Not Note	Ändring Alteration	Datum Date	Sign.	Not Note	Ändring Alteration	Datum Date	Sign.
---	INF AM 19260	930310	HK				

Ej ritning får inte utan Tetra Paks medgivande kopieras, utlånas till eller delgivas tredje man.

This drawing must not without the consent of Tetra Pak be copied, transmitted or disclosed to any third party.

EM

Machine: TBA/9

No:

Spec: 649205-1401

ELECTRICAL MANUAL

Övriga toleranser och fordringar enligt Tetra Paks Underleverantörsspecifikationer (US).

Other tolerances and requirements according to Tetra Paks Specifications for Sub-Contractors (US).

Där ej annat angetts/Unless otherwise stated

SKARPA KANTER BRUTNA/SHARP EDGES BROKEN

Gjutgods Castings ..... KA 21 11.10

Svetsade konstr./Welded constr. KA 21 11.50

Maskinbearb.ytor/Machined surface KA 21 11.30

Basic size	Tol.±	Basic size	Tol.±
(1)- 6	0.1	(120)- 315	0.5
(6)- 30	0.2	(315)-1000	0.8
(30)-120	0.3	(1000)-2000	1.2

Designer: HK

Date: 930310

Approved:

Scale: 1 : 1

◇ Marked with PART NUMBER

Method...../.....mm - KA2103.10

Assembly drawing

Material

Surface roughness

Surface treatment

TETRA PAK
LUND SWEDEN

LABEL
TBA/9-1401 S.A.

4-570 929

CADAM DRAWING

TETRA PAK

INDEX FOR TBA/9-1401

DATE: 930310
SIGN: HK/UTH

4-571516

1	BE-LIST	
2		
3	CE-LIST.	CONTROL CABINET
4		CONTROL PANEL
5		MACHINE
6		EQUIPMENT
7		EXTRA EQUIPMENT
8		SPARE PART KIT
9		TPIH
10		ELECTRICAL DOCUMENT
11	CIRCUIT DIAGRAM.	POSITION SUMMARY
12		DRAWINGS
13		GROUND CONNECTION
14		LINE SUMMARY
15		TERMINAL SUMMARY
16		ALTERATION MESSAGES
17		
18	PLC.	LIST OF BLOCKS
19		LIST OF ADDRESSES
20		VARIANT SETTINGS
21		SEQUENCE DIAGRAM
22		FUNCTIONS
23	MOUNT. DRAWINGS.	CONTROL CABINET
24		CONTROL PANEL
25		MACHINE
26		TPIH CABINET
27	CONNECTION DIAGRAM	
28	MAINS CONNECTION	
29	TERMINALS	
30	FUSE PANEL LABEL	
31		

Description: "Tetra Wedge" for TBA/9-1400 (MEK 1400)
ALTERATION AREA: 649205-1401

INTRODUCTION: 2000-03-15

ALTERATION REASON: Follow up

ADDITIONAL INFORMATION: Electrical documentation 559491-0100
"Tetra Wedge" valid for TBA/9
649205-1401. The drawings are kept at the
copying department and can be ordered on
specifications 559491-0100 ECN 73349
For changes see Alteration message
44093-99:43

ALSO INFLUENCE:

ECN TYPE: Electrical

DEGREE OF CHANGE: 2

ECN-MEETING

Date:	20000315	Time: 14:00
Place:	21:an	
Participants:	Ted Andersson	Per Holmqvist
	Peter Salmon	Lars Wåhlin
	Jonas Påhlman	
Also called:	Leif Christensen	Mats Hellstrand
	Cleas Lantz	Bengt Martinsson

ECHNICAL PUBLICATION:

SSUED BY: Ted Andersson

PPROVED BY Per Holmqvist

anged Bill of Material Valid from: 2000.03.15 Plant: Modena R&D Tetra Brik

entity	Description	Object management description
59492-0100	ELECTRICAL DOCUMENT	
59493-0100	ELECTRIC MATERIALS	

fected Documents Valid from 2000.03.15

cument-id	DTp	Prt	Vs	Size	Description / Material-ID / Object Management Description	Status
9492-0100	BOM	000	AC	A4	ELECTRICAL DOCUMENT	Released
	->				559492-0100 ELECTRICAL DOCUMENT	
9493-0100	BOM	000	AC	A4	ELECTRIC MATERIALS	Released
	->				559493-0100 ELECTRIC MATERIALS	
4093-0000	ELD	002	43	A4	POSITION SUMMARY	Released
4093-0000	ELD	032	43	A4	CIRCUIT DIAGRAM	Released
4093-0000	ELD	037	43	A4	CIRCUIT DIAGRAM	Released
4093-0000	ELD	070	43	A4	CIRCUIT DIAGRAM	Released
4093-0000	ELD	072	43	A4	CIRCUIT DIAGRAM	Released
4093-0000	ELD	083	43	A4	CIRCUIT DIAGRAM	Released
4093-0000	ELD	090	43	A4	LINE SUMMARY	Released
4093-0000	ELD	091	43	A4	TERMINAL SUMMARY	Released
4093-0000	ELD	099	43	A4	ALTERATION MESSAGES	Released
7615-0000	ELD	002	43	A4	LIST OF PLC-ADDRESSES	Released
7615-0000	ELD	019	43	A4	PLC-PROGRAM	Released
7615-0000	ELD	035	43	A4	PLC-PROGRAM	Released
1232-0000	ELD	013	43	A4	CONNECTION DRAWING	Released
1232-0000	ELD	014	43	A4	CONNECTION DRAWING	Released
1232-0000	ELD	023	43	A4	CONNECTION DRAWING	Released
1232-0000	ELD	033	43	A4	CONNECTION DRAWING	Released
1232-0000	ELD	051	43	A4	CONNECTION DRAWING	Released
2080-0000	ELD	001	02	A4	CHANGE CONN.SCHEDULE	Released

2 BoM(s) printed

neral remark
I - Electrical conversion 559491-0100
"TETRA WEDGE" valid for TBA9 649205-1401

N	72526	72800
lease date	990604	990902

g	Position	S p	Description	A s	Si ze	Identity	DTp	Prt Vs	Un it	Column quantity All
	0010		ELECTRICAL DOCUMENT	X		559492-0100			PC	1
	0020		ELECTRIC MATERIALS	X		559493-0100			PC	1

formation 'valid to' 1999.09.02

g	Position	S p	Description	A s	Si ze	Identity	DTp	Prt	Vs	Un it	Column quantity All
	0010		ELECTRICAL DOCUMENT	X		559492-0100				PC	1
	0020		ELECTRIC MATERIALS	X		559493-0100				PC	1

BILL-OF-MATERIAL "0" DATE PRINTED: 93-09-15

USED IN ASSEMB. 648152

ECN NUMBER:	EC 17786	EC 17872	EC 17873	EC 19260	EC 19261	EC 19262	EC 19721	EC 20080
DATE DISTRIBUTED	93-01-19	93-01-19	93-01-19	93-03-17	93-03-17	93-03-17	93-04-20	93-09-15

GROUP

VARIANT DESCRIP: -1401 TBA/9-1401 S.A.
-1402 TBA/9-1402 P.T.
-1403 TBA/9-1403 C.

POS	PART TITLE / REMARKS	PART NUMBER	R	SP	UN	1401	1402	1403
0010	CTRL CAB. TBA/9-1401 S.A.	CE- 41723-0101	-			1	-	-
0020	CTRL.PAN. TBA/9-1401 S.A.	CE- 41724-0101	-			1	-	-
0030	MACHINE	CE- 41725-0101	-			1	-	-
0040	EQUIPMENT TBA/9-1401 S.A.	CE- 41726-0101	-			1	-	-
0050	EXTRA EQU TBA/9-1401 S.A.	CE- 41727-0101	-			1	-	-
0060	SP. PARTS TBA/9-1401 S.A.	CE- 41728-0101	-			1	-	-
0070	EL-DOC. TBA/9-1401 S.A.	CE- 41729-0101	-			1	-	-
0080	EL-EQUIPMENT TPIH	CE- 41766-0101	-			1	1	1
0090	CTRL CAB. TBA/9-1402 P.T.	CE- 41750-0101	-			-	1	-
0100	CTRL.PAN. TBA/9-1402 P.T.	CE- 41751-0101	-			-	1	-
0110	MACHINE TBA/9-1402 P.T.	CE- 41752-0101	-			-	1	-
0120	EQUIPMENT TBA/9-1402 P.T.	CE- 41753-0101	-			-	1	-
0130	EXTRA EQU TBA/9-1402 P.T.	CE- 41754-0101	-			-	1	-
0140	SP. PARTS TBA/9-1402 P.T.	CE- 41755-0101	-			-	1	-
0150	EL-DOC. TBA/9-1402 P.T.	CE- 41756-0101	-			-	1	-
0160	EL-EQUIPMENT IH-GENERATOR	BE- 649411-0101	-			-	1	-
0170	ELECTRIC MATERIALS	CE- 69884-0101	-			-	1	-
0180	ELECTRICAL DOCUMENT	CE- 69885-0101	-			-	1	-
0190	ELECTRIC MATERIALS	CE- 69886-0101	-			-	1	-
0200	ELECTRICAL DOCUMENT	CE- 69887-0101	-			-	1	-
0210	CTRL CAB. TBA/9-1403 C.	CE- 41757-0101	-			-	-	1
0220	CTRL.PAN. TBA/9-1403 C.	CE- 41758-0101	-			-	-	1
0230	MACHINE TBA/9-1403 C.	CE- 41759-0101	-			-	-	1
0240	EQUIPMENT TBA/9-1403 C.	CE- 41760-0101	-			-	-	1
0250	EXTRA EQU TBA/9-1403 C.	CE- 41761-0101	-			-	-	1
0260	SP. PARTS TBA/9-1403 C.	CE- 41762-0101	-			-	-	1

BILL-OF-MATERIAL "0" DATE PRINTED: 93-09-15

POS	PART TITLE / REMARKS	PART NUMBER	R	SP	UN	1401	1402	1403
0270	EL-DOC. TBA/9-1403 C.	CE- 41763-0101	-		-	-	-	1

ENGINEER: HK 92-04-22 CONTROL: HK EL-EQUIPMENT TBA/9-140V BE- 649205-140V

ıeral remark

Electrical conversion 559491-0100
"TETRA WEDGE" valid for TBA9 649205-1401

ı	72526	72800	73349
lease date	990604	990902	000315

ı Position	S p	Description	A s	Si ze	Identity	DTp	Prt	Vs	Un it	Column quantity All
0010		TETRA WEDGE	A4	-	559491-0100	BOM	000	AB		x
0020		ELECTRICAL DOCUMENT	A4	-	559492-0100	BOM	000	AC		x
0030		ELECTRIC MATERIALS	A4	-	559493-0100	BOM	000	AC		x
0040		TERMINALBLOCK X302	A4	-	1370290-0100	BOM	000	AA		x
0102		POSITION SUMMARY	A4	-	44093-0000	ELD	002	43		x
0107		CIRCUIT DIAGRAM	A4	-	44093-0000	ELD	007	41		x
0113		CIRCUIT DIAGRAM	A4	-	44093-0000	ELD	013	41		x
0132		CIRCUIT DIAGRAM	A4	-	44093-0000	ELD	032	43		x
0137		CIRCUIT DIAGRAM	A4	-	44093-0000	ELD	037	43		x
0139		CIRCUIT DIAGRAM	A4	-	44093-0000	ELD	039	41		x
0145		CIRCUIT DIAGRAM	A4	-	44093-0000	ELD	045	41		x
0146		CIRCUIT DIAGRAM	A4	-	44093-0000	ELD	046	41		x
0157		CIRCUIT DIAGRAM	A4	-	44093-0000	ELD	057	41		x
0158		CIRCUIT DIAGRAM	A4	-	44093-0000	ELD	058	41		x
0166		CIRCUIT DIAGRAM	A4	-	44093-0000	ELD	066	41		x
0167		CIRCUIT DIAGRAM	A4	-	44093-0000	ELD	067	41		x
0170		CIRCUIT DIAGRAM	A4	-	44093-0000	ELD	070	43		x
0171		CIRCUIT DIAGRAM	A4	-	44093-0000	ELD	071	41		x
0172		CIRCUIT DIAGRAM	A4	-	44093-0000	ELD	072	43		x
0181		CIRCUIT DIAGRAM	A4	-	44093-0000	ELD	081	41		x
0182		CIRCUIT DIAGRAM	A4	-	44093-0000	ELD	082	41		x
0183		CIRCUIT DIAGRAM	A4	-	44093-0000	ELD	083	43		x

g Position	S p	Description	A s	Si ze	Identity	DTp	Prt	Vs	Un it	Column quantity All
0189		EARTH SUMMARY	A4	-	44093-0000	ELD	089	41		x
0190		LINE SUMMARY	A4	-	44093-0000	ELD	090	43		x
0191		TERMINAL SUMMARY	A4	-	44093-0000	ELD	091	43		x
0199		ALTERATION MESSAGES	A4	-	44093-0000	ELD	099	43		x
0201		LIST OF PLC-BLOCKS	A4	-	47615-0000	ELD	001	41		x
0202		LIST OF PLC-ADDRESSES	A4	-	47615-0000	ELD	002	43		x
0206		PLC-PROGRAM	A4	-	47615-0000	ELD	006	41		x
0214		PLC-PROGRAM	A4	-	47615-0000	ELD	014	41		x
0219		PLC-PROGRAM	A4	-	47615-0000	ELD	019	43		x
0235		PLC-PROGRAM	A4	-	47615-0000	ELD	035	43		x
0308		MOUNTING DRAWING, CABINET	A4	-	52471-0000	ELD	008	41		x
0310		MOUNTING DRAWING, CABINET	A4	-	52471-0000	ELD	010	41		x
0312		MOUNTING DRAWING, PANEL	A4	-	52471-0000	ELD	012	41		x
0405		CONNECTION DRAWING	A4	-	61232-0000	ELD	005	41		x
0413		CONNECTION DRAWING	A4	-	61232-0000	ELD	013	43		x
0414		CONNECTION DRAWING	A4	-	61232-0000	ELD	014	43		x
0423		CONNECTION DRAWING	A4	-	61232-0000	ELD	023	43		x
0433		CONNECTION DRAWING	A4	-	61232-0000	ELD	033	43		x
0450		CONNECTION DRAWING	A4	-	61232-0000	ELD	050	41		x
0451		CONNECTION DRAWING	A4	-	61232-0000	ELD	051	43		x
1010		TERMINALBLOCK X302	A4	-	1370290-0100	DRA	000	AA		x
1020		CHANGE CONN.SCHEDULE	A4	-	62080-0000	ELD	001	02		x
1030		CONVERSION DESCRIPTION	A4	-	53050-0000	ELD	001	01		x

formation 'valid to' 2000.03.15

g	Position	Sp	Description	As	Size	Identity	DTp	Prt	Vs	Unit	Column quantity All
	0020		ELECTRICAL DOCUMENT	A4-		559492-0100	BOM	000	AB		x
	0030		ELECTRIC MATERIALS	A4-		559493-0100	BOM	000	AB		x
	0102		POSITION SUMMARY	A4-		44093-0000	ELD	002	41		x
	0137		CIRCUIT DIAGRAM	A4-		44093-0000	ELD	037	41		x
	0170		CIRCUIT DIAGRAM	A4-		44093-0000	ELD	070	41		x
	0172		CIRCUIT DIAGRAM	A4-		44093-0000	ELD	072	41		x
	0183		CIRCUIT DIAGRAM	A4-		44093-0000	ELD	083	41		x
	0190		LINE SUMMARY	A4-		44093-0000	ELD	090	41		x
	0191		TERMINAL SUMMARY	A4-		44093-0000	ELD	091	41		x
	0199		ALTERATION MESSAGES	A4-		44093-0000	ELD	099	41		x
	0202		LIST OF PLC-ADDRESSES	A4-		47615-0000	ELD	002	41		x
	0219		PLC-PROGRAM	A4-		47615-0000	ELD	019	41		x
	0235		PLC-PROGRAM	A4-		47615-0000	ELD	035	41		x
	0413		CONNECTION DRAWING	A4-		61232-0000	ELD	013	41		x
	0414		CONNECTION DRAWING	A4-		61232-0000	ELD	014	41		x
	0423		CONNECTION DRAWING	A4-		61232-0000	ELD	023	41		x
	0451		CONNECTION DRAWING	A4-		61232-0000	ELD	051	41		x
	1020		CHANGE CONN.SCHEDULE	A4-		62080-0000	ELD	001	01		x

ieral remark

Electrical conversion 559491-0100
"TETRA WEDGE" valid for TBA9 649205-1401

I	72526	72800	73349
.ease date	990604	990902	000315

r Position	S p	Description	A s	Si ze	Identity	DTp	Prt Vs	Un it	Column quantity All
A310:2		TETRA WEDGE OUTFEED CONVEYOR TBA/9	X		1370415-0100			PC	1
1010		SHIELD CLIP KLBU 4-13.5		A3	90135-0039			PC	1
1020		GROUNDING RAIL 10x3 CU		A4	90135-0037			MM	100
1030		GLAND,EMC,EXTENDED WITH INSERT PR 22,5		A4	353245-0004			PC	1
1040		CABLE AWM D.BLUE 0,75mm2		A4	351172-0102			M	**100**
1050		CABLE AWM GN/YE 2,5mm2		A4	351175-0105			M	6
1060		CABLE AWM BLACK 2,5mm2		A4	351179-0105			M	**40**
1090		BY PASS TERMINAL WDU 2,5 Blue		A3	353021-0216			PC	**12**
A310		SERVO AMPLIFIER 5A RMS		A3	90045-0395			PC	1
A310:1		PLINTH 9032 011 970		A3	90045-0376			PC	1
A321		EXPANSION RELAY JSR1T-500ms		A2	90119-0084			PC	1
F310		FUSE 3P 6A K		A3	90007-0146			PC	1
K310		CONTACTOR 4KW COIL 24VDC		A2	90075-0127			PC	1
K310:1		AUXILIARY CONTACT K&M 22 DILM.2NO;2NC		A3	90075-0313			PC	1
K311		CONTACTOR 4KW COIL 24VDC		A2	90075-0127			PC	1
K311:1		AUXILIARY CONTACT K&M 22 DILM.2NO;2NC		A3	90075-0313			PC	1
K326		PLUG-IN RELAY 24VDC		A3	90119-0056			PC	1
K326:1		BASE 11 POLE		A3	90129-0006			PC	1

Position	Sp	Description	As	Size	Identity	DTp	Prt	Vs	Unit	Column quantity All
M.X070		Terminal module 19 cords	A3		90042-0535				PC	1
P.S013		ROTARY SWITCH	A3		90111-0139				PC	1
Q310		OVERLOAD PROT. PKZM 6,3A	A2		90095-0076				PC	1
Q310:1		AUX.CONTACT K&M NHI 11-PKZ0	A3		90259-0317				PC	1
W003		CABLE AWM BLACK 25MM2	A4		351179-0110				M	7
W004		CABLE AWM BLACK 25MM2	A4		351179-0110				M	7
W005		CABLE FKK,4x2,5	A4		351123-0165				M	10
W012		CABLE,OLFLEX 5x0,75 MM2	A4		351150-0405				M	10
W021		CABLE OLFLEX 3x0,75 MM2	A4		351150-0403				M	5
W288		CABLE,OLFLEX 5x0,75 MM2	A4		351150-0405				M	15
W289		CABLE OLFLEX 3x0,75 MM2	A4		351150-0403				M	15
W740		RESOLVER CABLE L=11000 mm M M / P P s t a t u s 00 Ready for PP and MM	A4		1255692-0110				PC	1
W741		CABLE 4x1,0+2(2x0,5)mm2	A3		90220-0116				M	11
Z310		Varistor filter, 150 V RMS/200 VDC, 13 J	A4		90024-0037				PC	1

formation 'valid to' 2000.03.15

; Position	S Description p	A Si Identity s ze	DTp Prt Vs	Un it	Column quantity All
1040	CABLE AWM D.BLUE 0,75mm2	A4 351172-0102		M	70
1060	CABLE AWM BLACK 2,5mm2	A4 351179-0105		M	30
1090	BY PASS TERMINAL WDU 2,5 Blue	A3 353021-0216		PC	9
M.Y070	Pilot valve, L=350 mm M M / P P s t a t u s 00 Ready for PP and MM	A3 90042-0538		PC	1
M.Y071	Pilot valve, L=350 mm M M / P P s t a t u s 00 Ready for PP and MM	A3 90042-0538		PC	1
M.Y072	Pilot valve, L=350 mm M M / P P s t a t u s 00 Ready for PP and MM	A3 90042-0538		PC	1

N 72526
lease date **

g	Position	S P	Description	A s	Si ze	Identity	DTp	Prt Vs	Un it	Column quantity All
1			RAIL TS 35/7,5	A4		353042-0004			MM	60
2			EARTH TERMINAL WPE 4	A3		353024-0205			PC	5
3			SET OF SIGNS 6-GW(EARTH)			359011-0834			PC	1

BILL-OF-MATERIAL "0" DATE PRINTED: 93-10-21

USED IN ASSEMB. 41729 649205

	ECN NUMBER:	EC 17786	EC 19260	EC 20080	EC 20398	EC 20406
	DATE DISTRIBUTED	93-01-19	93-03-17	93-09-15	93-10-01	93-10-18

POS	PART TITLE / REMARKS	PART NUMBER	R	SP	UN	0101
	MOUNTING DRAWING, CABINET	4- 52471-05:01				X
	MOUNTING DRAWING, CABINET	4- 52471-06:01				X
	MOUNTING DRAWING, CABINET	4- 52471-07:01				X
	MOUNTING DRAWING, CABINET	4- 52471-08:01				X
	MOUNTING DRAWING, CABINET	4- 52471-09:01				X
	MOUNTING DRAWING, CABINET	4- 52471-10:01				X
	MOUNTING DRAWING, RACK	4- 52471-11:01				X
A001:1	BACKPLANE FRONT RACK BTE	C- 68262-0101		S		1
A16A	PRINTED DESIGN CORR.LOGIC	C- 68471-0101		S		1
A16A:1	BACKPLANE FRONT RACK BTE	C- 68262-0101		S		1
A16B	CIRCUIT BOARD	C- 67058-0301		S		1
A16B:1	BACKPLANE FRONT RACK BTE	C- 68262-0101		S		1
A16B:2	FRONT PLATE	C- 68445-0106		S		1
R110	CIRCUIT BOARD	C- 68444-0101		US		1
0010	RACK	C- 67388-0102		C		1
0010:1	FRONT PLATE	C- 68445-0106		S		2
0010:2	FRONT PLATE	C- 68445-0101		S		2
0010:3	FRONT PLATE	C- 68445-0102		S		2
0010:4	FRONT PLATE	C- 68445-0103		S		2
0010:5	FRONT PLATE	C- 68445-0104		S		2
0010:6	FRONT PLATE	C- 68445-0105		S		2
A001	MOTOR DRIVE CONTROL	2- 90430-0037		S		1
A002	SAFETY RELAY	2- 90119-0072		C		1
A004	TEMPERATURE REGULATOR	2- 90410-0044		P		1
A004:1	SIGN"PRESTERILISATION V."	359241-0123		C		1
A006	TEMPERATURE REGULATOR	2- 90410-0044		P		1
A006:1	SIGN"PEROXIDE BATH WATER"	359241-0141		C		1
A008	TEMPERATURE REGULATOR	2- 90410-0044		P		1
A008:1	SIGN"LONGITUDINAL SEALING"	359241-0131		C		1
A010	TEMPERATURE REGULATOR	2- 90410-0044		P		1

POS	PART TITLE / REMARKS		PART NUMBER	R	SP	UN	0101
A010:1	SIGN"AIR SUPER HEATER"		359241-0130	C		1	
A013	TEMPERATURE REGULATOR	2-	90410-0044	P		1	
A013:1	SIGN"TEMP.AIR KNIFE"		359241-0126	C		1	
A014	TEMPERATURE REGULATOR	2-	90410-0044	P		1	
A014:1	SIGN"STEAM"		359241-0121	C		1	
A015	LEVEL REGULATOR	2-	90314-0021	S		1	
A017	LEVEL REGULATOR	2-	90314-0021	S		1	
A018	LEVEL REGULATOR	2-	90314-0021	S		1	
A019	LEVEL REGULATOR	2-	90314-0021	S		1	
A022	LEVEL REGULATOR	2-	90314-0021	S		1	
A023	OPTO-RELAY	3-	90119-0063	-		-	
	* SEE TERMINAL DRWG: 571519						
A024	OPTO-RELAY	3-	90119-0063	-		-	
	* SEE TERMINAL DRWG: 571519						
A025	OPTO-RELAY	3-	90119-0063	-		-	
	* SEE TERMINAL DRWG: 571519						
A030	TEMPERATURE REGULATOR	2-	90410-0044	P		1	
A030:1	SIGN"TEMP.PEROXIDE BATH"		359241-0125	C		1	
A101	ENCODER MODULE	2-	90025-0016	S		1	
A101:1	TERMINAL BLOCK	3-	90025-0025	C		1	
A102	INPUT MODULE	2-	90025-0017	S		1	
A102:1	TERMINAL BLOCK	3-	90025-0024	C		1	
A103	INPUT MODULE	2-	90025-0017	S		1	
A103:1	TERMINAL BLOCK	3-	90025-0024	C		1	
A104	INPUT MODULE	2-	90025-0017	S		1	
A104:1	TERMINAL BLOCK	3-	90025-0024	C		1	
A105	INPUT MODULE	2-	90025-0017	S		1	
A105:1	TERMINAL BLOCK	3-	90025-0024	C		1	
A106	INPUT MODULE	2-	90025-0017	S		1	
A106:1	TERMINAL BLOCK	3-	90025-0024	C		1	
A108	RACK	1-	90025-0052	C		1	
A114	OUTPUT MODULE	2-	90025-0053	S		1	
A114:1	TERMINAL PLINTH	3-	90025-0054	C		1	
A115	OUTPUT MODULE	2-	90025-0053	S		1	

POS	PART TITLE / REMARKS	PART NUMBER	R	SP	UN	0101
A115:1	TERMINAL PLINTH	3- 90025-0054	C		1	
A116	OUTPUT MODULE	2- 90025-0053	S		1	
A116:1	TERMINAL PLINTH	3- 90025-0054	C		1	
A117	OUTPUT MODULE	2- 90025-0053	S		1	
A117:1	TERMINAL PLINTH	3- 90025-0054	C		1	
A118	RACK	1- 90025-0058	C		1	
A120	OUTPUT MODULE	2- 90025-0053	S		1	
A120:1	TERMINAL PLINTH	3- 90025-0054	C		1	
A121	OUTPUT MODULE	2- 90025-0053	S		1	
A121:1	TERMINAL PLINTH	3- 90025-0054	C		1	
A128	RACK	1- 90025-0058	C		1	
A202	TEMPERATURE REGULATOR	2- 90410-0044	P		1	
A202:1	SIGN"STRIP APPLICATOR"	359241-0132	C		1	
A450	RELAY	3- 90119-0070	S		1	
	USE 90119-77					
	NOT A GENERAL REPLACEMENT					
A451	RELAY	3- 90119-0070	S		1	
	USE 90119-77					
	NOT A GENERAL REPLACEMENT					
D108	PROCESSOR	1- 90025-0070	C		1	
D108:1	ADAPTER	3- 90025-0096	C		1	
D108:2	TERMINAL PLINTH	3- 90025-0031	C		1	
E004	HOLDING FIXTURE	3- 90164-0301	S		1	
E004:1	FLUORESCENT TUBE 11W	90297-0007	P		1	
F001	FUSE 1P 10A K	3- 90007-0129	S		1	
F003	FINE-WIRE 1,6 A	3- 352550-0133	UP		--	
	* SEE TERMINAL DRWG: 571519					
F003:1	FUSE TERMINAL	353023-0102	C		--	
	* SEE TERMINAL DRWG: 571519					
F005	FUSE 1P 16A K	3- 90007-0131	S		1	
F008	FUSE 1P 10A K	3- 90007-0129	S		1	
F010	TUBE FUSE 16A	4- 90233-0027	UP		1	
F010:1	FUSE HOLDER	3- 90077-0112	S		1	

10:51 94.2.28

POS	PART TITLE / REMARKS	PART NUMBER	R	SP	UN	0101
F017	FUSE 1P 6A K	3- 90007-0128		UP		1
F019	FUSE 1P 6A K	3- 90007-0128		UP		1
F028	TUBE FUSE 16A	4- 90233-0027		UP		3
F028:1	FUSE HOLDER	3- 90077-0112		S		3
F029	TUBE FUSE	4- 90233-0029		UP		3
F029:1	FUSE HOLDER	3- 90077-0112		S		3
F030	TUBE FUSE 10A	4- 90233-0028		UP		1
F030:1	FUSE HOLDER	3- 90077-0112		S		1
F031	TUBE FUSE 10A	4- 90233-0028		UP		1
F031:1	FUSE HOLDER	3- 90077-0112		S		1
F041	FUSE H.MANN 2P 80A 2	90007-0118		S		1
F042	FUSE H.MANN 2P 80A 2	90007-0118		S		1
F055	FUSE 3P 10A K	3- 90007-0147		S		1
F056	TUBE FUSE 10A	4- 90233-0028		UP		3
F056:1	FUSE HOLDER	3- 90077-0112		S		3
F202	TUBE FUSE 16A	4- 90233-0027		S		1
F202:1	FUSE HOLDER	3- 90077-0112		S		1
G100	POWER SUPPLY UNIT	2- 90025-0055		S		1
K002	CONTACTOR 7,5KW	2- 90075-0128		US		1
K003	CONTACTOR	2- 90075-0126		US		1
	CONSISTS OF / SPARE PART			SP	UN	QTY
	3- 90075-0313 AUXILIARY CONTACT					
K006	RELAY	3- 90119-0056		UP		1
K006:1	BASE	3- 90129-0006		S		1
K006:2	CLAMP	90119-0312		S		1
K014	CONTACTOR 4KW	2- 90075-0124		US		1
	CONSISTS OF / SPARE PART			SP	UN	QTY
	3- 90075-0313 AUXILIARY CONTACT					
K026	RELAY	3- 90119-0056		UP		1
K026:1	BASE	3- 90129-0006		S		1
K026:2	CLAMP	90119-0312		S		1
K030	RELAY	3- 90119-0056		UP		1
K030:1	BASE	3- 90129-0006		S		1
K030:2	CLAMP	90119-0312		S		1
K036	RELAY	3- 90119-0056		UP		1

POS	PART TITLE / REMARKS	PART NUMBER	R	SP	UN	0101
K036:1	BASE	3- 90129-0006		S		1
K036:2	CLAMP	90119-0312		S		1
K046	RELAY	3- 90119-0056		UP		1
K046:1	BASE	3- 90129-0006		S		1
K046:2	CLAMP	90119-0312		S		1
K048	CONTACTOR 4KW	2- 90075-0124		US		1
	CONSISTS OF / SPARE PART			SP	UN	QTY
	3- 90075-0313 AUXILIARY CONTACT					
K051	CONTACTOR 4KW	2- 90075-0124		US		1
	CONSISTS OF / SPARE PART			SP	UN	QTY
	3- 90075-0313 AUXILIARY CONTACT					
K052	RELAY	3- 90119-0056		UP		1
K052:1	BASE	3- 90129-0006		S		1
K052:2	CLAMP	90119-0312		S		1
K053	RELAY	3- 90119-0056		UP		1
K053:1	BASE	3- 90129-0006		S		1
K053:2	CLAMP	90119-0312		S		1
K054	RELAY	3- 90119-0056		UP		1
K054:1	BASE	3- 90129-0006		S		1
K054:2	CLAMP	90119-0312		S		1
K071	CONTACTOR 7,5KW	2- 90075-0128		US		1
K075	CONTACTOR 7,5KW	2- 90075-0125		US		1
	CONSISTS OF / SPARE PART			SP	UN	QTY
	3- 90075-0313 AUXILIARY CONTACT					
K077	CONTACTOR 7,5KW	2- 90075-0125		US		1
	CONSISTS OF / SPARE PART			SP	UN	QTY
	3- 90075-0313 AUXILIARY CONTACT					
K081	CONTACTOR 4KW	2- 90075-0124		US		1
	CONSISTS OF / SPARE PART			SP	UN	QTY
	3- 90075-0313 AUXILIARY CONTACT					
K082	CONTACTOR 4KW	2- 90075-0124		US		1

>>>>>> CONTINUES ON NEXT PAGE >>>>>>>

POS	PART TITLE / REMARKS	PART NUMBER	R	SP	UN	QTY
	CONSISTS OF / SPARE PART				SP UN	QTY
	3- 90075-0313 AUXILIARY CONTACT					
K083	RELAY	3- 90119-0056			UP	1
K083:1	BASE	3- 90129-0006			S	1
K083:2	CLAMP	90119-0312			S	1
K084	RELAY	3- 90119-0056			US	1
K084:1	BASE	3- 90129-0006			S	1
K084:2	CLAMP	90119-0312			S	1
K087	CONTACTOR 7,5KW	2- 90075-0125			US	1
	CONSISTS OF / SPARE PART				SP UN	QTY
	3- 90075-0313 AUXILIARY CONTACT					
K088	CONTACTOR 7,5KW	2- 90075-0125			US	1
	CONSISTS OF / SPARE PART				SP UN	QTY
	3- 90075-0313 AUXILIARY CONTACT					
K091	CONTACTOR 7,5KW	2- 90075-0125			US	1
	CONSISTS OF / SPARE PART				SP UN	QTY
	3- 90075-0313 AUXILIARY CONTACT					
K092	CONTACTOR 4KW	2- 90075-0127			US	1
K093	CONTACTOR 4KW	2- 90075-0124			US	1
	CONSISTS OF / SPARE PART				SP UN	QTY
	3- 90075-0313 AUXILIARY CONTACT					
K094	CONTACTOR 4KW	2- 90075-0124			US	1
	CONSISTS OF / SPARE PART				SP UN	QTY
	3- 90075-0313 AUXILIARY CONTACT					
K095	RELAY	3- 90119-0056			UP	1
K095:1	BASE	3- 90129-0006			S	1
K095:2	CLAMP	90119-0312			S	1
K096	CONTACTOR 7,5KW	2- 90075-0128			US	1
K097	RELAY	3- 90119-0056			UP	1
K097:1	BASE	3- 90129-0006			S	1
K097:2	CLAMP	90119-0312			S	1

POS	PART TITLE / REMARKS	PART NUMBER	R	SP UN	0101
K098	CONTACTOR 7,5KW	2- 90075-0125		US	1
	CONSISTS OF / SPARE PART			SP UN	QTY
	3- 90075-0313 AUXILIARY CONTACT				
K099	CONTACTOR 4KW	2- 90075-0124		US	1
	CONSISTS OF / SPARE PART			SP UN	QTY
	3- 90075-0313 AUXILIARY CONTACT				
K105	SOLID-STATE RELAY	3- 90119-0067		UP	1
K106	SOLID-STATE RELAY	3- 90119-0067		UP	1
K108	SOLID-STATE RELAY	3- 90119-0067		UP	1
K110	OPTO SWITCH	3- 90119-0043		UP	1
K111	SOLID-STATE RELAY	3- 90119-0067		UP	1
K112	SOLID-STATE RELAY	3- 90119-0067		UP	1
K113	SOLID-STATE RELAY	3- 90119-0067		UP	1
K114	SOLID-STATE RELAY	3- 90119-0067		UP	1
K201	CONTACTOR 4KW	2- 90075-0124		US	1
	CONSISTS OF / SPARE PART			SP UN	QTY
	3- 90075-0313 AUXILIARY CONTACT				
K207	SOLID-STATE RELAY	3- 90119-0067		UP	1
L001	BALLAST COIL 50/60HZ	90297-0306		S	1
L002	BALLAST COIL 50/60HZ	90297-0306		S	1
L004	BALLAST COIL 50/60HZ	90297-0306		S	1
M002	FAN	90264-0026		C	1
M002:1	COOLING ELEMENT	3- 495201		C	1
M002:2	PIPE COUPLGI-15-1/2"	342723-0114		C	1
P002	HOUR METER	90178-0007		S	1
P004	COUNTING APPARATUS	90053-0029		S	1
P004:1	SIGN"PACKAGE COUNTER L 1"	359241-0199		C	1
P005	RECORDER 50HZ	90332-0007		C	1
	CONSISTS OF / SPARE PART			SP UN	QTY
	4- 90332-0308 KEY				
	90333-0004 GRAPH PAPER				
Q001	SWITCH	2- 90111-0135		C	1
Q001:1	SIGN	359241-0124		C	1

POS	PART TITLE / REMARKS	PART NUMBER	R	SP	UN	0101
Q001:2	SIGN,VOLTAGE/FREQ./CURR.	4- 359241-0297	C		1	
Q002	MOTOR SWITCH	2- 90259-0030	S		1	
Q002:1	AUXILIARY CONTACT	3- 90259-0306	S		1	
Q003	MOTOR SWITCH	3- 90259-0029	S		1	
Q003:1	AUXILIARY CONTACT	3- 90259-0306	S		1	
Q012	MOTOR SWITCH 1,6-2,4A	3- 90259-0023	S		1	
Q051	MOTOR SWITCH 6-10A	3- 90259-0026	S		1	
Q051:1	AUXILIARY CONTACT	3- 90259-0306	S		1	
Q077	MOTOR SWITCH	3- 90259-0027	S		1	
Q077:1	AUXILIARY CONTACT	3- 90259-0306	S		1	
Q081	MOTOR SWITCH 2-4A	3- 90259-0024	S		1	
Q081:1	AUXILIARY CONTACT	3- 90259-0306	S		1	
Q082	MOTOR SWITCH 1-1,6A	3- 90259-0017	S		1	
Q082:1	AUXILIARY CONTACT	3- 90259-0306	S		1	
Q087	MOTOR SWITCH 6-10A	3- 90259-0026	S		1	
Q087:1	AUXILIARY CONTACT	3- 90259-0306	S		1	
Q091	MOTOR SWITCH 6-10A	3- 90259-0026	S		1	
Q091:1	AUXILIARY CONTACT	3- 90259-0306	S		1	
Q093	MOTOR SWITCH 1-1,6A	3- 90259-0017	S		1	
Q094	MOTOR SWITCH	3- 90259-0021	S		1	
Q094:1	AUXILIARY CONTACT	3- 90259-0306	S		1	
Q098	MOTOR SWITCH 6-10A	3- 90259-0026	S		1	
Q098:1	AUXILIARY CONTACT	3- 90259-0306	S		1	
Q099	MOTOR SWITCH	3- 90259-0022	S		1	
Q099:1	AUXILIARY CONTACT	3- 90259-0306	S		1	
Q201	MOTOR SWITCH 1-1,6A	3- 90259-0017	S		1	
Q201:1	AUXILIARY CONTACT	3- 90259-0306	S		1	
R003	POTENTIOMETER	90130-0017	S		1	
R003:1	KNOB	90130-0301	C		1	
R003:2	SIGN	359241-0261	C		1	
R004	POTENTIOMETER	90130-0017	S		1	
R004:1	KNOB	90130-0301	C		1	
R004:2	SIGN	359241-0260	C		1	
S002	SWITCH	3- 90111-0124	S		1	
S002:1	SIGN"CL.OF ST.BARRIER SP.	359241-0122	C		1	
S003	SWITCH UNIT	90023-0070	S		1	
S003:1	SIGN	359320-0002	C		1	

10.51 94.2.28

POS	PART TITLE / REMARKS	PART NUMBER	R	SP	UN	0101
S004	KEY SWITCH	3- 90111-0122	S			1
S004:1	SIGN"SERVICE SWITCH"	359241-0133	C			1
S032	EMERGENCY STOP	3- 90064-0105	S			1
S032:1	SIGN	4- 486826-0001	C			1
S034	PUSH BUTTON RED	3- 90064-0085	S			1
S034:1	SIGN"SHORT STOP"	359301-0110	C			1
S034:2	TOUCH GUARD	90064-0317	C			1
T001	TRANSFORMER	2- 90245-0019	C			1
T002	TRANSFORMER	3- 23118	C			1
T009	TRANSFORMER	3- 23139	C			1
V003	RECTIFIER	3- 90038-0024	S			1
V010	FEED THROUKLAMMA WTRD 2,5 * SEE TERMINAL DRWG: 571519	3- 353021-0122	-			-
V011	FEED THROUKLAMMA WTRD 2,5 * SEE TERMINAL DRWG: 571519	3- 353021-0122	-			-
W406	CABLE	90220-0059	C		MM	5000
W407	CABLE	90220-0059	C		MM	5000
W408	CABLE	90220-0059	C		MM	5000
W409	CABLE	90220-0059	C		MM	5000
W410	CABLE	90220-0059	C		MM	5000
W411	CABLE	90220-0059	C		MM	5000
W412	CABLE	90220-0059	C		MM	5000
W447	CABLE	90220-0036	C		MM	4000
W448	CABLE	90220-0036	C		MM	4000
W450	CABLE	90220-0059	C		MM	5000
W604	CABLE	90220-0059	C		MM	5000
XL01	TERMINAL DRAWING XL1-3	4- 571525	-			1
XL02	TERMINAL DRAWING XL1-3	4- 571525	-			-
XL03	TERMINAL DRAWING XL1-3	4- 571525	-			-
XL10	TERMINAL DRAWING XL, X009	4- 571519	-			1
XL11	TERMINAL DRAWING XL, X009	4- 571519	-			-
XL12	TERMINAL DRAWING XL, X009	4- 571519	-			-
XL20	TERMINAL DRAWING XL, X009	4- 571519	-			-
XL50	TERMINAL DRAWING XL, X009	4- 571519	-			-
XL51	TERMINAL DRAWING XL, X009	4- 571519	-			-

POS	PART TITLE / REMARKS	PART NUMBER	R	SP	UN	0101
X001:1	TERMINAL DRWG X001, X011	4- 570926-0001	-			1
X001:2	TERMINAL DRAWING X001	4- 570926-0002	-			1
X001:3	TERMINAL DRAWING X001	4- 570926-0003	-			1
X001:4	TERMINAL DRAWING X001	4- 570926-0004	-			1
X003	TERMINAL DRAWING X003	4- 571516	-			1
X009	TERMINAL DRAWING XL, X009	4- 571519	-			-
X010	WALL SOCKET	3- 90001-0028	C			1
X011	TERMINAL DRWG X001, X011	4- 570926-0001	-			-
X016	STRIP	90077-0106	-			1
X017	CONTACT UNIT	90110-0028	C			1
X019	CONTACT UNIT	90110-0029	C			1
X021	TERMINAL BLOCK	90195-0010	C			1
X023	TERMINAL BLOCK	4- 90077-0102	C			1
X024	TERMINAL BLOCK	4- 90195-0020	C			1
0020	MACHINE PLATE	4- 27402	-			1
0030	SIGN HOLDER	2- 359240-0100	-			29
0040	SIGN"IDENTIF. OF WIRING"	90194-0080	-			1
I 0045	SIGN"WHITE CARD EL.EQ."	90194-0112	-			1
0050	FUSE PANEL LABEL	4- 571517	-			1
0060	SIGN, UNENGRAVED	4- 359240-0001	-			13
0070	CABLE GLANR:ST 36	352103-0122	S			1
0080	BLANK-OFF PLUG	90002-0014	C			5
0090	BLANK-OFF PLUG 22,5	4- 90002-0004	C			1
0095	NUT	90099-0110	C			1
0100	GLAND FITT	352136-0142	C			3
0110	HOSE .022	352135-0109	C		MM	1500
0120	SIGN"FLASH SIGN"	90194-0016	C			1
0130	CABLE AWM ORANGE 0,75	351180-0102	C		MM	X
0140	CABLE AWM RED 0,75	351176-0102	C		MM	X
0150	CABLE AWM RED 4,0	351176-0106	C		MM	X
0160	CABLE AWM DARKBLUE 0.75	351172-0102	C		MM	X
0170	CABLE AWM DARKBLUE 4,0	351172-0106	C		MM	X
0180	CABLE AWM BLACK 1,5	351179-0104	C		MM	X
0190	CABLE AWM BLACK 2,5	351179-0105	C		MM	X
0200	CABLE AWM BLACK 6,0	351179-0107	C		MM	X
0210	CABLE AWM BLACK 25,0	351179-0110	C		MM	X
0220	CABLE AWM LIGHTBLUE 1,5	351173-0104	C		MM	X

POS	PART TITLE / REMARKS	PART NUMBER	R	SP	UN	0101
0230	CABLE AWM LIGHTBLUE 2,5	351173-0105	C		MM	X
0240	CABLE AWM LIGHTBLUE 6,0	351173-0107	C		MM	X
0250	CABLE AWM LIGHTBLUE 25,0	351173-0110	C		MM	X
0260	CABLE AWM YELL/GREEN 0.75	351175-0102	C		MM	X
0270	CABLE AWM YELL/GREEN 1,5	351175-0104	C		MM	X
0280	CABLE AWM YELL/GREEN 2,5	351175-0105	C		MM	X
0290	CABLE AWM YELL/GREEN 4,0	351175-0106	C		MM	X
0300	CABLE AWM YELL/GREEN 6,0	351175-0107	C		MM	X
0310	CABLE AWM YELL/GREEN 16,0	351175-0109	C		MM	X

POS	PART TITLE / REMARKS		PART NUMBER	R	SP	UN	QTY
	CONTAINS PART/SPARE PART				SP	UN	QTY
	90036-0057 LIGHT BULB BA9S 28V						
S004H1	SIGN"DOWN"		359301-0005		S		1
S004H2	LIGHT BULB BA9S 28V		90036-0057		P		1
S006H	PUSH BUTTON RED	3-	90064-0083		S		1
S006H1	SIGN"SHORT STOP"		359301-0110		S		1
S006H2	LIGHT BULB BA9S 28V		90036-0057		P		1
S007	SWITCH	3-	90111-0120		S		1
S011H	PUSH BUTTON	3-	90064-0098		S		1
S011H1	SIGN"ALARM STOP"		359301-0105		S		1
S011H2	LIGHT BULB BA9S 28V		90036-0057		P		1
S012	PUSH BUTTON WHITE	3-	90064-0082		S		1
	CONTAINS PART/SPARE PART				SP	UN	QTY
	90036-0057 LIGHT BULB BA9S 28V						
S012:1	SIGN"LAMP TEST"		359301-0130		S		1
S019	PUSH BUTTON YELLOW	3-	90064-0084		S		1
S019:1	SIGN		359301-0050		S		1
S020	PUSH BUTTON YELLOW	3-	90064-0084		S		1
S020:1	SIGN		359301-0170		S		1
W017	CABLE OILFLEX 1260,75		351150-0407		C	MM	1000
Z001	INTERFERENCE PROTECTION	3-	276069		S		1
Z002	INTERFERENCE PROTECTION	3-	276069		S		1
0040	LAMP HOLDER BA9S		90124-0027		S		20
0050	LIGHT BULB BA9S 28V		90036-0057		S		20
0060	SIGN"FLASH SIGN"		90194-0018		C		1

USED IN ASSEMB. 41729 649205

ECN NUMBER: EC 17786 EC 19260
DATE DISTRIBUTED 93-01-19 93-03-17

POS	PART TITLE / REMARKS	PART NUMBER	R	SP	UN	0101
	MOUNTING DRAWING, PANEL	4- 52471-12:01				X
	MOUNTING DRAWING, PANEL	3- 52471-13:01				X
	MOUNTING DRAWING, PANEL	3- 52471-14:01				X
A016:1	POTENTIOMETER	C- 67062-0201		S		1
A016:2	SIGN	4- 479876		C		1
A100	CIRCUIT BOARD TBA/9-080V	1- 554063		C		1
A100:1	DISPLAY	1- 570133		C		1
	* CLICHé NO: 251012					
PL01	TERMINAL PLINTH	3- 90025-0029		S		1
PL02	TERMINAL PLINTH	3- 90025-0029		S		1
PL03	TERMINAL PLINTH	3- 90025-0029		S		1
PL04	TERMINAL PLINTH	3- 90025-0029		S		1
PL05	TERMINAL PLINTH	3- 90025-0030		S		1
PL06	TERMINAL PLINTH	3- 90025-0031		S		1
PX01	TERMINAL BLOCK P.X1, P.X2	4- 571520		-		1
PX02	TERMINAL BLOCK P.X1, P.X2	4- 571520		-		-
P003	COUNTER	90053-0024		S		1
P003:1	FRAME	90053-0305		S		1
P100	PROGRAM CARD	1- 90025-0042		S		1
S001	EMERGENCY STOP	3- 90064-0105		S		1
S001:1	SIGN	4- 486826-0001		S		1
S002H	PUSH BUTTON"GREEN"	3- 90064-0093		S		1
S002H1	SIGN"INCHING"	359301-0090		S		1
S002H2	LIGHT BULB BA9S 28V	90036-0057		P		1
S003H	PUSH BUTTON"GREEN"	3- 90064-0093		S		1
S003H1	SIGN"UP"	359301-0081		S		1
S003H2	LIGHT BULB BA9S 28V	90036-0057		P		1
S004H	PUSH BUTTON WHITE	3- 90064-0082		S		1

)))))))) CONTINUES ON NEXT PAGE (((((((

GENERAL REMARKS: THE FOLLOWING CABLES ARE PRE-WIRED COMPONENT CABLES: 0010, 0011, 0012, 0015, 0102, 0103, 0104, 0105, 0106, 0107, 0201, 0202, 0203, 0204, 0307, 0313, 0314, 0315, 0332, 0333, 0334, 0353, 0414, 0415, 0421, 0422, 0423, 0424, 0433, 0435, 0440, 0443, 0447, 0448, 0451, 0454, 0455, 0456, 0607, 0608, 0609, 0611
*
*
CABLE 0001-0026 BELONG TO BODY.
CABLE 0101-0199 BELONG TO DRIVING UNIT.
CABLE 0201-0299 BELONG TO FINAL FOLDER UNIT.
CABLE 0301-0399 BELONG TO SERVICE UNIT.
CABLE 0401-0499 BELONG TO SUPERSTRUCTURE.
CABLE 0601-0699 BELONG TO STRIP APPLICATOR.

USED IN ASSEMB. 41729 649205

	ECN NUMBER:	EC 19260	EC 20080	EC 20720
DATE DISTRIBUTED		93-03-17	93-09-15	93-12-02

POS	PART TITLE / REMARKS	PART NUMBER	R	SP	UN	0101
0001	CABLE AWM BLACK 25,0	351179-0110	C		MM	5800
0002	CABLE AWM BLACK 25,0	351179-0110	C		MM	5800
0003	CABLE AWM BLACK 25,0	351179-0110	C		MM	5800
0004	CABLE AWM BLACK 25,0	351179-0110	C		MM	5800
0005	CABLE OILFLEX 4G2,5	351150-0418	C		MM	6600
0006	CABLE OILFLEX 3G1,5	351150-0412	C		MM	3800
0007	CABLE OILFLEX 3G1,5	351150-0412	C		MM	3200
0008	CABLE OILFLEX N2X0,75	351150-0122	C		MM	5500
0013	CABLE OILFLEX N2X0,75	351150-0122	C		MM	900
0017	CABLE OILFLEX 16G0,75	351150-0408	C		MM	4700
0018	DATA CABLE	90220-0073	C		MM	5200
0019	CABLE OILFLEX 3G1,5	351150-0412	C		MM	4550
0022	CABLE OILFLEX 4G2,5	351150-0418	C		MM	2600
0023	CABLE OILFLEX 4G2,5	351150-0418	C		MM	6700
0025	CABLE OILFLEX 27G0,75	351150-0409	C		MM	6700
0026	CABLE OILFLEX N2X0,75	351150-0122	C		MM	4550
0101	CABLE OILFLEX 7G2,5	351150-0420	C		MM	3250
0108	CABLE OILFLEX 27G0,75	351150-0409	C		MM	3550

POS	PART TITLE / REMARKS	PART NUMBER	R	SP	UN	0101
0302	CABLE SIHF 3G2,5	351120-0145	C	MM	5000	
0304	CABLE OILFLEX 4G2,5	351150-0418	C	MM	6600	
0305	CABLE OILFLEX 3G2,5	351150-0417	C	MM	5500	
0306	CABLE OILFLEX 4G2,5	351150-0418	C	MM	6550	
0308	CABLE OILFLEX 4G2,5	351150-0418	C	MM	2500	
0309	CABLE OILFLEX 12G0,75	351150-0407	C	MM	4700	
0310	CABLE OILFLEX 7G0,75	351150-0406	C	MM	6550	
0311	CABLE OILFLEX N2X0,75	351150-0122	C	MM	4950	
0316	CABLE OILFLEX 3G0,75	351150-0403	C	MM	4600	
0317	CABLE OILFLEX 3G0,75	351150-0403	C	MM	4700	
0319	CABLE OILFLEX N2X0,75	351150-0122	C	MM	4500	
0320	CABLE OILFLEX N2X0,75	351150-0122	C	MM	4100	
0321	CABLE OILFLEX N2X0,75	351150-0122	C	MM	4300	
0322	CABLE OILFLEX 3G0,75	351150-0403	C	MM	4100	
0325	CABLE OILFLEX N2X0,75	351150-0122	C	MM	4000	
0335	CABLE AWM YELL/GREEN 16,0	351175-0109	C	MM	1000	
0336	CABLE AWM YELL/GREEN 4,0	351175-0106	C	MM	3400	
0342	CABLE OILFLEX N2X0,75	351150-0122	C	MM	4300	
0345	CABLE OILFLEX N2X0,75	351150-0122	C	MM	4100	
0348	CABLE OILFLEX N2X0,75	351150-0122	C	MM	3900	
0351	CABLE OILFLEX 3G1,5	351150-0412	C	MM	5700	
0352	CABLE OILFLEX N2X0,75	351150-0122	C	MM	4200	
0354	CABLE OILFLEX 3G0,75	351150-0403	C	MM	4400	
0355	CABLE OILFLEX 4G0,75	351150-0404	C	MM	5550	
0356	CABLE OILFLEX 4G0,75	351150-0404	C	MM	6000	
0358	CABLE OILFLEX 3G0,75	351150-0403	C	MM	900	
0360	CABLE OILFLEX 4G0,75	351150-0404	C	MM	2750	
0361	CABLE OILFLEX 3G0,75	351150-0403	C	MM	2850	
0370	COAXIAL CABLE L= 2500 MM	4- 551969-0004	-			1
0371	COAXIAL CABLE L= 2500 MM	4- 551969-0004	-			1
I 0372	COAXIAL CABLE L= 600 MM	4- 548770-0008	-			1
I 0373	COAXIAL CABLE L= 600 MM	4- 548770-0008	-			1
0401	CABLE SIHF 4G6	351120-0167	C	MM	5250	
0402	CABLE SIHF 3G2,5	351120-0145	C	MM	4700	
0403	CABLE SIHF 3G2,5	351120-0145	C	MM	5400	
0404	CABLE OILFLEX 5G2,5	351150-0419	C	MM	5600	
0405	CABLE OILFLEX 4G2,5	351150-0418	C	MM	4200	

10.91 61.2.26

POS	PART TITLE / REMARKS		PART NUMBER	R	SP	UN	0101
0406	CABLE		90220-0059	C	MM	5700	
0407	CABLE		90220-0059	C	MM	5800	
0408	CABLE		90220-0059	C	MM	5000	
0409	CABLE		90220-0059	C	MM	5700	
0410	CABLE		90220-0059	C	MM	4500	
0411	CABLE		90220-0059	C	MM	5350	
0412	CABLE		90220-0059	C	MM	5150	
0413	CABLE	OILFLEX 52G0,75	351150-0411	C	MM	4250	
0416	CABLE	OILFLEX N2X0,75	351150-0122	C	MM	2000	
0417	CABLE	OILFLEX N2X0,75	351150-0122	C	MM	3000	
0418	CABLE	OILFLEX N2X0,75	351150-0122	C	MM	3000	
0425	CABLE	OILFLEX 4G0,75	351150-0404	C	MM	3100	
0427	CABLE	OILFLEX N2X0,75	351150-0122	C	MM	1800	
0428	CABLE	OILFLEX N2X0,75	351150-0122	C	MM	1600	
0430	CABLE	OILFLEX 3G0,75	351150-0403	C	MM	3000	
0431	CABLE	OILFLEX 3G0,75	351150-0403	C	MM	3100	
0432	CABLE	OILFLEX 3G0,75	351150-0403	C	MM	3000	
0434	CABLE	OILFLEX 5G0,75	351150-0405	C	MM	2600	
0442	CABLE	OILFLEX 4G2,5	351150-0418	C	MM	4100	
0444	CABLE	OILFLEX N2X0,75	351150-0122	C	MM	2500	
0450	CABLE		90220-0059	C	MM	4550	
0452	CABLE	SIHF 4G10	351120-0168	C	MM	2500	
0601	CABLE	SIHF 3G2,5	351120-0145	C	MM	5500	
0602	CABLE	SIHF 3G2,5	351120-0145	C	MM	5550	
0603	CABLE	OILFLEX 4G2,5	351150-0418	C	MM	5300	
0604	CABLE		90220-0059	C	MM	5300	
0605	CABLE	OILFLEX 5G0,75	351150-0405	C	MM	6100	
0606	CABLE	OILFLEX 12G0,75	351150-0407	C	MM	4100	
0612	CABLE	OILFLEX N2X0,75	351150-0122	C	MM	2400	

BILL-OF-MATERIAL "0" DATE PRINTED: 93-03-17

USED IN ASSEMB. 41729 649205

ECN NUMBER: EC 19260
DATE DISTRIBUTED 93-03-17

POS	PART TITLE / REMARKS	PART NUMBER	R	SP	UM	QTY
0010	TFMC-DISCETTE	4- 47615-00:01	-			1

10.51 94.2.25

ENGINEER: HK 93-03-23 CONTROL: MK DOCUMENT TBA/9-1491 S.A. CE- 41726-0100 PAGE: 1

BILL-OF-MATERIAL "0" DATE PRINTED: 93-10-21

USED IN ASSEMB. 41729 649205

ECN NUMBER: EC 19260 EC 20398 EC 20406
DATE DISTRIBUTED 93-03-17 93-10-01 93-10-16

GROUP

C VARIANT DESCRIP: -0101 400/230V, 60 HZ.
C -0102 ANY MAINVOLTAGE 50HZ. EXCEPT 400/230V.
C -0103 ANY MAINVOLTAGE 60HZ. EXCEPT 400/230V.
C -0104 ANY MAINVOLTAGE 60HZ.-USA- EXCEPT 400/230V.

	POS	PART TITLE / REMARKS	PART NUMBER	R	SP	UN	0101	0102	0103	0104
	P005	RECORDER	90332-0008	C		1	-	1	1	
		CONSISTS OF / SPARE PART			SP	UN	QTY			
		4- 90332-0308 KEY								
		90333-0004 GRAPH PAPER								
	P016	RECORDER	2- 90332-0015	S			-	-	-	1
		CONSISTS OF / SPARE PART			SP	UN	QTY	ECN		
		4- 90332-0310 WRITING PAPER						17049		
		4- 90332-0311 RIBBON CASSETTE						17049		
	Q001:3	SIGN,VOLTAGE/FREQ./CURR.	4- 359241-0298	C			1	-	1	1
I	Q077	MOTOR SWITCH 6-10A	3- 90259-0026	S			1	-	1	1
	0010	TRANSFORMER	2- 90245-0024	C			-	1	1	1

ENGINEER: MRI 93-10-01 CONTROL: HK ATEA EQU TBA/9-1401 S.A. CE- 41727-010V

BILL-OF-MATERIAL "0" DATE PRINTED: 93-09-15

USED IN ASSEMB. 41729 649205

ECN NUMBER: EC 19260 EC 20080
DATE DISTRIBUTED 93-03-17 93-09-15

POS	PART TITLE / REMARKS		PART NUMBER	R	SP	UN	0101
0010	LIGHT BULB BASS 28V		90036-0057	-			10
0020	CONTACTOR 4KW	2-	90075-0127	-			1
0030	CONTACTOR 7,5KW	2-	90075-0128	-			1
0040	AUXILIARY CONTACT	3-	90075-0313	-			1
0050	RELAY	3-	90119-0056	-			1
0060	TOOL		90064-0315	-			1
0070	SOLID-STATE RELAY	3-	90119-0067	-			1
0080	PUSH BUTTON YELLOW	3-	90064-0084	-			1
0090	TUBE FUSE		90233-0009	-			5
0100	TUBE FUSE		90233-0019	-			5
0110	TUBE FUSE		90233-0020	-			5
0120	TUBE FUSE 16A	4-	90233-0027	-			5
0130	TUBE FUSE 10A	4-	90233-0026	-			5
0140	TUBE FUSE	4-	90233-0029	-			5
0150	GRAPH PAPER		90333-0004	-			5
0160	PADLOCK		779910-0101	-			1

10.51 94.2.28

ENGINEER: HK 92-04-23 CONTROL: HK . PARTS TBA/9-1401 S.A. CE- 41728-010V

USED IN ASSEMB. 41729 41756 41763 649205

ECN NUMBER: EC 17786 EC 19260 EC 20080
DATE DISTRIBUTED 93-01-19 93-03-17 93-09-15

POS	PART TITLE / REMARKS	PART NUMBER	R	SP	UN	0101
	MOUNTING DRAWING, TPIH	4- 52471-20:01				X
	MOUNTING DRAWING, TPIH	4- 52471-21:01				X
	MOUNTING DRAWING, TPIH	4- 52471-22:01				X
	MOUNTING DRAWING, TPIH	4- 52471-23:01				X
	MOUNTING DRAWING, TPIH	4- 52471-24:01				X
	MOUNTING DRAWING, TPIH	4- 52471-25:01				X
A401	TPIH 2000 GENERATOR	C- 67600-0501	C			1
A402	TPIH 2000 GENERATOR	C- 67600-0501	C			1
A401:1	CONTACT UNIT	90110-0121	C			2
A401:2	COVER	90110-0122	C			2
A401:3	SIGN	359241-0261	C			1
A401:4	SIGN HOLDER	2- 359240-0100	C			1
A402:1	CONTACT UNIT	90110-0121	C			2
A402:2	COVER	90110-0122	C			2
A402:3	SIGN	359241-0261	C			1
A402:4	SIGN HOLDER	2- 359240-0100	C			1
M001	FAN	90264-0025	C			1
W370	COAXIAL CABLE L= 1150 MM	4- 551969-0003	C			1
W371	COAXIAL CABLE L= 1150 MM	4- 551969-0003	C			1
X100	TERMINAL DRWG X100, TPIH	4- 571524	-			1
0010	SIGN"FLASH SIGN"	90194-0016	C			1
0020	BLANK-OFF PLUG 22,5	4- 90002-0004	C			1
0030	NUT	90099-0110	C			1
0040	GLAND FITT	352136-0142	C			3

USED IN ASSEMB. 649205

ECN NUMBER: EC 19260 EC 20080
DATE DISTRIBUTED: 93-03-17 93-09-15

POS	PART TITLE / REMARKS	PART NUMBER	R	SP	ON 0101
0010	CTRL CAB. TBA/9-1401 S.A.	CE- 41723-0101	-		1
0020	CTRL.FAN. TBA/9-1401 S.A.	CE- 41724-0101	-		1
0030	MACHINE	CE- 41725-0101	-		1
0040	EQUIPMENT TBA/9-1401 S.A.	CE- 41726-0101	-		1
0050	EXTRA EQU TBA/9-1401 S.A.	CE- 41727-0101	-		1
0060	SP. PARTS TBA/9-1401 S.A.	CE- 41728-0101	-		1
0070	EL-EQUIPMENT TPIH	CE- 41766-0101	-		1
0102	POSITION SUMMARY	4- 44093-02:01	-		1
0105	CIRCUIT DIAGRAM	4- 44093-05:01	-		1
0106	CIRCUIT DIAGRAM	4- 44093-06:01	-		1
0107	CIRCUIT DIAGRAM	4- 44093-07:01	-		1
0108	CIRCUIT DIAGRAM	4- 44093-08:01	-		1
0110	CIRCUIT DIAGRAM	4- 44093-10:01	-		1
0111	CIRCUIT DIAGRAM	4- 44093-11:01	-		1
0112	CIRCUIT DIAGRAM	4- 44093-12:01	-		1
0113	CIRCUIT DIAGRAM	4- 44093-13:01	-		1
0114	CIRCUIT DIAGRAM	4- 44093-14:01	-		1
0116	CIRCUIT DIAGRAM	4- 44093-16:01	-		1
0117	CIRCUIT DIAGRAM	4- 44093-17:01	-		1
0118	CIRCUIT DIAGRAM	4- 44093-18:01	-		1
0119	CIRCUIT DIAGRAM	4- 44093-19:01	-		1
0120	CIRCUIT DIAGRAM	4- 44093-20:01	-		1
0121	CIRCUIT DIAGRAM	4- 44093-21:01	-		1
0124	CIRCUIT DIAGRAM	4- 44093-24:01	-		1
0125	CIRCUIT DIAGRAM	4- 44093-25:01	-		1
0126	CIRCUIT DIAGRAM	4- 44093-26:01	-		1
0127	CIRCUIT DIAGRAM	4- 44093-27:01	-		1
0129	CIRCUIT DIAGRAM	4- 44093-29:01	-		1
0130	CIRCUIT DIAGRAM	4- 44093-30:01	-		1
0131	CIRCUIT DIAGRAM	4- 44093-31:01	-		1
0132	CIRCUIT DIAGRAM	4- 44093-32:01	-		1

0101 94.2.28

POS	PART TITLE / REMARKS	PART NUMBER	R SP UN 0101
0134	CIRCUIT DIAGRAM	4- 44093-34:01	-- 1
0135	CIRCUIT DIAGRAM	4- 44093-35:01	-- 1
0136	CIRCUIT DIAGRAM	4- 44093-36:01	-- 1
0137	CIRCUIT DIAGRAM	4- 44093-37:01	-- 1
0138	CIRCUIT DIAGRAM	4- 44093-38:01	-- 1
0139	CIRCUIT DIAGRAM	4- 44093-39:01	-- 1
0140	CIRCUIT DIAGRAM	4- 44093-40:01	-- 1
0141	CIRCUIT DIAGRAM	4- 44093-41:01	-- 1
0142	CIRCUIT DIAGRAM	4- 44093-42:01	-- 1
0143	CIRCUIT DIAGRAM	4- 44093-43:01	-- 1
0144	CIRCUIT DIAGRAM	4- 44093-44:01	-- 1
0145	CIRCUIT DIAGRAM	4- 44093-45:01	-- 1
0146	CIRCUIT DIAGRAM	4- 44093-46:01	-- 1
0157	CIRCUIT DIAGRAM	4- 44093-57:01	-- 1
0158	CIRCUIT DIAGRAM	4- 44093-58:01	-- 1
0161	CIRCUIT DIAGRAM	4- 44093-61:01	-- 1
0162	CIRCUIT DIAGRAM	4- 44093-62:01	-- 1
0163	CIRCUIT DIAGRAM	4- 44093-63:01	-- 1
0164	CIRCUIT DIAGRAM	4- 44093-64:01	-- 1
0165	CIRCUIT DIAGRAM	4- 44093-65:01	-- 1
0166	CIRCUIT DIAGRAM	4- 44093-66:01	-- 1
0167	CIRCUIT DIAGRAM	4- 44093-67:01	-- 1
0168	CIRCUIT DIAGRAM	4- 44093-68:01	-- 1
0169	CIRCUIT DIAGRAM	4- 44093-69:01	-- 1
0170	CIRCUIT DIAGRAM	4- 44093-70:01	-- 1
0171	CIRCUIT DIAGRAM	4- 44093-71:01	-- 1
0172	CIRCUIT DIAGRAM	4- 44093-72:01	-- 1
0185	CIRCUIT DIAGRAM	4- 44093-85:01	-- 1
0186	CIRCUIT DIAGRAM	4- 44093-86:01	-- 1
0187	CIRCUIT DIAGRAM	4- 44093-87:01	-- 1
0188	CIRCUIT DIAGRAM	4- 44093-88:01	-- 1
0189	EARTH SUMMARY	4- 44093-89:01	-- 1
0190	LINE SUMMARY	4- 44093-90:01	-- 1
0191	TERMINAL SUMMARY	4- 44093-91:01	-- 1
0199	ALTERATION MESSAGES	4- 44093-99:01	-- 1
0301	TPMC LIST OF BLOCKS	4- 47615-01:01	-- 1
0302	TPMC LIST OF ADDRESSES	4- 47615-02:01	-- 1

10.51 94.2.28

POS	PART TITLE / REMARKS	PART NUMBER	R	SP	UN	0101
0303	VOLUME ADAPTION DOCUMENT	4- 47615-03:01				1
0304	TPMC SEQUENCE DIAGRAM	4- 47615-04:01				1
0305	TPMC PROGRAM LIST	4- 47615-05:01				1
0306	TPMC PROGRAM LIST	4- 47615-06:01				1
0307	TPMC PROGRAM LIST	4- 47615-07:01				1
0308	TPMC PROGRAM LIST	4- 47615-08:01				1
0309	TPMC PROGRAM LIST	4- 47615-09:01				1
0310	TPMC PROGRAM LIST	4- 47615-10:01				1
0311	TPMC PROGRAM LIST	4- 47615-11:01				1
0312	TPMC PROGRAM LIST	4- 47615-12:01				1
0313	TPMC PROGRAM LIST	4- 47615-13:01				1
0314	TPMC PROGRAM LIST	4- 47615-14:01				1
0317	TPMC PROGRAM LIST	4- 47615-17:01				1
0318	TPMC PROGRAM LIST	4- 47615-18:01				1
0319	TPMC PROGRAM LIST	4- 47615-19:01				1
0320	TPMC PROGRAM LIST	4- 47615-20:01				1
0323	TPMC PROGRAM LIST	4- 47615-23:01				1
0324	TPMC PROGRAM LIST	4- 47615-24:01				1
0325	TPMC PROGRAM LIST	4- 47615-25:01				1
0326	TPMC PROGRAM LIST	4- 47615-26:01				1
0327	TPMC PROGRAM LIST	4- 47615-27:01				1
0328	TPMC PROGRAM LIST	4- 47615-28:01				1
0329	TPMC PROGRAM LIST	4- 47615-29:01				1
0330	TPMC PROGRAM LIST	4- 47615-30:01				1
0331	TPMC PROGRAM LIST	4- 47615-31:01				1
0332	TPMC PROGRAM LIST	4- 47615-32:01				1
0333	TPMC PROGRAM LIST	4- 47615-33:01				1
0390	TPMC PROGRAM LIST	4- 47615-90:01				1
0399	TPMC PROGRAM LIST	4- 47615-99:01				1
0405	MOUNTING DRAWING, CABINET	4- 52471-05:01				1
0406	MOUNTING DRAWING, CABINET	4- 52471-06:01				1
0407	MOUNTING DRAWING, CABINET	4- 52471-07:01				1
0408	MOUNTING DRAWING, CABINET	4- 52471-08:01				1
0409	MOUNTING DRAWING, CABINET	4- 52471-09:01				1
0410	MOUNTING DRAWING, CABINET	4- 52471-10:01				1
0411	MOUNTING DRAWING, RACK	4- 52471-11:01				1
0412	MOUNTING DRAWING, PANEL	4- 52471-12:01				1

10:51 94.2.28

BILL-OF-MATERIAL "0" DATE PRINTED: 93-10-26

POS	PART TITLE / REMARKS	PART NUMBER	R	SP	UN	0101
0413	MOUNTING DRAWING, PANEL	3- 52471-13:01	-			1
0414	MOUNTING DRAWING, PANEL	3- 52471-14:01	-			1
0415	MOUNTING DRAWING, MACHINE	4- 52471-15:01	-			1
0416	MOUNTING DRAWING, MACHINE	4- 52471-16:01	-			1
0417	MOUNTING DRAWING, MACHINE	4- 52471-17:01	-			1
0418	MOUNTING DRAWING, MACHINE	4- 52471-18:01	-			1
0420	MOUNTING DRAWING, TPIH	4- 52471-20:01	-			1
0421	MOUNTING DRAWING, TPIH	4- 52471-21:01	-			1
0422	MOUNTING DRAWING, TPIH	4- 52471-22:01	-			1
0423	MOUNTING DRAWING, TPIH	4- 52471-23:01	-			1
0424	MOUNTING DRAWING, TPIH	4- 52471-24:01	-			1
0425	MOUNTING DRAWING, TPIH	4- 52471-25:01	-			1
0605	CONNECTION DRAWING	4- 61232-05:01	-			1
0606	CONNECTION DRAWING	4- 61232-06:01	-			1
0607	CONNECTION DRAWING	4- 61232-07:01	-			1
0608	CONNECTION DRAWING	4- 61232-08:01	-			1
0609	CONNECTION DRAWING	4- 61232-09:01	-			1
0610	CONNECTION DRAWING	4- 61232-10:01	-			1
0612	CONNECTION DRAWING	4- 61232-12:01	-			1
0613	CONNECTION DRAWING	4- 61232-13:01	-			1
0614	CONNECTION DRAWING	4- 61232-14:01	-			1
0615	CONNECTION DRAWING	4- 61232-15:01	-			1
0616	CONNECTION DRAWING	4- 61232-16:01	-			1
0617	CONNECTION DRAWING	4- 61232-17:01	-			1
0618	CONNECTION DRAWING	4- 61232-18:01	-			1
0619	CONNECTION DRAWING	4- 61232-19:01	-			1
0620	CONNECTION DRAWING	4- 61232-20:01	-			1
0621	CONNECTION DRAWING	4- 61232-21:01	-			1
0622	CONNECTION DRAWING	4- 61232-22:01	-			1
0623	CONNECTION DRAWING	4- 61232-23:01	-			1
0624	CONNECTION DRAWING	4- 61232-24:01	-			1
0625	CONNECTION DRAWING	4- 61232-25:01	-			1
0627	CONNECTION DRAWING	4- 61232-27:01	-			1
0628	CONNECTION DRAWING	4- 61232-28:01	-			1
0629	CONNECTION DRAWING	4- 61232-29:01	-			1
0630	CONNECTION DRAWING	4- 61232-30:01	-			1
0631	CONNECTION DRAWING	4- 61232-31:01	-			1

POS	PART TITLE / REMARKS	PART NUMBER	R	SP	UN	0101
0632	CONNECTION DRAWING	4- 61232-32:01	-			1
0633	CONNECTION DRAWING	4- 61232-33:01	-			1
0634	CONNECTION DRAWING	4- 61232-34:01	-			1
0635	CONNECTION DRAWING	4- 61232-35:01	-			1
0636	CONNECTION DRAWING	4- 61232-36:01	-			1
0643	CONNECTION DRAWING	4- 61232-43:01	-			1
0644	CONNECTION DRAWING	4- 61232-44:01	-			1
0645	CONNECTION DRAWING	4- 61232-45:01	-			1
0646	CONNECTION DRAWING	4- 61232-46:01	-			1
0647	CONNECTION DRAWING	4- 61232-47:01	-			1
0648	CONNECTION DRAWING	4- 61232-48:01	-			1
0649	CONNECTION DRAWING	4- 61232-49:01	-			1
0705	MAINS CONNECTION	4- 61252-05:01	-			1
0706	MAINS CONNECTION	4- 61252-06:01	-			1
0800:1	TERMINAL DRWG X001, X011	4- 570926-0001	-			1
0800:2	TERMINAL DRAWING X001	4- 570926-0002	-			1
0800:3	TERMINAL DRAWING X001	4- 570926-0003	-			1
0800:4	TERMINAL DRAWING X001	4- 570926-0004	-			1
0801	TERMINAL DRAWING X003	4- 571518	-			1
0802	TERMINAL DRAWING XL, X009	4- 571519	-			1
0803	LABEL EL MANUAL	4- 570929	-			1
0804	INDEX EL-MANUAL	4- 571516	-			1
0805	FUSE PANEL LABEL	4- 571517	-			1
0806	TERMINAL BLOCK F:X1, F:X2	4- 571520	-			1
0807	TERMINAL DRWG X100, TFIH	4- 571524	-			1
0808	TERMINAL DRAWING XL1-3	4- 571525	-			1

10.01 94.2 26

Position	Sheet	Position	Sheet	Position	Sheet	Position	Sheet	Position	Sheet
A001	11:01	A114	61:01	M.B013	24:01	M.B051	40:01	F005	07:41
A002	35:01	A114	62:01	M.B014	06:01	M.B053	40:01	F008	07:41
A004	18:01	A115	63:01	M.B015	37:43	M.B054	25:01	F010	08:01
A006	18:01	A115	64:01	M.B015B	71:41	M.B055	20:01	F017	11:01
A008	19:01	A116	65:01	M.B016A	41:01	M.B061	40:01	F019	16:01
A010	19:01	A116	66:41	M.B016B	41:01	M.B062	41:01	F028A	08:01
A013	20:01	A117	67:41	M.B018	41:01	M.B063	40:01	F028B	08:01
A014	20:01	A117	68:01	M.B020	45:41	M.B064	25:01	F028C	08:01
A015	24:01	A118	17:01	M.B021A	37:43	M.B071	45:41	F029A	08:01
P.A016:1	88:01	A120	69:01	M.B021B	37:43	M.B080A	34:01	F029B	08:01
A016A	34:01	A120	70:43	M.B021C	37:43	M.B080B	34:01	F029C	08:01
A016B	34:01	A121	71:41	M.B024	39:41	M.B085	41:01	F030	10:01
A017	24:01	A121	72:43	M.B025	39:41	M.B090	37:43	F031	10:01
A018	25:01	A128	17:01	M.B030A	38:01	M.B092	45:41	F041A	07:41
A019	25:01	A202	21:01	M.B030B	38:01	M.B094	45:41	F041B	07:41
A022	26:01	A310	81:41	M.B032	39:41	M.B095	26:01	F042A	07:41
A023	30:01	A310	82:41	M.B033	39:41	M.B104	40:01	F042B	07:41
A024	30:01	A321	83:43	M.B034	25:01	M.B108	37:43	F055A	16:01
A025	72:43	A401	14:01	M.B035	40:01	M.B233	36:01	F055B	16:01
A030	21:01	A402	14:01	M.B036	21:01	M.B380	82:41	F055C	16:01
P.A100	17:01	A450	27:01	M.B037A	19:01			F056A	14:01
A101	36:01	A451	27:01	M.B037B	19:01	C001	06:01	F056B	14:01
A102	37:43			M.B038	18:01			F056C	14:01
A102	38:01	M.B001	36:01	M.B039	19:01	D108	17:01	F202	07:41
A103	39:41	M.B002	38:01	M.B040	18:01			F310	13:41
A103	40:01	M.B004	21:01	M.B043	24:01	M.E001A	06:01		
A104	41:01	M.B006	38:01	M.B044	39:41	M.E001B	06:01	G100	17:01
A104	42:01	M.B007	38:01	M.B045	41:01	M.E001C	06:01		
A105	43:01	M.B008	39:41	M.B046	40:01	E004	06:01	P.H001:1	85:01
A105	44:01	M.B009	39:41	M.B047	40:01	M.E011	32:43	P.H001:2	85:01
A106	45:41	M.B010	37:43	M.B048A	41:01			P.H002:1	85:01
A106	46:41	M.B011	37:43	M.B048B	41:01	F001	06:01	P.H002:2	85:01
A108	17:01	M.B012	37:43	M.B050	20:01	F003	32:43	P.H002S	88:01

Position	Sheet	Position	Sheet	Position	Sheet	Position	Sheet	Position	Sheet
P.H003:1	85:01	K051	63:01	K311	83:43	P004	72:43	R003	14:01
P.H003:2	85:01	K052	66:41	K326	66:41	P005	06:01	R004	14:01
P.H003S	88:01	K053	66:41					M.R005A	07:41
P.H004:1	85:01	K054	67:41	L001	06:01	Q001	05:01	M.R031	07:41
P.H004:2	86:01	K071	65:01	M.L001	14:01	Q002	05:01	M.R032	08:01
P.H004S	88:01	K075	65:01	L002	06:01	Q003	10:01	M.R035	08:01
P.H005:1	86:01	K077	63:01	M.L002	14:01	Q003	37:43	M.R036	08:01
P.H005:2	86:01	K081	62:01	L004	06:01	Q012	16:01	M.R037	07:41
P.H006:1	86:01	K082	63:01	P.L1	57:41	Q051	12:01	M.R038	07:41
P.H006:2	86:01	K083	67:41	P.L1	58:41	Q051	37:43	R110	32:43
P.H006S	88:01	K084	67:41	P.L3	85:01	Q077	12:01		
P.H007:1	86:01	K087	62:01	P.L3	86:01	Q077	37:43	P.S001	35:01
P.H007:2	86:01	K088	65:01	P.L4	87:01	Q081	10:01	S002	37:43
P.H008:1	86:01	K091	63:01	P.L4	88:01	Q081	37:43	P.S002H	57:41
P.H008:2	87:01	K092	65:01			Q082	11:01	S003	40:01
P.H009:1	87:01	K093	62:01	M.M PLE	13:41	Q082	37:43	P.S003H	57:41
P.H009:2	87:01	K094	62:01	M001	14:01	Q087	10:01	S004	38:01
P.H010:1	87:01	K095	67:41	M.M001	12:01	Q087	41:01	M.S004	35:01
P.H010:2	87:01	K096	65:01	M002	06:01	Q091	11:01	P.S004H	57:41
P.H011S	88:01	K097	67:41	M.M004	11:01	Q091	37:43	P.S006H	57:41
M.H031	32:43	K098	62:01	M.M005	10:01	Q093	13:41	P.S007	57:41
		K099	65:01	M.M006	11:01	Q094	10:01	P.S011H	57:41
P.I	17:01	K105	10:01	M.M007	10:01	Q094	37:43	P.S012	57:41
		K106	10:01	M.M010	11:01	Q098	10:01	P.S013	58:41
K002	65:01	K108	08:01	M.M012	12:01	Q098	41:01	M.S014	38:01
K003	35:01	K110	32:43	M.M013	11:01	Q099	12:01	P.S019	58:41
K006	66:41	K111	08:01	M.M014	10:01	Q099	41:01	P.S020	58:41
K014	63:01	K112	08:01	M.M016	10:01	Q201	12:01	M.S028	06:01
K026	66:41	K113	08:01	M.M017	12:01	Q201	37:43	S032	35:01
K030	66:41	K114	08:01	M.M370	81:41	Q310	13:41	M.S033	37:43
K036	32:43	K201	32:43			Q310	37:43	S034	37:43
K046	66:41	K207	07:41	P002	63:01			M.S035	37:43
K048	65:01	K310	83:43	P.P003	88:01	M.R001	06:01		

Position	Sheet	Position	Sheet	Position	Sheet	Position	Sheet	Position	Sheet
T001	16:01	M.Y006	69:01	M.Y073	70:43				
T002	07:41	M.Y007	69:01	M.Y086	68:01				
T009	07:41	M.Y008	68:01	M.Y092	71:41				
		M.Y009	68:01	M.Y102	62:01				
V003	16:01	M.Y012	64:01						
V010	32:43	M.Y013	64:01	P.Z001	17:01				
V011	32:43	M.Y014	64:01	P.Z002	57:41				
		M.Y017	68:01	Z310	81:41				
P.W017	34:01	M.Y018	61:01						
P.W017	35:01	M.Y019	68:01						
P.W017	57:41	M.Y020	61:01						
W370	14:01	M.Y021	61:01						
W371	14:01	M.Y022	69:01						
W406	21:01	M.Y023	68:01						
W407	18:01	M.Y024	61:01						
W408	18:01	M.Y025	68:01						
W409	19:01	M.Y026	61:01						
W410	19:01	M.Y027	64:01						
W411	20:01	M.Y029	69:01						
W412	20:01	M.Y031	69:01						
W447	34:01	M.Y032	62:01						
W448	34:01	M.Y033	70:43						
W450	19:01	M.Y034	70:43						
W604	21:01	M.Y035	70:43						
		M.Y039	70:43						
M.X001	36:01	M.Y041	70:43						
X010	06:01	M.Y042	71:41						
		M.Y043	71:41						
M.Y001	62:01	M.Y051	68:01						
M.Y002	69:01	M.Y063	71:41						
M.Y003	69:01	M.Y070	72:43						
M.Y004	70:43	M.Y071	72:43						
M.Y005	69:01	M.Y072	72:43						

Tetra Pak
LUND SWEDEN

This drawing must not without the consent of Tetra Pak be copied, transmitted or disclosed to any third party.

MAINS 400/230V
FOR CONNECTION
SEE DRAWING NO:
61252-05:01

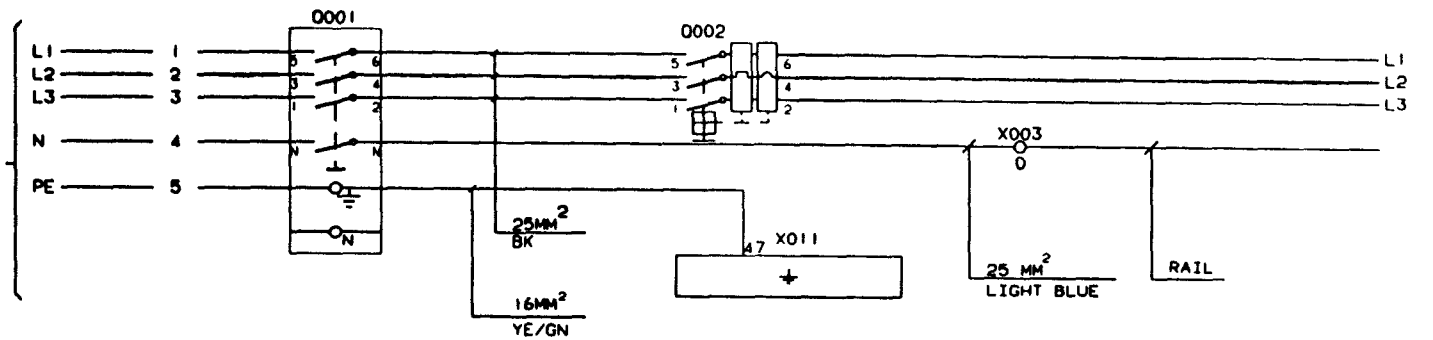

FOR TYPE OF WIRE, WIRING INSTRUCTIONS ETC.
SEE SPECIFICATION FOR SUBSUPPLIERS TPUS 3502.22

WHERE NOTHING ELSE IS SAID, WIRE 0.75 mm² BU
OR LINESUMMARY IS VALID

	19260	930310	HK/UTH

ALTERATIONS ONLY IN CADAM

DESCRIPTION: MAINS CONNECTION
MACHINE: TBA/9-1401 S.A
44093-05:01

10.51 94.2.28

Tetra Pak
LUND SWEDEN

This drawing must not without the consent of Tetra Pak be copied, transmitted or disclosed to any third party.

M.E001A	JAW SYSTEM, LIGHTING LEFT	X010	WALL SOCKET
M.E001B	JAW SYSTEM, LIGHTING RIGHT	P005	TIME RECORDER
M.E001C	JAW SYSTEM, LIGHTING FRONT	X017	SOCKET
M.S028	LIGHT SWITCH	X019	SOCKET
E004	LIGHTING CABINET	M002	FAN MOTOR, COOLING UNIT
L001	CHOKE	M.B014	SPLICER TEMP.
L002	CHOKE	M.R001	SPLICER PAPER
L004	CHOKE		

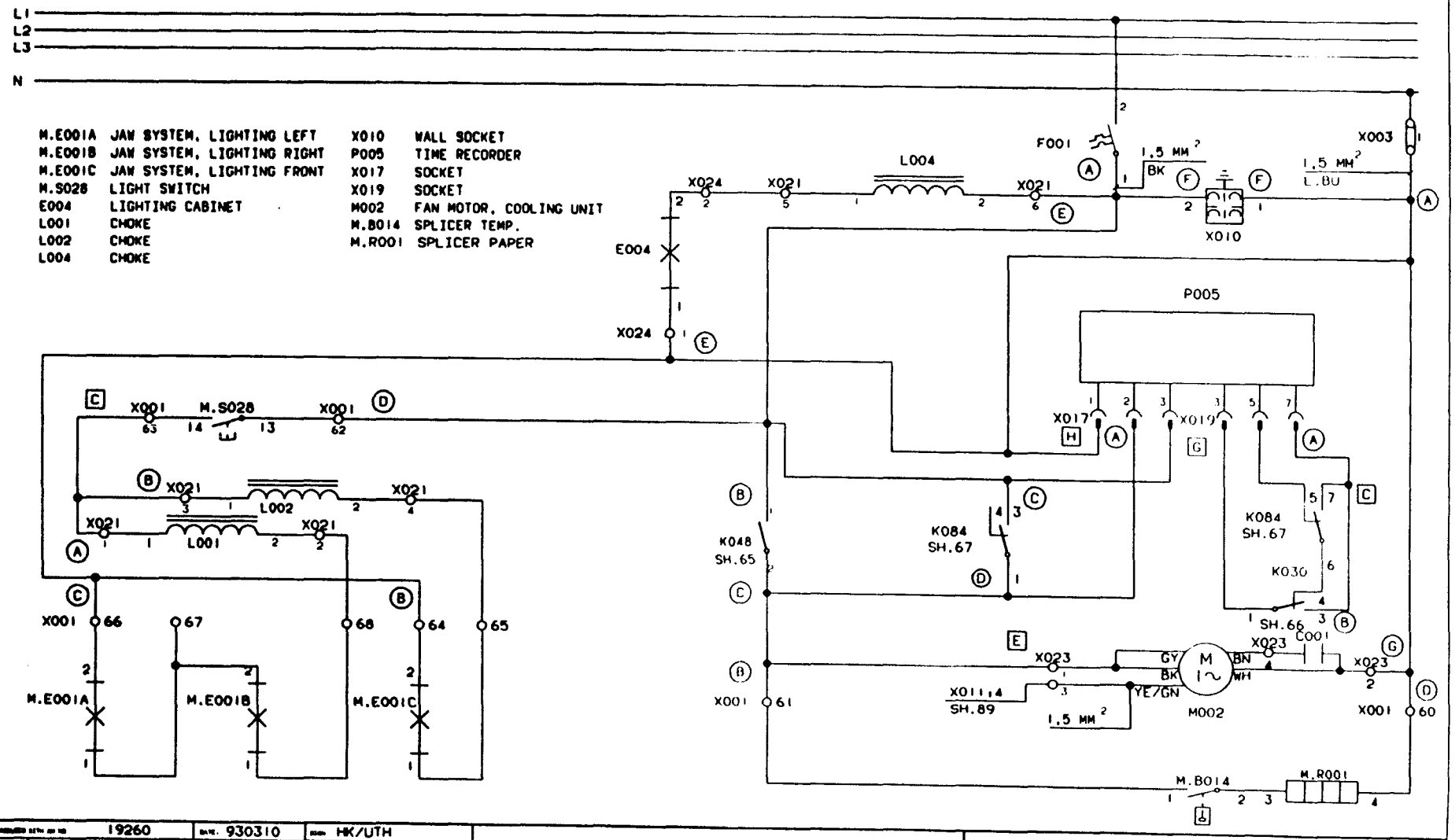

19260	930310	HK/UTH	

ALTERATIONS ONLY IN CADAM

DESCRIPTION: LIGHT FIXTURES, SPLICER

MACHINE: TBA/9-1401 S.A. | 44093-06:01

Tetra Pak
LUND SWEDEN

This drawing must not without the consent of Tetra Pak be copied, transmitted or disclosed to any third party.

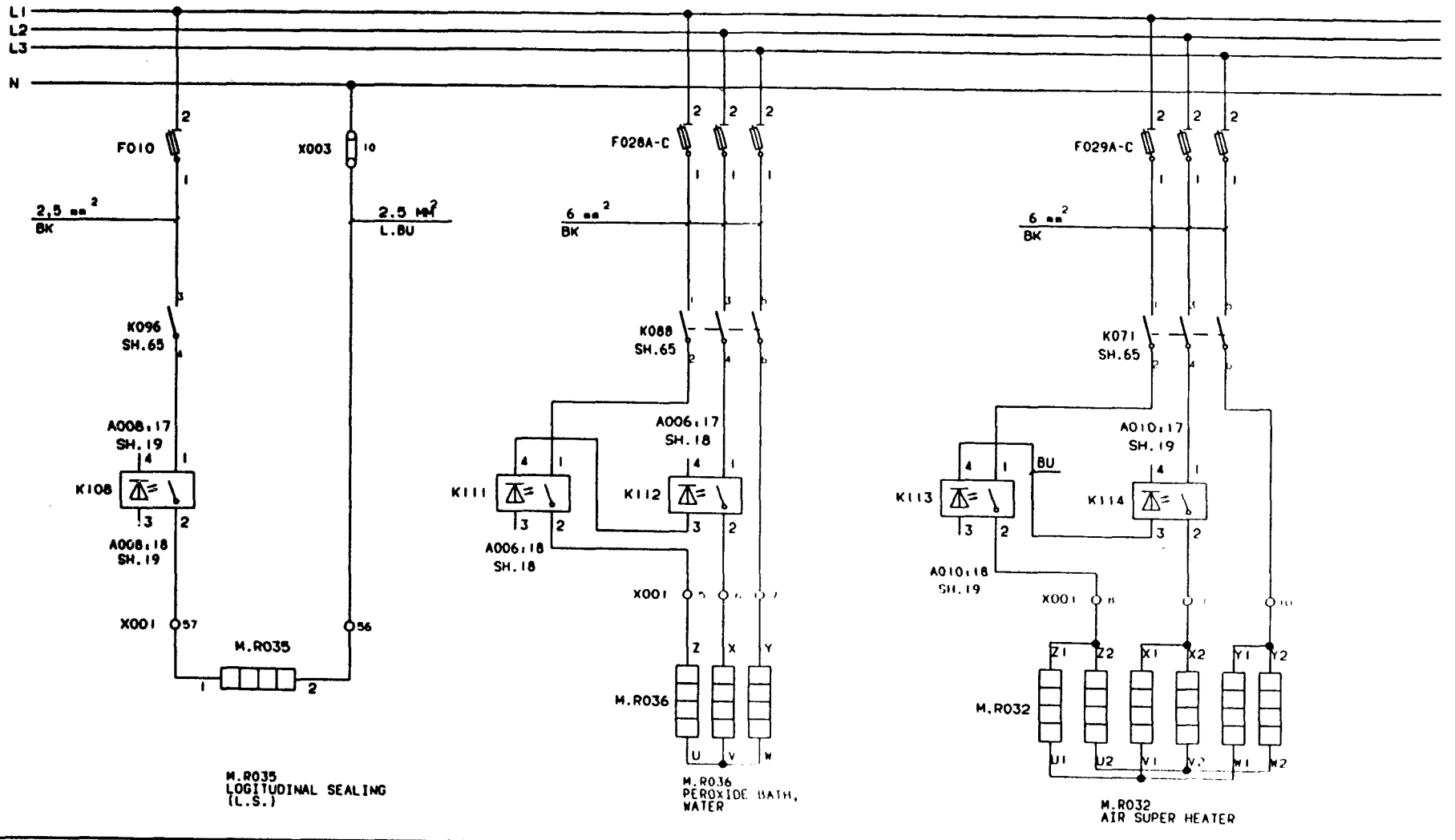

M.R035
LOGITUDINAL SEALING
(L.S.)

M.R036
PEROXIDE BATH,
WATER

M.R032
AIR SUPER HEATER

19260	930310	HK/UTH	

ALTERATIONS ONLY IN CADAM

DESCRIPTION: ELEMENTS

MACHINE: TBA/9-1401 S.A

44093-08:01

10.51 94.2.28

Tetra Pak
MODENA ITALY

This drawing must not without the consent of Tetra Pak be copied, transmitted or disclosed to any third party.

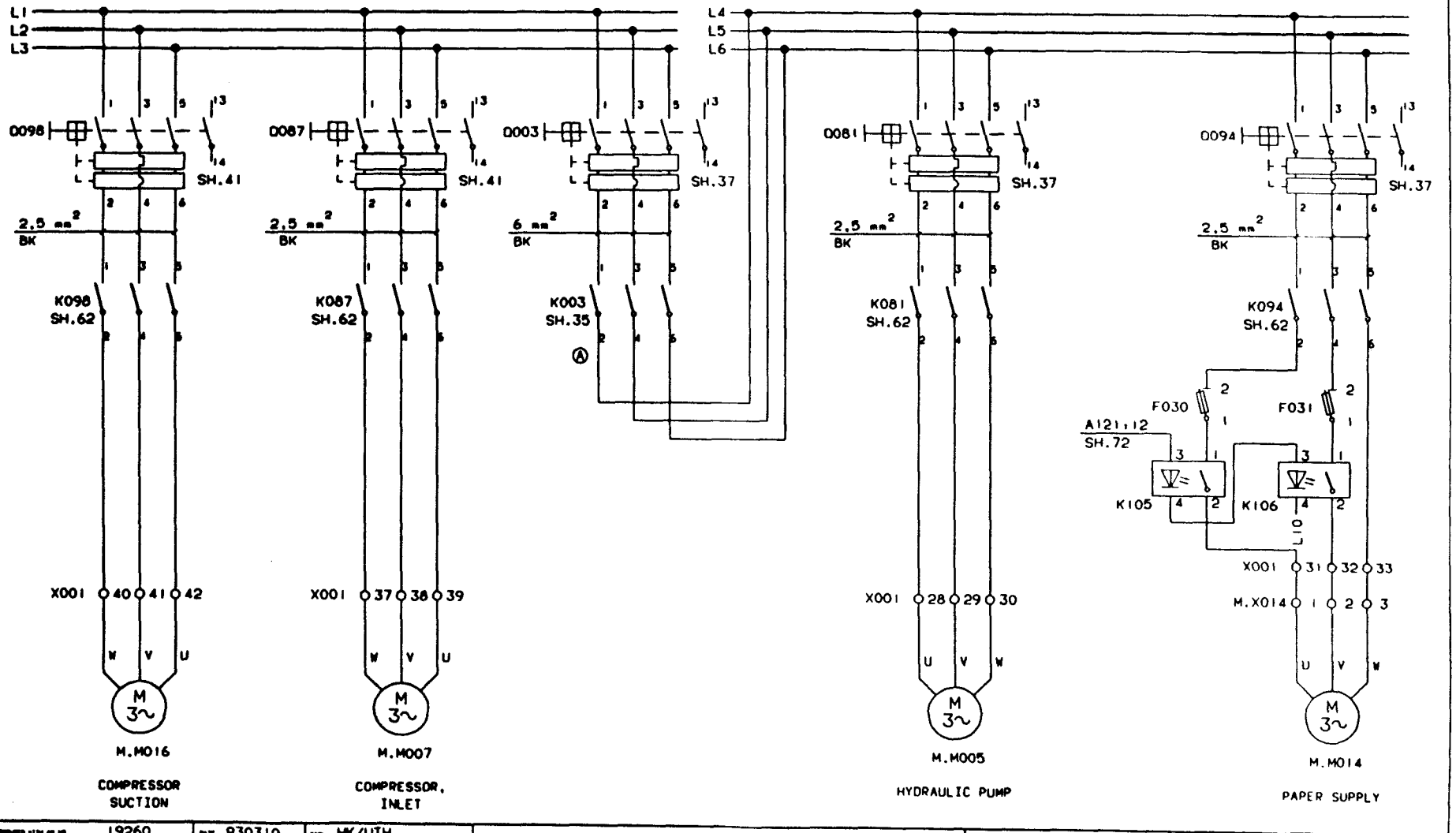

INTERLOCKED WITH JOB NO	19260	DATE 930310	DRAWN HK/UTH	DESCRIPTION: MOTORS	
ISSUE A					
JOB NO 20080					
DATE 930909					
DRAWN HK/MR				MACHINE: TBA/9-1401 S.A	44093-10:01

ALTERATIONS ONLY IN CADAM

Tetra Pak
MODENA ITALY

This drawing must not without the consent of Tetra Pak be copied, transmitted or disclosed to any third party.

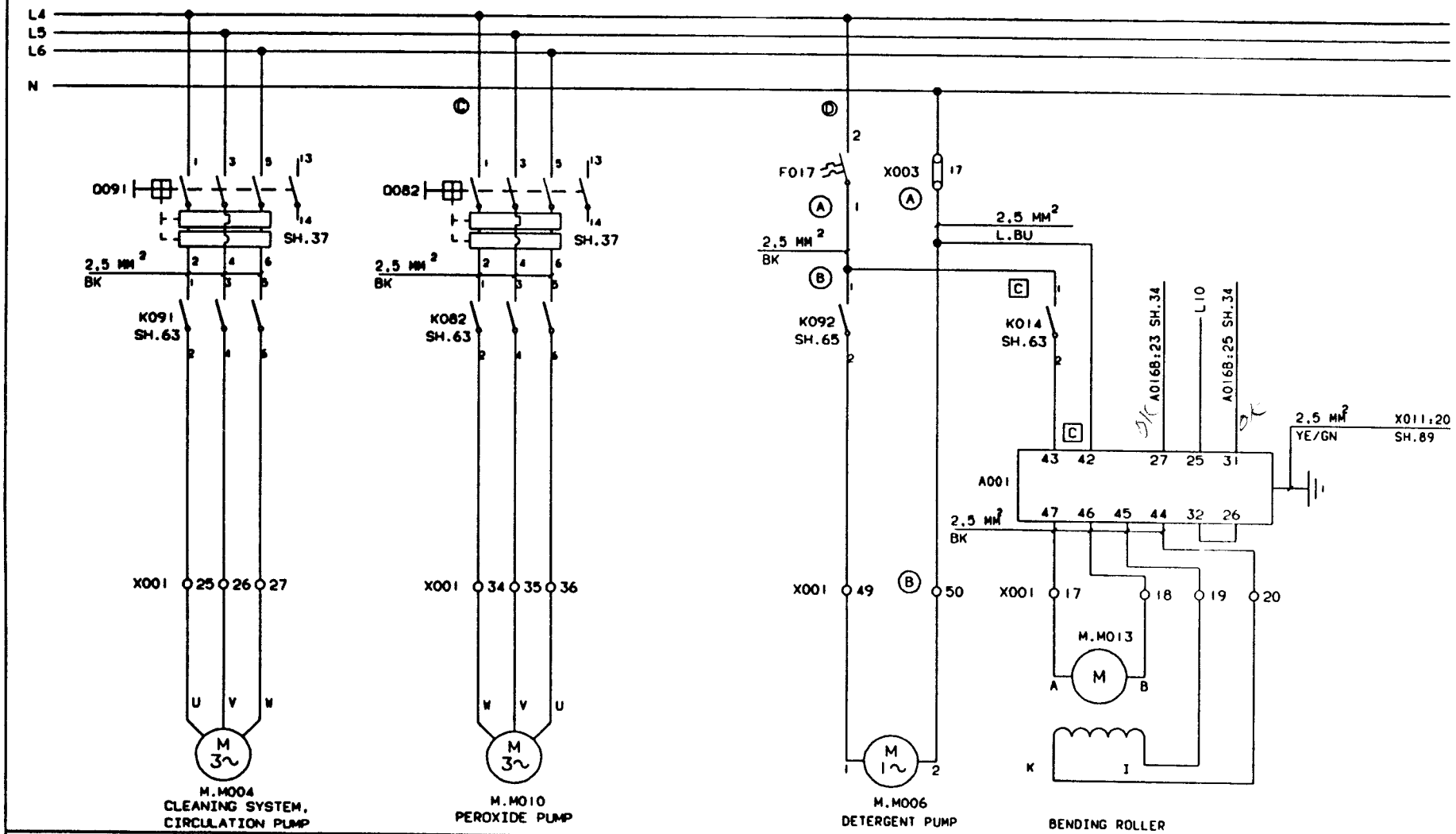

APPROVED WITH JOB NO	19260	DATE 930310	DRAWN HK/UTH	DESCRIPTION. MOTORS	
ISSUE	A				
JOB NO	20080				
DATE	930909				
DRAWN	HK/MRJ			MACHINE. TBA/9-1401 S.A	44093-11:01

ALTERATIONS ONLY IN CADAM

Tetra Pak
MODENA ITALY

This drawing must not without the consent of Tetra Pak be copied, transmitted or disclosed to any third party.

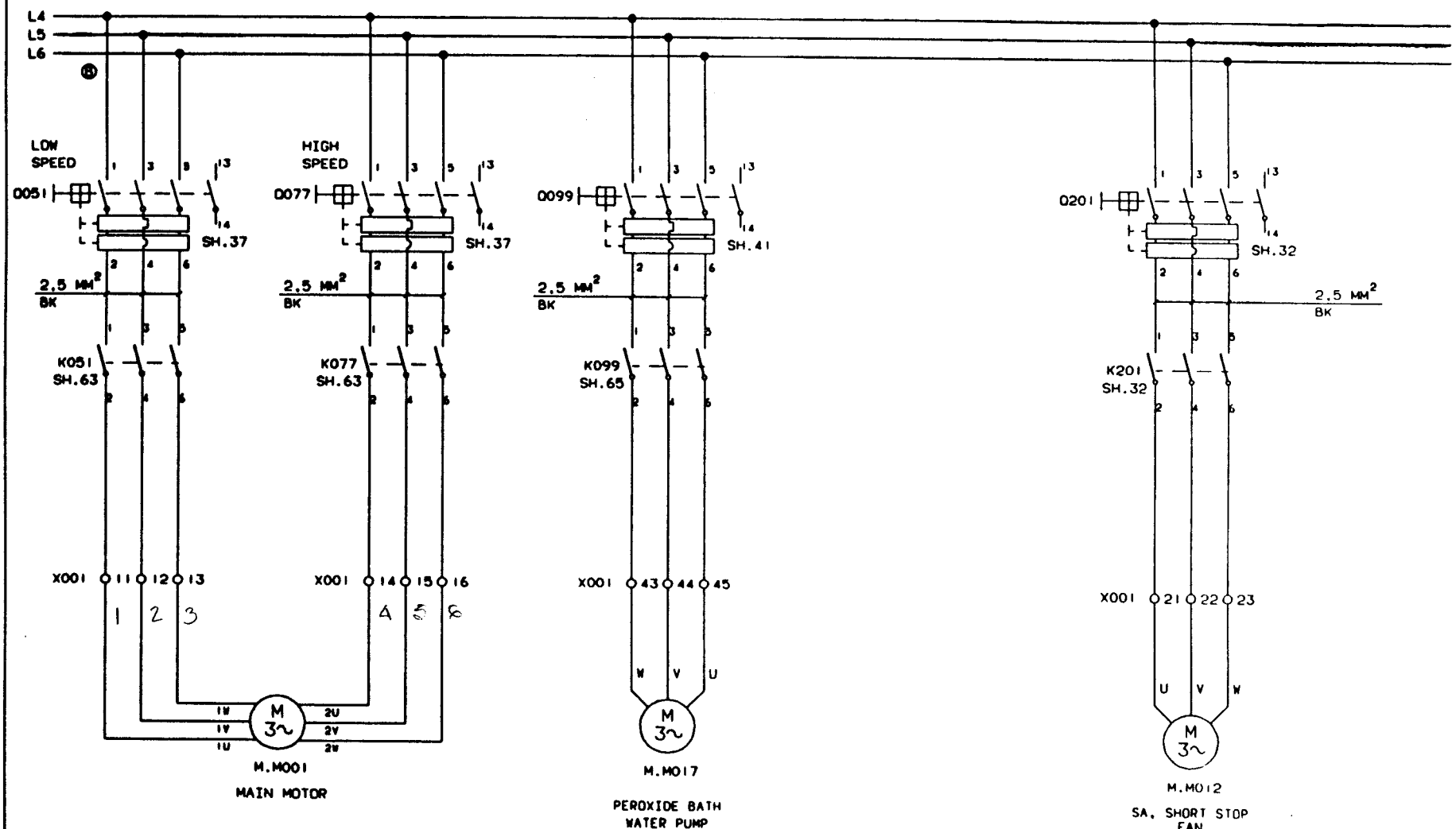

19260	930310	HK/UTH	
A			
20080			
930909			
HK/MR			

ALTERATIONS ONLY IN CADAM

DESCRIPTION: MOTORS

MACHINE: TBA/9-1401 S.A

44093-12:01

94.2.25 10.51

PRE-RELEASED/DEVELOPMENT STATE

This drawing must not without the consent of Tetra Pak be copied, transmitted or disclosed to any third party.

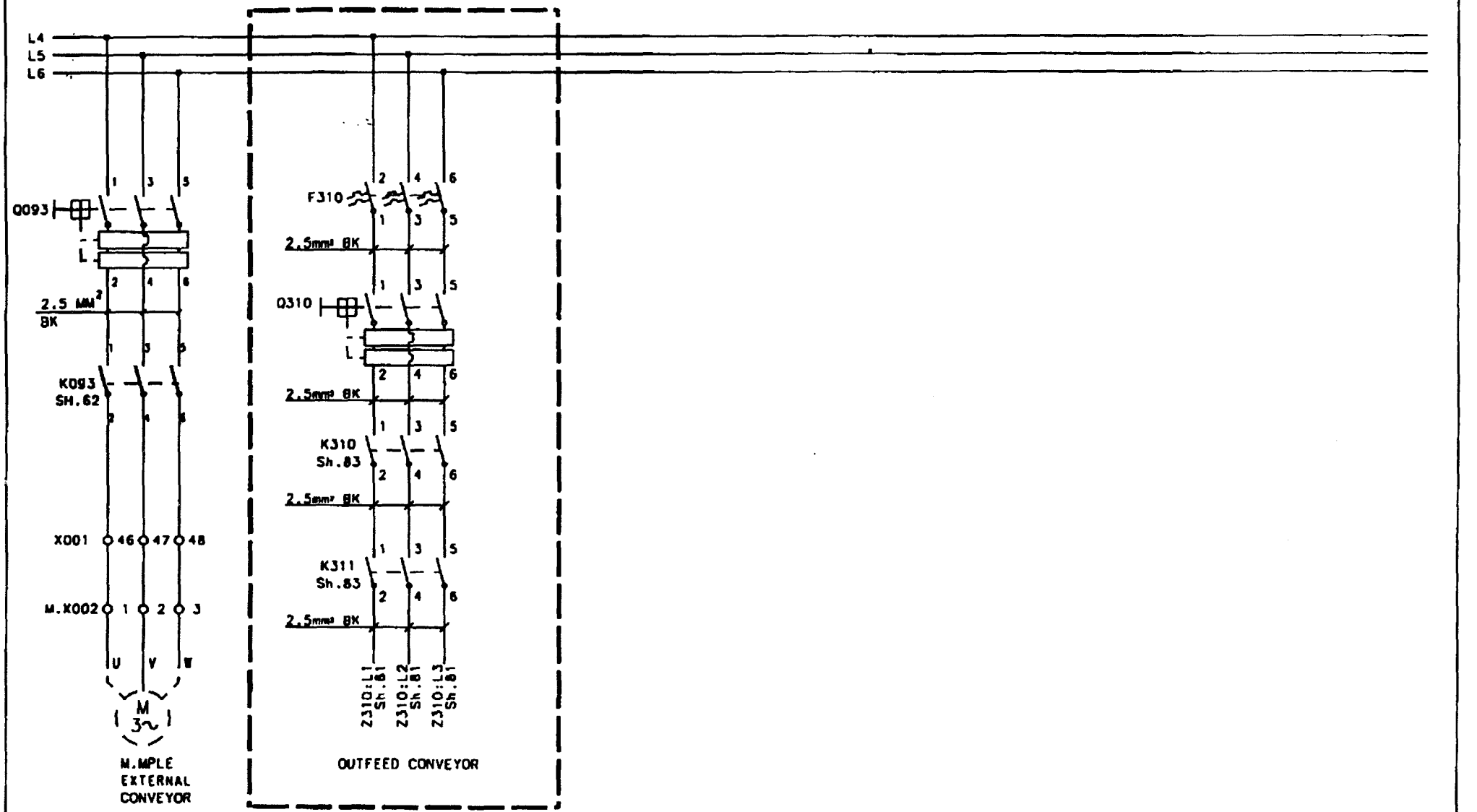

Date	-	A				Tetra Pak	Designer TEAN	Date 990521	Approved PIH Date 990602	Doc. class -
ECI No.	72526	72800					Marking TBA/9-1401	Denomination "TETRA WEDGE"		
Sign./Date	TEAN/990521	TEAN/990902			RK-559491-0100		Company Tetra Brik Packaging Systems AB	Drawing No RK-44093-13:41		Page -
Appr./Date	PIH/990602	PIH/990902			Drawing remarks					

Tetra Pak
MODENA ITALY

This drawing must not without the consent of Tetra Pak be copied, transmitted or disclosed to any third party.

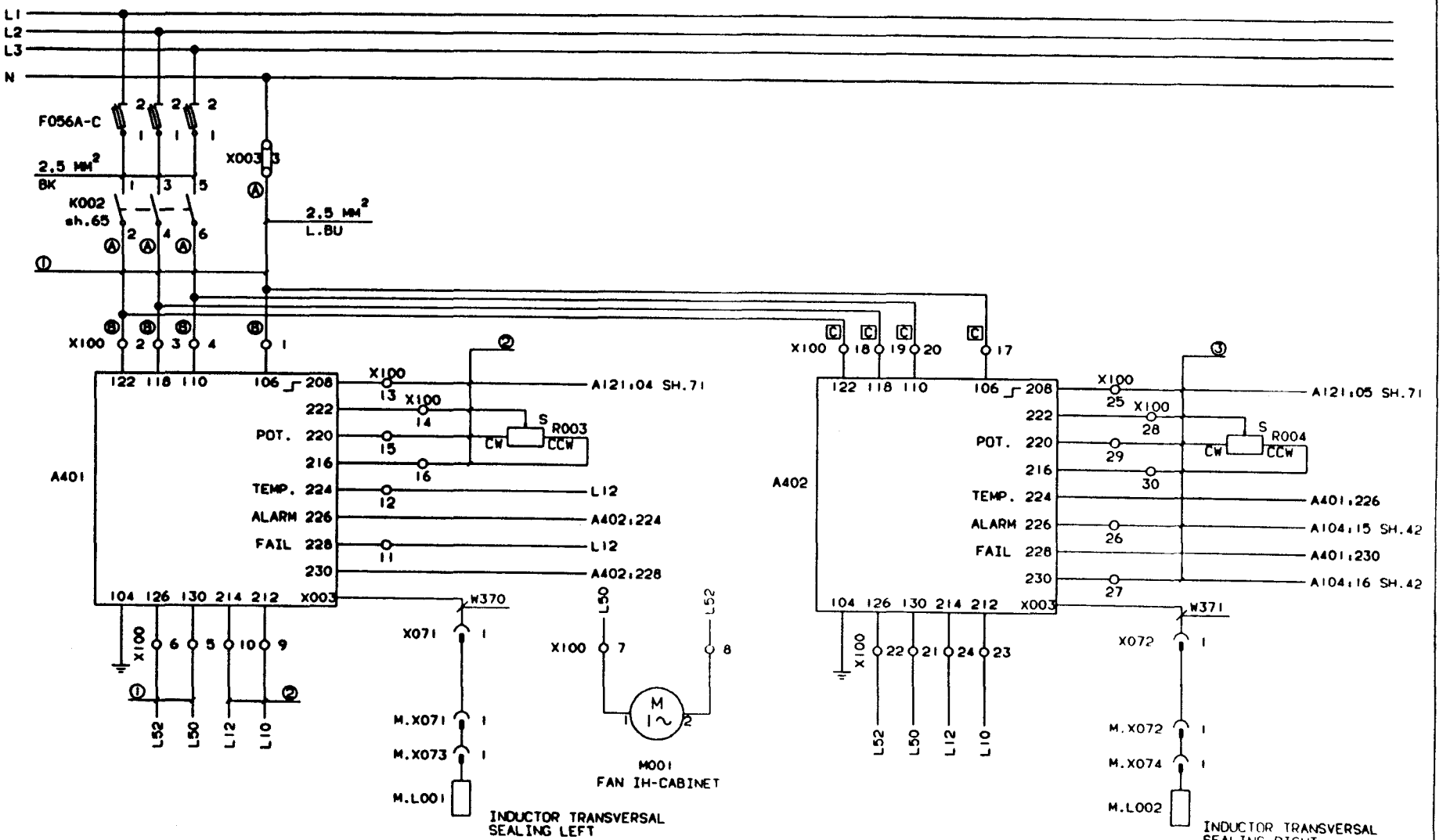

19260	930310	HK/UTH	① GOES THROUGH HOSE 1. SEE DRWG 52471-06 AND -25. ② GOES THROUGH HOSE 2. SEE DRWN 52471-06 AND -25. ③ GOES THROUGH HOSE 3. SEE DRWN 52471-06 AND -25.
A			
20080			
930909			
HK/MR			

ALTERATIONS ONLY IN CADAM

DESCRIPTION: IH-GENERATOR

MACHINE: TBA/9-1401 S.A. 44093-14:01

Tetra Pak
MODENA ITALY

This drawing must not without the consent of Tetra Pak be copied, transmitted or disclosed to any third party.

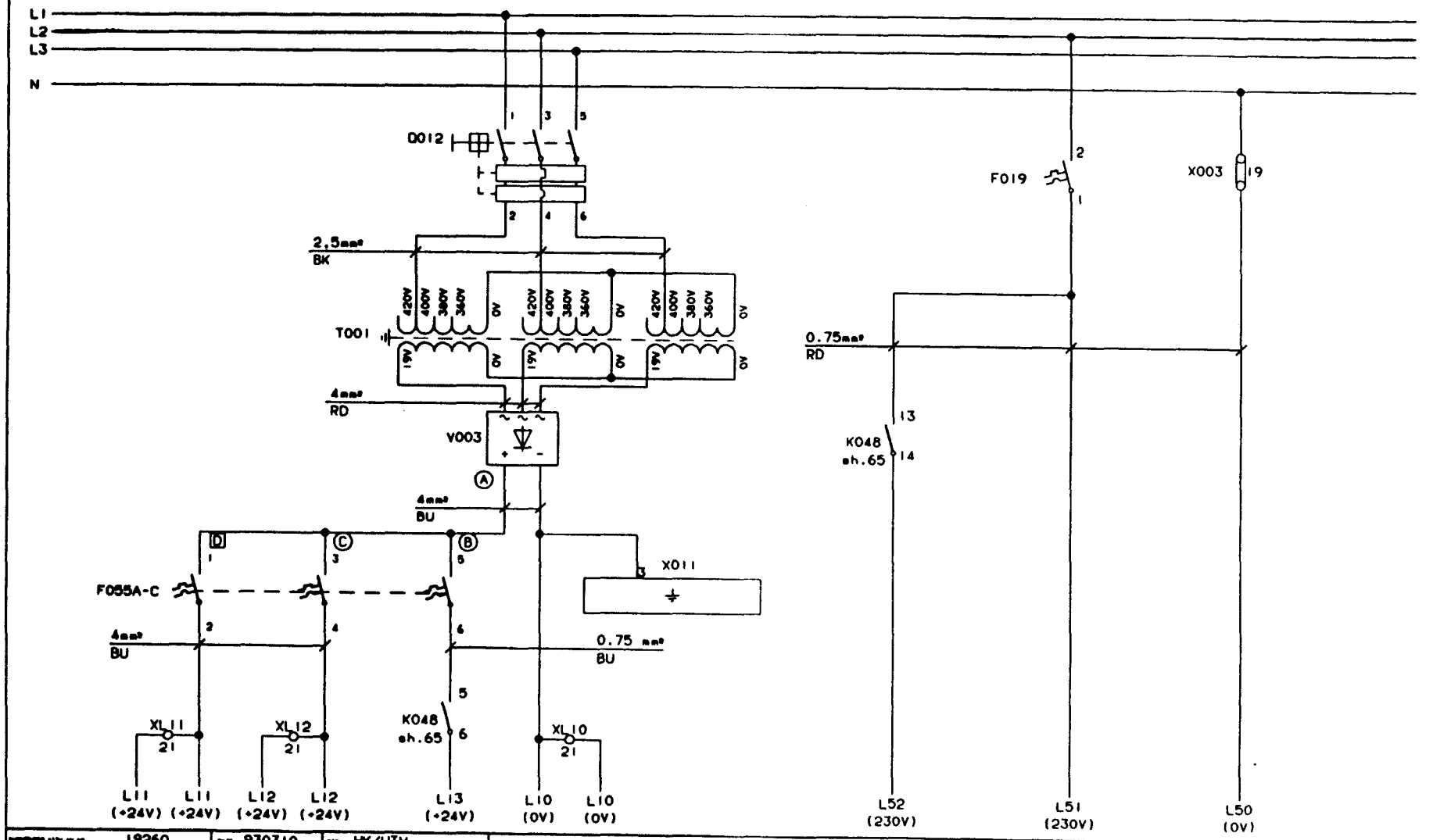

19260	930310	HK/UTH		
ISSUE A				
20080				
930909				
HK/MRT				

ALTERATIONS ONLY IN CADAM

DESCRIPTION: CONTROL VOLTAGE

MACHINE: TBA/9-1401 S.A

44093-16:01

10.51 94.2.28

Tetra Pak
MODENA ITALY

This drawing must not without the consent of Tetra Pak be copied, transmitted or disclosed to any third party.

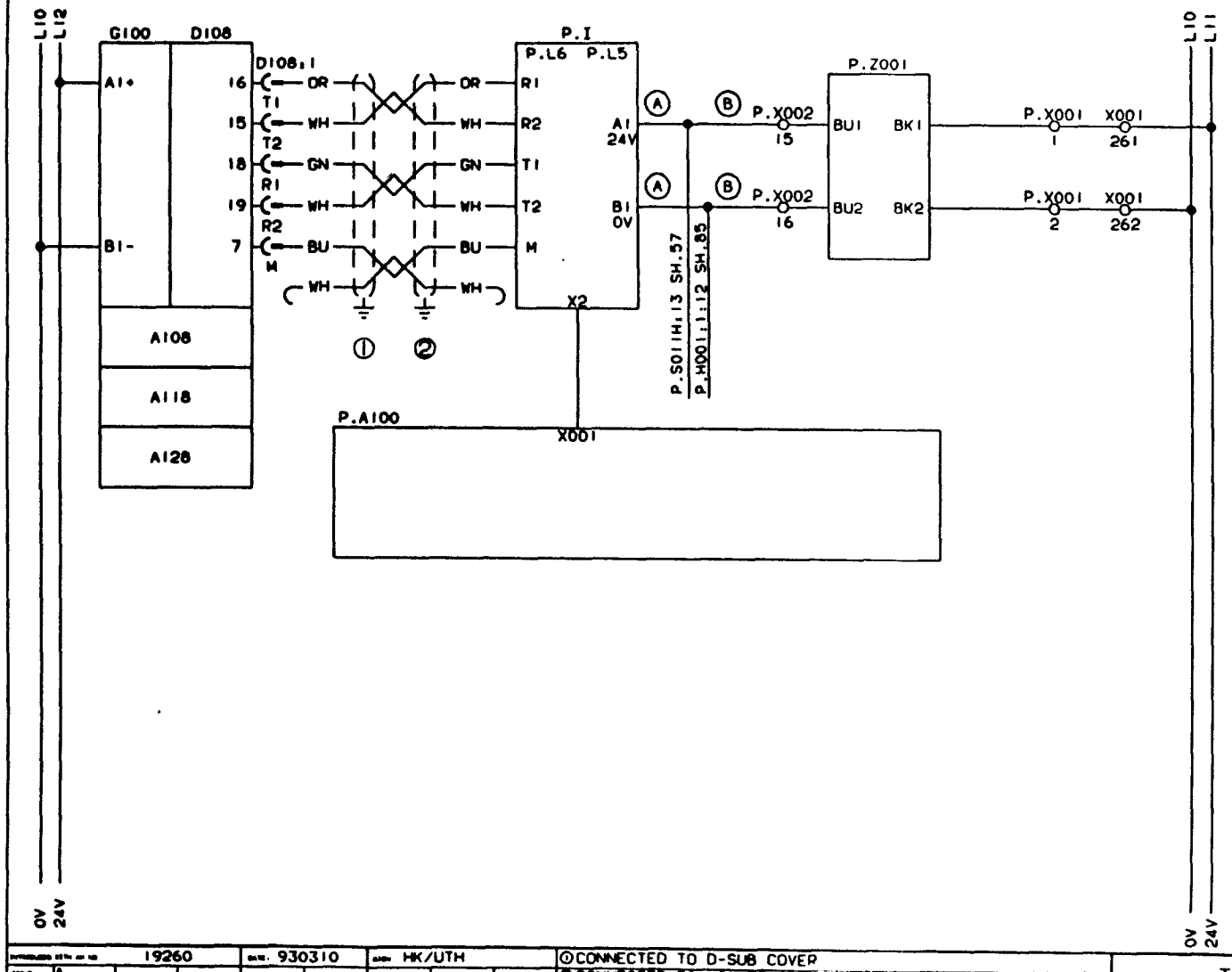

G100	POWER UNIT
D108	CPU
P.I	PANEL INTERFACE
P.Z001	INTERFACE PROTECTION
A108	
A118	RACK
A128	
P.A100	CIRCUIT BOARD

19260	930310	HK/UTH	①CONNECTED TO D-SUB COVER ②CONNECTED TO MOUNTINGPLATE NEAR INTERFERENCE PROT.	DESCRIPTION: TPMC	
A					
20080					
930909				MACHINE: TBA/9-1401 S.A	44093 17:01
HK/MR					

ALTERATIONS ONLY IN CADAM

10.51 94.2.28

Tetra Pak
LUND SWEDEN

This drawing must not without the consent of Tetra Pak be copied, transmitted or disclosed to any third party

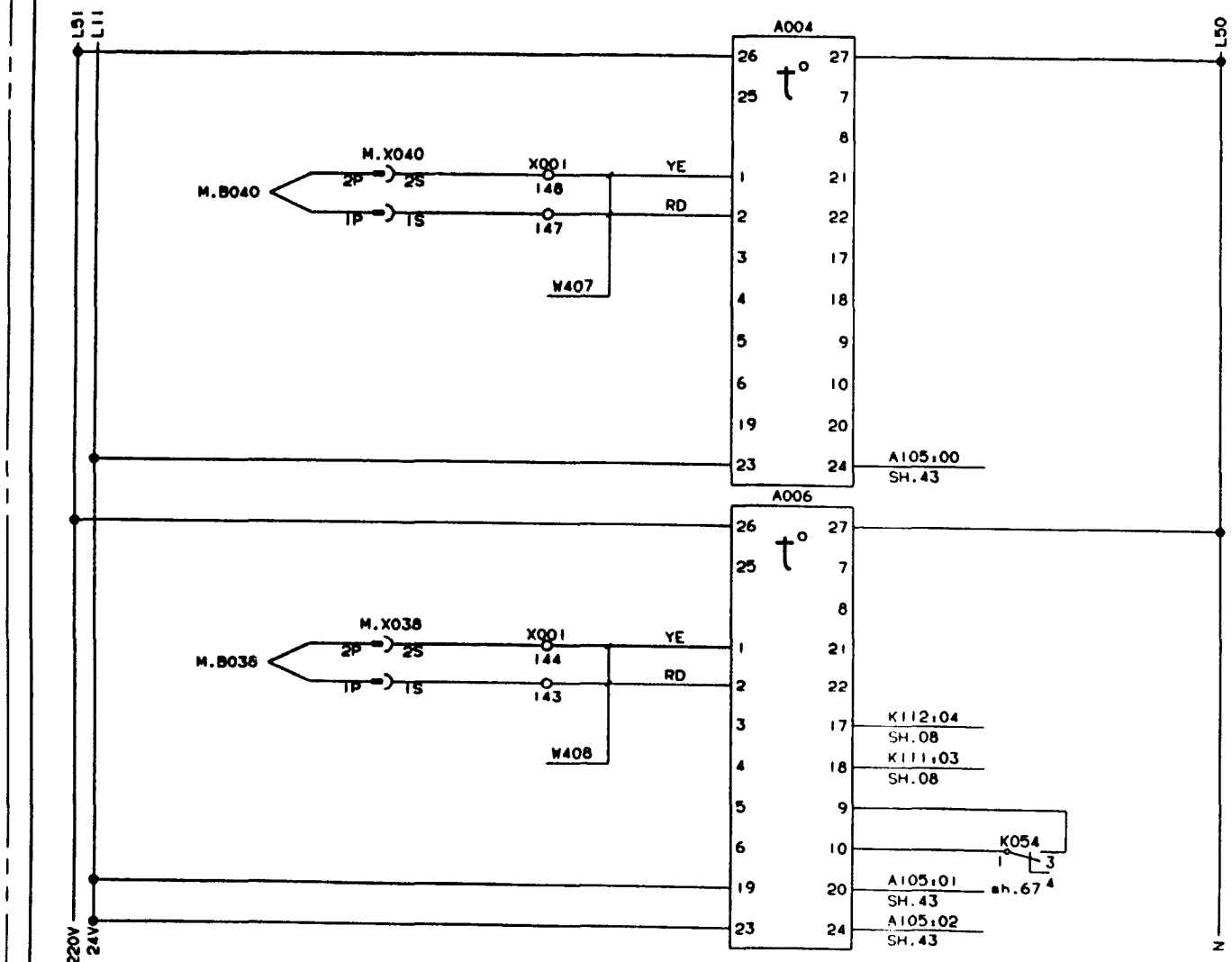

A004 TEMP. MONITOR
PRESTER VALVE

M.B040 PRESTERIL. TEMPERATURE

A006 TEMP. REGULATOR
PEROXID BATH, WATER

M.B038 PEROXIDE BATH.
TEMP.WATER

19260	930310	HK/UTH	

ALTERATIONS ONLY IN CADAM

DESCRIPTION: REGULATORS

MACHINE: TBA/9-1401 S.A

44093-18:01

10 51 94.2.22

Tetra Pak
LUND SWEDEN

This drawing must not without the consent of Tetra Pak be copied, transmitted or disclo- d to any third party.

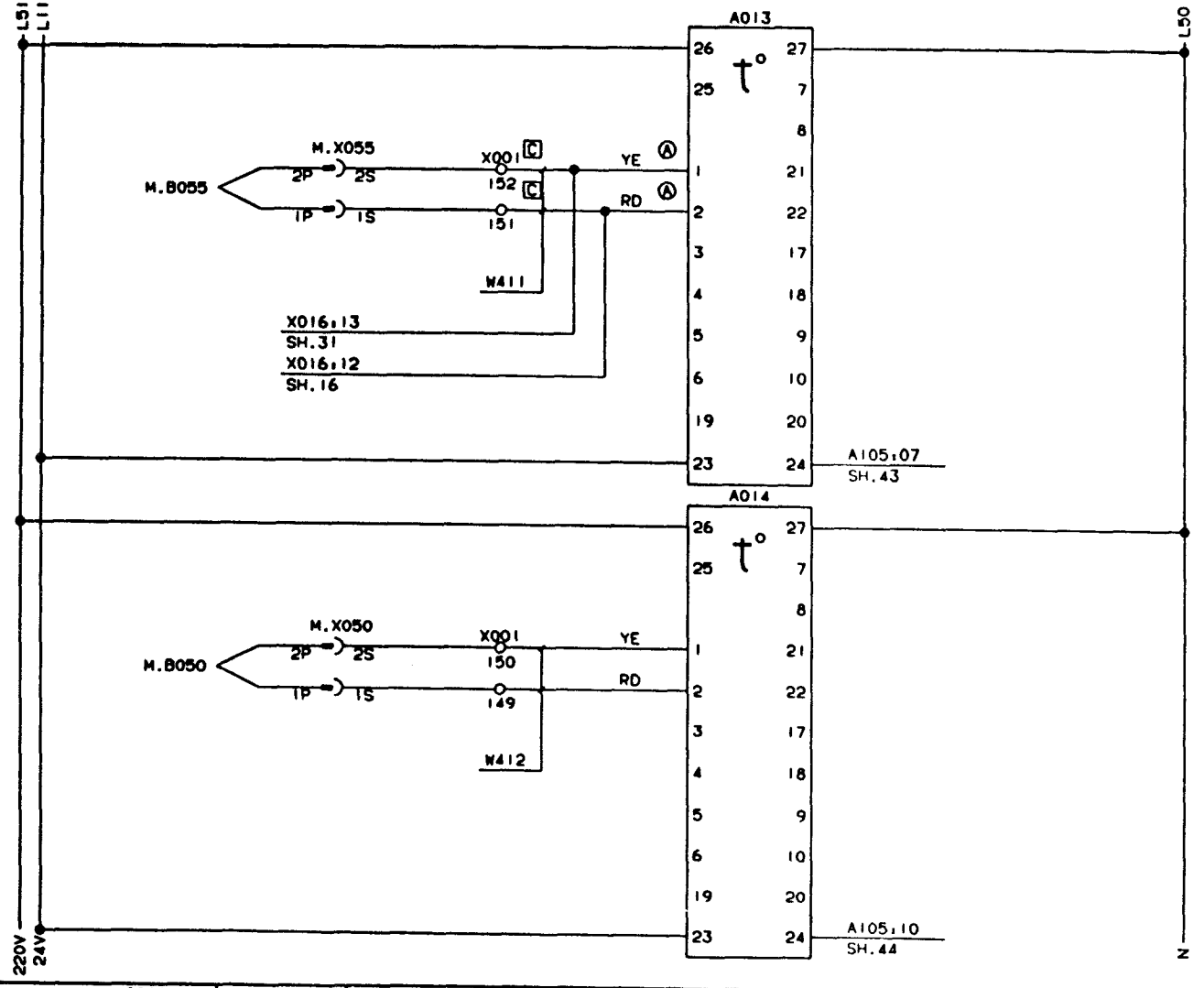

A013 TEMP. MONITOR AIR KNIVES

M.B055 AIR KNIVES TEMPERATURE

A014 TEMP. MONITOR STEAM

M.B050 STEAM TEMP

	19260	930310	HK/UTH	

ALTERATIONS ONLY IN CADAM

DESCRIPTION: REGULATORS

MACHINE: TBA/9-1401 S.A

44093-20:01

10.51 94.2.28

Tetra Pak
LUND SWEDEN

This drawing must not without the consent of Tetra Pak be copied, transmitted or disclosed to any third party

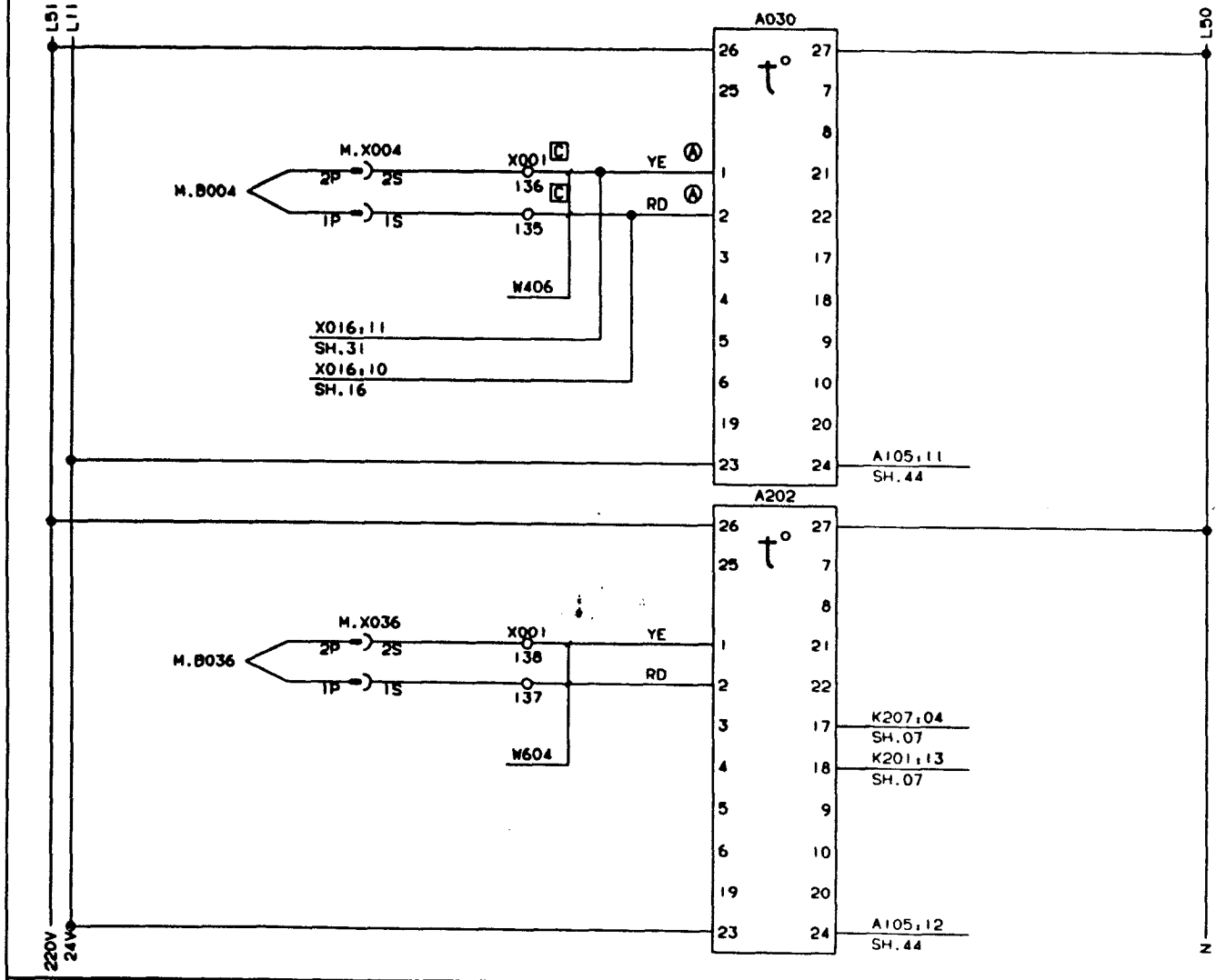

A030 TEMP. MONITOR
PEROXIDE BATH, PEROXIDE

M.B004 PEROXIDE BATH
TEMPERATURE PEROXIDE

A202 TEMP. REGULATOR
SA

M.B036 SA ELEMENT TEMPERATURE

19260	920325	HK/UTH	

ALTERATIONS ONLY IN CADAM

DESCRIPTION: REGULATORS

MACHINE: TBA/9-1401 S.A

44093-21:01

10.51 94.2.25

Tetra Pak
LUND SWEDEN

This drawing must not without the consent of Tetra Pak be copied, transmitted or disclosed to any third party.

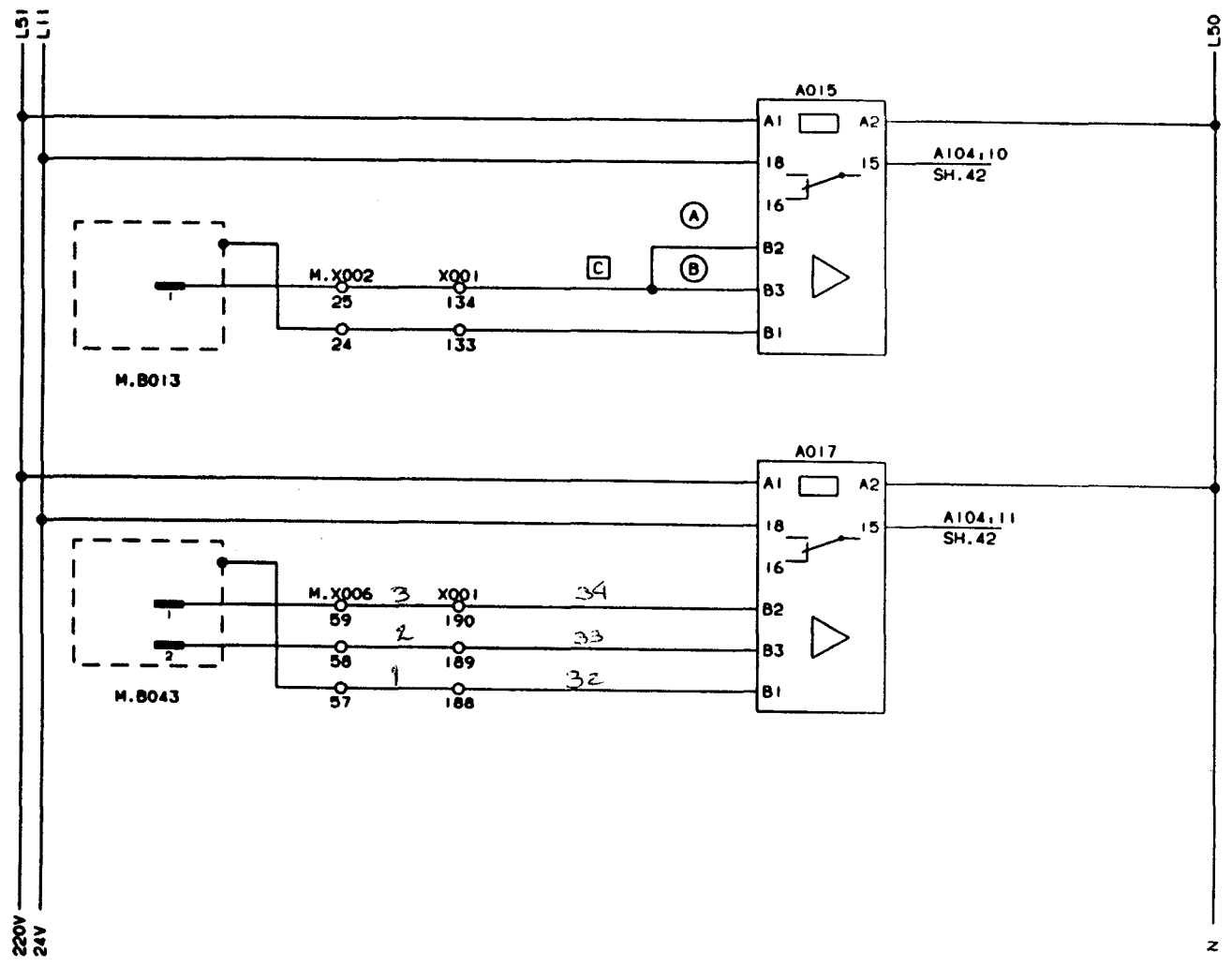

A015 CLEANING TRAY, LEVEL

M.B013 LEVEL SENSOR

A017 SPRAY TANK, LEVEL MAX/MIN

M.B043:1 LEVEL SENSOR MAX
M.B043:2 LEVEL SENSOR MIN

	19260	DATE 930310	DRAWN HK/UTH	
				DRAWING REMARKS

ALTERATIONS ONLY IN CADAM

DESCRIPTION: LEVEL MONITORS

MACHINE: TBA/9-1401 S.A

44093-24:01

10.51 94.2.28

Tetra Pak
LUND SWEDEN

This drawing must not without the consent of Tetra Pak be copied, transmitted or disclosed to any third party.

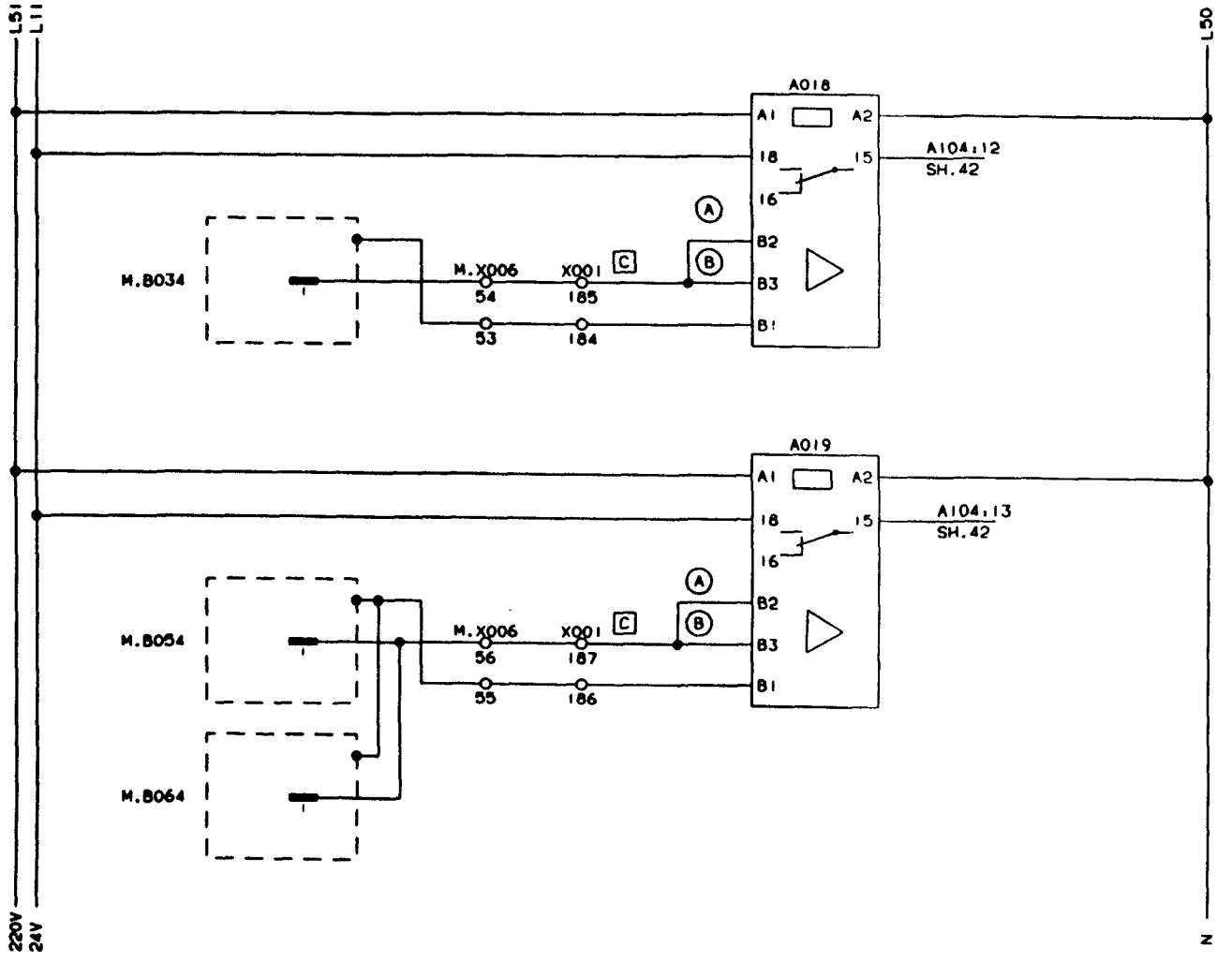

A018 PEROXIDE BATH, LEVEL

M.B034 LEVEL SENSOR

A019 WATER SEPARATOR, LEVEL

M.B054 INLET LEVEL

M.B064 SUCTION LEVEL

19260	DATE 930310	DRAWN HK/UTH	

ALTERATIONS ONLY IN CADAM

DRAWING REMARKS

DESCRIPTION: LEVEL MONITORS

MACHINE: TBA/9-1401 S.A

44093-25:01

10.51 94.2.28

Tetra Pak
LUND SWEDEN

This drawing must not, without the consent of Tetra Pak be copied, transmitted or disclosed to any third party.

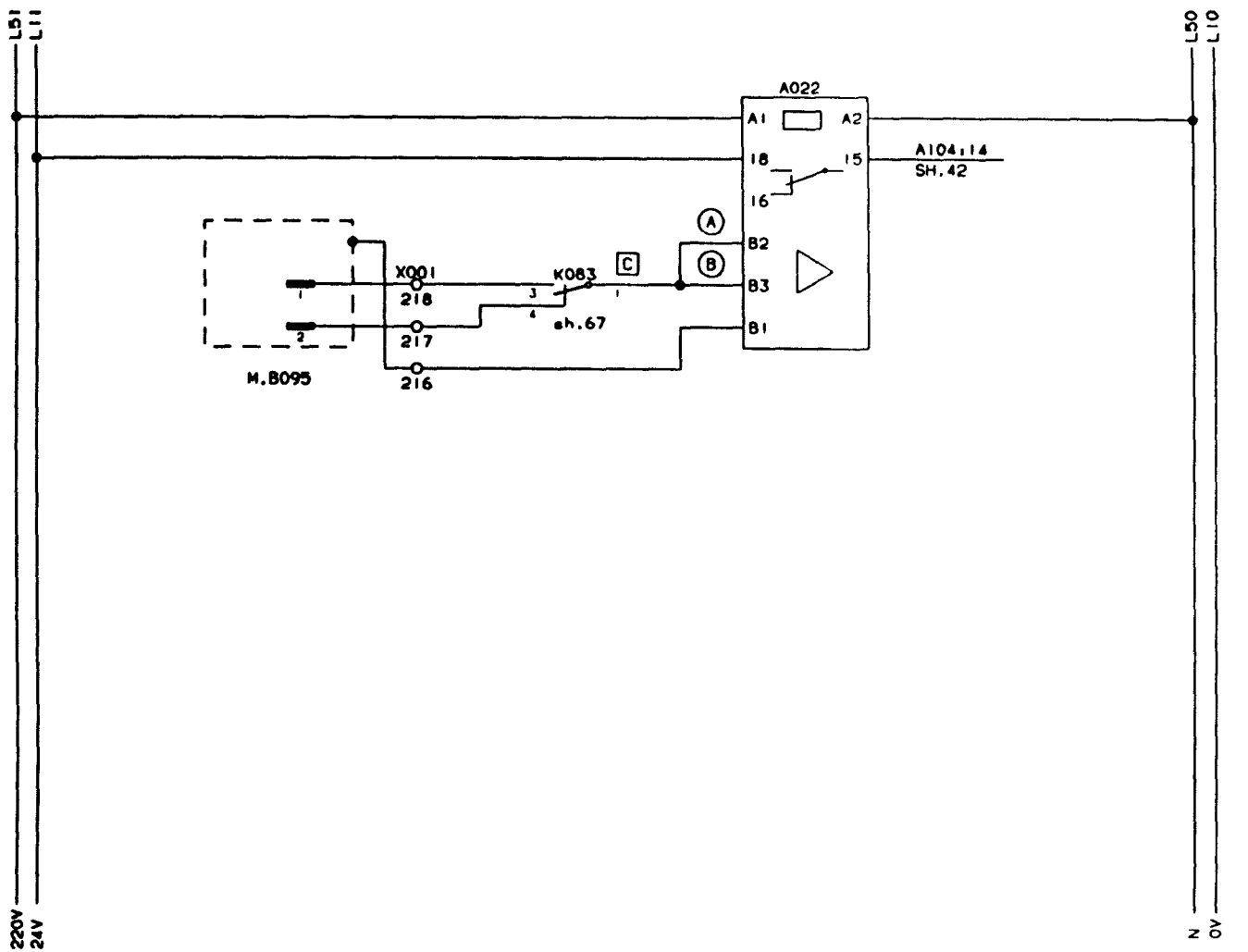

A022 PEROXIDE TANK, LEVEL

M.B095:1 LOW LEVEL (PRODUCTION)

M.B095:2 HIGH LEVEL

19260	930310	HK/UTH	

ALTERATIONS ONLY IN CADAM

DESCRIPTION: LEVEL MONITORS

MACHINE: TBA/9-1401 S.A

44093-26:01

Tetra Pak
LUND SWEDEN

This drawing must not without the consent of Tetra Pak be copied, transmitted or disclosed to any third party.

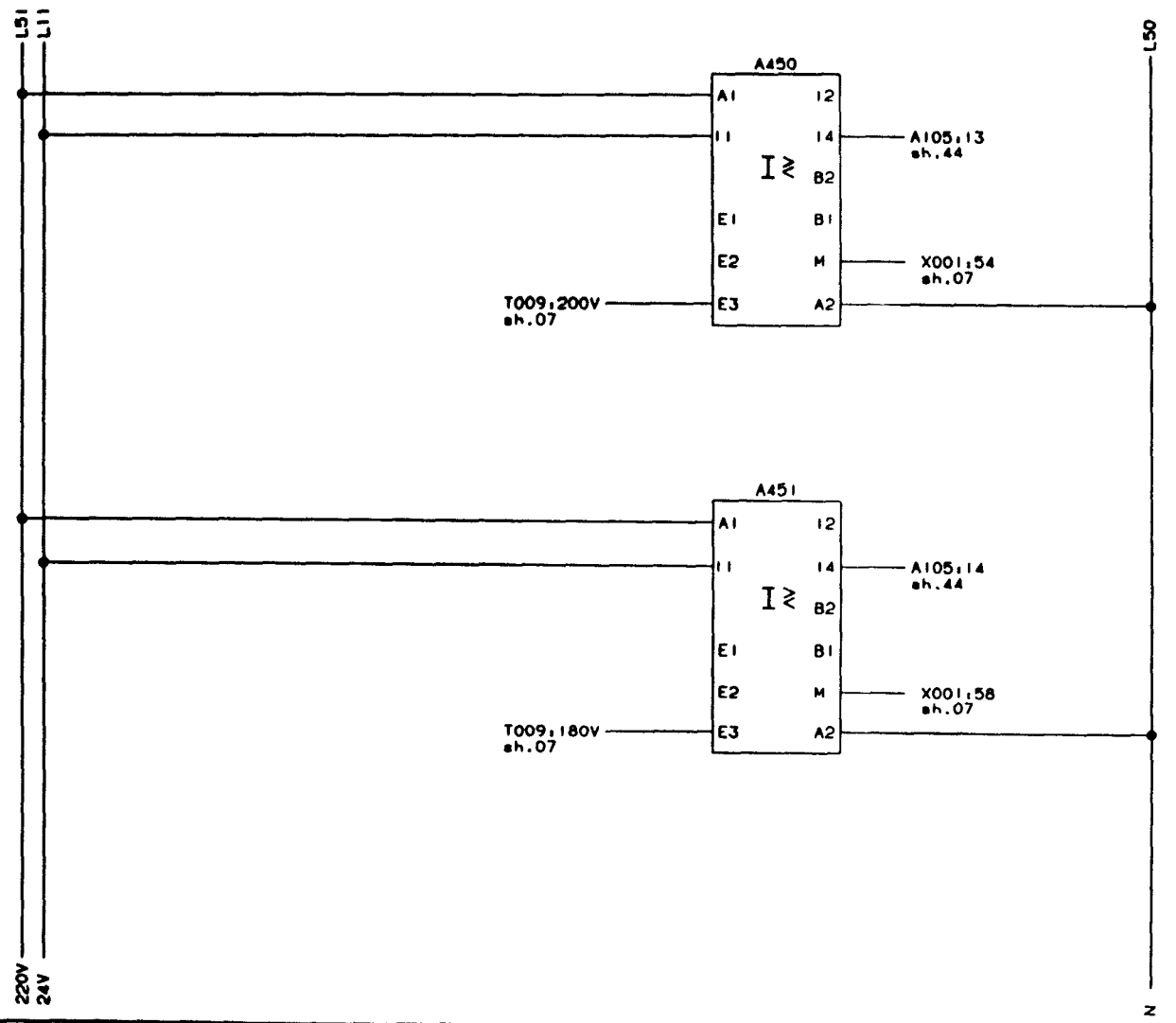

A450 SUPERVISION
SA SHORT STOP ELEMENT

A451 SUPERVISION
LS SHORT STOP ELEMENT

19260	930310	HK/UTH	

ALTERATIONS ONLY IN CADAM

DESCRIPTION: CURRENT MONITORS

MACHINE: TBA/9-1401 S.A

44093-27:01

10.51 94.2.28

Tetra Pak
MODENA ITALY

This drawing must not without the consent of Tetra Pak be copied, transmitted or disclosed to any third party.

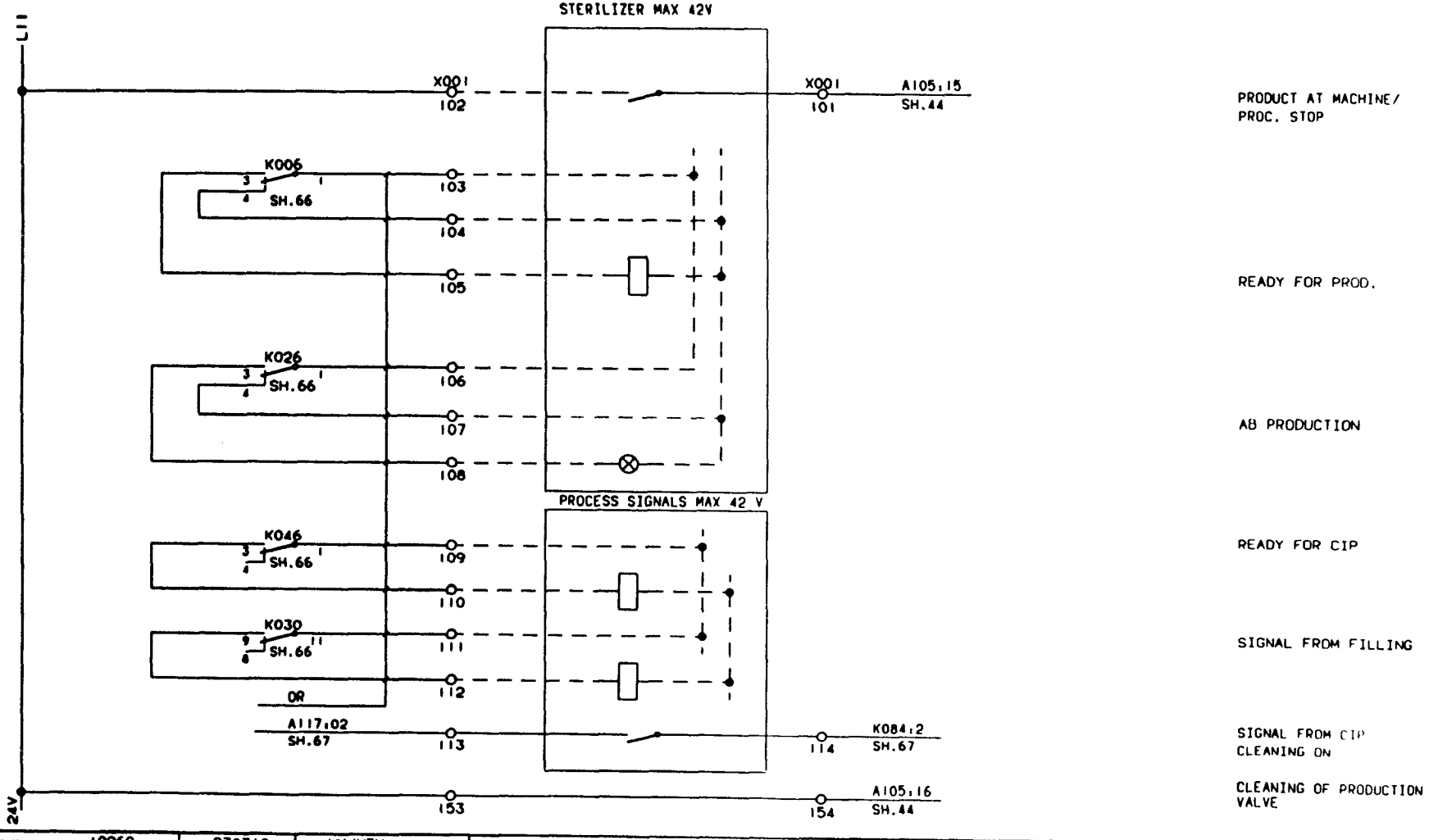

19260	930310	HK/UTH	
A			
20080			
930909			
HK/MR			

ALTERATIONS ONLY IN CADAM

DESCRIPTION: STERILIZER

MACHINE: TBA/9-1401 S.A

44093-29:01

10.51 94.2.28

Tetra Pak
LUND SWEDEN

This drawing must not without the consent of Tetra Pak be copied, transmitted or disclosed to any third party.

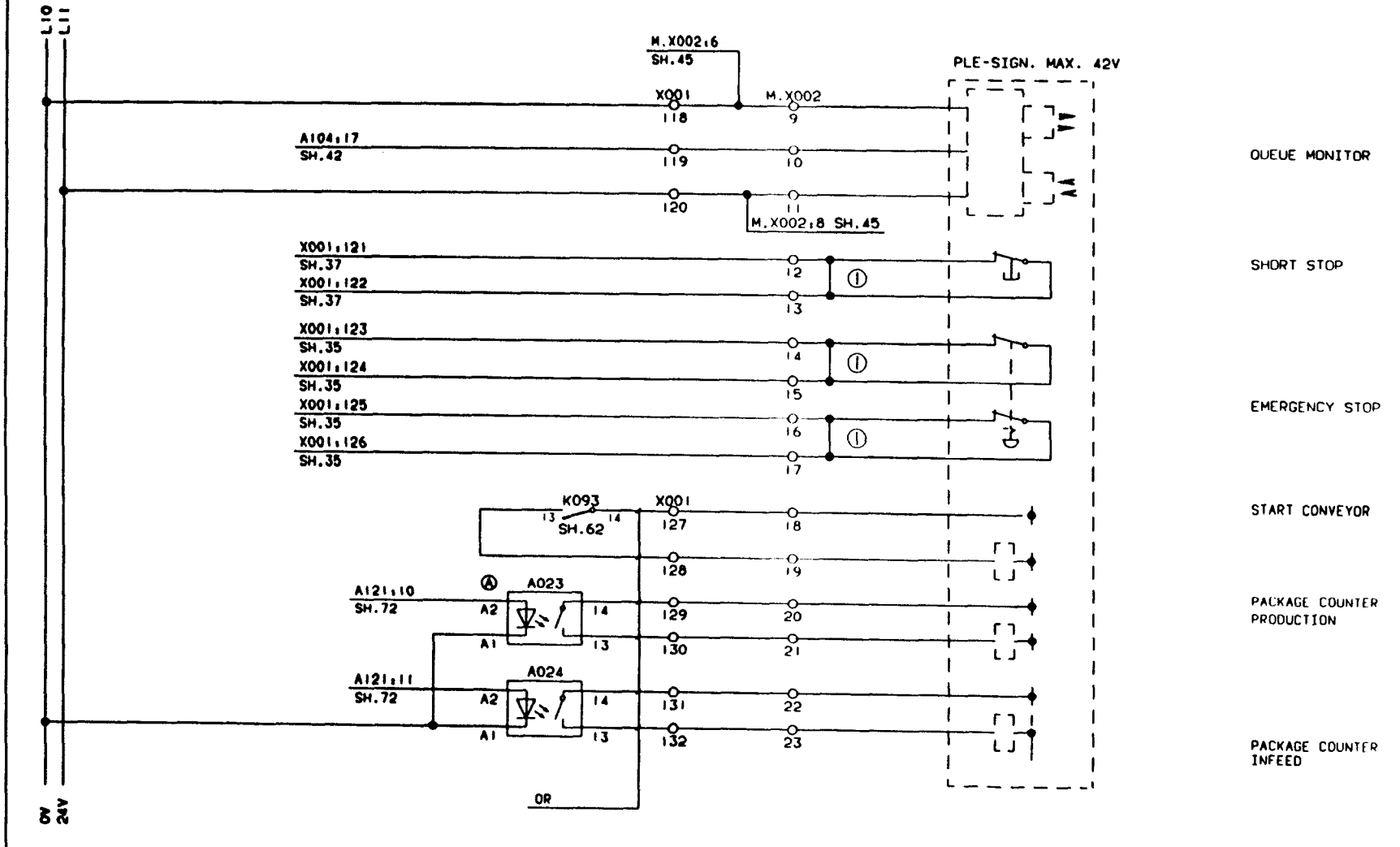

19260	930310	HK/UTH	① REMOVE BRIDGE CONNECTION WHEN PLE-EQUIPMENT IS INSTALLED	DESCRIPTION: PLE
				MACHINE: TBA/9-1401 S.A — 44093-30:01

ALTERATIONS ONLY IN CADAM

Tetra Pak
LUND SWEDEN

This drawing must not without the consent of Tetra Pak be copied, transmitted or disclosed to any third party.

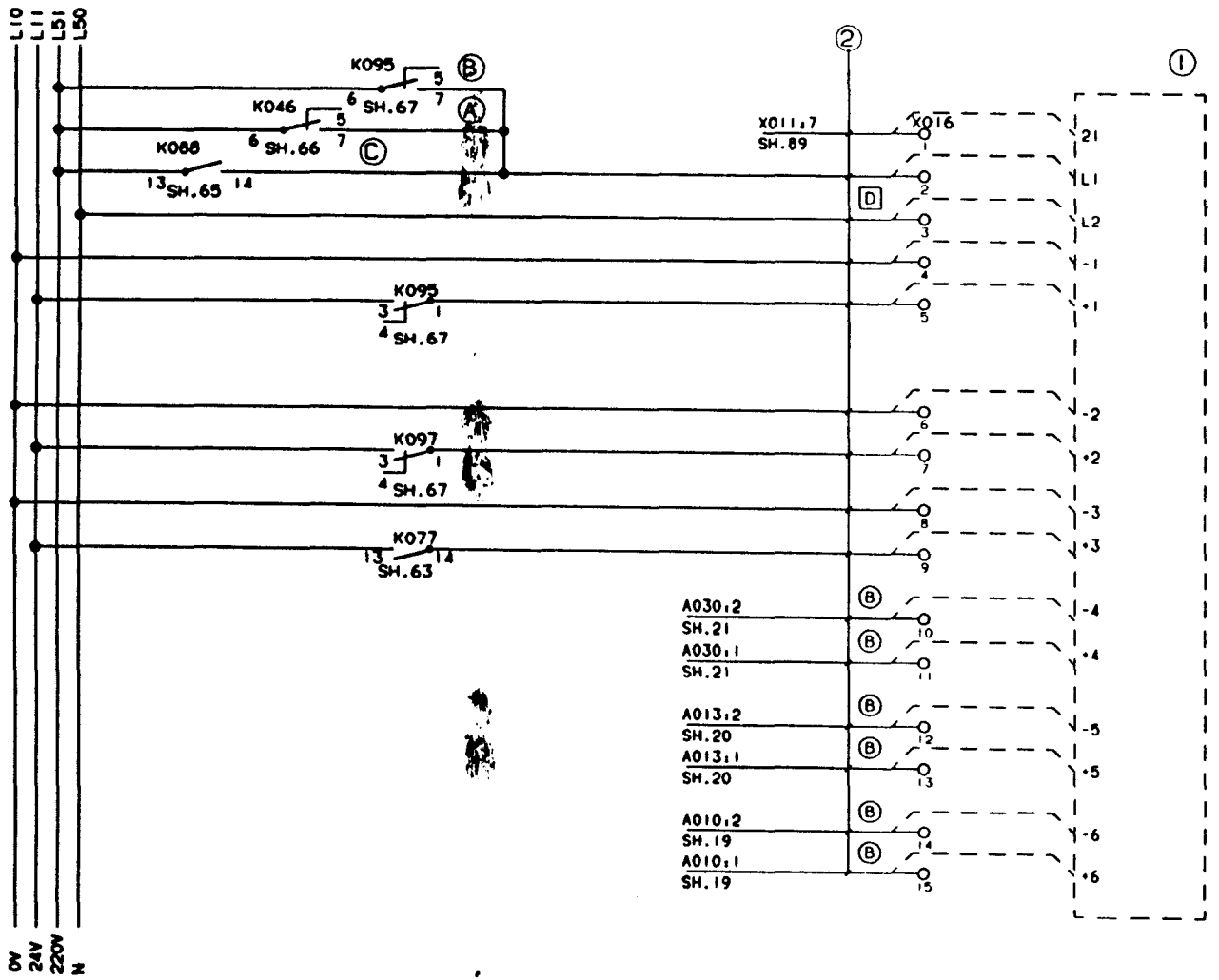

① P16=RECORDER

② MARK WIRES WITH P16 TERMINAL NUMBERS EACH WIRE HAS 400 mm EXTRA LENGHT, HIDDEN IN CABLE TRAY. TO BE PULLED OUT WHEN CONNECTING RECORDER P16

CHANNEL 1=STERILE PARAMETER

CHANNEL 2= OPERATIONAL PARAMETER

CHANNEL 3= MAIN MOTOR

CHANNEL 4= PEROXIDE BATH TEMP.PEROXIDE

CHANNEL 5= AIR KNIFE, TEMP.

CHANNEL 6= STERILE AIR. TEMP

19260	930310	HK/UTH	

ALTERATIONS ONLY IN CADAM

DESCRIPTION: PROCESS RECORDER

MACHINE: TBA/9-1401 S.A

44093-31:01

10.51 94.2.28

This drawing must not without the consent of Tetra Pak be copied, transmitted or disclosed to any third party.

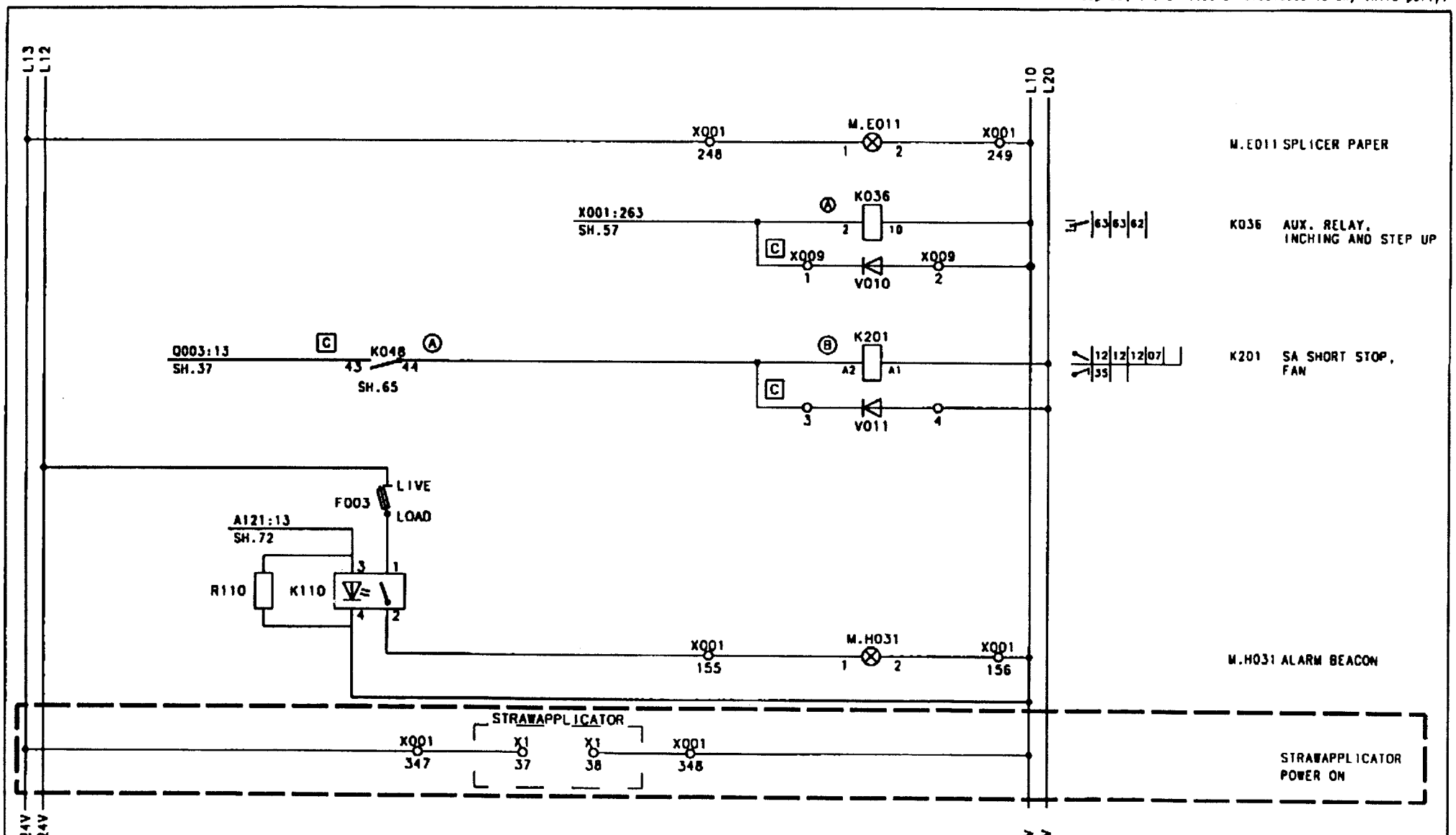

Note	-					Designer TEAN	Date 000104	Approved PIH Date 000315	Doc. class -
ECR No.	73349					Section T8A/9-1401	Denomination "TETRA WEDGE"		
Sign./Date	TEAN/000104					Company Tetra Brik Packaging Systems AB	Drawing No. RK-44093-32:43		Page -
Appr./Date	PIH/000315				Drawing remarks				

Tetra Pak
MODENA ITALY

This drawing must not without the consent of Tetra Pak be copied, transmitted or disclosed to any third party.

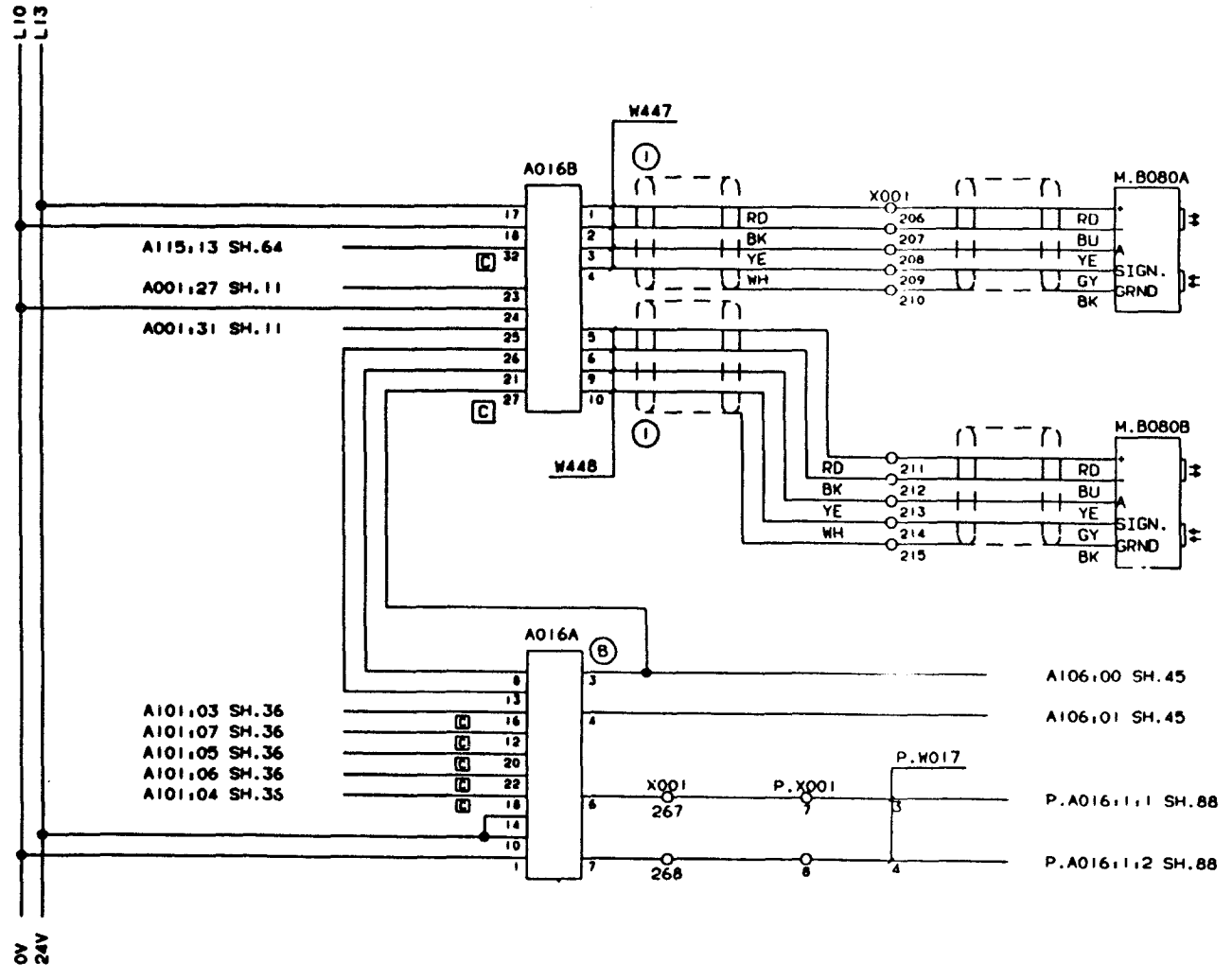

M.B080A DESIGN ADJUSTMENT DATA LEFT

M.B080B DESIGN ADJUSTMENT CLOCK RIGHT

19260	930310	HK/UTH	① SHIELD SHALL BE CUT OFF AT A016B
A			
20080			
930909			
HK/MR			

ALTERATIONS ONLY IN CADAM

DESCRIPTION: PRINTED DESIGN CORRECTION

MACHINE: TBA/9-1401 S.A

44093-34:01

10:51 94.2.25

Tetra Pak
LUND SWEDEN

This drawing must not without the consent of Tetra Pak be copied, transmitted or disclosed to any third party.

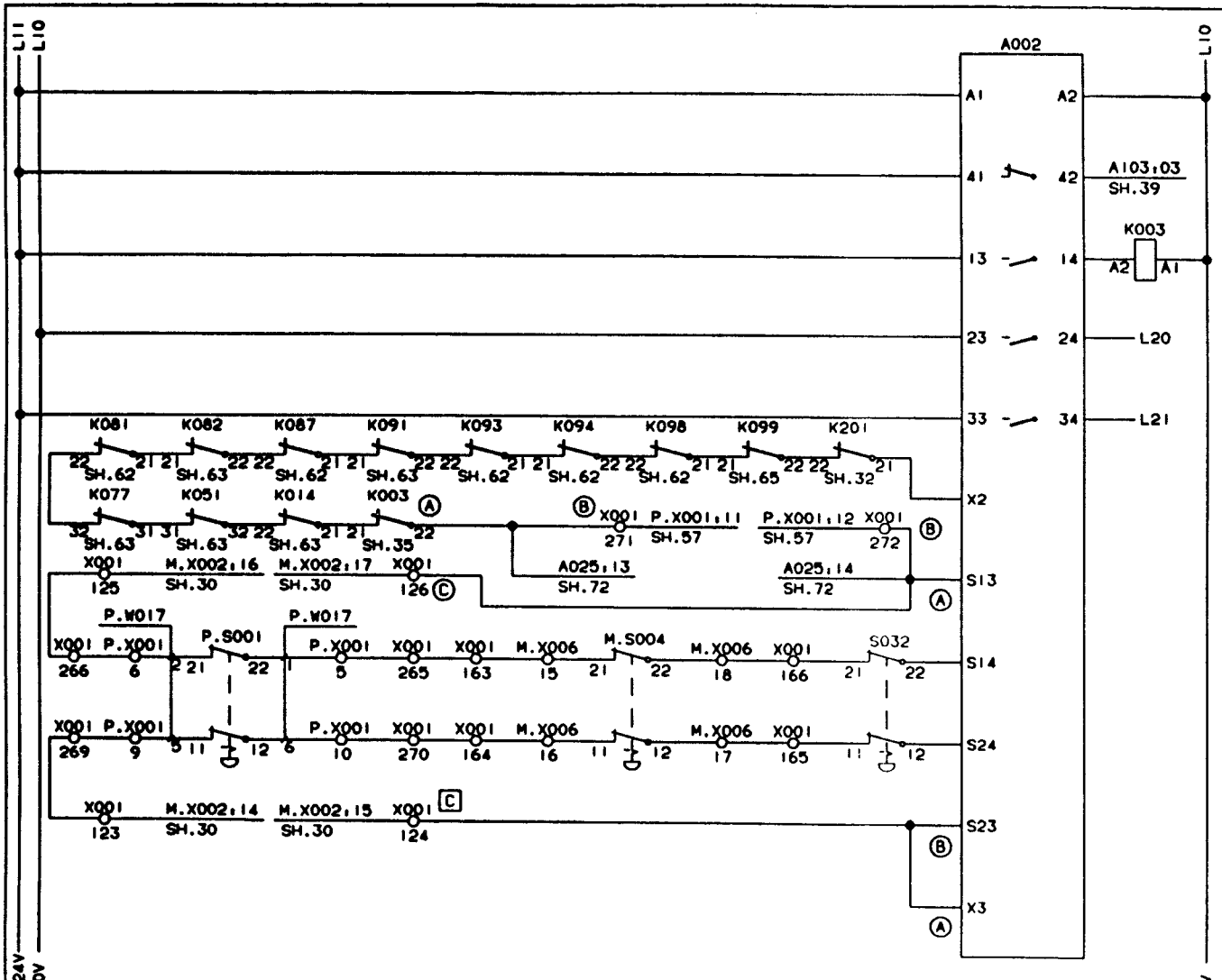

A002 EMERGENCY STOP MODULE

CONTACTOR TO ENSURE REDUNDANCE

K003 – K201 AUXILIARY CONTACTS ON EMERGENCY- AND SAFETY-MODULE CONTACTORS

P.S001
M.S004
S032 EMERGENCY STOP

	19260	930310	HK/UTH

ALTERATIONS ONLY IN CADAM

DESCRIPTION: EMERGENCY STOP FUNCTION
MACHINE: TBA/9-1401 S.A
44093-35:01

10.51 94.2.28

PRE-RELEASED/DEVELOPMENT STATE

This drawing must not without the consent of Tetra Pak: be copied, transmitted or disclosed to any third party.

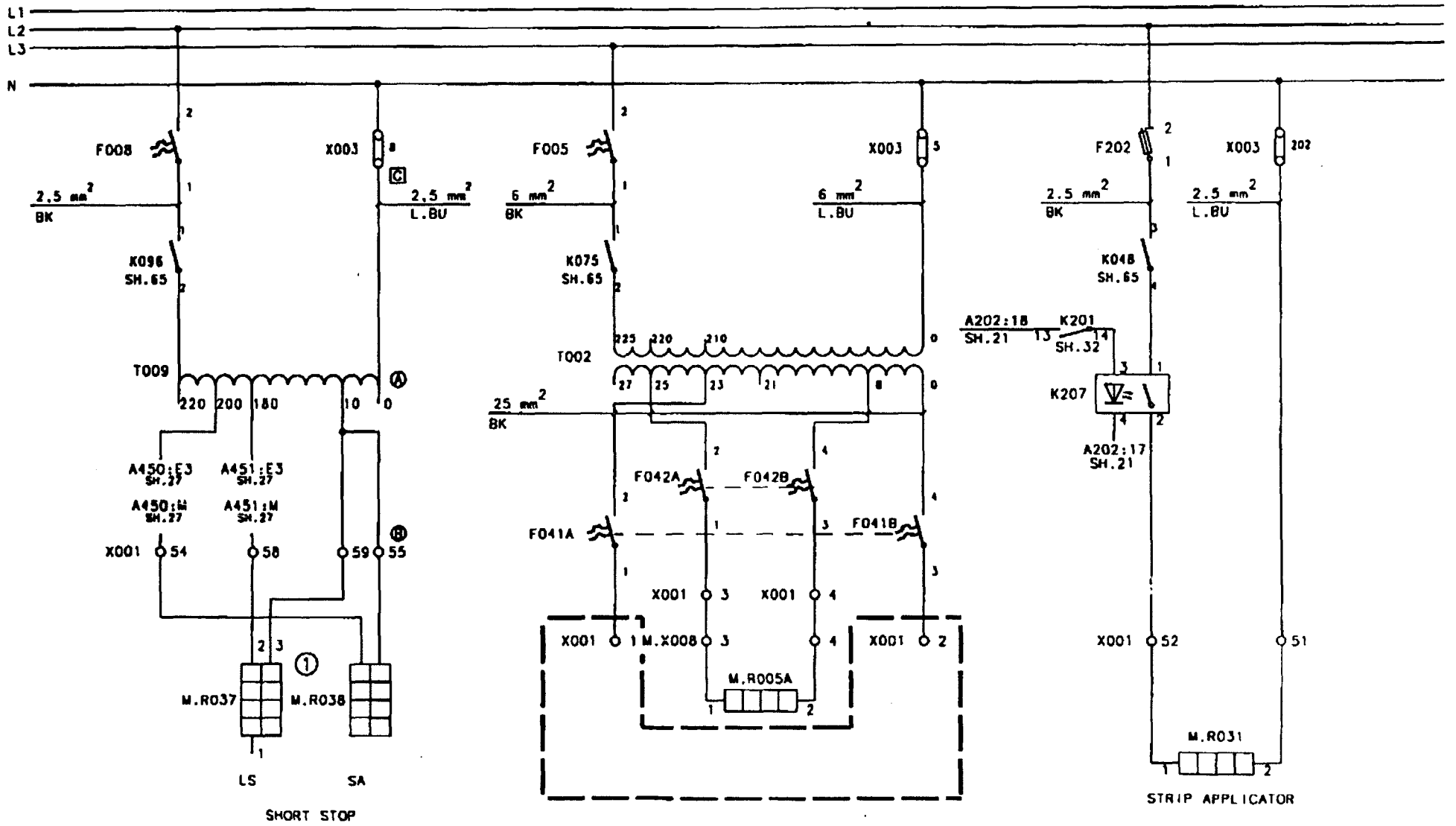

Date	-				ELEMENT PIN CONFIGURATION	Tetra Pak	Designer TEAN Date 990902	Approved PIH Date 990902	Doc. class -
CDB No.	72800				① 1-2= 1200W 1-3= 700W 2-3= 450W RK-559491-0100		Machine TBA/9-1401	Description "TETRA WEDGE"	
Sign./Date	TEAN/990902				Drawing remarks	Company Tetra Brik Packaging Systems AB	Drawing No. RK-44093-07:41		Page -
Appr./Date	PIH/990902								

This drawing must not without the consent of Tetra Pak: be copied, transmitted or disclosed to any third party.

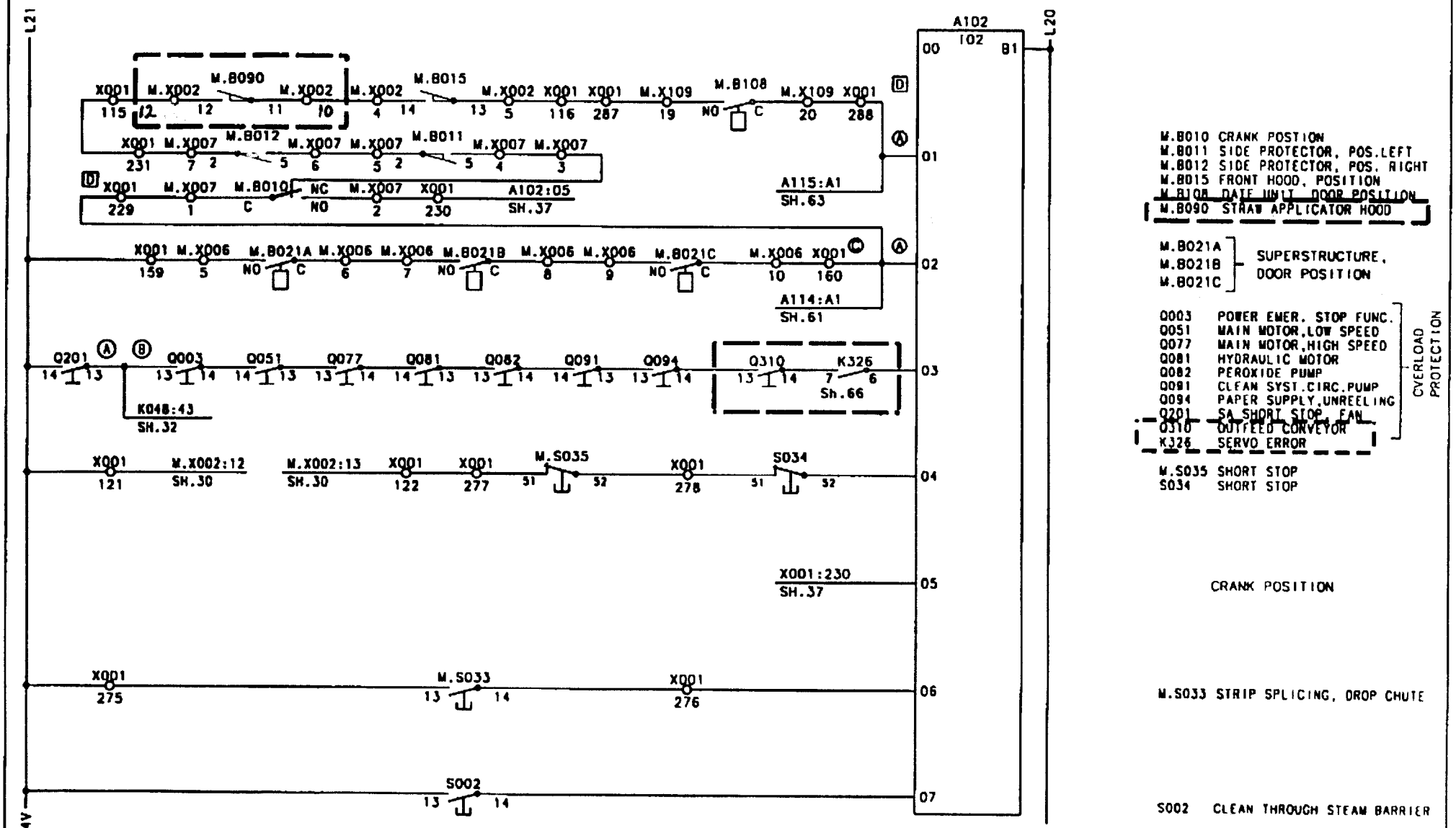

Note	-					Tetra Pak	Designer TEAN	Date 000104	Approved PIH Date 000315	Doc. class -
ECR No.	73349						Machine T8A/9-1401	Description "TETRA WEDGE"		
Sign./Date	TEAN/000104						Company Tetra Brik Packaging Systems AB	Drawing No. RK-44093 37:43		Page -
Appr./Date	PIH/000315									
					Drawing remarks					

Tetra Pak
MODENA ITALY

This drawing must not without the consent of Tetra Pak be copied, transmitted or disclosed to any third party

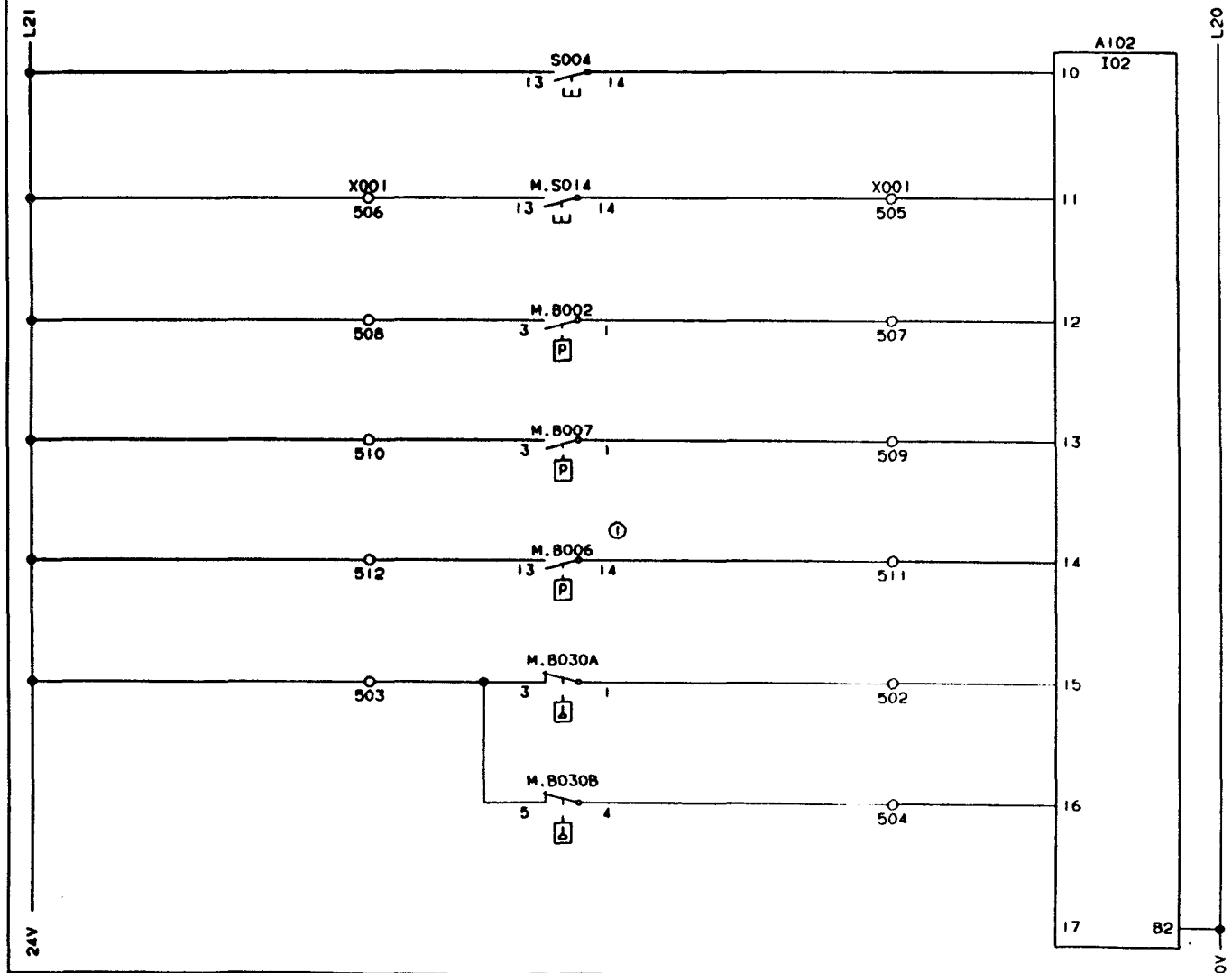

S004 SERVICE SWITCH

M.S014 MANUAL LUBRICATION

M.B002 MAIN AIR. PRESSURE

M.B007 COOL WATER. PRESSURE

M.B006 LUBRICATION OIL PRESSURE

M.B030A LUBRICATION OIL LOW LEVEL

M.B030B LUBRICATION OIL HIGH LEVEL

19260	DATE: 930310	DRAWN: HK/UTH	① BEFORE T-ORDER T-13147 AND T-20163 THE CONNECTION IS 1 AND 3 INSTEAD OF 13 AND 14	DESCRIPTION: PLC-IN, OPERATION MONITORS
ISSUE A B				MACHINE: TBA/9-1401 S.A
20080 20406				44093-38:01
930909 931015				
HK/MRI HK/MRI				

ALTERATIONS ONLY IN CADAM

94.2.25

PRE-RELEASED/DEVELOPMENT STATE

This drawing must not without the consent of Tetra Pak be copied, transmitted or disclosed to any third party.

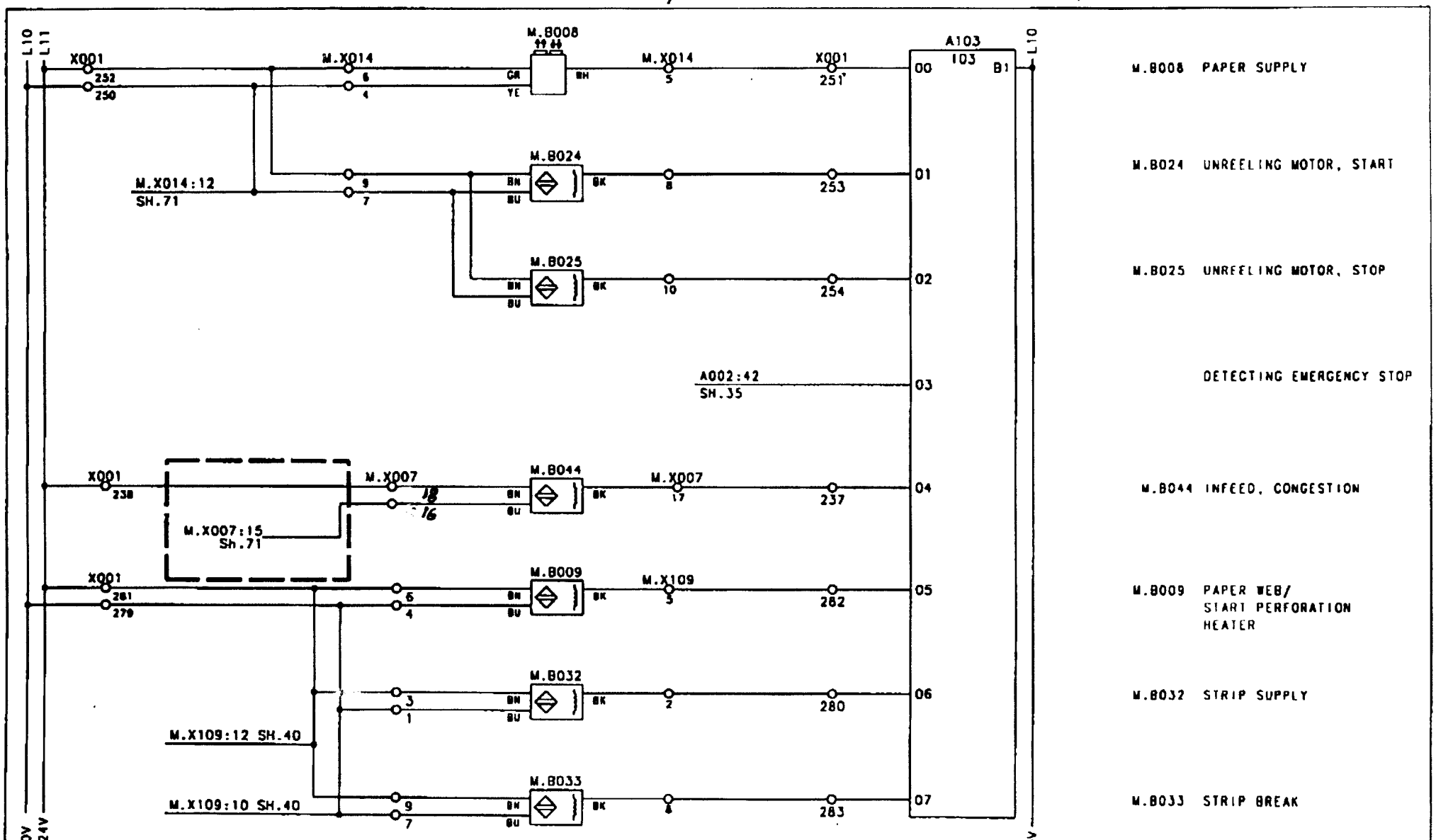

Note	-	A				Designer TEAN	Date 990521	Approved PIH Date 990602	Doc. class -
ECR No.	72526	72800				Machine T8A/9-1401	Denomination "TETRA WEDGE"		
Sign./Date	TEAN/990521	TEAN/990902			RK-559491-0100	Company Tetra Brik Packaging Systems AB	Drawing No RK-44093-39:41		Page -
Appr./Date	PIH/990602	PIH/990902			Drawing remarks				

Tetra Pak
MODENA ITALY

This drawing must not without the consent of Tetra Pak be copied, transmitted or disclosed to any third party.

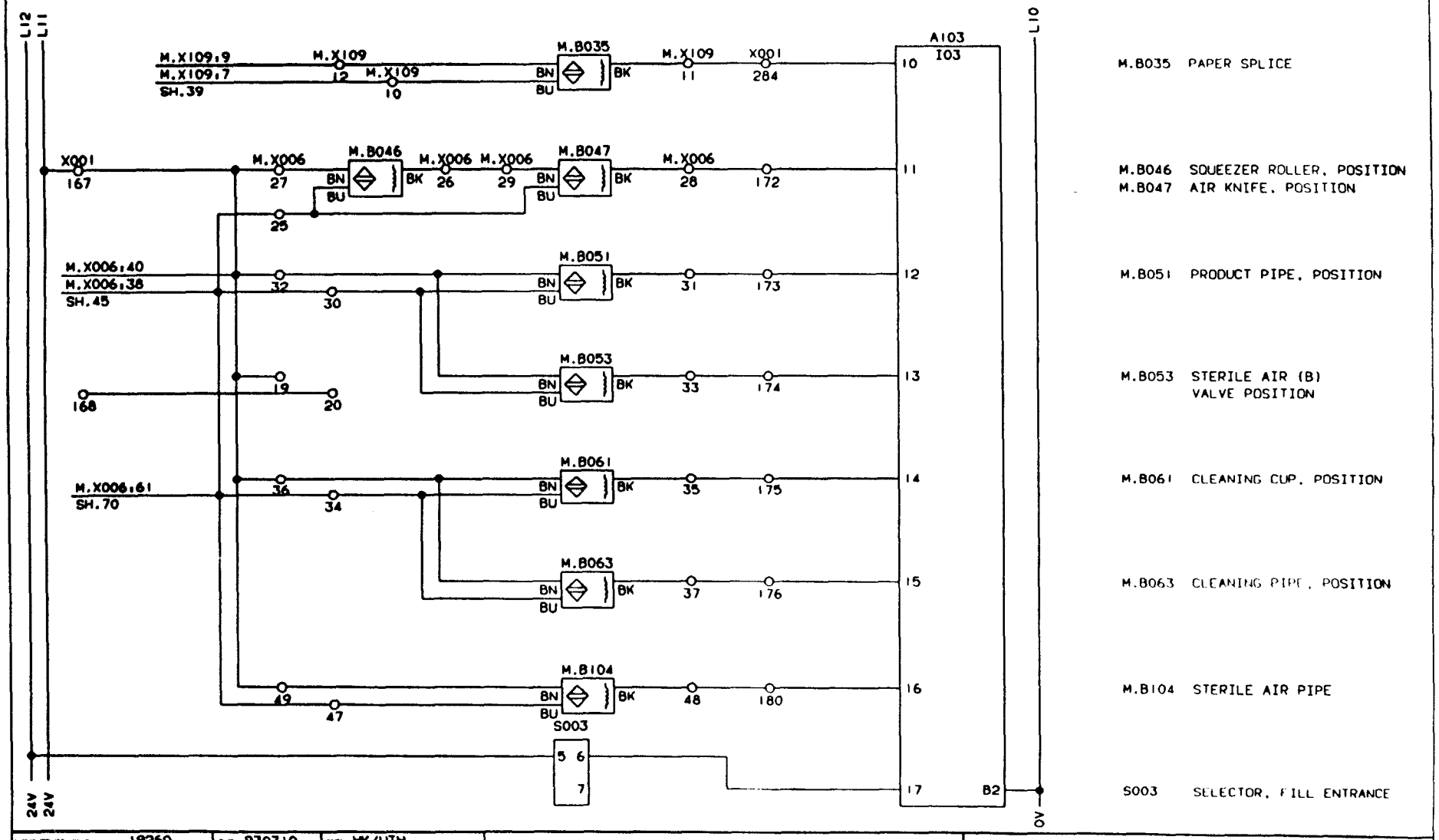

19260	930310	HK/UTH		
A				
20080				
930909				
HK/MRI				

ALTERATIONS ONLY IN CADAM

DESCRIPTION: PLC-IN, OPERATION MONITORS

MACHINE: TBA/9-1401 S.A

44093-40:01

10 51 94.2.28

Tetra Pak
MODENA ITALY

This drawing must not without the consent of Tetra Pak be copied, transmitted or disclosed to any third party.

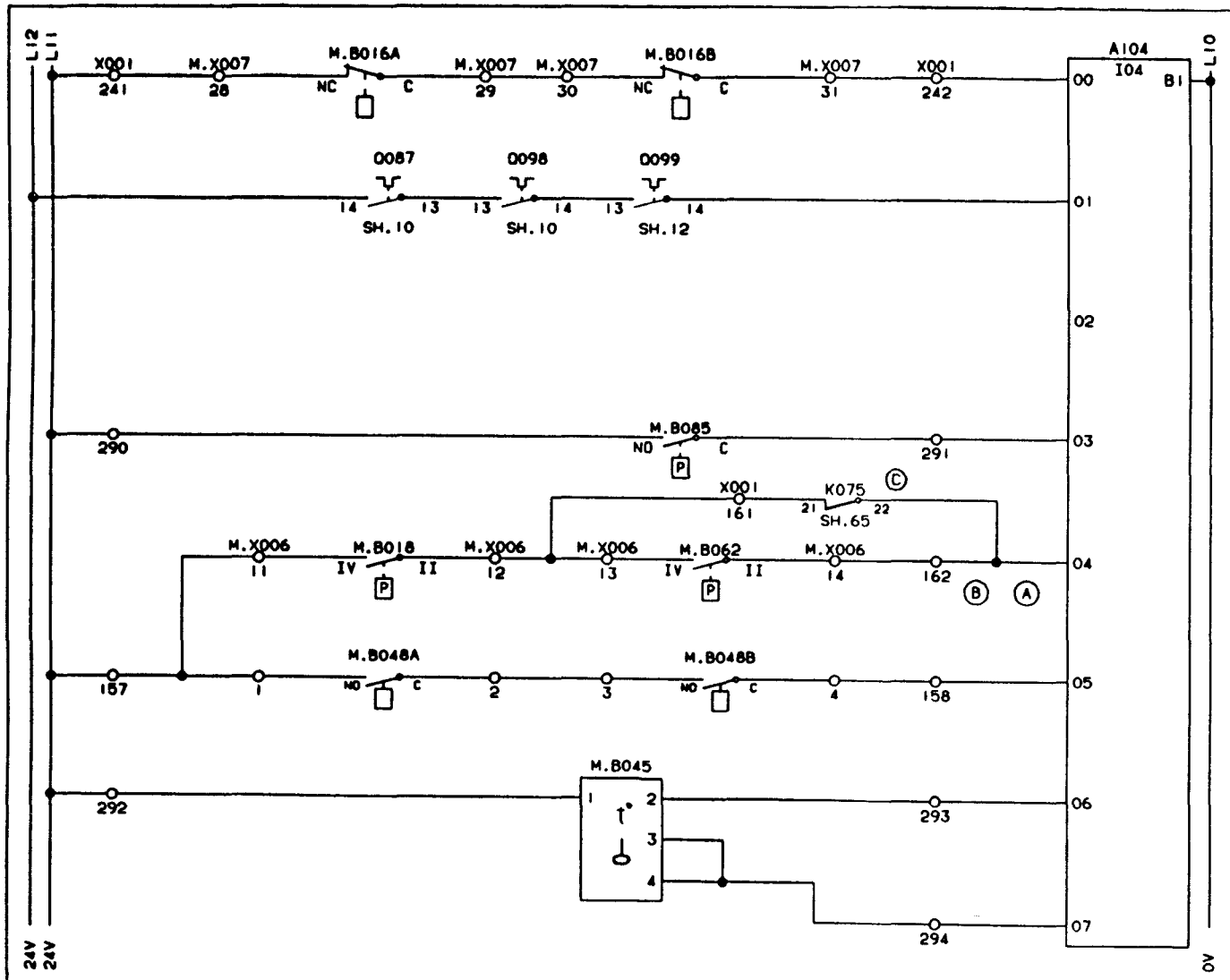

M.B016A JAW SYSTEM OVERLOAD, LEFT
M.B016B JAW SYSTEM OVERLOAD, RIGHT

0087 OVERLOAD PROTECTION
0098 COMPRESSOR
0099 PEROXIDE BATH, WATER PUMP

M.B085 PEROXIDE BATH WATER PRESSURE

M.B018 STERILE AIR PRESSURE, INLET
M.B062 STERILIE AIR PRESSURE, SUCTION

M.B048A, M.B048B PEROXIDE BATH BOTTOM COVER, POSITION

M.B045 HYDRAULIC UNIT TEMPERATURE

LOW LEVEL

	19260	930310	HK/UTH
A			
20080			
930909			
HK/MRI			

ALTERATIONS ONLY IN CADAM

DESCRIPTION: PLC-IN, OPERATION MONITORS

MACHINE: TBA/9-1401 S.A

44093-41:01

10.51 94.2.28

Tetra Pak
LUND SWEDEN

This drawing must not without the consent of Tetra Pak be copied, transmitted or disclosed to any third party.

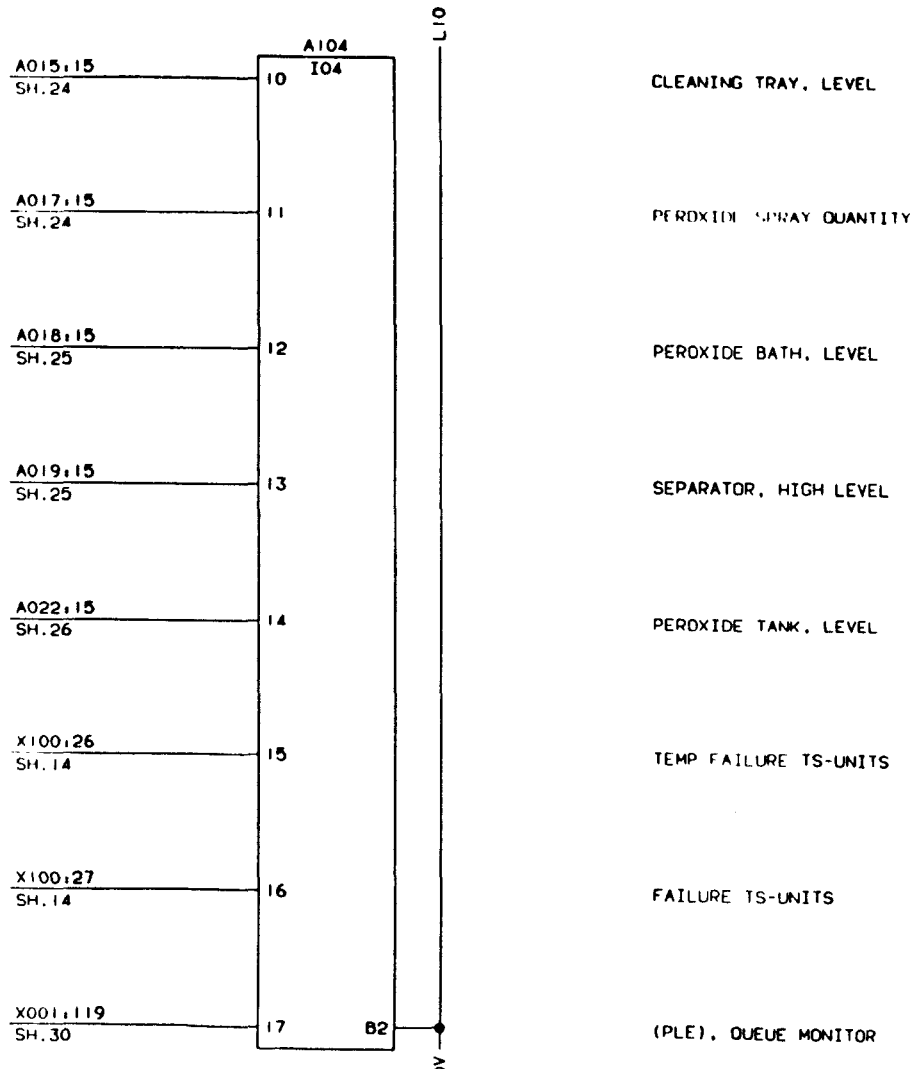

19260	930310	HK/UTH	

ALTERATIONS ONLY IN CADAM

DRAWING REMARKS

DESCRIPTION: PLC-IN

MACHINE: TBA/9-1401 S.A

44093-42:01

Tetra Pak
LUND SWEDEN

This drawing must not without the consent of Tetra Pak be copied, transmitted or disclosed to any third party.

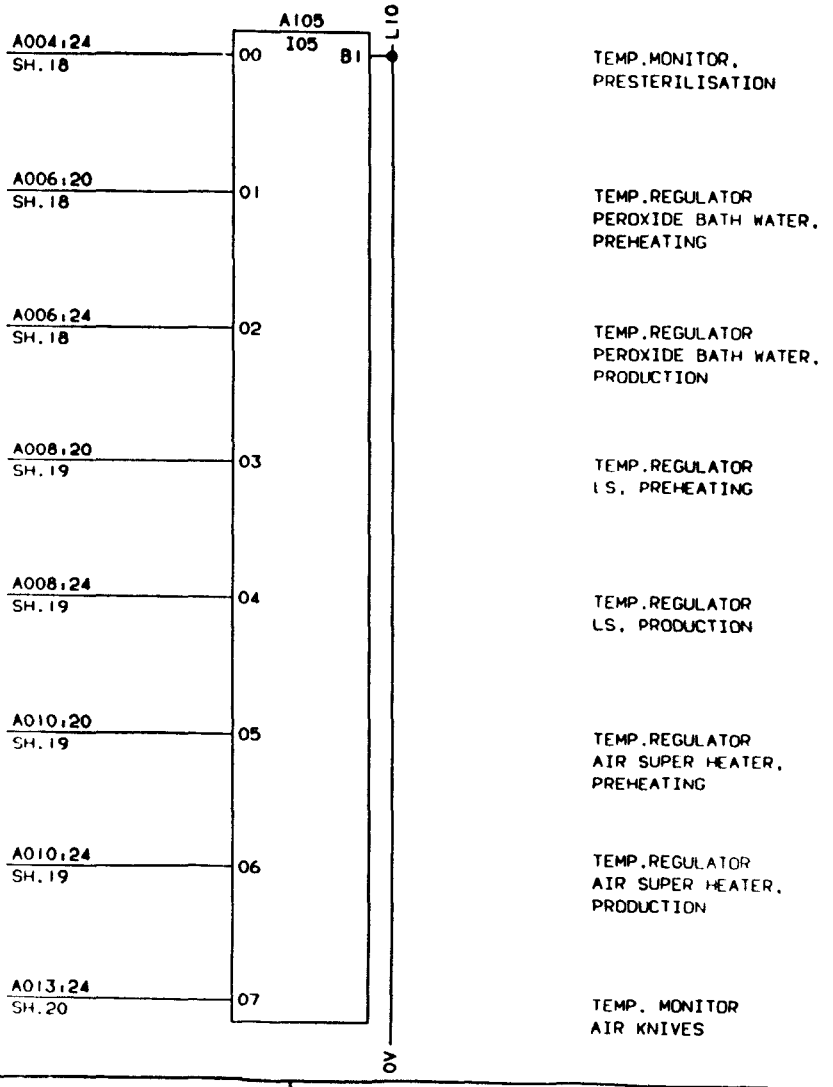

19260	930310	HK/UTH	DESCRIPTION: PLC-IN	
			MACHINE: TBA/9-1401 S.A	44093-43:01

ALTERATIONS ONLY IN CADAM

10.51 94.2.28

Tetra Pak
LUND SWEDEN

This drawing must not without the consent of Tetra Pak be copied, transmitted or disclosed to any third party.

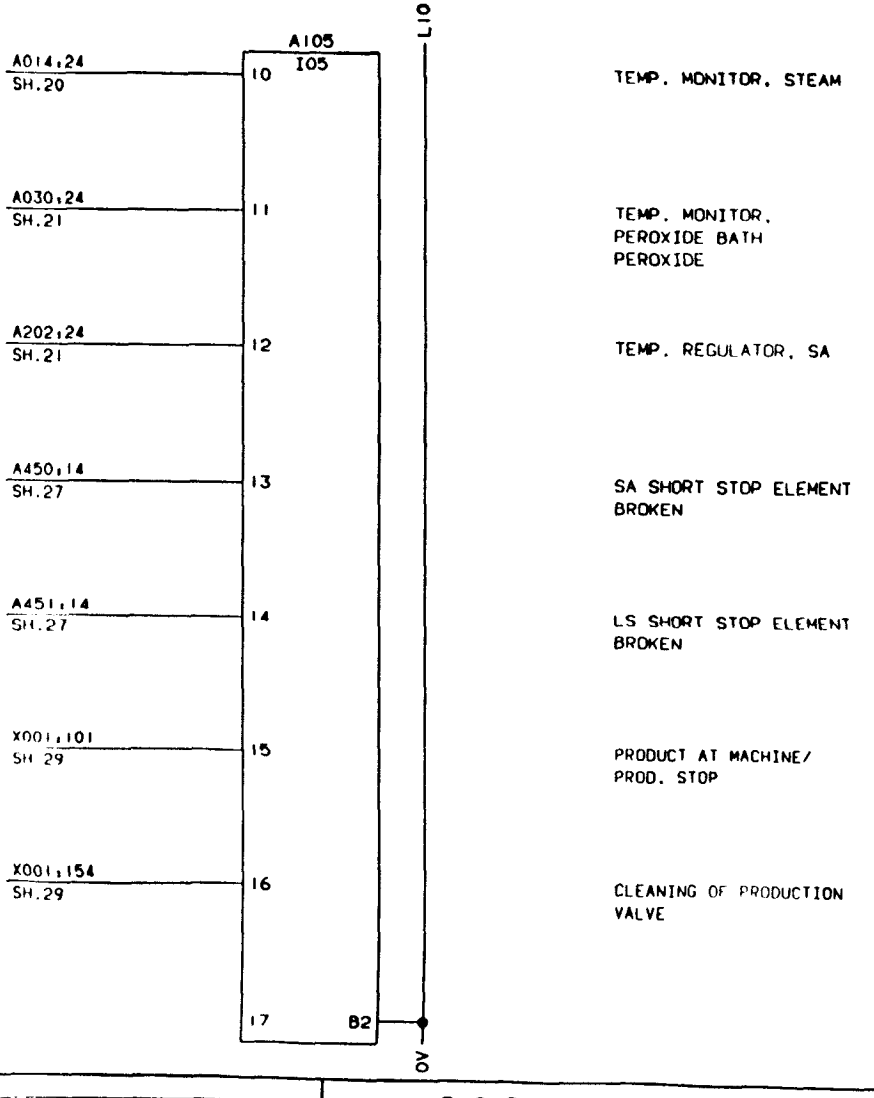

19260	930310	HK/UTH	

ALTERATIONS ONLY IN CADAM

DESCRIPTION. PLC-IN

MACHINE. TBA/9-1401 S.A

44093-44:01

PRE-RELEASED/DEVELOPMENT STATE

This drawing must not without the consent of Tetra Pak: be copied, transmitted or disclosed to any third party.

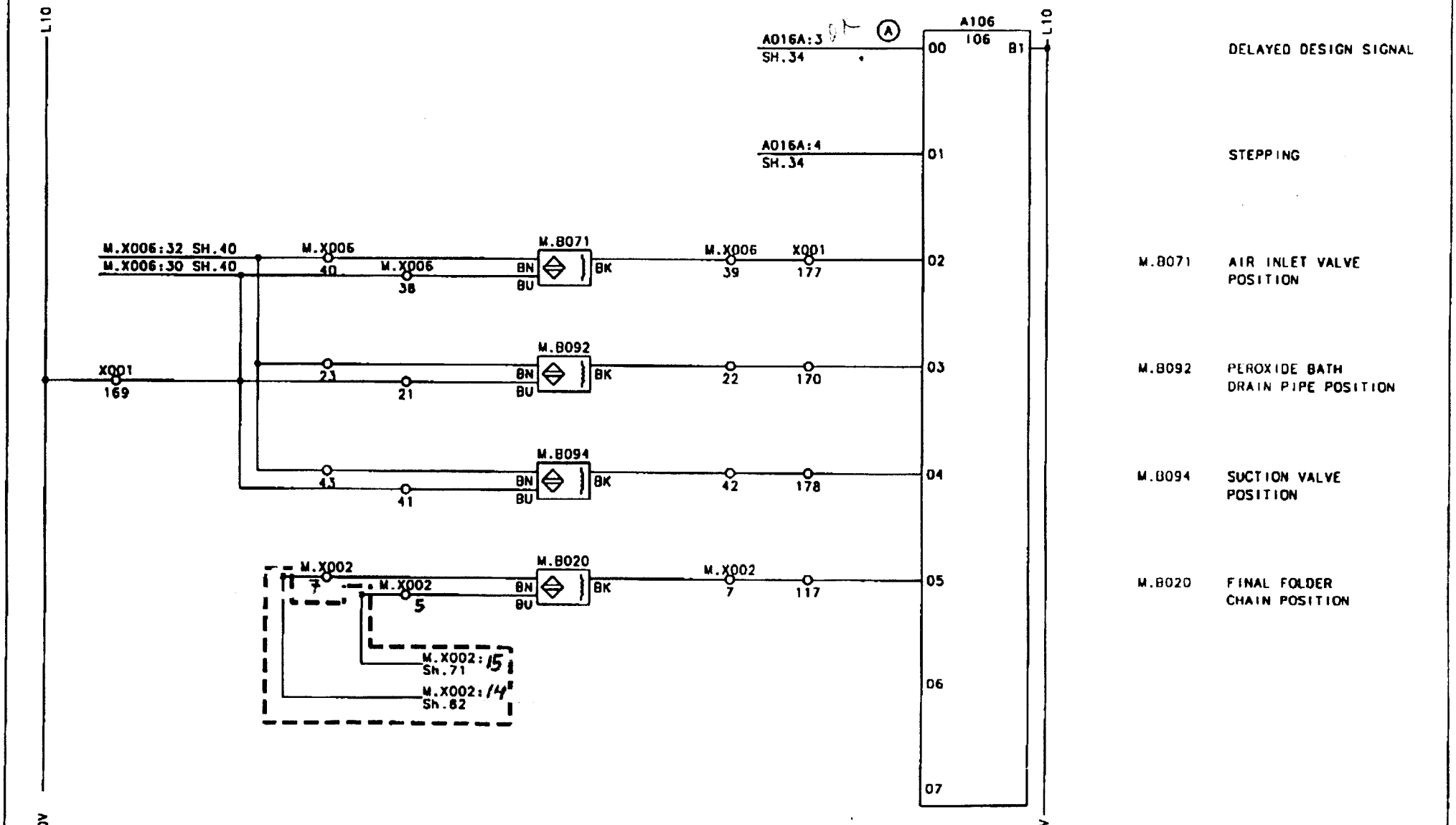

Note	-					Tetra Pak	Designer TEAN	Date 990902	Approved PIH Date 990902	Doc. class -
ECI No.	72800						Machine T8A/9-1401	Description "TETRA WEDGE"		
Sign./Date	TEAN/990902				RK-559491-0100		Company Tetra Brik Packaging Systems AB	Drawing No. RK-44093-45:41		Page -
Appr./Date	PIH/990902				Drawing remarks					

PRE-RELEASED/DEVELOPMENT STATE

This drawing must not without the consent of Tetra Pak: be copied, transmitted or disclosed to any third party.

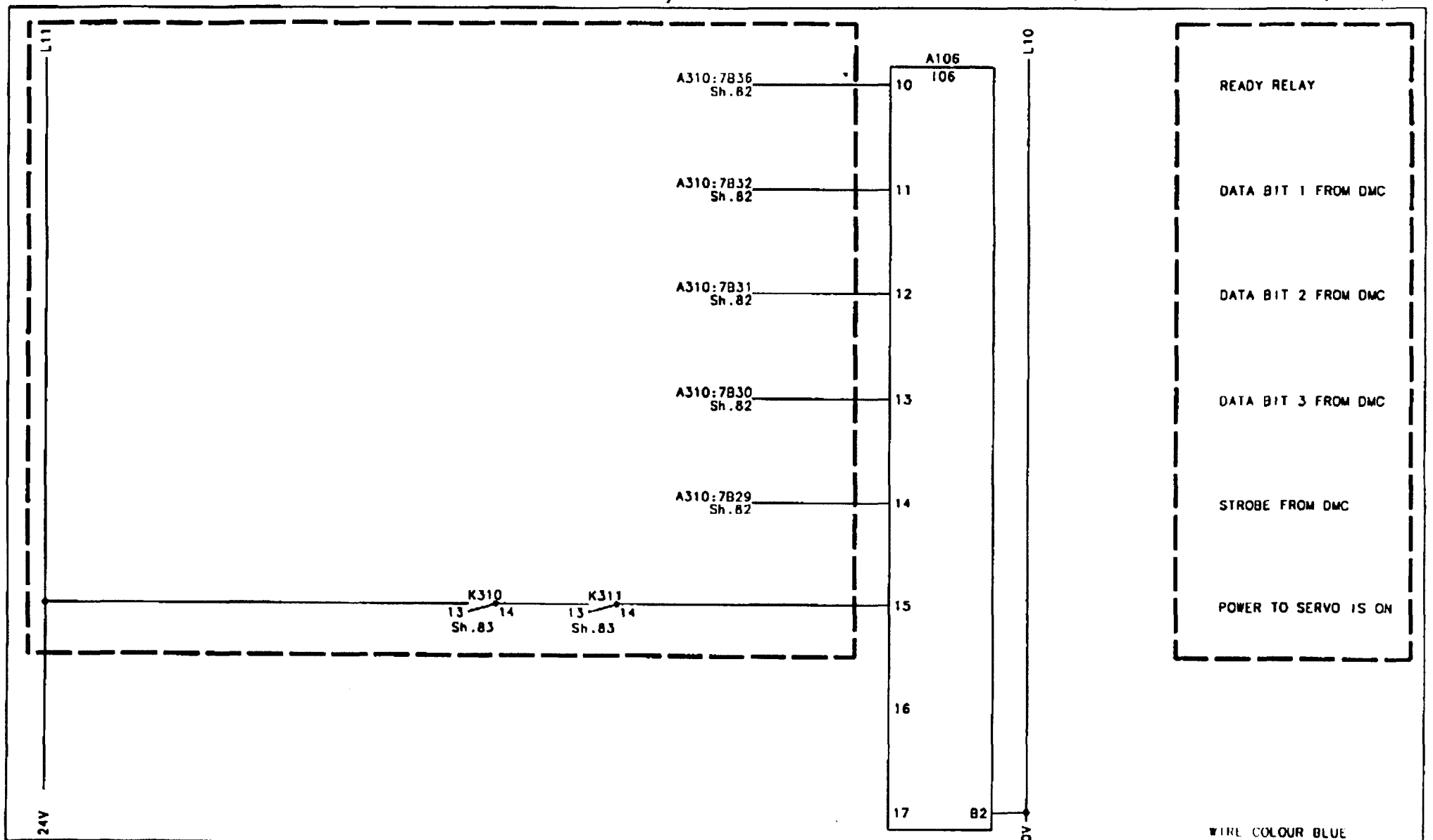

Auto	-	A				Tetra Pak	Designer TEAN	Date 990521	Approved PIH Date 990602	Doc. class -
ECN No.	72526	72600					Machine TBA/9-1401	Denomination "TETRA WEDGE"		
Sign./Date	TEAN/990521	TEAN/990902			RK-559491-0100		Company Tetra Brik Packaging Systems AB	Drawing No RK-44093-46:41		Page -
Appr./Date	PIH/990602	PIH/990902			Drawing remarks					

PRE-RELEASED/DEVELOPMENT STATE

This drawing must not without the consent of Tetra Pak be copied, transmitted or disclosed to any third party.

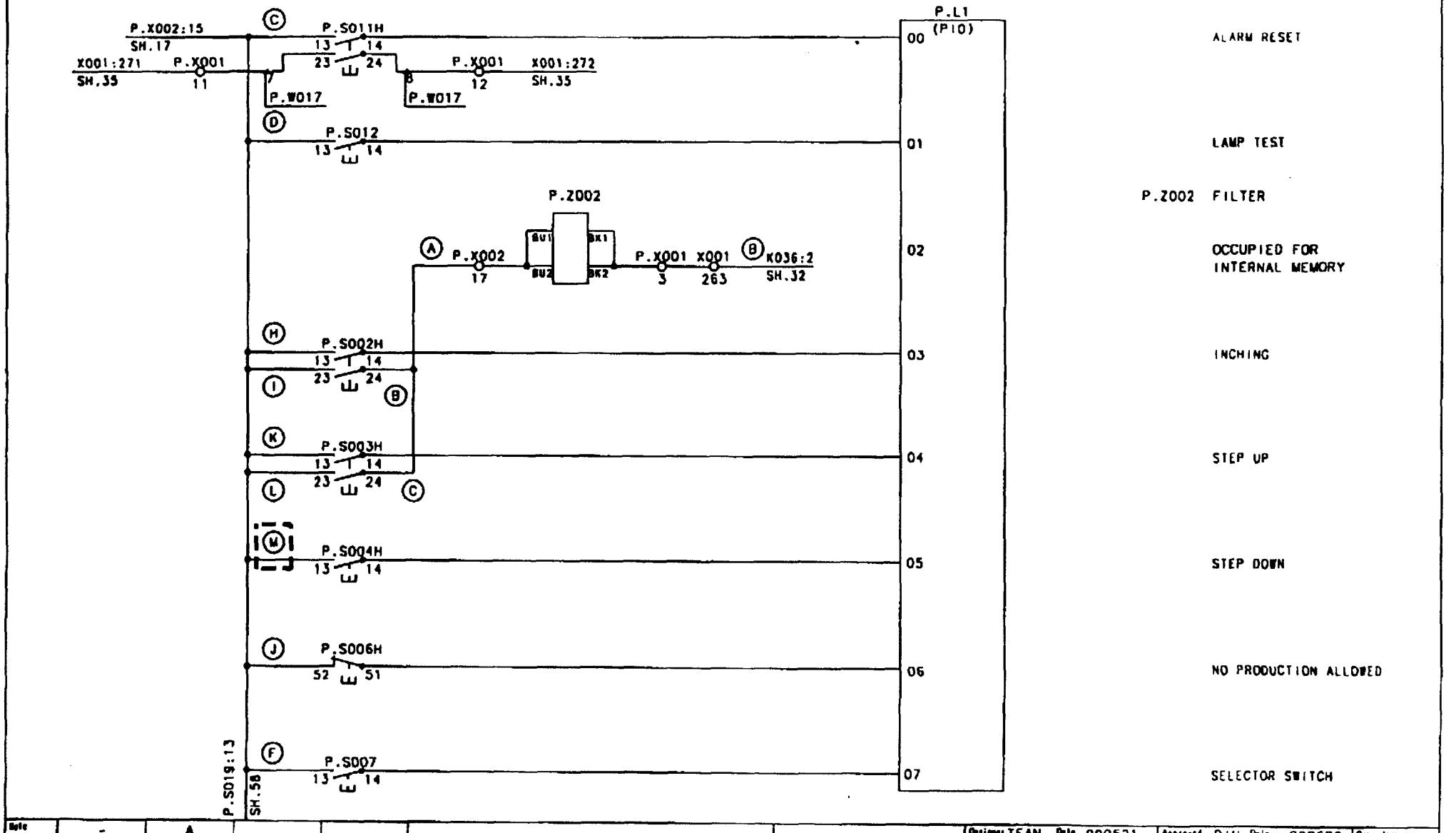

Date	-	A				Designer TEAN	Date 990521	Approved PIH Date 990602	Doc. class -
CDX No.	72526	72800				Tetra Pak	Machine TBA/9-1401	Denomination "TETRA WEDGE"	
Sign./Date	TEAN/990521	TEAN/990902			RK-559491-0100				
Appr./Date	PIH/990602	PIH/990902			Drawing remarks	Company Tetra Brik Packaging Systems AB		Drawing No. RK-44093-57:41	Page -

PRE-RELEASED/DEVELOPMENT STATE

This drawing must not without the consent of Tetra Pak be copied, transmitted or disclosed to any third party.

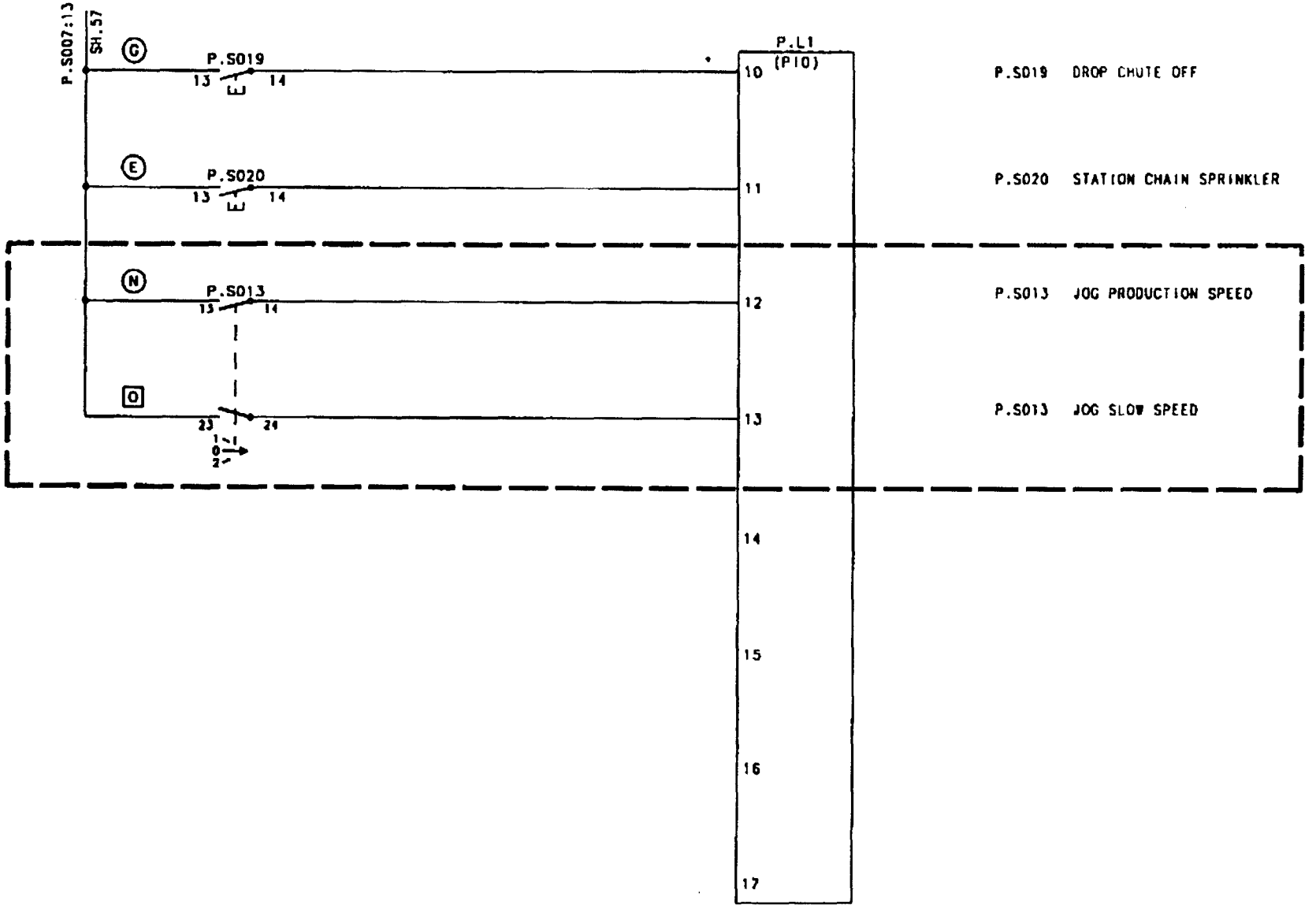

Date	-	A				Designer TEAN	Date 990521	Approved PIH Date 990602	Doc. class -
EDB No.	72526	72600				Machine TBA/9-1401	Description "TETRA WEDGE"		
Sign./Date	TEAN/990521	TEAN/990902			RK-559491-0100				
Appr./Date	PIH/990602	PIH/990902			Drawing remarks	Company Tetra Brik Packaging Systems AB	Drawing No. RK-44093-58:41		Page -

Tetra Pak

Tetra Pak
LUND SWEDEN

This drawing must not without the consent of Tetra Pak be copied, transmitted or disclosed to any third party.

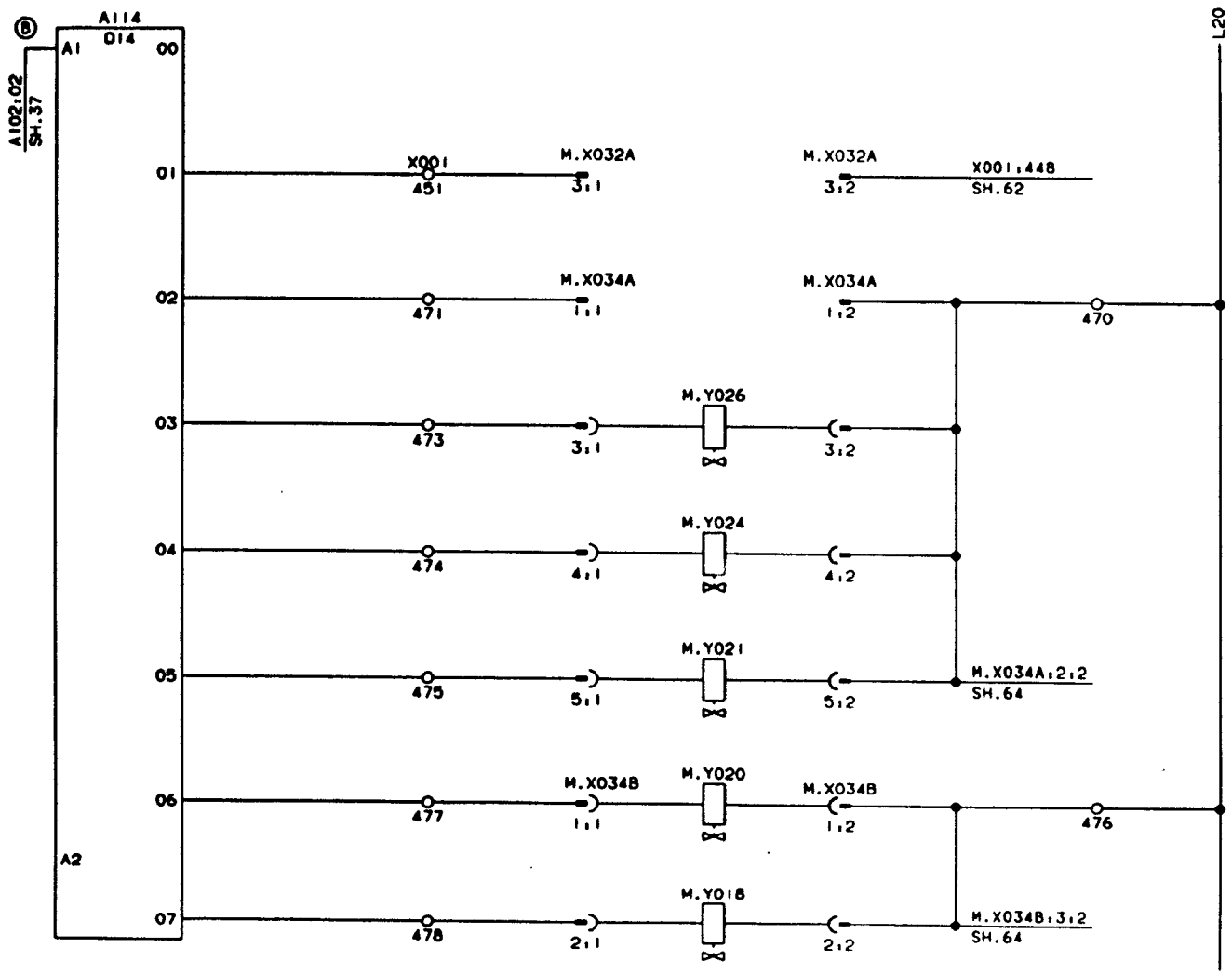

M.Y026 LS COUNTER ROLLER SHORT STOP

M.Y024 LS-ELEMENT, MOVEMENT

M.Y021 AIR KNIFE, SQUEEZER ROLLER

M.Y020 SHORT STOP, ELEMENT, MOVEMENT

M.Y018 PEROXIDE BATH, TOP, FILLING

19260	930310	HK/UTH	

ALTERATIONS ONLY IN CADAM

DESCRIPTION: PLC-OUT, VALVES

MACHINE: TBA/9-1401 S.A

44093-61:01

10.51 94.2.28

Tetra Pak
MODENA ITALY

This drawing must not without the consent of Tetra Pak be copied, transmitted or disclosed to any third party.

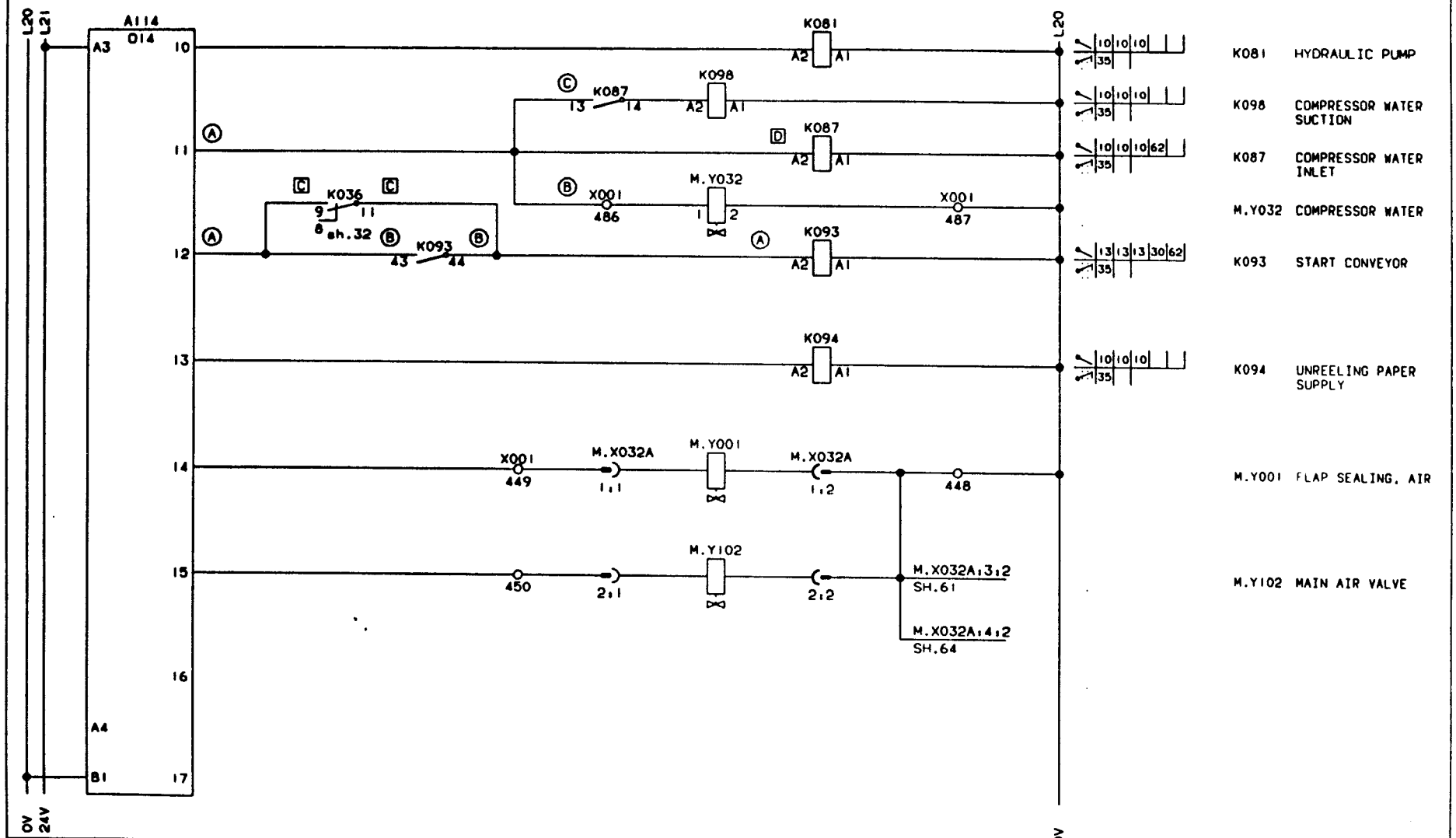

K081 HYDRAULIC PUMP

K098 COMPRESSOR WATER SUCTION

K087 COMPRESSOR WATER INLET

M.Y032 COMPRESSOR WATER

K093 START CONVEYOR

K094 UNREELING PAPER SUPPLY

M.Y001 FLAP SEALING, AIR

M.Y102 MAIN AIR VALVE

19260	930310	HK/UTH	
A			
20080			
930909			
HK/MR1			

ALTERATIONS ONLY IN CADAM

DESCRIPTION: PLC OUT. EMERGENCY MODULE

MACHINE: TBA/9-1401 S.A

44093-62:01

10.51 94.2.28

Tetra Pak
LUND SWEDEN

This drawing must not without the consent of Tetra Pak be copied, transmitted or disclosed to any third party.

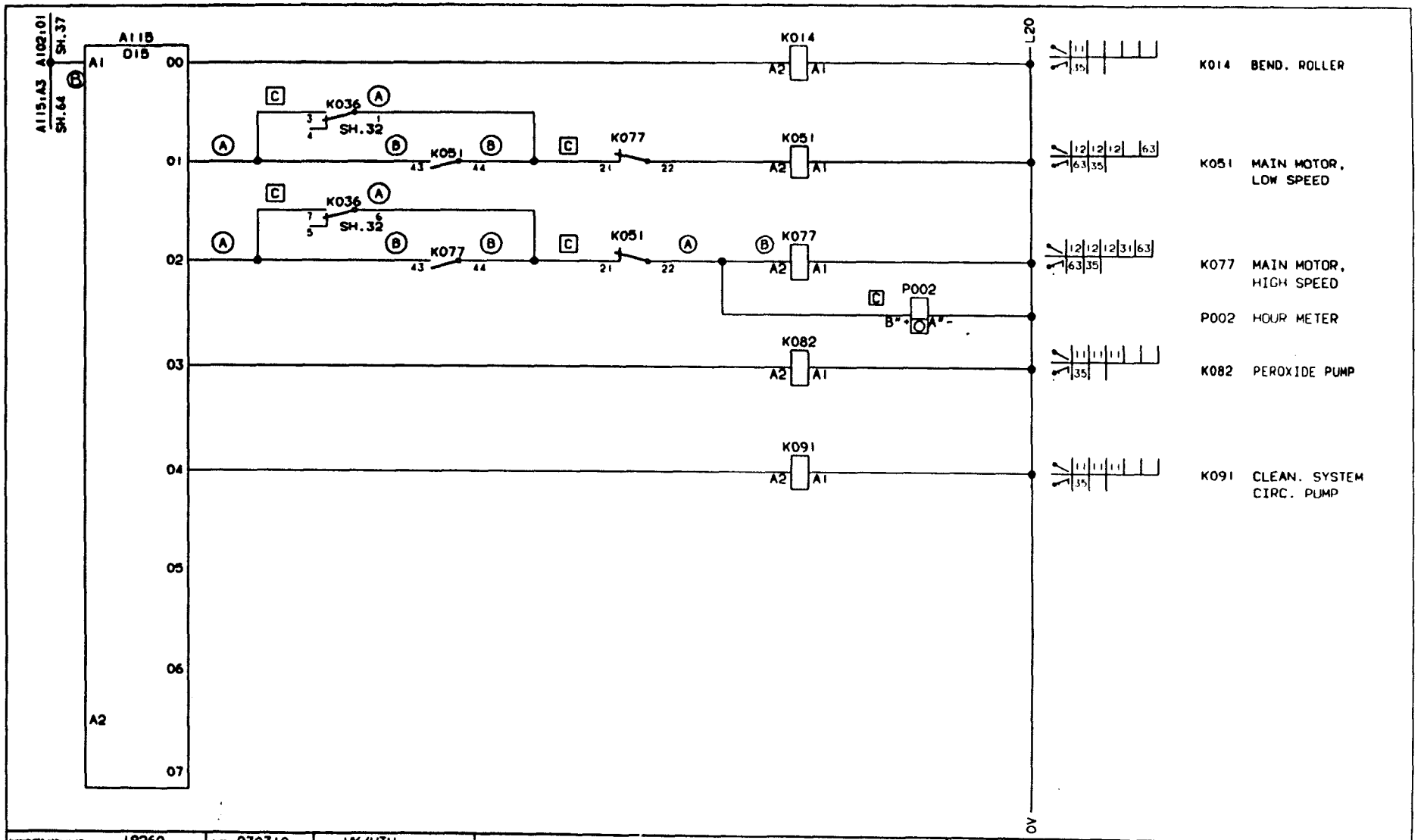

19260	930310	HK/UTH	

ALTERATIONS ONLY IN CADAM

DESCRIPTION: PLC OUT, CONTACTORS

MACHINE: TBA/9-1401 S.A

44093-63:01

10.51 94.2.28

Tetra Pak
MODENA ITALY

This drawing must not without the consent of Tetra Pak be copied, transmitted or disclosed to any third party.

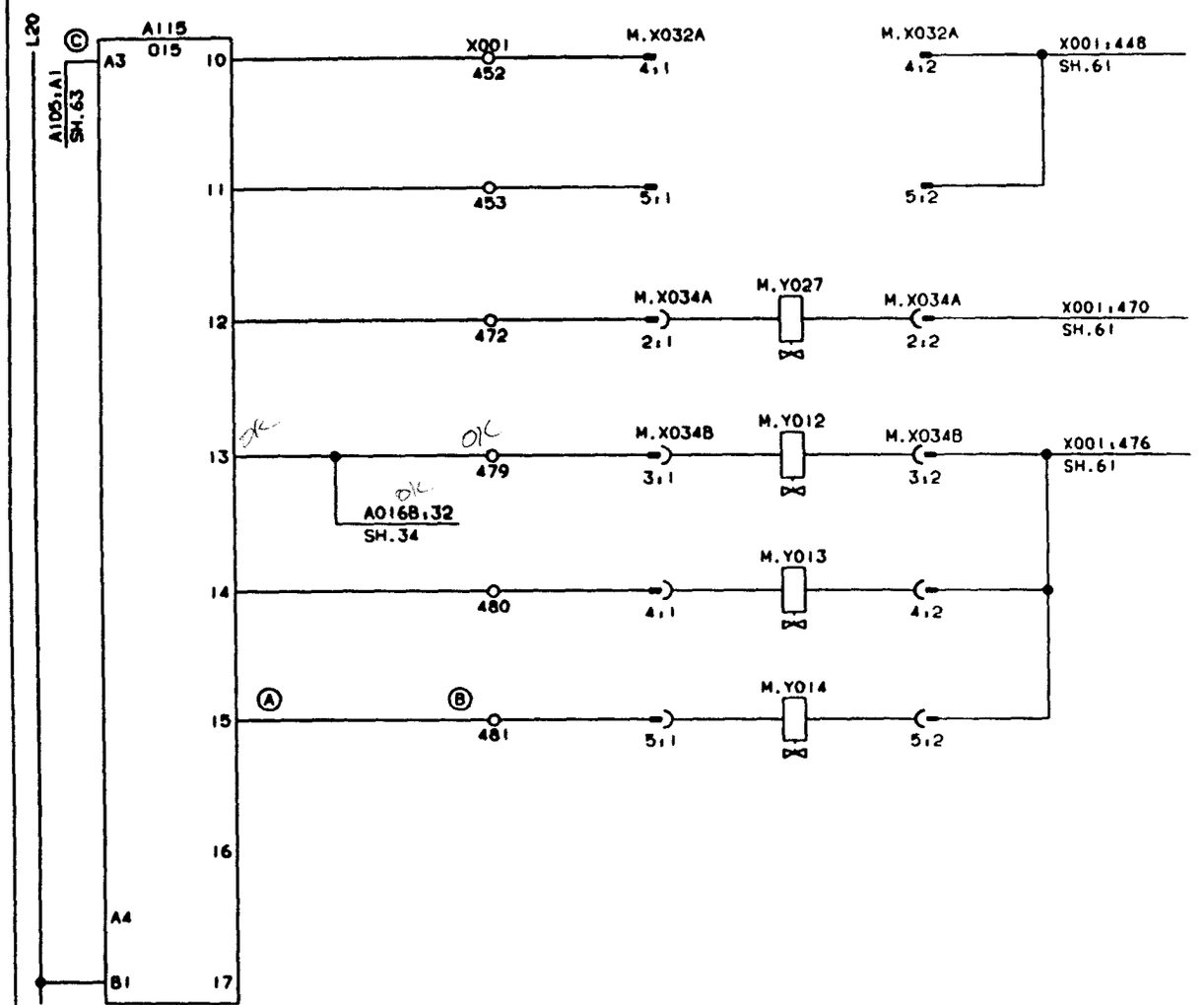

M.Y027 DROP CHUTE

M.Y012 PRE CORRECTION

M.Y013 AUTO CORRECTION LEFT

M.Y014 AUTO CORRECTION RIGHT

	19260	930310	HK/UTH	
	A			
	20080			
	930909			
	HK/MR			

ALTERATIONS ONLY IN CADAM

DRAWING READY

DESCRIPTION: PLC-OUT, VALVES

MACHINE: TBA/9-1401 S.A

44093-64:01

10.51 94.2 25

Tetra Pak
LUND SWEDEN

This drawing must not without the consent of Tetra Pak be copied, transmitted or disclosed to any third party.

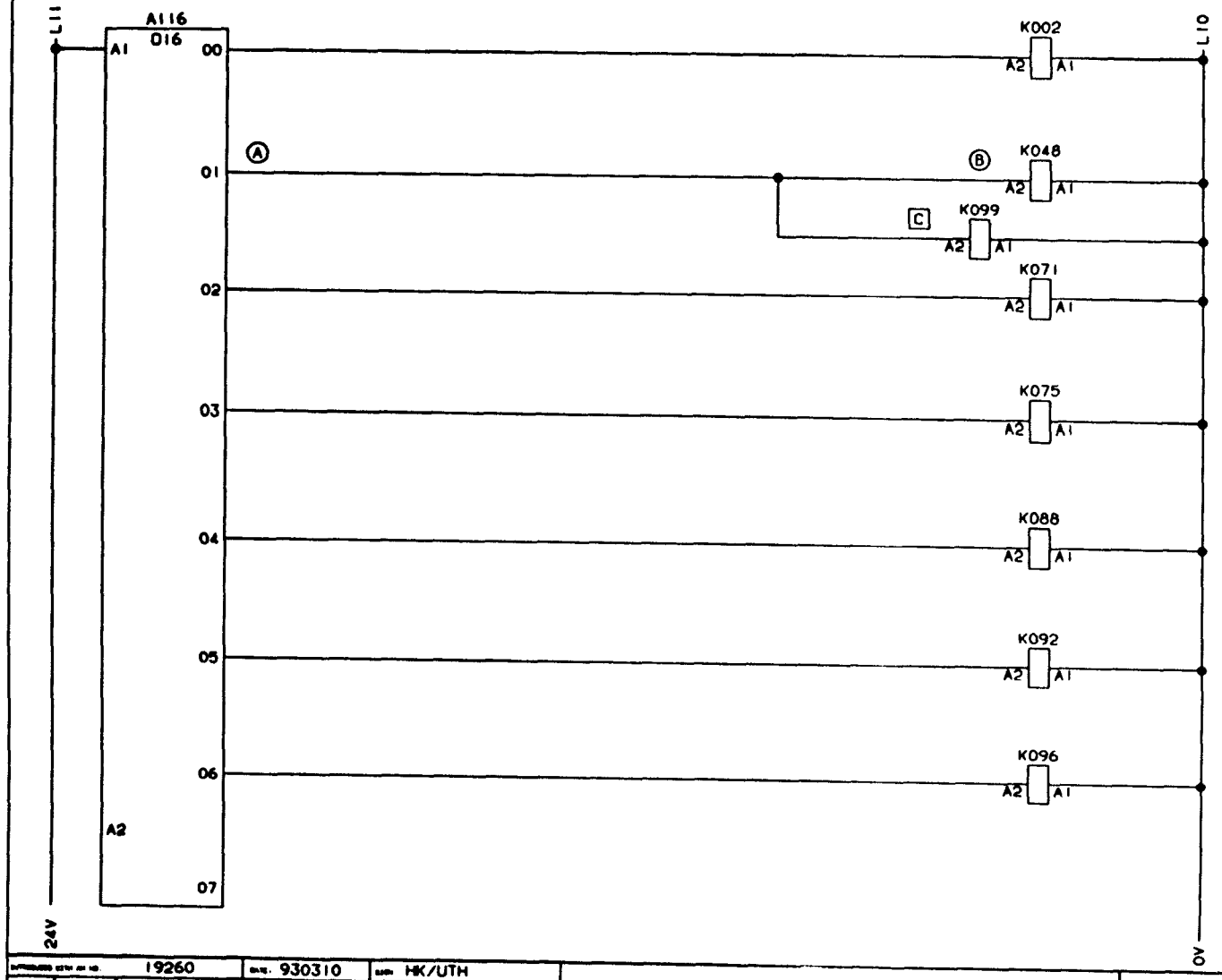

	19260	930310	HK/UTH

ALTERATIONS ONLY IN CADAM

DESCRIPTION: PLC-OUT, CONTACTORS

MACHINE: TBA/9-1401 S.A

44093-65:01

10.51 94.2.25

PRE-RELEASED/DEVELOPMENT STATE

This drawing must not without the consent of Tetra Pak be copied, transmitted or disclosed to any third party.

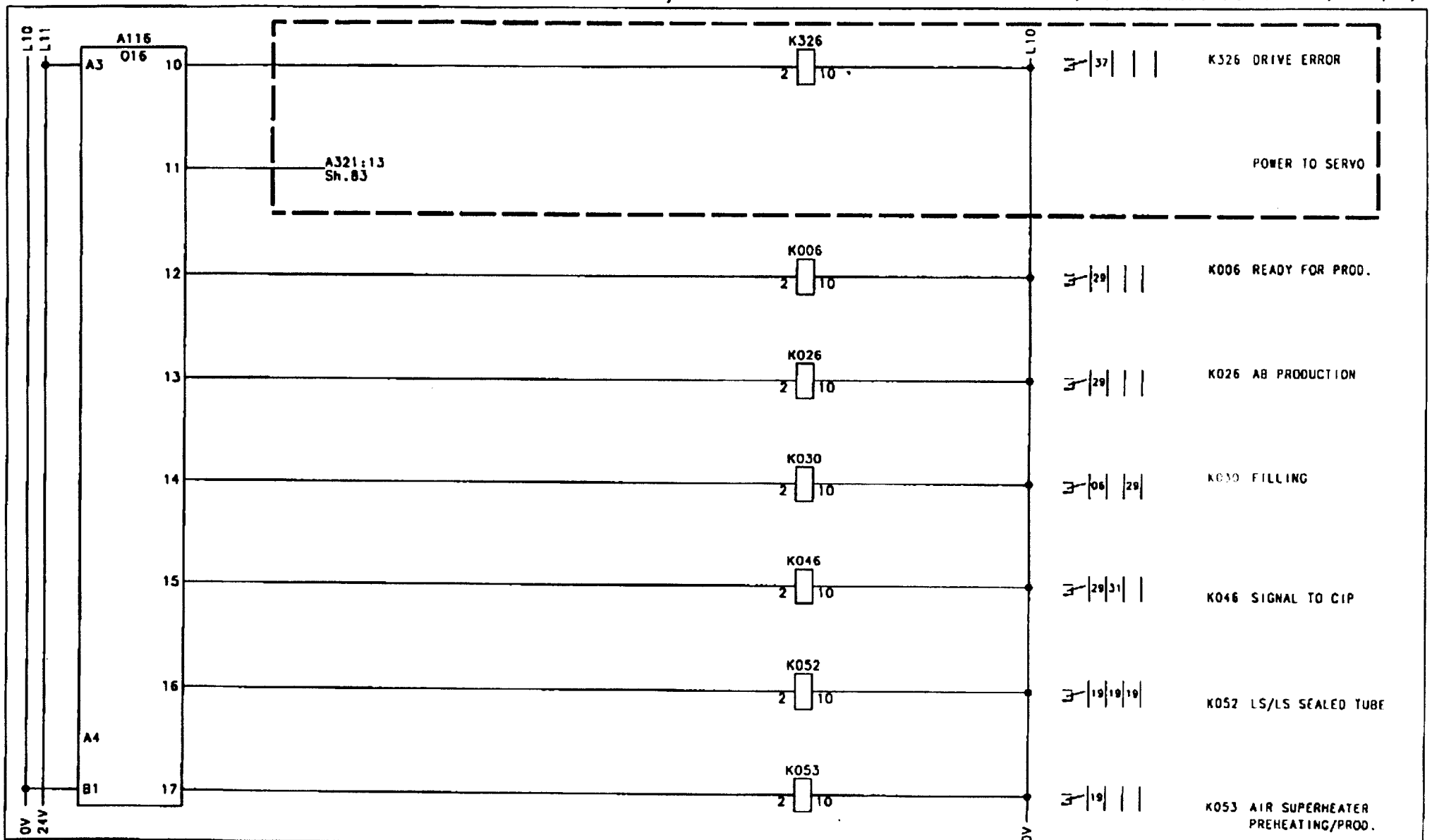

Mats	-	A				Designer TEAN	Date 990521	Approved PIH Date 990602	Doc. class -
ECR No.	72526	72800				Machine T8A/9-1401	Description "TETRA WEDGE"		
Sign./Date	TEAN/990521	TEAN/990902	RK-559491-0100		Tetra Pak	Company Tetra Brik Packaging Systems AB	Drawing No. RK-44093-66:41		Page -
Appr./Date	PIH/990602	PIH/990902	Drawing remarks						

PRE-RELEASED/DEVELOPMENT STATE

This drawing must not without the consent of Tetra Pak be copied, transmitted or disclosed to any third party.

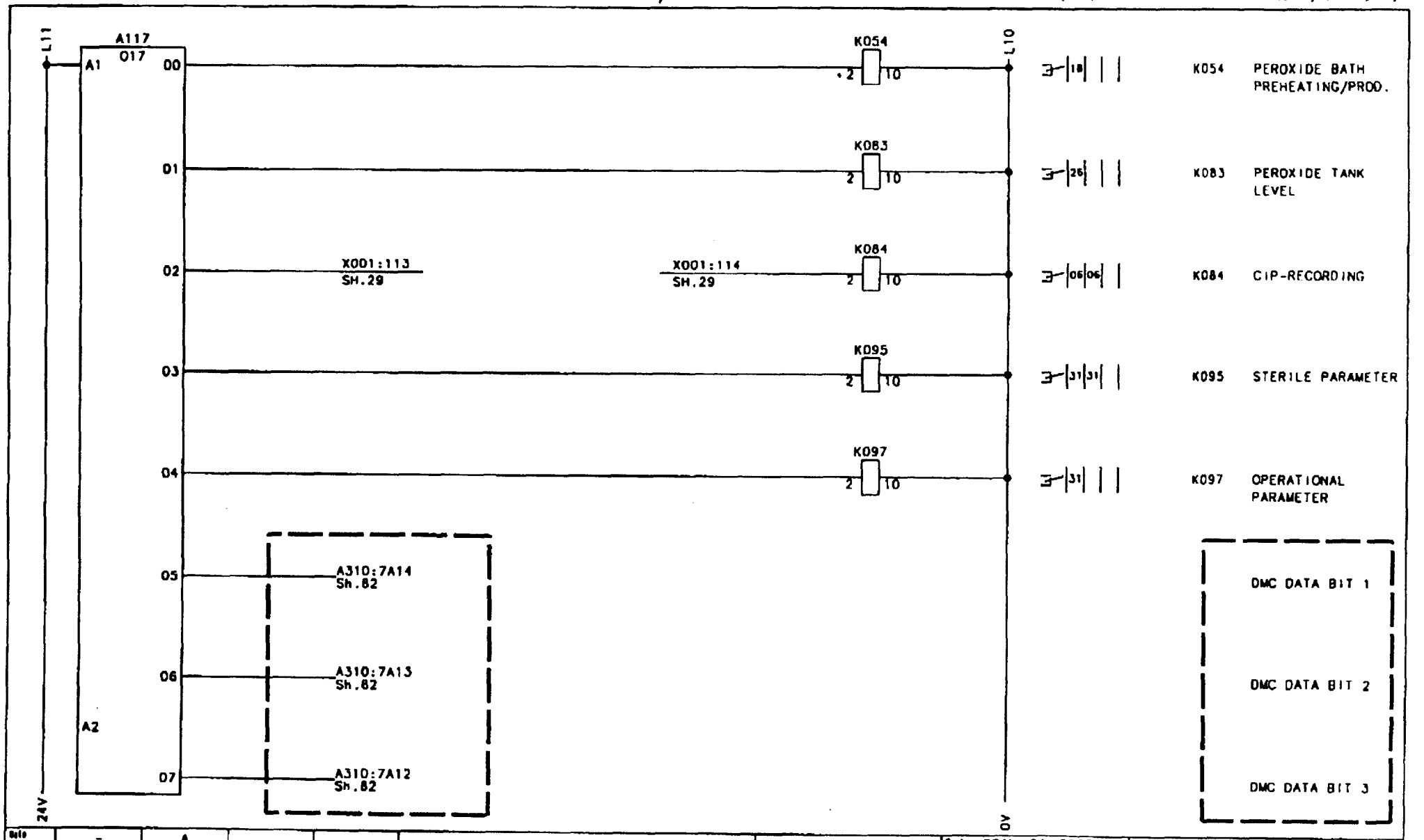

Date	-	A				Tetra Pak	Designer TEAN Date 990521	Approved PIH Date 990602	Doc. class -
ECR No.	72526	72800					Machine TBA/9-1401	Designation "TETRA WEDGE"	
Sign./Date	TEAN/990521	TEAN/990902			RK-559491-0100		Company Tetra Brik Packaging Systems AB	Drawing No. RK-44093-67:41	Page -
Appr./Date	PIH/990602	PIH/990902			Drawing remarks				

Tetra Pak
MODENA ITALY

This drawing must not without the consent of Tetra Pak be copied, transmitted or disclosed to any third party

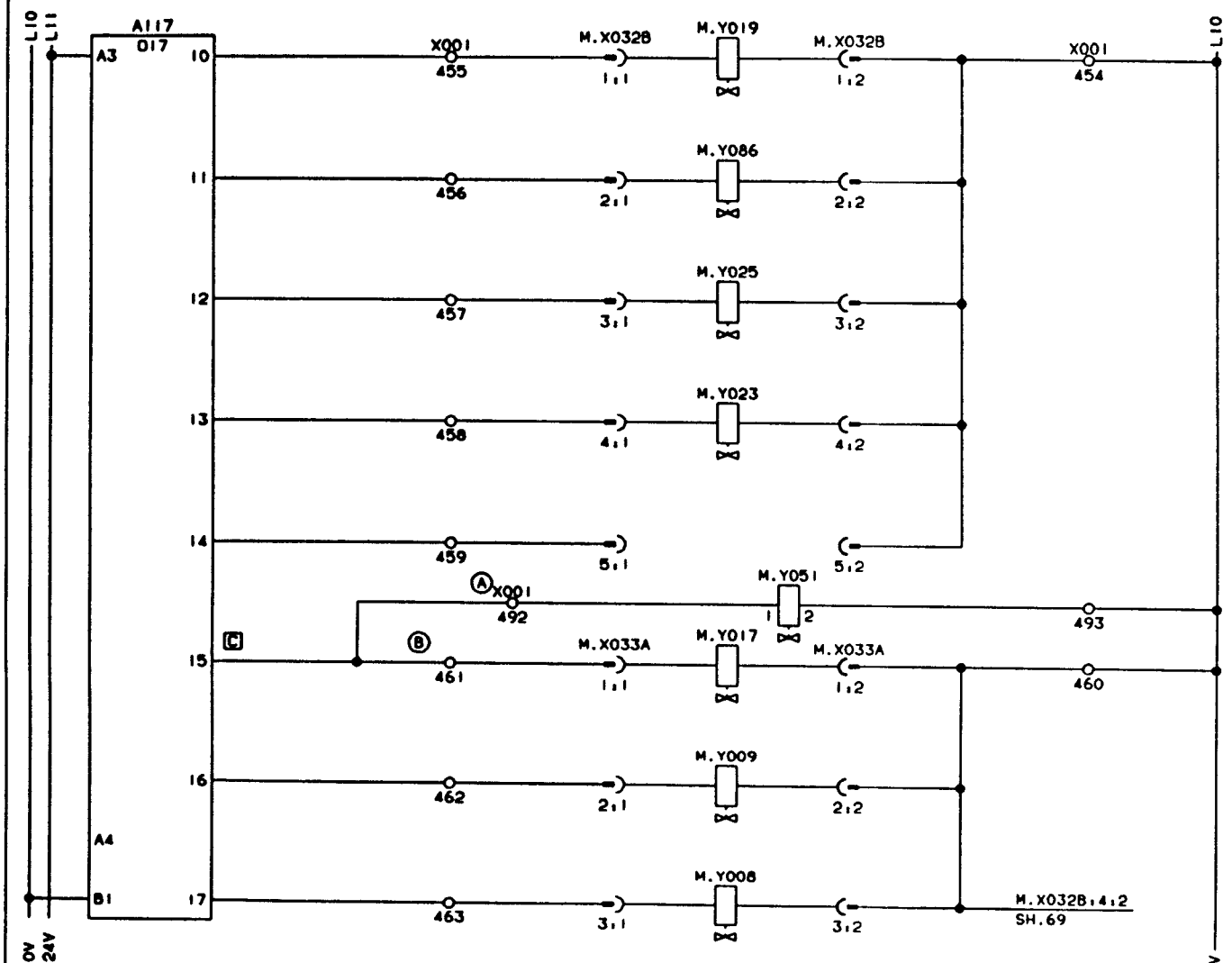

M.Y019 AIR INLET VALVE

M.Y086 VACUUM VALVE

M.Y025 HEAT EXHANGER VALVE

M.Y023 SUCTION VALVE

M.Y051 AIR INJECTION, COOLING WATER

M.Y017 CENTRAL LUBRUCATION, PUMP

M.Y009 PRODUCT, VALVE (A)

M.Y008 STERILE AIR, VALVE (B)

DRAWING WITH NO	19260	DATE 930310	DRAWN HK/UTH
ISSUE	A		
ECN NO	20080		
DATE	930909		
DRAWN	HK/MR1		

ALTERATIONS ONLY IN CADAM

DESCRIPTION: PLC-OUT, VALVES

MACHINE: TBA/9-1401 S.A

44093 68:01

10.51 94.2.28

Tetra Pak
LUND SWEDEN

This drawing must not without the consent of Tetra Pak be copied, transmitted or disclosed to any third party.

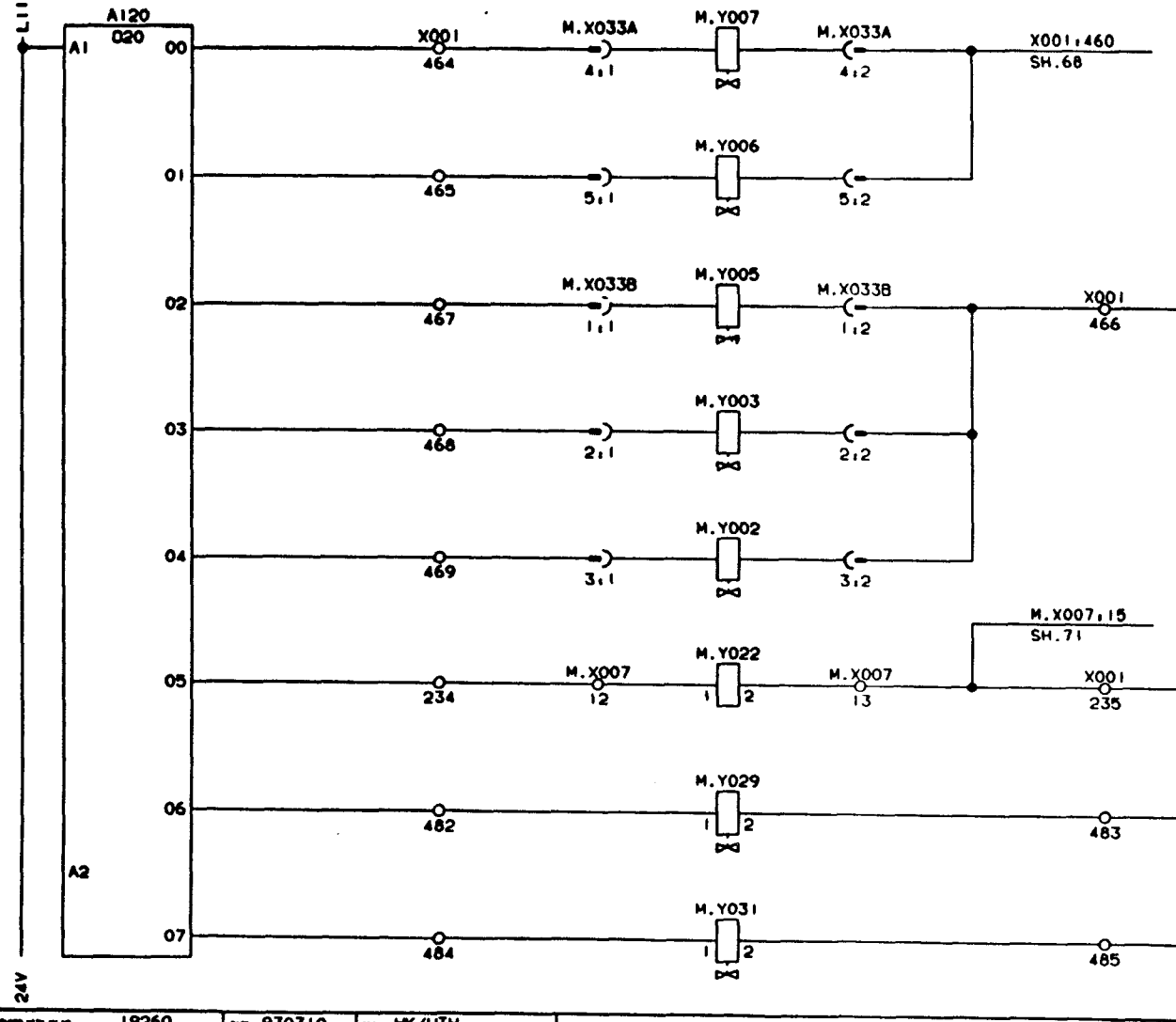

M.Y007 STEAM BARRIER VALVE (C)

M.Y006 PEROXIDE BATH, FILLING, DRAINING

M.Y005 PEROXIDE BATH, DRAINING

M.Y003 WASTE PACKAGES, AIR BLOWING

M.Y002 CLEANING TRAY, DRAINING

M.Y022 MAIN MACHINE CLUTCH

M.Y029 CLEANING SYSTEM HOT WATER

M.Y031 FINAL FOLDER SPRINKLER

	19260	930310	HK/UTH

ALTERATIONS ONLY IN CADAM

DESCRIPTION: PLC-OUT, VALVES

MACHINE: TBA/9-1401 S.A

44093-69:01

This drawing must not without the consent of Tetra Pak be copied, transmitted or disclosed to any third party.

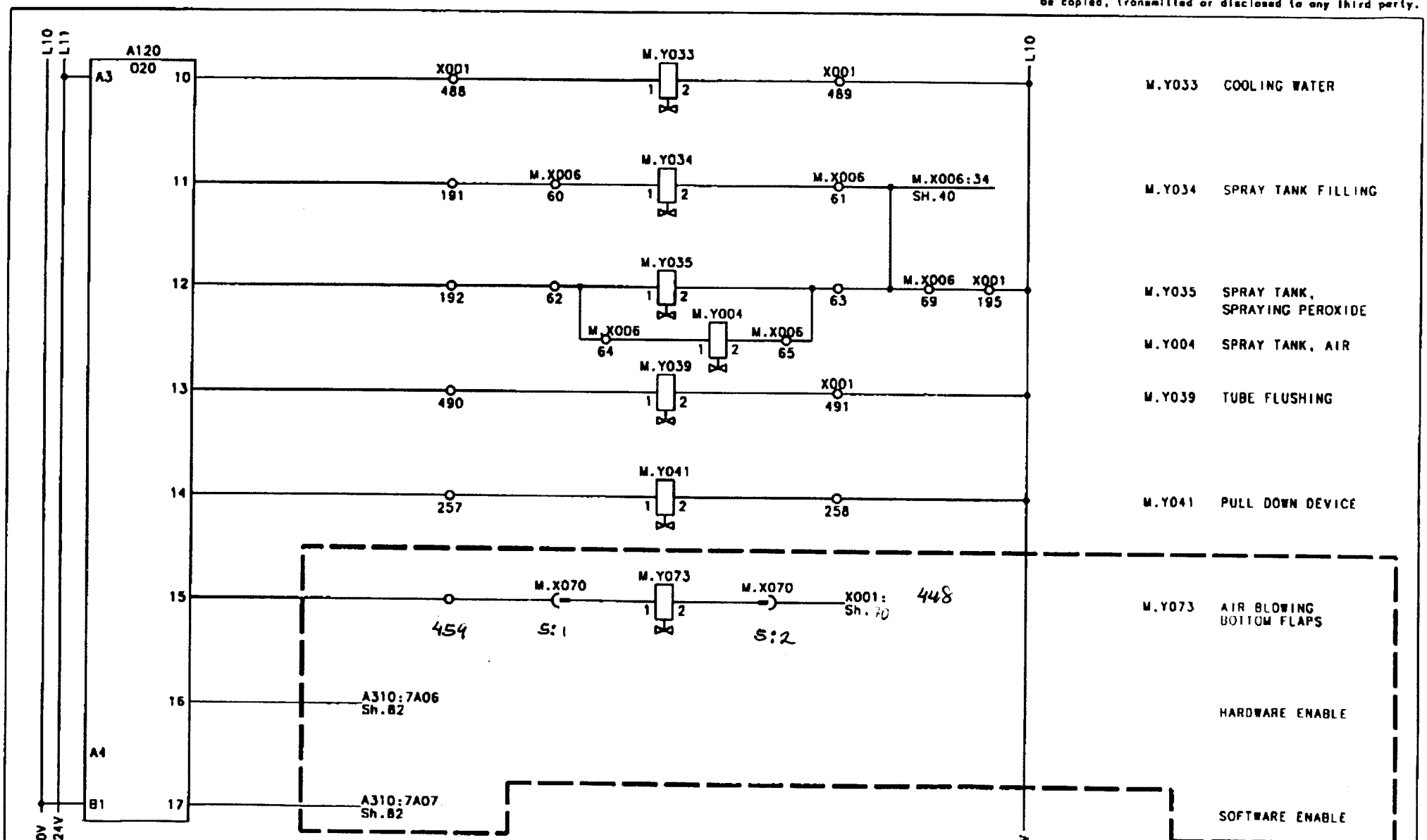

Note	-					Tetra Pak	Designer TEAN	Date 000104	Approved PIH Date 000315 Doc. class -
CDB No.	73349						Machine TBA/9-1401	Description "TETRA WEDGE"	
Sign./Note	TEAN/000104					Company Tetra Brik Packaging Systems AB		Drawing No. RK-44093-70:43	Page -
Appr./Note	PIH/000315				Drawing remarks				

This drawing must not without the consent of Tetra Pak be copied, transmitted or disclosed to any third party.

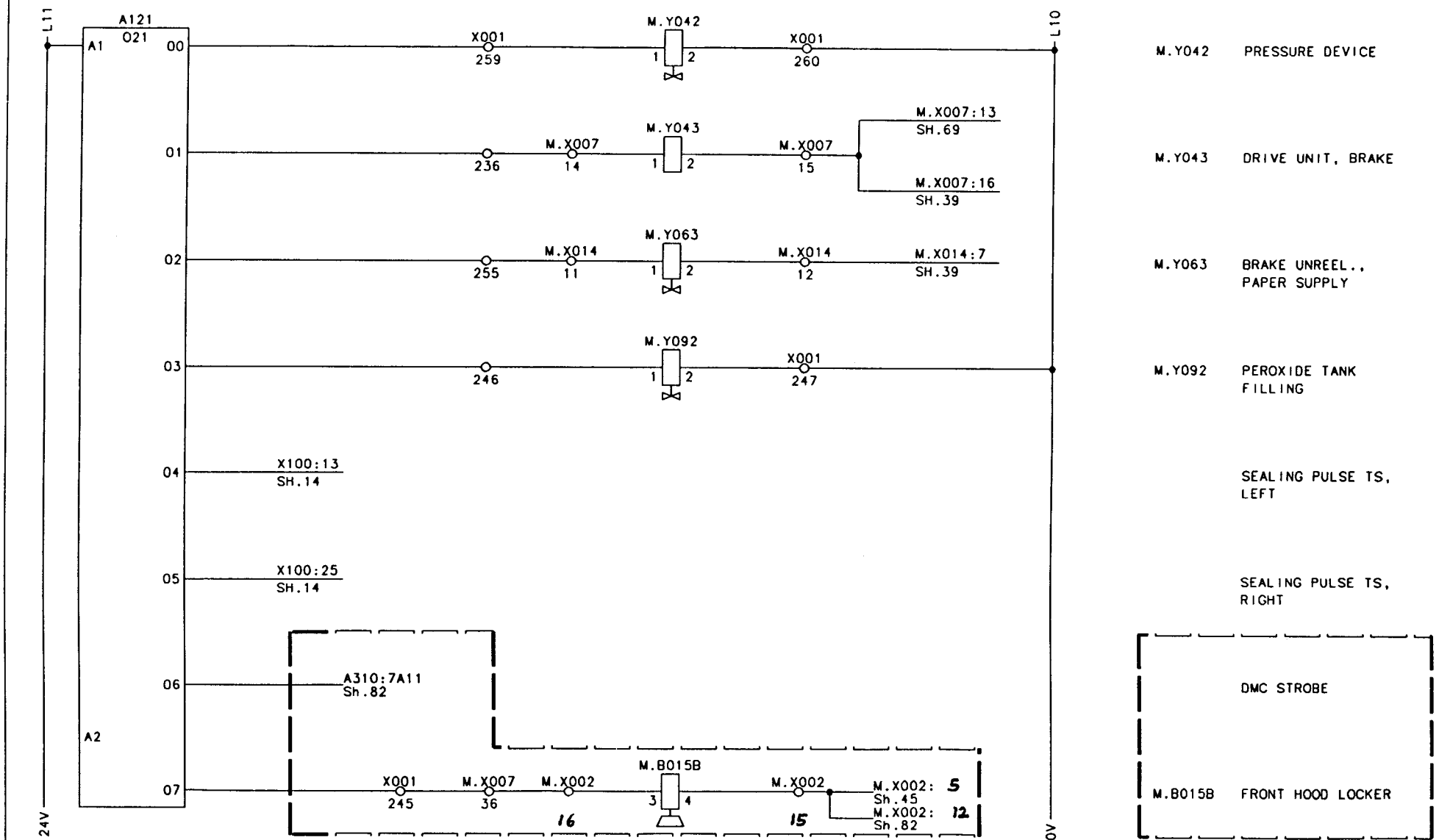

Date	-	A				Designer TEAN	Date 990521	Approved PIH	Date 990602	Doc. class -
ECN No.	72526	72800				Machine TBA/9-1401	Denomination "TETRA WEDGE"			
Sign./Date	TEAN/990521	TEAN/990902			RK-559491-0100	Company Tetra Brik Packaging Systems AB	Drawing No. RK-44093-71:41			Page -
Appr./Date	PIH/990602	PIH/990902			Drawing remarks					

Tetra Pak

This drawing must not without the consent of Tetra Pak be copied, transmitted or disclosed to any third party.

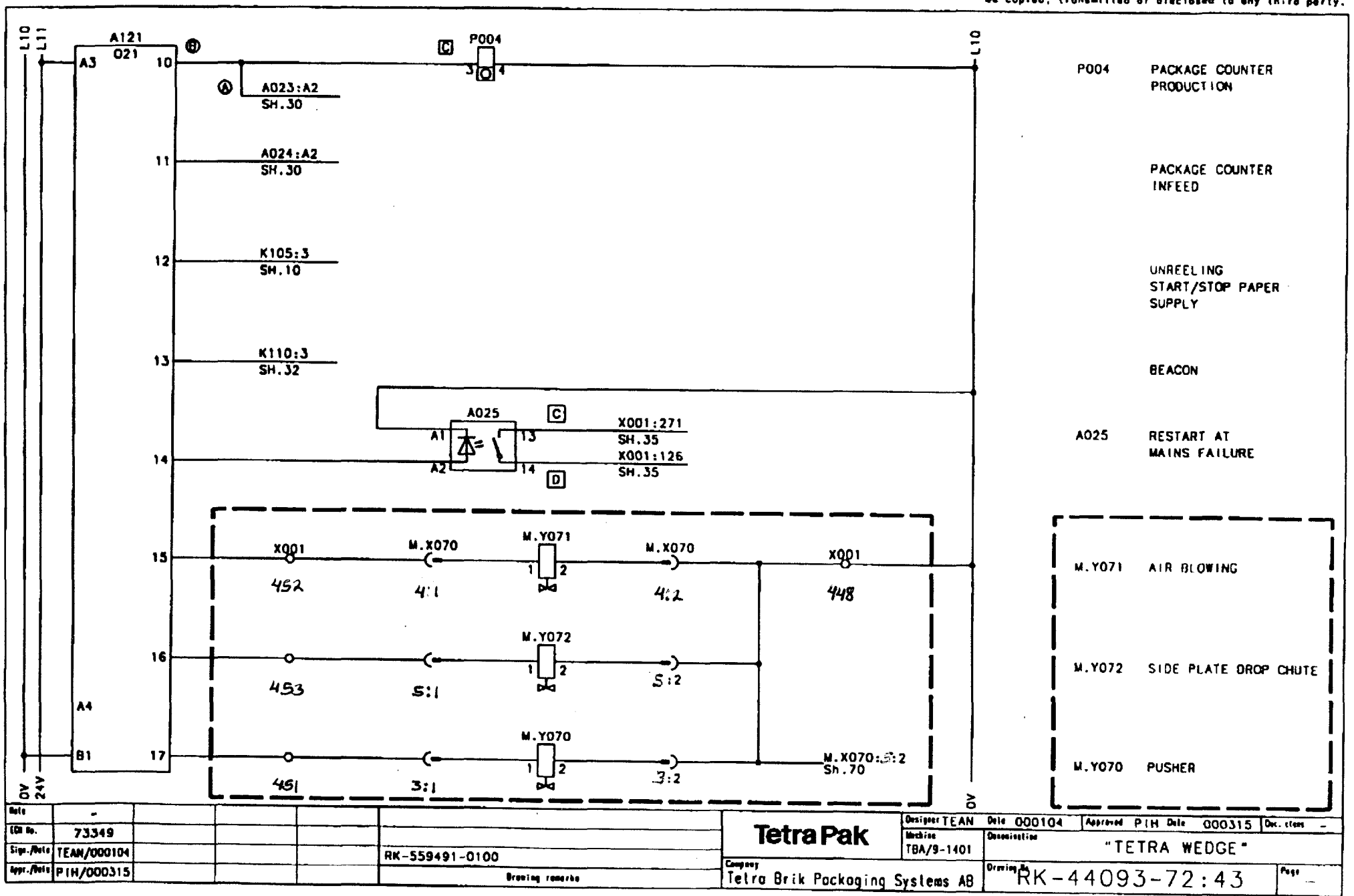

Note	-					Designer TEAN	Date 000104	Approved PIH Date 000315	Doc. class -
ECR No.	73349					Machine TBA/9-1401	Description "TETRA WEDGE"		
Sign./Date	TEAN/000104			RK-559491-0100		Company Tetra Brik Packaging Systems AB	Drawing No. RK-44093-72:43		Page -
Appr./Date	PIH/000315			Drawing remarks					

Tetra Pak

PRE-RELEASED/DEVELOPMENT STATE

This drawing must not without the consent of Tetra Pak be copied, transmitted or disclosed to any third party.

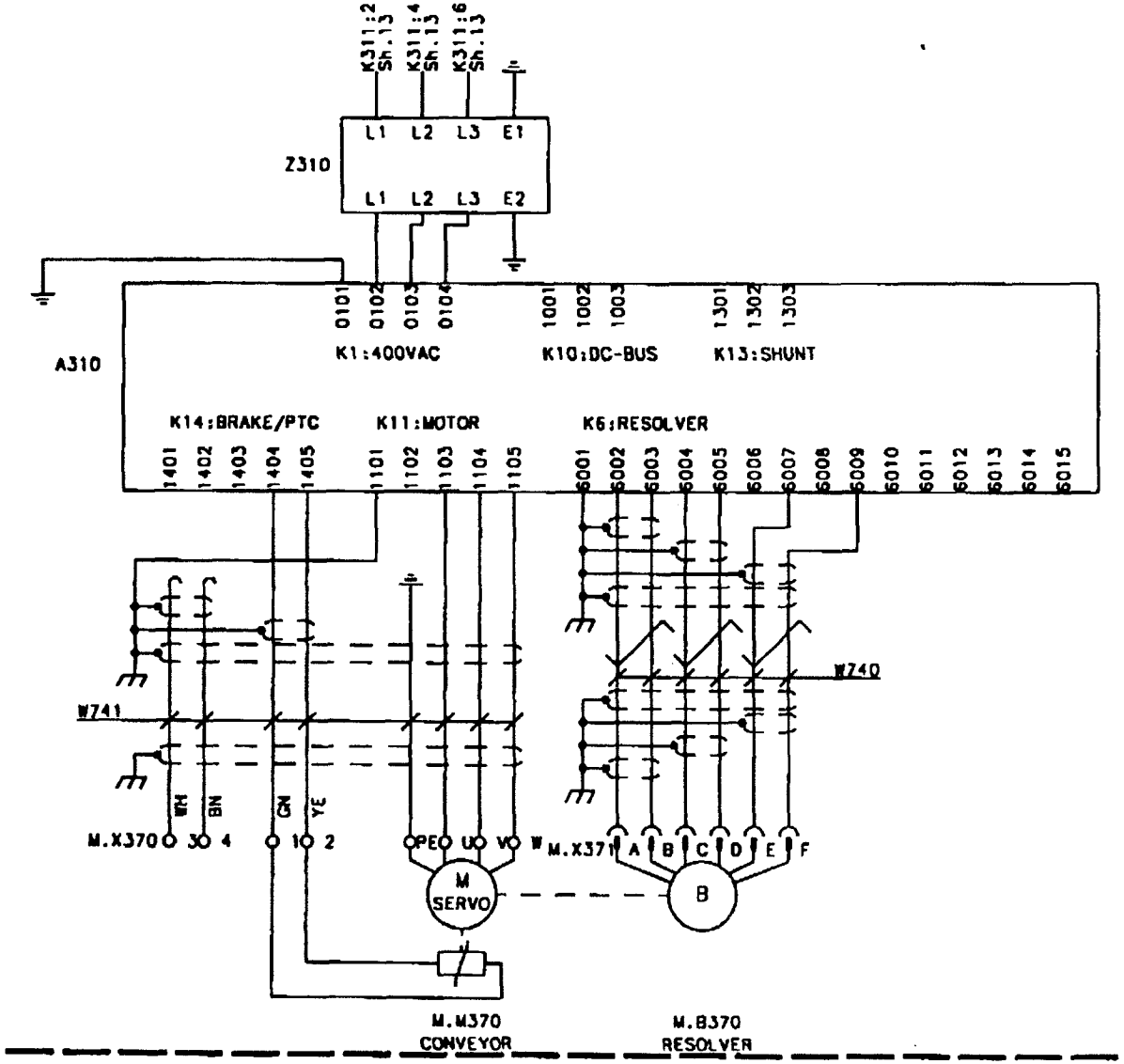

Note	-	A				Tetra Pak	Designer TEAN	Date 990521	Approved PIH Date 990602	Doc. class -
ECR No.	72526	72800					Section TBA/9-1401	Denomination "TETRA WEDGE"		
Sign./Date	TEAN/990521	TEAN/990902			RK-559491-0100		Company Tetra Brik Packaging Systems AB	Drawing No. RK-44093-81:41		Page -
Appr./Date	PIH/990602	PIH/990902			Drawing remarks					

PRE-RELEASED/DEVELOPMENT STATE

This drawing must not without the consent of Tetra Pak be copied, transmitted or disclosed to any third party.

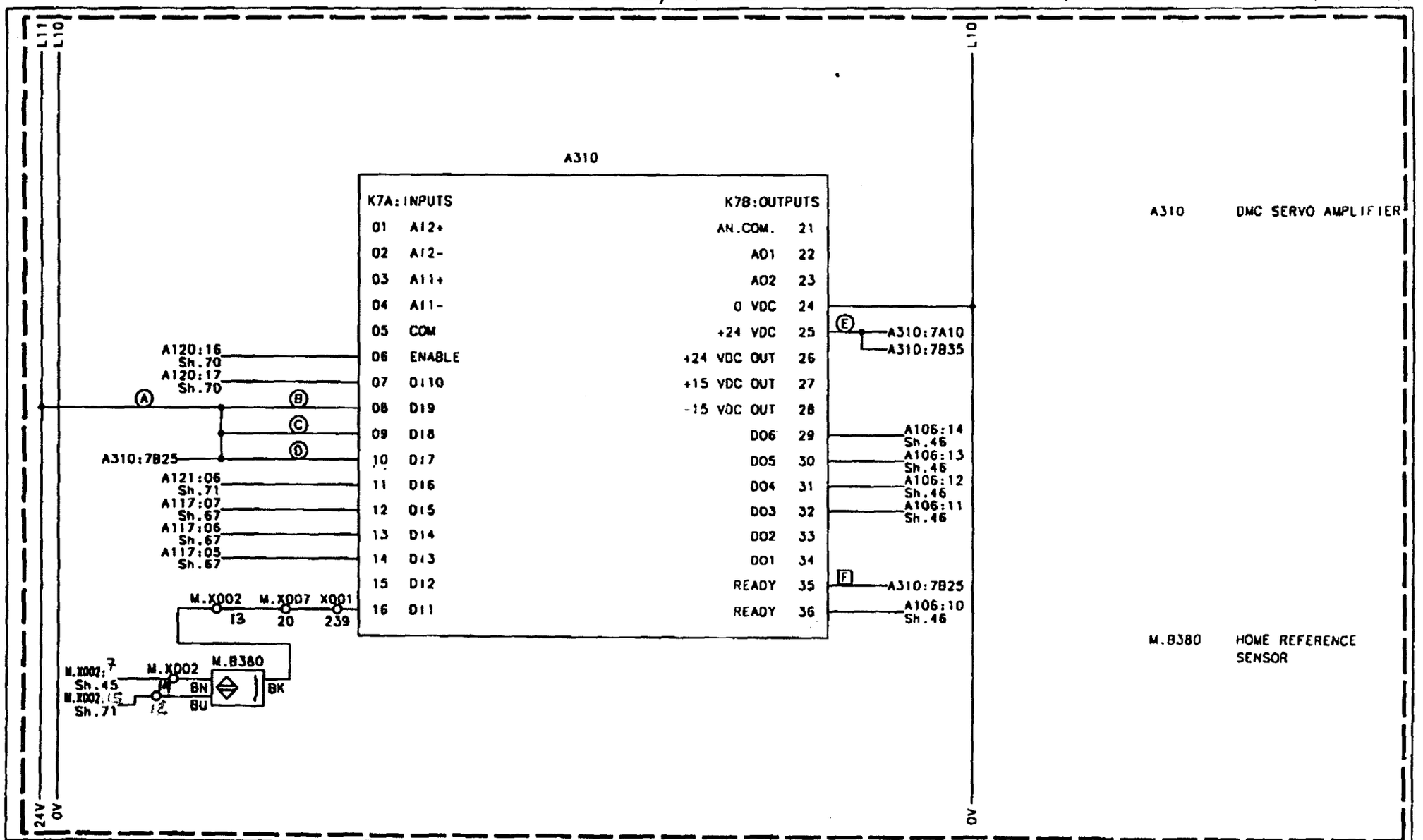

Rev.	-	A				Designer TEAN	Date 990521	Approved PIH	Date 990602	Doc. class -
CCI No.	72526	72800				Machine T8A/9-1401	Denomination "TETRA WEDGE"			
Sign./Date	TEAN/990521	TEAN/990902			RK-559491-0100	Company Tetra Brik Packaging Systems AB	Drawing No. RK-44093-82:41			Page -
Appr./Date	PIH/990602	PIH/990902			Drawing remarks					

Tetra Pak

This drawing must not without the consent of Tetra Pak be copied, transmitted or disclosed to any third party.

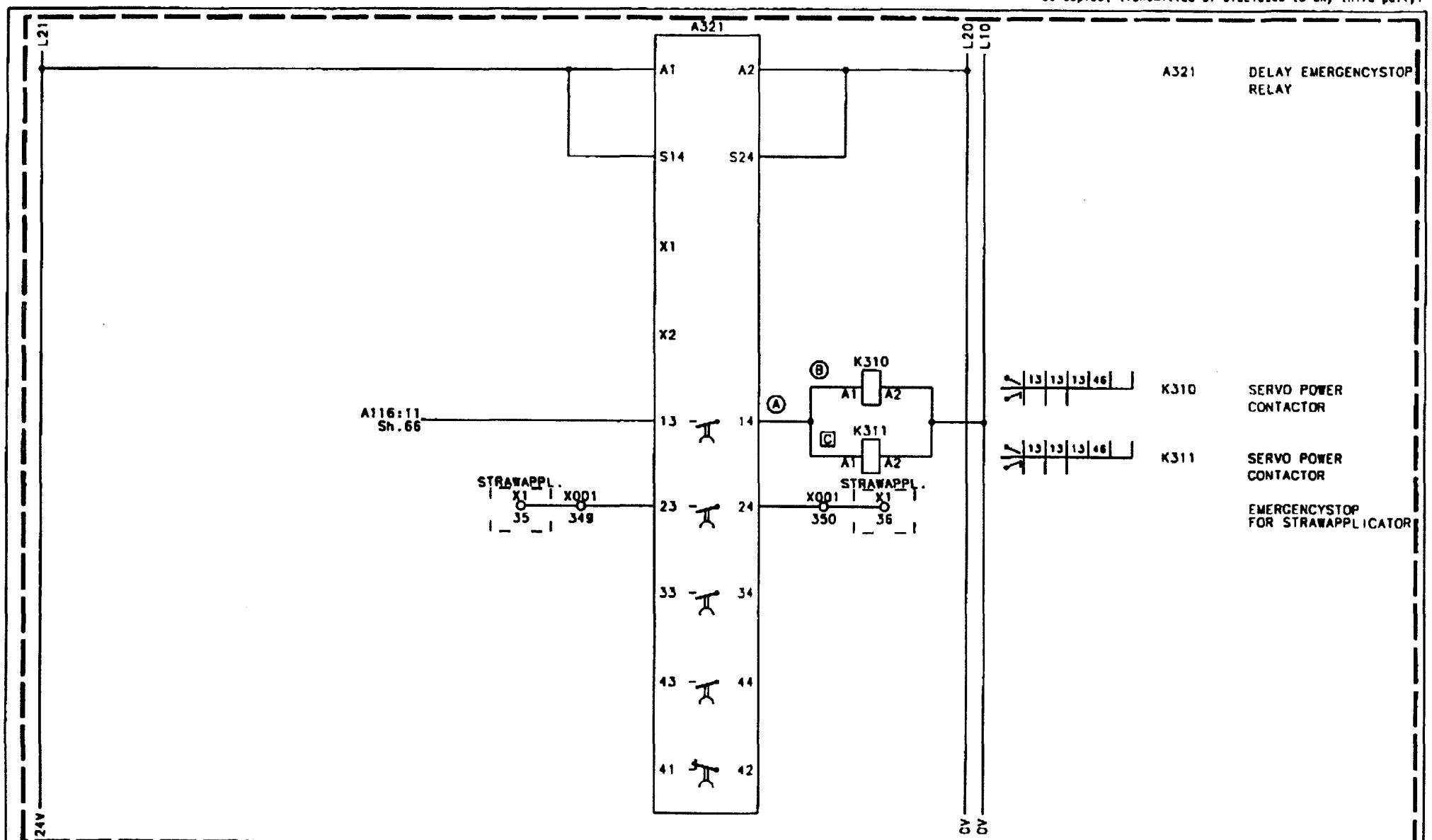

Rule	-					Tetra Pak	Designer TEAN Date 000104	Approved PIH Date 000315	Doc. class -
ECR No.	73349						Machine TBA/9-1401	Denomination "TETRA WEDGE"	
Sign./Date	TEAN/000104				RK-559491-0100		Company Tetra Brik Packaging Systems AB	Drawing No. RK-44093-83:43	Page -
Appr./Date	PIH/000315				Drawing remarks				

Tetra Pak
LUND SWEDEN

This drawing must not without the consent of Tetra Pak be copied, transmitted or disclosed to any third party.

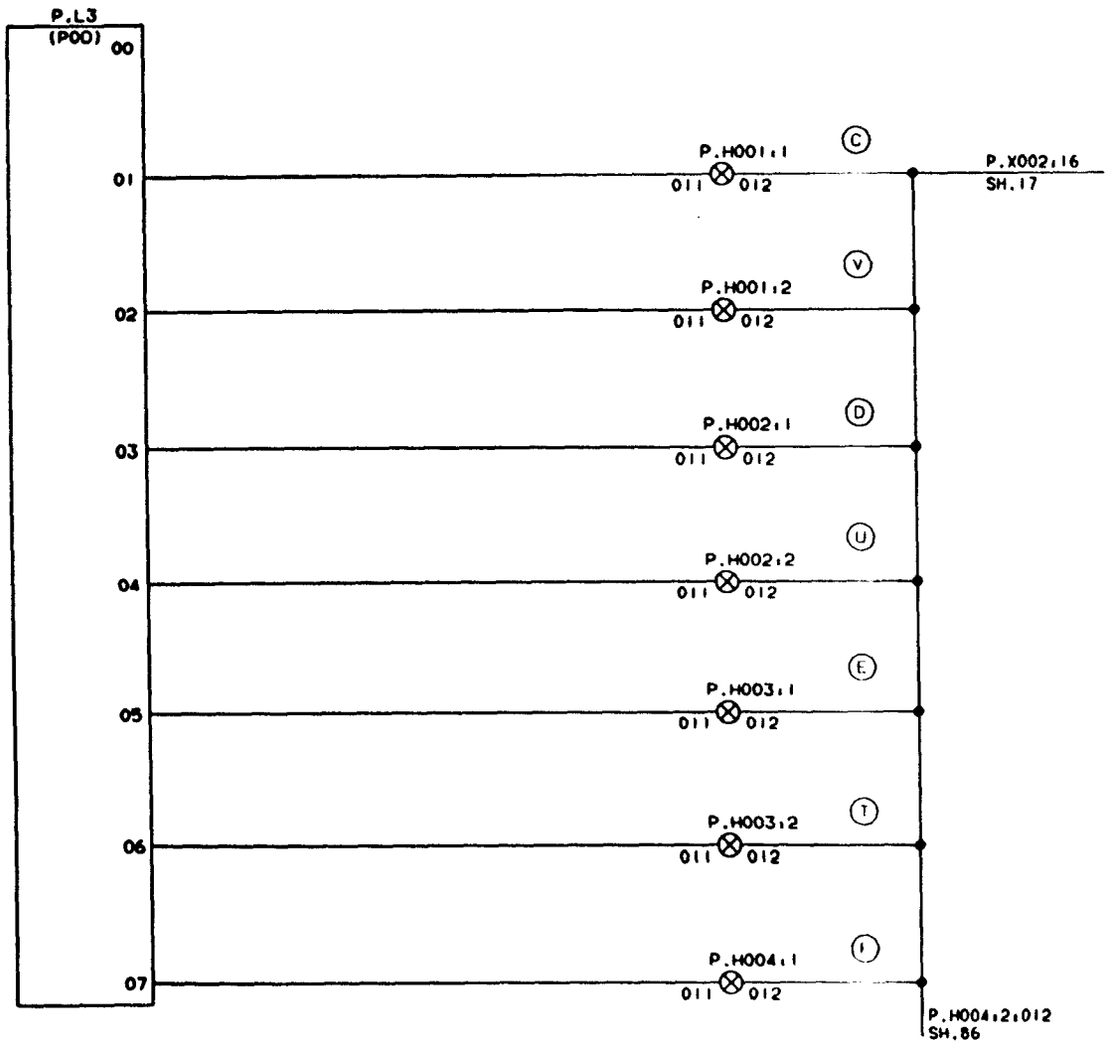

OCCUPIED FOR INTERNAL MEMORY

P.H001:1	PREHEATING I
P.H001:2	PREHEATING II
P.H002:1	TUBE SEALING
P.H002:2	PRESTERILIZING
P.H003:1	SPRAYING
P.H003:2	DRYING
P.H004:1	SIGNAL TO STERILIZER

19260	930310	HK/UTH	

ALTERATIONS ONLY IN CADAM

DESCRIPTION: PANEL INTERFACE OUT

MACHINE: TBA/9-1401 S.A

44093-85:01

Tetra Pak
LUND SWEDEN

This drawing must not without the consent of Tetra Pak be copied, transmitted or disclosed to any third party.

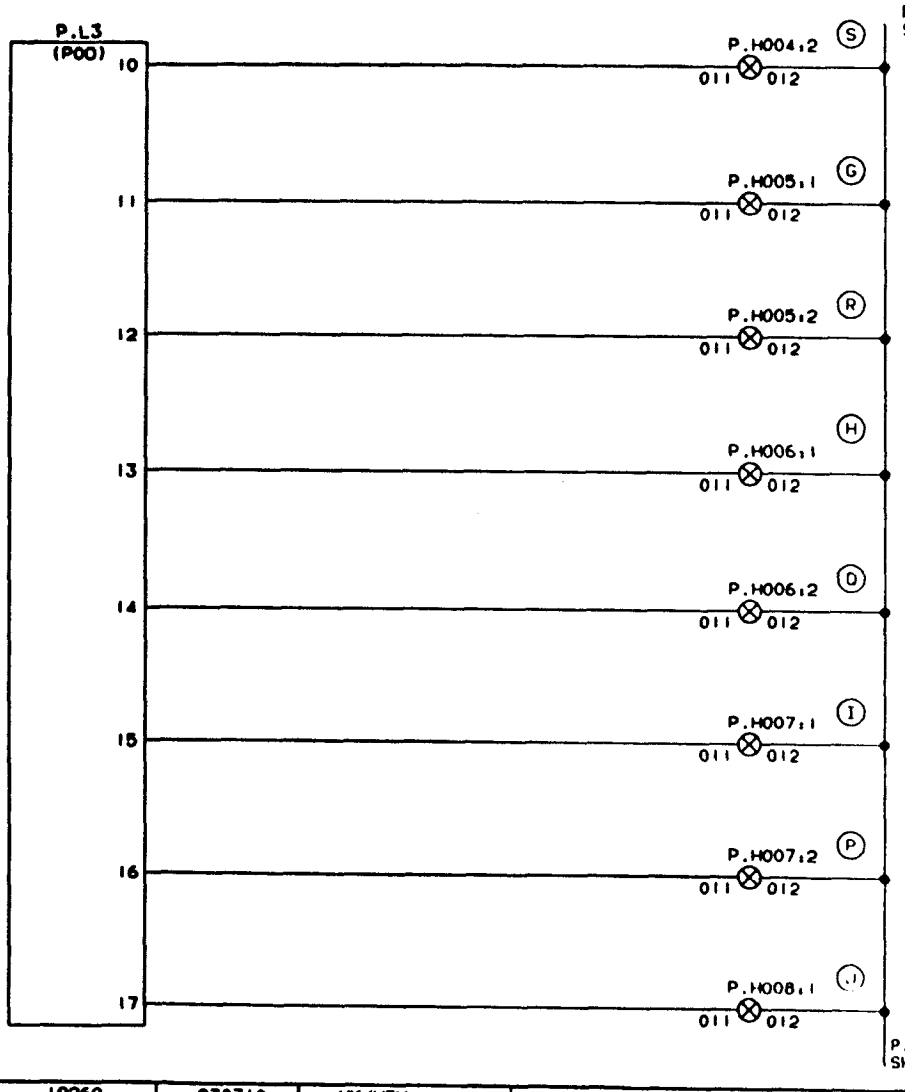

P.H004:2	SIGNAL FROM STERILIZER
P.H005:1	START SEQUENCE
P.H005:2	DRIVE MOTOR ON
P.H006:1	FILLING
P.H006:2	PRODUCTION
P.H007:1	NO PRODUCTION ALLLOWED
P.H007:2	PRODUCTION FINISHED
P.H008:1	WORK ENVIRONMENT ASEPTIC CHAMBER ON

19260	930310	HK/UTH	

DESCRIPTION: PANEL INTERFACE OUT

MACHINE: TBA/9-1401 S.A

44093-86:01

10.51 94.2.2

Tetra Pak
LUND SWEDEN

This drawing must not without the consent of Tetra Pak be copied, transmitted or disclosed to any third party.

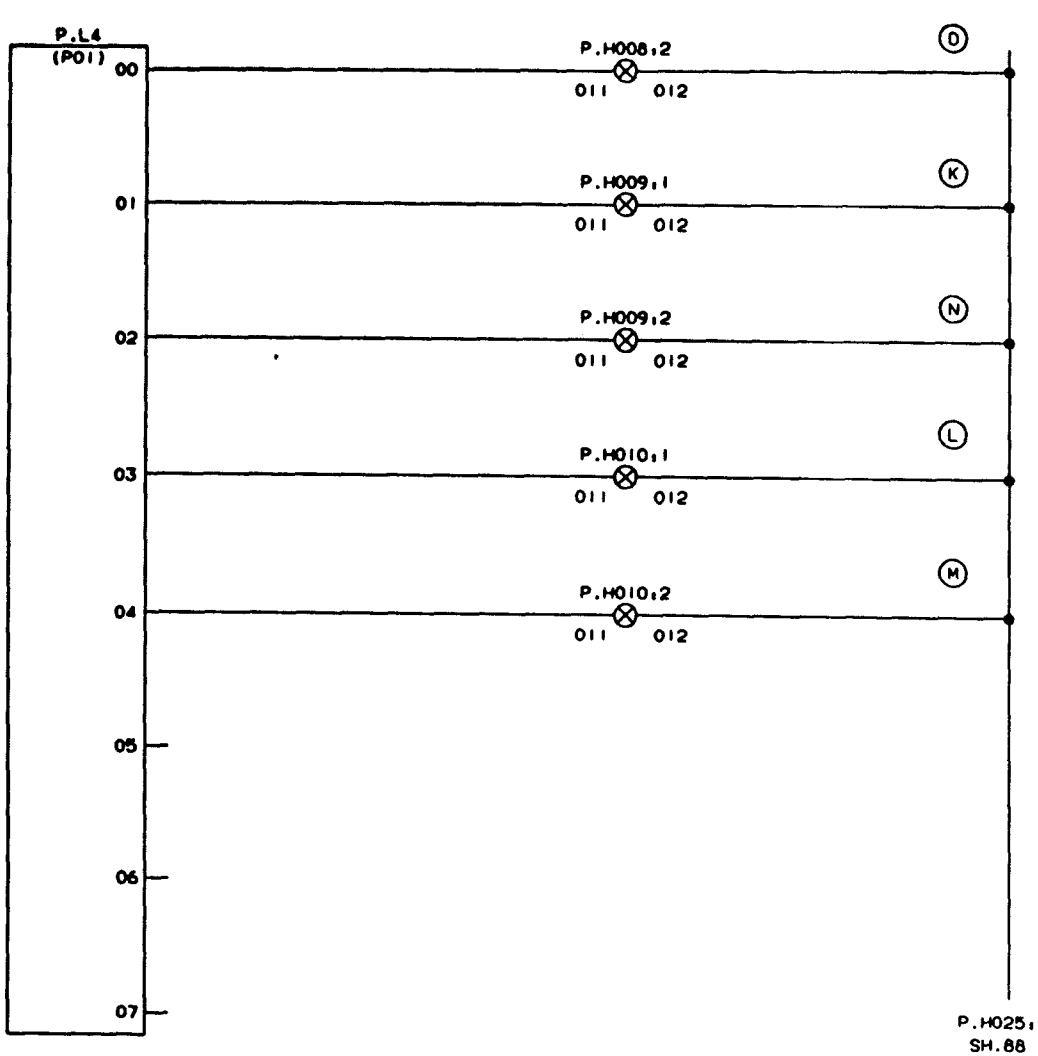

P.H008:2 WEAC READY FOR DOOR OPENING

P.H009:1 PREPARATION FOR MACHINE

P.H009:2 PREPARATION FOR CLEANING OF VALVE

P.H010:1 CLEANING MACHINE

P.H010:2 CLEANING VALVE

	19260	930310	HK/UTH	

ALTERATIONS ONLY IN CADAM

DESCRIPTION: PANEL INTERFACE OUT

MACHINE: TBA/9-1401 S.A

44093-87:01

Tetra Pak
LUND SWEDEN

This drawing must not without the consent of Tetra Pak be copied, transmitted or disclosed to any third party.

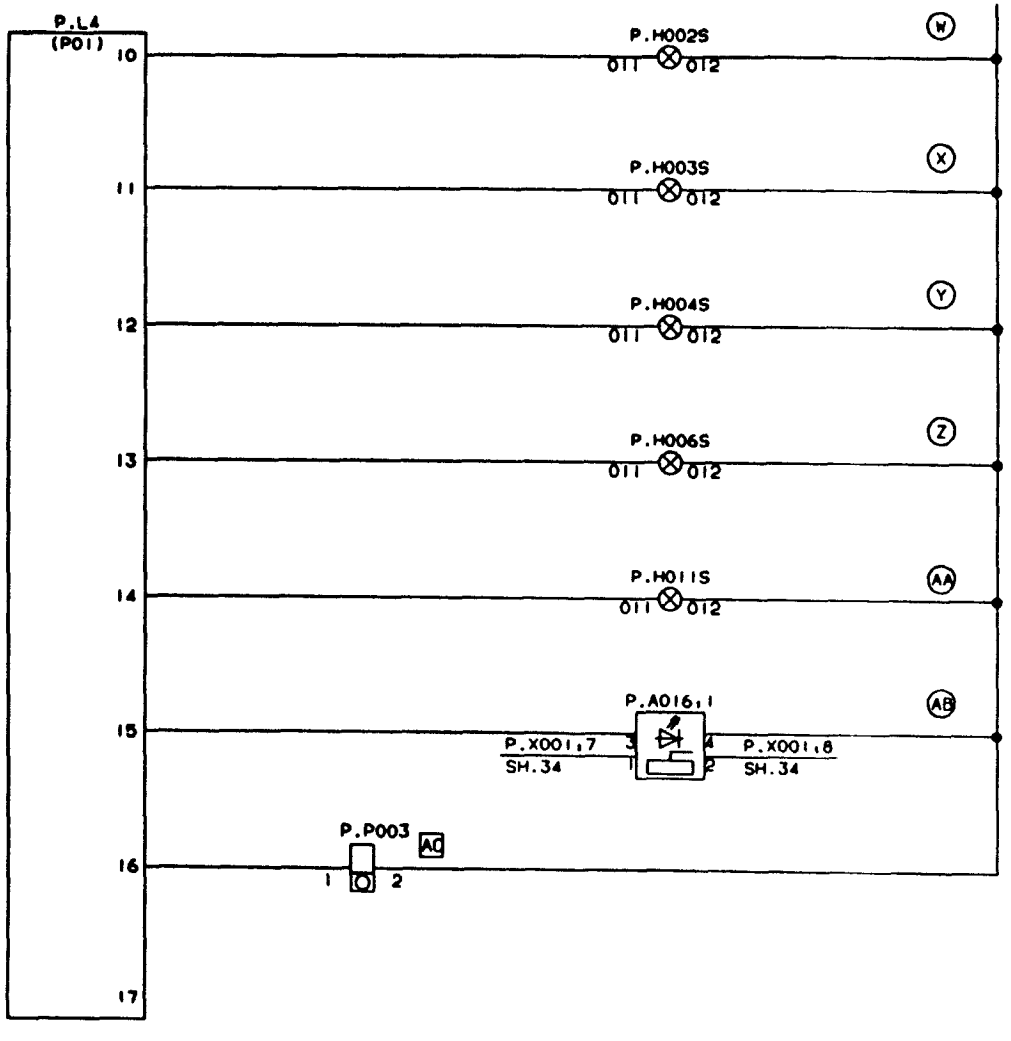

P.H002S	INCHING
P.H003S	STEP UP
P.H004S	STEP DOWN
P.H006S	NO PRODUCTION ALLOWED
P.H011S	ALARM RESET
P.A016:1	DESIGN CORRECTION
P.P003	PACKAGE COUNTER PRODUCTION

19260	930310	HK/UTH	
A			

ALTERATIONS ONLY IN CADAM

DRAWING REVISED

DESCRIPTION: PANEL INTERFACE OUT

MACHINE: TBA/9-1401 S.A

44093-88:01

IC 51 94.2.25

This drawing must not without the consent of Tetra Pak be copied, transmitted or disclosed to any third party.

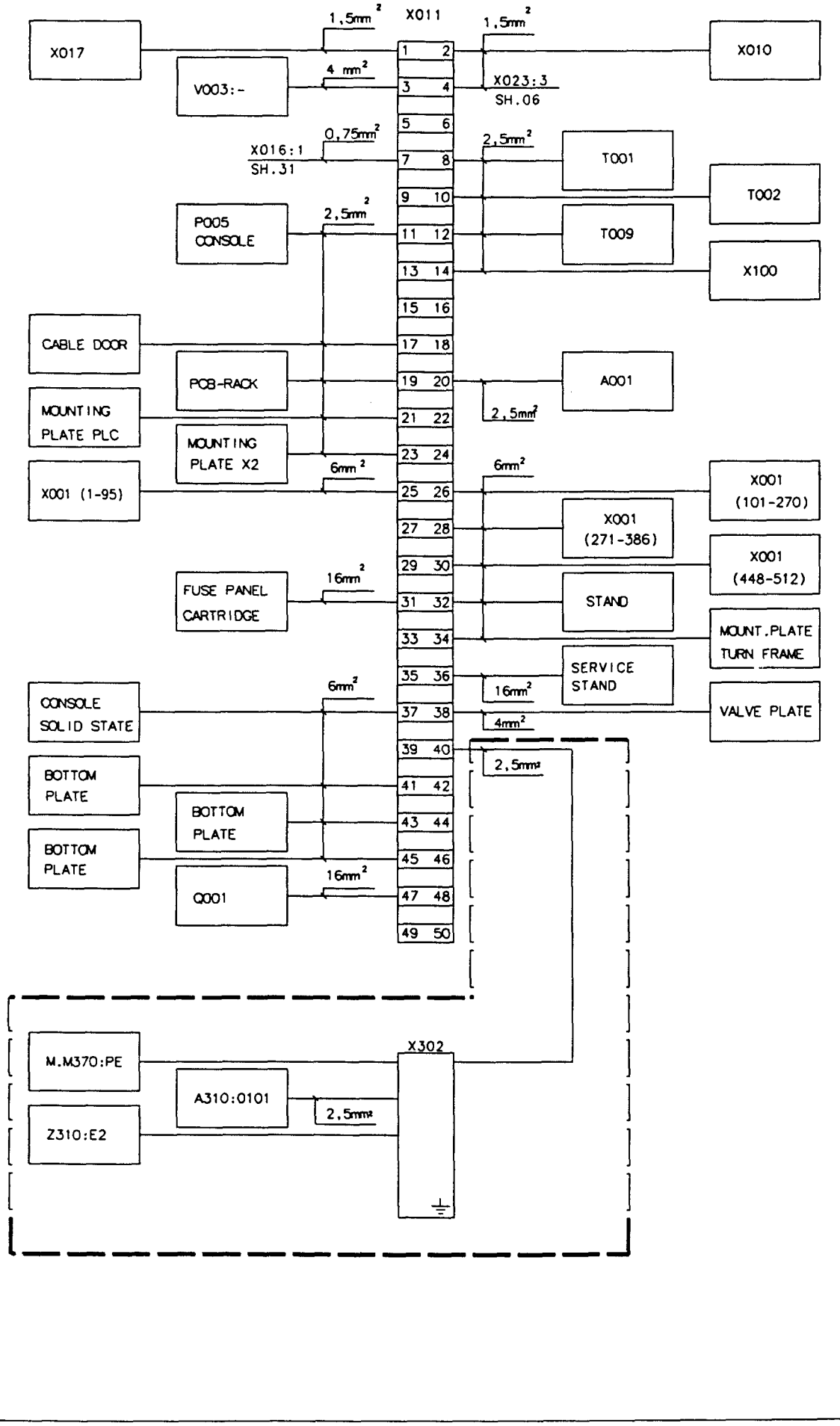

Date	-	A				Designer TEAN	Date 990521	Approved PIH	Date 990602
ECR No.	72526	72800			RK-559491-0100	Machine TBA/9-1401	Description "TETRA WEDGE"		Doc. class -
Sign./Date	TEAN/990521	TEAN/990902				Company Tetra Brik Packaging Systems AB		Drawing No RK-44093-89:41	Page -
Appr./Date	PIH/990602	PIH/990902			Drawing remarks	Tetra Pak			

This drawing must not without the consent of Tetra Pak be copied, transmitted or disclosed to any third party.

PRE-RELEASED/DEVLLOPMENT STATE

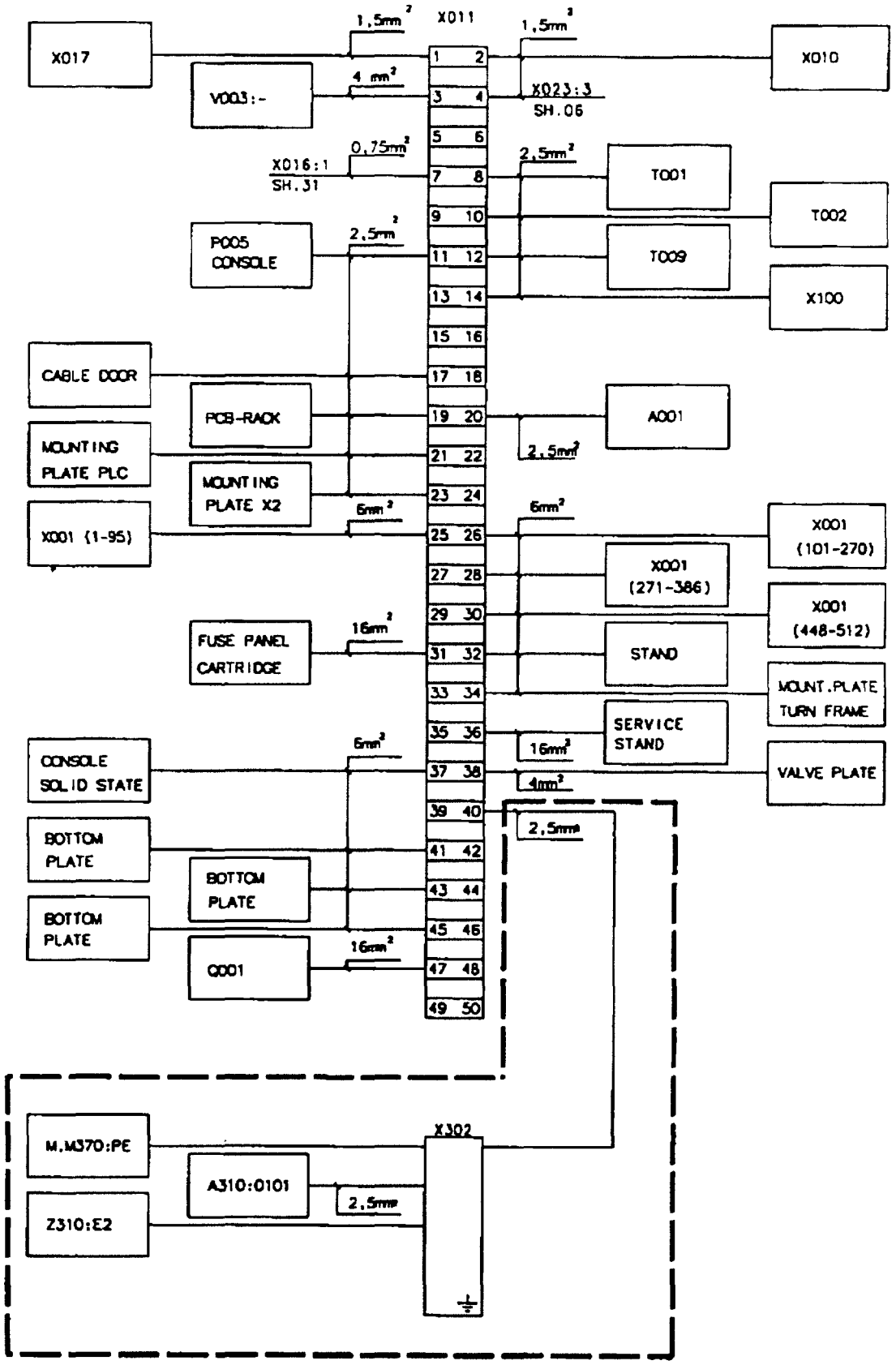

| | | |

Line: 649205
73349 'A'

Line	Position	Sheet	Area	Colour	Line	Position	Sheet	Area	Colour
L1	XL1,1		25	BK		F056B,2	14:01		
	Q002,6	05:01							
					L2	XL2,4		25	BK
L1	XL1,2		25	BK		F008,2	07:41		
	Q003,1	10:01				F019,1	16:01		
	Q012,1	16:01							
	Q087,1	10:01			L3	XL3,1		25	BK
	Q098,1	10:01				Q002,2	05:01		
L1	XL1,3		25	BK	L3	XL3,2		25	BK
	F010,2	08:01				Q003,5	10:01		
	F028A,2	08:01				Q012,5	16:01		
	F029A,2	08:01				Q087,5	10:01		
	F056A,2	14:01				Q098,5	10:01		
L1	XL1,4		25	BK	L3	XL3,3		25	BK
	F001,2	06:01				F028C,2	08:01		
						F029C,2	08:01		
L2	XL2,1		25	BK		F056C,2	14:01		
	Q002,4	05:01							
					L3	XL3,4		25	BK
L2	XL2,2		25	BK		F005,2	07:41		
	Q003,3	10:01							
	Q012,3	16:01			L10	XL10,1		4	BU
	Q087,3	10:01				V003,-	16:01		
	Q098,3	10:01				X011,3	16:01		
L2	XL2,3		25	BK	L10	XL10,2		0.75	BU
	F028B,2	08:01				X016,4	31:01		
	F029B,2	08:01				,6	31:01		

Line: 649205
73349 'A'

Line	Position	Sheet Area Colour	Line	Position	Sheet Area Colour
L10	X016,8	31:01		,23	35:01
	A016B,24	34:01			
	,18	34:01	L10	XL10,8	0.75 BU
	A016A,1	34:01		K097,10	67:41
	A001,25	11:01		K095,10	67:41
	P004,4	72:43		K084,10	67:41
				K083,10	67:41
L10	XL10,3	0.75 BU		K054,10	67:41
	X100,9	14:01		K053,10	66:41
	,23	14:01			
			L10	XL10,9	0.75 BU
L10	XL10,4	0.75 BU		K052,10	66:41
	K110,4	32:43		K046,10	66:41
	K106,4	10:01		K036,10	32:43
				K030,10	66:41
L10	XL10,5	0.75 BU		K026,10	66:41
	K075,A1	65:01		K006,10	66:41
	K071,A1	65:01			
	K048,A1	65:01	L10	XL10,10	0.75 BU
	K002,A1	65:01		X009,2	32:43
				A023,A1	30:01
L10	XL10,6	0.75 BU		A024,A1	30:01
	K099,A1	65:01		A025,A1	72:43
	K096,A1	65:01			
	K092,A1	65:01	L10	XL10,11	0.75 BU
	K088,A1	65:01		X001,118	30:01
				,156	32:43
L10	XL10,7	0.75 BU		,169	45:41
	K003,A1	35:01		,195	70:43
	A002,A2	35:01		,228	36:01

Line: 649205
73349 'A'

Line	Position	Sheet Area Colour	Line	Position	Sheet Area Colour
L10	X001,235	69:01	L10	XL10,20	4 BU
	,247	71:41		XL10,21	16:01
	,348	32:43			
			L10	XL10,22	0.75 BU
L10	XL10,12	0.75 BU		G100,B1	17:01
	X001,249	32:43			
	,250	39:41	L10	XL10,23	0.75 BU
	,258	70:43		A101,B2	36:01
	,260	71:41			
	,262	17:01	L10	XL10,25	0.75 BU
	,279	39:41		A103,B1	39:41
				,B2	40:01
L10	XL10,14	0.75 BU			
	X001,454	68:01	L10	XL10,26	0.75 BU
	,460	68:01		A104,B1	41:01
	,466	69:01		,B2	42:01
L10	XL10,15	0.75 BU	L10	XL10,27	0.75 BU
	X001,483	69:01		A105,B1	43:01
	,485	69:01		,B2	44:01
	,489	70:43			
	,491	70:43	L10	XL10,28	0.75 BU
	,493	68:01		A106,B1	45:41
	,516	72:43		,B2	46:41
L10	XL10,17	0.75 BU	L10	XL10,36	0.75 BU
	K326,10	66:41		A116,B1	66:41
	K310,A2	83:43			
	K311,A2	83:43	L10	XL10,37	0.75 BU
	A310,24	82:41		A117,B1	68:01

Line: 649205
73349 'A'

Line	Position	Sheet Area Colour	Line	Position	Sheet Area Colour
L10	XL10,38	0.75 BU		A013,Z3	Z0:01
	A120,B1	70:43		A010,19	19:01
				,Z3	19:01
L10	XL10,39	0.75 BU		A008,19	19:01
	A121,B1	72:43		,Z3	19:01
				A006,19	18:01
L11	XL11,1	4 BU		,Z3	18:01
	F055A,2	16:01		A004,Z3	18:01
L11	XL11,Z	0.75 BU	L11	XL11,7	0.75 BU
	X001,102	29:01		A015,18	Z4:01
	,120	30:01		A017,18	Z4:01
	,153	29:01		A018,18	25:01
	,157	41:01		A019,18	25:01
	,167	40:01		A022,18	26:01
	,227	36:01			
			L11	XL11,8	0.75 BU
L11	XL11,4	0.75 BU		K077,13	31:01
	X001,238	39:41		A450,11	27:01
	,241	41:01		A451,11	27:01
	,252	39:41		A002,A1	35:01
	,261	17:01		,13	35:01
	,281	39:41		,33	35:01
	,290	41:01		,41	35:01
	,292	41:01		K097,3	31:01
				K095,3	31:01
L11	XL11,6	0.75 BU			
	A202,Z3	Z1:01	L11	XL11,17	0.75 BU
	A030,Z3	Z1:01		K310,13	46:41
	A014,Z3	Z0:01		A310,08	82:41

hine: 649205
73349 'A'

Line	Position	Sheet	Area	Colour	Line	Position	Sheet	Area	Colour
L11	A310,09	82:41			L12	XL12,3		0.75	BU
	,10	82:41				Q087,14	41:01		
	,25	82:41							
	,35	82:41			L12	XL12,4		0.75	BU
						X100,10	14:01		
L11	XL11,18		4	BU		,11	14:01		
	XL11,21	16:01				,12	14:01		
						,24	14:01		
L11	XL11,23		0.75	BU					
	A116,A1	65:01			L12	XL12,5		0.75	BU
	,A3	66:41				F003,LIV	32:43		
L11	XL11,24		0.75	BU	L12	XL12,15		4	BU
	A117,A1	67:41				XL12,21	16:01		
	,A3	68:01							
					L12	XL12,22		0.75	BU
L11	XL11,25		0.75	BU		G100,A1	17:01		
	A120,A1	69:01							
	,A3	70:43			L12	XL12,23		0.75	BU
						A101,A2	36:01		
L11	XL11,26		0.75	BU					
	A121,A1	71:41			L13	XL13,		0.75	BU
	,A3	72:43				K048,6	16:01		
						X001,248	32:43		
L12	XL12,1		4	BU		A016A,10	34:01		
	F055B,2	16:01				,14	34:01		
						A016B,17	34:01		
L12	XL12,2		0.75	BU		X001,347	32:43		
	S003,5	40:01							
					L20	XL20,1		0.75	BU

Line: 649205
73349 'A'

Line	Position	Sheet Area Colour	Line	Position	Sheet Area Colour
L20	A002,24	35:01		P002,A"-	63:01
L20	XL20,2	0.75 BU	L20	XL20,12	0.75 BU
	K201,A1	32:43		X009,4	32:43
	K098,A1	62:01			
	K094,A1	62:01	L21	XL21,	0.75 BU
	K093,A1	62:01		A002,34	35:01
	K091,A1	63:01		Q201,14	37:43
	K087,A1	62:01		X001,121	37:43
	K082,A1	63:01		,159	37:43
	K081,A1	62:01		,275	37:43
	K077,A1	63:01		,503	38:01
	K051,A1	63:01		,506	38:01
	K014,A1	63:01		,508	38:01
				,510	38:01
L20	XL20,3	0.75 BU		,512	38:01
	X001,448	62:01		S002,13	37:43
	,470	61:01		S004,13	38:01
	,476	61:01		A114,A3	62:01
	,487	62:01		A321,A1	83:43
				,S14	83:43
L20	XL20,4	0.75 BU			
	A102,B1	37:43	L50	XL50,1	0.75 RD
	,B2	38:01		X003,19	16:01
	A114,B1	62:01			
	A115,B1	64:01	L50	XL50,2	0.75 RD
	A321,A2	83:43		A451,A2	27:01
	,S24	83:43		A450,A2	27:01
L20	XL20,11	0.75 BU	L50	XL50,11	0.75 RD

Line: 649205
73349 'A'

Line	Position	Sheet Area Colour	Line	Position	Sheet Area Colour
L50	A202,27	21:01	L51	XL51,11	0.75 RD
	A030,27	21:01		AZ02,26	21:01
	A014,27	20:01		A030,26	21:01
	A013,27	20:01		A014,26	20:01
	A010,27	19:01		A013,26	20:01
	A008,27	19:01		A010,26	19:01
	A006,27	18:01		A008,26	19:01
	A004,27	18:01		A006,26	18:01
	A015,A2	24:01		A004,26	18:01
	A017,A2	24:01		A015,A1	24:01
	A018,A2	25:01		A017,A1	24:01
	A019,A2	25:01		A018,A1	25:01
	A022,A2	26:01		A019,A1	25:01
	X016,3	31:01		A022,A1	26:01
L50	XL50,12	0.75 RD	L52	XL52,	0.75 RD
	X100,5	14:01		K048,14	16:01
	,7	14:01		X100,6	14:01
	,21	14:01		,8	14:01
				,22	14:01
L51	XL51,1	0.75 RD			
	F019,Z	16:01			
L51	XL51,2	0.75 RD			
	K048,13	16:01			
	K088,13	31:01			
	A450,A1	27:01			
	A451,A1	27:01			
	K046,6	31:01			
	K095,6	31:01			

hine: 649205

Position	Sheet	Position	Sheet	Position	Sheet	Position	Sheet
XL10,21	16:01	X001,28	10:01	X001,61	06:01	X001,94	
		,29	10:01	,62	06:01	,95	
XL11,21	16:01	,30	10:01	,63	06:01	,101	29:01
		,31	10:01	,64	06:01	,102	29:01
XL12,21	16:01	,32	10:01	,65	06:01	,103	29:01
		,33	10:01	,66	06:01	,104	29:01
X001,1	07:41	,34	11:01	,67	06:01	,105	29:01
,2	07:41	,35	11:01	,68	06:01	,106	29:01
,3	07:41	,36	11:01	,69		,107	29:01
,4	07:41	,37	10:01	,70		,108	29:01
,5	08:01	,38	10:01	,71		,109	29:01
,6	08:01	,39	10:01	,72		,110	29:01
,7	08:01	,40	10:01	,73		,111	29:01
,8	08:01	,41	10:01	,74		,112	29:01
,9	08:01	,42	10:01	,75		,113	29:01
,10	08:01	,43	12:01	,76		,114	29:01
,11	12:01	,44	12:01	,77		,115	37:43
,12	12:01	,45	12:01	,78		,116	37:43
,13	12:01	,46	13:41	,79		,117	45:41
,14	12:01	,47	13:41	,80		,118	30:01
,15	12:01	,48	13:41	,81		,119	30:01
,16	12:01	,49	11:01	,82		,120	30:01
,17	11:01	,50	11:01	,83		,121	37:43
,18	11:01	,51	07:41	,84		,122	37:43
,19	11:01	,52	07:41	,85		,123	35:01
,20	11:01	,53		,86		,124	35:01
,21	12:01	,54	07:41	,87		,125	35:01
,22	12:01	,55	07:41	,88		,126	35:01
,23	12:01	,56	08:01	,89		,127	30:01
,24		,57	08:01	,90		,128	30:01
,25	11:01	,58	07:41	,91		,129	30:01
,26	11:01	,59	07:41	,92		,130	30:01
,27	11:01	,60	06:01	,93		,131	30:01

Position	Sheet	Position	Sheet	Position	Sheet	Position	Sheet
X001,132	30:01	X001,165	35:01	X001,198		X001,231	37:43
,133	24:01	,166	35:01	,199		,232	
,134	24:01	,167	40:01	,200		,233	
,135	21:01	,168		,201		,234	69:01
,136	21:01	,169	45:41	,202		,235	69:01
,137	21:01	,170	45:41	,203		,236	71:41
,138	21:01	,171		,204		,237	39:41
,139	19:01	,172	40:01	,205		,238	39:41
,140	19:01	,173	40:01	,206	34:01	,239	
,141	19:01	,174	40:01	,207	34:01	,240	
,142	19:01	,175	40:01	,208	34:01	,241	41:01
,143	18:01	,176	40:01	,209	34:01	,242	41:01
,144	18:01	,177	45:41	,210	34:01	,243	
,145	19:01	,178	45:41	,211	34:01	,244	
,146	19:01	,179		,212	34:01	,245	71:41
,147	18:01	,180	40:01	,213	34:01	,246	71:41
,148	18:01	,181		,214	34:01	,247	71:41
,149	20:01	,182		,215	34:01	,248	32:43
,150	20:01	,183		,216	26:01	,249	32:43
,151	20:01	,184	25:01	,217	26:01	,250	39:41
,152	20:01	,185	25:01	,218	26:01	,251	39:41
,153	29:01	,186	25:01	,219	36:01	,252	39:41
,154	29:01	,187	25:01	,220	36:01	,253	39:41
,155	32:43	,188	24:01	,221	36:01	,254	39:41
,156	32:43	,189	24:01	,222	36:01	,255	71:41
,157	41:01	,190	24:01	,223	36:01	,256	
,158	41:01	,191	70:43	,224	36:01	,257	70:43
,159	37:43	,192	70:43	,225	36:01	,258	70:43
,160	37:43	,193		,226	36:01	,259	71:41
,161	41:01	,194		,227	36:01	,260	71:41
,162	41:01	,195	70:43	,228	36:01	,261	17:01
,163	35:01	,196		,229	37:43	,262	17:01
,164	35:01	,197		,230	37:43	,263	57:41

Position	Sheet	Position	Sheet	Position	Sheet	Position	Sheet
X001,264		X001,297		X001,330		X001,363	
,265	35:01	,298		,331		,364	
,266	35:01	,299		,332		,365	
,267	34:01	,300		,333		,366	
,268	34:01	,301		,334		,367	
,269	35:01	,302		,335		,368	
,270	35:01	,303		,336		,369	
,271	35:01	,304		,337		,370	
,272	35:01	,305		,338		,371	
,273		,306		,339		,372	
,274		,307		,340		,373	
,275	37:43	,308		,341		,374	
,276	37:43	,309		,342		,375	
,277	37:43	,310		,343		,376	
,278	37:43	,311		,344		,377	
,279	39:41	,312		,345		,378	
,280	39:41	,313		,346		,379	
,281	39:41	,314		,347	32:43	,380	
,282	39:41	,315		,348	32:43	,381	
,283	39:41	,316		,349	83:43	,382	
,284	40:01	,317		,350	83:43	,383	
,285		,318		,351		,384	
,286		,319		,352		,385	
,287	37:43	,320		,353		,386	
,288	37:43	,321		,354		,448	62:01
,289		,322		,355		,449	62:01
,290	41:01	,323		,356		,450	62:01
,291	41:01	,324		,357		,451	61:01
,292	41:01	,325		,358		,452	64:01
,293	41:01	,326		,359		,453	64:01
,294	41:01	,327		,360		,454	68:01
,295		,328		,361		,455	68:01
,296		,329		,362		,456	68:01

Position	Sheet	Position	Sheet	Position	Sheet	Position	Sheet
X001,457	68:01	X001,490	70:43	M.X001.5	36:01	M.X002,10	30:01
,458	68:01	,491	70:43	,6	36:01	,11	30:01
,459	68:01	,492	68:01	,7	36:01	,12	30:01
,460	68:01	,493	68:01	,8	36:01	,13	30:01
,461	68:01	,494		,9	36:01	,14	30:01
,462	68:01	,495		,10	36:01	,15	30:01
,463	68:01	,496		,11	36:01	,16	30:01
,464	69:01	,497		,12	36:01	,17	30:01
,465	69:01	,498				,18	30:01
,466	69:01	,499		P.X001,1	17:01	,19	30:01
,467	69:01	,500		,2	17:01	,20	30:01
,468	69:01	,501		,3	57:41	,21	30:01
,469	69:01	,502	38:01	,4		,22	30:01
,470	61:01	,503	38:01	,5	35:01	,23	30:01
,471	61:01	,504	38:01	,6	35:01	,24	24:01
,472	64:01	,505	38:01	,7	34:01	,25	24:01
,473	61:01	,506	38:01	,8	34:01	,26	71:41
,474	61:01	,507	38:01	,9	35:01	,27	71:41
,475	61:01	,508	38:01	,10	35:01	,31	37:43
,476	61:01	,509	38:01	,11	57:41	,32	37:43
,477	61:01	,510	38:01	,12	57:41		
,478	61:01	,511	38:01	,13		P.X002,15	17:01
,479	64:01	,512	38:01	,14		,16	17:01
,480	64:01	,513	72:43			,17	57:41
,481	64:01	,514	72:43	M.X002,1	13:41	,18	
,482	69:01	,515	72:43	,2	13:41		
,483	69:01	,516	72:43	,3	13:41	X003,0	05:01
,484	69:01	,517	70:43	,4	37:43	,1	06:01
,485	69:01			,5	37:43	,3	14:01
,486	62:01	M.X001,1	36:01	,6	45:41	,5	07:41
,487	62:01	,2	36:01	,7	45:41	,8	07:41
,488	70:43	,3	36:01	,8	45:41	,10	08:01
,489	70:43	,4	36:01	,9	30:01	,17	11:01

Position	Sheet	Position	Sheet	Position	Sheet	Position	Sheet
X003,19	16:01	M.X006,24		M.X006,57	24:01	M.X007,14	71:41
,90		,25	40:01	,58	24:01	,15	71:41
,201		,26	40:01	,59	24:01	,16	39:41
,202	07:41	,27	40:01	,60	70:43	,17	39:41
,203		,28	40:01	,61	70:43	,18	39:41
,204		,29	40:01	,62	70:43	,19	82:41
		,30	40:01	,63	70:43	,20	82:41
M.X004,1	21:01	,31	40:01	,64	70:43	,21	82:41
,2	21:01	,32	40:01	,65	70:43	,22	
		,33	40:01	,66		,23	
M.X006,1	41:01	,34	40:01	,67		,24	
,2	41:01	,35	40:01	,68		,25	
,3	41:01	,36	40:01	,69		,26	
,4	41:01	,37	40:01	,70		,27	
,5	37:43	,38	45:41	,71		,28	41:01
,6	37:43	,39	45:41	,72		,29	41:01
,7	37:43	,40	45:41	,73		,30	41:01
,8	37:43	,41	45:41	,74		,31	41:01
,9	37:43	,42	45:41	,75		,32	
,10	37:43	,43	45:41			,33	
,11	41:01	,44		M.X007,1	37:43	,34	
,12	41:01	,45		,2	37:43	,35	
,13	41:01	,46		,3	37:43	,36	71:41
,14	41:01	,47	40:01	,4	37:43	,37	
,15	35:01	,48	40:01	,5	37:43		
,16	35:01	,49	40:01	,6	37:43	M.X008,1	07:41
,17	35:01	,50		,7	37:43	,2	07:41
,18	35:01	,51		,8		,3	07:41
,19		,52		,9		,4	07:41
,20		,53	25:01	,10			
,21	45:41	,54	25:01	,11		X009,1	32:43
,22	45:41	,55	25:01	,12	69:01	,2	32:43
,23	45:41	,56	25:01	,13	69:01	,3	32:43

Position	Sheet	Position	Sheet	Position	Sheet	Position	Sheet
X009,4	32:43	X016,12	31:01	M.X032A,3:2	61:01	M.X033B,3:2	69:01
,5		,13	31:01	,4:1	64:01		
,6		,14	31:01	,4:2	64:01	M.X034A,1:1	61:01
,7		,15	31:01	,5:1	64:01	,1:2	61:01
,8				,5:2	64:01	,2:1	64:01
		X017,1	06:01			,2:2	64:01
X011,3	16:01	,2	06:01	M.X032B,1:1	68:01	,3:1	61:01
,47	05:01	,3	06:01	,1:2	68:01	,3:2	61:01
				,2:1	68:01	,4:1	61:01
M.X014,1	10:01	X019,3	06:01	,2:2	68:01	,4:2	61:01
,2	10:01	,5	06:01	,3:1	68:01	,5:1	61:01
,3	10:01	,7	06:01	,3:2	68:01	,5:2	61:01
,4	39:41			,4:1	68:01		
,5	39:41	X021,1	06:01	,4:2	68:01	M.X034B,1:1	61:01
,6	39:41	,2	06:01	,5:1	68:01	,1:2	61:01
,7	39:41	,3	06:01	,5:2	68:01	,2:1	61:01
,8	39:41	,4	06:01			,2:2	61:01
,9	39:41	,5	06:01	M.X033A,1:1	68:01	,3:1	64:01
,10	39:41	,6	06:01	,1:2	68:01	,3:2	64:01
,11	71:41			,2:1	68:01	,4:1	64:01
,12	71:41	X023,1	06:01	,2:2	68:01	,4:2	64:01
		,2	06:01	,3:1	68:01	,5:1	64:01
X016,1	31:01	,3	06:01	,3:2	68:01	,5:2	64:01
,2	31:01	,4	06:01	,4:1	69:01		
,3	31:01			,4:2	69:01	M.X036,1	21:01
,4	31:01	X024,1	06:01	,5:1	69:01	,2	21:01
,5	31:01	,2	06:01	,5:2	69:01		
,6	31:01					M.X037A,1	19:01
,7	31:01	M.X032A,1:1	62:01	M.X033B,1:1	69:01	,2	19:01
,8	31:01	,1:2	62:01	,1:2	69:01		
,9	31:01	,2:1	62:01	,2:1	69:01	M.X037B,1	19:01
,10	31:01	,2:2	62:01	,2:2	69:01	,2	19:01
,11	31:01	,3:1	61:01	,3:1	69:01		

Position	Sheet	Position	Sheet	Position	Sheet	Position	Sheet
M.X038,1	18:01	M.X074,1	14:01	M.X109,1	39:41	M.X371,D	81:41
,2	18:01			,Z	39:41	,E	81:41
		X100,1	14:01	,3	39:41	,F	81:41
M.X039,1	19:01	,2	14:01	,4	39:41		
,2	19:01	,3	14:01	,5	39:41		
		,4	14:01	,6	39:41		
M.X040,1	18:01	,5	14:01	,7	39:41		
,2	18:01	,6	14:01	,8	39:41		
		,7	14:01	,9	39:41		
M.X050,1	20:01	,8	14:01	,10	40:01		
,2	20:01	,9	14:01	,11	40:01		
		,10	14:01	,12	40:01		
M.X055,1	20:01	,11	14:01	,13			
,2	20:01	,12	14:01	,14			
		,13	14:01	,15			
M.X070,1:1	72:43	,14	14:01	,16			
,1:2	72:43	,15	14:01	,17			
,2:1	72:43	,16	14:01	,18			
,2:2	72:43	,17	14:01	,19	37:43		
,3:2	72:43	,18	14:01	,20	37:43		
,4:1	70:43	,19	14:01				
,4:2	70:43	,20	14:01	M.X370,PE	81:41		
		,21	14:01	,U	81:41		
X071,1	14:01	,22	14:01	,V	81:41		
		,23	14:01	,W	81:41		
M.X071,1	14:01	,24	14:01	,1	81:41		
		,25	14:01	,2	81:41		
X072,1	14:01	,26	14:01	,3	81:41		
		,27	14:01	,4	81:41		
M.X072,1	14:01	,28	14:01				
		,29	14:01	M.X371,A	81:41		
M.X073,1	14:01	,30	14:01	,B	81:41		
				,C	81:41		

Tetra Pak
MODENA ITALY

This drawing must not without the consent of Tetra Pak be copied, transmitted or disclosed to any third party.

AM-NO	DRAWING-NO.	ALTERATIONS
19260		DOCUMENTATION RELEASED
20080	BE-649205-140V	EL. EQUIPMENT IS CHANGED
	CE-41723-010V	CTRL. CAB. IS CHANGED: POS. 0001.1: PART N.(90111-332) IS DELETED POS. 0090: PART N.(90002-0009) IS DELETED POS. F032 IS DELETED POS. F032:1 IS DELETED POS. F033 IS DELETED POS. F033:1 IS DELETED POS. K202 IS DELETED POS. K203 IS DELETED POS. P004:1: PART N.(359241-0199) IS ADDED POS. 0090: PART N.(90002-0004) IS ADDED POS. 0095: PART N.(90099-0110) IS ADDED POS. K006:2 IS ADDED POS. K026:2 IS ADDED POS. K030:2 IS ADDED POS. K036:2 IS ADDED POS. K046:2 IS ADDED POS. K052:2 IS ADDED POS. K053:2 IS ADDED POS. K054:2 IS ADDED POS. K083:2 IS ADDED POS. K084:2 IS ADDED POS. K095:2 IS ADDED POS. K097:2 IS ADDED POS. 0030 IS CHANGED QTY: FROM 28 TO 29 POS. 0060 IS CHANGED QTY: FROM 12 TO 13
	CE-41725-010V	MACHINE IS CHANGED: POS. 0026: PART N.(351150-0403) IS DELETED POS. 0310: PART N.(351150-0407) IS DELETED POS. 0026: PART N.(351150-0122) IS ADDED POS. 0310: PART N.(351150-0406) IS ADDED POS. 0406 IS CHANGED QTY: FROM 5500 TO 5700 POS. 0407 IS CHANGED QTY: FROM 5650 TO 5800 POS. 0408 IS CHANGED QTY: FROM 4850 TO 5000 POS. 0409 IS CHANGED QTY: FROM 5550 TO 5700

AM-NO	DRAWING-NO.	ALTERATIONS
	CE-41728-010V	SP. PARTS IS CHANGED: POS. 0170: PART N.(75994) IS DELETED
	CE-41766-010V	EL. EQUIPMENT IS CHANGED: POS. A401: PART N.(67600-0401) IS DELETED POS. A402: PART N.(67600-0401) IS DELETED POS. A401: PART N.(67600-0501) IS ADDED POS. A402: PART N.(67600-0501) IS ADDED POS. 0020 IS ADDED POS. 0030 IS ADDED POS. 0040 IS ADDED
	CE-41729-010V	EL. DOCUMENT LIST IS CHANGED: POS. 0301 IS ADDED POS. 0302 IS ADDED POS. 0303 IS ADDED POS. 0304 IS ADDED POS. 0305 IS ADDED POS. 0306 IS ADDED POS. 0307 IS ADDED POS. 0308 IS ADDED POS. 0309 IS ADDED POS. 0310 IS ADDED POS. 0311 IS ADDED POS. 0312 IS ADDED POS. 0313 IS ADDED POS. 0314 IS ADDED POS. 0317 IS ADDED POS. 0318 IS ADDED POS. 0319 IS ADDED POS. 0320 IS ADDED POS. 0323 IS ADDED POS. 0324 IS ADDED POS. 0325 IS ADDED POS. 0326 IS ADDED POS. 0327 IS ADDED POS. 0328 IS ADDED POS. 0329 IS ADDED

	19260		DATE 930310		HK/UTH			
ISSUE	A	B	C	D	E			
AM-NO	20080	20398	20406	20698	20720			
DATE	930909	931001	931015	931119	931129			
SIGN	HK/MR	HK/MR	HK/MR	HK/MR	HK/MR			

ALTERATIONS ONLY IN CADAM

DESCRIPTION: ALTERATION MESSAGES

MACHINE: TBA/9-1401 S.A

44093-99:01

10.51 94.2.28

Tetra Pak
MODENA ITALY

This drawing must not without the consent of Tetra Pak be copied, transmitted or disclosed to any third party.

AM-NO	DRAWING-NO.	ALTERATIONS
		POS. 0330 IS ADDED
		POS. 0331 IS ADDED
		POS. 0332 IS ADDED
		POS. 0333 IS ADDED
		POS. 0390 IS ADDED
		POS. 0399 IS ADDED
	CIRCUIT DIAGRAM	
	44093-07:01	CONNECTION BETWEEN T009 AND X001:55 CHANGED FROM 0 TO 10
	44093-10:01	CONNECTION REFERENCE "A" IS INTRODUCED
	44093-11:01	CONN. REF. "C" AND "D" ARE INTRODUCED. TEXT "PRELIMINAR" IS REMOVED.
	44093-12:01	CONN. REF. "B" IS INTRODUCED, 0099 TEXT SH.32 IS CHANGED TO SH.41.
	44093-14:01	M001 PINS ARE NOW SHOWN, CABLE V.UP AND V.DOWN ARE REMOVED.
	44093-16:01	F019 PINS HAVE INVERTED THEIR PLACE, F055(B-C) HAVE CHANGED THEIR PIN NUMBERS, L50 CONNECTION POINT INTRODUCED.
	44093-17:01	D108:1 IS INTRODUCED
	44093-29:01	X001:113 IS CHANGED FROM A116:01 TO A117:02
	44093-32:01	K036 SHEET REFERENCE IS CHANGED TO 63-63-62
	44093-34:01	TEXT A115:15 IS CHANGED TO A115:13.
	44093-37:01	M.X007:3 AND 2 HAVE INVERTED THEIR PLACE.
	44093-38:01	M.B002 SYMBOL IS CHANGED FROM NO. TO NC.
	44093-40:01	M.B104, TEXT "B. VALVE" IS REMOVED. X001:168, M.X006:19 AND :20 ARE INTRODUCED CONNECTION BETWEEN M.X006:27 AND :32 IS INTRODUCED
	44093-41:01	K075 SHEET REFERENCE IS CHANGED TO SH.65.
	44093-57:01	TEXT P.L1:06 "SHORT STOP" IS CHANGED TO "NO PRODUCTION ALLOWED".
	44093-62:01	TEXT K087 IS CORRECTED TO ADDING "INLET".
	44093-64:01	M.Y012 HAS INVERTED PLACE WHIT M.Y014.
	44093-68:01	M.Y019 HAS CHANGED PLACE TO M.X032B 1:1 1:2
	44093-72:01	A121:13 TEXT IS CHANGED FROM SH.33 TO 32.

AM-NO	DRAWING-NO.	ALTERATIONS
	44093-90:01	LINE SUMMARY, L51 X.L51,1: K048,13 AND F019,1 ARE ADDED, F019,2 IS REMOVED. L51 X.L51,2: K048,13 IS REMOVED.
	44093-99:01	ALTERATION MESSAGES IS UPDATE: PAG.1 IS CHANGED, PAG.2 IS ADDED.
	TPMC-PROGRAM	
	47615-01:01	LIST OF BLOCKS IS ADDED.
	47615-02:01	LIST OF ADDRESSES IS ADDED
	47615-03:01	VOLUME ADAPTION DOCUMENT IS ADDED.
	47615-04:01	SEQUENCE DIAGRAM IS ADDED.
	47615-05:01	PROGRAM LIST IS ADDED.
	47615-06:01	PROGRAM LIST IS ADDED
	47615-07:01	PROGRAM LIST IS ADDED
	47615-08:01	PROGRAM LIST IS ADDED
	47615-09:01	PROGRAM LIST IS ADDED
	47615-10:01	PROGRAM LIST IS ADDED
	47615-11:01	PROGRAM LIST IS ADDED
	47615-12:01	PROGRAM LIST IS ADDED
	47615-13:01	PROGRAM LIST IS ADDED
	47615-14:01	PROGRAM LIST IS ADDED
	47615-17:01	PROGRAM LIST IS ADDED
	47615-18:01	PROGRAM LIST IS ADDED
	47615-19:01	PROGRAM LIST IS ADDED
	47615-20:01	PROGRAM LIST IS ADDED
	47615-23:01	PROGRAM LIST IS ADDED
	47615-24:01	PROGRAM LIST IS ADDED
	47615-25:01	PROGRAM LIST IS ADDED
	47615-26:01	PROGRAM LIST IS ADDED
	47615-27:01	PROGRAM LIST IS ADDED
	47615-28:01	PROGRAM LIST IS ADDED
	47615-29:01	PROGRAM LIST IS ADDED
	47615-30:01	PROGRAM LIST IS ADDED
	47615-31:01	PROGRAM LIST IS ADDED
	47615-32:01	PROGRAM LIST IS ADDED
	47615-33:01	PROGRAM LIST IS ADDED
	47615-90:01	PROGRAM LIST IS ADDED
	47615-99:01	PROGRAM LIST IS ADDED

	19260	930310	HK/UTH				
ISSUE	A	B	C	D	E		
AM-NO	20080	20398	20406	20698	20720		
DATE	930709	931001	931015	931119	931129		
SIGN	HK/MR1	HK/MR1	HK/MR1	HK/MR1	HK/MR1		

DESCRIPTION: ALTERATION MESSAGES

MACHINE: TBA/9-1401 S.A

44093-99:01 2 3

ALTERATIONS ONLY IN CABAM

10.51 94.2.28

Tetra Pak
MODENA ITALY

This drawing must not without the consent of Tetra Pak be copied, transmitted or disclosed to any third party.

AM-NO	DRAWING-NO.	ALTERATIONS
	MOUNTING DRAWING	
	52471-08:01	FUSES ARE CHANGED: F1,5,8,17,19, NOW ARE PLACED IN THIS ORDER FROM LEFT TO RIGHT: F1,8,5,S,19,S,17,...
	52471-15:01	M.B104 AND M.B108 ARE INTRODUCED.
	52471-25:01	DISTANCE BETWEEN 1-2-3-4 ARE CHANGED: SEE "DRAWING REMARKS".
	CONNECTION DIAGRAM	
	61232-06:01	CABLE 307 CHANGED FROM 1-2-3 TO BU-BK-BN.
	61232-13:01	CABLE OF EMERGENCY STOP IS CHANGED FROM 5-6 TO 3-4.
	61232-16:01	M.B021A-C CABLE TEXT ARE CHANGED FROM BK-BK TO BK-BU.
	61232-22:01	M.B010 SYMBOL IS CHANGED:NO CONNECTED TO BK, NC CONNECTED TO BN.
	61232-28:01	IN THE CABLE 26 THE Y/G. WIRE IS DELETED. M.B108B CABLE TEXT CHANGED FROM BU-BK TO BK-BK.
	61232-43:01	M.Y019 CHANGED FROM M.X032B 5:1 AND 5:2 TO M.X032B 1:1 AND 1:2.
	61232-45:01	M.Y012 AND 14 HAVE INVERTED THEIR PLACE.
	61232-48:01	M.B002 SYMBOL IS CHANGED.
	TERMINAL DRAWINGS	POS. 0313 IS ADDED
	570926-0004	DISTANCE BETWEEN :2 AND THE EDGE IS CHANGED TO 80 MM. POS. :9 IS REMOVED.
	571519	POS. :7 IS CHANGED FROM 10 PCS TO 7 PCS. POS. :15 IS INTRODUCED.
	571520	POS. :1 IS CHANGED FROM 110MM. TO 120MM. P.X002 IS MOVED CLOSER TO THE EDGE.
	571524	POS. :2 IS CHANGED FROM 8 PCS TO 6 PCS. POS. :3 IS REMOVED.
	571525	POS. :6 IS ADDED
	571517	FUSES PANEL LABEL: F1,5,8,17,19, NOW ARE PLACED IN THIS ORDER FROM LEFT TO RIGHT: F1,8,5,S,19,S,17,...

AM-NO	DRAWING-NO.	ALTERATIONS
20398	CE-41723-010V	CTRL. CAB. IS CHANGED: POS. 0077: PART NUMBER IS CHANGED FROM 90259-0026 TO 90259-0027.
	CE-41727-010V	EXTRA EQU. IS CHANGED: POS. 0077 IS ADDED.
	CIRCUIT DIAGRAM	
	44093-07:01	THE NOTE 1 MOVED FROM M.R038 TO M.R037. THE M.R038 CONNECTION HAS BEEN CHANGED.
	44093-99:01	ALTERATION MESSAGE IS UPDATE
	TPMC PROGRAMME	
	47615-07:01	RUNG 0714: THE PARALLEL BRANCH WHIT D055 MOVED IN THE FIRST PARALLEL POSITION DUE TO THE FUNCTION OF DON: T0000.1 MOVED BEFORE D055.
	47615-31:01	RUNG 3104: T0000.1 MOVED BEFORE D067.
	571517	FUSE PANEL LABEL: 0077 CHANGES THESE TWO VALUES: 50HZ. FROM 9.7A. TO 10A. 60HZ. FROM 8.0A. TO 9A.
20406	CE-41723-010V	CTRL. CAB. LIST IS CHANGED: POS.320-330 DELETED: POS.045 INTRODUCED.
	CE-41727-010V	EXTRA EQUIPMENT IS CHANGED: 0077 CHANGE PART NUMBER FROM 90259-0027 TO 90259-0026. THE VARIANT DESCRIPTION TEXTS ARE CHANGED
	CIRCUIT DIAGRAM	
	44093-38:01	THE CONNECTION FOR M.B006 HAS BEEN CHANGED FROM 1 AND 3 TO 13 AND 14. NOTE 1 IS INTRODUCED
	44093-99:01	ALTERATION MESSAGE IS UPDATE: PAG.3 IS CHANGED, PAG.4 IS ADDED.

DRAWING WITH AM NO	19260		DATE: 930310		DRAWN: HK/UTH		
ISSUE	A	B	C	D	E		
AM NO	20080	20398	20406	20696	20720		
DATE	930909	931001	931015	931119	931129		
DRAWN	HK/MRT	HK/MRT	HK/MRT	HK/MRT	HK/MRT		

ALTERATIONS ONLY IN CADAM

DESCRIPTION: ALTERATION MESSAGES

MACHINE: TBA/9-1401 S.A

44093-99:01 3.4

10.51 94.2.28

Tetra Pak
MODENA ITALY

This drawing must not without the consent of Tetra Pak be copied, transmitted or disclosed to any third party.

AM-NO	DRAWING-NO.	ALTERATIONS
	TPMC PROGRAM 47615-03:01	VOLUME ADAPTION DOCUMENT IS CHANGED: RUNG 621 IS CORRECTED TO 624, AND ITS REF. INSTRUCTION CHANGE FROM 017.10 TO M06.00 RUNG 1434 VALUE 200 S. CHANGE FROM KFE9FH TO KFF9FH
	CONNECTION DIAGRAM 61232-07:01 61232-48:01	THE M.R038 PIN CONFIGURATION IS DELETED THE CONNECTION FOR M.B006 HAS BEEN CHANGED FROM 1 AND 3 TO 13 AND 14. NOTE 1 IS INTRODUCED
20698	CIRCUIT DIAGRAM 44093-99:01	ALTERATION MESSAGE IS UPDATE
	TPMC PROGRAMME 47615-02:01 47615-03:01	LIST OF ADDRESSES IS CHANGED VOLUME ADAPTION DOCUMENT IS CHANGED: A NEW VOLUME 250CC SLIM IS ADDED. THE RUNGS 1406-1408 ARE ADDED WITH THIS NEW VOLUME.
	47615-14:01	RUNG 1406 AND 1408: VOLUME DEPENDENT TEXT ARE INTRODUCED.
	47615-17:01	RUNG 1705: D024 IS INTRODUCED RUNG 1706: BRANCH WITH M00.05 AND D024 ARE REMOVED
	47615-18:01	RUNG 1811: M00.07 IS REMOVED
20720	CE-41725-010V	MACHINE IS CHANGED: POS. 0372-0373, PART N.548770-005 ARE CHANGED IN 548770-0008
	CIRCUIT DIAGRAM 44093-99:01	ALTERATION MESSAGE IS UPDATE

AM-NO	DRAWING-NO.	ALTERATIONS

	19260	DATE 930310	DRAWN HK/UTH			DESCRIPTION: ALTERATION MESSAGES	
SERIAL	A	B	C	D	E		
AM-NO	20080	20398	20406	20698	20720		
DATE	930909	931001	931015	931119	931129		
DRAWN	HK/MRI	HK/MRI	HK/MRI	HK/MRI	HK/MRI	MACHINE: TBA/9-1401 S.A	44093-99:01 4/-

ALTERATIONS ONLY IN CADAM

94.2.28 10:51

This drawing must not without the consent of Tetra Pak be copied, transmitted or disclosed to any third party.

EC NO.	ALTERATIONS
72526	Documentation released
72800	Changed description to "TETRA WEDGE" on all sheets. 44093-07 Sheet added. Heating elements and cables removed. 44093-39 Reference M.X007:21 removed Reference M.X007:19 removed 44093-45 Sheet added. 44093-71 M.B0158 added. 44093-72 Sheet added. 44093-82 M.B380 connected throu M.X002:28,29,30
73349	559492-0100 New version of positions 0020,0030,0102,0137, 0170,0172,0183,0190,0191,0199,0413,0414,0423, 0451,1020 Added positions 0132,0433 559493-0100 Added positions W288,W289 Changed positions 1040,1060 and 1090. Removed positions M.Y070,M.Y071,M.Y072 44093-02:43 Changed according to circuit diagrams. 44093-32:43 Sheet added. 44093-37:43 M.B090 added. 44093-70:43 M.Y073 added. 44093-72:43 Reference to M.X070:4:2 added. 44093-83:43 Strawapplicator added. 44093-90:43 Changed according to circuit diagrams. 44093-91:43 Changed according to circuit diagrams. 44093-99:43 Changed according to ECN. 61232-13:43 Part 2 in cable W025 moved to sheet 14:43 61232-14:43 Strawapplicator added. 61232-23:43 Reference to M.X002:31-32 added. 61232-33:43 Sheet added. 61232-51:43 M.Y073 added. 47615-02:43 Crossreferences changed. 47615-19:43 Rung 1919: changed.

EC NO.	ALTERATIONS
47615-35:43	Rung 3516: non-contact M31.17 added. Rung 3519: rung added. Rung 3525: rung added. Rung 3526: rung added. Rung 3527: rung added. Rung 3528: contact S01.20 changed to M32.01. Rung 3530: non-contact 106.14 changed to contact. Rung 3537: 0075 added.

Date	-					Tetra Pak	Designer TEAN	Date 000104	Approved PIH Date 000315	Doc. class -
ECR No.	73349						Marking TBA/9-1401	Description "TETRA WEDGE"		
Sign./Date	TEAN/000104				RK-559491-0100		Company Tetra Brik Packaging Systems AB	Drawing No. RK-44093-99:43		Page -
Appr./Date	PIH/000315				Drawing remarks					

LIST OF BLOCKS

05	PULSE AND FLASHGENERATING
06	POSITIONS MACHINELADDER, STEP UP CONDITIONS
07	PREHEATING 1, PEROXID TANK HANDLING AND PREHEATING 2
08	TUBESEALING AND PRESTERILIZING
09	SPRAYING
10	DRYING, PREHEATING 3
11	SIGNALS TO AND FROM STERILIZER
12	STARTSEQUENZER FOR RUNNING PRODUCTION
13	ROTATION/CONG/FFU/STRIP/JAW/WATER BATH/PAPER SUPPLY/SUCT.,AIR-INLET AND B-VALVE
14	DRIVEMOTOR AND PRODUCTION
17	TRANSVERSAL SEALING
18	DESIGN CORRECTION
19	DUMPING OF PACKAGES
20	NO PRODUCTION ALLOWED
23	PRODUCTION ENDED, INTERNAL CLEANING
24	EXTERNAL CLEANING
25	LUBRICATION
26	6-CHANNEL RECORDER
27	MAINS INTERRUPT AND ALARMDELAYS
28	JUMP TO MACHINELADDERPOSITION "STERILIZATION FULLFILLED" (POSITION 3)
29	JUMP TO ZEROPOSITION IN MACHINELADDER
30	ALARM 1 TO 16 ON ALARMDISPLAY/BEACON
31	ALARM 17 TO 32 ON ALARMDISPLAY
32	ALARM 33 T0 48 ON ALARMDISPLAY
33	ALARM 49 T0 64 ON ALARMDISPLAY
90	
99	FAST FUNCTIONS, TS, DESIGN PULSE

10:51 94.2.28

LIST OF ADDRESSES

Building Kit	AM Number	Date	Sign	Description
559491-0100	72800	990820	TAN	WEDGE REBUILDINGKIT
559491-0100	73349	000104	TAN	FOLLOW UP

LIST OF ADDRESSES

TBA/9-1401 S.A.
47615 200ML ECN73349
EXTRA WEDGE REBUILDINGKIT

000104 TEAN
990820 TEAN
951009 HK/PRI
940916 HK/MRI
940426 HK/RAI

Type: 64.1
Size: 9185
Blocks: 28
Rungs: 411
Addresses: 661

I/O Map:

```
          RACK    0       1       2       3       4       5       6       7
        +---+---+--+--+  +--+--+  +--+--+  +--+--+  +--+--+  +--+--+  +--+--+  +--+--+
        !   !   !  !I4!  !  !O4!  !O0!O4!  !  !  !  !  !  !  !  !  !  !  !  !  !  !
        ! P !   +--+--+  +--+--+  +--+--+  +--+--+  +--+--+  +--+--+  +--+--+  +--+--+
        ! O ! C !E1!I5!  !  !O5!  !O1!  !  !  !  !  !  !  !  !  !  !  !  !  !  !  !
        ! W !   +--+--+  +--+--+  +--+--+  +--+--+  +--+--+  +--+--+  +--+--+  +--+--+
        ! E ! U !I2!I6!  !  !O6!  !  !  !  !  !  !  !  !  !  !  !  !  !  !  !  !  !
        ! R !   +--+--+  +--+--+  +--+--+  +--+--+  +--+--+  +--+--+  +--+--+  +--+--+
        !   !   !I3!  !  !  !O7!  !  !  !  !  !  !  !  !  !  !  !  !  !  !  !  !  !
        +---+---+--+--+  +--+--+  +--+--+  +--+--+  +--+--+  +--+--+  +--+--+  +--+--+
```

Fast I/O: Block90
Block99 E01 I06 O21

Scan time: Block05-89: 10
Block90-98: 2
Block99: 1

Sector: 0 = E01 1 = E01 2 = 3 = 4 = 5 = 6 = 7 =

LIST OF ADDRESSES

Address	Position		Function		used in rungs
C000			Printed design photocells	out of function	*1805, *1806
C001			Monitor position printed	design out of limit	*1809, *1810, *1811
C002			Sequenzer filling of	cleantray by ext.cleaning	*2407, *2409
C005			Sequencer for spraying of	hydrogeneperoxide	*0903, *0904
C006			Sequencer for spraying of	hydrogeneperoxid	*0903, *0904
C007			Sequencer drying after	fullfilled spraying	*1003, *1004
C009			Monitor machine speed		*1435, *1438
C010			Monitor paper low supply		*1312, *1313
C011			Max.time level tank		*0708, *0710
C012			Count packages		*1915, *1916
C0000.0	5-	6	Photocell	pulse prod.	1807
C0000.2	9-	10	Photocell	pulse prec.	1807
C0001.0	5-	9	Package out	of design	1809, 1812, 1903
C0001.1	0-	1	Startvalue	des. mon.	0621, 1810, 1813
C0001.2	0-	3	Out of des.	monitor	0614, 3107
C0002.1	110-	600	Allowed	fillingtime	2408
C0002.2	100-	110	Min filling	time	2416
C0002.3	0-	20	Draining	time	2411
C0002.4	570-	572	Max filling	time	2416
C0005.0	110-	112	Spraying	finished	0903, 0910
C0005.1	1-	9	Filling	spraytank	0905
C0005.2	11-	112	Spray count	contr.steam	0908, 2311, 2904, 2906
C0005.3	11-	20	Min empty-	ing time	0909
C0005.4	51-	110	Max empty-	ing time	0729, 0909
C0005.5	11-	109	Spray and	paus time	1441
C0006.1	10-	10	Limit perox	filling	0906
C0006.2	11-	50	Air inlet	tower on	0726, 2903
C0007.0	1200-	1210	Drytime	over	1003, 1005
C0007.1	1080-	1210	Closing of	AP-valve(B)	1006, 3206
C0007.2	1080-	1140	Run. time	drying	1441
C0009.0	105-	106	Pack. count	mach. speed	1436
C0009.1	1-	109	Speed timer	running	1437
C0009.2	109-	110	New speed	test	1438
C0010.0	150-	152	Max.run pac	low supply	1313, 2004

LIST OF ADDRESSES

Address	Position	Function		used in rungs
C0011.0	900- 910	M.time low	level tank	0708
C0011.1	900- 905	M.time low	level tank	0707, 2004
C0011.2	300- 905	Low level	H2O2 tank	3104
C0012.0	7- 200	Open drop	chute	1915, 1918
D002	0s40	Startdelay	low speed	1414
D003	0s40	Startdelay	high speed	1415
D004	0s20	Signal des.	correction	1804
D005	10s0	Delay mains	to 0-pos.	2704
D006	0s10	Restart	mains	2706
D007	0s70	Start delay	rot.mon.pap	1304
D008	0s70	Paper		1304
D009	3s0	Alarm delay		1315
D010	4s0	Delay fill.	cleantray	2408
D011	2m00s	Ready	cleaning	0718
D012	3s0	Delay stop	suct.valve	1314
D013	5s0	B-valve pos		1316
D016	30s0	Stop	conveyor	1219
D017	11s5	Stop delay	drive motor	1415
D018	0s70	St.delay FF	rot.monitor	1306
D019	3s0	Delay timer	FF rot.mon	1306
D020	15s0	Delay s.vis	lubr.press.	2507
D021	8s0	Delay s.vis	lubr.press.	2507
D022	20s0	Delay alarm	waterpres.	2702
D023	8s0	Delay	TS.seal off	1704
D024	5s0	Delay TS	off	1705
D025	0s70	Start delay	FF rot.mon.	1307
D026	0s618	Delay time	FF rot.mon.	1307
D027	3s0	Stop delay	from pos. 3	0606
D028	3s0	Drivemotor	off-delay	1414
D029	0s40	Delay brake		1418
D030	59m59s	Max runtime	lubr. fault	2509
D033	5m00s	Delay heat	off FF	1007
D034	10s0	Suctionvalv	house/bath	0725

LIST OF ADDRESSES

Address	Position	Function		used in rungs
D035	6s0	Delay super	steam mon.	1311
D036	10s0	Delay super	water press	1310
D037	0s50	LS-/SA	elements on	1216
D039	3s0	C-valve off	aft.sh.stop	1427
D040	3s0	Delay	C-valve on	1427
D042	6s0	Delay time	for C-valve	1427
D045	0s70	Delay strip	rotat.monit	1308
D046	0s70	Start delay	str.rot.mon	1308
D047	3s0	Delay cong.	monitor	1305
D049	25s0	Sprinkler	time	1430
D051	3s0	Delay perox	bath level	1207
D052	2s5	Alarm delay	ster.air pr	0720
D053	0s2	Start delay	ster.air pr	0609
D055	2m00s	Delay after	short stop	0714
D059	5s0	Main air	pressure	1010
D060	0s5	Main air	check delay	1010
D061	2s0	Alarm delay		0723
D062	2s0	Alarm delay		0724
D065	4s5	Main air	check delay	1010
D067	2m00s	Delay alarm		3104
D072	2s0	Check delay		2707
D073	35s	Delay alarm	H2O2 hi.lvl	0712
D074	0s340	Delay start	index	3526
D075	0s050	Delay DMC-	active off	3537
D081	0s60	Pulse train	for jog	3502
D082	0s50	Delay HW-	enable off	3504
D083	0s50	Delay SW-	enable on	3505
D084	5s0	Check servo	failure	3506
D085	3s0	Check power	failure	3507
D086	10s0	Delay servo	failure	3508
D087	0s020	Redo stop		3511
D088	10s0	Send new	jog signal	3524
D089	5s0	Check index	done	3530
D090	2m00s	CIP record	on	2323

LIST OF ADDRESSES

Address	Position	Function		used in rungs
D091	2m00s	CIP record	off	2323
D093	1s0	Delay time	Photo cell	1220
D094	10s0	Abort	homesearch	3519
D096	0s50	Delay after	Short Stop	1209
D097	22s00	End prolong	filling	1210
E01		M.M. angle		
E01.07		M.M. angle	bit 07	1406
				1406
I02.01	M.B10-15	Safety	monitors	0621, 1202, 1204, 1309, 1410, 1420, 1803, 2803, 3307
I02.02	M.B21A,B,C	Superstruct	door posit.	0619, 0702, 0703, 1217, 2305, 2306, 2405, 2904, 3111, 3307
I02.03	Q201-Q94	Overload	protection	0516, 0621, 1204, 1309, 1420, 2803, 3308
I02.04	S34-M.S35	No product.	allowed	0516, 2005
I02.05	M.B10	Crank pos.		1410, 1413, 1414, 1415, 1418, 3307
I02.06	M.S33	Strip spl.	drop chute	1911, 1912
I02.07	S2	Clean throu	steam barr.	2321
I02.10	S4	Service	switch	0604, 0610, 0620, 0621, 0904, 0910, 1005, 1006, 1012, 1102, 1103, 1106, 1107, 1206, 2004, 2008, 2304, 2309, 2311, 2602, 2603, 2903, 2904, 2905, 2906, 3014, 3306
I02.11	M.S14	Manual	lubrication	0509
I02.12	M.B2	Main air	pressure	0509, 0608, 0619, 0706, 0717, 1010, 2305
I02.13	M.B7	Cool water	pressure	0620, 2702, 3303
I02.14	M.B6	Lubr.oil	pressure	2507, 2508
I02.15	M.B30:A	Lubr oil	low level	0509, 0516, 0619, 2403, 2404, 2509, 3302
I03.00	M.B8	Paper	supply	1312, 1313, 3102
I03.01	M.B24	Unreeling	motor start	1420
I03.02	M.B25	Unreeling	motor stop	1420, 1421
I03.03	M.S4,S32,	Emergency	stops	0706, 2707, 2708, 3308, 3309, 3505, 3509
I03.04	M.B44	Infeed	congestion	0510
I03.05	M.B9	Paper web		0507, 1505

LIST OF ADDRESSES

Address	Position	Function		used in rungs
I03.06	M.B32	Strip	supply	3015
I03.07	M.B33	Strip	break	0508
I03.10	M.B35	Paper	splice	0511
I03.11	M.B46-47	Air knife/	squ.rol.pos	2003, 2603, 3020
I03.12	M.B51	Productpipe	position	0619, 1427, 2318, 2319, 2905, 3008
I03.13	M.B53	Ster.air	valve(B)pos	0619, 1316, 1429
I03.14	M.B61	Cleaning	cup posit.	0619, 2318, 2319, 3103
I03.15	M.B63	Cleaning	pipe posit.	0619, 2318, 2319, 3005
I03.16	M.B104	Sterile air	pipe posit.	0619, 2318, 2319, 2905, 3008
I03.17	S3	Selector	fill entr.	0615
I04.00	M.B16A,B	Jaw system	overload	0515, 1303
I04.01	Q87,98,99	Overl.prot	compr, fan	0717, 3308
I04.03	M.B85	Perox.bath	water press	0515, 1310
I04.04	M.B18,62	Sterile air	pres.inl/su	0609, 0619, 0720
I04.05	M.B48A,B	Per.bath	cover pos.	0515, 0619, 2906, 3109
I04.06	M.B45:2	Hydraulic	unit temp	1206, 2004, 3116
I04.07	M.B45:4	Hydr.unit	low level	2004, 3114
I04.10	A15.15	Cleaning	tray,level	2408, 2416
I04.11	A17.15	Spraytank	quantity	0906, 0909
I04.12	A18.15	Peroxide	bath,level	1203, 1207, 1213, 3010
I04.13	A19.15	Separator,	level	2305, 2905, 3202
I04.14	A22.15	Peroxide	tank, level	0619, 0707, 0709, 0712, 0714, 3104
I04.15	X100.26	Temp failur	T.S. units	1703
I04.16	X100.27	Failure	T.S. units	1703
I04.17	X1:119	Quemonitor	PLE equipm.	1220
I05.00	A4:24	Temp.monit	presteril.	0619, 0806
I05.01	A6:20	Perox.water	preheating	0809
I05.02	A6:24	Temp.regul.	perox.water	0620, 0808, 2003, 3007
I05.03	A8:20	Temp.regul.	LS tubeseal	0619, 3011
I05.04	A8:24	Temp.regul.	LS	0729, 3011
I05.05	A10:20	Air heater	preheating	3203
I05.06	A10:24	Temp.regul.	air heater	2904, 3203

LIST OF ADDRESSES

Address	Position	Function		used in rungs
I05.07	A13:24	Temp.mon.	air knifes	0728, 2003, 2603, 3206
I05.10	A14:24	Temp.monit.	steam	1311
I05.11	A30:24	Temp.mon.	peroxide	1203, 2003, 2603, 3009
I05.12	A202:24	Temp.regul.	SA	0619, 1413, 3019
I05.13	A450:14	S.A. Short	stop broken	0723
I05.14	A451:14	L.S. Short	stop broken	0724
I05.15	X1:101	Product at	machine	0621, 1102, 1104, 2803, 3014
I05.16	X1:154	Clean of	prod. valve	1006, 1429, 2321
I06.00	A16A:3	Delay	design sign	0505, 9906
I06.01	A16A:4	Design corr	stepping	1804, 1816, 1817
I06.02	M.B71	Air inlet	valve pos.	1315
I06.03	M.B92	Perox. bath	drain pipe	0619, 2906, 3106
I06.04	M.B94	Suction	valve posit	0619, 0620, 1314
I06.05	M.B20	Final fold.	chain pos.	0512, 3525
I06.10		Ready relay		3506
I06.11		Data bit 1	from DMC	3517, 3530, 3535
I06.12		Data bit 2	from DMC	3517, 3530, 3535
I06.13		Data bit 3	from DMC	3517, 3530, 3535
I06.14		Strobe from	DMC	3514, 3517, 3530, 3535
I06.15		Power to	servo is on	3504, 3507
M00.00		Aux. output position 00	ladder	0605, 0608, 0616, *0617, 0620, 0703, 0705, 0706, 0718, 0720, 0727, 1009, 1217, 1905, 2304, 2317, 2402, 2507, 2907, 3004, 3008, 3104, 3106, 3111, 3303, 3304, 3307, 3503
M00.01		Aux. output position 10	ladder	0509, 0608, 0610, *0617, 0619, 0620, 0716, 0718, 0722, 0725, 0726, 0728, 0729, 0802, 0803, 0806, 1012, 1413, 3011
M00.02		Aux. output position 20	ladder	0609, 0611, *0617, 0619, 0620, 0729, 0804, 0806, 0902, 0907, 1012
M00.03		Aux. output position 30	ladder	0607, 0613, *0617, 0620, 0729, 0902, 1002, 1102, 1409, 1411, 1412
M00.04		Aux. output position 40	ladder	0611, 0612, 0614, *0617, 0621, 0704, 1106, 1202, 1203, 1220

LIST OF ADDRESSES

Address	Position	Function		used in rungs
M00.05		Aux. output position 50	ladder	0611, 0613, 0615, *0617, 0621, 0702, 1203, 1205, 1209, 1425, 1428, 1430, 2803
M00.06		Aux. output position 60	ladder	0602, 0614, 0616, *0618, 0621, 1107, 1202, 1203, 1305, 1425, 1426, 1429, 1435, 1439, 1705, 1803, 1811, 1915, 1916, 1919, 1920, 2006, 2316, 2803
M00.07		Aux. output position 70	ladder	0606, 0611, *0618, 0702, 0718, 2304, 2315, 2320, 2405, 3010, 3107, 3515, 3520, 3521, 3523
M00.15		Aux. output position 05	ladder	0606, 0609, *0617, 0619, 0620, 0716, 0718, 1413, 3005, 3018, 3103
M00.17		Ladderposition 40-60		*0618, 1102, 1103, 1203, 1806, 2906, 3014
M01.00		Ladderposition 10-70		0718, *0718, 0720, 0805, 0904, 0910, 1012, 2304, 2405, 2907, 3015, 3018, 3109
M01.04		Aux. output position 40	ladder	*0612, 1203
M02.00		Output for	stepup pulse	*0502, 0509, 0610, 0611, 0613, 0616, 0717, 0803, 1203, 2319, 2404, 2405, 3010
M02.01		Output for	stepdown pulse	*0503, 0606, 0607, 0608, 0609, 0611, 0613, 0803, 2305
M02.02		Pulse short stop		*0504, 1821, 2006
M02.03		Output for	designpulse	*0505, 0615, 1806, 1809, 1810, 1814, 1815, 1816, 1817, 1822
M02.04		Pulse new package		*0506, 1433, 1435, 1913
M02.07		Output for pulse	rotation paper	*0507, 1304
M02.10		Output for pulse	strip break	*0508, 1308
M02.12		Output for pulse start	long lubrication period	*0509, 2502, 2503, 2504
M02.13		Output pulse	congestion	*0510, 1305
M02.15		Output for	paper splice pulse	*0511, 1431, 1432, 1911, 1912
M02.16		Pulse new station,	final folder	*0512, 1306, 1307, 1402, 1404, 1408
M03.00		Pulse		0502
M03.01		Pulse		0503

LIST OF ADDRESSES

Address	Position	Function		used in rungs
M03.02		Pulse		0504
M03.03		Pulse		0505
M03.04		Pulse		0506
M03.06		Pulse		1203
M03.07		Pulse		0507
M03.10		Pulse		0507
M03.11		Pulse		0508
M03.12		Pulse		0509
M03.13		Pulse		0510
M03.15		Pulse		0511
M03.16		Pulse		0512
M04.01		Too high machine speed		*1436, *1439, 2802, 3112
M04.02		Spray tank filling fault		0610, *0906, 3205
M04.04		Work environment aseptic	chamber stop on	0620, 0702, 0703, 0706, 0717, 0721, 0726, 0805, 0908, 1006, 1009, 1206, 2302, 2303, *2304, *2305, 2308, 2310, 2312, 2314, 2315, 2405, 3004
M04.05		Memory door monitor		0702, 0703, 2303, 2305, *2306, *2307, 2405
M04.07		WEAC stop 15 minutes		2304, 2309, *2310, *2311, 2313
M04.10		WEAC stop 5 or 15 minutes		2303, 2306, *2313, 2314
M04.11		Pulse		0513
M04.12		Memorycell 1/2 Hz flash		*0513, 0704
M04.14		WEAC stop 5 minutes		2304, *2308, *2309
M04.15		SA shortstop element OK		*0723, 2905, 3019
M04.16		LS shortstop element OK		*0724, 2905, 3011
M05.01		Output for sprink.puls		1430
M05.05		Pulse		9906
M05.07		Inching of FFU in pos. 30		*1411, *1412, 1413
M05.17		Pulse		1411
M06.00		Step up conditions in	machineladder okey	0608, 0611, 0613, 0615, 0616, *0621, 0702, 0703, 0704, 0717, 0803, 1203

LIST OF ADDRESSES

Address	Position	Function		used in rungs
M06.01		Step up conditions in	machineladder okey	*0619, 0620, *0620, 0621
M06.04		Demand I for	short stop	*2003, 2004
M06.05		Demand II for	short stop	*2004, 2005
M06.06		Demand III for	short stop	0621, 1202, 1203, *2005, 2006
M06.07		Machine in position	"Short stop on"	0616, 1106, 1107, 1203, 1209, 1305, 1313, 1409, 1416, 1417, 1418, 1425, 1426, 1803, 1820, 2002, 2006, *2006, 2007, 2803
M06.10		AB9 in machine ladderpos.	"Ready for cleaning"	0606, 0702, 0706, 0717, 0904, 1206, 1413, 2305, 2315, 2317, 2318, 2319, 2322, 2402, 2403, 2404, *2405, 2414, 2603, 3005, 3008, 3018, 3103, 3104
M06.11		AB9 in ladder position	"External cleaning"	0606, 0702, 1409, 1413, 1414, 1430, 1902, 1904, 2402, 2403, 2404, *2404, 2413, 2415
M06.12		AB9 in ladder position	"Internal cleaning"	0702, 1413, 1429, *2319, *2320, 2903
M06.13		Supervision B-valve	position	0620, *1316, 2318, 2319, 2320, 2905, 3006
M06.14		Jump to ladder position	"Sterilizing fullfilled"	0620, 2006, *2802, 2803
M06.15		Jump to ladder position	"Sterilizing fullfilled"	0611, *2803
M07.04		Level check peroxide bath	during production	*1207, 2003, 2603, 3010
M07.05		Too high level	peroxide tank	*0711, *0712, 2004, 3104
M07.12		Prepared for cleaning	steambarrier space	1427, *2321, *2322, 3016
M07.13		Memory machineladder	to zeroposition	0614, 1204, 2903, *2904, *2906, *2907
M07.14		Putting machineladder	to zeroposition	0606, 2602, *2902
M07.15		Putting machineladder	to zeroposition aux.out.	2902, *2903
M07.16		Aux. memory for jump to	position 0	*2905, 2906
M07.17		Auxiliary output step	down position 3	0606, 0607, *0607
M10.00		Manual stop	of filling	*0602, *0603, 0614, 0621, 0702
M10.01		Sterileconditions by-	passed due to service	*0604, *0605, 2903
M10.02		Tube flushing on		*1433, 1434
M10.03		Memory signal recieved	from sterilizer	*1104, *1105, 1106, 2803
M10.04		Hot water filling,rinsing	and cleaning in ext.clean	*2406, 2409, 2410
M10.05		Malfunction filling	cleantray by cleaning	2403, 2404, 2414, *2416, *2417, 3210
M10.06		Transversal	sealing on	*1705, *1706, 9902

LIST OF ADDRESSES

Address	Position	Function		used in rungs
M10.07		Alarm wrong pressure	during lubrication	2005, *2507, *2508, 3304
M10.13		Eject packages after	short stop	1903, *1913, *1914
M10.14		1 scanning change bit		*0514, 1418
M10.15		Malfunction during	spraysequenze H2O2	*0904, *0909, 2311, 2905, 3205
M10.16		Air inlet wrong position		0620, *1315, 2905, 3207
M10.17		Steam fault		0620, *1311, 2318, 2319, 2904, 3018
M11.01		Fault in IH-units	transversal sealing	*1702, *1703, 1704, 3108, 9903
M11.07		Long lubrication	period ordered	1009, *2504, *2505, 2506, 3303
M11.10		Photocell out of function		*1807, *1808, 2803, 3107
M11.11		Position printed design	out of limits	0614, *1812, *1813, 3107
M11.12		Auxiliary output	precorrection off	1802, *1803, 1807, *9906
M11.15		Memory startvalue after	short stop	*1820, *1821, 1822
M11.16		Spraying with hydrogen	peroxide fullfilled	0726, 0729, 0902, 0908, *0910, 1002, 1004, 1005, 1007, 1011, 2904, 3007, 3011, 3203
M11.17		Drying after spray H202	ready	0611, 0613, 0620, *1005, 2309, 2311
M12.00		Tubesealing going on		0803, *0803
M12.03		Synchronizing MM/FF	at start	*1402, *1403, 1404, 1406
M12.04		Synchronizing MM/FF	at production	1404, *1405, *1406, 1408, 1409, 1414
M12.05		Aux drive unit brake	short stop	*1416, *1417, 1418
M12.06		Auxiliary output clutch		1409, *1409, 1410, 1418, 1427, 1902
M12.07		Auxiliary output inching		*1413, 1414, 1415, 1419
M12.10		Inch conditions		0704, *1413
M12.11		Pressure fault main air		0620, *1010, 2903, 3305
M13.00		Mainsinterrupt to long	for sterile conditions	*2705, 2706, 2903
M13.01		Alarmdelay by restart	after mainsinterrupt	*2703, 2704, 2803, 2903, 2907
M14.00		Auxiliary output	startsequenze	0725, 1203, *1204, 1208, 1212, 1213, 1405, 1409, 1414, 1704
M14.01		Auxiliary output	startsequenze	1203, *1203, 1204
M14.02		Auxiliary output	stopsequenze ext.clean	2407, *2408, *2409, 2410, 2413
M14.03		Pressure fault	sterile air	*0719, *0720, 2905, 3208

LIST OF ADDRESSES

Address	Position	Function		used in rungs
M14.04		Memory for closing	heat exchanger valve	*0727, *0728, 0729
M14.10		Line L11-L10 not OK		*0515, 1303, 2707, 2708, 2902, 2903, 2907, 3114, 3116, 3308
M14.11		Line L21-L20 not OK		*0516, 1010, 2903, 3111, 3302, 3303, 3306, 3307, 3308
M14.12		Memory safety monitors		2706, *2707, *2708
M15.00		Max running time machine	with a lubrication fault	2005, *2509
M15.01		Control low level tank		0621, *0707, 0708, *0709, 0710
M15.02		Waterpressure delayd		1206, 2305, *2702, 3303
M15.03		Queue monitor		*1220, 2005, 3209
M15.04		Supervision suction valve	position	0620, *1314, 2803, 3204
M15.05		Prolonged filling of	peroxide bath at start	*1209, *1210, 1211, 1214
M15.07		Fault:emergency stop,	jaw,FF rot.	0620, *1309, 1409, 1411, 1413, 1414, 1415, 1418, 2403, 2404
M15.10		Alarm delay unsyncron	MM/FF at production	*1407, *1408, 2004, 3115
M15.11		Jaw system overload		*1302, *1303, 1309, 2802, 3113
M15.12		Paperweb fault		0620, *1302, *1304, 2004, 3013
M15.13		Congestion fault		*1302, *1305, 2004, 3105
M15.14		Rotation fault FF		*1302, *1306, *1307, 1309, 2802, 3211
M15.15		Strip break		0620, *1302, *1308, 2003, 3017
M15.16		Water pressure fault	peroxid bath	0715, *1310, 2802, 3012
M30.00		Pulsetrain for jog		3502, *3502, 3528
M30.01		Servo failure		*3506, 3508
M30.02		Power failure		*3507, 3508
M30.03		Help pulse em.stop		3509
M30.04		Pulse emergencystop		*3509, 3512
M30.05		Help pulse jog done		3510
M30.06		Pulse jog done		*3510, 3512
M30.07		Help pulse redo stop		3511
M30.10		Pulse redo stop		*3511, 3512
M30.11		Help pulse ext.cl.done		3520
M30.12		External cleaning done		*3520, 3523

LIST OF ADDRESSES

Address	Position	Function		used in rungs
M30.13		Send new jogsignal		3521, 3522, *3524
M30.14		Pulse DMC not active		3531, *3538
M30.15		Help pulse DMC not act		3538
M31.00		Servocommand	Do stop	3512, *3512, 3513, 3531, 3535, 3536
M31.01		Servocommand	Doing stop	3511, 3512, 3513, *3513, 3514, 3536
M31.02		Servocommand	Stop done	3512, 3513, *3514
M31.03		Servocommand	Do homesearch	3515, *3515, 3516, 3531, 3532, 3535, 3536
M31.04		Servocommand	Doing homesearch	3515, 3516, *3516, 3517, 3519, 3536
M31.05		Servocommand	Homesearch done	3515, 3516, *3517, 3518
M31.06		Servocommand	Do jog	3518, 3521, *3521, 3522, 3531, 3533, 3535, 3536
M31.07		Servocommand	Doing jog	3521, 3522, *3522, 3523, 3524, 3536
M31.10		Servocommand	Jog done	3510, 3521, 3522, *3523
M31.11		Servocommand	Do index	3528, *3528, 3529, 3531, 3533, 3534, 3535, 3537
M31.12		Servocommand	Doing index	3528, 3529, *3529, 3530, 3537
M31.13		Servocommand	Index done	3528, 3529, *3530
M31.14		DMC active		3515, 3521, 3528, *3537, 3538
M31.15		Homesearch has been done	and is still ok	3515, 3518, *3518, 3528
M31.16		Help for DMC active		*3536, 3537
M31.17		Abort homesearch		3516, *3519
M32.00		Start delay of indexstart		*3525, 3526, *3527
M32.01		Indexstart		*3526, 3527, 3528
M32.02		Help pulse indexstart		3525
M37.00		1Hz flash		0513, 0702, 0703, 0704, 0708, 0903, 1003, 2002, 2303, 2407
M37.14		First scan		1008, 2414, 2706
M37.15		Low battery TPMC		3110
M37.16		Scantime 80% exceed.		3110
M37.17		Bit to be shifted by the	shiftregister	1433, *1433, 1913, *1913

LIST OF ADDRESSES

Address	Position	Function		used in rungs
014.03	M.Y26	LS counter roller	short stop	1217, *1217
014.04	M.Y24	LS-element movement		*1216, 1218
014.05	M.Y21	Air knife squeezer roller		*1218, 1434, 1441
014.06	M.Y20	Short stop element	movement	*1215
014.07	M.Y18	Peroxide bath top filling	(on=open)	*1214
014.10	K81	Hydraulic pump		1012, *1206
014.11	K87/98/Y32	Compressor inlet	suction water	0609, 0717, *0717, 0720, 2307
014.12	K93	Start conveyor		*1219, 1220
014.13	K94	Unreeling paper supply		*1419, 1420
014.14	M.Y1	Flap sealing air valve		*1007, 1009
014.15	M.Y102	Main air valve		*1008, *1009, 1010
015.00	K14	Bending roller		
015.01	K51	Main motor low speed		*1440, *1441
015.02	K77	Main motor high speed		1206, 1306, *1414, 1415, 1423, 1902, 1905, 2404, 3515, 3520, 3521, 3523, 3528
				0607, 0611, 0711, 1206, 1209, 1210, 1216, 1217, 1304, 1307, 1308, 1404, 1409, 1414, 1415, *1415, 1418, 1422, 1423, 1424, 1702, 1706, 1902, 1903, 1905, 1917, 1918, 2502, 2503, 2903, 2905, 3521, 3523, 3528
015.03	K82	Peroxide pump		*1211, 1212, 1213
015.04	K91	Cleaning system	circulation pump	1007, *2413
015.12	M.Y27	Drop chute		0616, 1305, 1425, 1426, 1902, 1903, *1903, 1904, 1916
015.13	M.Y12	Precorrection		*1802, *1803, 1804, 1809, 1818, 1819, *1822
015.14	M.Y13	Auto correction, left		*1814, *1816, *1818
015.15	M.Y14	Auto correction, right		*1815, *1817, *1819
016.00	K2	Power Transversal sealing		
016.01	K48	Preheating 1 S.A.		*1704, 2803
016.02	K71	Air superheater		0620, 0705, *0706, 0714, 0715, 0717, 1012, 1310, 1419, 3019, 3102
016.03	K75	Heating FF		*0805, 3203
016.04	K88	Peroxide bath element		*1011
				*0715, 0807

LIST OF ADDRESSES

Address	Position	Function		used in rungs
016.05	K92	Detergent pump		*2412
016.06	K96	Preheating 2	LS, short stop	*0721, 0723, 0724
016.10		Drive error		*3508
016.11		Power to servo		*3503, 3504, 3507
016.12	K6	Ready for production		*1103, 1105
016.13	K26	AB production		*1107
016.14	K30	Filling		*1108
016.15	K46	Signal to CIP		0606, 1006, 1427, 2317, 2318, 2319, *2319, 2323, 2604, 2903, 3018
016.16	K52	LS sealed tube / LS	selector	*0722
016.17	K53	Air heater preheating /	production 400/360	*0806
017.00	K54	Peroxide bath, water	preheating	*0808, *0809
017.01	K83	Peroxid tank change level		*0713
017.02	K84	CIP recording		2323, *2323
017.03	K95	Sterile parameter		2602, *2602
017.04	K97	Operational parameter		2603, *2603, 2604, *2604
017.05		DMC data bit 1		*3531, *3532
017.06		DMC data bit 2		*3531, *3533
017.07		DMC data bit 3		*3531, *3534
017.10	M.Y19	Air inlet valve		0721, *0726, 1315, 1427
017.11	M.Y86	Vacuum valve		*2314
017.12	M.Y25	Heat exchange valve		*0729
017.13	M.Y23	Suction valve		*0725, 1314
017.15	M.Y17/Y51	Central lubrication pump	air injection	1012, *2506, 2507, 2508
017.16	M.Y9	Product valve (A)		1108, *1429
017.17	M.Y8	Sterile air valve (B)		*1006, 1316
020.00	M.Y7	Steam barrier, valve (C)		1427, *1427, 1428, 2904
020.01	M.Y6	Peroxide bath,fill/drain	(on=closed)	1213, *1213
020.02	M.Y5	Peroxide bath draining	(on=closed)	*1212
020.03	M.Y3	Waste packages	air blowing	*1902
020.04	M.Y2	Cleaning tray draining		1430, *2411, 2412
020.05	M.Y22	Main machine clutch		1216, 1304, 1308, *1410

Address	Position	Function		used in rungs
020.06	M.Y29	Cleaning system hot water		
020.07	M.Y31	Final folder	chain sprinkler	*2410, 2412, 2415
020.10	M.Y33	Cooling water (outflow)		*1430
020.11	M.Y34	Spray tank filling		*1012
020.12	M.Y35/M.Y4	Spray tank evacuation	of spraying peroxide	*0905, 1211
020.13	M.Y39	Tube flushing		*0908
020.14	M.Y41	Pull down device		*1434
020.16		Hardware enable		*1422
020.17		Software enable		*3504, 3505, 3506, 3507, 3515, 3516, 3518, 3521, 3522, 3523, 3528, 3529
				*3505, 3506, 3515, 3516, 3518, 3521, 3522, 3528, 3529
021.00	M.Y42	Pressure device FF		
021.01	M.Y43	Drive unit brake		*1424
021.02	M.Y63	Brake unreeling paper	supply	*1418
021.03	M.Y92	Peroxid tank filling		*1421
021.04	X1.13	Sealing pulse TS left		0714, *0714
021.05	X1.25	Sealing pulse TS right		*9904
021.06		Strobe to DMC		*9905
021.07	M.B015B	Front hood locker		3513, 3516, 3522, 3529, 3535, *3535
021.10	A23:A2/P4	Package counter	production	*1423
021.11	A24:A2	Package counter infeed		*1904, 1906
021.12	K105.3	Unreeling motor, start/	stop paper supply	*1905
021.13	K210.3	Beacon		1420, *1420
021.14	A25:A2	Restart at mainsfailure		*3004
021.15	M.Y071	Air blowing		*2706
021.16	M.Y072	Slide plate drop chute		*1919
021.17	M.Y070	Pusher		*1917, *1918
				*1920
PI0.00	P.S11H	Alarm reset		
				0711, 0719, 1302, 1407, 1439, 1702, 1808, 2417
PI0.01	P.S12H	Lamptest		3003, 3004
PI0.02		Occup.for	int.memory	3002, 3004
PI0.03	P.S2	Inching		0621, 0702, 1203, 1219, 1409, 1413, 1414, 1415, 1427

LIST OF ADDRESSES

Address	Position	Function			used in rungs
PI0.04	P.S3H	Step up			0502, 0603, 0608, 0609, 0614, 0616, 0717, 0803, 1009, 1203, 1409, 1427, 2008, 2404, 2603
PI0.05	P.S4H	Step down			0503, 0602, 0607, 0611, 0621, 2006, 2311, 2319, 2404
PI0.06	P.S6H	No product.	allowed		2005
PI0.07	P.S7	Selector	switch		0608, 0616, 0702, 0704, 0705, 1413, 1414, 1415, 2005, 2317, 2318, 2319, 2402, 2403, 2404, 3005, 3008, 3018, 3103
PI0.10	P.S19	Drop chute	off		1903
PI0.11	P.S20	Stat.chain	sprinkler		1430
PI0.12	P.S013	Jog prod.	speed		3515, 3528
PI0.13	P.S013	Jog slow	speed		3521, 3523
PL0.00	P.H47	Wrong position of		cleaning pipe	*3005
PL0.01	P.H48	Wrong position of		AP-valve B	*3006
PL0.02	P.H53	Too low temperature		peroxid bath, water	*3007
PL0.03	P.H46	Wrong position of		product pipe	*3008
PL0.04	P.H52	Too low temperature		peroxide	*3009
PL0.05	P.H49	Levelfault		peroxide bath, peroxide	*3010
PL0.06	P.H51	Too low temperature		element LS	*3011
PL0.07	P.H50	Too low level		peroxide bath, water	*3012
PL0.10	P.H38	Rotation monitor		paper web fault	*3013
PL0.11	P.H45	No product from process		available at machine	*3014
PL0.12	P.H41	Stripsupply of strip		applicator too low	*3015
PL0.13	P.H44	Cleaning steam barrier		space	*3016
PL0.14	P.H40	Broken strip of		stripapplicator	*3017
PL0.15	P.H43	Temperature out of		limit steam	*3018
PL0.16	P.H39	Too low temperature		at strip applicator	*3019
PL0.17	P.H42	Wrong position of		sqeezroller, air knife	*3020
PL1.00	P.H37	Supply of paper		too low	*3102
PL1.01	P.H57	Wrong position of		cleaning cup	*3103
PL1.02	P.H60	Levelfault peroxide tank			*3104
PL1.03	P.H59	Congestion monitor fault			*3105

LIST OF ADDRESSES

Address	Position	Function		used in rungs
PL1.04	P.H56	Wrong position pipe	draining peroxide bath	*3106
PL1.05	P.H55	Position printed	design out of limits	*3107
PL1.06	P.H58	Fault IH-units	transversal sealing	*3108
PL1.07	P.H54	Wrong position of	bottom cover peroxid bath	*3109
PL1.10	P.H25	Low battery TPMC, or	scantime 80% exceeded	*3110
PL1.11	P.H14	Monitor supervisioning	position of tower doors	*3111
PL1.12	P.H24	Machine speed too high		*3112
PL1.13	P.H15	Overload jaw system		*3113
PL1.14	P.H23	Too low level	hydraulic oil	*3114
PL1.15	P.H16	Unsynch. between MM/FF		*3115
PL1.16	P.H22	Too high temperature	hydraulic oil	*3116
PL2.01	P.H30	Too high level	separators	*3202
PL2.02	P.H31	Too low temperature	at air heater	*3203
PL2.03	P.H33	Wrong position of	suction valve	*3204
PL2.04	P.H34	Spray time out of limits	or HI fault	*3205
PL2.05	P.H35	Too low temperature	at air knife	*3206
PL2.06	P.H36	Wrong position of	inlet valve	*3207
PL2.07	P.H32	Pressurefault sterile air		*3208
PL2.10	P.H63	PLE-equipment		*3209
PL2.11	P.H62	Too low level clean tray		*3210
PL2.13	P.H61	Rotation fault	final folder	*3211
PL3.10	P.H21	Too low level	lubrication oil	*3302
PL3.11	P.H10	Too low pressure	cooling water	*3303
PL3.12	P.H20	Wrong pressure	lubrication oil	*3304
PL3.13	P.H11	Pressurefault main air		*3305
PL3.14	P.H19	Service switch in	on position	*3306
PL3.15	P.H12	Safety monitors in	of position	*3307
PL3.16	P.H18	Tripped overload	protection of motors	*3308
PL3.17	P.H13	Activated emergency stop		*3309
PO0.01	P.H1:1	Preheating 1		*0705
PO0.02	P.H1:2	Preheating 2		*0716

LIST OF ADDRESSES

Address	Position	Function		used in rungs
P00.03	P.H2:1	Tube sealing		*0802, 1425
P00.04	P.H2:2	Presterilizing		*0804
P00.05	P.H3:1	Spraying		*0902, 1106
P00.06	P.H3:2	Drying		*1002
P00.07	P.H4:1	Signal to sterilizer		*1102
P00.10	P.H4:2	Signal from sterilizer		*1106
P00.11	P.H5:1	Start sequence		*1202
P00.12	P.H5:2	Drive motor		*1205
P00.13	P.H6:1	Filling		*1425
P00.14	P.H6:2	Production		*1426
P00.15	P.H7:1	No production allowed		*2002
P00.16	P.H7:2	Production finished		*2315
P00.17	P.H8:1	Work environment aseptic	chamber on	*2302
P01		Lamptest of pushbuttons		3003, *3003
P01.00	P.H8:2	W.E.A.C. ready for	door opening	*2303
P01.01	P.H9:1	Preparation for cleaning	of machine	*2402
P01.02	P.H9:2	Preparation for cleaning	of valve	*2317
P01.03	P.H10:1	Cleaning of machine		*2403
P01.04	P.H10:2	Cleaning of valve		*2318
P01.10	P.H2S	Inching		*0704
P01.11	P.H3S	Step up		*0702, 0705, 0716, 0802, 0902, 1102, 1202, 2317, 2318, 2402, 2403
P01.12	P.H4S	Step down		*0703
P01.13	P.H6S	No production		*2002
P01.14	P.H11S	Alarm reset		*3002
P01.15	P.A16:1	Design correction		*1804
P01.16	P.P3	Package counter	production	*1906
R0000		Storageword for positions	in machineladder	*0606, *0608, *0609, *0610, 0611, *0611, *0613, *0614, *0615, *0616, 0617, 0618, 0620, 0705, 0717, 0904, 0910, 1006, 2603
R0010		Storageword shiftregister	packagedumping	1907, *1907, *1913
R0011		Storageword shiftregister	packagedumping	1908, *1908, 1913

LIST OF ADDRESSES

Address	Position	Function	used in rungs
R0012		Storageword shiftregister packagedumping	1909, *1909, 1911, *1911, 1913
R0013		Storageword shiftregister packagedumping	1910, *1910, 1912, *1912, 1913
R0014		Package dumping	1913
R0020		Shiftregister for tubeflushing	*1433
R0021		Shiftreg. tubeflush	1433
R0022		Shiftregister for tubeflushing	1431, *1431, 1433
R0023		Shiftregister for tubeflushing	1432, *1432, 1433
R0100		Storageword for Transversal sealing	1706, 9902, *9902, *9903, 9904, 9905
R0254		Storage word time mainsinterrupt	2703, *2704, 2705
S00.00	40- 45 240-245	Drop chute on	1312, 1903
S00.01	155-162 355-362	Drop chute off	1903
S00.02	100-277	Side change	1814, 1815, 1816, 1817, 2005, 9904, 9905
S00.03	10- 20 210-220	Short stop	0504
S00.04	114-223 314- 23	Transversal sealing	9903
S00.05	50- 53 250-253	New package	0506
S00.06	10- 60 210-260	Pull down device	1422
S00.07	110-137 310-337	Filling	0615
S00.08	120-147 320-347	Filling	0615
S00.09	140-153 340-353	Waste pack. blowing	1902
S00.10	6- 14 206-214	Design sector	9906
S00.11	26-105 226-305	Pressure device	1424

LIST OF ADDRESSES

Address	Position	Function		used in rungs
S00.12	3- 20 203-220	Printed	design corr	1805, 1809, 1810
S00.14	37-160 237-360	Synchr MM/	FFU check	1408
S00.15	140-150 340-350	Waste pack	blowing	1902
S00.16	151-176 351-376	Air blowing		1920
S00.20	151-176 351-376	Pusher		1919
S00.26	170-177 370-377	Brake		1416
S00.30	40-107 240-307	Sector for	pack.countr	1904
S01.00	10- 40 210-240	Count	packages	1915

T000	Startsequenzer	productionstart	*1204
T001	Startsequenser for	running production	*1204
T003	Maximum time for beeing	in short stop position	*2007, *2008
T005	Delay opening fill.valve	after production start	*1428
T006	Circulation of hydrogene-	peroxide in bath/tank	*1208
T008	Sequenzer external	cleaning program	*2414, *2415
T010	Sequenser lubrication-	program	*2503
T011	Sequenser lubrication-	program	*2502
T013	Timer WEAC on		*2312
T014	FFU timer syncronization,	production	*1404
T015	Delay time recording	sterile parameter	*2602
T016	Delay time recording	operational parameter	*2603
T023	Tube sealing		*0803
T024	Spray tank evacuation	before spraying	*0907
T025	Peroxide bath water	preheating high temp	*0807
T045	Machine speed timer		*1437

LIST OF ADDRESSES

Address	Position	Function		used in rungs
T0000.0	0s1	Hydr. pump		1206
	14s0			
T0000.1	10s0	End start-	sequenze	0614, 0702, 0712, 0713, 0714, 1102, 1213, 1219, 1415, 1427, 1429, 2003, 2006, 2603, 3010, 3104
	15s0			
T0000.2	9s8	Control	per.level	1203
	10s2			
T0000.3	0s1	Start	sequence	1106, 1402, 1403, 1418, 1907, 1908, 1909, 1910, 1914
	9s6			
T0000.4	9s5	Contr.temp	peroxide	3009
	15s0			
T0000.5	3s0	Delay TS		1703
	15s0			
T0001.0	8s0	SQ roller/	air knife	1218
	22s0			
T0001.1	4s5	Short stop	element on	1215
	9s2			
T0001.2	9s0	LS/RP	element on	1216, 1217, 3020
	23s0			
T0001.3	4s0	Ls counter	roller	1217
	9s8			
T0001.4	0s1	Start	sequence	1402
	1s0			
T0003.0	5m00s	Short stop	time out	2802
	6m00s			
T0003.1	0s	Cont.light	short stop	2002, 2008
	4m00s			
T0005.1	33s0	Delay	filling out	0621
	2m00s0			
T0006.0	30s0	End of H2O2	circulation	1208
	31s0			
T0006.1	0s0	Top filling	perox.pump	1211, 1214
	10s0			

LIST OF ADDRESSES

Address	Position	Function		used in rungs
T0006.3	26s0 28s0	Filling	perox.bath	0714
T0006.5	29s0 30s0	Contr.level	H2O2 tank	0707
T0008.0	22m30s 22m40s	Total ext.	clean. time	2403, 2404, 2903
T0008.1	1s 2m20s	First rinse	ext. clean.	1430, 2406
T0008.2	3m20s 12m20s	Clean. per.	ext. clean.	2406, 2412
T0008.3	13m30s 15m50s	Secnd rinse	ext. clean.	1430, 2406
T0008.4	17m00s 19m20s	Third rinse	ext. clean.	2406
T0008.5	19m20s 19m30s	Lubr. after	ext. clean	0509
T0010.0	15m00s 15m02s	Time lubric	period	2503
T0010.1	2m51s 15m02s	Pause lub-	ric.period	2503, 2505
T0010.2	0s 10s	1-st stroke	lubricvalve	2506
T0010.3	41s 51s	2-st stroke	lubricvalve	2506
T0010.4	1m21s 1m30s	3-st stroke	lubricvalve	2506
T0010.5	2m00s 2m10s	4-st stroke	lubricvalve	2506
T0011.0	15m00s 15m02s	Time lubric	period	2502
T0011.1	2m51s 15m02s	Pause lub-	ric.period	2502
T0011.5	2m40s 2m50s	5-th stroke	lubricvalve	2506

LIST OF ADDRESSES

Address	Position	Function		used in rungs
TO013.0	1h00m00s 1h00m01s	Too long	time WEAC	2305
TO013.1	5m00s 1h00m01s	WEAC	5 minutes	2313
TO013.2	15m00s 1h00m01s	WEAC	15 minutes	2313
TO014.0	0s000 6s500	FFU timer	end	1404
TO014.1	0s540 0s600	FFU timer	producton	1404
TO015.0	5m00s 5m02s	Sterile	record.end	2602
TO016.0	5m00s 5m02s	Operational	record.end	2603
TO023.0	0s0 1m00s0	Tubesealing	going on	0608, 1409, 1413, 1415
TO023.2	40s0 41s0	Tubesealing	ended	0610
TO023.3	0s7 1m00s0	Tubesealing	going on	0702, 0705, 0716, 0802, 0803, 1006, 1441
TO024.0	1s 30m00s	Spray tank	evac. pos20	0908
TO024.1	1s 1m30s	Spray tank	evac. pos20	0908
TO024.2	1m31s 31m00s	Spray tank	evac. pos20	0620
TO025.0	1s 40m00s	Perox bath	water preh.	0809
TO025.1	12m00s 12m01s	Perox bath	water preh.	0808
TO025.2	13m00s 40m00s	Perox bath	water preh.	0809
TO045.0	0s00 59s96	Speed test	going on	1436

LIST OF ADDRESSES

Address	Position	Function		used in rungs
TV014		Position	FFU, ms	1406

Tetra Pak
MODENA ITALY

This drawing must not without the consent of Tetra Pak be copied, transmitted or disclosed to any third party.

RUNG	REFERENCE INSTRUCTION	ADDRESS	VOLUME						
			125 cc	180 cc	236 cc	250 cc	284 cc	200 cc SLIM	250 CC SLIM
615	PUT R0000	S00.07	100-127 300-327			130-157 330-357	130-157 330-357	130-157 330-357	130-157 330-357
615	PUT R0000	S00.08	110-137 310-337			140-167 340-367	140-167 340-367	140-167 340-367	140-167 340-367
506		S00.05	120-123 320-323			50-53 250-253	50-53 250-253	50-53 250-253	50-53 250-253
9906	L M04.05	S00.10	6-14 206-214			6-14 206-214	6-14 206-214	6-14 206-214	6-14 206-214
610	PUT R0000	T0023.2	39S0-1M00S0			34S0-35S0	31S0-1M00S0	32S0-1M00S0	29S0-30S0
624	M06.00	T0005.1	35S0-2M00S0			27S0-2M00S0	21S0-2M00S0	22S0-2M00S0	17S0-2M00S0
1907	T000.3 PUT R0010	AND	KFC7EH			KFF1EH	KFF1EH	KFF1EH	KFF1EH
1908	T000.3 PUT R0011	AND	K3FFFH			K00FFH	K003FH	K003FH	K001FH
1909	T000.3 PUT R0012	AND	K0000H			K7FC0H	KE7F0H	KCFF0H	KF9FCH
1910	T000.3 PUT R0013	AND	KF3FEH			KFFFEH	KFFFFH	KFFFFH	KFFFFH
1911	M02.15 I02.06 PUT R0012	AND	KFFFFH			KE7FFH	KFE7FH	KFCFFH	KFF9FH
1912	M02.15 I02.06 PUT R0013	AND	KFF3FH			KFFFFH	KFFFFH	KFFFFH	KFFFFH
1434	M02.15 PUT R0022	AND	KFFFFH			KFCFFH		KFF9FH	KFFCFH
1435	M02.15 PUT R0023	AND	KFFE7H			KFFFFH		KFFFFH	KFFFFH
1406	E01.07 E01.07	K- K+							K00118 K00010
1408	M02.16 M10.15	S00.14							17-140 217-340
INTRODUCED ON ECN:	20080		20080			20080	20080	20080	20698

INTRODUCED WITH ECN NO	20080	DATE 930909	SIGN HK					
ISSUE	A	A						
ECN NO	20406	20698						
DATE	931015	931122						
SIGN	HK/MR1	HK/MR1						

DESCRIPTION: VOLUME ADAPTION DOCUMENT

MACHINE: TBA/9-1401 S.A | 47615-03:01

10:51 94.2.28

Tetra Pak
MODENA ITALY

This drawing must not without the consent of Tetra Pak be copied, transmitted or disclosed to any third party.

LADDER SYMBOLS

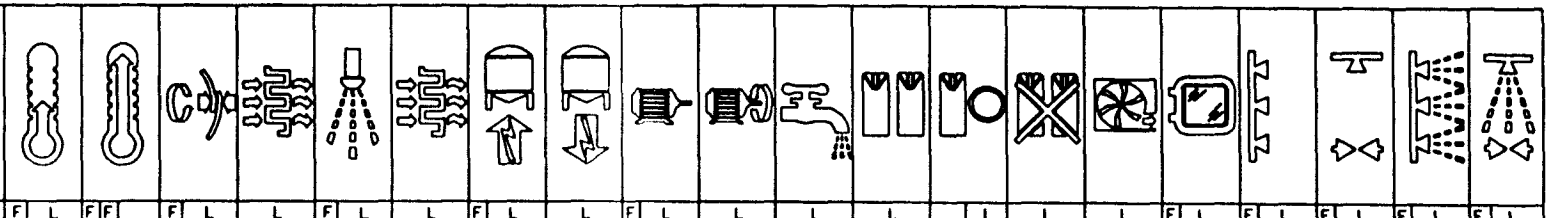

LADDER SYMBOL LIGHTS	F L	F	F		F L	L	F L	L	F L	L	F L	L	F L	L	F L	L	L	L	L	L	F L	F L	F L	F L	F L	F L
OPERATOR ACTIONS	↑	↱			↑		↑				↑				↱				◎ ↑ ↑				↑	↑	↑	↑
MACHINE MODE	PRE-HEAT-ING 1		PRE-HEAT-ING 2		TIGHT TUBE	PREHEAT. III	FILLING 8s	SPRAY 30s	PAUSE 60s	DRYING 20 min	SIGNAL TO CIP	SIGNAL TO STERILE	START SEQUENS	DRIVE MOTOR	FILLING	PROD-UCTION	SHORT STOP	PROD-UCTION	END OF PRODUCTION 2 min	WEAC 5 min	WEAC READY FOR DOOR OPENING	PREPARE FOR EXTERNAL CLEANING	PREPARE FOR VALVE CLEANING	EXTERNAL CLEANING	VALVE CLEANING A	B	C
DRIVE MOTOR LOW ON / OFF	K51 015.01																									
DRIVE MOTOR HIGH ON / OFF	K77 015.01																									
MAIN MACH.CLUTCH ON / OFF	Y22 020.05																									
DRIVE UNIT,BRAKE ON / OFF	Y43 021.01																									
BENDING ROLLER ON / OFF	K14 015.00																									
PAPER SUPPLY,MOTOR ON / OFF	K94 014.13																									
PAPER SUPPLY,MOTOR ON / OFF	K105 021.12																									
BRAKE UNREEL.PAPER SUPPLY ON / OFF	Y63 021.02																									
TUBE FLUSHING ON / OFF	Y39 02013																									
LUBR.AIR INJECTION ON / OFF	Y17,Y51 017.15																									
PRECORRECTION OFF / ON	Y12 015.15																									
OFF / ON																										
OFF / ON																										
ON / OFF																										
ON / OFF																										
ON / OFF																										
POSITION LADDER	0	00005		00010		00020		00030			00040			00050		00060					00070					

20080	930909	HK/PRI	F = FLASHING LIGHT; L = CONTINOUS LIGHT; ▭ = ELECTRICALLY ACTIVATED; ▲ = NORMAL PRESS; ➡ = LONG PRESS

DESCRIPTION: MACHINE OPERATION DIAGRAM

MACHINE: TBA/9-1401 S.A. | 47615-04:01 | 1/6

ALTERATIONS ONLY IN CADAM

10:51 94.2.25

This drawing must not without the consent of Tetra Pak be copied, transmitted or disclosed to any third party.

Tetra Pak
MODENA ITALY

LADDER SYMBOLS

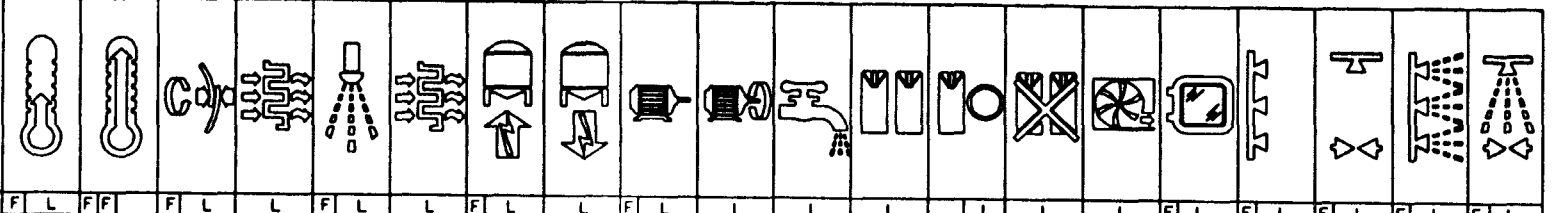

LADDER SYMBOL LIGHTS	F	L	F	F		F	L	L	F	L	L	F	L	L	F	L	L	L	L	L	L	F	L	F	L	F	L	F	L	F	L
OPERATOR ACTIONS	⇧		↱			⇧			⇧			⇧			↪				◎ ⇧ ⇧					⇧		⇧		⇧		⇧	
MACHINE MODE		PRE-HEAT-ING 1			PRE-HEAT-ING 2		TIGHT TUBE	PREHEAT. III	FILLING	SPRAY	PAUSE	DRYING	SIGNAL TO CIP	SIGNAL TO STERILE	START SEQUENS	DRIVE MOTOR	FILLING	PROD-UCTION	SHORT STOP	PROD-UCTION	END OF PRODUCTION	WEAC	WEAC READY FOR DOOR OPENING	PREPARE FOR EXTERNAL CLEANING	PREPARE FOR VALVE CLEANING	EXTERNAL CLEANING	VALVE CLEANING A	B	C
									10s	10s	30s	20 min									2 min	5 min							
CONVEYOR K93																															
ON OFF 014.02																															
DROP CHUTE Y27																															
ON OFF 015.12																															
AIR BLOWING, WASTE Y3																															
ON OFF 020.03																															
SPRINKLER, CHAIN Y31																															
ON OFF 020.07																															
COOLING WATER Y33																															
ON OFF 020.10																															
ON OFF																															
CIRC. PUMP, CLEANING K91																															
ON OFF 015.04																															
DRAIN., CLEAN. TRAY Y2																															
ON OFF 020.04																															
HOT WATER, CLEAN. Y29																															
ON OFF 020.06																															
PUMP, DETERGENT K92																															
ON OFF 016.05																															
OFF ON																															
OFF ON																															
OFF ON																															
ON OFF																															
ON OFF																															
ON OFF																															
POSITION LADDER		0	00005		00010			00020		00030			00040			00050		00060				00070									

20080	930909	HK/PRI	F = FLASHING LIGHT	= NORMAL PRESS	DESCRIPTION: MACHINE OPERATION DIAGRAM
			L = CONTINOUS LIGHT	= LONG PRESS	MACHINE: TBA/9-1401 S.A. 47615-04.01 2/6
			= ELECTRICALLY ACTIVATED		

10:51 94.2.28

Tetra Pak
MODENA ITALY

This drawing must not, without the consent of Tetra Pak be copied, transmitted or disclosed to any third party.

LADDER SYMBOLS

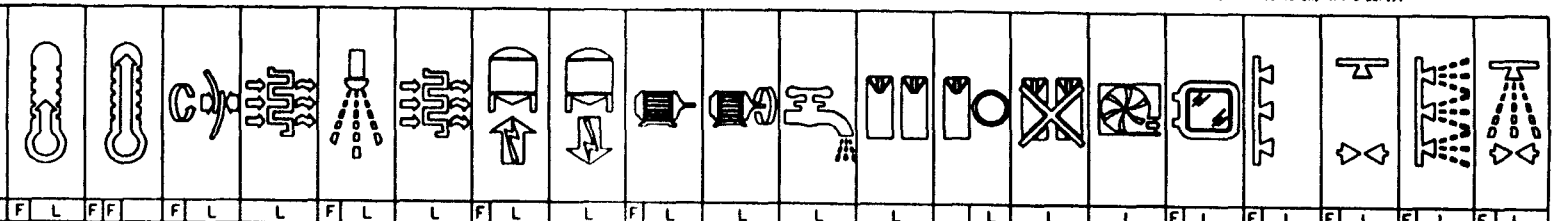

LADDER SYMBOL LIGHTS	F	L	F	F		F	L	L	F	L	L	F	L	L	F	L	L	L		L	L	F	L	F	L	F	L	F	L
OPERATOR ACTIONS	↑		↱			↑			↑			↑			↱			◎	↑	↑				↑		↑		↑	
MACHINE MODE	PRE-HEATING 1		PRE-HEATING 2		TIGHT TUBE	PREHEAT. III		FILLING 0s	SPRAY 0s	PAUSE 0s	DRYING 20 min	SIGNAL TO CIP	SIGNAL TO STERILE	START SEQUENS	DRIVE MOTOR	FILLING	PROD-UCTION	SHORT STOP	PROD-UCTION	END OF PRODUCTION 2 min	WEAC 5 min	WEAC READY FOR DOOR OPENING	PREPARE FOR EXTERNAL CLEANING	PREPARE FOR VALVE CLEANING	EXTERNAL CLEANING	VALVE CLEANING A	B	C
PREHEAT 1, SA K48	ON	OFF	016.01																										
PREHEAT 2, LS.LS/SA K96	ON	OFF	016.06																										
SELECT LS.SEALED TUBE K52	ON	OFF	016.16																										
SELECT LS, PROD. K52	OFF	ON	016.16																										
AIR FFU Y1	ON	OFF	014.14																										
PREHEAT 3, FFU K75	ON	OFF	016.03																										
PULL DOWN DEVICE.FFU Y41	ON	OFF	020.14																										
PRESS.DEVICE. FFU Y42	ON	OFF	021.00																										
MOVEM.,SH.STOP ELEM. Y20	ON	OFF	014.06																										
MOVEM.,LS/SA ELEM. Y24	ON	OFF	014.04																										
LS COUNTER ROLLER Y26	OFF	ON	014.03																										
AIR KNIFE/SQEEZE ROLL./ Y21	ON	TUBE FLUSH	014.05																										
MAIN AIR VALVE Y102	OFF	ON	014.15																										
	ON	OFF																											
	ON	OFF																											
	ON	OFF																											
POSITION LADDER	0	00005		00010		00020		00030				00040			00050		00060				00070								

20080	930909	HK/PRI	F = FLASHING LIGHT L = CONTINUOUS LIGHT [ ] = ELECTRICALLY ACTIVATED = NORMAL PRESS = LONG PRESS

DESCRIPTION. MACHINE OPERATION DIAGRAM

MACHINE. TBA/9-1401 S.A. | 47615-04:01 | 3/6

ALTERATIONS ONLY IN CADAM

10.51 94.2.28

Tetra Pak
MODENA ITALY

This drawing must not without the consent of Tetra Pak be copied, transmitted or disclosed to any third party.

LADDER SYMBOLS

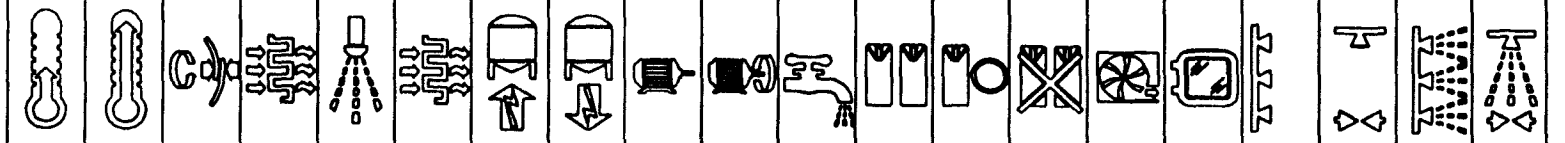

LADDER SYMBOL LIGHTS	F	L	F	F		F	L		F	L		F	L		F	L						F	L	F	L	F	L	F	L	F	L
OPERATOR ACTIONS		⇧		↱			⇧			⇧			⇧			↱					⇧	⇧					⇧		⇧		⇧	

MACHINE MODE		PRE-HEATING I	PRE-HEATING II	TIGHT TUBE	PREHEAT. III	FILLING	SPRAY	PAUSE	DRYING	SIGNAL TO CIP	SIGNAL TO STERILE	START SEQUENS	DRIVE MOTOR	FILLING	PROD-UCTION	SHORT STOP	PROD-UCTION	END OF PRODUCTION	WEAC	WEAC READY FOR DOOR OPENING	PREPARE FOR EXTERNAL CLEANING	PREPARE FOR VALVE CLEANING	EXTERNAL CLEANING	VALVE CLEANING A	B	C
						10s	10s	10s	20 min									2 min	5 min							
PUMP, HYDRAULIC	K81			■								■		■		■		■								
ON OFF	014.10																									
ON OFF																										
POWER IH UNIT TS	K2																									
ON OFF	016.00											■		■		■		■								
PULSE TS, LEFT	A401														▮▮▮▮		▮▮▮									
ON OFF	021.04																									
PULSE TS, RIGHT	A402														▮▮▮▮		▮▮									
ON OFF	021.05																									
ON OFF																										
ON OFF																										
ON OFF																										
ON OFF																										
ON OFF																										
OFF ON																										
OFF ON																										
OFF ON																										
ON OFF																										
ON OFF																										
ON OFF																										
POSITION LADDER		0 00005		00010	00020	00030				00040			00050		00060									00070		

	20080	930909	HK/PRI	F = FLASHING LIGHT L = CONTINOUS LIGHT = ELECTRICALLY ACTIVA	= NORMAL PRESS = LONG PRESS

DESCRIPTION: MACHINE OPERATION DIAGRAM

MACHINE: TBA/9-1401 S.A. | 47615-04:01 | 4/6

10:51 94.2.28

Tetra Pak
MODENA ITALY

This drawing must not without the consent of Tetra Pak be copied, transmitted or disclosed to any third party.

LADDER SYMBOLS

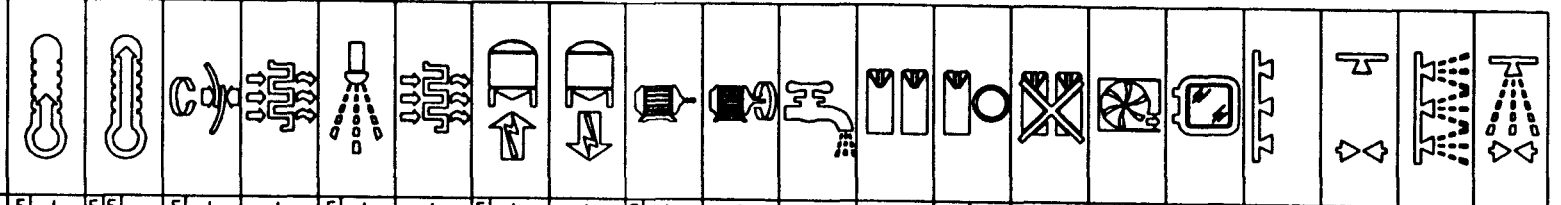

LADDER SYMBOL LIGHTS	F L	F	F		F L	L	F L	L	L	F L	L	L	F L	L	L	L	L	L	L	F L	F L	F L	F L	F L	F L
OPERATOR ACTIONS																										
MACHINE MODE		PRE-HEAT-ING 1		PRE-HEAT-ING 2	TIGHT TUBE	PREHEAT. III	FILLING 10s	SPRAY 10s	PAUSE 60s	DRYING 20 min	SIGNAL TO CIP	SIGNAL TO STERILE	START SEQUENS	DRIVE MOTOR	FILLING	PROD-UCTION	SHORT STOP	PROD-UCTION	END OF PRODUCTION 2 min	WEAC 5 min	WEAC READY FOR DOOR OPENING	PREPARE FOR EXTERNAL CLEANING	PREPARE FOR VALVE CLEANING	EXTERNAL CLEANING	VALVE CLEANING A	B	C
COMPRESSOR INLET ON OFF	K87,K98,Y32 014.11																									
AIR INLET VALVE SH BYPASS	Y19 017.14																									
SUCTION VALVE SH BATH	Y23 017.13																									
HEAT EXCHANGER ON OFF	Y25 017.12																									
AIR SUPER HEATER BYPASS	K71 016.02																									
AIR SUPER HEAT.400°C ON OFF	K53 016.17																									
AIR SUPER HEAT 360°C OFF ON	K53 016.17																									
VACUUM VALVE ON OFF	Y86 017.11																									
ON OFF																										
ON OFF																										
OFF ON																										
OFF ON																										
OFF ON																										
ON OFF																										
ON OFF																										
ON OFF																										
POSITION LADDER		0	00005		00010	00020		00030			00040		00050		00060				00070							

20080	DATE 930909	SIGN HK/PRI	F = FLASHING LIGHT L = CONTINOUS LIGHT [ ] = ELECTRICALLY ACTIVATED = NORMAL PRESS = LONG PRESS

DESCRIPTION: MACHINE OPERATION DIAGRAM

MACHINE: TBA/9-1401 S.A. | 47615-04:01 | 5/6

ALTERATIONS ONLY IN CADAM

10:51 94.2.28

Tetra Pak
MODENA ITALY

This drawing must not without the consent of Tetra Pak be copied, transmitted or disclosed to any third party.

LADDER SYMBOLS

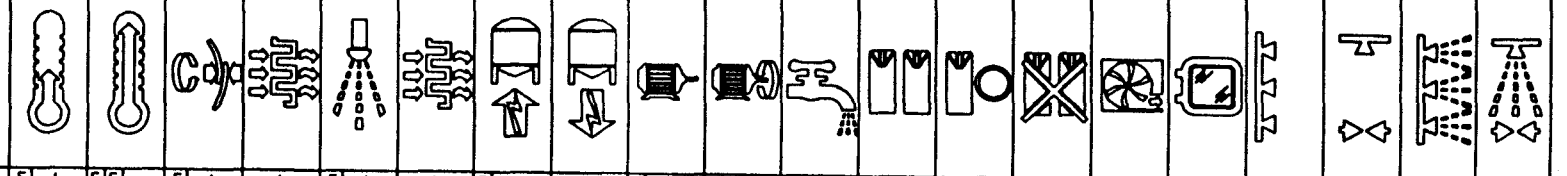

| | | |

PULSE AND FLASHGENERATING

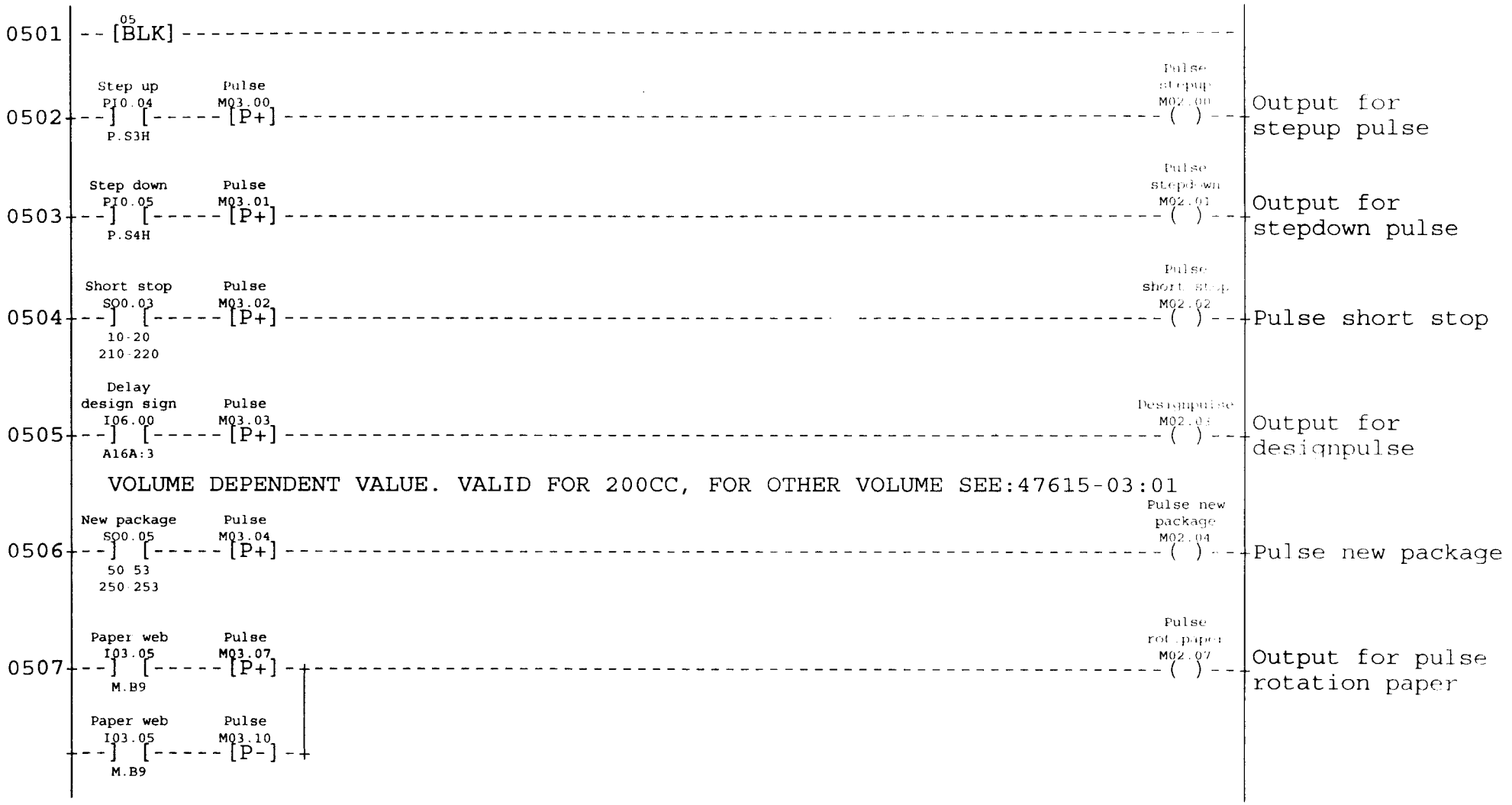

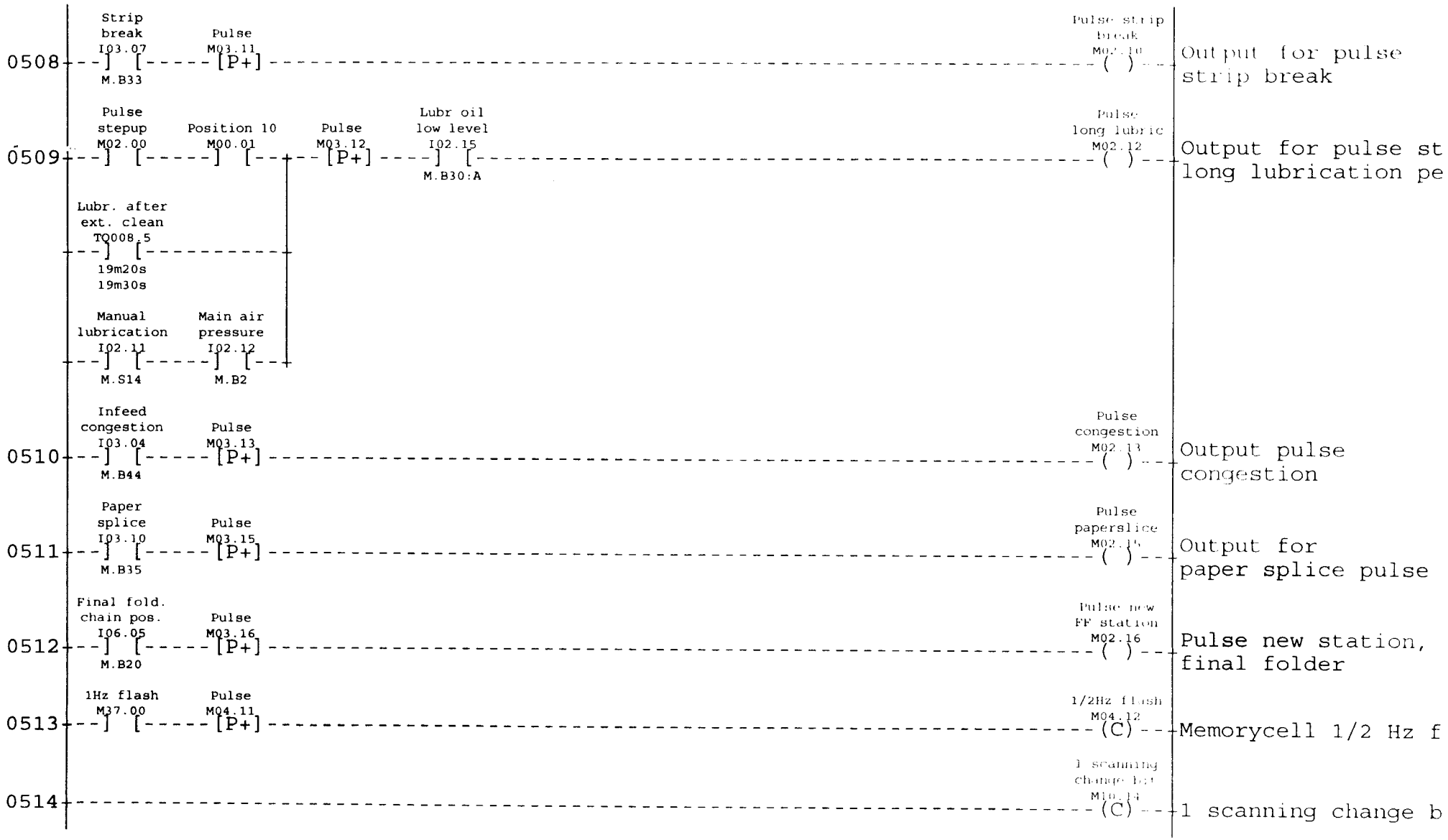

Machine individual adaptations see Block 02 TBA/9-1401 S.A.

AM: xxxxx Date: 000104 Sign: TEAN

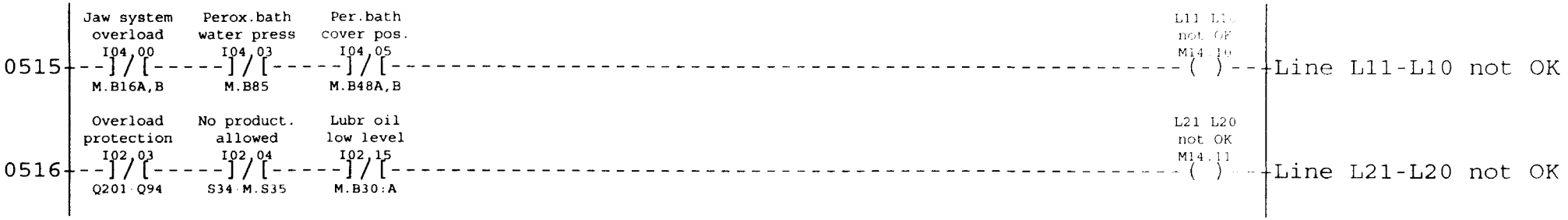
Jaw system overload
I04.00
M.B16A,B
Perox.bath water press
I04.03
M.B85
Per.bath cover pos.
I04.05
M.B48A,B
L11 L10 not OK
M14.10
Line L11-L10 not OK
Overload protection
I02.03
Q201.Q94
No product. allowed
I02.04
S34.M.S35
Lubr oil low level
I02.15
M.B30.A
L21 L20 not OK
M14.11
Line L21-L20 not OK

POSITIONS MACHINELADDER, STEP UP CONDITIONS

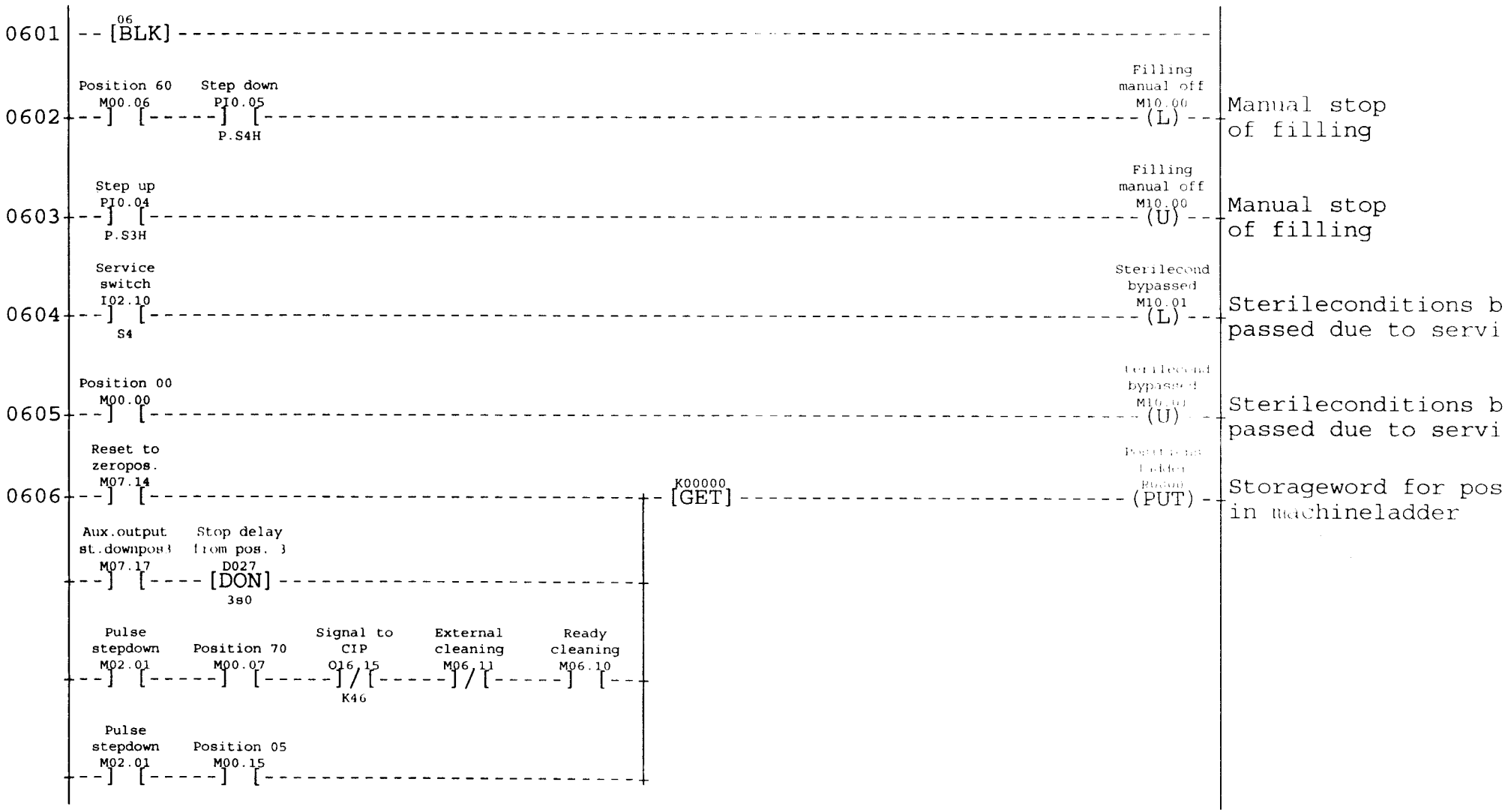

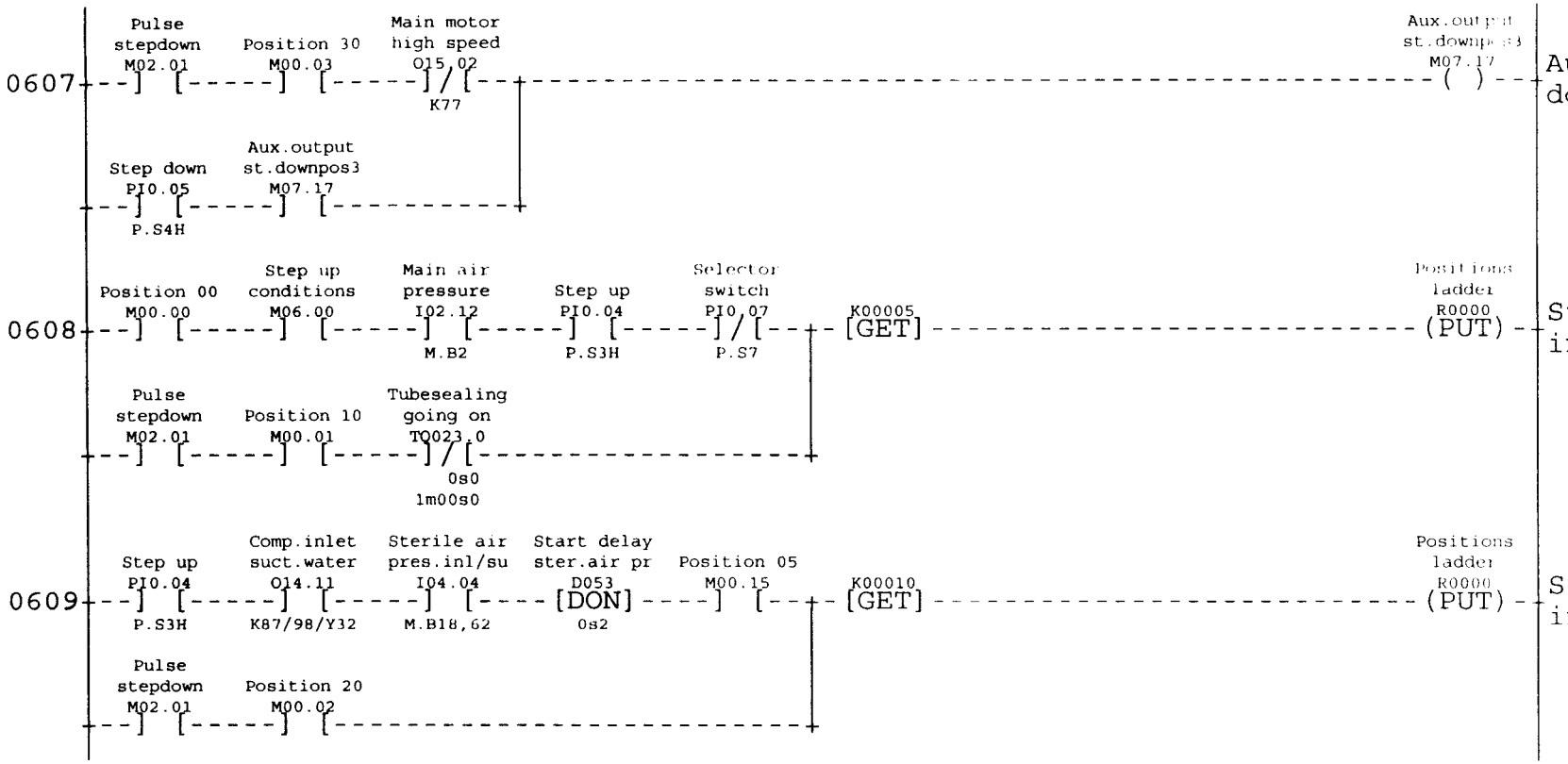
0607
Pulse stepdown M02.01
Position 30 M00.03
Main motor high speed O15.02 K77
Aux.output st.downpos3 M07.17
Step down PI0.05 P.S4H
Aux.output st.downpos3 M07.17
Auxiliary output st down position 3
0608
Position 00 M00.00
Step up conditions M06.00
Main air pressure I02.12 M.B2
Step up PI0.04 P.S3H
Selector switch PI0.07 P.S7
K00005 [GET]
Positions ladder R0000 (PUT)
Storageword for pos in machineladder
Pulse stepdown M02.01
Position 10 M00.01
Tubesealing going on TQ023.0 0s0 1m00s0
0609
Step up PI0.04 P.S3H
Comp.inlet suct.water O14.11 K87/98/Y32
Sterile air pres.inl/su I04.04 M.B18,62
Start delay ster.air pr D053 [DON] 0s2
Position 05 M00.15
K00010 [GET]
Positions ladder R0000 (PUT)
Storageword for pos in machineladder
Pulse stepdown M02.01
Position 20 M00.02

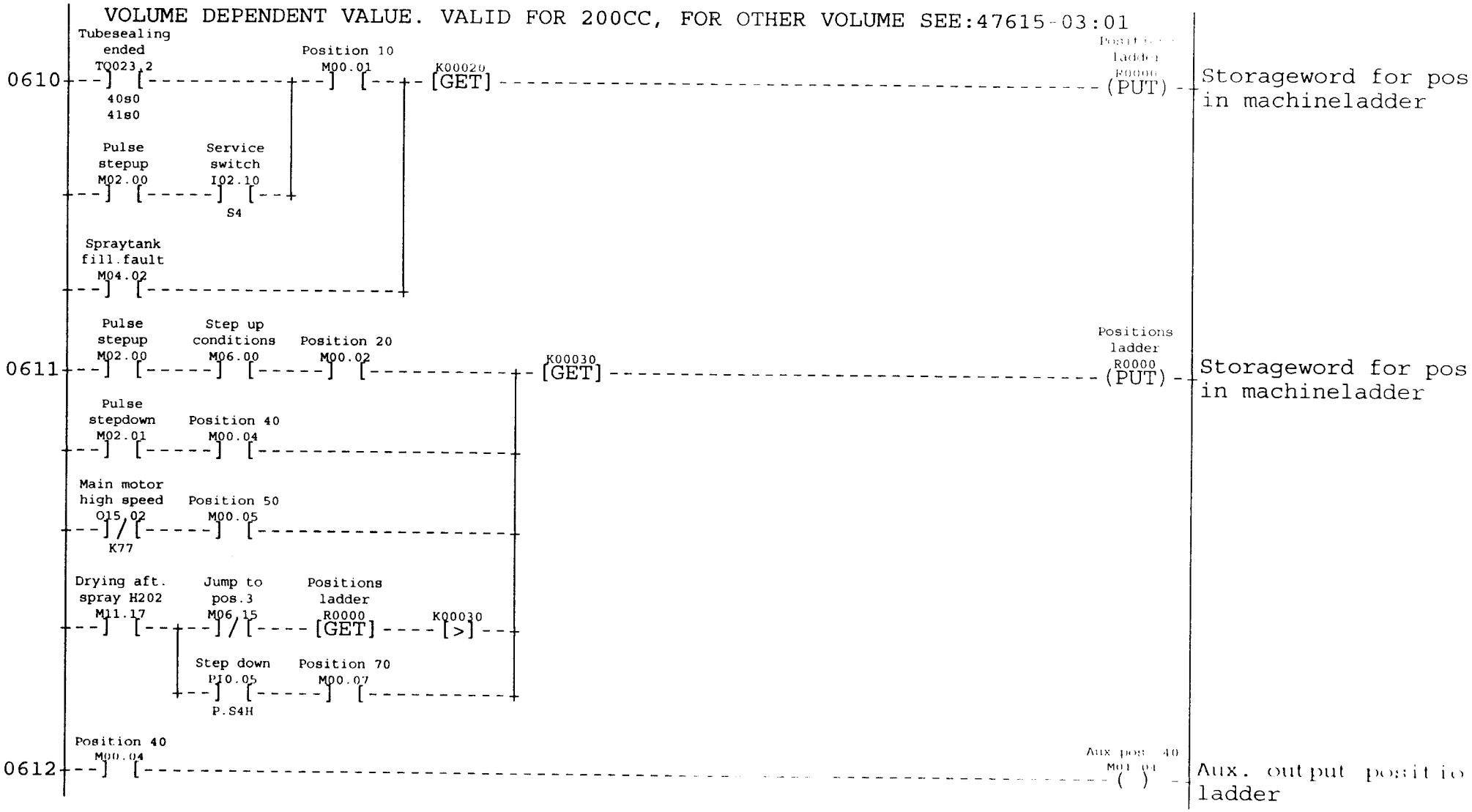

Machine individual adaptations see Block 02 TBA/9-1401 S.A.

AM: xxxxx Date: 000104 Sign: TEAN

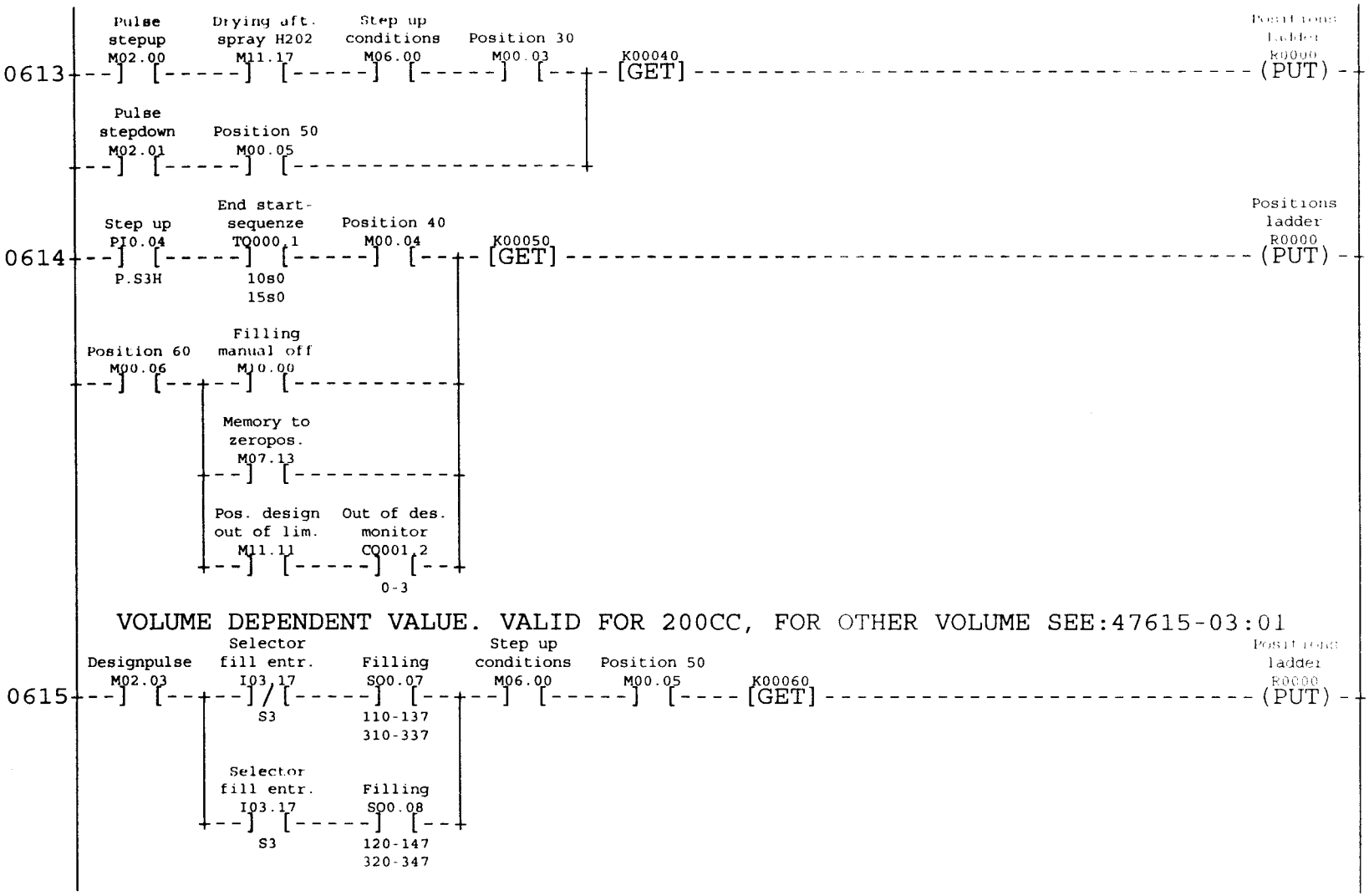
0613
Pulse stepup M02.00
Drying aft. spray H202 M11.17
Step up conditions M06.00
Position 30 M00.03
K00040
[GET]
Positions ladder K0000
(PUT)
Storageword for pos in machineladder
Pulse stepdown M02.01
Position 50 M00.05
0614
Step up PI0.04
P.S3H
End start-sequenze TQ000.1
10s0
15s0
Position 40 M00.04
K00050
[GET]
Positions ladder R0000
(PUT)
Storageword for pos in machineladder
Position 60 M00.06
Filling manual off M10.00
Memory to zeropos. M07.13
Pos. design out of lim. M11.11
Out of des. monitor CQ001.2
0-3
VOLUME DEPENDENT VALUE. VALID FOR 200CC, FOR OTHER VOLUME SEE:47615-03:01
0615
Designpulse M02.03
Selector fill entr. I03.17
S3
Filling SQ0.07
110-137
310-337
Step up conditions M06.00
Position 50 M00.05
K00060
[GET]
Positions ladder R0000
(PUT)
Storageword for pos in machineladder
Selector fill entr. I03.17
S3
Filling SQ0.08
120-147
320-347

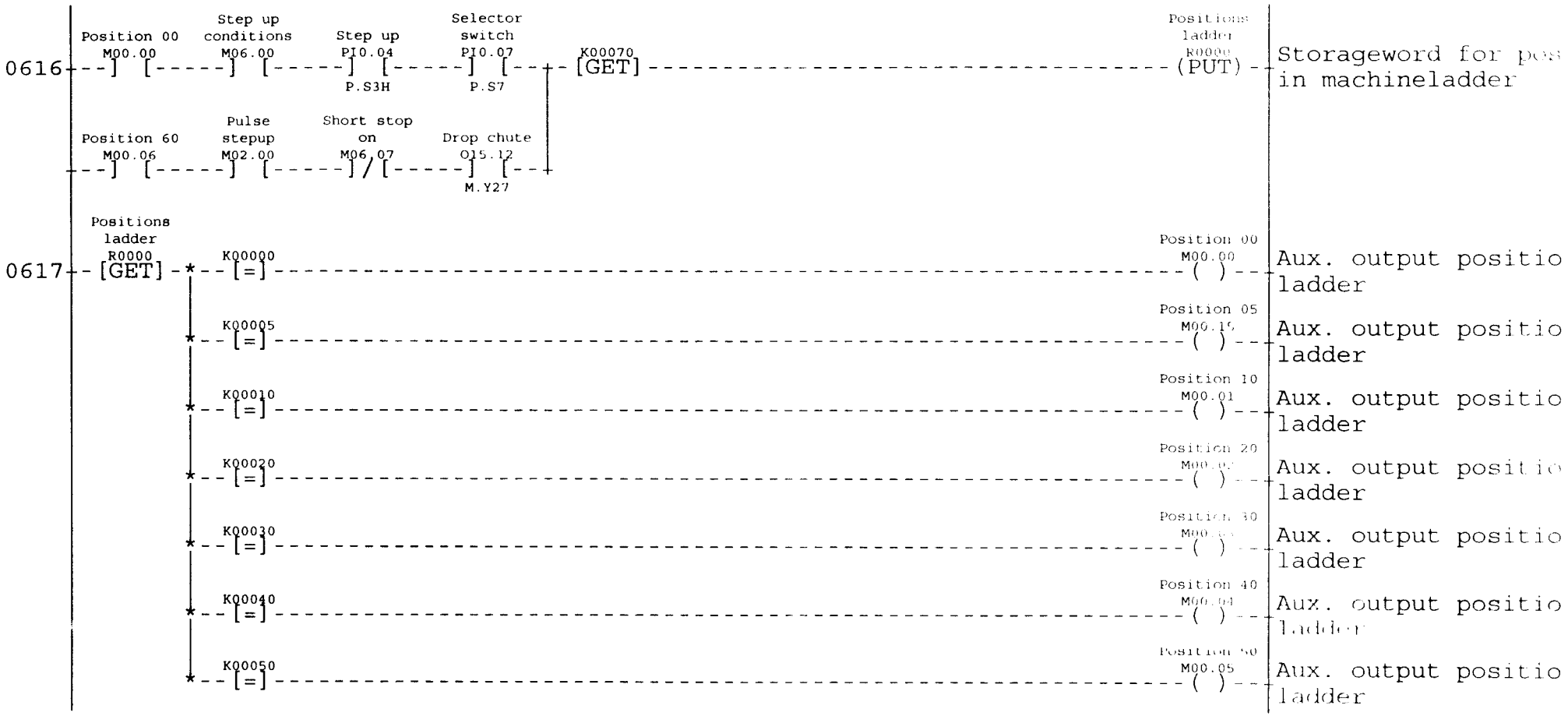
0616
Position 00
M00.00
Step up conditions
M06.00
Step up
PI0.04
P.S3H
Selector switch
PI0.07
P.S7
K00070
[GET]
Positions ladder
R0000
(PUT)
Storageword for pos
in machineladder
Position 60
M00.06
Pulse stepup
M02.00
Short stop on
M06.07
Drop chute
O15.12
M.Y27
0617
Positions ladder
R0000
[GET]
K00000
[=]
Position 00
M00.00
( )
Aux. output positio
ladder
K00005
Position 05
M00.16
Aux. output positio
ladder
K00010
Position 10
M00.01
Aux. output positio
ladder
K00020
Position 20
Aux. output positio
ladder
K00030
Aux. output positio
ladder
K00040
Position 40
M00.04
Aux. output positio
ladder
K00050
Position 50
M00.05
Aux. output positio
ladder

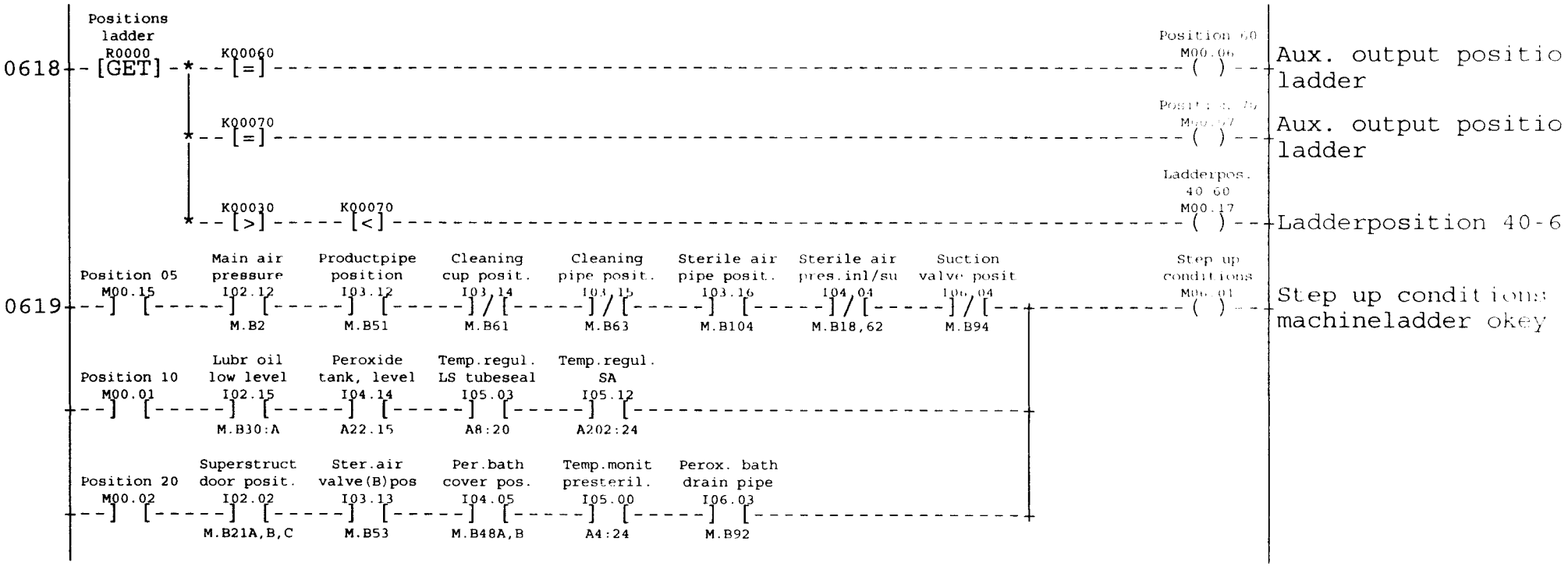
Positions ladder
R0000
0618
[GET]
K00060
[=]
Position 60
M00.06
( )
Aux. output positio ladder
K00070
[=]
Posit : 5, 7
M00.07
( )
Aux. output positio ladder
K00030
[>]
K00070
[<]
Ladderpos. 40 60
M00.17
( )
Ladderposition 40-6
0619
Position 05
M00.15
Main air pressure
I02.12
M.B2
Productpipe position
I03.12
M.B51
Cleaning cup posit.
I03.14
M.B61
Cleaning pipe posit.
I03.15
M.B63
Sterile air pipe posit.
I03.16
M.B104
Sterile air pres.inl/su
I04.04
M.B18,62
Suction valve posit
I06.04
M.B94
Step up conditions
M00.01
( )
Step up conditions machineladder okey
Position 10
M00.01
Lubr oil low level
I02.15
M.B30:A
Peroxide tank, level
I04.14
A22.15
Temp.regul. LS tubeseal
I05.03
A8:20
Temp.regul. SA
I05.12
A202:24
Position 20
M00.02
Superstruct door posit.
I02.02
M.B21A,B,C
Ster.air valve(B)pos
I03.13
M.B53
Per.bath cover pos.
I04.05
M.B48A,B
Temp.monit presteril.
I05.00
A4:24
Perox. bath drain pipe
I06.03
M.B92

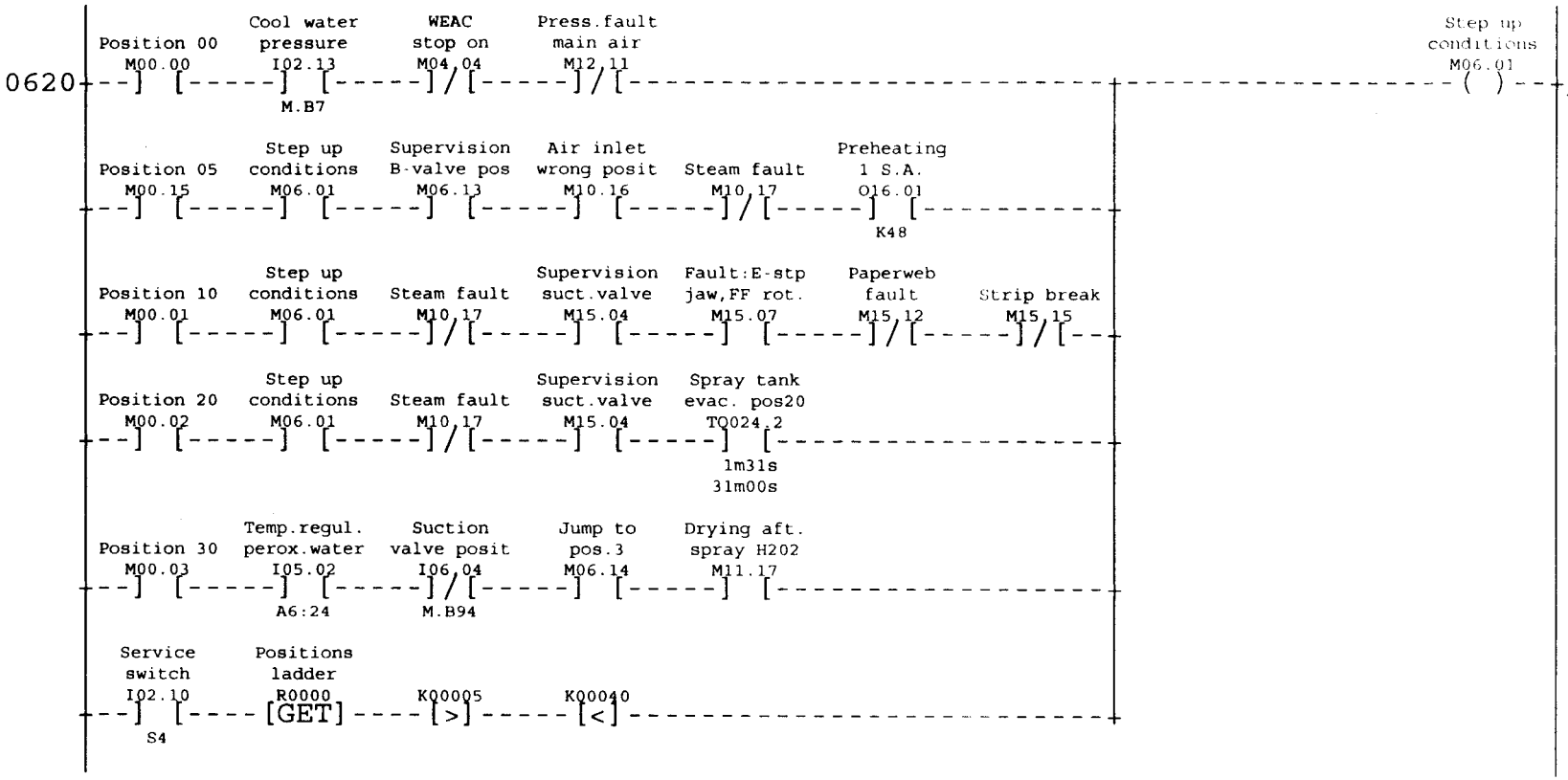

Machine individual adaptations see Block 02 TBA/9-1401 S.A.

AM: xxxxx Date: 000104 Sign: TEAN

Mach No: 649205-1401 Page
47615-06:43 Cont

VOLUME DEPENDENT VALUE. VALID FOR 200CC, FOR OTHER VOLUME SEE:47615-03:01

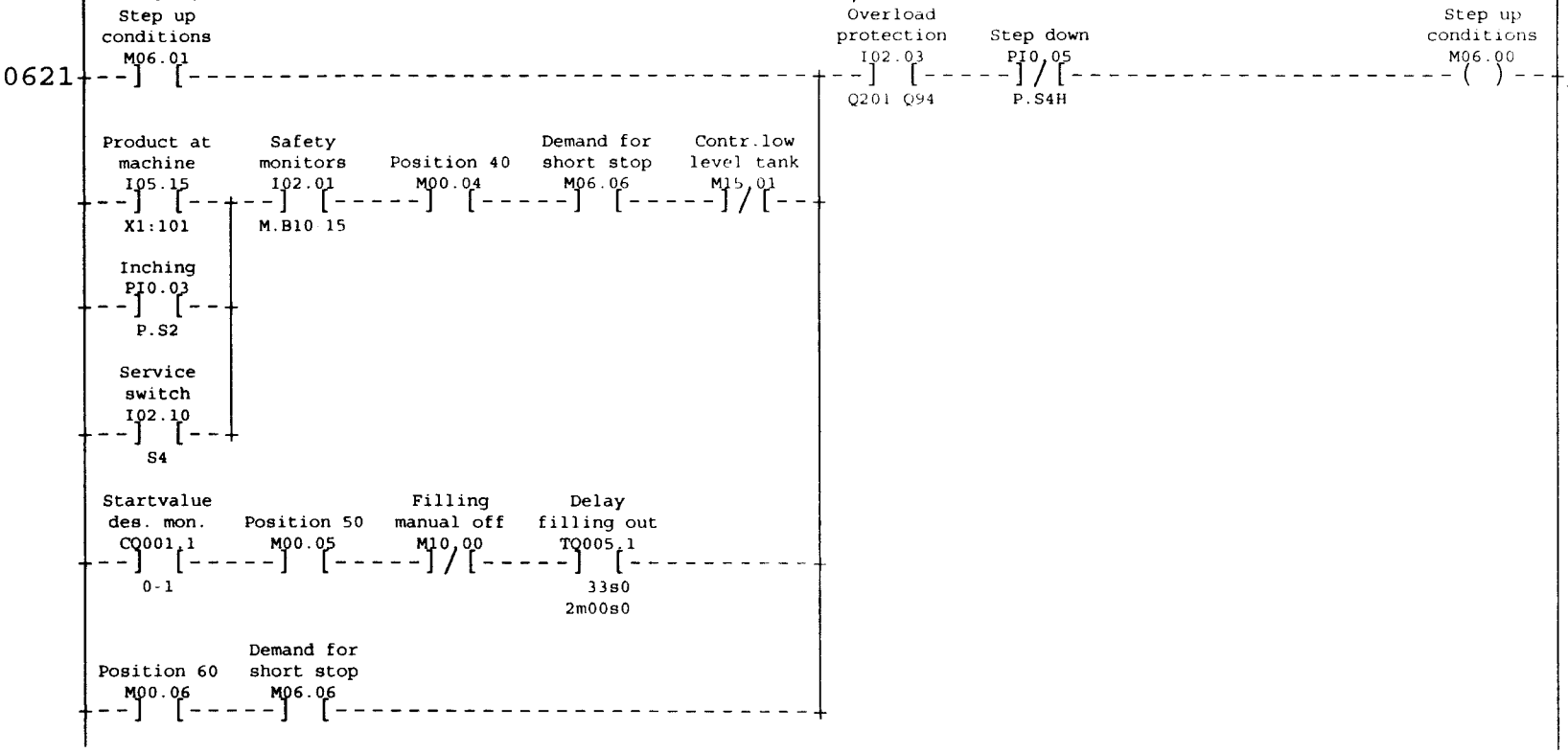

PREHEATING 1, PEROXID TANK HANDLING AND PREHEATING 2

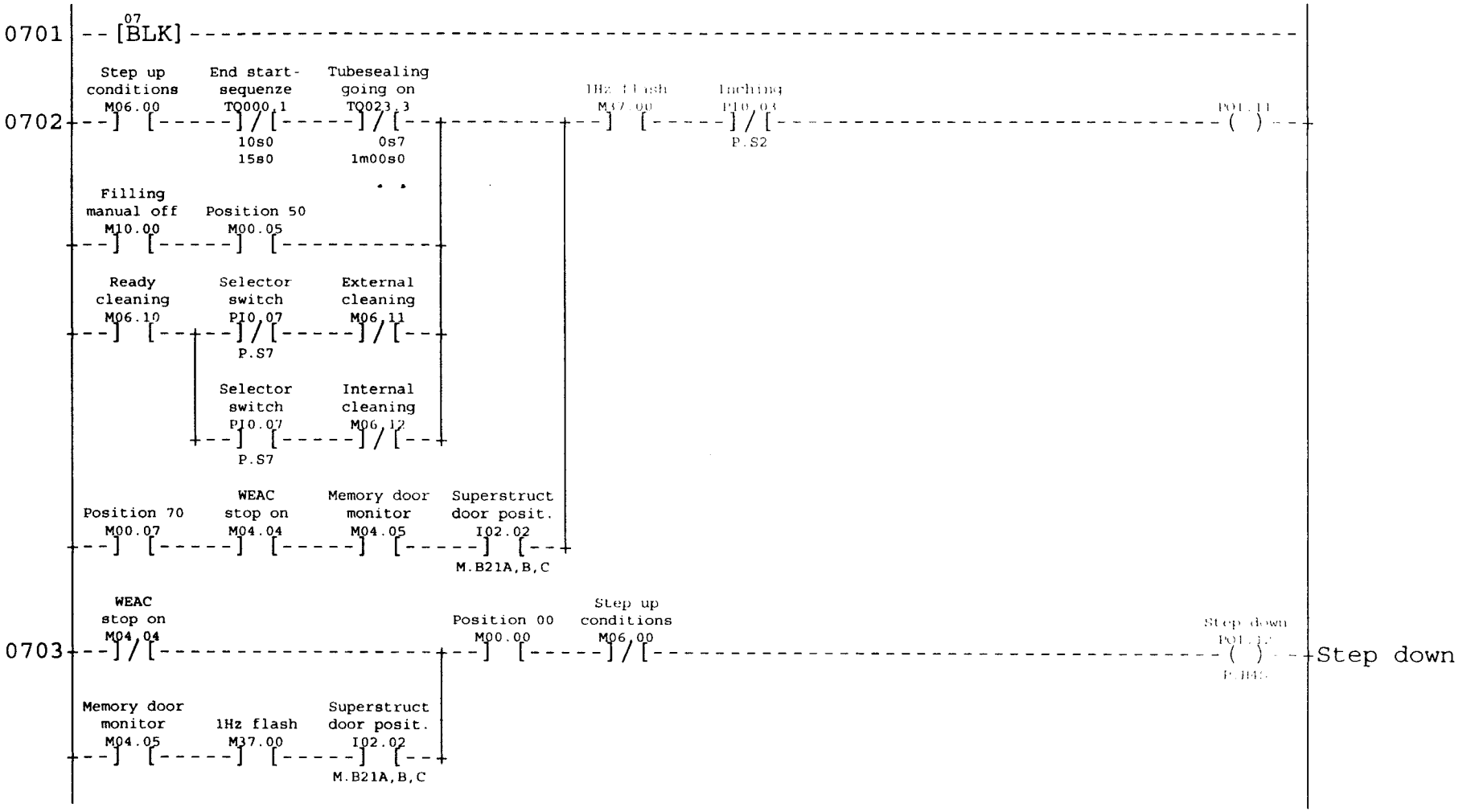

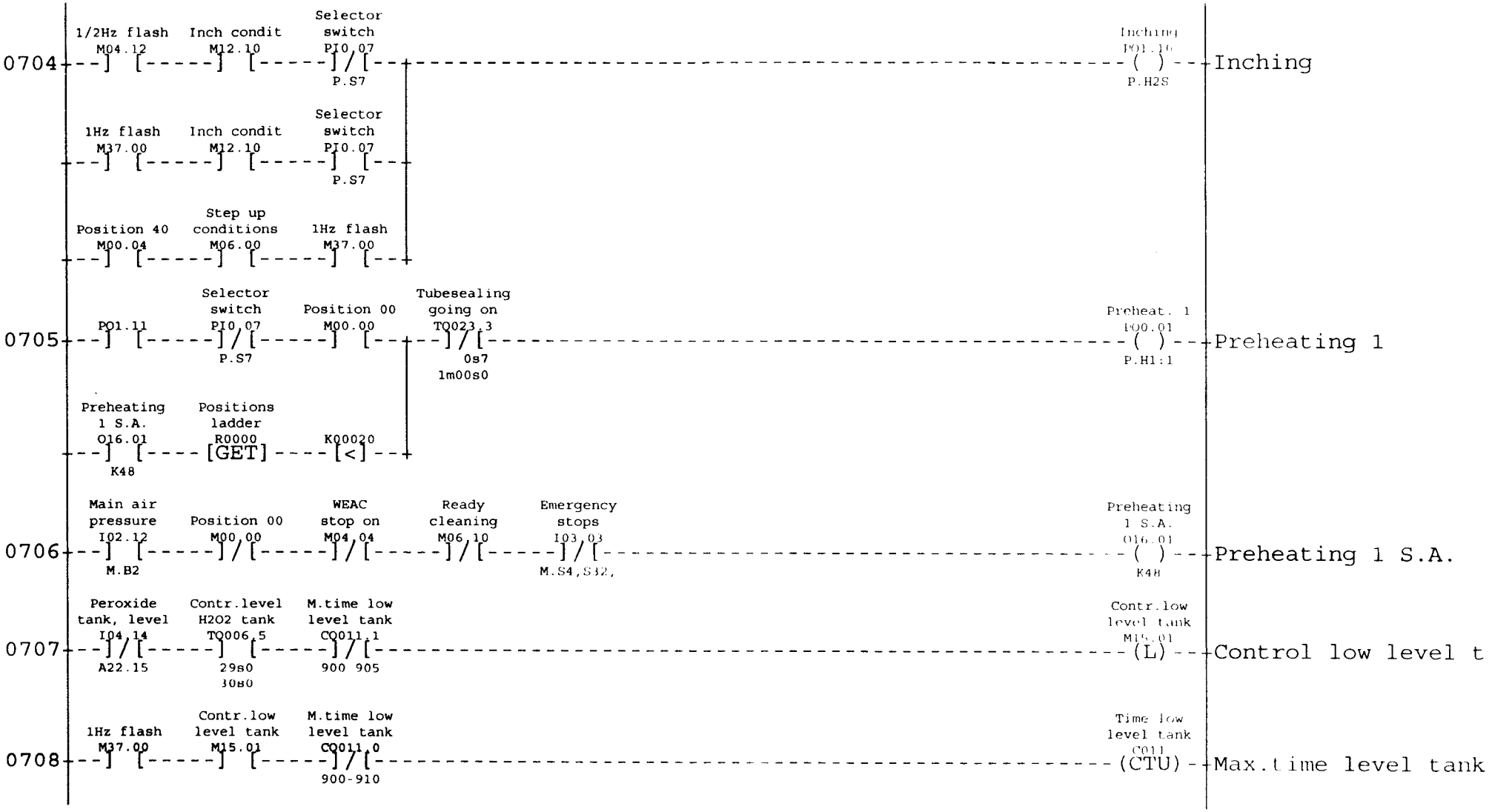

Machine individual adaptations see Block 02 TBA/9-1401 S.A.

AM: xxxxx Date: 000104 Sign: TEAN

Mach No: 649205-1401 Page

47615-07:43 Cont

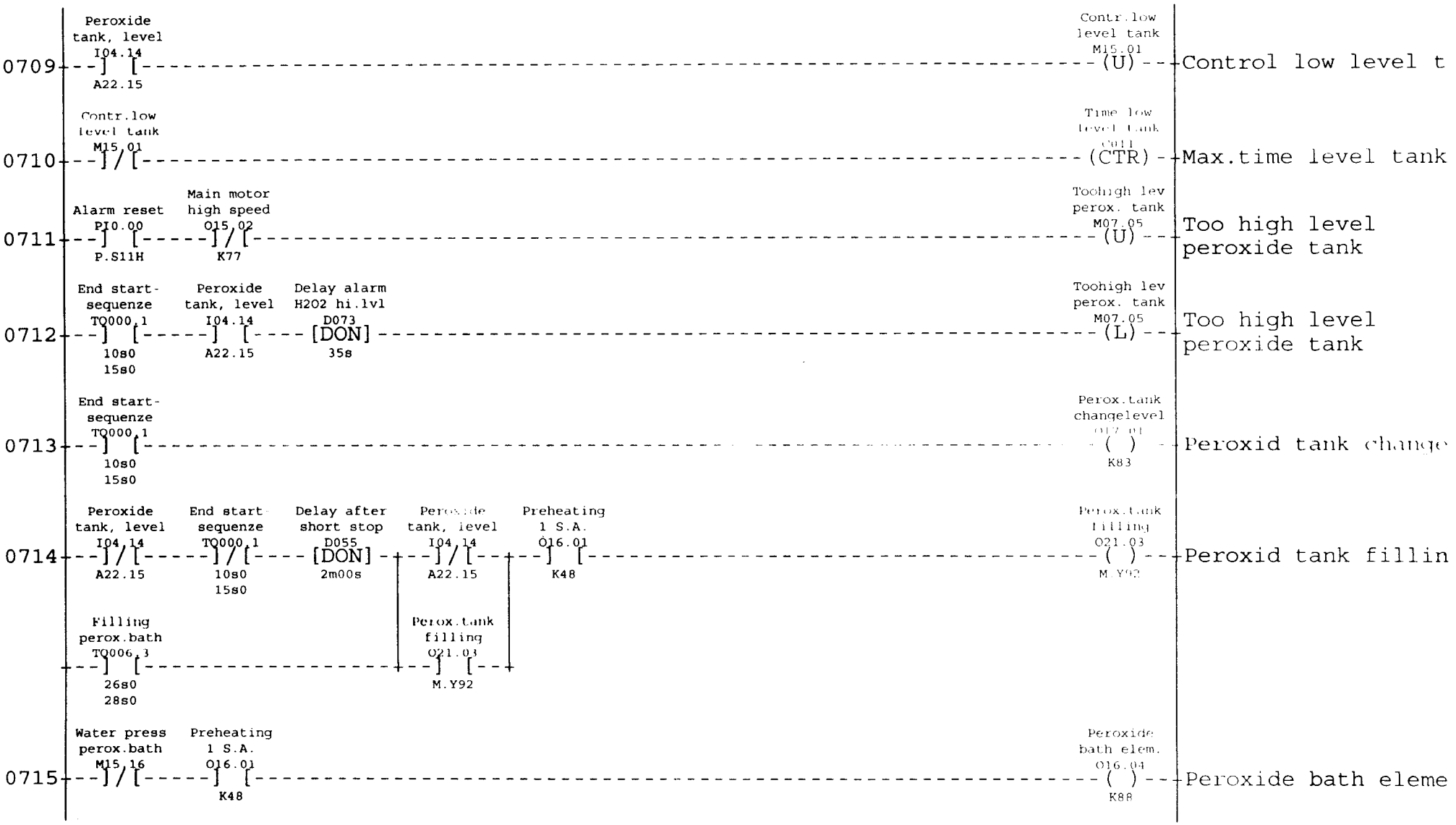
0709
Peroxide tank, level I04.14
A22.15
Contr.low level tank M15.01
(U)
Control low level t
0710
Contr.low level tank M15.01
Time low level tank C011
(CTR)
Max.time level tank
0711
Alarm reset PI0.00
P.S11H
Main motor high speed O15.02
K77
Toohigh lev perox. tank M07.05
(U)
Too high level peroxide tank
0712
End start-sequenze TQ000.1
10s0
15s0
Peroxide tank, level I04.14
A22.15
Delay alarm H2O2 hi.lvl D073
[DON]
35s
Toohigh lev perox. tank M07.05
(L)
Too high level peroxide tank
0713
End start-sequenze TQ000.1
10s0
15s0
Perox.tank changelevel O17.01
K83
Peroxid tank change
0714
Peroxide tank, level I04.14
A22.15
End start-sequenze TQ000.1
10s0
15s0
Delay after short stop D055
[DON]
2m00s
Peroxide tank, level I04.14
A22.15
Preheating 1 S.A. O16.01
K48
Perox.tank filling O21.03
M.Y92
Peroxid tank fillin
Filling perox.bath TQ006.3
26s0
28s0
Perox.tank filling O21.03
M.Y92
0715
Water press perox.bath M15.16
Preheating 1 S.A. O16.01
K48
Peroxide bath elem. O16.04
K88
Peroxide bath eleme

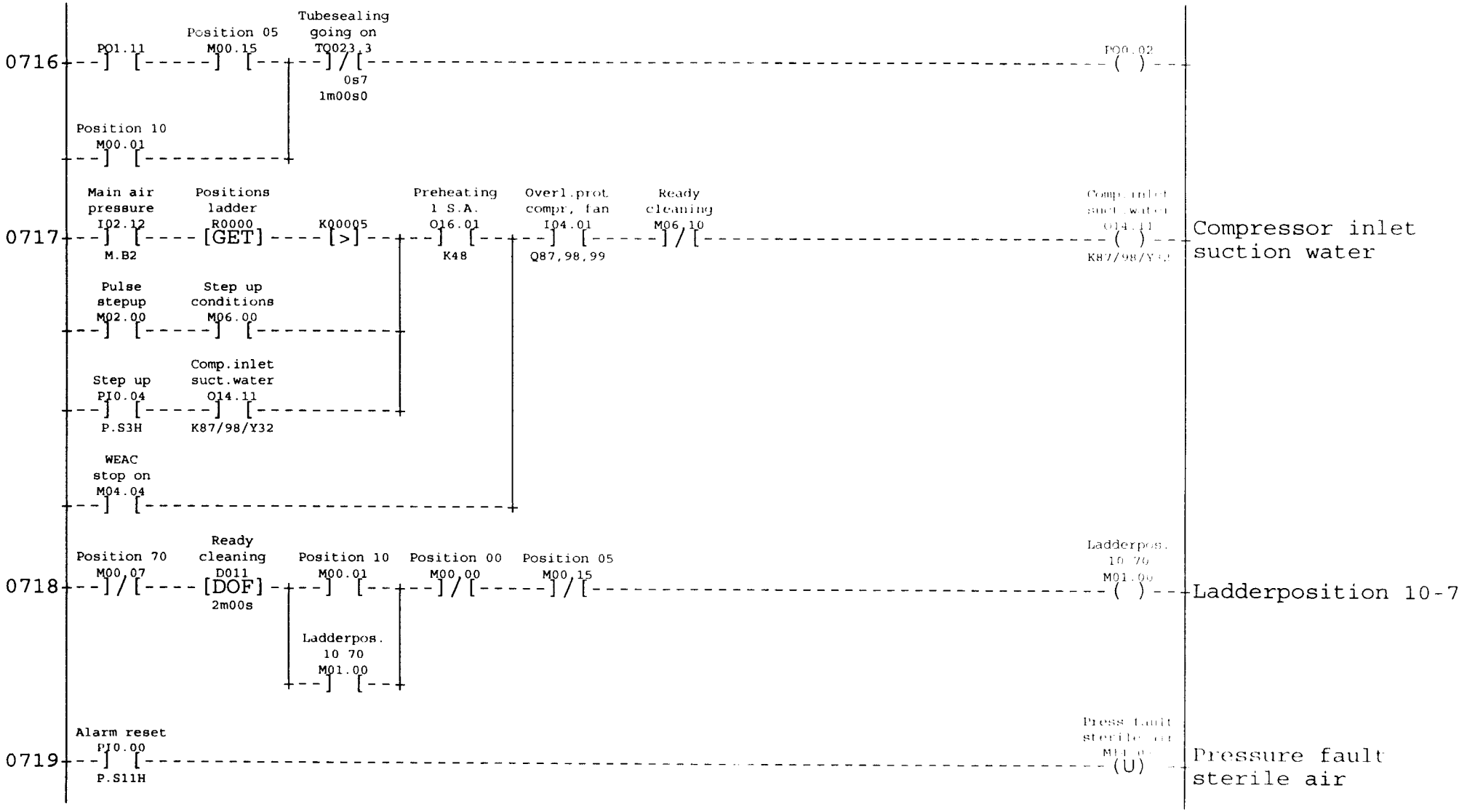

Machine individual adaptations see Block 02 TBA/9-1401 S.A.

AM: xxxxx Date: 000104 Sign: TEAN

Mach No: 649205-1401 Page
47615-07:43 Cont

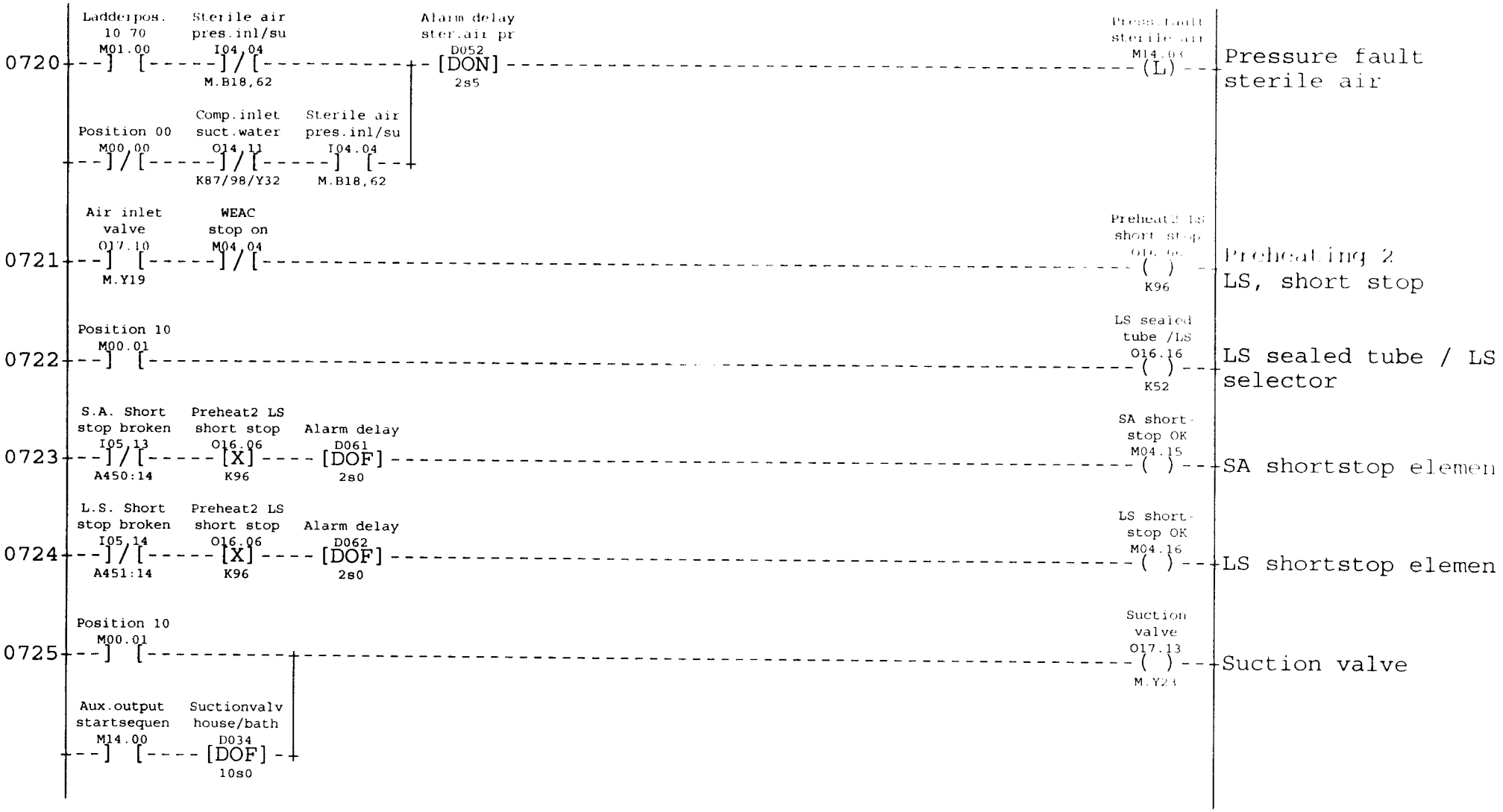

Machine individual adaptations see Block 02 TBA/9-1401 S.A.

AM: xxxxx Date: 000104 Sign: TEAN

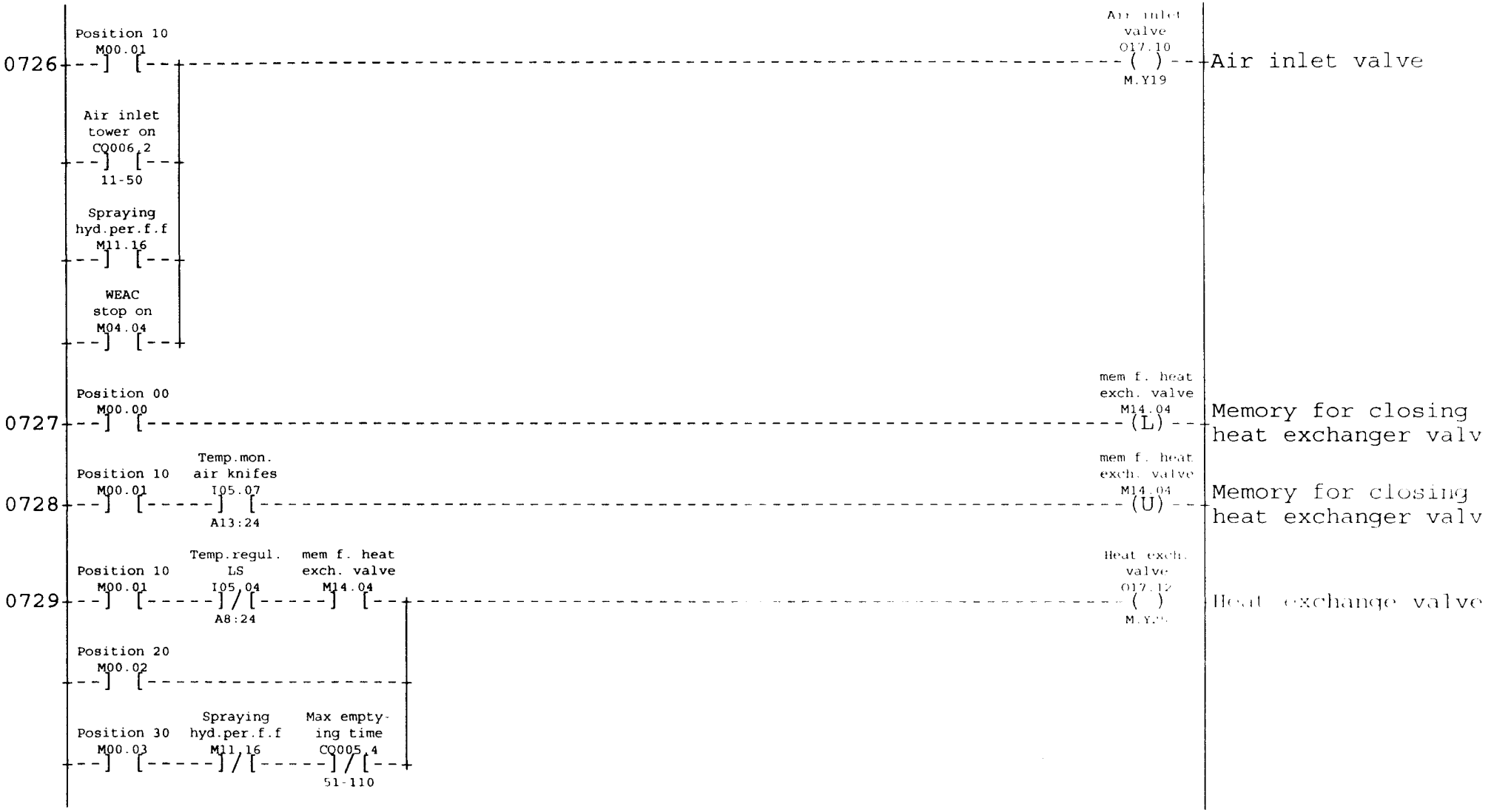
0726
Position 10
M00.01
Air inlet tower on
CQ006.2
11-50
Spraying hyd.per.f.f
M11.16
WEAC stop on
M04.04
Air inlet valve
O17.10
M.Y19
Air inlet valve
0727
Position 00
M00.00
mem f. heat exch. valve
M14.04
(L)
Memory for closing heat exchanger valv
0728
Position 10
M00.01
Temp.mon. air knifes
I05.07
A13:24
mem f. heat exch. valve
M14.04
(U)
Memory for closing heat exchanger valv
0729
Position 10
M00.01
Temp.regul. LS
I05.04
A8:24
mem f. heat exch. valve
M14.04
Heat exch. valve
O17.12
Heat exchange valve
Position 20
M00.02
Position 30
M00.03
Spraying hyd.per.f.f
M11.16
Max empty-ing time
CQ005.4
51-110

TUBESEALING AND PRESTERILIZING

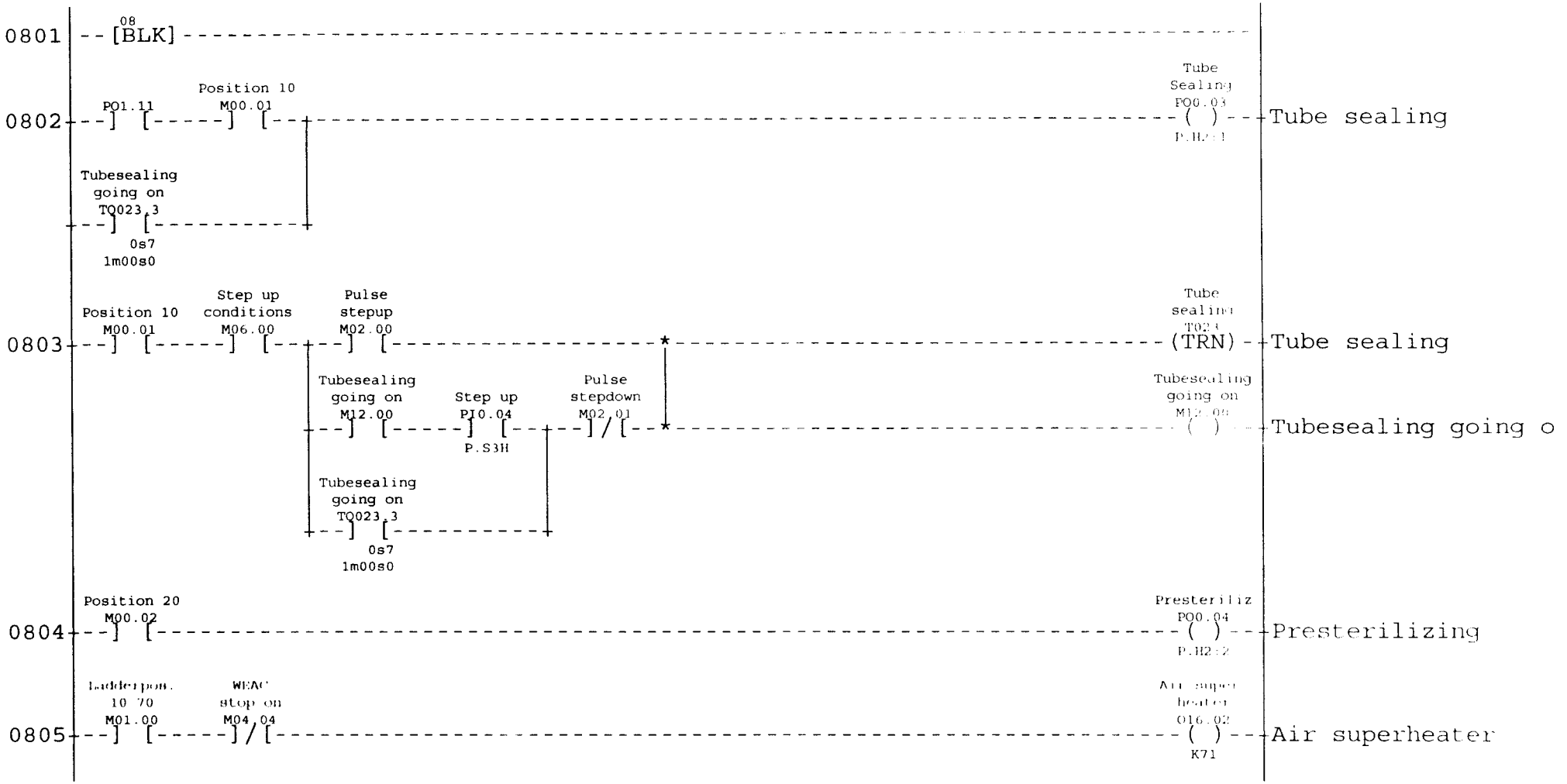


0806
Position 10
M00.01
Position 20
M00.02
Temp.monit
presteril.
I05.00
A4:24
Air heater
preh./prod.
Q16.07
K53
Air heater preheati
production 400/360
0807
Peroxide
bath elem.
Q16.04
K88
Perox bath
water preh.
T025
(TRN)
Peroxide bath water
preheating high tem
0808
Temp.regul.
perox.water
I05.02
A6:24
Perox bath
water preh.
TQ025.1
12m00s
12m01s
Perox. bath
preh. water
Q17.00
(L)
K54
Peroxide bath, wate
preheating
0809
Perox.water
preheating
I05.01
A6:20
Perox bath
water preh.
TQ025.2
13m00s
40m00s
Perox. bath
preh. water
Q17.00
(U)
K54
Peroxide bath, wate
preheating
Perox bath
water preh.
TQ025.0
1s
40m00s

SPRAYING

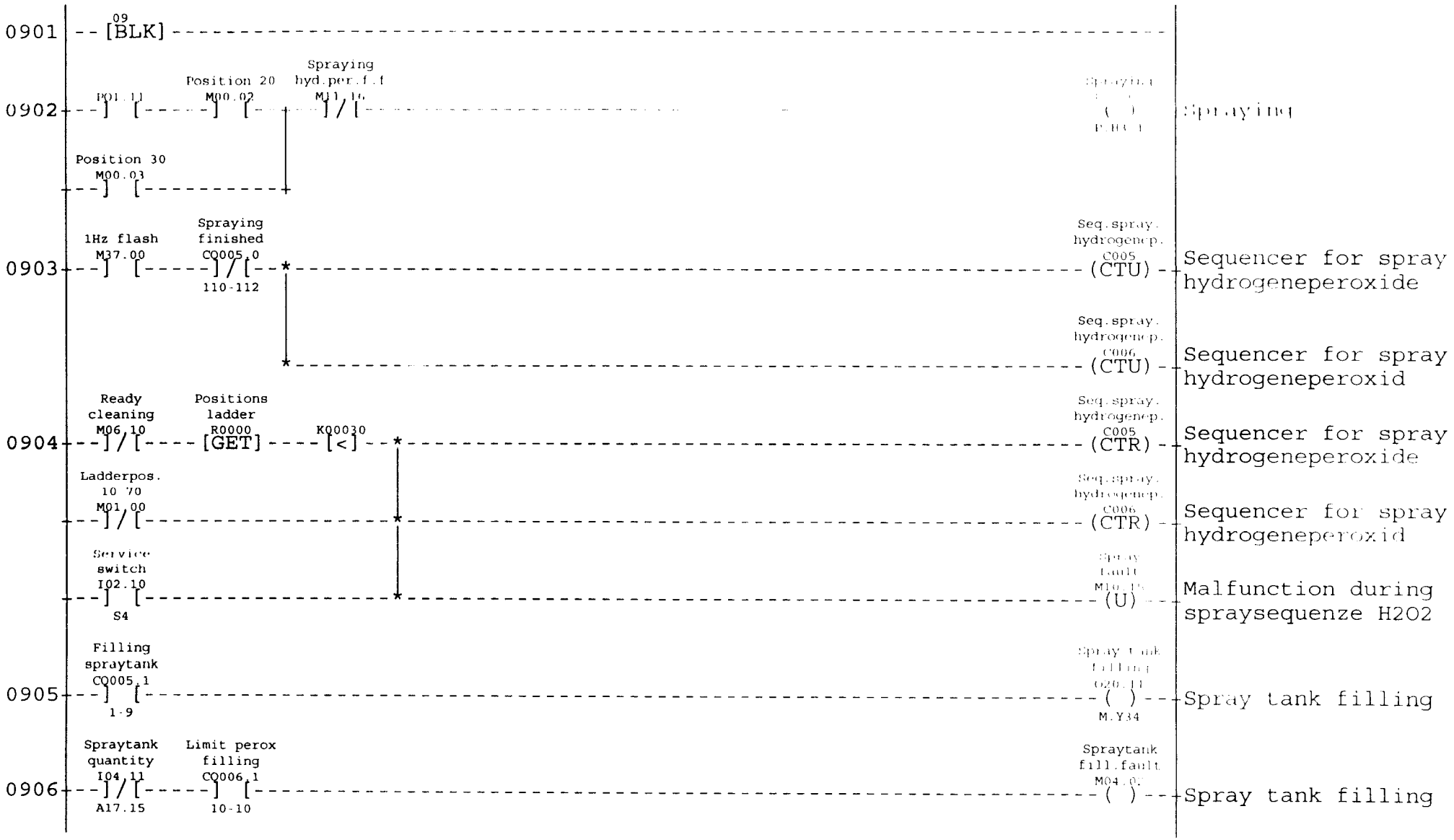
0901
09
[BLK]
0902
Position 20
M00.02
Spraying hyd.per.f.f
M11.16
Position 30
M00.03
Spraying
0903
1Hz flash
M37.00
Spraying finished
CQ005.0
110-112
Seq.spray. hydrogenep.
C005
(CTU)
Sequencer for spray hydrogeneperoxide
Seq.spray. hydrogenep.
C006
(CTU)
Sequencer for spray hydrogeneperoxid
0904
Ready cleaning
M06.10
Positions ladder
R0000
[GET]
K00030
[<]
Seq.spray. hydrogenep.
C005
(CTR)
Sequencer for spray hydrogeneperoxide
Ladderpos. 10 70
M01.00
Seq.spray. hydrogenep.
C006
(CTR)
Sequencer for spray hydrogeneperoxid
Service switch
I02.10
S4
Spray fault
M10.15
(U)
Malfunction during spraysequenze H2O2
0905
Filling spraytank
CQ005.1
1-9
Spray tank filling
M.Y34
Spray tank filling
0906
Spraytank quantity
I04.11
A17.15
Limit perox filling
CQ006.1
10-10
Spraytank fill.fault
M04.0
Spray tank filling

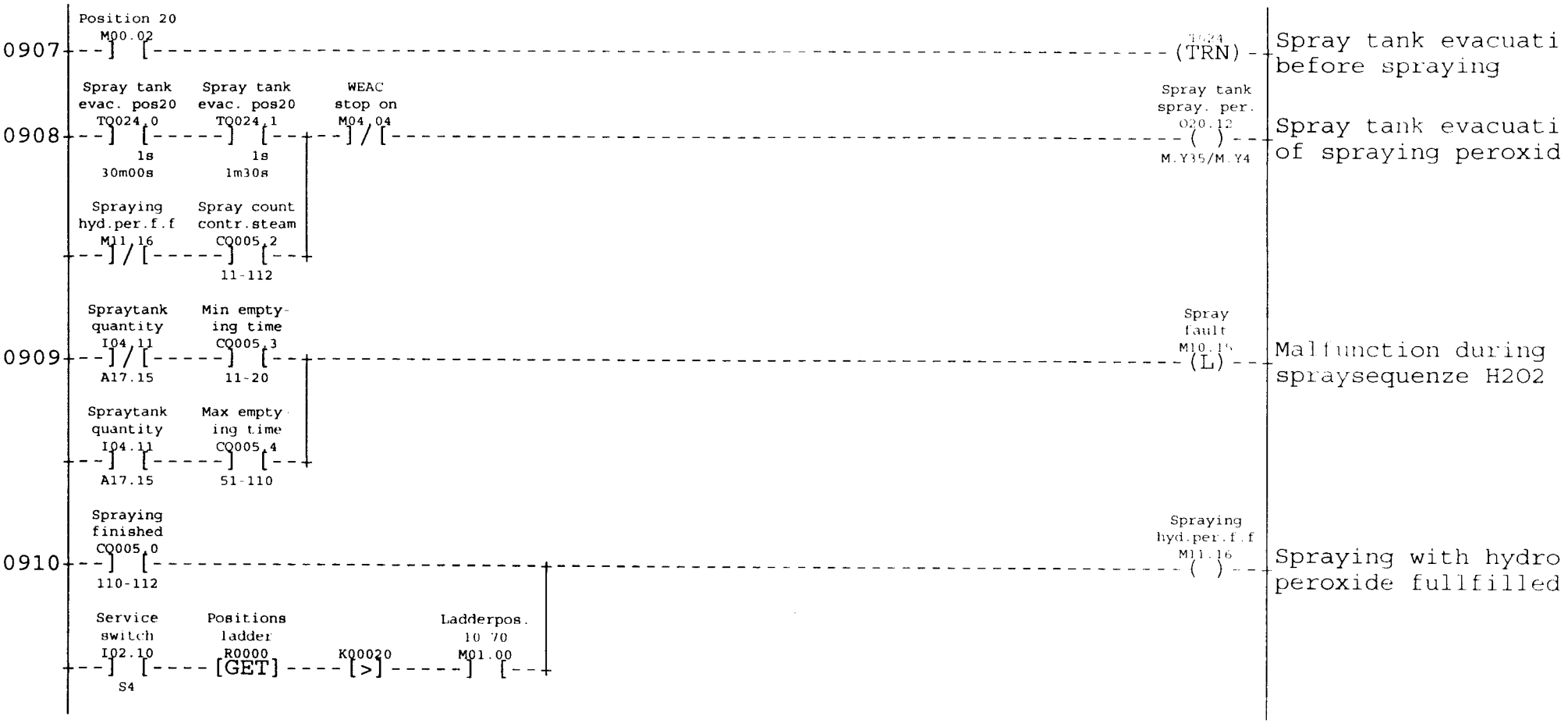
0907
Position 20
M00.02
T024
(TRN)
Spray tank evacuati
before spraying
0908
Spray tank
evac. pos20
TQ024.0
1s
30m00s
Spray tank
evac. pos20
TQ024.1
1s
1m30s
WEAC
stop on
M04.04
Spray tank
spray. per.
020.12
M.Y35/M.Y4
Spray tank evacuati
of spraying peroxid
Spraying
hyd.per.f.f
M11.16
Spray count
contr.steam
CQ005.2
11-112
0909
Spraytank
quantity
I04.11
A17.15
Min empty-
ing time
CQ005.3
11-20
Spray
fault
M10.1
(L)
Malfunction during
spraysequenze H2O2
Spraytank
quantity
I04.11
A17.15
Max empty
ing time
CQ005.4
51-110
0910
Spraying
finished
CQ005.0
110-112
Spraying
hyd.per.f.f
M11.16
Spraying with hydro
peroxide fullfilled
Service
switch
I02.10
S4
Positions
ladder
R0000
[GET]
K00020
[>]
Ladderpos.
10 70
M01.00

DRYING, PREHEATING 3

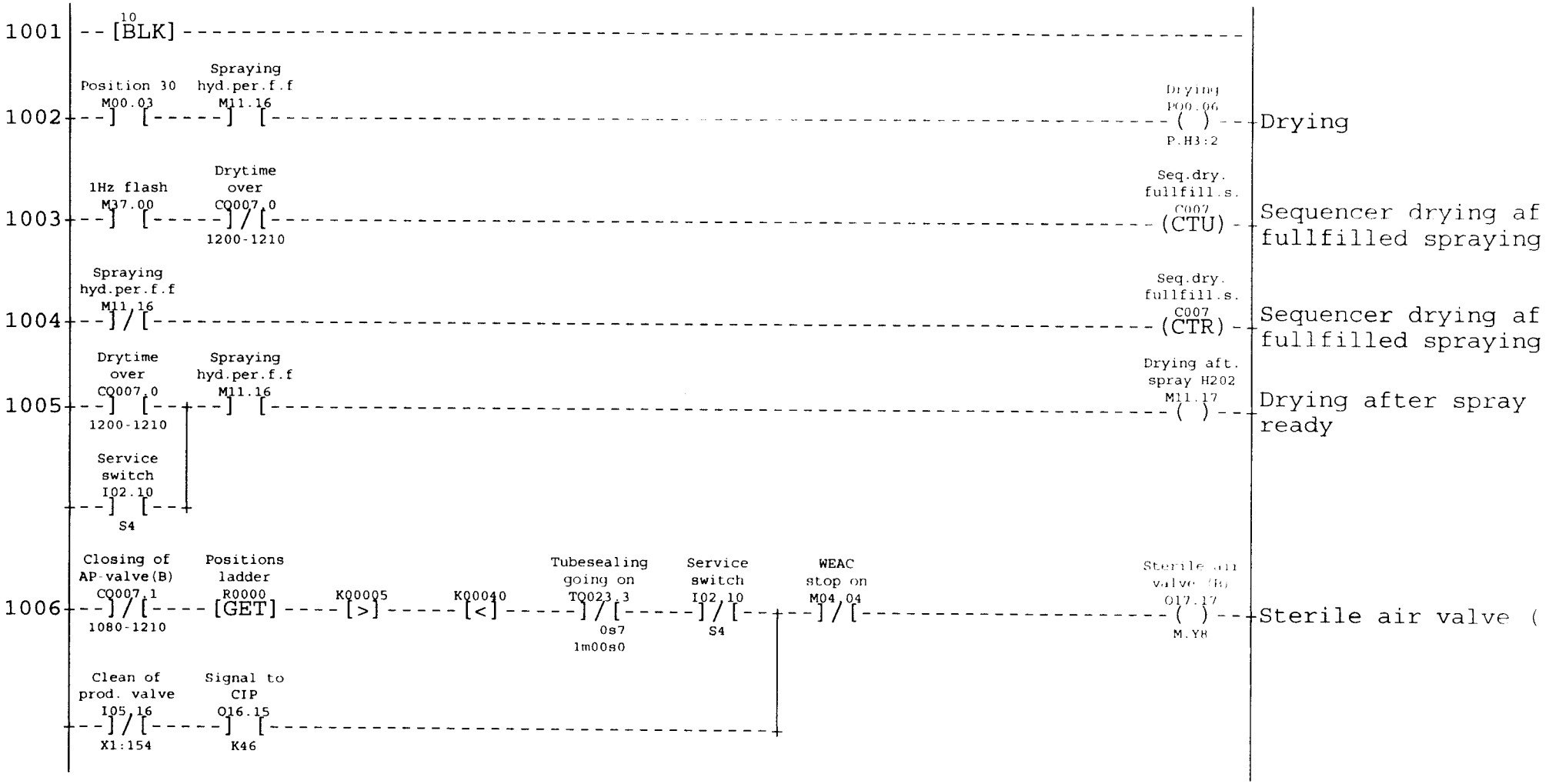

Machine individual adaptations see Block 02 TBA/9-1401 S.A.

AM: xxxxx Date: 000104 Sign: TEAN

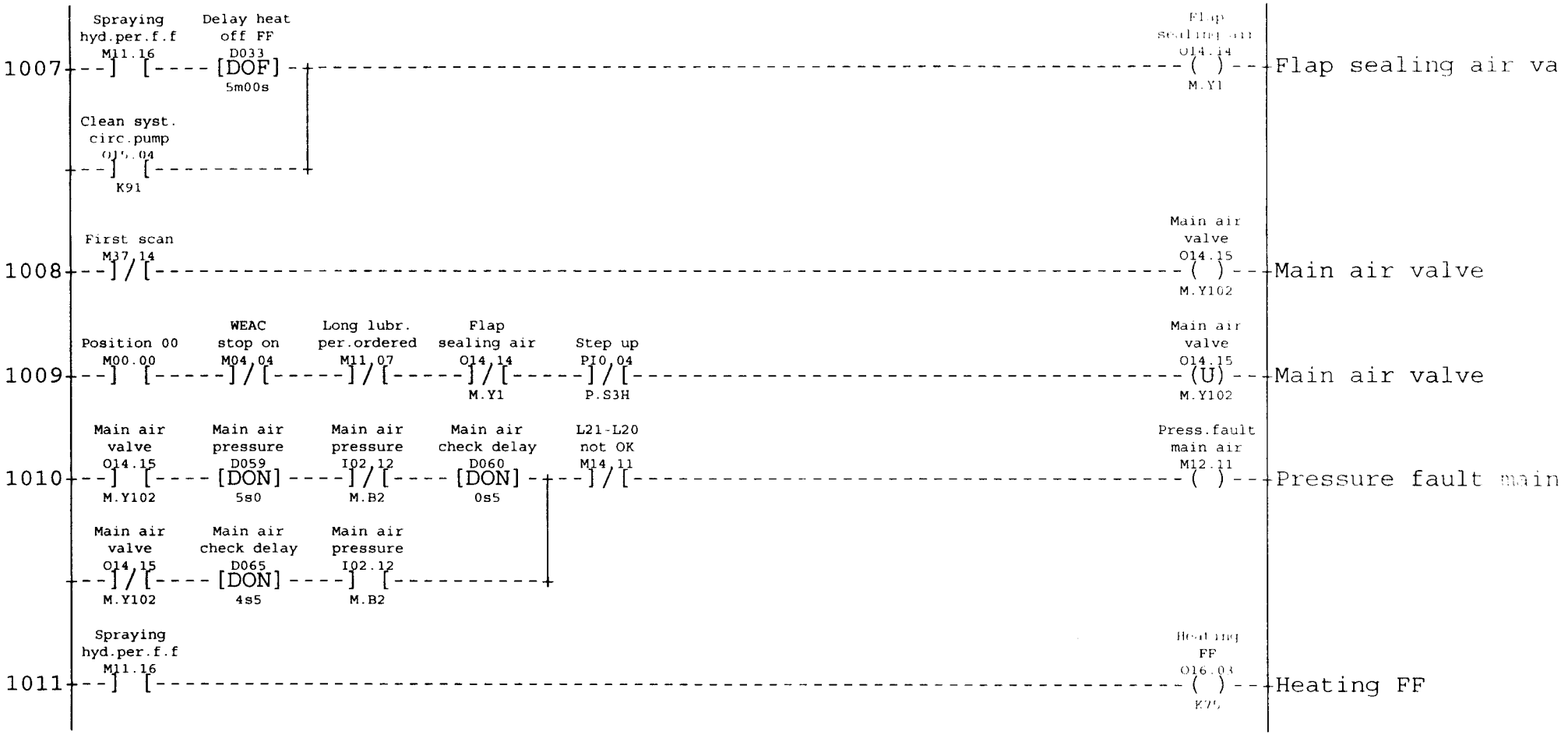
1007
Spraying hyd.per.f.f M11.16
Delay heat off FF D033
[DOF] 5m00s
Clean syst. circ.pump O15.04
K91
Flap Sealing air O14.14
M.Y1
Flap sealing air va
1008
First scan M37.14
Main air valve O14.15
M.Y102
Main air valve
1009
Position 00 M00.00
WEAC stop on M04.04
Long lubr. per.ordered M11.07
Flap sealing air O14.14
M.Y1
Step up PI0.04
P.S3H
Main air valve O14.15
M.Y102
(U)
Main air valve
1010
Main air valve O14.15
M.Y102
Main air pressure D059
[DON] 5s0
Main air pressure I02.12
M.B2
Main air check delay D060
[DON] 0s5
L21-L20 not OK M14.11
Press.fault main air M12.11
Pressure fault main
Main air valve O14.15
M.Y102
Main air check delay D065
[DON] 4s5
Main air pressure I02.12
M.B2
1011
Spraying hyd.per.f.f M11.16
Heating FF O16.03
K75
Heating FF

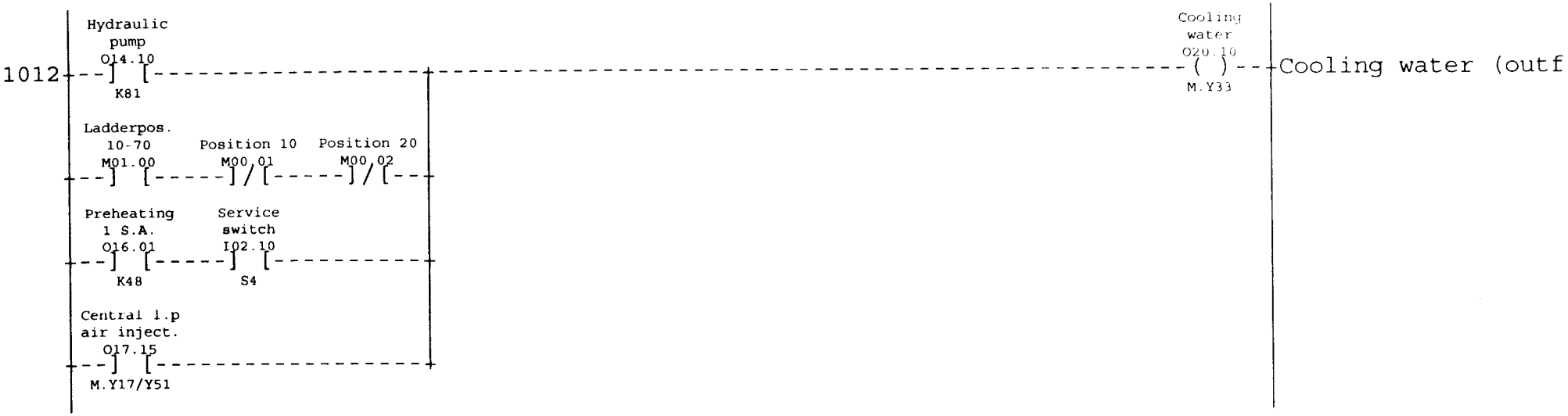
1012
Hydraulic pump
O14.10
K81
Ladderpos. 10-70
M01.00
Position 10
M00.01
Position 20
M00.02
Preheating 1 S.A.
O16.01
K48
Service switch
I02.10
S4
Central l.p air inject.
O17.15
M.Y17/Y51
Cooling water
O20.10
M.Y33
Cooling water (outf

SIGNALS TO AND FROM STERILIZER

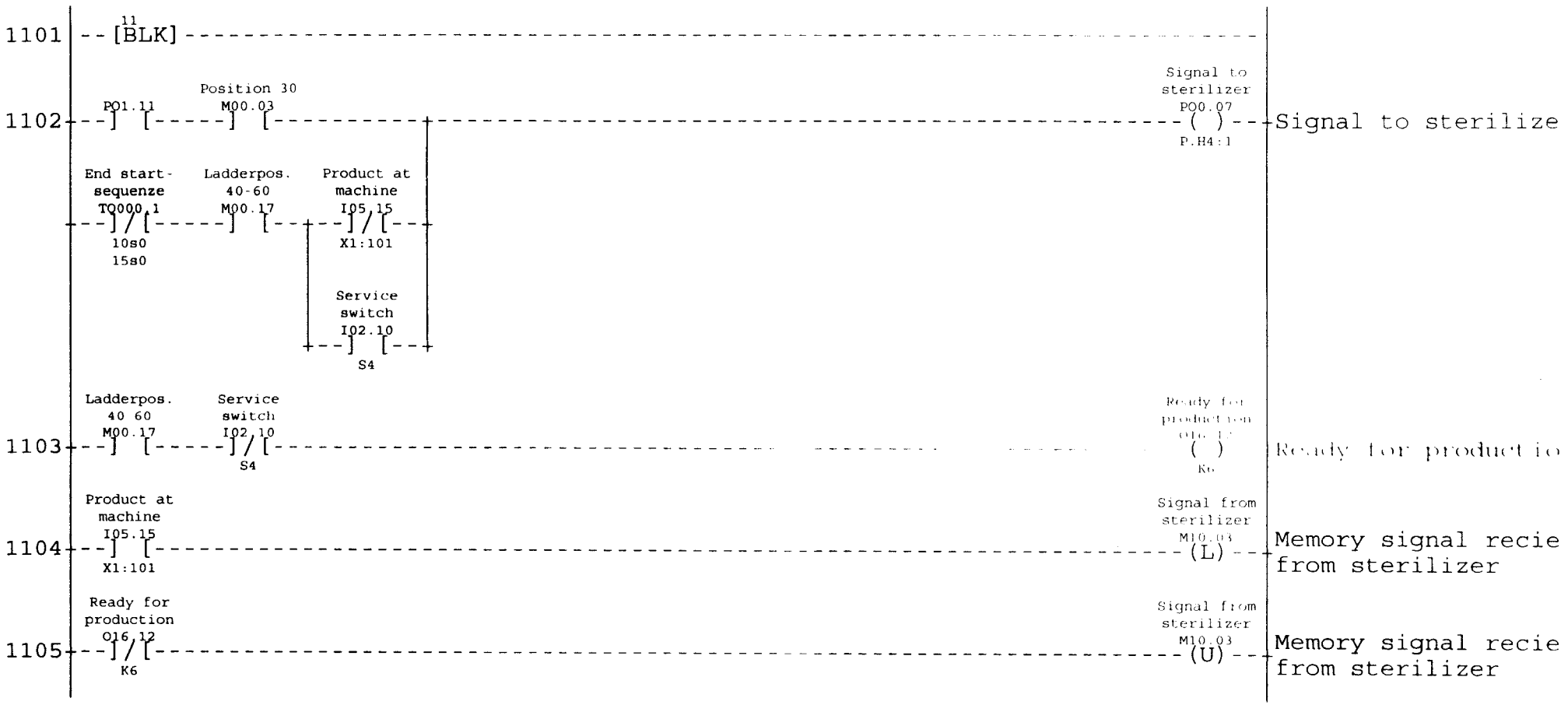

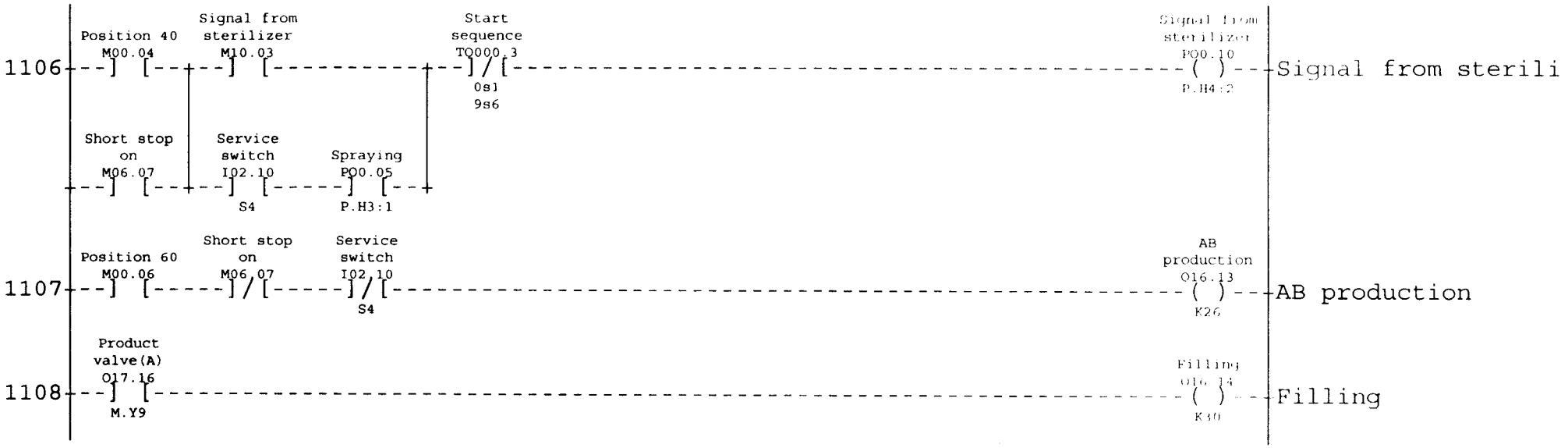
1106
Position 40
M00.04
Signal from sterilizer
M10.03
Start sequence
T0000.3
0s1
9s6
Signal from sterilizer
P00.10
P.H4:2
Signal from sterili
Short stop on
M06.07
Service switch
I02.10
S4
Spraying
P00.05
P.H3:1
1107
Position 60
M00.06
Short stop on
M06.07
Service switch
I02.10
S4
AB production
O16.13
K26
AB production
1108
Product valve(A)
O17.16
M.Y9
Filling
O16.14
K30
Filling

STARTSEQUENZER FOR RUNNING PRODUCTION

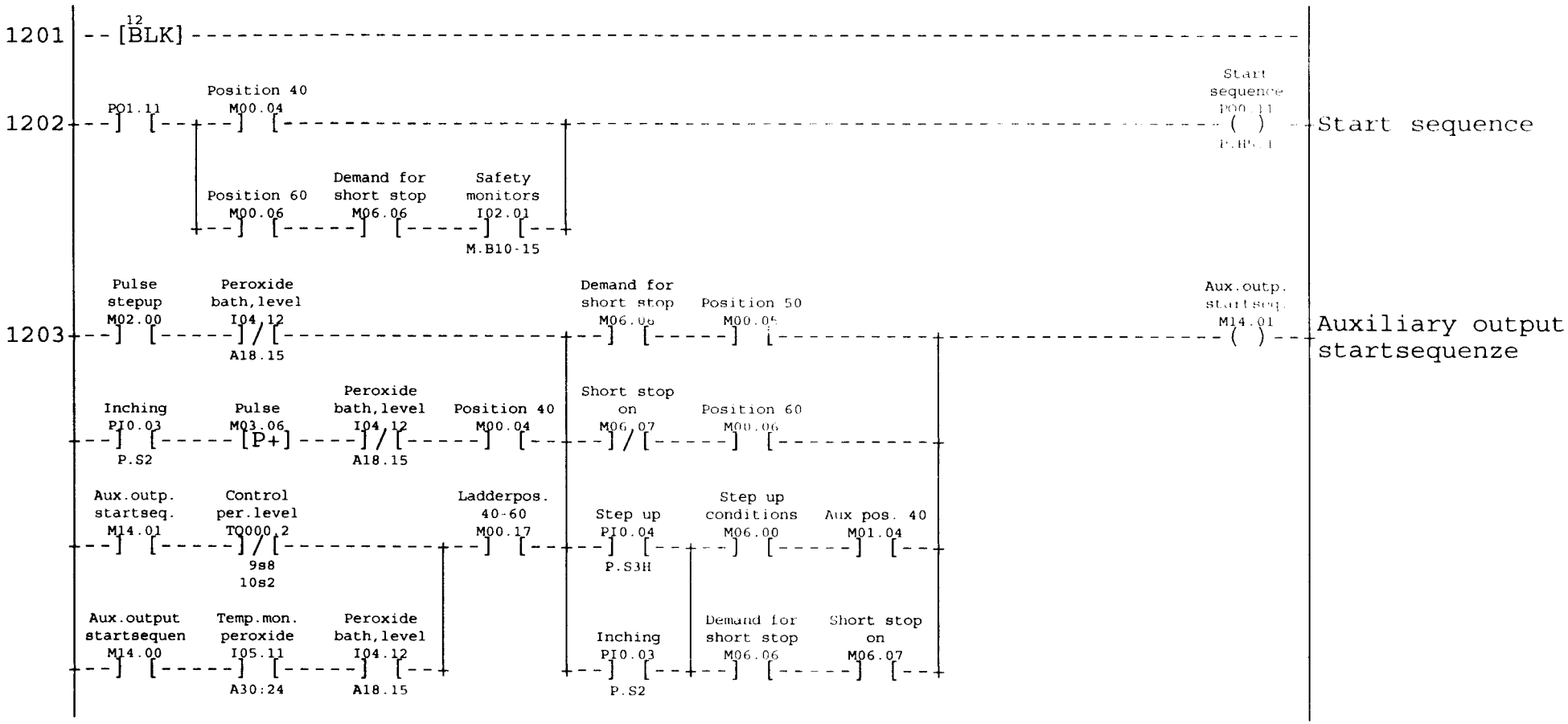

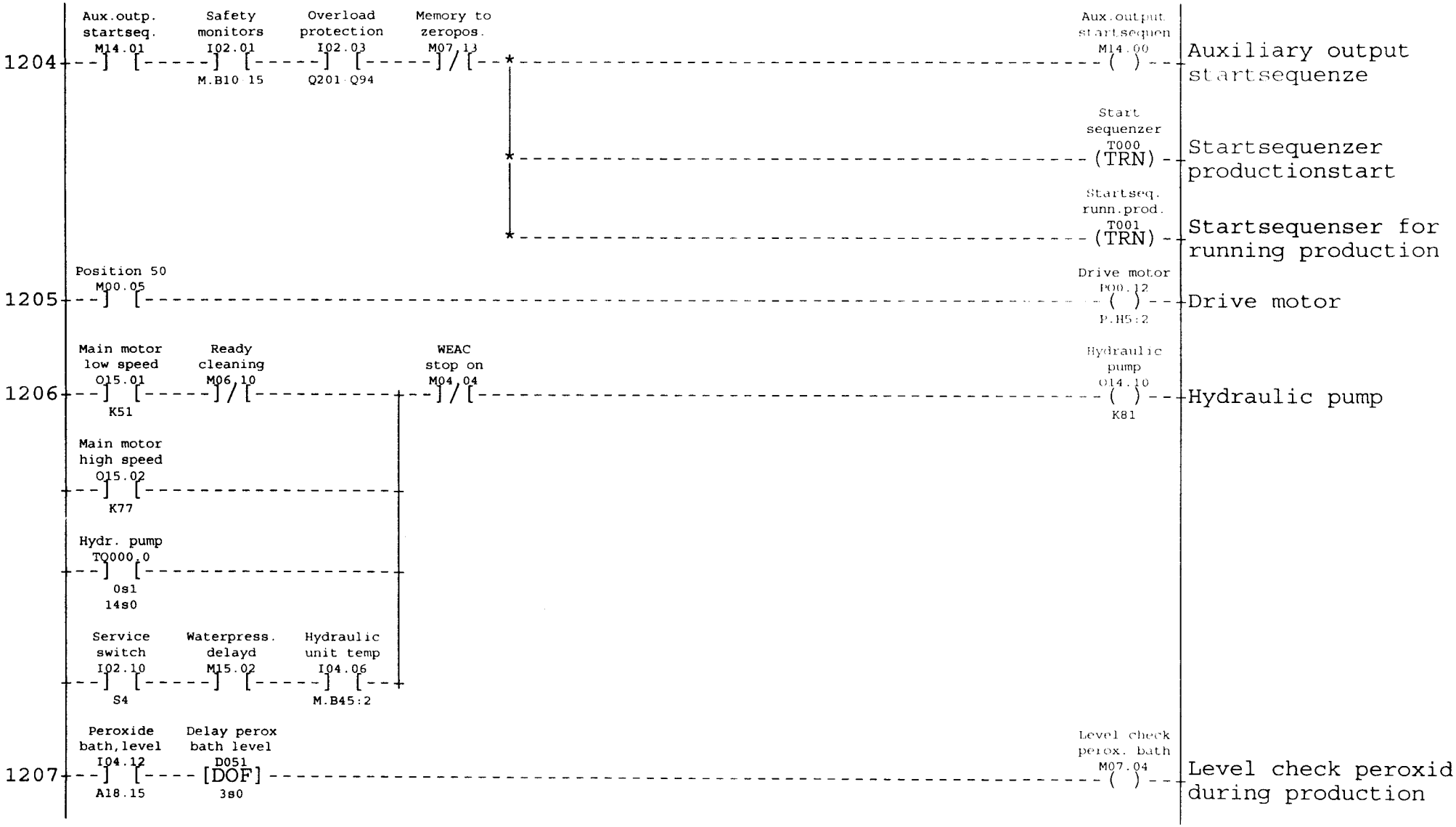

Machine individual adaptations see Block 02 TBA/9-1401 S.A.

AM: xxxxx Date: 000104 Sign: TEAN

Mach No: 649205-1401 Page

47615-12:43 Cont

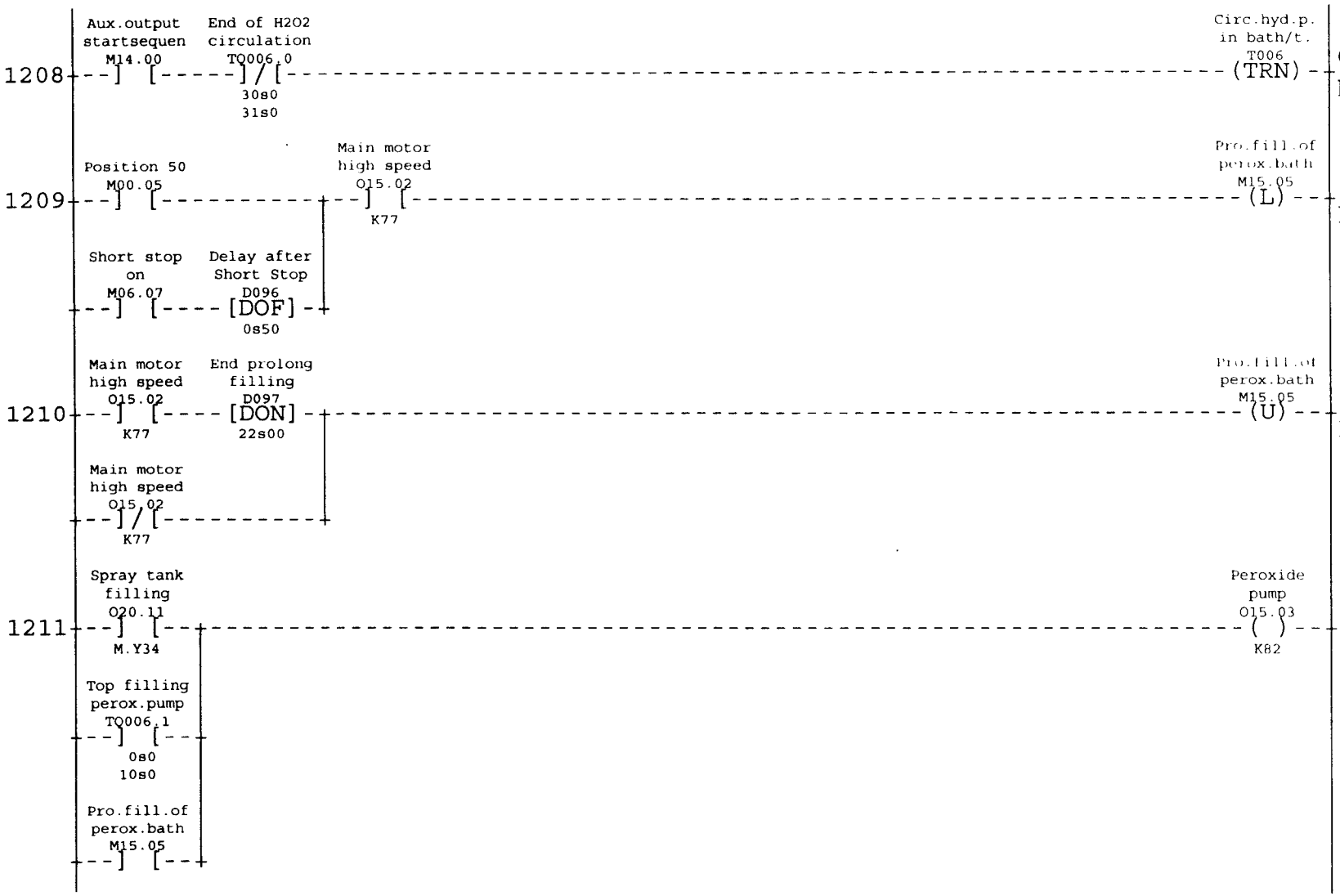
1208
Aux.output startsequen M14.00
End of H2O2 circulation T0006.0
30s0
31s0
Circ.hyd.p. in bath/t. T006
(TRN)
Circulation of hydr peroxide in bath/ta
1209
Position 50 M00.05
Main motor high speed O15.02
K77
Pro.fill.of perox.bath M15.05
(L)
Prolonged filling o peroxide bath at st
Short stop on M06.07
Delay after Short Stop D096
[DOF]
0s50
1210
Main motor high speed O15.02
K77
End prolong filling D097
[DON]
22s00
Pro.fill.of perox.bath M15.05
(U)
Prolonged filling o peroxide bath at st
Main motor high speed O15.02
K77
1211
Spray tank filling O20.11
M.Y34
Peroxide pump O15.03
( )
K82
Peroxide pump
Top filling perox.pump T0006.1
0s0
10s0
Pro.fill.of perox.bath M15.05



Machine individual adaptations see Block 02 TBA/9-1401 S.A.

AM: xxxxx Date: 000104 Sign: TEAN

Mach No: 649205-1401 Page
47615-12:43 Cont

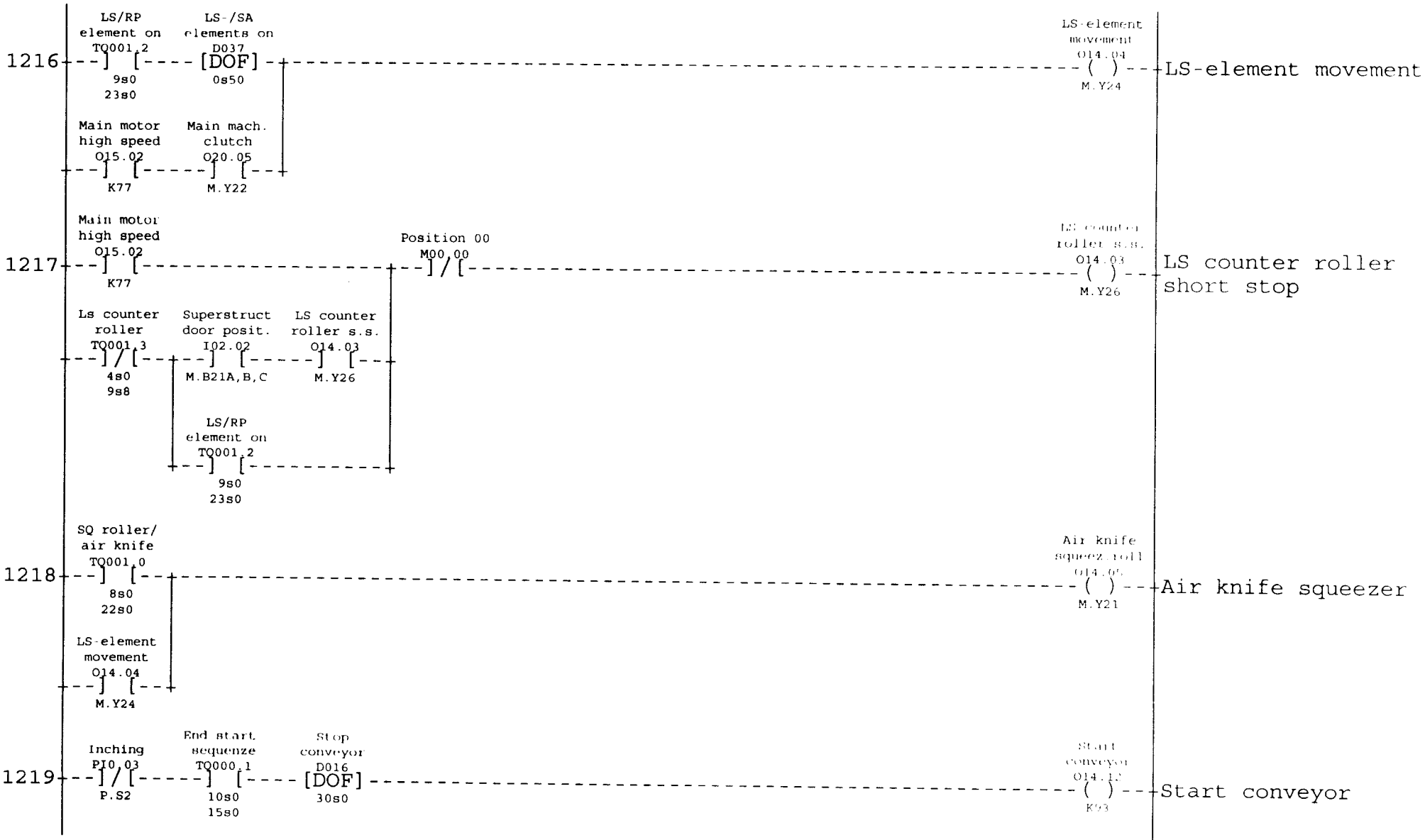

Machine individual adaptations see Block 02 TBA/9-1401 S.A.

AM: xxxxx Date: 000104 Sign: TEAN

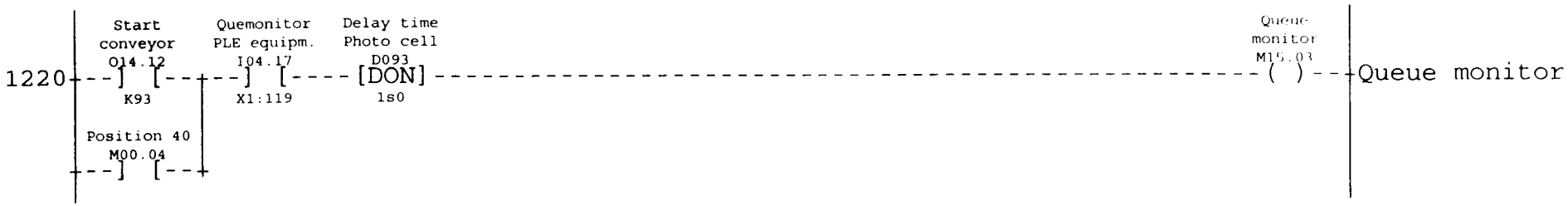
1220
Start conveyor
O14.12
K93
Quemonitor PLE equipm.
I04.17
X1:119
Delay time Photo cell
D093
[DON]
1s0
Queue monitor
M15.03
Queue monitor
Position 40
M00.04

ROTATION/CONG/FFU/STRIP/JAW/WATER BATH/PAPER SUPPLY/SUCT.,AIR-INLET AND B-VALVE

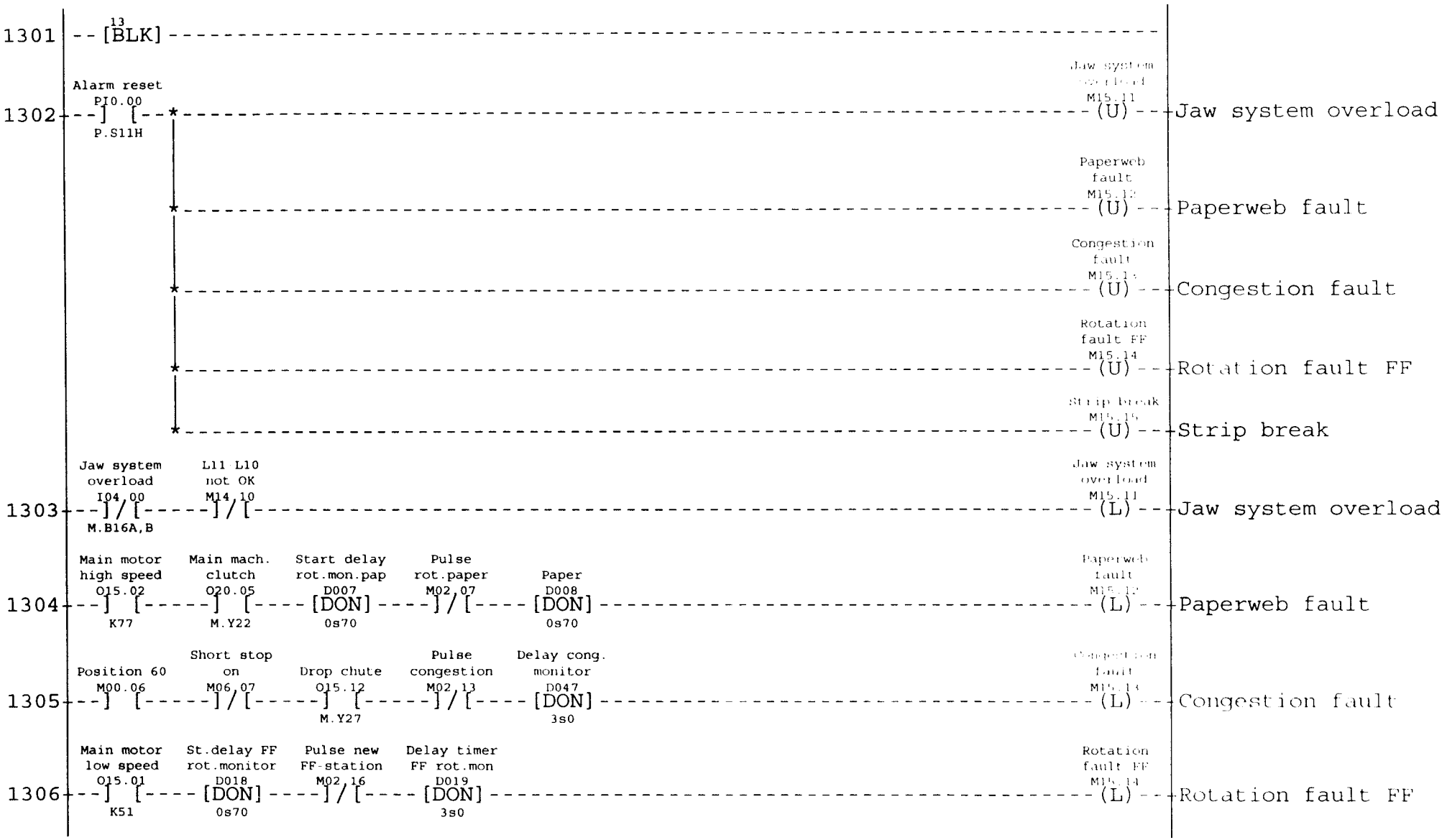

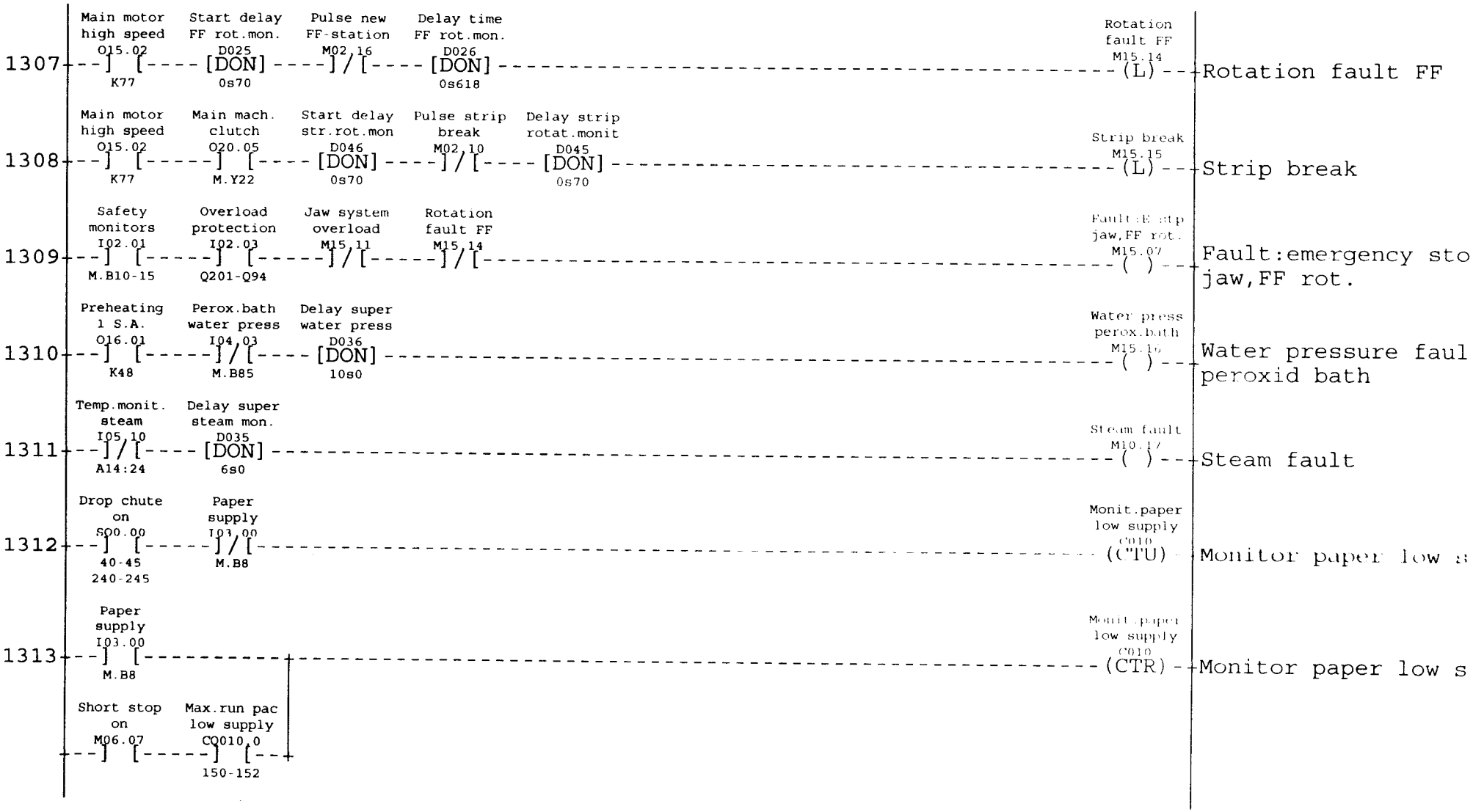

Machine individual adaptations see Block 02 TBA/9-1401 S.A.

AM: xxxxx Date: 000104 Sign: TEAN

Mach No: 649205-1401 Page
47615-13:43 Cont


1314
Suction valve posit I06.04 M.B94
Suction valve O17.13 M.Y23
Delay stop suct.valve D012 [DOF] 3s0
Supervision suct.valve M15.04
Supervision suction position
Suction valve posit I06.04 M.B94
Suction valve O17.13 M.Y23
1315
Air inlet valve pos. I06.02 M.B71
Air inlet valve O17.10 M.Y19
Alarm delay D009 [DOF] 3s0
Air inlet wrong posit M10.16
Air inlet wrong pos
Air inlet valve pos. I06.02 M.B71
Air inlet valve O17.10 M.Y19
1316
Sterile air valve (B) O17.17 M.Y8
Ster.air valve(B)pos I03.13 M.B53
B-valve pos D013 [DOF] 5s0
Supervision B valve pos M06.13
Supervision B-valve position
Sterile air valve (B) O17.17 M.Y8
Ster.air valve(B)pos I03.13 M.B53

DRIVEMOTOR AND PRODUCTION

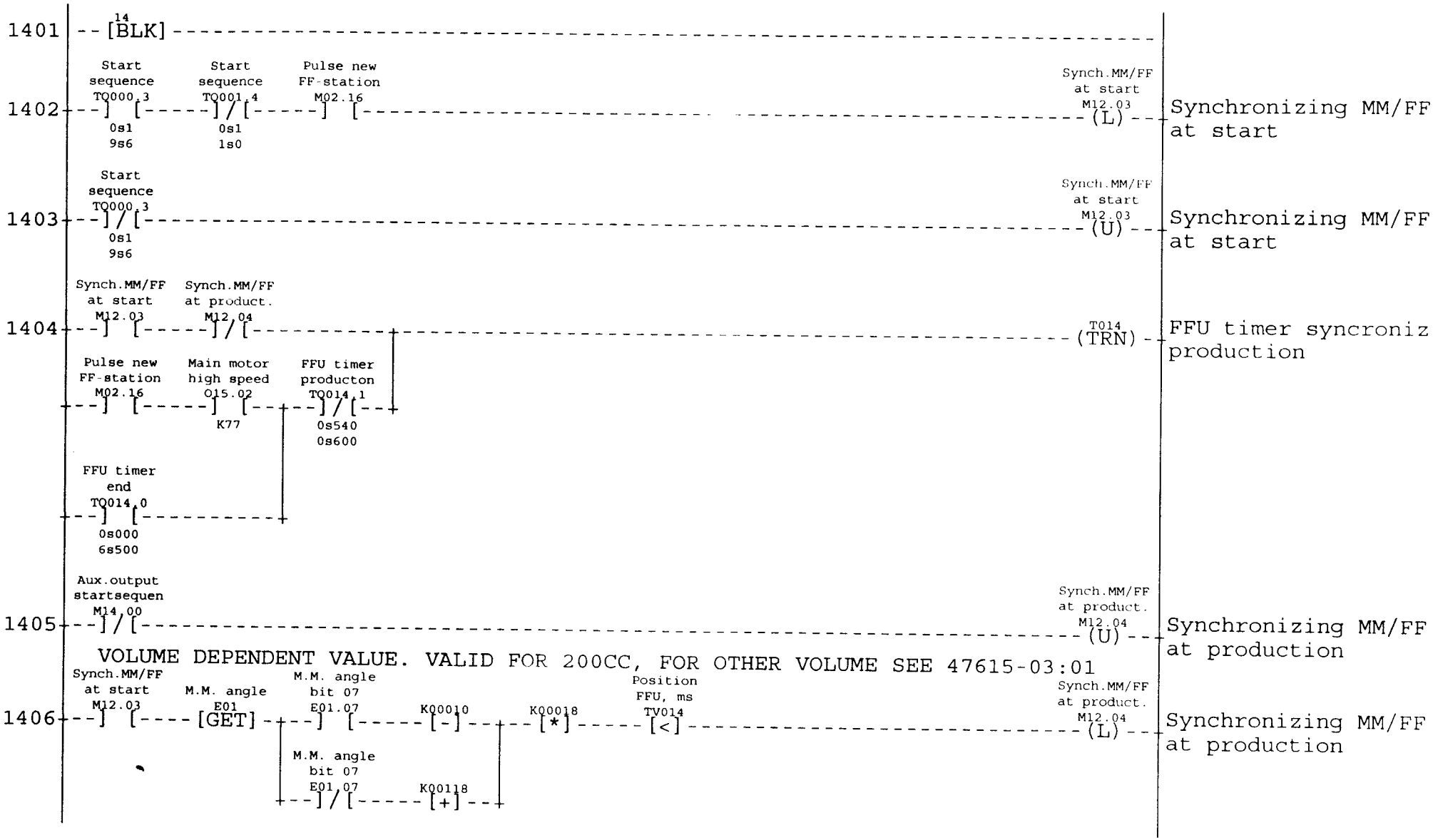

Machine individual adaptations see Block 02 TBA/9-1401 S.A.

AM: xxxxx Date: 000104 Sign: TEAN

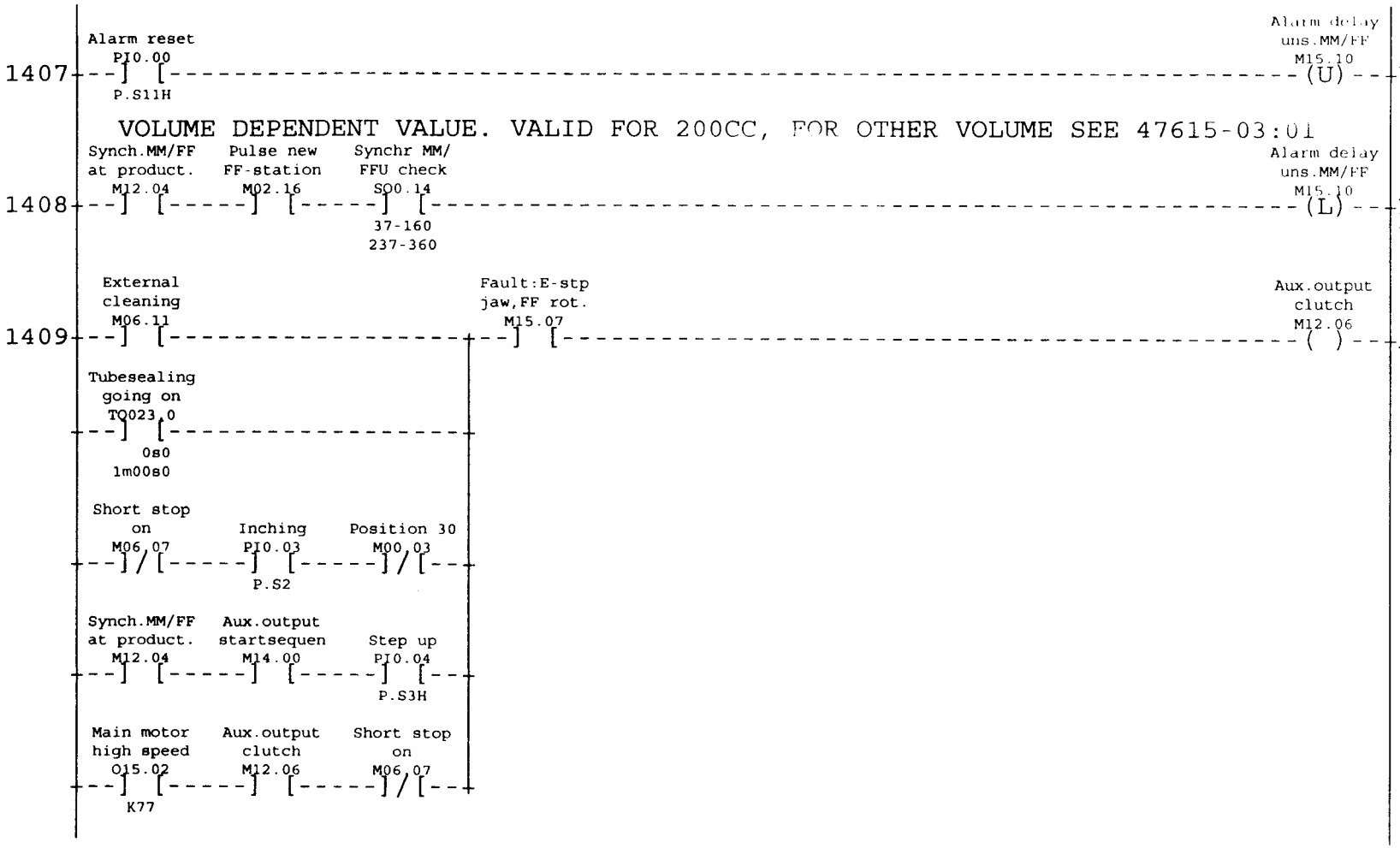
1407
Alarm reset
PI0.00
P.S11H
Alarm delay uns.MM/FF
M15.10
(U)
Alarm delay unsyncr MM/FF at production
VOLUME DEPENDENT VALUE. VALID FOR 200CC, FOR OTHER VOLUME SEE 47615-03:01
1408
Synch.MM/FF at product.
M12.04
Pulse new FF-station
M02.16
Synchr MM/ FFU check
SO0.14
37-160
237-360
Alarm delay uns.MM/FF
M15.10
(L)
Alarm delay unsyncr MM/FF at production
1409
External cleaning
M06.11
Fault:E-stp jaw,FF rot.
M15.07
Aux.output clutch
M12.06
( )
Auxiliary output cl
Tubesealing going on
TQ023.0
0s0
1m00s0
Short stop on
M06.07
Inching
PI0.03
P.S2
Position 30
M00.03
Synch.MM/FF at product.
M12.04
Aux.output startsequen
M14.00
Step up
PI0.04
P.S3H
Main motor high speed
O15.02
K77
Aux.output clutch
M12.06
Short stop on
M06.07

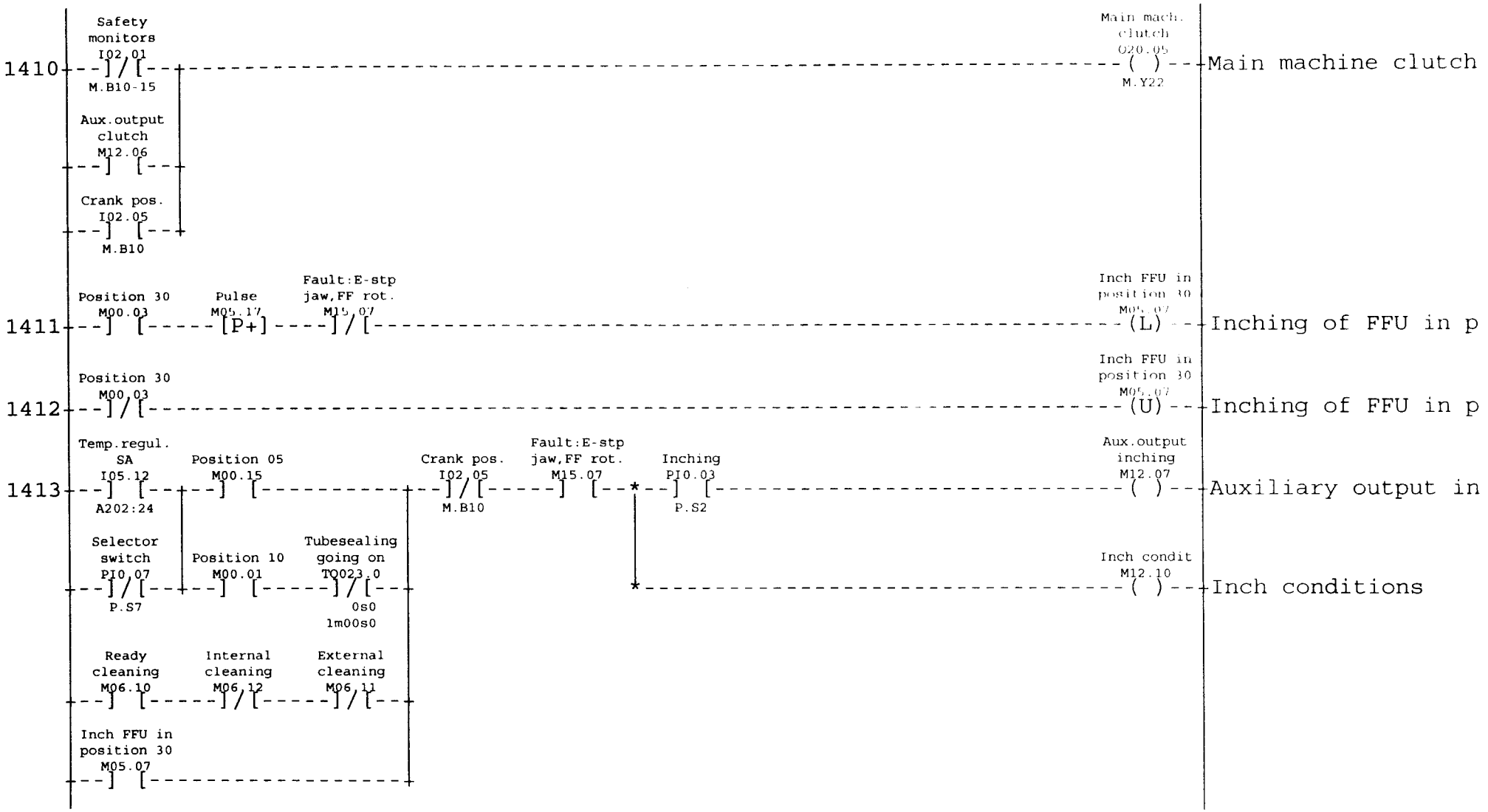
1410
Safety monitors I02.01
M.B10-15
Aux.output clutch M12.06
Crank pos. I02.05
M.B10
Main mach. clutch O20.05
M.Y22
Main machine clutch
1411
Position 30 M00.03
Pulse M05.17
[P+]
Fault:E-stp jaw,FF rot. M15.07
Inch FFU in position 30 M05.07
(L)
Inching of FFU in p
1412
Position 30 M00.03
Inch FFU in position 30 M05.07
(U)
Inching of FFU in p
1413
Temp.regul. SA I05.12
A202:24
Position 05 M00.15
Crank pos. I02.05
M.B10
Fault:E-stp jaw,FF rot. M15.07
Inching PI0.03
P.S2
Aux.output inching M12.07
Auxiliary output in
Selector switch PI0.07
P.S7
Position 10 M00.01
Tubesealing going on TQ023.0
0s0
1m00s0
Inch condit M12.10
Inch conditions
Ready cleaning M06.10
Internal cleaning M06.12
External cleaning M06.11
Inch FFU in position 30 M05.07

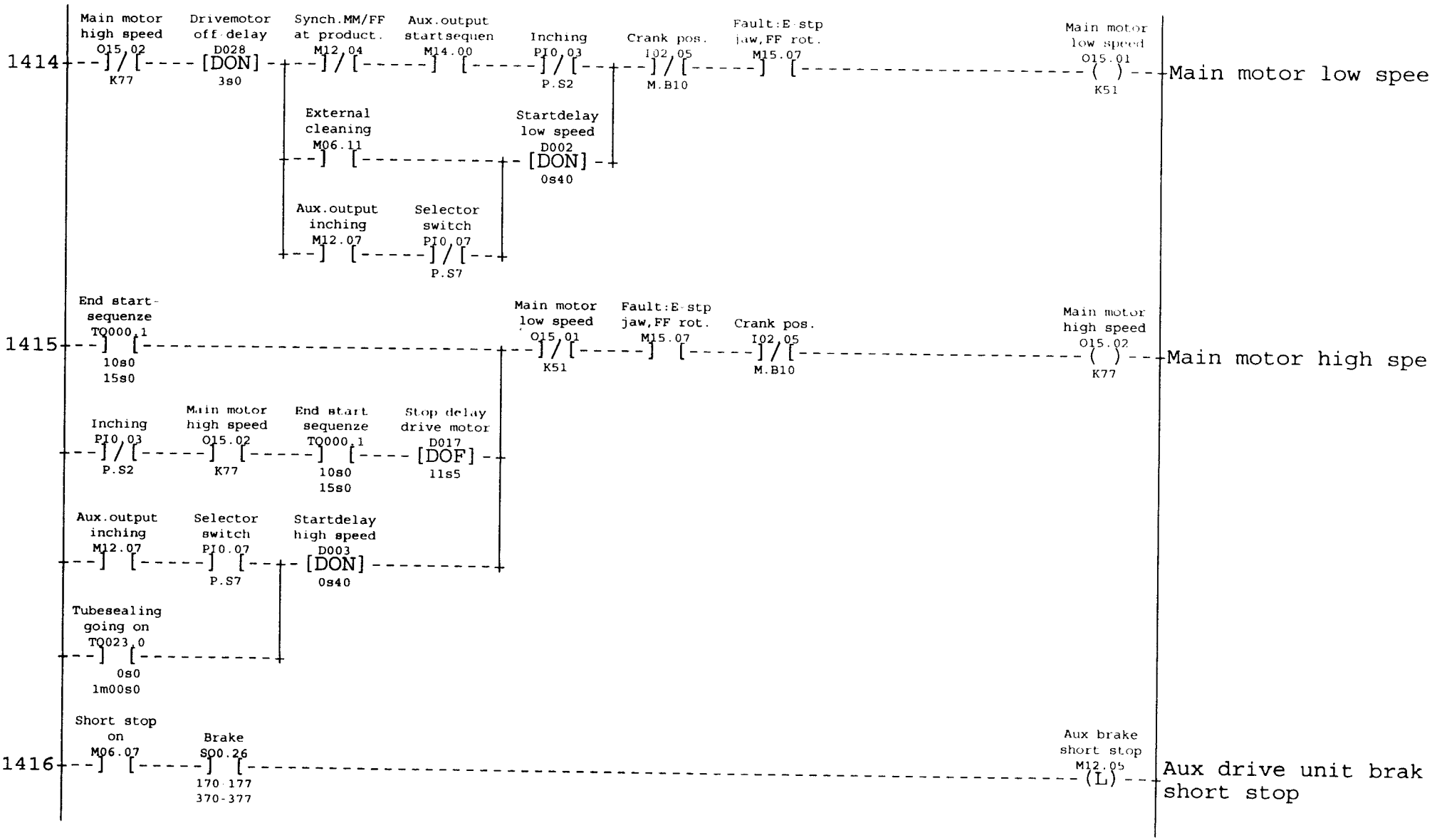

Machine individual adaptations see Block 02 TBA/9-1401 S.A.

AM: xxxxx Date: 000104 Sign: TEAN

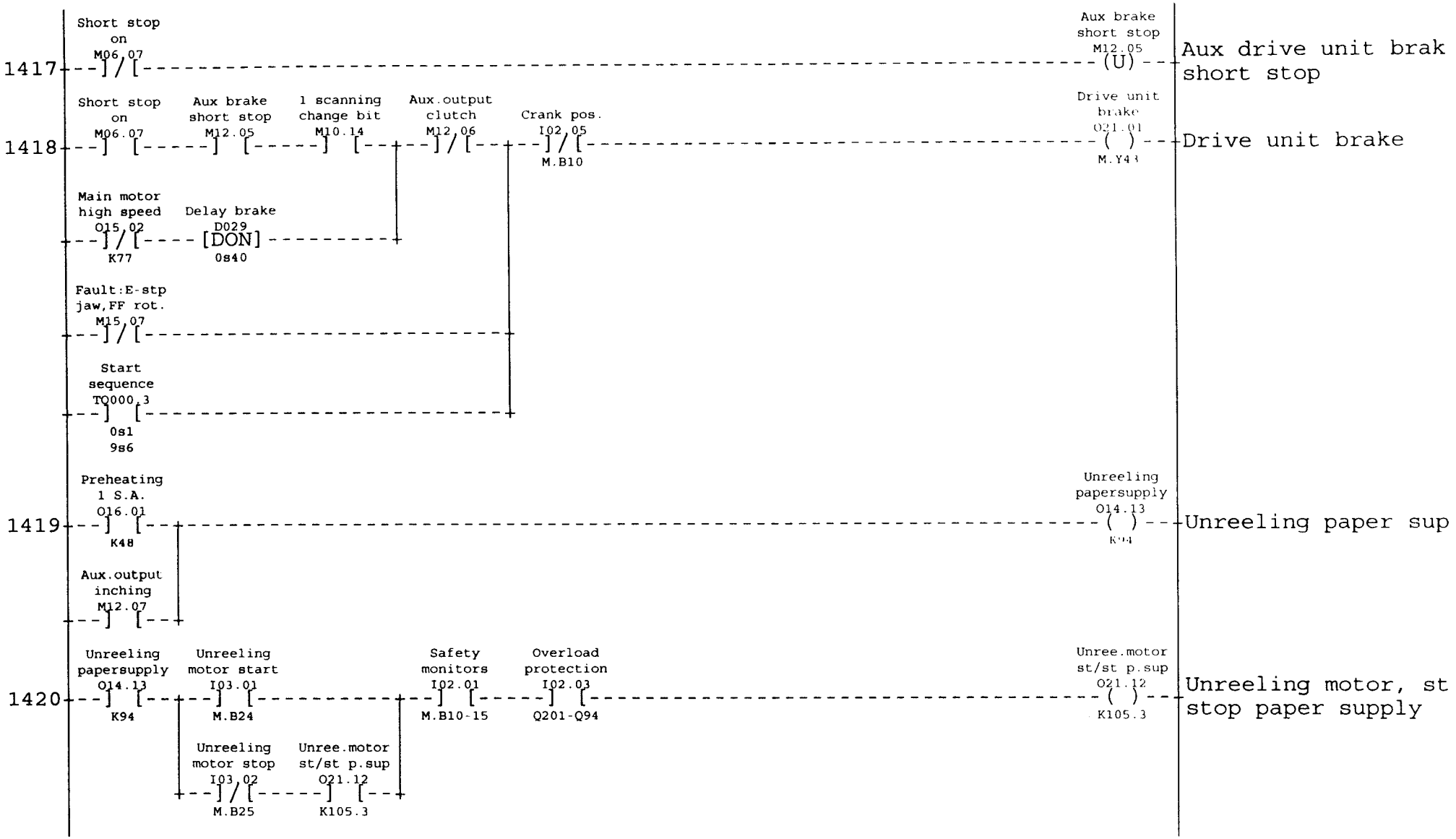
1417
Short stop on M06.07
Aux brake short stop M12.05 (U)
Aux drive unit brak short stop
1418
Short stop on M06.07
Aux brake short stop M12.05
1 scanning change bit M10.14
Aux.output clutch M12.06
Crank pos. I02.05 M.B10
Drive unit brake O21.01 M.Y43
Drive unit brake
Main motor high speed O15.02 K77
Delay brake D029 [DON] 0s40
Fault:E-stp jaw,FF rot. M15.07
Start sequence T0000.3 0s1 9s6
1419
Preheating 1 S.A. O16.01 K48
Aux.output inching M12.07
Unreeling papersupply O14.13 K94
Unreeling paper sup
1420
Unreeling papersupply O14.13 K94
Unreeling motor start I03.01 M.B24
Unreeling motor stop I03.02 M.B25
Unree.motor st/st p.sup O21.12 K105.3
Safety monitors I02.01 M.B10-15
Overload protection I02.03 Q201-Q94
Unree.motor st/st p.sup O21.12 K105.3
Unreeling motor, st stop paper supply

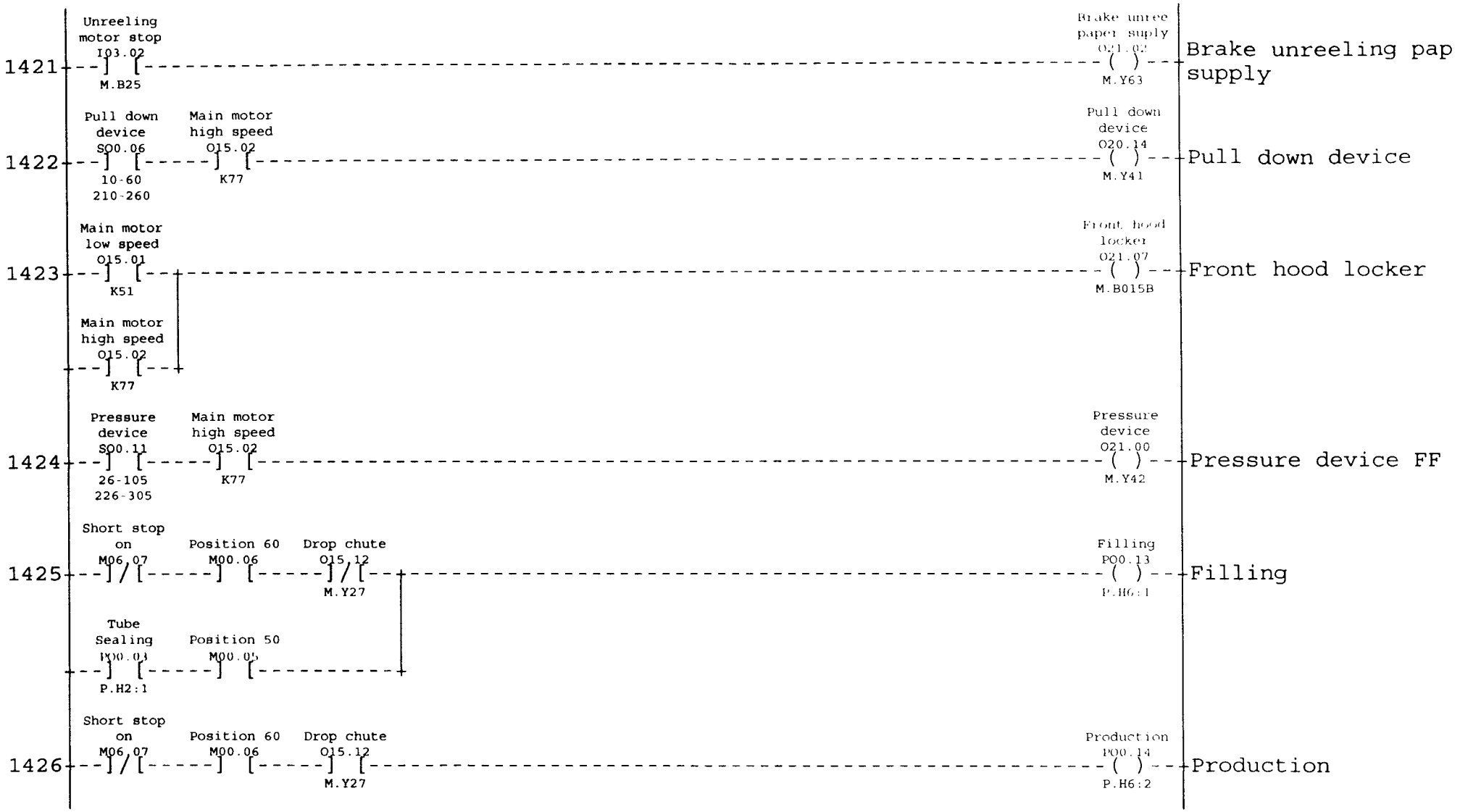
1421
Unreeling motor stop
I03.02
M.B25
Brake unree paper suply
O21.02
M.Y63
Brake unreeling pap supply
1422
Pull down device
S00.06
10-60
210-260
Main motor high speed
O15.02
K77
Pull down device
O20.14
M.Y41
Pull down device
1423
Main motor low speed
O15.01
K51
Main motor high speed
O15.02
K77
Front hood locker
O21.07
M.B015B
Front hood locker
1424
Pressure device
S00.11
26-105
226-305
Main motor high speed
O15.02
K77
Pressure device
O21.00
M.Y42
Pressure device FF
1425
Short stop on
M06.07
Position 60
M00.06
Drop chute
O15.12
M.Y27
Tube Sealing
P00.03
P.H2:1
Position 50
M00.05
Filling
P00.13
P.H6:1
Filling
1426
Short stop on
M06.07
Position 60
M00.06
Drop chute
O15.12
M.Y27
Production
P00.14
P.H6:2
Production

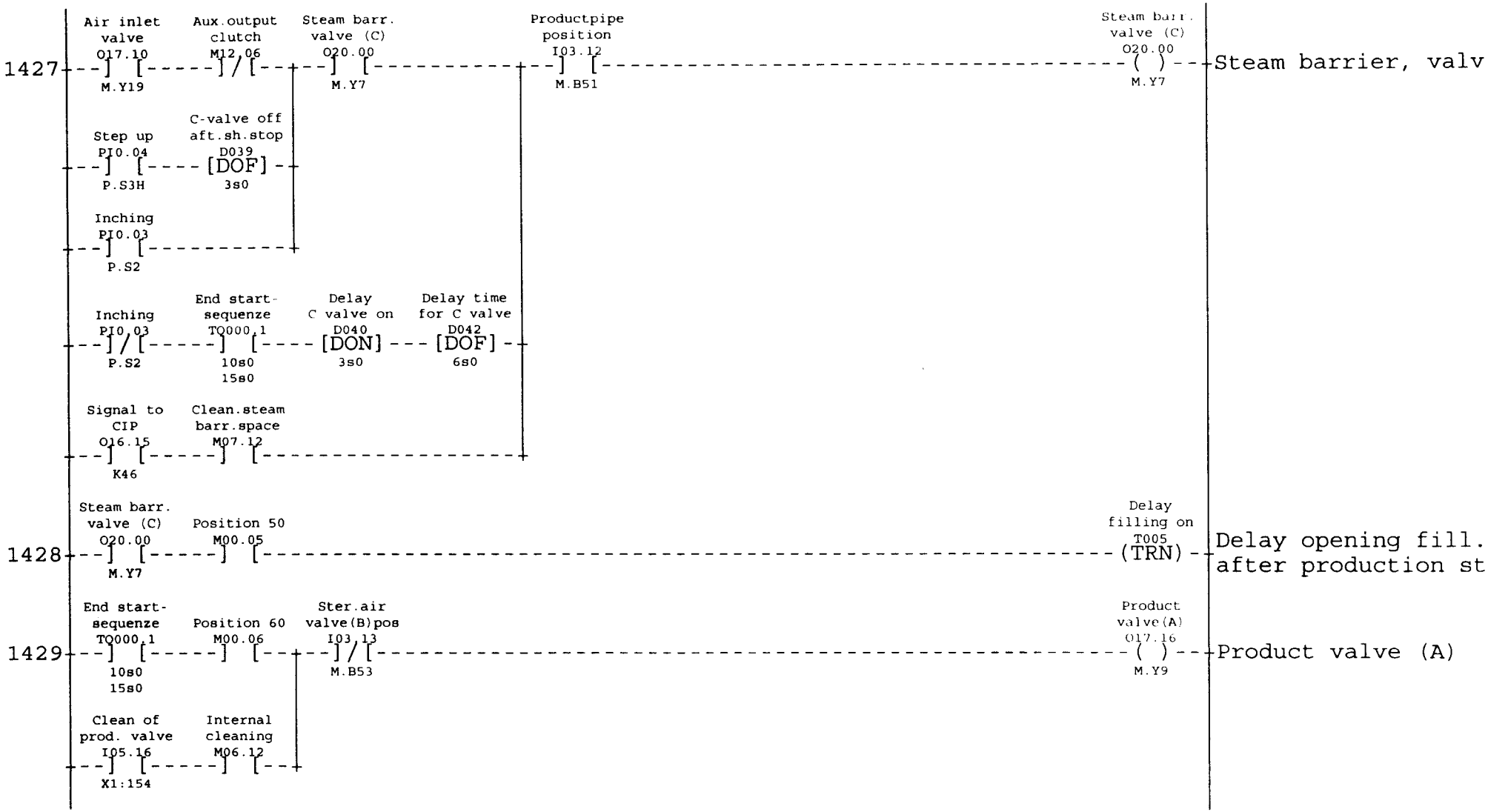
1427
Air inlet valve O17.10 M.Y19
Aux.output clutch M12.06
Steam barr. valve (C) O20.00 M.Y7
Productpipe position I03.12 M.B51
Steam barr. valve (C) O20.00 M.Y7
Steam barrier, valv
Step up PI0.04 P.S3H
C-valve off aft.sh.stop D039 [DOF] 3s0
Inching PI0.03 P.S2
Inching PI0.03 P.S2
End start-sequenze TQ000.1 10s0 15s0
Delay C valve on D040 [DON] 3s0
Delay time for C valve D042 [DOF] 6s0
Signal to CIP O16.15 K46
Clean.steam barr.space M07.12
1428
Steam barr. valve (C) O20.00 M.Y7
Position 50 M00.05
Delay filling on T005 (TRN)
Delay opening fill. after production st
1429
End start-sequenze TQ000.1 10s0 15s0
Position 60 M00.06
Ster.air valve(B)pos I03.13 M.B53
Product valve(A) O17.16 M.Y9
Product valve (A)
Clean of prod. valve I05.16 X1:154
Internal cleaning M06.12

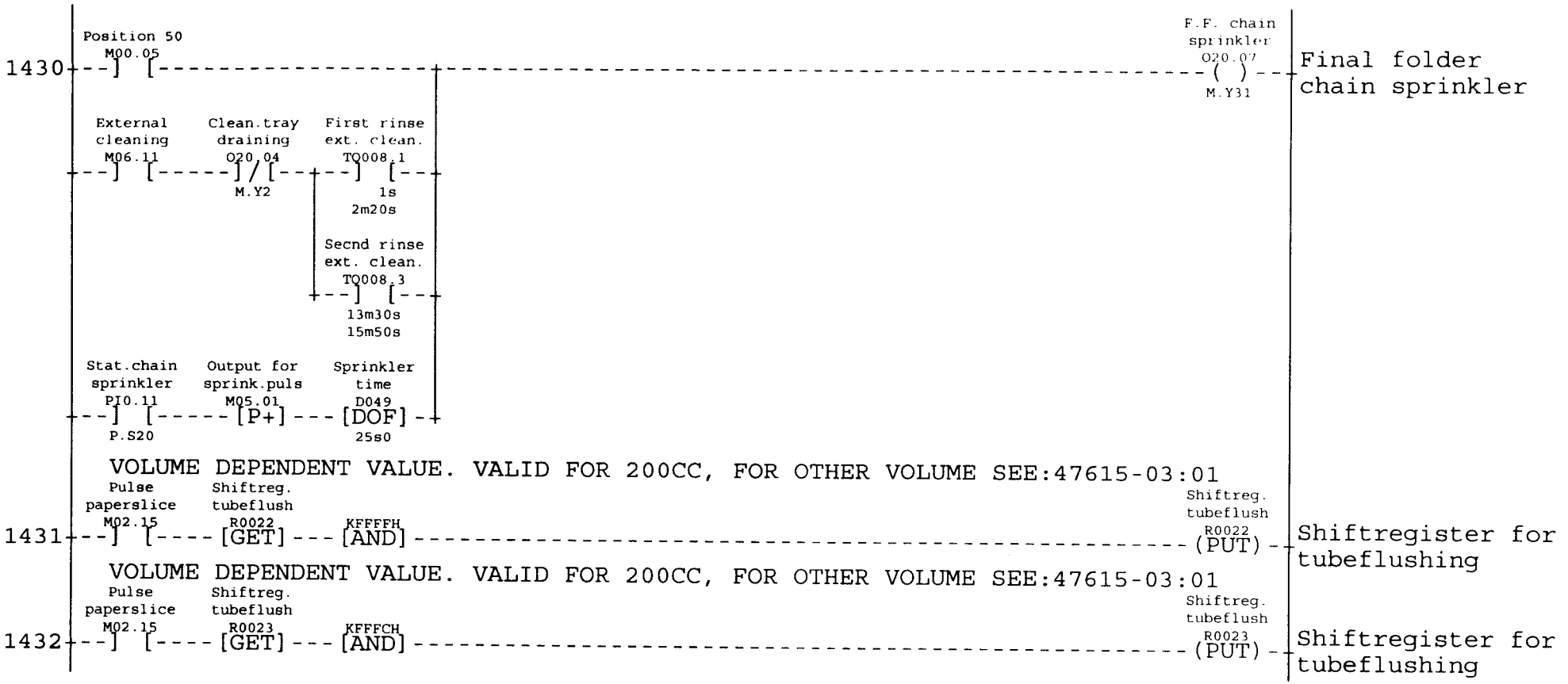
1430
Position 50
M00.05
F.F. chain sprinkler
O20.07
M.Y31
Final folder chain sprinkler
External cleaning
M06.11
Clean.tray draining
O20.04
M.Y2
First rinse ext. clean.
T0008.1
1s
2m20s
Secnd rinse ext. clean.
T0008.3
13m30s
15m50s
Stat.chain sprinkler
PI0.11
P.S20
Output for sprink.puls
M05.01
[P+]
Sprinkler time
D049
[DOF]
25s0
VOLUME DEPENDENT VALUE. VALID FOR 200CC, FOR OTHER VOLUME SEE:47615-03:01
1431
Pulse paperslice
M02.15
Shiftreg. tubeflush
R0022
[GET]
KFFFFH
[AND]
Shiftreg. tubeflush
R0022
(PUT)
Shiftregister for tubeflushing
VOLUME DEPENDENT VALUE. VALID FOR 200CC, FOR OTHER VOLUME SEE:47615-03:01
1432
Pulse paperslice
M02.15
Shiftreg. tubeflush
R0023
[GET]
KFFFCH
[AND]
Shiftreg. tubeflush
R0023
(PUT)
Shiftregister for tubeflushing



Machine individual adaptations see Block 02 TBA/9-1401 S.A.

AM: xxxxx Date: 000104 Sign: TEAN

Mach No: 649205-1401 Page
47615-14:43 Cont


Position 60
M00.06
Alarm reset
PI0.00
P.S11H
Too high
mach. speed
M04.01
1439
(U)
Too high machine sp
O15.00
1440
(L)
K14
Bending roller
Tubesealing
going on
TQ023.3
0s7
1m00s0
Spray and
paus time
CQ005.5
11-109
Air knife
squeez.roll
O14.05
M.Y21
Run. time
drying
CQ007.2
1080-1140
O15.00
1441
(U)
K14
Bending roller

TRANSVERSAL SEALING

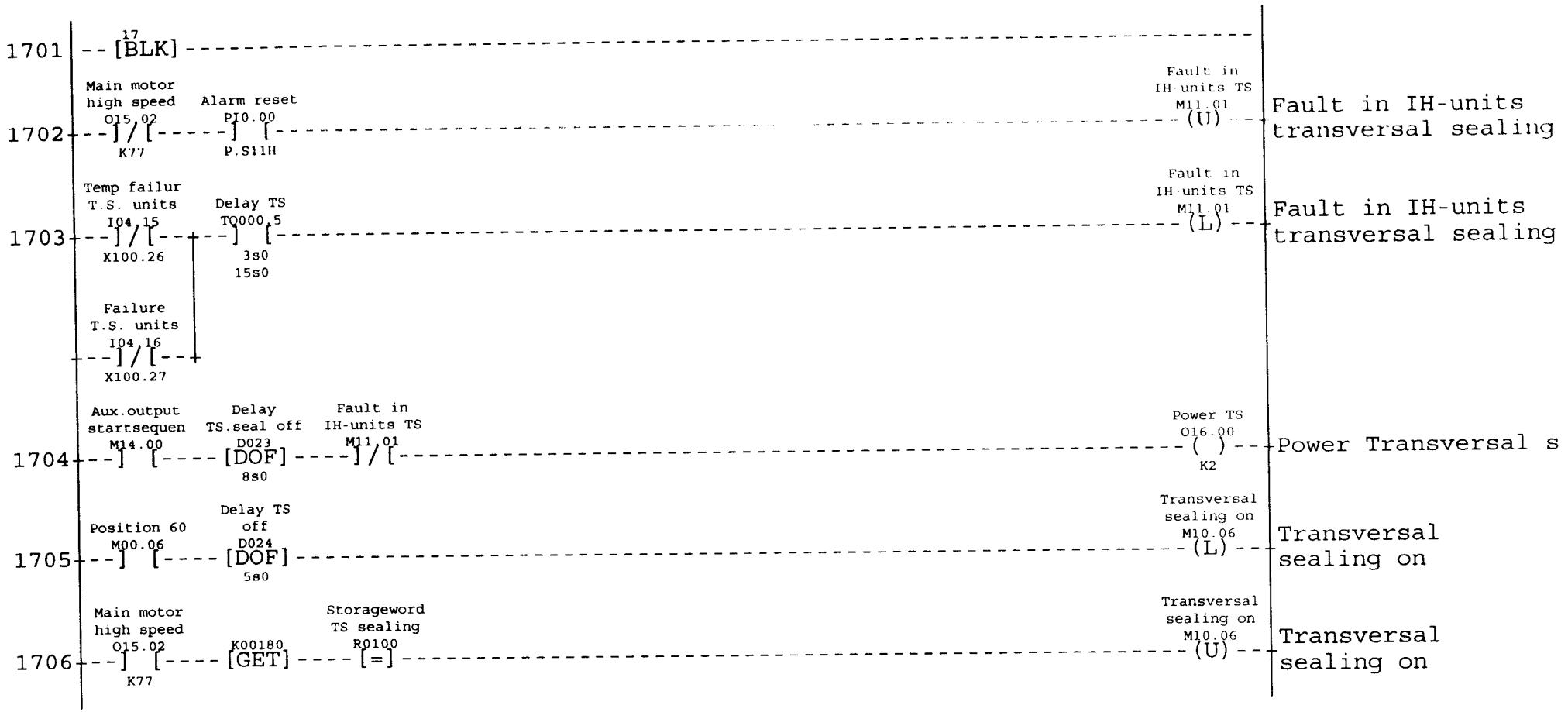

DESIGN CORRECTION

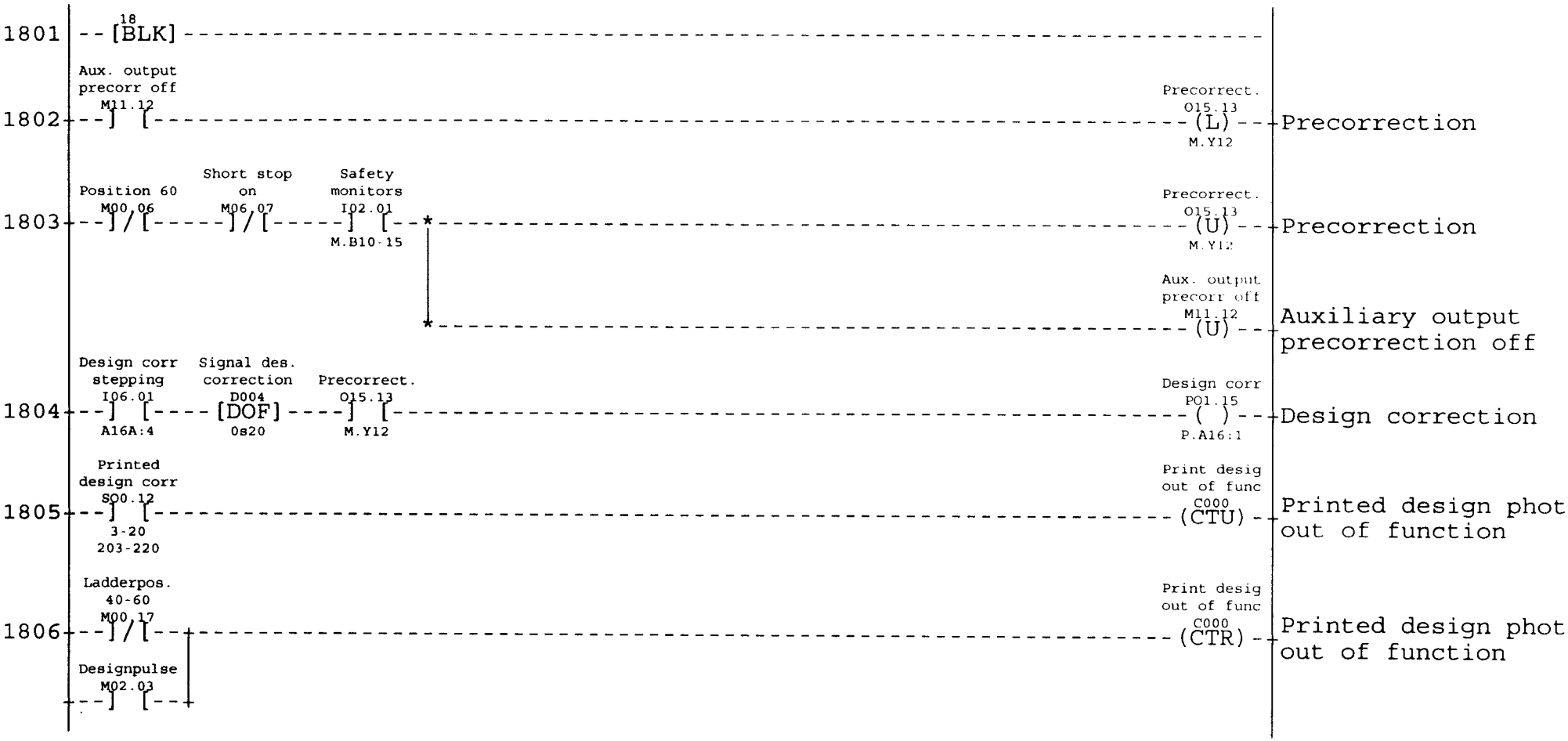

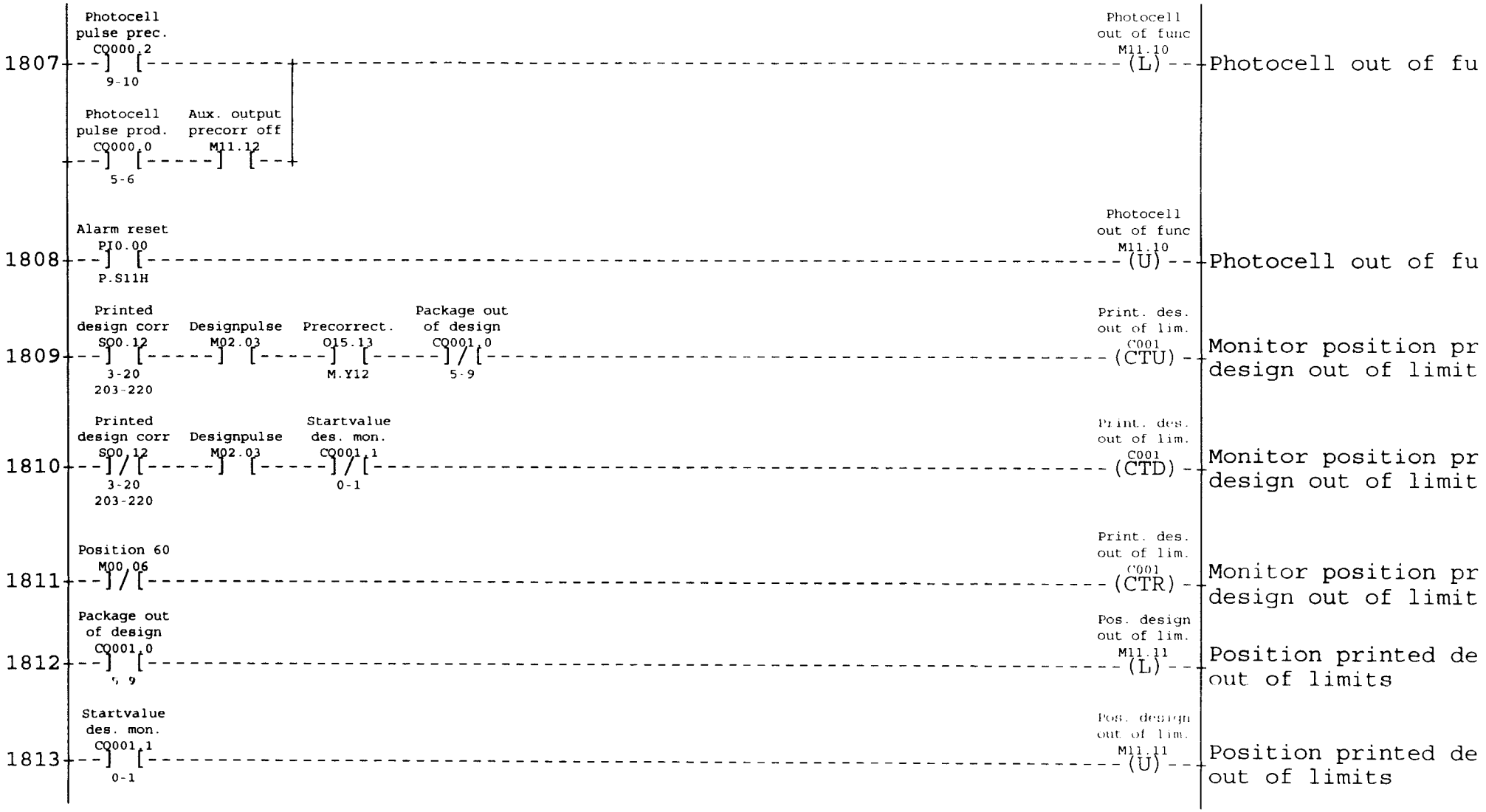
1807
Photocell pulse prec. CQ000.2
9-10
Photocell pulse prod. CQ000.0
5-6
Aux. output precorr off M11.12
Photocell out of func M11.10
(L)
Photocell out of fu
1808
Alarm reset PI0.00
P.S11H
Photocell out of func M11.10
(U)
Photocell out of fu
1809
Printed design corr SQ0.12
3-20
203-220
Designpulse M02.03
Precorrect. Q15.13
M.Y12
Package out of design CQ001.0
5-9
Print. des. out of lim. C001
(CTU)
Monitor position pr design out of limit
1810
Printed design corr SQ0.12
3-20
203-220
Designpulse M02.03
Startvalue des. mon. CQ001.1
0-1
Print. des. out of lim. C001
(CTD)
Monitor position pr design out of limit
1811
Position 60 M00.06
Print. des. out of lim. C001
(CTR)
Monitor position pr design out of limit
1812
Package out of design CQ001.0
5 9
Pos. design out of lim. M11.11
(L)
Position printed de out of limits
1813
Startvalue des. mon. CQ001.1
0-1
Pos. design out of lim. M11.11
(U)
Position printed de out of limits

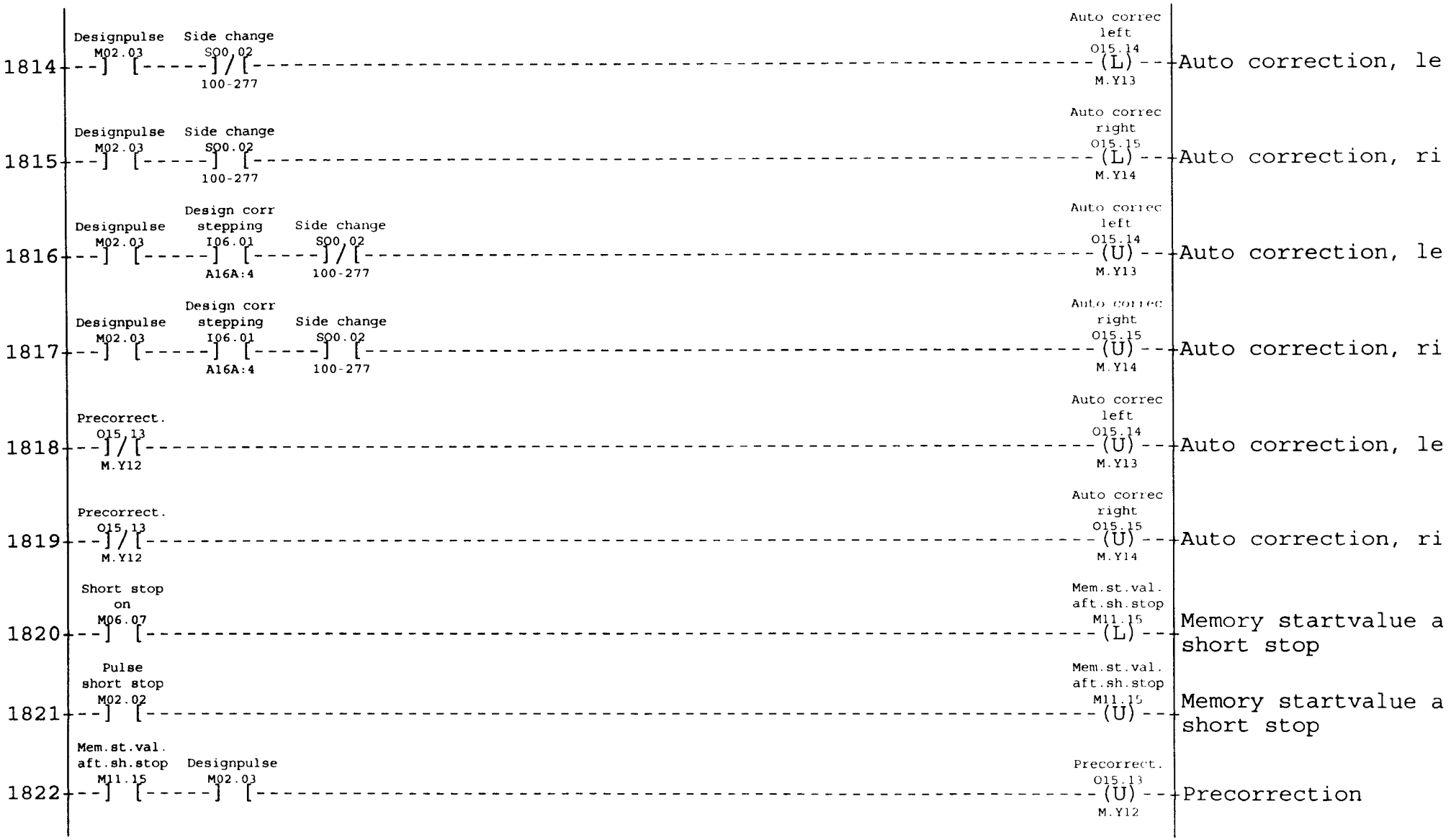
1814
Designpulse
M02.03
Side change
S00.02
100-277
Auto correc left
O15.14
(L)
M.Y13
Auto correction, le
1815
Designpulse
M02.03
Side change
S00.02
100-277
Auto correc right
O15.15
(L)
M.Y14
Auto correction, ri
1816
Designpulse
M02.03
Design corr stepping
I06.01
A16A:4
Side change
S00.02
100-277
Auto correc left
O15.14
(U)
M.Y13
Auto correction, le
1817
Designpulse
M02.03
Design corr stepping
I06.01
A16A:4
Side change
S00.02
100-277
Auto correc right
O15.15
(U)
M.Y14
Auto correction, ri
1818
Precorrect.
O15.13
M.Y12
Auto correc left
O15.14
(U)
M.Y13
Auto correction, le
1819
Precorrect.
O15.13
M.Y12
Auto correc right
O15.15
(U)
M.Y14
Auto correction, ri
1820
Short stop on
M06.07
Mem.st.val. aft.sh.stop
M11.15
(L)
Memory startvalue a short stop
1821
Pulse short stop
M02.02
Mem.st.val. aft.sh.stop
M11.15
(U)
Memory startvalue a short stop
1822
Mem.st.val. aft.sh.stop
M11.15
Designpulse
M02.03
Precorrect.
O15.13
(U)
M.Y12
Precorrection

DUMPING OF PACKAGES

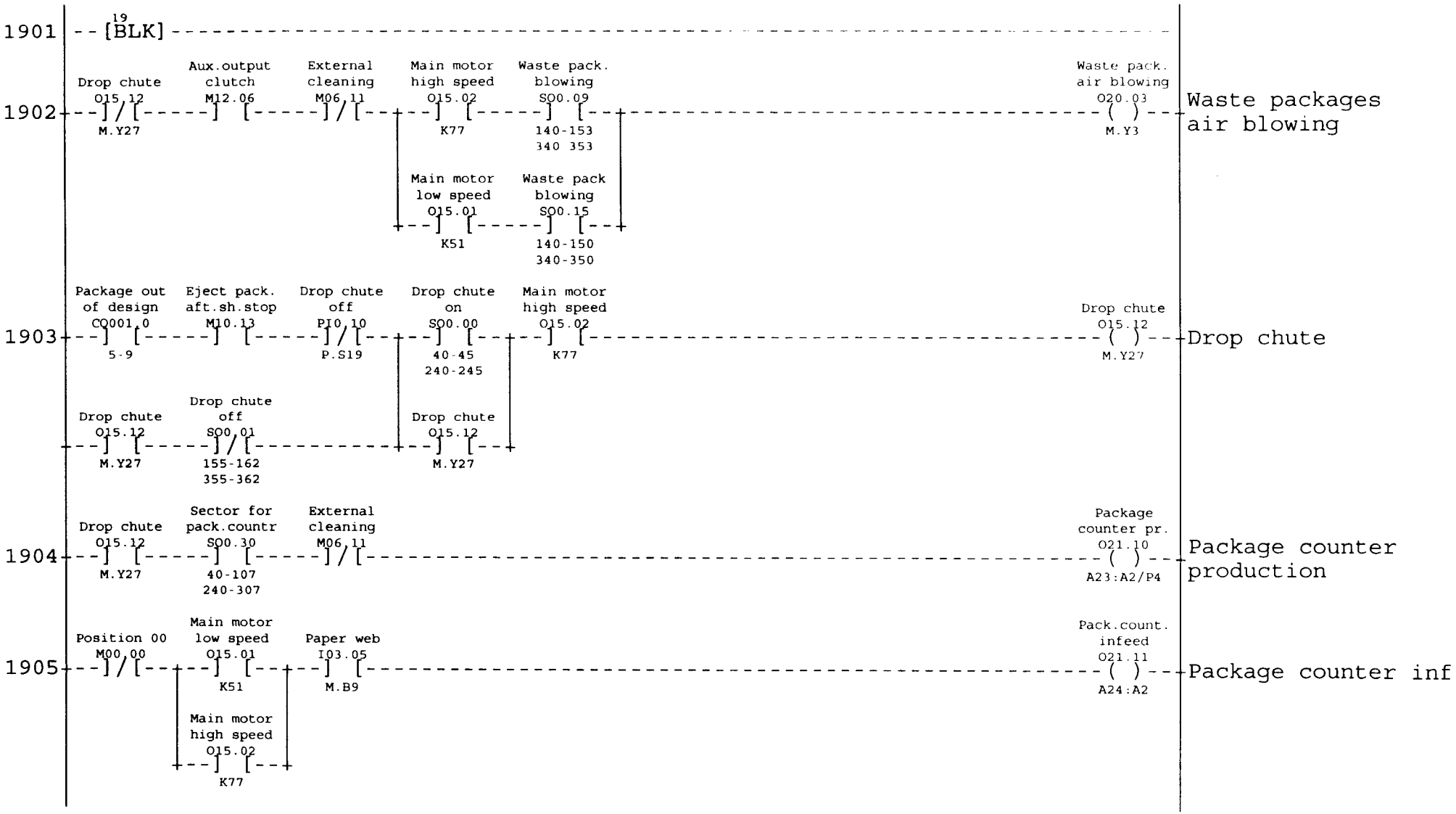

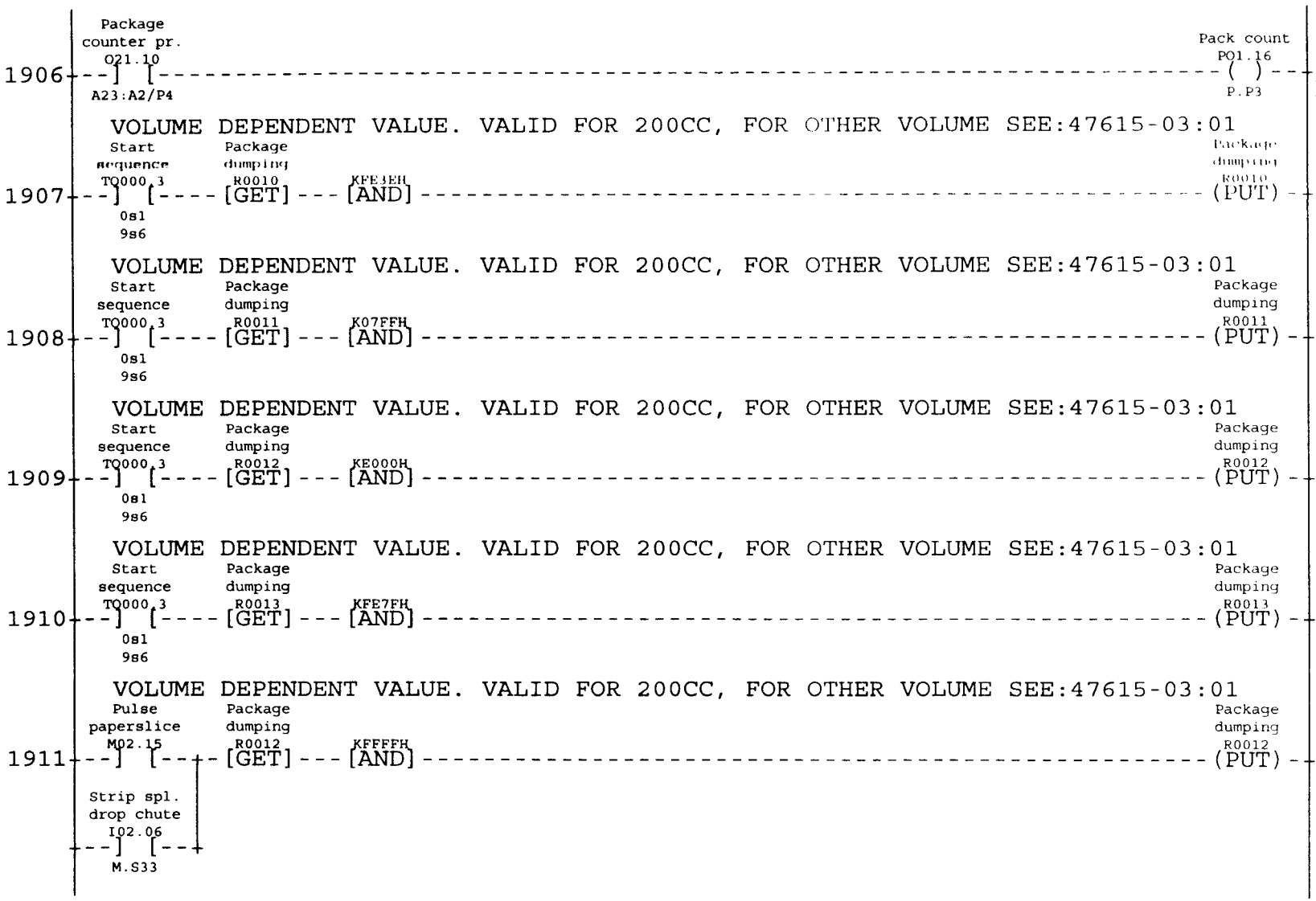
Package counter pr. O21.10
A23:A2/P4
Pack count PO1.16
P.P3
Package counter production
1906
VOLUME DEPENDENT VALUE. VALID FOR 200CC, FOR OTHER VOLUME SEE:47615-03:01
Start sequence TQ000.3
Package dumping R0010
KFE3EH
[GET]
[AND]
Package dumping R0010
(PUT)
0s1
9s6
Storageword shiftre packagedumping
1907
VOLUME DEPENDENT VALUE. VALID FOR 200CC, FOR OTHER VOLUME SEE:47615-03:01
Start sequence TQ000.3
Package dumping R0011
K07FFH
[GET]
[AND]
Package dumping R0011
(PUT)
0s1
9s6
Storageword shiftre packagedumping
1908
VOLUME DEPENDENT VALUE. VALID FOR 200CC, FOR OTHER VOLUME SEE:47615-03:01
Start sequence TQ000.3
Package dumping R0012
KE000H
[GET]
[AND]
Package dumping R0012
(PUT)
0s1
9s6
Storageword shiftre packagedumping
1909
VOLUME DEPENDENT VALUE. VALID FOR 200CC, FOR OTHER VOLUME SEE:47615-03:01
Start sequence TQ000.3
Package dumping R0013
KFE7FH
[GET]
[AND]
Package dumping R0013
(PUT)
0s1
9s6
Storageword shiftre packagedumping
1910
VOLUME DEPENDENT VALUE. VALID FOR 200CC, FOR OTHER VOLUME SEE:47615-03:01
Pulse paperslice M02.15
Package dumping R0012
KFFFFH
[GET]
[AND]
Package dumping R0012
(PUT)
Strip spl. drop chute I02.06
M.S33
Storageword shiftre packagedumping
1911

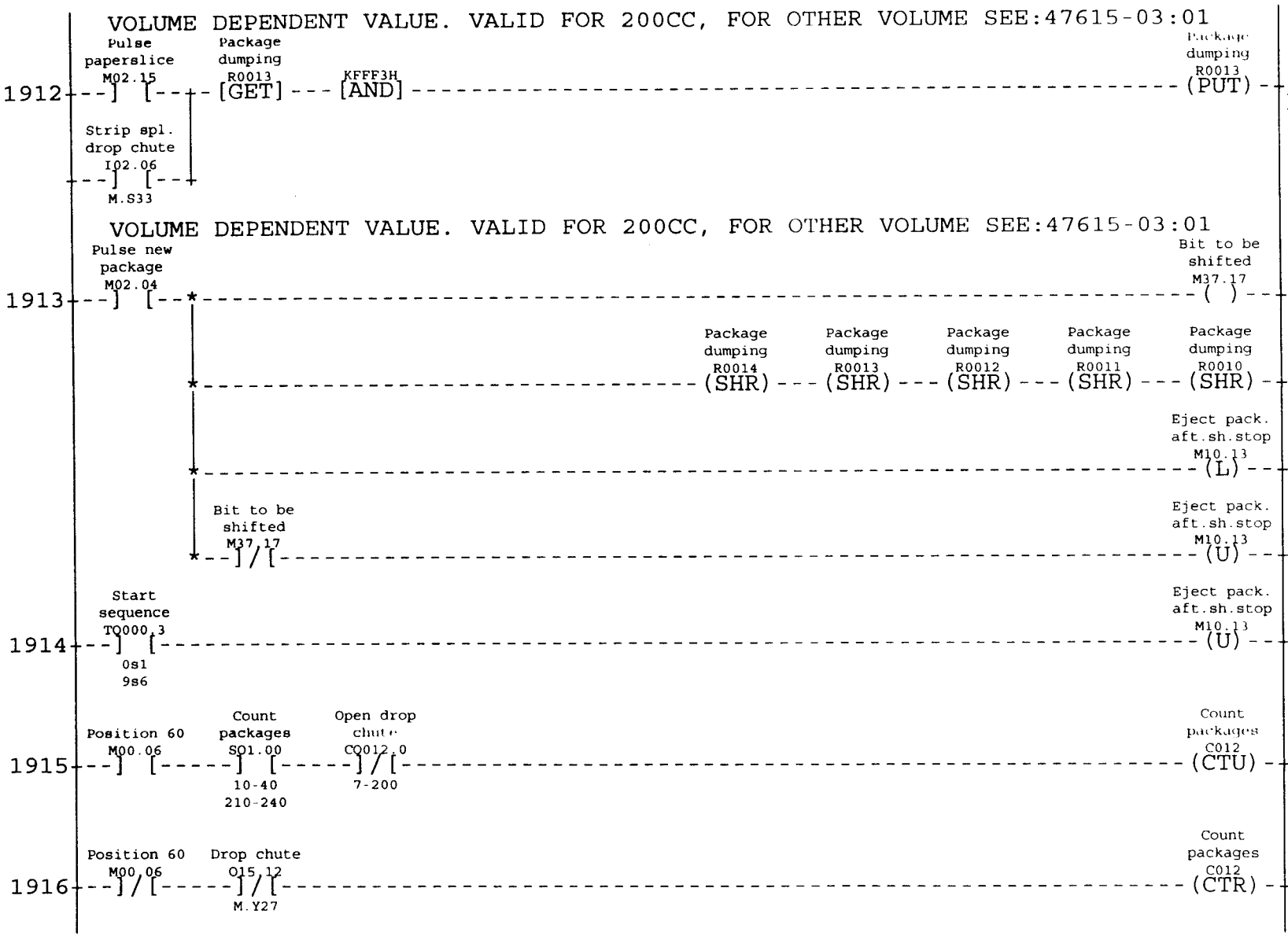
VOLUME DEPENDENT VALUE. VALID FOR 200CC, FOR OTHER VOLUME SEE:47615-03:01
Pulse paperslice M02.15
Package dumping R0013
KFFF3H
[GET]
[AND]
Package dumping R0013
(PUT)
Storageword shiftre packagedumping
1912
Strip spl. drop chute I02.06
M.S33
VOLUME DEPENDENT VALUE. VALID FOR 200CC, FOR OTHER VOLUME SEE:47615-03:01
Pulse new package M02.04
Bit to be shifted M37.17
( )
Bit to be shifted b shiftregister
1913
Package dumping R0014
Package dumping R0013
Package dumping R0012
Package dumping R0011
Package dumping R0010
(SHR)
Storageword shiftre packagedumping
Eject pack. aft.sh.stop M10.13
(L)
Eject packages afte short stop
Bit to be shifted M37.17
Eject pack. aft.sh.stop M10.13
(U)
Eject packages afte short stop
Start sequence T0000.3
0s1
9s6
Eject pack. aft.sh.stop M10.13
(U)
Eject packages afte short stop
1914
Position 60 M00.06
Count packages S01.00
10-40
210-240
Open drop chute C0012.0
7-200
Count packages C012
(CTU)
Count packages
1915
Position 60 M00.06
Drop chute O15.12
M.Y27
Count packages C012
(CTR)
Count packages
1916

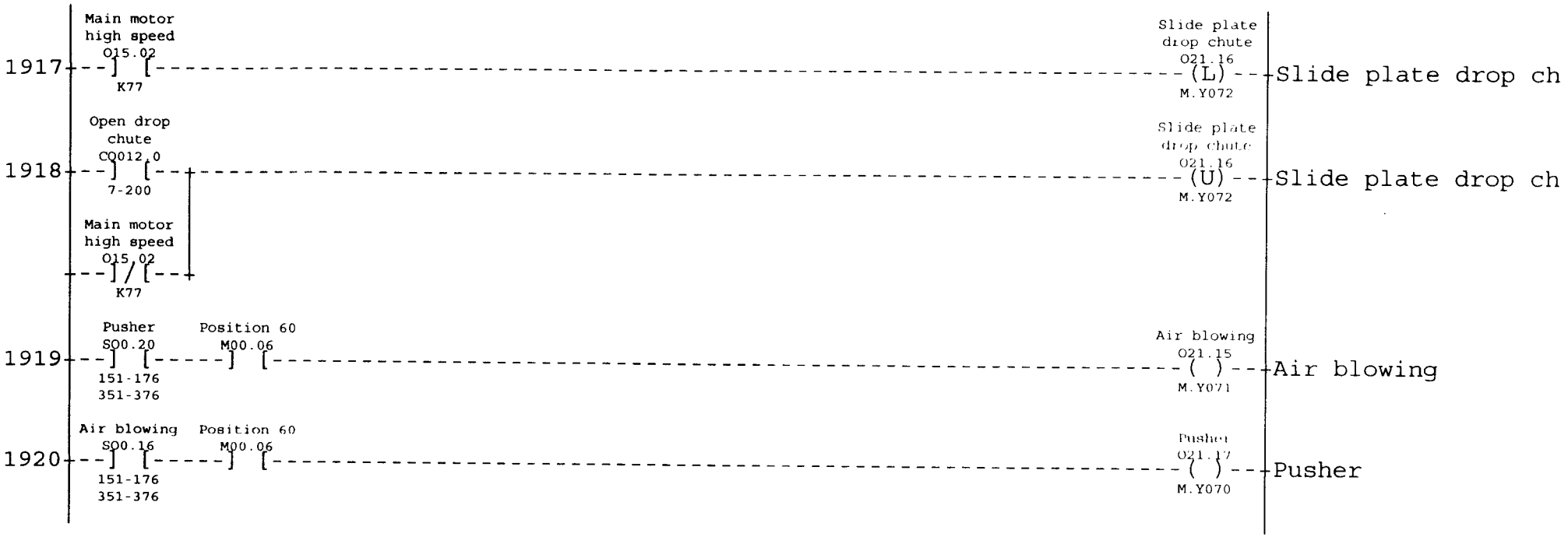

Machine individual adaptations see Block 02 TBA/9-1401 S.A.

AM: xxxxx Date: 000104 Sign: TEAN

Mach No: 649205-1401 Page
47615-19:43 Cont

NO PRODUCTION ALLOWED

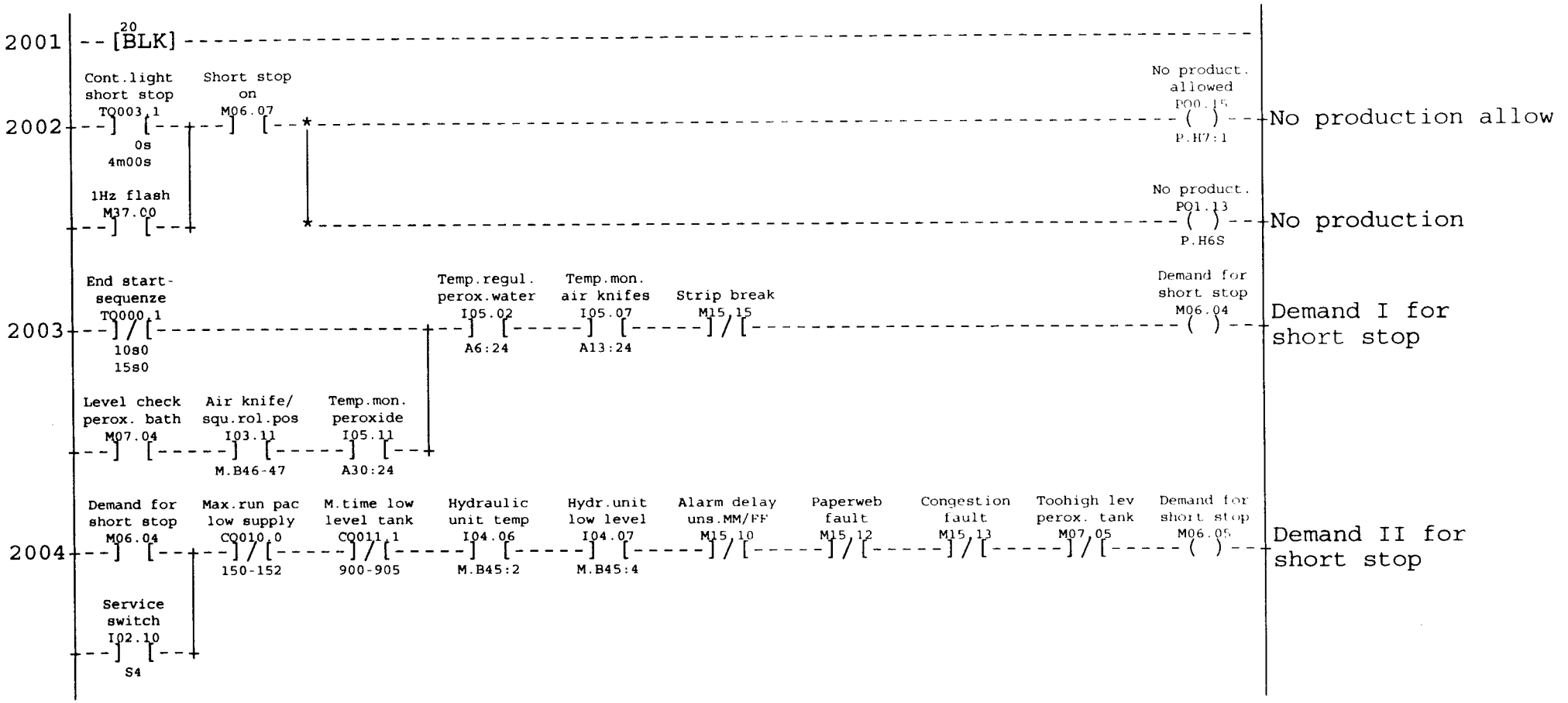

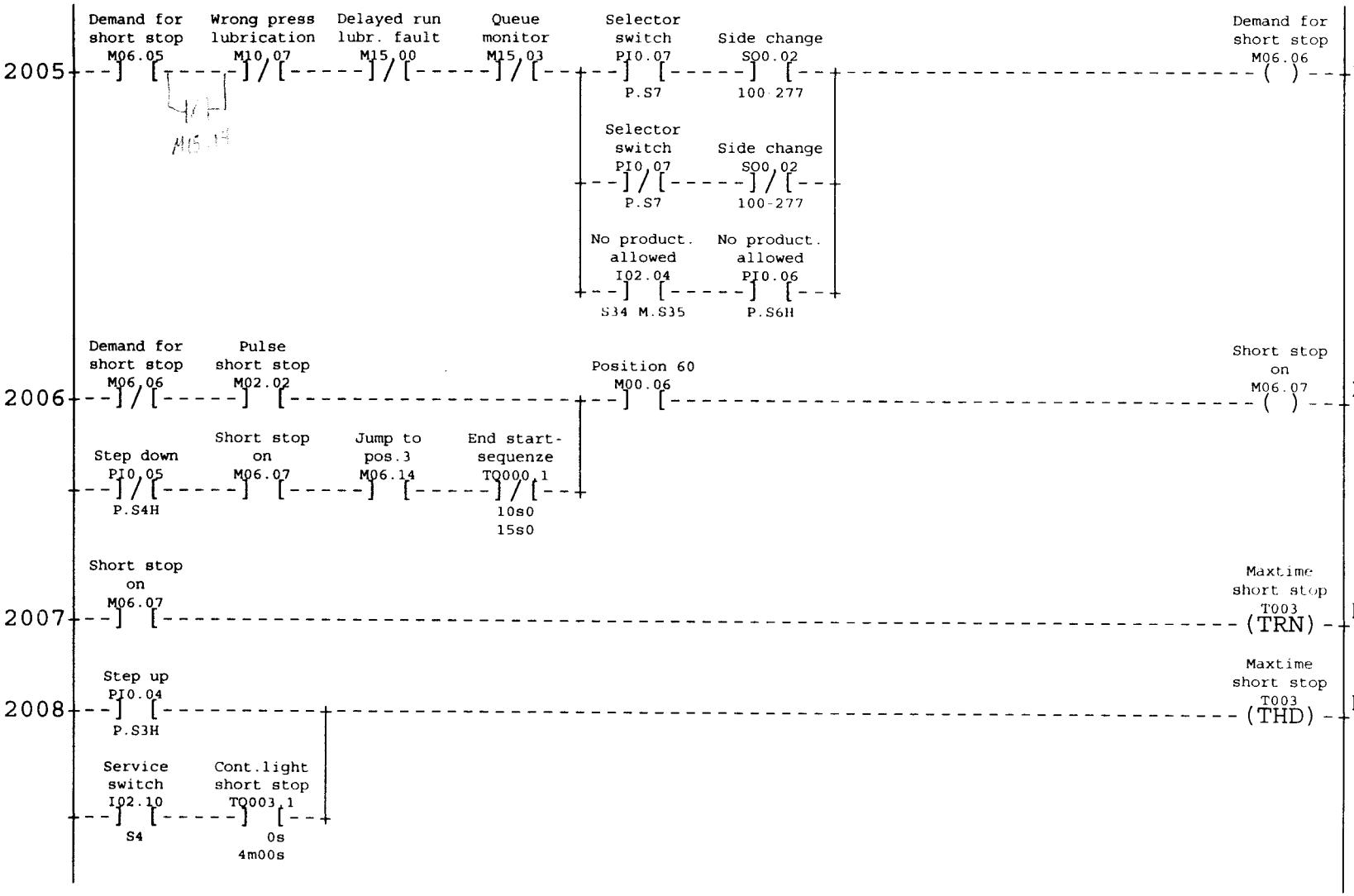
2005
Demand for short stop M06.05
Wrong press lubrication M10.07
Delayed run lubr. fault M15.00
Queue monitor M15.03
Selector switch PI0.07 P.S7
Side change S00.02 100-277
Selector switch PI0.07 P.S7
Side change S00.02 100-277
No product. allowed I02.04 S34 M.S35
No product. allowed PI0.06 P.S6H
Demand for short stop M06.06
Demand III for short stop
2006
Demand for short stop M06.06
Pulse short stop M02.02
Position 60 M00.06
Step down PI0.05 P.S4H
Short stop on M06.07
Jump to pos.3 M06.14
End start-sequenze T0000.1 10s0 15s0
Short stop on M06.07
Machine in position "Short stop on"
2007
Short stop on M06.07
Maxtime short stop T003 (TRN)
Maximum time for be in short stop posit
2008
Step up PI0.04 P.S3H
Maxtime short stop T003 (THD)
Maximum time for be in short stop posit
Service switch I02.10 S4
Cont.light short stop T0003.1 0s 4m00s

PRODUCTION ENDED, INTERNAL CLEANING

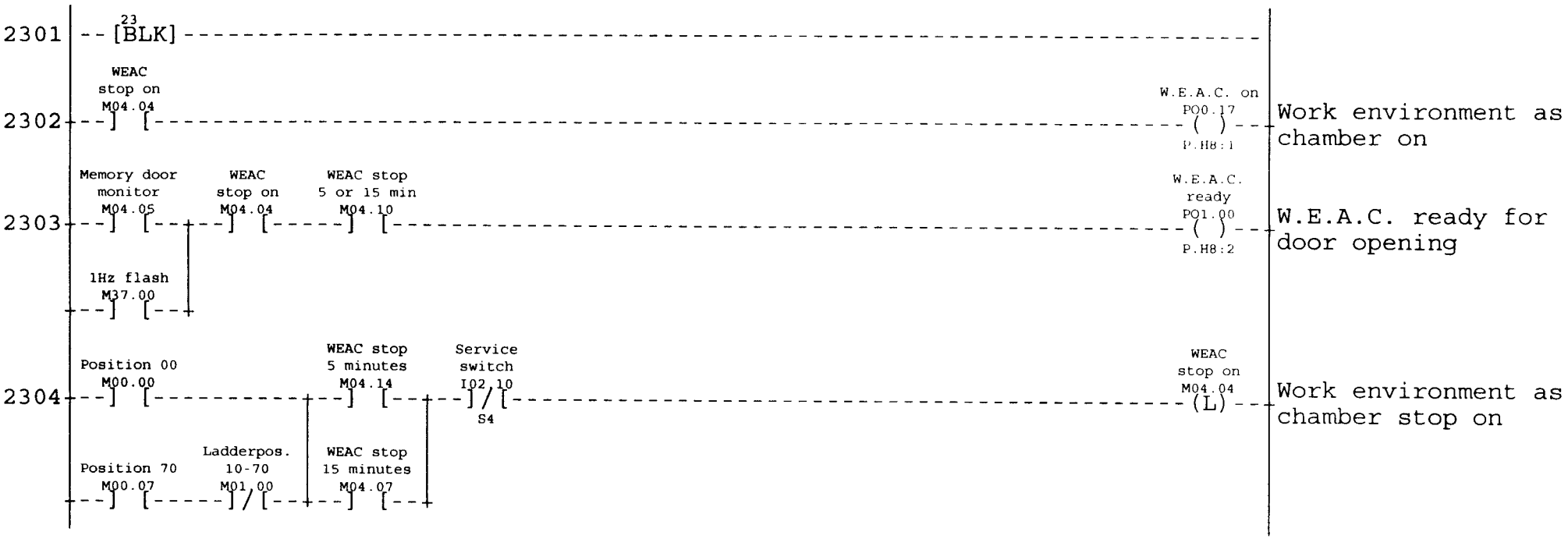

Machine individual adaptations see Block 02 TBA/9-1401 S.A.

AM: xxxxx Date: 000104 Sign: TEAN

Mach No: 649205-1401 Page
47615-23:43 Cont

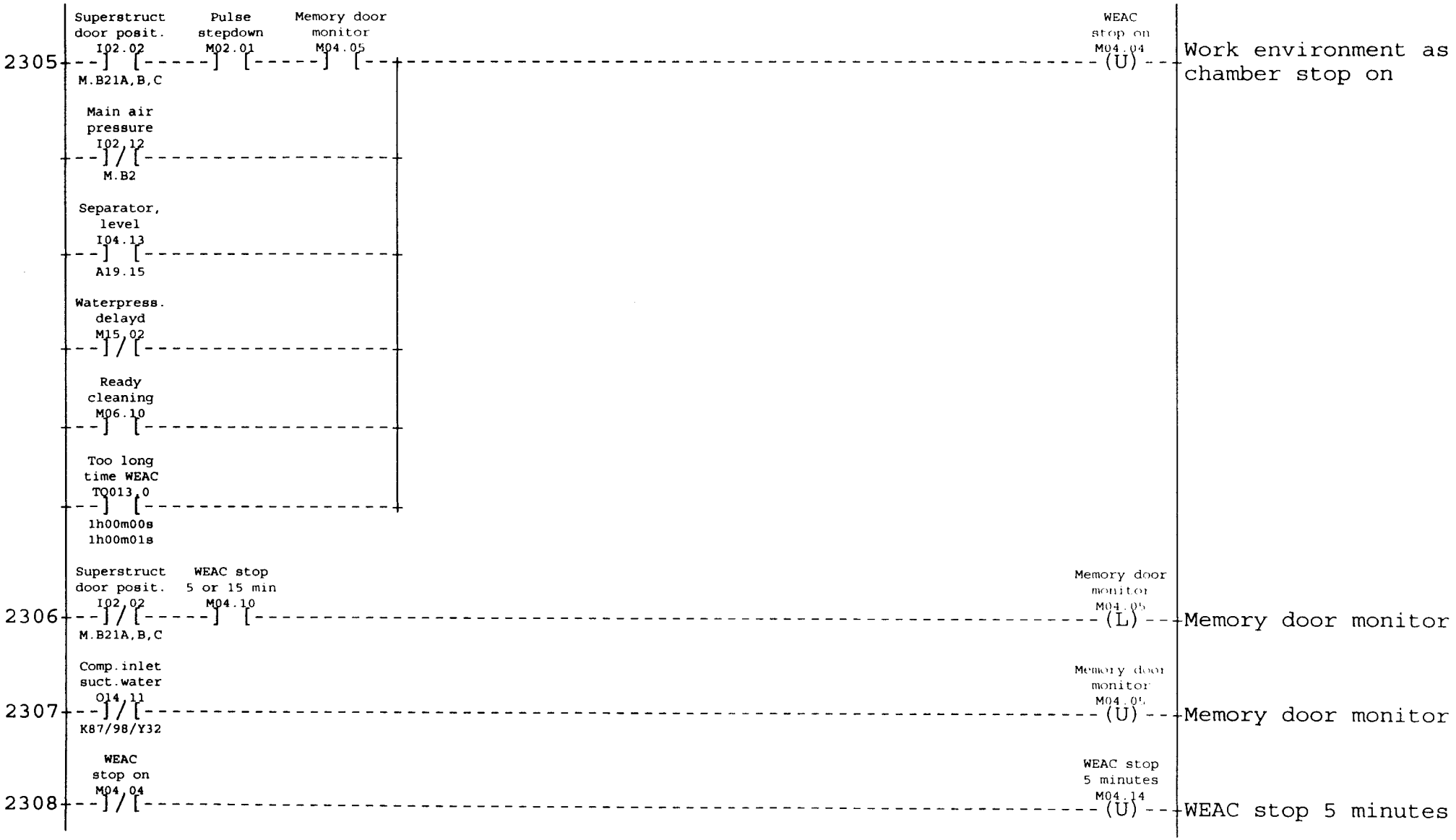
2305
Superstruct door posit. I02.02
M.B21A,B,C
Pulse stepdown M02.01
Memory door monitor M04.05
WEAC stop on M04.04
(U)
Work environment as chamber stop on
Main air pressure I02.12
M.B2
Separator, level I04.13
A19.15
Waterpress. delayd M15.02
Ready cleaning M06.10
Too long time WEAC TQ013.0
1h00m00s
1h00m01s
2306
Superstruct door posit. I02.02
M.B21A,B,C
WEAC stop 5 or 15 min M04.10
Memory door monitor M04.05
(L)
Memory door monitor
2307
Comp.inlet suct.water O14.11
K87/98/Y32
Memory door monitor M04.05
(U)
Memory door monitor
2308
WEAC stop on M04.04
WEAC stop 5 minutes M04.14
(U)
WEAC stop 5 minutes

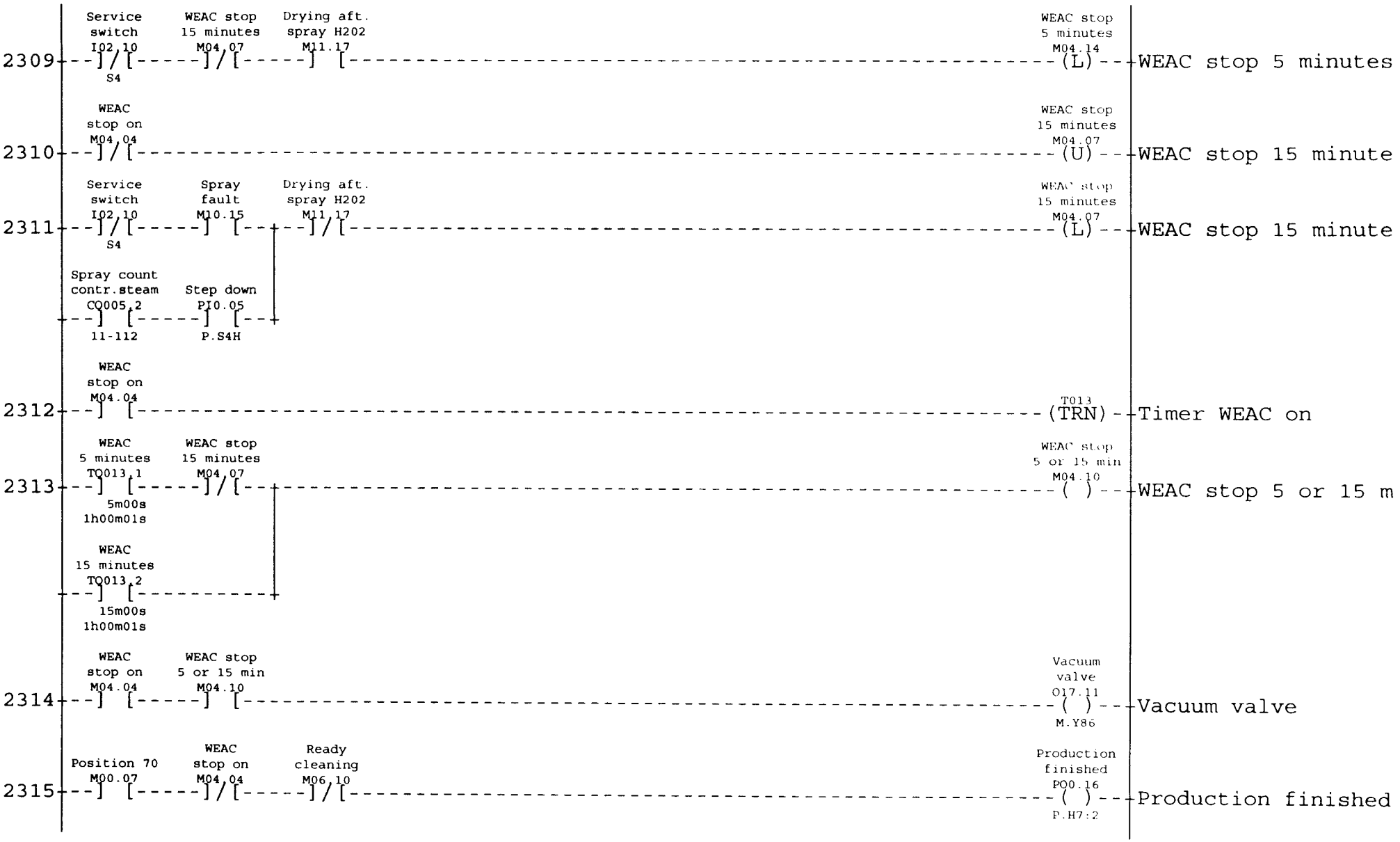

Machine individual adaptations see Block 02 TBA/9-1401 S.A.
AM: xxxxx Date: 000104 Sign: TEAN

Mach No: 649205-1401 Page
47615-23:43 Cont

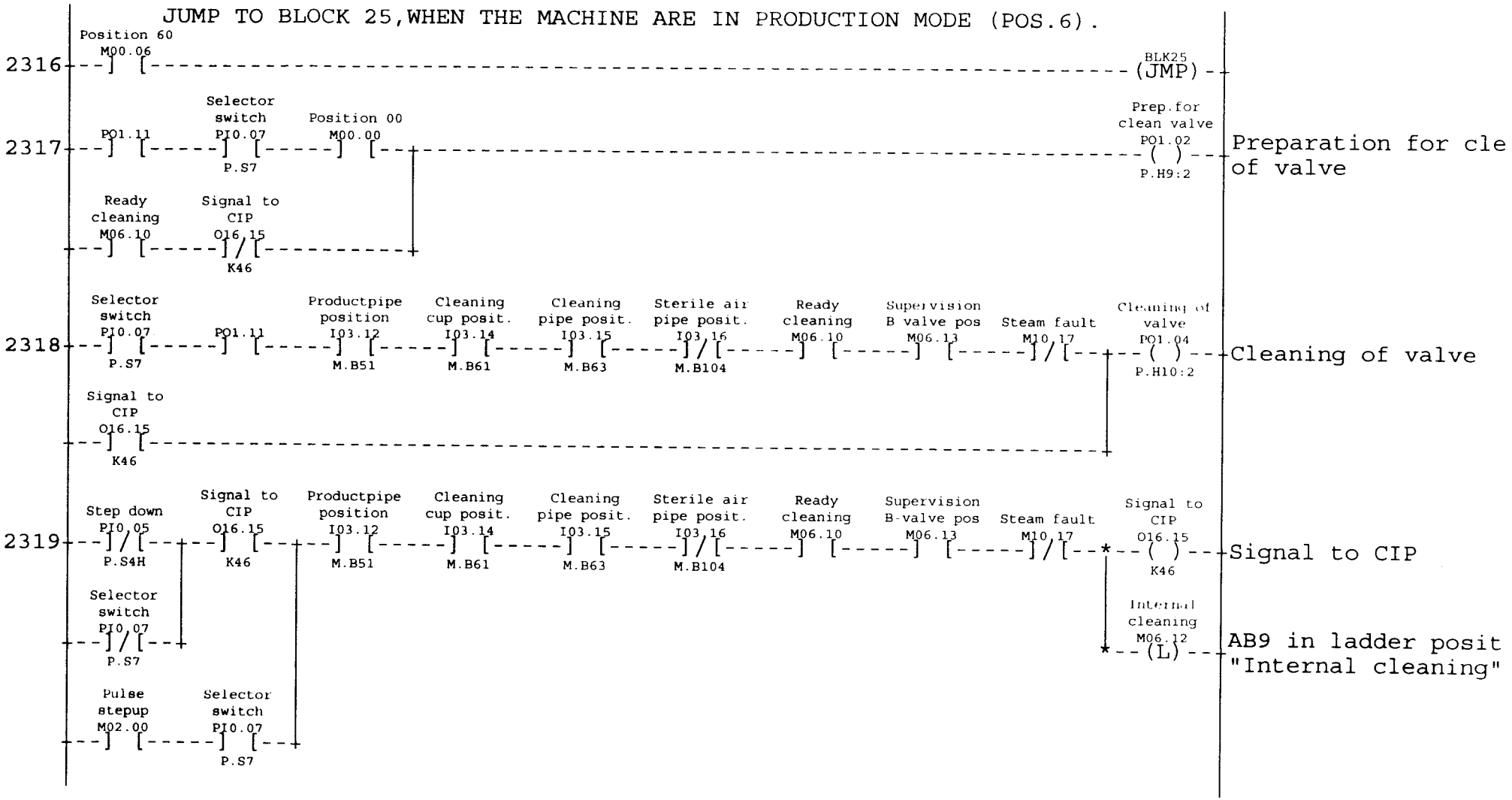
JUMP TO BLOCK 25,WHEN THE MACHINE ARE IN PRODUCTION MODE (POS.6).
2316
Position 60
M00.06
BLK25
(JMP)
2317
PO1.11
Selector switch
PI0.07
P.S7
Position 00
M00.00
Prep.for clean valve
PO1.02
P.H9:2
Preparation for cle of valve
Ready cleaning
M06.10
Signal to CIP
O16.15
K46
2318
Selector switch
PI0.07
P.S7
PO1.11
Productpipe position
I03.12
M.B51
Cleaning cup posit.
I03.14
M.B61
Cleaning pipe posit.
I03.15
M.B63
Sterile air pipe posit.
I03.16
M.B104
Ready cleaning
M06.10
Supervision B valve pos
M06.13
Steam fault
M10.17
Cleaning of valve
PO1.04
P.H10:2
Cleaning of valve
Signal to CIP
O16.15
K46
2319
Step down
PI0.05
P.S4H
Signal to CIP
O16.15
K46
Productpipe position
I03.12
M.B51
Cleaning cup posit.
I03.14
M.B61
Cleaning pipe posit.
I03.15
M.B63
Sterile air pipe posit.
I03.16
M.B104
Ready cleaning
M06.10
Supervision B-valve pos
M06.13
Steam fault
M10.17
Signal to CIP
O16.15
K46
Signal to CIP
Selector switch
PI0.07
P.S7
Internal cleaning
M06.12
(L)
AB9 in ladder posit "Internal cleaning"
Pulse stepup
M02.00
Selector switch
PI0.07
P.S7

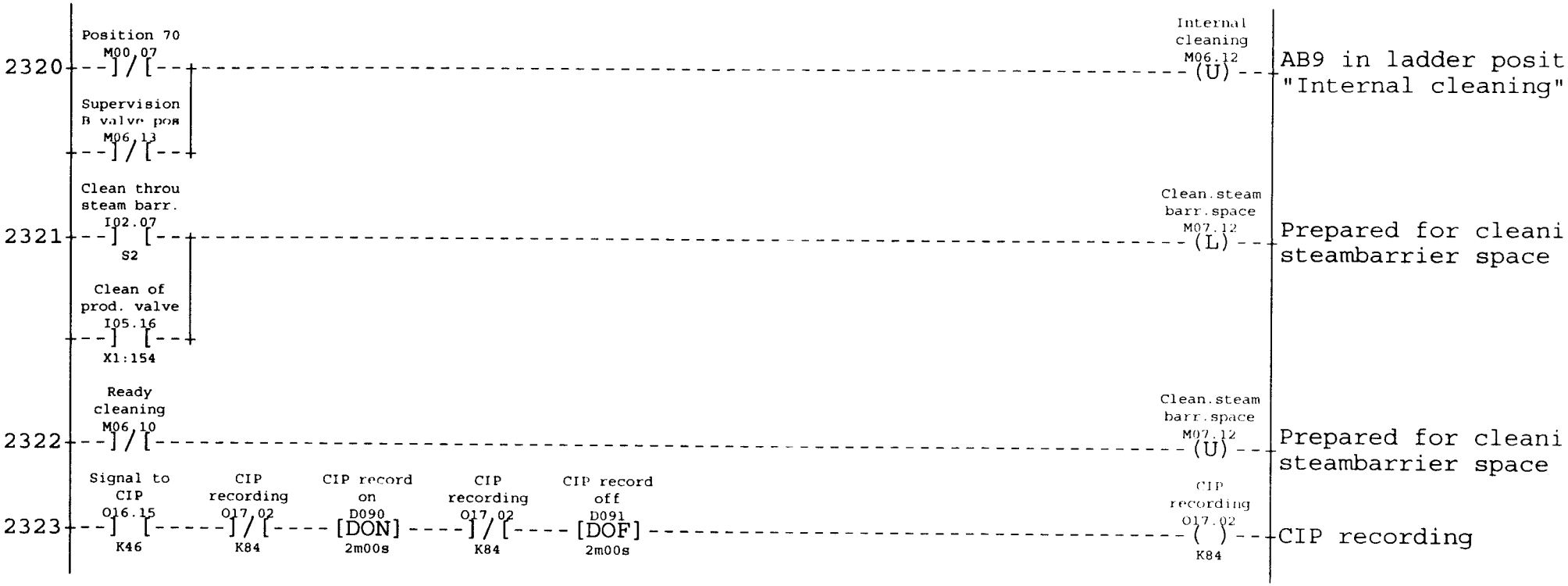
2320
Position 70
M00.07
Supervision
B valve pos
M06.13
Internal
cleaning
M06.12
(U)
AB9 in ladder posit
"Internal cleaning"
2321
Clean throu
steam barr.
I02.07
S2
Clean of
prod. valve
I05.16
X1:154
Clean.steam
barr.space
M07.12
(L)
Prepared for cleani
steambarrier space
2322
Ready
cleaning
M06.10
Clean.steam
barr.space
M07.12
(U)
Prepared for cleani
steambarrier space
2323
Signal to
CIP
O16.15
K46
CIP
recording
O17.02
K84
CIP record
on
D090
[DON]
2m00s
CIP
recording
O17.02
K84
CIP record
off
D091
[DOF]
2m00s
CIP
recording
O17.02
( )
K84
CIP recording

EXTERNAL CLEANING

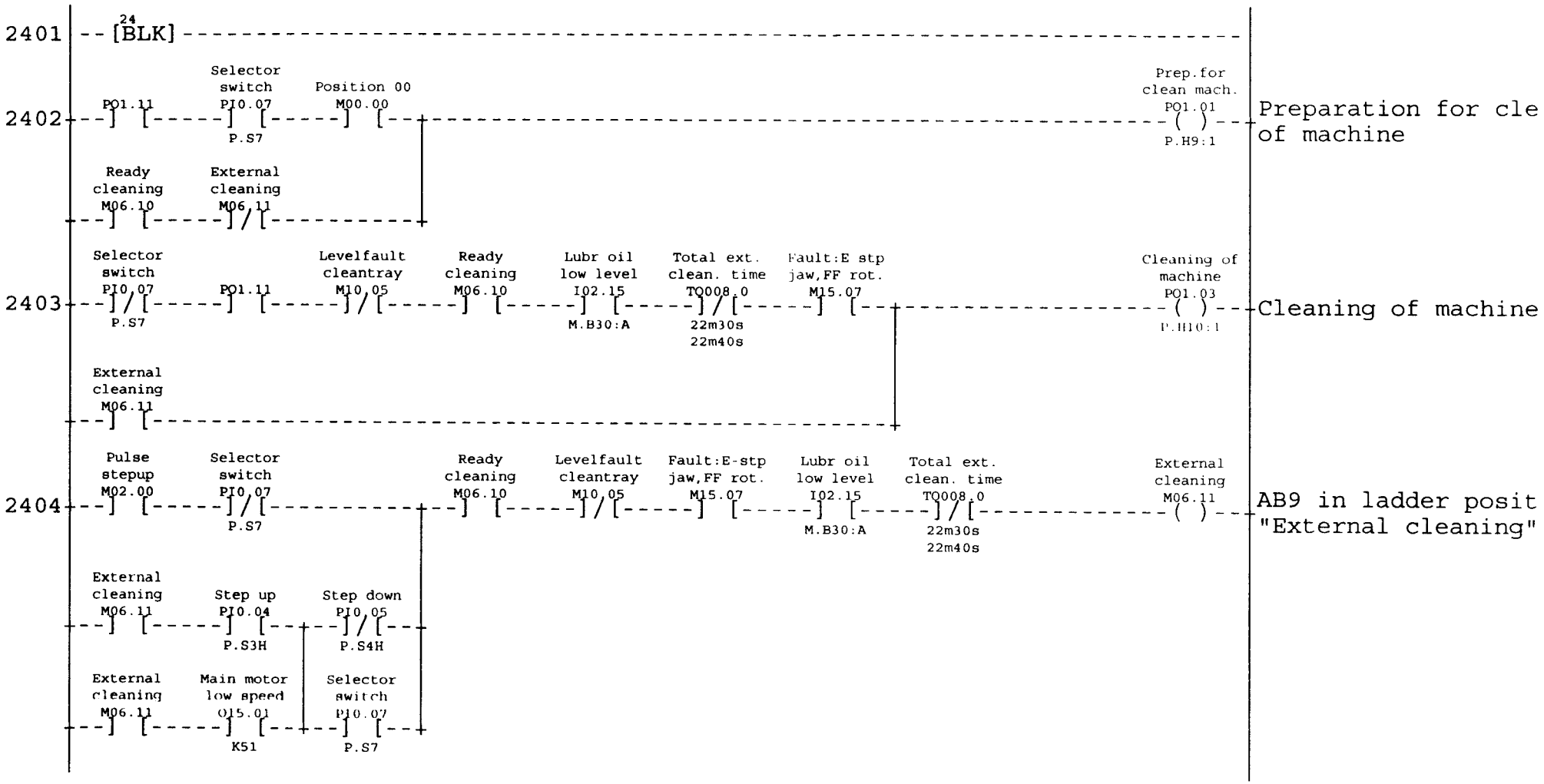

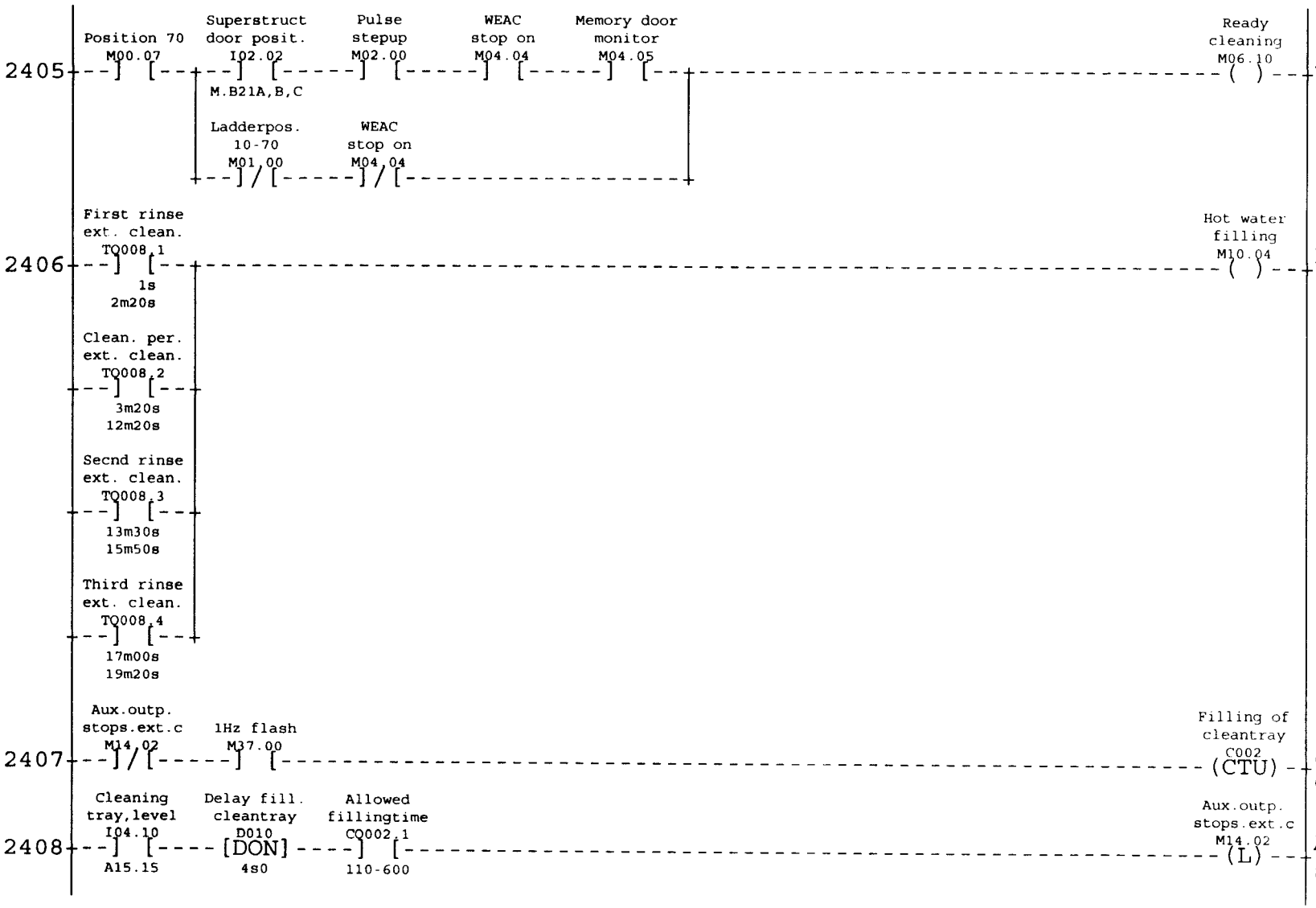
2405
Position 70
M00.07
Superstruct door posit.
I02.02
M.B21A,B,C
Ladderpos. 10-70
M01.00
Pulse stepup
M02.00
WEAC stop on
M04.04
WEAC stop on
M04.04
Memory door monitor
M04.05
Ready cleaning
M06.10
AB9 in machine ladd
"Ready for cleaning
2406
First rinse ext. clean.
TQ008.1
1s
2m20s
Clean. per. ext. clean.
TQ008.2
3m20s
12m20s
Secnd rinse ext. clean.
TQ008.3
13m30s
15m50s
Third rinse ext. clean.
TQ008.4
17m00s
19m20s
Hot water filling
M10.04
Hot water filling,r
and cleaning in ext
2407
Aux.outp. stops.ext.c
M14.02
1Hz flash
M37.00
Filling of cleantray
C002
(CTU)
Sequenzer filling o
cleantray by ext.cl
2408
Cleaning tray,level
I04.10
A15.15
Delay fill. cleantray
D010
[DON]
4s0
Allowed fillingtime
CQ002.1
110-600
Aux.outp. stops.ext.c
M14.02
(L)
Auxiliary output
stopsequenze ext.cl

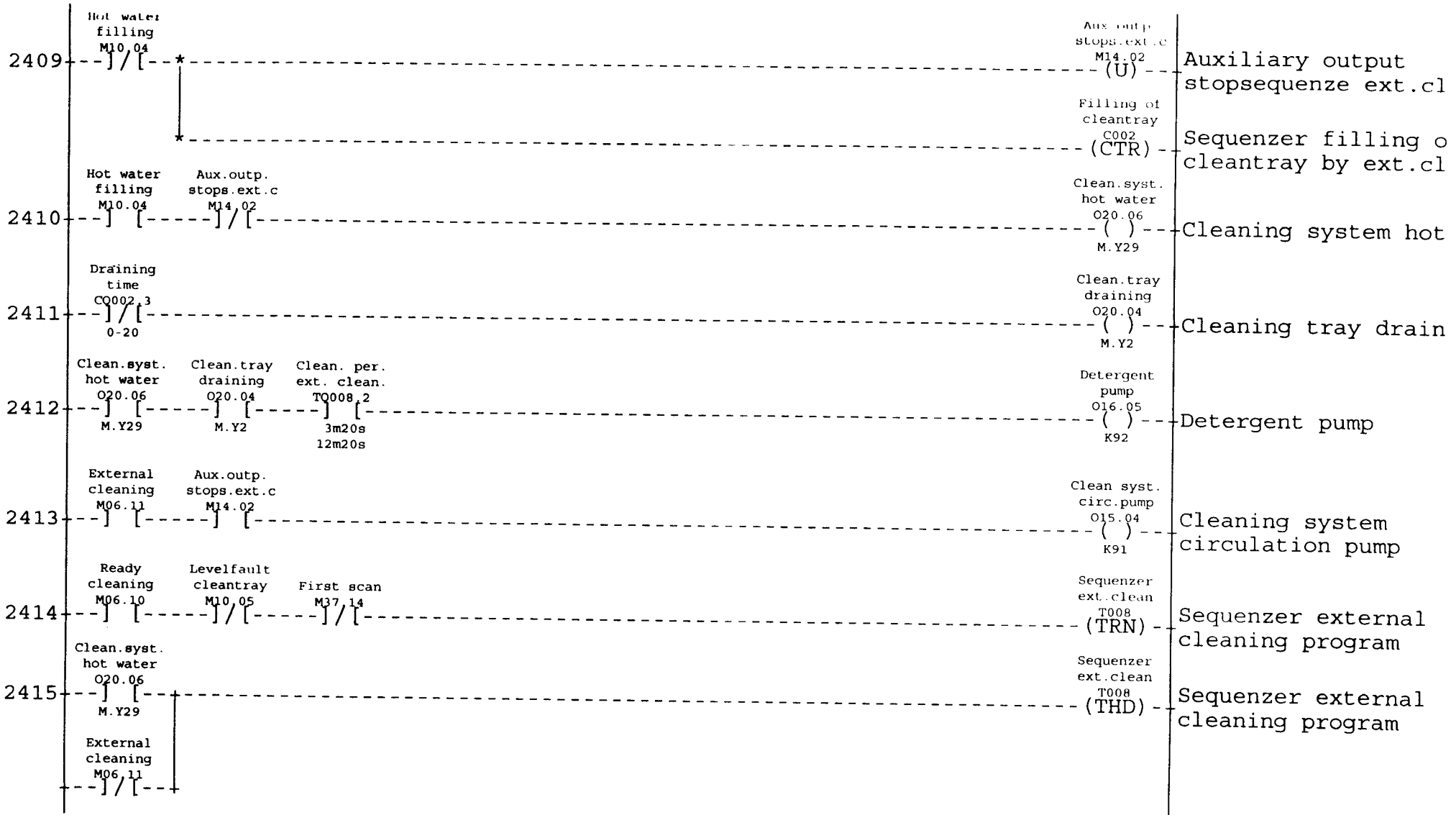

Machine individual adaptations see Block 02 TBA/9-1401 S.A.

AM: xxxxx Date: 000104 Sign: TEAN

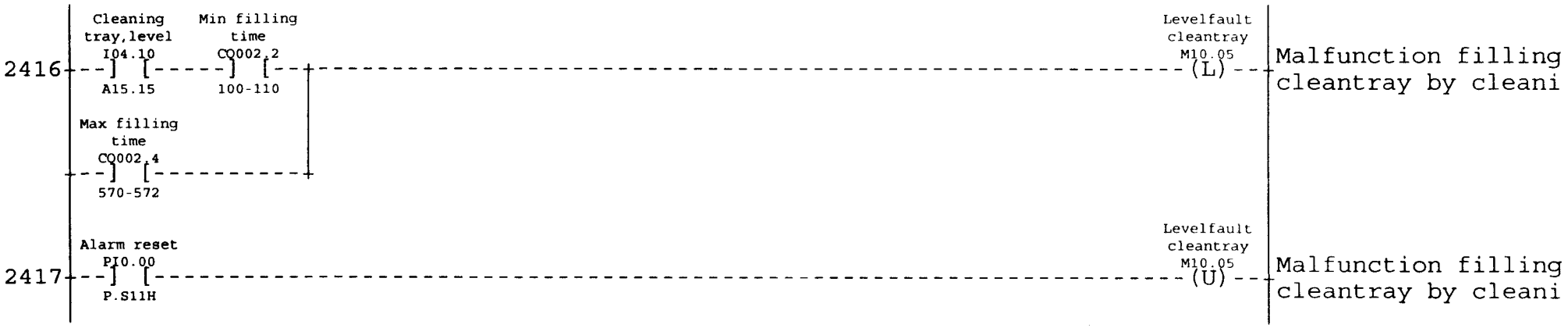
2416
Cleaning tray,level
I04.10
A15.15
Min filling time
CQ002.2
100-110
Max filling time
CQ002.4
570-572
Levelfault cleantray
M10.05
(L)
Malfunction filling cleantray by cleani
2417
Alarm reset
PI0.00
P.S11H
Levelfault cleantray
M10.05
(U)
Malfunction filling cleantray by cleani

LUBRICATION

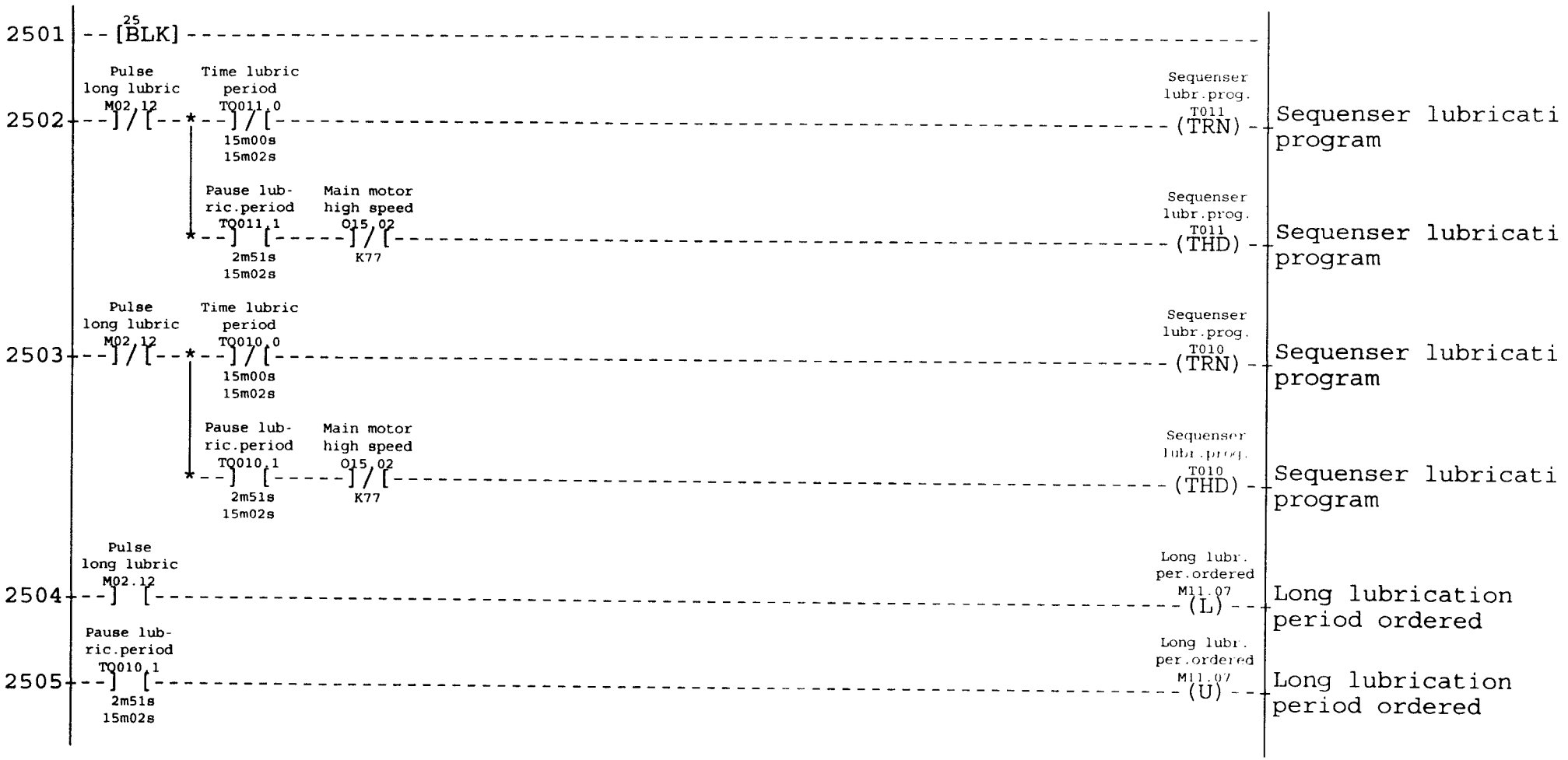

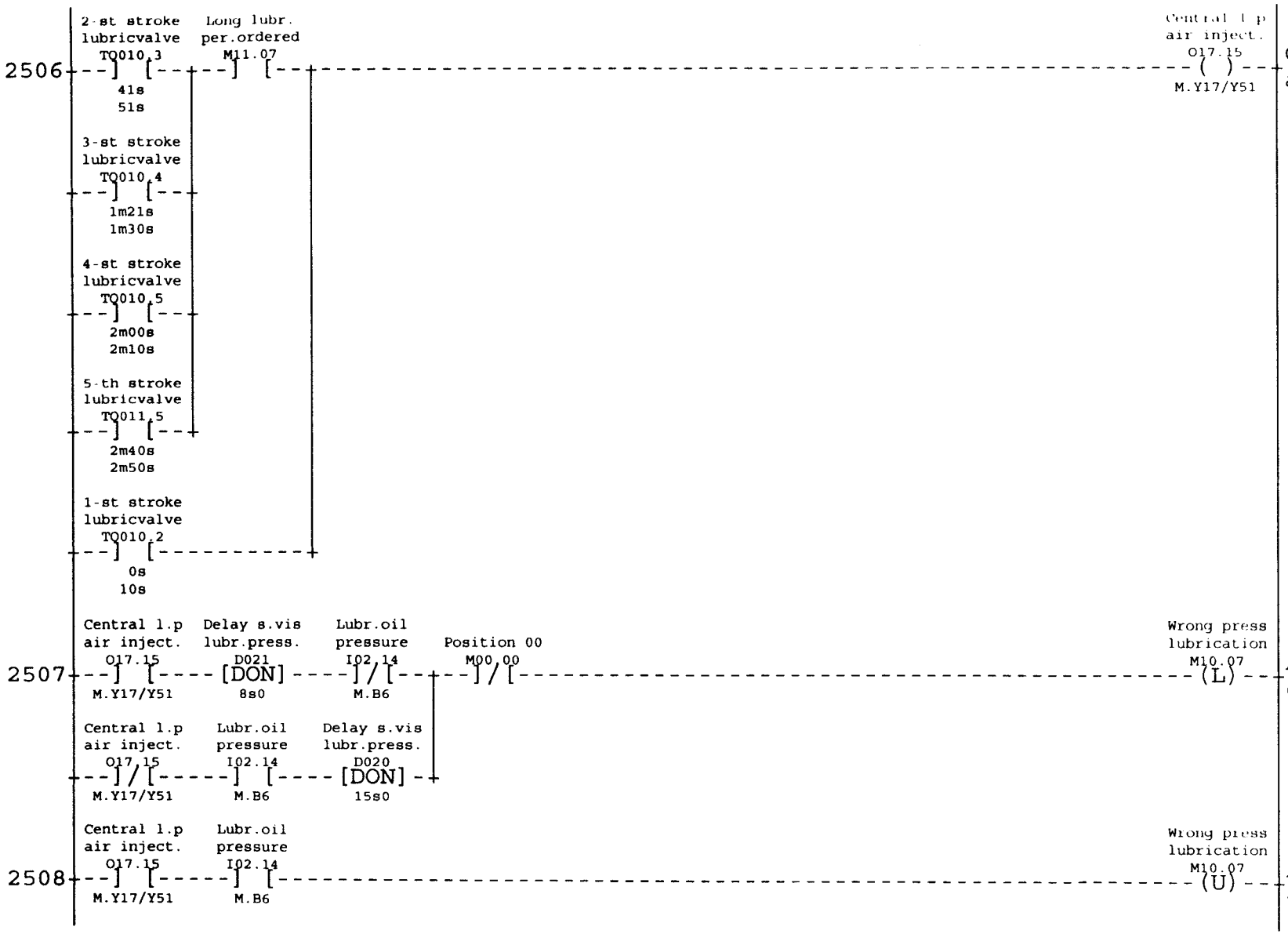
2506
2-st stroke lubricvalve TQ010.3
41s
51s
Long lubr. per.ordered M11.07
3-st stroke lubricvalve TQ010.4
1m21s
1m30s
4-st stroke lubricvalve TQ010.5
2m00s
2m10s
5-th stroke lubricvalve TQ011.5
2m40s
2m50s
1-st stroke lubricvalve TQ010.2
0s
10s
Central l.p air inject. O17.15
M.Y17/Y51
Central l.p air inject. O17.15
M.Y17/Y51
Central lubrication air injection
2507
Central l.p air inject. O17.15
M.Y17/Y51
Delay s.vis lubr.press. D021
8s0
Lubr.oil pressure I02.14
M.B6
Position 00 M00.00
Wrong press lubrication M10.07
(L)
Alarm wrong pressur during lubrication
Central l.p air inject. O17.15
M.Y17/Y51
Lubr.oil pressure I02.14
M.B6
Delay s.vis lubr.press. D020
15s0
2508
Central l.p air inject. O17.15
M.Y17/Y51
Lubr.oil pressure I02.14
M.B6
Wrong press lubrication M10.07
(U)
Alarm wrong pressur during lubrication

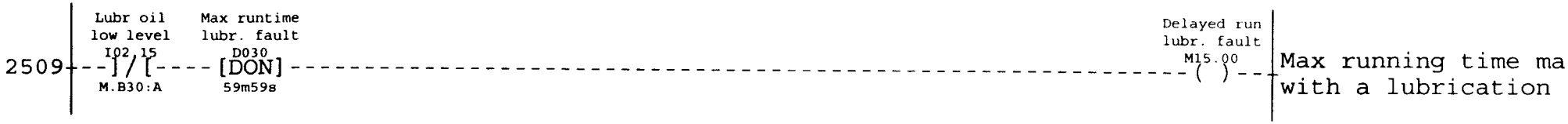
2509
Lubr oil
low level
I02.15
M.B30:A
Max runtime
lubr. fault
D030
[DON]
59m59s
Delayed run
lubr. fault
M15.00
Max running time ma
with a lubrication

6-CHANNEL RECORDER

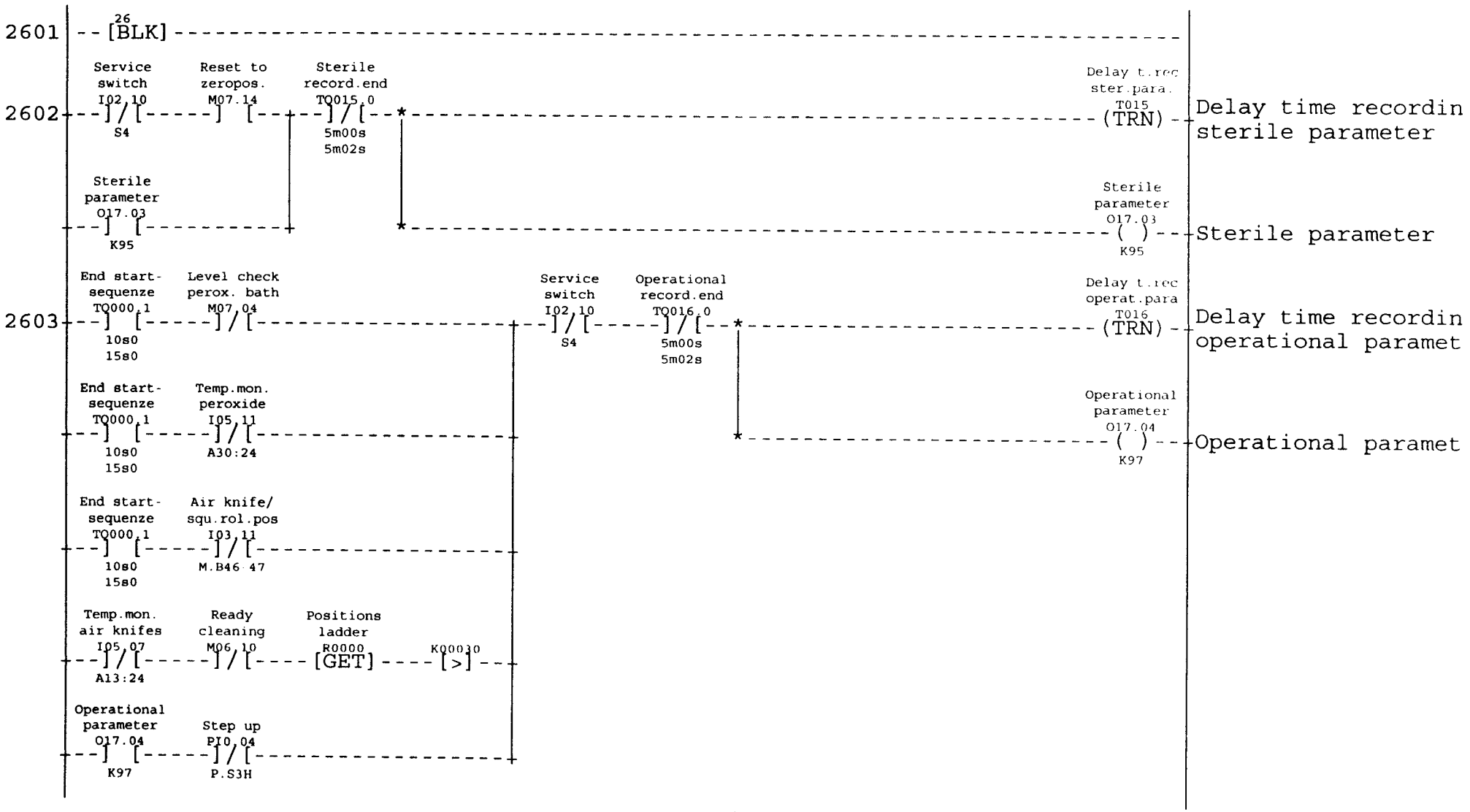

Machine individual adaptations see Block 02 TBA/9-1401 S.A.

AM: xxxxx Date: 000104 Sign: TEAN

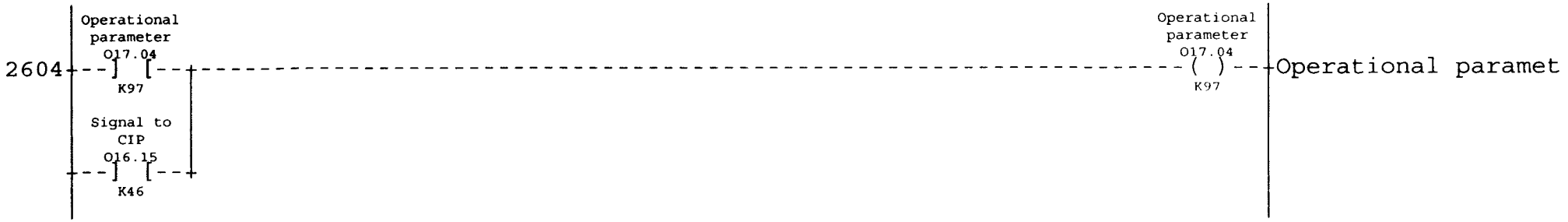
2604
Operational parameter O17.04 K97
Signal to CIP O16.15 K46
Operational parameter O17.04 K97
Operational paramet

MAINS INTERRUPT AND ALARMDELAYS

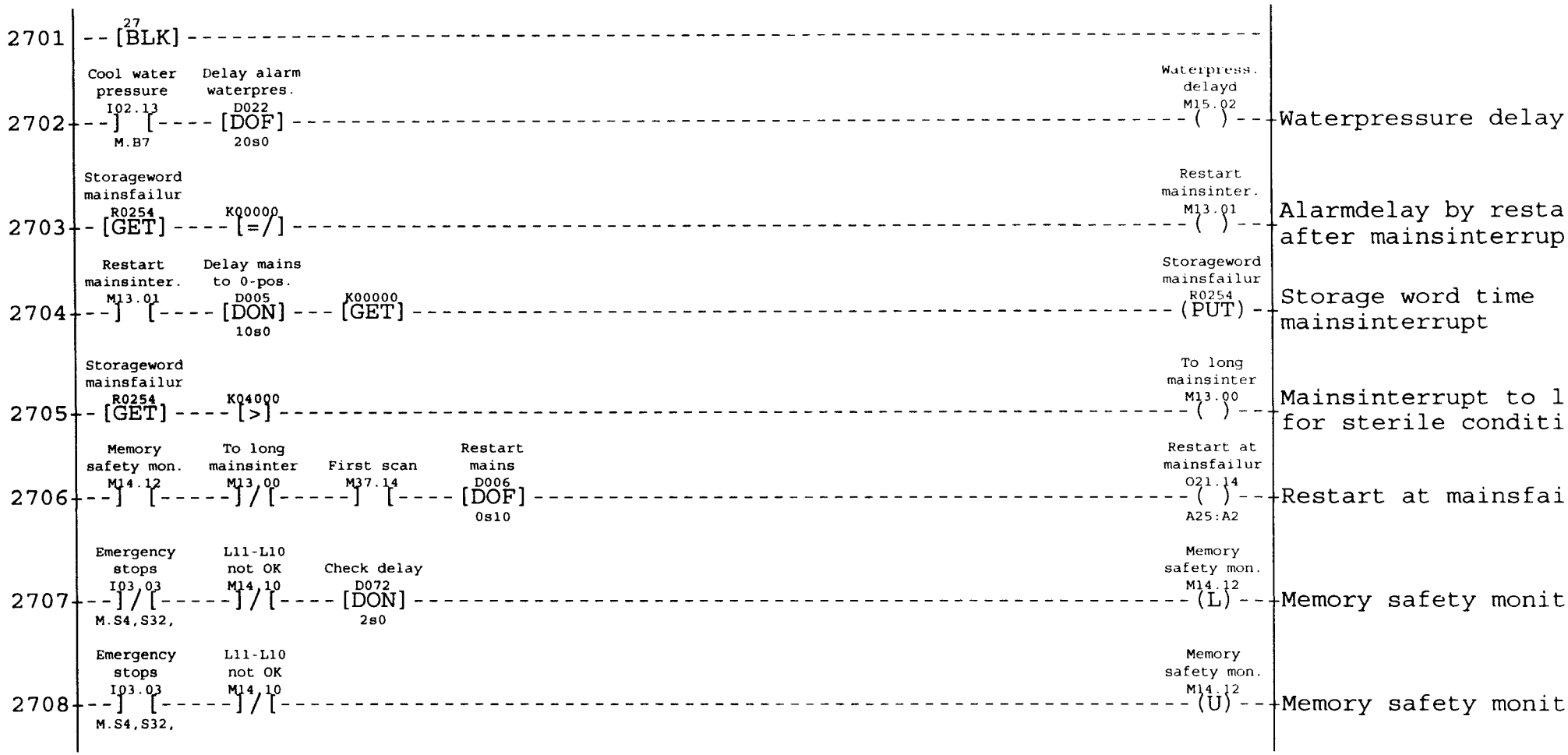

JUMP TO MACHINELADDERPOSITION "STERILIZATION FULLFILLED" (POSITION 3)

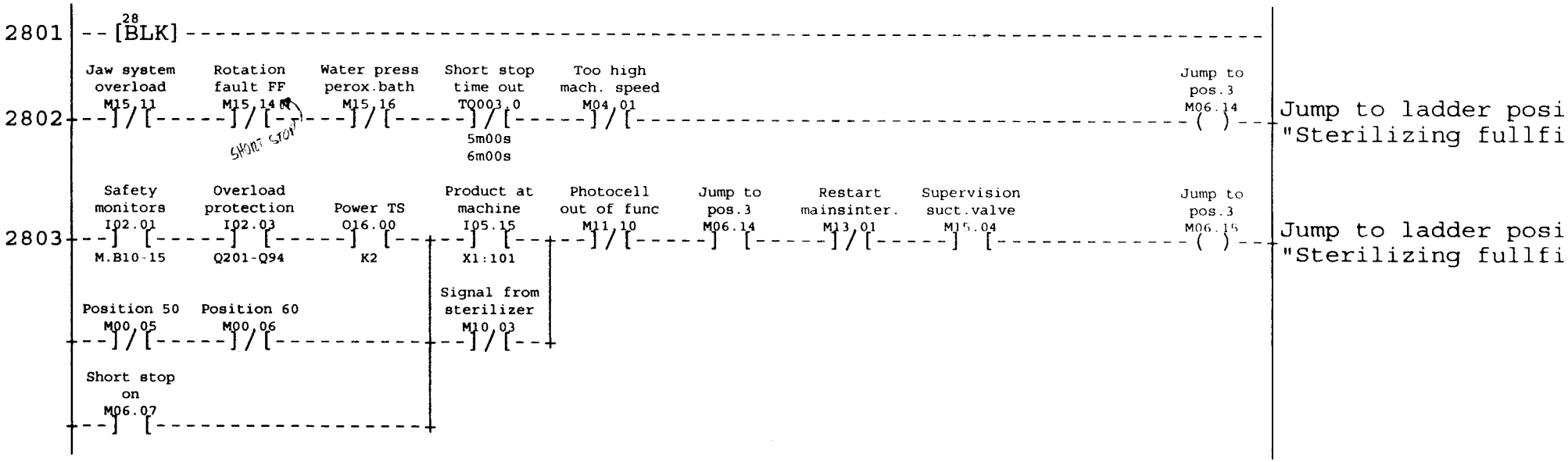

JUMP TO ZEROPOSITION IN MACHINELADDER

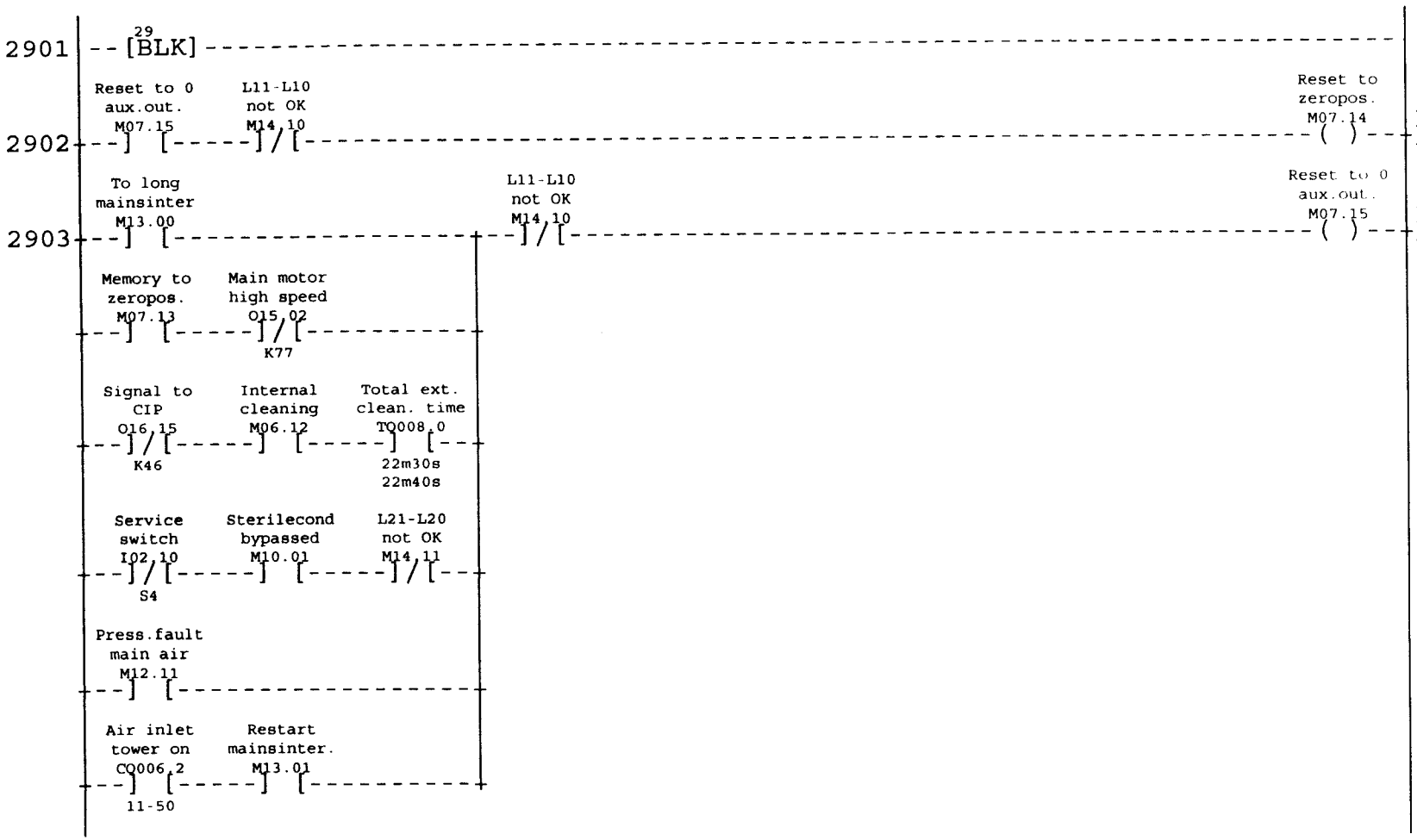

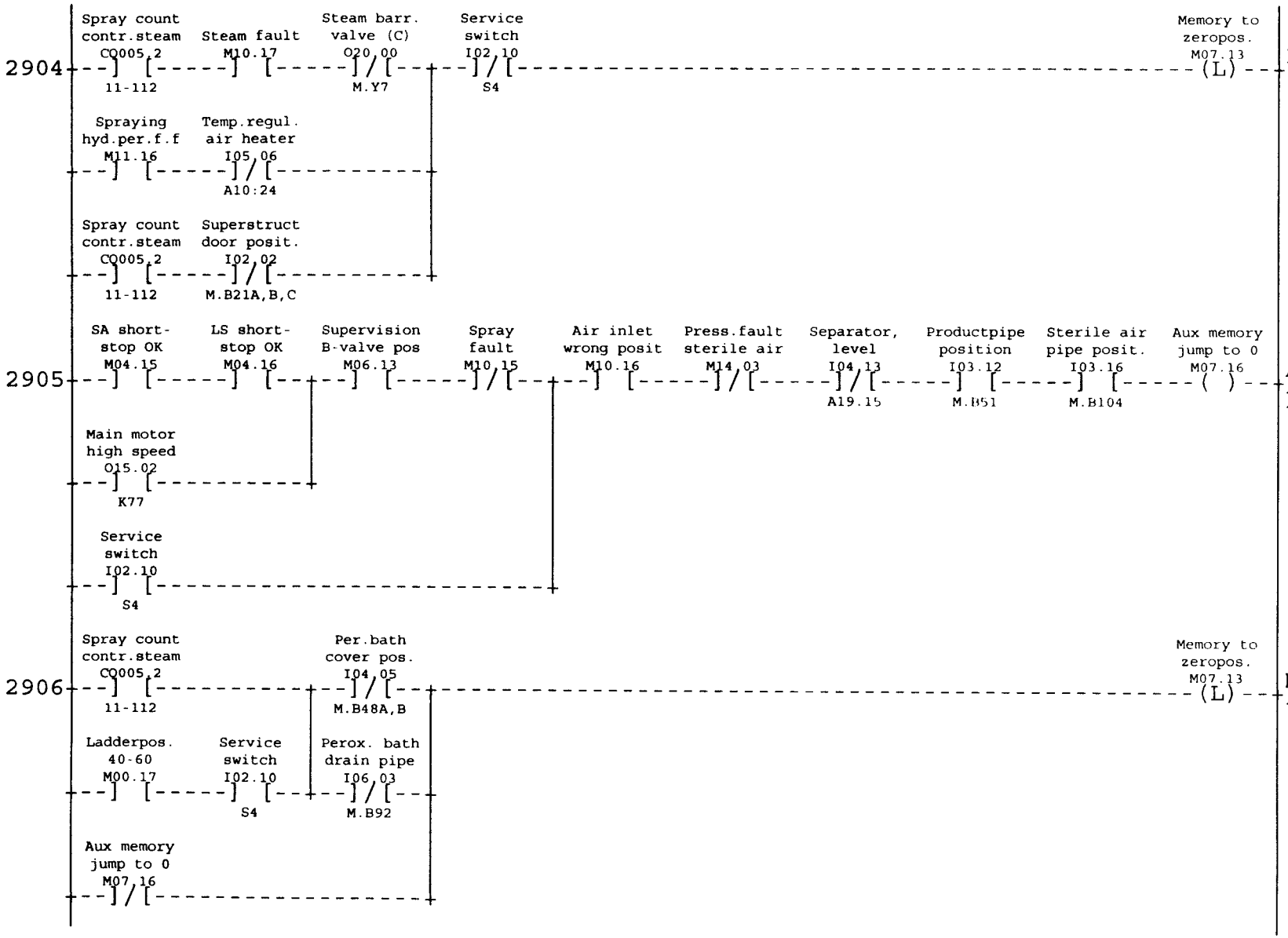
2904
Spray count contr.steam CQ005.2 11-112
Steam fault M10.17
Steam barr. valve (C) O20.00 M.Y7
Service switch I02.10 S4
Memory to zeropos. M07.13 (L)
Memory machineladde to zeroposition
Spraying hyd.per.f.f M11.16
Temp.regul. air heater I05.06 A10:24
Spray count contr.steam CQ005.2 11-112
Superstruct door posit. I02.02 M.B21A,B,C
2905
SA short-stop OK M04.15
LS short-stop OK M04.16
Supervision B-valve pos M06.13
Spray fault M10.15
Air inlet wrong posit M10.16
Press.fault sterile air M14.03
Separator, level I04.13 A19.15
Productpipe position I03.12 M.B51
Sterile air pipe posit. I03.16 M.B104
Aux memory jump to 0 M07.16 ( )
Aux. memory for jum position 0
Main motor high speed O15.02 K77
Service switch I02.10 S4
2906
Spray count contr.steam CQ005.2 11-112
Per.bath cover pos. I04.05 M.B48A,B
Memory to zeropos. M07.13 (L)
Memory machineladde to zeroposition
Ladderpos. 40-60 M00.17
Service switch I02.10 S4
Perox. bath drain pipe I06.03 M.B92
Aux memory jump to 0 M07.16

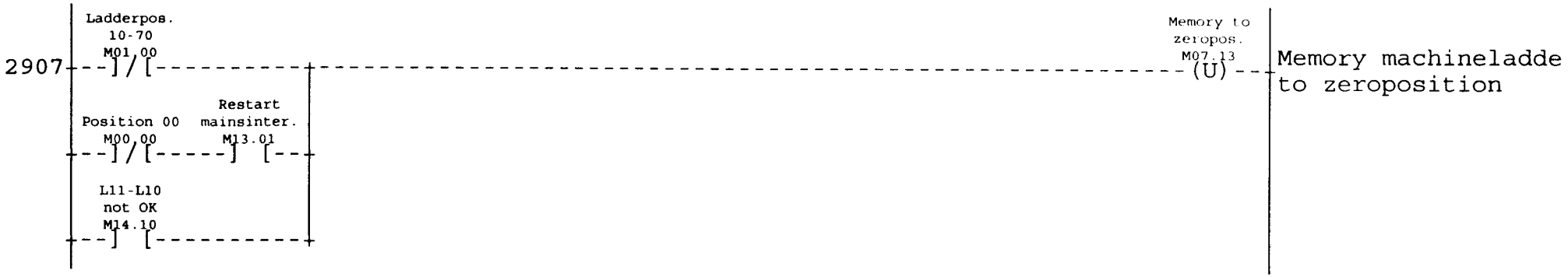
2907
Ladderpos.
10-70
M01.00
Position 00
M00.00
Restart
mainsinter.
M13.01
L11-L10
not OK
M14.10
Memory to
zeropos.
M07.13
(U)
Memory machineladde
to zeroposition

ALARM 1 TO 16 ON ALARMDISPLAY/BEACON

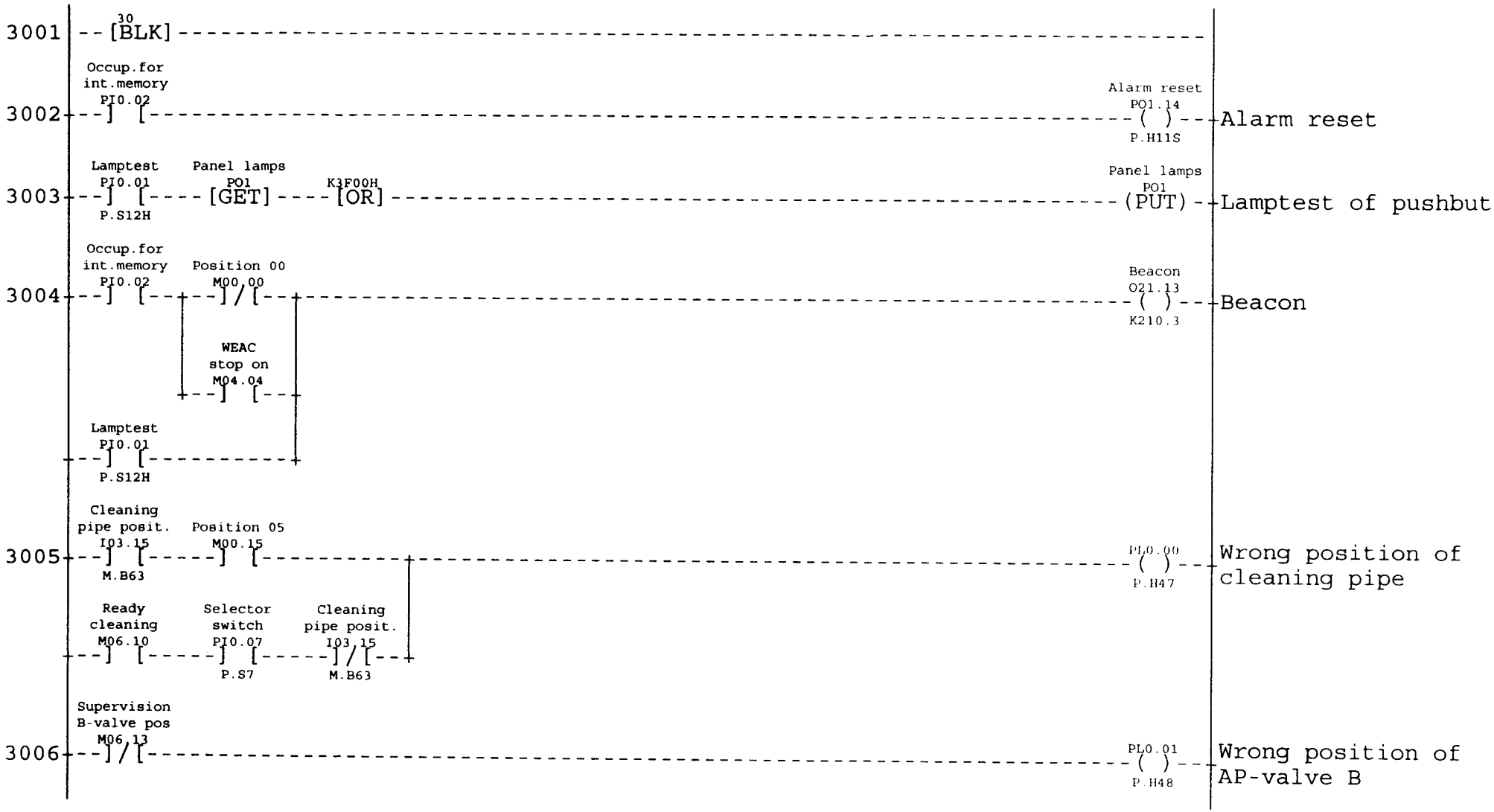

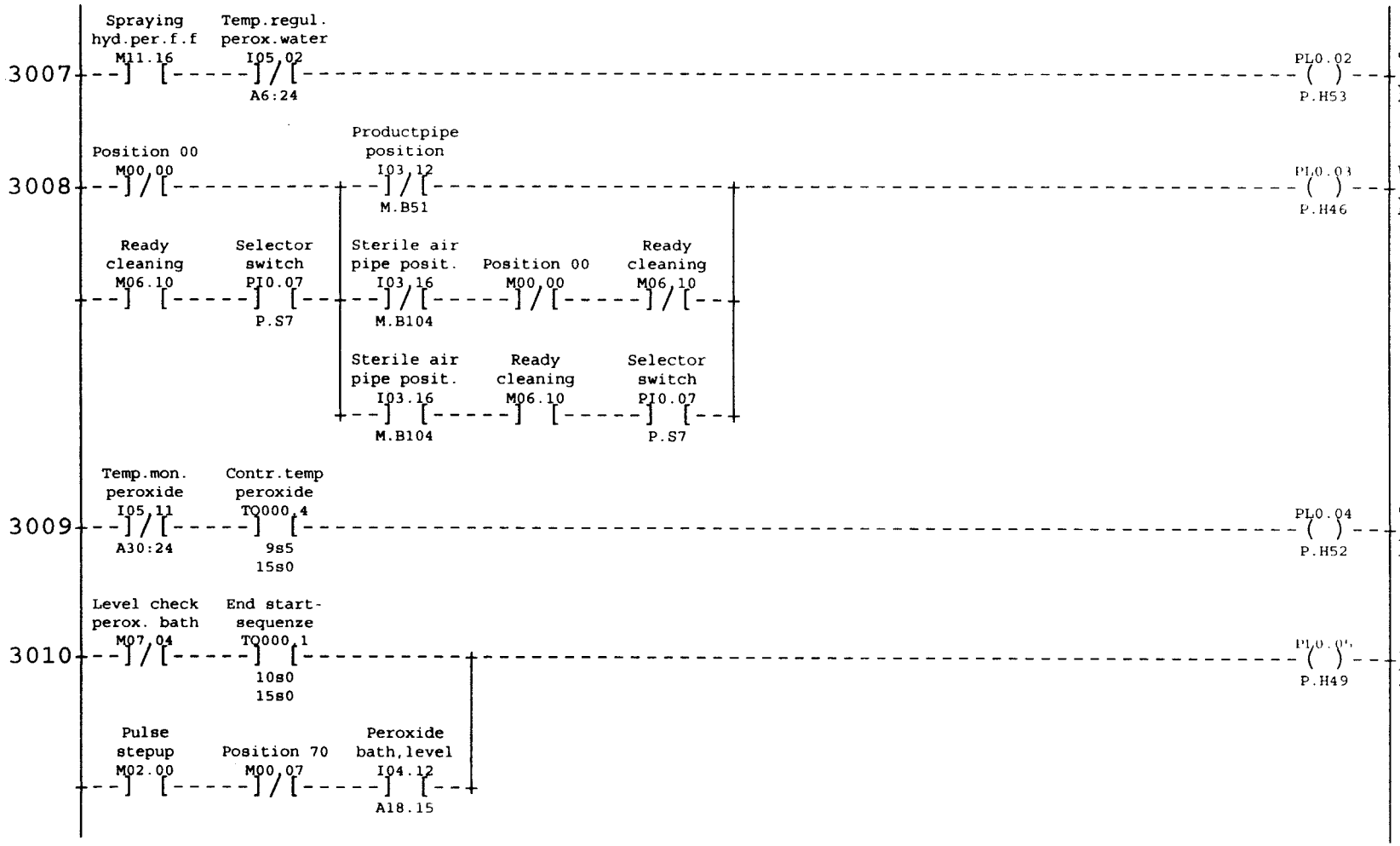

Machine individual adaptations see Block 02 TBA/9-1401 S.A.

AM: xxxxx Date: 000104 Sign: TEAN

Mach No: 649205-1401 Page
47615-30:43 Cont

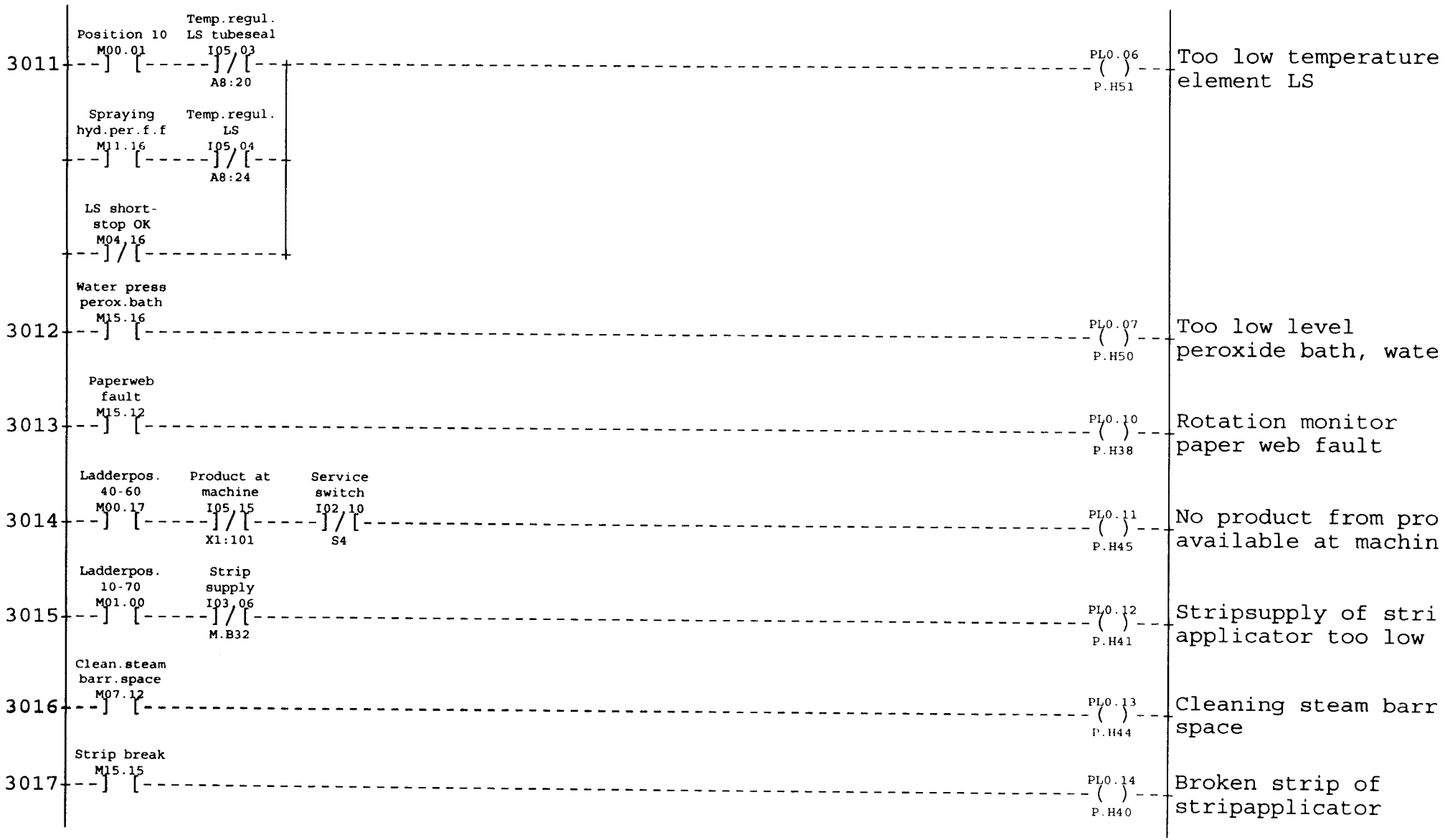
3011
Position 10
M00.01
Temp.regul.
LS tubeseal
I05.03
A8:20
Spraying
hyd.per.f.f
M11.16
Temp.regul.
LS
I05.04
A8:24
LS short-
stop OK
M04.16
PL0.06
P.H51
Too low temperature
element LS
3012
Water press
perox.bath
M15.16
PL0.07
P.H50
Too low level
peroxide bath, wate
3013
Paperweb
fault
M15.12
PL0.10
P.H38
Rotation monitor
paper web fault
3014
Ladderpos.
40-60
M00.17
Product at
machine
I05.15
X1:101
Service
switch
I02.10
S4
PL0.11
P.H45
No product from pro
available at machin
3015
Ladderpos.
10-70
M01.00
Strip
supply
I03.06
M.B32
PL0.12
P.H41
Stripsupply of stri
applicator too low
3016
Clean.steam
barr.space
M07.12
PL0.13
P.H44
Cleaning steam barr
space
3017
Strip break
M15.15
PL0.14
P.H40
Broken strip of
stripapplicator

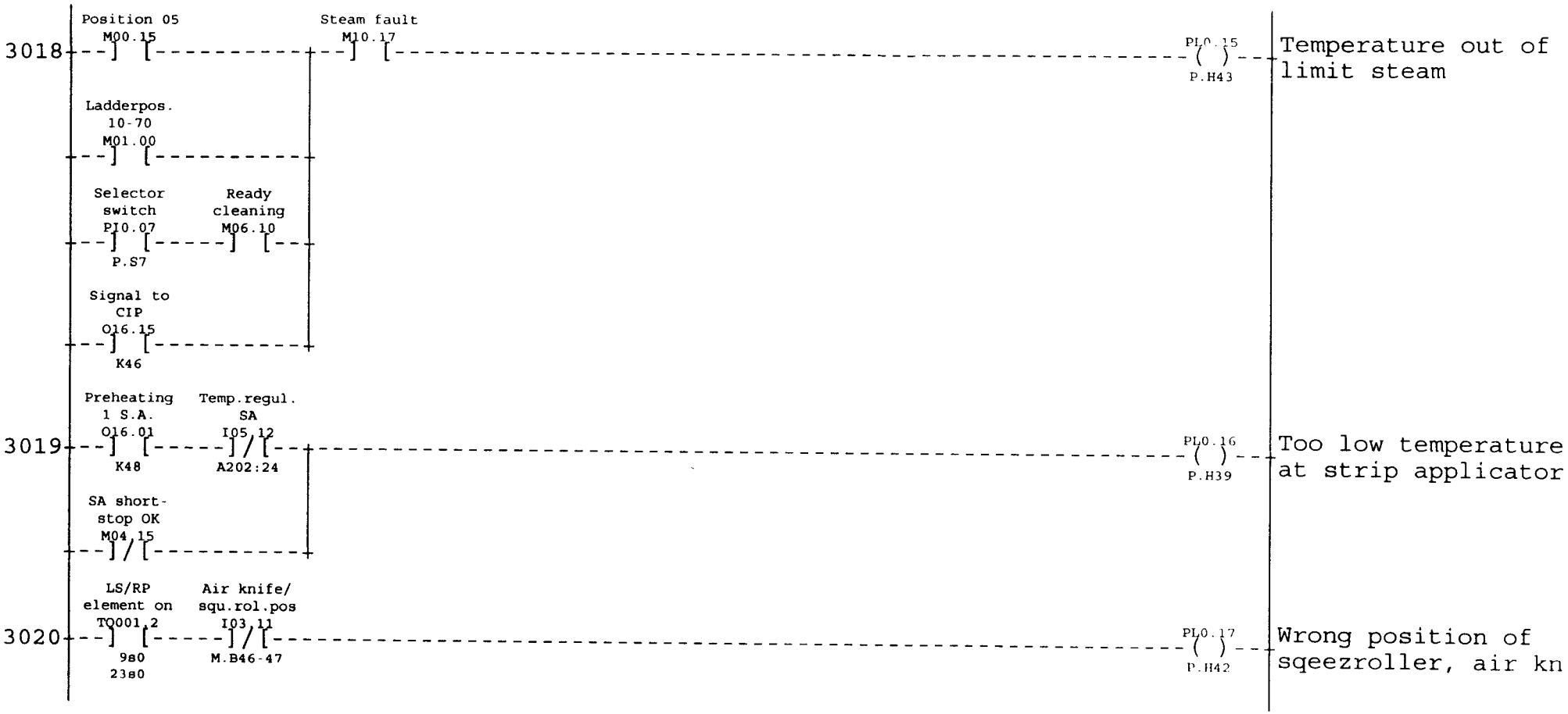

Machine individual adaptations see Block 02 TBA/9-1401 S.A.

AM: xxxxx Date: 000104 Sign: TEAN

Mach No: 649205-1401 Page
47615-30:43 Cont

ALARM 17 TO 32 ON ALARMDISPLAY

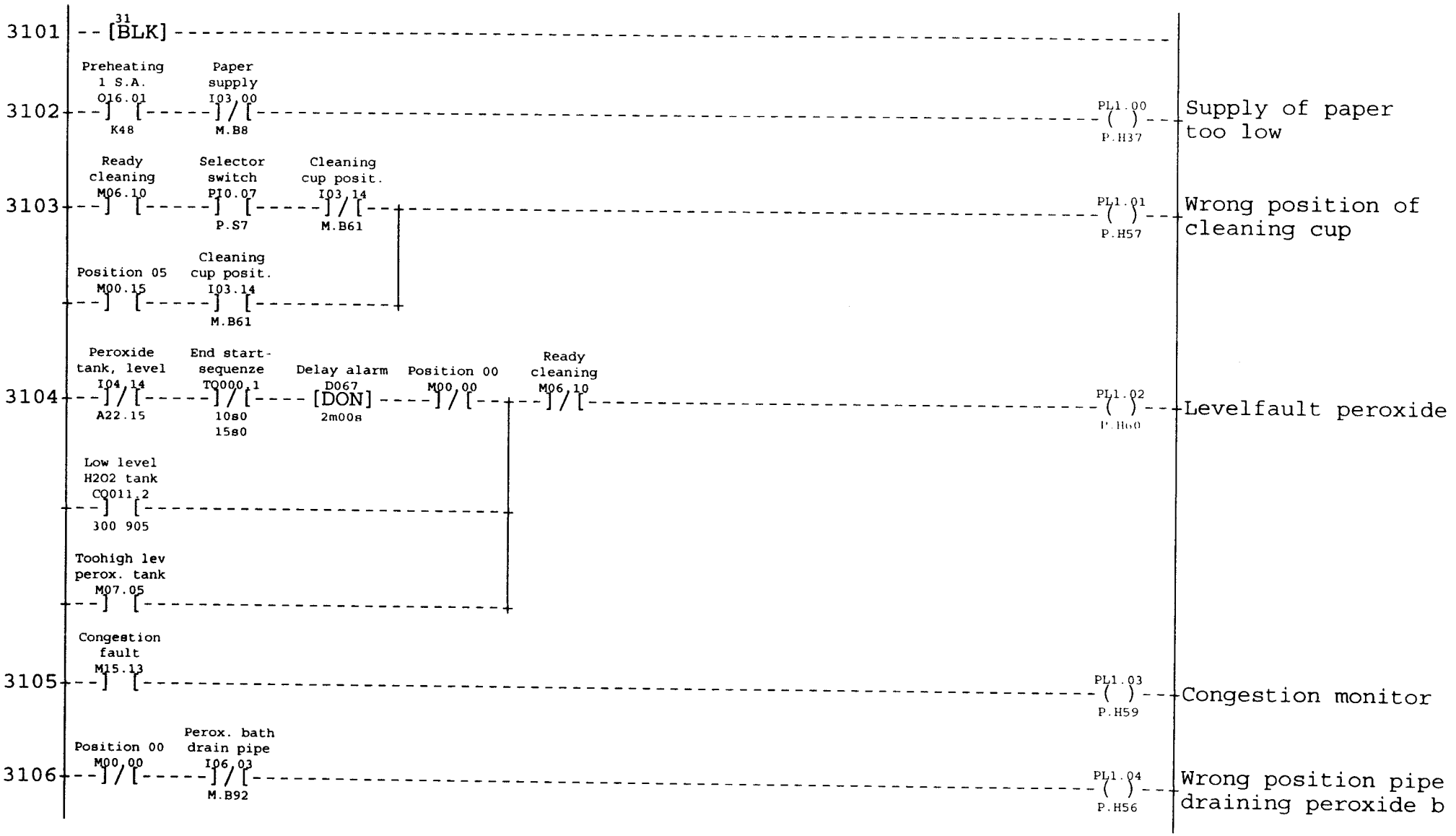

Machine individual adaptations see Block 02 TBA/9-1401 S.A.

AM: xxxxx Date: 000104 Sign: TEAN

Mach No: 649205-1401 Page
47615-31:43 Cont

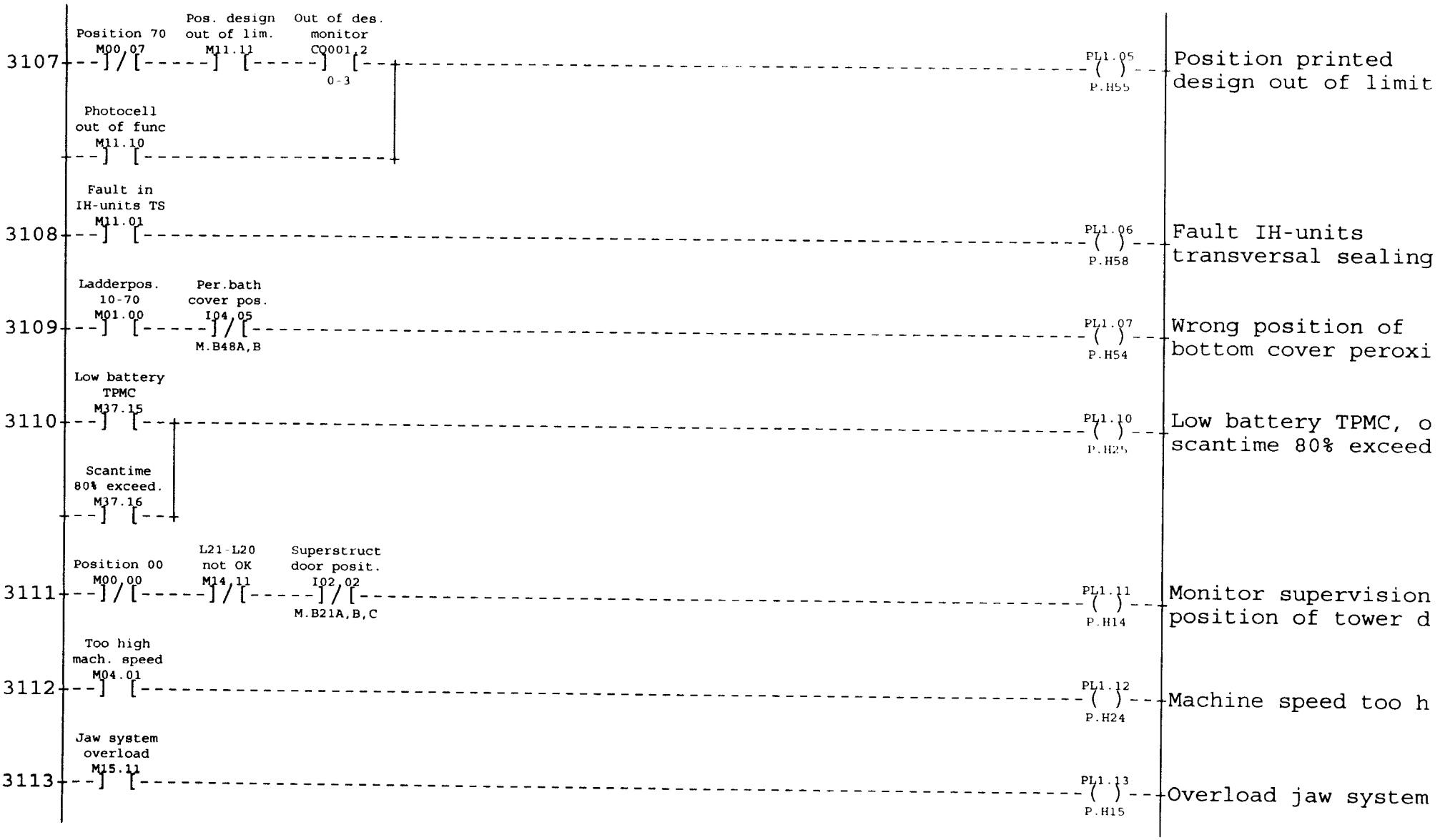

Machine individual adaptations see Block 02 TBA/9-1401 S.A.

AM: xxxxx Date: 000104 Sign: TEAN


3114
Hydr.unit
low level
I04.07
M.B45:4
L11-L10
not OK
M14.10
PL1.14
P.H23
Too low level
hydraulic oil
3115
Alarm delay
uns.MM/FF
M15.10
PL1.15
Unsynch. between MM
3116
Hydraulic
unit temp
I04.06
M.B45:2
L11-L10
not OK
M14.10
PL1.16
P.H22
Too high temperatur
hydraulic oil

ALARM 33 TO 48 ON ALARMDISPLAY



Machine individual adaptations see Block 02 TBA/9-1401 S.A.

AM: xxxxx Date: 000104 Sign: TEAN

Mach No: 649205-1401 Page
47615-32:43 Cont


3208
Press.fault sterile air M14.03
PL2.07
P.H42
Pressurefault steri
3209
Queue monitor M15.03
PL2.10
P.H63
PLE-equipment
3210
Levelfault cleantray M10.05
PL2.11
P.H62
Too low level clean
3211
Rotation fault FF M15.14
PL2.13
P.H61
Rotation fault final folder

ALARM 49 T0 64 ON ALARMDISPLAY

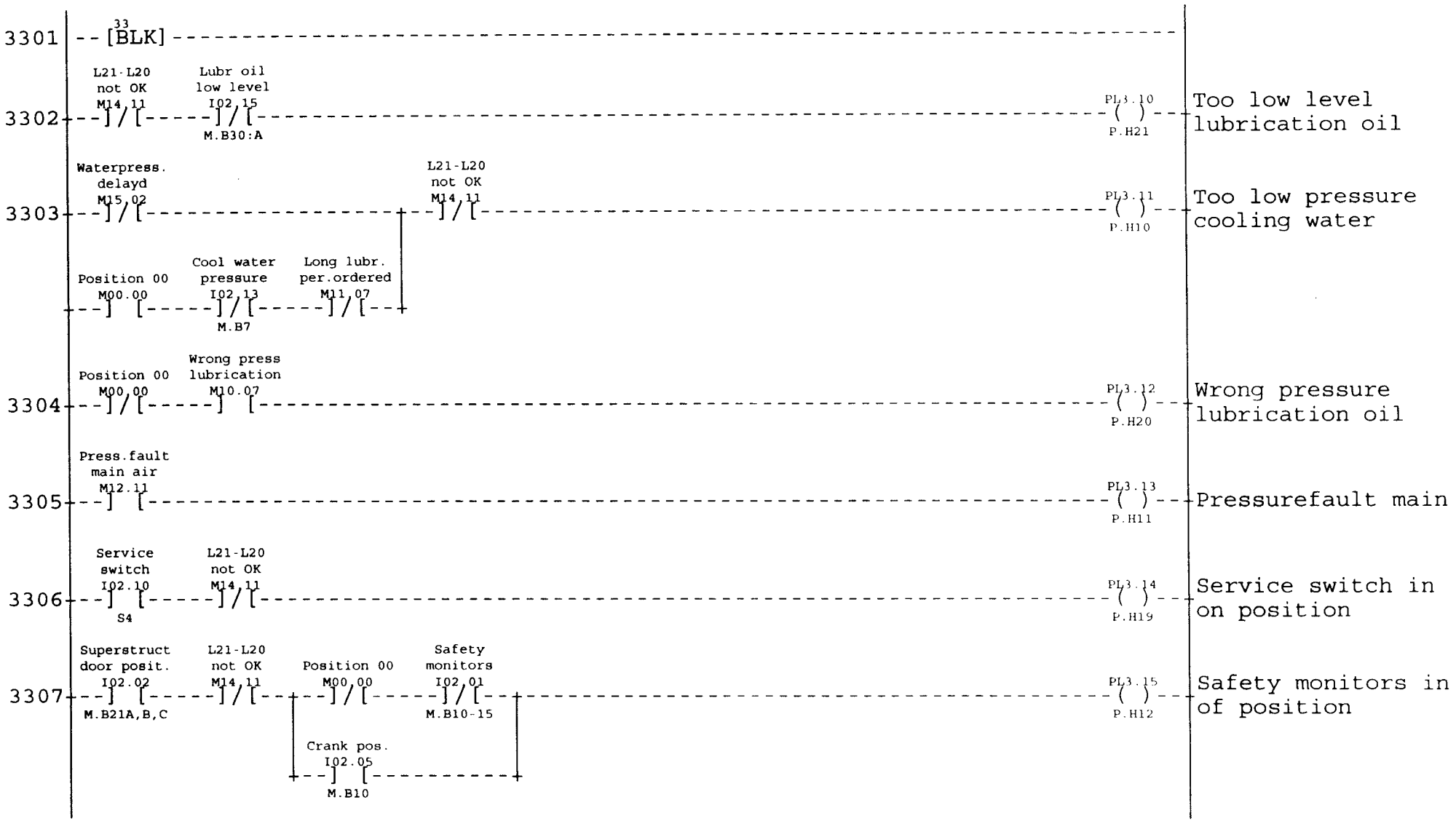

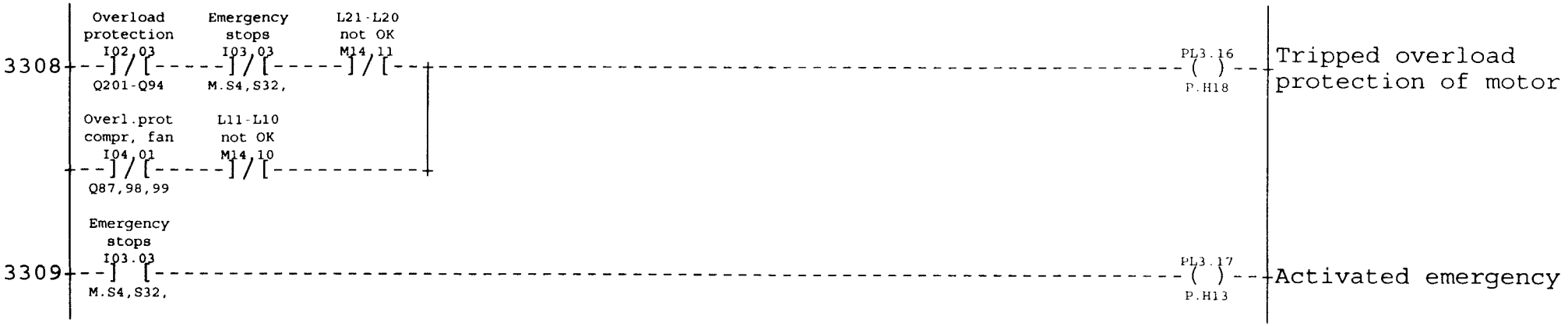
3308
Overload protection
I02.03
Q201-Q94
Emergency stops
I03.03
M.S4,S32,
L21-L20 not OK
M14.11
Overl.prot compr, fan
I04.01
Q87,98,99
L11-L10 not OK
M14.10
PL3.16
P.H18
Tripped overload protection of motor
3309
Emergency stops
I03.03
M.S4,S32,
PL3.17
P.H13
Activated emergency

OUTFEED CONVEYOR

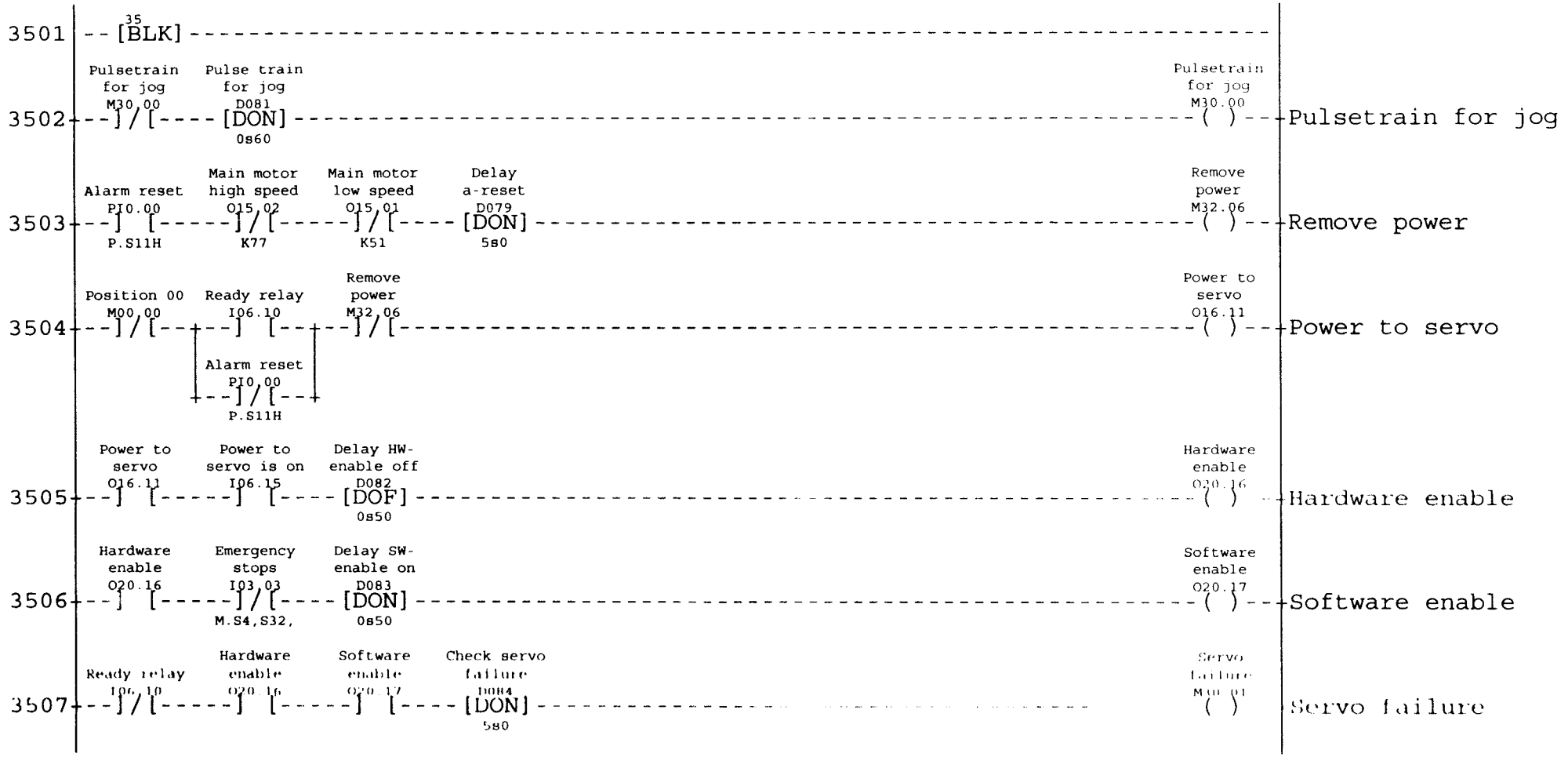

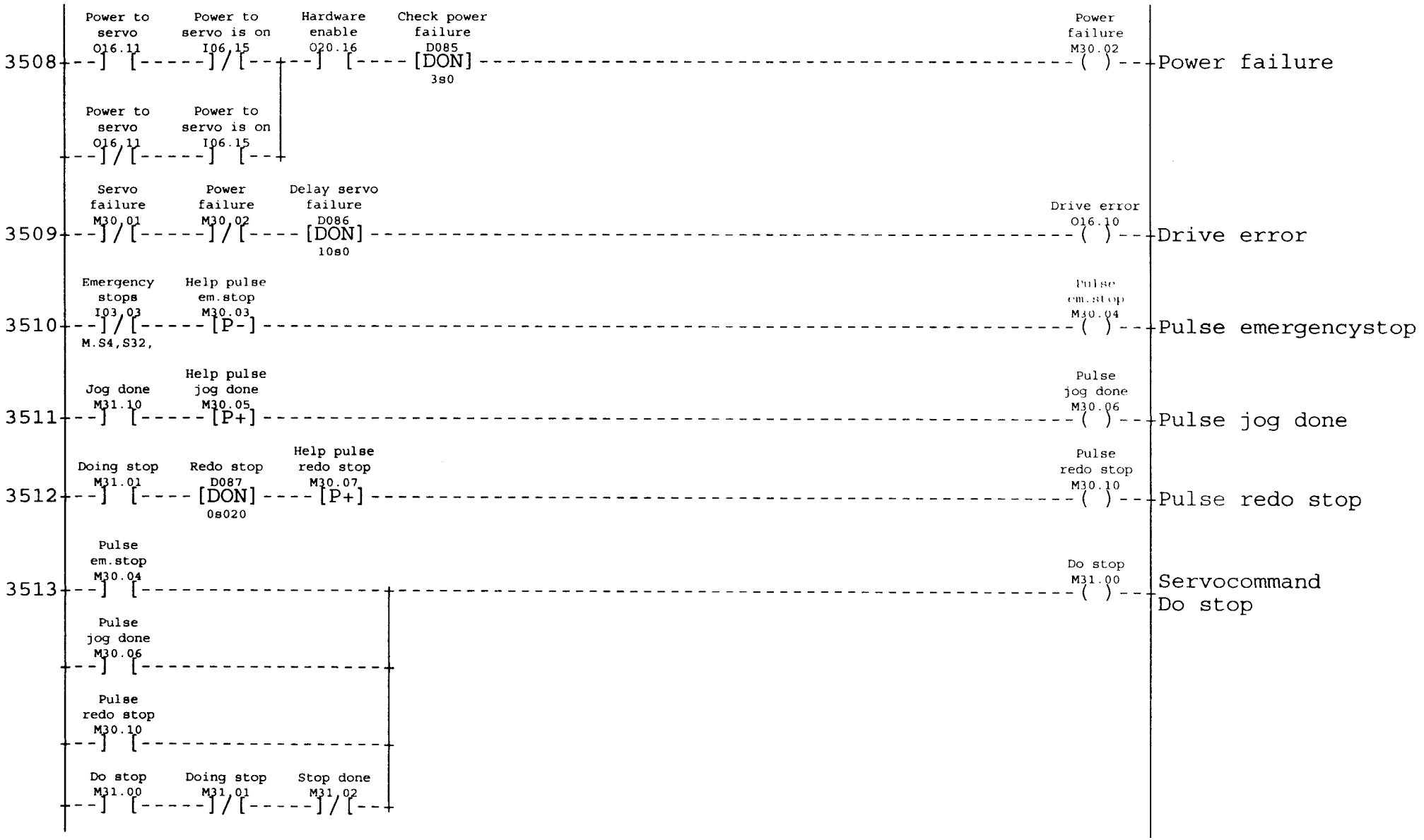

Machine individual adaptations see Block 02 TBA/9-1401 S.A.

AM: xxxxx Date: 000104 Sign: TEAN

Mach No: 649205-1401 Page
47615-35:43 Cont

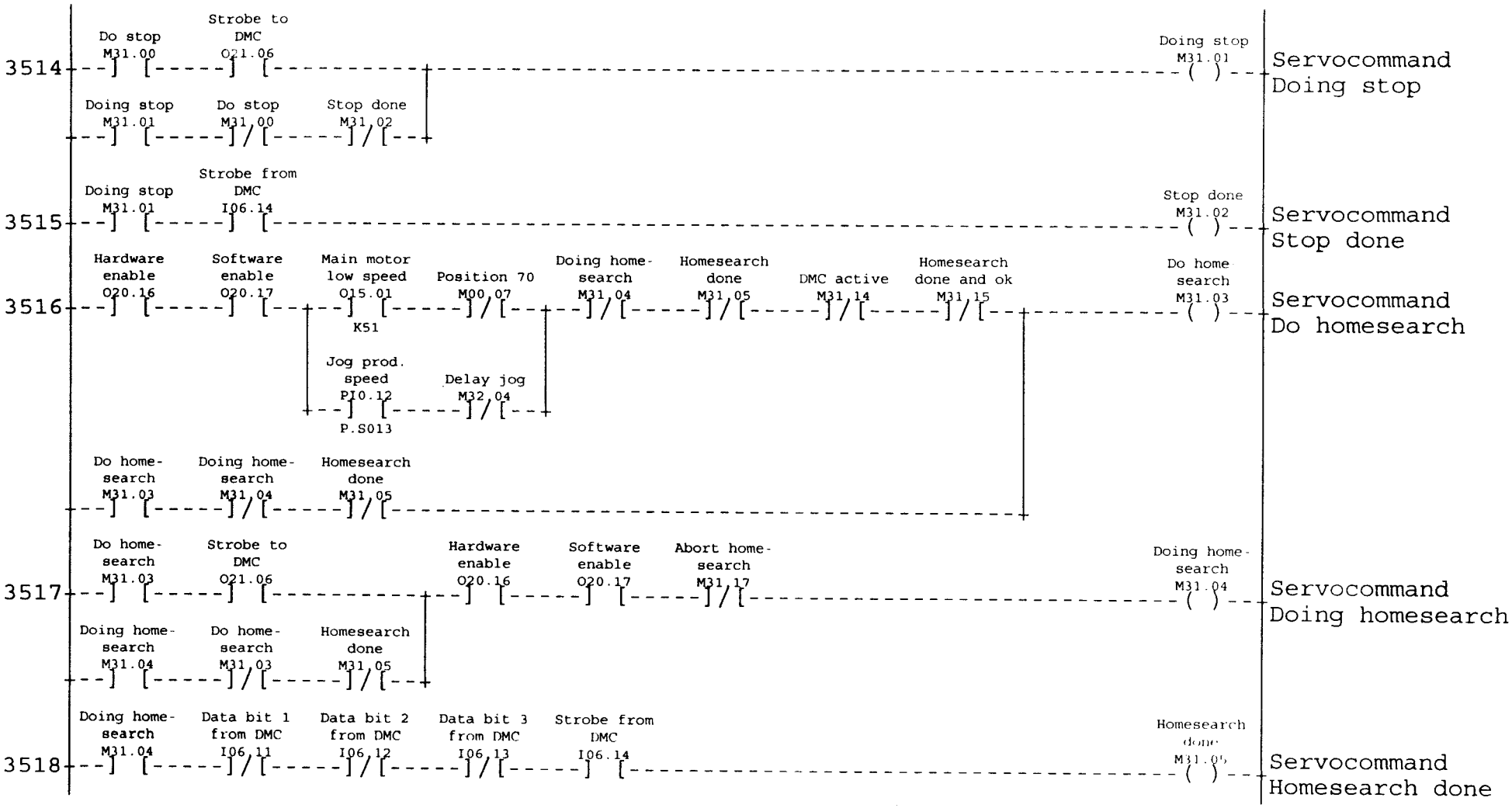
3514
Do stop M31.00
Strobe to DMC O21.06
Doing stop M31.01
Doing stop M31.01
Do stop M31.00
Stop done M31.02
Doing stop M31.01
Servocommand Doing stop
3515
Doing stop M31.01
Strobe from DMC I06.14
Stop done M31.02
Servocommand Stop done
3516
Hardware enable O20.16
Software enable O20.17
Main motor low speed O15.01
K51
Position 70 M00.07
Doing home-search M31.04
Homesearch done M31.05
DMC active M31.14
Homesearch done and ok M31.15
Do home search M31.03
Servocommand Do homesearch
Jog prod. speed PI0.12
P.S013
Delay jog M32.04
Do home-search M31.03
Doing home-search M31.04
Homesearch done M31.05
3517
Do home-search M31.03
Strobe to DMC O21.06
Hardware enable O20.16
Software enable O20.17
Abort home-search M31.17
Doing home-search M31.04
Servocommand Doing homesearch
Doing home-search M31.04
Do home-search M31.03
Homesearch done M31.05
3518
Doing home-search M31.04
Data bit 1 from DMC I06.11
Data bit 2 from DMC I06.12
Data bit 3 from DMC I06.13
Strobe from DMC I06.14
Homesearch done M31.05
Servocommand Homesearch done

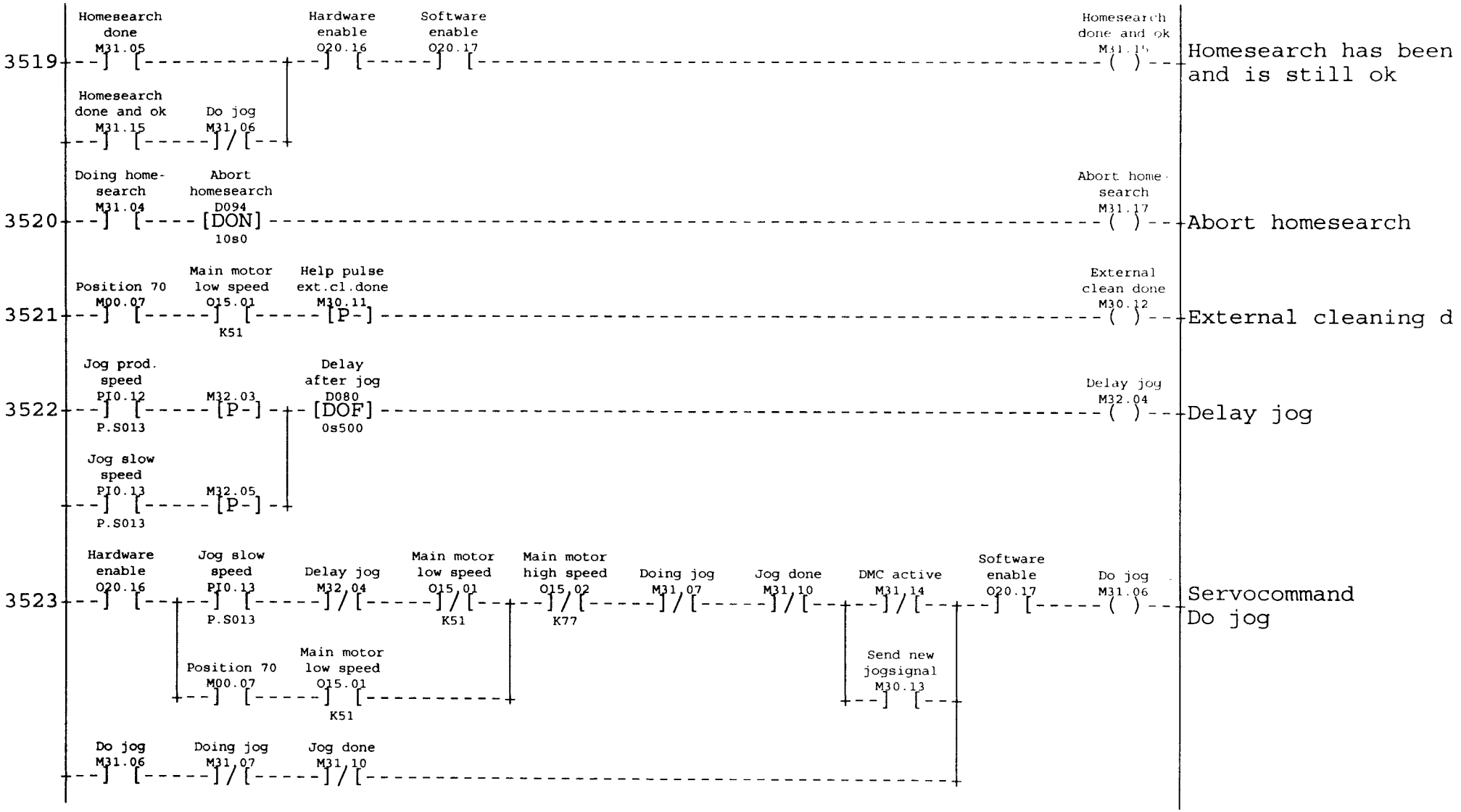

Machine individual adaptations see Block 02 TBA/9-1401 S.A.

AM: xxxxx Date: 000104 Sign: TEAN

Mach No: 649205-1401 Page

47615 35:43 Cont

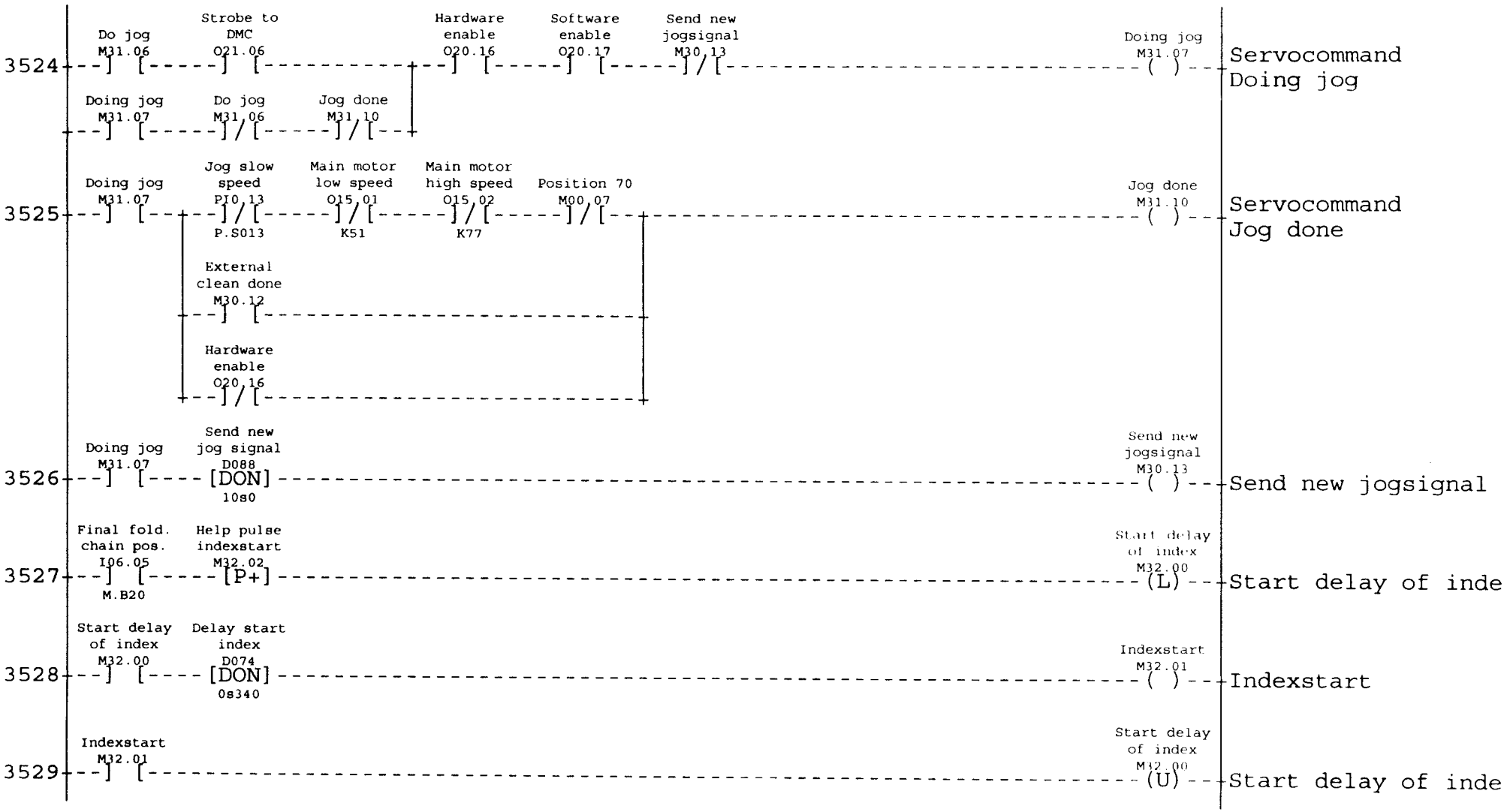
3524
Do jog
M31.06
Strobe to DMC
O21.06
Hardware enable
O20.16
Software enable
O20.17
Send new jogsignal
M30.13
Doing jog
M31.07
Servocommand Doing jog
Doing jog
M31.07
Do jog
M31.06
Jog done
M31.10
3525
Doing jog
M31.07
Jog slow speed
PI0.13
P.S013
Main motor low speed
O15.01
K51
Main motor high speed
O15.02
K77
Position 70
M00.07
Jog done
M31.10
Servocommand Jog done
External clean done
M30.12
Hardware enable
O20.16
3526
Doing jog
M31.07
Send new jog signal
D088
[DON]
10s0
Send new jogsignal
M30.13
Send new jogsignal
3527
Final fold. chain pos.
I06.05
M.B20
Help pulse indexstart
M32.02
[P+]
Start delay of index
M32.00
(L)
Start delay of inde
3528
Start delay of index
M32.00
Delay start index
D074
[DON]
0s340
Indexstart
M32.01
Indexstart
3529
Indexstart
M32.01
Start delay of index
M32.00
(U)
Start delay of inde

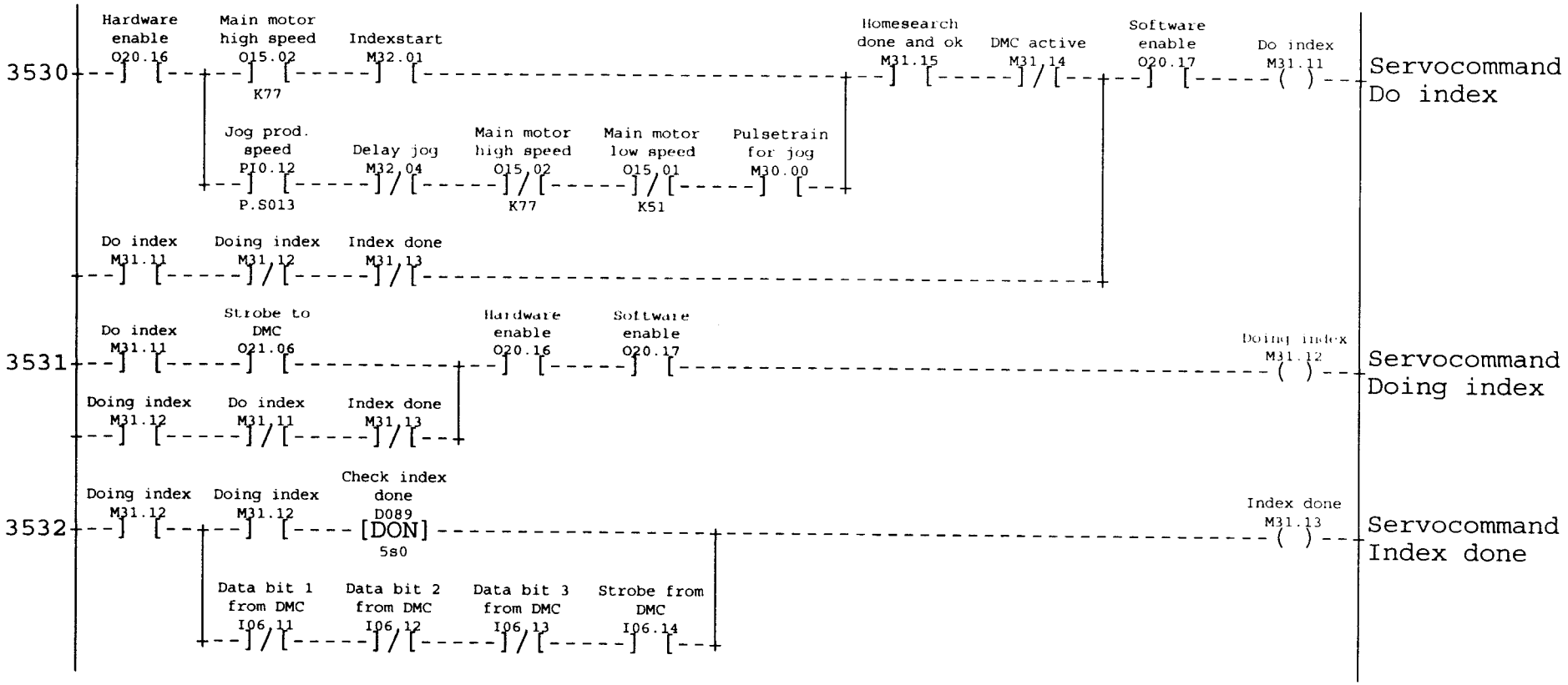

Machine individual adaptations see Block 02 TBA/9-1401 S.A.

AM: xxxxx Date: 000104 Sign: TEAN

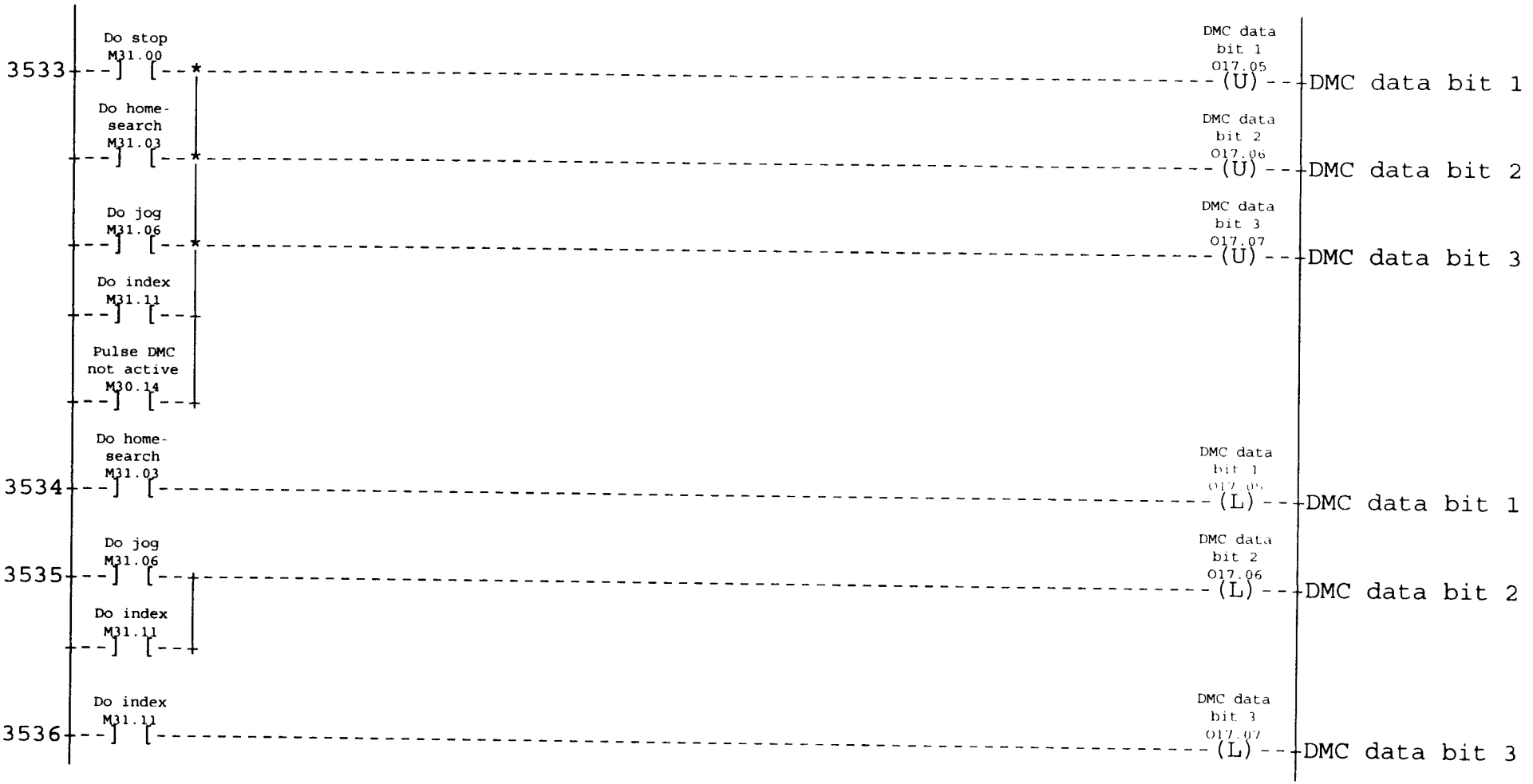
3533
Do stop
M31.00
Do home-search
M31.03
Do jog
M31.06
Do index
M31.11
Pulse DMC not active
M30.14
DMC data bit 1
O17.05
(U)
DMC data bit 1
DMC data bit 2
O17.06
(U)
DMC data bit 2
DMC data bit 3
O17.07
(U)
DMC data bit 3
3534
Do home-search
M31.03
DMC data bit 1
(L)
DMC data bit 1
3535
Do jog
M31.06
DMC data bit 2
O17.06
(L)
DMC data bit 2
Do index
M31.11
3536
Do index
M31.11
DMC data bit 3
O17.07
(L)
DMC data bit 3

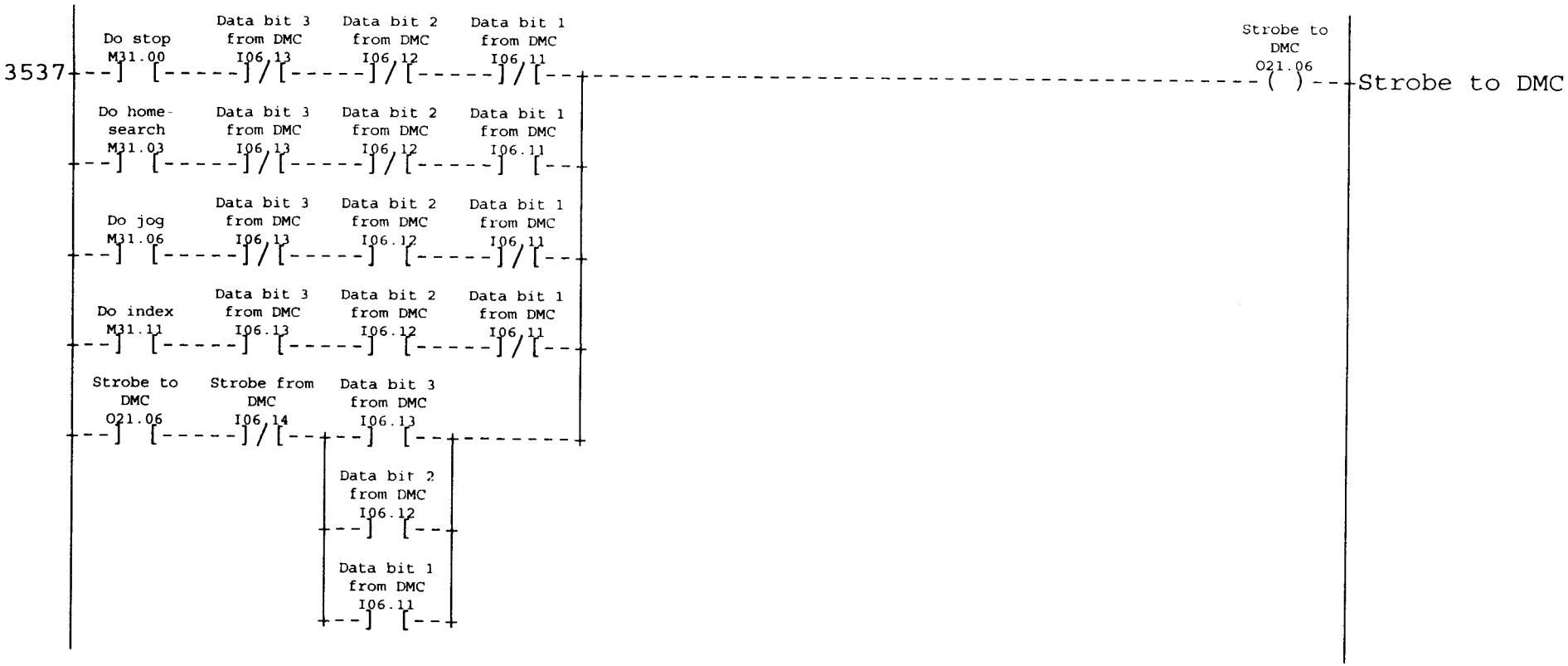

Machine individual adaptations see Block 02 TBA/9-1401 S.A.
AM: xxxxx Date: 000104 Sign: TEAN

Mach No: 649205-1401 Page
47615-35:43 Cont

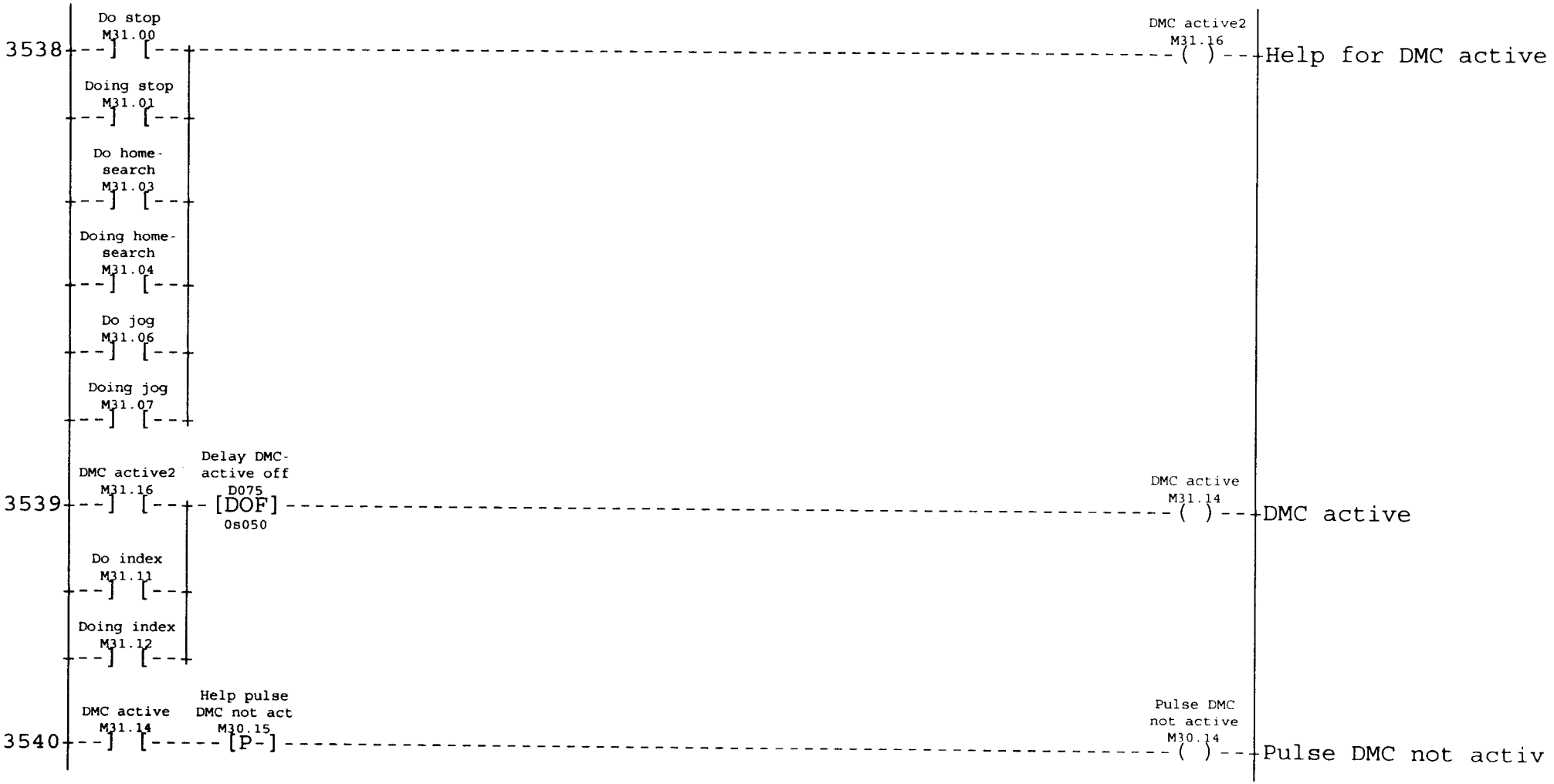
3538
Do stop
M31.00
Doing stop
M31.01
Do home-search
M31.03
Doing home-search
M31.04
Do jog
M31.06
Doing jog
M31.07
DMC active2
M31.16
Help for DMC active
3539
DMC active2
M31.16
Delay DMC-active off
D075
[DOF]
0s050
Do index
M31.11
Doing index
M31.12
DMC active
M31.14
DMC active
3540
DMC active
M31.14
Help pulse DMC not act
M30.15
[P-]
Pulse DMC not active
M30.14
Pulse DMC not activ

```
9001|--[90BLK]-----------------------------------------------------------------|
```

FAST FUNCTIONS, TS, DESIGN PULSE

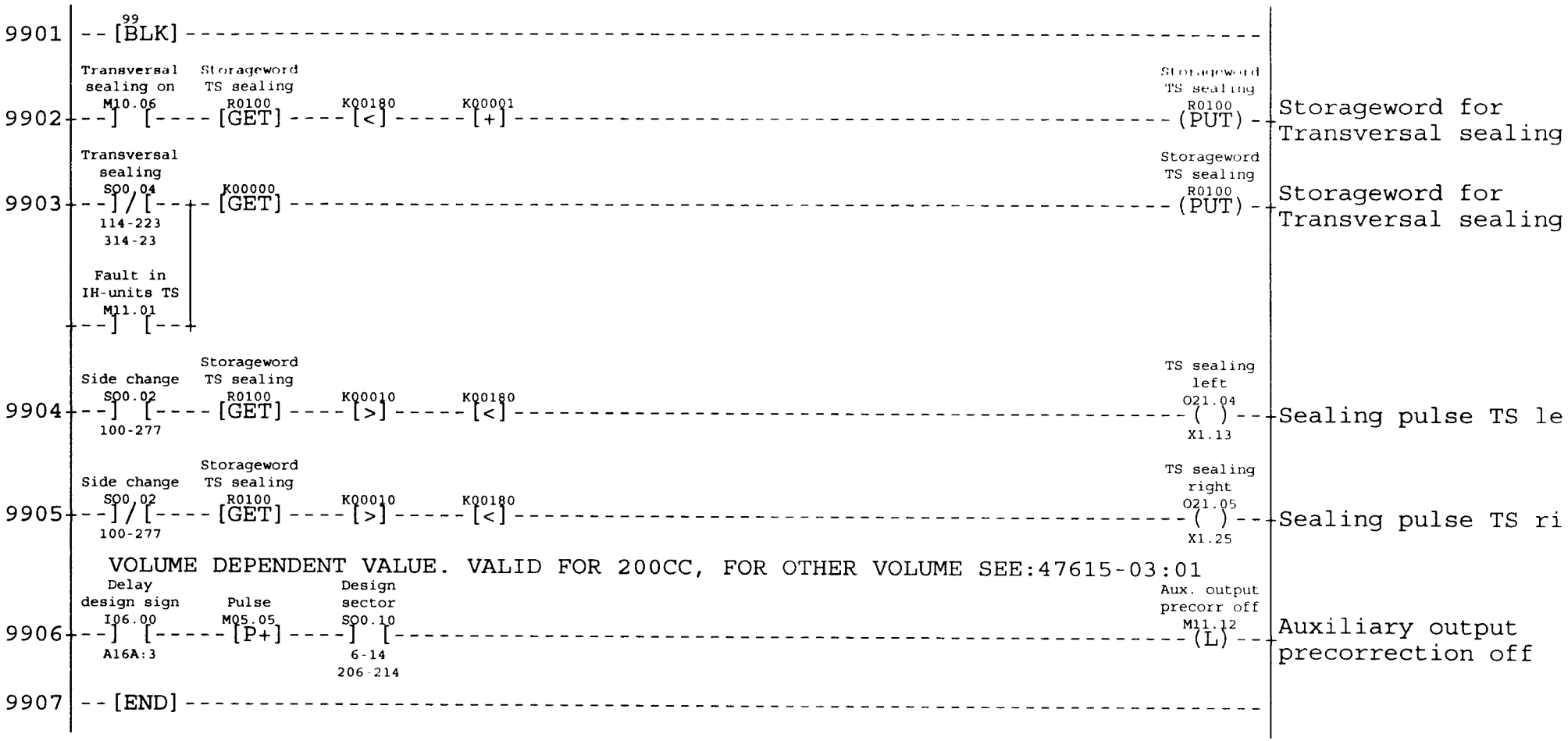

Tetra Pak
LUND SWEDEN

This drawing must not without the consent of Tetra Pak be copied, transmitted or disclosed to any third party.

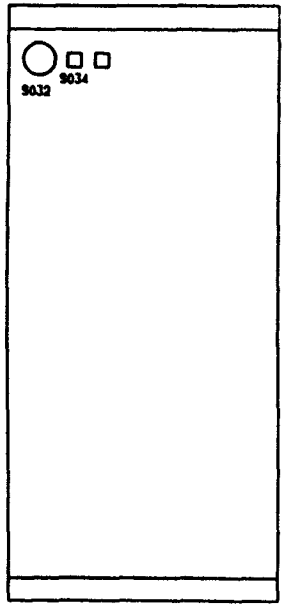

RIGHT HAND VIEW

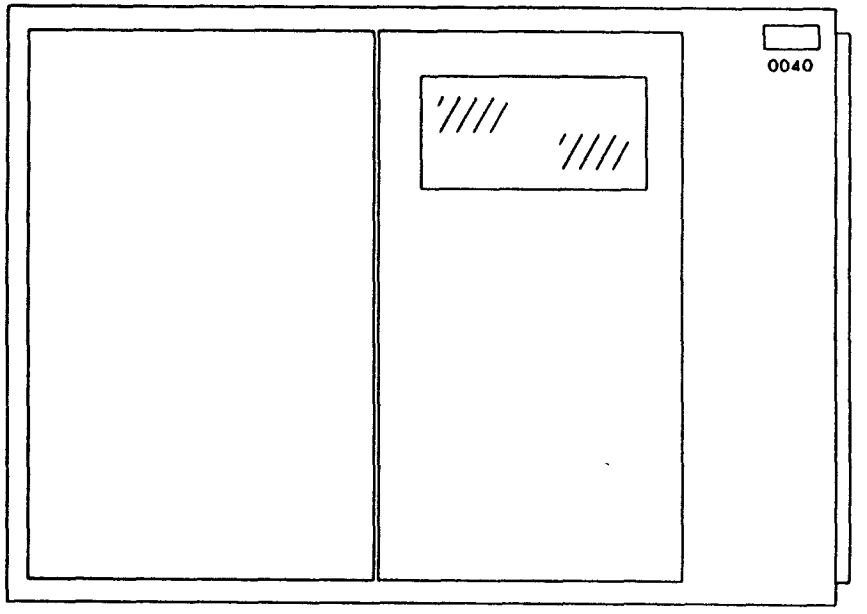

FRONT VIEW

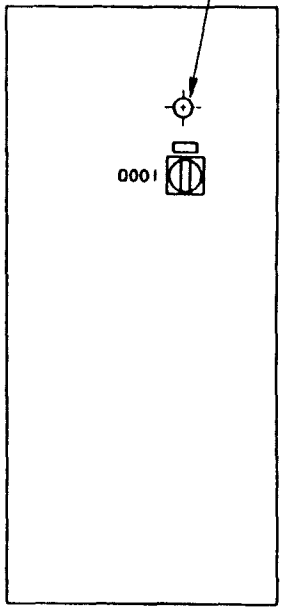

LEFT HAND VIEW

19260	930310	HK/UTH	DESCRIPTION: MOUNTING DRAWING	
			MACHINE: TBA/9-1401 S.A	52471-05:01

DRAWING REMARKS

ALTERATIONS ONLY IN CADAM

10.51 94.2.28

Tetra Pak
LUND SWEDEN

This drawing must not without the consent of Tetra Pak be copied, transmitted or disclosed to any third party.

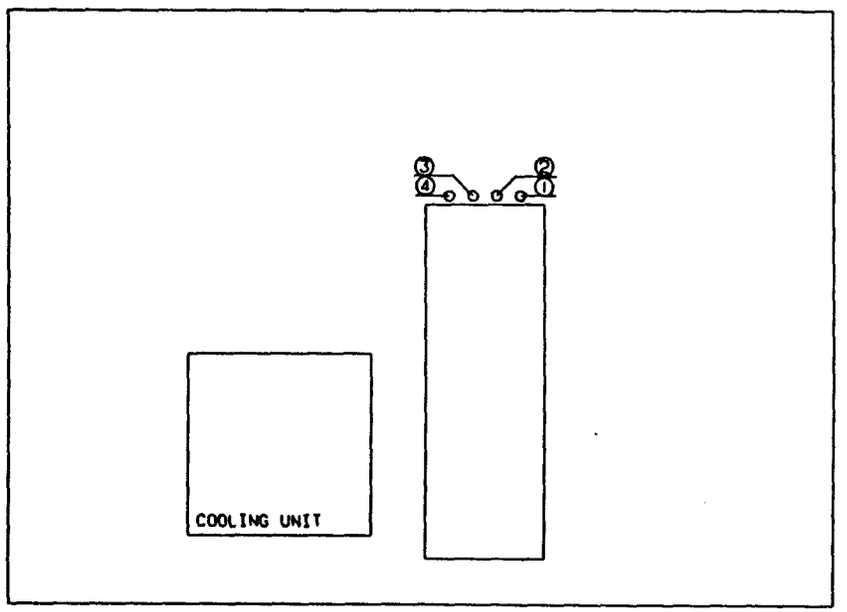

REAR VIEW

19260	930310	HK/UTH	① HOSE 1 ② HOSE 2 ③ HOSE 3 ④ PLUG

DRAWING REMARKS

ALTERATIONS ONLY IN CADAM

DESCRIPTION: MOUNTING DRAWING

MACHINE: TBA/9-1401 S.A

52471-06:01

10:51 94.2.28

Tetra Pak
LUND SWEDEN

This drawing must not without the consent of Tetra Pak be copied, transmitted or disclosed to any third party.

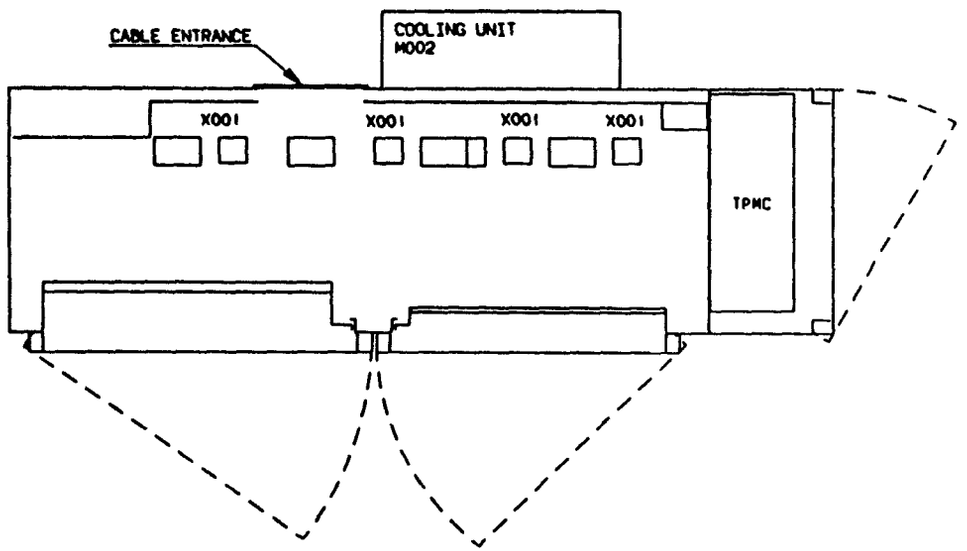

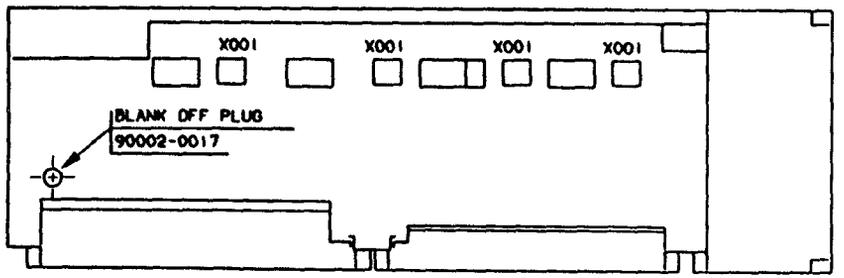

FLOOR VIEW

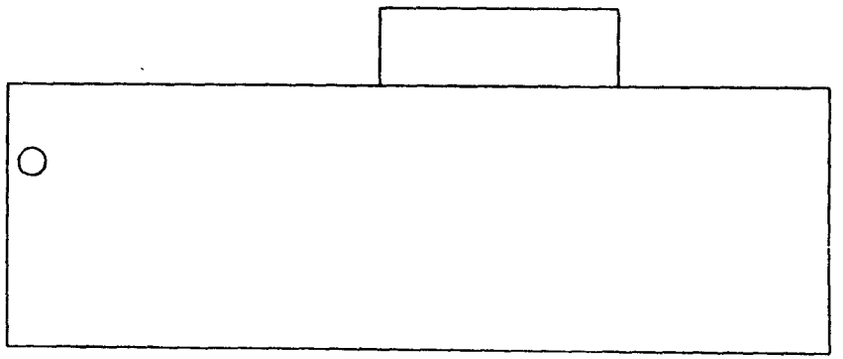

TOP VIEW

19260	930310	HK/UTH	DESCRIPTION: MOUNTING DRAWING	
			MACHINE: TBA/9-1401 S.A	52471-07:01

DRAWING REMARKS

ALTERATIONS ONLY IN CADAM

10:51 94.2.28

PRE-RELEASED/DEVELOPMENT STATE

This drawing must not without the consent of Tetra Pak be copied, transmitted or disclosed to any third party.

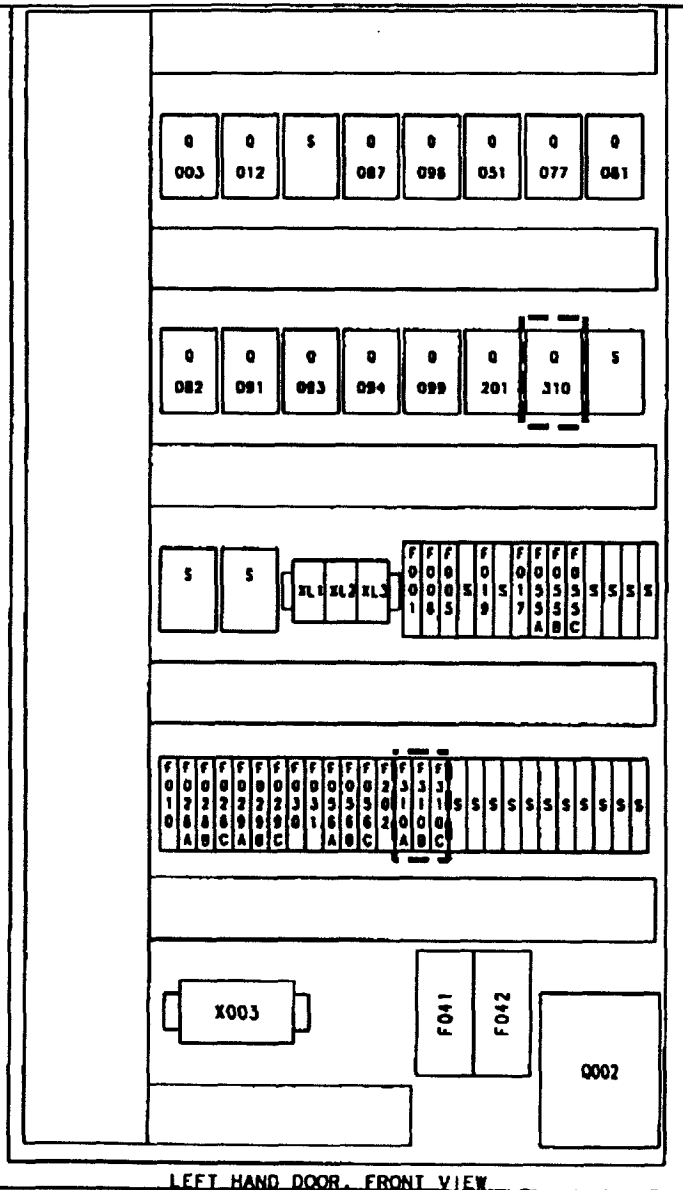

LEFT HAND DOOR, FRONT VIEW

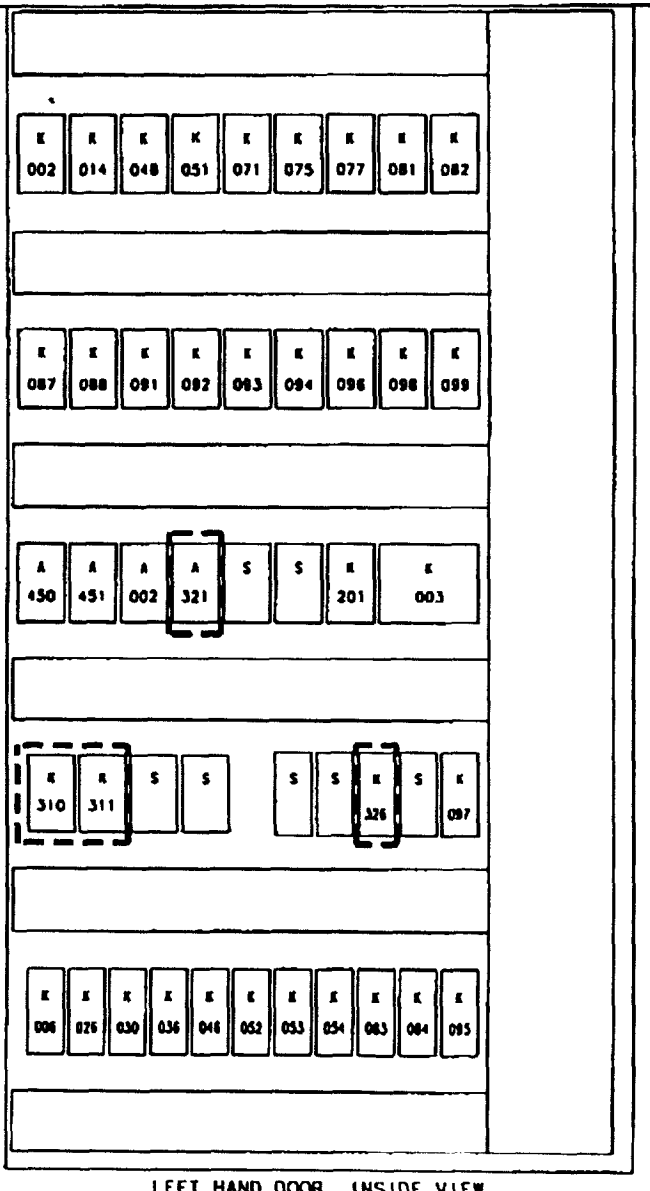

LEFT HAND DOOR, INSIDE VIEW

Note	-	A				Tetra Pak	Designer TEAN Date 990521	Approved PIH Date 990602	Doc. class -
ECR No.	72526	72800					Machine TBA/9-1401	Denomination "TETRA WEDGE"	
Sign./Date	TEAN/990521	TEAN/990902			RK-559491-0100		Company Tetra Brik Packaging Systems AB	Drawing No RK-52471-08:41	Page -
Appr./Date	PIH/990602	PIH/990902			Drawing remarks				

Tetra Pak
LUND SWEDEN

This drawing must not without the consent of Tetra Pak be copied, transmitted or disclosed to any third party.

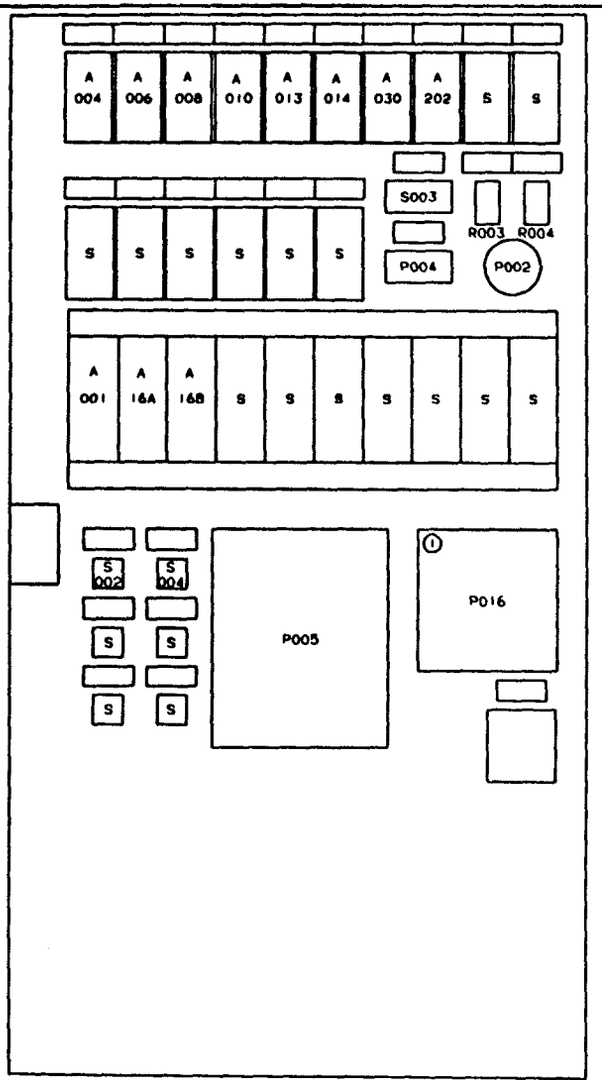

RIGHT HAND DOOR, FRONT VIEW

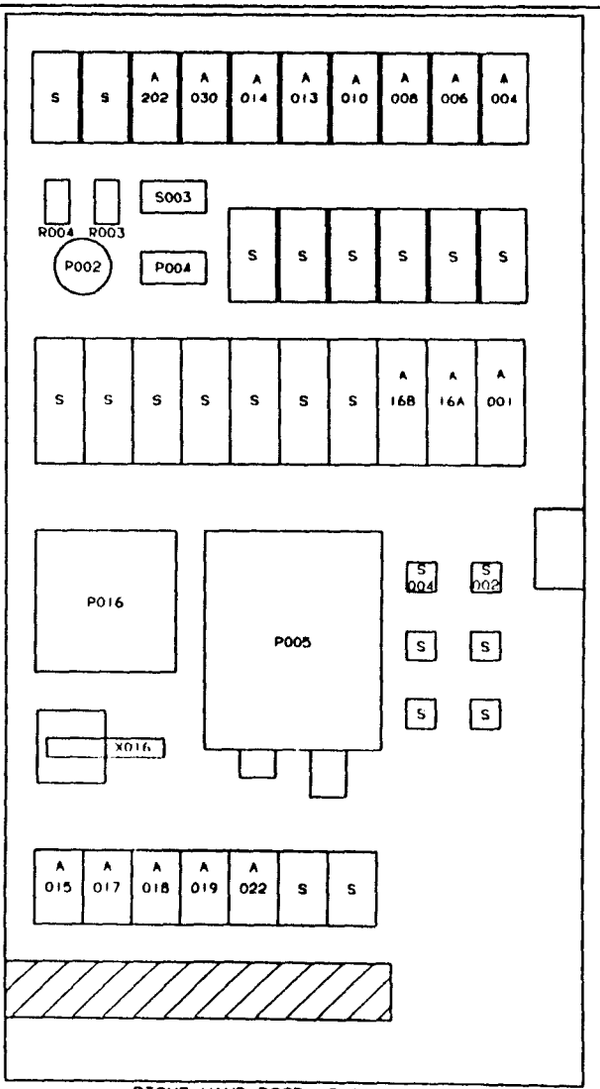

RIGHT HAND DOOR, INSIDE VIEW

19260	DATE 930310	SIGN HK/UTH	① EXTRA EQUIPMENT	DESCRIPTION: MOUNTING DRAWING
			DRAWING REMARKS	MACHINE: TBA/9-1401 S.A — 52471-09:01

ALTERATIONS ONLY IN CADAM

10.51 94.2.23

PRE-RELEASED/DEVELOPMENT STATE

This drawing must not without the consent of Tetra Pak be copied, transmitted or disclosed to any third party.

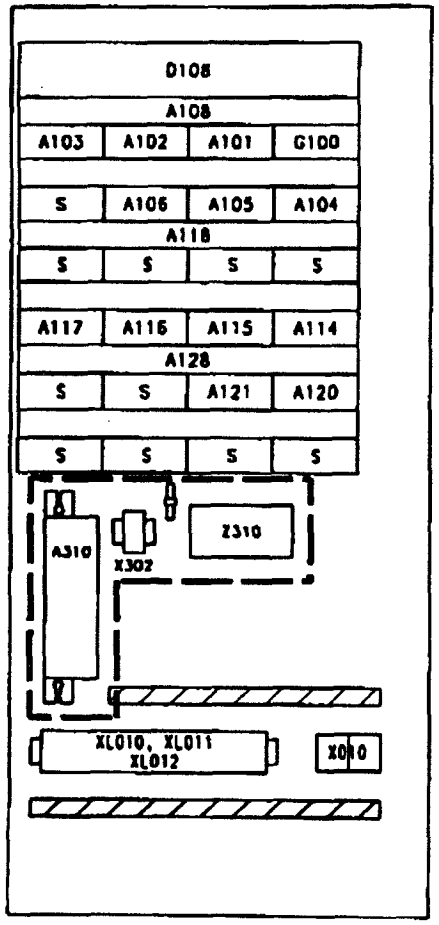

VIEW A-A

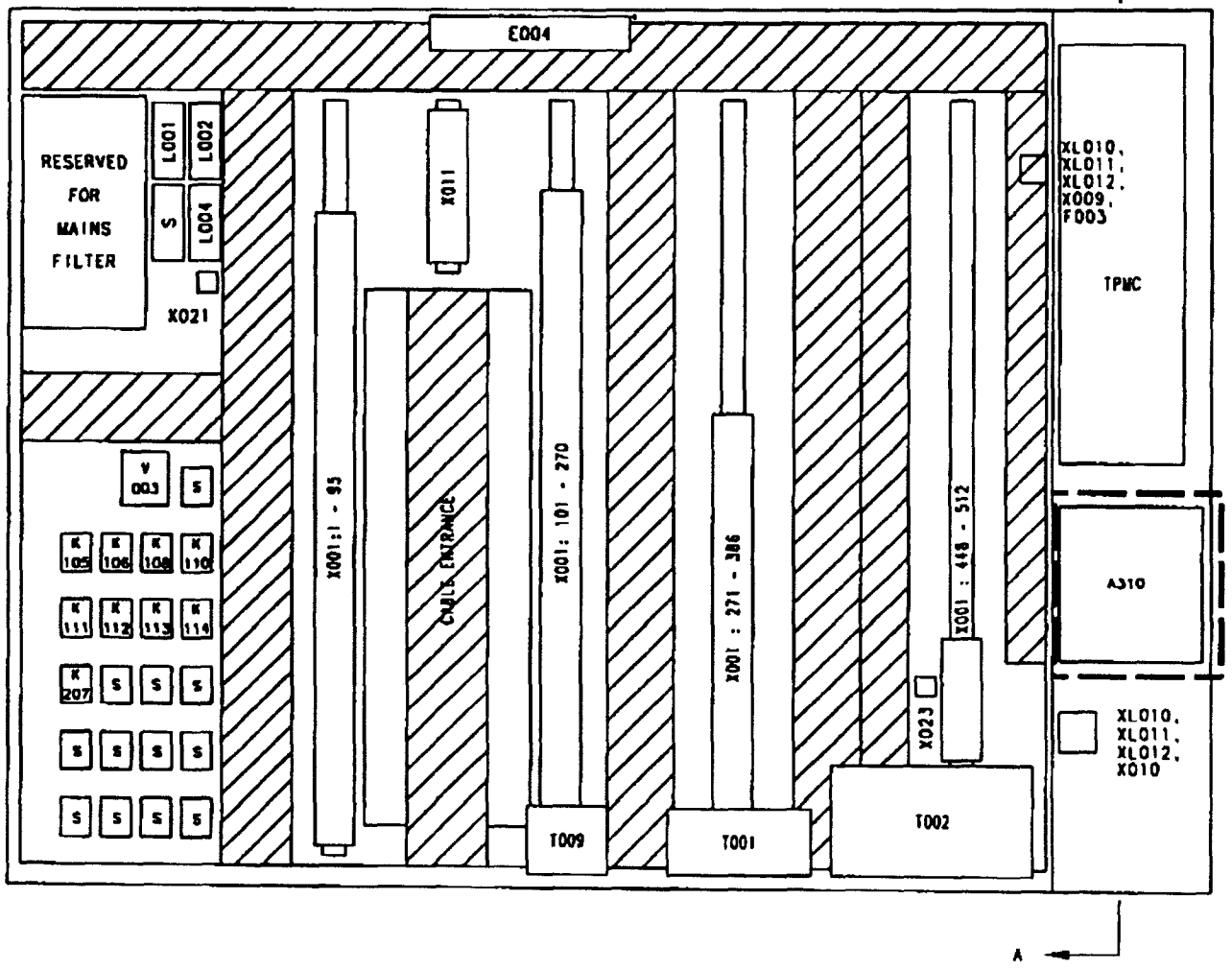

Note	-	A				Designer TEAN	Date 990521	Approved PIH Date 990602	Doc. class -
ECR No.	72526	72800				Machine TBA/9-1401	Denomination "TETRA WEDGE"		
Sign./Date	TEAN/990521	TEAN/990902			RK-559491-0100	Company Tetra Brik Packaging Systems AB	Drawing No. RK-52471-10:41		Page -
Appr./Date	PIH/990602	PIH/990902			Drawing remarks				

Tetra Pak

Tetra Pak
LUND SWEDEN

This drawing must not without the consent of Tetra Pak be copied, transmitted or disclosed to any third party.

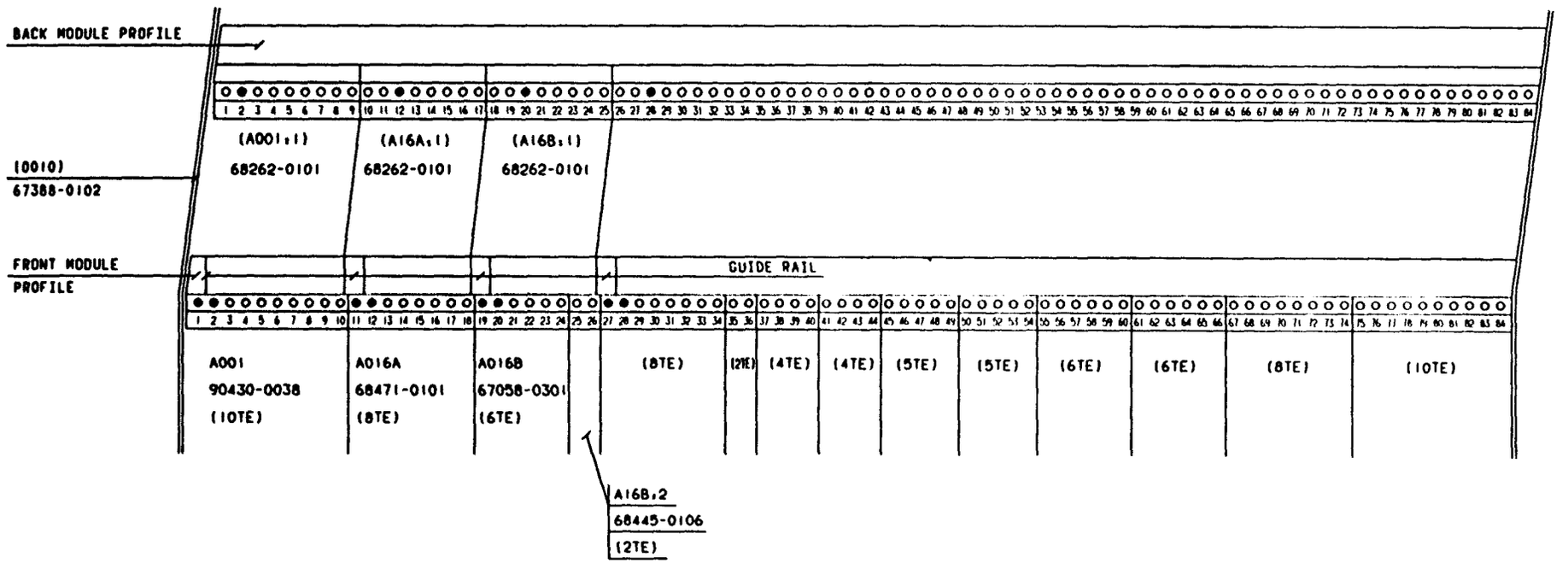

INTERNAL DTH OF NO 19260	DATE 930310	SIGN HK/UTH	
MINUS			
AP NO			
DATE			
SIGN			(DRAWING REMARKS)

ALTERATIONS ONLY IN CADAM

DESCRIPTION: MOUNTING DRAWING, RACK 0010

MACHINE: TBA/9-1401 S.A

52471-11:01

10:51 94.2.25

PRE-RELEASED/DEVELOPMENT STATE

This drawing must not without the consent of Tetra Pak: be copied, transmitted or disclosed to any third party.

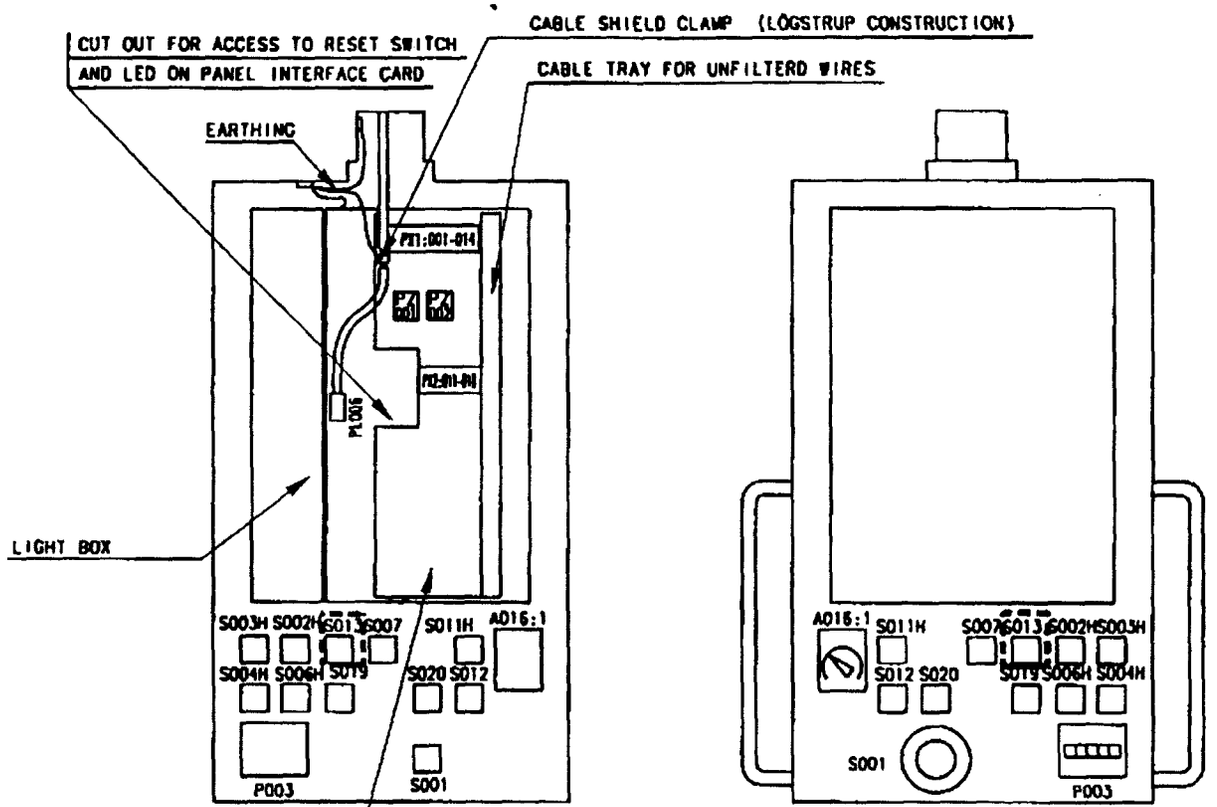

Note	-	A				Tetra Pak	Designer TEAN	Date 990521	Approved PIH Date 990602	Doc. class -
ECR No.	72526	72800					Machine TBA/9-1401	Denomination "TETRA WEDGE"		
Sign./Date	TEAN/990521	TEAN/990902			RK-559491-0100		Company Tetra Brik Packaging Systems AB	Drawing No. RK-52471-12:41		Page -
Appr./Date	PIH/990602	PIH/990902			Drawing remarks					

This drawing must not without the consent of Tetra Pak be copied, transmitted or disclosed to any third party

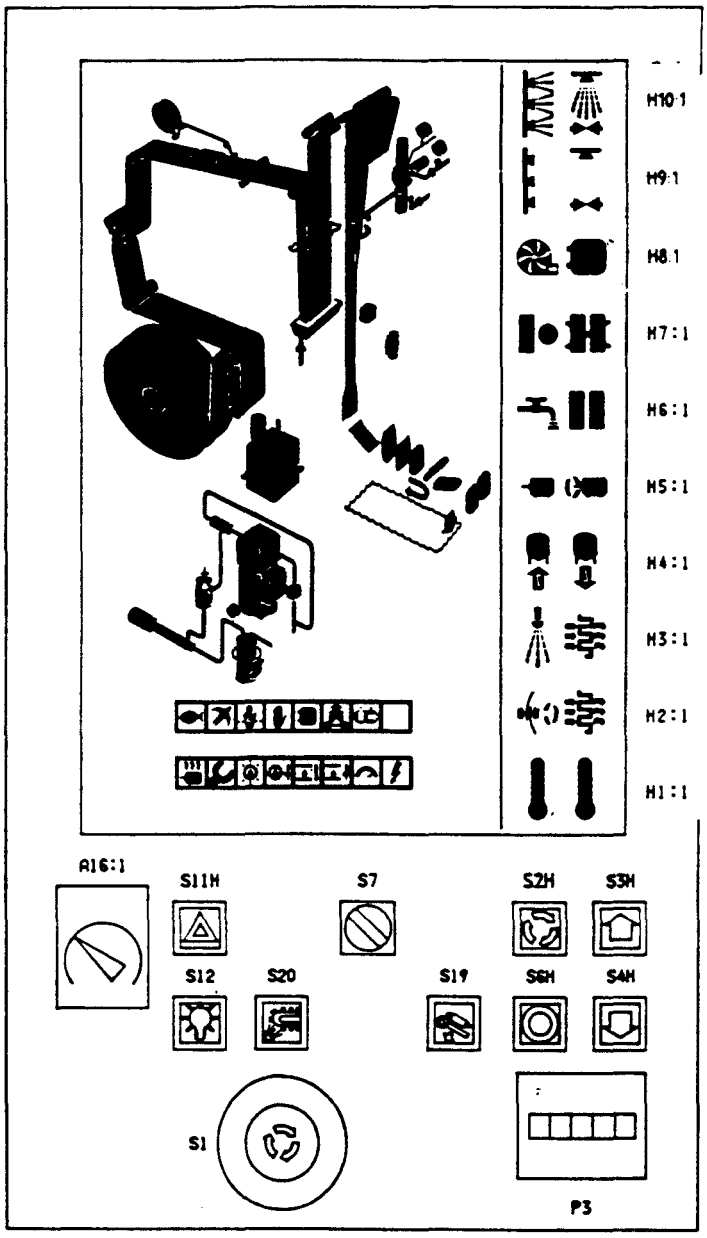

H1:1	PREHEATING I
H1:2	PREHEATING II
H2:1	TUBE SEALING
H2:2	PRESTERILIZING
H3:1	SPRAYING
H3:2	DRYING
H4:1	SIGNAL TO STERILIZER
H4:2	SIGNAL FROM STERILIZER
H5:1	START SEQUENCE
H5:2	DRIVE MOTOR
H6:1	FILLING
H6:2	PRODUCTION
H7:1	NO PRODUCTION ALLOWED
H7:2	PRODUCTION FINISHED
H8:1	WORK ENVIRONMENT ASEPTIC CHAMBER ON
H8:2	WEAC READY FOR DOOR OPENING
H9:1	PREPARE FOR CLEANING OF MACHINE
H9:2	PREPARE FOR CLEANING OF VALVE
H10:1	CLEANING OF MACHINE
H10:2	CLEANING OF VALVE

A16:1	DESIGN CORRECTION
P3	PACKAGE COUNTER. PRODUCTION
S1	EMERGENCY STOP
S2H	INCHING
S3H	STEP UP
S4H	STEP DOWN
S6H	SHORT STOP
S7	SELECTOR SWITCH
S11H	ALARM RESET
S12	LAMP TEST
S19	DROP CHUTE OFF
S20	STATION CHAIN SPRINKLER
P3	PACKAGE COUNTER. PRODUCTION

TETRA PAK

A B C D E G I K L M N O P R S T U V X Y Z

Description: MOUNTING DRAWING, CONTROL PANEL
Machine: TBA/9-1401 S A
52471-1301

Drawing Remarks

Sign. HK/UTH
Date: 930310
Introduced with AM No.
Issue
AM No.
Date
Sign.

This drawing must not without the consent of Tetra Pak be copied, transmitted or disclosed to any third party.

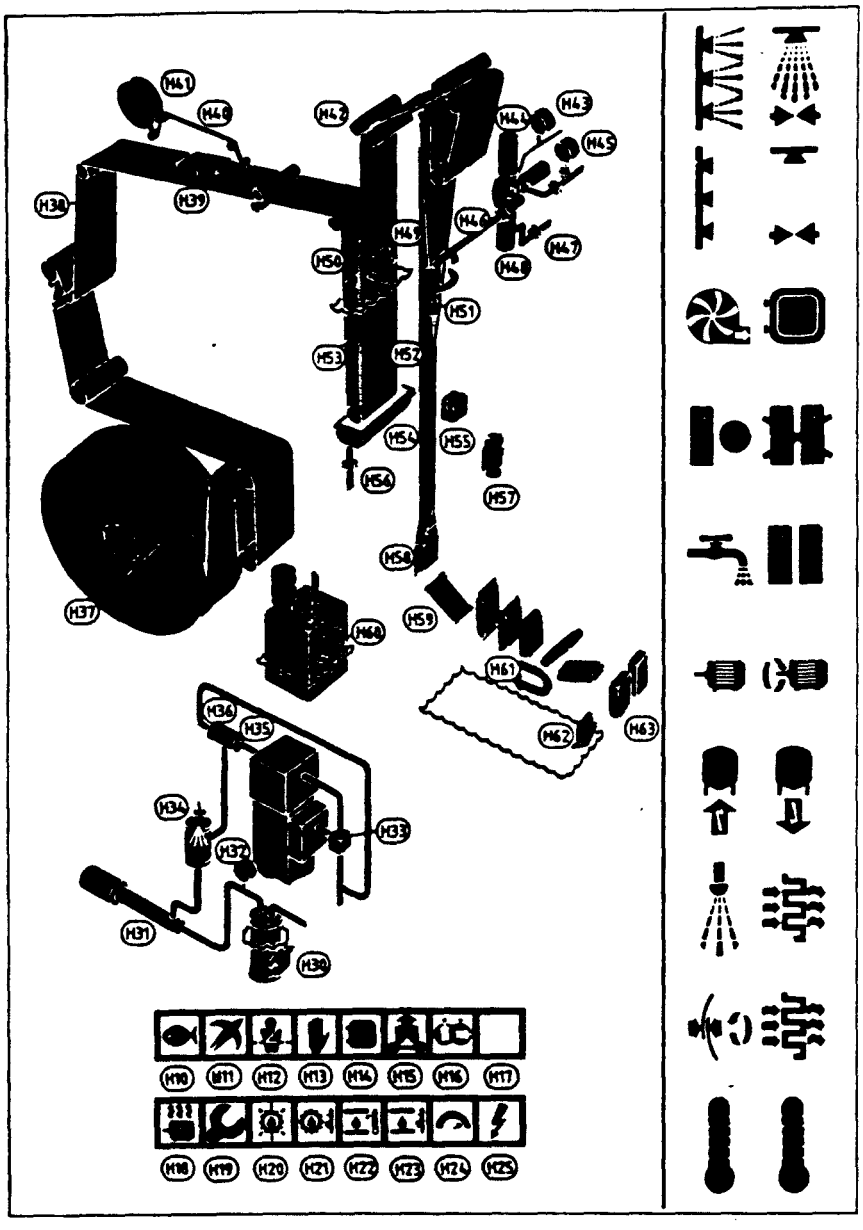

H10	TOO LOW PRESS. COOL. WATER
H11	TOO LOW PRESS. AIR
H12	SAFETY MONITORS IN OFF POS.
H13	ACTIVATED EMERGENCY STOP
H14	MONIT. SUPERV. POS. OF TOWER DOORS
H15	OVERLOAD JAW SYSTEM
H16	UNSYNCHR. BETWEEN MM/FF
H17	RESERV
H18	TRIPPED OVERLOAD PROT. OF MOTORS
H19	SERV. SWITCH IN ON POS.
H20	TOO LOW PRESS. LUB. OIL
H21	TOO LOW LEVEL LUB. OIL
H22	TOO HIGH TEMP. HYDRAULIC OIL
H23	TOO LOW LEVEL HYDRAULIC OIL
H24	MACHINE SPEED TOO HIGH
H25	MEMORY BATTERY LOW
H26	-
H27	-
H28	-
H29	-
H30	HIGH LEVEL. SEPARATORS
H31	TOO LOW TEMP. AT AIR HEATER
H32	TOO LOW PRESS. STERILE AIR
H33	INCORRECT POS., SUCTION VALVE
H34	SPRAY TIME OUT OF LIMITS
H35	TOO LOW TEMP. AT AIR KNIFE
H36	INCORRECT POS. OF INLET VALVE
H37	SUPPLY OF PAPER TOO LOW
H38	ROT. MONITOR PAPER WEB FAULT
H39	TOO LOW TEMP. AT STRIP APPLICATOR
H40	STRIP APPLICATOR STRIP BROKEN
H41	STRIP APPLICATOR SUPPLY TOO LOW
H42	INCORR. POS. SQUEEZ ROLL. AIR KNIFE
H43	STEAM TEMP. OUT OF LIMITS
H44	CLEANING STEAM BARRIER SPACE
H45	NO PRODUCT FROM PROCESS AT MACHINE
H46	INCORRECT POS.. PRODUCT PIPE
H47	INCORRECT POS.. CLEANING PIPE
H48	INCORRECT POS.. AP VALVE B
H49	TOO LOW LEVEL. PER. BATH. PEROXIDE
H50	TOO LOW LEVEL. PER. BATH. WATER
H51	LOW TEMP. ELEMENT. LS
H52	TOO LOW TEMP.. PEROXIDE
H53	TOO LOW TEMP.. PER. BATH. WATER
H54	INCORR. POS.. BOTTOM COVER. PER. BATH
H55	POS. PRINTED DESIGN OUT OF LIMITS
H56	INCORR. POS.. DRAIN PIPE. PER. BATH
H57	INCORR. POS.. CLEANING CUP
H58	FAULT IN UNITS. TS
H59	CONGESTION MONITOR FAULT
H60	TOO LOW LEVEL. PEROXIDE TANK
H61	ROTATION FAULT. FF
H62	TOO LOW LEVEL. CLEANING TRAY
H63	PLE - EQUIPMENT

TETRA PAK

A B C D E F G H K L M N O P R S T U V X Y Z

| | | |

Tetra Pak
LUND SWEDEN

This drawing must not without the consent of Tetra Pak be copied, transmitted or disclosed to any third party.

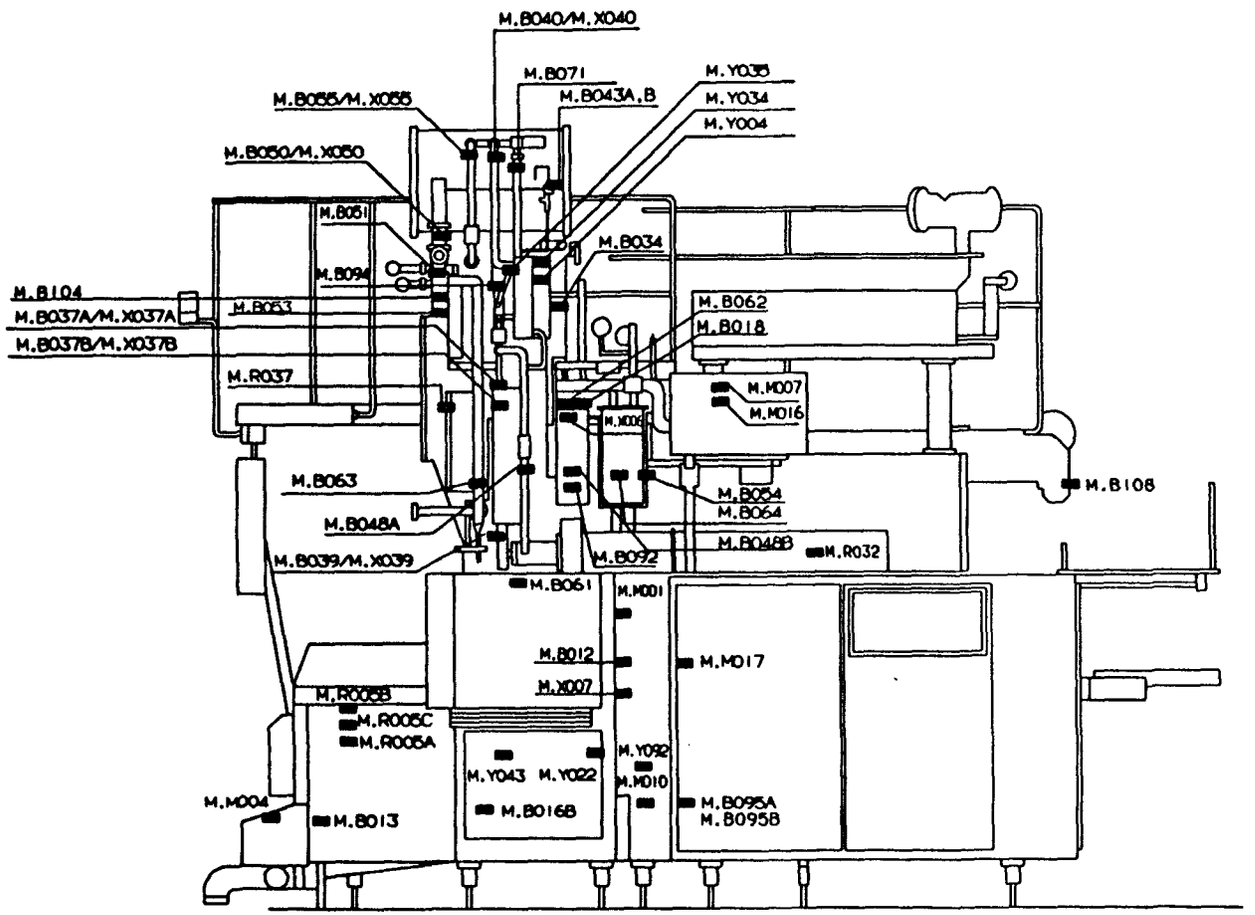

INTRODUCED WITH AP NO	19260	DWN 930310	DWN HK/UTH	DESCRIPTION: MOUNTING DRAWING, MACHINE
ISSUE	A			
AP NO	20080			
DATE	930608			MACHINE: TBA/9-1401 S.A
DWN	HK/PSG			52471-15:01

DRAWING REMARKS

ALTERATIONS ONLY IN CADAM

10:51 94.2.28

Tetra Pak
LUND SWEDEN

This drawing must not without the consent of Tetra Pak be copied, transmitted or disclosed to any third party.

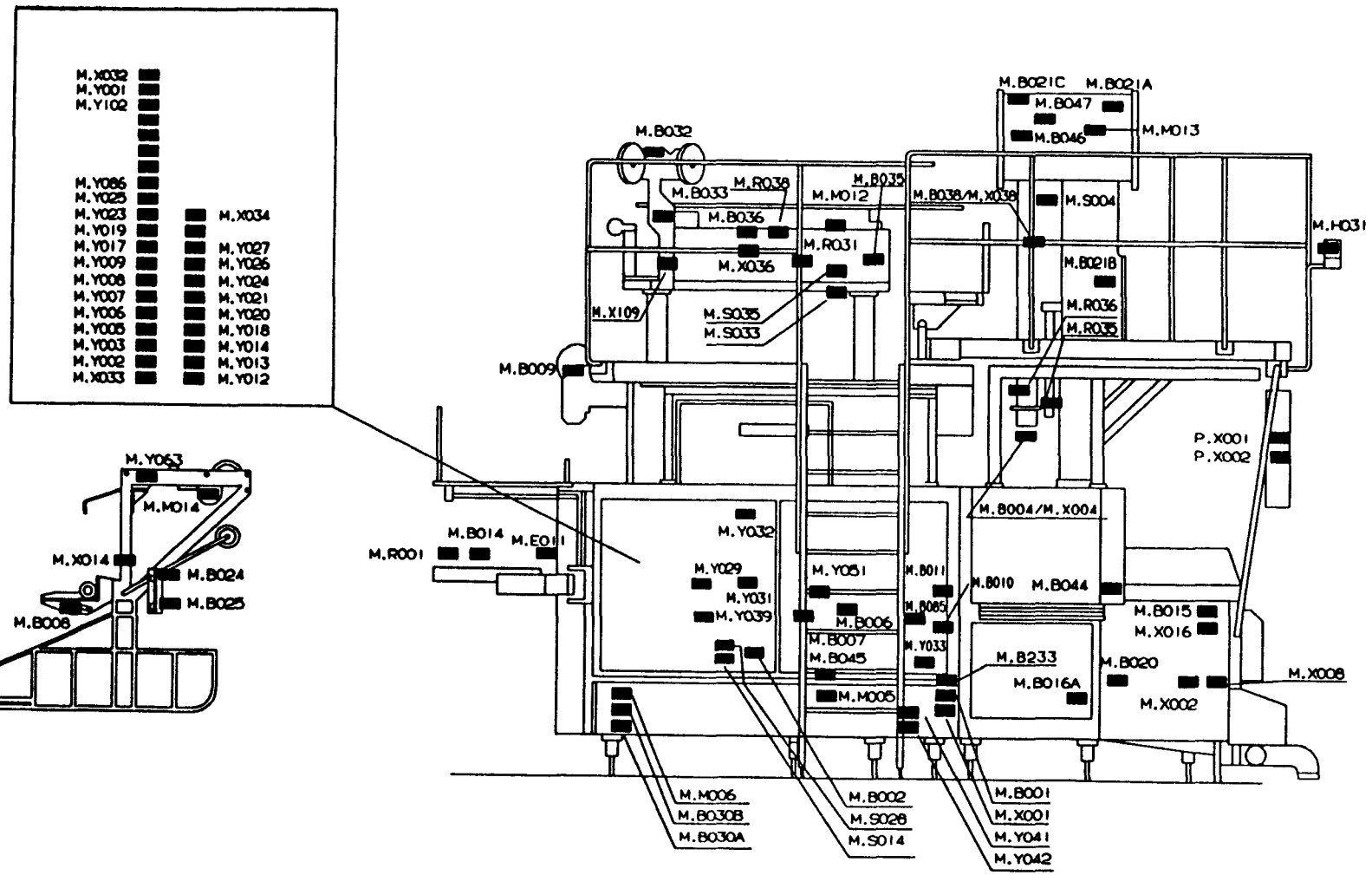

	19260	930310	HK/UTH	
ISSUE				
CHG NO				
DATE				
SIGN				

ALTERATIONS ONLY IN CADAM

DRAWING REMARKS

DESCRIPTION: MOUNTING DRAWING, MACHINE

MACHINE: TBA/9-1401 S.A

52471-16:01

10:51 94.2.28

Tetra Pak
LUND SWEDEN

This drawing must not without the consent of Tetra Pak be copied, transmitted or disclosed to any third party.

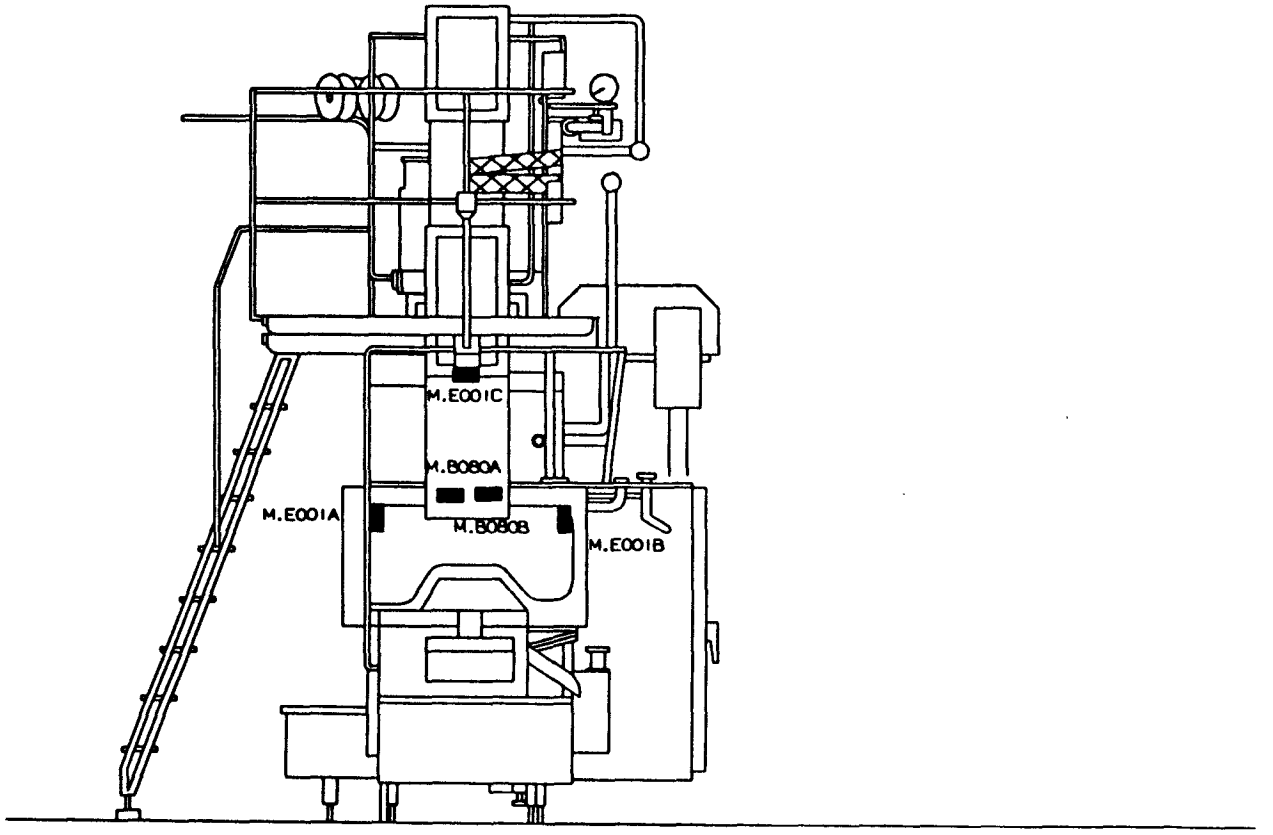

19260	930310	HK/UTH		

ALTERATIONS ONLY IN CADAM

DRAWING REMARKS

DESCRIPTION: MOUNTING DRAWING, MACHINE

MACHINE: TBA/9-1401 S.A

52471-17:01

10:51 94.2.28

Tetra Pak
LUND SWEDEN

This drawing must not without the consent of Tetra Pak be copied, transmitted or disclosed to any third party.

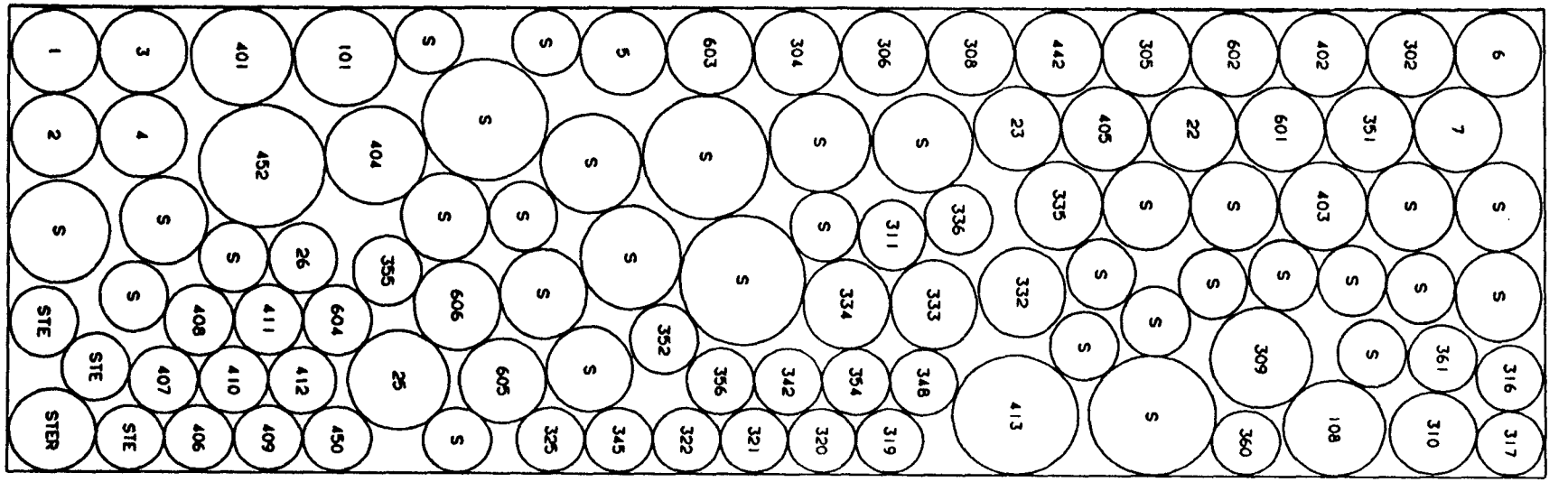
1
3
401
101
S
S
5
603
304
306
308
442
305
602
402
302
6
2
4
452
404
S
S
S
S
S
S
23
405
22
601
351
7
S
S
S
S
S
S
S
S
311
336
335
S
S
403
S
S
S
S
S
S
26
355
606
S
S
S
S
S
S
S
S

Tetra Pak
LUND SWEDEN

This drawing must not without the consent of Tetra Pak be copied, transmitted or disclosed to any third party.

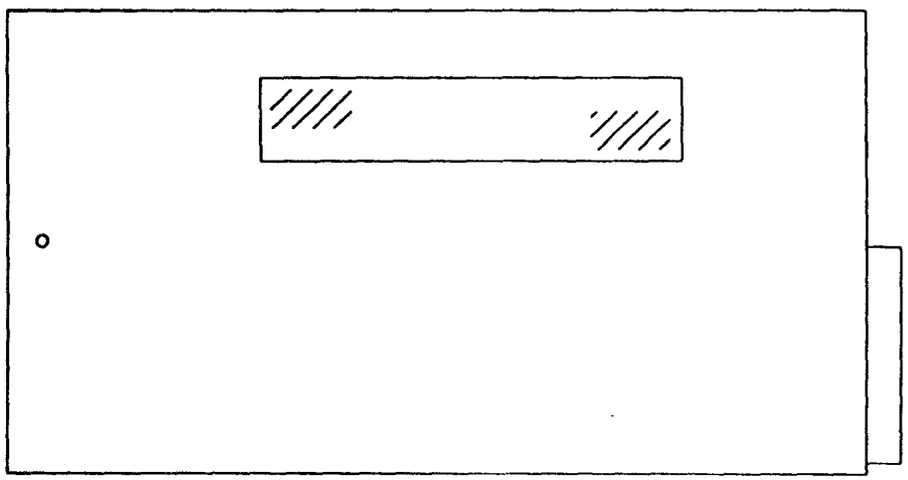

FRONT VIEW

19260	930310	HK/UTH	
			DRAWING REMARKS

ALTERATIONS ONLY IN CADAM

DESCRIPTION: MOUNTING DRAWING

MACHINE: TPIH CABINET

52471-20:01

10:51 94.2.25

Tetra Pak
LUND SWEDEN

this drawing must not without the consent of Tetra Pak be copied, transmitted or disclosed to any third party.

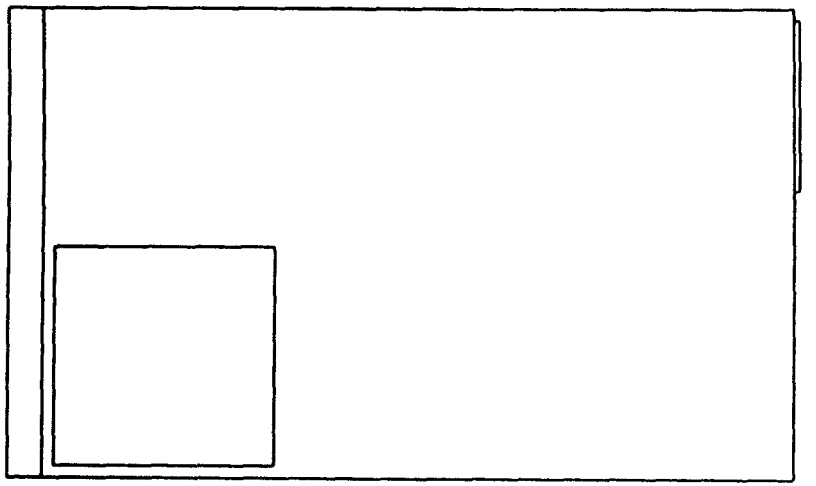

RIGHT HAND VIEW

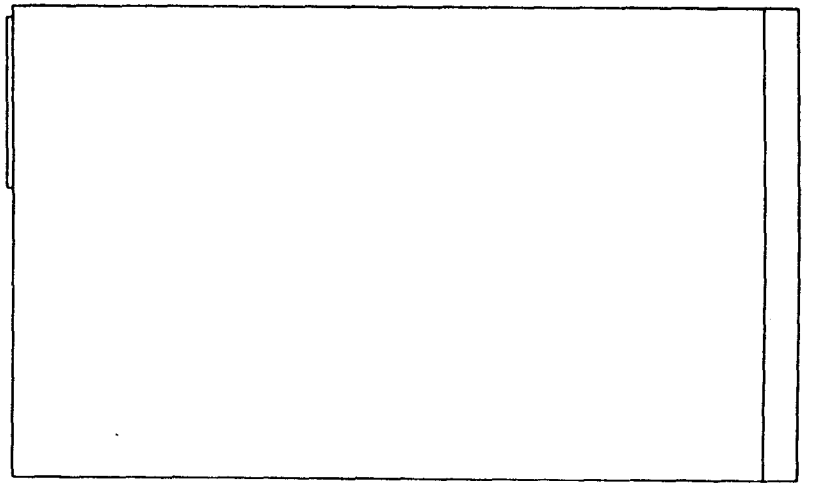

LEFT HAND VIEW

19260	930310	HK/UTH		DESCRIPTION: MOUNTING DRAWING
			DRAWING REMARKS	MACHINE: TPIH CABINET — 52471-21:01

ALTERATIONS ONLY IN CADAM

10:51 94.2.28

Tetra Pak
LUND SWEDEN

This drawing must not without the consent of Tetra Pak be copied, transmitted or disclosed to any third party.

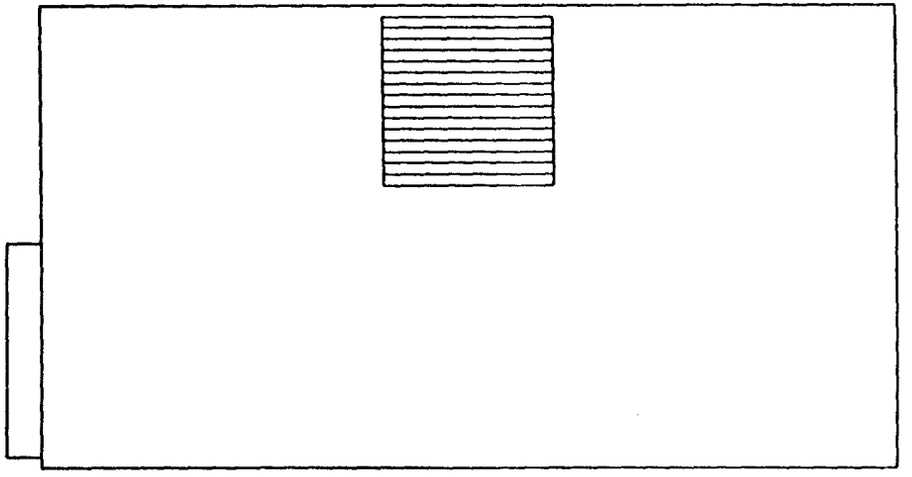

REAR VIEW

19260	930310	HK/UTH		DESCRIPTION: MOUNTING DRAWING
			DRAWING REMARKS	MACHINE: TPIH CABINET — 52471-22:01

ALTERATIONS ONLY IN CADAM

10.51 94.2.28

Tetra Pak
LUND SWEDEN

This drawing must not without the consent of Tetra Pak be copied, transmitted or disclosed to any third party.

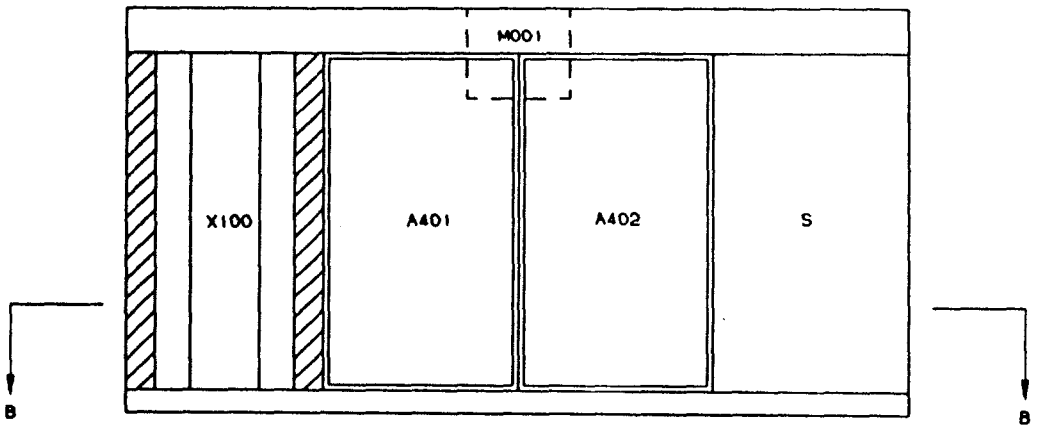

INSIDE VIEW

19260	930310	HK/UTH	
			DRAWING REMARKS

ALTERATIONS ONLY IN CADAM

DESCRIPTION: MOUNTING DRAWING

MACHINE: TPIH CABINET

52471-23:01

10.51 94.2.28

Tetra Pak
LUND SWEDEN

This drawing must not without the consent of Tetra Pak be copied, transmitted or disclosed to any third party.

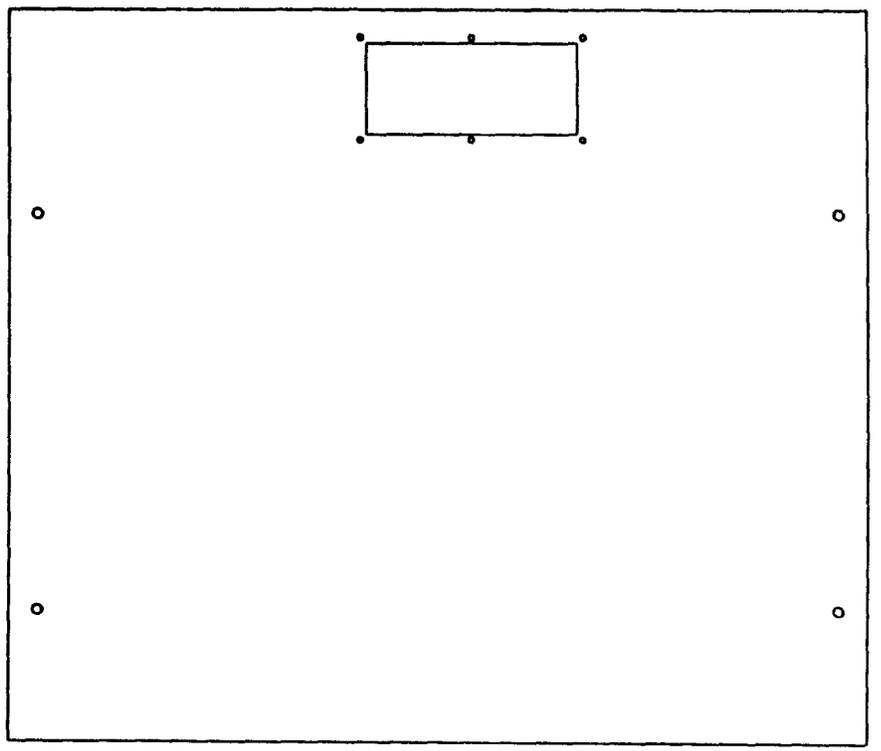

VIEW B-B

INTRODUCED WITH AM NO. 19260	DATE 930310	ASSM HK/UTH		DESCRIPTION: MOUNTING DRAWING	
ISSUE					
AM NO					
DATE				MACHINE: TPIH CABINET	52471-24:01
ASSM			DRAWING REMARKS		

ALTERATIONS ONLY IN CADAM

10:51 94.2.28

Tetra Pak
LUND SWEDEN

This drawing must not without the consent of Tetra Pak be copied, transmitted or disclosed to any third party.

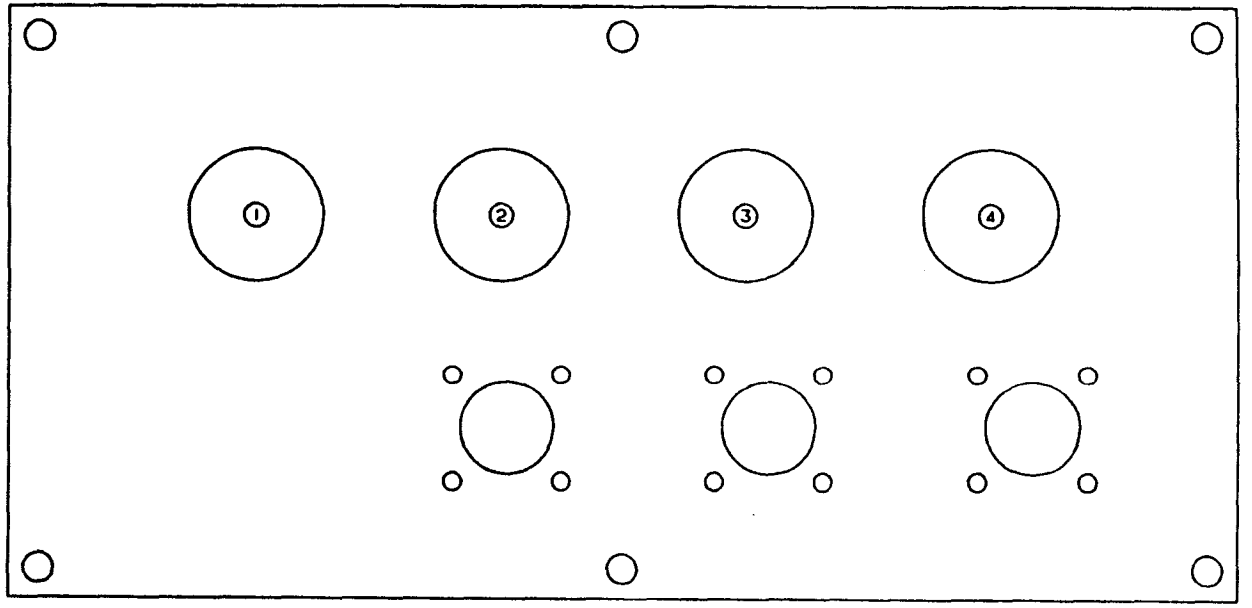

CABLE LEAD IN FROM THE INSIDE OF THE TPIH-CABINET

19260	date 930310	sign HK/UTH	① HOSE 1 LENGTH 500MM ② HOSE 2 LENGTH 500MM ③ HOSE 3 LENGTH 500MM ④ PLUG	description MOUNTING DRAWING	
issue A				machine TPIH CABINET	52471-25:01
art no 20080					
date 930505					
sign HK/PSG			DRAWING REMARKS		

ALTERATIONS ONLY IN CADAM

10.51 94.2.25

Tetra Pak
MODENA ITALY

This drawing must not without the consent of Tetra Pak be copied, transmitted or disclosed to any third party.

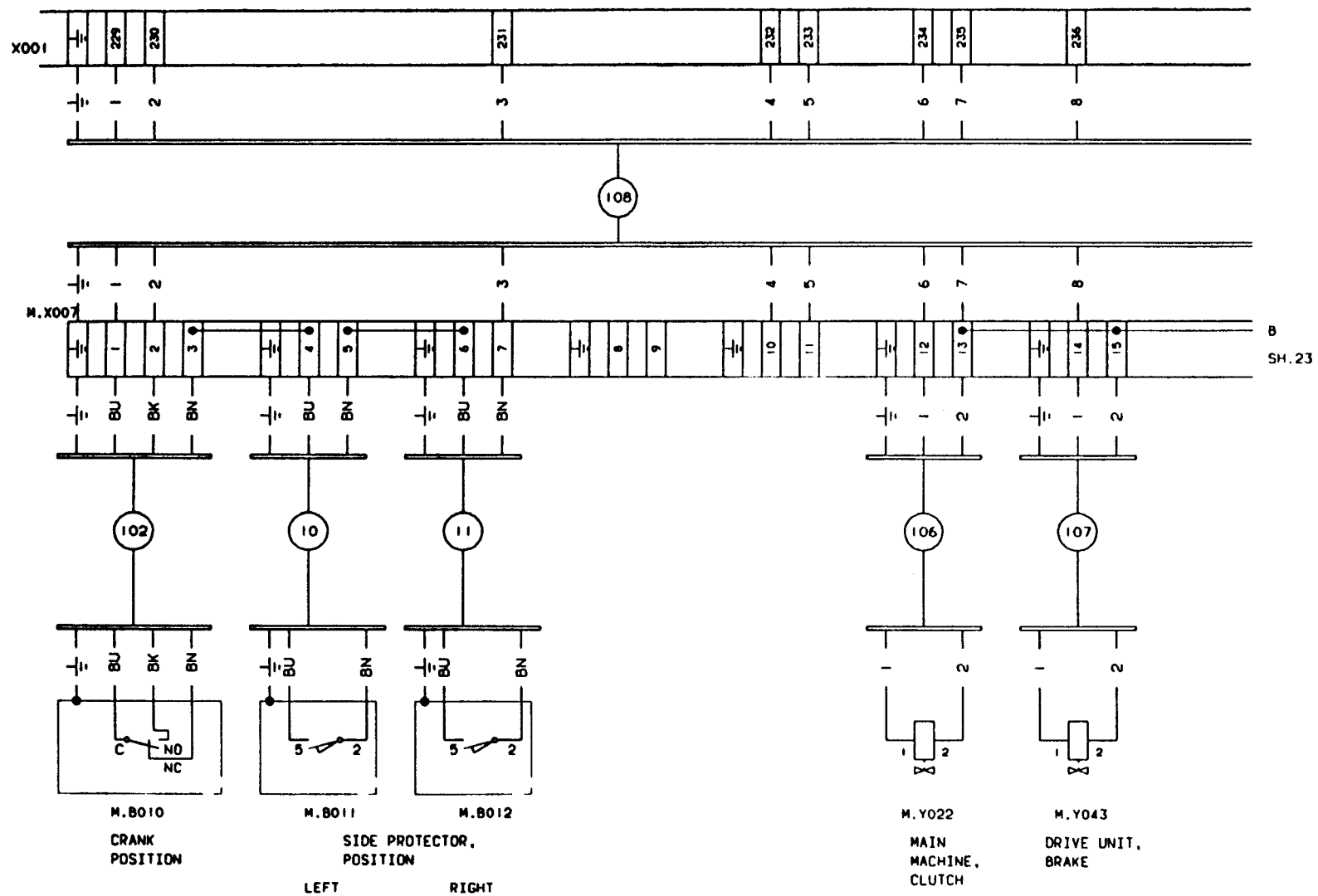

19260	930310	HK/UTH		DESCRIPTION: CONNECTION DIAGRAM	
A					
20080					
930909					
HK/MRI			DRAWING REMARKS	MACHINE: TBA/9-1401 S.A	61232-22:01

ALTERATIONS ONLY IN CADAM

10:51 94.2.28

This drawing must not without the consent of Tetra Pak be copied, transmitted or disclosed to any third party.

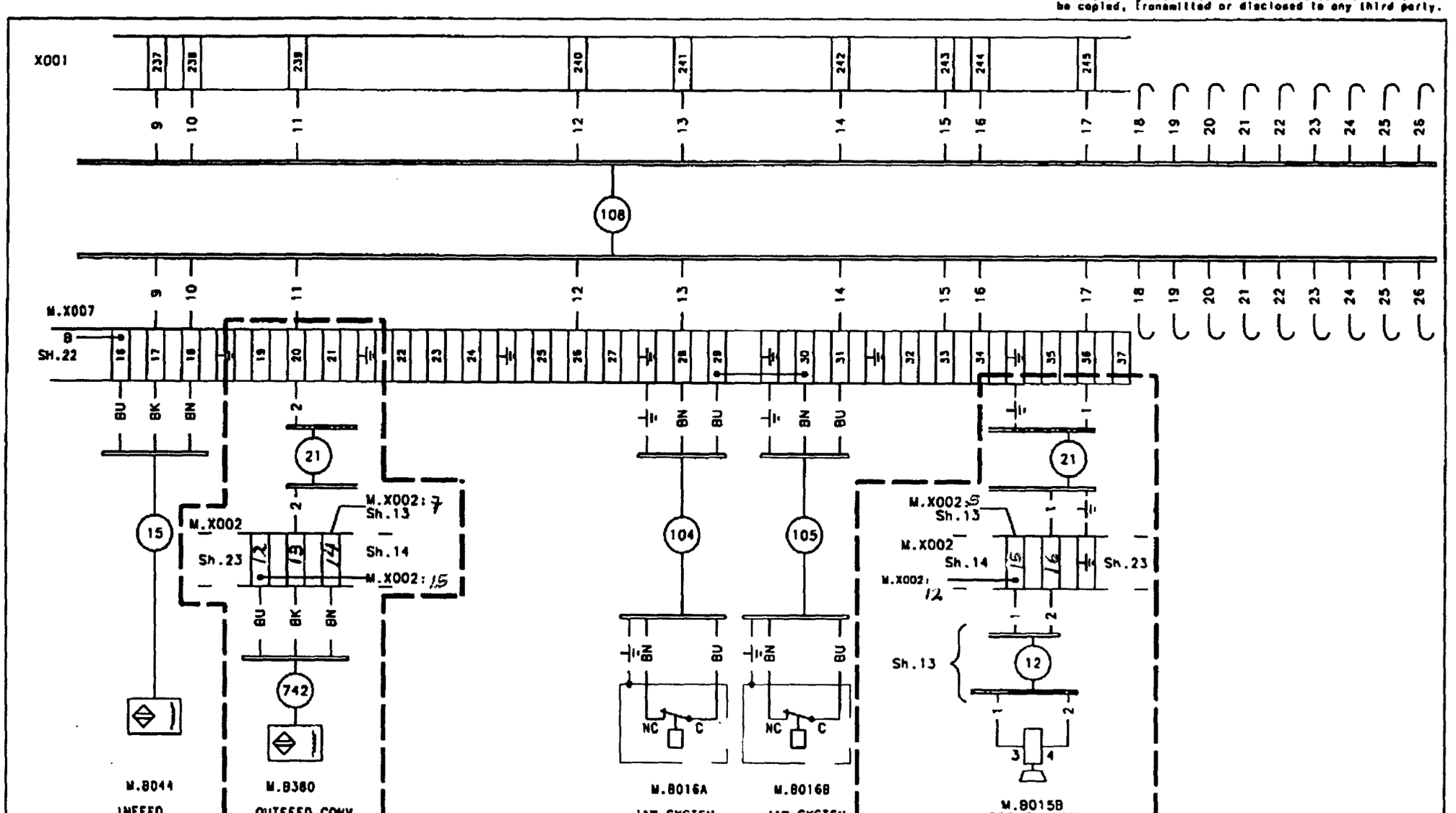

FOOT NOTE: CABLE CORES ARE TO BE MARKED WITH TERMINAL DESIGNATION

Date	-					Tetra Pak	Designer TEAN	Date 000104	Approved PIH Date 000315 Doc. class -
ECR No.	73349						Machine TBA/9-1401	Denomination "TETRA WEDGE"	
Sign./Date	TEAN/000104				RK-559491-0100		Company Tetra Brik Packaging Systems AB	Drawing No. RK-61232-23:43	Page -
Appr./Date	PIH/000315				Drawing remarks				

Tetra Pak
LUND SWEDEN

This drawing must not without the consent of Tetra Pak be copied, transmitted or disclosed to any third party.

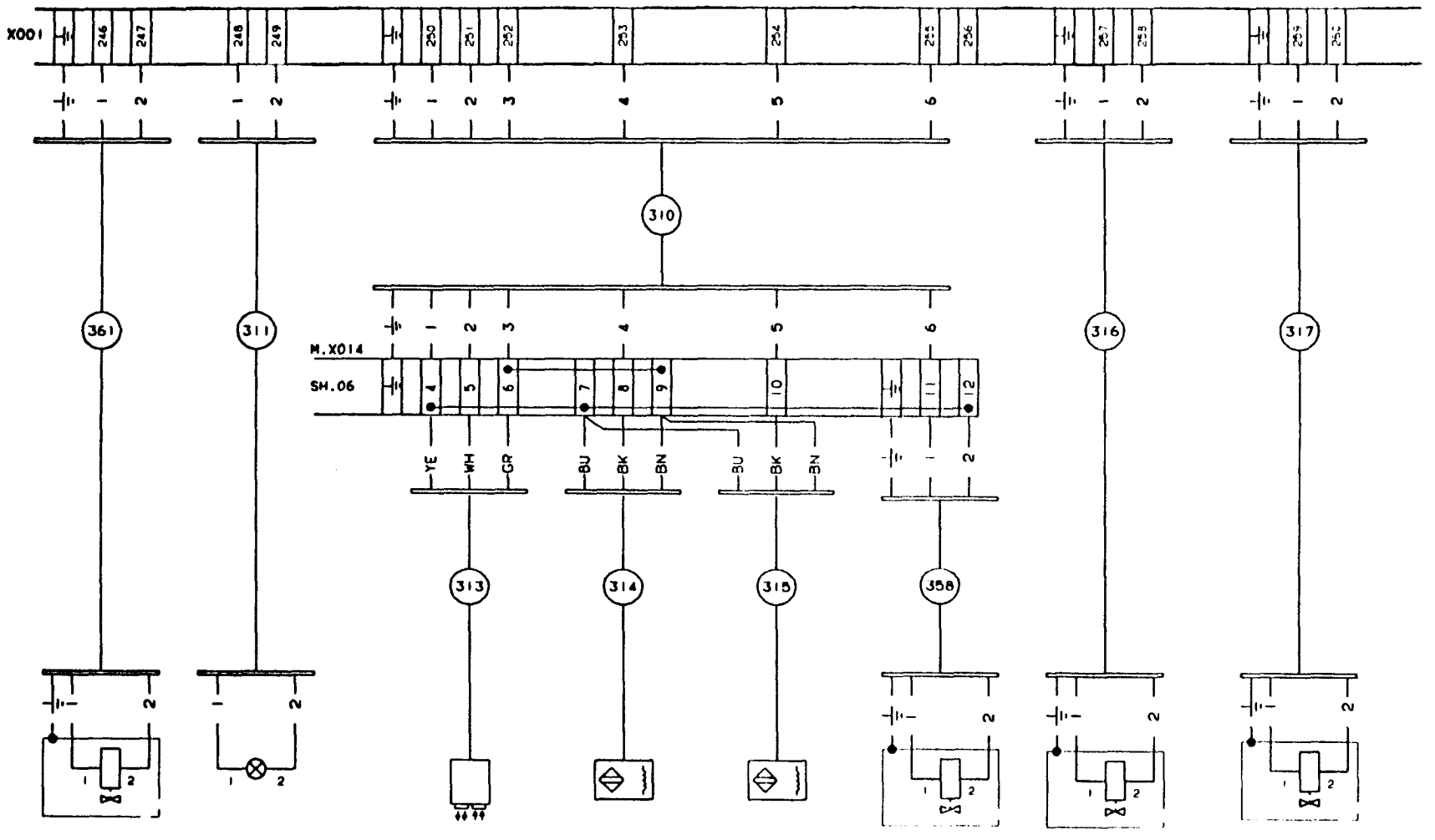

INTRODUCED WITH JOB NO	19260	DATE 930310	SIGN HK/UTH
MODULE			
JOB NO			
DATE			
SIGN			

ALTERATIONS ONLY IN CADAM

DRAWING REMARKS

DESCRIPTION: CONNECTION DIAGRAM

MACHINE: TBA/9-1401 S.A

61232-24:01

10:51 94.2.28

PRE-RELEASED/DEVELOPMENT STATE

This drawing must not without the consent of Tetra Pak be copied, transmitted or disclosed to any third party.

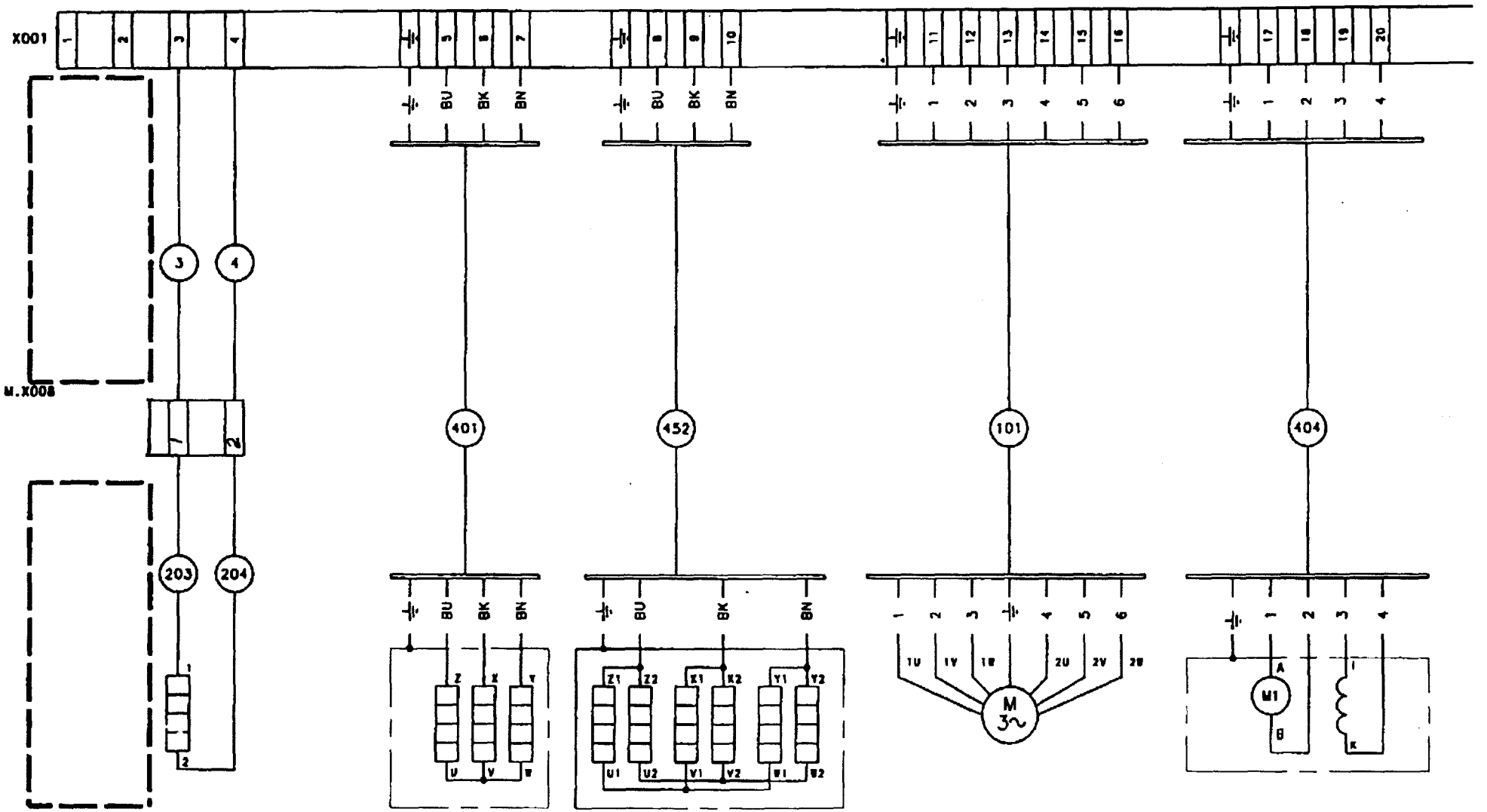

M.R005A
FLAP SEALING
BOTTOM

M.R036
PEROXIDE BATH
WATER

M.R032
AIR SUPER
HEATER

M.M001
MAIN MOTOR

M.M013
BENDING ROLLER

FOOT NOTE: CABLE CORES ARE TO BE MARKED WITH TERMINAL DESIGNATION

Rev.	-					Tetra Pak	Designer TEAN	Date 990902	Approved PIH Date 990902	Doc. class -
CR No.	72800						Machine TBA/9-1401	Denomination "TETRA WEDGE"		
Sign./Date	TEAN/990902				RK-559491-0100		Company Tetra Brik Packaging Systems AB	Drawing No. RK-61232-05:41		Page -
Appr./Date	PIH/990902				Drawing remarks					

Tetra Pak
MODENA ITALY

This drawing must not without the consent of Tetra Pak be copied, transmitted or disclosed to any third party.

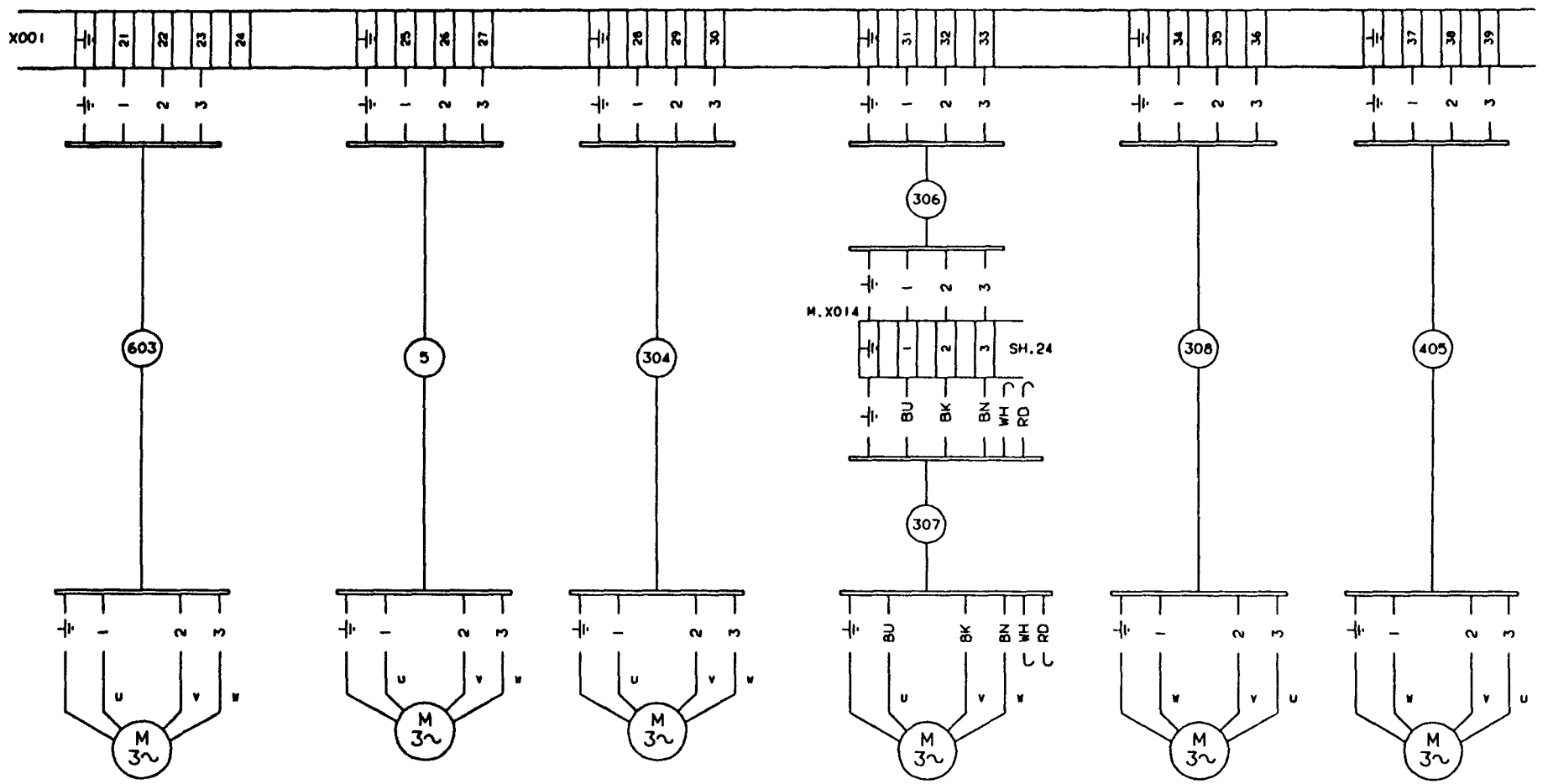

M.M012
SA, SHORT STOP, FAN

M.M004
CLEANING SYSTEM CIRC. PUMP

M.M005
HYDRAULIC PUMP

M.M014
PAPER SUPPLY, UNREELING

M.M010
PEROXIDE PUMP

M.M007
COMPRESSOR, INLET

FOOT NOTE: CABLE CORES ARE TO BE MARKED WITH TERMINAL DESIGNATION

19260	930310	HK/UTH	DESCRIPTION: CONNECTION DIAGRAM	
A				
20080				
930909				
HK/MRT		DRAWING REMARKS	MACHINE: TBA/9-1401 S.A	61232-06:01

ALTERATIONS ONLY IN CADAM

10:51 94.2.25

Tetra Pak
MODENA ITALY

This drawing must not without the consent of Tetra Pak be copied, transmitted or disclosed to any third party.

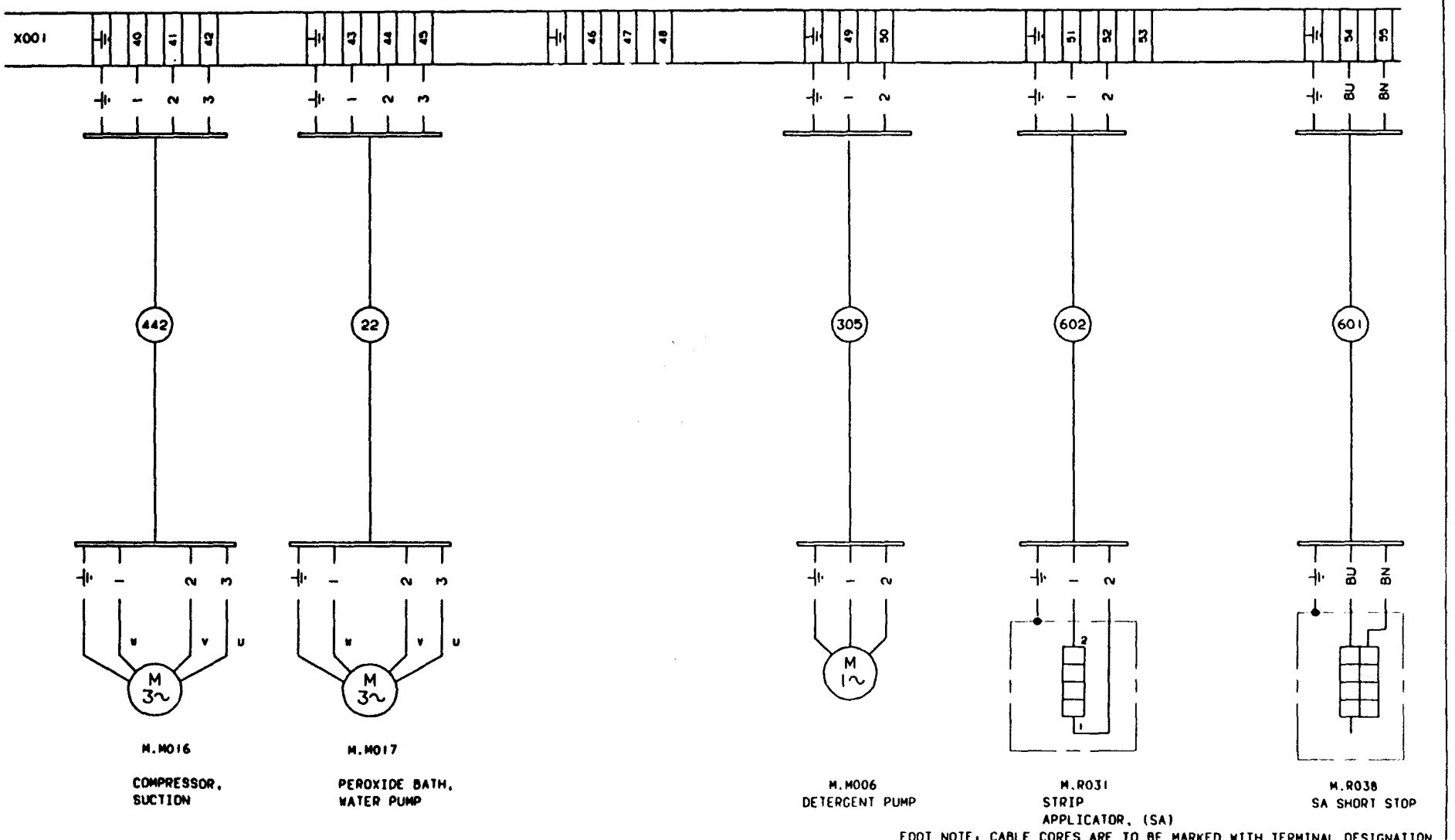

M.M016
COMPRESSOR, SUCTION

M.M017
PEROXIDE BATH, WATER PUMP

M.M006
DETERGENT PUMP

M.R031
STRIP APPLICATOR, (SA)

M.R038
SA SHORT STOP

FOOT NOTE: CABLE CORES ARE TO BE MARKED WITH TERMINAL DESIGNATION

19260	930310	HK/UTH	DESCRIPTION: CONNECTION DIAGRAM	
A				
20406				
931015				
HK/MR1		DRAWING REMARKS	MACHINE: TBA/9-1401 S.A	61232-07:01

ALTERATIONS ONLY IN CADAM

10:51 94.2.28

Tetra Pak
LUND SWEDEN

This drawing must not without the consent of Tetra Pak be copied, transmitted or disclosed to any third party.

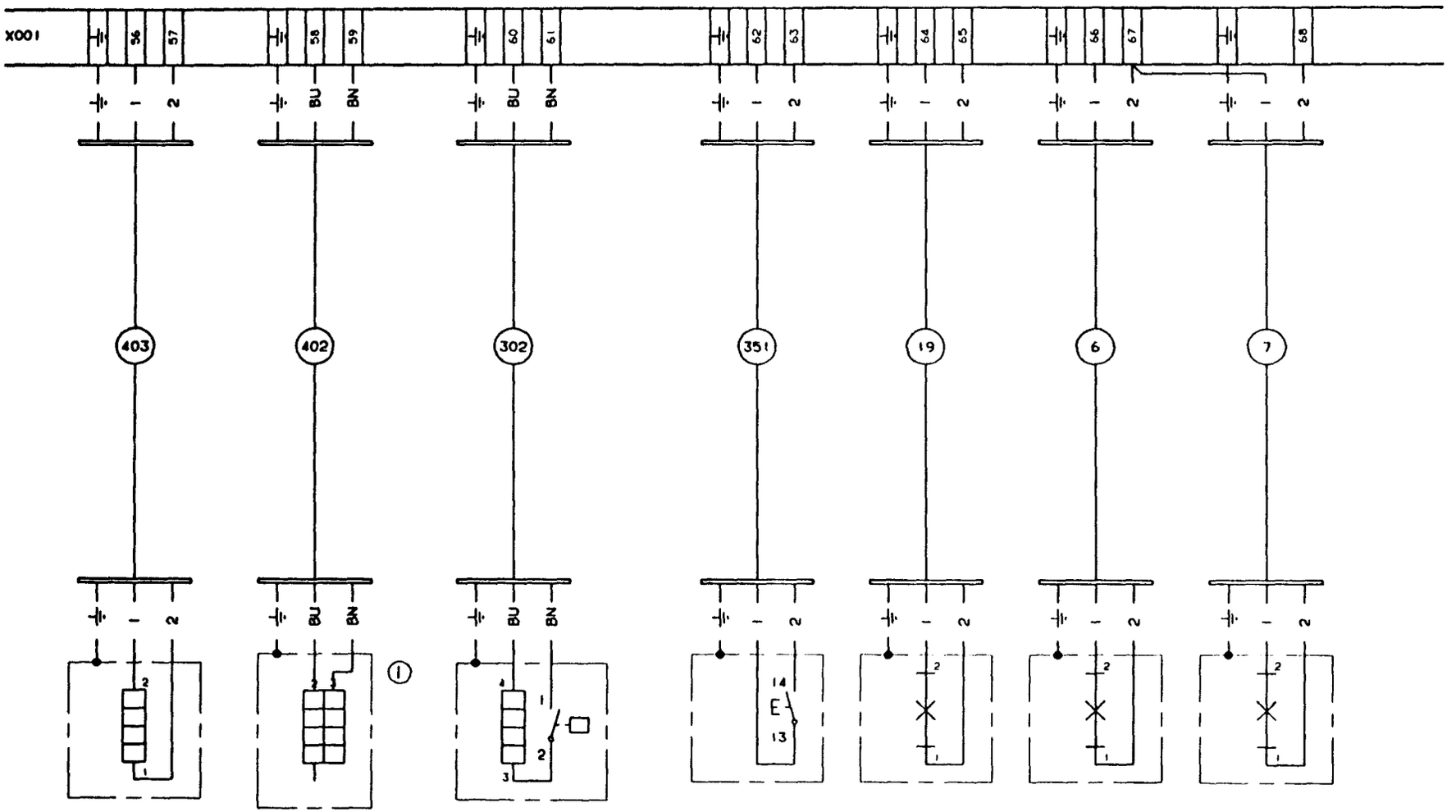

M.B035 LONGITUDINAL SEALING (LS)

M.R037 LS SHORT STOP

M.B014 M.R001 SPLICER, PAPER

M.S028 LIGHT SWITCH

M.E001C JAW SYSTEM, FRONT

M.E001A JAW SYSTEM, LEFT

M.E001B JAW SYSTEM, RIGHT

FOOT NOTE, CABLE CORES ARE TO BE MARKED WITH TERMINAL DESIGNATION

19260	930310	HK/UTH	ELEMENT PIN CONFIGURATION 1-2 = 1200W 1-3 = 700W 2-3 = 450W DRAWING REMARKS
ALTERATIONS ONLY IN CADAM			DESCRIPTION: CONNECTION DIAGRAM MACHINE: TBA/9-1401 S.A 61232-08:01

10:51 94.2.28

Tetra Pak
LUND SWEDEN

This drawing must not without the consent of Tetra Pak be copied, transmitted or disclosed to any third party.

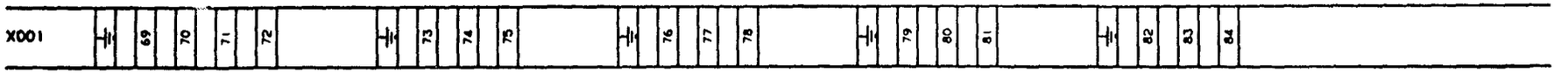

FOOT NOTE: CABLE CORES ARE TO BE MARKED WITH TERMINAL DESIGNATION

	19260	DATE: 930310	DRAWN: HK/UTH	DESCRIPTION: CONNECTION DIAGRAM	
				MACHINE: TBA/9-1401 S.A	61232-09:01
			DRAWING REMARKS		

ALTERATIONS ONLY IN CADAM

10:51 94.2.25

Tetra Pak
LUND SWEDEN

this drawing must not without the consent of Tetra Pak be copied, transmitted or disclosed to any third party.

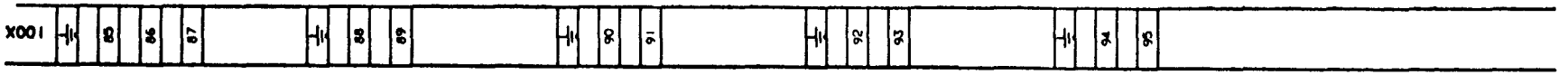

FOOT NOTE: CABLE CORES ARE TO BE MARKED WITH TERMINAL DESIGNATION

	19260	DATE 930310	DRAWN HK/UTH	DESCRIPTION: CONNECTION DIAGRAM
				MACHINE: TBA/9-1401 S.A 61232-10:01

DRAWING REMARKS

ALTERATIONS ONLY IN CADAM

10:51 94.2.23

Tetra Pak
LUND SWEDEN

This drawing must not without the consent of Tetra Pak be copied, transmitted or disclosed to any third party.

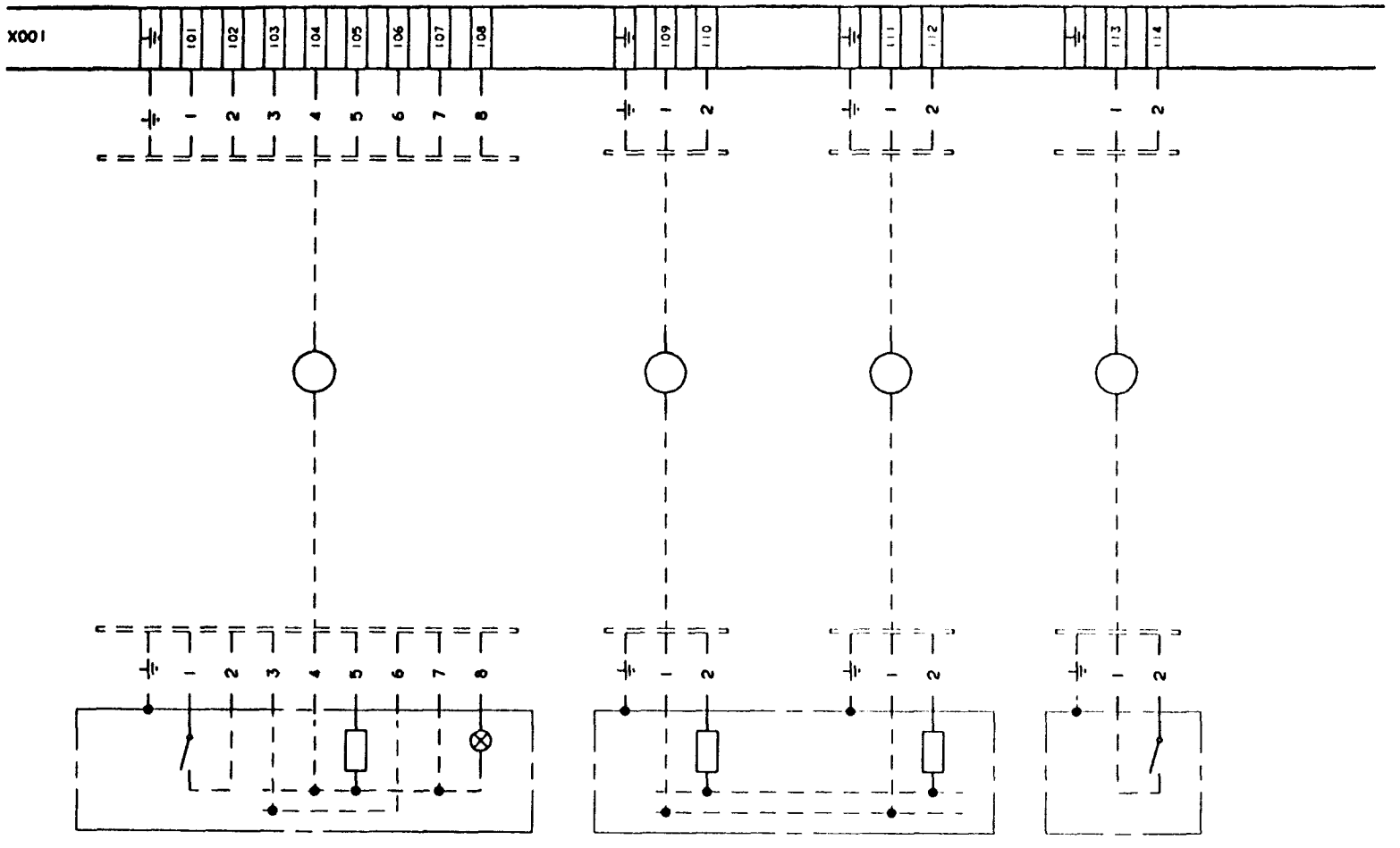

FOOT NOTE: CABLE CORES ARE TO BE MARKED WITH TERMINAL DESIGNATION

19260	930310	HK/UTH	DESCRIPTION: CONNECTION DIAGRAM
			MACHINE: TBA/9-1401 S.A — 61232-12:01

DRAWING REMARKS

ALTERATIONS ONLY IN CADAM

10.51 94.2.25

This drawing must not without the consent of Tetra Pak be copied, transmitted or disclosed to any third party.

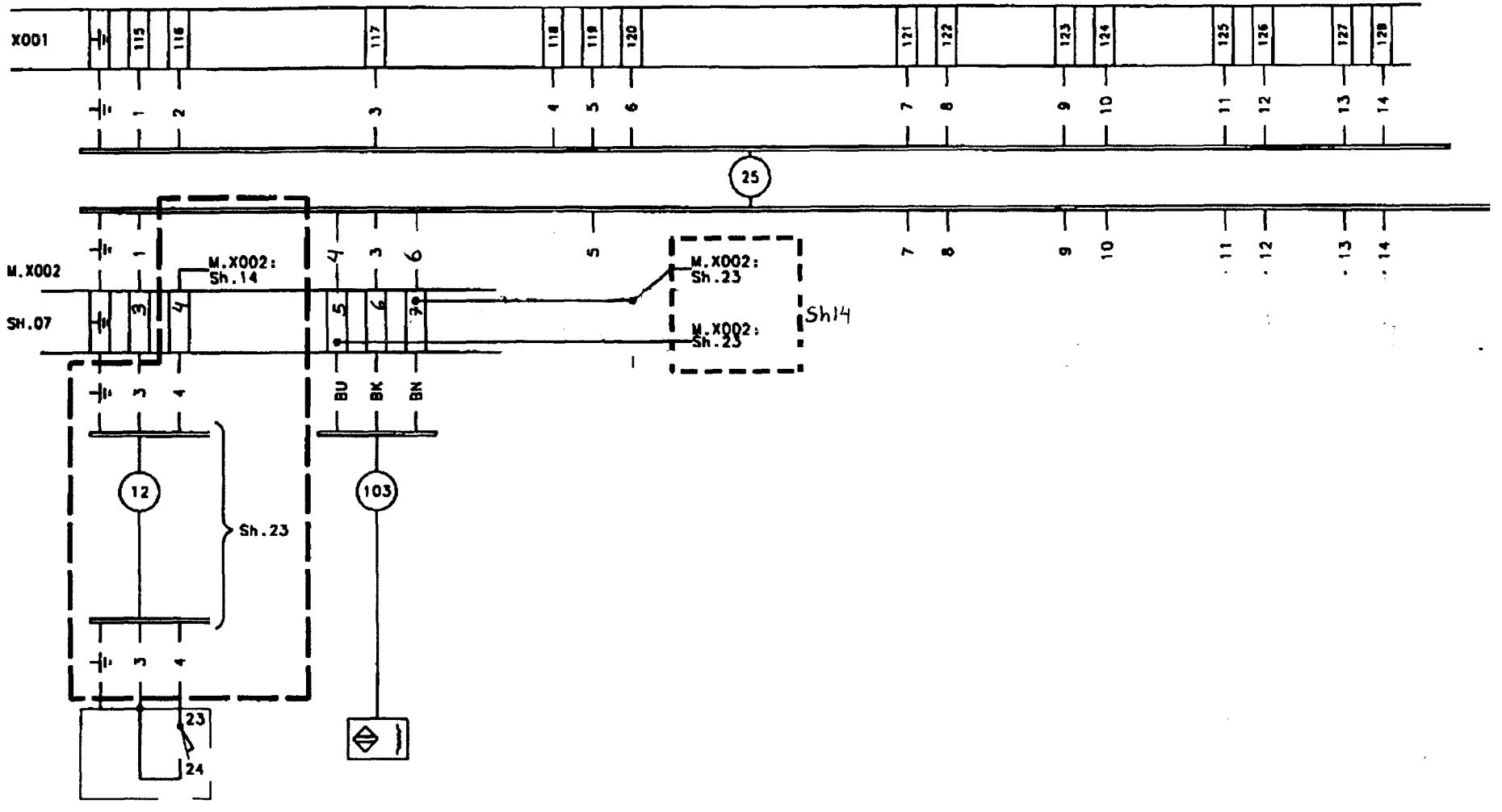

M.8015
FRONT HOOD,
POSITION

M.8020
FINAL FOLDER
CHAIN POSITION

FOOT NOTE: CABLE CORES ARE TO BE MARKED WITH TERMINAL DESIGNATION

Rev.	-				① REMOVE WHEN PLE IS INSTALLED.	Tetra Pak	Designer TEAN	Date 000104	Approved PIH Date 000315	Doc. class -
ECR No.	73349						Machine TBA/9-1401	Denomination "TETRA WEDGE"		
Sign./Date	TEAN/000104				RK-559491-0100					
Appr./Date	PIH/000315				Drawing remarks	Company Tetra Brik Packaging Systems AB		Drawing No. RK-61232-13:43		Page -

This drawing must not without the consent of Tetra Pak be copied, transmitted or disclosed to any third party.

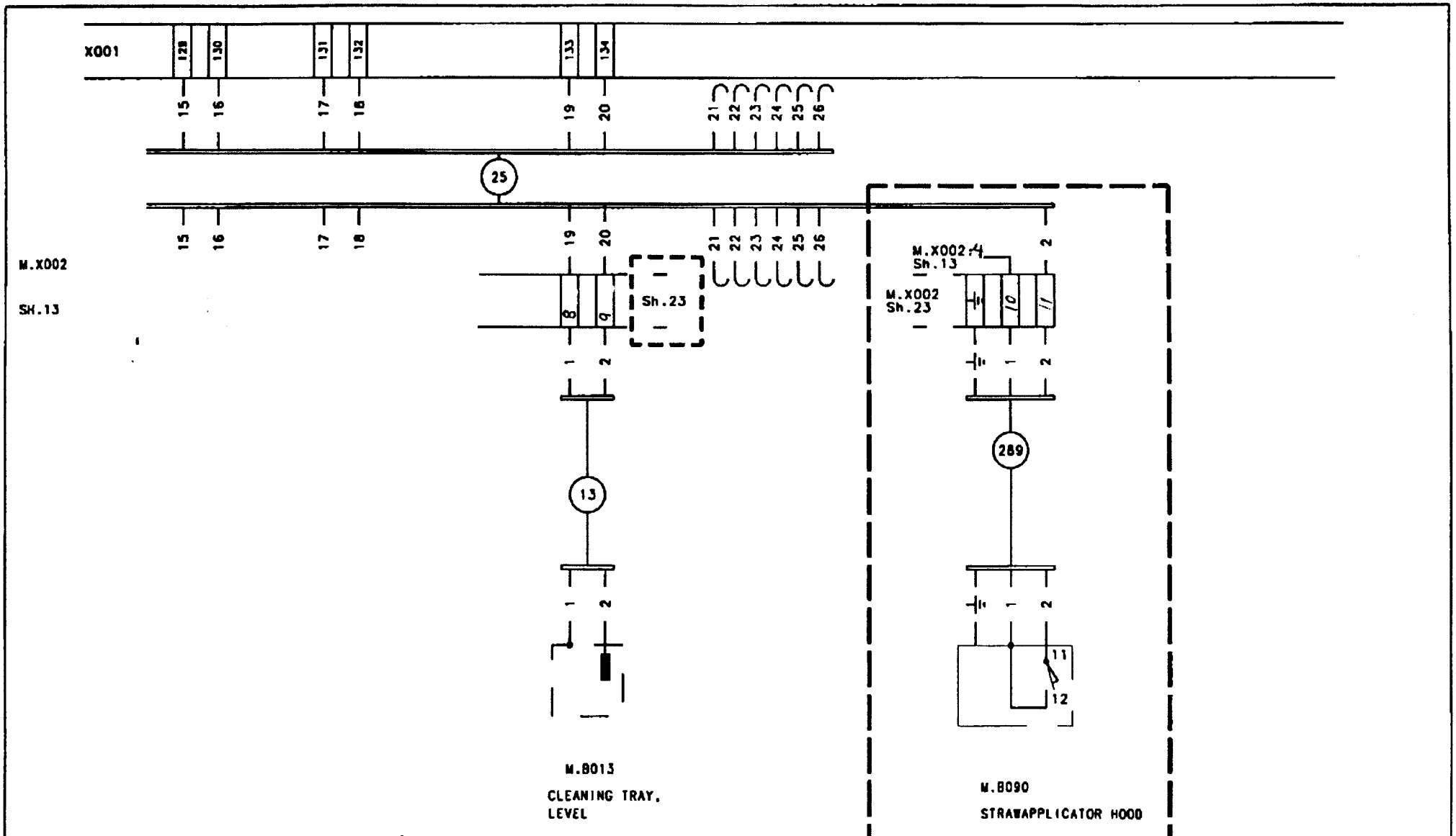

FOOT NOTE: CABLE CORES ARE TO BE MARKED WITH TERMINAL DESIGNATION

Mod	-				① REMOVE WHEN PLE IS INSTALLED.	Tetra Pak	Designer TEAN Date 000104	Approved PIH Date 000315	Doc. class -
ECR No.	73349						Machine TBA/9-1401	Characteristics "TETRA WEDGE"	
Sign./Date	TEAN/000104				RK-559491-0100		Company Tetra Brik Packaging Systems AB	Drawing No RK-61232-14:43	Page -
Appr./Date	PIH/000315				Drawing remarks				

Tetra Pak
LUND SWEDEN

This drawing must not without the consent of Tetra Pak be copied, transmitted or disclosed to any third party.

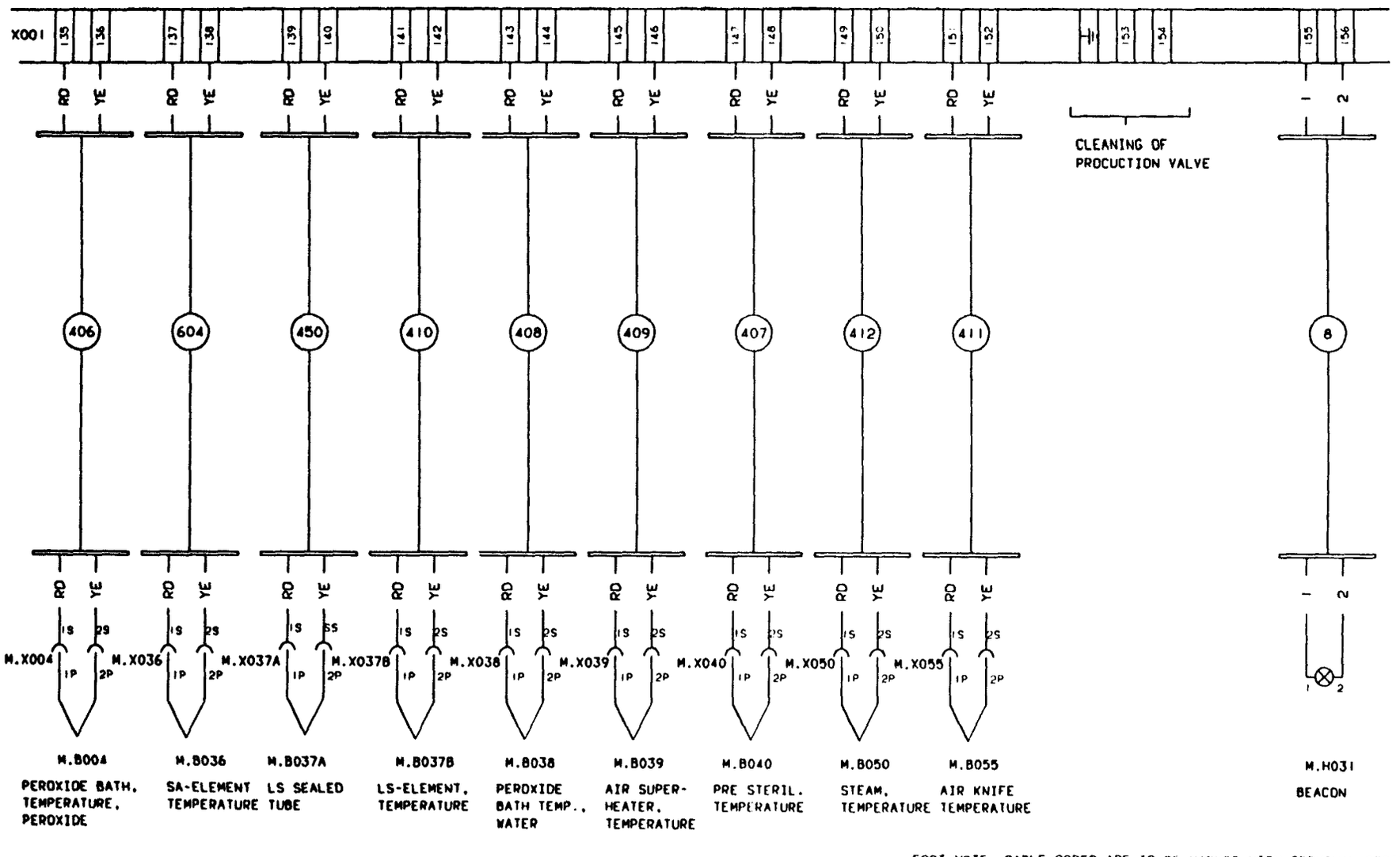

FOOT NOTE, CABLE CORES ARE TO BE MARKED WITH TERMINAL DESIGNATION

ISSUED WITH JOB NO. 19260	DATE 930310	DRAWN HK/UTH	DESCRIPTION. CONNECTION DIAGRAM	
ISSUE			MACHINE. TBA/9-1401 S.A	61232-15:01
JOB NO				
DATE				
DRAWN				

DRAWING REMARKS

ALTERATIONS ONLY IN CADAM

10.51 94.2.28

Tetra Pak
MODENA ITALY

This drawing must not without the consent of Tetra Pak be copied, transmitted or disclosed to any third party.

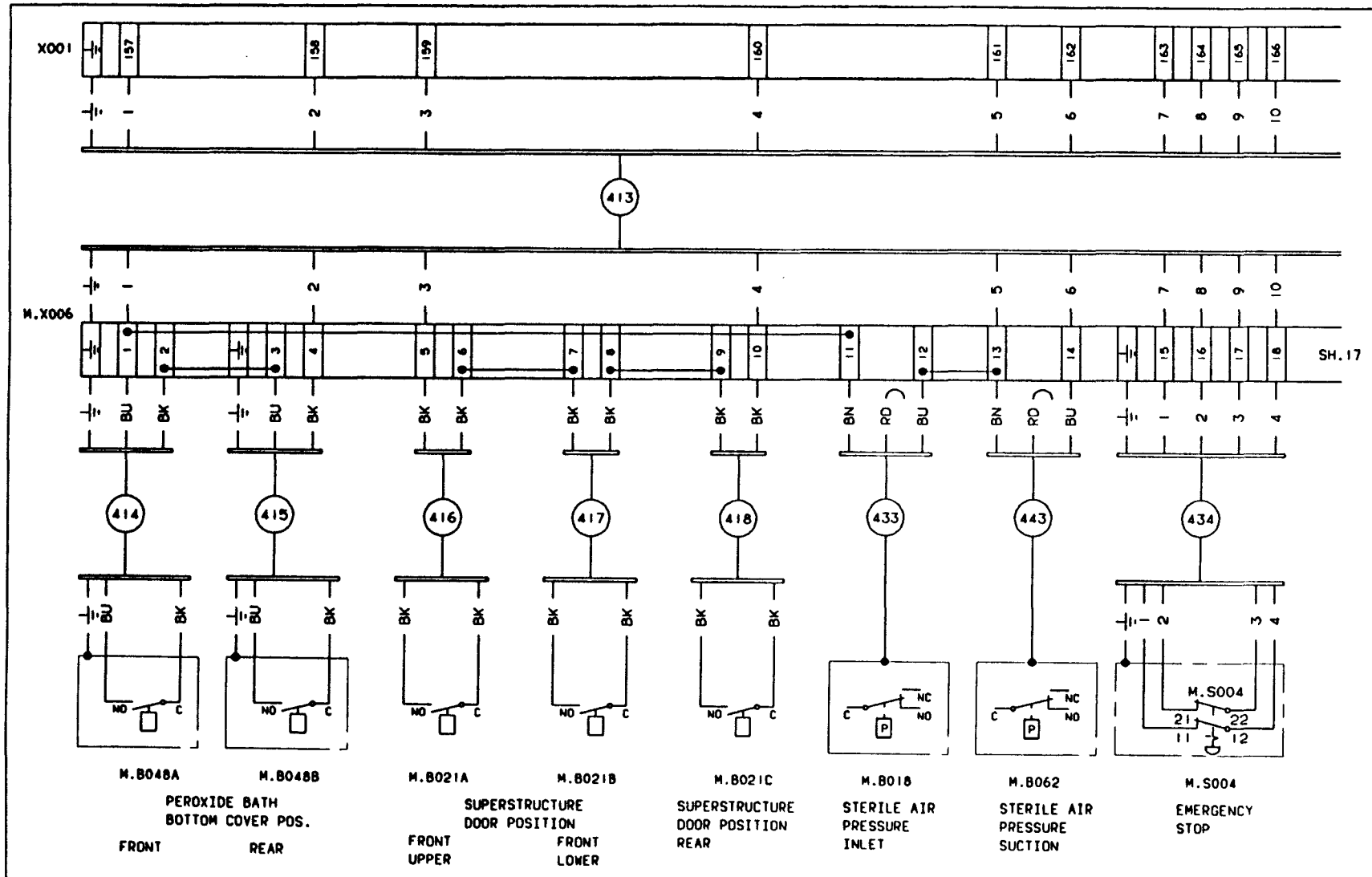

M.B048A PEROXIDE BATH BOTTOM COVER POS. FRONT

M.B048B PEROXIDE BATH BOTTOM COVER POS. REAR

M.B021A SUPERSTRUCTURE DOOR POSITION FRONT UPPER

M.B021B SUPERSTRUCTURE DOOR POSITION FRONT LOWER

M.B021C SUPERSTRUCTURE DOOR POSITION REAR

M.B018 STERILE AIR PRESSURE INLET

M.B062 STERILE AIR PRESSURE SUCTION

M.S004 EMERGENCY STOP

FOOT NOTE: CABLE CORES ARE TO BE MARKED WITH TERMINAL DESIGNATION

INTERLOCKED WITH DRG NO 19260	DATE 930310	DRAWN HK/UTH	
ISSUE A			
DRG NO 20080			
DATE 930909			
DRAWN HK/MRI			

DRAWING REMARKS

ALTERATIONS ONLY IN CADAM

DESCRIPTION: CONNECTION DIAGRAM

MACHINE: TBA/9-1401 S.A

61232-16:01

10.51 94.2.28

Tetra Pak
LUND SWEDEN

This drawing must not without the consent of Tetra Pak be copied, transmitted or disclosed to any third party.

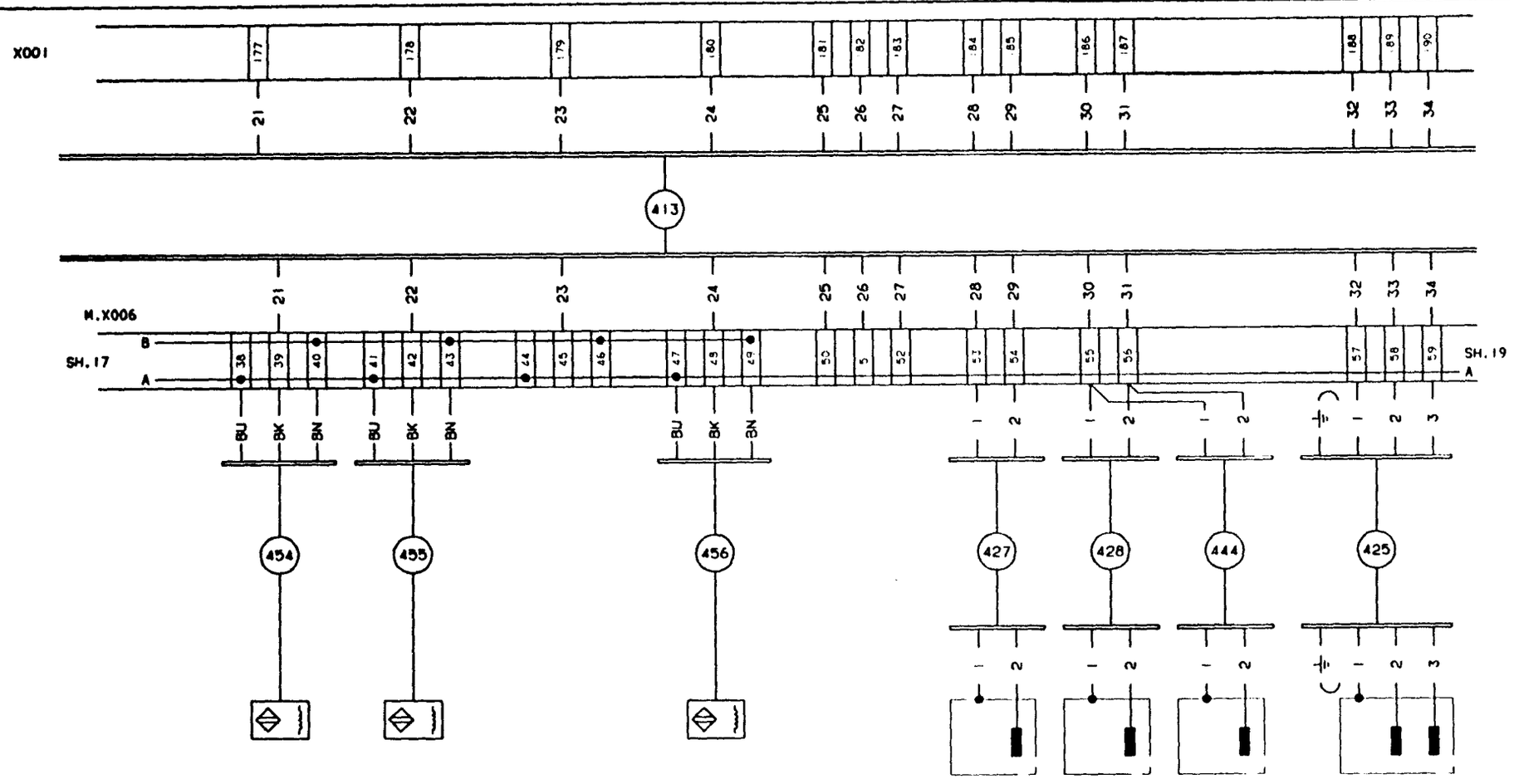

19260	930310	HK/UTH	
			DESCRIPTION: CONNECTION DIAGRAM
			MACHINE: TBA/9-1401 S.A — 61232-18:01

ALTERATIONS ONLY IN CADAM

10.51 94.2.28

Tetra Pak
LUND SWEDEN

This drawing must not without the consent of Tetra Pak be copied, transmitted or disclosed to any third party.

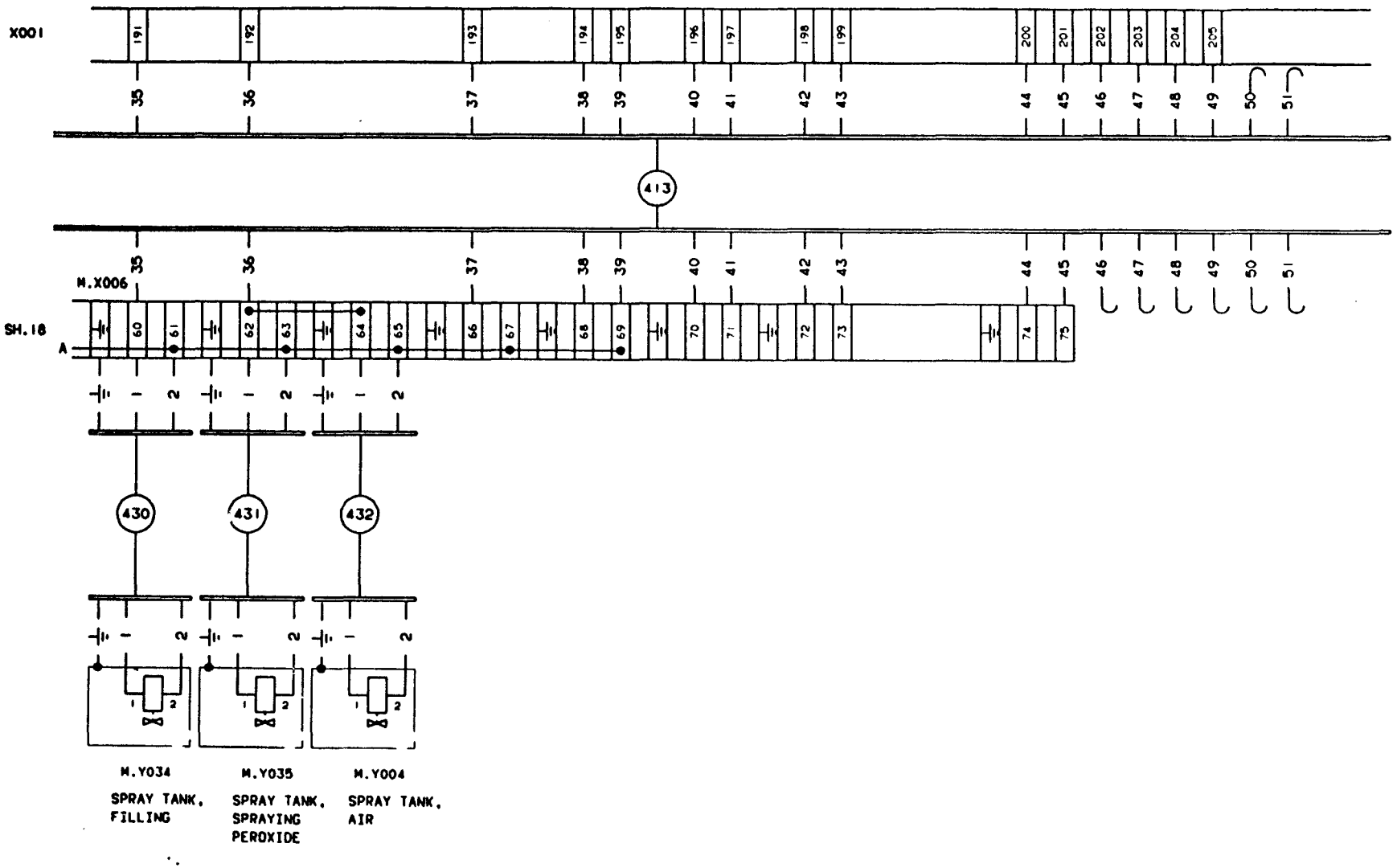

PROJECTED WITH JOB NO. 19260	DATE 9303|0	DRAWN HK/UTH	DESCRIPTION: CONNECTION DIAGRAM
ISSUE			MACHINE: TBA/9-1401 S.A
JOB NO			61232-19:01
DATE			
DRAWN		DRAWING REMARKS	

ALTERATIONS ONLY IN CADAM

10:51 94.2.23

This drawing must not without the consent of Tetra Pak be copied, transmitted or disclosed to any third party.

Tetra Pak
LUND SWEDEN

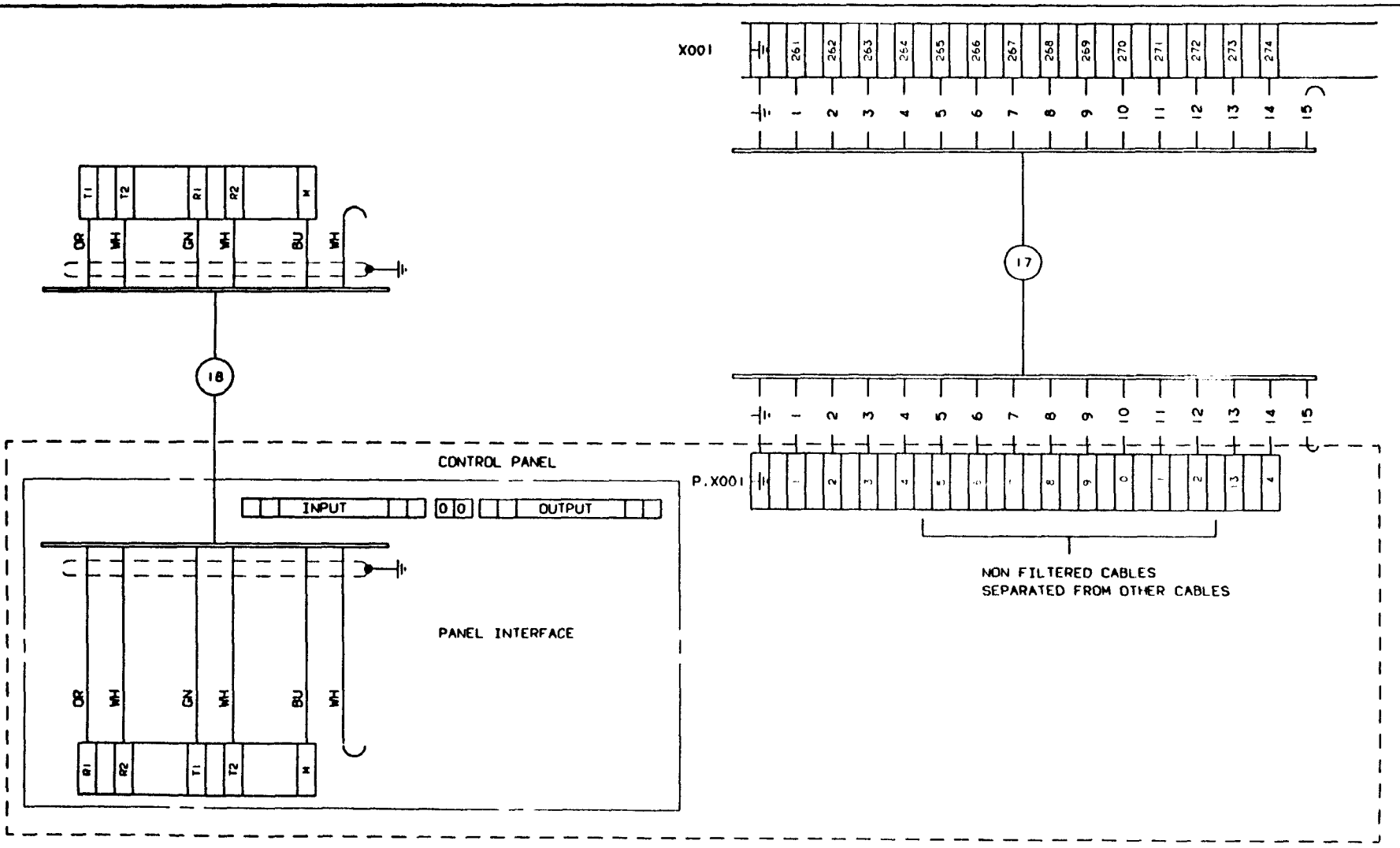

INTRODUCED WITH ART NO 19260	DATE 930310	SIGN HK/UTH		DESCRIPTION: CONNECTION DIAGRAM
ISSUE			DRAWING REMARKS	MACHINE: TBA/9-1401 S.A 61232-25:01
ART NO				
DATE				
SIGN				

ALTERATIONS ONLY IN CADAM

10.51 94.2.25

Tetra Pak
LUND SWEDEN

This drawing must not without the consent of Tetra Pak be copied, transmitted or disclosed to any third party.

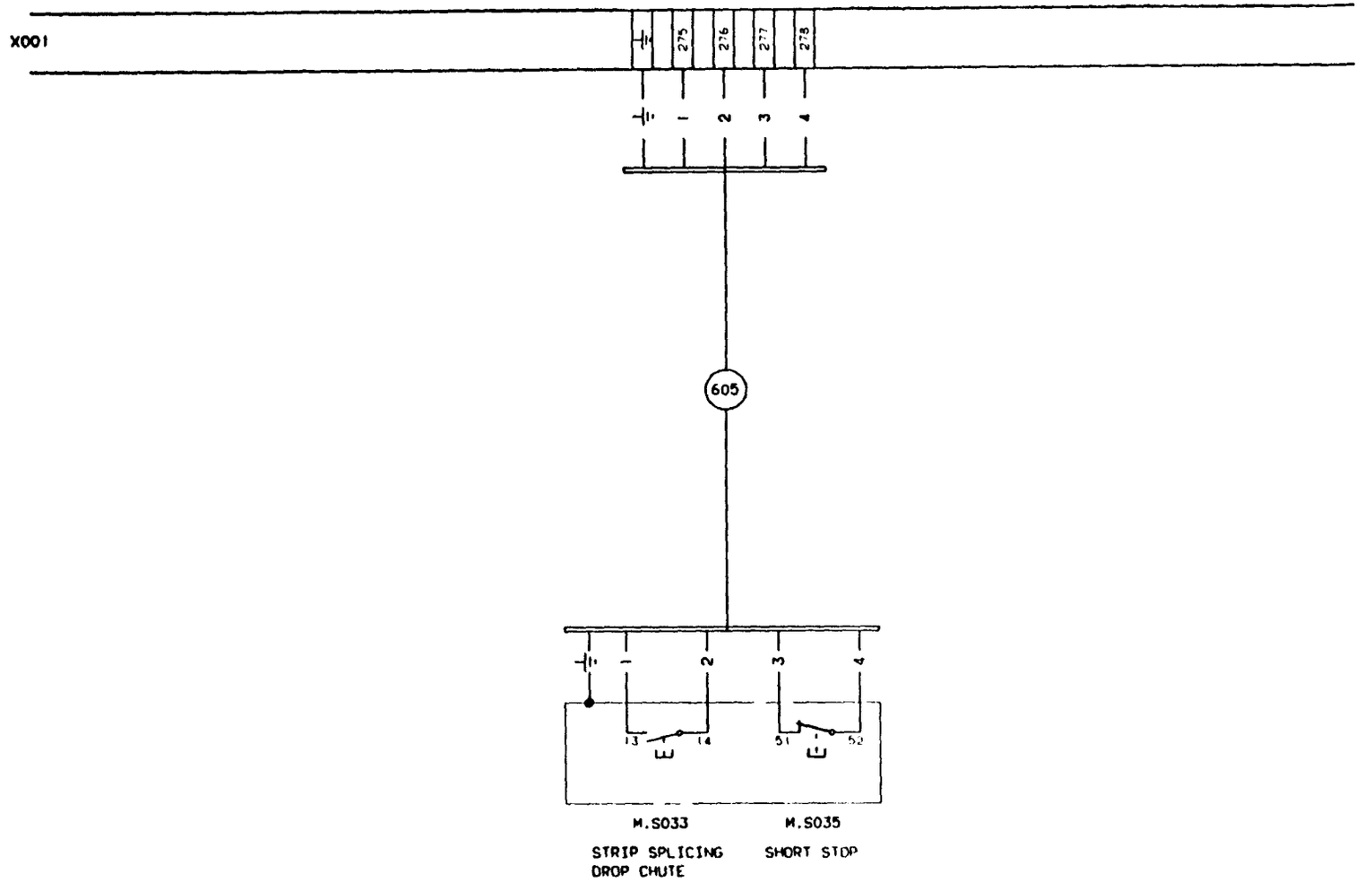

19260	930310	HK/UTH	

ALTERATIONS ONLY IN CADAM

DRAWING REMARKS

DESCRIPTION: CONNECTION DIAGRAM

MACHINE: TBA/9-1401 S.A

61232-27:01

10.51 94.2.28

Tetra Pak
MODENA ITALY

This drawing must not without the consent of Tetra Pak be copied, transmitted or disclosed to any third party.

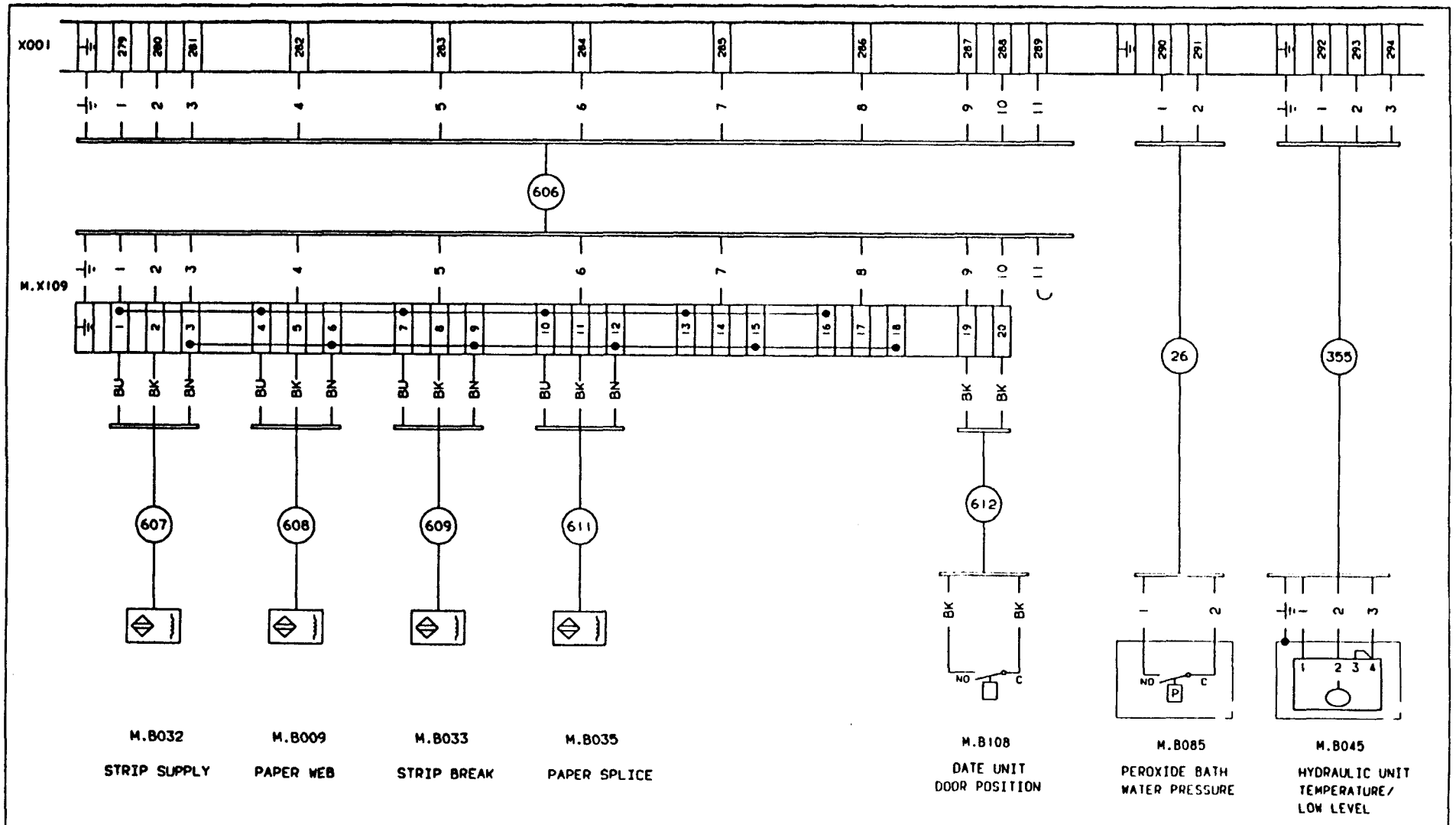

M.B032
STRIP SUPPLY

M.B009
PAPER WEB

M.B033
STRIP BREAK

M.B035
PAPER SPLICE

M.B108
DATE UNIT
DOOR POSITION

M.B085
PEROXIDE BATH
WATER PRESSURE

M.B045
HYDRAULIC UNIT
TEMPERATURE/
LOW LEVEL

19260	930310	HK/UTH	
A			
20080			
930909			
HK/MRT			

DESCRIPTION: CONNECTION DIAGRAM

MACHINE: TBA/9-1401 S.A

61232-28:01

10.51 94.2.28

Tetra Pak
LUND SWEDEN

This drawing must not without the consent of Tetra Pak be copied, transmitted or disclosed to any third party.



PROGRAMMED WITH ART NO 19260	DATE 930310	SIGN HK/UTH	DRAWING REMARKS
MADE			
ART NO			
DATE			
SIGN			

ALTERATIONS ONLY IN CADAM

DESCRIPTION: CONNECTION DIAGRAM

MACHINE: TBA/9-1401 S.A

61232-29:01

10:51 94.2.25

Tetra Pak
LUND SWEDEN

This drawing must not without the consent of Tetra Pak be copied, transmitted or disclosed to any third party.

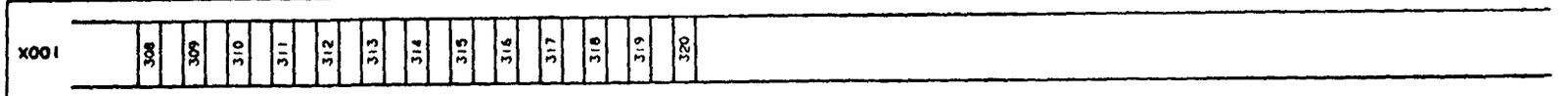

19260	DATE 930310	DRAWN HK/UTH		DESCRIPTION: CONNECTION DIAGRAM
			DRAWING REMARKS	MACHINE: TBA/9-1401 S.A — 61232-30:01

ALTERATIONS ONLY IN CADAM

10:51 94.2.28

Tetra Pak
LUND SWEDEN

This drawing must not without the consent of Tetra Pak be copied, transmitted or disclosed to any third party.

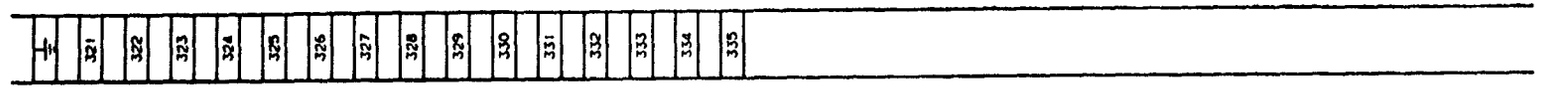

PRODUCED AT/BY AND NO. 19260	DATE 930310	DRAWN HK/UTH		DESCRIPTION CONNECTION DIAGRAM
ISSUE			DRAWING REMARKS	MACHINE TBA/9-1401 S.A 61232-31:01
APP. REF				
DATE				
DRAWN				

ALTERATIONS ONLY IN CADAM

10:51 94.2.28

Tetra Pak
LUND SWEDEN

This drawing must not without the consent of Tetra Pak be copied, transmitted or disclosed to any third party.

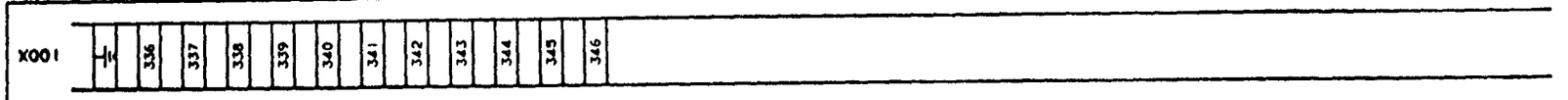

	19260	DATE: 930310	DRAWN: HK/UTH	DRAWING REMARKS	DESCRIPTION: CONNECTION DIAGRAM
					MACHINE: TBA/9-1401 S.A 61232-32:01

ALTERATIONS ONLY IN CADAM

94.2.25 10:51

This drawing must not without the consent of Tetra Pak be copied, transmitted or disclosed to any third party.

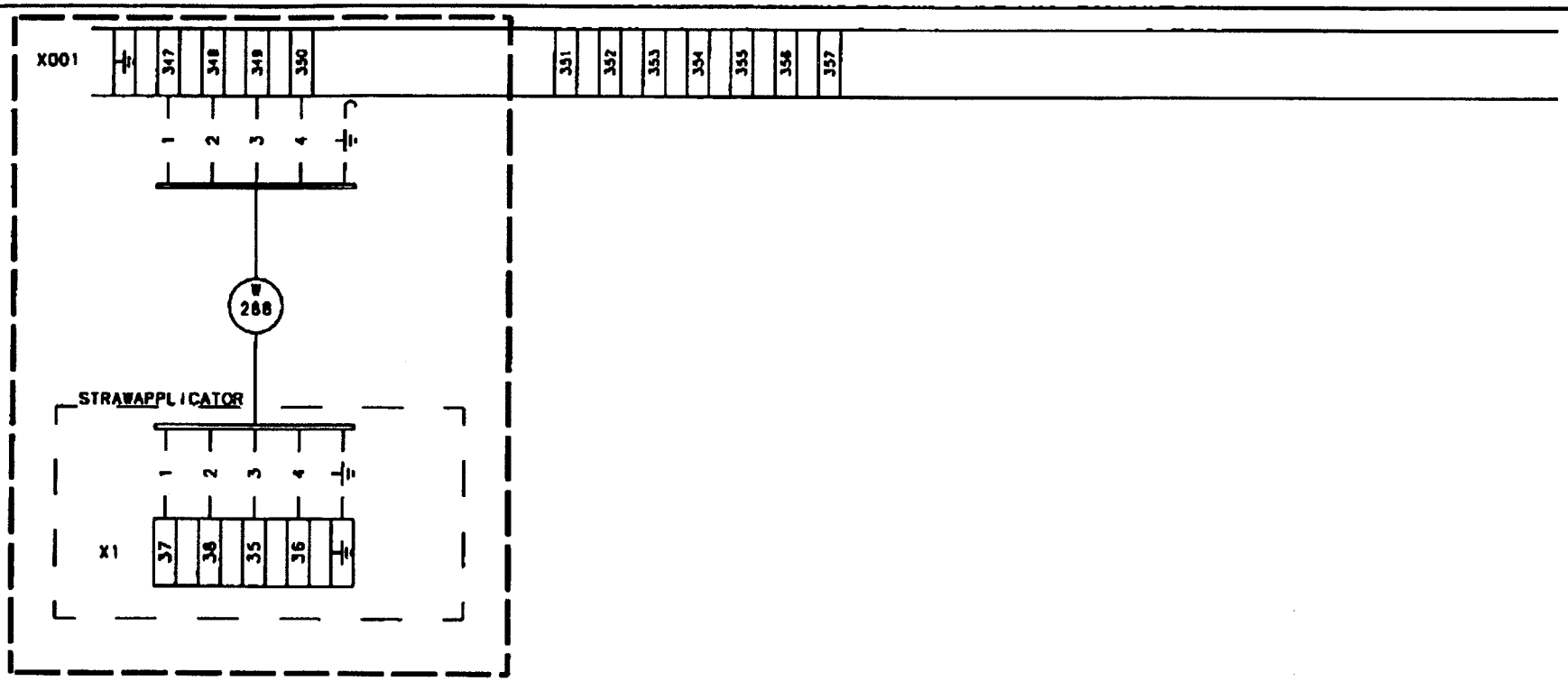

Note	-					Tetra Pak	Designer TEAN Date 000104	Approved PIH Date 000315	Doc. class -
ECN No.	73349						Machine TBA/9-1401	Designation "TETRA WEDGE"	
Sign./Date	TEAN/000104				RK-559491-0100		Company Tetra Brik Packaging Systems AB	Drawing No. RK-61232-33:43	Page -
Appr./Date	PIH/000315				Drawing remarks				

Tetra Pak
LUND SWEDEN

This drawing must not without the consent of Tetra Pak be copied, transmitted or disclosed to any third party.

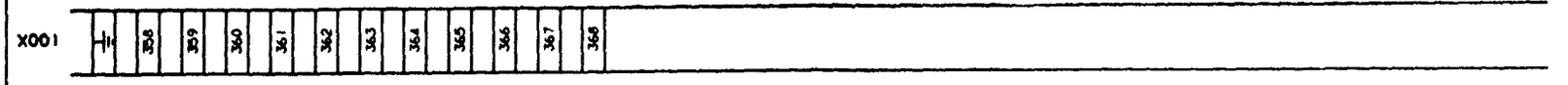

APPROVED SYM AND NO	19260	DATE 930310	SIGN HK/UTH	DRAWING REMARKS
ISSUE				
AM NO				
DATE				
SIGN				

ALTERATIONS ONLY IN CADAM

DESCRIPTION: CONNECTION DIAGRAM

MACHINE: TBA/9-1401 S.A

61232-34:01

10.51 94.2.25

Tetra Pak
LUND SWEDEN

This drawing must not without the consent of Tetra Pak be copied, transmitted or disclosed to any third party.



INTERCHANGED WITH ART NO	19260	DATE 930310	DRAWN HK/UTH
ISSUE			
ART NO			
DATE			
DRAWN			

DRAWING REMARKS

DESCRIPTION: CONNECTION DIAGRAM

MACHINE: TBA/9-1401 S.A

61232-35:01

ALTERATIONS ONLY IN CADAM

10:51 94.2.28

Tetra Pak
LUND SWEDEN

This drawing must not without the consent of Tetra Pak be copied, transmitted or disclosed to any third party.

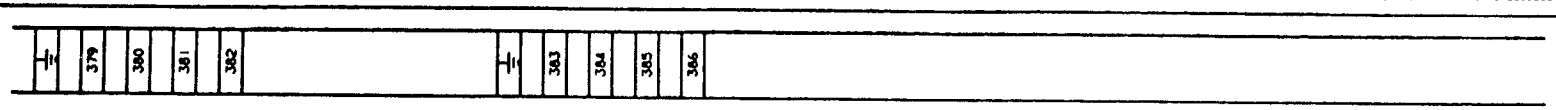

19260	930310	HK/UTH	
			DRAWING REMARKS

ALTERATIONS ONLY IN CADAM

DESCRIPTION: CONNECTION DIAGRAM

MACHINE: TBA/9-1401 S.A

61232-36:01

10:51 94.2.25

Tetra Pak
MODENA ITALY

This drawing must not without the consent of Tetra Pak be copied, transmitted or disclosed to any third party.

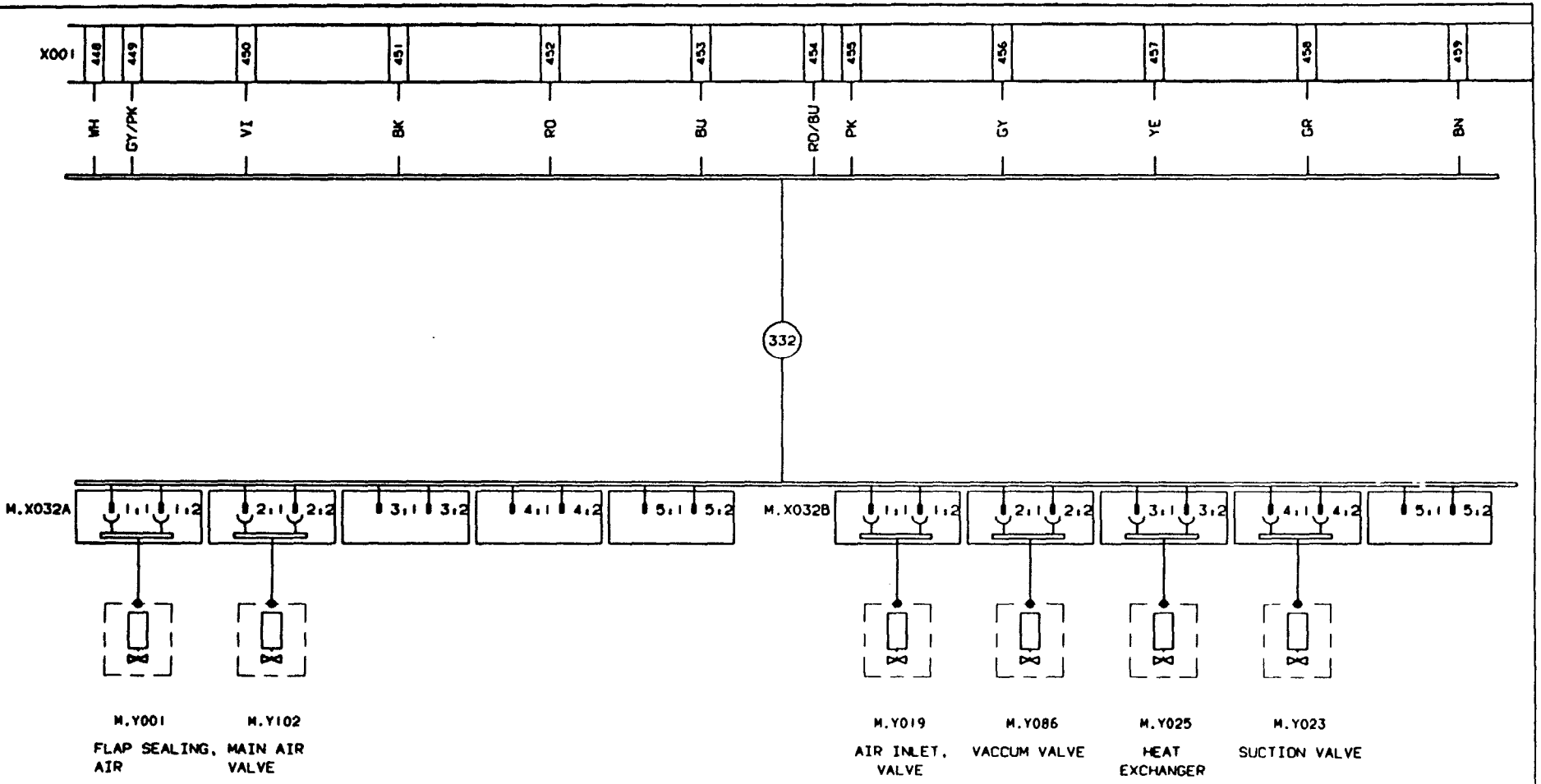

FOOT NOTE: CABLE CORES ARE TO BE MARKED WITH TERMINAL DESIGNATION

	19260	DATE: 930310	DRAWN: HK/UTH	DESCRIPTION: CONNECTION DIAGRAM	
ISSUE	A				
ART NO	20080				
DATE	930909				
DRAWN	HK/MRI		DRAWING REMARKS	MACHINE: TBA/9-1401 S.A	61232-43:01

ALTERATIONS ONLY IN CADAM

10:51 94.2.28

Tetra Pak
LUND SWEDEN

This drawing must not without the consent of Tetra Pak be copied, transmitted or disclosed to any third party.

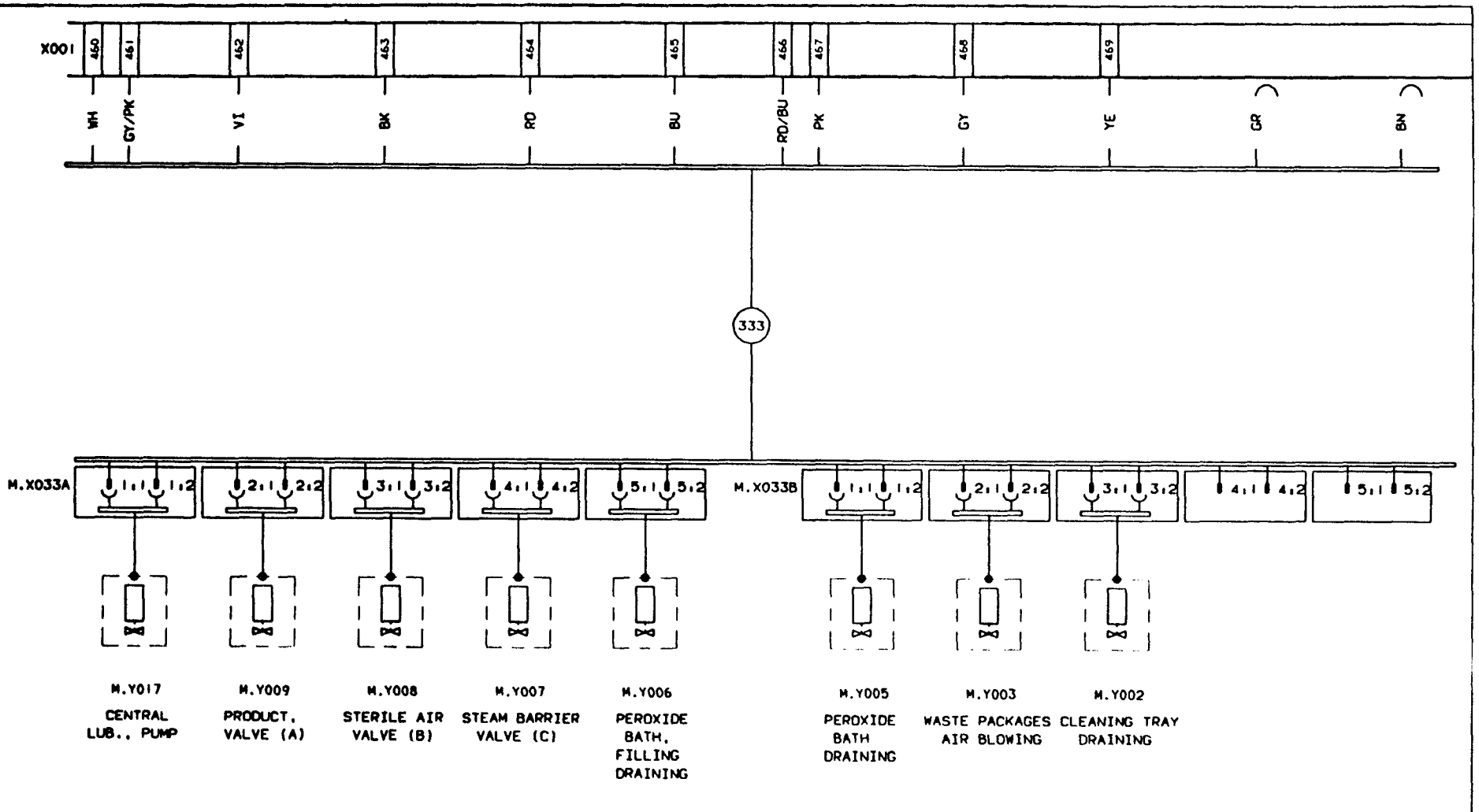

FOOT NOTE: CABLE CORES ARE TO BE MARKED WITH TERMINAL DESIGNATION

	19260	930310	HK/UTH

DRAWING REMARKS

ALTERATIONS ONLY IN CADAM

DESCRIPTION: CONNECTION DIAGRAM

MACHINE: TBA/9-1401 S.A

61232-44:01

10.51 94.2.23

Tetra Pak
MODENA ITALY

This drawing must not without the consent of Tetra Pak be copied, transmitted or disclosed to any third party.

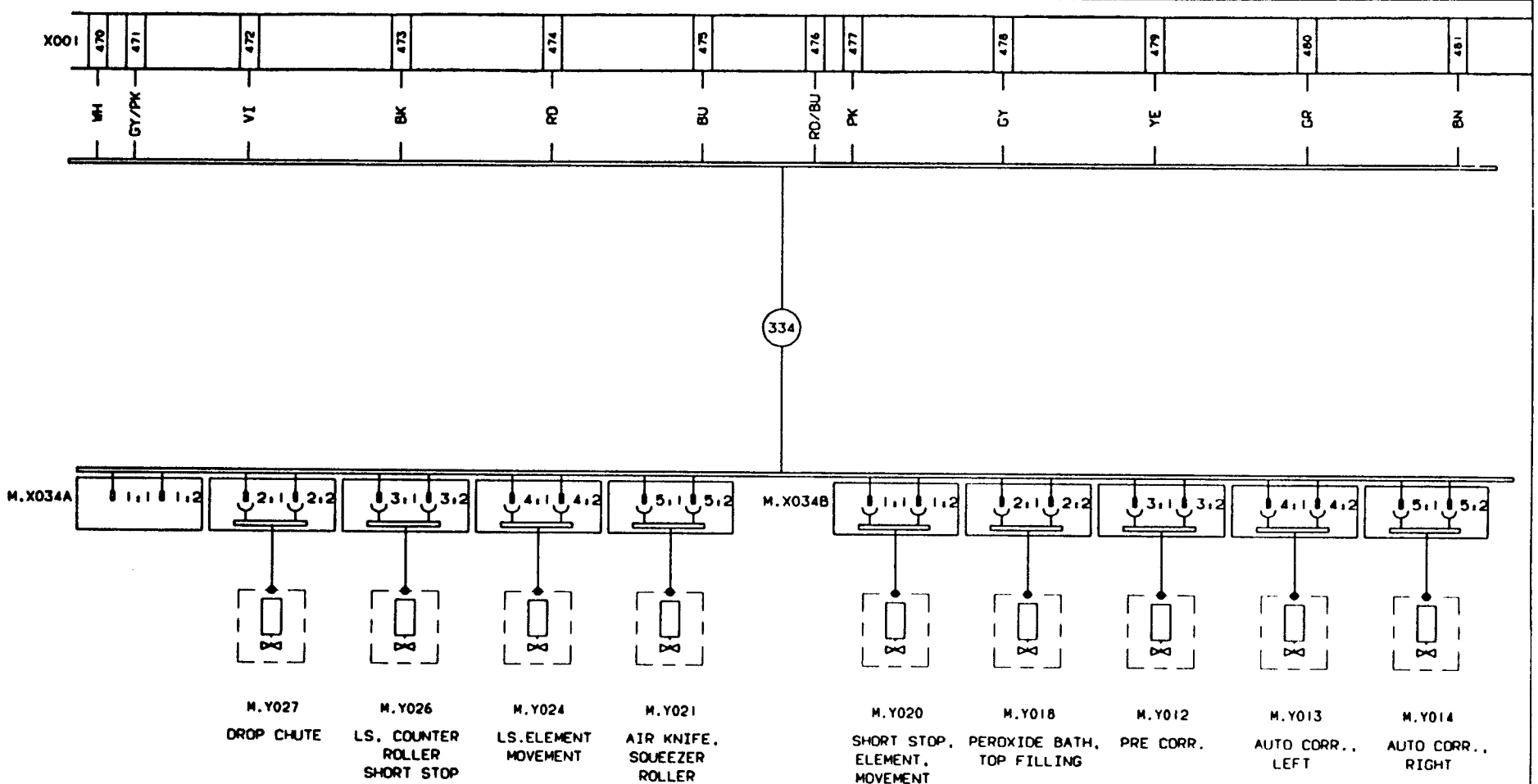

FOOT NOTE, CABLE CORES ARE TO BE MARKED WITH TERMINAL DESIGNATION

19260	DATE 930310	SIGN HK/UTH	
ISSUE A			
20080			
DATE 930909			
SIGN HK/MR			DRAWING REMARKS

ALTERATIONS ONLY IN CADAM

DESCRIPTION: CONNECTION DIAGRAM

MACHINE: TBA/9-1401 S.A

61232-45:01

10:51 94.2.28

Tetra Pak
LUND SWEDEN

This drawing must not without the consent of Tetra Pak be copied, transmitted or disclosed to any third party.

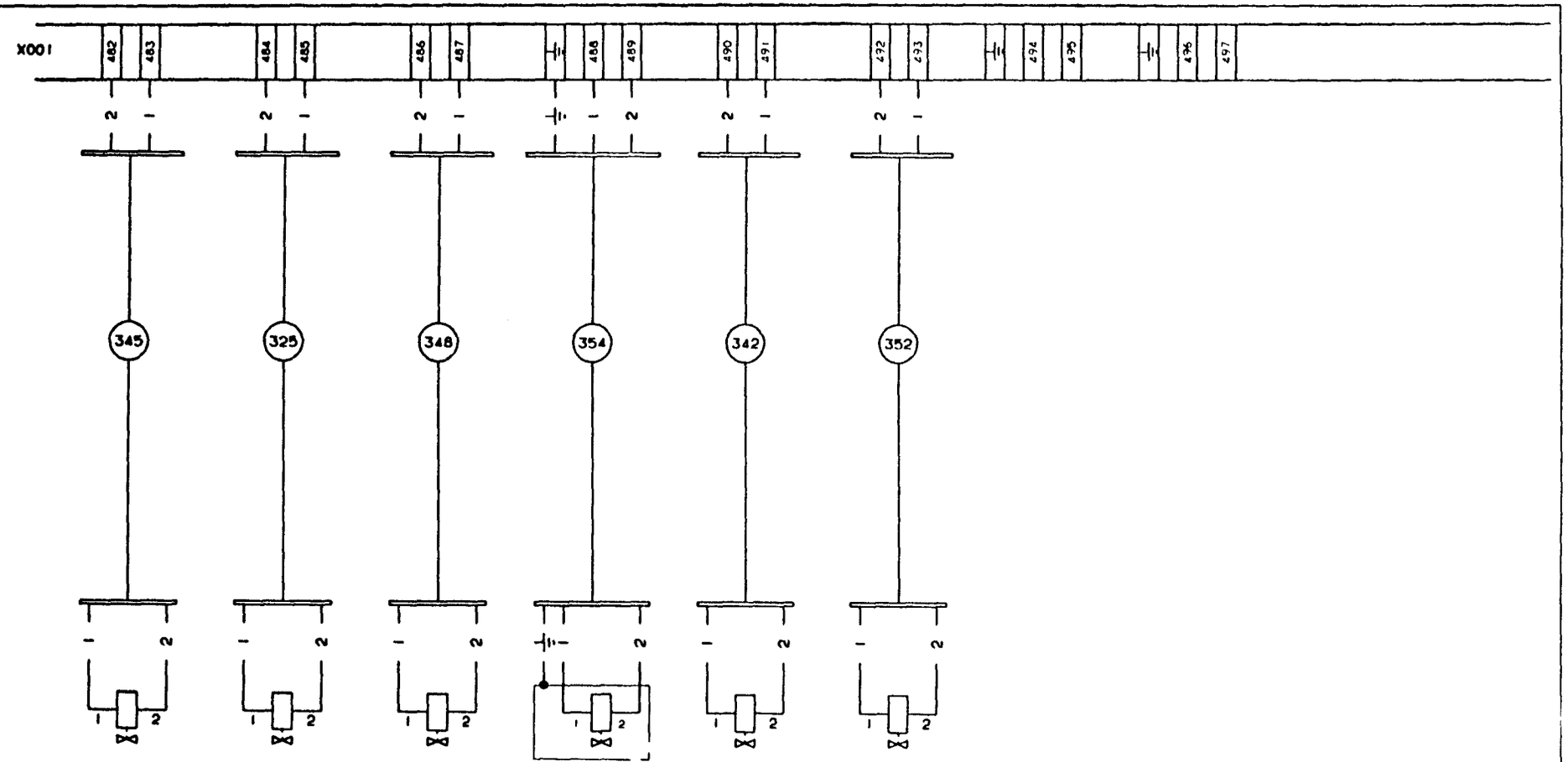

M.Y029	M.Y031	M.Y032	M.Y033	M.Y039	M.Y051
CLEAN. SYSTEM HOT WATER	FINAL FOLDER, SPRINKLER	COMPRESSOR WATER	COOLING WATER	TUBE FLUSHING	AIR INJECTION COOLING WATER

FOOT NOTE: CABLE CORES ARE TO BE MARKED WITH TERMINAL DESIGNATION

INTRODUCED WITH JOB NO 19260	DATE 930310	DRAWN HK/UTH	DESCRIPTION: CONNECTION DIAGRAM
			MACHINE: TBA/9-1401 S.A
DRAWING REMARKS			61232-46:01

ALTERATIONS ONLY IN CADAM

10.51 94.2.28

Tetra Pak
LUND SWEDEN

This drawing must not without the consent of Tetra Pak be copied, transmitted or disclosed to any third party.

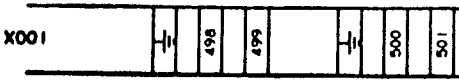

FOOT NOTE: CABLE CORES ARE TO BE MARKED WITH TERMINAL DESIGNATION

ALTERATIONS ONLY IN CADAM

19260	DATE 930310	SIGN HK/UTH	DRAWING REMARKS

DESCRIPTION: CONNECTION DIAGRAM

MACHINE: TBA/9-1401 S.A

61232-47:01

10.51 94.2.28

Tetra Pak
MODENA ITALY

This drawing must not without the consent of Tetra Pak be copied, transmitted or disclosed to any third party.

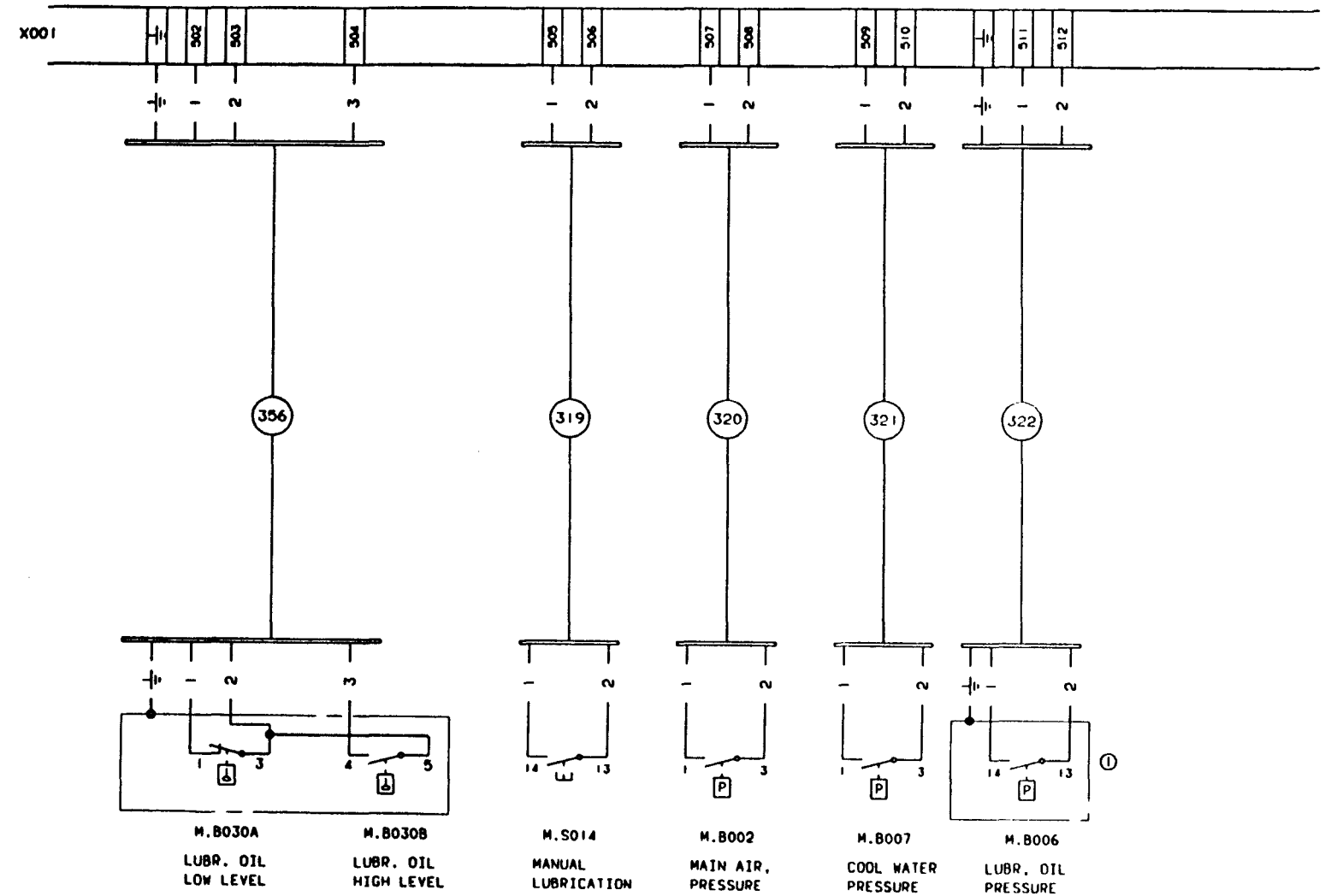

INTRODUCED WITH JOB NO. 19260	DATE 930310	SIGN HK/UTH	① BEFORE T-ORDER T-13147 AND T-20163 THE CONNECTION IS 1 AND 3 INSTEAD OF 13 AND 14	DESCRIPTION: CONNECTION DIAGRAM
ISSUE A B				
JOB NO 20080 20406				
DATE 930909 931015				
SIGN HK/MRI HK/MRI				MACHINE: TBA/9-1401 S.A
ALTERATIONS ONLY IN CADAM			DRAWING REMARKS	61232-48:01

10.51 94.2.23

Tetra Pak
LUND SWEDEN

this drawing must not without the consent of Tetra Pak be copied, transmitted or disclosed to any third party.

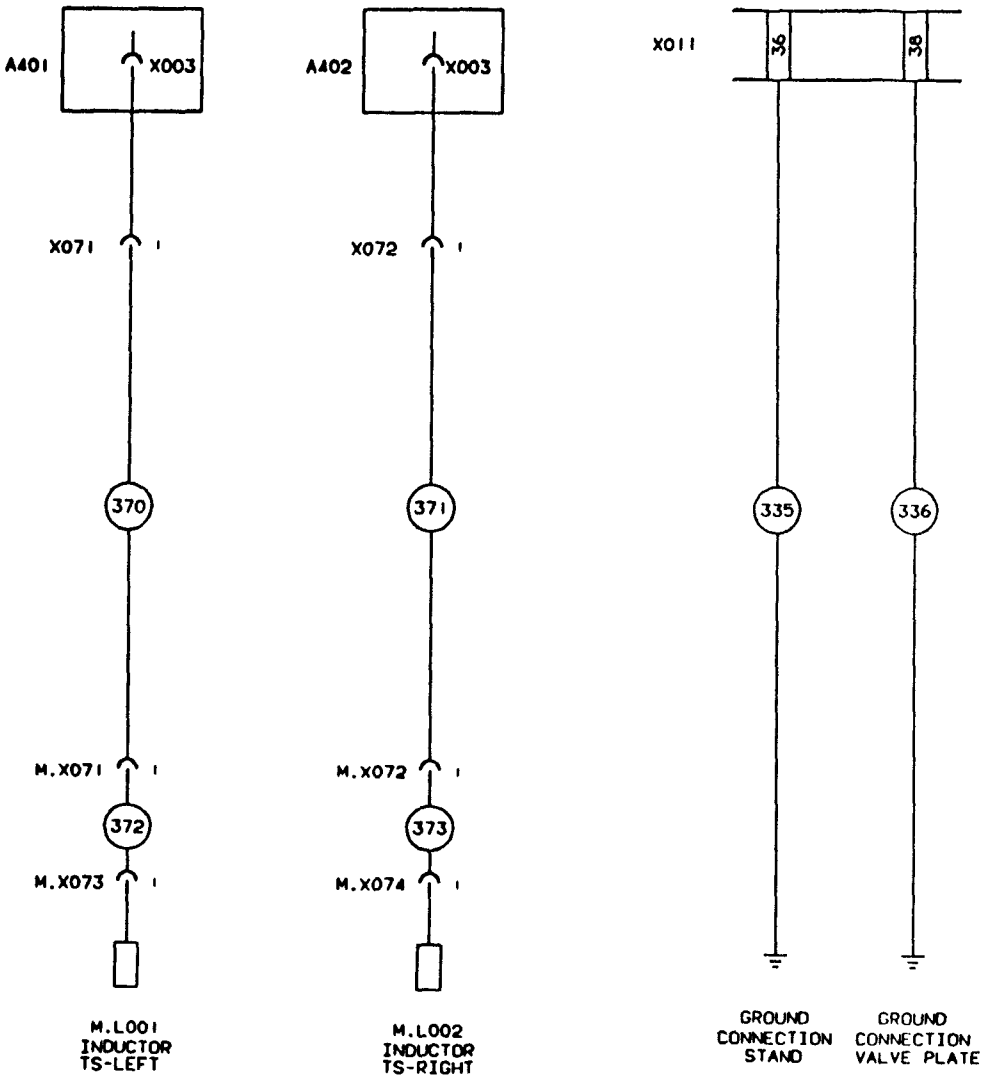

INTRODUCED WITH ADP NO. 19260	DATE 930310	SIGN HK/UTH	
ALTERATIONS ONLY IN CADAM			DRAWING REMARKS

DESCRIPTION: CONNECTION DIAGRAM

MACHINE: TBA/9-1401 S.A

61232-49:01

10.51 94.2.23

PRE-RELEASED/DEVELOPMENT STATE

This drawing must not without the consent of Tetra Pak be copied, transmitted or disclosed to any third party.

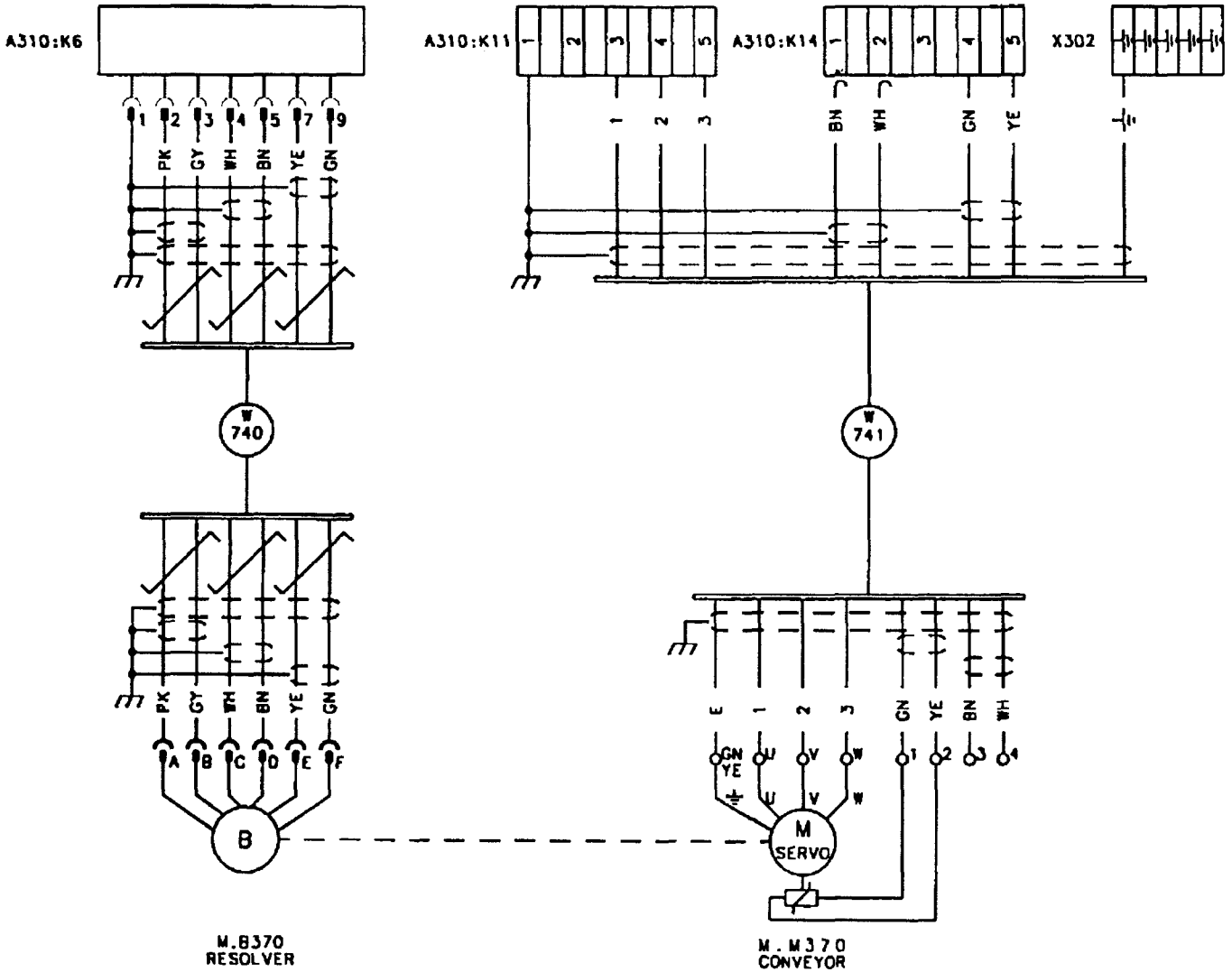

FOOT NOTE: CABLE CORES ARE TO BE MARKED WITH TERMINAL DESIGNATION

Rels	-	A				Tetra Pak	Designer TEAN	Date 990521	Approved PIH Date 990602	Doc. class -
ECR No.	72526	72800					Machine TBA/9-1401	Denomination "TETRA WEDGE"		
Sign./Date	TEAN/990521	TEAN/990902			RK-559491-0100					
Appr./Date	PIH/990602	PIH/990902			Drawing remarks		Company Tetra Brik Packaging Systems AB	Drawing No. RK-61232-50:41		Page -

This drawing must not without the consent of Tetra Pak be copied, transmitted or disclosed to any third party.

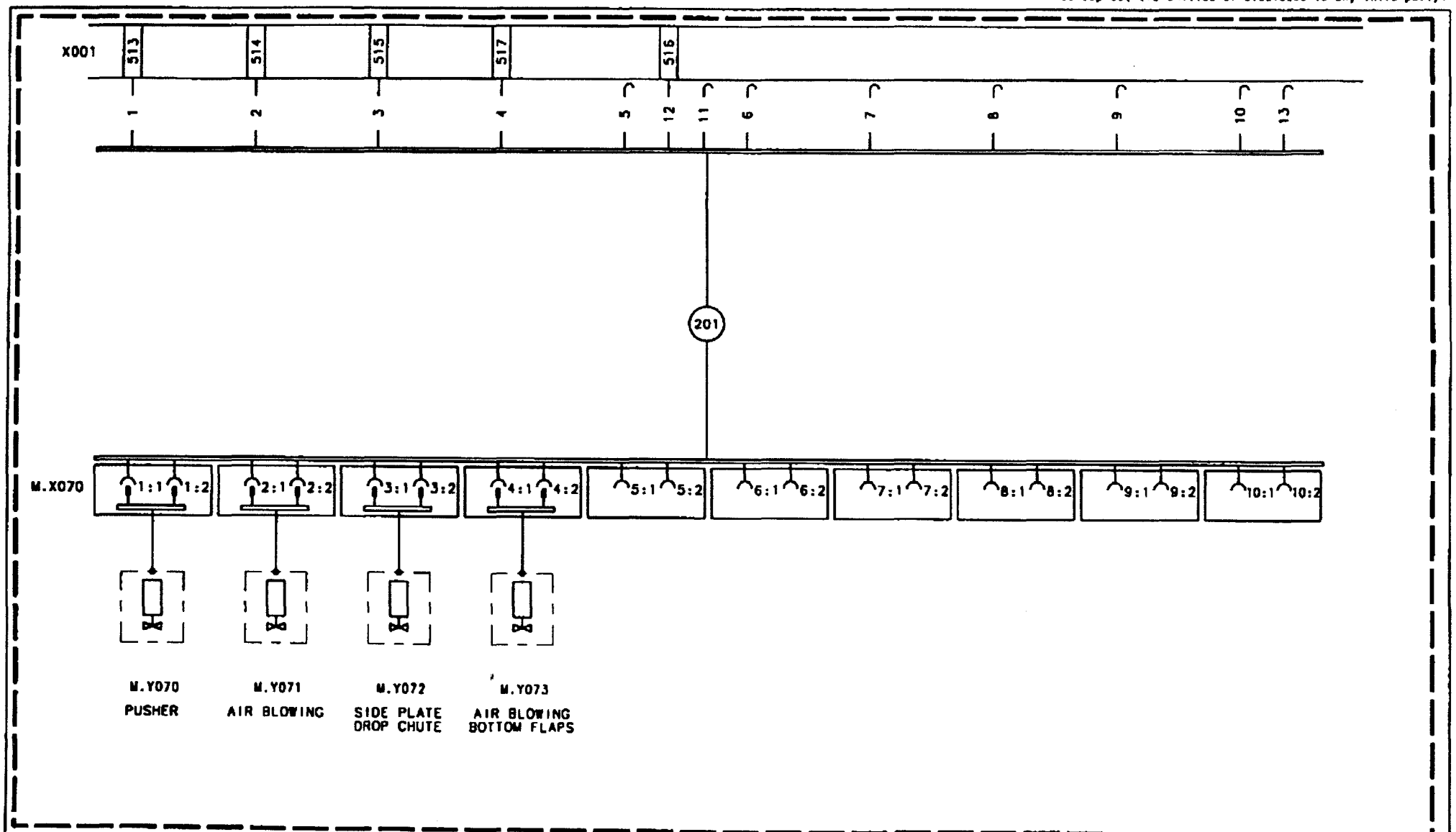

FOOT NOTE: CABLE CORES ARE TO BE MARKED WITH TERMINAL DESIGNATION

Rev.	-					Tetra Pak	Designer TEAN	Date 000104	Approved PIH Date 000315	Doc. class -
ECO no.	73349						Machine TBA/9-1401	Denomination "TETRA WEDGE"		
Sign./Date	TEAN/000104				RK-559491-0100		Company Tetra Brik Packaging Systems AB	Drawing no. RK-61232-51:43		Page -
Appr./Date	PIH/000315				Drawing remarks					

Tetra Pak
LUND SWEDEN

This drawing must not without the consent of Tetra Pak be copied, transmitted or disclosed to any third party.

MAIN VOLTAGE 200-600V EXCEPT 400/230V

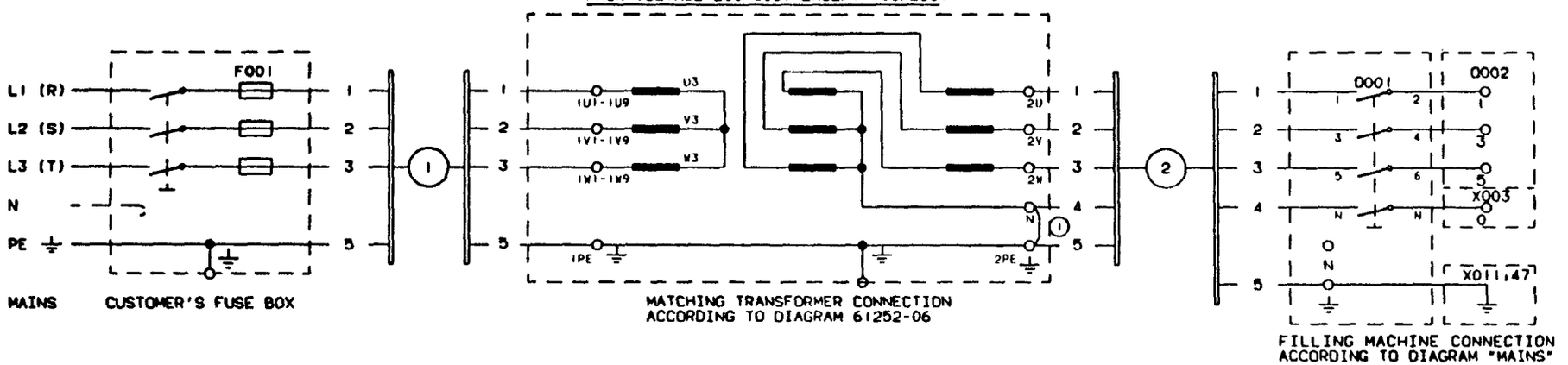

MAINS CUSTOMER'S FUSE BOX

MATCHING TRANSFORMER CONNECTION
ACCORDING TO DIAGRAM 61252-06

FILLING MACHINE CONNECTION
ACCORDING TO DIAGRAM "MAINS"

MAIN VOLTAGE 400/230V

AREA TO CABLE 4×25/16 AND
SETTING VALUE OF 0002 63/400

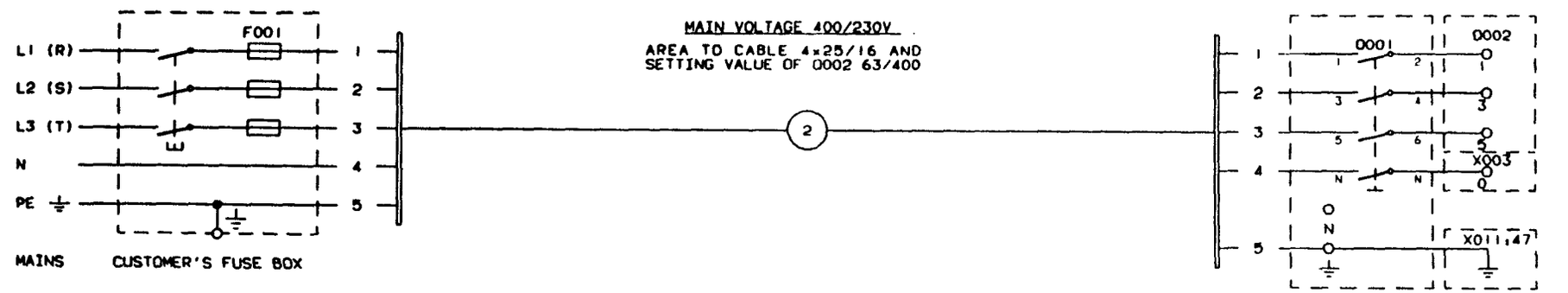

MAINS CUSTOMER'S FUSE BOX

FILLING MACHINE CONNECTION
ACCORDING TO DIAGRAM "MAINS"

19260	DWG. 930310	DRAWN HK/UTH	ATTENTION: PROTECTIVE GROUNDING TO BE CARRIED OUT ACCORDING TO CURRENT [illegible] REGULATIONS (1) MAKE SURE THAT THE [illegible] IS CONNECTED. AREA 16mm²

ALTERATIONS ONLY IN CADAM

DESCRIPTION: MAINS CONNECTION

MACHINE: TBA/9-1401 S.A. 61252-05:01

10.51 94.2.28

Tetra Pak
LUND SWEDEN

This drawing must not without the consent of Tetra Pak be copied, transmitted or disclosed to any third party.

MAIN VOLTAGE	FUSES (SLOW) ①F001	AREA TO CU CABLES NO. 1	AREA TO CU CABLES NO. 2	SETTING VALUE 0002	CONNECTIONS ON MATCHING TRANSFORMER			
					MAINS		TAP	CONNECT
V	A	mm²	mm²	A				
600/347 3x600	100	3x16/16	4x25/16	63/400	PHASE PHASE PHASE N GROUND	L1 L2 L3 N PE	1U9 1V9 1W9 N ⏚	1U3 - U4 1V3 - V4 1W3 - W4
550/318 3x550	100	3x16/16	4x25/16	63/400	PHASE PHASE PHASE N GROUND	L1 L2 L3 N PE	1U8 1V8 1W8 N ⏚	1U3 - U4 1V3 - V4 1W3 - W4
500/289 3x500	125	3x25/16	4x25/16	63/400	PHASE PHASE PHASE N GROUND	L1 L2 L3 N PE	1U7 1V7 1W7 N ⏚	1U3 - U4 1V3 - V4 1W3 - W4
480/277 3x480	125	3x25/16	4x25/16	63/400	PHASE PHASE PHASE N GROUND	L1 L2 L3 N PE	1U6 1V6 1W6 N ⏚	1U3 - U4 1V3 - V4 1W3 - W4
440/254 3x440	125	3x25/16	4x25/16	63/400	PHASE PHASE PHASE N GROUND	L1 L2 L3 N PE	1U5 1V5 1W5 N ⏚	1U2 - U4 1V2 - V4 1W2 - W4
415/240 3x415	125	3x25/16	4x25/16	63/400	PHASE PHASE PHASE N GROUND	L1 L2 L3 N PE	1U5 1V5 1W5 N ⏚	1U1 - U4 1V1 - V4 1W1 - W4
3x400 [3x380]	160	3x25/16	4x25/16	63/400	PHASE PHASE PHASE N GROUND	L1 L2 L3 N PE	1U4 1V4 1W4 N ⏚	1U1 - U4 1V1 - V4 1W1 - W4
240/140 3x240	250	3x70/35	4x25/16	63/400	PHASE PHASE PHASE N GROUND	L1 L2 L3 N PE	1U3 1V3 1W3 N ⏚	U3 - U4 1U3-1U6 V3 - V4 1V3-1V6 W3 - W4 1W3-1W6
220/127 3x220	250	3x70/35	4x25/16	63/400	PHASE PHASE PHASE N GROUND	L1 L2 L3 N PE	1U2 1V2 1W2 N ⏚	U3 - U4 1U2-1U5 V3 - V4 1V2-1V5 W3 - W4 1W2-1W5
200/115 3x200	315	3x95/50	4x25/16	63/400	PHASE PHASE PHASE N GROUND	L1 L2 L3 N PE	1U1 1V1 1W1 N ⏚	U3 - U4 1U1-1U4 V3 - V4 1V1-1V4 W3 - W4 1W1-1W4

MATCHING TRANSFORMER
90245-0024

Y/Z II-WIRED

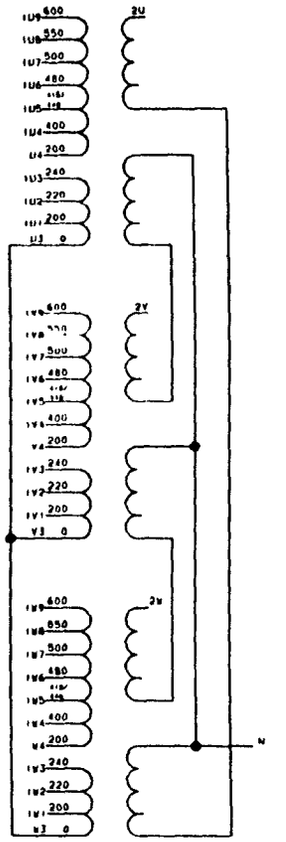

INTRODUCED WITH AR NO	19260	DATE 930310	DRAWN HK/UTH
REMARK			
AR NO			
DATE			
DRAWN			

ALTERATIONS ONLY IN CADAM

① RECOMMENDED MAINS FUSE TO ACHIEVE SELECTIVITY

DRAWING REMARKS

DESCRIPTION: MATCHING TRANSFORMER

MACHINE: TBA/9-1401 S.A

61252-06:01

Tetra Pak
LUND SWEDEN

This drawing must not without the consent of Tetra Pak be copied, transmitted or disclosed to any third party.

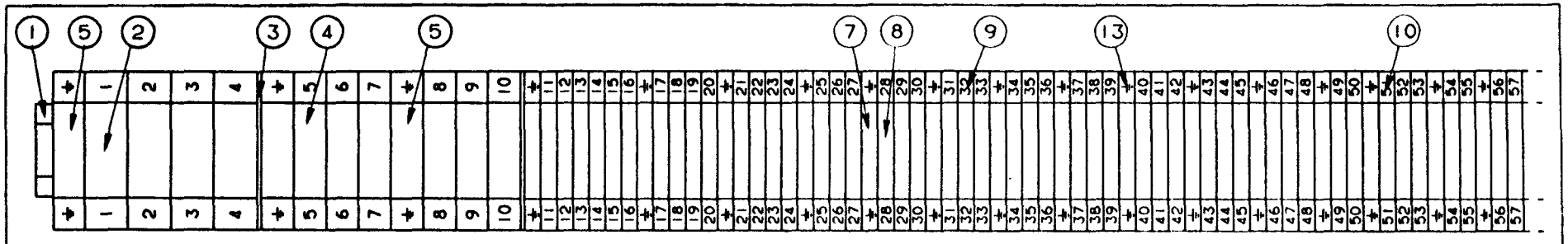

X001

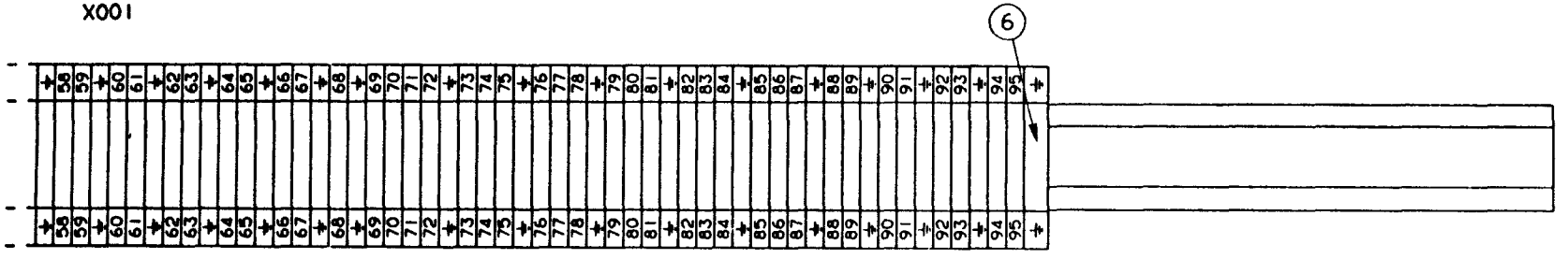

X001

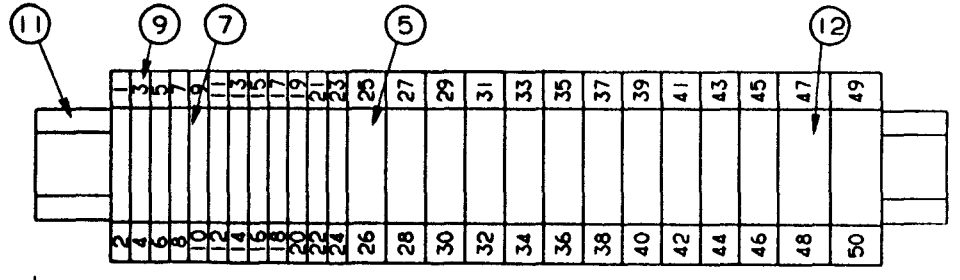

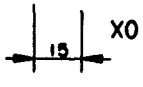

X011

POS.	TYPE	COMP. NO.	QUANT.
:1	TS35 STEEL 3834.0	90077-302 L=1050mm	1
:2	WDU 35 10205.0	353021-219	4
:3	WAP 10501.0	353032-006	2
:4	WDU 16 10204.0	353021-218	6
:5	WPE 16 10104.0	353024-208	14
:6	WPE 6 10102.0	353024-206	1
:7	WPE 4 10101.0	353024-205	43
:8	WDU 4 10201.0	353021-213	85
:9	FW 1-50 4734.6	359011-807	3
:10	FW 51-100 4734.6	359011-808	2
:11	TS35 STEEL 3834.0	90077-302 L=280mm	1
:12	WPE 35 10105.0	353024-209	2
:13	GW ⏚ 5762.6	359011-202	2

	17786	930115	HK/UTH

ALTERATIONS ONLY IN CADAM

DESCRIPTION: TERMINAL BLOCK X001, X011

MACHINE: TBA/9-1401 S.A

570926-0001

10.51 94.2.25

Tetra Pak
LUND SWEDEN

This drawing must not without the consent of Tetra Pak be copied, transmitted or disclosed to any third party.

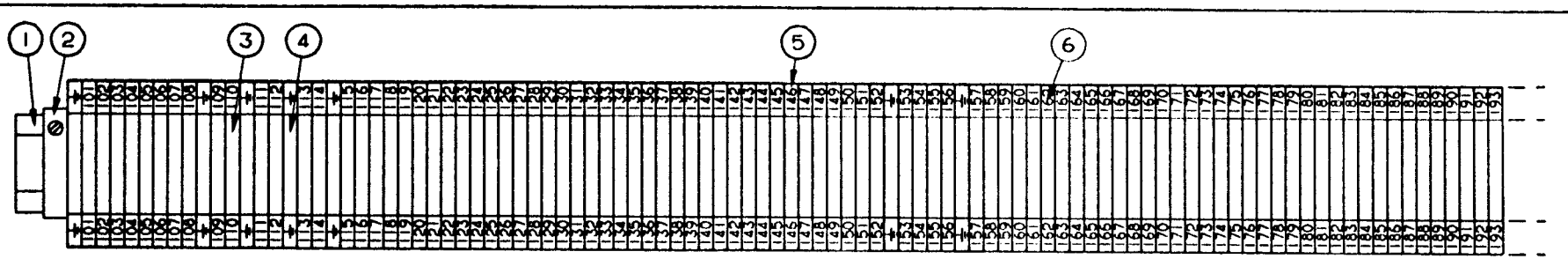

X001

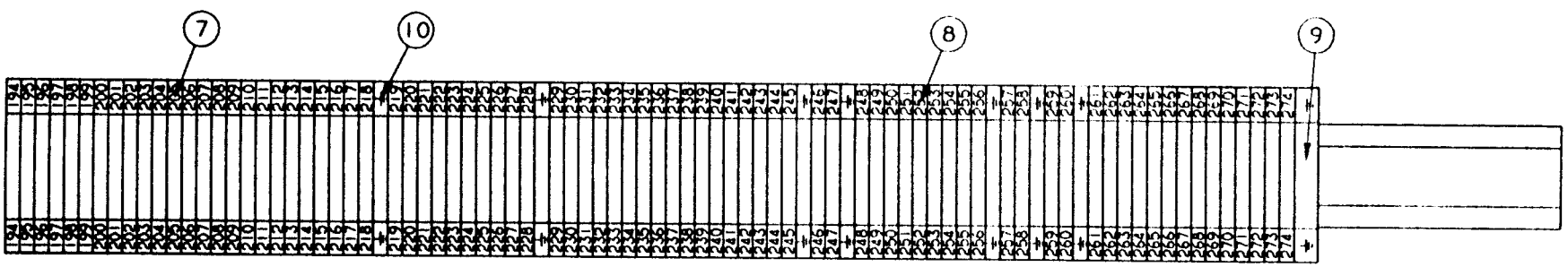

X001

POS.	TYPE	COMP. NO.	QUANT.
:1	TS35 STEEL 3834.0	90077-302 L=1050mm	1
:2	EW 35 3835.6	353031-201	1
:3	WDU 2,5 10200.8	353021-216	174
:4	WPE 2,5 10100.0	353024-204	14
:5	FW 101-150 4734.6	359011-809	2
:6	FW 151-200 4734.6	359011-810	2
:7	FW 201-250 4734.6	359011-811	2
:8	FW 251-300 4734.6	359011-812	2
:9	WPE 6 10102.0	353024-206	1
:10	GW ⏚ 5762.6	359011-202	1

17786	930115	HK/UTH	

ALTERATIONS ONLY IN CADAM

DRAWING REMARKS

DESCRIPTION: TERMINAL BLOCK X001

MACHINE: TBA/9-1401 S.A

570926-0002

10.51 94.2.28

Tetra Pak
LUND SWEDEN

This drawing must not without the consent of Tetra Pak be copied, transmitted or disclosed to any third party.

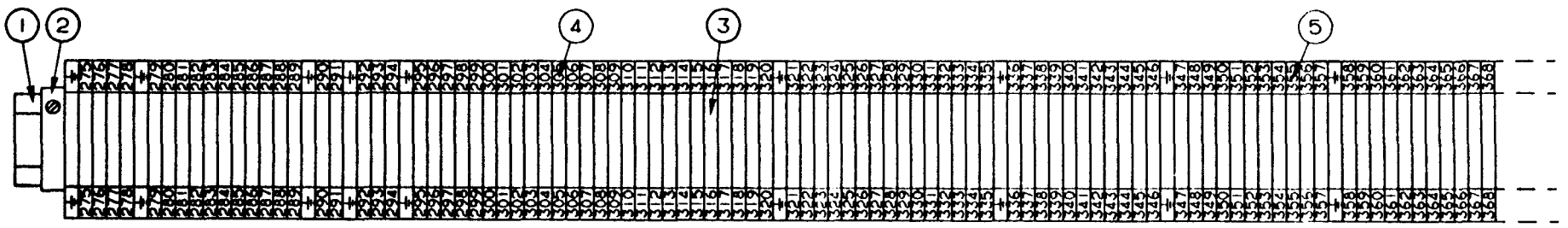

X001

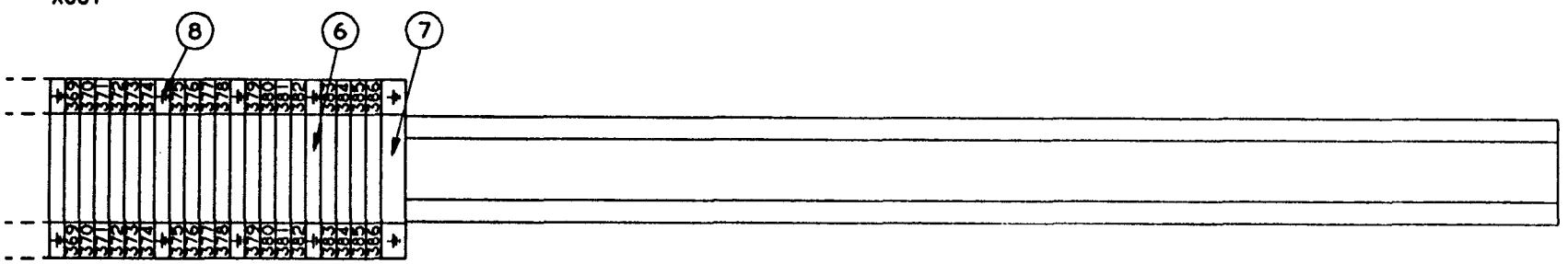

POS.	TYPE	COMP. NO.	QUANT.
:1	TS35 STEEL 3834.0	90077-302 L=1050mm	1
:2	EW 35 3835.6	353031-201	1
:3	WDU 2,5 10200.8	353021-216	112
:4	FW 301-350 4734.6	359011-813	2
:5	FW 351-400 4734.6	359011-814	2
:6	WPE 2,5 10100.0	353024-204	14
:7	WPE 6 10102.0	353024-206	1
:8	GW ⏚ 5762.6	359011-202	1

17786	date 930115	drawn HK/UTH	DESCRIPTION: TERMINAL BLOCK X001
		DRAWING REMARKS	MACHINE: TBA/9-1401 S.A 570926-0003

ALTERATIONS ONLY IN CADAM

10.51 94.2.28

Tetra Pak
MODENA ITALY

This drawing must not without the consent of Tetra Pak be copied, transmitted or disclosed to any third party.

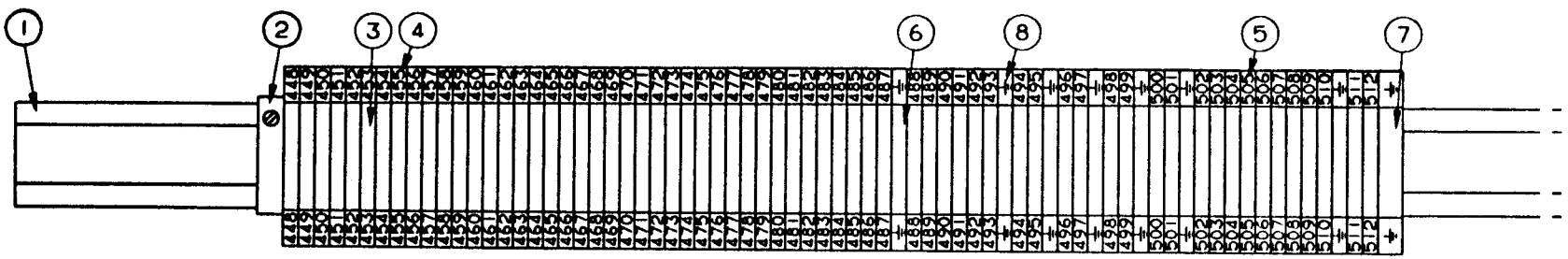

X001

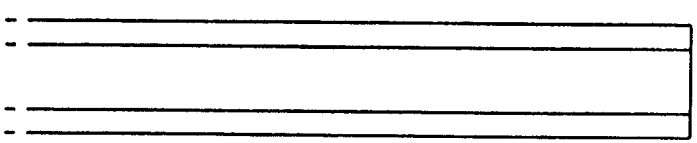

POS.	TYPE	COMP. NO.	QUANT.
1	TS35 STEEL 3834.0	90077-302 L=1050mm	1
2	EW 35 3835.6	353031-201	1
3	WDU 2,5 10200.8	353021-216	65
4	FW 450-500 4734.6	359011-816	2
5	FW 501-550 4734.6	359011-817	2
6	WPE 2,5 10100.0	353024-204	7
7	WPE 6 10102.0	353024-206	1
8	GW ⏚ 5762.6	359011-202	1

17786	DATE 930115	DRAWN HK/UTH	DESCRIPTION. TERMINAL BLOCK X001
ISSUE A			MACHINE. TBA/9-1401 S.A
AM NO 20080			570926-0004
DATE 930909			
DRAWN HK/MRY			

ALTERATIONS ONLY IN CADAM

10.51 94.2.28

Tetra Pak
LUND SWEDEN

This drawing must not without the consent of Tetra Pak be copied, transmitted or disclosed to any third party

571517

OVERLOAD PROTECTIONS

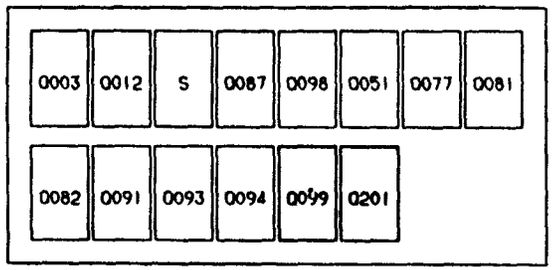

POS	SETTING	FUNCTION
0003	50Hz-25A/40°C 60Hz-25A/40°C	MAIN POWER
0012	50Hz-2,0A/40°C 60Hz-2,0A/40°C	CONTROL TRANSFORMER
0051	50Hz-7,0A/40°C 60Hz-6,0A/40°C	MAIN MOTOR, LOW SPEED
0077	50Hz-10A/40°C 60Hz-9,0A/40°C	MAIN MOTOR HIGH SPEED
0081	50Hz-2,9A/40°C 60Hz-2,9A/40°C	HYDRAULIC PUMP

POS	SETTING	FUNCTION
0082	50Hz-1,5A/40°C 60Hz-1,5A/40°C	PEROXIDE PUMP
0087	50Hz-9,2A/40°C 60Hz-9,4A/40°C	COMPRESSOR, INLET
0091	50Hz-6,8A/40°C 60Hz-8,0A/40°C	CLEANING SYSTEM, CIRCULATION PUMP
0093	50Hz-1,2A/40°C 60Hz-1,3A/40°C	EXTERNAL CONVEYOR
0094	50Hz-0,45A/40°C 60Hz-0,45A/40°C	PAPER SUPPLY

POS	SETTING	FUNCTION
0098	50Hz-9,2A/40°C 60Hz-9,4A/40°C	COMPRESSOR SUCTION
0099	50Hz-0,94A/40°C 60Hz-0,94A/40°C	PEROXIDE BATH, WATER PUMP
0201	50Hz-1,3A/40°C 60Hz-1,3A/40°C	SA, SHORT STOP, FAN

FUSE PANEL

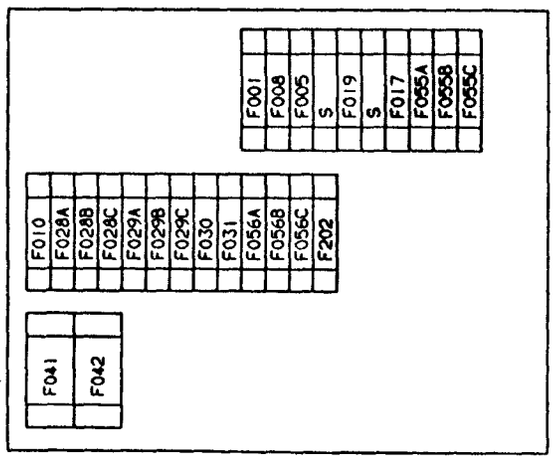

POS	FUNCTION		
F001	10A	TIME RECORDER, WALL SOCKET FAN MOTOR, SPLICER, LIGHT FIXTURES	
F005	16A	FLAP SEALING TOP/BOTTOM	
F008	10A	LS, SHORT STOP	
F010	16A	LONGITUDINAL SEALING	
F017	6A	DETERGENT PUMP, BENDING ROLLER	
F019	6A	CONTROL VOLTAGE, 220V AC TPMC, UNITS	
F028	16A	PEROXIDE BATH, WATER	

POS	SIZE	FUNCTION
F029	25A	AIR SUPER HEATER
F030	10A	PAPER SUPPLY, UNREELING
F031	10A	PAPER SUPPLY, UNREELING
F041	80A	FLAP SEALING, TOP
F042	80A	FLAP SEALING, BOTTOM
F055	10A	CONTROL VOLTAGE, 24V DC
F056	10A	TPIH

POS		FUNCTION
F202	16A	STRIP APPLICATOR

MAX LOAD CIRCUIT BREAKER

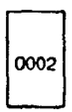

POS	SETTING	MAGNETIC SETTING	FUNCTION
0002	63A/55°C	400A/55°C	MAINS, EL CABINET

TBA/9-1401 S.A.

PROJECTED WITH JOB NO	17786	DATE 930115	DRAWN HK/UTH		
ISSUE	A	B	C		
JOB NO	19260	20080	20398		
DATE	930310	930427	931001		
DRAWN	HK/UTH	HK/PSG	HK/MRJ		

DRAWING REMARKS

DESCRIPTION FUSE PANEL LABEL

MACHINE TBA/9-1401 S.A | 571517

10:51 94.2.23

Tetra Pak
LUND SWEDEN

This drawing must not without the consent of Tetra Pak be copied, transmitted or disclosed to any third party.

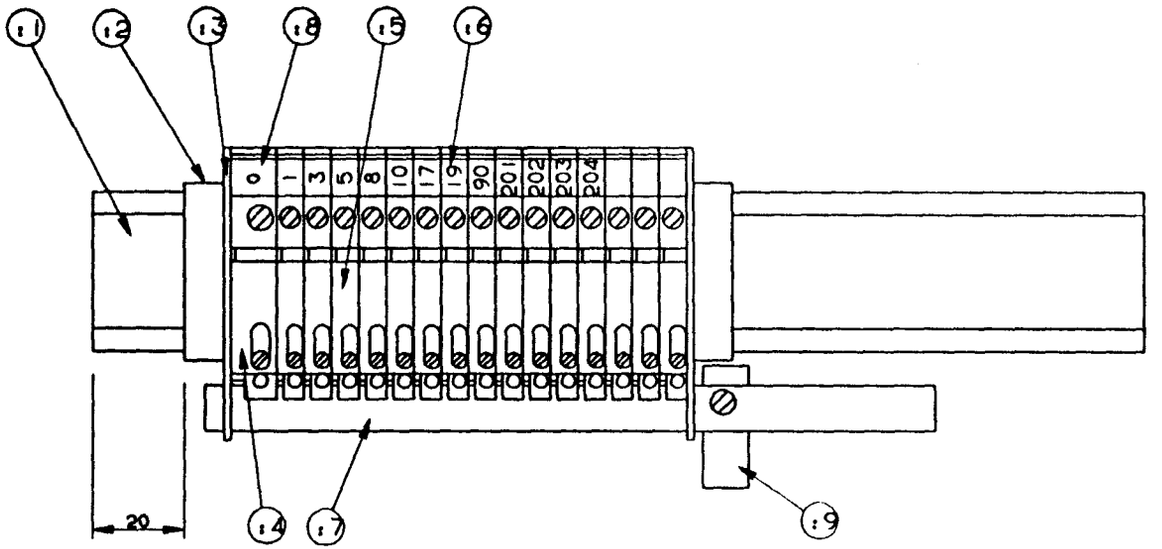

POS	TYPE		COMP. NO.	QUANT
:1	TS35 STEEL	3834.0	90077-302 L=230	1
:2	EW 35	3835.6	353031-201	2
:3	WHP	10502.8	353033-104	2
:4	WNT 10	10109.8	353022-004	1
:5	WNT 6	10108.8	353022-003	15
:6	FW 1-50	4734.6	359011-807	1
:6	FW 201-250	4734.6	359011-811	1
:7	SSch 10-3	2598.0	353041-001 L=160	1
:8	GW 0	5227.6	359011-807	1
:9	ZB-35	2665.0	90135-19	1

PROCESSED WITH AM NO	17786	DATE: 930115	DRAWN: HK/UTH	DESCRIPTION: TERMINAL BLOCK X3
ISSUE				MACHINE: TBA/9-140V
AM NO				571518
DATE				
DRAWN			DRAWING REMARKS	

ALTERATIONS ONLY IN CADAM

10:51 94.2.25

Tetra Pak
MODENA ITALY

This drawing must not without the consent of Tetra Pak be copied, transmitted or disclosed to any third party.

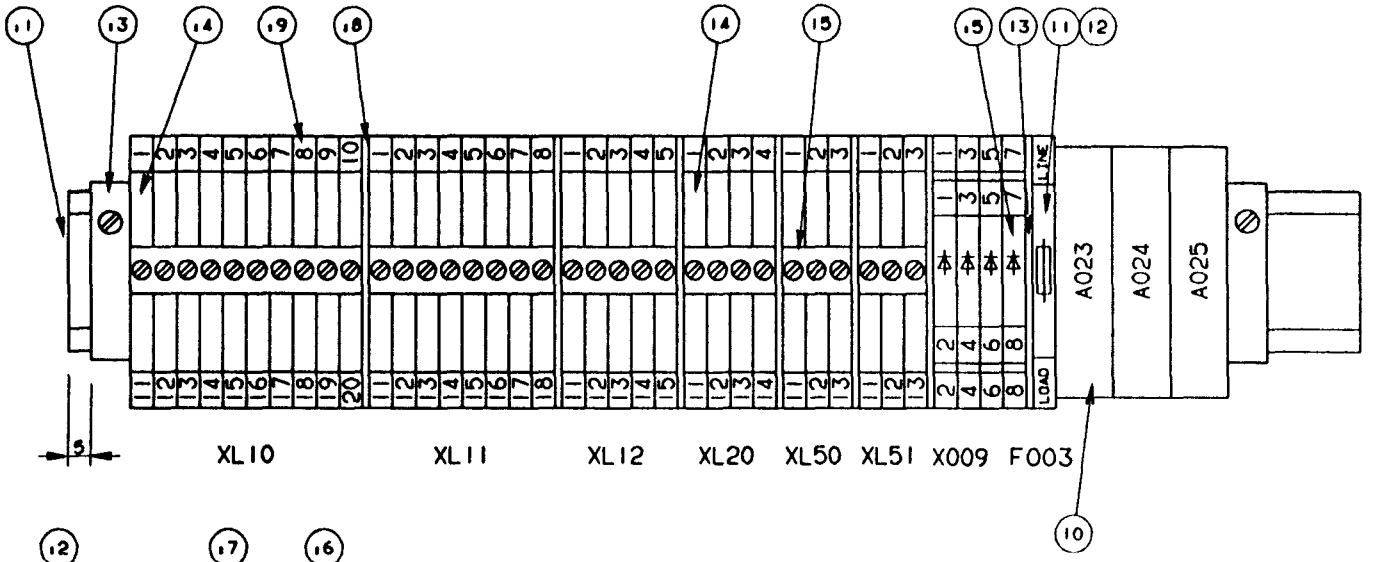

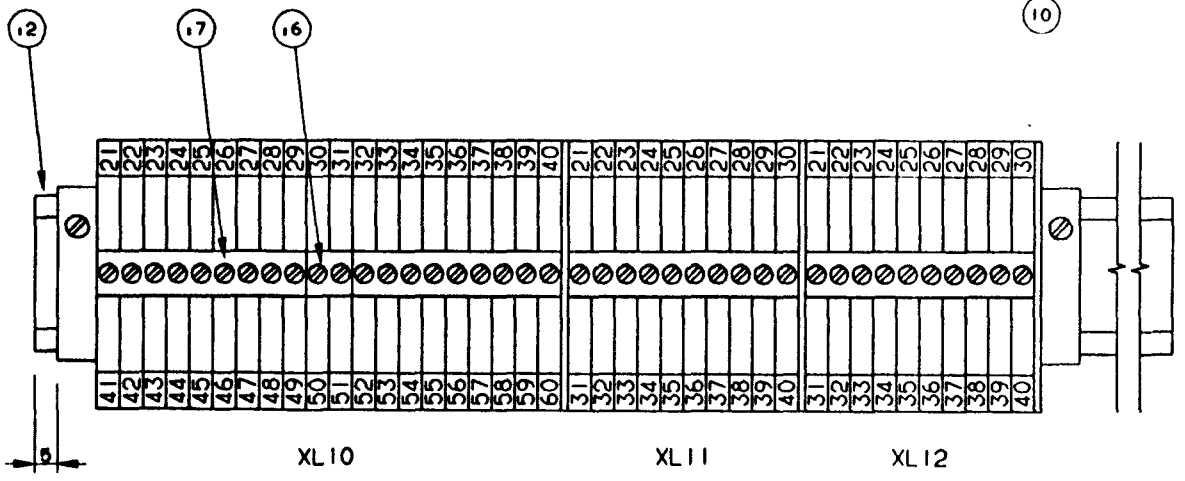

POS	TYPE		COMP. NO.	QUANT
1	TS35 STEEL	3834.0	90077-302 L=300mm	1
2	TS35 STEEL	3834.0	90077-302 L=350mm	1
3	EW 35	3835.6	353031-201	4
4	WDU 4	10201.8	353021-217	63
5	WTR 2,5D	10135.0	353021-122	4
6	WDV 4/2	10519.6	353034-	1
7	WDV 4/10	10520.6	353034-031	7
8	WAP 2.5-10	10500.8	353032-005	9
9	FW 1-50	4735.6	359011-807	8
9	FW 51-100	4735.6	359011-808	1
10	AMMS-10-1		90119-063	3
11	WSI6	10110.0	353023-102	1
12	FUSE FAST	1.6A	352550-133	1
13	WAP 2.5/10	10500.0	353032-004	1
14	WDU 2.5	10200.8	353021-216	10
15	WDV 2.5/10	10544.6	353034-030	1

DRAWING NO.	17786	DATE 930115	DRAWN HK/UTH
ISSUE	A	B	
DRG NO	19260	20080	
DATE	930310	930909	
DRAWN	HK/UTH	HK/MR1	

ALTERATIONS ONLY IN CADAM

DRAWING REMARKS

DESCRIPTION: TERMINAL BLOCK XL, X9

MACHINE: TBA/9-140V

571519

10.51 94.2.28

Tetra Pak
MODENA ITALY

This drawing must not without the consent of Tetra Pak be copied, transmitted or disclosed to any third party.

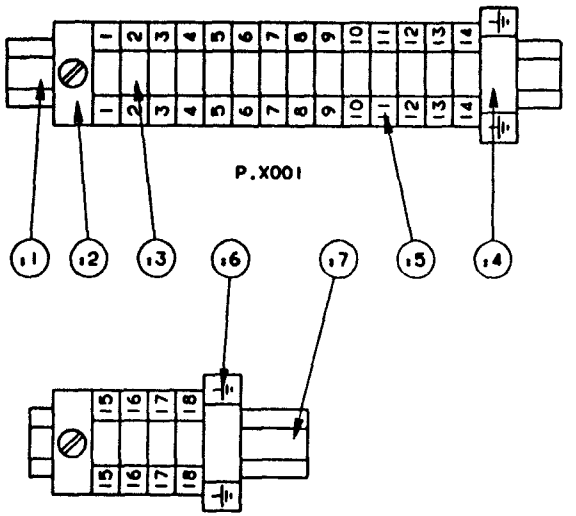

POS	TYPE		COMP. NO.	QUANT
.1	TS15 STEEL	1175.0	90077-328 L=120mm	1
.2	EW15	3828.6	90077-307	2
.3	AKZ 4	2943.6	90077-079	18
.4	AKE 4	3802.6	90135-126	2
.5	FW 1-50	4736.6	359011-807	2
.6	GW	⏚ 5762.6	359011-202	1
.7	TS15 STEEL	1175.0	90077-328 L=60mm	1

INTERNAL SYS. ART. NO. 17786	DATE 930115	SIGN HK/UTH	
ISSUE A			
ART. NO 20080			
DATE 930909			
SIGN HK/MRJ			DRAWING REMARKS

ALTERATIONS ONLY IN CADAM

DESCRIPTION: TERMINAL BLOCK P.X001, P.X002

MACHINE: TBA/9-140V

571520

10:51 94.2.28

Tetra Pak
MODENA ITALY

This drawing must not without the consent of Tetra Pak be copied, transmitted or disclosed to any third party.

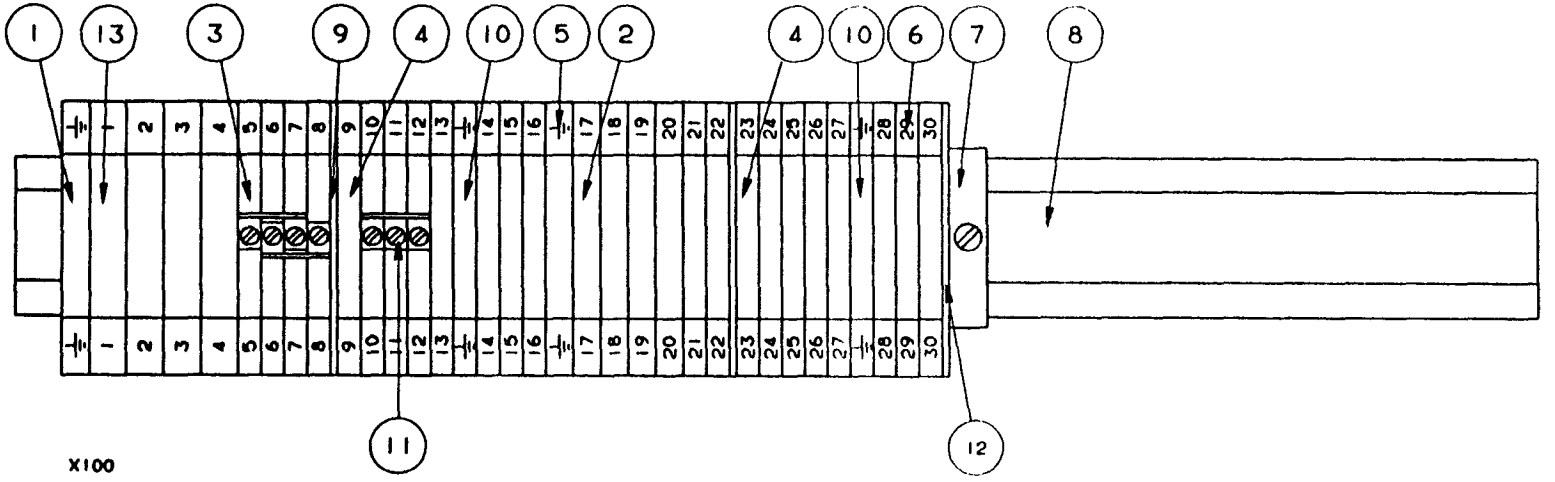

POS	TYPE		COMP. NO.	QUANT
:1	WPE 4	10101.0	353021-228	2
:2	WDU 4	10201.0	353021-213	6
:3	WDU 2,5	10200.0	353021-212	4
:4	WDU 2,5	10200.8	353021-216	16
:5	GW	⏚ 5762.6	359011-202	1
:6	FW 1-50	4735.6	359011-807	2
:7	EW 35	3635.6	353031-201	1
:8	TS35 STEEL	3834.0	90077-302 L=330mm	1
:9	WTW 2,5-10	10501.0	353032-006	2
:10	WPE 2,5	10100.0	353024-204	2
:11	WQV 2,5/10	10537.6	353034-030	1
:12	WAP 2,5	10500.8	353032-005	1
:13	WDU 6	10202.0	353021-214	4

INTRODUCED WITH A/R NO	17786		DATE 930115		SIGN HK/UTH				
ISSUE	A								
A/R NO	20080								
DATE	930909								
SIGN	HK/MR								

ALTERATIONS ONLY IN CASAM

DRAWING REMARKS

DESCRIPTION: TERMINAL BLOCK IH, X100

MACHINE: TBA/9-140V

571524

10.51 94.2.23

Tetra Pak
MODENA ITALY

This drawing must not without the consent of Tetra Pak be copied, transmitted or disclosed to any third party.

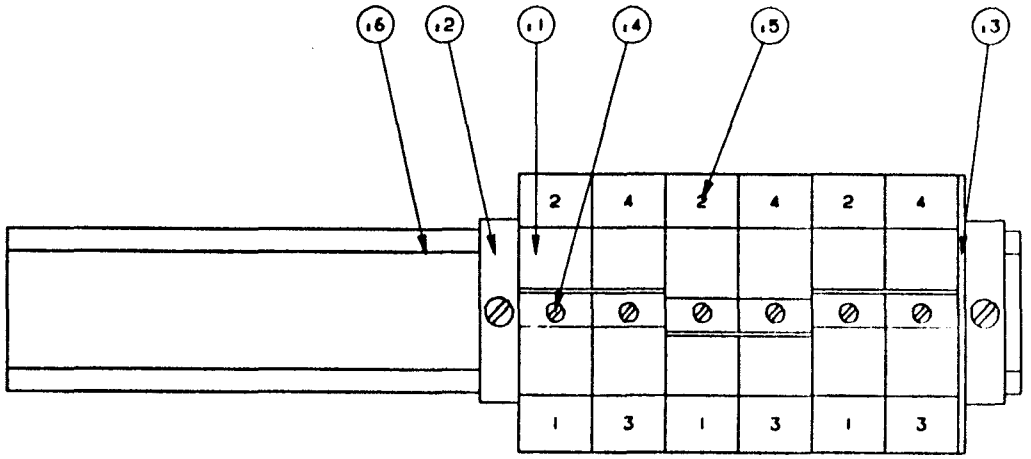

POS	TYPE		COMP. NO.	QUANT
:1	WDU 35	10205.0	353021-219	6
:2	EW 35	3835.6	353031-201	2
:3	WAP 16-35	10501.0	353021-245	1
:4	WDW 35/10	10530.6	353021-240	3
:5	FW 1-50	4686.6	359011-821	3
:6	TS35 STEEL	3834.0	90077-302 L=220mm	1

	17786	930115	HK/UTH	
ISSUE	A			
ECN NO	20080			
DATE	930909			
DRAWN	HK/MR			

AS CREATIONS ONLY IN CADAM

DRAWING REMARKS

DESCRIPTION: TERMINAL BLOCK XL1, XL2, XL3

MACHINE: TBA/9-140V

571525

10.51 94.2.28

PRE-RELEASED/DEVELOPMENT STATE

This drawing must not without the consent of Tetra Pak be copied, transmitted or disclosed to any third party.

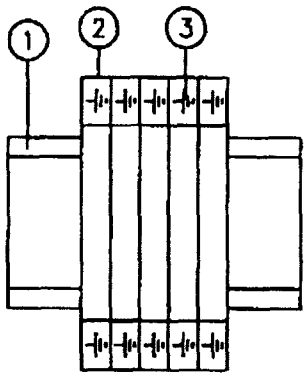

Note	-					Tetra Pak	Designer TEAN	Date 990521	Approved PIH Date 990602	Doc. class -	
ECR No.	72526						Machine TBA/9-1401	Denomination TERMINALBLOCK X302			
Sign./Date	TEAN/990521						Company Tetra Brik Packaging Systems AB	Drawing No 1370290		Page -	
Appr./Date	PIH/990602					Drawing remarks					