MM
Maintenance Manual

TBA/9 140V

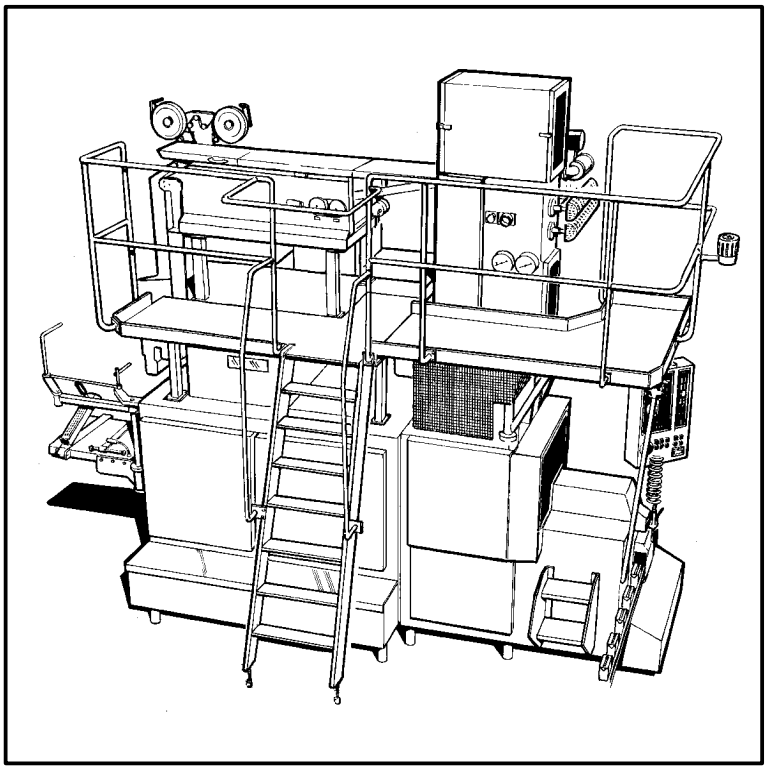

Tetra Pak

Doc No MM-80231-2

This document is valid for:

Series No/ Machine No Sign

MM
Maintenance Manual

TBA/9 Tetra Brik Aseptic
648152–140V

Equipment Included:

Doc No MM-80231-2

Issue 9409

Tetra Pak

Tetra Brik Packaging Systems

Introduction	000
Superstructure	100
Machine Body	200
Drive System	300
Jaw System	400
Final Folder	500
Service Unit	600
Strip Applicator	700
PullTab Device	800
Technical Data Lubricants	900
Electrical Equipment	1000

Description TBA/9

Safety precautions – use of hazard information, service technician 001

Safety precautions – emergency stop 002

Safety precautions – doors and safety covers 003

Safety precautions – electrical cabinet; IH generator 004

Safety precautions – sterilization liquid (5 pages) 005

Safety precautions – nitrogen gas 006

Safety precautions – caustic soda 007

Safety precautions – ink 008

Safety precautions – chemical products, ear protectors 009

Introduction – machine identification (2 pages) 010

Introduction – manufacturer, service, design modifications 011

Introduction – machine status 012

Introduction – document information 013

Introduction – page number 014

To ensure maximum safety for the operator, always read this section carefully before doing any work on the machine or making any adjustments

Use of hazard information

Hazard information in this document has the following significance:

WARNING!
Failure to observe this information can result in personal injury!

Caution!
Failure to observe this information can result in damage to or destruction of equipment!

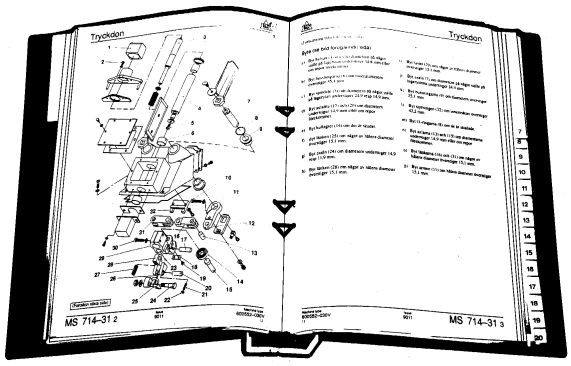

Service technician

Only trained or instructed service technicians are allowed to carry out work on the machine.

The work is to be carried out in such a way that there will be no risk of personal injury.

During maintenance or service work, the technician is responsible not only for the machine and the working area around the machine, but also for the personnel in the vicinity of the machine!

It is also the responsibility of the technician to assure that the machine safety devices are fully operational before he finishes the maintenance or service work.

WARNING!
If the Safety precautions are not followed, there is risk of personal injury.

Emergency stop

In case of danger to people or machine, one of the emergency stop buttons must immediately be depressed.

Emergency stop must only be used in case of danger to people or machine. To stop production in the normal way, see the **Stop**-section in the OS book.



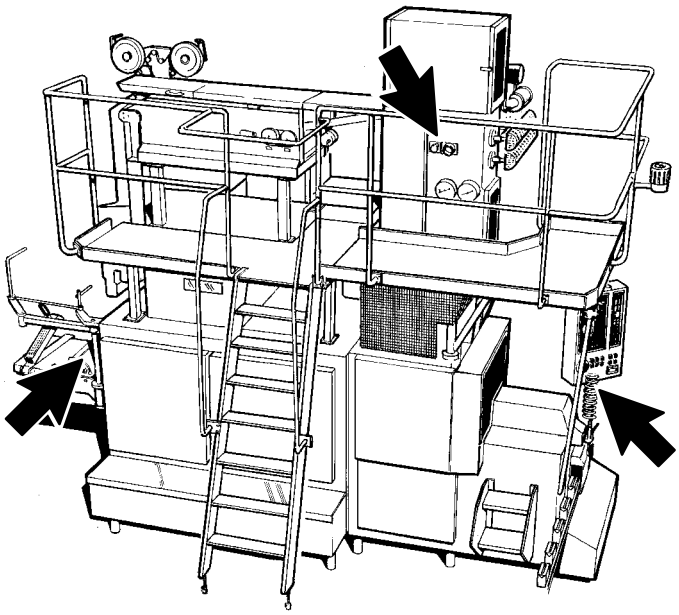

TBA/9 with strip applicator

Doors, hatches and safety covers

WARNING!
Risk of serious injuries!
Moving parts and hot surfaces can cause serious injuries. Never inch or run the machine if any safety switch is non-operational or any safety cover is not fitted.

The doors shown in the picture are provided with safety switches. These switches form part of the safety system of the machine and **must under no circumstances be bridged, or by-passed, or otherwise made non-operational**.

- Do not open doors during production.
- Never stop the machine by opening a door with a safety switch. The machine may perform a forward and backward movement during the first few seconds after a stop.
- Some machine parts may be hot.

After maintenance, check that all safety covers are fitted to the machine before it is inched or run.

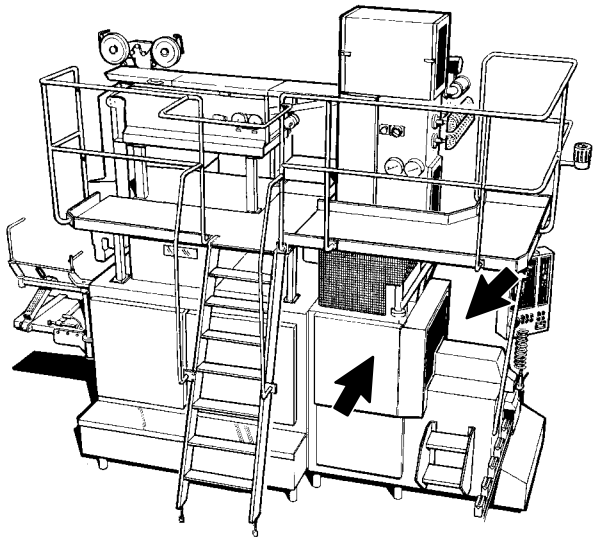

TBA/9 with strip applicator

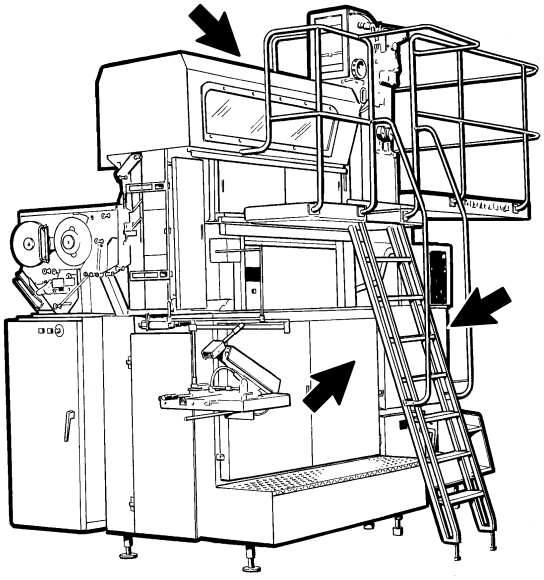

TBA/9 with PullTab device

Electrical cabinet

WARNING!
The voltage is 380V inside the electrical cabinet. This can cause electric shock or serious injury. In case of accident, immediately call for medical attention.

Work inside the electrical cabinet must be performed by skilled or instructed persons only.

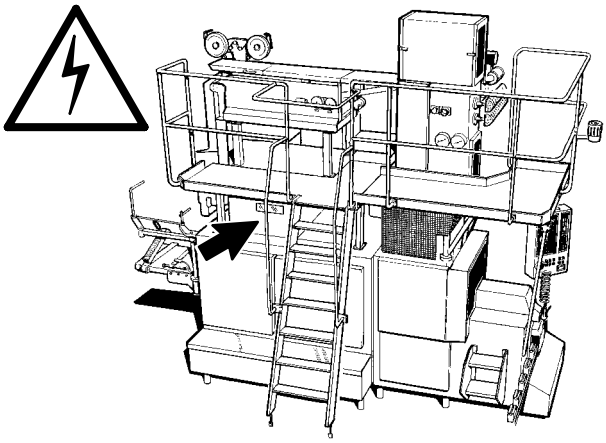

TBA/9 with strip applicator

TPIH generator

WARNING!
High voltage!
The TPIH generator must NOT be opened. Will shock, burn, or cause death. In case of accident, immediately call for medical attention.

Only authorized service personnel are allowed to carry out work on the TPIH generator.

The safety precautions in chapter MM 1000 must be followed unconditionally!

Sterilization liquid

WARNING!
Risk of corrosion injuries!
In both liquid and gas form, hydrogen peroxide may cause irritation or damage if in contact with skin, mucous membranes, eyes, or clothes.

WARNING!
Risk of fire!
Causes burns. Contact with combustible materials may cause fire.

The sterilization liquid used for sterilizing the packaging material consists of 35% hydrogen peroxide (H_2O_2).

Hydrogen peroxide can

Carefully follow the instructions on the can label (see picture).

Hydrogen peroxide:

- 35% w/w Aqueous Solution UN No 2014.
- Corrosive. Oxidizing.
- Causes burns. Contact with combustible materials may cause fire.
- Keep in a cool place away from sources of heat.
- Avoid contamination.
- Wear suitable protective clothing, gloves, and eye/face protection.
- After contact with skin, wash immediately with plenty of water.
- In case of contact with eyes, rinse immediately with plenty of water and seek medical advice.
- In case of spillage or fire, drench with water.

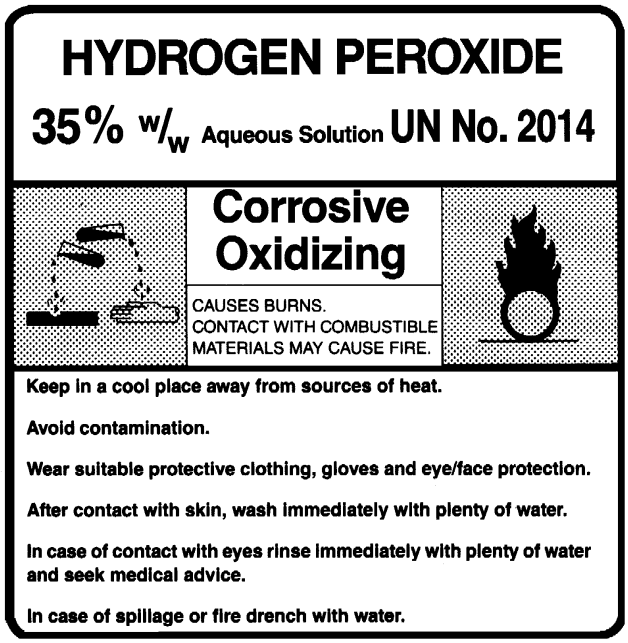

Example of can label

Reference:
TP document No M 1751.80.

(Cont'd overleaf)

(Cont'd)

Storage of hydrogen peroxide

WARNING!
Risk of explosion!
When contaminated, pouring back in original container, or decomposition of hydrogen peroxide, risk of explosion can arise.

The hydrogen peroxide has been stabilized but may nevertheless decompose into oxygen and water, if exposed to heat, pollution, or strong sunlight.

For this reason, the room or area used for storage must be:

- cool, clean, and well ventilated,
- shielded from direct sunlight.
- kept free from combustible materials.

Avoid contamination of hydrogen peroxide. It may react to, or **form explosive products** with many organic substances (for instance acetone, cellulose, and ethanol).

Hydrogen peroxide must be stored only in the **original container** as delivered by the supplier.

Do not pour surplus hydrogen peroxide back into the original container.
Risk of explosion!

The container must be kept upright and must only be closed with **a ventilation cap** (arrow in picture), which allows oxygen to escape. If not, there may be an explosion if decomposition of the peroxide occurs violently.

Always make sure that the container is properly closed.

Pumps or other facilities, used for hydrogen peroxide, must be used for this purpose only**.**

(Cont'd overleaf)

(Cont'd)

Disposal of hydrogen peroxide

The hydrogen peroxide should be sent for destruction, or be diluted with water to a concentration below 1% and poured into drainage.

Hydrogen peroxide with a concentration below 1% is considered harmless when poured into the drain.

Never put used hydrogen peroxide back into storage.

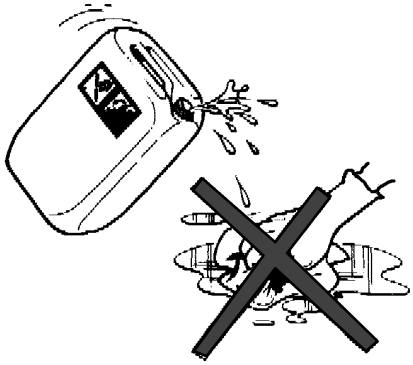

Spillage of sterilization liquid

WARNING!
Risk of fire!
Never wipe with combustible material, such as rags or paper, as these may self-ignite.

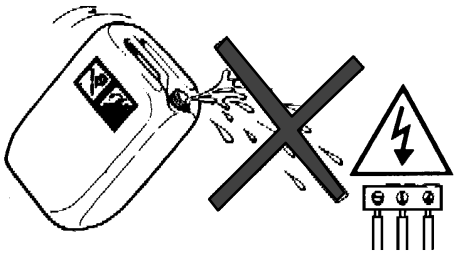

WARNING!
Risk of short-circuit!
Do not allow hydrogen peroxide to get in contact with live electrical parts. Risk of short circuit.

If peroxide is **spilt** on the floor or a table, dilute it with large amounts of water and flush it into the drain.

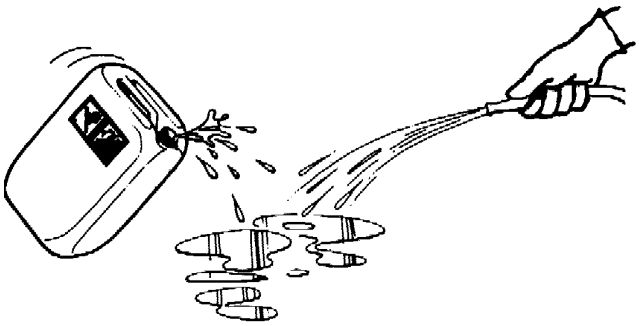

In case of fire, cool the peroxide containers by **hosing** with large quantities of water.

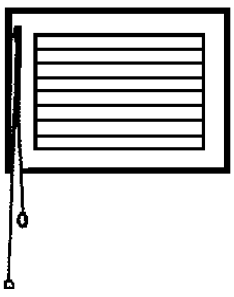

Make sure that areas or rooms used for handling or storing hydrogen peroxide are well **ventilated**.

(Cont'd overleaf)

(Cont'd)

Personal protective equipment

Whenever there is risk of contact with the sterilization liquid, always wear

- **safety glasses**,
- **protective gloves**,
- **shoes** made of PVC or PE plastic, or rubber, and
- **apron**.

In case of accident involving hydrogen peroxide, always make sure that:

- the **shower** works,
- that an **eyewash device** is available at or near each machine site and,
- there are additional washing facilities.

(Cont'd overleaf)

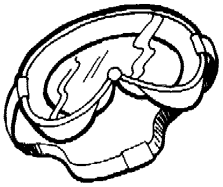

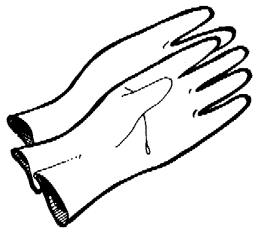

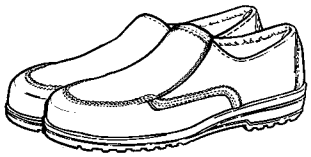

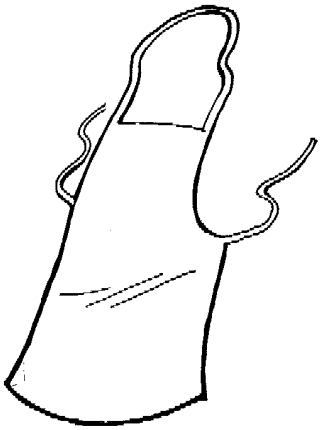

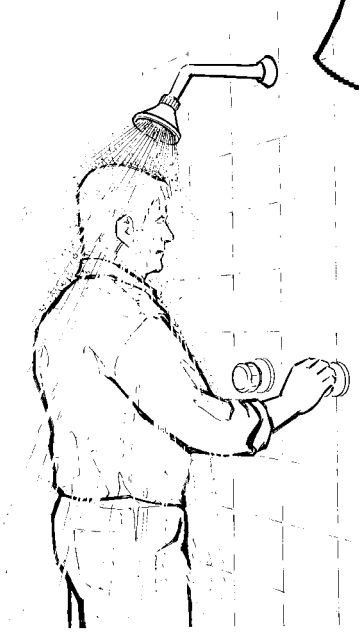



(Cont'd)

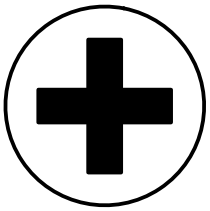

Emergency procedures

In case of accident involving hydrogen peroxide the basic rule is to **rinse as soon as possible with as much water as possible.**

If you happen to **swallow** hydrogen peroxide;

- Drink large amounts of lukewarm water (in order to dilute the peroxide).
- Seek medical attention immediately.



If you get splashes or vapor from hydrogen peroxide in your **eyes**:

- wash the eyes thoroughly with lukewarm water for 15 minutes (keep eyelids widely apart),
- then seek medical attention immediately.

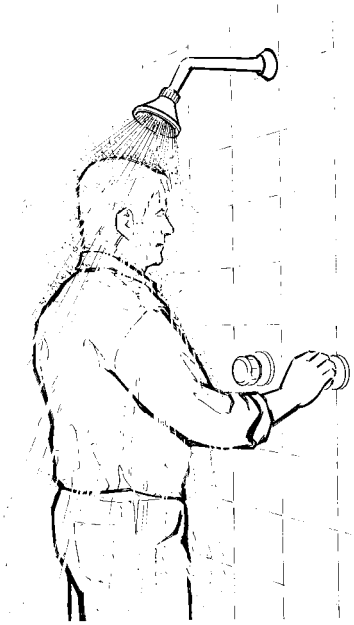

If hydrogen peroxide gets in contact with **skin or clothes;**

- Immediately rinse with plenty of water.
- If skin burns appear, seek medical advice immediate.
- Thoroughly wash the clothes before they are worn again.

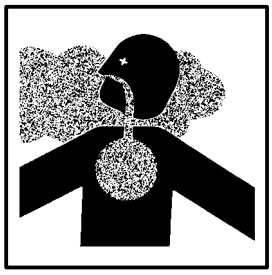

If you experience irritation or pain due to having **inhaled** peroxide vapor;

- Leave the affected area and get some fresh air.
- If the symptoms get worse; seek medical advice.

Nitrogen gas

WARNING!
Risk of personal injury!
May be harmful to inhale. Can cause shortness of breath, dizziness, a pricking feeling in the tongue.

Handling of nitrogen gas

Make sure that the areas used for handling or storing the nitrogen gas are well ventilated.

Carefully follow the instructions on the bottle label (see picture).

NITROGEN N48

Nitrogen gas
THE GAS MAY CAUSE COLD DAMAGE DURING EXPANSION
Store and transport with valves closed and with the protection nut and safety cap fastened securely.

Protect against warming. Remove to a safe place during fire.

To be connected to connections marked only for this gas.

Open the valve slowly.

Return with overpressure.

Example of bottle label

Disposal of nitrogen gas

The gas bottles should be returned with valve closed, and with protection nut and safety cap fastened securely.

Return the gas bottles with overpressure.

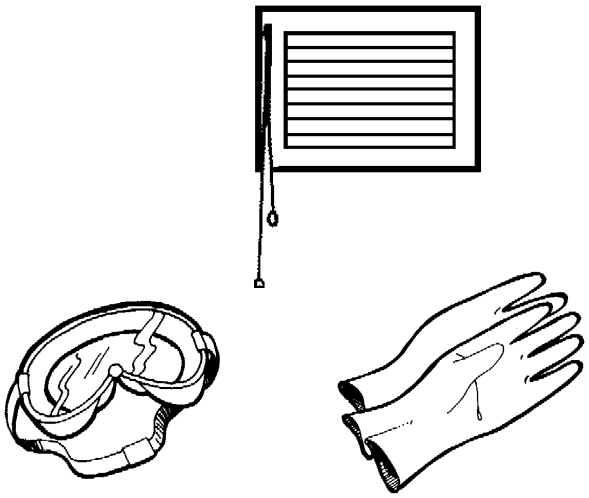

Personal protective equipment

- Use protective gloves and shoes, and safety goggles.
- For emergency situations, be prepared with respiratory equipment.

Emergency procedures

- Leave the affected area and get some fresh air. If the symptoms get worse. seek medical advice.
- In case of unconsciousness, get stricken person out in the fresh air, and if necessary, assist with artificial respiration. Seek medical advice immediately.
- Rescue party are to wear a protective mask.

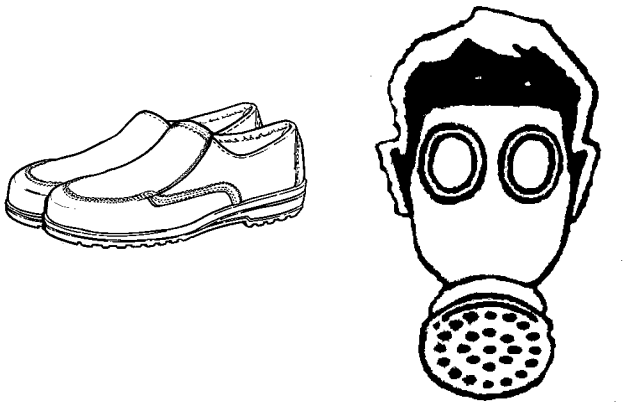

Caustic soda

WARNING!
Risk of personal injury!
Corrosive. May be harmful to inhale. Can cause shortness of breath. Caustic soda may cause irritation or damage if in contact with skin and eyes.

Handling of caustic soda

Make sure that the areas used for handling the caustic soda are well ventilated. The container should be closed.

If caustic soda is spilt on the floor, bound it with sand, turf dust or another suitable expedient and gather up. Rinse with water afterwards – skidding risk.

Personal protective equipment

- Wear suitable protective clothing, gloves, and eye/face protection.
- Shower and eyewash device should be on the place of work.

Emergency procedures

- Leave the affected area and get some fresh air. Rinse the nose and mouth with water. Seek medical advice.
- After contact with skin, wash immediately with plenty of water.
- In case of contact with eyes, rinse immediately with plenty of water for 15–30 minutes (keep eyelids wide apart). Then seek medical advice.

Caustic soda

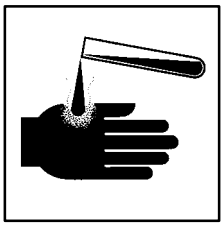

White powder, flakes, pastilles, pearls or crystalline mass. The water solution is colourless liquid.

Solvent could emit fog at heating.

Sanitary limit value for dust or fog: 2 mg/m^3 , top limit value.

Example of label

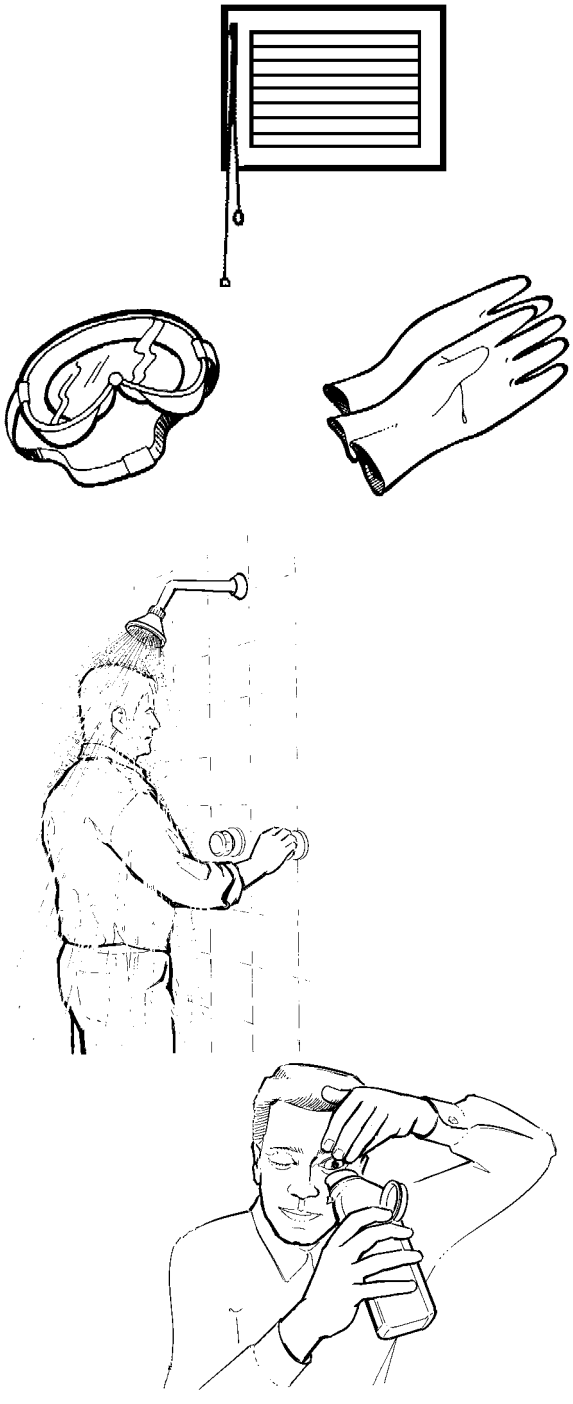

Ink

WARNING!
Inflammable and harmful.
Carefully follow the warning text on the bottle label (see picture).

Never wash the dating unit/ink roller with water.

Warning text on ink bottle

The following warning is written on the ink bottle:

INFLAMMABLE

Avoid direct contact with the product

Use gloves and goggles

Care for good ventilation

Propylene glycol mono methyl ether >30%
Ethanol 1 – 5%

SHAKE BEFORE USE

Use gloves as the ink can irritate the skin.

In case of contact with eyes, rinse immediately with plenty of water and seek medical care.

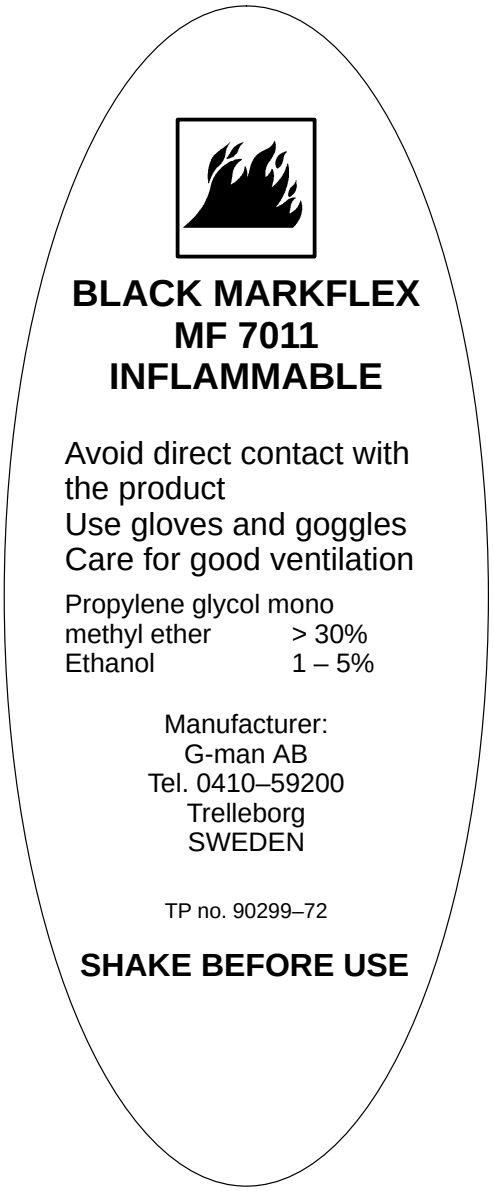

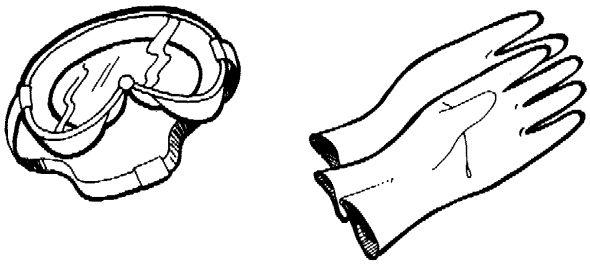

Chemical products

WARNING!
Can be flammable or hazardous to health.
Read the warning texts!

When handling chemical products, i e hydraulic oil, lubricants, and cleaning solutions, carefully follow the warning texts on the container labels.

Always use safety equipment according to the instructions on the container labels. For final handling of solutions, follow the instructions from the suppliers.

Ear protectors

WARNING!
Use ear protectors to minimize the risk of impaired hearing.

Always wear ear protectors while the machine is running.



Machine identification

These pages contains basic information about the machine described in this document.

WARNING!
To ensure maximum safety for the technicians, always read the Safety precautions pages before doing any work on the machine or making adjustments.

Machine specification

- The machine plate, see fig. is an example of the type of machine plate attached to the service unit.
  The plate carries the data needed when contacting Tetra Pak concerning this particular machine.
- At the bottom of every MM page, the machine type is specified.
- Arrow pointing at development step signifies up to and including the development step. Arrow pointing away from development step signifies from and including the development step.
  Example:
  TBA/9 100V→140V = from and including development step 100V up to and including development step 140V.
- Machine variant 0V in the A list means that the A list contains optional variants of the machine.
  On delivery the variant is to be specified and 0V replaced by, for instance, 01.

  XX01 = Machine with Strip Applicator (SA)
  XX02 = Machine with PullTab device
  XX03 = Compact body machine

(Cont'd overleaf)

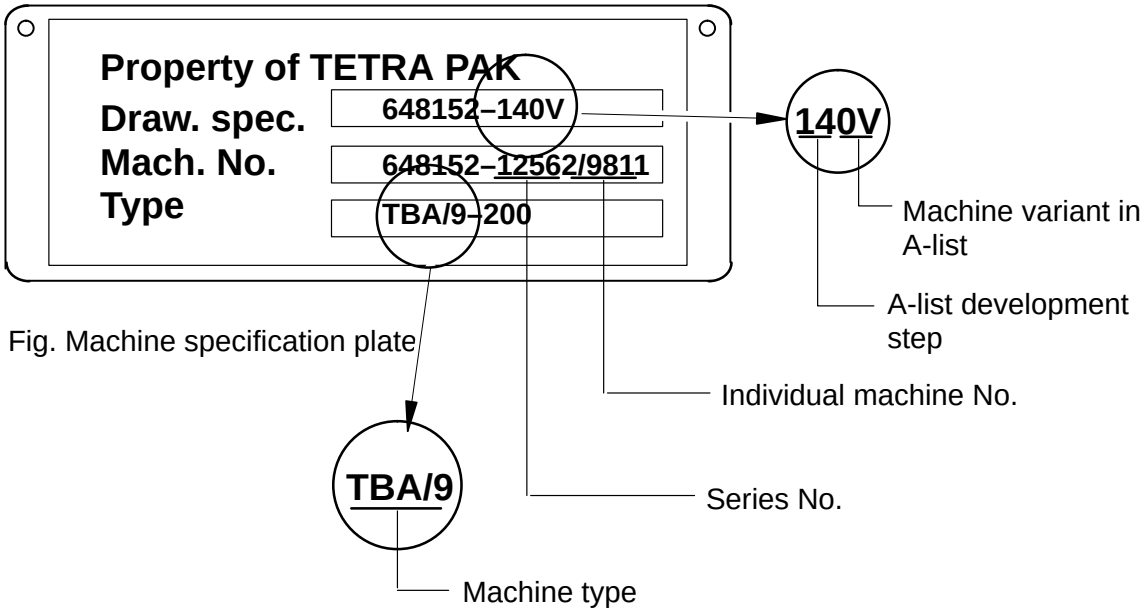

Fig. Machine specification plate

(Cont'd)

Group No.

Attached to each of the main groups of the machine, there is a plate specifying group No, group development step, and group variant.

In case any rebuilding or remodelling of the machine has been carried out, this is recorded as a machine deviation.

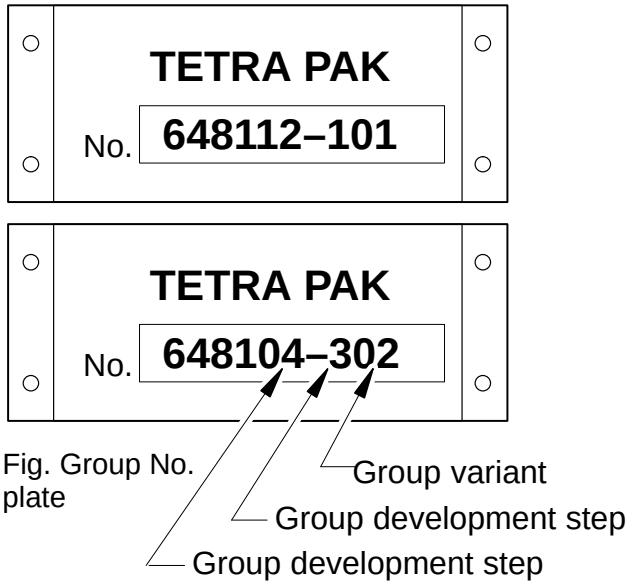

Fig. Group No. plate

B list development step

V = Variant of development step

B list	TBA
Superstructure	648111–100V
Machine body	648102–100V
Drive unit	648103–0902
Jaw system	648104–1002
Final folder	648105–1001
Service unit	648106–100V
Strip applicator	648107–100V
PullTab device	648118–0902
Standard equipment	648109–100V
Extra equipment	648119–1001
Electrical equipment	E–649205–1401 E–649205–1402 E–649205–1403

Manufacturer

If the serial number starts with **1**, the machine has been produced by:

- Tetra Brik Packaging Systems AB
  Ruben Rausings gata
  221 86 LUND
  Sweden

If the serial number starts with **2**, the machine has been produced by:

- Tetra Brik Packaging Systems S.p.A.
  Via Delfini 1
  411 00 MODENA
  Italy

Service

In case of problems with operating the machine, contact the nearest Tetra Pak Service station.

Design modifications

The directives in this document are in accordance with the design and construction of the machine at the time it was delivered from the Tetra Pak machine production facility.

Machine status

If nothing else is stated in the instruction, the machine program is in step **0**. All supplies to the machine (i.e. input air and input water) are turned off and the main power switch has been padlocked.

The packaging material and the strip(s) have been removed from the machine.

Document information

Purpose of the Maintenance Manual (MM)

The purpose of the Maintenance Manual is to provide technicians with information on how to perform maintenance on the machine.

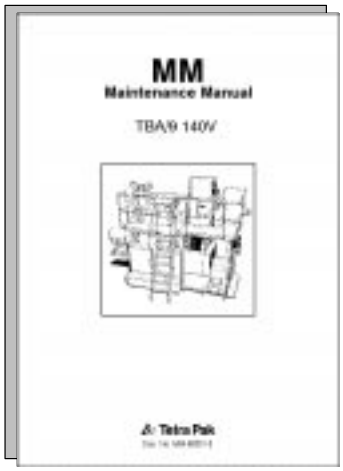

Document producer

This document has been produced by:

- Tetra Brik Packaging Systems
  Product Documentation
  Via Delfini 1
  411 00 MODENA
  Italy

Further copies

Further copies can be ordered from:

- Tetra Pak P&PS Service AB
  Central Technical Publications
  Ruben Rausings gata
  221 86 LUND
  Sweden

Number of pages

This document contains totally 522 pages.

Copyright © 1994 Tetra Brik Packaging Systems

All rights reserved. No parts of this document may be reproduced or copied in any form or by any means without written permission from Tetra Brik Packaging Systems.

Page numbering

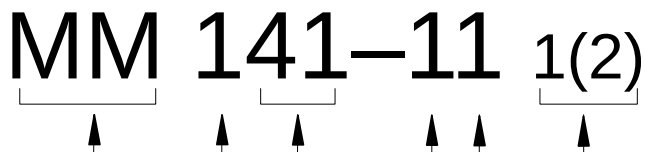

Maintenance Manual

Main group

For example Superstructure.

Sub-group

For example Forming rings and Tube supports.

Action code

1 Checking/cleaning
2 Removal
3 Overhaul/replacement
4 Fitting
5 Setting
7 Miscellaneous

Running No.

In case there is more than one variant of the same page.

Sub-page number

In case there is more than one page with the same page number.

Description	TB/9	TBA/9
Steam trap – overhaul		101–31
Steam filter – overhaul/cleaning (3 pages)		103–31
Splice monitor – checking		108–11
Splice monitor – setting		108–51
LS nozzle – checking	116–11	116–11
LS nozzle – setting (3 pages)		116–51
LS nozzle – setting (2 pages)		116–52
LS, short stop nozzle – checking	119–51	119–51
Low level switch, water bath – checking/setting		125–11
Product valve – overhaul (2 pages)		127–31
Product valve – cylinder and drive motor sequence diagram		127–71
Suction valve – checking		129–11
Suction valve – setting		129–51
Change over valve, WEAC – checking		130–11
Change over valve, WEAC – dismantling		130–21
Change over valve, WEAC – setting		130–51
Sealing lip – checking/replacement		131–11
Support rollers – checking/replacement		133–11
Lower filling pipe – checking	134–11	134–11
Lower filling pipe – removal	134–21	134–21
LS alignment – setting		136–51
LS alignment – setting		136–52
Filling pipe – checking	137–11	137–11
Filling pipe – setting	137–51	137–51

Description	TB/9	TBA/9
Bending rollers – checking		144–11
Photocells, design correction (5 pages)	148–51	148–51
Driven bending roller – checking		153–11
Driven bending roller – removal		153–21
Driven bending roller – setting (2 pages)	153–51	153–51
Compressor – checking		160–11
Compressor – removal		160–21
Compressor – fitting		160–41
Constant flow valve, compressor – checking		161–11
Sterile air pipes – checking/cleaning		162–11
Sterile air pipes – setting/balancing		162–51
Aseptic chamber/Peroxide bath – setting (2 pages)		163–51
Aseptic chamber/Peroxide bath – measuring leakages (2 pages)		163–71
Pressure switch – checking		165–11
Water separator – cleaning/checking		167–11
Air superheater – cleaning/checking of element		168–11
Heat exchanger – cleaning/checking of tightness (2 pages)		169–11
Valve for heat exchanger – checking		170–11
Valve for heat exchanger – removal		170–21
Air knife – checking		172–11
Air knife – setting (2 pages)		172–51
Sterile air system (2 pages)		175–71
Air inlet valve – checking		177–11
Air inlet valve – removal		177–21

Description	TB/9	TBA/9
Suction box seal – checking		179–11
Suction box seal – checking		179–12
Peroxide bath, bending roller – checking/cleaning		181–11
Peroxide bath bending roller – overhaul		181–31
Peroxide system – checking/cleaning		183–11
Peroxide system – passivation (2 pages)		183–71
Squee-gee rollers – checking		184–11
Squee-gee rollers – removal (2 pages)		184–21
Squee-gee rollers – setting (2 pages)		184–51
Tube flushing – checking	190–11	190–11
Forming rings – checking		196–11
Forming rings – removal		196–21
Forming rings – setting (3 pages)		196–51

Overhaul

a) Undo the cap (1). Remove the disc (2). Clean the disc, or if the steam trap is excessively dirty, replace it.

b) On assembly, the disc should be fitted with the **grooved side** facing the body.

c) Fit the cap. A thin layer of Molybdenum Disulphide grease (TP No. 90296–57) should be applied to the threads.

d) Undo the cap (7). Remove the spacer (6) and the spring (5). Clean the strainer (4), or if the steam trap is excessively dirty, replace it.

e) Reassemble in reverse order.

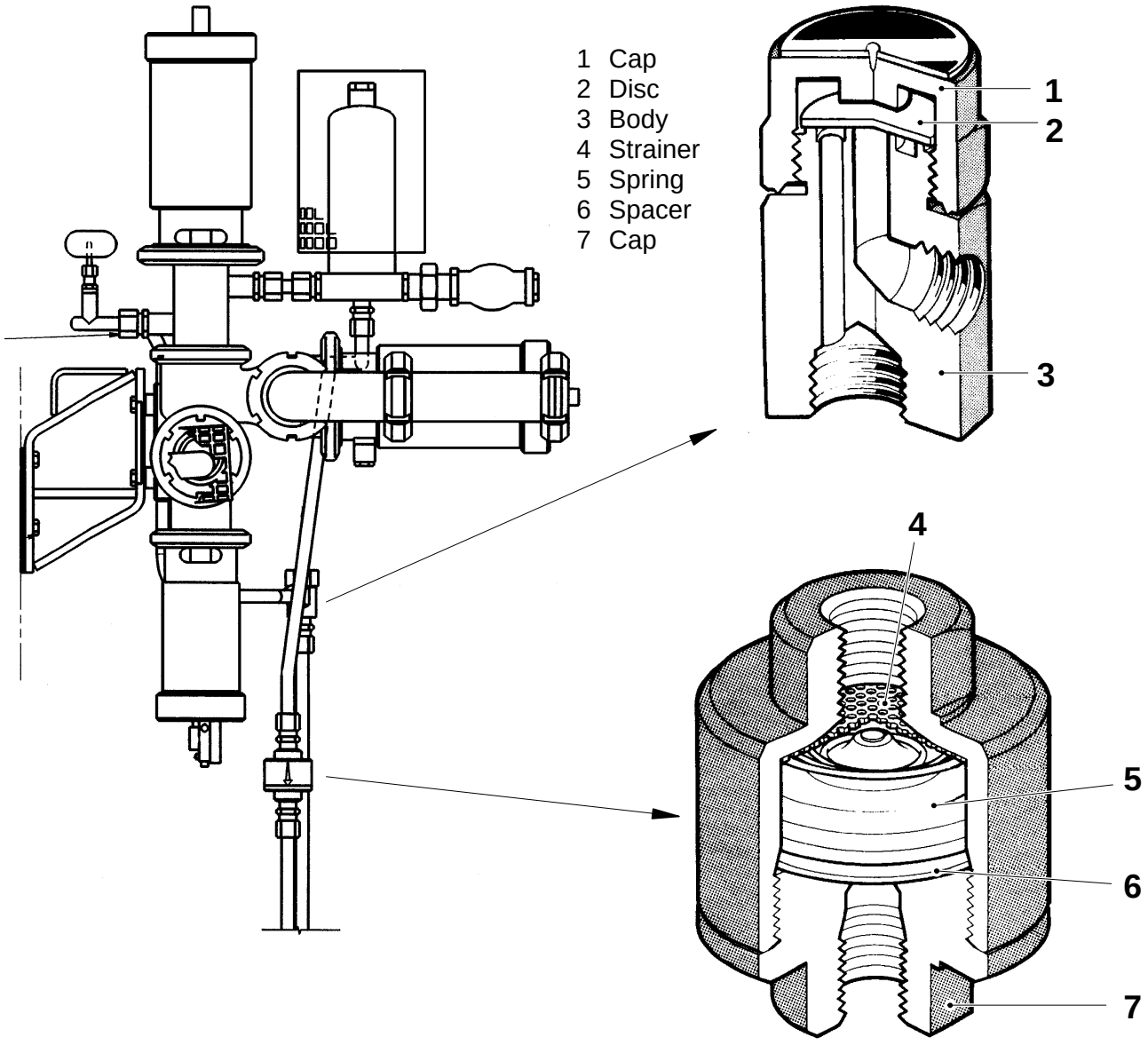

Overhaul/Cleaning

Close the system inlet valve and slowly open the vent and drain valve to release the pressure.

WARNING!
Hot steam. Risk of personal injury or damage to equipment. Check the system pressure gauge to ensure that no residual pressure remains in the filter housing. Do not open under pressure.

a) Undo the T-nut (1) and remove the protective cover (2).
Clean the inside of the cover.

b) Remove the filter cartridge (3).

c) Remove the O-rings from the filter cartridge. Replace the O-ring (4) as required.

d) Clean the filter cartridge, see page MM 103–3X:2.

e) Refit the filter cartridge and cover.

f) Do not tighten the T-nut too hard. Finger tight only.

(Cont'd overleaf)

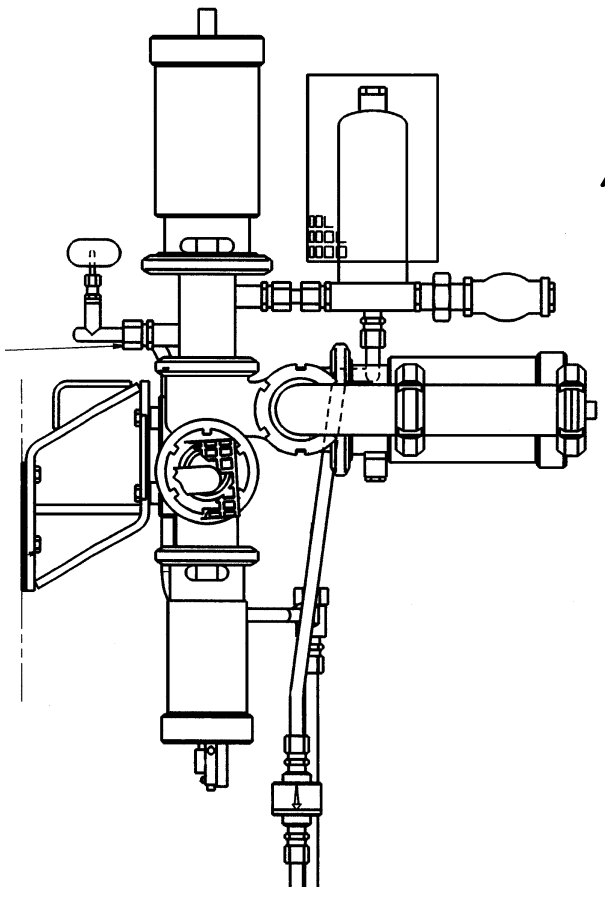

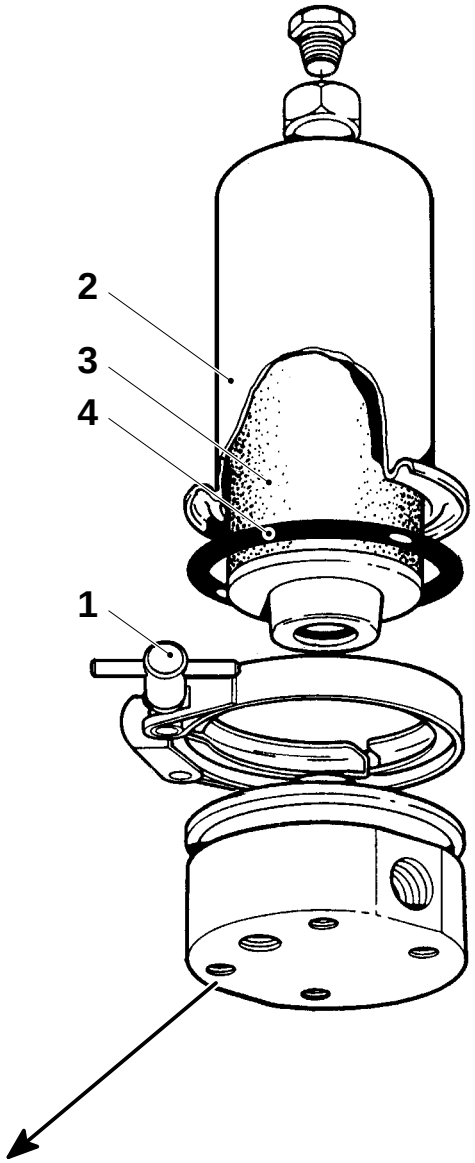

1 T-nut
2 Protective cover
3 Filter cartridge
4 O-ring

(Cont'd)

General information

To obtain optimum performance of the filter cartridges:

- clean the filter cartridges thoroughly (**or** return to Pall for cleaning and testing) before reusing, and
- label and store used cartridges **after** removing the O-ring.

Water used in the procedure should be deionized **and** filtered.

For rinsing, use a 50 litre tank, designed to avoid "dead spaces". Incoming water (renewal rate 5 l/min) must be filtered with Pall Profile 10µm.

The contents of the tank should be agitated by means of compressed air, filtered through a Coalecher element from the Pall SU-range.

Cleaning with nitric acid

WARNING!
Nitric acid is extremely corrosive and causes severe burns.
Carefully observe the Safety precautions in section 000.
The cleaning procedure must not contravene any legal or local safety regulations.

a) Immerse the filter cartridge in 14 – 15% (w/w) nitric acid at 60 – 70°C for 10 – 20 minutes.
Footnote!
If the cartridge is highly contaminated or if the recommended temperature cannot be used, contact **Pall Scientific and Laboratory Services** for advice.

b) Rinse the cartridge in water for **at least** 10 minutes.

c) Empty the tank and refill with water. The pH level of the tank contents should now be 6 – 8.

d) Rinse the cartridges again for at least two hours, or until the pH level of the tank contents is the same as that of the incoming water.

e) Flush the cartridges in reverse direction with water.
If the water emerging from the cartridge is discoloured or contains visible contaminants, repeat steps a) and b).

(Cont'd overleaf)

(Cont'd)

Reverse bubble point testing

Note
Perform these steps **immediately** after step e) in the previous section.

a) Thoroughly soak and wet the filter cartridge in water.

b) Seal one end of the cartridge to a compressed air line. The pressure should be in the range of 0 – 13 kPa.

c) Submerge the filter cartridge in water. The filter should be kept approximately 125 mm below the surface.

d) Gradually increase the air pressure while rotating the filter cartridge slowly, until air bubbles can be seen emerging from it. Record the air pressure at this point.

e) Carefully inspect the filter cartridge to ensure that the air bubbles emerge at a similar rate from the entire cartridge.

f) Lower the pressure to half the recorded pressure. If air bubbles emerge from an isolated area of the cartridge at this pressure, contact **Pall Scientific and Laboratory Service** for advice.

Drying procedure

Dry the filter at 105 – 120°C for 1 – 2 hours to constant weight.

After drying, visually check the filter cartridge for damage and/or corrosion. Replace the cartridge, if required.

Fit the filter cartridge with new O-rings.

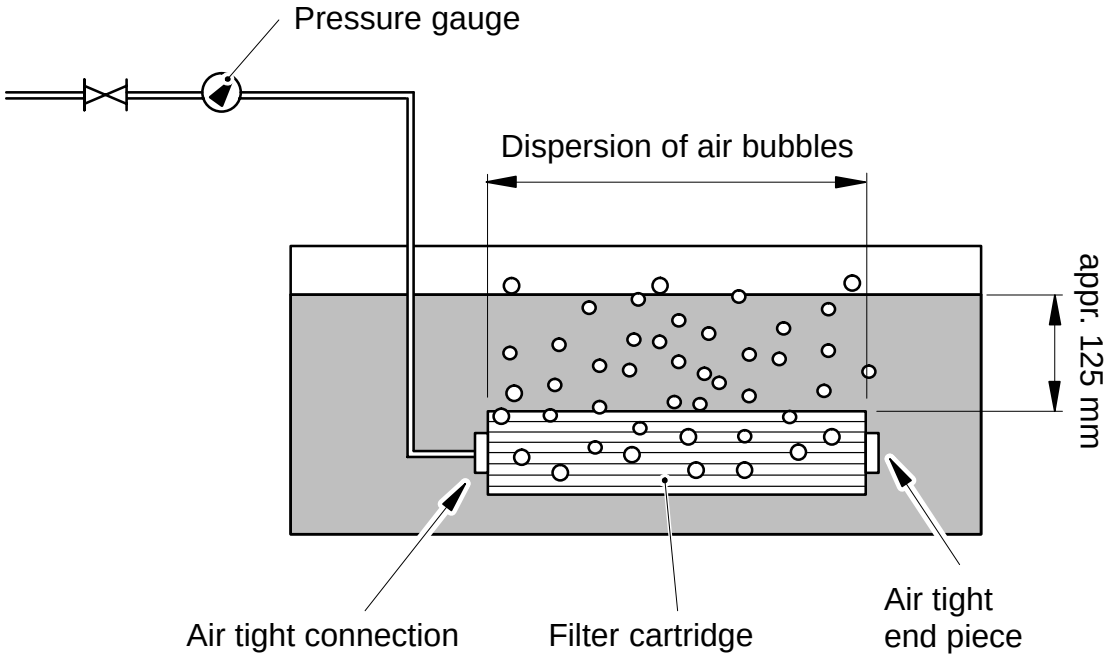

Checking

Check the following details for wear and/or damage:

- the roller (1); make sure that it rotates easily
- the arm (2); make sure that it is easy to move
- the proximity switch (2)

Replace as required.

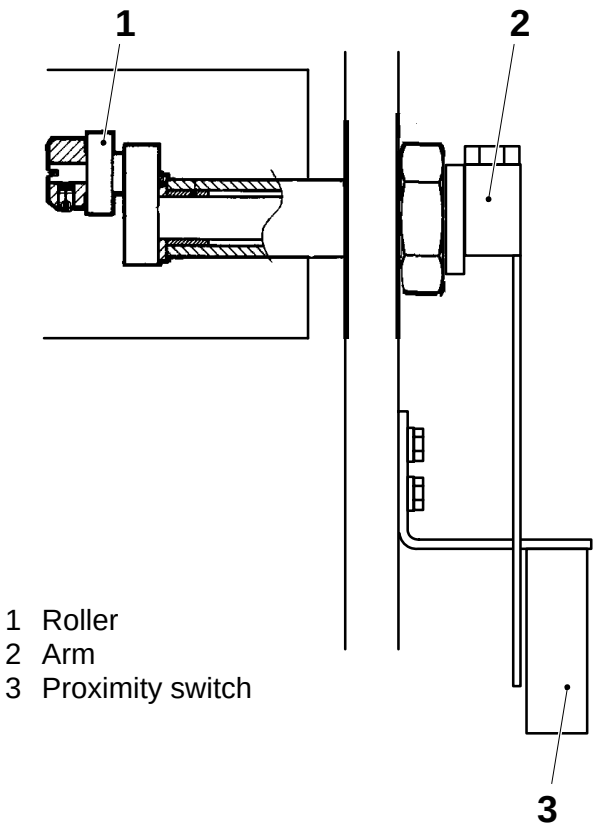

1 Roller
2 Arm
3 Proximity switch

Setting

a) Place a double piece of packaging material between the roller (1) and the bending roller (2).

b) Loosen the screw (3) and shift the arm (4) until the LED of the proximity switch (5) lights up. At the same time, set distance A between the arm and the switch.

c) Tighten the screw (3).

d) Remove the double packaging material and check that the LED goes out.

e) Insert double packaging material between the roller and the bending roller again and recheck the setting.

f) Set the pressure of the roller (1) by bending the spring. The roller is to touch the packaging material with as little pressure as possible.

Checking during operation

a) Tape a piece of packaging material to the material web and check that the taped-on piece passes the roller (1).

b) Check that the machine ejects two to three packages and that the package with the taped-on piece of material is one of these.

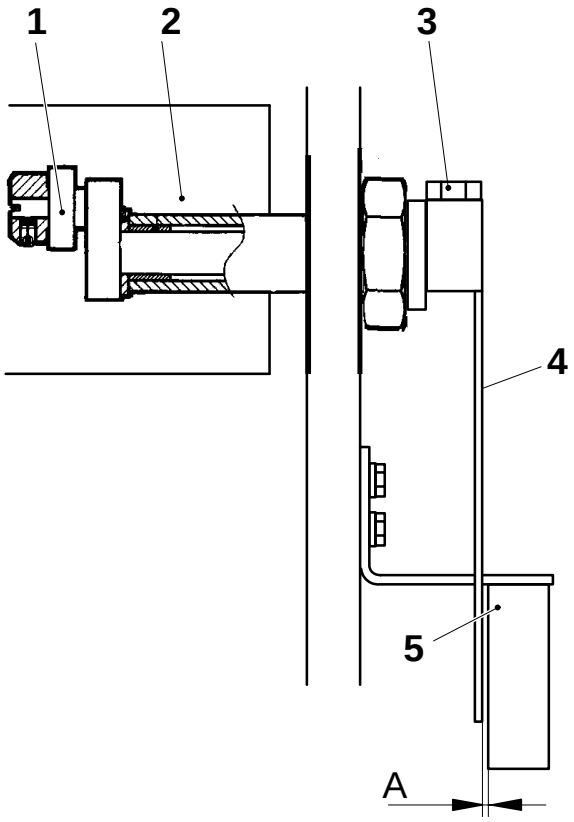

A = 0.2 – 0.5 mm

1 Roller
2 Bending roller
3 Screw
4 Arm
5 Proximity switch

Checking

Check the following details for wear and/or damage:

- the rollers (1) and (2); make sure the rollers rotate freely
- the axles of the rollers
- the pipe (3)

Clean all details. Replace as required.

Make sure that the air holes of the LS nozzle are not clogged and that the nozzle is clean and without defects.

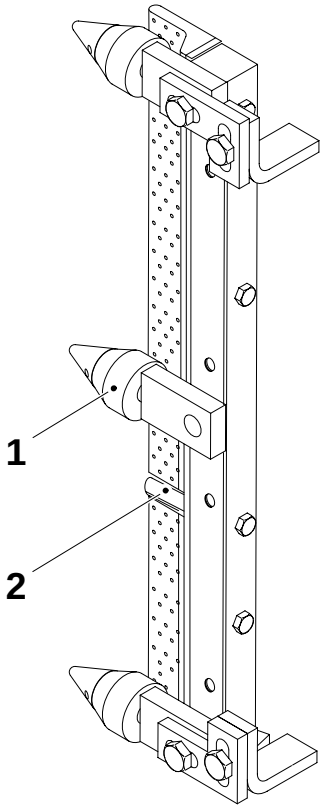

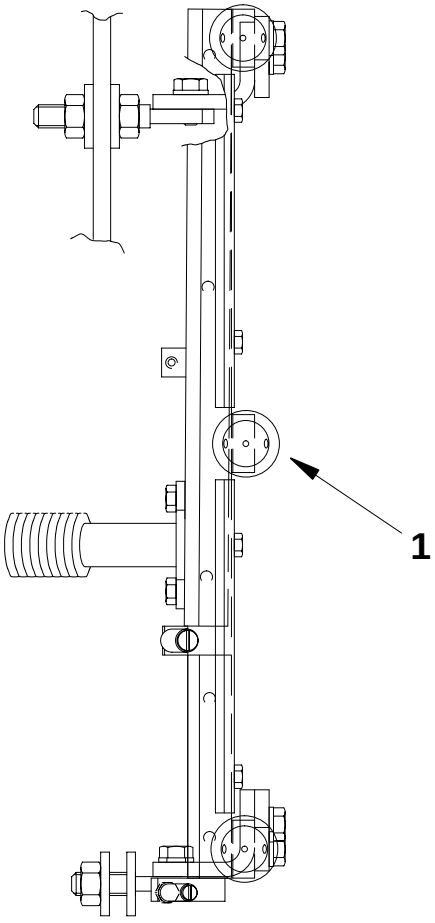

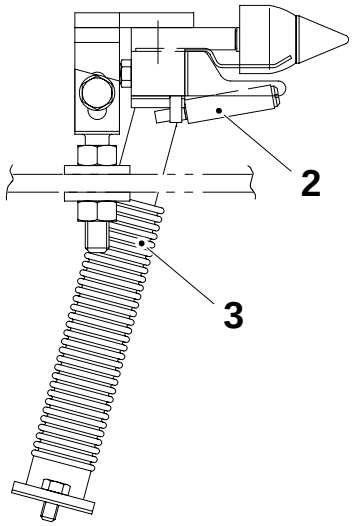

1 Roller
2 Roller
3 Pipe

Setting

Valid for all volumes except 250 S ml

Basic setting

a) Loosen the limit screw.

b) Remove the cover plates (1) from the LS nozzle. Remove the lower roller (2).

c) Remove the lock plates (11) and the roller (10) in the lower forming ring.

d) Put the lower pin of the template (9), see table, in the place of the roller in the forming ring. Fit the spacer (3) and secure the template with the screw (4).

e) Loosen the screws (5) and (6), and the nuts (7) and move the LS nozzle against the contact surfaces of the template. It may be necessary to adjust the cylinder stroke.

f) Tighten the screw (8).

g) Tighten the screws (5). Make sure that there is space for final adjustment (i.e. the screws must not be in an end position in the oblong holes).

h) Tighten the screws (6) and the nuts (7).

Volume, ml	Template TP No.
125 S	76133–301
160 S, 200 S	76606–301
180 B – 284 B	76595–301

(Cont'd overleaf)

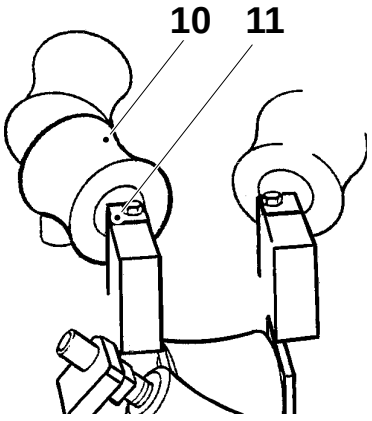

1 Cover plate
2 Lower roller
3 Spacer
4 Screw
5 Screw
6 Screw
7 Nut
8 Screw
9 Template
10 Roller
11 Lock plate

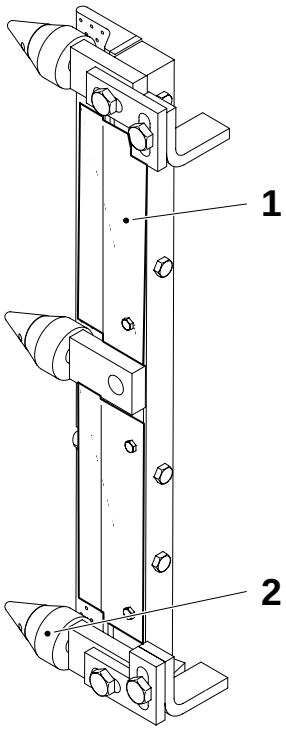

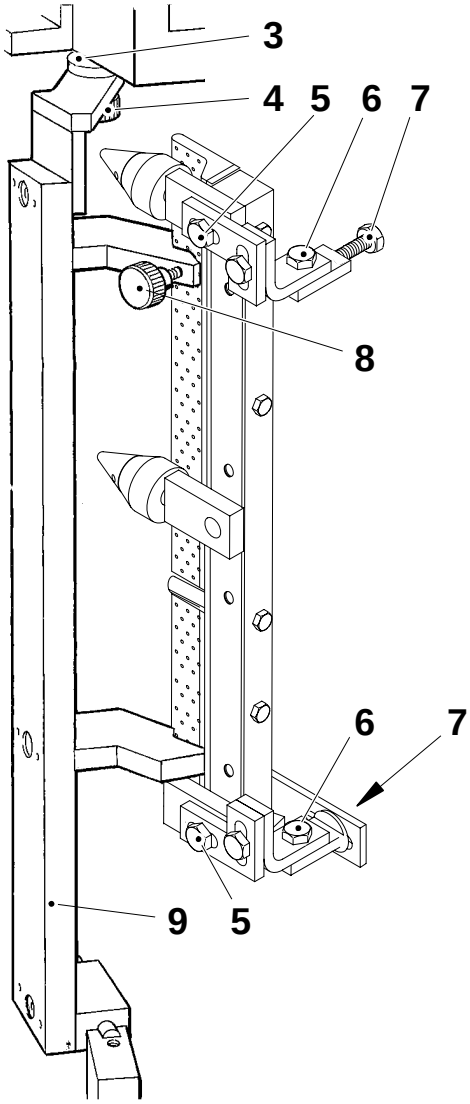

(Cont'd)

i) Set the limit screw (12) so that it touches the contact point on the LS nozzle.

j) Set the rollers (19) as illustrated. To adjust, loosen the screws (16) to shift the blow nozzles (13) and (14).

k) Set distance A, between the LS nozzle (17) and the short-stop nozzle (18), when the machine is **cold**.
To adjust, loosen the screws (15) and shift the nozzle up or down.

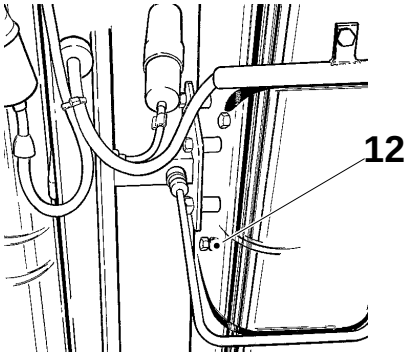

(Cont'd overleaf)

A = 2 ±1 mm
B = 1.0 – 1.5 mm
C = 0.5 – 1.0 mm

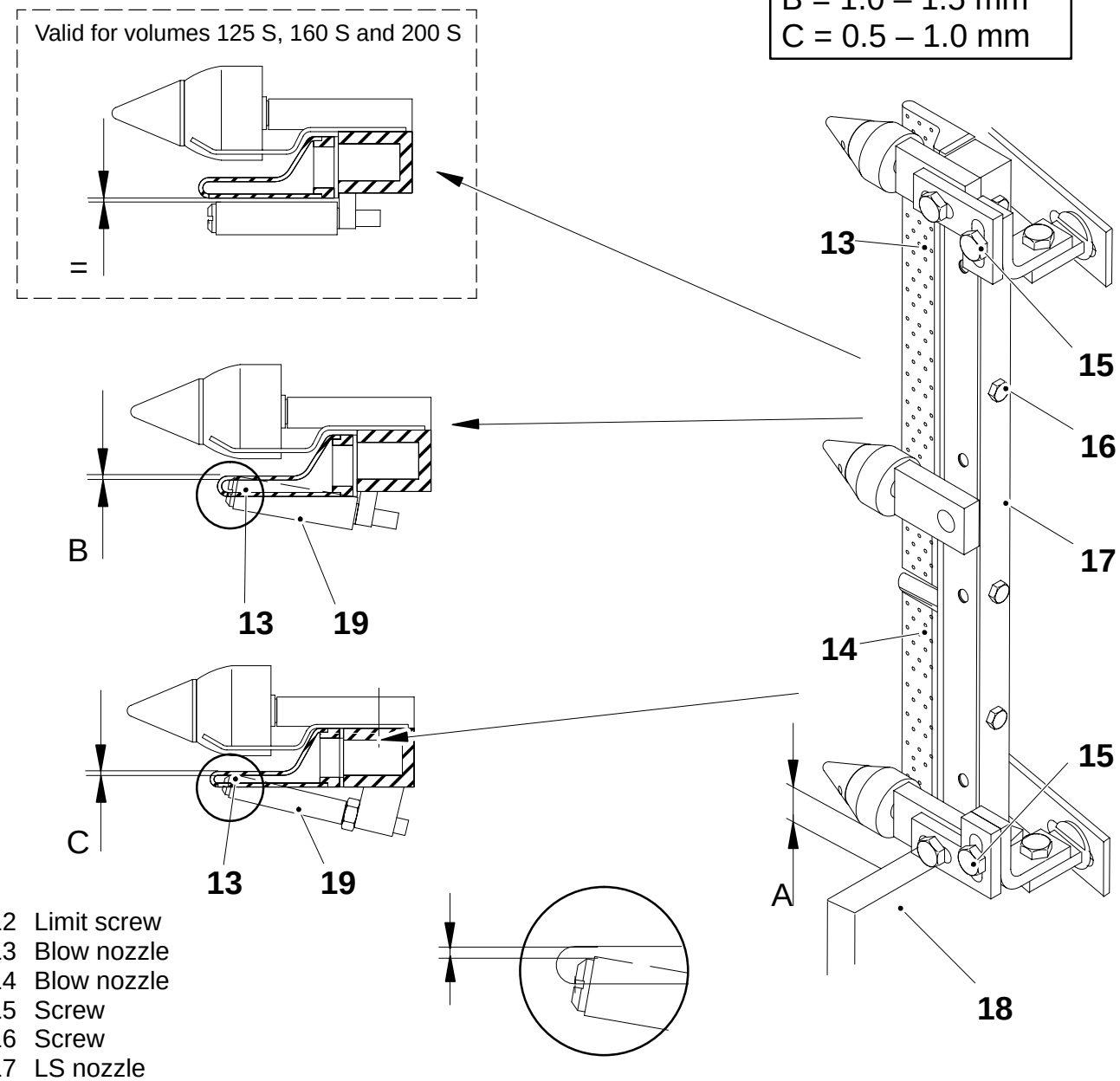

12 Limit screw
13 Blow nozzle
14 Blow nozzle
15 Screw
16 Screw
17 LS nozzle
18 LS short stop nozzle
19 Roller

(Cont'd)

Final setting

a) Thread the packaging material web, all the way down to the jaws.

WARNING!
Movable machine parts and hot surfaces.
Be careful.

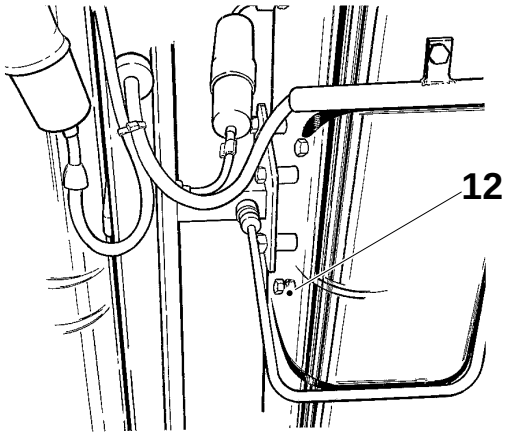

b) With the machine in step **Preheating machine**, inch at high speed and verify the following:

WARNING!
Risk of personlal injury!
Interrupt the inching before any action is taken.

- the rows of holes on the nozzle are to be parallel with the edge of the packaging material. If required, adjust by loosening the screws (5) and shifting the nozzle
- the inner row of holes (volumes 125 S, 160 S and 200 S ml – the second row of holes) is to be aligned directly underneath the edge of packaging material.
  Adjust by means of the limit screw (12)
- the upper and lower rolles (20) are to touch the packaging material. Adjust by loosening the screws (7) and shifting the bracket.

c) After adjustment, inch the machine again and recheck.

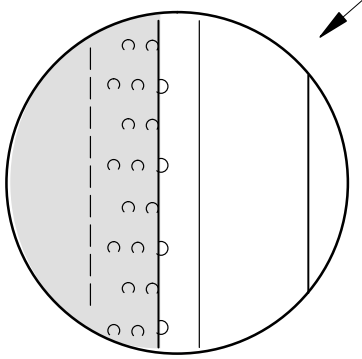

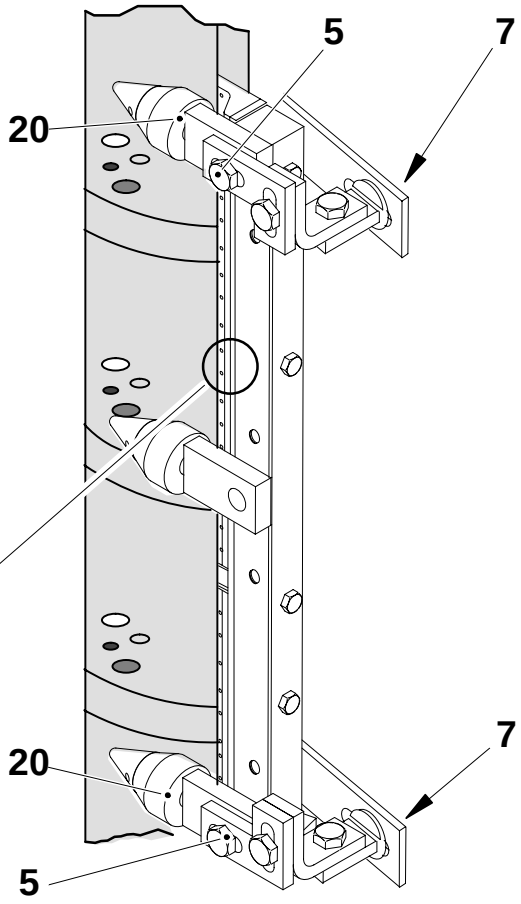

5 Screw
7 Nut
12 Limit screw
20 Roller

Setting

Valid for volume 250 S ml

a) Remove the cover plates from the LS nozzle.

b) Set the rollers (1) correctly, see fig. To adjust, loosen the screws (2) to shift the blow nozzles (3) and (4).

c) Thread the packaging material web, all the way down to the jaws.

d) Loosen the screws (5) and (6) and the nuts (7) and set the LS nozzle. The row of holes should be parallel with the edge of the packaging material.

(Cont'd overleaf)

1 Roller
2 Screw
3 Blow nozzle
4 Blow nozzle
5 Screw
6 Screw
7 Nut

A = 1.0 – 1.5 mm
B = 0.5 – 1.0 mm

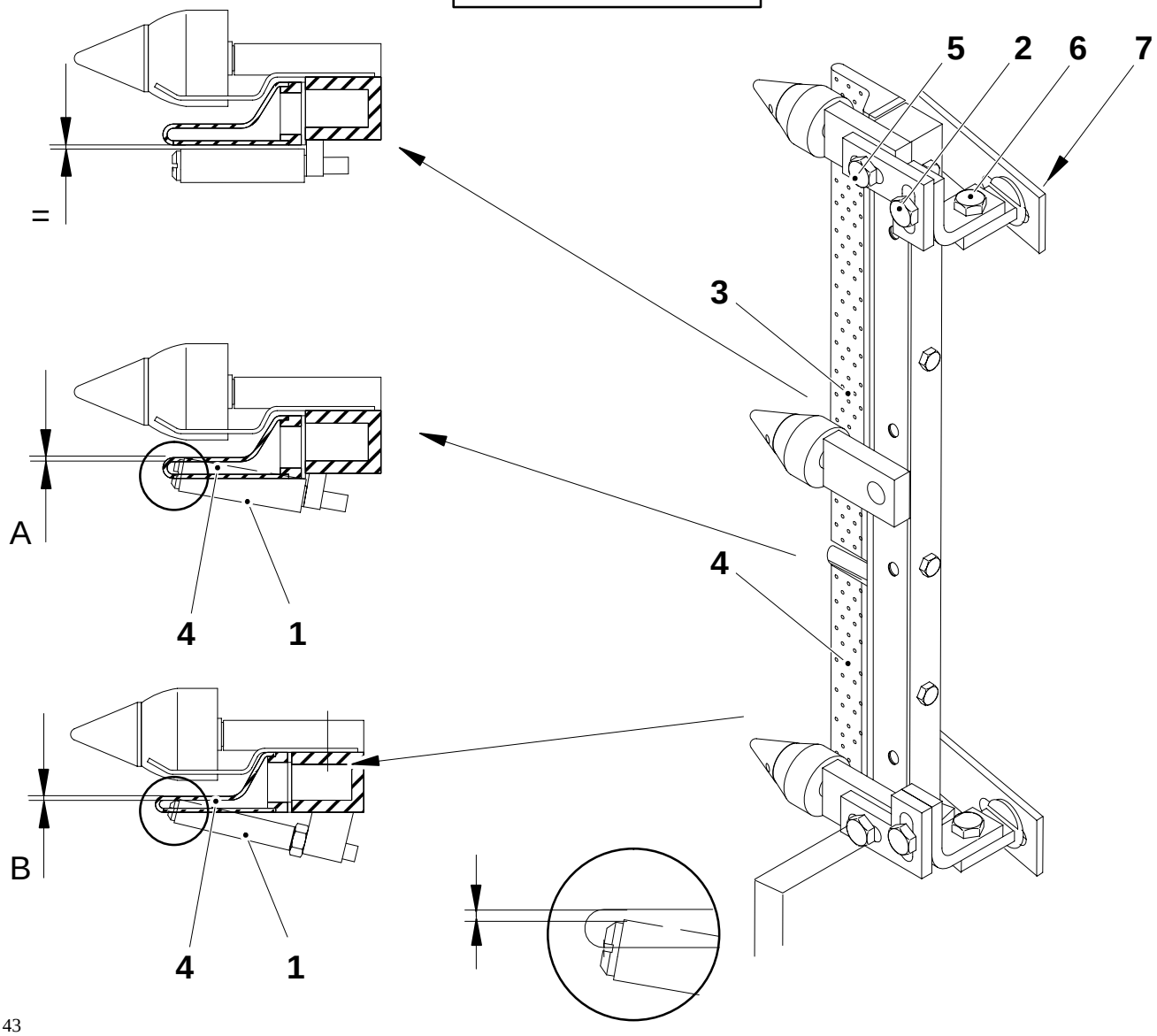

(Cont'd)

e) The rollers (8) should be in contact with the packaging material and the second row of holes aligned directly underneath the edge of the packaging material, see fig.
It may be necessary to adjust the cylinder stroke. Tighten. Turn in the limit screw (9) against the contact point on the LS nozzle.

f) If required, finally adjust lateral deviations during operation by means of the limit screw.

g) Set gap C between the LS nozzle (10) and the LS short stop nozzle (11) when the machine is **cold**. To adjust, loosen the screws (2) and shift the LS nozzle up or down.

h) Set the LS overlap and the tube centering, see page MM 196–1X.

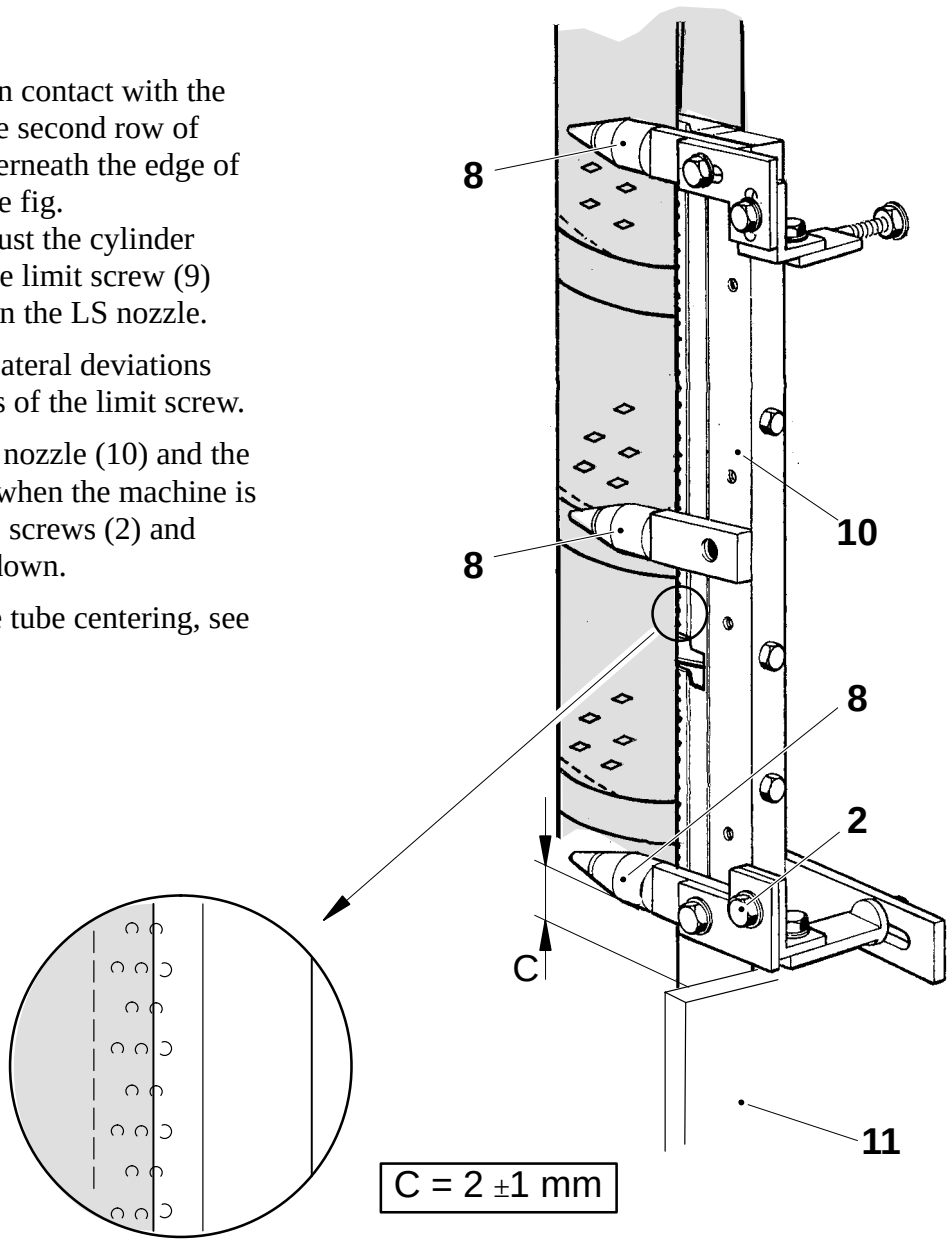

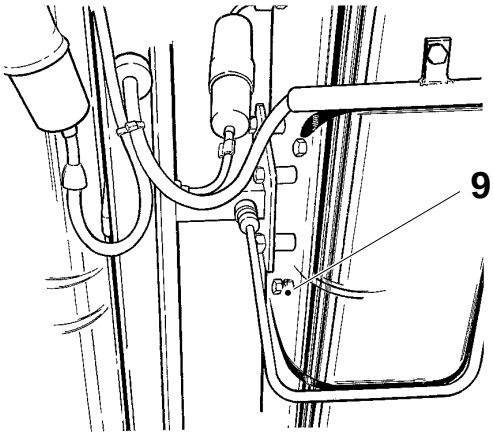

2 Screw
8 Roller
9 Limit screw
10 LS nozzle
11 LS short stop nozzle

Setting

Note
The **Short stop** movement can be simulated by manually actuating the pneumatic valve Y20 on the valve panel.

a) Insert packaging material, all the way to the jaws. Loosen the screws (1) and set distances A and B from the heat shield (2) to the short stop nozzle (3).

b) Loosen the nut (4) and shift the short stop nozzle until the edge of the heat shield is in line with the packaging material tube (5). At the same time, set the corner of the short stop nozzle so that it protrudes distance C beyond the edge of the packaging material.

c) Set the distance between the LS nozzle and the short stop nozzle, see page MM 116–5X.

d) With the machine in step **Production**, push **Short stop** and check that the nozzle moves without fouling the pressure roller and LS nozzle. If required, adjust on the cylinder throttles.

e) Check that the LS seal is without fault in the package that remained opposite the short stop nozzle during the stop.

WARNING!
Risk of burns! Be careful.
Risk of electric shock!

f) The heating can be altered by adjusting the clamp union (6).

g) The heating of the short stop nozzle can also be altered by reconnecting transformer T9 in the electrical cabinet, but this must only be done by a qualified electrician.

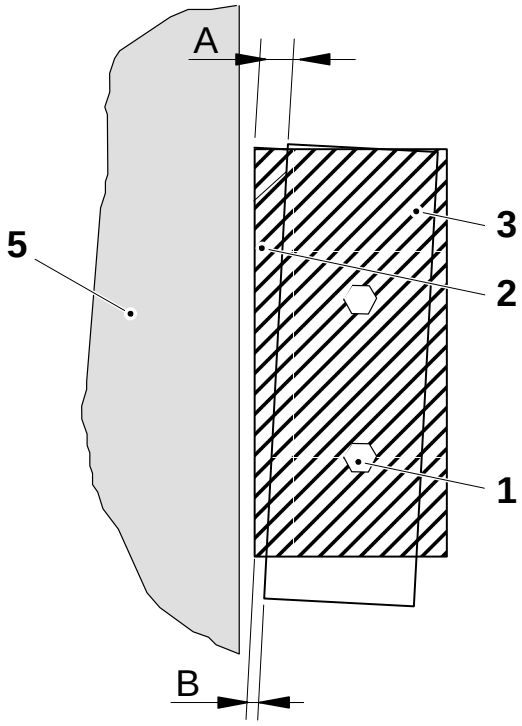

A = 8 ±0.5 mm
B = 3 ±0.5 mm
C = 1 ±0.5 mm

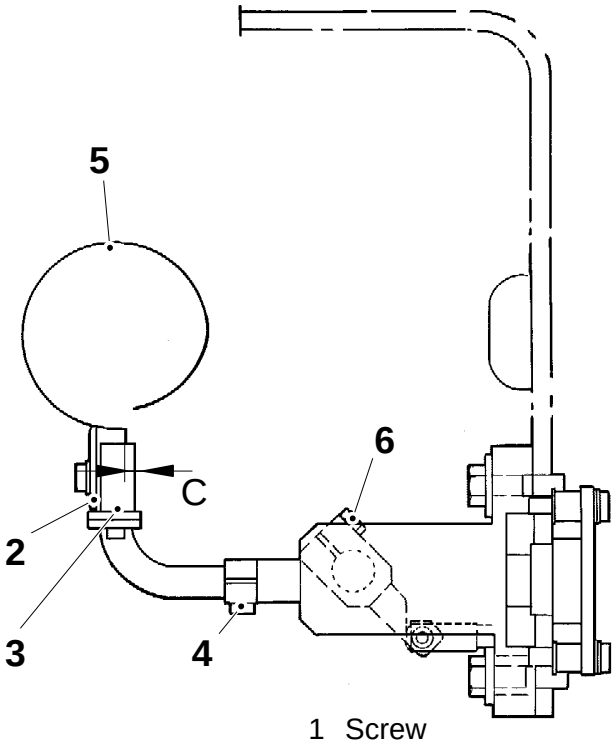

1 Screw
2 Heat shield
3 Short stop nozzle
4 Nut
5 Material tube
6 Clamp union

Checking/Setting

a) Turn on the main power switch.

b) Loosen the nut (4) and vent the pressure switch (2).

c) Connect a transparent hose (approx 1500 mm) to the valve (1).

d) Open the valve gently and drain the water bath of the peroxide bath.

e) When the input I 05.03. goes out, close the valve immediately and put the hose in an upright position.

f) Open the valve again and check that the distance from the plate (5) to the water level is 1300 ±30 mm WC.

g) If the level is too high, lift the cap (3) and adjust clockwise on the screw. Make the adjustments in very small steps.

h) Check that the low level switch is correctly set by repeating items c), d) and e).

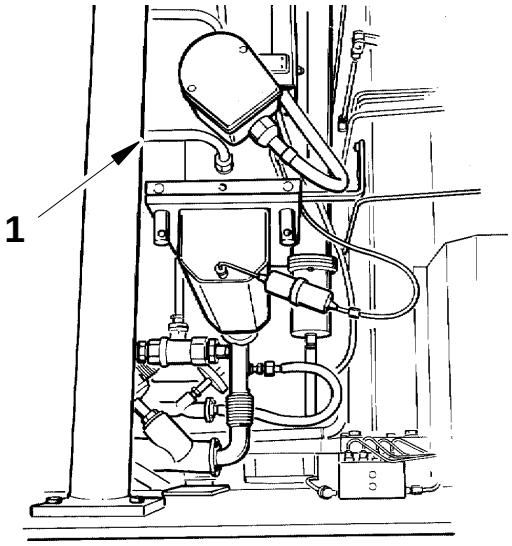

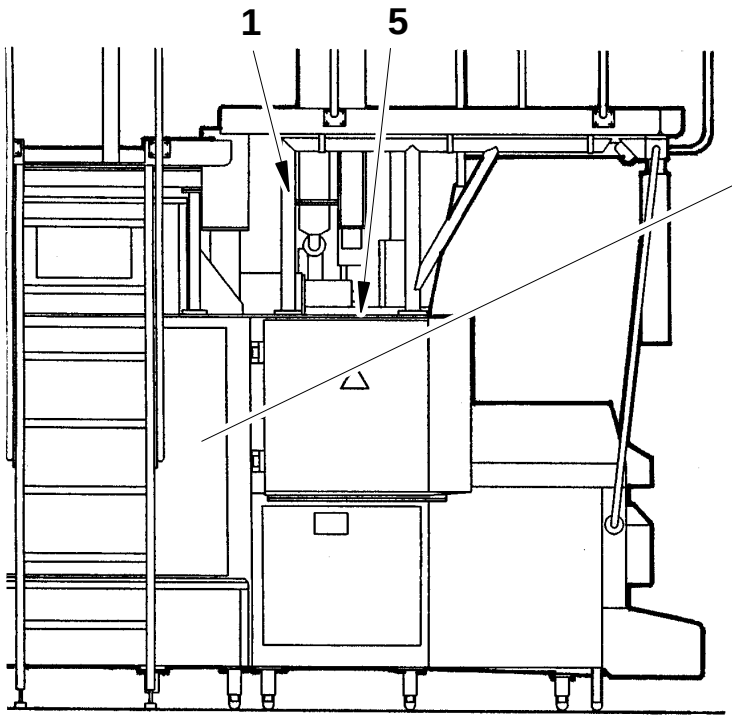

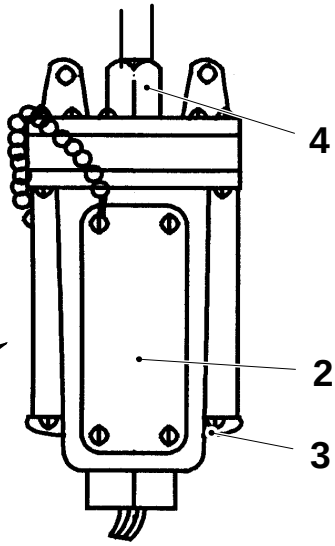

1 Valve
2 Pressure switch
3 Cap
4 Nut
5 Plate

Overhaul

Replacement of seals and membranes

Close the system inlet valve and slowly open the vent and drain valve to release the pressure.

WARNING!
Hot steam. Risk of personal injury or damage to equipment. Check the system pressure gauge to ensure no residual pressure remains in the filter housing. Do not open under pressure.

a) Disconnect the steam and air lines, and monitors.

(Cont'd overleaf)

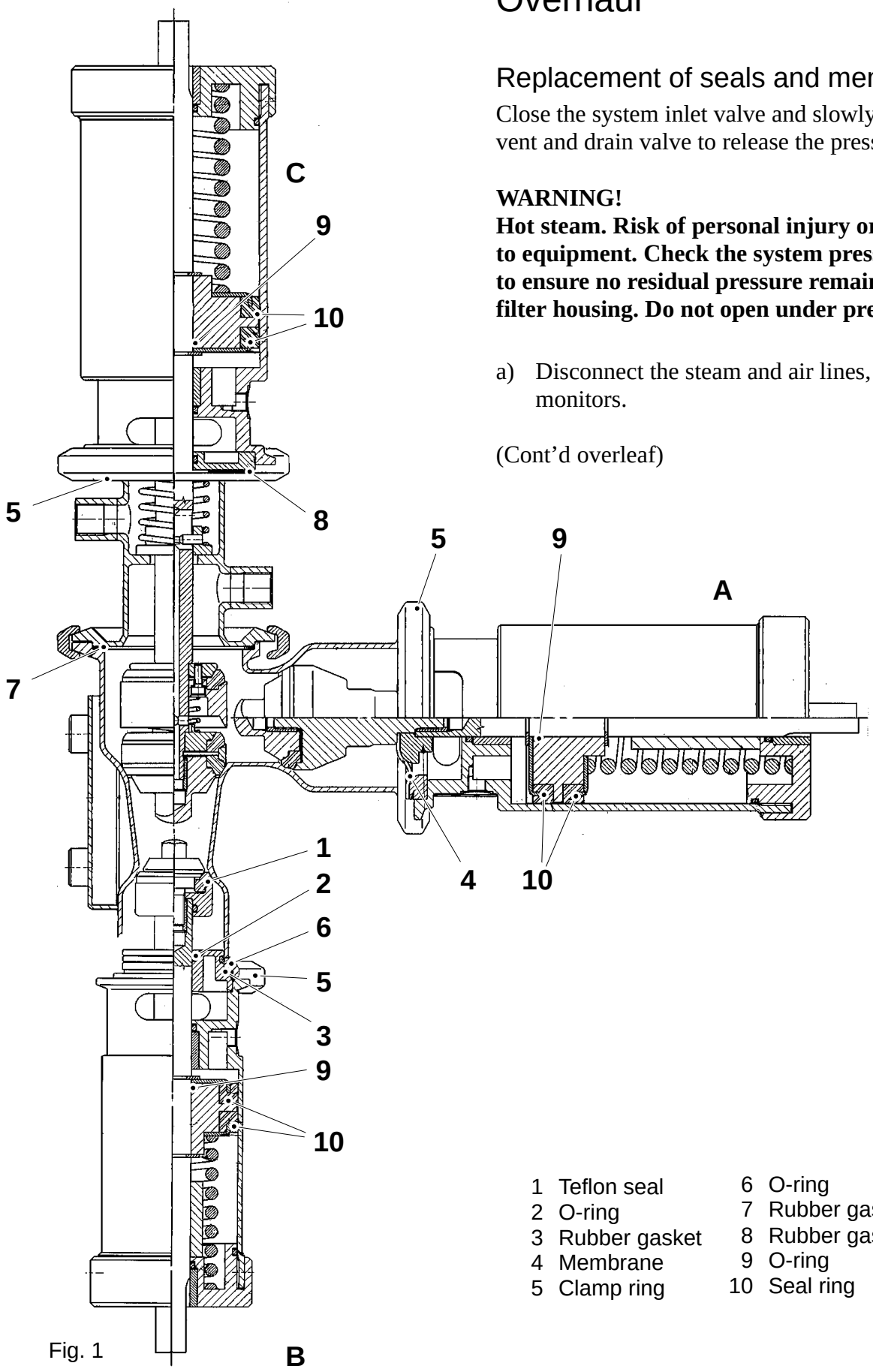

Fig. 1

1 Teflon seal
2 O-ring
3 Rubber gasket
4 Membrane
5 Clamp ring
6 O-ring
7 Rubber gasket
8 Rubber gasket
9 O-ring
10 Seal ring

(Cont'd)

b) Fit the tool TP No. 449969–101 by means of the outer handle. Compress the valve spring to take the load off the inner clamp ring.

c) Loosen the inner clamp ring (pos 5, fig. 1) and remove the valve.

d) **Product valve (A)**
Get a hold with the tool (fig. 2) and unscrew the valve cone (fig. 3). Replace the teflon seal and the membrane.

e) **Steam valve (C)**
Unscrew the valve cone. Dismantle the teflon ring holder by loosening four screws (fig. 4). Unscrew the valve rod. Replace the three teflon seals, the O-ring, and the two rubber gaskets.

f) **Sterile air valve (B)**
Unscrew the valve cone. Replace the teflon seal, the O-ring, and the rubber gasket.

g) If required, clean the valves and valve housings.

h) Reassemble and fit the valves. Torque on valve cones 50 Nm. Before the clamp rings are tightened, check that the valves move freely.

i) Reconnect the steam and air lines, and the monitors.

Note
In case work is done to the A, B, or C valve pneumatic cylinders, replace the O-rings (9) and seal rings (10). Use tool TP No. 449969–101 (fig. 2) to unload the spring.

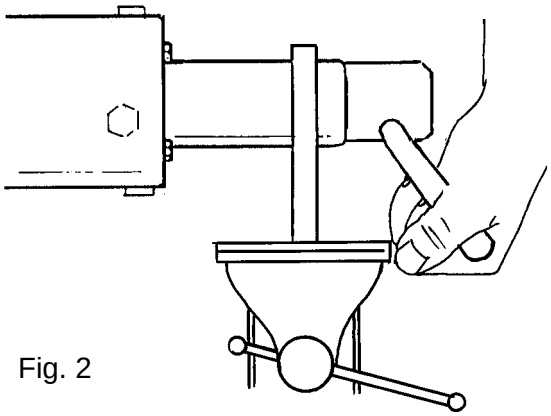

Fig. 2

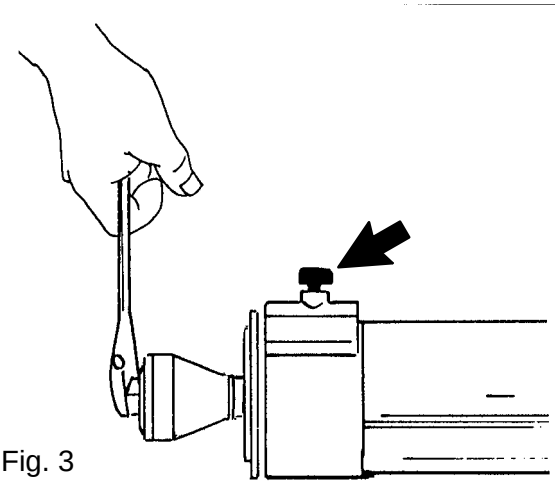

Fig. 3

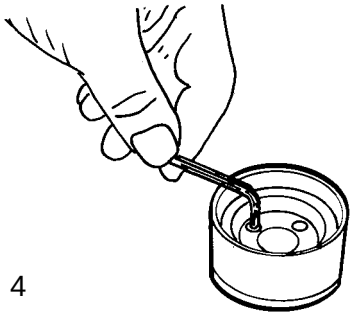

Fig. 4

Cylinder and drive motor sequence diagram

The synchronization between the valves must follow the diagram.

*The closing time of the C valve varies, depending on product viscosity; the higher the viscosity the longer the time.

All valves are shown in closed position. The cylinders are vented and springs are closing them.

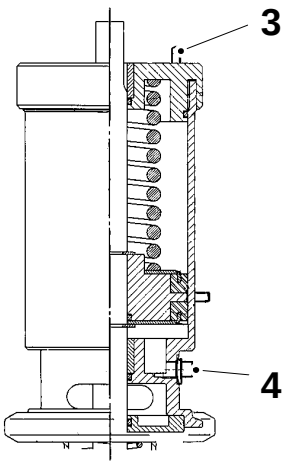

A Product
B Hot air or cleaning
C Steam

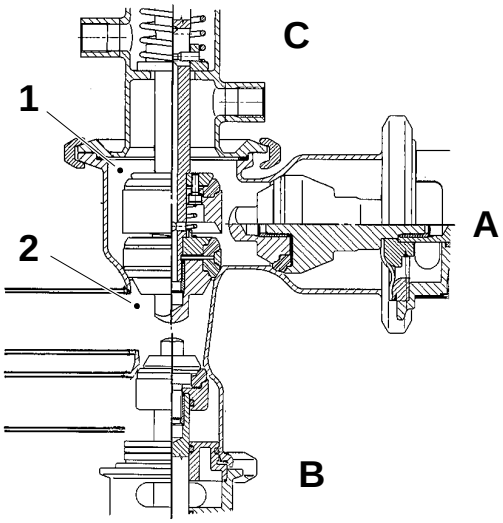

1 Open position
2 Closed position
3 Exhaust with throttle
4 Air intake

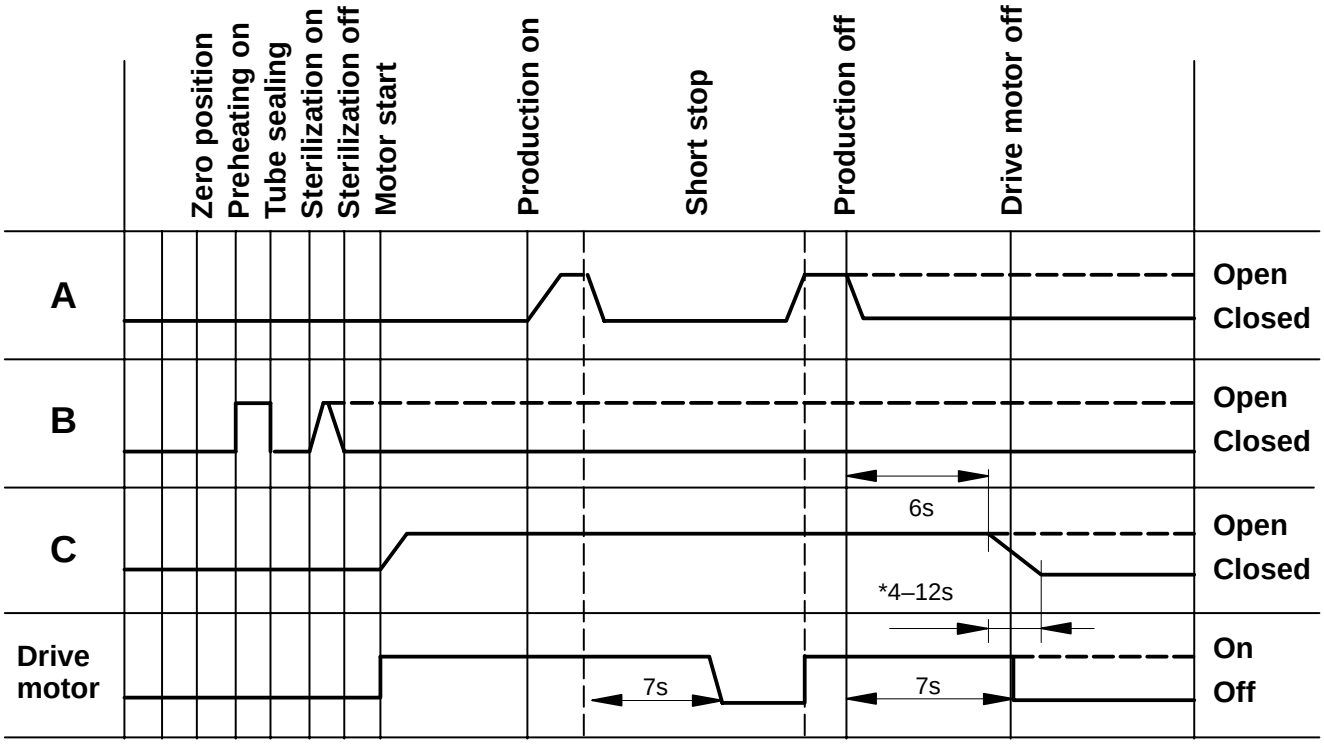

Checking

Loosen the screw (1) and swing aside the cylinder bracket (2).

Undo the four screws (3) and the bearing cover (4).

Pull out the bracket (5) and the block (6) and then the two springs (7).

Check the following details for wear and/or damage:

- the inside of the valve housing (8)
- the three O-rings (9) and (10)
- the two bushings (11)
- the slide piece (6)
- the two springs (7)
- the two axle ends (12) on the bracket (5)
- the cylinder (13); it must move smoothly

Replace as required.

Reassemble in reverse order. Set the valve, see page MM 129–5X.

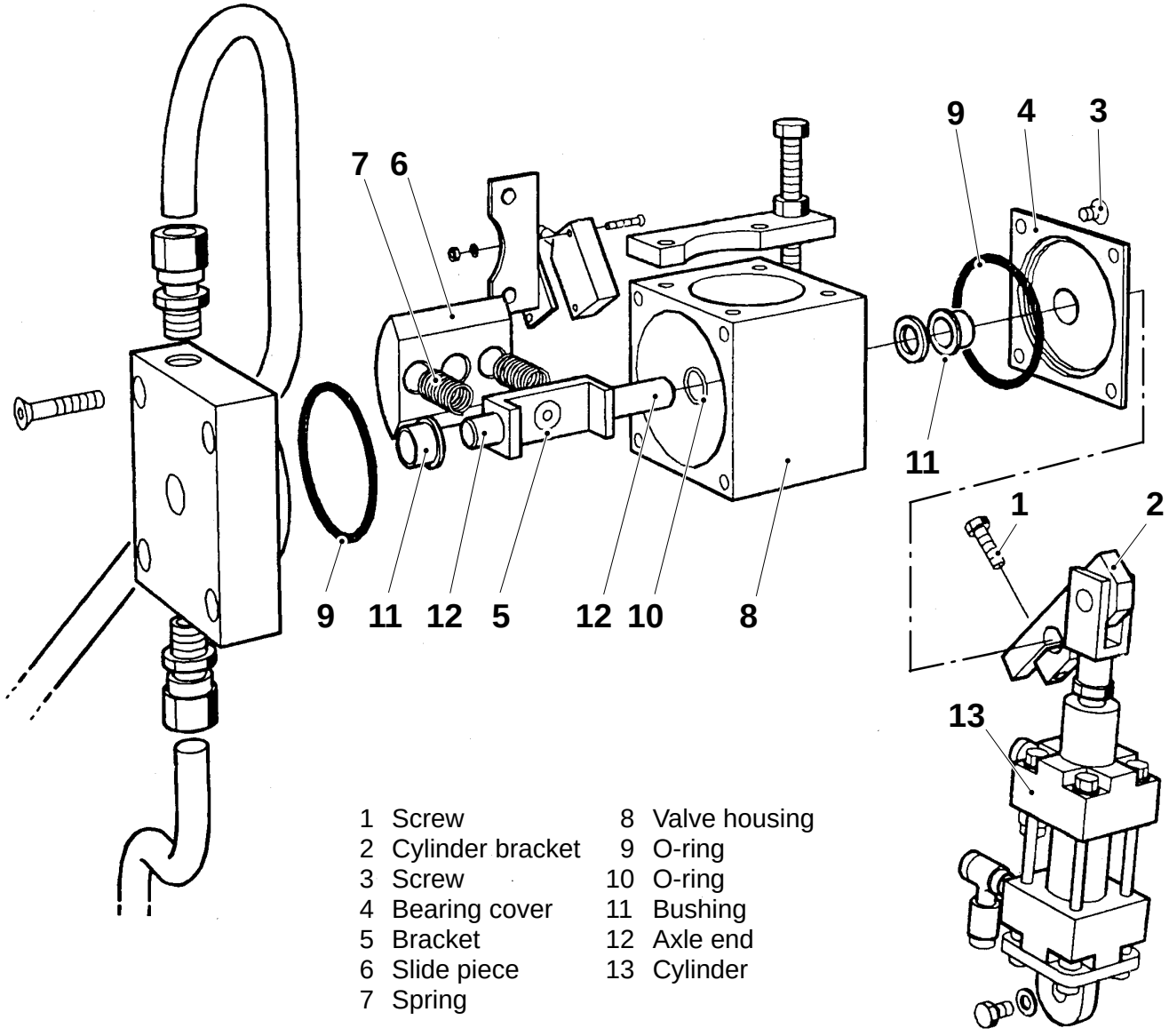

1	Screw	8	Valve housing
2	Cylinder bracket	9	O-ring
3	Screw	10	O-ring
4	Bearing cover	11	Bushing
5	Bracket	12	Axle end
6	Slide piece	13	Cylinder
7	Spring		

Setting

a) Set the correct position of the valve shaft (1) on the suction valve. The mark on the shaft must be positioned as illustrated when the piston rod (2) is outside the cylinder.

b) Loosen the screw (3) and adjust on the cylinder bracket.

c) Set distance A by means of the screws (4).

d) Set distance B on the stop screw.

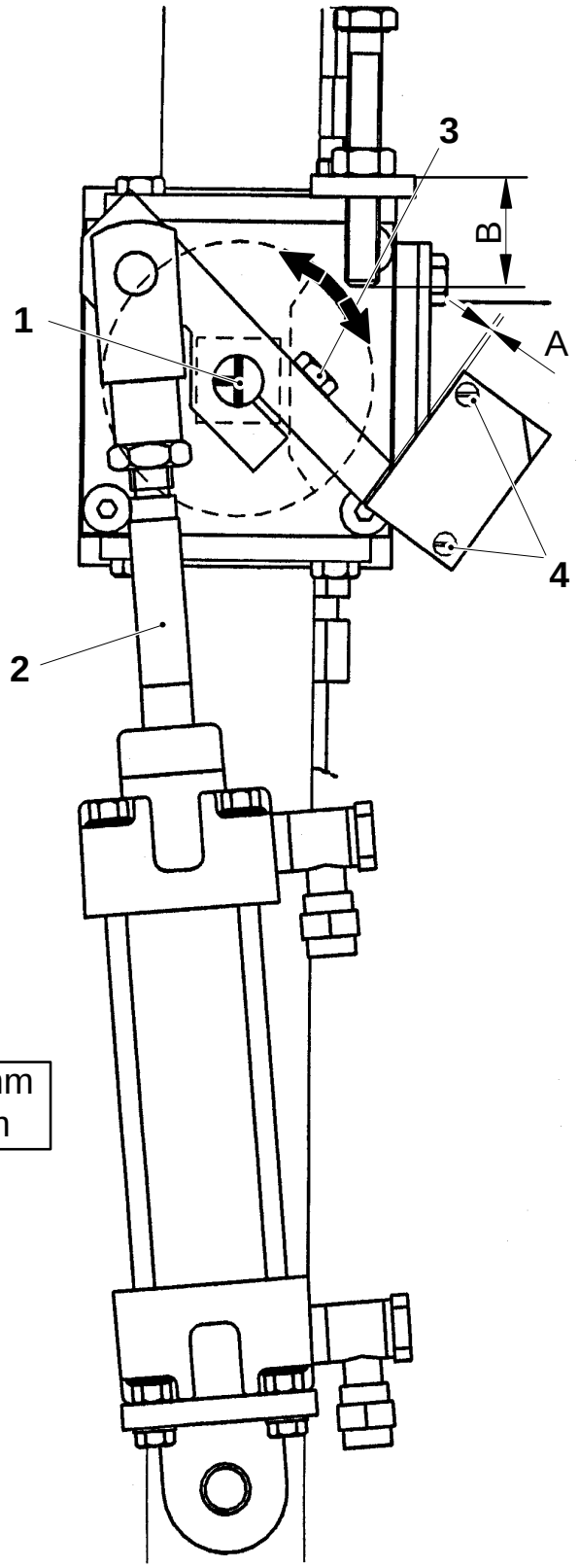

A = 0.5 – 1.0 mm
B = 39 ±0.5 mm

1 Position, valve shaft
2 Piston rod
3 Screw
4 Screw

Checking

Check the following details for wear and/or damage:

- the O-rings (1) and (4)
- the bushings (2)
- the washer (3)
- the slide piece (5)
- the inside of the valve housing
- the cylinder (6); make sure it moves smoothly
- the filter net (7); it must not be clogged

Replace as required.

When replacing the filter net, also replace the O-ring (8).

Open the compressed air inlet and check that there is no air leakage in the valve and/or the cylinder.

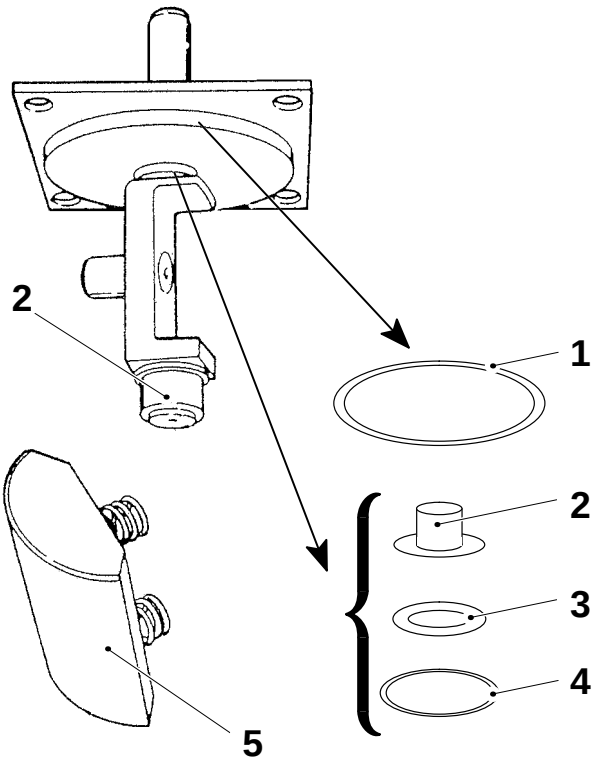

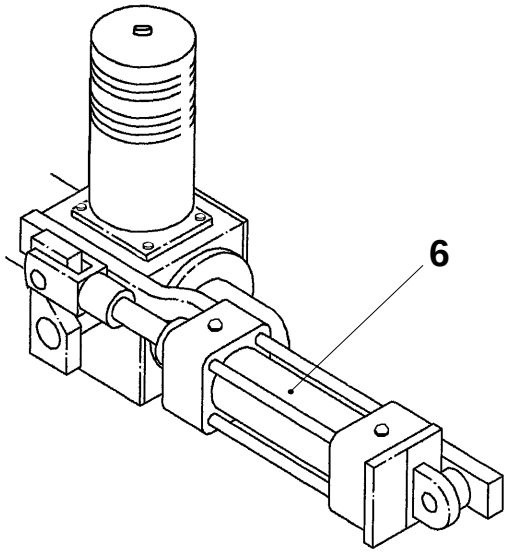

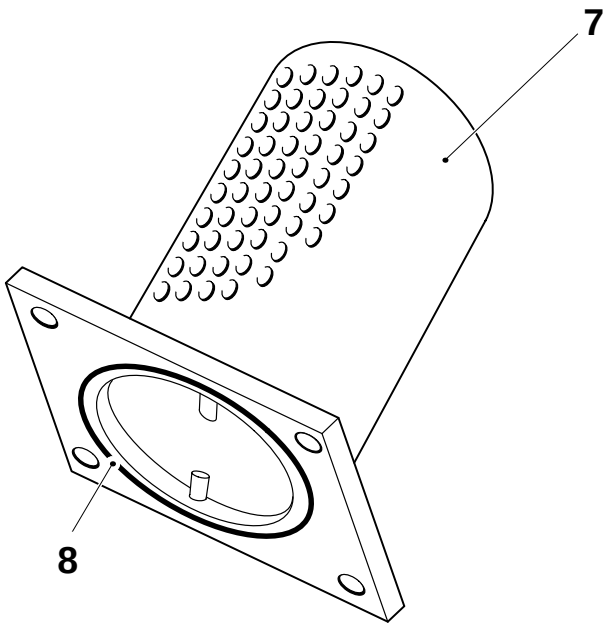

1 O-ring
2 Bushing
3 Washer
4 O-ring
5 Slide piece
6 Cylinder
7 Filter net
8 O-ring

Dismantling

Undo the screws (4), four on each connection.

Undo the air connections (5) to the cylinder.

Remove the cylinder and the valve.

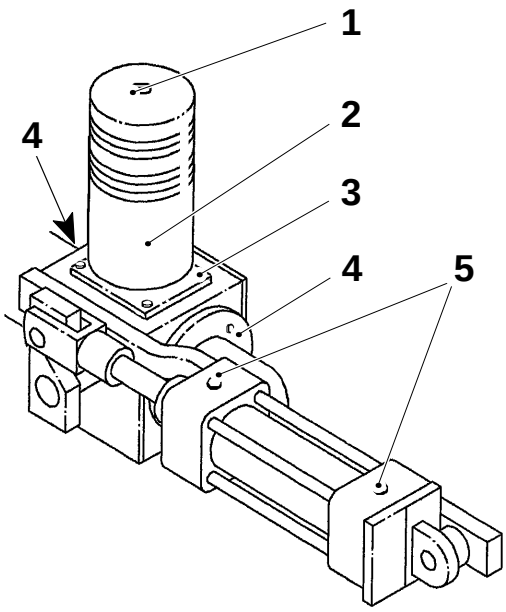

Valve

a) Loosen the screw (7), pull out, and swing up the cylinder bracket (8).

b) Undo the four screws (6) and remove the bearing cover (9) together with the slide piece (10) and the springs (11).

Reassemble in reverse order. Make sure the slide piece (10) and the springs (11) are fitted correctly.

Set the position of the change over valve, see page MM 130–5X.

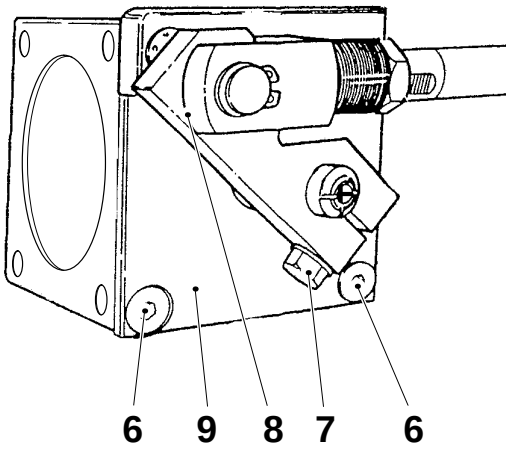

Filter

a) Undo the screw (1) and remove the filter cover (2).

b) Undo the four screws (3).

c) Undo the two screws (12), the ring and the filter net.

Reassemble in reverse order.

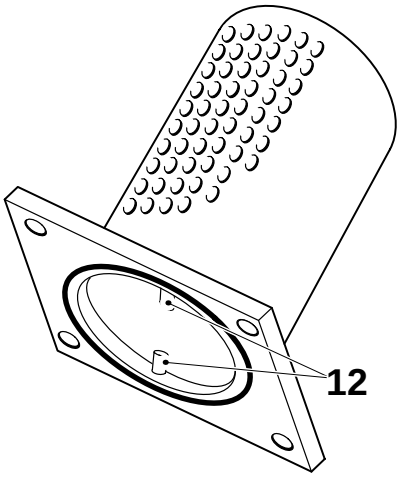

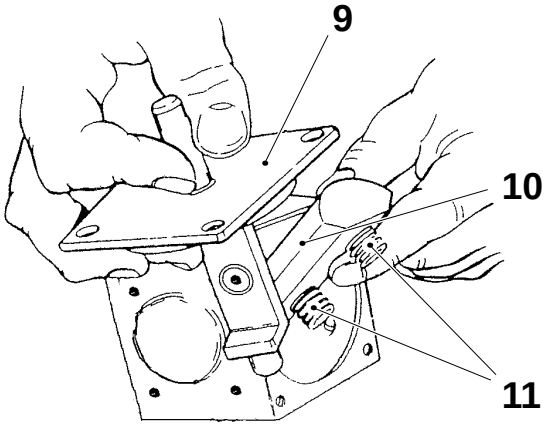

1 Screw
2 Filter cover
3 Screw
4 Screw
5 Pipe connection
6 Screw
7 Screw
8 Cylinder bracket
9 Bearing cover
10 Slide piece
11 Spring
12 Screw

Setting

a) Set the piston (4) in its inner position.

b) Set the T-mark (2) in the position illustrated and tighten the screw (1).

c) Set the cylinder stroke by loosening the nut (3) and turning the piston (5). There should be distance A between the nut and the key handle (4) on the piston rod.

Note
The adjustment screws of the end position damping **must** be fully open.

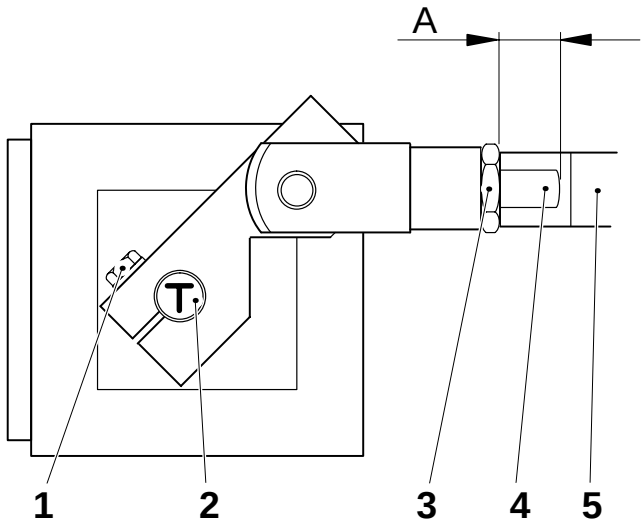

A = 11 ± 1 mm

1 Screw
2 T-mark
3 Nut
4 Key handle
5 Piston

Checking/Replacement

a) Check that the sealing lip (3) is not worn and that it is tight around the tube.

b) Check distance A.

c) If required, undo the screws (1) and remove the ring (2) with all its components.

d) Replace the sealing lip (3).

Reassemble in reverse order.

A < 0.5 mm

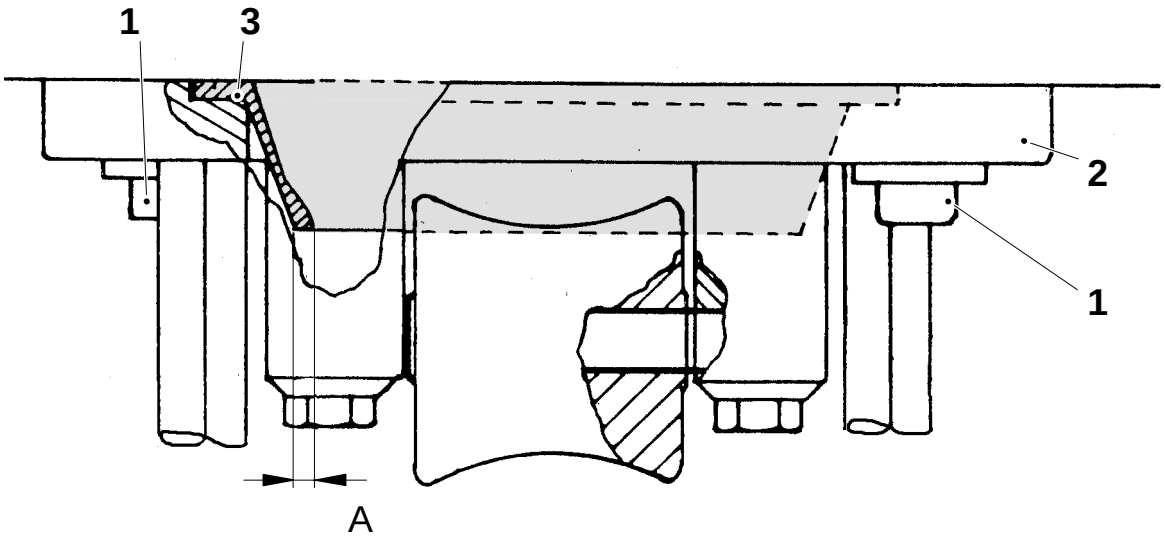

1 Screw
2 Ring
3 Sealing lip

Checking/Replacement

a) Check that the rollers (3) run smoothly and that their running surfaces are not damaged.

b) If required, undo the screws (1) and remove the axle support (2) and the roller (3).

c) Replace the rollers and/or axle (4).

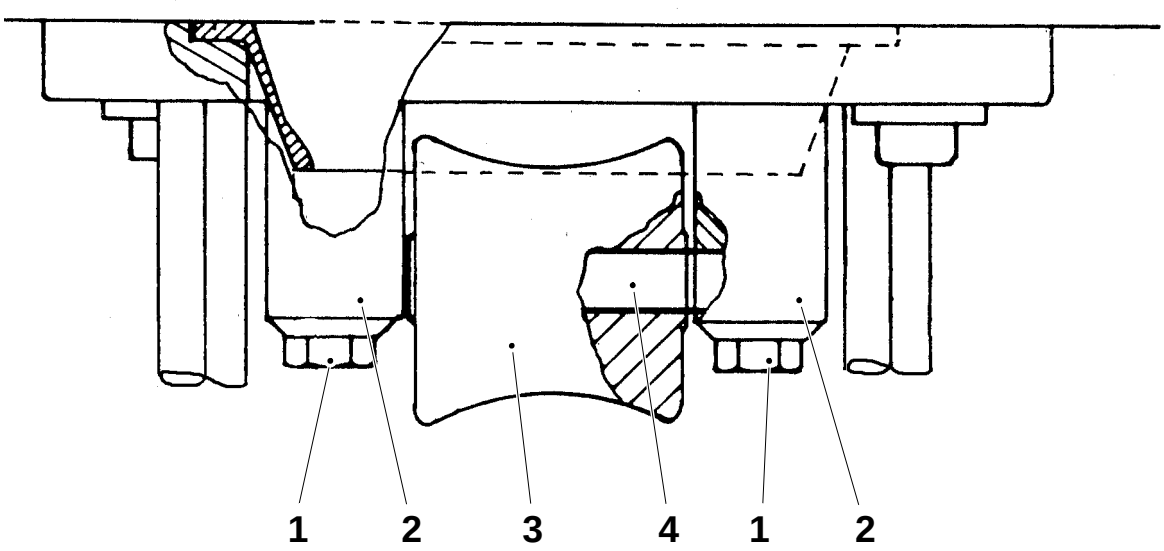

1 Screw
2 Axle support
3 Roller
4 Axle

Checking

Check the following details for wear and/or damage:

- the floater (1), shake it to make sure that no liquid has leaked into it (the weight of the float is stamped into it so it can by checked by weighing)
- the shear pin (2)
- the clamping element (3)
- the link (4)
- the arm (5)
- the throttle (6)
- the locking fingers (7)
- the lower filling pipe (8); especially the area indicated by the arrow

Replace as required.

Make sure the mechanism moves smoothly without binding.

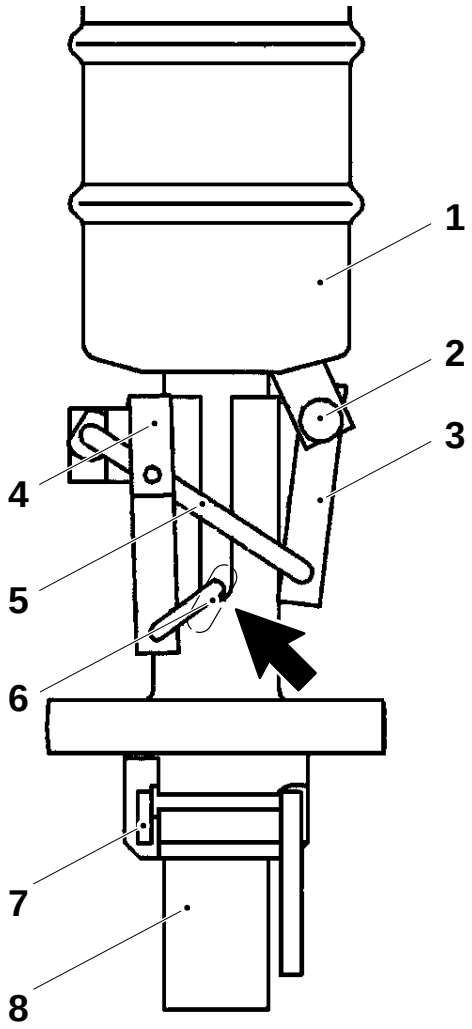

1 Floater
2 Shear pin
3 Clamping element
4 Link
5 Arm
6 Throttle
7 Locking finger
8 Lower filling pipe

Removal

a) Remove the locking finger (1).

b) Pull out the shear pin (2).

c) Lower the pressure flange (3) with the arm and the link.

d) Remove the throttle (4) and the pressure flange.

e) Remove the arm (5) and the link (6) with the clamping element (7).

f) Pull off the floater (8).

Reassemble in reverse order.

Make sure that the throttle is open when the floater is in its bottom position and closed when the floater is in its top position.

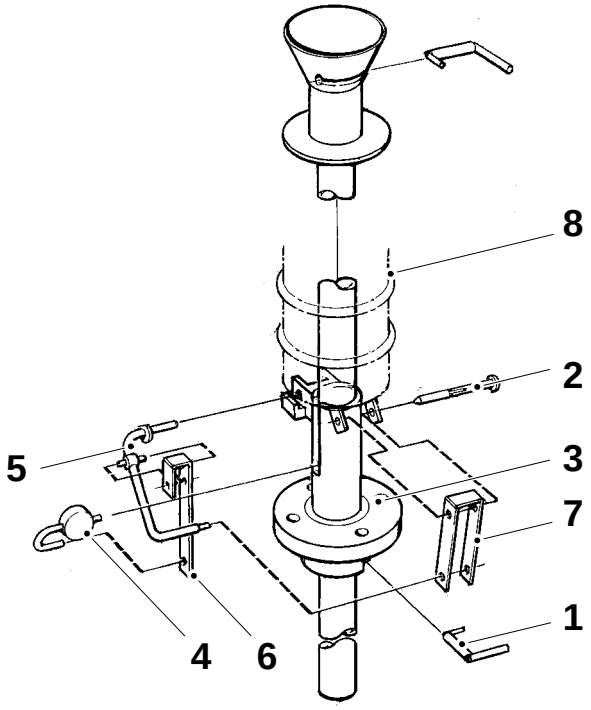

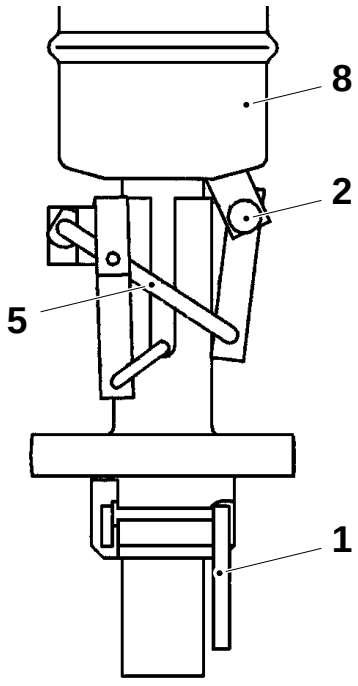

Fig. shows the lower filling pipe for volumes 125 ml S and 200 ml S

1 Locking finger
2 Shear pin
3 Pressure flange
4 Throttle
5 Arm
6 Link
7 Clamping element
8 Floater

Setting

Set the LS alignment so that the crease lines marked with arrows are opposite one another (fig. 1) or displaced symmetrically (fig. 2 and fig. 3).

Fig. 1 – 3 show the **top** of the package, with the flaps unfolded.

With the machine in step **Production**, pick out a package and unfold the top flaps.

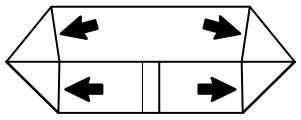

Fig.1

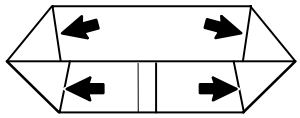

Fig. 3

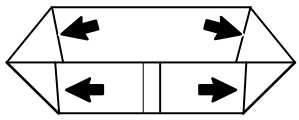

Fig. 2

Coarse setting

a) Turn the knob (1), on the SA. The pointer (2) indicates how much the packaging material web is adjusted.

b) Turning the knob clockwise moves the tube as illustrated in fig. 4.

c) Set the LS nozzle, see page MM 116–5X.

Fine setting

a) Turn the knob (3) on the superstructure.

b) Turning the knob clockwise moves the tube as illustrated in fig. 4.

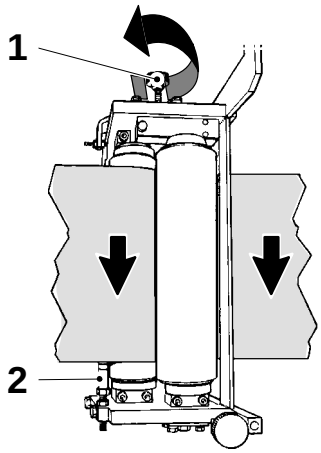

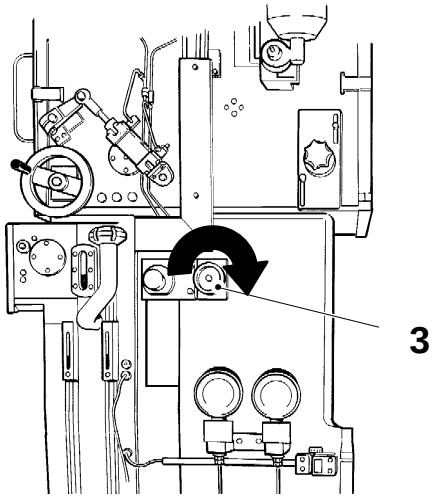

1 Knob
2 Pointer
3 Knob

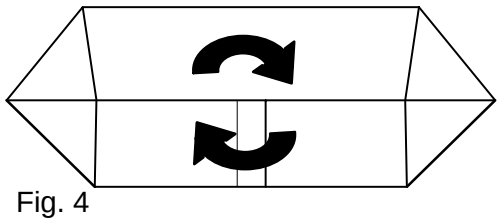

Fig. 4

Setting

Set the LS alignment so that the crease lines marked with top arrows are opposite one another (fig. 1) or displaced symmetrically (fig. 2 and fig. 3).

Fig. 1 – 3 show the **top** of the package, with the flaps unfolded.

With the machine in step **Production**, pick out a package and unfold the flaps.

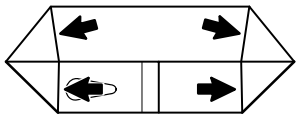

Fig. 1

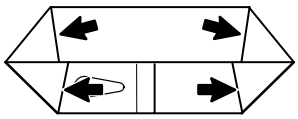

Fig. 2

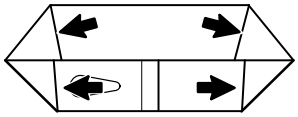

Fig. 3

Coarse setting

a) Turn the knob (1), on the packaging material magazine.

b) Turning the knob clockwise moves the tube as illustrated in fig. 4.

c) Set the LS nozzle, see page MM 116–5X.

Fine setting

a) Turn the knob (2) on the superstructure.

b) Turning the knob clockwise moves the tube as illustrated in fig. 4.

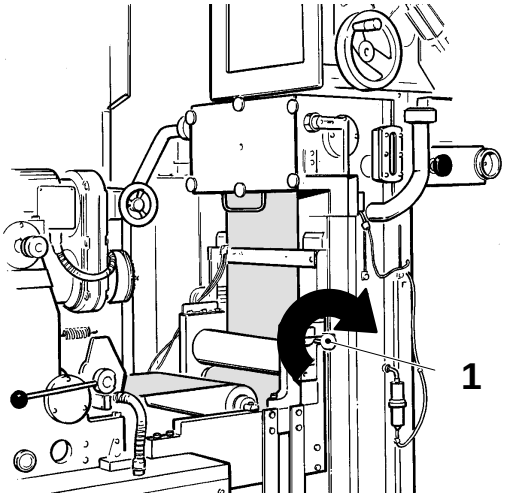

Fig. shows TBA/9 1302

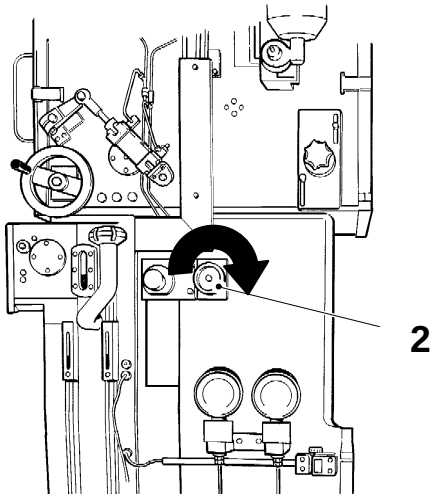

1 Knob
2 Knob

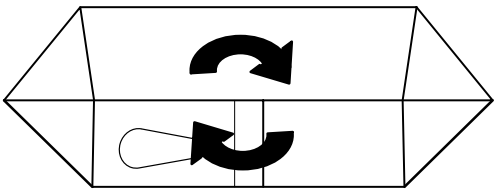

Fig. 4

Checking

Check the following details for wear and/or damage:

- the spring (1)
- the pressure roller (2); make sure the roller rotates freely
- the bearing (3); the play must not exceed 0.5 mm
- the locking pin (4)

Replace as required.

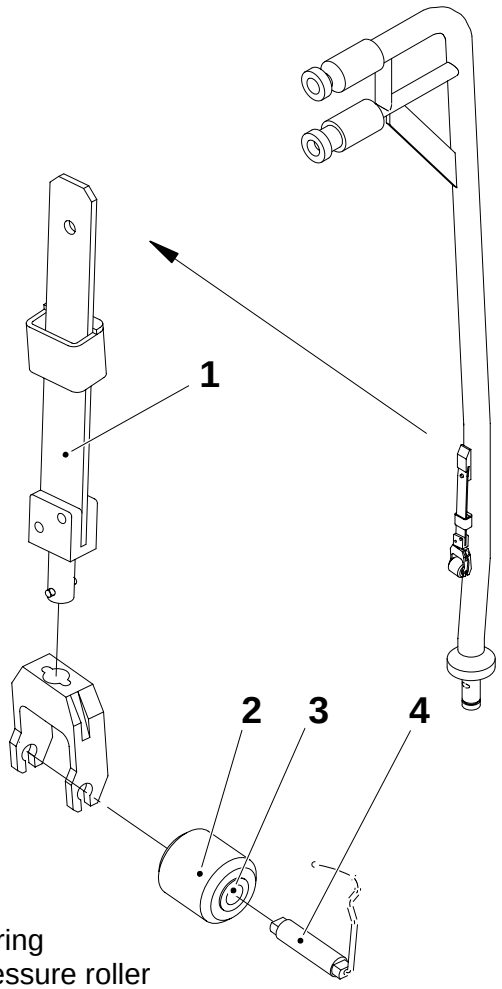

1 Spring
2 Pressure roller
3 Bearing
4 Locking pin

Setting

Pressure roller

a) Open the compressed air inlet. Turn on the main power switch and actuate valve Y26 for the counter roller.

b) Measure the spring force by pushing with the tool (5) (TP No. 74767) against the fork head until the pressure roller (3) just eases off the counter roller (4).
The spring force is to be 30 – 40 N.

c) Replace the spring (1) or bend it until the correct force is obtained.

d) Put a piece of packaging material (folded double) between the pressure roller and the counter roller.
The spring must not touch the cover (2).

e) If required, bend the spring (1) to adjust.

Note!
The spring force must be 30 – 40 N.

f) Deactuate valve Y26, turn off the main power switch and close for compressed air.

Set the height relatively the forming ring, see page MM 196–5X.

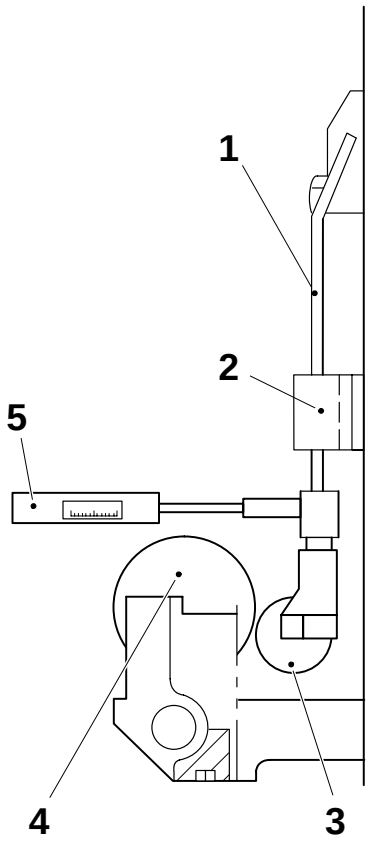

1 Spring
2 Cover
3 Pressure roller
4 Counter roller
5 Tool TP No. 74767

Checking

Check the radial play of all bending rollers. If the play is too big or if the rollers do not rotate freely, replace the bearings.

Note
To check the bending roller of the peroxide bath, see page MM 181–1X.

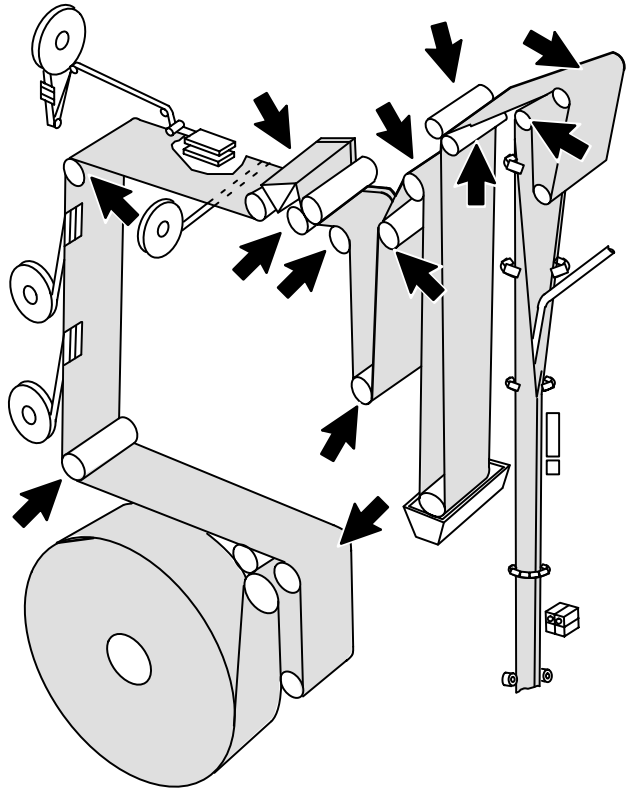

TBA with PullTab device

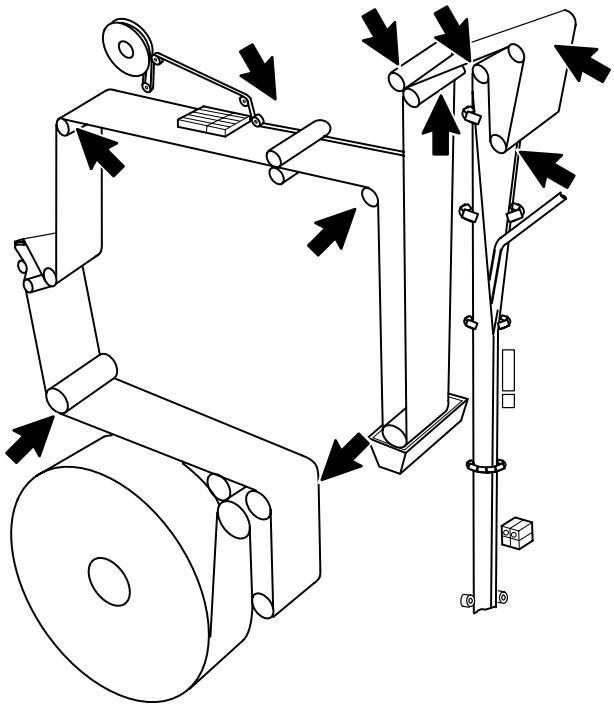

TBA with strip applicator

Setting

Vertical position

a) Set the bracket (1) in production position.

b) Set the limit screw (2) so that it bears against the bracket (1) and eliminates any play.

c) Crank the machine to 0°.

d) Loosen the screws (3) and set distance A between the carrier and the photocell focal point, see table below.

Note
Push the bracket (1) against the wall when tightening the screws after adjustments, in order to ensure that the play always works in the same direction.

Volume, ml	Gap A, mm
284 B	455
250 B	415
250 S	480
236 B*	552
200 B	489
200 S	447
180 B	–
160 S	520
125 S	460

* Note that the photocells are fitted upside down on TB volume 236 B ml.

(Cont'd overleaf)

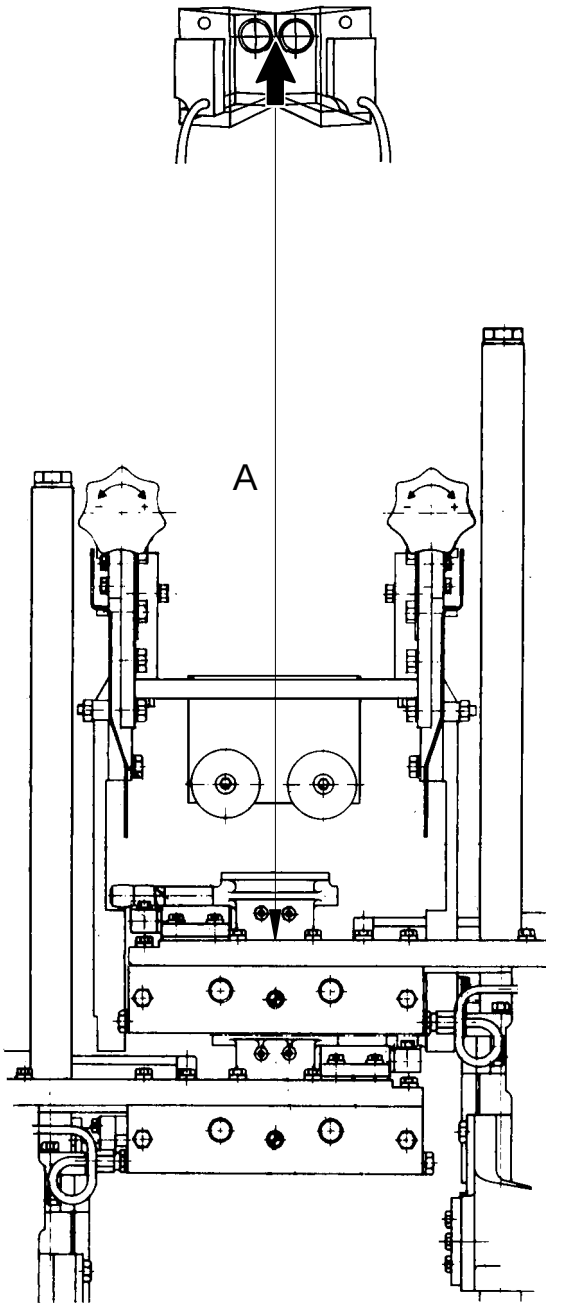

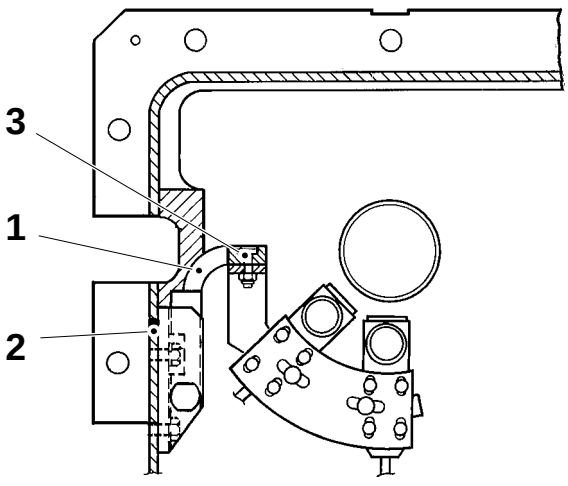

1 Bracket
2 Limit screw
3 Screw

(Cont'd)

Sensitivity

Each photocell is equipped with two separate light sources.

Select light source with the selector (5).

Always use the LH light source first. When it has been used up, transfer to the RH source.

Note
Whenever there is a change of light source, the photocell sensitivity must be reset.

a) Turn on the main power switch. Open for compressed air and insert packaging material all the way to the jaws. Inch until a sealed tube is obtained.

b) Loosen the screws (9) and set distance B between the photocell (10) and the sealed tube (11).

c) Set the photocells so that the light spots are centred on the photocell trigger marks on the tube by means of the screws (7).

d) Remove the cover (8) over the adjustment knobs. Set the light source selector (5) at position O.

e) Crank forward a section of white packaging material in front of the photocell.

f) Turn the selector to position J.

g) Attach a piece of black tape along the edge of a sheet of white paper and stick this paper around the tube. Move up the black tape in front of the photocells.

h) Check whether the light emitting diode (4) on the photocell is on or off. If it is off, turn the setting knob (6) counter-clockwise until the light emitting diode lights up.

(Cont'd overleaf)

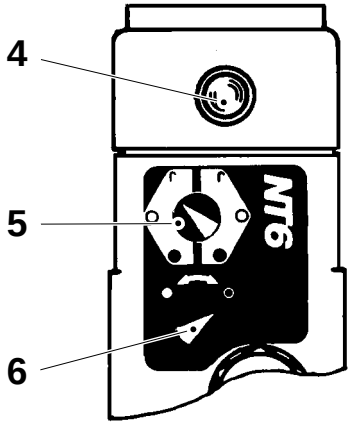

B = 9 ±1 mm

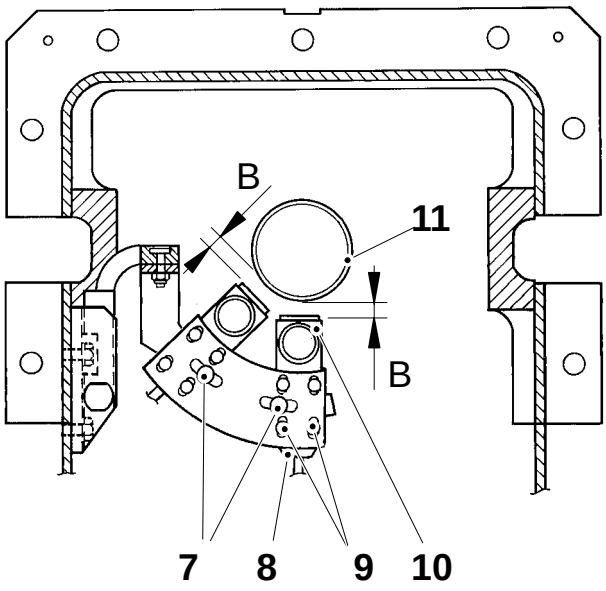

4 Light emitting diode
5 Selector
6 Setting knob
7 Screw
8 Cover
9 Screw (4 off)
10 Photocell
11 Sealed tube

(Cont'd)

i) Thereafter follow one of the two alternative procedures below, without shifting the paper.

Alternative 1

Only packaging material with white background for the photocell mark is being used:

Turn the setting knob (6) clockwise until the light emitting diode (4) just goes out.

Alternative 2

Packaging material with both white and unbleached background for the photocell mark is being used:

Turn the setting knob clockwise until the light emitting diode (4) just goes out and then turn it back, counter-clockwise, one turn.

Both alternatives

Turn the light source selector (5) to position ●.

Fit the photocell covers.

(Cont'd overleaf)

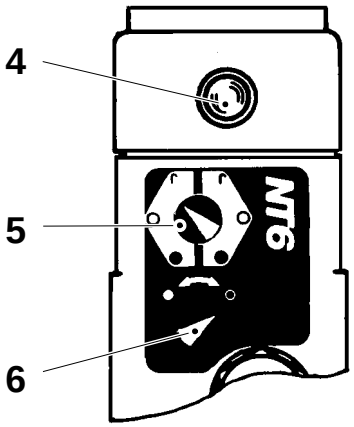

4 Light emitting diode
5 Selector
6 Setting knob

(Cont'd)

Levelling

a) Put black tape very accurately along the edge of a sheet of white paper. Attach the paper around the tube so that the black tape matches exactly.

b) Move the paper slowly upwards/downwards so that the photocell light spots pass across the horizontal borderline between white and black.

c) Stop dead when the light emitting diode on the inner photocell (11) lights up.

d) Both photocells are to light up exactly simultaneously.

e) If required, loosen the screws (9) on the **outer photocell** (10) and adjust the position vertically by means of the screws (12).

f) Check distance B between the photocell and tube.

g) Tighten the screws (9).

h) Repeat the setting procedure until the light emitting diodes of both photocells light up exactly simultaneously.

i) Note that all settings are to be made on the outer photocell only.

(Cont'd overleaf)

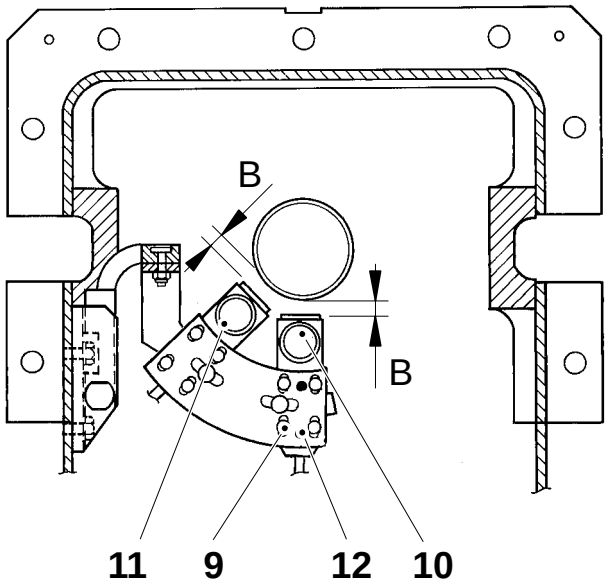

Valid for 180 B ml – 284 B ml

B = 9 ±1 mm

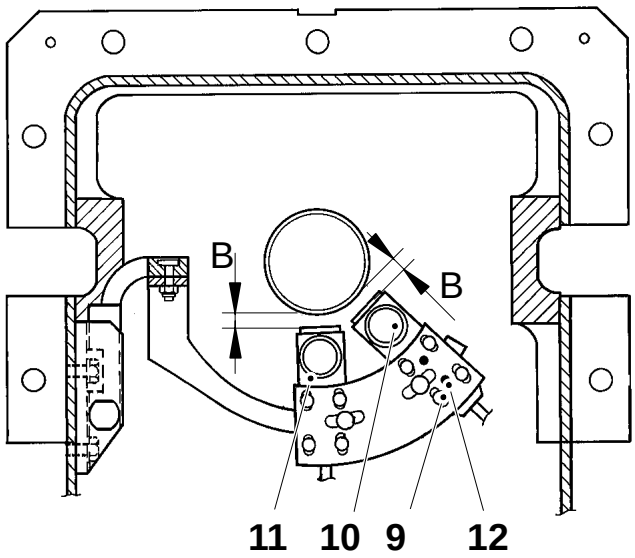

Valid for 125 S ml, 200 S ml, 250 S ml

9 Screw
10 Outer photocell
11 Inner photocell
12 Screw

(Cont'd)

Final setting

a) With the machine in step **Production**, set the potentiometer (13) at 0.

b) Check the crease positions on the packages. If required, finally set the position of the creases by loosening the screws (3) and raising or lowering the photocells.
Push the bracket (1) against the wall when tightening the screws after adjustment.

c) Check the leveling, see previous page (MM 148–5X:4).

d) When the mechanical setting has been completed, final adjustment may be made by means of the potentiometer (13).
To shift the crease upwards on the package, turn clockwise.

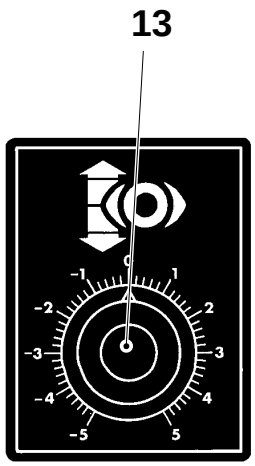

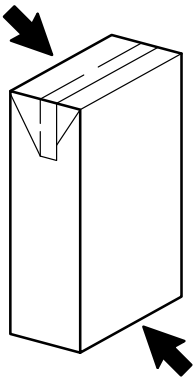

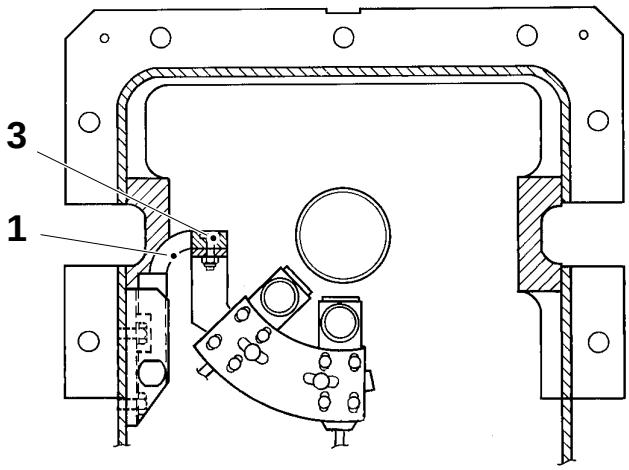

1 Bracket
3 Screw
13 Potentiometer

Checking

Check the following details for wear and/or damage:

- the carbon brushes (1); they must not be shorter than 5 mm
- the bearings (3); check for excessive radial play
- the gear wheels (4) and (5); adjust the gear play by loosening the screws (2) and shifting the motor up or down
- the function of the free-wheel hub (6)

Replace as required.

Note
In case of dismantling, the free-wheel hub, gear wheels, and bearings are to be lubricated with silicon grease, code L.

1 Carbon brush
2 Adjusting screw
3 Bearing
4 Gear wheel
5 Gear wheel
6 Free-wheel hub

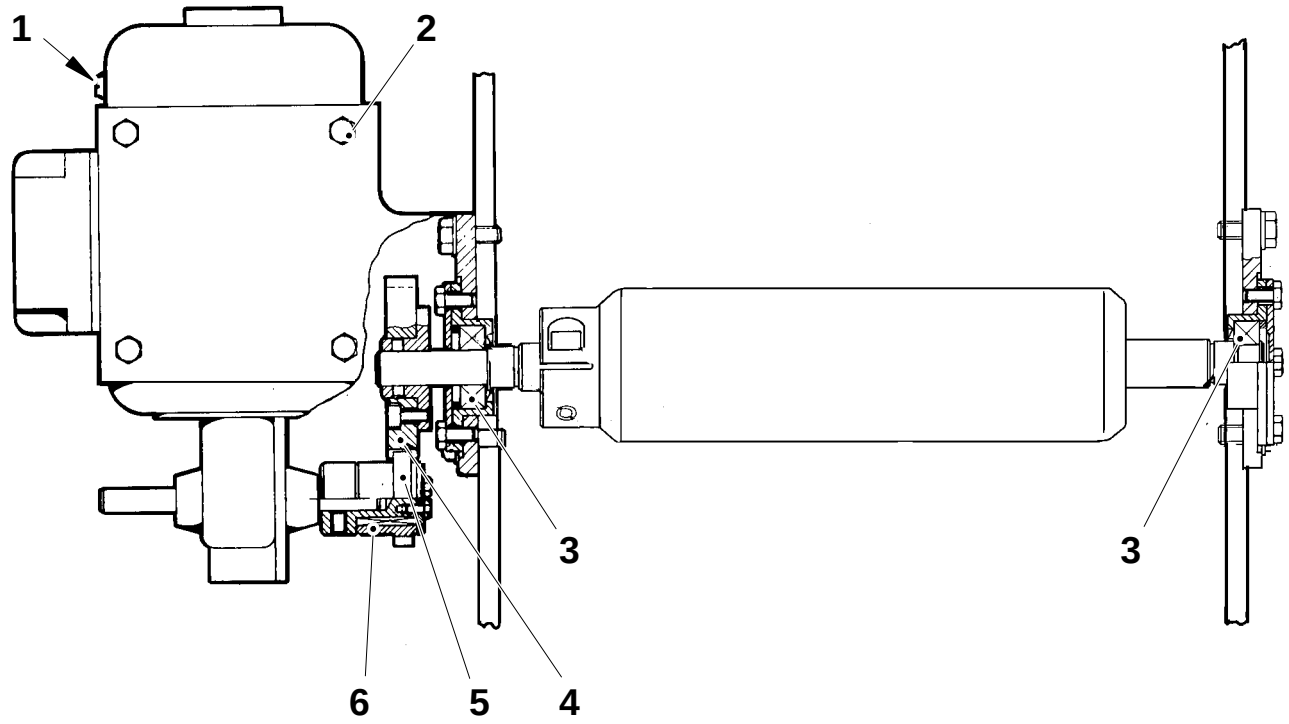

Removal

a) Undo the four screws (1) and remove the motor with the hub (2), the free wheel coupling (3) and the gear wheel (4).

b) Undo the three screws (5) and remove the gear wheel (6).

c) Remove the cylindrical pin (7) and pull out the hub (8).

d) Undo the four screws and remove the bearing cover (9), the bearing (10) and the ring, the spacer ring, and the bearing seat (11).

e) On the other side, undo the four screws (12) and remove the bearing cover (13).

f) Remove the locking washer (14). Remove the spacer ring (15), the bearing (16) the ring (17) and the bearing seat (18).

g) Loosen the screws (19) and pull out the shaft (20) to remove the bending roller (21).

h) Reassemble in reverse order.

1 Screw (4 off)
2 Hub
3 Free wheel coupling
4 Gear wheel
5 Screw (3 off)
6 Gear wheel
7 Locking pin
8 Hub
9 Bearing cover
10 Bearing
11 Bearing seat
12 Screw (4 off)
13 Bearing cover
14 Locking washer
15 Spacer ring
16 Bearing
17 Ring
18 Bearing seat
19 Screw (2 off)
20 Shaft
21 Bending roller

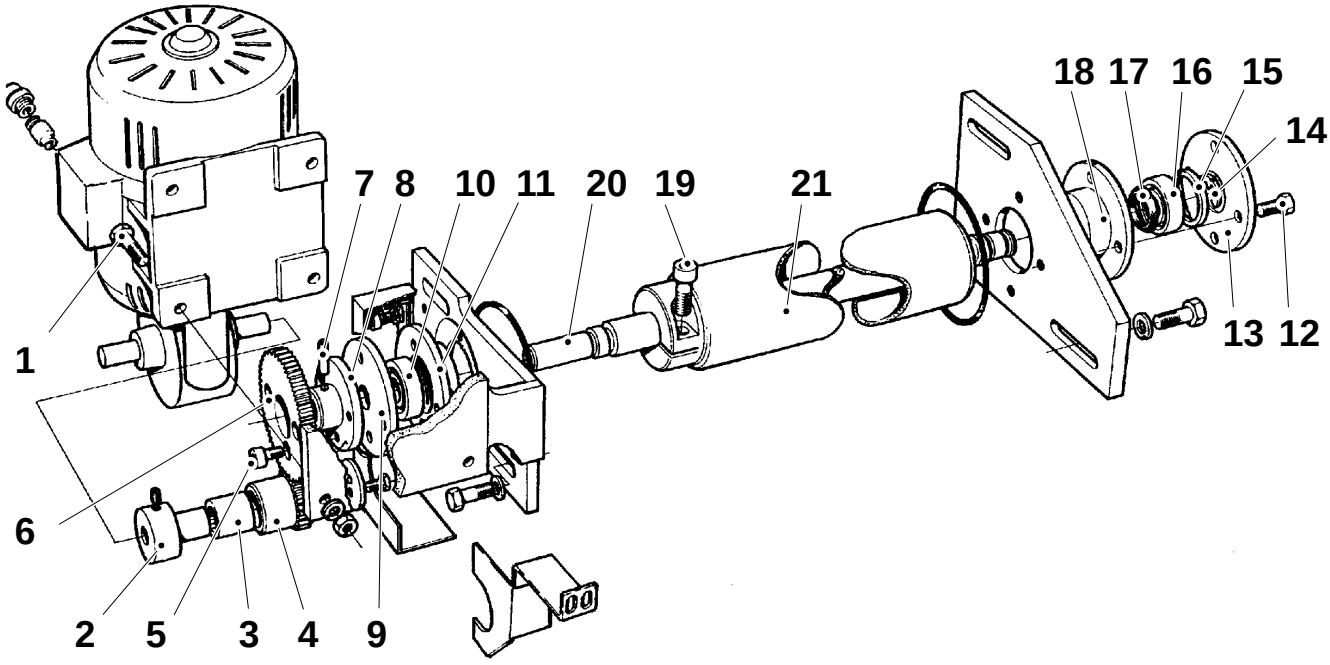

Setting

Centering

Set the centering of the bending roller according to the figure below. Adjust by loosening the clamp device (1) and move the bending roller sideways.

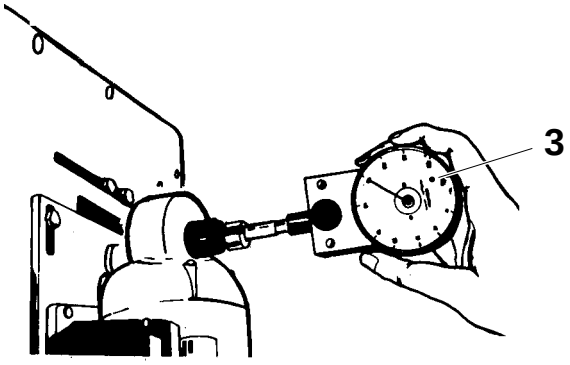

Speed

WARNING!
Remember that all metal components of the board are electrically live.

a) Measure the speed of the driven bending roller by means of a tachometer (3).

b) Turn on the main power switch. Start the bending roller by activating the PLC output 015.00.

c) Put the switch (2) in position MIN on the board A016B.

d) Set the minimum speed to 100 r/min by means of potentiometer M (4).

e) Put the switch (2) in position MAX and set the maximum speed to 130 r/min by means of potentiometer S (5).

f) Put the switch in position MIN and check the minimum speed.

g) Check the maximum speed.

(Cont'd overleaf)

A016B

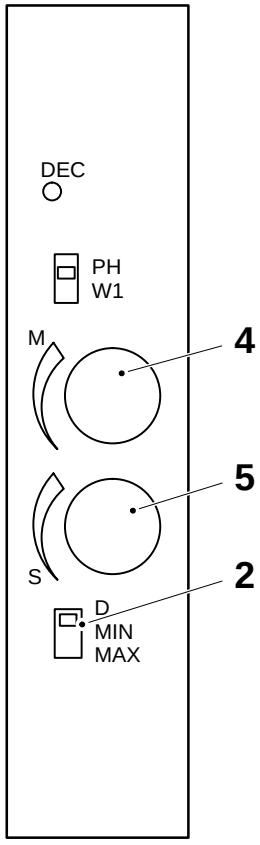

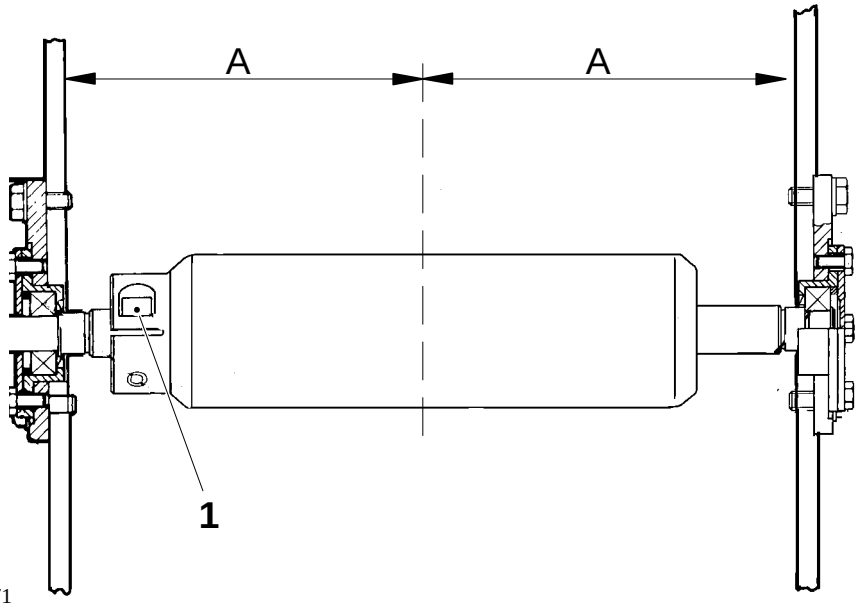

1 Clamp device
2 Switch
3 Tachometer
4 Potentiometer M (min)
5 Potentiometer S (max)

71

(Cont'd)

h) RI compensation. Put the switch (2) in MAX position.

i) Slowly increase the speed of the bending roller by means of the potentiometer marked I × R (6) on the A001. Stop when the speed of the bending roller becomes unsteady and begins to oscillate. Turn the potentiometer back so that the speed just steadies.

j) Turn the Acc ramp potentiometer (7) fully counter clockwise.

k) Deactivate the PLC output.

l) Put the switch (2) in position D.

m) Note that light emitting diode DEC (8) indicates that the photocells are reading the code correctly.

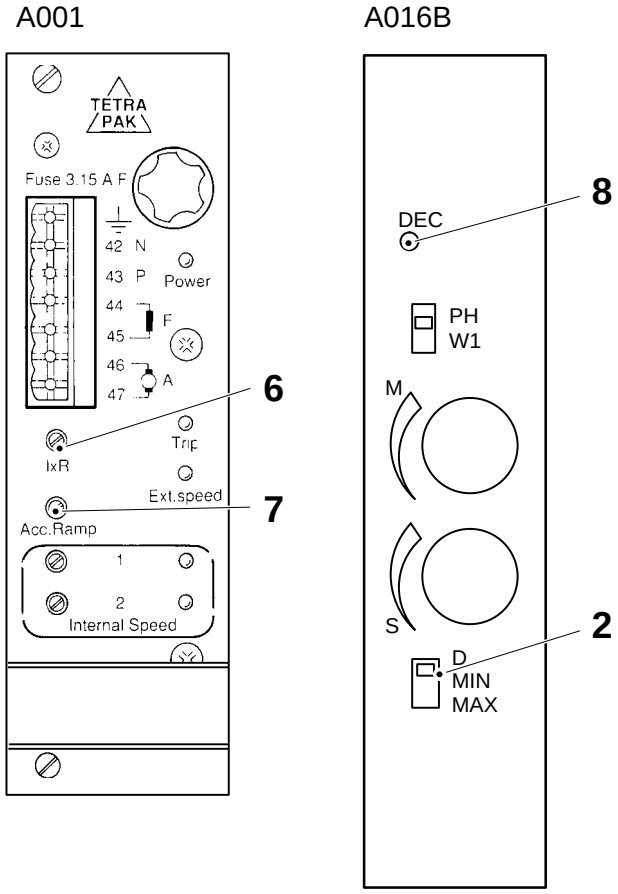

2 Switch
6 Potentiometer IxR
7 Potentiometer Acc.Ramp
8 Light emitting diode DEC

Checking

a) With the machine in step **Preheating**, check that the compressors starts.

If the compressor does not start, check:

- If the motor overload protection has been tripped.
- If the motor is running while the button is kept depressed but stops when it is unpressed, see item d). Too low pressure.
- If sterile air pressure switches are out of action.

b) Check that the compressors are running without any abnormal sounds. Abnormal sound may be caused by dirt in the compressor housing.
Clean by removing the drain plug (2) and flushing with water. Check that the nuts (4) are tightened.

c) Check that the axial seals (1) of the compressors do not leak. Any leakage can be seen on the lower side at the joint between the motor and the compressor housing (3).

d) Turn in the LS and LS short stop air pressure setting screws fully and then turn them out one and a half turns.
Open for cold water.

With the machine in step **Production**, check that the pressure, indicated by the separator pressure gauge, is 25 – 40 kPa.

- **Too high pressure** may be due to blocking somewhere in the air system.
- **Too low pressure** may be due to leakage in the air system or too low compressor capacity. The reason for the latter may be inadequate water supply, faulty solenoid valve (MY32), faulty constant flow valve or clogged suction filter in the air knife.

e) If checks according to items b) – a) have been done and a pressure of 25 – 40 kPa cannot be obtained, replace the pressure switch and/or the compressor.

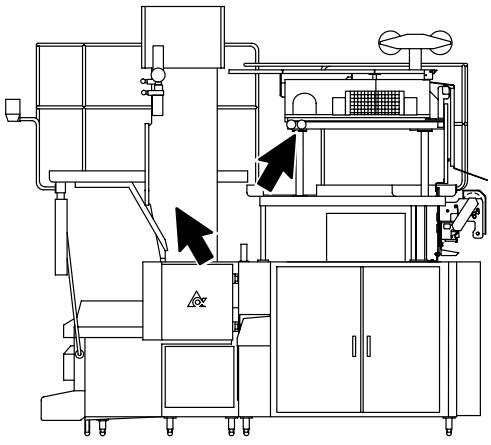

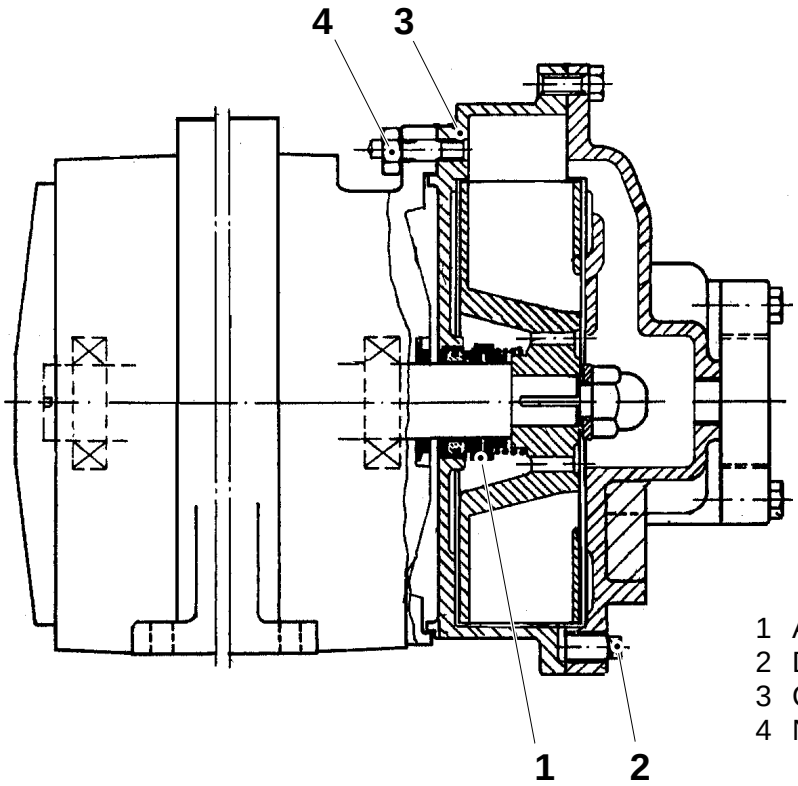

1 Axial seal
2 Drain plug
3 Compressor housing
4 Nut

Removal

a) Remove the screws (7) and the gasket (6).

b) Remove the lock nut (4), the washer (3), and the rotor (8). There are two holes in the rotor for the use of extractor TP No. 74305–101.

c) Remove the rotor key (2).

d) Remove the four nuts (5) and separate the compressor housing (9) from the motor (11). The seal (10) will come away with the compressor housing when it is detached. Take care not to damage the ceramic sealing surfaces when removing the compressor housing.

e) Remove the seal (1) from the compressor housing by applying an even pressure from the motor side.

1 Seal
2 Rotor key
3 Washer
4 Lock nut
5 Nut
6 Gasket
7 Screw
8 Rotor
9 Compressor housing
10 Seal
11 Motor

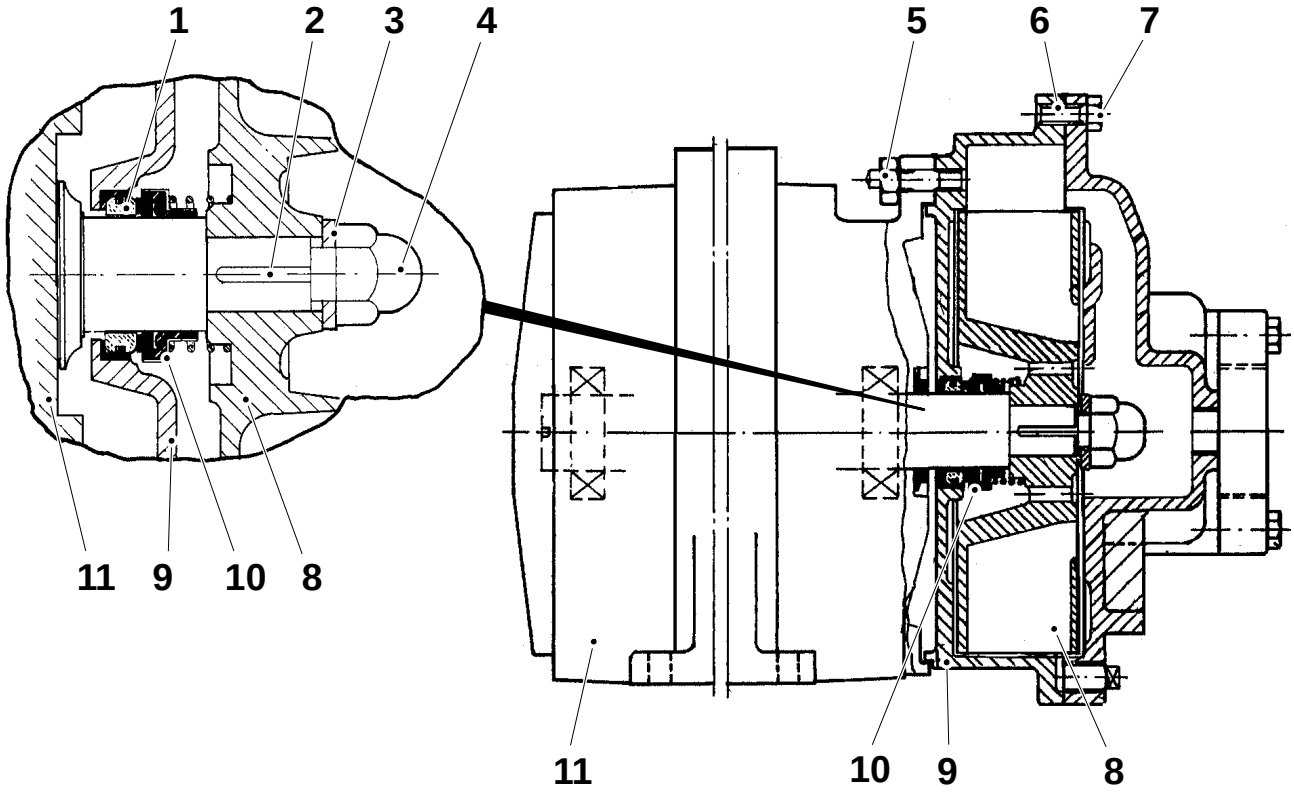

Fitting

a) Fit the seal (15) in the compressor housing (14) aided by a thin film of oil on the rubber sleeve.

Caution!
No grease on the sealing surfaces.

b) Fit the water deflector ring (16) on the motor shaft.

c) Fit the compressor housing (14) against the motor with the nuts (6). Do not tighten the nuts.

d) Fit the rotating section (1) of the seal on the motor shaft. Fit the coil spring (2).

e) Place the key (3) in its keyway in the shaft.

f) Fit the rotor (13).

g) Fit the washer (4) and the lock nut (5) on the shaft and tighten firmly.

h) Put the gasket (17) in place. Fit the end cover (9), and attach it with the screws (8). Undo the nuts (6) of the compressor housing **before** tightening the end cover screws.

i) Fit shims (7) at the four screws between the compressor housing and the mounting flange of the motor. Shim thickness as follows: Measure distance A at the four screws with the nuts (6) loosened. Add 0.1 – 0.2 mm to the average value of distance A.

j) Tighten the nuts (6).

k) Check that the distance between the rotor (13) and the end cover (9) is appox 0.1 mm, by inserting a feeler gauge through the inlet pipe or outlet pipe.

l) Loosen the screws (8). Position the end cover (9) in the centre. Tighten the screws (8).

m) Check that the rotor does not scrape against the cover when turned (by turning the motor fan).

n) Fit the inlet and outlet flanges (11) and the gasket (12) with the screws (10).

o) Check once more that the rotor rotates freely.

1 Rotating section
2 Coil spring
3 Key
4 Washer
5 Lock nut
6 Nut
7 Shim
8 Screw
9 End cover
10 Screw
11 Flange
12 Gasket
13 Rotor
14 Compressor housing
15 Seal
16 Water deflector ring
17 Gasket

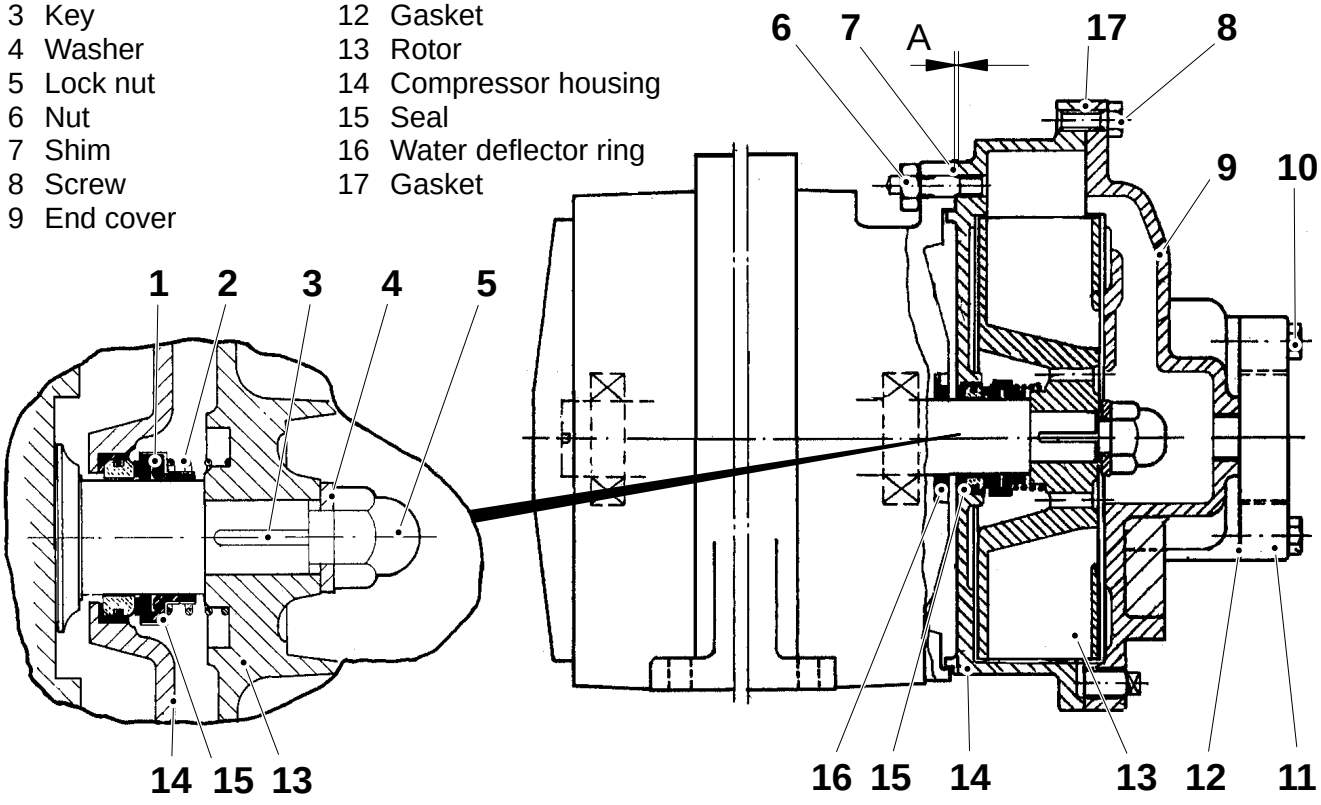

Checking

a) Remove the constant flow valve (1) and check that the rubber ring (2) is intact.

b) Make sure that the valve is not clogged with lime deposits.

c) Replace as required.

d) Refit the valve.
The direction of the flow (3) is marked on the side of the valve.

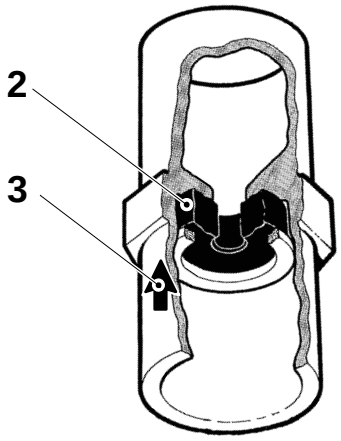

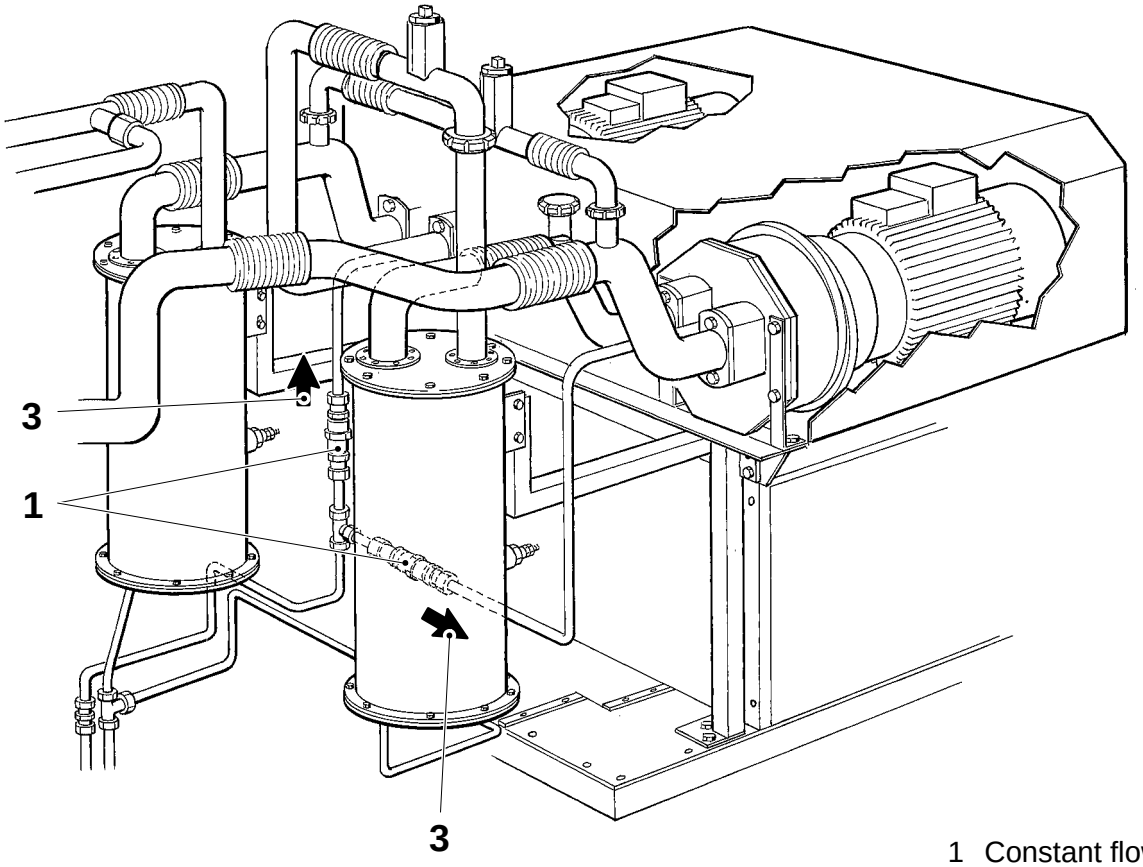

1 Constant flow valve
2 Rubber ring
3 Direction of flow

Cleaning/Checking

a) Undo the balance pipe (4) (on 60 Hz machines also undo the pipe (5)).

b) Loosen the nuts (1). Undo the throttle screw (3).

c) Delime the pipes with one of the four acids listed below. All solutions must have a temperature of 50° – 60° C during deliming.

- acetic acid (CH_3COOH), 20%.
- nitric acid (HNO_3), 5–10%.
- citric acid ($C_6H_8O_7$), 20%.
- phosphoric acid (H_3PO_4), 5–10%.

d) Check that the O-rings are intact. Replace if worn or damaged.

e) Fit the throttle screw and the pipes.

f) Set the sterile air pressure, see page MM 162–5X.

1 Nut
2 O-ring
3 Throttle screw
4 Balance pipe
5 Pipe

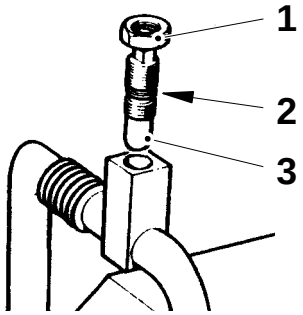

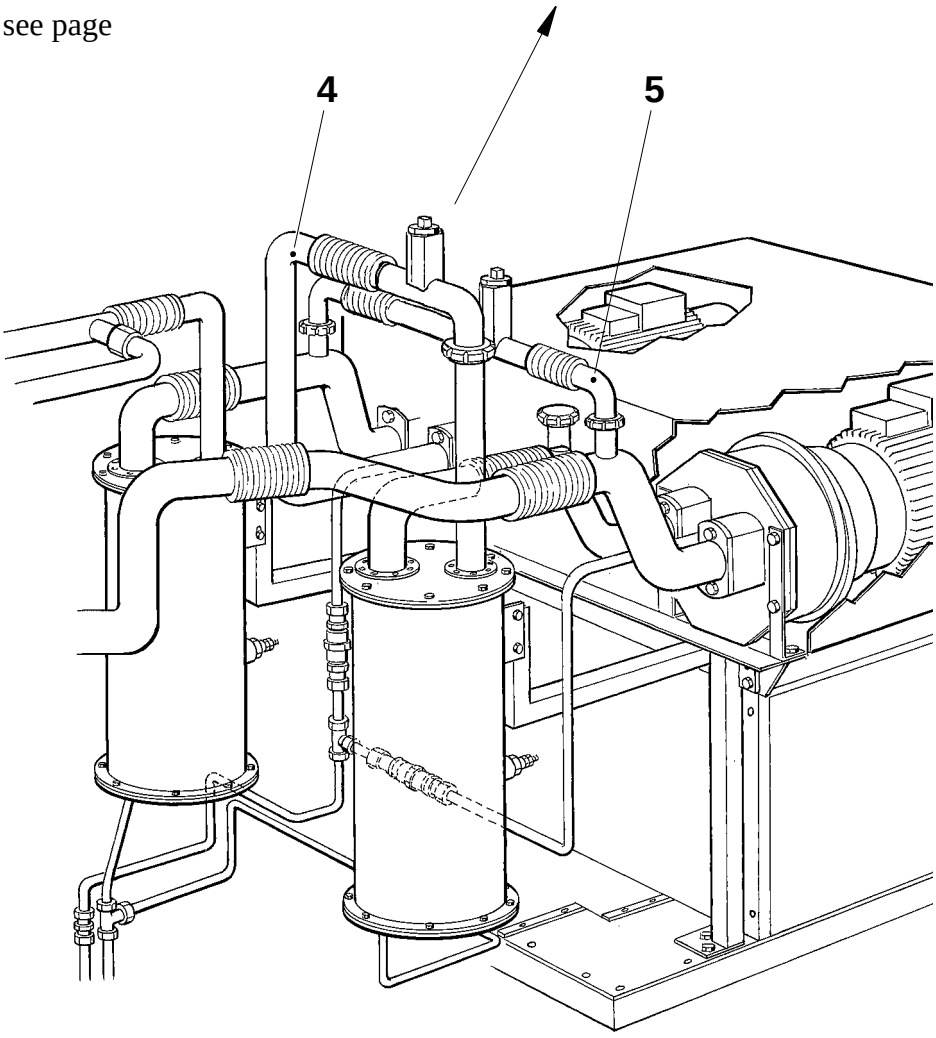

Setting/Balancing

a) With the machine in step **Preheating**, adjust the shunt valve (1), and on 60 Hz machines also the shunt valve (2), until pressure gauges (arrow) indicate 25 – 35 kPa.

b) With the machine in step **Production**, adjust in the same way as above until the pressure gauges indicate 30 – 40 kPa.

c) Set the pressures in the aseptic chamber and peroxide bath, see page MM 163–5X.

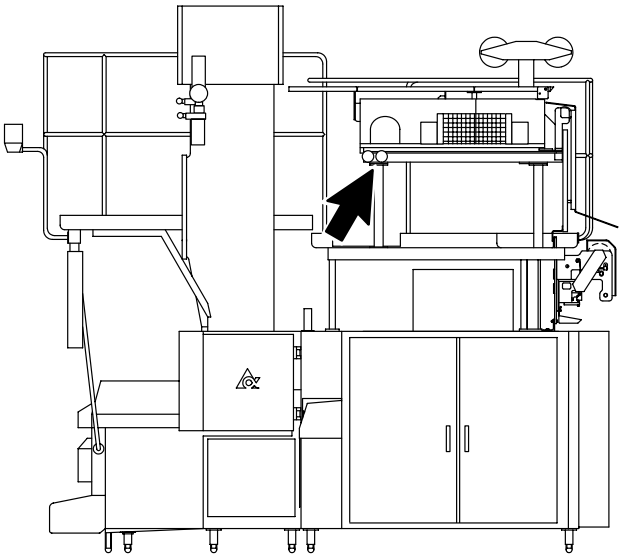

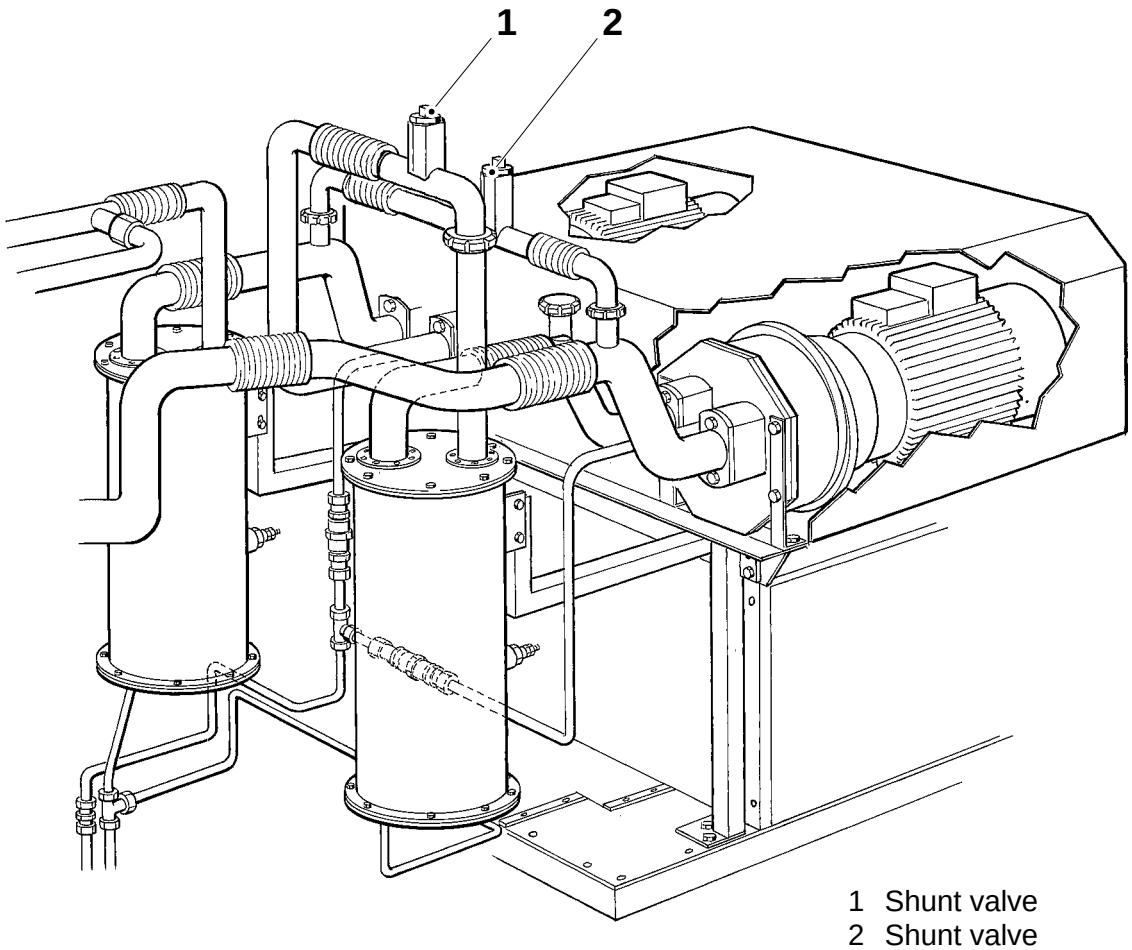

1 Shunt valve
2 Shunt valve

Setting

Overpressure/Underpressure

With the machine in step **Production**, set the pressures in the aseptic chamber and peroxide bath as follows:

a) Undo the screw (1) in the aseptic chamber and the screw (2) in the peroxide bath.

b) Fit hose connections in place of the screws.

c) Connect pressure gauges (TP No 90243–137) to the hose connections and set the pressures:

- Aseptic chamber – **overpressure 20 – 50 mm WC**
- Peroxide bath – **underpressure 1 – 20 mm WC**

d) Adjust by means of the screw (3). Tighten it to reduce the overpressure/increase the underpressure.

(Cont'd overleaf)

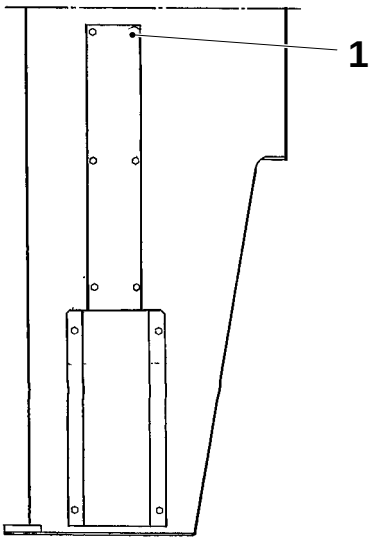

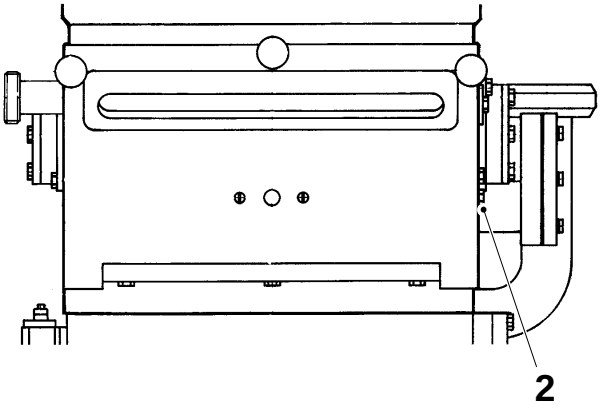

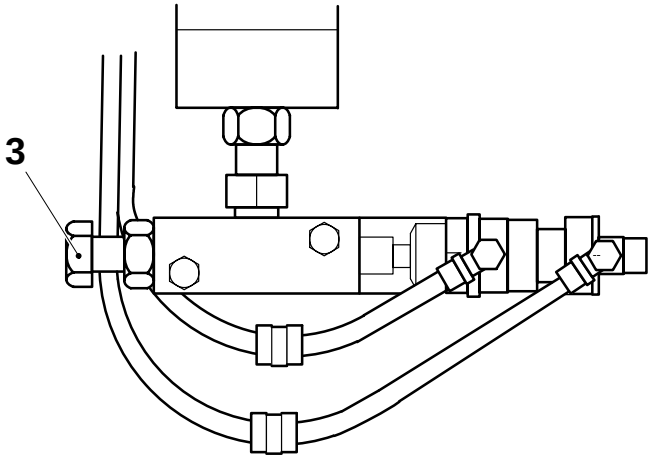

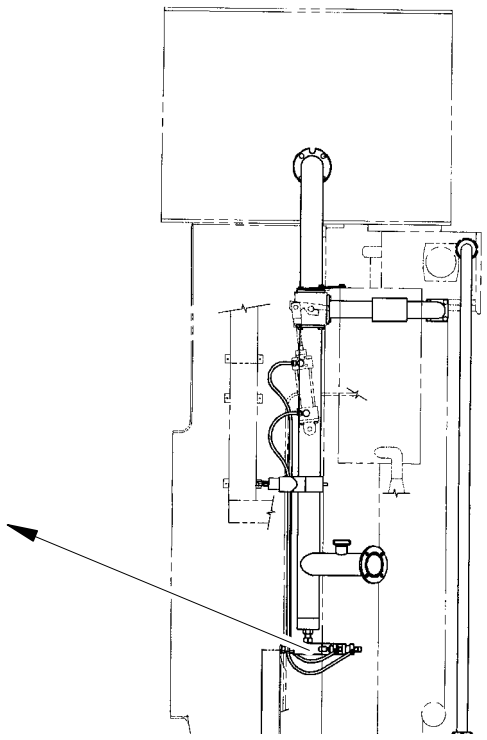

1 Screw, aseptic chamber
2 Screw, peroxide bath
3 Setting screw

(Cont'd)

e) Set the pressure during a **Short stop**:

- Aseptic chamber –
  overpressure 5 – 40 mm WC
- Peroxide bath –
  underpressure 10 mm WC –
  overpressure 15 mm WC

Adjust by loosening the screws (4) and shifting the valve (5).

f) If it is not possible to obtain the recommended pressures, check the seals around the peroxide bath chains.

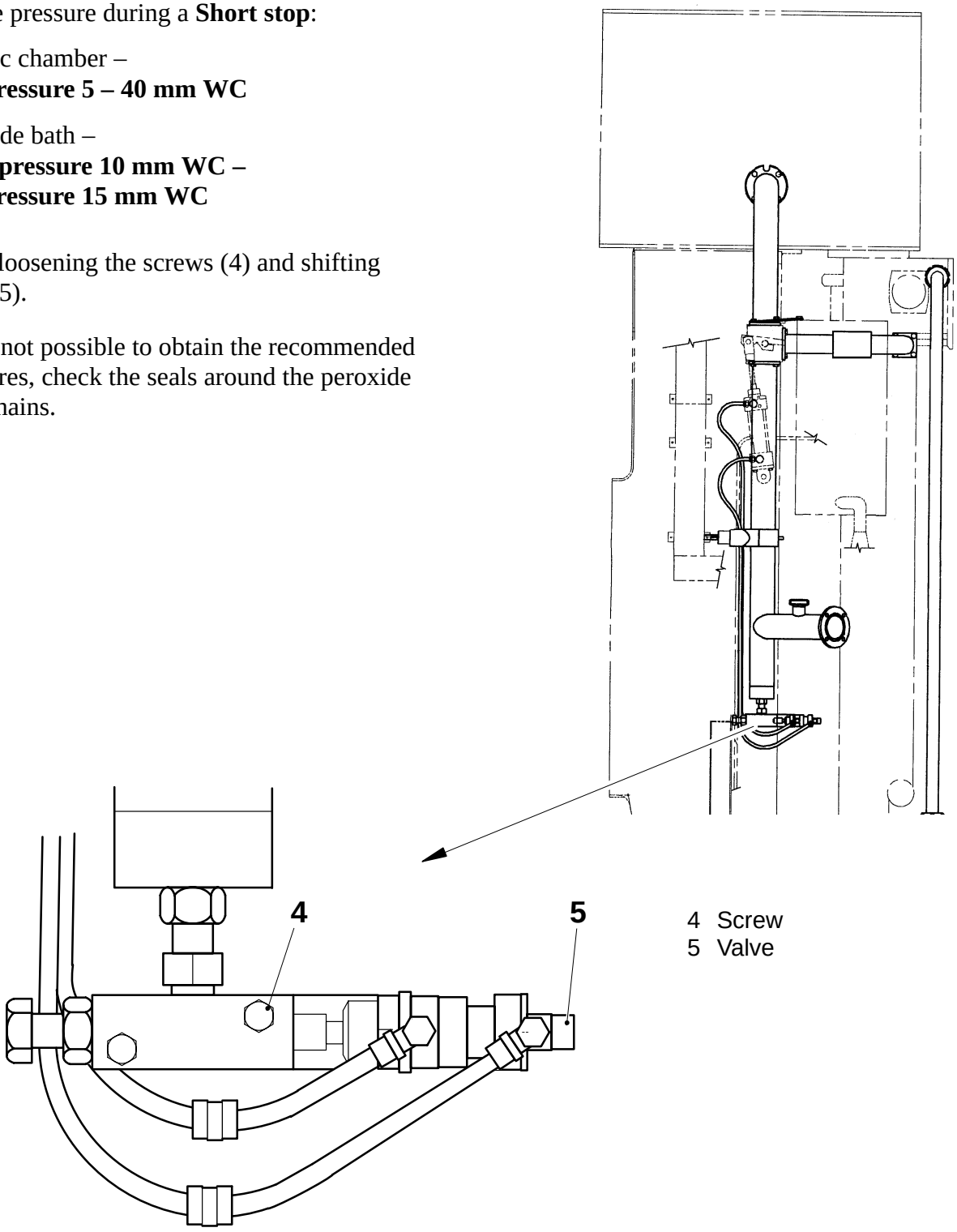

4 Screw
5 Valve

Measuring leakages

With the machine in step **Production**, perform a **Short stop**.
Push **Program down** to step **0**. Let the machine cool down.

a) Undo the thermocouple (3) at the air knife and connect the hose from the pressure gauge (1) to the test equipment (7).

b) Connect a compressed air line to the regulator (2).
Substitute a hose connection in place of the screw (6) in the aseptic chamber and connect the pressure gauge (5).

c) Seal the membrane valve (8) with tape.

d) Actuate valve Y19 on the valve panel. By hand, shift over the valve (9) to closed position.

e) Open the regulator slowly until the pressure gauge indicates **20 mm WC.**

f) Read the flow rate on the flow meter (4) and the pressure on the pressure gauge (5). Enter these values on the diagram and read the leakage quantity (Q).
Q_{max} = 2.5 m^3/h.

(Cont'd overleaf)

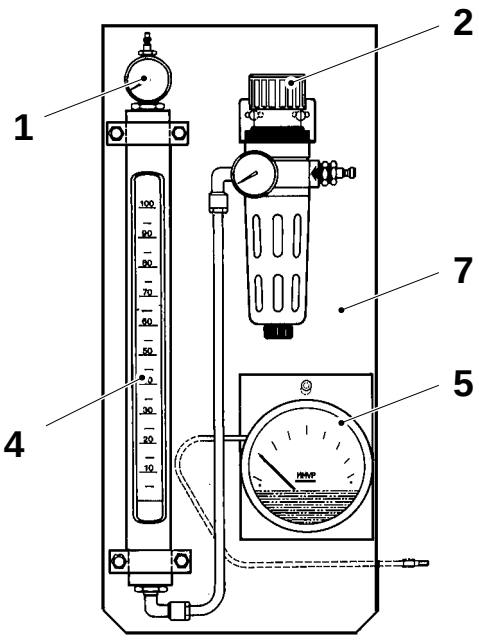

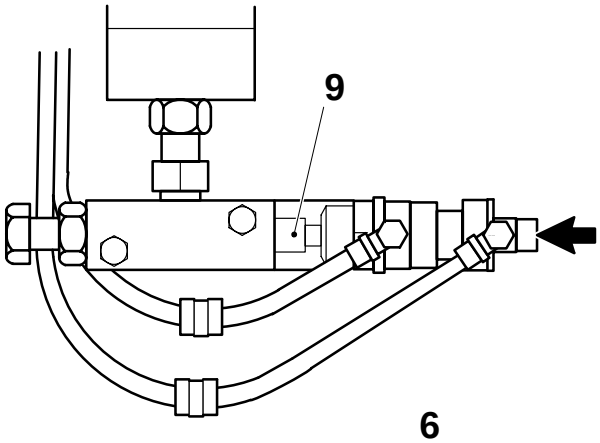

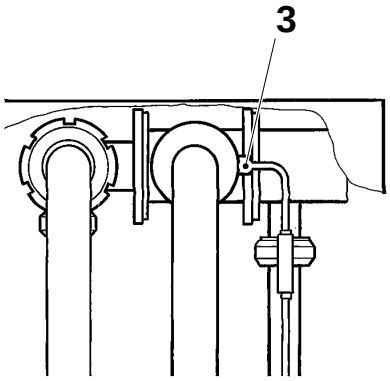

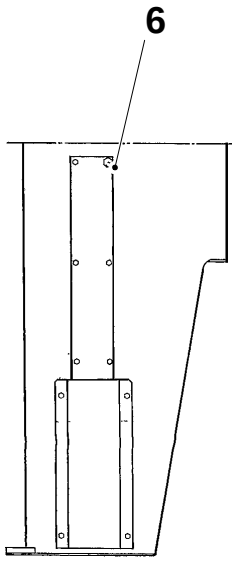

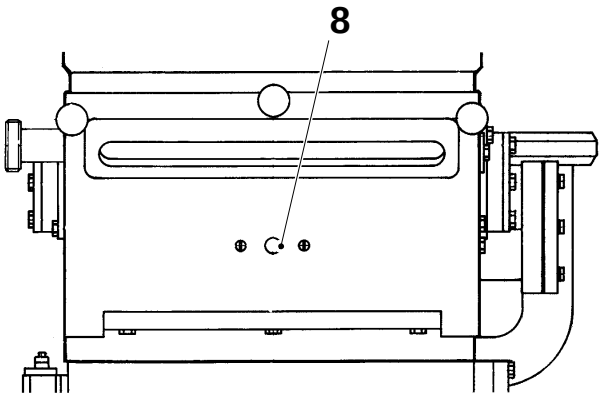

1 Pressure gauge
2 Regulator
3 Thermocouple
4 Flow meter
5 Pressure gauge
6 Screw
7 Test equipment TP No. 533014–101
8 Membrane valve
9 Valve

(Cont'd)
If the leakage quantity is excessive, check the tightness at the following points:

- the safety valve in the peroxide tank,
- the lead-in of the driven bending roller shaft,
- the shaft lead-in and bearing cover of the crease wheel and creasing roller,
- the door seals in the aseptic chamber,
- the pipe connections,
- the seals, see pages MM 131–1X and MM 179–1X.

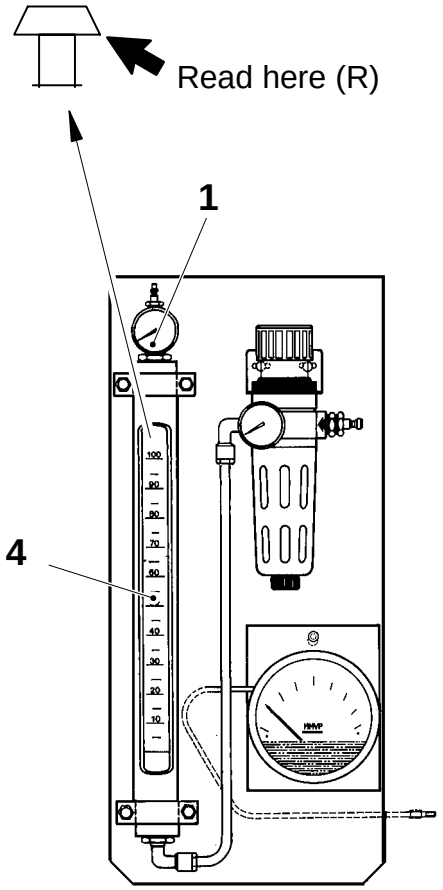

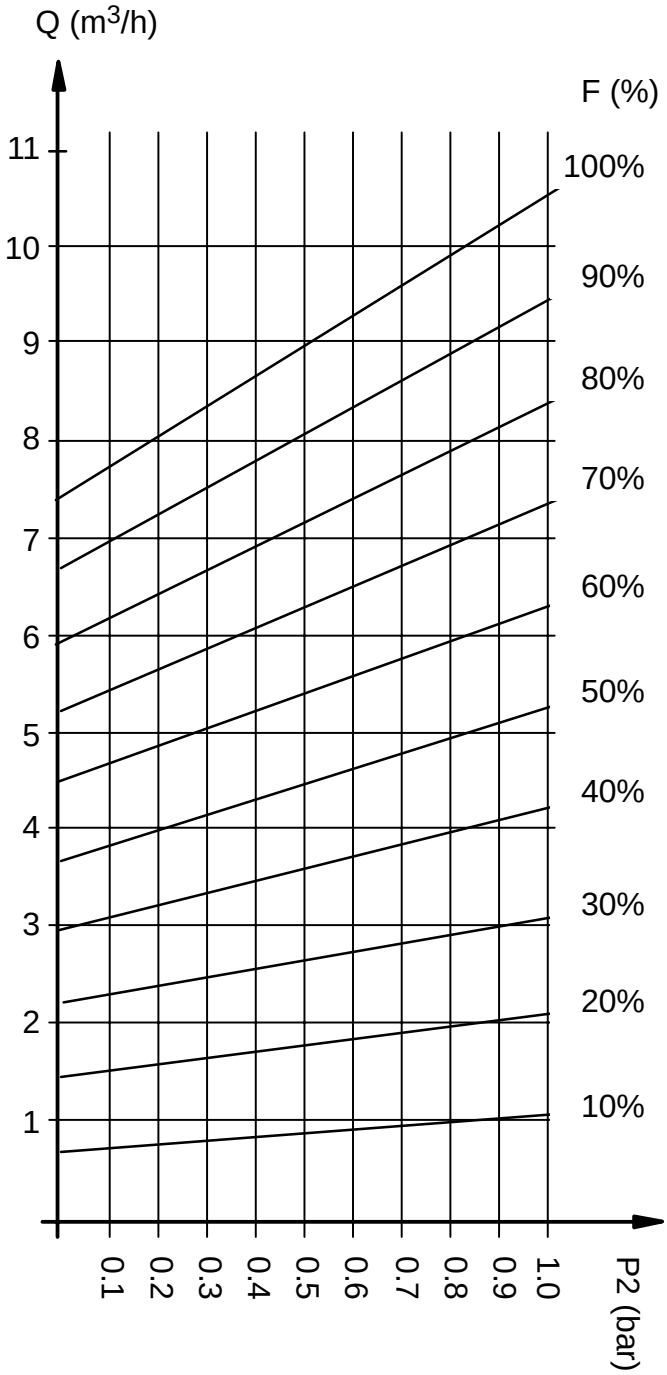

Q = Leakage
F = Flow (flow meter (4))
R = Reading point
P2 = Pressure (pressure gauge (1))

Checking

With the machine in step **Preheating**, close the cold water supply to the machine.

Check on the water separator pressure gauges (1) that the machine goes down to step **0** when the pressure has dropped to about 15 kPa.

If this does not happen, replace the pressure switches (2) and/or (3).

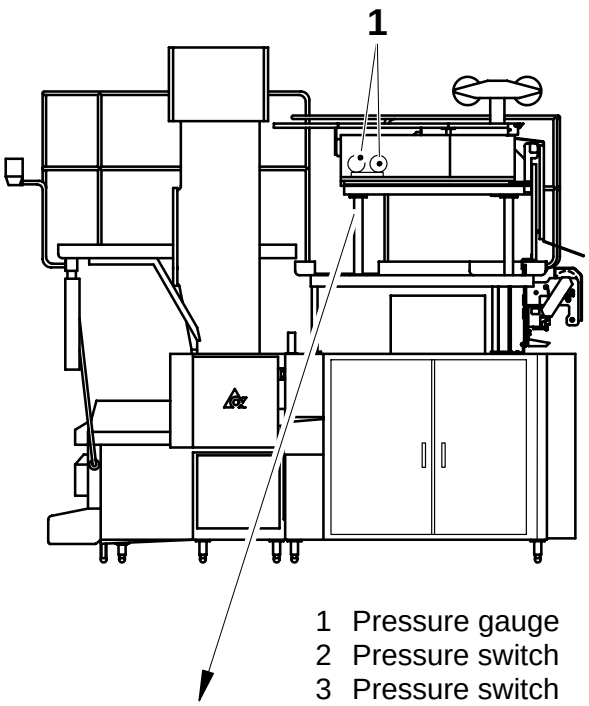

1 Pressure gauge
2 Pressure switch
3 Pressure switch

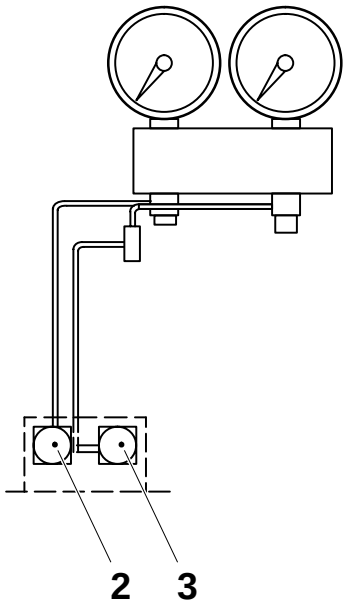

Cleaning/Checking

a) Remove the separator from the machine.

b) Remove the top cover (1) and the bottom cover (7).

c) Clean the float mechanism (5), the container, the level switch (4), and the pipe-work. If required, use a deliming agent.
One of the four solutions listed below must be used. All solutions must have a temperture of 50° – 60°C during deliming.

- acetic acid (CH_3COOH), 20%
- nitric acid (HNO_3), 5–10%
- citric acid ($C_6H_8O_7$), 20%
- phosphoric acid (H_3PO_4), 5–10%

d) Replace the O-rings (3) on the flanges and the pipe joint seals.
Note!
Make sure the O-rings are correctly placed in their grooves.

e) Reassemble the separator and fit it to the machine.

f) After starting the compressor, check that water is pouring out of the overflow pipe (6). If not, the separator must be taken off the machine again and its float mechanism checked.

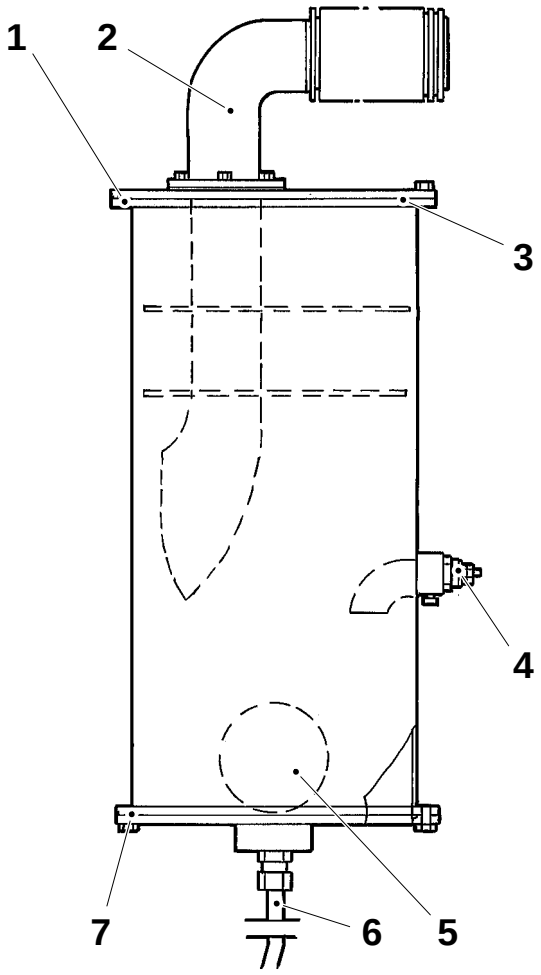

1 Top cover
2 Inlet pipe
3 O-ring
4 Level switch
5 Float mechanism
6 Overflow pipe
7 Bottom cover

Cleaning

a) Remove the cover (1) and undo the screws (2).

b) Remove the clamp (3).

c) Disconnect the pipe joints (4). Pull off the contact (5) of the temperature transmitter.

d) Pull the container (6) forwards and away from the element unit.

e) Clean the element and the container. Flush through the container and check that there are no deposits in the outer chamber (7) of the container.

f) Replace the pipe joint gaskets.

g) Reassemble.

Checking of element

Check that all six elements function by measuring the phase amperage.
In each phase there should be approximately 15A. Considerably lower values indicate defective elements.
This check should be done in the electrical cabinet or at the terminal block (8).

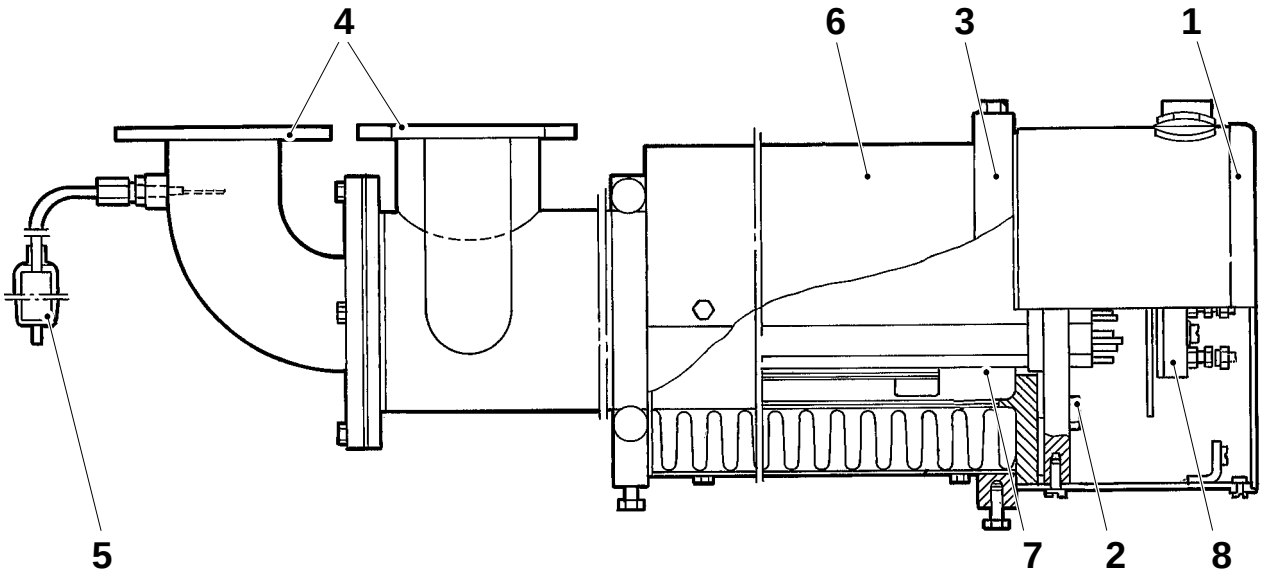

1 Cover
2 Screw
3 Clamp
4 Pipe joint
5 Contact
6 Container
7 Outer chamber
8 Terminal block

Cleaning/Checking of tightness

a) Loosen the screws (6) and remove the heat exchanger from the machine.

b) Check for tightness as follows:

- Plug one of the connections by means of blank off flange TP No. 565533.
- Connect the hydrostatic test equipment TP No. 565536, with flange TP No. 565535, to one of the heat exchanger connections (7), diagonally placed to the plugged connection (8).
  Make sure the equipment is connected in the correct direction – the flow is to run **from** the valve (2) **towards** the pressure gauge (5).
  Caution!
  Before compressed air (1) is connected, turn the adjustment screw (4) counter-clockwise until the spring load is released and close the valve (2).
- Submerge the whole heat exchanger in water. Make sure **not** to drench the pressure controller (3). Let all air bubbles disappear.
- Open the valve (2). Adjust the pressure to 50 kPa (0.5 bar), indicated on the pressure gauge (5), by means of the adjustment screw (4). Air bubbles will immediately show any leaking points.
- Repeat the procedure with the other cooling coil. If leakage is suspected, replace the heat exchanger.

(Cont'd overleaf)

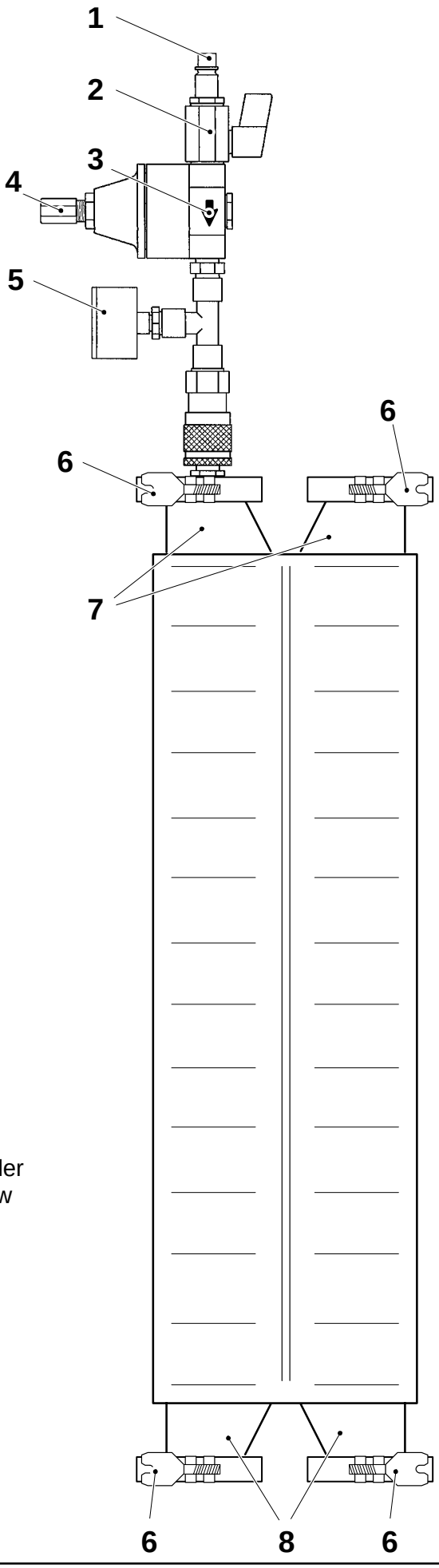

1 Air connection
2 Valve
3 Pressure controller
4 Adjustment screw
5 Pressure gauge
6 Screw
7 Connection
8 Connection

86

(Cont'd)

c) If the temperature of the air knife exceeds 135°C during production, deliming of the heat exchanger with one of the four acid solutions listed below must be done. All solutions must have a temperature of 50°– 60°C during deliming.

- acetic acid (CH_3COOH), 20%
- nitric acid (HNO_3), 5–10%
- citric acid ($C_6H_8O_7$), 20%
- phosphoric acid (H_3PO_4), 5–10%

d) Replace the joint gaskets.

e) Fit the exchanger with the same prepunched digit on each flange against each other, see fig.

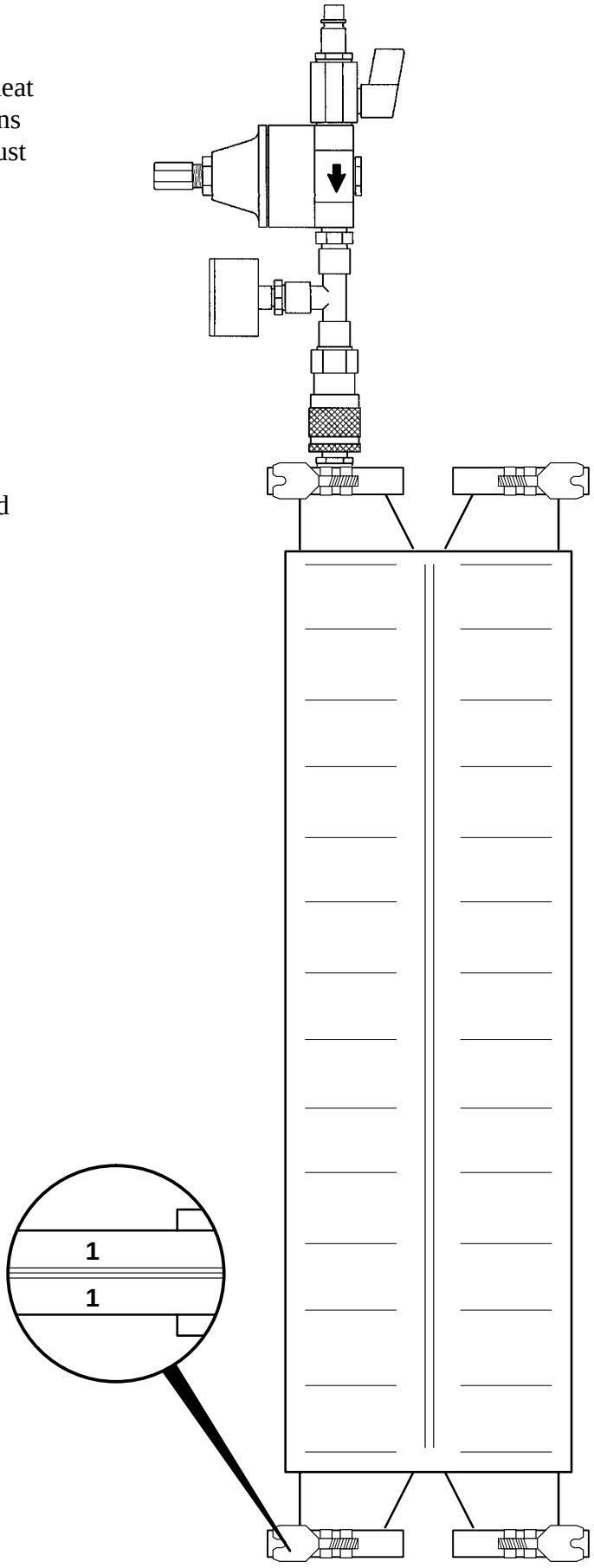

Checking

Check the following details for wear and/or damages:

- the piston rod (1); make sure that it moves smoothly when it is warm
- the gaskets (2) and (3)
- the rings (4); make sure that the piston seals against the seat
- the ring (5)
- the plain bearing (6)
- the cylinder (7); make sure that it moves smoothly

Replace as required.

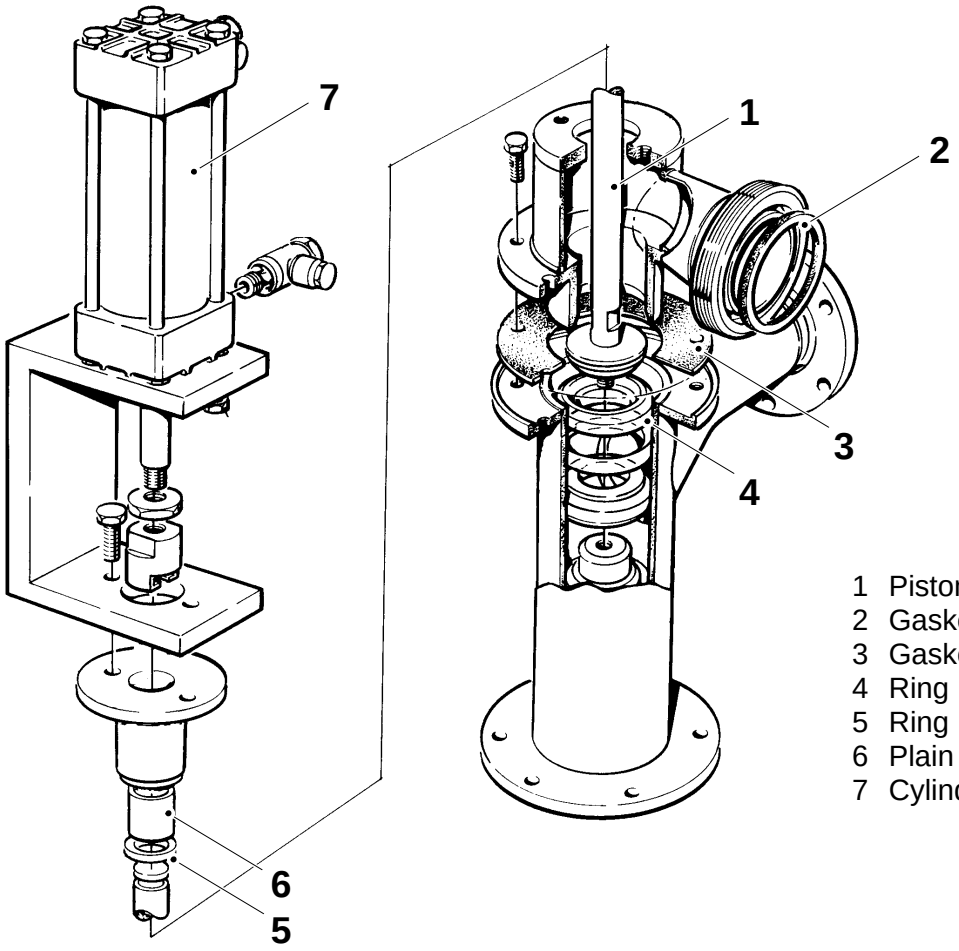

1 Piston rod
2 Gasket
3 Gasket
4 Ring
5 Ring
6 Plain bearing
7 Cylinder

Removal

a) Undo the banjo connections (1).

b) Disconnect the pipe unions (2).

c) Undo the screws (3) and remove the cylinder. Remove the pendulum suspension (4), the spindle guide (5) with the bearing and the ring.

d) Undo the screws (6) and remove the house and the gasket.

e) Remove the piston rod (7) with its parts. Undo the nut (8) and remove the seal rings and the ring.

Reassemble in reverse order.
Make sure that the the piston rod seals against the seat; if required, loosen the nut (9) and turn the piston rod (10).

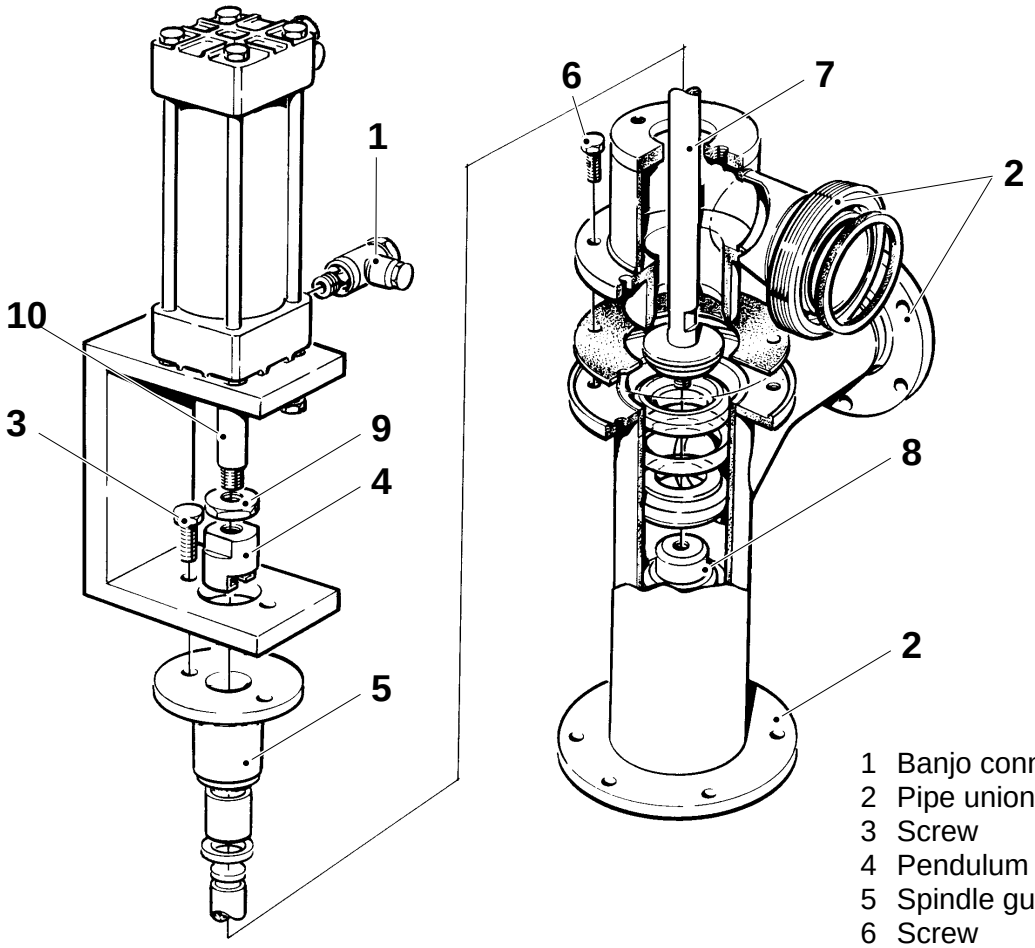

1 Banjo connection
2 Pipe union
3 Screw
4 Pendulum suspension
5 Spindle guide
6 Screw
7 Piston rod
8 Nut
9 Nut
10 Piston rod

Checking

Check the following details for wear and/or damages:

- the cylinder (1); make sure that it moves smoothly
- the bushings (2) and (3)
- the proximity switch (5)

Replace as required.

Make sure that the screws (4) are tightened.

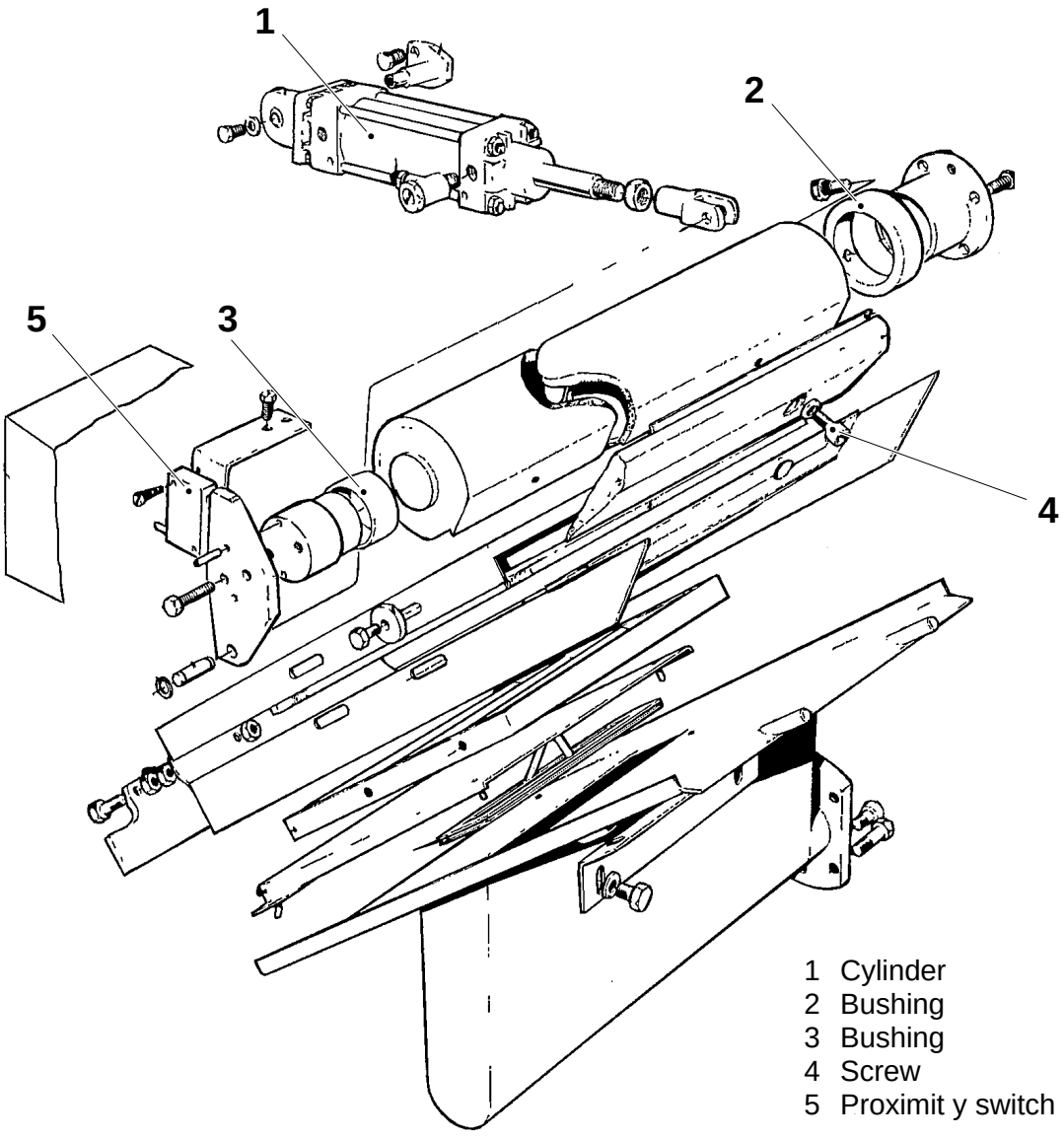

1 Cylinder
2 Bushing
3 Bushing
4 Screw
5 Proximit y switch

Setting

Basic setting

a) Set distance A by means of the screws (1).

b) Place a ruler (2) between the squee-gee roller (3) and the bending roller (4). Set distance B between the ruler and the air knife by loosening the screws (5) and turning the bracket (6).

c) Set distance C by loosening the nuts (7) and shifting the air guide (8).

d) Set distance E between the proximity switch and the plate.

e) Set distance F so that the cylinder does not move fully home when the air knife is in working position.

Valid for 125 S ml, 160 S ml and 200 S ml

a) Set distance D along the whole width of the bending roller. Adjust by shimming under the guide rail (9).

b) Place a ruler (10) on the guide rail (9). Loosen the screws (11) and shift the guide rail so that the ruler touches the lug (12) at point (13). Retighten the screws.

(Cont'd overleaf)

A = 9 ±1 mm
B = 3 – 4 mm
C = 30 ±2 mm
D = 1.2 ±0.05 mm
E = 0.5 – 1.0 mm
F = max 39 mm

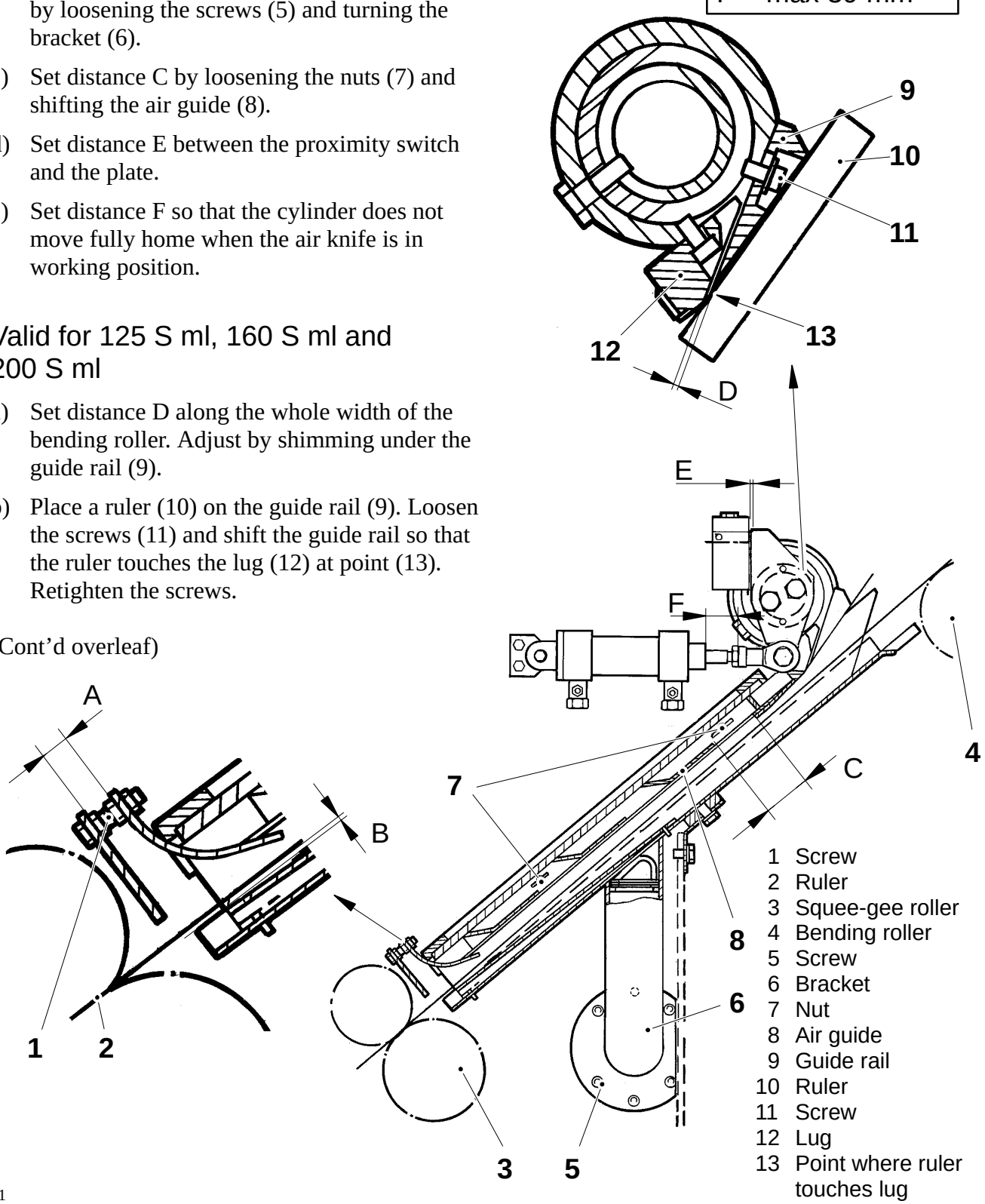

1 Screw
2 Ruler
3 Squee-gee roller
4 Bending roller
5 Screw
6 Bracket
7 Nut
8 Air guide
9 Guide rail
10 Ruler
11 Screw
12 Lug
13 Point where ruler touches lug

(Cont'd)

Temperature

a) With the machine in step **Production**, let it run for approx. one minute.

b) Set the air knife temperature, see page MM 910–7X, by means of the by-pass throttle (14).

c) Read the air knife temperature on temperature regulator A13.

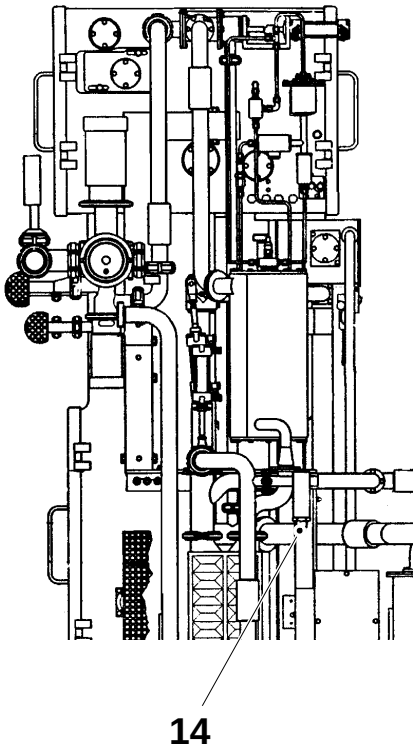

14 By-pass throttle

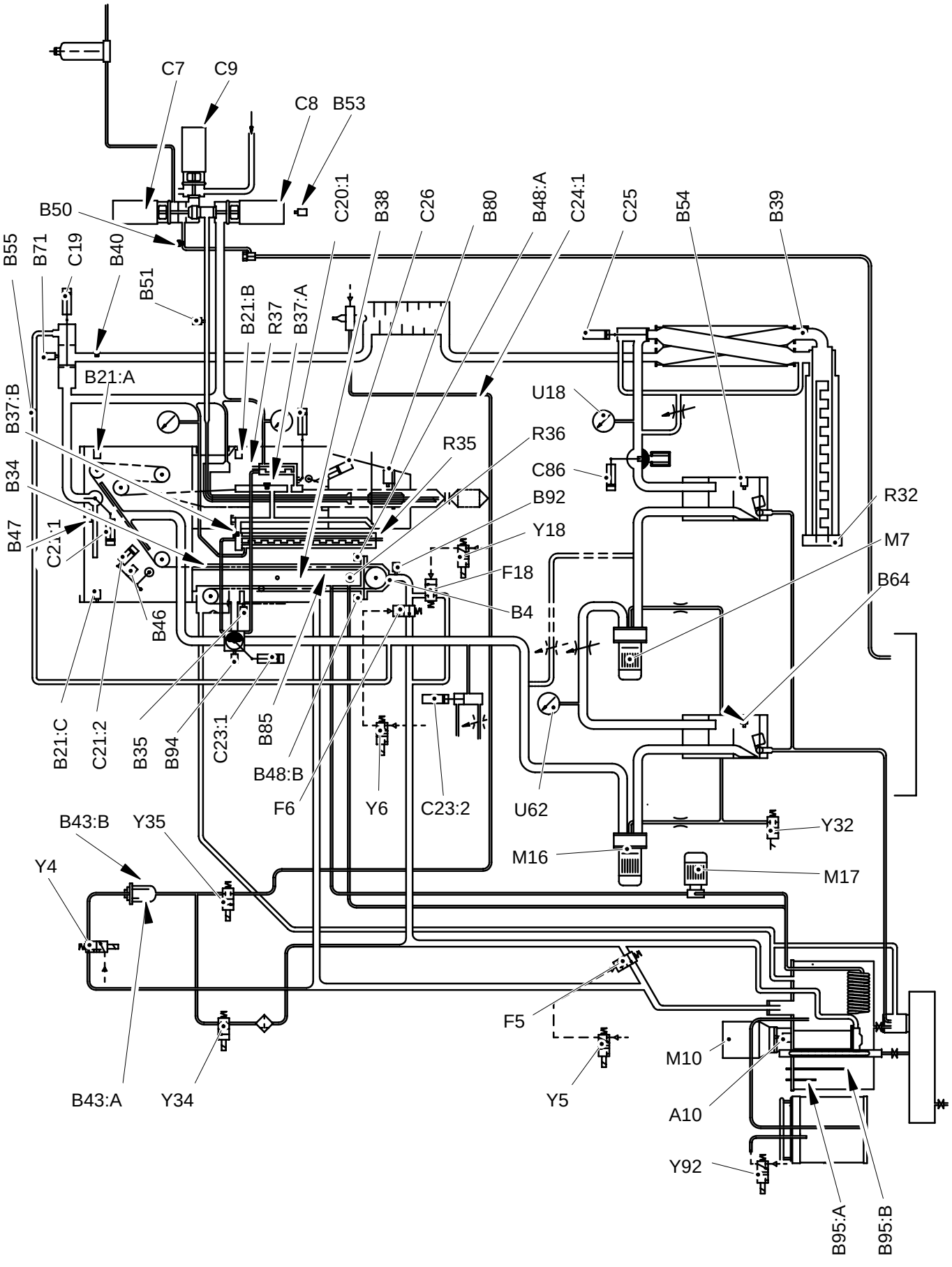
C7
C9
C8
B53
B50
C20:1
B38
C26
B80
B48:A
C24:1
C25
B54
B39
B55
B71
C19
B40
B51
B21:B
R37
B37:A
B21:A
B37:B
U18
R35
R36
C86
B34
B92
R32
B47
Y18
M7
F18
B64
B4
B46
B21:C
C21:2
B35
B94
C23:1
B85
B48:B
F6
Y6
C23:2
U62
B43:B
Y35
Y32
M16
Y4
M17
F5
M10
B43:A
Y34
Y5
A10
Y92
B95:A
B95:B

(Cont'd)

A10	Safety valve, peroxide tank
U18	Sterile air, pressure inlet
U62	Sterile air, pressure suction
B4	Peroxide bath, peroxide temperature
B21:A	Superstructure door, upper front position
B21:B	Superstructure door, lower front position
B21:C	Superstructure door, rear position
B34	Peroxide bath, level
B35	Packaging material splice
B37:A	LS nozzle, temperature
B37:B	LS element, temperature
B38	Peroxide bath, water temperature
B39	Air-super heater
B40	Pre-sterilization, temperature
B43:A	Spray tank, max level
B43:B	Spray tank, min level
B46	Sqee-gee rollers, position
B47	Air knife, position
B48:A	Peroxide bath bottom cover, front position
B48:B	Peroxide bath bottom cover, rear position
B50	Steam temperature
B51	Product pipe, position
B53	Sterile air valve, position
B54	Water separator, inlet level
B55	Air knife temperature
B64	Water separator, suction level
B71	Air inlet, position
B80	Photocell, design correction bar code
B85	Peroxide bath, water level
B92	Peroxide pipe, position
B94	Suction valve, position
B95:A	Peroxide tank, max level
B95:B	Peroxide tank, min level
C7	Steam barrier, C valve
C8	Sterile air, B valve
C9	Product, A valve
C19	Air inlet valve
C20:1	Short stop nozzle, movement
C21:1	Air knife
C21:2	Squee-gee roller
C23:1	Suction valve
C23:2	Pressure feed
C24:1	LS element, movement
C25	Heat exchanger valve
C26	LS short stop, counter roller
C86	Vacuum valve
F5	Peroxide bath, draining
F6	Peroxide bath, filling – draining
F18	Peroxide bath, top filling
M7	Compressor inlet
M10	Peroxide pump
M16	Compressor, suction
M17	Hot water circulation, pump
R32	Air superheater
R35	Longitudinal sealing (LS)
R36	Peroxide bath, water
R37	LS short stop
Y4	Spray tank, air
Y5	Peroxide bath, draining
Y6	Peroxide bath, filling – draining
Y18	Peroxide bath, top filling
Y32	Compressor, water
Y34	Spray tank, filling
Y35	Spray tank, spraying peroxide
Y92	Peroxide container, air

Checking

Check the following details for wear and/or damage:

- the gaskets (1) and (3)
- the seal rings (4)
- the O-rings (2)
- the piston rod (5)
- the lock ring (6)
- the spindle guide (7)
- the plan bearings (8)
- the cylinder (9); it should move smoothly and there must be no air leakage
- the proximity swich (10)
- the ring (11)
- the protective cover (12)

Replace as required.

1 Gasket
2 O-ring
3 Gasket (2 off)
4 Seal ring
5 Piston rod
6 Lock ring
7 Spindle guide
8 Plan bearing (2 off)
9 Cylinder
10 Proximity switch
11 Ring
12 Protective cover

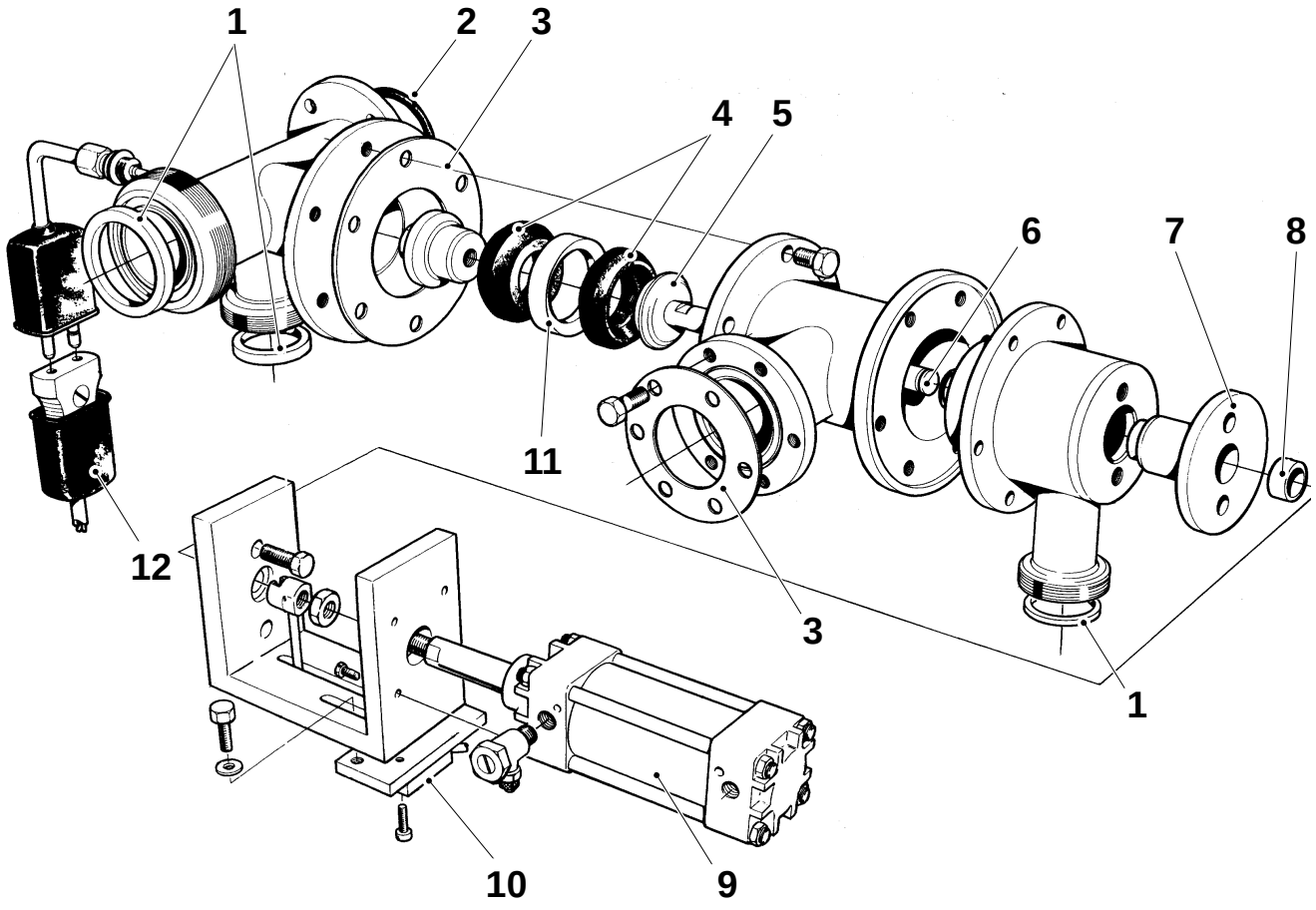

Removal

a) Undo the socket (14). Disconnect the two air lines (8) and the three pipe unions (1). Remove the gaskets.

b) Undo the two screws (13) and remove the cylinder and the bracket.

c) Undo the screws (11) and remove the proximity switch (10).

d) Undo the screws (2) and (6) and remove the valve from the machine.

e) Undo the screws (7) and take the valve apart.

f) Undo the nut (3) and remove the two seal rings (4) and the ring (5).

Reassemble in reverse order.

Set the proximity switch (10). There should be a 0.5 mm distance between the proximity switch and the flag (12) when the piston rod (9) is inside the cylinder.

Make sure that the piston seals against the seat. If required, adjust on the pendulum suspension (15).

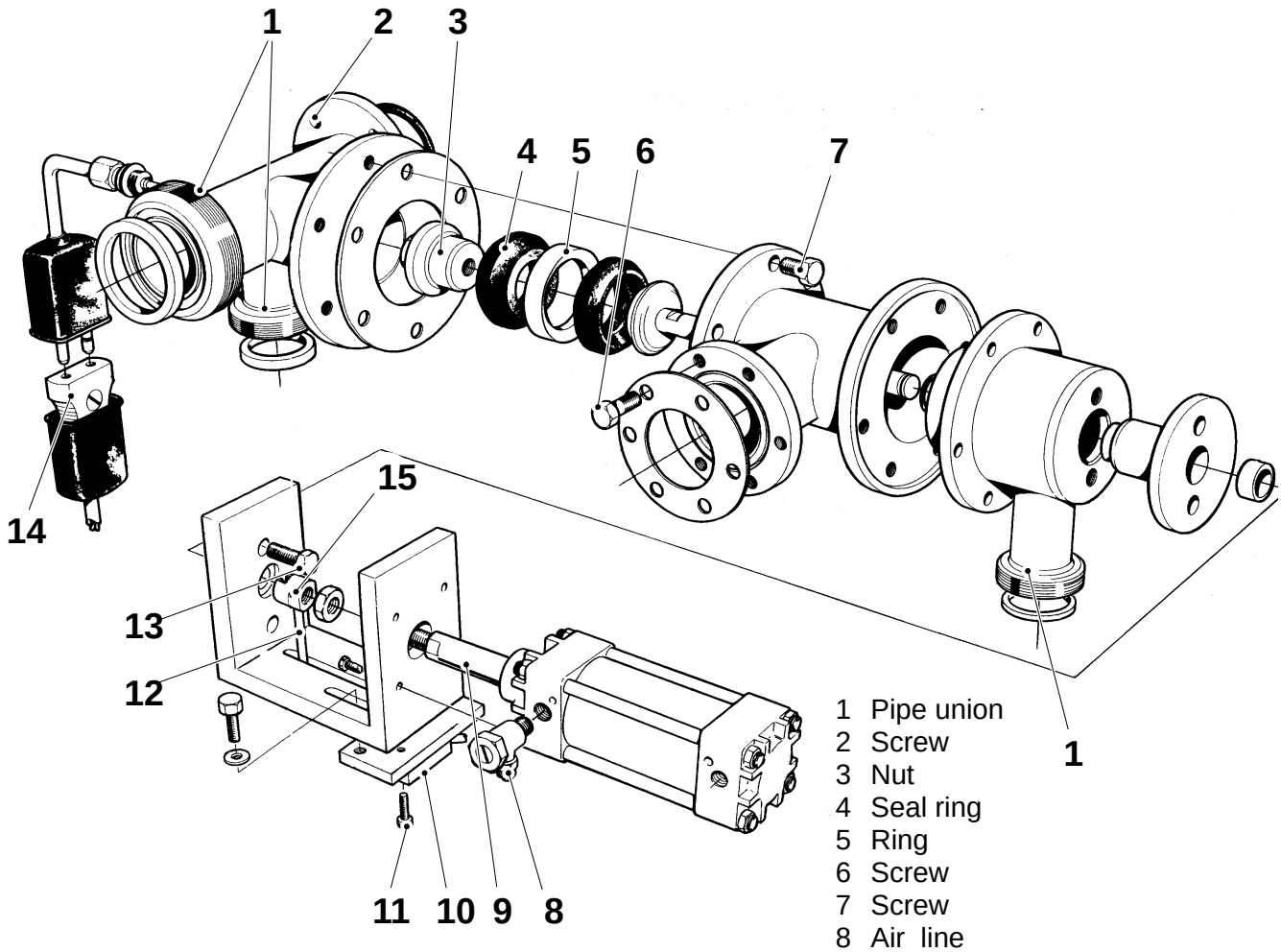

1 Pipe union
2 Screw
3 Nut
4 Seal ring
5 Ring
6 Screw
7 Screw
8 Air line
9 Piston rod
10 Proximity switch
11 Screw
12 Flag
13 Screw
14 Socket
15 Pendulum suspension

Checking

WARNING!
Peroxide, see Safety precautions section MM 000.

a) Undo the knobs (5) and remove the lid (2). Check the seal (6). Replace as required.

b) Check the membrane valve (3). Replace as required.
The slits in the valve are angled, and the valve is to be fitted as illustrated. The valve is correctly fitted if it reverts to **closed position** after actuation **from the outside.**

c) Insert a piece of packaging material of the correct width through the seal (1). Check that the seal closes tightly and that the bevelled edges are not worn. If required, replace the seal.

d) Set the pressure in the aseptic chamber/peroxide bath, see page MM 163–5X.

e) Fit the lid.

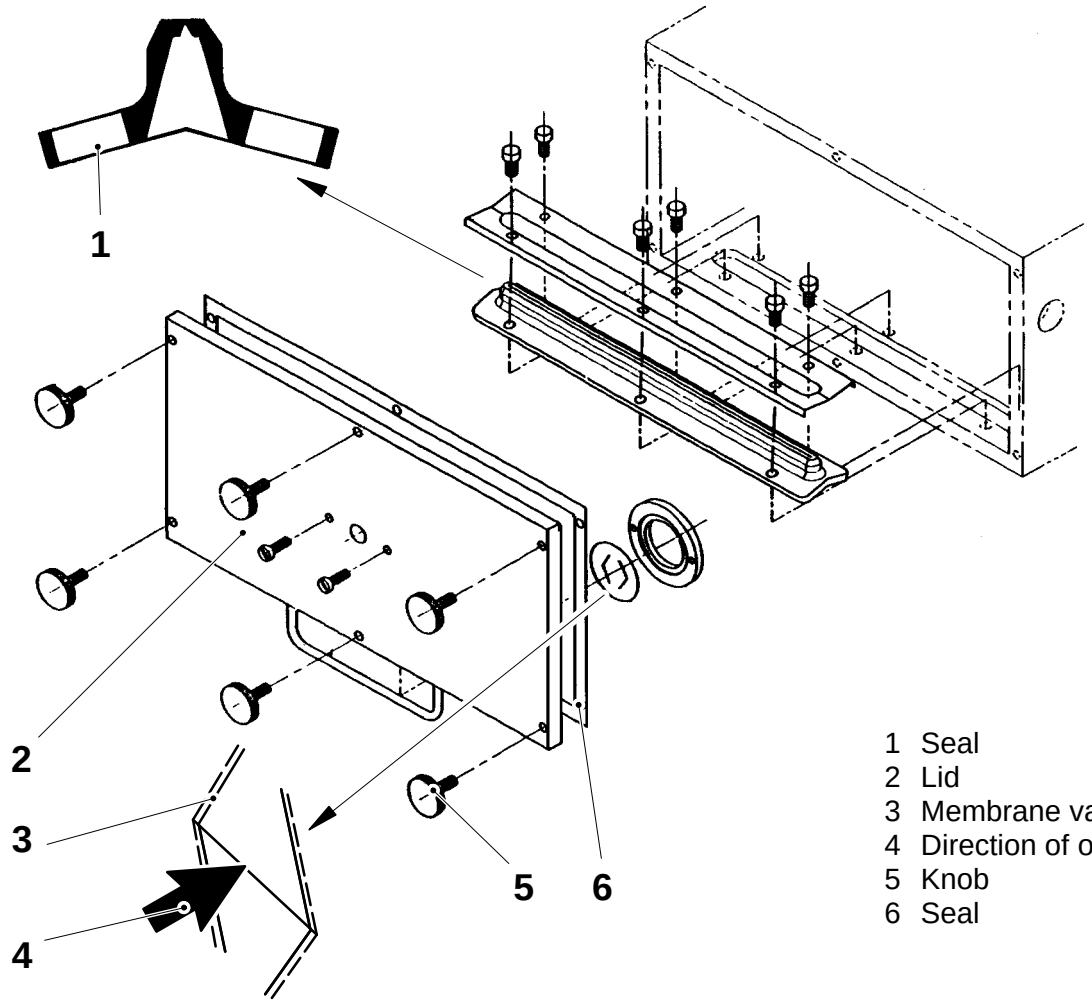

1 Seal
2 Lid
3 Membrane valve
4 Direction of opening
5 Knob
6 Seal

Checking

WARNING!
Peroxide, see Safety precautions section MM 000.

a) Undo the three knobs (4) and lower the lid (3). Check the seal (2). Replace as required.

b) Check the membrane valve (5). Replace as required.
The slits in the valve are angled, and the valve is to be fitted as illustrated. The valve is correctly fitted if it reverts to **closed position** after actuation **from the outside.**

c) Insert a piece of packaging material of the correct width through the seal (1). Check that the seal closes tightly and that the bevelled edges are not worn. If required, replace the seal.

d) Set the pressure in the aseptic chamber/peroxide bath, see page MM 163–5X.

e) Raise the lid and fit the knobs (4).

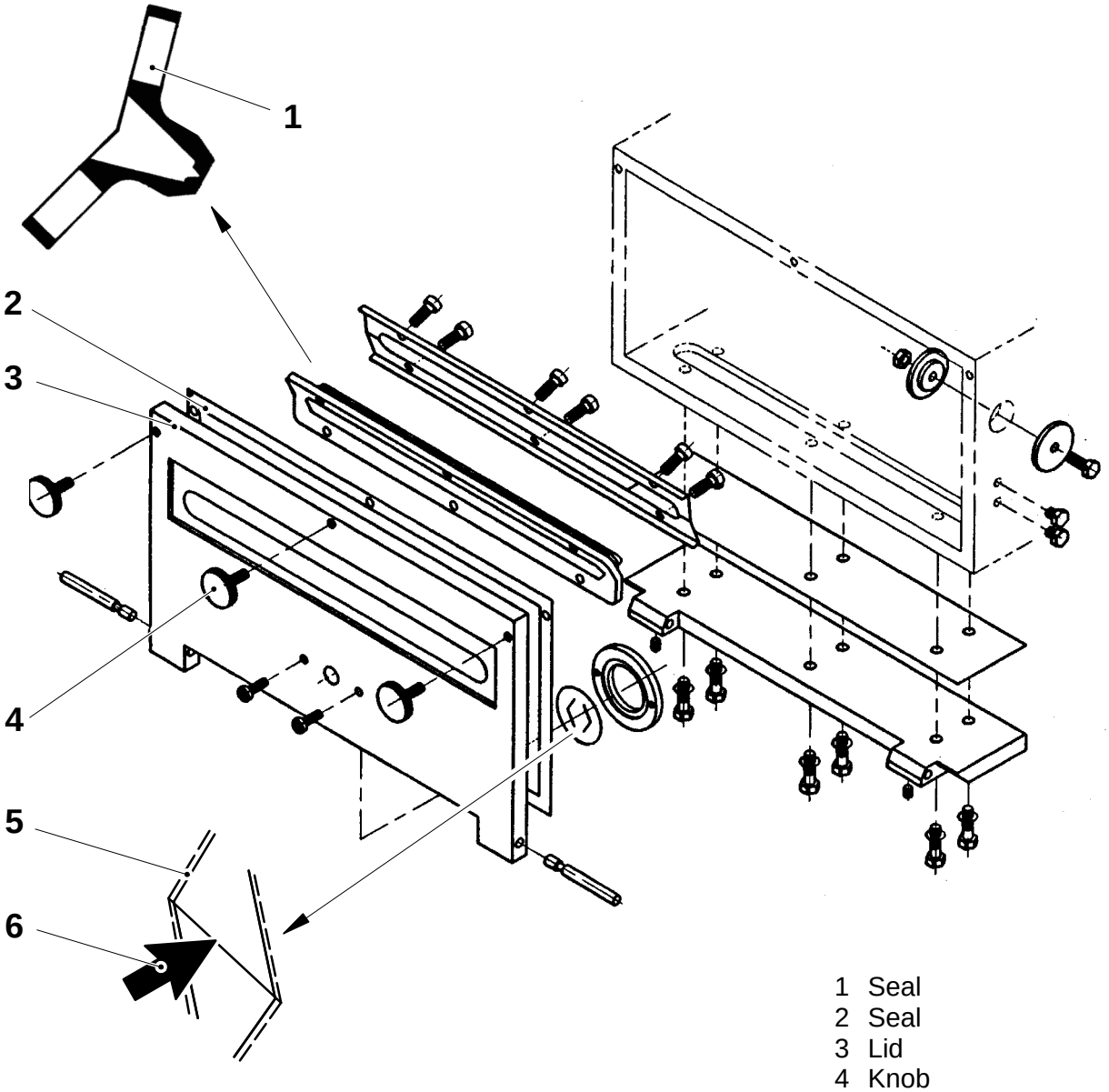

1 Seal
2 Seal
3 Lid
4 Knob
5 Membrane valve
6 Direction of opening

Checking/Cleaning

WARNING!
Peroxide, see Safety precautions section MM 000.

a) Remove the proximity switch (1) and the pipe (2).

b) Loosen the screws (3) and lower the bottom lid (4).

c) Check and, if required, replace the seal (7). Clean the bottom lid and check that there are no strip remnants left.

Caution!
The bearings **must not be lubricated**.

d) Check that the lower bending roller rotates easily. If required, overhaul, see page MM 181–3X.

e) Raise the bottom lid and tighten the screws (3). Check that the microswitches (5) are not triggered until the screws have been tightened hard.

f) If required, adjust with the screws (6).

g) Fit the pipe (2) and put the proximity switch (1) back in position. Check that the LED lights up.
If required set distance A.

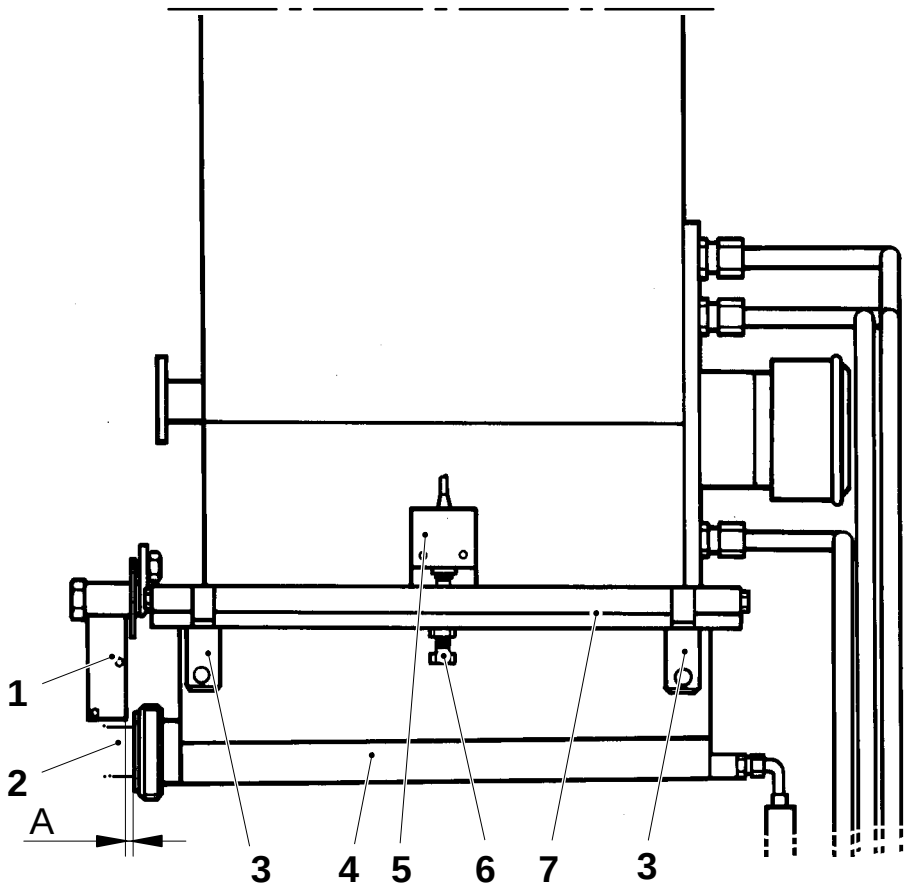

A = 0.2 – 0.5 mm

1 Proximity switch
2 Pipe
3 Screw
4 Bottom lid
5 Microswitch
6 Adjustment screw
7 Seal

Overhaul

WARNING!
Peroxide, see Safety precautions section MM 000.

a) Remove the bottom cover, see page MM 181–1X.

b) Undo the screws (1), two on each side.

c) Undo the screw (5) that holds the shaft.

d) Pull out the axle supports (2).

e) On one side, push the chain off the wheel (3) (towards the roller) and remove the wheel. If required, slacken the chain tension.

f) Swing out the bending roller (4) and remove it.

g) Undo the nuts (6) and remove the bearing holders (7), bushings (8), thrust bearings (9), and shaft (10).

h) Clean or replace the bearings and the shaft.

Caution!
The bearings **must not** be lubricated.

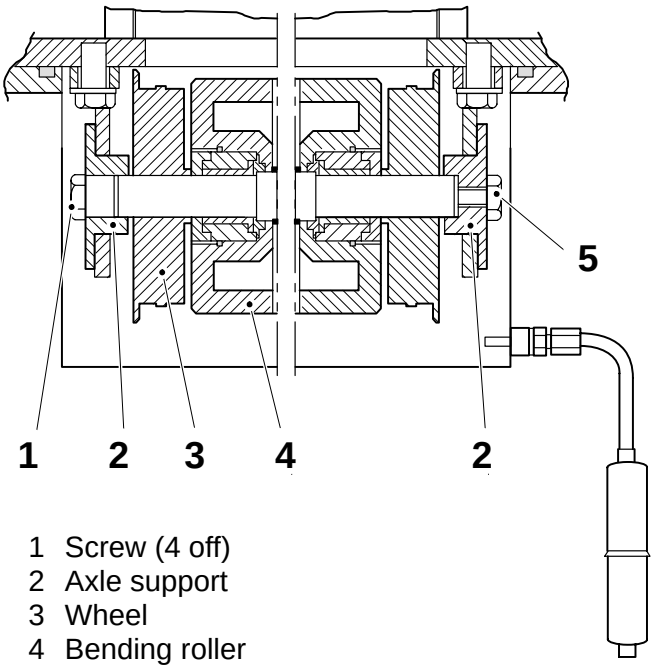

1 Screw (4 off)
2 Axle support
3 Wheel
4 Bending roller
5 Screw
6 Nut (2 off)
7 Bearing holder
8 Bushing
9 Thrust bearing
10 Shaft

Reassemble in reverse order.

Do not forget to tension the chains.

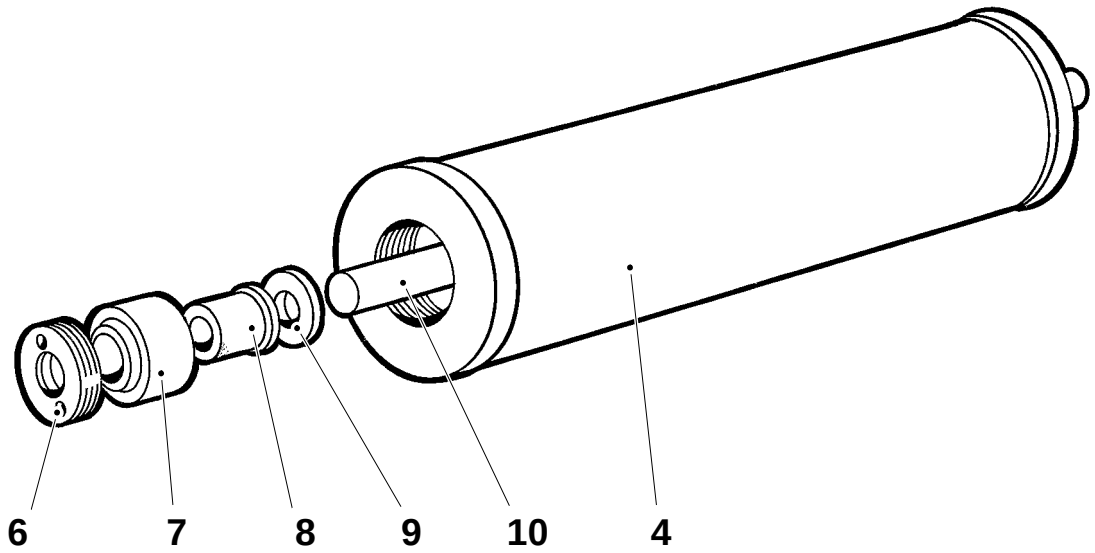

Checking/Cleaning

WARNING!
Peroxide, see Safety precautions section MM 000.

Clean the filter insert (1) with compressed air.

If the filter insert is very clogged, replace it.

Clean the filter (2) with compressed air. If the filter is badly clogged, replace it.

Before removing the lid (3), mark its position on the tank.

Check all peroxide pipes and peroxide pipe connections shown in the picture for leakage.

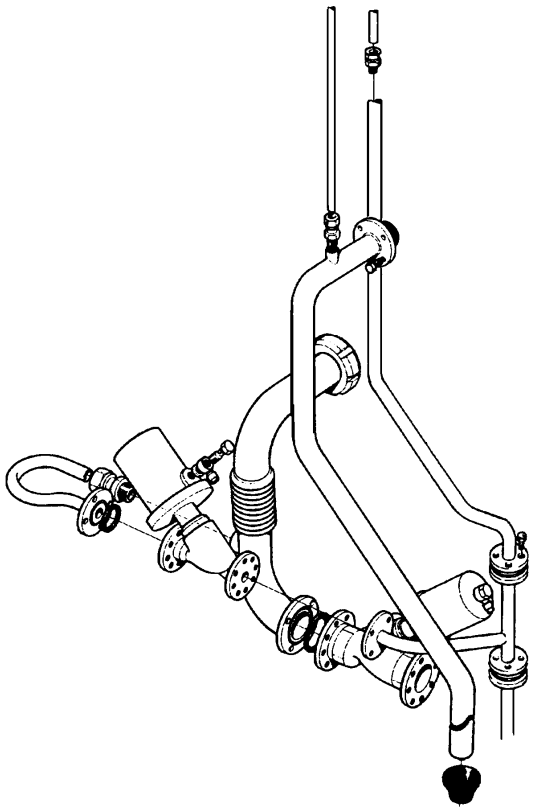

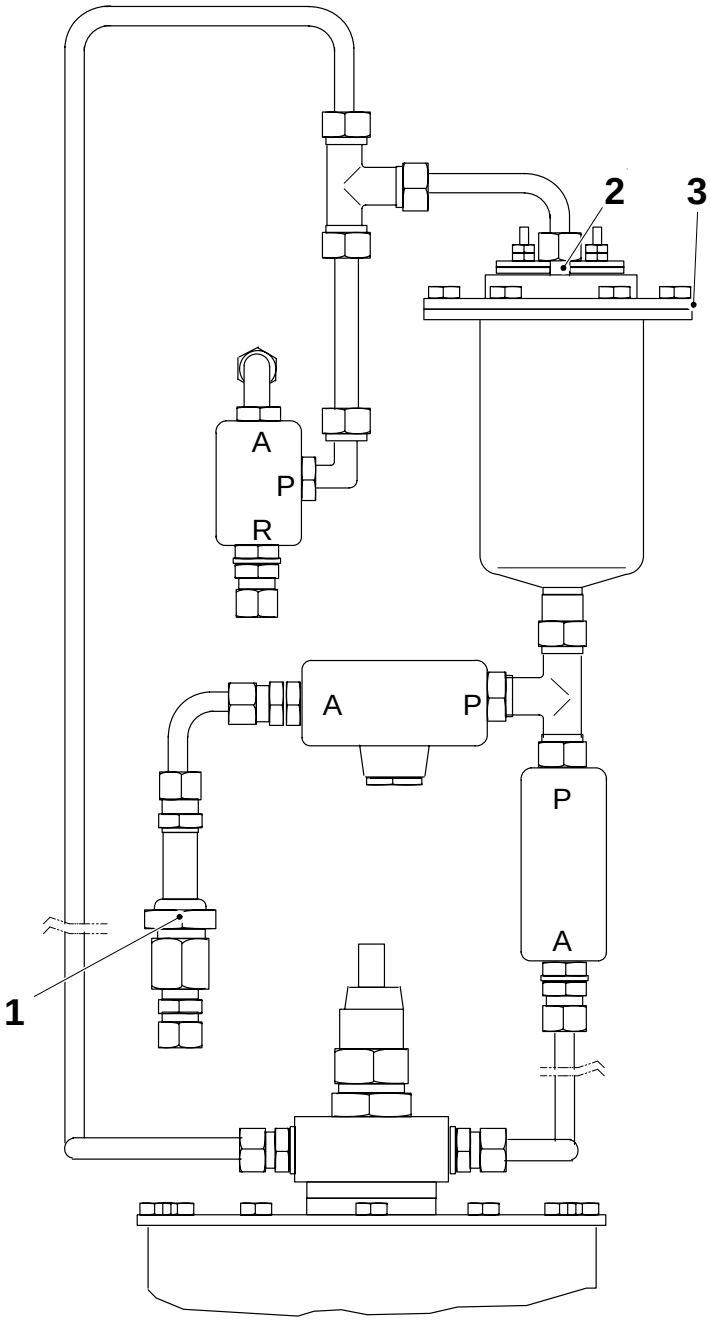

1 Filter insert
2 Filter
3 Lid

Passivation

In case the peroxide system has been polluted, all internal surfaces in contact with the peroxide must be treated with nitric acid in order to obtain a thin protective oxide film.
Passivation is to be carried out whenever service activities in the peroxide system have taken place.

Preparations

WARNING!
Peroxide, see Safety precautions section MM 000.

a) Clean the peroxide filters, see page MM 183–1X, as well as the filling filter of the peroxide tank.

b) Remove any dirt. If there are any stabilizer deposits on the sqee-gee rollers, replace the rollers.

c) Seal the suction valve pipe (1) at the connection with the peroxide bath using sealing disc TP No. 752099.

Note
In addition to the sealing disc, use packaging material and adhesive tape as sealing material.

d) Seal the membrane valve (3).

e) Seal the packaging material web entry (2) into the peroxide bath.

f) Seal the passage (4) from the peroxide bath to the drying chamber.

(Cont'd overleaf)

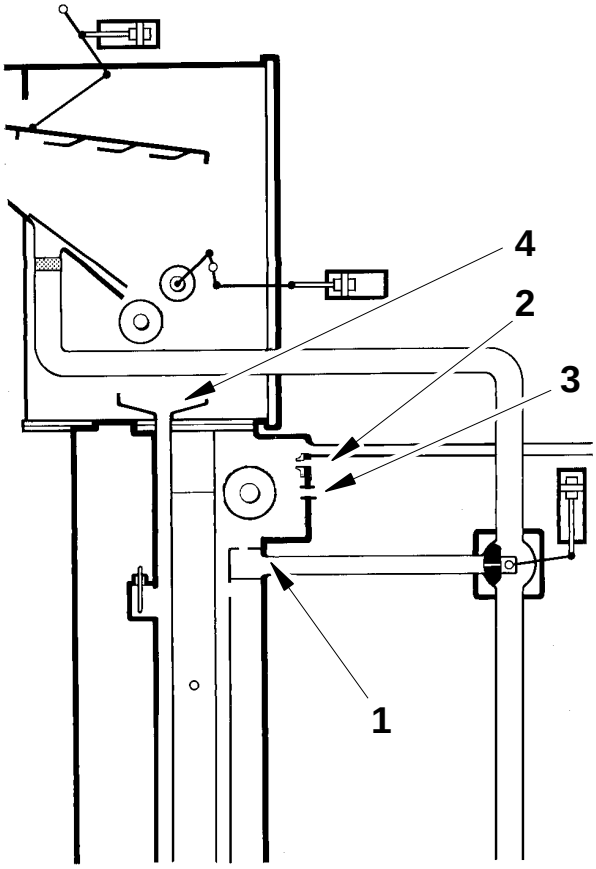

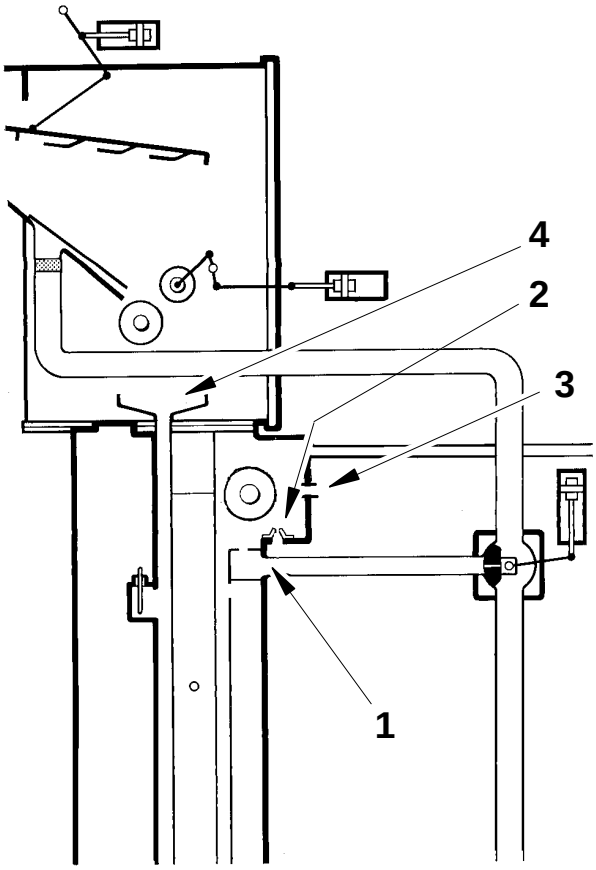

1 Suction valve pipe
2 Packaging material web entry
3 Membrane valve
4 Passage, peroxide bath/ drying chamber

(Cont'd)

Start with circulation of drinking water

Empty the peroxide tank and fill it with 25 litres of water.

Set the circulation pump overload protection Q82, located behind the left hand door of the electrical cabinet, in position 0.

Activate the peroxide pump contactor K82 by bridging TPMC outputs A115.06 and A115.A3.

Close the peroxide bath drain valve by opening valve Y5 on the valve panel.

Open the topping-up valve Y18 on the valve panel.

Start the circulation pump by changing the overload protection to position 1.

Let the water circulate for 10 minutes.

Empty the peroxide tank.

Proceed with degreasing

WARNING!
When mixing alkali and water, the alkali must always be added to the water – never the other way around!

Degrease by means of 25 litres of 5% sodium hydroxide (NaOH) at room temperature.

The water in the water bath (the water warming the peroxide) must be at room temperature. The simplest way to achieve this is to change the water.

Degreasing is carried out in the same way as circulating the water. Degreasing is to go on for two hours with a one minute interruption every 15 minutes.

Thereafter, rinse with drinking water for at least 3 x 5 minutes, changing the water every five minutes. Check that the pH value of the outcoming rinsing water is not more than 0.5 units higher than that of the incoming water. If required, rinse once more.

Finish with passivation

WARNING!
When mixing acid and water, the acid must always be added to the water – never the other way around!

Passivation is carried out with 25 litres of 33% nitric acid (HNO_3) at room temperature, in the same way as degreasing.

Rinse with drinking water until the pH value of the outcoming rinsing water is not less than 0.5 units lower than that of the incoming water. If required, rinse once more.

After the last water rinse, rinse once more by circulating de-ionized or distilled water for five minutes.

Remove the sealing disc and the rest of the material used for sealing purposes.

Fill the tank with peroxide. Test-run the machine and check the peroxide concentration, see the OS book.

The machine is now ready for production

Check the hydrogen peroxide concentration at intervals shorter than normal during the first 24 hours.

Checking

WARNING!
Peroxide, see Safety precautions section MM 000.

Check the following details for wear and/or damage:

- the proximity switch (1)
- the cylinder (2); make sure the cylinder moves freely
- the axle supports (3)
- the bearing covers (4)
- the cylindrical jackets of the squee-gee rollers (5) and the rollers
- the bushings (6) and (9)
- the ball bearings (7)
- the shafts (8) and (12)
- the O-rings (10)
- the brackets (11)

Replace as required.

Grease the ball bearings (7) with silicon grease, code L.

With the machine in step **Production**, check that there are no drops of peroxide on the packaging material web after the air knife, i.e. that no peroxide passes the squee-gee rollers.

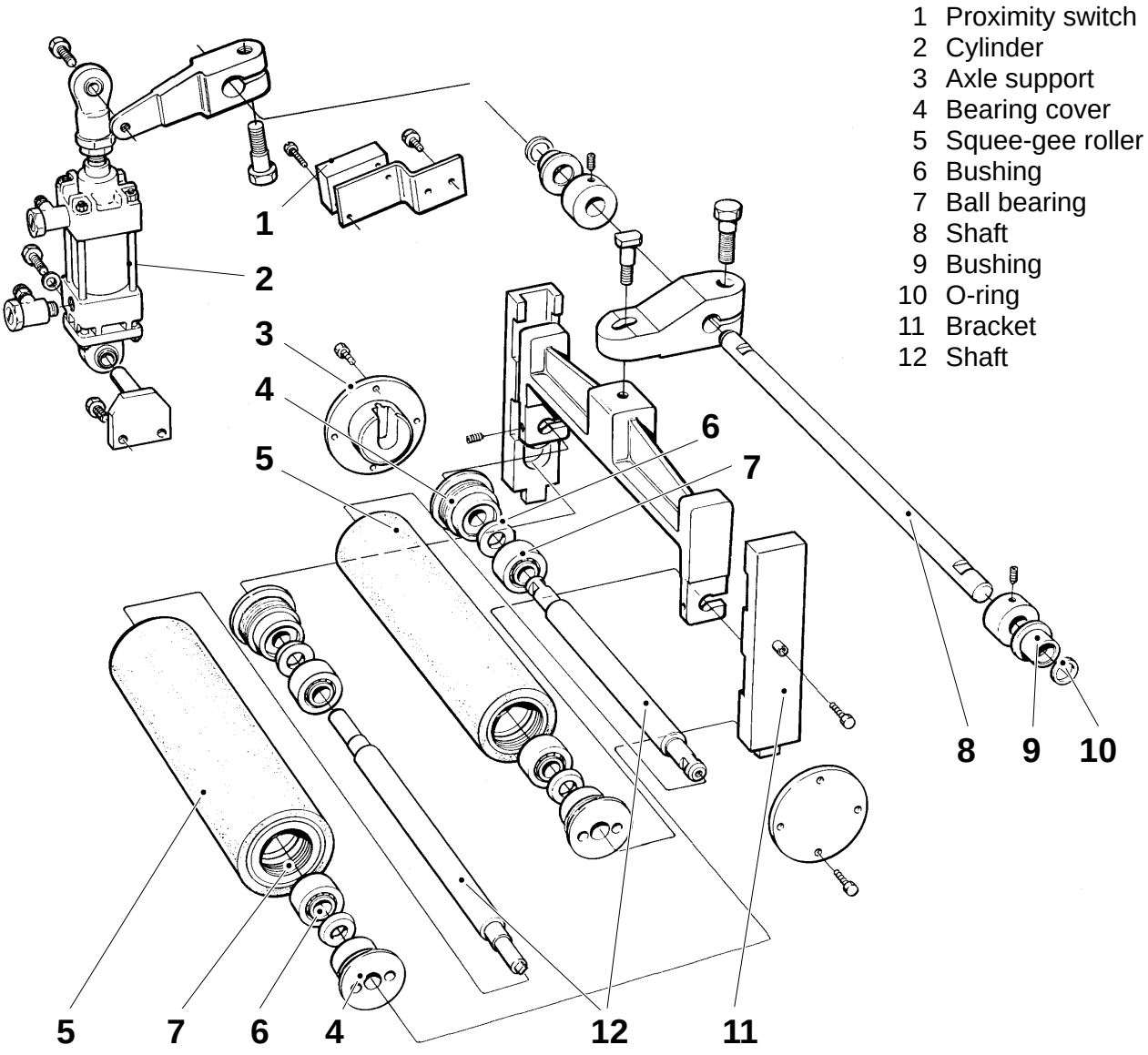

Removal

WARNING!
Peroxide, see Safety precautions section MM 000.

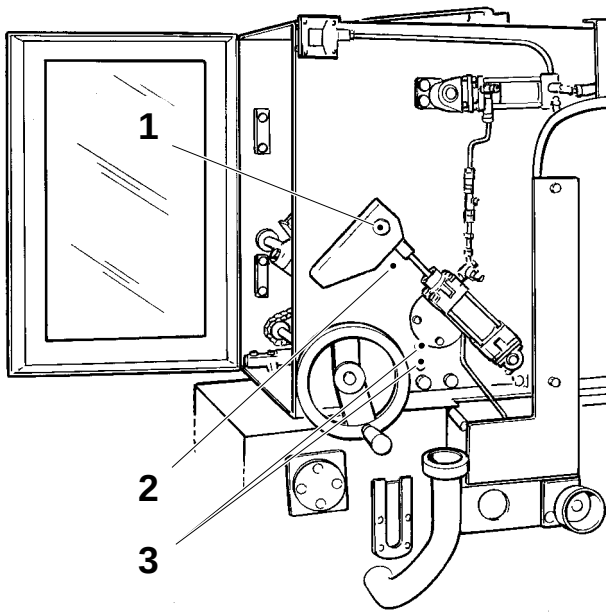

a) Undo the screw (1).

b) Mark the position of the pressure arm (5) on the shaft (7).

c) Undo the screw (4). Loosen the screw (6) and rotate the pressure arm upwards.

d) Pull out the movable squee-gee roller (8).

e) Undo the two screws (2), one on each side of the aseptic chamber, and remove the brackets (10).

f) Undo the two screws (3) and remove the protective cover (11).

g) Pull out the fixed squee-gee roller (9). If necessary, push the air knife cover out of the way to make it easier to pull out the roller.

(Cont'd overleaf)

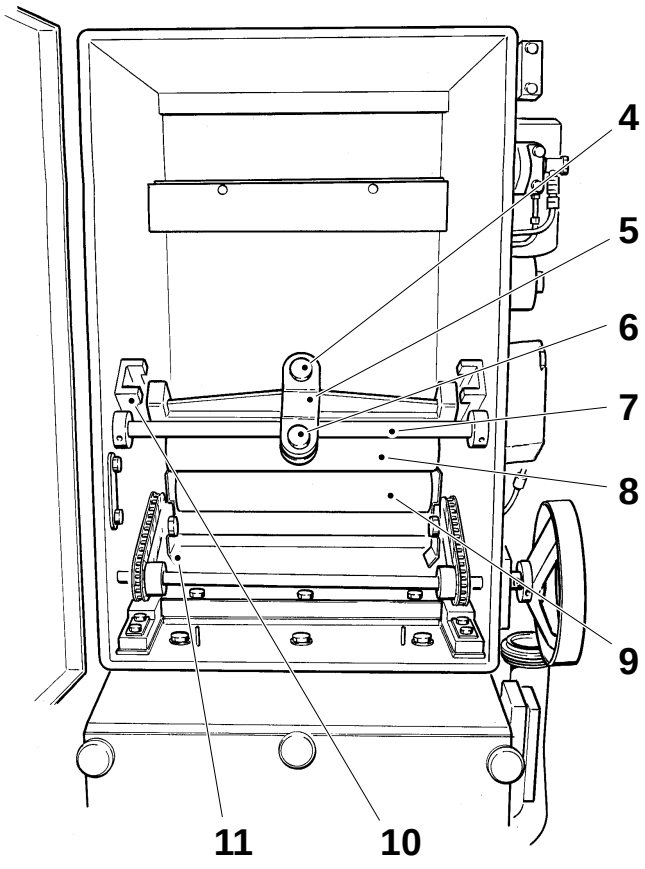

1 Screw
2 Screw
3 Screw
4 Screw
5 Pressure arm
6 Screw
7 Shaft
8 Movable squee-gee roller
9 Fixed squee-gee roller
10 Bracket
11 Protective cover

(Cont'd)

Movable squee-gee roller

a) Remove the bearing covers (15) and pull out the shaft (16).

b) Remove the bushings (14) and the ball bearings (13).

Fixed squee-gee roller

a) Remove the bearing covers (20) and pull out the shaft (21).

b) Remove the bushings (19) and the ball bearings (18).

Reassemble in reverse order. Make sure that the pressure arm is fitted in the correct position according to the mark previously made on the shaft.

Setting, see page MM 184–5X.

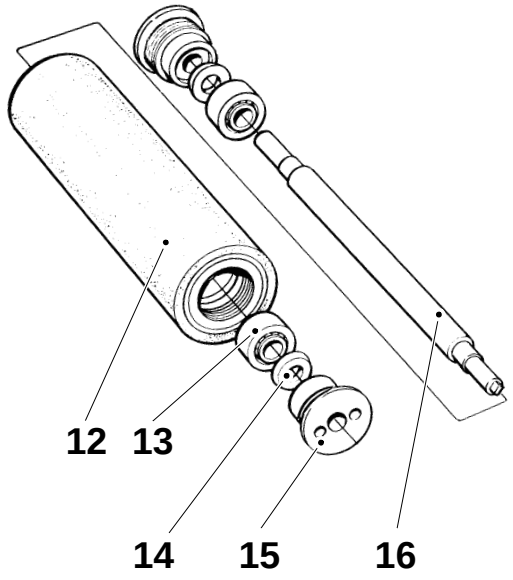

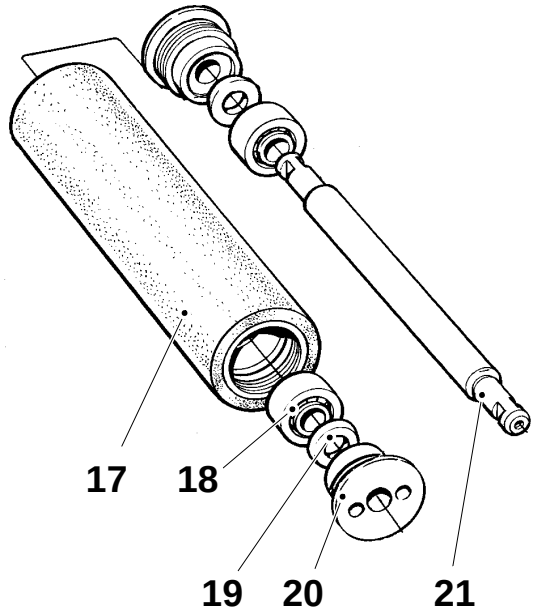

12 Fixed squee-gee roller
13 Ball bearing
14 Bushing
15 Bearing cover
16 Shaft
17 Movable squee-gee roller
18 Ball bearing
19 Bushing
20 Bearing cover
21 Shaft

Setting

WARNING!
Peroxide, see Safety precautions section MM 000.

Cylinder

a) Turn on the main power switch and open for air and cooling water.

b) Force the solenoid valve for the squee-gee rollers.

c) Set the cylinder (1) so that it does not reach its end position when the rollers are pressed against each other, distance A. Adjust on the link head (2).

d) Set the proximity switch (3), distance B.

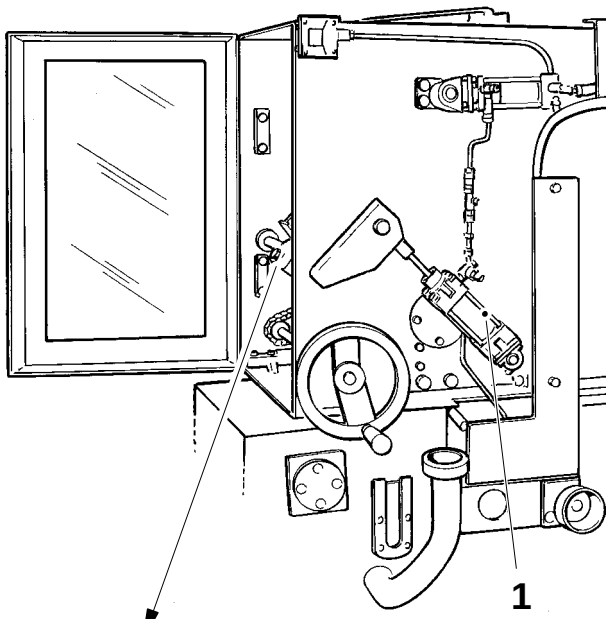

Squee-gee rollers

a) Thread the packaging material web down to the jaws.

b) Close the squee-gee roller air valve.

c) Raise the movable squee-gee roller (4), so that it does not touch the packaging material.

d) Select fast inching and inch the machine for about one minute.

e) Stop the machine and, without moving the packaging material web (5), mark the position of the web edge on the fixed squee-gee roller (arrow).

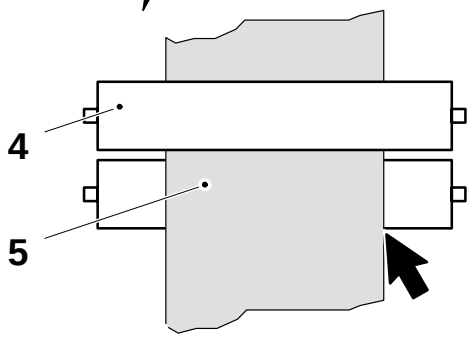

1 Cylinder
2 Link head
3 Proximity switch
4 Movable squee-gee roller
5 Packaging material

(Cont'd overleaf)

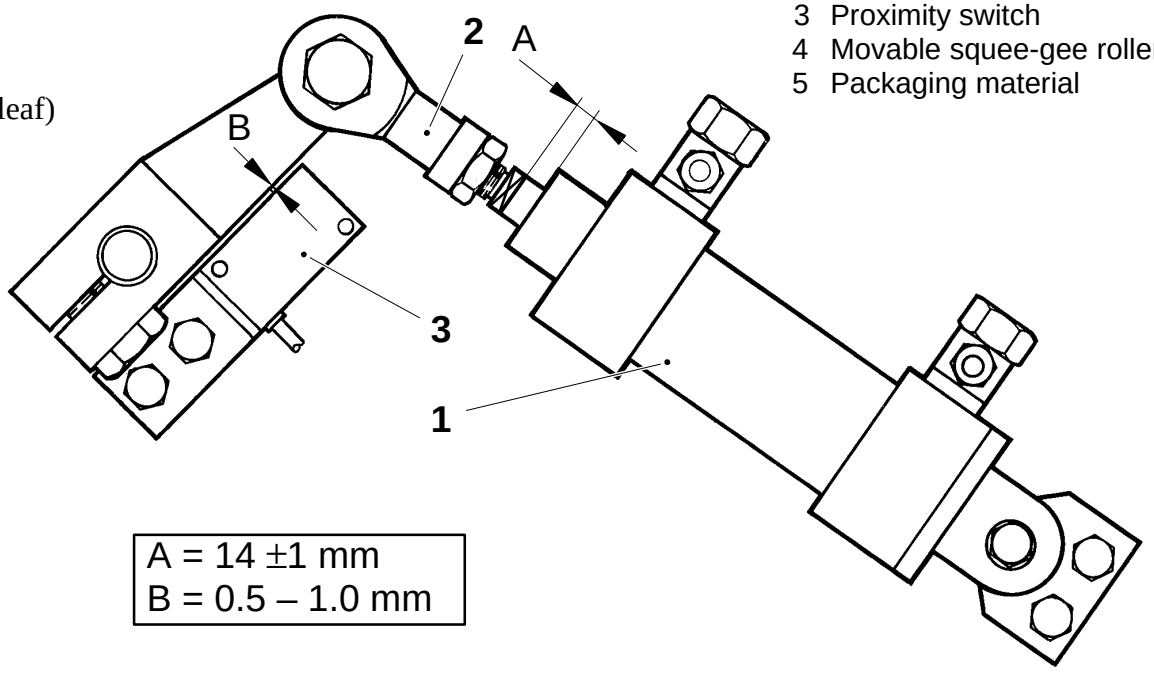

A = 14 ±1 mm
B = 0.5 – 1.0 mm

(Cont'd)

f) Set the correct squee-gee roller air pressure, see page MM 910–7X.

g) Select fast inching and inch the machine for about one minute. Tighten the screws (6).

h) Stop the machine and check that the edge of the packaging material web is in line with the mark previously made on the fixed squee-gee roller (7).

i) If adjustment is required, loosen the screws (6) on the outside of the aseptic chamber (one on each side), and correct the position of the movable squee-gee roller by shifting the brackets (8). Tighten the screws.

j) Inch the machine, stop it, and recheck.

Repeat items g) – j) until correct setting has been obtained.

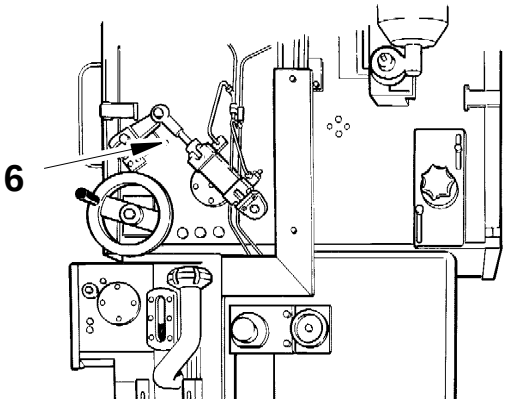

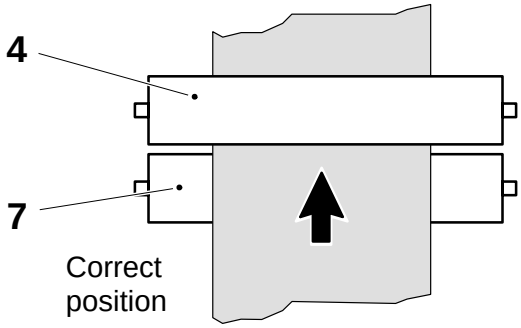

4 Movable squee-gee roller
6 Screw
7 Fixed squee-gee roller
8 Bracket

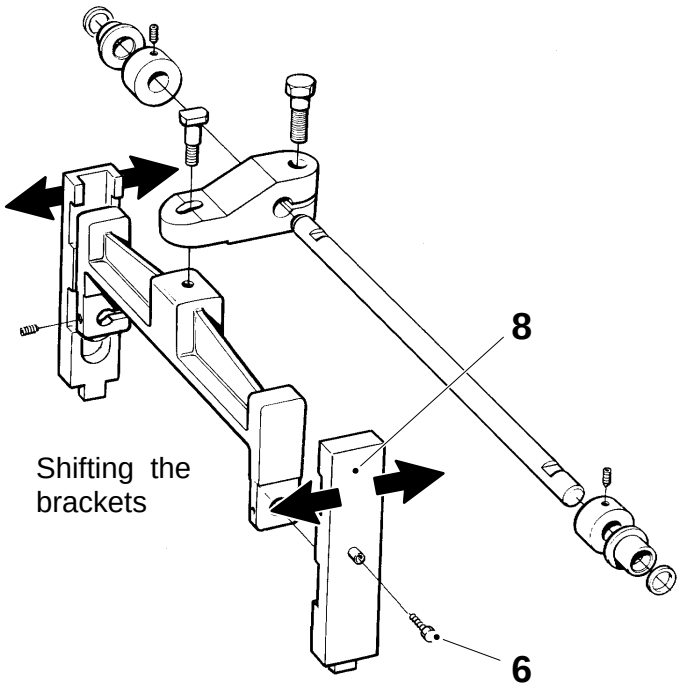

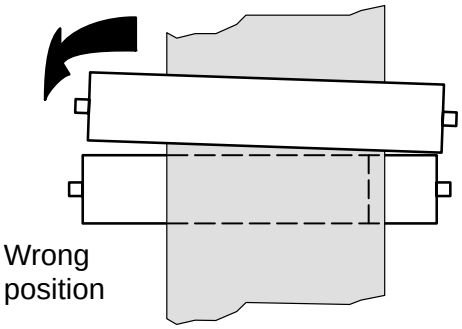

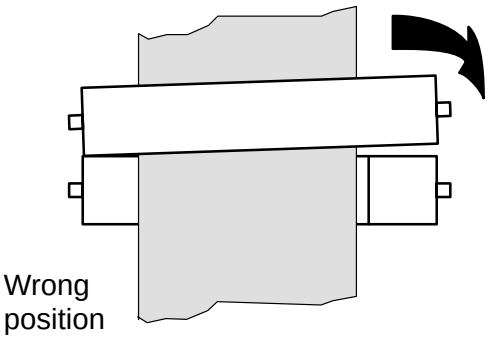

Checking

With the machine in step **Production**:

- check that no holes for water or air are blocked
- check that the water jets reach the tube

TBA with PullTab device

Check that the tabs are lifted by the air jets and flushed underneath by the water jets.

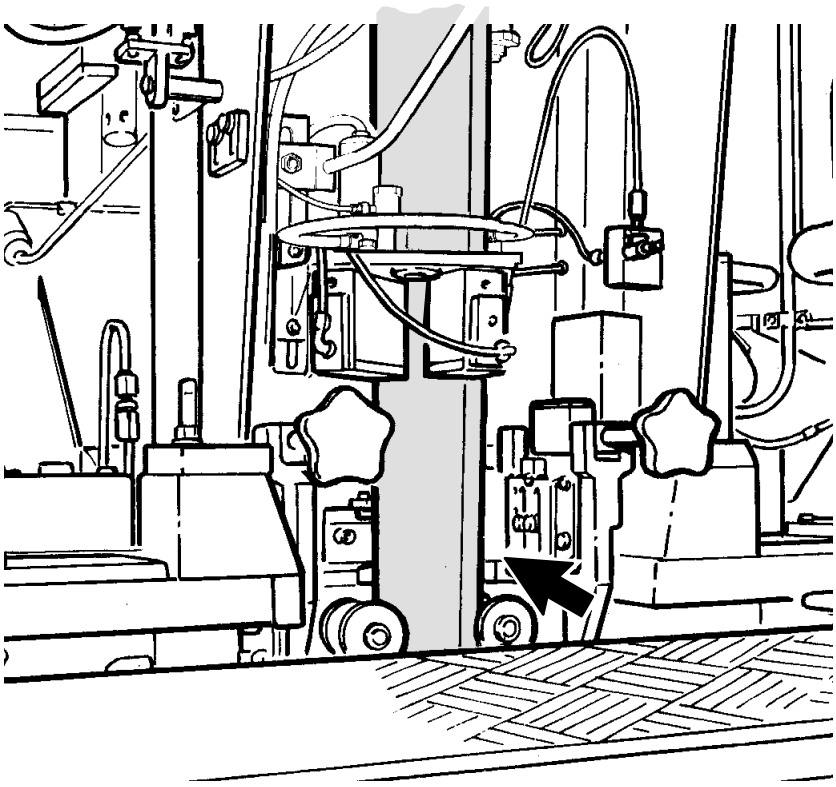

Checking

a) Check that all rollers are intact and undamaged.
Replace as required.

b) Check that the play between the rollers (7), distance A, does not exceed 0.1 mm. Replace worn bushings (8) or axle pins (5) as required.

The play between the rollers (7) is to be the same all the way around. Adjust by means of shimming washers (6).

c) When the machine is **warm**, check that all rollers rotate freely.
If required, adjust according to item b).

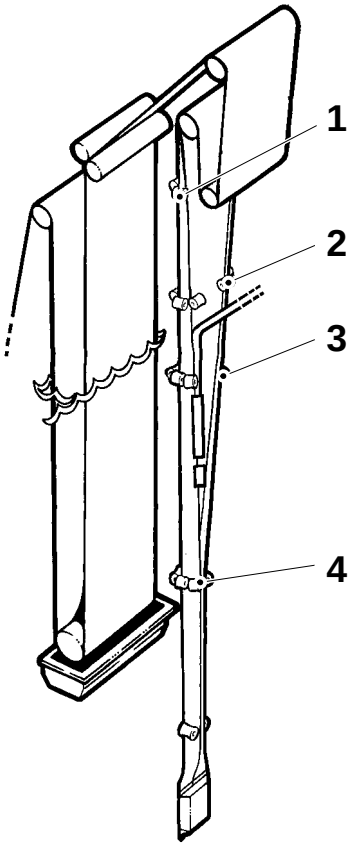

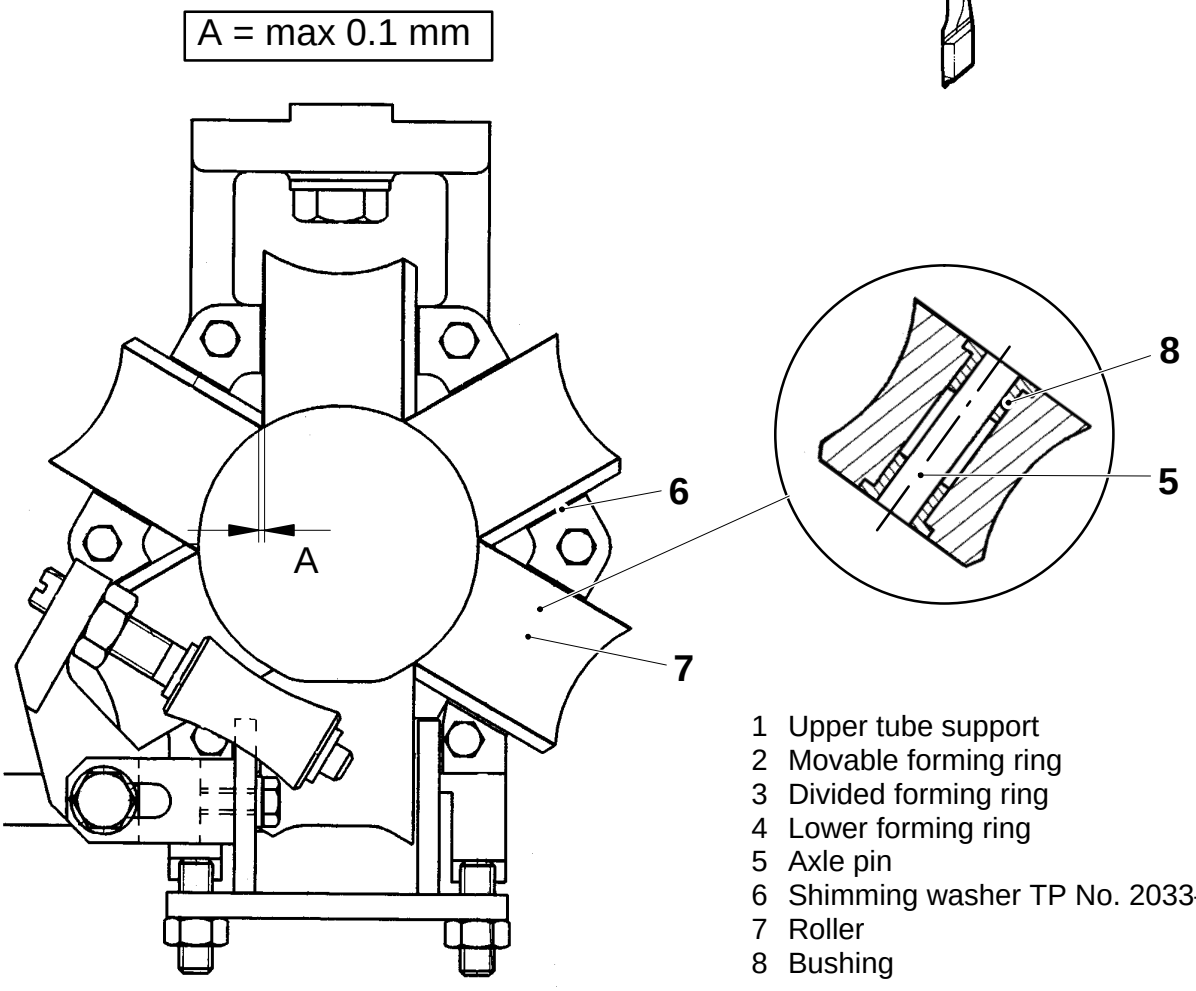

1 Upper tube support
2 Movable forming ring
3 Divided forming ring
4 Lower forming ring
5 Axle pin
6 Shimming washer TP No. 2033–11
7 Roller
8 Bushing

Removal

a) Measure the play between the rollers in the forming rings.

b) Undo the screws and remove the plates (1) and the rollers (2).

c) Remove the bushings (3) from the rollers.

d) Reassemble in reverse order; make sure that the same play, see item a), is obtained.

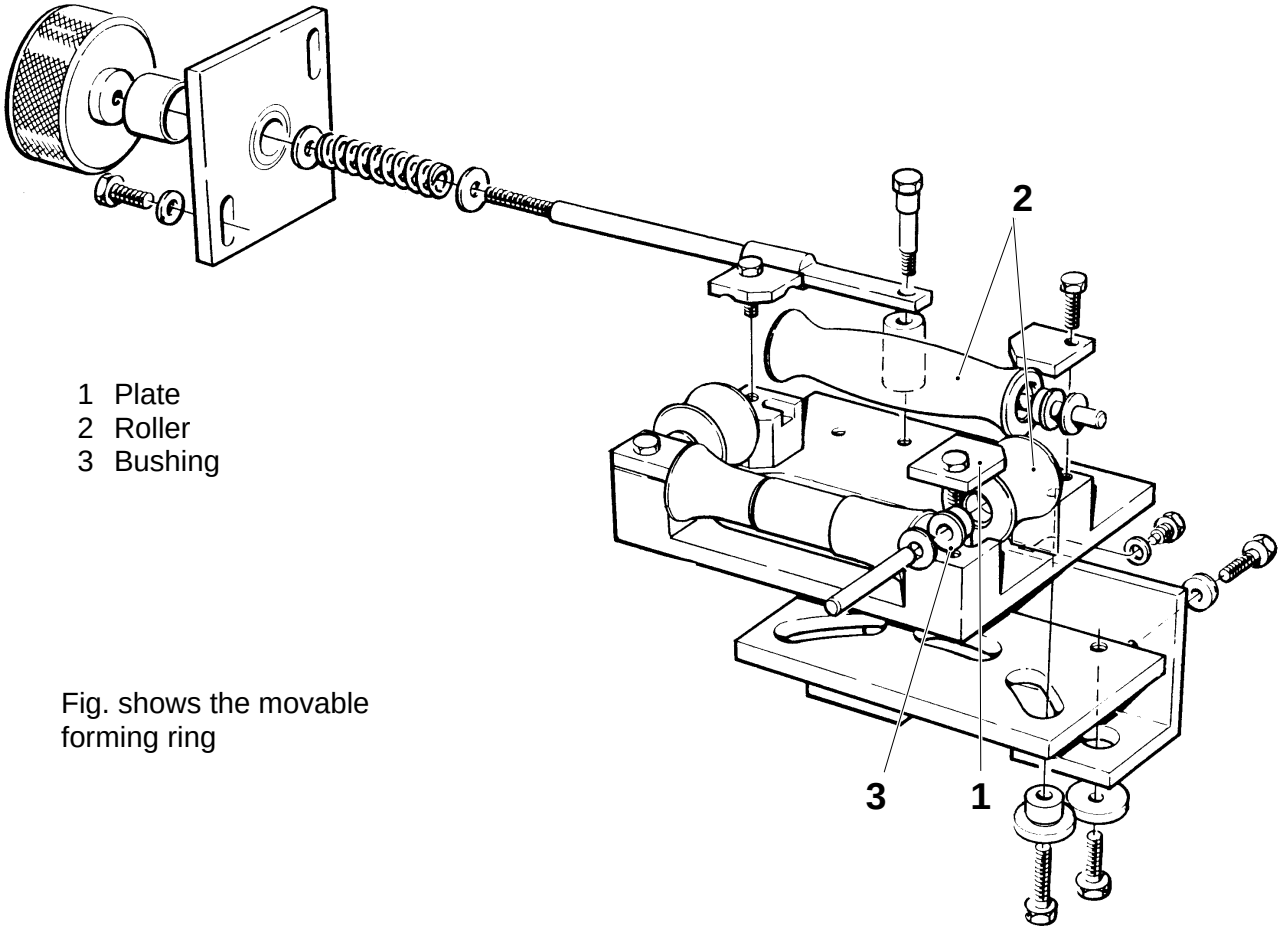

1 Plate
2 Roller
3 Bushing

Fig. shows the movable forming ring

Setting

a) Set the position of the forming rings, see table below.

Volume, ml	A ±1.0 mm	B ±1.0 mm	C ±1.0 mm
180 B – 284 B	532	956	1292
125 S	540	962	1326
200 S, 250 S	541	977	1283

b) Turn out the counter roller (1) and apply a ruler, slide callipers (2), or a similar tool.

c) Set the height of the lower forming ring, distance D. The top of the roller (4) and the slide callipers are to be in level (for volumes 125 S ml, 160 S ml and 200 S ml, the roller (4) is to be distance E **below** the slide callipers).

Volume, ml	D ±0.5 mm	E ±0.5 mm
180 B – 284 B	38	0
125 S, 200 S, 250 S	53	1

(Cont'd overleaf)

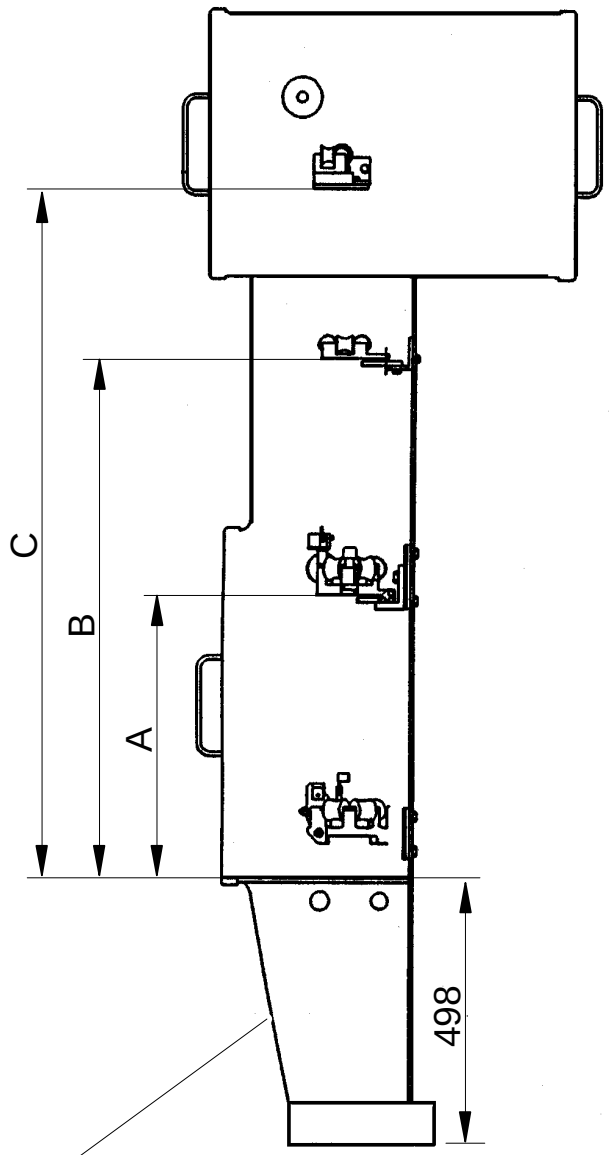

1 Counter roller
2 Slide callipers
3 Lower forming ring
4 Pressure roller

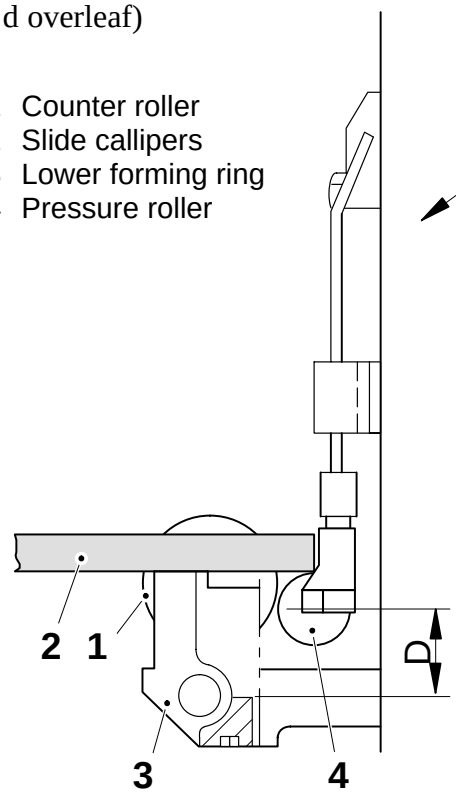

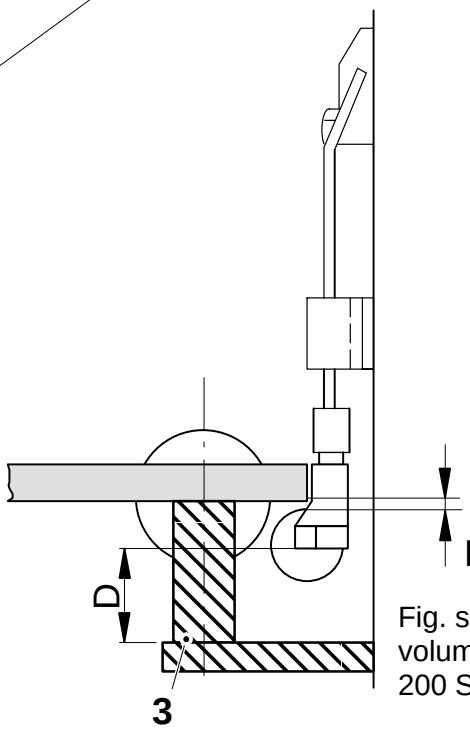

Fig. shows variant for volumes 125 S and 200 S

(Cont'd)

Support roller, lower forming ring

a) Insert packaging material all the way to the jaws. Make sure that the packaging material is well straightened.

b) Set distance A between the support roller and the edge of the packaging material tube.

c) Adjust, during operation, so that the support roller (1) does not guide the tube or affect the overlap.

(Cont'd overleaf)

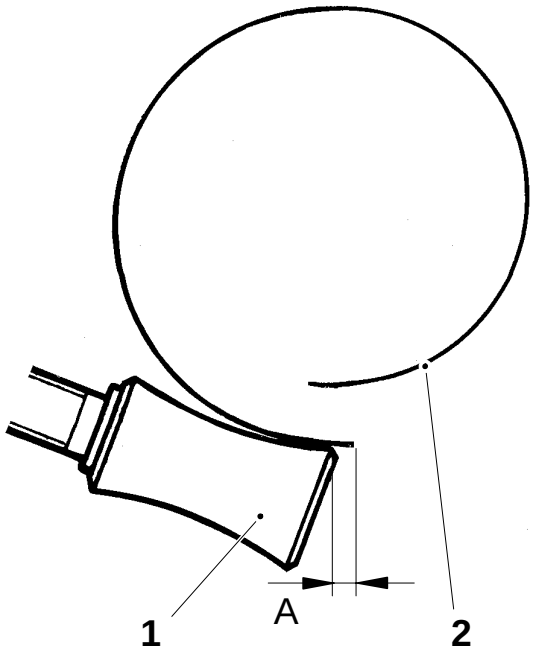

1 Support roller
2 Packaging material tube

A = 1 ±0.2 mm

(Cont'd)

LS overlap

Set the LS overlap as follows. The specified overlap applies to the listed nominal packaging material width. If the width varies, the overlap has to be increased or decreased corrispondingly.

a) Replace one to three regular rollers with minus trimming rollers to **increase** overlap A.

b) Replace one to three regular rollers with plus trimming rollers to **decrease** overlap A.

c) Trimming rollers must always be fitted **symmetrically** relative to the pressure roller (4).

d) Plus and minus trimming rollers must **never** be fitted at the same time in the forming ring.

e) Set the LS nozzle, see page MM 116–1X.

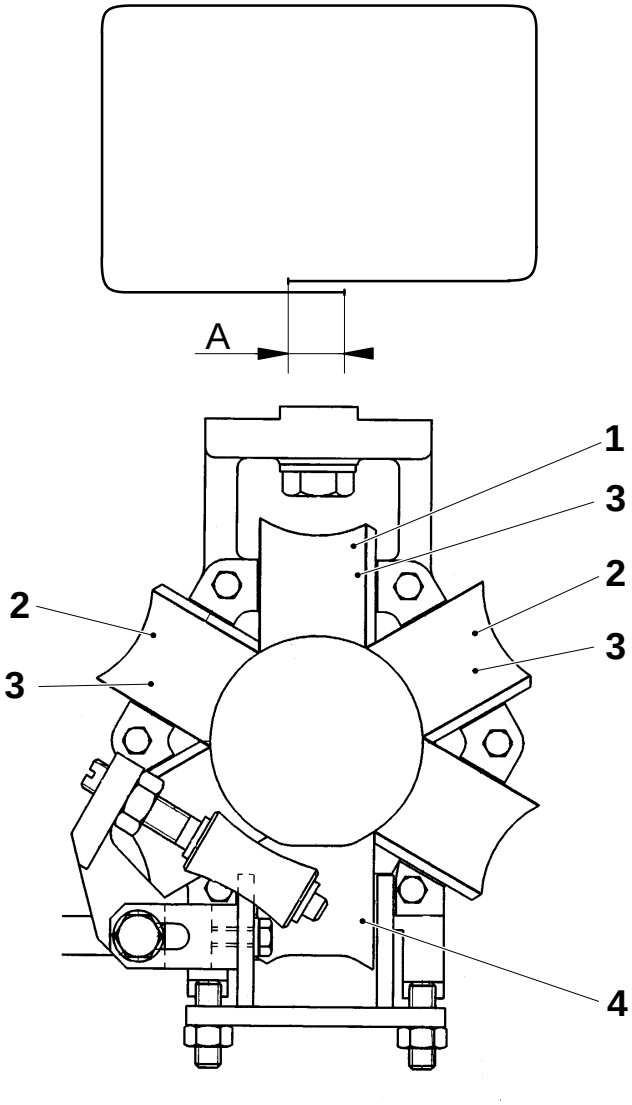

1 Where to put one trimming roller
2 Where to put two trimming rollers
3 Where to put three trimming rollers
4 Pressure roller

Volume, ml	Paper width, mm	Overlap, mm	Regular roller	Minus trimming roller	Plus trimming roller
TB					
180 B – 250 B	214	8	4–28326	4–28838	4–28837
200 S	174	4	4–491966	4–491969	4–491968
TBA					
180 B – 284 B	214	8	3–751502	3–752463	3–752462
125 S	162	4	3–752153	3–752467	3–752466
200 S, 160 S	174	4	3–752138	3–752465	3–752464
250 S	188	6	3–574346	3–574447	3–574446

Description	TB/9	TBA/9
Drop chute – checking	205–11	205–11
Drop chute – removal/fitting (2 pages)	205–21	205–21
Drop chute – setting (2 pages)	205–51	205–51
Cleaning system – checking		220–11
Cleaning system – setting (2 pages)		220–51
Safety functions – checking	249–11	249–11

Checking

Check the following details for wear and/or damage:

- the drop chute (1)
- the O-ring (2)
- the finger (3)
- the pivot arm (4)
- the friction bearing (5)
- the seal ring (6)
- the O-ring (7); if there is oil and/or water on top of the indexing unit, clean it and then replace the O-ring
- the link head (8)
- the cylinder (9); make sure it moves smoothly and that there is no air leakage
- the leaf springs (10); make sure they spring back to prevent the packages from bouncing
- the proximity switch (11)

Replace as required.

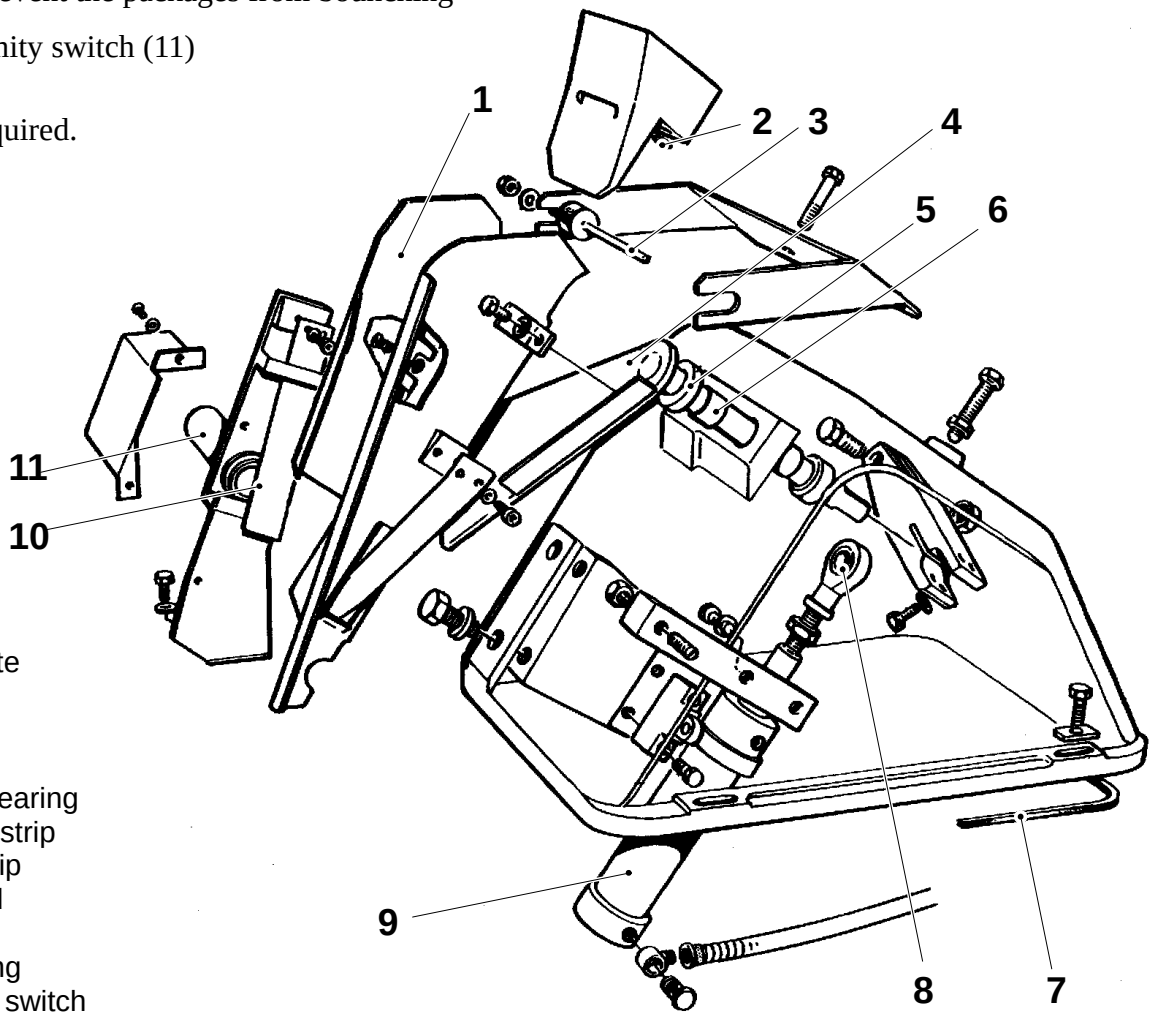

1 Drop chute
2 O-ring
3 Finger
4 Pivot arm
5 Friction bearing
6 Seal ring strip
7 O-ring strip
8 Link head
9 Cylinder
10 Leaf spring
11 Proximity switch

117

Removal/Fitting

a) Mark the position of the cantilever (1) on the plate (2).

b) Undo the screws (3) and remove the slide lug (4), the O-ring (5), and the holder (6). Undo the two screws (7) and remove the drop chute (8).

c) Remove the finger (9). Undo the screws (10) and remove the two leaf springs (11).

d) Remove the cover (12) and the congestion monitor (13). Undo the screws (14) and remove the head plate (15).

e) Undo the four screws (16) and lift up the cantilever (1). Remove the O-ring (17).

(Cont'd overleaf)

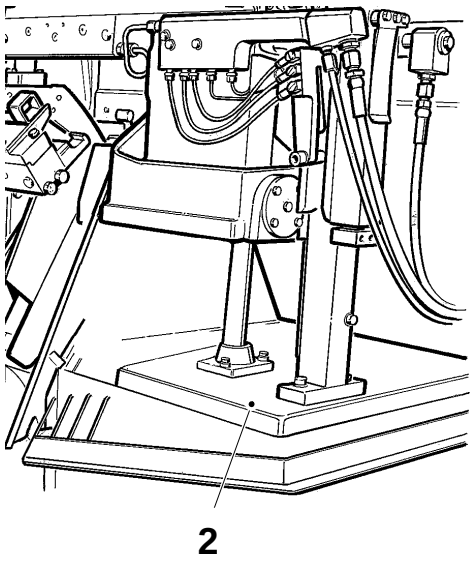

1 Cantilever
2 Plate
3 Screw
4 Slide lug
5 O-ring
6 Holder
7 Screw
8 Drop chute
9 Finger
10 Screw
11 Leaf spring
12 Cover
13 Congestion monitor
14 Screw
15 Head plate
16 Screw
17 O-ring

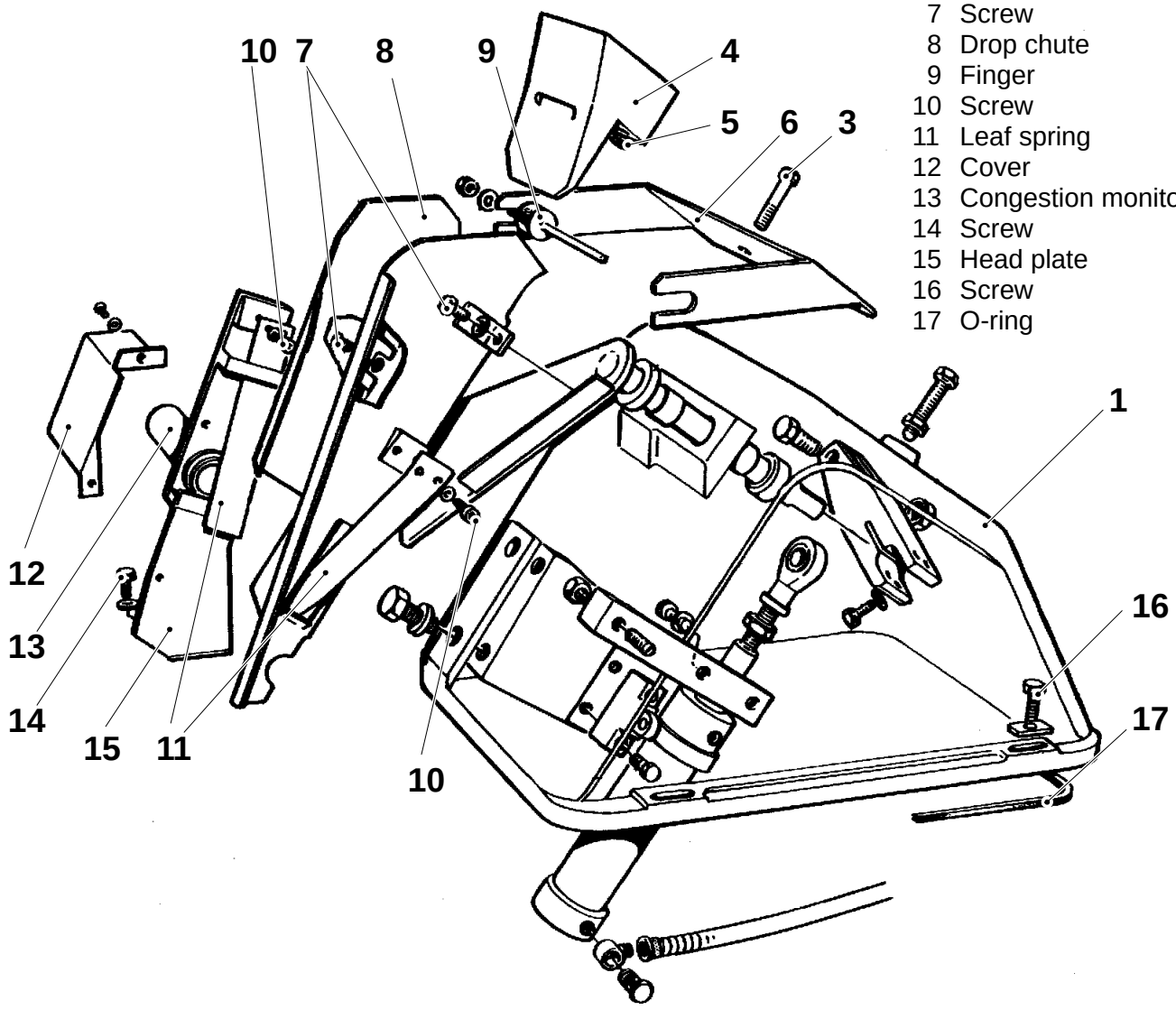

(Cont'd)

f) Loosen the screw (18). Remove the pivot arm (19), the friction bearing (20) and the seal ring (21).

g) Disconnect the air blow and the air lines to the cylinder.

h) Undo the screws (22). Remove the cylinder (23). Lift out the cantilever.

i) Reassemble in reverse order. Fit the cantilever according to the marks on the plate.

j) Set the drop chute, see page MM 205–5X.

18 Screw
19 Pivot arm
20 Friction bearing
21 Seal ring
22 Screw
23 Cylinder

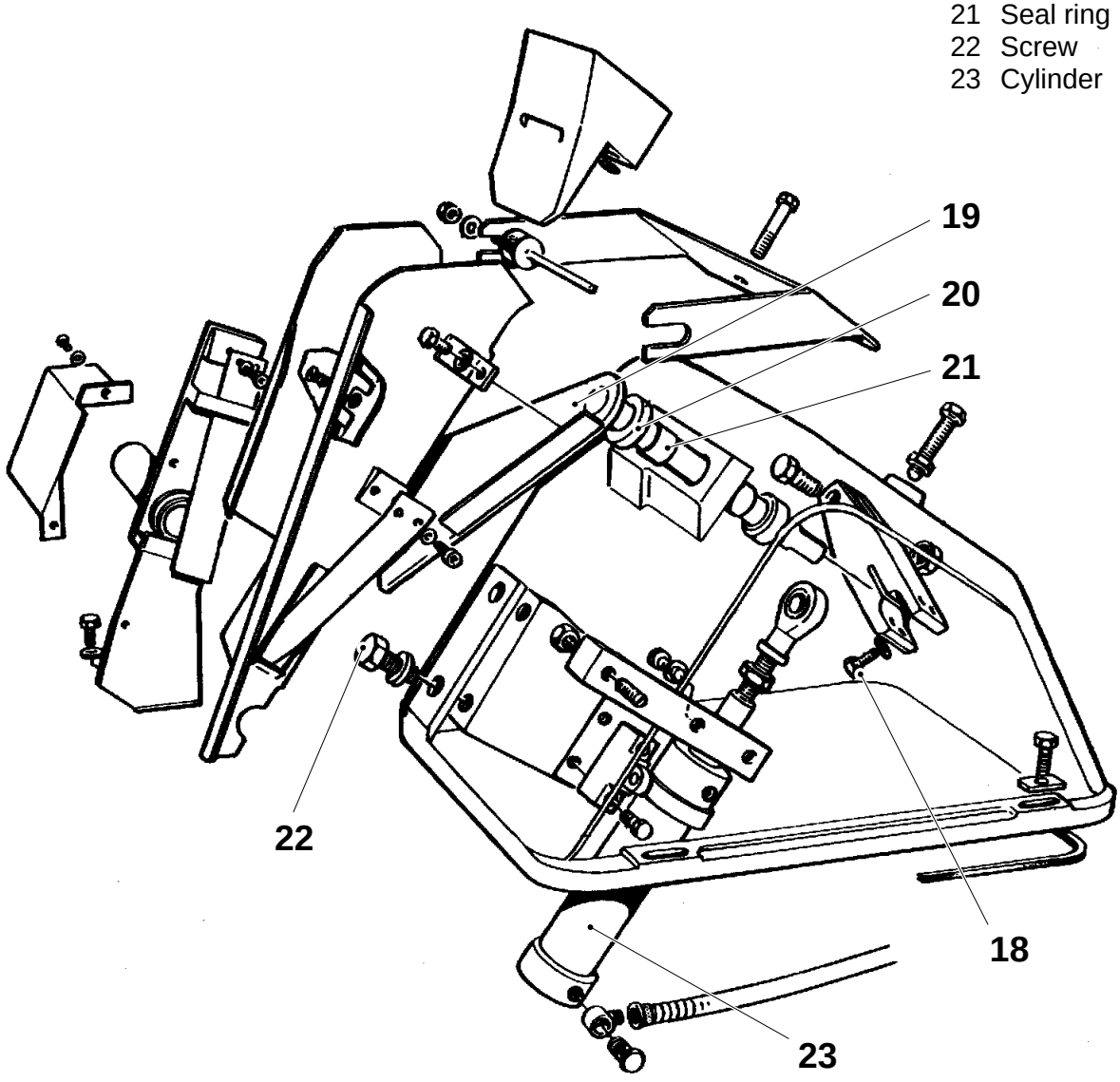

Setting

Turn on the main power and open for compressed air. Actuate valve Y27 so that the drop chute is positioned opposite the station chain.

Setting in depth

a) Crank until the station chain stops indexing.

b) Put a ruler (6) into the drop chute (7). Set distance A by loosening the screws (4) and shifting the cantilever (2).

Note
The drop chute plate (13) must be parallel (within 0.5 mm) with the station.

c) Tighten the screw (4). Seal with silicon around the edge of the cantilever (arrow).

d) Set distance B, see table, between the station (5) and the leaf spring (8). Adjust by means of the screws (1).

Machine type	B, mm
TBA	17
TB	22

Setting sideways

a) Place a ruler (6) against the RH side of the drop chute.

b) Set the RH side of the drop chute aligned with the RH guide plate (9) on the final folder. Adjust by means of the adjustment screw (3).

c) Place the ruler against the LH side of the drop chute.

d) Set the head plate (11) of the congestion monitor aligned with the LH guide plate (10). To adjust, loosen the screws (12) and shift the bracket.

(Cont'd overleaf)

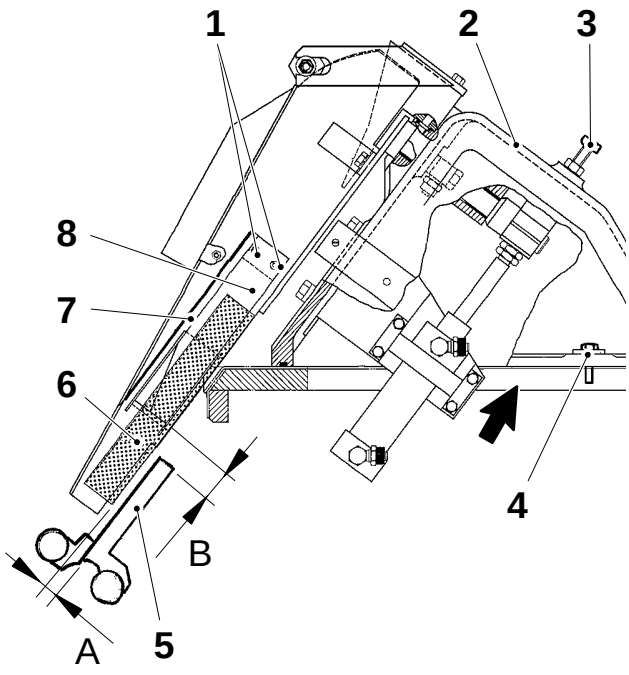

A = 0 – 1 mm

Fig. 1

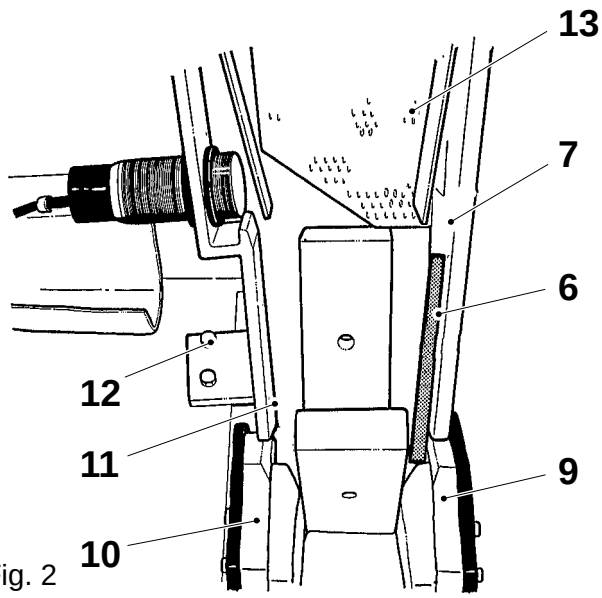

Fig. 2

1 Screw
2 Cantilever
3 Adjustment screw
4 Screw
5 Station
6 Ruler
7 Drop chute
8 Leaf spring
9 Guide plate
10 Guide plate
11 Head plate
12 Screw
13 Drop chute plate

(Cont'd)

Congestion monitor

a) Turn on the main power switch and open for cooling water.

b) Actuate valve Y27.

c) Take a semi-finished package and move it slowly down through the drop chute (7).

d) Shift the congestion monitor (14) so that it transmits a signal when the package passes and stops to transmit when the package has passed.

e) Deactuate valve Y27, close for compressed air and turn off the main power switch.

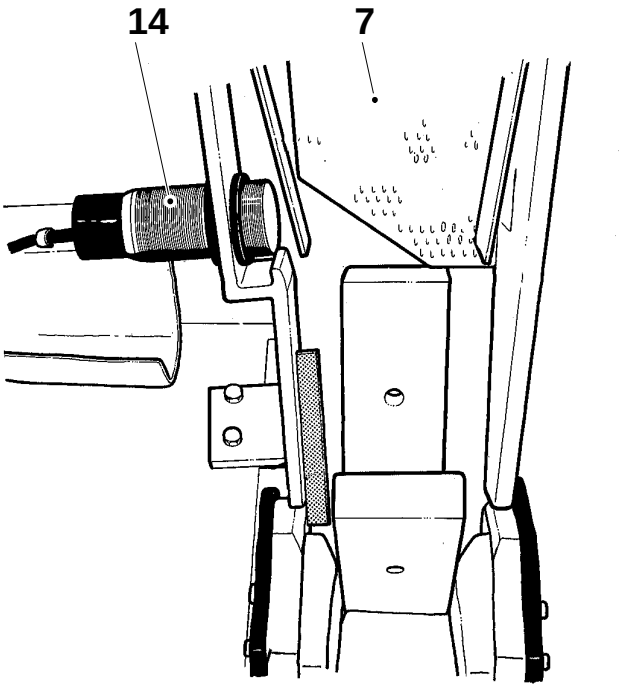

7 Drop chute
14 Congestion monitor

Checking

a) Check that all nozzles (1), (2) and (3) are clean and without defects.
Clean, delime or replace as required.

b) Check all pipes and pipe connections for leaks.

c) Setting, see page MM 550–5X.

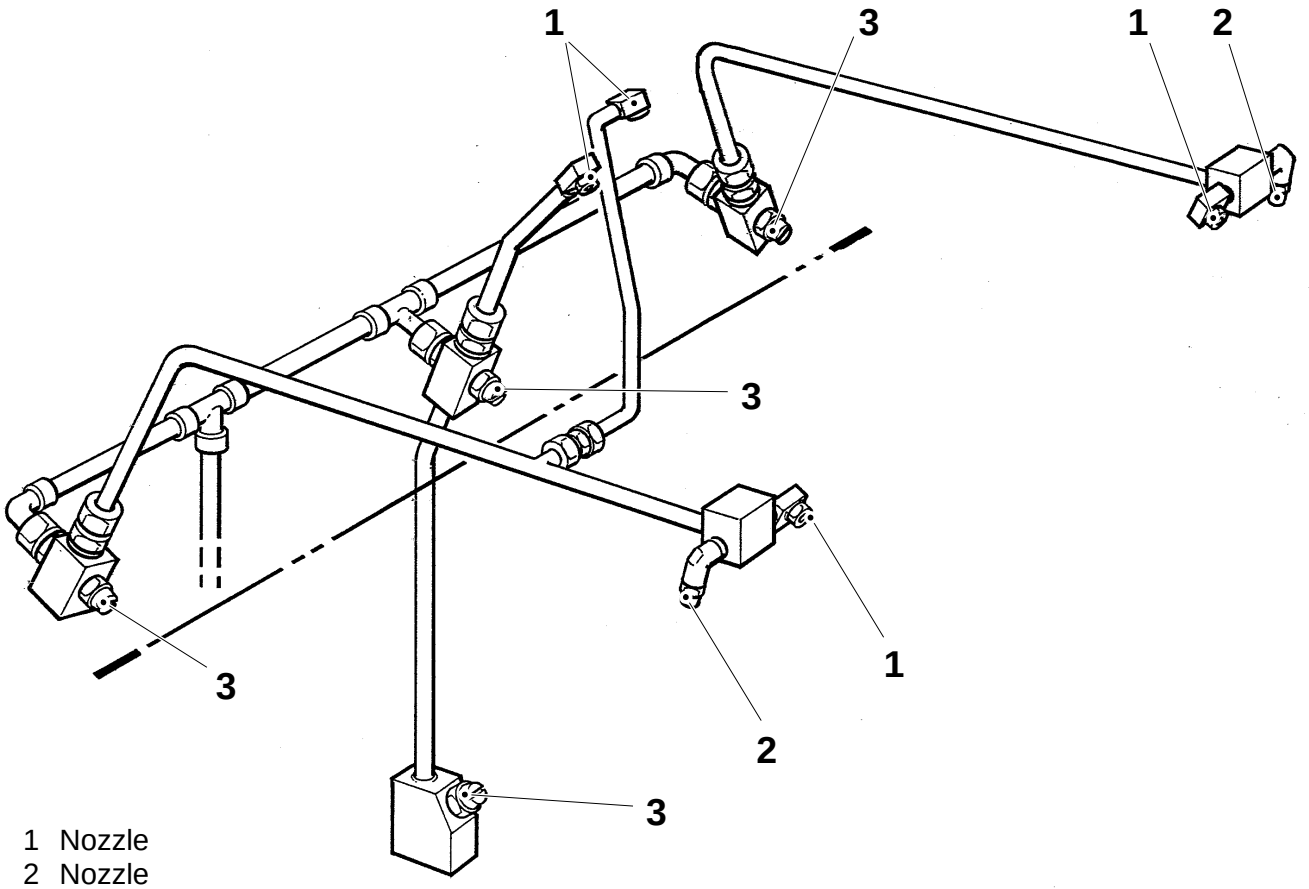

1 Nozzle
2 Nozzle
3 Nozzle

Setting

a) Set the opening of the nozzles (1) parallel with the blocks (2).

(Cont’d overleaf)

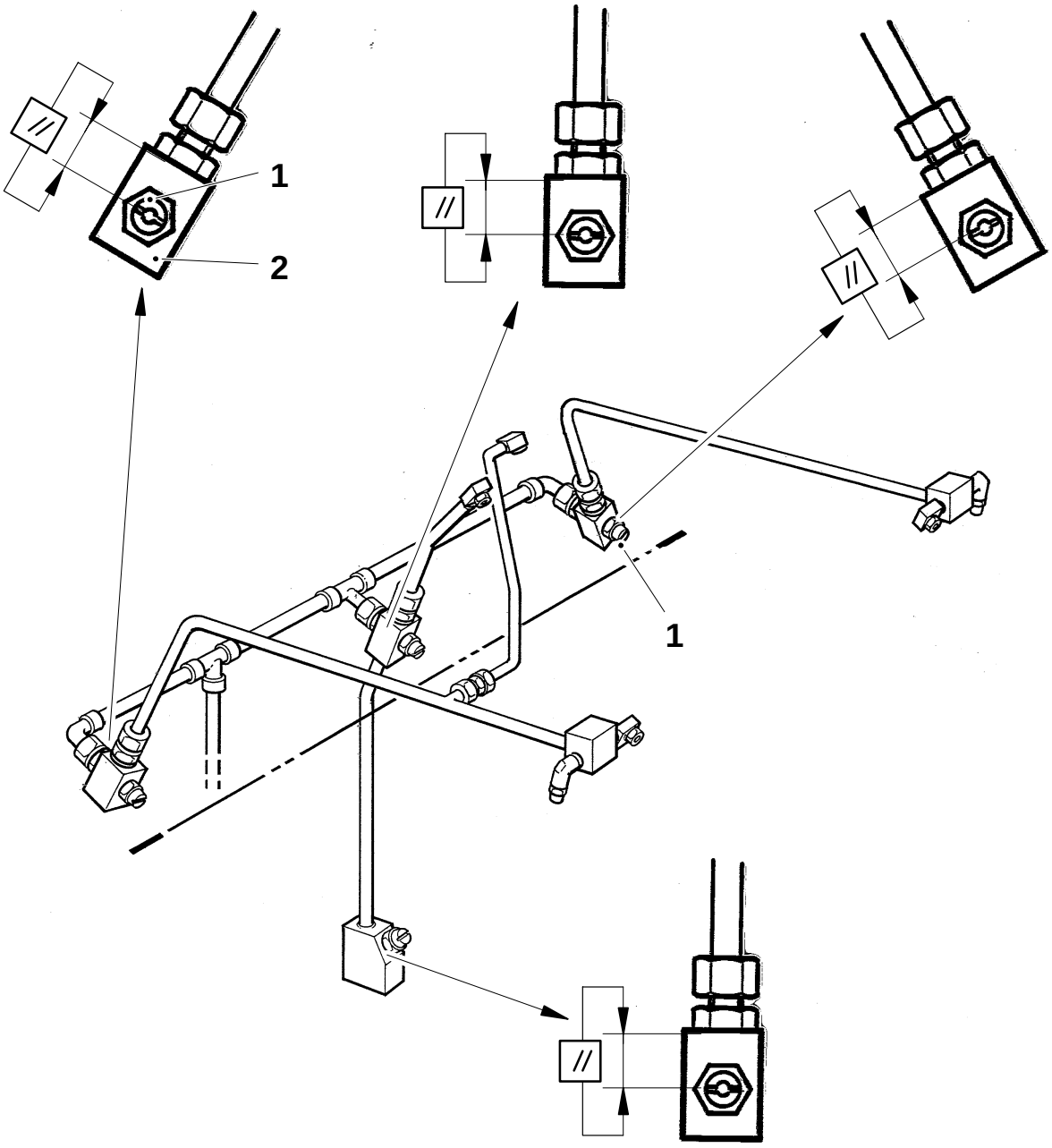

(Cont'd)

b) Set the nozzle (3) at an angle A to the vertical plane.

c) Set the nozzle (4) parallel with the pipe.

d) Set the nozzles (5) horizontal.

e) Set the openings of the nozzles (6) and (7) parallel with the block (view from below) and at an angle B to the vertical plane.

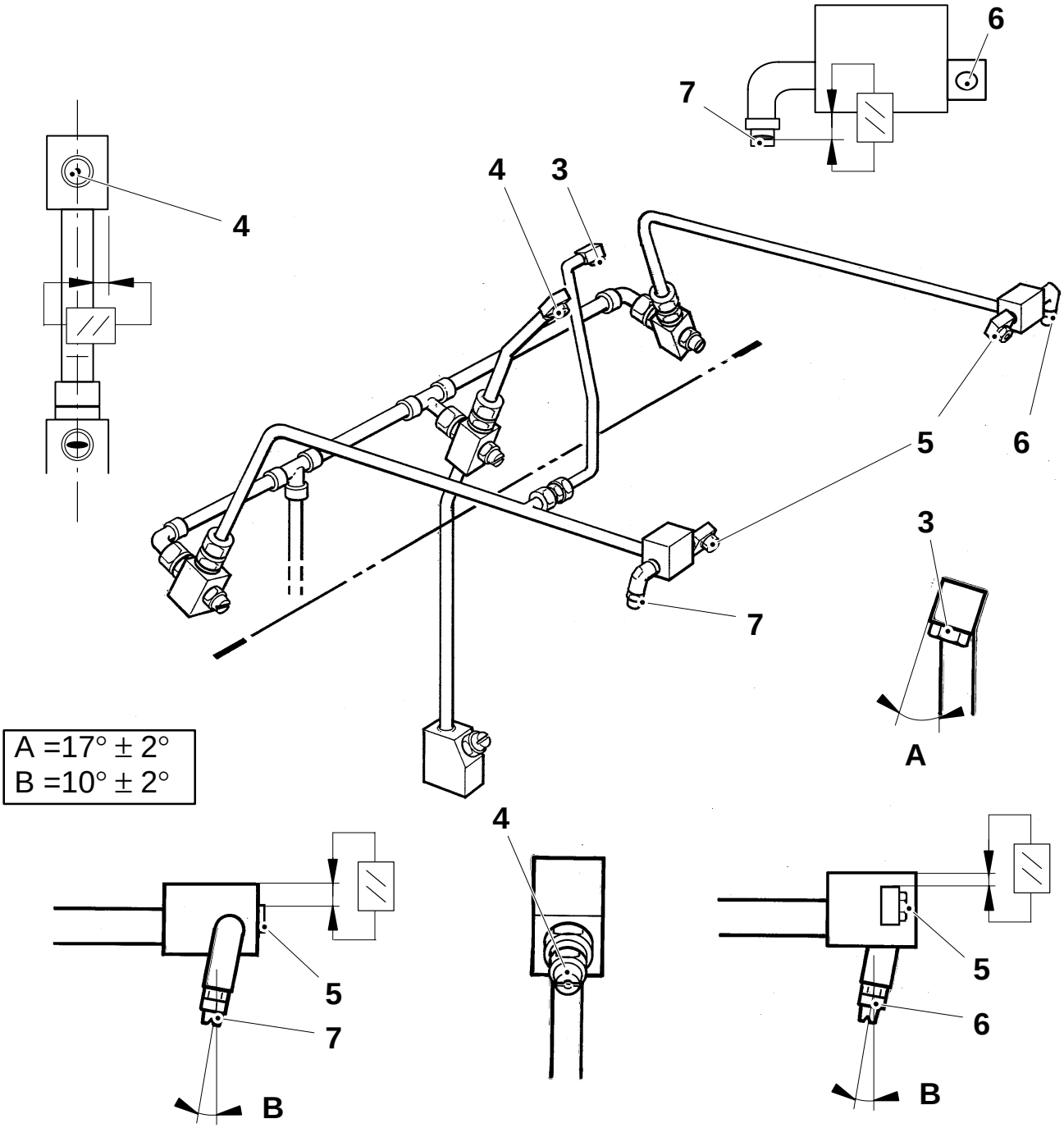

Checking

With the machine in step **Preheating machine**, inch the machine and check that the machine **stops immediately** when:

- the final folder cover is opened
- the dating unit cover is opened
- any of the doors of the aseptic chamber are opened
- any of the doors to the jaw system are opened
- the crank mechanism is in engaged position
- any of the emergency stop buttons are pushed
- the cover of the pull tab device is opened

Description	TB/9	TBA/9
Link system – checking	301–11	301–11
Yoke lifter arm – removal	303–21	303–21
Hold-down device – checking	306–11	306–11
Hold-down device – removal (2 pages)	306–21	306–21
Hold-down device – timing belt replacement	306–31	306–31
Hold-down device – fitting	306–41	306–41
Link arm – removal	311–21	311–21
Overload protection, jaw system – checking (2 pages)	314–11	314–11
Overload protection, jaw system – removal	314–21	314–21
Overload protection, jaw system – setting (2 pages)	314–51	314–51
Cam segment, overload protection – setting	315–51	315–51
Curve pack – removal (3 pages)	331–21	331–21
Curve pack – fitting (3 pages)	331–41	331–41
Curve pack – fitting (2 pages)	331–42	331–42
Curve pack – setting	331–51	331–51
Curve pack – setting (2 pages)	331–52	331–52
Degree scale – setting	336–51	336–51
Degree scale pointer – setting	337–51	337–51
Worm gear – removal (3 pages)	345–21	345–21
Worm gear – fitting (3 pages)	345–41	345–41
Worm gear – setting	345–51	345–51
Worm gear – oil change	345–71	345–71

Description	TB/9	TBA/9
Belt transmission – checking	347–11	347–11
Belt transmission – removal	347–21	347–21
Belt transmission – fitting	347–41	347–41
Belt transmission – setting	347–51	347–51
Brake – checking	360–11	360–11
Brake – removal	360–21	360–21
Brake – setting	360–51	360–51
Clutch – checking	361–11	361–11
Clutch – removal	361–21	361–21
Clutch – fitting	361–41	361–41
Crank mechanism – checking	362–11	362–11
Crank mechanism – removal	362–21	362–21
Crank mechanism – fitting	362–41	362–41
Crank mechanism – setting	362–51	362–51
Clamp fitting – removal	370–21	370–21
Clamp fitting – fitting (2 pages)	370–41	370–41

Checking

a) Undo the four screws (8) and remove the degree scale (9).

b) Release the spring force of the hold-down device, see page MM 306–2X.

c) On RH side and LH side, check the following details for wear and/or damage:

- the timing belt rollers (1)
- the cam rollers (2)
- the link heads (3)
- the running surface (4) of the cams
- the bearings (6), (10), and (11)
- the cam segments (7)

d) Replace as required.

e) Check the lubrication of the the timing belt rollers (1).

f) Check that no screws on the clamp fittings (5) and (12) are missing and that all screws are tightened.
If required, fit new screws and tighten, see page MM 370–4X.

g) Apply the spring force of the hold-down device, see page MM 306–4X.

h) Fit the degree scale (9) and tighten the screws (8).

1 Timing belt roller
2 Cam roller
3 Link head
4 Running surface
5 Clamp fitting
6 Bearing, hold-down device
7 Cam segment
8 Screw
9 Degree scale
10 Bearing, link arm
11 Bearing, yoke lifter arm
12 Clamp fitting

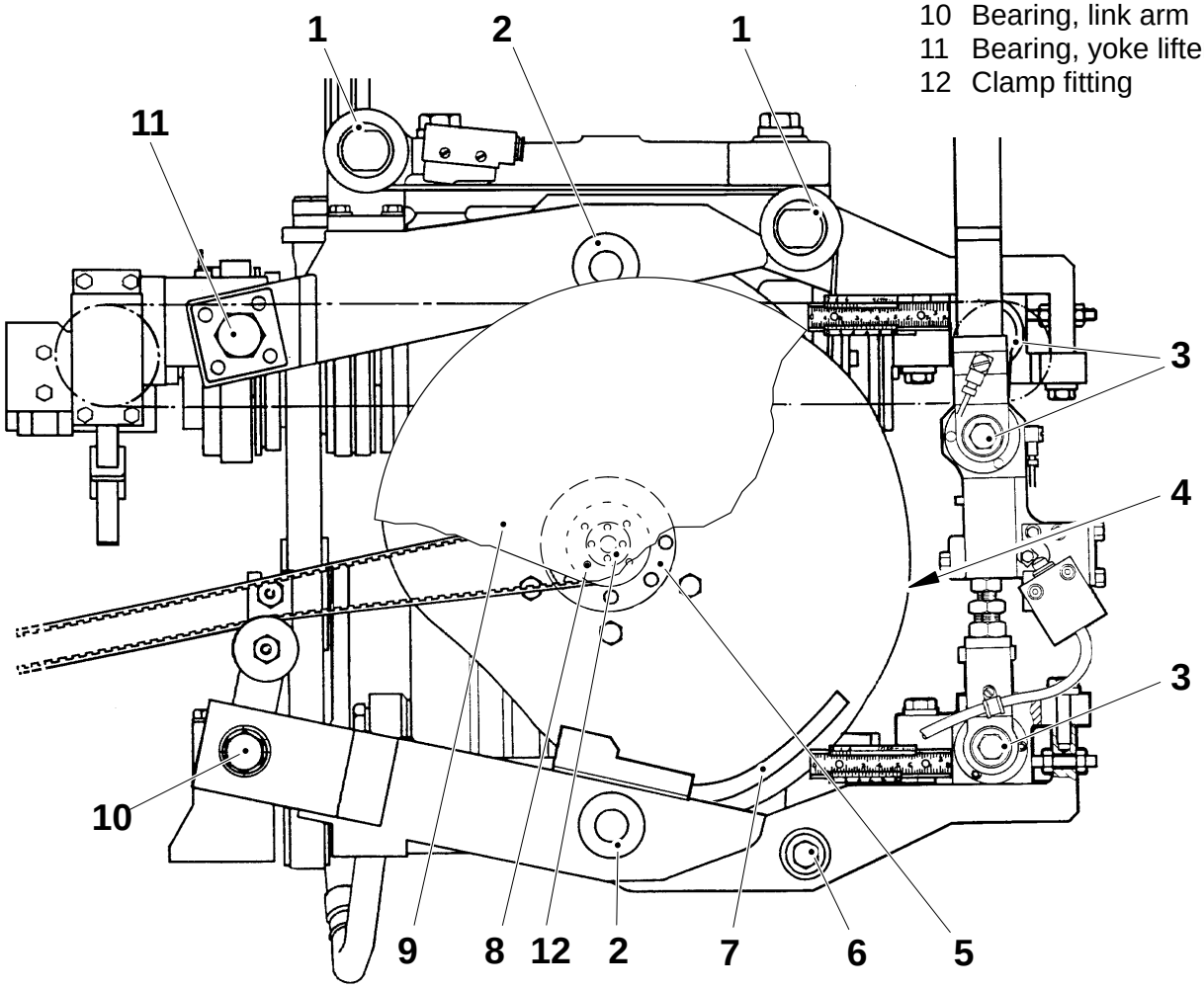

Removal

a) Release the spring force of the hold-down device, see page MM 306–2X.

b) Remove the LH and RH link arms, see page MM 311–2X.

c) Disconnect the lubrication oil pipes (1).

d) Lift the timing belt (2) out of the way.

e) Undo the four screws (3).

f) Undo the screws holding the crank bracket to the LH yoke lifter arm.

g) Undo the screws (5) and lift out the yoke lifter arm (4).

h) Reassemble in reverse order.

i) Apply the hold-down device spring force, see page MM 306–4X.

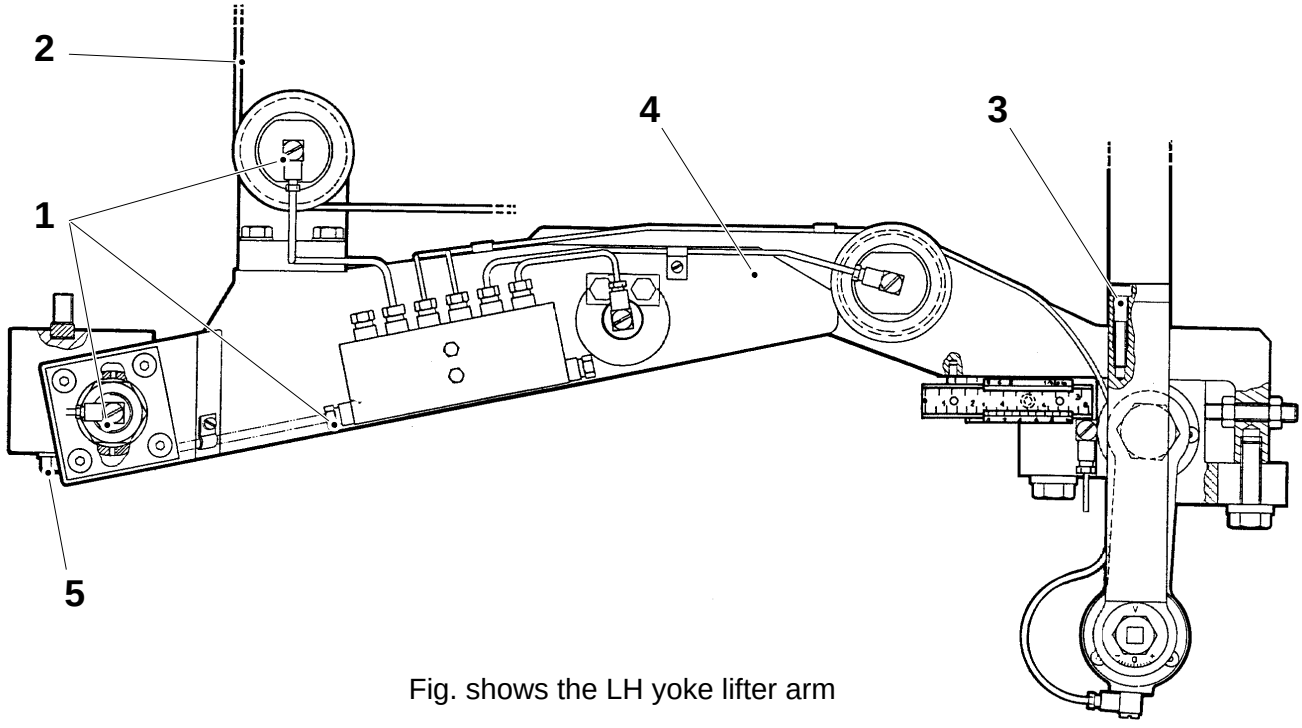

Fig. shows the LH yoke lifter arm

1 Lubrication oil pipe
2 Timing belt
3 Screw
4 Yoke lifter arm
5 Screw

Checking

Check the following details for wear and/or damage:

- the spring brackets (1)
- the ball bearings (2) and (8)
- the shafts (3) and (4)
- the springs (5)
- the belt holders (6)
- the timing belt (7); specially at the stress points.
  Crank the machine to get all parts of the timing belt accessible.
- the flange bushings (9)

Replace as required.

Replacement of timing belt, see page MM 306–3X.

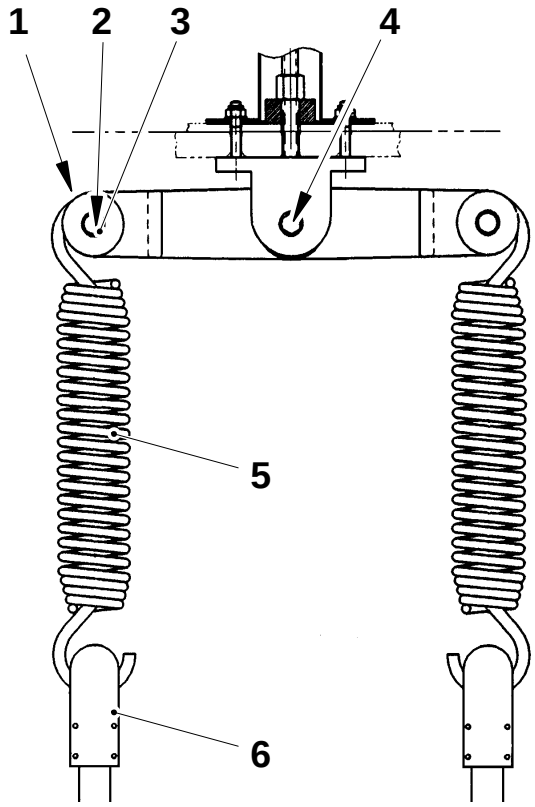

1 Spring bracket
2 Ball bearing
3 Shaft
4 Shaft
5 Spring
6 Belt holder
7 Timing belt
8 Ball bearing
9 Flange bushing

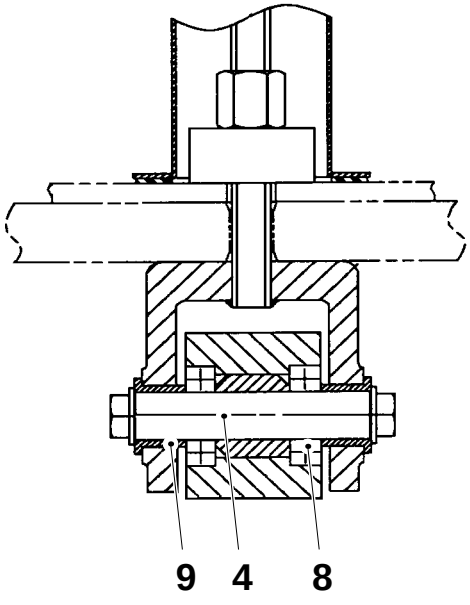

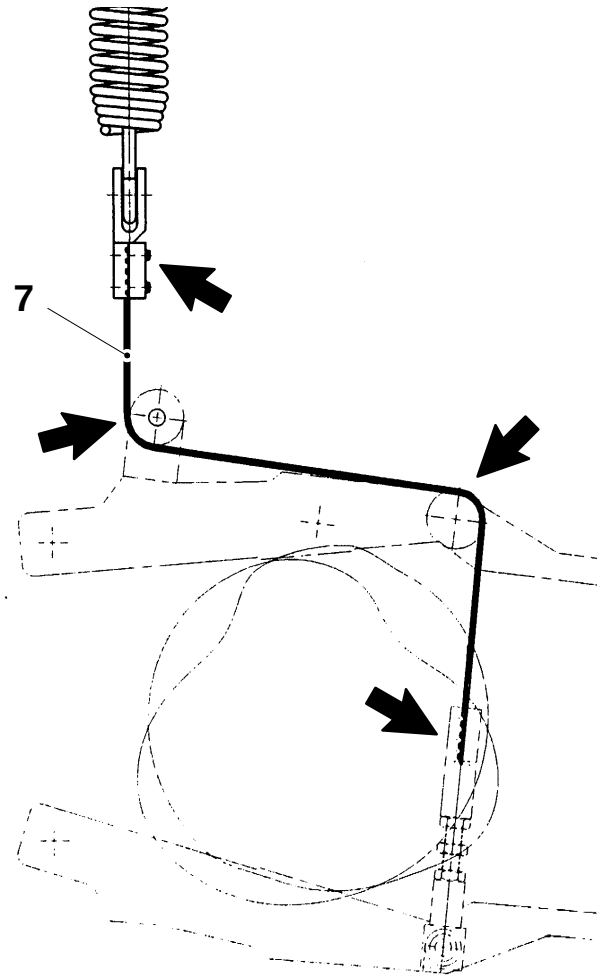

Removal

a) Remove the cover (1).

b) Release the spring force of the hold-down device by loosening the nut (2). Loosen the nut until the top of it is in level with the top of the screw.

WARNING!
The nut must not be unscrewed completely!

c) Remove the degree scale.

Caution!
Take care not to alter the setting of the pointer (4) when removing the degree scale.

d) Remove the timing belts (5) from the timing belt rollers (6) on both sides.

e) Unhook the timing belt attachments (7) from the springs (8) on both sides.

(Cont'd overleaf)

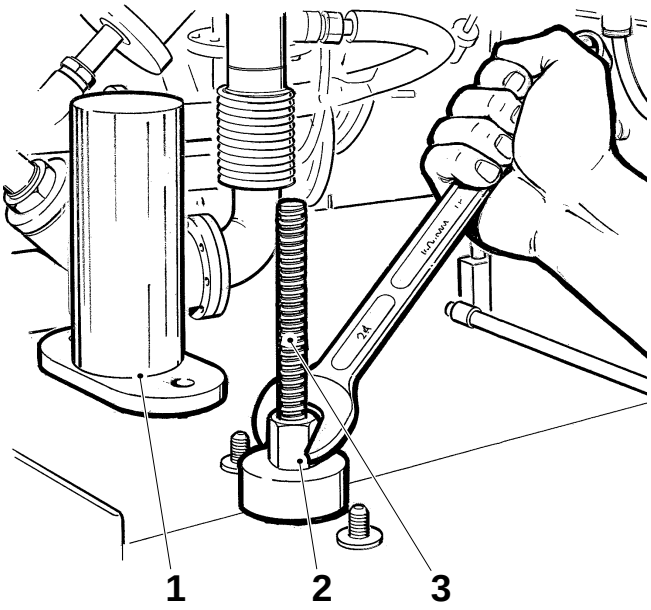

1 Cover
2 Nut
3 Screw
4 Pointer
5 Timing belt
6 Timing belt roller
7 Timing belt attachment
8 Spring

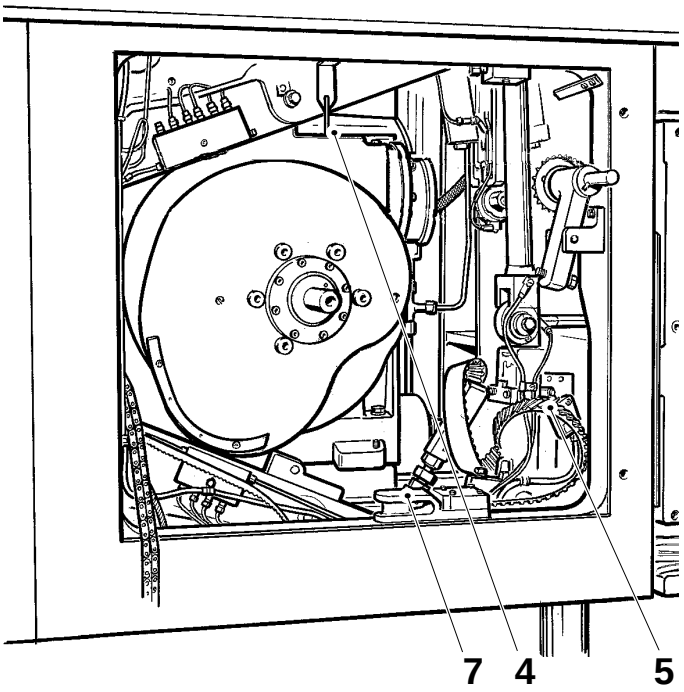

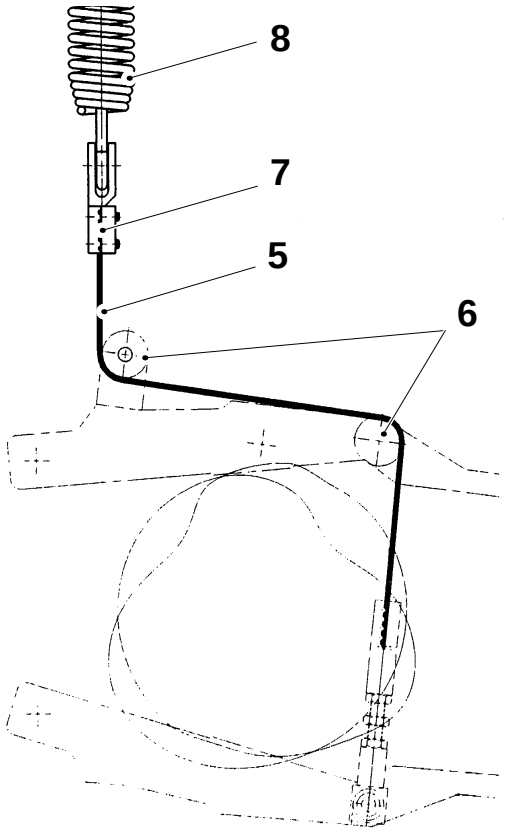

(Cont'd)

f) Unhook the springs (8) from the spring brackets (9).

g) Undo the nut (10) and remove the rocker arm (11).

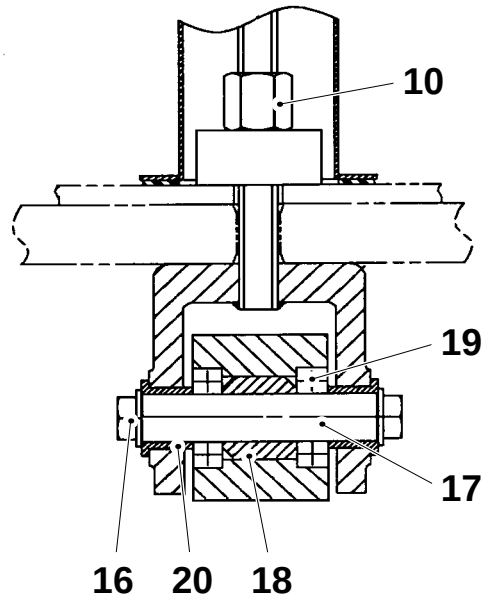

Rocker arm

h) Undo the circlips (12) and loosen the stop screws (13).

i) Remove the shafts (14). Remove the spring brackets (9) and the ball bearings (15).

j) Undo the screws (16), remove the shaft (17), the spacer (18) and the ball bearings (19).

k) Remove the flange bushings (20).

Reassemble the rocker arm in reverse order.

8 Spring
9 Spring bracket
10 Nut
11 Rocker arm
12 Circlip
13 Stop screw
14 Shaft
15 Ball bearings
16 Screw
17 Shaft
18 Spacer
19 Ball bearing
20 Bushing

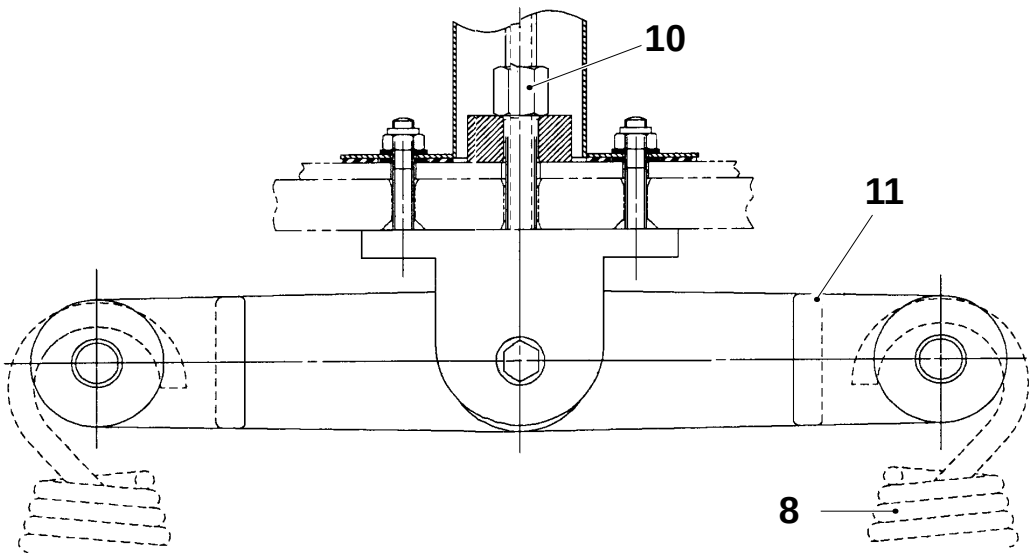

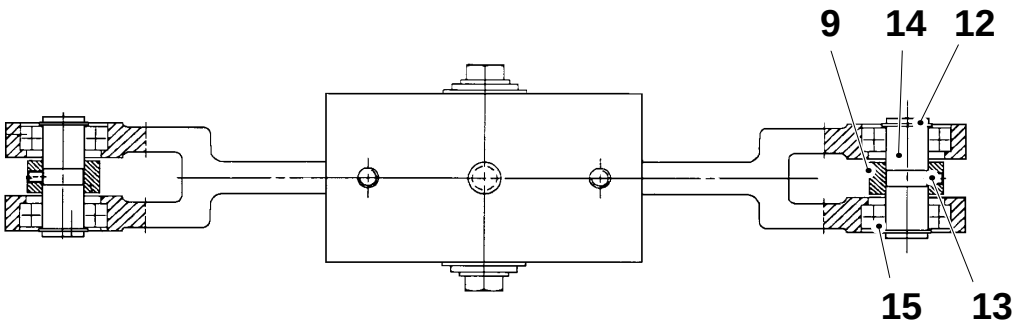

Timing belt replacement

a) Release the spring force of the hold-down device, see page MM 306–2X.

b) Undo the oil pipe connection (2).

c) Lift the timing belt off the timing belt rollers (3). Remove the upper bracket from the spring.

d) Undo the brackets (1) from the belt.

e) Cut the belt to distance A, see table below.

f) Fit the brackets (1) to the new belt.

g) Fit the new belt and oil pipe connection and apply the spring force, see page MM 306–4X.

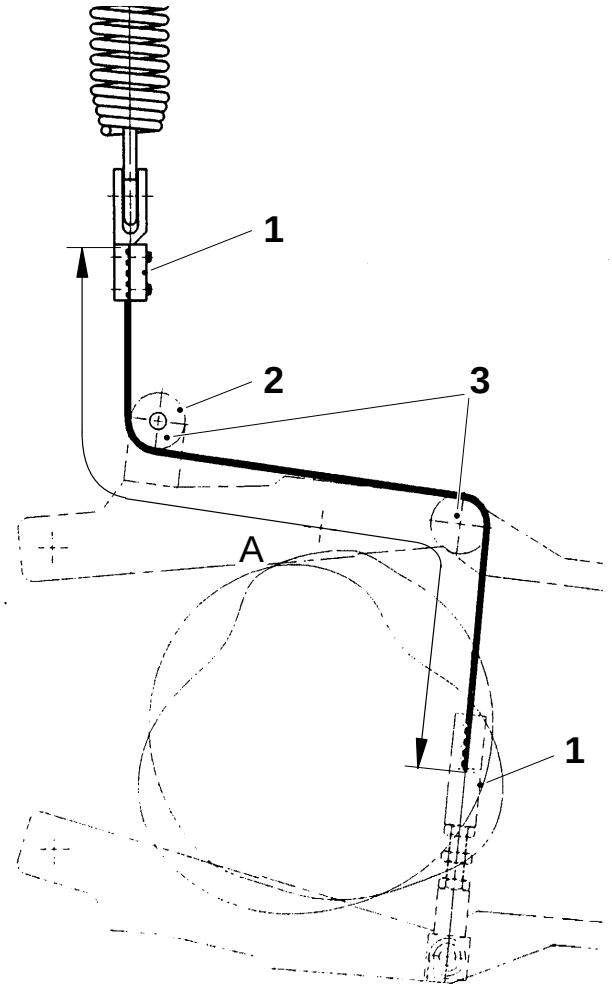

1 Bracket
2 Oil pipe connection
3 Timing belt roller

Volume, ml	A, mm	TP No.
TB 180 B	740	560404–1
TB 200 B	740	560404–1
TB 200 S	700	566404–3
TB 236 B	710	566404–2
TB 250 B	710	566404–2
TBA 125 S	740	566404–1
TBA 160 S	740	566404–1
TBA 180 B	740	566404–1
TBA 200 B	740	566404–1
TBA 200 S	710	566404–2
TBA 236 B	740	566404–1
TBA 250 B	710	566404–2
TBA 250 S	710	566404–2
TBA 284 B	710	566404–2

Fitting

(Assembly of the rocker arm, see page MM 306–2X.)

Timing belt

a) Hook the timing belt (1) to the spring of the hold-down device. Fit the timing belt over the two timing belt rollers.

b) Set distance B, see table, on the LH and RH rigging screws. Make sure that the threads of the rigging screws (3) are equally screwed into the link arm (4) and the bracket (2).

c) Tighten the lock nuts.

Applying the spring force

a) Tighten the nut (6) of the hold-down device.

b) Refit the cover (5).

c) Tighten the nuts (7). Torque 30 ± 2 Nm.

Volume, ml	B ±1 mm
TB 180 B	62
TB 200 B	57
TB 200 S	45
TB 236 B	62
TB 250 B	46
TBA 125 S	70
TBA 160 S	45
TBA 180 B	63
TBA 200 B	52
TBA 200 S	45
TBA 236 B	45
TBA 250 B	60
TBA 250 S	45
TBA 284 B	60

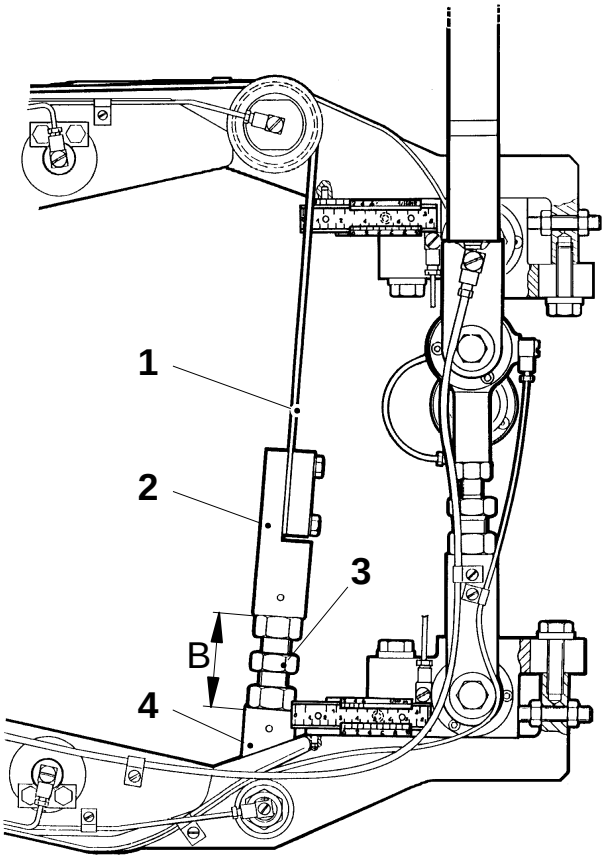

Fig. 1

1 Timing
2 Timing belt bracket
3 Rigging screw
4 Link arm
5 Cover
6 Nut
7 Nut

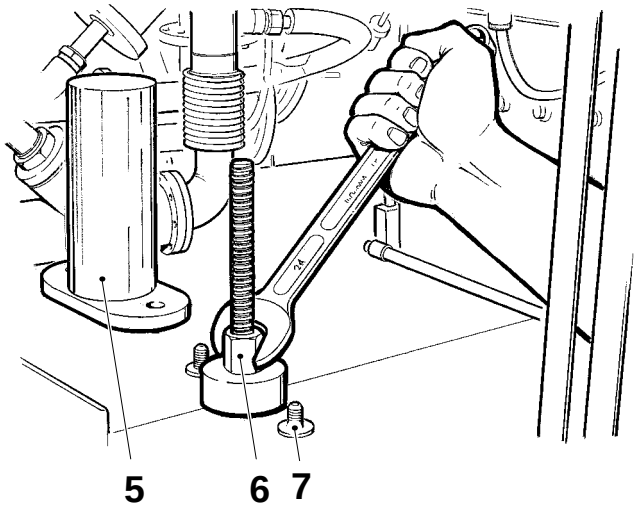

Fig. 2

Removal

a) Release the spring force of the hold-down device, see page MM 306–2X.

b) Remove the belt tensioner (1) from the LH link arm bracket.

c) Undo the banjo connections (2).

d) Disconnect the microswitch cable from the clamps (3).

e) Undo the screw (4) and drive out the axle pin. Lower the link arm to the bottom plate.

f) Disconnect the oil pipes (5).

g) Undo the screws (6).

h) Lift out the link arm (7).

i) Reassemble in reverse order.

j) Apply the spring force of the hold-down device, see page MM 306–4X.

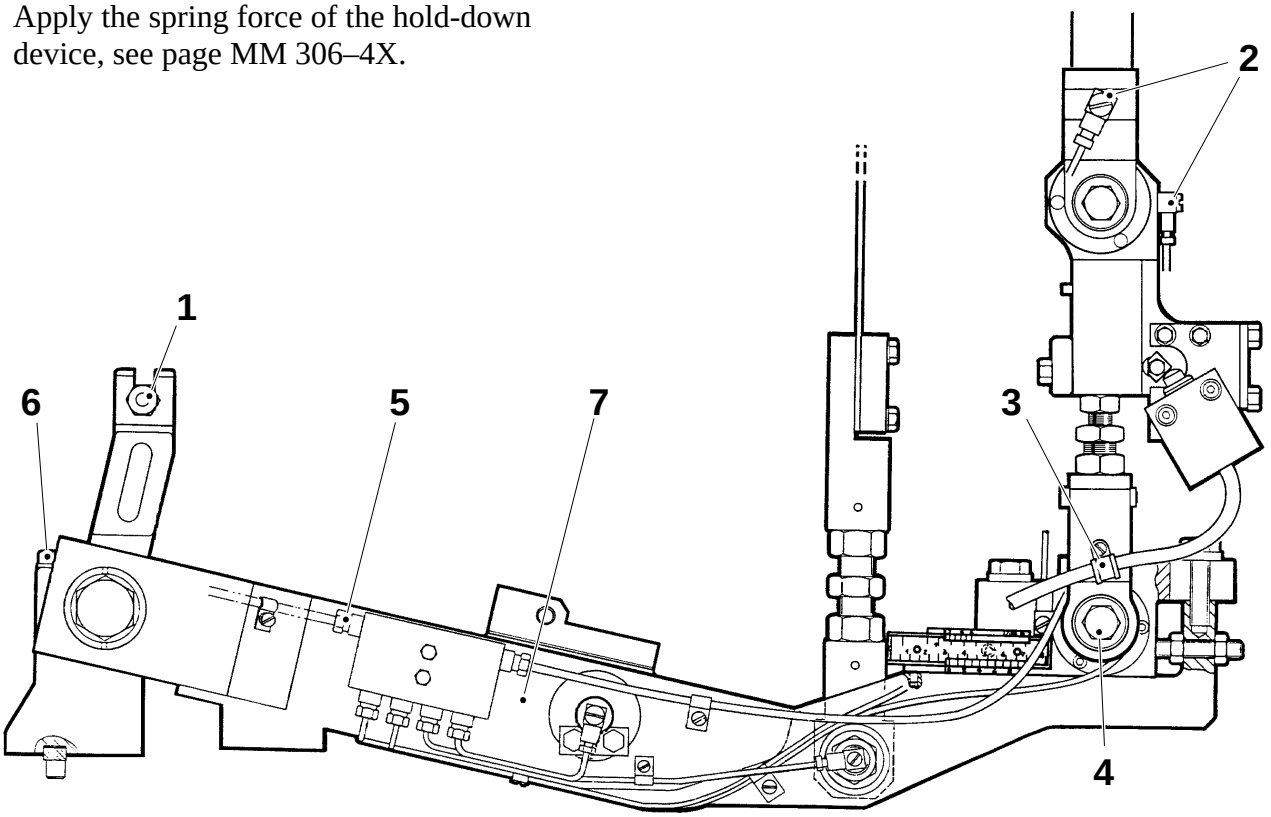

Fig. shows the LH link arm

1 Belt tensioner
2 Banjo connection
3 Clamp
4 Screw
5 Oil pipe
6 Screw
7 Link arm

Checking

Note
To ensure that the correct cut-out force is checked, first grease the overload protection thorouhgly.

a) Crank to approx 120° (LH side) and 300° (RH side).

b) Place the tool (1) between the carriers, see fig. Make sure that the plate on the back of the tool bears against the inner carrier (2).

c) Close the regulator (3). Open for compressed air.

d) Connect the tool to the compressed air connection on the valve panel of the machine.

e) Slowly increase the air pressure by means of the regulator (3) until the overload protection cuts out mechanically.
To help the protection to cut out, it may be necessary to push or pull it by hand, or to loosen the screws (4) a little at a time.

f) Pull the jaws as far apart as possible when the overload protection has cut out.

g) Retighten the screws.

(Cont’d overleaf)

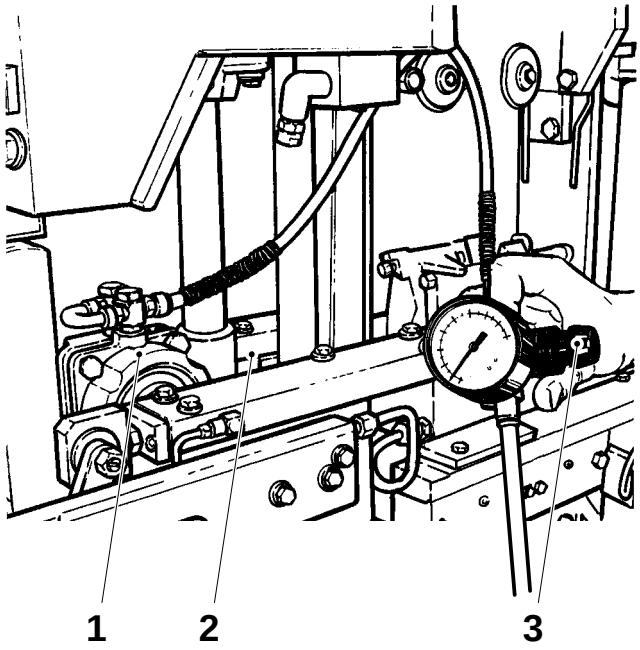

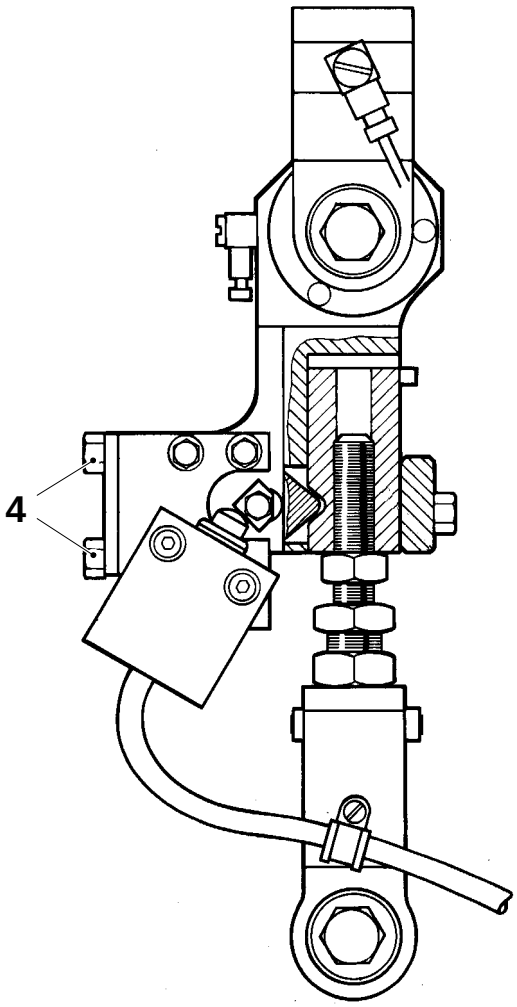

1 Tool TP No. 563740–101
2 Inner carrier
3 Regulator
4 Screw

(Cont'd)

h) Check cables (7) for cracks. Replace as required.

i) Check that the piston (8) and slide lug (5) are intact and move freely. Replace as required.

j) Thoroughly lubricate all friction surfaces of the slide lug (5) with Molykote, TP No. 90296–12.

k) Gently move the jaws back to their initial position.

Caution!
Make sure the cam roller on the folding flap cam returns to its correct position.

l) Repeat the cut-out procedure a couple of times so that the lubricant is spread out evenly.

m) Increase the air pressure slowly until the overload protection cuts out. Check that the overload protection cuts out when the pressure is 3 – 4.5 bar.

n) If required, set the overload protection, see page MM 314–5X.

o) Repeat the procedure on the other jaw pair.

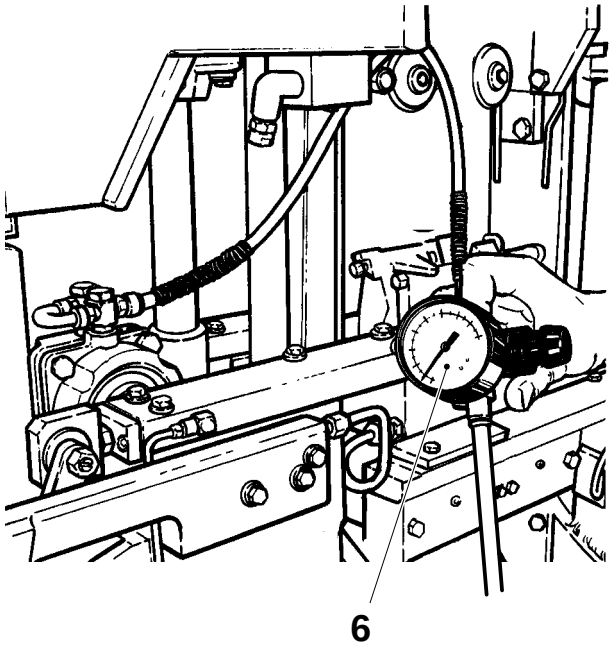

5 Slide lug
6 Pressure gauge
7 Cable
8 Piston

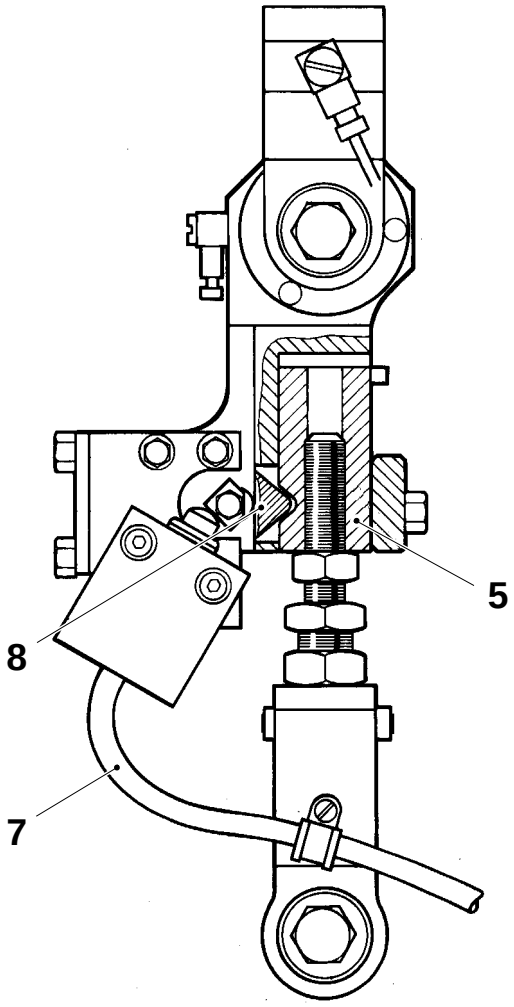

Removal

a) Crank to 120° (LH side)/300° (RH side).

b) Undo the screw (1) and remove the carrier (2).

c) Undo the screws (3) and remove the cover (4) and the shims.

d) Remove the cup springs (5) and the piston (6).

e) Undo the screw (7) and remove the slide lug (8).

f) Thoroughly lubricate all friction surfaces of the slide lug (8) and the piston (6) with Molykote, TP No. 90296–12 before reassembling.

g) Reassemble in reverse order.

h) Setting, see page MM 314–5X.

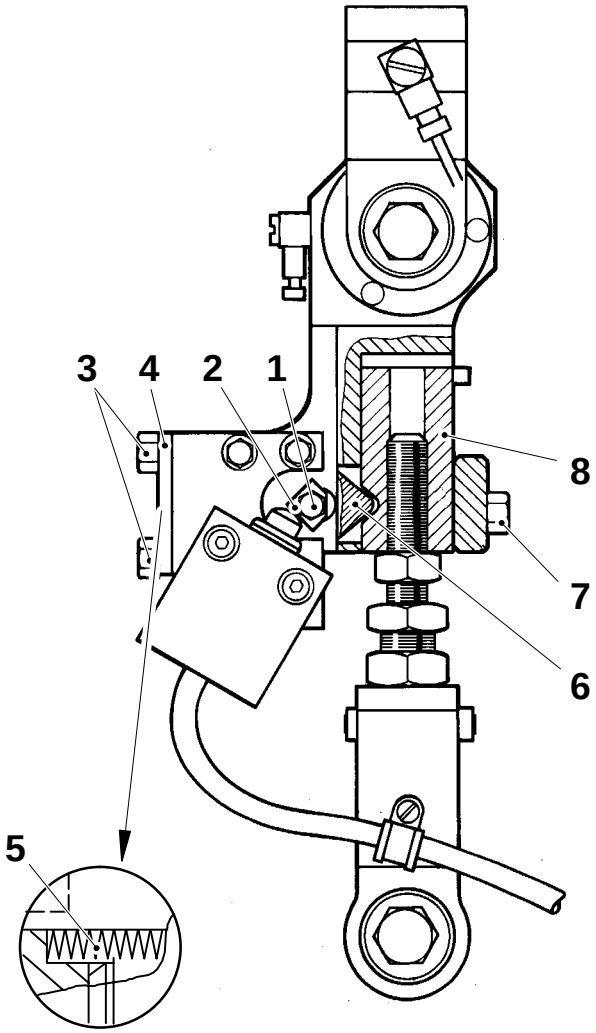

1 Screw
2 Carrier
3 Screw
4 Cover
5 Cup spring (42 off)
6 Piston
7 Screw
8 Slide lug

Setting

Cut-out force

a) Place the assembly stud (1) in the hole.

b) Undo the screws (2) and carefully remove the cover.

Caution!
There are cup springs behind the cover.

c) Set the cut-out force by means of shims (3). Reduce the shimming thickness to increase the spring force.
Basic setting = 2.0 mm.

Caution!
The shimming A must be within the limits. If required, replace the cup springs (4).
Make sure that the springs are correctly positioned on assembly, see fig.

d) Check the cut-out force, see page MM 314–1X.
Check at least twice on each side.

Shim, TP No. 752674	Thickness, mm
–7	1.0
–6	1.5
–5	0.4
–4	0.8
–3	0.7
–2	0.6
–1	0.5

(Cont’d overleaf)

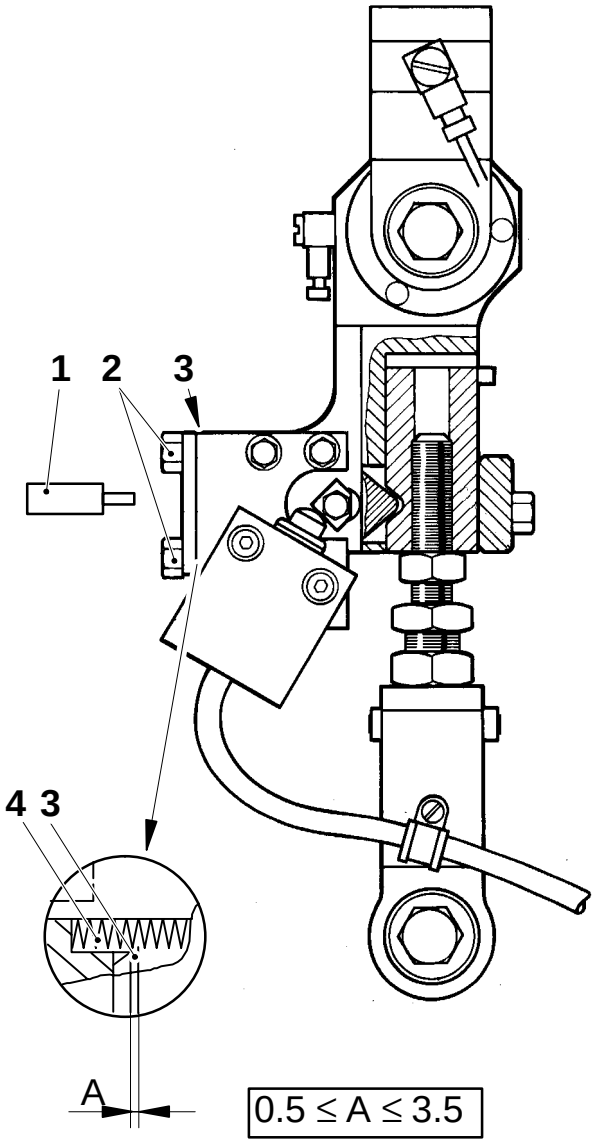

1 Assembly stud TP No. 77247
2 Screw
3 Shim TP No. 752674
4 Cup spring (42 off)

(Cont'd)

Switch

a) Loosen the screws (5).

b) Shift the plate (6) sideways and set the gap between the switch (7) and the carrier (8) to satisfy the following conditions:

- the overload protection must **not be activated** when a 0.8 mm feeler gauge is inserted between the switch and the carrier,
- the overload protection **is to be activated** when a 0.9 mm feeler gauge is inserted between the switch and the carrier.

c) Retighten the screws.

d) Recheck.

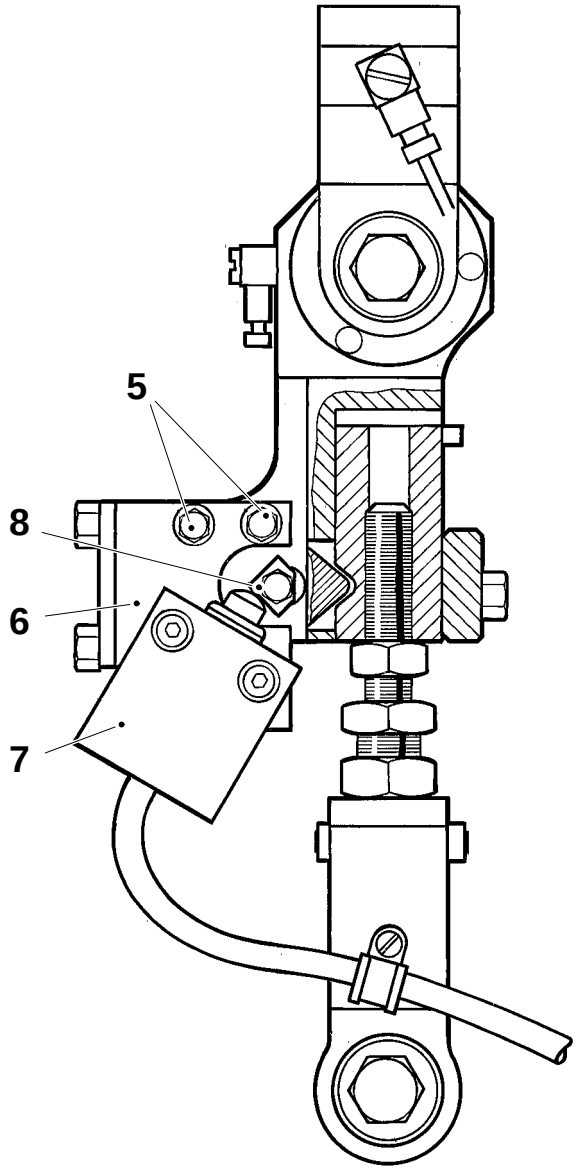

5 Screw
6 Plate
7 Switch
8 Carrier

Setting

This procedure has to be carried out on both RH and LH side.

a) Fit the cam segment (1) on the cam arm by means of the screws (2).

b) Crank the machine until the roller (3) is positioned at the beginning of the cam segment.

c) Set distance A between the roller and the cam segment. Check in the vicinity of the screws (2).

d) To set, remove/add shims (4) under the holder (5) or shift the cam segment within its holes.

e) If required, drill new ∅3.8 mm holes next to the old ones and broach them to ∅4.0 H7.

f) Fit the pins (6).

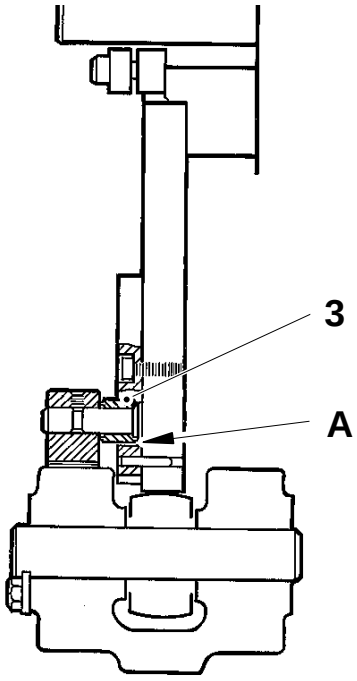

A = 0.2 – 0.3 mm

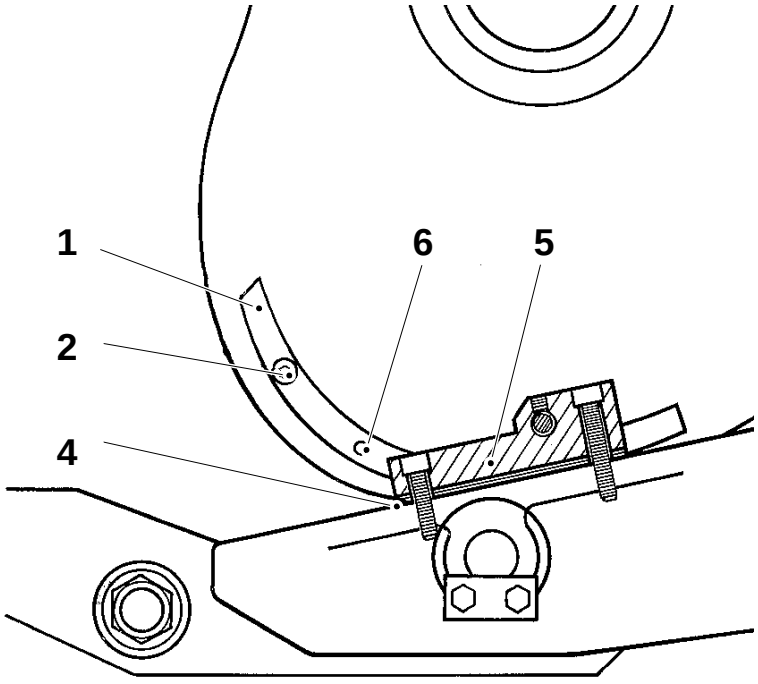

1 Cam segment
2 Screw
3 Roller
4 Shim TP No. 491319
5 Holder
6 Pin

Removal

a) Crank to 0° – compare with the impulse transmitter display.

b) Slacken the crank chain (1) using the chain tensioner (2) and remove the crank chain from the chain tensioner sprocket (3).

c) Place wooden blocks (4) underneath both yokes.

(Cont’d overleaf)

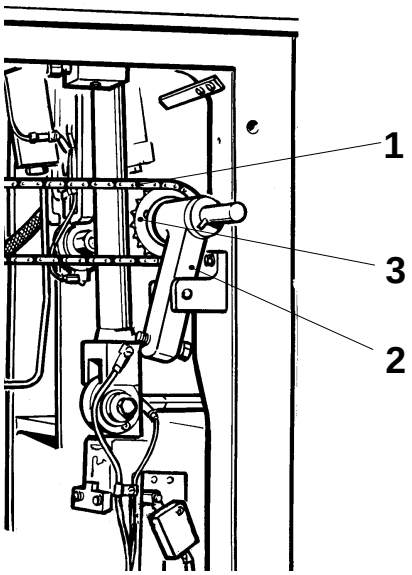

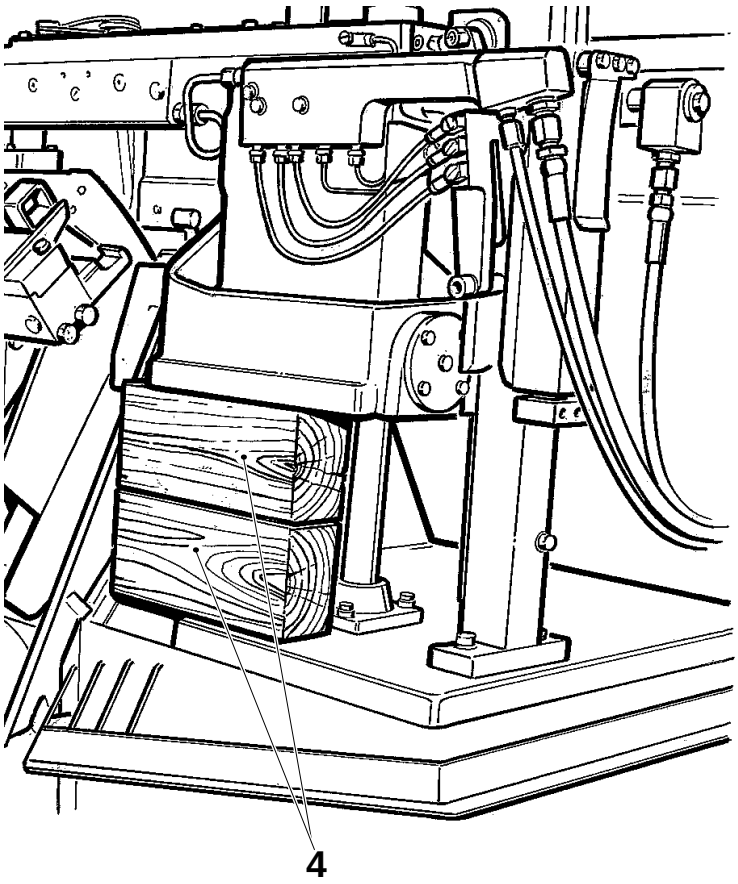

1 Chain
2 Chain tensioner
3 Chain tensioner sprocket
4 Wooden block

(Cont'd)

WARNING!
Risk of squeezing. Mind hands and fingers when releasing the clamp unions!

d) Loosen the six screws (5) on the clamp unions of both inner guides (6).

e) Loosen the two screws (7) of the clamp union of both outer guides (8).

Caution!
Be careful not to damage or change the setting of the pointer (11).

f) Undo the four screws (9) and remove the degree scale (10).

(Cont'd overleaf)

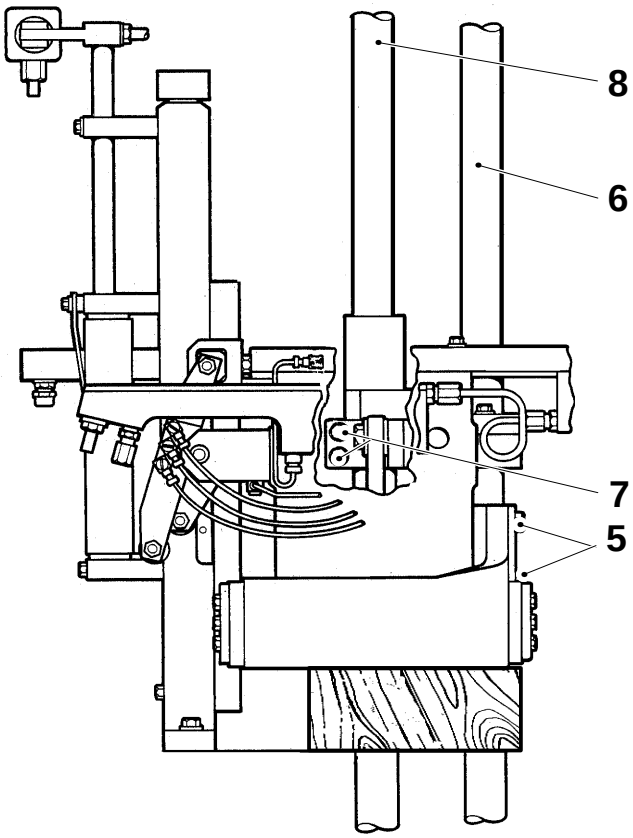

5 Screw
6 Inner guide
7 Screw
8 Outer guide
9 Screw
10 Degree scale
11 Pointer

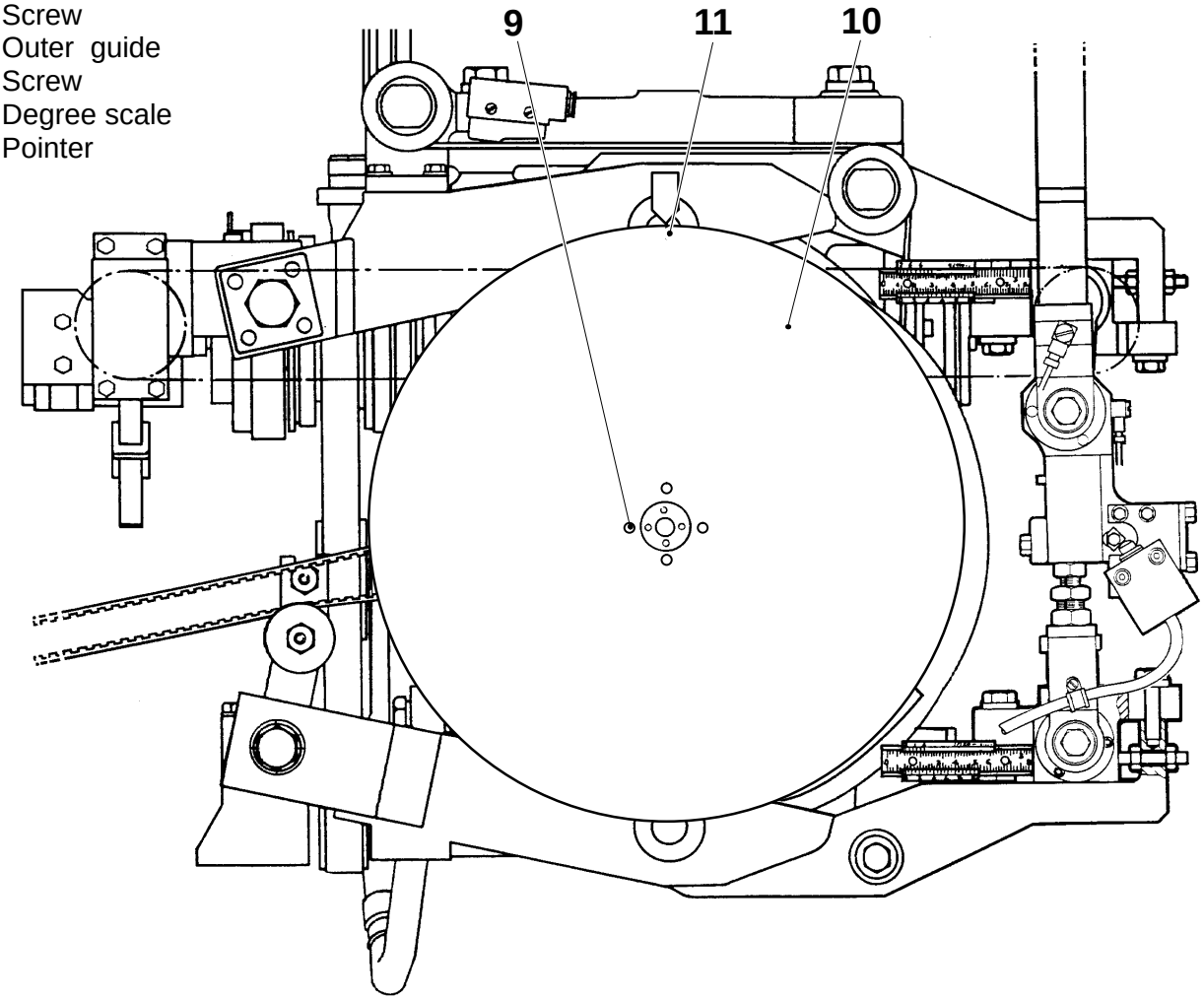

(Cont'd)

g) Slacken the belt tensioner (12) and remove the belt.

h) Loosen the clamp fitting (13), see page MM 370–2X. Remove the belt pulley (14).

i) Release the spring force of the hold-down device, see page MM 306–2X.

j) Lower the link arms (17) towards the base plate and raise the yoke lifter arms (15) towards the top inside on both sides. Secure by tightening the screws (5) on the clamp unions of both inner guides (6).

k) Loosen the clamp fitting (16), see page MM 370–2X.

l) Lift out the curve packs.

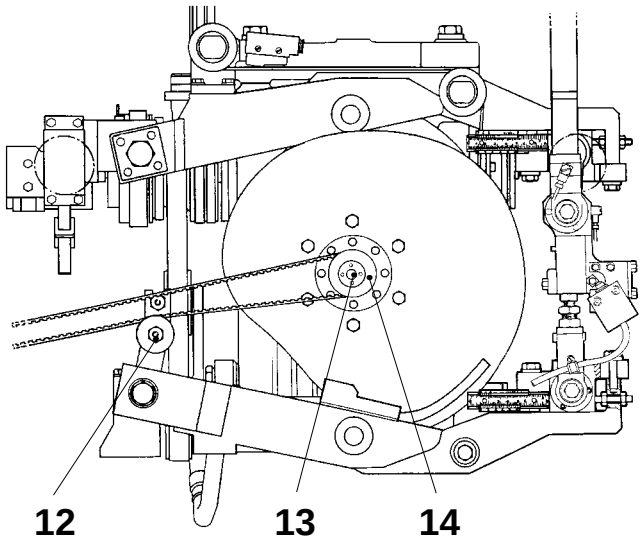

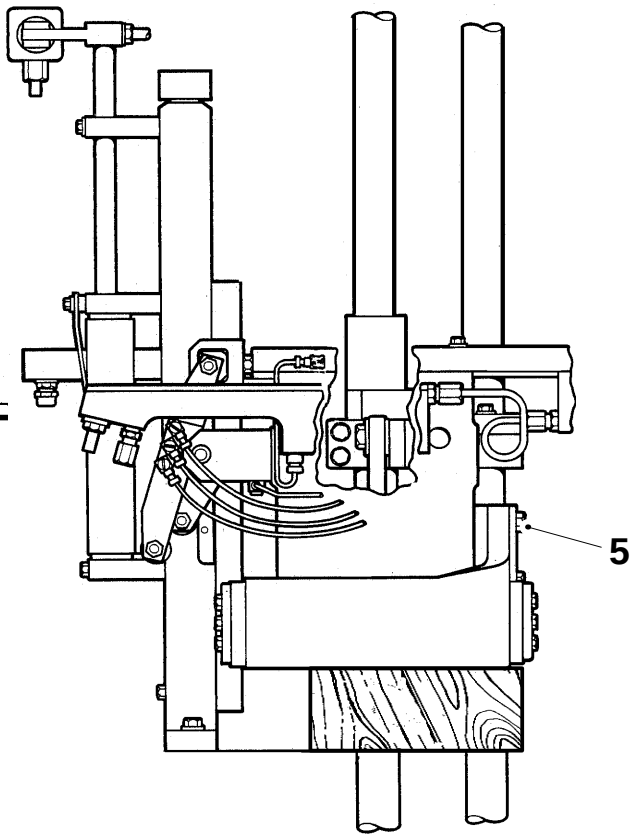

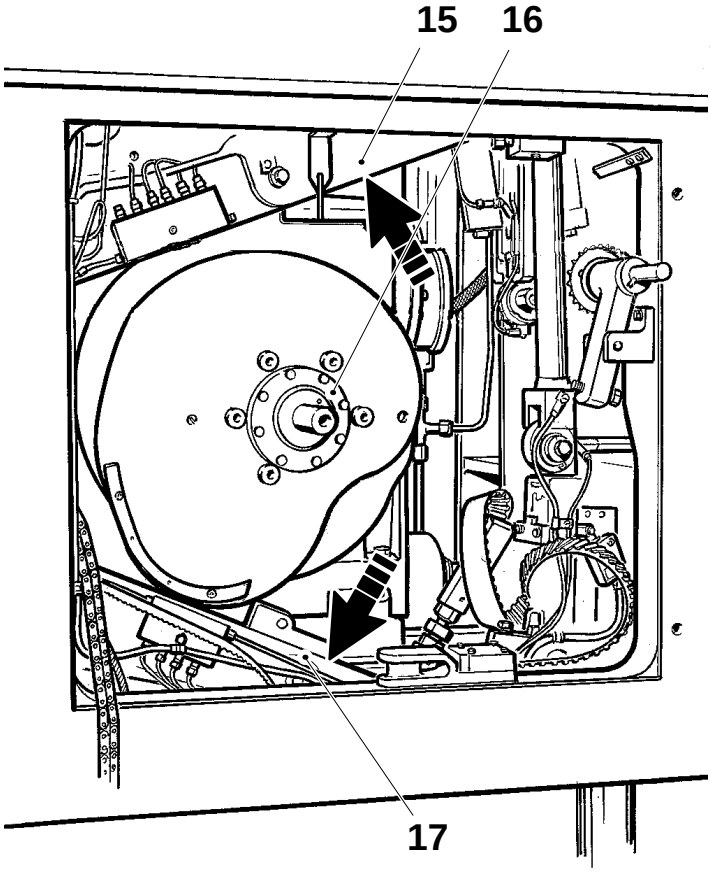

5 Screw
12 Belt tensioner
13 Clamp fitting
14 Belt pulley
15 Yoke lifter arm
16 Clamp fitting
17 Link arm

Fitting

Valid for volumes TBA 250 B ml, TBA 200 B ml and TBA 284 B ml

a) Remove all grease and clean the shafts, curve packs and clamp fittings, on both sides, prior to fitting.

b) Fit the curve packs on the shafts (1). Make sure the marks on the curve pack coincide with the marks on the alignment template (2) (marks 90°L and 90°R on both), see fig.

c) Tighten the clamp fittings (3) on both sides, see page MM 370–4X.

d) Loosen the screws (4).

(Cont’d overleaf)

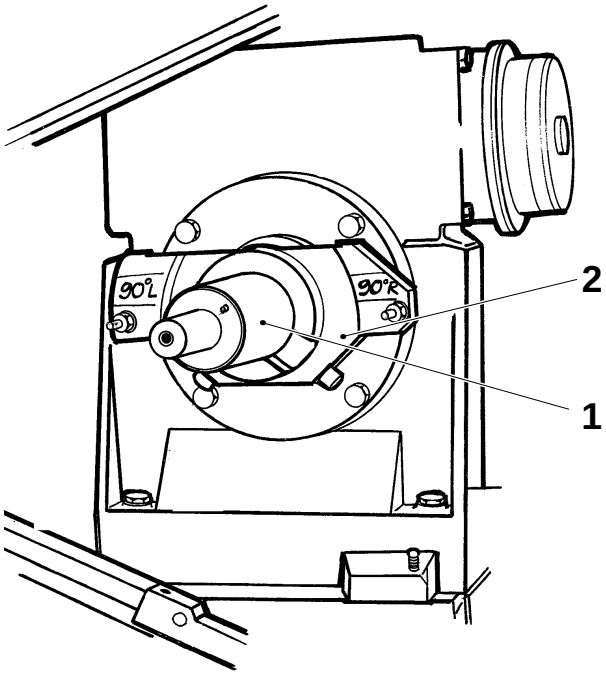

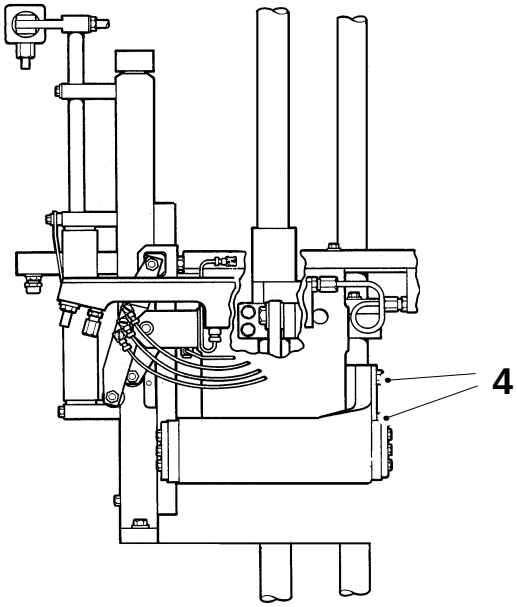

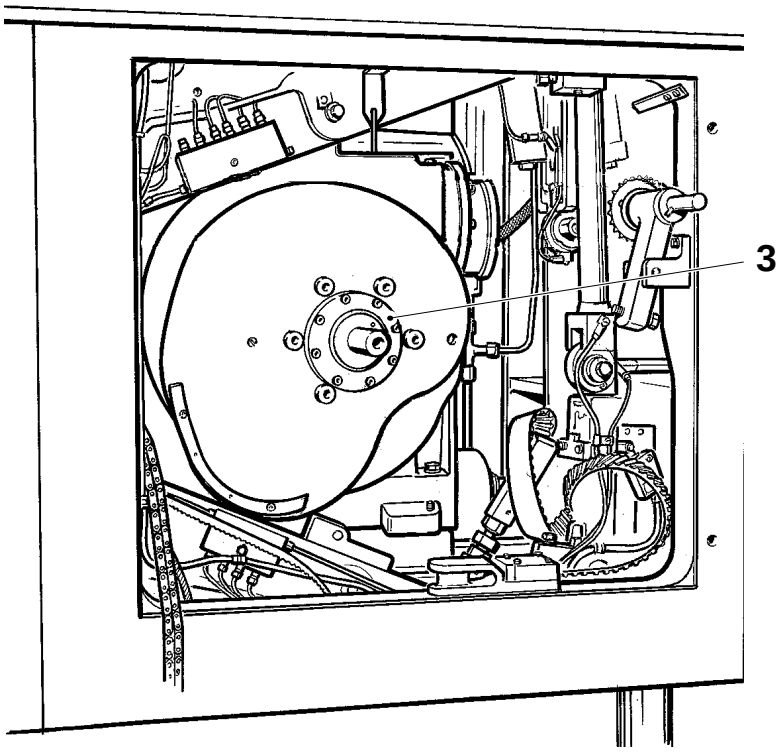

1 Shaft
2 Template
3 Clamp fitting
4 Screw

(Cont'd overleaf)

e) Hook the timing belt holders (6) to the springs (5) of the counter device. At the same time, put the timing belts (7) over the belt pulleys (8).

f) Apply the spring force of the hold-down device, see page MM 306–4X.

g) Refit the timing belt pulley (9). Make sure the pin is positioned correctly.

h) Tighten the clamp fitting (12), see page MM 370–4X.

i) Turn the impulse transmitter cam disc (11) until the display (10) shows 0°.

(Cont'd)

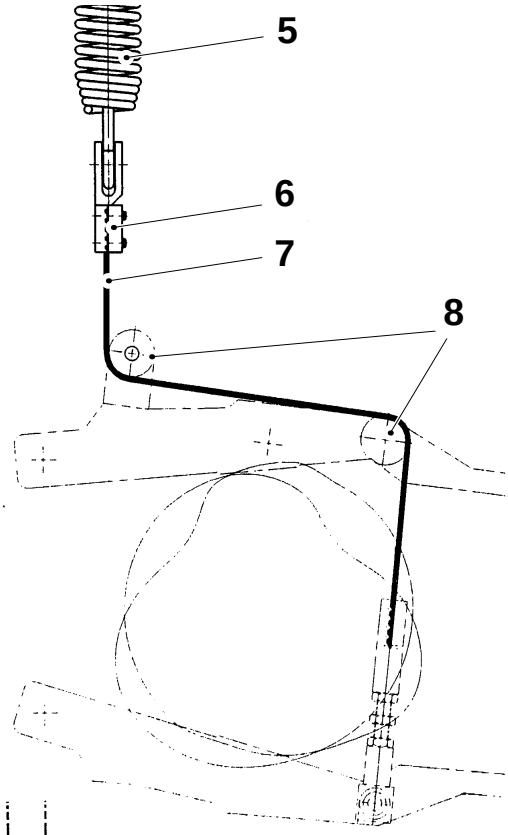

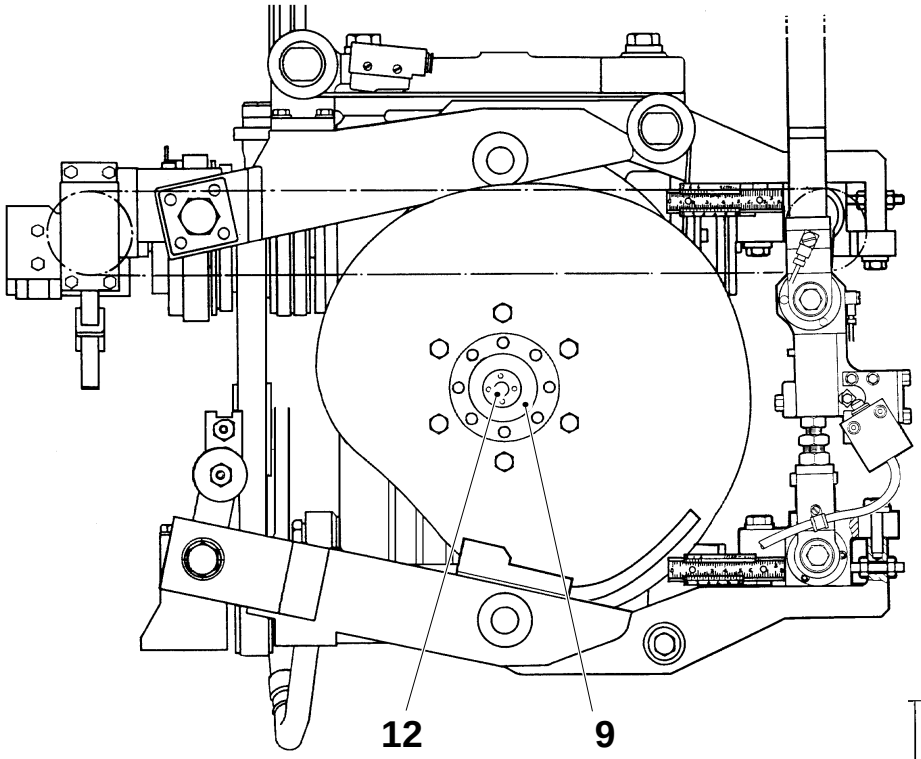

5 Spring
6 Timing belt holder
7 Timing belt
8 Belt pulley
9 Timing belt pulley
10 Display
11 Impulse transmitter cam disc
12 Clamp fitting

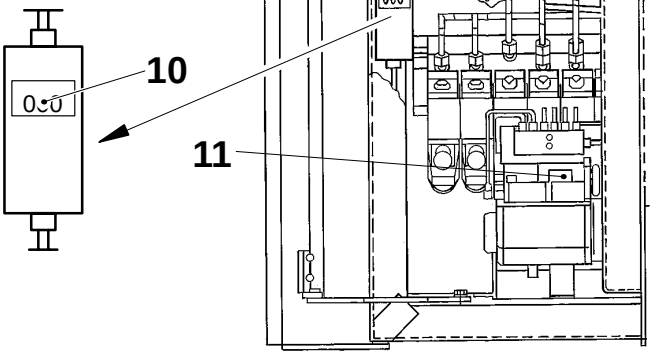

(Cont'd)

j) Fit the impulse transmitter timing belt (14). Make sure that the position of the impulse transmitter cam disc is not altered.

k) Tension the timing belt by means of the belt tensioner (15).

l) Check that the display shows 0°. If required, slacken the belt (14) and skip teeth.

m) Set the timing belt tension, see page MM 603–5X.

n) Tighten the screws (4) on both sides.

o) Remove the wooden blocks from under the yokes.

p) Fit and tension the crank chain (13).

q) Fit the degree scale. Make sure that the two pins are correctly positioned. The degree scale and display are to show 0°. If required, set the degree scale, see page MM 336–5X and the pointer, see page MM 337–5X.

r) If further adjustment is required, slacken the timing belt (14) and skip timing belt teeth.

s) Set the stroke, see page MM 436–5X, the jaw gap, see page MM 445–5X, and the jaw over jaw distance, see page MM 458–5X.

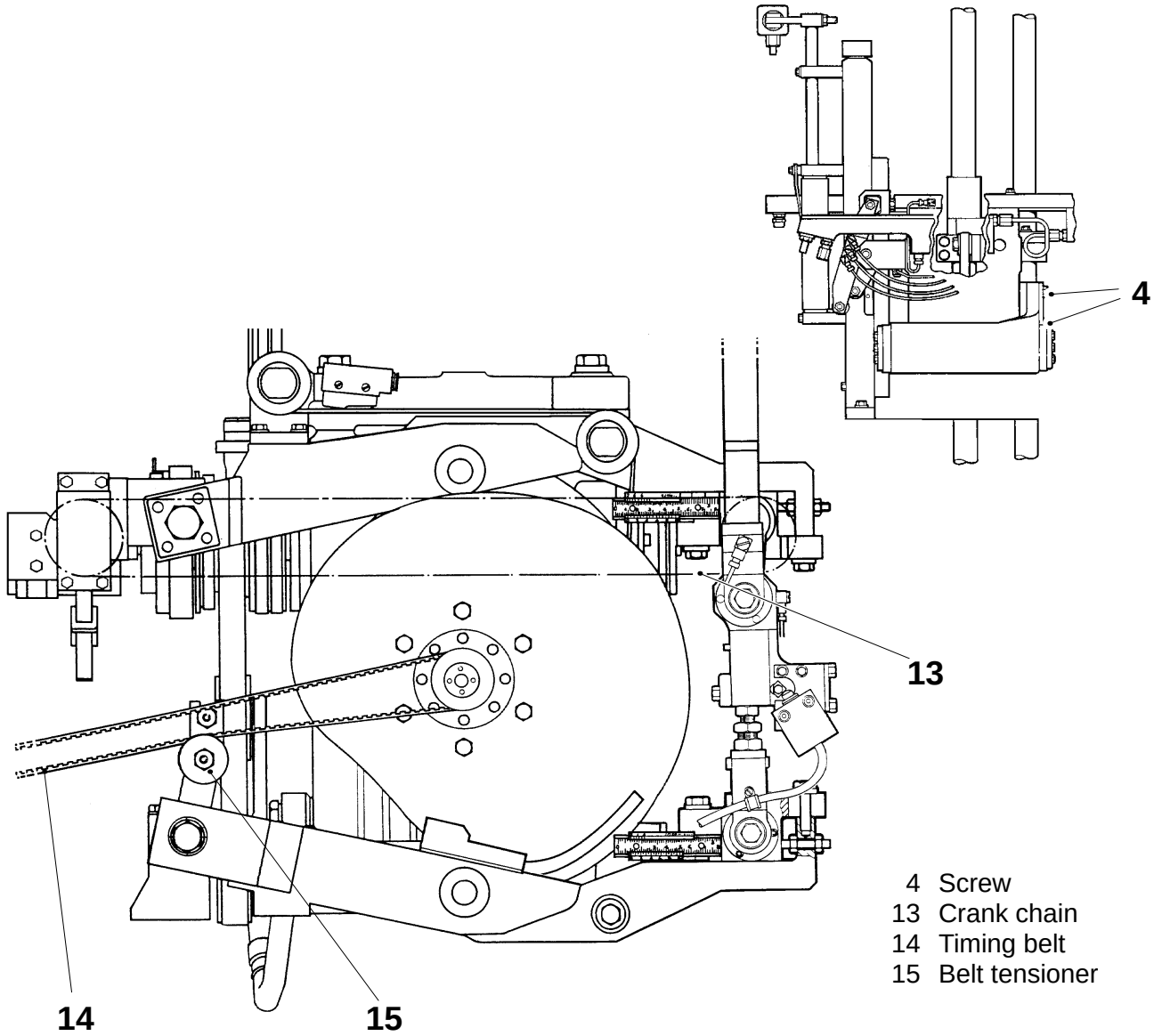

4 Screw
13 Crank chain
14 Timing belt
15 Belt tensioner

Fitting

Valid for all volumes **except** TBA 250 B ml, 200 B ml and 284 B ml

a) Remove all grease and clean the shafts, curve packs and clamp fittings, on both sides, prior to fitting.

b) Fit and set the RH and the LH curve packs, see page MM 331–5X.

c) Loosen the screws (1).

(Cont’d overleaf)

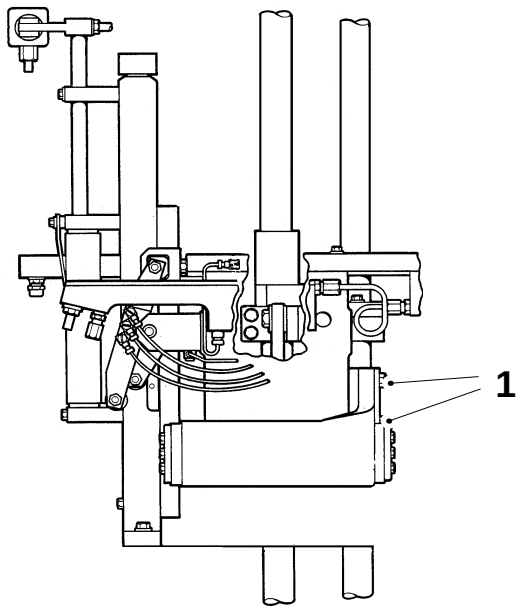

1 Screw

(Cont'd overleaf)

d) Hook the timing belt holders (2) to the springs (3) of the counter device. At the same time, put the timing belts (4) over the belt pulleys (5).

e) Apply the spring force of the hold-down device, see page MM 306–4X.

f) Refit the timing belt pulley (6). Make sure the pin is positioned correctly.

g) Tighten the clamp fitting (9), see page MM 370–4X.

h) Turn the impulse transmitter cam disc (7) until the display (8) shows 0°.

(Cont'd)

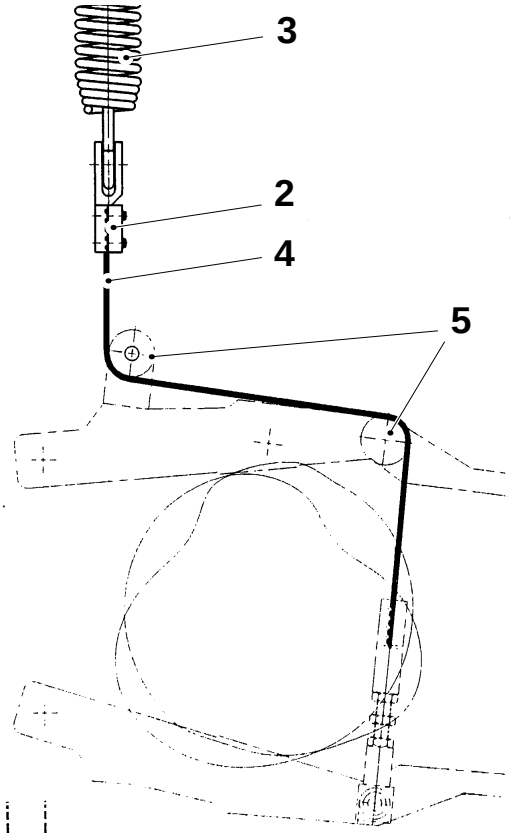

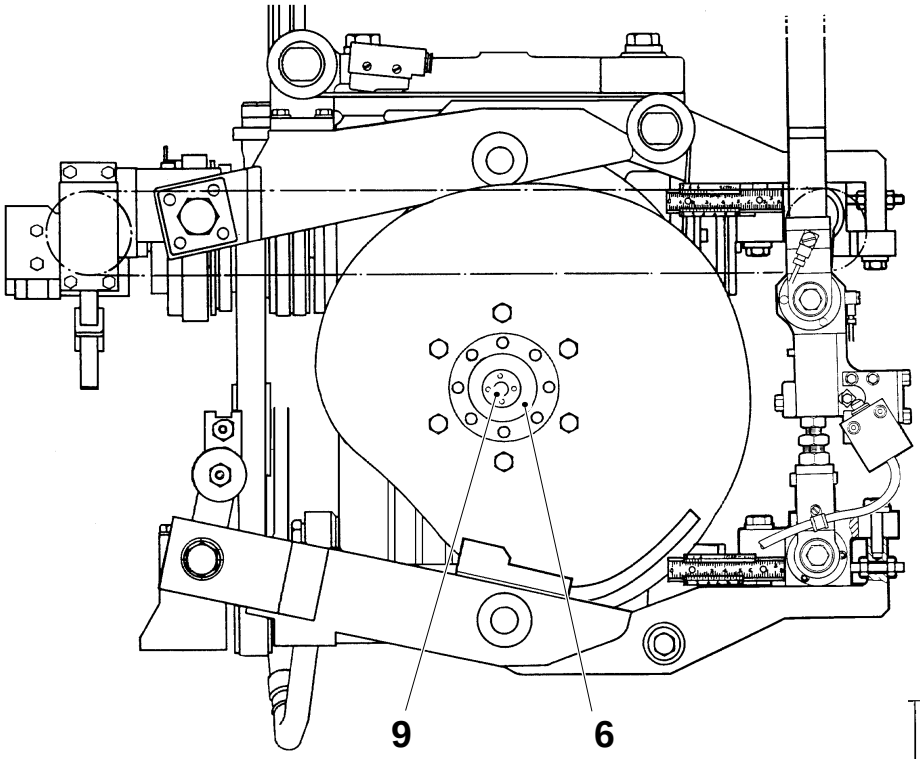

2 Timing belt holder
3 Spring
4 Timing belt
5 Belt pulley
6 Timing belt pulley
7 Impulse transmitter cam disc
8 Display
9 Clamp fitting

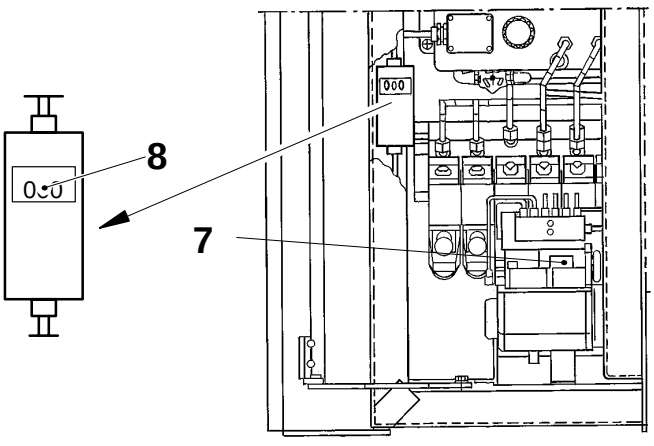

150

(Cont'd)

i) Fit the impulse transmitter timing belt (11). Make sure that the position of the impulse transmitter cam disc is not altered.

j) Tension the timing belt by means of the belt tensioner (12).

k) Check that the display shows 0°. If required, slacken the belt (11) and skip teeth.

l) Set the timing belt tension, see page MM 603–5X.

m) Tighten the screws (1) on both sides.

n) Remove the wooden blocks from under the yokes.

o) Fit and tension the crank chain (10).

p) Fit the degree scale. Make sure that the two pins are correctly positioned. The degree scale and display are to show 0°. If required, set the degree scale, see page MM 336–5X and the pointer, see page MM 337–5X.

q) If further adjustment is required, slacken the timing belt and skip timing belt teeth.

r) Set the stroke, see page MM 436–5X, the jaw gap, see page MM 445–5X, and the jaw over jaw distance, see page MM 458–5X.

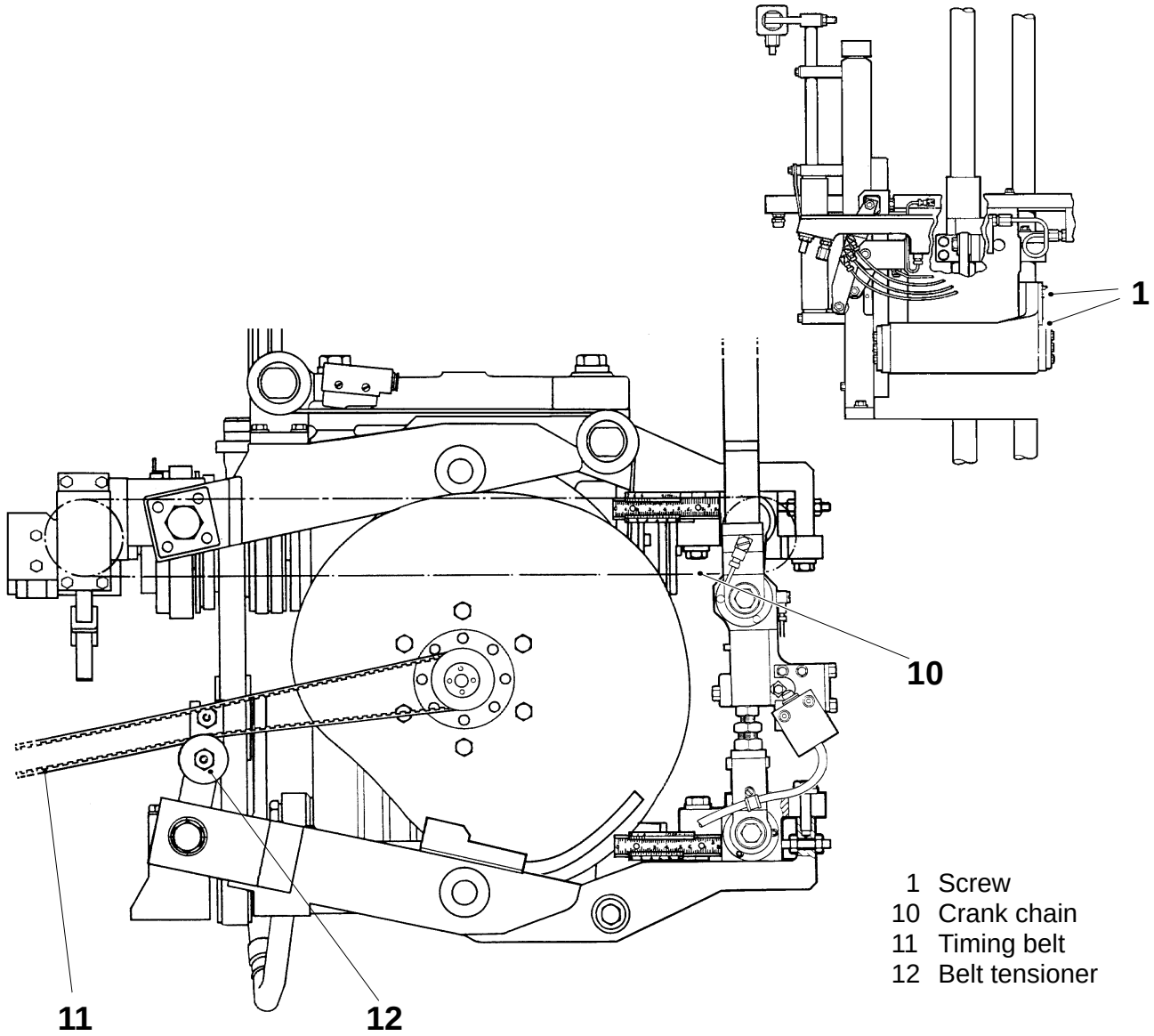

1 Screw
10 Crank chain
11 Timing belt
12 Belt tensioner

Setting

Valid for volumes TBA 250 B ml, TBA 200 B ml and TBA 284 B ml

Level the templates relative one another within 3 scale divisions on the spirit level (2).

a) Fit the template (2) on the RH gear shaft (3).

b) Apply a spirit level (1) on the template and set the template horizontal.

c) Tighten the screws.

d) Put the other tempate on the LH gear shaft. Repeat items b) and c).

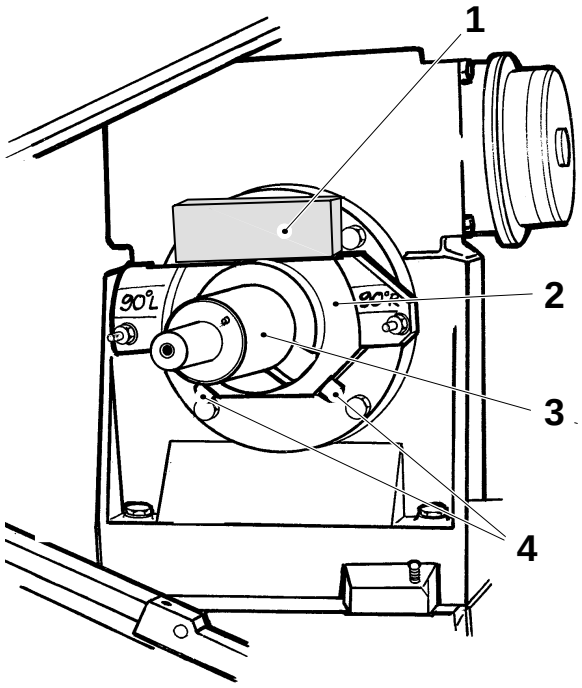

1 Spirit level TP No. 90243–163
2 Template
3 Gear shaft
3 Screw

Setting

Valid for all volumes **except** TBA 250 B ml, TBA 200 B ml and TBA 284 B ml

Level the curve packs relative one another within 3 scale divisions on the spirit level (2).

a) Put the LH curve pack (1) and clamp fitting (7) on the gear box shaft.

b) The curve packs are marked with arrows (4). On the LH curve pack, the arrow points clockwise, on the RH pack counter-clockwise.

c) Insert the two guide pins (6) into the holes of the LH curve pack. The holes are marked 120°L and 120°R (applies to TB 200S) or 90°L and 90°R (applies to other volumes).

d) Fit the template (5) to the guide pins and place the spirit level (2) on top.

e) Crank the gear until the spirit level is horizontal.

f) Tighten the clamp fitting lightly and turn the curve pack so that it is horizontal.

g) Make sure the curve pack bears against the spacer ring (8) when the clamp fitting is tightened.

h) Firmly tighten the clamp fitting, see page MM 370–4X.

(Cont'd overleaf)

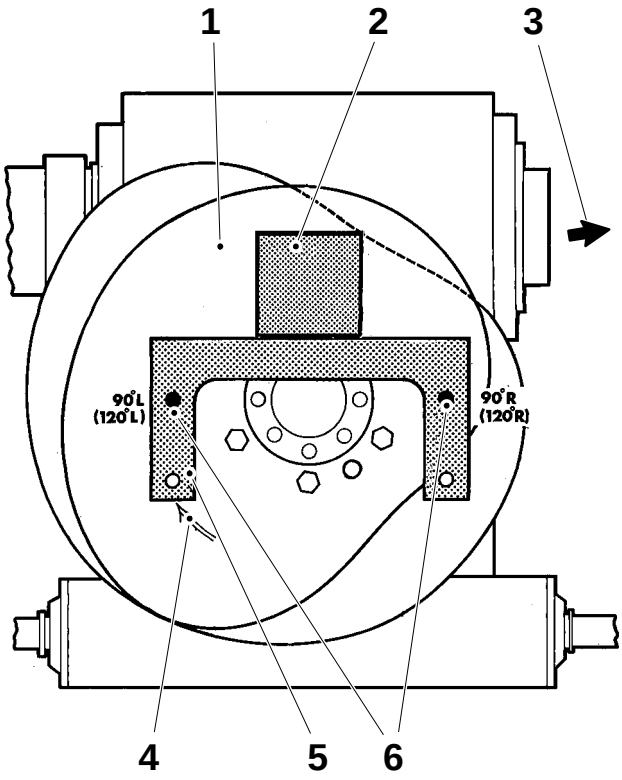

1 LH curve pack
2 Spirit level TP No. 90243–163
3 Towards final folder
4 Arrow
5 Template TP No. 76338
6 Guide pin TP No. 75451
7 Clamp fitting
8 Spacer ring

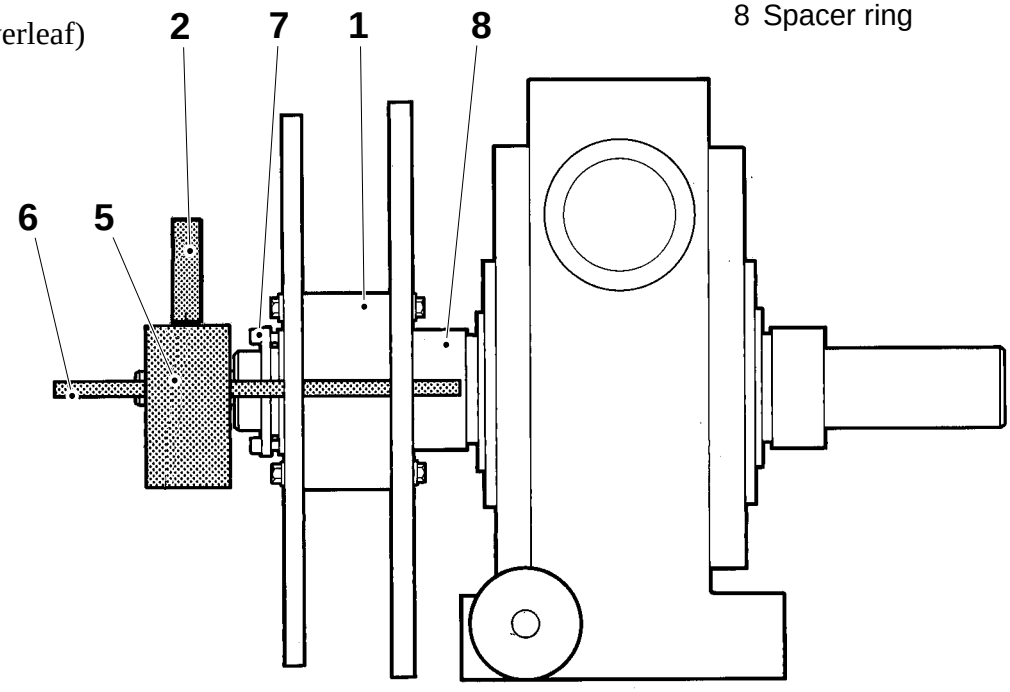

(Cont'd)

i) Fit and turn the RH curve pack (7) on the shaft until it is displaced by 180° in relation to the LH curve pack.

j) Fit the setting templates to the RH curve pack.

k) Tighten the clamp fitting lightly and turn the curve pack so that it is horizontal.

l) Tighten the clamp fitting (10), see page MM 370–4X.

m) Check, by means of the setting templates that the LH curve pack is still horizontal. Remove the setting templates.

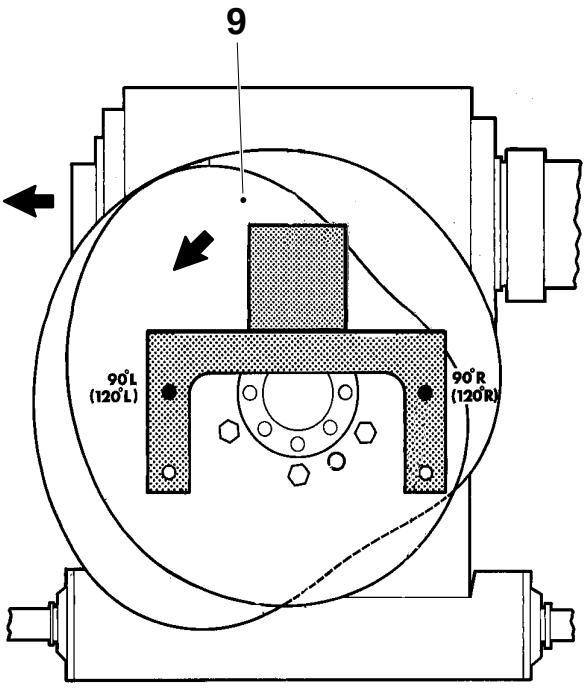

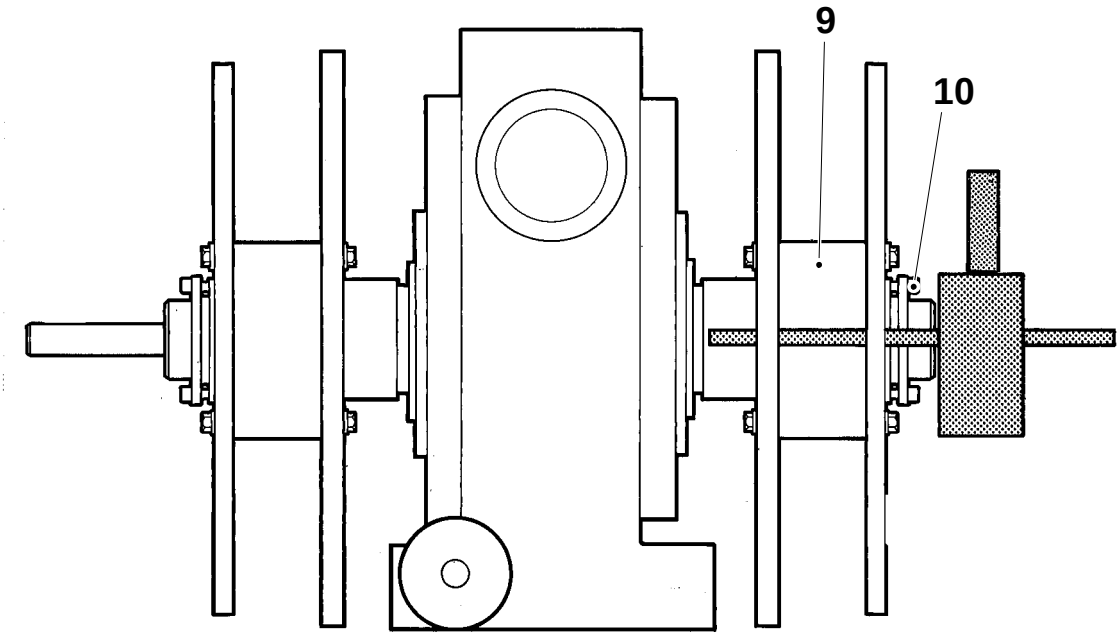

9 RH curve pack
10 Clamp fitting

Setting

a) Crank the machine until the RH yoke is in its upper turning position.

b) Fit and tighten the degree scale (1) on the timing belt pulley (2).

c) Loosen the clamp fitting (3) of the timing belt pulley, see page MM 370–2X. Turn the degree scale so that the 230°–240° divisions face upwards.

d) Set the degree scale so that the hole at the 270° (300° on TB 200 S ml) divisions is in front of the hole marked 90°R (120°R on TB 200 S ml) on the arm cam behind.

e) Insert the guide pins (4) through the holes at the 90° and 270° (120° and 300° on TB 200 S ml) divisions and through the arm cam and yoke cam.

f) Tighten the clamp fitting (3), see page MM 370–4X.

g) Pull out the guide pins.

h) Set the pointer, see page MM 337–5X.

i) Set the impulse transmitter, see page MM 603–5X.

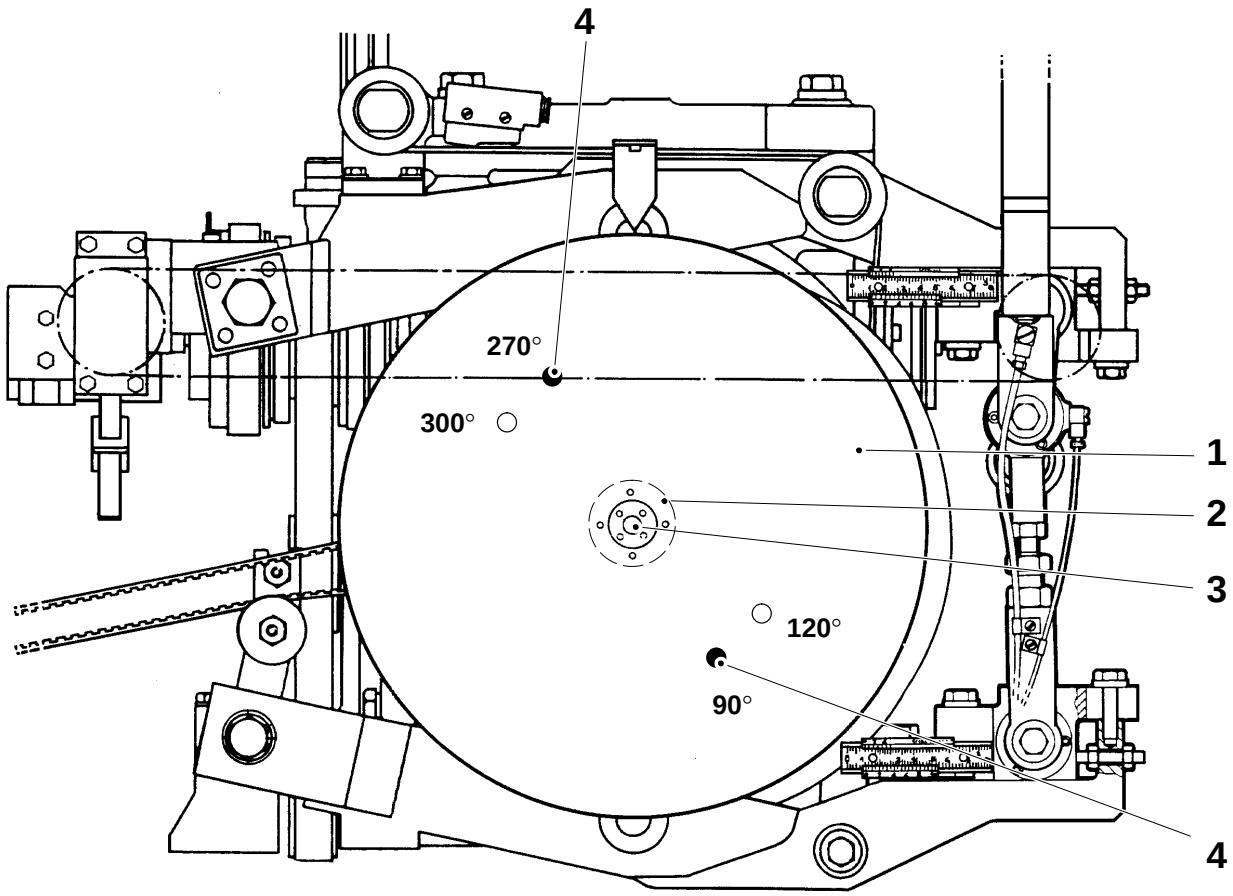

1 Degree scale
2 Timing belt pulley
3 Clamp fitting
4 Guide pin TP No. 75451

Setting

a) Crank the machine so that 0° on the scale faces upward (30° on TB 200 S).

b) Fit the guide pins (4), the tool (3) and the spirit level (2) on the cam pack.

c) Crank the machine until the spirit level is horizontal.

d) Fit and secure the pointer (1) opposite 0° on the degree scale (30° on TB 200 S).

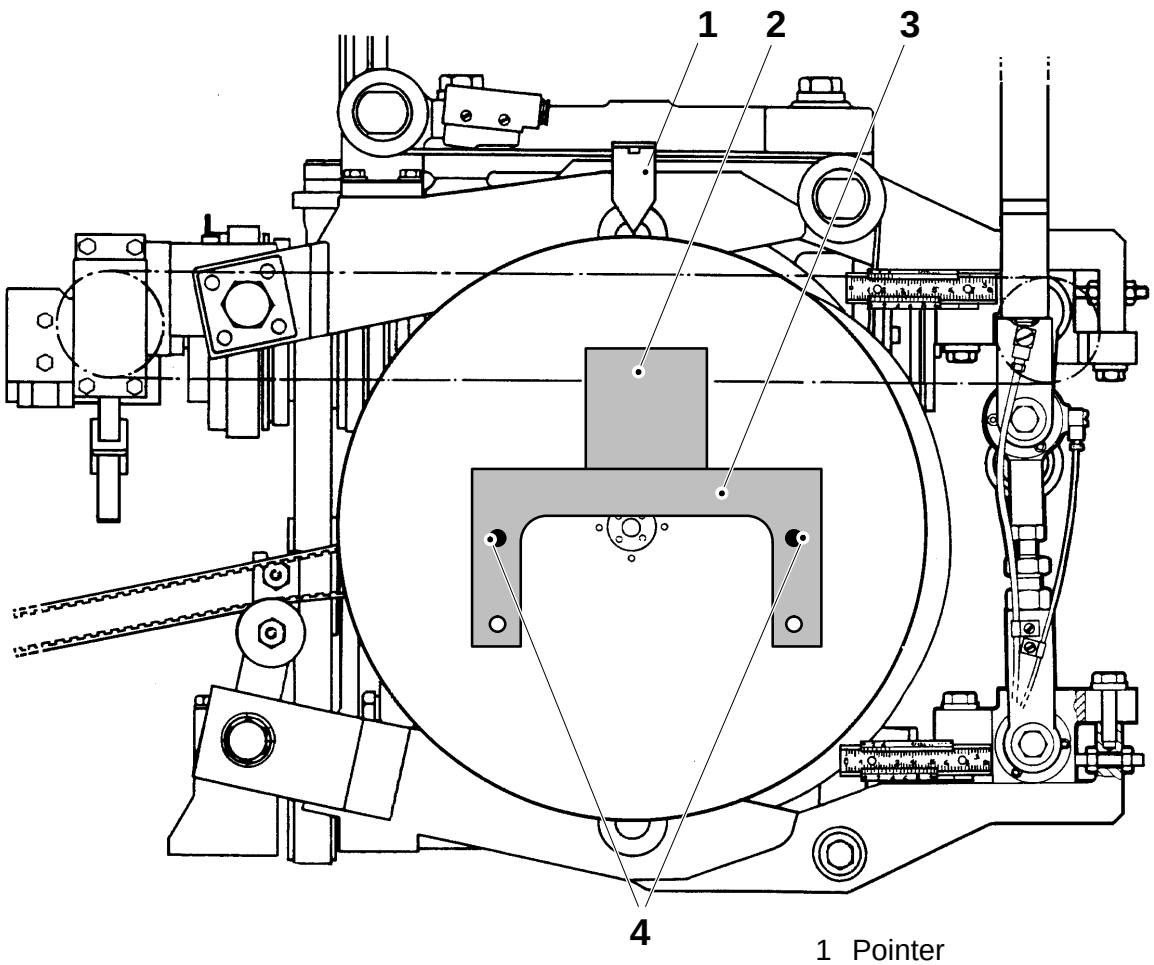

1 Pointer
2 Spirit level TP No. 90243–163
3 Tool TP No. 76338
4 Guide pin TP No. 75451

Removal

a) Mark the position of the cantilever (1) on the frame.

b) Remove the slide lug (2), drop chute (3), and cantilever (1).

c) Disconnect the air blow and air lines (4) from the cylinder. Lift out the bracket.

(Cont’d overleaf)

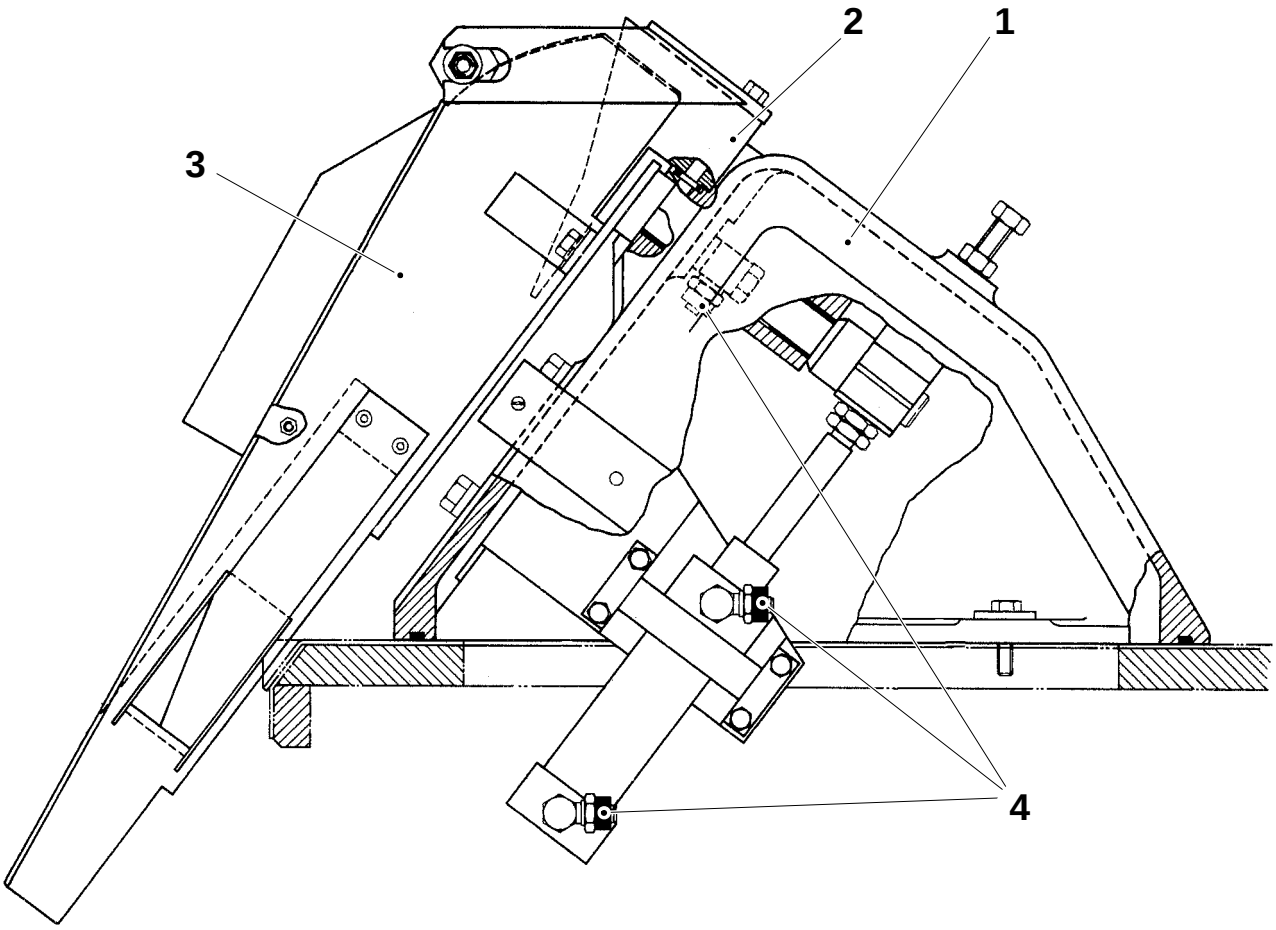

1 Cantilever
2 Slide lug
3 Drop chute
4 Air line

(Cont'd)

d) Remove the lugs (5) holding the top of the gear against the frame.

e) Disconnect the cable between the worm gear brake and the terminal box above the gear.

f) Disconnect the cable between the worm gear clutch and the box underneath the drive motor.

g) Remove the RH and LH curve packs (6), see page MM 331–2X.

h) Remove the oil filler hose (7) from the frame and tie up the hose to the gear.

i) Remove the belt tensioner (8).

j) Disconnect the two oil pipes on the gear.

(Cont'd overleaf)

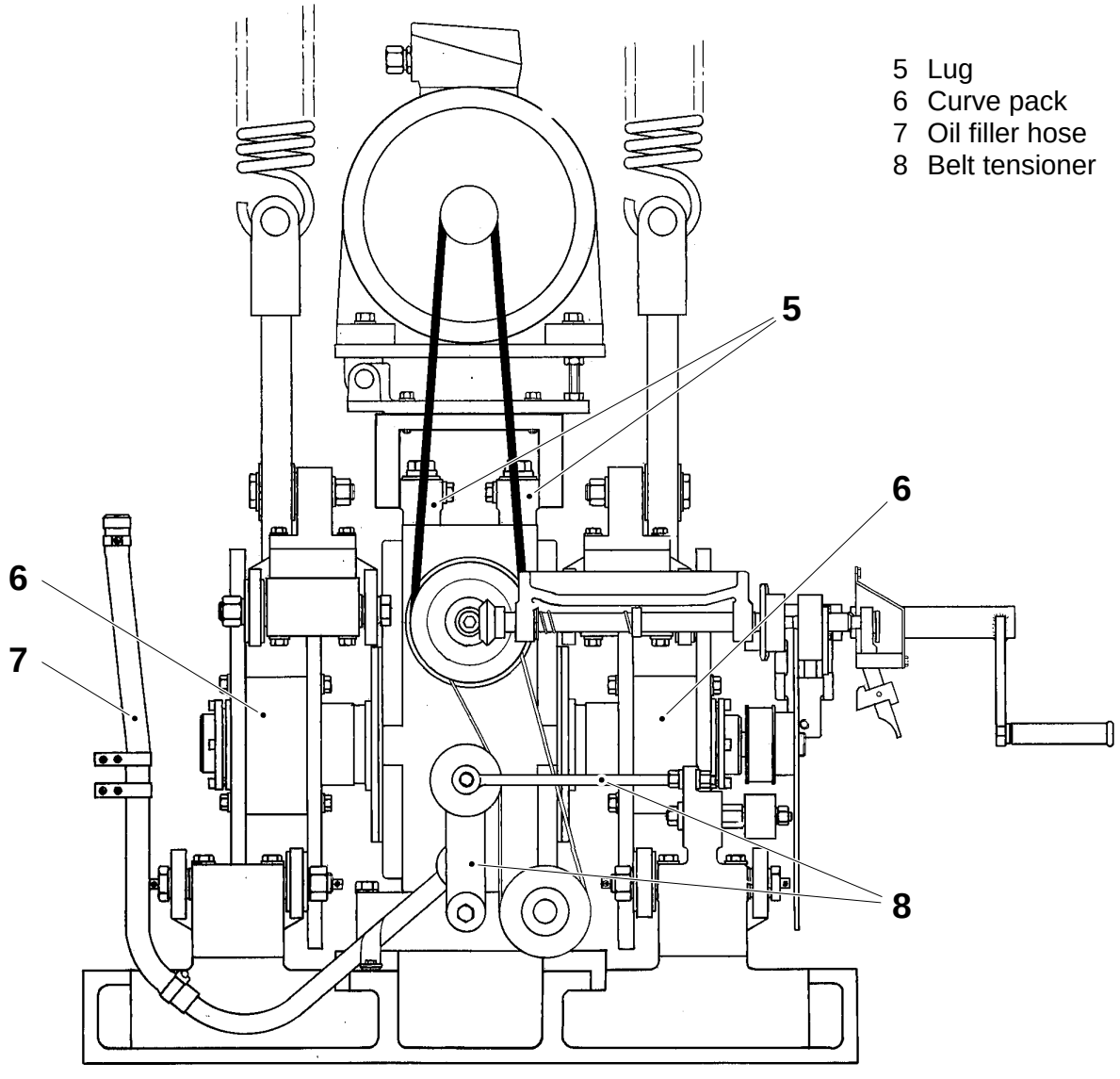

5 Lug
6 Curve pack
7 Oil filler hose
8 Belt tensioner

(Cont'd)

k) Remove the LH and RH microswitch cables from the clamps on the link arm (9).

l) Remove the LH and RH link arms, see page MM 311–2X.

m) Remove the LH and RH yoke lifter arms (10), see page MM 303–2X.

n) Slacken the drive motor V-belts (11) and remove them.

o) Loosen the screws holding the bracket (12) a couple of turns.

p) Separate the worm gear from the final folder by removing the clamp connection (13). Loosen the screw (14) and remove the shaft (15).

q) Remove the cleaning system manifold beside the shaft clutch (16).

r) Undo the screws (17) and remove the pins.

s) Lift out the gear to the right, from the machine.

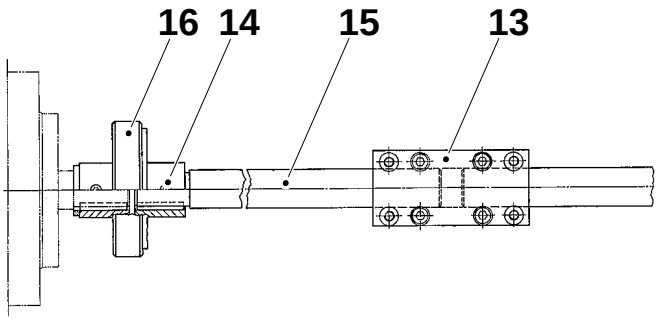

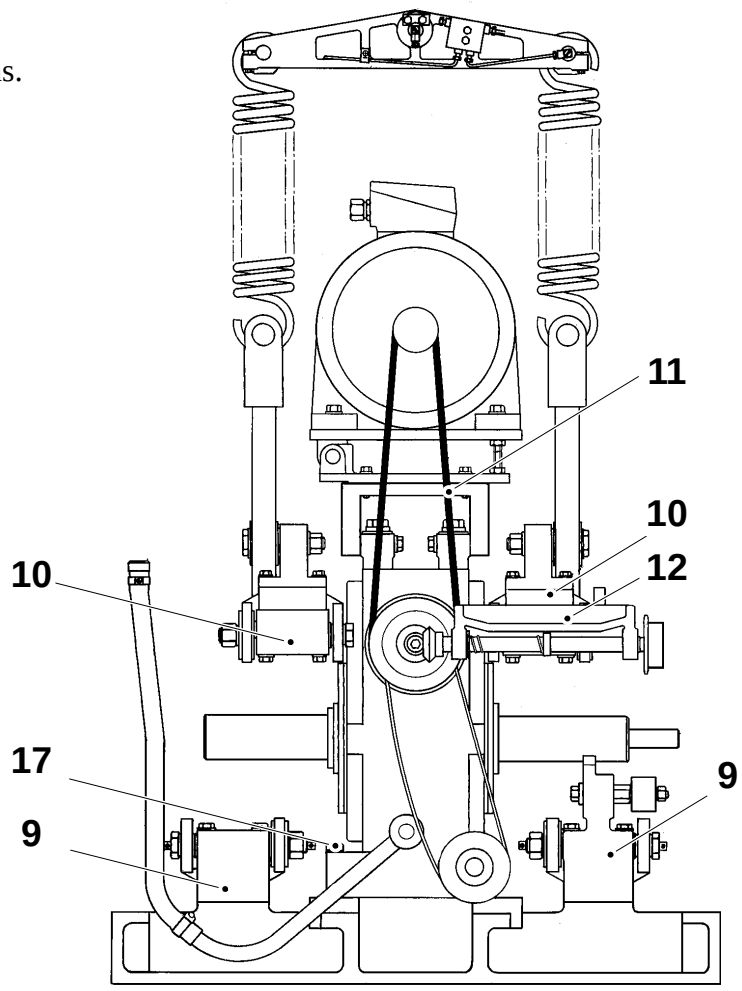

9 Link arm
10 Yoke lifter arm
11 V-belt
12 Bracket
13 Clamp connection
14 Screw
15 Shaft
16 Saft clutch
17 Screw

Fitting

a) Place the gear in the machine.

b) Fit the V-belt (1) between the drive motor and gear.

c) Attach the bow (2) of the clutch to the pin on the frame.

d) Put in the gear pins (3) and tighten the gear to the bottom plate with the screws (4).
Torque 80 ±3 Nm (8 kpm).
If required, set the worm gear, see page MM 345–5X.

e) Tension the V-belt (1), see page MM 347–1X.

f) Set the crank mechanism, see page MM 362–5X.

g) Fit the final folder coupling, the cleaning manifold and the gear oil pipes.

h) Fit the lugs (5). Torque, see fig.

i) Fit the cables from the worm gear brake and clutch, and the oil filler hose (6).

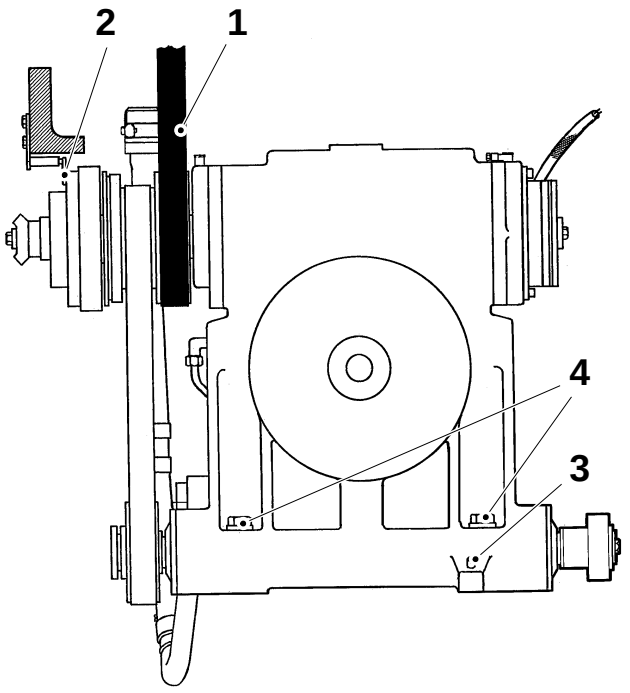

(Cont'd overleaf)

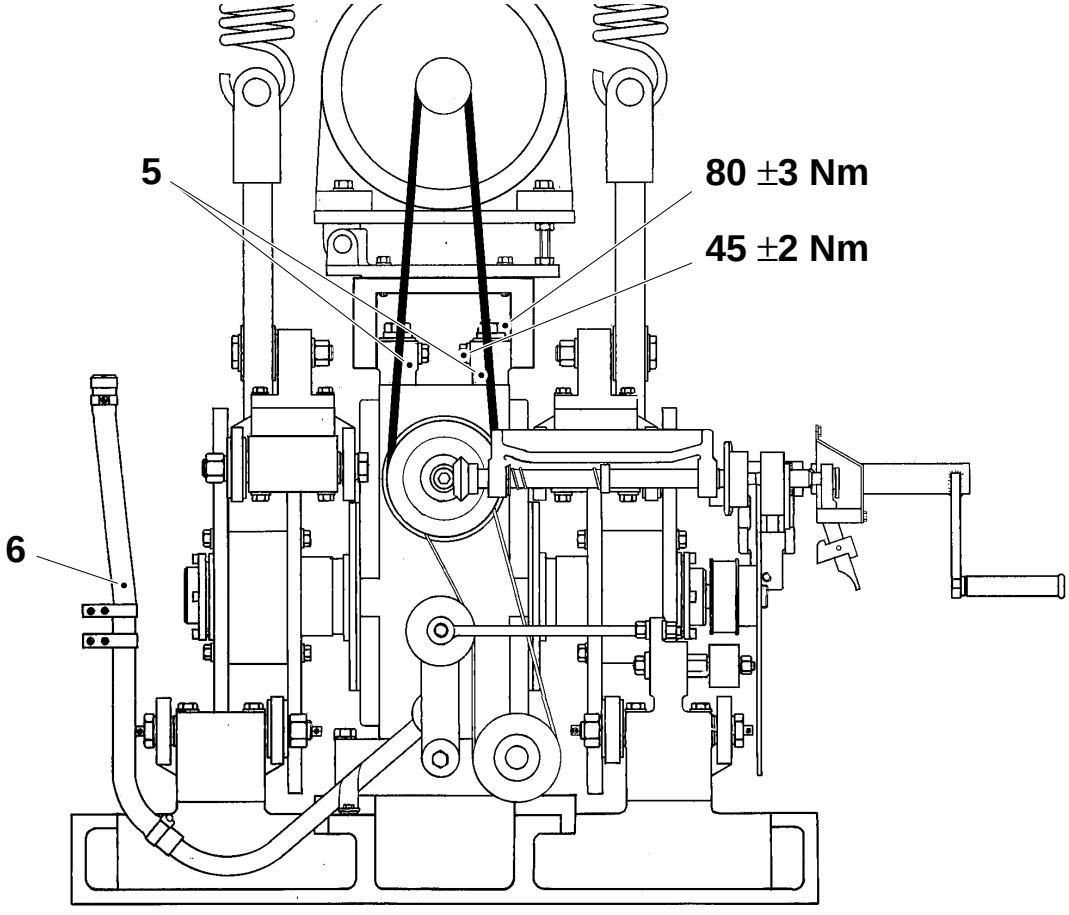

1 V-belt
2 Bow
3 Pin
4 Screw
5 Lug
6 Oil filler hose

(Cont'd)

j) Fit the LH and RH yoke lifter arms (7) and the link arms (8) to the frame.

k) Fit the belt tensioner (9) and tension the timing belt, see page MM 347–5X.

l) Fit the curve packs (10), see page MM 331–4X:1

m) Fit the LH and RH yoke lifter arms to the guide.

n) Fit the LH and RH link arms to the guide.

o) Connect all the oil pipes to the yoke lifter arm and link arm.

p) Remove the wooden blocks under the LH and RH yokes.

q) Fit and tension the crank chain (11).

r) Apply the spring force of the hold-down device, see page MM 306–4X.

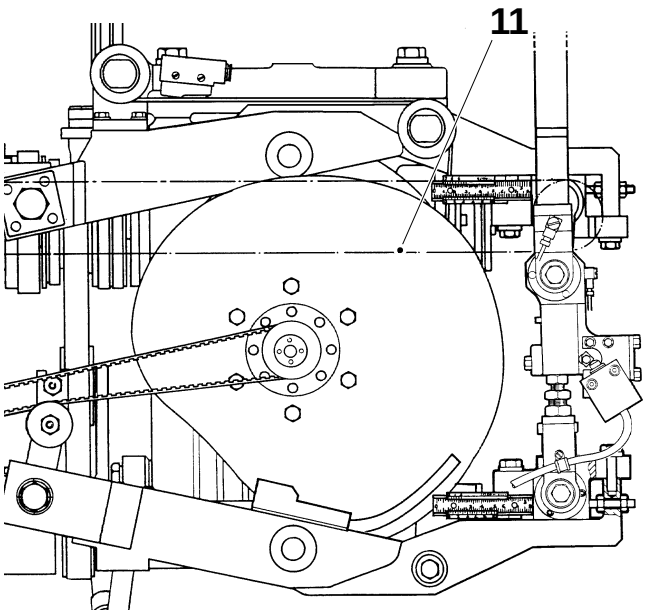

7 Yoke lifter arm, LH and RH
8 Link arm
9 Belt tensioner
10 Curve pack, LH and RH
11 Crank chain

(Cont'd overleaf)

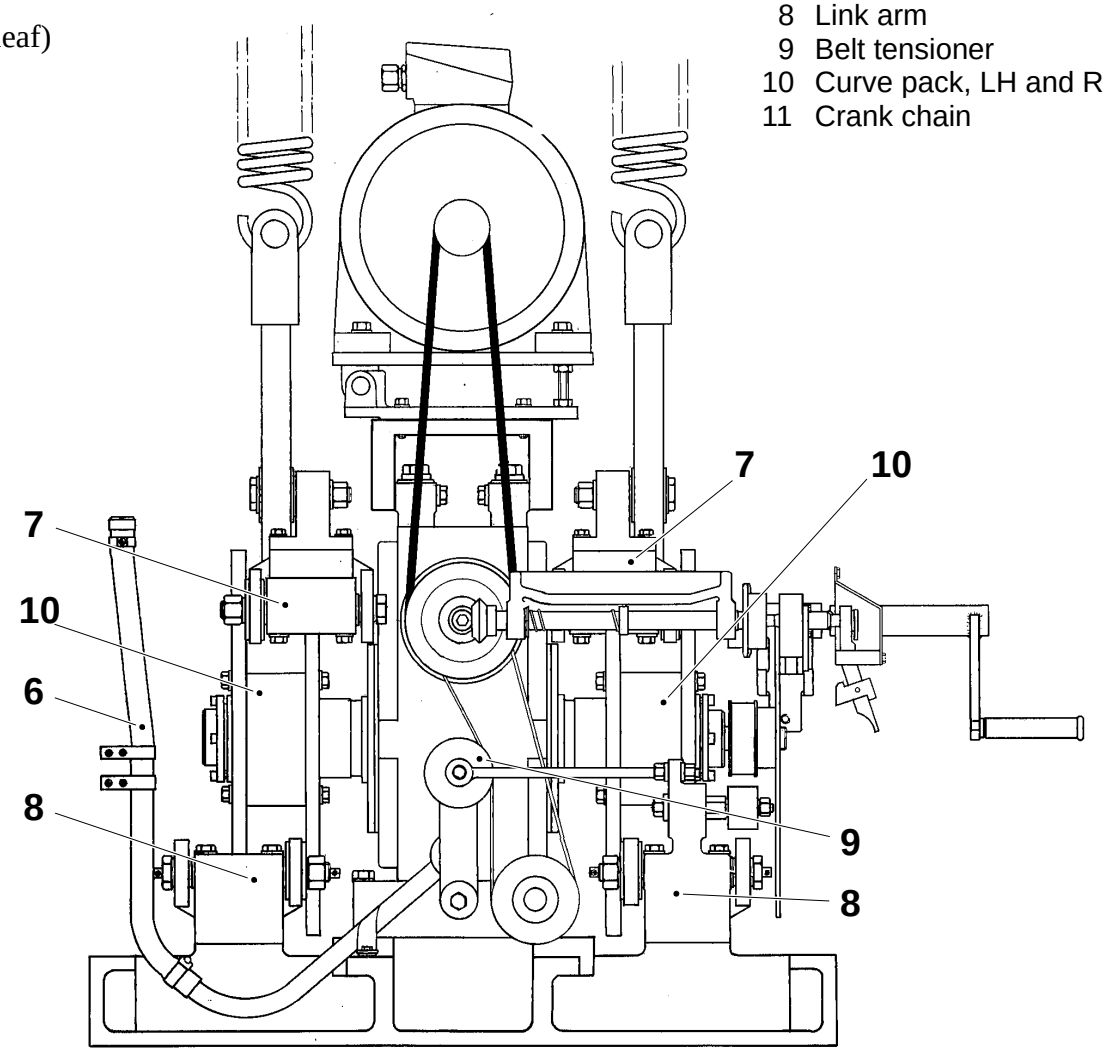

(Cont'd)

s) Fit the micro switch (12) to the link arm and set it, see page MM 314–5X.

t) Fit the timing belt (13) and the angle encoder pulley (14) to the worm gear. Do not tighten the clamp fitting (15) yet.

u) Fit and set the degree scale, see page MM 336–5X, and the pointer, see page MM 337–5X.

v) Set the impulse transmitter, see page MM 603–5X.

w) Set the timing belt, see page MM 604–1X.

x) Fit the slide lug (16), drop chute (17), and cantilever (18) (use the marks made before removal).

y) Set the drop chute, see page MM 205–5X.

z) Top up with oil in the worm gear, see page MM 345–7X.

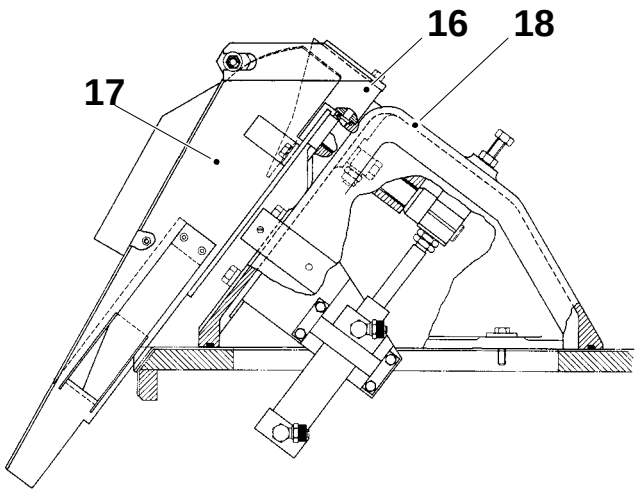

12 Micro switch
13 Timing belt
14 Angle encoder pulley
15 Clamp fitting
16 Slide lug
17 Drop chute
18 Cantilever

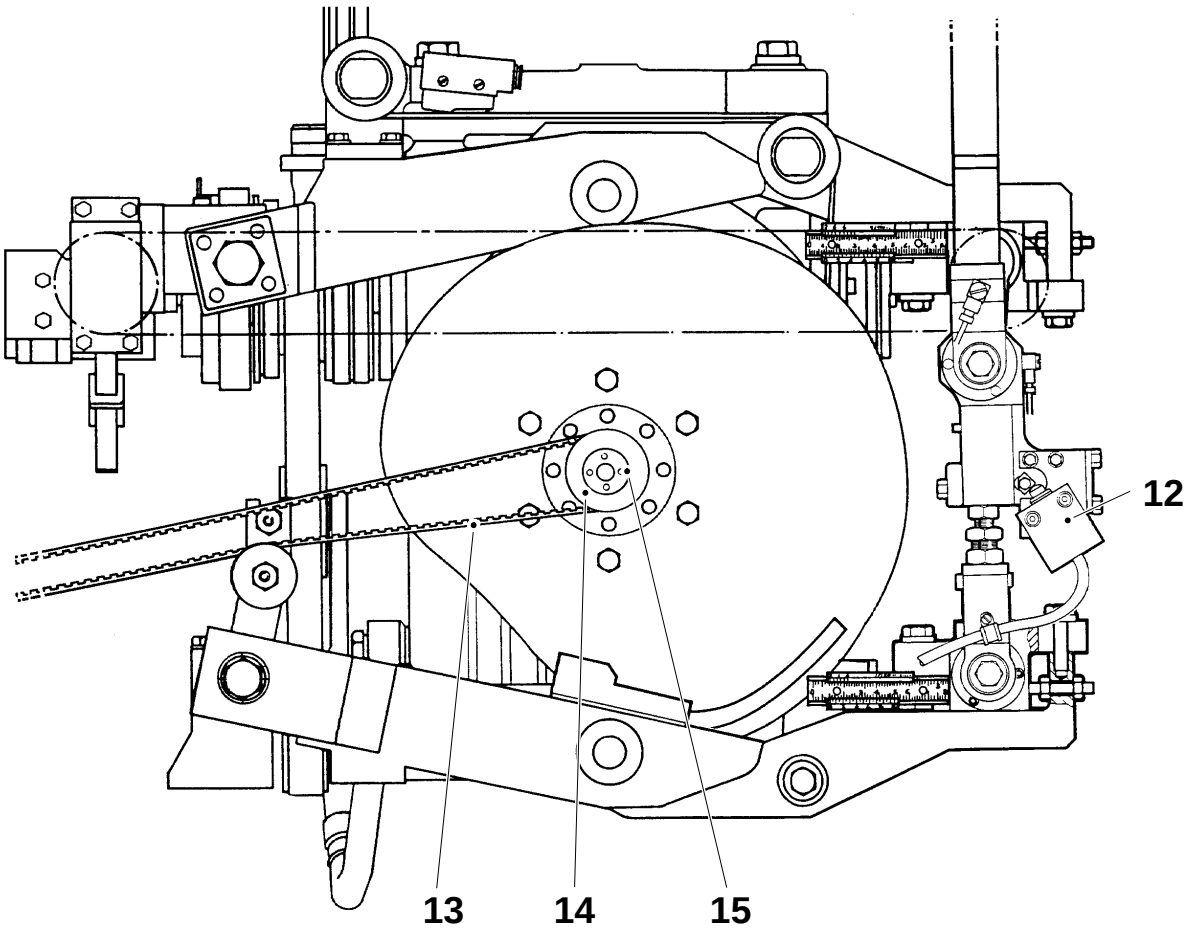

Setting

a) The gear is pinned, but if setting has to be redone, put the gear in place.

b) Fit the setting templates (1) together with the spacer rods (2).

c) Fit the templates at the mounting points (3) of the link arm and yoke lifter arm, one template on the RH side and one on the LH side.

d) Move the gear towards the templates so that the shafts of the gear bear against the spacer rods.

e) If the guides have been removed, fit the template (4) in the holes for the LH side guides.

f) Move the gear sideways towards the template so that the brake (5) bears against the template.

g) If the guides have already been fitted, put a set-square (6) against the guides (7), and set distance B, see fig. 2.

h) Secure the gear on the base plate. Torque 80 ±3 Nm (8 kpm). Set distance A between spacer rods (2) and the shafts (8) on both sides.

i) Pin the gear.

1 Template TP No. 75453
2 Spacer rod TP No. 75454
3 Mounting point
4 Template TP No. 978421
5 Brake
6 Set square
7 Guide
8 Shaft

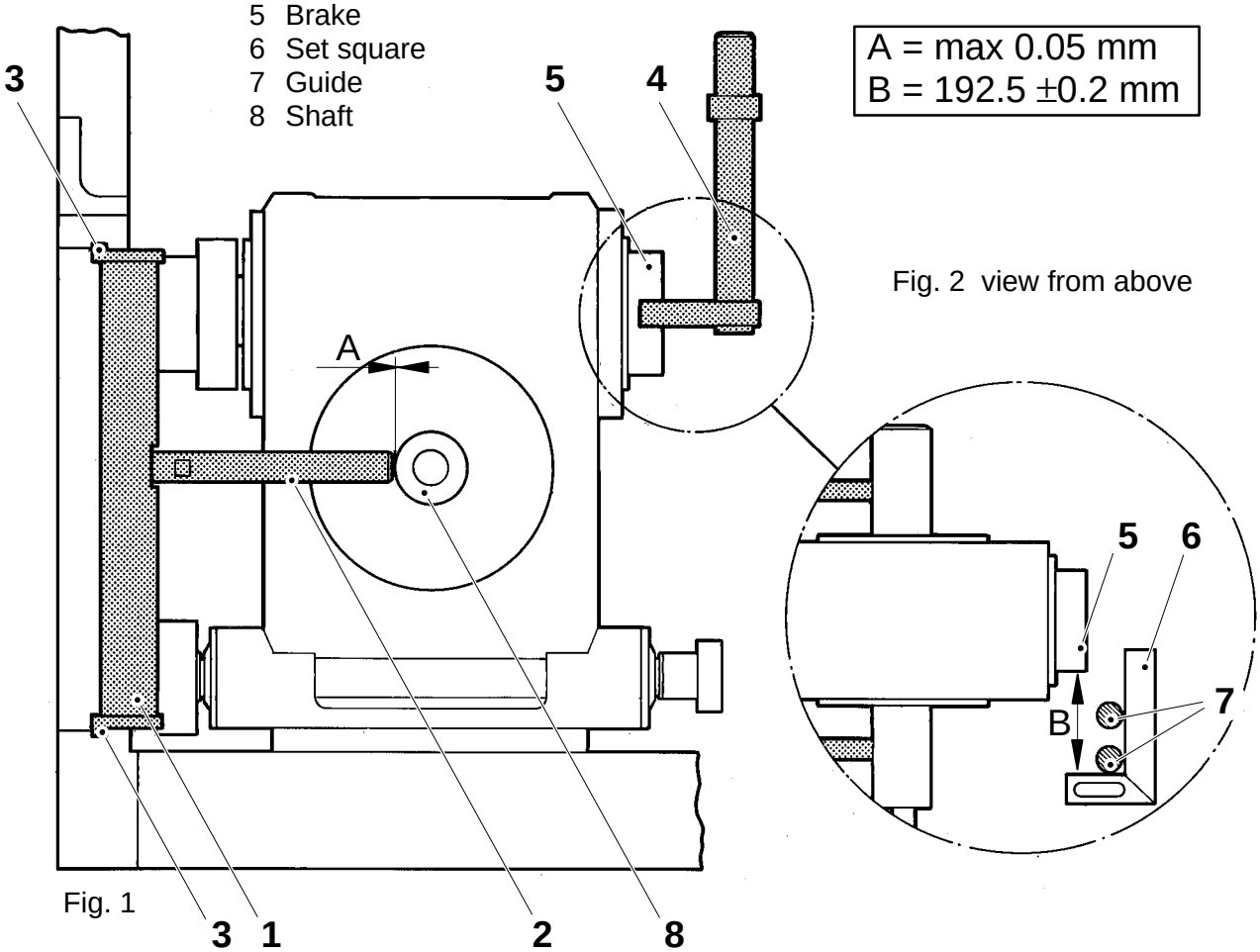

Fig. 1

A = max 0.05 mm
B = 192.5 ±0.2 mm

Fig. 2 view from above

Oil change

Caution!
Always fill oil into the worm gear when it is **cold**.

a) Undo the plug (1).

b) Remove the hose (3) from the clip (2) and empty the oil.

c) Fill up with oil, type B, see MM 940–7X.

d) Fit the plug.

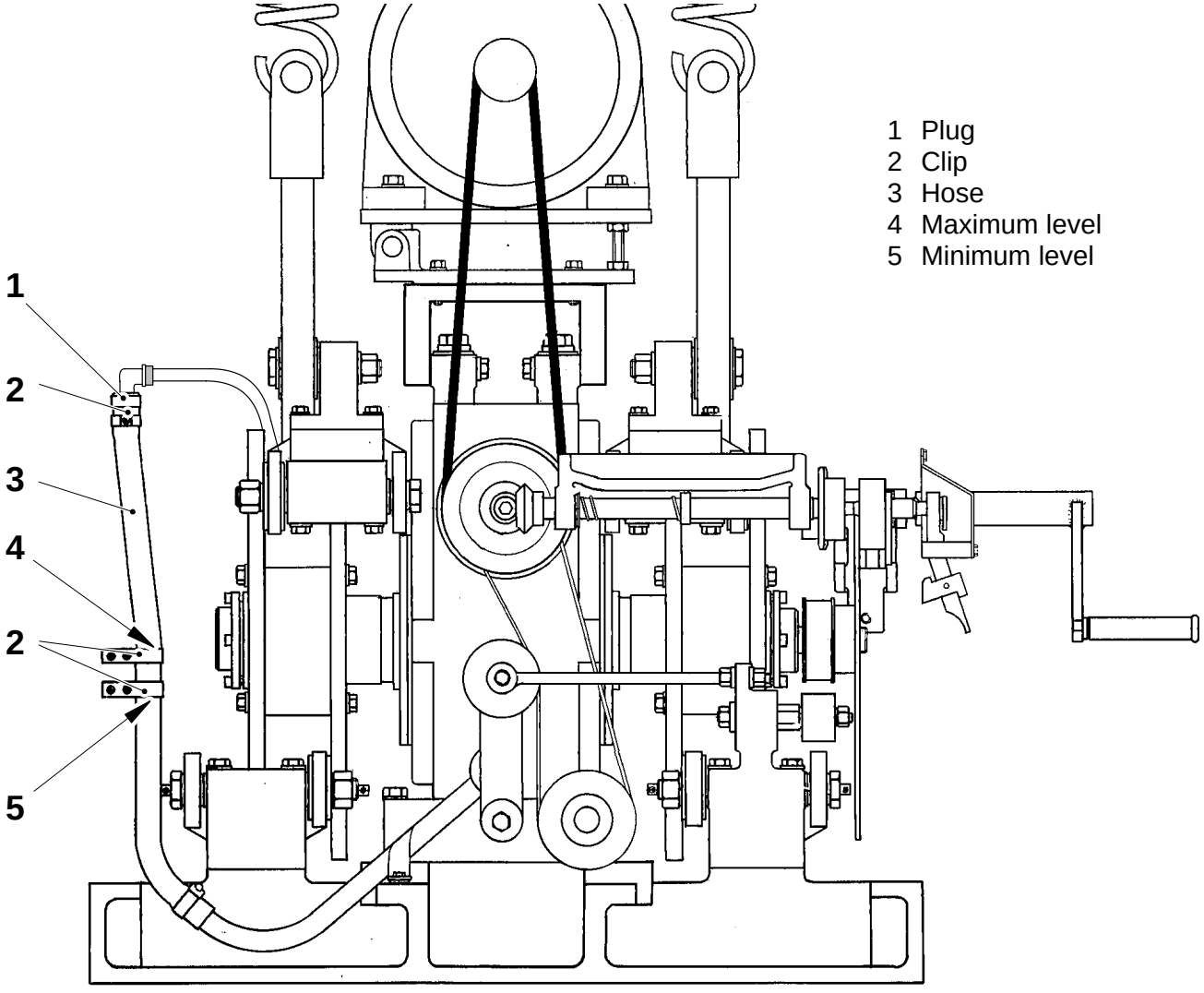

Checking

Check the following details for wear and/or damage:

- the V-belt (1) and timing belt (9),
- the shaft (2),
- the seal rings (3),
- the ball bearings (4),
- the oil seals (5),
- the spacer sleeve (6),
- the gear wheel (7),
- the clamp fitting (8), and
- the belt tensioner (10).

Replace as required.

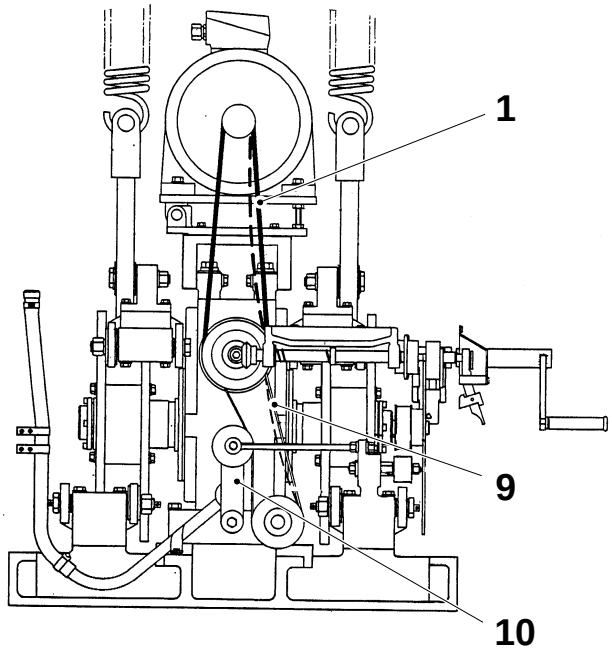

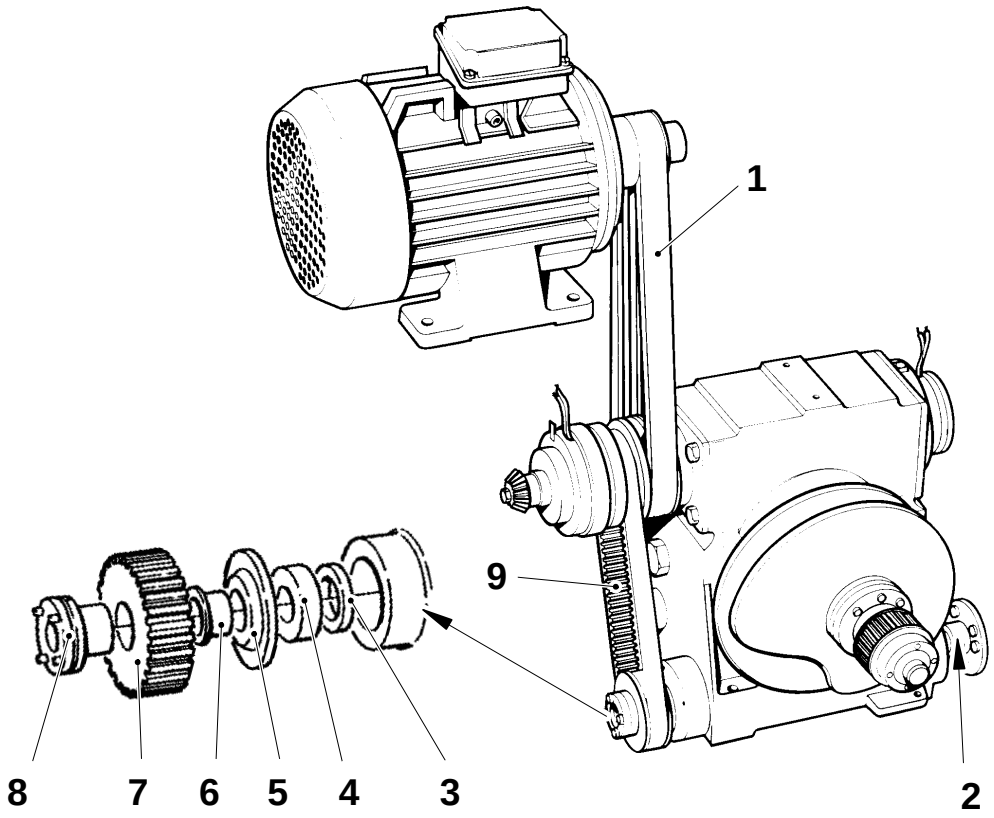

1 V-belt
2 Shaft
3 Seal ring
4 Ball bearing
5 Oil seal
6 Spacer sleeve
7 Gear wheel
8 Clamp fitting
9 Timing belt
10 Belt tensioner

Removal

a) Slacken the belts by means of the screws (1) and (2).

b) Remove the V-belt (3) and timing belt (4).

c) Undo the final folder coupling (5) and the connection (6).

d) Loosen the clamp fitting (7), see page MM 370–2X.

e) Pull out the gear wheel (8) and the clamp fitting (7).

f) On both sides, remove the spacer sleeves (9) and the oil seals (10). Carefully tap the shaft sideways to make it easier to remove the ball bearings (11) and the seal rings (12).

g) Pull out the shaft (13).

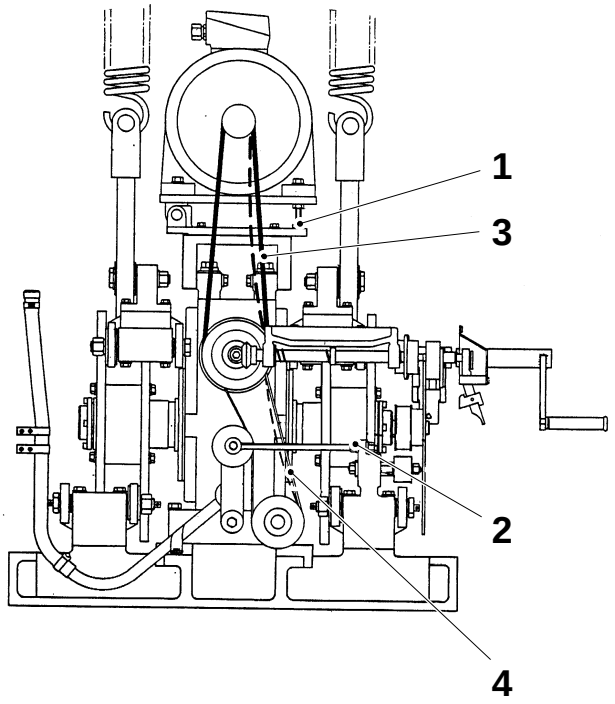

1 Screw
2 Screw
3 V-belt
4 Timing belt
5 Coupling
6 Connection
7 Clamp fitting
8 Gear wheel
9 Spacer sleeve
10 Oil seal
11 Bearing
12 Seal ring
13 Shaft

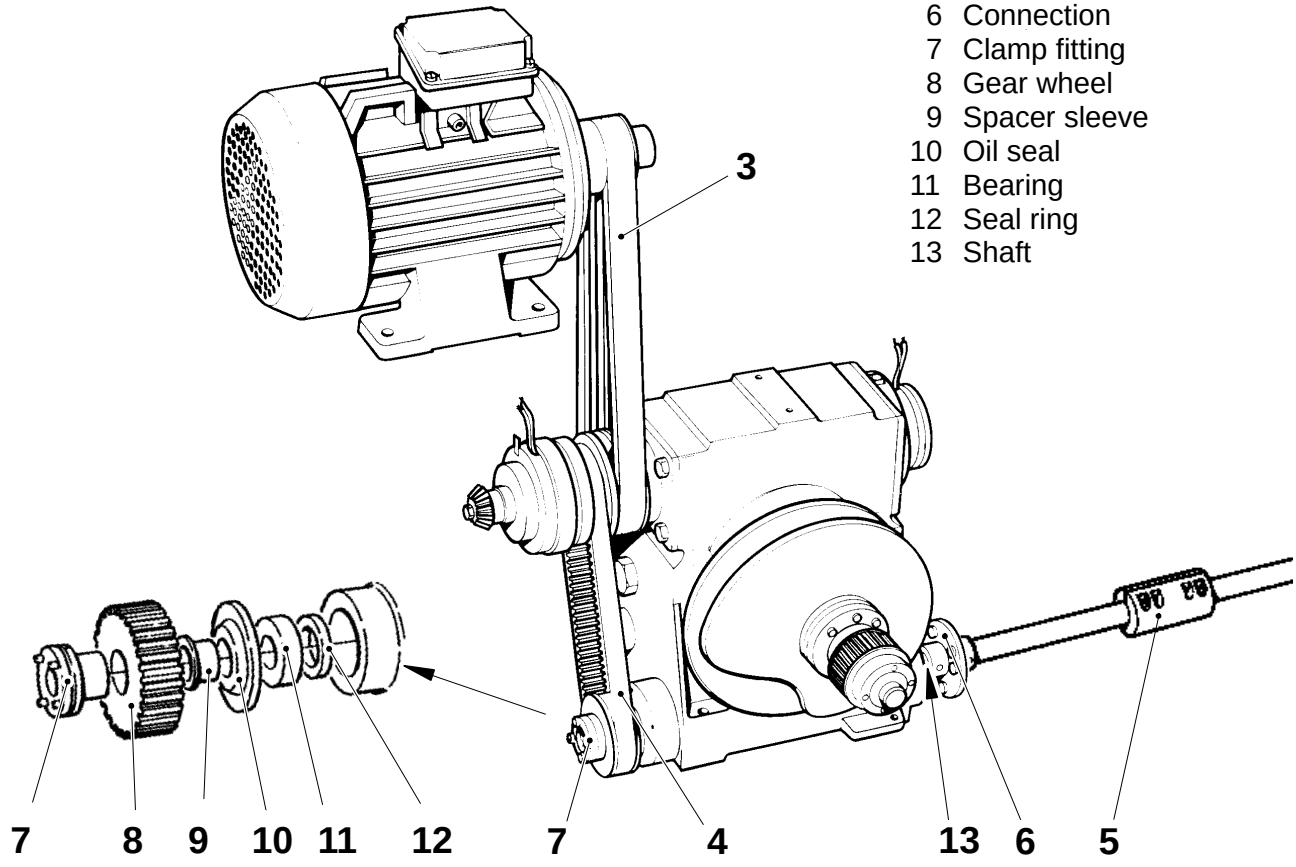

Fitting

a) Fit the shaft (1), the seal rings (2) and the ball bearings (3).

b) Fit the oil seal (4) and the spacer sleeves (5); put locking liquid on the spacer sleeves.

c) Fit the clamp fitting (6) and the gear wheel (7).
Tighten the clamp fitting, see page MM 370–4X.

d) Fit the final folder coupling (8) and the connection (9).

e) Fit the timing belt (10) and the V-belt (11).
Tension the belts, see page MM 347–5X.

f) Tighten the screws (12) and (13).

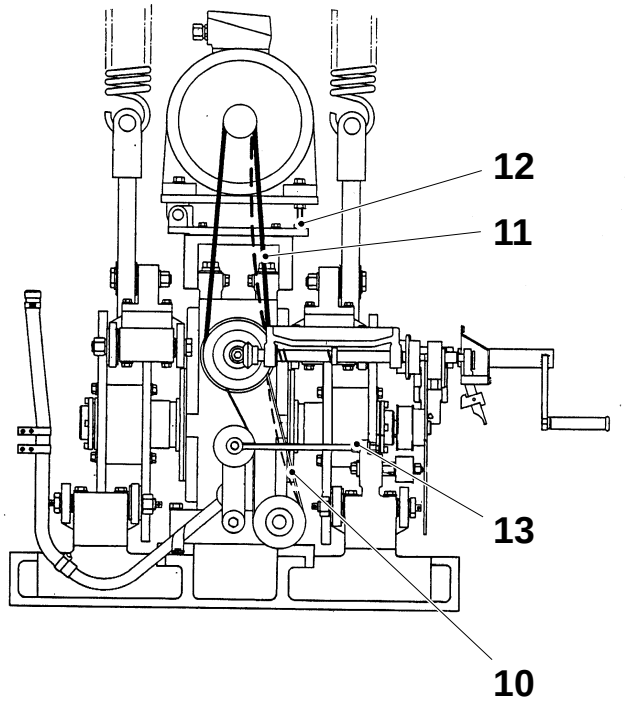

1 Shaft
2 Seal ring
3 Bearing
4 Oil seal
5 Spacer sleeve
6 Clamp fitting
7 Gear wheel
8 Coupling
9 Connection
10 Timing belt
11 V-belt
12 Screw
13 Screw

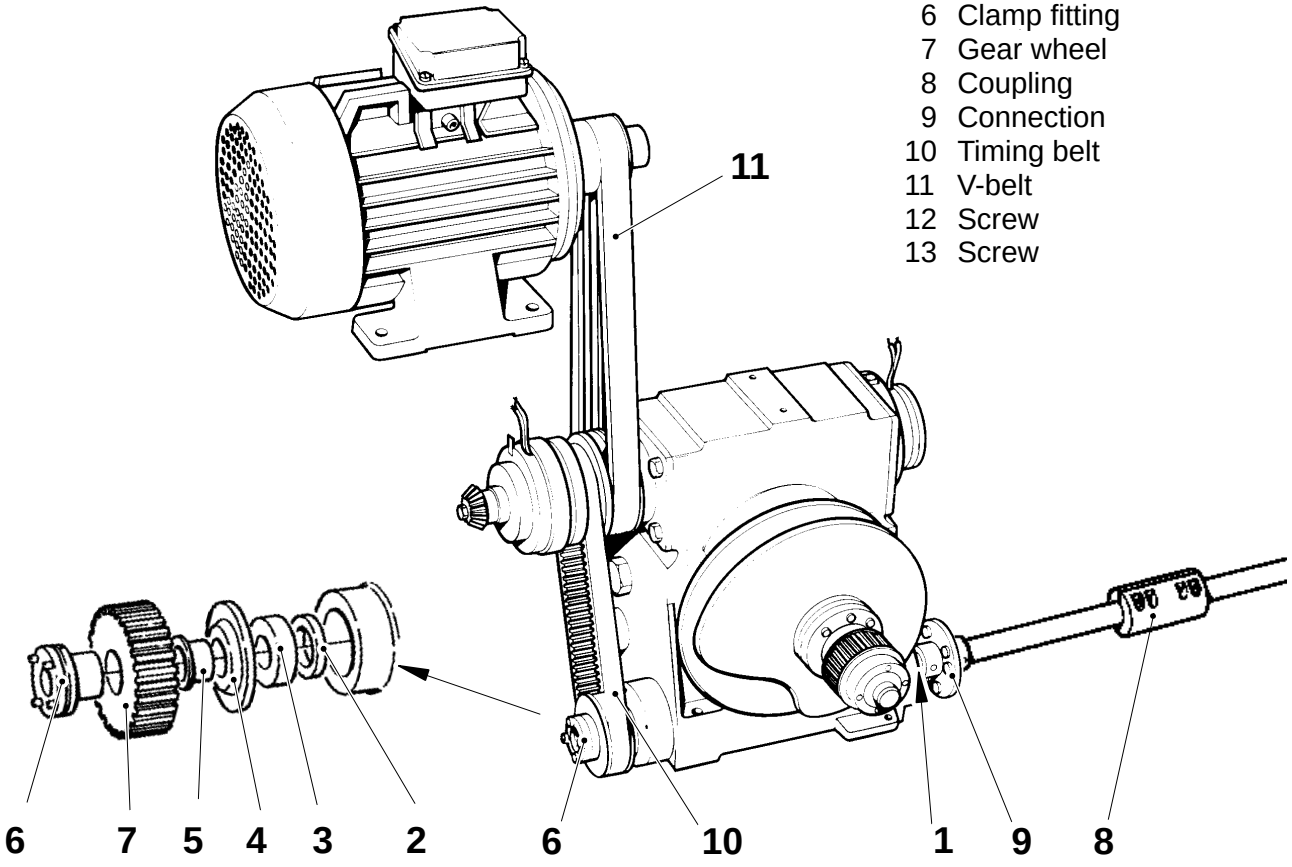

Setting

a) Set the tension of the V-belt (1) and timing belt (2) by means of a spring balance. The spring balance is to be applied at right angles to the belts and in the middle of the span of the belt.

b) Adjust the V-belt tension by means of the screw (3).

c) Adjust the timing belt tension by means of the belt tensioner (4).

Belt	Load force, N	Deflection, mm
Timing belt	14 – 16	4 – 6
V-belt	24 – 26	9 – 11

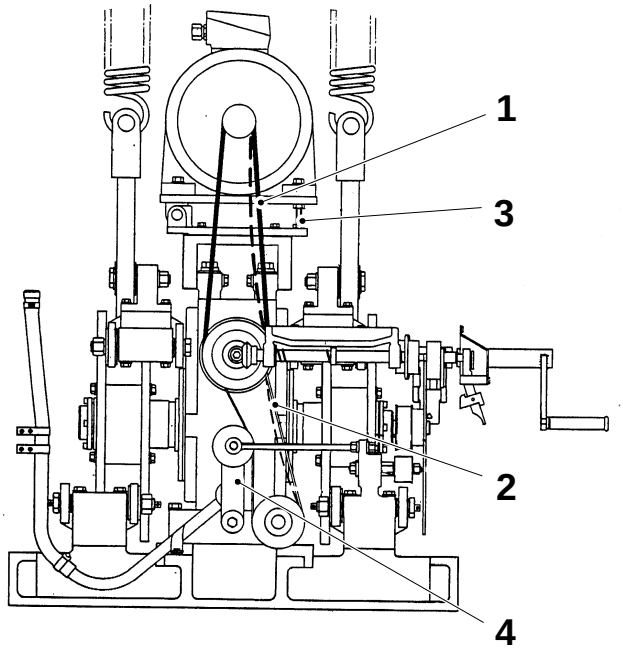

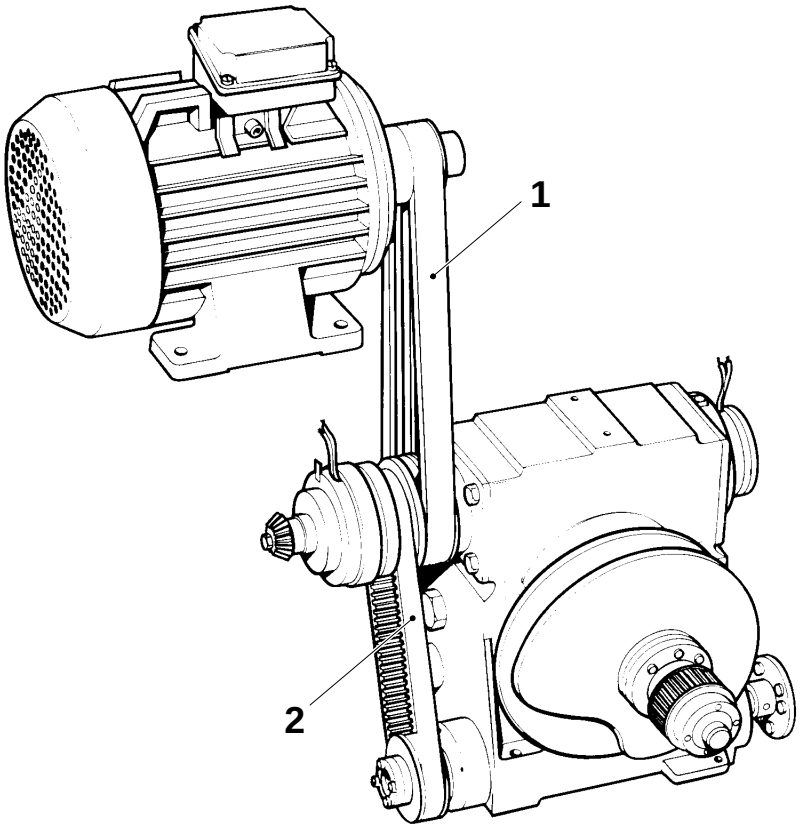

1 V-belt
2 Timing belt
3 Screw
4 Belt tensioner

Checking

a) Check the function of the brake.
With the machine in step **Production**, push the **Emergency stop** button, and check that the machine stops immediately.

b) Check distance A between the brake housing (1) and the brake disc (2). If required, set the brake, see page MM 360–5X.

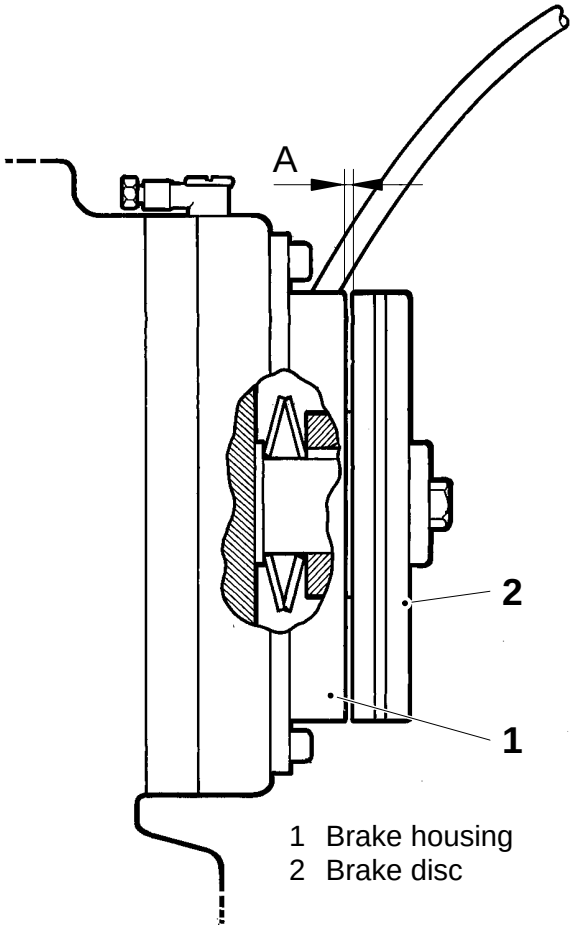

A = 0.3 – 0.5 mm

Removal

a) Mark and disconnect the cable (1) between the brake and the terminal box above the worm gear.

b) Undo the screw (2) and remove the washer (3).

c) Pull off the disc (4) together with the brake disc (5).

d) Remove the key and the cup springs (6).

e) Undo the screws (7) and remove the brake housing (8).

Reassemble in reverse order.
Tighten the screws (7). Torque 16 ± 2 Nm.

Set the brake, see page MM 360–5X.

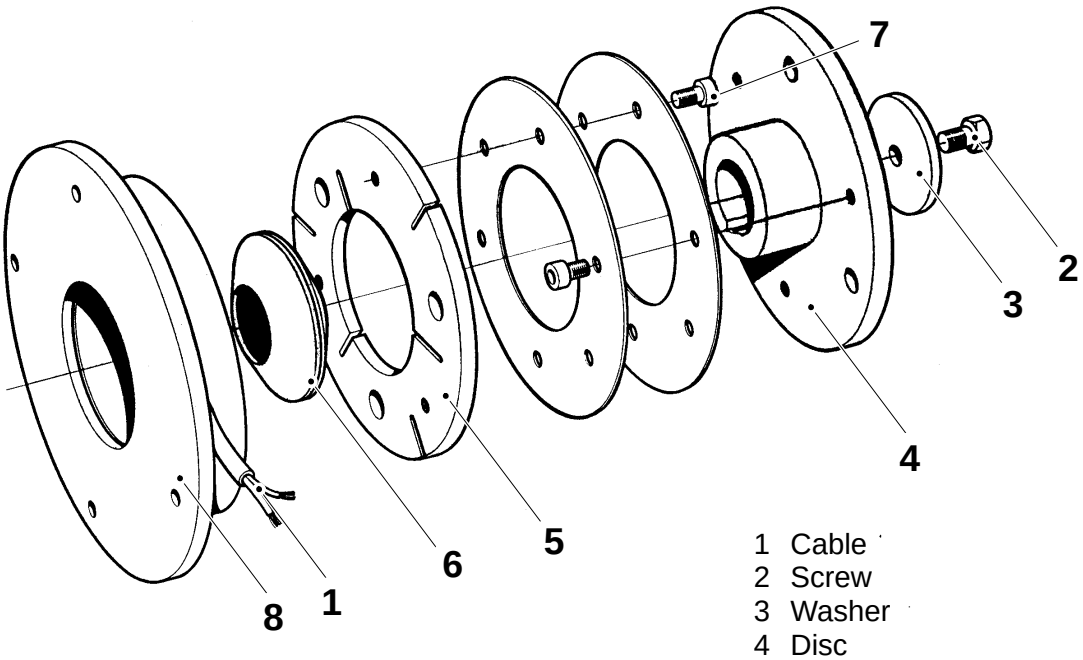

1 Cable
2 Screw
3 Washer
4 Disc
5 Brake disc
6 Cup spring
7 Screw
8 Brake housing

Setting

Set distance A between the brake housing (1) and the disc (2) by means of the screw (3).

Secure the screw with lock fluid.

Engage the brake a couple of times and make sure that distance A stays the same.

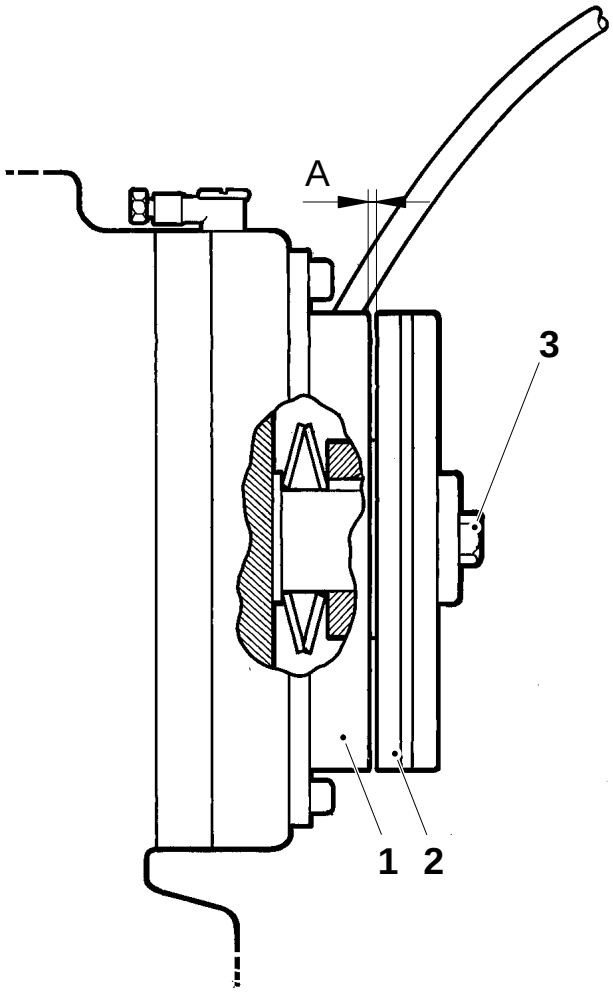

A = 0.3 – 0.5 mm

1 Brake housing
2 Brake disc
3 Screw

Checking

Check the following details for wear and/or damages:

- the pin (1)
- the magnetic clutch (2)
- the disc (3)
- the flanges (4)
- the ball bearings (5)
- the toothed pulley (6)
- the V-belt pulley (7)

Replace as required.

Check distance A between the clutch and the disc. In case of deviation, the clutch has to be removed and reset, see pages MM 361–2X and MM 361–4X.

With the machine in step **Production**, listen forcheck that there is no abnormal noise from the clutch.

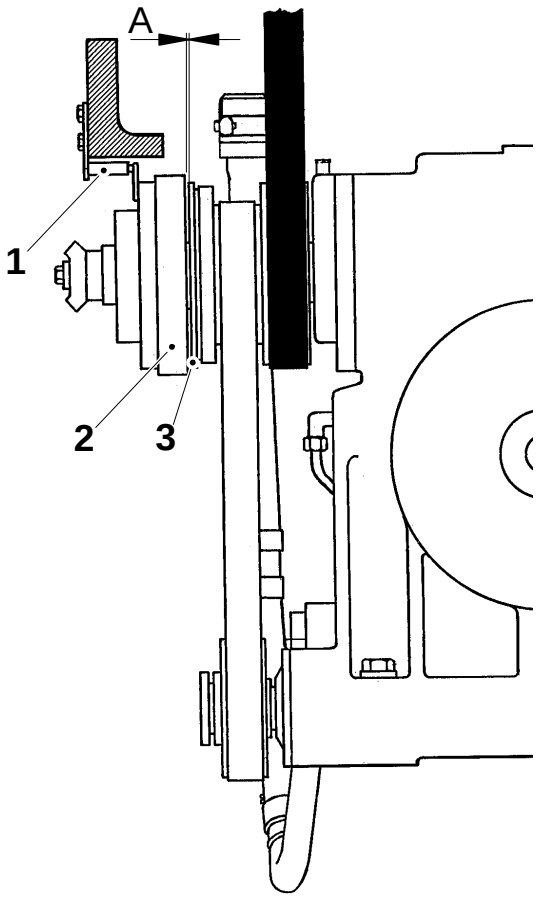

1 Pin
2 Magnetic cluth
3 Disc
4 Flange
5 Ball bearing
6 Toothed pulley
7 V-belt pulley

A = 0.2 – 0.45 mm

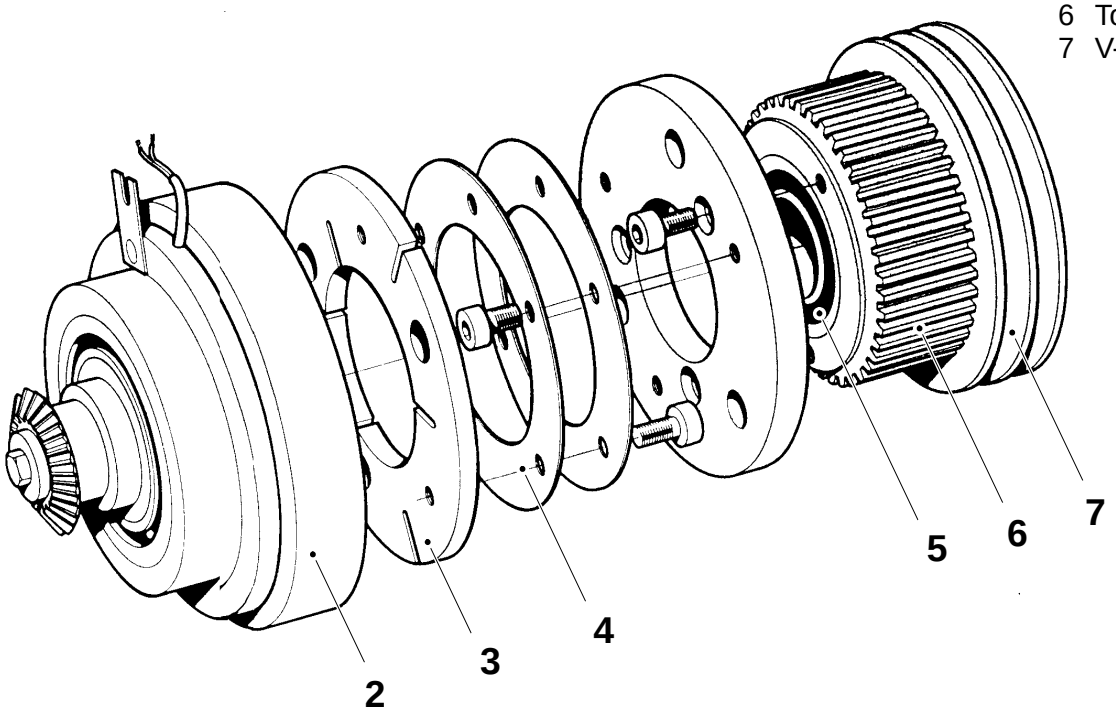

Removal

a) Remove the crank mechanism, see page MM 362–2X.

b) Undo the screws (18) and remove the pin (17).

c) Mark and disconnect the cable (1) between the clutch and the terminal box underneath the drive motor.

d) Undo the screw (15) and remove the washer (14).

e) Remove the gear wheel (13) by means of a puller.

f) Remove the key (16) and washer (12).

g) Fit a puller at points B and pull off the magnetic clutch (2).

h) Remove the key (11) and spacer (4).

Note
Do not lose the shims (10).

i) Undo the screws (3) and remove the disc (9).

j) Undo the screws (7) and remove the fixing ring (8).

k) Remove the pulleys (5) and (6) by means of a puller.

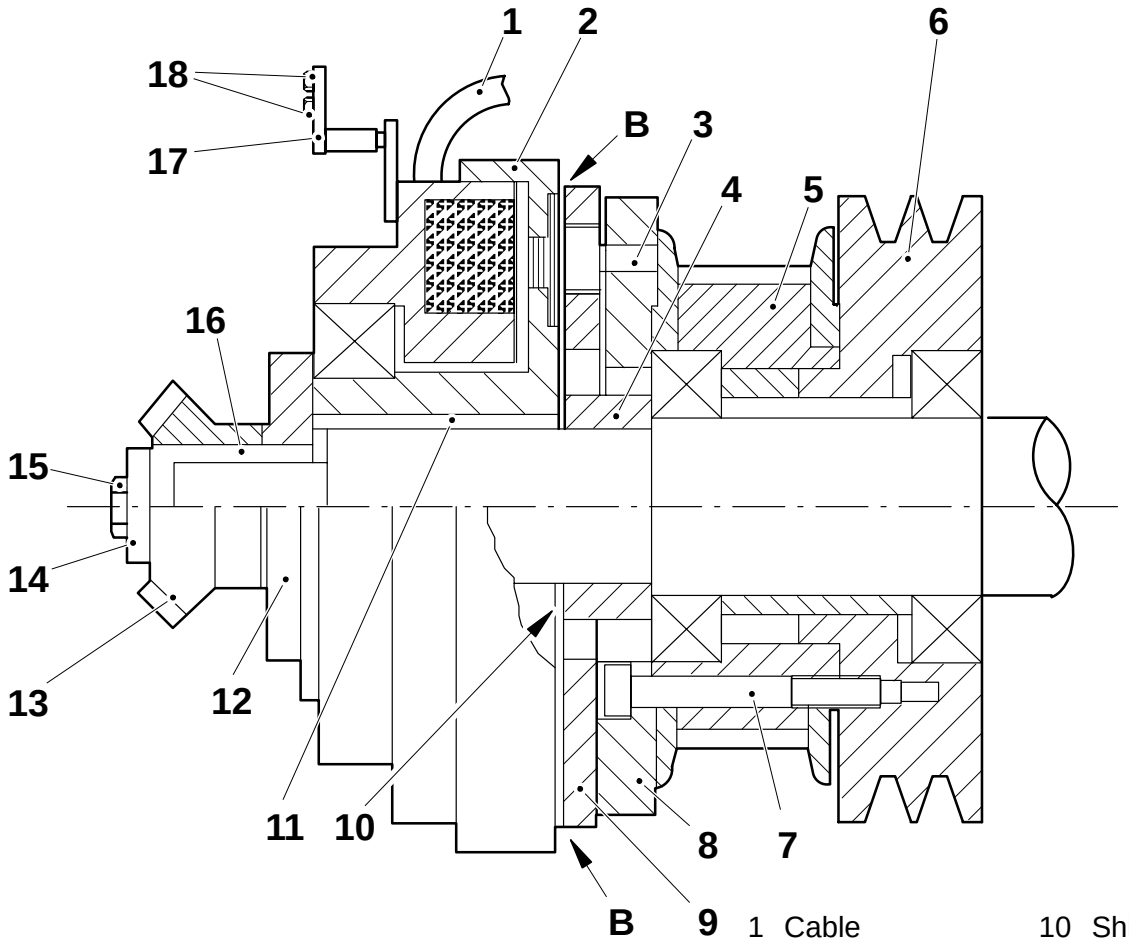

1	Cable	10	Shim
2	Magnetic clutch	11	Key
3	Screw	12	Washer
4	Spacer	13	Gear wheel
5	Toothed pulley	14	Washer
6	V-belt pulley	15	Screw
7	Screw	16	Key
8	Fixing ring	17	Pin
9	Disc	18	Screw

Fitting

a) Fit the V-belt pulley (5) and the toothed pulley (4).

b) Fit the fixing ring (7) and secure it with the screws (6). Torque, see fig.

c) Fit the spacer (3).

d) Fit the disc (8) and secure it with the screws (2). Torque, see fig.

e) Measure how much the spacer (3) protrudes outside the disc.
This corresponds to distance A between the disc and magnetic clutch.
If required, put in shims (9) to obtain the correct distance A.

f) Fit the key (10).

g) Fit the magnetic clutch (1) and check distance A.

h) Fit the key (15) and the washer (11).

i) Fit the gear wheel (12) and the washer (13). Tighten the screw (14) and secure it with lock fluid.

j) Recheck distance A.

k) Fit and set the crank mechanism, see page MM 362–5X.

l) Fit the pin (17) against the bow (16) and tighten the screws (18).

m) Connect the cable (19) to the terminal box.

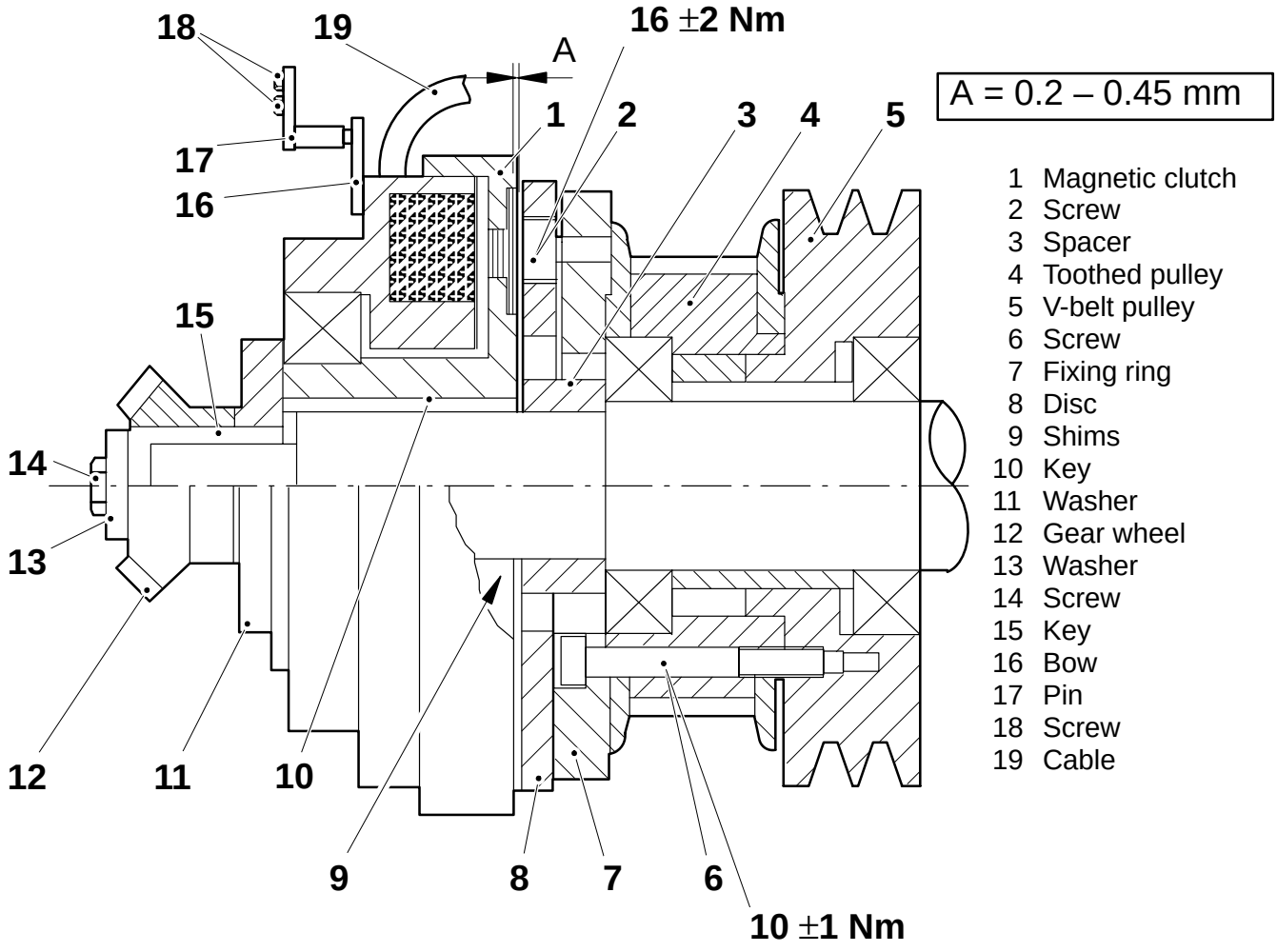

Checking

Check the following details for wear and/or damage:

- the gear wheel (2)
- the bushings (3)
- the spring (4)
- the crank switch (5)
- the shaft (6)
- the bearing (7)

Replace as required.

Check the play between the gear wheels. If required, set according to page MM 362–5X.

Check that the gear wheels (1) and (2) do not mesh until signal lamp **Safety monitor** (see OS-book) on the control panel lights up.
The check is done best by slowly pulling out the lock mechanism (8) and cranking at the same time. If required, set, see page MM 362–5X.

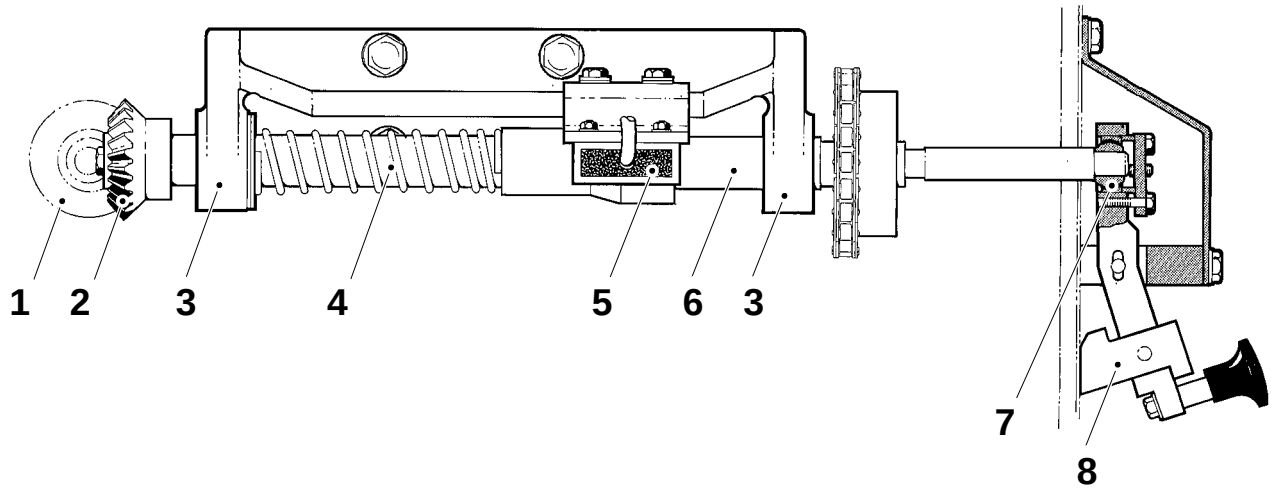

1 Gear wheel
2 Gear wheel
3 Bushing
4 Spring
5 Crank switch
6 Shaft
7 Bearing
8 Lock mechanism

Removal

a) Slacken the chain (11) with the chain tensioner and open the chain lock.

b) Remove the crank switch (13).

c) Undo the screws (8) and (10) and remove the cover (9).

d) Undo the screws (4). Remove the lid (2) and the ring (3).

e) Fit a puller and pull the bearing (1) and lock mechanism (5) off the shaft (6).

f) Undo the screws (7) and lift out the crank mechanism.

g) Undo the screw (17) and remove the gear wheel (16).

WARNING!
Spring force. Be careful.

h) Undo the pin (14). Remove the spring (15) and the shaft (6) with the sleeve.

i) Push out the bushings (12).

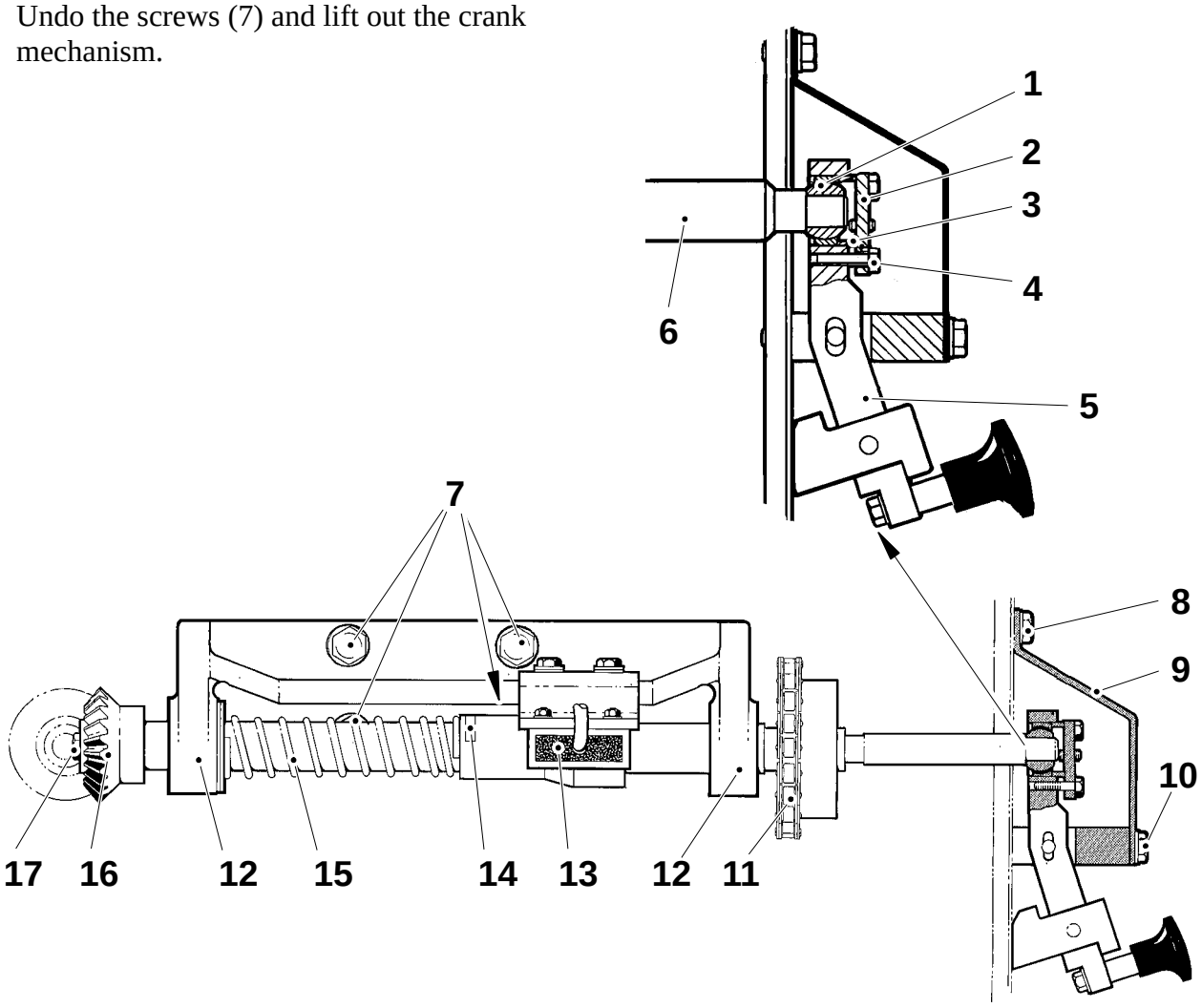

1 Bearing
2 Lid
3 Ring
4 Screw
5 Lock mechanism
6 Shaft
7 Screw
8 Screw
9 Cover
10 Screw
11 Chain
12 Bushing
13 Crank switch
14 Pin
15 Spring
16 Gear wheel
17 Screw

Fitting

a) Fit the bushings (18).

b) Fit the spring (17) and the shaft (12) with the sleeve (15). Secure the shaft with the pin (16).

c) Fit the gear wheel (8) on the crank mechanism.

d) Put the crank mechanism in place in the machine and tighten the screws (10) loosely.

e) Align the gear wheels (7) and (8) with one another by pushing in the shaft (12) by hand and then shifting the bracket (9) up or down.

f) Tighten the screws (10).

g) Fit the bearing (1), the ring (2), and the lid (3). Tighten the screws (4).

h) Secure the lock mechanism (6) with the screws (5).

i) Fit the cover (11) and the crank switch, and set the crank mechanism, see page MM 362–5X.

j) Fit and tension the chain (13).

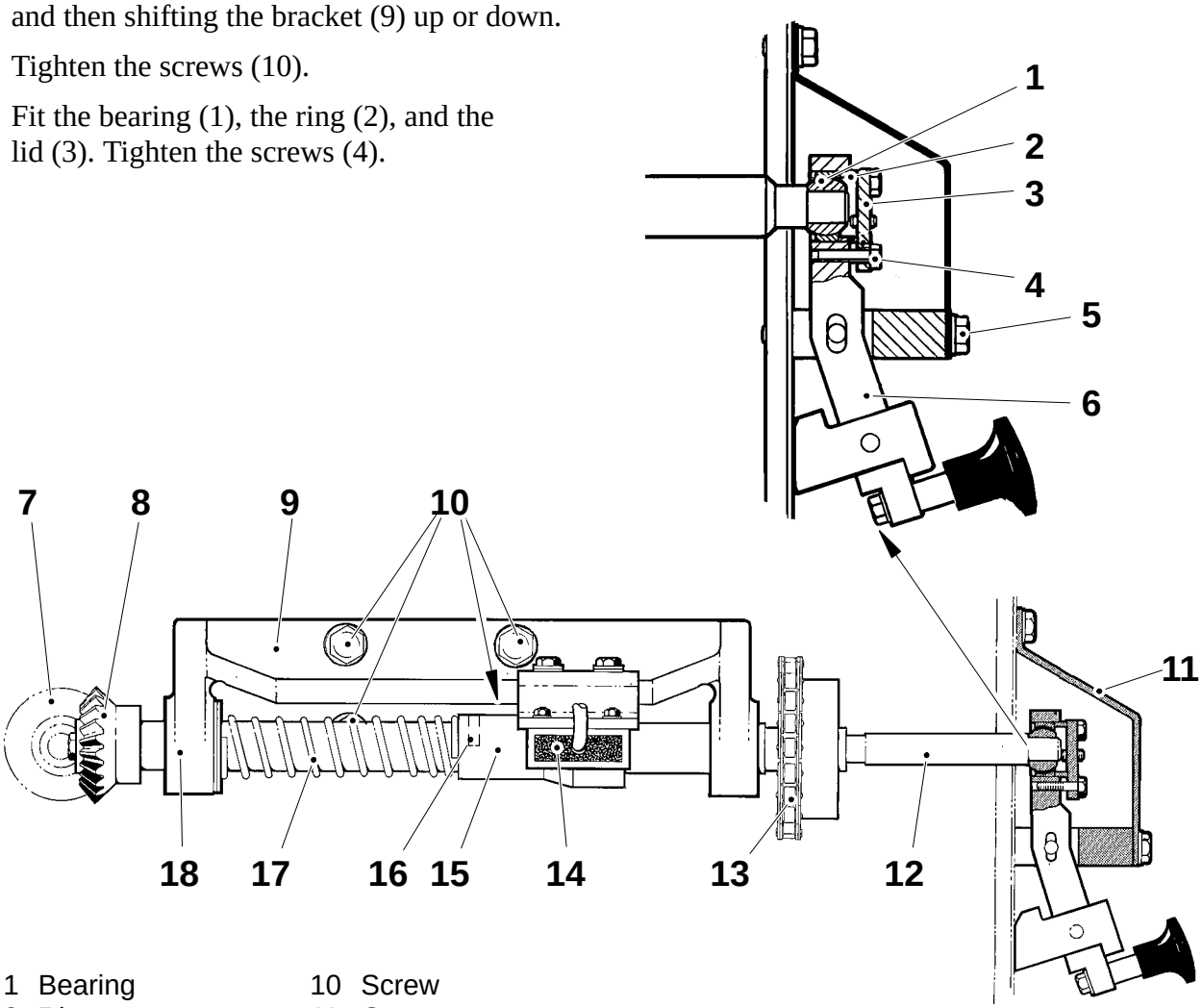

1	Bearing	10	Screw
2	Ring	11	Cover
3	Lid	12	Shaft
4	Screw	13	Chain
5	Screw	14	Crank switch
6	Lock mechanism	15	Sleeve
7	Gear wheel	16	Pin
8	Gear wheel	17	Spring
9	Bracket	18	Bushing

Setting

a) Loosen the screws (9), push the shaft (10), and shift the bracket (8) up or down until the gear wheels (6) and (7) are aligned. Tighten the screw.

b) Remove the cover (12).

c) Tighten the lock mechanism (5) with the screws (4).

d) Set the gear play as follows:

To decrease the play:
Lock the mechanism in engaged position. Loosen the screws (2). Tighten the screws (3) until the correct gear play is obtained. Tighten the screws (2).

To increase the play:
Loosen the screws (2) and (3) and tap the lock mechanism to shift it slightly on the bearing (1).

Note
If there is not enough adjustment range left, loosen the screws (9) and shift the bracket sideways. Watch the gear wheel alignment. Repeat the gear play setting.

e) Fit the cover (12).

f) Set the crank switch (11) so that the gear wheels (6) and (7) do not mesh until the signal lamp **Safety monitor** (see OS book) on the monitor panel lights up.
To adjust, loosen the screws (13) and shift the switch.

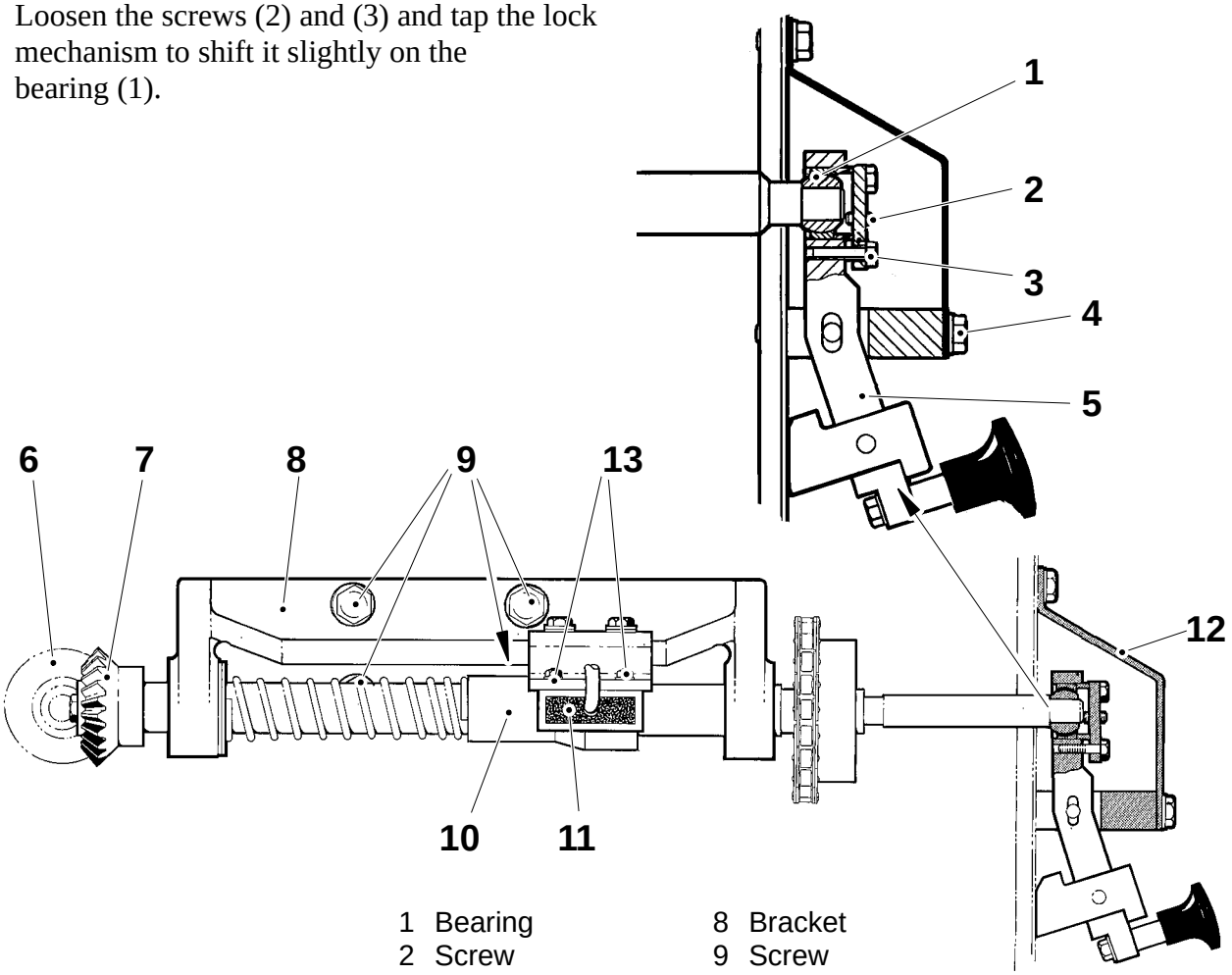

1 Bearing
2 Screw
3 Screw
4 Screw
5 Lock mechanism
6 Gear wheel
7 Gear wheel
8 Bracket
9 Screw
10 Shaft
11 Crank switch
12 Cover
13 Screw

Removal

Clamp bushing

a) Loosen the screws (1) **in sequence** around the flange, half a turn at a time.

Caution!
The screws must not be unscrewed completely.

b) If the clamp bushing sticks to the hub (2), long screws may be used as puller tools.

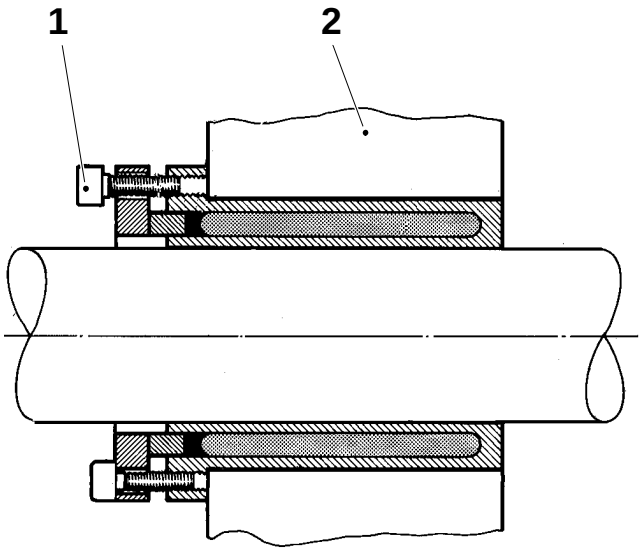

Clamp element

a) Loosen the screws (3) a couple of turns.

b) Put two screws over into the puller holes (4).

c) Tighten these screws cross-wise, in small steps, until the outer sleeve comes off the inner one.

d) Remove the clamp element.

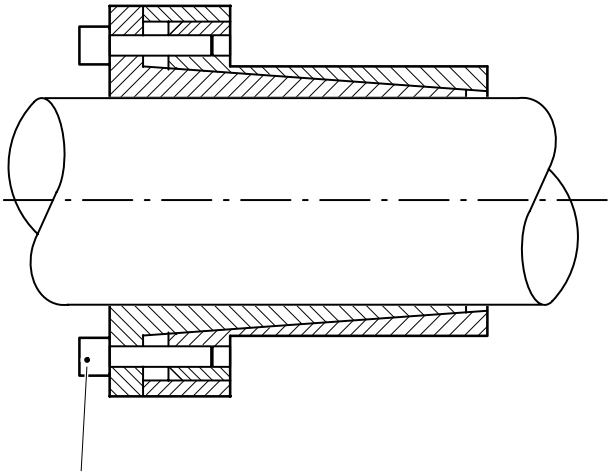

1 Screw
2 Hub
3 Screw
4 Puller hole

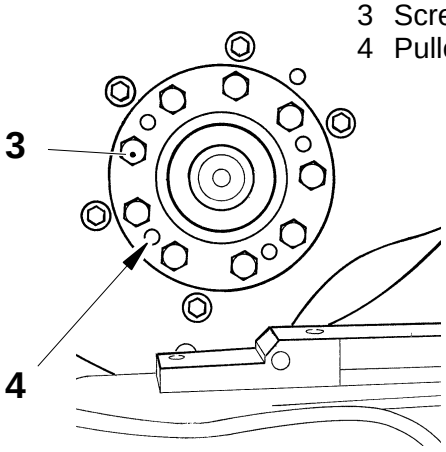

Fitting

Clamp bushing

Wash off rust inhibitor and grease from the clamp fitting, the shaft (3) and hub (2). Use white spirit.

Make sure that the screws (1) are lubricated with lubricant TP No. 92296–2.

Put the clamp fitting in place and tighten the screws (1) in sequence around the flange, half a turn at a time until maximum torque is reached, see table.

Caution!
Do not tighten the pressure ring (4) and sleeve (5) against one another, distance A.

WARNING!
Never adjust the tightening torque afterwards by turning out the screws, as the result may be that the screws shake loose.

Shaft diameter, mm	Tightening torque, Nm
19 – 42	8.0 ±1
45 – 65	13.0 ±1

(Cont’d overleaf)

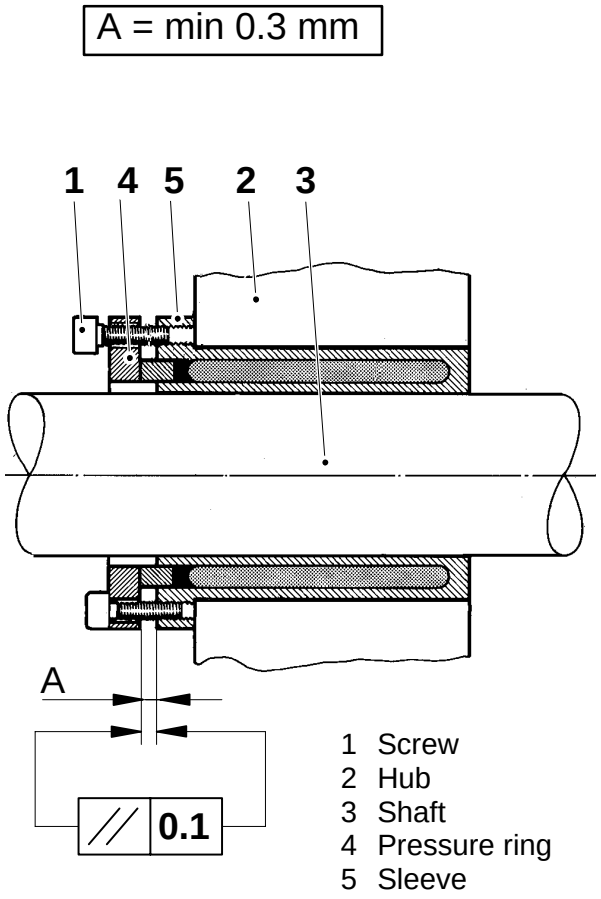

(Cont'd)

Clamp element

Wash off rust inhibitor and grease from the clamp fitting, the shaft (3) and hub (2). Use white spirit.

Make sure that the screws (1) are lubricated with lubricant TP No. 92296–2.

a) With screws in the puller holes, the clamp element is kept apart.

b) Oil the clamp element.

Caution!
Do **not** use Molybdenum disulphide oil, high pressure oil or grease.

c) Put the clamp element in place, shift the screws from the puller holes. Tighten the screws (1) cross-wise, by hand, then with **half** the tightening torque, see table.

d) Finally tighten cross-wise with torque according to the table.
Tighten the screws cross-wise several times, with full tightening torque, until it is not possible to tighten them further.

Shaft diameter, mm	Tightening torque, Nm
25	11.5 ±1
60	28.0 ±1

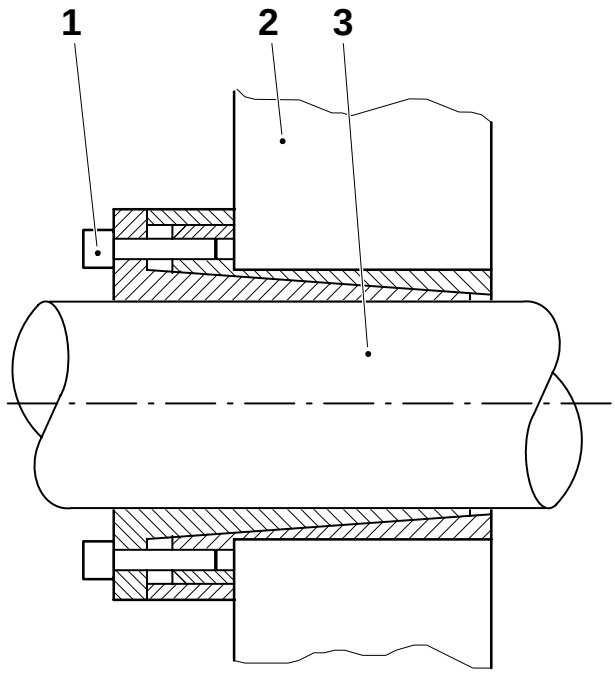

1 Screw
2 Hub
3 Shaft
4 Pressure ring
5 Sleeve

Description	TB/9	TBA/9
Setting sequence – basic setting	401–51	401–51
Inductor – checking		409–11
Inductor – removal		409–21
Yoke – checking	410–11	410–11
Yoke – removal (3 pages)	410–21	410–21
Yoke – setting (2 pages)	410–51	410–51
Yoke symmetry – setting (2 pages)	414–51	414–51
Cutting jaw and pressure jaw alignment – setting (2 pages)	415–51	415–51
Shock absorber – checking	416–11	416–11
Volume flap – checking	417–11	417–11
Volume flap – removal (2 pages)	417–21	417–21
Volume flap – setting	417–51	417–51
Volume cam section – checking	421–11	421–11
Volume cam section – removal	421–21	421–21
Volume cam section – setting (2 pages)	421–51	421–51
Design correction mechanism – checking	423–11	423–11
Design correction mechanism – setting (3 pages)	423–51	423–51
Folding flaps – checking bearing play	428–11	428–11
Folding flap mechanism – setting (2 pages)	429–51	429–51
Folding flap mechanism – setting	430–51	430–51
Cutting pistons – checking	433–11	433–11
Cutting pistons – overhaul (2 pages)	433–31	433–31
Cutting pistons – bleeding	433–71	433–71

Description	TB/9	TBA/9
Stroke – checking	436–11	436–11
Stroke – setting (2 pages)	436–51	436–51
Volume flap alignment – setting	442–51	442–51
Tube support rollers – basic/final setting (2 pages)	443–51	443–51
Jaw gap and non-parallelity in movement – checking	445–11	445–11
Jaw gap and non-parallelity in movement – setting	445–51	445–51
Knife holder – checking	450–11	450–11
Knife holder – replacement	450–31	450–31
Jaw-over-jaw – checking/final setting	458–11	458–11
Jaw-over-jaw – basic setting	458–51	458–51
Hoses, cables and lubrication connections – checking	461–11	461–11
Catches – checking	465–11	465–11
Catches – overhaul	465–31	465–31
Catches – bleeding	465–71	465–71
Catch clearance – checking	467–11	467–11
Catch pivot spring – setting	468–51	468–51
Catch lifter cams and rollers – checking	469–11	469–11
Catch lifter cams and rollers – setting	469–51	469–51
Way – checking	470–11	470–11
Way – removal	470–21	470–21

Basic setting

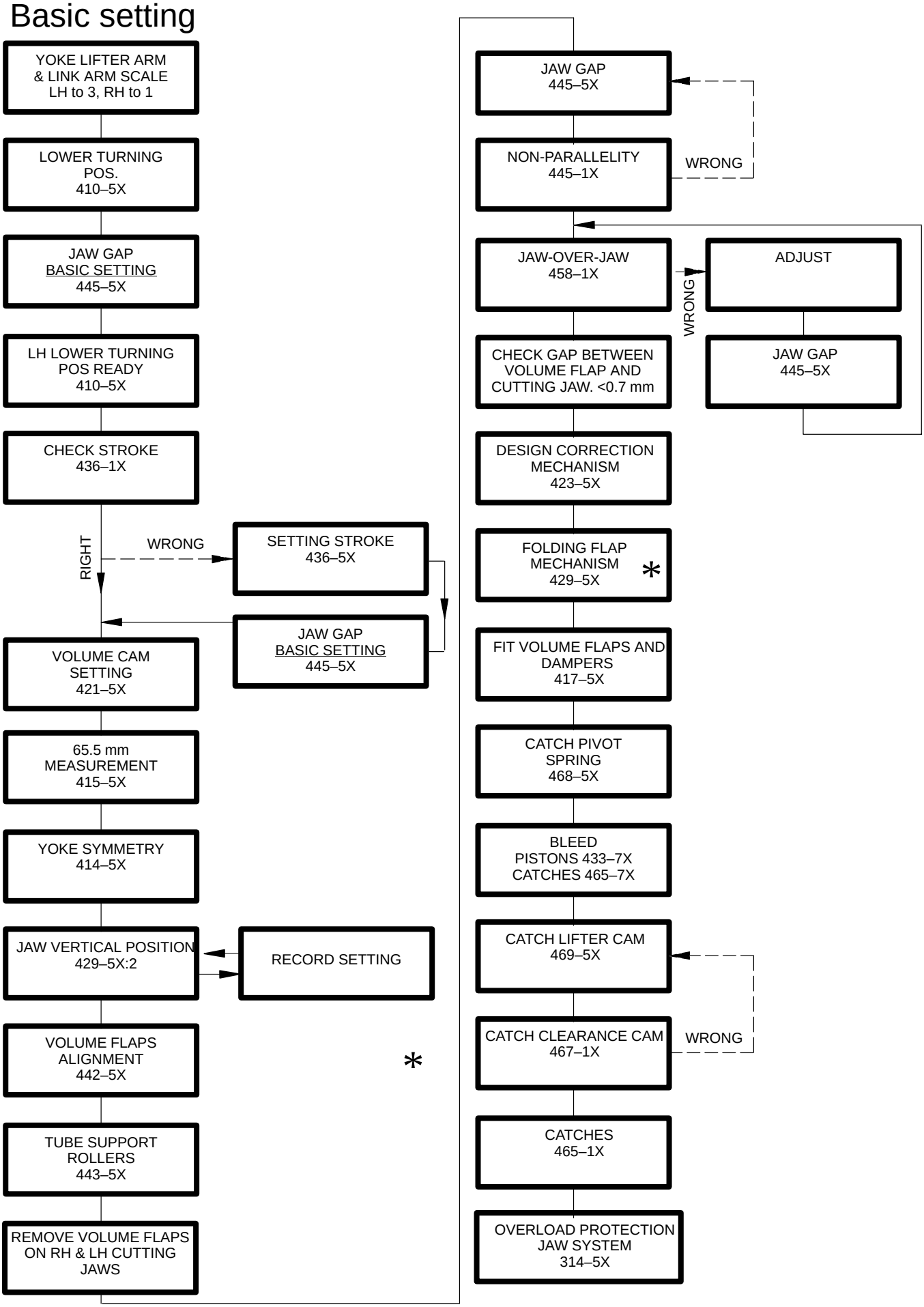

Checking

Check the following details for wear and/or damage:

- the inductor; make sure that the slot (2) in the inductor is not blocked and that the edges are not deformed
- the electrical conductors (1), make sure they are free from oxidation; if required, clean with a brass wire brush
- the insulator parts
- the inductor; flush through the cooling water pipes to make sure they are not blocked by lime deposits

Replace as required.

Caution!
When replacing the inductor, make sure the new inductor has **the same part number** as the old one.

If the transformer/inductor combination is not correct, the generator cannot operate and the front panel LED will display **Load error** (3).

If the inductors have been changed, set the jaws in vertical position, see page MM 429–5X.

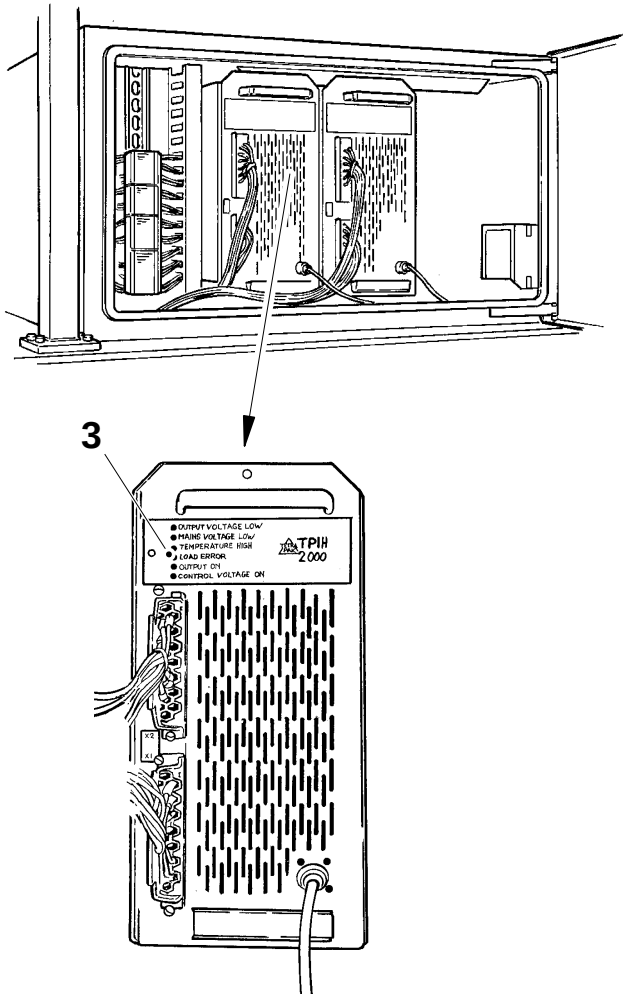

1 Electrical conductor
2 Slot
3 LED Load error

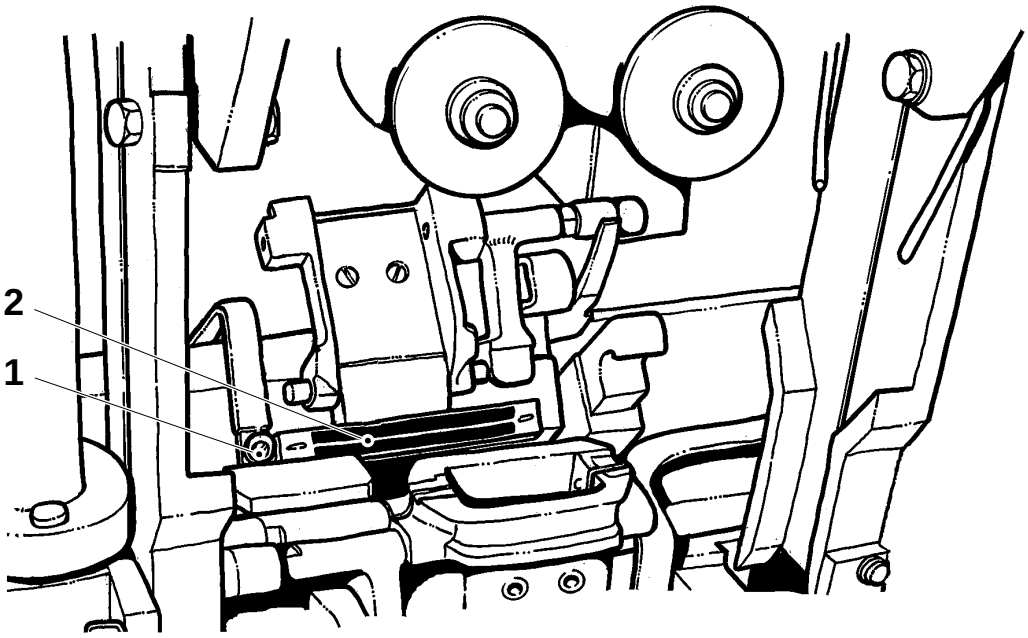

Removal

a) Undo the screw (1) and remove the washer (2), the insulation nut (3) and the washer (4).

b) Undo the screws (5) and remove the O-rings (6).

c) Undo the three screws (7) and remove the inductor from the rail.

   Note
   Do not lose the gasket (8) when taking the inductor and rail apart.

Reassemble in reverse order.

Make sure that the gasket (8) and the O-rings (6) are fitted correctly.

1 Screw
2 Washer
3 Insulation nut
4 Washer
5 Screw
6 O-ring
7 Screw
8 Gasket

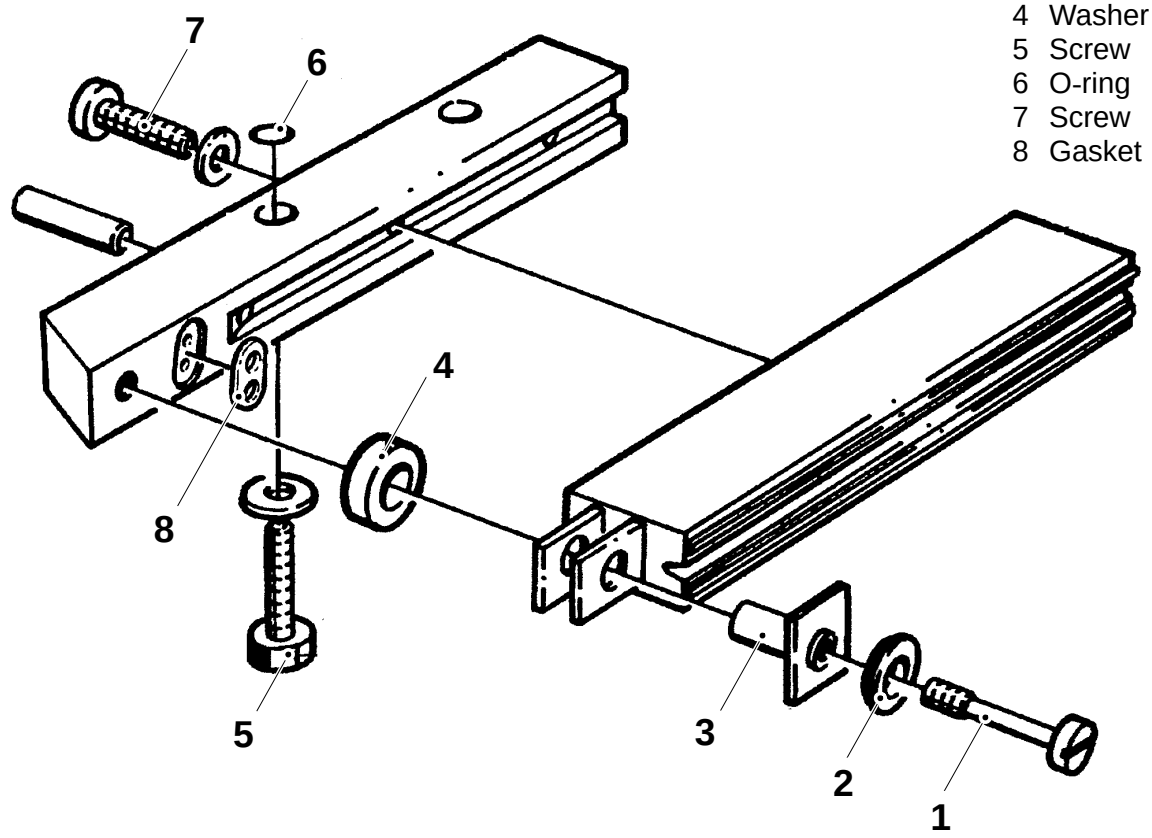

Checking

Check the following details for wear and/or damage:

- the bushings (1) and (13)
- the curve rollers (2) and (7); make sure that the rollers have not been worn flat and that the bearing play does not exceed 0.1 mm; replace the bearings as required
- the dowel (3)
- the piece (4)
- the axle pins (5) and (8)
- the O-rings (6), (12) and (14)
- the springs (9)
- the plungers (10)
- the sliders (11)
- the pivot pins (15)
- the shaft (16)

Replace as required.

1 Bushing
2 Curve roller
3 Dowel
4 Piece
5 Axle pin
6 O-ring
7 Curve roller
8 Axle pin
9 Spring
10 Plunger
11 Slider
12 O-ring
13 Bushing
14 O-ring
15 Pivot pin
16 Shaft

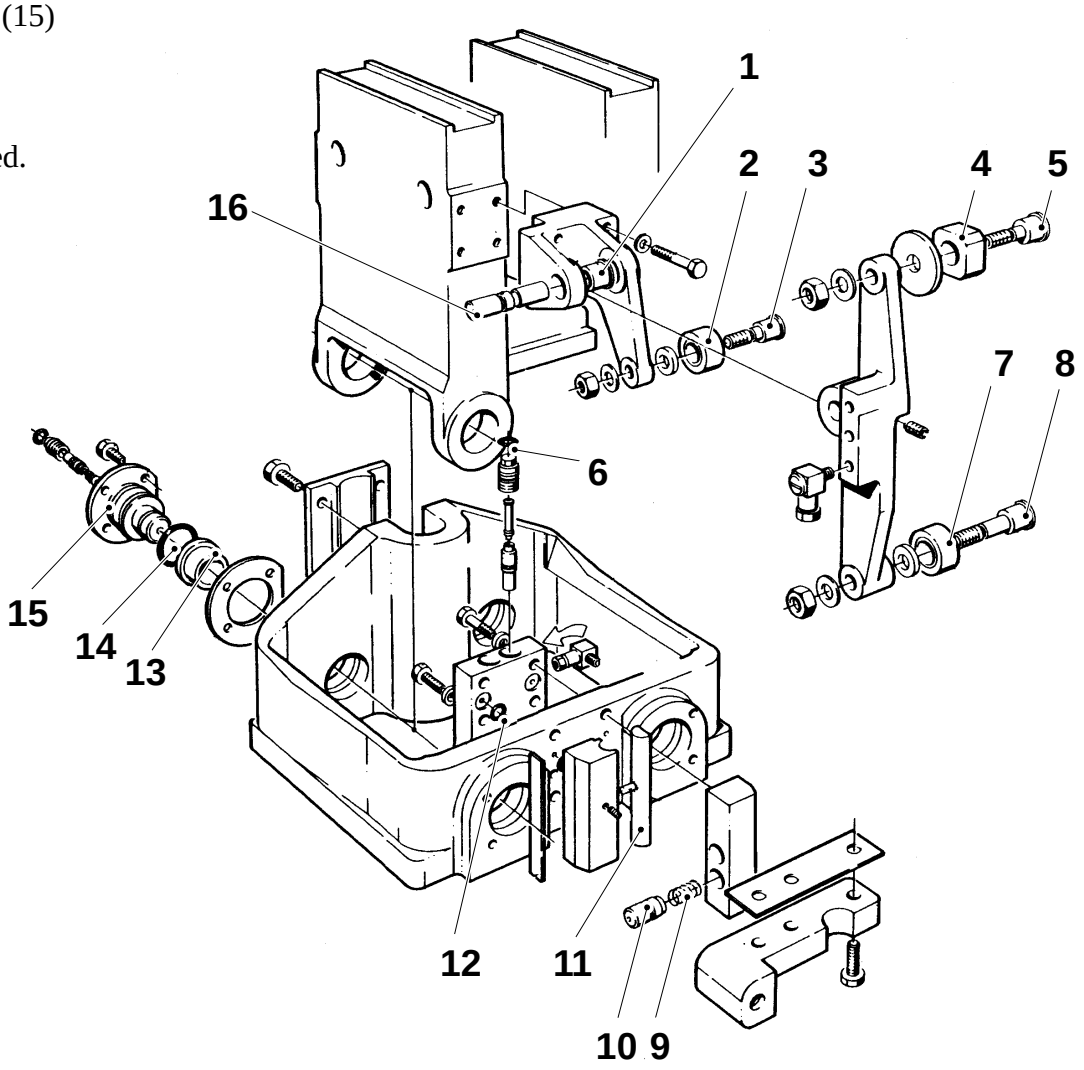

Removal

a) Release the spring force of the hold down device, see page MM 306–2X.

b) Undo the banjo connections (1) and (2).

c) Remove the carrier (3).

d) Loosen the screws (4) and (5) and carefully lower the yoke (6).

e) Undo the two screws (7) under the outer guides and lower the link arms down onto the bottom plate.

(Cont’d overleaf)

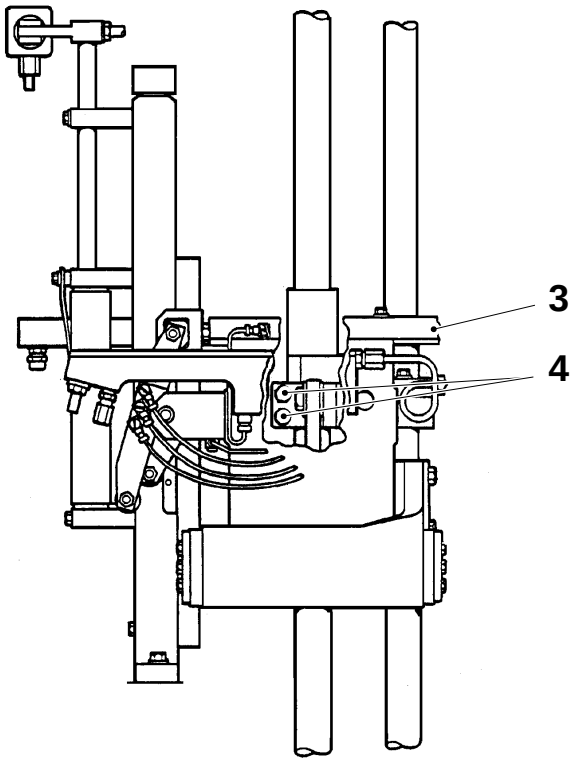

1 Banjo connection
2 Banjo connection
3 Carrier
4 Screw
5 Screw
6 Yoke
7 Screw

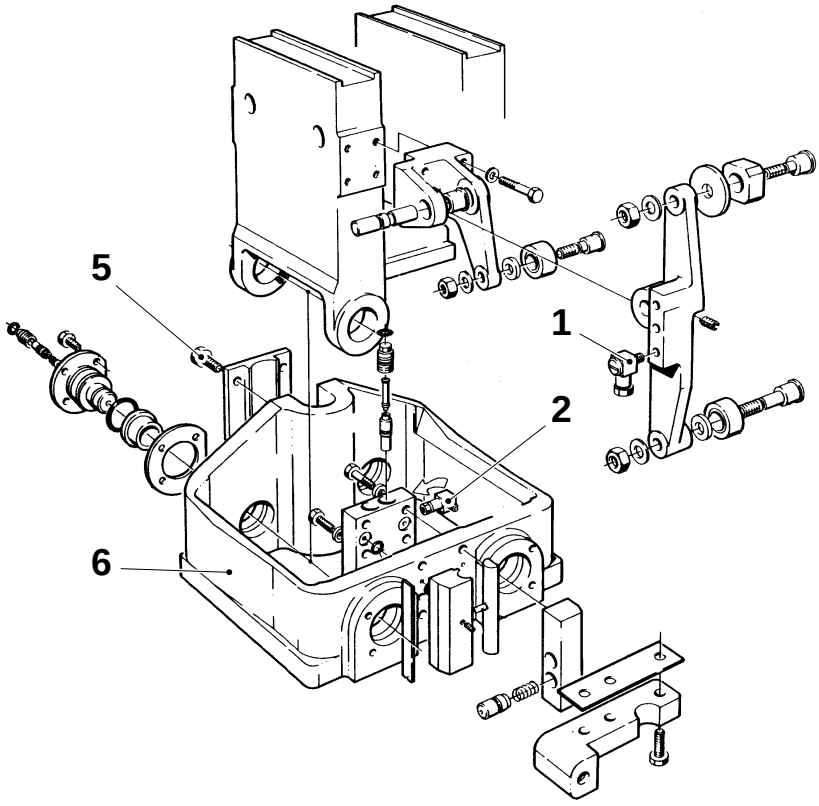

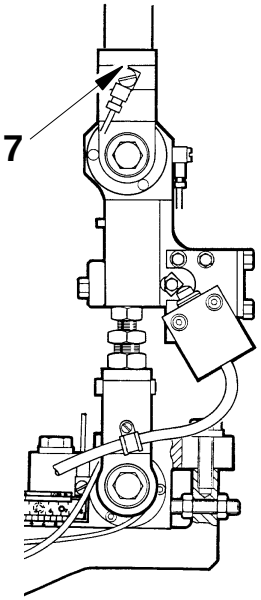

f) Undo the four (8) screws on the plate under the inner guides. Undo the two screws (9) under the guides and remove the plate.

g) Push up the guides, and remove the yoke.

Note
Do not lose the shims (10).

h) Undo the nut (11). Remove the axle pin (12), the curve roller (13) and the washers (14) and (15).

i) Undo the nut (16). Remove the washer (17), the piece (18) and the axle pin (19).

(Cont'd overleaf)

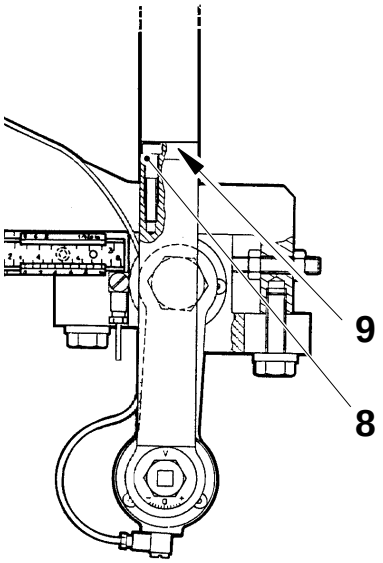

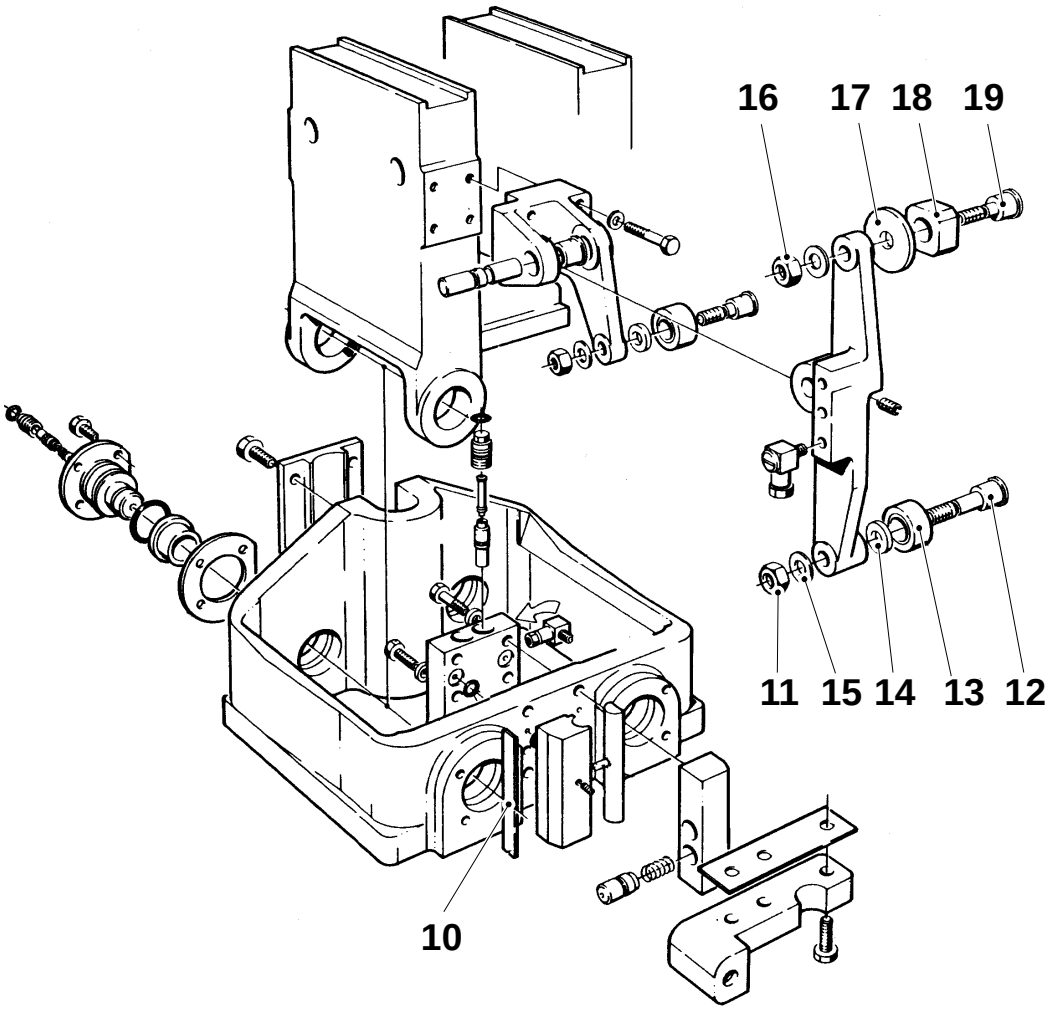

8 Screw
9 Screw
10 Shim
11 Nut
12 Axle pin
13 Curve roller
14 Washer
15 Washer
16 Nut
17 Washer
18 Piece
19 Axle pin

(Cont'd)

j) Undo the nut (20). Remove the dowel (21), the curve roller (22) and the washers (23).

k) Loosen the stop screw (24). Remove the shaft (25).

l) Remove the bushing (26).

m) Undo the screws (27). Remove the pivot pin (28) with the O-ring (29), the bushing (30) and shims.
Repeat on all four.

n) Loosen the stop screw (31) and pull out the slider (32).

o) Remove the plunger (33) and the spring (34) from the bracket (35).

p) Undo the screw (36). Remove the O-ring (37), the spacer (38) and the dosing valve (39).

q) Undo the spacer (40). Remove the O-ring and the spacer (41).

r) Remove the guides.

Reassemble in reverse order.

Note
Make sure that the shaft (25) and the piece (18) are fitted correctly. The lubrication hole in the piece should be pointing outwards (arrow).
At reassembly, put locking fluid on the screws of the guides.

18 Piece
20 Nut
21 Dowel
22 Curve roller
23 Washer
24 Stop screw
25 Shaft
26 Bushing
27 Screw
28 Pivot pin
29 O-ring
30 Bushing
31 Stop screw
32 Slider
33 Plunger
34 Spring
35 Bracket
36 Screw
37 O-ring
38 Spacer
39 Dosing valve
40 Spacer
41 Spacer

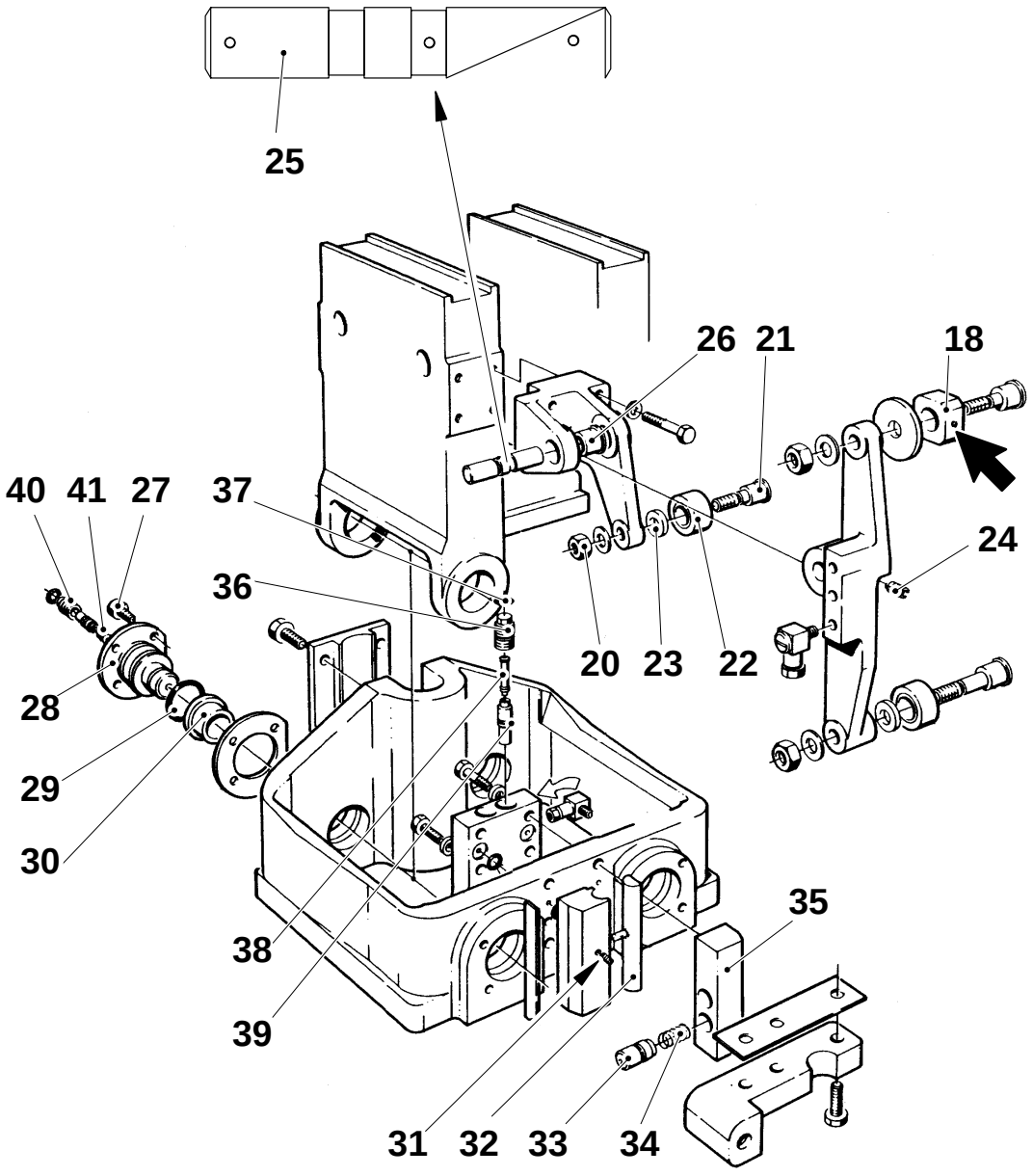

Setting

Turning positions

a) Set the scales of the LH yoke lifter arm and link arm at 3.

b) Set the scales of the RH yoke lifter arm and link arm at 1.

c) Crank the machine until the LH yoke (3) is in its lower turning position, see table.

d) Loosen the two screws (1) and the six screws (2).

e) Place the template (4), see table, on the plate (5) and let the yoke rest against the template.

(Cont'd overleaf)

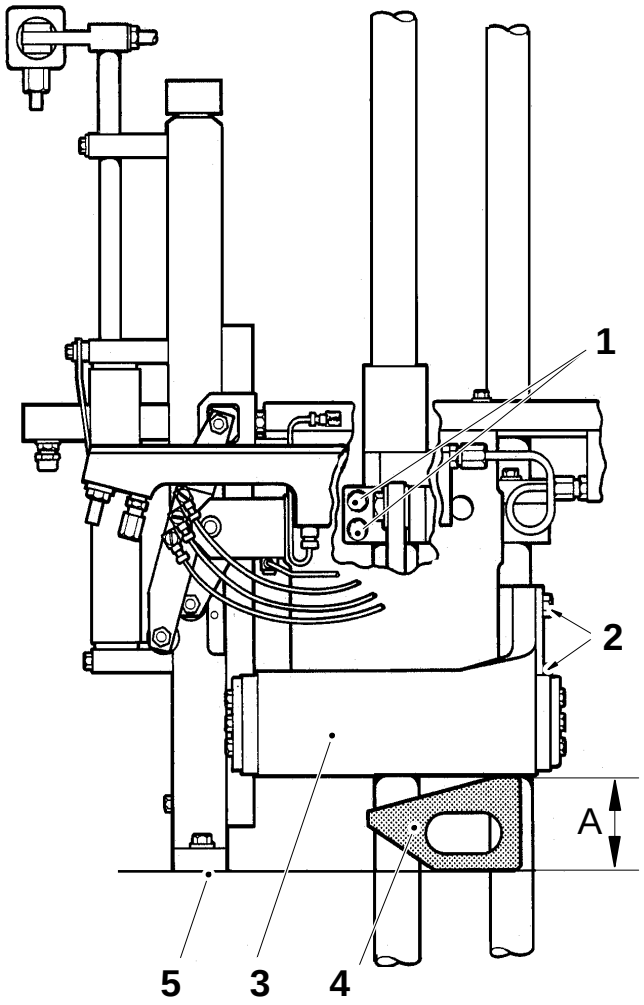

1 Screw
2 Screw
3 Yoke, LH
4 Template TP No. 75931–X
5 Plate

Volume, ml	Turning position		Template	A
	LH Yoke	RH Yoke	TP No.	±0.2 mm
TB 180 B	346°	166°	75931–3	53.1
TB 200 B	348°	168°	75931–2	51.3
TB 200 S	348°	168°	75931–4	47.4
TB 236 B	346°	166°	75931–13	48.9
TB 250 B	346°	166°	75931–1	50.1
TBA 125 S	330°	150°	75931–9	48.4
TBA 160 S	306°	136°	75931–8	47.4
TBA 180 B	332°	152°	75931–8	47.4
TBA 200 B	330°	150°	75931–11	47.9
TBA 200 S	330°	150°	75931–10	40.1
TBA 236 B	330°	150°	75931–6	46.5
TBA 250 B	330°	150°	75931–5	46.0
TBA 250 S	316°	136°	75931–10	40.1
TBA 284 B	330°	150°	75931–12	41.8

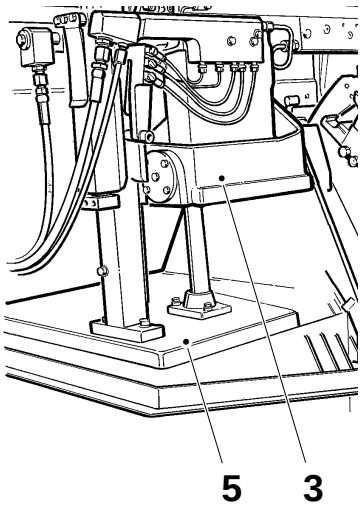

(Cont'd)

f) Set surface (5) on the bracket (6) parallel to surface (7) on the yoke lifter arm (8).

g) Tighten the six screws (2) and remove the template.

h) **Caution!**
During the setting procedure, the jaw system must be forcibly guided by hand while the machine is being cranked.

Set the jaw gap, basic setting, see page MM 445–5X.

i) Tighten the screws (1).

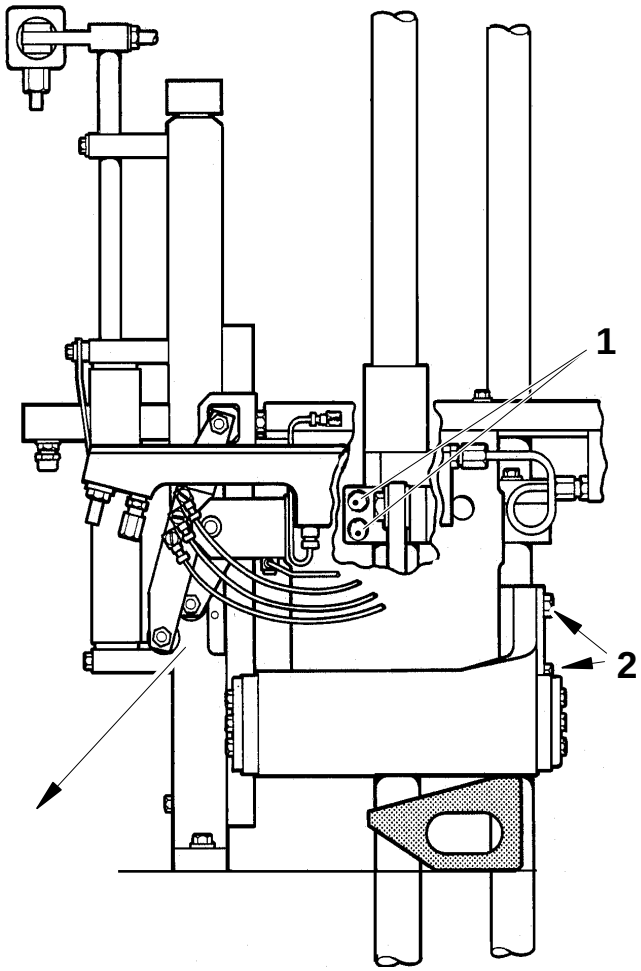

Cam and support rollers

Set distance B, between the support rollers and the cam (9), by means of the eccentric screw (10).

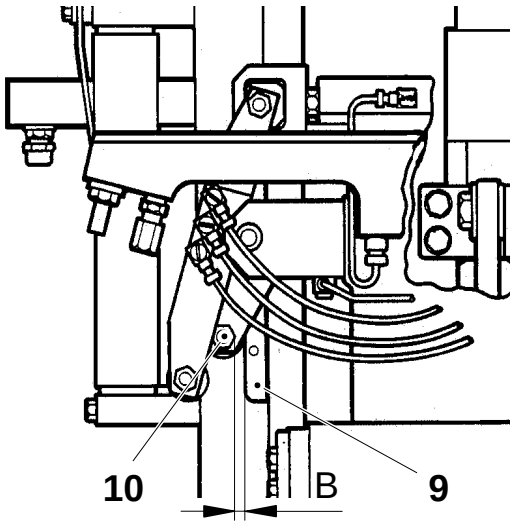

B = 0.05 – 0.10 mm

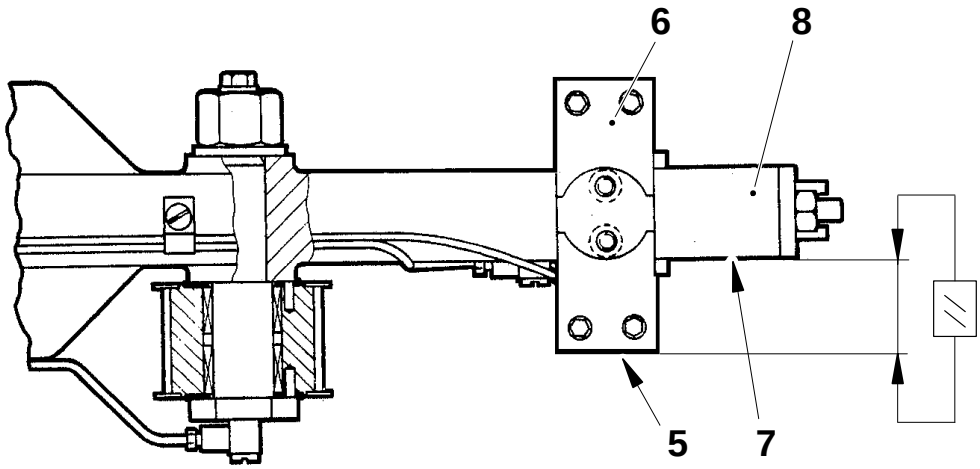

1 Screw
2 Screw
5 Surface
6 Bracket
7 Surface
8 Yoke lifter arm
9 Cam
10 Eccentric screw

Setting

LH Yoke

a) Crank to 175°.

b) Place the template (4) between the carriers.

c) Fit the template (5) to the carrier (3) on the cutting side, LH yoke.

d) Measure distance A between the template and the guide; record the result.

e) Remove the coaxial cable, the cover (2), the rail (1) and the banjo connections on the carrier (6) on the pressure jaw side. Undo the two bleeding screws.

(Cont'd overleaf)

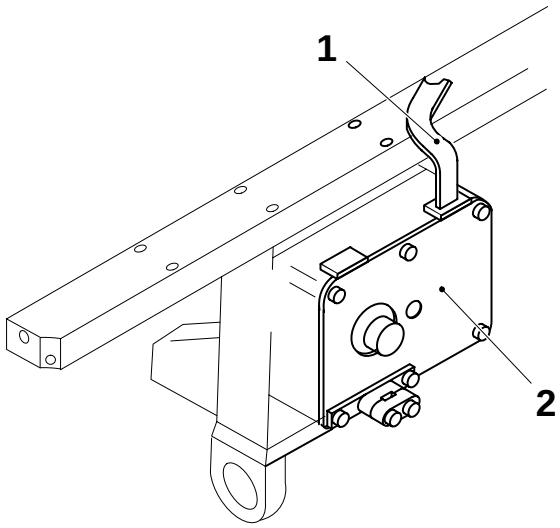

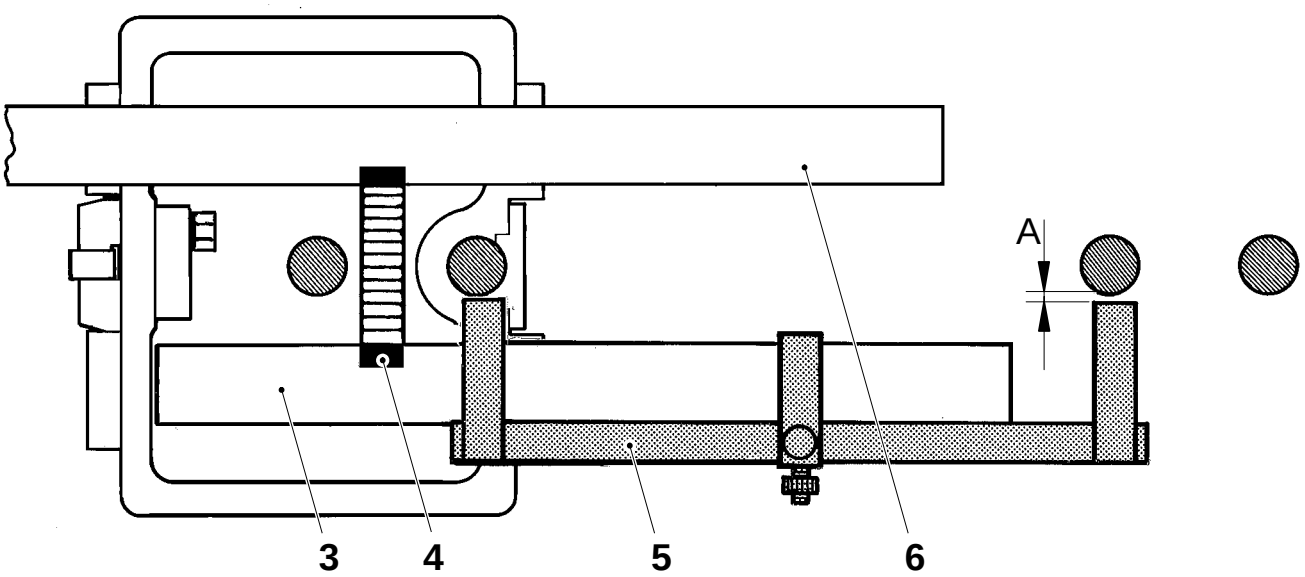

1 Rail
2 Cover
3 Carrier, cutting jaw side
4 Template TP No. 76304–101
5 Template TP No. 76301–101
6 Carrier, pressure jaw side

(Cont'd)

f) Shift the template (5) to the carrier (6) on the pressure jaw side.

g) Measure distance B; record the result. Distances A and B are to be the same within 0.1 mm. If not, adjust by loosening the upper and lower screws (7), and altering the thickness of the shimming (8). (Altering the shimming by 0.1 mm, changes the symmetry distances A and B by approx 0.15 mm).

h) Retighten the screws (7) and check the symmetry distances A and B.

i) Refit the coaxial cable, the cover, the rail, the banjo connections, and the two bleeding screws.

RH Yoke

a) Crank to 355°.

b) Place the template (4) between the carrier rails.

c) Fit the template (5) to the carrier (3) on the cutting jaw side, RH yoke.

d) Repeat d) – g) from the LH yoke.

e) Refit the coaxial cable, the cover, the rail, the banjo connections, and the two bleeding screws.

f) Set the clearance between the support roller and cam, see page MM 410–5X.

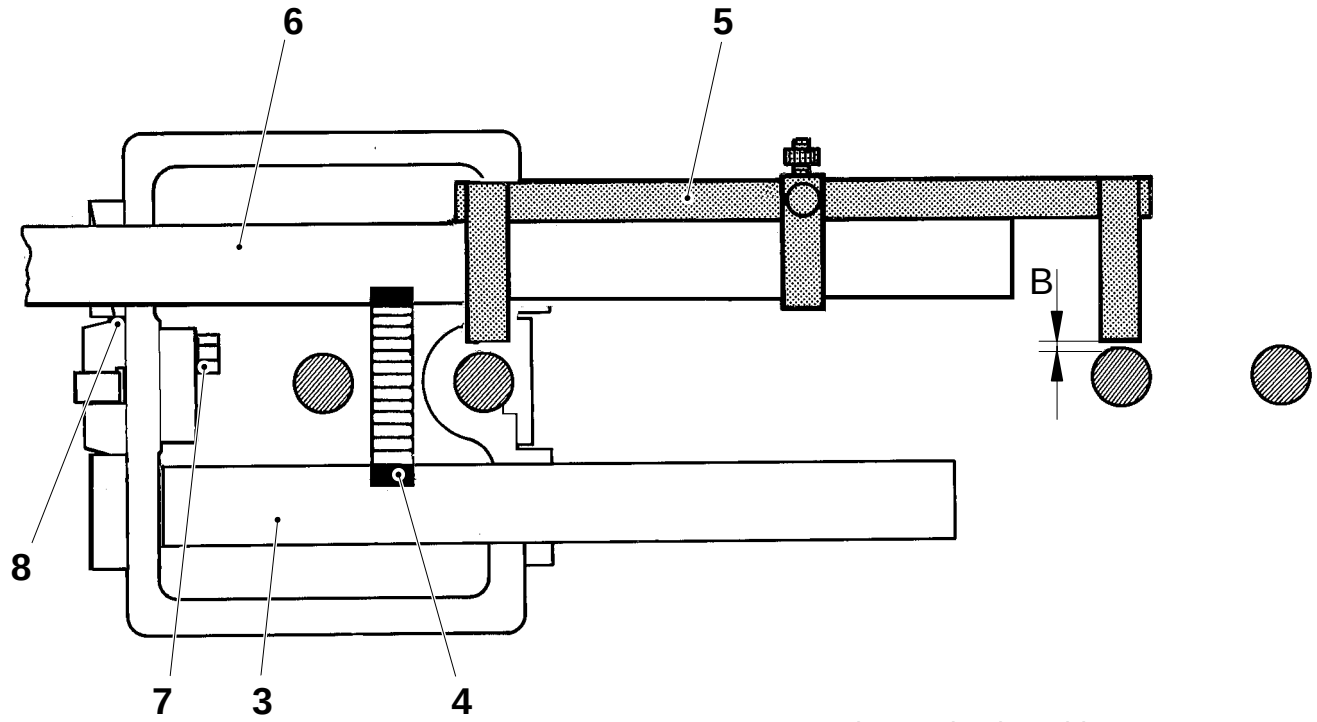

3 Carrier, cutting jaw side
4 Template TP No. 76304–101
5 Template TP No. 76301–101
6 Carrier, pressure jaw side
7 Screw
8 Shim TP No. 257317

Setting

LH Yoke

a) Remove the coaxial cable, the cover (2), the rail (1) and the banjo connections. Undo the two bleeding screws on the carrier.

b) Crank to 175°.

c) Place the template (9) between the carriers.

d) Place the template (8) on the carrier (5) on the pressure jaw side, see fig. 2.

e) Set distance A by loosening the screws (3) and shifting the bracket (4) up or down. If no template is available, set distance B.

f) Tighten the screws (3).

(Cont'd overleaf)

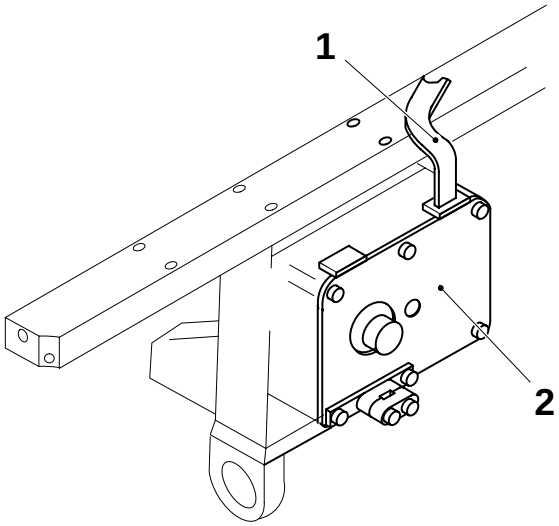

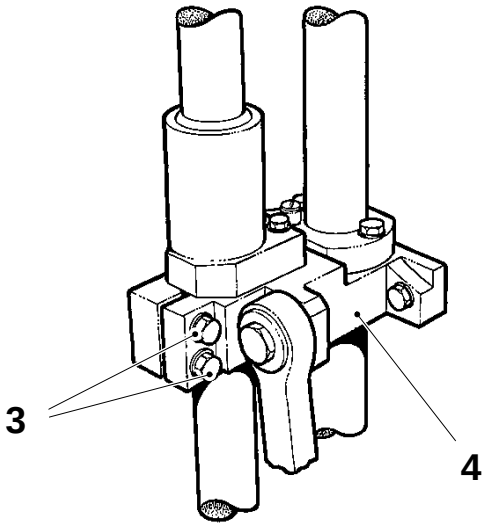

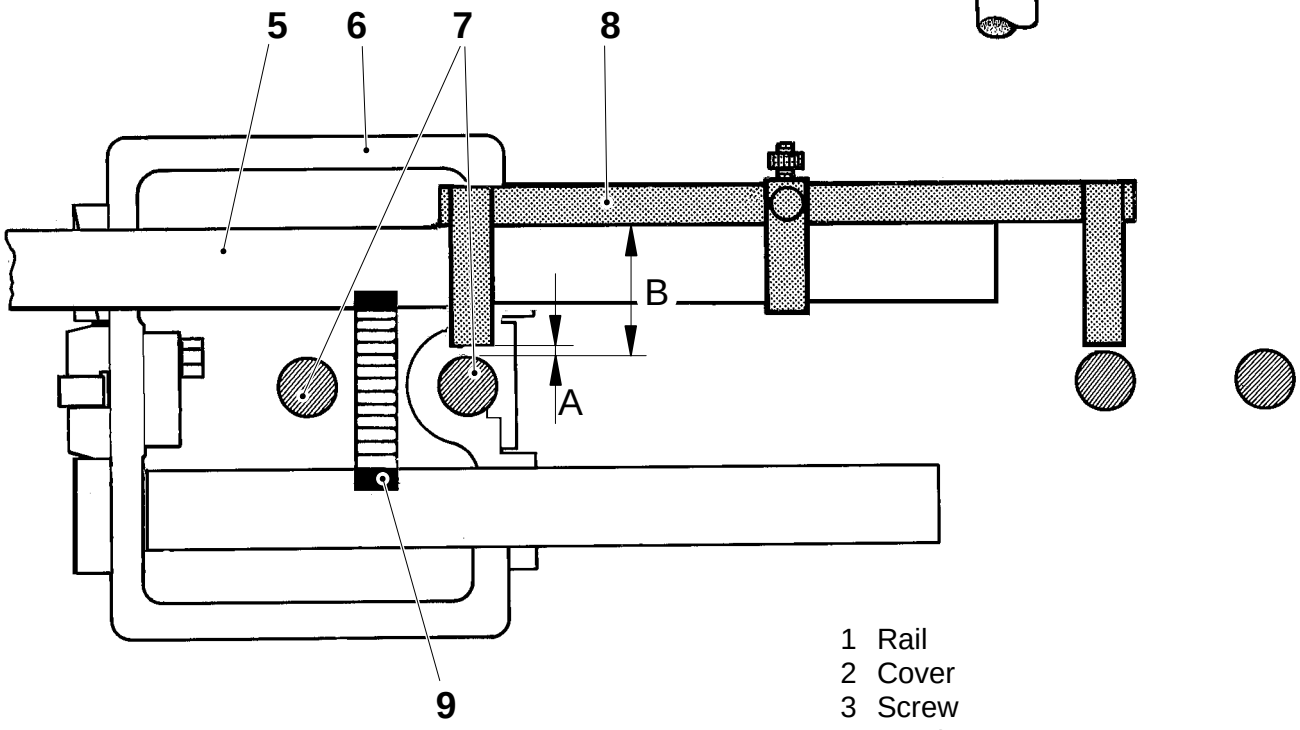

A = 1.0 ±0.05 mm
B = 65.5 ±0.05 mm

1 Rail
2 Cover
3 Screw
4 Bracket
5 Carrier, pressure jaw side
6 Yoke
7 Guide, LH jaw pair
8 Template TP No. 76301–101
9 Template TP No. 76304–101

(Cont'd)

g) Place the template (8) onto the carrier (10) on the cutting jaw side.

h) Set distance C by means of shimming (11). The shims may be put in position after the screws (12) and bracket (13) have been removed. (Altering the shim thickness by 0.1 mm, changes distance C approx 0.15 mm.)

   If no template is available, set distance D between the template (8) and the LH jaw pair guide (7).

i) Refit the coaxial cable, the cover, the rail, the banjo connections, and the two bleeding screws.

RH Yoke

a) Remove the coaxial cable, the cover, the rail and the banjo connections. Undo the two bleeding screws on the carrier.

b) Crank to 355°.

c) Repeat items c) – i) from the LH yoke.

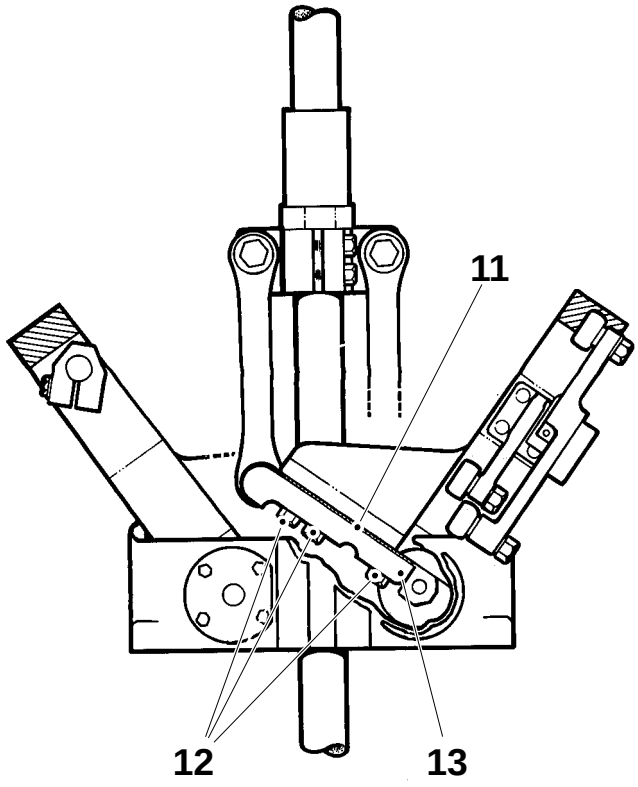

4 Yoke
5 Guide, LH jaw pair
6 Template TP No. 76301–101
7 Template TP No. 76304–101
8 Carrier, cutting jaw side
9 Shim TP No. 256880
10 Screw
11 Bracket

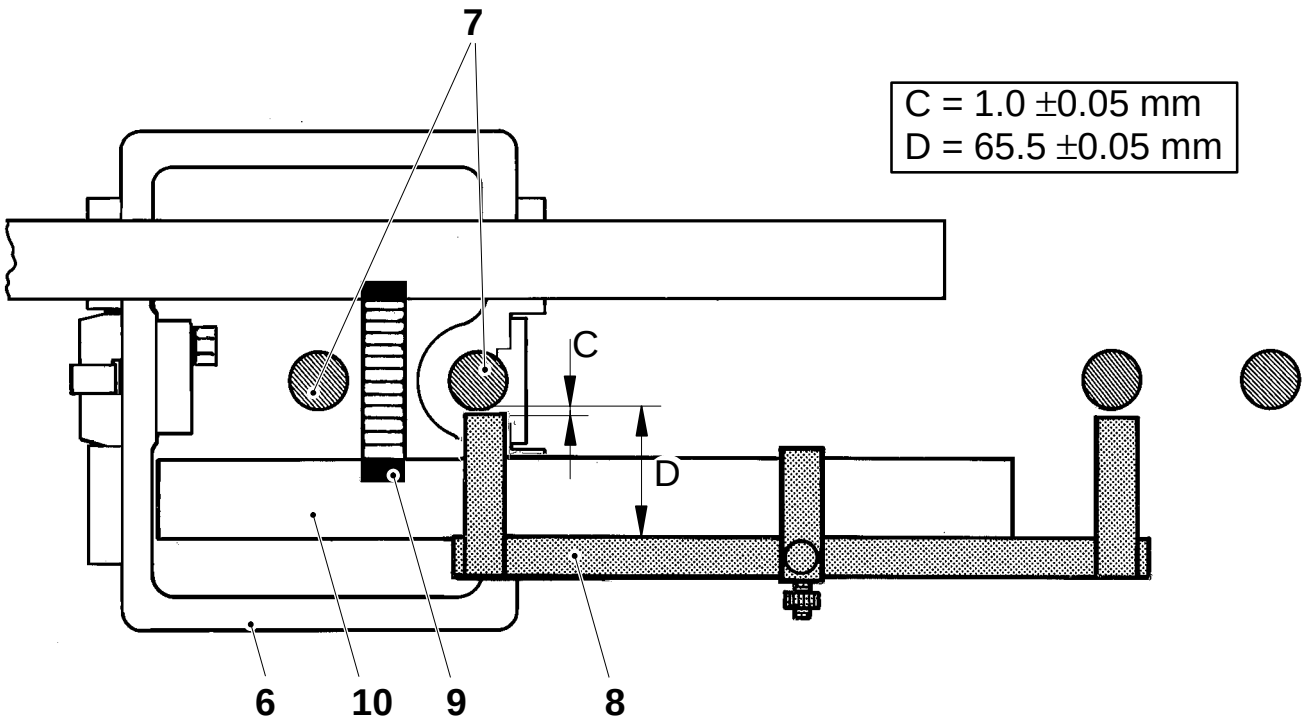

197

Checking

Check the following details for wear and/or damage:

- the spring (1); make sure it moves easily in its fitting points (4)
- the link (2)
- the sleeve (3)

Replace as required.

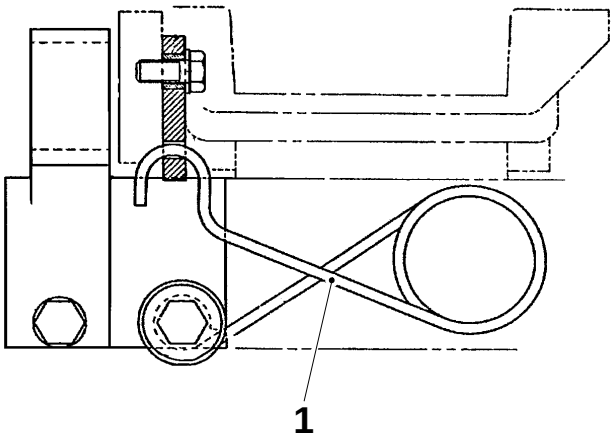

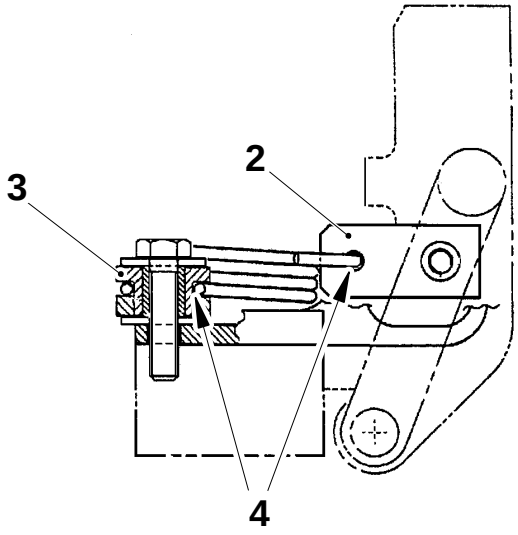

1 Spring
2 Link
3 Sleeve
4 Fitting point

Checking

Check the following details for wear and/or damage:

- the bushings (1); the bearing play must not exceed 0.3 mm
- the volume flap (2)
- the carrier (3)
- the rubber hose (4)
- the shaft (5)
- the roller (6), the bearing play must not exceed 0.3 mm
- the volume bulge (7)

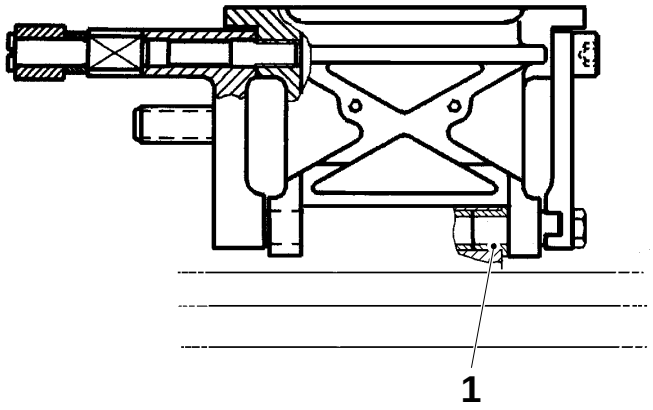

Replace as required.

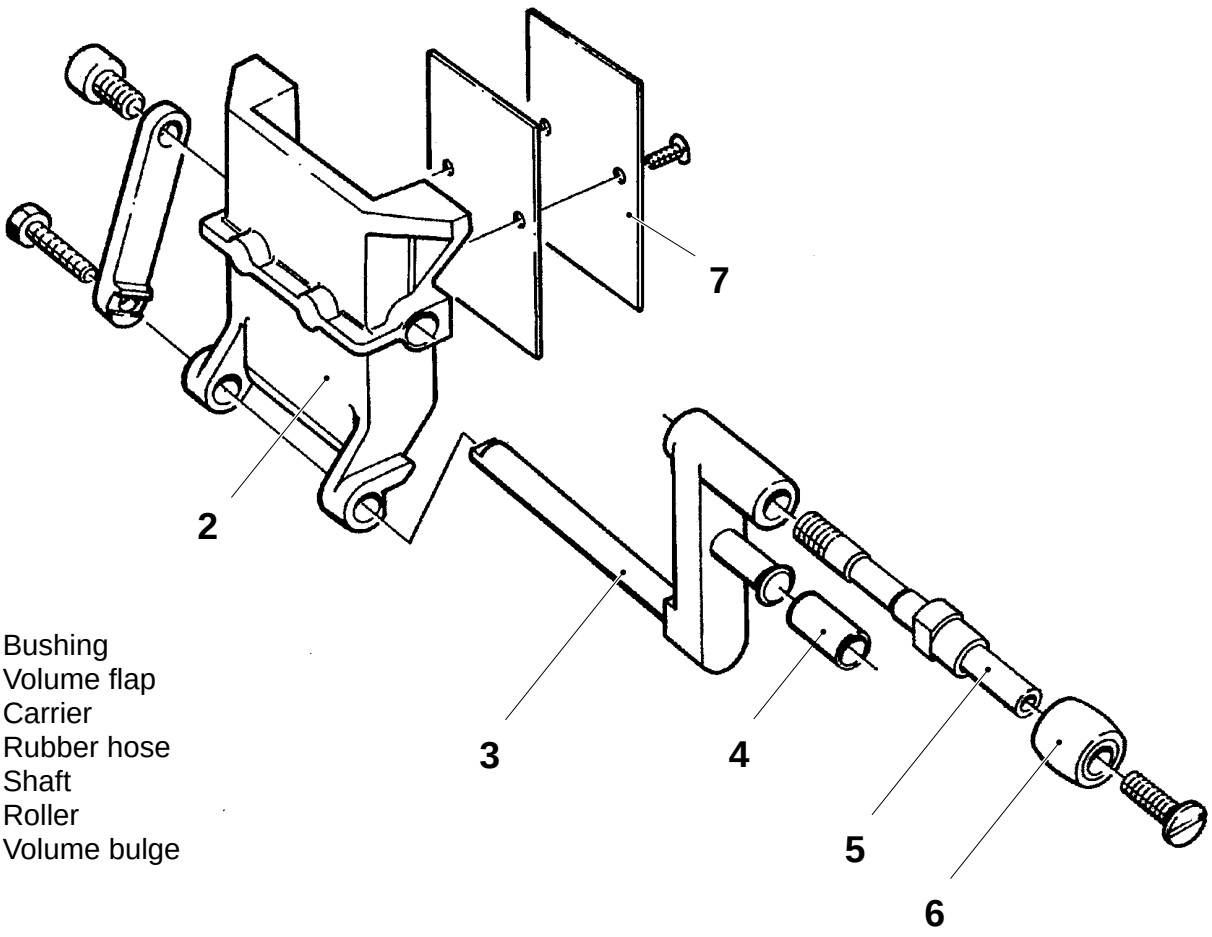

1 Bushing
2 Volume flap
3 Carrier
4 Rubber hose
5 Shaft
6 Roller
7 Volume bulge

Removal

Cutting jaw

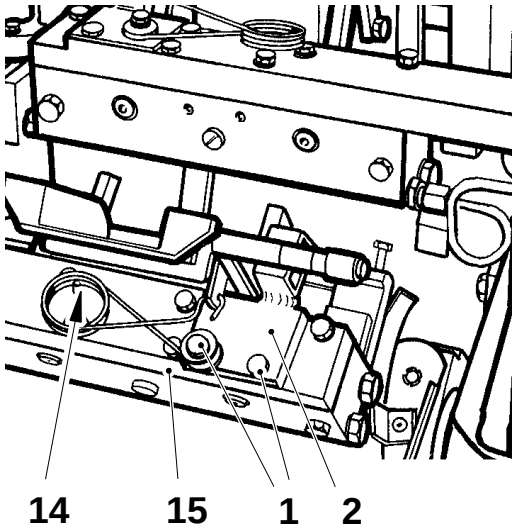

a) Undo the screws (1) and remove the damper unit (2).

b) Undo the shaft (3).

c) Undo the screw (4).

d) Pull out the carrier (5) together with the shaft and remove the volume flap (6).

e) Undo the screw (7) and remove the arm (8). Undo the screws (9) and remove the volume bulge (10) and the shim.

f) Undo the screw (11) and remove the roller (12) and the spacer (13).

Reassemble in reverse order.

Note
When fitting the damper unit, make sure that the pin (14) is placed **inside** the spring. Also make sure that the damper unit (2) is fitted in line with the carrier (15).

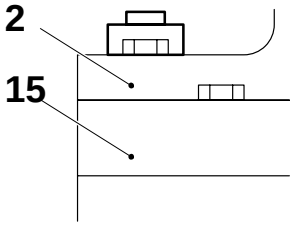

(Cont'd overleaf)

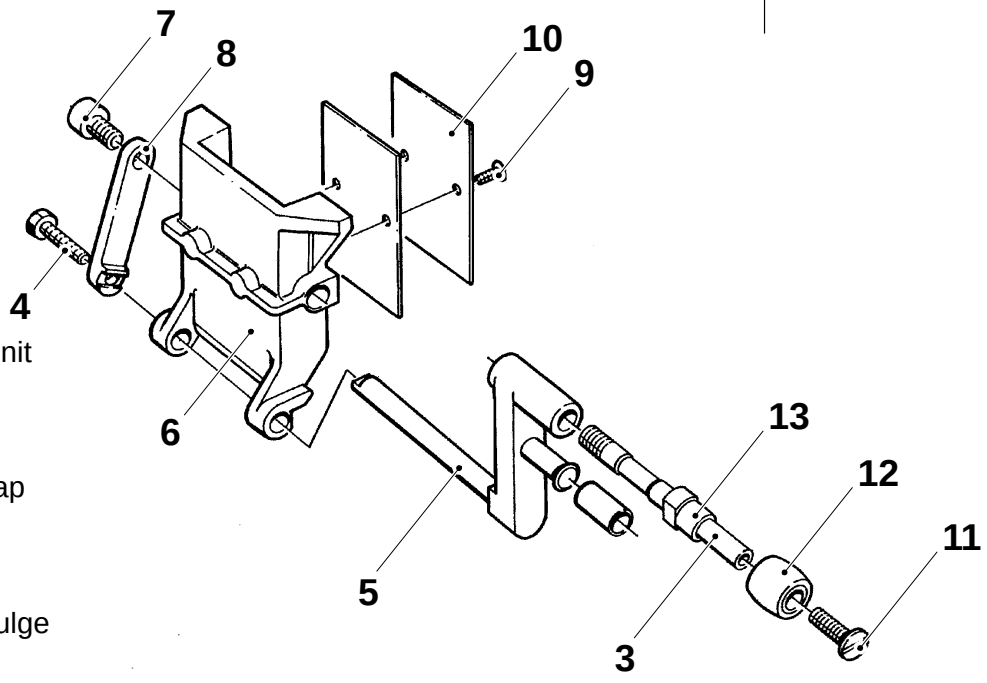

1 Screw
2 Damper unit
3 Shaft
4 Screw
5 Carrier
6 Volume flap
7 Screw
8 Arm
9 Screw
10 Volume bulge
11 Screw
12 Roller
13 Spacer
14 Pin
15 Carrier

(Cont'd)

Pressure jaw

a) Undo the screws (1) and remove the damper unit (2).

b) Undo the shaft (3).

c) Undo the screw (4).

d) Measure and record distance A between the volume cams.

e) Close the volume adjustment device with the adjustment knob.

f) Crank the machine until the catches are engaged and the carrier (5) is clear of the volume cam.

g) Pull out the carrier together with the shaft (3) and remove the volume flap (6).

h) Undo the screw (7) and remove the arm (8). Undo the screws (9) and remove the volume bulge (10) and the shim.

i) Undo the screw (11) and remove the roller (12) and the spacer (13).

Reassemble in reverse order. Make sure that the damper unit is fitted in line with the carrier (2). Set distance A (noted earlier).

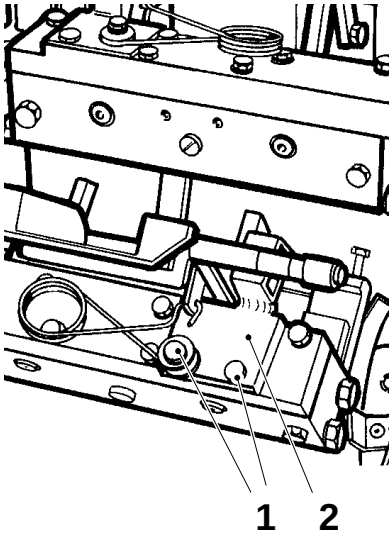

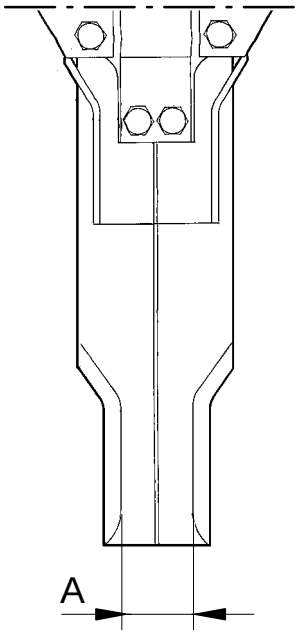

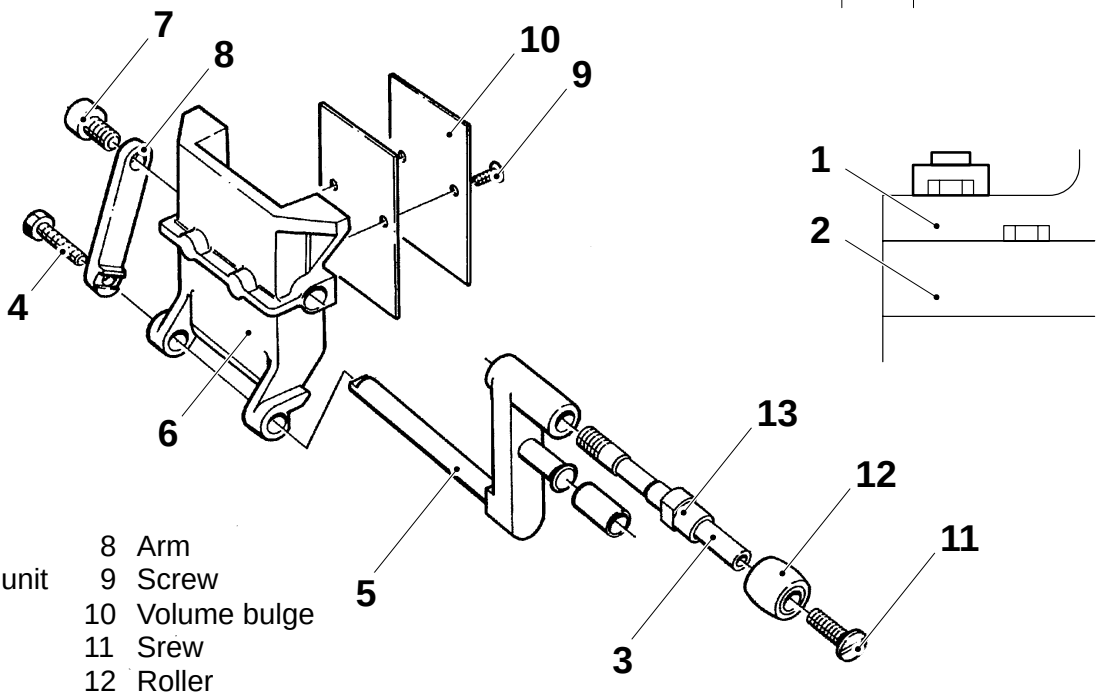

1	Screw	8	Arm
2	Damper unit	9	Screw
3	Shaft	10	Volume bulge
4	Screw	11	Srew
5	Carrier	12	Roller
6	Volume flap	13	Spacer
7	Screw		

201

Setting

Package weight

a) Set the volume cam section, see page MM 421–5X.

b) Basically set the package weight by means of the volume shims (1), see table below.

c) The number of volume shims used should be approximately the same on both the cutting jaw side and the pressure jaw side.

d) To adjust, undo the screws (2) and remove the volume bulge (3).

e) Final set according to the OS book.

Volume, ml	Shim, TP No.
125 S	272987
160 S	577212
180 B	272986–4
200 B	272986–3
200 S	272991
236 B	272986–2
250 B	272986–1
250 S	574366
284 B	272986–5

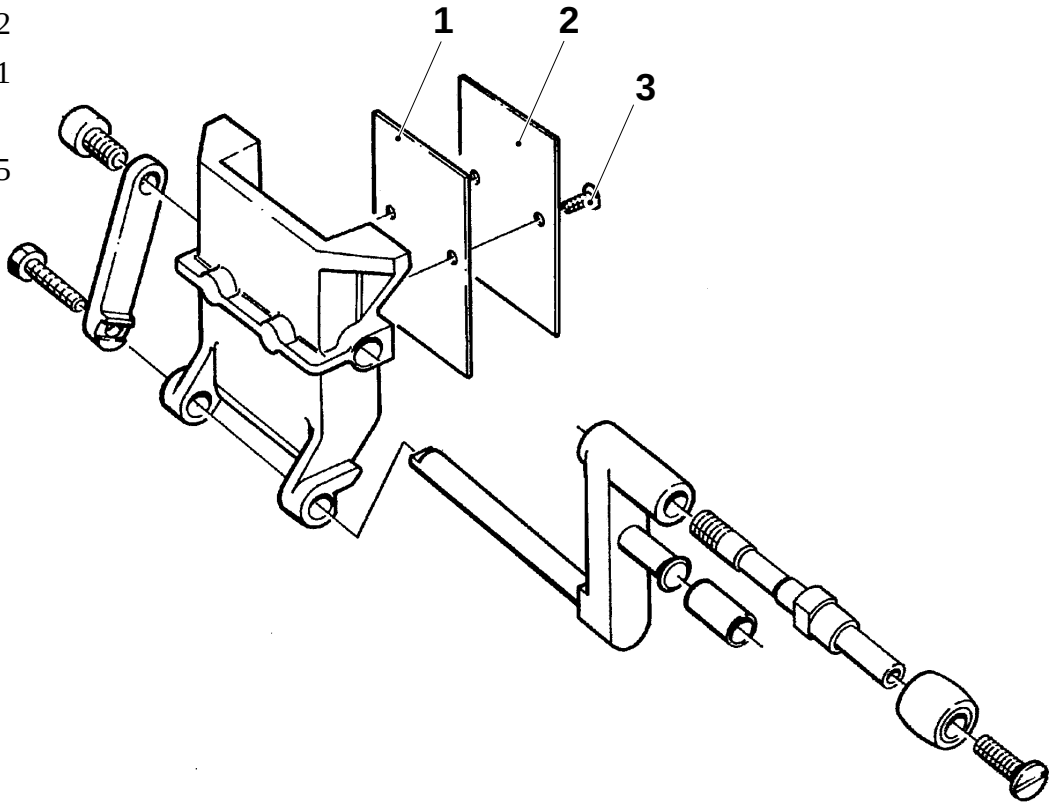

1 Volume shim
2 Volume bulge
3 Screw

Checking

Check the following details for wear and/or damages:

- the nuts (1)
- the spring (2) and the ball (3)
- the spindle (4)
- the pins (5)
- the volume cams; especially the section that determines the volume (6). Maximum allowed wear A, see fig. Check that the volume cams are parallel, distance B

Replace as required.

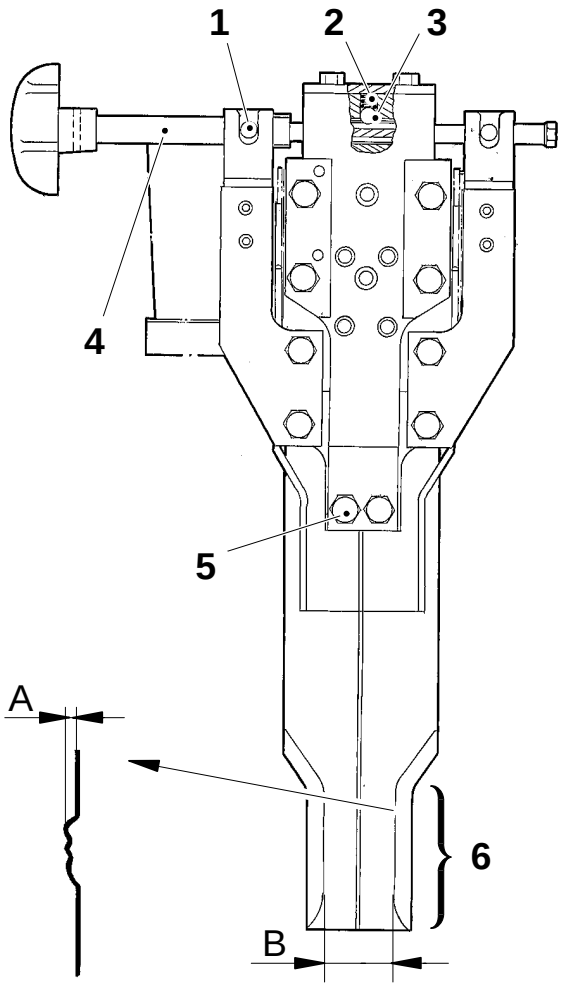

1 Nut
2 Spring
3 Ball
4 Spindle
5 Pin
6 Section of cam that determines volume

A $\leq$ 0.5 mm
B // $\pm$ 0.2 mm

Removal

a) Undo the four screws (5) and remove the volume cam section.

b) Undo the two pins (7).

c) Undo the four screws (6) and remove the volume cams (1).

d) Undo the two screws (3). Remove the spring and the ball.

e) Unscrew the spindle by means of the knob (2). Remove the nuts (4) and the spindle.

f) Reassemble in reverse order.

g) Set the volume cam, see page MM 421–5X.

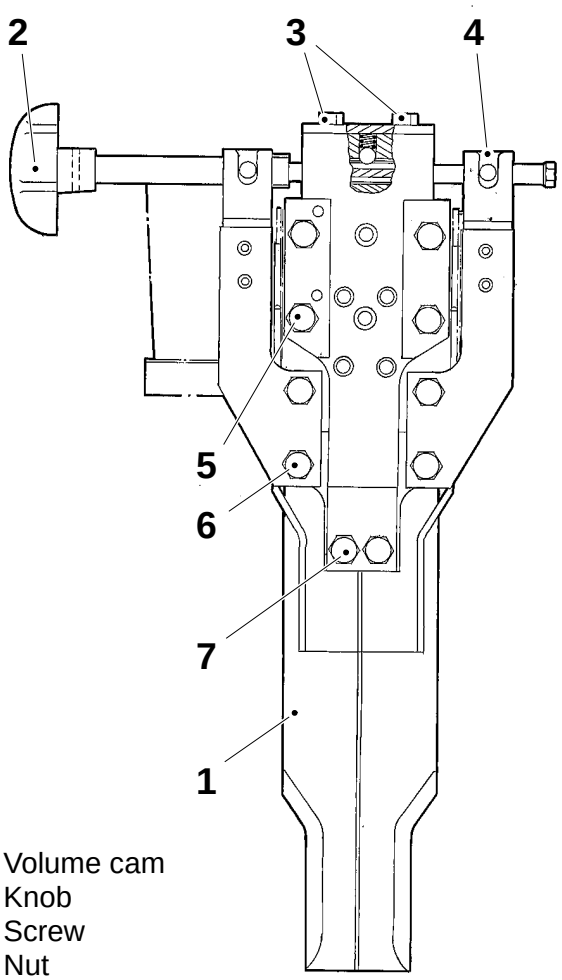

1 Volume cam
2 Knob
3 Screw
4 Nut
5 Screw
6 Screw
7 Pin

Setting

a) Crank to 180° (LH side).

b) Turn the knob (3) fully in and then out one and a half turn (in order to make sure that there is a gap between the volume cams when the knob is turned fully in).

c) Loosen the screws (4) and fit the template (2) on the LH volume cam section, see fig. 1. If required, loosen the screws (6).

d) Set the outer volume cam (1) parallel to the template. Tighten the screws (4) and remove the template.

e) Undo the four screws (5) and remove the volume cam section from the machine.

f) Loosen the screws (6) and set the inner volume cam (7) parallel (± 0.2 mm) with the outer volume cam. Tighten the screws.

g) Fit the volume cam section.

h) Fit the template and check that the volume cams are parallel.

i) Remove the template.

j) Undo the screw (8) and shift the lug (10). Fit the screw (8) in the hole (9).

k) Crank to 0° (RH side).

l) Fit the template on the RH volume cam section and set according to above.

(Cont'd overleaf)

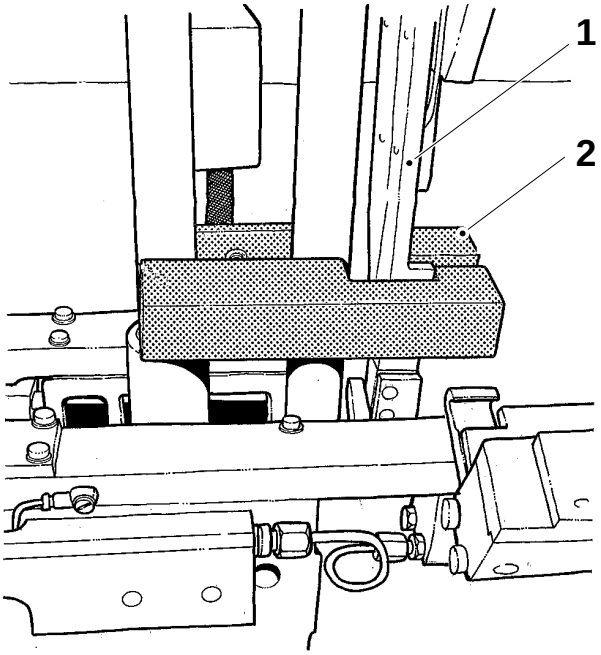

Fig. 1

1 Outer volume cam
2 Template TP No. 75469–201
3 Knob
4 Screw
5 Screw
6 Screw
7 Inner volume cam
8 Screw
9 Hole
10 Lug

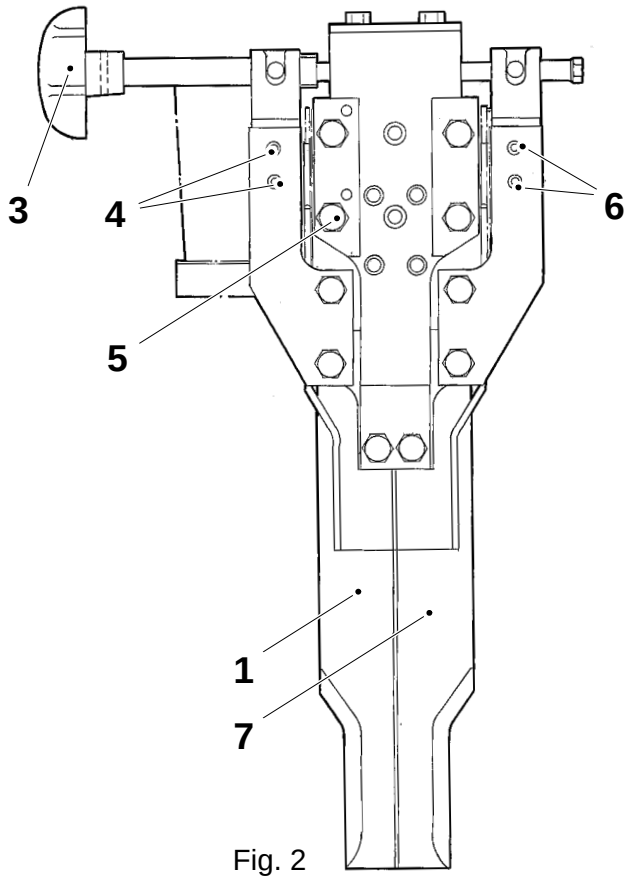

Fig. 2

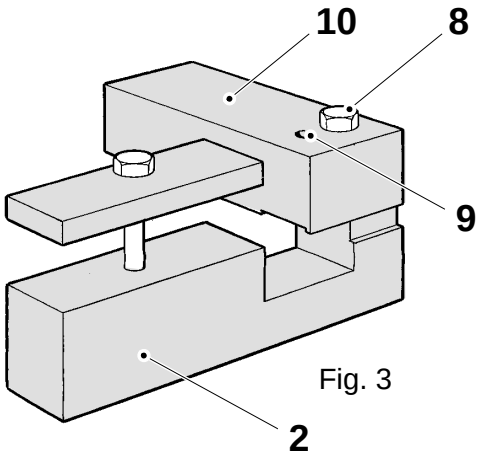

Fig. 3

(Cont'd)

m) Basically set distance B by means of the volume adjustment knob (3).

n) Undo the screws (5) and set distance A, between the inner volume cam (7) and the plate (11), see table below.

o) Set the package weight, see page MM 417–5X.

Volume, ml	A ±1mm	B mm
TB 180 B	355.5	34.0
TB 200 B	364.0	34.0
TB 200 S	362.5	34.0
TB 236 B	357.5	34.0
TB 250 B	360.0	33.5
TBA 125 S	369.0	34.0
TBA 160 S	361.0	34.0
TBA 180 B	361.5	34.0
TBA 200 B	369.0	34.0
TBA 200 S	357.5	34.0
TBA 236 B	363.0	34.0
TBA 250 B	362.5	33.5
TBA 250 S	356.0	34.0
TBA 284 B	362.5	33.5

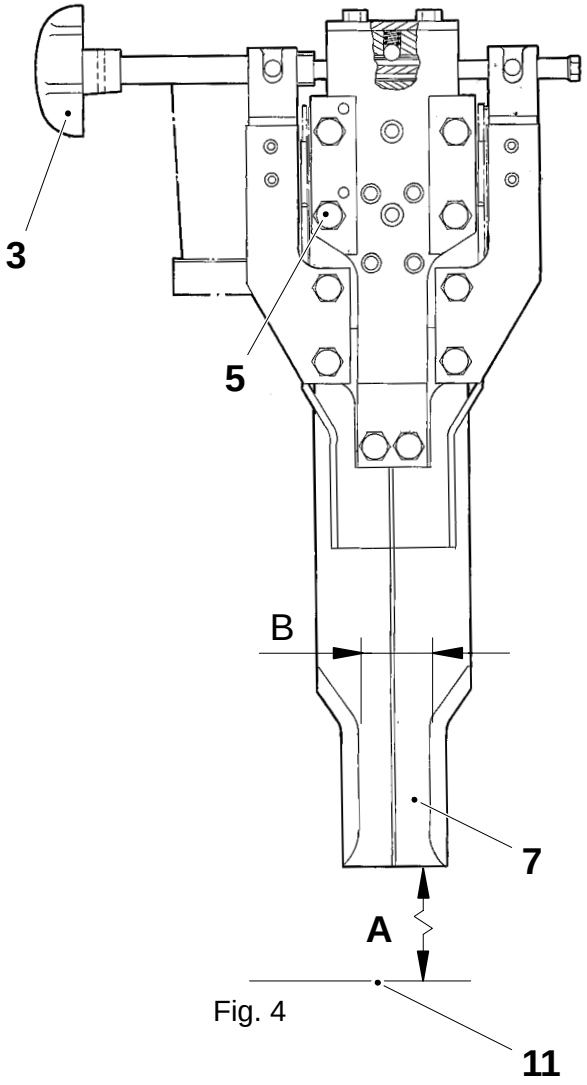

Fig. 4

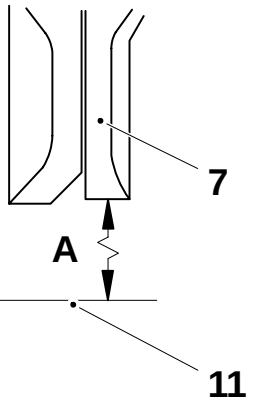

Fig. 5

Note!
Alternative design

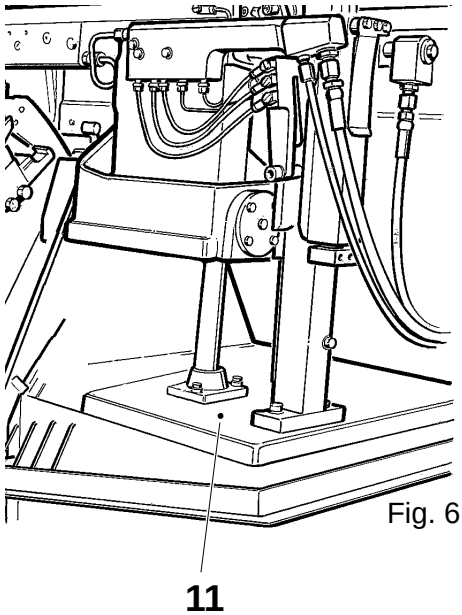

Fig. 6

3 Volume adjustment knob
5 Screw
7 Inner volume cam
11 Plate

Checking

Check the following details for wear and/or damage:

- the points (1); check that there is no play
- the leaf springs (2); the springs must bear against the back of the cam
- the cam (3); especially the running surface
- the spacer (4)
- the cylinder (5); pull the piston rod forwards and backwards and make sure that the mechanism runs smoothly
- the bushing (6)
- the pin (7)
- the link head (8)
- the air connections (9); make sure that there is no air leakage

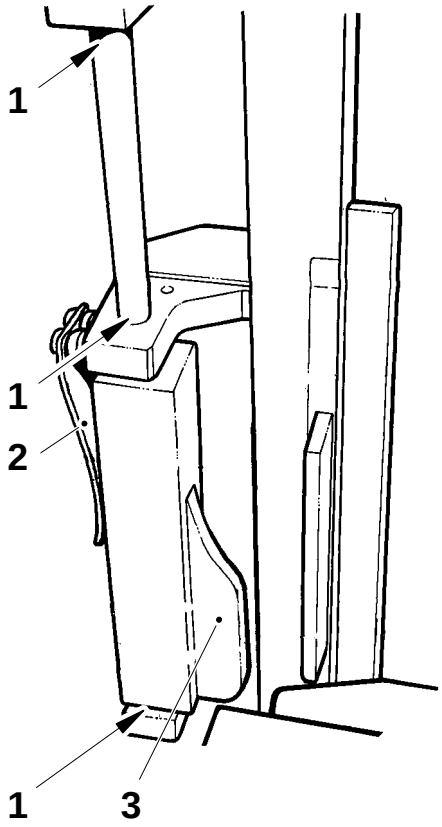

Replace as required.

Lubricate at the points (1), (4) and (6).

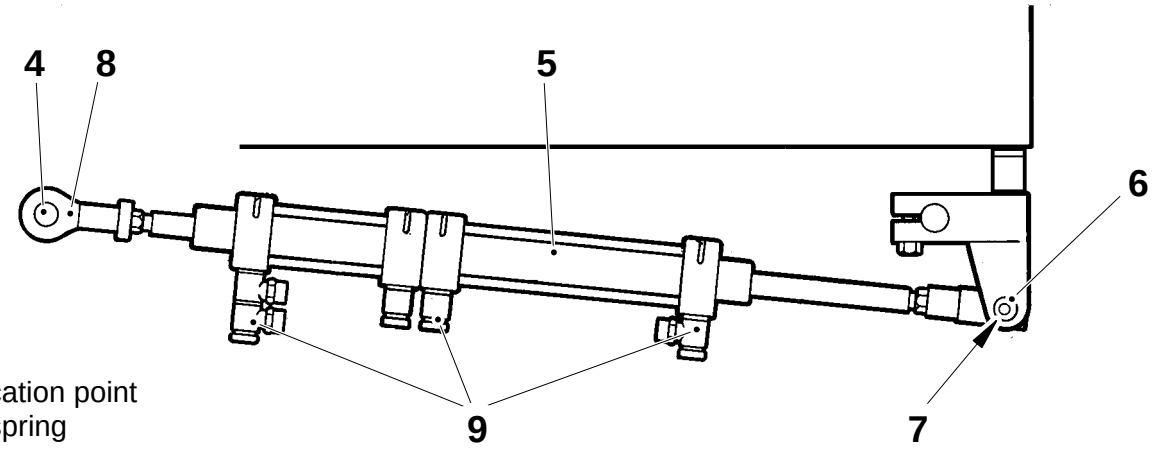

1 Lubrication point
2 Leaf spring
3 Cam
4 Spacer
5 Cylinder
6 Bushing
7 Pin
8 Link head
9 Air connection

Setting

a) Crank to approx 10°(LH side)/190°(RH side).

b) Set the screws (6) of the end position damper fully open (screwed out to stop).

c) Set the arm (10) parallel with the frame (7) by putting shims underneath the stop lug (8).

d) Set distances A and B.

Set with template

a) Place the template (2) with the chamfered corner (5) facing forwards. Loosen the screw (9) and turn the eccentric shaft (1) until the cam (4) bears against the gauge with its contact surface (3). Tighten the screw (9).

(Cont'd overleaf)

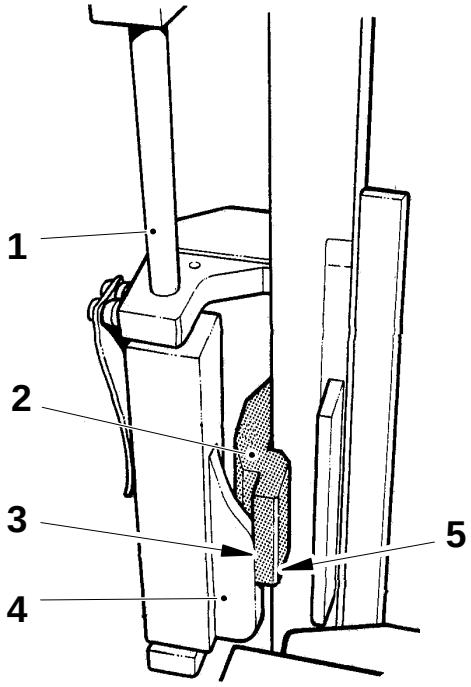

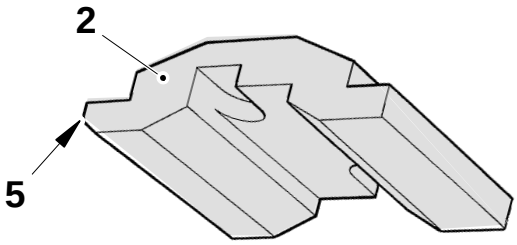

1 Eccentric shaft
2 Template TP No. 75945
3 Contact surface
4 Cam
5 Chamfered corner
6 Screw
7 Frame
8 Stop lug
9 Screw
10 Arm

A = 10 ±0.5 mm
B = 8 ±0.5 mm

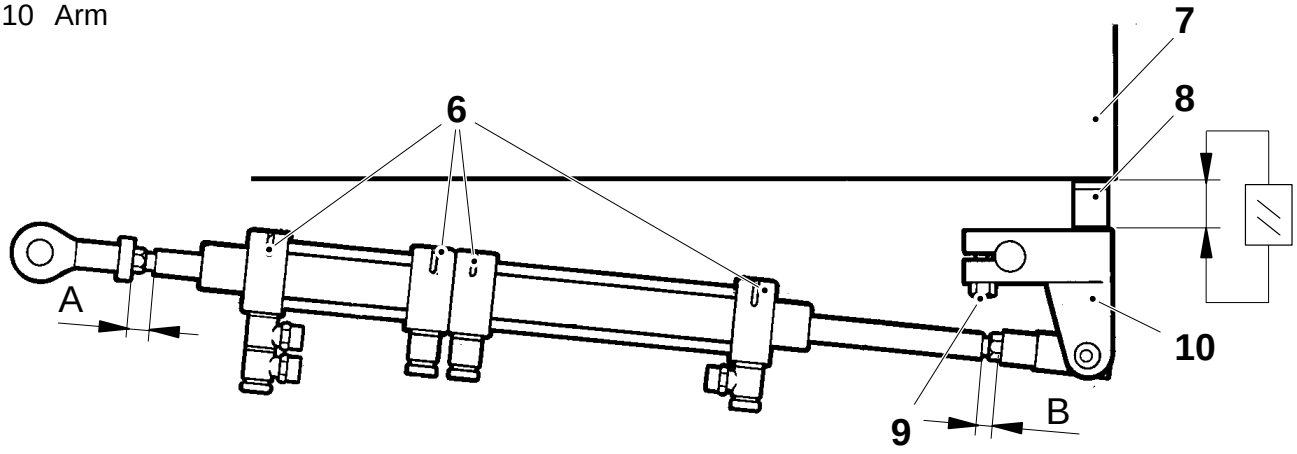

(Cont'd)

b) Pull out the piston rod (15) and keep it pulled out. At the same time, move the cylinder combination (13) and (14) back to end position, so that the arm (10) pivots.

c) Turn the template (2) 180° (the chamfered corner facing backwards).
Check that the cam (4) bears against surface (3). If required, adjust distance A.

d) Set distance C between the blocking piece (12) and the cam. If required, shift the blocking piece.

(Cont'd overleaf)

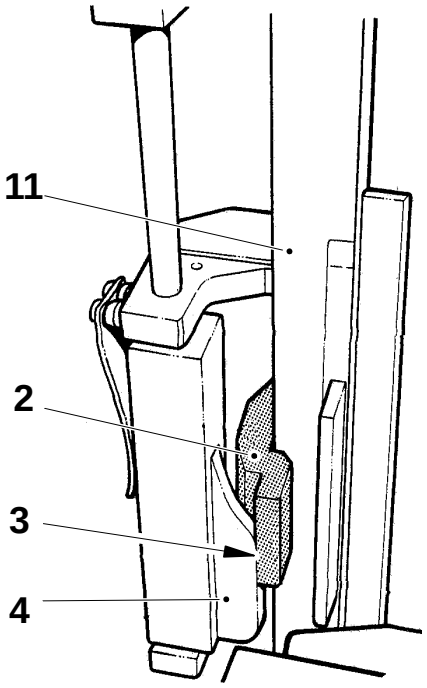

2 Template TP No. 75945
3 Surface
4 Cam
10 Arm
11 Column
12 Blocking piece
13 Cylinder
14 Cylinder
15 Piston rod

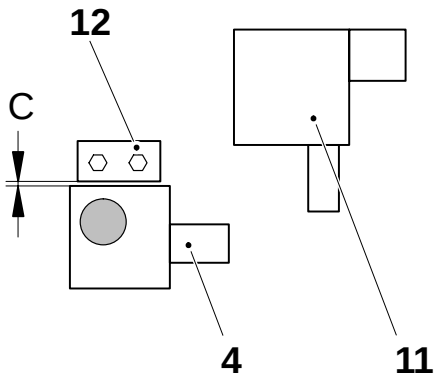

A = 10 ±0.5 mm
C = 0.1 ±0.05 mm

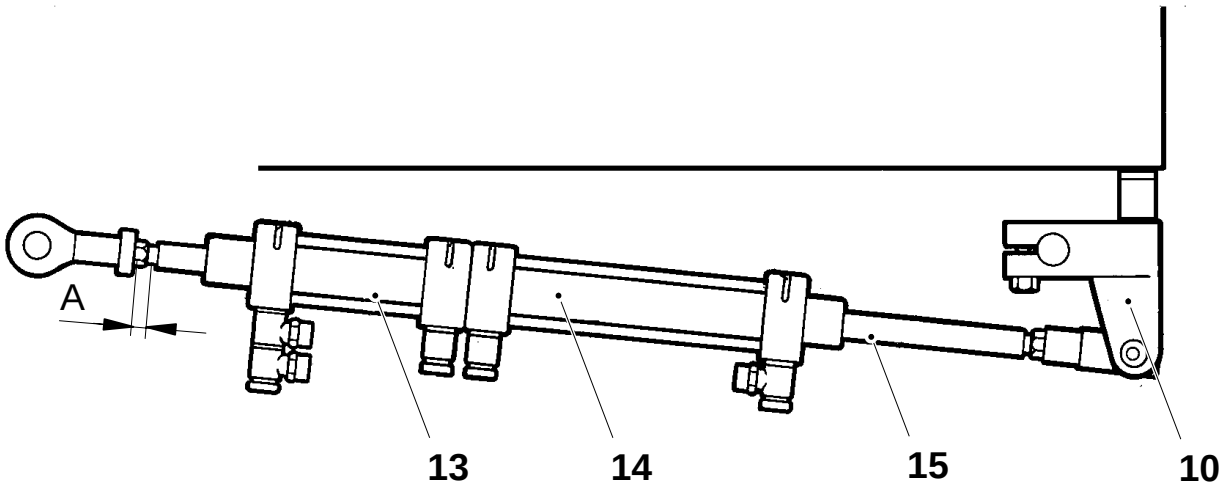

(Cont'd)

If no template is available

a) Move the cylinder combination (13) and (14), with the piston rods in, back to end position and turn the arm (10).

b) Set distance D mm between the cam (4) and the column (11).

c) Set distance C between the blocking piece (12) and the cam. If required, shift the blocking piece.

d) Pull out the piston rod (15) and keep it pulled out. At the same time, move the cylinder combination (13) and (14) back to end position, so that the arm (10) pivots.

e) Set stroke E of the cylinder (13). If required, adjust distance A.

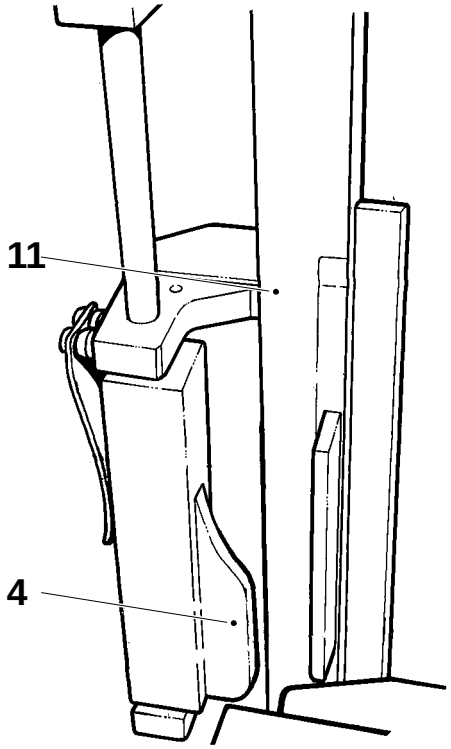

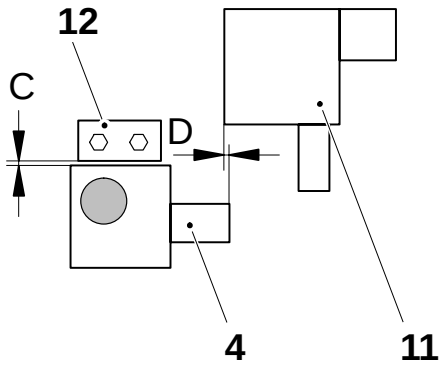

4 Cam
10 Arm
11 Column
12 Blocking piece
13 Cylinder
14 Cylinder
15 Piston rod

A = 10 ±0.5 mm
C = 0.1 ±0.05 mm
D = 0.5 ±0.05 mm
E = 15 ±0.5 mm

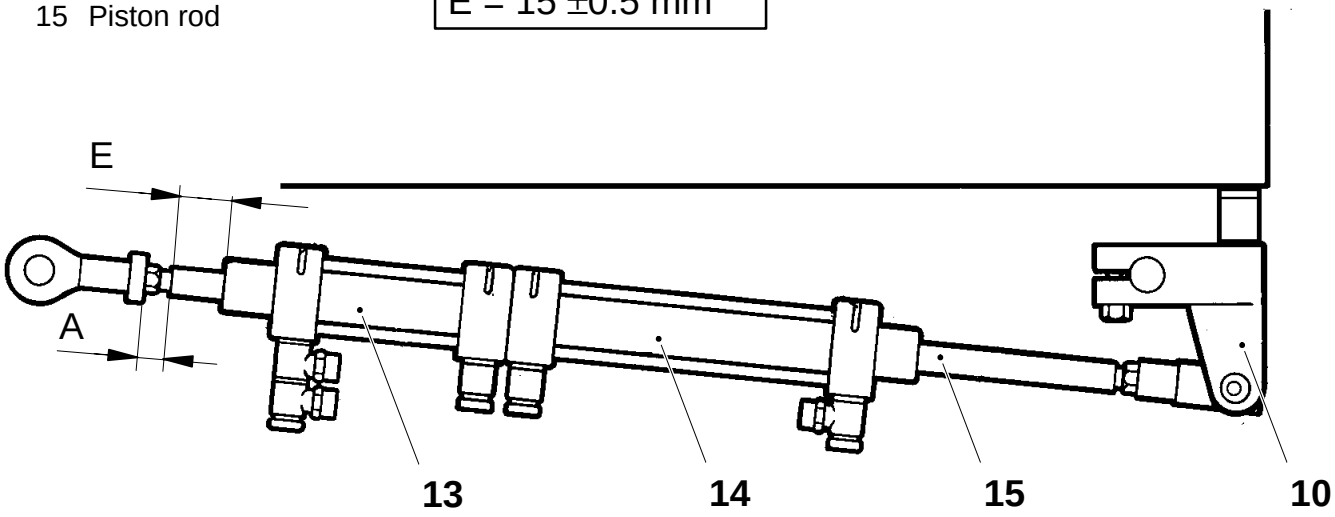

Checking bearing play

a) Check that the play in the folding flap bearings in the cutting jaw do not exceed A mm.

b) Put a load on the operating rod (1) so that the folding flaps are pressed against the cutting jaw. Check that the play in the folding flaps does not exceed B mm.

c) Repeat the check on the other side.

d) Replace the rollers, the bearings, and the beam, as required.

A ≤ 0.2 mm
B ≤ 0.3 mm

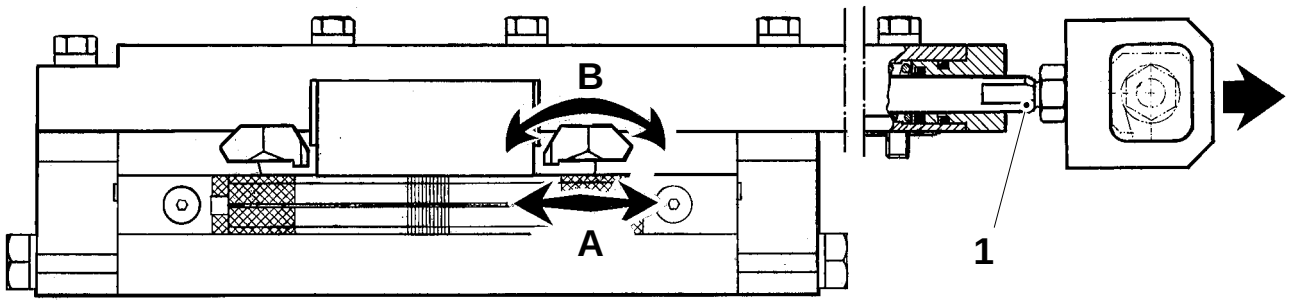

1 Operating rod

Setting

a) Set distance B; it should be possible to twist the ear (2) slightly sideways. Adjust by shifting the bracket (4).

b) Remove the volume flaps on the cutting jaw side.

c) Crank to 0° (RH side)/180° (LH side).

d) Place a feeler gauge, thickness 0.7 mm, under the folding flaps.

e) Move the design correction cylinder into non-corrective position, i.e. full paper feed.

f) Loosen the lock nut (1) and turn the operating rod (3) to obtain distance A.

g) Check distance A along the whole folding flap (cutting side and inductor side) and at the top and bottom parts of the folding flap cam.

h) If distance A differs on the cutting side and the inductor side, adjust by means of shims underneath the carrier on the cutting side.

i) Repeat items a) – h) on the other side.

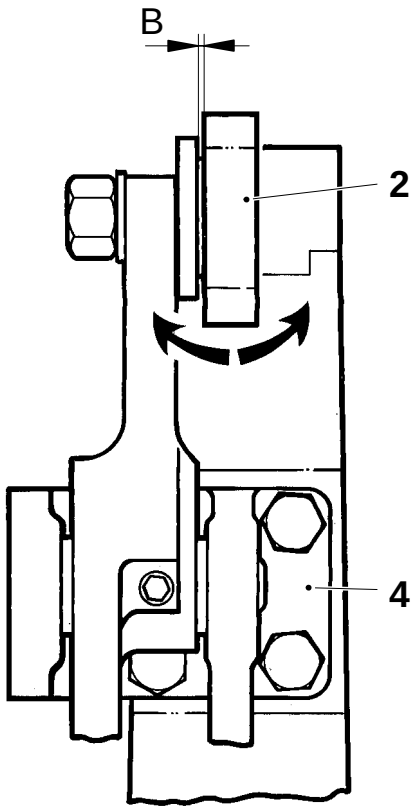

Fig. 1

(Cont'd overleaf)

A = 0.7 ±0.05 mm
B = 0.1 – 0.5 mm

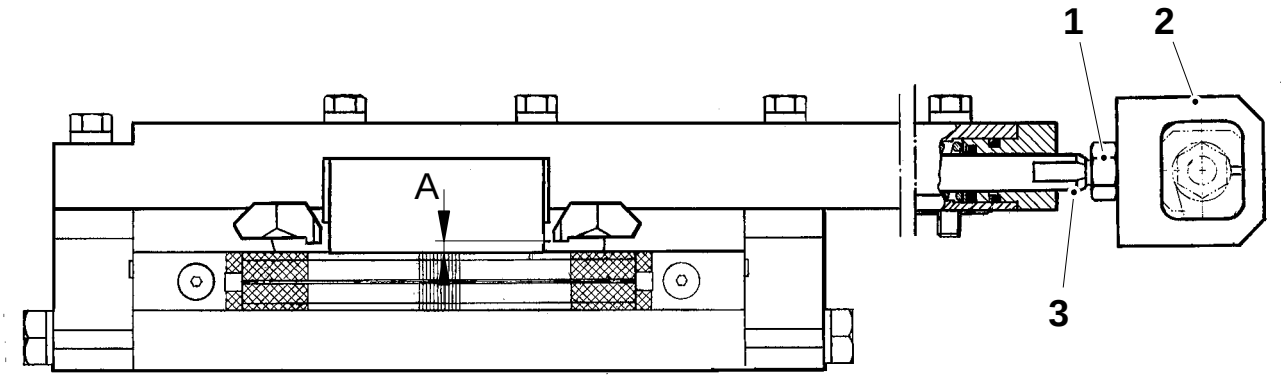

Fig. 2

1 Lock nut
2 Ear
3 Operating rod
4 Bracket

(Cont'd)

If actions according to item h) on the previous page have been carried out, proceed as follows:

j) Crank to 30°(RH side)/210°(LH side).

k) Stick two pieces of adhesive tape (6) to each inductor (or TPC bar), see fig. 3.

l) Crank to 79°(RH side)/259°(LH side).

m) Tap the head of the knife screw (5) lightly so that the knife cuts through the tape.

n) Crank the jaws open. Remove the upper right and lower left pieces of tape.

o) Check the vertical position.
The knife must **not** hit edges of the groove.

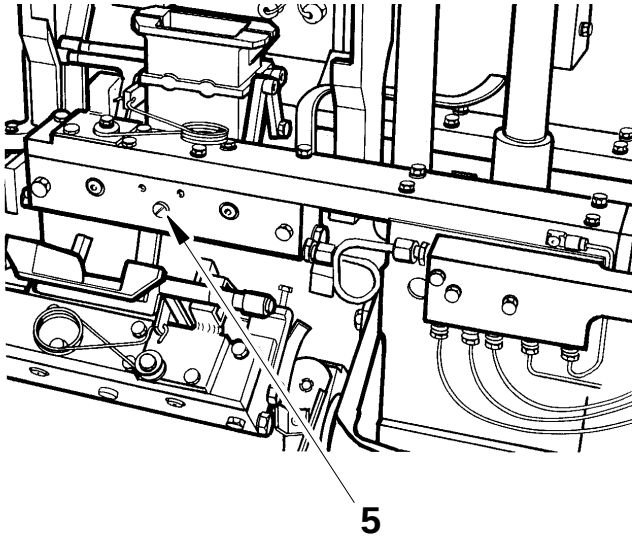

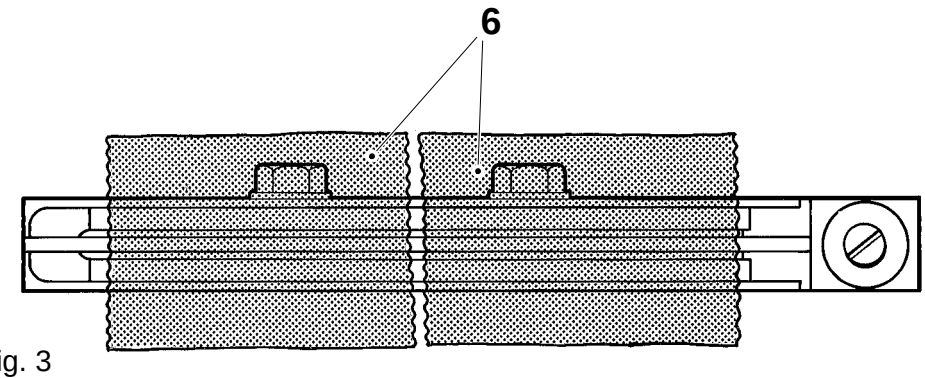

Fig. 3

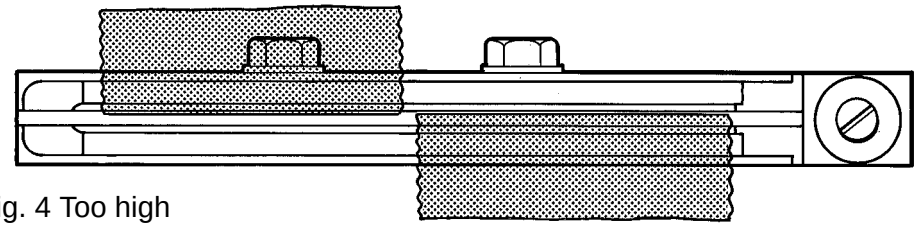

Fig. 4 Too high

5 Screw
6 Adhesive tape

Setting

Parallelity

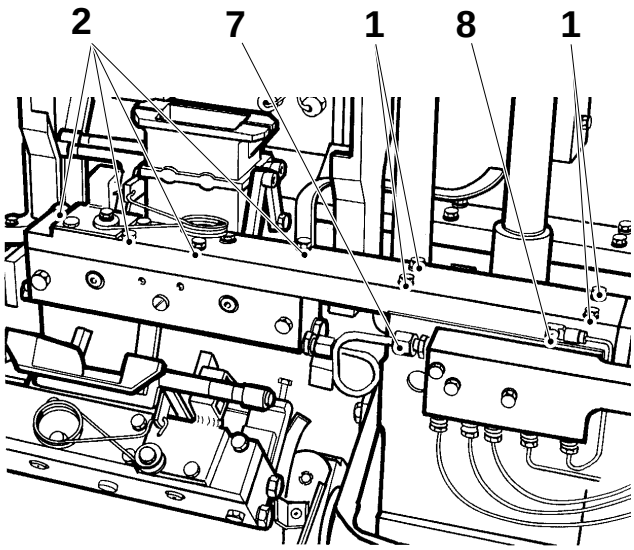

a) Undo the four screws (1), the oil connection (7) and the banjo connection (8). Remove the carrier on the cutting side.

b) Undo the four screws (2) and remove the cutting jaw from the carrier.

c) Loosen the screws (3) and (4).

d) Set the folding flaps parallel by means of altering the shims (5) in the carrier ruler (6). (Altering the shim thickness 0.05 mm changes distance A 0.07 mm)

e) Tighten the screws (3) and (4).
Fit the cutting jaw on the carrier. Place a feeler gauge (0.7 mm) under one folding flap and move the carrier ruler into non-corrective position.

f) Check that the other folding flap has the same distance within ± 0.05 mm. If not, adjust according to the above.

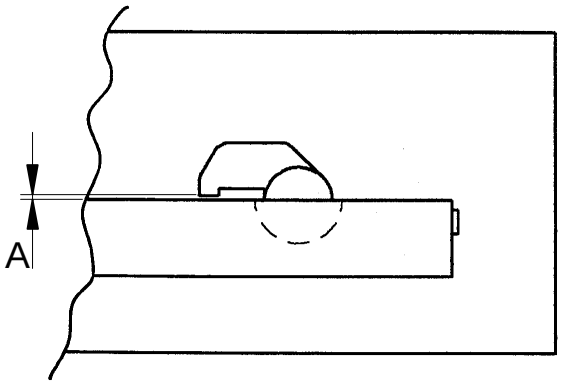

g) Fit the carrier.

h) Fill the bearing housing with oil.

i) Bleed the cutting mechanism, see page MM 433–7X.

j) Set the volume flap alignment, see page MM 442–5X.

k) Set the folding flap mechanism, see page MM 429–5X.

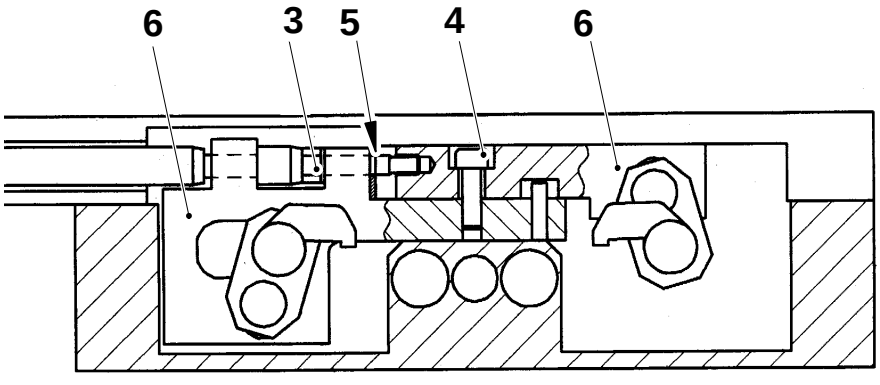

1 Screw
2 Screw
3 Screw
4 Screw
5 Shim TP No. 751580
6 Carrier ruler
7 Oil connection
8 Banjo connection

Checking

a) Turn on the main switch and open for cooling water.

b) Start the hydraulic pump.

c) Clean and blow the cutting knives dry.

d) Crank until the knives are in cutting position.

e) Check that the cutting pistons (1) do not leak any hydraulic oil. If required, overhaul, see page MM 433–3X.

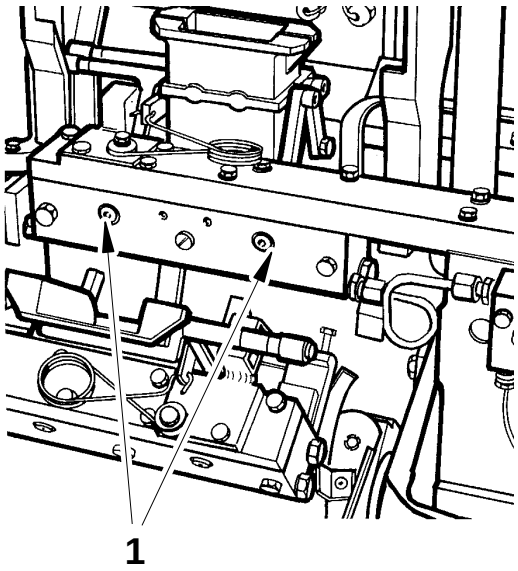

1 Cutting piston

Overhaul

a) Undo the two screws (1) and remove the outer cutting jaw (2).

b) Undo the two screws (3) and remove the inner cutting jaw (4).

c) Undo the nut (5) and pull the pipe aside.

d) Blow **very gently** with compressed air into the pipe (6).

e) Pull out the pistons (7) and remove the seals. Check the pistons for wear and/or damage. Replace as required.

(Cont'd overleaf)

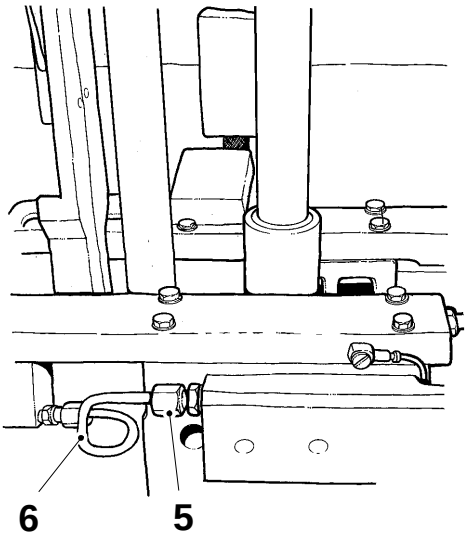

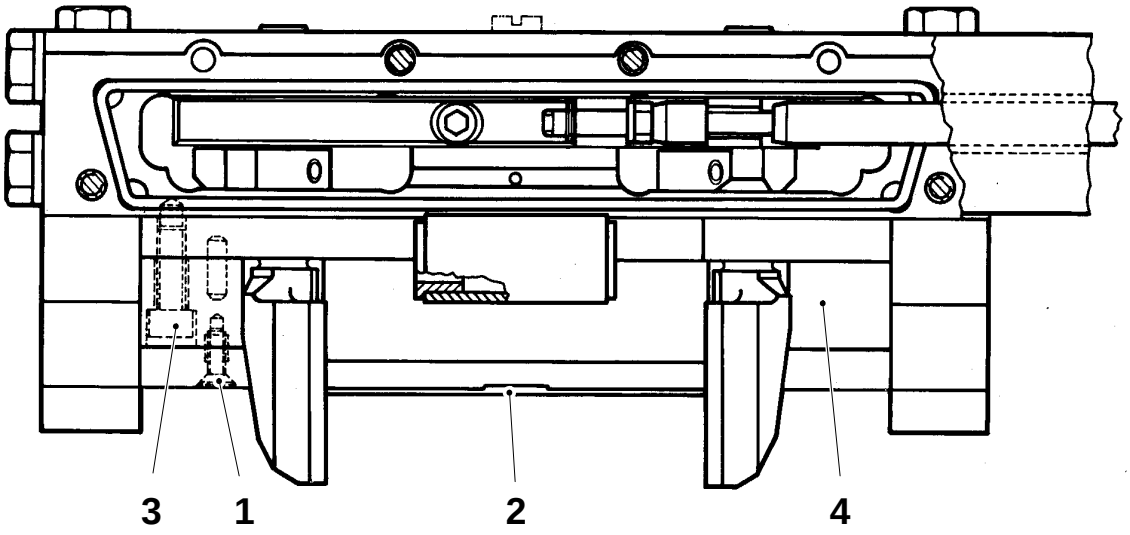

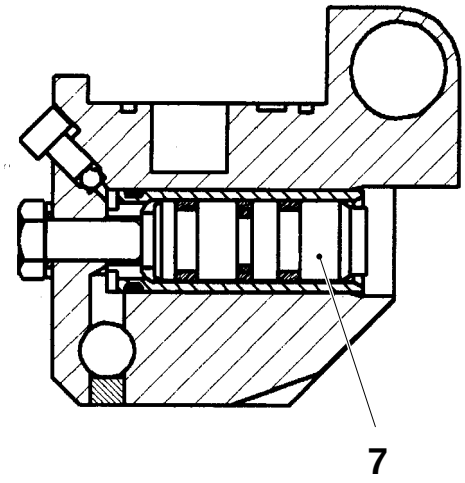

1 Screw
2 Outer cutting jaw
3 Screw
4 Inner cutting jaw
5 Nut
6 Pipe
7 Piston

(Cont'd)

f) Check the bushings (8) for wear and/or damages. Replace as required. Undo the screw (9) to remove the bushings.

Note
Replace the O-ring (10) at replacement of the bushing.

g) Slide the assembly cone (11) on to the piston (7).

h) Slide the O-ring (12) over the cone.

i) Move the O-ring into the groove in the piston by means of the assembly tool (13).

j) Slide the seal ring (14) onto the cone. Move the seal ring into the groove by means of the assembly tool.

k) Calibrate the seal ring by forcing the piston through the calibration tool (15).

l) Fit the support rings (16) in their grooves. Shaping the rings will be easier if they are heated in boiling water.

m) Insert the calibration tool (15) into the bearing housing (17).
Put the piston (7) through the calibration tool and into the bearing housing.

n) Connect the pipe. Fit the inner cutting jaw and the outer cutting jaw.

o) Bleed the cutting mechanism, see page MM 433–7X.

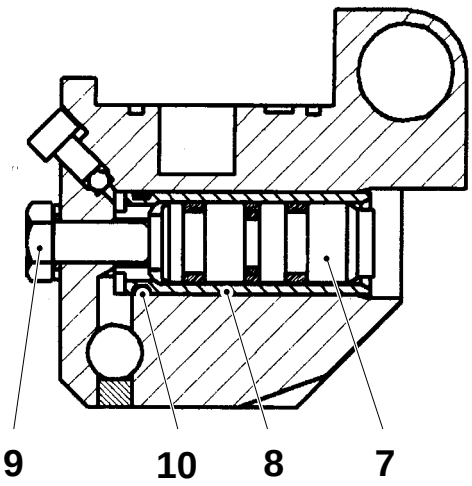

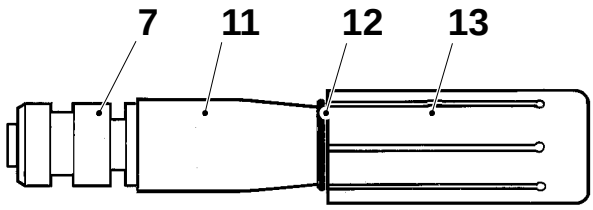

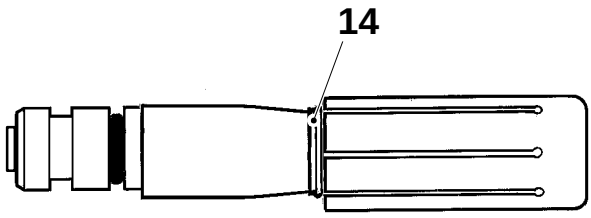

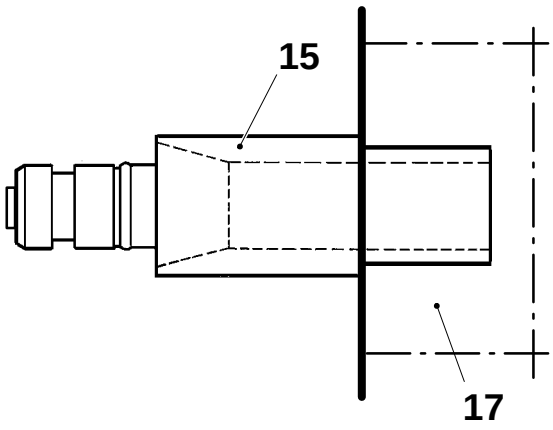

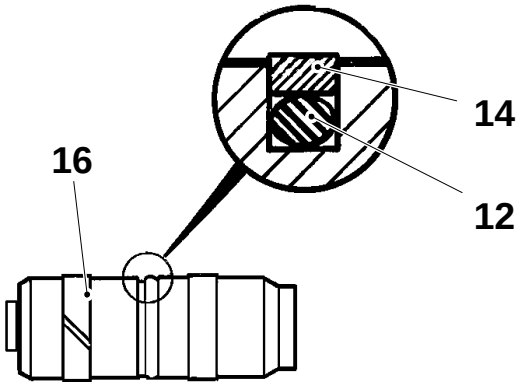

7 Piston
8 Bushing
9 Screw
10 O-ring
11 Assembly cone TP No. 76131
12 O-ring
13 Assembly tool TP No. 76132
14 Seal ring
15 Calibration tool TP No. 78801
16 Support ring
17 Bearing housing

Bleeding

a) Crank to 75° for the RH jaw pair.

b) Turn on the cooling water and electric power and start the hydraulic pump.

c) Reduce the hydraulic pressure (cutting pressure) to approximately 4 MPa, see page MM 601–5X.

d) Loosen the screws (1) carefully and bleed the cutting mechanism.

e) Retighten the screws.

Caution!
Do not overtighten.

f) Crank to 255° and bleed the cutting mechanism on the LH jaw pair.

g) Set the correct hydraulic pressure, see page MM 910–7X.
Setting procedure, see page MM 601–5X.

h) Check that there is no oil leakage.

i) Stop the hydraulic pump. Close the cooling water inlet and turn off the main switch.

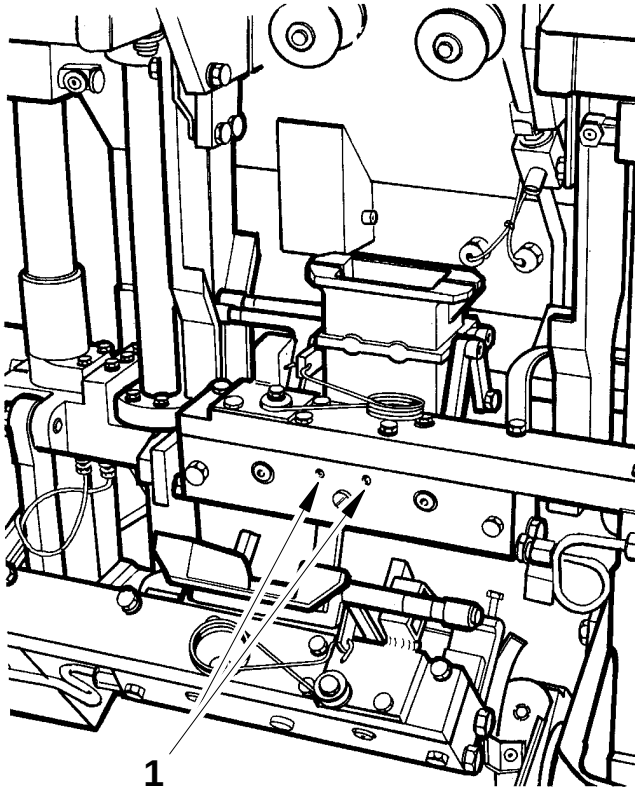

1 Screw

Checking

a) Crank to 35° (30° for 200S) and fit the point measuring clamp (1), on the LH yoke guide, see fig. 1.

b) Crank until the yoke (2) reaches its lower turning position, see table below.

c) Measure stroke A with a rod micrometer and record the result, see fig. 2.

d) Remove the point measuring clamp (1).

e) Crank to 215° (210° for 200 S) and fit the point measuring clamp to the RH yoke guide.

f) Repeat items b) – d).

The difference between the stroke measured on the two sides must not exceed 0.2 mm.
If required, set the stroke, see page MM 436–5X.

Volume, ml	Turning position	
	LH Yoke	RH Yoke
TB 180 B	346°	166°
TB 200 B	348°	168°
TB 200 S	348°	168°
TB 236 B	346°	166°
TB 250 B	346°	166°
TBA 125 S	330°	150°
TBA 160 S	306°	136°
TBA 180 B	332°	152°
TBA 200 B	330°	150°
TBA 200 S	330°	150°
TBA 236 B	330°	150°
TBA 250 B	330°	150°
TBA 250 S	316°	136°
TBA 284 B	330°	150°

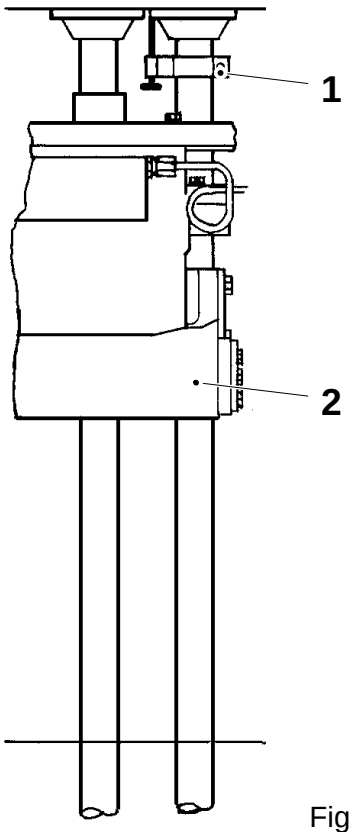

Fig. 1

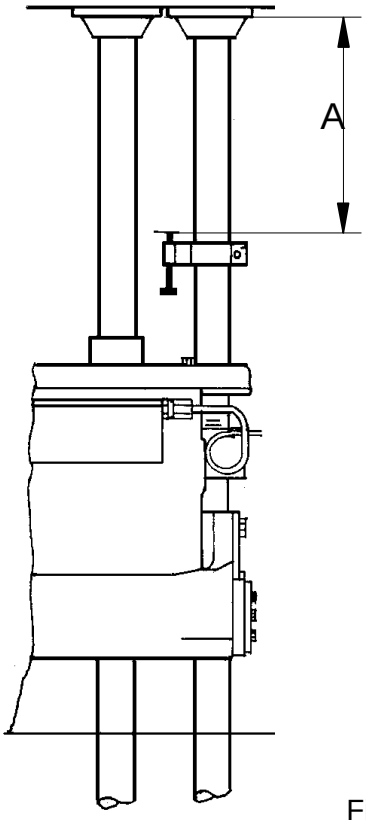

Fig. 2

1 Measuring clamp TP No. 76416–101
2 Yoke

Setting

a) The difference between the LH side and the RH side strokes must not exceed 0.2 mm.

b) Loosen the screws (3) on the yoke lifter arm (2). Alter the stroke by means of the adjustment nuts (4). To increase the stroke, shift the scale towards the final folder. Tighten the screws (3).

c) Adjust the link arm (5), so that the scale (6) shows the same setting as the yoke lifter arm vernier scale (1).

(Cont'd overleaf)

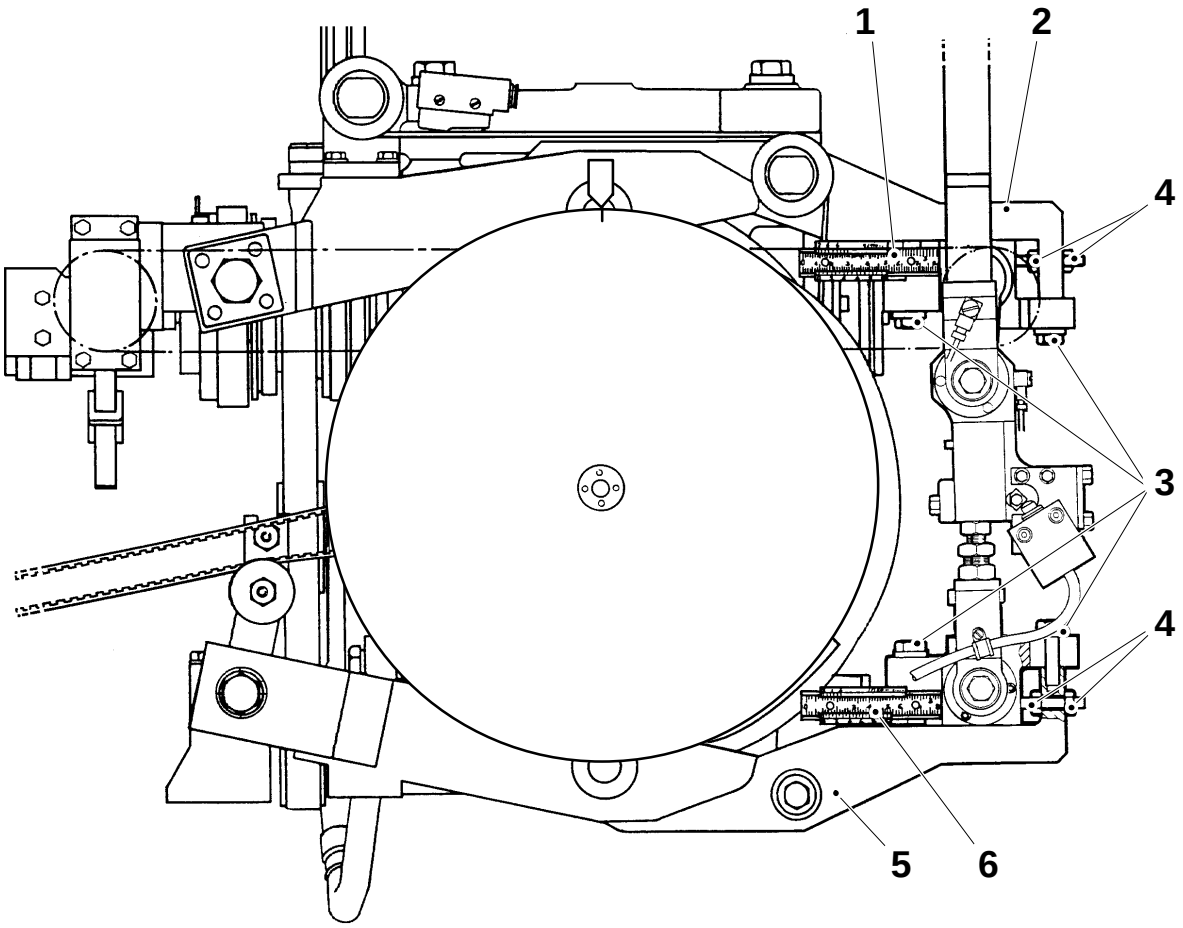

1 Vernier scale
2 Yoke lifter arm
3 Screw
4 Adjustment nut
5 Link arm
6 Vernier scale

(Cont'd)

d) Crank to 90° and check that the distance between the volume flap and the cutting jaw is B mm. Crank to 180° and check distance B again.

e) Set the jaw gap, see page MM 445–1X.

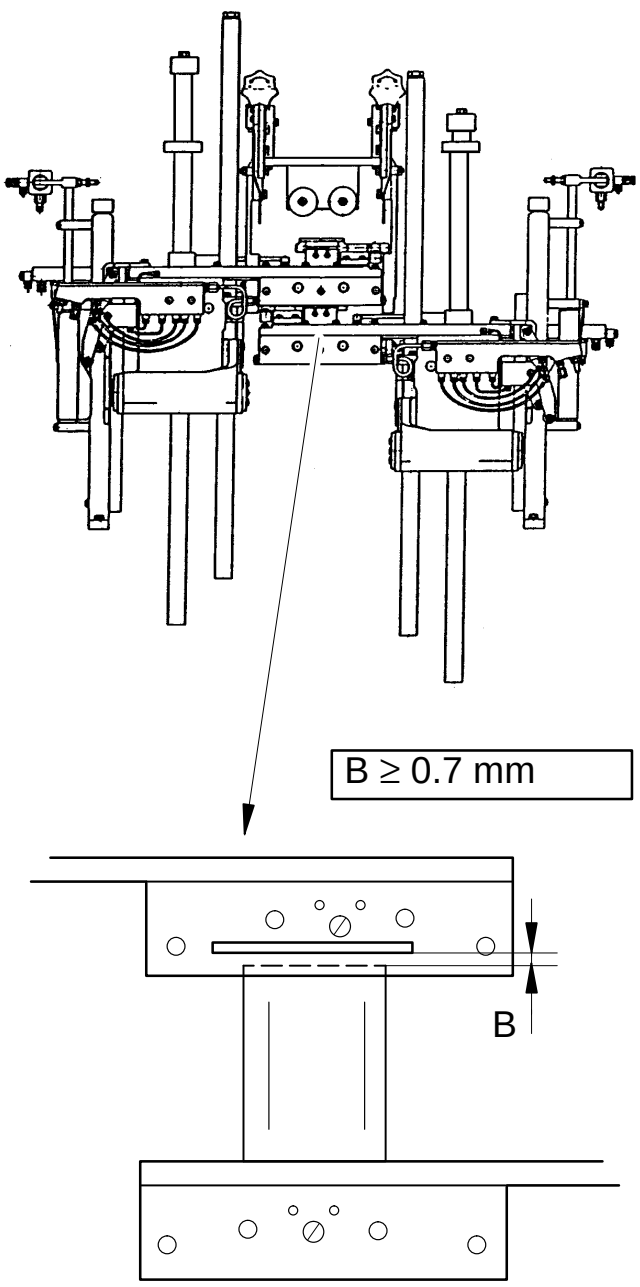

Basic setting

Volume, ml	Stroke length A, mm
TB 180 B	181.3
TB 200 B	190.2
TB 200 S	244.4
TB 236 B	217.6
TB 250 B	226.6
TBA 125 S	175.1
TBA 160 S	192.8
TBA 180 B	174.0
TBA 200 B	181.2
TBA 200 S	236.2
TBA 236 B	206.0
TBA 250 B	214.4
TBA 250 S	231.0
TBA 284 B	234.7

Setting

a) Remove the volume bulges from the volume flaps.

b) Remove the bracket of the tube support rollers (applies to 125 S ml).

c) Crank to 5° (0° for 200 S ml and 15° for 250 S ml), RH volume flap.

d) Fit the setting fixtures (2) and (3) together with template (4), see table.

e) Loosen the screws (1). Apply the template (4), see table, to the fixture (3).

f) Shift the carrier sideways until the template moves easily in the volume flaps from either side of the ruler.

g) Tighten the screws.

h) Remove the setting fixtures and the template.

i) Crank to 185° (195° for 250 S ml) and repeat the setting procedure with the LH volume flap.

j) Fit the volume bulges and the bracket

k) Set the folding flaps, see page MM 429–5X.

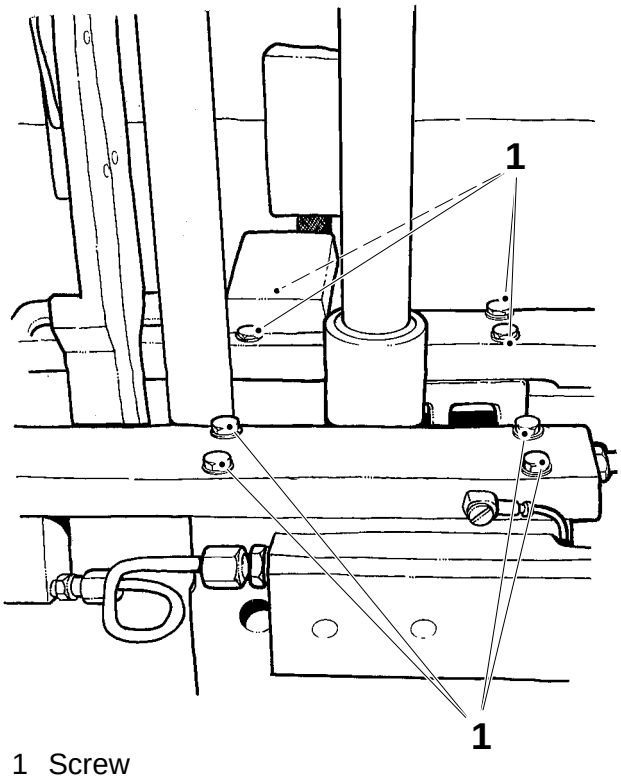

1 Screw
2 Fixture TP No. 76291–101
3 Fixture TP No. 76298
4 Template

Volume, ml	Template TP No.
125 S	75943
180 B – 284 B	75939
160 S, 200 S	75944
250 S	574455

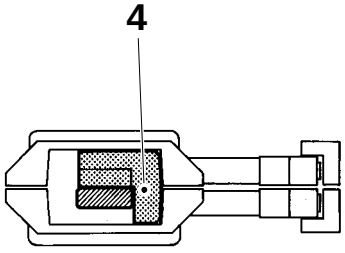

A–A

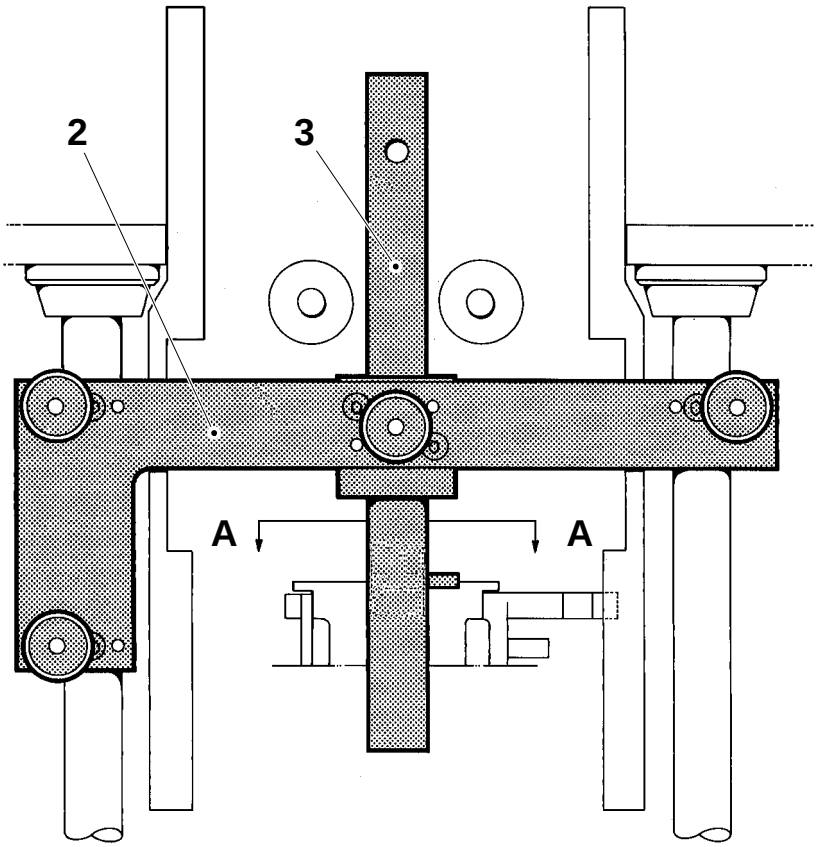

Basic setting

Alignment and vertical position

a) Loosen the screws (3) and set distance A, see table and fig.

b) Crank to 5° or 185°.

c) Fit the setting fixtures (5) and (6).

d) Loosen the locking screw (1). Apply the template (7), see table, to the fixture (6), see fig. 1.

e) Turn the adjustment screw (4) until the LH tube support roller (2) bears against the template. Tighten the screw (1).

Volume, ml	Template B, TP No.
125 S	75937
180 B – 284 B	75936
160 S, 200 S	76176
250 S	574454

Volume, ml		A ±1mm
TB	200 B	60
	200 S	10
	236 B	40
	250 B	50
TBA	125 S	110
	160 S	0
	180 B	60
	200 B	60
	200 S	40
	236 B	40
	250 B	50
	250 S	29
	284 B	30

(Cont'd overleaf)

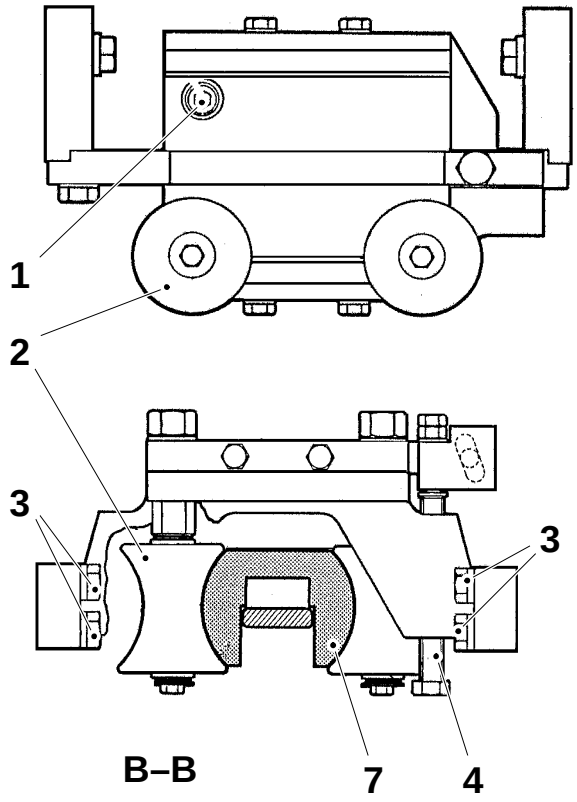

Fig. 1

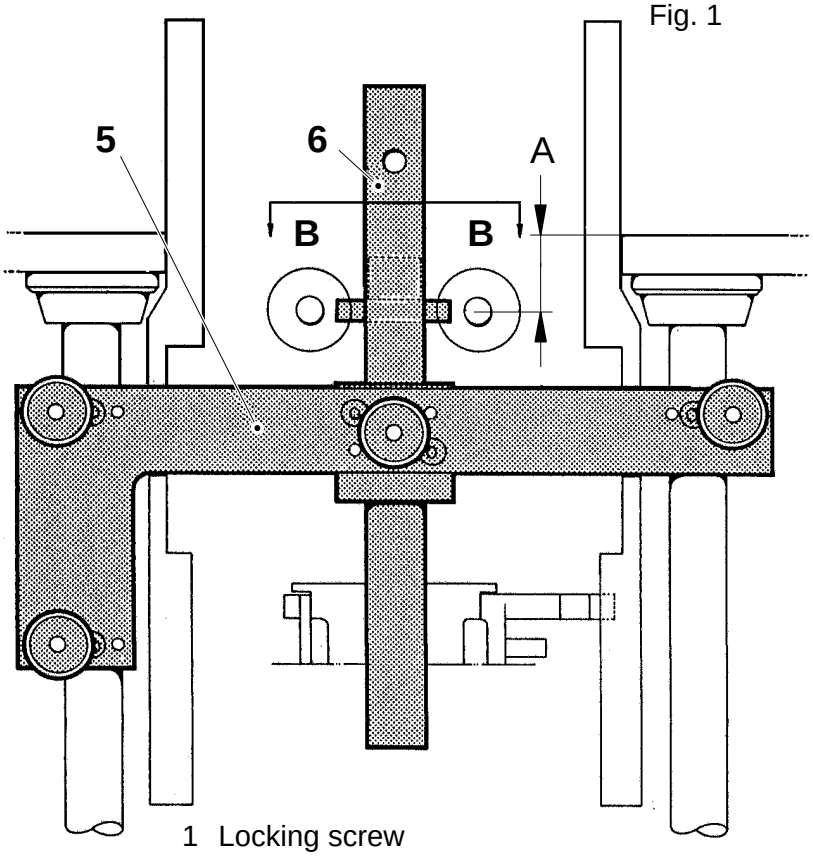

1 Locking screw
2 Tube support roller, LH
3 Screw
4 Adjustment screw
5 Fixture TP No. 76291–101
6 Fixture TP No. 76298
7 Template

Fig. 2

(Cont'd)

f) Set the roller (2) so that it bears evenly against the template by means of the shims (10), distance C. After setting, check that the roller rotates freely.

g) Loosen the nut (8) and slide the RH tube support roller (9) against the template. Tighten the nut (8) and repeat the setting according to item f) on the RH roller.

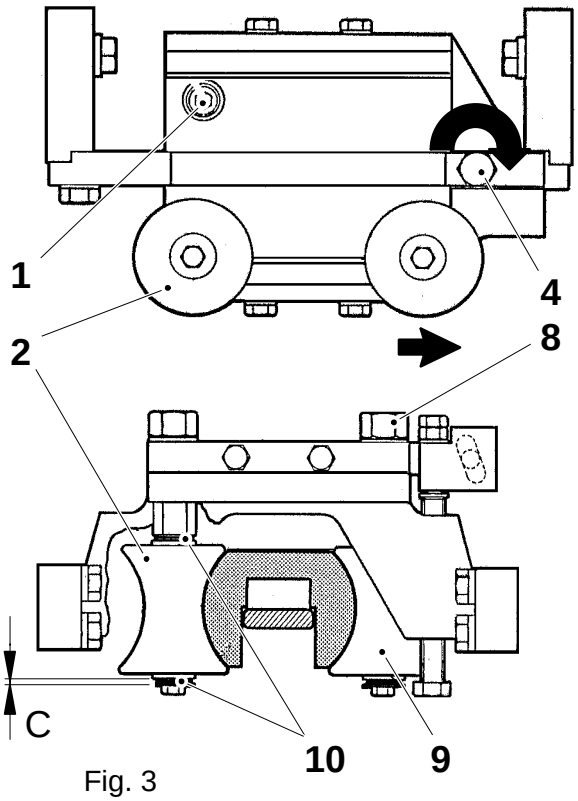

Fig. 3

C = 0.2 – 0.3 mm

Final setting

Centering and vertical position

a) With the machine in step **Production**, push out the drop chute. Pick two consecutive semi-finished packages and check that the short sides are indentically shaped.

b) Fig. 4 shows a section through a semi-finished package, seen from above. Shift the support rollers in the direction of the arrow.

c) To adjust, push **Short stop** and loosen the screw (1). Adjust by means of the adjustment screw (4).
Turning the screw (4) clockwise moves the tube support roller to the right.

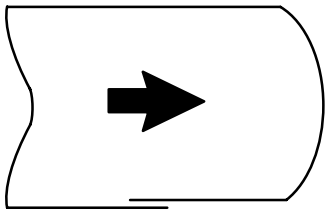

Fig. 4

1 Locking screw
2 Tube support roller, LH
4 Adjustment screw
8 Nut
9 Tube support roller, RH
10 Shim TP No. 2033–14

Checking

Jaw gap

a) Place the tool (2) between the carriers (1).

b) Crank to 80°(LH side)/260°(RH side).

c) With a feeler gauge, measure from above jaw distance A between the pressure and cutting jaws, see table.

d) If required, set the jaw gap, see page MM 445–5X.

Volume, ml	A, mm
125 S	1.3 ±0.1
160 S	1.5 ±0.1
180 B – 284 B	1.5 ±0.1

Non-parallelity in movement

a) Crank to 190°(LH side)/10°(RH side). Measure the jaw gap from above and record the value.

b) Crank to:
for TB – 310°(LH side)/130°(RH side)
for TBA – 290°(LH side)/110°RH side).
Measure the jaw gap from underneath and record the value.

c) If any of the jaw gap distances is wider than 1.8 mm, shift the adjustment device (3) on the link arm approx 1 mm forwards. If the jaw gap is smaller than 0.4 mm at any point, shift the adjustment device backwards approx 1 mm.

d) After setting according to the above, check the jaw gap.

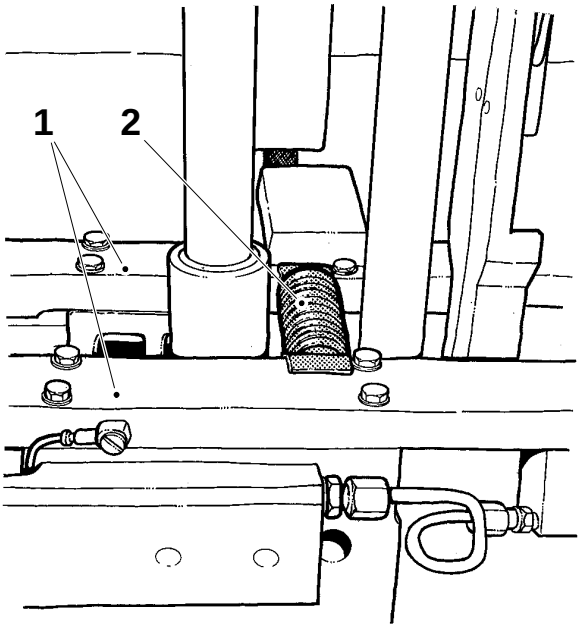

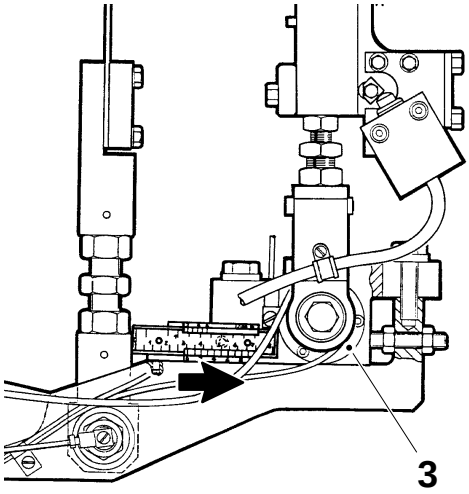

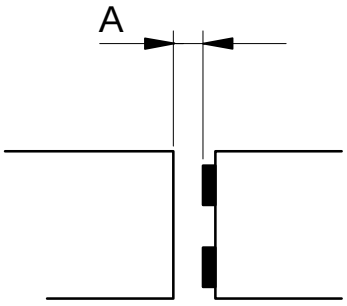

1 Carrier
2 Tool TP No. 76304–101
3 Adjustment device

Setting

a) Place the tool (1) between the carriers (2).

b) Crank to 80°(LH side)/260°(RH side).

Basic setting

a) Loosen the oil pipe clamps and the lock nuts (3). Set distances B and C (see table) by means of the screw (4).

b) Measure jaw gap A between the pressure and the cutting jaws. If it exceeds 2 mm or is less than 0.05 mm, loosen the screws (5) and compress the jaws to a jaw gap of 0.5 – 1.0 mm. Retighten the screws.

Final setting

a) Set jaw gap A, see table, by means of the screw (4). Increasing distance B, increases jaw gap A.

b) Tighten the lock nuts and recheck the jaw gap.

c) Also recheck the non-parallelity in movement of the jaw gap, see page MM 445–1X.

Volume, ml	A ±0.1mm	B ±1 mm	C ±1 mm
125 S	1.3	44	17
160 S	1.5	39	15
180 B	1.5	44	17
200 B	1.5	44	17
200 S	1.5	39	15
236 B	1.5	44	17
250 B	1.5	44	17
250 S	1.5	39	15
284 B	1.5	44	17

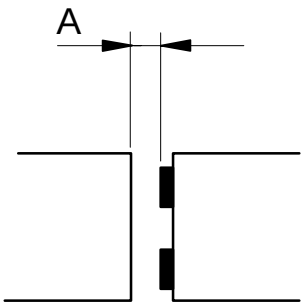

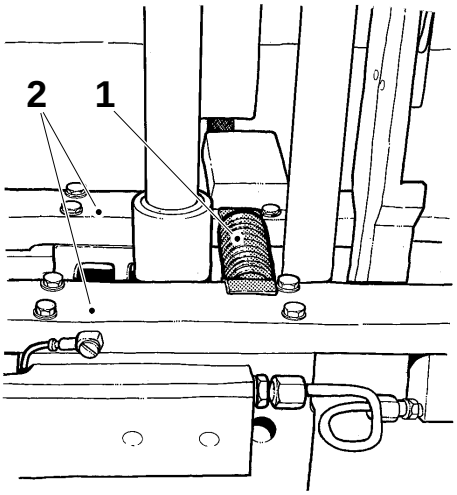

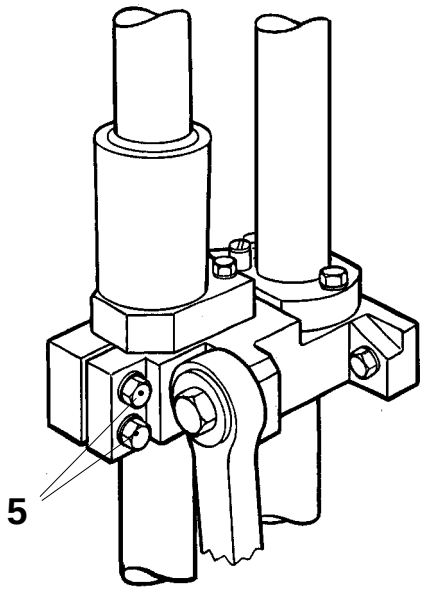

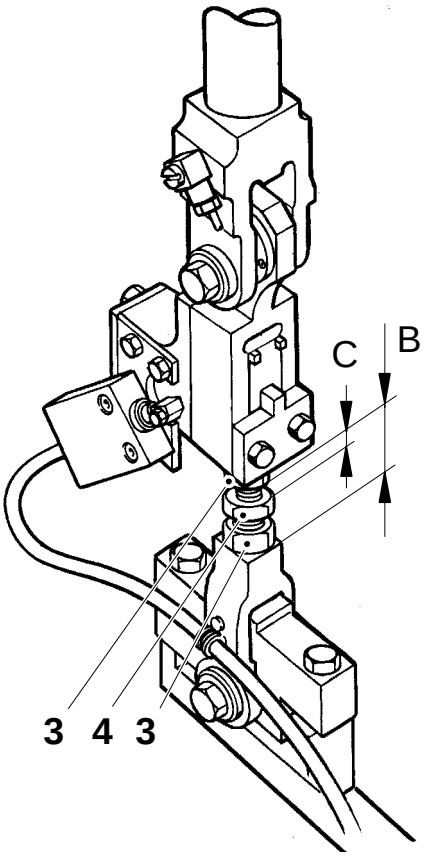

1 Screw
2 Lock nut
3 Screw

Checking

Check the following details for wear and/or damage:

- the spring (1)
- the link (2)
- the guide (3)
- the knife holder (4)
- the knife (5)

Replace as required.

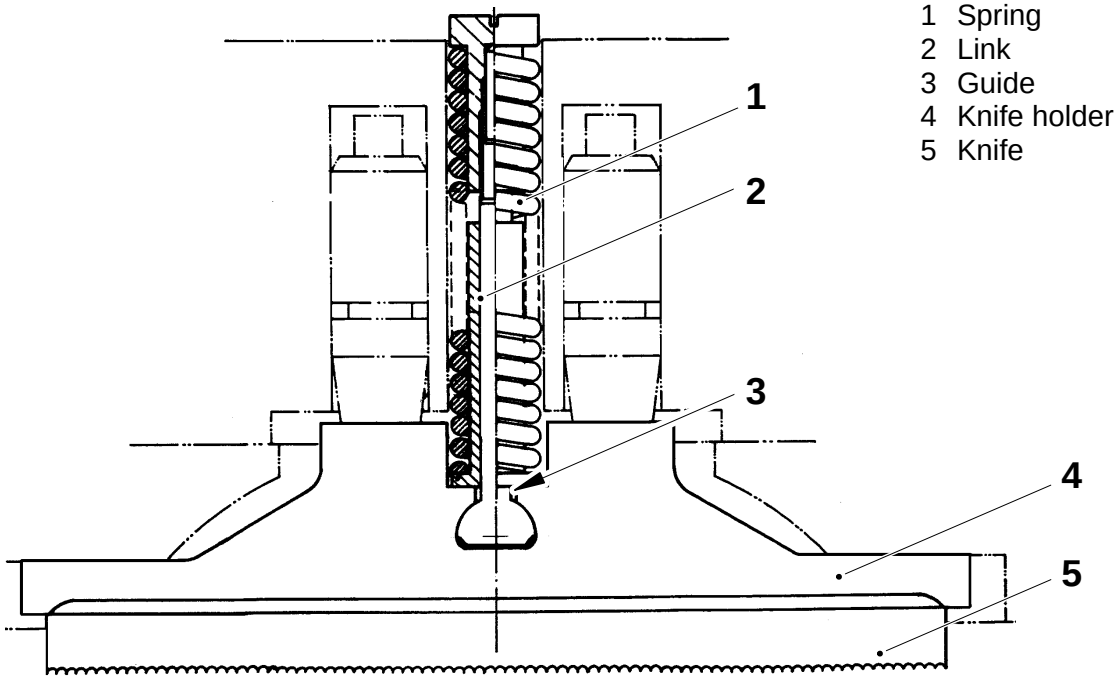

1 Spring
2 Link
3 Guide
4 Knife holder
5 Knife

Replacement

Knife

WARNING!
Risk of personal injuries!
The knife is sharp and may be hot.

a) Undo the screw (1) and remove the knife (3).

b) Heat the knife and knife holder (2) to 120°C by means of hot air.

c) **WARNING!**
Chemical products, see Safety precautions in section 000.
Pull out the knife. Remove all remnants of packaging material and product from the knife and the knife holder. Clean with oil-free acetone.

d) Buff the surface of the knife and clean it with oil free acetone.

e) Apply glue, TP No. 90153–54, to the knife holder and glue TP No. 90153–55 to the knife. Fit the knife on the knife holder and let them dry.

f) Reassemble.

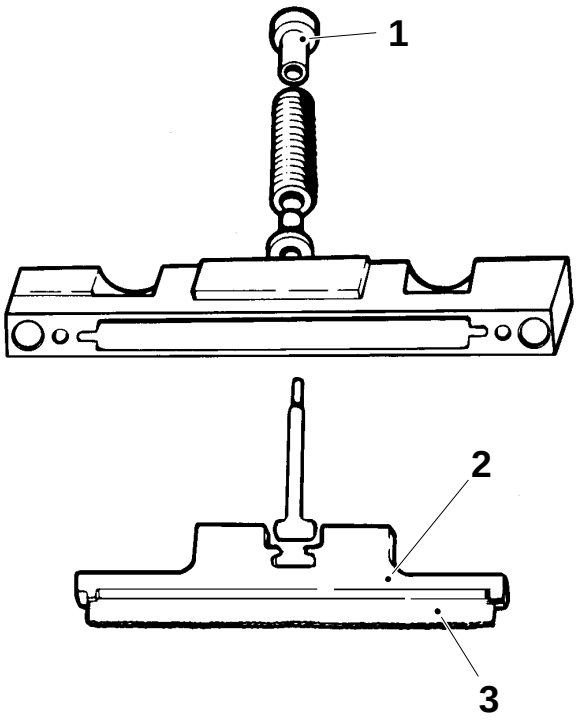

1 Screw
2 Knife holder
3 Knife

Checking

a) Remove the volume flaps on both cutting jaws.

b) Crank to 90°.

c) Measure and record distance A between the inductors (1) (or TPC bars).

d) Crank to 270° and measure distance A.
Note!
Measure the distance at the same place on the inductor (or TPC bar) both times.

e) The difference between the two distances must not exceed 0.1 mm. Adjust as required, see page MM 458–5X.

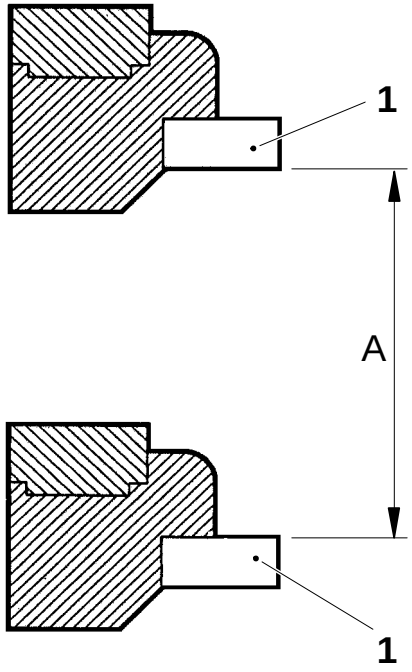

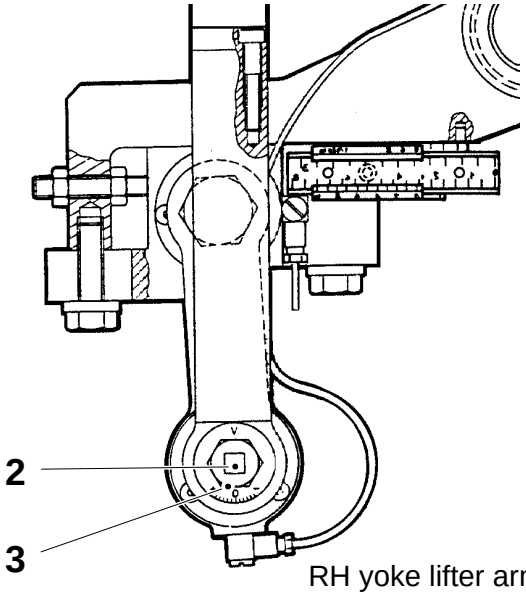

RH yoke lifter arm

1 Inductor/TPC bar
2 Eccentric axle pin
3 Lock nut

Setting

Coarse setting

If the difference between the distances A **exceeds** 1.0 mm, set as follows.

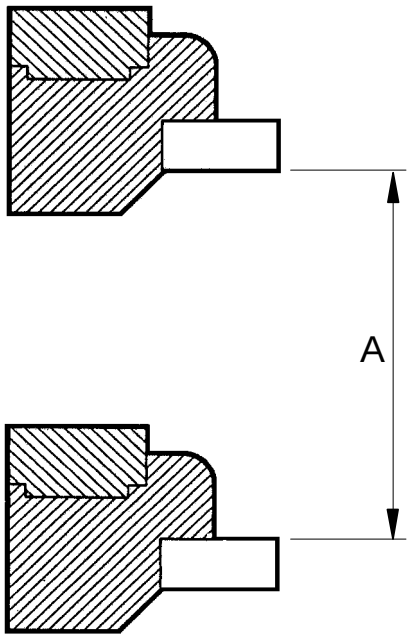

To reduce distance

a) Place the template (3) and a feeler gauge with a thickness equal to the adjustment, underneath the RH yoke.

Note
Adjust only half the difference.

b) Crank so that the yoke rests against the template and feeler gauge.

c) Loosen the two screws (1) and the six screws (2).

d) Remove the feeler gauge and lower the yoke against the template.

e) Tighten the screws (2).

f) Set the jaw gap, see page MM 445–5X.

Caution!
The jaw system must be forcibly guided by hand when the machine is being cranked.

g) Check distance A, see page MM 458–1X.

To increase distance

a) Place the template (3) underneath the RH yoke.

b) Crank so that the yoke rests against the template.

c) Loosen the two screws (1) and the six screws (2).

d) Lift the yoke and place a feeler gauge, with thickness equal to the adjustment, between the template and the yoke.

Note
Adjust only half the difference.

e) Tighten the screws (2).

(Cont'd overleaf)

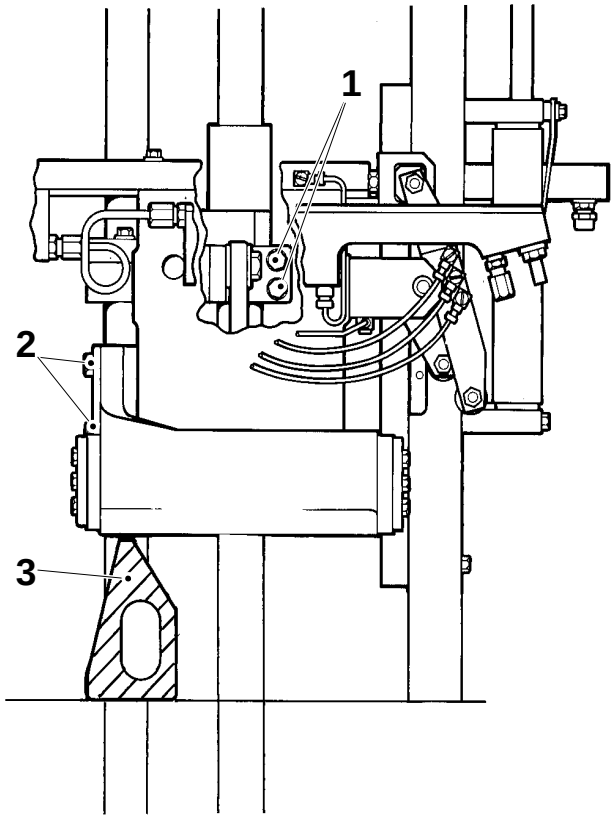

RH side

1 Screw
2 Screw
3 Template TP No. 75931

(Cont'd)

f) Set the jaw gap, see page MM 445–5X.

Caution!
The jaw system must be forcibly guided by hand when the machine is being cranked.

g) Check distance A, see page MM 458–1X.

Fine setting

If the difference between distances A is **less than** 1.0 mm, set as follows:

a) Always adjust on the **RH** yoke lifter arm.

b) Loosen the lock nut (5) on the **RH** yoke lifter arm and shift the eccentric axle pin (4); one scale division = 0.1 mm.

Note
Adjust only half the difference.

c) Check the jaw gap, see page MM 445–1X. If required, set distance A and the jaw gap until both are within their tolerances.

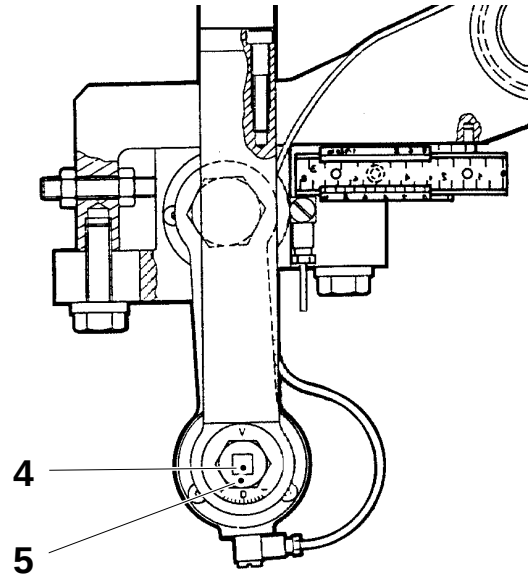

4 Eccentric axle pin
5 Lock nut

Checking

a) Make sure the cooling water hoses, hydraulic hoses, and lubrication pipes do not leak, and that they are intact and their connections tight.

b) Check that all hoses and cables are properly clamped.

c) Check that the insulation of the electrical cables and their connections are not damaged, and that the electrical conductors are not oxidized. If required, clean them with a brass wire brush.

Checking

a) Check that the engagements of the catches are not worn.

b) Open the cooling water inlet and turn on the main power switch.

c) Start the hydraulic pump.

d) Put piece of a double packaging material (0.7 – 0.8 mm) with the same width as the transversal sealing between the jaws.
Cut the packaging material so that the folding flaps pass by.

e) Crank to 180°(LH side)/360°(RH side), and check distance A, see fig.

f) If distance A is less than 0.3 mm, check and, if required, replace/overhaul the pressure jaws, the pressure rubbers (TBA) and the catches.

g) Check that the catches do not leak any hydraulic oil. If required overhaul, see page MM 465–3X.

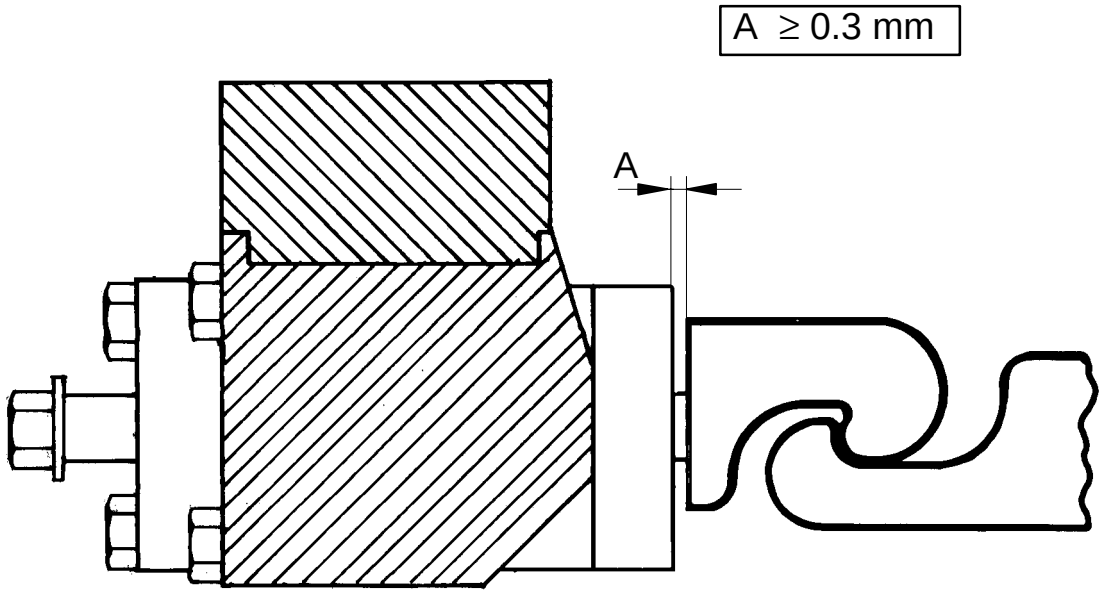

Overhaul

a) Undo the screw (1) and remove the catch (2).

WARNING!
Risk of personal injuries!
Spring force. Be careful.

b) Undo the screws (3) and remove the lid (4).

c) Remove the springs (5) and (6) and check that they are not damaged. Replace as required.

d) Press out the piston (7) and check it for wear and/or damages. Replace as required.

e) Replace the sealings (8) and (9) and the support rings (11) and (12). Use tool TP No. 90243–146.
(Shaping the rings will be easier if they are heated in boiling water.)

f) Reassemble in reverse order.

Note
The space (10) is to be filled with grease, type F, see page MM 940–7X.
Tighten the screw (1). Torque 25 ±2 Nm.

g) Bleed the catches, see page MM 465–7X.

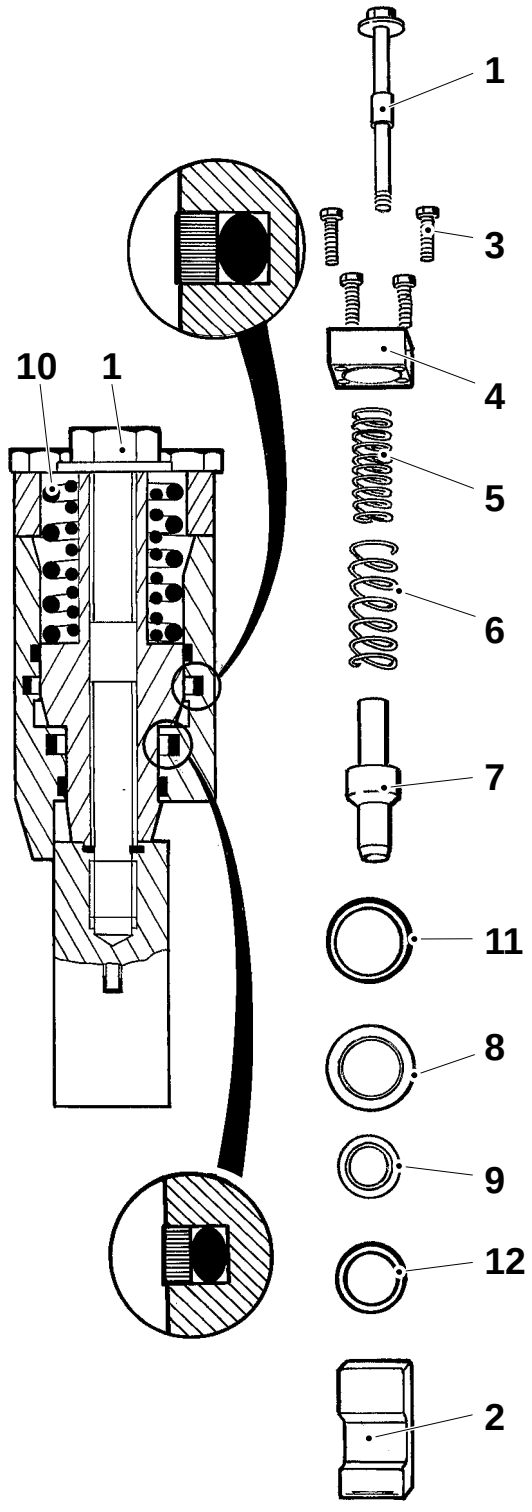

1	Screw	7	Piston
2	Catch	8	Sealing
3	Screw	9	Sealing
4	Lid	10	Space
5	Spring	11	Support ring
6	Spring	12	Support ring

Bleeding

a) Crank to 0° for the RH jaw pair.

b) Turn on the cooling water and the electric power, and start the hydraulic pump.

c) Reduce the hydraulic pressure (jaw pressure) to approximately 4 MPa, see page MM 601–5X.

d) **WARNING!**
Risk of personal injuries!
Watch out for splashing.
Loosen the screws (1) carefully (two on each carrier), and bleed the catches.

e) Retighten the screws.
Caution!
Do not overtighten.

f) Crank to 180° and bleed the catches of the LH jaw pair.

g) Set the correct hydraulic pressure, see page MM 910–7X.
Setting procedure, see page MM 601–5X.

h) Check that there is no oil leakage.

i) Stop the hydraulic pump. Close the cooling water inlet and turn off the main poewer switch.

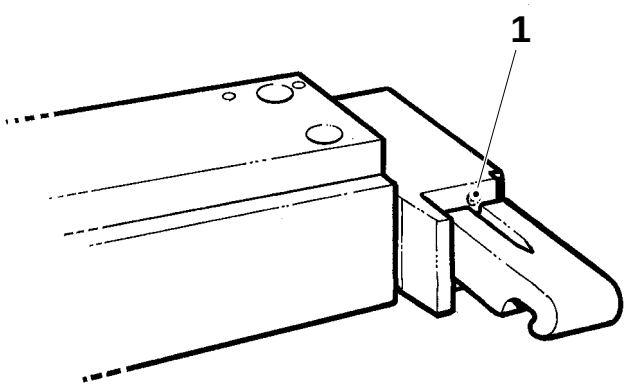

1 Screw

Checking

a) Turn on the main power switch, open for cooling water and start the hydraulic pump.

b) Crank the machine and check distance A between the catches on the disengagement movement.

c) If distance A is too small, set the catch lifter cams, see page MM 469–5X, and the catch pivot spring, see page MM 468–5X.

d) Crank to C°, see table below and check distance B.

e) Crank to D° and check distance B for the other jaw pair.

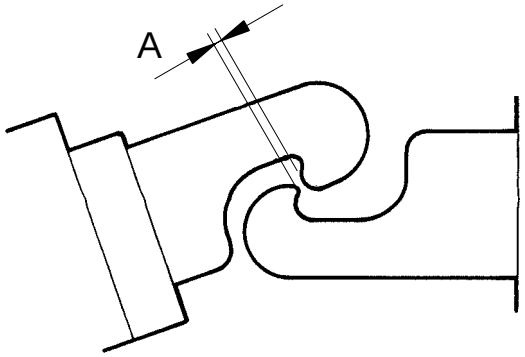

Volume, ml	C°	D°
TB all volumes	15	195
TBA 125 S	5	185
TBA 160 S	352	172
TBA 200 S	5	185
TBA 250 S	355	175
TBA 180 B – 284 B	5	185

A ≥ 0.7 mm
B ≥ 4 mm

f) Stop the hydraulic pump, close for cooling water and turn off the main power switch.

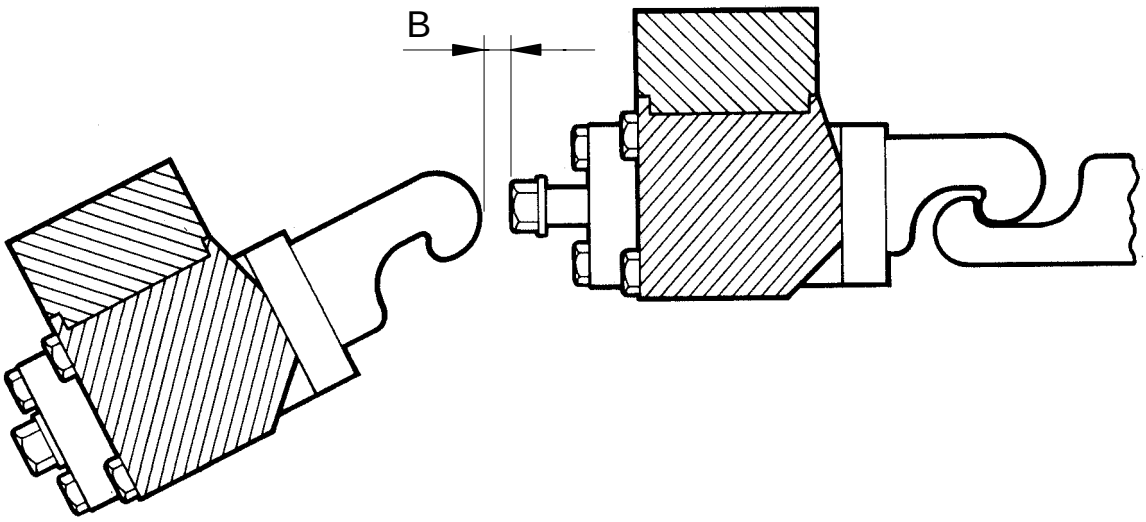

Setting

a) Lubricate the bushing (4) with grease, type F, see page MM 940–7X.

b) Crank until the catches are engaged.

c) Set distance A, between the corner of the lug (3) and the top side of the carrier (1), by loosening the screw (2) and turning the lug (3).

d) Make sure that the lug (3) moves freely before tightening the screw (2).

A = 59 ±2 mm

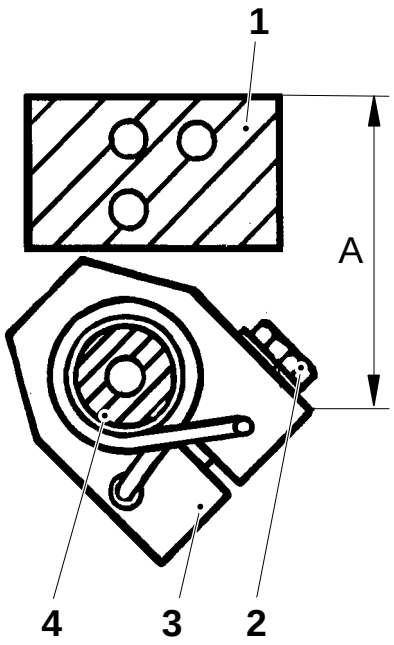

1 Carrier
2 Screw
3 Lug
4 Bushing

Checking

Check the following details for wear and/or damages:

- the running surfaces of the catch lifter cams (1)
- the running surface of the cam rollers (2); they must not have an angular shape

Replace as required.

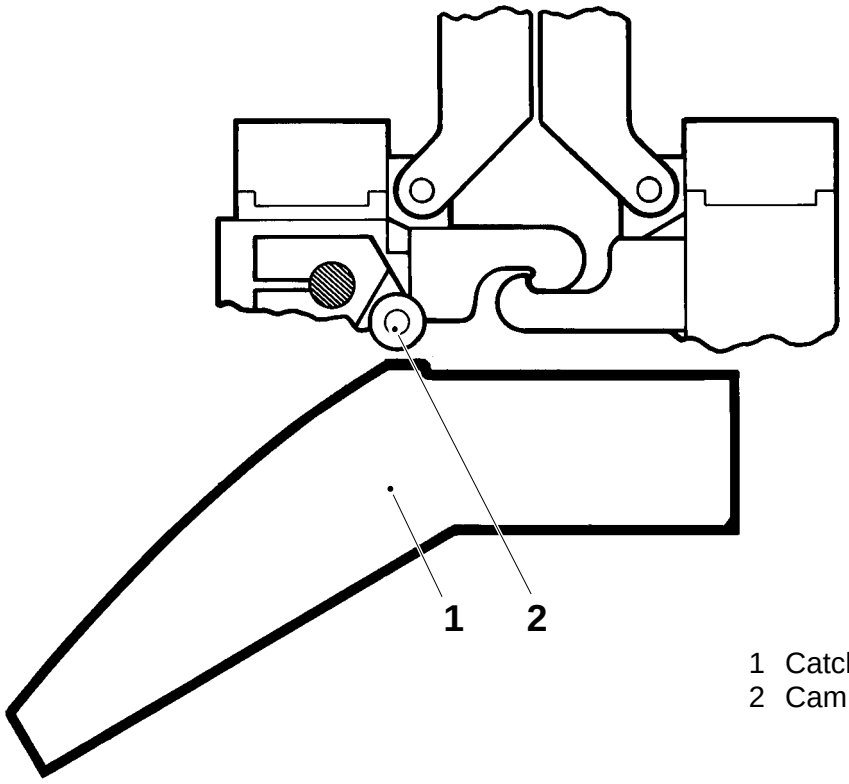

1 Catch lifter cam
2 Cam roller

Setting

a) Open the cooling water inlet, turn on the main power switch and start the hydraulic pump.

b) Put a piece of double packaging material between the jaws.

c) Crank to approx 0°(RH side)/180°(LH side).

d) Undo the screws (6) and (7).

e) Set distance A between the cam (1) and cam roller (2) by shimming (3) between the bracket (4) and yoke (5).

f) Fit the cam and yoke edge-to-edge in order to always obtain the same initial position. On assembly, tighten the screws (7) first.

g) Crank the machine and lift the catch manually in the direction of the arrow (8). Check that an overtravel B can be obtained between the cam and cam roller at the highest point of the cam.

h) Check the catch clearance, see page MM 467–1X.

i) Stop the hydraulic pump. Close the cooling water inlet an turn off the main power switch.

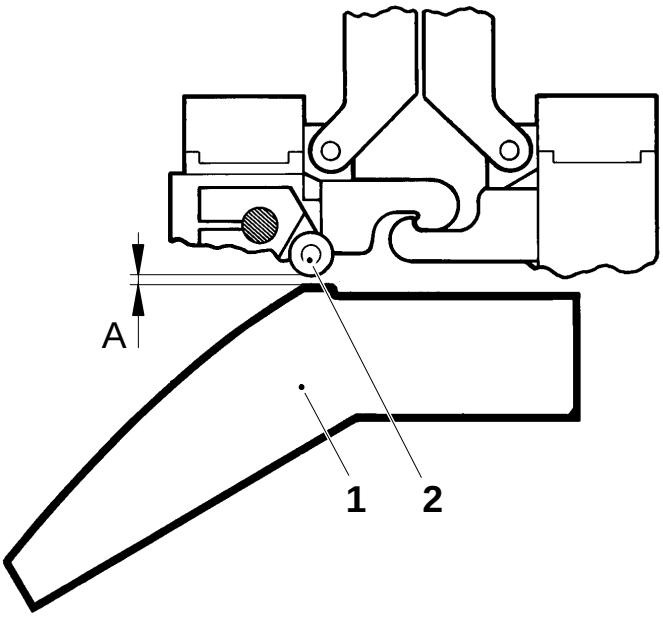

A = 0.05 – 0.10 mm
B ≥ 0.5 mm

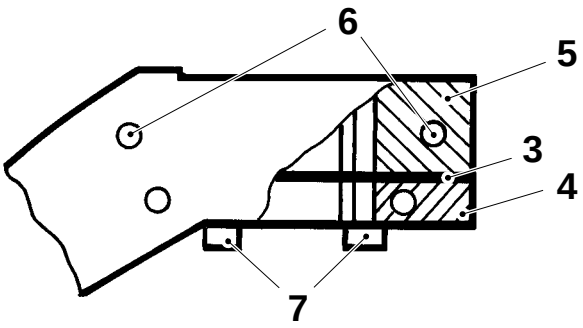

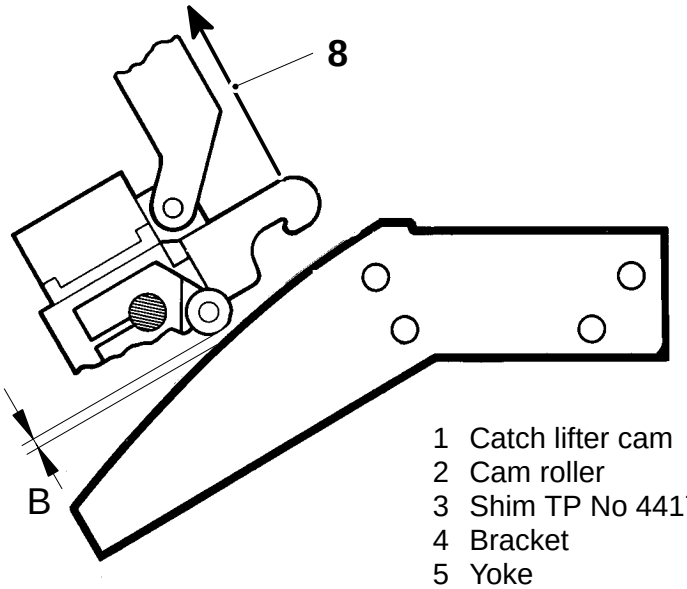

1 Catch lifter cam
2 Cam roller
3 Shim TP No 441751
4 Bracket
5 Yoke
6 Screw
7 Screw
8 Direction of lifting

Checking

Check the following details for wear and/or damage:

- the ways (1) and (5)
- the rods (2)
- the link bearings (3)
- the metering valves (4)
- the O-rings (6) and (8)
- the bearings (7)
- the upper bushing (9) and the lower bushing (12),
- the felt seals (10), and
- the seal rings (11).

Replace as required.

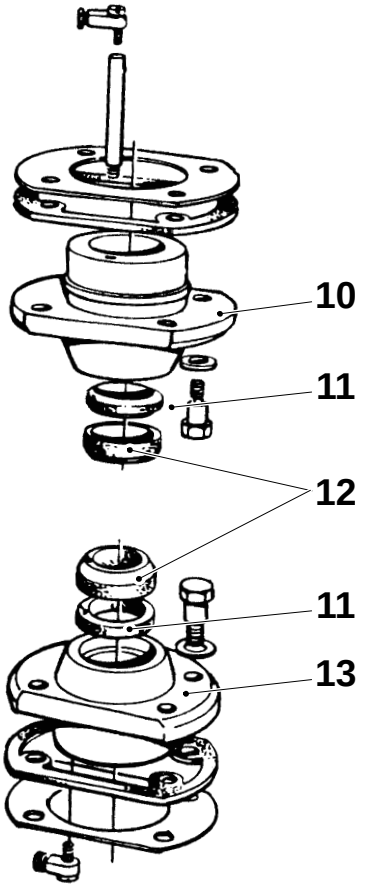

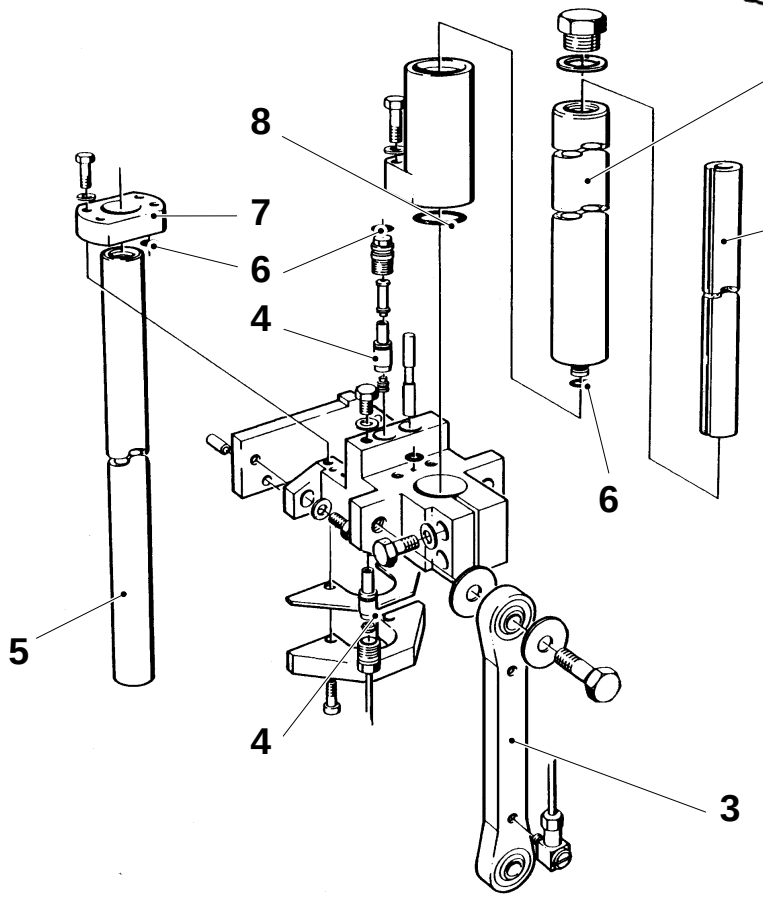

1 Way
2 Rod
3 Link bearing
4 Metering valve
5 Way
6 O-ring
7 Bearing
8 O-ring
9 Gasket
10 Upper bushing
11 Felt seal
12 Seal ring
13 Lower bushing

Removal

a) Remove the yoke, see page MM 410–2X.

b) Undo the banjo connections (1) and the hoses (2). Remove the cones and the metering valves.

c) Undo the screws (3). Remove the washers and the links (4).

d) Undo the screws (5). Remove the washers, bearings (6) and O-rings (7).

e) Undo the screws (8). Remove the washers, sleeves (9) and O-rings (10).

f) Undo the screws (11). Remove the O-rings, the spacers and the metering valves.

g) Undo the screws (12). Remove the washers and the cam (13).

h) Undo the screws (14) and move up/down the bushings (15) and (16).

i) Undo the screws (17). Remove the washers and the rod (18). Remove the ways (19) and (20).

j) Remove the volume cams.

k) Undo the pipe connections (21) and the pipes.

l) Remove the seal rings (22), felt seals (23), upper (15) and lower (16) bushings, seals and washers.

m) Reassemble in reverse order.

Note
Put sealing compound, TP No 90157–22, at the lower bushings.

n) Apply the spring force of the hold down device, see page MM 306–4X.

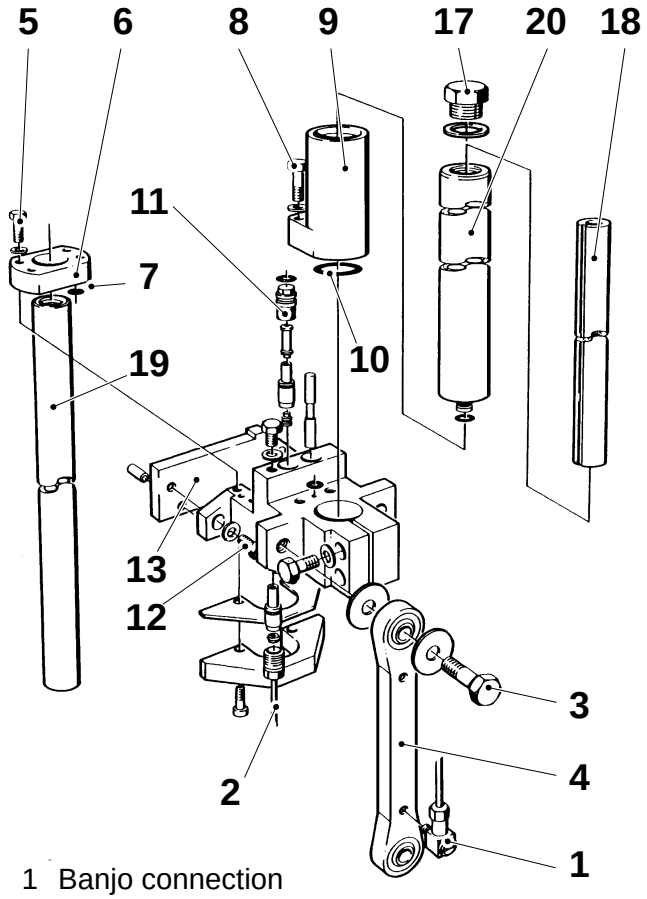

1 Banjo connection
2 Hose
3 Screw
4 Link
5 Screw
6 Bearing
7 O-ring
8 Screw
9 Sleeve
10 O-ring
11 Screw
12 Screw
13 Cam
14 Screw
15 Upper bushing
16 Lower bushing
17 Screw
18 Rod
19 Way
20 Way
21 Pipe connection
22 Seal ring
23 Felt seal

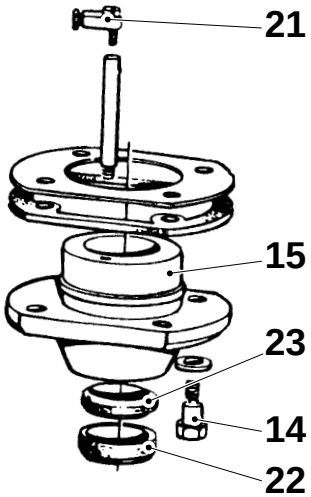

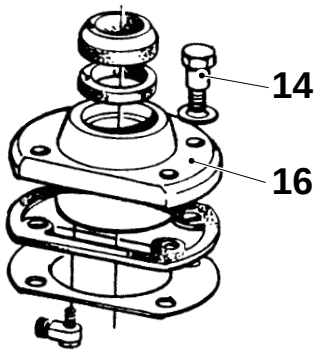

Description	TB/9	TBA/9
Setting sequence	501–51	501–51
Guide system – checking	503–11	503–11
Guide system – removal	503–21	503–21
Guide system – fitting (5 pages)	503–41	503–41
Station chain – checking	505–11	505–11
Station chain – removal	505–21	505–21
Station chain – fitting	505–41	505–41
Station chain – setting	505–51	505–51
Pull-down device – checking	511–11	511–11
Pull-down device – setting (5 pages)	511–51	511–51
Pull-down device – bleeding	511–71	511–71
Pressure unit – checking	521–11	521–11
Pressure unit – setting (2 pages)	521–51	521–51
Pressure unit – bleeding	521–71	521–71
FS element – overhaul (2 pages)	525–31	525–31
FS element – setting	525–51	525–51
Discharge finger – checking	529–11	529–11
Discharge finger – setting (3 pages)	529–51	529–51
Discharge roller – checking	531–11	531–11
Discharge roller – setting (2 pages)	531–51	531–51
Discharger shear pin – fitting	532–41	532–41
Pivot frame – checking	535–11	535–11
Pivot frame – overhaul	535–31	535–31

Description	TB/9	TBA/9
Safety coupling – checking	537–11	537–11
Drive wheel – checking	542–11	542–11
Drive wheel – removal	542–21	542–21
Tensioner sprocket – checking	544–11	544–11
Tensioner sprocket – removal	544–21	544–21
External cleaning – checking	550–11	550–11
External cleaning – overhaul	550–31	550–31
External cleaning – setting (2 pages)	550–51	550–51
External cleaning – cleaning program	550–71	550–71
Indexing unit – checking	578–11	578–11
Indexing unit – oil change	578–71	578–71
Worm gear – oil change	579–71	579–71

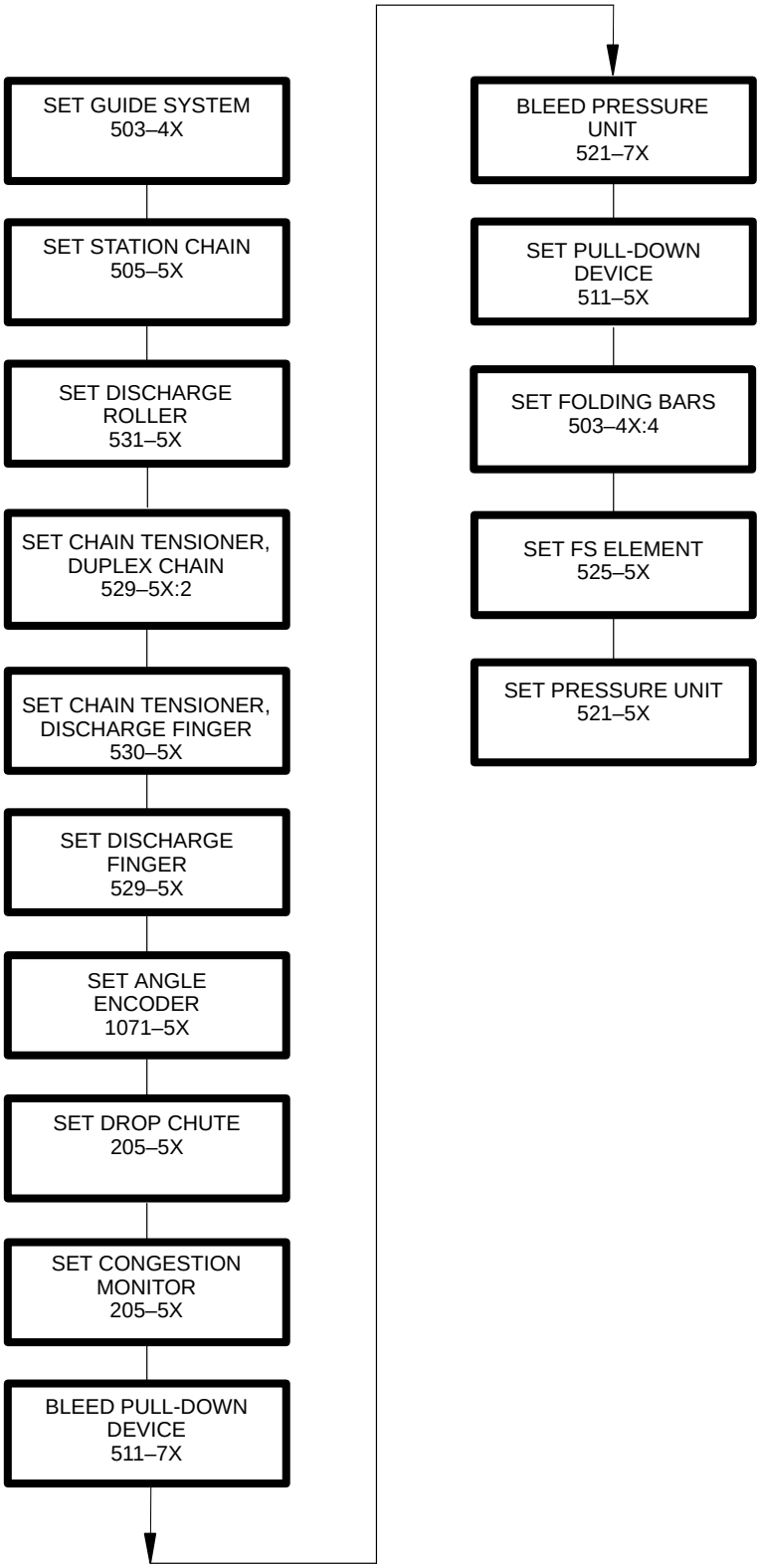
SET GUIDE SYSTEM
503–4X
SET STATION CHAIN
505–5X
SET DISCHARGE ROLLER
531–5X
SET CHAIN TENSIONER, DUPLEX CHAIN
529–5X:2
SET CHAIN TENSIONER, DISCHARGE FINGER
530–5X
SET DISCHARGE FINGER
529–5X
SET ANGLE ENCODER
1071–5X
SET DROP CHUTE
205–5X
SET CONGESTION MONITOR
205–5X
BLEED PULL-DOWN DEVICE
511–7X
BLEED PRESSURE UNIT
521–7X
SET PULL-DOWN DEVICE
511–5X
SET FOLDING BARS
503–4X:4
SET FS ELEMENT
525–5X
SET PRESSURE UNIT
521–5X

Checking

Remove the station chain, see page MM 505–2X.

Check the following details for wear and/or damages:

- the slide rails (1)
- the plates (2)
- the folding bar (3)

Replace as required.

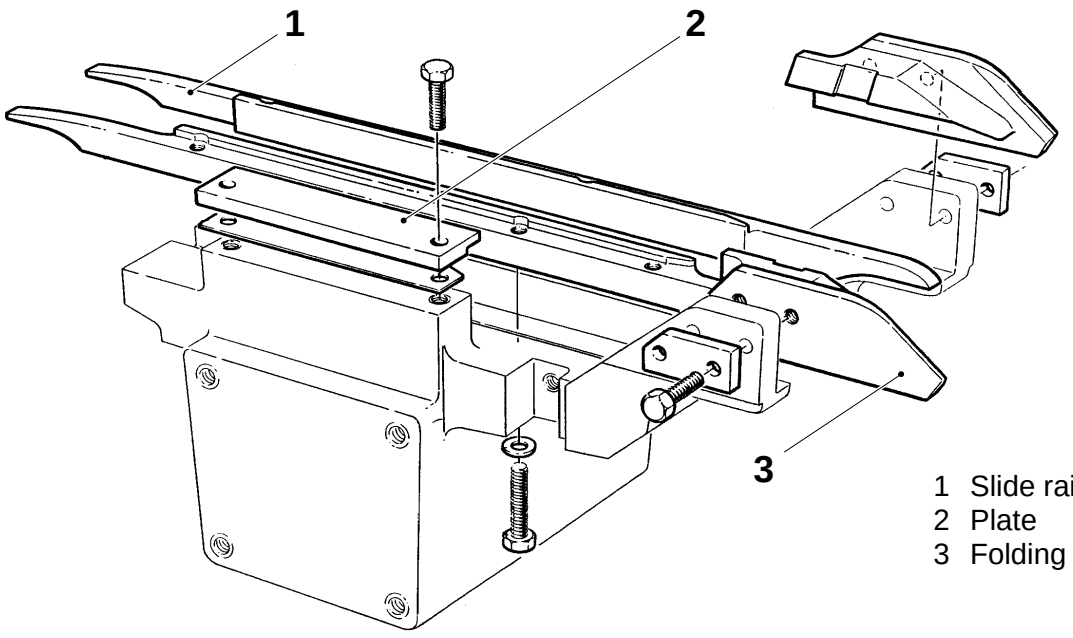

1 Slide rail
2 Plate
3 Folding bar

Removal

a) Remove the protection cover (1), the guide rail (2) and the cleaning pipe (3).

b) Undo the banjo connection (4), the screws (5) and (6) and remove the distributor block.

c) Undo the screws (10) and remove the plates (8) and the shims (9).

d) Remove the station chain, see page MM 505–2X.

e) Undo the screws (11) and remove the slide rails (7).

f) Undo the screws and remove the supporting arm (12).

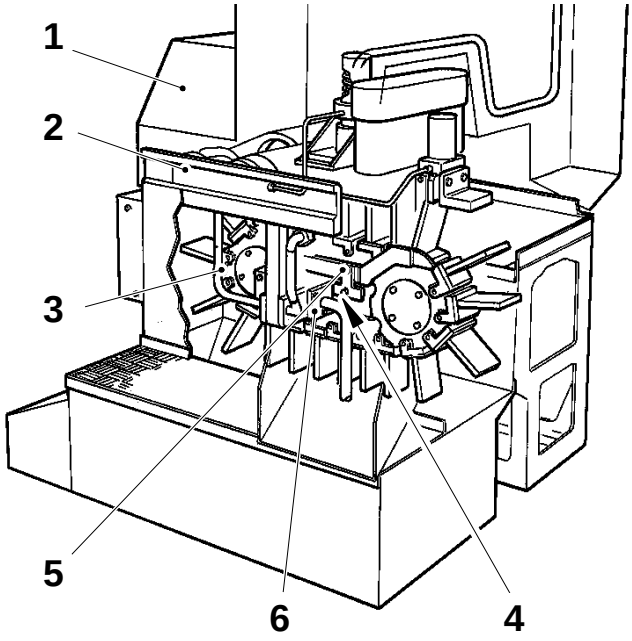

1 Protection cover
2 Guide rail
3 Cleaning pipe
4 Banjo connection
5 Screw
6 Screw
7 Slide rail
8 Plate
9 Shims
10 Screw
11 Screw
12 Supporting arm

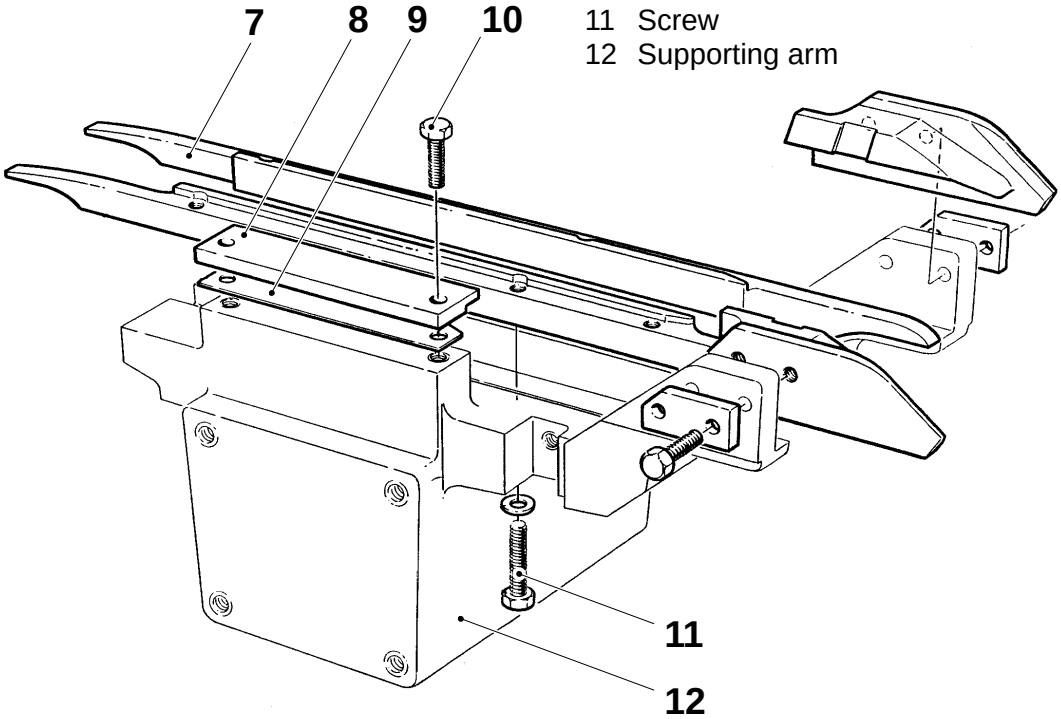

Fitting

a) Fit the LH slide rail (2) on the supporting arm (1). Set the slide rail, distance A.

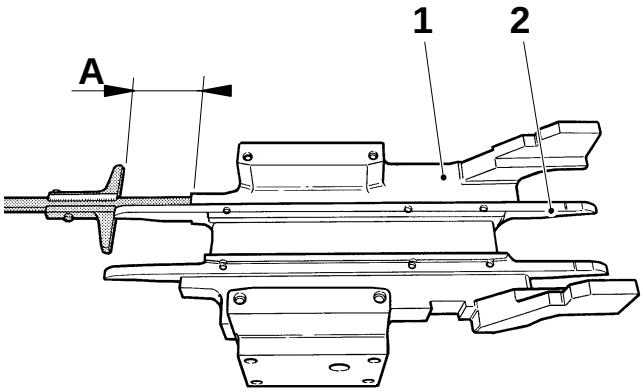

A = 61.0 ± 0.2 mm

1 Supporting arm
2 LH slide rail
3 RH slide rail

b) Fit the RH slide rail (3) parallel to the LH slide rail very carefully with a set square.

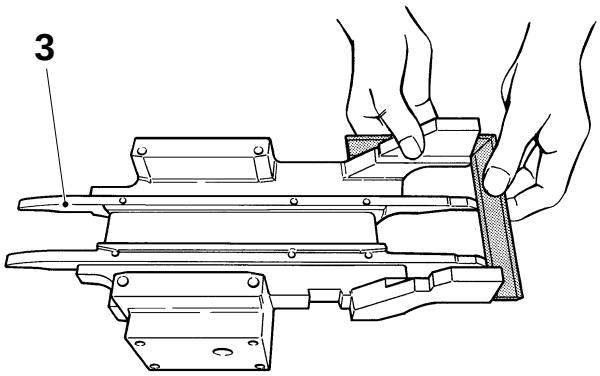

c) Measure distance B between the RH slide rail and the supporting arm very carefully. Record the result.

d) Remove the RH slide rail.

e) Fit the supporting arm on the final folder and tighten it.

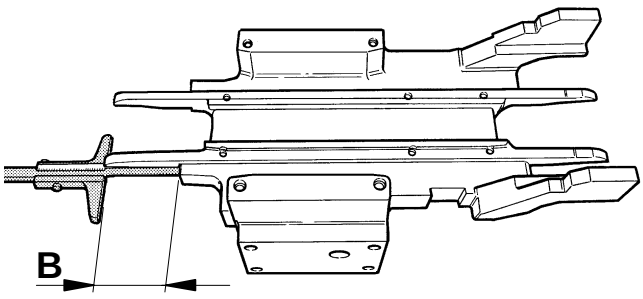

(Cont'd overleaf)

(Cont'd)

f) Slide the drive sprocket (4) on to the shaft without securing it.

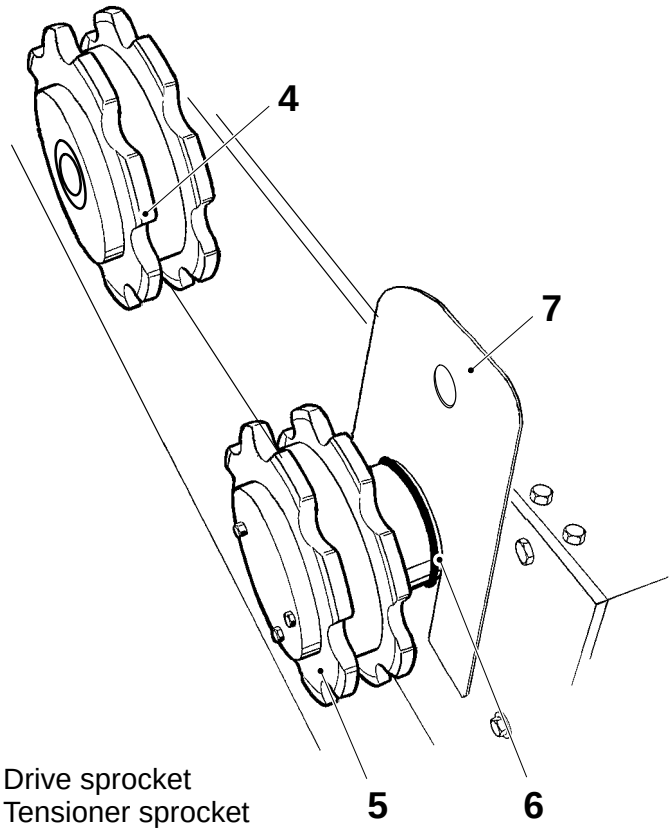

g) Put the tensioner sprocket (5) in its place in the final folder. Take care not to damage the seal (6). Use the protection plate (7) during fitting.

4 Drive sprocket
5 Tensioner sprocket
6 Seal
7 Protection plate TP No. 79003
8 Nut
9 RH slide rail

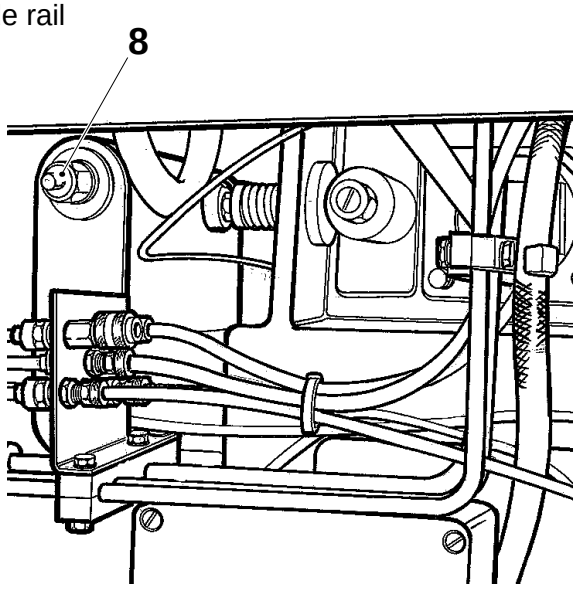

h) Tighten the tension sprocket by means of the nut (8). Torque 140 ±5 Nm.

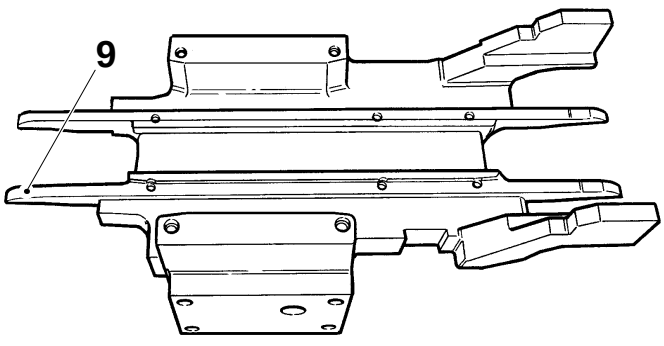

i) Fit the RH slide rail (9) on the supporting arm.

(Cont'd overleaf)

(Cont'd)

j) Place a ruler (10) with the edge on the LH of the supporting arm and measure the distance between the supporting arm and the tensioner sprocket.

k) Repeat item j) on the RH side of the supporting arm.
The distances must be the same within 0.2 mm.

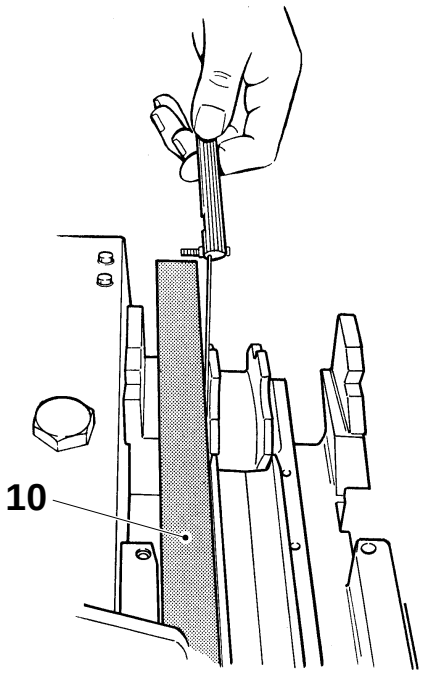

10 Ruler
11 Shim TP No. 441589

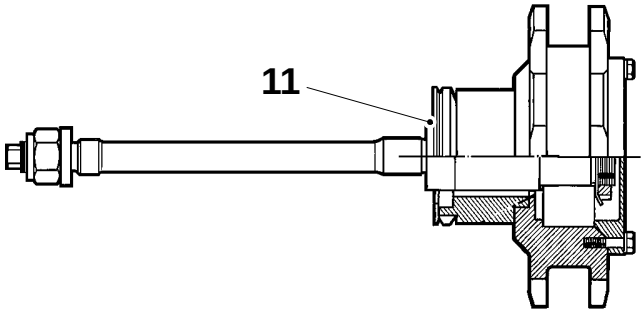

l) In case of incorrect setting, remove the RH rail, the tensioner sprocket and adjust by means of shims (11).

m) Fit the the tensioner sprocket and the rail.

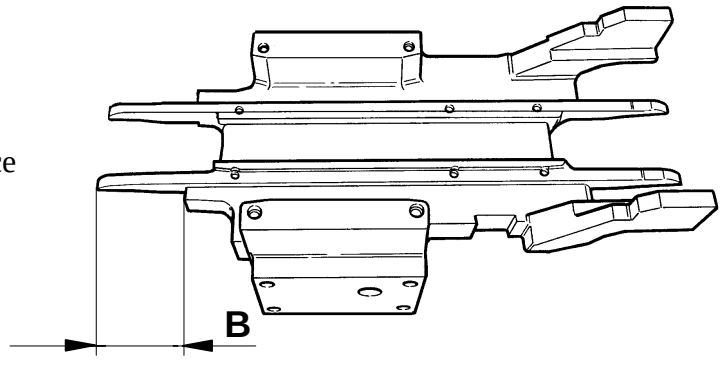

n) Set distance B between the RH slide rail and the supporting arm. Use the recorded distance from item c).

(Cont'd overleaf)

(Cont'd)

o) Fit the station chain, see page MM 505–4X.

p) Fit the shims (13) (basic setting is two on each side) and the plates (12) (with the bevelling direction inwards and downwards).

q) Adjust by means of the shims (13) so that distance C between the station chain and the plate is obtained.

r) Set gaps D between the plates and station chain (14).

s) Set the station chain, see page MS 505–5X.

t) Set the discharge finger, see page MM 529–5X:1.

u) Synchronize the main machine with the final folder, see page MM 574–5X.

v) Fit the folding bars (15) with the plates (16). Lower the pivot frame and set the folding bars sideways so that the cut-outs (alt. scribed lines) on the pull-down arms (17) are opposite the cut-outs in the folding bars.
The folding bars are to bear against the supporting arm (1) vertically.

(Cont'd overleaf)

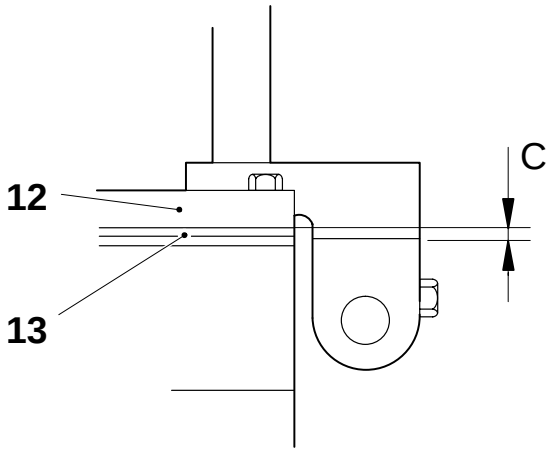

1 Supporting arm
12 Plate
13 Shim TP No. 491266
14 Station chain
15 Folding bar
16 Plate
17 Pull-down arm

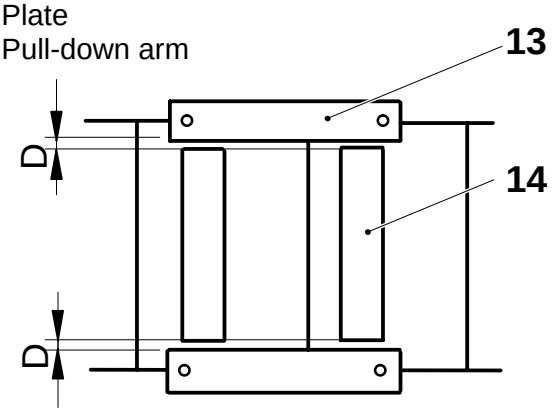

C = 0.1 – 0.2 mm
D = 0.3 – 0.5 mm

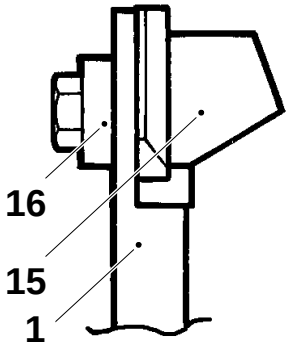

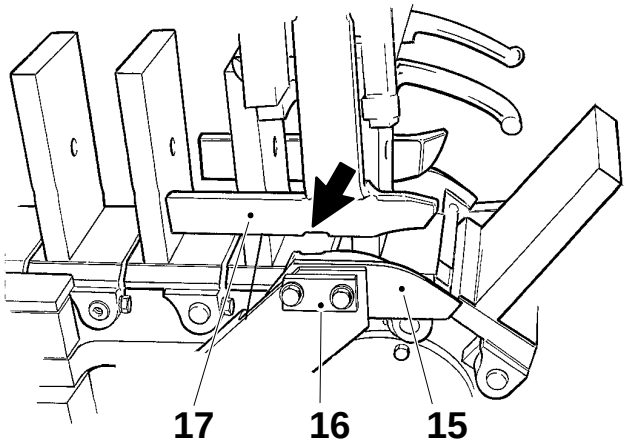

(Cont'd)

w) Fit the distribution block (18) with the lubrication brushes (19).
Fit the banjo connection (20) to the lubrication block.

x) Adjust the lubrication brushes so that they touch the station chain lugs (21) lightly, distance E below the station chain lugs.

y) Fit the cleaning pipe (22).

z) Fit the guide rail (23) and the protection cover (24).

E = 2 – 3 mm

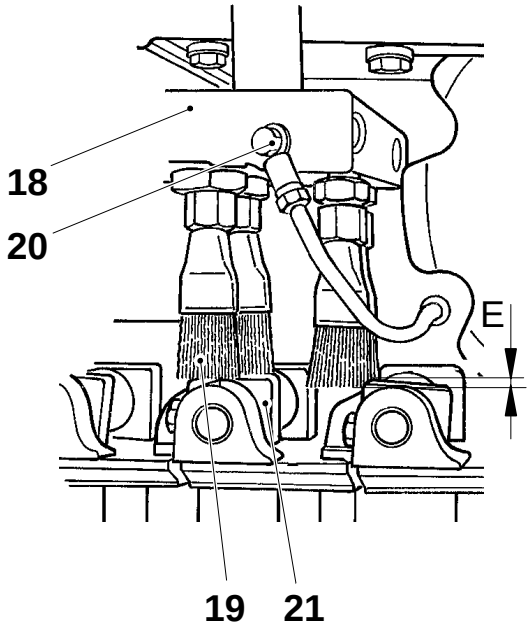

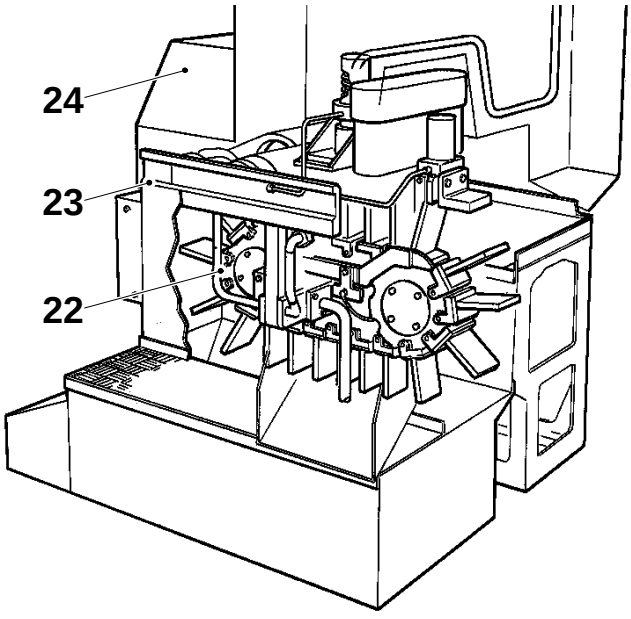

18 Distribution block
19 Lubrication brush
20 Banjo connection
21 Chain lug
22 Cleaning pipe
23 Guide rail
24 Protection cover

Checking

Remove the station chain, see page MM 505–2X.

Check the following details for wear and/or damage:

- the stations (1)
- the bushings (2)
- the slide lugs (3)
- the axle pins (4); if the axle pin is worn, turn it around 180° once before replacement
- the station chain position monitor (5); clean it if necessary

Replace as required.

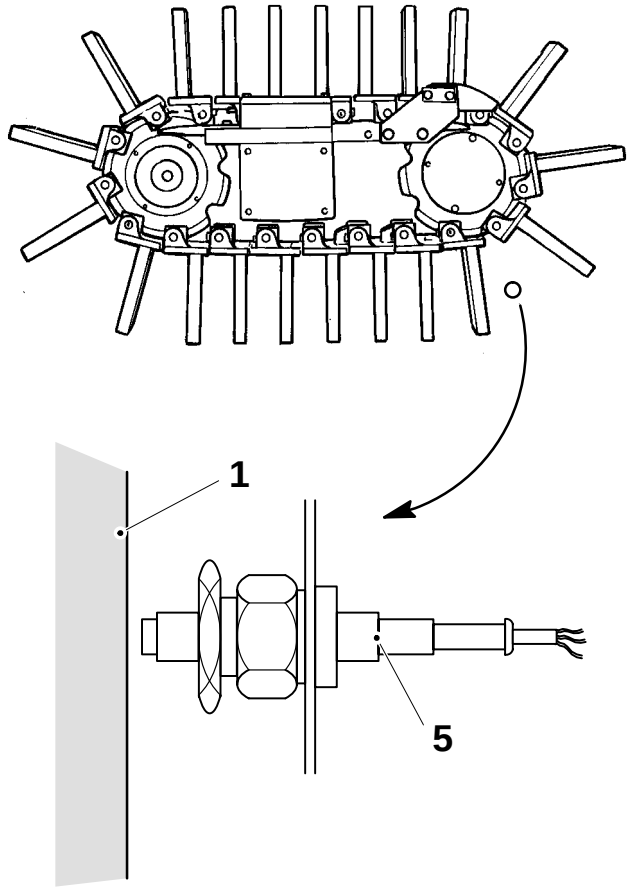

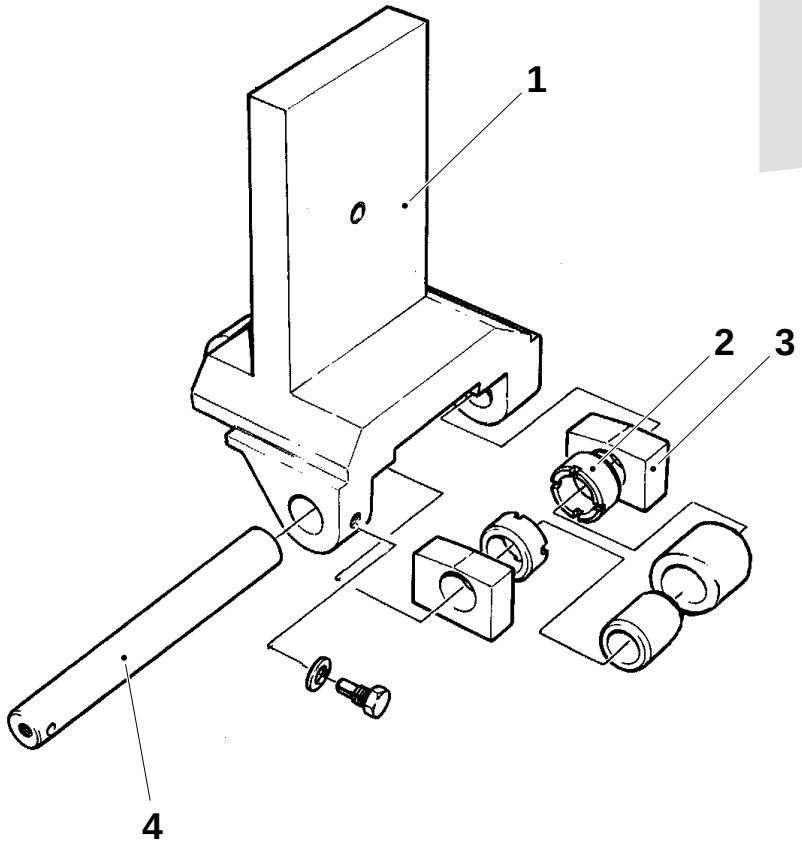

1 Station
2 Bushing
3 Slide lug
4 Axle pin
5 Chain position monitor

Removal

a) Remove the cover (5) and loosen the clamp fitting, see page MM 370–2X.

b) Move the chain around until an axle with a threaded hole in the axle end is in the dismantling position (1).
Note!
Make sure that the discharge finger (9) runs clear of the station chain.

c) Reduce the tension of the station chain by means of the nut (2) on the slipping eccentric. Undo the screws (4) to remove the folding bars (3).

d) Undo the grub screw (6) and fit a long screw in the axle end (8). Pull out the axle (7).

e) Pull out the rear end of the chain through the opening left free by the folding bars.

f) Pull out the chain.

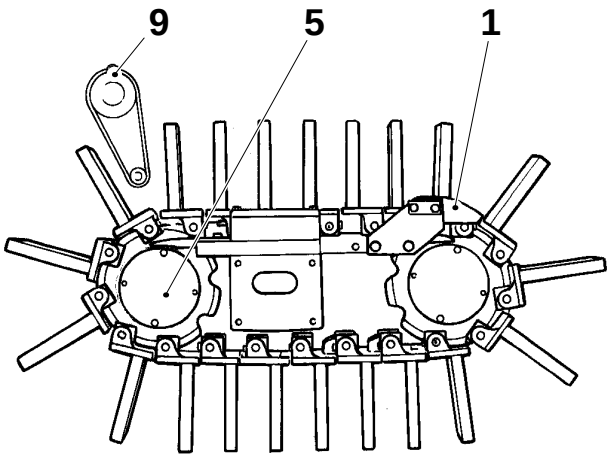

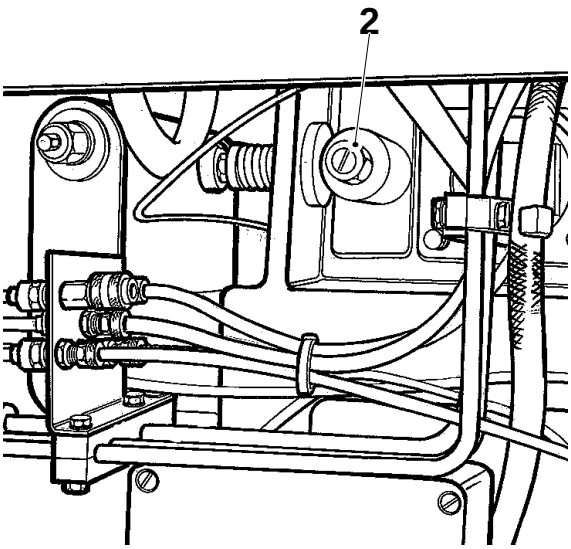

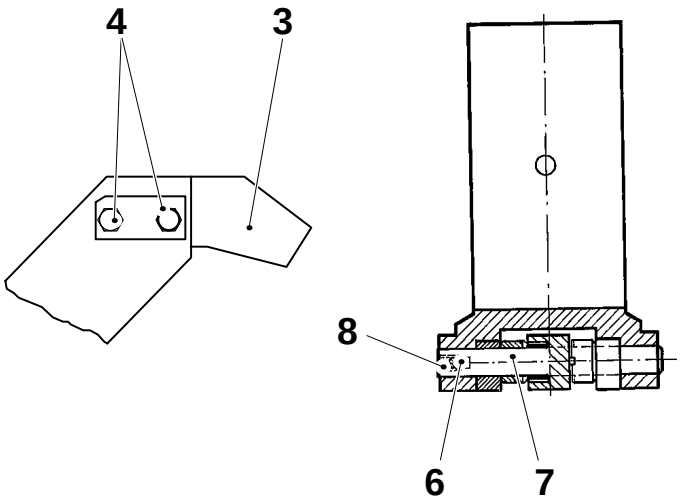

1 Dismantling position
2 Nut
3 Folding bar
4 Screw
5 Cover
6 Grub screw
7 Axle
8 Axle end
9 Discharge finger

Fitting

a) Insert the station chain (1) in the direction indicated by the arrow.

b) Move the chain around until the chain ends meet.

c) Fit the bushings (2), slide lugs (3), and the axle pin (4). Fit the grub screw (5).

d) Tension the station chain by turning the nut (6) on the slipping eccentric.

e) Set the station chain, see page MM 505–5X.

f) Fit and set the folding bars, see page MM 503–4X:4.

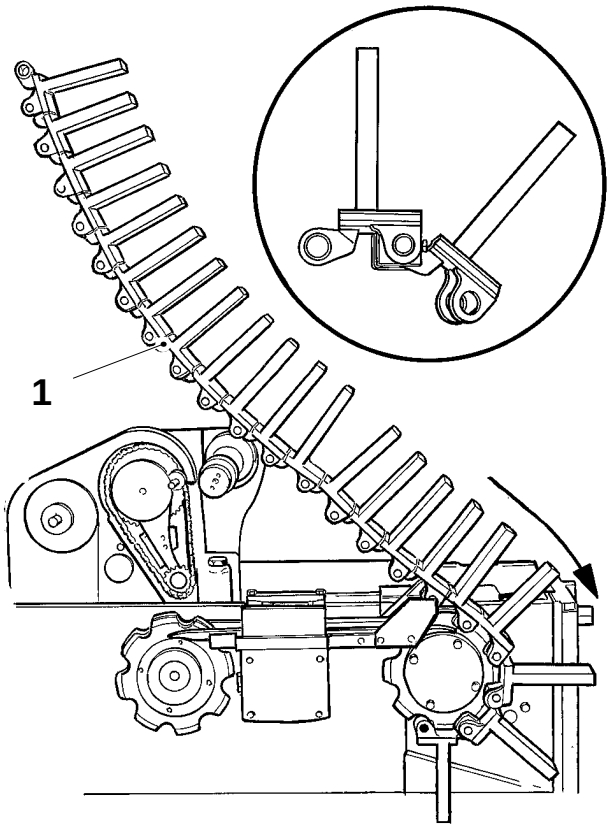

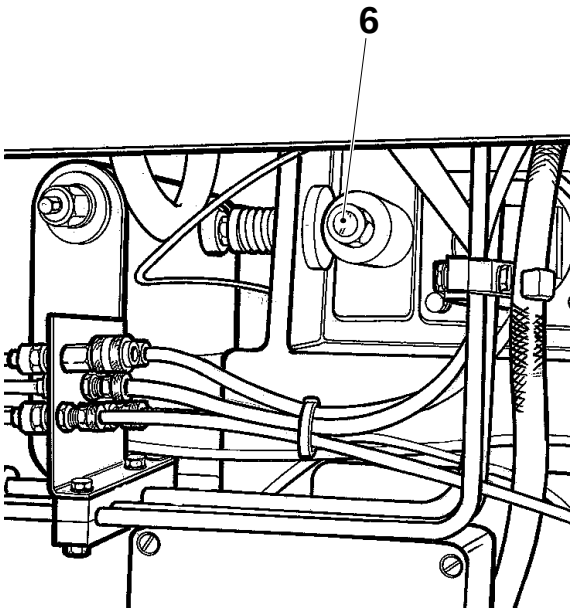

1 Station chain
2 Bushing
3 Slide lug
4 Axle pin
5 Grub screw
6 Nut

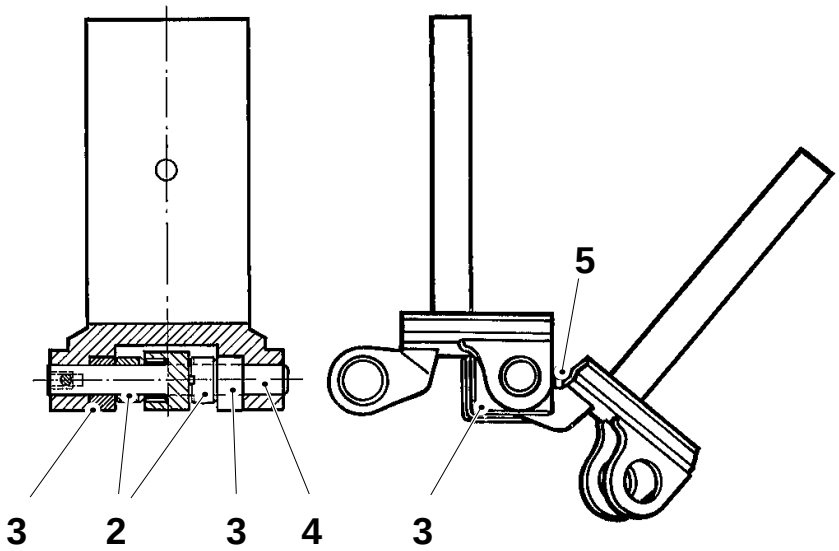

Setting

a) Crank until the station chain stops indexing.

b) Remove the cover over the drive sprocket (1) and loosen the clamp fitting (2), see page MM 370–2X.

c) If a template (3) is available, place it in the station chain at the drop chute and turn the chain until it station chain touches the template.
If no template is available, place an angle gauge (4) on the station chain and move the chain to angle A.

d) Set distance B between the side of the slide rail and the side of the drive sprocket.

e) Tighten the clamp fitting, see page MM 370–4X, and fit the cover.
Note!
Make sure that angle A and distance B are still correct.

f) Set the discharge finger, see page MM 529–5X:1.

g) Check that the drive sprocket is centered by turning the station chain slide lugs on both sides of the sprocket to make sure they move clear.

h) Set distance C between the station and the sensor (5).

i) Set the pressure unit side lugs, see page MM 521–5X.

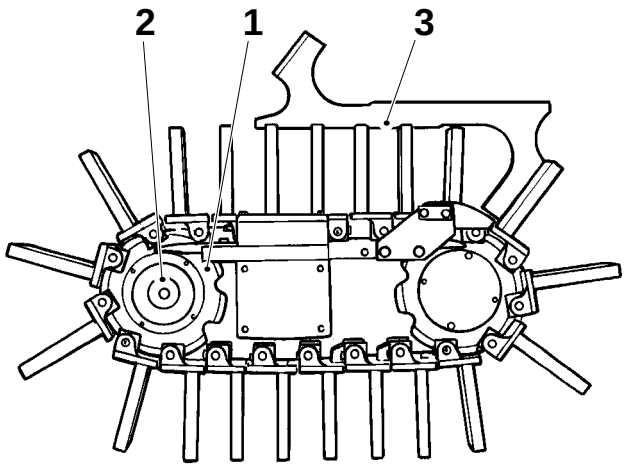

A= 37° ±0.5°
B= 9.1 ±0.1 mm
C = $1^{+0}_{-0.2}$ mm

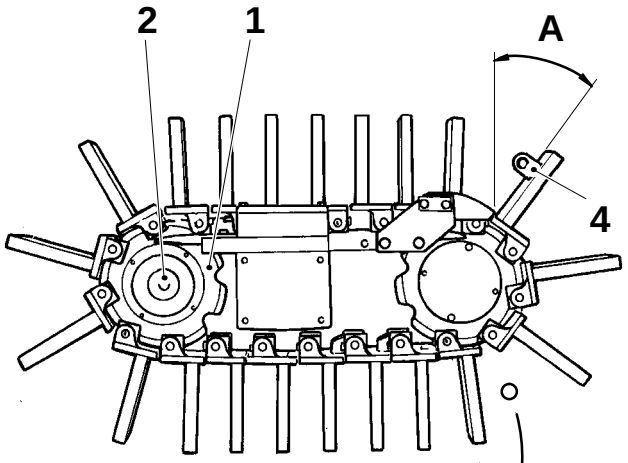

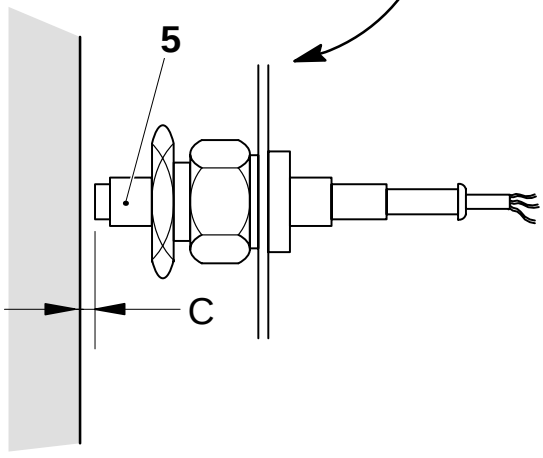

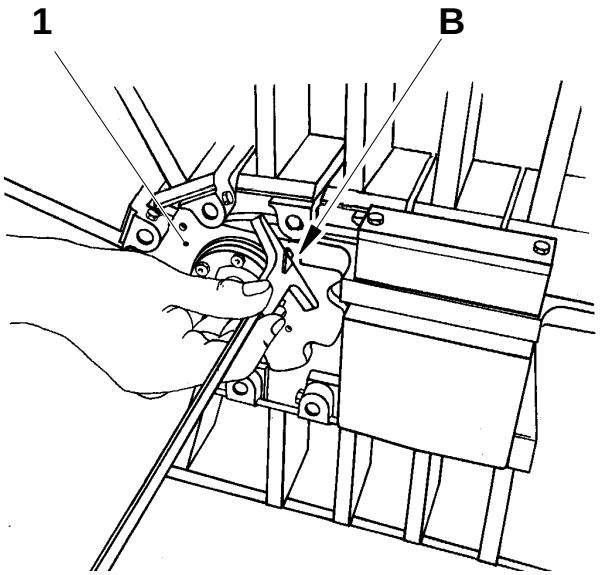

1 Drive sprocket
2 Clamp fitting
3 Template TP No. 76128
4 Angle gauge
5 Sensor, station chain position

Checking

Check the following details for wear and/or damage:

- the buffer rings (2)
- the guidings (5)
- the bracket (6), especially the sliding surface
- the blocking piece (7)
- the rails (8)
- the folding surfaces of the pull down arms (9)

Replace as required.

Turn on the main power switch and open for cooling water.

Start the hydraulic pump and forcibly actuate hydraulic valve Y41 by means of tool TP No. 76167.

Check that there is no leakage of hydraulic oil from the pull-down device. If there is, replace the seal rings (1) and (4) and the support rings (3).

Note
Fit the seal rings according to the figure.

Remove the tool and stop the hydraulic pump.

Close for cooling water and turn off the main switch.

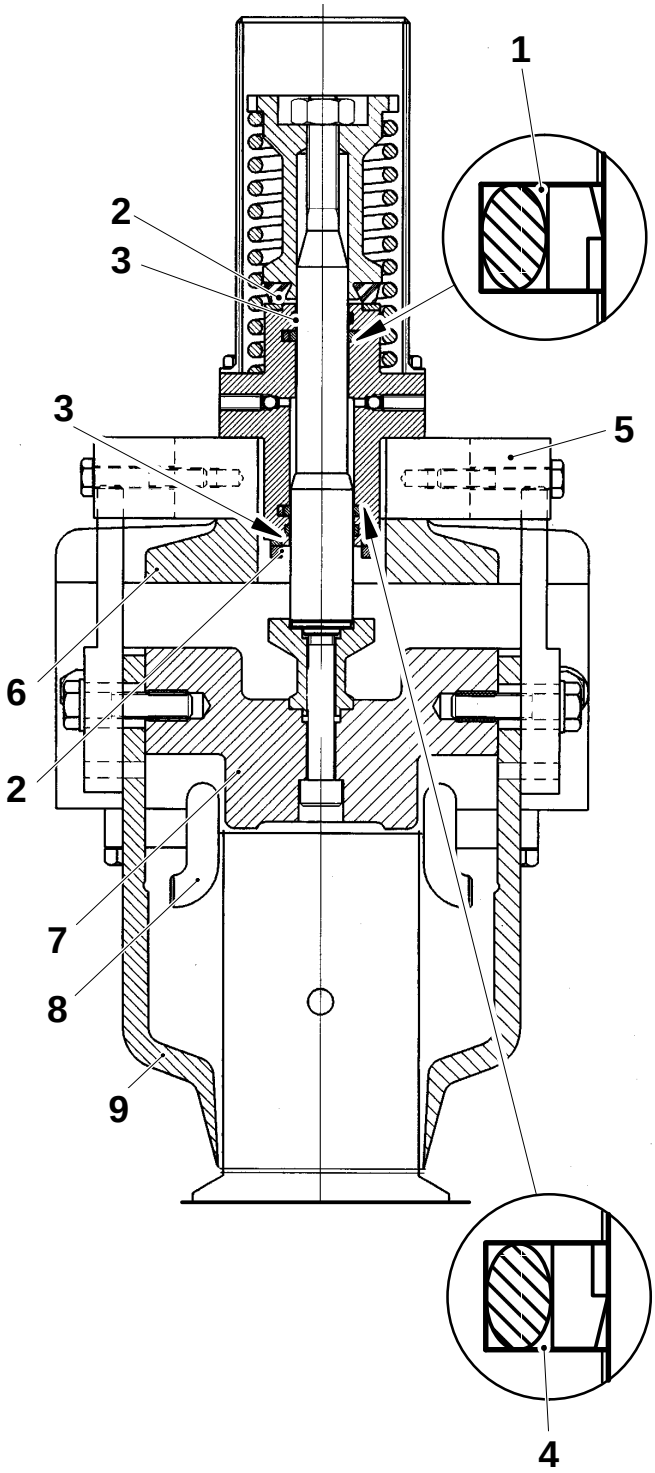

1 Seal ring
2 Buffer ring
3 Support ring
4 Seal ring
5 Guiding
6 Bracket
7 Blocking piece
8 Rail
9 Pull down arm

Setting

Rails

a) Raise the pivot frame, remove the pull-down arms (1) and loosen the screws (2).

b) Position the template (3), see table, against the blocking piece (4).

c) Adjust the rails (5) so that they lightly touch the template. Move the template forward and backward on the blocking piece (4) and check that the rails are parallel with the blocking piece. Tighten the screws (2).

d) Remove the template and lower the pivot frame.

Volume, ml	Template, TP No.	A ±0.2mm
125 S	76307–5	48
160 S	76307–6	48
180 B	76307–4	64
200 B	76307–3	64
200 S	76307–6	48
236 B	76307–2	64
250 B	76307–1	64
250 S	76307–9	54
284 B	76307–8	64

(Cont’d overleaf)

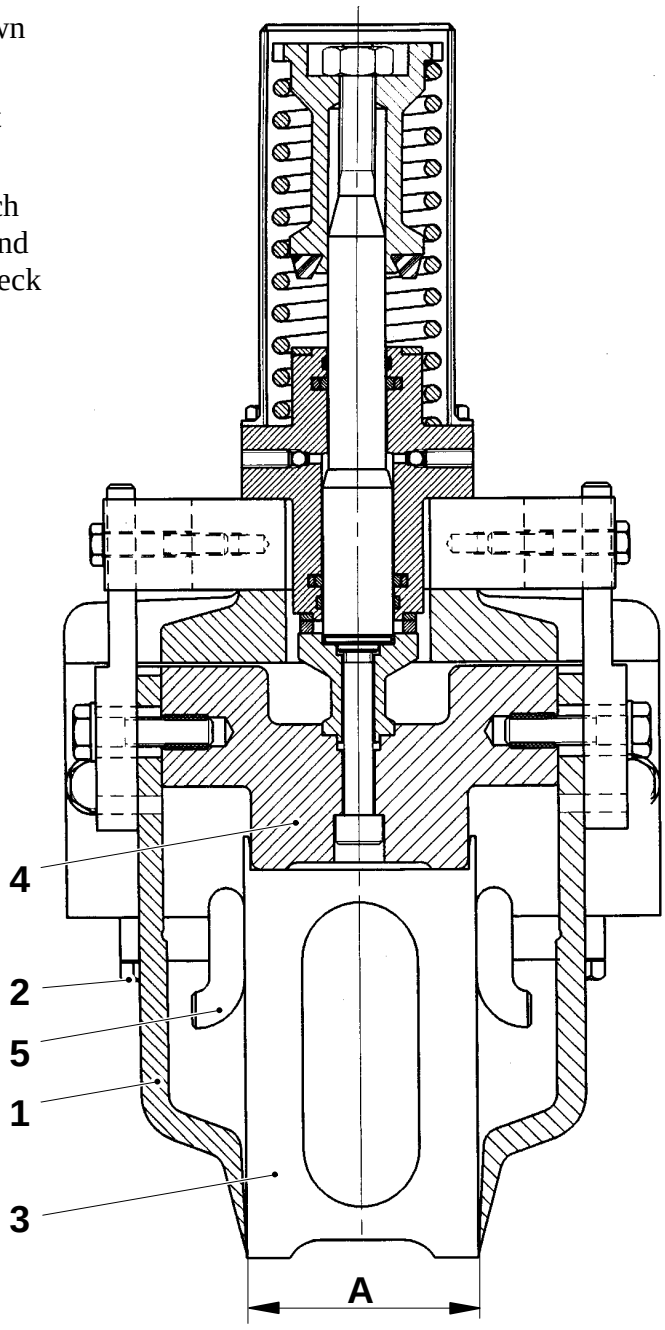

1 Pull-down arm
2 Screw
3 Template
4 Blocking piece
5 Rail

(Cont'd)

e) Crank until the station chain stops indexing.

f) Align the rails symmetrically over the stations (6). The distances A must be the same within 0.2 mm on both sides of the station. Set as follows:

g) Remove the FS element, see page MM 525–4X.

h) Undo the screws (7) and remove the cover. Make a note of the number of shims (8).

i) Raise the pivot frame (9) and pull it off the shaft (10).

j) Add or remove the number of shims (11) required to align; if shims have to be added at point (8), these are to be taken from point (11) and vice versa.

k) Fit in reverse order. Fit the FS element, see page MM 525–4X.

l) Bleed the hydraulic system, see page MM 511–7X or MM 521–7X.

m) Set pull-down arms (1), see below.

(Cont'd overleaf)

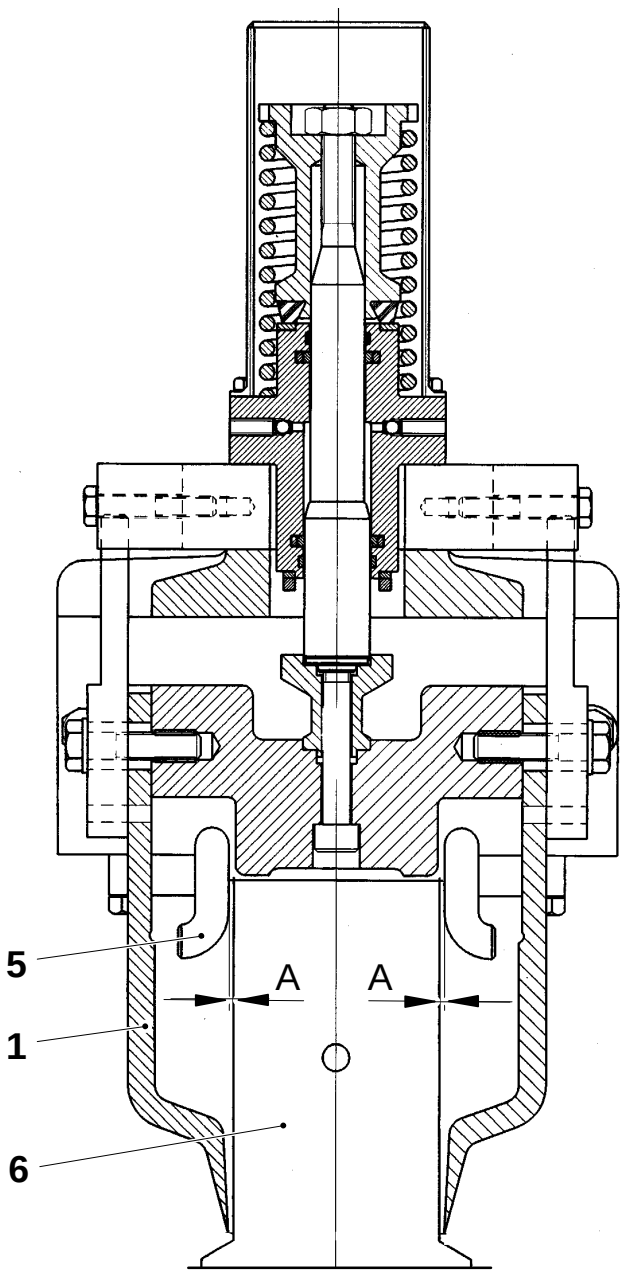

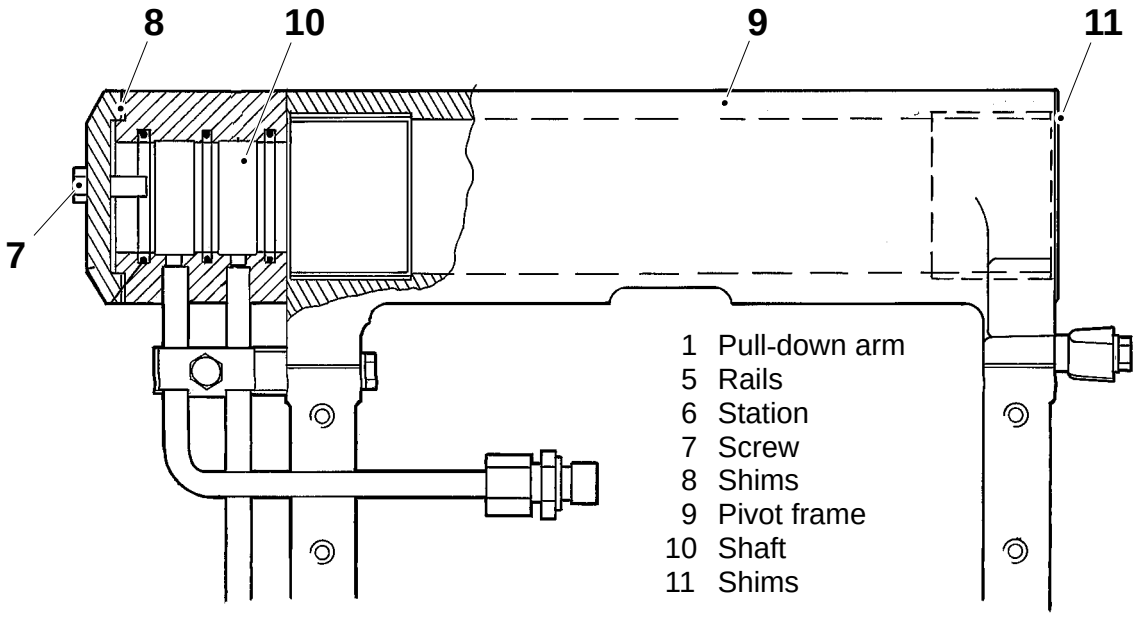

(Cont'd)

Blocking piece

a) Crank until the station chain stops indexing.

b) Remove the cover (12). Loosen the screws (13) and move up the pull-down arms (1) as far as possible.

c) Raise the pivot frame.

d) Turn on the main power switch, open for cooling water. Start the hydraulic pump and forcibly actuate hydraulic valve Y41 by means of tool TP No. 76167 so that the blocking piece (4) moves down.

e) Place template (3), see table, in the station chain centered underneath the blocking piece.

f) Carefully tilt back the pivot frame.

g) Loosen the nut (14) and turn the threaded sleeve (15) until there is a play, 0.05 mm, under the stop lug (16) of the pivot frame.

h) Tighten the nut (14) and remove the template.

i) Set the pull down arms vertical position, see below.

Volume, ml	Template, TP No.	B ±0.2 mm
125 S	76307–5	86.5
160 S	76307–6	95.0
180 B	76307–4	76.0
200 B	76307–3	83.5
200 S	76307–6	119.8
236 B	76307–2	100.2
250 B	76307–1	106.8
250 S	76307–9	131.5
284 B	76307–8	120.2

(Cont'd overleaf)

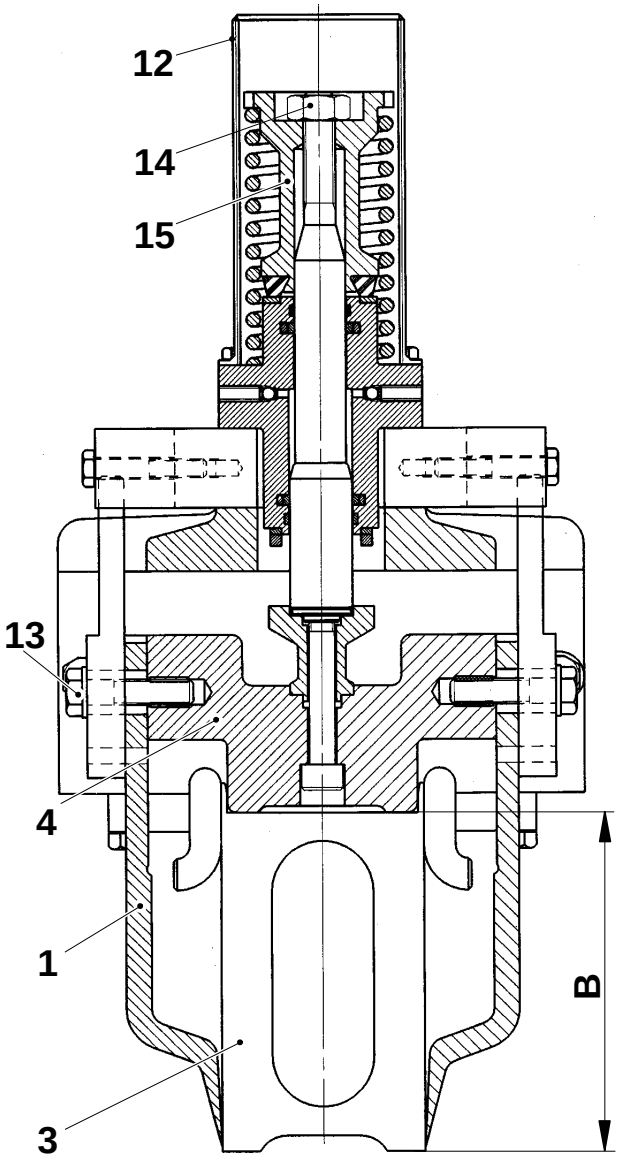

1 Pull-down arm
3 Template
4 Blocking piece
12 Cover
13 Screw
14 Nut
15 Threaded sleeve
16 Stop lug

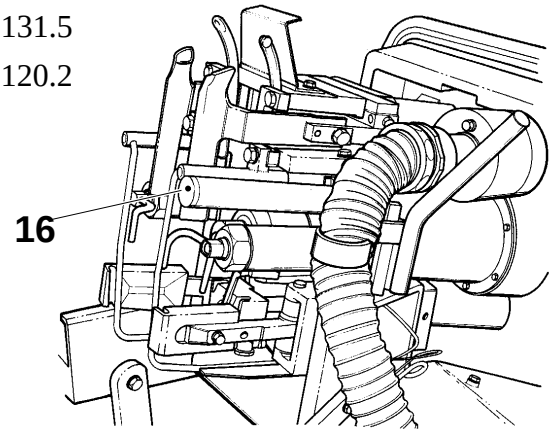

(Cont'd)

Pull-down arms, sideways position

a) Crank until the station chain stops indexing.

b) Place the template, see table, in the station chain.

c) Lower the pivot frame.

d) Set the pull-down arms (1) so that they are touching the template lightly. This has to be done by bending the pull-down arms.

Note
If the arms have to be bent more than a little, remove them before bending.

e) Remove the template.

f) Set the pull-down arms, vertical position, see below.

Volume, ml	Template, TP No.	A ±0.2mm
125 S	76307–5	48
160 S	76307–6	48
180 B	76307–4	64
200 B	76307–3	64
200 S	76307–6	48
236 B	76307–2	64
250 B	76307–1	64
250 S	76307–9	54
284 B	76307–8	64

(Cont'd overleaf)

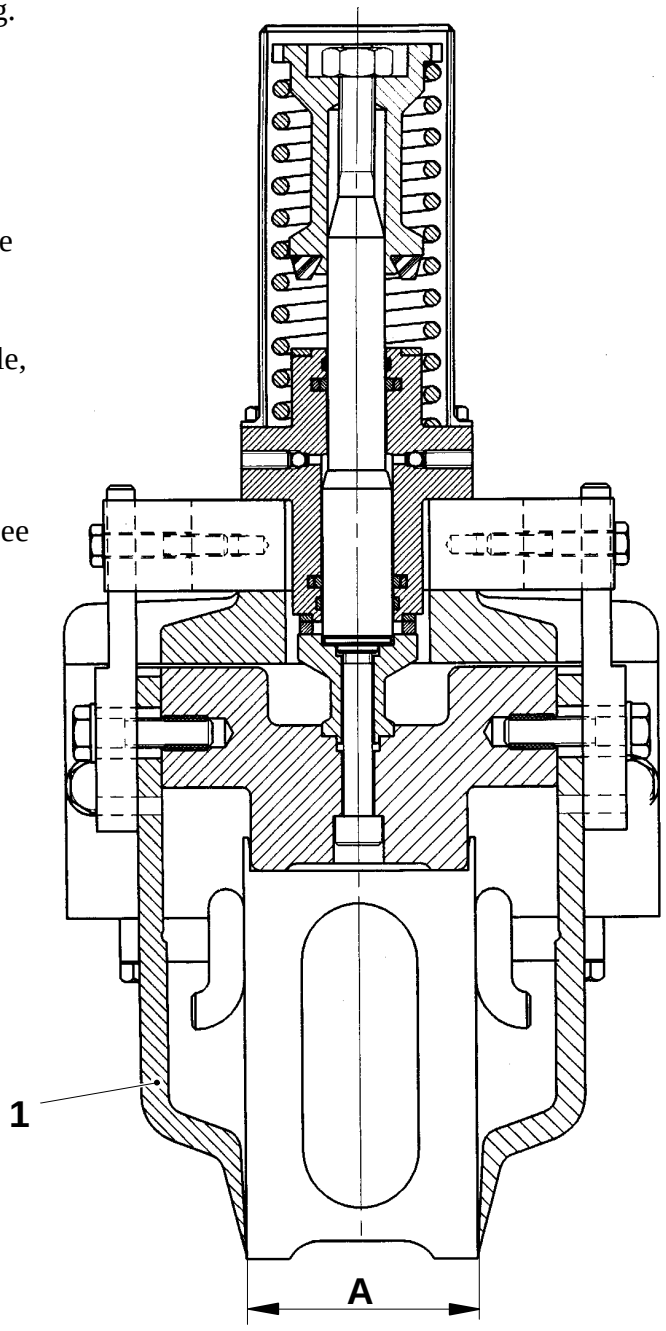

1 Pull-down arm

(Cont'd)

Pull-down arms, vertical position

a) Put a piece of sheet metal (17), thickness 1.25 mm, in the station (6) at the front edge of the pull-down arms (1).

b) Open for cooling water and turn on the main power switch.

c) Start the hydraulic pump.

d) Forcibly actuate hydraulic valve Y41 with tool TP No. 76167 so that the pull-down arms (1) move down.

e) Loosen the screws (13) and shift the pull-down arms (1) so that they lightly touch the piece of metal (17).

f) Remove the piece of sheet metal and the tool TP No. 76167. Stop the hydraulic pump. Close for cooling water and turn off the main power switch.

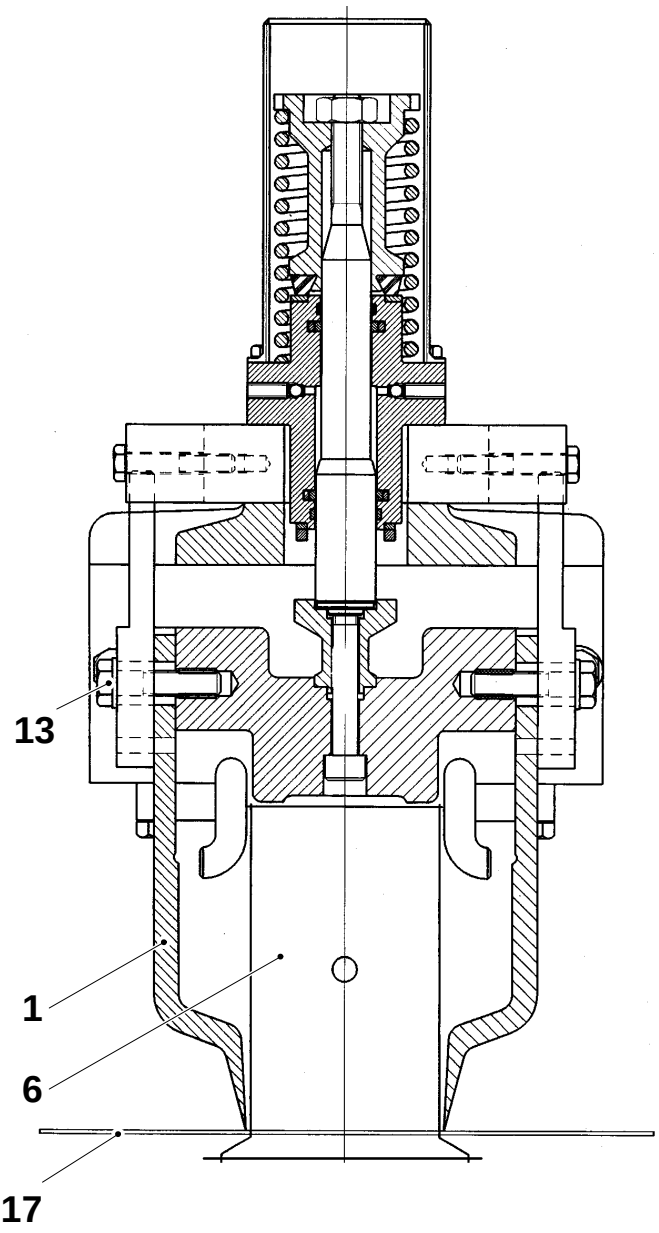

1 Pull-down arm
6 Station
13 Screw
17 Piece of sheet metal, thickness 1.25 mm

Bleeding

a) Crank until the station chain stops indexing.

b) Turn on cooling water and electric power.

c) Start the hydraulic pump.

d) Reduce the hydraulic pressure (jaw pressure) to approximately 4 MPa, see page MM 601–5X.

e) Actuate the hydraulic valve (Y41) for the pull-down device with tool TP No. 76167.

f) **WARNING!**
Risk of personal injuries!
Watch out for splashing.
Loosen the screw (1) and bleed the pull-down device.

g) Tighten the screw (1).

h) Set the correct hydraulic pressure, see page MM 601–5X.

i) Check that there is no oil leakage.

j) Remove the tool.

k) Stop the hydraulic pump. Close for cooling water and turn off the main power switch.

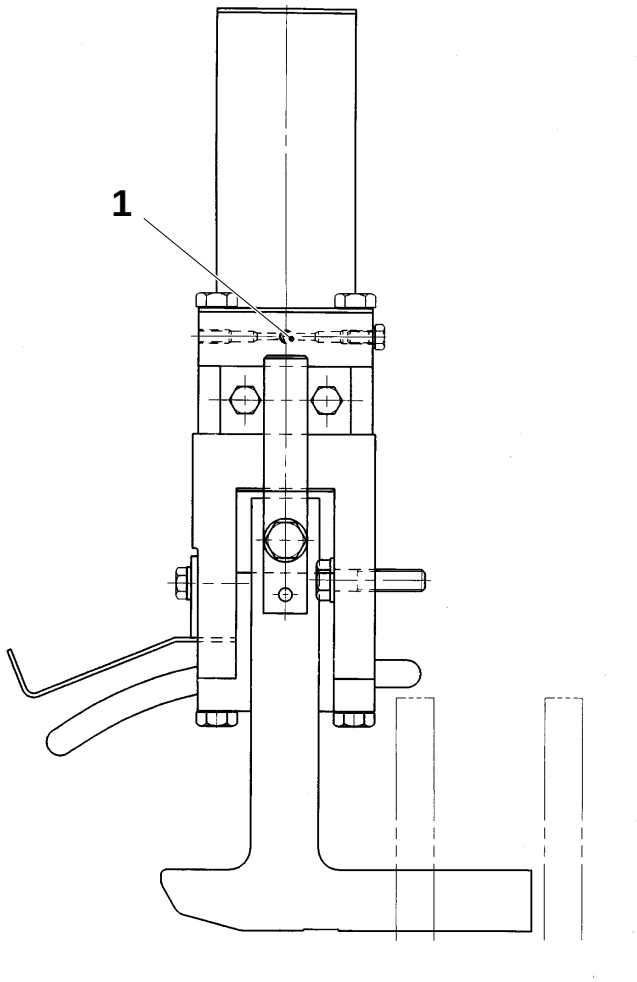

1 Screw

Checking

Check the following details for wear and/or damage:

- the bushings
- the shafts
- the pressure block
- the side blocks

Replace as required.

Turn on the cooling water.

Start the hydraulic pump and forcibly actuate hydraulic valve Y42 with tool TP No. 76167.

Check that there is no leakage of hydraulic oil from the pressure unit.
If there is, replace the seal rings (1) and the support rings (2).

Note
Fit the seal rings according to the figure.

Remove tool TP No. 76167 and stop the hydraulic pump. Close for cooling water and turn off the main power switch.

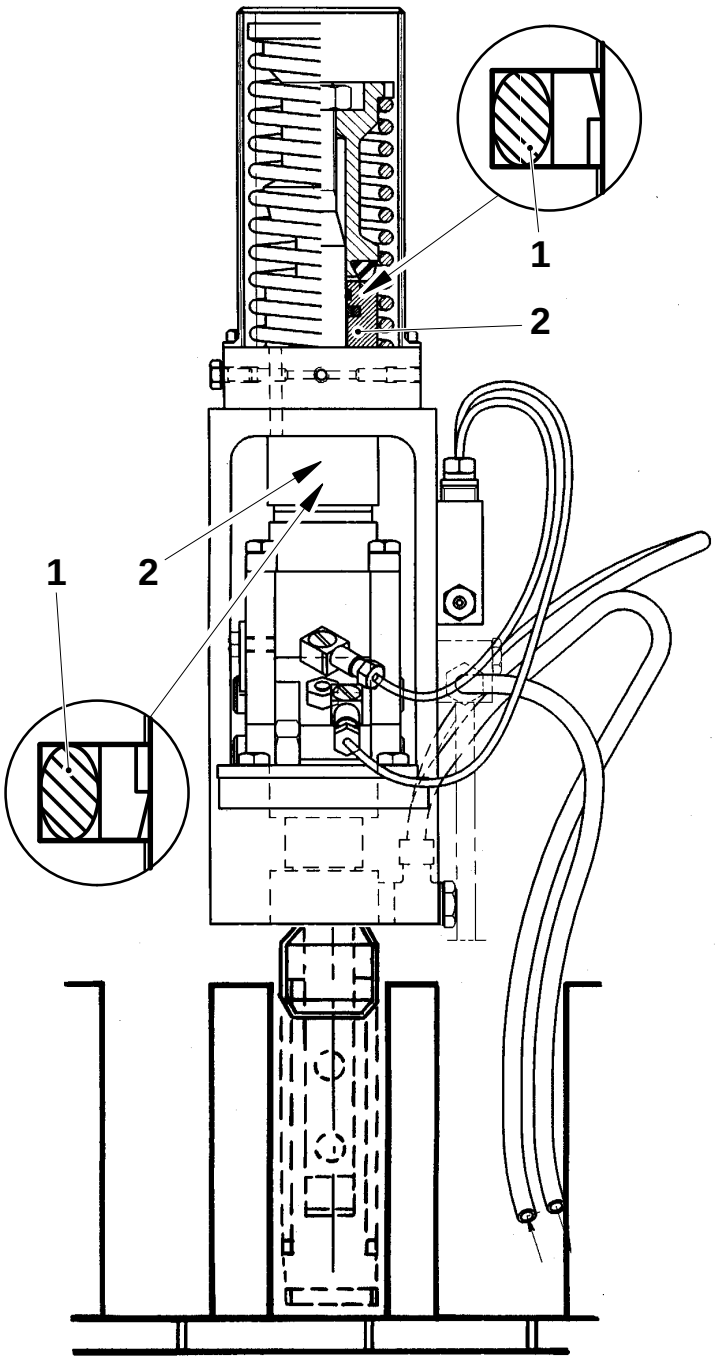

1 Seal ring
2 Support ring

Setting

Vertical position

a) Remove the cover (1).

b) Set distance B. To set, loosen the nut (2) and turn the threaded sleeve (3).

c) Fine setting may be done after examining the packages.

Note
Make sure distance B is within limits.

(Cont’d overleaf)

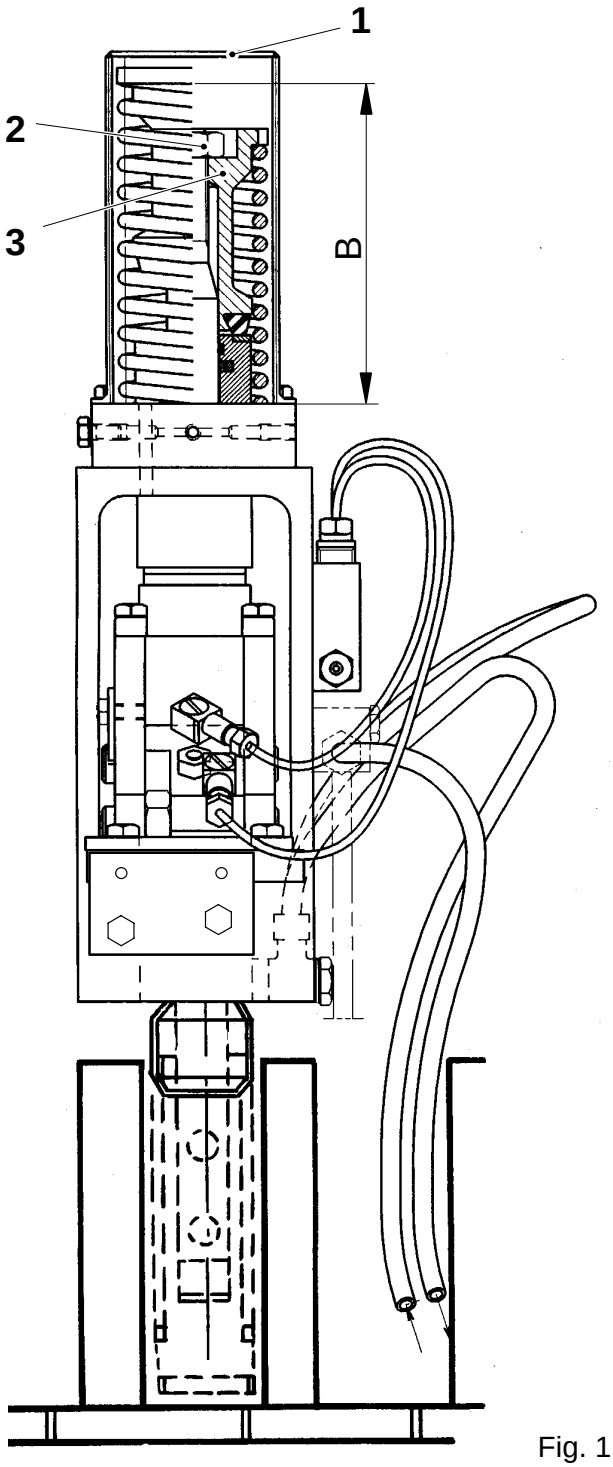

Fig. 1

B = 100 mm ±1 mm

1 Cover
2 Nut
3 Threaded sleeve

(Cont'd)

Parallelity

a) Turn on the main power switch.

b) Crank until the station chain stops indexing.

c) Loosen the nuts (6) and set the side lugs (7) in their outer position (tap on the locking pin to set the eccentric axle pin (5) free).

d) Open for cooling water.

e) Start the hydraulic pump. Forcibly actuate hydraulic valve Y42 with tool TP No. 76167.

f) Set the cooling pipes as close to the side lugs as possible without touching them. Make sure that all cooling pipes go clear.

g) Set the side lugs parallel to the station (8), see fig. 2. Tighten the nut (6).

h) Loosen the screws (4). Set the side lugs (7) positioned symmetrically ±0.2 mm between the stations (8), see fig. 3, by shifting the pressure unit lengthwise.

i) Set the side lugs (7) positioned symmetrically ±0.2 mm between the stations (8), see fig. 4, by loosening/tightening the allen screws (9).

j) Tighten the screws (4).

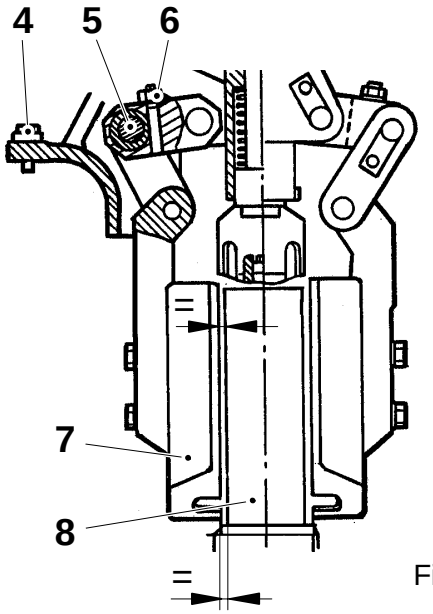

Fig. 2

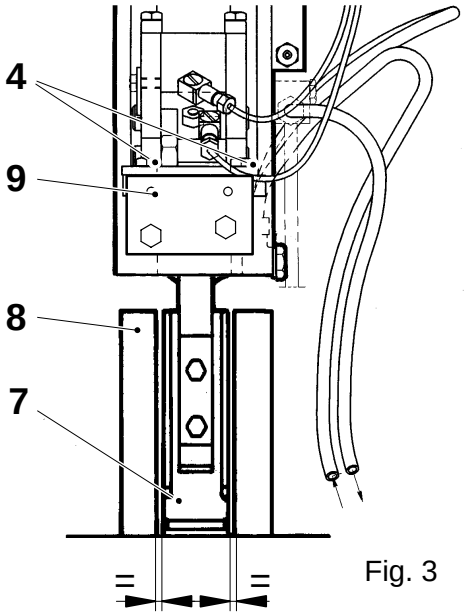

Fig. 3

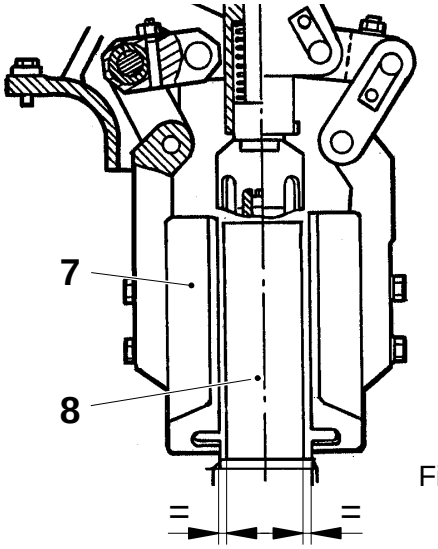

Fig. 4

4 Screw
5 Eccentric axle pin
6 Nut
7 Side lug
8 Station
9 Allen screw

Bleeding

a) Crank until the station chain stops indexing.

b) Turn on cooling water and electric power.

c) Start the hydraulic pump.

d) Reduce the hydraulic pressure (jaw pressure) to approximately 4 MPa, see page MM 601–5X.

e) Actuate the hydraulic valve (Y42) for the pressure unit with tool TP No. 76167.

f) **WARNING!**
Risk of personal injury!
Watch out for splashing.
Loosen the screw (1) and bleed the pressure unit.

g) Tighten the screw (1).

h) Set the correct hydraulic pressure, see page MM 910–7X.
Setting, see page MM 601–5X.

i) Check that there is no oil leakage.

j) Remove the tool.

k) Stop the hydraulic pump. Close for cooling water and turn off the main power switch.

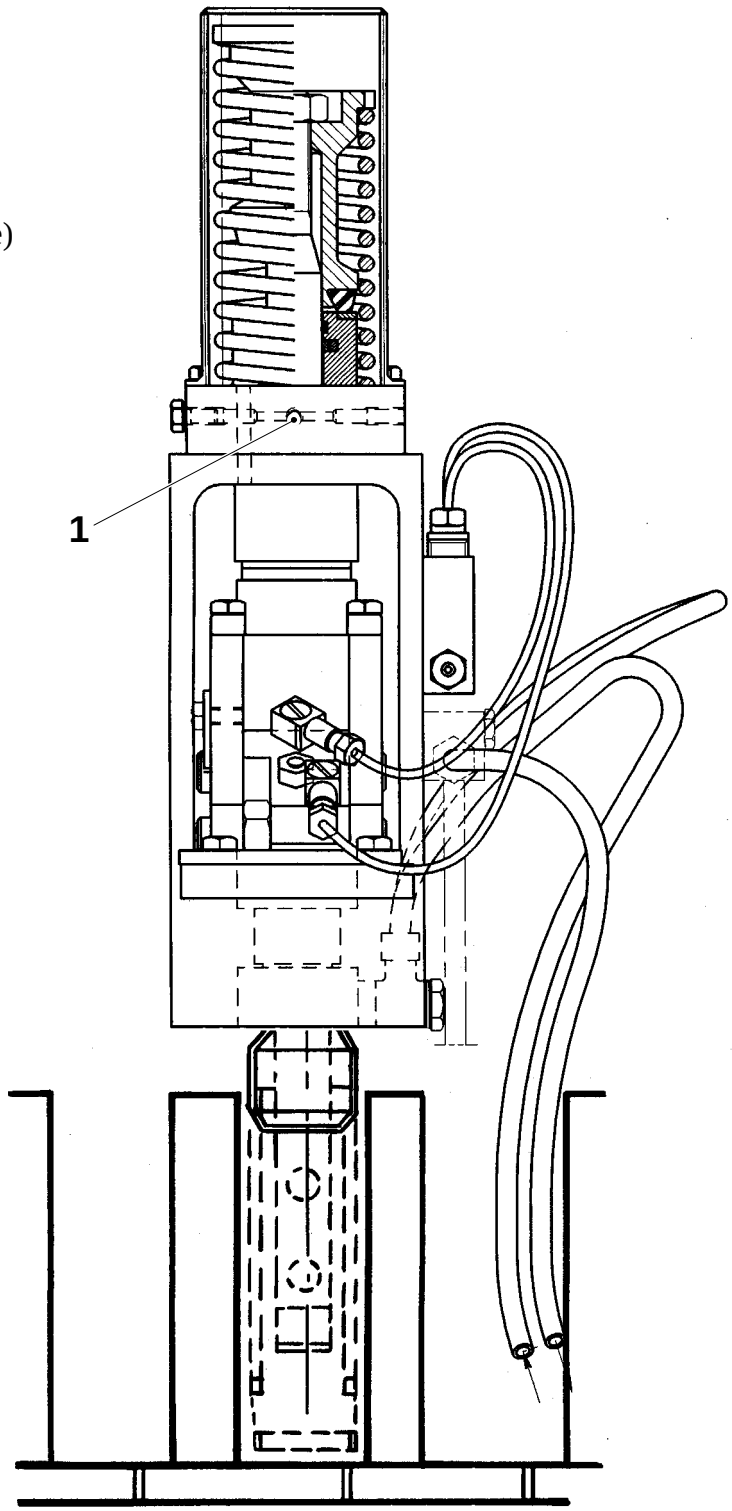

1 Screw

Overhaul

a) Remove the lid (1) and the gasket; Make sure that the gasket is intact.

b) Mark and undo the electrical connections (2).

c) Undo the four screws (3) and remove the FS element (4).
Remove the element units (5).

d) Undo the screws (6). Remove the air nozzles (7), the insulating pipes (8) and the throttle washers (9).

e) Undo the screws (10). Remove the side pipes (11), the insulating pipes (12), the nuts (13) and the gaskets (14).

f) Undo the screws (15). Remove the air nozzle (16) and the insulating pipe (17), the nut (18), and gaskets (19).

(Cont'd overleaf)

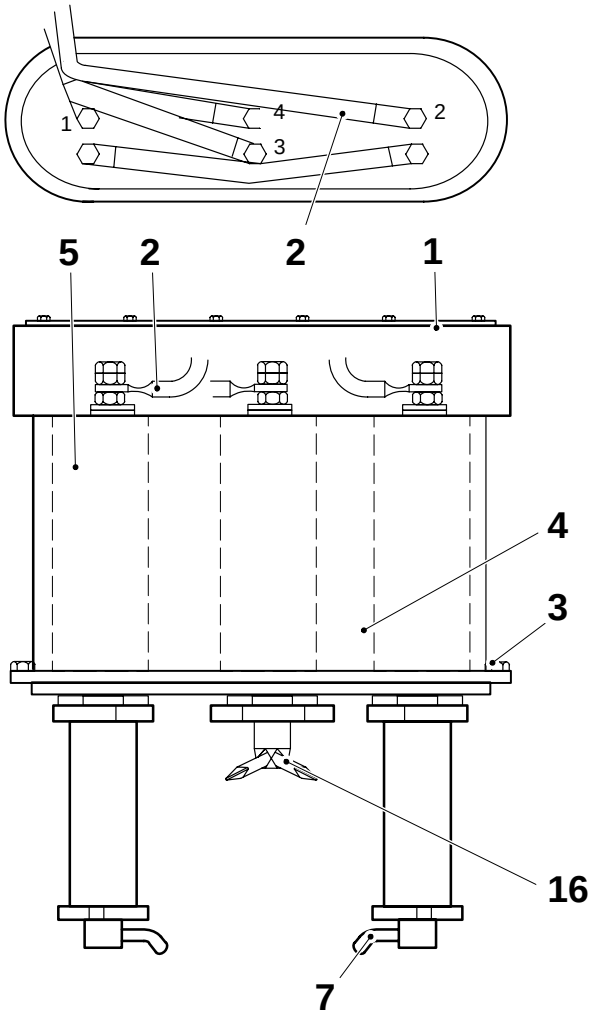

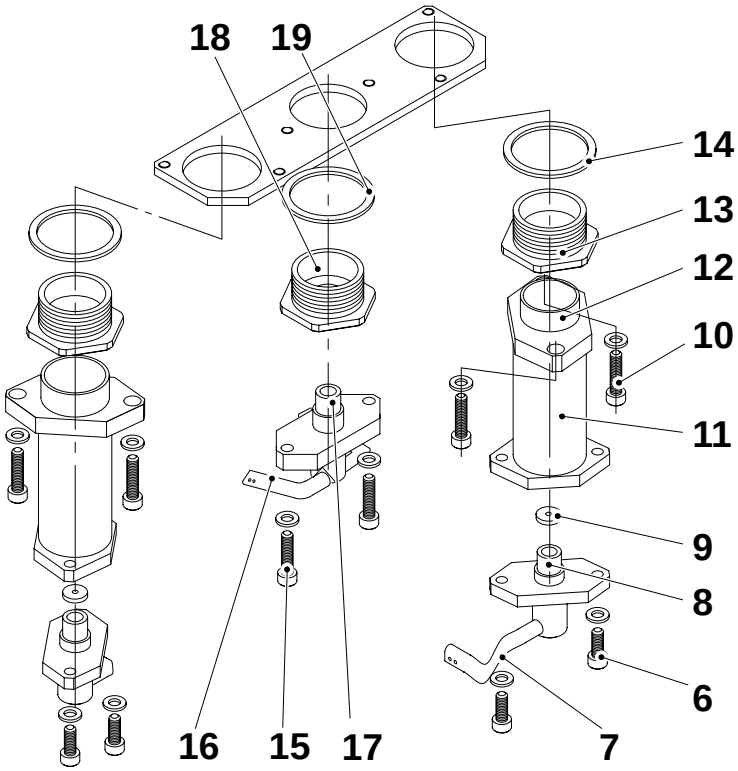

1 Lid
2 Electrical connection
3 Screw
4 FS element
5 Element unit
6 Screw
7 Air nozzle
8 Insulating pipe
9 Throttle washer
10 Screw
11 Side pipe
12 Insulating pipe
13 Nut
14 Gasket
15 Screw
16 Air nozzle
17 Insulating pipe
18 Nut
19 Gasket

(Cont'd)

g) Undo the nuts (20) and take the element units (5) apart.

h) Make sure all parts are clean and without defects before fitting (e.g. the air holes in the nozzzles must be open, the insulating pipes must not be discoloured, the throttle washers must not be clogged). Clean or replace as required.

i) Fit in reverse order. Secure the element units so that they can not fall out if the FS element is turned upside down. Make sure that the throttle washers are placed correctly.

j) Fit the electrical connections according to the marks.

k) Set the air nozzles, see page MM 525–5X.

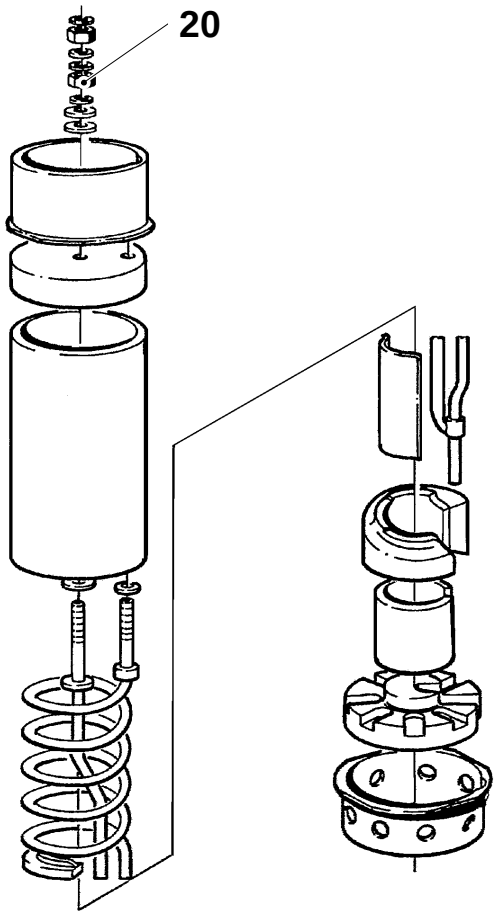

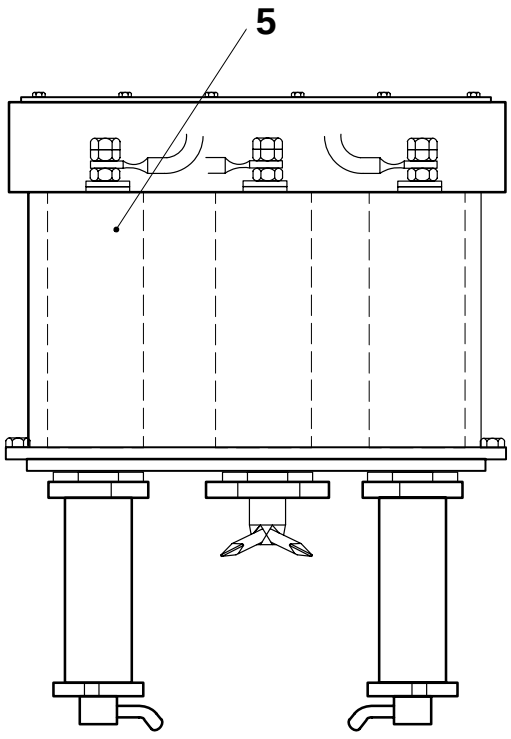

5 Element unit
20 Nut

Setting

Vertical

a) Crank until the station chain stops indexing.

b) Put templates A and B on the stations. The arrows on the templates are to be in the running direction of the station chain.

c) Set the nozzles vertically by removing or adding gaskets (3). The nozzles are to touch the template.

Volume, ml	Template A, TP No.	Template B, TP No.
125 S, 160 S	79223	77224
200 S	77248	77249
250 S	574488	574487
180 B – 284 B	77250	77251

Horizontal

a) Set the air nozzle (1) by loosening the screws (6) and shifting the FS element (5), see fig. 2. Tighten the screws.

b) Set the air nozzles (2) by loosening the screws (4) and shifting the nozzles sideways.

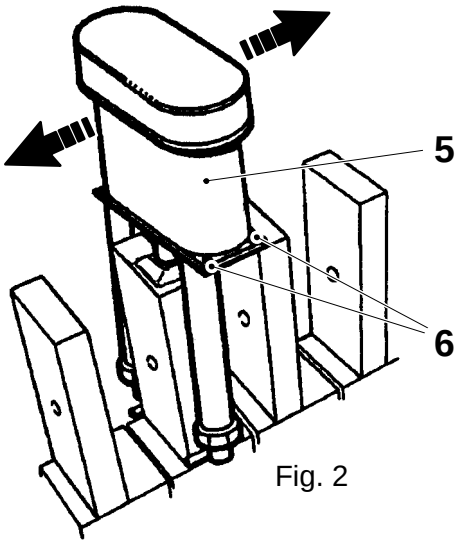

Fig. 2

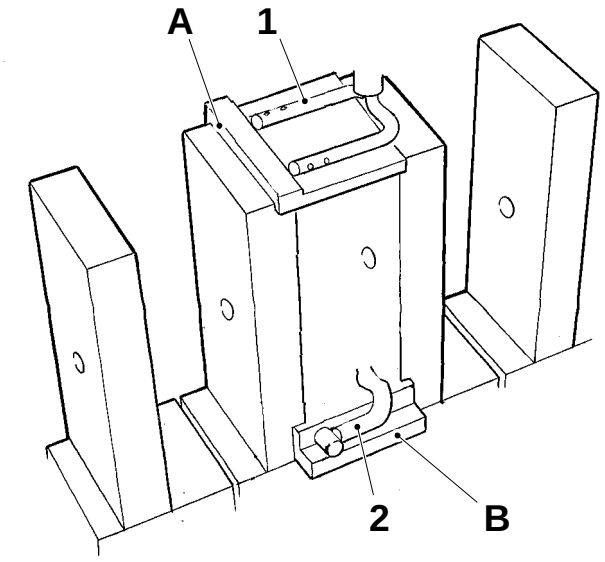

Fig. 1

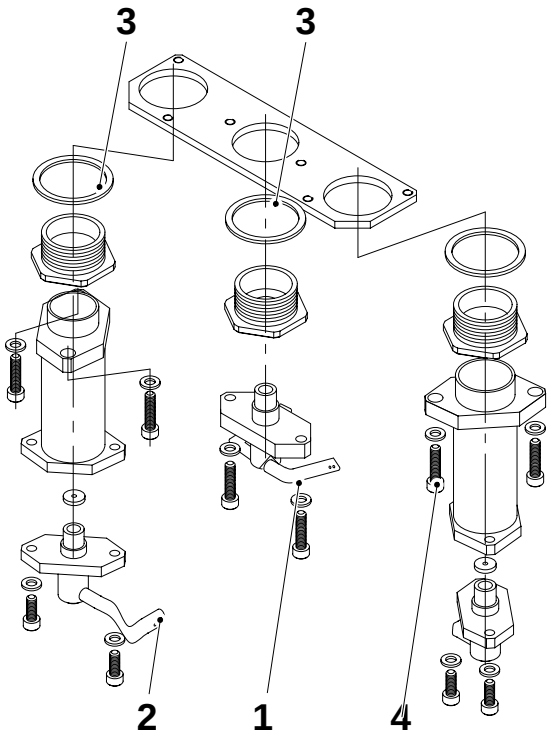

Fig. 3

1 Air nozzle
2 Air nozzle
3 Gasket
4 Screw
5 FS element
6 Screw

Checking

Check the following details for wear and/or damage:

- the discharge finger (1); make sure it is straight and that the spring is not damaged
- the sprockets (2)
- the sprocket bearings
- the slide segment (4) of the chain tensioner
- the duplex chain slide lugs (6)
- the duplex chain (7); check distance A between the holder (5) and cover plate (3). Setting, see page MM 529–5X

Replace as required.

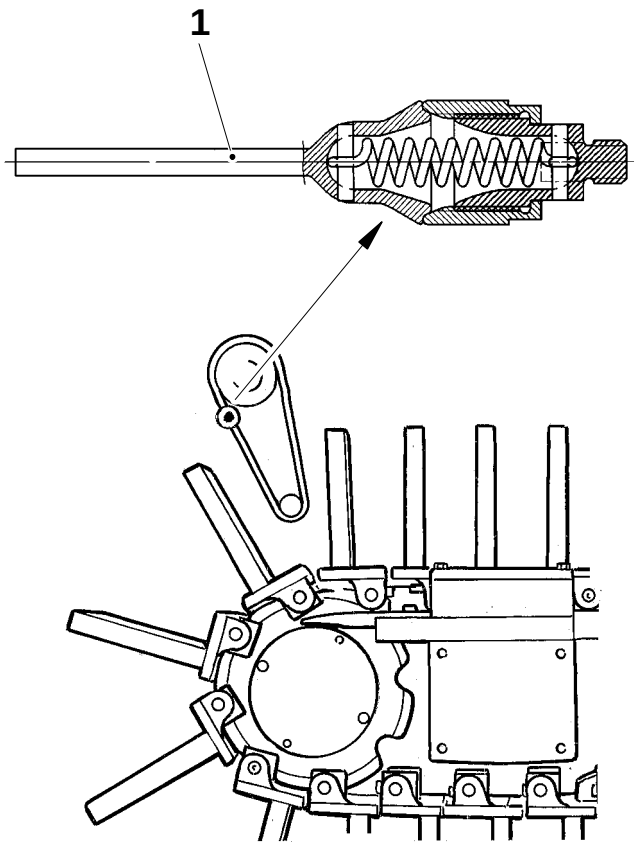

A ≥ 2 mm

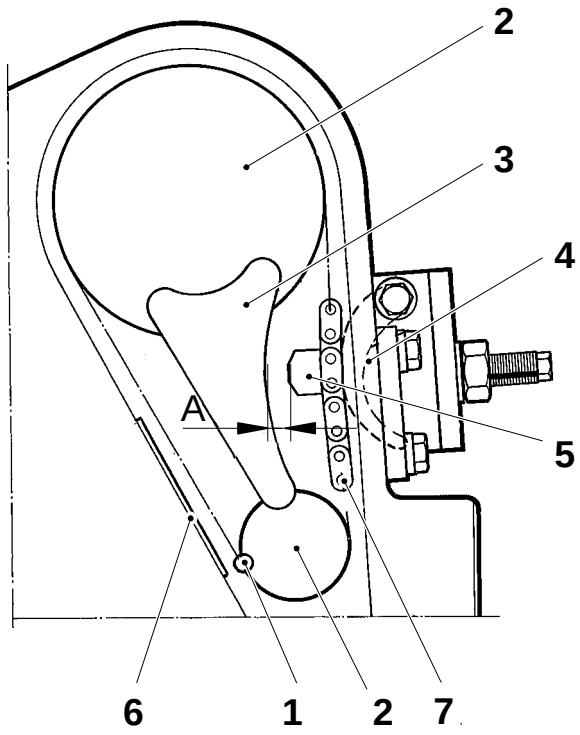

1 Discharge finger
2 Sprocket
3 Cover plate
4 Slide segment
5 Holder
6 Slide lug
7 Duplex chain

Setting

a) Crank until the station chain (1) just begins to index.

Note
Make sure the discharge finger runs clear of the station chain.
Alt. design; remove the lead-in (7).

b) Remove the cover on the LH side of the discharge unit (2).

c) Reduce the tension of the chain (3) by loosening the nut (6). Set distance A by shifting the chain on the sprocket.

d) Turn the axle (5) to tension the chain. Tighten the nut (6).

e) Crank and check that the discharge finger (4) runs clear.

f) Fit the cover.

(Cont'd overleaf)

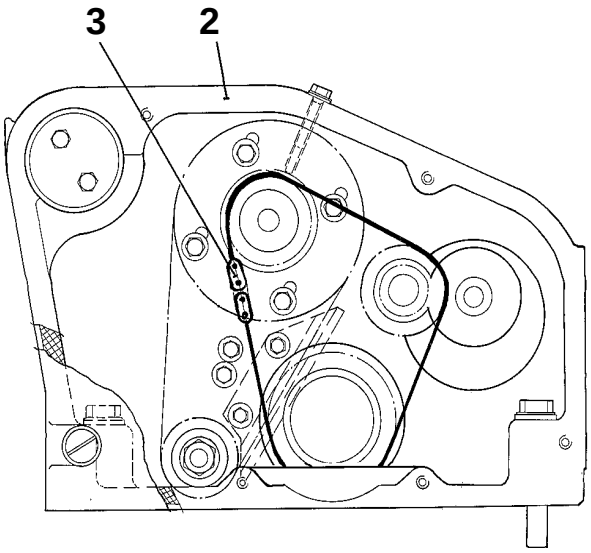

A = 5 – 30 mm

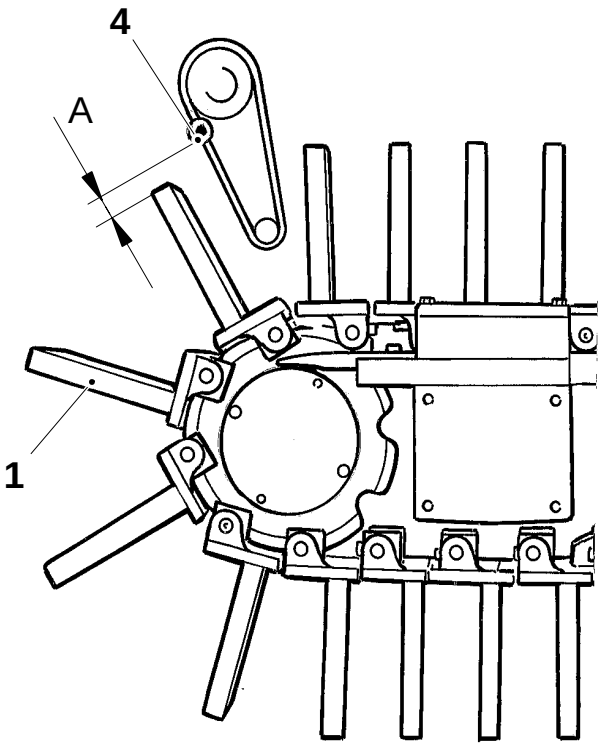

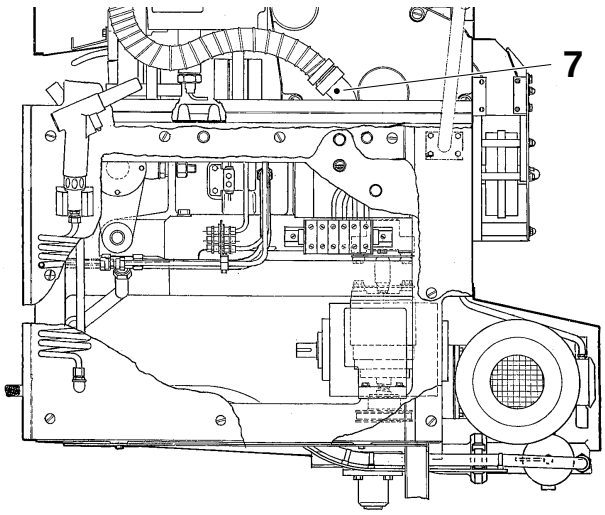

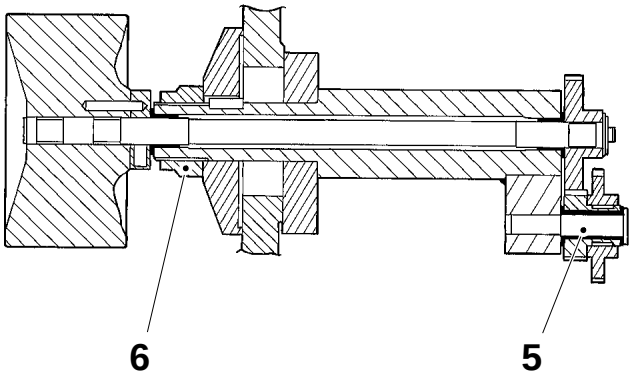

1 Station chain
2 Discharge unit
3 Chain
4 Discharge finger
5 Axle
6 Nut
7 Lead-in

(Cont'd)

Chain tensioner

a) Set distance B between the setting screw (8) and the holder (9).

b) Assemble the chain tensioner completely.

c) Compress the spring (10) by depressing the pressure pin (11).

d) Lock the spring in this position by inserting a locking pin (12) through the hole in the setting screw and pressure pin.

e) Fit the chain tensioner to the discharge housing. Position the chain tensioner so that it is aligned symmetrically over the duplex chain (13).

f) Tighten the screws (14).

g) Remove the locking pin.

(Cont'd overleaf)

B = 3 ±0.5 mm

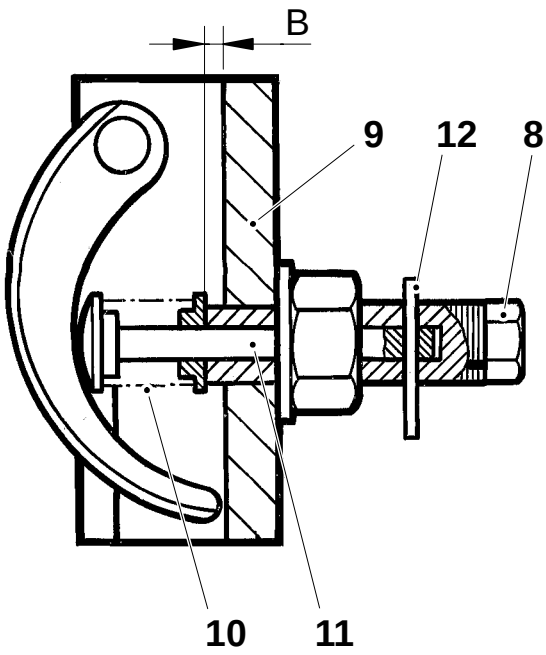

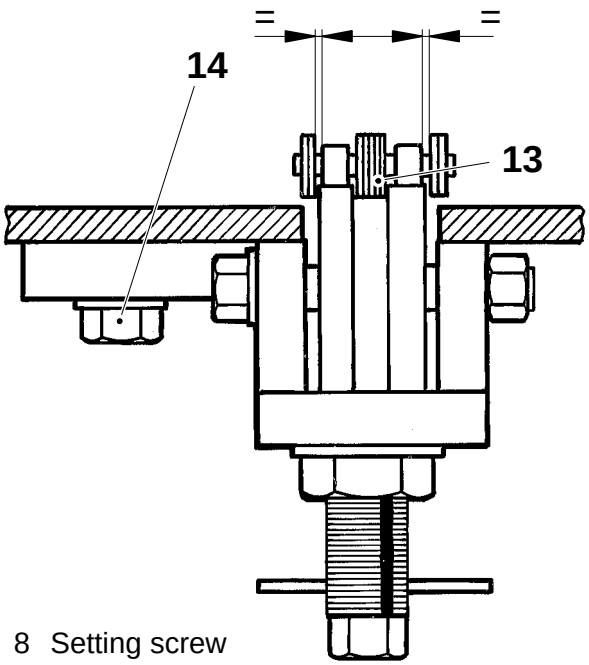

8 Setting screw
9 Holder
10 Spring
11 Pressure pin
12 Locking pin
13 Duplex chain
14 Screw

(Cont'd)

Duplex chain

a) **Alt. design;** remove the lead-in (7).

b) Remove the cover on the LH side of the discharge unit (2).

c) Loosen the screws (15).

d) Reduce the tension of the chain (3) by loosening the nut (6).

e) Tension the duplex chain (17) by means of the screw (16), until the chain tensioner (18) depresses the chain 5 – 10 mm.

f) Tighten the screws (15).

g) Set the chain (3), see page MM 531–5X.

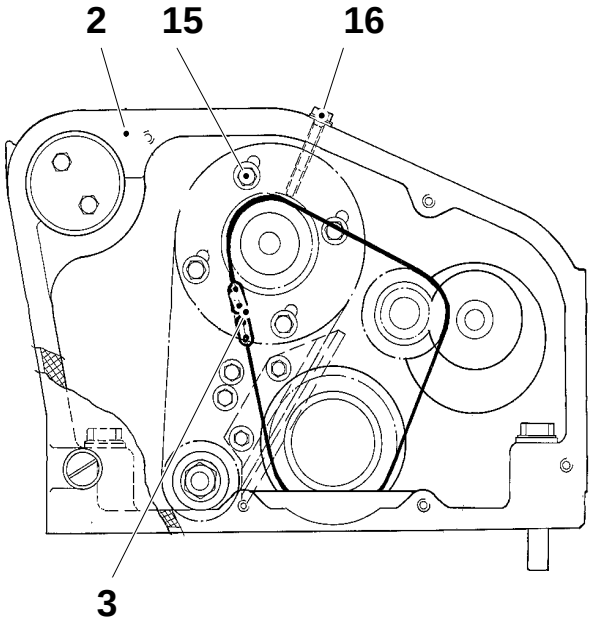

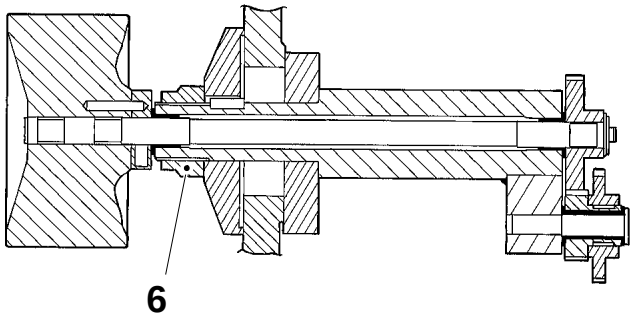

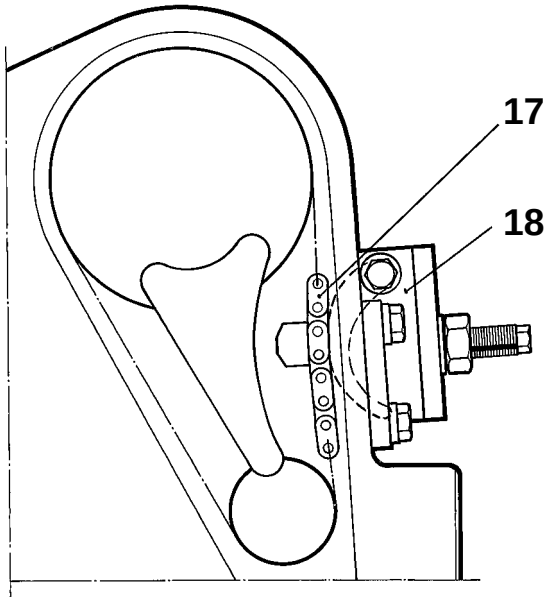

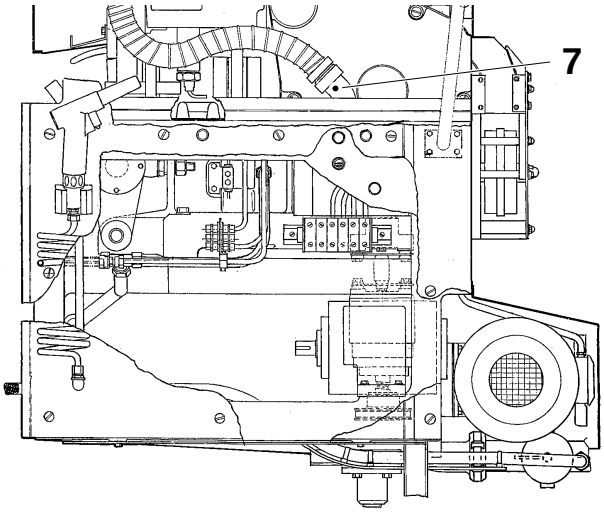

2 Discharge unit
3 Chain
6 Nut
7 Lead-in
15 Screw
16 Screw
17 Duplex chain
18 Chain tensioner

Checking

Check the following details for wear and/or damages:

- the discharge roller (1)
- the bearings (2)
- the shafts (3)
- the bushings
- the chain (4)
- the gears and sprockets (5)

Replace as required.

Set the discharge roller and the tension of the chain (4), see page MM 531–5X.

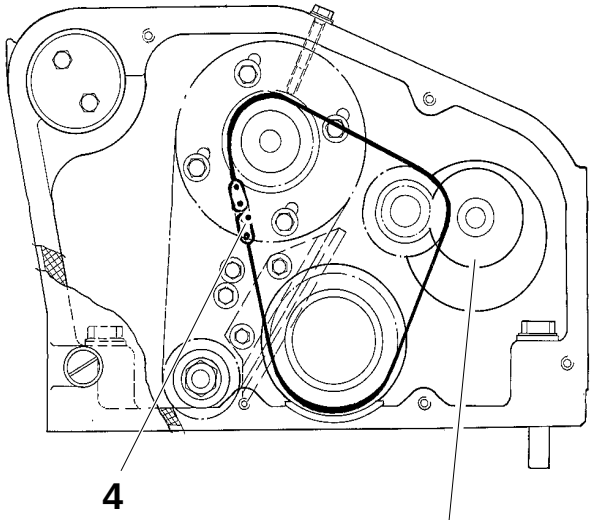

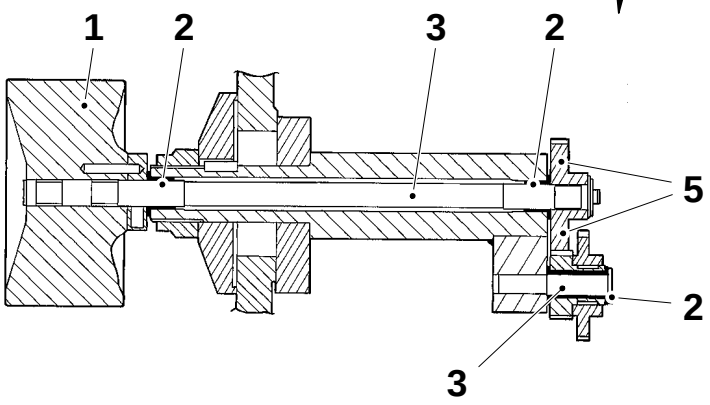

1 Gear, sprocket
2 Bearing
3 Chain
4 Shaft
5 Discharge roller

Setting

a) Crank until the station chain stops indexing.

b) **Alt. design;** remove the cable lead-in (7).

c) Remove the cover on the LH side of the discharge unit (1).

d) Loosen the nut (5).

e) Set the discharge roller (4) by shifting the position of the setting ring (3) in the discharge unit, see table page 2.

f) Turn the axle (6) and tension the chain (2).

g) Tighten the nut (5).

h) Check the tension of the chain (2), deflection 5 ±0.5 mm with 50 ±2 N load force.

(Cont'd overleaf)

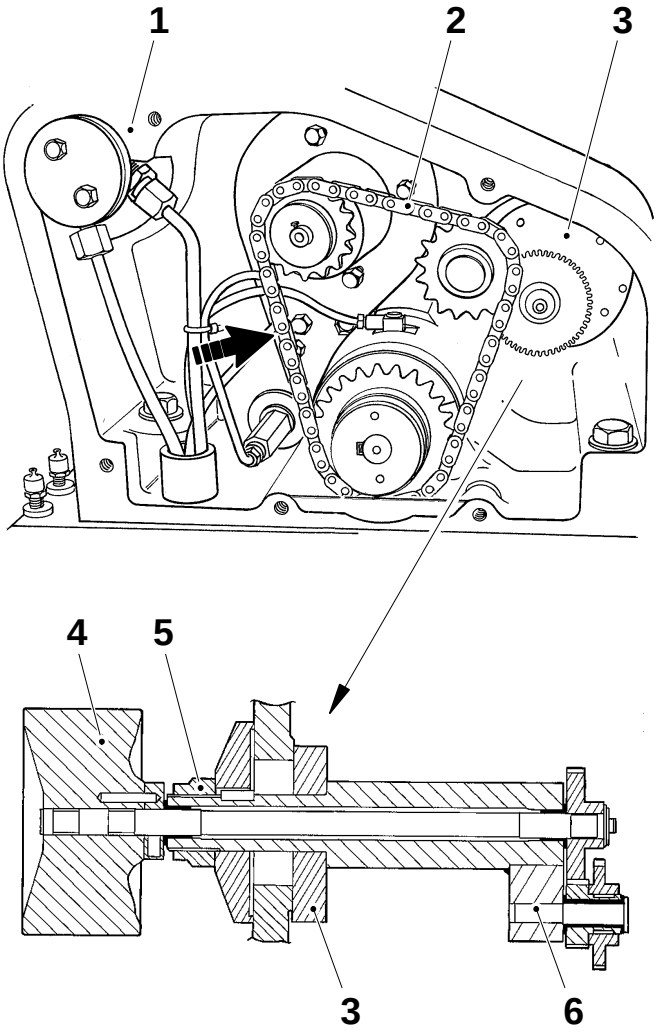

1 Discharge unit
2 Chain
3 Setting ring
4 Discharge roller
5 Nut
6 Axle
7 Lead-in

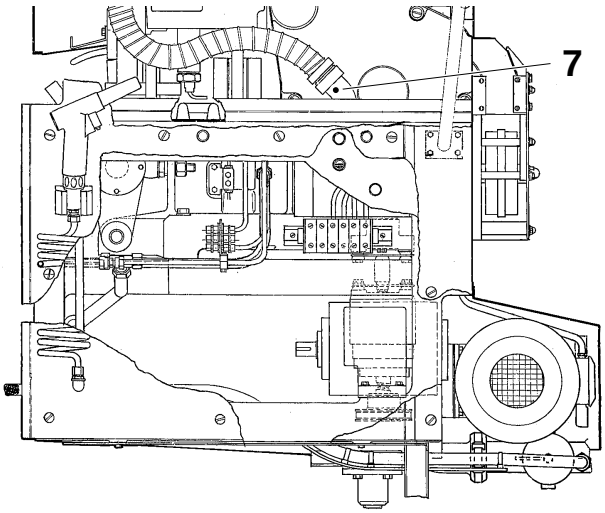

(Cont'd)

*) These letters are stamped on the back of the setting ring.

Volume 180 – 284 ml:
The letter at pin I always has to be visible.

Volume 125 ml:
The letter at pin II always has to be visible.

Volume, ml	Speed, pkg/h	Hole Pin I	Hole Pin II
125 S	5000	J	M
	6000	J	M
160 S	5000	J	M
	6000	J	M
180 B	5000	–	–
	6000	A	B
200 S	5000	M	L
	6000	F	E
TBA 200 B	5000	N	O
	6000	J	K
TB 200 B	5000	T	O
	6000	–	–
236 B	5000	M	L
	6000	M	L
250 B	5000	Q	P
	6000	Q	P
250 S	5000	–	–
	6000	B	A
284 B	5000	–	–
	6000	F	E

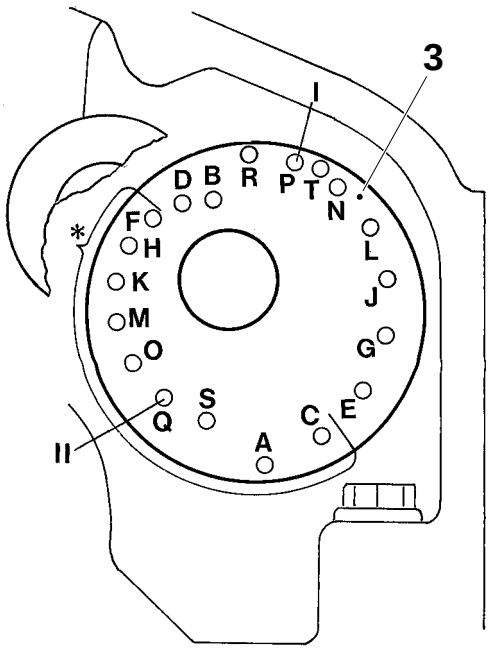

3 Discharge roller

Fitting

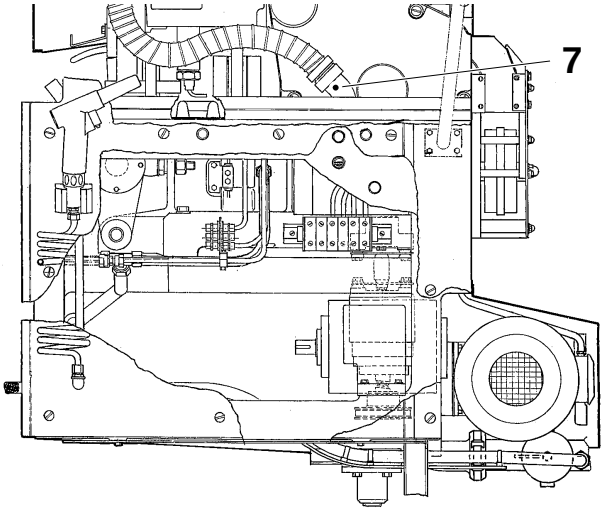

a) **Alt. design;** remove the cable lead-in (7).

b) Remove the cover on the LH side of the discharge unit.

c) Turn the discharge roller so that the hole for the shear pin in the sprocket (1) is opposite the hole (2) for the shear pin in the hub. This is obtained when the reference hole (3) in the hub is opposite the groove in the sprocket.

d) Gently tap a new shear pin into the hole.

Caution!
Take care to remove the broken shear pin from the gear.

Footnote
If the sealing washer (5) has been removed, top up with oil, code H, see page MM 940–7X, first through the banjo connection (4) until the oil comes out in the oil bath. Top up the bath until the level reaches the edge of the sealing washer.

e) Fit the cover.

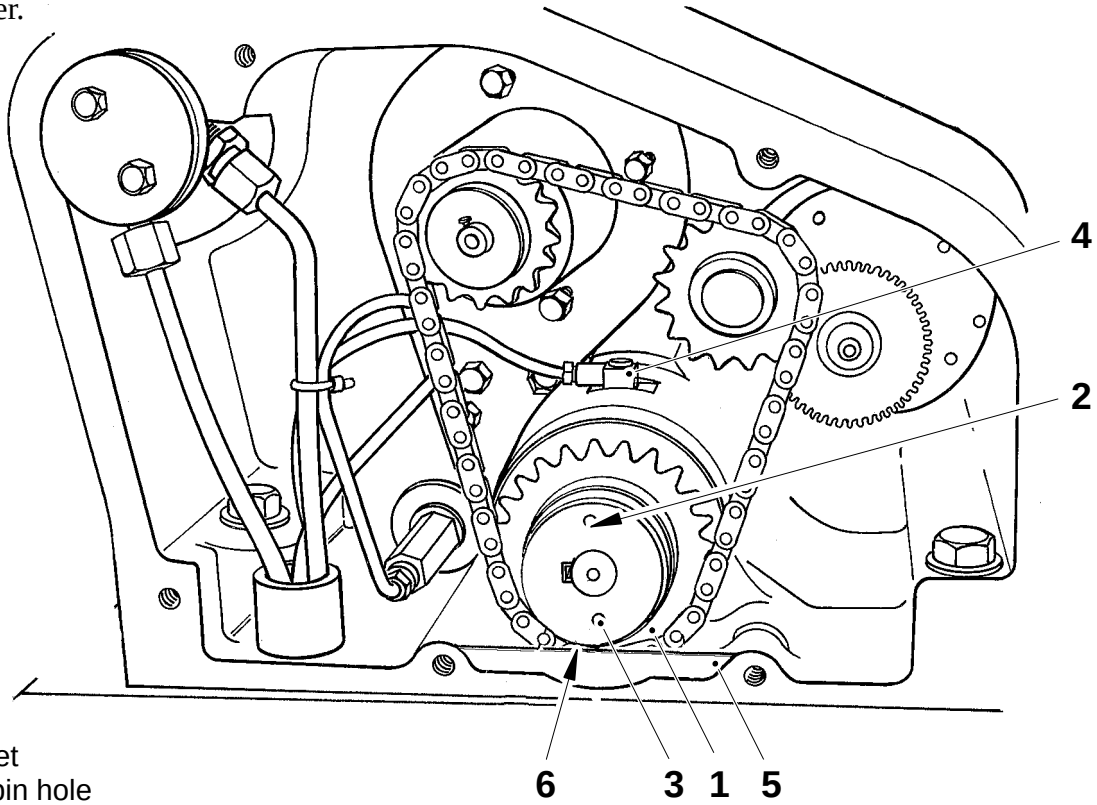

1 Sprocket
2 Shear pin hole
3 Reference hole
4 Banjo connection
5 Sealing washer
6 Oil bath
7 Lead-in

Checking

a) Crank until the station chain stops indexing.

b) Open for cooling water and turn on the main power switch.

c) Start the hydraulic pump and forcibly actuate the valve Y41 by means of tool TP No. 76167.

d) Check the positions indicated (arrows) for oil leakage.

e) Shift the tool to valve Y42 and repeat the leakage check.

f) Remove tool TP No. 76167 and stop the hydraulic pump. Turn off the main power switch and close for cooling water.

g) If required, overhaul, see page MM 535–3X.

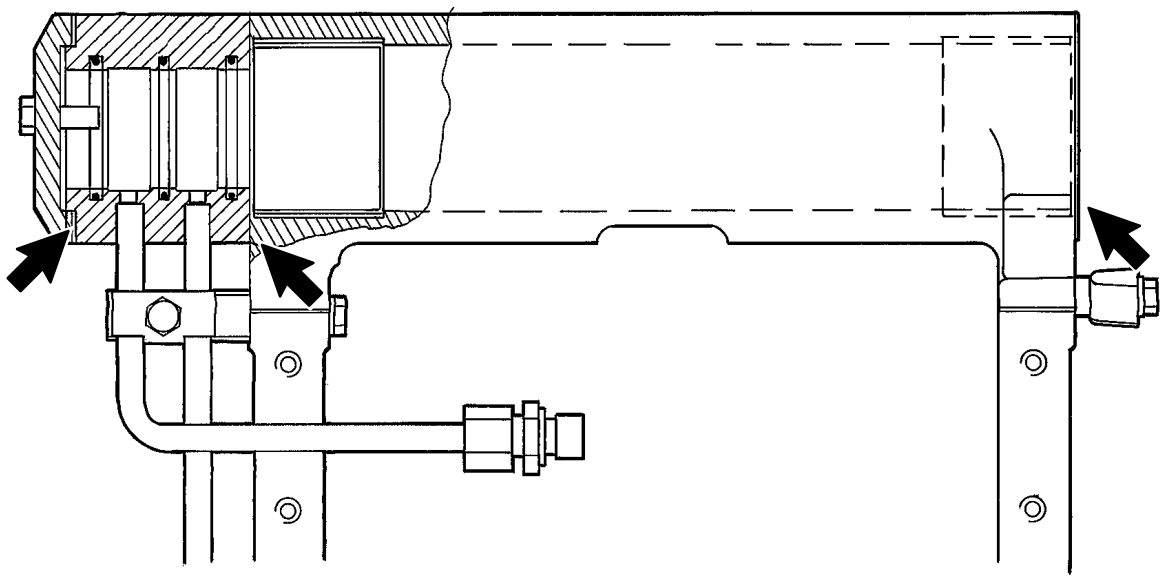

Overhaul

a) Remove the FS element and put it aside, see page MM 525–3X.

b) Undo the screws (1) and remove the cover (2). Make a note of the number of shims (3).

c) Raise the pivot frame (4) and pull it off the shaft (5).

d) Replace the three sealings (6).

e) Fit in reverse order.

f) Fit the FS element, see page MM 525–3X.

g) Bleed the hydraulic system, see page MM 511–7X and MM 521–7X.

h) Check the pivot frame, see page MM 535–1X.

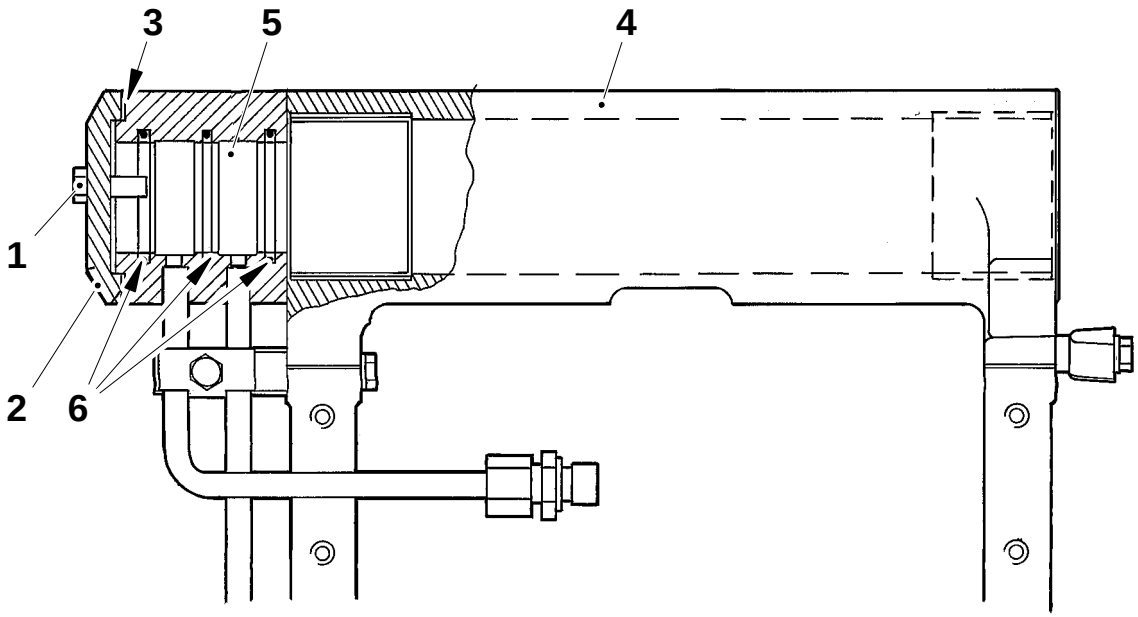

1 Screw
2 Cover
3 Shims
4 Pivot frame
5 Shaft
6 Sealing

Checking

Cut-out torque

a) Remove the outer guide flange (1).

b) Loosen the clamp fitting, see page MM 370–2X.

c) Fit a 18 mm socket on the nut and turn it in **reverse direction** by means of a dynamometric wrench (2). The coupling should cut out at 85 ±5 Nm.

d) Turn the sprocket and check the cut-out torque at each coupling step.
If incorrect torque, replace the indexing unit.

e) Remove the wrench and set the station chain, see page MM 505–5X.

f) Fit the guide flange (1).

Caution!
If the safety coupling has cut out, make sure that the coupling is reset.

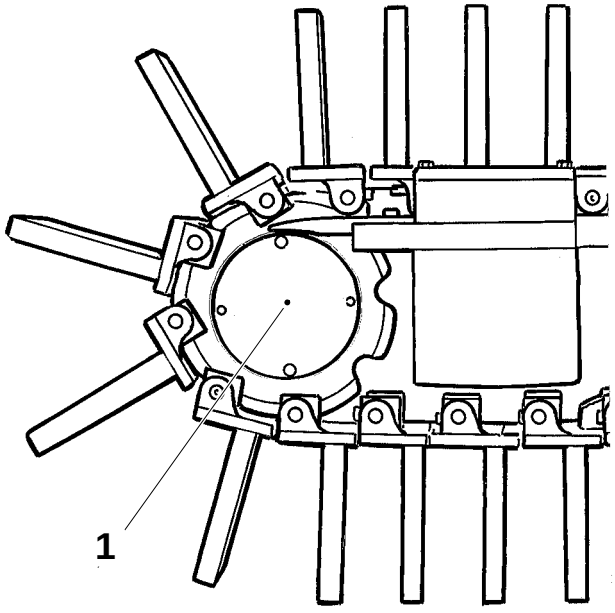

1 Guide flange
2 Dynamometric wrench

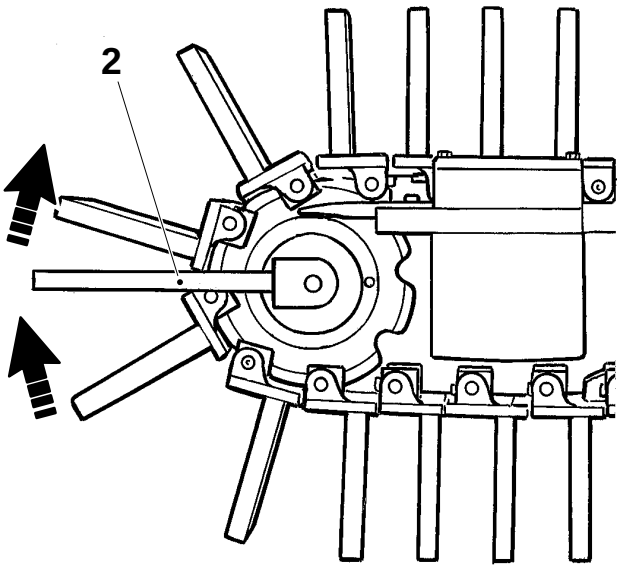

Checking

Check the following details for wear and/or damage:

- the seal ring (1)
- the drive wheel (2)
- the clamp fitting (3)
- the O-ring (4)

Replace as required.

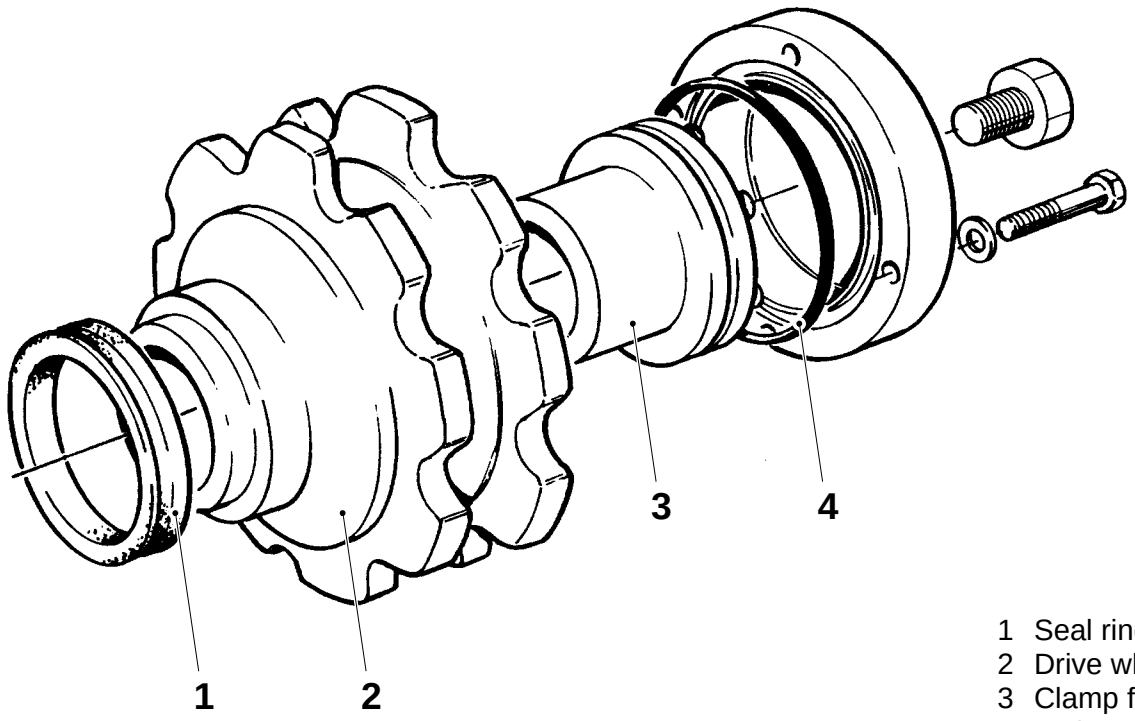

1 Seal ring
2 Drive wheel
3 Clamp fitting
4 O-ring

Removal

a) Remove the following details, see page MM 503–2X:

- the protection cover
- the side cover
- the guide rail and the pipe
- the plates

b) Remove the station chain, see page MM 505–2X.

c) Undo the screws and remove the lid (5) and the O-ring (4).

d) Remove the seal ring (1).

e) Remove the clamp fitting (3) from the drive wheel (2).

f) Reassemble in reverse order.

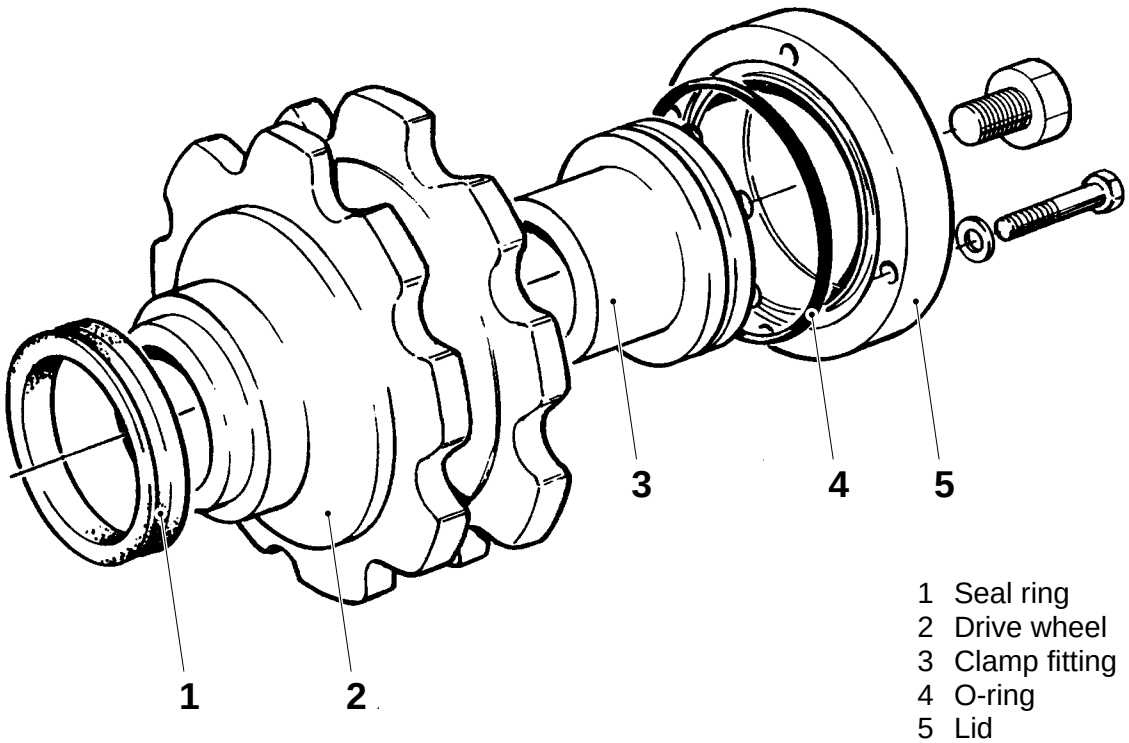

1 Seal ring
2 Drive wheel
3 Clamp fitting
4 O-ring
5 Lid

Checking

Check the following details for wear and/or damage:

- the ball bearing (1)
- the lock washer (2)
- the O-ring (3)
- the seal rings (4) and (5)
- the tensioner sprocket (6)
- the shaft (7)

Replace as required.

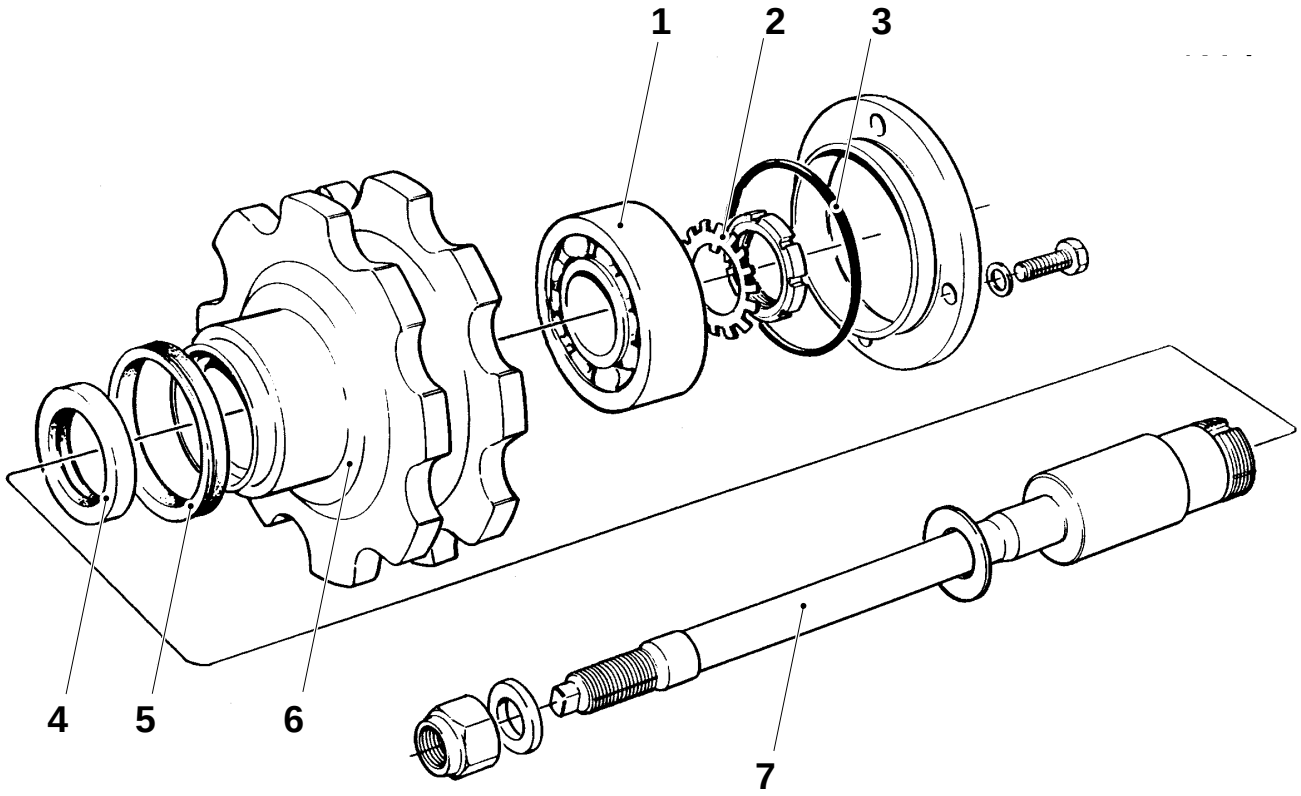

1 Ball bearing
2 Lock washer
3 O-ring
4 Seal ring
5 Seal ring
6 Tensioner sprocket
7 Shaft

Removal

Remove the following details, see page MM 503–2X:

- the protection cover
- the side cover
- the guide rail and the cleaning pipe
- the plates

a) Remove the station chain, see page MM 505–2X.

b) Undo the nut (1) and remove the tensioner sprocket. Do not forget the shims (12).

c) Undo the screws (2). Remove the lid (3) and the O-ring (4).

d) Unlock the lock washer (5). Undo the nut (6).

e) Pull out the shaft (7) from the tensioner sprocket (8).

f) Remove the seal ring (9), the seal ring (10) and the ball bearing (11).

g) Reassemble in reverse order.

Note
Do not forget to lock the nut (6) by means of the lock washer (5).

h) Fit the guide system, see page MM 503–4X.

i) Fit the station chain, see page MM 505–4X.

1 Nut
2 Screw
3 Lid
4 O-ring
5 Lock washer
6 Nut
7 Shaft
8 Tensioner sprocket
9 Seal ring
10 Seal ring
11 Ball bearing
12 Shim

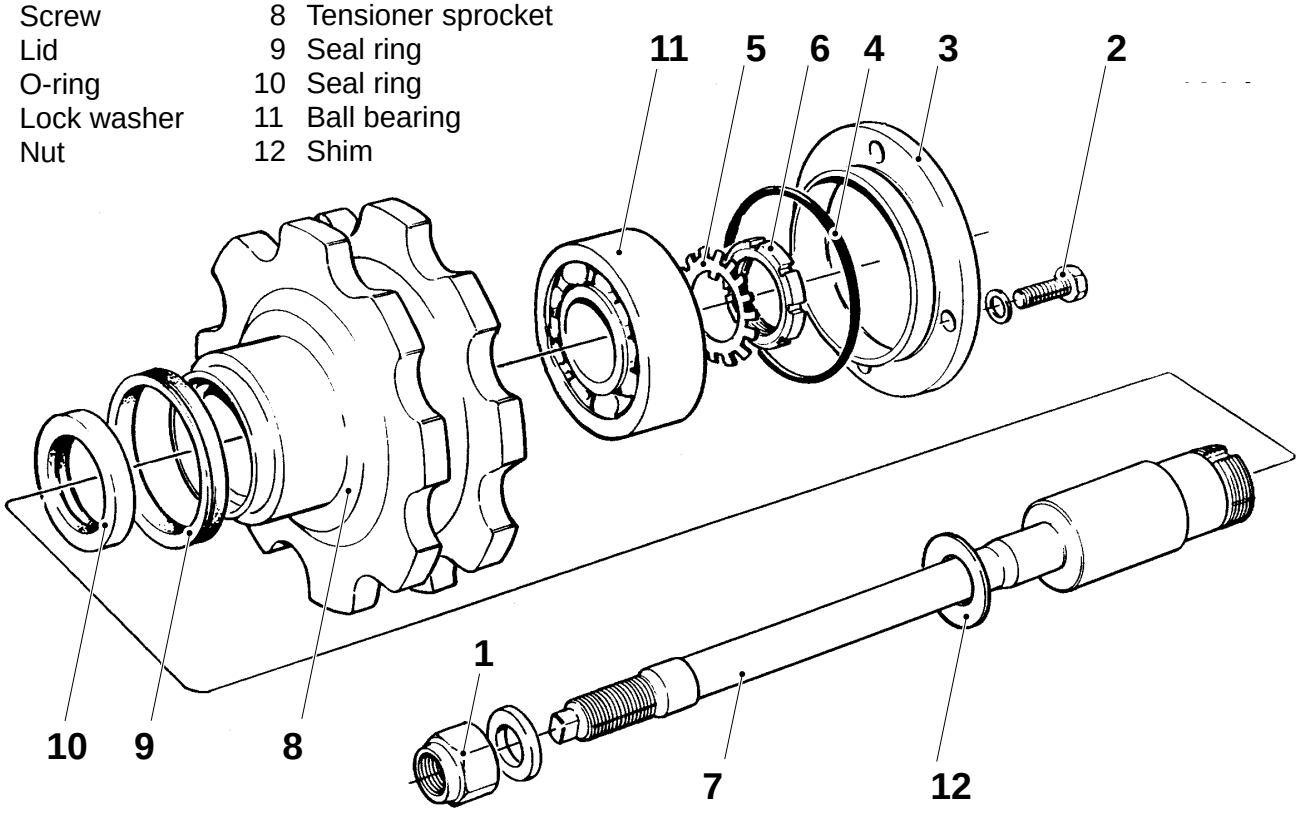

Checking

a) Check that the cleaning rotors (1) and (3) rotate freely.
Overhaul as required, see page MM 550–3X.

b) Check that all nozzles (2) are clean and without defects.
Clean, delime or replace as required.

c) Check all pipes and pipe connections for leaks.

d) Make sure there are no abnormal sound or vibrations in the cleaning pump.
Overhaul as required.

e) Pull out and check the filter insert (4) in the pressure line. Clean as required.

f) Make sure the pump and the piping do not leak.

g) Set the nozzles, see page MM 550–5X.

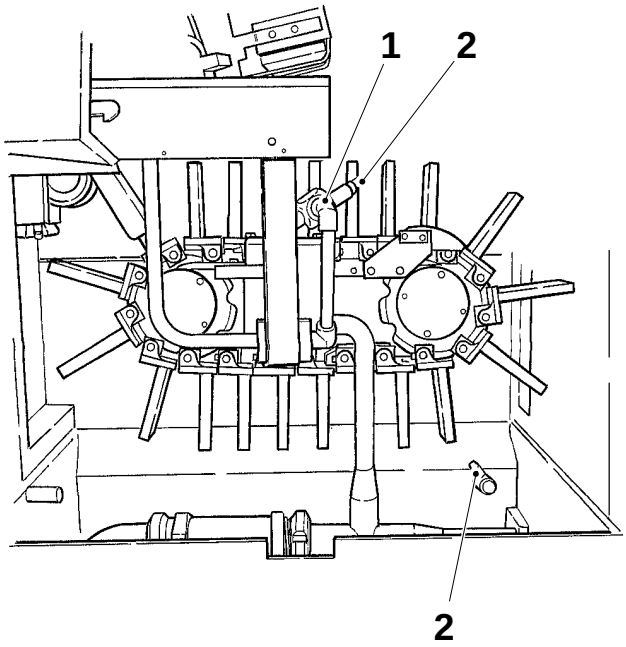

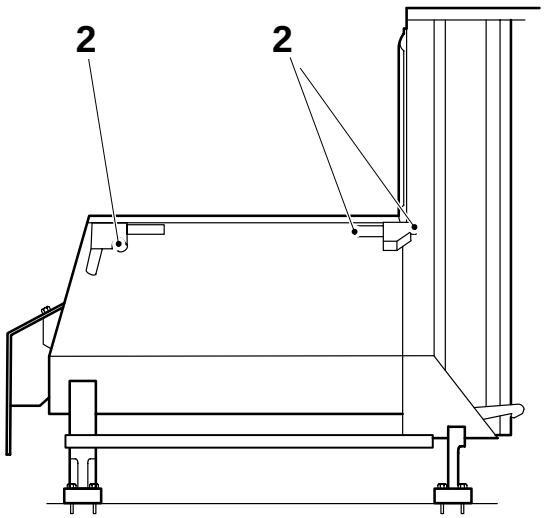

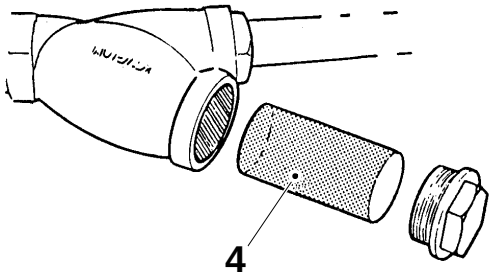

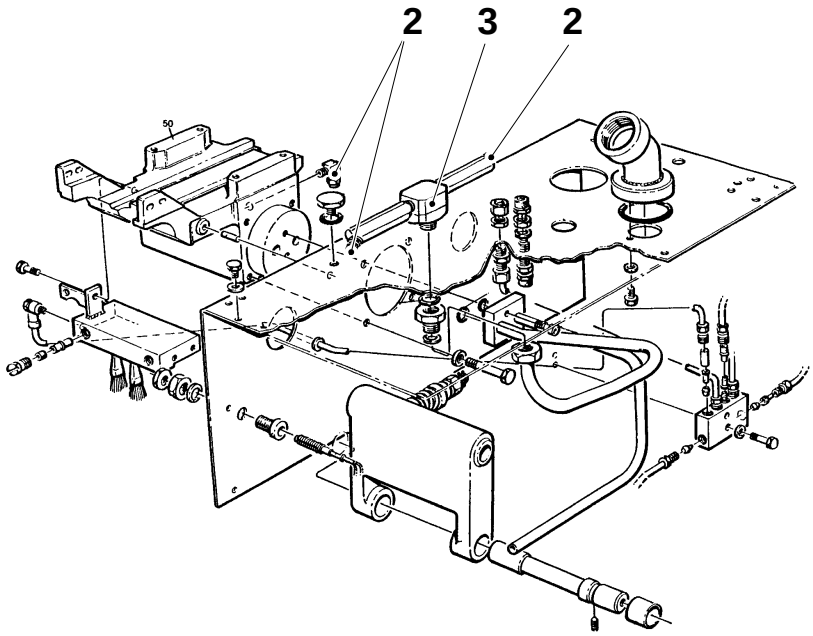

1 Cleaning rotor
2 Nozzle
3 Cleaning rotor
4 Filter insert

Overhaul

Cleaning rotors

a) Undo the screws (1). Remove the cover (2) and the O-ring (3).

b) Carefully remove the seal (4).

c) Undo the pivot pin (10) with an allen key.

d) Remove the washer (5) and the circlip (7).

e) Remove the pivot pin from the bearing housing (9), and the ball bearings (8).

f) Replace worn and/or damaged details.

g) Reassemble in reverse order and check that the cleaning rotors rotate freely.

Note
Make sure the pivot pin flange is in level with the bottom of the bearing housing (9), see fig. 1.

h) Set the nozzles, see page MM 550–5X.

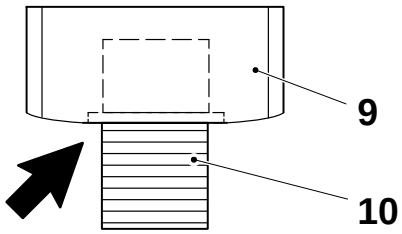

Fig.1

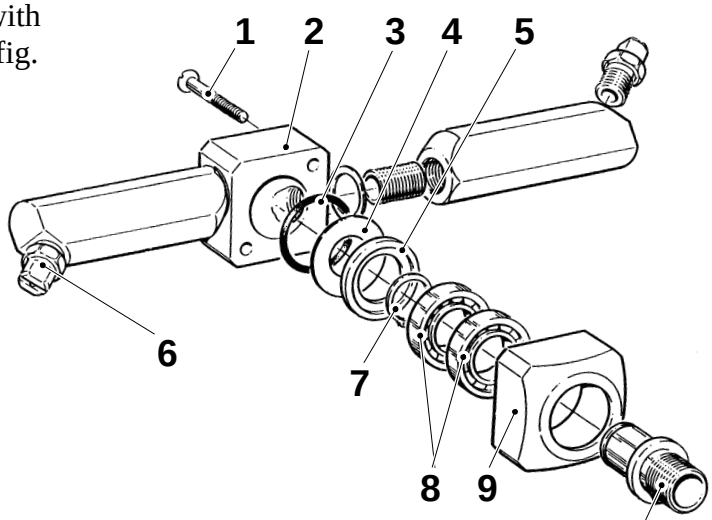

Fig. 2

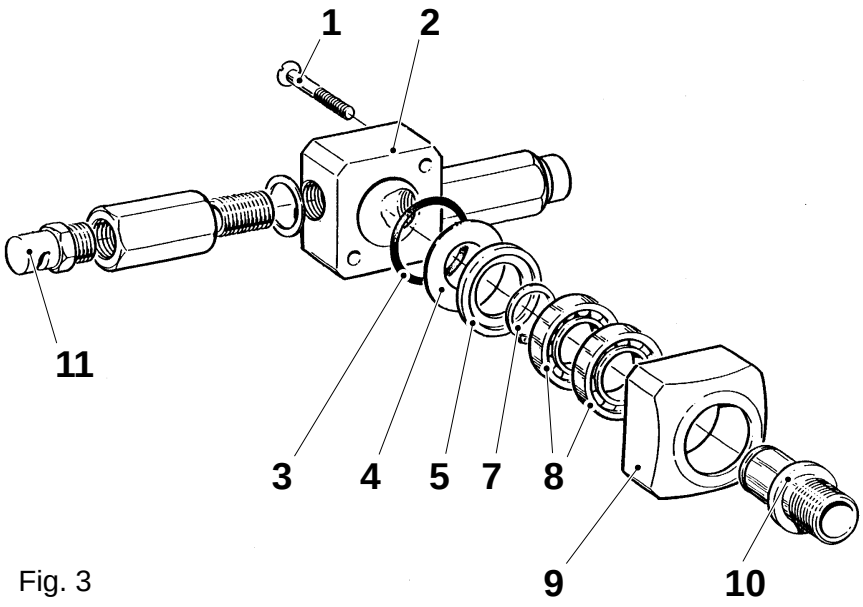

Fig. 3

1 Screw
2 Cover
3 O-ring
4 Seal
5 Washer
6 Nozzle
7 Circlip
8 Ball bearing
9 Bearing housing
10 Pivot pin
11 Nozzle

Setting

Cleaning rotor nozzles

a) Set the opening of the nozzle (2) at right angles to the key handle (1), with the jet direction at 70° ±5° angle, see fig. 1.

b) Set the opening of the nozzle (3) in parallel with the key handle (4), with the jet direction at 50° ±5° angle, see fig. 2.

c) Set the jet direction of the nozzle (5) at 60° ±5° angle and nozzle (6) at 10° ±5° angle to the cover, see fig. 3 and fig. 4.

(Cont'd overleaf)

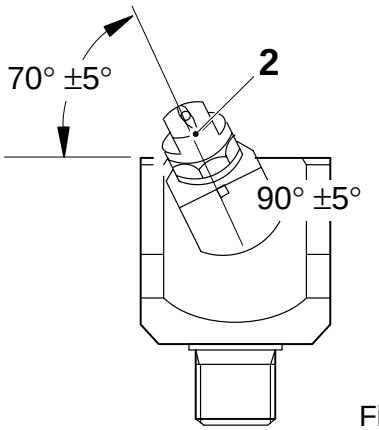

Fig. 1

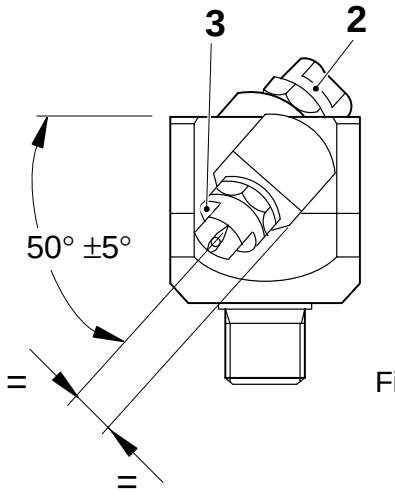

Fig. 2

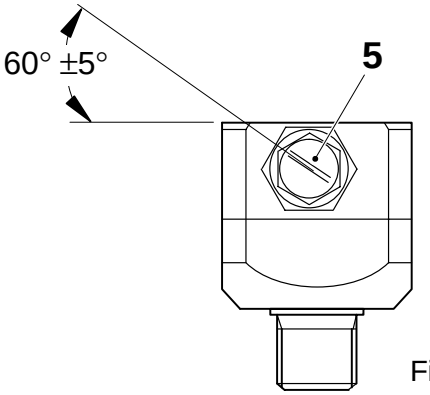

Fig. 3

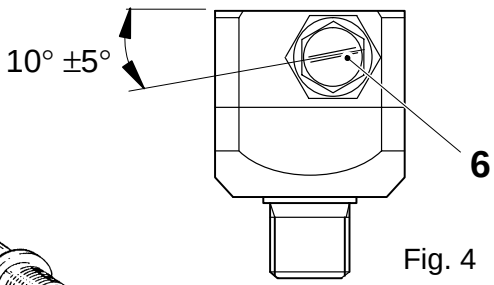

Fig. 4

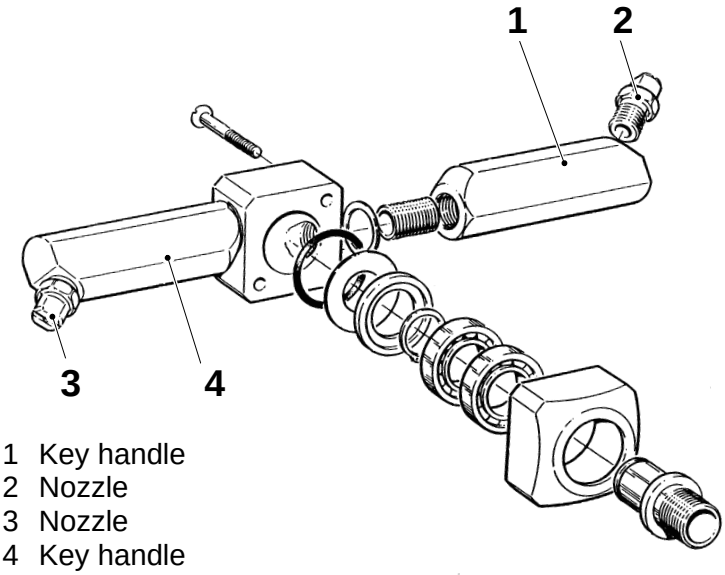

1 Key handle
2 Nozzle
3 Nozzle
4 Key handle
5 Nozzle
6 Nozzle
7 Key handle

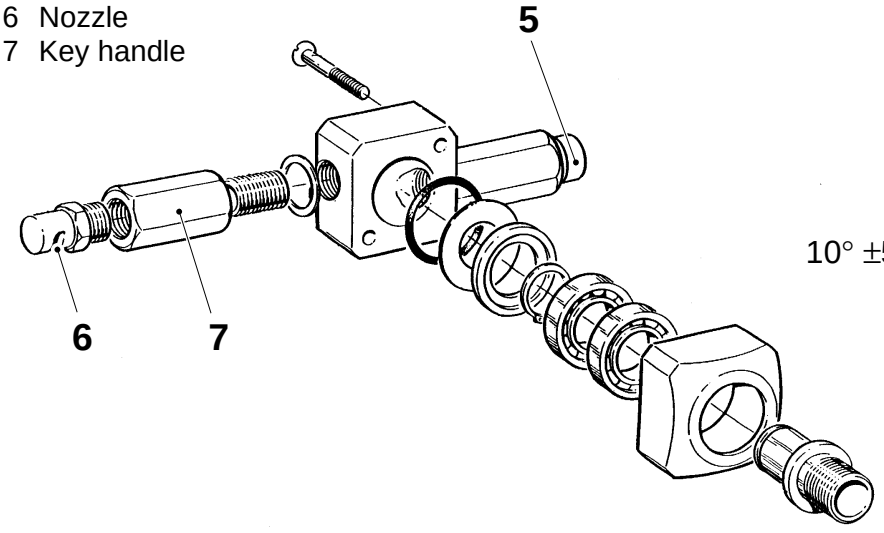

(Cont'd)

Fixed nozzles

a) Set the nozzles (10) so that the slots are horizontal.

b) Set the jet direction of the nozzle (9) at 45° ±5° angle and the nozzle (8) at 70 ±5 mm distance from the inside of the tray, see fig. 3.

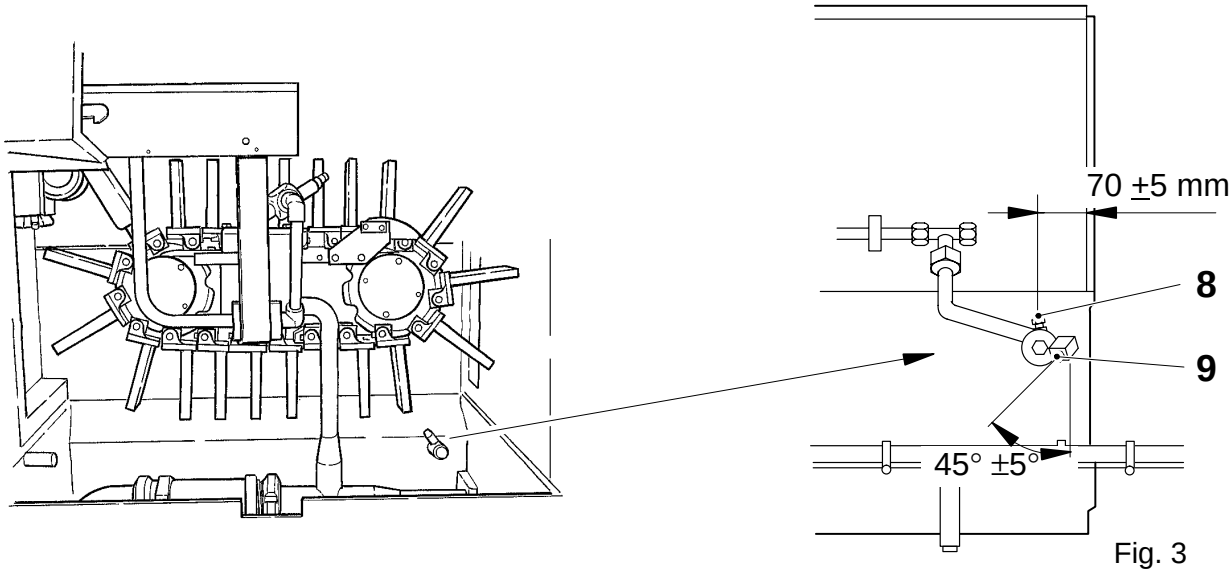

Fig. 3

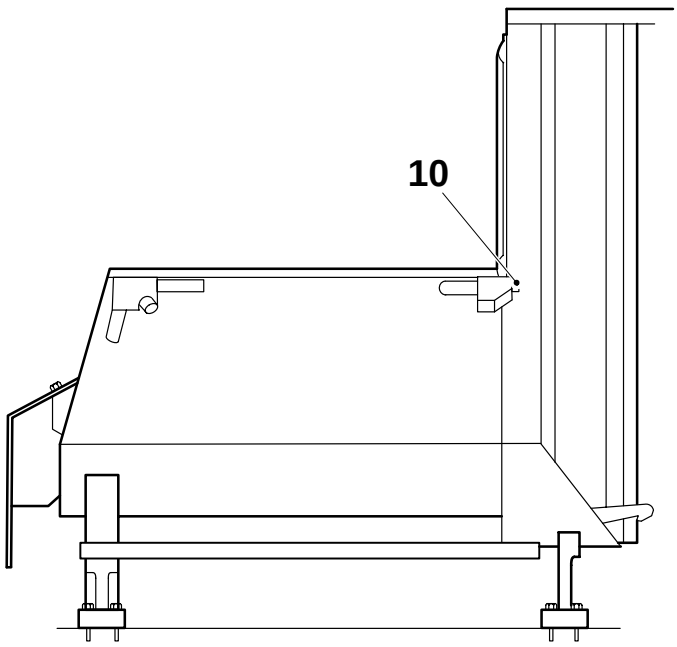

8 Nozzle
9 Nozzle
10 Nozzle (2 off)

Cleaning program

	Program	Quantity, l	Approx. time, min.
a	Filling hot water I	70 – 80	–
b	Rinsing, hot water I	–	2.3
c	Draining I	–	0.3
d	Filling, hot water II + dosing detergent	70 – 80 approx 0.8	–
e	Cleaning	–	9.0
f	Draining II	–	0.3
g	Filling hot water III	70 – 80	–
h	Rinsing, hot water II	–	2.3
i	Draining III	–	0.3
j	Filling hot water IV	70 – 80	–
k	Rinsing, hot water III	–	2.3
l	Draining IV + lubrication (machine program steps down to 0)	–	0.3
m	Drainage valve open	–	–
n	Sprinkler open	–	–

Note
The filling sequence is controlled by a level monitor

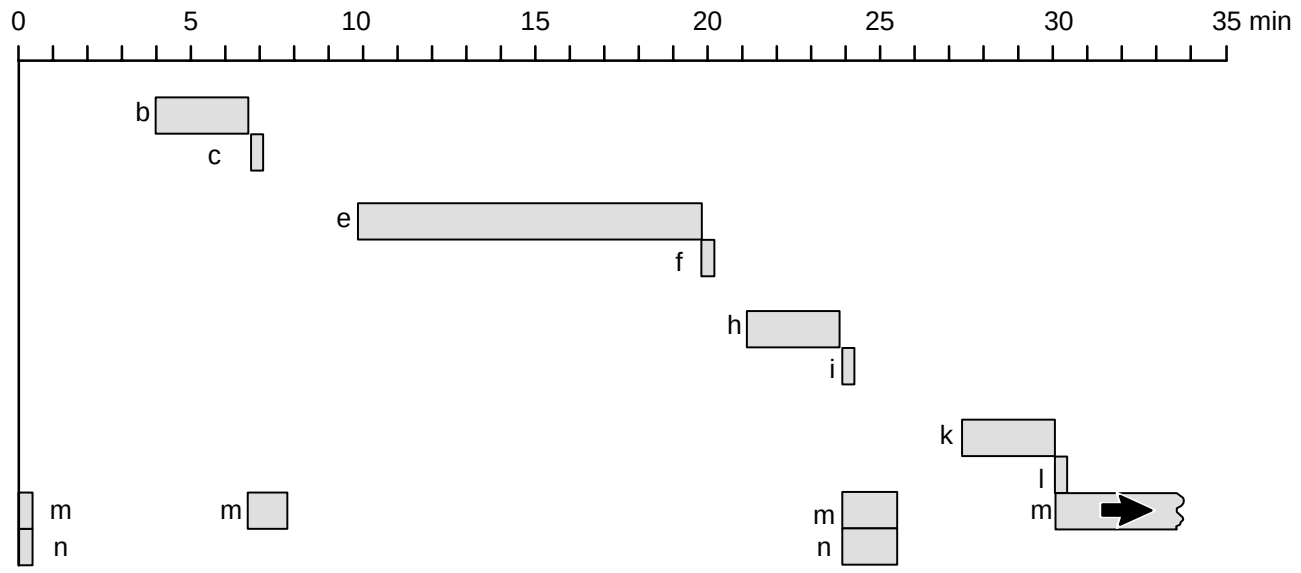

290

Checking

a) Check that the upper bearing (1) of the indexing unit is not worn and/ort damaged. Replace as required.

b) Check that there is no abnormal noise in the indexing unit.

c) Grease the bearing with silicon grease. TP No. 90292–6.

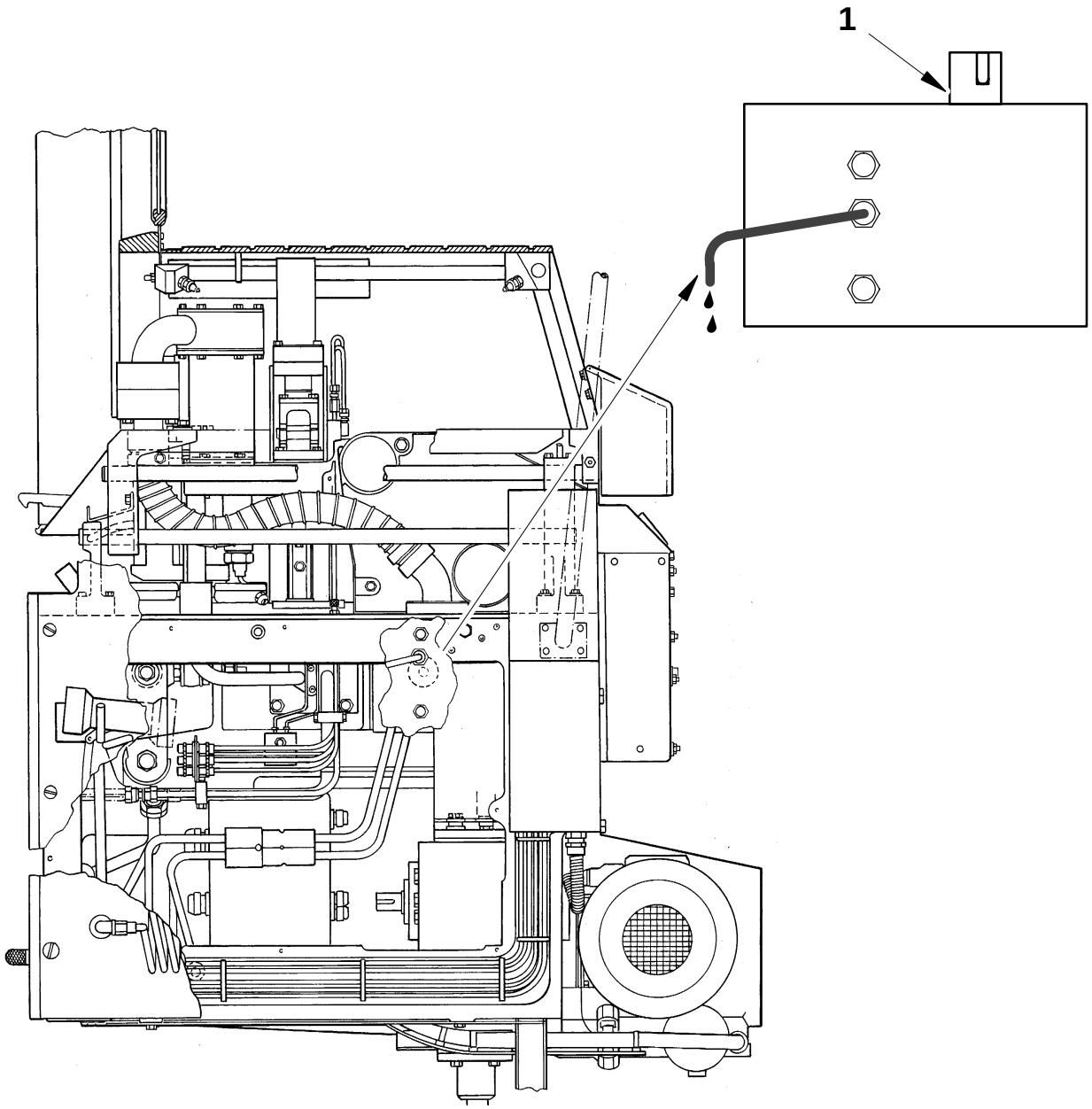

Oil change

a) Undo the filling plug (1).

b) Undo the drain plug (2) and drain the oil.

c) When all oil is drained, fit the drain plug and top up with oil type B, see page MM 940–7X until the oil flows out of the hose (3).

d) Fit the filling plug.

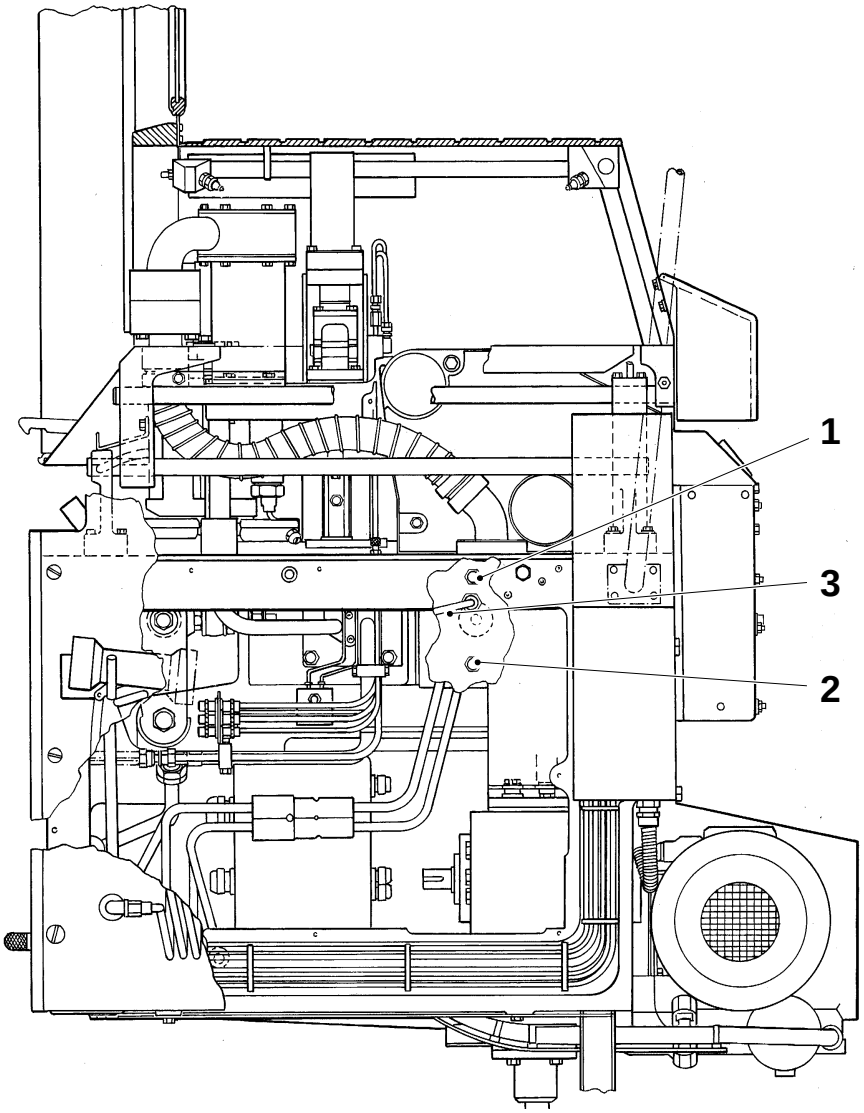

1 Filling plug
2 Drain plug
3 Hose

Oil change

a) Undo the filter plug (1). Undo the hose plug, lower the hose (3) and drain the oil.

b) When all oil has been drained, top up with oil through the hose to correct level in the level glass (2).
Oil type B, see page MM 940–7X.

c) Check that the filter plug is not clogged. If required, clean it with compressed air.

d) Fit the filter plug and the hose plug. Fit the hose in its clip.

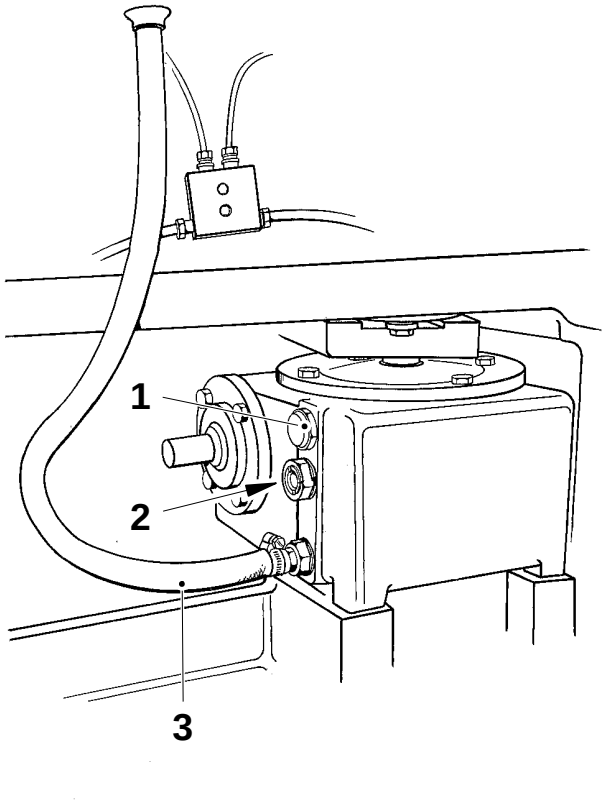

1 Filter plug
2 Level glass
3 Hose

Description	TB/9	TBA/9
Hydraulic system – checking	601–11	601–11
Hydraulic system – setting	601–51	601–51
Impulse transmitter – checking	603–11	603–11
Impulse transmitter – setting (2 pages)	603–51	603–51
Pressure switch, main air	608–11	608–11
Air system – checking	610–11	610–11
Filter regulator – checking/setting	612–11	612–11
Valve panel filters – checking (2 pages)	613–11	613–11
Cooling water system – checking		616–11
Cooling water system – setting		616–51
Central lubrication – checking	621–11	621–11
Central lubrication – removal	621–21	621–21
Carriage – checking	624–11	624–11
Carriage – setting	624–51	624–51
Packaging material monitor – setting	628–51	628–51
Splicing device – checking	630–11	630–11
Splicing device – setting	630–51	630–51
Splicing device – setting	630–52	630–52
Power feed roller – checking	631–11	631–11
Power feed roller – setting (2 pages)	631–51	631–51
Paper guide roller – checking	633–11	633–11
Paper guide roller – setting	633–51	633–51
Dancer roller – checking	634–11	634–11
Dancer roller – setting	634–51	634–51

Description	TB/9	TBA/9
Reel holder – checking	636–11	636–11
Packaging material trolley – checking	645–11	645–11
Packaging material trolley – removal (4 pages)	645–21	645–21
Packaging material trolley – setting	645–51	645–51
Receiver – checking	663–11	663–11
Receiver – recharging	668–71	663–71
Peroxide pump – checking		670–11
Peroxide pump – removal		670–21
Peroxide pump – fitting (2 pages)		670–41
Detergent tank – checking		675–11
Peroxide system – checking tightness		687–11
TPMC angle encoder, main machine – degree setting	690–51	690–51

Checking

a) Check if the filter button (1) protrudes out of the filter housing/the color of the blockage indicator has changed. If that is the case, replace the filter insert.

b) Check that the oil level reaches the level sight glass (2).

c) Check that there is no water in the oil. Drain any water through the valve (3).

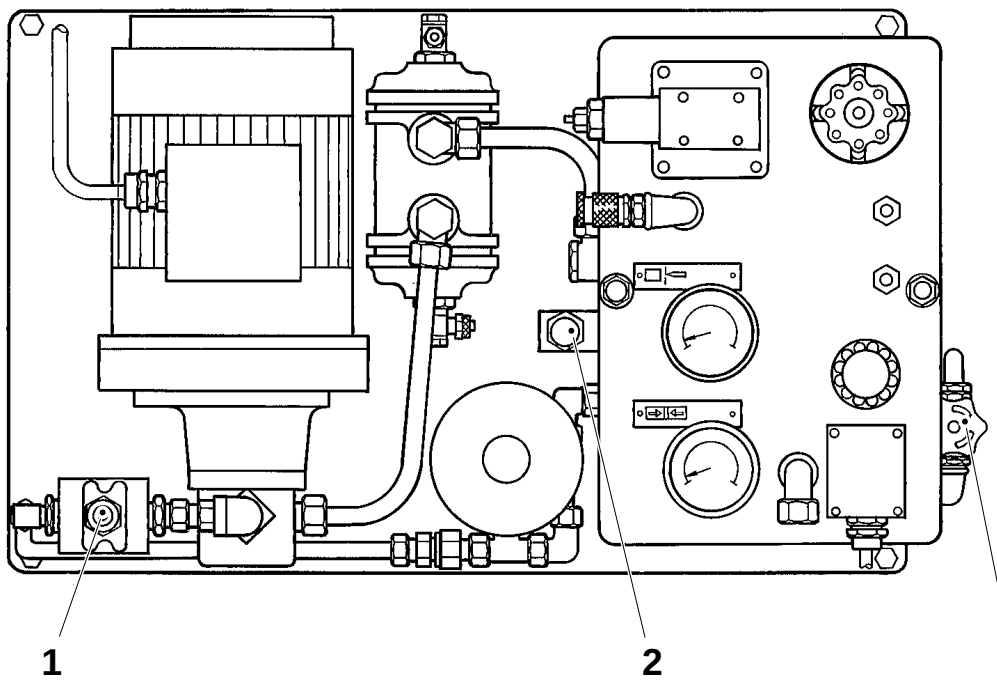

1 Button/Blockage indicator
2 Level sight glass
3 Valve

Setting

a) Pressures, see pages MM 910/920–7X.

b) Set the hydraulic pressure (jaw pressure) by means of the overflow valve (1) and the pressure gauge (2).

c) Set the cutting pressure by means of the reducing valve. Loosen the lock nut (3) and adjust with the setting screw (4).

d) Read the pressure on the pressure gauge (5).

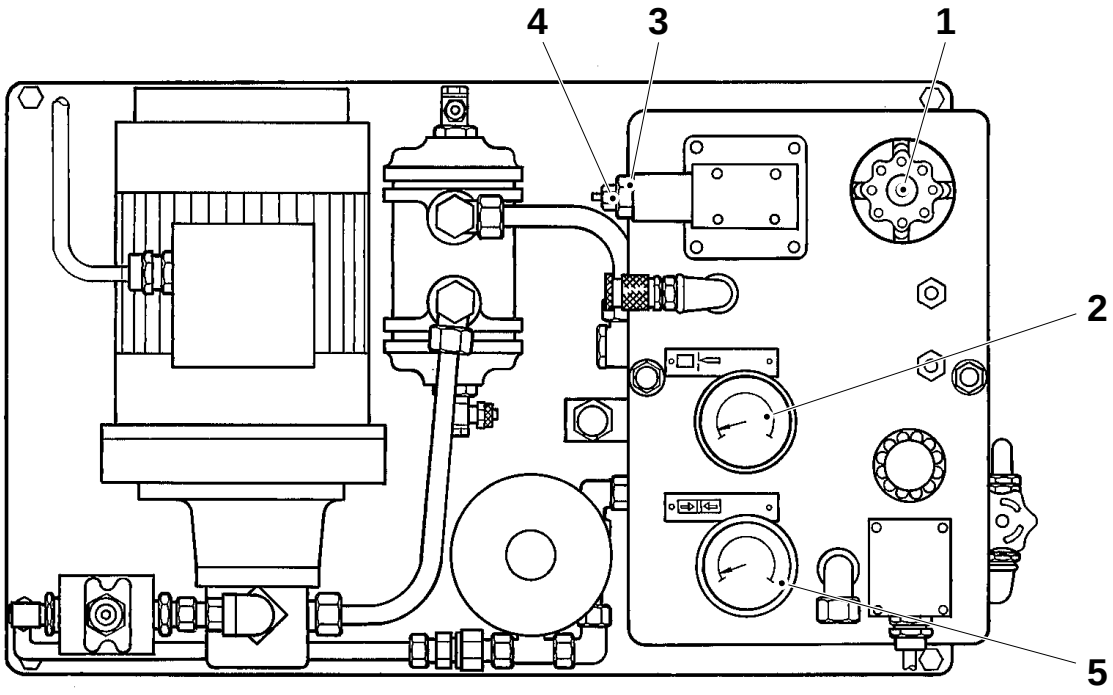

1 Overflow valve
2 Pressure gauge, jaw pressure
3 Lock nut
4 Setting screw
5 Pressure gauge, cutting pressure

Checking

Check the following parts for wear and/or damages:

- the valves (1)
- the cam rollers (2)
- the belt (3)
- the cam disc (4)
- the axles (6) and (9)
- the bushings (5) and (8)
- the screws (7)

Replace as required.

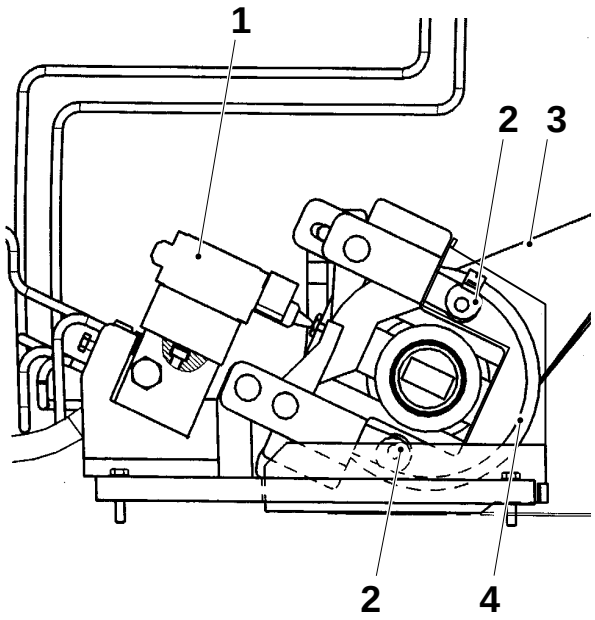

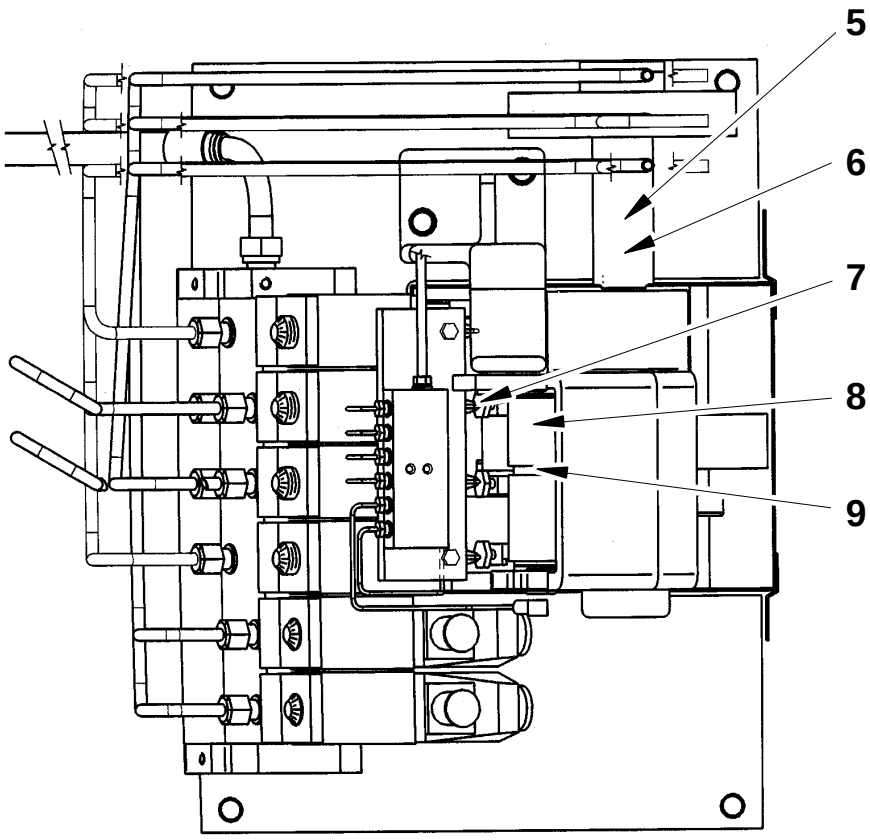

1 Valve
2 Cam roller
3 Belt
4 Cam disc
5 Bushing
6 Axle
7 Screw
8 Bushing
9 Axle

Setting

Zero position

a) Crank to exactly 0°.

b) Loosen the clamp bushings (1) by means of the screws. If required, use two of the screws in the treaded holes to separate the clamp element.

c) Zero the cam disc by turning the axle until the mark on the cam disc (2) is positioned opposite the indication plate (3). If required, apply a small amount of oil.

Caution!
Never use grease or oil which contains molybdenum sulphide or oil with high pressure agent.

d) Tighten the clamp element, see page MM 370–4X.

Set the angle encoder, see page MM 690–5X.

(Cont'd overleaf)

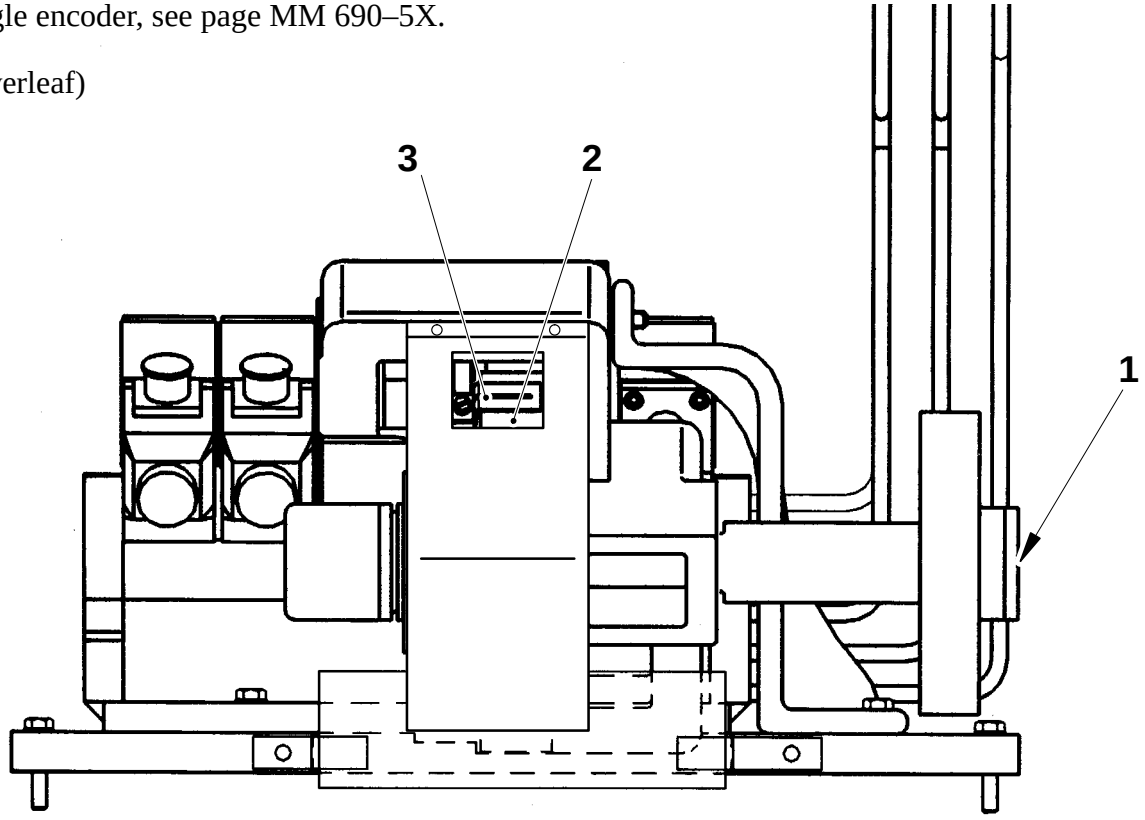

1 Clamp element
2 Cam disc
3 Indication plate

(Cont'd)

Valve clearance

a) Undo the screws (4), the oil pipe connections (5), and remove the plate (6), together with the distribution block.

b) Crank until one of the cam rollers raises on the cam.

c) Fit tool TP No. 76138 on the corresponding valve and tighten until the valve reaches the bottom.

d) Set distance A, the valve clearance, by means of the screw (7).

e) Repeat the procedure for each of the valves.

f) Remove the tool, fit the distribution block and connect the oil pipes.

g) Push the manual lubrication button on the valve panel five to six times to bleed the oil pipes.

Timing belt

Set the tension of the timing belt (8) by means of the belt tensioner (9), 8 ± 1 mm deflection with 15 ± 1 N load force.

A = 0.3 – 0.4 mm

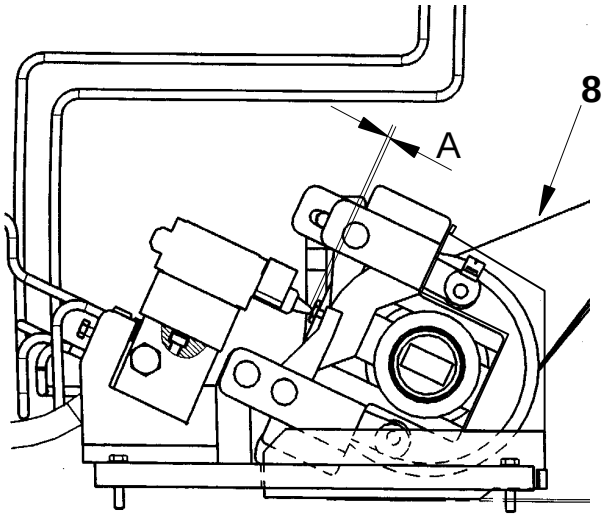

4 Screw
5 Oil pipe connection
6 Plate
7 Screw
8 Timing belt
9 Belt tensioner

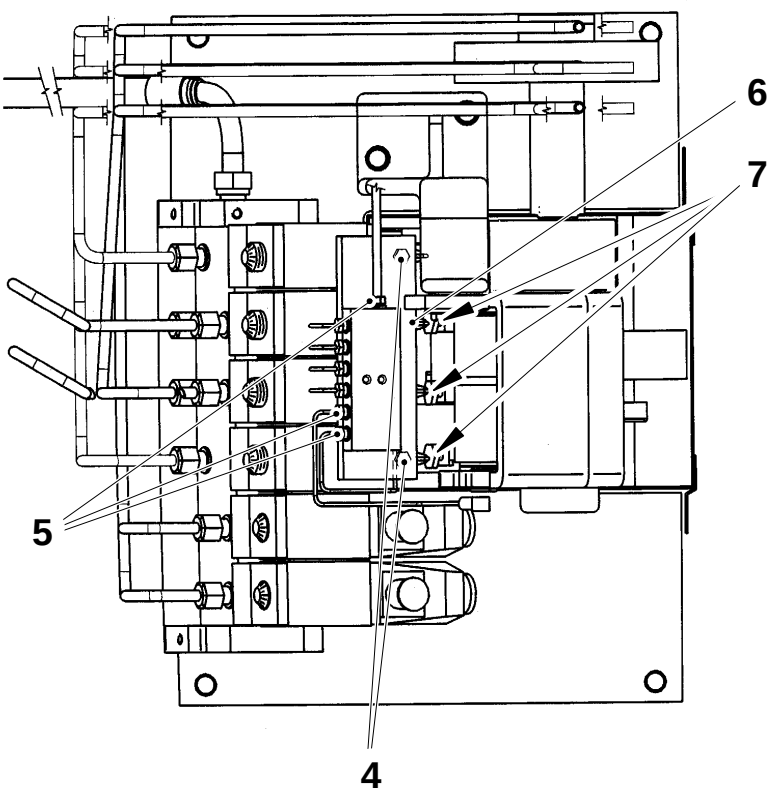

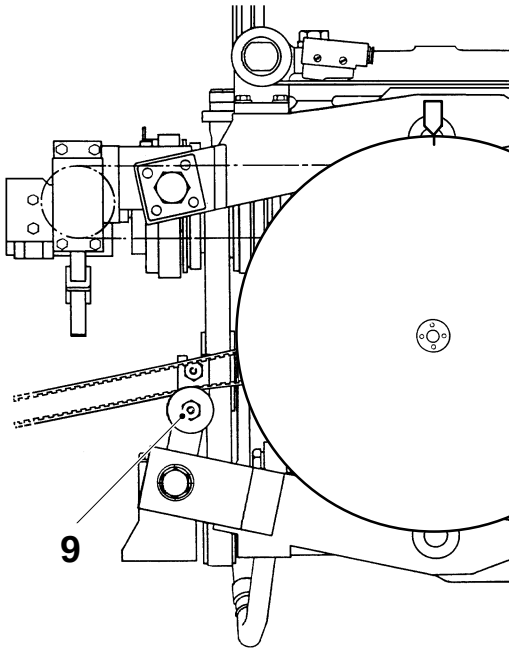

Checking

a) With the machien in step **Preheating machine**, close the valve (2).

b) Make sure that the machine goes down to step **0** when the pressure reaches 5.5 bar.

c) If this does not occur, replace the pressure switch (1).

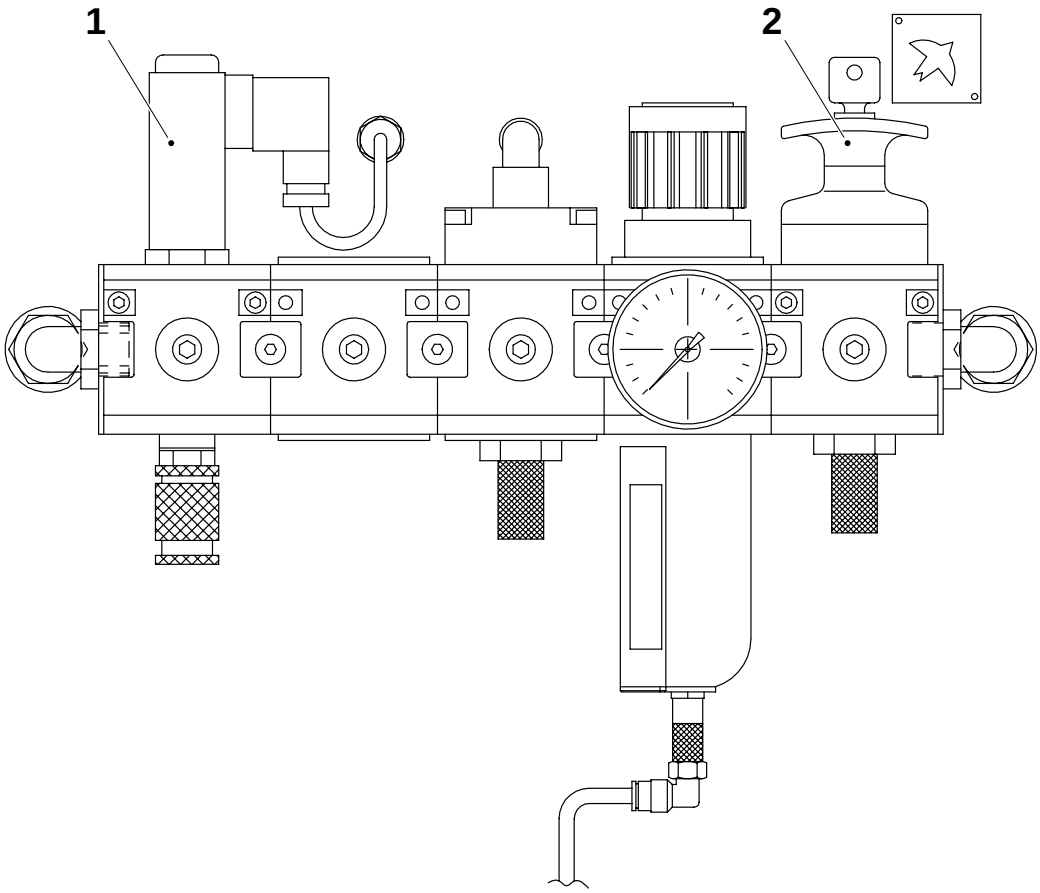

1 Pressure switch
2 Valve

Checking

Open the main air valve.

Check that the air system is tight; the connections, the cylinders and the hoses.

Replace or overhaul leaking parts as required.

Tighten all connections.

Checking

a) Check that there is no liquid in the indication tube (1). If required, undo the air connection (2) and remove the reservoir (3).

b) Clean the reservoir with soapy water.

c) Remove and clean the filter cartridge.

d) Fit the reservoir. Make sure the O-ring is correctly fitted.

e) Open the valve and check that the filter regulator is tight.

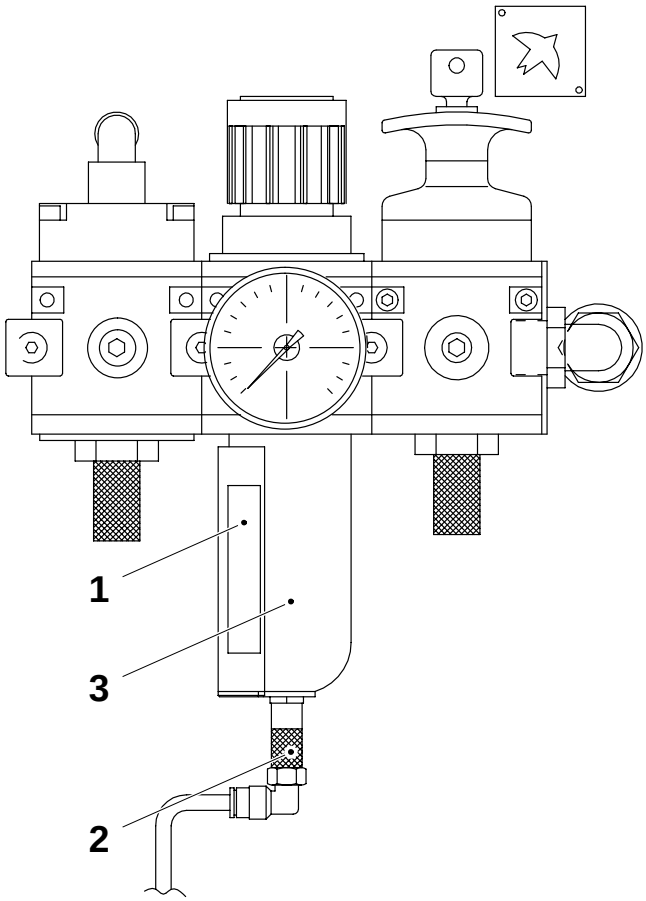

1 Indication tube
2 Air connection
3 Reservoir

Checking

Spray air filter

a) Undo the filter cover (1). Check and, if required, replace the filter cartridge.

b) Fit the filter cover.

Photocell air filter

a) Check the colour of the air filters of the photocells.

b) The liquid and gas filter (2) is to be replaced when it is red.

c) The moisture-absorbing filter (3) is to be replaced when it is pink.

(Cont’d overleaf)

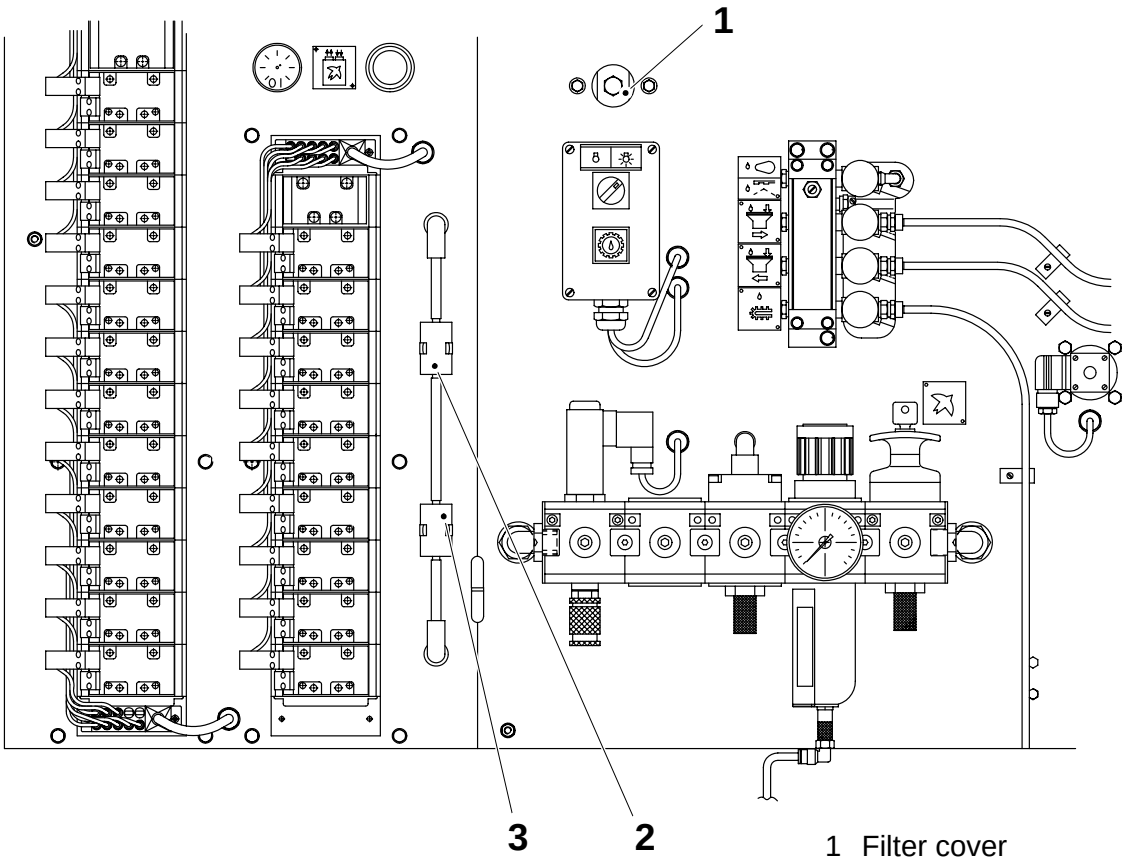

1 Filter cover
2 Liquid and gas filter
3 Moisture-absorbing filter

(Cont'd)

Water filter

a) Remove the plug (4) and the seal ring (5) and pull out the filter insert (6).

b) Clean or replace the filter insert.

c) Check that the seal ring (5) is intact. Replace as required.

d) Fit in reverse order.

Magnetic filter

a) Remove the magnetic filter (7) and blow it clean. Fit the filter.

b) Remove the lime separator (8) and blow it clean. Clean the grooves inside it. Fit the separator.

c) Open the water valves and check that there is no leakage.

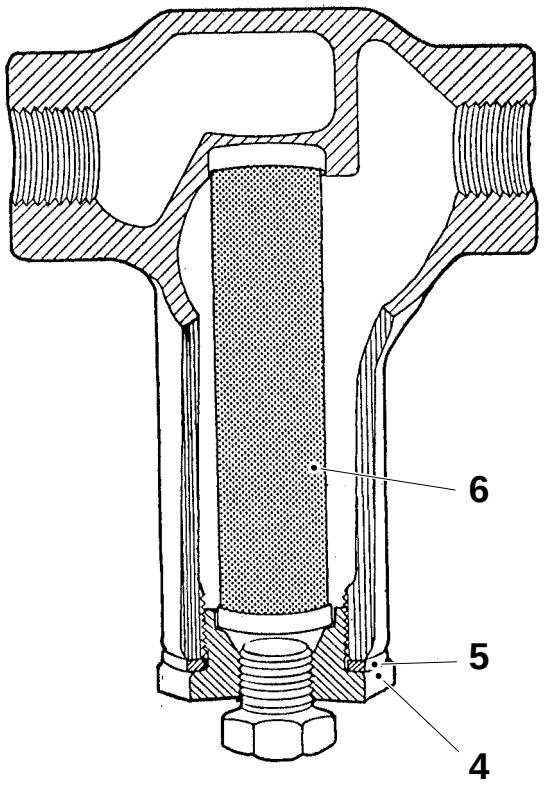

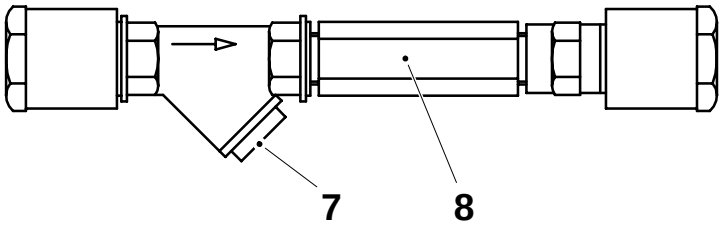

4 Plug
5 Seal ring
6 Filter insert
7 Magnetic filter
8 Lime separator

Checking

Water flow rate

Open for cooling water inlet.

Check the water flow rate, see table. If required, blow the pipe-line clear with compressed air.

Unit	Min flow rate l/min
PullTab device or Zone heater	0.8
Inductor	0.8/side
Final folder Oil cooler Flow rate monitor	1.2

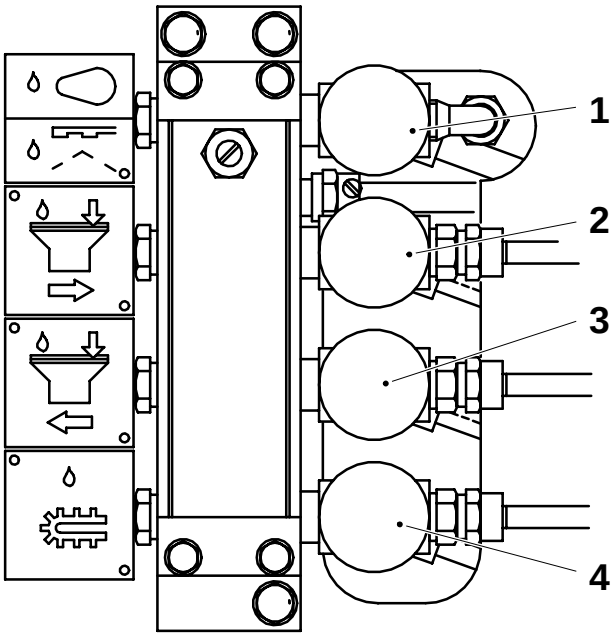

1 PullTab device or Zone heater
2 Inductor RH
3 Inductor LH
4 Final folder
Oil cooler
Flow rate monitor

Setting

Pressure switch

a) Turn on the main power supply.

b) Remove the lid (1).

c) Slowly open the cold water valve (2) until the cooling water pressure gauge indicates 0.2 MPa.

d) Slowly turn the screw (3) until the cooling water signal lamp on the control panel just lights up.

e) Increase the cold water pressure to 0.3 MPa.

f) Slowly turn the screw (4) until the signal lamp is extinguished.

g) Check that the pressure switch is correctly set by slowly closing the cold water valve. When the pressure passes 0.2 MPa the signal lamp is to light up.

h) Put the lid back on.

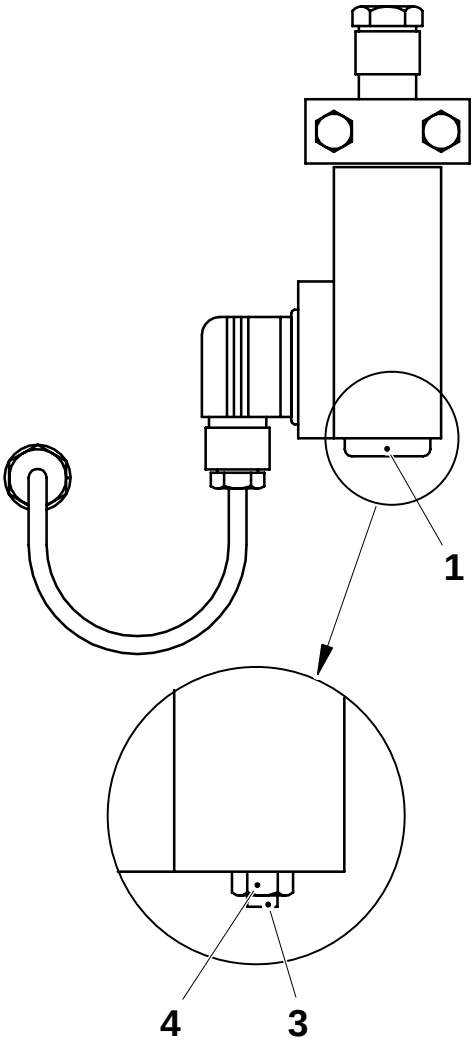

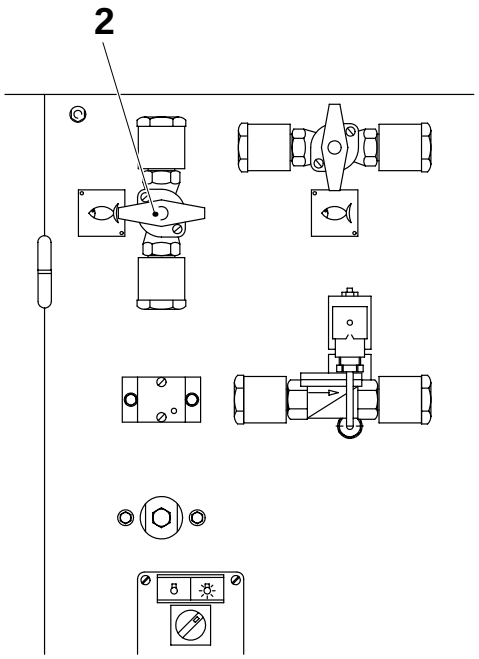

1 Lid
2 Cold water valve
3 Screw, min pressure
4 Screw, min pressure re-setting

Checking

Pressure

a) Turn on the main power supply. Open for compressed air and input cooling water.

b) Undo the plug (1).

c) Connect a 0 – 6 MPa pressure gauge (2) to the distribution block of the LH yoke lifter arm.

d) Push **Manual lubrication**.

e) Check that the pressure raises to 3 – 5 MPa. If not, replace the pump, see page MM 621–2X.

f) Remove the pressure gauge and fit the plug.

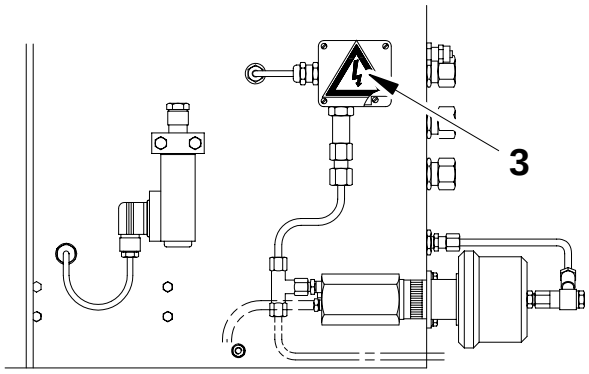

Pressure guard

Remove the pressure guard cover (3) (two alt. designs).

Push **Manual lubrication**. Check that the mechanism moves and that it remains in the new position during the whole lubrication cycle.

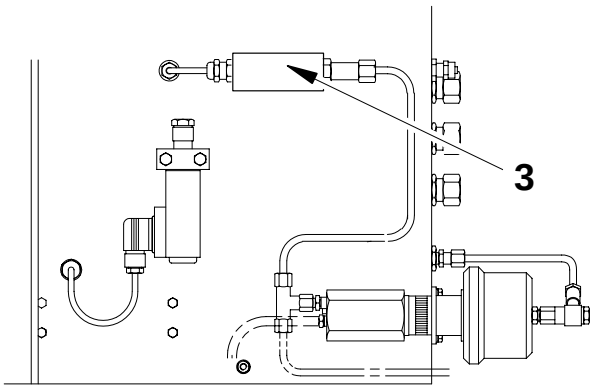

Alt. design

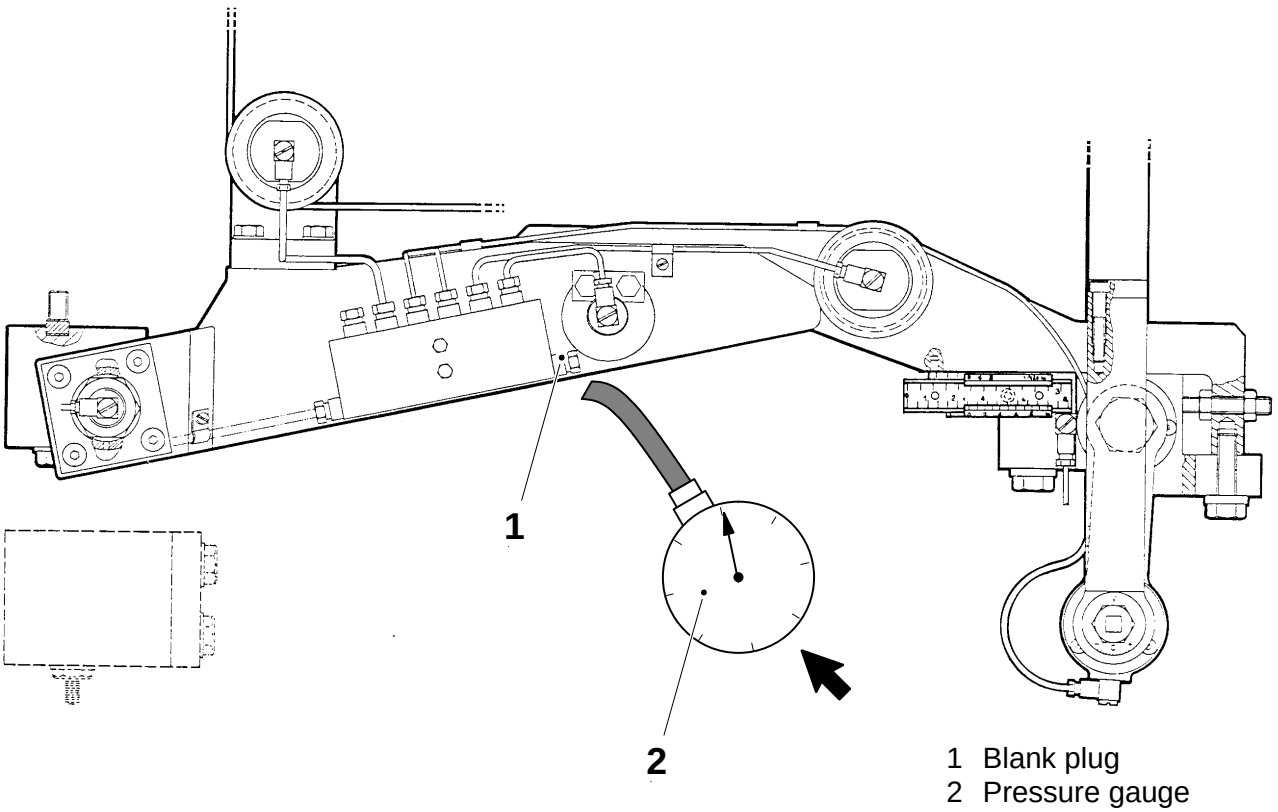

1 Blank plug
2 Pressure gauge
3 Pressure guard cover

Removal

Oil pump

a) Disconnect the air line (1), suction line (2), pressure line (3), (and bleed line (8), if any) from the oil pump (4).

b) Blank off the lines.

c) Remove the pneumatic cylinder (5) and sleeve (6). Remove the oil pump from its bracket (7).

d) Fit in reverse order.

e) Bleed the central lubrication system.

f) Check the oil pressure, see page MM 621–1X.

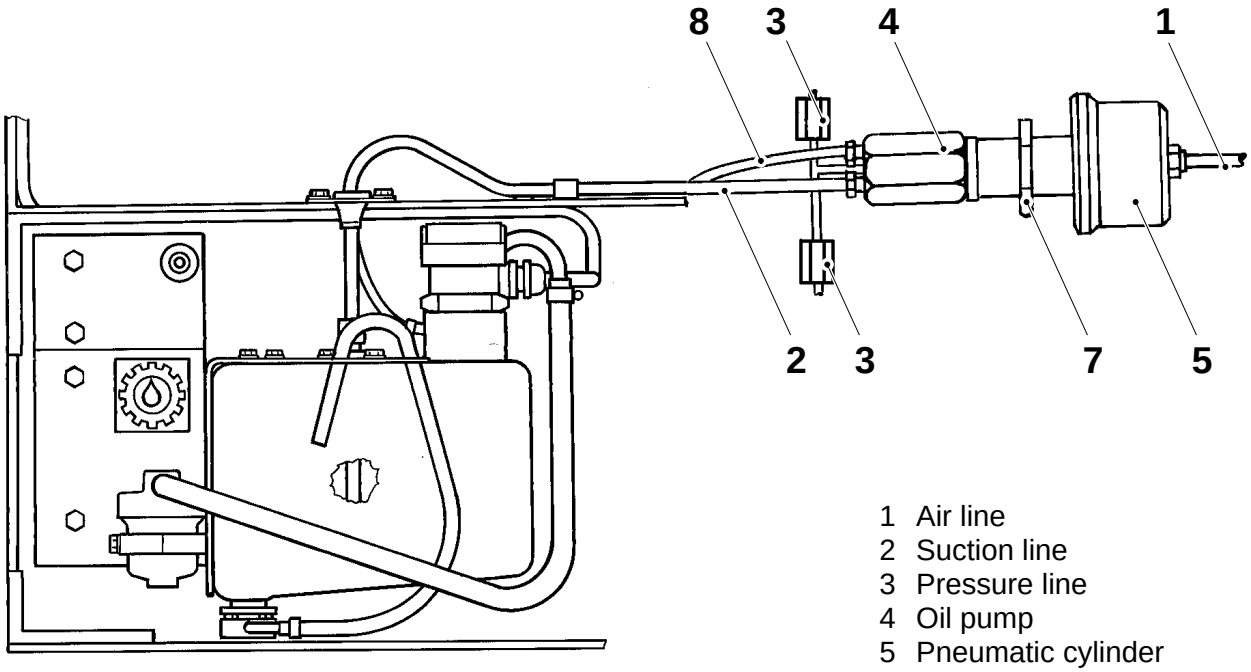

1 Air line
2 Suction line
3 Pressure line
4 Oil pump
5 Pneumatic cylinder
6 Sleeve
7 Oil pump bracket
8 Bleed line (alt design)

Checking

Check the following details for wear and/or damage:

- the locking device of the carriage; it must run easily
- the catch mechanism
- the guides; first lift out the carriage (if required, use tool TP No. 75542–101 fitted on the carriage to lift it out of the cassette)

  Caution!
  Be careful not to drop the carriage on your feet.

- the rollers (1); their running surfaces must not have an angular shape
- the bearing blocks (2); minimum thickness A.

Replace as required.

Lift the carriage back on the guides and check that it is running easily.

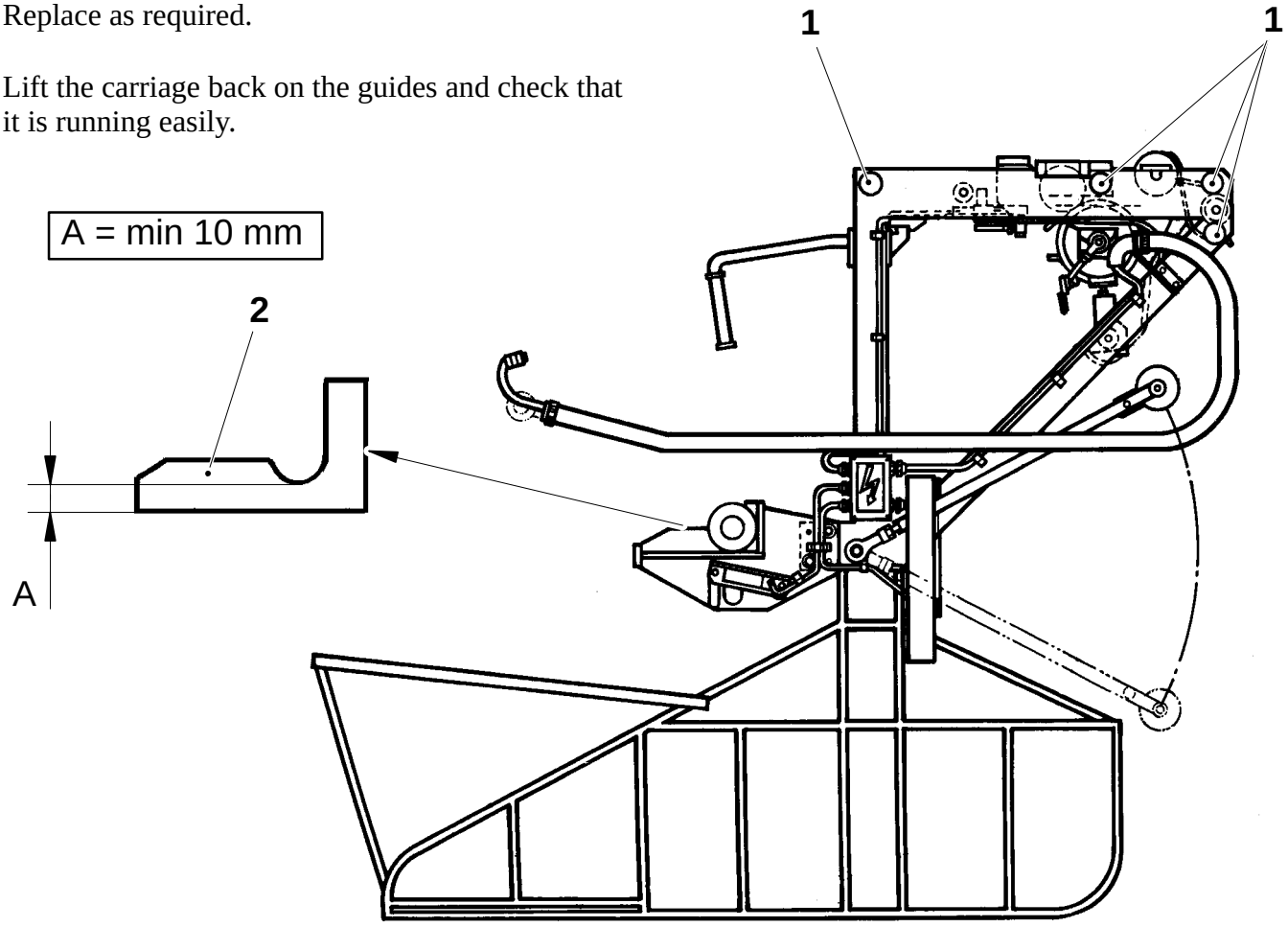

1 Roller
2 Bearing block

Setting

a) Set distance A of the arms (1).

b) Assemble the carriage.

c) Hang the carriage on two horizontal and parallel rulers.

d) Check that the bending roller (2) is fitted horizontally and normal to the rollers (3) of the carriage.

e) Loosen the four screws (4), and set the power feed roller (5) horizontal and parallel (±0.2 mm) to the bending roller (2). Tighten the screws (4).

f) Put a straight axle (6) ∅32 mm in the bearing blocks (7).

g) Loosen the two screws (8) on each side, and set the axle (6) horizontal and parallel (±0.2 mm) to the bending roller (2). Tighten the screws (8).

h) Set the dancer roller (9) parallel (±1.0 mm) to the axle (6) in the bearing blocks (7).

Note
Distance A must be within the limits, see fig.

i) Lift up the carriage on the guides and check that it is running easily forwards and backwards in the machine.

j) Check that the rollers (3) of the carriage do not press against the guide bars. Adjust by reducing the quantity of spacers from 3 pieces to 2 pieces, if required.

k) Set the brake for the power feed roller, see page MM 631–5X.

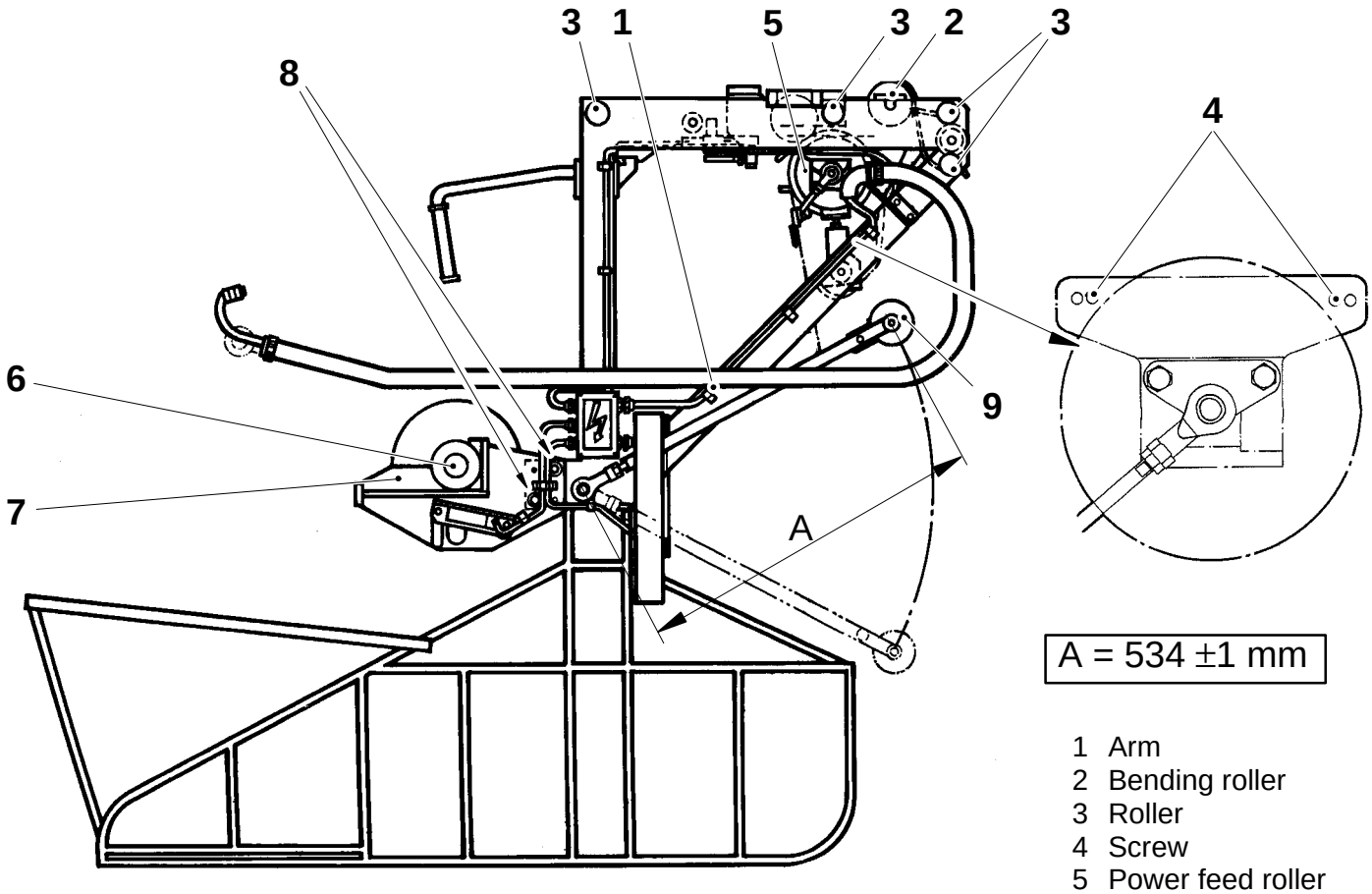

A = 534 ±1 mm

1 Arm
2 Bending roller
3 Roller
4 Screw
5 Power feed roller
6 Axle
7 Bearing block
8 Screw
9 Dancer roller

Setting

Normal size packaging material reels

Set the packaging material monitor (1) in its upper position (2).

Jumbo size packaging material reels

Set the packaging material monitor (1) in its lower position (3).

Note
After changing the position of the photocell, it is necessary to set it in order to obtain an alarm when the prescribed amount of packaging material is left in the reel.

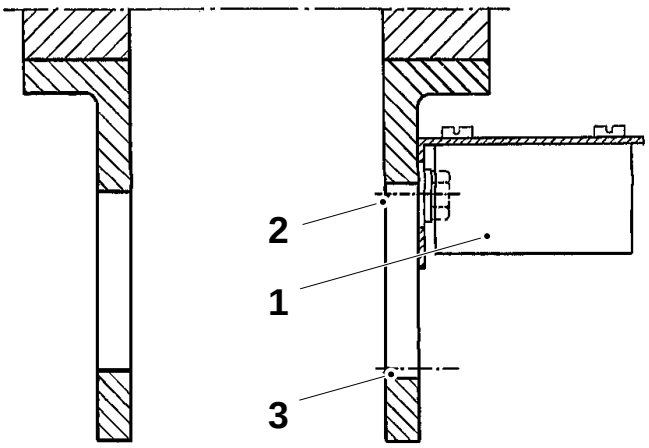

1 Photocell
2 Upper postion
3 Lower position

Checking

a) Check that the teflon tape (1) and teflon cloth (2) are not worn and/or damaged. Replace as required.

b) Make sure that the knife (3) is not worn and/or damaged. Replace as required. Check that the knife is parallel with the sealing arm.

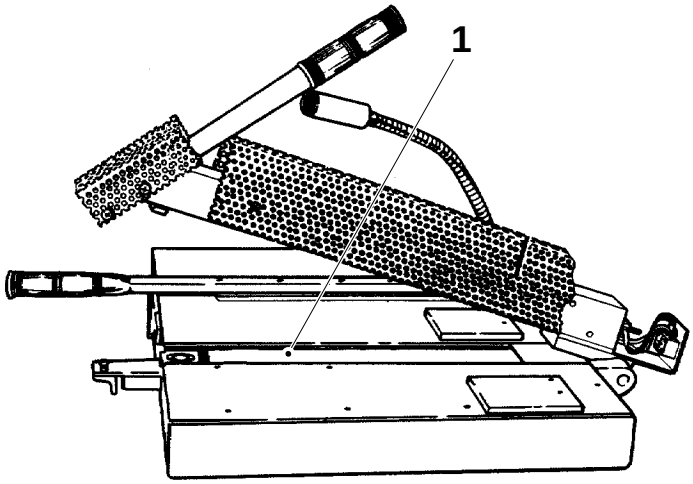

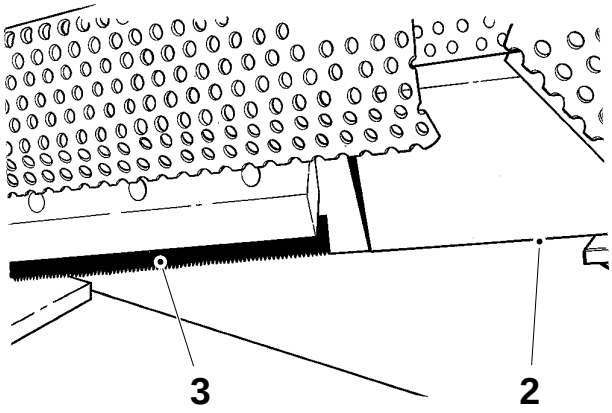

1 Teflon tape
2 Teflon cloth
3 Knife

Setting

Standard splicing device

a) Set the knife (2) so that the edge is in level with the botton of the sealing arm.

b) Set distance A, see table. The overlap in the sealing zone is to be 10 – 15 mm on both sides.

Volume, ml	A ±1 mm
125 S	82
160 B	125
180 B	61
200 B	77
200 S	93
236 B	78
250 B	98
250 S	111
284 B	99

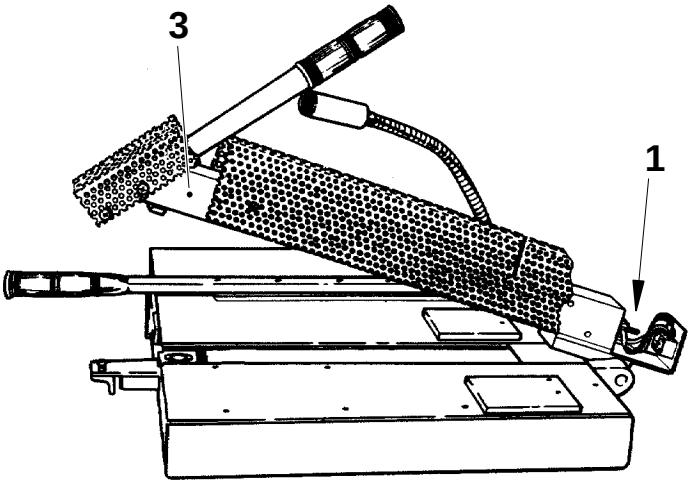

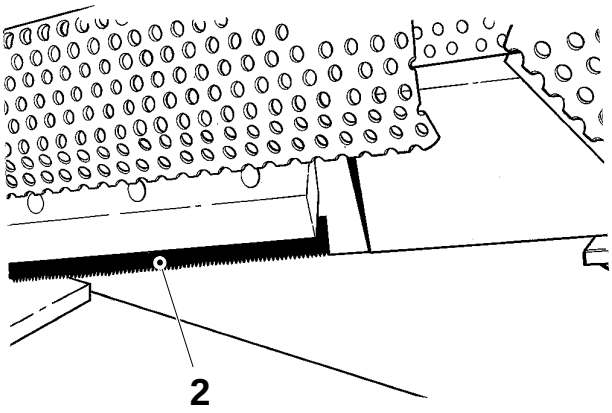

c) Step up the machine to step **Preheating** and wait for approx 10 minutes.

d) **WARNING!**
The sealing arm is hot. Risk of burns.
Remove the cover and set the temperature of the outer sealing arm by means of the screw (1) to approx 200°C. Measure the temperature by means of a pyrometer. Measure on the side surface (3) of the heating element, as close to the clamp bar as possible.

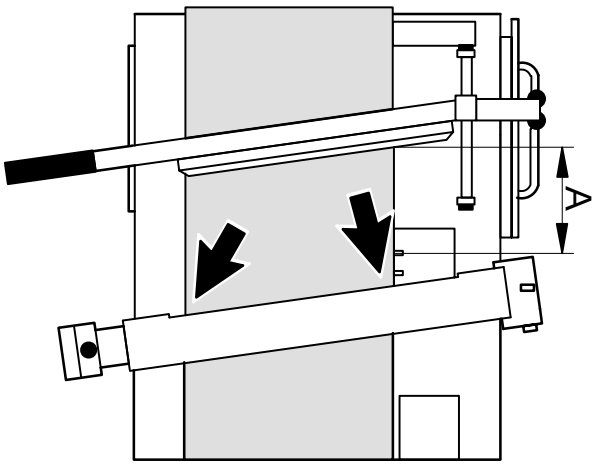

1 Adjustment screw
2 Knife
3 Side surface

Setting

Device for straight splicing (option)

a) Set the knife (2) so that the edge is in level with the botton of the sealing arm.

b) Set distance A, see table. The overlap in the sealing zone is to be 10 – 15 mm on both sides.

Volume, ml	A ±0.5 mm
125 S	219
180 B	211
200 B	86
200 S	122
236 B	103
250 B	109
284 B	122

c) Step up the machine to step **Preheating** and wait for approx 10 minutes.

d) **WARNING!**
The sealing arm is hot. Risk of burns.
Remove the cover and set the temperature of the outer sealing arm by means of the screws (1) to approx 200°C. Measure the temperature by means of a pyrometer. Measure on the side surface (3) of the heating element, as close to the clamp bar as possible.

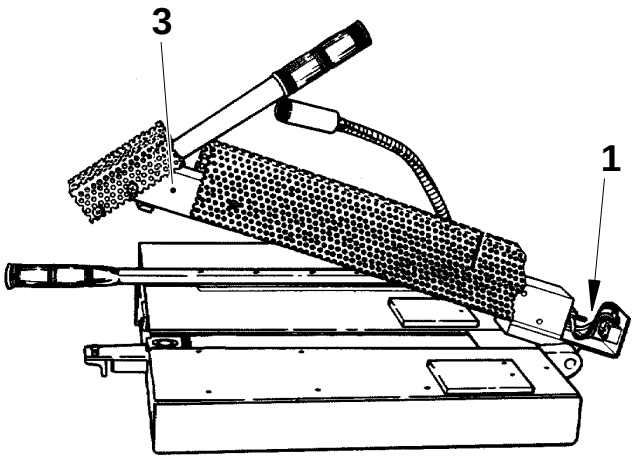

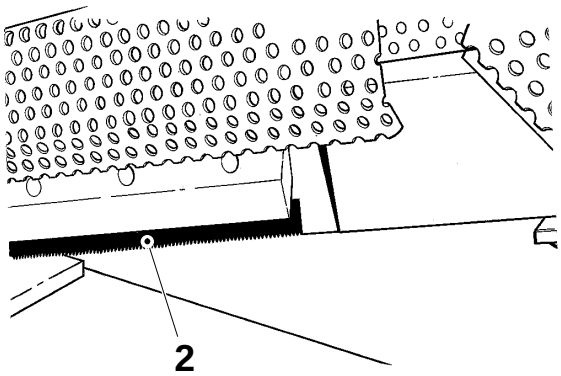

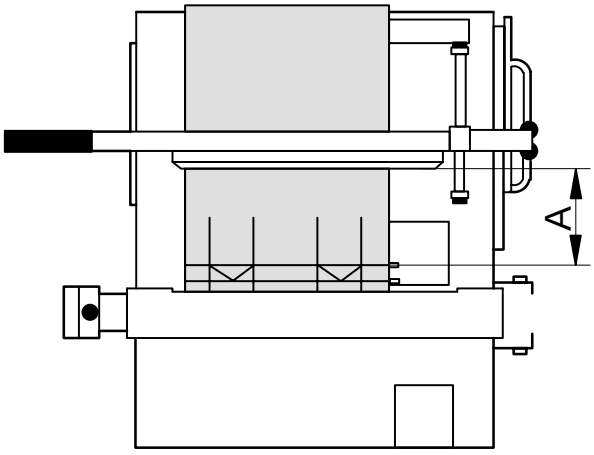

1 Adjustment screw
2 Screw

Checking

Check the following details for wear and/or damages:

- the brake lug (1); it may be turned 180° before it has to be replaced
- the friction surface (2); it must be free from oil, grease etc; clean as required
- the cylinder (3); make sure it moves freely
- the power feed roller (4)
- the bearings (5) and (6)
- the running surfaces of the bow clamp (7)
- the two springs (8)
- the paper guide (9); make sure that the paper guide is clean and that it springs back

Replace as required.

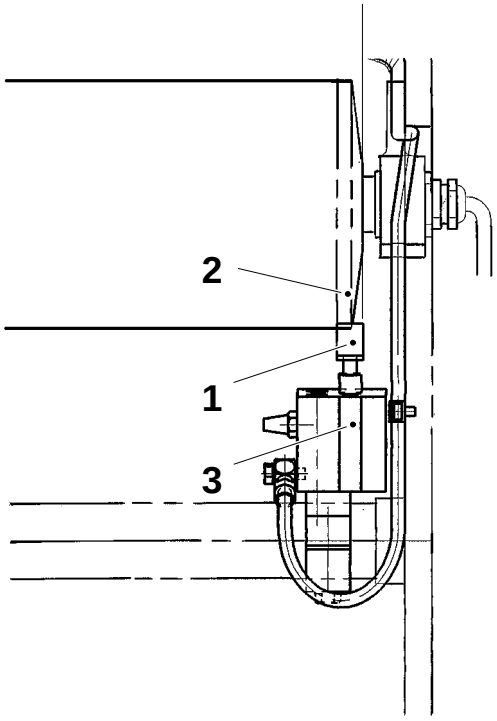

1 Brake lug
2 Friction surface
3 Cylinder
4 Power feed roller
5 Bearing
6 Bearing
7 Bow clamp
8 Spring
9 Paper guide

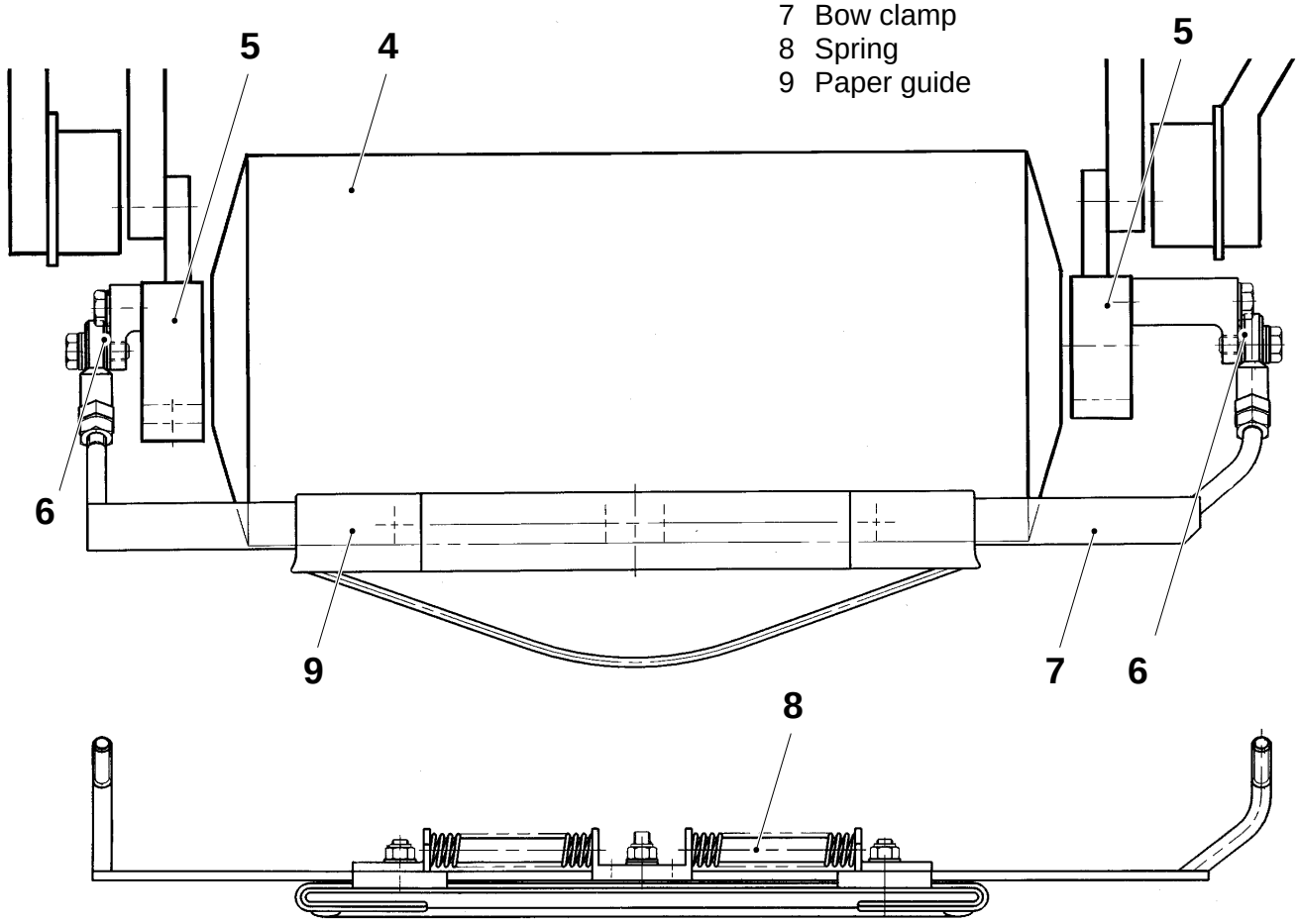

Setting

Brake

a) Move the brake lug forwards by hand towards the feed roller.

b) Loosen the clamp fitting (1). Set the brake lug (2) aligned with the power feed roller and with half its width outside the power feed roller, distance B.

c) Move the brake lug back and set distance A between the brake lug and feed roller. Adjust at the cylinder piston rod (3).

(Cont’d overleaf)

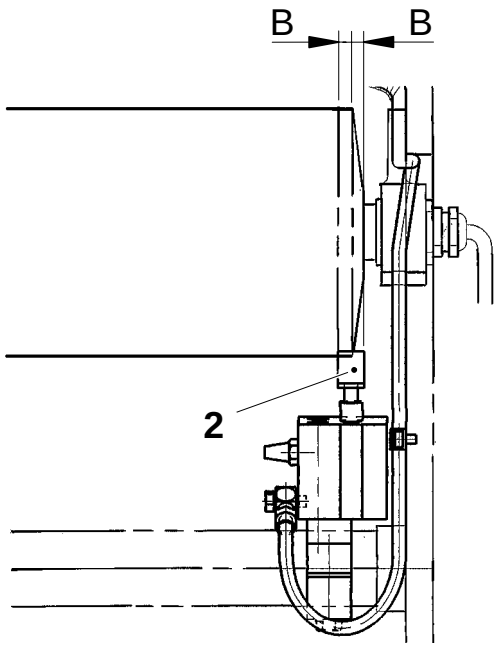

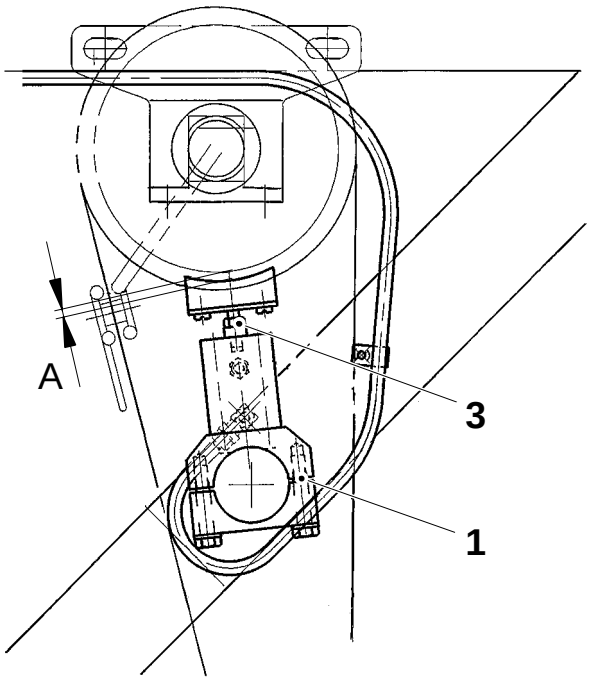

A = 4 ±0.2 mm

1 Brake lug
2 Friction surface
3 Cylinder piston rod

(Cont'd)

Paper guide

a) Undo the screws (4) and remove the paper guide (5).

b) Set the paper guide parallel to the power feed roller (6) by adjusting on the link heads (7).

c) Refit the paper guide.

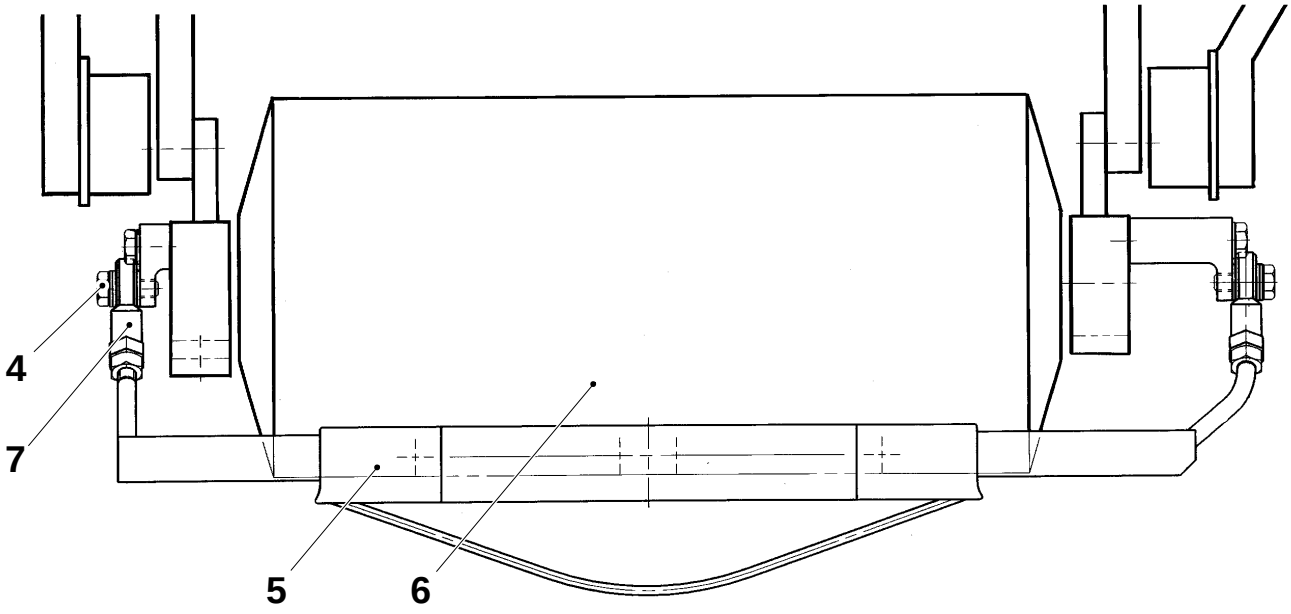

4 Screw
5 Paper guide
6 Power feed roller
7 Link head

Checking

Check the following details for wear and/or damages:

- the roller (1); clean as required
- the shafts (2) and (3), and the nut (6); make sure the rollers and shafts runs easily
- the bearings (4)
- the flange bushings (5)
- the cylinder (7); make sure it runs smoothly

Replace as required.

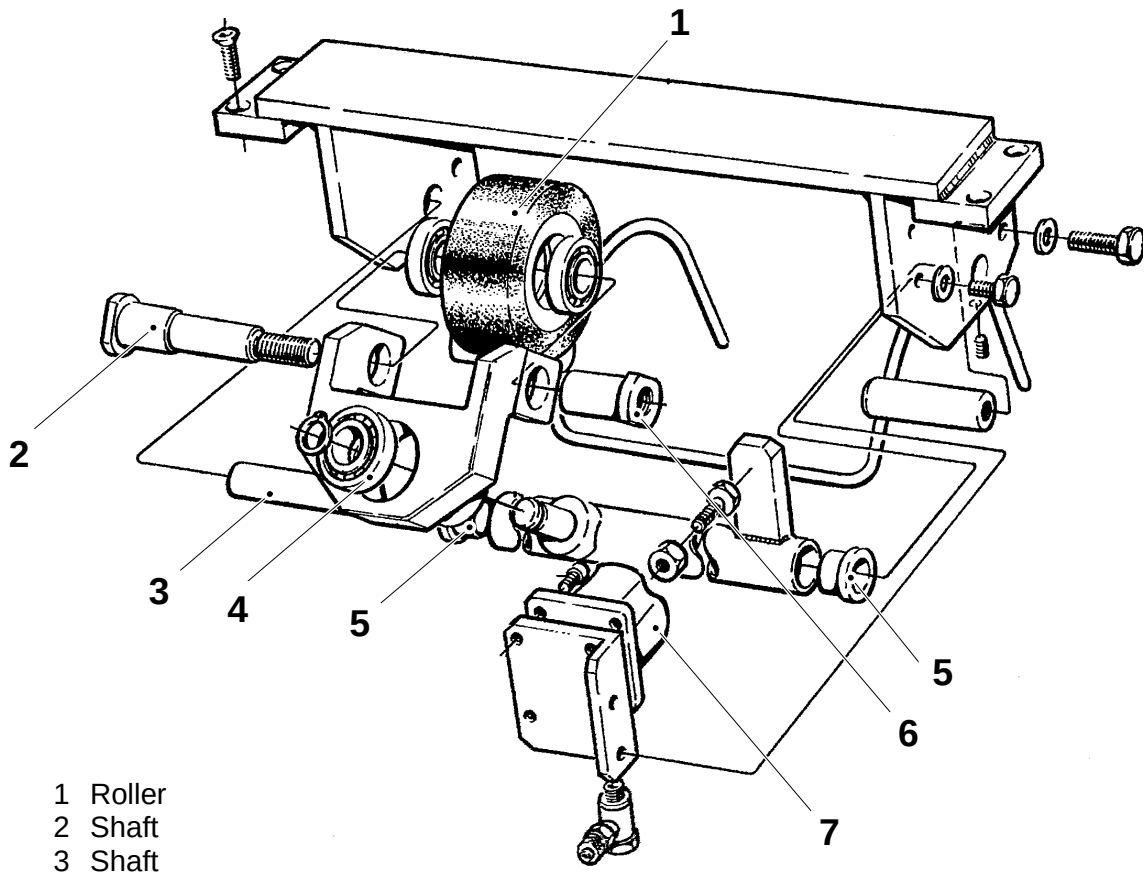

1 Roller
2 Shaft
3 Shaft
4 Ball bearing
5 Flange bushing
6 Nut
7 Cylinder

Setting

a) Set distance A between the roller (1) and the power feed roller (2) by means of the screw (3).

b) Open the air supply valve.

c) Set the air pressure, see page MM 910–7X.

d) Set distance B between the power feed roller (2) and the clamp (4) by means of the screws (5).

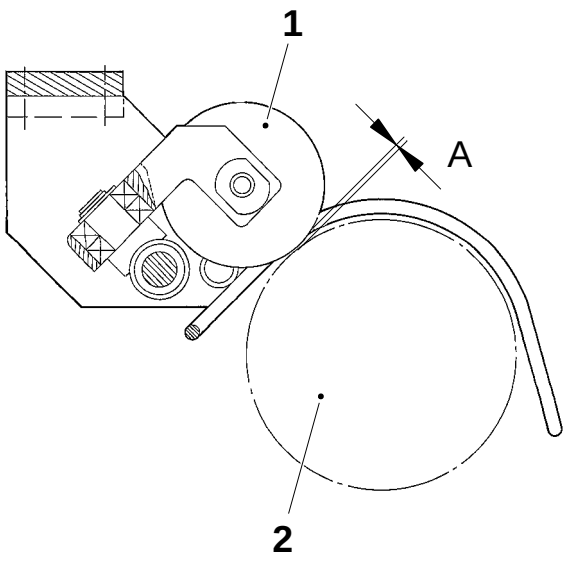

A = 2 – 3 mm
B = 3 – 4 mm

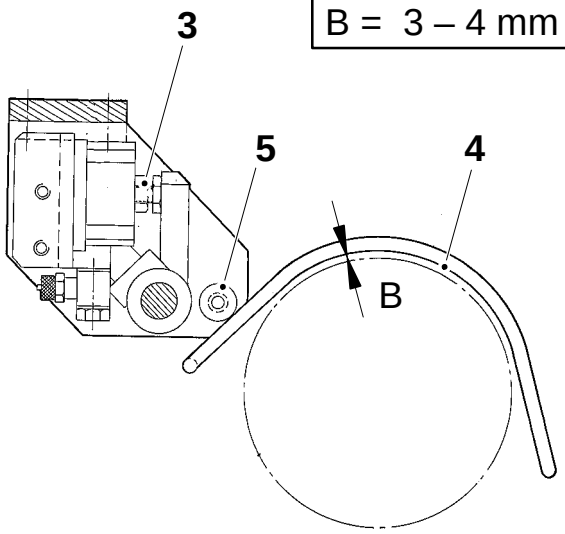

1 Roller
2 Power feed roller
3 Screw
4 Clamp
5 Screw

Checking

Check the following details for wear and/or damages:

- the dancer roller (1); make sure it runs easily
- the bearings (2) and (5)
- the slide (7); it must run smoothly in the guiding (4)
- the monitors (6) and (8)

Replace as required.

Check that the power feed roller is started when raising the dancer roller (1), and is stopped when lowering it.

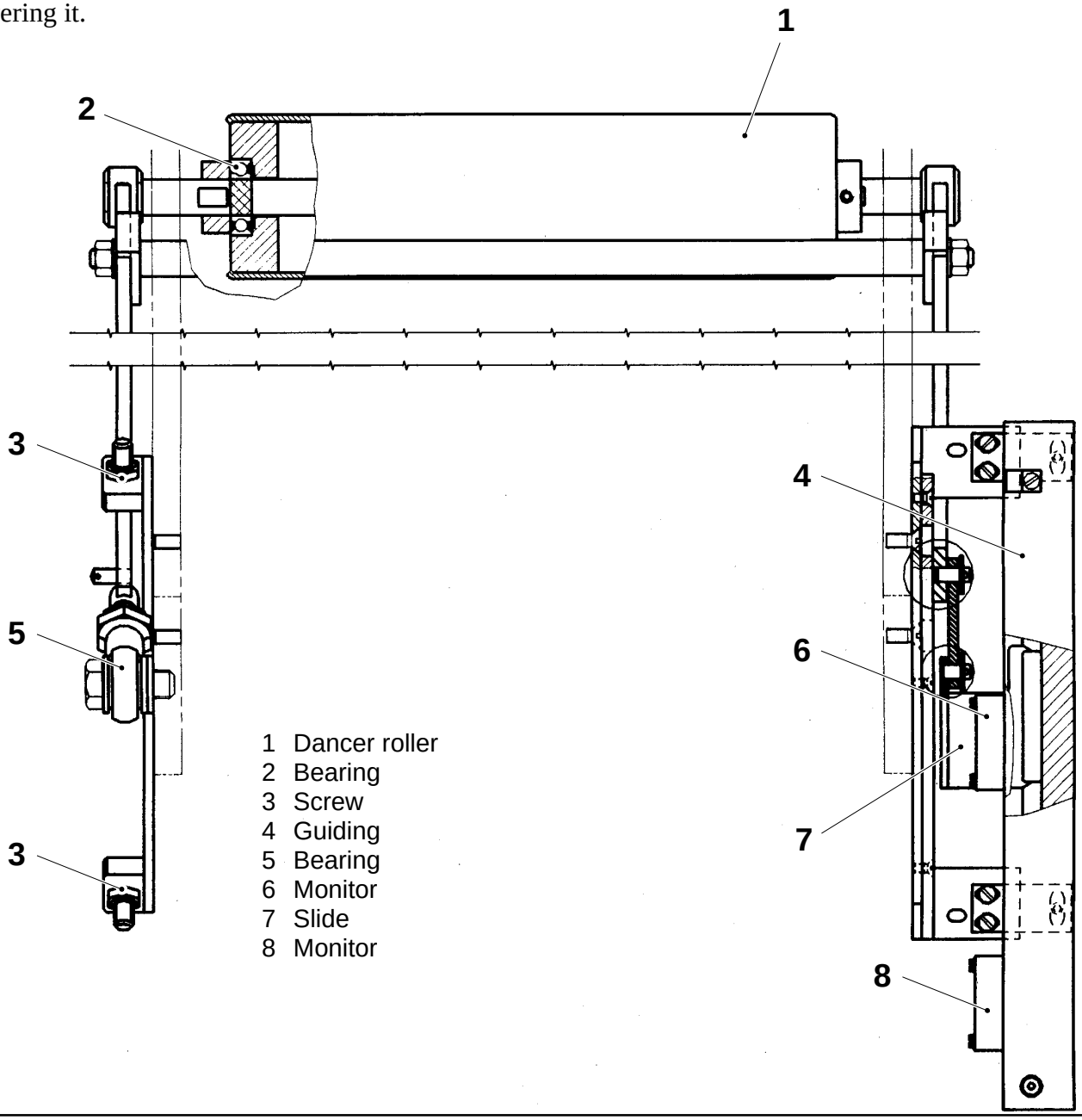

1 Dancer roller
2 Bearing
3 Screw
4 Guiding
5 Bearing
6 Monitor
7 Slide
8 Monitor

Setting

a) Set distance A between the monitors (1) and (2), and the slide (3).

b) When the dancer roller (4) is in its top position, the LED on the monitor (1) is to be on.

c) When the dancer roller is in its bottom position, the LED on the monitor (2) is to be on.

d) Adjust the dancer roller stop position with the screws (5) as required.

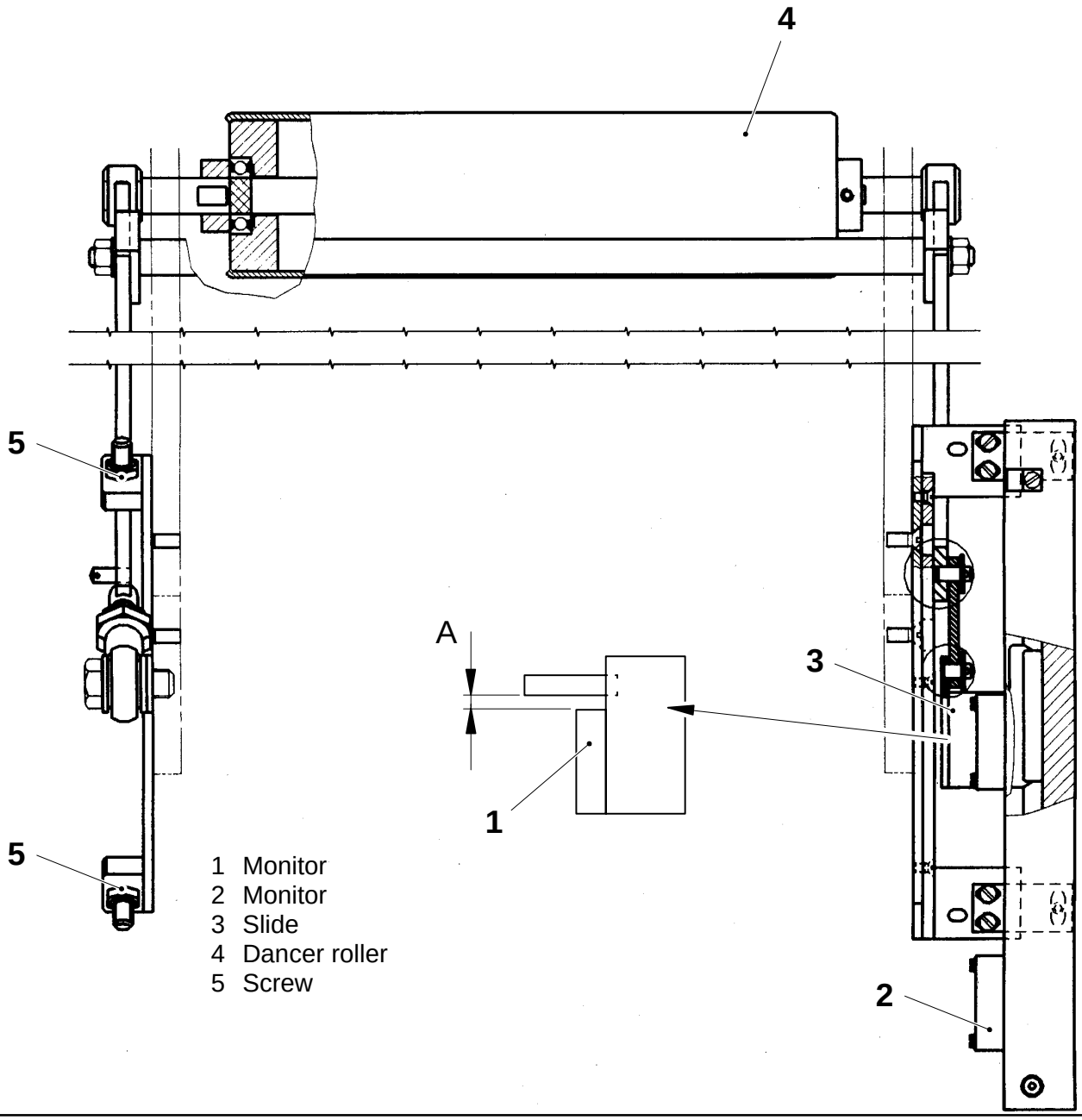

Checking

Check the following details for wear and/or damages:

- the locking device (1); make sure it runs easily
- the shaft of the reel holder; make sure it is straight
- the surfaces of those parts of the reel holder that rotate in the bearing blocks.

Replace as required.

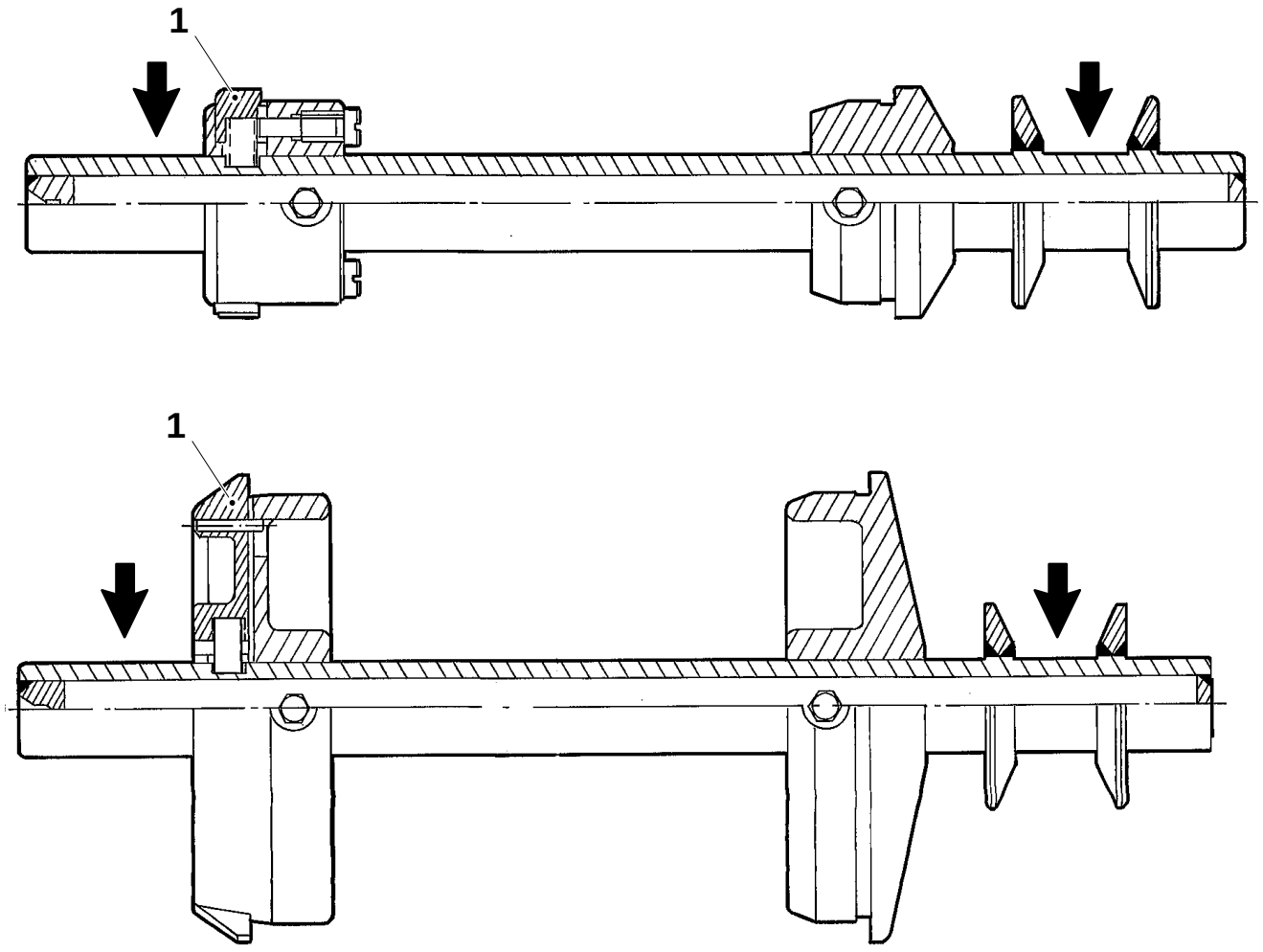

1 Locking device

Checking

Pull in the handle (1) and check that the break releases.

Check that all hydralic connections are dry.

Put a reel in the trolley and pump up the lift arms. Wait for 10 min. Make sure that it does not sink. Sinking can be caused by a broken pump cylinder (2).

Pump up the lift arms again and let them down. Very fast sinking can be caused by a broken sink valve (3).

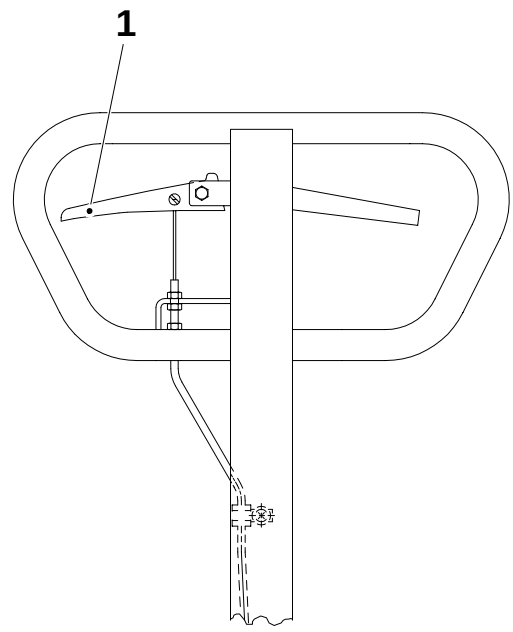

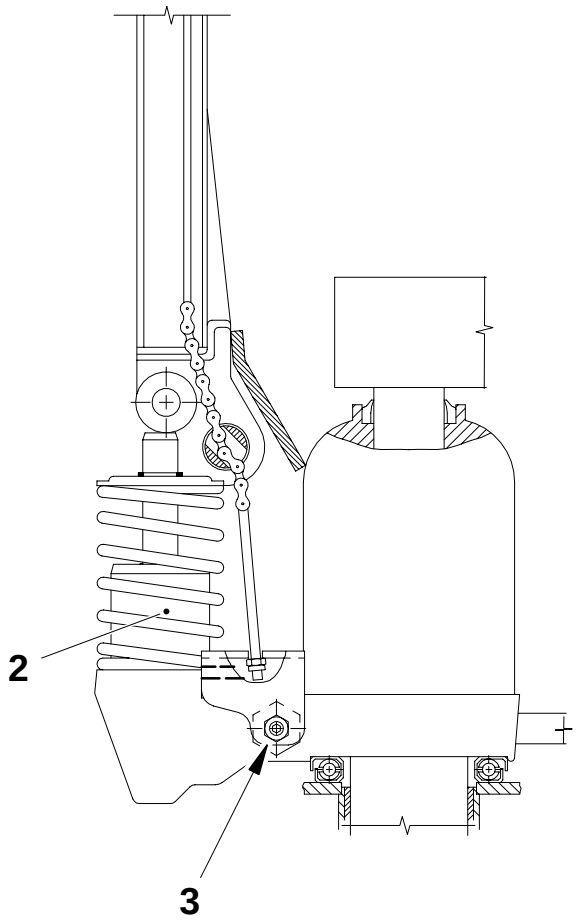

1 Handle
2 Sink valve
3 Pump cylinder

Removal

Tie rod

a) Unhook the chain (5) from the valve arm (3).

b) Remove screw (2) to the axle pin (4).

c) Turn the axle pin (4) a bit clockwise and pull out the chain (5)

d) Pull out the axle pin (4).

e) Remove the tie rod (1).

Roller

a) Drive in the slotted turf (6) until stop.

b) Remove the axle pin (8) and the roller (7).

Reassemble in reverse order.

Pump cylinder

a) Remove the locking circlip (9), the top washer (12) and the spring (10).

b) Unscrew the cylinder (11) and pull out the axle (13) backwards.

c) Remove the oil seal (14), the locking circlip (15), the spacer (16), the seal (17), the locking ring (18) and the O-ring (19).

Reassemble in reverse order.

(Cont'd overleaf)

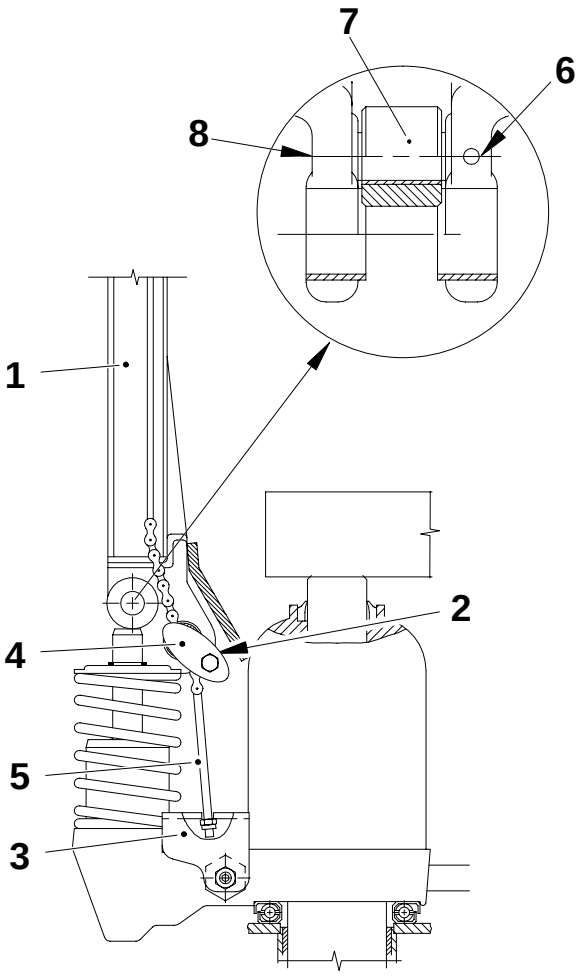

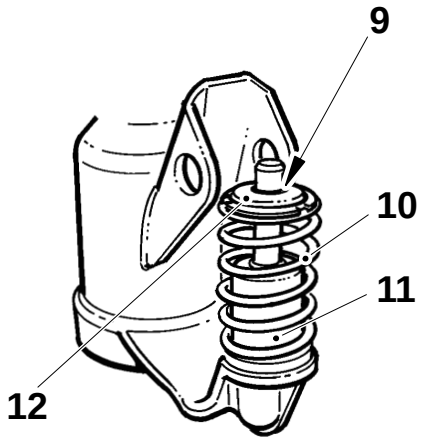

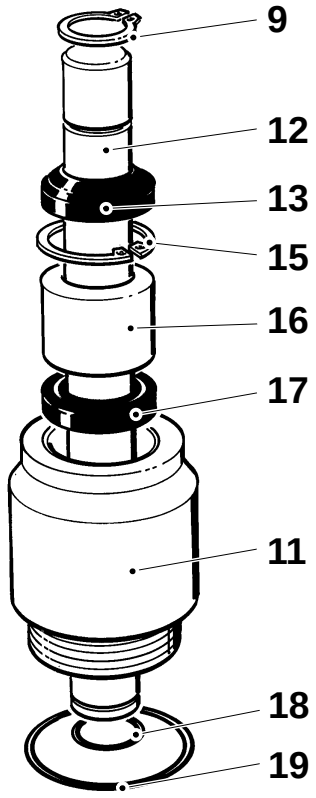

1 Tie rod
2 Screw
3 Valve arm
4 Axle pin
5 Chain
6 Slotted turf
7 Roller
8 Axle in
9 Locking circlip
10 Spring
11 Cylinder
12 Top washer
13 Axle
14 Oil seal
15 Locking circlip
16 Spacer
17 Seal
18 Locking ring
19 O-ring

(Cont'd)

Lifting cylinder

a) Turn the trolley upside down and remove the locking circlip (20).

b) Turn back the trolley and put some support (21) under the forks.

c) Pull out the axle (22).

d) Use a screwdriver to remove the sealings (23) and (24).

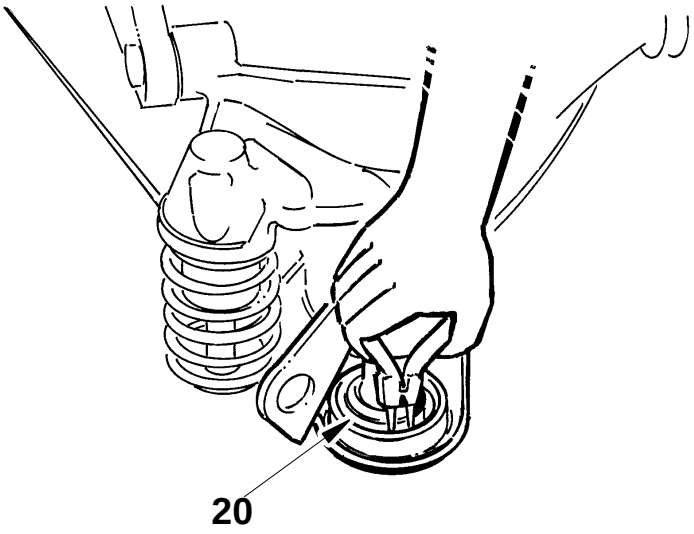

Reassemble in reverse order.

Note
When fitting the sealings (23) and (24), squeeze them togheter as a " V " and then put in correct position in the track.
Oil the axle (22) before fitting.

(Cont'd overleaf)

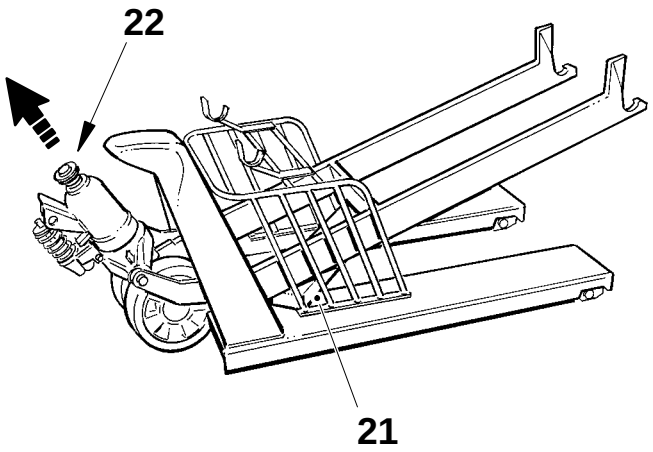

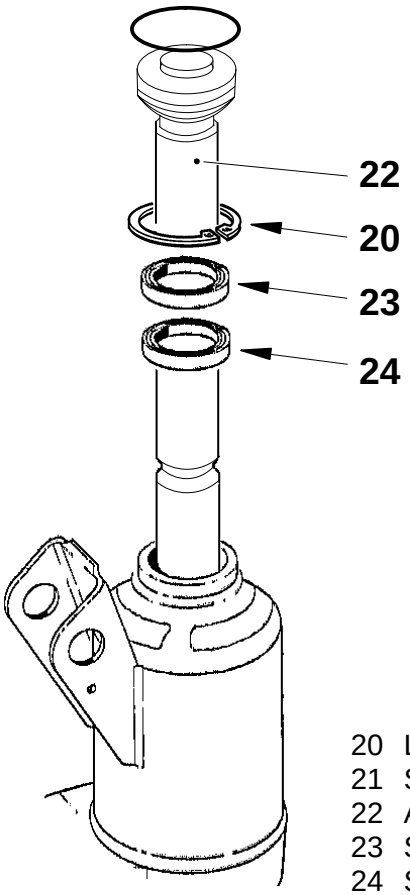

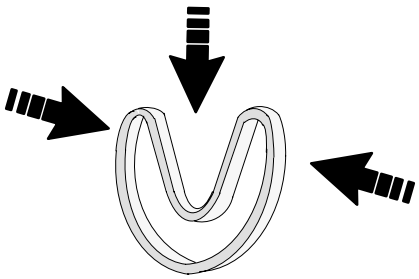

20 Locking circlip
21 Support
22 Axle
23 Sealing
24 Sealing

(Cont'd)

Sink valve

a) Unhook the chain (25) and drive out the slotted turf (26) and the valve arm (27).

b) Unscrew the sink valve (28).

c) Remove the O-rings (29), the copper washer (30) and the teflon washer (31).

Reassemble in reverse order.

Fork wheel

Put the trolley on the side.

a) Drive in the pins (32) in the axle (33) and pull out the axle.

b) Remove the wheel (34) and the sleeves (35).

Reassemble in reverse order.

(Cont'd overleaf)

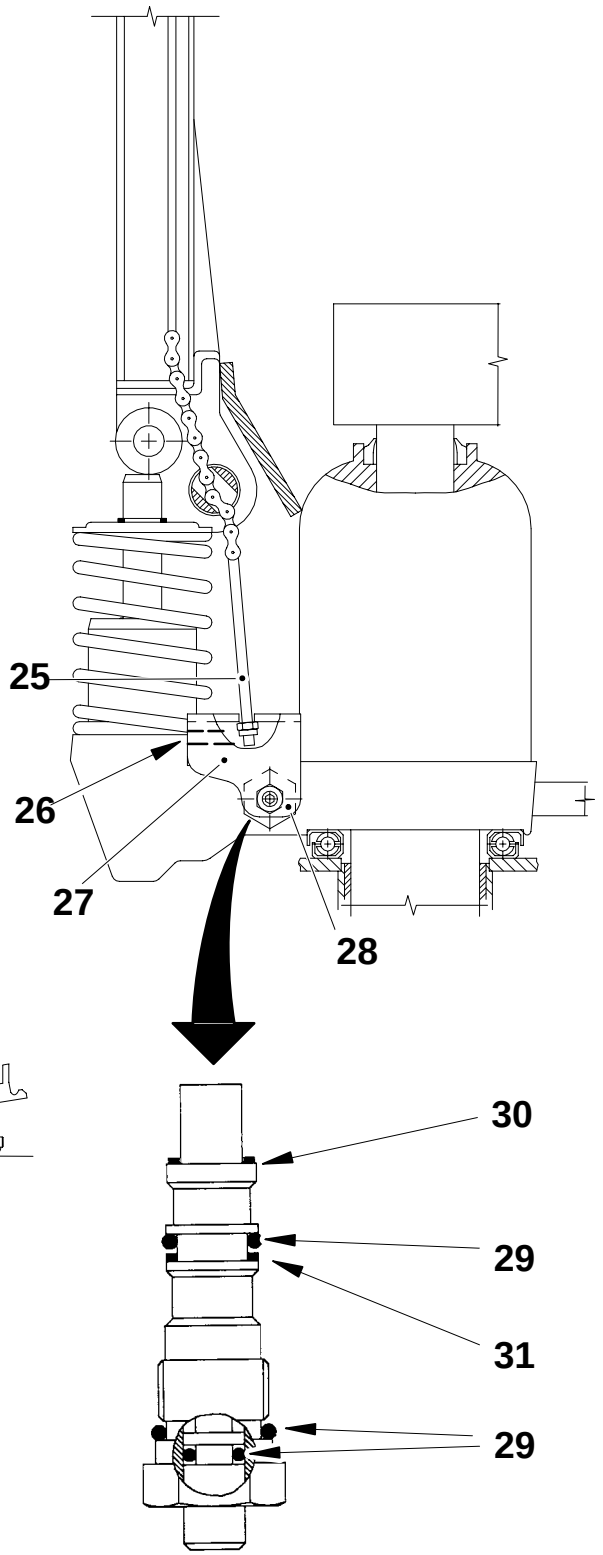

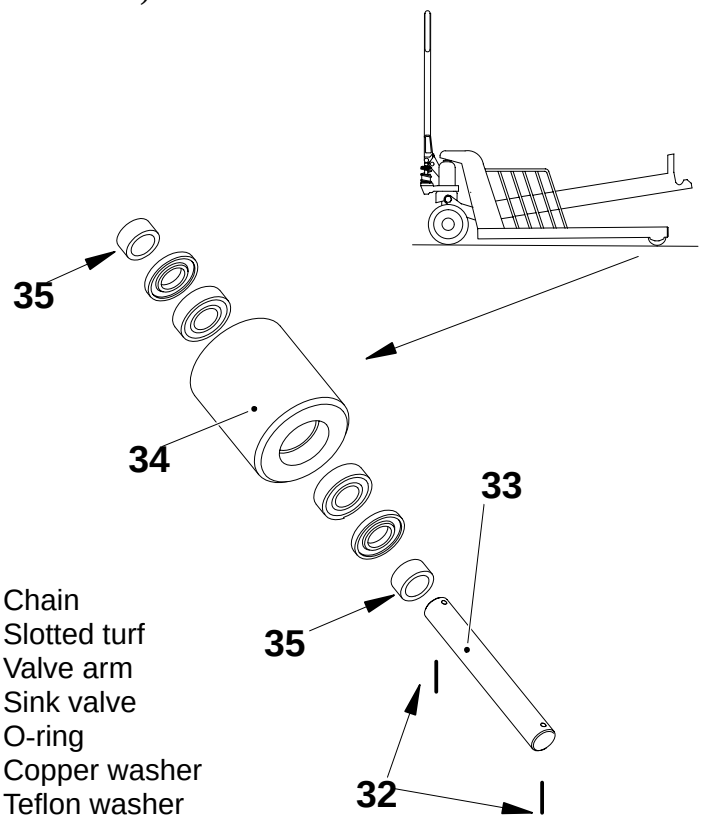

25 Chain
26 Slotted turf
27 Valve arm
28 Sink valve
29 O-ring
30 Copper washer
31 Teflon washer
32 Pin
33 Axle
34 Washer
35 Sleeve

(Cont'd)

Guide wheel

a) Put the paper reel trolley on its side.

b) Remove the plastic plug (36), the locking circlip (37) and the wheel (38).

c) Unhook the torsing spring (39) at the screw

d) Remove the springs (40) wich hold the two break linings (41) together.

Reassemble in reverse order.

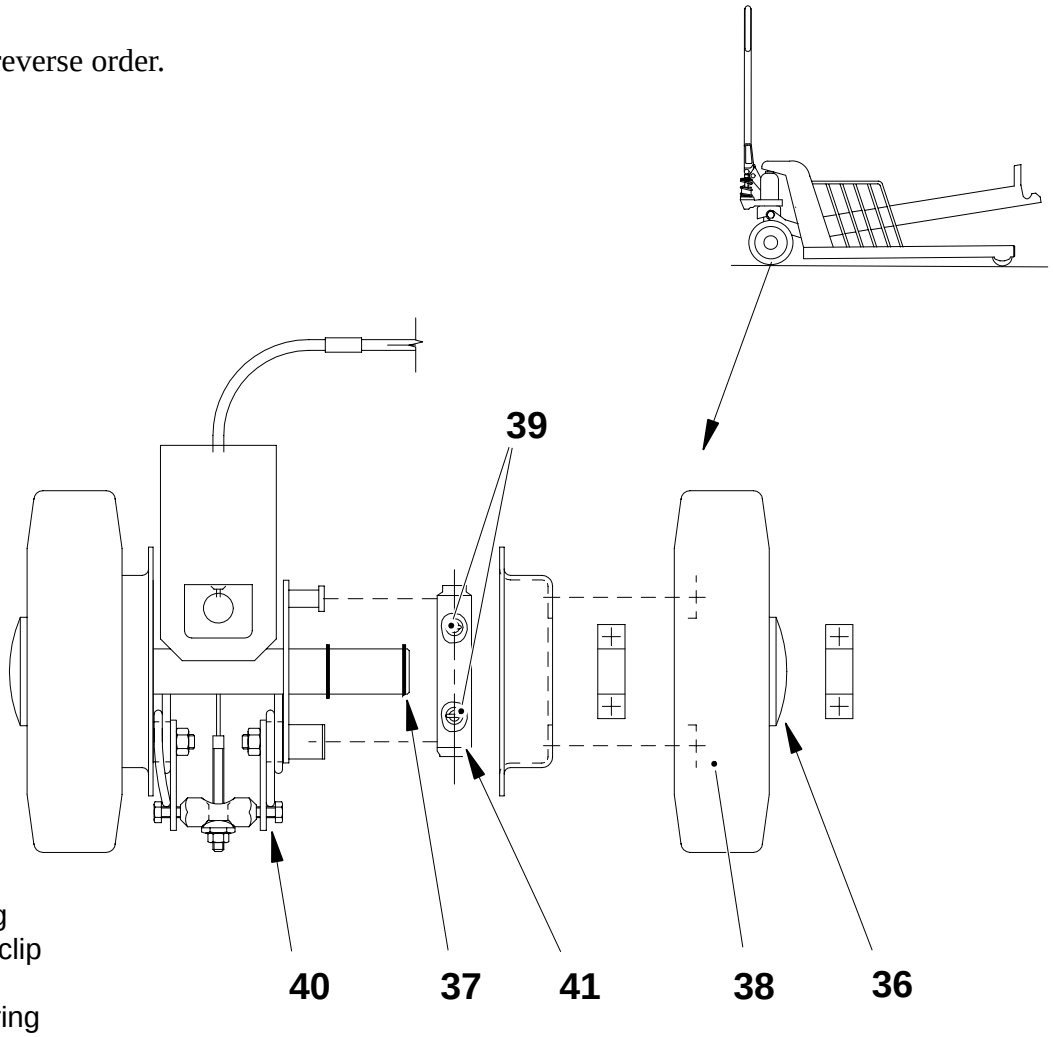

36 Plastic plug
37 Locking circlip
38 Wheel
39 Torsing spring
40 Spring
41 Brake lining

Setting

A = 30 ± 5 mm

Brake

Press in the handle, distance A. Adjust the nuts (1) and the nut (2) until the break release.

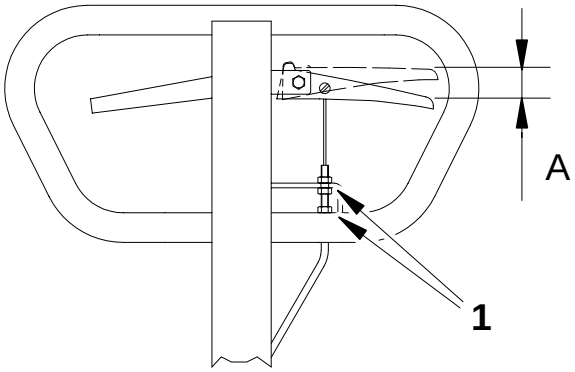

Sink valve

Pump up the lift arms to its highest position.

Unscrew the setting screw (3) in the valve arm (4). Press in the handle and screw in the screw (3) until the lift arms start to sink, then turn it one more turn.

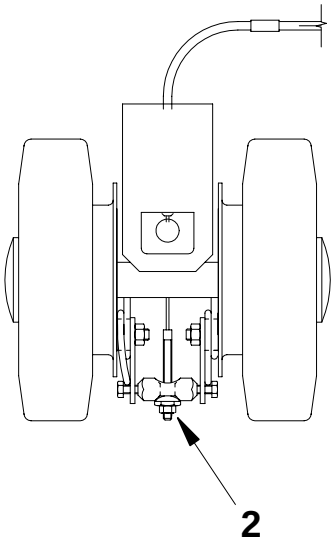

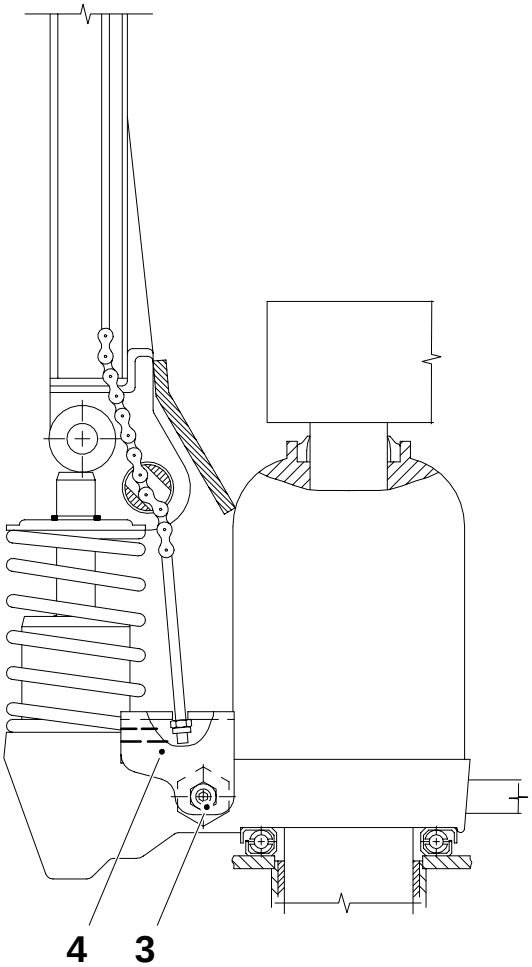

1 Nut
2 Nut
3 Setting screw
4 Arm

Checking

a) Check the pressure in the receiver (1) as follows:

b) With the machine in step **Production**, push **Program down** to stop the hydraulic pump, or drop the pressure in the hydraulic system by means of the overflow valve (2).

c) When the receiver pressure is being passed the pointer of the pressure gauge (3) jerks briefly.

d) If the pressure is below 4.0 MPa at that moment, the receiver must be recharged, see page MM 663–7X.

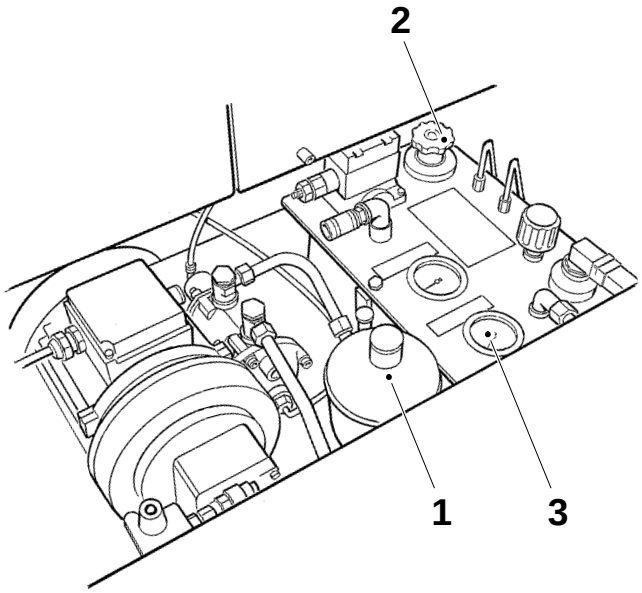

1 Receiver
2 Overflow valve
3 Pressure gauge

Recharging

WARNING!
Risk of explosion.
The pressure chamber (1) must be filled with nitrogen only. Wear protective safety eye glasses.

a) Make sure that the pressure gauges indicate zero.

b) Remove the cap (2) and loosen the screw (3) half a turn.

c) Connect the pressure gauge (4) to the receiver.

d) Turn the screw (5) counter-clockwise to open the screw (3). The pressure gauge will now indicate the pressure (correct pressure 6 – 7 MPa (60 – 70 bar)).

e) If the pressure is too low, fit a reduction valve on the nitrogen bottle.

f) Connect the hose (8) between the nitrogen bottle reduction valve and the pressure gauge pipe (6).

g) Slowly open the reduction valve and let the nitrogen gradually flow into the recevier.

h) Close the valve on the nitrogen bottle and read the pressure on the gauge.

i) Repeat steps g) – h), until the required pressure is obtained.

j) If the pressure becomes too high, slowly open the valve (7) to let nitrogen out of the receiver.

k) Close the screw (3) by turning the screw (5) clockwise.

l) Wait for 5 minutes and recheck the pressure. If the pressure is correct, remove the pressure gauge and tighten the screw (3).

m) Make sure that there is no leakage. Fit the cap (2).

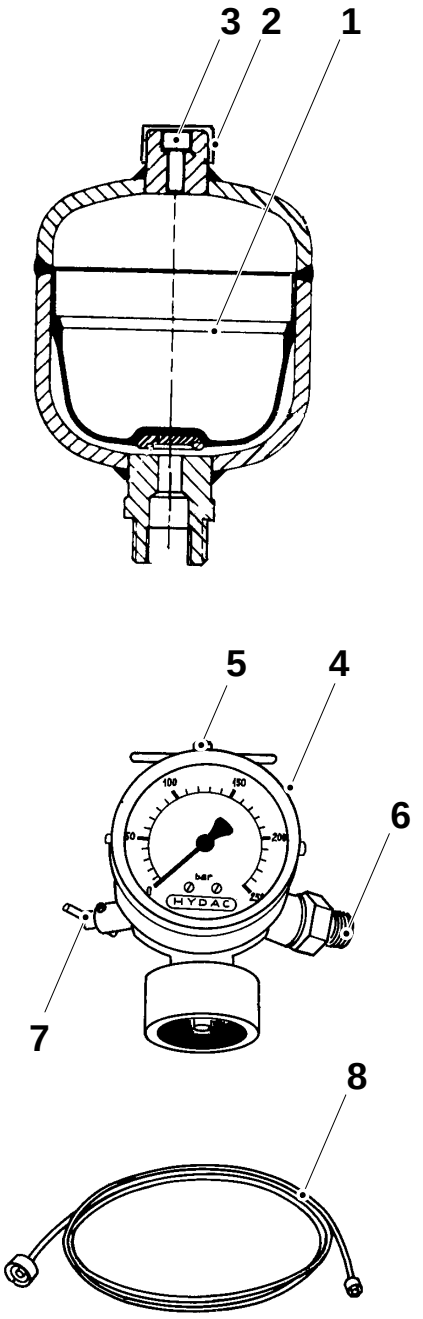

1 Pressure chamber
2 Cap
3 Screw
4 Pressure gauge TP No.90321–537
5 Screw
6 Pressure gauge pipe
7 Valve
8 Hose, TP No. 90231–538

Checking

WARNING!
Peroxide. See Safety Precautions, section MM 000.

Check that there are no abnormal noise or vibrations in the pump.

Check the following details for wear and/or damage:

- the motor (1)
- the seal ring (2)
- the shaft (3)
- the bushing (4)
- the O-rings (5) and (6)
- the gasket (7)
- the hoses

Replace as required.

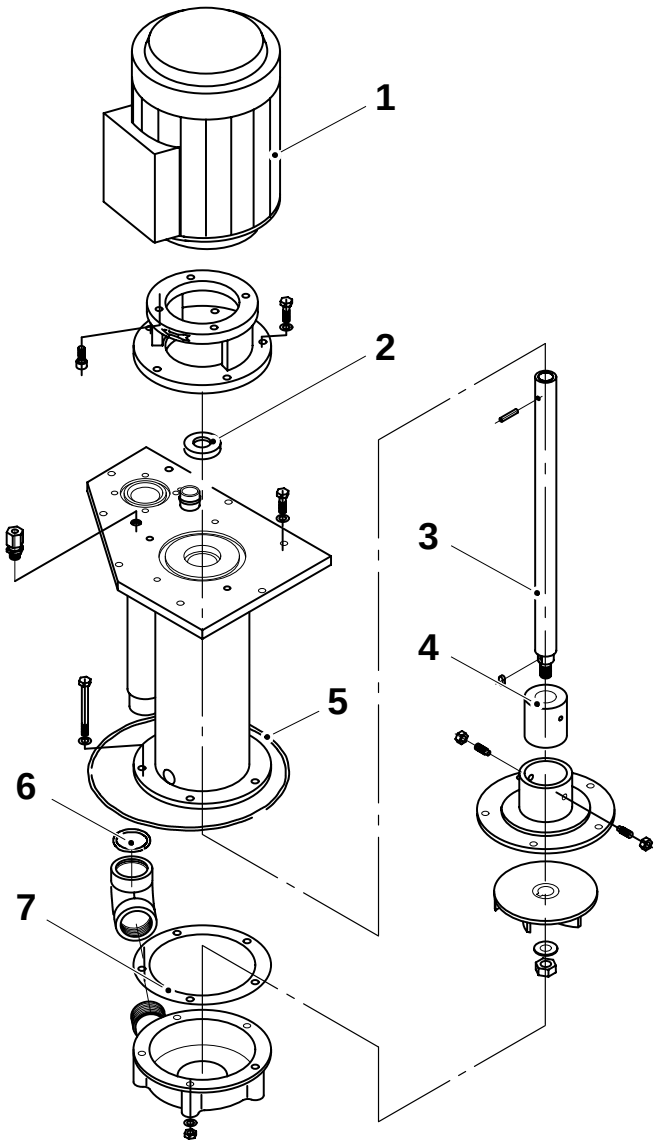

1 Motor
2 Seal ring
3 Shaft
4 Bushing
5 O-ring
6 O-ring
7 Gasket

Removal

WARNING!
Peroxide. See Safety Precautions, section MM 000.

Drain the hydrogen peroxide, see the OS book. Rinse carefully with deionized water.

a) Undo the nut (1) and swing the pipe (2) aside. Undo the pipe (3) and remove the hose from the hose sleeve (4).

b) Mark and undo the electrical connections of the motor (5).

c) Undo the screws (6) and lift out the pump unit.

d) Mark the position of the pump housing (7) on the extension pipe (8).

e) Undo the screws (9) and remove the pump housing with the elbow pipe (10) and the O-ring (11), and the gasket (12).

f) Remove the split pin and undo the nut (13). Pull off the impeller wheel (14). If required, use a puller.
Remove the flat wedge (15).

g) Separate the bearing cover (16) from the extension pipe (8). Undo the screws (17) and remove the extension pipe from the motor.

h) Undo the grub screws (18) and pull out the bushing (19) from the bearing cover.

i) Undo the screws (20) and remove the flange (21)

j) Tap out the pin (22) and remove the shaft (23).

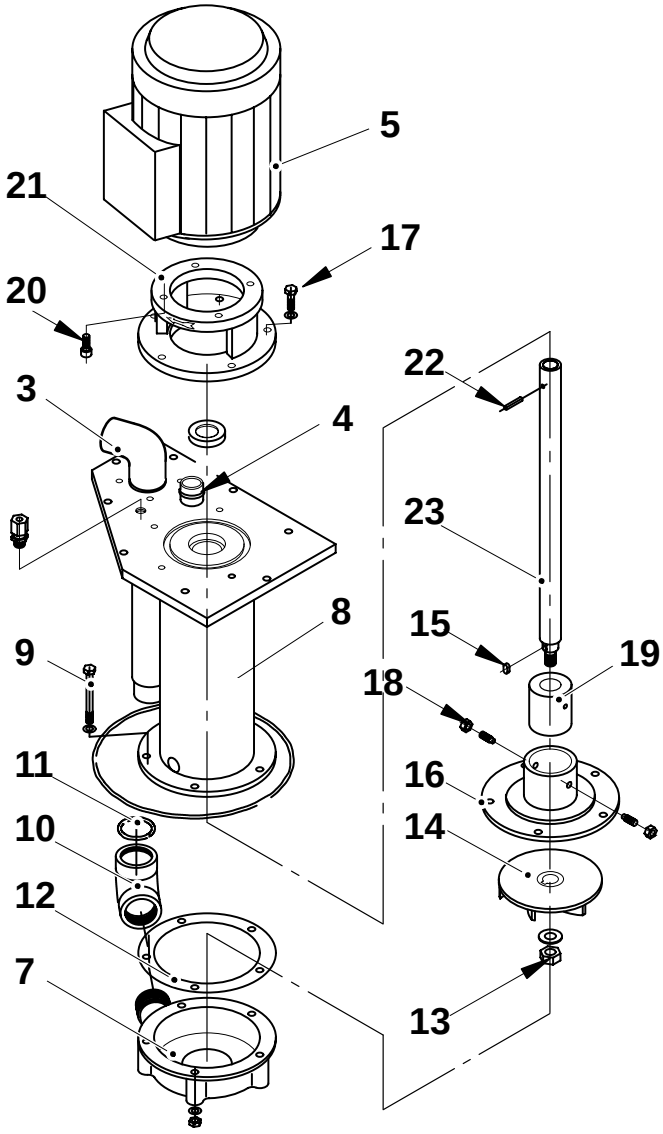

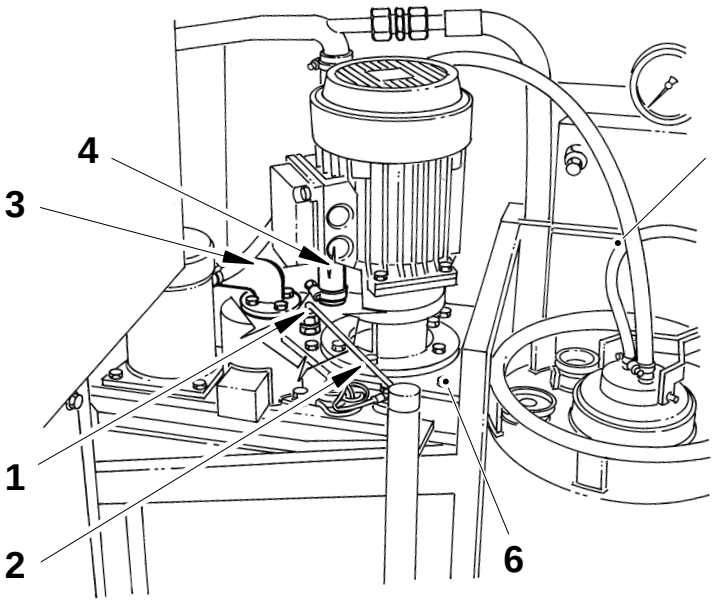

1	Nut	13	Nut
2	Pipe	14	Impeller wheel
3	Pipe	15	Flat wedge
4	Hose sleeve	16	Bearing cover
5	Motor	17	Screw
6	Screw	18	Grub screw
7	Pump housing	19	Bushing
8	Extension pipe	20	Screw
9	Screw	21	Flange
10	Elbow pipe	22	Pin
11	O-ring	23	Shaft
12	Gasket		

Fitting

WARNING!
Peroxide. Follow the Safety Precautions, section MM 000.

a) Fit:

- the shaft (1) and pin it; make sure that there is distance A between the impeller wheel and the extension pipe;
- the flange (2) on the motor (3), do not forget the seal ring (4);
- the bushing (5) in the bearing cover (6) and tighten the grub screws (7);
- the motor with the flange and the shaft on the extension pipe (8);
- the bearing cover on the extension pipe;
- the flat wedge (9) and the impeller wheel (10), tighten the nut (11).

b) If required, remove the pin (12), set distance A and repin.
Fit the split pin.

c) Fit the gasket (13) and the pump housing (14) with the elbow pipe (15) and O-ring.

(Cont'd overleaf)

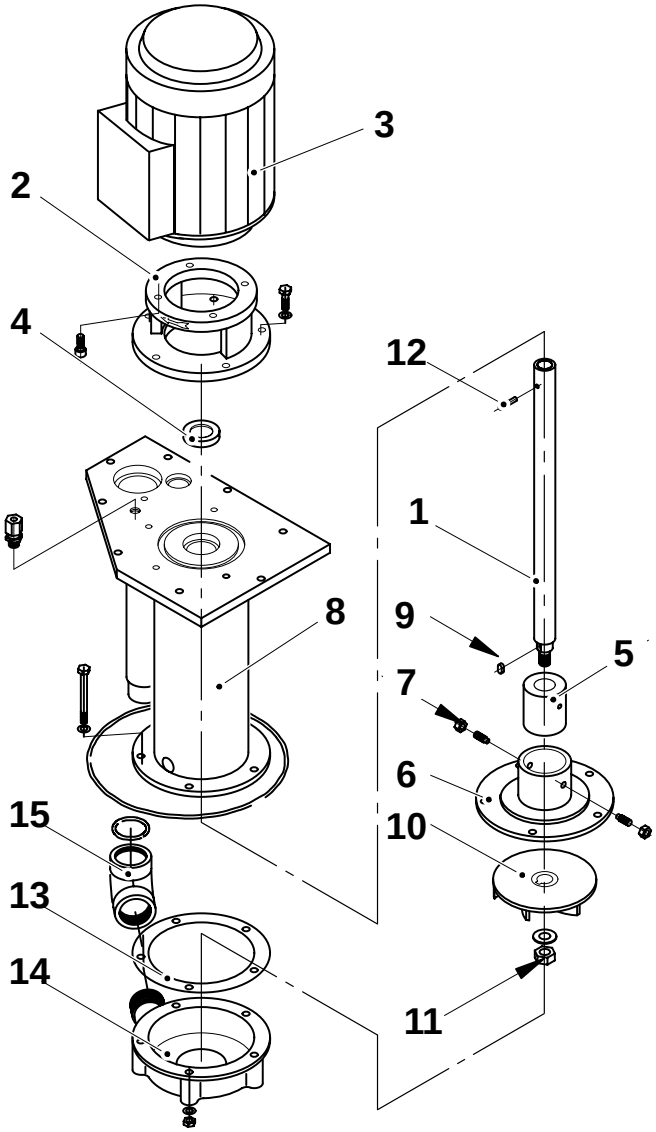

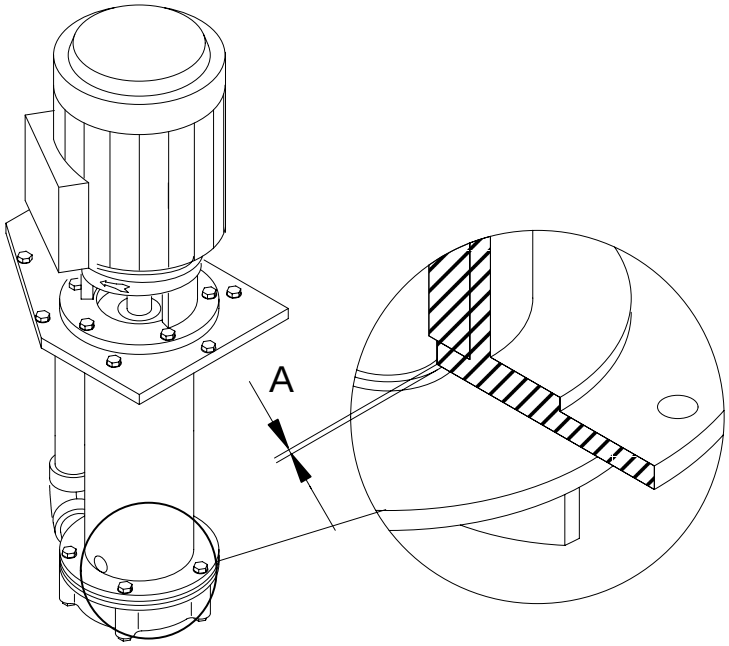

1 Shaft
2 Flange
3 Motor
4 Seal ring
5 Bushing
6 Bearing cover
7 Grub screw
8 Extension pipe
9 Flat wedge
10 Impeller wheel
11 Nut
12 Pin
13 Gasket
14 Pump housing
15 Elbow pipe

A = 1.0 ± 0.5 mm

(Cont'd)

d) Fit the pipe (16) and the hose on the hose sleeve (17).

WARNING!
Do not grease any of the pump details.

e) Fit the pump unit on the peroxide tank.

f) Swing the pipe (18) to correct position and tighten the nut (19).

g) Fit the electrical connections to the motor (20).

h) Make sure the rotation direction of the motor is correct.

i) Rinse the peroxide tank with deionized water and top up with hydrogen peroxide according to the OS book.

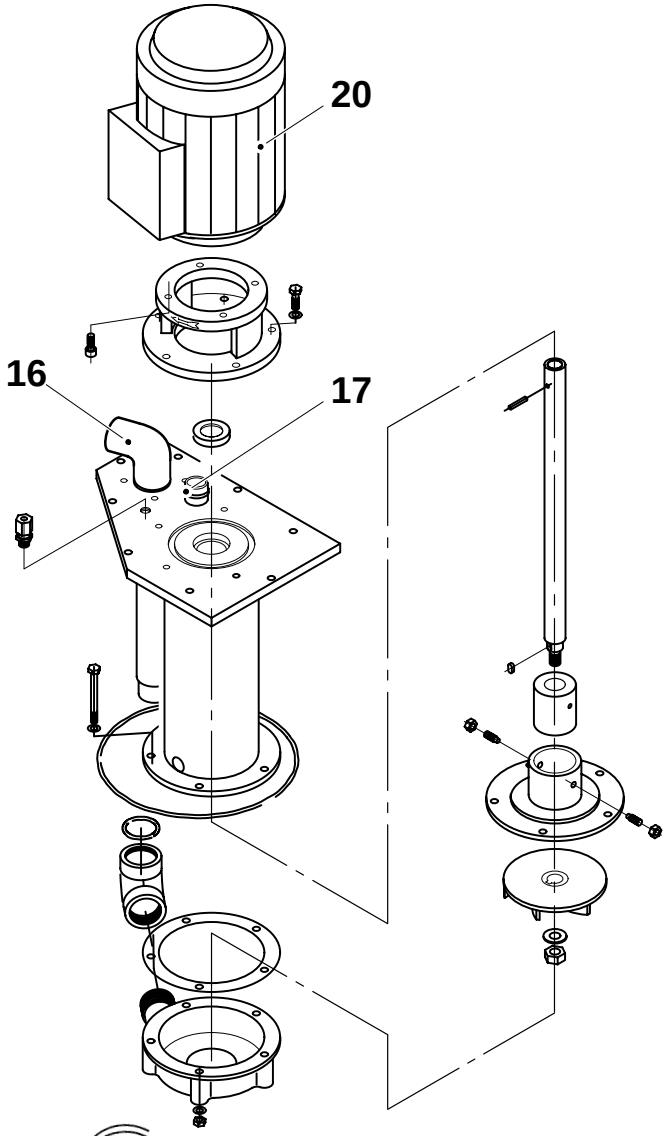

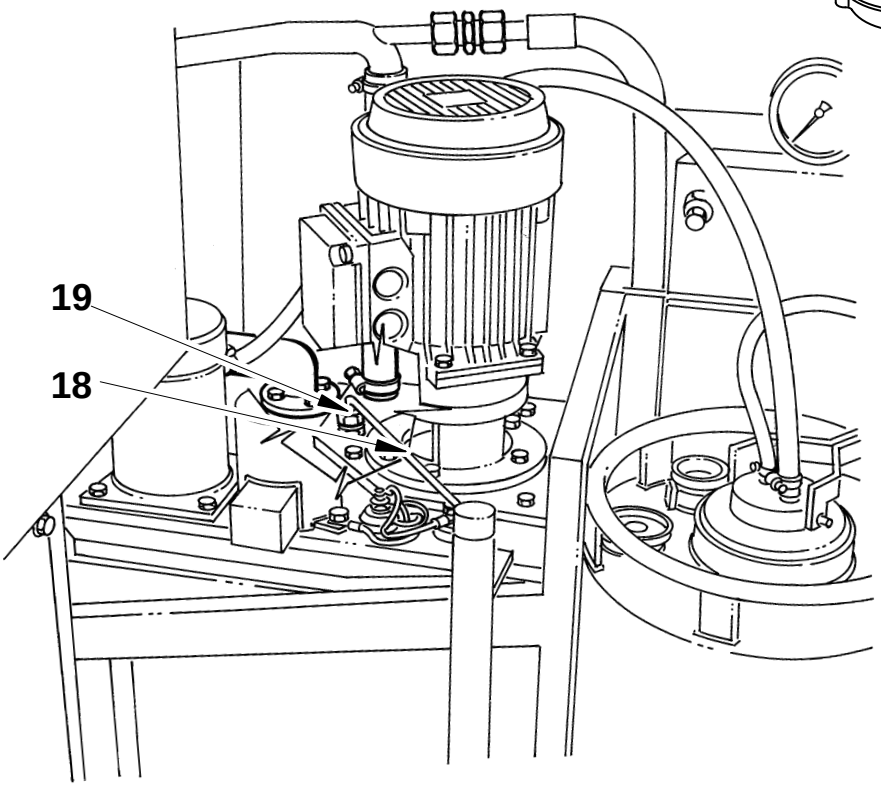

16 Pipe
17 Hose sleeve
18 Pipe
19 Nut
20 Motor

Checking

a) Undo the lid (1), pull out the pipe and check that the filter (3) is not clogged.

b) Make sure that the hose (2) is not damaged.

c) Check that the lid of the detergent tank is not damaged, and that it is fitted correctly.

Replace as required.

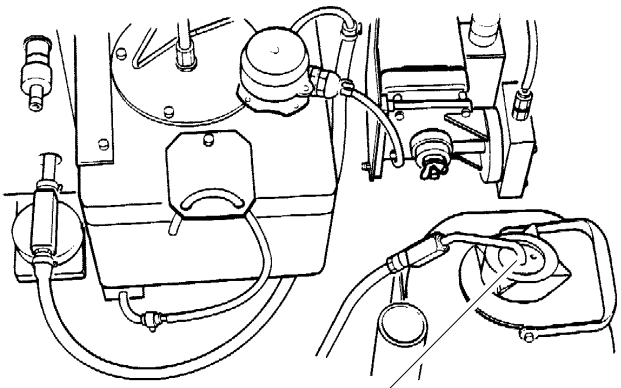

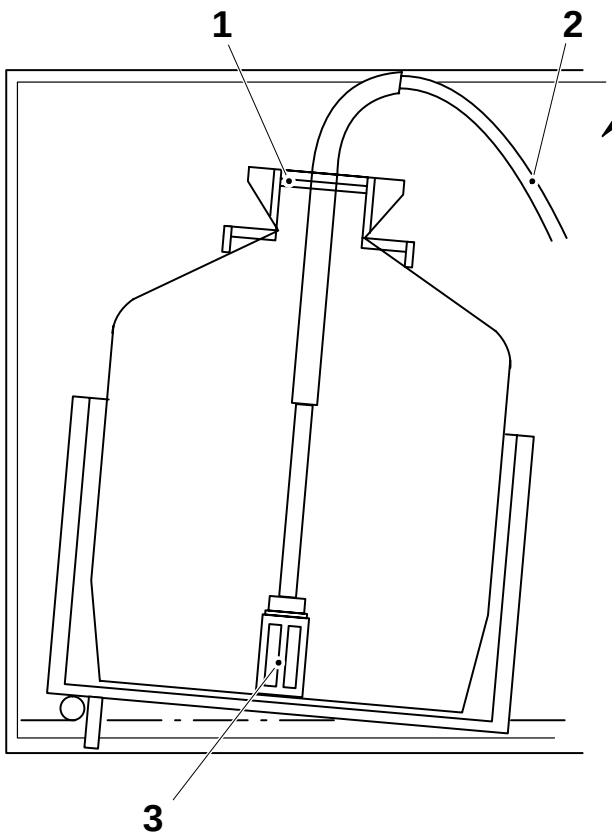

1 Lid
2 Hose
3 Filter

Checking

WARNING!
Peroxide. Follow the Safety precautions, section MM 000.

When peroxide is being pumped through the system, check that components, pipe connections, and pipes (marked grey) do not leak.

Take actions to eliminate any leakage.

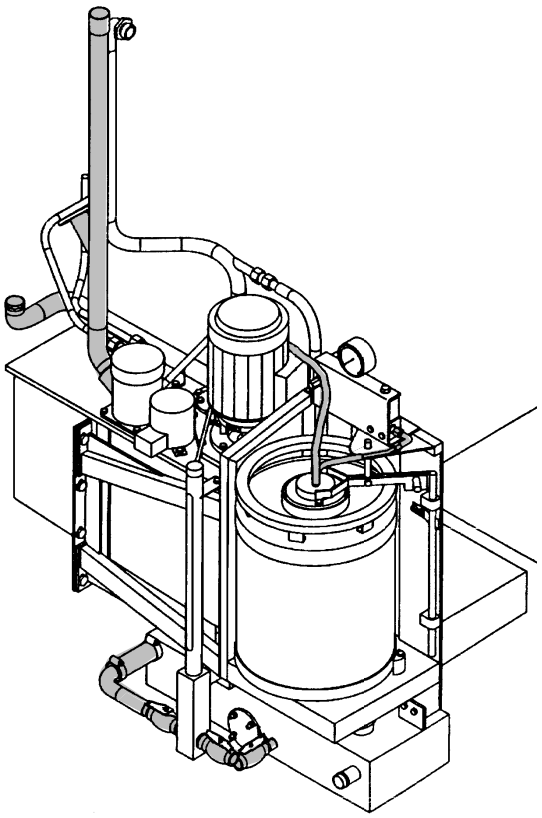

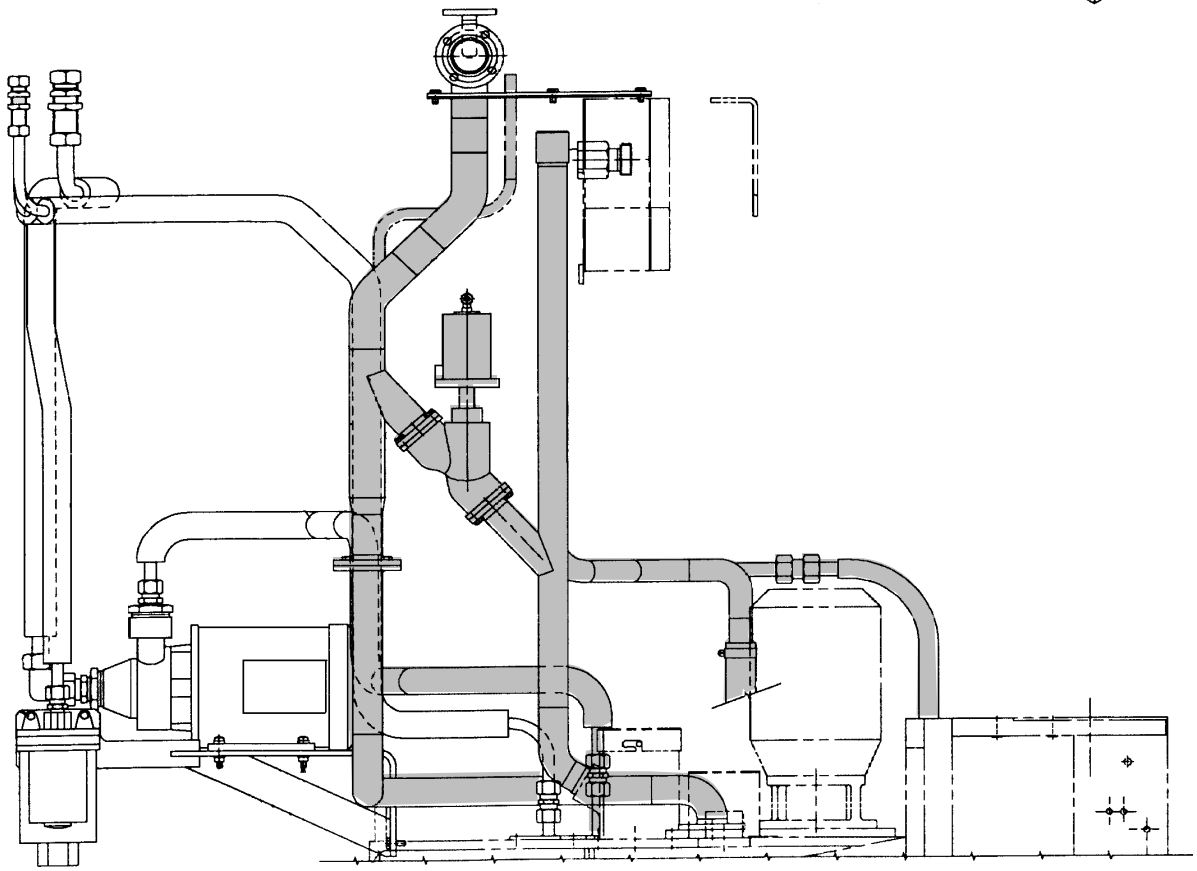

Degree setting

a) Turn on the main power supply.

b) Crank the machine to exactly 0°.

c) Loosen the screws (1).

d) Turn the angle encoder (2) until the display (3) shows 0_8 alternatively the PLC inputs A10100 – A10107 goes out.

e) Crank the machine to 252_8, and the inputs are to be on or, alternatively the display should show $252_{8.}$

f) Tighten the screws.

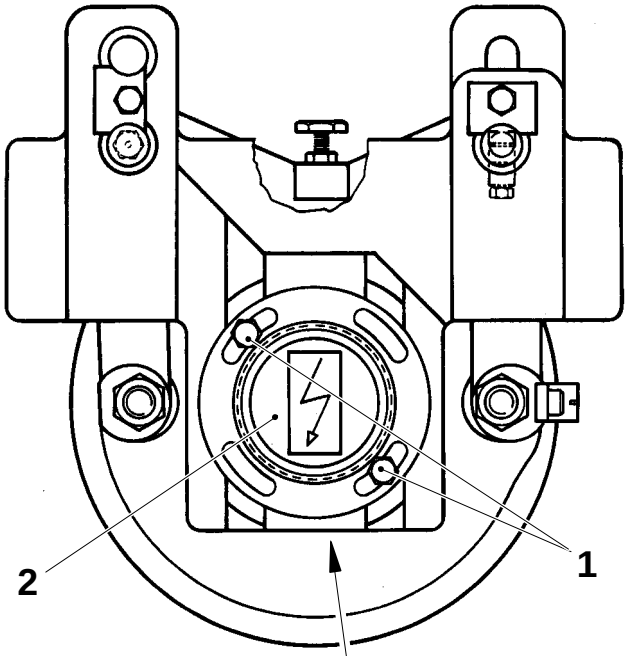

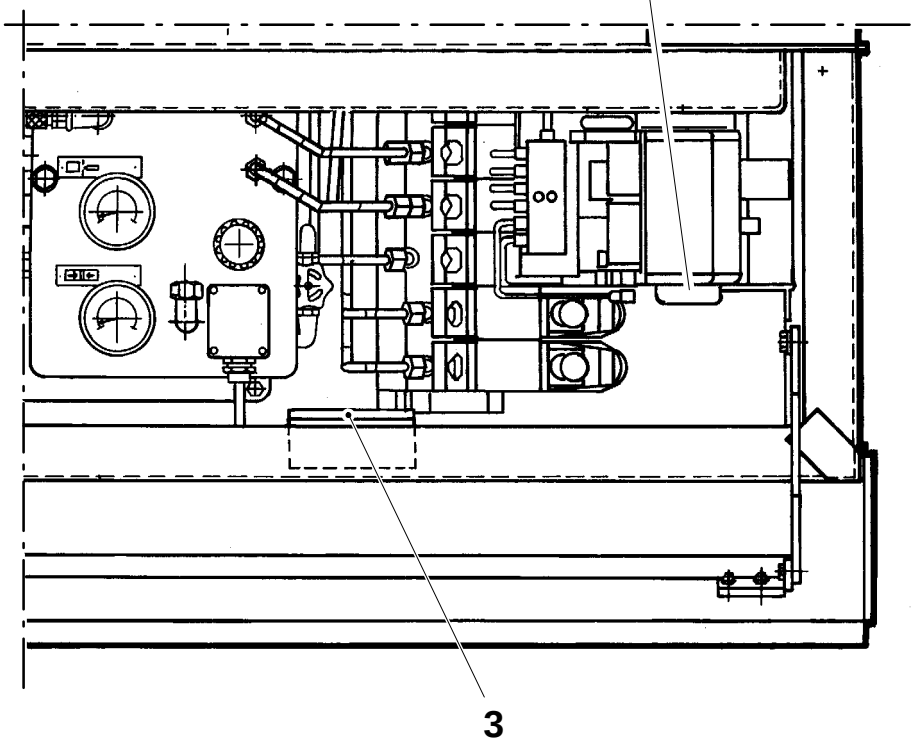

1 Screw
2 Angle encoder
3 Display

Description	TB/9	TBA/9
SA sealing, air pressure – setting	702–51	702–51
Dating unit – checking (2 pages)	705–11	705–11
Dating unit – setting (4 pages)	705–51	705–51
Strip guide and strip holder – checking	710–11	710–11
Strip guide and strip holder – setting (2 pages)	710–51	710–51
SA nozzle – checking	715–11	715–11
SA nozzle – setting	715–51	715–51
SA, short stop nozzle – checking	718–11	718–11
SA, short stop nozzle – setting	718–51	718–51
Pressure and counter rollers – checking	720–11	720–11
Pressure and counter rollers – replacing teflon sleeve	720–31	720–31
Pressure and counter rollers – setting	720–51	720–51
Ink unit – checking	737–11	737–11
Ink unit – removal	737–21	737–21
Ink unit – setting	737–51	737–51
Printing wheel – checking	738–11	738–11
Stamping position – checking	740–11	740–11
Adjustment device, web – checking	742–11	742–11
Splice monitor – checking	793–11	793–11
Splice monitor – setting	793–51	793–51

Setting

a) With the machine in step **Signal to sterilizer**, set the air pressure for SA (1) with the adjustment screw (2).

b) Set the pressure for SA short stop (3) by turning the adjustment screw (4).

c) Setting values, see page MM 910–7X.

d) Lock with the locking nuts (5) and (6).

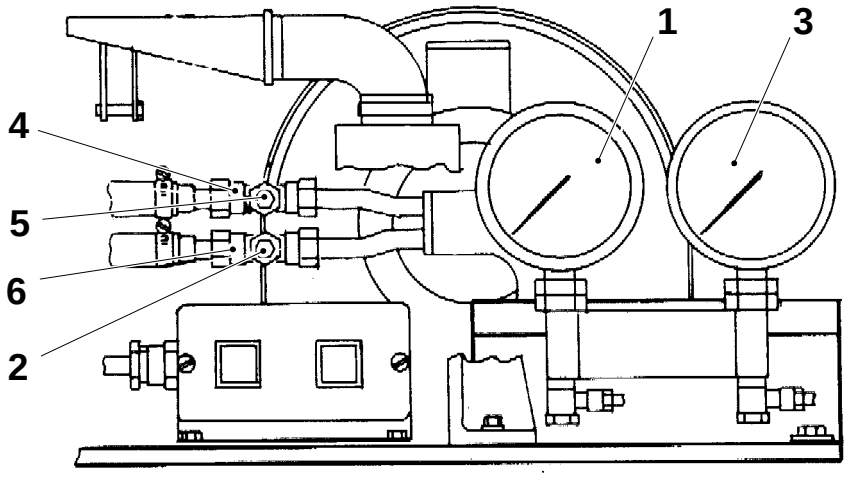

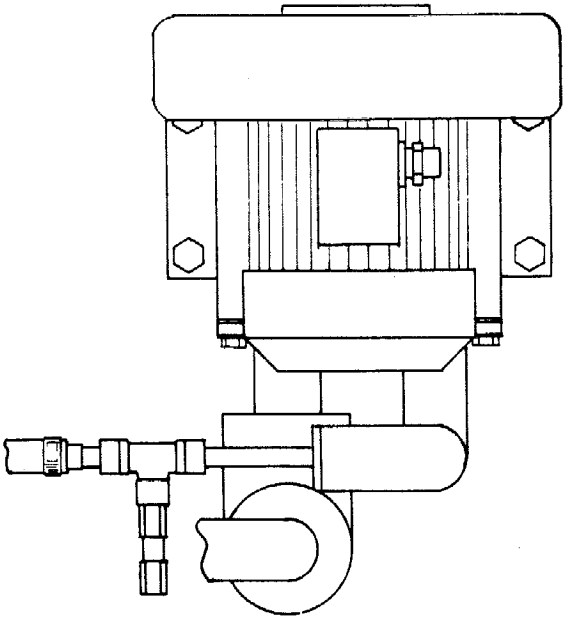

1 SA pressure
2 Adjustment screw, SA
3 SA short stop pressure
5 Locking nut
4 Adjustment screw, SA short stop
6 Locking nut

Checking

Check the following details for wear and/or damage:

- the bearings (1)
- the sprockets (2) and (7)
- the chain (3)
- the spring (4)
- the nylon roller (5)
- the bending rollers (6) with bearings (9) and shafts (10)
- the bending roller (8) with bearings (11) and shaft (12)
- the adjustment device sprocket (13) and the bushings

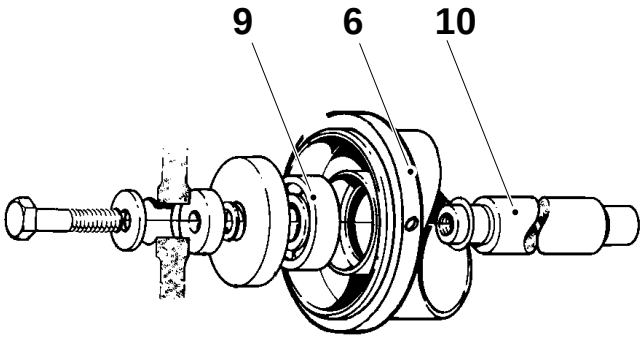

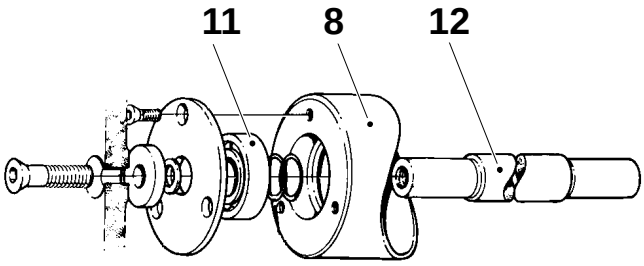

(Cont’d overleaf)

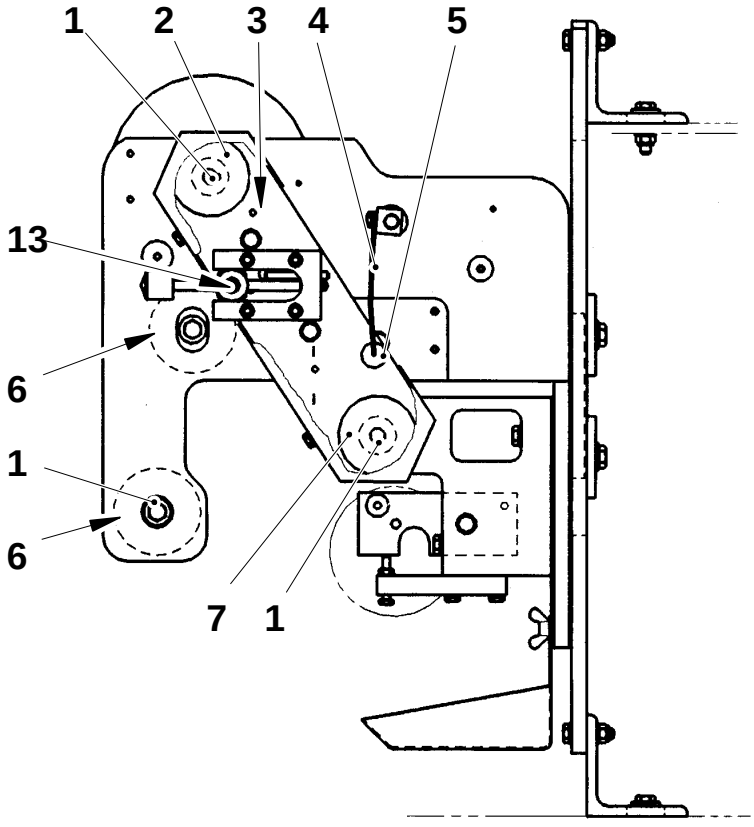

1 Bearing
2 Sprocket
3 Chain
4 Spring
5 Nylon roller
6 Bending roller
7 Sprocket
8 Bending roller
9 Bearing
10 Shaft
11 Bearing
12 Shaft
13 Sprocket

(Cont'd)

- the proximity switch (14)
- the crease bars (15); they must not be bent or have burrs

Replace as required.

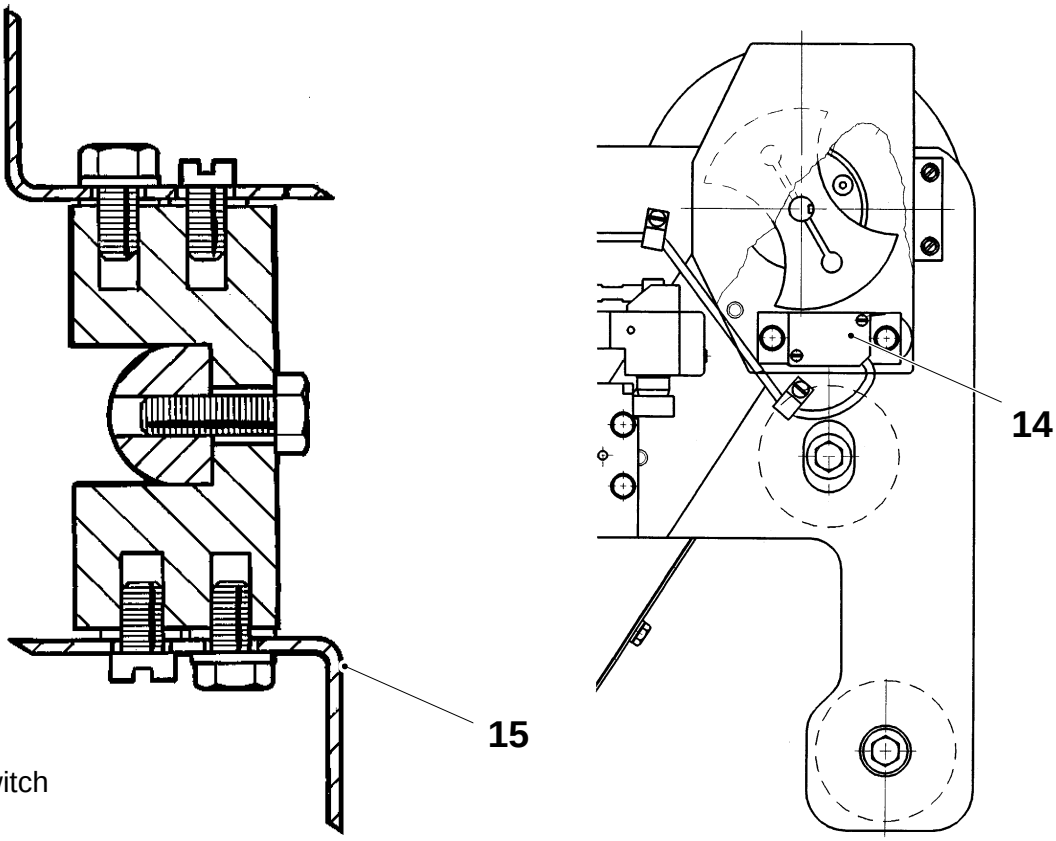

14 Proximity switch
15 Crease bar

Setting

Alignment

a) Apply the template (5) and set the carrier axle (7) and the printing wheel axle (6) parallel sideways by means of the screws (3).

b) Apply the template between the printing wheel axle (6) and the bending roller (4) and set distance A by means of the ring nuts (2)

c) Loosen the clamp fitting (1) and set distance B.

(Cont'd overleaf)

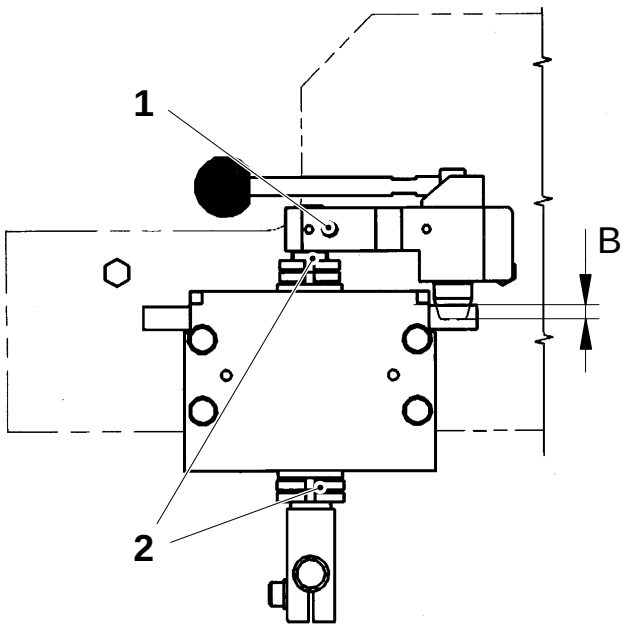

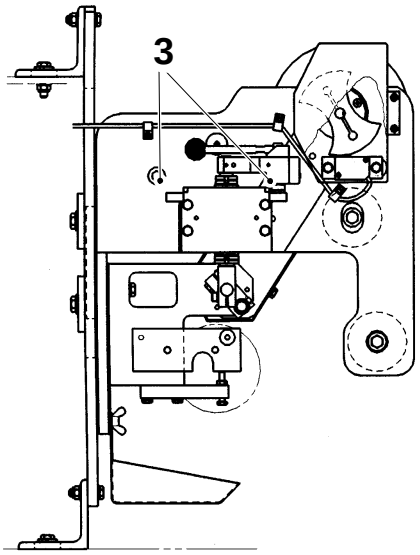

A = 31.3 ±0.1 mm
B ≥ 6 mm

1 Clamp fitting
2 Ring nut
3 Screw
4 Bending roller
5 Template, TP No. 76602
6 Printing wheel axle
7 Carrier axle

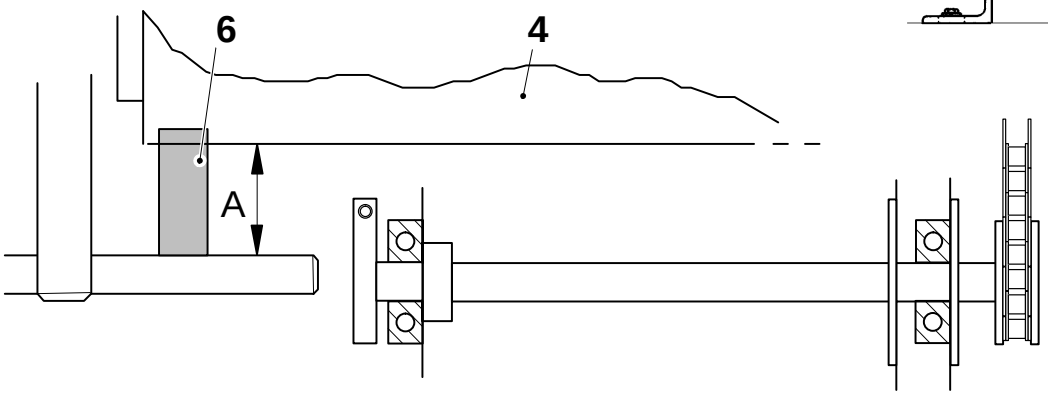

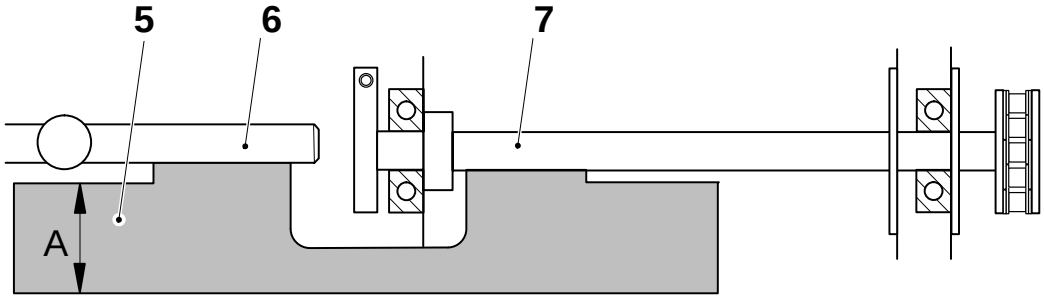

(Cont'd)

d) Loosen the screws and set the proximity switch (8) for the rotation monitor, distance C.

C = 0.5 – 1.0 mm

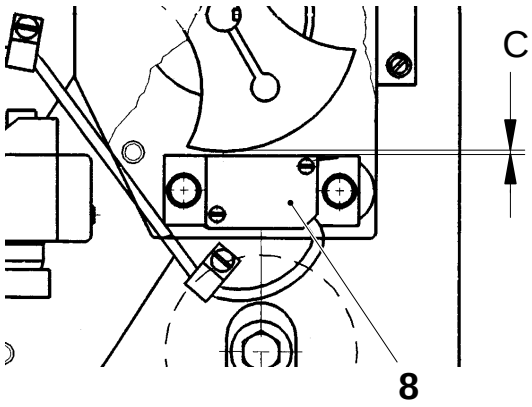

Crease wheel

a) Set distance D, see table, by aligning the crease bars (10).

b) Set distance E, see table, by means of shimming washers (9) under the crease bars. Make sure that the crease bars are parallel within 0.2 mm.

c) Loosen the screws (11) and set the bending roller in its bottom position. Tighten.

d) Make sure that the dating crease wheel is correctly positioned in the creases throughout the setting procedure and that the material web is well tensioned through the machine.

e) With the machine in step **Production**, perform a **Short stop**.

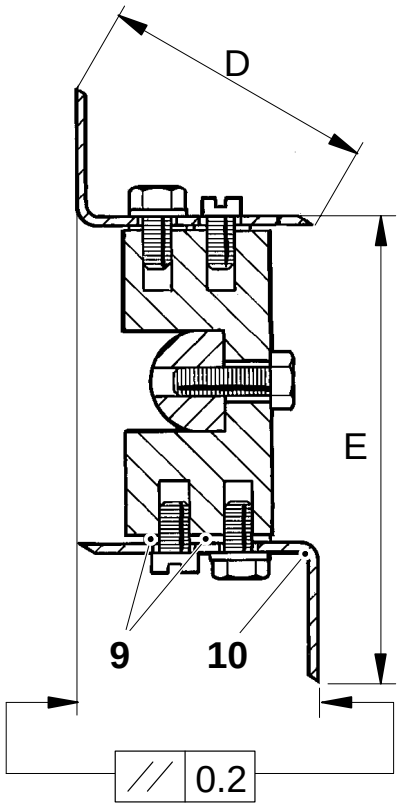

Volume, ml	D ±0.2 mm	E ±0.2 mm
125 S	44	86.0
160 S	54	93.5
180 B	57	75.5
200 B	57	83.0
200 S	54	118.6
236 B	57	98.4
250 B	57	106.0
250 S	54	130.2
284 B	57	118.9

Note
The distances may vary depending on the packaging material quality. Final adjustment has to be carried out.

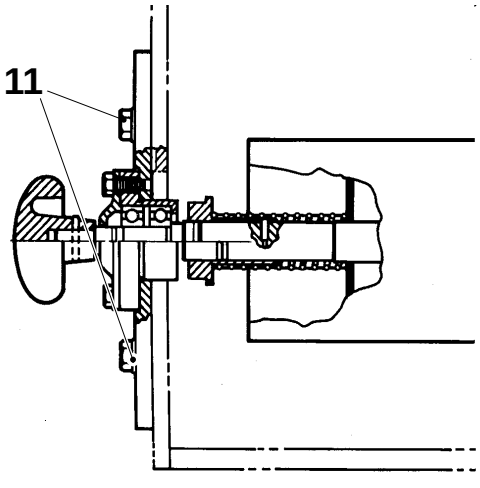

8 Proximity switch
9 Shim
10 Crease bar
11 Screw

(Cont'd overleaf)

347

(Cont'd)

f) Crank the machine to X°, see table.

g) Loosen the screws (12) and shift the bracket until the dating crease wheel (13) is horizontal in both directions. Tighten.

h) Set the ink unit, see page MM 737–5X.

Volume, ml	X°
TB 200 B	105
TB 236 B	105
TBA 125 S	90
TBA 160 S	15
TBA 200 S	120
TBA 200 B	170
TBA 250 S	10
TBA 250 B	90
TBA 284 B	32

Synchronization

a) Mark the position of the clamp union on the axle.

b) Undo the clamp union (14) and synchronize the date printing with the printed design on the packaging material web by turning the axle.

c) Final adjustment can be made with the knob (15).

(Cont'd overleaf)

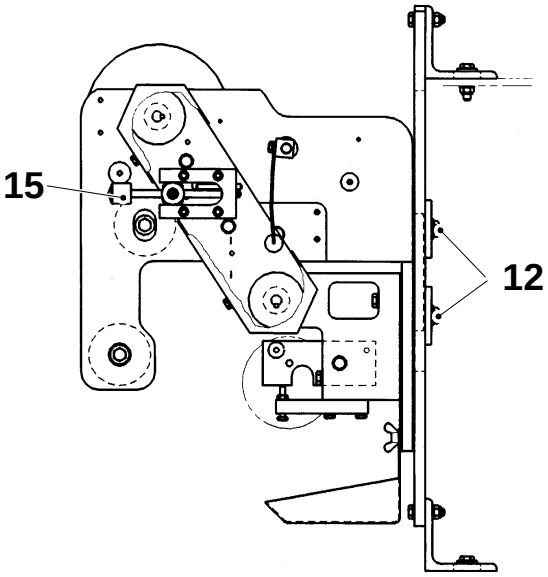

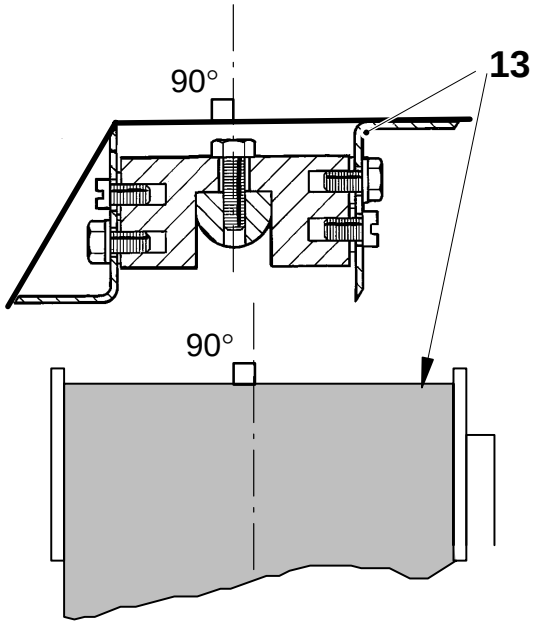

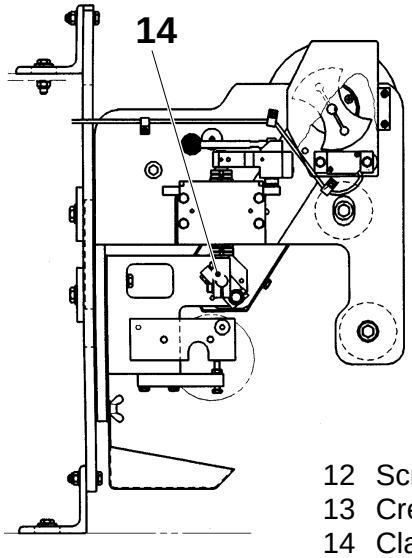

12 Screw
13 Crease wheel
14 Clamp union
15 Knob

348

(Cont'd)

Stamping position

a) Move the sprocket (16) inwards as much as possible with the knob (14).

Note
The sides of the chain (17) must not touch each other.

b) Set the stop (19) against the sprocket and lock it with the locking screw (18).

c) Move the sprocket out as far as possible (but not so far that the chain loses contact with the sprocket). Mark the end position (20).

d) Move the sprocket in to 2/3 of the adjustable distance. Mark the basic setting position (21).

Setting during operation

a) Set the force of the spring loaded screw (22). It must prevent the shaft (15) from rotating during operation.

Note
The shaft must not bind.

b) Set the stamping position, see page MM 740–1X, with the knob (14).

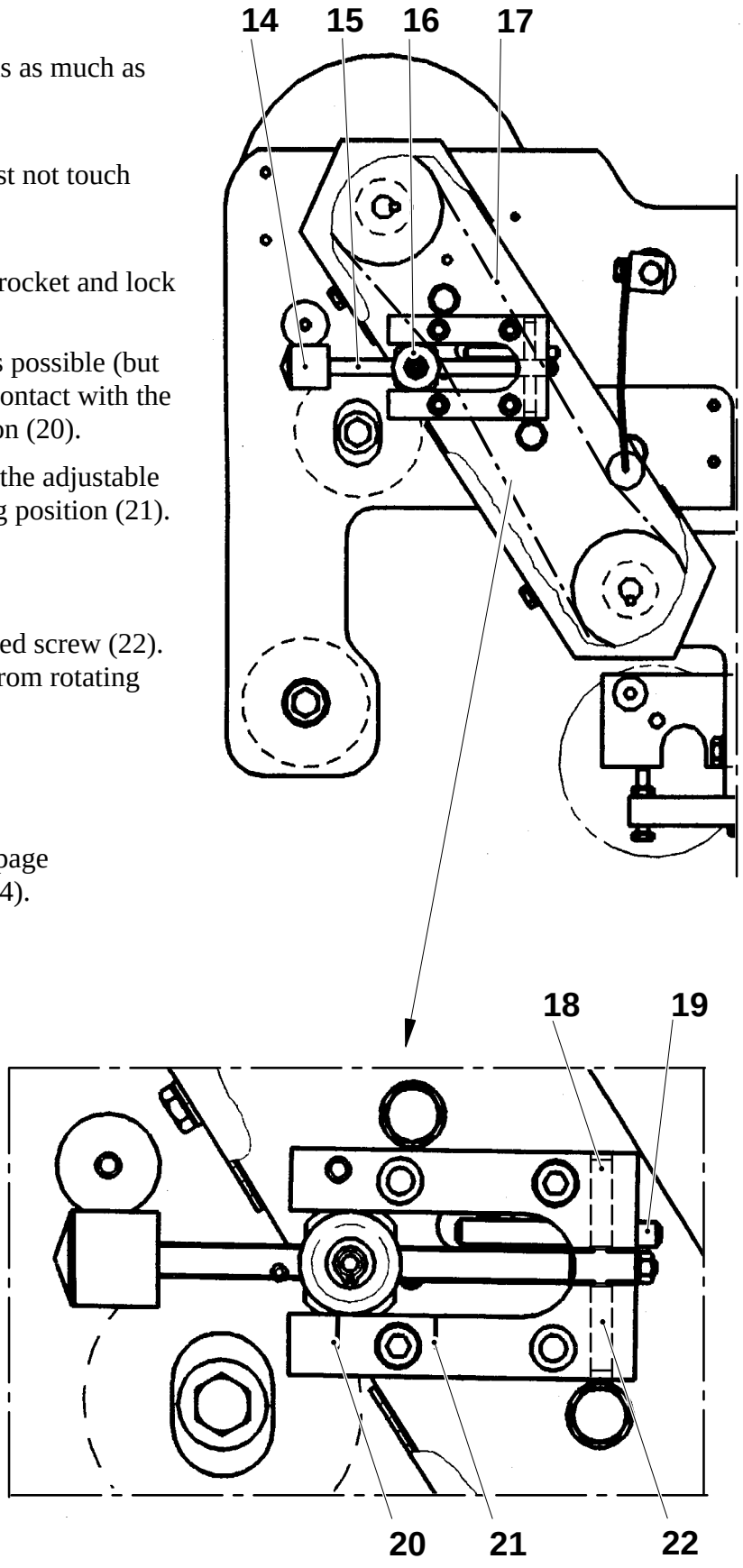

14 Knob
15 Shaft
16 Sprocket
17 Chain
18 Locking screw
19 Stop
20 End position
21 Basic setting position
22 Spring loaded screw

Checking

Check the following details for wear and/or damage:

- the roller (1); max radial play 1.0 mm, max axial play 0.5 mm
- the bushings (2); make sure the strip guide moves freely
- the rollers (3); max radial play 1.0 mm
- the brake springs (4)
- the bearings in the bobbins (5); max radial play 1.5 mm. Clean the bearings and make sure that they rotate freely
- the bearing (6); max radial play 0.5 mm

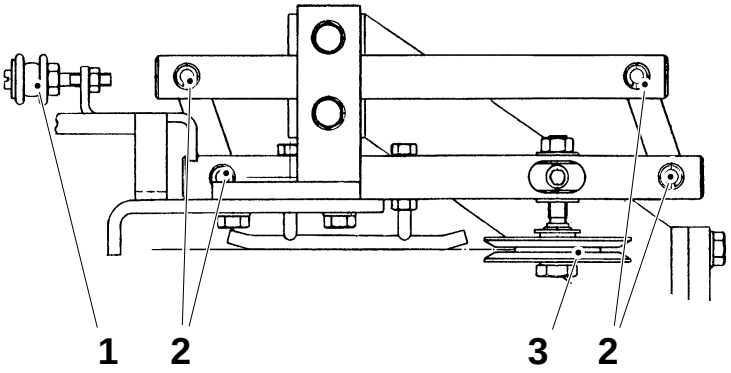

Replace as required.

Clean the strip guide.

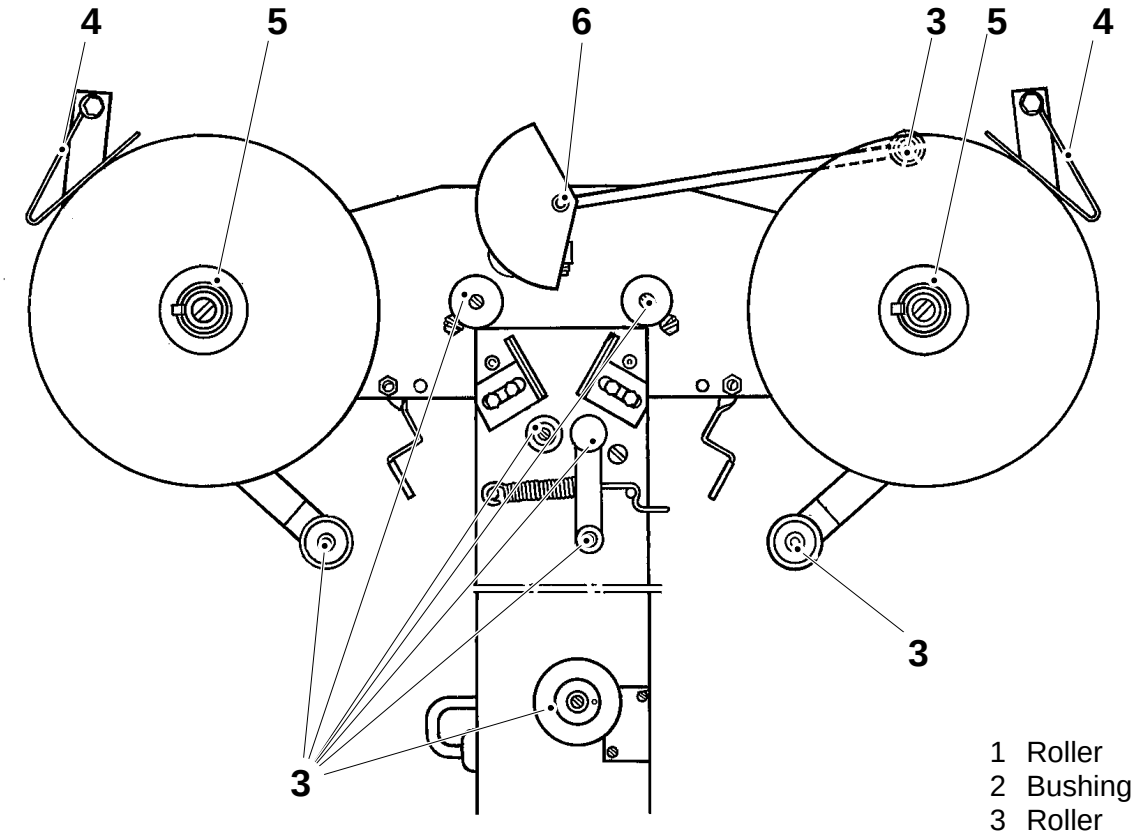

1 Roller
2 Bushing
3 Roller
4 Brake
5 Bobbin
6 Bearing

Setting

a) With the packaging material web and strip threaded, set the guide wheel (1) parallel with the web (2) and at the same height. Adjust by means of the nut (3).

b) Set distance A. Adjust by means of the clamp fitting (4).

c) Set the guide bracket (5) so that it slightly touches the web. Adjust by means of the nuts (6).

d) Set the LS strip (7) so that it is positioned symmetrically over the edge of the packaging material web. Adjust by means of the guide roller (8).

(Cont'd overleaf)

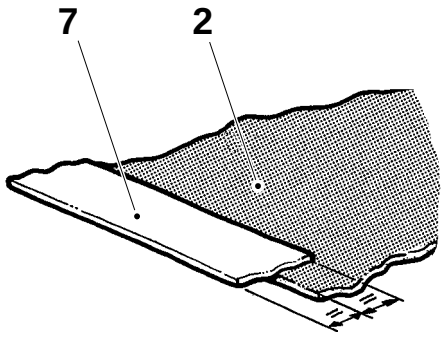

A = 10 ±1 mm

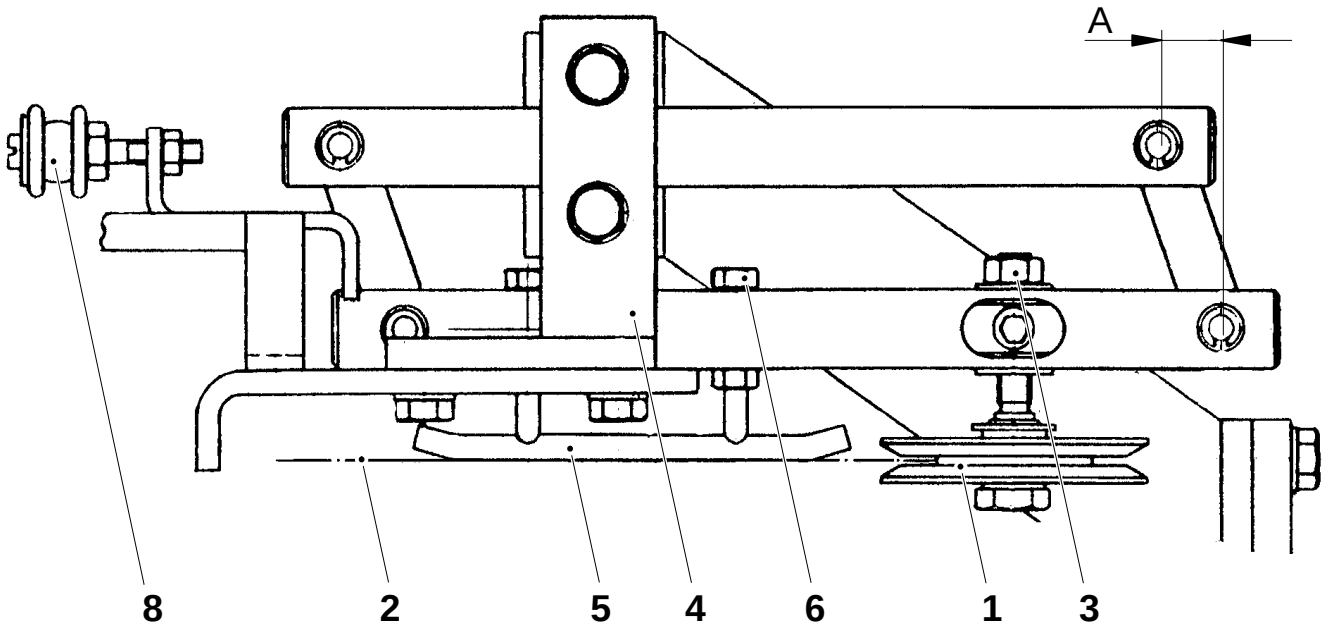

1 Guide wheel
2 Packaging material web
3 Nut
4 Clamp fitting
5 Guide bracket
6 Nut
7 LS strip
8 Guide roller

(Cont'd)

Supply monitor

a) Set the proximity switch (9) so that it triggers an alarm when approx 15 mm of strip wraps remain on the reel.

b) Loosen the screws and shift the proximity switch. Set on both strip reels.

Strip breakage monitor

a) Set the proximity switch (10) so that it triggers an alarm as the roller (11) stops after the strip has been cut or removed.

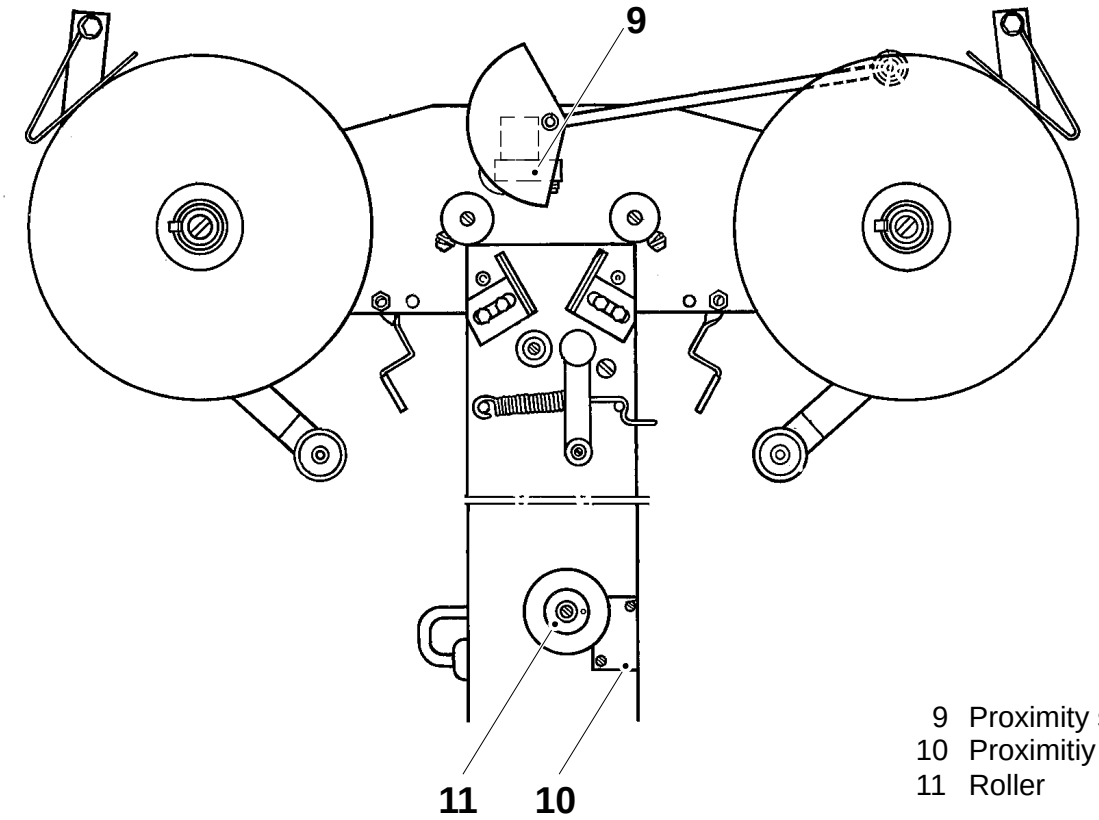

9 Proximity switch
10 Proximitiy switch
11 Roller

Checking

a) Undo the screws (2) and remove the nozzle.

b) Check that the SA nozzle is clean and that the air holes (1) are not blocked.

c) Check that the nozzle is straight (not warped by heat). Replace as required.

d) When fitting the nozzle, check the gasket (3) and pins (4).

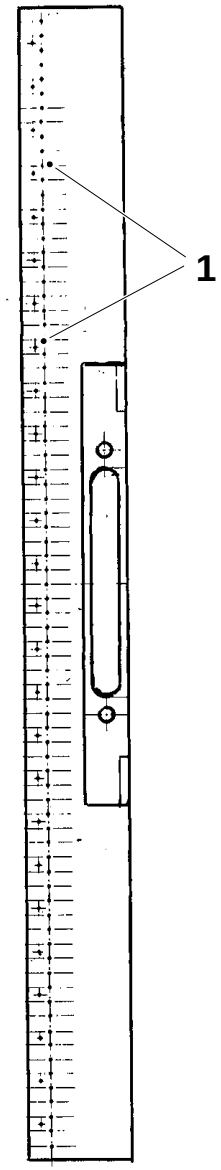

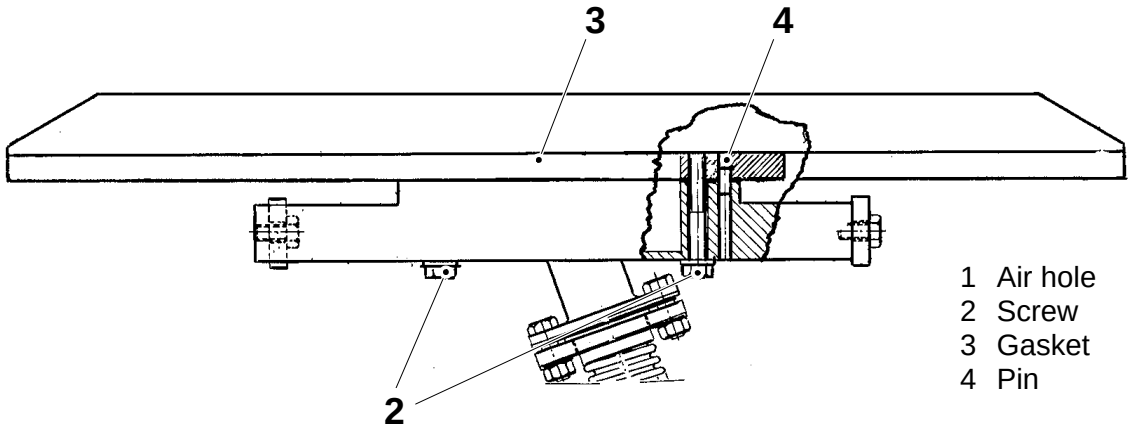

1 Air hole
2 Screw
3 Gasket
4 Pin

Setting

a) With the packaging material web threaded, set the SA nozzle (1) parallel with the packaging material web (2) by means of the nuts (3).

b) At the same time set distance B, between the nozzle and the packaging material web.

c) Set distance A by means of the nuts (4).

d) The marks (5) on the SA nozzle should coincide with the edge of the web.

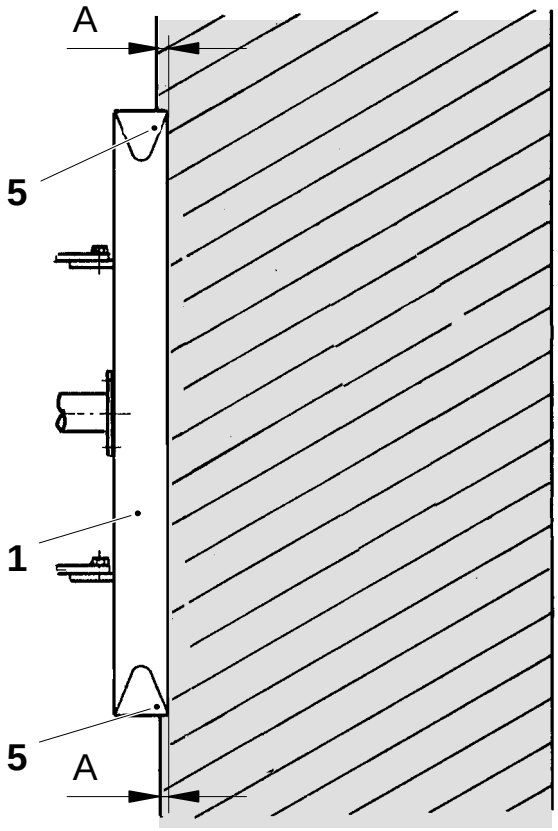

A = 8 ±0.5 mm
B = 2 – 3 mm

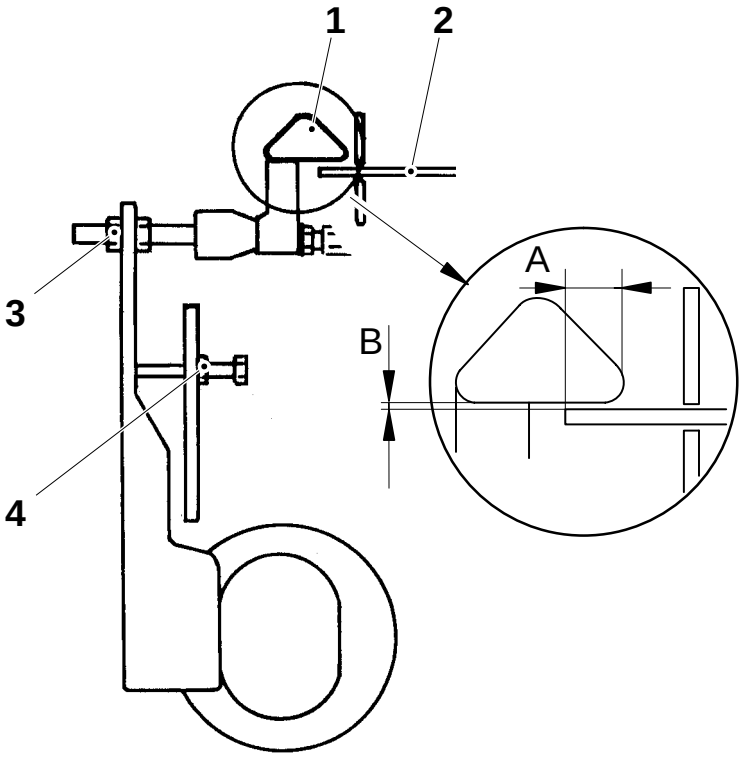

1 SA nozzle
2 Packaging material web
3 Nut
4 Nut
5 Mark on nozzle

Checking

Check the following details for wear and/or damages:

- the cylinder; make sure that it moves smoothly
- the support plate (1)
- the air holes of the short stop nozzle (2); make sure that they are not blocked
- the short stop nozzle; make sure that the nozzle turns freely

Replace as required.

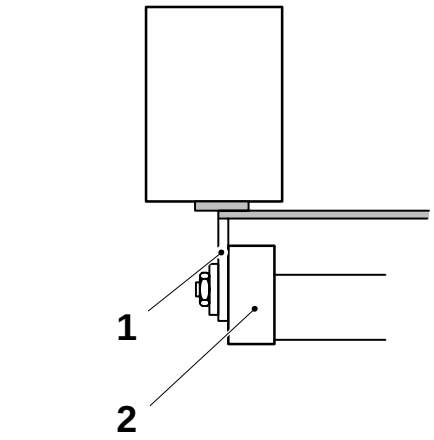

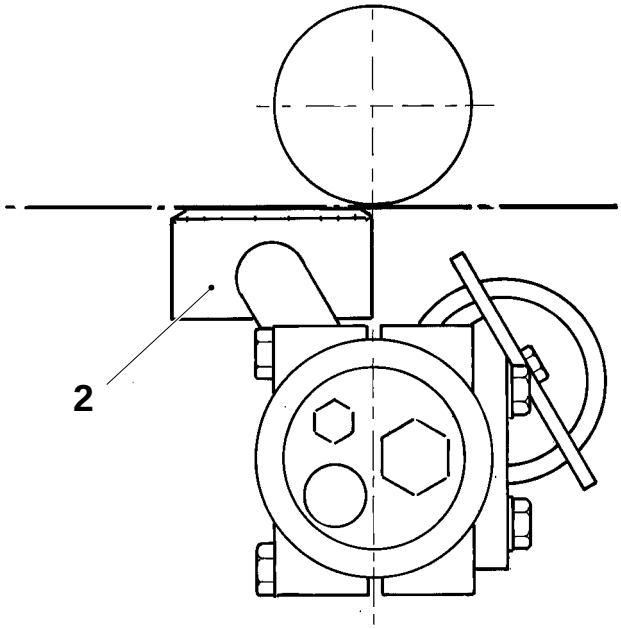

1 Support plate
2 Short stop nozzle

Setting

a) Set distance A between the support plate (1) and the short stop nozzle (2). With the machine in step **Short stop**, the support plate is to be in line with the edge of the packaging material.

b) Set the air pressure, see page MM 702–5X.

c) With the machine in step **Production**, perform a **Short stop**.

d) Check the SA sealing in the packages that has been opposite the short stop nozzle.

e) Set the initial heating after **Short stop** by altering the speed of the engagement movement of the SA short stop nozzle. Adjust by means of the valve throttles.

Caution!
If the nozzle moves too fast, there is risk of damaging it.

f) If required, set the temperature of the short stop nozzle by reconnecting the wiring on transformer T9 in the electrical cabinet.

WARNING!
Work in the electrical cabinet must only be done by a qualified electrician.

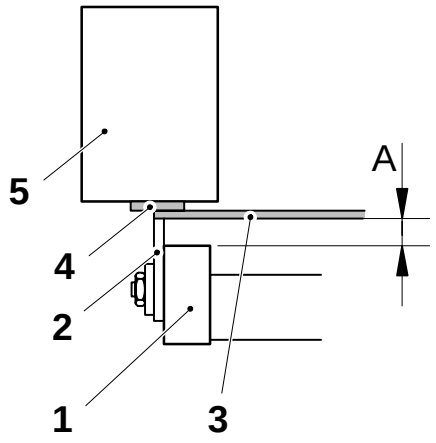

A = 8 ±0.5 mm

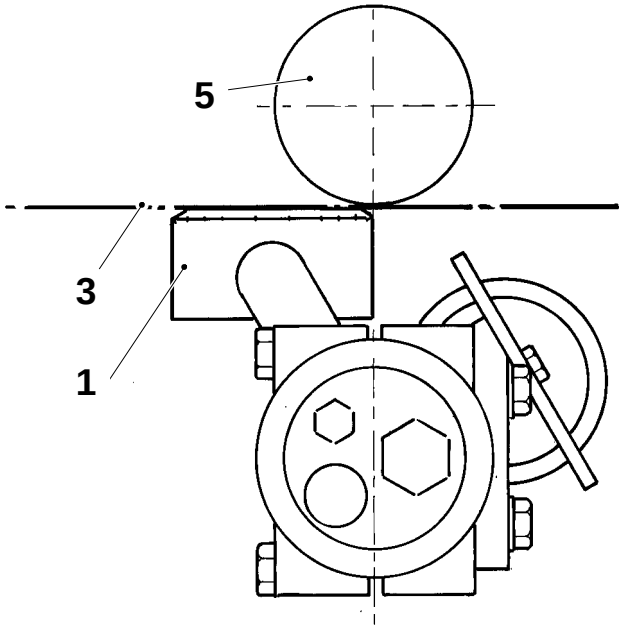

1 Short stop nozzle
2 Support plate
3 Packaging material
4 LS strip
5 Upper pressure roller

Checking

Check the following details for wear and/or damage:

- the pressure roller (1); the bearing play must not exceed 0.5 mm
- the counter roller (2); the bearing play must not exceed 0.5 mm
- the teflon sleeve (replacement, see page MM 720–3X)

Replace as required.

Remove the cap (4) of tool TP No. 74767–102.

Apply the tool to the stud bolt (3) and check the spring force.
Force 35 – 58 N (3.5 – 5.8 kp).

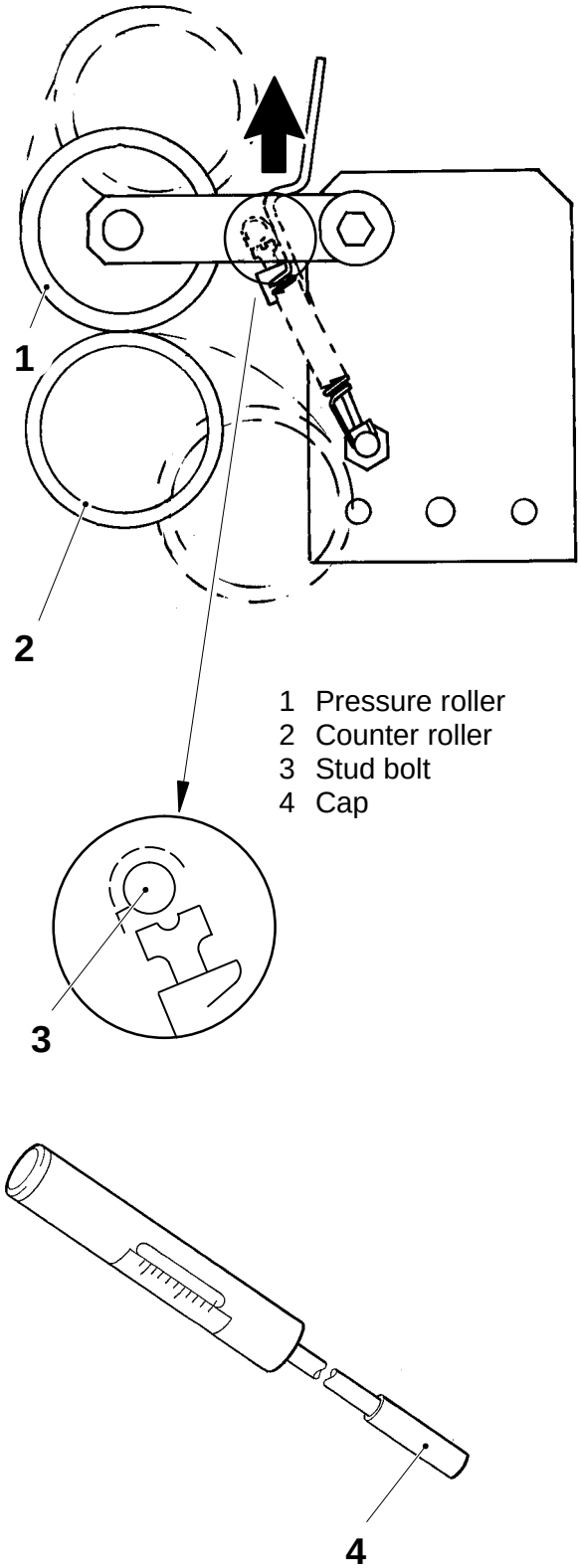

1 Pressure roller
2 Counter roller
3 Stud bolt
4 Cap

Replacing teflon sleeve

Use a hot air gun or an oven. Temperature 260–400°C.

a) Remove the old teflon sleeve.

b) Clean off any grease or other deposits, and sand the surface by hand so it becomes rough.

c) Put the roller on an axle so that it can revolve, i.e. a lathe.

d) Cut off the required length of teflon hose for the sleeve; width of roller plus 5 mm.

e) If required, clean the inside of the sleeve with a cloth that does not leave any fluff.

f) Slip the sleeve over the roller and rotate the roller and the sleeve at a reasonably even speed.

g) Aim the hot air gun at the middle of the roller at a range of 50 – 80 mm.

   Heat this area until the sleeve shrinks evenly around the roller, see fig. 1.

   When the sleeve has shrunk so that it hugs the roller closely, the range should be reduced to 25 mm. Move the hot air gun sideways to first one and then the other edge making sure the protruding free butt of the sleeve shrinks down to its minimum size, see fig. 2.

h) After the sleeve has been shrunk on, cut off excess material leaving approximately 1 mm protruding outside the edge of the roller.

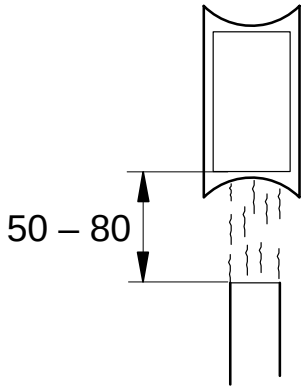

Fig. 1

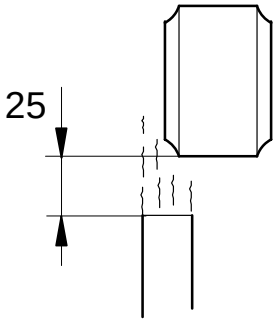

Fig. 2

Setting

a) Open for input air.

b) When the counter roller (1) is in its upper position, set gap A between the stud bolt (2) and the screw (3).

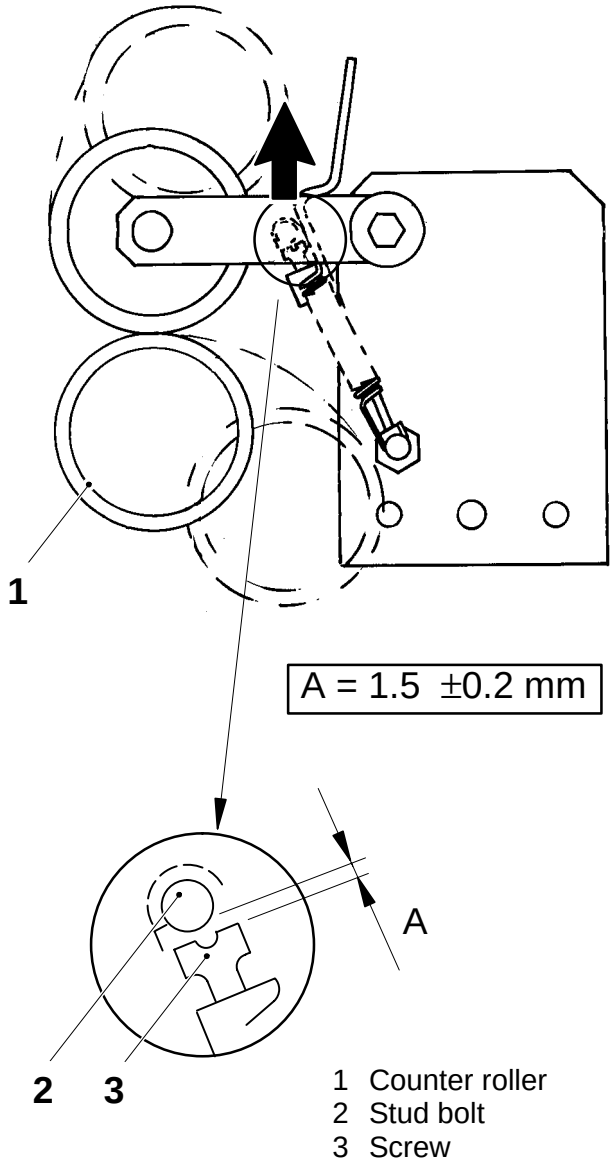

Checking

WARNING!
Chemical products, see Safety Precautions in chapter MM 000.

Remove the ink unit. Clean the parts in methylated spirit, rinse them in water, and let them air-dry.

Check the following details for wear and/or damage:

- the clamp (1)
- the strip (2)
- the transfer roller (3); make sure the roller rotates freely
- the ink roller (4); make sure that the roller rotates freely
- the O-ring (5) and (6)
- the shaft (7) and the eccentric shaft (8); the axial play is to be 0.2 – 0.3 mm
- the rubber gasket (9), make sure that there is no ink in the spillage bottle (13)
- the spring (10); make sure that the ink bottle stays in its upper position when it has been raised
- the hose (11); make sure the hose is not folded when the ink bottle is raised/lowered
- the spring (12)

Replace a required.

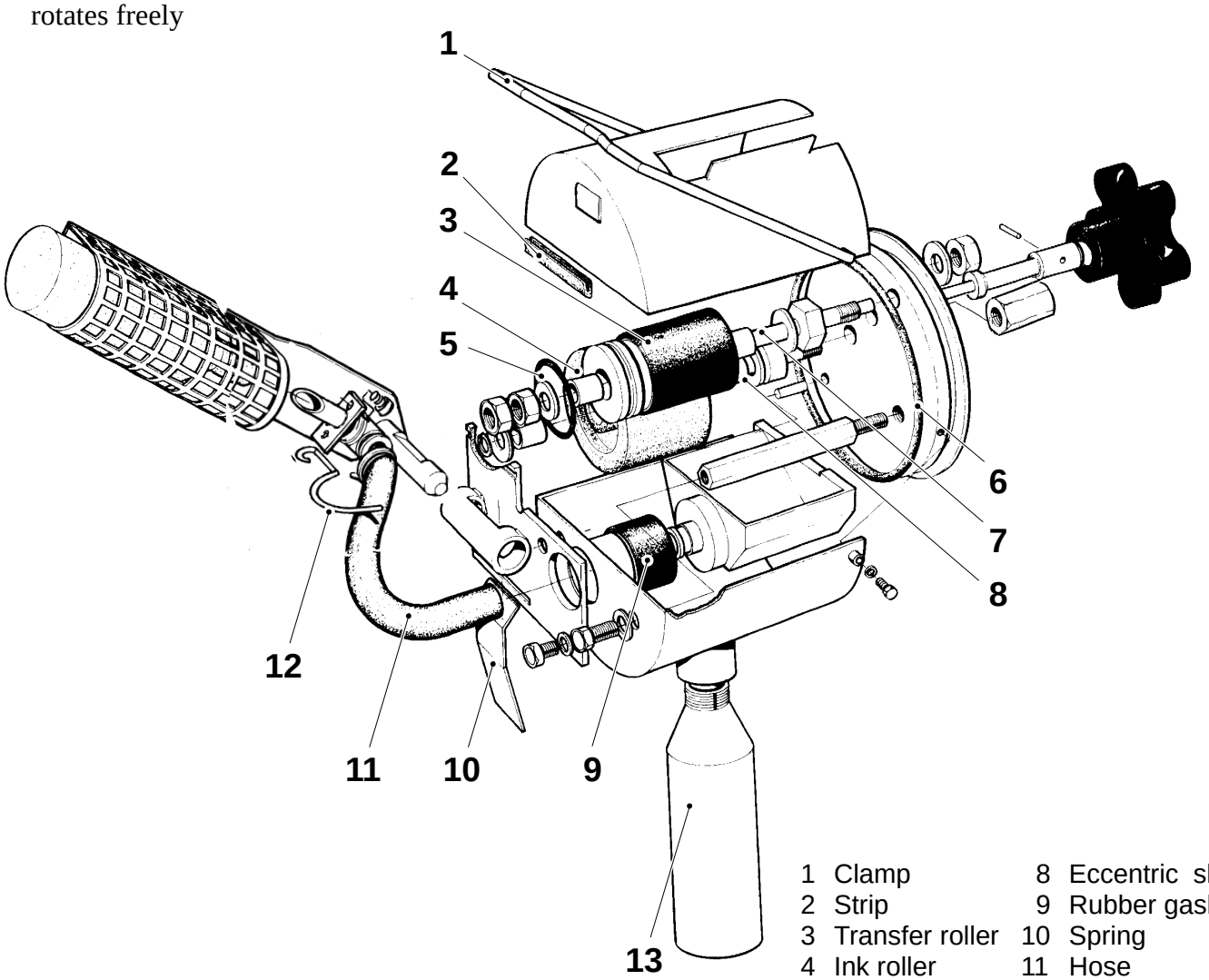

1	Clamp	8	Eccentric shaft
2	Strip	9	Rubber gasket
3	Transfer roller	10	Spring
4	Ink roller	11	Hose
5	O-ring	12	Spring
6	O-ring	13	Spillage bottle
7	Shaft		

360

Removal

a) Remove the ink bottle (1) and the spillage bottle (2). Undo the knob (3) and pull the ink unit off its bracket.

b) Undo the clamp (4) and remove the cover of the ink unit.

c) Carefully remove the O-ring (5). Undo the nuts (6) and remove the shaft with the washers, the bushing (7) and the transfer roller (8).

d) Undo the nut (9) and remove the ink roller (10).

e) Undo the screws (11) and (12), loosen the spacing screw (13) and remove the trough (14) and the gasket (15).

f) Remove the hose (16).

g) Reassemble in reverse order.

Caution!
Shafts and bushings must **not** be oiled.

1	Ink bottle	9	Nut
2	Spillage bottle	10	Ink roller
3	Knob	11	Screw
4	Clamp	12	Screw
5	O-ring	13	Spacing screw
6	Nut	14	Through
7	Bushing	15	Gasket
8	Transfer roller	16	Hose

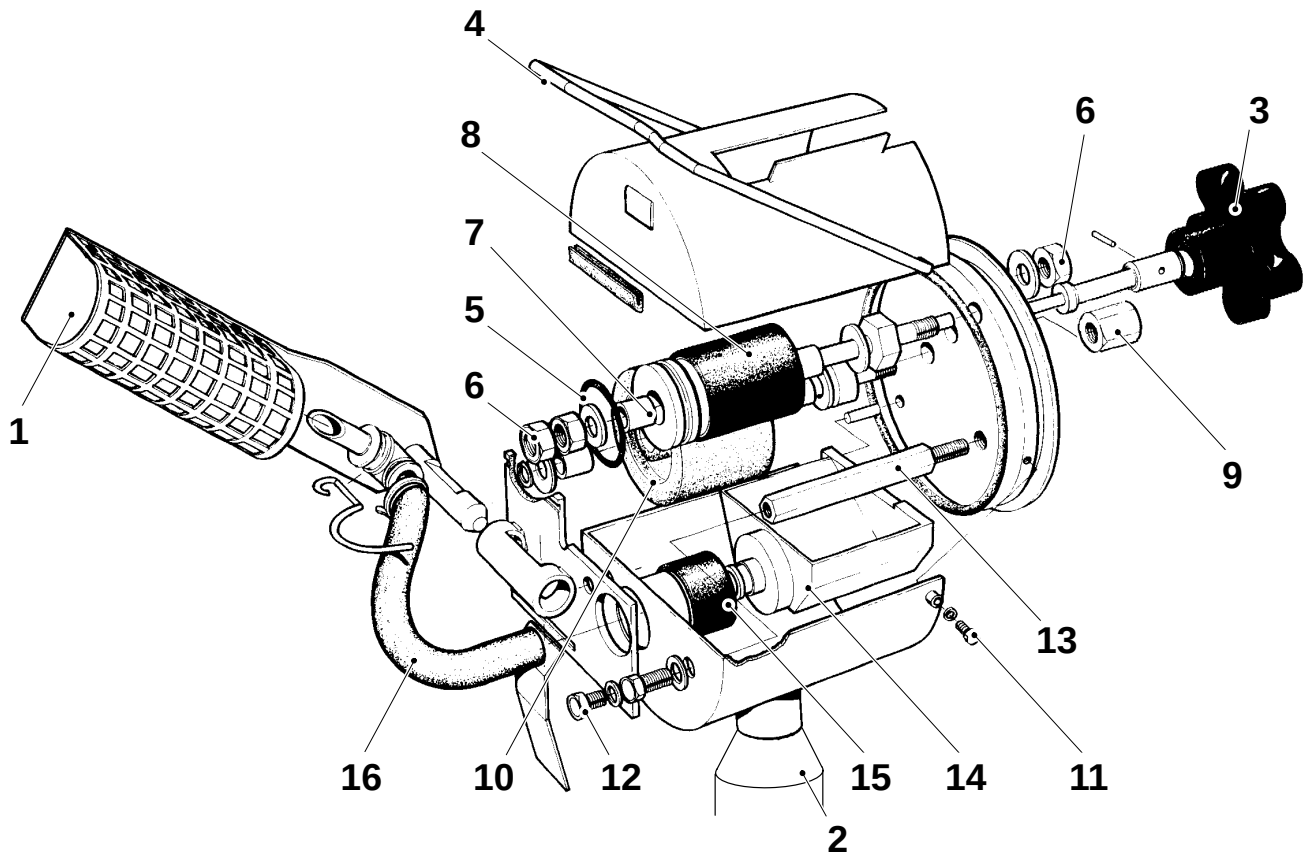

Setting

a) Fit a printing wheel and set the O-ring (1) of the transfer roller exactly in the middle between the two O-rings of the printing wheel.
Adjust by shimming under the flanges of the roller shafts.

b) Set the ink roller (2) exactly opposite the transfer roller (3). Adjust by shimming (shimming washer TP No. 293669) under the flange of the eccentric shaft (4) of the ink roller.

c) Set the ink roller so that there is no slip between the transfer roller and the ink roller, by turning the eccentric shaft (4) (turning the shaft clockwise closes up the rollers).

d) Apply template TP No. 76602 between the printing wheel shaft (5) and the transfer roller (3) and set distance A. Adjust by means of the screw (6).

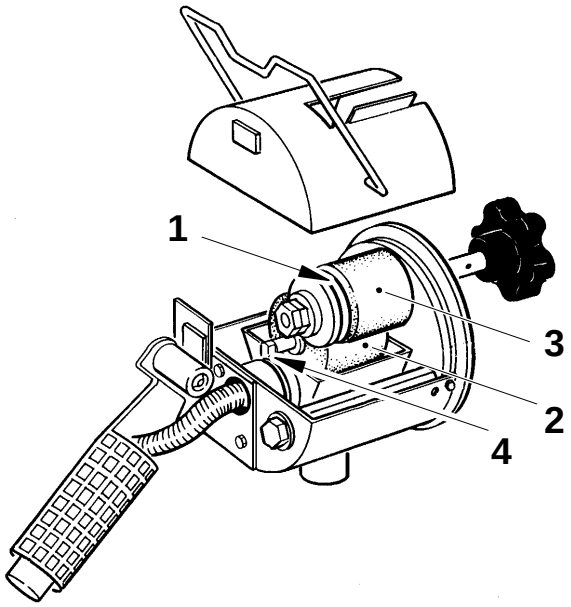

1 O-ring
2 Ink roller
3 Transfer roller
4 Eccentric shaft
5 Printing wheel shaft
6 Screw

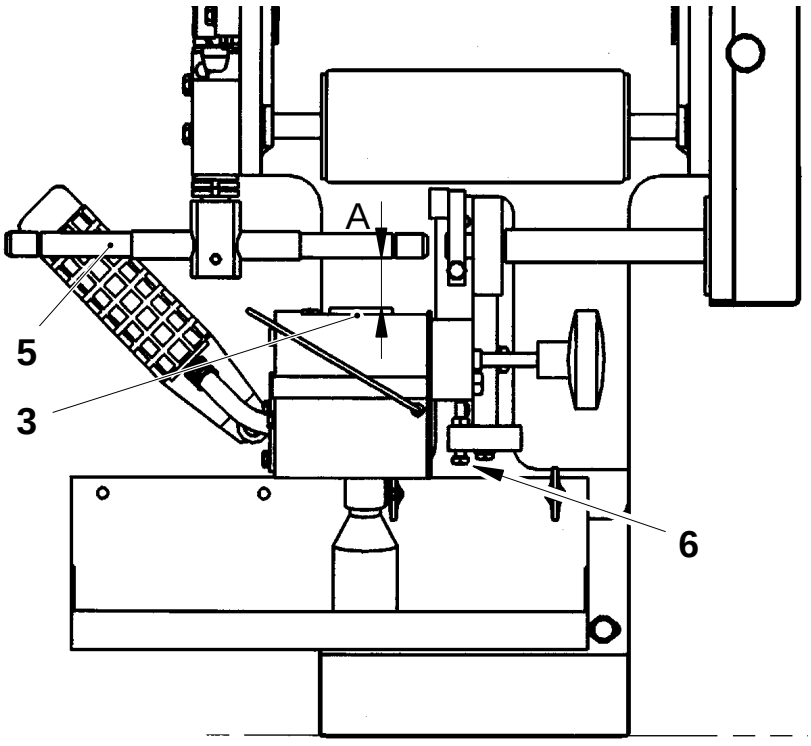

A = 31.0 ±0.1 mm

Checking

Check the following details for wear and/or damages:

- the bushings (1)
- the sleeve (2)
- the type holders (3)
- the locking spring (4)
- the O-rings (5); measure distance A

Replace as required.

A ≥ 78 mm

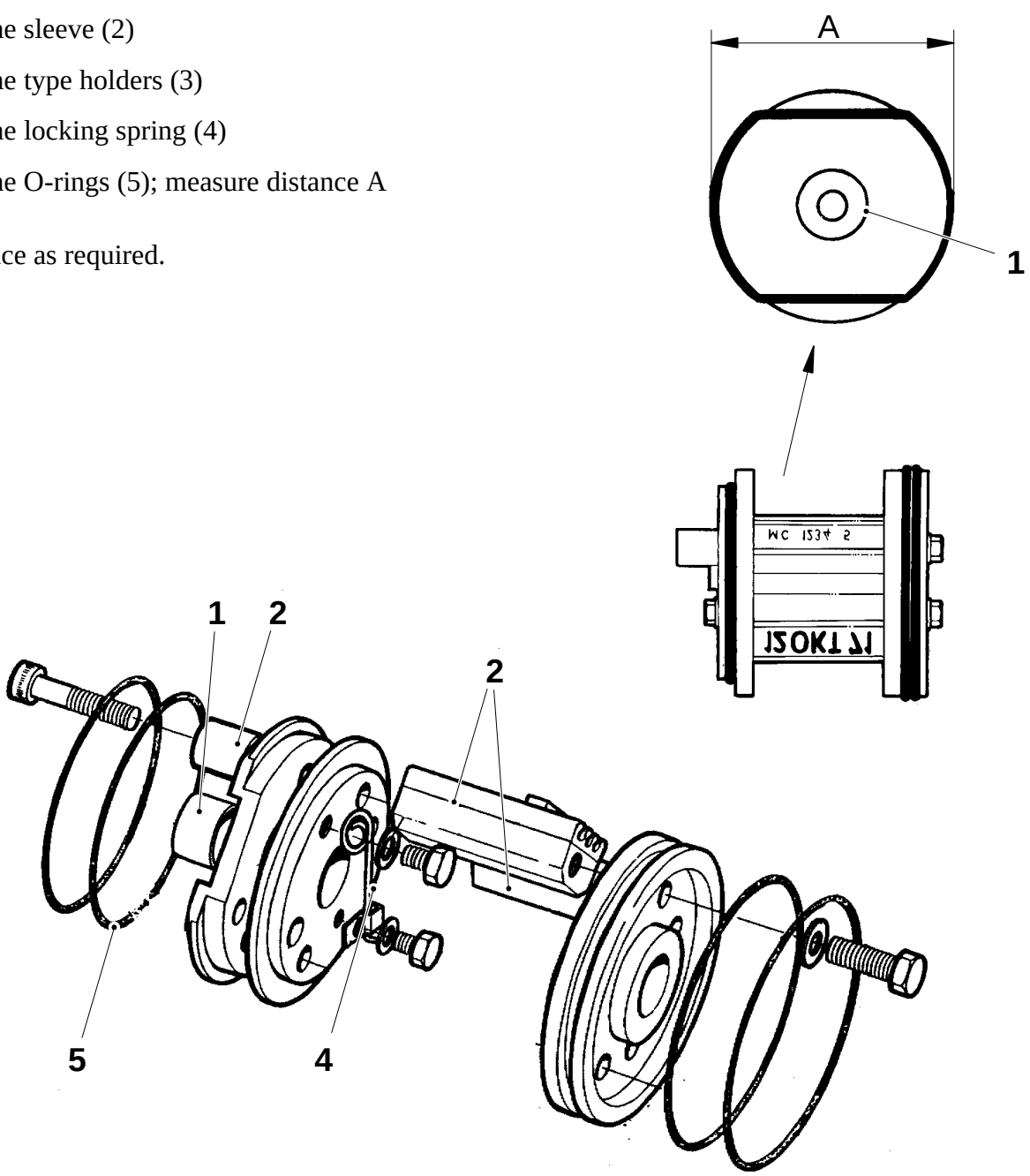

1 Bushing
2 Sleeve
3 Type holder
4 Locking spring
5 O-ring

Checking

a) Put in printing inserts, so that stamping is done within the whole of the stamping area (one of the areas marked).

b) Check that the stamp is clear within this area.

Volume, ml	A	B	C	D	E	F	G	H
125 S	4	12	8	21.5	11	–	9.5	–
160 S	4	12.5	10.5	21.5*/22**	11	–	9.5	–
200 S	4	12.5	10.5	21.5*/22**	11	–	9.5	–
180 B	4	17.5*	9.5	30*	11	26.5	9.5	17.5
200 B	4	17.5*	9.5	30*	11	26.5	9.5	17.5
236 B	4	17.5	11.5*/9.5**	30	11	–	9.5	–
250 B	4	17.5*	11.5*/9.5**	30*	11	26.5	9.5	17.5
250 S	4	21.5**	10.5**	12.5**	–	–	–	–
284 B	4	–	–	–	11	26.5	9.5	17.5

* only valid for PullTab machine
** only valid for strip applicator machine

Package seen from above

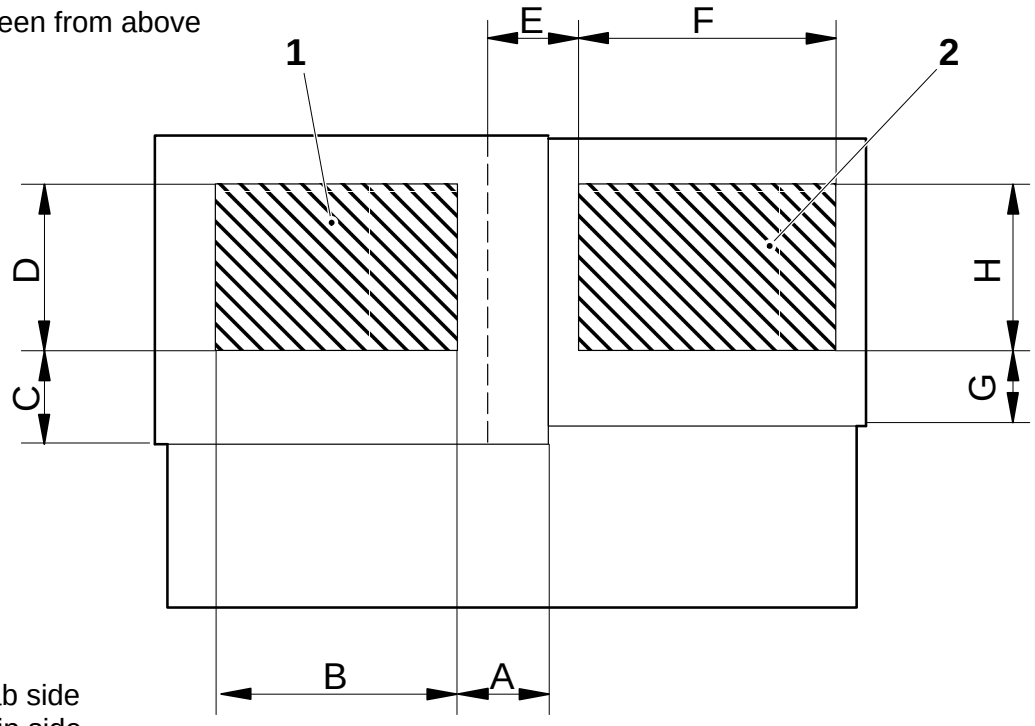

1 Pull tab side
2 LS strip side

Checking

a) Turn the knob (1) and check that it does not bind.

b) Check that the adjustment device is working properly. It must be possible to set the roller (2) in its end positions with the knob.

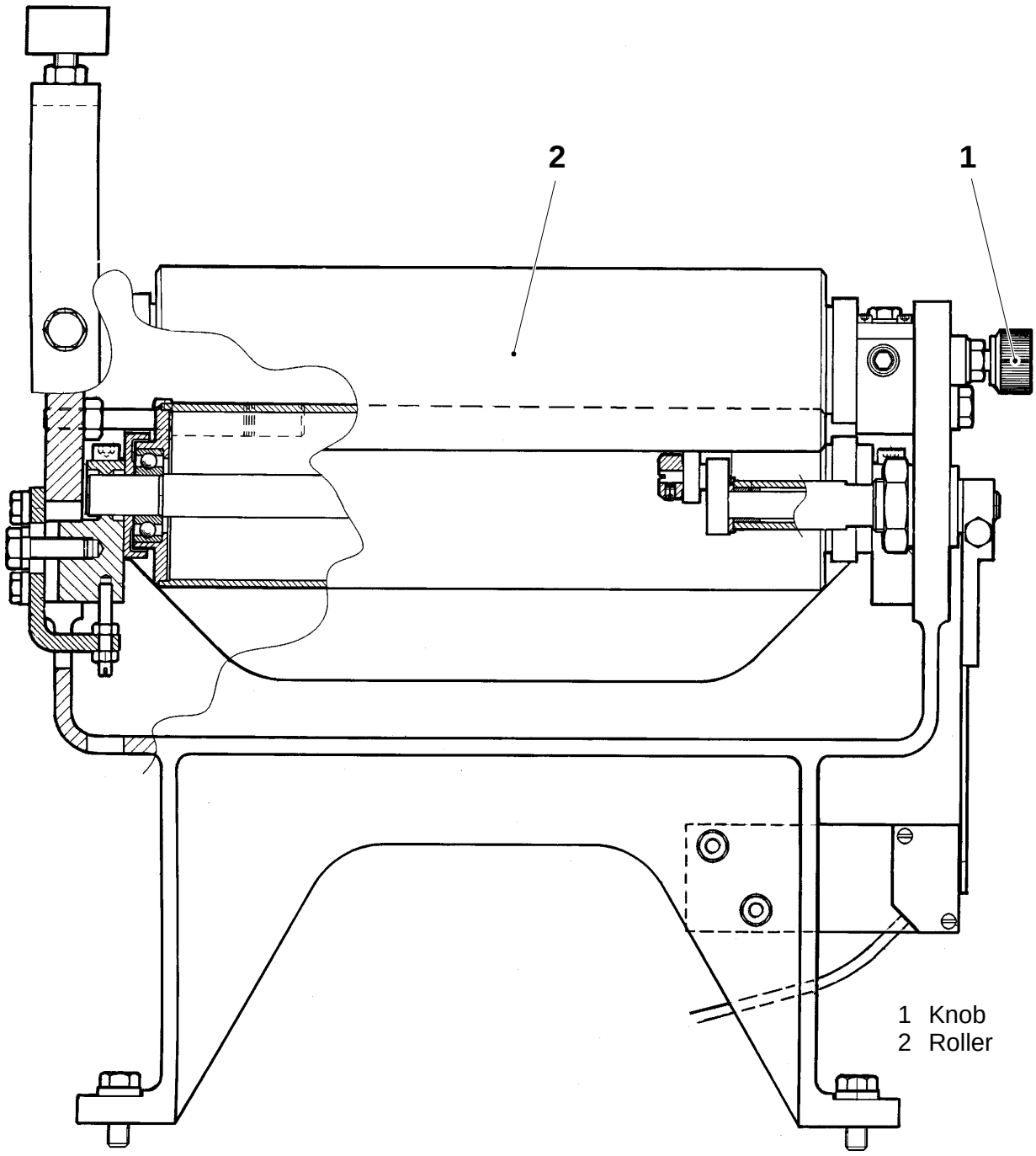

Checking

Check the following details for wear and/or damage:

- the roller (1); make sure that it rotates easily
- the arm (2); make sure that it is easy to move
- the proximity switch (3)

Replace as required.

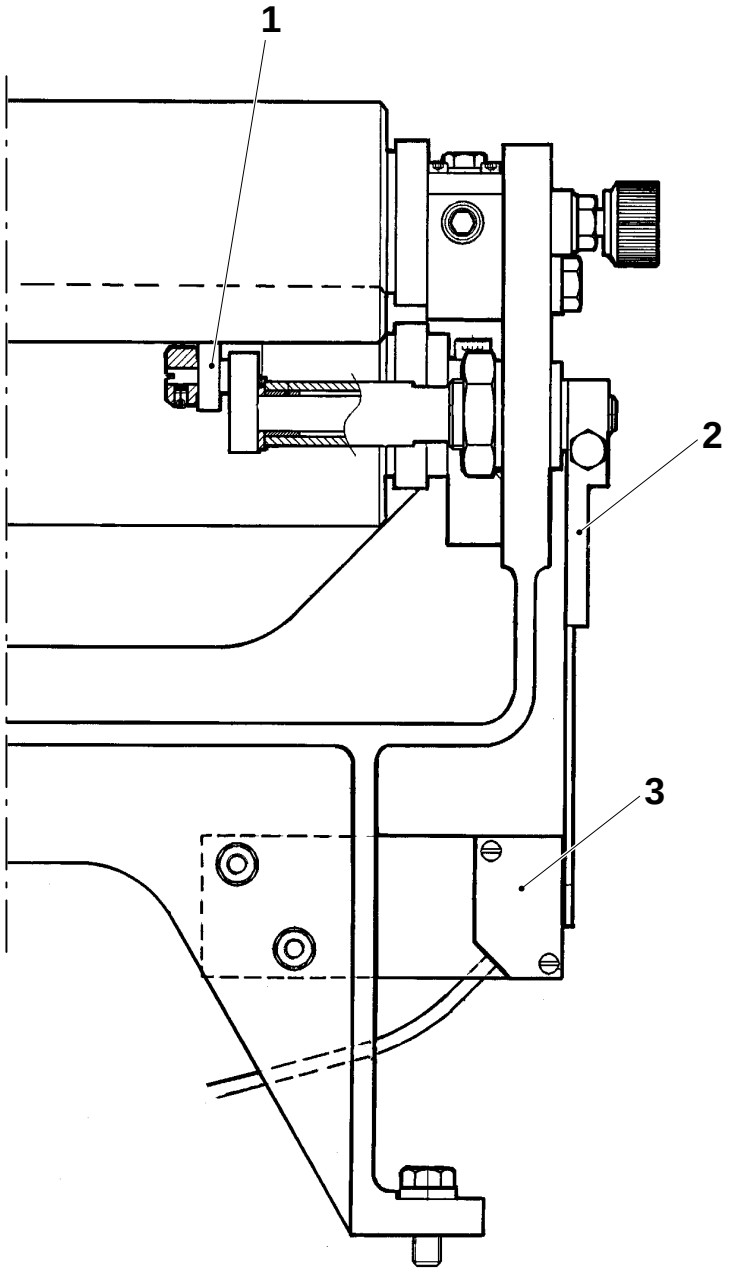

1 Roller
2 Arm
3 Proximity switch

Setting

a) Place a double piece of packaging material between the roller (1) and the bending roller (2).

b) Loosen the screw (3) and shift the arm (4) until the LED of the proximity switch (6) lights up. At the same time, set distance A between the arm and the switch.

c) Tighten the screw (3).

d) Remove the double packaging material and check that the LED goes out.

e) Insert double packaging material between the roller and the bending roller again and recheck the setting.

f) Set the pressure of the roller (1) by bending the spring (5). The roller is to touch the packaging material with as little pressure as possible.

g) Verify the setting by taping a piece of packaging material to the material web on the splice monitor side.

h) With the machine in step **Production**, check that the machine ejects two to three packages and that the package with the taped-on piece of material is one of these.

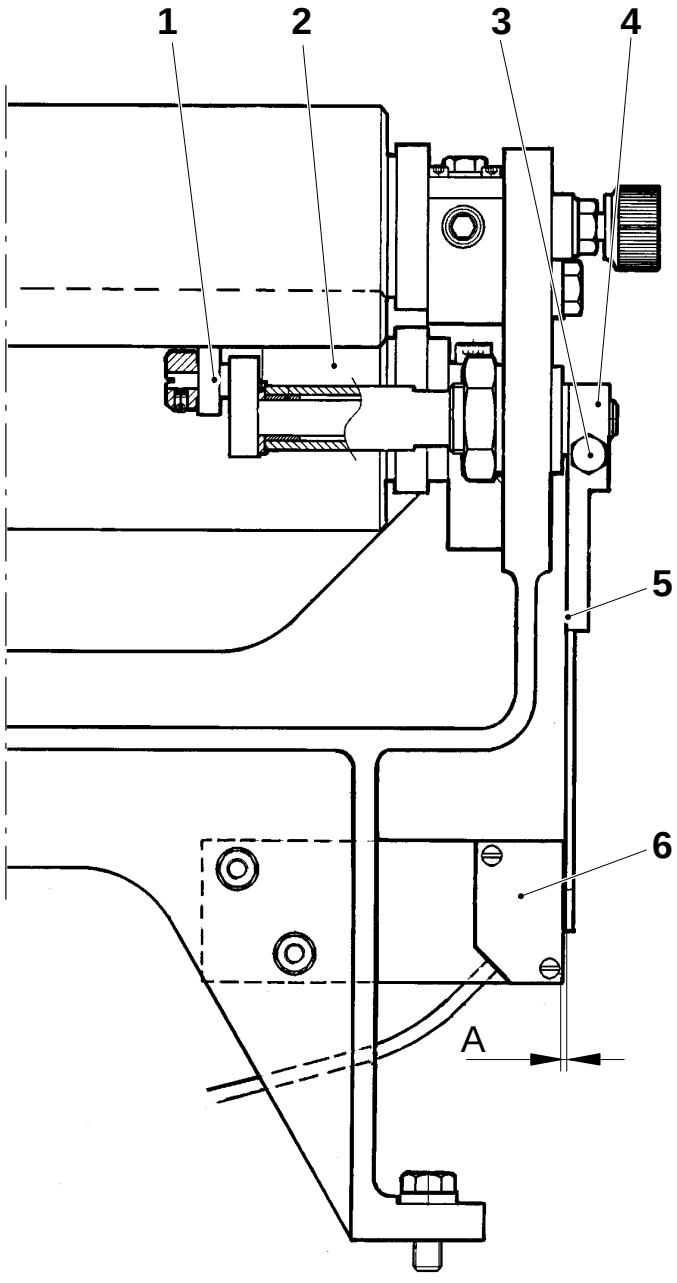

A = 0.2 – 0.5 mm

1 Roller
2 Bending roller
3 Screw
4 Arm
5 Spring
6 Proximity switch

367

Description	TB/9	TBA/9
Reference planes	801–71	801–71
Strip magazine – checking (2 pages)	803–11	803–11
Strip magazine – removal	803–21	803–21
Strip magazine – setting	803–51	803–51
Strip magazine, splicing unit – checking (2 pages)	805–11	805–11
Strip magazine, splicing unit – overhaul (2 pages)	805–31	805–31
Strip magazine, splicing unit – setting (2 pages)	805–51	805–51
Powder brake – overhaul (2 pages)	812–31	812–31
Powder brake – setting	812–51	812–51
Brake unit – checking/cleaning		813–11
Brake unit – setting (2 pages)		813–51
Strip feed – checking		814–11
Strip feed – setting		814–51
Hole punch – checking	815–11	815–11
Hole punch – overhaul	815–31	815–31
Hole punch – setting	815–51	815–51
Strip guide – checking	816–11	816–11
Strip guide – setting (2 pages)		816–51
Strip applicator – checking		817–11
Strip applicator – setting		817–51
Sealing jaw – checking		818–11
Sealing jaw – overhaul		818–31
Sealing jaw – setting		818–51
Counter jaw – checking		819–11

Description	TB/9	TBA/9
Counter jaw – removal		819–21
Counter jaw – setting		819–51
Counter jaw – setting		819–52
Tab unit – checking	823–11	823–11
Tab unit – checking	823–12	823–12
Tab unit – setting (2 pages)	823–51	823–51
Tab strip feed device – checking	827–11	827–11
Tab strip feed device – setting (3 pages)	827–51	827–51
Tab strip magazine – checking	828–11	828–11
Knives – checking	829–11	829–11
Knives – replacement (3 pages)	829–31	829–31
Twisted strip guard – checking	831–11	831–11
Twisted strip guard – setting	831–51	831–51
Bending rollers – checking	833–11	833–11
Bending rollers – setting	833–51	833–51
Vacuum pump – checking	834–11	834–11
Vacuum pump – setting	834–51	834–51
Crease wheel – checking	835–11	835–11
Crease wheel – setting (2 pages)	835–51	835–51
Crease wheel, vacuum – checking	837–11	837–11
Crease wheel, vacuum – overhaul	837–31	837–31
Crease wheel, vacuum – setting	837–51	837–51
PullTab position – setting	840–51	840–51
PullTab position – setting	841–51	841–51

Description	TB/9	TBA/9
PullTab hole – setting (2 pages)	842–51	842–51
Start-up sequence of PullTab hole and tab – setting	843–51	843–51
Drive roller – checking	844–11	844–11
Pressure roller – checking	845–11	845–11
Pressure roller – setting	845–51	845–51
Packaging material magazine – setting	847–51	847–51
Cams and indexing – sequence diagram and positioning cams (2 pages)	849–71	849–71
Brake – setting	855–51	855–51
Safety clutch – removal	856–21	856–21
Drive belt, PullTab device – checking	858–11	858–11
Drive belt, PullTab device – replacement	858–31	858–31
Drive belts – checking	861–11	861–11
Indexing unit – checking	865–11	865–11
Lubrication – rollers and bearings/gear wheel	865–71	865–71
Synchronization – setting (3 pages)	871–51	871–51
PullTab device, motor – setting	873–51	873–51
Pneumatic diagram	878–71	878–71
Black tape detector – setting	880–51	880–51
Black tape detector, sensor control – setting	881–51	881–51

Description	TB/9	TBA/9
Dating unit – checking (2 pages)	885–11	885–11
Dating unit – removal	885–21	885–21
Dating unit – overhaul (3 pages)	885–31	885–31
Dating unit – setting (4 pages)	885–51	885–51
Adjustment device, web – checking	890–11	890–11

Reference planes

Plane A (1) runs horizontally in the PullTab device.

Plane B (2) runs vertically in the PullTab device.

1 Plane A
2 Plane B

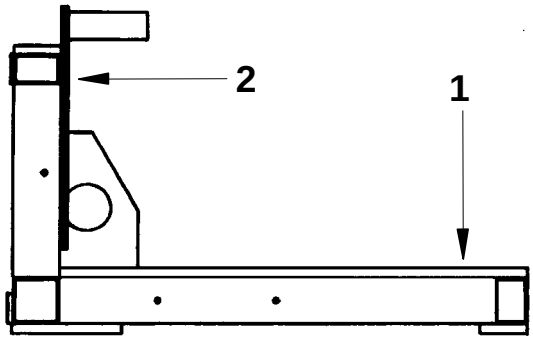

A — A

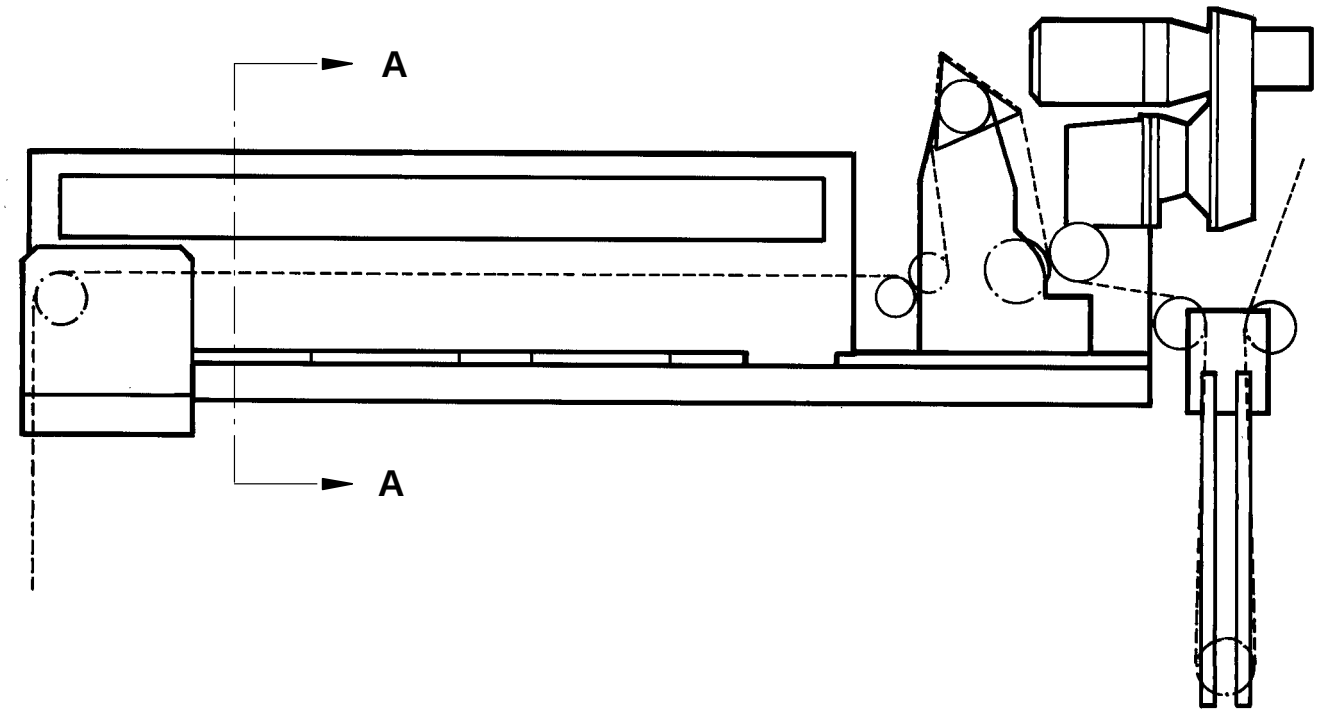

Checking

Turn on the main power switch.

Check the following details for wear and/or damage:

- the flag (1); make sure that the LED on the proximity switch (2) lights up on both lugs of the flag
- the lip brake (3)
- the IS strip wheels (4); make sure that they rotate freely without radial play
- the brake rubber (5) and the leaf spring; make sure that there are no cracks
- the rollers on the strip magazine; make sure that they rotate freely
  The rollers (6) and (7) must be parallel with each other; max axial play 0.5 mm.
  The rollers (8) and (9) must be parallel with each other; max axial play 0.5 mm
- the proximity switch (10); make sure that it works by spinning the roller

(Cont'd overleaf)

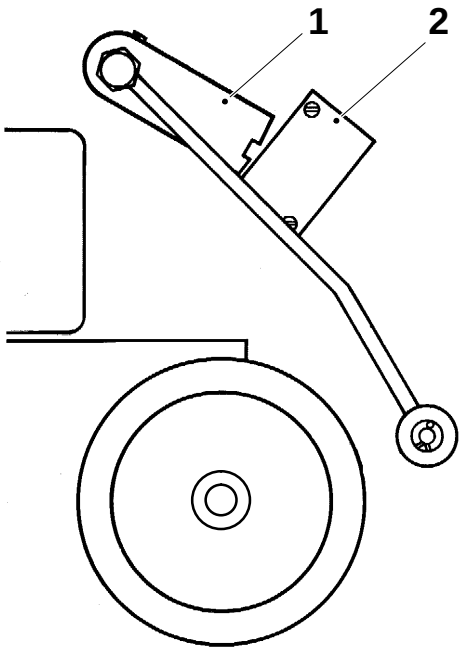

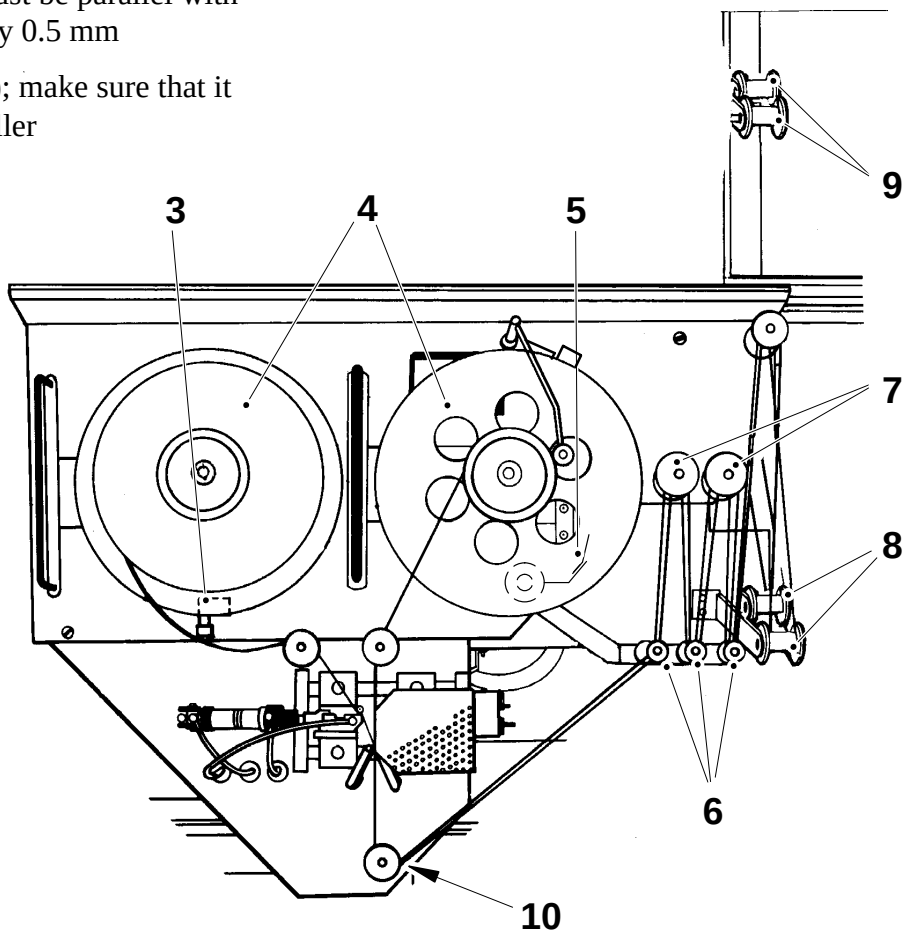

1 Flag
2 Proximity switch
3 Lip brake
4 IS strip wheel
5 Brake rubber
6 Roller
7 Roller
8 Roller
9 Roller
10 Proximity switch

(Cont'd)

- the springs (11)
- the bushing (12) in the arm

Replace as required.

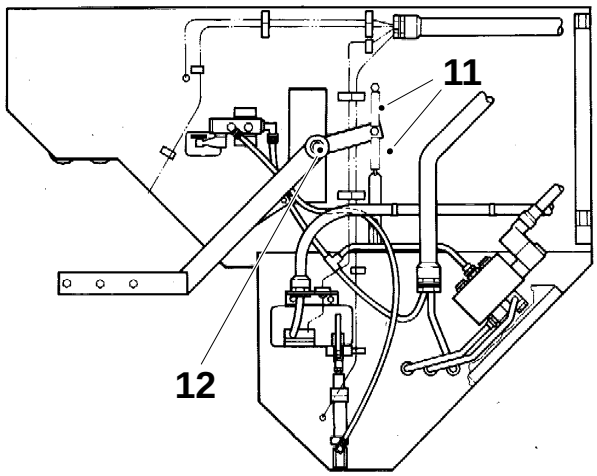

11 Springs
12 Bushing

Removal

a) Undo the screws (1) and swing out the IS strip magazine (2).

b) Undo the screws (3) and (4) and remove the cover (5) of the IS strip magazine.

Fit in reverse order.

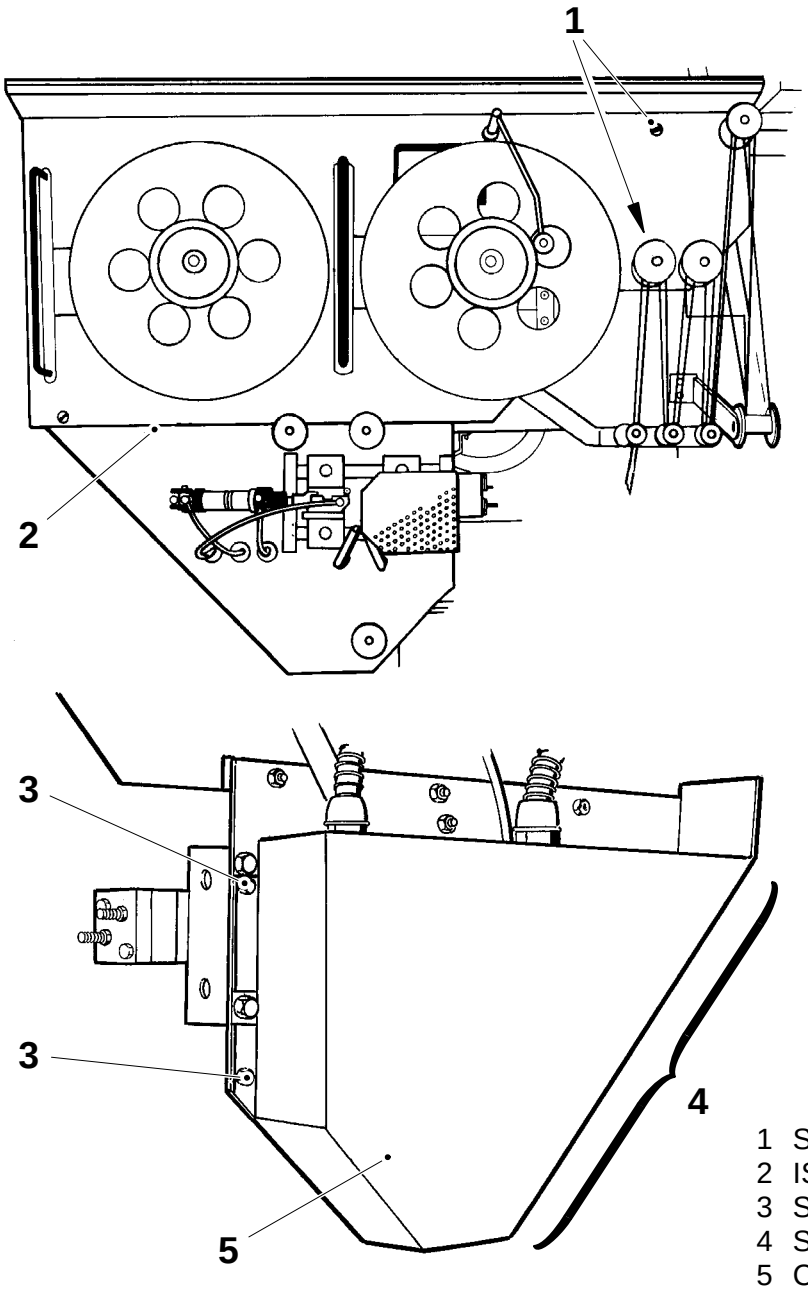

1 Screw
2 IS strip magazine
3 Screw
4 Screw (3 off)
5 Cover

Setting

Turn on the main power switch.

A = 0.2 – 0.3 mm
B = 12 ±1 mm
C = 1 – 2 mm

Strip supply monitor

a) Set distance A between the switch (1) and the flag (2) by shifting the switch.

b) Place an empty IS strip roller for wide strip (3) in the strip magazine.

c) Loosen the screw (4) to set the flag so that the roller (5) is distance B over the empty roller when the LED on the switch lights up on the lower lug (6).

d) Tighten the screw.

IS strip breakage monitor

Adjust the proximity switch (7) so that there is a distance C between the proximity switch and the roller (8).

1 Proximity switch
2 Flag
3 Empty wide IS strip roller
4 Screw
5 Roller
6 Lower lug of flag
7 Proximity switch
8 Roller

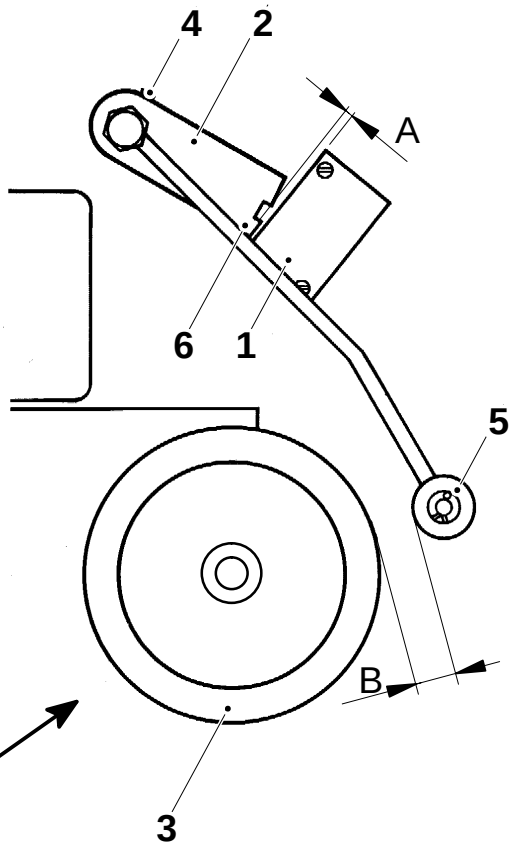

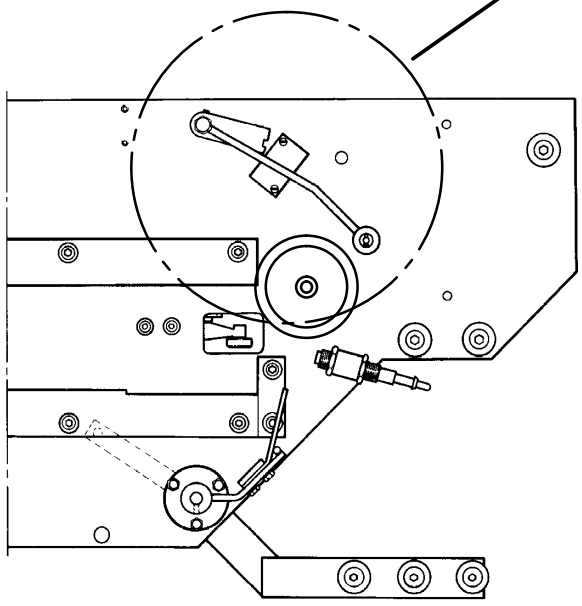

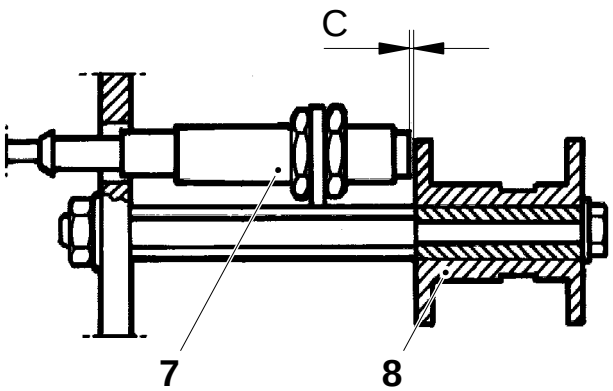

Checking

Step up the machine to step **Ready for production**.

Check the following details for wear and/or damage:

- the vacuum holes (1); make sure that they are clear and that the that the vacuum is sufficient to hold the IS strip (2) in position
- the ball bushings (3); make sure that they do not get stuck; tighten the screw (5) as required
- the V-notch (4), make sure that it moves easily
- the teflon cloths (7) on the counter jaw (6); make sure that it is correctly positioned
- the edge (8) for burning off the IS strip; make sure that it is not coated with charred plastic residues

Replace as required.

a) Check that the jaws are parallel by placing a piece of IS strip between the jaws. Activate the solenoid valve of the counter jaw.

b) Pull both edges of the IS strip. The IS strip must be held equally hard on both sides. Deactivate the solenoid valve.

c) Check that the pin and the V-notch are parallel by putting a piece of IS strip between the pin and the V-notch. Activate the solenoid valve of the counter jaw.

d) Pull both edges of the IS strip. The IS strip must be held equally hard on both sides. Deactivate the solenoid valve.

(Cont'd overleaf)

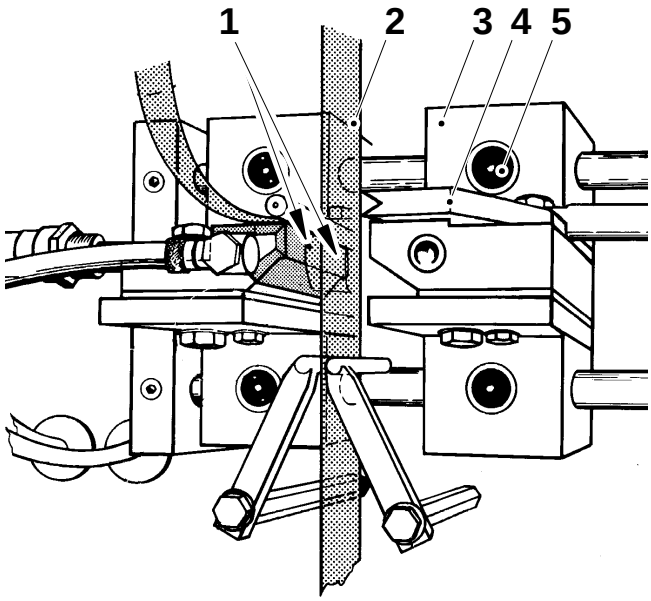

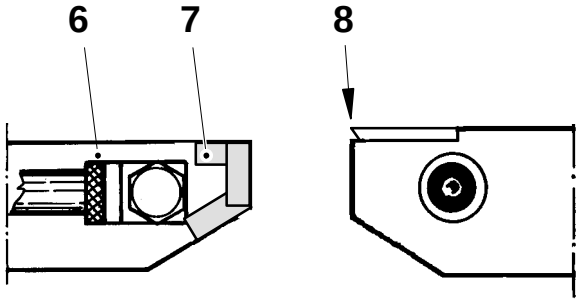

1 Vacuum hole
2 IS strip
3 Ball bushing
4 V-notch
5 Screw
6 Counter jaw
7 Teflon cloth
8 Edge

(Cont'd)

During operation

a) With the machine in step **Production**, prepare for splicing.

b) Press the **Manual strip splice** button.

c) Perform a **Short stop**.

d) Check the quality of the splice.

e) Start the machine again.

f) Put in a new roller and check that the pin (9) is in its upper position until the roller (10) has moved down to the RH position.

g) Check that the pin goes down on the LH side side of the strip.

h) Setting, see page MM 805–5X.

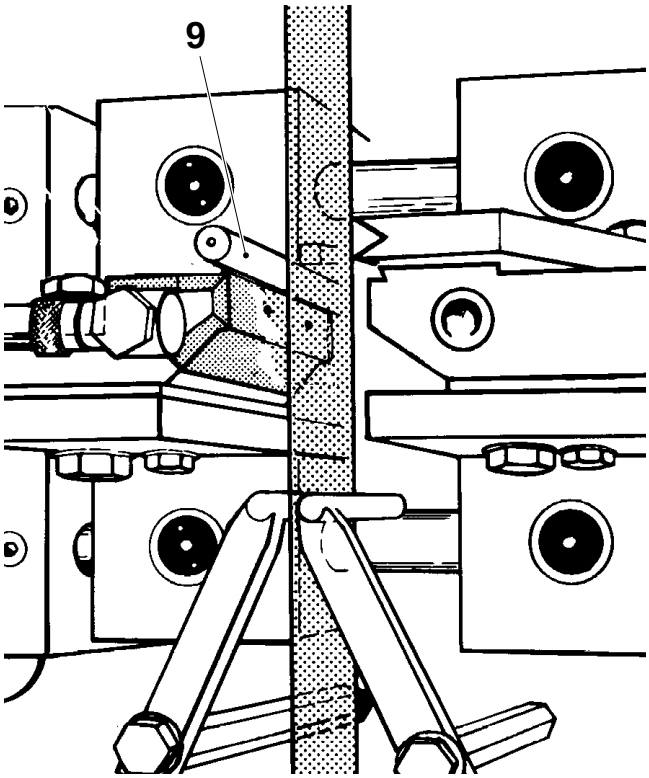

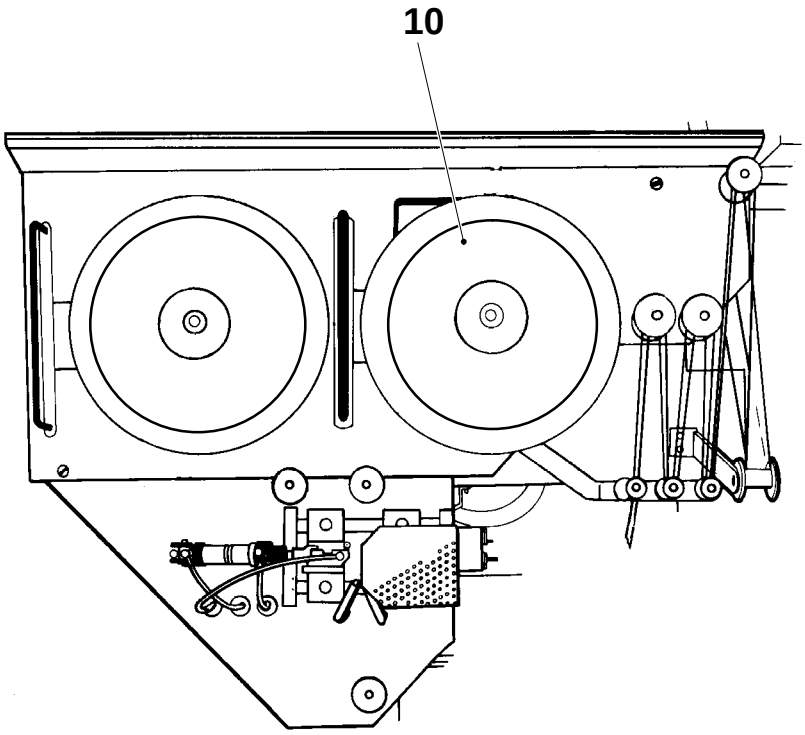

9 Pin
10 IS strip roller

Overhaul

Undo the screws (1) and swing out the IS strip magazine.

Heater and sensor

a) Remove the clamp (2) to the cables.

b) Replace heater and/or sensor.

c) Use heat-zink compound when fitting in reverse order.

Knife

a) Remove the string clamp (3) on top of the V-notch.

b) Undo the screws (4) and replace the knife.

c) Use heat-zink compound when fitting in reverse order.

Upper ball bushings

a) Loosen the clamp (5) to the cylinder axle.

b) Undo the screw (6).

c) Loosen the socket screws (7) and tap out the axle (8).

d) Undo the screws (9) and replace the bushing (10).

e) Remove the screw (11) to the V-notch.

f) Undo the screws (12) and replace the bushing (13).

g) Fit in reverse order

h) Set the parallelity between the pin and the V-notch, see page MM 805–5X.

(Cont'd overleaf)

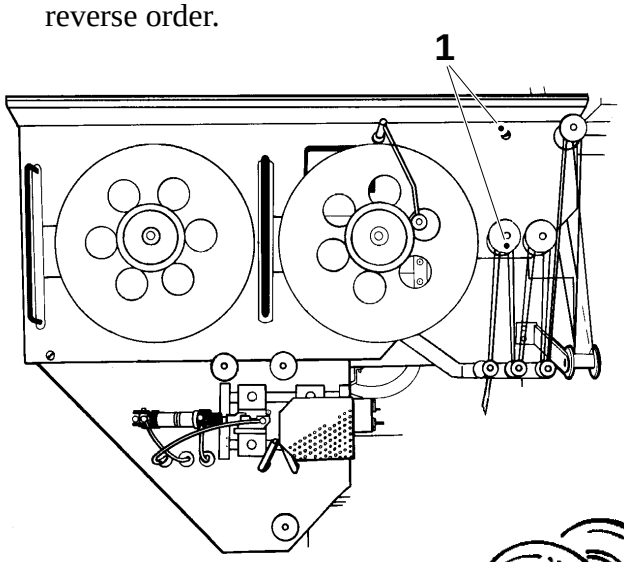

1 Screw
2 Clamp
3 Clamp
4 Screw
5 Clamp
6 Screw
7 Socket screw
8 Axle
9 Screw
10 Bushing
11 Screw
12 Screw
13 Bushing

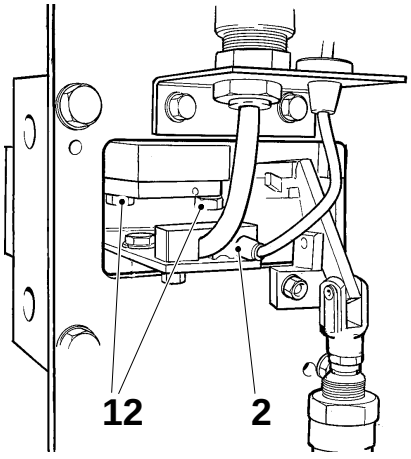

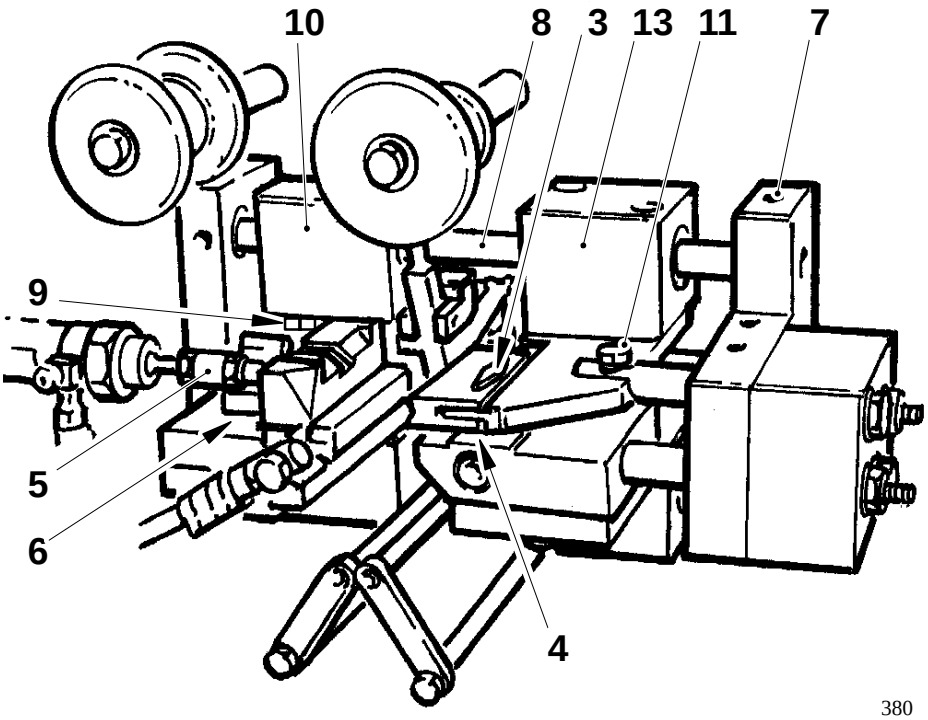

380

(Cont'd)

Lower ball bushings

a) Remove the clamp to the cables and remove the heater and the sensor.

b) Loosen the clamp (5) to the cylinder axle.

c) Undo the screws (13).

d) Loosen the socket screws (14) and tap out the axle (15).

e) Undo the screws (16) and replace the bushing (17).

f) Undo the screws (18) and replace the bushing (19).

g) Fit in reverse order. Use heat-zink compound when fitting the sensor and the heater.

h) Set the parallelity between the jaws, see page MM 805–5X.

Swing back the IS strip magazine and tighten the screws.

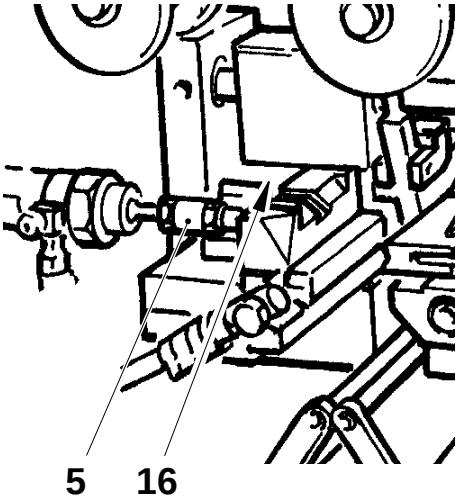

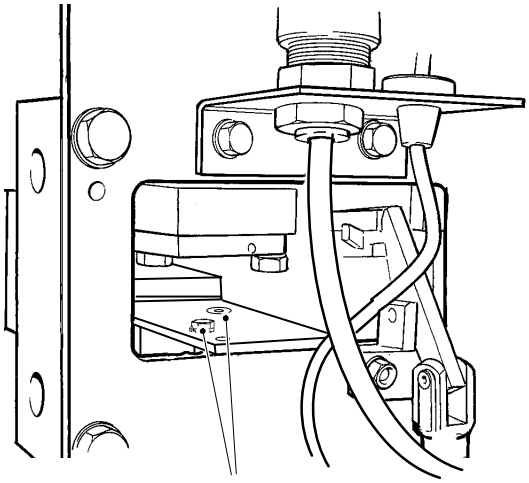

5 Clamp
13 Screw
14 Socket screw
15 Axle
16 Screw
17 Bushing
18 Screw
19 Bushing

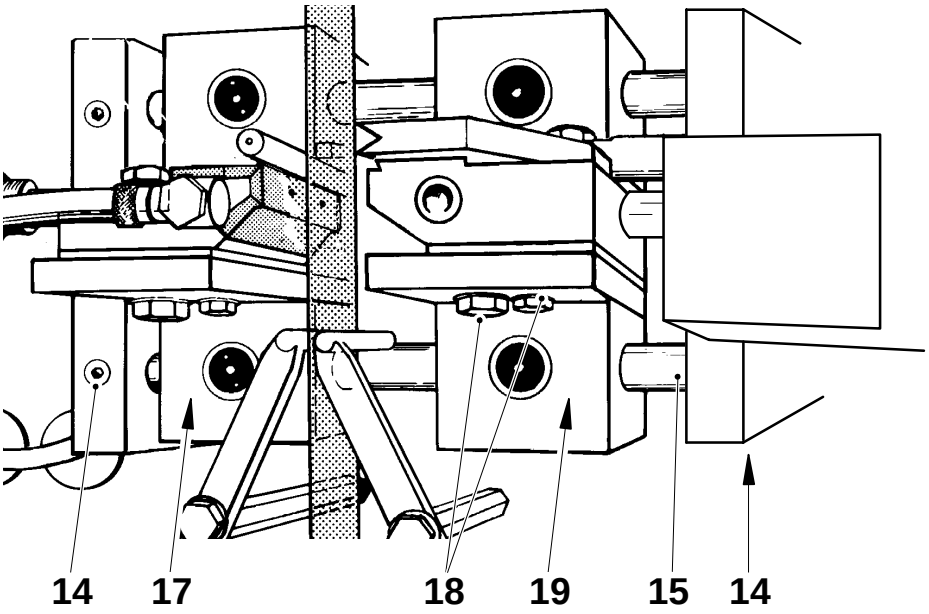

Setting

Open for incoming air. Turn on the main power switch.

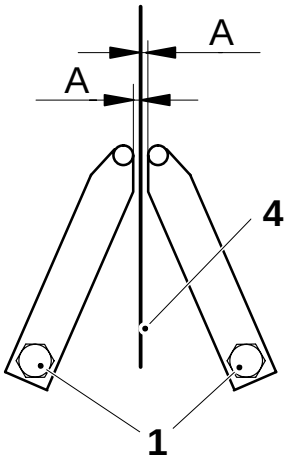

A = 1 mm

a) Set distance A, between the IS strip and the two fender pins, on both sides. Adjust by means the screws (1).

b) Set the speed of the cylinder for the pin by means of the screw for input air.

c) Set the speed of the sealing cylinder by means of the screws for input and outlet air.

d) Loosen the two screws (2) and set the counter jaw (3) parallel with the heating jaw.

e) With IS strip (4) inserted between the jaws, check that the counter jaw and heating jaw (5) are parallel. Actuate the cylinder by hand. Pull both edges of the IS strip; it must be held equally hard on both sides.

f) Loosen the two screws (6) and the screw (7) and set the V-notch stop block (8) parallel with the pin (9).

g) Check by placing the IS strip between the pin and the V-notch stop block. The IS strip is to be held equally on both sides. Tighten the screws.

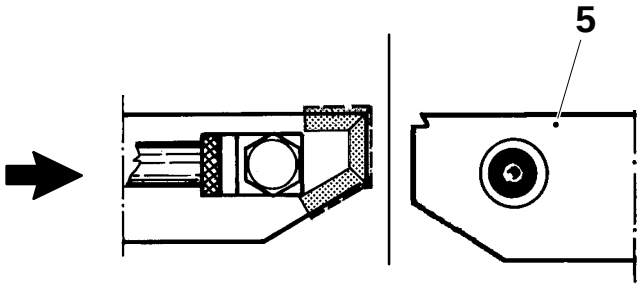

(Cont'd overleaf)

1 Screw
2 Screw
3 Counter jaw
4 IS strip
5 Heating jaw
6 Screw
7 Screw
8 V-notch stop block
9 Pin

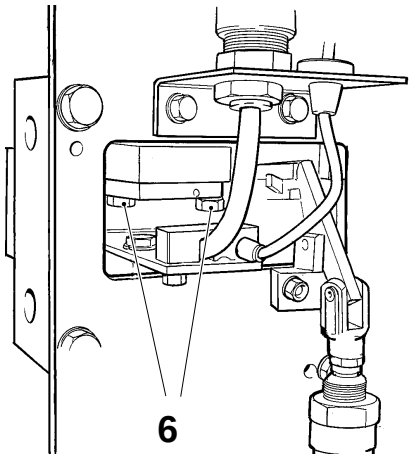

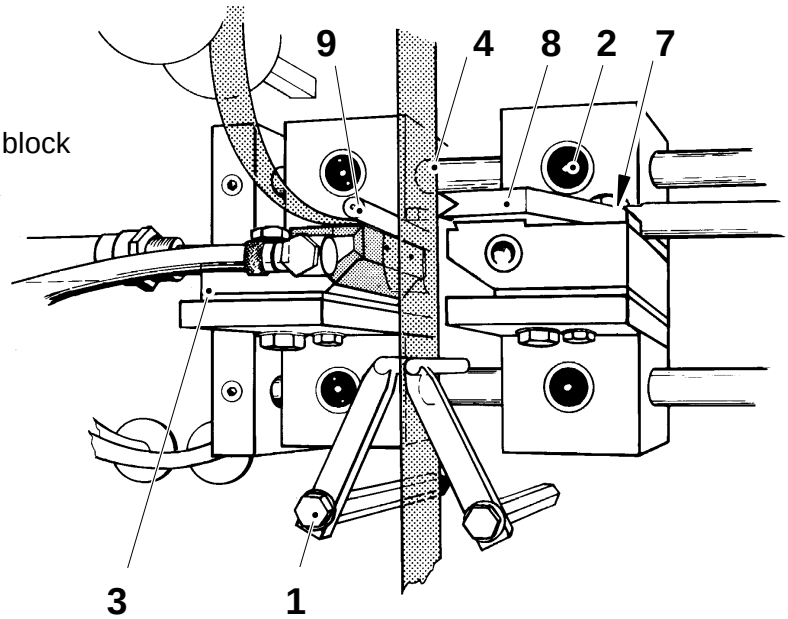

(Cont'd)

h) Set distance B.

i) Activate the solenoid valve (10) of the pressure jaw cylinder. The jaw pressure should now press back the heating jaw so that it moves distance C. Adjust the cylinder shaft and make a new stroke with the cylinder and repeat until the correct distance is obtained.

j) Deactivate the solenoid valve and align the stop screw (11) so that the cylinder does not reach/touch the bottom. Make sure that the pin (9) runs free from the roller.

k) Activate the solenoid valve and adjust the screw (12) so that the pin overlap, distance D, is maintained.

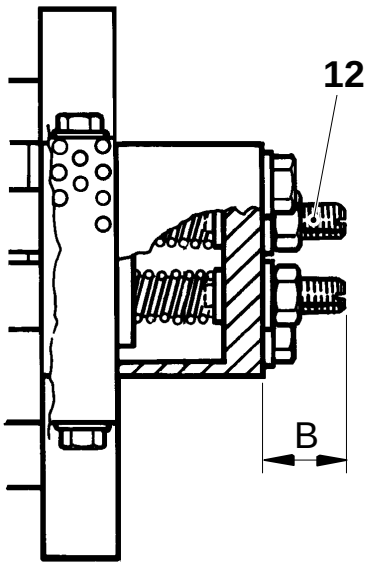

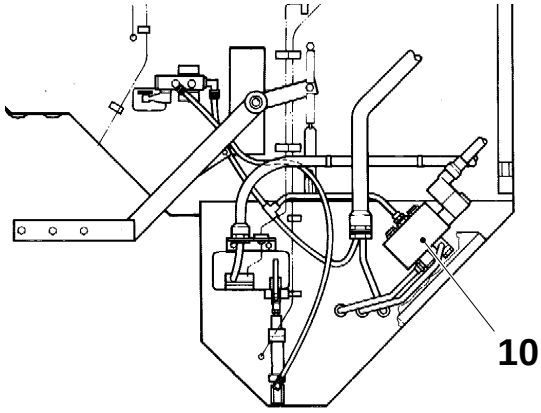

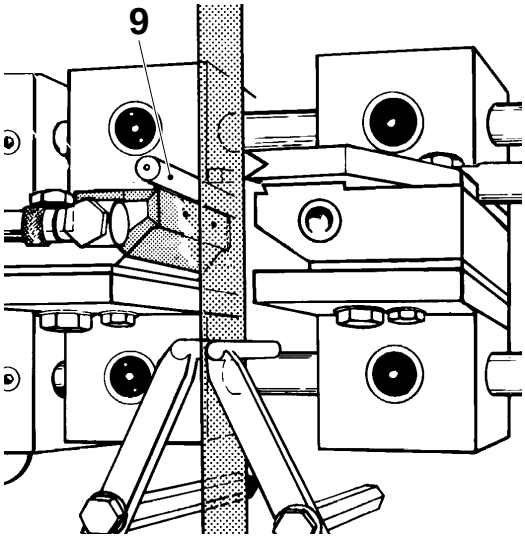

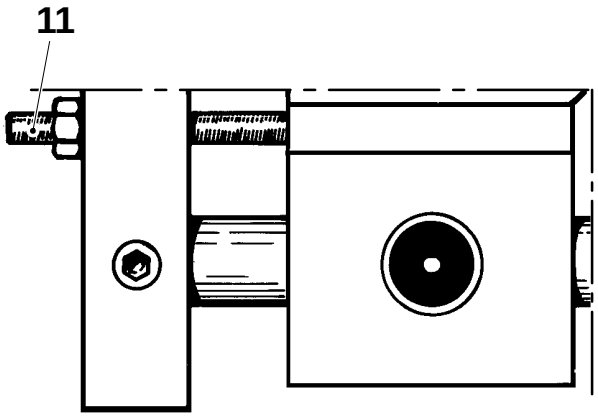

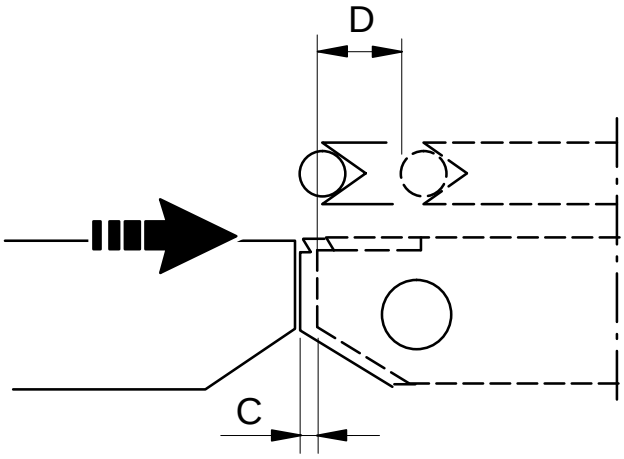

9 Pin
10 Solenoid valve
11 Stop screw
12 Screw

B = 13 mm ± 1 mm
C = 0.1 – 0.5 mm
D = 8 –10 mm

Overhaul

Check the rubber covering of the roller (1) for wear and/or damage. If required, replace the roller as follws:

a) Turn the main shaft until the cam to the brake enters the lowest section of the cam.

b) Undo the nut (2), the screws (3) and (4) and remove the end section (5).

c) Remove the powder brake unit (6) from the shaft.

d) Undo the screws (7) to cable bracket.

e) Undo the three screws (8) that are through, see fig. 3.

(Cont'd overleaf)

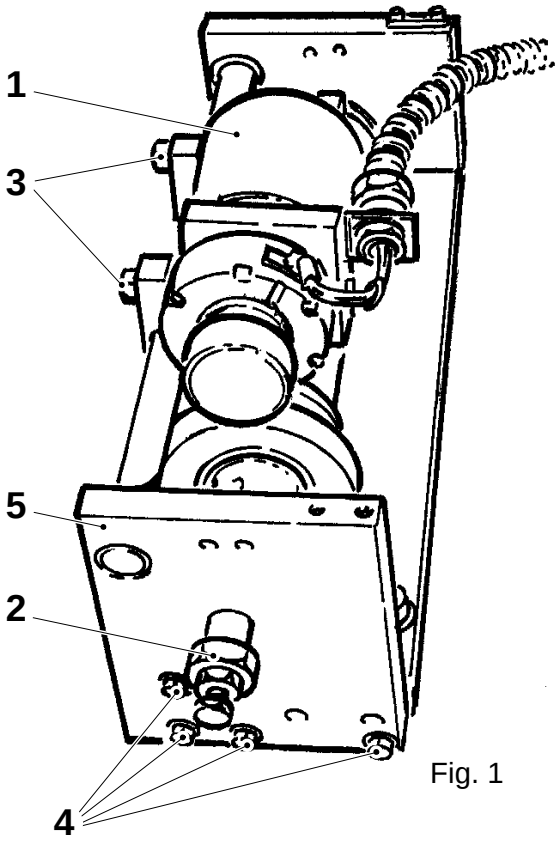

Fig. 1

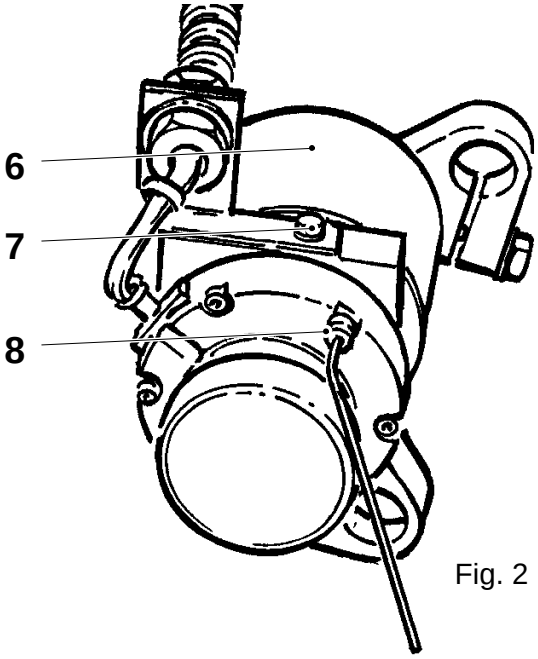

Fig. 2

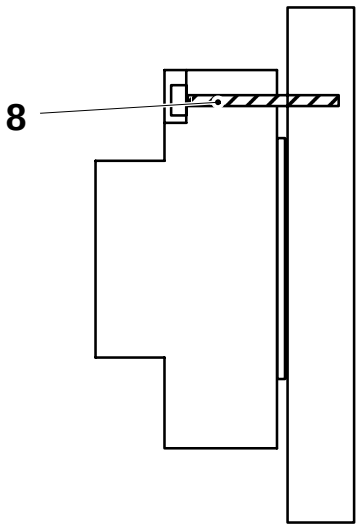

Fig. 3

1 Roller
2 Nut
3 Screw
4 Screw
5 End section
6 Powder brake unit
7 Screw
8 Screw

(Cont'd)

f) Loosen the electrical brake from the axle, see fig. 4.

g) Remove the clamp ring (9) and the clamping plate (10).

h) Undo the four screws (11); take two of the screws and fit in the holes (12) to separate the roller from the flange. Repeat on the other side.

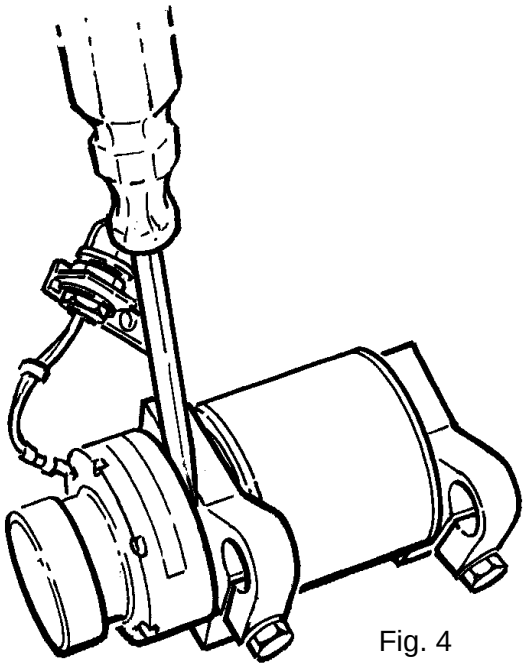

Fig. 4

Replace the roller (1).

Reassemble in reverse order.

Note
Press the roller (1) against the bending roller and tighten the screws (3).

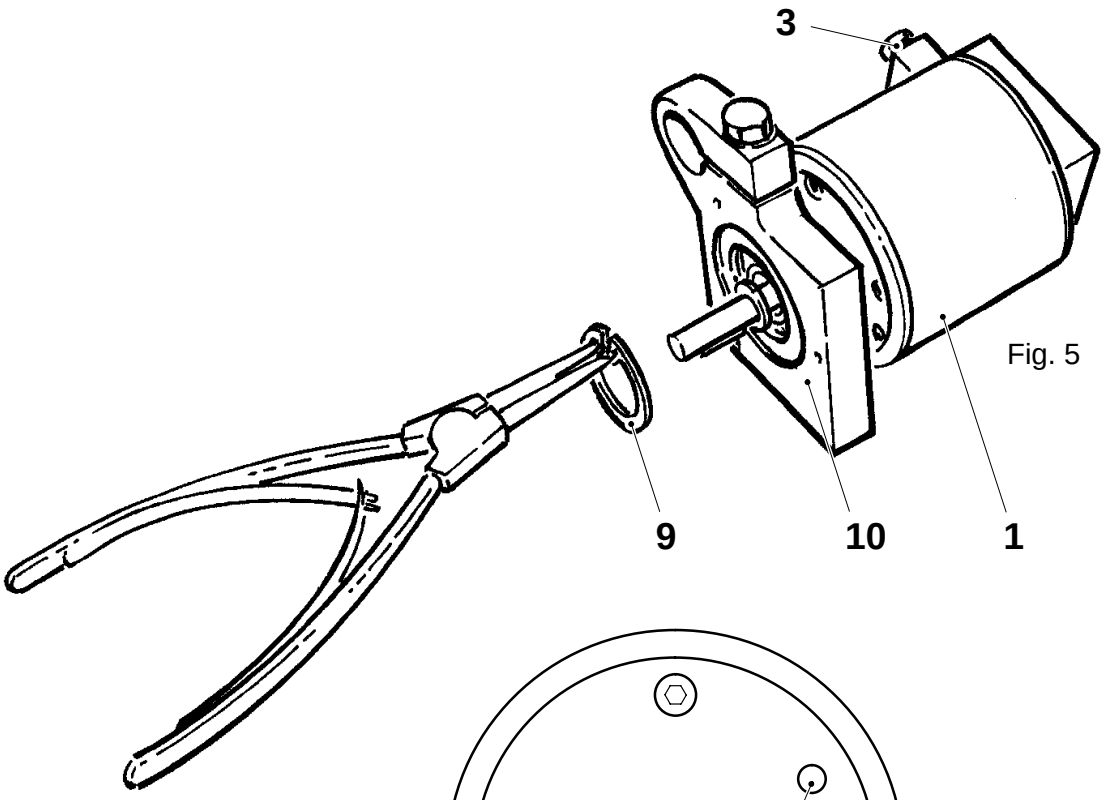

Fig. 5

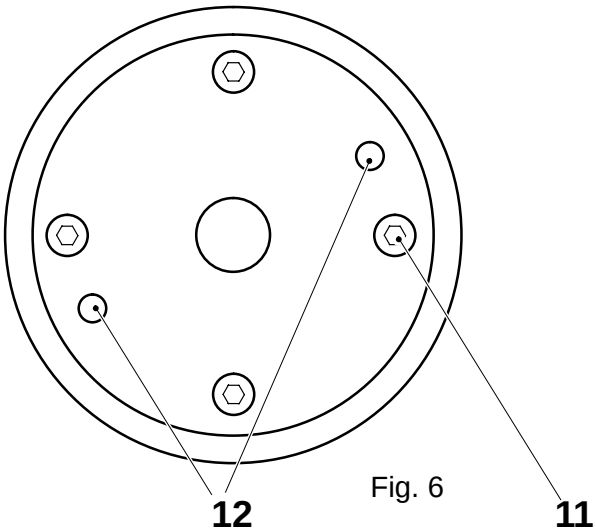

Fig. 6

1 Roller
3 Screw
9 Clamp ring
10 Clamping plate
11 Screw
12 Hole

Setting

Set the powder brake unit in the centre of the bending roller by loosening the screws (1) and shifting the powder brake roller (2) sideways.

Set the brake unit, see page MM 813–5X.

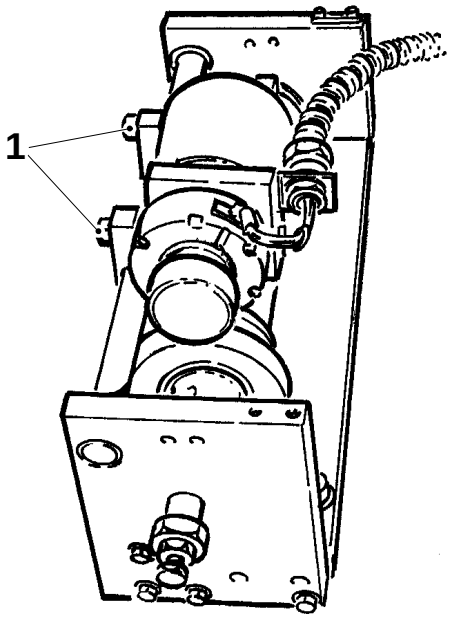

1 Screw
2 Brake roller

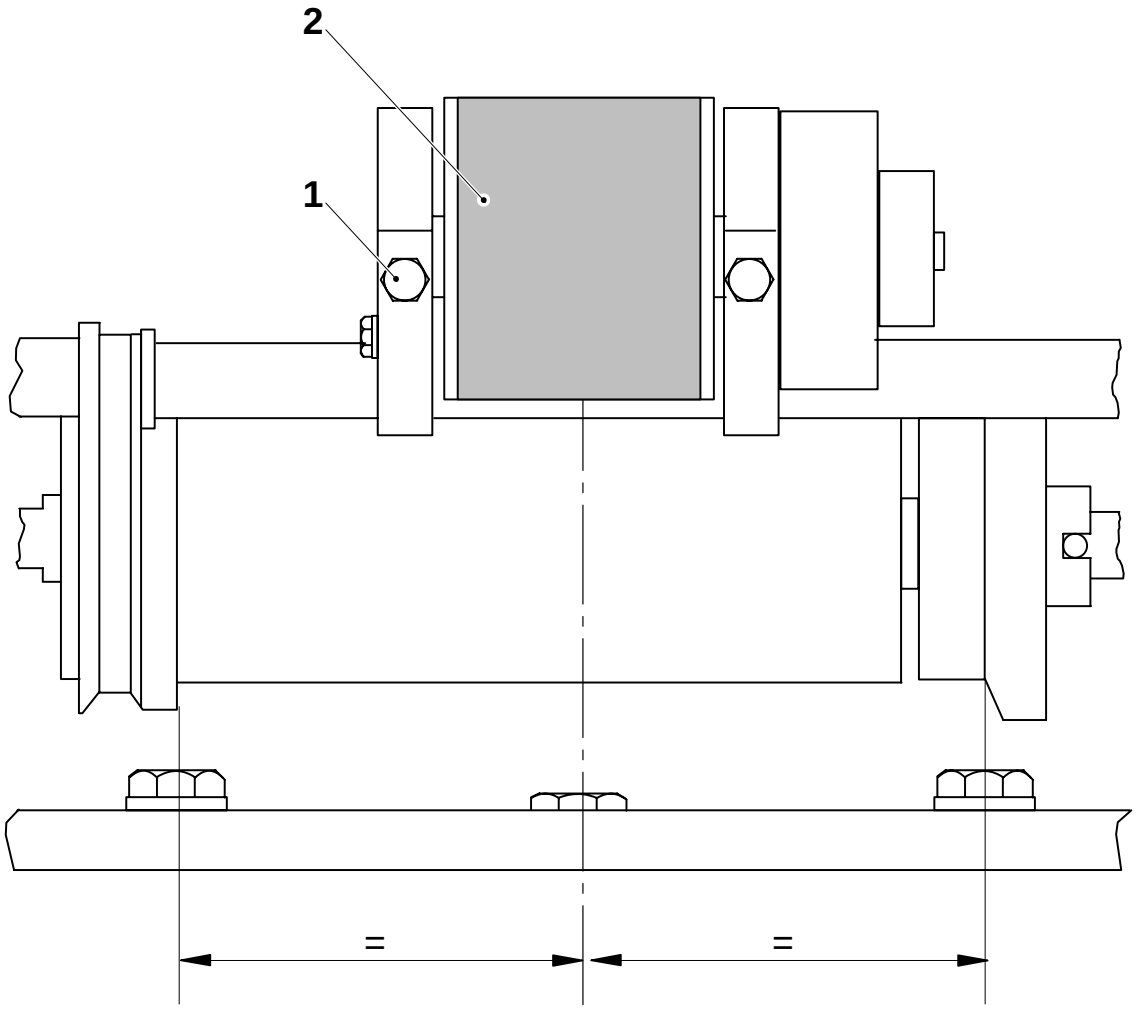

Checking

Check the following details for wear and/or damage:

- the bearing (1)
- the cam (2) and the roller
- the link (3)
- the rubber roller (4); clean as required
- the proximity switch (5)
- the flange (6); make sure that it moves easily
- the radial play of the bending rollers; if excessive play, replace the bearings (7)
- the plastic wheels (8)

Replace as required.

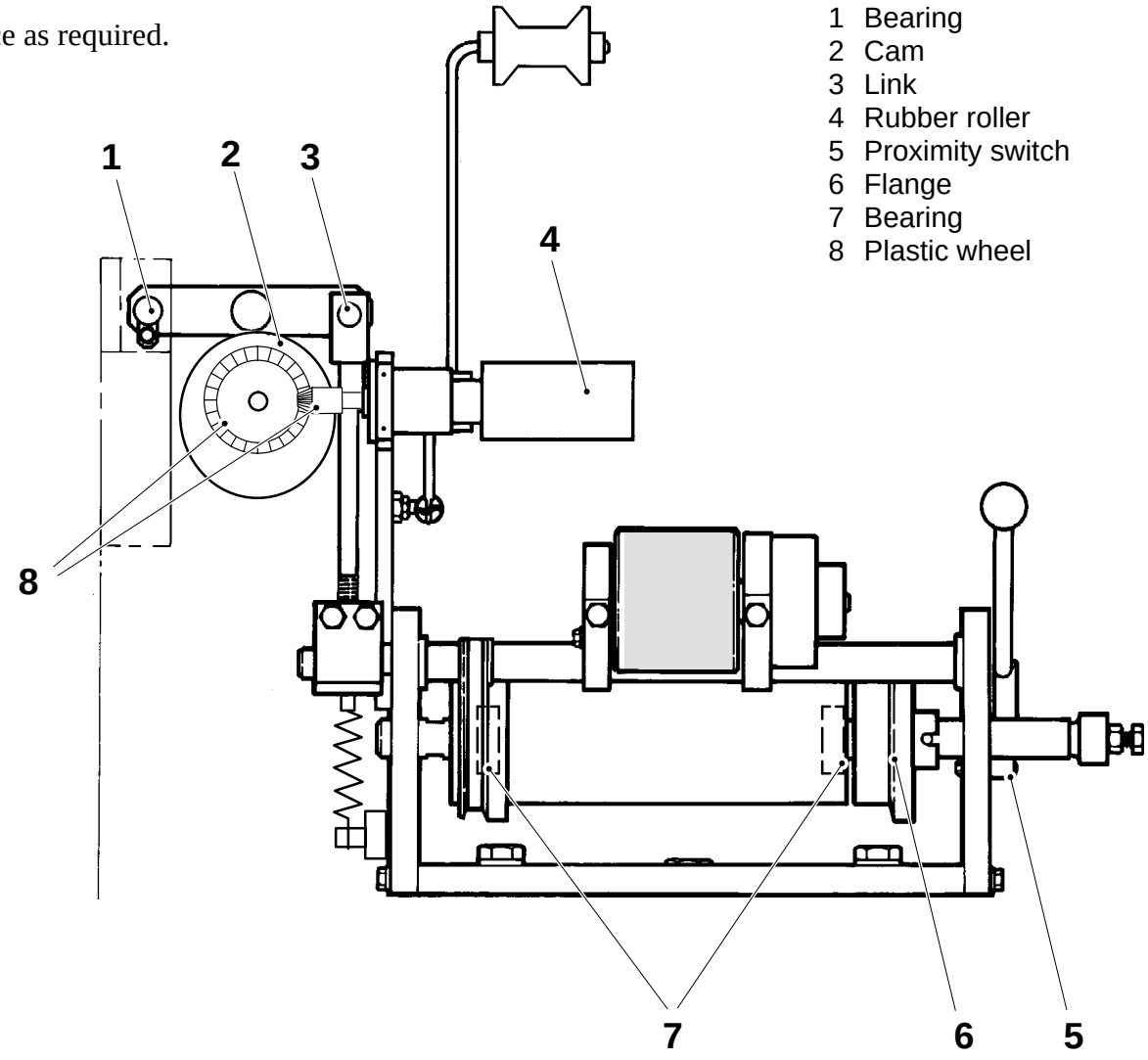

1 Bearing
2 Cam
3 Link
4 Rubber roller
5 Proximity switch
6 Flange
7 Bearing
8 Plastic wheel

Setting

Turn on the main power switch.

a) Loosen the screws (6) to set distance A, see table, between the flange and the vertical plane B of the pull tab device.

Web width, mm	A ± 0.2 mm
214	203.5
174	210.0
162	210.0

b) Place the packaging material between the bending roller and the brake roller.

c) Set the bending roller, see page MM 833–5X.

d) Turn the main shaft until the roller (1) to the brake enters the lowest section of the cam (2).

e) Loosen the turnbuckle (3) and set distance C between the roller and the cam.
Note! The arm (4) is to be horisontal.

f) Set the force of the spring (5) to 150 N.

(Cont'd overleaf)

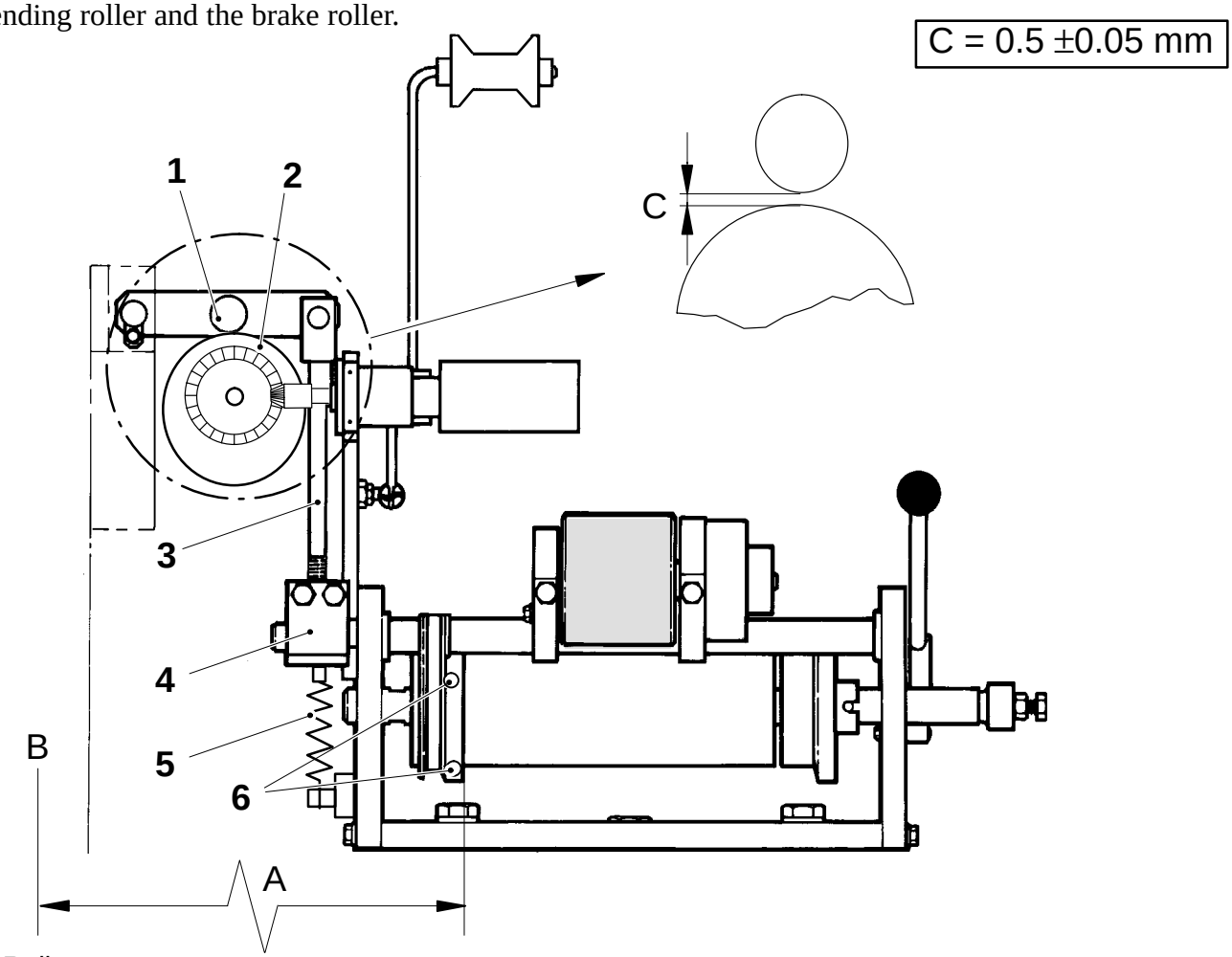

1 Roller
2 Cam
3 Turnbuckle
4 Arm
5 Spring
6 Screw

(Cont'd)

g) Turn the main shaft until the roller to the brake enters the highest section of the cam (2).

h) Turn the releasing handle (7) to the upper position.

i) Set distance D between the rollers by means of the screws (8) in the clamp.

j) Set the proximity switch (9) so that it is activated with the handle in the lower position and not activated in the higher position.

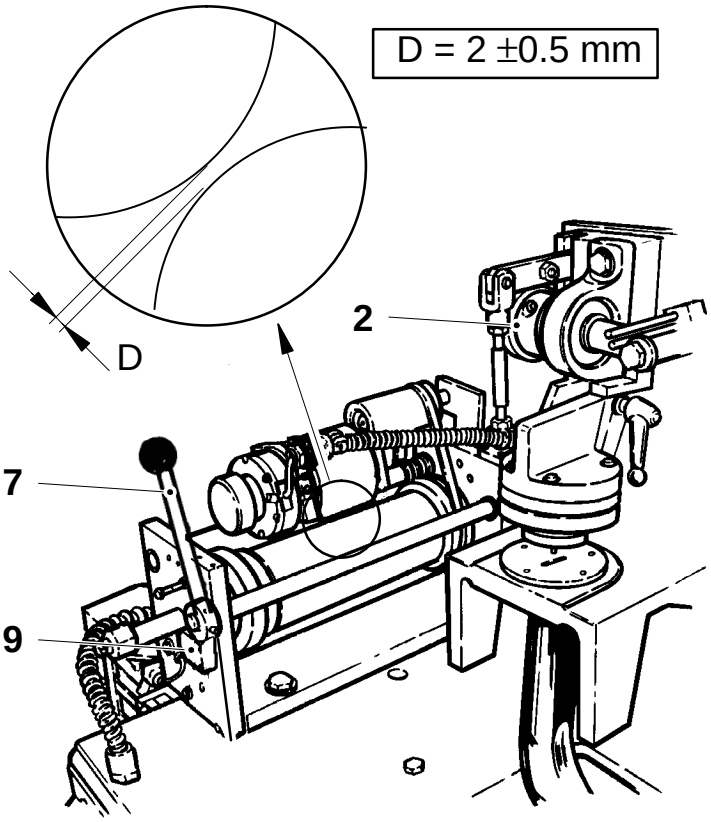

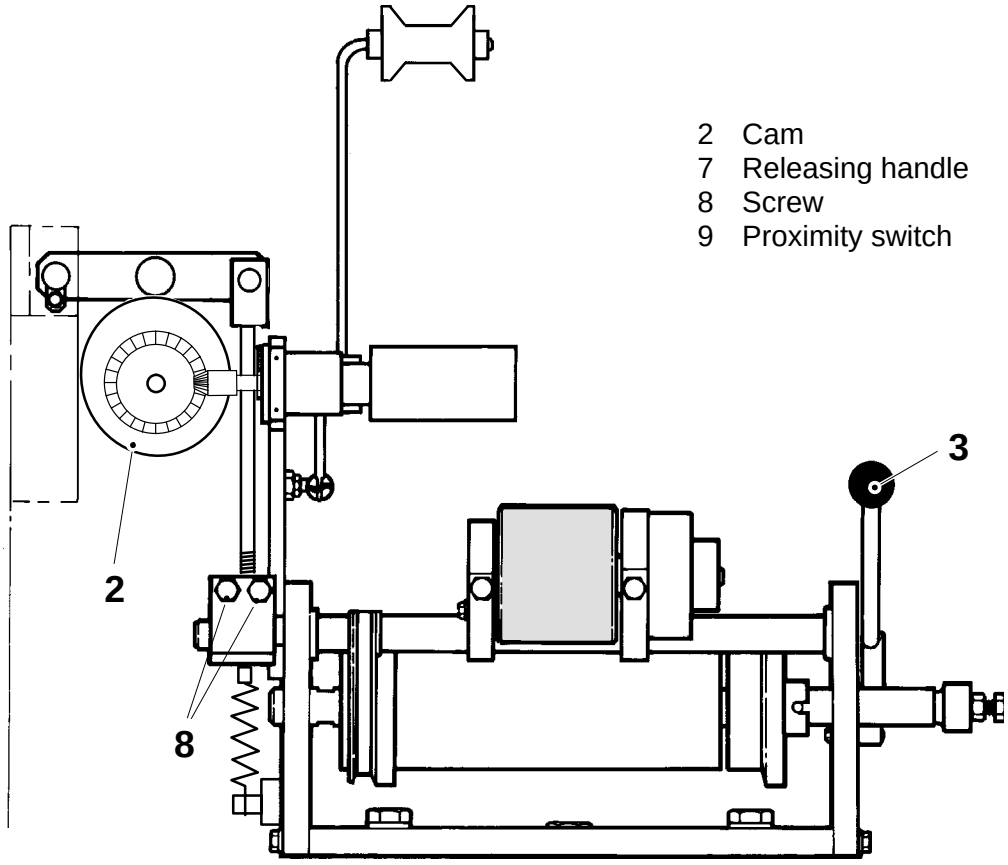

2 Cam
7 Releasing handle
8 Screw
9 Proximity switch

Checking

Check the following details for wear and/or damage:

- the bearings; max axial play 0.5 mm
- the spring (1)
- the plastic gear wheels (2); max play 0.4 mm

Replace as required.

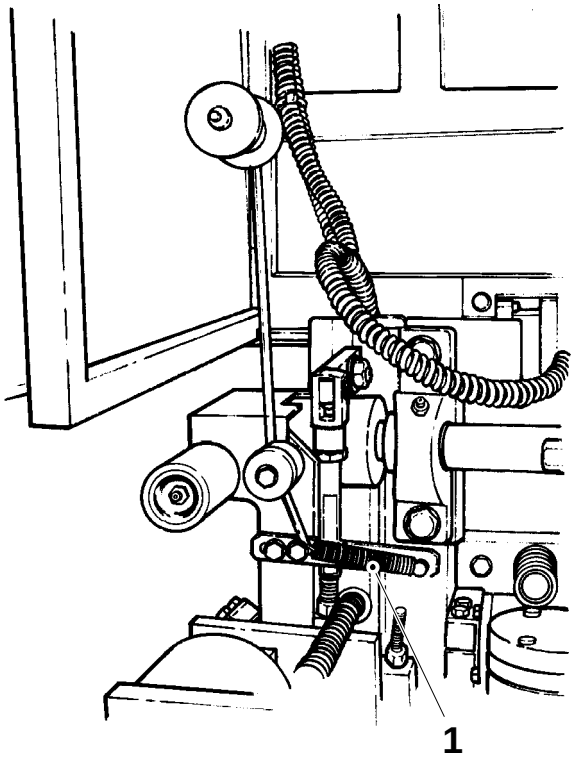

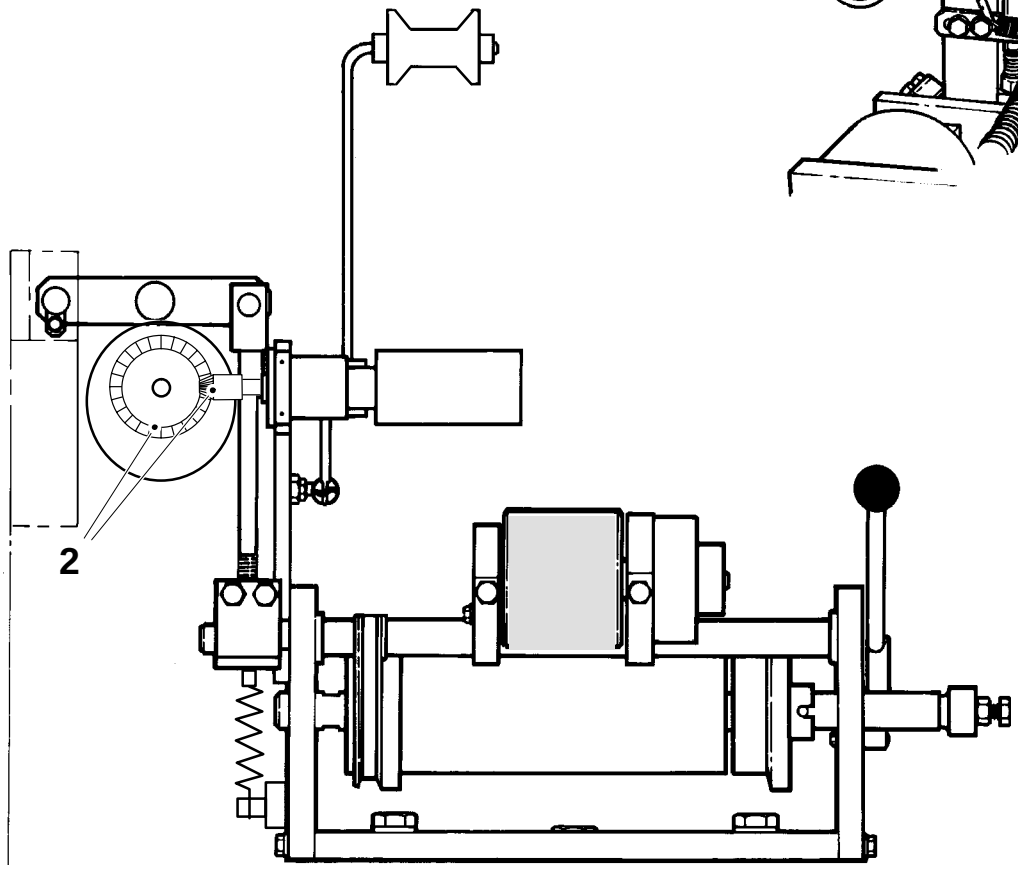

1 Spring
2 Gear wheel

Setting

a) The arm (1) must not be under spring tension when standing vertical. If required, shift the spring holder.

b) Set the gear wheels (2) and (3) centered to each other by shifting the gear wheel (3) Set the gear play to 0.1 – 0.2 mm.

c) Loosen the retaining ring (4) and bend the arm (1) forward and set distance A between the vertical plane B and the inner edge of the roller (5), see table. Tighten the retaining ring.

d) Loosen and adjust the retaining ring (6) so that there is a minimal play in the roller (5).

Volume, ml	Hole type	A ±0.5 mm
125 S, 200 S	10, 11	207.0
180 B – 284 B	20	200.0
180 B – 284 B	21	199.5

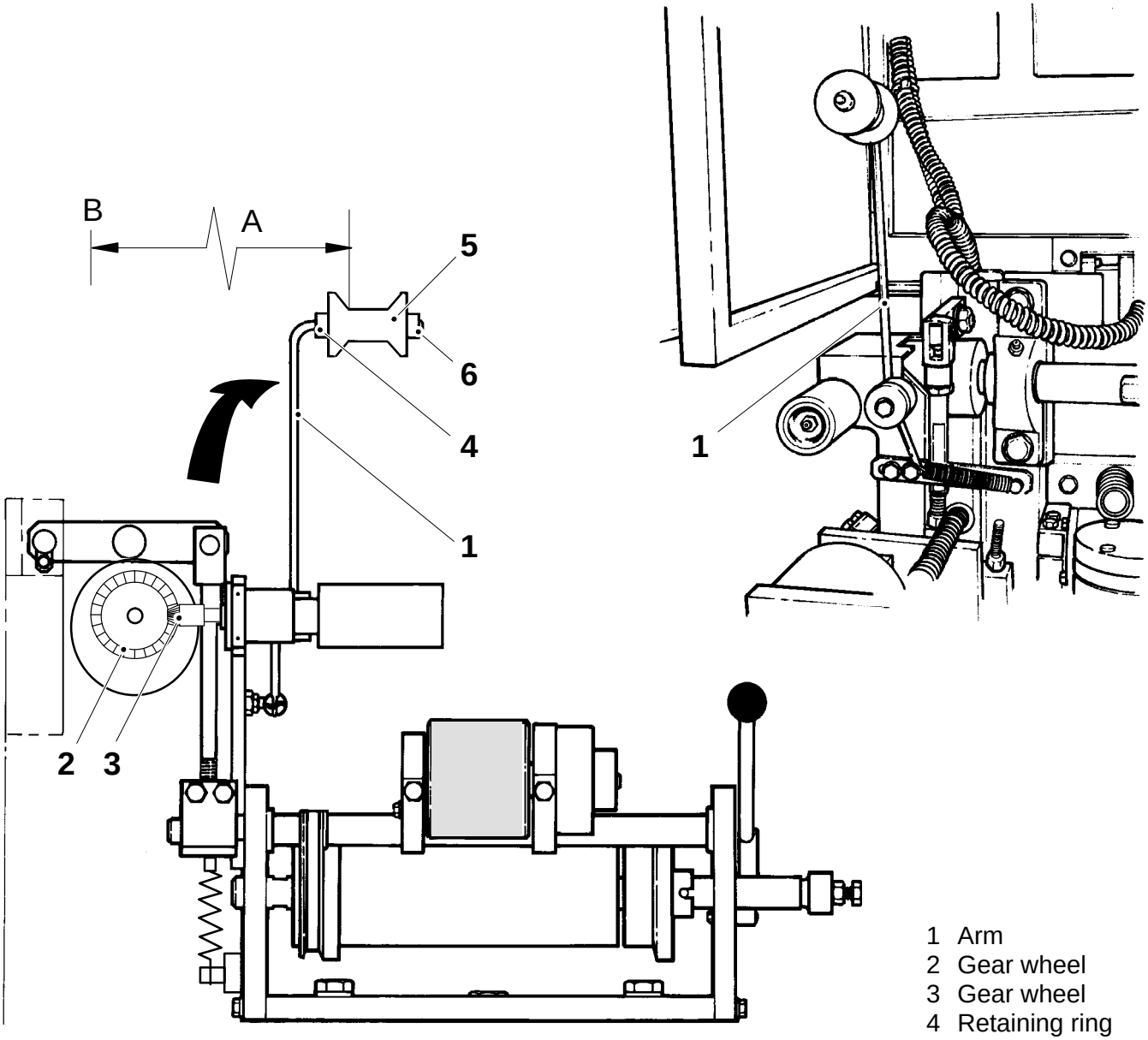

1 Arm
2 Gear wheel
3 Gear wheel
4 Retaining ring
5 Roller
6 Retaining ring

Checking

Open for compressed air. Turn on the main power switch.

Check the following details for wear and/or damage:

- the springs (1); make sure that the cam roller rests against the cam after the return movement of the lever (2)
- the plastic pegs (3); they must not jam
- the surfaces of the punch (6) and the die (4); place a distance piece (9), 3 mm thick, between the punch and the die.
  Make sure that the punch runs smoothly into the die
- the cam surface
- the cam roller bearing
  Footnote
  When replacing the cam, synchronize the cam to the cam shaft, see page MM 871–5X.
- the air duct (5) and the air pipe (7); make sure that they are not blocked and that a sufficient flow of air blows through
- the bearing (8)

Replace as required.

Make sure that the edges of the punched holes in the packaging material are clean-cut. If required, set according to page MM 815–5X.
Replace the punch and die as required.

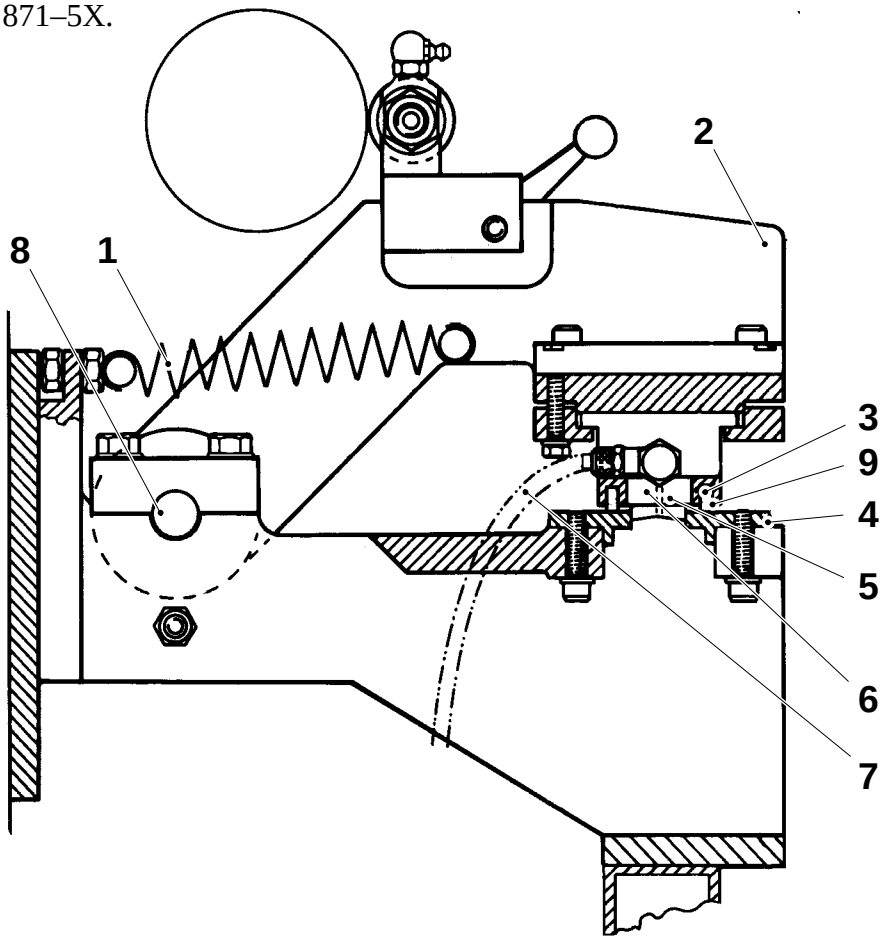

1 Spring
2 Lever
3 Plastic peg
4 Die
5 Air duct
6 Punch
7 Air pipe
8 Bearing
9 Distance piece

Overhaul

a) Remove the air nipple (1) and the waste pipe (2).

b) If required, undo the screws (3) and replace the die (4).

c) Undo the screws (5) and the air nipple (6).

d) Undo the screws (7).

e) If required, undo the screws (8) and replace the plastic pegs.

f) If required, undo the screws (9) and replace the punch knife (10).

Reassemble in reverse order.

1 Air nipple
2 Waste pipe
3 Screw
4 Die
5 Screw
6 Air nipple
7 Screw
8 Screw
9 Screw
10 Punch knife

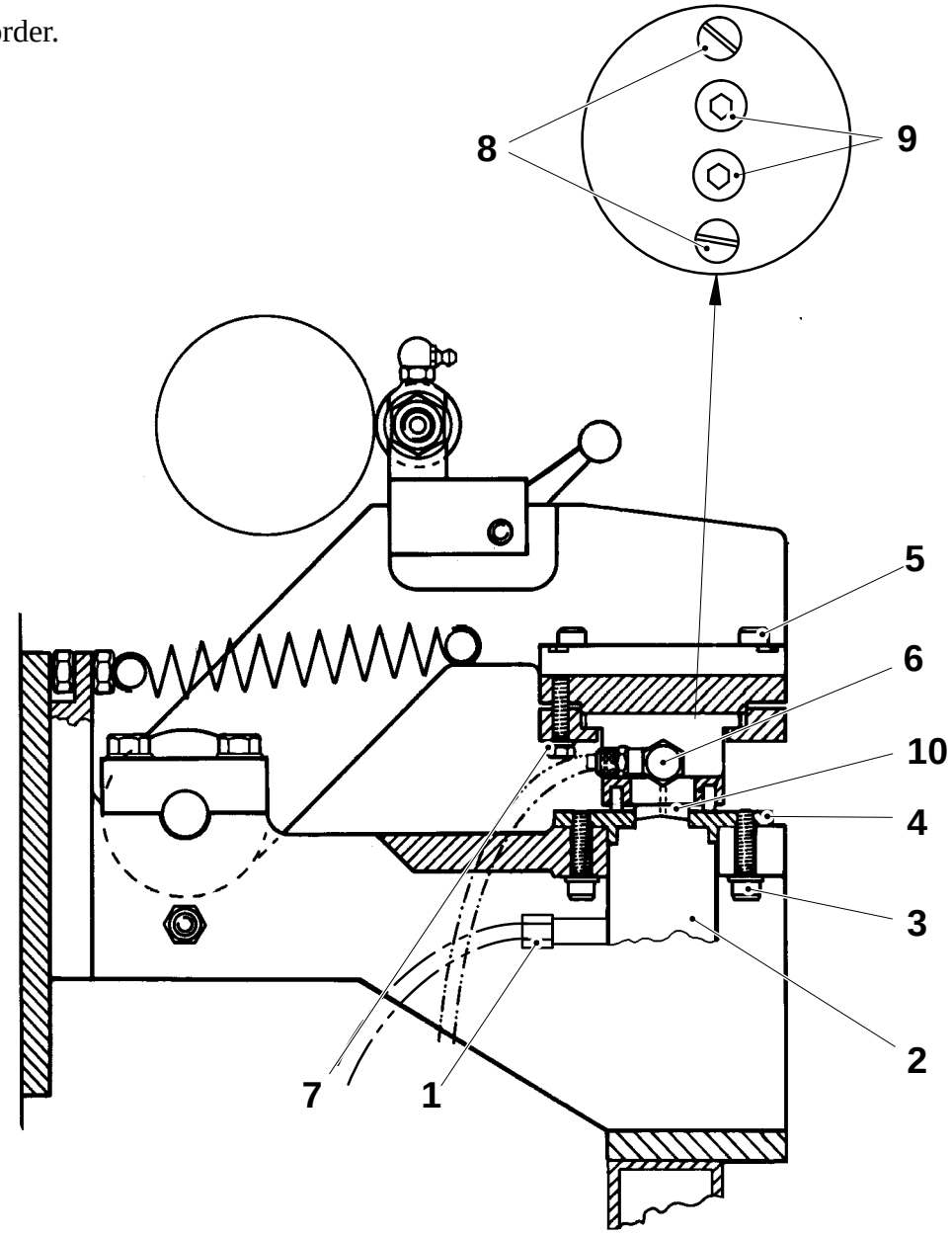

Setting

a) Remove the waste pipe (1).

b) Loosen the screws (2) and adjust the die (3) so that it is straight. Retighten the screws stepwise and alternately.

c) Loosen the screws (4).

d) Place a distance piece (5), 3 mm thick, between the punch and the die. Operate the punch by hand.

e) Press the punch (6) slowly into the die. Retighten the screws (4) stepwise and alternately, while the punch still is in the die.

f) Check that the punch moves easily through the die. Remove the distance piece.

g) Place a sheet of thin paper in the hole punch. Check that the hole punch is working by turning the main shaft. The edges of the hole must be clean-cut.

h) Fit the waste pipe.

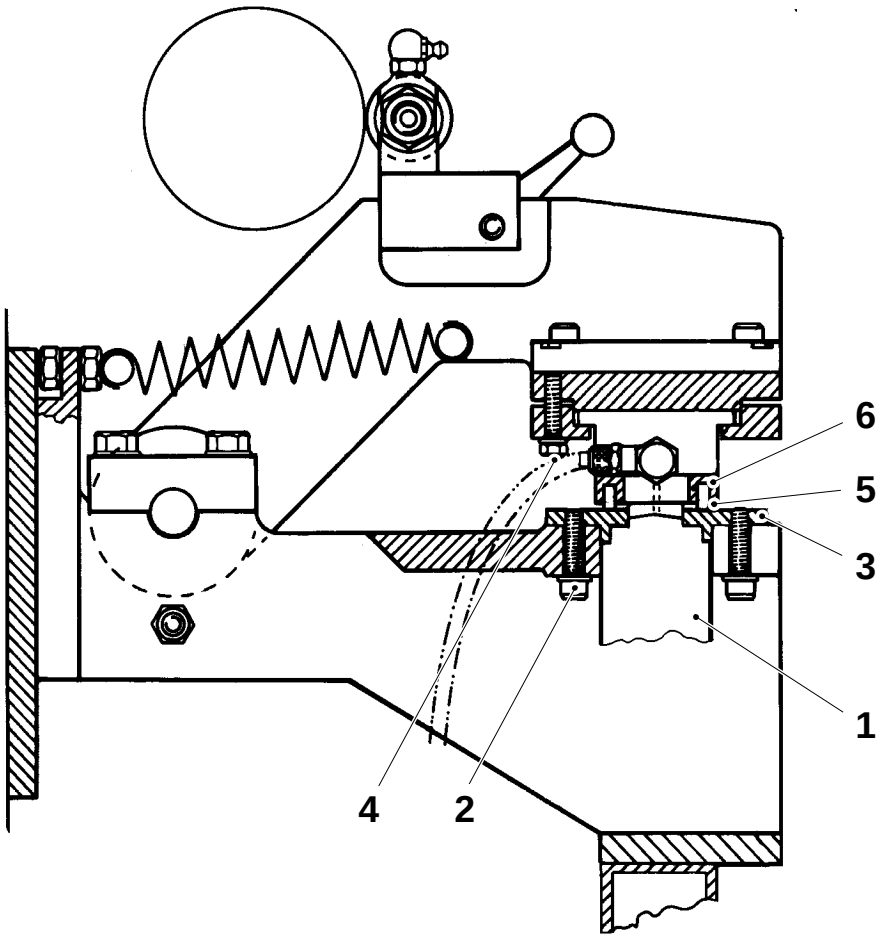

1 Waste pipe
2 Screw
3 Die
4 Screw
5 Distance pipe
6 Punch

Checking

Check the following details for wear and/or damage:

- the vacuum filter (1); make sure the air line is not blocked; blow through with compressed air
- the rollers (2) and (4); axial play 0.1 – 0.2 mm, radial play 0.05 – 0.2 mm; make sure that the rollers rotate freely; clean the rollers
- the vacuum plate (3); make sure that the air holes are not blocked
- the O-rings (4 pcs); loosen the two screws (9), undo the screws (8) and pull off the vacuum plate

  Note
  When fitting the vacuum plate, push it approx 20 mm onto the two shafts. Tighten the screws (9) until they reach touch the bottom and then another half turn. Push the vacuum plate to correct position and fit the screws.

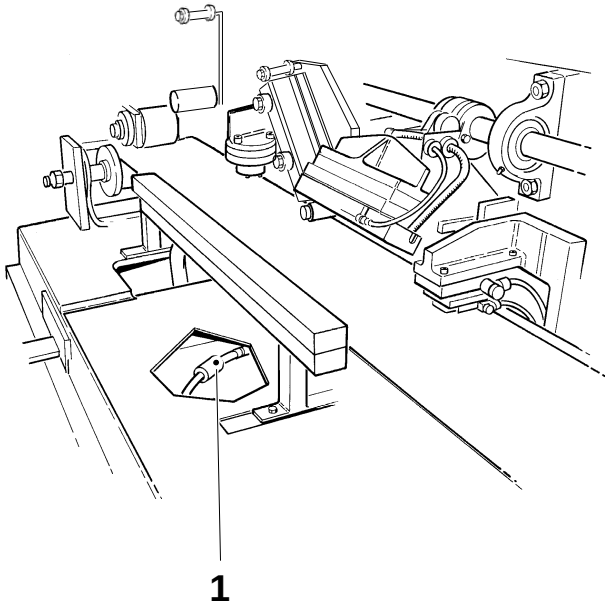

- the pressure roller (5); clean the roller
- the release eccenter (6)
- the proximity switch (7)

Replace as required.

Check that the spring force applied to the pressure roller (5) is 35 – 45 N. Use tool TP No. 74767–102.

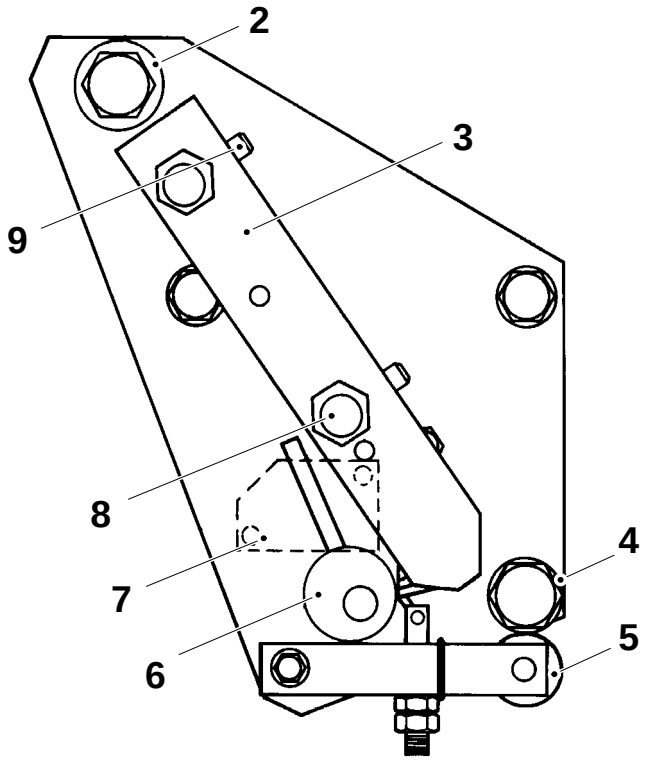

1 Vacuum filter
2 Roller
3 Vacuum plate
4 Roller
5 Counter roller
6 Release eccenter
7 Proximity switch
8 Screw
9 Screw

Setting

a) Place the ruler (1) in the groove in the vacuum plate. Loosen the nuts (2) and move the pins to set the position of the vacuum plate.
The ruler is to touch the roller (3).

b) Set the pressure screws (4) so that the vacuum plate (5) can only be moved sidways.

c) Place the ruler (6) in the groove and check that the flanges of the roller (3) and the groove are in line. Adjust by means of shims (7) behind the roller. Check with both narrow and wide IS strip.

d) Undo the screws (8) and pull off the vacuum plate (5). Fit tool TP No. 74767–102, see arrow fig. 3.

e) Set the spring force for the pressure roller to 35 – 45 N. Adjust the spring force by means of the adjustment screw (9).

(Cont'd overleaf)

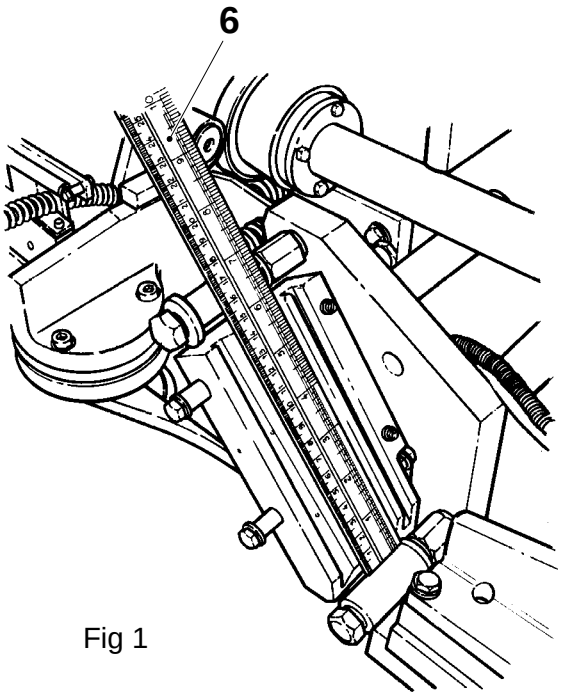

Fig 1

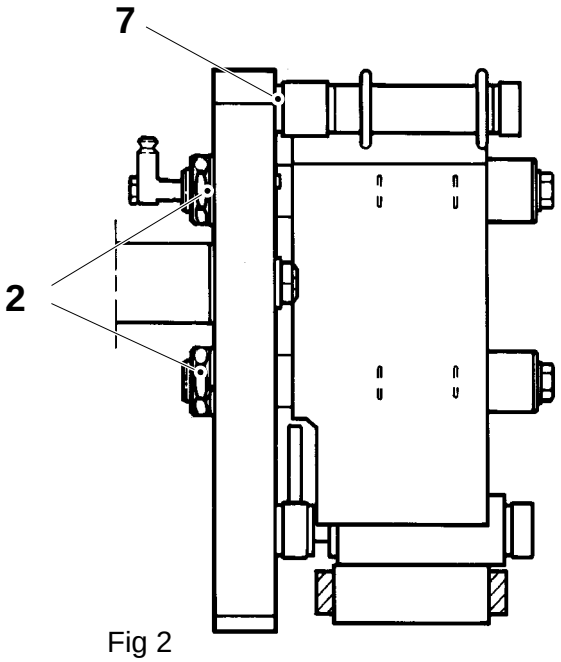

Fig 2

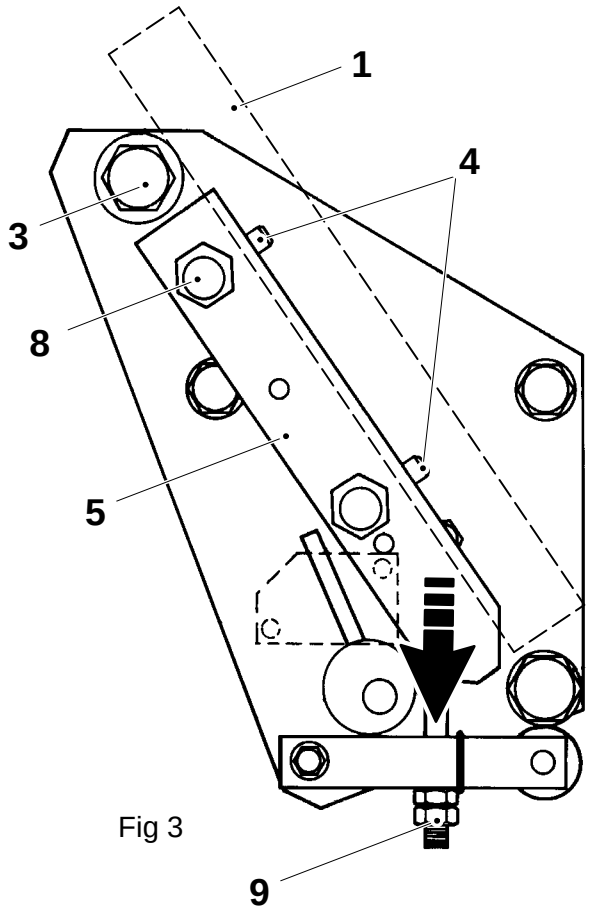

Fig 3

1 Ruler
2 Nut
3 Roller
4 Pressure screw
5 Vacuum plate
6 Ruler
7 Shim
8 Screw
9 Adjustment screw

(Cont'd)

f) Set the strip feed, see page MM 814–5X. Set for both narrow and wide IS strip. Adjust by means of shims (10) behind the plate on screws (11) and (12).

g) Set the IS strip guide so that the packaging material is placed A mm above the inductor card. Loosen the two screws (11) and (12) and adjust by lowering or lifting the IS strip guide at the screw (12).

h) Set the vacuum pump, see page MM 834–5X.

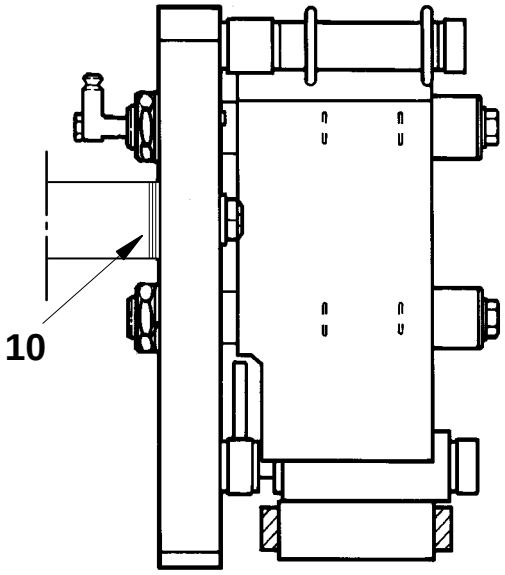

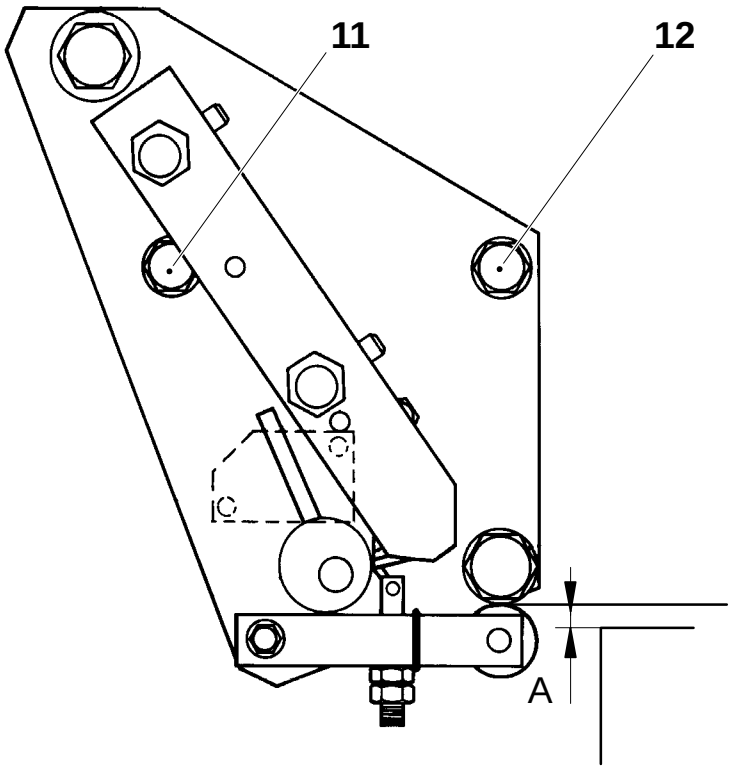

A = 1.0 ± 0.5 mm

10 Shim
11 Screw
12 Screw

Checking

Check the following details for wear and/or damage:

- the bearing of the cam roller (1)
- the cam roller (1); make sure that the roller rests against the cam after the return movement of the lever (4); if required, replace the spring (6)
- the bushings (2), (8), and (12)
- the cam (3)
- the bearings (5)
- the inductor (10); make sure that cooling water flows out of the outlet (9)
- the air spring (11)
- the **Short stop** cylinder (7); make sure that the cylinder and its links move easily

Replace as required.

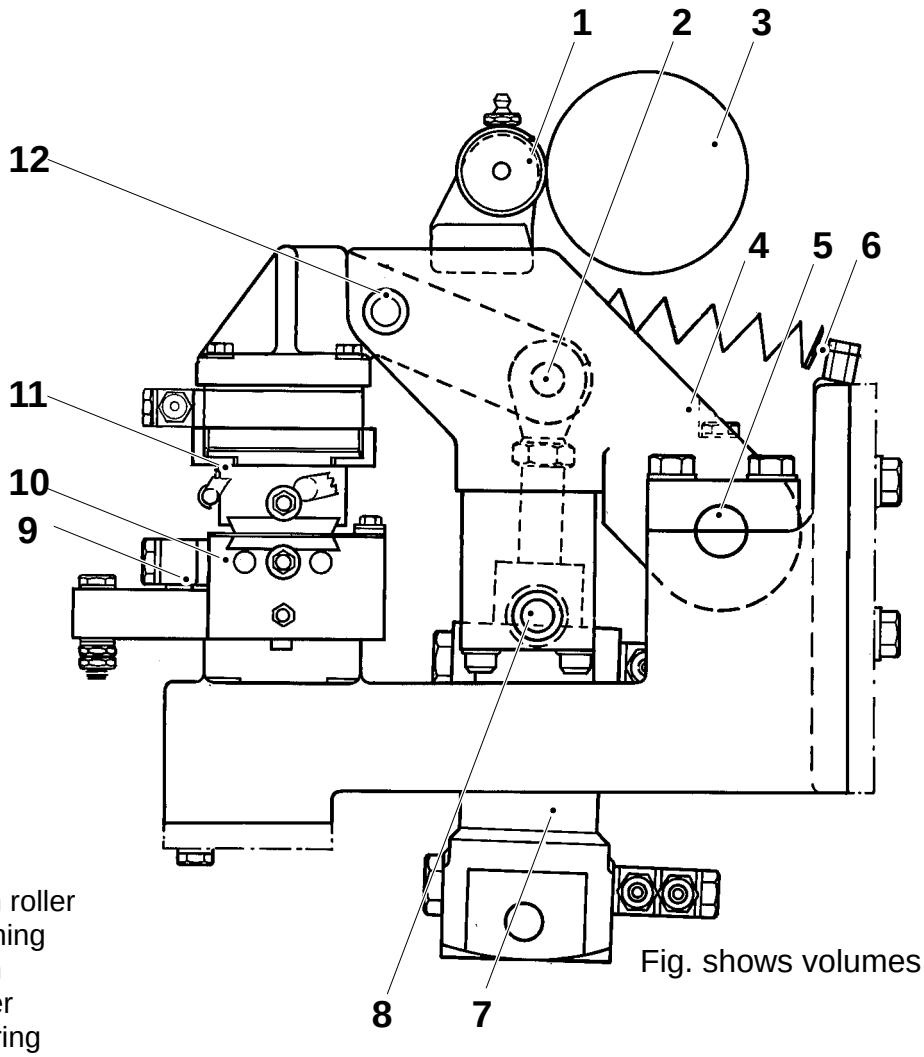

Fig. shows volumes 125 S – 236 B ml

1 Cam roller
2 Bushing
3 Cam
4 Lever
5 Bearing
6 Spring
7 Cylinder
8 Bushing
9 Cooling water connection
10 Inductor
11 Air spring
12 Bushing

Setting

Open for compressed air. Turn on the main power switch.

a) Turn the main shaft until the cam roller to the brake enters the lowest section of the cam (1).

b) Move the cylinder (2) to its plus position by manually actuating the solenoid valve of the cylinder.

c) Turn the main shaft until the cam to the brake enters the highest section of the cam.

Caution!
Reversal of this procedure will damage the inductor board!

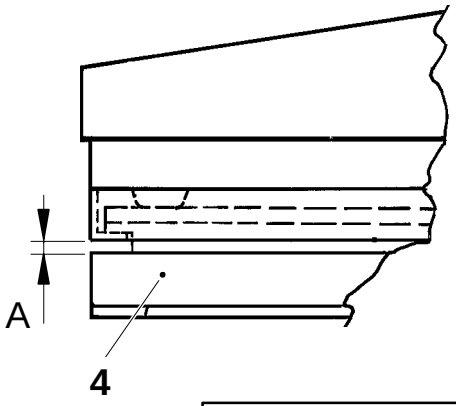

A = 0.7 ±0.1 mm

d) Set the sealing pressure to 0.2 MPa.

e) Adjust the cylinder piston rod head (3) until the counter jaw (4) is parallel with the inductor (5).

f) Place a piece of packaging material and a piece of IS strip between the counter jaw (4) and the inductor (5). Adjust with shims (6) so that the air spring (7) is compressed to distance A.

g) Set the sealing pressure, see page MM 910–7X.

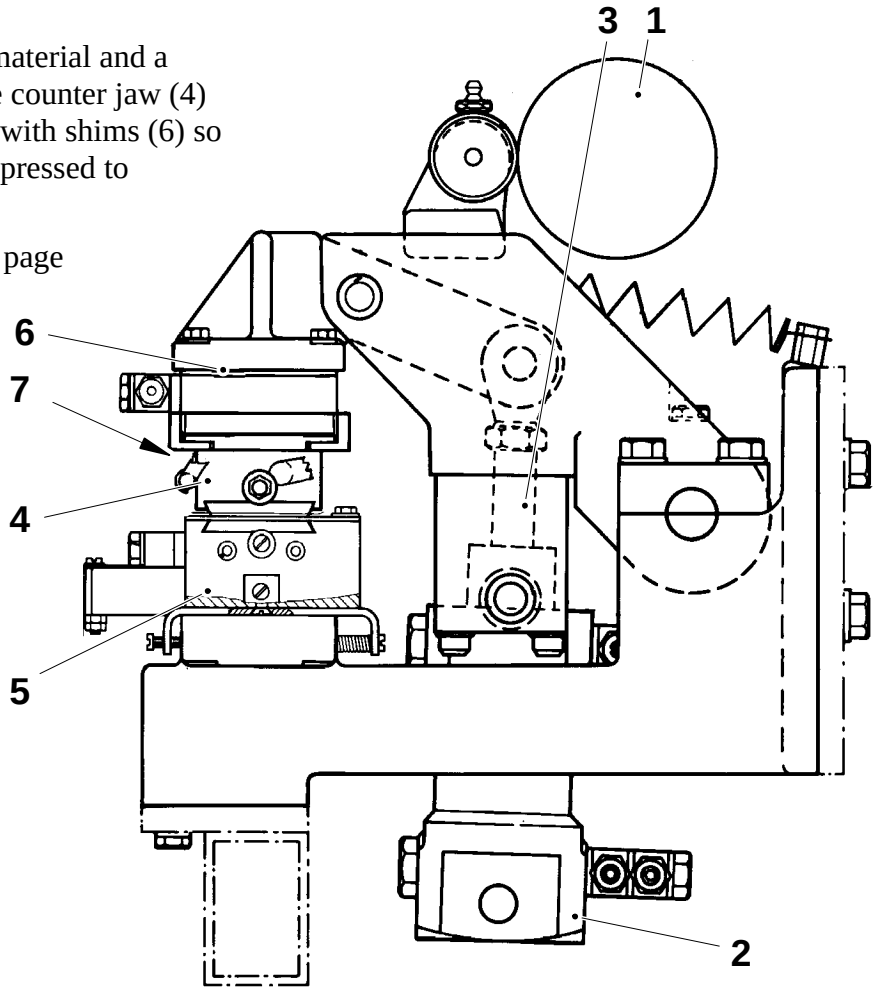

1 Cam
2 Cylinder
3 Piston rod head
4 Counter jaw
5 Inductor
6 Shim
7 Air spring

Fig. shows volume 250 B ml

Checking

Check the following details for wear and/or damages:

- the inductor (1); make sure that there are no cracks; make sure that the heat image on the packaging material is complete
- the ceramic dolly (2)
- the sealing jaw; make sure that cooling water flows out of the outlet (3)
- the teflon cloth (4); make sure that there are no plastic deposits

Replace as required.

Fig. shows volume 250 B ml

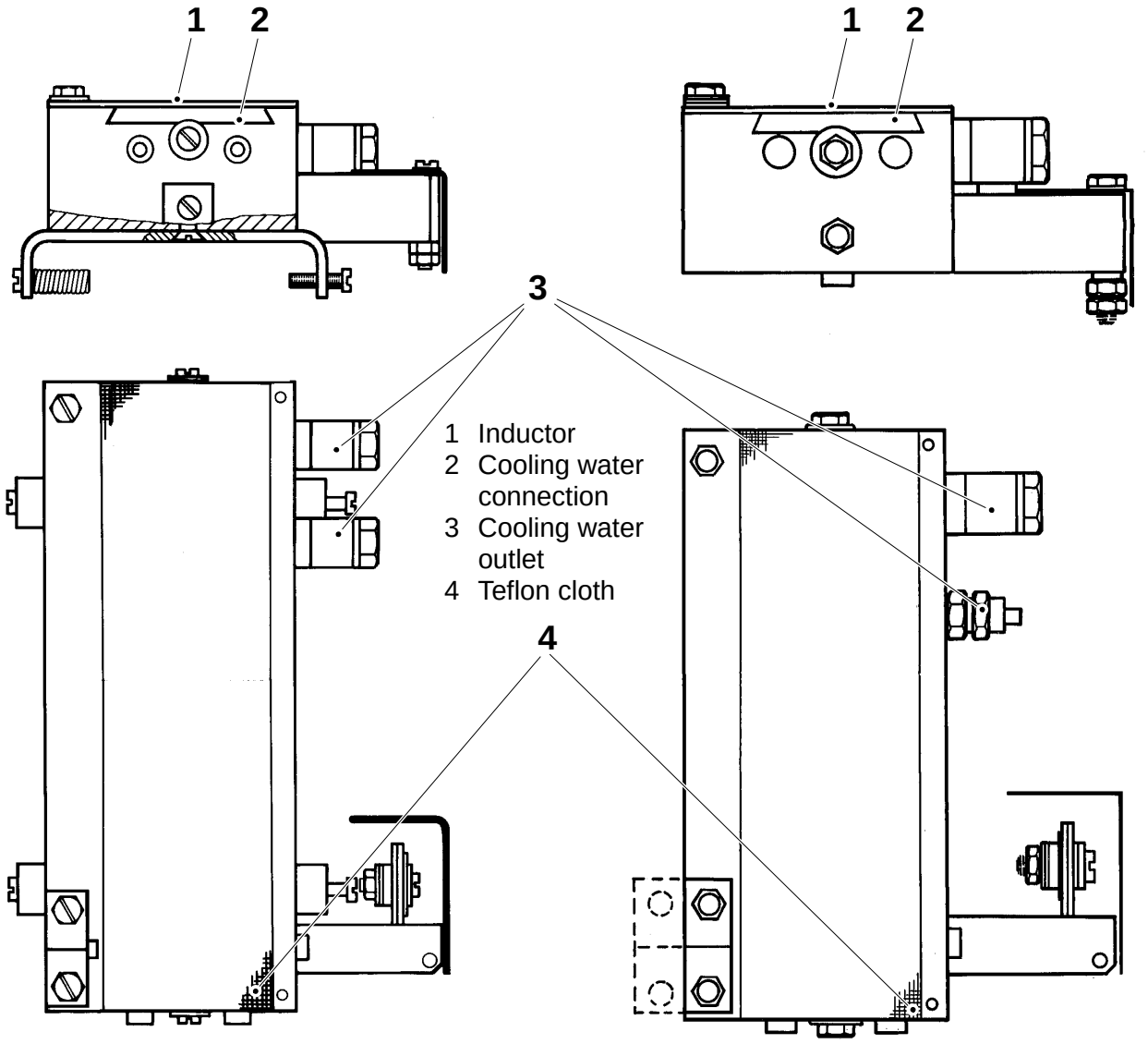

Fig. shows volumes 125 S – 236 B ml

1 Inductor
2 Cooling water connection
3 Cooling water outlet
4 Teflon cloth

Overhaul

Inductor

a) Loosen the screws (1) and (2).

b) Remove the defective inductor (5) with a screwdriver where the pins (3) and (4) are positioned.

c) Replace the dolly (6) by removing the screw (7) on one side and pushing out the dolly.

d) Replace the inductor.

e) Reassemble in reverse order.

Teflon cloth

a) Tear away the teflon cloth (8) carefully, without damaging the inductor (5). Clean the inductor from remnants of the teflon cloth, if any.

b) Fit a new teflon cloth. Make sure that there are no folds. The teflon cloth is to be large enough to cover the entire inductor exactly.

Note
Excess parts of the cloth are to be removed and must **not** be folded under the inductor.

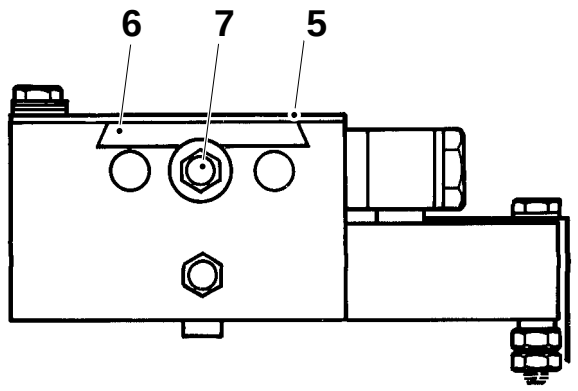

Fig. shows volumes 125 S ml – 236 B ml

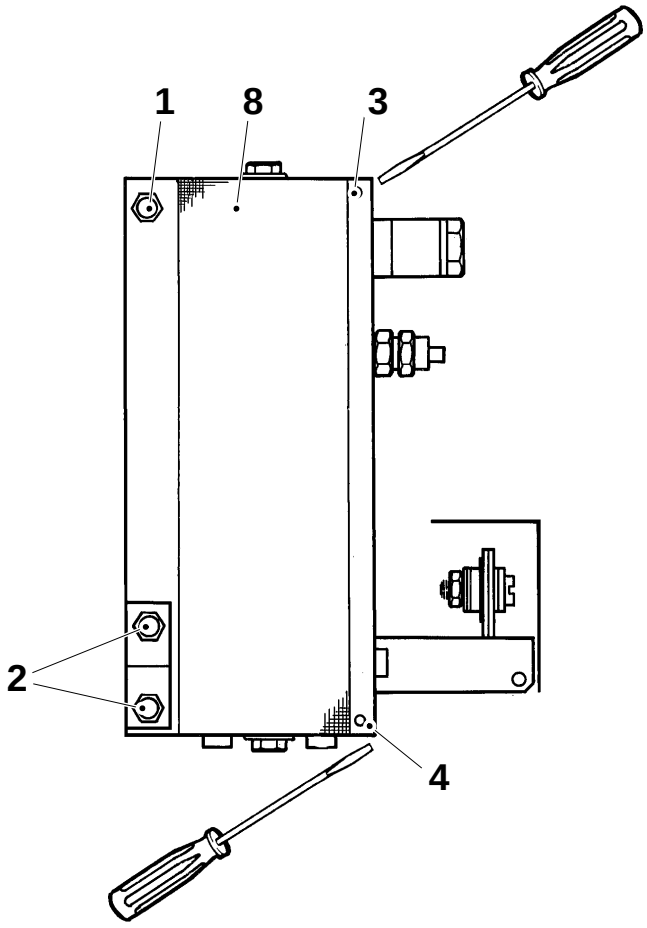

1 Screw
2 Screw
3 Pin
4 Pin
5 Inductor
6 Ceramic dolly
7 Screw
8 Teflon cloth

Setting

Inductor position, volume 250 B ml

Use the wide IS strip, 45 mm.

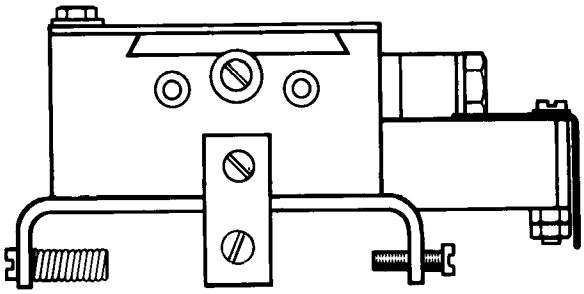

a) Loosen the screw (1) and set distance A between the vertical plane B, see page MM 801–7X, and the longitudinal inductor bar.

b) Set the pulse duration, see page MM 1065–1X and the HF voltage, see page MM 1075–5X.

c) Set the brake unit, see page MM 813–5X and the bending rollers, see page MM 833–5X.

d) Set the IS strip position, see page MM 814–5X.

e) Run the pull tab device and examine the sealed strip. If necessary, loosen the screw (1) and adjust the position of the inductor by means of the screws (2).

f) The heated zone is to be parallel, with an overlap of 0.5 mm.

g) Set the counter jaw, see page MM 819–5X.

A = 204 ±0.5 mm

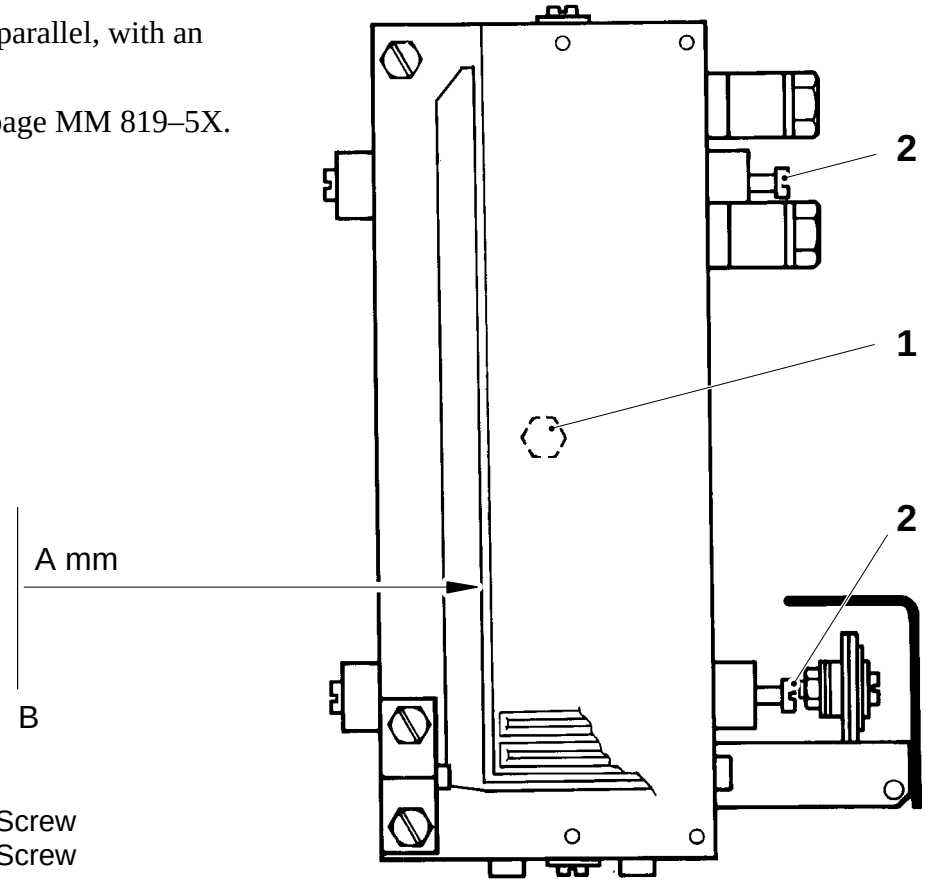

1 Screw
2 Screw

Checking

Check the following details for wear and/or damage:

- the temperature probe (1)
- the ceramic dolly (2)
- the heating element (3)

Replace as required.

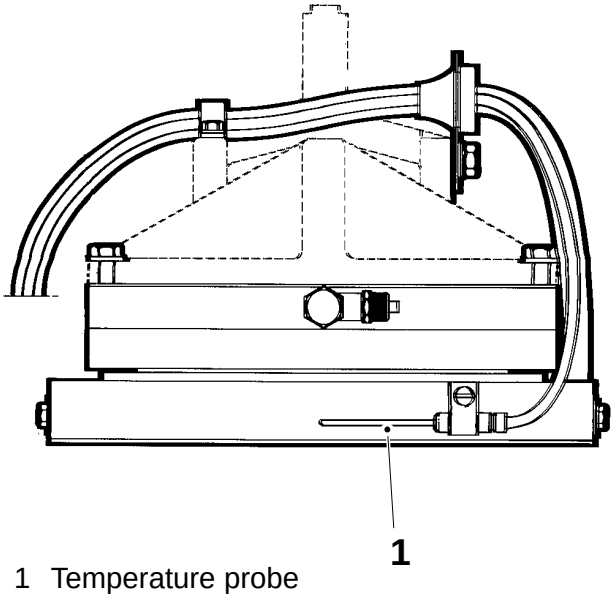

1 Temperature probe
2 Heating element
3 Ceramic dolly

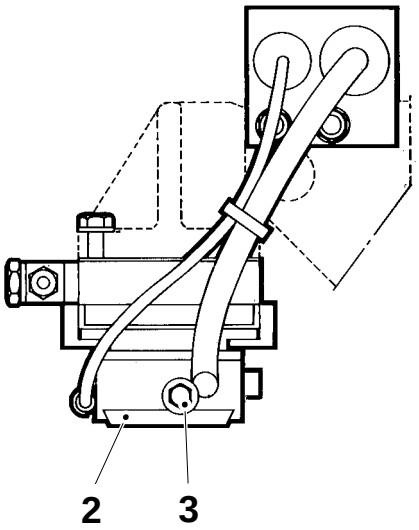

Removal

a) Turn the main shaft until the cam roller to the brake enters the lowest section of the cam.

b) Loosen the screws (1) and slide out the ceramic dolly (2). Fit a new dolly.

c) Undo the four screws (3) and the screw (4). Pull out the heating element. Fit a new heating element with heat-dissipating paste.

d) Loosen the screw (6) and pull out the temperature probe (7). Fit a new probe.

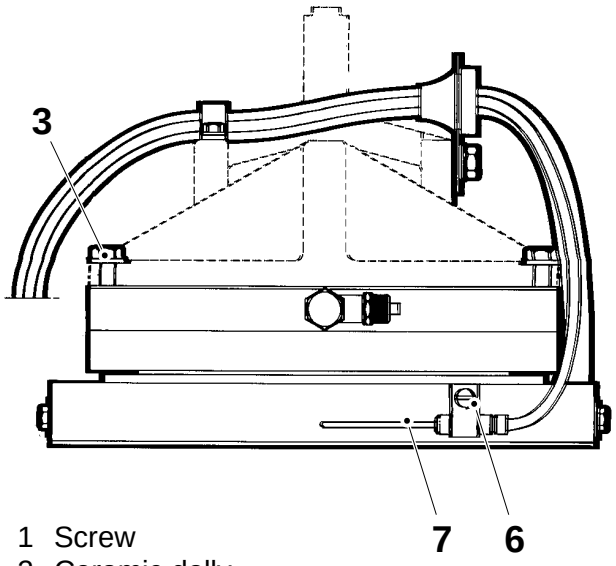

1 Screw
2 Ceramic dolly
3 Screw
4 Screw
5 Heating element
6 Scrtew
7 Temperature probe

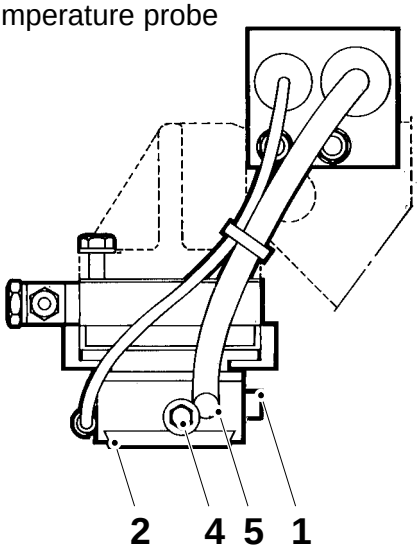

Setting

Open for input air. Turn on the main power switch.

Valid for volumes 125 S – 236 B ml

a) Turn the main shaft until the cam roller to the brake enters the lowest section of the cam.

b) Move the cylinder to its plus position by manually actuating the solenoid valve of the cylinder.

c) Reduce the air pressure to 0.05 MPa.

d) Place pins (∅3 x 12, TP No. 311102–234) in the holes of the inductor card. Loosen the screws (1).

e) Turn the main shaft until the cam roller to the brake enters the highest section of the cam.

f) Adjust the position of the counter, using the pins as guides. Tighten the screws.

g) Remove the pins and reset the air pressure. Run the pull tab unit for 5 – 10 s and examine the sealed strip.

h) The longitudinal sealed zone towards the centre of the packaging material is to be distance A. If not, reduce the air pressure to 0.05 MPa, loosen the screws (1) and set the position of the counter jaw.

i) Tighten the screws and set the air pressure.

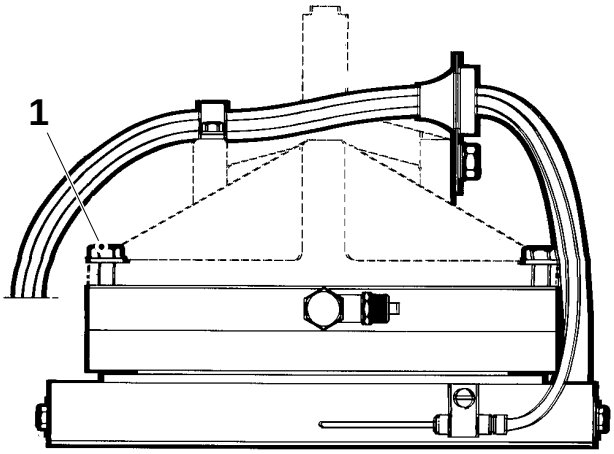

1 Screw

A = 1.5 ± 0.5 mm

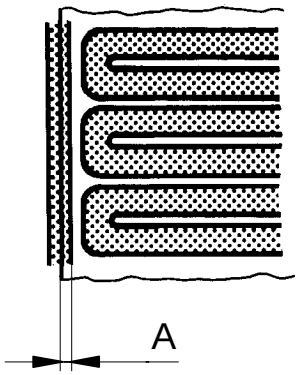

Setting

Open for input air. Turn on the main power switch.

Valid for volume 250 B ml only

a) Turn the main shaft until the cam roller to the brake enters the lowest section of the cam.

b) Move the cylinder to its plus position by manually actuating the solenoid valve of the cylinder.

c) Reduce the air pressure to 0.05 MPa.

d) Set the sealing jaw see MM 818–5X.

e) Place pins (∅3 x 12, TP No. 311102–234) in the holes of the inductor card. Loosen the screws (1).

f) Turn the main shaft until the cam roller to the brake enters the highest section of the cam.

g) Adjust the position of the counter, using the pins as guides. Tighten the screws.

h) Remove the pins and reset the air pressure. Run the pull tab unit for 5 – 10 s and examine the sealed strip.

i) The longitudinal sealed zone towards the centre of the packaging material is to be distance A. If not, reduce the air pressure to 0.05 MPa, loosen the screws (1) and set the position of the counter jaw.

j) Center the pressure from the dolly above the bars in the inductor. Loosen the screw (3) and adjust by means of the screw (2).

k) Tighten the screws and set the air pressure.

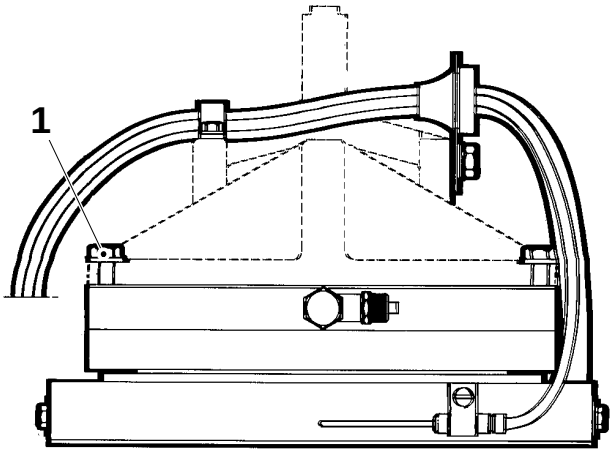

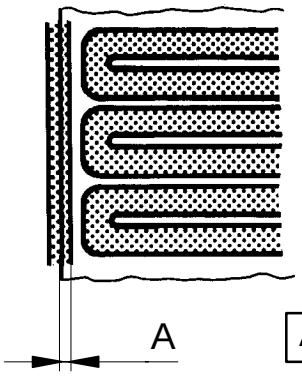

A = 1.5 ± 0.5 mm

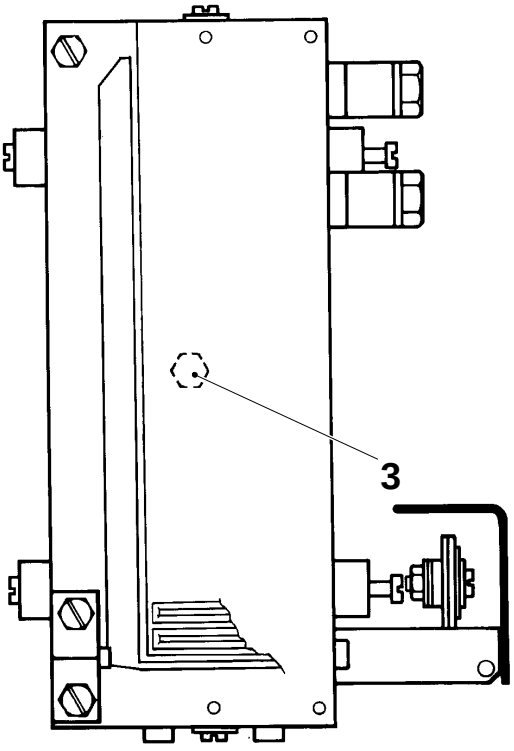

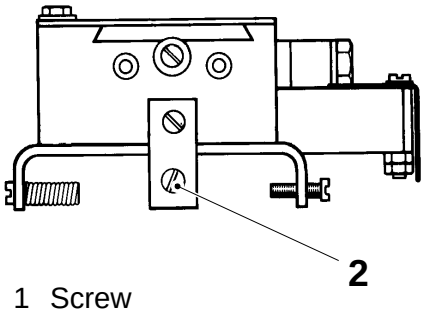

1 Screw
2 Screw
3 Screw

Checking

Valid for volumes 125 S – 236 B ml

Check the following details for wear and/or damage:

- the cam (1); make sure that the cam roller rests against the cam after the return movement of the lever (3); replace the spring (5) as required
- the roller (2)
- the bearing (4)
- the cylinder (6); make sure that it moves smoothly
- the bushings (7), (8), and (9)
- the heating rail (10)
- the cutting knife (11)
- the support roller (12); make sure that it rotates easily
- the counter jaw dolly (13); to replace it, undo the two screws (14) and slide out the dolly

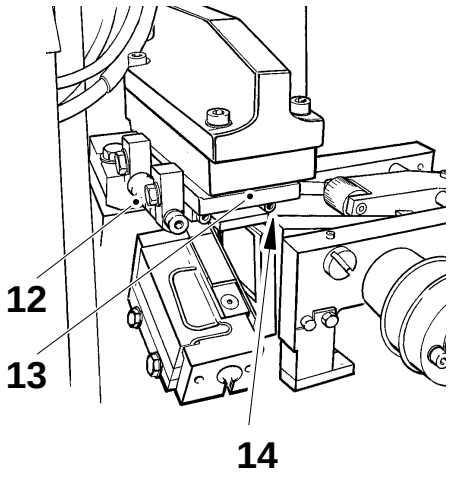

Replace as required.

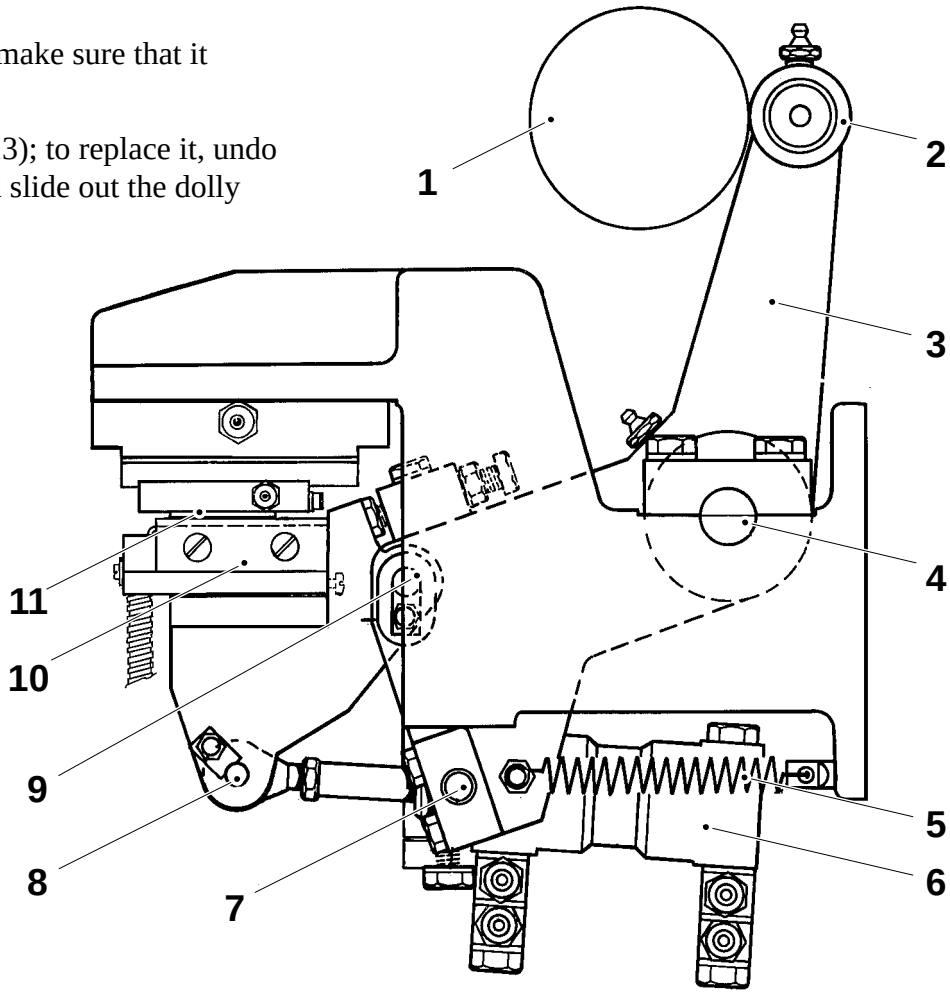

1 Cam
2 Cam roller
3 Lever
4 Bearing
5 Spring
6 Cylinder
7 Bushing
8 Bushing
9 Bushing
10 Heating rail
11 Cutting knife
12 Support roller
13 Counter jaw dolly
14 Screw

Checking

Valid for volume 250 B ml

Check the following details for wear and/or damages:

- the cam (1); make sure that the cam roller rests against the cam after the return movement of the lever (3); replace the spring (5) as required
- the roller (2)
- the bearing (4)
- the bushings (7), (8), and (9)
- the cylinder (6); make sure that it moves smoothly
- the cutting knife (11)
- the heating rail (10)
- the connections (12); make sure that there are no leakage
- the counter jaw dolly (13); to replace it, undo the two screws (14) and slide out the dolly

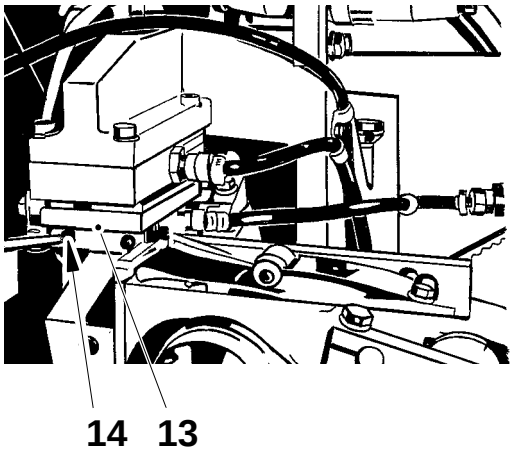

Replace as required

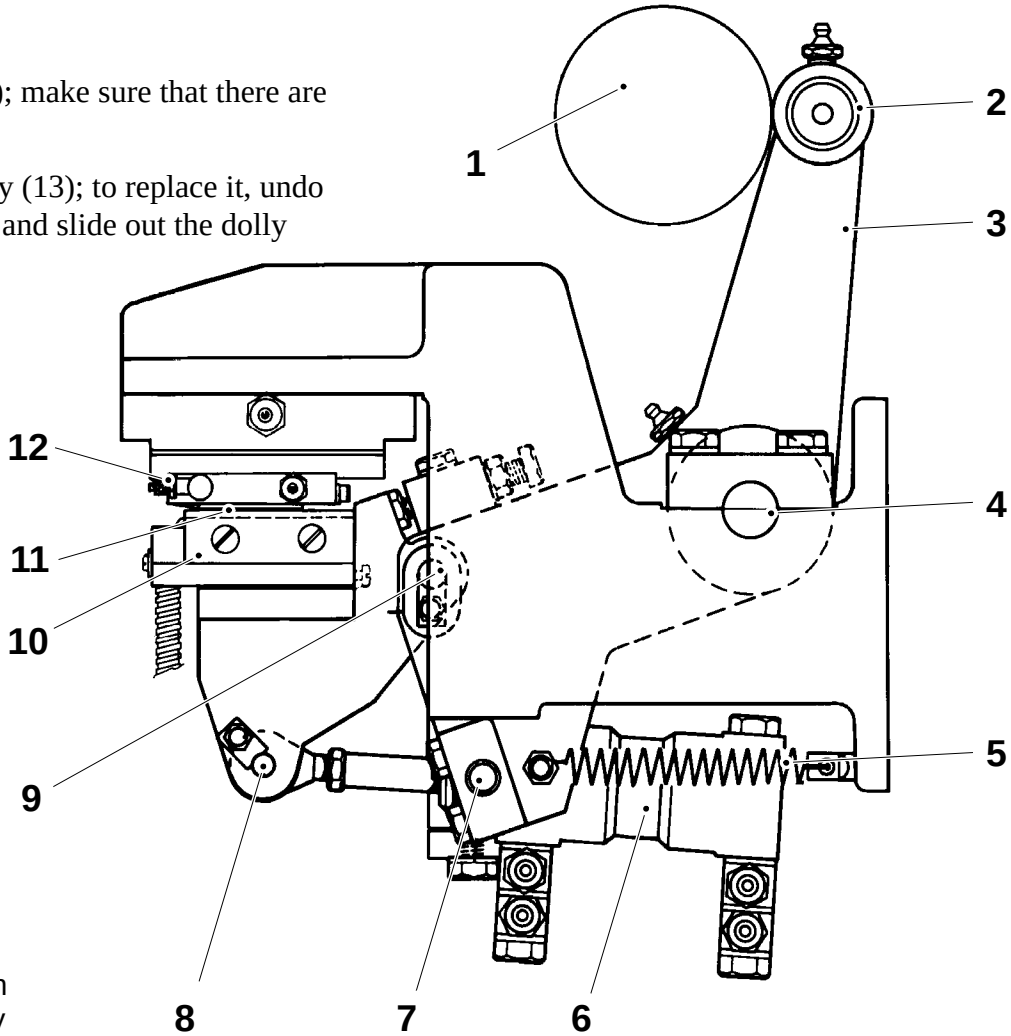

1 Cam
2 Cam roller
3 Lever
4 Bearing
5 Spring
6 Cylinder
7 Bushing
8 Bushing
9 Bushing
10 Heating rail
11 Cutting knife
12 Water connection
13 Counter jaw dolly
14 Screw

Setting

Open for compressed air.

A = 0.5 ± 0.05 mm

Valid for volume 250 B ml

a) Remove the heating block, see page MM 829–3X.

b) Set the heating rail (1) so that the knife (2) is located distance A below the heating rail. Adjust by means of shims (3) between the heating rail (1) and the heating block (4).

c) Turn the main shaft until the cam roller to the brake enters the lowest section of the cam.

d) Set the sealing pressure at 0.2 MPa.

(Cont'd overleaf)

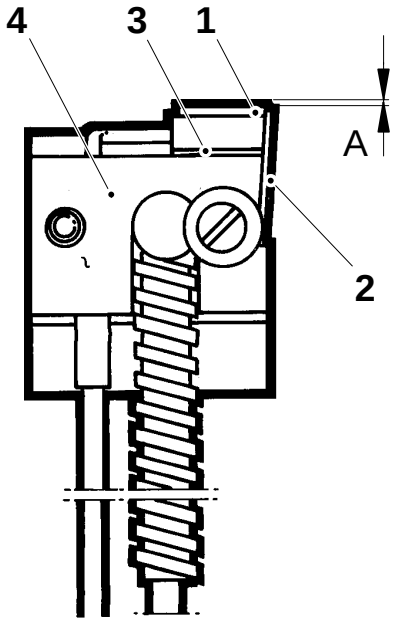

1 Heating rail
2 Knife
3 Shim
4 Heating block

(Cont'd)

e) Turn on the main power switch.

f) Move the cylinder (5) to its plus position by manually actuating the solenoid valve of the cylinder.

g) Turn the main shaft until the cam roller to the brake enters the highest section of the cam.

Caution!
Reversal of this procedure will damage the heating rail!

h) Check that the piston rod does not reach its bottom position.

i) Adjust by means of the setting screw (6) until the heating block (4) is parallel with the counter jaw (7). Check with a feeler gauge.

j) Put a piece of packaging material, IS strip and tab strip between the counter jaw (7) and the heating block (4).

k) Adjust by means of shims (8) between the heating block (4) and the insulation block (9). until the air spring (10) has been compressed to **half its stroke**, distance B.

l) Set the sealing jaw so that the tab is sealed, see sealing length, page MM 842–5X.

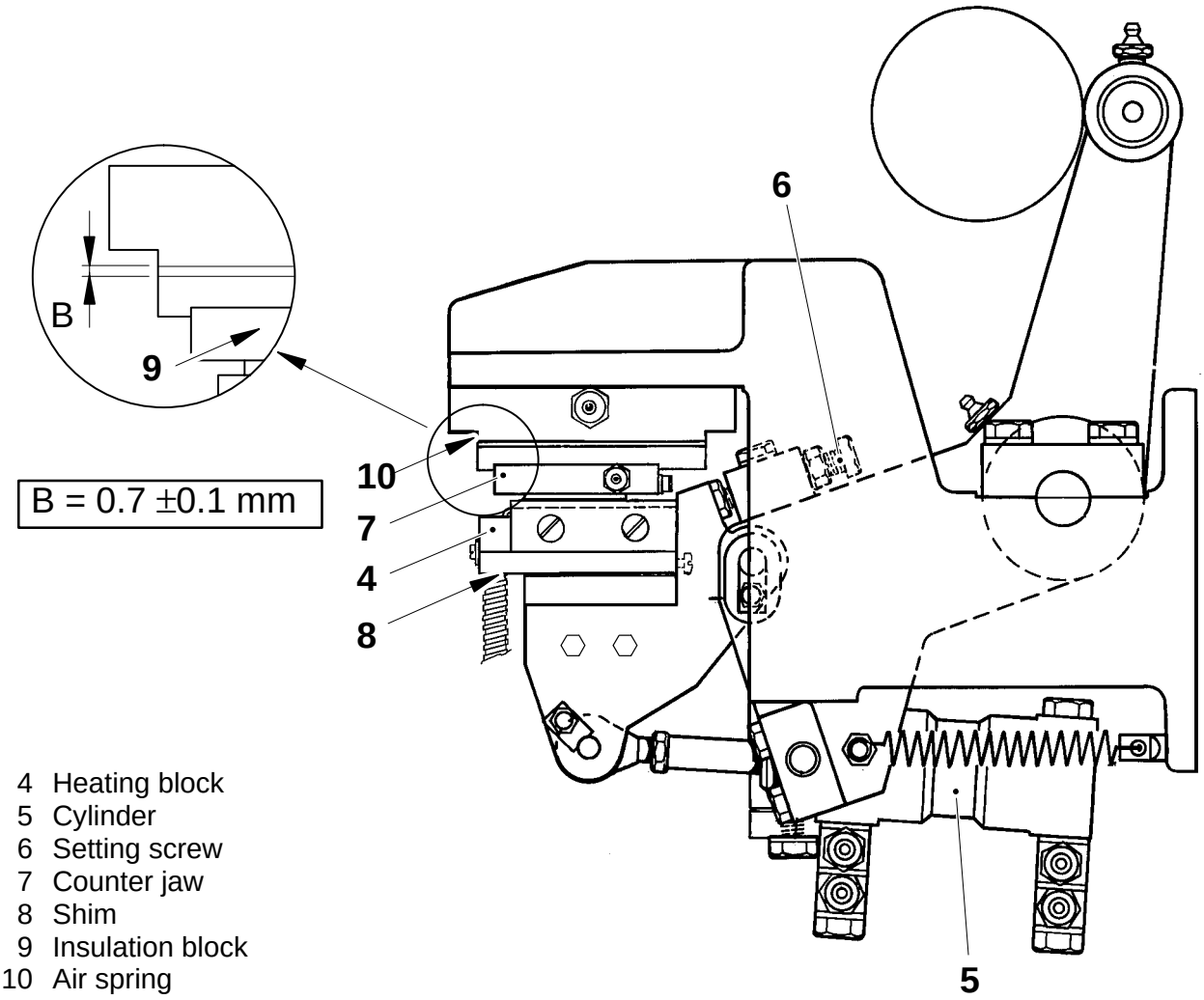

4 Heating block
5 Cylinder
6 Setting screw
7 Counter jaw
8 Shim
9 Insulation block
10 Air spring

Checking

a) Clean the rollers (1), (2) and (3).

b) Check the rollers for wear and/or damage. Replace as required.

c) Check that the spring (4) gives the correct pressure at the roller (2), see page MM 827–5X.

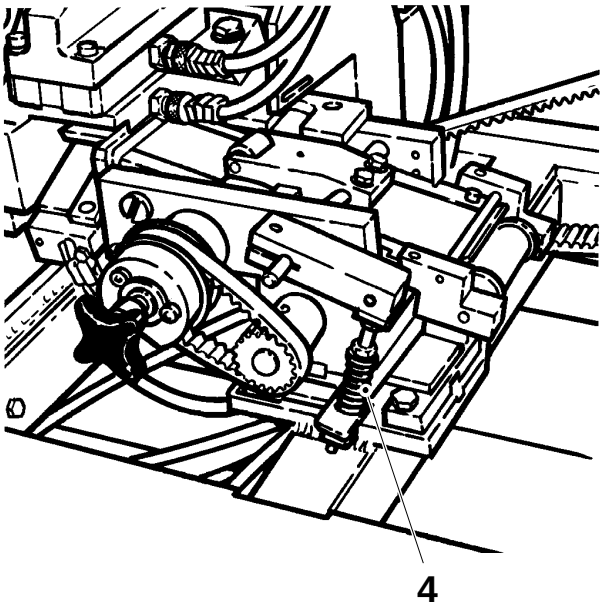

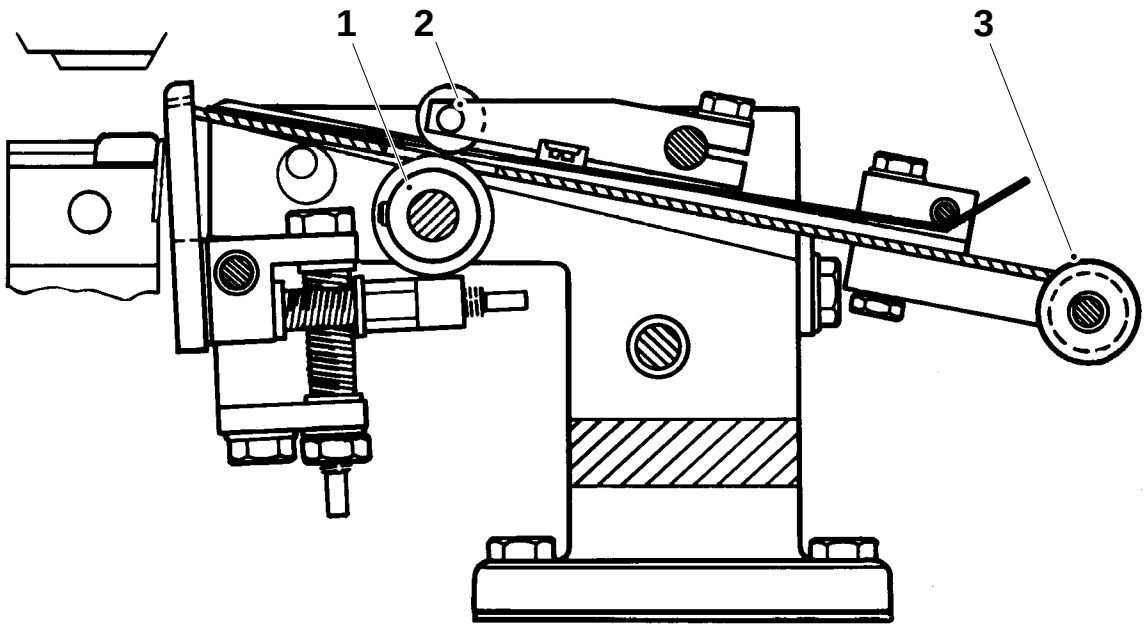

1 Roller
2 Roller
3 Roller
4 Spring

Setting

PullTab strip unit guide

a) Dismantle the tab strip feed device from the PullTab, see page MM 829–3X.

Note
The following settings are to be done at the work bench.

b) Loosen the lock nut (1) and adjust by means of the screw (2), so that there is distance A between the window knife (3) and the vertical plane (4) (pre-setting).

c) Insert the tab strip unit guide (5) and secure it.

d) Set the tab strip chute so that the roller (6) is in line with the slide plate, see fig. 3.

e) Loosen the two screws (7) and the grub screw (8) of the eccentric pin (9) and shift the plate (10) to set distance B between the **corner** of the window knife and the strip unit guide.

Note
Adjust so that the tab strip chute is stable.

f) Make sure that the roller is correctly aligned. Tighten the screws (7).

(Cont'd overleaf)

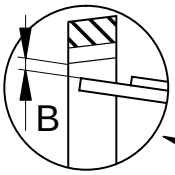

Fig. 2

A = 1.0 ±0.1 mm
B = 0.5 ±0.1 mm

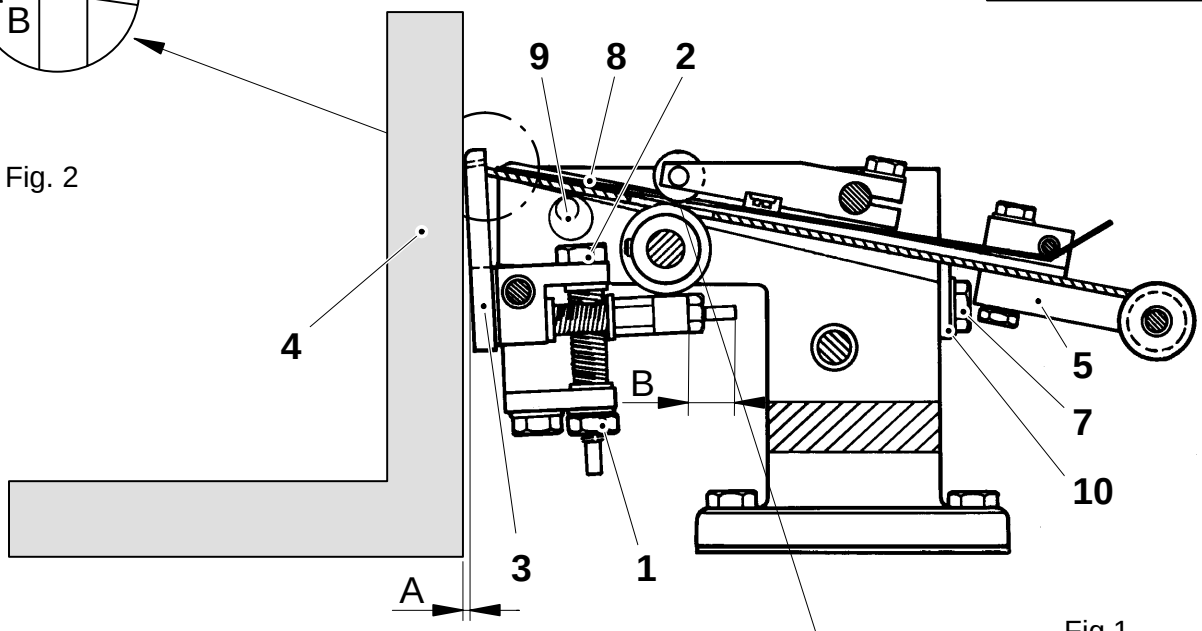

Fig.1

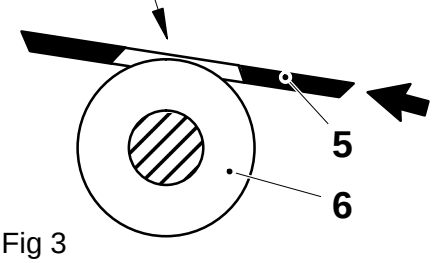

Fig 3

1 Lock nut
2 Screw
3 Window knife
4 Vertical plane (composing stick)
5 Tab strip unit guide
6 Roller
7 Screw
8 Grub screw
9 Eccentric pin
10 Plate

(Cont'd)

Window knife

a) Loosen the two lock nuts (11) and adjust the nuts (12) equally so that the distance from the nuts to the end of the thread is distance C, see fig. Tighten the lock nuts.

b) Place the tab strip feeder on a straight flat surface.

c) Loosen the lock nut (1) and turn the screw (2) until the distance from the bottom outside edge of the opening in the tab window knife to the vertical plane is distance D.
Tighten the lock nut.

Lengthwise and vertically

a) Turn the main shaft until the cam roller enters the lowest section of the cam.

b) Set distance E between the counter jaw and the top of the window knife. Undo the screws (13) and add or remove shims (14).

c) Deactivate the solenoid valve to the sealing jaw.

(Cont'd overleaf)

1 Lock nut
2 Screw
11 Lock nut
12 Nut
13 Screw
14 Shim

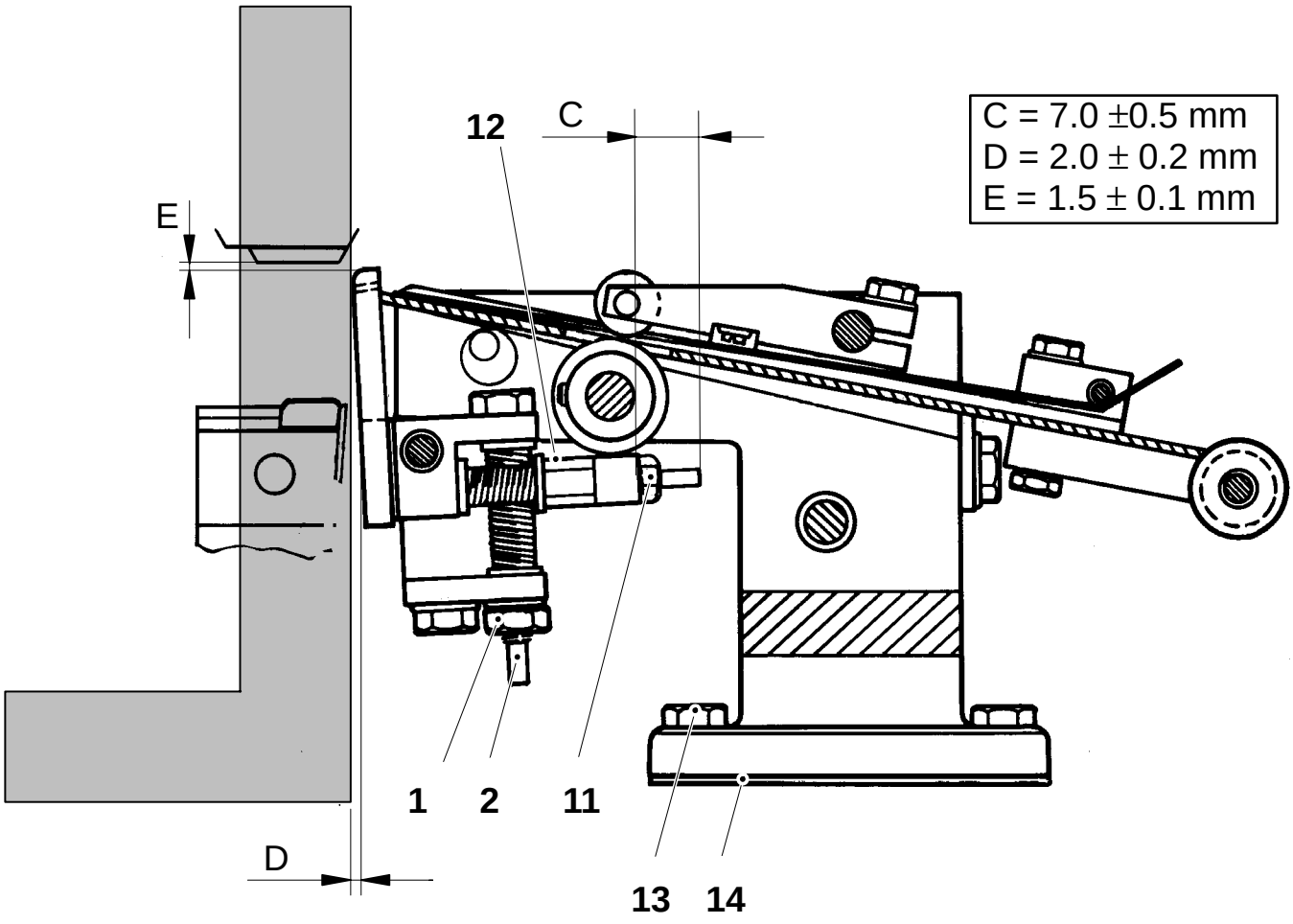

413

(Cont'd)

d) Open for compressed air. Turn on the main power switch.

e) Turn the main shaft until the knife (13) is on the same level as the corner of the window knife.

f) Activate the solenoid valve to the sealing jaw.

g) Set distance F.
Note
After adjustment of distance F, recheck distance E.

h) Tighten the screws (15).

i) Set the length of the spring (14), distance G.

j) Loosen screw (15). Push the holder (16) against the feed roller (17) and keep it there. Retighten.

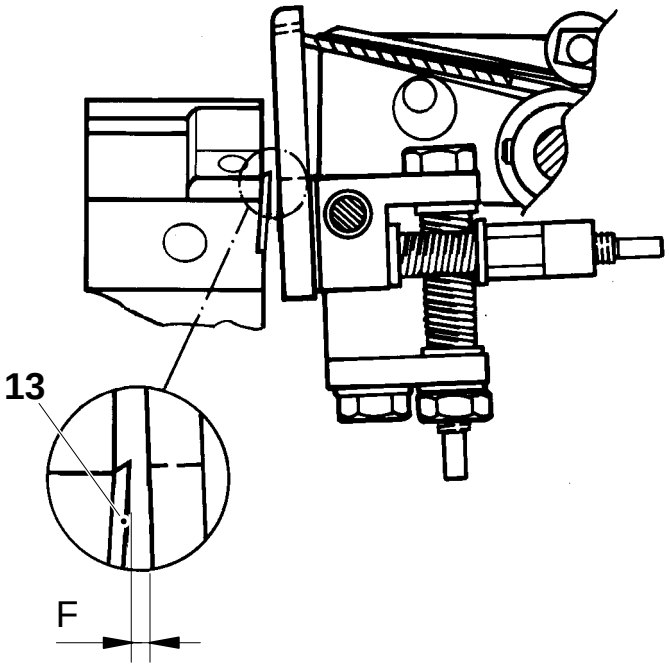

F = 1.5 ± 0.1 mm
G = 26.5 ± 1.0 mm

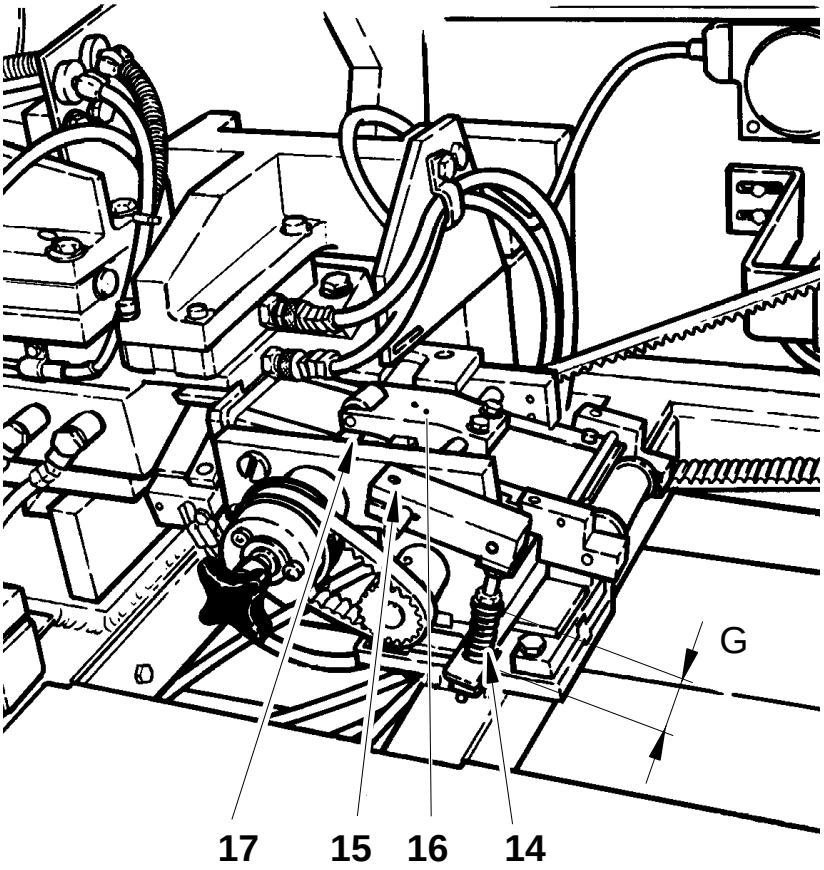

13 Knife
14 Spring
15 Screw
16 Holder
17 Feed roller

Checking

Turn on the main power switch.

Check the following details for wear and/or damages:

- the rollers (1) for axial and radial wear; make sure all rollers run smoothly
- the bearing (2)
- the proximity switch (3); the alarm should be triggered when there is A mm of strip left on the reel
- the guides (4); make sure that they are straight
- the roller on the arm (5); make sure that it does not hit the bottom bracket, distance B; loosen the screws (6) to adjust
- the spring-loaded ball (7)
- the knife (8)
- the clamps (9); make sure that they hold the strip; adjust after loosening the screws (10)

Replace as required.

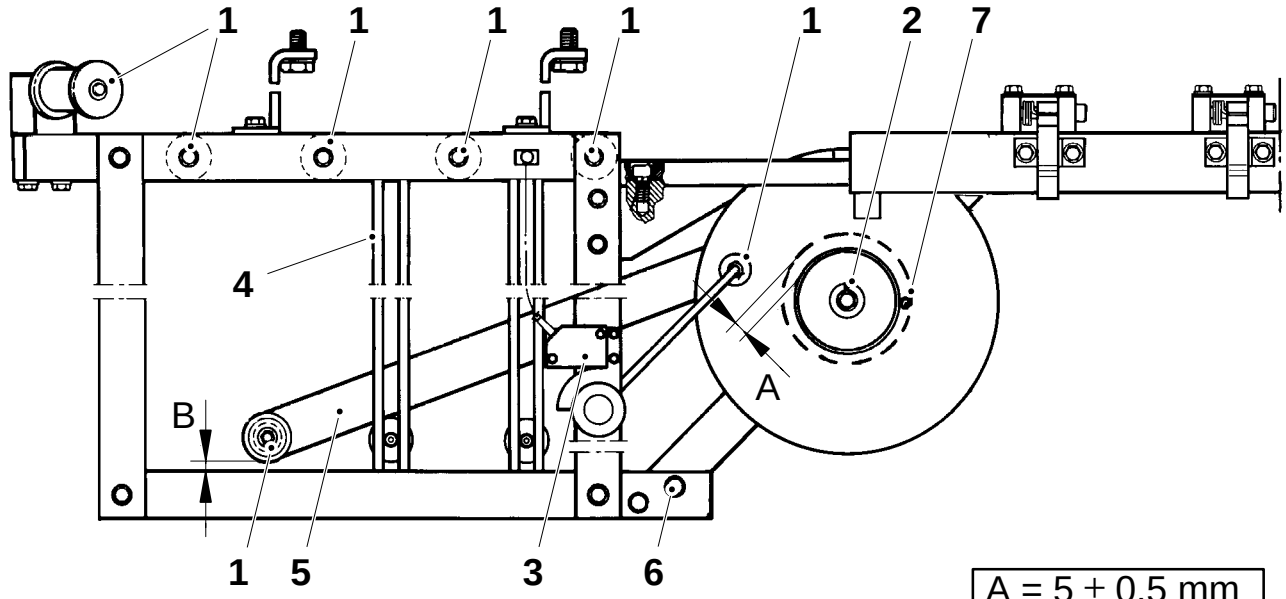

A = 5 ± 0.5 mm
B ≥ 5 mm

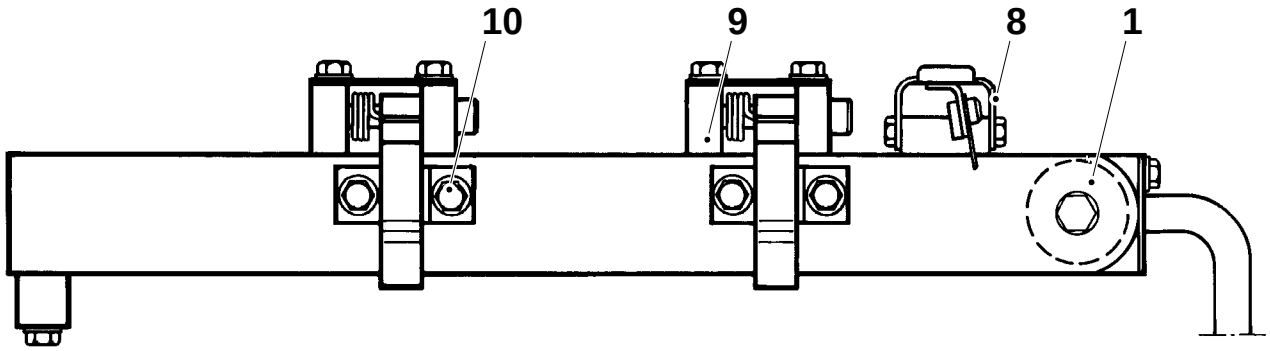

1	Roller	6	Screw
2	Bearing	7	Ball
3	Proximity switch	8	Knife
4	Guide	9	Clamp
5	Arm	10	Screw

Checking

Check the following details for wear and/or damages:

- the cut of the PullTab strip on a package
- the knife edges of the moving knife (1); make sure that the cut is straight and even
- the knife edges of the window knife (2); make sure that the cut is straight and even
- the rubber rollers (3) and (4)

Replace as required.

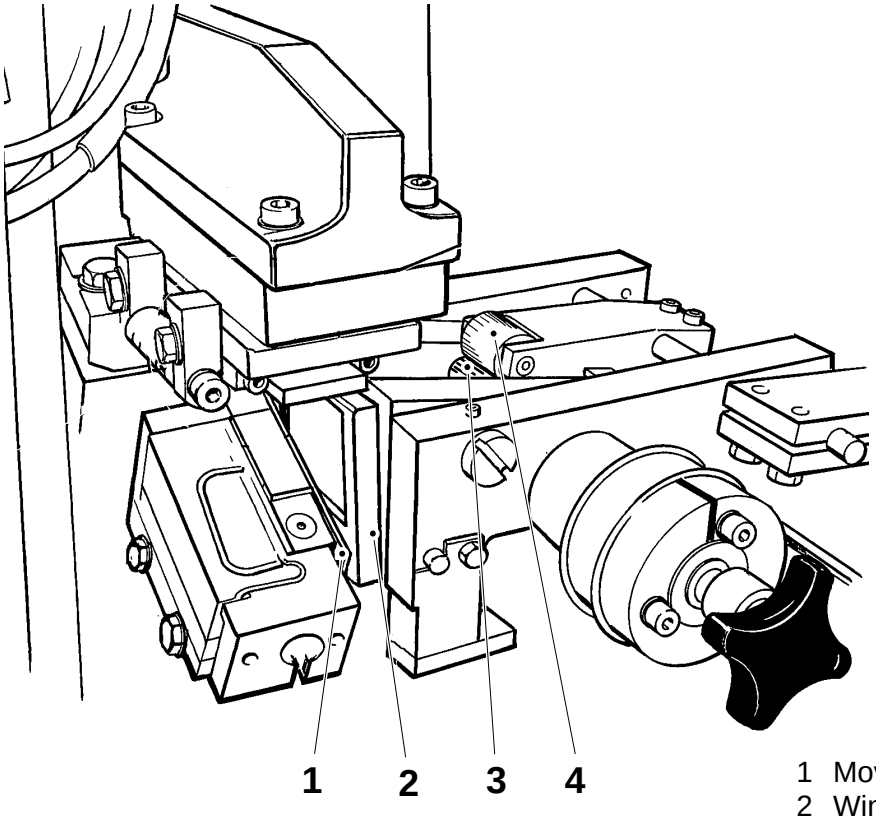

1 Moving knife
2 Window knife
3 Rubber roller
4 Rubber roller

Replacement

Window knife

a) Slacken the belt tensioner (1) and remove the feed drive belt (2).

b) Turn the cam shaft to 25° – 155°.

c) Undo the four screws (3) and remove the tab strip feed device.

d) Check if there are shims under the tab strip feed device.

e) Undo the two screws (4) and replace the window knife (5). Setting, see page MM 827–5X.

(Cont'd overleaf)

Bottom side

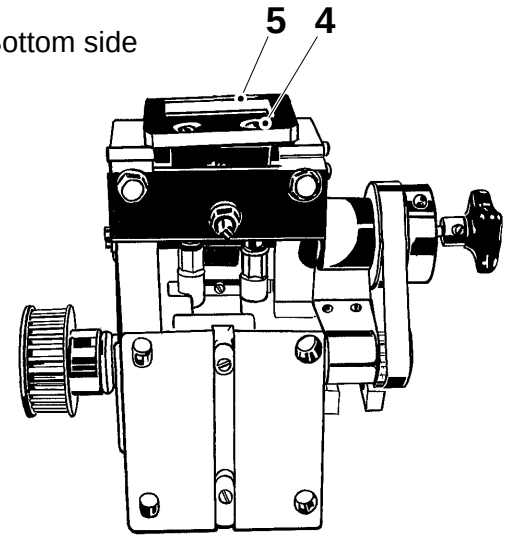

Top side

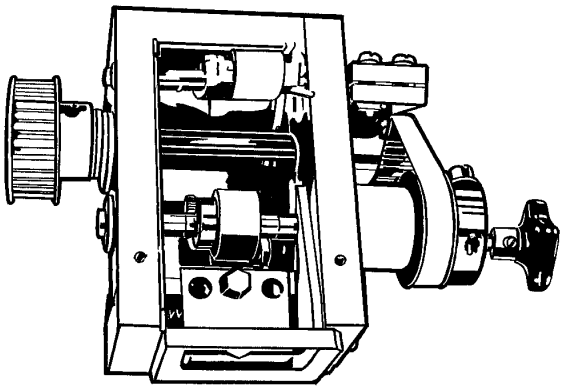

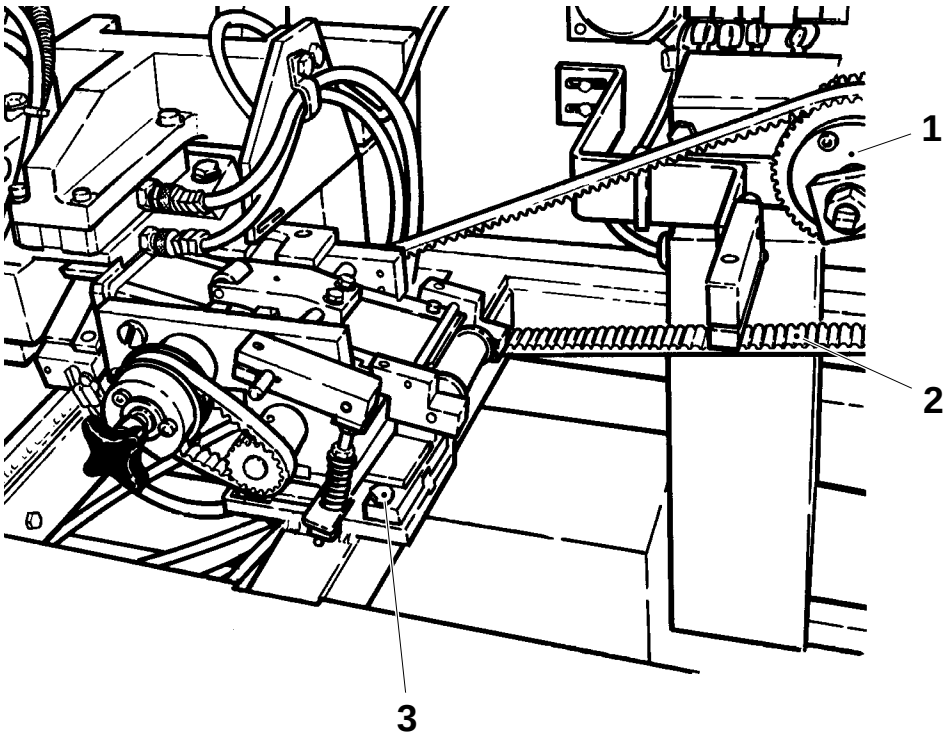

1 Belt tensioner
2 Feed drive belt
3 Screw
4 Screw
5 Window knife

(Cont'd)

f) Refit the tab strip feeder.

Caution!
Make sure all shims are correctly positioned.

g) Open the compressed air supply valve.

h) Check distance B between the knife (5) and the counter jaw (7) by means of a feeler gauge (6).
If required, adjust the shims underneath the tab strip feed device.

i) Run the machine and check the cutting and the feed.

(Cont'd overleaf)

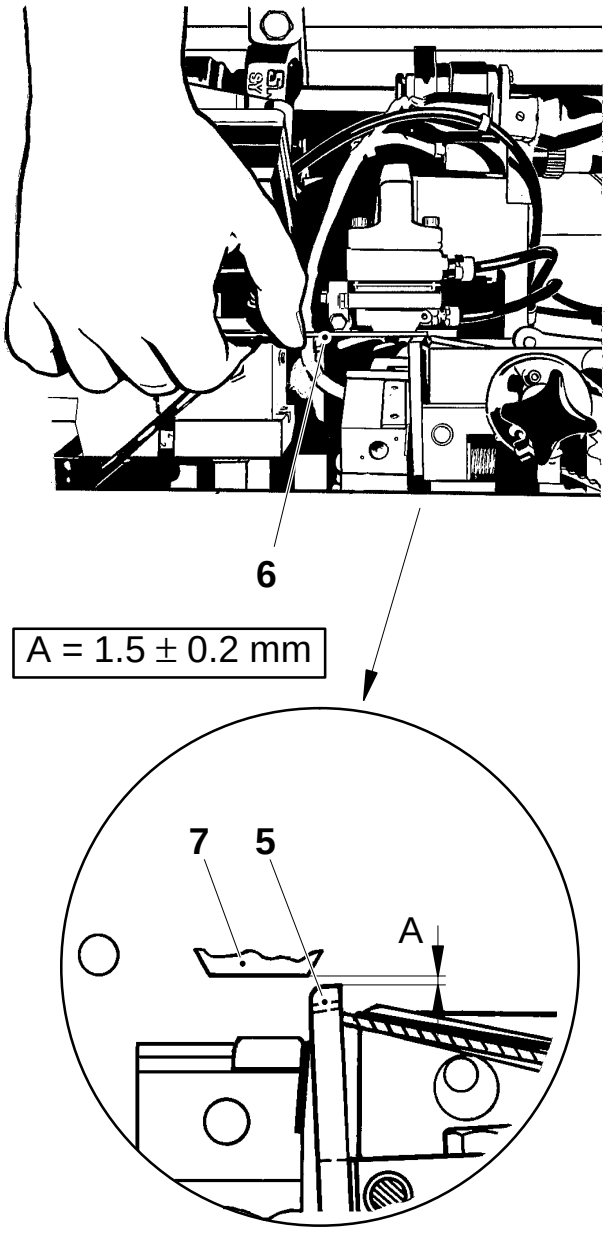

5 Window knife
6 Feeler gauge
7 Counter jaw

(Cont'd)

Moving knife

a) To replace only the moving knife is to be replaced, loosen the two screws (8) and remove the heating block.

b) Undo the two screws (9) on the side of the heating block (10) and replace the moving knife (11).

c) Refit.

d) Set the height, see page MM 823–5X.

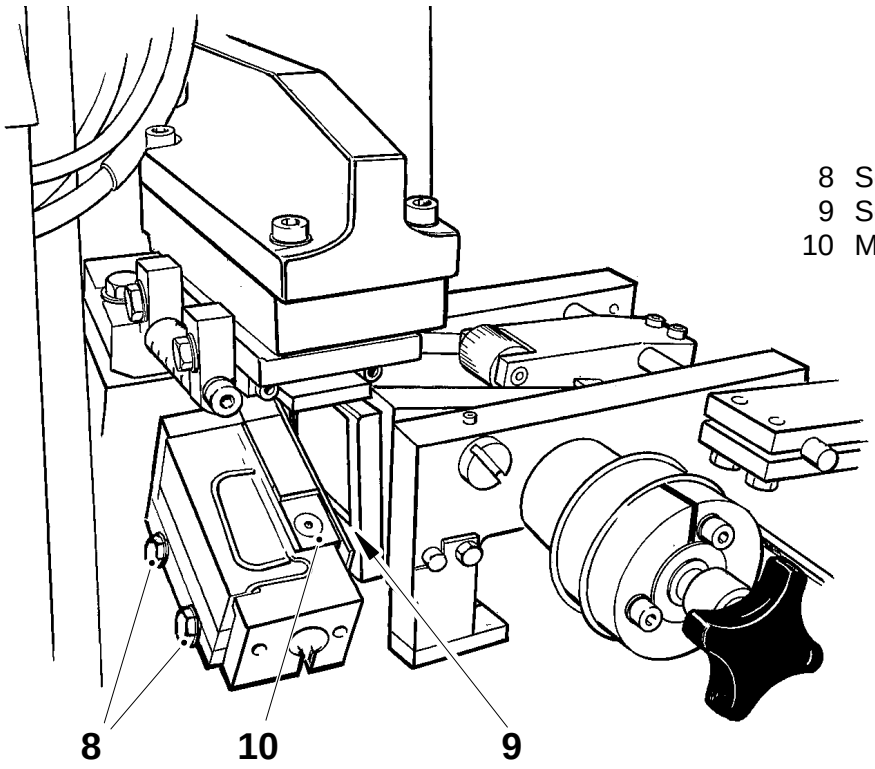

8 Screw
9 Screw
10 Moving knife

Checking

Step up the machine to step **Production**.

a) Cut a mark in the IS strip and the web, see fig. 1.

b) Run the machine and check that there is an alarm on the monitor panel and that one package is ejected.

c) If not, set the twisted strip guard (1), see page MM 831–5X.

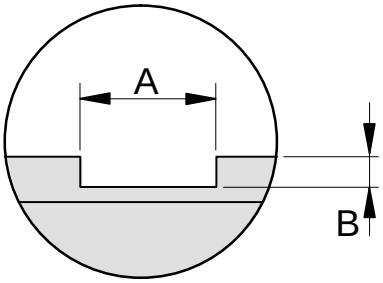

Fig. 1

A = 25 ±1 mm
B = 4 ±0.1 mm

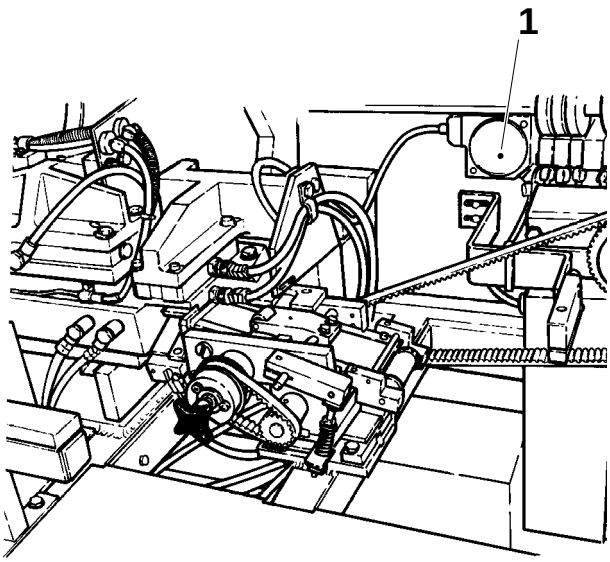

Fig. 2

1 Twisted strip guard

Setting

Turn on the main power switch.

a) Undo the screws (1) and set the height of the guide (2) by means of shims (3). The guide should be in level with the inductor.

b) Set distance A with the screws (4).

c) Set distance B with the screws (1).

d) Thread the packaging material web, see the OS book.

e) Loosen the screws (5) and set the sideways position of the lens (6). The mark (7) should be aligned with the packaging material web (8).

f) Remove the packaging material web and set the sensitivity of the photocell as follows:

- Turn the setting knob (9) clockwise until the LED (10) lights up.
- Turn the setting knob counter-clockwise until the LED just goes out and then rotate it once counter-clockwise.

A = 1.0 ± 0.1 mm
B = min 0.5 mm

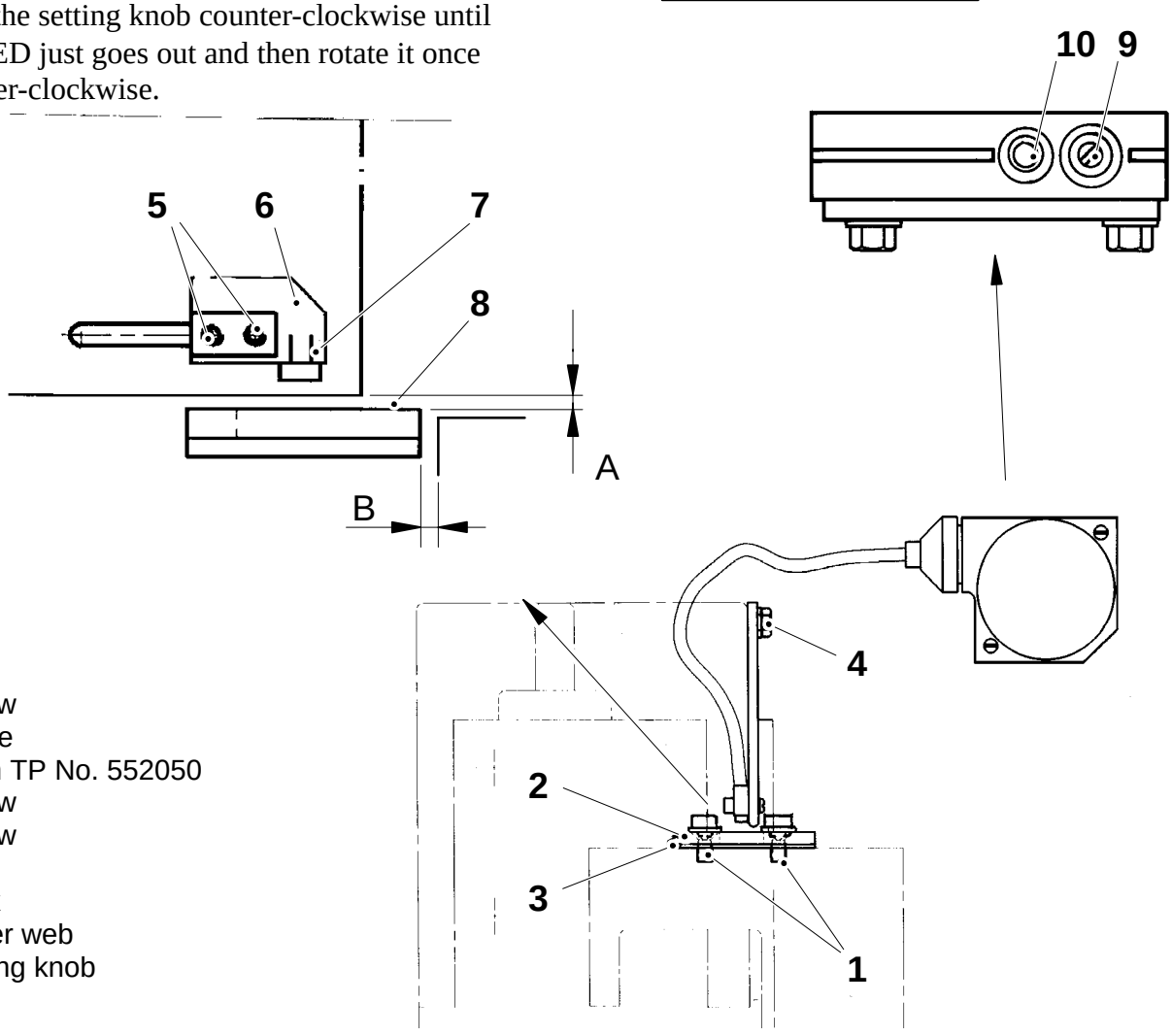

1 Screw
2 Guide
3 Shim TP No. 552050
4 Screw
5 Screw
6 Lens
7 Mark
8 Paper web
9 Setting knob
10 LED

Checking

Check the following details for wear and/or damages:

- the rollers (2) and (3); make sure that there are no burrs on them; clean the rollers
- the fixed roller (3); make sure that there are no excessive radial play
- the spring-loaded flange (1); make sure that it runs easily, and that it has not worn a groove in the shaft

Replace as required.

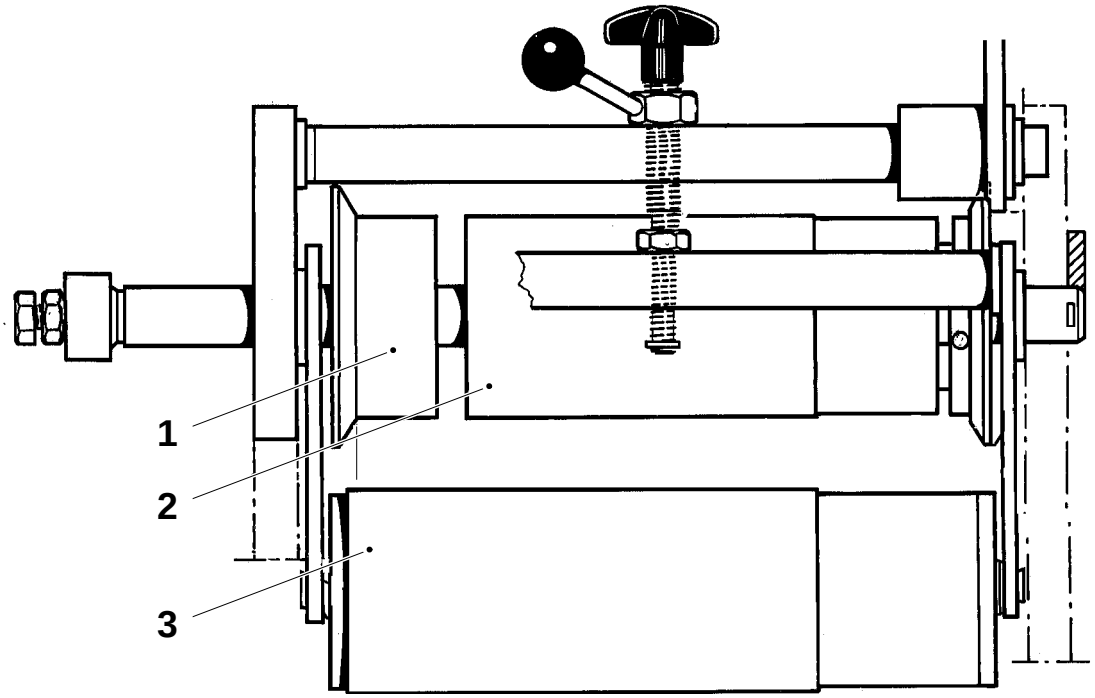

Fig. 1

1 Spring-loaded flange
2 Roller
3 Fixed roller

Setting

a) Loosen the screws (1) and set distance A from the vertical plane B, see page MM 801–7X, according to packaging material web width, see table.

Paper width mm	A ± 0.2 mm
214	203.5
174	210.0
162	210.0

b) Loosen the nut (2) and adjust with the screw (3) so that the packaging material web is positioned according to fig. 2 between the flange (4) and the spring loaded flange (5).

c) Tighten the nut (2).

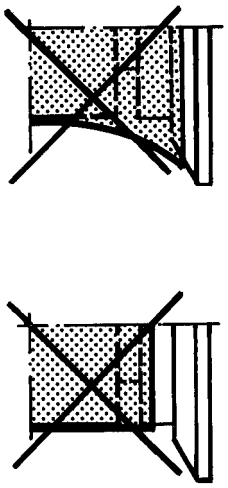

Fig. 2

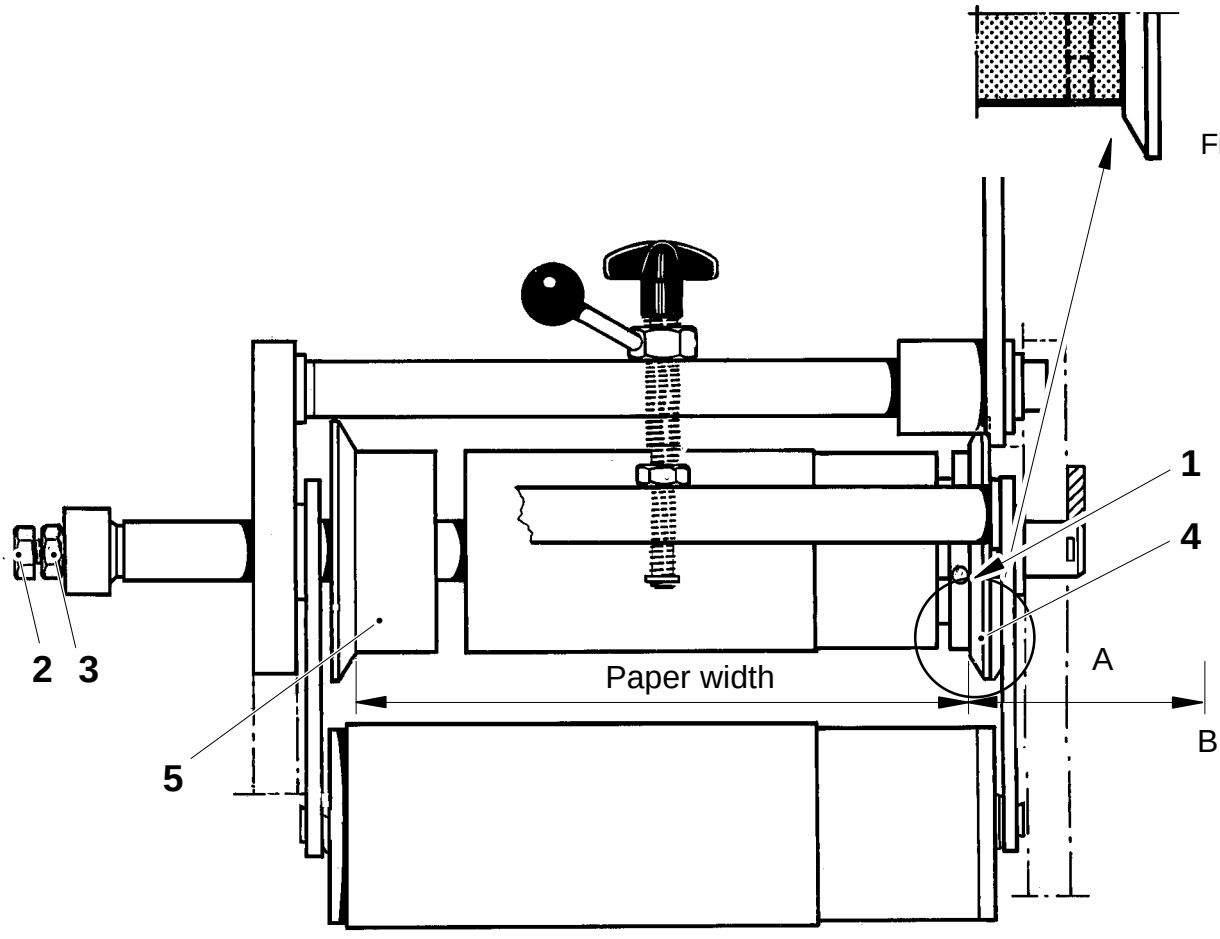

Fig. 1

1 Screw
2 Nut
3 Screw
4 Flange
5 Spring loaded flange

Checking

a) Undo the two screws (1) and the twelve screws (2).

b) Carefully pull the pump apart. Gently pull out the rubber diaphragm valves (3) and examine them for any cracks or brittle edges. Replace as required.

c) Slide out the filter (4) and clean it with compressed air. Replace as required.

d) Check that the muffler (5) is not clogged with dust. If necessary, clean with compressed air.

e) Assemble the vacuum pump in reverse order.

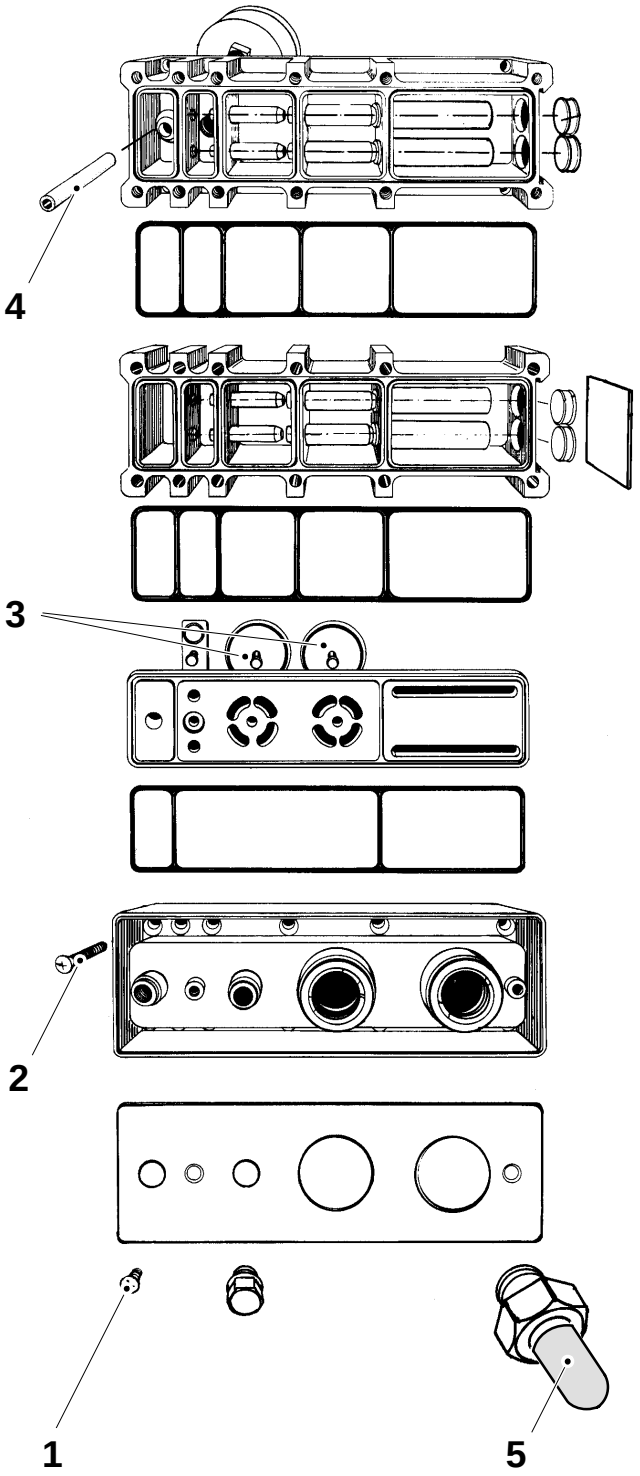

1 Screw
2 Screw
3 Rubber diaphragm valve
4 Filter
5 Muffler

Setting

Step up the machine to step **Ready for production**.

a) Thread the IS strip, see the OS book.

b) Set the strip guide in the narrow IS strip position. Place a narrow IS strip in the groove in the vacuum plate.

c) Run the pulltab unit and adjust the vacuum to -20 kPa by using the screw (1).

d) Set the strip guide in the wide IS strip position. Place a wide IS strip in the groove in the vacuum plate.

e) Activate valve Y211. Adjust the vaccum to 0 kPa using the screw (2).

f) Check the position of the strip with the machine in step **Production**.

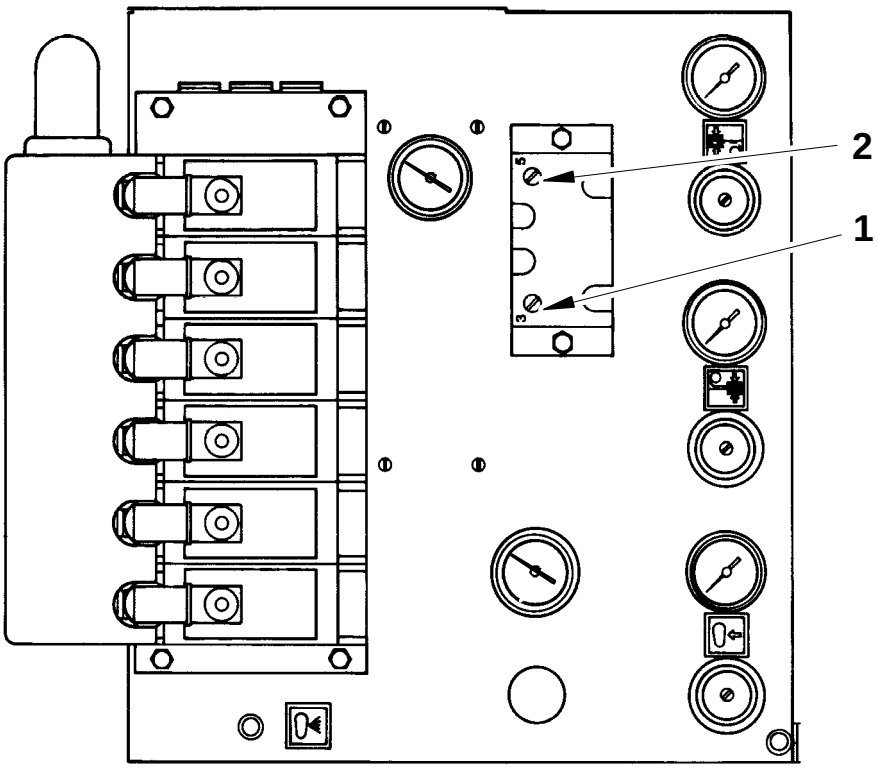

1 Screw
2 Screw

Checking

Check the following details for wear and/or damages:

- the carrier edges (1); make sure that they are not worn so that they begin to become round
- the carriers (2); make sure that they are straight
- the suction cups (3)

Replace as required.

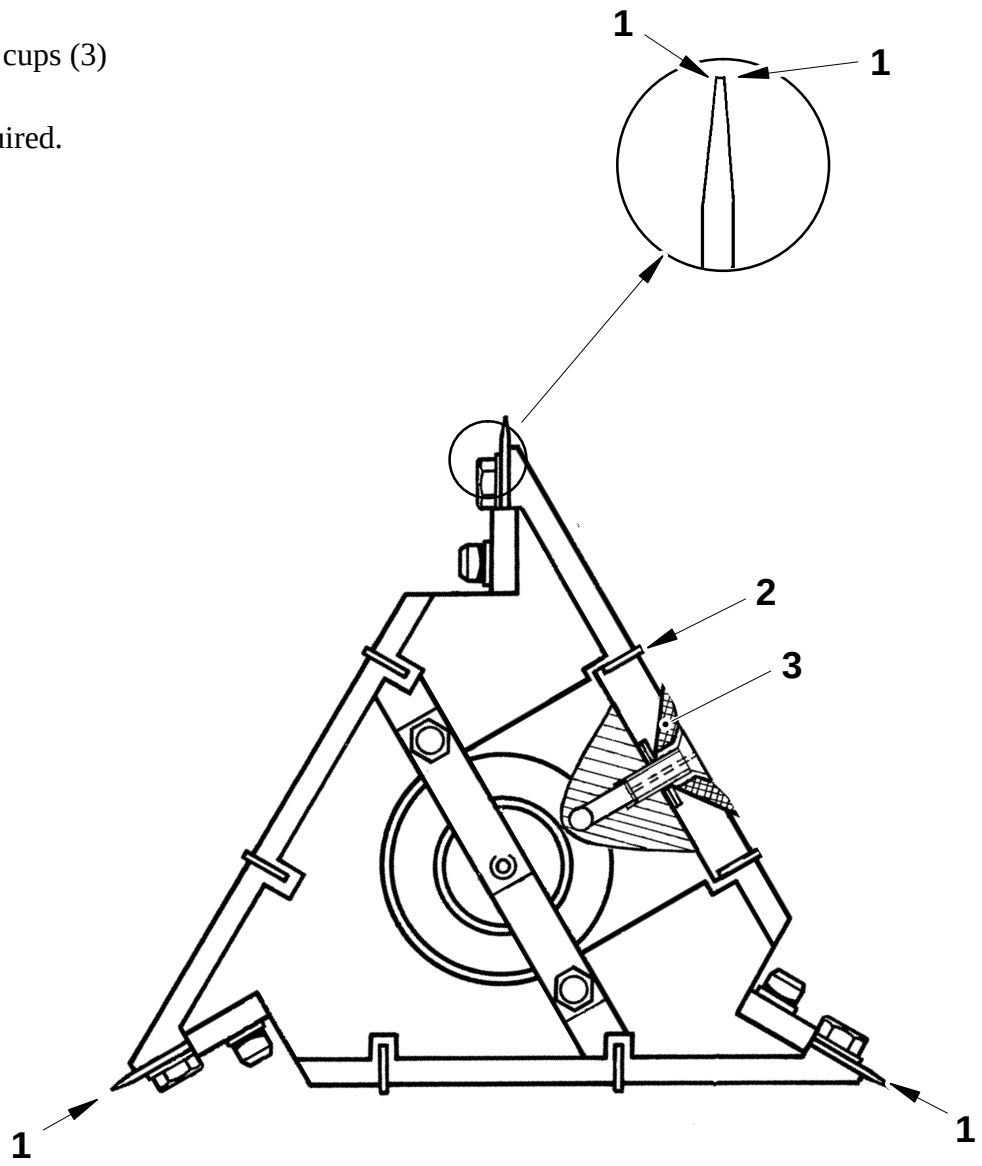

1 Carrier edge
2 Carrier
3 Suction cup

Setting

a) Set distance A between the edges of the carriers, as listed in the table, by turning the setting ring (1). Turn it clockwise to increase the distance.

b) Lock with the locking nut (2).

c) The screws (3) may be tightened very lightly to permit adjusting.

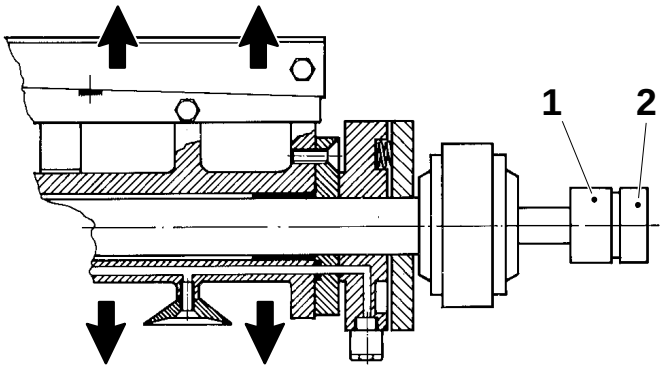

Volume, ml	A, mm
125 S	129.4
200 S	172.7
180 B	131.9
200 B	139.4
236 B	156.0
250 B	162.7
284 B	175.9

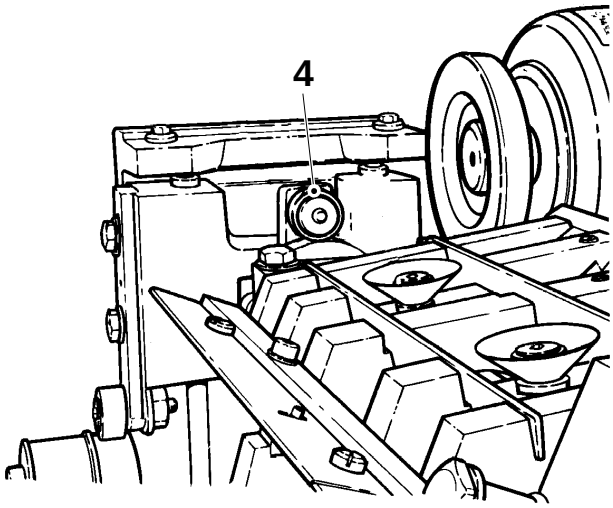

d) Crank the device by hand until the roller (4) for the return feed, has moved fully to the **lowest** part of the cam section.

(Cont'd overleaf)

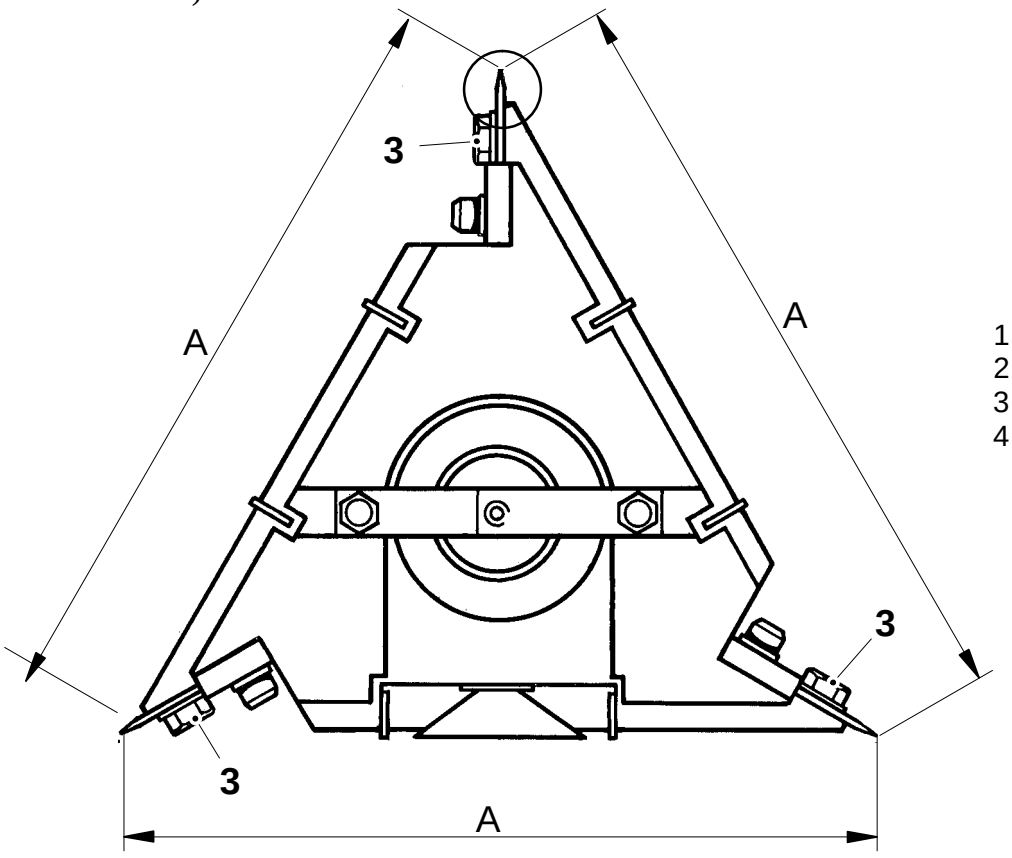

1 Setting ring
2 Locking nut
3 Screw
4 Roller

427

(Cont'd)

e) Loosen the clamp fitting, see page MM 370–2X.

f) Set the crease wheel at 40° using an angle gauge.

g) Tighten the clamp fitting, see page MM 370–4X.

h) When the cam (5) on the **main** shaft is in its **highest** position, loosen the screws (6) and set distance B between the roller (4) and the cam (7).

i) Place a ruler (8) on the carriers (9). Set distance C between the carriers and the top of the screw head (10), see fig.

j) Adjust by means of shims (11).

(Cont'd overleaf)

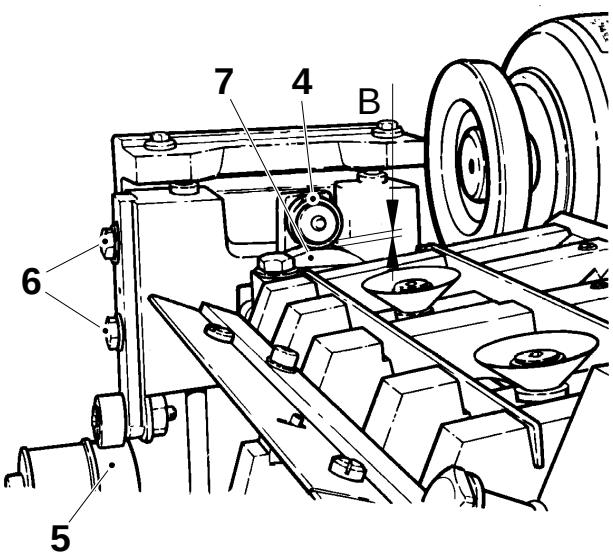

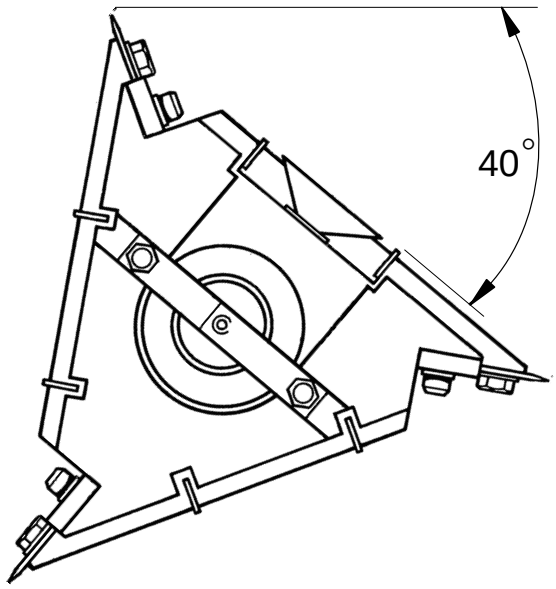

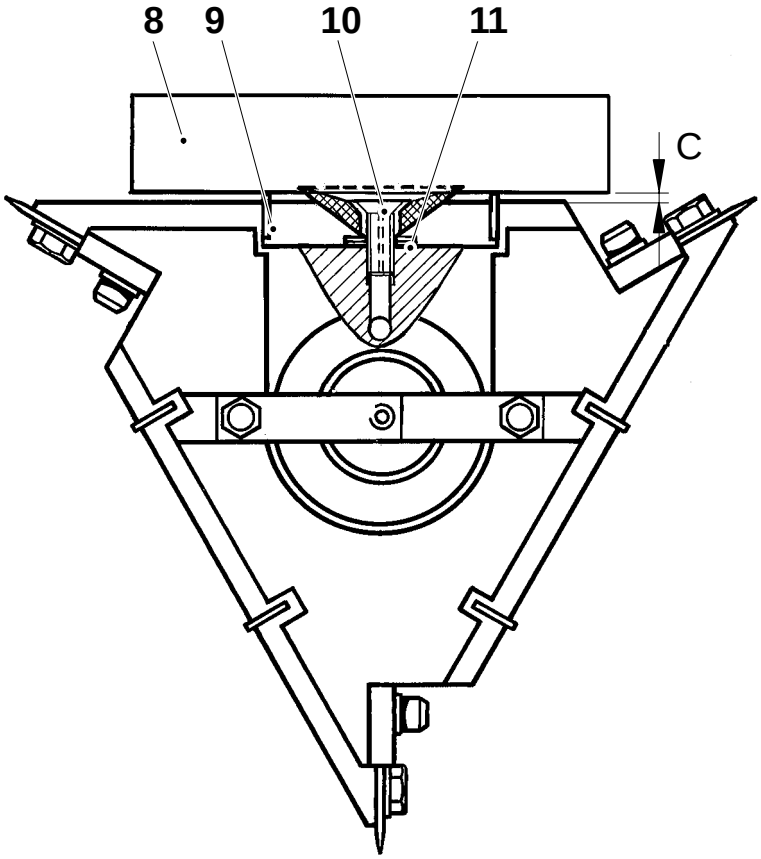

B = 0.2 ± 0.05 mm
C = 0.9 ± 0.1 mm

4 Roller
5 Cam
6 Screw
7 Cam
8 Ruler
9 Carrier
10 Screw
11 Shim 0.3 mm, TP No. 2033–13
Shim 0.2 mm, TP No. 255119

Checking

The tightness of the system can be checked with packaging material in the machine.

If the vacuum achieved is not at least 40 kPa, check:

- that the hoses and hose couplings are intact
- the vacuum pump, see page MM 834–1X
- the suctions cups, see page MM 835–1X

Overhaul

Open for compressed air.

Reconditioning plate connector vacuum

a) Undo the screws (1) and remove the top plate (2).

b) Undo the vacuum line connection (3).

c) Undo the setting screw (4).

d) Remove the two plates (5) and (6).

e) Check that the wear of the vacuum coupling plate (6) does not exceed 1.5 mm (2.5 mm of the groove is to remain). Replace as required.

f) Undo the three screws (7) and detach the plate (8).

g) Check the three O-rings (9). Replace as required.

h) Reassemble in reverse order.

i) Synchronize the vacuum device, see page MM 837–5X.

1 Screw
2 Top plate
3 Vacuum line connection
4 Setting screw
5 Plate
6 Vacuum coupling plate
7 Screw
8 Plate
9 O-ring

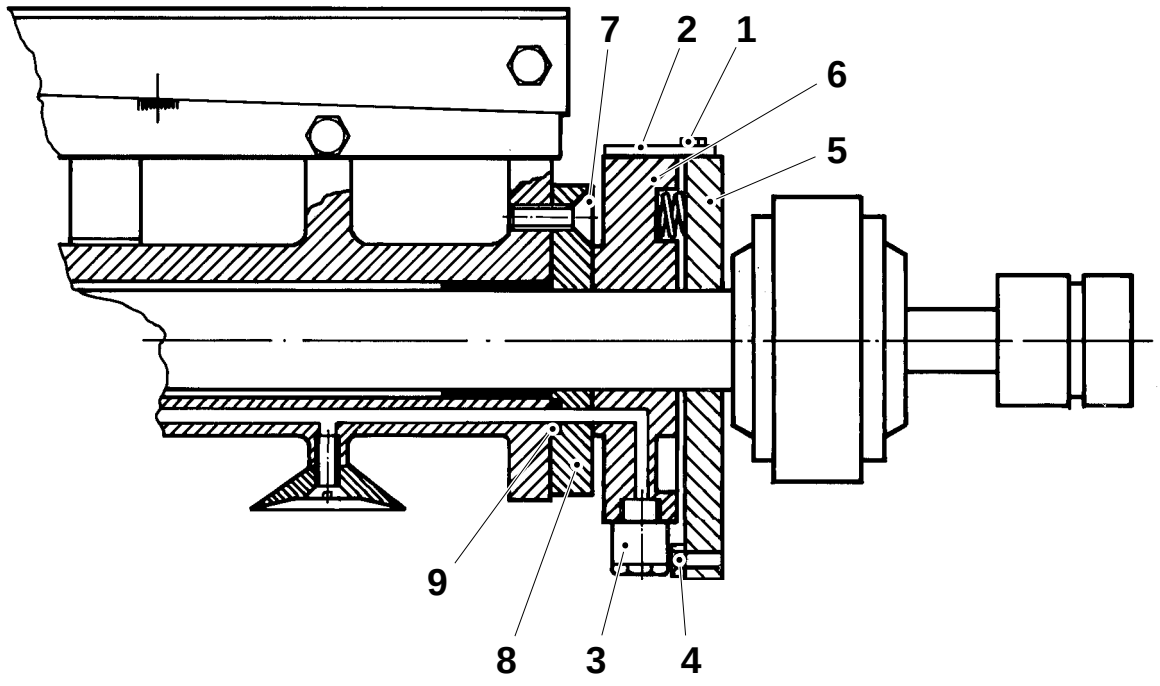

Setting

Step up the machine to step **Ready for production**.

Vacuum synchronization

a) Place a ruler (1) on the crease wheel.

b) Turn the crease wheel (in the normal direction of rotation) until the ruler is distance A above the rollers. In this position, there should be **no** vacuum.

c) To adjust, loosen the setting screw (2) and turn the plate to the correct position. Tighten the screw.

d) With the machine in step **Production**, make sure that the packaging material is not forced off the suction cups, see fig. 3 and fig. 4. If required, stop the machine and adjust.

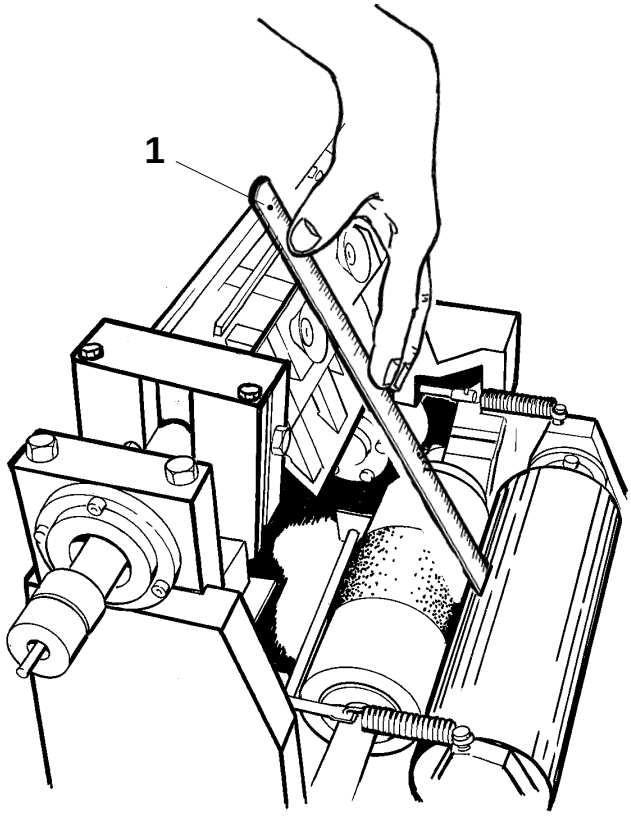

Fig.1

1 Ruler
2 Setting screw

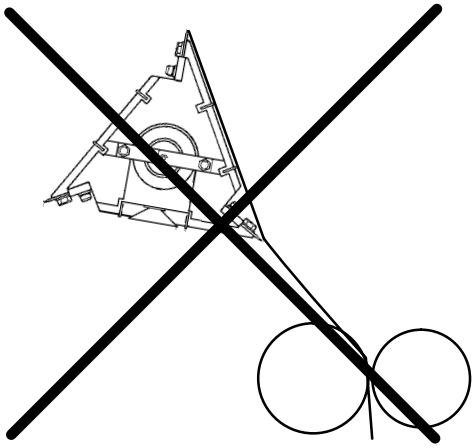

Fig. 3

A = 8 – 10 mm

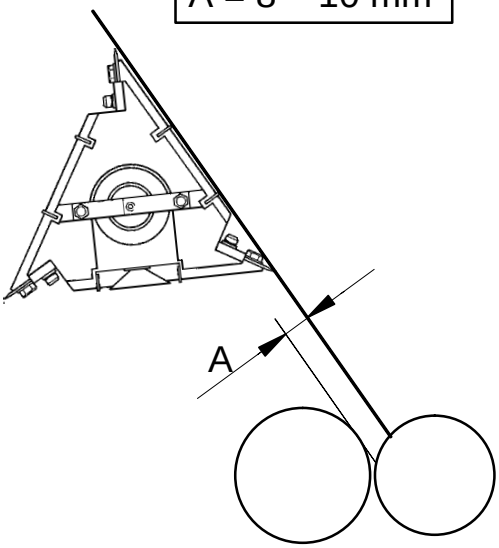

Fig. 4

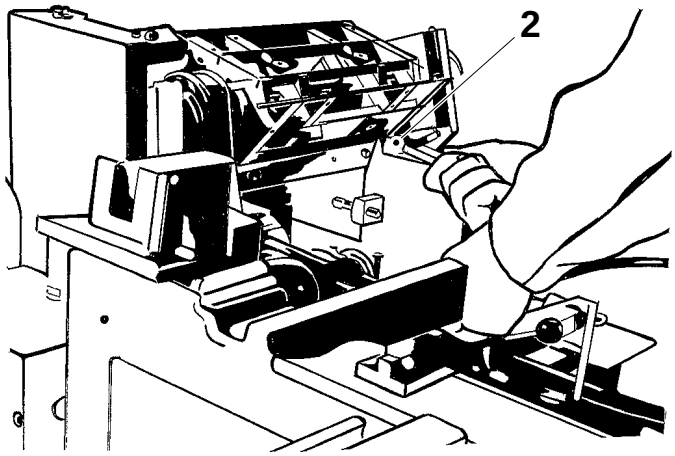

Fig. 2

Setting

a) Set the packaging material web position, see page MM 814–5X and MM 833–5X.

b) The distance between the rear edge (2) of the tab and the edge of the packaging material (1) is to be distance A.

c) Set the distance by loosening the screws (3) and shifting the tab strip feed device (4). Tighten the screws.

Volume, ml	A ±0.5 mm
125 S	2.5
200 S	2.5
180 B	4.0
200 B	4.0
236 B	4.0
250 B	4.0
284 B	4.0

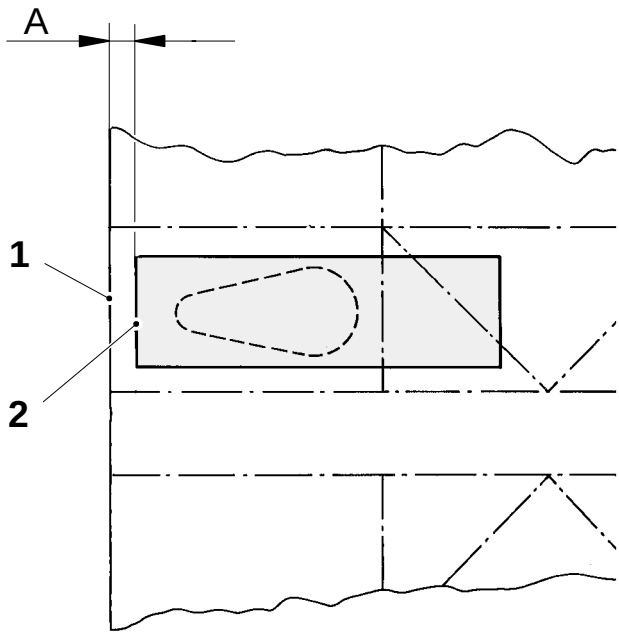

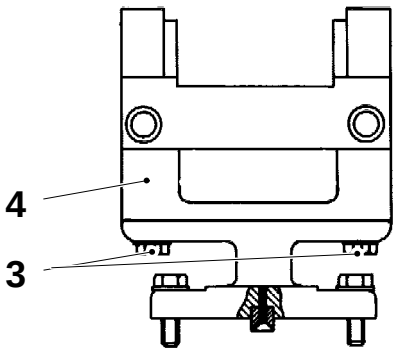

1 Edge of packaging material
2 Tab, rear edge
3 Screw
4 Tab strip feed device

Setting

a) Adjust the bending rollers (1) by means of setting handle (2) until the tab (3) is positioned distance A from the top crease (4).

b) Release the locking handle (5) and loosen the nut (6).

c) Turn the setting handle (2) clockwise to increase the distance and vice versa.

d) After setting, engage the locking handle and tighten the nut.

e) Set the position of the PullTab hole, see page MM 842–5X.

Volume, ml	A ± 1 mm
125 S	1.5
200 S hole 10	3.5
200 S hole 11	4.0
180 B – 284 B	5.0

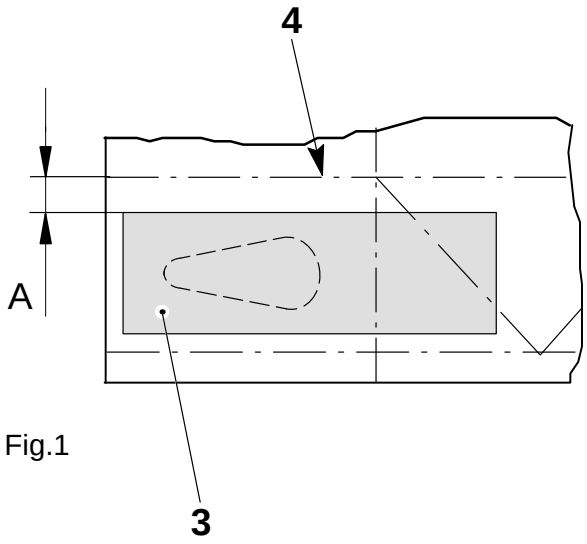

Fig.1

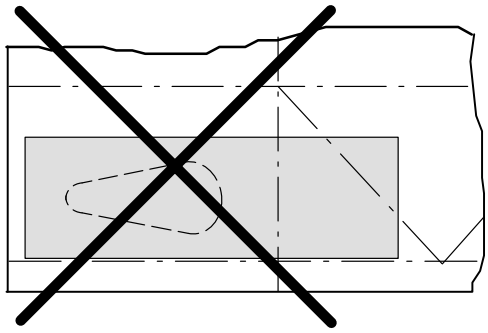

Fig.2

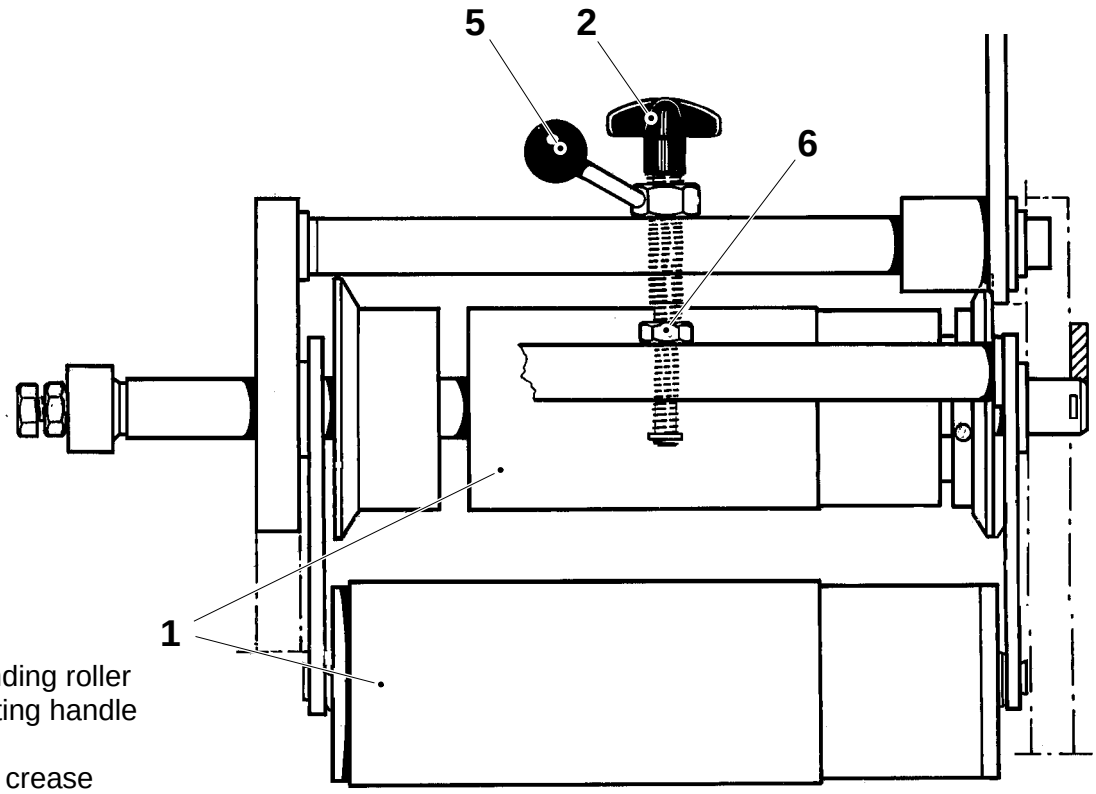

1 Bending roller
2 Setting handle
3 Tab
4 Top crease
5 Locking handle
6 Nut

Setting

a) The mark after the unsealed zone by the PullTab hole (1) should be placed in the middle of the sealed zone (2), distance A.

b) To adjust the hole position, loosen the screws (3), and adjust by means of the handle (4). Tighten the screws.

(Cont'd overleaf)

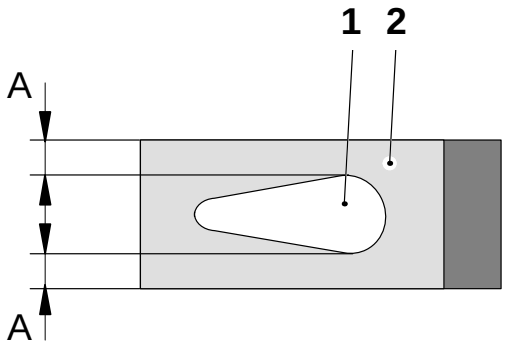

A ≥ 0.5 mm

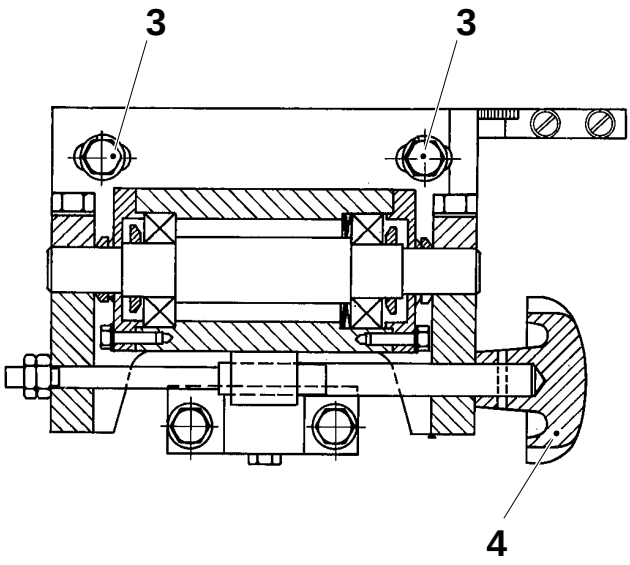

1 PullTab hole
2 Sealed zone
3 Screw
4 Handle

(Cont'd)

Sealing length

a) After removal/fitting, check that the sealed zone (2) continues past the PullTab hole; measures, see fig.

b) Loosen the screws (5) and set the sealing length with the screw (6).

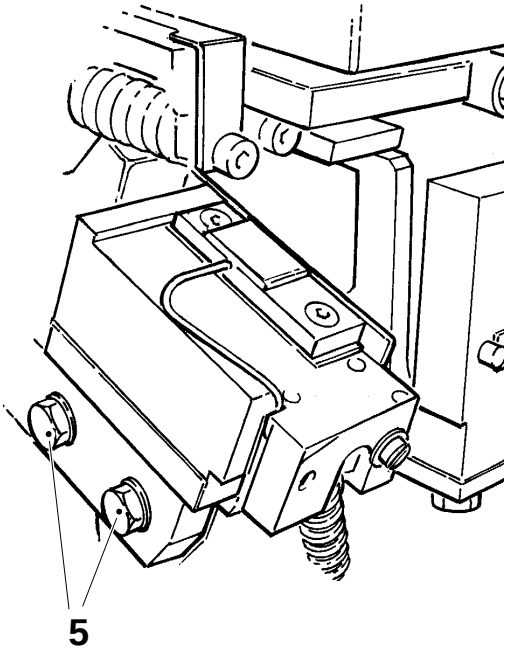

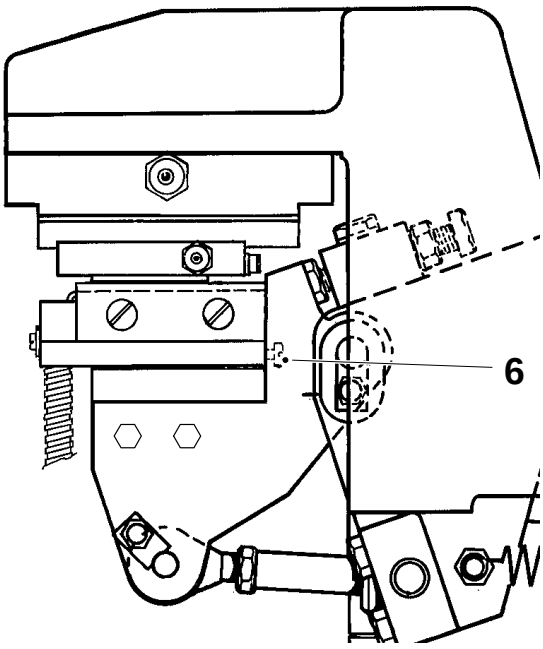

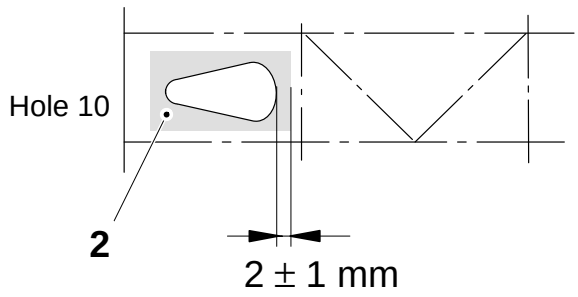

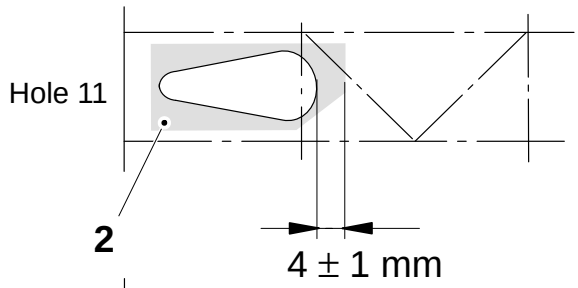

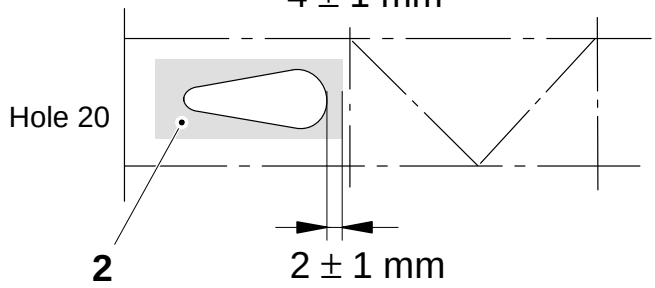

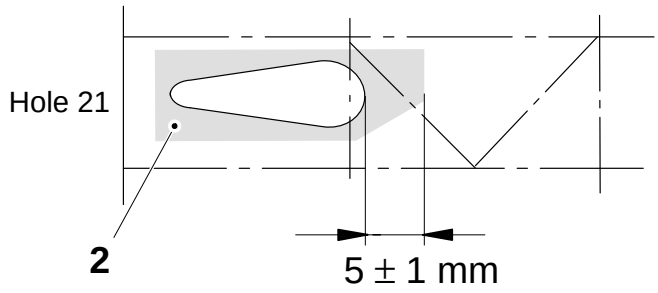

2 Sealed zone
5 Screw
6 Adjustment screw

Setting

Step up the machine to step **Production**.

The tab unit (1) is secured in a fixed position. All measurements are counted from this unit.

a) Thread the packaging material through the machine and start the machine.

b) Adjust the bending rollers (2) until the tab is positioned, see page MM 841–5X.
Note! Be aware of the unsealed part of the tab.

c) Adjust the hole punch (3) so that the hole is positioned according to page MM 842–5X.

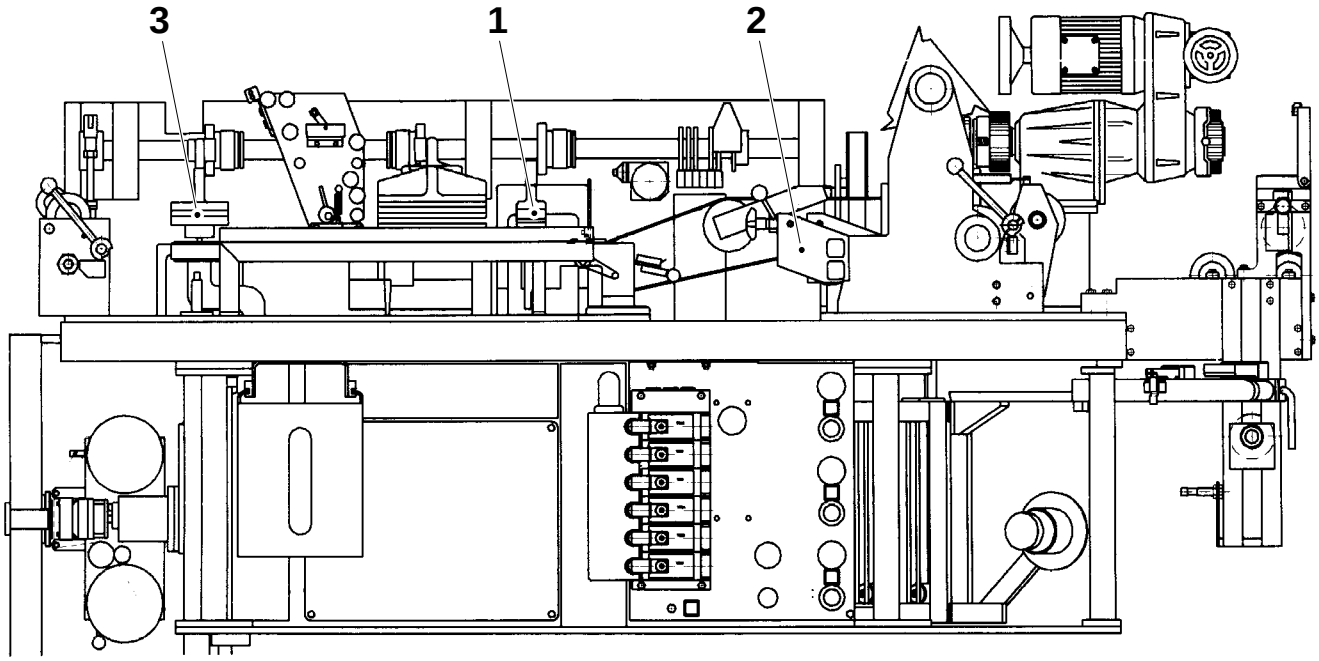

1 Tab unit
2 Bending roller
3 Hole punch

Checking

Turn on the main power switch.

Check the following details for wear and/or damages:

- the rubber covering (1); clean the covering
- the gear wheels (2)

Replace as required.

Note
During stoppages longer than 24 hours, the drive roller must be disengaged from the counter roller.

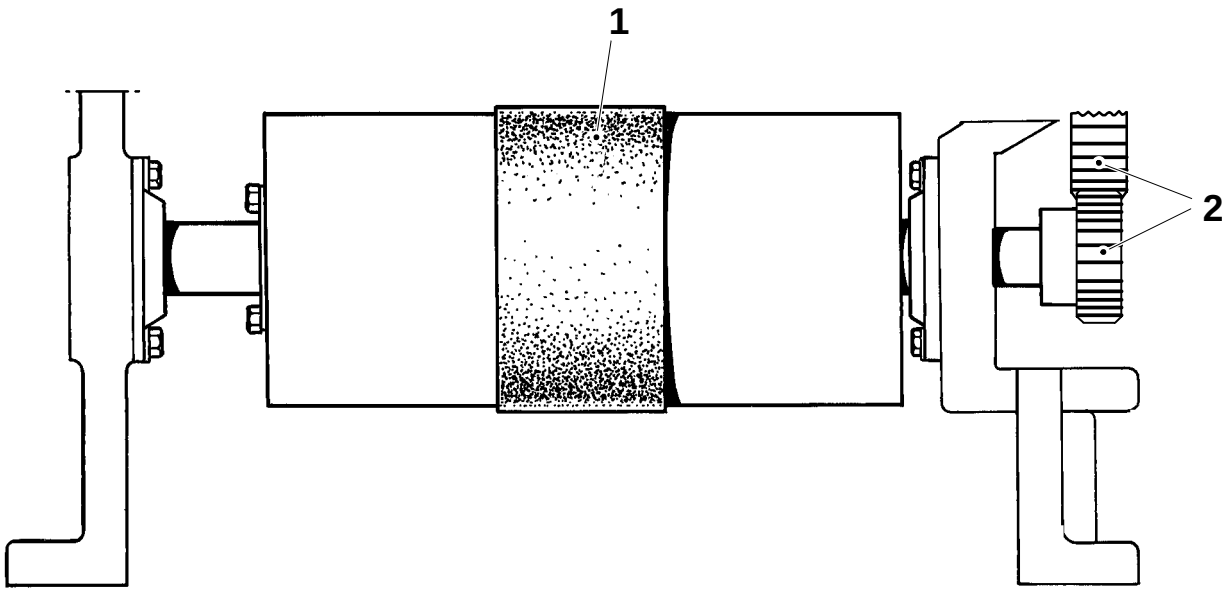

1 Rubber covering
2 Gearwheel

Checking

Turn on the main power switch.

Check the following details for wear and/or damage:

- the release handle (1)
- the proximity switch (2)
- the spring (3)

Replace as required.

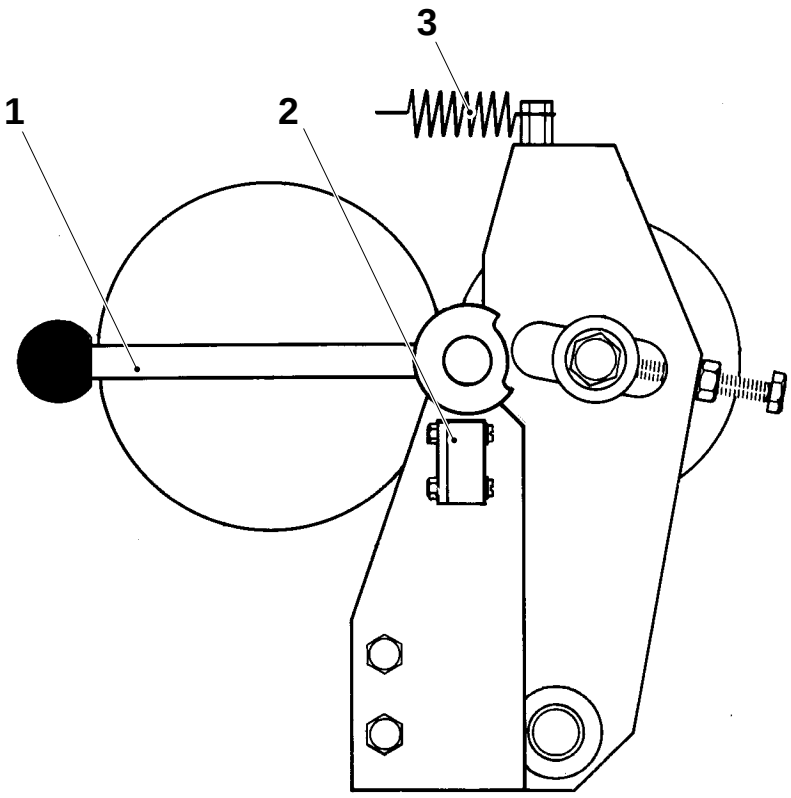

1 Release handle
2 Proximity switch
3 Spring

Setting

Spring force

a) Measure the spring force for each of the two springs by means of a spring balance.

b) The force is to be 150 N for each of the springs. If required, adjust the force at the threaded spring holder.

Gap

a) Put packaging material between the rollers (3) and (5).

b) Crank the unit until the roller (2) is in the lower cam section.

c) Loosen the two screws (4) and the two nuts (6) and set distance A between the cam (1) and the roller (2).

d) Adjust equally on both sides, by means of the two screws (7); make sure that the counter roller (5) is parallel with the drive roller (3).

e) Tighten the two nuts (6) and thereafter the two screws (4). Check the distance between the cam (1) and the cam roller (2).

A = 0.05 – 0.1 mm

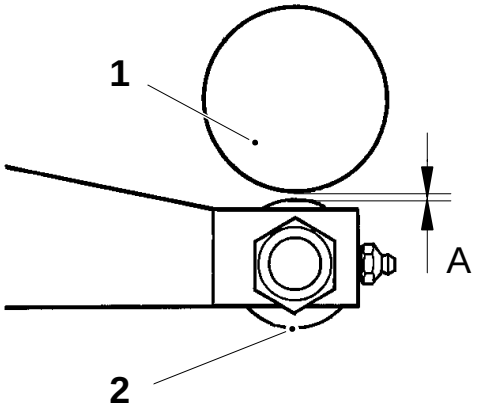

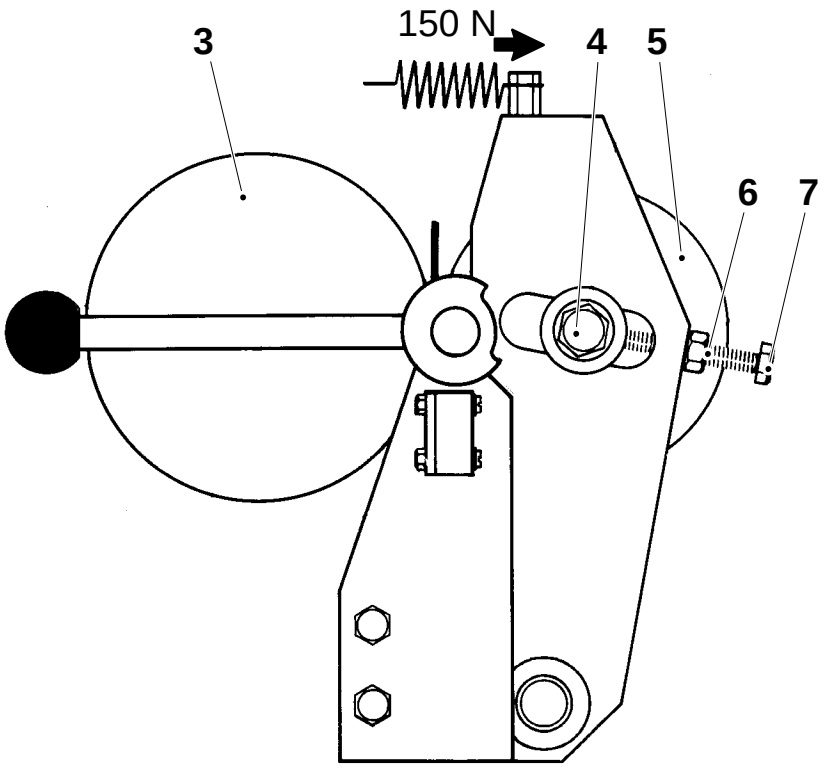

1 Cam
2 Roller
3 Drive roller
4 Screw
5 Counter roller
6 Nut
7 Screw

Setting

Turn on the main power switch.

Proximity switches

Note
Make sure the two guides (1) and (2) are parallel and at right angles to the flat surface of the plane (3) on both sides.

a) Tighten the screws (4).

b) Set the two proximity switches (5) so that the clearance between them and the trigger flags (6) do not exceed distance A when the slide lug (7) is in its outermost position.

c) Measure distance B to the guide (1) on the LH side and set the RH side guide at the same distance.

d) Set the guides (2) to obtain a maximum sideways movement of 0.5 mm between the slide lug and guides.

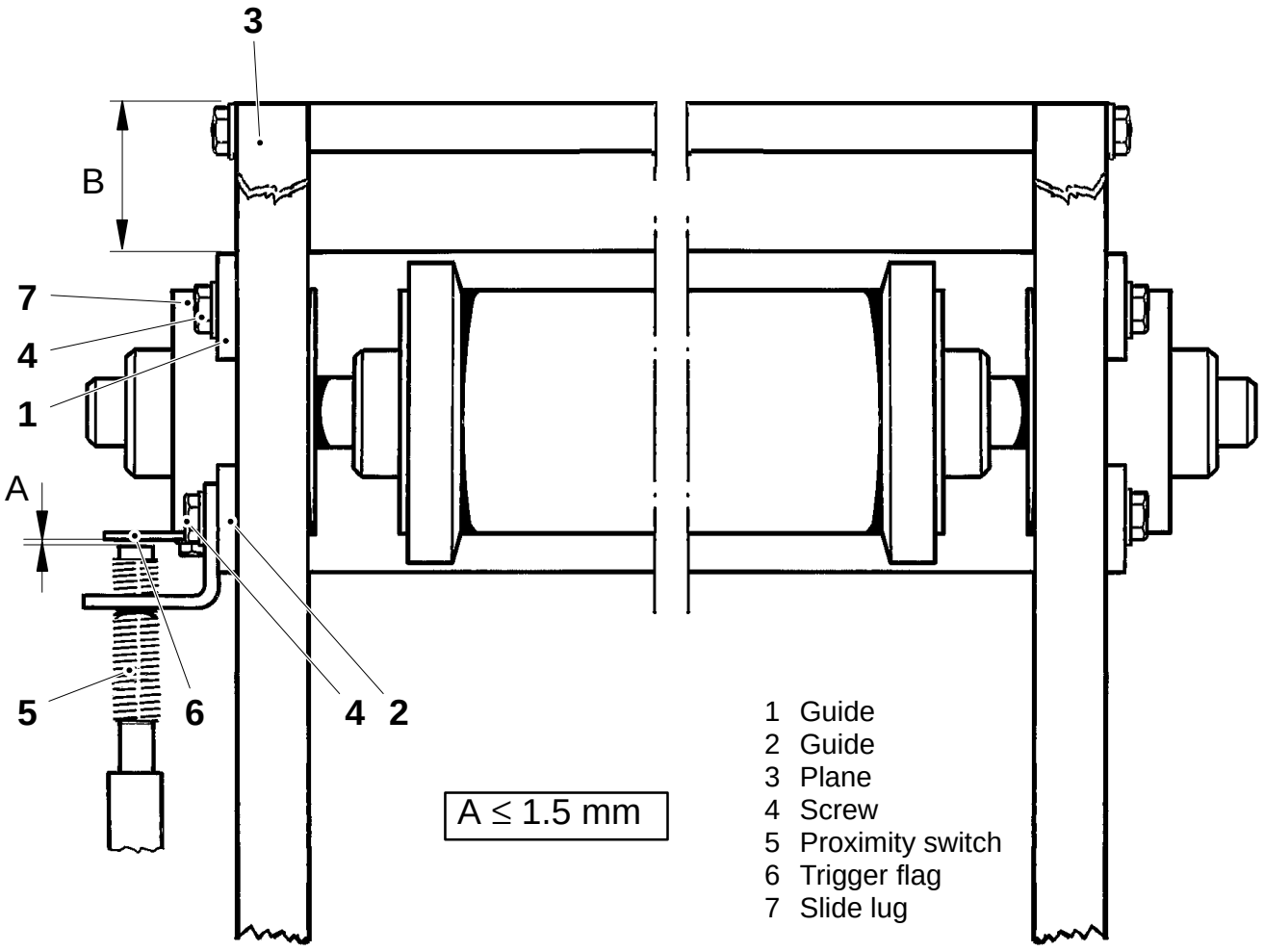

Sequence diagram and positioning cams

Sequence diagram, see next page.

The cams 1, 2, 3, 4, and 10 are fixed by clamp devices.

The cams 5, 6, 7, 8, and 9 are fixed by grub screws.

(Cont’d overleaf)

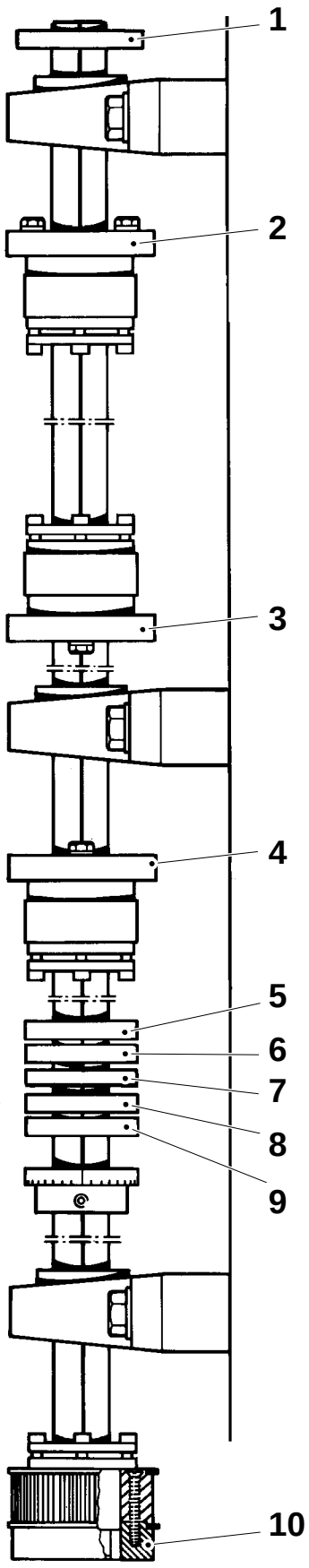

Cams:

1 Brake release
2 Punch
3 IS strip sealing, pressure
4 Tab sealing, pressure
5 Brake (web tension)
6 Synchronization to main machine
7 IS strip sealing, IH generator
8 Synchronous stop
9 Tab sealing, CAP, date marking
10 Adjustment of crease wheel

(Cont'd)
Numbering, see previous page.

Note
The graphs shows the profiles of the cams.

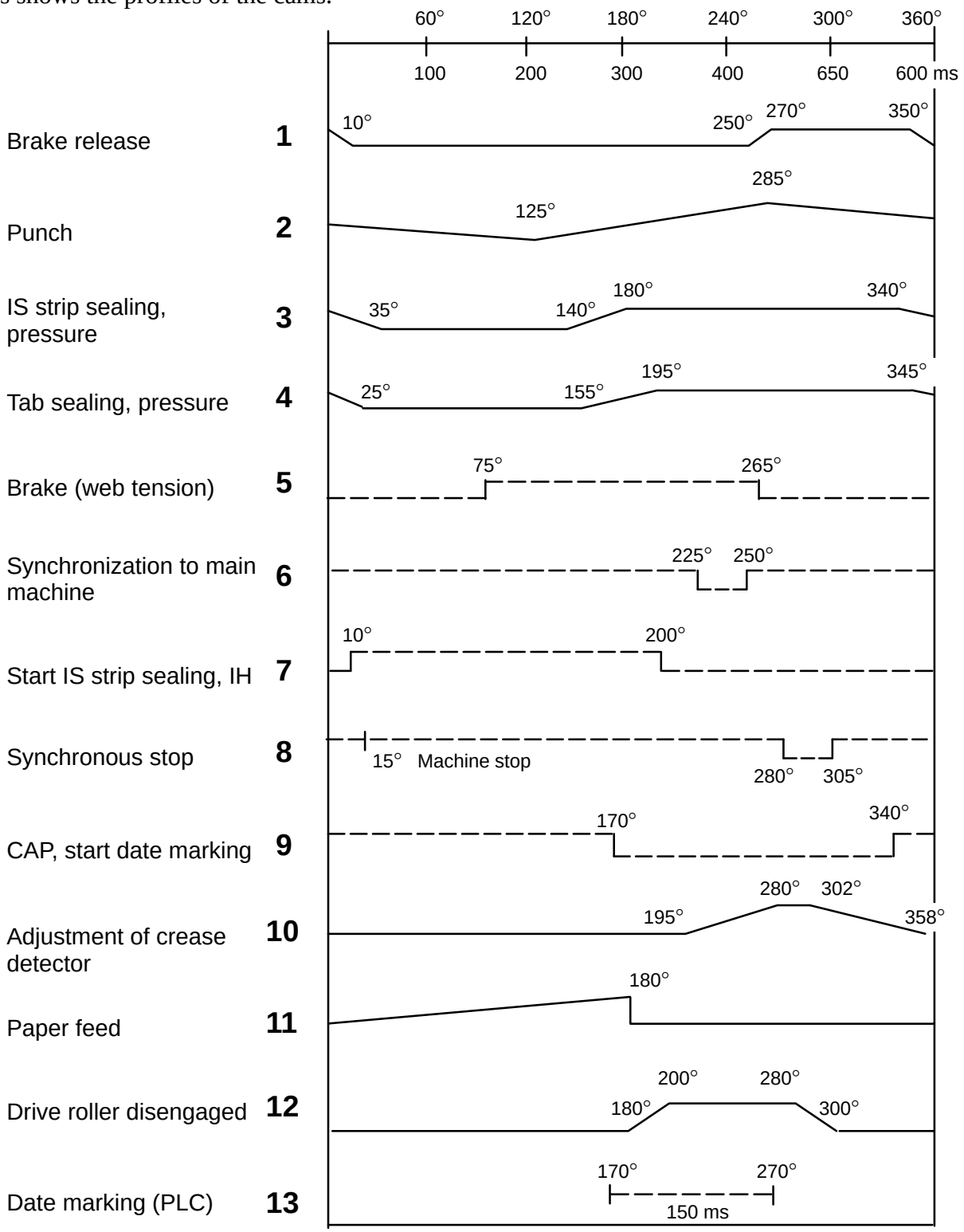

Setting

a) If the brake is weak, loosen the nuts (1).

b) Hold the nuts and adjust by means of the three screws (2) to set distance A.

c) Tighten the nuts.

d) Pull the handle by hand. If the brake can not be properly disengaged, set distance B.

e) Adjust by means of the two screws (3).

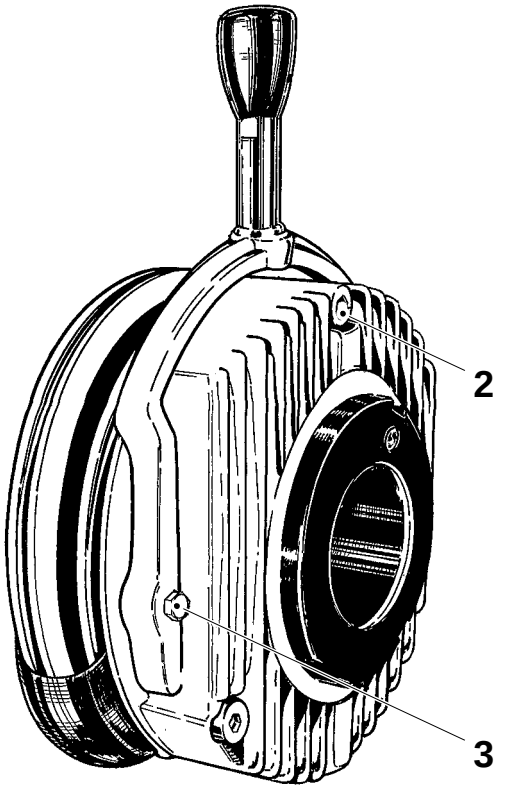

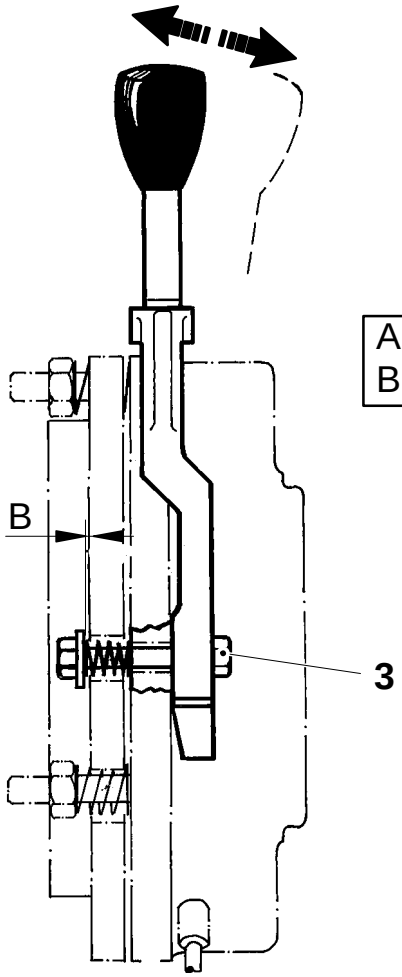

A = 0.2 ± 0.05 mm
B = 1.0 ± 0.1 mm

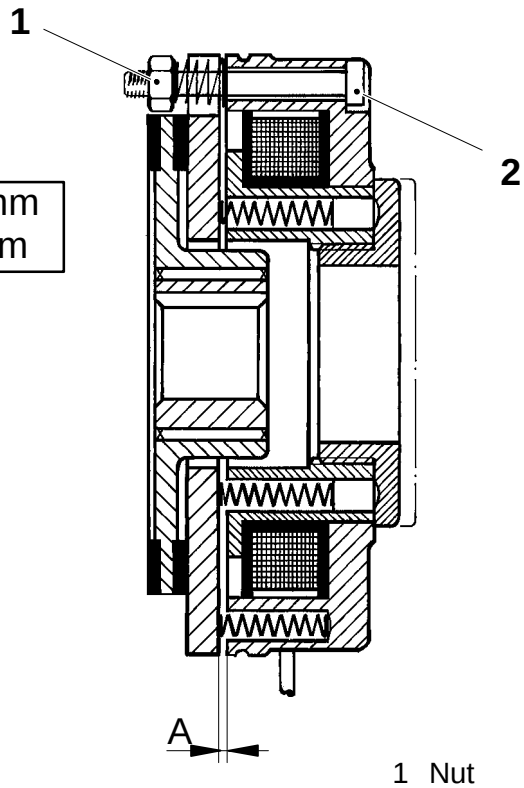

1 Nut
2 Screw
3 Screw

Removal

Segment

a) Loosen the screw (1).

b) Undo the lock nut (2) and remove the segments (3).

c) Fit in reverse order; make sure that the outer segment is correctly positioned **in all three slots**.
Tighten the nut (2) securely.

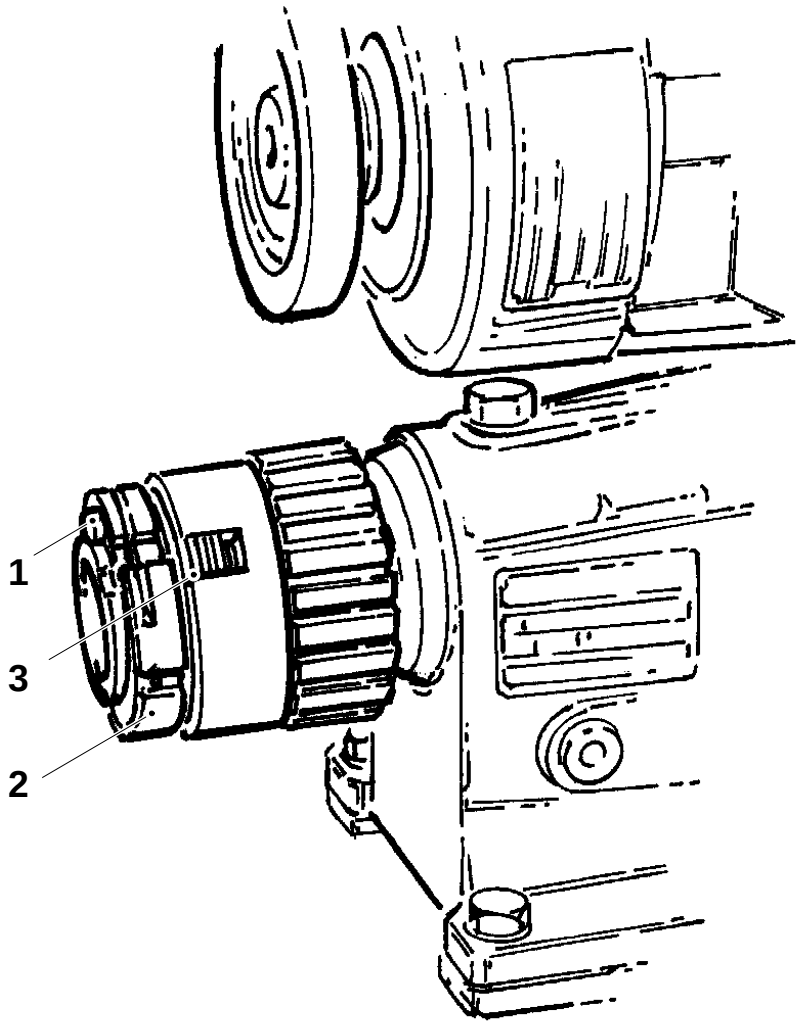

1 Screw
2 Lock nut
3 Segment

Checking

a) Remove the cover (1).

b) Check the belt (2) for wear and/or damage. Replace as required.

c) Position the belt (2) in the middle of the lower belt pulley see fig. 3.

d) Refit the cover while rotating the motor by hand. Check that the belt does not catch.

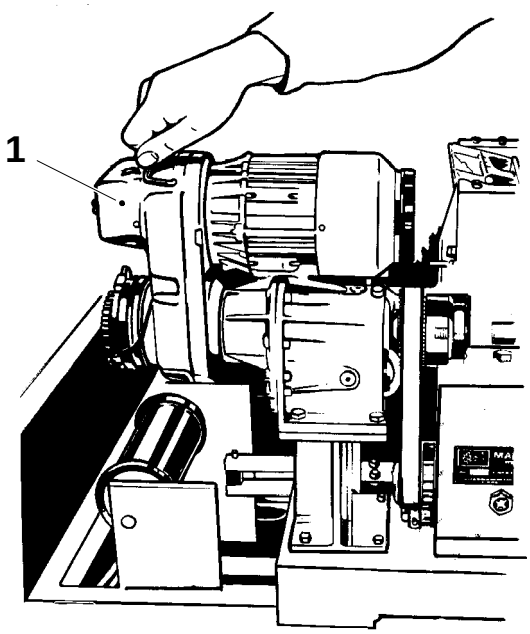

Fig 1

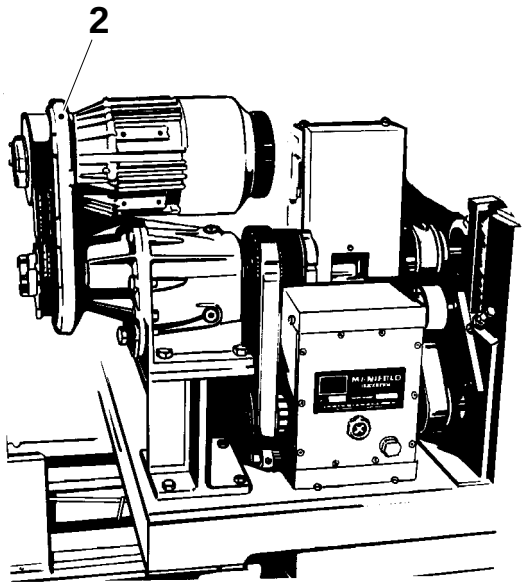

Fig 2

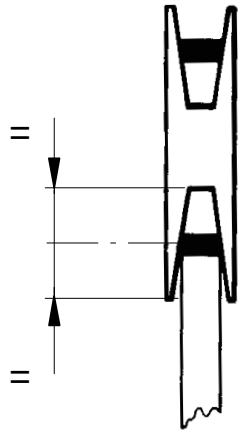

Fig 3

1 Cover
2 Belt

Replacement

a) Remove the cover (1).

b) Remove the clamp ring (2), and the outer wheel (3).

c) Put the new belt on the upper wheel and then on the lower wheel.

d) Press the belt into the lower track, see fig 2. Try to put the belt as far out on the track on the upper wheel as possible.

e) Reassemble and fit the cover (1).

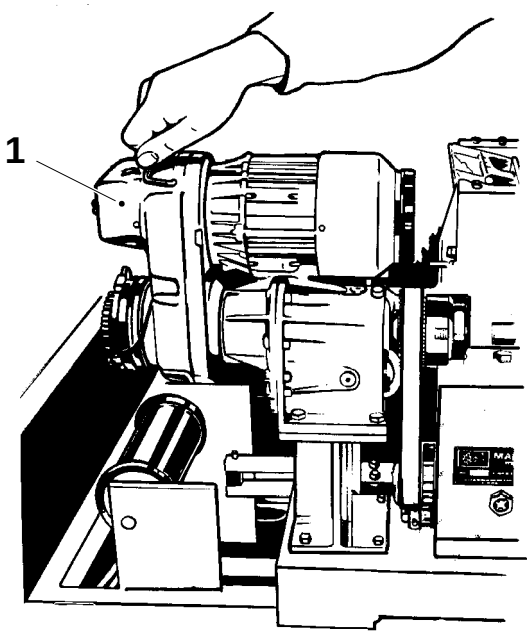

Fig 1

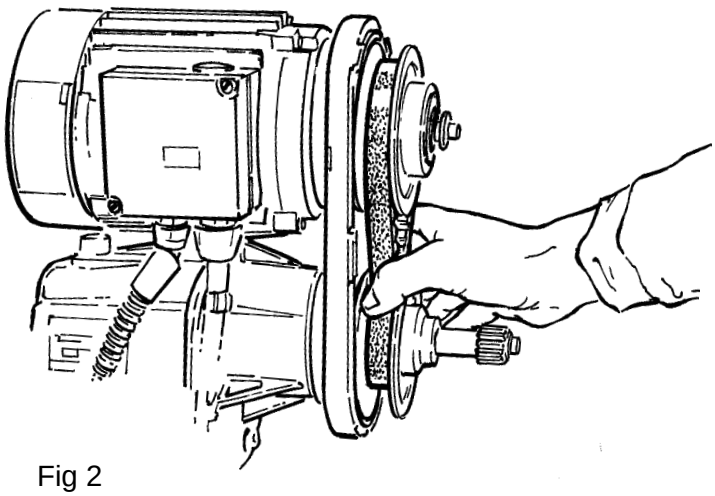

Fig 2

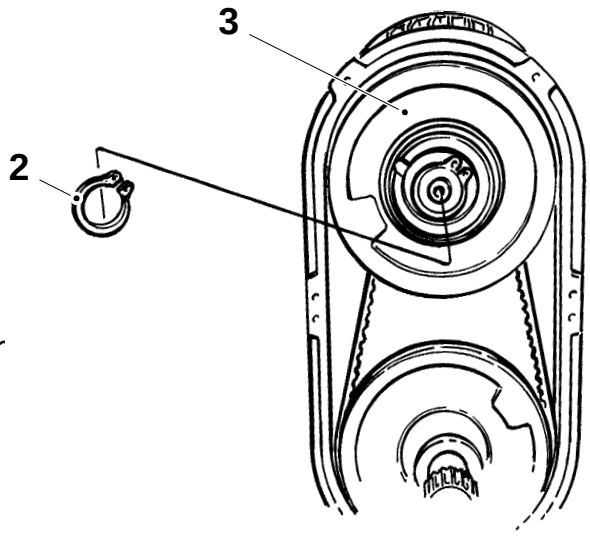

Fig 3

1 Cover
2 Clamp ring
3 Outer wheel

Checking

a) Check the belts (1), (2), (3), and (4) for wear and/or damages. Replace as required.

b) Check the tension of the belts (1) and (2). The free length of the belt should yield 3 – 5 mm when depressed by hand.

c) Check the tension of the belt (4). The free length of the belt should yield 10 – 15 mm when depressed by hand.

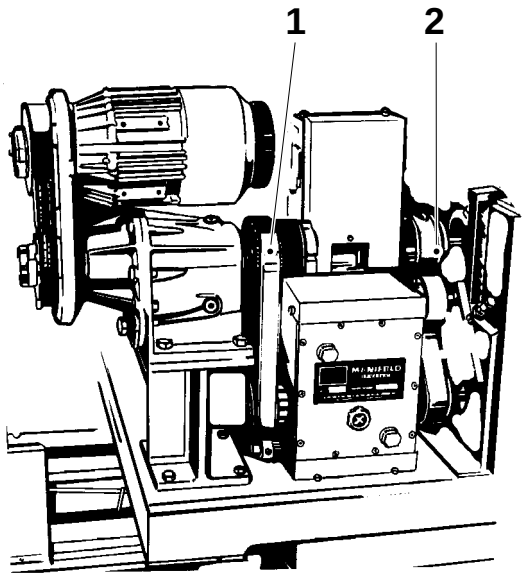

1 Belt, gear box – indexing unit
2 Belt, indexing unit – main shaft
3 Belt, tab feeder
4 Belt, indexing unit – tab feeder

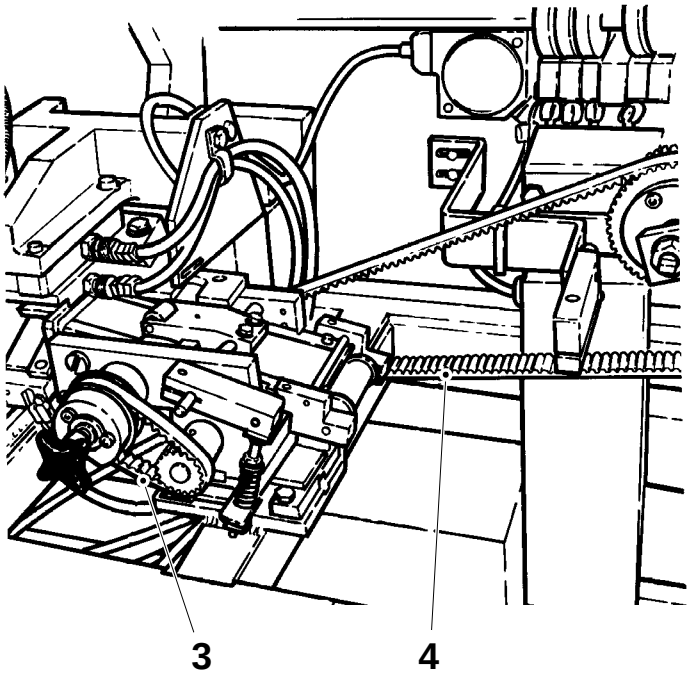

Checking

a) Check the oil level at the level glass (2) in the indexing unit.

b) If required, top up through the filler hole (1), until the level reaches the level glass. Use oil code B, (only TP No. 90296–72), see page MM 940–7X.

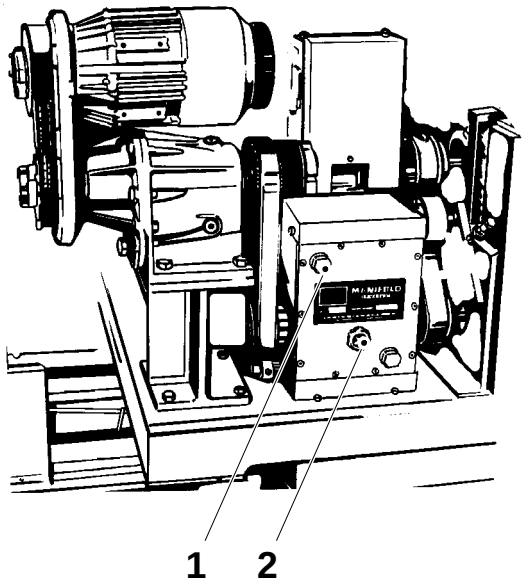

1 Filler hole
2 Level glass

Rollers and bearings

Lubricate the three bearings (1) and the five rollers (2) with grease, code F, see page MM 940–7X.

Gear wheel

Grease the gear wheels (3) with Molykote, TP No. 90296–12. Remove any remaining grease.

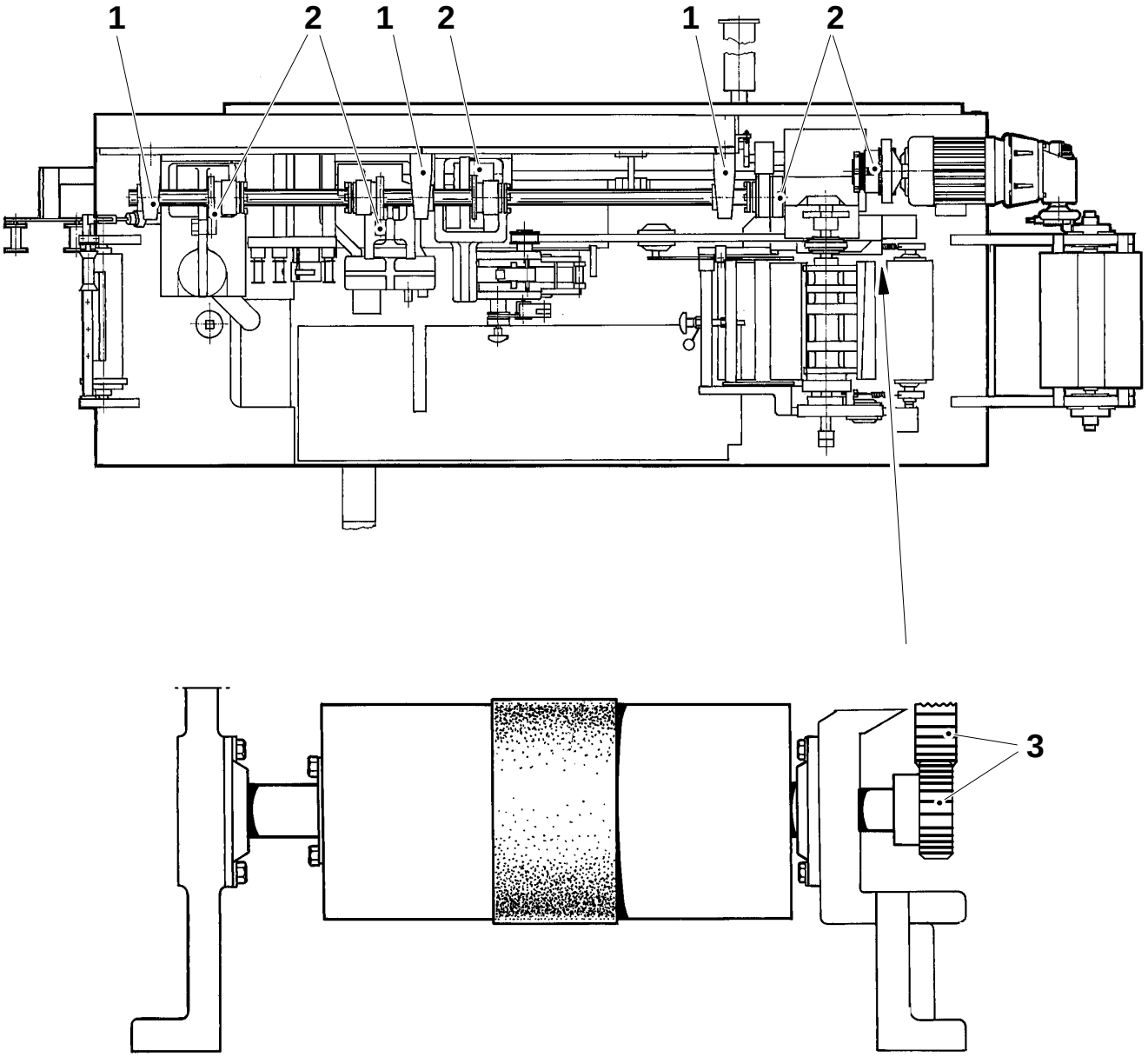

1 Bearing
2 Roller
3 Gear wheel

Setting

a) Set the four cams (1) and the degree scale (2) on the shaft (3) so that the scribed line (4) is exactly aligned with the scribe line (5) on the shaft.

b) Remove the gear wheel unit (6) from the shaft.

(Cont'd overleaf)

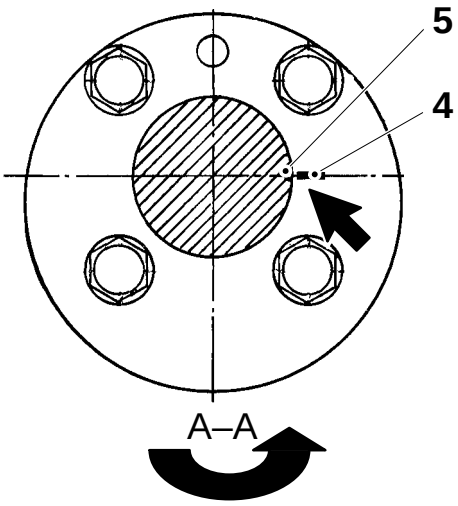

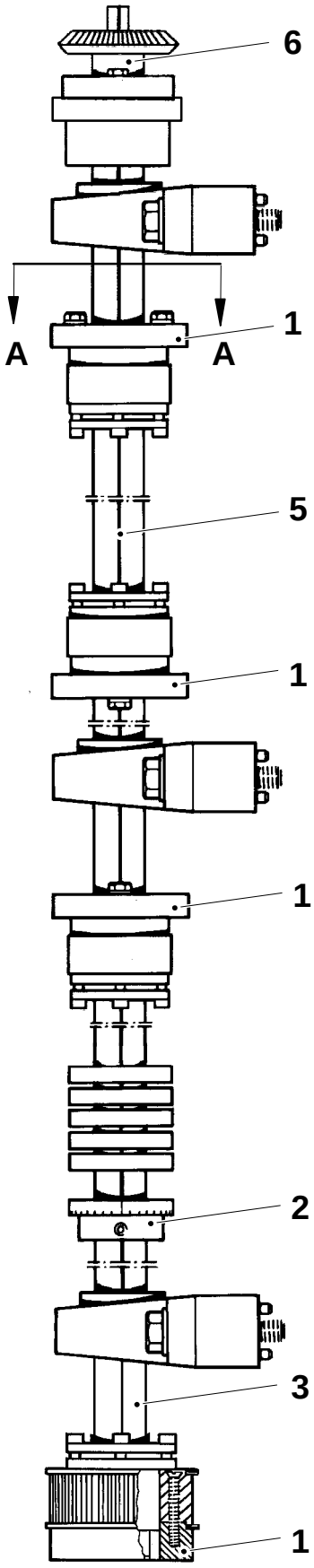

1 Cam
2 Degree scale
3 Shaft
4 Scribed line
5 Scribed line
6 Gear wheel unit

(Cont'd)

c) Loosen the clamp fitting (7), see page MM 370–2X.

d) **Alternative 1**
Fit a dial indicator (8) against one of the teeth of the gear wheel (9) on the drive roller.

Alternative 2
Fasten a piece of tape (10) between the gear wheel (9) and the bracket, see fig. Make sure that the tape is properly stretched.

e) Disengage the brake of the PullTab device drive motor with the lever (11).

f) Turn the input shaft of the gear with the wheel (12) until the dial indicator shows that the indexing movement starts or, alternatively, the tape creases.

g) Turn the shaft (3) until the scribed line (13) is in correct position and the scribed line (14) is at right angles to the vertical plane B. Use a set square (15)

h) Tighten the clamp fitting (7), see page MM 370–4X.

i) Set the degree scale on the indication window at 0 ± 2.5°. Remove the dial indicator or the tape.

j) Crank the machine one turn and recheck.

(Cont'd overleaf)

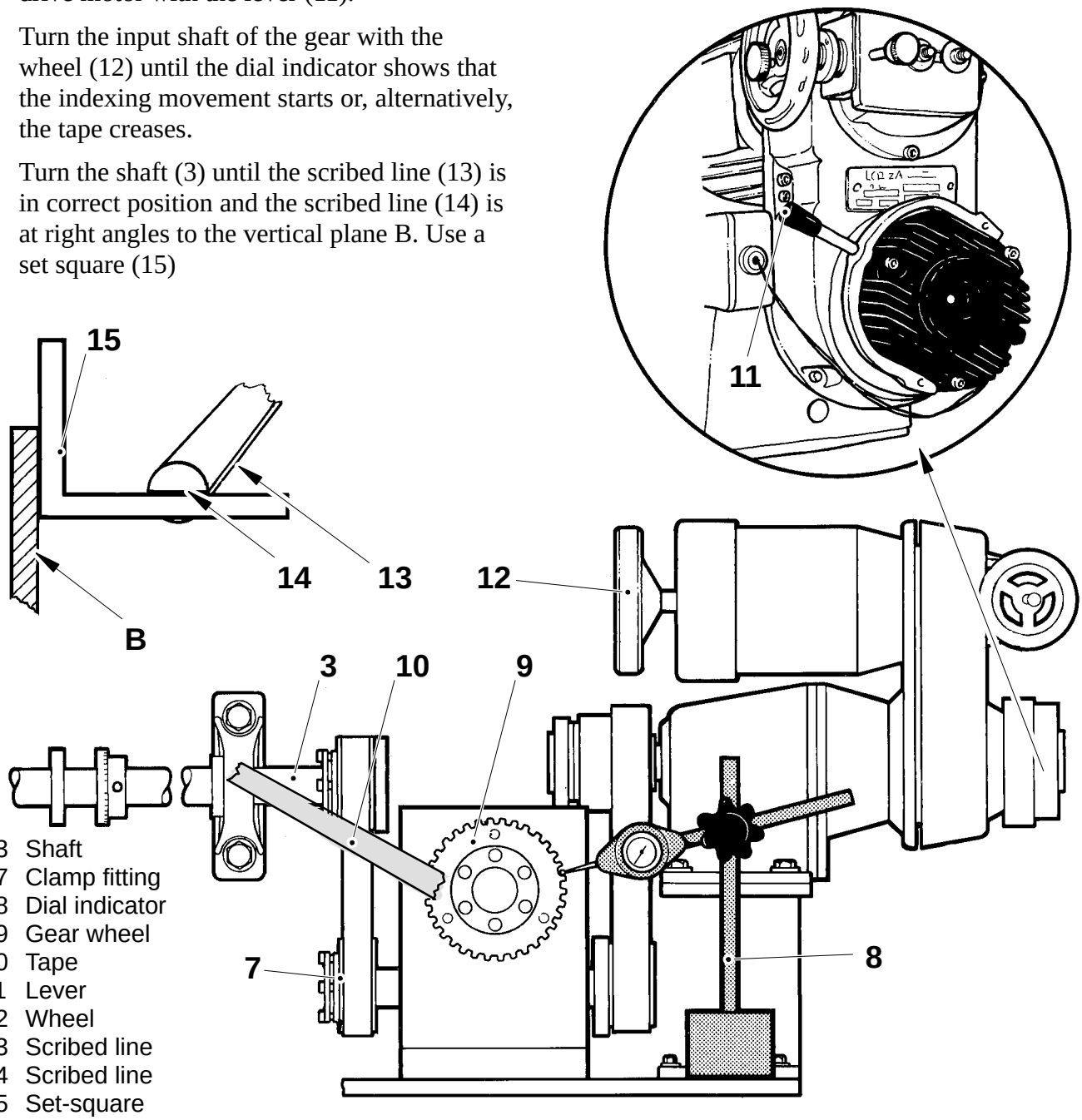

3 Shaft
7 Clamp fitting
8 Dial indicator
9 Gear wheel
10 Tape
11 Lever
12 Wheel
13 Scribed line
14 Scribed line
15 Set-square

451

(Cont'd)

k) Set the cams (16), (17), (18), (19), (20), and (21) according to the degree settings shown in the function diagram, see page MM 849–1X.

l) Fit the gear wheel unit.

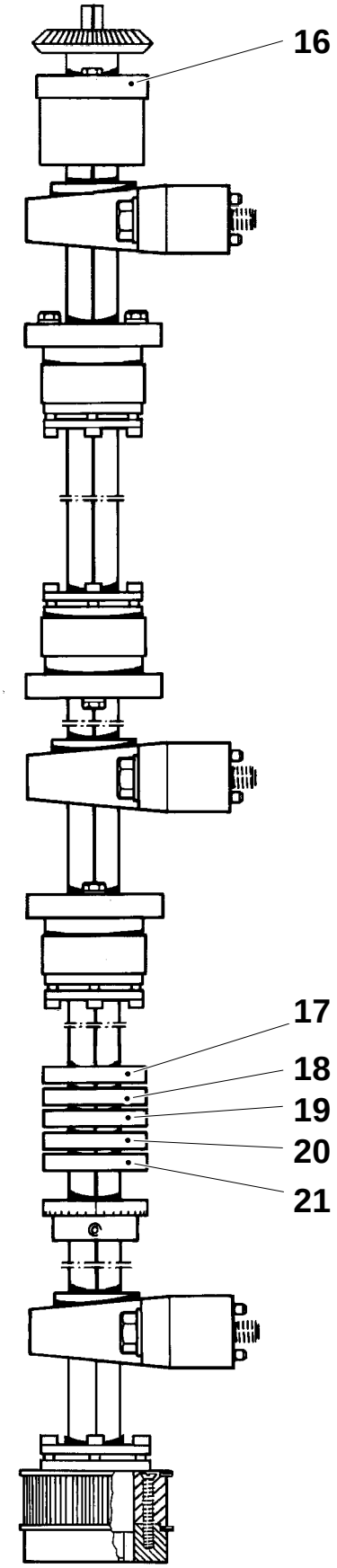

Cams:
16 Brake release
17 Brake (web tension)
18 Synchronization to main machine
19 IS strip sealing, IH-generator
20 Synchronous stop
21 Tab sealing CAP, date marking

Setting

Step up the machine to step **Production**.

Caution!
The setting must be carried out with the motor of the PullTab device **running**.

Connect a pulse timer to the TPMC between O22.11 and O22.00A and adjust the motor speed until the pulse timer shows 50 – 70 ms. Adjust as follows:

Coarse setting

Turn out the screw (1) so it does **not** engage the hole of the flange (3). Turn the hand wheel (2) clockwise to increase the speed.

Turn in the screw (1) so it engages the hole of the flange (3).

Fine setting

Loosen the locking screw (4). Turn the hand wheel clockwise to increase the speed.

After completed setting, tighten the locking screw (4).

1 Screw
2 Hand wheel
3 Flange
4 Locking screw

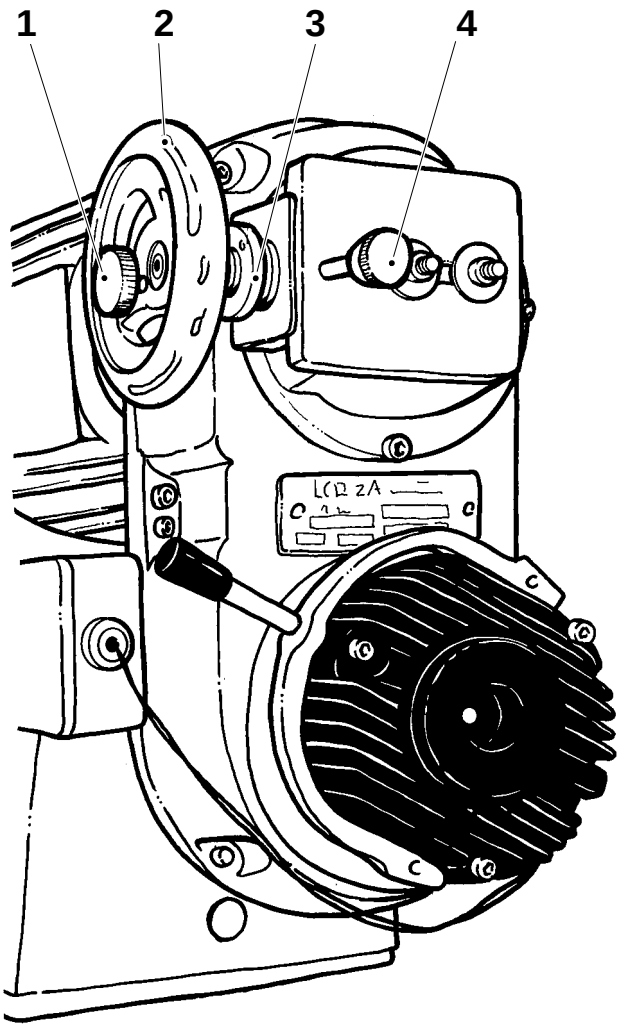

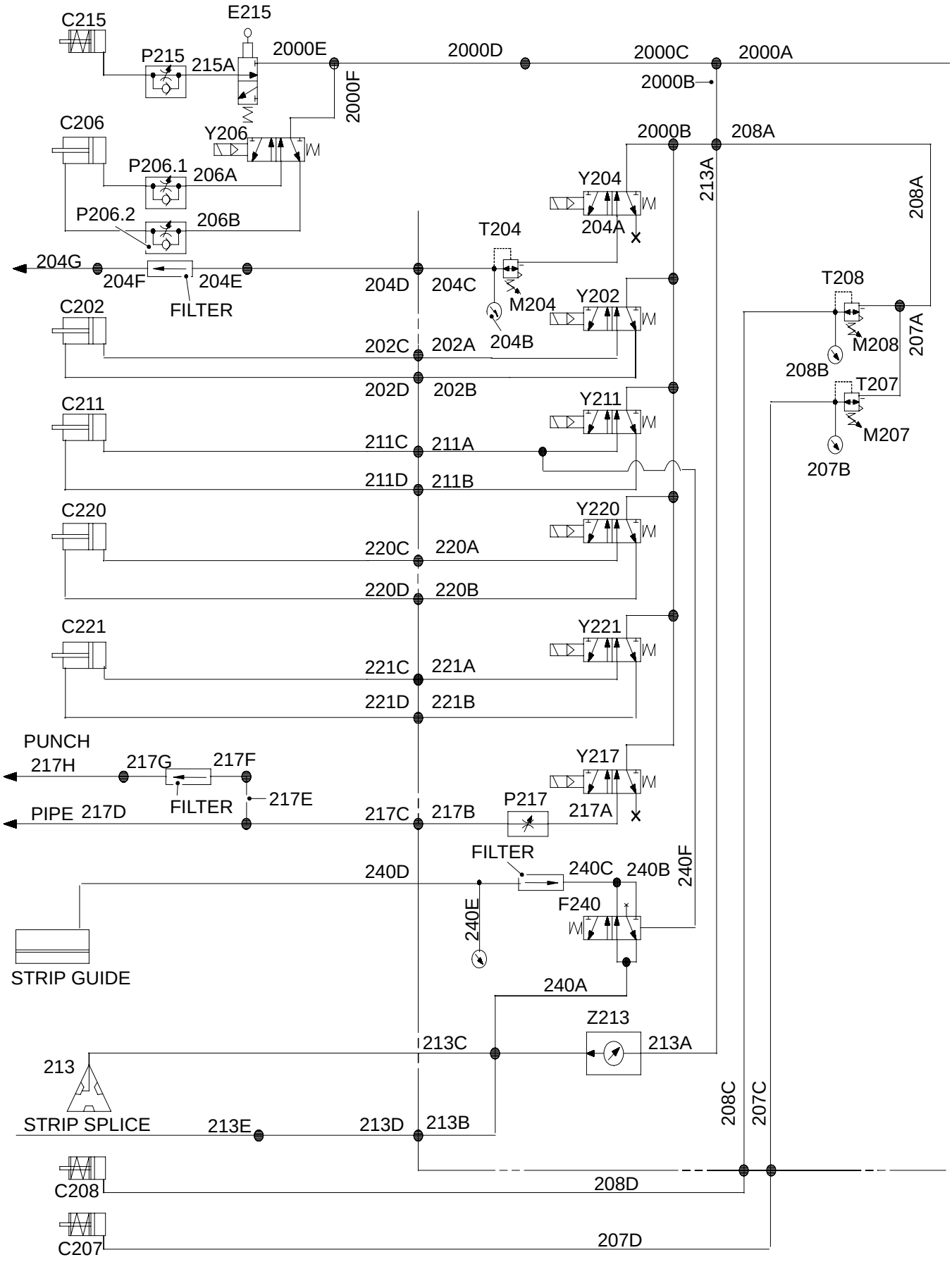
C215
E215
P215
215A
2000E
2000D
2000C
2000A
2000B
2000F
C206
Y206
P206.1
206A
P206.2
206B
Y204
204A
213A
208A
T204
204G
204F
204E
FILTER
204D
204C
M204
204B
T208
M208
208B
207A
C202
Y202
202C
202A
202D
202B
T207
M207
207B
C211
Y211
211C
211A
211D
211B
C220
Y220
220C
220A
220D
220B
C221
Y221
221C
221A
221D
221B
PUNCH
217H
217G
217F
Y217
PIPE
217D
FILTER
217E
217C
217B
P217
217A
FILTER
240D
240C
240B
240F
240E
F240
STRIP GUIDE
240A
Z213
213C
213A
213
STRIP SPLICE
213E
213D
213B
208C
207C
C208
208D
C207
207D

Setting

a) Turn on the main power switch.
Thread the packaging material web.

b) Undo the screws (1) and set distance A between the rails by means of shims (2).

c) Set the position of the lenses by means of the screws (3). The focal point of the outer lens (4) should be aligned with the edge of the packaging material.

d) Set the sensitivity of the photocells (5) and (8) as follows:

- Turn the setting knob (6) counter-clockwise until the LED (7) goes out.
- Turn the setting knob clockwise until the LED lights up and then turn it 3/4 of a turn further clockwise.

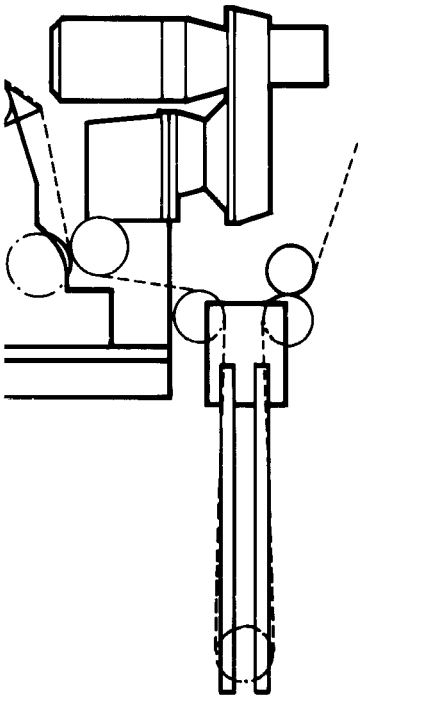

A = 1.0 ±0.1 mm

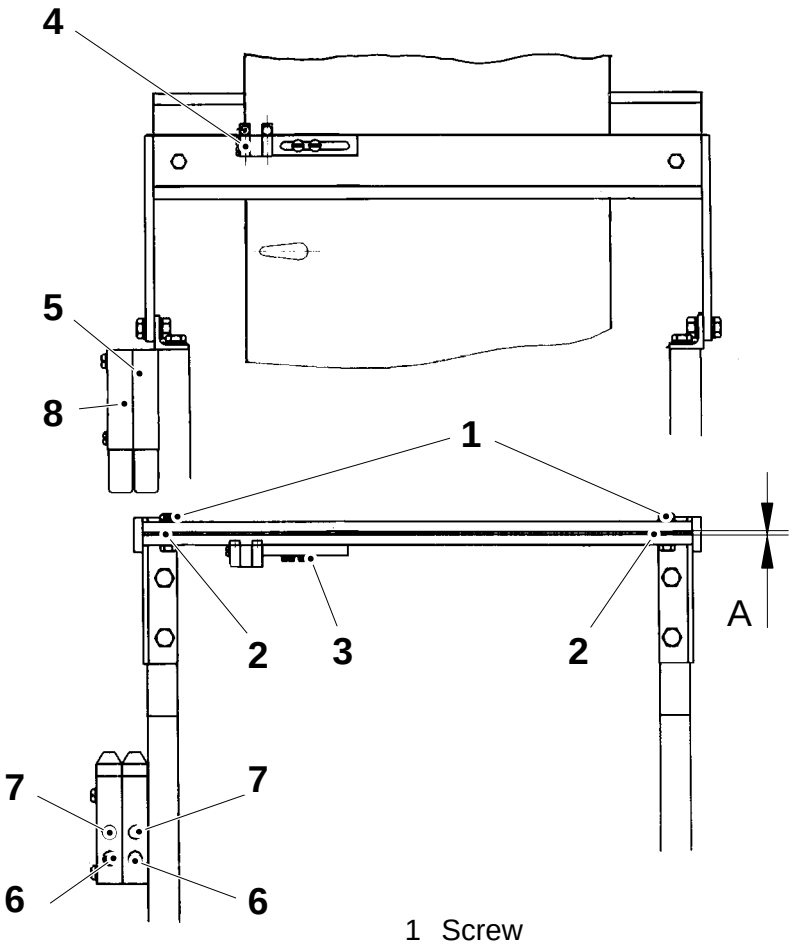

1 Screw
2 Shims TP No. 315105–146
3 Screw
4 Outer lens
5 Photocell
6 Setting knob
7 LED
8 Photocell

Setting

Open for air and cooling water. Turn on the main power switch.

a) Set the dip switches (1) and (2) on the sensor control in position **off**.

b) Set the dip switches (3) and (4) in position **on**.

c) Turn the knob (5) fully counter-clockwise.

d) Check the function of the sensor control as follows:

- Attach a patch of black tape to the IS strip, see OS book ”Splicing of strips”.
- Connect a pulse time counter TP102 (TP No. 90243–90) between pins 1 and 2.
- With the machine in **Production**, check that the pulse duration is between 20 and 100 ms.

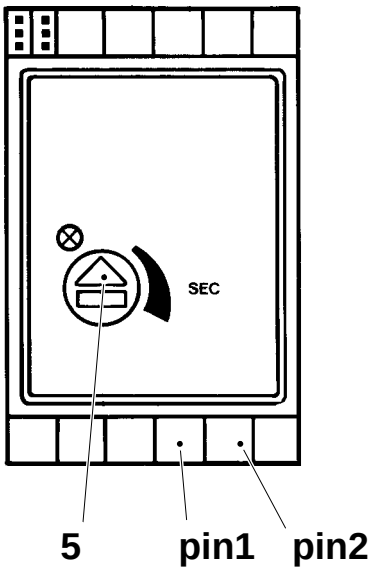

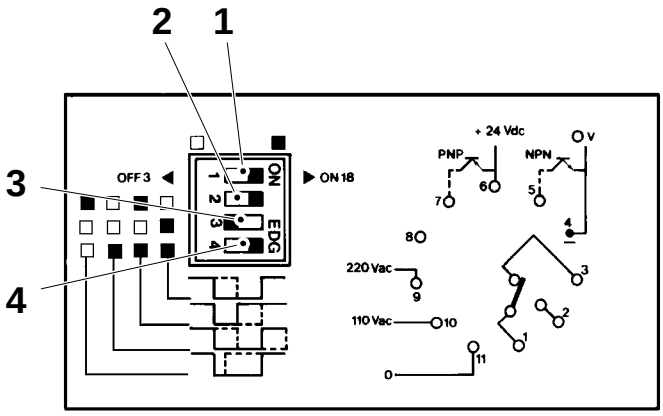

1 Position OFF
2 Position OFF
3 Position ON
4 Position ON
5 Knob

Checking

Check the following details for wear and/or damages:

- the air connections; make sure that all connections are tight
- the drive belt (1)
- the bushings and contact surfaces indicated by the arrows
- the bearing (3); first remove the pulley (2); clean the bearing
- the toothed bar (4) and the toothed wheel (5); apply with grease; backlash approx 0.2 mm

(Cont'd overleaf)

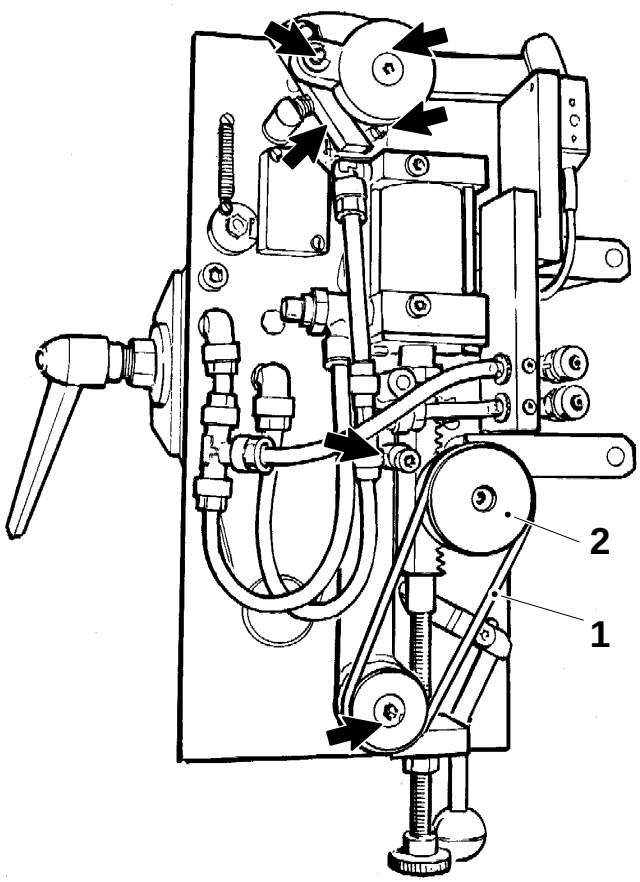

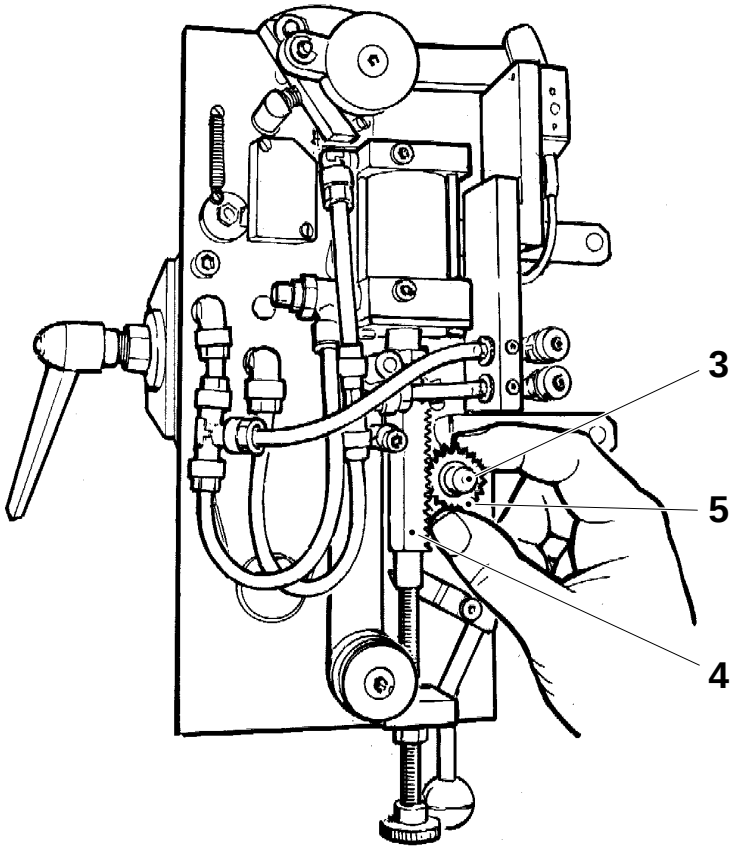

1 Drive belt
2 Pulley
3 Bearing
4 Toothed bar
5 Toothed wheel

(Cont'd)

- the counter roller (6); clean the roller
- the feeding roller (7); clean the roller
- the counter plate (8); replace if damaged all over.
  Loosen the screw (9), push the bracket aside and undo the screws (10) to make the plate accessible
- the supply monitor (11)
- the sheet breakage monitor (12); the alarm is to be triggered when the brake lever (13) is moved away from the switch

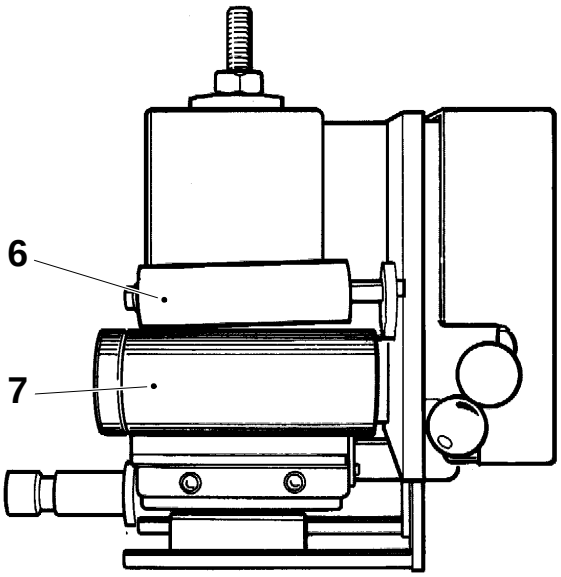

Replace as required.

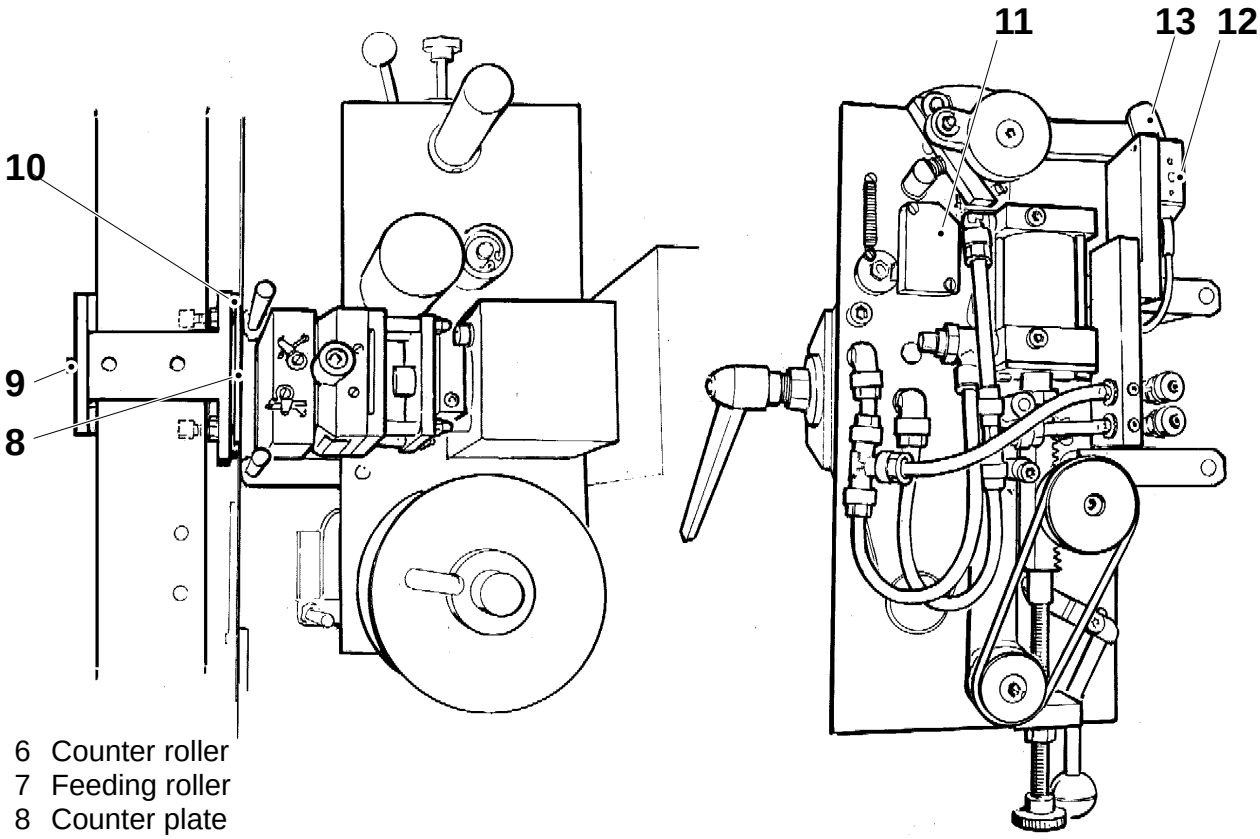

6 Counter roller
7 Feeding roller
8 Counter plate
9 Screw
10 Screw
11 Supply monitor
12 Strip breakage monitor
13 Brake lever

Removal

Heating cartridge

a) Undo the screw (1) and remove the type holder (2).

b) Loosen the hexagonal screw which is placed under the type holder.

c) Remove the heating cartridge (3).

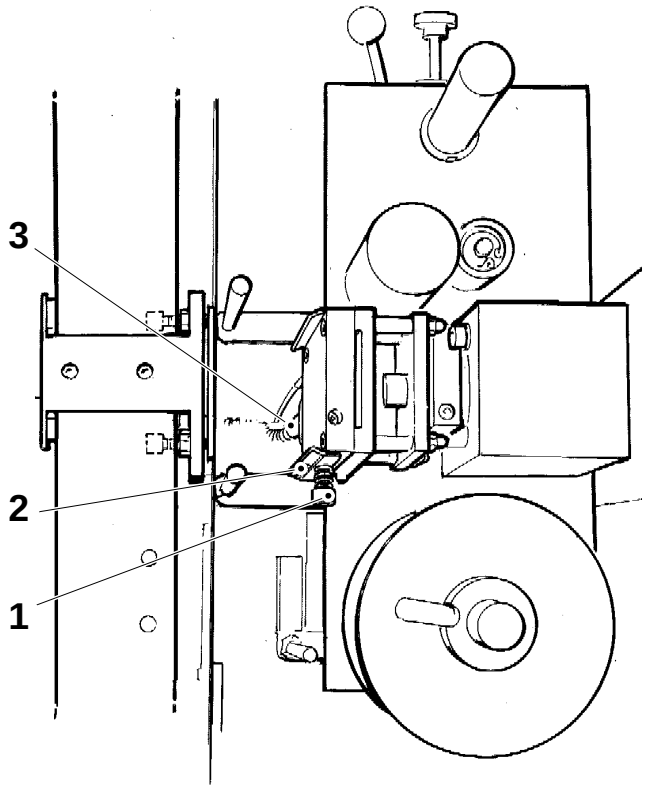

Temperature sensor

Loosen the screw (4) and remove the temperature sensor (5).

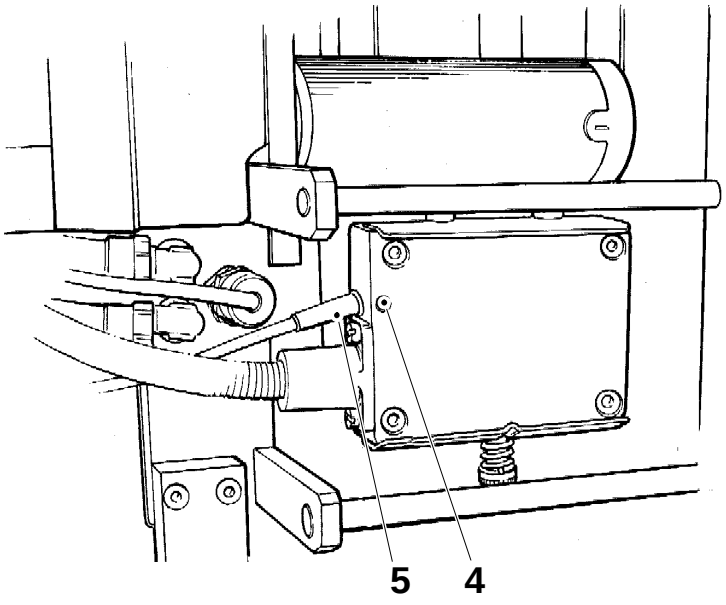

1 Screw
2 Type holder
3 Heating cartridge
4 Screw
5 Temperature sensor

Overhaul

Feeding cylinder

a) Undo the air connections (1).

b) Undo the screw (2) and remove the cylinder from the dating unit.

c) Dismount the toothed bar (3) and the gasket holder (4) from the axle.

d) Undo the screws (5) and separate the cylinder.

e) Replace the gasket (6), the paper gaskets (7) and the bushing (8).

f) Reassemble in reverse order.

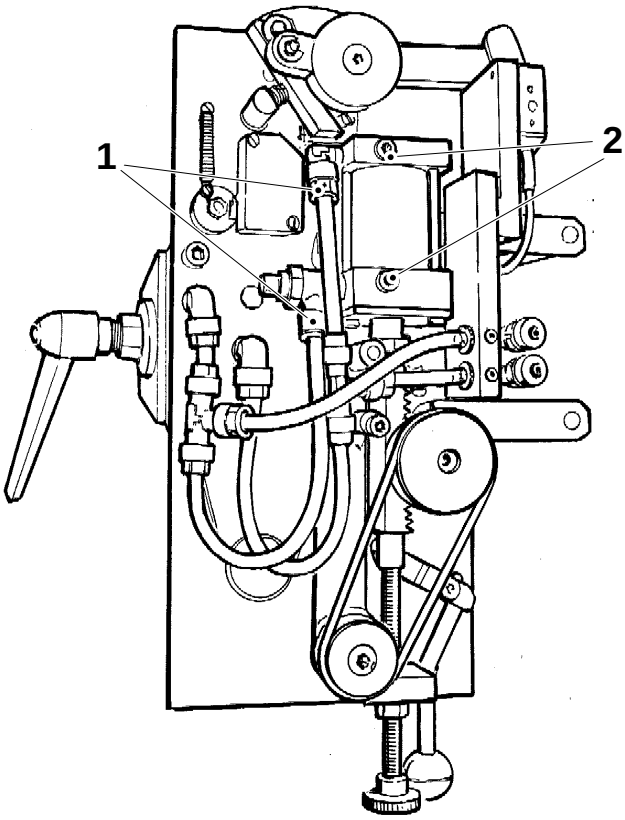

Note
When assembling, secure the gasket holder and the toothed bar with locking fluid, TP No. 90157–16, and to apply grease on the toothed bar.

(Cont'd overleaf)

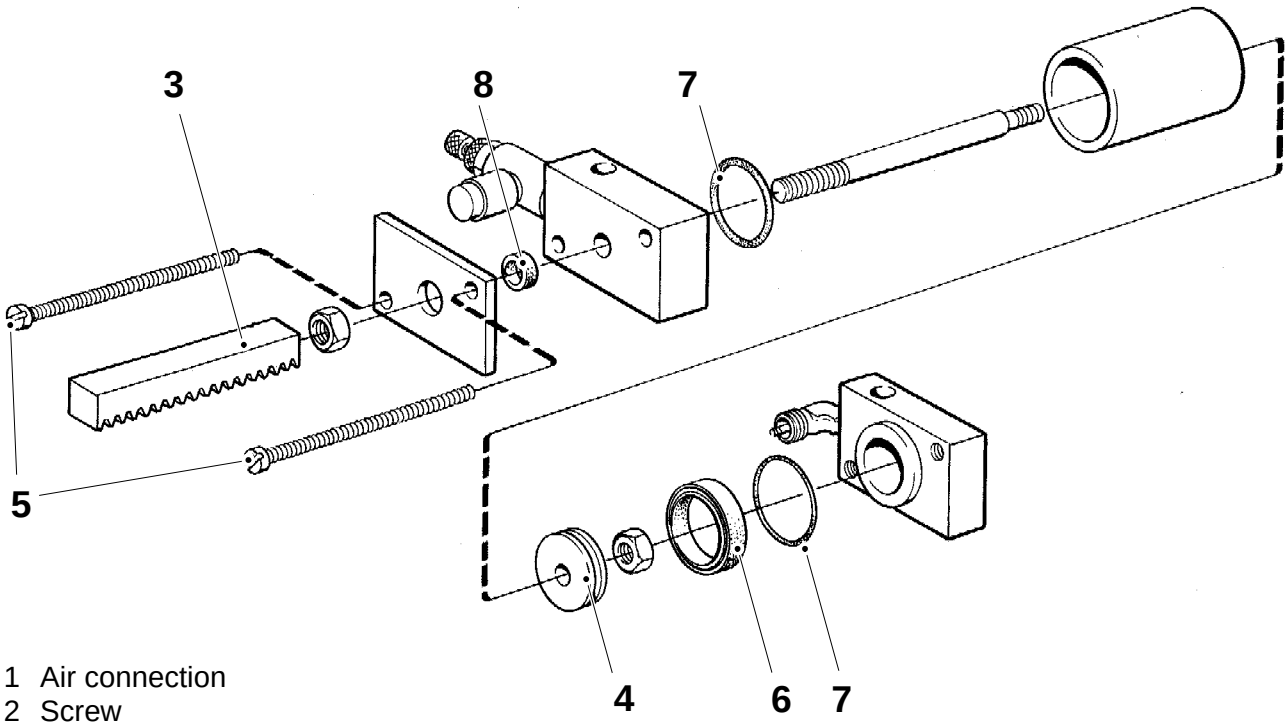

1 Air connection
2 Screw
3 Toothed bar
4 Gasket holder
5 Screw
6 Gasket
7 Paper gasket
8 Bushing

Main cylinder

a) Dismount the type holder.

b) Undo the four screws (9) and remove the plate (10).

c) Undo the screw (11) and remove the bracket (12).

d) Undo the two screws (13).

e) Pull out the plunger (14).

(Cont’d overleaf)

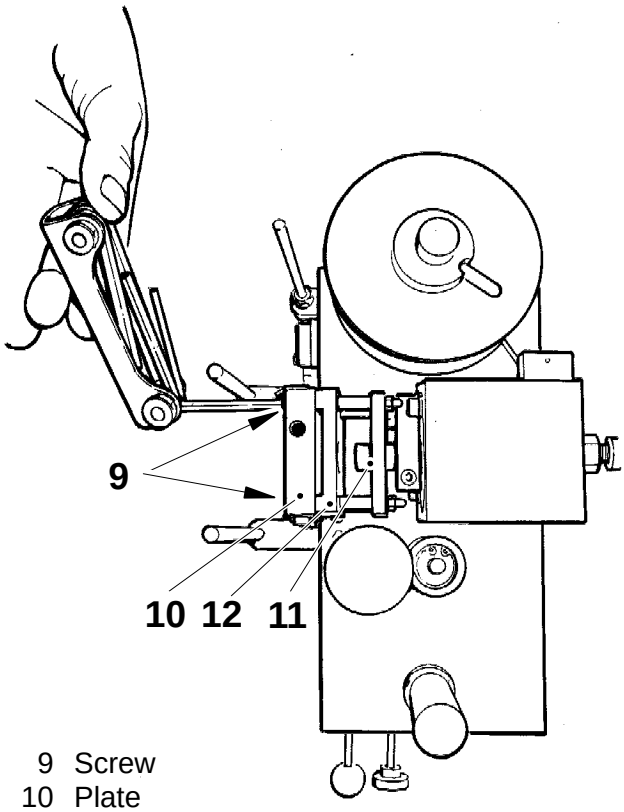

9 Screw
10 Plate
11 Screw
12 Bracket
13 Screw
14 Plunger

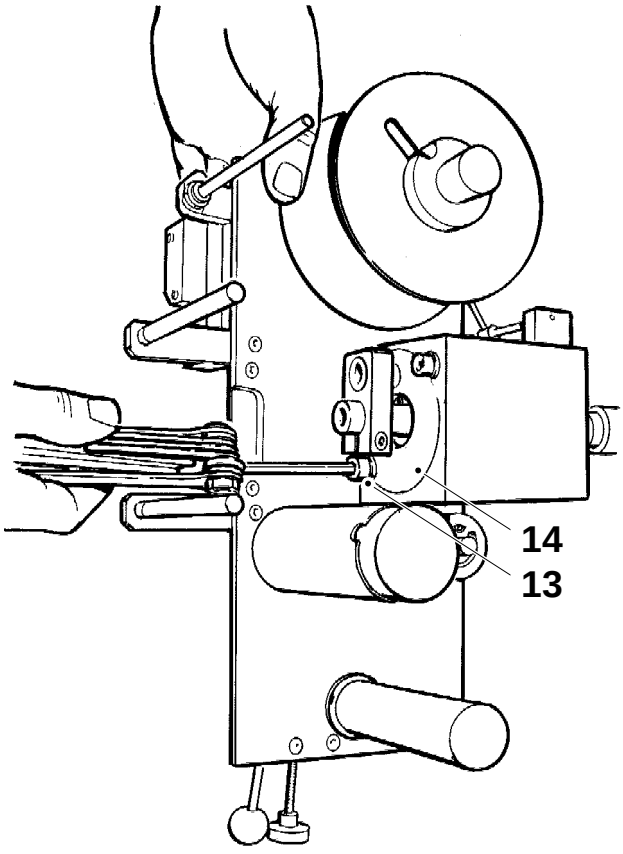

(Cont'd)

f) Loosen the screw (15) and remove the clamp joint (16).

g) Pull out the piston (17) from the plunger.

h) Remove the circlip (18) and replace the sealing (19).

i) Replace the support rings (20) in the plunger.

j) Replace the O-ring (21) and the sealing (22).

k) Replace the bushing (23) in the clamp joint.

l) Reassemble in reverse order.

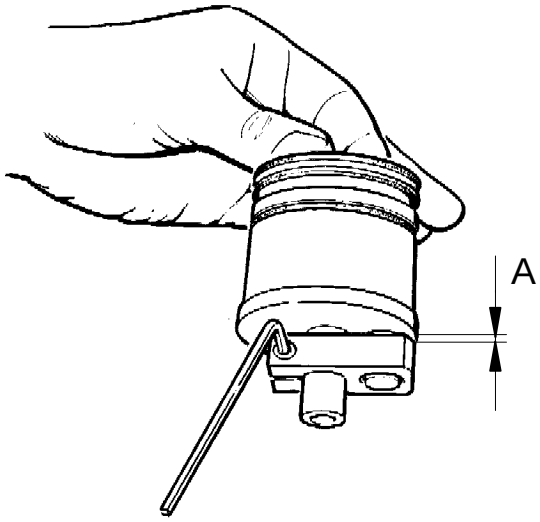

A = 0.5 – 1.0 mm

Note
When assembling the clamp joint, set distance A.

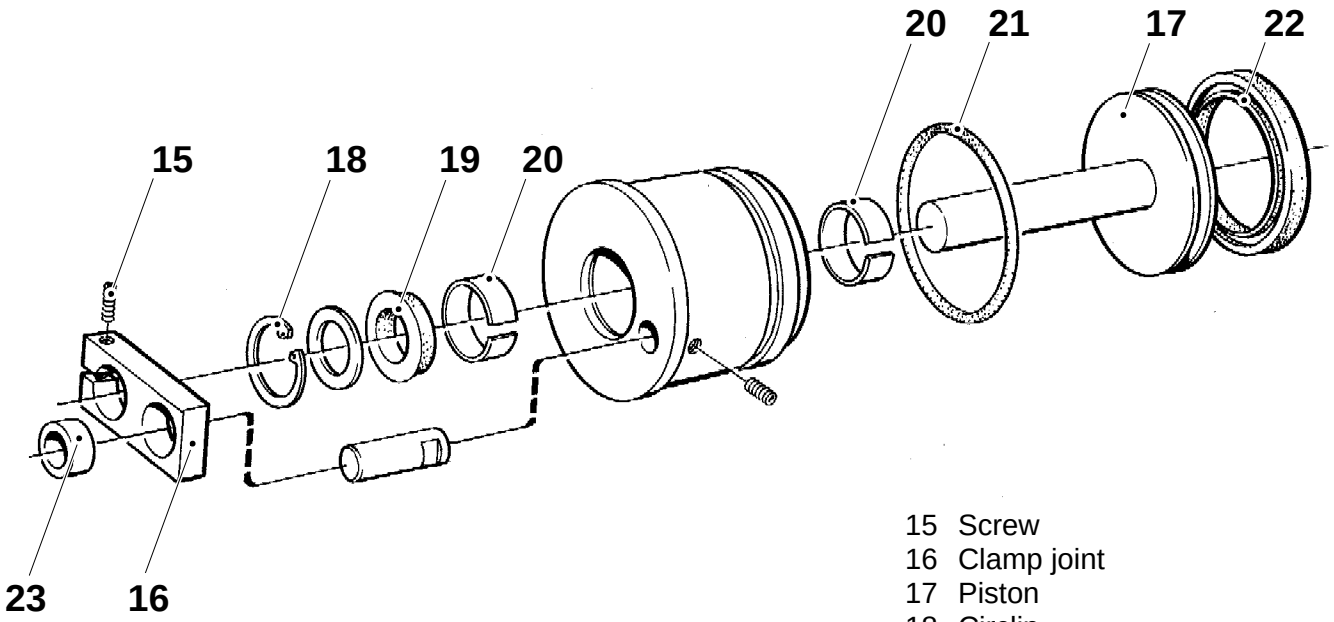

15 Screw
16 Clamp joint
17 Piston
18 Circlip
19 Sealing
20 Support ring
21 O-ring
22 Sealing
23 Bushing

Setting

a) Disengage the counter roller (1) with the handle so that it just touches the feed roller (2) in the outer corner.

b) Undo the screw (3) and place the axle in a vice. Adjust the axle by bending it lightly by hand to set distance A between the counter roller and the feed roller.

c) Loosen the screws (4) and set the play between the toothed bar and the toothed wheel by means of the eccentric shaft (5); backlash appr. 0.2 mm.

d) Tighten the screws.

(Cont’d overleaf)

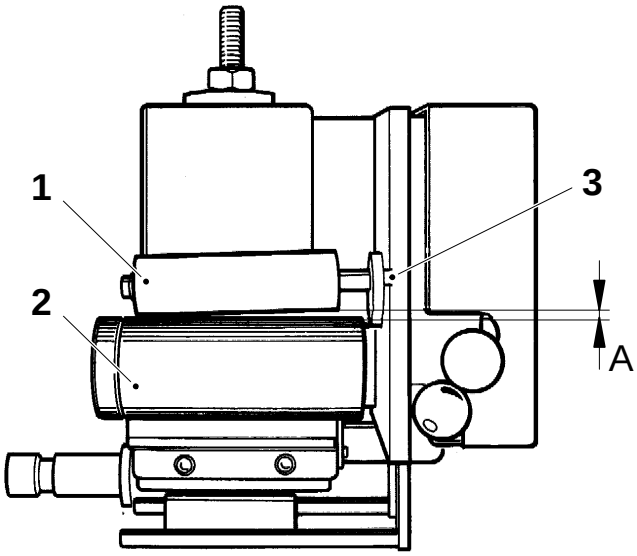

A = 1 ±0.05 mm

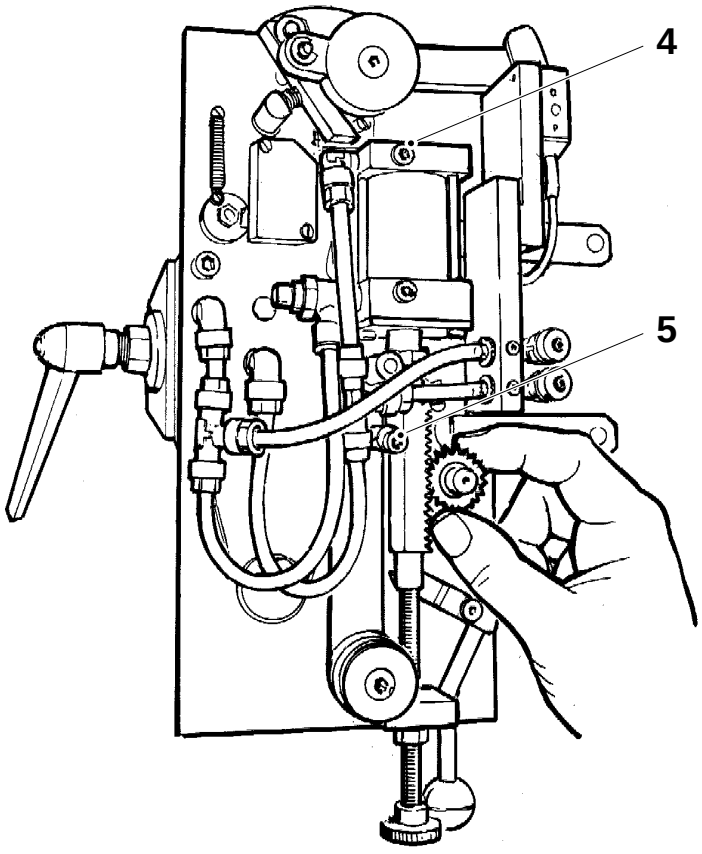

1 Counter roller
2 Feed roller
3 Screw
4 Screw
5 Eccentric shaft

(Cont'd)

Set distances B and C, basic setting, see table below.

Volume, ml	B, mm	C, mm
125 S	390.0	218
180 B	397.5	240
200 B	420.0	218
200 S	520.0	193
236 B	470.0	145
250 B	490.0	240

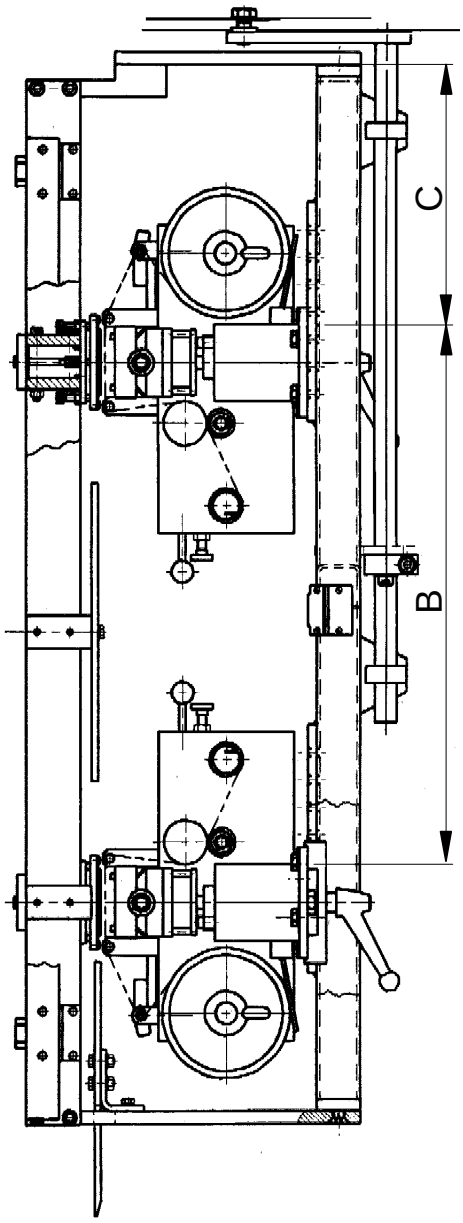

Counter plate

a) Adjust with the screws (6) until an even pressure is obtained. Shift the plate until an undamaged surface is in front of the types.

b) Check the date printing. The entire impression must be visible and clear.

c) Use the screws (7) to adjust in longitudinal direction or screws (8) in transversal direction.

(Cont'd overleaf)

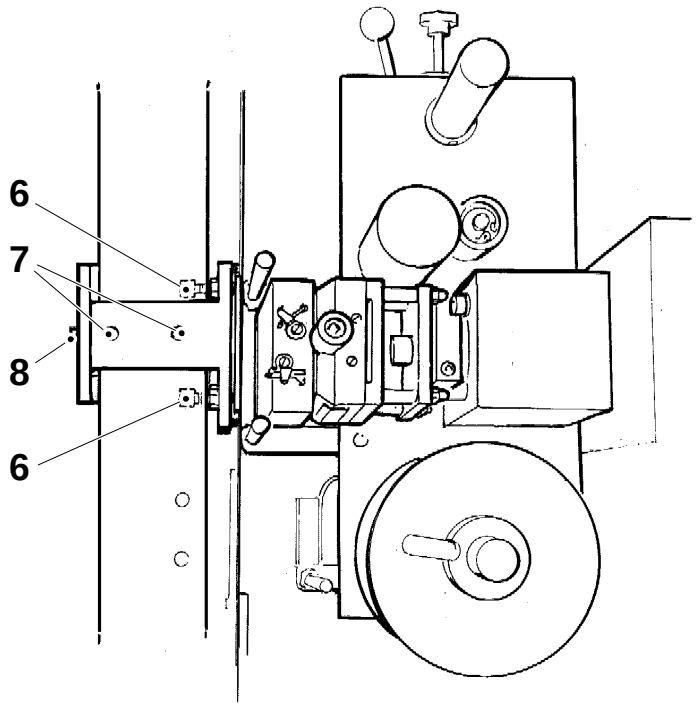

6 Screw
7 Screw
8 Screw

(Cont'd)

Open for incoming air. Turn on the main power switch.

Brake

a) Move the brake lever (9) until the eccentric screw (10) just touches the carrier (11).

b) Set distance D between the lever and the pin (12) by loosening the lock screw (13) and turning the eccentric screw.

c) Set distance E between the carrier and the washer (14) by means of the setting screw (15).

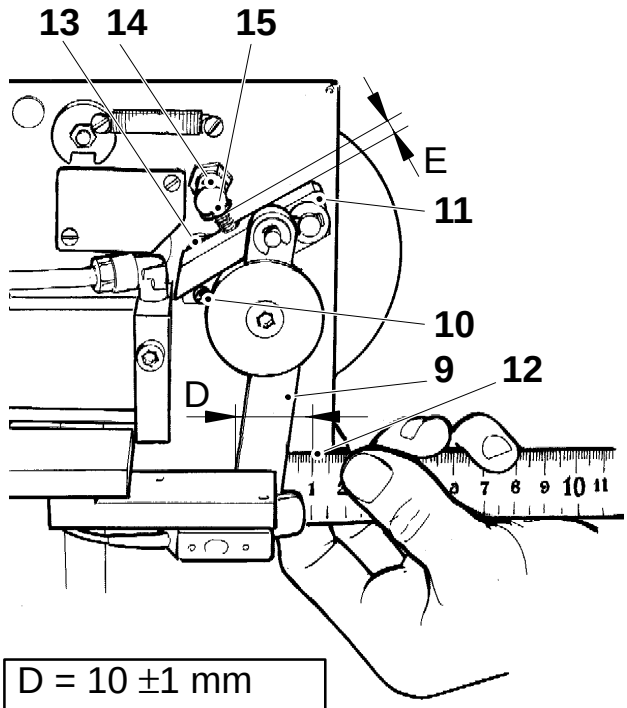

D = 10 ±1 mm
E = 7.5 ±1.0 mm

Imprinting sheet feed

a) Loosen the lock nut (16) and close the throttle screw (17). Open the screw four turns.

b) Run the dating unit.

c) Slowly adjust with the throttle screw until the cylinder feeds exactly the same amount of imprinting sheet on each stroke.

d) Lock the throttle screw with the locking nut.

Foil feed

a) Set distance F, see table below, between the setting screw (18) and the end of the toothed bar (19).

Number of stamping lines	Feed, mm	F, mm
One	4.0	2.50
Two	9.0	5.50
Three	13.5	7.35

(Cont'd overleaf)

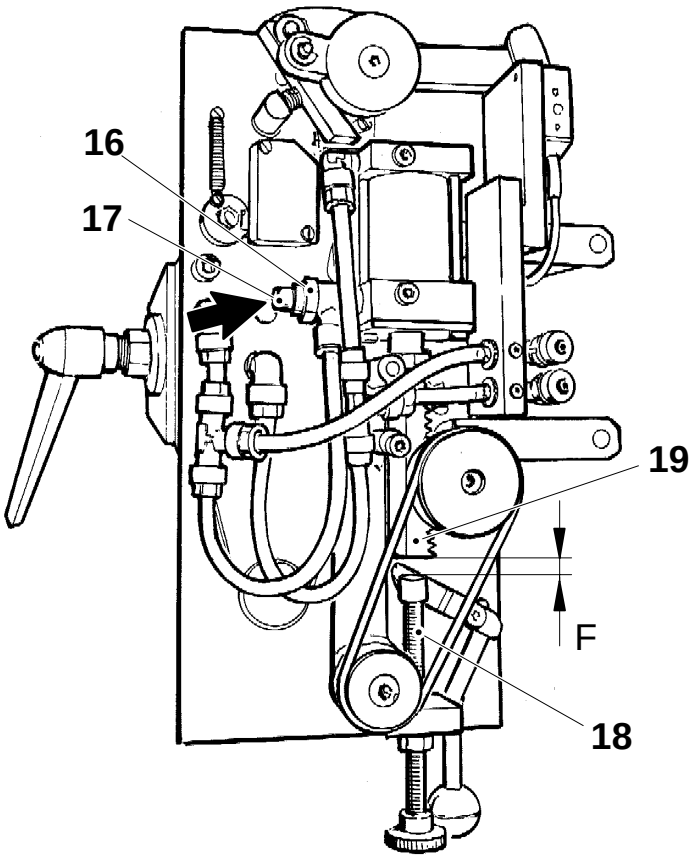

9 Brake lever
10 Eccentric screw
11 Carrier
12 Pin
13 Lock screw
14 Washer
15 Screw
16 Lock nut
17 Throttle screw
18 Setting screw
19 Toothed bar

(Cont'd)

b) To adjust, loosen the lock nut (20) and adjust by means of the setting screw (18).

Note
The toothed bar must be in its rear position.

c) With the machine in step **Production**, check and, if required, final set the foil feed, in order not to use more foil than necessary.

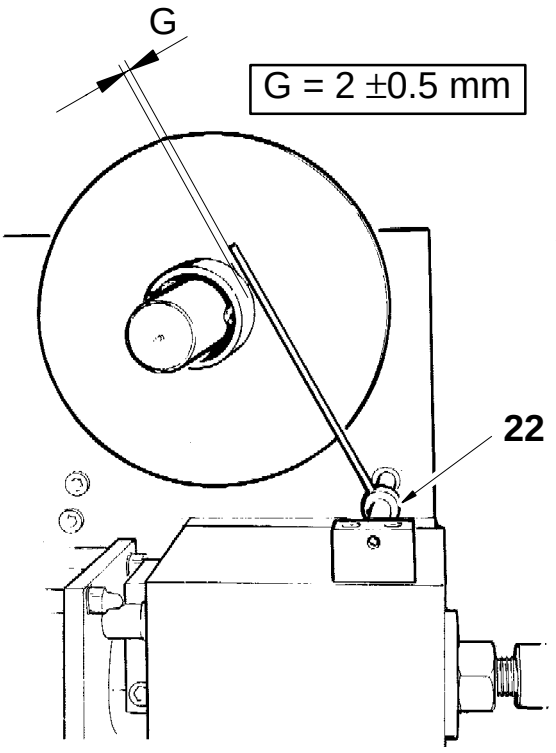

Supply monitor

The proximity switch (21) shall trigger an alarm when approximately 2 mm of strip wraps remain on the reel. If required adjust with the screw (22).

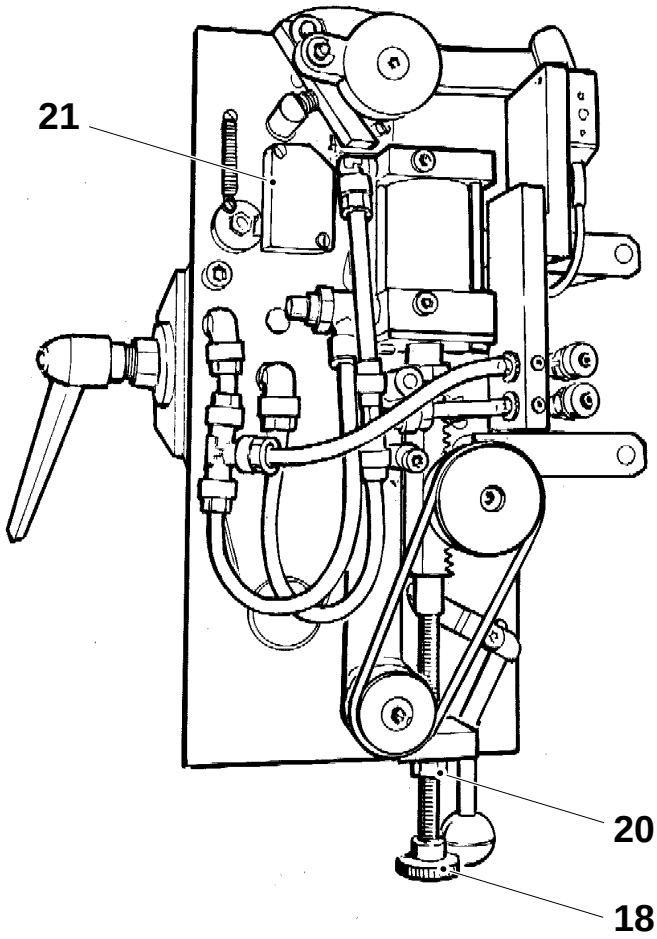

18 Setting screw
20 Lock nut
21 Proximity switch
22 Screw

Checking

a) Turn the knob (1) and check that it does not bind.

b) Check that the adjustment device is working properly. It must be possible to set the roller (2) in its end positions with the knob.

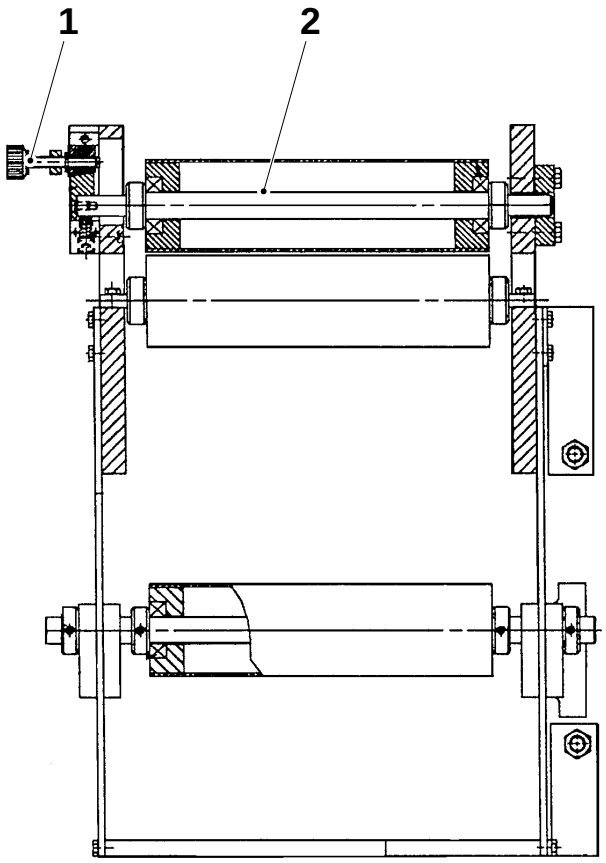

1 Knob
2 Roller

Description	TB/9	TBA/9
Settings (3 pages)		910–71
Lubricant recommendations (3 pages)	940–71	940–71
Tools supplied with machine	975–71	975–71
Templates and tools (14 pages)	980–71	980–71

Recommended pressures

Input air		MPa	0.6 – 0.7
Input cooling water		MPa	0.30 – 0.45
Steam, overpressure		kPa	170 ±30
LS sealing (basic setting)		kPa	2.7
LS sealing, short stop		kPa	2.0
Jaw pressure, 180 B – 284 B ml		MPa	10.0 – 11.0
Jaw pressure, 250 S ml		MPa	9.2 – 10.2
Jaw pressure, 160 S ml and 200 S ml		MPa	8.6 – 9.6
Jaw pressure, 125 S ml		MPa	8.0 – 9.0
Cutting pressure		MPa	8.0 – 9.0
Squee-gee roller, 125 S ml		kPa	230
Squee-gee roller, 180 B – 284 B ml		kPa	300
Air to spray container		kPa	300
Design correction		kPa	200 – 300
Flap sealing		kPa	150 – 200
Paper guide roller/Brake, power feed roller		kPa	100 – 150
Air to photocell unit		kPa	40
Product pressure (depends on product and local production conditions)		kPa (bar)	50 – 150 (0.5 – 1.5)
Product pressure, permitted variation during production		kPa (bar)	± 10 (0.1)
Air to peroxide container		kPa	20 – 30
Sterile air pressure		kPa	25 – 40
SA sealing (basic setting)		kPa	2.7
SA sealing, short stop		kPa	2.0
Tab strip sealing		MPa	0.3
IS strip sealing		MPa	0.3
Vacuum, IS strip guide	narrow strip	kPa	-20
	wide strip	kPa	±0
Vacuum		kPa	min. 40
CAP sealing		MPa	0.3

cont’d overleaf

cont'd

Pressure switches

Sterile air	kPa	15
Input air	MPa	0.4

Temperatures

Hot water	°C	50 – 75
Sterilization bath, water	°C	80
Sterilization bath, peroxide	°C	70
Air super heater	°C	360
Air super heater, preheating	°C	400
LS, sealed tube, (basic setting)	°C	260
LS sealing, (basic setting)	°C	320
Air knife	°C	125
Pre-sterilization	°C	270
Input steam	°C	125 – 140
SA sealing (basic setting)	°C	290
SA sealing, 125 S ml (basic setting)	°C	255
Tab strip sealing	°C	175
IS strip splice	°C	200
Pre-heated counter jaw (PullTab)	°C	75
Dating unit (PullTab)	°C	130

Timers

Transversal seal	See page MM 1065–5X

cont'd overleaf

cont'd

Noise declaration

TBA/9 with strip applicator:		
Sound power level (acc. to ISO 3746)	dB (A)	94 ± 4
(Sound pressure level at optimal room conditions)	dB (A)	76
TBA/9 with PullTab device:		
Sound power level (acc. to ISO 3746)	dB (A)	96 ± 4
(Sound pressure level at optimal room conditions)	dB (A)	77

Lubrication

The table below lists only a selection of lubricants with their respective designations. Comparable lubricants from other suppliers may be selected with the aid of the lubricant specifications (document No in the table).

Lubricant specifications may be ordered from:
Tetra Pak, R & D Services AB
Technical Standardization
Ruben Rausings gata
221 86 LUND, Sweden.

Lubricant Code	Document No	Material No (internal TP designation)	Part No (used when ordering from TP)	Example	
				Supplier	Product designation
A Motoroil	M 1251.122	51122–85	90 296–28	BP Esso Statoil Mobil Shell Caltex/ Texaco Optimol	Vanellus FE 10W–30 Essolube XD–3 10W–30 PowerWay D2 10W–30 Delwac 1400 Super 10W–30 Myrina TX 10W–30 Ursa LA 10W –30 Non Plus Ultra 10W–40
B High-pressure oil	M 1254.322	54322–220	90 296–73 90 296–78	BP Esso Statoil Mobil Shell Caltex/ Texaco Imperial Klüber Optimol	Energol GR–XP 220 Spartan EP 220 LoadWay EP 220 Mobilgear 630 Omala oil 220 Meropa Lubricant 220 Tribol ET 280–220 Lamora 220 Optigear 5150 VG 220
		54322–150 For use in production plant with start temperature below 5°C.	90 296–72	BP Esso Statoil Mobil Shell Caltex/ Texaco Imperial Klüber Optimol	Energol GR–XP 150 Spartan EP 150 LoadWay EP 150 Mobilgear 629 Omala oil 150 Meropa Lubricant 150 Tribol ET 280–150 Lamora 150 Optigear 5120 VG 150
C Hydraulic oil	M 1252.122	52122–32	90 296–53	BP Esso Statoil Mobil Shell	Bartran HV 32 Univis N 32 HydraWay HV 32 DTE Oil 13 Tellus Oil T 32

Table cont'd overleaf

Cont'd from previous page

Lubricant Code	Document No	Material No (internal TP designation)	Part No (used when ordering from TP)	Example	
				Supplier	Product designation
D Mist lubrication oil	M 1251.822	51822–37	90 296–80	BP Esso Statoil Mobil Shell Caltex/ Texaco	Autran GM – MP ATF Dexron TransWay DX II ATF 220 ATF Dexron II Texamatic Fluid (DEXRON II)
E Compounded cylinder oil	M 1254.922	54922–460	90 296–77 90 296–2	BP Esso Statoil Mobil Shell Caltex/ Texaco	Energol AC–C460 Cylesso TK 460 CylWay FZ 460 600W Super Cylinder Oil Valvata Oil J460 Vanguard Cylinder Oil
F Litihum, grease EP type	M 1255.115	55115–20	90 296–68	BP Esso Statoil Mobil Shell Klüber Optimol	Energrease LS EP 2 Esso MP Grease/ Beacon EP 2 UniWay EP 2N Mobillux EP 2 Grease 1344 LiEP 2 Centoplex 2 EP Longtime PD 2
H High-pressure oil	M 1254.322	54322–320	90 296–75	BP Esso Statoil Mobil Shell Caltex/ Texaco Imperial Klüber Optimol	Energol GR–XP 320 Spartan EP 320 LoadWay EP 320 Mobilgear 632 Omala oil 320 Meropa Lubricant 320 Tribol ET 280–320 Lamora 320 Optigear 5180 VG 320
		54322–220 For use in production plant with start temperature below 5°C.	90 296–73 90 296–78	BP Esso Statoil Mobil Shell Caltex/ Texaco Imperial Klüber Optimol	Energol GR–XP 220 Spartan EP 220 LoadWay EP 220 Mobilgear 630 Omala oil 220 Meropa Lubricant 220 Tribol ET 280–220 Lamora 220 Optigear 5150 VG 220

Table cont'd overleaf

Cont’d from previous page

Lubricant Code	Document No	Material No (internal TP designation)	Part No (used when ordering from TP)	Example	
				Supplier	Product designation
K Circulation oil	M 1254.942	54942–100	90 296–15	BP Esso Statoil Mobil Shell Caltex/ Texaco Imperial Klüber	Energol CS 100 Turbesso 100 TurbWay 100 DTE Oil Heavy Tellus Oil 100 Regal Oil R & O 100 Tribol 775 Crucolan 100
L Silicon grease	M 1255.322	55322–30	90 296–9	Dow Klüber	Dow Corning 7 Compound Unisilikon L 250 L
M Litihum, grease EP type	M 1255.112	55112–10	90 296–70	BP Esso Statoil Mobil Klüber Optimol	Energrease LS EP 1 Beacon EP 1 UniWay EP 1 Mobillux EP 1 Centoplex 1 EP Longtime PD 1
O Lithium–complex grease	M 1255.122	55122–30	90 296–61	BP Esso Statoil Imperial	Energrease LS 3 Unirex N3 UniWay HT–63 Molub–Alloy ET 860–220
P Synthetic compressor oil	M 1254.632	54632–68	90 296–54	BP Esso Statoil Mobil Shell Caltex/ Texaco	Energol RC–R68 Compressor oil 68 CompWay 68 Rarus 427 Corena Oil H 68 Compressor Oil VDL 68

9303

Tool cabinet

Tool	TP No.	Quantity
Assembly tool	4–75665	1
C spanner, fixed	4–72947	1
Locking clamp	3–76167	1
Locking clamp	3–76138	1
Gauge	4–434841	1
Assembly cone	4–76131	1
Assembly tool	4–76132	1
Setting tool	4–76153	1
Open spanner	777120–215	2
Open spanner	777120–220	2
Open spanner	777120–232	2
Open spanner, 36 mm	777122–137	1
Open spanner, 46 mm	777122–142	1
Spanner set, hexagonal	777150–801	2
Union spanner	777200–101	1

Superstructure

Intended for	Page	TP No.	Fig.
Pressure roller, filling pipe	137–1X	74767–102	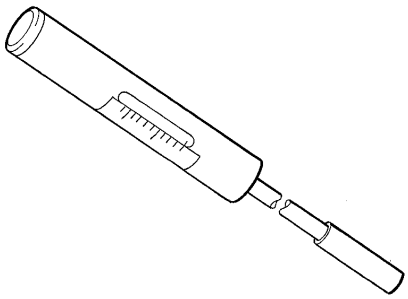
SA pressure roller	720–1X		
LS nozzle	116–5X		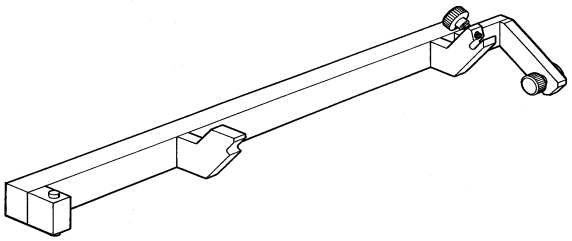
TBA 125 S ml		76133–301	
TBA 160 S, 200 S ml		76606–301	
TBA 180 B – 284 B ml		76595–301	
Filling pipe			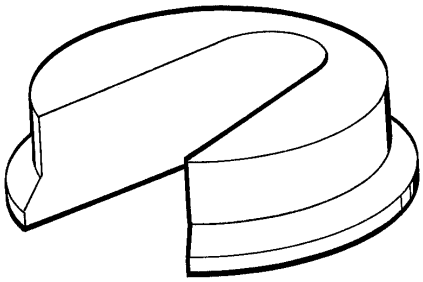
TBA 125 S ml		76187	
TBA 160 S, 200 S ml		76188	
TBA 250 S ml		574453	
TBA 180 B – 284 B ml		76398	
Removal pneumatic cylinder	127–3X	449969–101	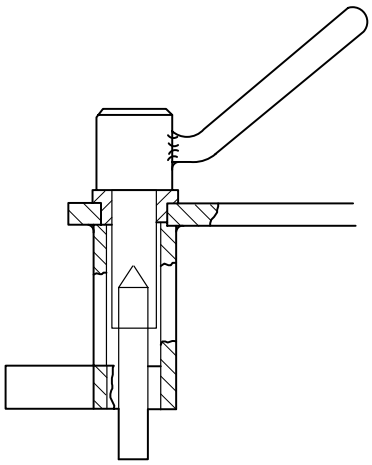
Product valve TBA			
Tachometer	148–5X	90243–105	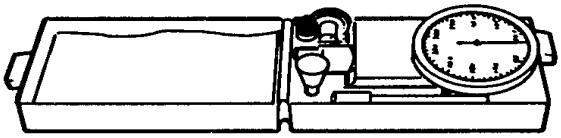
Driven bending roller	1075–5X		
	1076–5X		

Superstructure

Intended for	Page	TP No.	Fig.
Puller Rotor compressor TBA	160–3X	74305–101	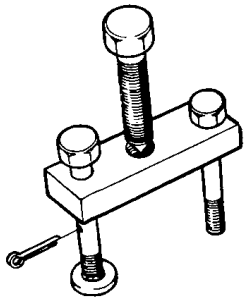
Hydrostatic test instrument	169–1X	565536	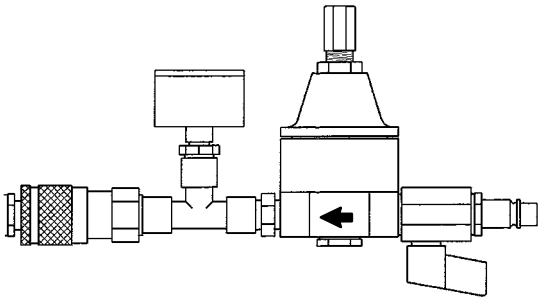
Gasket Valve group TB	128–1X	36489	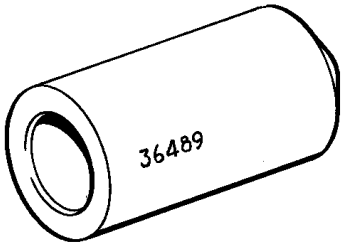
Sleeve, heater cartridge water bath TBA		90206–330	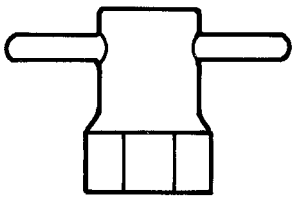
Sealing disc, passivation	950–7X	752099	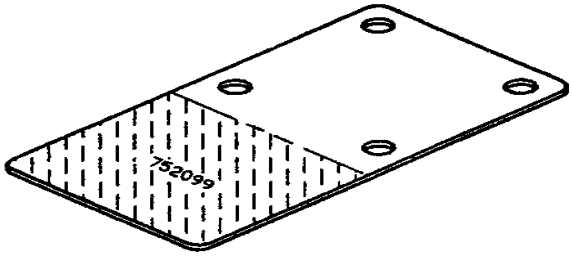

Superstructure

Intended for	Page	TP No.	Fig.
Pressure gauge Pressure aseptic chamber	163–1X	90243–137	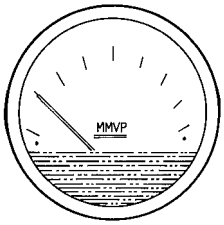
Leakage tracing device Pressure aseptic chamber TBA	163–1X	533014–010V	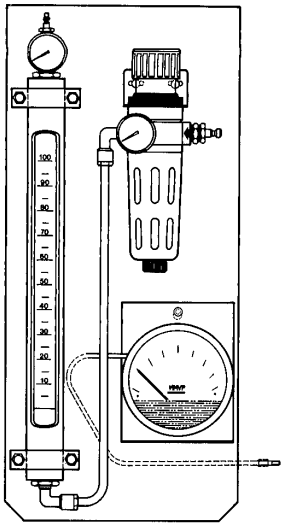

Drive unit

Intended for	Page	TP No.	Fig.
Worm gear	345–5X	75466–301	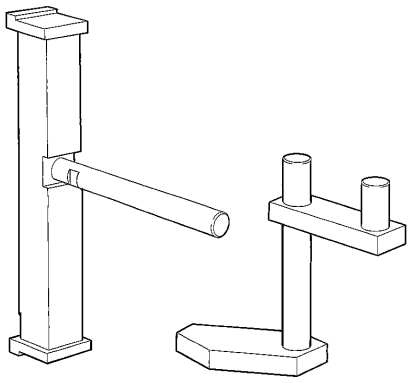
Cam pack synchronization Degree scale Spirit level	331–5X 332–5X 337–5X	75467–201 90243–163	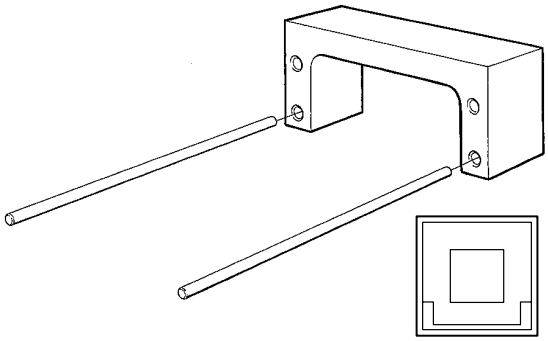
Leaf springs, overload protection	314–5X	77247	
Puller Yoke lifter arm Coupling link	 361–2X	77165–101	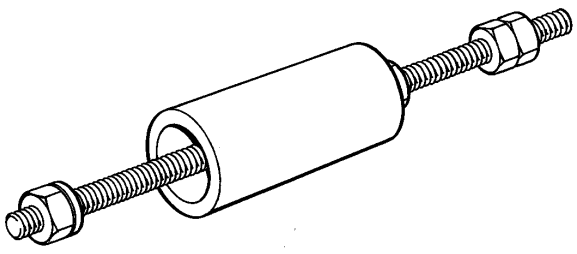
Fitting Hold-down device	 306–2X 306–4X	75514	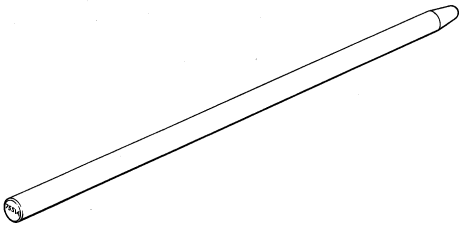
Puller Discharge unit		79201	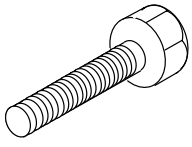

Drive unit

Intended for	Page	TP No.	Fig.
Puller Bearing coupling Worm gear		76175–101	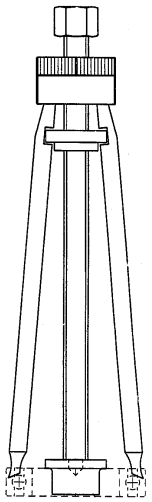
Overload protection	314–1X	563740–101	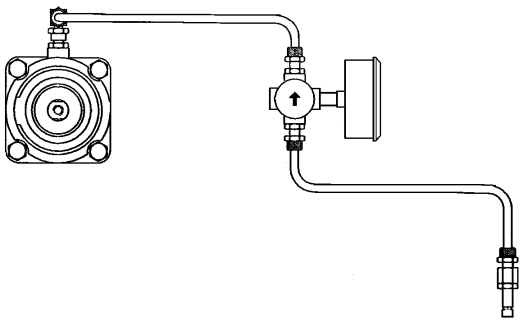

Jaw system

Intended for		Page	TP No.	Fig.
Volume cam		421–5X	75469–201	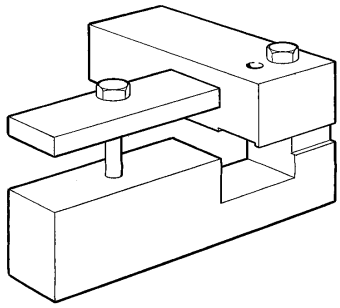
Jaw-over-jaw		458–5X		
Yoke turning positions		412–5X		
TB	250 B ml		75931–1	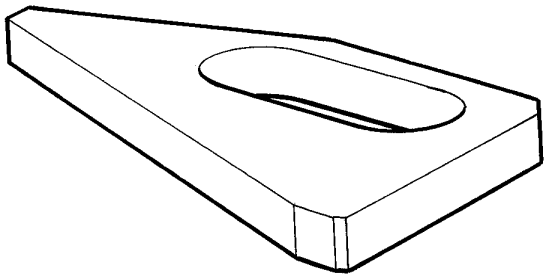
	236 B ml		75931–13	
	200 B ml		75931–2	
	200 S ml		75931–4	
TBA	284 B ml		75931–12	
	250 S ml		75931–10	
	250 B ml		75931–5	
	236 B ml		75931–6	
	200 S ml		75931–10	
	200 B ml		75931–11	
	160 B ml		75931–8	
	180 B ml		75931–8	
	125 S ml		75931–9	
Tube support rollers, alignment and vertical position 180 B – 284 B ml **not** 200 S ml, 250 S ml		443–5X	75936	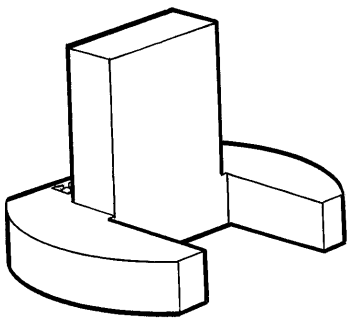

Jaw system

Intended for	Page	TP No.	Fig.
Tube support rollers, alignment and vertical position 125 S ml	443–5X	75937	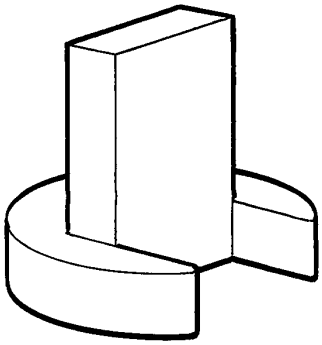
Tube support rollers, alignment and vertical position TBA 160 S, 200 S ml TBA 250 S ml TB 200 S ml	443–5X	76176 574454 75938	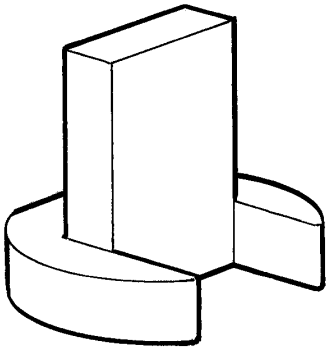
Volume flap alignment 180 B – 284 B **not** 200 S ml, 250 S ml	442–5X	75939	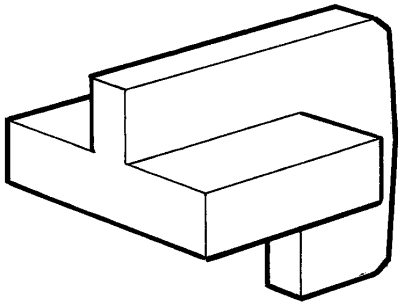
Volume flap alignment 125 S ml	442–5X	75943	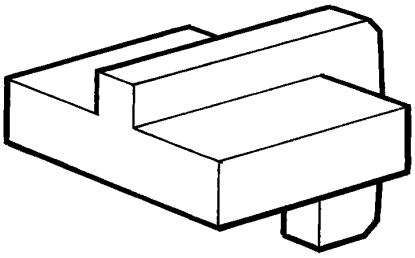
Volume flap alignment 160 S, 200 S ml 250 S ml	442–5X	75944 574455	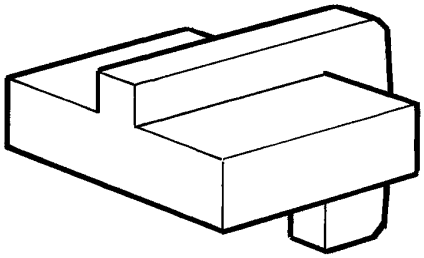

484

Jaw system

Intended for	Page	TP No.	Fig.
Design correction mechanism	423–5X	75945	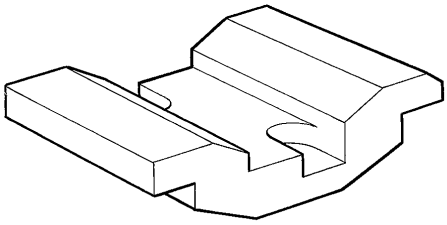
Yoke		76291–101	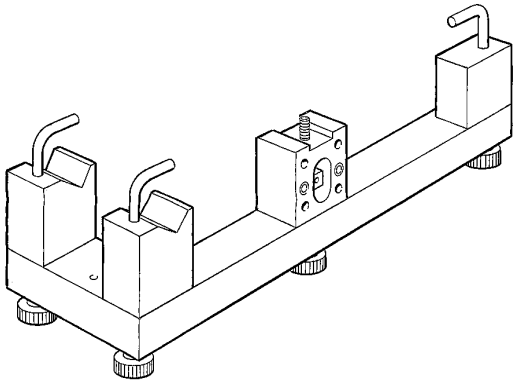
Volume flap alignment	442–5X		
Tube support rollers, alignment and vertical position	443–5X		
Bracket for tube support rollers			
Ruler		76298	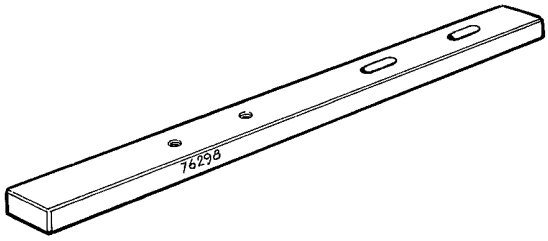
Volume flap alignment	442–5X		
Tube support rollers, alignment and vertical position	443–5X		
Bracket for tube support rollers		76299	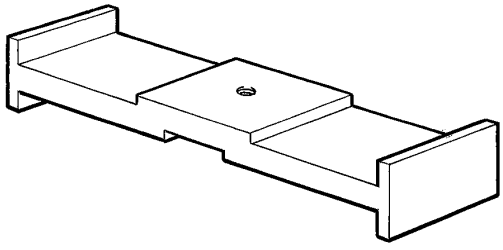
Yoke symmetry	414–5X	76301–101	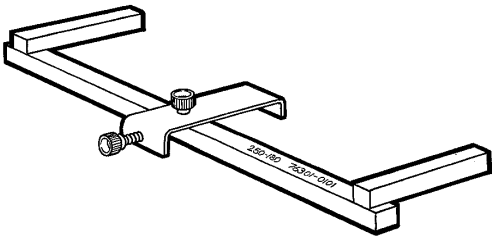
Alignment of cutting jaw and pressure jaw arms	415–5X		

Jaw system

Intended for	Page	TP No.	Fig.
Jaw gap and non parallelity in movement Yoke symmetry Alignment of cutting jaw and pressure jaw arms	445–1X 414–5X 415–5X	76304–101	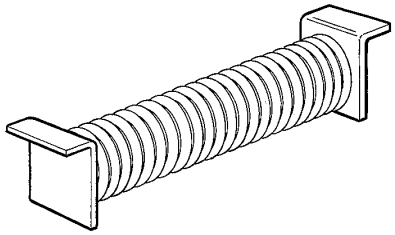
Stroke, point measuring clamp	436–1X	76416–101	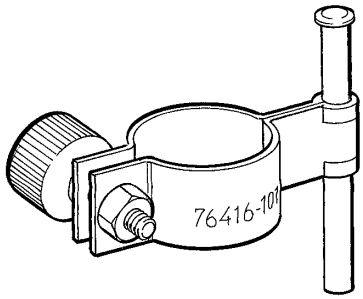
Fitting Hydraulic seal, cutting knife	405–4X	76132	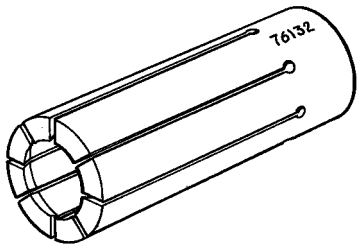
Fitting cone Hydraulic seal, cutting knife	405–5X	76131	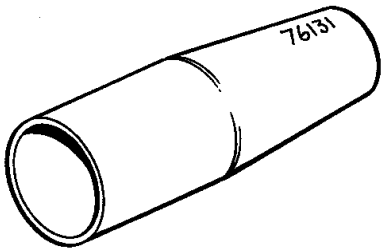
Calibration Hydraulic seal, cutting knife	405–4X	78801	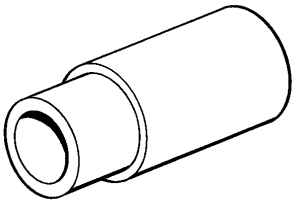
Fitting Hydraulic seal, catches	465–3X	90243–146	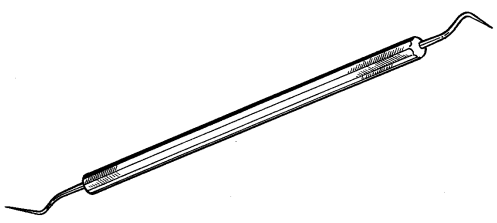

Final folder

Intended for	Page	TP No.	Fig.
FS element, air nozzle of top flaps, 125 S ml 180 B – 284 B ml **not** 200 S, 250 S ml	525–5X	 79224 77251	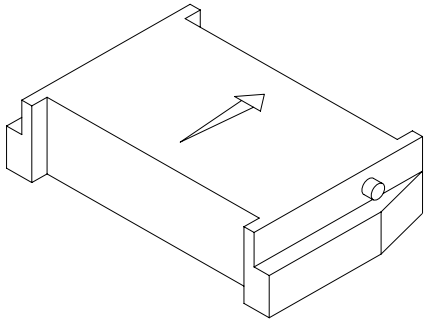
FS element, air nozzle of top flaps, 160 S, 200 S ml 250 S ml	525–5X	 77249 574487	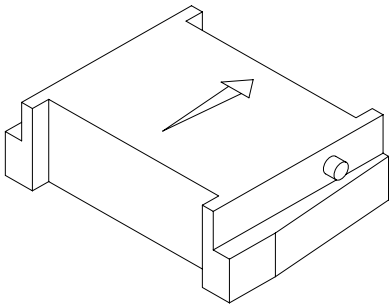
FS element, air nozzle of bottom flaps, 180 B – 284 B ml **not** 200 S, 250 S ml	525–5X	 77250	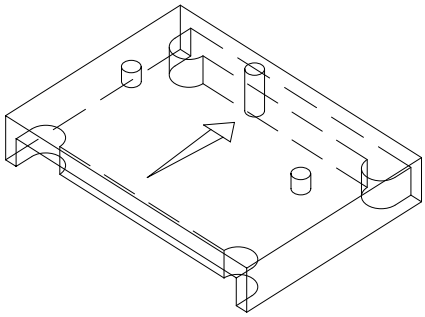
FS element, air nozzle of bottom flaps, 125 S ml 160 S, 200 S ml 250 S ml	525–5X	 79223 77248 574488	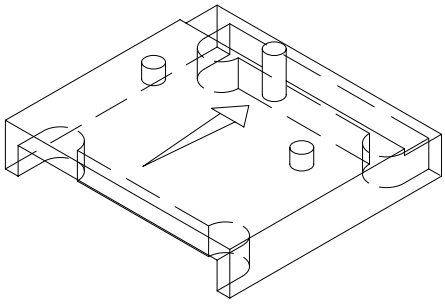
Lift rails, 180 B – 284 B ml 125 S, 160 S, 200 S ml 250 S	509–5X	 76308 75545 574442	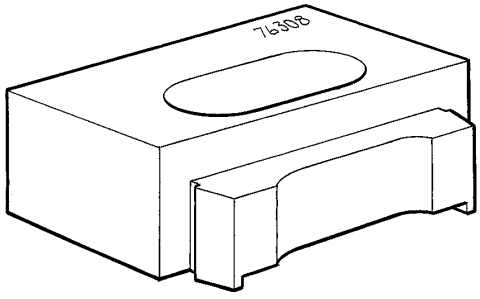

Final folder

Intended for	Page	TP No.	Fig.
Station chain	505–5X	76128	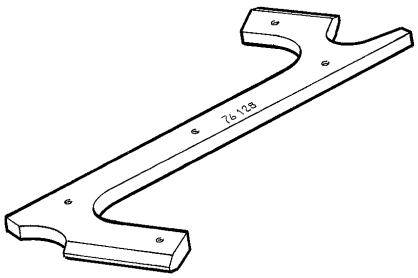
Safety sprocket	537–1X	77100	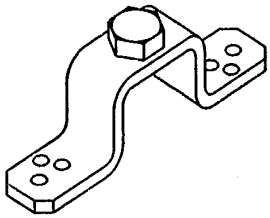
Pull-down block and rail	511–5X		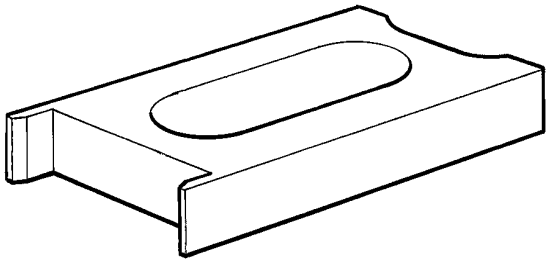
284 B ml		76307–8	
250 B ml		76307–1	
236 B ml		76307–2	
Pull-down arms, sideways position	515–5X		
200 B ml		76307–3	
180 B ml		76307–4	
125 S ml		76307–5	
160 S ml		76307–10	
200 S ml		76307–6	
250 S ml	517–5X	76307–9	
Pull-down block, vertical position			
Pressure unit alignment		76130	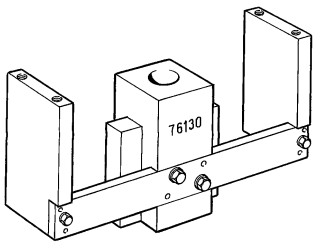
Guard plate for tensioner sprocket	503–4X	79003	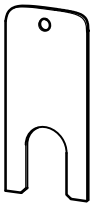

Service unit

Intended for	Page	TP No.	Fig.
Lifting carriage	624–1X	75542–101	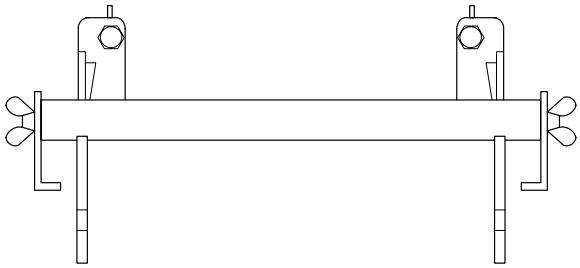
Valve clearance Impulse transmitter	604–1X	76138	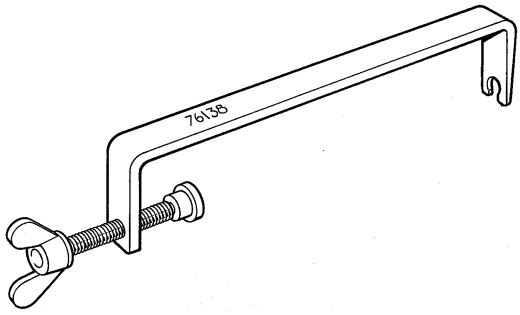
Forcing hydraulic valves Pull-down device Pressure unit	606–5X 517–5X 521–1X	76167	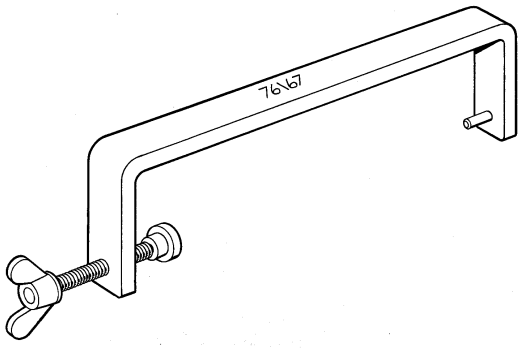
Accumulator pre-pressure		90321–537 90321–538 (hose only)	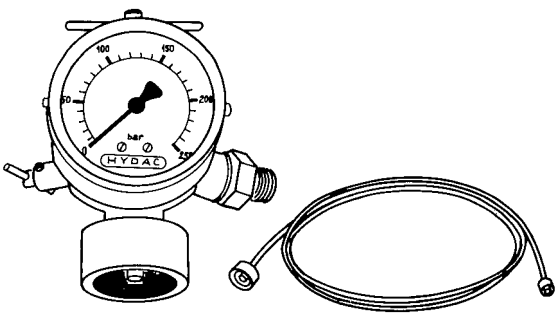
Ink roller, ink unit	737–5X	434448	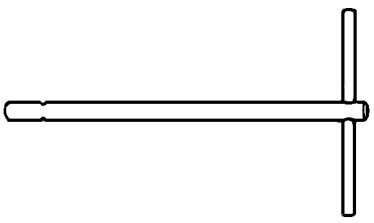

Strip applicator

Intended for	Page	TP No.	Fig.
Dating unit Ink unit	705–5X 737–5X	76602	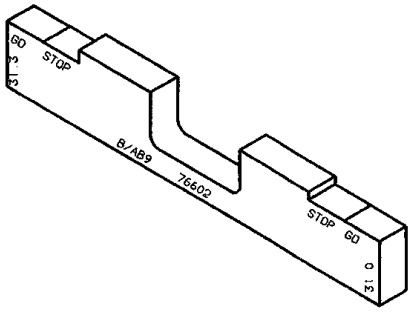
Dating unit		466397–1	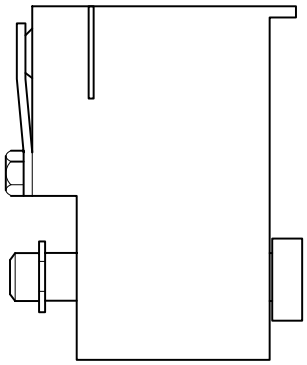

Electrical equipment

Intended for	Page	TP No.	Fig.
Test instrument	1019–1X	68462	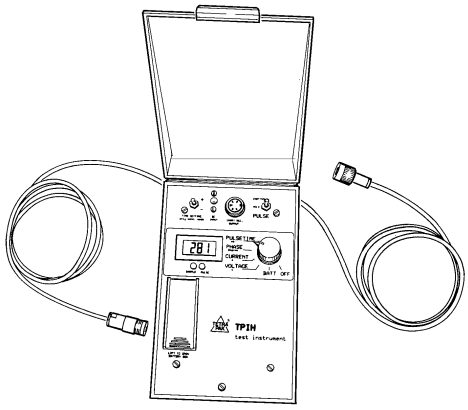
Test instrument	1020–1X	68462	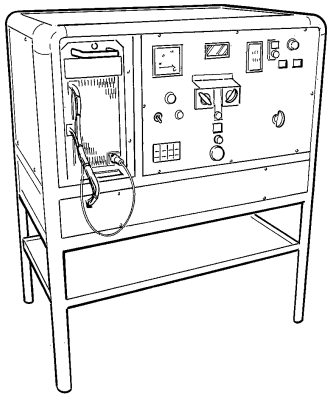

Description	TB/9	TBA/9
Safety precautions – IH, oscillator section (2 pages)		1002–71
Safety precautions – Important information TPIH		1002–72
Electrical cabinet – checking	1005–11	1005–11
Electrical cabinet – removal	1005–21	1005–21
Current relay, short stop element – setting	1007–51	1007–51
Temperature regulators – setting (3 pages)		1010–51
Converting table, octal degrees	1012–71	1012–71
TPMC, battery – checking/replacement	1016–11	1016–11
Code circuit board, design correction – setting	1018–51	1018–51
TPIH-2000		
Trouble shooting – LED display		1030–71
Generator – removal		1033–21
Cables – checking		1035–11
Cables – removal		1035–21
TPIH test instrument – general		1038–71
TPIH power – setting		1045–51
IH (PullTab)		
Trouble shooting – general (3 pages)		1050–71
Anode voltage – checking		1055–11
Anode current – checking		1057–11
Grid current – checking		1060–11
Pulse duration – setting (2 pages)		1065–51
Blocking voltage – checking		1070–11
Blocking voltage – trouble shooting		1070–71

Description	TB/9	TBA/9
HF voltage – setting (3 pages)		1075–51
HF voltmeter – general		1077–71
Control and high voltage sections – checking		1080–11
Oscillator section – cleaning/checking		1085–11
Oscillator section – removal		1085–21
Process recorder – setting		1090–51

IH, Oscillator section

WARNING!
High voltage. Work inside the generator must be performed by authorized service personnel only!

a) Before you start to work inside the oscillator section, make sure that the main switch of the machine is in position **off** and that it has been padlocked.

b) Open fuses Q27 for the high voltage transformer and F3A for the blocking voltage transformer.

c) Check that the high voltage meter reads zero volts.

d) Remove the protection cover from the oscillator section.

e) Make sure the high voltage lead (6) is properly grounded by the automatic grounding device (1).

WARNING!
The high voltage line must remain grounded until the protection cover has been refitted.

f) Discharge the blocking voltage and retain ground by connecting a lead between ground and capacitor C406 (3) in the oscillator section.

(Cont'd overleaf)

1 Automatic grounding device
2 Manual grounding
3 Capacitor C406
4 Stand Off E403
5 Capacitor C404
6 High voltage lead

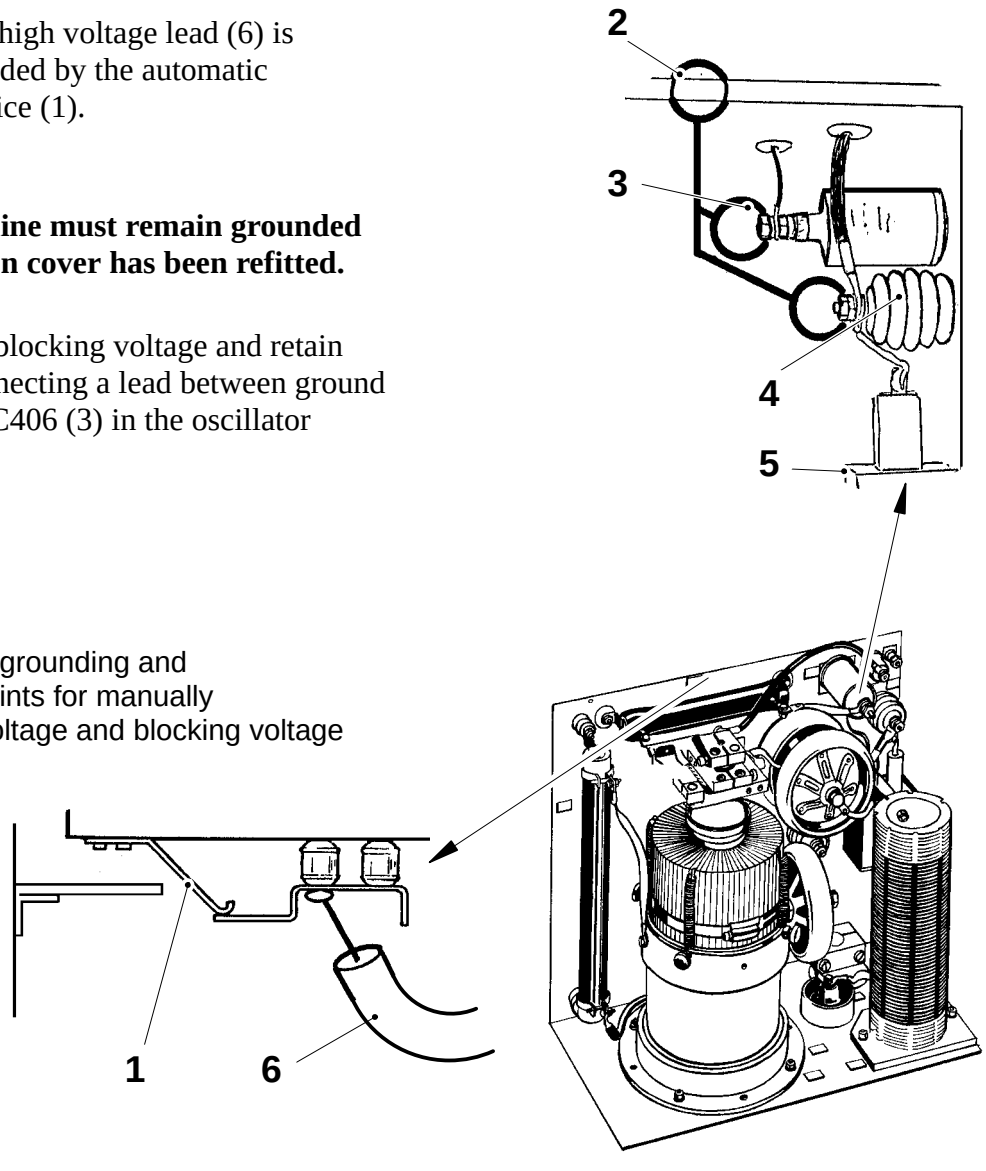

Fig. 1 Automatic grounding and recommended points for manually grounding high voltage and blocking voltage

(Cont'd)

Control section

WARNING!
High voltage. Work inside the generator must be performed by authorized service personnel only!

a) Before any work inside the control section is undertaken, make sure that the main switch of the machine is in position **off** and that it is padlocked.

b) Open fuses Q27 for the high voltage transformer and F3A for the blocking voltage transformers.

c) Check that the high voltage meter reads zero volt.

d) Discharge all six capacitors in the mains filter.

e) Discharge the blocking voltage between ground and pin 20 on the connector on the rectifier card.

f) When carrying out work on the high-voltage transformer and/or rectifier the ground wire **must** be connected between two of the capacitors in the mains filter.

Caution!
The ground wire must be connected between two capacitors with either odd or even number designations, e. g. **between C1 and C3**, or **between C2 and C4**.

A ground wire must be connected between ground and pin 20 on the connector for the pulse card.

WARNING!
Prior to reconnecting the generator, the technician responsible for the work must make sure that this can be done safely.

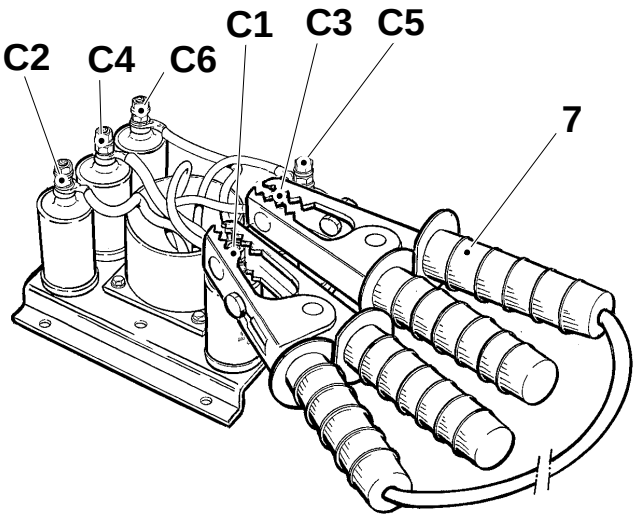

Fig 2. Mains filter

7 Ground wire
8 Cathode 6.3 V AC
9 Grid -700 V
10 Anode 3800 – 6000 V

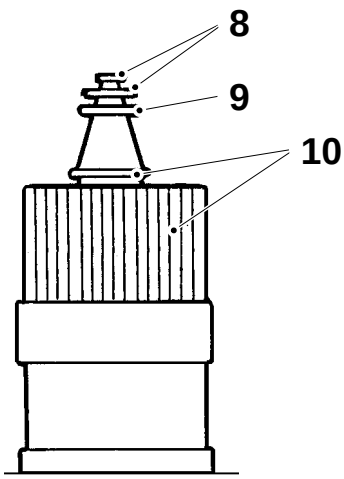

Fig. 3. Tube connections and applicable voltages

Important information TPIH

WARNING!
High voltage!
The TPIH generator must not be opened. May cause shock, burns or even death. In case of accident, immediately call for medical advice.

If a generator is to be replaced, make sure that the three phase 380/220 V and the 220 V voltages are **disconnected** from the TPIH generator!

Nobody, except a service technician with the required trai ning and knowledge is allowed to open the TPIH generator.

Checking

Cooling fan

a) Turn on the main power switch.

b) Open the RH side door of the electrical cabinet. Engage the proximity switch (3) and check that the cooling fan (2) functions. Close the door.

c) Repeat the procedure for the LH side door.

d) If required, replace the fan and/or the proximity switch.

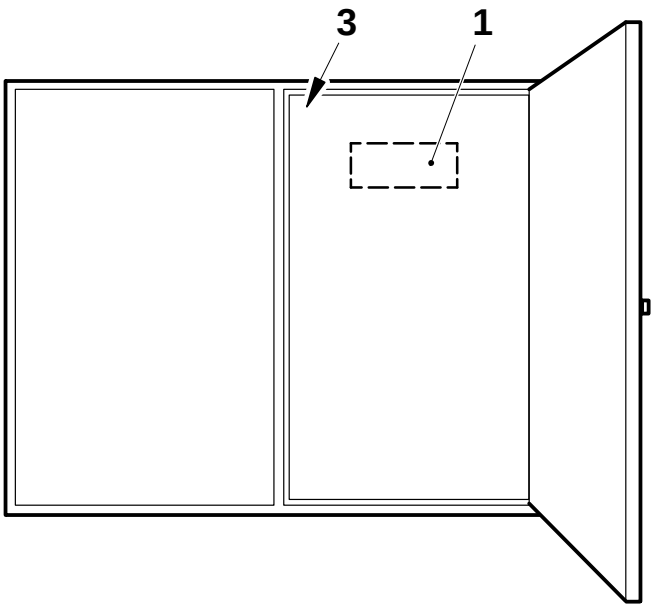

Air filter

a) Open the RH door of the electrical cabinet.

b) Swing the pivot frame aside.

c) Remove the air filter (1) from its holder and clean the air intake.
Blow the filter clean with compressed air or, if required, replace it.

d) Use the old filter as a template to cut the new one correctly.

e) Swing back the pivot frame and close the door.

1 Air filter TP No. 90264–336
2 Cooling fan
3 Proximity switch

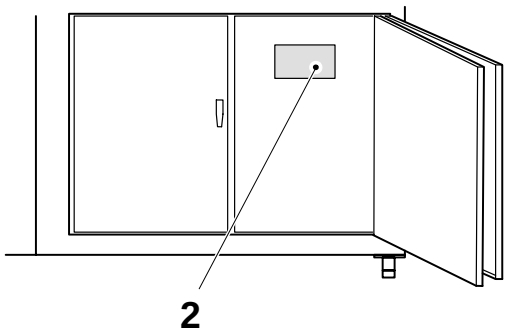

Removal

Cooling fan

a) Pull out and lift off the carriage. If available, use tool TP No 75542–101 fitted on the carriage, to lift it off.

Caution!
Be careful not to drop the carriage.

b) Remove the plate inside the cassette, on the electrical cabinet side.

c) Mark the electrical wires to the cooling fan (1) before disconnecting them.

d) Replace the fan.

e) Reassemble in reverse order

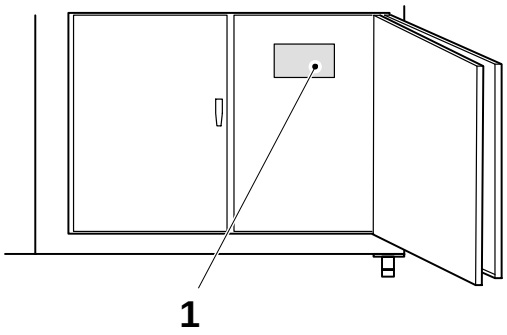

1 Cooling fan

Setting

WARNING!
High voltage! Risk of electric shock.

a) With the machine in step **Preheating machine**, set the current relays A450 (SA) and A451 (LS) for the short stop elements.

b) Set the switch (1) in position **N**.

c) Turn the potentiometers (2), (4) and (5) fully counter-clockwise (to 0).

d) Turn the potentiometer (6) to approx. 10 (%), until the LEDs are both lit up.

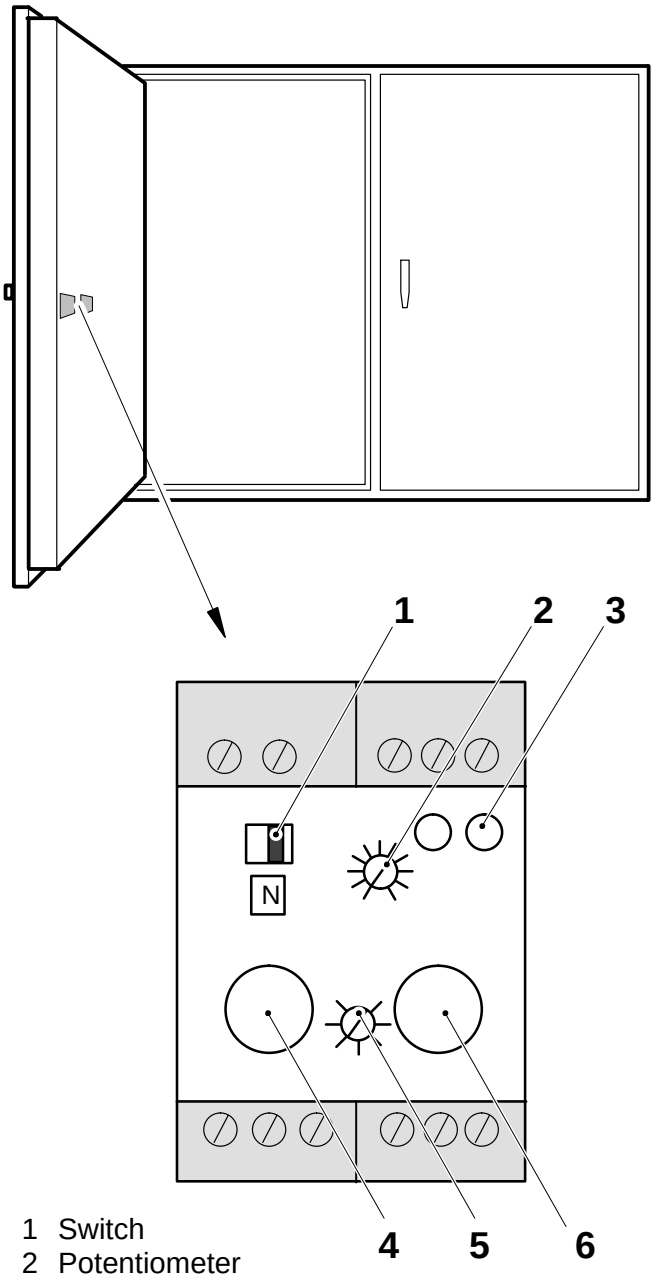

1 Switch
2 Potentiometer
3 LED (red)
4 Potentiometer (%)
5 Potentiometer
6 Potentiometer (%)

Setting

Turn on the main power switch.

The actual temperature is displayed in actual value/parameter (3).

Set the correct set value **W** (4), see table below. To change values, press the increase value button (6) or the decrease value button (7).

a) Press the menu button (5) for three seconds to step to the parameter level.
Press the menu button until parameter **Loc** is displayed and set the value to 0.

b) Press the menu button (5) for five seconds to step to the configuration level.
Con1 and the configuration code **0230** should be displayed. Set the code, if required.

c) Press the **menu** button once more. **Con2** and configuration code **0000** should be displayed. Set the code, if required.

d) Press the menu button once for transition to the operating level.

e) Press the menu button (5) for three seconds to step to the parameter level. Set the correct values **only** for parameters **SP2**, **LCL1**, **LCH1**, **LCL2**, **LCH2**, **HCA**, **SPL** and **SPH**, see table below.

When all settings are correct, wait for 30 seconds, and the temperature regulator returns to the operating level automatically.

(Cont'd overleaf)

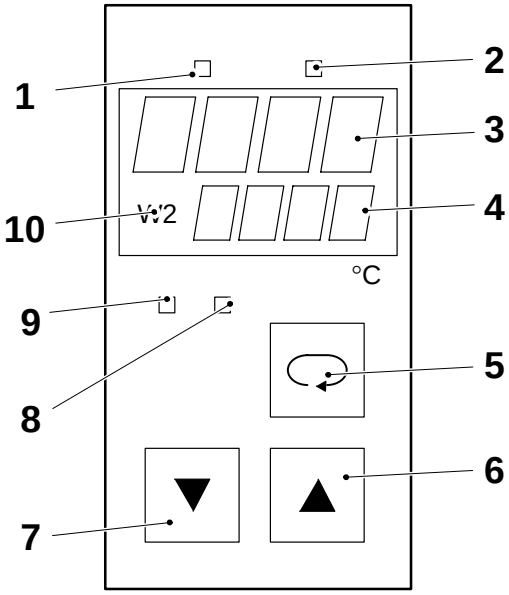

1 Heating
2 Cooling
3 Actual value/parameter
4 Set value (W)
5 Menu button
6 Increase value
7 Decrease value
8 Heating current alarm (red LED)
9 Temperature within limits (green LED)
10 W2 value (ramp function)

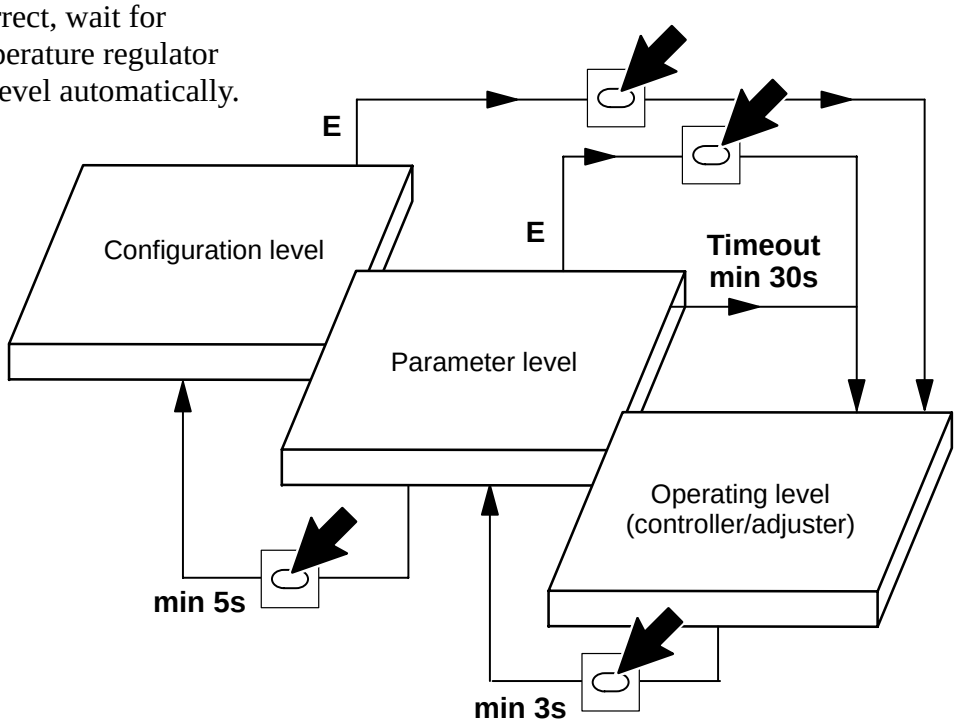

Footnote
After Timeout, changes are effective
E = end of access

(Cont'd)

Parameters:

Des = designation		LCH	= upper OK limit, °C
W	= temperature, °C	HCA	= current limit, A
SP2	= setpoint, °C	SPL	= lower setpoint limit, °C
Pt2	= segment time, min	SPH	= upper setpoint limit, °C
LCL	= lower OK limit, °C	Loc	= blocking at operation

No	Regulator	Des	W	SP2	PT_2	LCL1	LCH1	LCL2	LCH2	HCA	Loc	SPL	SPH
11	Pre-sterilization	A4	270	0	0	1	100	–	–	–	1	270	290
12	Sterilization bath, water/ preheating	A6	80	90	0	10	12	1	1	–	1	0	95
13	LS/ LS sealed tube (basic)	A8	320	260	0	20	20	20	50	–	1	0	400
14	Air superheater/ preheating	A10	360	400	0	10	10	50	50	–	1	0	400
15	Air knife	A13	125	0	0	10	10	–	–	–	1	0	150
16	Steam	A14	125	0	0	1	100	–	–	–	1	125	400
17	Sterilization bath, peroxide	A30	70	0	0	1	100	–	–	–	1	70	85
18	SA (basic)	A202	290	0	0	20	20	–	–	–	1	0	400
	*Sealing, tab strip (basic)	A202	175	0	0	20	20	–	–	–	1	0	400
19	*Dating unit I (basic)	A203	130	0	0	20	20	–	–	–	1	0	180
20	*Dating unit II (basic)	A204	130	0	0	20	20	–	–	–	1	0	180
21	*IS strip splice (basic)	A205	200	0	0	20	20	–	–	–	1	0	400
22	*Preheated counter jaw (basic)	A206	75	0	0	10	10	–	–	–	1	0	125

* = PullTab machine

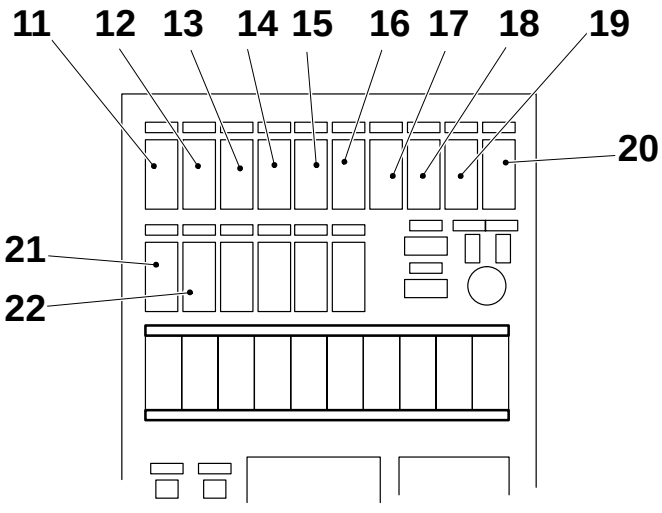

Note
Selftuning, see below, on regulators (12), (13), (14), (18), (19), (20), (21) and (22).
During the selftuning, parameters Pb1, ti, td and t1 are set automatically.

(Cont'd overleaf)

(Cont'd)

Selftuning during operation

Caution!
Selftuning **must not** be performed with the machine in step **Production**.

a) When all temperatures are correct, press the menu button (5) and the increase value button (6) simultaneously.

b) Process value and code **AdA** are displayed alternately in actual value/parameter (3). After maximum 10 minutes, code **AdA** disappears and the actual process value is displayed.

c) Return to the operating level by pressing the menu button, or wait for 30 seconds.

d) Press the menu button for three seconds to step to the parameter level. Step to parameter **Loc** and set the value to 1.

e) Return to the operating level.

Note
If successful tuning is prevented due to faults in the control loop during start or tuning, the tuning is cancelled and **AdA** is displayed (error signal).

Error signals

a) In case of an error, an error signal instead of the process value is displayed in actual value/parameter, until the error is acknowledged, or until its cause has been eliminated. With range monitoring, the sensor error is displayed until eliminated.

b) The following error signals can be displayed:

Display	Cause
FdF	Sensor break
POL	Wrong sensor polarity
AdF	Selftuning error

c) In case of problems with a temperature regulator, check all connections.
Replace the temperature regulator as required.

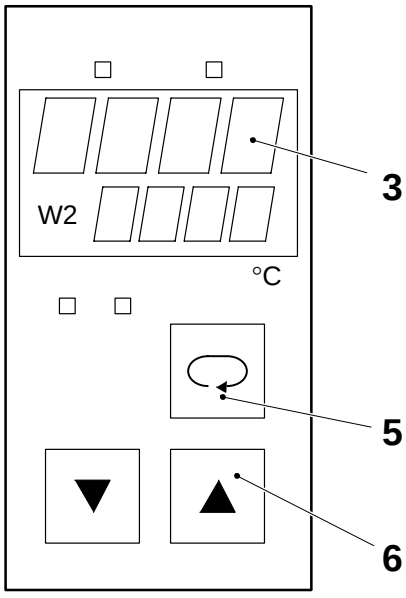

3 Actual value/parameter
5 Menu button
6 Increase value

Converting table, octal degrees

Octal degrees	Degrees	Octal degrees	Degrees	Octal degrees	Degrees	Octal degrees	Degrees	Octal degrees	Degrees	Octal degrees	Degrees
000	0	060	67.5	140	135.0	220	202.5	300	270.0	360	337.5
001	1.4	061	68.9	141	136.4	221	203.9	301	271.4	361	338.9
002	2.8	062	70.3	142	137.8	222	205.3	302	272.8	362	340.3
003	4.2	063	71.7	143	139.2	223	206.7	303	274.2	363	341.7
004	5.6	064	73.1	144	140.6	224	208.1	304	275.6	364	343.1
005	7.0	065	74.5	145	142.0	225	209.5	305	277.0	365	344.5
006	8.4	066	75.9	146	143.4	226	210.9	306	278.4	366	345.9
007	9.8	067	77.3	147	144.8	227	212.3	307	279.8	367	347.3
010	11.3	070	78.8	150	146.3	230	213.8	310	281.3	370	348.8
011	12.7	071	80.2	151	147.7	231	215.2	311	282.7	371	350.2
012	14.1	072	81.6	152	149.1	232	216.6	312	284.1	372	351.6
013	15.5	073	83.0	153	150.5	233	218.0	313	285.5	373	353.0
014	16.9	074	84.4	154	151.9	234	219.4	314	286.9	374	354.4
015	18.3	075	85.8	155	153.3	235	220.8	315	288.3	375	355.8
016	19.7	076	87.2	156	154.7	236	222.2	316	289.7	376	357.2
017	21.1	077	88.6	157	156.1	237	223.6	317	291.1	377	358.6
020	22.5	100	90.0	160	157.5	240	225.0	320	292.5	400	360
021	23.9	101	91.4	161	158.9	241	226.4	321	293.9		
022	25.3	102	92.8	162	160.3	242	227.8	322	295.3		
023	26.7	103	94.2	163	161.7	243	229.2	323	296.7		
024	28.1	104	95.6	164	163.1	244	230.6	324	298.1		
025	29.5	105	97.0	165	164.5	245	232.0	325	299.5		
026	30.9	106	98.4	166	165.9	246	233.4	326	300.9		
027	32.3	107	99.8	167	167.3	247	234.8	327	302.3		
030	33.8	110	101.3	170	168.8	250	236.3	330	303.8		
031	35.2	111	102.7	171	170.2	251	237.7	331	305.2		
032	36.6	112	104.1	172	171.6	252	239.1	332	306.6		
033	38.0	113	105.5	173	173.0	253	240.5	333	308.0		
034	39.4	114	106.9	174	174.4	254	241.9	334	309.4		
035	40.8	115	108.3	175	175.8	255	243.3	335	310.8		
036	42.2	116	109.7	176	177.2	256	244.7	336	312.2		
037	43.6	117	111.1	177	178.6	257	246.1	337	313.6		
040	45.0	120	112.5	200	180.0	260	247.5	340	315.0		
041	46.4	121	113.9	201	181.4	261	248.9	341	316.4		
042	47.8	122	115.3	202	182.8	262	250.3	342	317.8		
043	49.2	123	116.7	203	184.2	263	251.7	343	319.2		
044	50.6	124	118.1	204	185.6	264	253.1	344	320.6		
045	52.0	125	119.5	205	187.0	265	254.5	345	322.0		
046	53.4	126	120.9	206	188.4	266	255.9	346	323.4		
047	54.8	127	122.3	207	189.8	267	257.3	347	324.8		
050	56.3	130	123.8	210	191.2	270	258.8	350	326.3		
051	57.7	131	125.2	211	192.7	271	260.2	351	327.7		
052	59.1	132	126.6	212	194.1	272	261.6	352	329.1		
053	60.5	133	128.0	213	195.5	273	263.0	353	330.5		
054	61.9	134	129.4	214	196.9	274	264.4	354	331.9		
055	63.3	135	130.8	215	198.3	275	265.8	355	333.3		
056	64.7	136	132.2	216	199.7	276	267.2	356	334.7		
057	66.1	137	133.6	217	201.1	277	268.6	357	336.1		

Checking/Replacement

a) When the **Battery** signal lamp (1) lights up, the battery **must** be replaced.

b) Turn on the main power supply.

c) Power to the TPMC unit **must not be** cut while the battery is being removed.

Caution!
If the main power is off, the replacement of the battery must not take more than 20 seconds. TPMC loses power after 20 seconds.

d) To replace the battery, loosen the screws (3) and remove the battery holder.

Note
Clean the battery connections before fitting a new battery.

e) The battery (TP No. 90 334–6), type ”AA”, **should be replaced every two years**, as a new battery is capable of preserving the PC memory for two years without using mains voltage.

f) Note the date of the replacement on the sign.

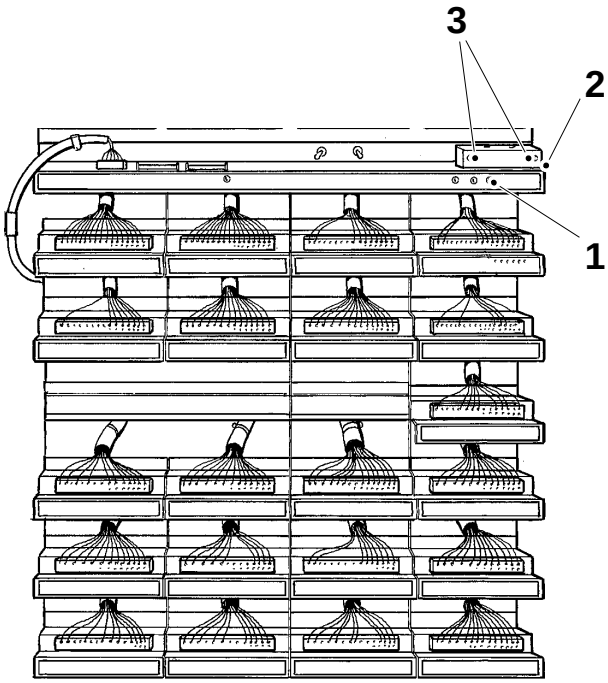

1 BATTERY signal lamp
2 Battery cover plate
3 Screw

Setting

a) Set the potentiometers on the code circuit board A016B in the electrical cabinet according to the table below.

Machine	Volume, ml	Potentiometer P1	Potentiometer P2	Switch S3
TB	250 B	25	25	8
	236 B	20	25	8
	200 S	30	20	8
	200 B	0	35	8
TBA	284 B	40	15	C
	250 B	40	15	C
	250 S	45	10	C
	236 B	35	20	C
	200 S	45	10	C
	200 B	30	25	C
	180 B	20	25	C
	160 S	45	10	C
	125 S	20	25	C

b) Set the switch (1) in position PH.

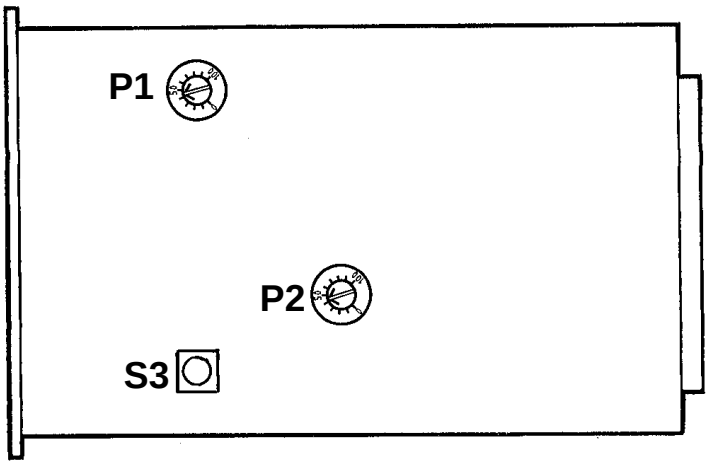

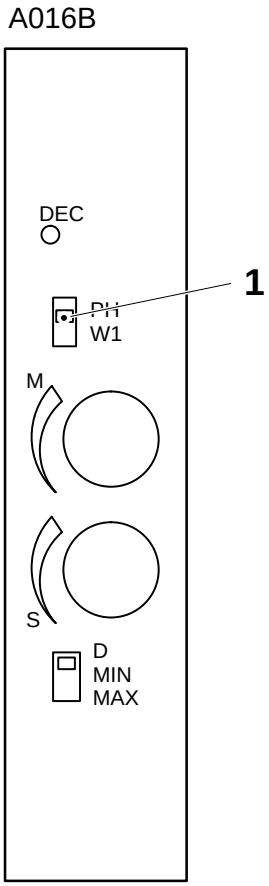

1 Switch

LED display

(1) Control voltage on (green)

220V is connected – alarms are enabled.
Note that this does **not** check the three phase 380/220V to the power supply.

(2) Output on (green)

Lights up when a pulse is transmitted from the generator into a proper load – the entire generator system is operating perfectly.

(3) Load error (red)

The generator is unable to transmit a pulse due to faulty load caused by:

- short circuit in coaxial cable, flexible cable, inductor or impedance transformer,
- open circuit in coaxial cable, flexible cable, inductor or impedance transformer,
- no pressure applied to the inductor,
- wrong type of impedance transformer, or
- wrong type of inductor installed.

(4) Temperature high (red)

- the cooling fan inside the generator is not working, or
- the ambient temperature is above 50°C.

Replace the generator if the fan does not operate.

(5) Mains voltage low (red)

At least one of the three phases is below 85% of nominal value, and as a consequence the generator is not able to deliver the proper output power.

Check the mains supply for any possible open fuse. If all three fuses are intact, the problem will disappear when the voltage rises above 85% again.

(6) Output voltage low (red)

If this is the only red LED that has lit up:

- the generator is faulty and must be replaced, or
- the +10 V DC to the potentiometer is missing, or
- the potentiometer setting is below the minimum value of 350 V, or
- the potentiometer is broken.

Before replacing the generator, check the potentiometer setting and the presence of 10 V DC across the potentiometer. Also establish that the output voltage from the potentiometer follows the movement of the slider.

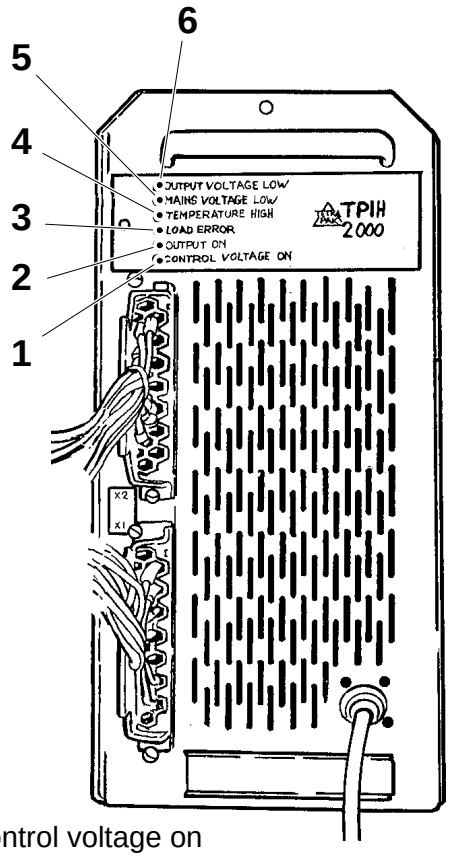

1 Control voltage on
2 Output on
3 Load error
4 Temperature high
5 Mains voltage low
6 Output voltage low

Removal

a) Make sure that the main power switch of the machine is in position **off** and that it has been padlocked.

b) Undo connectors X1 and X2 (2).

c) Undo the coaxial connector (3).

d) Loosen the screw (1) and pull out the generator.

WARNING!
High voltage. Do not open the generator.

e) Send the generator to the nearest service center for cleaning or service.

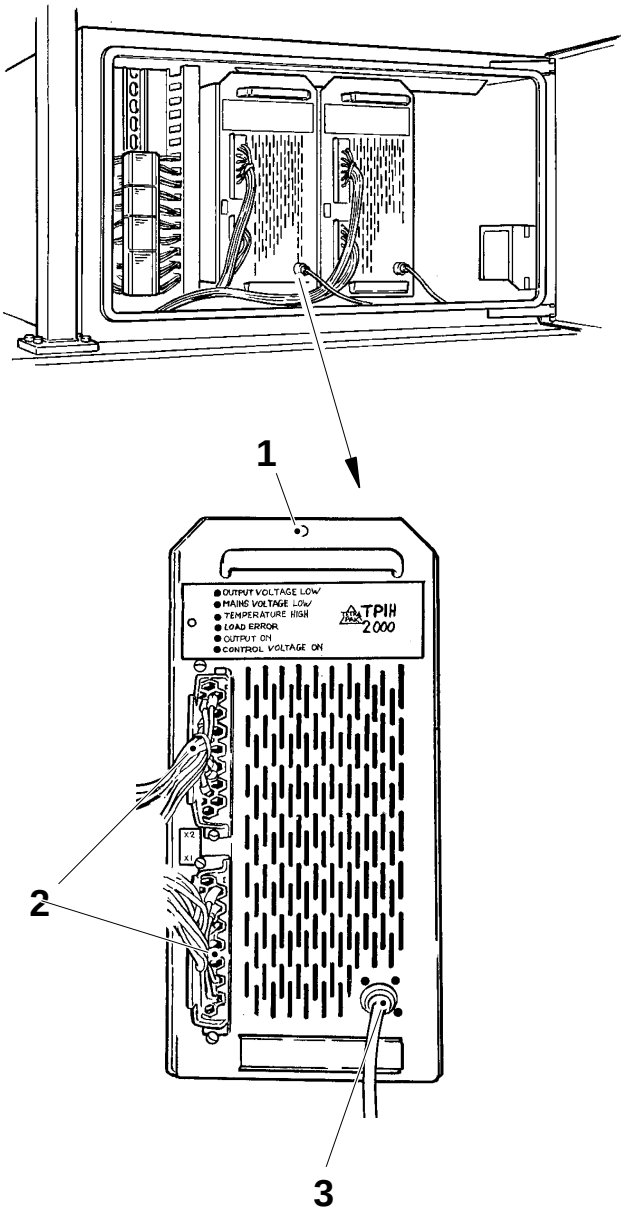

1 Screw
2 Connectors X1 and X2
3 Coaxial connector

Checking

TPIH

Check the following details for wear and/or damage:

- the contact rails (1); make sure that there are no signs of moisture. Clean as required
- the coaxial cables (2); make sure that the cables are flexible
- the coaxial connectors (3); make sure there is no moisture
- the other connectors
- the rubber gasket (4) in the male connector; make sure that it seals properly (it should not be possible to turn the male connector easily). If required, replace the IH transformer

Replace as required.

IH (PullTab device)

Check the following details for wear and/or damage:

- the contact rails
- the flexible cables; make sure that the insulation is intact

Replace as required.

Tighten the screws at the contact points.

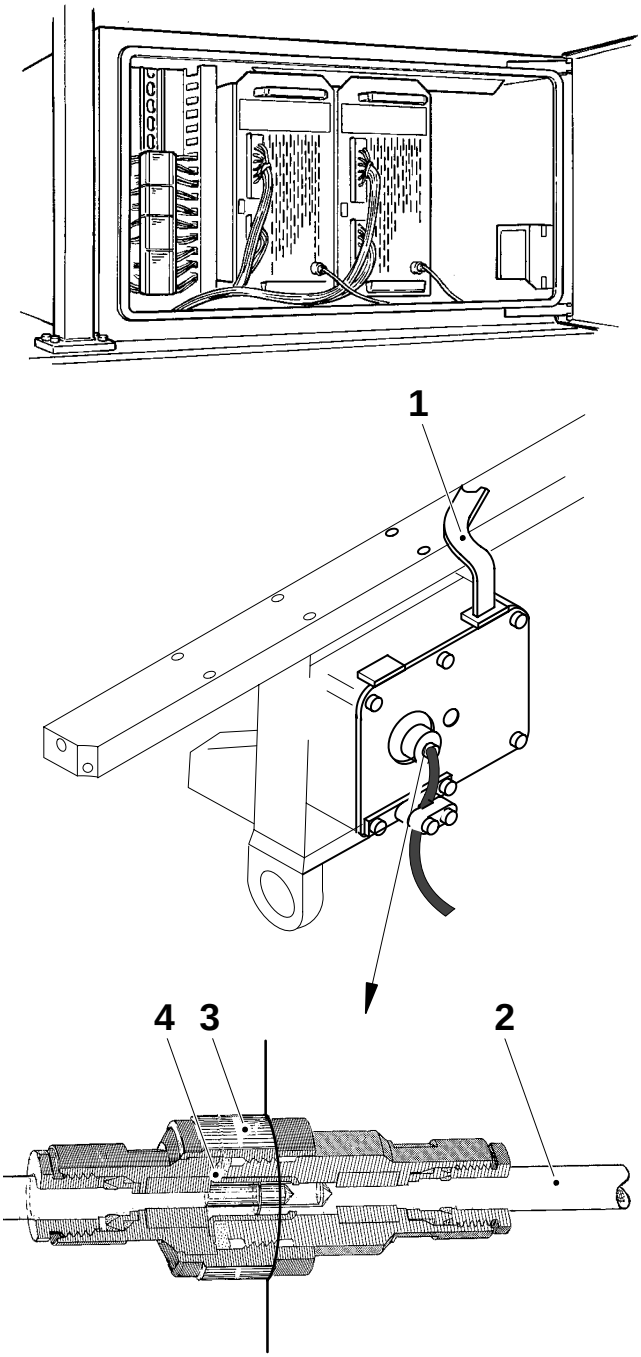

1 Contact rail
2 Coaxial cable
3 Coaxial connector
4 Rubber gasket

Removal

a) Undo the screws (1) and remove the cramp.

b) Remove the coaxial cable from the impedance transformer.

c) Undo the screws and remove the plate (2).

d) Remove the busbar (3).

e) Undo the screw (4) and remove the transformer.

f) Reassemble in reverse order.

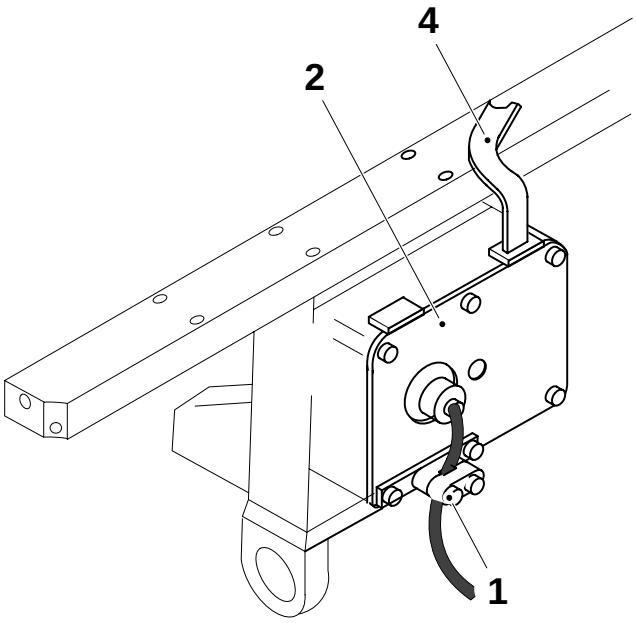

1 Screw
2 Plate
3 Bus bar
4 Screw

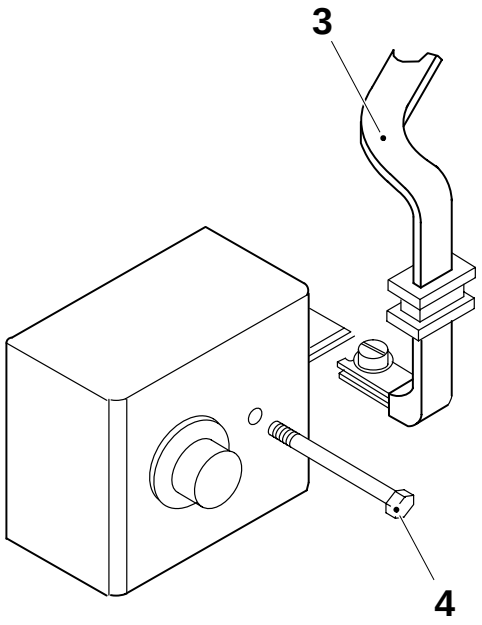

General

The TPIH test instrument, TP No. 68462 is used to check the available output power from the TPIH generator as well as the condition of the coaxial cable, the impedance transformer, the current rail and the inductor.

The instrument is connected in series with the coaxial cable from the generator.

Note
Stop the machine in **Short stop** to prevent the generator from pulsing, when the instrument shall be connected or disconnected.

The instrument can be used for direct measurement of the following parameters:

- HF voltage
- HF current
- phase shift voltage/current
- pulse duration

The results of these measurements can be used to compute the available HF power.

The instrument should simplify the work, when trying to locate the origin of a problem.

One 9 V battery is used for the instrument and an automatic power-off function is used to minimize the battery consumption.

A test outlet permits connection of a printer, such as a Brush recorder. Print-outs of the HF voltage, HF-current and the phase shift as a function of time are possible.

The instrument kit contains complete operating instructions as well as a printer cable and a battery eliminator.

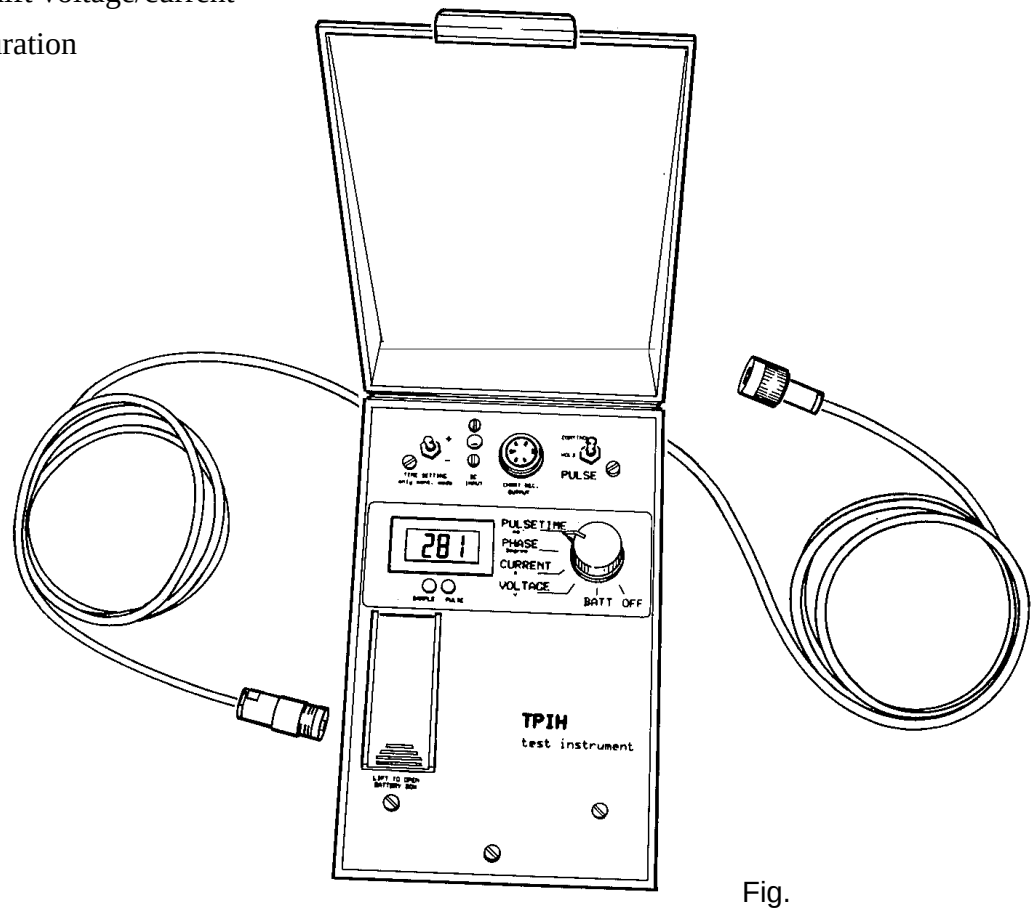

Fig.
Test instrument TP No. 68462

Setting

The power can be set in any machine step.

Basic setting

Set power for the TS sealing unit with the potentiometer (1), see table below.

Volume, ml	Value
125 S	600
160 S	720
180 B	760
200 B	760
200 S	720
236 B	760
250 B	760
250 S	650
284 B	760

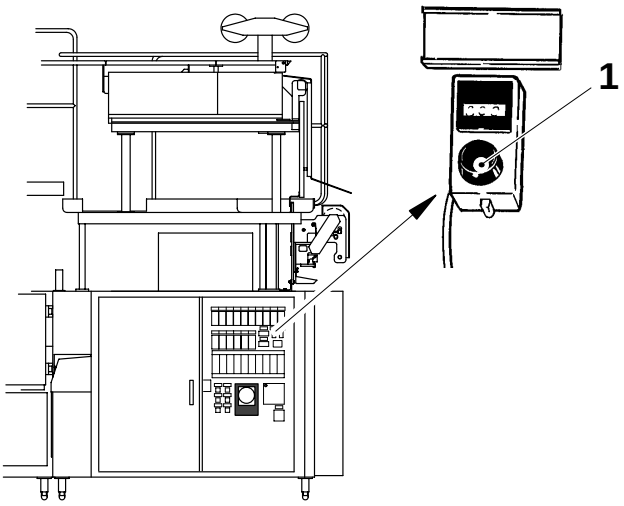

1 Potentiometer

Final setting

Evaluate the TS sealings, see the OS-book.
If required, make further adjustments on the potentiometer.

General

For PullTab IH equipment, the trouble shooting information is divided into four sections, see below.

WARNING!
Follow the safety precautions on page MM 1002–7X unconditionally!

Section A

Check by means of the high-voltage meter when no oscillator is pulsed.

	Fault	Action
A:1	Voltmeter indicates 0V despite energized high voltage contactor (K2 in electrical cabinet)	Check: • motor switch Q27 • overload relay Q101* • phase monitor K101* • door monitors* • high voltage contactor (K2 in electrical cabinet) * fault should be indicated by monitor panel
A:2	Overload relay Q101 is tripping	Check automatic grounding device and connections. Residual gas in new tube might lead to internal flash-over. Restart a few times. Check that tube connections (see page MM 1002–7X, fig. 3.) are parallel. Make sure spacing between grid and cathode tube is >3 mm at any point. Check capacitor C404 oscillator section
A:3	Motor switch Q27 is tripping	Check: • rectifier V201 – V206 • filter Z101 • transformer T101
A:4	Voltmeter for PullTab device generator shows that voltage differs substantially from appr. 6.3 kV.	Check: • mains voltage • connections, transformer T101
A:5	Voltmeter for PullTab device generator shows appr. 6.3 kV.	Correct. Proceed to section B.

(Cont’d overleaf)

(Cont'd)

Section B

Check by means of the high-voltage meter when oscillator is **not** pulsed.

	Fault	Action
B:1	No voltage drop for oscillator during pulse	Replace pulse card. If required, check if pulse card indicates pulse: a) If pulse is indicated: Check filament voltage Check all oscillator connections Replace tube Check R401 and connections Check L402 and connections b) If pulse is not indicated: Check timer (page MM 1065–1X) Check rectifier card (page MM 1070–7X)
B:2	Abnormal voltage drop during pulse. (1000V or more)	Check: • rectifier V201 – V206 • transformer T101 • fuse Q27 • mains voltage
B:3	Voltage drops approximately 500 V	Correct. Proceed to section C

Section C

Check by means of the am-meter when oscillator section is pulsed.

C:1	No current despite correct high voltage	Return to B:1
C:2	Current for PullTab oscillator below 0.6 A or above 1.0 A	Check: • contact rails • flex cable connections or open cirquit or short circuit • inductor • generator adjustments
C:3	Current too high for all oscillators	Mains voltage (max + 10% accepted)
C:4	Overload relay Q101 is tripping when oscillator is pulsed.	Check: • short-circuit or flash-over between connections on tubes or in HF transformer • components L401, C403 and RL401 • inductor and inductor connections

(Cont'd overleaf)

(Cont’d)

Section E

A certain amount of HF-radiation can always be measured in the vicinity of the oscillator, but the level is normally negligible.

If the level is too high, it can lead to malfunctioning of nearby equipment, such as temperature regulators.

Check the joints between the oscillator and the inductor. An improper joint or worn insulation can lead to excessive HF-radiation.

If the interconnections are perfect, the problem is probably inside the oscillator section.

Faulty joints can lead to arcing. Check all joints.

Contamination can cause flash-over.

The tube itself might create interference. Replace the tube.

Checking

The control section is equipped with a voltmeter to monitor the high-voltage during operation.

The high-voltage shall be approximately 6.3 kV with no pulse.

When the pulse starts the voltage drops approximately 0.5 kV.

The phase sensor monitors the three-phase system. Should an unbalance occur, the phase sensor disables the high voltage contactor.

The monitor panel displays **Phase monitor**.

Phase failure inside the generator will not be detected by the phase sensor. The quiescent high voltage is normal, but during the pulse the voltage will drop approx 1 kV. Check for open diode in V201 – V206, or fault in transformer T101.

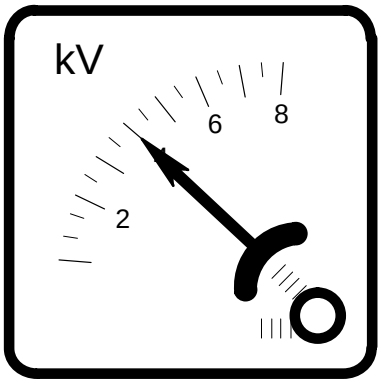

Checking

Turn on the main power switch.

a) Connect the test instrument (2) to the test outlet (1) in the generator.

b) Check the anode current.

Oscillator	Anode current, mA
Wide IS strip	900 – 1500
Narrow IS strip	400 – 750

c) With the oscillator unloaded, i.e with the contact rails disconnected, the current should be around 400 mA in the wide IS strip position.

Note
The anode current is affected by the load. The difference in current for a pulsed oscillator when it is loaded by Al-foil compared to without this load is related to the power applied to the seal.

If the current is measured without the test instrument, the displayed current will be around 50 mA too low.

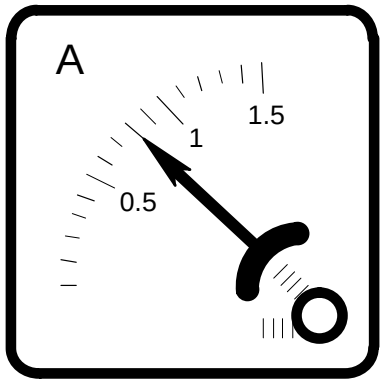

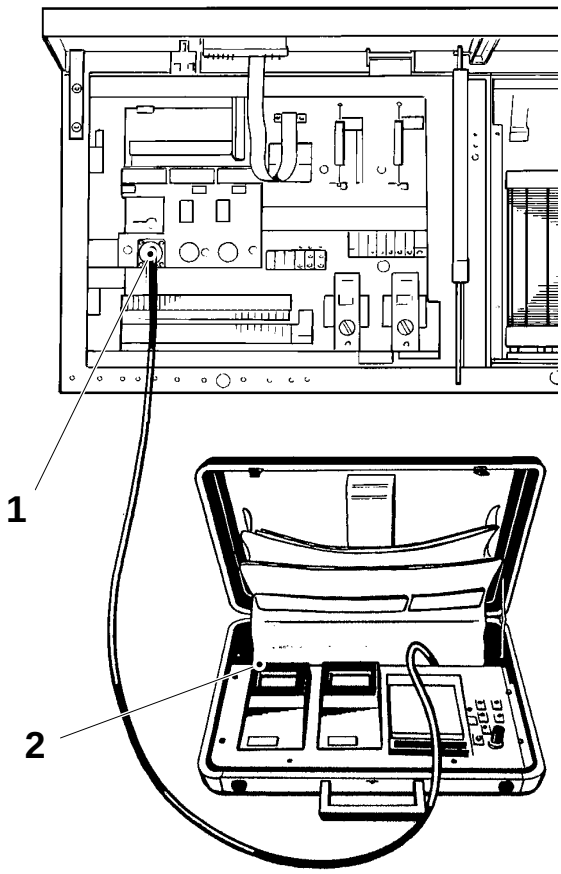

1 Test outlet X006
2 Test instrument TP101A

Checking

Note
When the machine is new or when a tube has been replaced, **record** the grid current **and** the mains voltage. These values are used for checking the condition of the tubes.

a) Connect the test instrument (2) to the test outlet (1). Turn on the main power switch.

b) Check the grid current during pulse, see table below.

Oscillator	Grid current, mA
Wide IS strip	350 – 550
Narrow IS strip	5 – 150

c) If the contact rails are disconnected, the current might rise to 750 mA. (The grid current increases for an unloaded oscillator.)

d) When the grid current has **dropped to around 35%** of its original value, replace the tube.

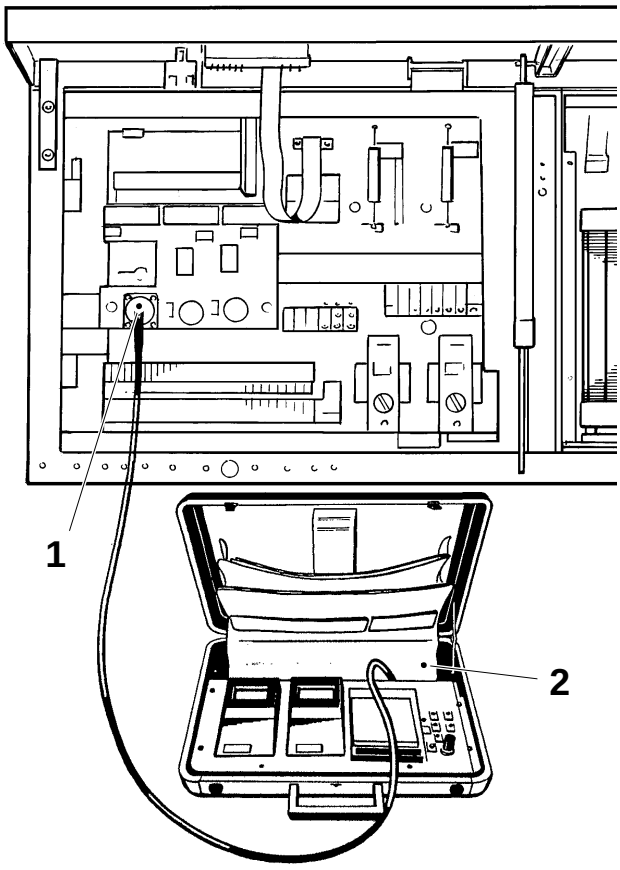

1 Test outlet X006
2 Test instrument TP101A

Setting

The pulse duration can be measured on the inductor (HF-signal) or on the input to the pulse card (DC-signal). The most convenient place is the connector X001 (2), where the input to the pulse card is available between pins 1 and 2.

a) Measure the incoming mains voltage and record the value.

b) Connect the pulse time counter TP102 (1), see above.

c) With the machine in step **Production**, set the pulse time, see table below, by means of the potentiometer in the electrical cabinet (see OS book).

(Cont'd overleaf)

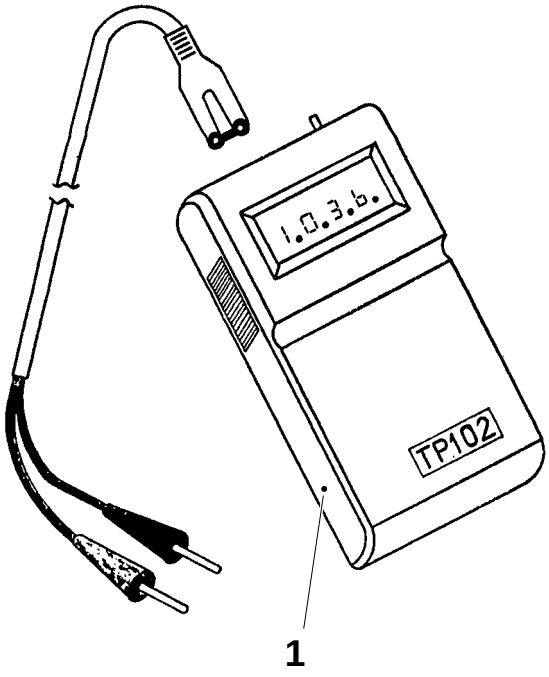

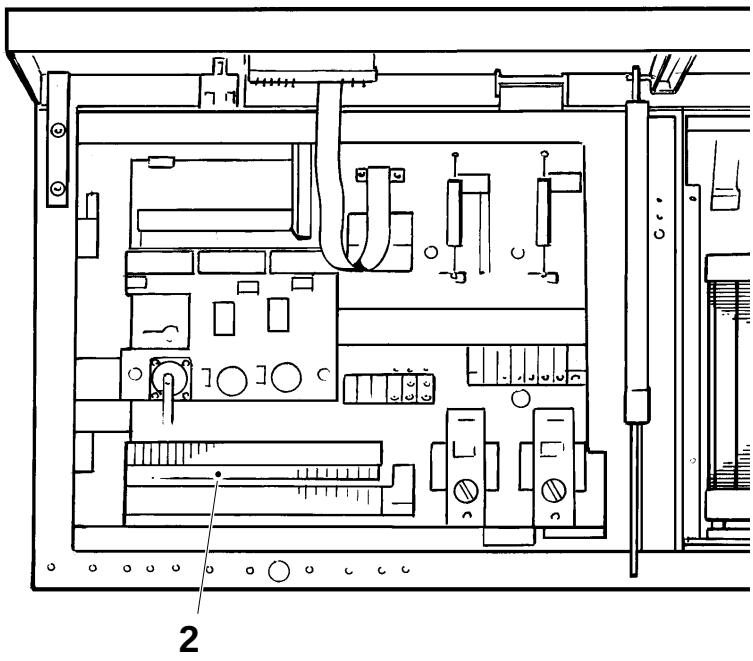

1 Pulse time counter TP102, TP No. 90243–90
2 Connector X001

(Cont'd)

Recommended pulse durations

Mains voltage, V	Pulse duration, ms						
	125 S ml 7.5/29	125 S ml 7.5/35	180 B ml 7.5/35	200 S ml 7.5/29	200 S ml 7.5/35	200 B ml 7.5/37.5	250 B ml 7.5/37.5
323/187	152	143	–	125	125	159	138
328/190	147	138	130	121	121	154	134
337/195	140	131	124	115	115	146	127
345/200	133	125	120	109	109	139	121
354/205	127	119	114	104	104	132	115
363/210	121	113	108	99	99	126	110
371/215	115	108	102	94	94	120	105
380/220	110	103	98	90	90	115	100
389/225	105	98	94	86	86	110	96
397/230	101	94	90	82	82	105	91
406/235	96	90	86	79	79	101	88
415/240	92	87	82	76	76	97	84
418/242	91	85	81	74	74	95	83

Note
The recommended pulse durations are to be used as initial settings. The final setting must be done by examination of the seal quality, see OS book.

Trouble shooting

If the generator is not activated by the pulse, i.e. the blocking voltage (see page MM 1070–1X) remains high, check the pulse card function by temporarily connecting +24V DC to pin 32 on the pulse card (see page MM 1075–5X:1).

Checking

The blocking voltage is derived from the rectifier card (2), which is located underneath the pulse card (1), see fig. The rectifier card also contains a 12 V rectifier for the pulse card.

WARNING!
High voltage! Do not touch the transistor (4). It is connected to -700V.

The pulse card operates as a switch to enable the oscillator.

a) Turn on the main power switch.

b) Connect the test instrument (3) and read the blocking voltage.

c) The voltage for a quiescent oscillator (i.e. with no pulse) shall be -700 V. During the pulse the voltage will be close to zero.

d) If the oscillator fails to operate, see page MM 1050–7X, section B.

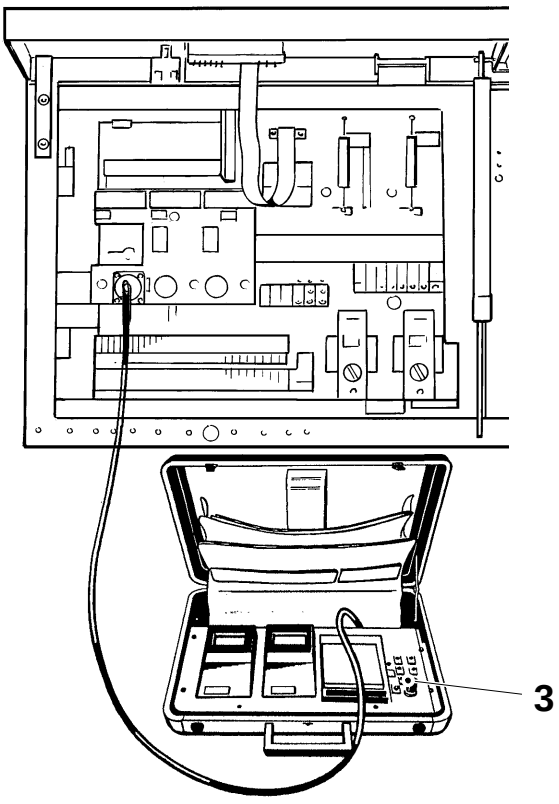

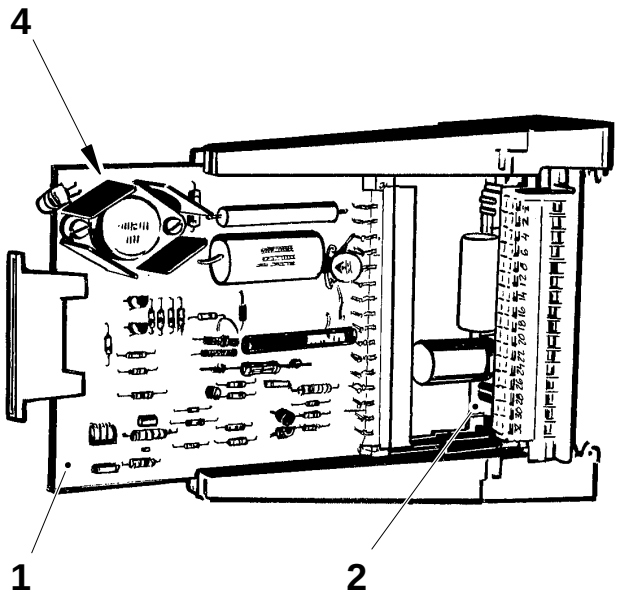

1 Pulse card A101
2 Rectifier card A102
3 Test instrument TP101A
TP No. 67026
4 Transistor

Trouble shooting

WARNING!
Follow the safety precautions when working in the generator section!

a) If the oscillator fails to operate and the blocking voltage is missing, check fuse F101. If the fuse is OK and the fan is operating, check the transformer (2) and the connector (1).

b) If the oscillator is inoperative and the blocking voltage remains around -700V, replace the pulse card (3).

Note
Press the spring (7) to release the pulse card.

If this does not cure the problem, make sure the **enable** signal from the timer is received. This signal shall be around 24 V between pins 32 (6) and 30 (5) on the rectifier card. A broken low-voltage winding in the transformer (2) or an open diode on the rectifier card might create the same problem.

c) If the blocking voltage is controlled by the pulse, but the oscillator does not operate, check if the resistor (8) is broken.

d) If the oscillator gives a constant pulse, switch it off to prevent damage to the inductor.

e) Press the spring (7), pull out the pulse card and replace it. If the fault remains, check the capacitor (9) for short-circuit. If required, replace the rectifier card (4).

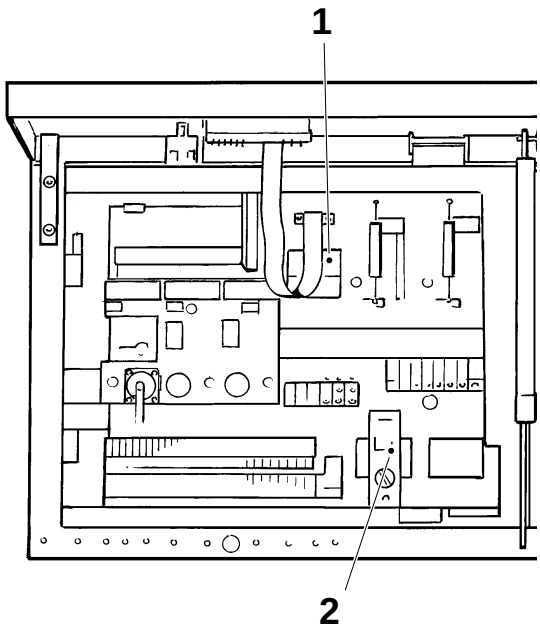

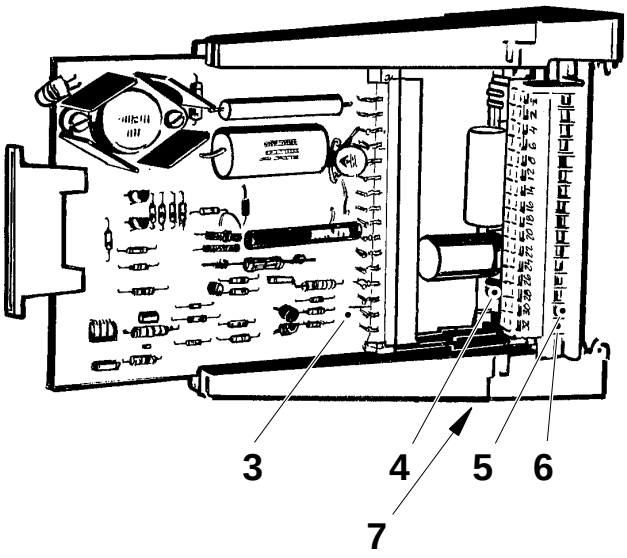

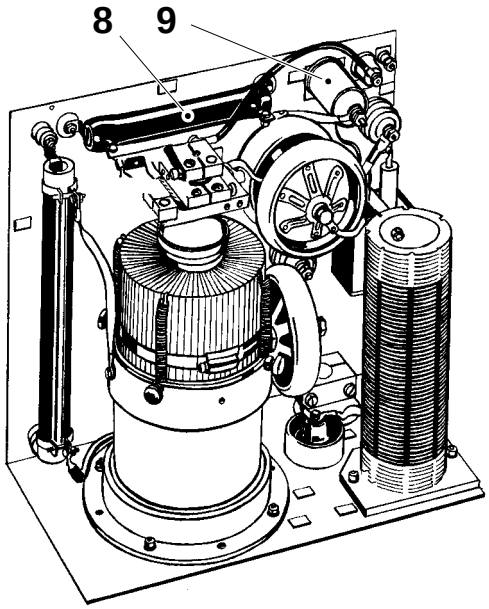

1 Connector X004
2 Transformer T104
3 Pulse card
4 Rectifier card
5 Pin 30 (–)
6 Pin 32 (+)
7 Spring
8 Resistor R401
9 Capacitor C406

Setting

WARNING!
Follow the safety precautions when working in the generator section!

Wide IS strip

Caution!
This setting affects the HF voltage for narrow IS strip.

a) Turn on the main power switch.

b) Measure the main voltage and record it.

c) Connect the HF voltmeter (1) to the connections on the inductor card.

d) With the machine in step **Production**, read the HF voltage and compare with the values in the table below.

Note
A voltage reading around 20 V implies that only one pole of the probe is in contact with the rail.

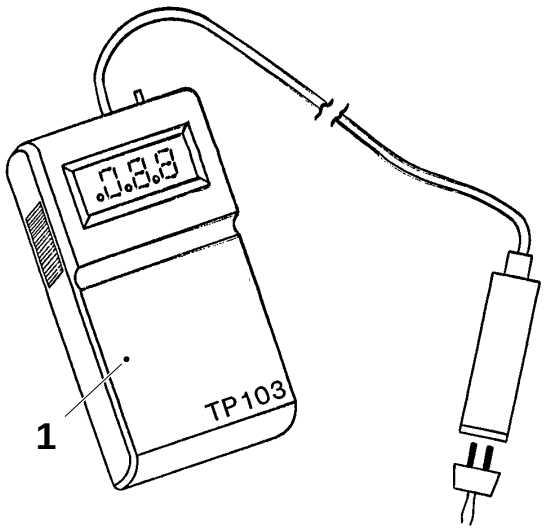

1 HF voltmeter TP103 (TP No. 67024)

Main voltage, V	HF voltage wide IS strip, V						
	125 S ml 29 mm	125 S ml 35 mm	180 B ml 35 mm	200 S ml 29 mm	200 S ml 35 mm	200 B ml 37.5 mm	250 B ml 37.5 mm
328/190	121	142	198	181	199	181	212
337/195	124	146	205	186	204	186	217
345/200	127	150	209	191	209	191	223
354/205	130	154	214	196	214	196	228
363/210	134	157	218	200	220	200	234
371/215	137	161	225	205	225	205	239
380/220	140	165	230	210	230	210	245
389/225	143	169	235	215	235	215	251
397/230	146	172	242	220	240	220	256
406/235	150	176	246	224	246	224	262
415/240	153	180	251	229	251	229	267
418/242	154	182	253	231	253	231	269

(Cont’d overleaf)

523

(Cont'd)

e) If required, adjust as follows:

f) Push **Short stop**.

g) Loosen the nuts (2) and the allen screw (3) (5 mm key) on both transformers. Increase or decrease the HF voltage by shifting the nuts up or down. Set both at the same value.

h) Retighten the allen screws and the nuts.

i) Repeat items b) – d) and set the HF voltage for the narrow IS strip.

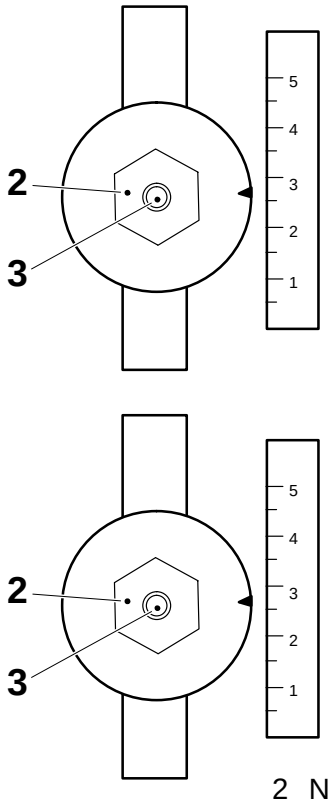

2 Nut
3 Allen screw

Narrow IS strip

Caution!
First set the HF voltage for wide IS strip.

a) Measure the main voltage and record it.

b) Connect two test leads between the HF voltmeter (1) and the inductor card.

c) With the machine in step **Production**, record the HF voltage and compare the values with the table below.

Main voltage, V	HF voltage narrow IS strip, V					
	125 S ml 7.5/29 mm	125 S ml 7.5/35 mm	180 B ml 35 mm	200 S ml 7.5 mm	200 B ml 7.5 mm	250 B ml 7.5 mm
323/187	60	61	–	94	61	94
328/190	60	62	–	95	62	95
337/195	62	64	–	97	64	97
345/200	64	65	–	100	65	100
354/205	65	67	–	102	67	102
363/210	67	69	–	105	69	105
371/215	68	70	–	107	70	107
380/220	70	72	–	110	72	110
389/225	72	74	–	112	74	112
397/230	73	75	–	115	75	115
406/235	75	77	–	117	77	117
415/240	76	79	–	120	79	120
418/242	77	79	–	121	79	121

(Cont'd overleaf)

(Cont'd)

d) If required, adjust as follows:

e) Stop the machine and turn the main switch to position **off** and padlock it.

f) Remove the cover of the oscillator section.

g) Loosen the screw (4) and shift the adjustment clip (5) on both resistors. The voltage **increases** if the clip is shifted towards plus, see fig. Tighten the screw.

h) Fit the cover and start the machine.

i) Check that the voltage is in accordance with the table. If not, repeat from item e).

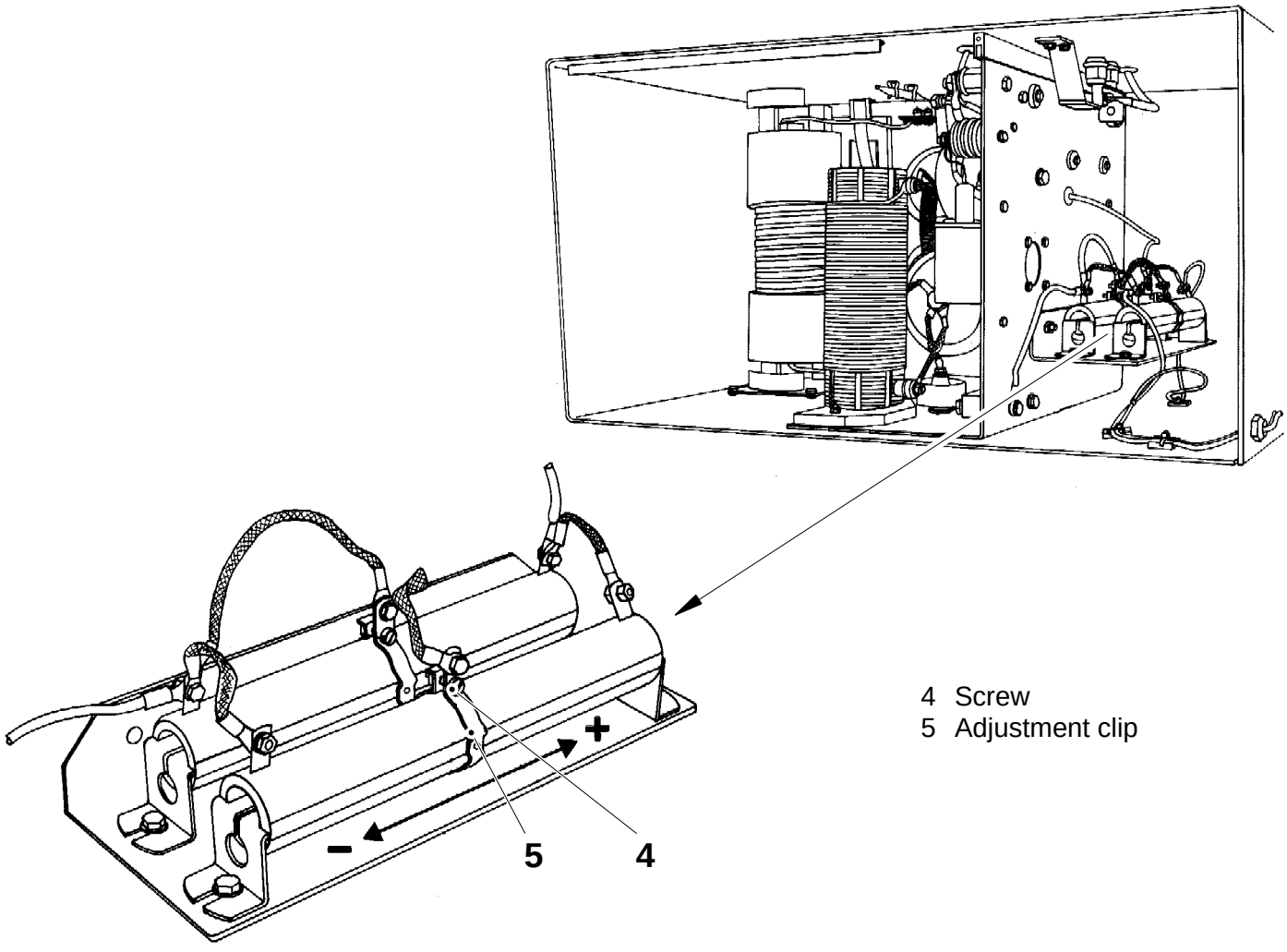

4 Screw
5 Adjustment clip

General

HF voltmeter TP 103 (TP No. 67024)

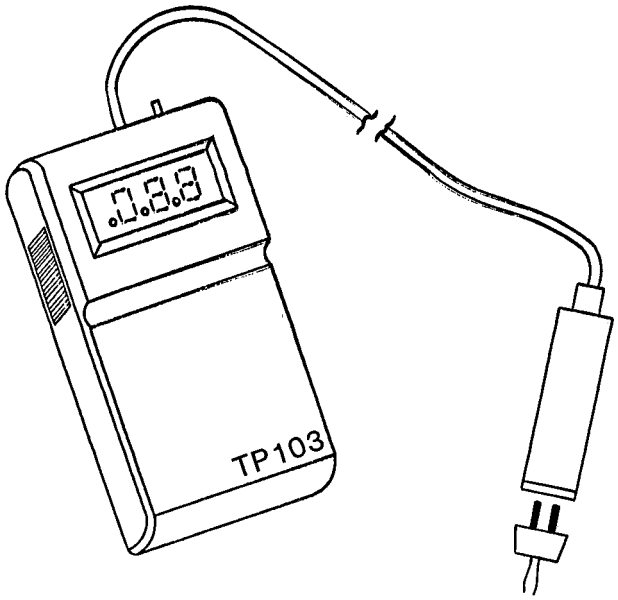

The instrument TP 103 used for measuring the HF voltage has a three digit display giving an immediate presentation of the actual HF voltage. The hold function retains the measured voltage until the next pulse is received. (A voltage fluctuation of ±1 V is normal.) Whenever a pulse is present the three decimal points are displayed.

When the battery voltage drops below 7.5 V, a ”BAT”-indication is shown in the upper left hand corner of the display. The instrument **can be used for about another hour** after the ”BAT”-indication appears.

The minimum voltage needed to trigger the voltmeter is around 20 V and the minimum pulse duration is around 50 ms.

Note
A voltage reading around 20 V implies only one pole of the probe is in contact with the rail.

Whenever the instrument is switched on, a random number is displayed. Disregard this number completely.

Checking

WARNING!
Follow the safety precautions when working in the generator section!

Check that the following details are clean and not worn and/or damaged:

- the high voltage section (1); clean with white spirit. Blow with dry compressed air
- the fan; if required, remove the fan and clean it
- all connections; replace defective screws and nuts and secure them with lacquer

1 High voltage section

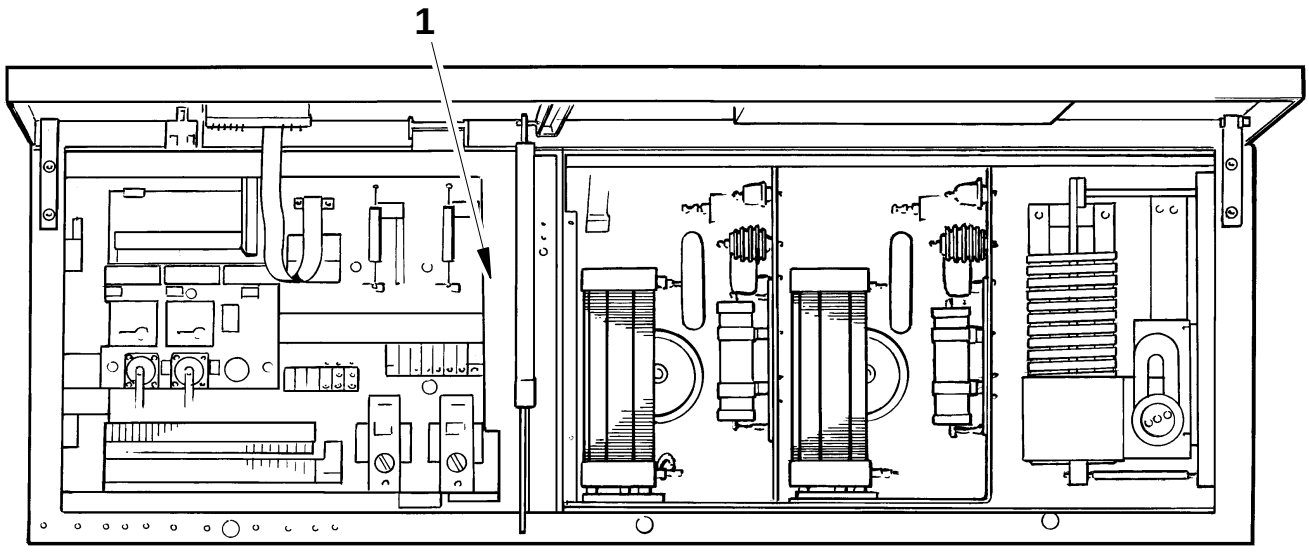

Checking

WARNING!
Follow the safety precautions when working in the generator section!

Caution!
Clean carefully. Contamination leads to flash-over and overheating.

a) Remove the oscillator modules, see page MM 1085–2X.

b) Remove the tube and clean its cooling flanges (3).

Note
Use compressed air and/or white spirit for cleaning.

c) Clean the tube socket (4) on the inside and the outside.

d) Clean the rest of the module.

e) Reinstall the tube.

f) Check all connections. Pay particular attention to the tube connectors. They must be parallel and a clearance of at least 3 mm must be maintained between the cathode (1) and the grid connectors and their leads (2).

g) Replace defective screws and nuts and secure them with lacquer.

h) Clean the HF transformers (5) and the capacitors.

i) Replace defective parts.

j) Reinstall the oscillator module.

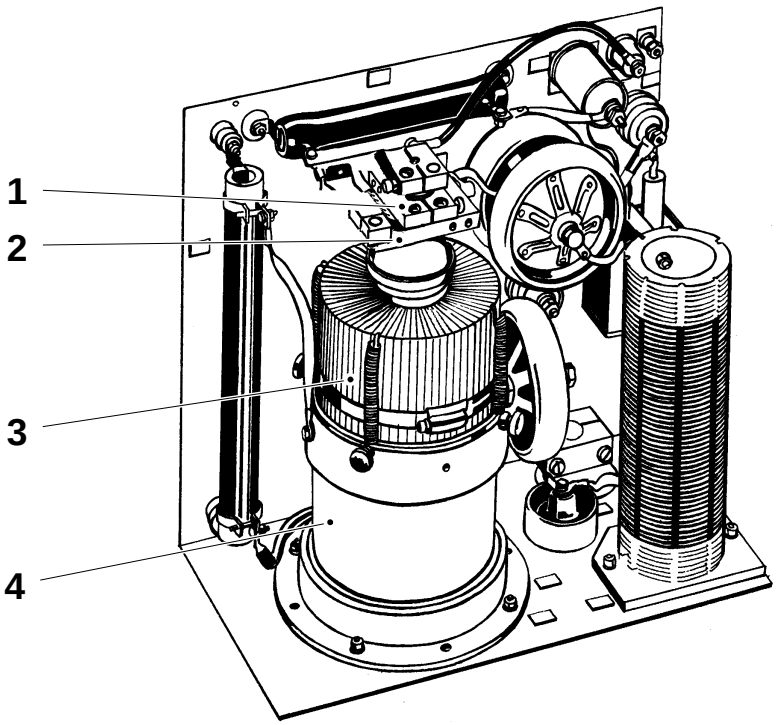

1 Cathode
2 Grid
3 Cooling flange
4 Tube socket
5 HF transformer

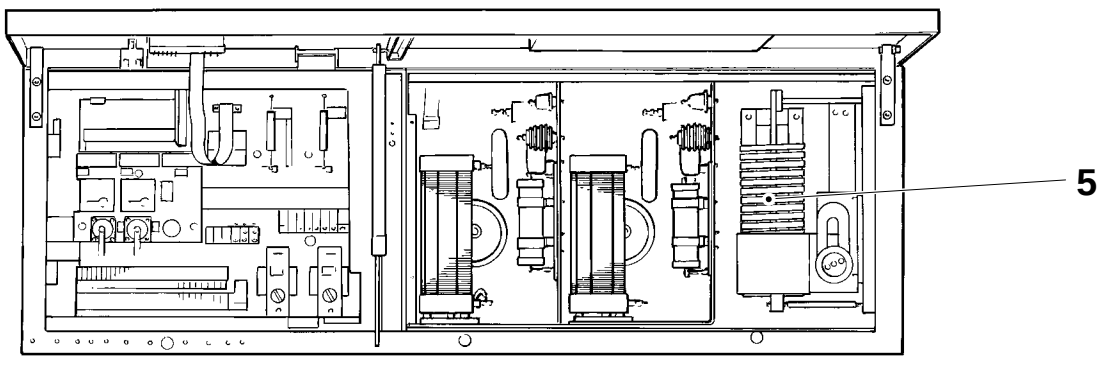

Removal

WARNING!
Follow the safety precautions when working in the generator section!

a) Undo the screws (1).

b) Disconnect and label the leads to connections (3), (4), (5) and (6), and the HF connector (2).

c) Carefully bend the leads to prevent damage to their insulation when the module is pulled out.

d) Carefully remove the module.

e) Reassemble in reverse order.

Note
If flash-over problems occur after installing a tube, check the tube connectors. After installation of a new tube, flash-over might occur inside the tube. This problem will disappear after resetting the overload relay three or four times.

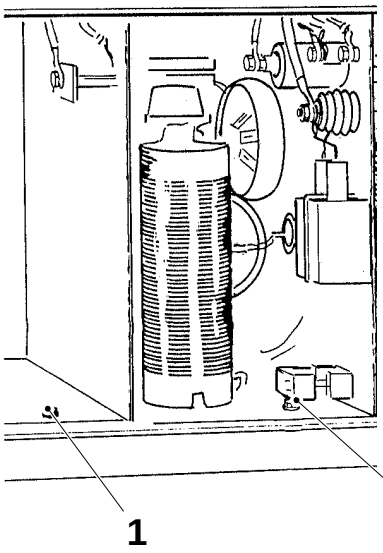

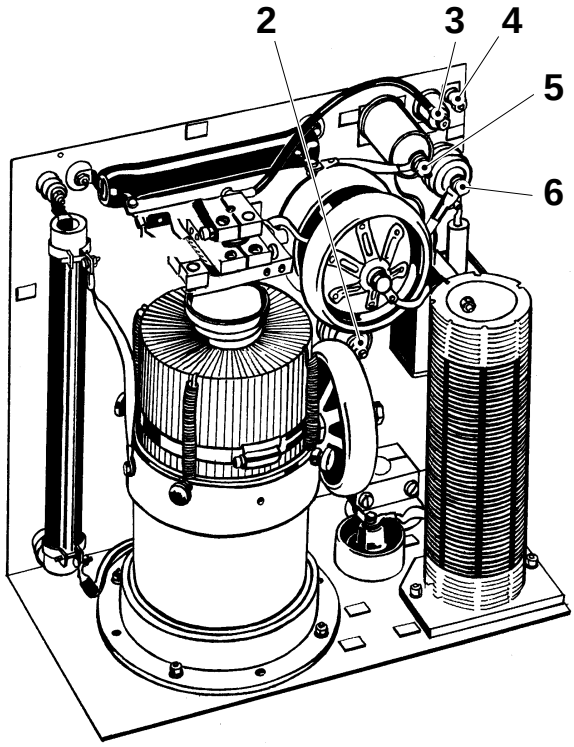

1 Screw
2 HF connector
3 Filament voltage connection
4 Ground
5 Blocking voltage connection
6 High voltage connection

Setting

Caution!
All changes in the program must be carried out by skilled or instructed persons only and should be done at the service station.

See the Yokogawa Program Manual (IM 4D3B1–20E) and the Instruction Manual (IM 4D3B4–01E) for further information.

To list the channel parameters, push the **List** button on the process recorder.

The following parameters are to be programmed in the process recorder:

Chart SP1 (F) 60 mm/h.

Chart SP2 (F) 60 mm/h.

Channel No.	Range	Record span	Scale span	Unit
Ch 01	50V	0.00 50.00	0.0 100.0	%
Ch 02	50V	–1.40 35.00	0.0 100.0	%
Ch 03	50V	–2.50 26.00	0.0 100.0	%
Ch 04	Type K	0.00 200.00	–	˚C
Ch 05	Type K	0.00 200.00	–	˚C
Ch 06	Type K	0.00 400.00	–	˚C

The measuring range for the voltage channels is to be 35 (linear scaling).