SPC

Spare Parts Catalogue

TBA/9 140V

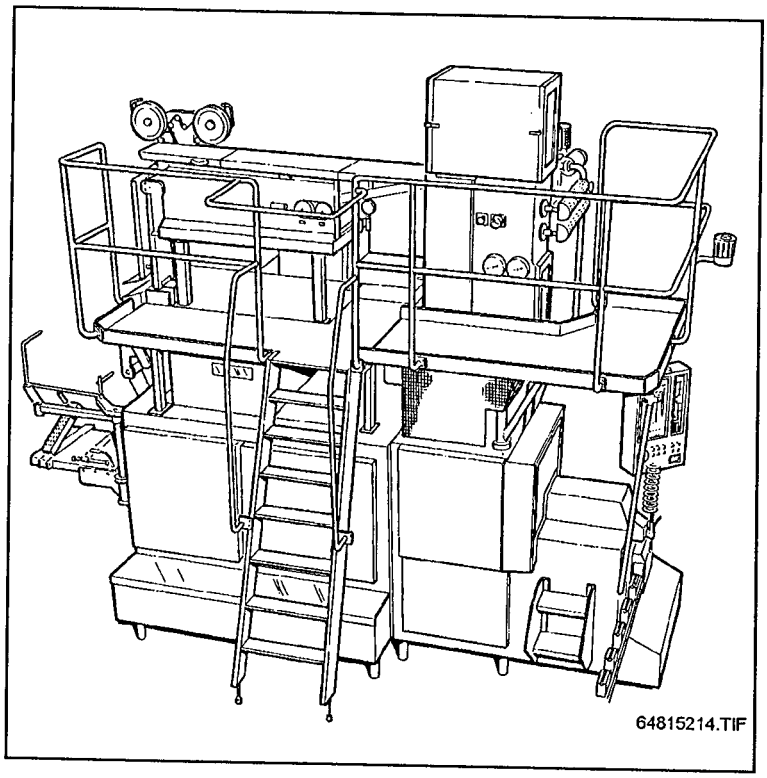

Tetra Pak

Doc No SPC-80236-2

This document is valid for:

Series No/Machine No Sign.

SPC

Spare Parts Catalogue

Tetra Brik Aseptic
TBA/9
648152-140V

Contents Page No

Superstructure
648111-100V 3

Machine Body
648102-100V 127

Drive
648103-090V 227

Jaw System
648104-100V 261

Final Folder
648105-100V 339

Service Unit
648106-100V 421

Strip Applicator
648107-100V 593

Opening Arrangement
648118-090V 693

Accessories
648109-100V 835

Installed Extra Equipments
To check your actual machine data and eventual installed extra equipments, check the machine specification, supplied on machine delivery!

Order/add necessary documents.

Issue 9405

Tetra Pak

Tetra Brik Packaging Systems AB

Service

When ordering spare parts for your machine, contact the nearest Tetra Pak service station. You will find a list of all service stations at the end of this publication.

Manufacturer

This machine is produced by:

Tetra Brik Packaging Systems AB
Ruben Rausings gata
S-221 86 LUND
Sweden

Tetra Brik Packaging Systems S.p.A.
Via Delfini 1
I-411 00 MODENA
Italy

Machine Identification

The machine plate on the right is an example of the type of machine plate attached to the machine frame. The plate carries data needed when contacting Tetra Pak concerning this particular machine.

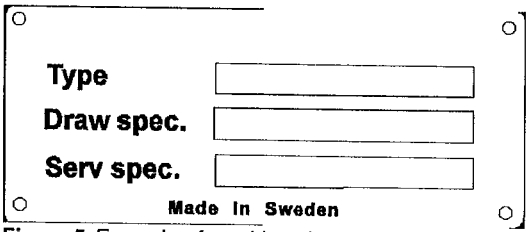

Figure 5 *Example of machine plate*

The location of the different machine plates is shown on the page "Location of machine number plates", page I-7.

Document Information

Purpose of the Spare Parts Catalogue

The purpose of the Spare Parts Catalogue (SPC) is to provide the service technicians and contact personnel with information on how to find and order spare parts for repairing and servicing the machine.

For instructions on how to replace parts and adjust machine setup, see the Maintenance manual.

Design Modifications
The content of this document is in accordance with the design and construction of the machine at the time it was delivered from the Tetra Pak machine production facility.

Document producer
This document has been produced by:

Tetra Brik Packaging Systems
Technical Documentation
Via Delfini 1
I-411 00 MODENA
Italy

Further copies
Additional copies can be ordered from nearest Tetra Pak service station. Copies are also available directly from:

Tetra Pak P&PS Service AB
Central Technical Publications
Ruben Rausings gata
S-221 86 LUND
Sweden

When ordering technical publications, always quote the **document No** printed on the front cover of the document concerned.

Number of pages
This document contains a total number of ***28 introduction and 849 catalogue pages.***

Copyright
This document is protected under the Copyright Act and **must not be copied** without the express permission by Tetra Pak.

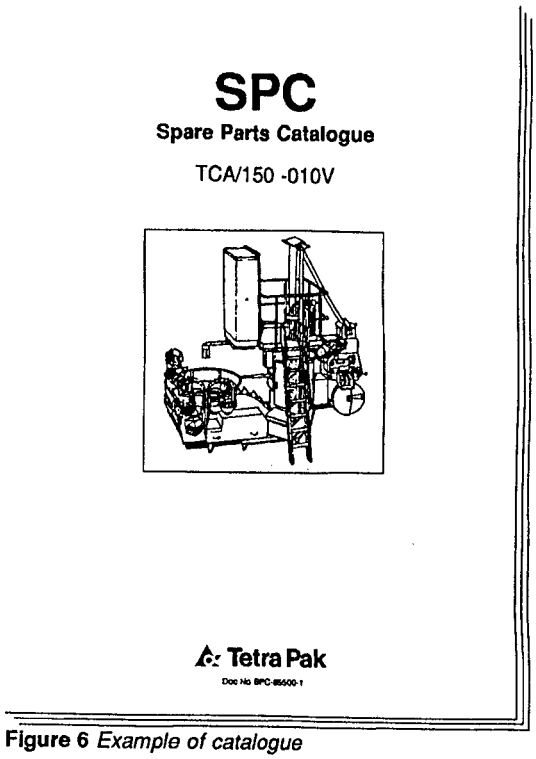

Figure 6 *Example of catalogue*

Tetra Pak Part Numbering System

Example of part/group number

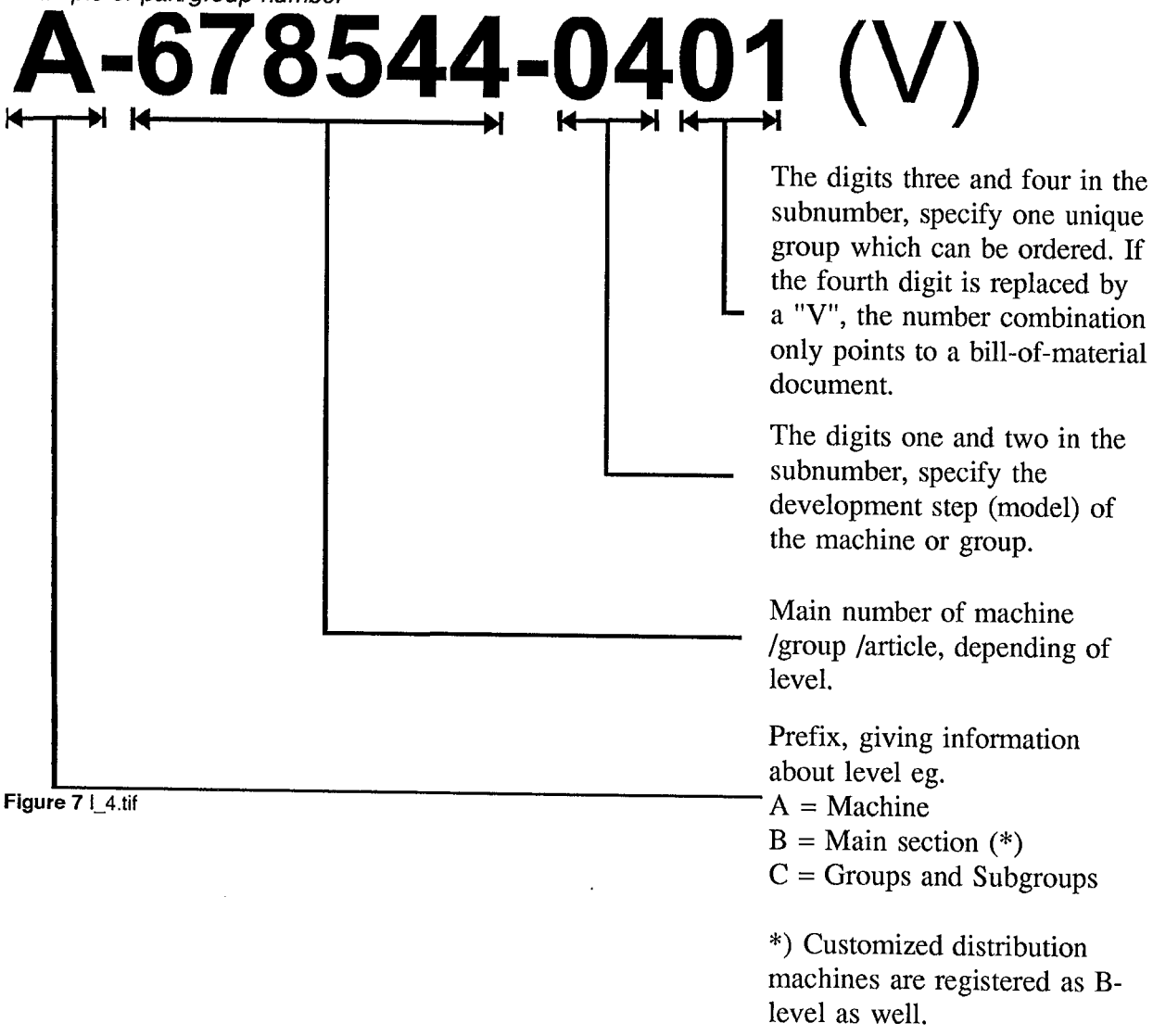

Figure 7 I_4.tif

Location of Machine Number Plates

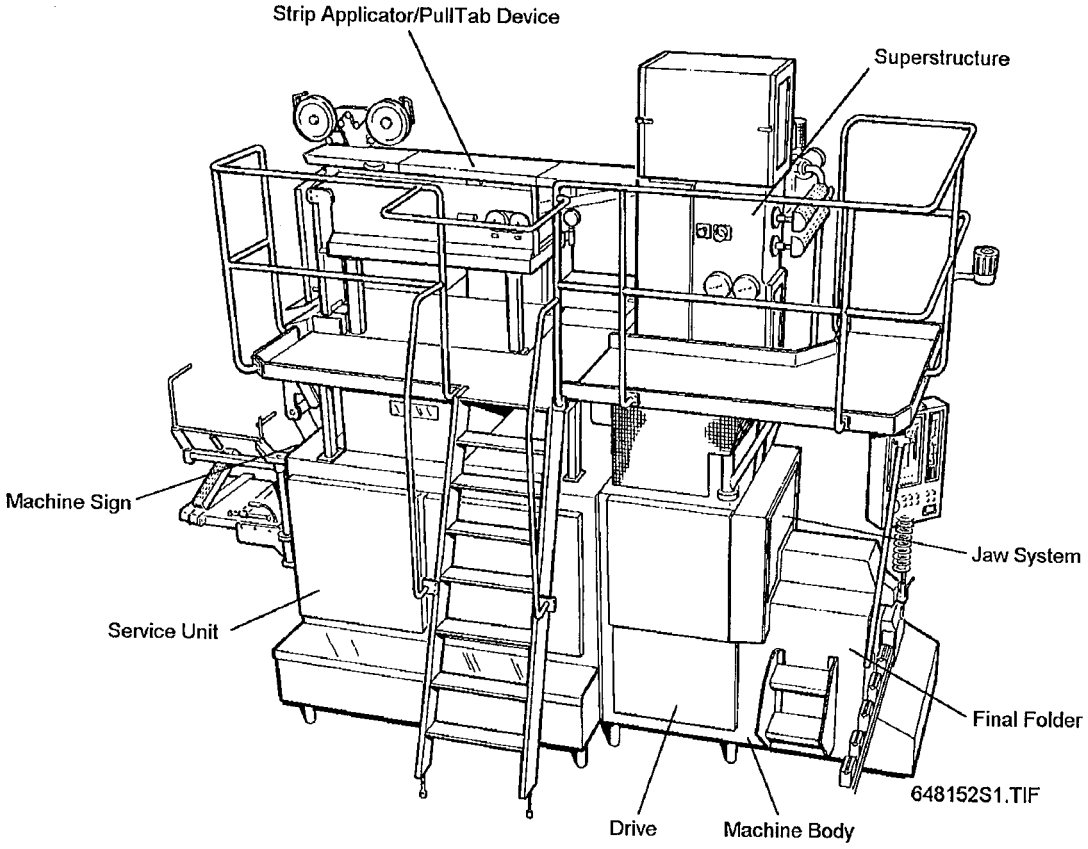

Machine Sign

Type	
Draw spec.	
Serv spec.	

Made In Sweden

Group Number Plate

TETRA PAK

№

For the correct machine data, check your machine specification, supplied on machine delivery!

How to find the correct Spare Part Number

A. Check that the data on your machine type sign, and/or machine specification corresponds with the catalogue, in which you are looking at right now. If not change/order an actual catalogue.

1. Main groups of the machine

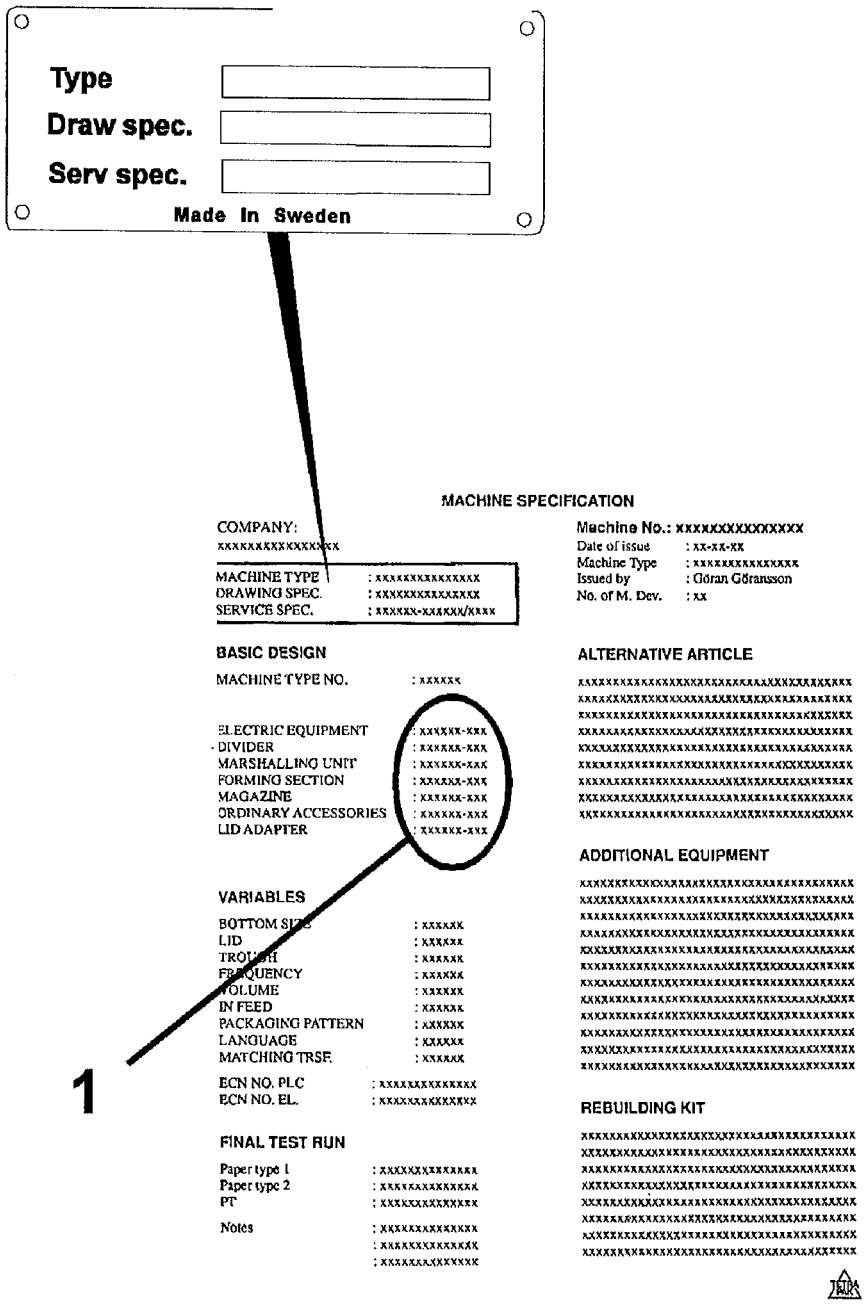

Figure 11 *Example of machine specification*

Tetra Pak

B. The second catalogue sheet contains a table of content for the main groups, included in the catalogue.
The information regarding machine and main group status MUST correspond with your machine specification.
Locate and choose the main groups page number, in which you want to search for spare parts.

1. Main group of the machine
2. Machine Type

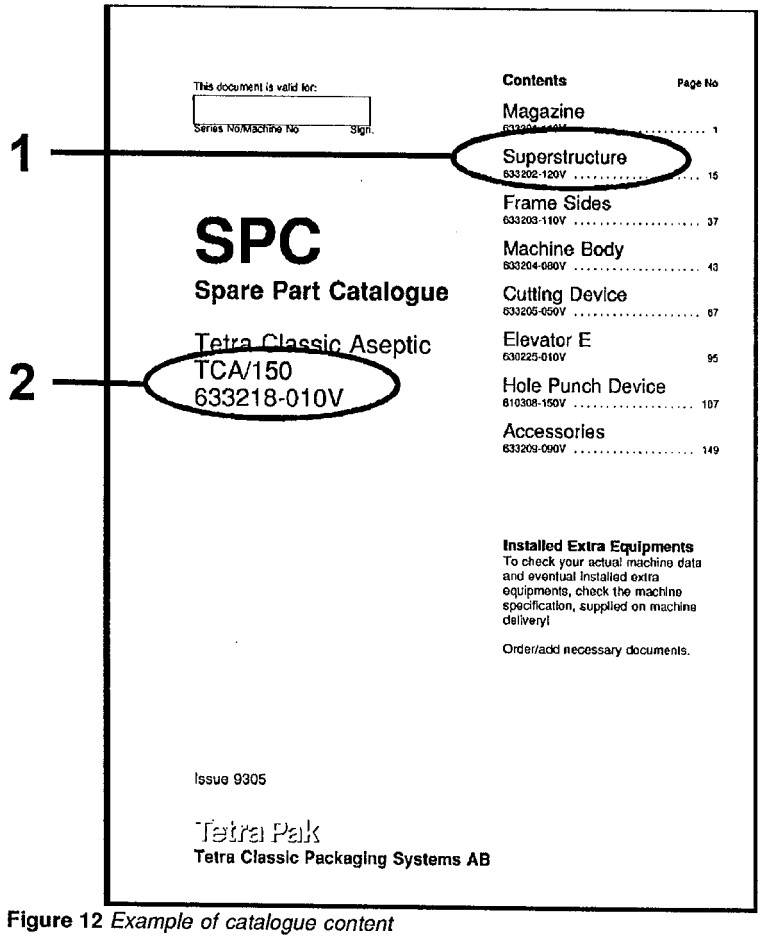

Figure 12 *Example of catalogue content*

Continued overleaf

How to find the correct Spare Part Number

C. Search in the main group illustration, the item number, which may hold your wanted spare part. Go to the text page below and read page number for the actual group.

4. Internal information, such as latest Alteration Message, bill-of-materials included in catalogue page.
5. Pos number on main group illustration
6. Pos numbering on illustration.
7. Illustration number in the SPC database.
8. Continuous page numbering through the document.
9. Pos number corresponding to illustration.
10. Group or article number, to spare parts store.
11. Group or article description.
12. Machine type including development status.
13. Group description.
14. Group number (bill-of-material) including development status.
15. Document number.

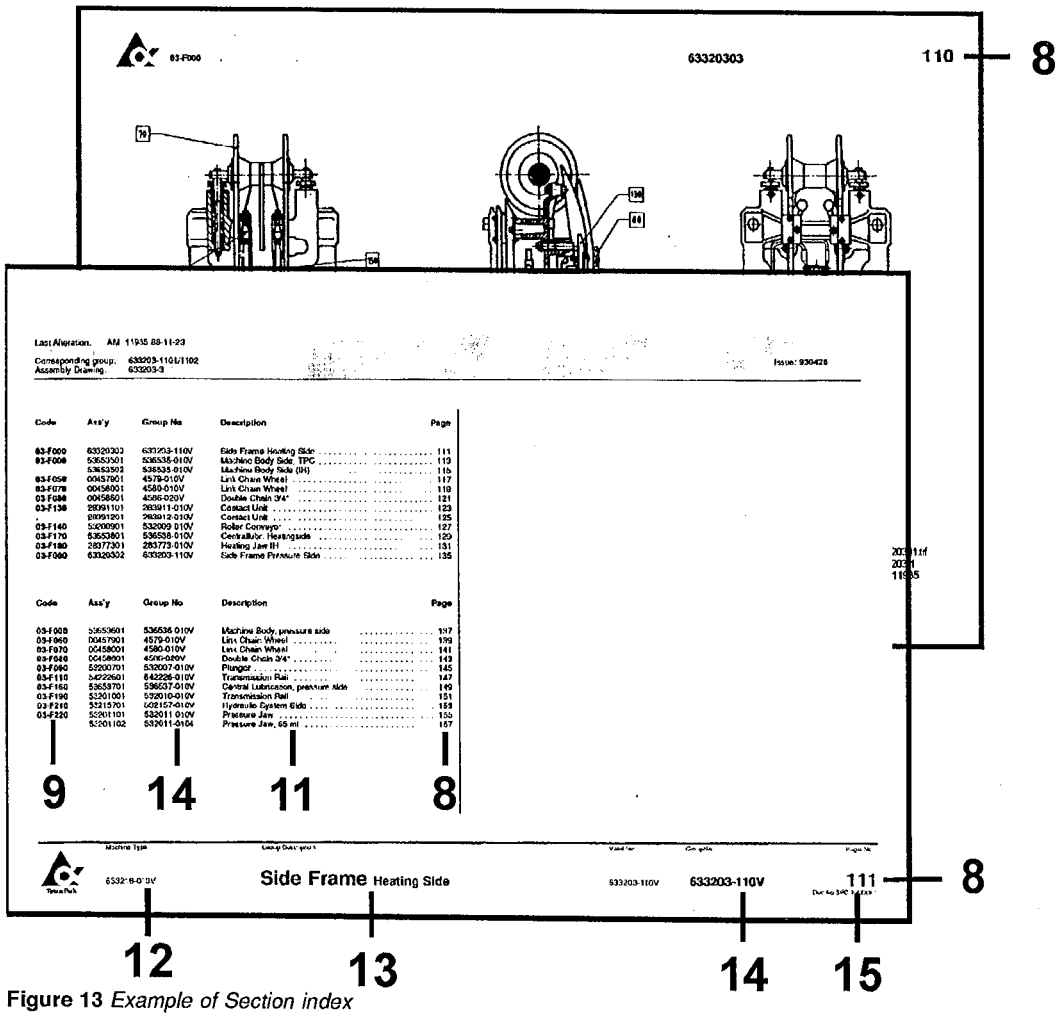

Figure 13 *Example of Section index*

D. Continue to the found page number, and search in the illustration, for your spare part. Go to the text row for the found item number, and read the part number. Take eventual variant headings in consideration; if you are unsure, read your machine specification.

16. Variant heading, eg volume, left/right etc.
17. Heading for common parts.
18. SP = Code for articles, which are included into various spare part kits.
    - U = Kit 101, start up parts supplied on machine delivery.
    - P = Kit 102, production parts to be held at production site workshop.
    - S = Kit 103, overhaul parts to be held at service stations store.
    - C = Kit 104, security parts to be avaiable at the central store.
19. UN = Short code for measure units eg mm, kg etc.
20. Qty = Number of item needed in the complete assembly.

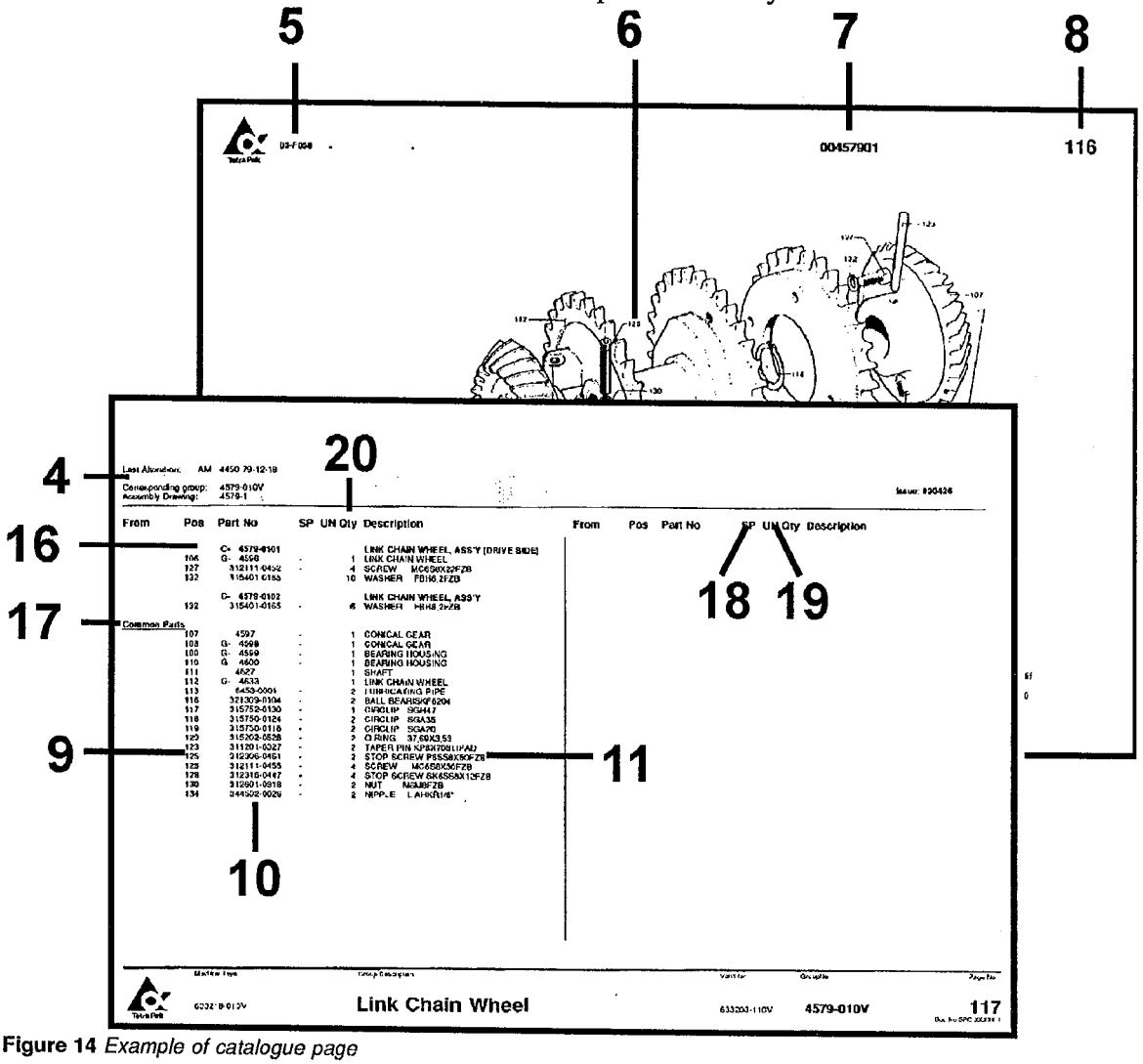

Figure 14 *Example of catalogue page*

On the page overleaf you will find a complete page number index, for the catalogue, sorted in both alfabetical and numerical group number order. A similar index will be found at the beginning of each main section, containing the sections pages in geographical structure/page number order.

Alfabetical group number index

Pos	Group No	Description	Page
648109-F040	491942-010V	(Paper)Reel Trolley	841
440630-F010	539209-010V	A-Cylinder	67
648109-F110	499082-010V	Adapter, Type 1	849
752646-F004	543143-010V	Adjustment Device	677
752645-F004	543143-010V	Adjustment Device	663
752914-F004	543143-010V	Adjustment Device	649
752913-F004	543143-010V	Adjustment Device	637
978739-F001	456757-020V	Air Injector	503
648102-F130	271414-020V	Air Jet Gun	157
648111-F120	272025-030V	Air Knife	33
648111-F140	469501-040V	Air Nozzle	37
	978740-010V	Air Panel TBA/9	515
	978740-010V	Air Panel TB/9	517
	978740-010V	Air Panel TB/9	519
978738-F002	978740-010V	Air Panel TBA/9	513
648111-F020	271181-040V	Air Super-Heater	5
	68917-010V	Angle indicator	559
272560-F005	440630-020V	AP Valve	65
648103-F030	256197-050V	Arm	233
648111-F230	272021-060V	Aseptic Chamber	59
	272021-060V	Aseptic Chamber	61
456836-F040	752495-010V	Attachment	111
440630-F120	539211-010V	B-Cylinder	71
648118-F200	294695-010V	Back Feeder	743
648111-F110	256014-060V	Bath	25
	256014-060V	Bath	27
648103-F070	256199-040V	Belt Stretcher	239
533844-F190	476080-020V	Belt Tightener	741
272404-F050	271017-030V	Bending Roller	433
648111-F030	272004-040V	Bending Roller	7
	272028-060V	Bending Roller	11
648111-F040	272028-060V	Bending Roller	9
648106-F010	272359-020V	Bending Roller	423
272404-F030	272473-010V	Bending Roller	429
648118-F180	533844-010V	Bending Roller	739
648107-F650	560202-010V	Bending Roller Rear TB/9	689
648107-F020	752627-010V	Bending Roller Rear	599
648107-F030	752628-020V	Bending Roller Front	601
648118-F550	490610-040V	Bending Rollers, LS-Strip	819
648118-F580	554346-010V	Black Tape Detector	823
751691-F105	271168-040V	Block	563
490600-F490	484858-030V	Bobbin	797
490600-F490	547756-010V	Bobbin	799
441000-F060	7003-010V	Bobbin	607
	7003-010V	Bobbin	801
648105-F150	256674-030V	Bottom Valve	373
456460-F400	751332-010V	Bracket	215
751900-F400	751332-010V	Bracket	221
456459-F400	751332-010V	Bracket	209
	554360-010V	Brake	813
648118-F530	554360-010V	Brake	811
272404-F090	751478-020V	Brake	447
648118-F170	469634-010V	Busbar	737
440630-F110	539210-010V	C-Cylinder	69
648105-F300	441850-040V	Cable Assembly	415
648107-F600	752889-010V	Cable Duct	687
648106-F160	271569-0501	Cable Track TBA/9	479
	271569-0502	Cable Track TBA/9C	481
	271569-0503	Cable Track TB/9	483
648111-F380	469374-040V	Cable Trench	107
648111-F090	272024-040V	Calender Roller	23
648105-F200	272765-070V	Cantilever	385
490600-F510	484950-020V	Cantilever	807
648106-F020	272404-070V	Carriage	425

Tetra Pak

Alfabetical group number index

Pos	Group No	Description	Page
272404-F025	272788-010V	Carriage	427
272404-F070	271454-020V	Catch Handle	443
272765-F160	272652-030V	Chain Tensioner	389
295310-F225	491871-010V	Chain Tensioner	401
648111-F170	256084-050V	Change-Over Valve	43
456976-F015	476859-020V	Change-Over Valve	51
440630-F130	541163-010V	Clamp Ring	73
440630-F140	541164-010V	Clamp Ring	75
272765-F170	978048-010V	Clamping Element	391
648109-F050	295904-010V	Clamping Piece	843
648109-F020	295262-060V	Cleaning Pipe	839
271261-F070	271261-050V	Cleaning System	145
648105-F230	456588-030V	Cleaning System	403
648111-F390	456836-040V	Cleaning System	109
67379-F130/F210	68474-010V	Coil	315
67379-F130/F210	68474-010V	Coil	323
648111-F180	469452-030V	Compressor Unit	45
648111-F180	751800-020V	Compressor Unit TBA/9 C	47
648111-F190	456976-050V	Conduit	49
648104-F240	257381-030V	Connection Block	331
648104-F250	257382-030V	Connection Block	333
752784-F010	451348-020V	Connection Box	557
441850-F010	456435-040V	Connection Box	417
456100-F030	456827-020V	Connection Box	135
648118-F340	457856-020V	Connection Box	779
548057-F005	544390-010V	Connection Box	789
490600-F520	552013-010V	Connection Box	809
441000-F065	563088-010V	Connection Box	609
648106-F280	752784-010V	Connection Box	555
272404-F080	978604-010V	Connection Box	445
751352-F050	751406-010V	Connection Housing	547
751352-F060	527898-010V	Container	551
548057-F010	544389-010V	Control Panel	791
648109-F005	560846-010V	Conveyor Frame	837
648118-F130	283607-020V	Counter Jaw	725
648118-F130	283607-030V	Counter Jaw	727
	283607-030V	Counter Jaw, Hole 21 250ml	729
648118-F080	283614-020V	Counter Jaw	719
648118-F080	497534-030V	Counter Jaw	717
271699-F020	37894-010V	Counter Rail	469
648106-F130	751885-030V	Cover Plates TBA/9 C	463
648105-F240	271114-050V	Covering Panel	407
	271513-060V	Covering Plate	459
648106-F130	271513-060V	Covering Plate	457
648118-F320	469635-010V	Covering Plate	773
648103-F120	256806-030V	Crank	253
648111-F060	751088-030V	Crease Roller	15
648103-F090	256201-040V	Curve Pack TPC	243
648103-F100	256202-050V	Curve Pack IH	245
	256202-050V	Curve Pack IH	247
751691-F115	751689-010V	Curve Pack	565
	256204-050V	Cutting Jaw IH	267
	256204-050V	Cutting Jaw IH	265
648104-F010	256204-050V	Cutting Jaw TPC	263
	256205-050V	Cutting Jaw IH	271
	256205-050V	Cutting Jaw IH	273
648104-F020	256205-050V	Cutting Jaw TPC	269
256208-F010	978763-010V	Cutting Piece	285
648118-F400	548057-010V	Dating Unit	787
648107-F160	752645-020V	Dating Unit	651
	752645-020V	Dating Unit	655
	752645-020V	Dating Unit	653
648107-F160	752646-020V	Dating Unit	665
	752646-020V	Dating Unit	669

Alfabetical group number index

Pos	Group No	Description	Page
	752646-020V	Dating Unit	667
	752913-010V	Dating Unit TB/9 ST-R	629
648107-F160	752913-010V	Dating Unit TB/9 ST-R	627
648107-F160	752914-010V	Dating Unit TB/9 ST-ER	639
	752914-010V	Dating Unit TB/9 ST-ER	641
752913-F003	751718-010V	Dating Wheel Holder	635
752645-F003	751718-010V	Dating Wheel Holder	661
752914-F003	751718-010V	Dating Wheel Holder	647
752646-F003	751718-010V	Dating Wheel Holder	675
	256206-020V	Design Correction Device	277
648104-F030	256206-020V	Design Correction Device	275
	256207-020V	Design Correction Device	281
648104-F040	256207-020V	Design Correction Device	279
648106-F170	490761-010V	Detergent Pump	485
648105-F070	256437-020V	Disc Coupling	353
648105-F270	456560-010V	Discharge Chute	409
648105-F220	295310-070V	Discharge Unit	395
	295310-070V	Discharge Unit	397
648103-F130	491787-020V	Disconnection Link Right	255
648103-F140	491788-020V	Disconnection Link Left	257
271261-F080	491650-010V	Distributor Block	147
648111-F300	441486-040V	Divided Forming Ring	89
	441486-040V	Divided Forming Ring	91
648106-F100	256873-040V	Door	451
648102-F090	271442-030V	Door	149
648102-F100	271443-030V	Door	153
648106-F120	469535-010V	Door	455
648111-F130	491570-020V	Door	35
648111-F330	491579-020V	Door	97
751352-F070	553657-010V	Door	553
456696-F230	456688-020V	Drive Roller	749
648118-F150	476349-030V	Drive Shaft	733
648103-F000	648103-090V	Drive TB/TBA/9	227
648118-F250	283626-040V	Drive Unit	753
648105-F020	491850-010V	Drive Wheel	343
	456180-010V	Drop Chute	139
648102-F040	456180-010V	Drop Chute	137
648111-F320	295470-050V	El.Connection Box	95
648105-F090	256547-040V	Element	357
	256547-040V	Element	359
256547-F010	31390-010V	Element	361
	31390-011V	Element	363
	31390-012V	Element	365
648111-F080	469091-030V	Filler Tube	21
648105-F000	648105-100V	Final Folder TB/TBA/9	339
295310-F130	978720-010V	Finger	399
978739-F003	469118-020V	Flow Meter	509
648118-F030	469299-020V	Fluorescent Lamp	701
648105-F130	295218-010V	Folding Bar	369
648105-F120	295211-010V	Frame	367
648107-F150	752247-010V	Frame Dating Unit	625
648111-F400	491083-030V	Gauge Group	113
648111-F350	272407-020V	Generator	103
271699-F010	37877-030V	Heating Block	467
648103-F110	572760-010V	Hold-Down Device	249
648118-F020	457853-030V	Hood	699
978162-F005	978367-010V	Hood	619
	548031-020V	Hose Installation TB/9	817
648118-F540	548031-020V	Hose Installation TBA/9	815
648111-F150	256055-060V	Hot Air Element	39
648111-F260	256095-050V	Hot Air Element	79
271442-F005	544540-010V	Housemarks Set of Signs	151
648106-F360	491894-010V	Hydraulic System	573
648106-F260	751352-020V	Hydrogen Peroxide	531

Tetra Pak

Alfabetical group number index

Pos	Group No	Description	Page
572643-F100	67379-010V	IH Transformator I	321
572642-F100	67379-010V	IH Transformator I	313
648106-F290	751691-010V	Impulse Transmitter	561
648105-F050	256410-060V	Indexing Unit	347
752646-F002	434074-030V	Ink Unit	673
752914-F002	434074-030V	Ink Unit	645
752913-F002	434774-030V	Ink Unit	633
752645-F002	434774-030V	Ink Unit	659
648103-F080	256200-030V	Intermediary Shaft	241
648104-F000	648104-100V	Jaw System	261
978739-F004	469121-020V	Junction Block	511
648104-F050	256208-040V	Knife Holder	283
456457-F010	567034-010V	Ladder	163
752959-F010	751923-010V	Ladder	203
752958-F010	751923-010V	Ladder	193
752958-F020	751924-010V	Ladder	195
752959-F020	751924-010V	Ladder	205
648102-F210	572306-010V	Ladder TBA/9	223
648118-F300	552017-010V	Leg	767
648118-F300	457881-030V	Leg TBA/9	765
648106-F090	257146-020V	Lid	449
751398-F005	493652-010V	Lid	545
751373-F007	493652-010V	Lid	541
256014-F070	752173-010V	Lid	31
648118-F160	550128-010V	Lifter	735
456100-F020	441534-010V	Light Fixture	133
456458-F165	441535-010V	Light Fixture	173
	441535-010V	Light Fixture	181
456457-F165	441535-010V	Light Fixture	165
441307-F040	565462-010V	Lock Plate	87
648111-F050	255921-040V	Lower Filling Tube	13
	456309-050V	Lower Forming Ring	19
648111-F070	456309-050V	Lower Forming Ring	17
	256843-060V	Machine Body, Service Unit	525
	256843-060V	Machine Body, Service Unit	523
648106-F230	256843-060V	Machine Body, Service Unit	521
648105-F190	441695-020V	Machine Body	383
648102-F010	456100-030V	Machine Body	129
	456100-030V	Machine Body	131
648107-F400	456923-030V	Machine Body TB/TBA/9	679
648118-F010	457867-020V	Machine Body	695
	457867-020V	Machine Body	697
648102-F000	648102-100V	Machine Body TB/TBA/9	127
648118-F310	546285-010V	Magazine	769
648103-F020	271128-040V	Motor	231
648107-F120	272408-050V	Mounting Plate	615
648111-F250	441304-040V	Movable Forming Ring	77
	491536-010V	Non-Return Valve	505
648106-F350	491890-010V	Oil Tank	571
648102-F110	256665-020V	Opening	155
648106-F110	256875-020V	Opening	453
648111-F420	751702-010V	Opening	119
648118-F330	536859-020V	Panel TB/9	775
	536859-020V	Panel TBA/9	777
648118-F220	456696-030V	Paper Feed	747
648107-F130	752244-020V	Paper Guard TBA/9	621
648107-F130	978162-010V	Paper Guard TB/9	617
648107-F140	978179-010V	Paper Guard (rear)	623
272404-F052	271934-030V	Paper Guide Plate	435
648118-F380	547601-010V	Paper Guide	783
272404-F054	751968-010V	Paper Guide	437
648106-F150	271992-020V	Paper Holder	477
648118-F260	552030-010V	Paper Magazine TBA/9	755
648118-F260	552036-010V	Paper Magazine TB/9	759

Alfabetical group number index

Pos	Group No	Description	Page
272404-F060	458383-020V	Paper Reel Holder	439
272404-F060	458384-010V	Paper Reel Holder	441
648111-F210	456556-020V	Peroxide Pipe	55
751373-F005	751393-010V	Peroxide Pump	539
751352-F030	751373-010V	Peroxide Tank	537
751352-F040	751398-020V	Peroxide Tank	543
648109-F090	531345-010V	Personal Protect. Eq H_2O_2	845
648111-F410	491976-020V	Photocell Unit	115
	491976-020V	Photocell Unit	117
648102-F060	271562-080V	Pipe Work Machine Body	143
648106-F370	271866-060V	Pipe Work	575
	271866-060V	Pipe Work	585
	271866-060V	Pipe Work	587
	271866-060V	Pipe Work	581
	271866-060V	Pipe Work	577
	271866-060V	Pipe Work	583
	271866-060V	Pipe Work	579
648111-F370	295045-070V	Pipe Work Pneumatic	105
648105-F140	456455-030V	Pipe Work	371
648107-F450	456935-030V	Pipe Work TBA/9	683
751352-F020	491207-030V	Pipe Work TBA/9	533
	491207-030V	Pipe Work TBA/9 C	535
	751860-010V	Platform	177
648102-F165	751860-010V	Platform	175
648102-F170	978158-010V	Platform Rear	183
648102-F150	456457-040V	Platform TB/9	159
648102-F160	456458-040V	Platform TBA/9	167
	456458-040V	Platform TBA/9	169
648105-F060	256436-060V	Pressure Device	349
	256436-060V	Pressure Device	351
648104-F100	256212-050V	Pressure Jaw Right	295
648104-F110	256213-050V	Pressure Jaw Left	297
648104-F120	256214-040V	Pressure Rail IH	299
648104-F130	256215-040V	Pressure Rail TPC	301
648107-F010	246388-060V	Pressure Roller	597
648107-F110	272343-050V	Pressure Roller	613
456696-F240	283604-020V	Pressure Roller	751
752914-F001	293684-020V	Printing Wheel	643
752646-F001	293684-020V	Printing Wheel	671
752913-F001	293685-020V	Printing Wheel	631
752645-F001	293685-020V	Printing Wheel	657
648111-F240	272560-060V	Product Valve	63
271513-F005	752567-010V	Protective Casing TBA/9	461
648105-F160	256712-050V	Pull-Down Device	375
	256712-050V	Pull-Down Device	377
648118-F110	283605-010V	Pull Tab Sealing Unit	721
648118-F140	548331-010V	Pull Tab Feed	731
648118-F000	648118-090V	PullTab Device	693
648118-F040	548040-010V	Punch	703
978739-F002	456882-010V	Push Button Box	507
978158-F170	752958-010V	Railing / Platform C/C 2000mm	185
	752958-010V	Railing / Platform C/C 2000mm	187
	752958-010V	Railing / Platform C/C 2000mm	191
	752958-010V	Railing / Platform C/C 2000mm	189
	752959-010V	Railing/Platform C/C 2150mm	199
	752959-010V	Railing/Platform C/C 2150mm	201
978158-F170	752959-010V	Railing/Platform C/C 2150mm	197
648102-F180	456459-040V	Railing TB/9	207
648102-F190	456460-040V	Railing TBA/9	211
	456460-040V	Railing TBA/9	213
	751900-010V	Railing TBA/ C	219
648102-F192	751900-010V	Railing TBA/9 C	217
648118-F210	469173-010V	Reel	745
648109-F000	648109-100V	Regular Accessories	835

Tetra Pak

Alfabetical group number index

Pos	Group No	Description	Page
	572750-010V	Rocker Arm	251
552036-F280	283629-020V	Roller	761
552030-F280	283629-020V	Roller	757
272765-F150	441798-010V	Rotor	387
456588-F235	441811-010V	Rotor	405
295778-F010	499255-020V	Seal Kit	123
648118-F120	283606-020V	Sealing Jaw Pulltab	723
648118-F070	457866-030V	Sealing Jaw TBA/9	711
	457866-030V	Sealing Jaw TBA/9	713
648118-F070	531657-020V	Sealing Jaw	715
648105-F215	456567-010V	Separation Insert	393
648106-F000	648106-100V	Service Unit	421
456457-F005	544536-010V	Set of Signs	161
456458-F150	544536-010V	Set of Signs	171
	544536-010V	Set of Signs	179
648104-F080	752671-010V	Shock Absorber Version 1	291
648104-F090	752672-010V	Shock Absorber Version 2	293
648105-F290	456103-010V	Side Feeder	413
648103-F050	491814-020V	Slewing Bracket Right	235
648103-F060	491815-020V	Slewing Bracket Left	237
648118-F290	457937-020V	Sliding Glass	763
	295883-050V	Spacer Piece TB/9	529
256843-F005	295883-050V	Spacer Piece TBA/9	527
256014-F020	752957-010V	Splice Detector	29
648106-F140	271699-040V	Splicing Device	465
546285-F315	544420-010V	Splicing Device	771
	484984-020V	Splicing Device	805
490600-F500	484984-020V	Splicing Device	803
648105-F280	271387-030V	Spray Gun	411
648111-F220	272623-050V	Spray System	57
648104-F300	295523-040V	Start-Up Kit	335
648107-F500	295668-030V	Start-Up Kit	685
648111-F500	295778-040V	Start-Up Kit	121
648118-F600	469316-020V	Start-Up Kit	825
	469316-020V	Start-Up Kit	827
648106-F600	469384-010V	Start-Up Kit	589
	486955-020V	Start-Up Kit	831
648118-F610	486955-020V	Start-Up Kit	829
648105-F010	491225-010V	Station Chain	341
256712-F200	752664-010V	Steering	379
272404-F040	272084-030V	Stretcher	431
648107-F090	295891-030V	Strip Applicator	611
	648107-100V	Strip Applicator TBA/9	595
648107-F000	648107-100V	Strip Applicator TB/9	593
648107-F040	456032-010V	Strip Guide	603
648118-F050	547913-010V	Strip Guide	705
648118-F050	566280-010V	Strip Guide	707
648107-F050	441000-050V	Strip Holder	605
490600-F480	469736-040V	Strip Magazine	795
648118-F470	490600-040V	Strip Magazine Complete	793
648118-F060	283612-020V	Strip Sealer	709
648111-F200	456555-040V	Suction Pipe	53
648111-F000	648111-100V	Superstructure TBA/9	3
648104-F230	256223-040V	Support Roller	329
271699-F040	271626-030V	Suspension Arm	473
648118-F570	554341-010V	Switch (monitor)	821
271699-F050	271641-020V	Table	475
271699-F030	450101-020V	Tearing Device	471
648105-F040	491846-020V	Tension Sprocket	345
648109-F100	77099-020V	Tool Kit	847
648102-F050	571918-010V	Transmission	141
648104-F190	572642-010V	Transmission IH Right	311
648104-F200	572643-010V	Transmission IH Left	319
648104-F200	256220-030V	Transmission Left	317

Alfabetical group number index

Pos	Group No	Description	Page
648104-F190	256219-030V	Transmission Right	309
648107-F450	752898-010V	Tube Assembling TB/9	681
648111-F340	469781-030V	Tube Flushing Device Without Pull Tab	99
	469781-030V	Tube Flushing Device With Pull Tab	101
648118-F350	457857-030V	Upper Cable Duct	781
	441307-030V	Upper Tube Support 125ml	83
648111-F270	441307-030V	Upper Tube Support 284ml -180ml	81
	441307-030V	Upper Tube Support 160ml 200ml/250ml Slim	85
648111-F310	271169-040V	Valve	93
648111-F160	272337-040V	Valve	41
751406-F005	751410-010V	Valve Panel	549
	978738-010V	Valve Panel TBA/9	489
648106-F180	978738-010V	Valve Panel TBA/9	487
	978738-010V	Valve Panel TB/9	493
	978738-010V	Valve Panel TB/9	491
648104-F210	256221-020V	Volume Curve Piece	325
648104-F220	256222-020V	Volume Curve Piece	327
648104-F060	256209-030V	Volume Flap	287
648104-F070	256210-030V	Volume Flap	289
648118-F390	456679-010V	Waste Box	785
	978739-010V	Water Panel	501
	978739-010V	Water Panel TB/9	499
	978739-010V	Water Panel TBA/9	497
978738-F001	978739-010V	Water Panel TBA/9	495
648104-F160	256217-040V	Way	307
648106-F320	271468-040V	Way	567
648106-F330	271469-020V	Way	569
648105-F180	491259-020V	Way	381
648103-F010	256173-050V	Worm Gear	229
648105-F080	256438-020V	Worm Gear	355
648104-F140	256951-040V	Yoke	303
648104-F150	256952-040V	Yoke	305

Tetra Pak

Numerical group number index

Pos	Group No	Description	Page
648107-F010	246388-060V	Pressure Roller	597
648111-F050	255921-040V	Lower Filling Tube	13
648111-F110	256014-060V	Bath	25
	256014-060V	Bath	27
648111-F150	256055-060V	Hot Air Element	39
648111-F170	256084-050V	Change-Over Valve	43
648111-F260	256095-050V	Hot Air Element	79
648103-F010	256173-050V	Worm Gear	229
648103-F030	256197-050V	Arm	233
648103-F070	256199-040V	Belt Stretcher	239
648103-F080	256200-030V	Intermediary Shaft	241
648103-F090	256201-040V	Curve Pack TPC	243
648103-F100	256202-050V	Curve Pack IH	245
	256202-050V	Curve Pack IH	247
	256204-050V	Cutting Jaw IH	267
648104-F010	256204-050V	Cutting Jaw TPC	263
	256204-050V	Cutting Jaw IH	265
	256205-050V	Cutting Jaw IH	273
648104-F020	256205-050V	Cutting Jaw TPC	269
	256205-050V	Cutting Jaw IH	271
648104-F030	256206-020V	Design Correction Device	275
	256206-020V	Design Correction Device	277
	256207-020V	Design Correction Device	281
648104-F040	256207-020V	Design Correction Device	279
648104-F050	256208-040V	Knife Holder	283
648104-F060	256209-030V	Volume Flap	287
648104-F070	256210-030V	Volume Flap	289
648104-F100	256212-050V	Pressure Jaw Right	295
648104-F110	256213-050V	Pressure Jaw Left	297
648104-F120	256214-040V	Pressure Rail IH	299
648104-F130	256215-040V	Pressure Rail TPC	301
648104-F160	256217-040V	Way	307
648104-F190	256219-030V	Transmission Right	309
648104-F200	256220-030V	Transmission Left	317
648104-F210	256221-020V	Volume Curve Piece	325
648104-F220	256222-020V	Volume Curve Piece	327
648104-F230	256223-040V	Support Roller	329
648105-F050	256410-060V	Indexing Unit	347
648105-F060	256436-060V	Pressure Device	349
	256436-060V	Pressure Device	351
648105-F070	256437-020V	Disc Coupling	353
648105-F080	256438-020V	Worm Gear	355
648105-F090	256547-040V	Element	357
	256547-040V	Element	359
648102-F110	256665-020V	Opening	155
648105-F150	256674-030V	Bottom Valve	373
648105-F160	256712-050V	Pull-Down Device	375
	256712-050V	Pull-Down Device	377
648103-F120	256806-030V	Crank	253
648106-F230	256843-060V	Machine Body, Service Unit	521
	256843-060V	Machine Body, Service Unit	525
	256843-060V	Machine Body, Service Unit	523
648106-F100	256873-040V	Door	451
648106-F110	256875-020V	Opening	453
648104-F140	256951-040V	Yoke	303
648104-F150	256952-040V	Yoke	305
648106-F090	257146-020V	Lid	449
648104-F240	257381-030V	Connection Block	331
648104-F250	257382-030V	Connection Block	333
272404-F050	271017-030V	Bending Roller	433
648105-F240	271114-050V	Covering Panel	407
648103-F020	271128-040V	Motor	231
751691-F105	271168-040V	Block	563
648111-F310	271169-040V	Valve	93

Numerical group number index

Pos	Group No	Description	Page
648111-F020	271181-040V	Air Super-Heater	5
271261-F070	271261-050V	Cleaning System	145
648105-F280	271387-030V	Spray Gun	411
648102-F130	271414-020V	Air Jet Gun	157
648102-F090	271442-030V	Door	149
648102-F100	271443-030V	Door	153
272404-F070	271454-020V	Catch Handle	443
648106-F320	271468-040V	Way	567
648106-F330	271469-020V	Way	569
	271513-060V	Covering Plate	459
648106-F130	271513-060V	Covering Plate	457
648102-F060	271562-080V	Pipe Work Machine Body	143
648106-F160	271569-0501	Cable Track TBA/9	479
	271569-0502	Cable Track TBA/9C	481
	271569-0503	Cable Track TB/9	483
271699-F040	271626-030V	Suspension Arm	473
271699-F050	271641-020V	Table	475
648106-F140	271699-040V	Splicing Device	465
	271866-060V	Pipe Work	583
	271866-060V	Pipe Work	579
	271866-060V	Pipe Work	577
	271866-060V	Pipe Work	581
	271866-060V	Pipe Work	585
648106-F370	271866-060V	Pipe Work	575
	271866-060V	Pipe Work	587
272404-F052	271934-030V	Paper Guide Plate	435
648106-F150	271992-020V	Paper Holder	477
648111-F030	272004-040V	Bending Roller	7
648111-F230	272021-060V	Aseptic Chamber	59
	272021-060V	Aseptic Chamber	61
648111-F090	272024-040V	Calender Roller	23
648111-F120	272025-030V	Air Knife	33
648111-F040	272028-060V	Bending Roller	9
	272028-060V	Bending Roller	11
272404-F040	272084-030V	Stretcher	431
648111-F160	272337-040V	Valve	41
648107-F110	272343-050V	Pressure Roller	613
648106-F010	272359-020V	Bending Roller	423
648106-F020	272404-070V	Carriage	425
648111-F350	272407-020V	Generator	103
648107-F120	272408-050V	Mounting Plate	615
272404-F030	272473-010V	Bending Roller	429
648111-F240	272560-060V	Product Valve	63
648111-F220	272623-050V	Spray System	57
272765-F160	272652-030V	Chain Tensioner	389
648105-F200	272765-070V	Cantilever	385
272404-F025	272788-010V	Carriage	427
456696-F240	283604-020V	Pressure Roller	751
648118-F110	283605-010V	Pull Tab Sealing Unit	721
648118-F120	283606-020V	Sealing Jaw Pulltab	723
648118-F130	283607-020V	Counter Jaw	725
	283607-030V	Counter Jaw, Hole 21 250ml	729
648118-F130	283607-030V	Counter Jaw	727
648118-F060	283612-020V	Strip Sealer	709
648118-F080	283614-020V	Counter Jaw	719
648118-F250	283626-040V	Drive Unit	753
552030-F280	283629-020V	Roller	757
552036-F280	283629-020V	Roller	761
752914-F001	293684-020V	Printing Wheel	643
752646-F001	293684-020V	Printing Wheel	671
752913-F001	293685-020V	Printing Wheel	631
752645-F001	293685-020V	Printing Wheel	657
648118-F200	294695-010V	Back Feeder	743
648111-F370	295045-070V	Pipe Work Pneumatic	105

Tetra Pak

Numerical group number index

Pos	Group No	Description		Page
648105-F120		295211-010V	Frame	367
648105-F130		295218-010V	Folding Bar	369
648109-F020		295262-060V	Cleaning Pipe	839
		295310-070V	Discharge Unit	397
648105-F220		295310-070V	Discharge Unit	395
648111-F320		295470-050V	El.Connection Box	95
648104-F300		295523-040V	Start-Up Kit	335
648107-F500		295668-030V	Start-Up Kit	685
648111-F500		295778-040V	Start-Up Kit	121
		295883-050V	Spacer Piece TB/9	529
256843-F005		295883-050V	Spacer Piece TBA/9	527
648107-F090		295891-030V	Strip Applicator	611
648109-F050		295904-010V	Clamping Piece	843
256547-F010		31390-010V	Element	361
		31390-011V	Element	363
		31390-012V	Element	365
271699-F010		37877-030V	Heating Block	467
271699-F020		37894-010V	Counter Rail	469
752914-F002		434074-030V	Ink Unit	645
752646-F002		434074-030V	Ink Unit	673
752913-F002		434774-030V	Ink Unit	633
752645-F002		434774-030V	Ink Unit	659
272560-F005		440630-020V	AP Valve	65
648107-F050		441000-050V	Strip Holder	605
648111-F250		441304-040V	Movable Forming Ring	77
		441307-030V	Upper Tube Support 160ml 200ml/250ml Slim	85
648111-F270		441307-030V	Upper Tube Support 284ml -180ml	81
		441307-030V	Upper Tube Support 125ml	83
		441486-040V	Divided Forming Ring	91
648111-F300		441486-040V	Divided Forming Ring	89
456100-F020		441534-010V	Light Fixture	133
		441535-010V	Light Fixture	181
456458-F165		441535-010V	Light Fixture	173
456457-F165		441535-010V	Light Fixture	165
648105-F190		441695-020V	Machine Body	383
272765-F150		441798-010V	Rotor	387
456588-F235		441811-010V	Rotor	405
648105-F300		441850-040V	Cable Assembly	415
271699-F030		450101-020V	Tearing Device	471
752784-F010		451348-020V	Connection Box	557
648107-F040		456032-010V	Strip Guide	603
		456100-030V	Machine Body	131
648102-F010		456100-030V	Machine Body	129
648105-F290		456103-010V	Side Feeder	413
		456180-010V	Drop Chute	139
648102-F040		456180-010V	Drop Chute	137
		456309-050V	Lower Forming Ring	19
648111-F070		456309-050V	Lower Forming Ring	17
441850-F010		456435-040V	Connection Box	417
648105-F140		456455-030V	Pipe Work	371
648102-F150		456457-040V	Platform TB/9	159
648102-F160		456458-040V	Platform TBA/9	167
		456458-040V	Platform TBA/9	169
648102-F180		456459-040V	Railing TB/9	207
		456460-040V	Railing TBA/9	213
648102-F190		456460-040V	Railing TBA/9	211
648111-F200		456555-040V	Suction Pipe	53
648111-F210		456556-020V	Peroxide Pipe	55
648105-F270		456560-010V	Discharge Chute	409
648105-F215		456567-010V	Separation Insert	393
648105-F230		456588-030V	Cleaning System	403
648118-F390		456679-010V	Waste Box	785
456696-F230		456688-020V	Drive Roller	749
648118-F220		456696-030V	Paper Feed	747

Numerical group number index

Pos	Group No	Description	Page
978739-F001	456757-020V	Air Injector	503
456100-F030	456827-020V	Connection Box	135
648111-F390	456836-040V	Cleaning System	109
978739-F002	456882-010V	Push Button Box	507
648107-F400	456923-030V	Machine Body TB/TBA/9	679
648107-F450	456935-030V	Pipe Work TBA/9	683
648111-F190	456976-050V	Conduit	49
648118-F020	457853-030V	Hood	699
648118-F340	457856-020V	Connection Box	779
648118-F350	457857-030V	Upper Cable Duct	781
	457866-030V	Sealing Jaw TBA/9	713
648118-F070	457866-030V	Sealing Jaw TBA/9	711
	457867-020V	Machine Body	697
648118-F010	457867-020V	Machine Body	695
648118-F300	457881-030V	Leg TBA/9	765
648118-F290	457937-020V	Sliding Glass	763
272404-F060	458383-020V	Paper Reel Holder	439
272404-F060	458384-010V	Paper Reel Holder	441
648111-F080	469091-030V	Filler Tube	21
978739-F003	469118-020V	Flow Meter	509
978739-F004	469121-020V	Junction Block	511
648118-F210	469173-010V	Reel	745
648118-F030	469299-020V	Fluorescent Lamp	701
648118-F600	469316-020V	Start-Up Kit	825
	469316-020V	Start-Up Kit	827
648111-F380	469374-040V	Cable Trench	107
648106-F600	469384-010V	Start-Up Kit	589
648111-F180	469452-030V	Compressor Unit	45
648111-F140	469501-040V	Air Nozzle	37
648106-F120	469535-010V	Door	455
648118-F170	469634-010V	Busbar	737
648118-F320	469635-010V	Covering Plate	773
490600-F480	469736-040V	Strip Magazine	795
	469781-030V	Tube Flushing Device With Pull Tab	101
648111-F340	469781-030V	Tube Flushing Device Without Pull Tab	99
533844-F190	476080-020V	Belt Tightener	741
648118-F150	476349-030V	Drive Shaft	733
456976-F015	476859-020V	Change-Over Valve	51
490600-F490	484858-030V	Bobbin	797
490600-F510	484950-020V	Cantilever	807
490600-F500	484984-020V	Splicing Device	803
	484984-020V	Splicing Device	805
	486955-020V	Start-Up Kit	831
648118-F610	486955-020V	Start-Up Kit	829
648118-F470	490600-040V	Strip Magazine Complete	793
648118-F550	490610-040V	Bending Rollers, LS-Strip	819
648106-F170	490761-010V	Detergent Pump	485
648111-F400	491083-030V	Gauge Group	113
751352-F020	491207-030V	Pipe Work TBA/9	533
	491207-030V	Pipe Work TBA/9 C	535
648105-F010	491225-010V	Station Chain	341
648105-F180	491259-020V	Way	381
	491536-010V	Non-Return Valve	505
648111-F130	491570-020V	Door	35
648111-F330	491579-020V	Door	97
271261-F080	491650-010V	Distributor Block	147
648103-F130	491787-020V	Disconnection Link Right	255
648103-F140	491788-020V	Disconnection Link Left	257
648103-F050	491814-020V	Slewing Bracket Right	235
648103-F060	491815-020V	Slewing Bracket Left	237
648105-F040	491846-020V	Tension Sprocket	345
648105-F020	491850-010V	Drive Wheel	343
295310-F225	491871-010V	Chain Tensioner	401
648106-F350	491890-010V	Oil Tank	571

Tetra Pak

Numerical group number index

Pos	Group No	Description	Page
648106-F360	491894-010V	Hydraulic System	573
648109-F040	491942-010V	(Paper)Reel Trolley	841
	491976-020V	Photocell Unit	117
648111-F410	491976-020V	Photocell Unit	115
751373-F007	493652-010V	Lid	541
751398-F005	493652-010V	Lid	545
648118-F080	497534-030V	Counter Jaw	717
648109-F110	499082-010V	Adapter, Type 1	849
295778-F010	499255-020V	Seal Kit	123
751352-F060	527898-010V	Container	551
648109-F090	531345-010V	Personal Protect. Eq H_2O_2	845
648118-F070	531657-020V	Sealing Jaw	715
648118-F180	533844-010V	Bending Roller	739
	536859-020V	Panel TBA/9	777
648118-F330	536859-020V	Panel TB/9	775
440630-F010	539209-010V	A-Cylinder	67
440630-F110	539210-010V	C-Cylinder	69
440630-F120	539211-010V	B-Cylinder	71
440630-F130	541163-010V	Clamp Ring	73
440630-F140	541164-010V	Clamp Ring	75
752914-F004	543143-010V	Adjustment Device	649
752645-F004	543143-010V	Adjustment Device	663
752913-F004	543143-010V	Adjustment Device	637
752646-F004	543143-010V	Adjustment Device	677
548057-F010	544389-010V	Control Panel	791
548057-F005	544390-010V	Connection Box	789
546285-F315	544420-010V	Splicing Device	771
	544536-010V	Set of Signs	179
456457-F005	544536-010V	Set of Signs	161
456458-F150	544536-010V	Set of Signs	171
271442-F005	544540-010V	Housemarks Set of Signs	151
648118-F310	546285-010V	Magazine	769
648118-F380	547601-010V	Paper Guide	783
490600-F490	547756-010V	Bobbin	799
648118-F050	547913-010V	Strip Guide	705
	548031-020V	Hose Installation TB/9	817
648118-F540	548031-020V	Hose Installation TBA/9	815
648118-F040	548040-010V	Punch	703
648118-F400	548057-010V	Dating Unit	787
648118-F140	548331-010V	Pull Tab Feed	731
648118-F160	550128-010V	Lifter	735
490600-F520	552013-010V	Connection Box	809
648118-F300	552017-010V	Leg	767
648118-F260	552030-010V	Paper Magazine TBA/9	755
648118-F260	552036-010V	Paper Magazine TB/9	759
751352-F070	553657-010V	Door	553
648118-F570	554341-010V	Switch (monitor)	821
648118-F580	554346-010V	Black Tape Detector	823
	554360-010V	Brake	813
648118-F530	554360-010V	Brake	811
648107-F650	560202-010V	Bending Roller Rear TB/9	689
648109-F005	560846-010V	Conveyor Frame	837
441000-F065	563088-010V	Connection Box	609
441307-F040	565462-010V	Lock Plate	87
648118-F050	566280-010V	Strip Guide	707
456457-F010	567034-010V	Ladder	163
648102-F050	571918-010V	Transmission	141
648102-F210	572306-010V	Ladder TBA/9	223
648104-F190	572642-010V	Transmission IH Right	311
648104-F200	572643-010V	Transmission IH Left	319
	572750-010V	Rocker Arm	251
648103-F110	572760-010V	Hold-Down Device	249
648102-F000	648102-100V	Machine Body TB/TBA/9	127
648103-F000	648103-090V	Drive TB/TBA/9	227

Numerical group number index

Pos	Group No	Description	Page
648104-F000	648104-100V	Jaw System	261
648105-F000	648105-100V	Final Folder TB/TBA/9	339
648106-F000	648106-100V	Service Unit	421
648107-F000	648107-100V	Strip Applicator TB/9	593
	648107-100V	Strip Applicator TBA/9	595
648109-F000	648109-100V	Regular Accessories	835
648111-F000	648111-100V	Superstructure TBA/9	3
648118-F000	648118-090V	PullTab Device	693
572643-F100	67379-010V	IH Transformator I	321
572642-F100	67379-010V	IH Transformator I	313
67379-F130/F210	68474-010V	Coil	315
67379-F130/F210	68474-010V	Coil	323
	68917-010V	Angle indicator	559
441000-F060	7003-010V	Bobbin	607
	7003-010V	Bobbin	801
648111-F060	751088-030V	Crease Roller	15
456460-F400	751332-010V	Bracket	215
751900-F400	751332-010V	Bracket	221
456459-F400	751332-010V	Bracket	209
648106-F260	751352-020V	Hydrogen Peroxide	531
751352-F030	751373-010V	Peroxide Tank	537
751373-F005	751393-010V	Peroxide Pump	539
751352-F040	751398-020V	Peroxide Tank	543
751352-F050	751406-010V	Connection Housing	547
751406-F005	751410-010V	Valve Panel	549
272404-F090	751478-020V	Brake	447
751691-F115	751689-010V	Curve Pack	565
648106-F290	751691-010V	Impulse Transmitter	561
648111-F420	751702-010V	Opening	119
752645-F003	751718-010V	Dating Wheel Holder	661
752914-F003	751718-010V	Dating Wheel Holder	647
752913-F003	751718-010V	Dating Wheel Holder	635
752646-F003	751718-010V	Dating Wheel Holder	675
648111-F180	751800-020V	Compressor Unit TBA/9 C	47
	751860-010V	Platform	177
648102-F165	751860-010V	Platform	175
648106-F130	751885-030V	Cover Plates TBA/9 C	463
	751900-010V	Railing TBA/ C	219
648102-F192	751900-010V	Railing TBA/9 C	217
752959-F010	751923-010V	Ladder	203
752958-F010	751923-010V	Ladder	193
752958-F020	751924-010V	Ladder	195
752959-F020	751924-010V	Ladder	205
272404-F054	751968-010V	Paper Guide	437
256014-F070	752173-010V	Lid	31
648107-F130	752244-020V	Paper Guard TBA/9	621
648107-F150	752247-010V	Frame Dating Unit	625
456836-F040	752495-010V	Attachment	111
271513-F005	752567-010V	Protective Casing TBA/9	461
648107-F020	752627-010V	Bending Roller Rear	599
648107-F030	752628-020V	Bending Roller Front	601
	752645-020V	Dating Unit	655
648107-F160	752645-020V	Dating Unit	651
	752645-020V	Dating Unit	653
	752646-020V	Dating Unit	667
	752646-020V	Dating Unit	669
648107-F160	752646-020V	Dating Unit	665
256712-F200	752664-010V	Steering	379
648104-F080	752671-010V	Shock Absorber Version 1	291
648104-F090	752672-010V	Shock Absorber Version 2	293
648106-F280	752784-010V	Connection Box	555
648107-F600	752889-010V	Cable Duct	687
648107-F450	752898-010V	Tube Assembling TB/9	681
648107-F160	752913-010V	Dating Unit TB/9 ST-R	627

Tetra Pak

Numerical group number index

Pos	Group No	Description	Page
	752913-010V	Dating Unit TB/9 ST-R	629
648107-F160	752914-010V	Dating Unit TB/9 ST-ER	639
	752914-010V	Dating Unit TB/9 ST-ER	641
256014-F020	752957-010V	Splice Detector	29
	752958-010V	Railing / Platform C/C 2000mm	189
	752958-010V	Railing / Platform C/C 2000mm	187
	752958-010V	Railing / Platform C/C 2000mm	191
978158-F170	752958-010V	Railing / Platform C/C 2000mm	185
	752959-010V	Railing/Platform C/C 2150mm	201
	752959-010V	Railing/Platform C/C 2150mm	199
978158-F170	752959-010V	Railing/Platform C/C 2150mm	197
648109-F100	77099-020V	Tool Kit	847
272765-F170	978048-010V	Clamping Element	391
648102-F170	978158-010V	Platform Rear	183
648107-F130	978162-010V	Paper Guard TB/9	617
648107-F140	978179-010V	Paper Guard (rear)	623
978162-F005	978367-010V	Hood	619
272404-F080	978604-010V	Connection Box	445
295310-F130	978720-010V	Finger	399
	978738-010V	Valve Panel TB/9	493
648106-F180	978738-010V	Valve Panel TBA/9	487
	978738-010V	Valve Panel TB/9	491
	978738-010V	Valve Panel TBA/9	489
978738-F001	978739-010V	Water Panel TBA/9	495
	978739-010V	Water Panel TBA/9	497
	978739-010V	Water Panel	501
	978739-010V	Water Panel TB/9	499
978738-F002	978740-010V	Air Panel TBA/9	513
	978740-010V	Air Panel TBA/9	515
	978740-010V	Air Panel TB/9	517
	978740-010V	Air Panel TB/9	519
256208-F010	978763-010V	Cutting Piece	285

This page is intentionally left blank

Special terminology and abbreviations

This page is intentionally left blank

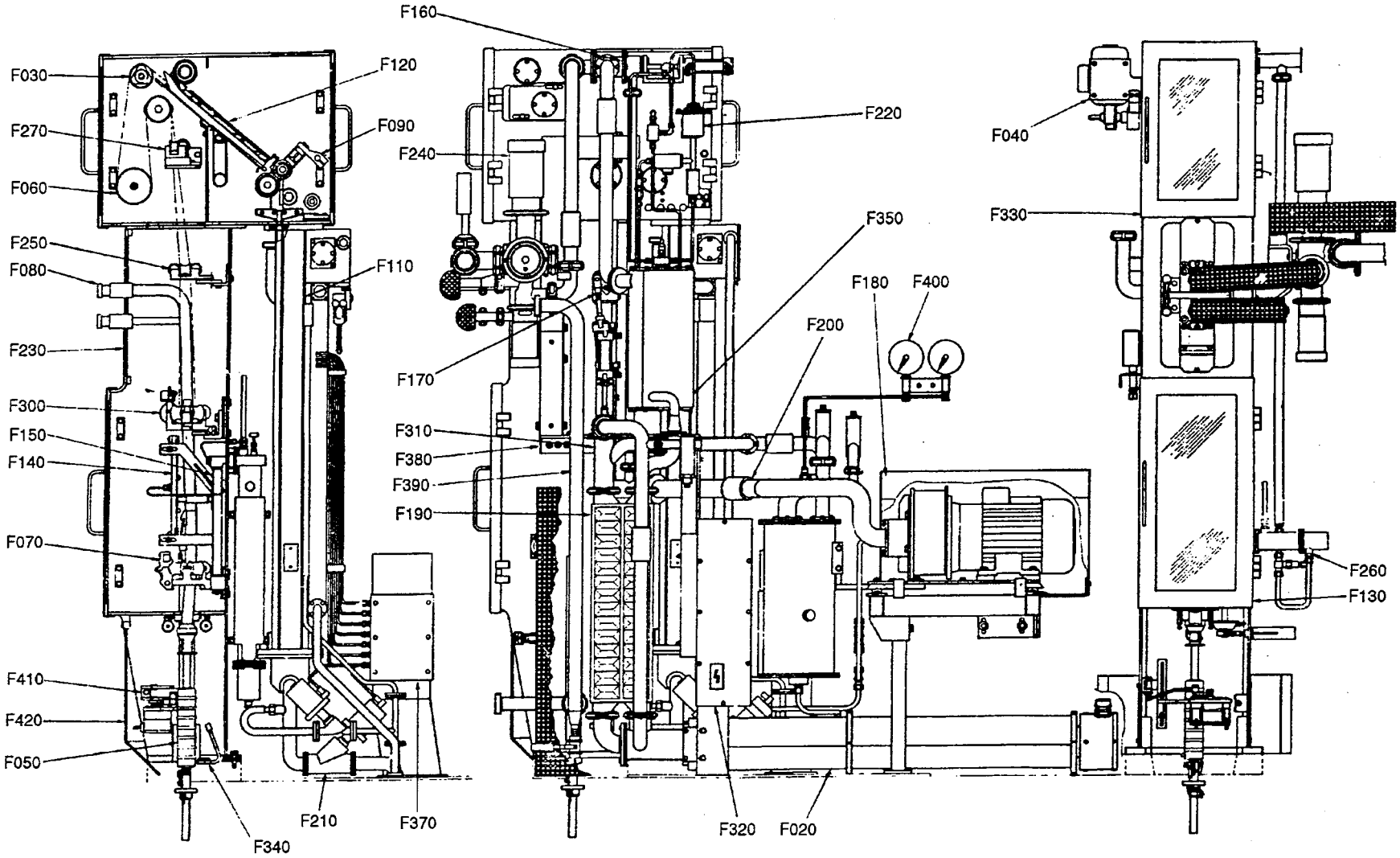

F500 Start-Up Kit

64811111.TIF
648111-11
AM 18737

Last Alteration: AM 20236 93-12-30

Corresponding group: 648111-100V
Assembly Drawing: 648111-11

Issue: **940524**

Pos	Group No	Description	
648111-F000	648111-100V	Superstructure TBA/9	3
648111-F020	271181-040V	Air Super-Heater	5
648111-F030	272004-040V	Bending Roller	7
648111-F040	272028-060V	Bending Roller	9
	272028-060V	Bending Roller	11
648111-F050	255921-040V	Lower Filling Tube	13
648111-F060	751088-030V	Crease Roller	15
648111-F070	456309-050V	Lower Forming Ring	17
	456309-050V	Lower Forming Ring	19
648111-F080	469091-030V	Filler Tube	21
648111-F090	272024-040V	Calender Roller	23
648111-F110	256014-060V	Bath	25
	256014-060V	Bath	27
256014-F020	752957-010V	Splice Detector	29
256014-F070	752173-010V	Lid	31
648111-F120	272025-030V	Air Knife	33
648111-F130	491570-020V	Door	35
648111-F140	469501-040V	Air Nozzle	37
648111-F150	256055-060V	Hot Air Element	39
648111-F160	272337-040V	Valve	41
648111-F170	256084-050V	Change-Over Valve	43
648111-F180	469452-030V	Compressor Unit	45
648111-F180	751800-020V	Compressor Unit TBA/9 C	47
648111-F190	456976-050V	Conduit	49
456976-F015	476859-020V	Change-Over Valve	51
648111-F200	456555-040V	Suction Pipe	53
648111-F210	456556-020V	Peroxide Pipe	55
648111-F220	272623-050V	Spray System	57
648111-F230	272021-060V	Aseptic Chamber	59
	272021-060V	Aseptic Chamber	61
648111-F240	272560-060V	Product Valve	63
272560-F005	440630-020V	AP Valve	65
440630-F010	539209-010V	A-Cylinder	67
440630-F110	539210-010V	C-Cylinder	69
440630-F120	539211-010V	B-Cylinder	71
440630-F130	541163-010V	Clamp Ring	73
440630-F140	541164-010V	Clamp Ring	75
648111-F250	441304-040V	Movable Forming Ring	77
648111-F260	256095-050V	Hot Air Element	79
648111-F270	441307-030V	Upper Tube Support 284ml -180ml	81
	441307-030V	Upper Tube Support 125ml	83
	441307-030V	Upper Tube Support 160ml 200ml/250ml Slim	85
441307-F040	565462-010V	Lock Plate	87
648111-F300	441486-040V	Divided Forming Ring	89
	441486-040V	Divided Forming Ring	91

Pos	Group No	Description	
648111-F310	271169-040V	Valve	93
648111-F320	295470-050V	El.Connection Box	95
648111-F330	491579-020V	Door	97
648111-F340	469781-030V	Tube Flushing Device Without Pull Tab	99
	469781-030V	Tube Flushing Device With Pull Tab	101
648111-F350	272407-020V	Generator	103
648111-F370	295045-070V	Pipe Work Pneumatic	105
648111-F380	469374-040V	Cable Trench	107
648111-F390	456836-040V	Cleaning System	109
456836-F040	752495-010V	Attachment	111
648111-F400	491083-030V	Gauge Group	113
648111-F410	491976-020V	Photocell Unit	115
	491976-020V	Photocell Unit	117
648111-F420	751702-010V	Opening	119
648111-F500	295778-040V	Start-Up Kit	121
295778-F010	499255-020V	Seal Kit	123

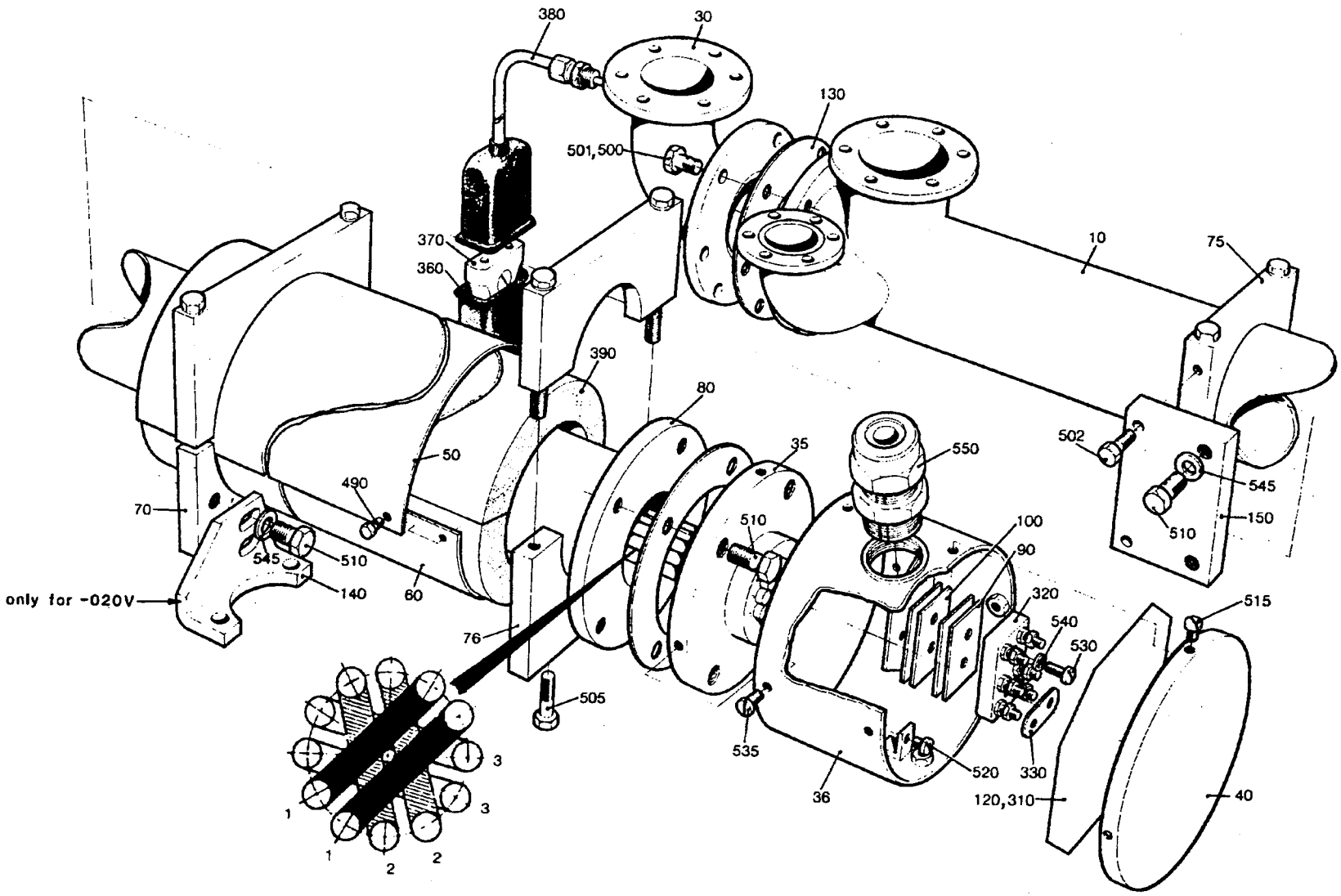

27118104.TIF
271181-4
AM 16686

Last Alteration: AM 16686 91-10-15

Corresponding group: 271181-040V
Assembly Drawing: 271181-4

Issue: **940524**

From	Pos	Part No	SP	UN	Qty	Description
		C- 271181-0401				**Air Super-Heater, Ass'y**
	010	752220	C		1	HEATING PIPE
	030	752221	-		1	PIPE
	035	449939-0001	S		1	HEATING ELEMENT 15KW
		449938-0001	S		2	* HEATING PIPE
		449938-0002	S		2	* HEATING PIPE
		449938-0003	S		2	* HEATING PIPE
	036	451430	-		1	CONNECTION HOUS.(MINOR)
	040	29876	-		1	LID
	050	271184	-		1	DISCHARGE TRAY
	060	271185	-		1	DISCHARGE TRAY
	070	491218	-		1	SUPPORT
	075	272794	-		1	SUPPORT
	076	456123	-		1	SUPPORT
	080	531731	S		1	GASKET
	090	751009	S		1	INSULATION
	100	30298	S		1	INSULATION
	120	491305	-		1	WIRING DIAGRAM
	130	751016	-		1	GASKET
	150	456125	-		1	FASTENING PLATE
	310	90153-0020	S	ML	X	ADHESIVE
	320	90195-0028	S		1	TERMINAL BLOCK
	330	90195-0029	S		3	COUPLING STRIP
	360	90326-0012	P		1	PROTECTIVE COVER
	370	90326-0020	P		1	SOCKET
	380	90326-0051	P		1	THERMO COUPLE
	390	90411-0005	S	MM	1100	INSULATOR
	490	312105-0325	-		12	SCREW M6S5X10 A2 80
	500	312105-0368	-		5	SCREW M6S6X16RFR
	501	312105-0370	-		1	SCREW M6S6X20RFR
	502	312105-0374	-		2	SCREW M6S6X30RFR
	505	312105-0455	-		3	SCREW M6S8X30RFR
	510	312105-0453	-		6	SCREW M6S8X25RFR
	515	312105-0287	-		4	SCREW M6S4X8 A2 80
	520	312125-0323	-		1	SLOTTED HEMCS5X8RFR
	530	312125-0331	-		2	SLOTTED HEMCS5X20RFR
	535	312125-0366	-		4	SLOTTED HEMCS6X12RFR
	540	315105-0146	-		2	WASHER BRB5,3X10RFR
	545	315125-0165	-		3	WASHER SB 8,4X26X5 RFR
	550	352100-0121	-		1	CABLE GLANR. 37-23,5

From	Pos	Part No	SP	UN	Qty	Description

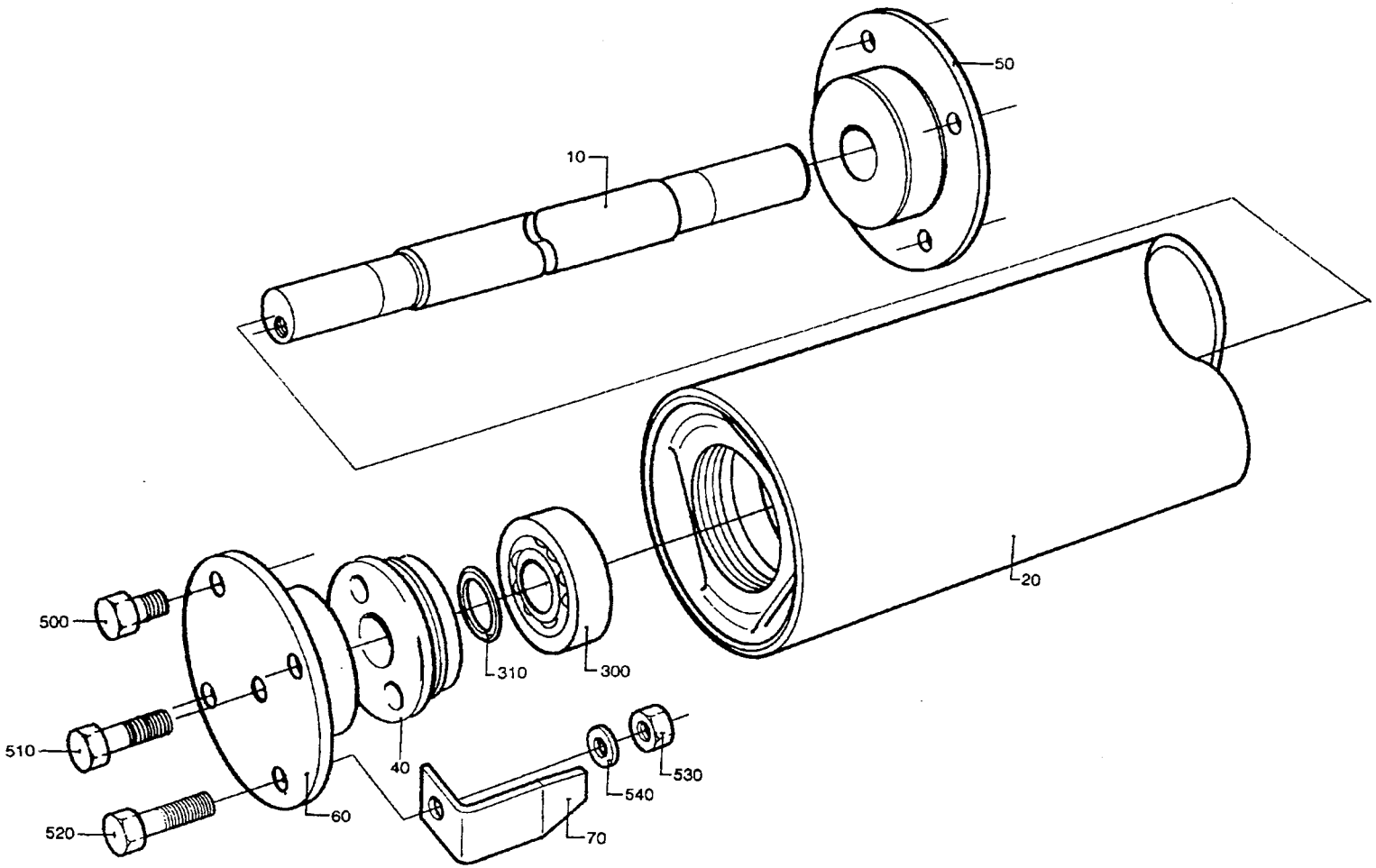

27200404.TIF
272004-4
AM 14591

Last Alteration: AM 19266 93-06-01

Corresponding group: 272004-040V
Assembly Drawing: 272004-4

Issue: 940524

From	Pos	Part No	SP	UN	Qty	Description
284ml - 180ml						
		C- 272004-0401				**Bending roller, Ass'y**
	070	752857	-		1	POINTER
200ml Slim						
		C- 272004-0402				**Bending roller, Ass'y**
	070	752858	-		1	POINTER
125ml						
		C- 272004-0403				**Bending roller, Ass'y**
	070	752859	-		1	POINTER
250ml Sliml						
		C- 272004-0404				**Bending roller, Ass'y**
	070	574415	-		1	INDICATOR 250S
Common Parts						
	010	491392	S		1	SHAFT
	020	272005	S		1	BENDING ROLLER
	040	247170	-		2	BEARING COVER
	050	491393	-		1	AXLE SUPPORT
	060	272018	-		1	AXLE SUPPORT
	300	90214-0098	S		2	BALL BEARING
	310	90214-0303	S		2	RING
	500	312105-0366	-		7	SCREW M6S6X12RFR
	510	312105-0370	-		1	SCREW M6S6X20RFR
	520	312105-0371	-		1	SCREW M6S6X22RFR
	530	312605-0316	-		1	NUT M6M6RFR
	540	315105-0153	-		1	WASHER BRB6,4X12RFR

From	Pos	Part No	SP	UN	Qty	Description

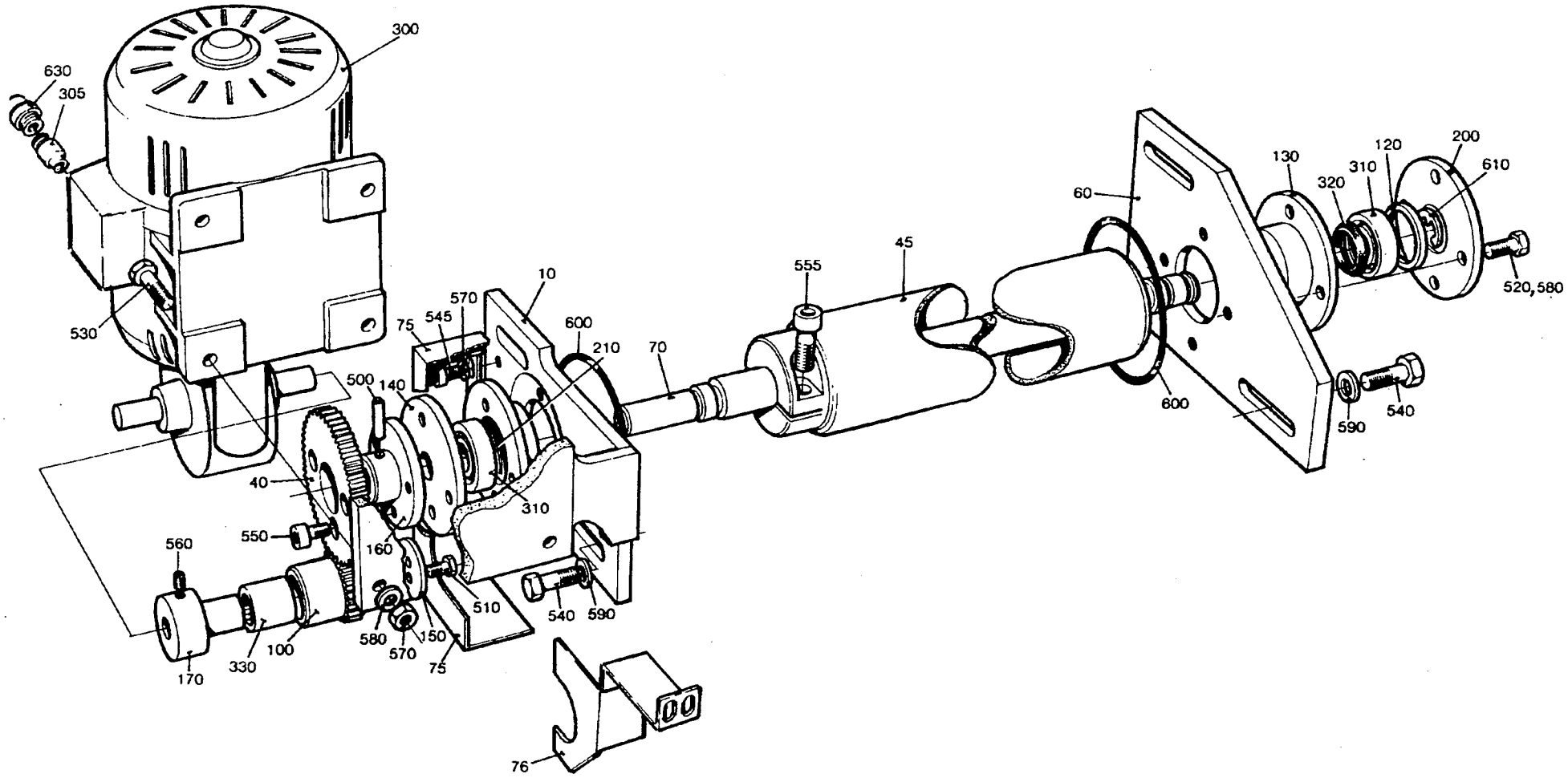

27202804.TIF
272028-4
AM 12861

From	Pos	Part No	SP	UN	Qty	Description
284ml						
		C- 272028-0601				**Bending Roller, Ass'y**
	010	572156	-		1	MOTOR PLATE
	040	255897-0008	S		1	GEAR WHEEL
	045	441546	S		1	BENDING ROLLER
	060	572158	-		1	BEARING PANEL
	070	456515	S		1	SHAFT
	100	209331-0001	S		1	GEAR WHEEL
	555	312115-0451	-		2	SCREW 8X20 A4 80
250ml						
		C- 272028-0602				**Bending Roller, Ass'y**
	010	572156	-		1	MOTOR PLATE
	040	255897-0007	S		1	GEAR WHEEL
	045	441546	S		1	BENDING ROLLER
	060	572158	-		1	BEARING PANEL
	070	456515	S		1	SHAFT
	100	209331-0001	S		1	GEAR WHEEL
	555	312115-0451	-		2	SCREW 8X20 A4 80
236ml						
		C- 272028-0603				**Bending Roller, Ass'y**
	010	572156	-		1	MOTOR PLATE
	040	255897-0007	S		1	GEAR WHEEL
	045	441546	S		1	BENDING ROLLER
	060	572158	-		1	BEARING PANEL
	070	456515	S		1	SHAFT
	100	209331-0001	S		1	GEAR WHEEL
	555	312115-0451	-		2	SCREW 8X20 A4 80
200ml						
		C- 272028-0604				**Bending Roller, Ass'y**
	010	572156	-		1	MOTOR PLATE
	040	255897-0004	S		1	GEAR WHEEL
	045	441546	S		1	BENDING ROLLER
	060	572158	-		1	BEARING PANEL
	070	456515	S		1	SHAFT
	100	209331-0011	S		1	GEAR WHEEL
	555	312115-0451	-		2	SCREW 8X20 A4 80
180ml						
		C- 272028-0605				**Bending Roller, Ass'y**
	010	572156	-		1	MOTOR PLATE
	040	255897-0005	S		1	GEAR WHEEL
	045	441546	S		1	BENDING ROLLER
	060	572158	-		1	BEARING PANEL
	070	456515	S		1	SHAFT
	100	209331-0006	S		1	GEAR WHEEL
	555	312115-0451	-		2	SCREW 8X20 A4 80

From	Pos	Part No	SP	UN	Qty	Description
125ml						
		C- 272028-0606				**Bending Roller, Ass'y**
	010	571545	-		1	MOTOR PLATE
	040	255897-0005	S		1	GEAR WHEEL
	045	441547	S		1	BENDING ROLLER
	060	572157	-		1	BEARING PANEL
	070	456515	S		1	SHAFT
	100	209331-0006	S		1	GEAR WHEEL
	555	312115-0451	-		2	SCREW 8X20 A4 80
200ml Slim						
		C- 272028-0607				**Bending Roller, Ass'y**
	010	571545	-		1	MOTOR PLATE
	040	255897-0008	S		1	GEAR WHEEL
	045	456527	S		1	BENDING ROLLER
	060	572157	-		1	BEARING PANEL
	100	209331-0009	S		1	GEAR WHEEL
250ml Slim						
		C- 272028-0608				**Bending Roller, Ass'y**
	010	571545	-		1	MOTOR PLATE
	040	255897-0008	S		1	GEAR WHEEL
	045	441546	S		1	BENDING ROLLER
	060	572157	-		1	BEARING PANEL
	070	456515	S		1	SHAFT
	100	209331-0009	S		1	GEAR WHEEL
160ml						
		C- 272028-0609				**Bending Roller, Ass'y**
	010	571545	-		1	MOTOR PLATE
	040	255897-0003	S		1	GEAR WHEEL
	045	441546	S		1	BENDING ROLLER
	060	572157	-		1	BEARING PANEL
	100	209331-0008	S		1	GEAR WHEEL
Common Parts						
	075	752569	-		1	COVER
	076	752568	-		1	PROTECTION
	120	247172	-		1	SPACER RING
	130	247173	C		2	BEARING SEAT
	140	250590	-		1	BEARING COVER
	150	250592	-		1	WASHER
	160	255898	-		1	HUB
	170	255899	-		1	HUB
	200	456516	-		1	BEARING COVER
	210	491333	S		2	SPACER RING

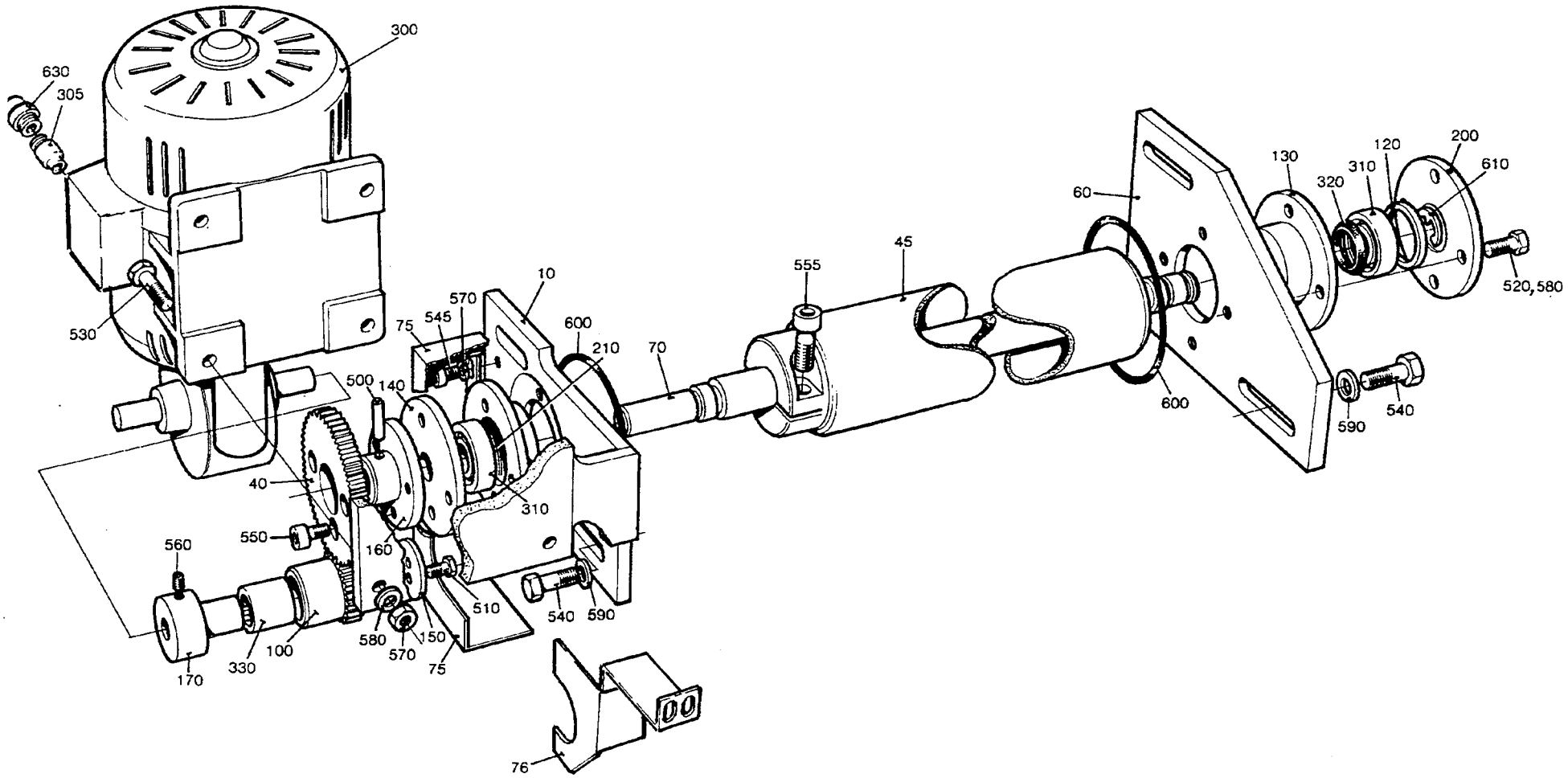

27202804.TIF
272028-4
AM 12861

Last Alteration: AM 202236 93-10-28

Corresponding group: 272028-060V
Assembly Drawing: 272028-4

Issue: **940524**

From	Pos	Part No	SP	UN	Qty	Description
	300	90069-0099	S		1	WORM GEAR MOTOR
		90056-0024	S		1	* WORM GEAR
		90069-0380	S		1	* SATSER
	305	90089-0017	-		1	TRANSITIONAL MUFF
	310	90214-0098	S		2	BALL BEARING
	320	90214-0303	S		2	RING
	325	90296-0009	-	ML	X	GREASE
	330	90348-0007	S		1	FREE WHEEL COUPLING
	500	311103-0310	-		1	CYLINDRICACP M6 5X20 RF
	520	312105-0367	-		8	SCREW M6S6X14RFR
	530	312105-0372	-		4	SCREW M6S6X25RFR
	540	312105-0451	-		4	SCREW M6S8X20RFR
	545	312115-0323	-		4	SCREW 5X8 A4 80
	550	312115-0327	-		3	SCREW MC6S5X12 A4 80
	560	312318-0364	-		1	STOP SCREW SK6SS6X10RFR
	570	312605-0316	-		4	NUT M6M6RFR
	575	315105-0146	-		4	WASHER BRB5,3X10RFR
	580	315105-0153	-		12	WASHER BRB6,4X12RFR
	590	315115-0165	-		4	WASHER TBRB8,4X16RFR
	600	315204-0310	P		2	O-RING 5X3 VITON
	610	315755-0112	-		1	LOCKING WAE 12 RFR
	630	352103-0111	-		1	CABLE GLAND ST 16

From	Pos	Part No	SP	UN	Qty	Description

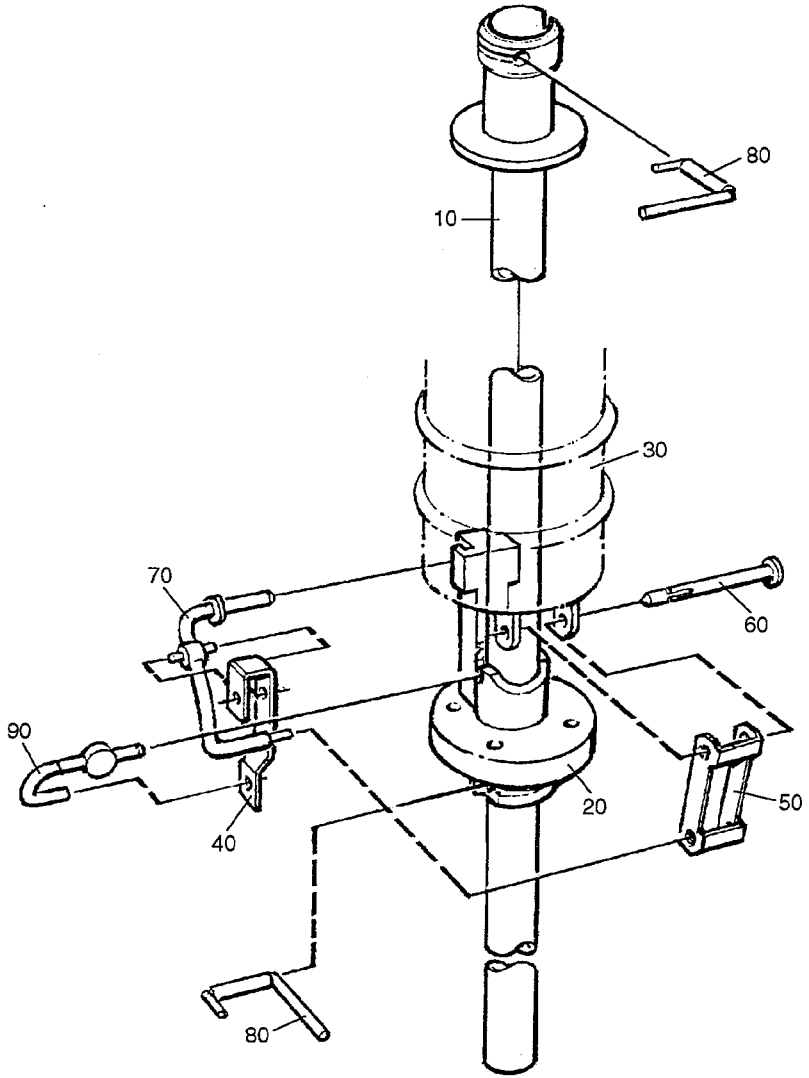

25592108.TIF
255921-8
AM 16212

Last Alteration: AM 20233 93-10-28

Corresponding group: 255921-040V
Assembly Drawing: 255921-8

Issue: **940524**

From	Pos	Part No	SP	UN Qty	Description
125ml					
		C- 255921-0401			**Lower Filling Tube, Ass'y**
	010	490869	S	1	FILLING TUBE LOWER
	020	490850	S	1	PRESSURE FLANGE
	030	272056	S	1	FLOAT
	040	271348	S	1	LINK
	050	491458	S	1	LINK
	060	271351	P	1	SHEAR PIN
	070	271347	S	1	ARM
	080	978562	P	2	LOCKING FINGER
	090	271350	P	1	THROTTLE
200ml 180ml					
		C- 255921-0402			**Lower Filling Tube, Ass'y**
	010	469972-0001	S	1	FILLING TUBE LOWER
	020	469973	S	1	PRESSURE FLANGE
	030	550487	S	1	FLOAT
	040	36816	S	1	LINK
	050	36817	S	1	CLAMPING ELEMENT
	060	36821-0002	P	1	SHEAR PIN
	070	37296	S	1	ARM
	080	38535-0002	P	2	LOCKING FINGER
	090	295987	P	1	THROTTLE
284ml - 236ml					
		C- 255921-0403			**Lower Filling Tube, Ass'y**
	010	469972-0002	S	1	FILLING TUBE LOWER
	020	469973	S	1	PRESSURE FLANGE
	030	550487	S	1	FLOAT
	040	36816	S	1	LINK
	050	36817	S	1	CLAMPING ELEMENT
	060	36821-0002	P	1	SHEAR PIN
	070	37296	S	1	ARM
	080	38535-0002	P	2	LOCKING FINGER
	090	295987	P	1	THROTTLE
200ml Slim 160ml					
		C- 255921-0404			**Lower Filling Tube, Ass'y**
	010	491270	S	1	FILLING TUBE LOWER
	020	491271	S	1	PRESSURE FLANGE
	030	491142	S	1	FLOAT
	040	271348	S	1	LINK
	050	271349	S	1	LINK
	060	271351	P	1	SHEAR PIN
	070	271347	S	1	ARM
	080	978562	P	2	LOCKING FINGER
	090	491141	S	1	THROTTLE

From	Pos	Part No	SP	UN Qty	Description
250ml Slim					
		C- 255921-0405			**Lower Filling Tube, Ass'y**
	010	574412	S	1	FILLING TUBE LOWER
	020	574413	S	1	PRESSURE FLANGE
	030	574414	S	1	FLOAT
	040	36816	S	1	LINK
	050	574475	S	1	LINK
	060	36821-0002	P	1	SHEAR PIN
	070	37296	S	1	ARM
	070	574472	S	1	ARM
	080	38535-0002	P	2	LOCKING FINGER
	090	228943	S	1	THROTTLE

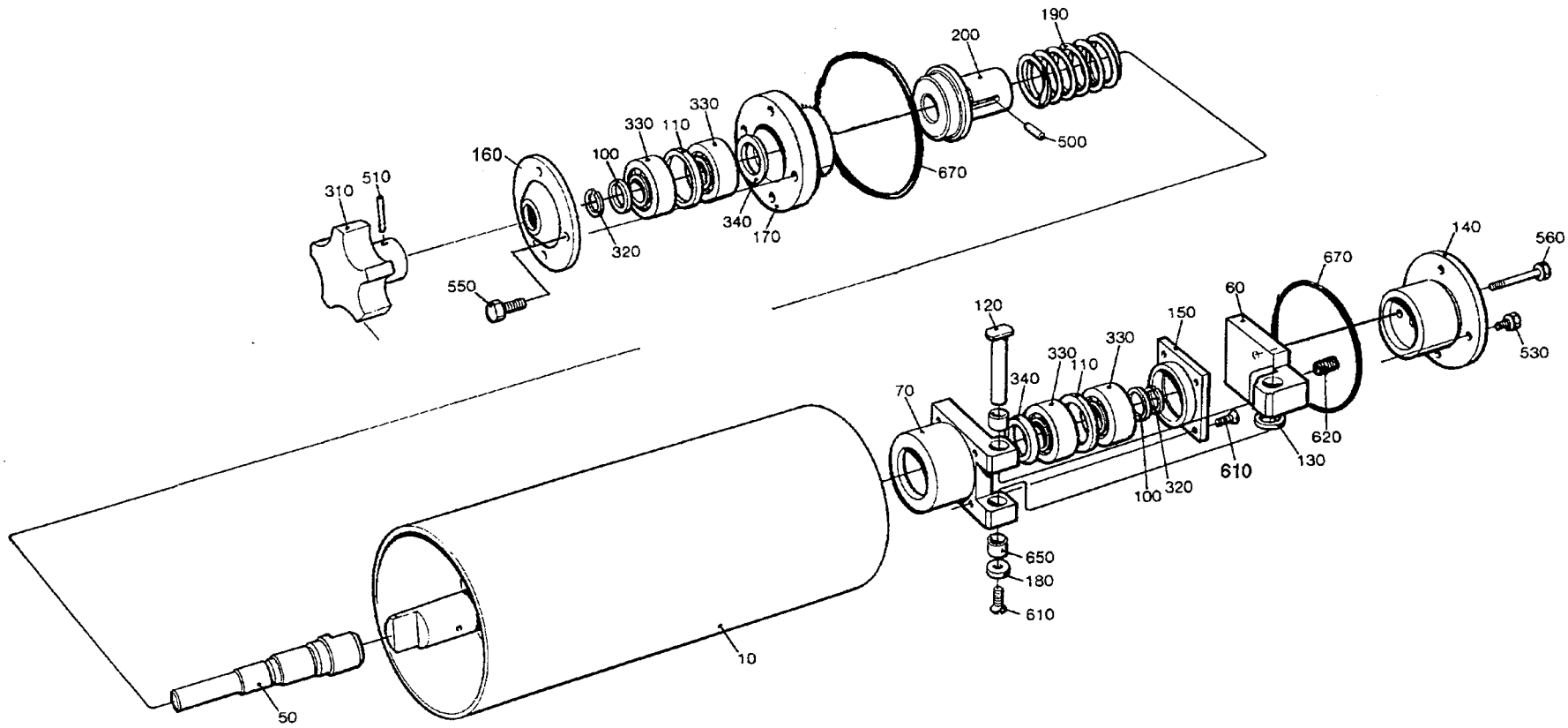

75108803.TIF
751088-3
AM 17875

Last Alteration: AM 17875 92-11-24

Corresponding group: 751088-030V
Assembly Drawing: 751088-3

Issue: **940524**

From	Pos	Part No	SP	UN	Qty	Description
		C- 751088-0301				**Crease Roller, Ass'y**
	010	490882	-		1	ROLL
	050	752744	C		1	SHAFT
	060	271835	C		1	BRACKET
	070	456012	S		1	BEARING SEAT
	100	15529	-		2	WASHER
	110	247172	S		2	SPACER RING
	120	751467	S		1	SHAFT
	130	271656	S		2	WASHER
	140	572159	C		1	BRACKET
	150	456013	S		1	BEARING COVER
	160	572231	C		1	BEARING COVER
	170	572160	C		1	BEARING SEAT
	180	271844	C		1	WASHER
	190	272001	S		1	COMPRESSION SPRING
	200	295010	S		1	GUIDE SLEEVE
	310	90051-0045	-		1	HANDLE
	320	90141-0011	S		2	RING
	330	90214-0098	S		4	BALL BEARING
	340	90214-0303	P		2	RING
	350	90296-0009	-		X	GREASE
	500	311103-0234	S		1	CYLINDRICACP M6 3X12 RFR
	510	311103-0238	-		1	CYLINDRICACP M6 3X20 RFR
	530	312105-0364	-		4	SCREW M6S6X10RFR
	550	312105-0372	-		4	SCREW M6S6X25RFR
	560	312105-0371	-		2	SCREW M6S6X22RFR
	610	312145-0287	-		5	SLOTTED HEMFS4X8RFR
	620	312318-0364	-		1	STOP SCREW SK6SS6X10RFR
	650	321127-0100	S		2	BUSHING 10/13X10
	670	315204-0301	P		2	O-RING 49,5X3VITON

From	Pos	Part No	SP	UN	Qty	Description

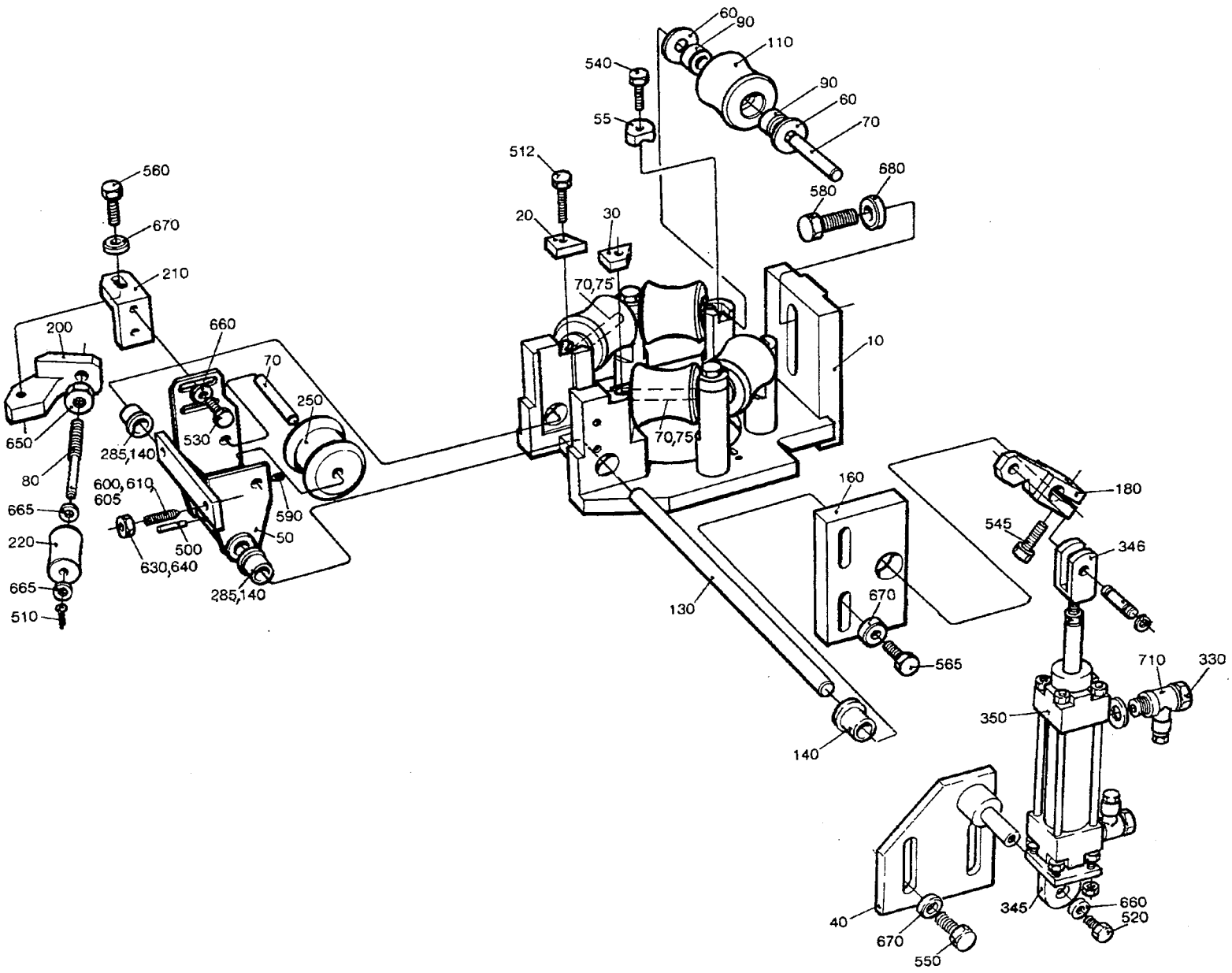

45630905.TIF
456309-5/6
AM 15640

Last Alteration: AM 20223 93-10-28

Corresponding group: 456309-050V
Assembly Drawing: 456309-5/6

Issue: **940524**

From	Pos	Part No	SP	UN	Qty	Description
284ml -180ml						
		C- 456309-0501				**Lower Forming Ring, Ass'y**
	010	G- 490518	-		1	HOLDER
	020	G- 490539	-		1	LOCK PLATE
	030	G- 490540	-		1	LOCK PLATE
	050	257040	-		1	FORK
	055	G- 490538	-		4	LOCK PLATE
	070	752186-0005	S		6	SHAFT
	110	751502	S		5	ROLL
	140	255970	S		1	BUSHING
	160	571543	-		1	BEARING PLATE
	250	751503	P		1	COUNTER ROLLER
	285	752047	S		2	BUSHING
	512	312105-0331	-		6	SCREW M6S5X20 A2 80
	610	312318-0451	-		2	STOP SCREW SK6SS8X20RFR
	640	312605-0318	-		2	NUT M6M8RFR
125ml						
		C- 456309-0502				**Lower Forming Ring, Ass'y**
	010	456837	-		1	HOLDER
	020	456840	-		1	LOCK PLATE
	030	456839	-		1	LOCK PLATE
	050	257041	-		1	FORK
	055	456838	-		4	LOCK PLATE
	070	752186-0003	S		4	SHAFT
	075	752186-0012	S		2	SHAFT
	110	752153	P		5	FORMING ROLLER
	140	255970	S		3	BUSHING
	160	571544	-		1	BEARING PLATE
	250	752155	P		1	COUNTER ROLLER
	512	312105-0331	-		2	SCREW M6S5X20 A2 80
	540	312105-0370	-		4	SCREW M6S6X20RFR
	600	312318-0368	-		1	STOP SCREW SK6SS6X16RFR
	605	312318-0372	-		1	STOP SCREW SK6SS6X25RFR
	630	312605-0316	-		2	NUT M6M6RFR
160ml 200ml Slim						
		C- 456309-0503				**Lower Forming Ring, Ass'y**
	010	456837	-		1	HOLDER
	020	456840	-		1	LOCK PLATE
	030	456839	-		1	LOCK PLATE
	050	257041	-		1	FORK
	055	456838	-		4	LOCK PLATE
	070	752186-0003	S		4	SHAFT
	075	752186-0012	S		2	SHAFT
	110	752138	P		5	FORMING ROLLER
	140	255970	S		3	BUSHING
	160	571544	-		1	BEARING PLATE
	250	752140	P		1	COUNTER ROLLER
	512	312105-0331	-		2	SCREW M6S5X20 A2 80
	540	312105-0370	-		4	SCREW M6S6X20RFR
	600	312318-0368	-		1	STOP SCREW SK6SS6X16RFR
	605	312318-0372	-		1	STOP SCREW SK6SS6X25RFR
	630	312605-0316	-		2	NUT M6M6RFR
250ml Slim						
		C- 456309-0504				**Lower Forming Ring, Ass'y**
	010	574337	-		1	BRACKET
	020	574339	-		1	LOCK PLATE
	030	574340	-		1	LOCK PLATE
	050	574341	-		1	FORK
	055	574338	-		4	LOCK PLATE
	070	752186-0003	S		1	SHAFT
	075	752186-0004	S		5	SHAFT
	110	574346	P		5	ROLL
	140	255970	S		3	BUSHING
	160	571544	-		1	BEARING PLATE
	250	574347	P		1	COUNTER ROLLER
	512	312105-0331	-		2	SCREW M6S5X20 A2 80
	540	312105-0370	-		4	SCREW M6S6X20RFR
	600	312318-0368	-		1	STOP SCREW SK6SS6X16RFR
	605	312318-0372	-		1	STOP SCREW SK6SS6X25RFR
	630	312605-0316	-		2	NUT M6M6RFR
Common Parts						
	040	491022	-		1	CYLINDER BRACKET
	060	2033-0011	P		12	WASHER
	080	239440	P		1	SHAFT
	090	90240-0172	P		12	FLANGE BUSHING
	130	255969	S		1	SHAFT
	180	441483	-		1	CYLINDER BRACKET
	200	257042	-		1	BRACKET
	210	257043	-		1	ANGLE BRACKET
	220	257044	P		1	ROLL
	315	752038	-		4	SHIM
	330	90235-0282	S		2	VALVE
	345	90239-0453	S		1	BRACKET
	346	90239-0516	S		1	PISTON ROD HEAD
	350	90239-0779	S		1	CYLINDER
		90239-0442	S		1	* SEAL KIT
	500	311103-0238	-		2	CYLINDRICACP M6 3X20 RFR
	510	311411-0140	-		1	SPLIT PIN SP1,6X16RFR
	520	312105-0364	-		1	SCREW M6S6X10RFR
	530	312105-0368	-		2	SCREW M6S6X16RFR

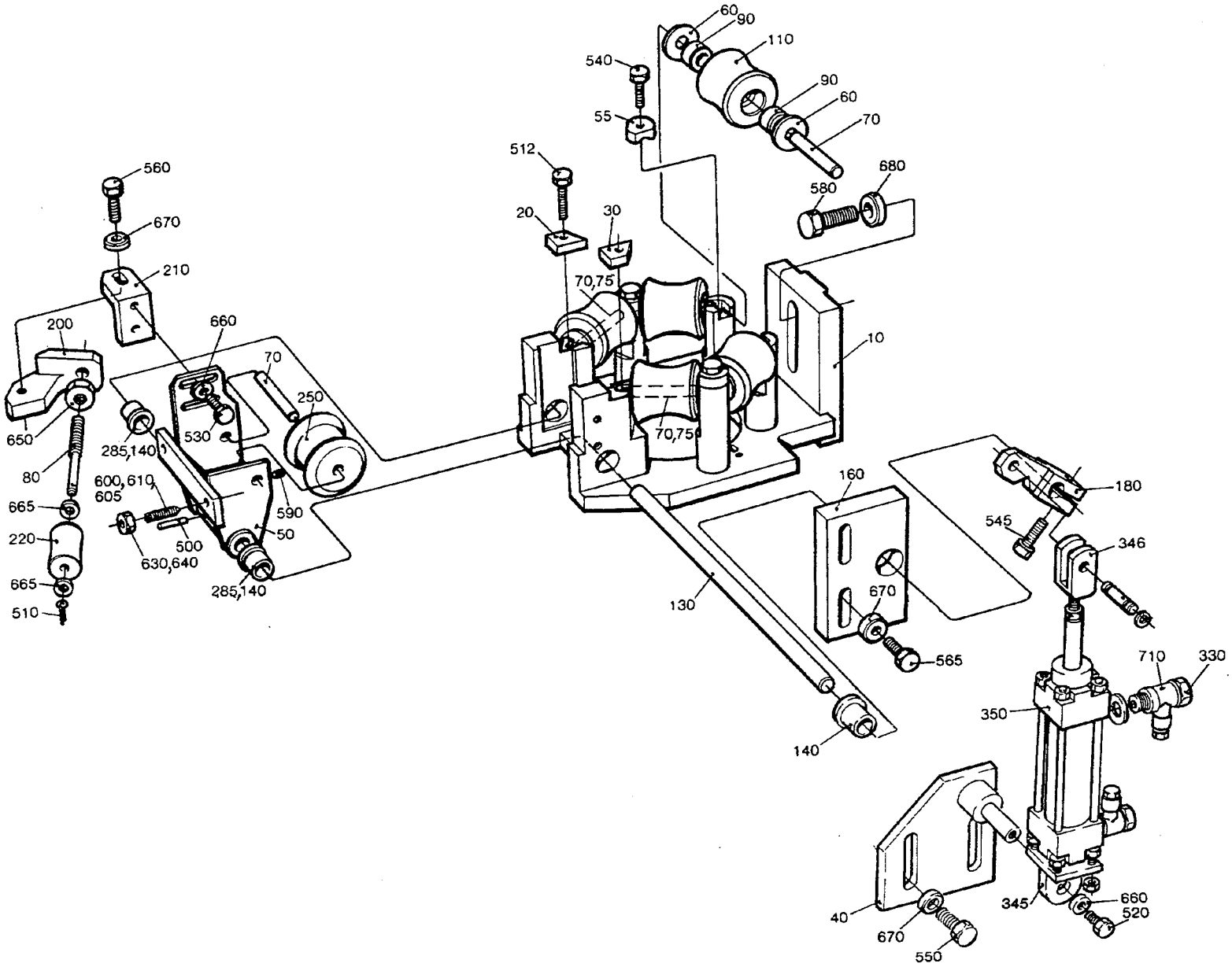

45630905.TIF
456309-5/6
AM 15640

From	Pos	Part No	SP	UN Qty	Description
	545	312105-0372	-	1	SCREW M6S6X25RFR
	547	312105-0447	-	2	SCREW M6S8X12RFR
	560	312105-0451	-	1	SCREW M6S8X20RFR
	565	312105-0453	-	2	SCREW M6S8X25RFR
	580	312105-0536	-	1	SCREW M6S12X30RFR
	590	312318-0285	-	1	STOP SCREW SK6SS4X6RFR
	650	312605-0320	-	1	NUT M6M10RFR
	660	315105-0153	-	3	WASHER BRB6,4X12RFR
	665	315105-0165	-	4	WASHER BRB8,4X16RFR
	670	315115-0165	-	3	WASHER TBRB8,4X16RFR
	680	315115-0178	-	1	WASHER TBRB13X24RFR
	710	342797-0121	S	2	BANJO CONNSINGEL 6-1/8

From	Pos	Part No	SP	UN Qty	Description

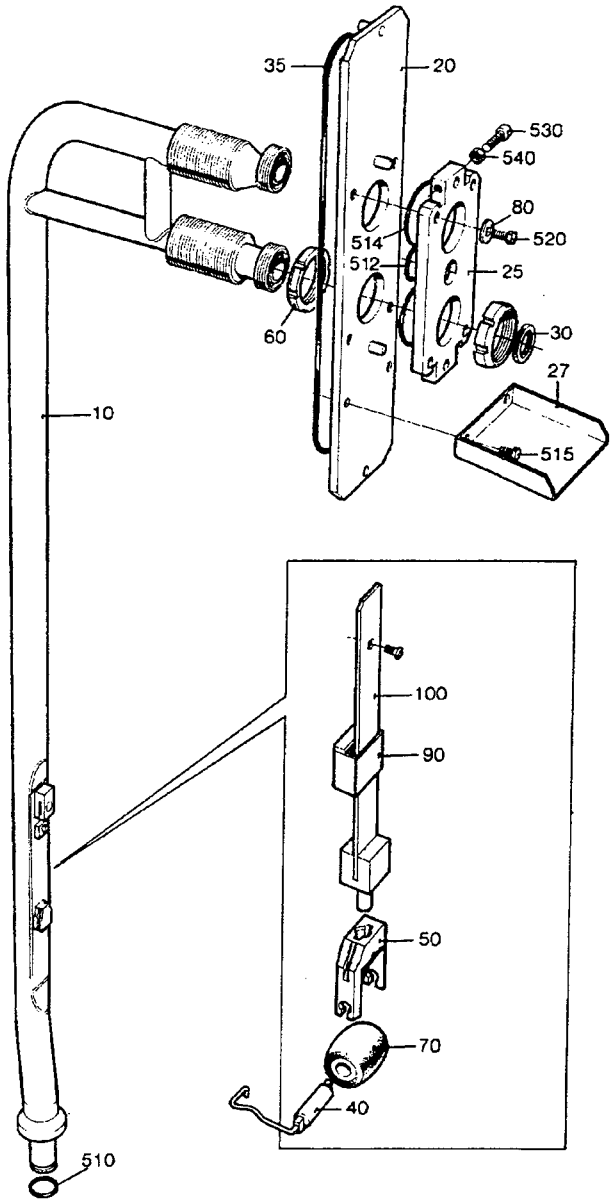

46909104.TIF
469091-4/5
AM 16685

Last Alteration: AM 20223 93-10-28

Corresponding group: 469091-030V
Assembly Drawing: 469091-4/5

Issue: **940524**

From	Pos	Part No	SP	UN	Qty	Description
284ml - 180ml						
		C- 469091-0301				**Filler Tube, Ass'y**
	010	752694	S		1	FILLING TUBE UPPER
	040	295376	P		1	SHAFT
	050	568583	P		1	FORK
	070	257330	PU		1	PRESSURE ROLLER
	090	295377-0002	P		1	HOOD
	100	544894	P		1	SPRING
160ml 200ml Slim						
		C- 469091-0302				**Filler Tube, Ass'y**
	010	565461	S		1	FILLING TUBE UPPER
	040	255977	-		1	SHAFT
	050	255978	P		1	FORK
	070	272479	PU		1	PRESSURE ROLLER
	090	295377-0001	P		1	HOOD
	100	751604	P		1	SPRING
125ml						
		C- 469091-0303				**Filler Tube, Ass'y**
	010	565461	S		1	FILLING TUBE UPPER
	040	255977	-		1	SHAFT
	050	255978	P		1	FORK
	070	272479	PU		1	PRESSURE ROLLER
	090	491441	P		1	HOOD
	100	751604	P		1	SPRING
250ml Slim						
		C- 469091-0304				**Filler Tube, Ass'y**
	010	574384	S		1	FILLING TUBE 250S
	040	255977	-		1	SHAFT
	050	255978	P		1	FORK
	070	272479	PU		1	PRESSURE ROLLER
	090	295377-0001	P		1	HOOD
	100	751604	P		1	SPRING

From	Pos	Part No	SP	UN	Qty	Description
Common Parts						
	020	491414	S		1	PLATE
	025	491415	-		1	FASTENING PLATE
	027	295984	-		1	DRIP GUARD
	030	12242-0001	P		2	GASKET
	035	491418-0001	PU		1	O-RING
	060	255981	-		4	NUT
	080	315125-0153	-		4	WASHER SB 6,4X22X4 RFR
	510	315204-0214	PU		1	O-RING 17,3X2,4VITON
	512	315204-0217	PU		1	O-RING 24,2X3VITON
	514	315204-0301	PU		2	O-RING 49,5X3VITON
	515	312105-0364	-		2	SCREW M6S6X10RFR
	520	312105-0372	-		4	SCREW M6S6X25RFR
	530	312115-0455	-		4	SCREW 8X30 A4 80
	540	312605-0318	-		4	NUT M6M8RFR

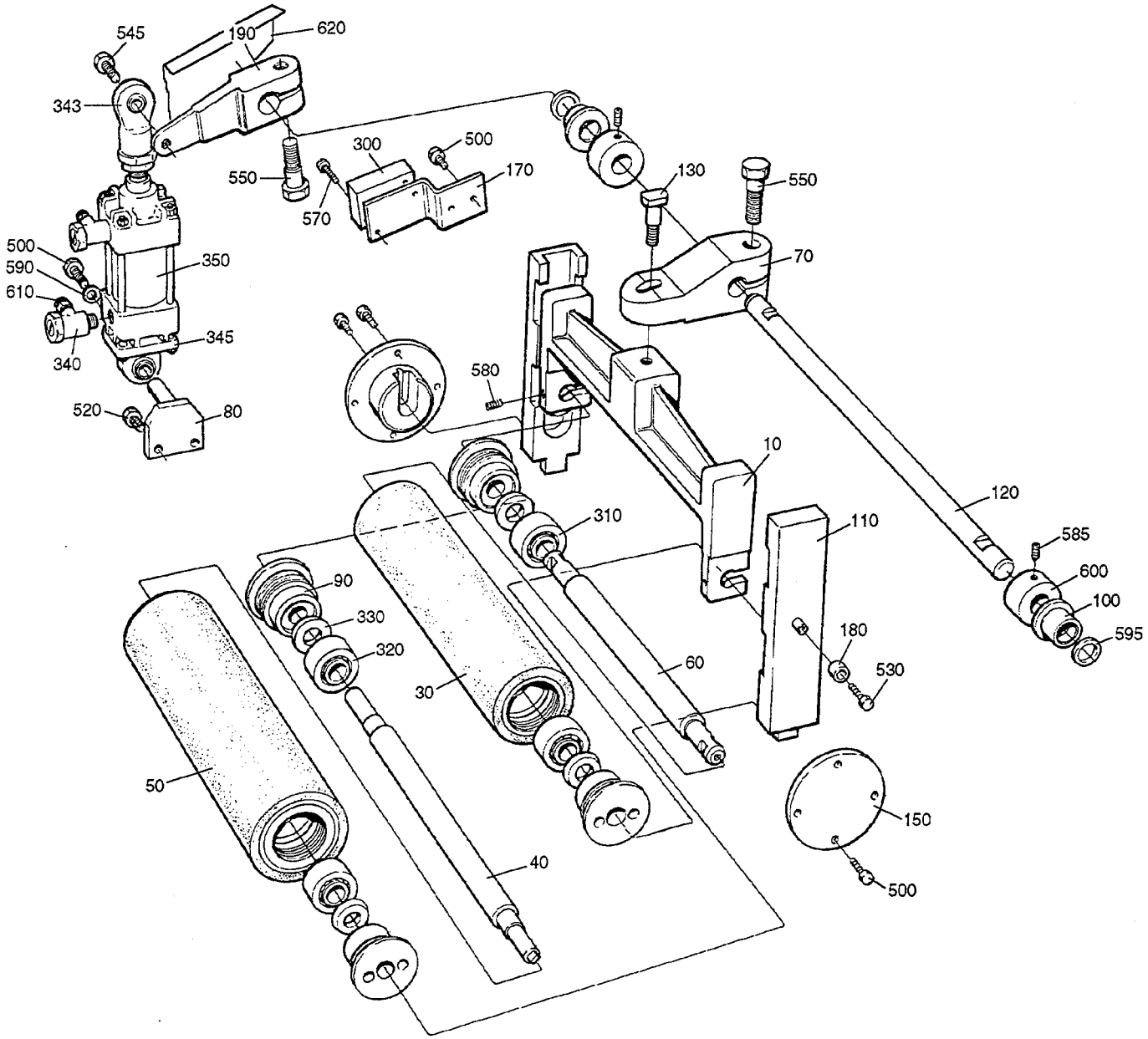

27202404.TIF
272024-4
AM 17862

Last Alteration: AM 17862 92-09-30

Corresponding group: 272024-040V
Assembly Drawing: 272024-4

Issue: **940524**

From	Pos	Part No	SP	UN	Qty	Description
		C- 272024-0401				**Calender Roller, Ass'y**
	010	G- 272926	-		1	FORK
	030	491396	S		1	CALENDER ROLLER
	040	566695	C		1	SHAFT
	050	491397	S		1	CALENDER ROLLER
	060	271893	S		1	SHAFT
	070	272927	-		1	PRESSURE ARM
	080	441578-0002	-		1	CYLINDER BRACKET
	090	247170	C		4	BEARING COVER
	100	271269	S		2	BUSHING
	110	566696	-		2	GUIDE CONSOLE
	120	751132	C		1	SHAFT
	130	271898	C		1	SCREW
	140	271899	C		4	SCREW
	150	566697	-		2	AXLE SUPPORT
	170	272033	-		1	BRACKET
	180	315115-0153	-		2	WASHER TBRB6,4X12RFR
	190	G- 441904	-		1	ARM
	300	90044-0104	P		1	INDUCTIVE SWITCH
	310	90214-0098	S		4	BALL BEARING
	320	90214-0040	P		4	BALL BEARING
	330	90214-0303	P		4	RING
	340	90235-0274	-		2	VALVE
	343	90239-0405	S		1	LINK HEAD
	345	90239-0453	S		1	BRACKET
	350	90239-0773	S		1	CYLINDER
		90239-0442	S		1	* SEAL KIT
	360	90296-0009	-		X	GREASE
	500	312105-0364	-		11	SCREW M6S6X10RFR
	520	312105-0447	-		2	SCREW M6S8X12RFR
	530	312105-0366	-		2	SCREW M6S6X12RFR
	545	312105-0495	-		1	SCREW M6S10X30RFR
	550	312105-0536	-		2	SCREW M6S12X30RFR
	555	312605-0320	-		1	NUT M6M10RFR
	570	312125-0228	-		2	SLOTTED HEMCS3X16RFR
	580	312318-0327	-		2	STOP SCREW SK6SS5X12RFR
	585	312318-0362	-		4	STOP SCREW SK6SS6X8RFR
	590	315105-0153	-		1	WASHER BRB6,4X12RFR
	595	315204-0111	-		2	O-RING 1X1,6 VITON
	600	315742-0112	-		2	RETAINING 16SMS199RFR
	610	342797-0121	S		2	BANJO CONNSINGEL 6-1/8
	620	978462	-		1	PROTECTION PLATE

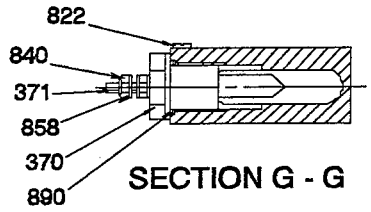

SECTION G - G

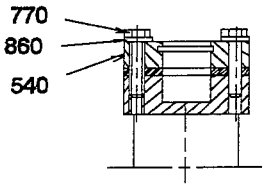

SECTION C - C

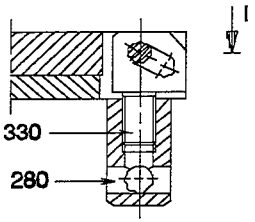

SECTION F - F

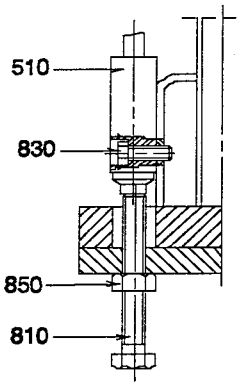

SECTION E - E

90°

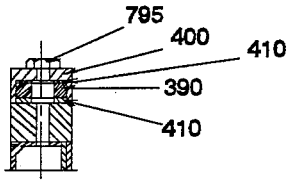

SECTION D - D

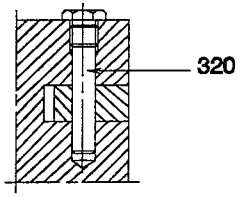

SECTION I - I

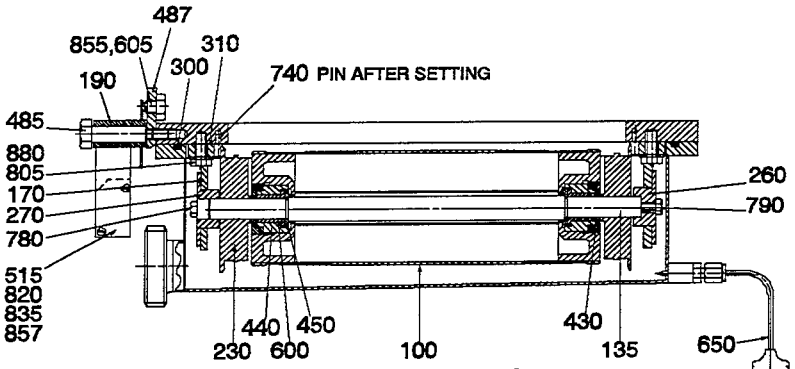

SECTION A - A

90°

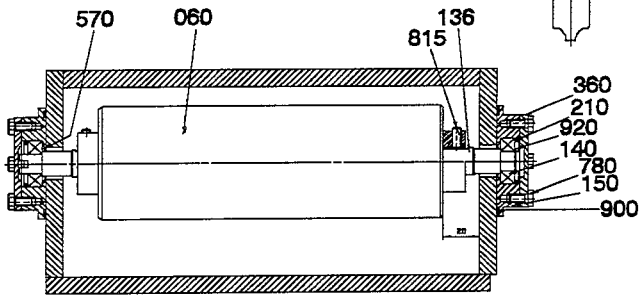

SECTION H - H

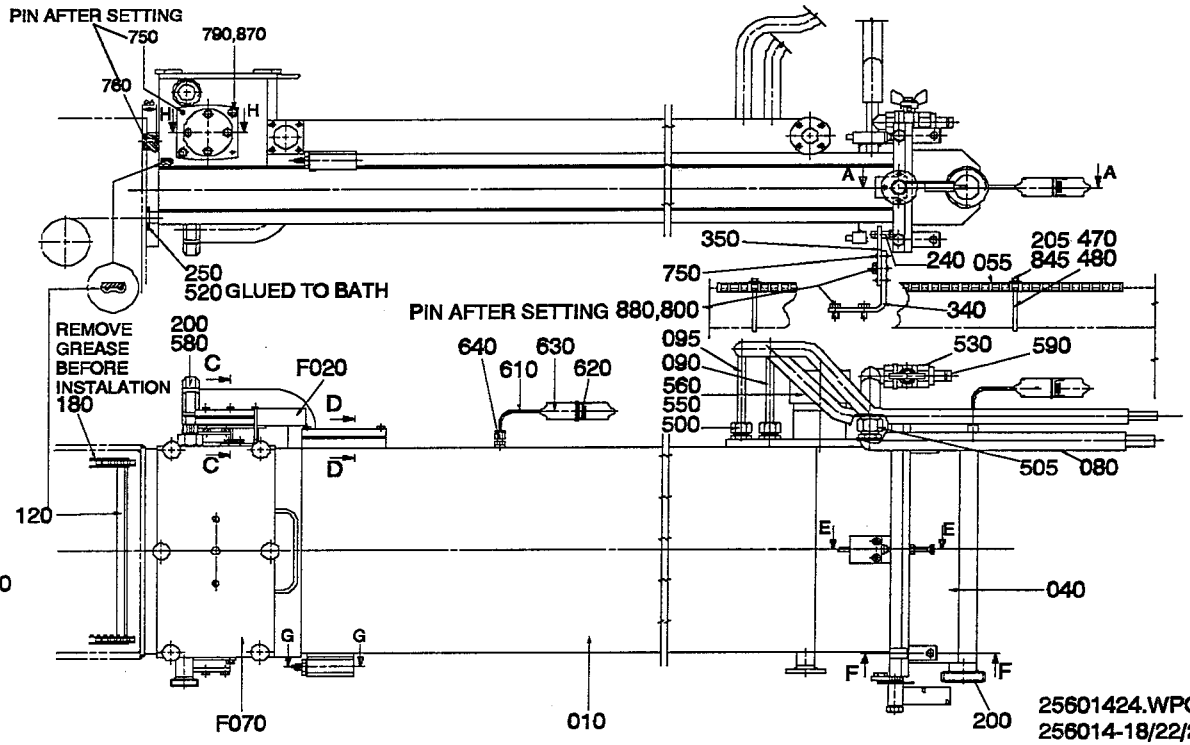

25601424.WPG
256014-18/22/24/25
AM 18737

Last Alteration: AM 19335 93-02-22

Corresponding group: 256014-060V
Assembly Drawing: 256014-18/22/24/25

Issue: **940524**

From	Pos	Part No	SP	UN	Qty	Description
With Pull-Tab						
		C- 256014-0601				**Bath, Ass'y**
	F020	**C- 752957-0101**	**-**		**1**	**SPLICE DETECTOR**
Without Pull-Tab						
		C- 256014-0602				**Bath, Ass'y**
Common parts						
	F070	**C- 752173-010V**	**-**		**1**	**LID**
	010	978574	-		1	BATH
	040	491593	-		1	COVER
	055	978547	-		1	TOUCH GUARD
	060	491594	-		1	BENDING ROLLER
	080	572469	-		1	PIPE
	090	572468	-		1	PIPE
	095	572471	-		1	PIPE
	100	295111	S		1	BENDING ROLLER
	120	456995	S		1	CARRIER
	135	978569	C		1	SHAFT
	136	491737	-		1	SHAFT
	140	484190	S		2	BALL BEARING
	150	491598	-		2	BEARING SEAT
	170	491600	-		2	CANTILEVER
	180	491601	S		2	ROLLER CHAIN
		484204	P		0	* LINK
	190	751761	-		1	ARM
	200	12242-0003	PU		2	GASKET
	205	27815	S		4	WASHER
	210	247172	S		2	SPACER RING
	230	247239	S		2	WHEEL
	240	247248	-		2	PEG
	250	256005	S		1	GASKET
	260	256006	-		1	AXLE SUPPORT
	270	256007	-		1	AXLE SUPPORT
	280	256010	S		4	NUT
	300	295388	PU		1	GASKET
	310	441474	-		2	SHIM
	320	441636	-		4	SHAFT
	330	441637	-		4	DOWEL
	340	456472	-		2	ANGLE
	350	456474	-		2	ADJUSTMENT PLATE
	360	456516	C		2	BEARING COVER
	370	560931	S		1	BRACKET
	371	567070-0012	-		1	ELECTRODE
	390	543470	S		2	LEVEL GLASS
	400	476398	-		2	LID
	410	569016	P		4	GASKET
	430	491363	-		2	NUT
	440	491364	-		2	BEARING HOLDER
	450	491365	-		2	THRUST BEARING
	470	751698	-		2	HOLDER
	480	751699	-		2	WASHER
	485	751762	-		1	SHAFT
	487	751763	-		1	BRACKET
	500	90030-0187	S		2	PIPE CONNECTION
	505	90030-0191	S		1	PIPE CONNECTION
	510	90044-0084	P		2	MICRO SWITCH
	515	90044-0104	-		1	INDUCTIVE SWITCH
	520	90153-0016	-	ML	X	ADHESIVE
	530	90187-0029	S		1	VALVE
	540	90199-0010	S		1	LEVEL GLASS
	550	90206-0326	-		1	CONNECTION BOX
	560	90206-0070	PU		1	HEATING ELEMENT
	570	90214-0303	P		6	RING
	580	90217-0035	-		1	NUT
	590	90224-0078	-		1	CONNECTION
	600	90240-0146	S		2	FLANGE BUSHING
	605	90287-0106	-		1	SPRINGLOADED SCREW
	610	90326-0019	P		1	THERMOELEMENT
	620	90326-0020	P		2	SOCKET
	630	90326-0012	P		2	PROTECTIVE COVER
	640	90326-0017	P		1	GLAND
	650	90326-0052	P		1	THERMO ELEMENT
	740	311103-0236	-		4	CYLINDRICACP M6 3X16 RFR
	750	311103-0270	-		8	CYLINDRICACP M6 4X16 RFR
	760	311103-0310	-		2	CYLINDRICACP M6 5X20 RFR
	770	312105-0332	-		6	SCREW M6S5X22RFR
	780	312105-0366	-		16	SCREW M6S6X12RFR
	790	312105-0368	-		6	SCREW M6S6X16RFR
	795	312105-0370	-		4	SCREW M6S6X20RFR
	800	312105-0449	-		10	SCREW M6S8X16RFR
	805	312105-0451	-		4	SCREW M6S8X20RFR
	810	312109-0463	-		2	SCREW
	815	312318-0368	-		2	STOP SCREW SK6SS6X16RFR
	820	312125-0230	-		2	SLOTTED HEMCS3X20RFR
	822	312125-0285	-		1	SLOTTED HEMCS4X6RFR
	830	312115-0329	-		4	SCREW 5X16 A4 80
	835	312605-0310	-		2	NUT M6M3RFR
	840	312605-0312	-		2	NUT M6M4RFR
	845	312605-0314	-		4	NUT M6M5RFR
	850	312605-0318	-		2	NUT M6M8RFR
	855	312605-0320	-		1	NUT M6M10RFR

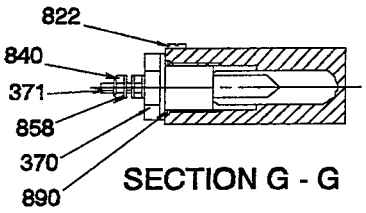

SECTION G - G

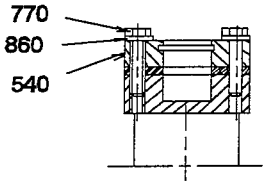

SECTION C - C

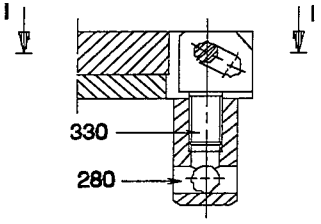

SECTION F - F

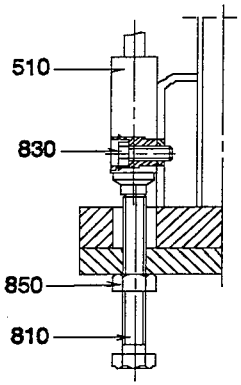

SECTION E - E
90°

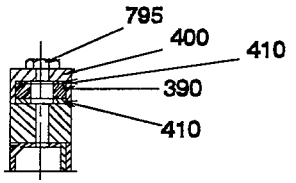

SECTION D - D

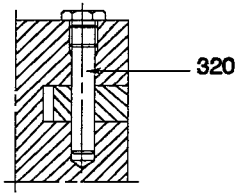

SECTION I - I

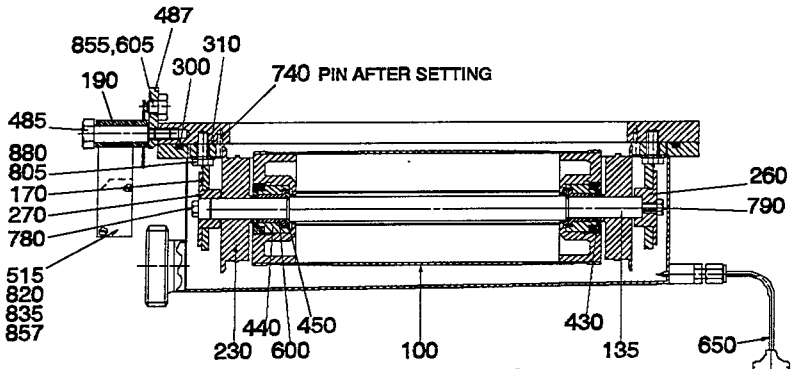

SECTION A - A
90°

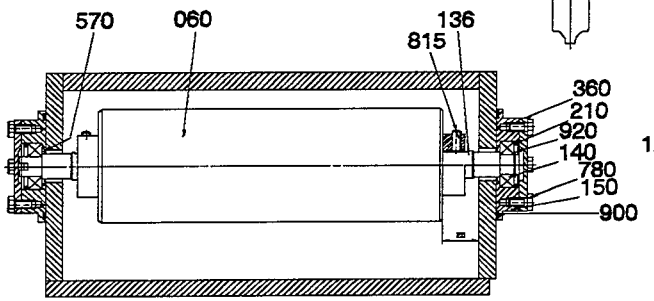

SECTION H - H

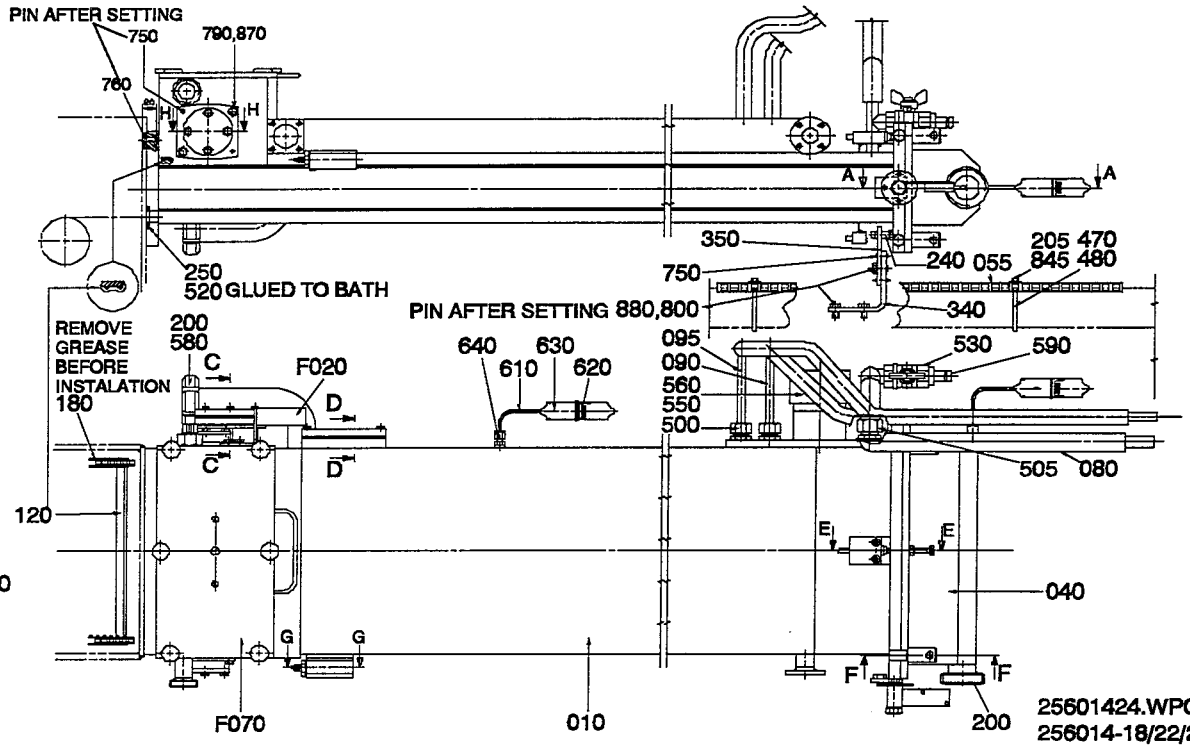

25601424.WPG
256014-18/22/24/25
AM 18737

Last Alteration: AM 19335 93-02-22

Corresponding group: 256014-060V
Assembly Drawing: 256014-18/22/24/25

Issue: 940524

From	Pos	Part No	SP	UN Qty	Description
	857	315105-0124	-	2	WASHER BRB3,2X6RFR
	858	315105-0136	-	3	WASHER BRB4,3X8RFR
	860	315105-0146	-	6	WASHER BRB5,3X10RFR
	870	315105-0153	-	5	WASHER BRB6,4X12RFR
	880	315105-0165	-	6	WASHER BRB8,4X16RFR
	890	315204-0213	P	1	O-RING 15,3X2,4VITON
	900	315204-0305	P	2	O-RING 69,5X3
	920	315751-0112	S	1	CIRCLIP SGA15 RFR

From	Pos	Part No	SP	UN Qty	Description

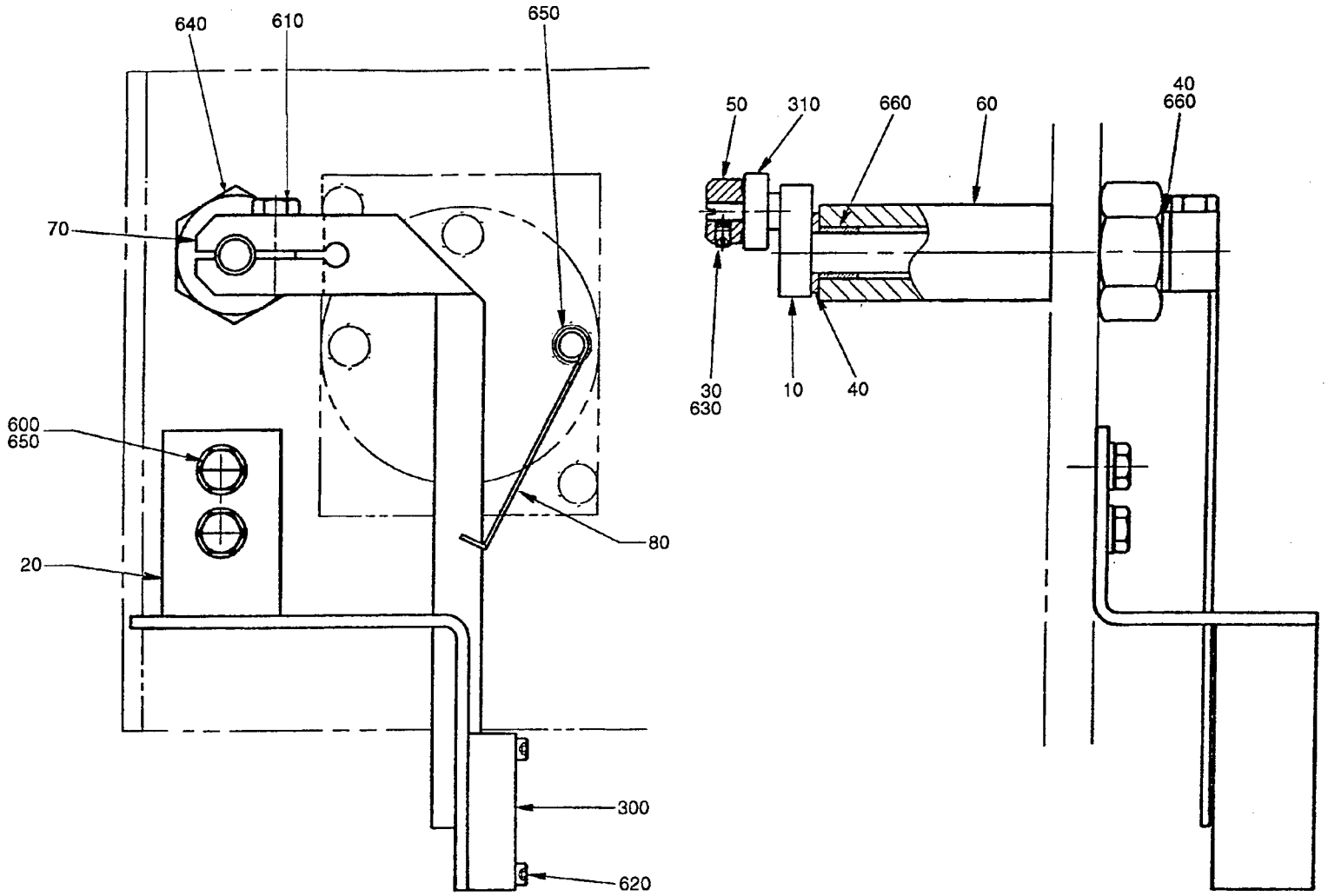

75295701.TIF
752957-1
AM 13604

From	Pos	Part No	SP	UN	Qty	Description
		C- 752957-0101				**Splice Detector, Ass'y**
	010	469979	-		1	HOLDER
	020	491578	-		1	BRACKET
	030	24356	-		1	PIECE
	040	271211	-		2	WASHER
	050	271654	-		1	RETAINING RING
	060	469981	-		1	BRACKET
	070	456121	-		1	ARM
	080	491149	-		1	SPRING
	300	90044-0104	-		1	INDUCTIVE SWITCH
	310	90214-0138	-		1	BALL BEARING
	600	312105-0368	-		2	SCREW M6S6X16RFR
	610	312105-0370	-		1	SCREW M6S6X20RFR
	620	312115-0228	-		2	SCREW 3X16 A4 80
	630	312318-0283	-		1	STOP SCREW SK6SS4X4RFR
	640	312605-0326	-		1	NUT M6M20RFR
	650	315105-0153	-		3	WASHER BRB6,4X12RFR
	660	321127-0100	-		2	BUSHING 10/13X10

From	Pos	Part No	SP	UN	Qty	Description

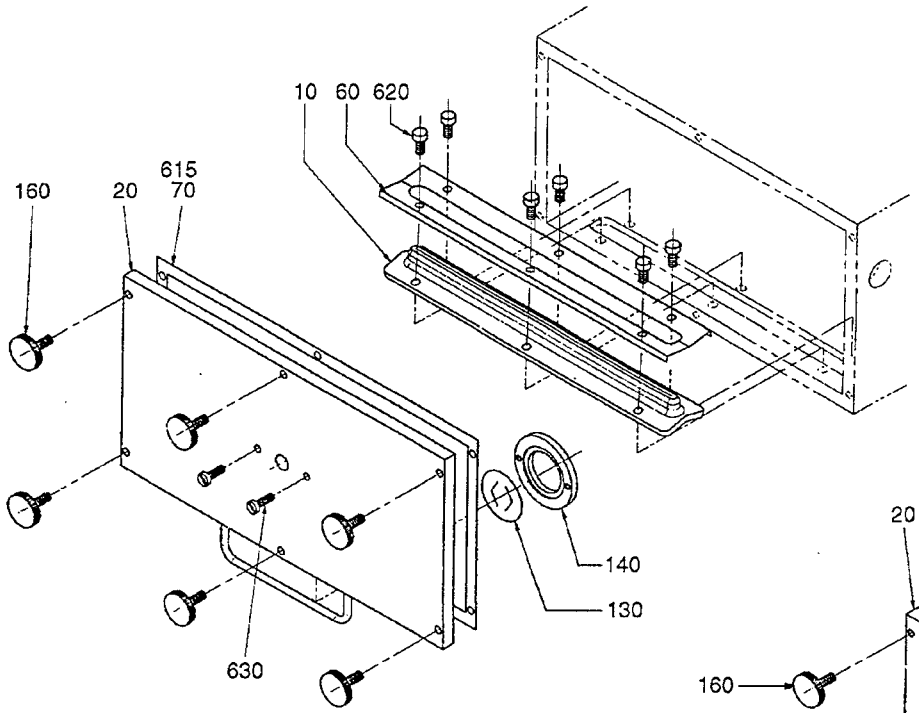

With Pull-Tab

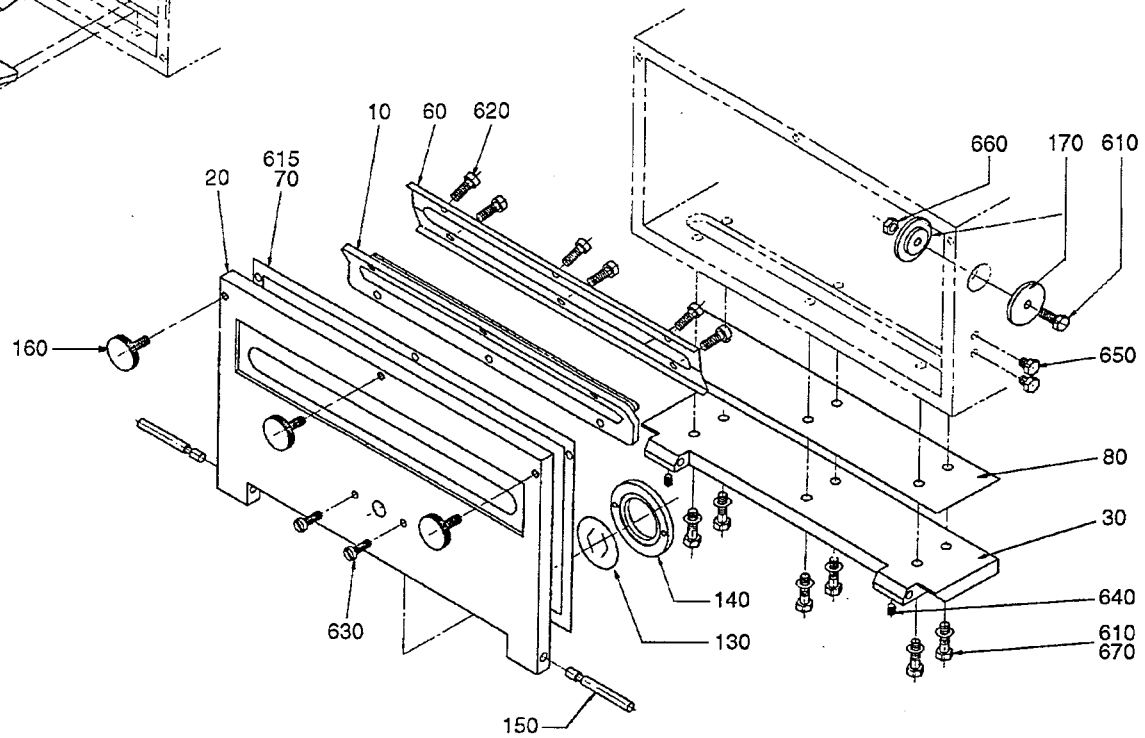

Without Pull-Tab

75217301.TIF
752173-1/2
AM 14880

From	Pos	Part No	SP	UN	Qty	Description
With Pull-Tab						
		C- 752173-0101				**Lid, Ass'y**
	020	491595	-		1	LID
	160	491126	-		6	SCREW
Without Pull-Tab						
		C- 752173-0102				**Lid, Ass'y**
	020	751756	-		1	LID
	030	751757	-		1	BRACKET
	080	751759	-		1	GASKET
	150	751679	-		2	SHAFT
	160	751680	-		3	SCREW
	170	752417	-		2	WASHER
	610	312105-0372	-		7	SCREW M6S6X25RFR
	640	312318-0321	-		2	STOP SCREW SK6SS5X6RFR
	650	312105-0362	-		2	SCREW M6S6X8RFR
	660	312605-0316	-		1	NUT M6M6RFR
	670	315125-0153	-		6	WASHER SB 6,4X22X4 RFR
Common parts						
	010	273954	P		1	SEAL
	060	456784	-		1	LID
	070	751331	P		1	GASKET
	130	273937	P		1	DIAPHRAGM
	140	469982	-		1	WASHER
	615	90153-0023	-		X	ADHESIVE
	620	312115-0366	-		6	SCREW 6X12 A4 80
	630	312125-0331	-		2	SLOTTED HEMCS5X20RFR

From	Pos	Part No	SP	UN	Qty	Description

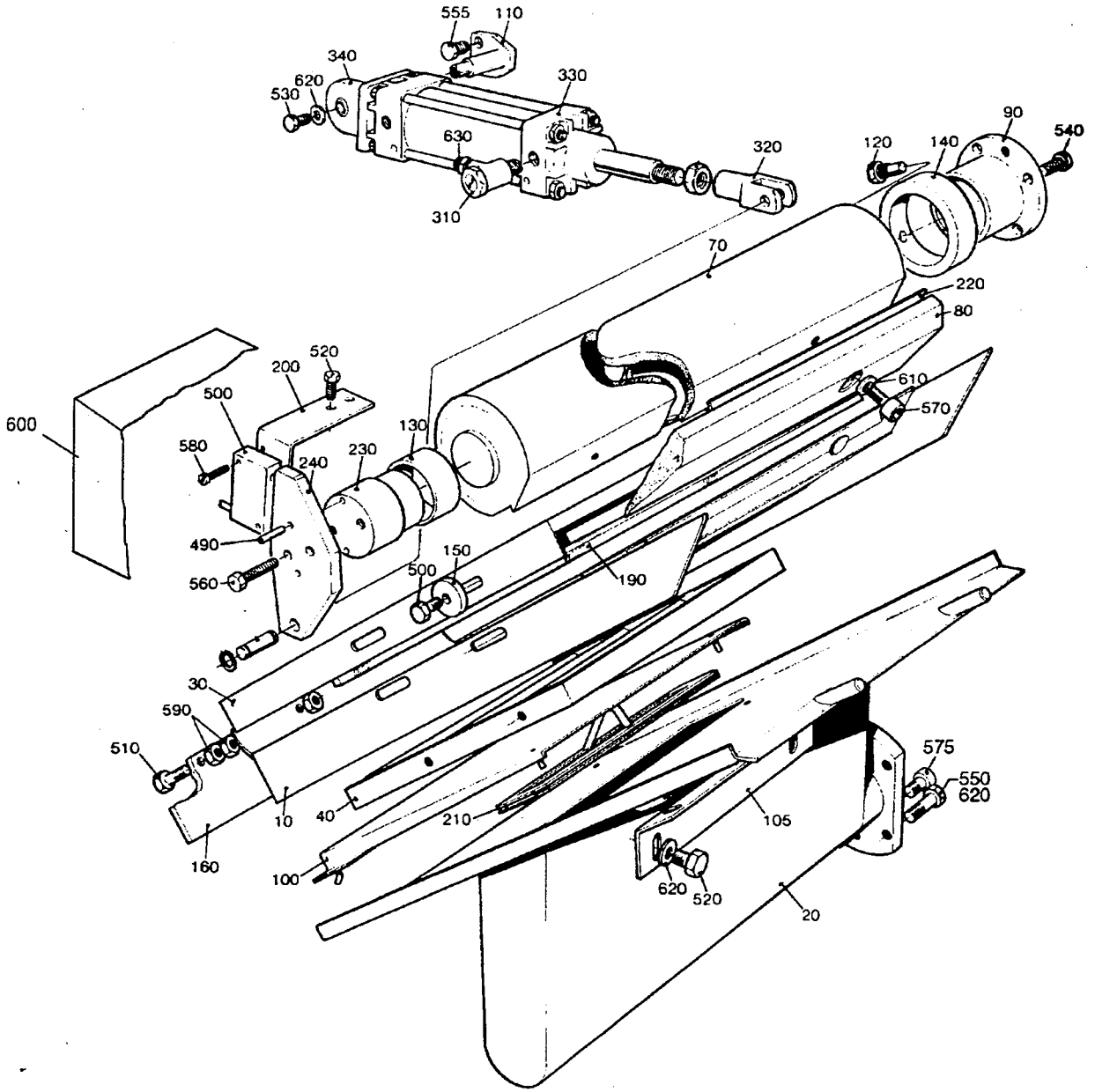

27202503.tif
272025-3/4
AM 16686

Last Alteration: AM 20223 93-10-28

Corresponding group: 272025-030V
Assembly Drawing: 272025-3/4

Issue: 940524

From	Pos	Part No	SP	UN	Qty	Description
125ml						
		C- 272025-0301				**Air Knife, Ass'y**
	010	271824	-		1	AIR KNIFE, MOVABLE
	020	271825	-		1	FIXED AIR KNIFE
	030	271941-0001	-		1	FRAME
	040	271942-0001	-		1	AIR GUIDE
	070	272026-0001	-		1	AIR DISTRIBUTOR
	080	271820-0001	-		1	STEERING RAIL
	100	272140-0001	-		1	HEAD PLATE
	160	271827-0001	-		1	HEAD PLATE
	190	272027-0001	S		1	GLASS PANE
	210	272141-0001	S		1	FILTER
	220	272329-0001	S		2	LACE
	570	312115-0325	-		5	SCREW 5X10 A4 80
	610	315105-0146	-		3	WASHER BRB5,3X10RFR
250 ml Slim 284ml - 180ml						
		C- 272025-0302				**Air Knife, Ass'y**
	010	272022	-		1	AIR KNIFE, MOVABLE
	020	272023	-		1	FIXED AIR KNIFE
	030	271941-0002	-		1	FRAME
	040	271942-0002	-		1	AIR GUIDE
	070	272026-0002	-		1	AIR DISTRIBUTOR
	080	469991	-		1	RAIL
	100	272140-0002	-		1	HEAD PLATE
	160	271827-0002	-		1	HEAD PLATE
	190	272027-0002	S		1	GLASS PANE
	210	272141-0002	S		1	FILTER
	220	272329-0002	S		3	LACE
	570	312115-0325	-		7	SCREW 5X10 A4 80
	610	315105-0146	-		5	WASHER BRB5,3X10RFR
160ml 200ml Slim						
		C- 272025-0303				**Air Knife, Ass'y**
	010	272022	-		1	AIR KNIFE, MOVABLE
	020	272023	-		1	FIXED AIR KNIFE
	030	271941-0002	-		1	FRAME
	040	271942-0002	-		1	AIR GUIDE
	070	272026-0002	-		1	AIR DISTRIBUTOR
	080	271820-0002	-		1	STEERING RAIL
	100	272140-0002	-		1	HEAD PLATE
	160	271827-0002	-		1	HEAD PLATE
	190	272027-0002	S		1	GLASS PANE
	210	272141-0002	S		1	FILTER
	220	272329-0002	S		3	LACE
	570	312115-0325	-		7	SCREW 5X10 A4 80
	610	315105-0146	-		5	WASHER BRB5,3X10RFR

From	Pos	Part No	SP	UN	Qty	Description
Common parts						
	090	271858	-		1	FLANGE
	105	272464	-		1	ANGLE BRACKET
	110	441578-0001	S		1	CYLINDER BRACKET
	120	255995	S		1	SCREW
	130	751165	S		1	BUSHING
	140	256022	S		1	BUSHING
	150	263311	C		4	WASHER
	200	490867	-		1	BRACKET
	230	441576	-		1	SPACER
	240	441903	C		1	ARM
	250	978461	-		1	PROTECTION PLATE
	300	90044-0104	P		1	INDUCTIVE SWITCH
	310	90235-0274	-		2	VALVE
	320	90239-0516	-		1	PISTON ROD HEAD
	330	90239-0773	S		1	CYLINDER
		90239-0442	S		1	* SEAL KIT
	340	90239-0453	-		1	BRACKET
	490	311103-0233	-		2	CYLINDRICACP M6 3X10 RFR
	500	312105-0293	-		4	SCREW M6S4X16 A2 80
	510	312105-0331	-		2	SCREW M6S5X20 A2 80
	520	312105-0364	-		6	SCREW M6S6X10RFR
	530	312105-0366	-		3	SCREW M6S6X12RFR
	540	312105-0368	-		4	SCREW M6S6X16RFR
	550	312105-0370	-		4	SCREW M6S6X20RFR
	555	312105-0447	-		2	SCREW M6S8X12RFR
	560	312105-0464	-		2	SCREW M6S8X65RFR
	575	312115-0366	-		2	SCREW 6X12 A4 80
	580	312125-0228	-		2	SLOTTED HEMCS3X16RFR
	590	312605-0314	-		4	NUT M6M5RFR
	600	312605-0316	-		2	NUT M6M6RFR
	620	315105-0153	-		9	WASHER BRB6,4X12RFR
	630	342797-0121	S		2	BANJO CONNSINGEL 6-1/8

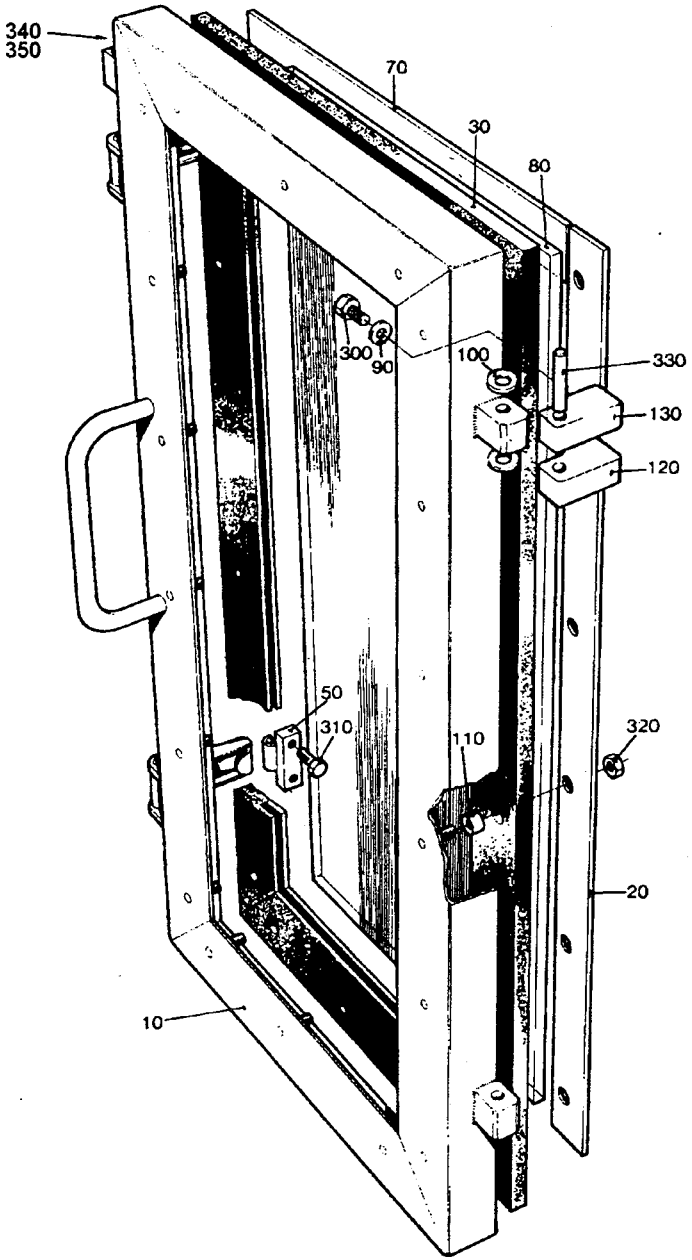

49157002.TIF
491570-1
AM 17862

From	Pos	Part No	SP	UN	Qty	Description
		C- 491570-0201				**Door, Ass'y**
	010	978542	-		1	FRAME
	020	272780	-		2	COVER SLIP
	030	272785	-		1	RUBBER STRIP
	050	271860	S		2	CLAMP BLOCK
	070	272782	-		2	COVER SLIP
	080	272783-0003	-		1	GLASS PANE
	090	441737	S		2	WASHER
	100	441739	S		4	WASHER
	110	441718	C		18	SPACER
	120	G- 441740	S		2	HINGE FLANGE
	130	G- 441741	S		2	HINGE FLANGE
	300	312105-0451	-		4	SCREW M6S8X20RFR
	310	312105-0366	-		4	SCREW M6S6X12RFR
	320	312605-0314	-		18	NUT M6M5RFR
	330	311103-0413	-		2	CYLINDRICACP M6 8X50 RFR
	340	312155-0329	-		2	SCREW MF6S5X16RFR
	350	312812-0314	-		2	LOCK NUT A2-M5RFR

From	Pos	Part No	SP	UN	Qty	Description

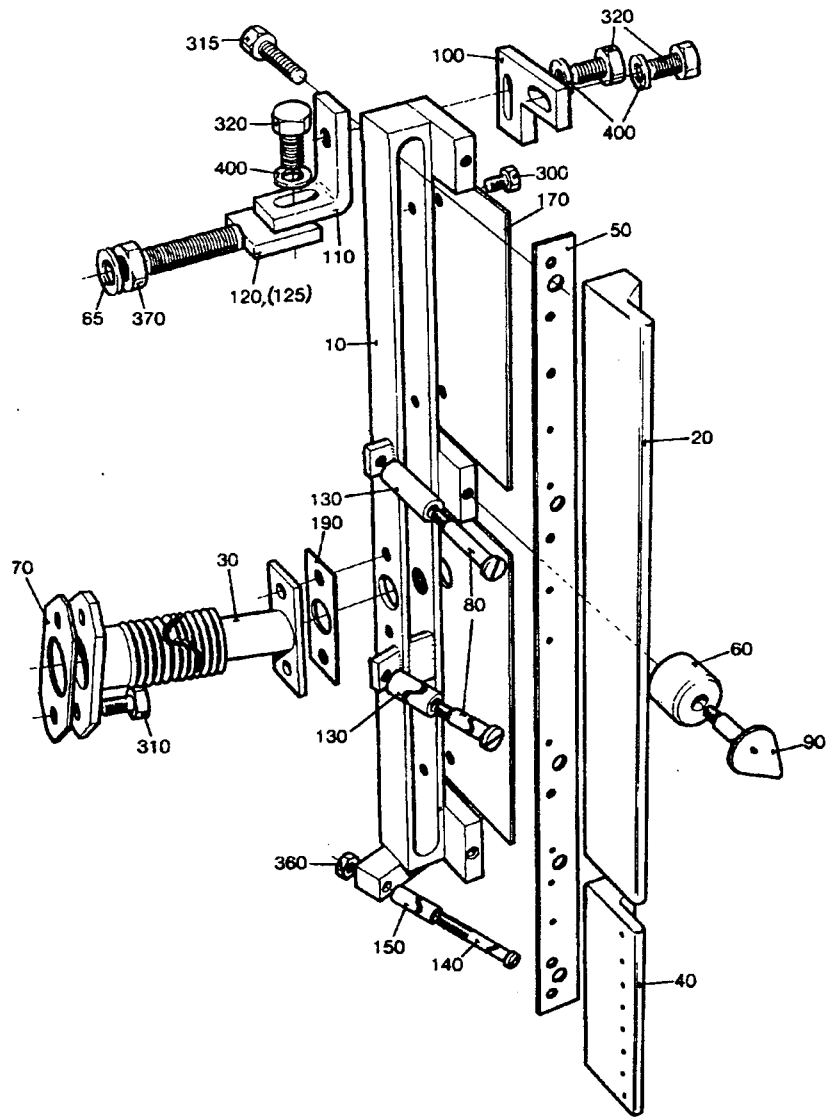

46950105.TIF
469501-5
AM 17886

Last Alteration: AM 20236 93-12-30

Corresponding group: 469501-040V
Assembly Drawing: 469501-5

Issue: 940524

From	Pos	Part No	SP	UN	Qty	Description
125ml 160ml 200ml Slim 250ml Slim						
		C- 469501-0401				**Air Nozzle, Ass'y**
	080	256899	S		2	SHAFT
	130	469461	P		2	ROLL
284ml - 180ml						
		C- 469501-0401				**Air Nozzle, Ass'y**
	080	256899	S		1	SHAFT
	130	469461	P		1	ROLL
Common Parts						
	010	752218	C		1	ATTACHMENT
	020	568577	S		1	AIR NOZZLE
	030	751722	C		1	PIPE-LINE
	040	568578	C		1	AIR NOZZLE
	050	568581	S		1	DISTRIBUTOR WING
	060	6161	P		3	ROLL
	065	28036	-		4	WASHER
	070	751010	P		1	GASKET
	090	272095	S		3	SHAFT
	100	469458	-		2	BRACKET
	110	469459	-		2	BRACKET
	120	469460	-		1	BRACKET
	125	491143	-		1	BRACKET
	140	469463	S		1	SHAFT
	150	469464	P		1	ROLL
	170	469466	-		2	SHEET
	190	751024	P		1	GASKET
	300	312105-0287	-		4	SCREW M6S4X8 A2 80
	310	312105-0325	-		4	SCREW M6S5X10 A2 80
	315	312105-0333	-		5	SCREW M6S5X25 A2 80
	320	312105-0366	-		6	SCREW M6S6X12RFR
	360	312605-0312	-		1	NUT M6M4RFR
	370	312605-0318	-		3	NUT M6M8RFR
	400	315105-0153	-		6	WASHER BRB6,4X12RFR

From	Pos	Part No	SP	UN	Qty	Description

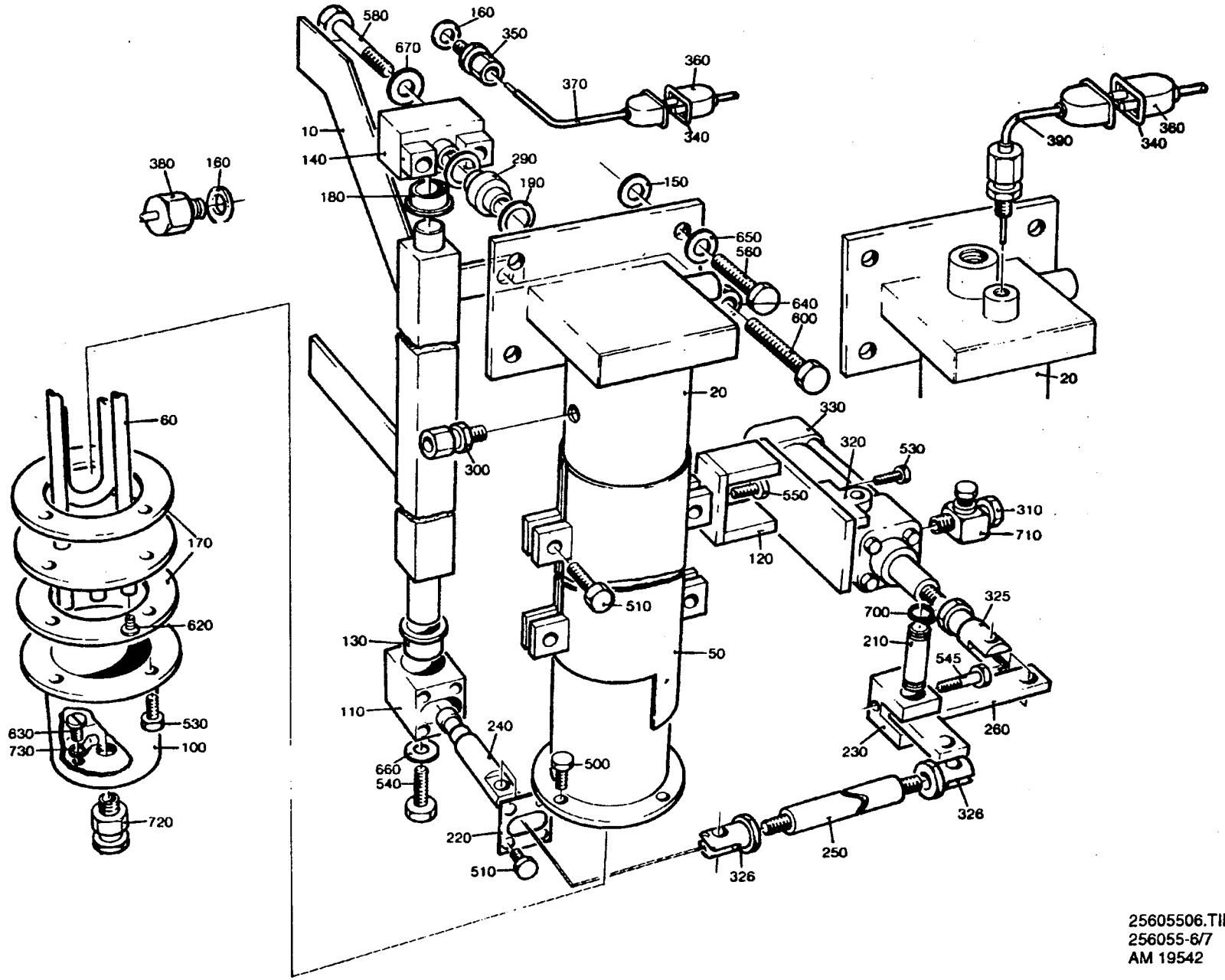

25605506.TIF
256055-6/7
AM 19542

Last Alteration: AM 19542 93-04-05

Corresponding group: 256055-060V
Assembly Drawing: 256055-6/7

Issue: **940524**

From	Pos	Part No	SP	UN Qty	Description
		C- 256055-060V			**Hot Air Element, Ass'y**
	010	491169	C	1	PIVOT ARM
	020	752174	C	1	HEATING PIPE
	050	272114	-	1	HEAT GUARD
	060	441804	PU	1	COIL HEATER
	100	491170	C	1	COVER
	110	491171	C	1	BEARING BLOCK
	120	G- 978736	-	1	BRACKET
	130	271269	P	2	BUSHING
	140	272286	-	1	AXLE SUPPORT
	150	751019	P	8	WASHER
	160	273429	S	2	WASHER
	170	751020	P	2	GASKET
	180	295909	P	1	BUSHING
	190	751023	P	2	GASKET
	210	491931	-	1	SHAFT
	220	491172	S	1	GASKET
	230	491173	S	1	BRACKET
	240	491174	S	1	ARM
	250	491175	S	1	LINK
	260	491177	S	1	ARM
	290	491487	S	1	BUSHING
	300	90030-0187	-	1	PIPE CONNECTION
	310	90235-0282	-	2	VALVE
	320	90239-0460	-	1	BRACKET
	325	90239-0516	S	1	PISTON ROD HEAD
	326	90239-0532	S	2	
	330	90239-0779	S	1	CYLINDER
		90239-0442	S	1	* SEAL KIT
	340	90326-0012	P	2	PROTECTIVE COVER
	350	90326-0017	P	1	GLAND
	360	90326-0020	P	2	SOCKET
	370	90326-0048	P	1	THERMOELEMENT
	380	90326-0304	S	1	LEAD IN
	390	90326-0057	P	1	THERMOELEMENT
	500	312105-0327	-	2	SCREW M6S5X12 A2 80
	510	312105-0368	-	8	SCREW M6S6X16RFR
	530	312105-0370	-	10	SCREW M6S6X20RFR
	540	312105-0372	-	1	SCREW M6S6X25RFR
	545	312105-0376	-	2	SCREW M6S6X35RFR
	550	312105-0449	-	2	SCREW M6S8X16RFR
	560	312105-0455	-	4	SCREW M6S8X30RFR
	580	312105-0462	-	2	SCREW M6S8X55RFR
	600	312109-0457	-	1	SCREW 8X35 H A4 80
	620	312125-0226	-	3	SLOTTED HEMCS3X12RFR
	630	312125-0323	-	1	SLOTTED HEMCS5X8RFR
	640	312605-0318	-	1	NUT M6M8RFR
	650	315105-0165	-	4	WASHER BRB8,4X16RFR
	660	315125-0153	-	1	WASHER SB 6,4X22X4 RFR
	670	315125-0165	-	2	WASHER SB 8,4X26X5 RFR
	700	90141-0016	-	2	LOCK RING
	710	342797-0121	S	2	BANJO CONNSINGEL 6-1/8
	720	352100-0106	-	1	CABLE GLANR.18,6-10,5
	730	353101-0132	P	1	CABLE SHOE

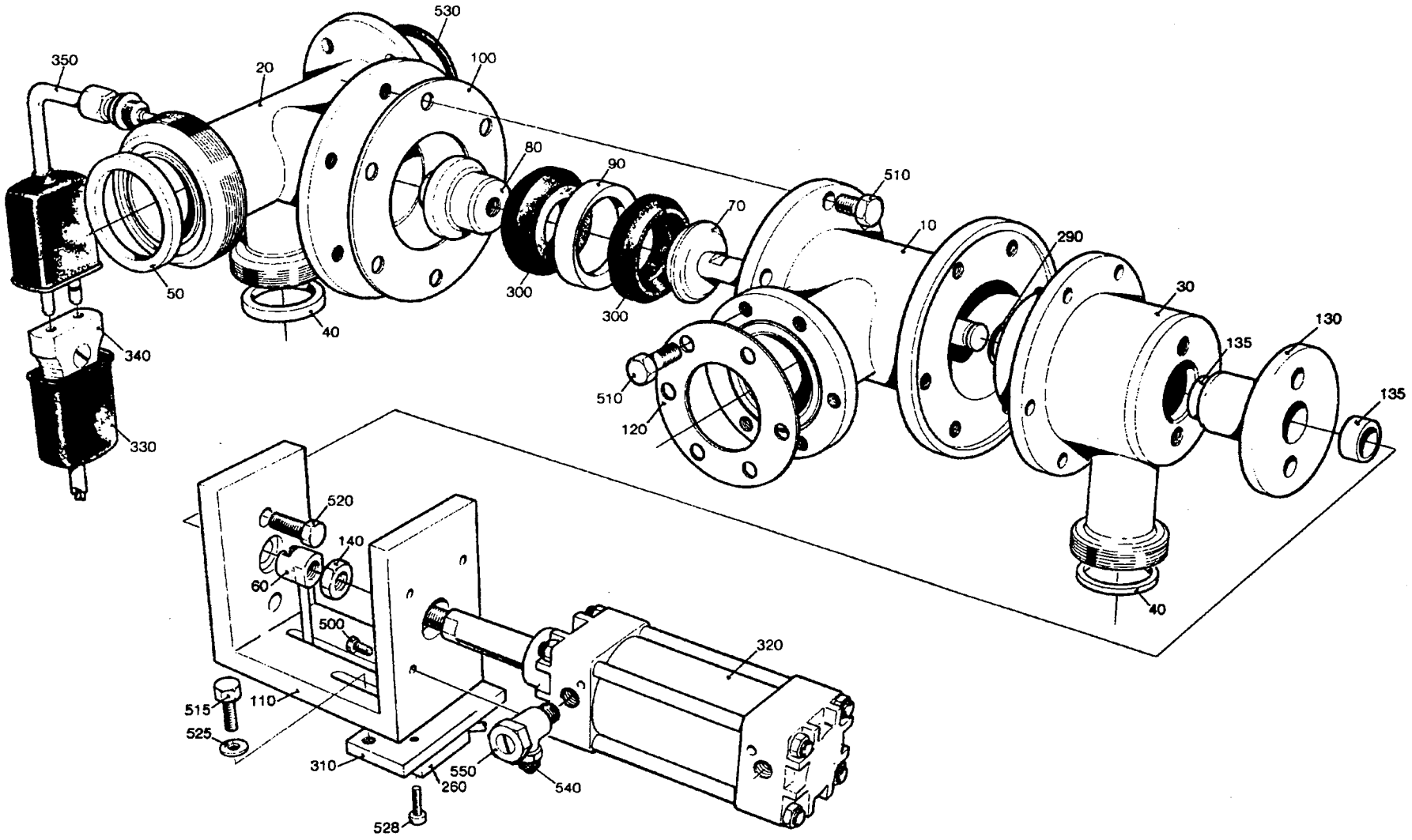

27233704.TIF
272337-4
AM 12648

From	Pos	Part No	SP	UN	Qty	Description
		C- 272337-0401				**Valve, Ass'y**
	010	271167	C		1	VALVE HOUSING
	020	490884	-		1	BRANCH PIPE
	030	491101	C		1	HOUSE
	040	90091-0180	P		2	GASKET
	050	90091-0182	P		1	GASKET
	060	553183	S		1	PENDULUM SUSPENSION
	070	266389	S		1	PISTON ROD
	080	266390	S		1	NUT
	090	266391	S		1	RING
	100	295160	S		2	GASKET
	110	553184	C		1	BRACKET
	120	531742	P		1	GASKET
	130	532348	S		1	SPINDLE GUIDE
	135	532349	S		2	PLAIN BEARING
	140	441286	C		1	NUT
	260	90044-0104	P		1	INDUCTIVE SWITCH
	290	90141-0022	S		1	RING
	300	530588	P		2	SEAL RING
	310	553187	-		1	MOUNTING SHEET
	320	90239-0779	S		1	CYLINDER
		90239-0442	S		1	* SEAL KIT
	330	90326-0012	S		1	PROTECTIVE COVER
	340	90326-0020	S		1	SOCKET
	350	90326-0051	P		1	THERMO COUPLE
	500	312105-0331	-		4	SCREW M6S5X20 A2 80
	510	312105-0366	-		18	SCREW M6S6X12RFR
	515	312105-0370	-		2	SCREW M6S6X20RFR
	520	312105-0451	-		2	SCREW M6S8X20RFR
	525	315125-0153	-		2	WASHER SB 6,4X22X4 RFR
	528	312125-0228	-		2	SLOTTED HEMCS3X16RFR
	530	315204-0223	-		1	O-RING 39,2X3VITON
	540	342797-0121	S		2	BANJO CONNSINGEL 6-1/8
	550	342980-0303	-		2	BANJO CONN SINGEL 1/8"

From	Pos	Part No	SP	UN	Qty	Description

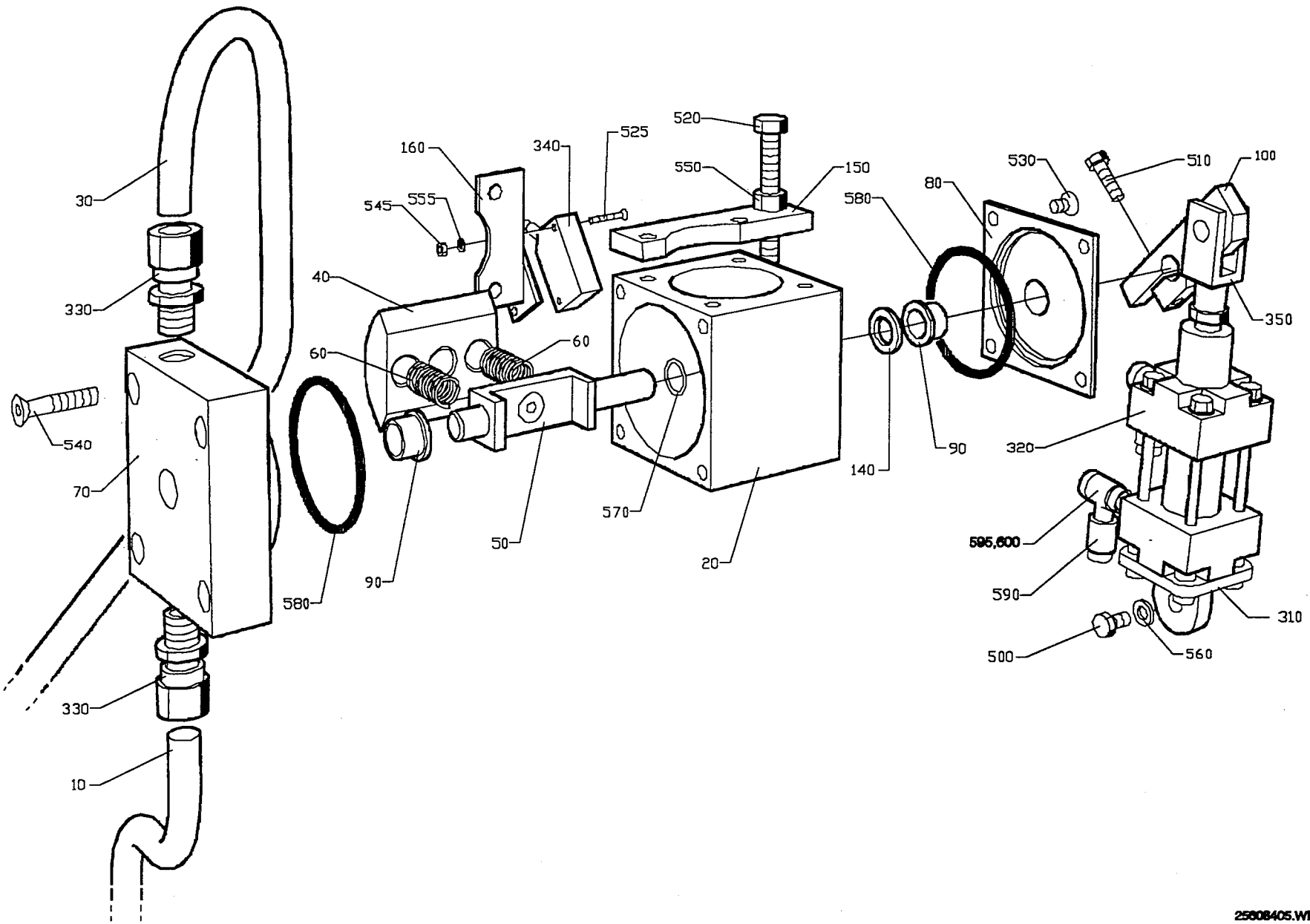

25608405.WPG
256084-5
AM 18737

Last Alteration: AM 20223 93-10-28

Corresponding group: 256084-050V
Assembly Drawing: 256084-5

Issue: 940524

From	Pos	Part No	SP	UN	Qty	Description
284ml - 180ml						
		C- 256084-0501				**Change-Over Valve, Ass'y**
	010	752742-0001	-		1	PIPE
250ml 200ml Slim 125ml 160ml						
		C- 256084-0502				**Change-Over Valve, Ass'y**
	010	752742-0002	-		1	PIPE
Common parts						
	020	255870	C		1	VALVE HOUSING
	030	751736	-		1	PIPE
	040	255871	S		1	PIECE
	050	751732	S		1	BRACKET
	060	21521	S		2	COMPRESSION SPRING
	070	751731	S		1	BEARING COVER
	080	441957	S		1	BEARING COVER
	090	255875	S		2	BUSHING
	100	751760	C		1	CYLINDER BRACKET
	140	266737	-		1	WASHER
	150	751740	-		1	STOP
	160	752419	-		1	BRACKET
	310	90239-0453	-		1	BRACKET
	320	90239-0779	S		1	CYLINDER
		90239-0442	S		1	* SEAL KIT
	330	90030-0187	-		4	PIPE CONNECTION
	340	90044-0104	-		1	INDUCTIVE SWITCH
	350	90239-0516	-		1	PISTON ROD HEAD
	500	312105-0366	-		1	SCREW M6S6X12RFR
	510	312105-0370	-		1	SCREW M6S6X20RFR
	520	312109-0463	-		1	SCREW
	525	312125-0230	-		2	SLOTTED HEMCS3X20RFR
	530	312155-0364	-		4	SCREW MF6S6X10RFR
	540	312155-0374	-		4	SCREW MF6S6X30RFR
	545	312605-0310	-		2	NUT M6M3RFR
	550	312605-0318	-		1	NUT M6M8RFR
	555	315105-0124	-		2	WASHER BRB3,2X6RFR
	560	315105-0153	-		1	WASHER BRB6,4X12RFR
	570	315204-0110	-		1	O-RING 1X1,6 VITON
	580	315204-0302	S		2	O-RING 54,5X3VITON
	590	342797-0121	S		2	BANJO CONNSINGEL 6-1/8
	595	342980-0113	S		2	BANJO CONNSINGEL 6/4-1/8
	600	342980-0313	-		2	BANJO CONN DUBBEL 1/8

From	Pos	Part No	SP	UN	Qty	Description

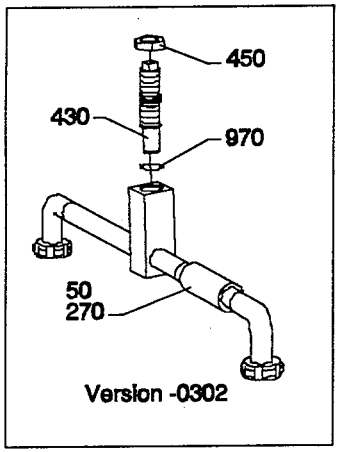

46945205.WPG
469452-5/6
AM 19465

From	Pos	Part No	SP	UN	Qty	Description
50Hz						
		C- 469452-0301				**Compressor Unit, Ass'y**
	430	490998	C		1	THROTTLE SCREW
	450	442237	C		1	NUT
	635	90217-0026	-		2	NUT
	970	315202-0119	P		1	O-RING 25,1X1,6
60Hz						
		C- 469452-0302				**Compressor Unit, Ass'y**
	050	491090	-		1	PIPE
	430	490998	C		2	THROTTLE SCREW
	450	442237	C		2	NUT
	970	315202-0119	P		2	O-RING 25,1X1,6
Common parts						
	030	751064	-		1	COVER
	040	751250	-		1	PIPE
	055	751251	-		1	PIPE
	060	751598	-		1	CANTILEVER
	070	751002	-		1	PLATE
	080	752002	-		2	BRACKET
	110	271640	C		2	LID
	120	751215	-		1	PIPE
	130	751216	-		1	PIPE
	145	469511	C		2	BOTTOM
	160	491750	-		1	SUPPORT
	190	751235	-		2	INSULATION
	200	269443	C		2	BRACKET
	210	269461	C		2	CONTAINER
	220	751246	-		1	HOSE
	230	469156	-		1	PIPE
	240	751247	-		1	HOSE
	250	751248	-		1	HOSE
	260	491095	-		1	PIPE
	270	12242-0001	P		2	GASKET
	280	12242-0003	P		1	GASKET
	310	179595	C		2	CLOSING DEVICE
	320	179596	C		2	FLOAT
	330	230551	PU		4	GASKET
	350	531742	P		1	GASKET
	365	751044	-		4	BRACKET
	370	271461	PU		2	GASKET
	480	456270	-		1	PIPE
	490	456271	-		2	PIPE
	510	567070-0012	S		2	ELECTRODE
	511	560931	-		2	BRACKET
	600	90005-0006	-		2	SEAL RING
	610	90030-0058	-		1	CONNECTION
	620	90030-0109	-		2	PIPE CONNECTION
	625	90144-0004	-		X	TAPE
	630	90030-0187	-		6	PIPE CONNECTION
	670	90242-0084	PU		4	O-RING
	680	90270-0011	-		2	COMPRESSOR
		90270-0338	S		1	* SPARE PARTS KIT
		90270-0345	S		1	* SHIMS
		90270-0346	S		1	* GASKET
		90270-0348	R		1	* MOTOR
	690	90270-0347	C		2	VALVE
	695	90330-0029	-		2	PLUG
	710	90347-0089	-		5	DAMPER
	790	311103-0310	-		2	CYLINDRICACP M6 5X20 RFR
	800	311103-0361	-		2	CYLINDRICACP M6 6X40 RFR
	810	312105-0287	-		4	SCREW M6S4X8 A2 80
	820	312105-0366	-		62	SCREW M6S6X12RFR
	830	312105-0447	-		18	SCREW M6S8X12RFR
	835	312105-0451	-		2	SCREW M6S8X20RFR
	840	312105-0453	-		4	SCREW M6S8X25RFR
	845	312105-0457	-		2	SCREW M6S8X35RFR
	850	312105-0489	-		4	SCREW M6S10X16RFR
	860	312105-0491	-		13	SCREW M6S10X20RFR
	865	312105-0493	-		2	SCREW M6S10X25RFR
	870	312105-0495	-		16	SCREW M6S10X30RFR
	880	312115-0368	-		4	SCREW 6X16 A4 80
	890	312125-0285	-		2	SLOTTED HEMCS4X6RFR
	895	312812-0318	-		2	LOCK NUT A2-M8RFR
	900	312318-0323	-		2	STOP SCREW SK6SS5X8RFR
	910	312605-0312	-		4	NUT M6M4RFR
	911	315105-0136	-		6	WASHER BRB4,3X8RFR
	930	315105-0153	-		6	WASHER BRB6,4X12RFR
	940	315105-0165	-		8	WASHER BRB8,4X16RFR
	950	315105-0173	-		12	WASHER BRB10,5X22RFR
	955	315115-0173	-		10	WASHER B 10,5X22 RFR
	960	315115-0165	-		6	WASHER TBRB8,4X16RFR
	965	315125-0165	-		2	WASHER SB 8,4X26X5 RFR
	980	315204-0103	P		4	O-RING 5,1X1,6VITON
	985	315204-0213	P		2	O-RING 15,3X2,4VITON
	990	315204-0217	P		2	O-RING 24,2X3VITON
	995	352103-0111	-		2	CABLE GLAND ST 16

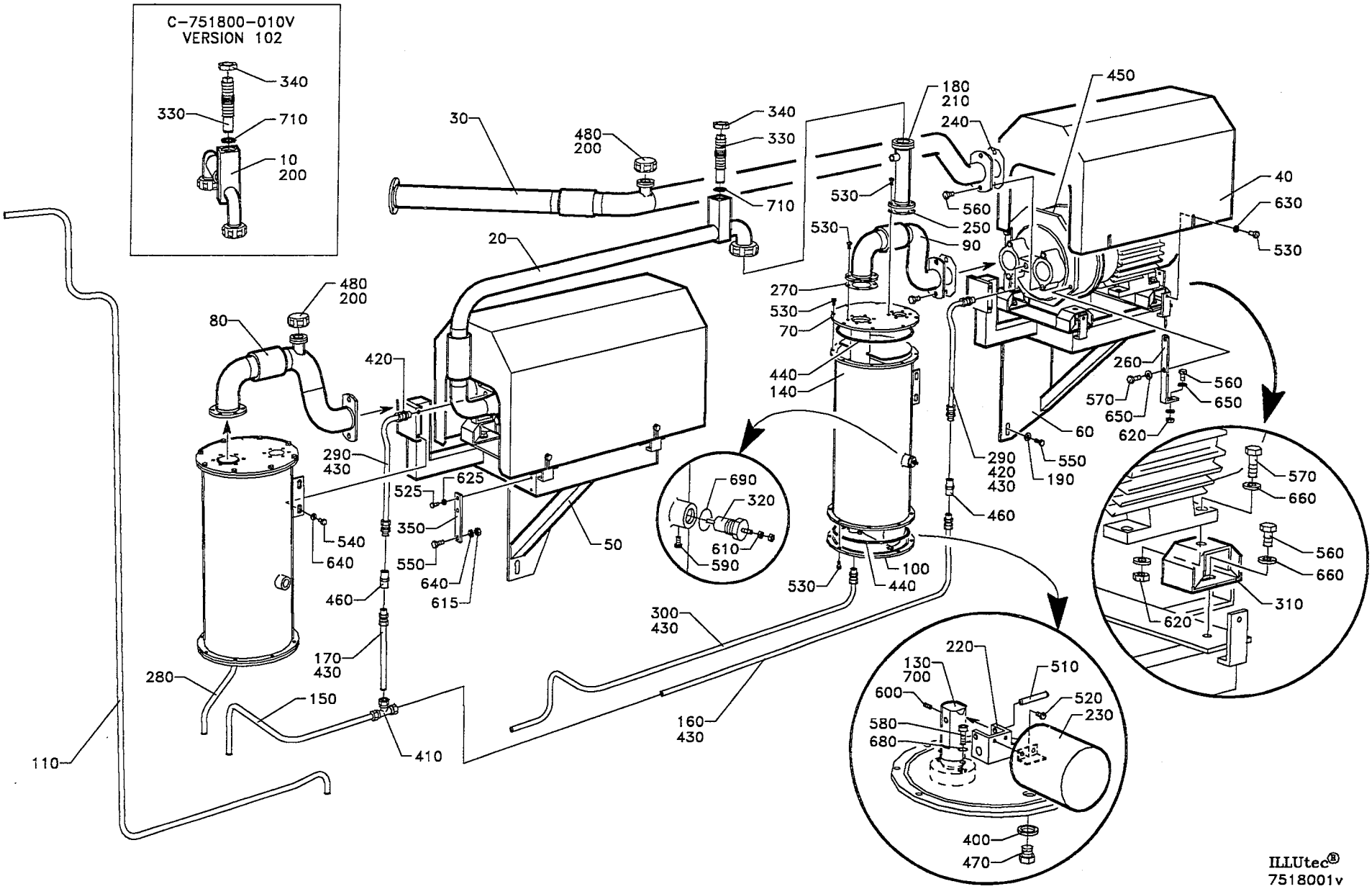
C-751800-010V
VERSION 102
340
330
710
10
200
30
480
200
340
330
710
20
180
210
240
450
40
630
530
530
560
250
90
530
270
530
70
440
140
480
200
80
420
290
430
625
525
350
550
640
615
540
640
460
50
690
320
610
590
100
440
530
300
430
160
430
170
430
280
150
410
110
290
420
430
460
60
550
190
260
570
650
620
560
650
570
660
560
660
310
620
220
130
700
600
580
680
510
520
230
400
470
ILLUtec®
7518001v

Last Alteration: AM 8833 89-12-02

Corresponding group: 751800-020V
Assembly Drawing: 751800-2/3

Issue: **940524**

From	Pos	Part No	SP	UN	Qty	Description
50Hz						
		C- 751800-0201				**Compressor Unit, Ass'y**
	330	490998	C		1	THROTTLE SCREW
	340	442237	C		1	NUT
	480	90217-0026	-		2	NUT
	710	315202-0119	P		1	O-RING 25,1X1,6
60Hz						
		C- 751800-0202				**Compressor Unit, Ass'y**
	010	751804	-		1	PIPE
	330	490998	C		2	THROTTLE SCREW
	340	442237	C		2	NUT
	710	315202-0119	P		2	O-RING 25,1X1,6
Common parts						
	020	751802	-		1	PIPE
	030	751803	-		1	PIPE
	040	751808	-		2	COVER
	050	751801	-		1	CANTILEVER
	060	751805	-		1	CANTILEVER
	070	271640	C		2	LID
	080	469153	-		1	PIPE
	090	469154	-		1	PIPE
	100	469511	C		2	BOTTOM
	120	751235	-		2	INSULATION
	130	269443	C		2	BRACKET
	140	269461	C		2	CONTAINER
	150	751809	-		1	PIPE
	160	751810	-		1	PIPE
	170	751811	-		1	PIPE
	180	491095	-		1	PIPE
	190	28036	-		6	WASHER
	200	12242-0001	P		2	GASKET
	210	12242-0003	P		1	GASKET
	220	179595	C		2	CLOSING DEVICE
	230	179596	C		2	FLOAT
	240	230551	PU		4	GASKET
	250	531742	P		1	GASKET
	260	269859	-		4	BRACKET
	270	271461	PU		2	GASKET
	280	456269	-		1	PIPE
	290	751812	-		2	PIPE
	300	751813	-		1	PIPE
	310	469160	S		8	VIBRATION DAMPER
	320	SP- 567189-0101	S		2	ELECTRODE
	350	752313	-		1	FASTENING IRON
	400	90005-0006	-		2	SEAL RING
	410	90030-0058	-		1	CONNECTION
	420	90030-0109	-		2	PIPE CONNECTION
	425	90144-0004	-		X	TAPE
	430	90030-0187	-		6	PIPE CONNECTION
	440	90242-0084	PU		4	O-RING
	450	90270-0011	-		2	COMPRESSOR
		90270-0338	S		1	* SPARE PARTS KIT
		90270-0345	S		1	* SHIMS
		90270-0346	S		1	* GASKET
		90270-0348	R		1	* MOTOR
	460	90270-0347	C		2	VALVE
	470	90330-0029	-		2	PLUG
	510	311103-0361	-		2	CYLINDRICACP M6 6X40 RFR
	520	312105-0287	-		4	SCREW M6S4X8 A2 80
	525	312105-0327	-		2	SCREW M6S5X12 A2 80
	530	312105-0366	-		58	SCREW M6S6X12RFR
	540	312105-0447	-		8	SCREW M6S8X12RFR
	550	312105-0451	-		7	SCREW M6S8X20RFR
	560	312105-0491	-		20	SCREW M6S10X20RFR
	570	312105-0495	-		12	SCREW M6S10X30RFR
	580	312115-0368	-		4	SCREW 6X16 A4 80
	590	312125-0285	-		2	SLOTTED HEMCS4X6RFR
	600	312318-0323	-		2	STOP SCREW SK6SS5X8RFR
	610	312605-0312	-		4	NUT M6M4RFR
	615	312605-0318	-		1	NUT M6M8RFR
	620	312605-0320	-		8	NUT M6M10RFR
	625	315105-0146	-		2	WASHER BRB5,3X10RFR
	630	315105-0153	-		10	WASHER BRB6,4X12RFR
	640	315105-0165	-		9	WASHER BRB8,4X16RFR
	650	315105-0173	-		12	WASHER BRB10,5X22RFR
	660	315115-0173	-		14	WASHER B 10,5X22 RFR
	680	315204-0103	P		4	O-RING 5,1X1,6VITON
	690	315204-0213	P		2	O-RING 15,3X2,4VITON
	700	315204-0217	P		2	O-RING 24,2X3VITON
	720	352103-0111	-		2	CABLE GLAND ST 16

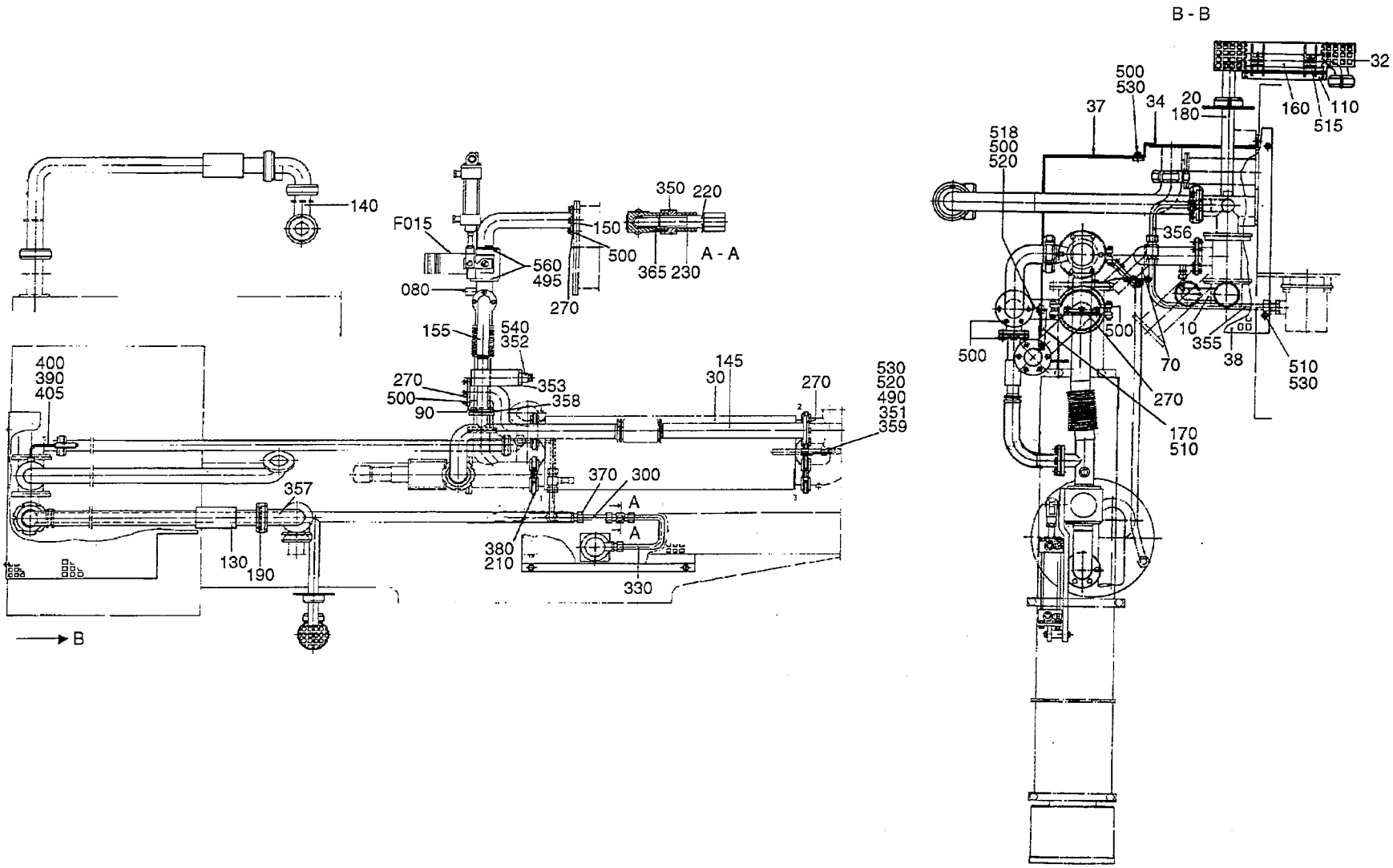

45697610.TIF
456976-10/11
AM 17886

From	Pos	Part No	SP	UN	Qty	Description
125ml						
		C- 456976-0501				**Conduit, Ass'y**
	130	491637	-		1	PIPE
	140	491638	-		1	PIPE
284ml - 180ml						
		C- 456976-0502				**Conduit, Ass'y**
	130	456591-0003	-		1	PIPE
	140	456592-0002	-		1	PIPE
160ml 200ml Slim 250ml Slim						
		C- 456976-0503				**Conduit, Ass'y**
	130	456591-0003	-		1	PIPE
	140	456592-0002	-		1	PIPE
Common parts						
	F015	**C- 476859-020V**	**-**		**1**	**CHANGE-OVER VALVE**
	010	491755	-		1	PIPE
	020	491219	-		1	PIPE
	030	752219	C		1	HEAT EXCHANGER
	032	272557-0001	-		1	TOUCH GUARD
	034	491299	-		1	TOUCH GUARD
	037	456912	-		1	TOUCH GUARD
	038	456913	-		1	TOUCH GUARD
	070	491154	-		1	PIPE
	080	566174	-		1	ATTACHMENT PIPE
	090	752223	-		1	PIPE
	110	272556-0001	-		1	TOUCH GUARD
	145	469385	-		1	PIPE
	150	566175	-		1	ELBOW PIPE
	155	491089	-		1	PIPE
	160	978546	-		1	PIPE
	170	752268	-		1	BRACKET
	180	12242-0001	P		1	GASKET
	190	12242-0003	P		2	GASKET
	210	978420	P		4	GASKET
	220	209145	-		2	THROTTLE SCREW
	230	209146	-		2	BARRIER NUT
	270	531742	PU		4	GASKET
	300	272349-0004	-		1	PIPE
	330	491209-0001	-		1	PIPE
	350	279589	-		2	NUT
	351	295549	-		1	CRAMP
	352	490998	S		1	THROTTLE SCREW
	353	442237	-		1	NUT
	355	491220	-		1	PIPE
	356	491221	-		1	PIPE
	357	456904	-		1	PIPE
	358	441721	PU		2	GASKET
	359	752267	-		1	BRACKET
	365	90030-0058	-		2	CONNECTION
	370	90030-0187	-		2	PIPE CONNECTION
	380	90217-0305	-		4	CLAMP
	390	90326-0012	P		1	PROTECTIVE COVER
	400	90326-0020	P		1	SOCKET
	405	90326-0051	P		1	THERMO COUPLE
	490	312105-0364	-		2	SCREW M6S6X10RFR
	495	312105-0366	-		8	SCREW M6S6X12RFR
	500	312105-0367	-		45	SCREW M6S6X14RFR
	510	312105-0370	-		5	SCREW M6S6X20RFR
	515	312115-0329	-		4	SCREW 5X16 A4 80
	518	315125-0153	-		1	WASHER SB 6,4X22X4 RFR
	520	312605-0316	-		3	NUT M6M6RFR
	530	315105-0153	-		6	WASHER BRB6,4X12RFR
	540	315204-0119	P		1	O-RING 1X1,6 VITON
	560	315204-0222	-		2	O-RING 36,2X3VITON

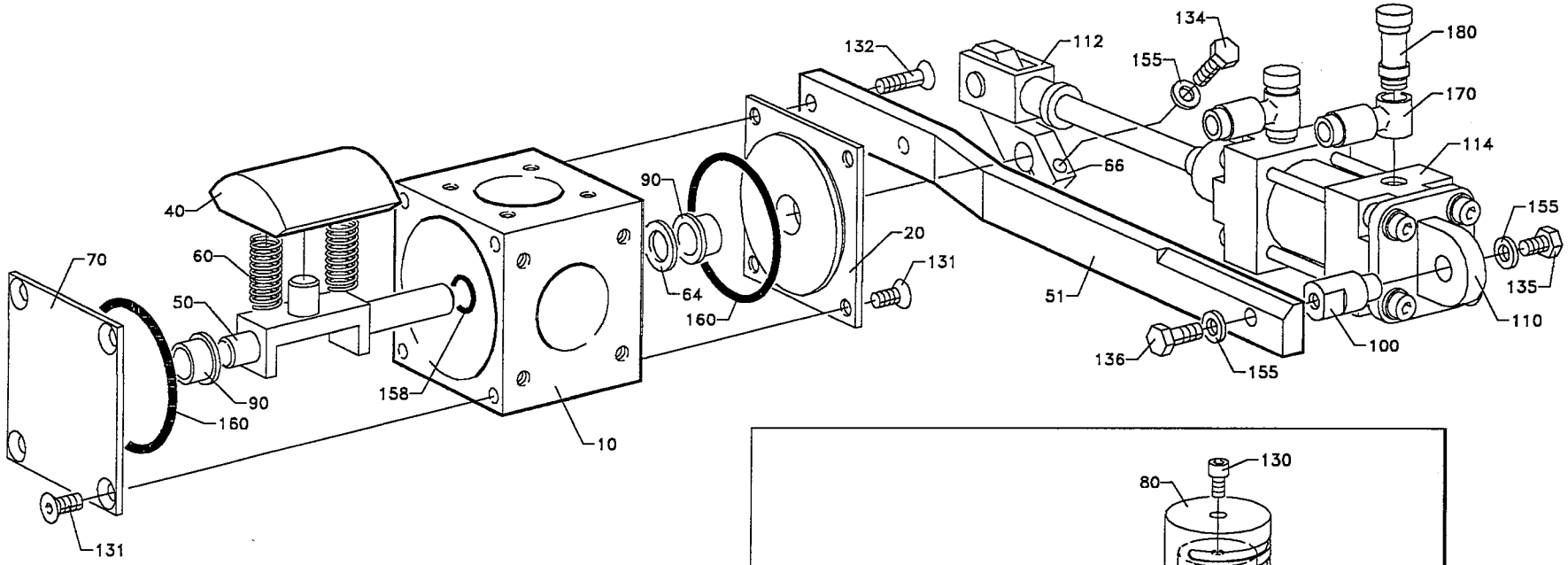

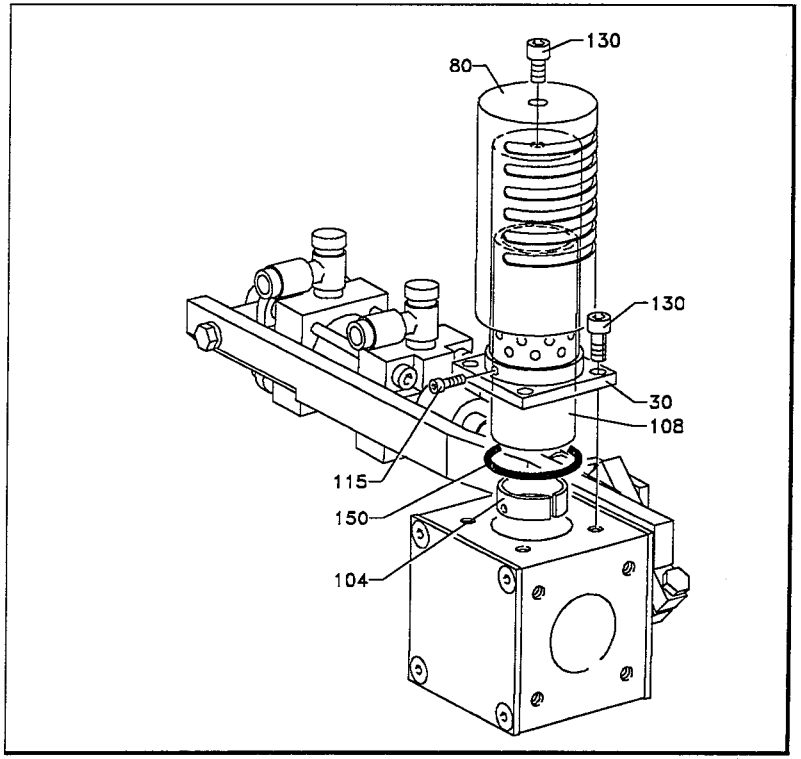

ILLUtec®
47685903.dwg
AM 17647

Last Alteration: AM 17647 92-05-25

Corresponding group: 476859-020V
Assembly Drawing: 476859-3/4/5

Issue: **940524**

From	Pos	Part No	SP	UN	Qty	Description
		C- 476859-0201				**Change-Over Valve, Ass'y**
	030	466477	-		1	INNER PIPE
	080	466478	-		1	OUTER PIPE
	104	466483	-		1	CLAMPING PIECE
	108	466484	-		1	NET
	115	312115-0224	-		2	SCREW S 3X10 A4 80
	130	312115-0364	-		5	SCREW 6X10 A4 80
	150	315204-0222	-		1	O-RING 36,2X3VITON
		C- 476859-0203				**Change-Over Valve, Ass'y**
	030	466477	-		1	INNER PIPE
	080	466478	-		1	OUTER PIPE
	104	466483	-		1	CLAMPING PIECE
	108	466484	-		1	NET
	115	312115-0224	-		2	SCREW S 3X10 A4 80
	130	312115-0364	-		5	SCREW 6X10 A4 80
	150	315204-0222	-		1	O-RING 36,2X3VITON
Common Parts						
	010	466474	-		1	VALVE HOUSING
	020	255874	-		1	BEARING COVER
	040	466479	S		1	PIECE
	050	555541	-		1	BRACKET
	051	555542	-		1	BRACKET
	060	21521	S		2	COMPRESSION SPRING
	064	266737	-		1	WASHER
	066	441483	-		1	CYLINDER BRACKET
	070	255874	-		1	BEARING COVER
	090	255875	S		2	BUSHING
	100	555540	-		1	SPACER
	110	90239-0453	-		1	BRACKET
	112	90239-0516	-		1	PISTON ROD HEAD
	114	90239-0779	-		1	CYLINDER
		90239-0442	S		1	* SEAL KIT
	131	312155-0364	-		6	SCREW MF6S6X10RFR
	132	312155-0370	-		2	SCREW MF6S6X20RFR
	134	312105-0370	-		1	SCREW M6S6X20RFR
	135	312105-0364	-		2	SCREW M6S6X10RFR
	136	312105-0368	-		1	SCREW M6S6X16RFR
	155	315105-0153	-		3	WASHER BRB6,4X12RFR
	158	315204-0110	-		1	O-RING 1X1,6 VITON
	160	315204-0302	S		2	O-RING 54,5X3VITON
	170	342797-0121	-		2	BANJO CONNSINGEL 6-1/8
	180	342980-0303	-		2	BANJO CONN SINGEL 1/8"

From	Pos	Part No	SP	UN	Qty	Description

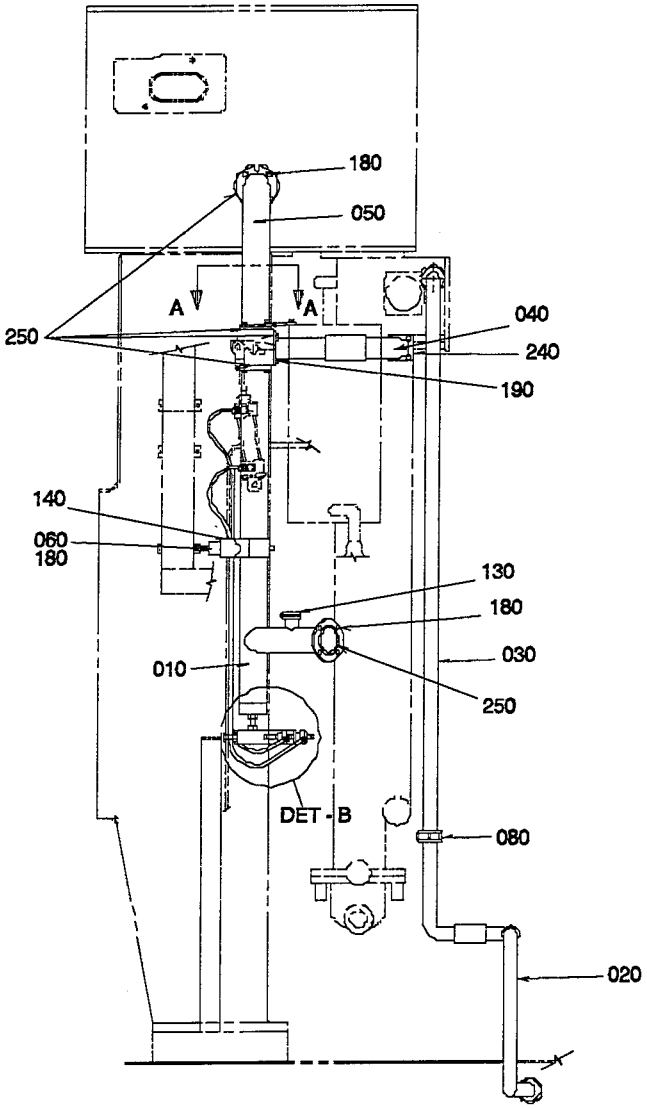
180
050
A
A
250
040
240
190
140
060
180
130
180
030
010
250
DET - B
080
020

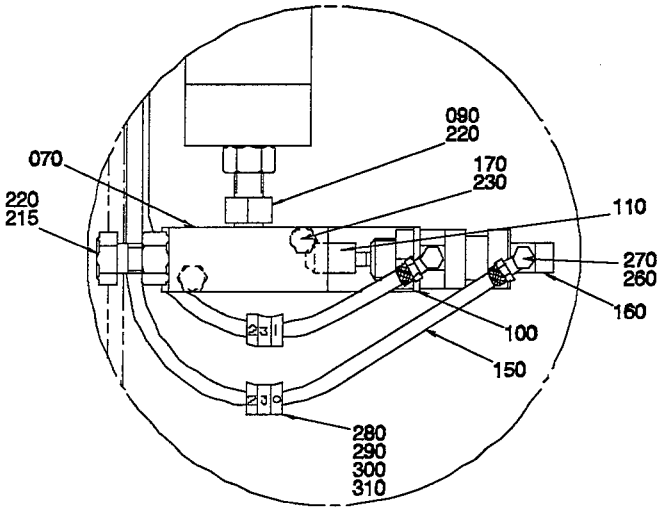
090
220
070
170
230
220
215
110
270
260
160
100
150
280
290
300
310

DET - B

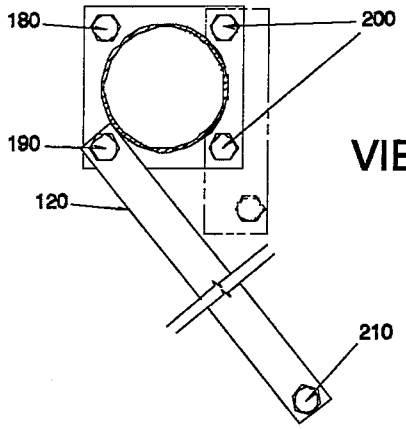
180
200
190
120
210

VIEW A - A

Last Alteration: AM 20303 93-09-06

Corresponding group: 456555-040V
Assembly Drawing: 456555-5

Issue: **940524**

From	Pos	Part No	SP	UN	Qty	Description
		C- 456555-0401				**Suction Pipe, Ass'y**
	010	978575	C		1	PIPE
	020	491360	C		1	PIPE
	030	469992	C		1	PIPE
	040	255879	C		1	PIPE
	050	255905	C		1	PIPE
	060	490967	-		1	BRACKET
	070	572487	-		1	THROTTLING
	080	12242-0001	S		3	GASKET
	090	566669	-		1	NIPPLE
	100	572485	-		1	BRACKET
	110	572486	-		1	PISTON
	120	752175	-		1	STRUT
	130	90091-0180	S		1	GASKET
	140	90101-0004	-		1	HOLDER
	150	90166-0124	P	MM	2000	HOSE
	160	90239-0840	S		1	CYLINDER
	170	312105-0362	-		2	SCREW M6S6X8RFR
	180	312105-0366	-		17	SCREW M6S6X12RFR
	190	312105-0368	-		3	SCREW M6S6X16RFR
	200	312105-0370	-		2	SCREW M6S6X20RFR
	210	312105-0372	-		1	SCREW M6S6X25RFR
	215	312105-0536	-		1	SCREW M6S12X30RFR
	220	312605-0322	-		2	NUT M6M12RFR
	230	315105-0153	-		2	WASHER BRB6,4X12RFR
	240	315204-0223	S		1	O-RING 39,2X3VITON
	250	315204-0301	S		5	O-RING 49,5X3VITON
	260	342980-0111	S		2	BANJO CONNSINGEL 6/4-5M
	270	342980-0301	-		2	BANJO CONN SINGEL 5M
		315233-0101	P		0	* SEAL RINM5
	280	359000-0400	-		1	MARKING CO2/4"0"
	290	359000-0401	-		1	MARKING CO2/4"1"
	300	359000-0402	-		2	MARKING CO2/4"2"
	310	359000-0403	-		2	MARKING CO2/4"3"

From	Pos	Part No	SP	UN	Qty	Description

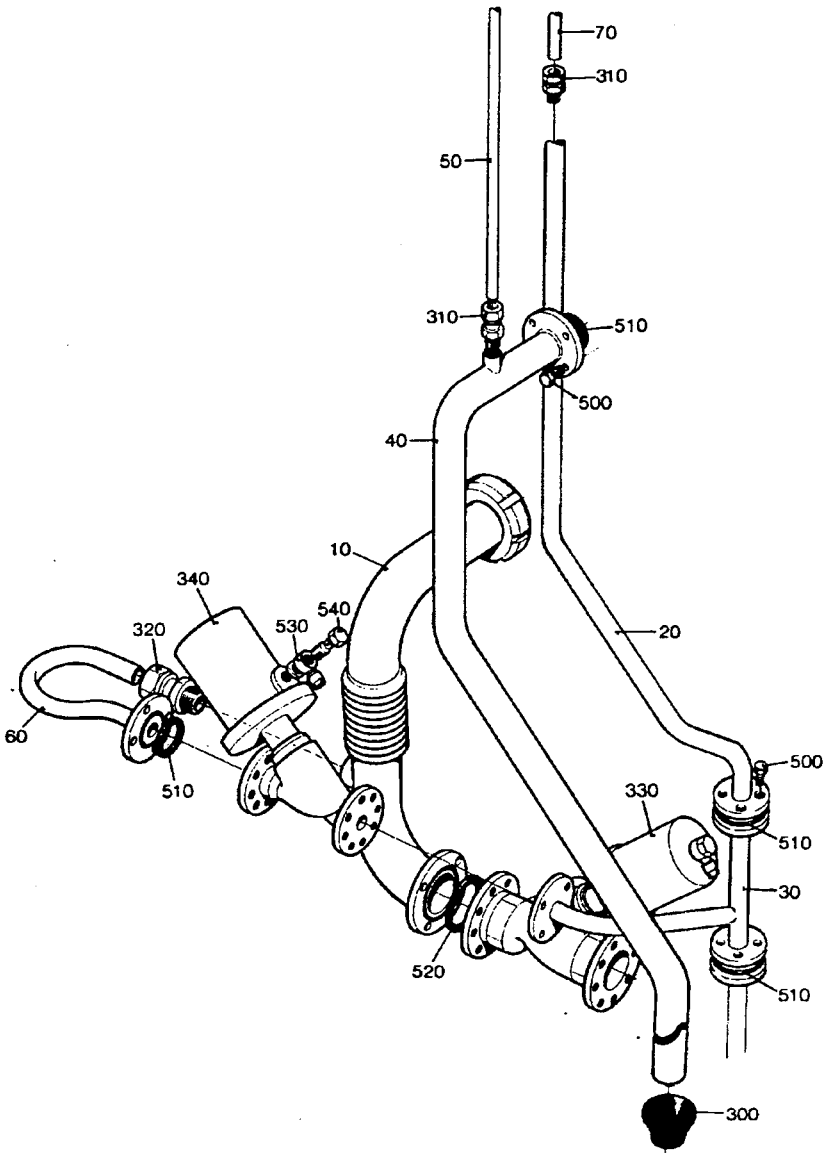

45655602.TIF
456556-2
AM 16128

Last Alteration: AM 16128 91-02-21

Corresponding group: 456556-020V
Assembly Drawing: 456556-2

Issue: **940524**

From	Pos	Part No	SP	UN Qty	Description
		C- 456556-0201			**Peroxide Pipe, Ass'y**
	010	490966	-	1	PIPE
	020	491398	-	1	PIPE
	030	490994	-	1	PIPE
	040	490996	-	1	PIPE
	050	491399	-	1	PIPE
	060	490991	C	1	HOSE
	070	490979	-	1	PIPE
	300	90015-0024	P	1	BUSHING
	310	90030-0184	-	2	PIPE CONNECTION
	320	90030-0188	-	1	PIPE CONNECTION
	330	484538	S	1	VALVE
		90235-0460	S	1	* WEAR & TEAR PARTS KIT
	340	484192	S	1	VALVE
	500	312105-0366	-	24	SCREW M6S6X12RFR
	510	315204-0218	PU	5	O-RING 26,2X3VITON
	520	315204-0223	PU	2	O-RING 39,2X3VITON
	530	342797-0122	-	2	BANJO CONNSINGEL 6-1/4
	540	342980-0304	-	2	BANJO CONN SINGEL 1/4

From	Pos	Part No	SP	UN Qty	Description

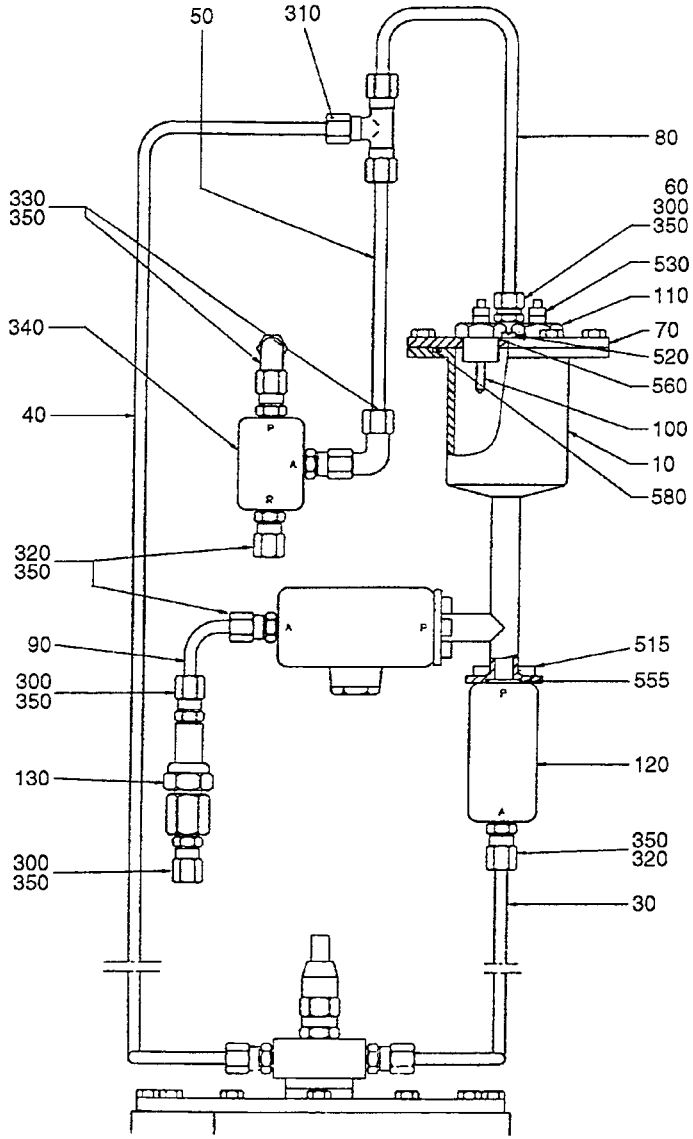

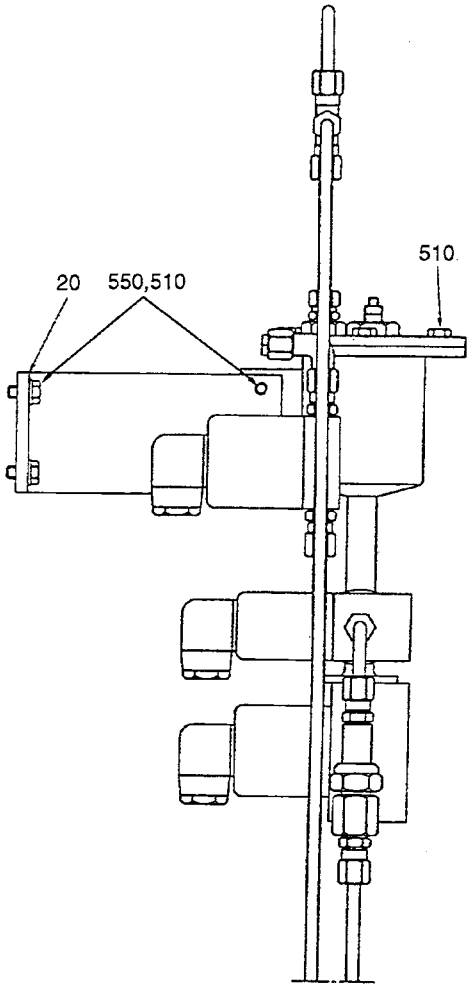

27262305.TIF
272623-5
AM 16334

Last Alteration: AM 16334 91-06-24

Corresponding group: 272623-050V
Assembly Drawing: 272623-5

Issue: **940524**

From	Pos	Part No	SP	UN	Qty	Description
		C- 272623-0501				**Spray System, Ass'y**
	010	752576	C		1	CONTAINER
	020	272844	-		1	BRACKET
	030	456897	-		1	PIPE
	040	752696	-		1	PIPE
	050	752676	-		1	PIPE
	060	450833	P		1	FILTER
	070	450837	-		1	LID
	080	752675	-		1	PIPE
	090	456900	-		1	PIPE
	100	567070-0013	S		1	ELECTRODE
	105	567070-0010	-		1	ELECTRODE
	110	560931	S		2	BRACKET
	120	544906	S		2	SOLENOID VALVE
	130	484196	S		1	FILTER
		484197	PU		0	* FILTER
	300	90030-0184	-		3	PIPE CONNECTION
	310	90030-0076	-		1	CONNECTION
	320	90030-0202	-		3	PIPE CONNECTION
	330	90030-0203	-		2	PIPE CONNECTION
	340	90042-0171	S		1	SOLENOID VALVE
		90042-0466	S		1	* DIAPHRAGM
	510	312105-0366	-		10	SCREW M6S6X12RFR
	515	312115-0323	S		6	SCREW 5X8 A4 80
	520	312125-0285	-		1	SLOTTED HEMCS4X6RFR
	530	312605-0312	-		6	NUT M6M4RFR
	531	315105-0136	-		6	WASHER BRB4,3X8RFR
	550	315105-0153	-		4	WASHER BRB6,4X12RFR
	555	315204-0211	P		2	O-RING 13,3X2,4VITON
	560	315204-0213	P		3	O-RING 15,3X2,4VITON
	580	315204-0305	P		1	O-RING 69,5X3

From	Pos	Part No	SP	UN	Qty	Description

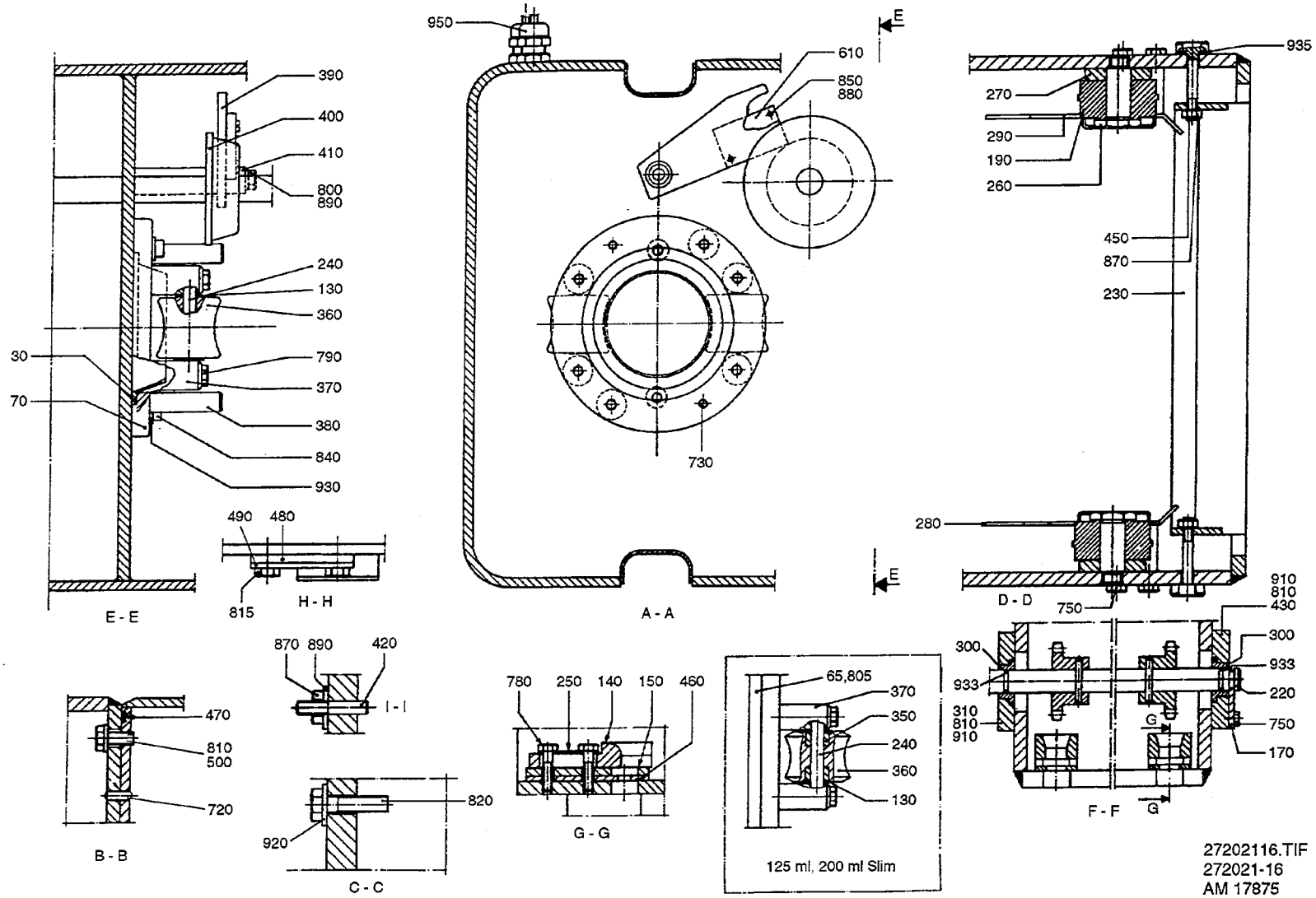

27202116.TIF
272021-16
AM 17875

Last Alteration: AM 20707 93-11-24

Corresponding group: 272021-060V
Assembly Drawing: 272021-16/17

Issue: **940524**

From	Pos	Part No	SP	UN	Qty	Description
125ml						
		C- 272021-0601				**Aseptic Chamber, Ass'y**
	030	490900	P		1	SEALING RING
	065	571537	-		1	RING
	070	571538	-		1	RING
	240	490903	P		2	SHAFT
	350	751230	P		4	PLAIN BEARING
	360	441876	P		2	ROLL
	370	490902	-		4	AXLE SUPPORT
	380	571540	-		2	PEG
	390	578216	-		1	ARM
	410	978384	C		1	PIVOT PIN
	730	311103-0313	-		2	CYLINDRICACP M6 5X28 RFR
	800	312105-0386	-		1	SCREW M6S6X80RFR
	805	315204-0309	P		1	O-RING 89,5X3 VITON
	840	312115-0372	-		2	SCREW MC6S6X25 A4 80
284ml - 180ml						
		C- 272021-0602				**Aseptic Chamber, Ass'y**
	030	273953	P		1	SEAL
	070	456794	-		1	RING
	240	263655-0006	P		2	SHAFT
	360	456796	P		2	ROLL
	370	456797	-		4	AXLE SUPPORT
	380	752519-0002	-		2	PEG
	390	456801	-		1	ARM
	410	456803	C		1	PIVOT PIN
	730	311103-0310	-		2	CYLINDRICACP M6 5X20 RFR
	800	312105-0384	-		1	SCREW M6S6X70RFR
	840	312115-0370	-		2	SCREW 6X20 A4 80
200ml slim 160ml						
		C- 272021-0603				**Aseptic Chamber, Ass'y**
	030	490901	P		1	SEALING RING
	065	571537	-		1	RING
	070	571539	-		1	RING
	240	490903	P		2	SHAFT
	350	751230	P		4	PLAIN BEARING
	360	456996	P		2	ROLL
	370	490902	-		4	AXLE SUPPORT
	380	571540	-		2	PEG
	390	578216	-		1	ARM
	410	978384	C		1	PIVOT PIN
	730	311103-0313	-		2	CYLINDRICACP M6 5X28 RFR
	800	312105-0386	-		1	SCREW M6S6X80RFR
	805	315204-0309	P		1	O-RING 89,5X3 VITON
	840	312115-0372	-		2	SCREW MC6S6X25 A4 80

From	Pos	Part No	SP	UN	Qty	Description
250ml Slim						
		C- 272021-0604				**Aseptic Chamber, Ass'y**
	030	574336	P		1	SEAL
	065	574334	-		1	RING
	070	574335	-		1	RING
	240	490903	P		2	SHAFT
	350	751230	P		4	PLAIN BEARING
	360	574333	P		2	ROLL
	370	490902	-		4	AXLE SUPPORT
	380	571540	-		2	PEG
	390	578217	-		1	ARM
	410	553809	C		1	PIVOT PIN
	730	311103-0313	-		2	CYLINDRICACP M6 5X28 RFR
	800	312105-0386	-		1	SCREW M6S6X80RFR
	805	315204-0309	P		1	O-RING 89,5X3 VITON
	840	312115-0372	-		2	SCREW MC6S6X25 A4 80
Common Parts						
	010	571541	-		1	PILLAR
	020	571542	-		1	HOUSE
	040	295426	-		1	CAP
	050	295427	-		1	LOCK
	060	295428	-		1	HINGE
	095	490964	C		2	COVER
	110	469092	-		1	SHIM
	130	2033-0007	-		8	WASHER
	140	247349	P		2	STEERING
	150	491602	-		2	GASKET HOLDER
	170	247355	-		1	LOCK WASHER
	180	247358	C		1	SHIFTER HANDLE
	190	255986	S		2	WHEEL
	200	256163	S		1	SHAFT
	210	247357	S		2	SPROCKET
	220	751131	S		1	SHAFT
	230	256170	-		2	DRIP PLATE
	250	267033	-		2	WASHER
	260	271863	S		2	SHAFT
	270	271864	-		2	WASHER
	280	272002	-		1	PROTECTIVE COVER LEFT
	290	272003	-		1	PROTECTIVE COVER RIGHT
	300	279008	S		2	BUSHING
	310	279010	-		1	BEARING PLATE
	320	295429	C		1	HANDLE
	330	978532	-		2	BRACKET
	340	978531	-		1	BRACKET
	400	751730	C		1	LOCKING CIRCLIP

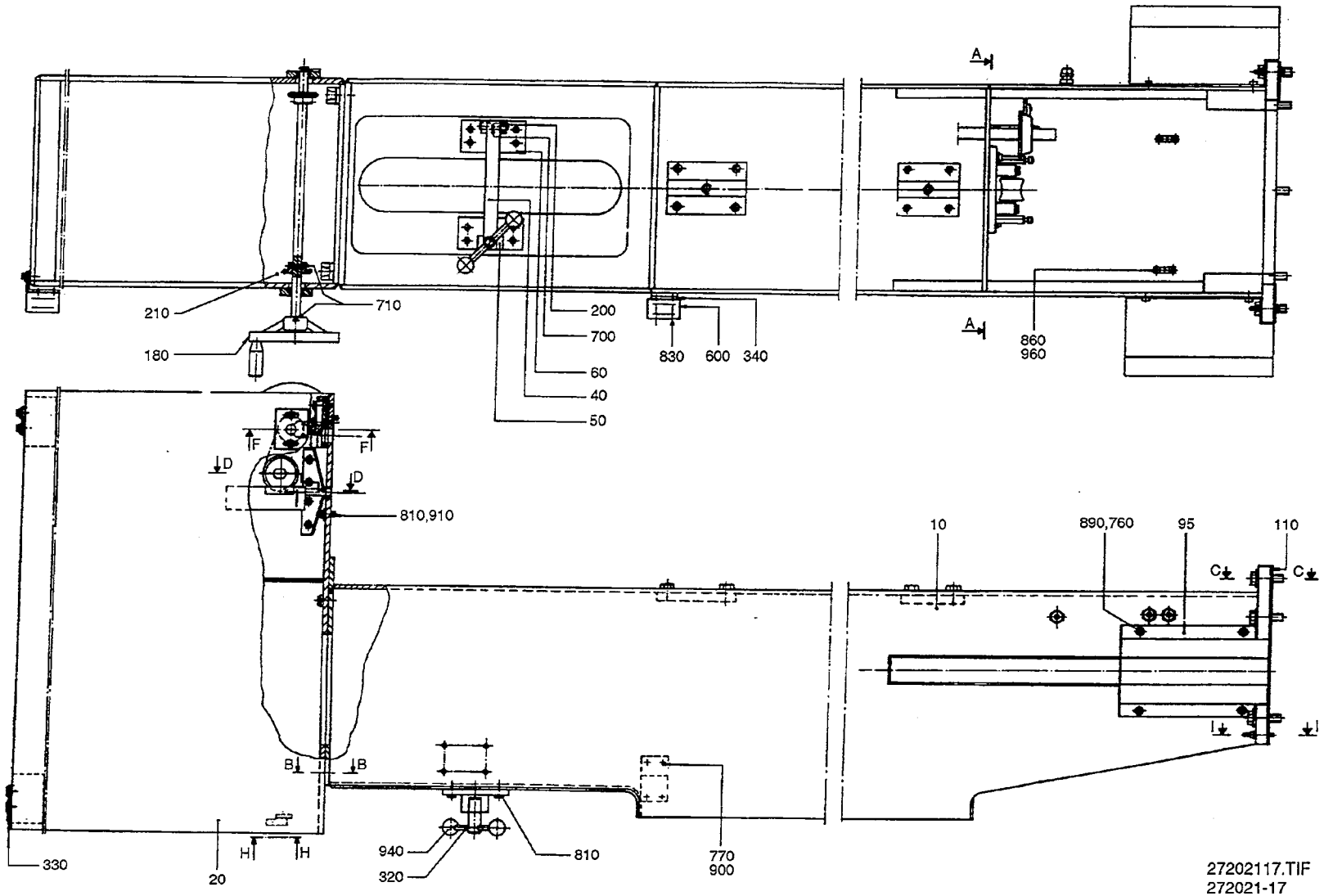
A
A
210
710
180
200
700
60
40
50
830
600
340
860
960
F
F
D
D
810,910
10
890,760
95
110
C
C
B
B
H
H
330
20
940
320
810
770
900
27202117.TIF
272021-17
AM 17875

From	Pos	Part No	SP	UN Qty	Description
	420	469159	-	2	PEG
	430	469521	-	1	BEARING PLATE
	450	491314	-	8	SCREW
	460	491128	P	2	GASKET
	470	491418-0002	P	1	O-RING
	480	751684	S	1	STOP LUG
	490	441737	-	1	WASHER
	500	28036	-	6	WASHER
	600	90044-0103	P	3	LIMIT SWITCH
	610	90044-0104	-	1	INDUCTIVE SWITCH
	700	311103-0272	-	1	CYLINDRICACP M6 4X20 RFR
	710	311103-0276	-	3	CYLINDRICACP M6 4X30 RFR
	720	311103-0308	-	2	CYLINDRICACP M6 5X16 RFR
	750	312105-0327	-	6	SCREW M6S5X12 A2 80
	760	312105-0362	-	8	SCREW M6S6X8RFR
	770	312105-0368	-	6	SCREW M6S6X16RFR
	780	312105-0372	-	4	SCREW M6S6X25RFR
	790	312105-0378	-	4	SCREW M6S6X40RFR
	810	312105-0451	-	24	SCREW M6S8X20RFR
	815	312105-0453	-	2	SCREW M6S8X25RFR
	820	312105-0499	-	7	SCREW M6S10X40RFR
	830	312115-0329	-	6	SCREW 5X16 A4 80
	850	312125-0230	-	2	SLOTTED HEMCS3X20RFR
	860	312125-0287	-	4	SLOTTED HEMCS4X8RFR
	870	312605-0316	-	10	NUT M6M6RFR
	880	315105-0124	-	2	WASHER BRB3,2X6RFR
	890	315105-0153	-	11	WASHER BRB6,4X12RFR
	900	315115-0153	-	6	WASHER TBRB6,4X12RFR
	910	315115-0165	-	10	WASHER TBRB8,4X16RFR
	920	315115-0173	-	7	WASHER B 10,5X22 RFR
	930	315125-0153	-	2	WASHER SB 6,4X22X4 RFR
	933	315204-0109	P	2	O-RING 11,1X1,6VITON
	935	315204-0208	P	8	O-RING 9,3X2,4VITON
	940	318800-0103	S	2	HANDLE BALLA D.25-M6
	950	352103-0101	-	3	CABLE GLAND ST 9
	960	352110-0100	-	4	CRAMP TK 5-7

From	Pos	Part No	SP	UN Qty	Description

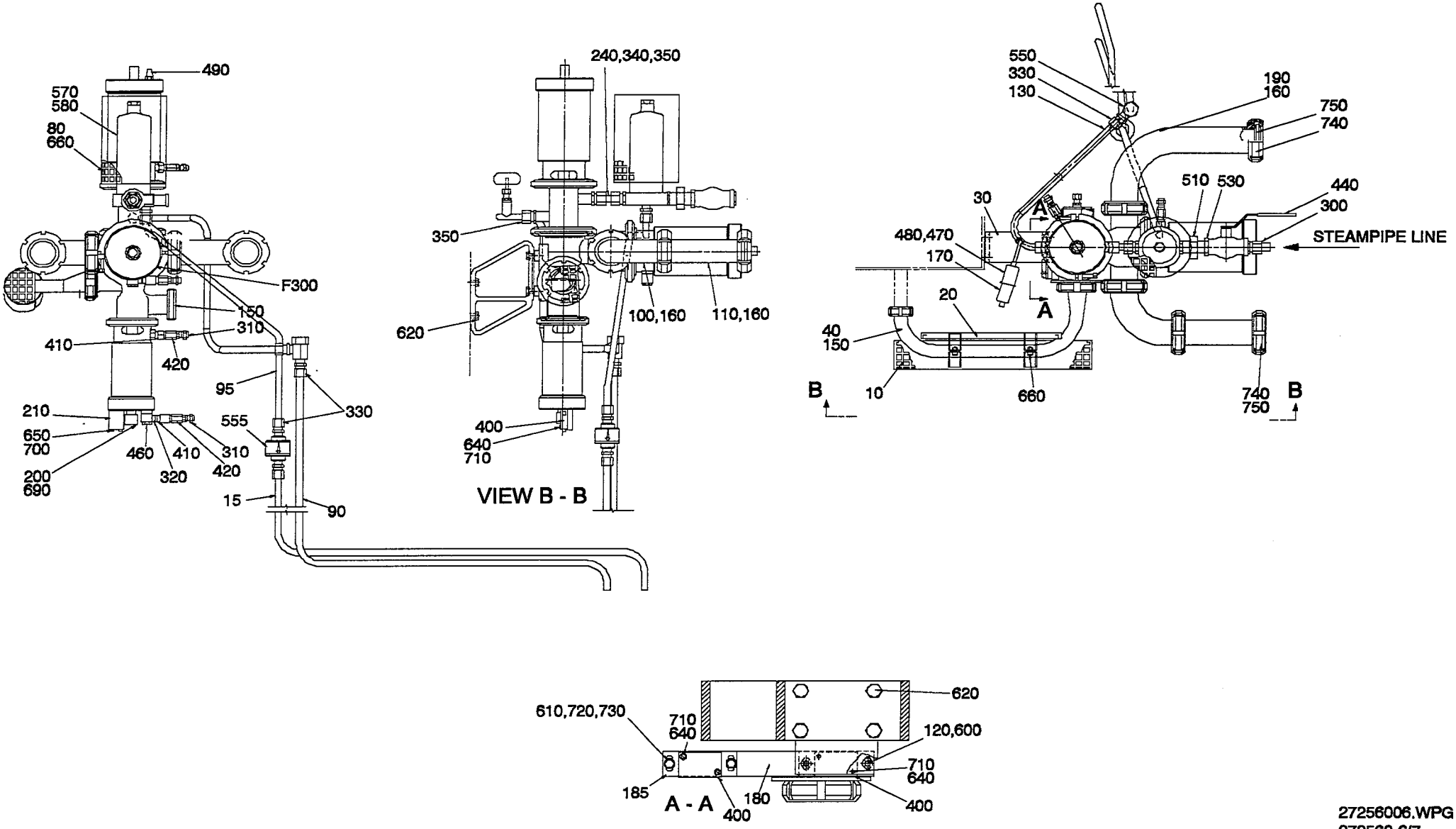

27256006.WPG
272560-6/7
AM 20303

Last Alteration: AM 19542 93-04-05

Corresponding group: 272560-060V
Assembly Drawing: 272560-6/7

Issue: **940524**

From	Pos	Part No	SP	UN Qty	Description
		C- 272560-0601			**Product Valve, Ass'y**
	F005	**C- 440630-0201**	**C**	**1**	**AP-VALVE**
		SP- 499255-0201	PU	1	* SEAL KIT
		SP- 499255-0202	P	1	* SEAL KIT
		SP- 499255-0203	P	1	* SEAL KIT
	010	272555	-	1	TOUCH GUARD
	015	978787	-	1	PIPE
	020	272554	-	1	TOUCH GUARD
	030	G- 978734	-	1	CANTILEVER
	040	490983	-	1	PIPE
	080	752176	-	1	PROTECTIVE CASING
	090	752691	-	1	PIPE
	095	978788	-	1	PIPE
	100	440978	-	1	PIPE BEND
	110	255368	C	1	PRESSURE GAUGE TUBE
	130	752692	-	1	PIPE
	150	12242-0003	P	2	GASKET
	160	12242-0005	P	5	GASKET
	170	37768	P	1	THERMOCOUPLE
	180	520081	-	1	PROX.SW. BRACKET
	185	297195	-	1	SPACER
	190	469503	-	1	ELBOW PIPE
	200	440647	-	1	SLEEVE
	210	440731	-	1	PLATE
	240	752711	-	1	PIPE
	300	90030-0109	-	1	PIPE CONNECTION
	310	90224-0307	C	4	CONNECTION
	320	90224-0308	C	2	BANJO CONNECTION
	330	90030-0088	-	5	PIPE CONNECTION
	340	90030-0180	-	1	PIPE CONNECTION
	350	90030-0187	-	2	PIPE CONNECTION
	400	90044-0104	P	3	INDUCTIVE SWITCH
	410	90163-0057	C	4	NIPPLE
	420	90163-0062	C	4	SLEEVE
	440	90187-0082	S	1	BALL VALVE
	460	342980-0303	S	2	BANJO CONN SINGEL 1/8"
	470	90326-0012	P	1	PROTECTIVE COVER
	480	90326-0020	P	1	SOCKET
	490	90328-0003	S	3	SILENCER
	510	90330-0106	-	1	PIPE COUPLING
	530	90330-0021	-	1	NIPPLE
	550	90360-0009	-	1	STEAM TRAP
	555	90360-0011	-	1	STEAM TRAP
	570	90277-0055	-	1	FILTER SLEEVE
	580	90337-0315	-	1	FILTER

From	Pos	Part No	SP	UN Qty	Description
	600	312105-0329	-	2	SCREW M6S5X16 A2 80
	610	312105-0333	-	2	SCREW M6S5X25 A2 80
	620	312105-0451	-	8	SCREW M6S8X20RFR
	640	312115-0228	-	10	SCREW 3X16 A4 80
	650	312115-0305	-	2	SCREW 4X50 A4 80
	660	312115-0329	-	5	SCREW 5X16 A4 80
	690	312155-0532	-	1	SCREW MF6S12X20RFR
	700	315105-0136	-	2	WASHER BRB4,3X8RFR
	710	315105-0124	-	10	WASHER BRB3,2X6RFR
	720	315105-0146	-	6	WASHER BRB5,3X10RFR
	730	312605-0314	-	2	NUT M6M5RFR
	740	342803-0104	-	2	NUT 51
	750	342812-0104	-	2	SLEEVE ANSL.51

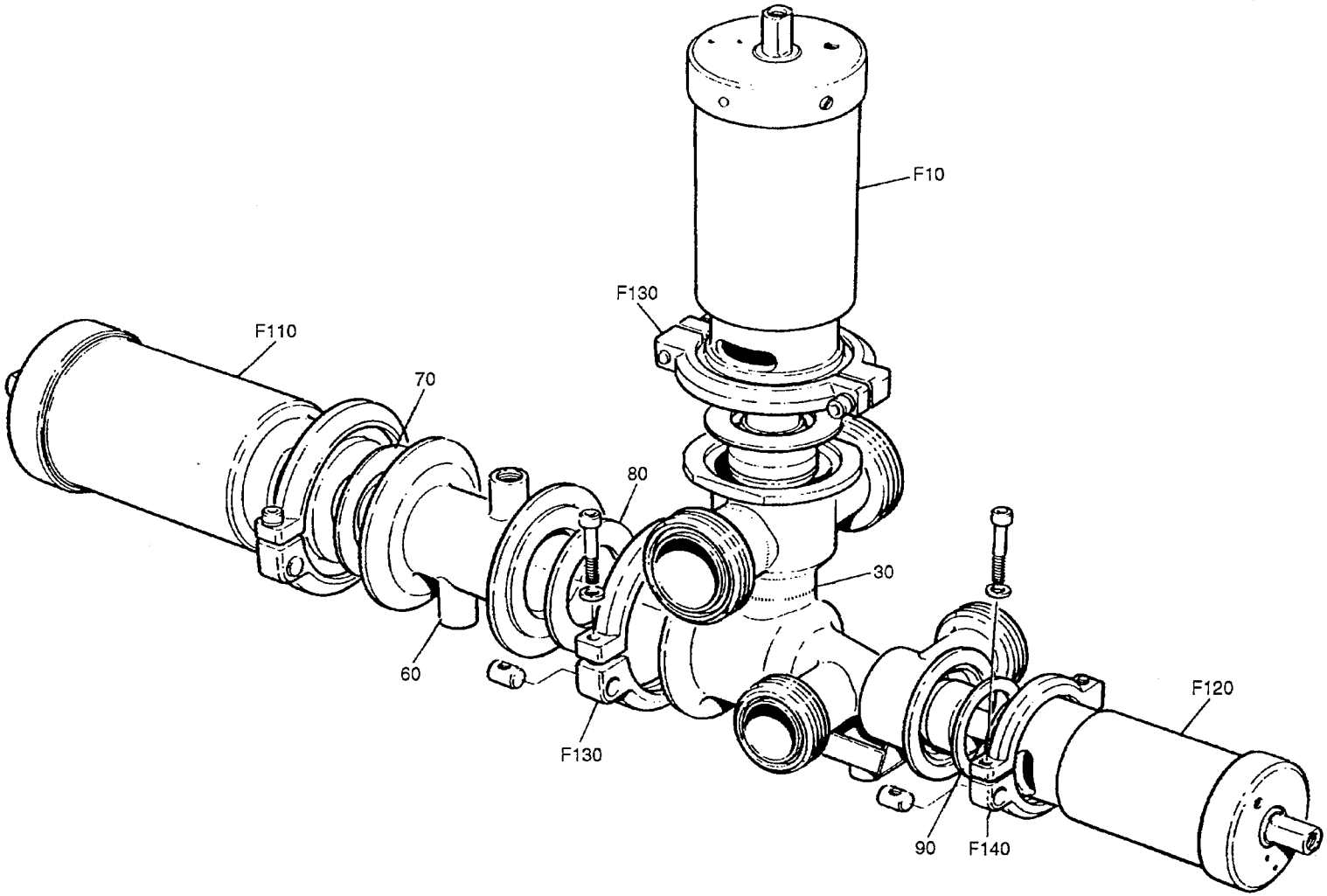

44063003.TIF
440630-3
AM

Last Alteration: AM 10455 87-11-11

Corresponding group: 440630-020V
Assembly Drawing: 440630-3

Issue: **940524**

From	Pos	Part No	SP	UN	Qty	Description
2" Valve TBA/8 TBA/9						
		C- 440630-0201				**AP Valve, Ass'y**
	F010	**C- 539209-0101**	**-**		**1**	**A-CYLINDER**
	030	440631	-		1	VALVE BODY 51
3" Valve TBA/8						
		C- 440630-0202				**AP Valve, Ass'y**
	F020	**C- 539209-0102**	**-**		**1**	**A-CYLINDER**
	050	449678	-		1	VALVE BODY 76
2" Valve TBA/3 TBA/3R TCA/500 TCA/300 TCA/150						
		C- 440630-0203				**AP Valve, Ass'y**
	F010	**C- 539209-0101**	**-**		**1**	**A-CYLINDER**
	040	484997	-		1	VALVE BODY 51
Common Parts						
	F110	**C- 539210-0101**	**-**		**1**	**C-CYLINDER**
	F120	**C- 539211-0101**	**-**		**1**	**B-CYLINDER**
	F130	**C- 541163-0101**	**-**		**3**	**CLAMP RING**
	F140	**C- 541164-0101**	**-**		**1**	**CLAMP RING**
	060	440634	-		1	HOUSE
	070	539212	-		1	GASKET
	080	90207-0363	-		1	GASKET
	090	90207-0365	-		1	GASKET

From	Pos	Part No	SP	UN	Qty	Description

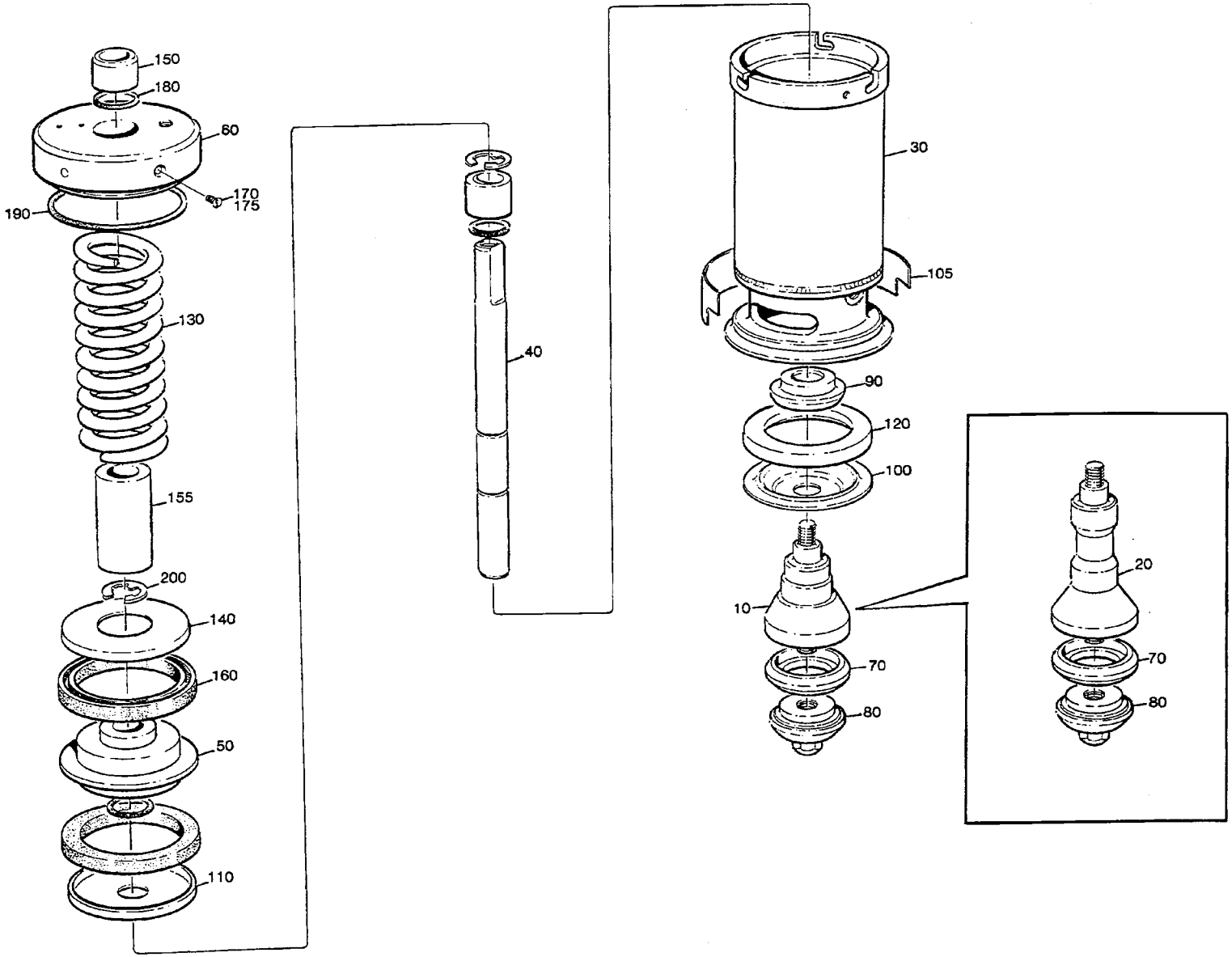

53920901.TIF
539209-1
AM

Last Alteration: AM 15504 90-10-31

Corresponding group: 539209-010V
Assembly Drawing: 539209-1

Issue: **940524**

From	Pos	Part No	SP	UN	Qty	Description
	F000	**C- 539209-0101**				**A- Cylinder 2", Ass'y**
	F000	**C- 539209-0102**				**A- Cylinder 3", Ass'y**
	010	530592	-		1	SEAL RING HOLDER 2"
	020	530595	-		1	SEAL RING HOLDER 3"
	030	440632	-		1	CYLINDER HOUSING
	040	440637	-		1	PISTON ROD
	050	440638	-		1	PISTON
	060	484998	-		1	END SECTION
	070	530589	PU		1	SEAL RING
	080	530590	-		1	VALVE CONE
	090	541166	-		1	WASHER
	100	533169	PU		1	DIAPHRAGM
	105	476203	-		1	PROTECTION
	110	440651	-		1	WASHER
	120	440655	-		1	RING
	130	440663	-		1	COMPRESSION SPRING
	140	484975	-		1	WASHER
	150	497933	-		2	BUSHING
	155	541167	-		1	SPACER SLEEVE
	160	90020-0028	P		2	SLEEVE
	170	312125-0323	-		1	SLOTTED HEMCS5X8RFR
	175	315233-0101	-		1	SEAL RING M5
	180	315202-0308	P		1	O-RING 84,5X3
	190	315204-0215	P		3	O-RING 19,2X3VITON
	200	315754-0113	P		2	LOCKING WAE 15

From	Pos	Part No	SP	UN	Qty	Description

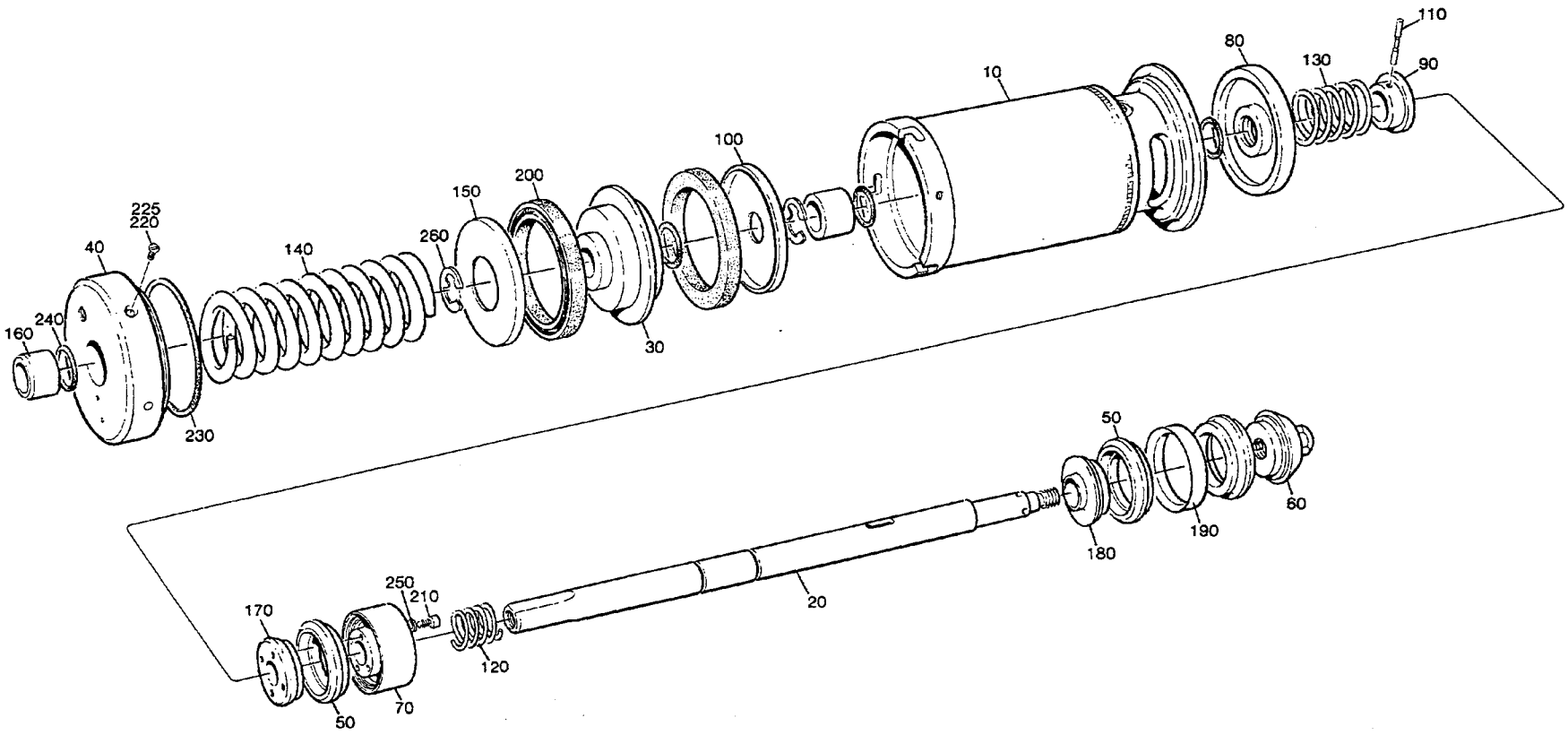

53921001.TIF
539210-1
AM

Last Alteration: AM 15504 90-10-31

Corresponding group: 539210-010V
Assembly Drawing: 539210-1

Issue: **940524**

From	Pos	Part No	SP	UN	Qty	Description
		C- 539210-0101				**C-CYLINDER, ASS'Y**
	010	440632	-		1	CYLINDER HOUSING
	020	440635	-		1	PISTON ROD
	030	440638	-		1	PISTON
	040	484998	-		1	END SECTION
	050	530589	PU		3	SEAL RING
	060	530590	-		1	VALVE CONE
	070	530591	-		1	HOLDER
	080	440648	-		1	SEALING WASHER
	090	440650	-		1	WASHER
	100	440651	-		1	WASHER
	110	440659	-		1	CYLINDRICAL PIN
	120	440660	-		1	COMPRESSION SPRING
	130	440661	-		1	COMPRESSION SPRING
	140	440663	-		1	COMPRESSION SPRING
	150	484975	-		1	WASHER
	160	497933	-		2	BUSHING
	170	530597	-		1	WASHER
	180	530598	-		1	WASHER
	190	530599	-		1	RING
	200	90020-0028	P		2	SLEEVE
	210	312115-0291	-		4	SCREW MC6S4X12 A4 80
	220	312125-0323	-		1	SLOTTED HEMCS5X8RFR
	225	315233-0101	-		1	SEAL RING M5
	230	315202-0308	P		1	O-RING 84,5X3
	240	315204-0215	P		4	O-RING 19,2X3VITON
	250	315402-0136	-		4	WASHER FBB4,1RFR
	260	315754-0113	P		2	LOCKING WAE 15

From	Pos	Part No	SP	UN	Qty	Description

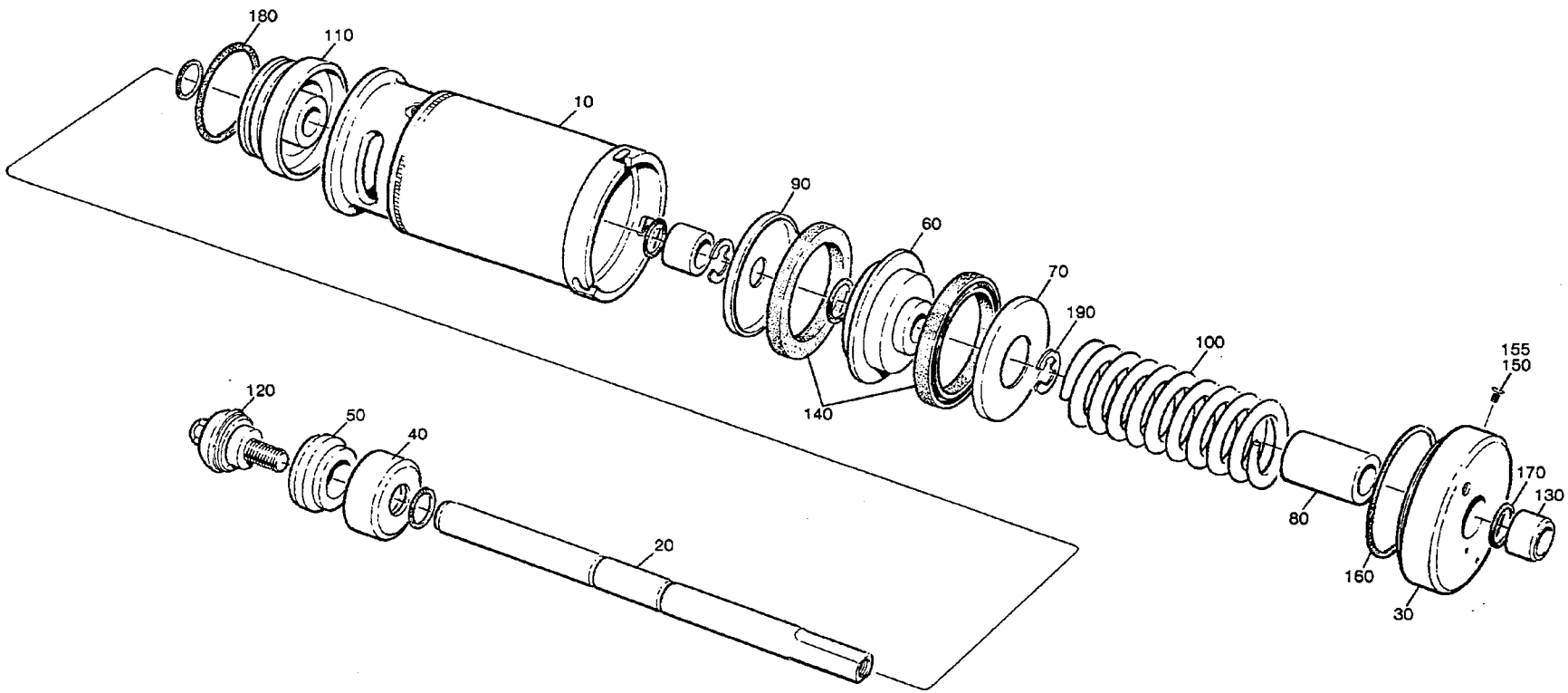

53921101.TIF
539211-1
AM

Last Alteration: AM 15504 90-10-31

Corresponding group: 539211-010V
Assembly Drawing: 539211-1

Issue: **940524**

From	Pos	Part No	SP	UN	Qty	Description
		C- 539211-0101				**B-CYLINDER, ASS'Y**
	010	440633	-		1	CYLINDER HOUSING
	020	440636	-		1	PISTON ROD
	030	440695	-		1	END SECTION
	040	530587	-		1	WASHER
	050	530588	PU		1	SEAL RING
	060	440646	-		1	PISTON
	070	440652	-		1	WASHER
	080	440654	-		1	SPACER SLEEVE
	090	440656	-		1	WASHER
	100	440662	-		1	COMPRESSION SPRING
	110	440664	-		1	SEALING WASHER
	120	476185	-		1	VALVE CONE
	130	497933	-		2	BUSHING
	140	90020-0027	P		2	SLEEVE
	150	312125-0323	-		1	SLOTTED HEMCS5X8RFR
	155	315233-0101	-		1	SEAL RING M5
	160	315202-0304	P		1	O-RING 64,5X3
	170	315204-0215	PU		5	O-RING 19,2X3VITON
	180	315204-0301	PU		1	O-RING 49,5X3VITON
	190	315754-0113	P		2	LOCKING WAE 15

From	Pos	Part No	SP	UN	Qty	Description

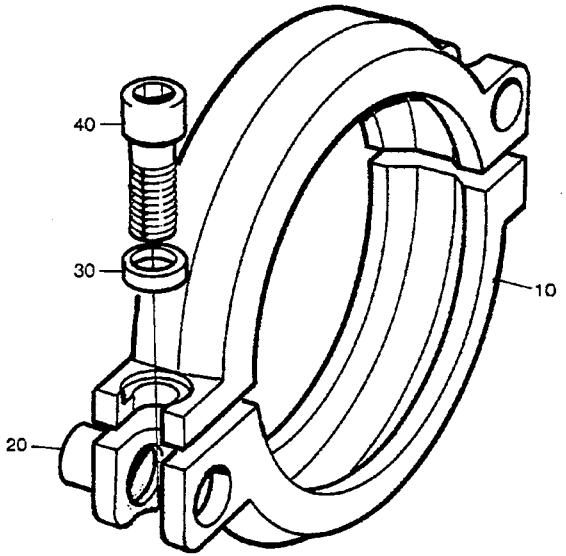

54116301.TIF
541163-1
AM

Last Alteration: AM 10455 87-11-11

Corresponding group: 541163-010V
Assembly Drawing: 541163-1

Issue: **940524**

From	Pos	Part No	SP	UN	Qty	Description
	F000	**C- 541163-0101**				**Clamp Ring, Ass'y**
	010	G- 532117	-		2	CLAMP RING
	020	497748	-		2	PEG
	030	541165	-		2	WASHER
	040	312115-0459	-		2	SCREW 8X40 A4 80

From	Pos	Part No	SP	UN	Qty	Description

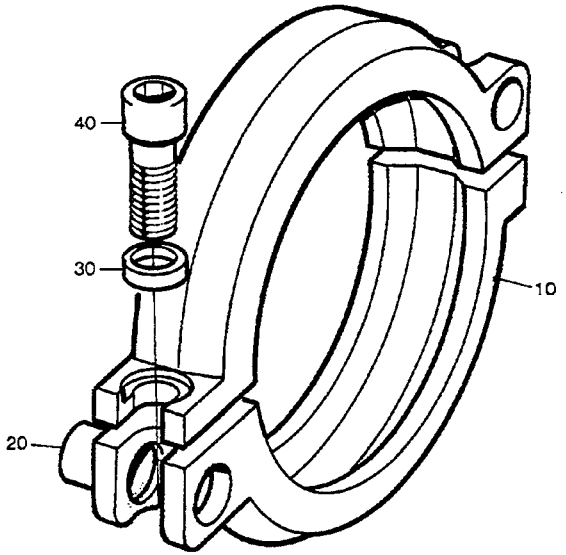

54116401.TIF
541164-1
AM

Last Alteration: AM 10455 87-11-11

Corresponding group: 541164-010V
Assembly Drawing: 541164-1

Issue: **940524**

From	Pos	Part No	SP	UN Qty	Description
		C- 541164-0101			**CLAMP RING, ASS'Y**
	010	G- 532118	-	2	CLAMP RING
	020	497748	-	2	PEG
	030	541165	-	2	WASHER
	040	312115-0459	-	2	SCREW 8X40 A4 80

From	Pos	Part No	SP	UN Qty	Description

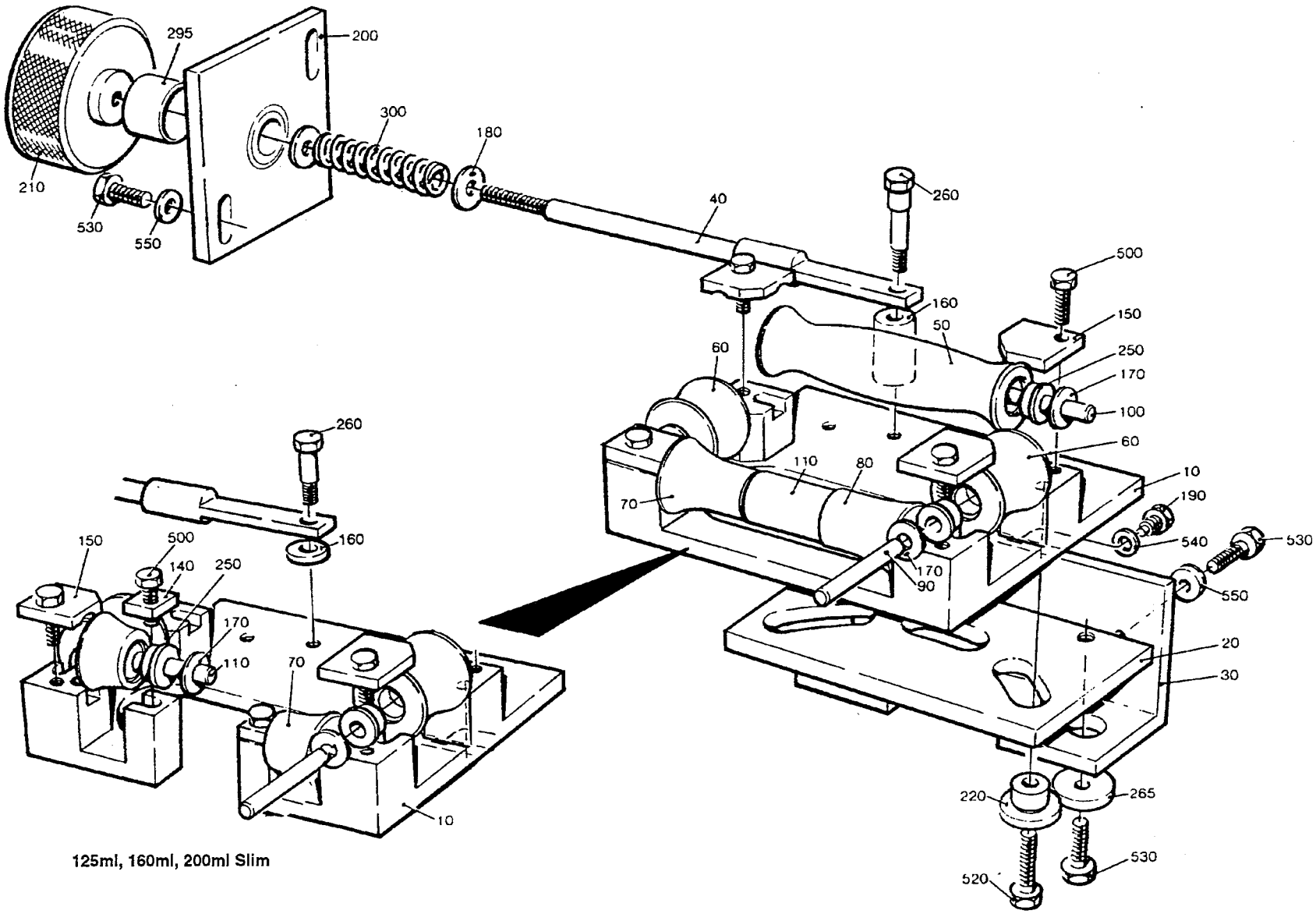

125ml, 160ml, 200ml Slim

44130404.TIF
441304-4/5
AM 17158

From	Pos	Part No	SP	UN	Qty	Description
284ml - 180ml						
		C- 441304-0401				**Movable Forming Ring, Ass'y**
	010	978792	-		1	PLATE
	030	571535	-		1	CANTILEVER
	050	751491	S		1	ROLL
	060	751492	S		2	ROLL
	070	751493	S		1	ROLL
	080	751494	S		1	ROLL
	090	752186-0005	S		2	SHAFT
	100	752186-0009	S		1	SHAFT
	110	752187	S		1	SHAFT
	150	456139	-		4	LOCK PLATE
	250	90240-0172	P		10	FLANGE BUSHING
	260	751265	-		1	SCREW
	500	312105-0368	-		4	SCREW M6S6X16RFR
125ml						
		C- 441304-0402				**Movable Forming Ring, Ass'y**
	010	456905	-		1	FASTENING PLATE
	030	571536	-		1	CANTILEVER
	050	752141	-		1	FORMING ROLLER
	060	752142	-		2	FORMING ROLLER
	070	752143	-		2	FORMING ROLLER
	090	752186-0002	-		2	SHAFT
	100	752186-0008	-		1	SHAFT
	110	752186-0006	-		2	SHAFT
	140	456907	-		2	LOCK PLATE
	150	456906	-		4	LOCK PLATE
	250	90240-0172	P		6	FLANGE BUSHING
	255	752156	P		4	FLANGE BUSHING
	260	456042	S		1	SCREW
	500	312105-0332	-		6	SCREW M6S5X22RFR
160ml 200ml Slim						
		C- 441304-0403				**Movable Forming Ring, Ass'y**
	010	456905	-		1	FASTENING PLATE
	030	571535	-		1	CANTILEVER
	050	752126	-		1	FORMING ROLLER
	060	752127	-		2	FORMING ROLLER
	070	752128	-		2	FORMING ROLLER
	090	752186-0002	-		2	SHAFT
	100	752186-0008	-		1	SHAFT
	110	752186-0006	-		2	SHAFT
	140	456907	-		2	LOCK PLATE
	150	456906	-		4	LOCK PLATE
	250	90240-0172	P		6	FLANGE BUSHING
	255	752156	P		4	FLANGE BUSHING
	260	456042	S		1	SCREW
	500	312105-0332	-		6	SCREW M6S5X22RFR
250ml Slim						
		C- 441304-0404				**Movable Forming Ring, Ass'y**
	010	574404	-		1	BRACKET
	030	571535	-		1	CANTILEVER
	050	574479	-		1	ROLL
	060	574480	-		2	ROLL
	070	574481	-		2	ROLL
	090	752186-0002	-		2	SHAFT
	100	752186-0008	-		1	SHAFT
	110	752186-0006	-		2	SHAFT
	140	574407	-		2	LOCK PLATE
	150	574406	-		2	LOCK PLATE
	155	574405	-		2	LOCK PLATE
	250	90240-0172	P		6	FLANGE BUSHING
	255	752156	P		4	FLANGE BUSHING
	260	456042	S		1	SCREW
	500	312105-0332	-		6	SCREW M6S5X22RFR
Common Parts						
	020	751333	-		1	SETTING PLATE
	040	256309	S		1	SHAFT
	160	256312	-		1	WASHER
	170	2033-0011	P		10	WASHER
	180	26490	-		2	WASHER
	190	256280	S		2	DOWEL
	200	571534	-		1	PLATE
	210	257090	-		1	SHIFTER HANDLE
	220	751334	S		3	SPACER
	265	28037	-		2	WASHER
	295	491153	P		1	COMPRESSION GLAND
	300	90335-0008	S		1	SPRING
	520	312105-0371	-		3	SCREW M6S6X22RFR
	530	312105-0451	-		6	SCREW M6S8X20RFR
	540	315105-0165	-		2	WASHER BRB8,4X16RFR
	550	315115-0165	-		4	WASHER TBRB8,4X16RFR

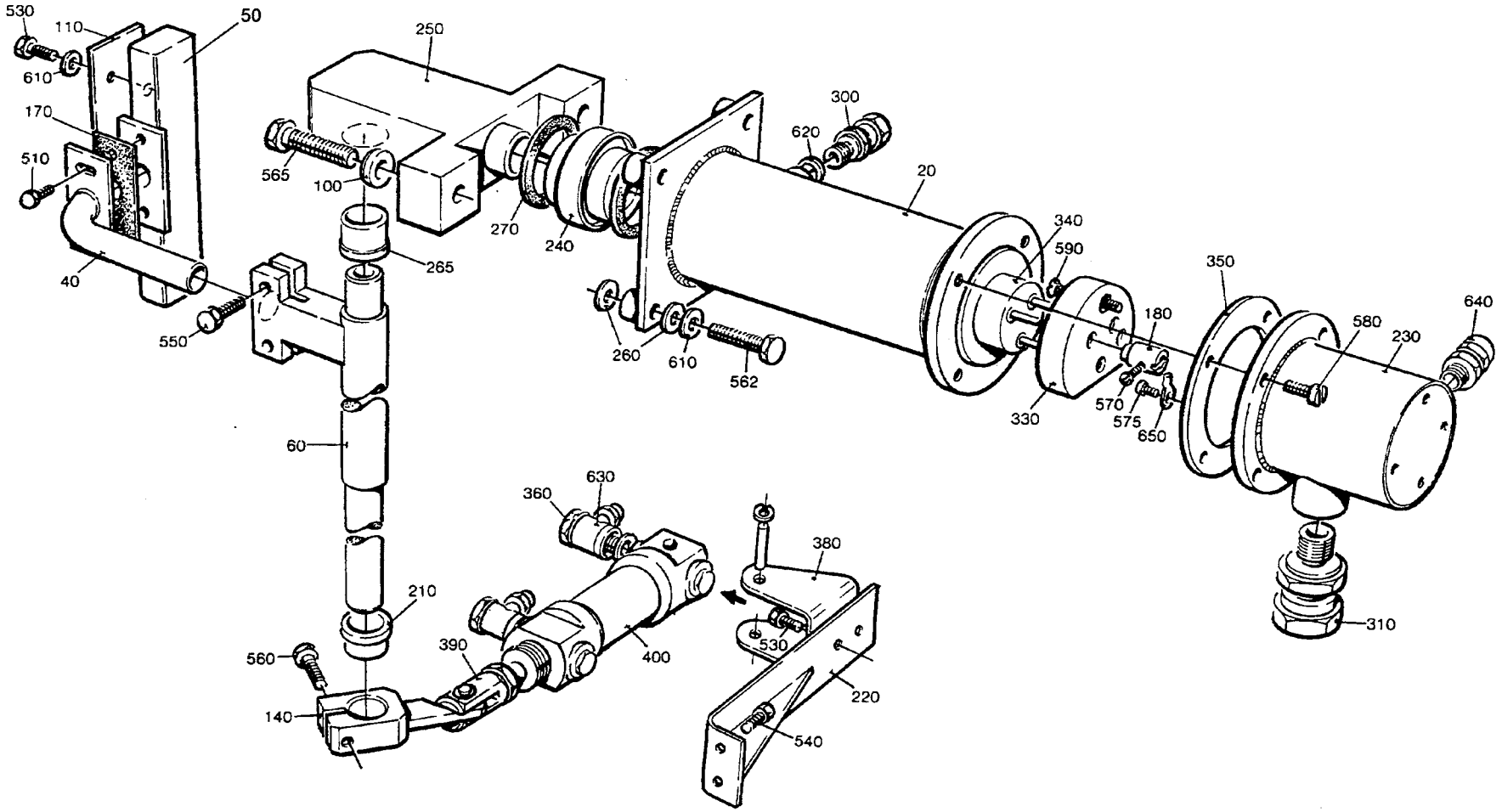

25609502.TIF
256095-2
AM 12181

Last Alteration: AM 20223 93-10-28

Corresponding group: 256095-050V
Assembly Drawing: 256095-2

Issue: **940524**

From	Pos	Part No	SP	UN	Qty	Description
284ml - 180ml						
		C- 256095-0501				**Hot Air Element, Ass'y**
	040	256112	C		1	BRACKET
160ml 250ml Slim 200ml Slim						
		C- 256095-0502				**Hot Air Element, Ass'y**
	040	571532	C		1	BRACKET
125ml						
		C- 256095-0403				**Hot Air Element, Ass'y**
	040	571533	C		1	BRACKET
Common parts						
	020	751733	C		1	HEATING PIPE
	050	256689	S		1	AIR NOZZLE
	060	272948-0003	S		1	SHAFT
	100	315125-0165	-		2	WASHER SB 8,4X26X5 RFR
	110	491097	S		1	HEAT GUARD
	140	491545	C		1	BRACKET
	170	751015	P		1	GASKET
	180	266739	P		3	CABLE GLAND
	210	271269	S		1	BUSHING
	220	491224	-		1	BRACKET
	230	491223	C		1	COVER
	240	295936	S		1	BUSHING
	250	272287	-		1	AXLE SUPPORT
	260	751018	P		8	WASHER
	265	295910	S		1	BUSHING
	270	751023	P		2	GASKET
	300	90030-0184	-		1	PIPE CONNECTION
	310	90030-0187	-		1	PIPE CONNECTION
	330	90125-0020	S		1	PLATE
		270926	S		6	* NUT
		270927	S		3	* SCREW
		294464	S		1	* BASE PLATE
	340	90206-0031	PU		1	HEATING ELEMENT
	350	90206-0322	P		1	GASKET
	360	90235-0282	S		2	VALVE
	380	90239-0487	-		1	BRACKET
	390	90239-0532	S		1	
	400	90239-0847	S		1	CYLINDER
	510	312105-0287	-		2	SCREW M6S4X8 A2 80
	530	312105-0364	-		4	SCREW M6S6X10RFR
	540	312105-0366	-		2	SCREW M6S6X12RFR
	550	312105-0368	-		2	SCREW M6S6X16RFR
	560	312105-0370	-		1	SCREW M6S6X20RFR
	562	312105-0372	-		4	SCREW M6S6X25RFR
	565	312105-0455	-		2	SCREW M6S8X30RFR

From	Pos	Part No	SP	UN	Qty	Description
	570	312125-0220	-		3	SLOTTED HEMCS3X6RFR
	575	312125-0285	-		1	SLOTTED HEMCS4X6RFR
	580	312125-0291	-		4	SLOTTED HEMCS4X12RFR
	590	312145-0228	-		3	SLOTTED HEMFS3X16RFR
	610	315105-0153	-		6	WASHER BRB6,4X12RFR
	620	315234-0109	S		1	SEAL RING R1/8"
	630	342797-0121	S		2	BANJO CONNSINGEL 6-1/8
	640	352103-0106	-		1	CABLE GLANR.ST 11
	650	353104-0130	P		1	CABLE SHOEYAV 025 M 4*

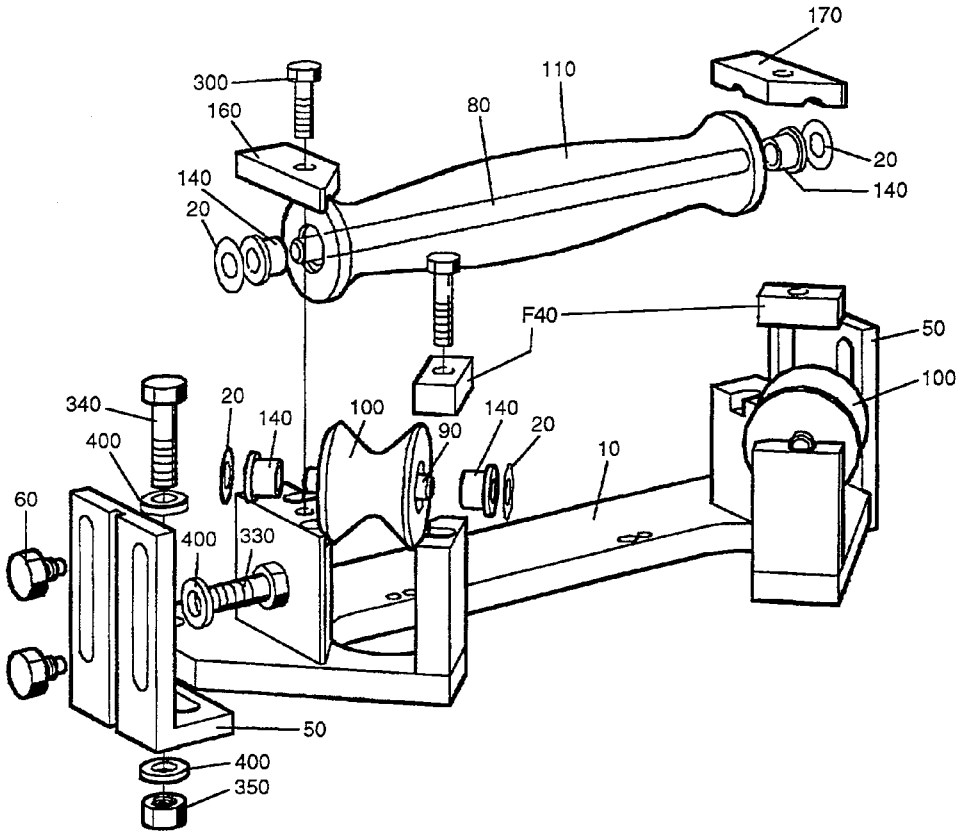

44130704.tif
441307-4
AM 16685

From	Pos	Part No	SP	UN	Qty	Description
284ml - 180ml						
		C- 441307-0301				**Upper Tube Support,Ass'y**
	F040	**C- 565462-0101**	**-**		**1**	**LOCK PLATE**
	010	978791	-		1	HOLDER
	050	751267	-		2	CANTILEVER
	080	752186-0011	S		1	SHAFT
	090	752186-0004	S		2	SHAFT
	100	751284	S		2	ROLL
	110	751283	S		1	ROLL
	160	751287	-		1	PLATE
	170	751288	-		1	PLATE
	300	312105-0368	-		2	SCREW M6S6X16RFR
	340	312105-0455	-		2	SCREW M6S8X30RFR
Common Parts						
	020	2033-0011	P		6	WASHER
	060	256280	S		4	DOWEL
	140	90240-0172	P		6	FLANGE BUSHING
	330	312105-0451	-		4	SCREW M6S8X20RFR
	350	312605-0318	-		2	NUT M6M8RFR
	400	315115-0165	-		8	WASHER TBRB8,4X16RFR

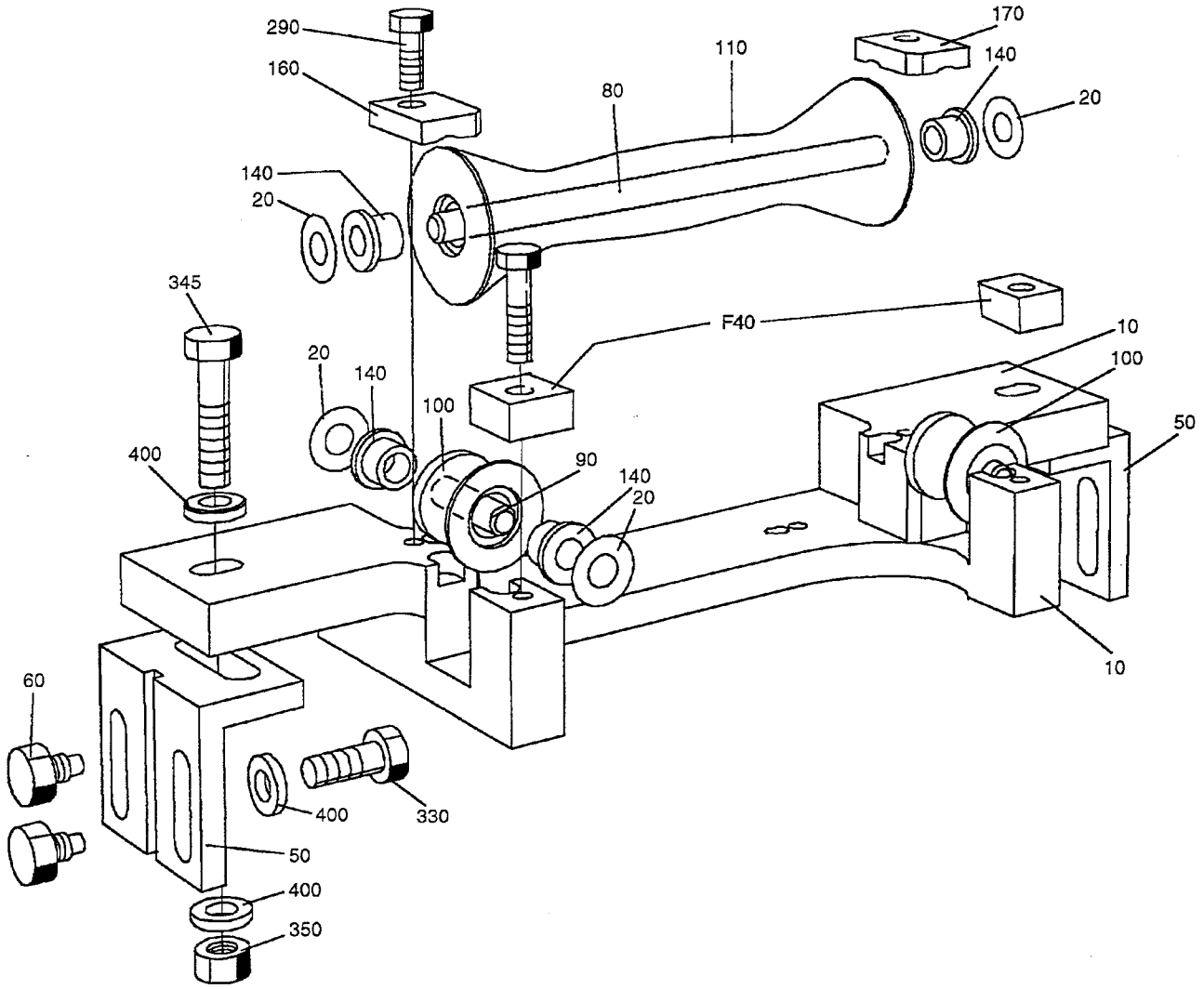

44130705.tif
441307-5
AM 16685

Last Alteration: AM 20223 93-10-28

Corresponding group: 441307-030V
Assembly Drawing: 441307-4

Issue: **940524**

From	Pos	Part No	SP	UN	Qty	Description
125ml						
		C- 441307-0302				**Upper Tube Support,Ass'y**
	F040	**C- 565462-0102**	**-**		**1**	**LOCK PLATE**
	010	469078	-		1	HOLDER
	050	256279	-		2	ANGLE
	080	752186-0010	-		1	SHAFT
	090	752186-0001	-		2	SHAFT
	100	752145	-		2	FORMING ROLLER
	110	752144	-		1	FORMING ROLLER
	160	469079	-		1	LOCK PLATE
	170	469080	-		1	LOCK PLATE
	290	312105-0368	-		2	SCREW M6S6X16RFR
	345	312105-0457	-		2	SCREW M6S8X35RFR
Common Parts						
	020	2033-0011	P		6	WASHER
	060	256280	S		4	DOWEL
	140	90240-0172	P		6	FLANGE BUSHING
	330	312105-0451	-		4	SCREW M6S8X20RFR
	350	312605-0318	-		2	NUT M6M8RFR
	400	315115-0165	-		8	WASHER TBRB8,4X16RFR

From	Pos	Part No	SP	UN	Qty	Description

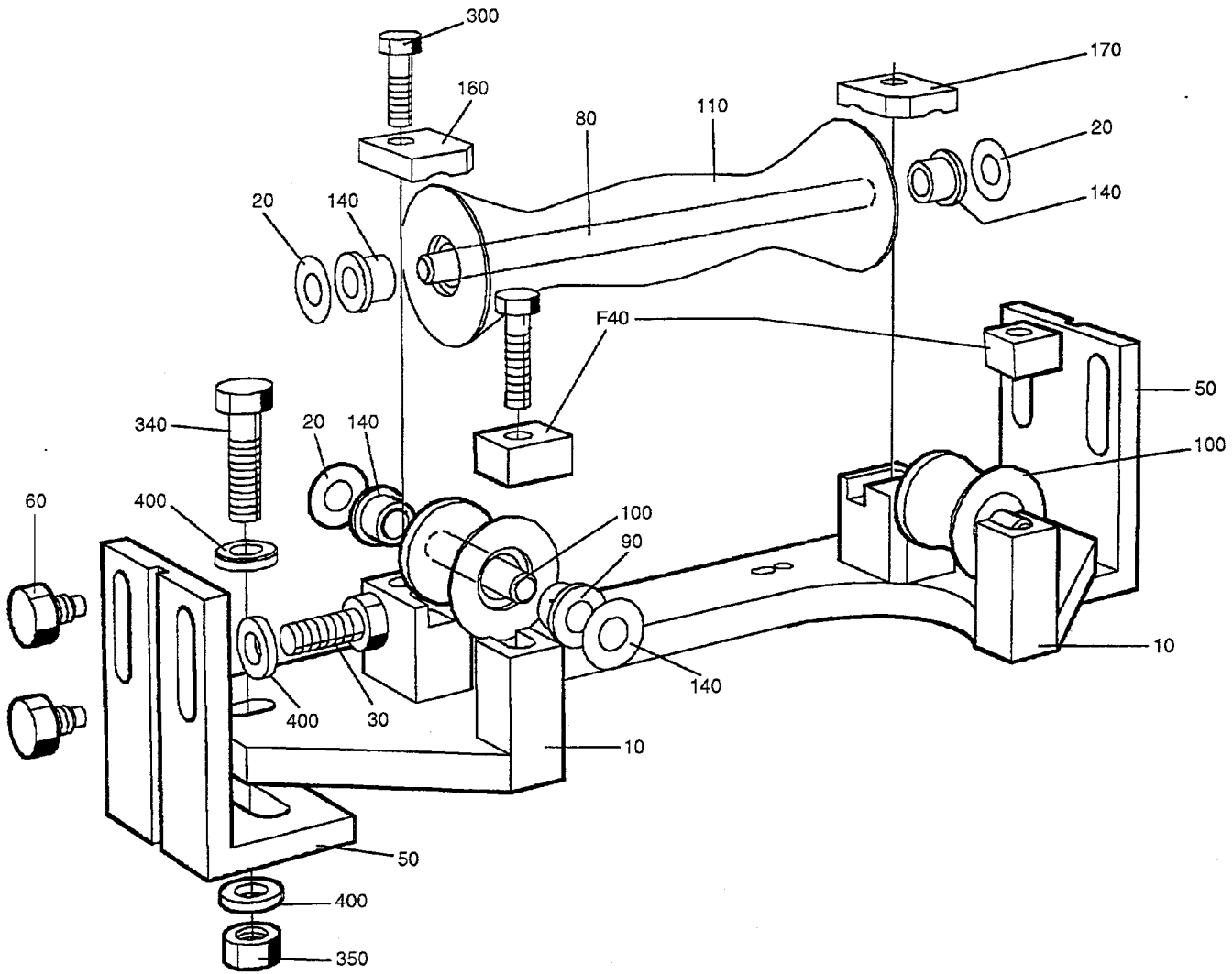

44130706.tif
441307-6
AM 16685

From	Pos	Part No	SP	UN	Qty	Description
284ml - 180ml						
		C- 565462-0101				**Lock Plate, Ass'y**
	010	568289	-		2	LOCK PLATE
	020	312105-0370	-		2	SCREW M6S6X20RFR
125ml						
		C- 565462-0102				**Lock Plate, Ass'y**
	010	469081	-		2	LOCK PLATE
	020	312105-0368	-		2	SCREW M6S6X16RFR
160ml 200ml Slim						
		C- 565462-0103				**Lock Plate, Ass'y**
	010	469044	-		2	LOCK PLATE
	020	312105-0370	-		2	SCREW M6S6X16RF
250ml Slim						
		C- 565462-0104				**Lock Plate, Ass'y**
	010	574419	-		2	LOCK PLATE
	020	312105-0370	-		2	SCREW M6S6X20RFR

From	Pos	Part No	SP	UN	Qty	Description

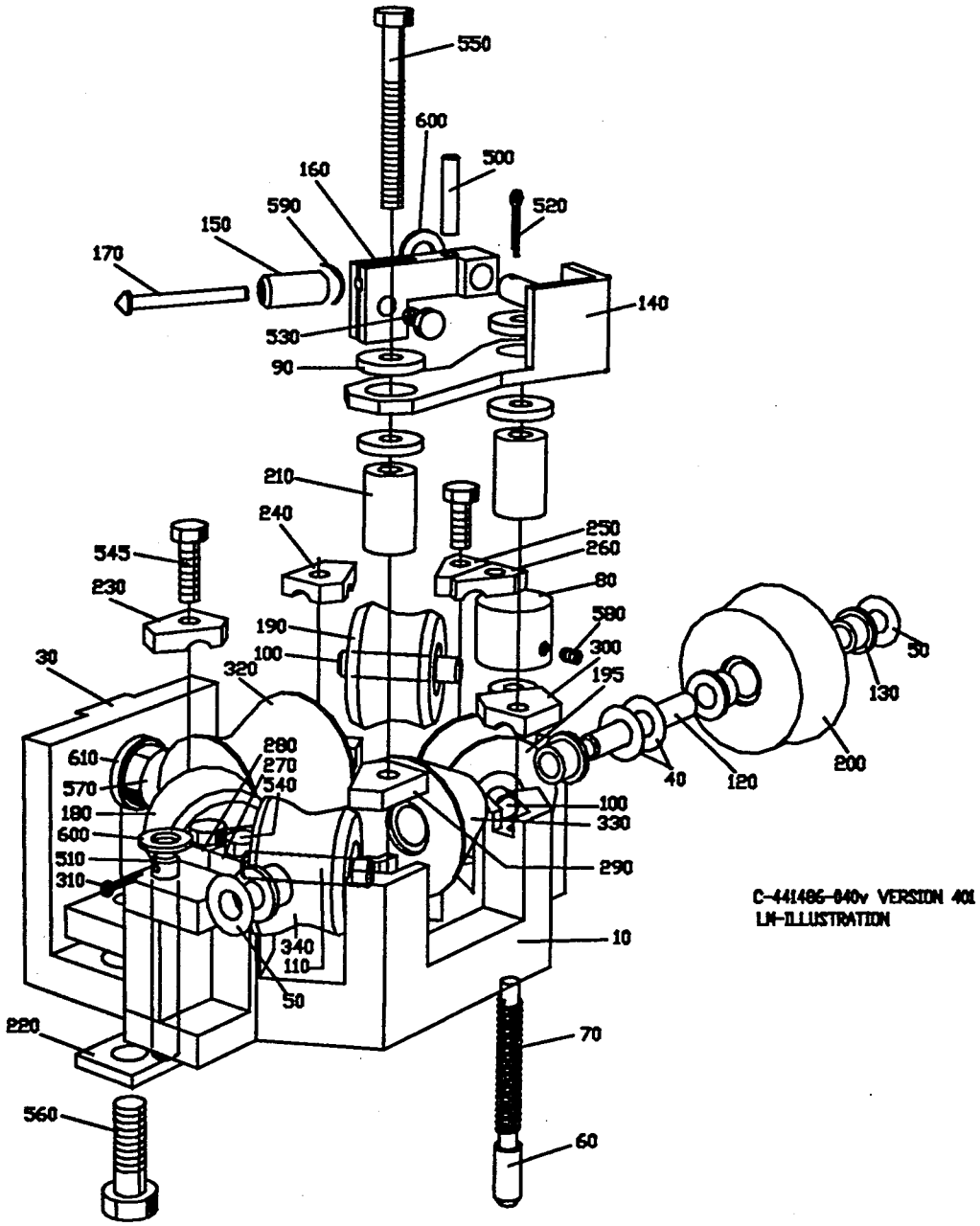
550
600
500
160
590
520
150
170
140
530
90
210
240
250
260
545
230
80
190
580
100
300
30
320
195
50
130
280
610
270
570
540
180
100
330
600
290
510
310
340
110
10
50
220
70
560
60
40
120
200
C-441486-040v VERSION 401
LH-ILLUSTRATION

Last Alteration: AM 20223 93-10-28

Corresponding group: 441486-040V
Assembly Drawing: 441486-7/8

Issue: 940524

From	Pos	Part No	SP	UN	Qty	Description
284ml - 180ml						
		C- 441486-0401				**Divided Forming Ring, Ass'y**
	010	978791	-		1	BRACKET
	040	2033-0008	P		2	WASHER
	050	2033-0011	P		12	WASHER
	090	257175	-		4	WASHER
	100	752186-0004	S		2	SHAFT
	110	752186-0005	S		2	SHAFT
	120	752186-0007	S		2	SHAFT
	130	90240-0172	P		14	FLANGE BUSHING
	140	441918	-		1	BRACKET
	150	451117	S		1	ROLL
	160	451148	-		1	BRACKET
	170	451149	S		1	SHAFT
	180	751499	S		1	ROLL
	190	751497	S		1	ROLL
	195	751496	S		1	ROLL
	200	751495	S		1	ROLL
	210	456181	-		2	SPACER
	230	456183	-		1	LOCK PLATE
	240	456184	-		1	LOCK PLATE
	250	456185	-		1	LOCK PLATE
	260	456186	-		1	LOCK PLATE
	270	456187	-		1	LOCK PLATE
	280	456188	-		1	LOCK PLATE
	290	456198	-		1	LOCK PLATE
	300	456199	-		1	LOCK PLATE
	320	751498	S		1	ROLL
	330	751501	S		1	ROLL
	340	751500	S		1	ROLL
	500	311103-0312	-		1	CYLINDRICACP M6 5X25 RFR
	520	311411-0165	-		1	SPLIT PIN SP2,5X16RFR
	530	312105-0325	-		1	SCREW M6S5X10 A2 80
	540	312105-0368	-		4	SCREW M6S6X16RFR
	545	312105-0370	-		2	SCREW M6S6X20RFR
	550	312105-0381	-		2	SCREW M6S6X55RFR
	590	315105-0136	-		1	WASHER BRB4,3X8RFR
	600	315105-0165	-		3	WASHER BRB8,4X16RFR
125ml						
		C- 441486-0402				**Divided Forming Ring, Ass'y**
	010	469745	-		1	BRACKET
	050	2033-0011	P		14	WASHER
	100	752186-0003	S		4	SHAFT
	120	752186-0006	-		1	SHAFT
	125	752185	S		1	SHAFT
	130	90240-0172	P		12	FLANGE BUSHING
	180	752147	S		1	FORMING ROLLER
	190	752148	S		1	FORMING ROLLER
	195	752150	S		1	FORMING ROLLER
	200	752151	S		1	FORMING ROLLER
	230	456869	-		1	LOCK PLATE
	240	456871	-		1	LOCK PLATE
	250	456873	-		2	LOCK PLATE
	260	456874	-		2	LOCK PLATE
	290	456870	-		1	LOCK PLATE
	300	456872	-		1	LOCK PLATE
	320	752146	S		1	FORMING ROLLER
	330	752152	S		1	FORMING ROLLER
	340	752149	S		1	FORMING ROLLER
	350	752156	P		2	FLANGE BUSHING
	535	312105-0329	-		4	SCREW M6S5X16 A2 80
	536	312105-0332	-		4	SCREW M6S5X22RFR
	600	315105-0165	-		2	WASHER BRB8,4X16RFR
160ml 200ml Slim						
		C- 441486-0403				**Divided Forming Ring, Ass'y**
	010	469745	-		1	BRACKET
	050	2033-0011	P		14	WASHER
	100	752186-0003	S		4	SHAFT
	120	752186-0006	-		1	SHAFT
	125	752185	S		1	SHAFT
	130	90240-0172	P		12	FLANGE BUSHING
	180	752132	S		1	FORMING ROLLER
	190	752133	S		1	FORMING ROLLER
	195	752135	S		1	FORMING ROLLER
	200	752136	S		1	FORMING ROLLER
	230	456869	-		1	LOCK PLATE
	240	456871	-		1	LOCK PLATE
	250	456873	-		2	LOCK PLATE
	260	456874	-		2	LOCK PLATE
	290	456870	-		1	LOCK PLATE
	300	456872	-		1	LOCK PLATE
	320	752131	S		1	FORMING ROLLER
	330	752137	S		1	FORMING ROLLER
	340	752134	S		1	FORMING ROLLER
	350	752156	P		2	FLANGE BUSHING
	535	312105-0329	-		4	SCREW M6S5X16 A2 80
	536	312105-0332	-		4	SCREW M6S5X22RFR
	600	315105-0165	-		2	WASHER BRB8,4X16RFR

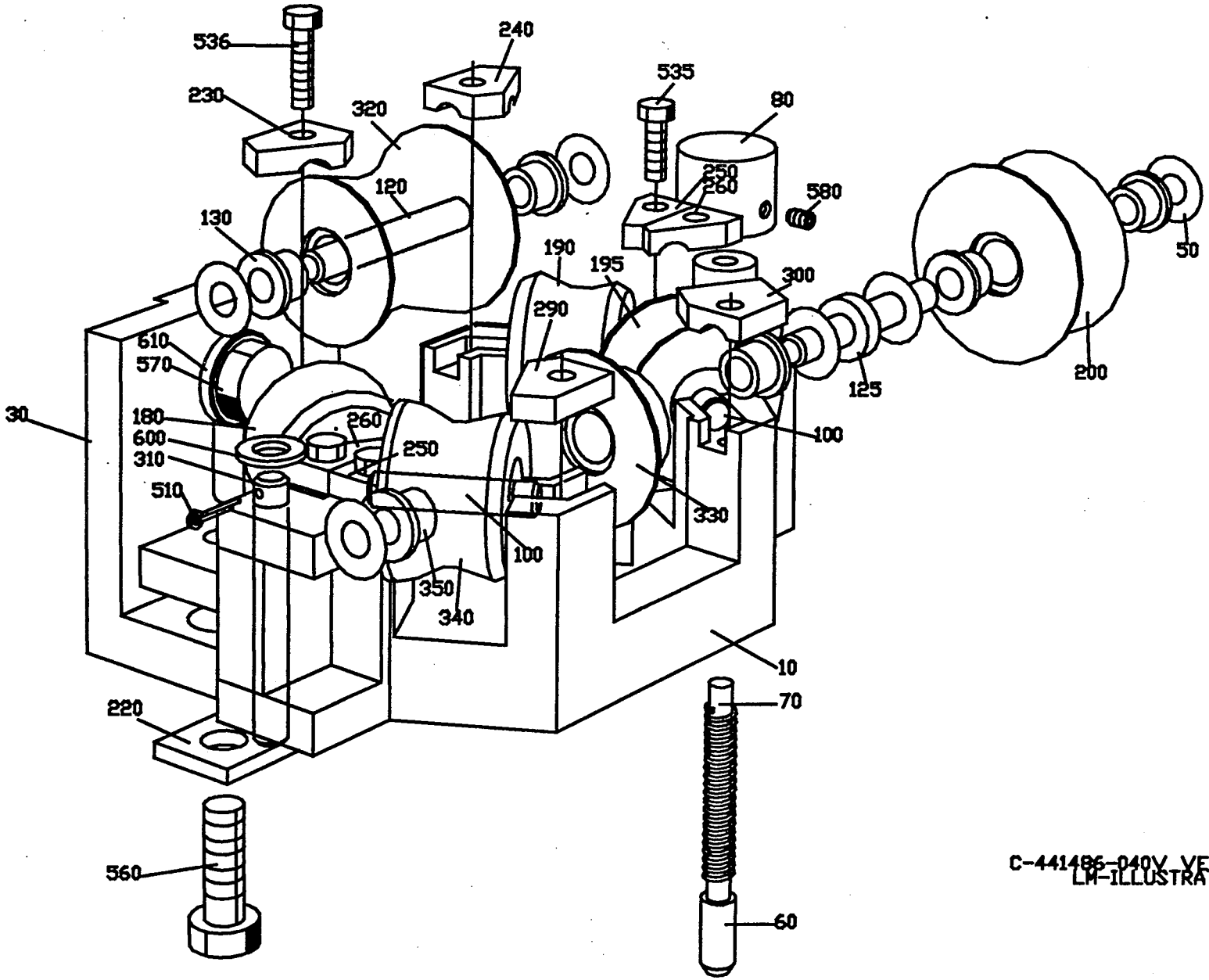

C-441486-040V VERSION 402
LM-ILLUSTRATION

Last Alteration: AM 20223 93-10-28

Corresponding group: 441486-040V
Assembly Drawing: 441486-7/8

Issue: 940524

From	Pos	Part No	SP	UN	Qty	Description
250ml Slim						
		C- 441486-0404				Divided Forming Ring, Ass'y
	010	574396	-		1	BRACKET
	050	2033-0011	P		14	WASHER
	100	752186-0004	S		4	SHAFT
	120	752186-0006	-		1	SHAFT
	125	574395	S		1	SHAFT
	130	90240-0172	P		12	FLANGE BUSHING
	140	574456			1	BRACKET
	150	451117	S		1	ROLL
	160	451148			1	BRACKET
	170	451149	S		1	ROLL
	180	574397	S		1	ROLL
	190	574399	S		1	ROLL
	195	574400	S		1	ROLL
	200	574401	S		1	ROLL
	210	456181			2	SPACER
	230	574389	-		1	LOCK PLATE
	240	574390	-		1	LOCK PLATE
	250	574391	-		2	LOCK PLATE
	260	574392	-		2	LOCK PLATE
	290	574394	-		1	LOCK PLATE
	300	574393	-		1	LOCK PLATE
	320	574398	S		1	ROLL
	330	574402	S		1	ROLL
	340	574403	S		1	ROLL
	350	752156	P		2	FLANGE BUSHING
	500	311103-0312	-		1	CYLINDRICACP M6 5X25 RFR
	520	311411-0165	-		1	SPLIT PIN SP2,5X16RFR
	530	312105-0325	-		1	SCREW M6S5X10 A2 80
	535	312105-0329	-		4	SCREW M6S5X16 A2 80
	536	312105-0332	-		4	SCREW M6S5X22RFR
	550	312105-0381	-		2	SCREW M6S6X55RFR
	590	315105-0136	-		1	WASHER BRB4,3X8RFR
	600	315105-0165	-		3	WASHER BRB8,4X16RFR

From	Pos	Part No	SP	UN	Qty	Description
Common Parts						
	030	G- 456230	-		1	ANGLE BRACKET
	060	35918	S		1	SHAFT
	070	35919	S		1	COMPRESSION SPRING
	080	36325	S		1	KNOB
	220	456182	-		1	PLATE
	310	751318	-		1	SHAFT
	510	311411-0150	-		2	SPLIT PIN SP2X12RFR
	560	312105-0495	-		2	SCREW M6S10X30RFR
	570	312105-0536	-		1	SCREW M6S12X30RFR
	580	312318-0285	-		1	STOP SCREW SK6SS4X6RFR
	610	315115-0178	-		1	WASHER TBRB13X24RFR

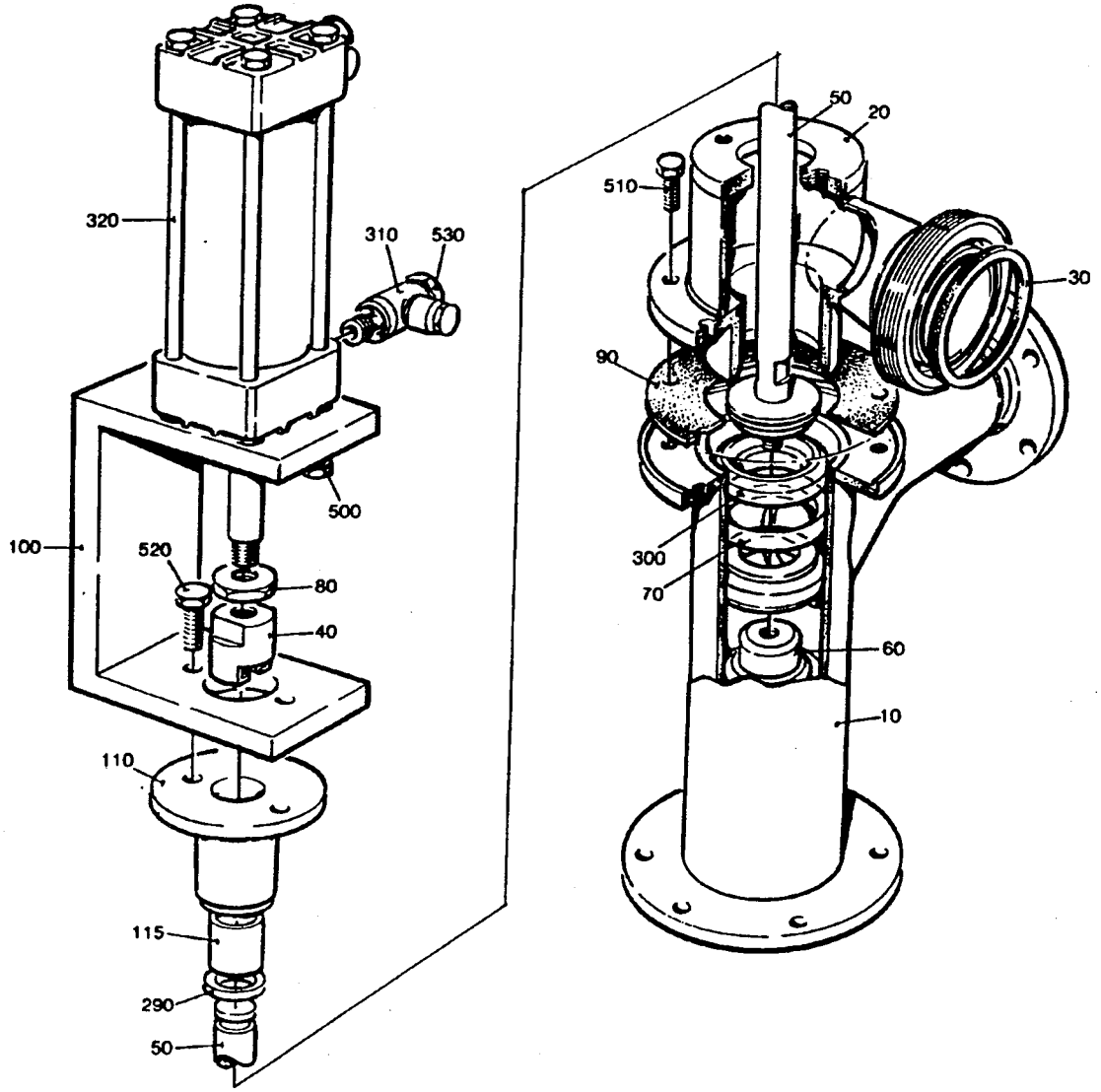

27116904.TIF
271169-4
AM 12366

Last Alteration: AM 12366 89-11-22

Corresponding group: 271169-040V
Assembly Drawing: 271169-4

Issue: 940524

From	Pos	Part No	SP	UN	Qty	Description
		C- 271169-0401				**Valve, Ass'y**
	010	752222	C		1	VALVE
	020	269401	C		1	HOUSE
	030	90091-0180	P		1	GASKET
	040	441871	S		1	PENDULUM SUSPENSION
	050	266389	S		1	PISTON ROD
	060	266390	S		1	NUT
	070	266391	S		1	RING
	080	441286	C		1	NUT
	090	295160	S		1	GASKET
	100	441843	C		1	BRACKET
	110	532348	S		1	SPINDLE GUIDE
	115	532349	S		2	PLAIN BEARING
	290	90141-0022	S		1	RING
	300	530588	P		2	SEAL RING
	320	90239-0779	S		1	CYLINDER
		90239-0442	S		1	* SEAL KIT
	500	312105-0331	-		4	SCREW M6S5X20 A2 80
	510	312105-0366	-		6	SCREW M6S6X12RFR
	520	312105-0451	-		2	SCREW M6S8X20RFR
	530	342797-0121	S		2	BANJO CONNSINGEL 6-1/8
	540	342980-0303	-		2	BANJO CONN SINGEL 1/8"

From	Pos	Part No	SP	UN	Qty	Description

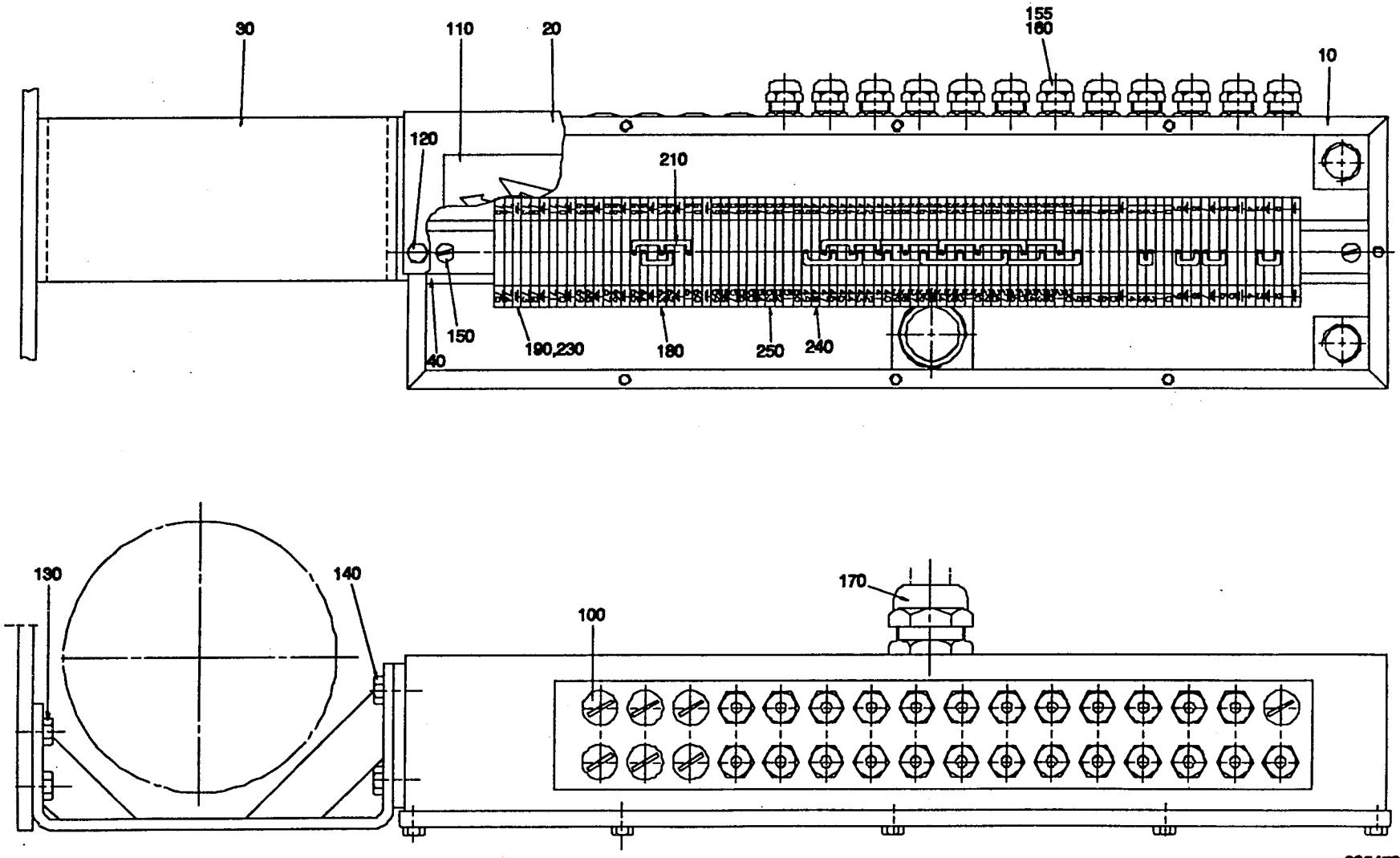

29547004.WPG
295470-4
AM 19293

From	Pos	Part No	SP	UN	Qty	Description
With Pull-Tab						
		C- 295470-0501				**El.Connection Box, Ass'y**
	100	90002-0013	-		9	BLANK-OFF PLUG 15,2
	155	352103-0100	-		10	CABLE GLANR.STR 9
Without Pull-Tab						
		C- 295470-0502				**El.Connection Box, Ass'y**
	100	90002-0013	-		8	BLANK-OFF PLUG 15,2
	155	352103-0100	-		11	CABLE GLANR.STR 9
Common Parts						
	010	978600	-		1	BOX
	020	295624	-		1	LID
	030	456554	-		1	CANTILEVER
	040	751125-0003	-		1	RAIL
	110	90194-0016	-		1	SIGN"FLASH SIGN"
	120	312105-0366	-		8	SCREW M6S6X12RFR
	130	312105-0449	-		4	SCREW M6S8X16RFR
	140	312105-0451	-		4	SCREW M6S8X20RFR
	150	312125-0364	-		2	SLOTTED HEMCS6X10RFR
	160	352103-0101	-		13	CABLE GLAND ST 9
	170	352103-0121	-		1	CABLE GLANR.ST 29
	180	353021-0216	P		75	FEED TRHOUGH TERM.WDU 2,5
	190	353024-0204	P		14	EARTH TERMINAL WPE 2.5
	210	353034-0030	-		11	BRIDGE CONN. WQV 2,5/10
	230	359011-0819	-		1	SET OF SIG5-GW (JORD)
	240	359011-0807	-		2	SET OF SIG5-FW 1-50
	250	359011-0808	-		2	SET OF SIG5-FW 51-100

From	Pos	Part No	SP	UN	Qty	Description

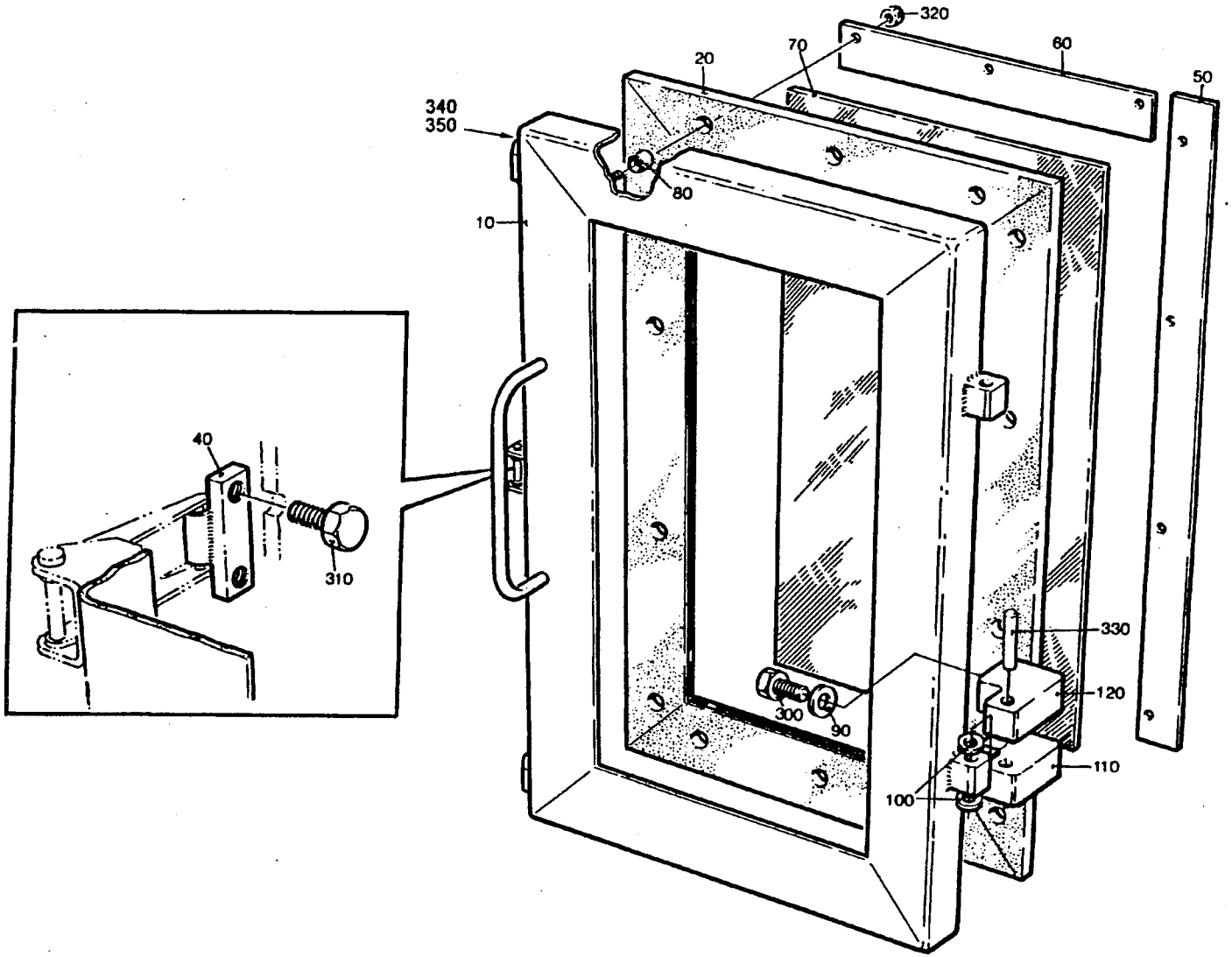

49157902.TIF
491579-2
AM 17862

Last Alteration: AM 17882 92-09-30

Corresponding group: 491579-020V
Assembly Drawing: 491579-2

Issue: 940524

From	Pos	Part No	SP	UN	Qty	Description
		C- 491579-0201				**Door, Ass'y**
	010	978543	-		1	FRAME
	020	272784-0002	S		1	RUBBER STRIP
	040	271860	S		1	CLAMP BLOCK
	050	272781-0002	-		2	COVER SLIP
	060	272782	-		2	COVER SLIP
	070	272783-0002	S		1	GLASS PANE
	080	441718	S		14	SPACER
	090	441737	S		2	WASHER
	100	441739	S		4	WASHER
	110	G- 441740	S		2	HINGE FLANGE
	120	G- 441741	S		2	HINGE FLANGE
	300	312105-0451	-		4	SCREW M6S8X20RFR
	310	312105-0366	-		2	SCREW M6S6X12RFR
	320	312605-0314	-		14	NUT M6M5RFR
	330	311103-0413	-		2	CYLINDRICACP M6 8X50 RFR
	340	312155-0329	-		4	SCREW MF6S5X16RFR
	350	312812-0314	-		4	LOCK NUT A2-M5RFR

From	Pos	Part No	SP	UN	Qty	Description

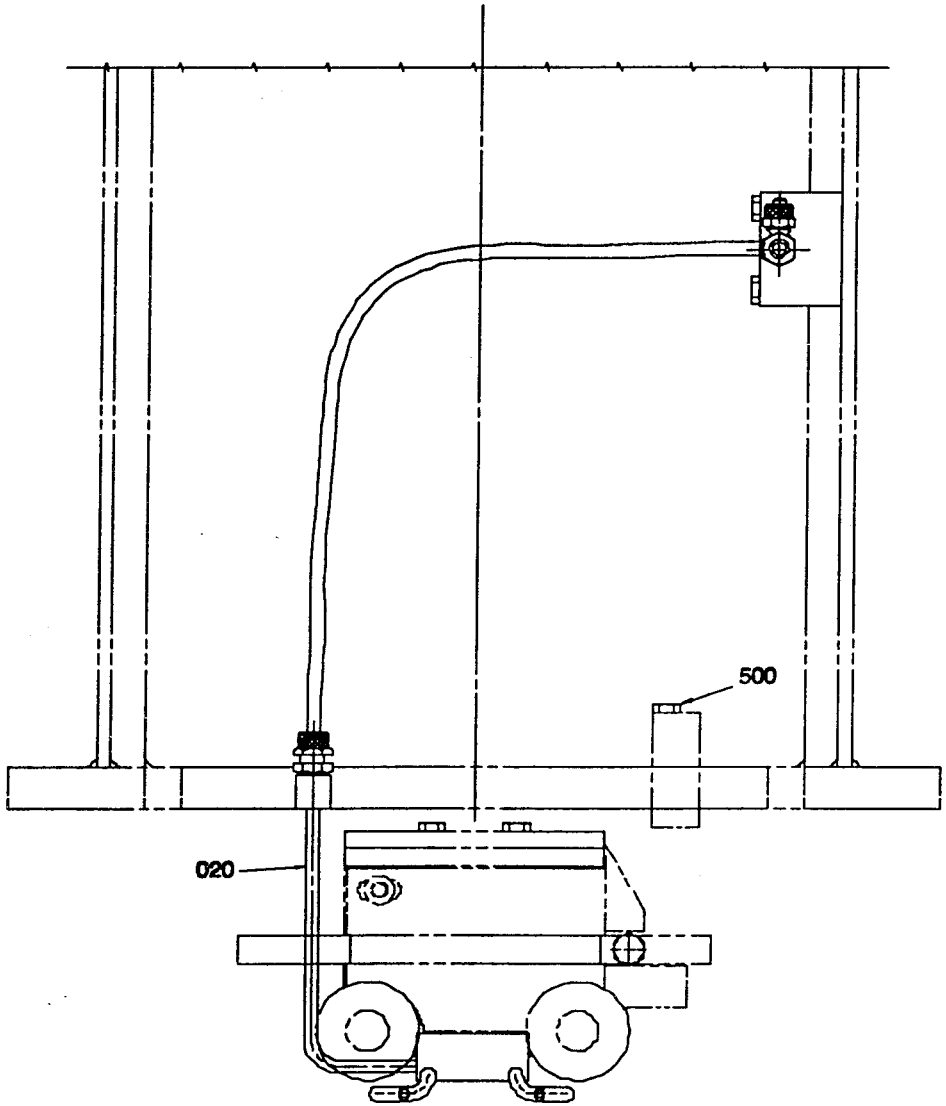
500
020

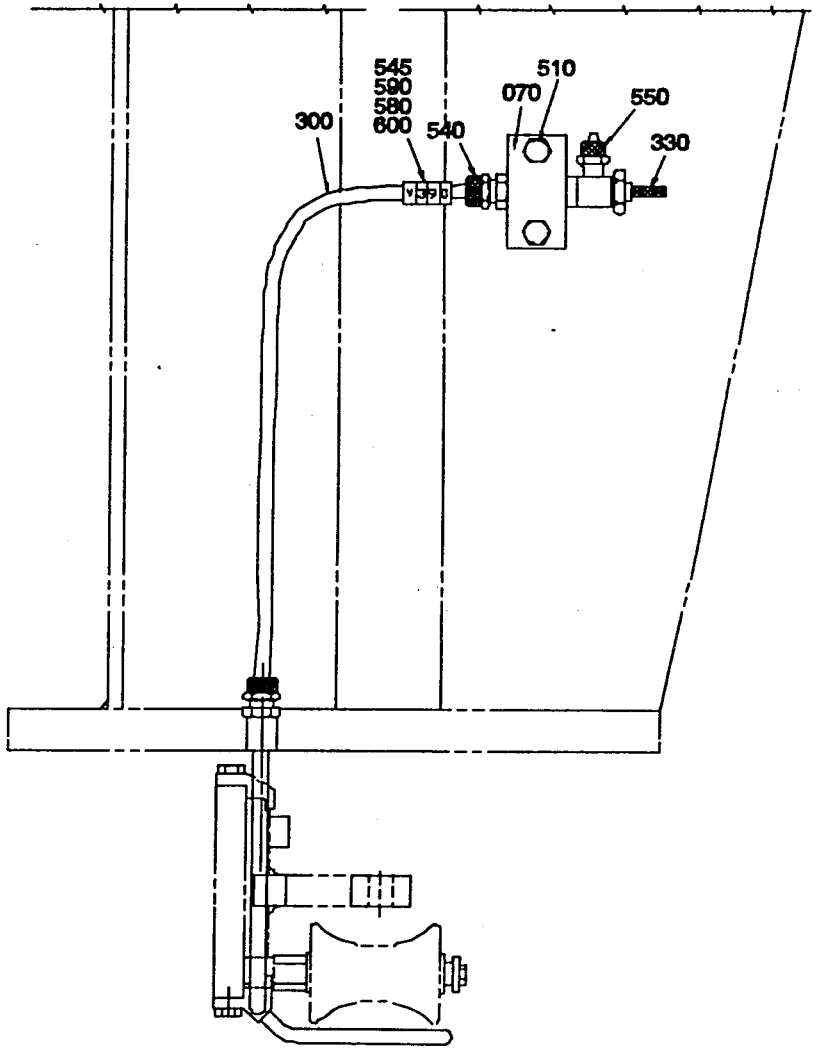
545
590
580
600
300
540
070
510
550
330

Last Alteration: AM 20223 93-10-28

Corresponding group: 469781-030V
Assembly Drawing: 469781-5

Issue: 940524

From	Pos	Part No	SP	UN	Qty	Description
Without Pull Tab 284ml - 180ml 250ml Slim						
		C- 469781-0301				**Tube Flushing Device, Ass'y**
	020	569109	C		1	NOZZLE
	330	90235-0280	-		1	VALVE
	540	342921-0113	-		2	PIPE COUPL6/4-1/8"
	550	342980-0113	S		1	BANJO CONNSINGEL 6/4-1/8
Without Pull Tab 125ml						
		C- 469781-0302				**Tube Flushing Device, Ass'y**
	020	571103	C		1	NOZZLE
	330	90235-0280	-		1	VALVE
	540	342921-0113	-		2	PIPE COUPL6/4-1/8"
	550	342980-0113	S		1	BANJO CONNSINGEL 6/4-1/8
Without Pull Tab 200ml Slim 160ml						
		C- 469781-0303				**Tube Flushing Device, Ass'y**
	020	571103	C		1	NOZZLE
	330	90235-0280	-		1	VALVE
	540	342921-0113	-		2	PIPE COUPL6/4-1/8"
	550	342980-0113	S		1	BANJO CONNSINGEL 6/4-1/8
Common Parts						
	070	271509	-		1	JUNCTION BLOCK
	300	90166-0119	P	MM	500	HOSE
	500	312105-0366	-		1	SCREW M6S6X12RFR
	510	312105-0378	-		2	SCREW M6S6X40RFR
	545	359000-0400	-		1	MARKING CO2/4"0"
	580	359000-0403	-		1	MARKING CO2/4"3"
	590	359000-0409	-		1	MARKING CO2/4"9"
	600	359000-0771	-		1	MARKING CO2/4"V"

From	Pos	Part No	SP	UN	Qty	Description

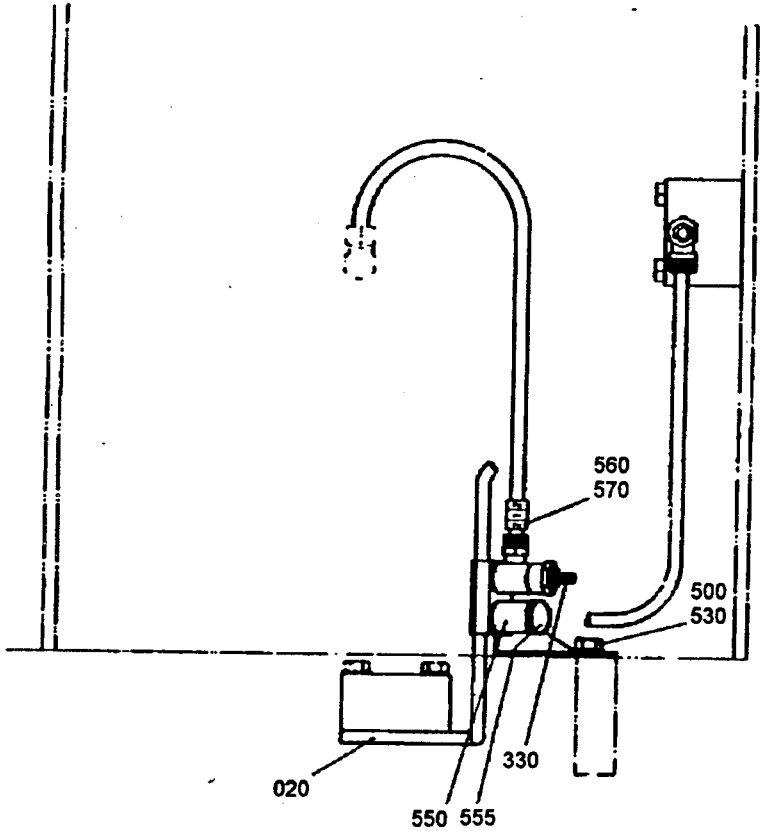

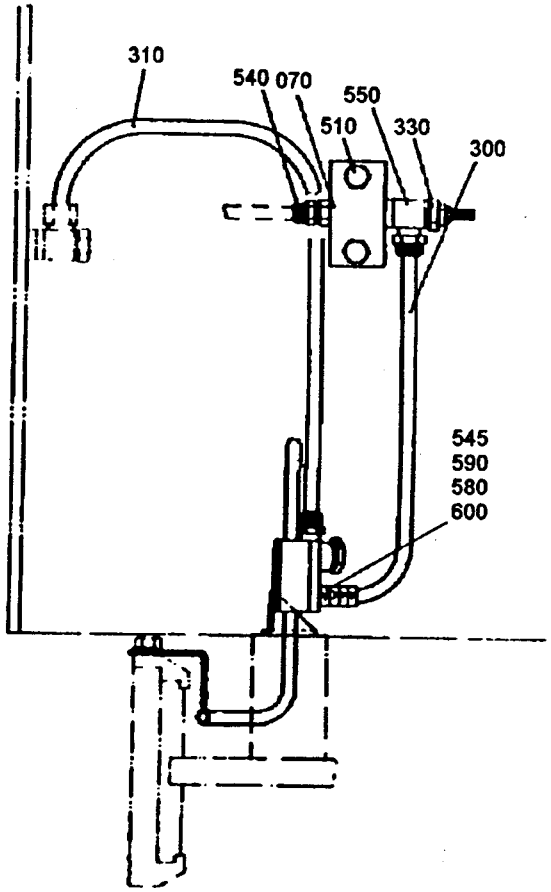

46978104.TIF
469781-4
AM 11456

Last Alteration: AM 20223 93-10-28

Corresponding group: 469781-030V
Assembly Drawing: 469781-4

Issue: 940524

From	Pos	Part No	SP	UN	Qty	Description
WithPull Tab 284ml - 180ml						
		C- 469781-0304				**Tube Flushing Device, Ass'y**
	020	469499	C		1	FORCE SPRING
	310	90166-0124	-	MM	250	HOSE
	330	90235-0280	-		2	VALVE
	530	315105-0153	-		1	WASHER BRB6,4X12RFR
	540	342921-0113	-		1	PIPE COUPL6/4-1/8"
	550	342980-0113	S		3	BANJO CONNSINGEL 6/4-1/8
	555	342980-0303	-		1	BANJO CONN SINGEL 1/8"
	560	359000-0401	-		2	MARKING CO2/4"1"
	570	359000-0402	-		1	MARKING CO2/4"2"
With Pull Tab 125ml						
		C- 469781-0305				**Tube Flushing Device, Ass'y**
	020	469778	C		1	FORCE SPRING
	310	90166-0124	-	MM	250	HOSE
	330	90235-0280	-		2	VALVE
	530	315105-0153	-		1	WASHER BRB6,4X12RFR
	540	342921-0113	-		1	PIPE COUPL6/4-1/8"
	550	342980-0113	S		3	BANJO CONNSINGEL 6/4-1/8
	555	342980-0303	-		1	BANJO CONN SINGEL 1/8"
	560	359000-0401	-		2	MARKING CO2/4"1"
	570	359000-0402	-		1	MARKING CO2/4"2"
With Pull Tab 200ml Slim						
		C- 469781-0306				**Tube Flushing Device, Ass'y**
	020	469522	C		1	FORCE SPRING
	310	90166-0124	-	MM	250	HOSE
	330	90235-0280	-		2	VALVE
	530	315105-0153	-		1	WASHER BRB6,4X12RFR
	540	342921-0113	-		1	PIPE COUPL6/4-1/8"
	550	342980-0113	S		3	BANJO CONNSINGEL 6/4-1/8
	555	342980-0303	-		1	BANJO CONN SINGEL 1/8"
	560	359000-0401	-		2	MARKING CO2/4"1"
	570	359000-0402	-		1	MARKING CO2/4"2"
Common Parts						
	070	271509	-		1	JUNCTION BLOCK
	300	90166-0119	P	MM	500	HOSE
	500	312105-0366	-		1	SCREW M6S6X12RFR
	510	312105-0378	-		2	SCREW M6S6X40RFR
	545	359000-0400	-		1	MARKING CO2/4"0"
	580	359000-0403	-		1	MARKING CO2/4"3"
	590	359000-0409	-		1	MARKING CO2/4"9"
	600	359000-0771	-		1	MARKING CO2/4"V"

From	Pos	Part No	SP	UN	Qty	Description

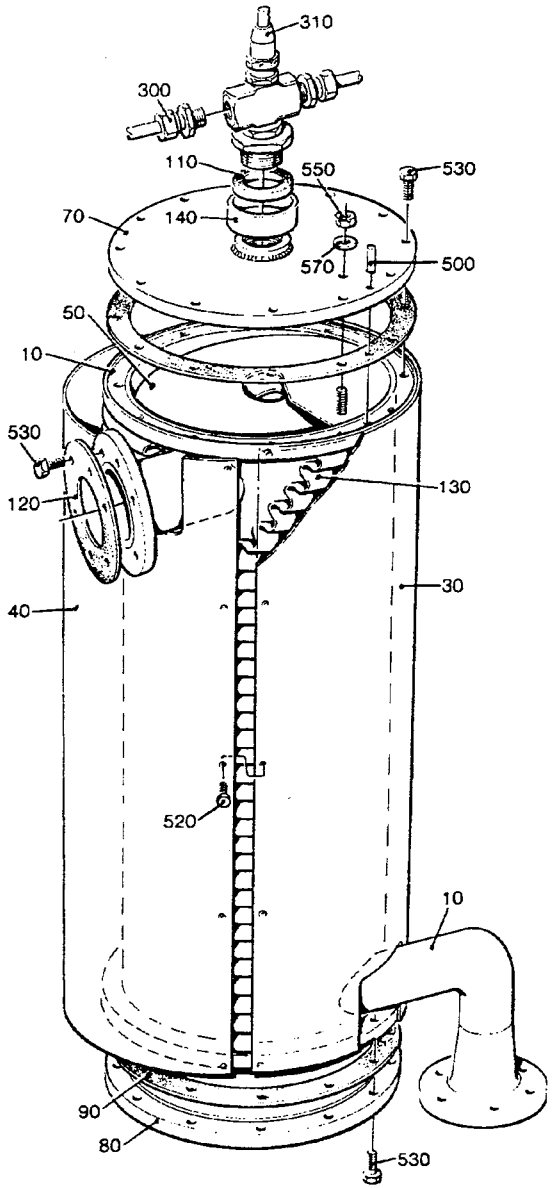

27240701.TIF
272407-1
AM 9415

From	Pos	Part No	SP	UN Qty	Description
		C- 272407-0201			**Generator, Ass'y**
	010	272274	C	1	CONTAINER
	030	272319	-	1	DISCHARGE TRAY
	040	272320	-	1	DISCHARGE TRAY
	050	272325	C	1	SPIRAL
	070	272275	C	1	LID
	080	272276	C	1	BOTTOM
	090	272277	S	2	GASKET
	110	12242-0001	S	1	GASKET
	120	531742	S	1	GASKET
	130	441501	S	1	INSULATION
	140	295993	C	1	GASKET HOLDER
	300	90030-0062	S	2	CONNECTION
	310	90424-0017	S	1	NOZZLE
		90424-0301	S	0	* SLEEVE
		90424-0302	S	0	* GASKET
		90424-0303	S	0	* GASKET
		90424-0304	PU	0	* GASKET
	500	311103-0236	-	1	CYLINDRICACP M6 3X16 RFR
	520	312105-0325	-	14	SCREW M6S5X10 A2 80
	530	312105-0368	-	30	SCREW M6S6X16RFR
	550	312605-0314	-	1	NUT M6M5RFR
	570	315105-0146	-	1	WASHER BRB5,3X10RFR

From	Pos	Part No	SP	UN Qty	Description

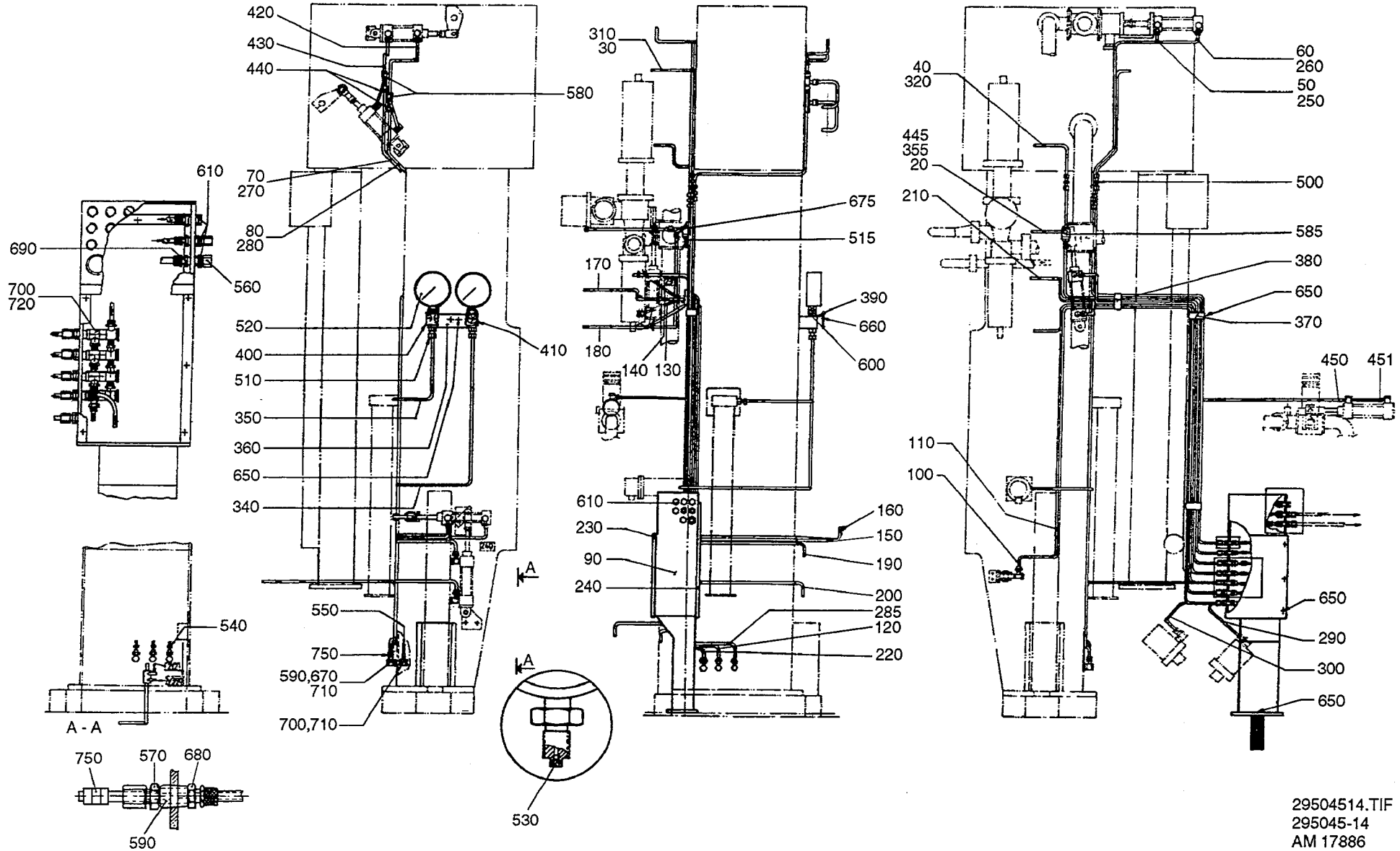

29504514.TIF
295045-14
AM 17886

Last Alteration: AM 20740 93-12-20

Corresponding group: 295045-070V
Assembly Drawing: 295045-14/15

Issue: **940524**

From	Pos	Part No	SP	UN	Qty	Description
With Pull-Tab						
		C- 295045-0701				**Pipe Work Pneumatic, Ass'y**
	120	491659	-		1	PIPE 212
	560	90224-0324	S		1	CONNECTION
	570	90224-0307	S		26	CONNECTION
	610	90330-0066	-		6	PLUG
	670	342797-0121	-		3	BANJO CONNSINGEL 6-1/8
	700	342980-0113	-		11	BANJO CONNSINGEL 6/4-1/8
	710	342980-0303	-		6	BANJO CONN SINGEL 1/8"
Without Pull-Tab						
		C- 295045-0701				**Pipe Work Pneumatic, Ass'y**
	570	90224-0307	S		27	CONNECTION
	610	90330-0066	-		7	PLUG
	670	342797-0121	-		2	BANJO CONNSINGEL 6-1/8
	700	342980-0113	-		10	BANJO CONNSINGEL 6/4-1/8
	710	342980-0303	-		4	BANJO CONN SINGEL 1/8"
Common Parts						
	020	978563	-		1	PIPE 90
	030	295734	-		1	PIPE
	040	295735	-		1	PIPE
	050	295736	-		1	PIPE
	060	295737	-		1	PIPE
	070	295738	-		1	PIPE
	080	295739	-		1	PIPE
	090	752285	-		1	CONNECTION BOX
	100	491657	-		1	PIPE 200
	110	491658	-		1	PIPE 201
	130	491660	-		1	PIPE 230
	140	491661	-		1	PIPE 231
	150	491662	-		1	PIPE 240
	160	491663	-		1	PIPE 241
	170	491664	-		1	PIPE 250
	180	491665	-		1	PIPE 251
	190	491666	-		1	PIPE 260
	200	491667	-		1	PIPE 261
	210	295568	-		1	PIPE
	220	295590	-		1	PIPE
	230	456411	-		1	LID
	240	491423	-		1	LID
	250	491655	-		1	PIPE 190
	260	491656	-		1	PIPE 191
	270	491668	-		1	PIPE 210
	280	491669	-		1	PIPE 211
	285	751071	-		1	PIPE
	290	295591	-		1	PIPE
	300	295594	-		1	PIPE
	310	295740	-		1	PIPE
	320	295741	-		1	PIPE
	340	469497	-		1	PIPE
	350	469498	-		1	PIPE
	355	978564	-		1	PIPE
	360	33577	-		1	CANTILEVER
	370	295604	-		3	CRAMP
	380	295605	-		3	BRACKET
	390	464173	-		2	LABEL HOLDER
	400	464174	-		1	SIGN
	410	464175	-		1	SIGN
	420	491670	-		1	PIPE 210
	430	491671	-		1	PIPE 211
	440	491672	-		2	PIPE 210 (211)
	445	978565	-		1	PIPE
	450	571936	-		1	AIR PIPE
	451	571937	-		1	AIR PIPE
	500	90224-0304	S		6	CONNECTION
	510	90030-0092	S		2	PIPE CONNECTION
	515	90030-0184	S		1	PIPE CONNECTION
	520	90043-0034	S		2	PRESSURE GAUGE
	530	90043-0302	S		2	SCREW
	540	90166-0119	P	MM	2100	HOSE
	550	90166-0132	P	M	3	HOSE
	580	90224-0310	S		2	CONNECTION
	585	90235-0259	S		1	VALVE
	587	90328-0003	-		1	DAMPER
	590	90330-0025	S		37	BUSHING
	600	90330-0105	S		2	NUT
	650	312105-0366	-		27	SCREW M6S6X12RFR
	660	312502-0120	-		4	DRIVE SCREKDS0X5FNB
	675	342751-0204	-		1	ELBOW FITT LE- 6-LR/SY
	680	342921-0113	-		26	PIPE COUPL6/4-1/8"
	690	342921-0121	S		1	PIPE COUPL8/6-1/8"
	720	342980-0313	-		4	BANJO CONN DUBBEL 1/8
	750	359000-0400	-		61	MARKING CO2/4"0"
	750	359000-0401	-		59	MARKING CO2/4"1"
	750	359000-0402	-		44	MARKING CO2/4"2"
	750	359000-0403	-		12	MARKING CO2/4"3"
	750	359000-0404	-		12	MARKING CO2/4"4"
	750	359000-0405	-		4	MARKING CO2/4"5"
	750	359000-0406	-		14	MARKING CO2/4"6"
	750	359000-0407	-		4	MARKING CO2/4"7"
	750	359000-0408	-		12	MARKING CO2/4"8"
	750	359000-0771	-		4	MARKING CO2/4"V"
	750	359000-0409	-		14	MARKING CO2/4"9"

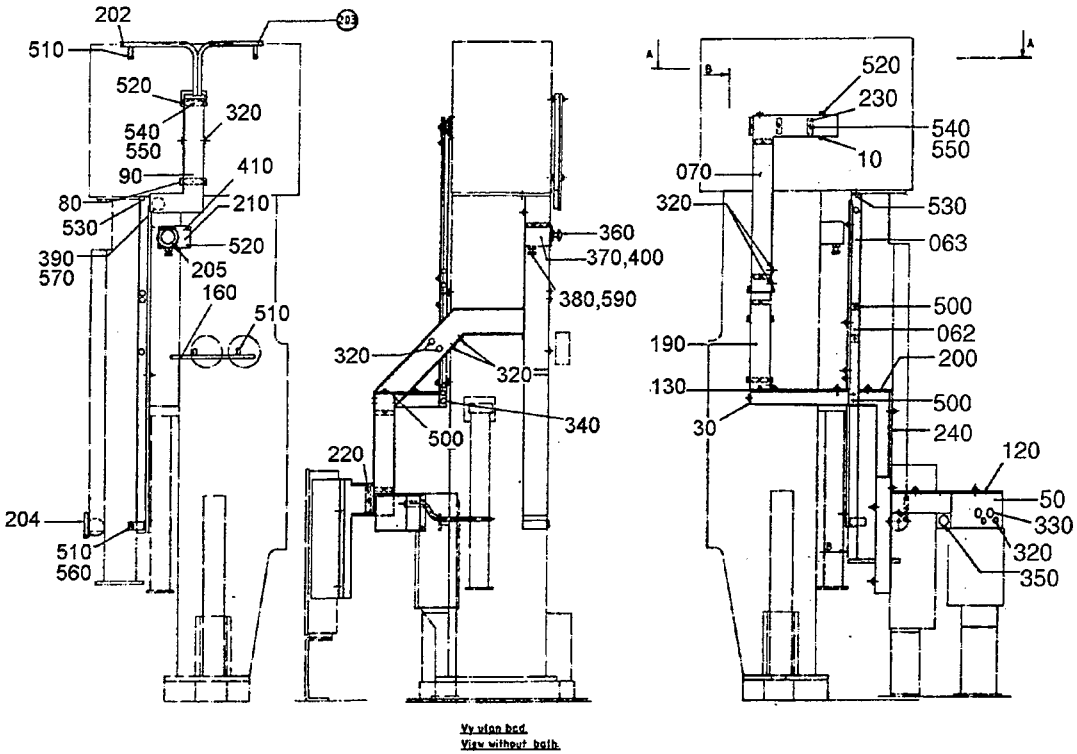

Vy utan bod.
View without bolt.

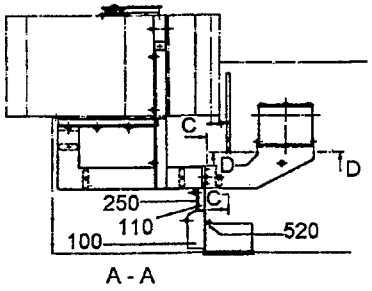

A - A

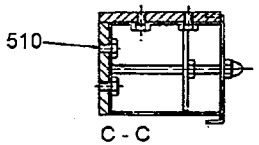

C - C

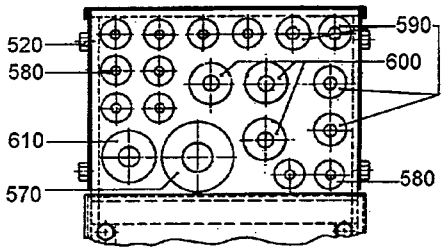

D - D

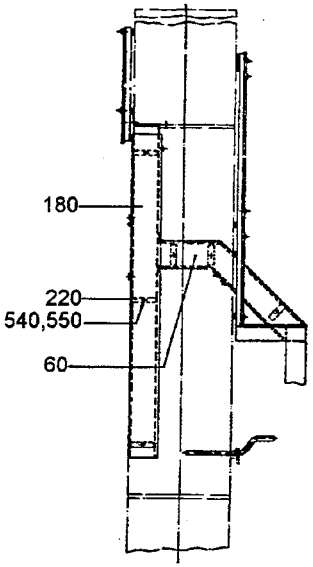

B - B

46937405.TIF
469374-5/6
AM 19334

Last Alteration: AM 19334 93-02-22

Corresponding group: 469374-040V
Assembly Drawing: 469374-5/6

Issue: **940524**

From	Pos	Part No	SP	UN	Qty	Description
		C- 469374-0401				**Cable Trench, Ass'y**
	010	553215	-		1	CABLE TRENCH
	030	553216	-		1	CABLE TRENCH
	050	553217	-		1	CABLE TRENCH
	060	469347	-		1	LID
	062	553218	-		1	CABLE TRENCH
	063	491837	-		1	CABLE TRENCH
	070	751077	-		1	LID
	080	295782	-		1	CABLE TRENCH
	090	295783	-		1	LID
	100	752439	-		1	COVER
	110	752441	-		1	CABLE TRENCH
	120	469350	-		1	LID
	130	469351	-		1	LID
	160	978539	-		1	CABLE CONDUIT
	180	469352	-		1	LID
	190	469353	-		1	LID
	200	469354	-		1	LID
	202	978540	-		1	CABLE CONDUIT
	203	978541	-		1	CABLE CONDUIT
	204	491838	-		1	CABLE CONDUIT
	205	207658-0001	-		1	CAUTION SIGN
	210	271508	-		1	BRACKET
	220	272945	-		7	LOCK
	230	295466	-		15	LOCK
	240	295819-0003	-		1	LID
	250	469355	-		1	LID
	320	90015-0020	-		20	BUSHING
	330	90015-0021	-		2	BUSHING
	340	90015-0023	-		1	BUSHING
	350	90015-0024	-		1	BUSHING
	360	90064-0052	-		1	PUSH BUTTON
	370	90066-0013	-		1	PUSH BUTTON BOX
	380	90089-0003	-		1	SLEEVE
	390	90099-0011	-		1	NUT
	400	90143-0069	S	MM	350	RUBBER STRIP
	410	90194-0016	-		1	SIGN"FLASH SIGN"
	500	312105-0362	-		6	SCREW M6S6X8RFR
	510	312105-0364	-		13	SCREW M6S6X10RFR
	520	312105-0366	-		25	SCREW M6S6X12RFR
	530	312125-0323	-		2	SLOTTED HEMCS5X8RFR
	540	312605-0316	-		23	NUT M6M6RFR
	550	312705-0316	-		25	CAP NUT MHM 6 A2
	560	315105-0153	-		10	WASHER BRB6,4X12RFR
	570	352101-0107	-		2	LEAD-IN G 37
	580	352101-0102	-		10	LEAD-IN G 15,2
	590	352101-0103	-		4	LEAD-IN G 18,6
	600	352101-0105	-		3	LEAD-IN G 22,5
	610	352101-0106	-		1	LEAD-IN G 28,3

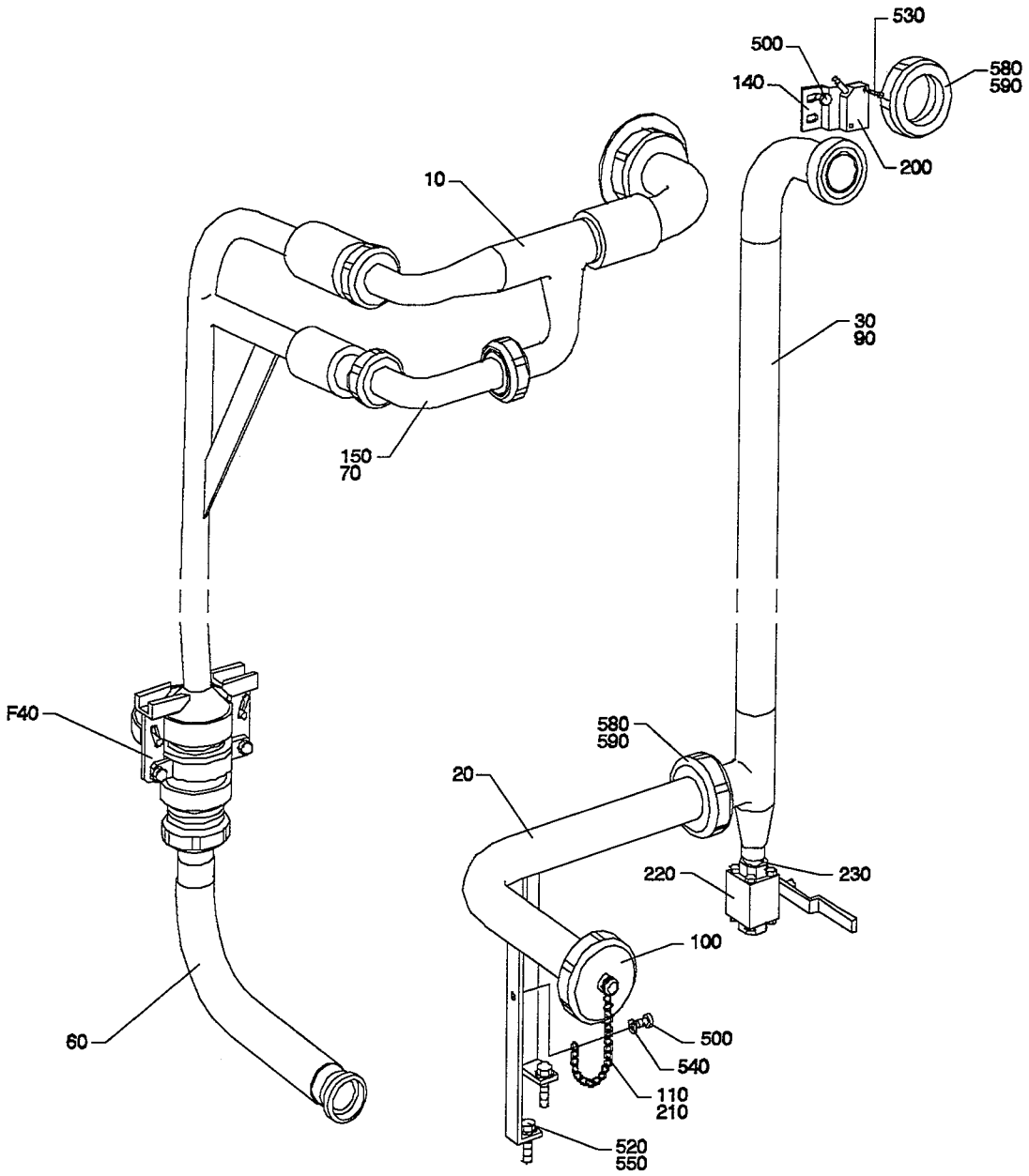

45683605.WPG
456836-5
AM 14814

From	Pos	Part No	SP	UN	Qty	Description
		C- 456836-0401				**Cleaning System, Ass'y**
	F040	**C- 752495-010V**	**-**		**1**	**ATTACHMENT**
	010	751121	-		1	CLEANING PIPE
	020	456858	-		1	PIPE
	030	456859-0002	-		1	PIPE
	060	564543	-		1	CLEANING PIPE
	070	12242-0001	P		2	GASKET
	090	12242-0003	P		4	GASKET
	100	209181	-		1	LID
	110	209183	-		1	RING
	140	456857	-		1	BRACKET
	150	456902	-		1	PIPE
	200	90044-0104	-		1	INDUCTIVE SWITCH
	210	90155-0008	-	MM	200	CHAIN
	220	90187-0051	-		1	BALL VALVE
	230	90330-0028	-		1	NIPPLE
	500	312105-0364	-		3	SCREW M6S6X10RFR
	520	312105-0455	-		2	SCREW M6S8X30RFR
	530	312125-0228	-		2	SLOTTED HEMCS3X16RFR
	540	315105-0153	-		1	WASHER BRB6,4X12RFR
	550	315105-0165	-		2	WASHER BRB8,4X16RFR
	580	342803-0103	-		2	NUT 38
	590	342812-0103	-		2	SLEEVE ANSL.38

From	Pos	Part No	SP	UN	Qty	Description

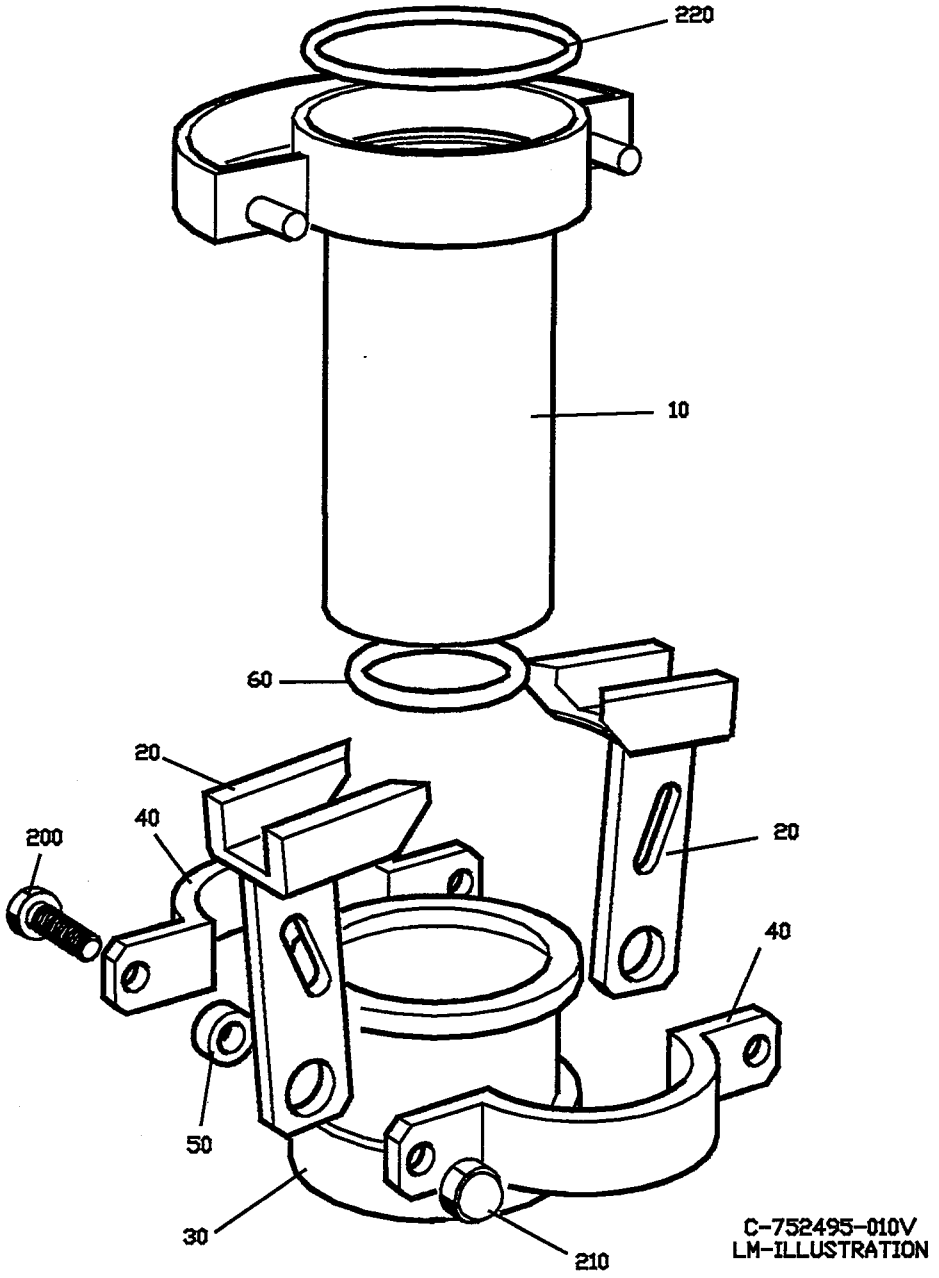
220
10
60
20
40
200
20
40
50
30
210
C-752495-010V
LM-ILLUSTRATION

From	Pos	Part No	SP	UN	Qty	Description
284ml - 180ml						
		C- 752495-0101				**Attachment, Ass'y**
	010	752496	-		1	CLEANING PIPE
	020	752498	-		2	CATCH
	220	90242-0182	P		1	O-RING
200ml Slim 160ml 125ml						
		C- 752495-0102				**Attachment, Ass'y**
	010	752517	-		1	CLEANING PIPE
	020	752521	-		2	CATCH
	220	315204-0526	P		1	O-RING 36,1X3,53VITON
250ml Slim						
		C- 752495-0103				**Attachment, Ass'y**
	010	574431	-		1	CLEANING PIPE
	020	12242-0003	P		1	GASKET
	020	752521	-		2	CATCH
Common Parts						
	030	752497	-		1	NUT
	040	752499	-		2	RING
	050	553586	-		2	SPACER
	060	12242-0002	P		1	GASKET
	200	312105-0371	-		2	SCREW M6S6X22RFR
	210	312811-0316	-		2	LOCK NUT M6RFR

From	Pos	Part No	SP	UN	Qty	Description

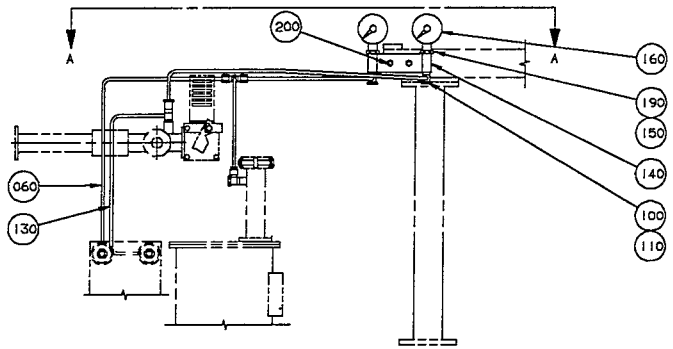

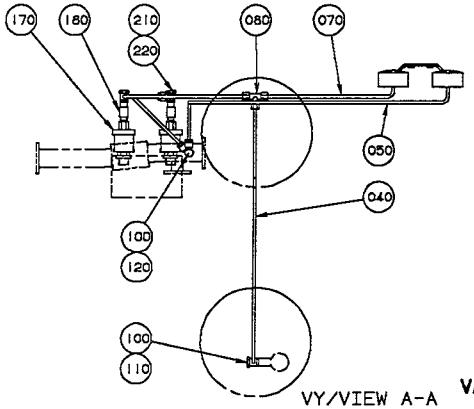

VY/VIEW A-A

VARIANT -302

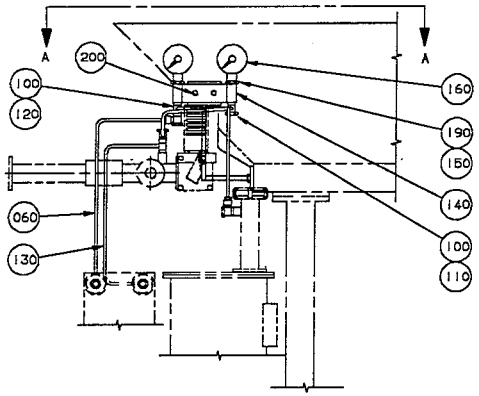

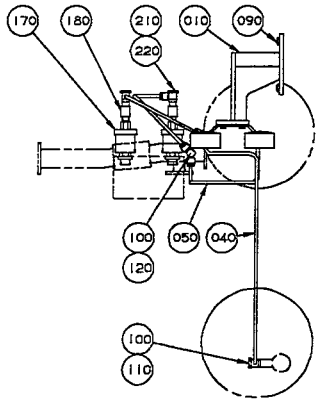

VY/VIEW A-A

VARIANT -301

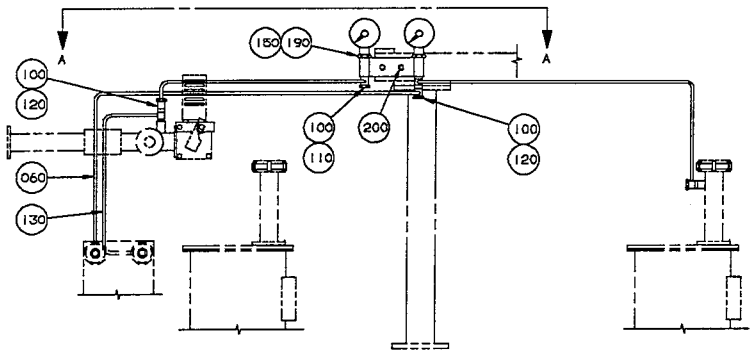

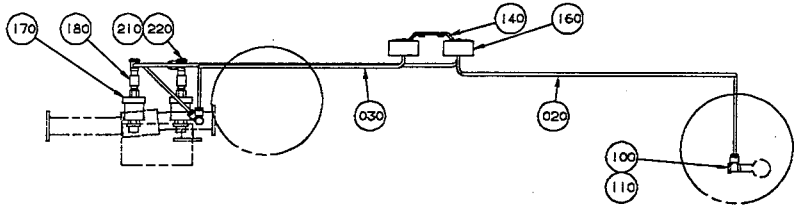

VY/VIEW A-A

VARIANT -303

49108303.WPG
491083-3
AM 17886

Last Alteration: AM 17886 93-01-19

Corresponding group: 491083-030V
Assembly Drawing: 491083-3

Issue: **940524**

From	Pos	Part No	SP	UN	Qty	Description
With Pull Tab TBA/9						
		C- 491083-0301				**Gauge Group, Ass'y**
	010	491086	-		1	CANTILEVER
	040	491779	-		1	PIPE
	050	978597	-		1	PIPE
	060	978594	-		1	PIPE
	090	312105-0449	-		2	SCREW M6S8X16RFR
	100	342797-0122	-		6	BANJO CONNSINGEL 6-1/4
	110	342980-0304	-		2	BANJO CONN SINGEL 1/4
	120	342980-0314	-		2	BANJO CONN DUBBEL 1/4
Without Pull Tab TBA/9						
		C- 491083-0302				**Gauge Group, Ass'y**
	040	978578	-		1	PIPE
	050	978579	-		1	PIPE
	060	978581	-		1	PIPE
	070	978580	-		1	PIPE
	080	90030-0076	-		1	CONNECTION
	100	342797-0122	-		5	BANJO CONNSINGEL 6-1/4
	110	342980-0304	-		3	BANJO CONN SINGEL 1/4
	120	342980-0314	-		1	BANJO CONN DUBBEL 1/4
Without Pull Tab TBA/9C						
		C- 491083-0303				**Gauge Group, Ass'y**
	020	751886	-		1	PIPE
	030	978598	-		1	PIPE
	060	978599	-		1	PIPE
	100	342797-0122	-		6	BANJO CONNSINGEL 6-1/4
	110	342980-0304	-		2	BANJO CONN SINGEL 1/4
	120	342980-0314	-		2	BANJO CONN DUBBEL 1/4
Common Parts						
	130	978582	-		1	PIPE
	140	978596	-		1	CANTILEVER
	150	315234-0110	-		2	SEAL RING
	160	90043-0095	S		2	PRESSURE GAUGE
	170	90274-0045	S		2	GUARD
	180	90330-0012	S		2	REDUCTION SLEEVE
	190	90330-0120	-		2	NUT
	200	312105-0366	-		2	SCREW M6S6X12RFR
	210	342797-0121	-		2	BANJO CONNSINGEL 6-1/8
	220	342980-0303	-		2	BANJO CONN SINGEL 1/8"

From	Pos	Part No	SP	UN	Qty	Description

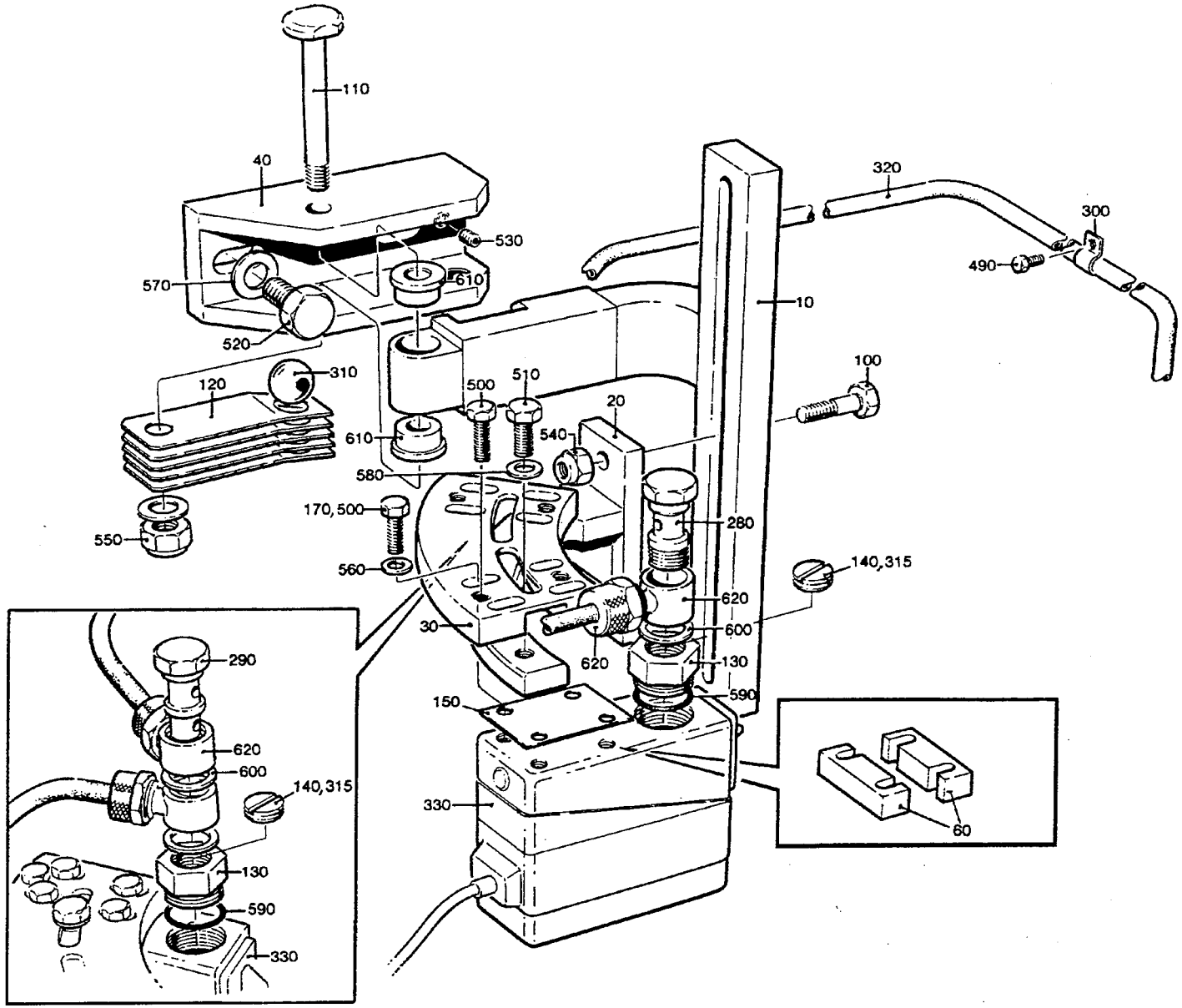

49197603.TIF
491976-3/4/5/6/7
AM 16686

From	Pos	Part No	SP	UN	Qty	Description
284ml 250ml 200ml 180ml						
		C- 491976-0201				**Photocell Unit, Ass'y**
	020	G- 751457	-		1	CANTILEVER
	030	978735	-		1	FASTENING PLATE
	150	536374	-		2	WASHER
	500	312105-0329	-		10	SCREW M6S5X16 A2 80
	510	312105-0366	-		2	SCREW M6S6X12RFR
	580	315115-0153	-		2	WASHER TBRB6,4X12RFR
236ml						
		C- 491976-0202				**Photocell Unit, Ass'y**
	020	G- 565642	-		1	CANTILEVER
	030	491880	-		1	FASTENING PLATE
	050	565670	-		2	SPACER
	055	565671	-		2	SPACER
	070	565641	-		1	LOCK PLATE
	160	312105-0325	-		8	SCREW M6S5X10 A2 80
	500	312105-0329	-		10	SCREW M6S5X16 A2 80
	515	312105-0374	-		2	SCREW M6S6X30RFR
	565	315105-0153	-		2	WASHER BRB6,4X12RFR
160ml 125ml 250ml Slim 200ml Slim						
		C- 491976-0203				**Photocell Unit, Ass'y**
	020	G- 751476	-		1	CANTILEVER
	030	491880	-		1	FASTENING PLATE
	060	752554	-		4	SPACER
	170	312109-0335	-		8	SCREW M6S5X30HRFR
	500	312105-0329	-		2	SCREW M6S5X16 A2 80
	510	312105-0366	-		2	SCREW M6S6X12RFR
	580	315115-0153	-		2	WASHER TBRB6,4X12RFR
Common parts						
	010	G- 751456	-		1	HOLDER
	040	490876	-		1	BRACKET
	100	312105-0370	-		2	SCREW M6S6X20RFR
	110	457367	-		1	SHAFT
	120	457368	-		5	SPRING
	130	548337	-		2	BUSHING
	140	548336	-		2	WASHER
	280	90030-0265	-		1	HOLLOW SCREW
	290	90030-0266	-		1	HOLLOW SCREW
	300	90074-0001	-		1	CLIP
	310	90090-0016	-		1	BALL
	315	90157-0016	-		X	LOCKING FLUID
	320	90166-0124	-	MM	750	HOSE
	330	90232-0055	S		2	PHOTOCELL
	490	312105-0287	-		1	SCREW M6S4X8 A2 80
	520	312105-0449	-		2	SCREW M6S8X16RFR
	530	312318-0325	-		1	STOP SCREW SK6SS5X10RFR
	540	312812-0316	-		2	LOCK NUT A2-M6RFR
	550	312812-0318	-		1	LOCK NUT A2-M8RFR
	560	315105-0146	-		8	WASHER BRB5,3X10RFR
	570	315115-0165	-		2	WASHER TBRB8,4X16RFR
	590	315204-0116	S		2	O-RING 18,1X1,6VITON
	610	321101-0143	-		2	FLANGE BUS 8F7X8
	620	342980-0114	-		3	BANJO CONNSINGEL 6/4-1/4

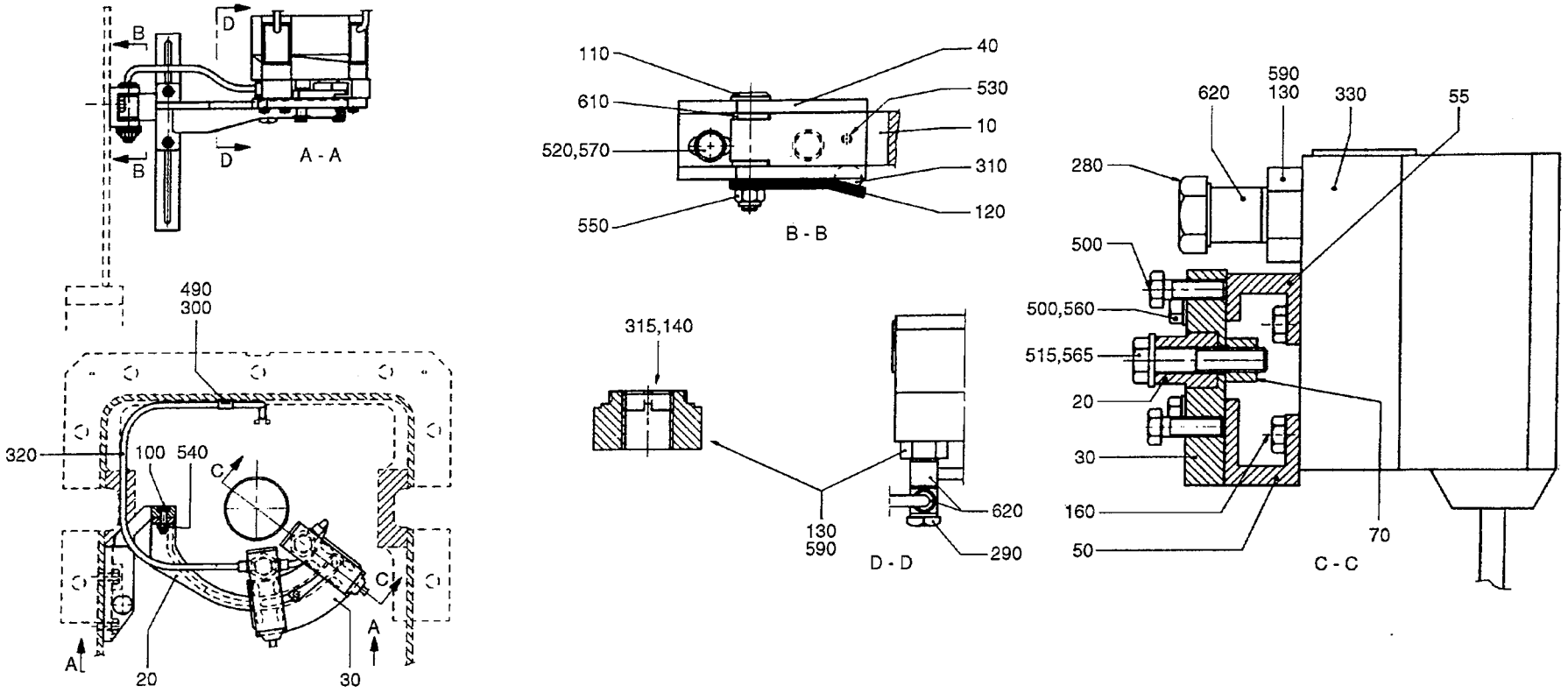

49197606.TIF
491976-6/7
AM 16686

From	Pos	Part No	SP	UN	Qty	Description
284ml 250ml 200ml 180ml						
		C- 491976-0201				**Photocell Unit, Ass'y**
	020	G- 751457	-		1	CANTILEVER
	030	978735	-		1	FASTENING PLATE
	150	536374	-		2	WASHER
	500	312105-0329	-		10	SCREW M6S5X16 A2 80
	510	312105-0366	-		2	SCREW M6S6X12RFR
	580	315115-0153	-		2	WASHER TBRB6,4X12RFR
236ml						
		C- 491976-0202				**Photocell Unit, Ass'y**
	020	G- 565642	-		1	CANTILEVER
	030	491880	-		1	FASTENING PLATE
	050	565670	-		2	SPACER
	055	565671	-		2	SPACER
	070	565641	-		1	LOCK PLATE
	160	312105-0325	-		8	SCREW M6S5X10 A2 80
	500	312105-0329	-		10	SCREW M6S5X16 A2 80
	515	312105-0374	-		2	SCREW M6S6X30RFR
	565	315105-0153	-		2	WASHER BRB6,4X12RFR
125ml 200ml Slim 250ml Slim						
		C- 491976-0203				**Photocell Unit, Ass'y**
	020	G- 751476	-		1	CANTILEVER
	030	491880	-		1	FASTENING PLATE
	060	752554	-		4	SPACER
	170	312109-0335	-		8	SCREW M6S5X30HRFR
	500	312105-0329	-		2	SCREW M6S5X16 A2 80
	510	312105-0366	-		2	SCREW M6S6X12RFR
	580	315115-0153	-		2	WASHER TBRB6,4X12RFR
Common parts						
	010	G- 751456	-		1	HOLDER
	040	490876	-		1	BRACKET
	100	312105-0370	-		2	SCREW M6S6X20RFR
	110	457367	-		1	SHAFT
	120	457368	-		5	SPRING
	130	548337	-		2	BUSHING
	140	548336	-		2	WASHER
	280	90030-0265	-		1	HOLLOW SCREW
	290	90030-0266	-		1	HOLLOW SCREW
	300	90074-0001	-		1	CLIP
	310	90090-0016	-		1	BALL
	315	90157-0016	-		X	LOCKING FLUID
	320	90166-0124	-	MM	750	HOSE
	330	90232-0055	S		2	PHOTOCELL
	490	312105-0287	-		1	SCREW M6S4X8 A2 80
	520	312105-0449	-		2	SCREW M6S8X16RFR
	530	312318-0325	-		1	STOP SCREW SK6SS5X10RFR
	540	312812-0316	-		2	LOCK NUT A2-M6RFR
	550	312812-0318	-		1	LOCK NUT A2-M8RFR
	560	315105-0146	-		8	WASHER BRB5,3X10RFR
	570	315115-0165	-		2	WASHER TBRB8,4X16RFR
	590	315204-0116	S		2	O-RING 18,1X1,6VITON
	610	321101-0143	-		2	FLANGE BUS 8F7X8
	620	342980-0114	-		3	BANJO CONNSINGEL 6/4-1/4

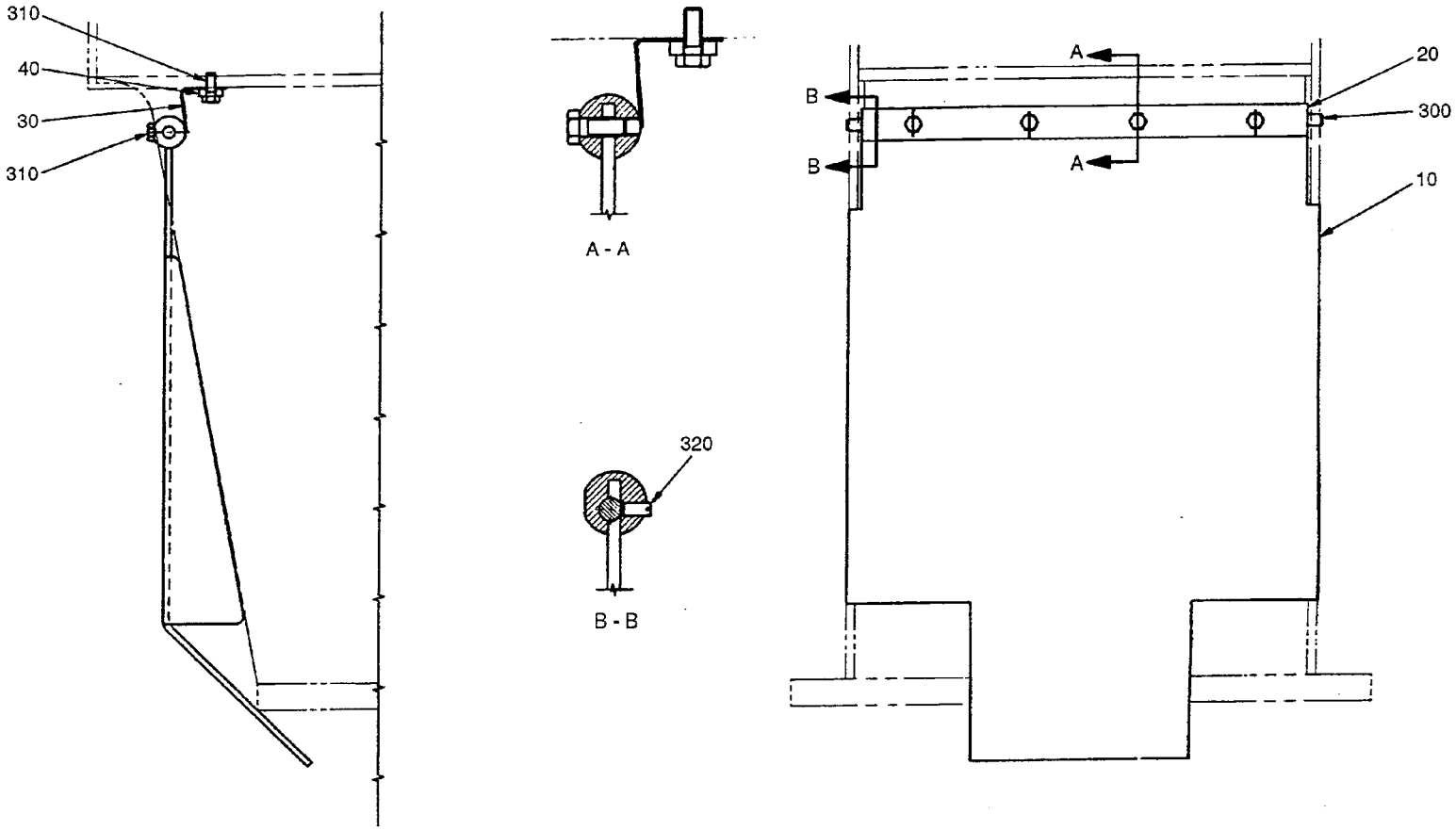

75170201.TIF
751702-1
AM 17870

Last Alteration: AM 17870 92-08-31

Corresponding group: 751702-010V
Assembly Drawing: 751702-1

Issue: **940524**

From	Pos	Part No	SP	UN	Qty	Description
		C- 751702-0101				**Opening, Ass'y**
	010	751674	-		1	OPENING
	020	456809	-		1	SHAFT
	030	469922	-		1	SPRING
	040	469927	-		1	RIM
	300	311103-0405	-		2	CYLINDRICACP M6 8X30 RFR
	310	312105-0368	-		7	SCREW M6S6X16RFR
	320	312318-0323	-		2	STOP SCREW SK6SS5X8RFR

From	Pos	Part No	SP	UN	Qty	Description

648111-F500 . .

295778

120

Last Alteration: AM 20223 93-10-28

Corresponding group: 295778-040V
Assembly Drawing:

Issue: **940524**

From	Pos	Part No	SP	UN	Qty	Description
125ml						
		C- 295778-0401				**Start Up-Kit, Ass'y**
	120	272479	-		1	PRESSURE ROLLER
284ml -180ml						
		C- 295778-0402				**Start Up-Kit, Ass'y**
	070	257330	-		1	PRESSURE ROLLER
160ml 200ml Slim						
		C- 295778-0403				**Start Up-Kit, Ass'y**
	120	272479	-		1	PRESSURE ROLLER
Common parts						
	F010	**SP- 499255-0201**	**-**		**1**	**SEAL KIT**
	020	441804	-		1	COIL HEATER
	050	12242-0003	-		2	GASKET
	060	230551	-		2	GASKET
	080	531742	-		2	GASKET
	110	271461	-		1	GASKET
	150	295388	-		1	GASKET
	153	441721	-		1	GASKET
	160	90206-0031	-		1	HEATING ELEMENT
	180	90206-0070	-		1	HEATING ELEMENT
	200	315204-0214	-		1	O-RING 17,3X2,4VITON
	210	90242-0084	-		2	O-RING
	220	90415-0316	-		1	FILTER
	230	90424-0304	-		1	GASKET
	240	315204-0218	-		1	O-RING 26,2X3VITON
	260	315204-0223	-		2	O-RING 39,2X3VITON

From	Pos	Part No	SP	UN	Qty	Description

From	Pos	Part No	SP	UN	Qty	Description
Seal Kit , Valve Change every 1000-1200h Service						
		C- 499255-0201				**Seal Kit, Ass'y**
	010	530589	-		4	SEAL RING
	020	530588	-		1	SEAL RING
	030	533169	-		1	DIAPHRAGM
	060	90207-0363	-		1	GASKET
	070	90207-0365	-		1	GASKET
	080	539212	-		1	GASKET
	100	315204-0215	-		4	O-RING 19,2X3VITON
	110	315202-0301	-		1	O-RING 49,5X3
Sealing Kit , Air cylinder "A" and "C"						
		C- 499255-0202				**Seal Kit, Ass'y**
	050	90020-0028	-		2	SLEEVE
	100	315204-0215	-		4	O-RING 19,2X3VITON
	120	315202-0308	-		1	O-RING 84,5X3
Sealing Kit , Air cylinder "B"						
		C- 499255-0203				**Seal Kit, Ass'y**
	040	90020-0027	-		2	SLEEVE
	090	315202-0304	-		1	O-RING 64,5X3
	100	315204-0215	-		5	O-RING 19,2X3VITON

From	Pos	Part No	SP	UN	Qty	Description

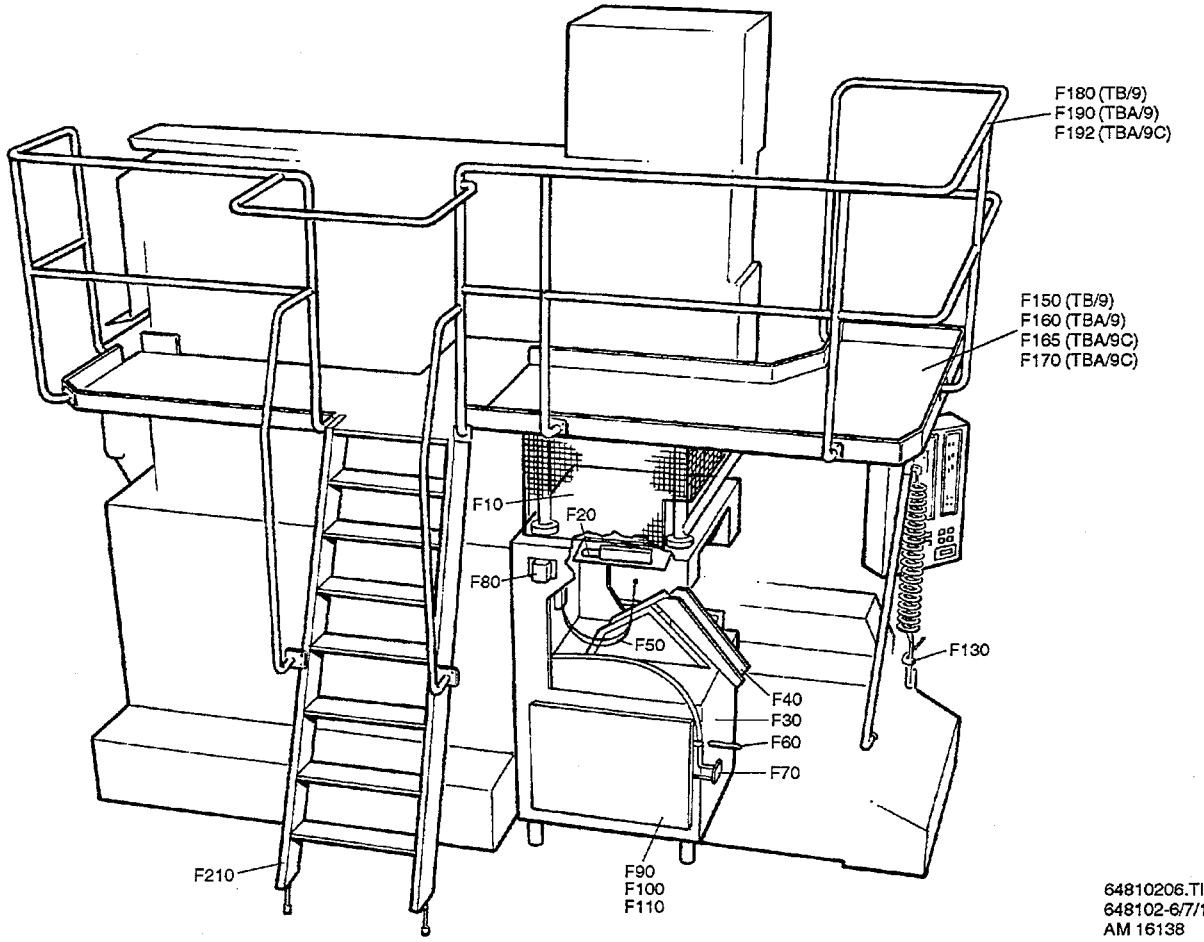

64810206.TIF
648102-6/7/12/13/14/15
AM 16138

Pos	Group No	Description	
648102-F000	648102-100V	Machine Body TB/TBA/9	127
648102-F010	456100-030V	Machine Body	129
	456100-030V	Machine Body	131
456100-F020	441534-010V	Light Fixture	133
456100-F030	456827-020V	Connection Box	135
648102-F040	456180-010V	Drop Chute	137
	456180-010V	Drop Chute	139
648102-F050	571918-010V	Transmission	141
648102-F060	271562-080V	Pipe Work Machine Body	143
271261-F070	271261-050V	Cleaning System	145
271261-F080	491650-010V	Distributor Block	147
648102-F090	271442-030V	Door	149
271442-F005	544540-010V	Housemarks Set of Signs	151
648102-F100	271443-030V	Door	153
648102-F110	256665-020V	Opening	155
648102-F130	271414-020V	Air Jet Gun	157
648102-F150	456457-040V	Platform TB/9	159
456457-F005	544536-010V	Set of Signs	161
456457-F010	567034-010V	Ladder	163
456457-F165	441535-010V	Light Fixture	165
648102-F160	456458-040V	Platform TBA/9	167
	456458-040V	Platform TBA/9	169
456458-F150	544536-010V	Set of Signs	171
456458-F165	441535-010V	Light Fixture	173
648102-F165	751860-010V	Platform	175
	751860-010V	Platform	177
	544536-010V	Set of Signs	179
	441535-010V	Light Fixture	181
648102-F170	978158-010V	Platform Rear	183
978158-F170	752958-010V	Railing / Platform C/C 2000mm	185
	752958-010V	Railing / Platform C/C 2000mm	187
	752958-010V	Railing / Platform C/C 2000mm	189
	752958-010V	Railing / Platform C/C 2000mm	191
752958-F010	751923-010V	Ladder	193
752958-F020	751924-010V	Ladder	195
978158-F170	752959-010V	Railing/Platform C/C 2150mm	197
	752959-010V	Railing/Platform C/C 2150mm	199
	752959-010V	Railing/Platform C/C 2150mm	201
752959-F010	751923-010V	Ladder	203
752959-F020	751924-010V	Ladder	205
648102-F180	456459-040V	Railing TB/9	207
456459-F400	751332-010V	Bracket	209
648102-F190	456460-040V	Railing TBA/9	211
	456460-040V	Railing TBA/9	213
456460-F400	751332-010V	Bracket	215

Pos	Group No	Description	
648102-F192	751900-010V	Railing TBA/9 C	217
	751900-010V	Railing TBA/ C	219
751900-F400	751332-010V	Bracket	221
648102-F210	572306-010V	Ladder TBA/9	223

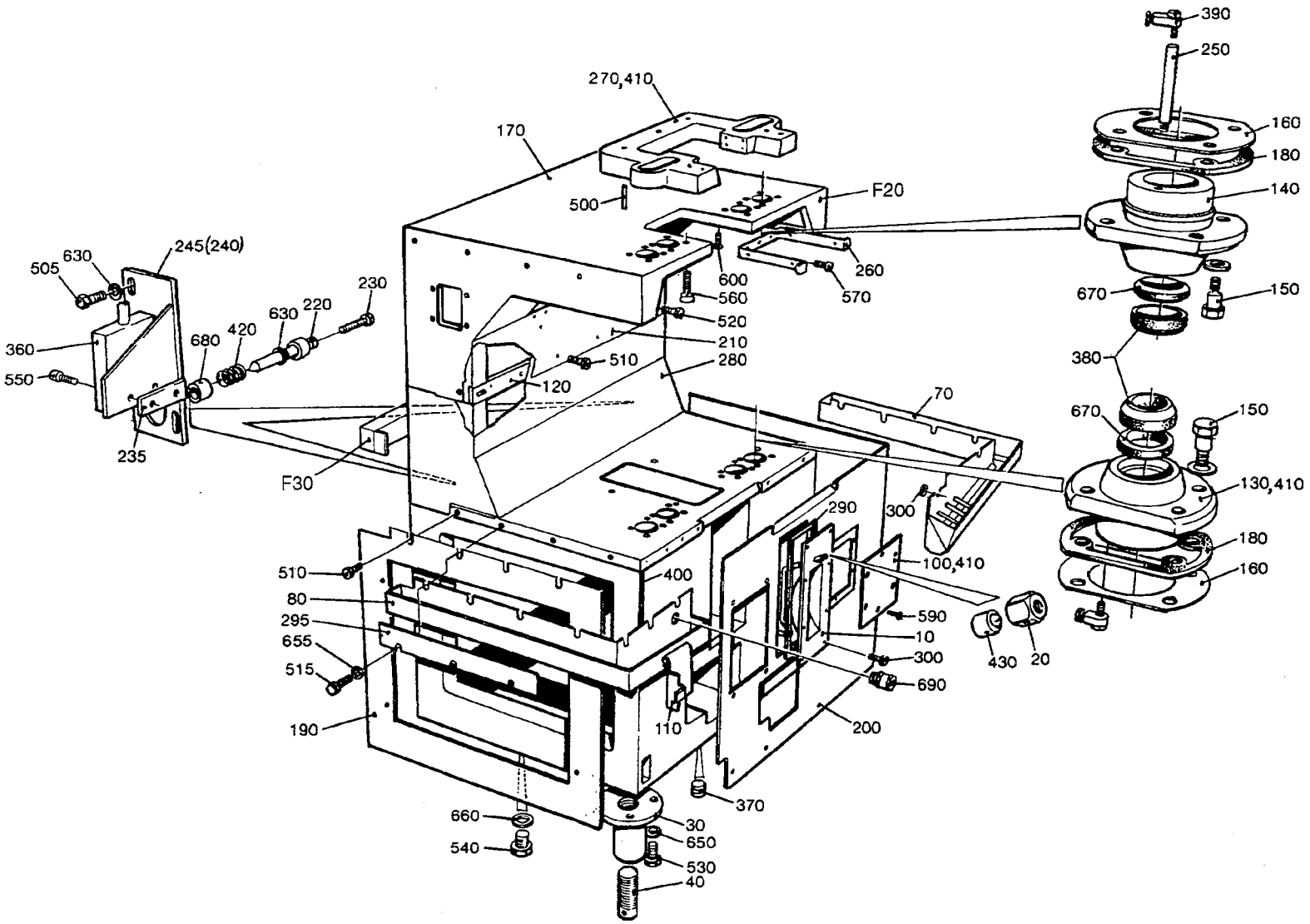

4561003.TIF
456100-3
AM 19268

Last Alteration: AM 20226 93-10-28

Corresponding group: 456100-030V
Assembly Drawing: 456100-3

Issue: 940524

From	Pos	Part No	SP	UN	Qty	Description
TB/9 284ml						
		C- 456100-0301				**Machine Body, Ass'y**
	200	441659	-		1	FRONT PLATE
	290	441810	C		1	GASKET
TB/9 250ml						
		C- 456100-0302				**Machine Body, Ass'y**
	010	469832-0002	-		1	COVER
	200	441659	-		1	FRONT PLATE
	290	441810	C		1	GASKET
TB/9 236ml						
		C- 456100-0303				**Machine Body, Ass'y**
	010	469832-0003	-		1	COVER
	200	441659	-		1	FRONT PLATE
	290	441810	C		1	GASKET
TB/9 200ml						
		C- 456100-0304				**Machine Body, Ass'y**
	010	469831-0004	-		1	COVER
	020	441077	-		1	NOZZLE BRACKET
	200	441659	-		1	FRONT PLATE
	290	441810	C		1	GASKET
TB/9 187ml						
		C- 456100-0305				**Machine Body, Ass'y**
	200	441659	-		1	FRONT PLATE
	290	441810	C		1	GASKET
TB/9 180ml						
		C- 456100-0306				**Machine Body, Ass'y**
	010	469831-0006	-		1	COVER
	020	441077	-		1	NOZZLE BRACKET
	200	441659	-		1	FRONT PLATE
	290	441810	C		1	GASKET
TB/9 200ml Slim						
		C- 456100-0307				**Machine Body, Ass'y**
	010	469832-0001	-		1	COVER
	200	441659	-		1	FRONT PLATE
	290	441810	C		1	GASKET
TBA/9 284ml						
		C- 456100-0308				**Machine Body, Ass'y**
	010	469832-0001	-		1	COVER
	020	441077	-		1	NOZZLE BRACKET
	200	456573	-		1	FRONT PLATE
	290	441810	C		1	GASKET
TBA/9 250ml						
		C- 456100-0309				**Machine Body, Ass'y**
	010	469832-0002	-		1	COVER
	200	456573	-		1	FRONT PLATE
	290	441810	C		1	GASKET

From	Pos	Part No	SP	UN	Qty	Description
TBA/9 236ml						
		C- 456100-0310				**Machine Body, Ass'y**
	010	469831-0003	-		1	COVER
	020	441077	-		1	NOZZLE BRACKET
	200	456573	-		1	FRONT PLATE
	290	441810	C		1	GASKET
TBA/9 200ml						
		C- 456100-0311				**Machine Body, Ass'y**
	010	469831-0004	-		1	COVER
	020	441077	-		1	NOZZLE BRACKET
	200	456573	-		1	FRONT PLATE
	290	441810	C		1	GASKET
TBA/9 187ml						
		C- 456100-0312				**Machine Body, Ass'y**
	200	456573	-		1	FRONT PLATE
	290	441810	C		1	GASKET
TBA/9 180ml						
		C- 456100-0313				**Machine Body, Ass'y**
	010	469831-0006	-		1	COVER
	020	441077	-		1	NOZZLE BRACKET
	200	456573	-		1	FRONT PLATE
	290	441810	C		1	GASKET
TBA/9 125ml						
		C- 456100-0314				**Machine Body, Ass'y**
	010	469831-0007	-		1	COVER
	020	441077	-		1	NOZZLE BRACKET
	200	456573	-		1	FRONT PLATE
	290	441810	C		1	GASKET
TBA/9 100ml						
		C- 456100-0315				**Machine Body, Ass'y**
	200	456573	-		1	FRONT PLATE
	290	441810	C		1	GASKET
	010	469832-0001	-		1	COVER
TBA/9 200ml Slim						
		C- 456100-0316				**Machine Body, Ass'y**
	200	456573	-		1	FRONT PLATE
	290	441810	C		1	GASKET
TBA/9 250ml Slim						
		C- 456100-0317				**Machine Body, Ass'y**
	010	574429	-		1	COVER
	200	456573	-		1	FRONT PLATE
	290	574430	C		1	GASKET

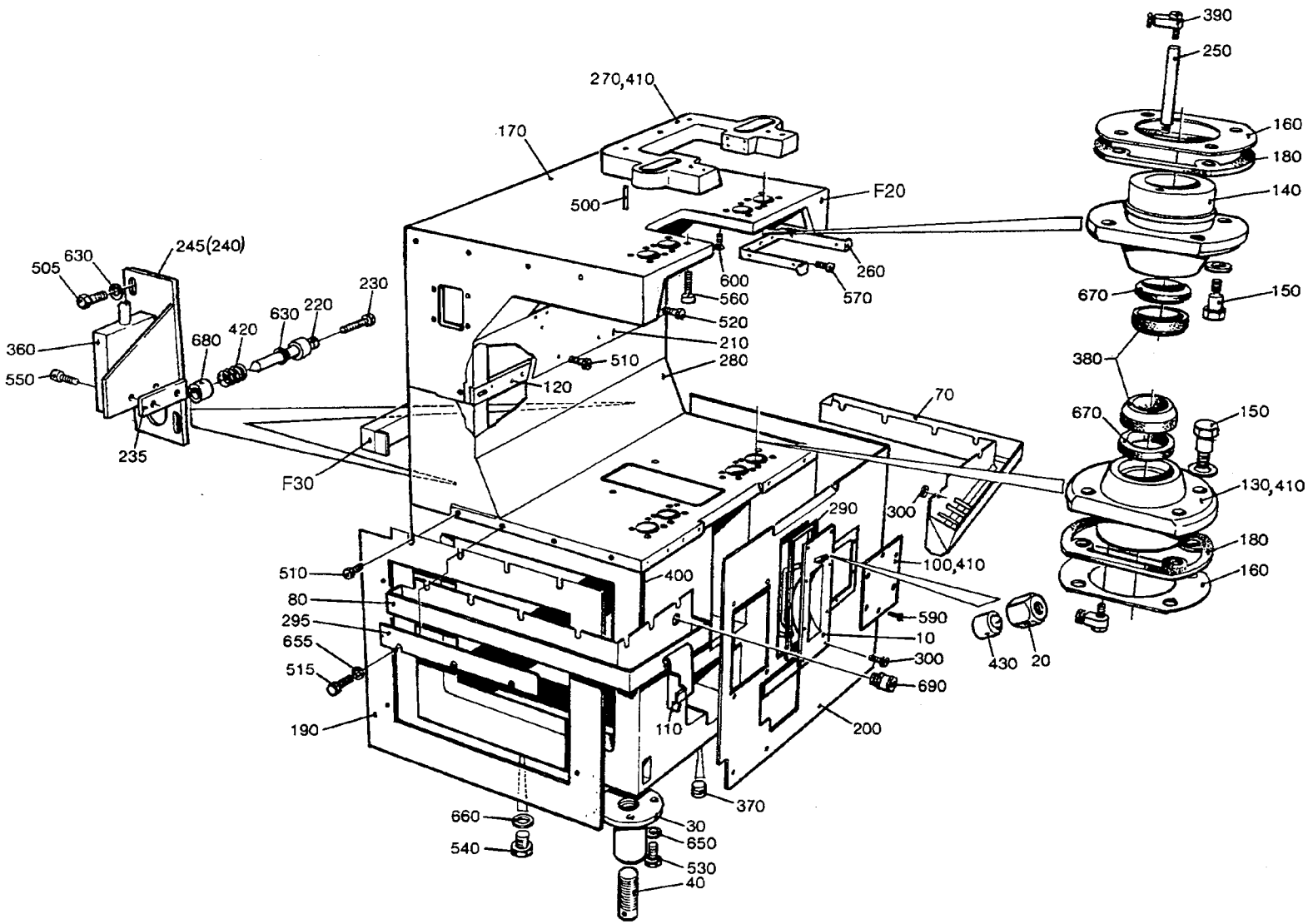

4561003.TIF
456100-3
AM 19268

From	Pos	Part No	SP	UN	Qty	Description
TBA/9 160ml						
		C- 456100-0318				**Machine Body, Ass'y**
	010	469831-0009	-		1	COVER
	020	441077	-		1	NOZZLE BRACKET
	200	456573	-		1	FRONT PLATE
	290	441810	C		1	GASKET
Common Parts						
	F020	**C- 441534-0101**	**-**		**2**	**LIGHT FIXTURE**
	F030	**C- 456827-0201**	**-**		**1**	**CONNECTION BOX**
	030	469095	C		4	HOLDER
	040	469096	C		4	LEG
	060	751085	-		32	BUSHING
	070	978413	-		1	CHUTE
	080	272671	-		1	CHUTE
	100	295302	-		1	OPENING
	110	441162	-		1	PROTECTION PLATE
	120	441212	C		1	HOLDER
	130	G- 441217	S		4	BUSHING LOWER
	140	G- 441218	S		4	BUSHING UPPER
	160	441221	-		8	WASHER
	170	G- 456475	-		1	MACHINE BODY
	180	441593	-		8	GASKET
	190	441658	-		1	FRONT PLATE
	210	978576	-		1	FRONT PLATE
	220	490891	C		2	PEG
	230	272158	S		2	DOWEL
	235	490890	-		2	NUT PLATE
	240	490910	-		1	PLATE
	245	490911	-		1	PLATE
	250	469937	-		4	PIPE
	260	441677	-		1	FRONT PLATE
	270	G- 441806	-		1	COLLAR
	280	441809	-		1	FRONT PLATE
	295	490986	-		1	SHEET
	300	6278	S		1	WASHER
	360	90044-0101	S		2	LIMIT SWITCH
	370	90087-0002	-		3	PIPE PLUG
	380	90091-0106	S		8	SEALED RING
	390	90137-0010	-		8	PIPE JOINT
	400	90143-0010	-	MM	260	STRIP
	405	90157-0016	-	ML	X	LOCKING FLUID
	410	90157-0022	-	G	X	SEALING COMPOUND
	420	90335-0036	S		2	SPRING
	430	90424-0027	S		1	NOZZLE
	500	311103-0415	-		3	CYLINDRICACP M6 8X55 RFR
	505	312105-0327	-		4	SCREW M6S5X12 A2 80
	510	312105-0366	-		27	SCREW M6S6X12RFR
	515	312105-0368	-		3	SCREW M6S6X16RFR
	520	312105-0370	-		2	SCREW M6S6X20RFR
	525	312105-0374	-		32	SCREW M6S6X30RFR
	530	312105-0451	-		16	SCREW M6S8X20RFR
	540	312105-0489	-		8	SCREW M6S10X16RFR
	550	312111-0331	-		4	SCREW MC6S5X20FZB
	560	312115-0503	-		10	SCREW 10X60 A4 80
	570	312125-0323	-		7	SLOTTED HEMCS5X8RFR
	590	312155-0325	-		6	SCREW MF6S5X10RFR
	600	312155-0366	-		9	SCREW MF6S6X12RFR
	630	315105-0146	-		4	WASHER BRB5,3X10RFR
	650	315105-0165	-		16	WASHER BRB8,4X16RFR
	655	315105-0153	-		35	WASHER BRB6,4X12RFR
	660	315233-0109	S		8	SEAL RING R1/8"
	670	315259-0102	S		8	FELT SEAL SKFFI190
	680	321116-0135	S		4	BUSHING 10E7/16X10
	690	352103-0100	-		1	CABLE GLANR.STR 9

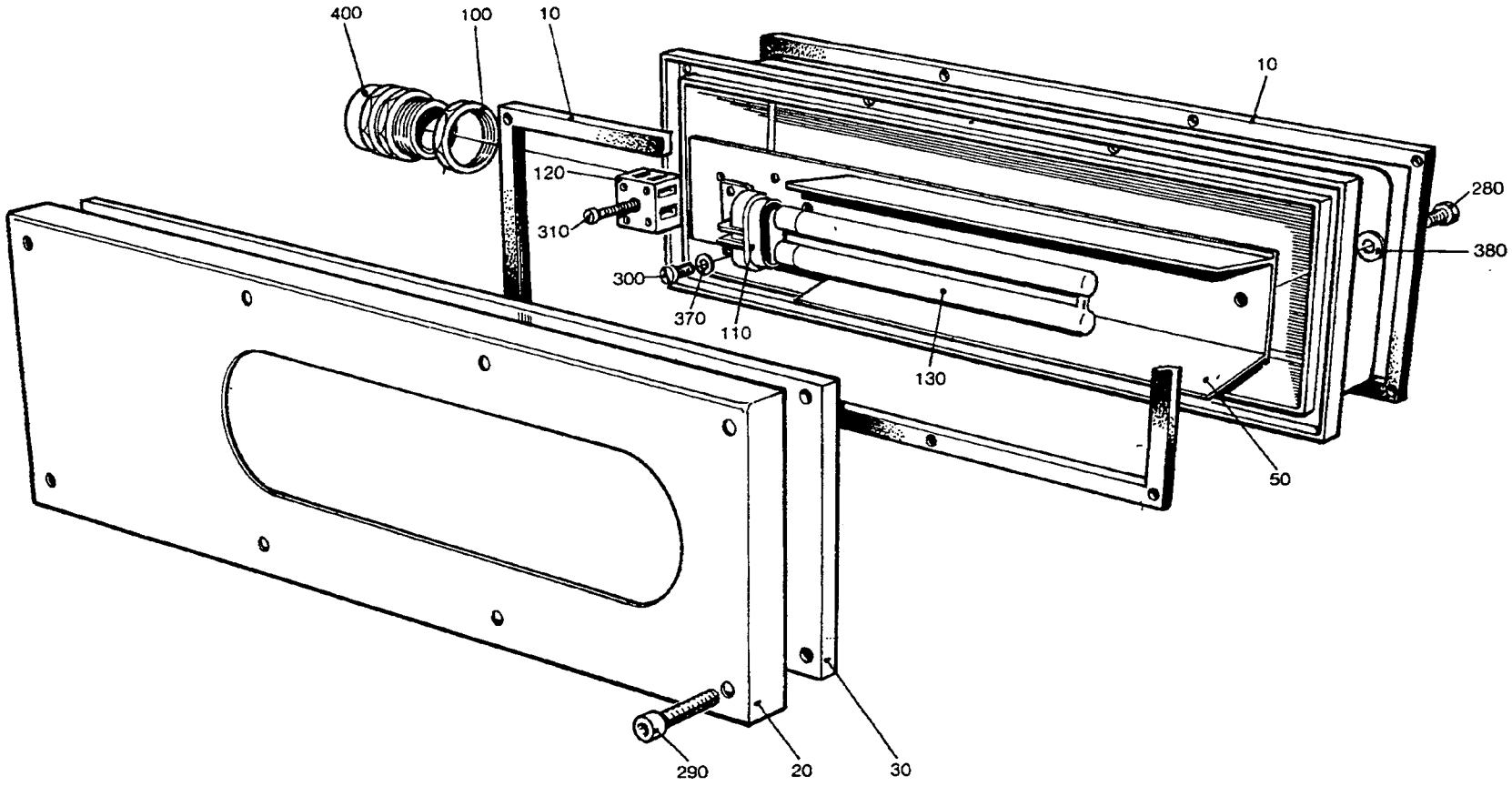

44153401.TIF
441534-1
AM 9085

From	Pos	Part No	SP	UN	Qty	Description
		C- 441534-0101				**Light Fixture, Ass'y**
	010	441536	S		2	GASKET
	020	456263	-		1	SHEET
	030	456264	S		1	GLASS
	040	469336	S		1	COVER
	050	469337	-		1	REFLECTOR
	100	90099-0002	-		1	NUT
	110	90164-0301	S		1	HOLDING FIXTURE
	120	90195-0020	-		1	TERMINAL BLOCK
	130	90297-0006	P		1	FLUORESCENT LAMP
	280	312105-0325	-		2	SCREW M6S5X10 A2 80
	290	312115-0331	-		8	SCREW 5X20 A4 80
	300	312125-0220	-		2	SLOTTED HEMCS3X6RFR
	310	312125-0230	-		1	SLOTTED HEMCS3X20RFR
	370	315105-0124	-		2	WASHER BRB3,2X6RFR
	380	315105-0146	-		2	WASHER BRB5,3X10RFR
	400	352103-0106	-		1	CABLE GLANR.ST 11

From	Pos	Part No	SP	UN	Qty	Description

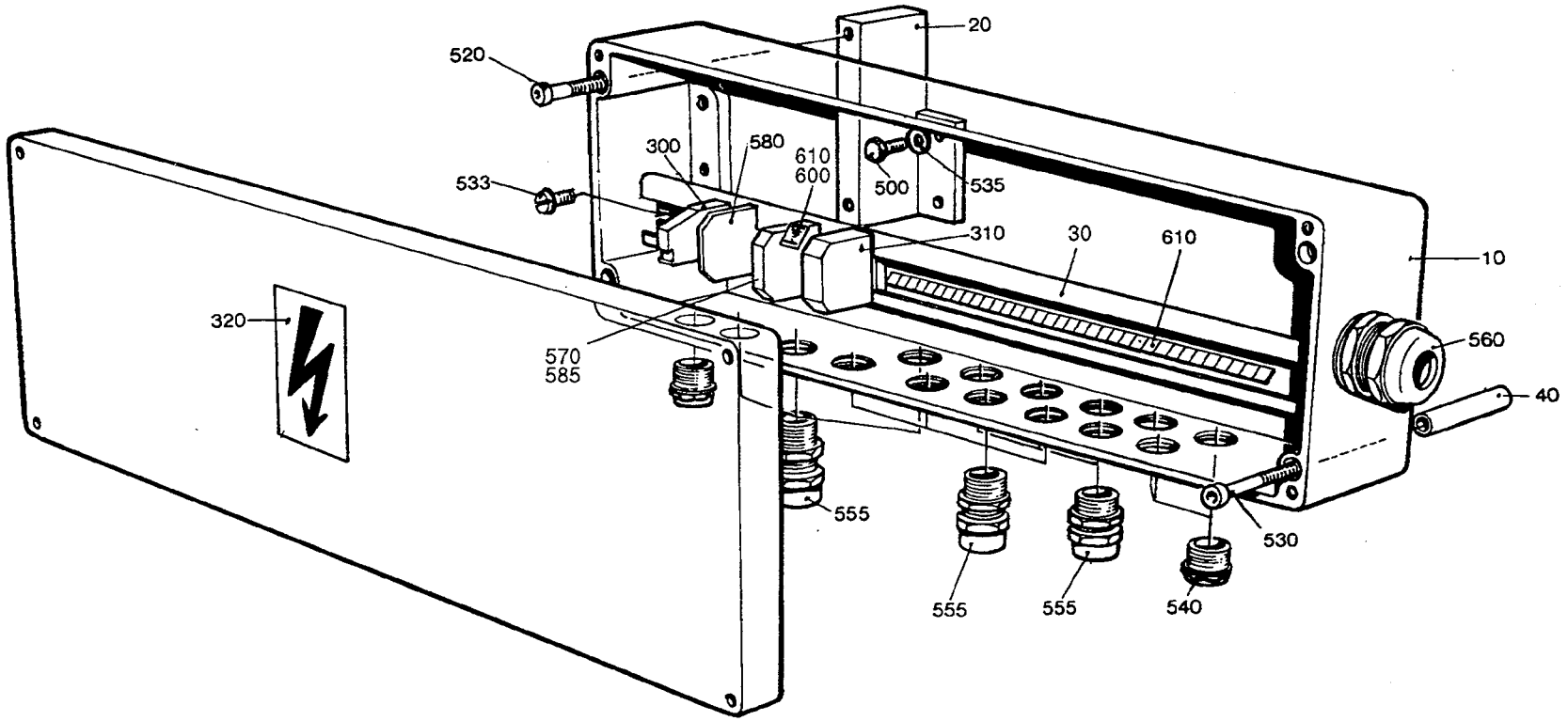

4568270 2.TIF
456827-2
AM 17890

Last Alteration: AM 17890 93-01-23

Corresponding group: 456827-020V
Assembly Drawing: 456827-2

Issue: **940524**

From	Pos	Part No	SP	UN	Qty	Description
		C- 456827-0201				**Connection Box, Ass'y**
	010	456750	-		1	APPLIANCE BOX
	020	456751	-		1	BRACKET
	030	571929	-		1	RAIL
	040	456753	-		1	SPACER
	300	353031-0201	-		1	END BRACKET EW 35
	310	353024-0204	-		14	EARTH TERMINAL WPE 2.5
	320	90194-0016	-		1	SIGN"FLASH SIGN"
	500	312101-0368	-		2	SCREW M6S6X16FZB
	520	312111-0372	-		2	SCREW MC6S6X25FZB
	530	312111-0385	-		1	SCREW MC6S6X75FZB
	533	312125-0364	-		2	SLOTTED HEMCS6X10RFR
	535	315101-0153	-		2	WASHER BRB6,4X12FZB
	540	352101-0102	-		7	LEAD-IN G 15,2
	555	352103-0101	-		8	CABLE GLAND ST 9
	560	352103-0115	-		1	CABLE GLANR.STR 21
	570	353021-0216	-		37	FEED TRHOUGH TERM.WDU 2,5
	580	353032-0005	-		1	END PLATE
	585	353034-0030	-		2	BRIDGE CONN. WQV 2,5/10
	600	359011-0819	-		28	SET OF SIG5-GW (JORD)
	610	359011-0807	-		2	SET OF SIG5-FW 1-50

From	Pos	Part No	SP	UN	Qty	Description

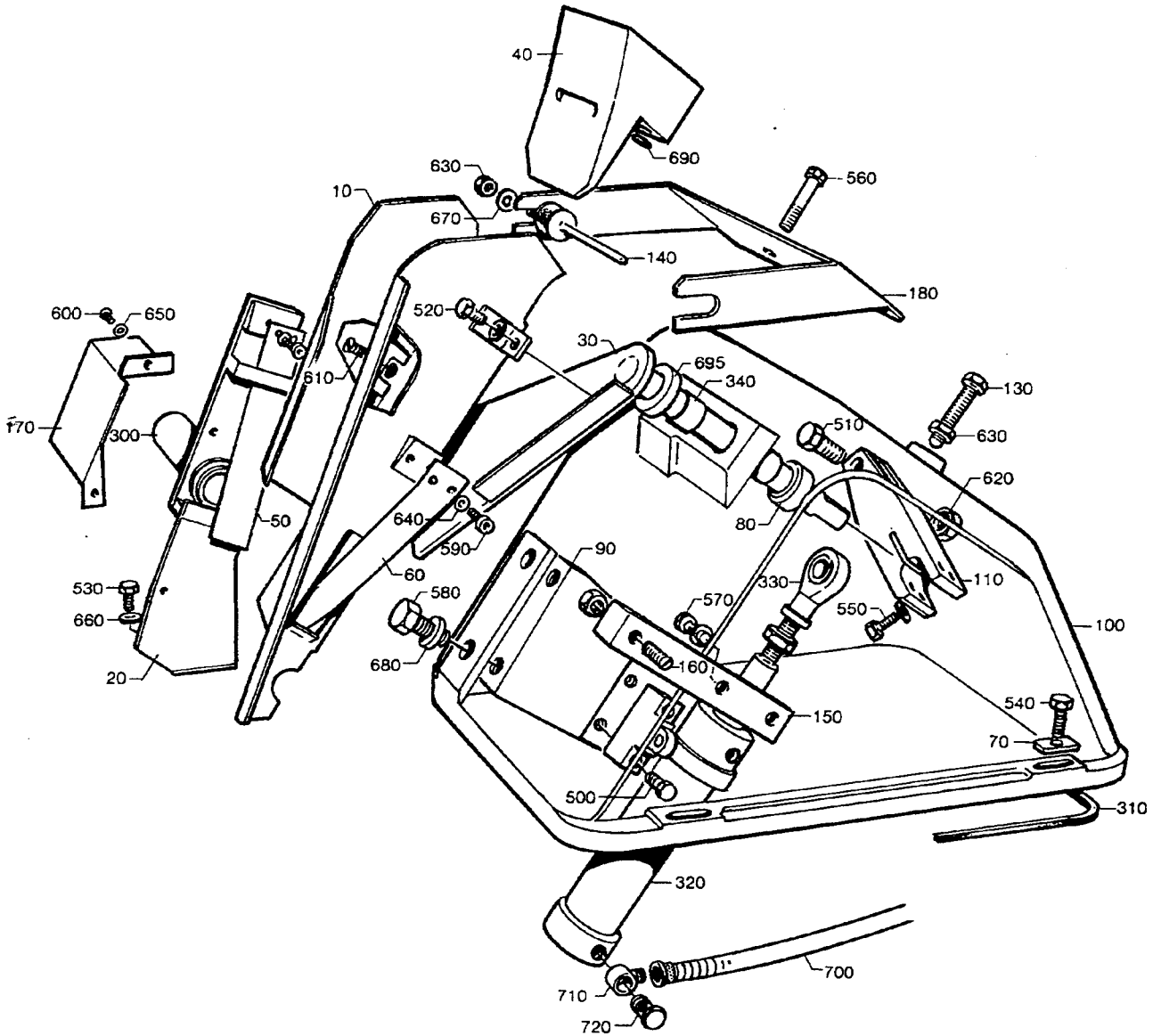

45618001.TIF
456180-1/2
AM 16090

Last Alteration: AM 20226 93-10-28

Corresponding group: 456180-010V
Assembly Drawing: 456180-1/2

Issue: **940524**

From	Pos	Part No	SP	UN	Qty	Description
TB/9 250ml						
		C- 456180-0102				**Drop Chute, Ass'y**
	010	978407	-		1	DROP CHUTE TB/9 V0250
	020	456159	-		1	HEAD PLATE
	030	491881-0001	-		1	PIVOT ARM
	040	295097	S		1	SLIDER
	050	456165	S		1	LEAF SPRING
	060	456167	S		1	LEAF SPRING
	170	295075	-		1	PROTECTION
TB/9 236ml						
		C- 456180-0103				**Drop Chute, Ass'y**
	010	978406	-		1	DROP CHUTE TB/9 V0236
	020	456160	-		1	HEAD PLATE
	030	491881-0001	-		1	PIVOT ARM
	040	295097	S		1	SLIDER
	050	456165	S		1	LEAF SPRING
	060	456167	S		1	LEAF SPRING
	170	295075	-		1	PROTECTION
TB/9 200ml						
		C- 456180-0104				**Drop Chute, Ass'y**
	010	978405	-		1	DROP CHUTE TB/9 V0200
	020	456161	-		1	HEAD PLATE
	030	491881-0001	-		1	PIVOT ARM
	040	295097	S		1	SLIDER
	050	456165	S		1	LEAF SPRING
	060	456167	S		1	LEAF SPRING
	170	295075	-		1	PROTECTION
TB/9 180ml						
		C- 456180-0106				**Drop Chute, Ass'y**
	010	978404	-		1	DROP CHUTE TB/9 V0180
	020	456162	-		1	HEAD PLATE
	030	491881-0001	-		1	PIVOT ARM
	040	295097	S		1	SLIDER
	050	456165	S		1	LEAF SPRING
	060	456167	S		1	LEAF SPRING
	170	295075	-		1	PROTECTION
TB/9 200ml Slim						
		C- 456180-0107				**Drop Chute, Ass'y**
	010	456158	-		1	DROP CHUTE
	020	456163	-		1	HEAD PLATE
	030	491881-0001	-		1	PIVOT ARM
	040	255942	S		1	SLIDER
	050	456164	S		1	LEAF SPRING
	060	456166	S		1	LEAF SPRING
	170	295075	-		1	PROTECTION

From	Pos	Part No	SP	UN	Qty	Description
TBA/9 284ml						
		C- 456180-0108				**Drop Chute, Ass'y**
	010	978412	-		1	DROP CHUTE TBA/9 V0284
	020	456152	-		1	HEAD PLATE
	040	295097	S		1	SLIDER
	050	978263	S		1	LEAF SPRING
	060	752893	S		1	LEAF SPRING
	170	295075	-		1	PROTECTION
TBA/9 250ml						
		C- 456180-0109				**Drop Chute, Ass'y**
	010	978411	-		1	DROP CHUTE TBA/9 V0250
	020	456147	-		1	HEAD PLATE
	030	491881-0001	-		1	PIVOT ARM
	040	295097	S		1	SLIDER
	050	456165	S		1	LEAF SPRING
	060	456167	S		1	LEAF SPRING
	170	295075	-		1	PROTECTION
TBA/9 236ml						
		C- 456180-0110				**Drop Chute, Ass'y**
	010	978410	-		1	DROP CHUTE TBA/9 V0236
	020	456148	-		1	HEAD PLATE
	030	491881-0001	-		1	PIVOT ARM
	040	295097	S		1	SLIDER
	050	456165	S		1	LEAF SPRING
	060	456167	S		1	LEAF SPRING
	170	295075	-		1	PROTECTION
TBA/9 200ml						
		C- 456180-0111				**Drop Chute, Ass'y**
	010	978409	-		1	DROP CHUTE TBA/9 V0200
	020	456149	-		1	HEAD PLATE
	030	491881-0001	-		1	PIVOT ARM
	040	295097	S		1	SLIDER
	050	456165	S		1	LEAF SPRING
	060	456167	S		1	LEAF SPRING
	170	295075	-		1	PROTECTION
TBA/9 180ml						
		C- 456180-0113				**Drop Chute, Ass'y**
	010	978408	-		1	DROP CHUTE TBA/9 V0180
	020	456150	-		1	HEAD PLATE
	030	491881-0001	-		1	PIVOT ARM
	040	295097	S		1	SLIDER
	050	456165	S		1	LEAF SPRING
	060	456167	S		1	LEAF SPRING
	170	295075	-		1	PROTECTION

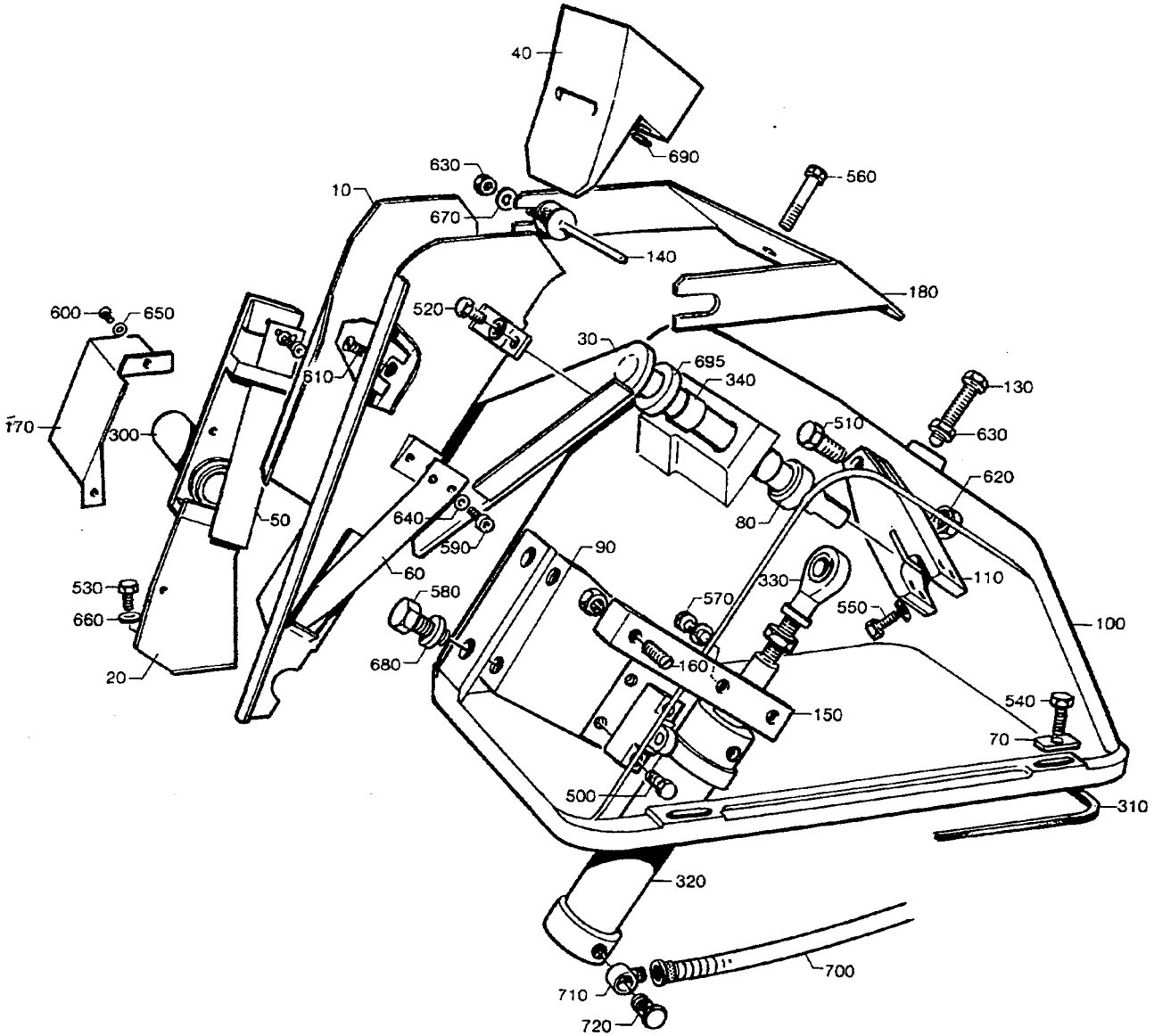

45618001.TIF
456180-1/2
AM 16090

From	Pos	Part No	SP	UN	Qty	Description
TBA/9 125ml						
		C- 456180-0114				**Drop Chute, Ass'y**
	010	456145	-		1	DROP CHUTE
	020	456151	-		1	HEAD PLATE
	030	491881-0002	-		1	PIVOT ARM
	040	255942	S		1	SLIDER
	050	456164	S		1	LEAF SPRING
	060	456166	S		1	LEAF SPRING
	170	295075	-		1	PROTECTION
TBA/9 200ml Slim						
		C- 456180-0116				**Drop Chute, Ass'y**
	010	456146	-		1	DROP CHUTE
	020	456152	-		1	HEAD PLATE
	030	491881-0001	-		1	PIVOT ARM
	040	469502	S		1	SLIDER
	050	456164	S		1	LEAF SPRING
	060	456166	S		1	LEAF SPRING
	170	295075	-		1	PROTECTION
TBA/9 250ml Slim						
		C- 456180-0117				**Drop Chute, Ass'y**
	010	574448	-		1	DROP CHUTE
	020	574450	-		1	HEAD PLATE
	030	491881-0001	-		1	PIVOT ARM
	040	574449	S		1	SLIDER
	050	456164	S		1	LEAF SPRING
	060	456166	S		1	LEAF SPRING
	170	574452	-		1	PROTECTION
TBA/9 160ml						
		C- 456180-0118				**Drop Chute, Ass'y**
	010	577215	-		1	DROP CHUTE
	020	577214	-		1	HEAD PLATE
	030	491881-0003	-		1	PIVOT ARM
	040	469502	S		1	SLIDER
	050	456164	S		1	LEAF SPRING
	060	577226	S		1	LEAF SPRING
	170	574452	-		1	PROTECTION

From	Pos	Part No	SP	UN	Qty	Description
Common parts						
	070	255939	-		4	WASHER
	080	255940	-		1	SPACER
	090	255943	-		1	HOLDER
	100	271163	C		1	CANTILEVER
	110	272600	-		1	ARM
	130	272602	-		1	SCREW
	140	272742	S		1	FINGER
	150	272852	-		1	HOLDER
	160	272853	-		1	SCREW
	180	295399	C		1	HOLDER
	300	90044-0095	P		1	PROXIMITY SWITCH
	310	90161-0001	S	MM	1500	STRIP
	320	90450-0033	S		1	CYLINDER
	330	90239-0405	S		1	LINK HEAD
	340	90240-0073	S		2	RICTION BEARING
	500	312101-0331	-		4	SCREW M6S5X20FZB
	510	312101-0499	-		1	SCREW M6S10X40FZB
	520	312105-0364	-		1	SCREW M6S6X10RFR
	530	312105-0368	-		2	SCREW M6S6X16RFR
	540	312105-0372	-		4	SCREW M6S6X25RFR
	550	312105-0376	-		2	SCREW M6S6X35RFR
	560	312105-0380	-		2	SCREW M6S6X50RFR
	570	312105-0451	-		2	SCREW M6S8X20RFR
	580	312105-0455	-		2	SCREW M6S8X30RFR
	590	312115-0285	-		4	SCREW S 4X6 A4 80
	600	312125-0323	-		2	SLOTTED HEMCS5X8RFR
	610	312155-0364	-		1	SCREW MF6S6X10RFR
	620	312601-0320	-		1	NUT M6M10FZB
	630	312605-0318	-		4	NUT M6M8RFR
	640	315105-0136	-		4	WASHER BRB4,3X8RFR
	650	315105-0146	-		2	WASHER BRB5,3X10RFR
	660	315105-0153	-		5	WASHER BRB6,4X12RFR
	670	315105-0165	-		2	WASHER BRB8,4X16RFR
	680	315115-0165	-		4	WASHER TBRB8,4X16RFR
	690	315202-0206	S		1	O-RING 7,3X2,4
	695	315233-0111	-		1	SEAL RING R3/8"
	700	342903-0121	S		3	NUT J#DER 1723-8/6
	710	342980-0121	S		3	BANJO CONNINGEL 8/6-1/8"
	720	342980-0303	S		3	BANJO CONN SINGEL 1/8"

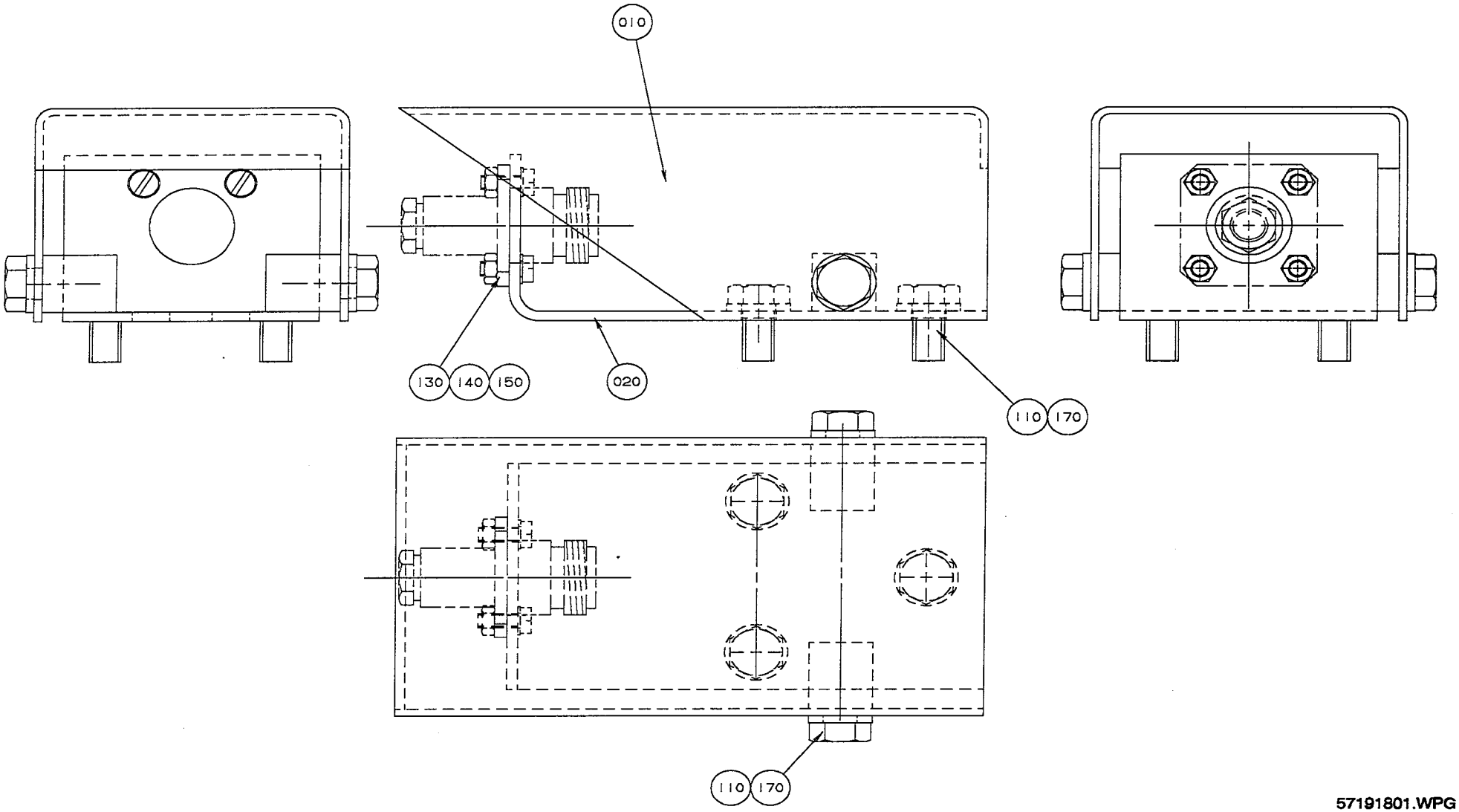

57191801.WPG
571918-1
AM 17890

Last Alteration: AM 17890 93-01-23

Corresponding group: 571918-010V
Assembly Drawing: 571918-1

Issue: **940524**

From	Pos	Part No	SP	UN	Qty	Description
		C- 571918-0101				**Transmission, Ass'y**
	010	256975	-		1	PROTECTION
	020	978176	-		1	BRACKET
	110	312105-0364	-		5	SCREW M6S6X10RFR
	130	312125-0222	-		4	SLOTTED HEMCS3X8RFR
	140	312605-0310	-		4	NUT M6M3RFR
	150	315105-0124	-		4	WASHER BRB3,2X6RFR
	170	315105-0153	-		5	WASHER BRB6,4X12RFR

From	Pos	Part No	SP	UN	Qty	Description

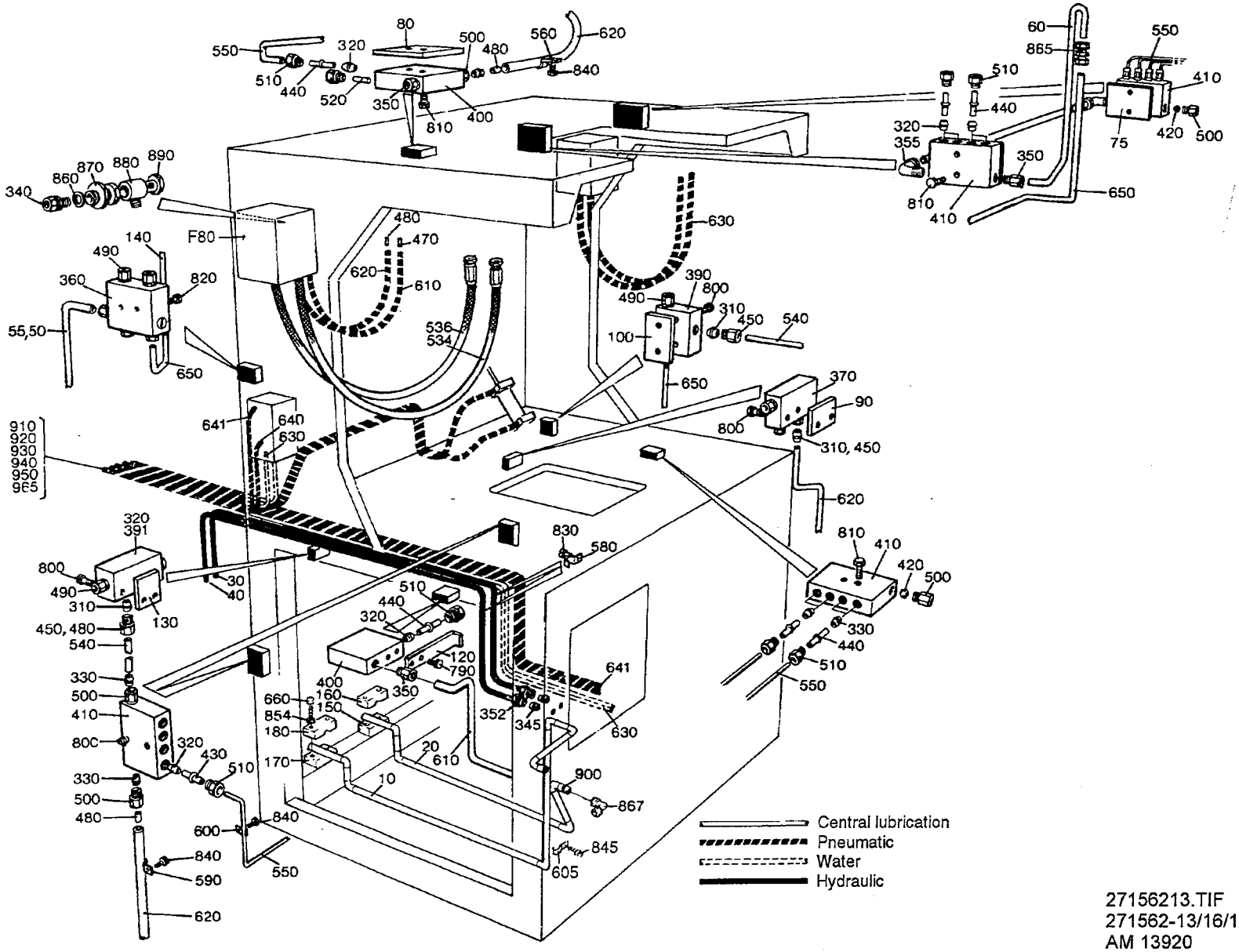

27156213.TIF
271562-13/16/18/17
AM 13920

Last Alteration: AM 17890 93-01-23

Corresponding group: 271562-080V
Assembly Drawing: 271562-13/18/20/21

Issue: **940524**

From	Pos	Part No	SP	UN	Qty	Description
TB/9						
		C- 271562-0801				**Pipe Work Machine Body, Ass'y**
	630	90166-0118	-	M	12	HOSE
TBA/9						
		C- 271562-0802				**Pipe Work Machine Body, Ass'y**
	630	90166-0118	-	M	11	HOSE
Common Parts						
	F070	**C- 271261-050V**	**-**		**1**	**CLEANING SYSTEM**
	F080	**C- 491650-0101**	**-**		**1**	**DISTRIBUTOR BLOCK**
	010	491854	-		1	PIPE WATER
	020	491855	-		1	PIPE WATER
	030	271742	-		1	PIPE
	040	271743	-		1	PIPE
	050	752727	-		1	LUBRICATING PIPE
	055	752726	-		1	LUBRICATING PIPE
	060	469133	-		1	PIPE
	070	469132	-		1	PIPE
	075	469131	-		2	LACE
	090	271622	-		1	LACE
	100	271623	-		1	LACE
	120	295986	-		1	HOLDER
	130	456407	-		1	LACE
	140	491390	-		1	PIPE CENTRAL LUBRICATION
	150	491859	-		1	HOLDER
	160	491860	-		1	HOLDER
	170	491861	-		1	HOLDER
	180	491862	-		1	HOLDER
	310	90028-0001	S		5	CONE
	320	90028-0020	S		22	CONE
	330	90028-0021	S		5	CONE
	340	90030-0051	S		1	PIPE CONNECTION
	345	90030-0098	S		10	CONE
	347	90030-0132	-		1	PLUG
	350	90030-0162	S		3	CONNECTION
	352	90030-0172	S		10	NUT
	355	90030-0200	-		2	PIPE JOINT
	360	90032-0014	-		1	JUNCTION BLOCK
	370	90032-0026	-		1	JUNCTION BLOCK
	390	90032-0030	-		1	JUNCTION BLOCK
	391	90032-0031	-		1	JUNCTION BLOCK
	400	90032-0038	-		1	BLOCK
	410	90032-0039	-		5	BLOCK
	420	90090-0008	S		2	STEEL BALL
	430	90092-0052	S		10	VALVE
	440	90092-0053	S		12	VALVE
	450	90134-0003	S		5	BUSHING
	470	90134-0030	S		4	SLEEVE
	480	90134-0031	S		6	SLEEVE
	490	90134-0034	S		10	NIPPLE
	500	90134-0038	S		8	BUSHING
	510	90134-0039	S		22	BUSHING
	534	90148-0037	S		2	HOSE
	536	90148-0038	S		2	HOSE
	540	90151-0001	-	M	2,2	BRASS PIPE
	550	90266-0019	-	MM	7000	PIPE
	560	90165-0002	-		1	CLIP
	580	90165-0007	-		2	CLIP
	590	90165-0022	-		8	CLIP
	600	90165-0023	-		6	CLIP
	605	90165-0039	-		1	CLIP
	610	90166-0108	-	MM	3300	HOSE
	620	90166-0109	-	MM	7000	HOSE
	640	90166-0081	-	M	13	HOSE
	641	90166-0013	-	M	22	HOSE
	650	90266-0006	-	MM	3400	TUBE
	660	312101-0337	-		4	SCREW M6S5X35FZB
	790	312105-0289	-		2	SCREW M6S4X10 A2 80
	800	312105-0295	-		8	SCREW M6S4X20 A2 80
	810	312105-0297	-		11	SCREW M6S4X25 A2 80
	820	312105-0372	-		2	SCREW M6S6X25RFR
	830	312115-0289	-		2	SCREW S4X10 A4 80
	840	312125-0287	-		15	SLOTTED HEMCS4X8RFR
	845	312125-0323	-		1	SLOTTED HEMCS5X8RFR
	850	312165-0325	-		2	SLOTTED HEMKFS5X10RFR
	854	315101-0146	-		4	WASHER BRB5,3X10FZB
	857	315105-0136	-		8	WASHER BRB4,3X8RFR
	860	315234-0109	S		1	SEAL RING R1/8"
	865	342727-0102	-		1	PIPE COUPLG6-LFZB
	867	342736-0109	-		1	ELBOW PIPE W-12
	870	342767-0100	S		1	BULKHEAD LR1/8
	880	342797-0121	S		1	BANJO CONNSINGEL 6-1/8
	890	342980-0303	S		1	BANJO CONN SINGEL 1/8"
	900	352113-0101	-		4	RIBBON CLA
	910	359000-0400	-		22	MARKING CO2/4"0"
	920	359000-0401	-		20	MARKING CO2/4"1"
	930	359000-0402	-		14	MARKING CO2/4"2"
	940	359000-0403	-		8	MARKING CO2/4"3"
	950	359000-0404	-		2	MARKING CO2/4"4"
	951	359000-0405	-		4	MARKING CO2/4"5"
	952	359000-0406	-		4	MARKING CO2/4"6"
	965	359000-0407	-		8	MARKING CO2/4"7"
	990	359000-0771	-		16	MARKING CO2/4"V"

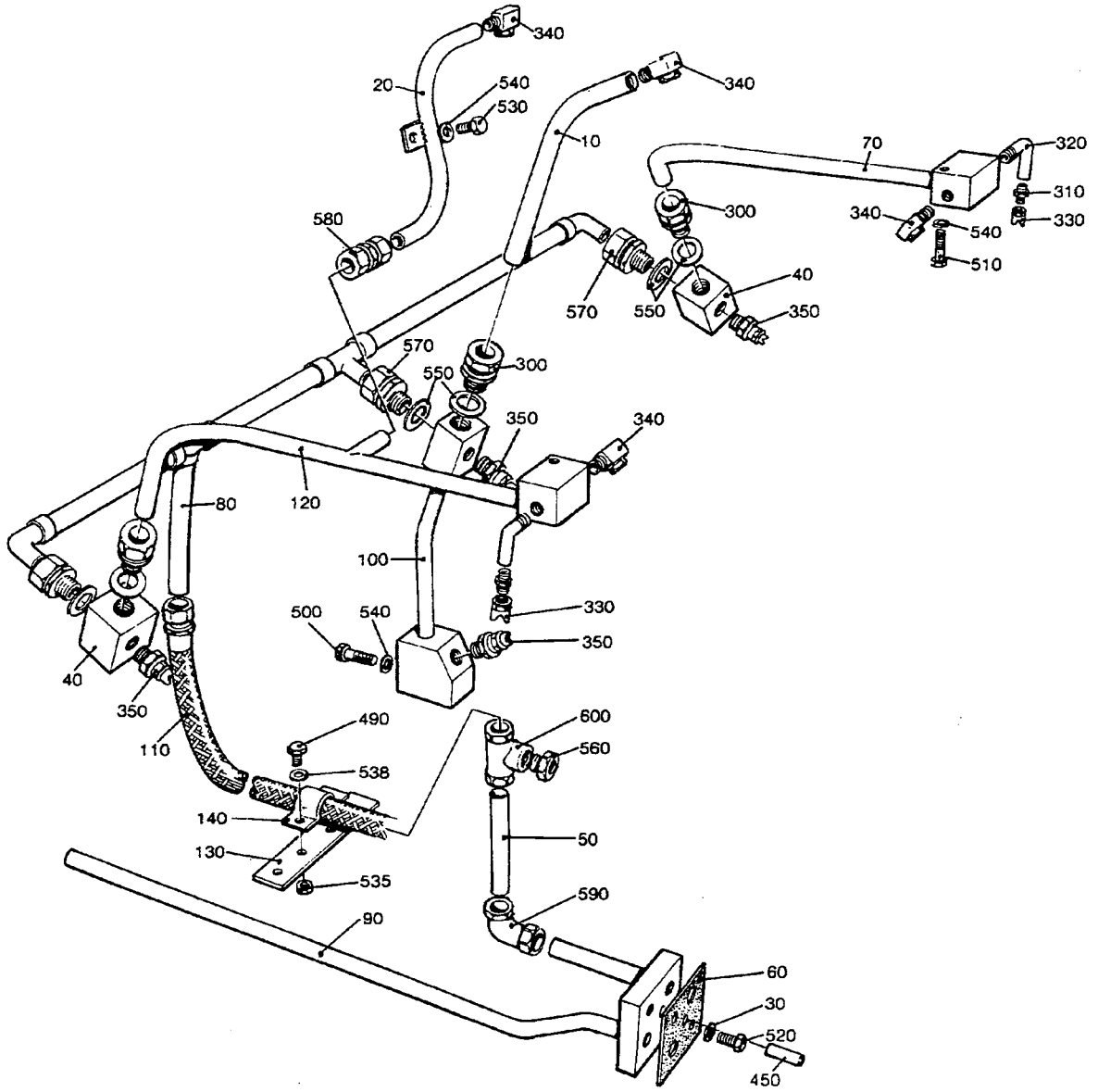

27126106.TIF
271261-6
AM 9059

From	Pos	Part No	SP	UN	Qty	Description
TB/9 284ml-180ml						
		C- 271261-0501				**Cleaning System, Ass'y**
	010	271121	-		1	FORCE SPRING
	020	456129-0002	-		1	FORCE SPRING
TB/9 200ml Slim						
		C- 271261-0502				**Cleaning System, Ass'y**
	010	295985	-		1	FORCE SPRING
	020	456129-0002	-		1	FORCE SPRING
TBA/9 284ml-180ml						
		C- 271261-0503				**Cleaning System, Ass'y**
	010	271121	-		1	FORCE SPRING
	020	456129-0002	-		1	FORCE SPRING
TBA/9 125ml 100ml						
		C- 271261-0504				**Cleaning System, Ass'y**
	010	271121	-		1	FORCE SPRING
	020	456129-0001	-		1	FORCE SPRING
TBA/9 160ml 200ml Slim 250ml Slim						
		C- 271261-0505				**Cleaning System, Ass'y**
	010	295985	-		1	FORCE SPRING
	020	456129-0002	-		1	FORCE SPRING
Common parts						
	030	18542	S		2	WASHER
	040	257190	-		2	SEPARATION BLOCK
	050	272679	-		1	PIPE
	060	295417	-		1	GASKET
	070	295785	-		1	FORCE SPRING
	080	295978	-		1	PIPE
	090	491870	-		1	BRANCH PIPE
	100	441665	-		1	FORCE SPRING
	110	469146	-		1	HOSE
	120	456128	-		1	FORCE SPRING
	130	469134	-		1	BRACKET
	140	469135	-		1	HOLDER
	300	90030-0151	S		3	CONNECTION
	310	90330-0097	-		2	NIPPLE
	320	90330-0099	-		2	ELBOW PIPE
	330	90424-0032	S		2	NOZZLE
	340	90424-0033	S		4	NOZZLE
	350	90424-0035	S		4	NOZZLE
	450	311103-0272	-		1	CYLINDRICACP M6 4X20 RFR
	490	312105-0327	-		4	SCREW M6S5X12 A2 80
	500	312105-0364	-		1	SCREW M6S6X10RFR
	510	312105-0378	-		2	SCREW M6S6X40RFR
	520	312105-0459	-		2	SCREW M6S8X40RFR
	530	312115-0364	-		1	SCREW 6X10 A4 80
	535	312605-0314	-		2	NUT M6M5RFR
	538	315105-0146	-		6	WASHER BRB5,3X10RFR
	540	315105-0153	-		4	WASHER BRB6,4X12RFR
	550	315233-0113	S		6	SEAL RING R1/2"
	560	342710-0115	S		1	REDUCER RBM16/8
	570	342720-0114	S		3	PIPE COUPLGA-15-1/2"
	580	342726-0109	S		1	PIPE COUPLG-12
	590	342736-0114	S		1	ELBOW PIPE W-15
	600	342746-0114	S		1	T-CONNECTI T-15

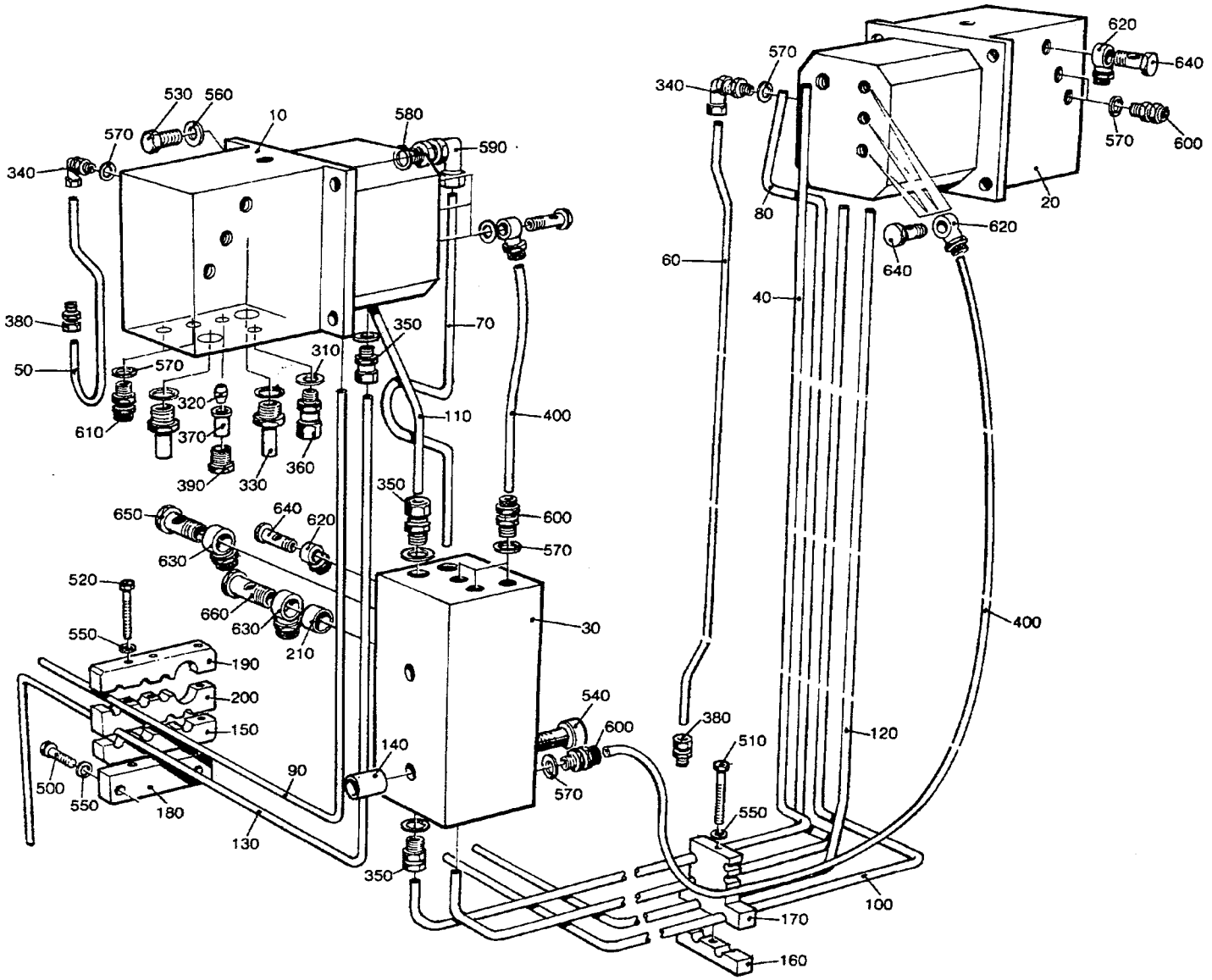

49165001.TIF
491650-1/2
AM 12270

Last Alteration: AM 12270 88-10-20

Corresponding group: 491650-010V
Assembly Drawing: 491650-1/2

Issue: **940524**

From	Pos	Part No	SP	UN	Qty	Description
		C- 491650-0101				**Distributor Block, Ass'y**
	010	491255	-		1	DISTRIBUTOR BLOCK LEFT
	020	491254	-		1	DISTRIBUTOR BLOCK RIGHT
	030	491256	-		1	DISTRIBUTOR BLOCK LEFT
	040	491244	-		1	PIPE WATER
	050	491245	-		1	PIPE CENTRAL LUBRICATION
	060	491246	-		1	PIPE CENTRAL LUBRICATION
	070	491247	-		1	PIPE WATER
	080	491248	-		1	PIPE WATER
	090	491249	-		1	PIPE HYDRAULIC
	100	491250	-		1	PIPE HYDRAULIC
	110	491251	-		1	PIPE WATER
	120	491252	-		1	PIPE HYDRAULIC
	130	491253	-		1	PIPE HYDRAULIC
	140	271088	-		2	SPACER
	150	271323	-		1	HOLDER
	160	271343	-		2	HOLDER
	170	271344	-		2	HOLDER
	180	456561	-		1	BRACKET
	190	469000	-		1	HOLDER
	200	469001	-		1	HOLDER
	210	469071	-		2	SPACER
	310	90005-0045	-		2	WASHER
	320	90028-0021	P		2	CONE
	330	90030-0065	S		4	PIPE CONNECTION
	340	90030-0171	S		2	CONNECTION
	350	90030-0185	S		8	PIPE CONNECTION
	360	90134-0019	S		2	GLAND
	370	90134-0031	S		2	SLEEVE
	380	90134-0034	S		2	NIPPLE
	390	90134-0038	-		2	BUSHING
	400	90166-0132	-	M	5	HOSE
	500	312101-0372	-		2	SCREW M6S6X25FZB
	510	312101-0385	-		2	SCREW M6S6X75FZB
	520	312101-0388	-		3	SCREW M6S6X90FZB
	530	312105-0453	-		8	SCREW M6S8X25RFR
	540	312111-0471	-		2	SCREW MC6S8X100FZB
	550	315101-0153	-		7	WASHER BRB6,4X12FZB
	560	315105-0165	-		8	WASHER BRB8,4X16RFR
	570	315211-0105	S		16	SEALING WA
	580	315211-0108	S		4	SEALING WA
	590	342738-0208	S		4	ELBOW PIPEY
	600	342921-0113	S		10	PIPE COUPL6/4-1/8"
	610	342921-0121	S		4	PIPE COUPL8/6-1/8"
	620	342980-0113	S		11	BANJO CONNSINGEL 6/4-1/8
	630	342980-0122	S		5	BANJO CONNSINGEL 8/6-1/4
	640	342980-0303	S		11	BANJO CONN SINGEL 1/8"
	650	342980-0304	S		3	BANJO CONN SINGEL 1/4
	660	342980-0314	S		2	BANJO CONN DUBBEL 1/4

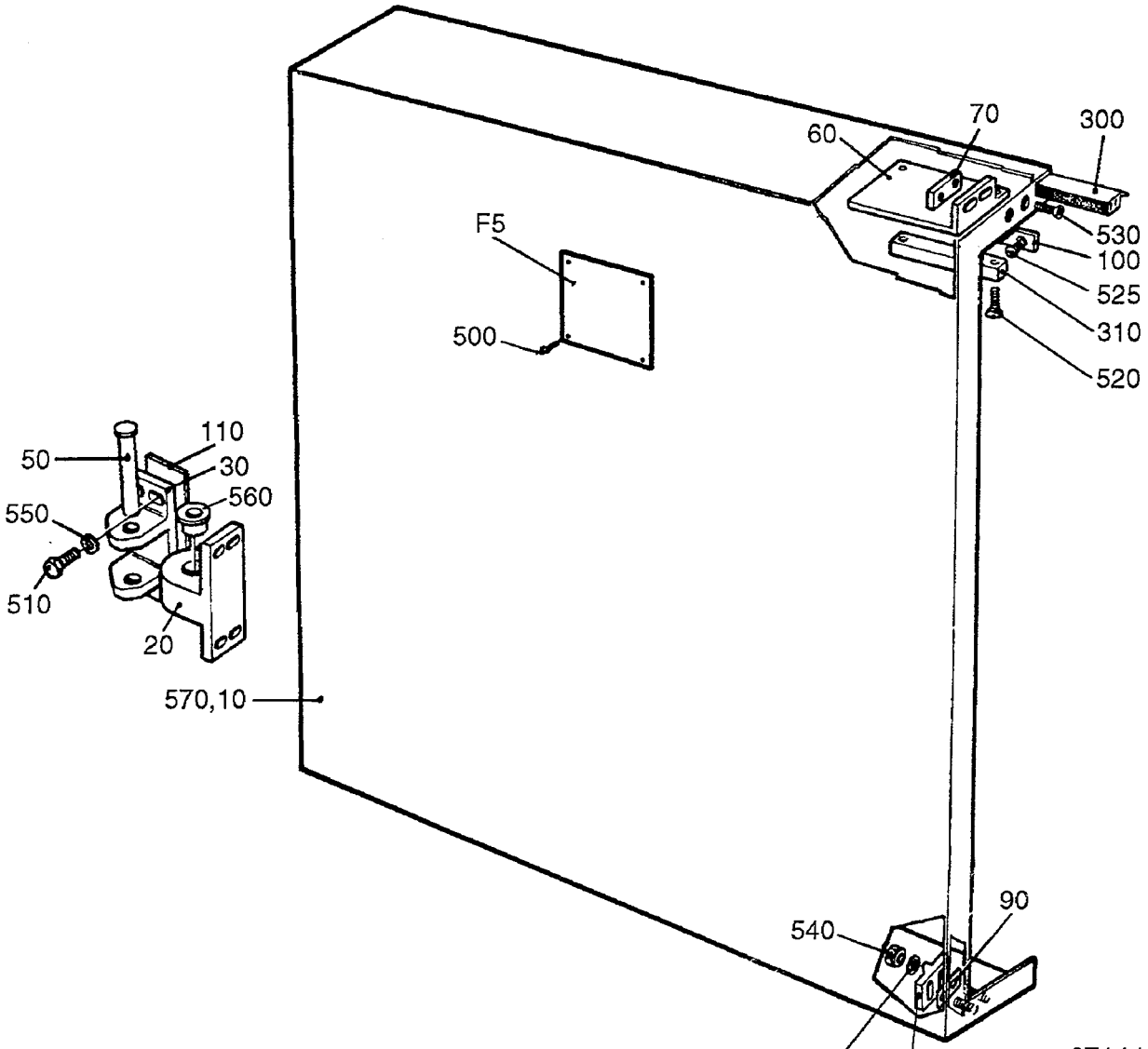

27144203.TIF
217442-3
AM 16094

Last Alteration: AM 16094 91-02-01

Corresponding group: 271442-030V
Assembly Drawing: 271442-3

Issue: **940524**

From	Pos	Part No	SP	UN	Qty	Description
		C- 271442-0301				**Door, Ass'y**
	F005	**C- 544540-0101**	**C**		**1**	**HOUSEMARKS SET OF SIGNS**
	010	441667	C		1	DOOR
	020	271219	C		2	HINGE
	030	G- 271220	C		2	HINGE
	050	271221	C		2	PEG
	060	441668	-		1	HOLDER
	070	441691	-		1	PLATE
	080	491233	-		1	GUIDE LUG
	090	456829	-		2	SHIM
	100	469492	-		1	SPACER
	110	491235	-		2	WASHER
	300	90143-0049	-	MM	1500	STRIP
	310	90237-0071	S		1	LOCK
	500	311520-0435	-		4	BLANK RIVE3,2X10
	510	312105-0329	-		16	SCREW M6S5X16 A2 80
	520	312145-0222	-		2	SLOTTED HEMFS3X8RFR
	525	312145-0291	-		2	SLOTTED HEMFS4X12RFR
	530	312155-0329	-		2	SCREW MF6S5X16RFR
	540	312605-0314	-		2	NUT M6M5RFR
	550	315105-0146	-		18	WASHER BRB5,3X10RFR
	560	321111-0096	S		4	FLANGE BUS 8E7X8
	570	90143-0060	-	MM	575	STRIP

From	Pos	Part No	SP	UN	Qty	Description

Last Alteration: AM 12850 89-11-09

Corresponding group: 544540-010V
Assembly Drawing:

Issue: **940524**

From	Pos	Part No	SP	UN	Qty	Description
		C- 544540-0101				**HOUSEMARKS SET OF SIGNS**
	010	574658	-		1	HOUSEMARK

From	Pos	Part No	SP	UN	Qty	Description

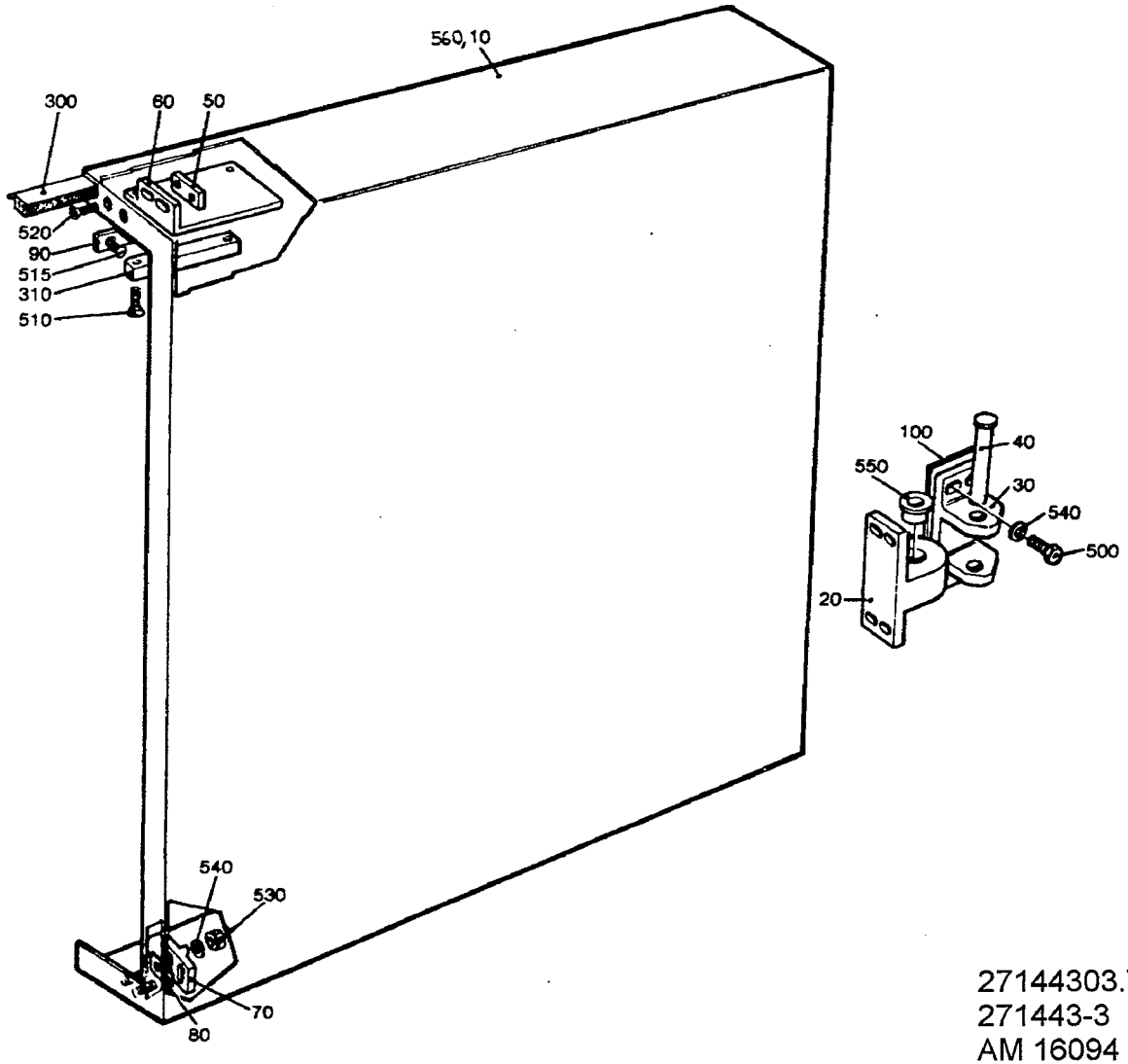

27144303.TIF
271443-3
AM 16094

Last Alteration: AM 16094 91-02-01

Corresponding group: 271443-030V
Assembly Drawing: 271443-3

Issue: **940524**

From	Pos	Part No	SP	UN	Qty	Description
		C- 271443-0301				**Door, Ass'y**
	010	441669	-		1	DOOR
	020	271219	C		2	HINGE
	030	G- 271220	C		2	HINGE
	040	271221	C		2	PEG
	050	441691	-		1	PLATE
	060	441692	-		1	HOLDER
	070	491233	-		1	GUIDE LUG
	080	456829	-		2	SHIM
	090	469492	-		1	SPACER
	100	491235	-		2	WASHER
	300	90143-0049	-	MM	1500	STRIP
	310	90237-0071	S		1	LOCK
	500	312105-0329	-		16	SCREW M6S5X16 A2 80
	510	312145-0222	-		2	SLOTTED HEMFS3X8RFR
	515	312145-0291	-		2	SLOTTED HEMFS4X12RFR
	520	312155-0329	-		2	SCREW MF6S5X16RFR
	530	312605-0314	-		2	NUT M6M5RFR
	540	315105-0146	-		18	WASHER BRB5,3X10RFR
	550	321111-0096	S		4	FLANGE BUS 8E7X8
	560	90143-0060	-	MM	575	STRIP

From	Pos	Part No	SP	UN	Qty	Description

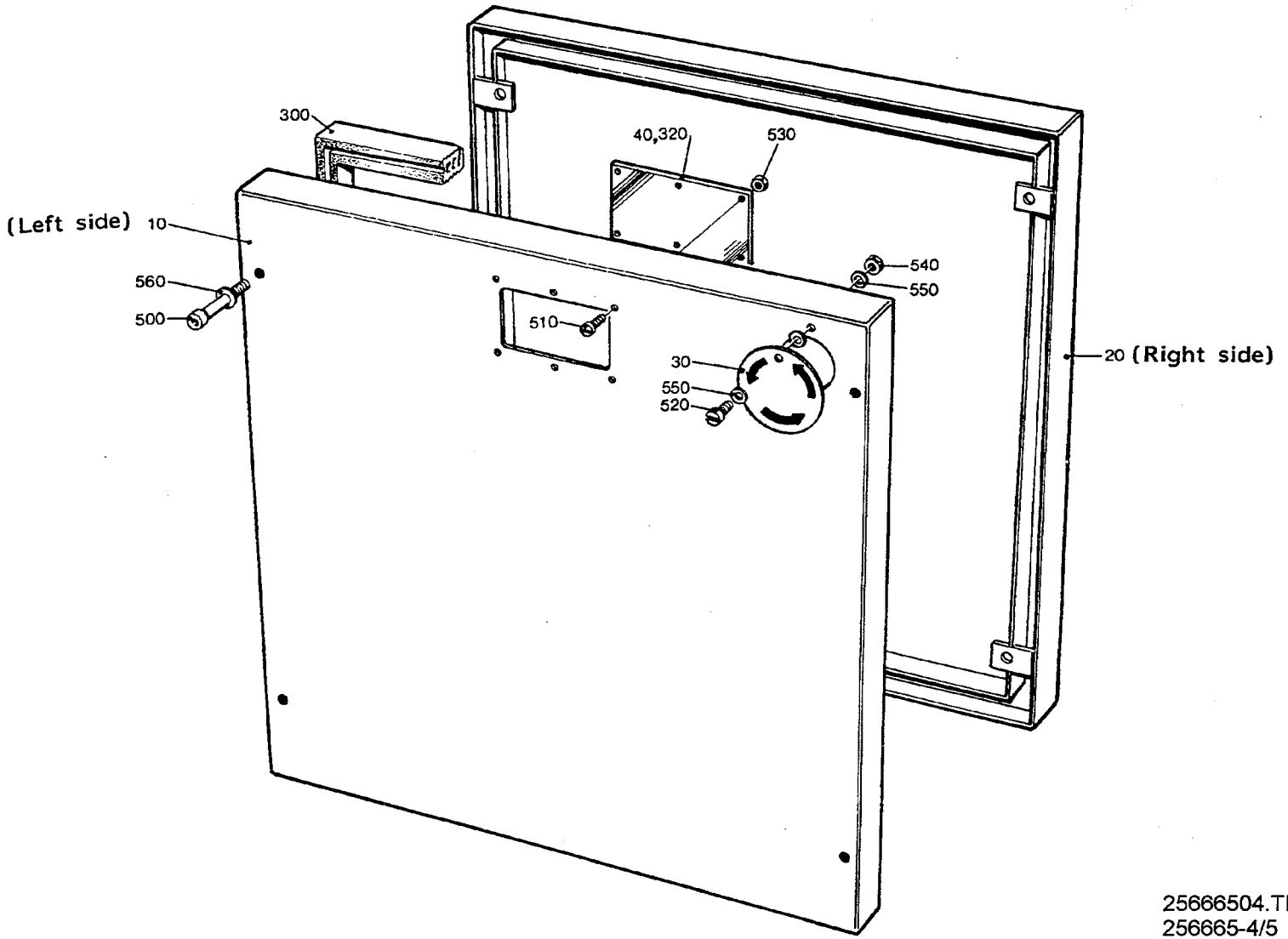

25666504.TIF
256665-4/5
AM 10505

From	Pos	Part No	SP	UN	Qty	Description
Left Hand Design						
		C- 256665-0201				**Opening, Ass'y**
	010	295197	-		1	OPENING
	030	469964	-		1	LID
	520	312125-0368	-		1	SLOTTED HEMCS6X16RFR
	540	312810-0314	-		1	LOCK NUT 5FZB
	550	315105-0146	-		3	WASHER BRB5,3X10RFR
Right Hand Design						
		C- 256665-0202				**Opening, Ass'y**
	020	295198	-		1	OPENING
Common parts						
	040	257231	C		1	WINDOW
	300	90143-0049	S	MM	2200	STRIP
	320	90157-0022	S	G	X	SEALING COMPOUND
	500	312115-0463	-		4	SCREW 8X60 A4 80
	510	312125-0291	-		6	SLOTTED HEMCS4X12RFR
	530	312605-0312	-		6	NUT M6M4RFR
	560	315105-0165	-		4	WASHER BRB8,4X16RFR

From	Pos	Part No	SP	UN	Qty	Description

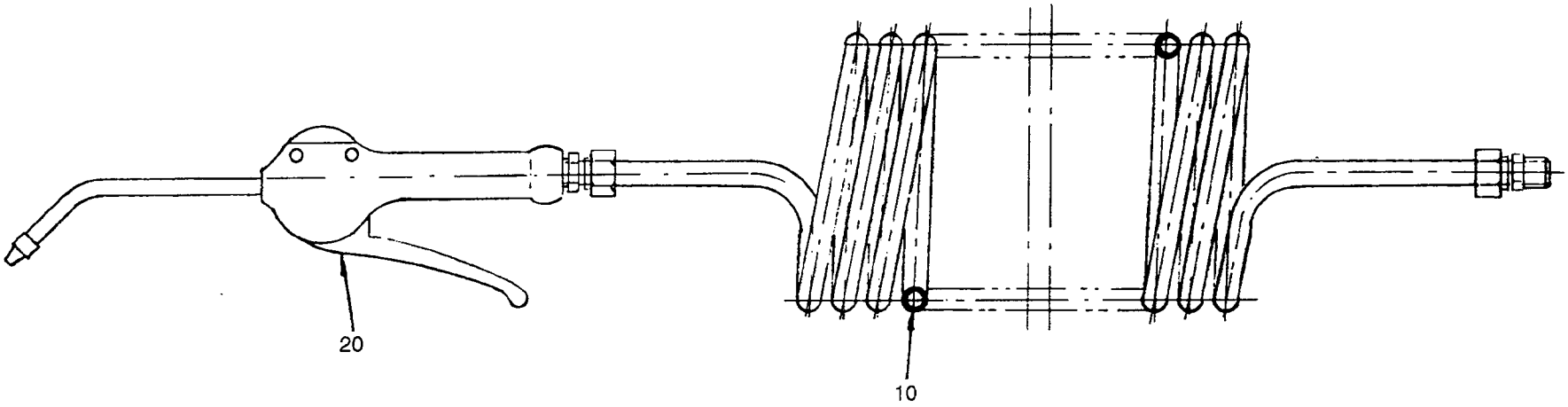

27141401.TIF
2714141-1
AM 6317

Last Alteration: AM 6317 83-11-03

Corresponding group: 271414-020V
Assembly Drawing: 271414-1

Issue: **940524**

From	Pos	Part No	SP	UN	Qty	Description
		C- 271414-0201				**Air Jet Gun, Ass'y**
	010	90152-0016	S		1	HOSE
	020	90243-0061	S		1	FAN NOZZLE

From	Pos	Part No	SP	UN	Qty	Description

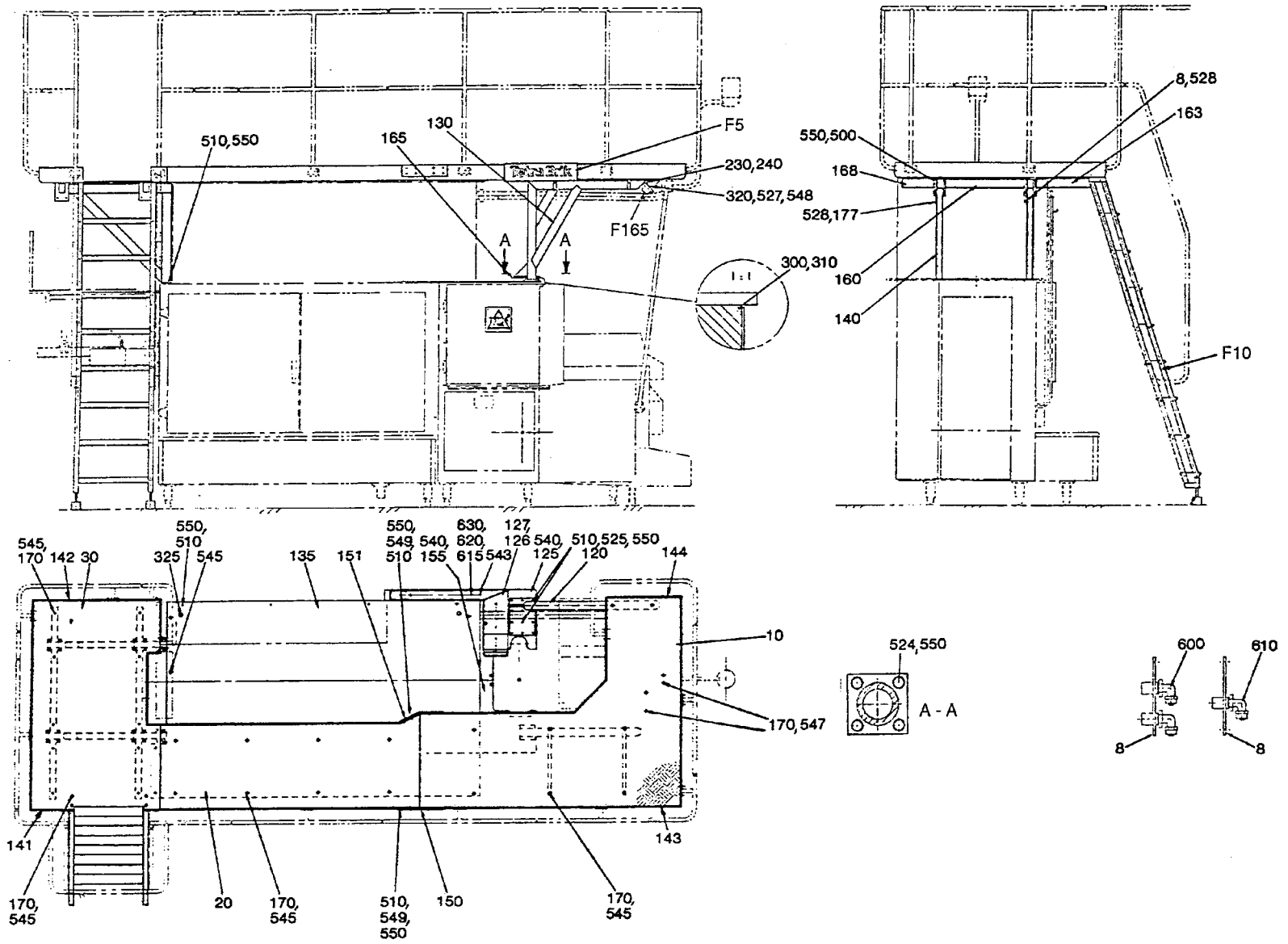

45645707.TIF
456457-7/8
AM

From	Pos	Part No	SP	UN	Qty	Description
With Pull-Tab						
		C- 456457-0401				**Platform, Ass'y**
	008	752883	-		1	OPENING
	610	342931-0122	-		1	ELBOW PIPE
Without Pull-Tab						
		C- 456457-0402				**Platform, Ass'y**
	008	752882	-		1	OPENING
	600	342931-0113	-		4	ELBOW PIPE
Common parts						
	F005	**C- 544536-0101**	**-**		**1**	**SET OF SIGNS TB**
	F010	**C- 567034-0101**	**-**		**1**	**LADDER**
	F165	**C- 441535-0102**	**-**		**1**	**LIGHT FIXTURE**
	010	566298	-		1	PLATFORM
	020	566676	-		1	PLATFORM
	030	566299	-		1	PLATFORM
	120	469016	-		1	FRAME SECTION
	125	752800	-		1	SHEET
	126	752802	-		1	CABLE DUCT
	127	752803	-		1	LID
	130	752877	-		1	FRAME SECTION
	135	752799	-		1	SHEET
	140	752878	-		2	FRAME SECTION
	141	566308	-		1	SHEET
	142	566307	-		1	SHEET
	143	566309	-		1	SHEET
	144	566306	-		1	SHEET
	150	751854	-		1	SHEET
	151	751855	-		1	SHEET
	155	752801	-		1	SHEET
	160	752879	-		2	BEAM
	163	752881	-		2	BEAM
	165	752876	-		1	LACE
	168	752880	-		2	BEAM
	170	230918	-		36	WASHER
	177	752884	-		1	OPENING
	230	491016	-		2	HOLDER
	240	469027	-		1	SPACER
	300	90143-0016	-	MM	1900	STRIP
	310	90153-0017	-	G	100	ADHESIVE
	320	90157-0022	-	G	X	SEALING COMPOUND
	325	90261-0019	-		2	PIPE PLUG
	500	312105-0452	-		32	SCREW M6S8X22RFR
	510	312105-0453	-		57	SCREW M6S8X25RFR
	524	312109-0457	-		4	SCREW 8X35 H A4 80
	525	312105-0460	-		6	SCREW M6S8X45RFR
	527	312125-0323	-		2	SLOTTED HEMCS5X8RFR
	528	312145-0323	-		8	SLOTTED HEMFS5X8RFR
	540	312155-0449	-		10	SCREW MF6S8X16RFR
	543	312125-0364	-		3	SLOTTED HEMCS6X10RFR
	545	312155-0451	-		40	SCREW MF6S8X20RFR
	547	312155-0455	-		5	SCREW MF6S8X30RFR
	548	315105-0146	-		2	WASHER BRB5,3X10RFR
	549	312605-0318	-		36	NUT M6M8RFR
	550	315105-0165	-		119	WASHER BRB8,4X16RFR
	615	312705-0312	-		5	CAP NUT MHM 4 A2
	620	315105-0136	-		5	WASHER BRB4,3X8RFR
	630	90015-0020	-		2	BUSHING

Last Alteration: AM 14331 92-03-24

Corresponding group: 544536-010V
Assembly Drawing:

Issue: **940524**

From	Pos	Part No	SP	UN	Qty	Description
TETRA BRIK						
		C- 544536-0101				**Set of Sign, ass'y**
	010	544526	-		2	MACHINE PLATE TB
	060	544533	-		4	PLASTIC PEHD 21172-10
	100	90165-0086	-		4	CRAMP
TETRA BRIK ASEPTIC						
		C- 544536-0102				**Set of Sign, ass'y**
	010	544527	-		2	MACHINE PLATE TBA
	060	544533	-		4	PLASTIC PEHD 21172-10
	100	90165-0086	-		4	CRAMP
TETRA CLASSIC replaced by -0109						
		C- 544536-0103				**Set of Sign, ass'y**
	010	551612	-		2	MACHINE PLATE TCA
	060	544533	-		4	PLASTIC PEHD 21172-10
	100	90165-0086	-		4	CRAMP
TETRA CLASSIC ASEPTICreplaced by -0110						
		C- 544536-0104				**Set of Sign, ass'y**
	010	551613	-		1	MACHINE PLATE TCA
	050	545818	-		2	HOLDER FOR SIGN
	060	544533	-		2	PLASTIC PEHD 21172-10
TETRA REX						
		C- 544536-0105				**Set of Sign, ass'y**
	010	544530	-		2	MACHINE PLATE TR
	060	544533	-		4	PLASTIC PEHD 21172-10
	100	90165-0086	-		4	CRAMP
TETRA TOP						
		C- 544536-0106				**Set of Sign, ass'y**
	010	544531	-		2	MACHINE PLATE TT
	060	544533	-		4	PLASTIC PEHD 21172-10
	100	90165-0086	-		4	CRAMP
TETRA KING						
		C- 544536-0107				**Set of Sign, ass'y**
	010	544532	-		2	MACHINE PLATE TK
	060	544533	-		4	PLASTIC PEHD 21172-10
	100	90165-0086	-		4	CRAMP
TETRA REX ASEPTIC						
		C- 544536-0108				**Set of Sign, ass'y**
	010	544534	-		2	MACHINE PLATE TRA
	060	544533	-		4	PLASTIC PEHD 21172-10
	100	90165-0086	-		4	CRAMP
TETRA CLASSIC						
		C- 544536-0109				**Set of Sign, ass'y**
	010	551612	-		2	MACHINE PLATE TCA
	060	544533	-		4	PLASTIC PEHD 21172-10
	100	90165-0086	-		4	CRAMP

From	Pos	Part No	SP	UN	Qty	Description
TETRA CLASSIC ASEPTIC						
		C- 544536-0110				**Set of Sign, ass'y**
	010	551613	-		1	MACHINE PLATE TCA
	050	545818	-		2	HOLDER FOR SIGN
	060	544533	-		2	PLASTIC PEHD 21172-10
LP40						
		C- 544536-0111				**Set of Sign, ass'y**
	010	554560	-		2	MACHINE PLATE LP40
	060	544533	-		4	PLASTIC PEHD 21172-10
	100	90165-0086	-		4	CRAMP
LP222						
		C- 544536-0112				**Set of Sign, ass'y**
	010	554561	-		2	MACHINE PLATE LP222
	060	544533	-		4	PLASTIC PEHD 21172-10
	100	90165-0086	-		4	CRAMP
LP800						
		C- 544536-0113				**Set of Sign, ass'y**
	010	554562	-		2	MACHINE PLATE LP800
	060	544533	-		4	PLASTIC PEHD 21172-10
	100	90165-0086	-		4	CRAMP
LP1800						
		C- 544536-0114				**Set of Sign, ass'y**
	010	554563	-		2	MACHINE PLATE LP1800
	060	544533	-		4	PLASTIC PEHD 21172-10
	100	90165-0086	-		4	CRAMP
LPX						
		C- 544536-0115				**Set of Sign, ass'y**
	010	554564	-		2	MACHINE PLATE LPX
	060	544533	-		4	PLASTIC PEHD 21172-10
	100	90165-0086	-		4	CRAMP
TETRA CLASSIC ASEPTIC TCA/25						
		C- 544536-0116				**Set of Sign, ass'y**
	010	551613	-		2	MACHINE PLATE TCA
	110	564605	-		2	ROD
	120	564606	-		2	BRACKET
Common parts						
	200	312155-0370	-		4	SCREW MF6S6X20RFR
	210	312812-0316	-		4	LOCK NUT A2-M6RFR

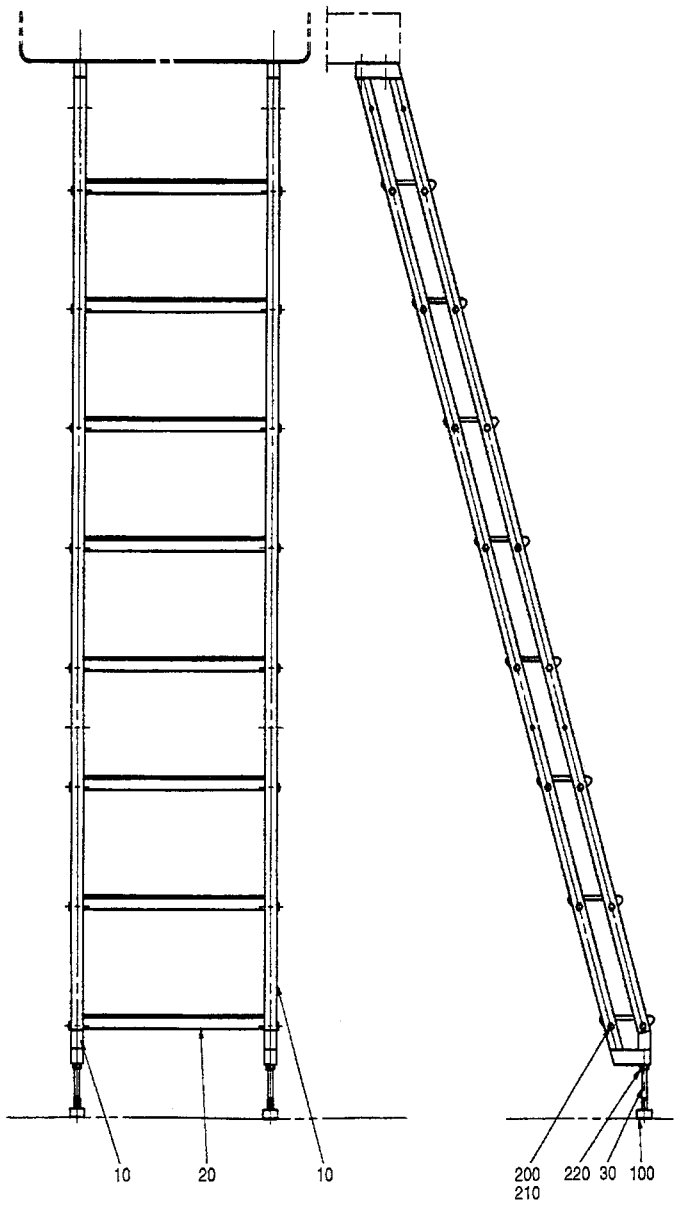

56703401.TIF
567034-1
AM 16371

Last Alteration: AM 16371 91-05-23

Corresponding group: 567034-010V
Assembly Drawing: 567034-1

Issue: **940524**

From	Pos	Part No	SP	UN Qty	Description
		C- 567034-0101			**Ladder, Ass'y**
	010	751958	-	2	SIDE PIECE
	020	441679	-	8	STAIR
	030	441905	-	2	RETARD PIN
	100	90347-0004	-	2	VIBRATION DAMPER
	200	312105-0459	-	32	SCREW M6S8X40RFR
	210	315105-0165	-	32	WASHER BRB8,4X16RFR
	220	312605-0322	-	2	NUT M6M12RFR

From	Pos	Part No	SP	UN Qty	Description

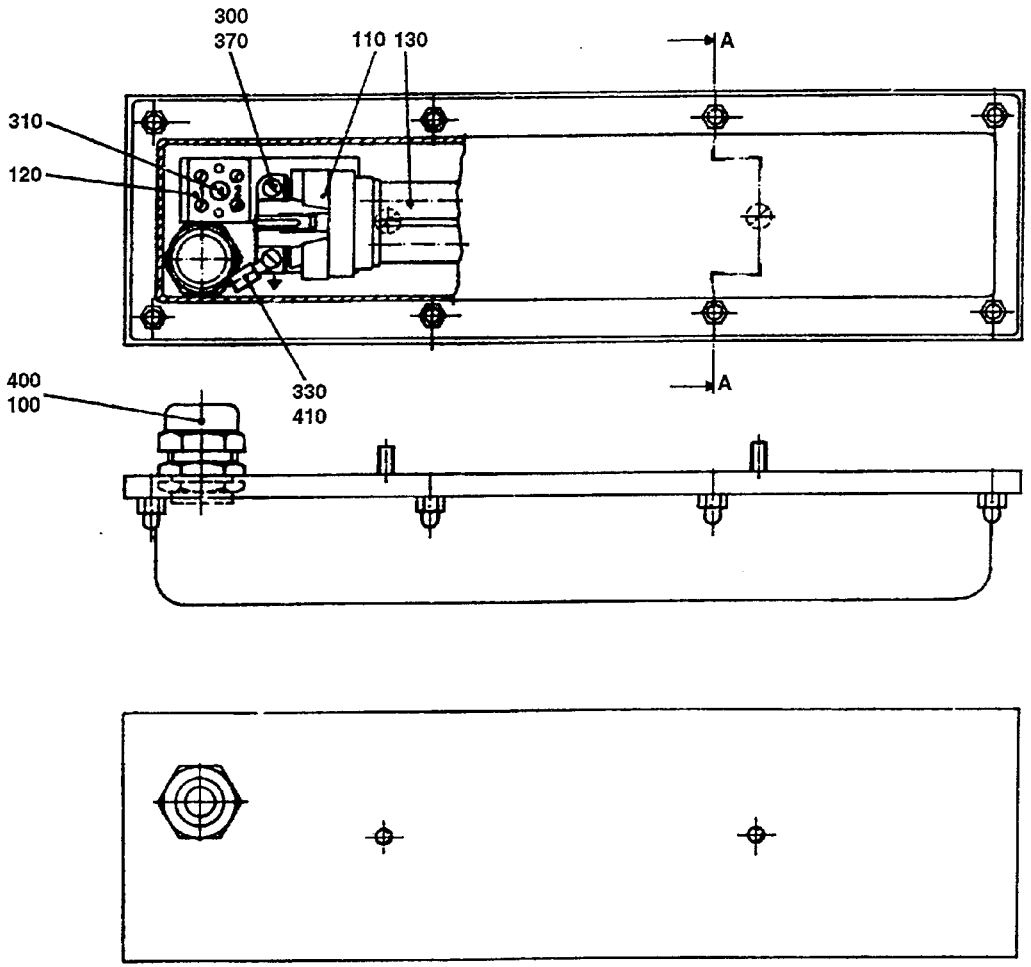

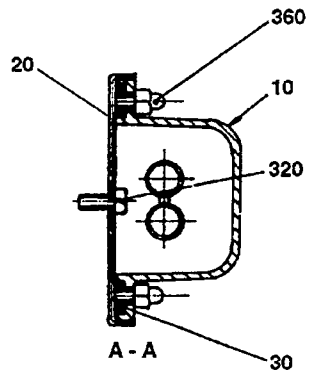

44153501.TIF
441535-1/2
AM 19104

From	Pos	Part No	SP	UN	Qty	Description
Gable Entrance of Elcable						
		C- 441535-0101				**Light Fixture, Ass'y**
	010	456259	S		1	COVER
	020	456261	-		1	SHEET
	350	312605-0314	-		2	NUT M6M5RFR
	380	315105-0146	-		2	WASHER BRB5,3X10RFR
Bottom Entrance of Elcable.						
		C- 441535-0102				**Light Fixture, Ass'y**
	010	456260	S		1	COVER
	020	456262	-		1	SHEET
Common parts						
	030	441536	S		1	GASKET
	100	90099-0087	-		1	NUT
	110	90164-0301	S		1	HOLDING FIXTURE
	120	90195-0020	-		1	TERMINAL BLOCK
	130	90297-0007	P		1	FLUORESCENT LAMP
	300	312125-0220	-		2	SLOTTED HEMCS3X6RFR
	310	312125-0230	-		1	SLOTTED HEMCS3X20RFR
	320	312125-0327	-		2	SLOTTED HEMCS5X12RFR
	330	312132-0284	-		1	SLOTTED MSCS4X5MSGFN
	360	312705-0314	-		8	CAP NUT MHM 5 A2
	370	315105-0124	-		2	WASHER BRB3,2X6RFR
	400	352103-0108	-		1	CABLE GLANR.ST 13
	410	353101-0129	-		1	CABLE SHOE

From	Pos	Part No	SP	UN	Qty	Description

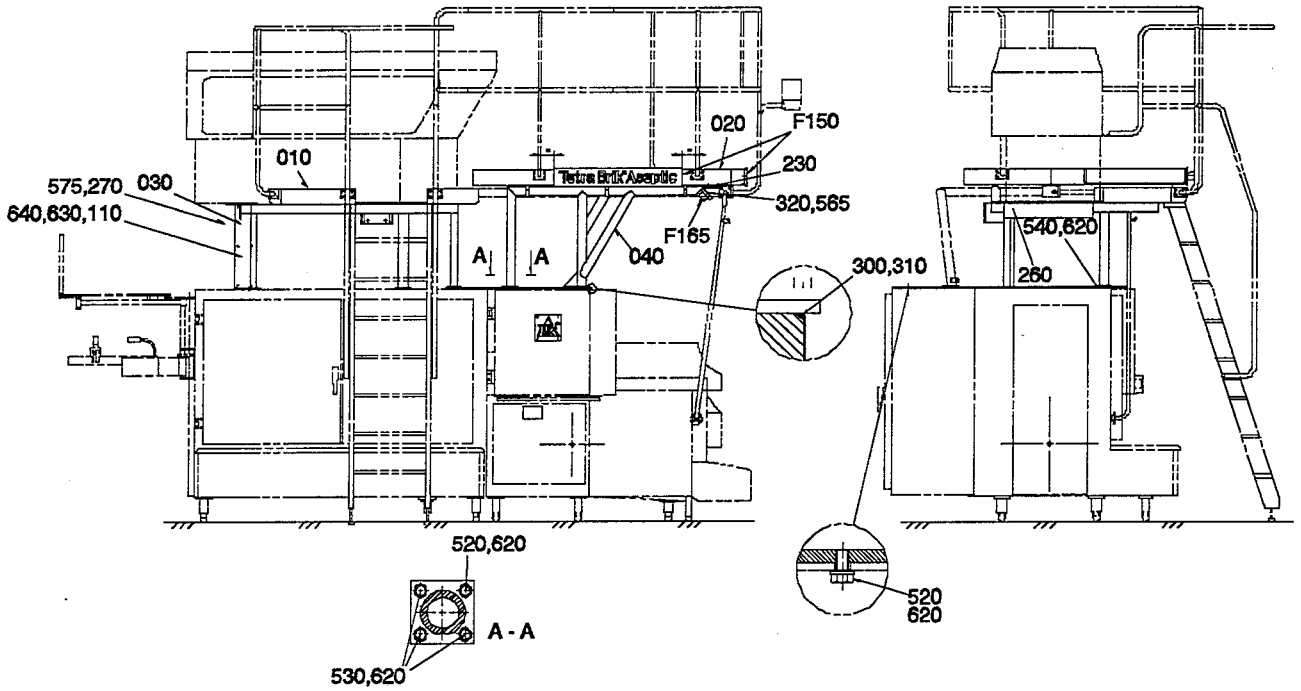
010
020
F150
230
320,565
575,270
030
640,630,110
F165
040
A
A
300,310
540,620
260
520,620
A - A
530,620
520
620

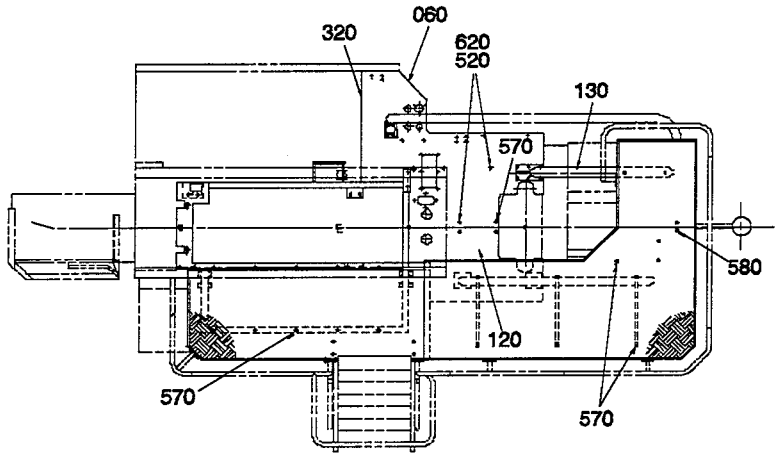
320
060
620
520
130
570
580
120
570
570

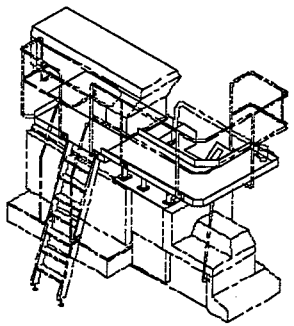

Last Alteration: AM 19463 93-03-03

Corresponding group: 456458-040V
Assembly Drawing: 456458-7/8

Issue: 940524

From	Pos	Part No	SP	UN	Qty	Description
With Pull-Tab						
		C- 456458-0401				**Platform, Ass'y**
	010	572307	-		1	PLATFORM
	030	572310	-		1	FRAME
	110	572312	-		1	LID
	530	312105-0453	-		13	SCREW M6S8X25RFR
	570	312155-0449	-		33	SCREW MF6S8X16RFR
	580	312155-0453	-		2	SCREW MF6S8X25RFR
	620	315105-0165	-		36	WASHER BRB8,4X16RFR
	660	315125-0165	-		4	WASHER SB 8,4X26X5 RFR
Common Parts						
	F150	**C- 544536-0102**	**-**		**1**	**SET OF SIGNS TBA**
	F165	**C- 441535-0102**	**-**		**1**	**LIGHT FIXTURE**
	020	469005	-		1	PLATFORM
	040	469007	-		1	FRAME SECTION
	060	571926	-		1	SHEET
	120	571925	-		1	SHEET
	130	469016	-		1	FRAME SECTION
	230	572344	-		2	HOLDER
	260	90015-0020	-		2	BUSHING
	270	352113-0203	-		2	ARMATURE M3S10-M
	300	90143-0012	-	MM	1900	STRIP
	310	90153-0017	-	G	50	ADHESIVE
	320	90157-0022	-	G	X	SEALING COMPOUND
	520	312105-0449	-		7	SCREW M6S8X16RFR
	540	312105-0455	-		12	SCREW M6S8X30RFR
	565	312125-0323	-		2	SLOTTED HEMCS5X8RFR
	575	312145-0289	-		2	SLOTTED HEMFS4X10RFR
	630	312105-0364	-		6	SCREW M6S6X10RFR
	640	315105-0153	-		6	WASHER BRB6,4X12RFR

From	Pos	Part No	SP	UN	Qty	Description

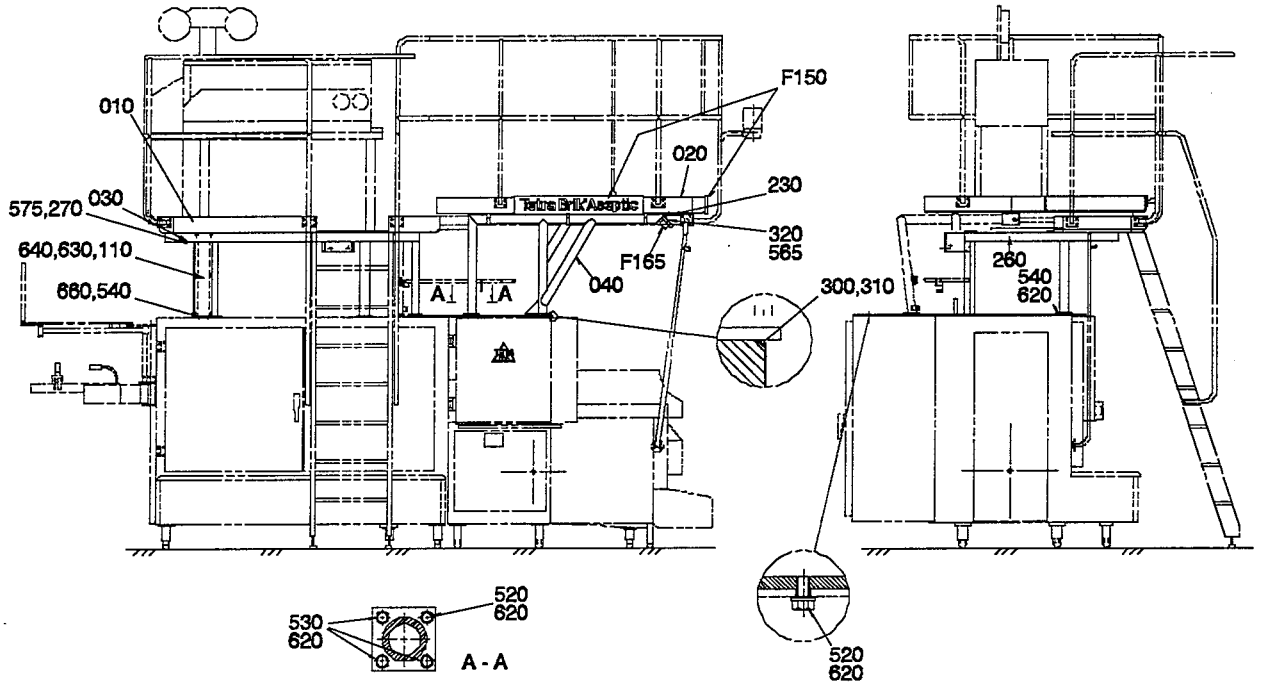
010
F150
020
230
575,270
030
320
565
640,630,110
660,540
F165
040
300,310
260
540
620
520
620
530
620
A - A
520
620

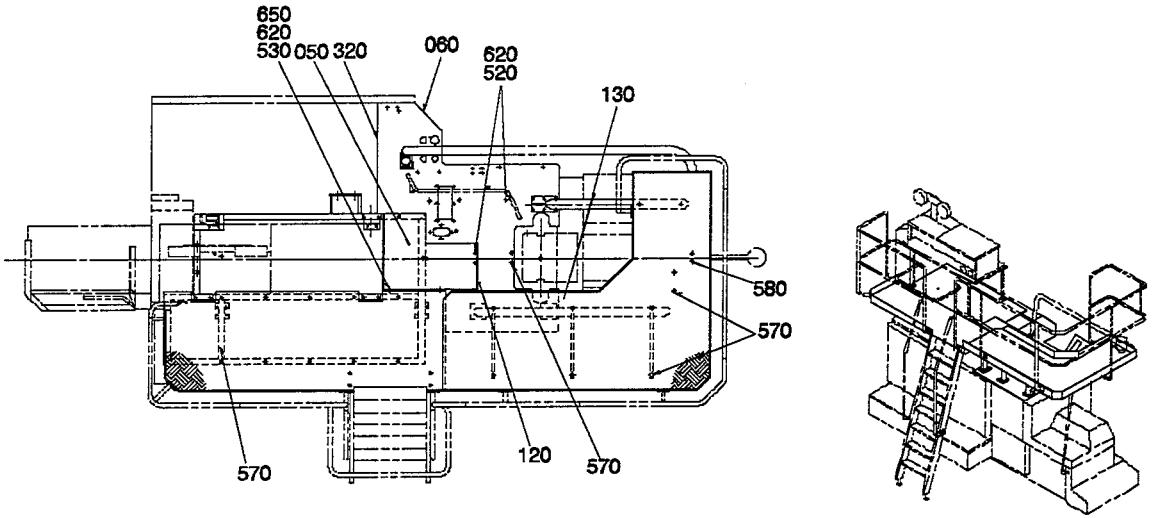
650
620
530
050
320
060
620
520
130
580
570
570
120
570

From	Pos	Part No	SP	UN	Qty	Description
Without Pull-Tab						
		C- 456458-0402				**Platform, Ass'y**
	010	567069	-		1	PLATFORM
	030	572745	-		1	FRAME
	050	572324	-		1	PLATFORM
	110	572746	-		1	LID
	530	312105-0453	-		15	SCREW M6S8X25RFR
	570	312155-0449	-		48	SCREW MF6S8X16RFR
	580	312155-0453	-		3	SCREW MF6S8X25RFR
	620	315105-0165	-		40	WASHER BRB8,4X16RFR
	650	312605-0318	-		2	NUT M6M8RFR
	660	315125-0165	-		6	WASHER SB 8,4X26X5 RFR
Common Parts						
	F150	**C- 544536-0102**	**-**		**1**	**SET OF SIGNS TBA**
	F165	**C- 441535-0102**	**-**		**1**	**LIGHT FIXTURE**
	020	469005	-		1	PLATFORM
	040	469007	-		1	FRAME SECTION
	060	571926	-		1	SHEET
	120	571925	-		1	SHEET
	130	469016	-		1	FRAME SECTION
	230	572344	-		2	HOLDER
	260	90015-0020	-		2	BUSHING
	270	352113-0203	-		2	ARMATURE M3S10-M
	300	90143-0012	-	MM	1900	STRIP
	310	90153-0017	-	G	50	ADHESIVE
	320	90157-0022	-	G	X	SEALING COMPOUND
	520	312105-0449	-		7	SCREW M6S8X16RFR
	540	312105-0455	-		12	SCREW M6S8X30RFR
	565	312125-0323	-		2	SLOTTED HEMCS5X8RFR
	575	312145-0289	-		2	SLOTTED HEMFS4X10RFR
	630	312105-0364	-		6	SCREW M6S6X10RFR
	640	315105-0153	-		6	WASHER BRB6,4X12RFR

From	Pos	Part No	SP	UN	Qty	Description

From	Pos	Part No	SP	UN	Qty	Description
TETRA BRIK						
		C- 544536-0101				**Set of Sign, ass'y**
	010	544526	-		2	MACHINE PLATE TB
	060	544533	-		4	PLASTIC PEHD 21172-10
	100	90165-0086	-		4	CRAMP
TETRA BRIK ASEPTIC						
		C- 544536-0102				**Set of Sign, ass'y**
	010	544527	-		2	MACHINE PLATE TBA
	060	544533	-		4	PLASTIC PEHD 21172-10
	100	90165-0086	-		4	CRAMP
TETRA CLASSIC replaced by -0109						
		C- 544536-0103				**Set of Sign, ass'y**
	010	551612	-		2	MACHINE PLATE TCA
	060	544533	-		4	PLASTIC PEHD 21172-10
	100	90165-0086	-		4	CRAMP
TETRA CLASSIC ASEPTICreplaced by -0110						
		C- 544536-0104				**Set of Sign, ass'y**
	010	551613	-		1	MACHINE PLATE TCA
	050	545818	-		2	HOLDER FOR SIGN
	060	544533	-		2	PLASTIC PEHD 21172-10
TETRA REX						
		C- 544536-0105				**Set of Sign, ass'y**
	010	544530	-		2	MACHINE PLATE TR
	060	544533	-		4	PLASTIC PEHD 21172-10
	100	90165-0086	-		4	CRAMP
TETRA TOP						
		C- 544536-0106				**Set of Sign, ass'y**
	010	544531	-		2	MACHINE PLATE TT
	060	544533	-		4	PLASTIC PEHD 21172-10
	100	90165-0086	-		4	CRAMP
TETRA KING						
		C- 544536-0107				**Set of Sign, ass'y**
	010	544532	-		2	MACHINE PLATE TK
	060	544533	-		4	PLASTIC PEHD 21172-10
	100	90165-0086	-		4	CRAMP
TETRA REX ASEPTIC						
		C- 544536-0108				**Set of Sign, ass'y**
	010	544534	-		2	MACHINE PLATE TRA
	060	544533	-		4	PLASTIC PEHD 21172-10
	100	90165-0086	-		4	CRAMP
TETRA CLASSIC						
		C- 544536-0109				**Set of Sign, ass'y**
	010	551612	-		2	MACHINE PLATE TCA
	060	544533	-		4	PLASTIC PEHD 21172-10
	100	90165-0086	-		4	CRAMP

From	Pos	Part No	SP	UN	Qty	Description
TETRA CLASSIC ASEPTIC						
		C- 544536-0110				**Set of Sign, ass'y**
	010	551613	-		1	MACHINE PLATE TCA
	050	545818	-		2	HOLDER FOR SIGN
	060	544533	-		2	PLASTIC PEHD 21172-10
LP40						
		C- 544536-0111				**Set of Sign, ass'y**
	010	554560	-		2	MACHINE PLATE LP40
	060	544533	-		4	PLASTIC PEHD 21172-10
	100	90165-0086	-		4	CRAMP
LP222						
		C- 544536-0112				**Set of Sign, ass'y**
	010	554561	-		2	MACHINE PLATE LP222
	060	544533	-		4	PLASTIC PEHD 21172-10
	100	90165-0086	-		4	CRAMP
LP800						
		C- 544536-0113				**Set of Sign, ass'y**
	010	554562	-		2	MACHINE PLATE LP800
	060	544533	-		4	PLASTIC PEHD 21172-10
	100	90165-0086	-		4	CRAMP
LP1800						
		C- 544536-0114				**Set of Sign, ass'y**
	010	554563	-		2	MACHINE PLATE LP1800
	060	544533	-		4	PLASTIC PEHD 21172-10
	100	90165-0086	-		4	CRAMP
LPX						
		C- 544536-0115				**Set of Sign, ass'y**
	010	554564	-		2	MACHINE PLATE LPX
	060	544533	-		4	PLASTIC PEHD 21172-10
	100	90165-0086	-		4	CRAMP
TETRA CLASSIC ASEPTIC TCA/25						
		C- 544536-0116				**Set of Sign, ass'y**
	010	551613	-		2	MACHINE PLATE TCA
	110	564605	-		2	ROD
	120	564606	-		2	BRACKET
Common parts						
	200	312155-0370	-		4	SCREW MF6S6X20RFR
	210	312812-0316	-		4	LOCK NUT A2-M6RFR

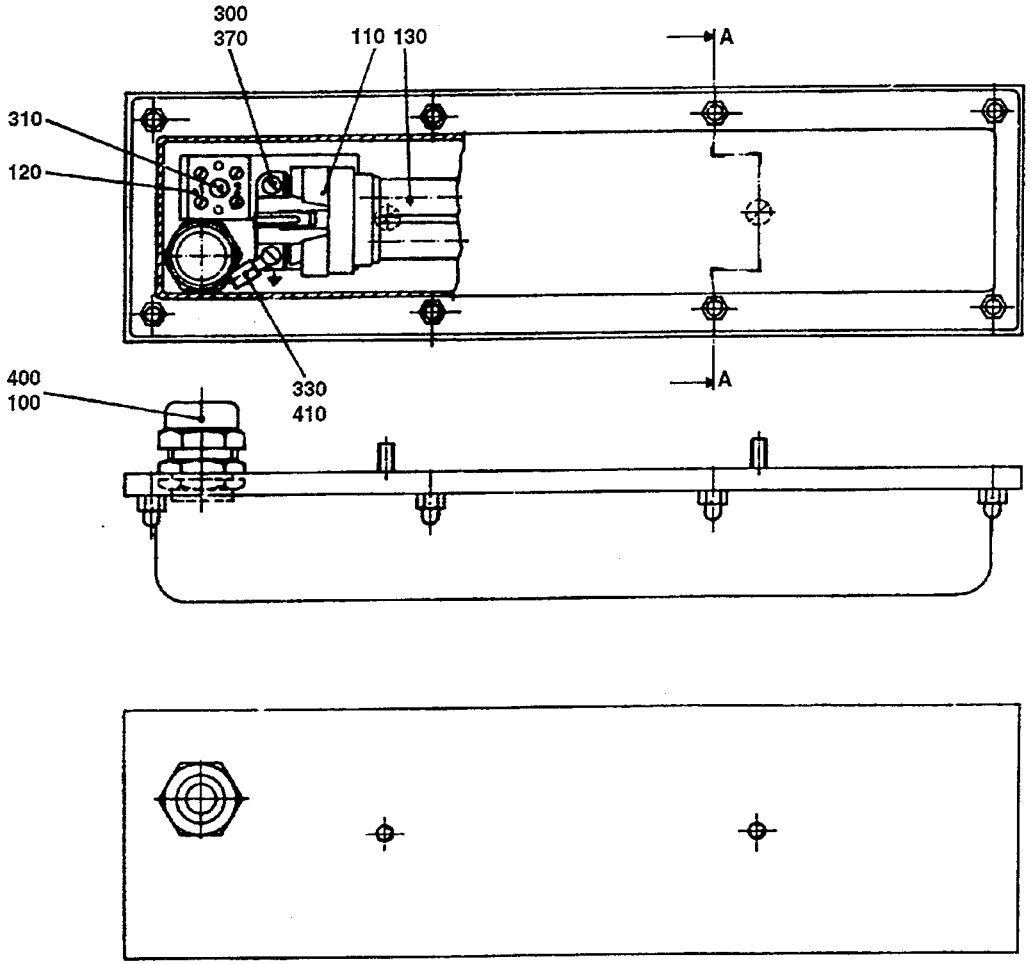

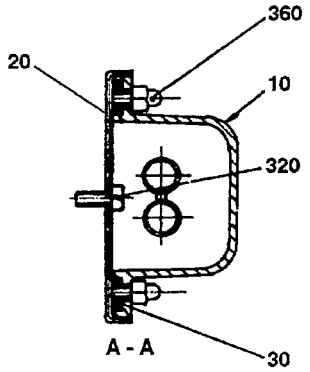

44153501.TIF
441535-1/2
AM 19104

Last Alteration: AM 19104 92-12-21

Corresponding group: 441535-010V
Assembly Drawing: 441535-1/2

Issue: **940524**

From	Pos	Part No	SP	UN	Qty	Description
Gable Entrance of Elcable						
		C- 441535-0101				**Light Fixture, Ass'y**
	010	456259	S		1	COVER
	020	456261	-		1	SHEET
	350	312605-0314	-		2	NUT M6M5RFR
	380	315105-0146	-		2	WASHER BRB5,3X10RFR
Bottom Entrance of Elcable.						
		C- 441535-0102				**Light Fixture, Ass'y**
	010	456260	S		1	COVER
	020	456262	-		1	SHEET
Common parts						
	030	441536	S		1	GASKET
	100	90099-0087	-		1	NUT
	110	90164-0301	S		1	HOLDING FIXTURE
	120	90195-0020	-		1	TERMINAL BLOCK
	130	90297-0007	P		1	FLUORESCENT LAMP
	300	312125-0220	-		2	SLOTTED HEMCS3X6RFR
	310	312125-0230	-		1	SLOTTED HEMCS3X20RFR
	320	312125-0327	-		2	SLOTTED HEMCS5X12RFR
	330	312132-0284	-		1	SLOTTED MSCS4X5MSGFN
	360	312705-0314	-		8	CAP NUT MHM 5 A2
	370	315105-0124	-		2	WASHER BRB3,2X6RFR
	400	352103-0108	-		1	CABLE GLANR.ST 13
	410	353101-0129	-		1	CABLE SHOE

From	Pos	Part No	SP	UN	Qty	Description

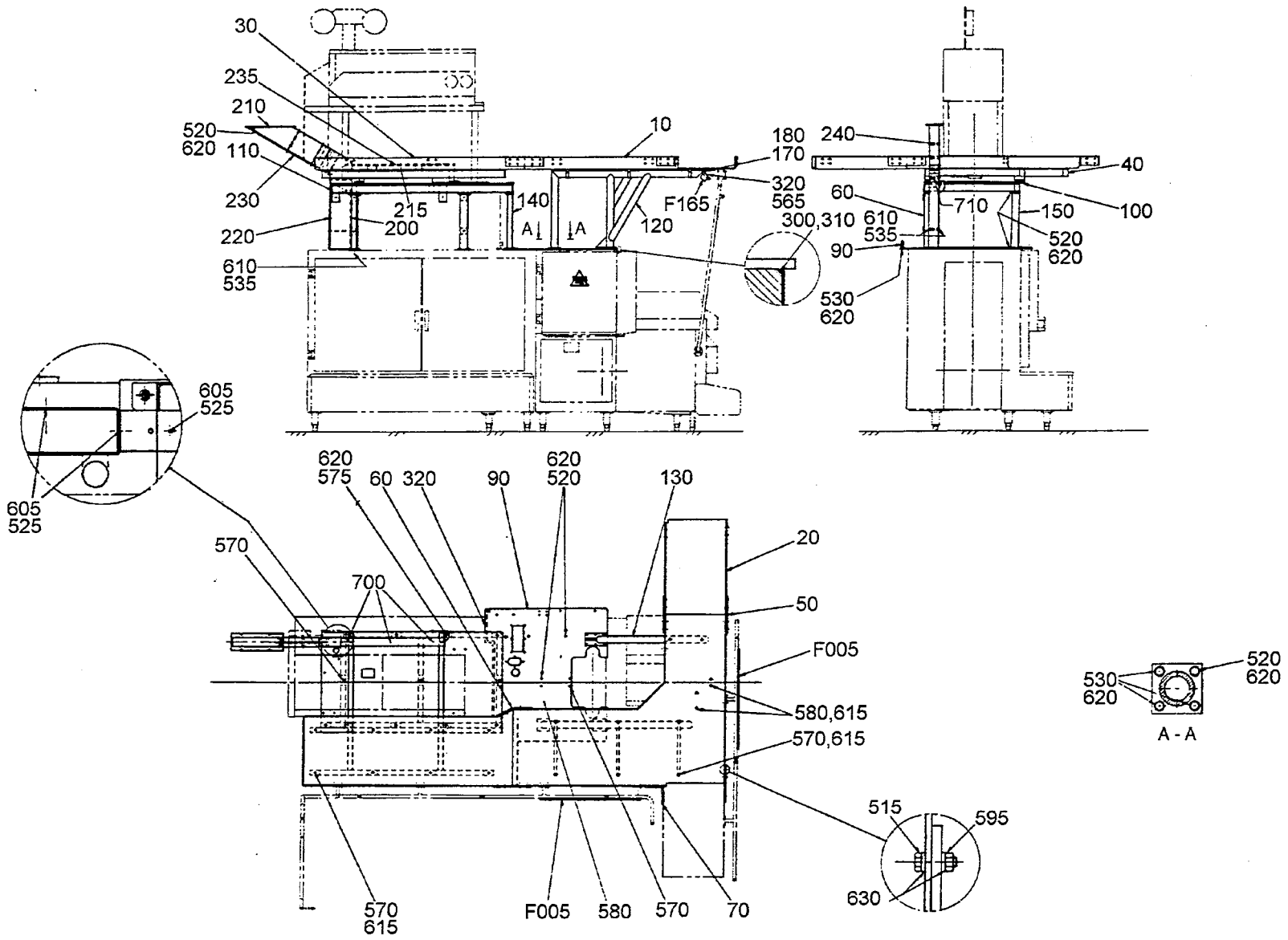

75186001.TIF
751860-1/2
AM 15592

From	Pos	Part No	SP	UN	Qty	Description
Machine space C/C 2000mm Single Machine						
		C- 751860-0201				**Platform, Ass'y**
	010	751857	-		1	PLATFORM
	050	751854	-		1	SHEET
	515	312105-0455	-		16	SCREW M6S8X30RFR
	595	312605-0318	-		16	NUT M6M8RFR
	630	315115-0165	-		32	WASHER TBRB8,4X16RFR
Machine space C/C 2000mm First Machine						
		C- 751860-0202				**Platform, Ass'y**
	010	751858	-		1	PLATFORM
	020	751853	-		1	PLATFORM
	050	751854	-		3	SHEET
	515	312105-0455	-		32	SCREW M6S8X30RFR
	595	312605-0318	-		32	NUT M6M8RFR
	630	315115-0165	-		64	WASHER TBRB8,4X16RFR
Machine space C/C 2000mm Intermediate Machine						
		C- 751860-0203				**Platform, Ass'y**
	010	751851	-		1	PLATFORM
	020	751853	-		1	PLATFORM
	050	751854	-		4	SHEET
	070	751856	-		1	SHEET
	515	312105-0455	-		48	SCREW M6S8X30RFR
	595	312605-0318	-		48	NUT M6M8RFR
	630	315115-0165	-		96	WASHER TBRB8,4X16RFR
Machine space C/C 2000mm Last Machine						
		C- 751860-0204				**Platform, Ass'y**
	010	751859	-		1	PLATFORM
	050	751854	-		2	SHEET
	070	751856	-		1	SHEET
	515	312105-0455	-		32	SCREW M6S8X30RFR
	595	312605-0318	-		32	NUT M6M8RFR
	630	315115-0165	-		64	WASHER TBRB8,4X16RFR
Machine space C/C 2150mm First Machine						
		C- 751860-0205				**Platform, Ass'y**
	010	751857	-		1	PLATFORM
	050	751854	-		1	SHEET
	515	312105-0455	-		16	SCREW M6S8X30RFR
	595	312605-0318	-		16	NUT M6M8RFR
	630	315115-0165	-		32	WASHER TBRB8,4X16RFR
Machine space C/C 2150mm First Machine						
		C- 751860-0206				**Platform, Ass'y**
	010	751858	-		1	PLATFORM
	020	752301	-		1	PLATFORM
	050	751854	-		3	SHEET
	515	312105-0455	-		32	SCREW M6S8X30RFR
	595	312605-0318	-		32	NUT M6M8RFR
	630	315115-0165	-		64	WASHER TBRB8,4X16RFR
Machine space C/C 2150mm Intermediate Machine						
		C- 751860-0207				**Platform, Ass'y**
	010	751851	-		1	PLATFORM
	020	752301	-		1	PLATFORM
	050	751854	-		4	SHEET
	070	751856	-		1	SHEET
	515	312105-0455	-		48	SCREW M6S8X30RFR
	595	312605-0318	-		48	NUT M6M8RFR
	630	315115-0165	-		96	WASHER TBRB8,4X16RFR
Machine space C/C 2150mm Last Machine						
		C- 751860-0208				**Platform, Ass'y**
	010	751859	-		1	PLATFORM
	050	751854	-		2	SHEET
	070	751856	-		1	SHEET
	515	312105-0455	-		32	SCREW M6S8X30RFR
	595	312605-0318	-		32	NUT M6M8RFR
	630	315115-0165	-		64	WASHER TBRB8,4X16RFR
Common parts						
	F005	**C- 544536-0102**	**-**		**1**	**SET OF SIGNS TBA**
	F165	**C- 441535-0102**	**-**		**1**	**LIGHT FIXTURE**
	030	751852	-		1	PLATFORM
	040	751850	-		1	FRAME
	060	751855	-		1	SHEET
	080	571925	-		1	SHEET
	090	571927	-		1	SHEET
	100	751829	-		1	FRAME SHEET
	110	751807	-		1	FRAME
	120	469007	-		1	FRAME SECTION
	130	469016	-		1	FRAME SECTION
	140	469019	-		1	LEG
	150	469020	-		1	LEG
	155	978266	-		1	COVERING PLATE
	160	751806	-		2	LEG
	170	491016	-		2	HOLDER
	180	469027	-		1	SPACER
	190	751862	-		1	VERTICAL PILLAR
	200	751863	-		1	CABLE TRENCH
	210	751864	-		1	CABLE TRENCH
	215	751878	-		1	CABLE TRENCH
	220	751865	-		1	LID
	230	751866	-		1	LID

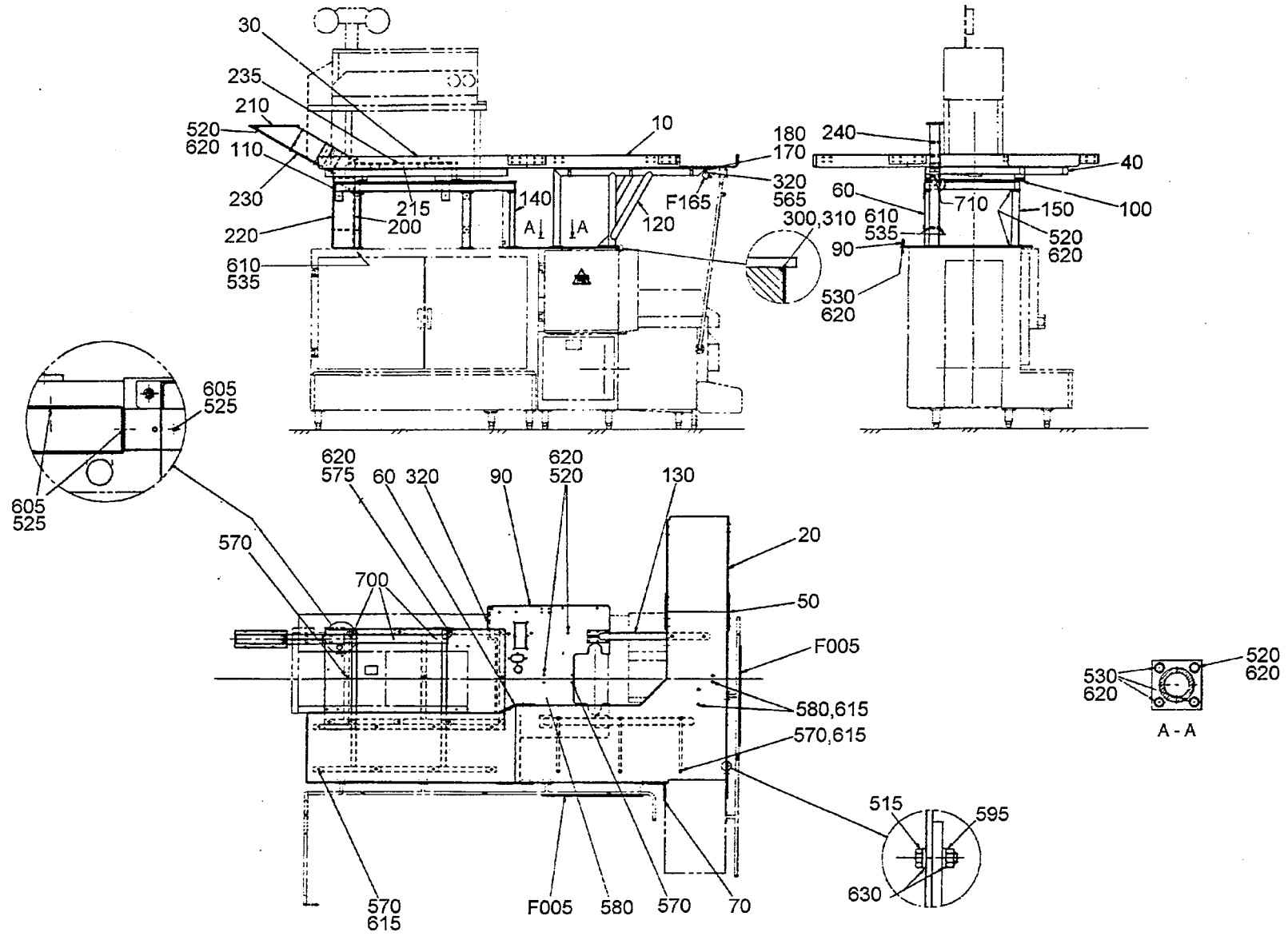

75186001.TIF
751860-1/2
AM 15592

From	Pos	Part No	SP	UN	Qty	Description
	235	751879	-		1	LID
	240	751867	-		5	SPACER
	300	90143-0012	-	MM	1900	STRIP
	310	90153-0017	-	G	X	ADHESIVE
	320	90157-0022	-		X	SEALING COMPOUND
	520	312105-0449	-		45	SCREW M6S8X16RFR
	525	312105-0325	-		4	SCREW M6S5X10 A2 80
	530	312105-0453	-		14	SCREW M6S8X25RFR
	535	312105-0367	-		12	SCREW M6S6X14RFR
	565	312125-0323	-		2	SLOTTED HEMCS5X8RFR
	570	312155-0449	-		18	SCREW MF6S8X16RFR
	575	312109-0457	-		4	SCREW 8X35 H A4 80
	580	312155-0453	-		1	SCREW MF6S8X25RFR
	605	315105-0146	-		4	WASHER BRB5,3X10RFR
	615	230918	-		22	WASHER
	620	315105-0165	-		63	WASHER BRB8,4X16RFR
	625	315105-0173	-		2	WASHER BRB10,5X22RFR
	700	312705-0316	-		3	CAP NUT MHM 6 A2
	710	312705-0318	-		5	CAP NUT MHM 8 A2

From	Pos	Part No	SP	UN	Qty	Description

From	Pos	Part No	SP	UN	Qty	Description
TETRA BRIK						
		C- 544536-0101				**Set of Sign, ass'y**
	010	544526	-		2	MACHINE PLATE TB
	060	544533	-		4	PLASTIC PEHD 21172-10
	100	90165-0086	-		4	CRAMP
TETRA BRIK ASEPTIC						
		C- 544536-0102				**Set of Sign, ass'y**
	010	544527	-		2	MACHINE PLATE TBA
	060	544533	-		4	PLASTIC PEHD 21172-10
	100	90165-0086	-		4	CRAMP
TETRA CLASSIC replaced by -0109						
		C- 544536-0103				**Set of Sign, ass'y**
	010	551612	-		2	MACHINE PLATE TCA
	060	544533	-		4	PLASTIC PEHD 21172-10
	100	90165-0086	-		4	CRAMP
TETRA CLASSIC ASEPTICreplaced by -0110						
		C- 544536-0104				**Set of Sign, ass'y**
	010	551613	-		1	MACHINE PLATE TCA
	050	545818	-		2	HOLDER FOR SIGN
	060	544533	-		2	PLASTIC PEHD 21172-10
TETRA REX						
		C- 544536-0105				**Set of Sign, ass'y**
	010	544530	-		2	MACHINE PLATE TR
	060	544533	-		4	PLASTIC PEHD 21172-10
	100	90165-0086	-		4	CRAMP
TETRA TOP						
		C- 544536-0106				**Set of Sign, ass'y**
	010	544531	-		2	MACHINE PLATE TT
	060	544533	-		4	PLASTIC PEHD 21172-10
	100	90165-0086	-		4	CRAMP
TETRA KING						
		C- 544536-0107				**Set of Sign, ass'y**
	010	544532	-		2	MACHINE PLATE TK
	060	544533	-		4	PLASTIC PEHD 21172-10
	100	90165-0086	-		4	CRAMP
TETRA REX ASEPTIC						
		C- 544536-0108				**Set of Sign, ass'y**
	010	544534	-		2	MACHINE PLATE TRA
	060	544533	-		4	PLASTIC PEHD 21172-10
	100	90165-0086	-		4	CRAMP
TETRA CLASSIC						
		C- 544536-0109				**Set of Sign, ass'y**
	010	551612	-		2	MACHINE PLATE TCA
	060	544533	-		4	PLASTIC PEHD 21172-10
	100	90165-0086	-		4	CRAMP

From	Pos	Part No	SP	UN	Qty	Description
TETRA CLASSIC ASEPTIC						
		C- 544536-0110				**Set of Sign, ass'y**
	010	551613	-		1	MACHINE PLATE TCA
	050	545818	-		2	HOLDER FOR SIGN
	060	544533	-		2	PLASTIC PEHD 21172-10
LP40						
		C- 544536-0111				**Set of Sign, ass'y**
	010	554560	-		2	MACHINE PLATE LP40
	060	544533	-		4	PLASTIC PEHD 21172-10
	100	90165-0086	-		4	CRAMP
LP222						
		C- 544536-0112				**Set of Sign, ass'y**
	010	554561	-		2	MACHINE PLATE LP222
	060	544533	-		4	PLASTIC PEHD 21172-10
	100	90165-0086	-		4	CRAMP
LP800						
		C- 544536-0113				**Set of Sign, ass'y**
	010	554562	-		2	MACHINE PLATE LP800
	060	544533	-		4	PLASTIC PEHD 21172-10
	100	90165-0086	-		4	CRAMP
LP1800						
		C- 544536-0114				**Set of Sign, ass'y**
	010	554563	-		2	MACHINE PLATE LP1800
	060	544533	-		4	PLASTIC PEHD 21172-10
	100	90165-0086	-		4	CRAMP
LPX						
		C- 544536-0115				**Set of Sign, ass'y**
	010	554564	-		2	MACHINE PLATE LPX
	060	544533	-		4	PLASTIC PEHD 21172-10
	100	90165-0086	-		4	CRAMP
TETRA CLASSIC ASEPTIC TCA/25						
		C- 544536-0116				**Set of Sign, ass'y**
	010	551613	-		2	MACHINE PLATE TCA
	110	564605	-		2	ROD
	120	564606	-		2	BRACKET
Common parts						
	200	312155-0370	-		4	SCREW MF6S6X20RFR
	210	312812-0316	-		4	LOCK NUT A2-M6RFR

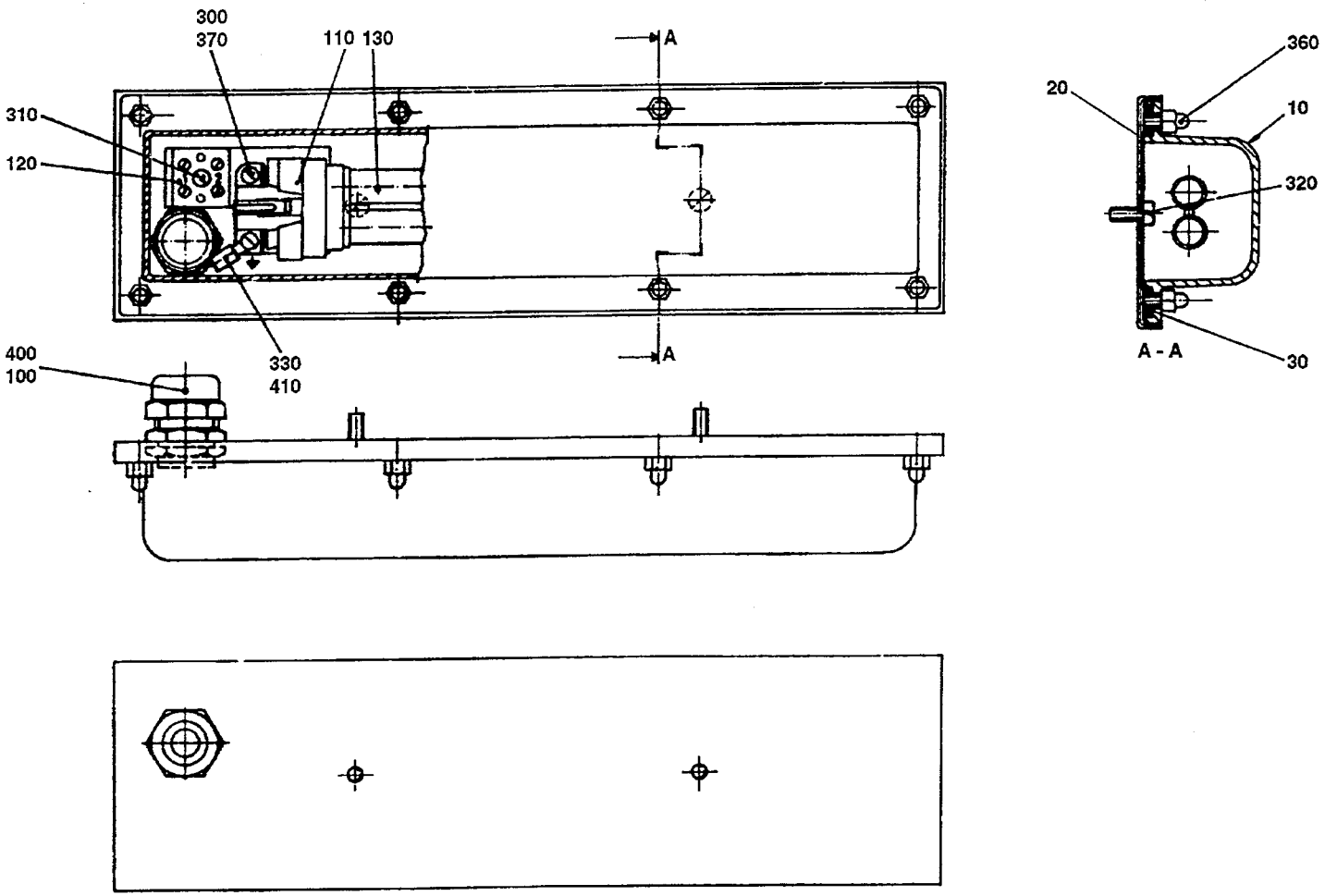

44153501.TIF
441535-1/2
AM 19104

From	Pos	Part No	SP	UN	Qty	Description
Gable Entrance of Elcable						
		C- 441535-0101				**Light Fixture, Ass'y**
	010	456259	S		1	COVER
	020	456261	-		1	SHEET
	350	312605-0314	-		2	NUT M6M5RFR
	380	315105-0146	-		2	WASHER BRB5,3X10RFR
Bottom Entrance of Elcable.						
		C- 441535-0102				**Light Fixture, Ass'y**
	010	456260	S		1	COVER
	020	456262	-		1	SHEET
Common parts						
	030	441536	S		1	GASKET
	100	90099-0087	-		1	NUT
	110	90164-0301	S		1	HOLDING FIXTURE
	120	90195-0020	-		1	TERMINAL BLOCK
	130	90297-0007	P		1	FLUORESCENT LAMP
	300	312125-0220	-		2	SLOTTED HEMCS3X6RFR
	310	312125-0230	-		1	SLOTTED HEMCS3X20RFR
	320	312125-0327	-		2	SLOTTED HEMCS5X12RFR
	330	312132-0284	-		1	SLOTTED MSCS4X5MSGFN
	360	312705-0314	-		8	CAP NUT MHM 5 A2
	370	315105-0124	-		2	WASHER BRB3,2X6RFR
	400	352103-0108	-		1	CABLE GLANR.ST 13
	410	353101-0129	-		1	CABLE SHOE

From	Pos	Part No	SP	UN	Qty	Description

Last Alteration: AM 14198 90-03-06

Corresponding group: 978158-010V
Assembly Drawing:

Issue: **940524**

From	Pos	Part No	SP	UN	Qty	Description
Machine space C/C 2000mm						
		C- 978158-0101				**Platform Rear, Ass'y**
	F170	**C- 752958-010V**	**-**		**1**	**RAILING / PLATFORM**
		C- 751923-0101				. LADDER
		C- 751924-0102				. LADDER
		C- 751924-0101				. LADDER
Machine space C/C 2150mm						
		C- 978158-0102				**Platform Rear, Ass'y**
	F170	**C- 752959-010V**	**-**		**1**	**RAILING / PLATFORM**
		C- 751923-0101				. LADDER
		C- 751924-0101				. LADDER

From	Pos	Part No	SP	UN	Qty	Description

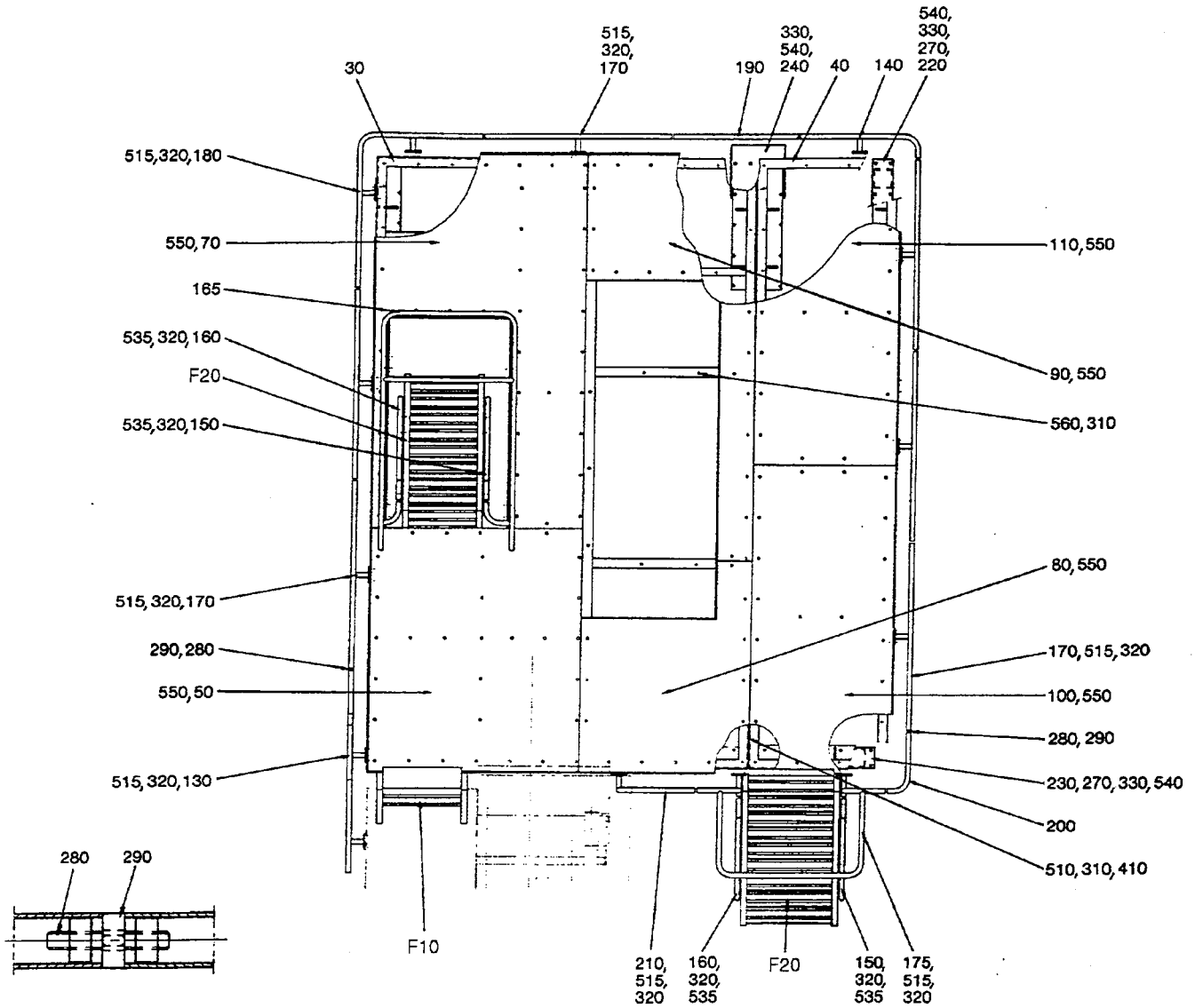

75295801.TIF
752958-1
AM

From	Pos	Part No	SP	UN Qty	Description
S-Out-Ladder					
		C- 752958-0101			**Railing/Platform, Ass'y**
	F020	**C- 751924-0102**	**-**	**1**	**LADDER**
	040	752922	-	1	FRAME
	050	752923	-	1	PLATFORM
	070	752924	-	1	PLATFORM
	100	752926	-	1	PLATFORM
	110	752927	-	1	PLATFORM
	130	751891	-	1	RAILING
	140	751897	-	1	RAILING
	150	751898	-	1	RAIL RIGHT
	160	751899	-	1	RAIL LEFT
	170	751948	-	6	RAILING
	175	751952	-	1	RAILING
	180	752988	-	1	RAILING
	190	752989	-	1	RAILING
	200	752990	-	1	RAILING
	210	752991-0002	-	1	RAILING
	220	751919	-	3	LEG
	230	752302	-	3	LEG
	240	752992	-	3	CANTILEVER
	250	751926	-	1	FASTENING IRON
	260	751925	-	1	FASTENING IRON
	270	534867	-	6	LEG
	280	751485	-	28	SCREW
	290	751484	-	28	CLAMPING RING
	320	315115-0165	-	84	WASHER TBRB8,4X16RFR
	330	315115-0178	-	42	WASHER TBRB13X24RFR
	420	312605-0318	-	12	NUT M6M8RFR
	515	312105-0449	-	56	SCREW M6S8X16RFR
	520	312105-0453	-	8	SCREW M6S8X25RFR
	530	312105-0455	-	4	SCREW M6S8X30RFR
	535	312109-0459	-	4	SCREW M6S8X40H A4 80
	540	312105-0536	-	42	SCREW M6S12X30RFR
	550	90287-0076	-	158	SCREW
S-Ins-Ladder					
		C- 752958-0102			**Railing/Platform, Ass'y**
	F020	**C- 751924-0101**	**-**	**1**	**LADDER**
	040	752922	-	1	FRAME
	050	752923	-	1	PLATFORM
	070	752929	-	1	PLATFORM
	100	752928	-	1	PLATFORM
	110	752927	-	1	PLATFORM
	130	751891	-	1	RAILING
	140	751897	-	1	RAILING
	150	751898	-	1	RAIL RIGHT
	160	751899	-	1	RAIL LEFT
	165	751903	-	1	RAILING
	170	751948	-	7	RAILING
	180	752988	-	1	RAILING
	190	752989	-	1	RAILING
	200	752990	-	1	RAILING
	210	752991-0002	-	1	RAILING
	220	751919	-	3	LEG
	230	752302	-	3	LEG
	240	752992	-	3	CANTILEVER
	270	534867	-	6	LEG
	280	751485	-	28	SCREW
	290	751484	-	28	CLAMPING RING
	320	315115-0165	-	72	WASHER TBRB8,4X16RFR
	330	315115-0178	-	42	WASHER TBRB13X24RFR
	515	312105-0449	-	68	SCREW M6S8X16RFR
	535	312109-0459	-	4	SCREW M6S8X40H A4 80
	540	312105-0536	-	42	SCREW M6S12X30RFR
	550	90287-0076	-	152	SCREW
S-Two-Ladder					
		C- 752958-0103			**Railing/Platform, Ass'y**
	F020	**C- 751924-0101**	**-**	**1**	**LADDER**
	F020	**C- 751924-0102**	**-**	**1**	**LADDER**
	040	752922	-	1	FRAME
	050	752923	-	1	PLATFORM
	070	752929	-	1	PLATFORM
	100	752926	-	1	PLATFORM
	110	752927	-	1	PLATFORM
	130	751891	-	1	RAILING
	140	751897	-	1	RAILING
	150	751898	-	1	RAIL RIGHT
	160	751899	-	1	RAIL LEFT
	165	751903	-	1	RAILING
	170	751948	-	6	RAILING
	175	751952	-	1	RAILING
	180	752988	-	1	RAILING
	190	752989	-	1	RAILING
	200	752990	-	1	RAILING
	210	752991-0002	-	1	RAILING
	220	751919	-	3	LEG
	230	752302	-	3	LEG
	240	752992	-	3	CANTILEVER
	270	534867	-	6	LEG
	280	751485	-	28	SCREW

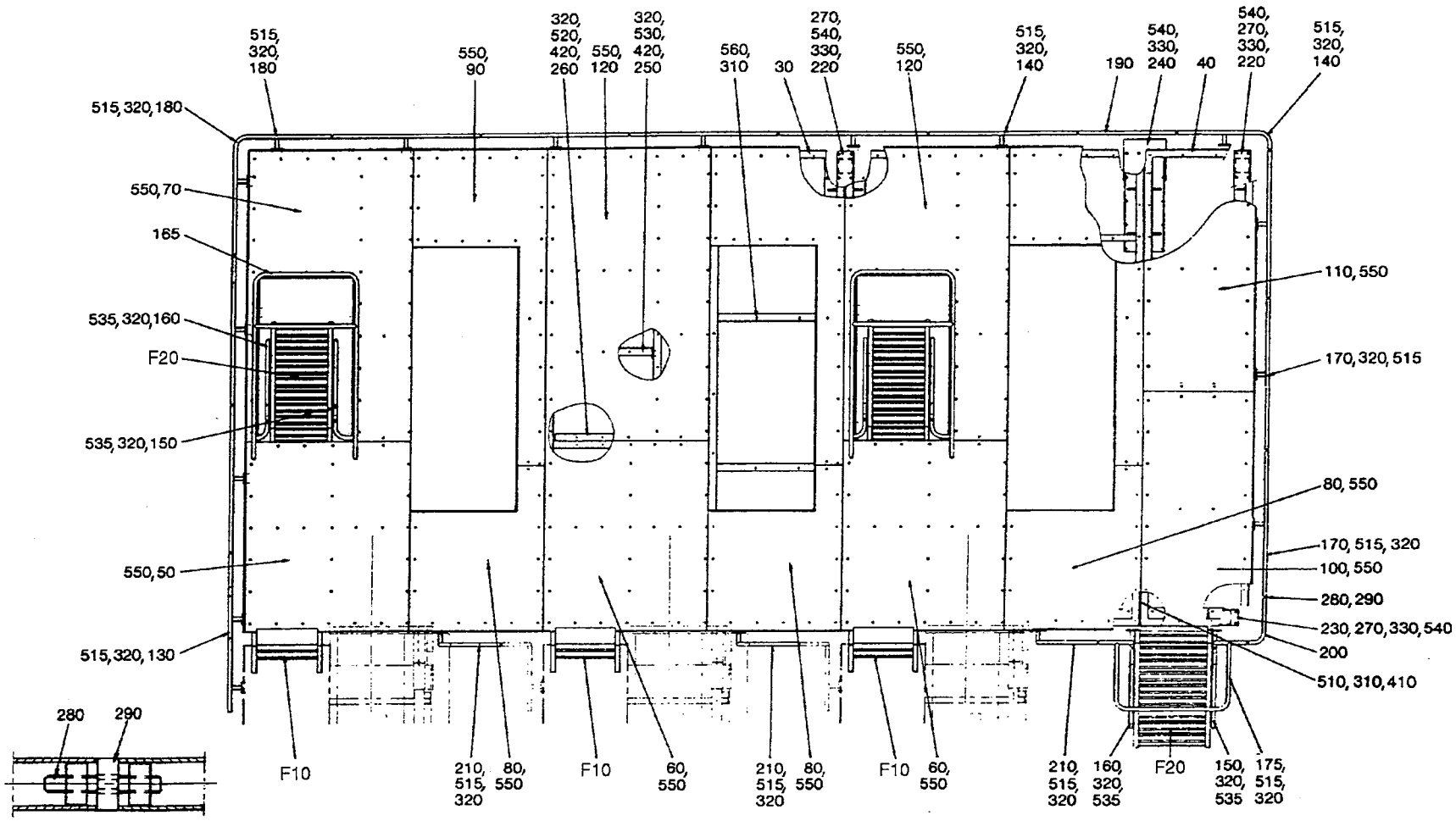

75295802.TIF
752958-2
AM

From	Pos	Part No	SP	UN Qty	Description
	290	751484	-	28	CLAMPING RING
	320	315115-0165	-	80	WASHER TBRB8,4X16RFR
	330	315115-0178	-	42	WASHER TBRB13X24RFR
	515	312105-0449	-	72	SCREW M6S8X16RFR
	535	312109-0459	-	8	SCREW M6S8X40H A4 80
	540	312105-0536	-	42	SCREW M6S12X30RFR
	550	90287-0076	-	152	SCREW
First		**C- 752958-0104**			**Railing/Platform, Ass'y**
	050	752923	-	1	PLATFORM
	070	752924	-	1	PLATFORM
	130	751891	-	1	RAILING
	170	751948	-	3	RAILING
	180	752988	-	1	RAILING
	210	752991-0002	-	1	RAILING
	220	751919	-	2	LEG
	230	752302	-	2	LEG
	240	752992	-	1	CANTILEVER
	250	751926	-	1	FASTENING IRON
	260	751925	-	1	FASTENING IRON
	270	534867	-	4	LEG
	280	751485	-	14	SCREW
	290	751484	-	14	CLAMPING RING
	320	315115-0165	-	60	WASHER TBRB8,4X16RFR
	330	315115-0178	-	28	WASHER TBRB13X24RFR
	420	312605-0318	-	16	NUT M6M8RFR
	515	312105-0449	-	36	SCREW M6S8X16RFR
	520	312105-0453	-	8	SCREW M6S8X25RFR
	530	312105-0455	-	4	SCREW M6S8X30RFR
	540	312105-0536	-	28	SCREW M6S12X30RFR
	550	90287-0076	-	114	SCREW
First-Ladder		**C- 752958-0105**			**Railing/Platform, Ass'y**
	F020	**C- 751924-0101**	**-**	**1**	**LADDER**
	050	752923	-	1	PLATFORM
	070	752929	-	1	PLATFORM
	130	751891	-	1	RAILING
	150	751898	-	1	RAIL RIGHT
	160	751899	-	1	RAIL LEFT
	165	751903	-	1	RAILING
	170	751948	-	3	RAILING
	180	752988	-	1	RAILING
	210	752991-0002	-	1	RAILING
	220	751919	-	2	LEG
	230	752302	-	2	LEG
	240	752992	-	1	CANTILEVER
	270	534867	-	4	LEG
	280	751485	-	16	SCREW
	290	751484	-	16	CLAMPING RING
	320	315115-0165	-	52	WASHER TBRB8,4X16RFR
	330	315115-0178	-	28	WASHER TBRB13X24RFR
	515	312105-0449	-	48	SCREW M6S8X16RFR
	535	312109-0459	-	4	SCREW M6S8X40H A4 80
	540	312105-0536	-	28	SCREW M6S12X30RFR
	550	90287-0076	-	108	SCREW
Inter-Ladder		**C- 752958-0106**			**Railing/Platform, Ass'y**
	F020	**C- 751924-0101**	**-**	**1**	**LADDER**
	060	751908	-	1	PLATFORM
	120	752932	-	1	PLATFORM
	150	751898	-	1	RAIL RIGHT
	160	751899	-	1	RAIL LEFT
	165	751903	-	1	RAILING
	170	751948	-	2	RAILING
	220	751919	-	1	LEG
	230	752302	-	1	LEG
	240	752992	-	1	CANTILEVER
	270	534867	-	2	LEG
	280	751485	-	8	SCREW
	290	751484	-	8	CLAMPING RING
	320	315115-0165	-	32	WASHER TBRB8,4X16RFR
	330	315115-0178	-	14	WASHER TBRB13X24RFR
	515	312105-0449	-	28	SCREW M6S8X16RFR
	535	312109-0459	-	4	SCREW M6S8X40H A4 80
	540	312105-0536	-	14	SCREW M6S12X30RFR
	550	90287-0076	-	108	SCREW
Intermediate		**C- 752958-0107**			**Railing/Platform, Ass'y**
	060	751908	-	1	PLATFORM
	120	752931	-	1	PLATFORM
	170	751948	-	2	RAILING
	220	751919	-	1	LEG
	230	752302	-	1	LEG
	240	752992	-	1	CANTILEVER
	250	751926	-	1	FASTENING IRON
	260	751925	-	1	FASTENING IRON
	270	534867	-	2	LEG
	280	751485	-	6	SCREW
	290	751484	-	6	CLAMPING RING
	320	315115-0165	-	36	WASHER TBRB8,4X16RFR

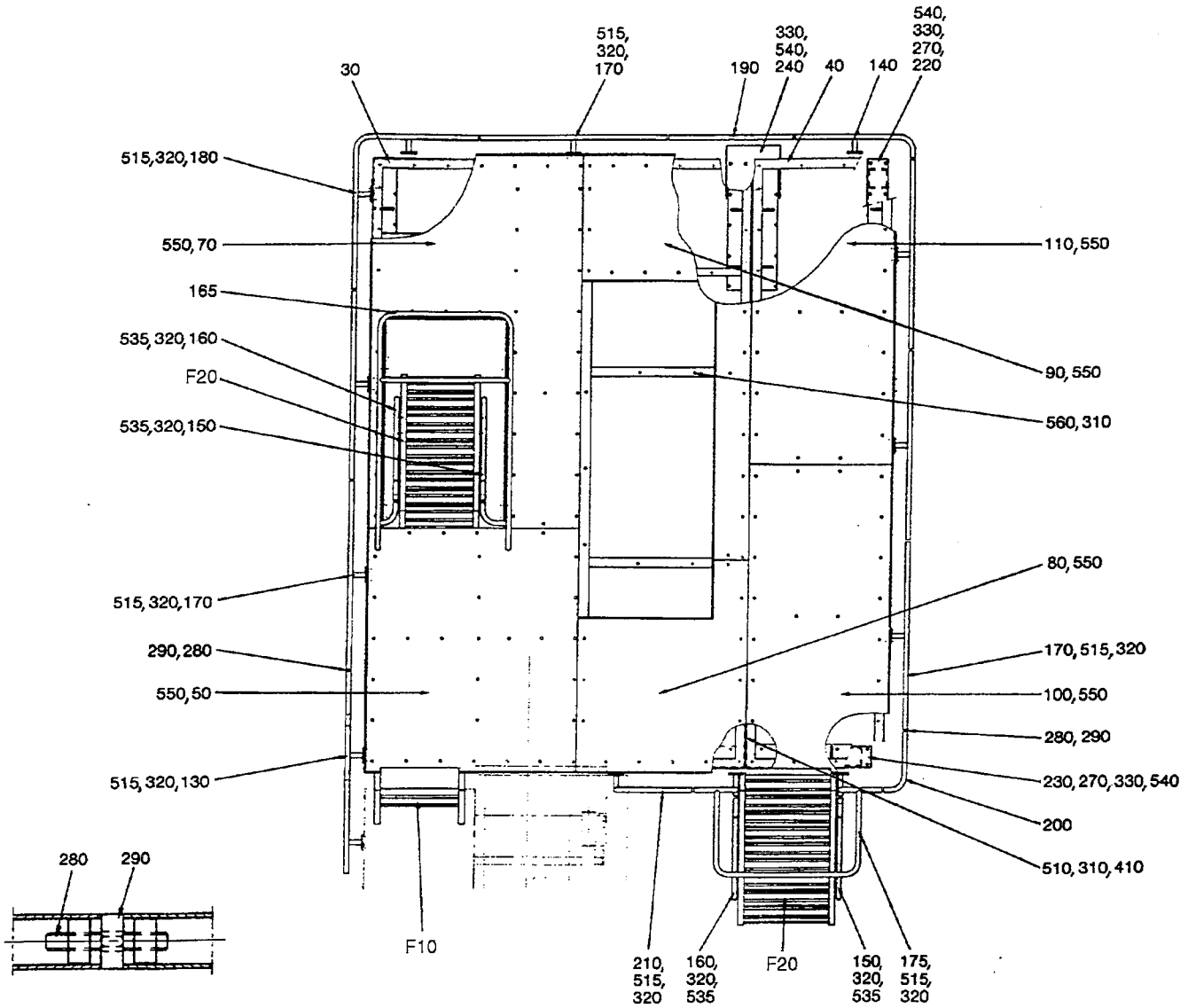

75295801.TIF
752958-1
AM

From	Pos	Part No	SP	UN Qty	Description
	330	315115-0178	-	14	WASHER TBRB13X24RFR
	420	312605-0318	-	16	NUT M6M8RFR
	515	312105-0449	-	12	SCREW M6S8X16RFR
	520	312105-0453	-	8	SCREW M6S8X25RFR
	530	312105-0455	-	4	SCREW M6S8X30RFR
	540	312105-0536	-	14	SCREW M6S12X30RFR
	550	90287-0076	-	114	SCREW
L-Out-Ladder					
		C- 752958-0108			**Railing/Platform, Ass'y**
	F020	**C- 751924-0102**	**-**	**1**	**LADDER**
	040	752922	-	1	FRAME
	060	751908	-	1	PLATFORM
	100	752926	-	1	PLATFORM
	110	752927	-	1	PLATFORM
	120	752931	-	1	PLATFORM
	140	751897	-	1	RAILING
	150	751898	-	1	RAIL RIGHT
	160	751899	-	1	RAIL LEFT
	170	751948	-	5	RAILING
	175	751952	-	1	RAILING
	190	752989	-	1	RAILING
	200	752990	-	1	RAILING
	210	752991-0002	-	1	RAILING
	220	751919	-	2	LEG
	230	752302	-	2	LEG
	240	752992	-	3	CANTILEVER
	250	751926	-	1	FASTENING IRON
	260	751925	-	1	FASTENING IRON
	270	534867	-	4	LEG
	280	751485	-	22	SCREW
	290	751484	-	22	CLAMPING RING
	320	315115-0165	-	68	WASHER TBRB8,4X16RFR
	330	315115-0178	-	28	WASHER TBRB13X24RFR
	420	312605-0318	-	16	NUT M6M8RFR
	515	312105-0449	-	40	SCREW M6S8X16RFR
	520	312105-0453	-	8	SCREW M6S8X25RFR
	530	312105-0455	-	4	SCREW M6S8X30RFR
	535	312109-0459	-	4	SCREW M6S8X40H A4 80
	540	312105-0536	-	28	SCREW M6S12X30RFR
	550	90287-0076	-	158	SCREW
L-Ins-Ladder					
		C- 752958-0109			**Railing/Platform, Ass'y**
	F020	**C- 751924-0101**	**-**	**1**	**LADDER**
	040	752922	-	1	FRAME
	060	751908	-	1	PLATFORM

From	Pos	Part No	SP	UN Qty	Description
	100	752928	-	1	PLATFORM
	110	752927	-	1	PLATFORM
	120	752932	-	1	PLATFORM
	140	751897	-	1	RAILING
	165	751903	-	1	RAILING
	170	751948	-	6	RAILING
	190	752989	-	1	RAILING
	200	752990	-	1	RAILING
	210	752991-0002	-	1	RAILING
	220	751919	-	2	LEG
	230	752302	-	2	LEG
	240	752992	-	3	CANTILEVER
	270	534867	-	4	LEG
	280	751485	-	24	SCREW
	290	751484	-	24	CLAMPING RING
	320	315115-0165	-	56	WASHER TBRB8,4X16RFR
	330	315115-0178	-	28	WASHER TBRB13X24RFR
	515	312105-0449	-	52	SCREW M6S8X16RFR
	535	312109-0459	-	4	SCREW M6S8X40H A4 80
	540	312105-0536	-	28	SCREW M6S12X30RFR
	550	90287-0076	-	152	SCREW
L-Two-Ladder					
		C- 752958-0110			**Railing/Platform, Ass'y**
	F020	**C- 751924-0101**	**-**	**1**	**LADDER**
	F020	**C- 751924-0102**	**-**	**1**	**LADDER**
	040	752922	-	1	FRAME
	060	751908	-	1	PLATFORM
	100	752926	-	1	PLATFORM
	110	752927	-	1	PLATFORM
	120	752932	-	1	PLATFORM
	140	751897	-	1	RAILING
	150	751898	-	1	RAIL RIGHT
	160	751899	-	1	RAIL LEFT
	165	751903	-	1	RAILING
	170	751948	-	5	RAILING
	175	751952	-	1	RAILING
	190	752989	-	1	RAILING
	200	752990	-	1	RAILING
	210	752991-0002	-	1	RAILING
	220	751919	-	2	LEG
	230	752302	-	2	LEG
	240	752992	-	3	CANTILEVER
	270	534867	-	4	LEG
	280	751485	-	24	SCREW
	290	751484	-	24	CLAMPING RING

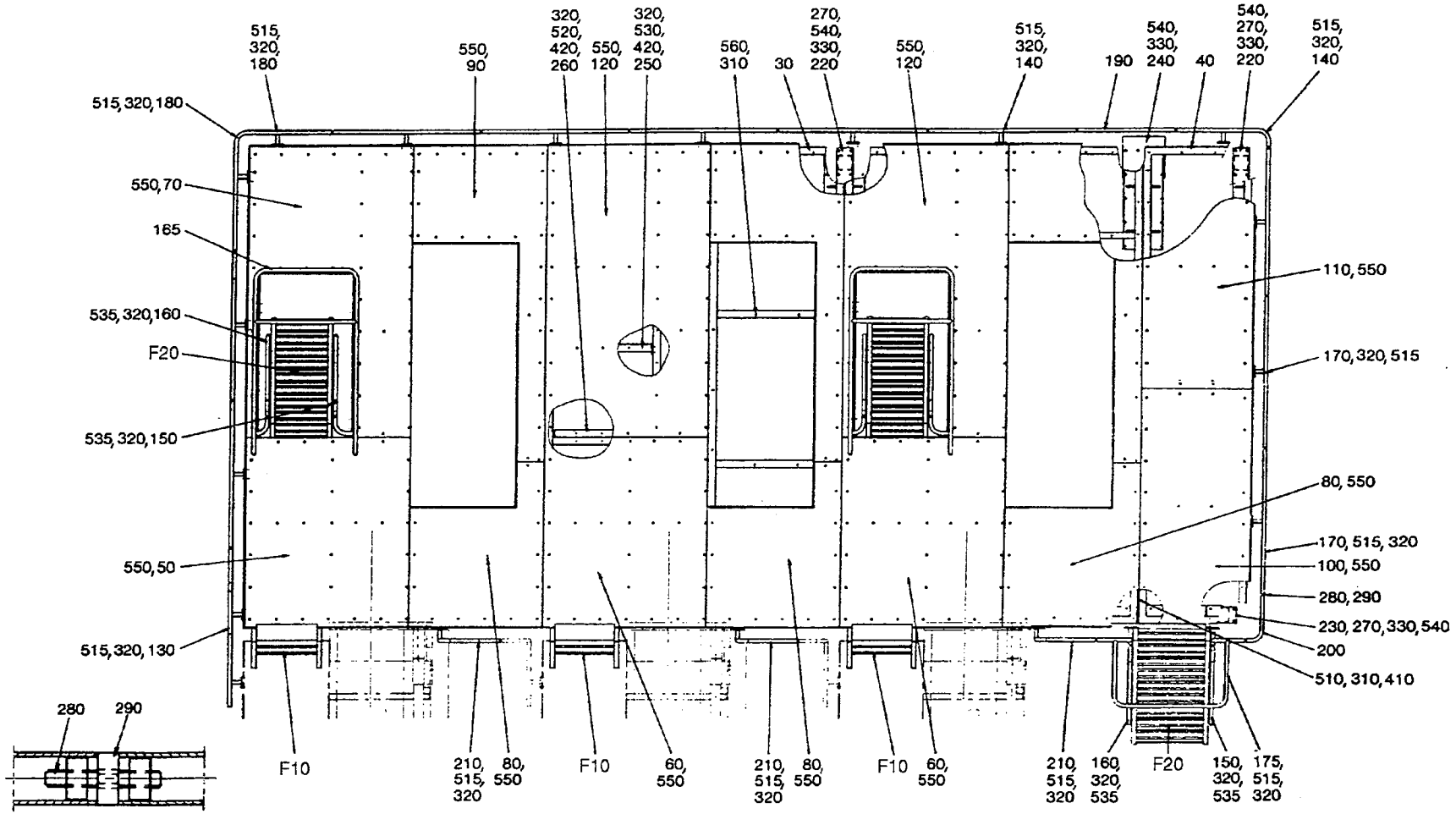

75295802.TIF
752958-2
AM

From	Pos	Part No	SP	UN Qty	Description
	320	315115-0165	-	60	WASHER TBRB8,4X16RFR
	330	315115-0178	-	28	WASHER TBRB13X24RFR
	515	312105-0449	-	52	SCREW M6S8X16RFR
	535	312109-0459	-	8	SCREW M6S8X40H A4 80
	540	312105-0536	-	28	SCREW M6S12X30RFR
	550	90287-0076	-	152	SCREW
Common parts					
	F010	**C- 751923-0101**	**-**	**1**	**LADDER**
	030	752920	-	1	FRAME
	080	752981	-	1	PLATFORM
	090	752925	-	1	PLATFORM
	310	315115-0173	-	15	WASHER B 10,5X22 RFR
	410	312605-0320	-	4	NUT M6M10RFR
	510	312105-0497	-	4	SCREW M6S10X35RFR
	560	312105-0493	-	7	SCREW M6S10X25RFR

From	Pos	Part No	SP	UN Qty	Description

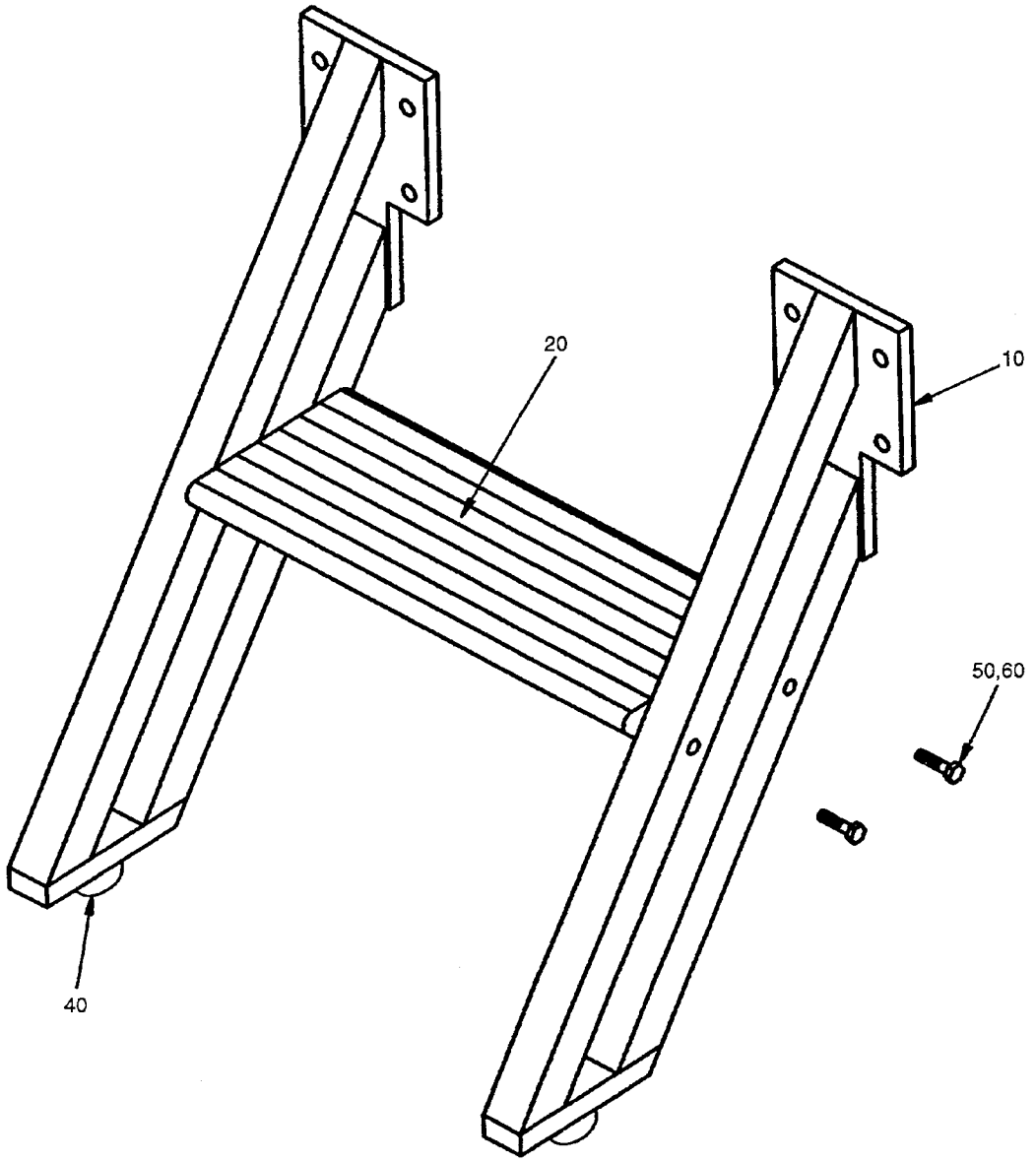

75192301.TIF
751923-1
AM 12423

Last Alteration: AM 12423 89-02-13

Corresponding group: 751923-010V
Assembly Drawing: 751923-1

Issue: **940524**

From	Pos	Part No	SP	UN	Qty	Description
		C- 751923-0101				**Ladder, Ass'y**
	010	751904	-		2	SIDE PIECE
	020	751921-0002	-		1	STAIR
	040	90347-0004	-		2	VIBRATION DAMPER
	050	312105-0460	-		4	SCREW M6S8X45RFR
	060	315105-0165	-		4	WASHER BRB8,4X16RFR

From	Pos	Part No	SP	UN	Qty	Description

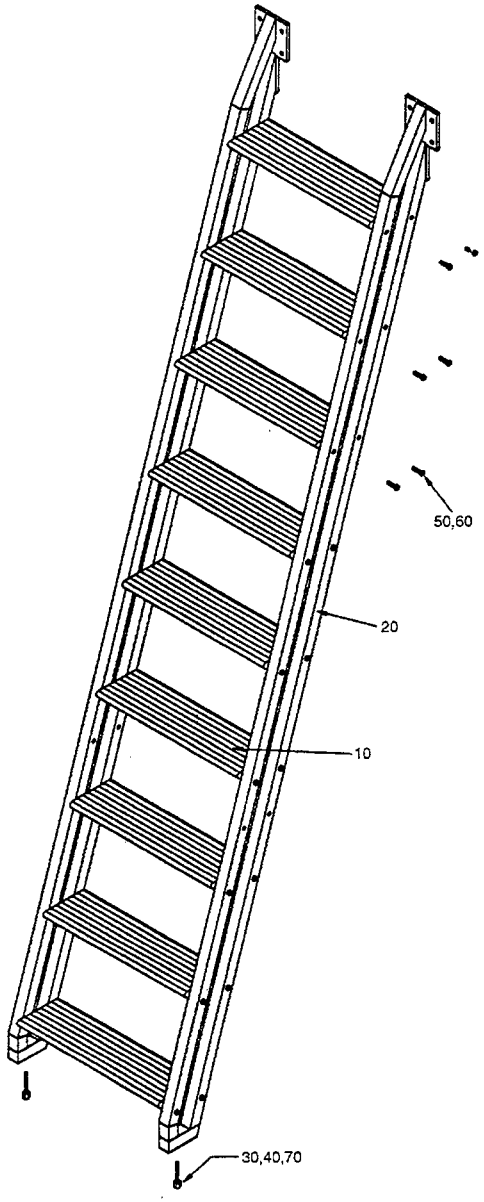

75192401.TIF
751924-1
AM 12423

From	Pos	Part No	SP	UN Qty	Description
Run of a step 350					
		C- 751924-0101			**Ladder, Ass'y**
	010	751921-0001	-	9	STAIR
Run of a step 450					
		C- 751924-0102			**Ladder, Ass'y**
	010	441679	-	9	STAIR
Common parts					
	020	751905	-	2	SIDE PIECE
	030	441905	-	2	RETARD PIN
	040	90347-0004	-	2	VIBRATION DAMPER
	050	312105-0460	-	36	SCREW M6S8X45RFR
	060	315105-0165	-	36	WASHER BRB8,4X16RFR
	070	312601-0322	-	2	NUT M6M12FZB

From	Pos	Part No	SP	UN Qty	Description

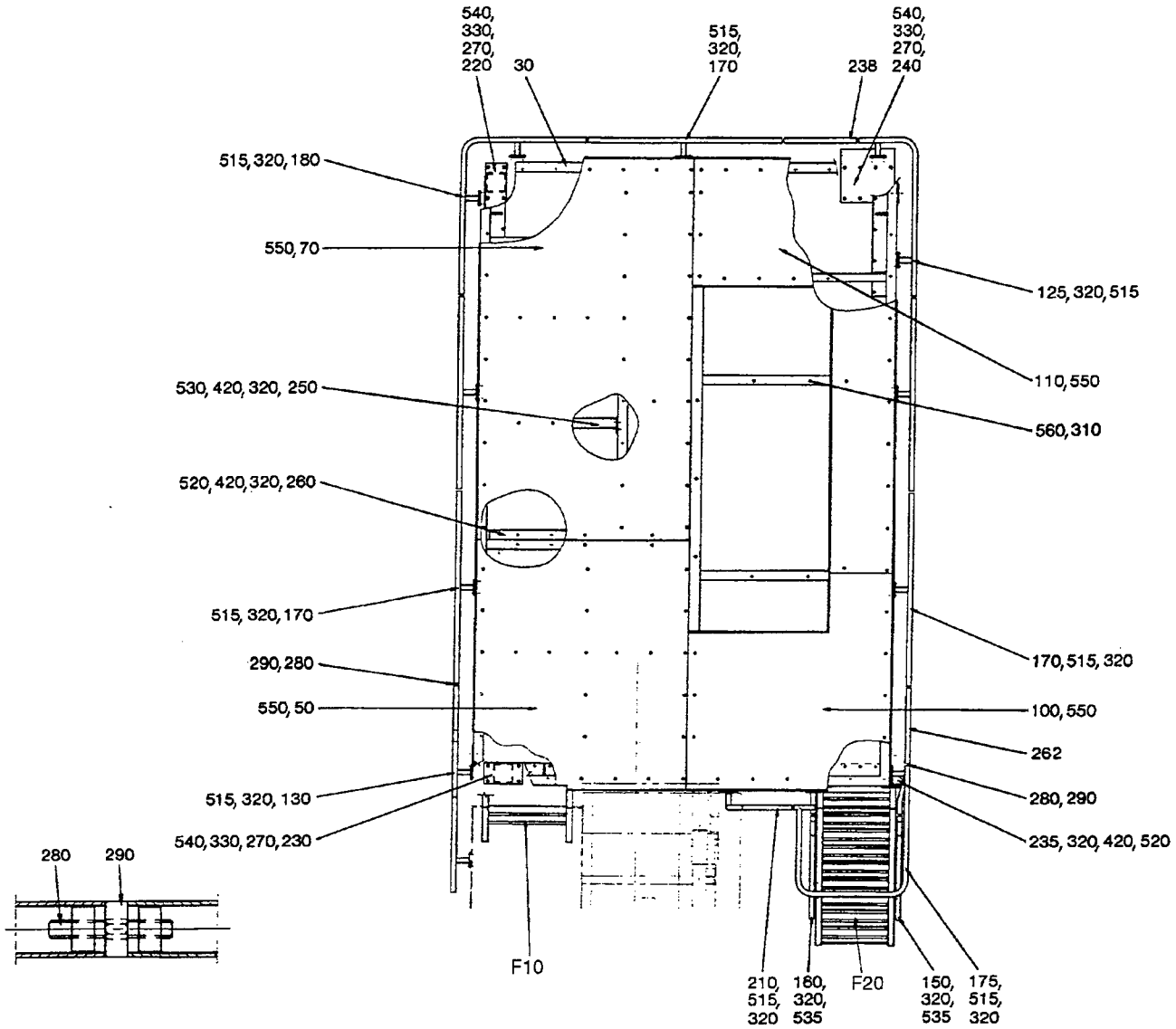

75295901.TIF
752959-1
AM 14198

Last Alteration: AM 14198 90-03-06

Corresponding group: 752959-010V
Assembly Drawing: 752959-1/2

Issue: **940524**

From	Pos	Part No	SP	UN Qty	Description
Single Machine					
		C- 752959-0101			**Railing/Platform, Ass'y**
	F020	**C- 751924-0101**	**-**	**1**	**LADDER**
	050	752923	-	1	PLATFORM
	070	752924	-	1	PLATFORM
	100	752979	-	1	PLATFORM
	110	752934	-	1	PLATFORM
	125	751889	-	1	RAILING
	130	751891	-	1	RAILING
	150	751898	-	1	RAIL RIGHT
	160	751899	-	1	RAIL LEFT
	170	751948	-	5	RAILING
	175	752307	-	1	RAILING
	180	752988	-	1	RAILING
	210	752991-0001	-	1	RAILING
	220	751919	-	2	LEG
	230	752302	-	2	LEG
	235	752308	-	1	CANTILEVER
	238	752978	-	2	RAILING
	240	752992	-	2	CANTILEVER
	250	751926	-	1	FASTENING IRON
	260	751925	-	1	FASTENING IRON
	262	751951	-	2	RAILING
	270	534867	-	4	LEG
	280	751485	-	24	SCREW
	290	751484	-	24	CLAMPING RING
	320	315115-0165	-	80	WASHER TBRB8,4X16RFR
	330	315115-0178	-	42	WASHER TBRB13X24RFR
	420	312605-0318	-	12	NUT M6M8RFR
	515	312105-0449	-	56	SCREW M6S8X16RFR
	520	312105-0453	-	8	SCREW M6S8X25RFR
	530	312105-0455	-	4	SCREW M6S8X30RFR
	540	312105-0536	-	42	SCREW M6S12X30RFR
	550	90287-0076	-	158	SCREW
First					
		C- 752959-0102			**Railing/Platform, Ass'y**
	050	752923	-	1	PLATFORM
	070	752924	-	1	PLATFORM
	080	752980	-	1	PLATFORM
	090	752933	-	1	PLATFORM
	130	751891	-	1	RAILING
	170	751948	-	3	RAILING
	180	752988	-	1	RAILING
	210	752991-0003	-	1	RAILING
	220	751919	-	2	LEG
	230	752302	-	2	LEG
	240	752992	-	2	CANTILEVER
	250	751926	-	1	FASTENING IRON
	260	751925	-	1	FASTENING IRON
	270	534867	-	4	LEG
	280	751485	-	14	SCREW
	290	751484	-	12	CLAMPING RING
	320	315115-0165	-	60	WASHER TBRB8,4X16RFR
	330	315115-0178	-	28	WASHER TBRB13X24RFR
	420	312605-0318	-	16	NUT M6M8RFR
	515	312105-0449	-	36	SCREW M6S8X16RFR
	520	312105-0453	-	8	SCREW M6S8X25RFR
	530	312105-0455	-	4	SCREW M6S8X30RFR
	540	312105-0536	-	28	SCREW M6S12X30RFR
	550	90287-0076	-	114	SCREW
First-Ladder					
		C- 752959-0103			**Railing/Platform, Ass'y**
	F020	**C- 751924-0101**	**-**	**1**	**LADDER**
	050	752923	-	1	PLATFORM
	070	752929	-	1	PLATFORM
	080	752980	-	1	PLATFORM
	090	752933	-	1	PLATFORM
	130	751891	-	1	RAILING
	150	751898	-	1	RAIL RIGHT
	160	751899	-	1	RAIL LEFT
	165	751903	-	1	RAILING
	170	751948	-	3	RAILING
	180	752988	-	1	RAILING
	210	752991-0003	-	1	RAILING
	220	751919	-	2	LEG
	230	752302	-	2	LEG
	240	752992	-	2	CANTILEVER
	270	534867	-	4	LEG
	280	751485	-	16	SCREW
	290	751484	-	14	CLAMPING RING
	320	315115-0165	-	64	WASHER TBRB8,4X16RFR
	330	315115-0178	-	28	WASHER TBRB13X24RFR
	515	312105-0449	-	64	SCREW M6S8X16RFR
	540	312105-0536	-	28	SCREW M6S12X30RFR
	550	90287-0076	-	108	SCREW
Intermediate					
		C- 752959-0104			**Railing/Platform, Ass'y**
	060	751908	-	1	PLATFORM
	080	752980	-	1	PLATFORM
	090	752933	-	1	PLATFORM

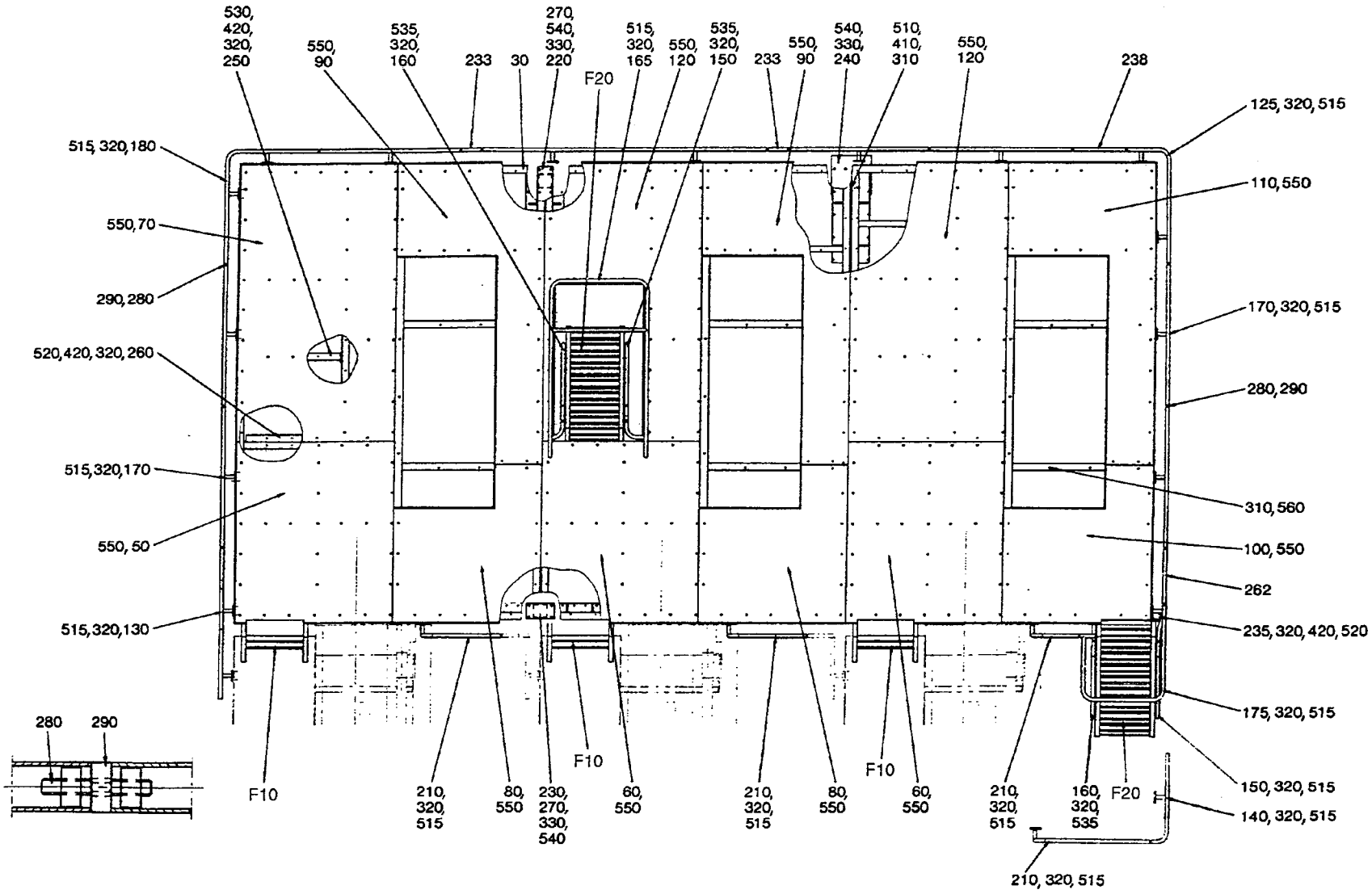

75295902.TIF
752959-2
AM 14198

From	Pos	Part No	SP	UN Qty	Description
	120	752931	-	1	PLATFORM
	170	751948	-	2	RAILING
	210	752991-0003	-	1	RAILING
	220	751919	-	1	LEG
	230	752302	-	1	LEG
	233	751927	-	2	RAILING
	240	752992	-	1	CANTILEVER
	250	751926	-	1	FASTENING IRON
	260	751925	-	1	FASTENING IRON
	270	534867	-	2	LEG
	280	751485	-	8	SCREW
	290	751484	-	8	CLAMPING RING
	310	315115-0173	-	8	WASHER B 10,5X22 RFR
	320	315115-0165	-	28	WASHER TBRB8,4X16RFR
	330	315115-0178	-	14	WASHER TBRB13X24RFR
	410	312605-0320	-	4	NUT M6M10RFR
	510	312105-0497	-	4	SCREW M6S10X35RFR
	515	312105-0449	-	28	SCREW M6S8X16RFR
	540	312105-0536	-	14	SCREW M6S12X30RFR
	550	90287-0076	-	108	SCREW
Inter-Ladder					
		C- 752959-0105			**Railing/Platform, Ass'y**
	F020	**C- 751924-0101**	**-**	**1**	**LADDER**
	060	751908	-	1	PLATFORM
	080	752980	-	1	PLATFORM
	090	752933	-	1	PLATFORM
	120	752932	-	1	PLATFORM
	150	751898	-	1	RAIL RIGHT
	160	751899	-	1	RAIL LEFT
	165	751903	-	1	RAILING
	170	751948	-	2	RAILING
	210	752991-0003	-	1	RAILING
	220	751919	-	1	LEG
	230	752302	-	1	LEG
	233	751927	-	2	RAILING
	240	752992	-	1	CANTILEVER
	270	534867	-	2	LEG
	280	751485	-	6	SCREW
	290	751484	-	10	CLAMPING RING
	310	315115-0173	-	8	WASHER B 10,5X22 RFR
	320	315115-0165	-	52	WASHER TBRB8,4X16RFR
	330	315115-0178	-	14	WASHER TBRB13X24RFR
	410	312605-0320	-	4	NUT M6M10RFR
	420	312605-0318	-	16	NUT M6M8RFR
	510	312105-0497	-	4	SCREW M6S10X35RFR
	515	312105-0449	-	28	SCREW M6S8X16RFR
	520	312105-0453	-	8	SCREW M6S8X25RFR
	530	312105-0455	-	4	SCREW M6S8X30RFR
	540	312105-0536	-	14	SCREW M6S12X30RFR
	550	90287-0076	-	114	SCREW
L-Out-Ladder					
		C- 752959-0106			**Railing/Platform, Ass'y**
	F020	**C- 751924-0101**	**-**	**1**	**LADDER**
	060	751908	-	1	PLATFORM
	100	752979	-	1	PLATFORM
	110	752934	-	1	PLATFORM
	120	752931	-	1	PLATFORM
	125	751889	-	1	RAILING
	150	751898	-	1	RAIL RIGHT
	160	751899	-	1	RAIL LEFT
	170	751948	-	4	RAILING
	175	752307	-	1	RAILING
	210	752991-0001	-	1	RAILING
	220	751919	-	1	LEG
	230	752302	-	1	LEG
	235	752308	-	1	CANTILEVER
	238	752978	-	2	RAILING
	240	752992	-	1	CANTILEVER
	250	751926	-	1	FASTENING IRON
	260	751925	-	1	FASTENING IRON
	262	751951	-	2	RAILING
	270	534867	-	2	LEG
	280	751485	-	22	SCREW
	290	751484	-	20	CLAMPING RING
	310	315115-0173	-	8	WASHER B 10,5X22 RFR
	320	315115-0165	-	68	WASHER TBRB8,4X16RFR
	330	315115-0178	-	28	WASHER TBRB13X24RFR
	410	312605-0320	-	4	NUT M6M10RFR
	420	312605-0318	-	20	NUT M6M8RFR
	510	312105-0497	-	4	SCREW M6S10X35RFR
	515	312105-0449	-	40	SCREW M6S8X16RFR
	520	312105-0453	-	12	SCREW M6S8X25RFR
	530	312105-0455	-	4	SCREW M6S8X30RFR
	540	312105-0536	-	28	SCREW M6S12X30RFR
	550	90287-0076	-	158	SCREW
Last					
		C- 752959-0107			**Railing/Platform, Ass'y**
	060	751908	-	1	PLATFORM
	100	752930	-	1	PLATFORM
	110	752934	-	1	PLATFORM

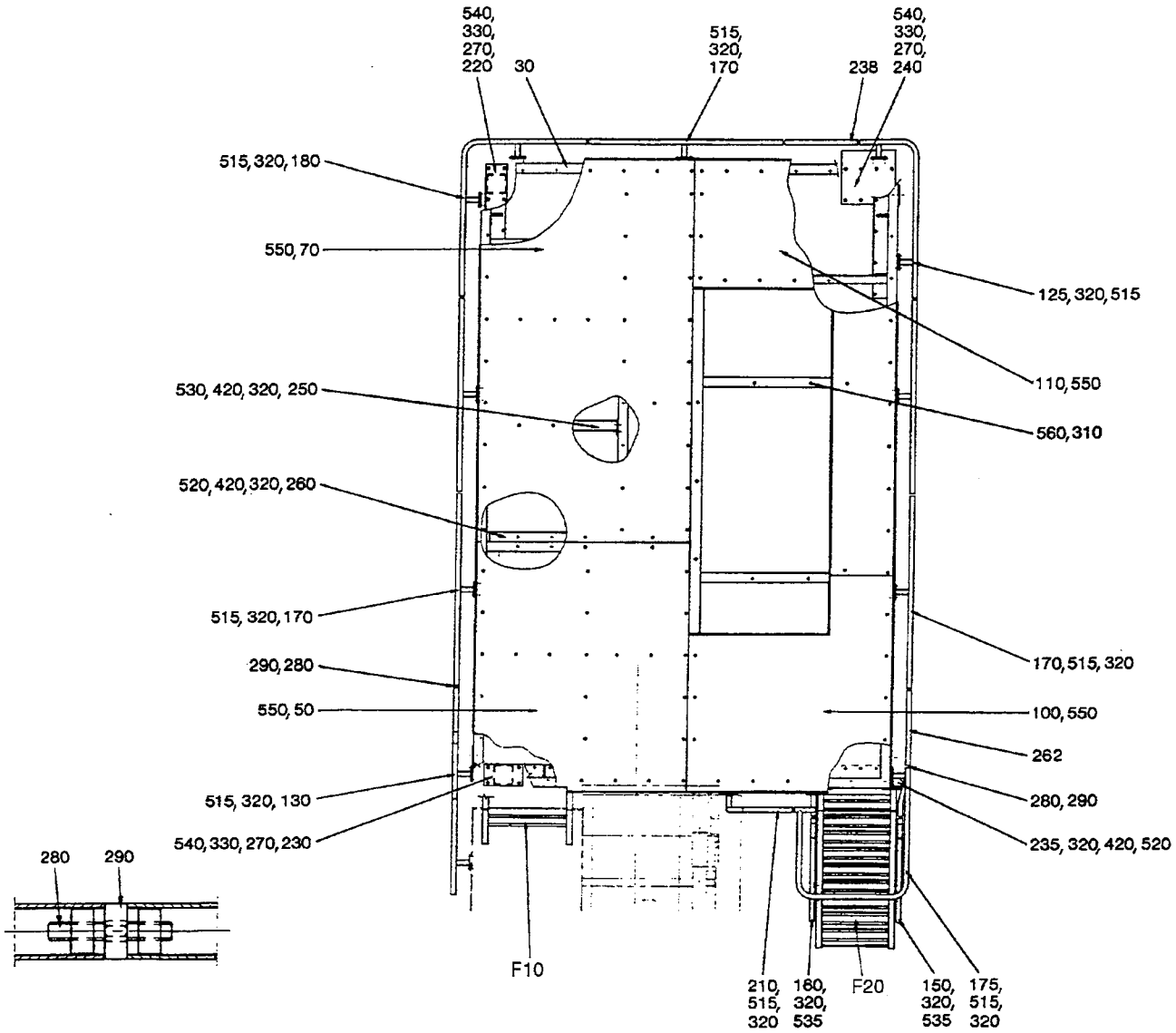

75295901.TIF
752959-1
AM 14198

Last Alteration: AM 14198 90-03-06

Corresponding group: 752959-010V
Assembly Drawing: 752959-1/2

Issue: **940524**

From	Pos	Part No	SP	UN Qty	Description
	120	752931	-	1	PLATFORM
	125	751889	-	1	RAILING
	140	751897	-	1	RAILING
	170	751948	-	4	RAILING
	210	752991-0004	-	1	RAILING
	220	751919	-	1	LEG
	230	752302	-	1	LEG
	238	752978	-	2	RAILING
	240	752992	-	1	CANTILEVER
	270	534867	-	2	LEG
	280	751485	-	24	SCREW
	290	751484	-	20	CLAMPING RING
	310	315115-0173	-	8	WASHER B 10,5X22 RFR
	320	315115-0165	-	52	WASHER TBRB8,4X16RFR
	330	315115-0178	-	28	WASHER TBRB13X24RFR
	410	312605-0320	-	4	NUT M6M10RFR
	510	312105-0497	-	4	SCREW M6S10X35RFR
	515	312105-0449	-	52	SCREW M6S8X16RFR
	540	312105-0536	-	28	SCREW M6S12X30RFR
	550	90287-0076	-	152	SCREW
Common parts					
	F010	**C- 751923-0101**	**-**	**1**	**LADDER**
	030	752921	-	1	FRAME
	560	312105-0493	-	7	SCREW M6S10X25RFR

From	Pos	Part No	SP	UN Qty	Description

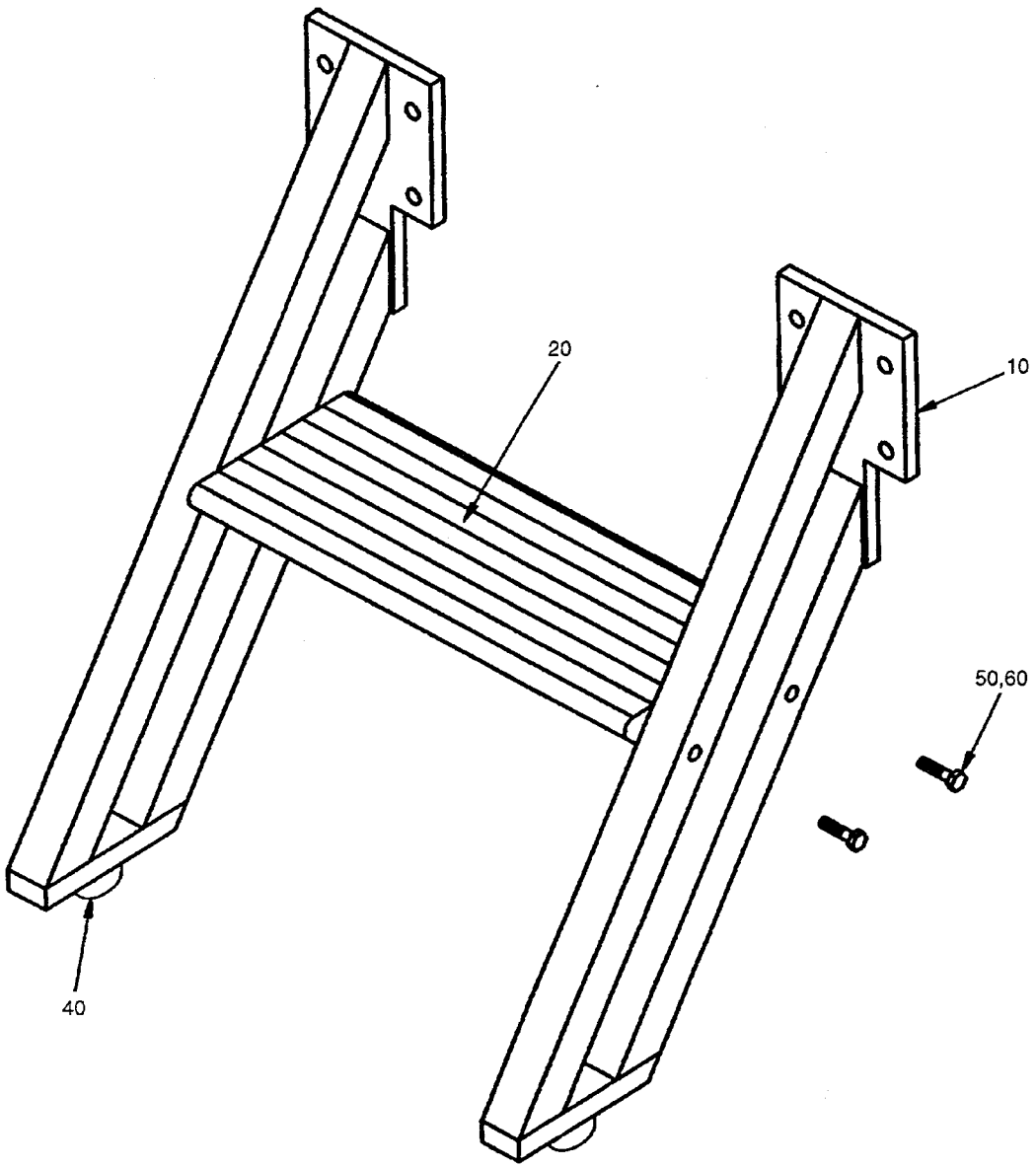

75192301.TIF
751923-1
AM 12423

Last Alteration: AM 12423 89-02-13

Corresponding group: 751923-010V
Assembly Drawing: 751923-1

Issue: **940524**

From	Pos	Part No	SP	UN	Qty	Description
		C- 751923-0101				**Ladder, Ass'y**
	010	751904	-		2	SIDE PIECE
	020	751921-0002	-		1	STAIR
	040	90347-0004	-		2	VIBRATION DAMPER
	050	312105-0460	-		4	SCREW M6S8X45RFR
	060	315105-0165	-		4	WASHER BRB8,4X16RFR

From	Pos	Part No	SP	UN	Qty	Description

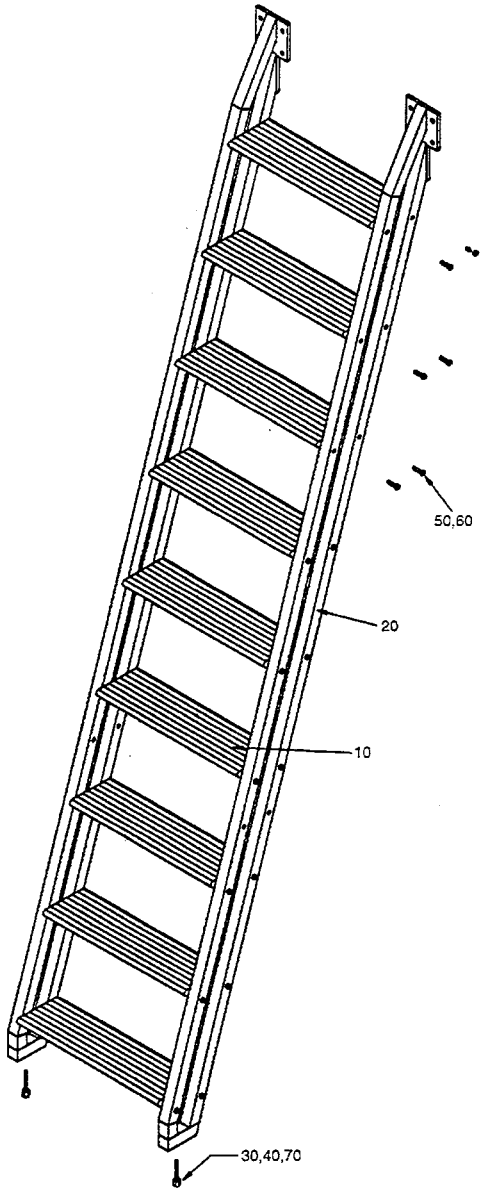

75192401.TIF
751924-1
AM 12423

From	Pos	Part No	SP	UN Qty	Description
Run of a step 350					
		C- 751924-0101			**Ladder, Ass'y**
	010	751921-0001	-	9	STAIR
Run of a step 450					
		C- 751924-0102			**Ladder, Ass'y**
	010	441679	-	9	STAIR
Common parts					
	020	751905	-	2	SIDE PIECE
	030	441905	-	2	RETARD PIN
	040	90347-0004	-	2	VIBRATION DAMPER
	050	312105-0460	-	36	SCREW M6S8X45RFR
	060	315105-0165	-	36	WASHER BRB8,4X16RFR
	070	312601-0322	-	2	NUT M6M12FZB

From	Pos	Part No	SP	UN Qty	Description

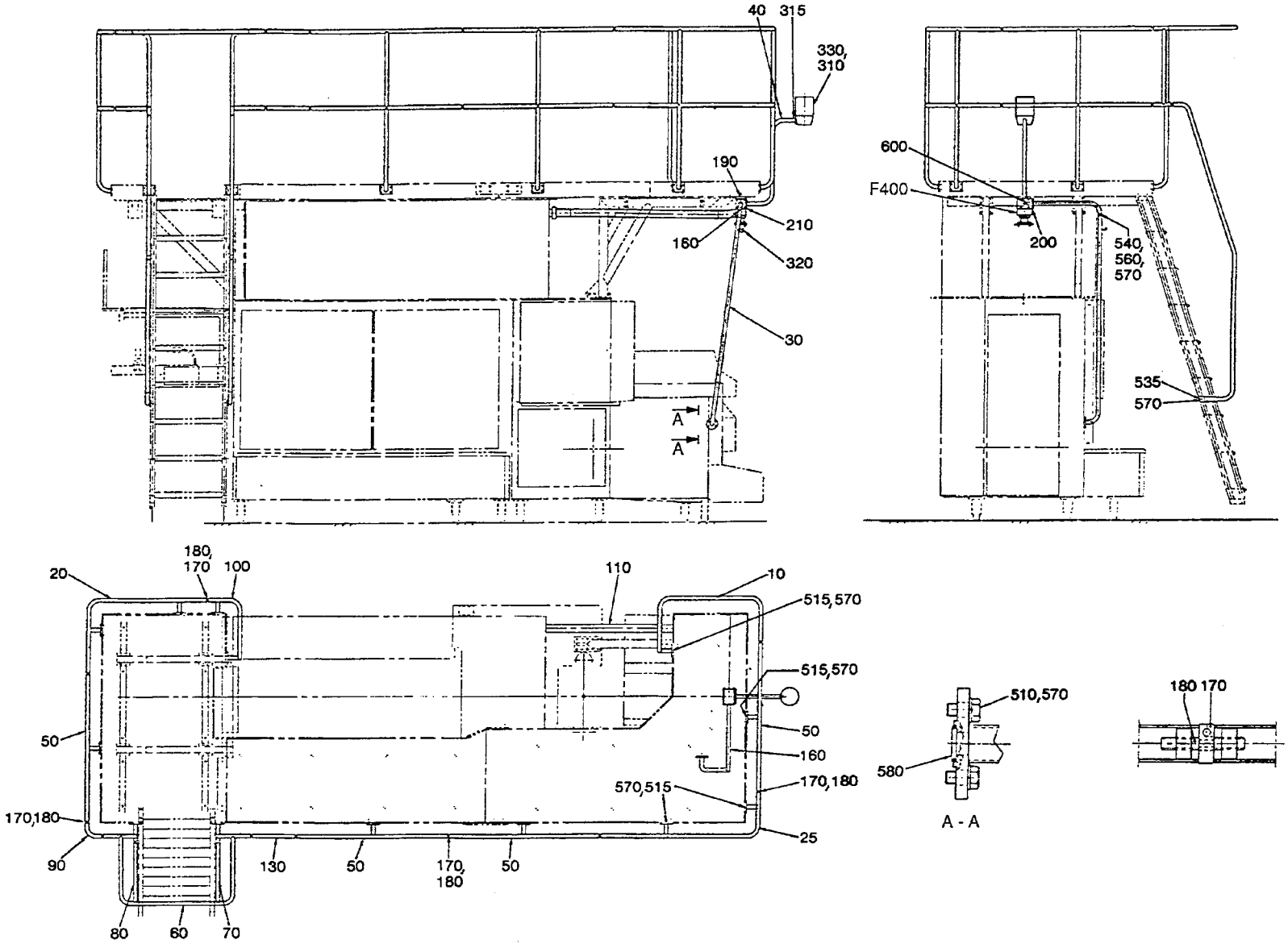

45645907.TIF
456459-7/8
AM 16138

Last Alteration: AM 16138 91-03-20

Corresponding group: 456459-040V
Assembly Drawing: 456459-7/8

Issue: 940524

From	Pos	Part No	SP	UN Qty	Description
		C- 456459-0401			**Railing TB/9, Ass'y**
	F400	**C- 751332-0101**	**-**	**1**	**BRACKET**
	010	566300	-	1	RAILING
	020	566302	-	1	RAILING
	025	566301	-	1	RAILING
	030	752897	-	1	STRUT
	040	751896	-	1	HOLDER
	050	751948	-	4	RAILING
	060	566305	-	1	RAILING
	070	751956	-	1	HAND RAIL
	080	751957	-	1	HAND RAIL
	090	566303	-	1	RAILING
	100	566304	-	1	RAILING
	110	752894	-	1	CABLE CONDUIT
	130	566657	-	2	RAILING
	160	751056	-	1	STRUT END
	170	751484	-	24	CLAMPING RING
	180	751485	-	24	SCREW
	190	469026	-	1	INTERMEDIATE PART
	200	751182	-	1	GASKET
	210	751183	-	1	GASKET
	310	90036-0038	P	1	BULB
	315	90099-0002	-	1	NUT
	320	90224-0234	S	1	BRACKET
	330	90419-0005	S	1	ALARM LAMP
		90419-0302	S	1	* LENS
	510	312105-0449	-	12	SCREW M6S8X16RFR
	515	312105-0451	-	40	SCREW M6S8X20RFR
	535	312105-0459	-	8	SCREW M6S8X40RFR
	540	312115-0453	-	2	SCREW 8X25 A4 80
	560	312605-0318	-	2	NUT M6M8RFR
	570	315105-0165	-	58	WASHER BRB8,4X16RFR
	580	315202-0215	S	1	O-RING 19,2X3
	600	352103-0108	-	1	CABLE GLANR.ST 13

From	Pos	Part No	SP	UN Qty	Description

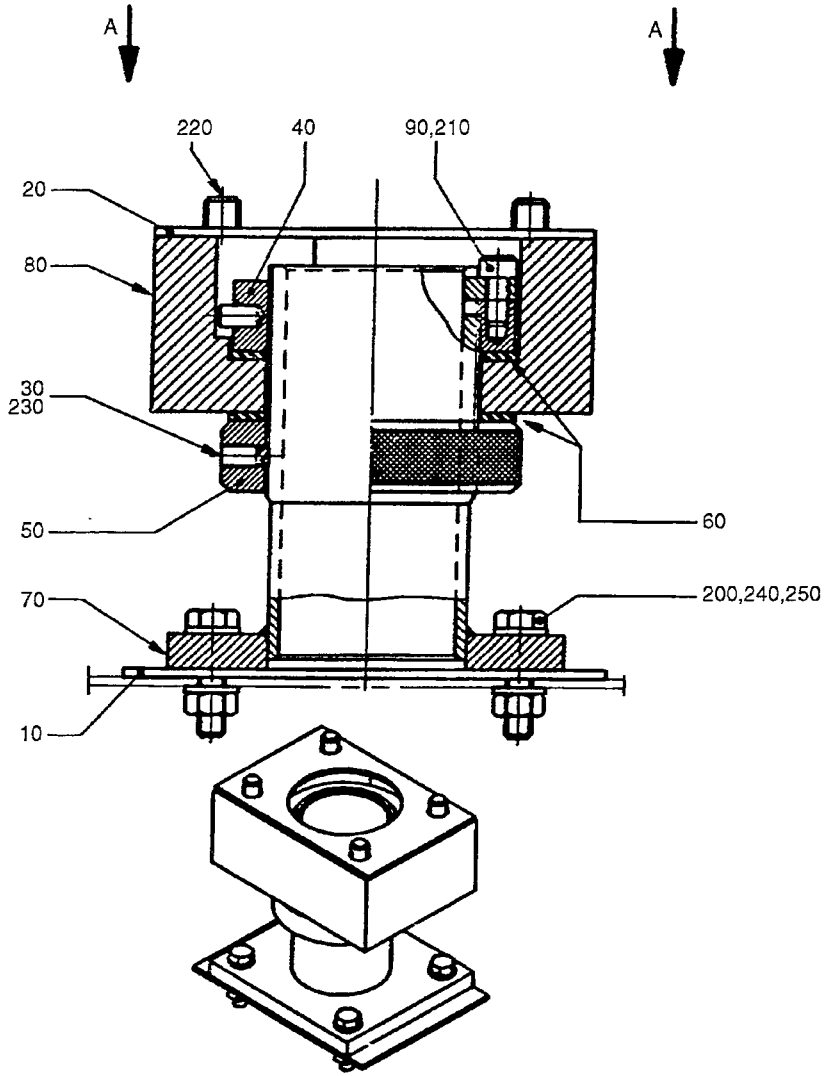

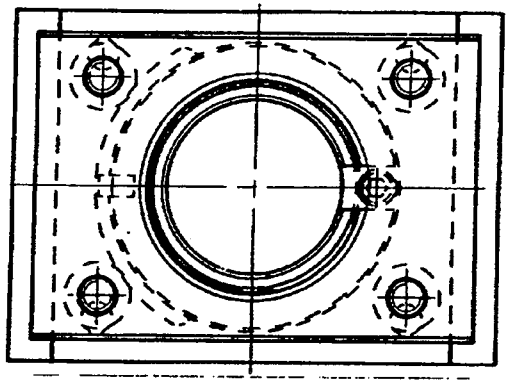

A - A

75133201.TIF
751332-1
AM 10058

Last Alteration: AM 10058 87-08-06

Corresponding group: 751332-010V
Assembly Drawing: 751332-1

Issue: **940524**

From	Pos	Part No	SP	UN Qty	Description
		C- 751332-0101			**Bracket, Ass'y**
	010	441448	S	1	GASKET
	020	490500	S	1	GASKET
	030	751095	S	2	PLUG
	040	751096	C	1	LOCKING CIRCLIP
	050	751097	C	1	BRAKE RING
	060	751098	S	2	FRICTION DISC
	070	751099	C	1	LEAD-IN
	080	751100	C	1	BEARING HOUSING
	090	751108	C	1	SECURING PLATE
	200	312105-0372	-	4	SCREW M6S6X25RFR
	210	312115-0325	-	1	SCREW 5X10 A4 80
	220	312115-0459	-	4	SCREW 8X40 A4 80
	230	312318-0323	-	2	STOP SCREW SK6SS5X8RFR
	240	312605-0316	-	4	NUT M6M6RFR
	250	315105-0153	-	8	WASHER BRB6,4X12RFR

From	Pos	Part No	SP	UN Qty	Description

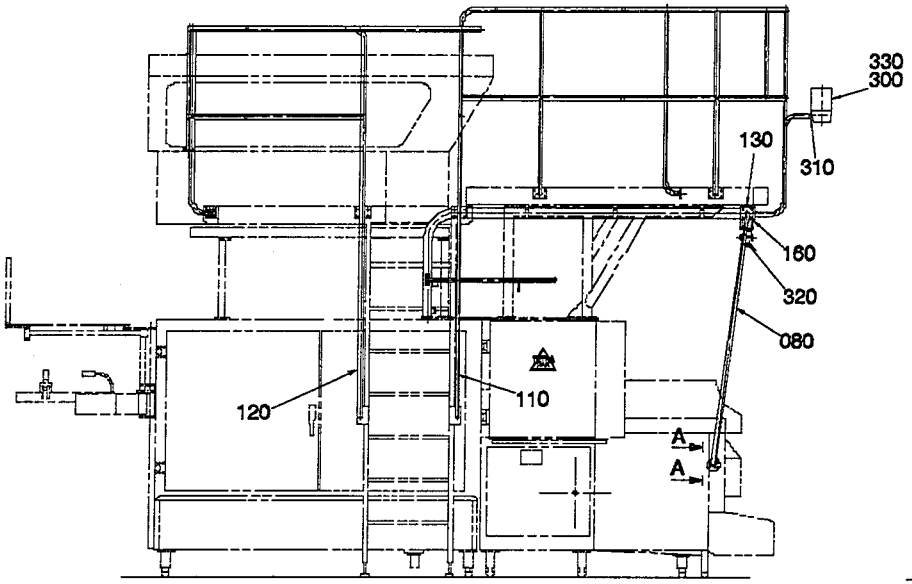

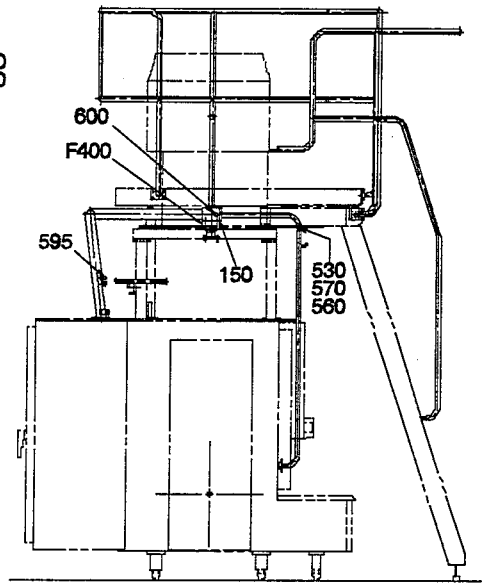

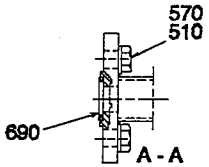

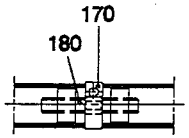

DETAIL OF RAILING JOINT

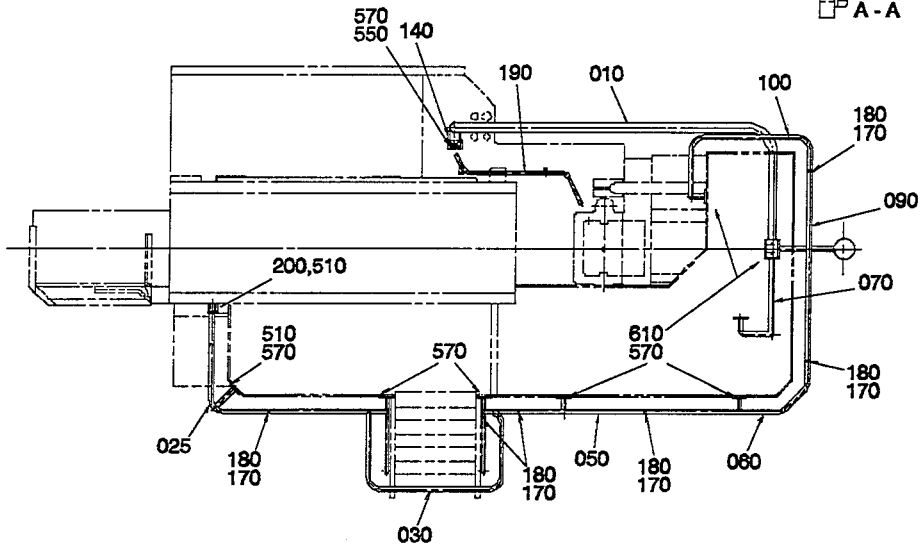

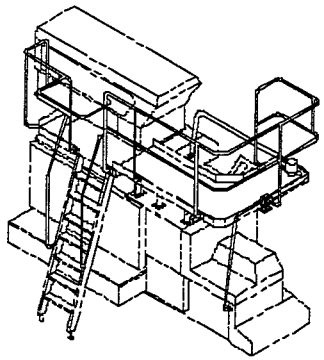

Last Alteration: AM 17942 93-01-19

Corresponding group: 456460-0401
Assembly Drawing: 456460-15/16

Issue: 940524

From	Pos	Part No	SP	UN Qty	Description
With Pull-Tab					
		C- 456460-0401			**Railing TBA/9, Ass'y**
	025	572308	-	1	RAILING
	200	572311	-	1	BRACKET
	510	312105-0449	-	38	SCREW M6S8X16RFR
	560	312605-0318	-	11	NUT M6M8RFR
	570	315105-0165	-	47	WASHER BRB8,4X16RFR
Common Parts					
	F400	**C- 751332-0101**	**-**	**1**	**BRACKET**
	010	751075-0002	-	1	CABLE CONDUIT
	030	572299	-	1	RAILING
	050	572300	-	1	RAILING
	060	751052	-	1	RAILING
	070	751056	-	1	STRUT END
	080	751055	-	1	STRUT
	090	751053	-	1	RAILING
	100	751057	-	1	RAILING
	110	572301	-	1	HAND RAIL
	120	572309	-	1	HAND RAIL
	130	469026	-	1	INTERMEDIATE PART
	140	469028	-	1	GASKET
	150	751182	-	1	GASKET
	160	751183	-	1	GASKET
	170	751484	-	12	CLAMPING RING
	180	751485	-	12	SCREW
	190	751745	-	1	CABLE CONDUIT
	300	90036-0038	P	1	BULB
	310	90099-0002	-	1	NUT
	320	90224-0234	S	1	BRACKET
	330	90419-0005	S	1	ALARM LAMP
		90419-0302	S	1	* LENS
	530	312115-0453	-	1	SCREW 8X25 A4 80
	550	312105-0455	-	4	SCREW M6S8X30RFR
	590	315202-0215	S	1	O-RING 19,2X3
	595	352103-0100	-	2	CABLE GLANR.STR 9
	600	352103-0108	-	1	CABLE GLANR.ST 13

From	Pos	Part No	SP	UN Qty	Description

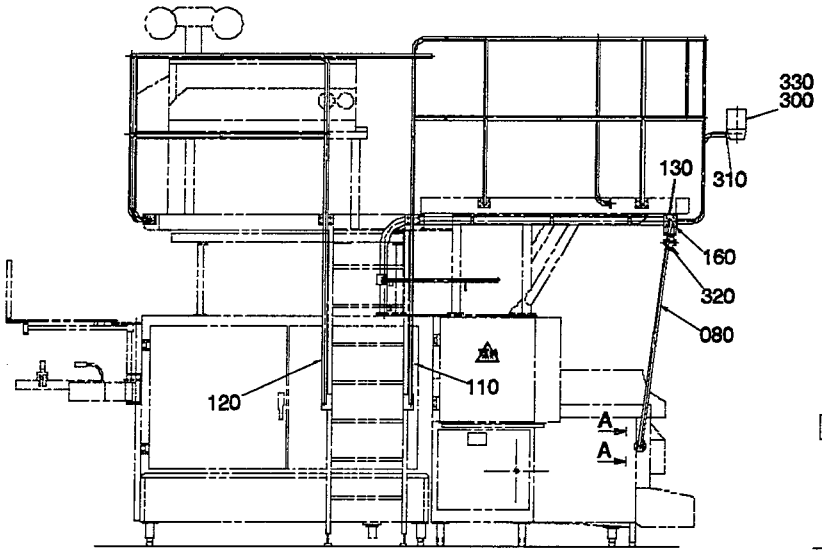

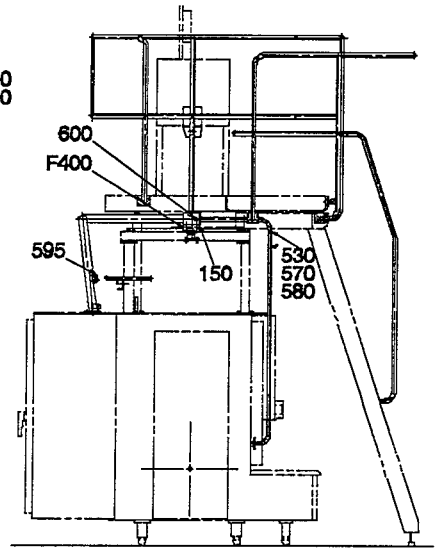

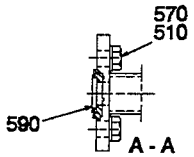

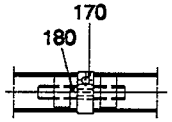

DETAIL OF RAILING JOINT

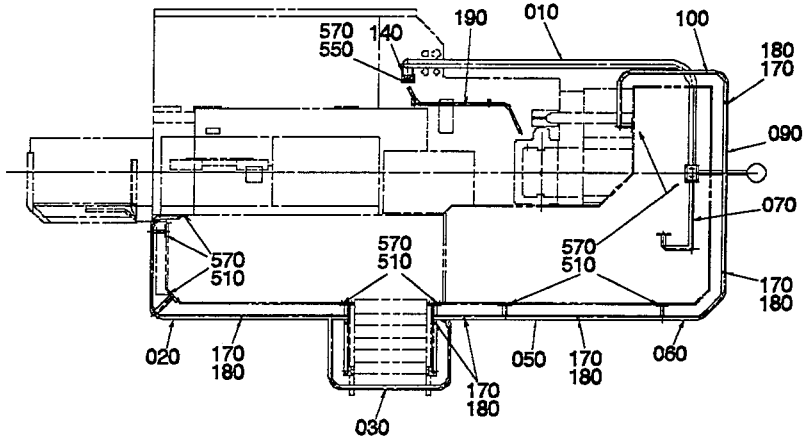

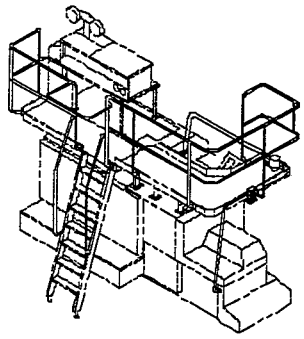

Last Alteration: AM 17942 93-01-19

Corresponding group: 456460-0402
Assembly Drawing: 456460-13/14

Issue: **940524**

From	Pos	Part No	SP	UN	Qty	Description
Without Pull-Tab						
		C- 456460-0402				**Railing TBA/9, Ass'y**
	020	572313	-		1	RAILING
	510	312105-0449	-		41	SCREW M6S8X16RFR
	560	312605-0318	-		10	NUT M6M8RFR
	570	315105-0165	-		50	WASHER BRB8,4X16RFR
Common Parts						
	F400	**C- 751332-0101**	**-**		**1**	**BRACKET**
	010	751075-0002	-		1	CABLE CONDUIT
	030	572299	-		1	RAILING
	050	572300	-		1	RAILING
	060	751052	-		1	RAILING
	070	751056	-		1	STRUT END
	080	751055	-		1	STRUT
	090	751053	-		1	RAILING
	100	751057	-		1	RAILING
	110	572301	-		1	HAND RAIL
	120	572309	-		1	HAND RAIL
	130	469026	-		1	INTERMEDIATE PART
	140	469028	-		1	GASKET
	150	751182	-		1	GASKET
	160	751183	-		1	GASKET
	170	751484	-		12	CLAMPING RING
	180	751485	-		12	SCREW
	190	751745	-		1	CABLE CONDUIT
	300	90036-0038	P		1	BULB
	310	90099-0002	-		1	NUT
	320	90224-0234	S		1	BRACKET
	330	90419-0005	S		1	ALARM LAMP
		90419-0302	S		1	* LENS
	530	312115-0453	-		1	SCREW 8X25 A4 80
	550	312105-0455	-		4	SCREW M6S8X30RFR
	590	315202-0215	S		1	O-RING 19,2X3
	595	352103-0100	-		2	CABLE GLANR.STR 9
	600	352103-0108	-		1	CABLE GLANR.ST 13

From	Pos	Part No	SP	UN	Qty	Description

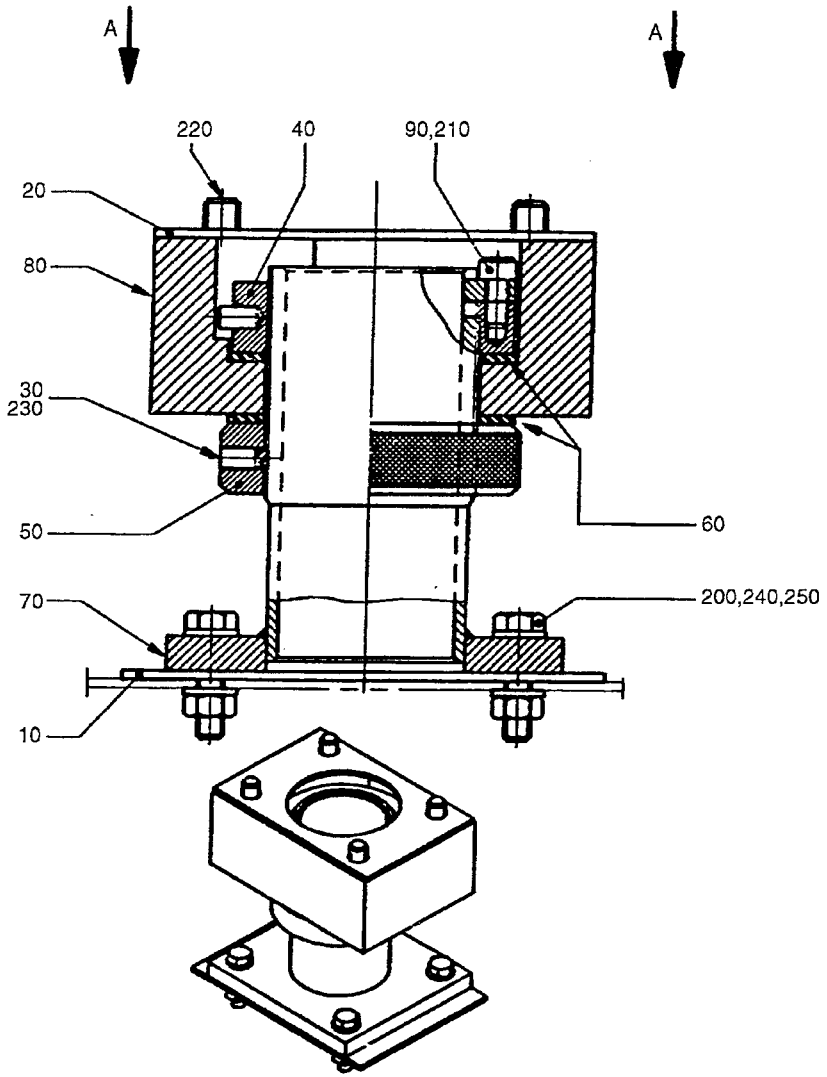

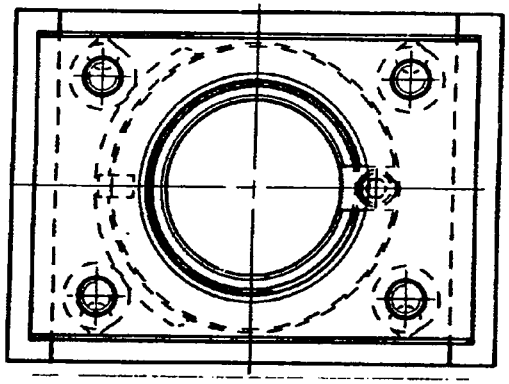

A - A

75133201.TIF
751332-1
AM 10058

Last Alteration: AM 10058 87-08-06

Corresponding group: 751332-010V
Assembly Drawing: 751332-1

Issue: **940524**

From	Pos	Part No	SP	UN Qty	Description
		C- 751332-0101			**Bracket, Ass'y**
	010	441448	S	1	GASKET
	020	490500	S	1	GASKET
	030	751095	S	2	PLUG
	040	751096	C	1	LOCKING CIRCLIP
	050	751097	C	1	BRAKE RING
	060	751098	S	2	FRICTION DISC
	070	751099	C	1	LEAD-IN
	080	751100	C	1	BEARING HOUSING
	090	751108	C	1	SECURING PLATE
	200	312105-0372	-	4	SCREW M6S6X25RFR
	210	312115-0325	-	1	SCREW 5X10 A4 80
	220	312115-0459	-	4	SCREW 8X40 A4 80
	230	312318-0323	-	2	STOP SCREW SK6SS5X8RFR
	240	312605-0316	-	4	NUT M6M6RFR
	250	315105-0153	-	8	WASHER BRB6,4X12RFR

From	Pos	Part No	SP	UN Qty	Description

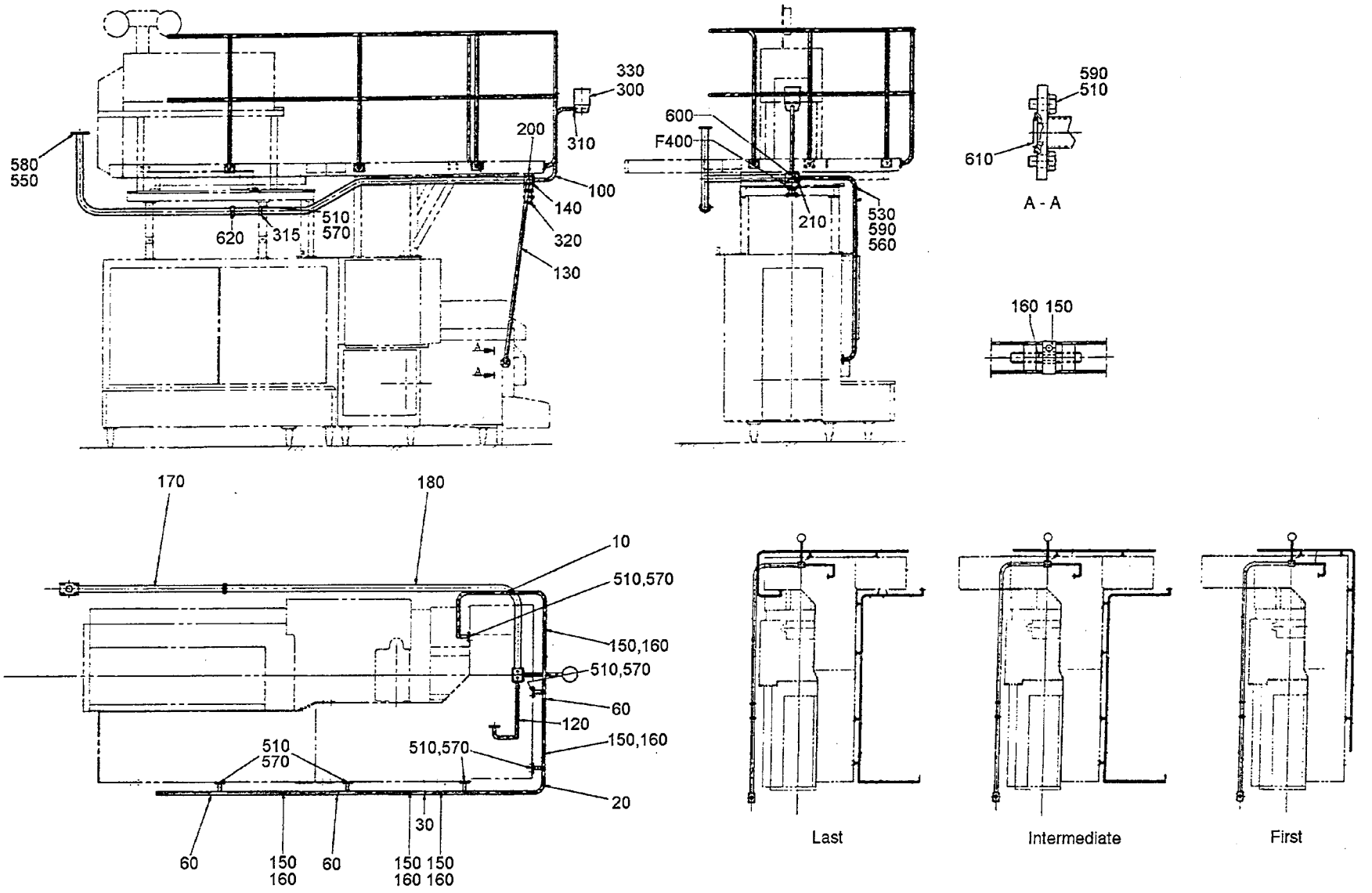

75190001.TIF
751900-1
AM 14198

From	Pos	Part No	SP	UN	Qty	Description
Machine space C/C 2000mm Single Machine						
		C- 751900-0101				**Railing, Ass'y**
	010	751888	-		1	RAILING
	020	751889	-		1	RAILING
	030	751890	-		2	RAILING
	060	751948	-		3	RAILING
	150	751484	-		10	CLAMPING RING
	160	751485	-		10	SCREW
	510	312105-0449	-		29	SCREW M6S8X16RFR
	560	312605-0318	-		11	NUT M6M8RFR
	570	315115-0165	-		24	WASHER TBRB8,4X16RFR
Machine space C/C 2000mm First Machine						
		C- 751900-0102				**Railing, Ass'y**
	020	751889	-		1	RAILING
	030	751890	-		2	RAILING
	060	751948	-		3	RAILING
	150	751484	-		10	CLAMPING RING
	160	751485	-		10	SCREW
	510	312105-0449	-		25	SCREW M6S8X16RFR
	560	312605-0318	-		11	NUT M6M8RFR
	570	315115-0165	-		20	WASHER TBRB8,4X16RFR
Machine space C/C 2000mm Intermediate Machine						
		C- 751900-0103				**Railing, Ass'y**
	040	751893	-		1	RAILING
	050	751894	-		1	RAILING
	060	751948	-		4	RAILING
	070	751954	-		1	RAILING
	110	751895	-		1	RAILING
	150	751484	-		14	CLAMPING RING
	160	751485	-		14	SCREW
	510	312105-0449	-		33	SCREW M6S8X16RFR
	540	312105-0453	-		2	SCREW M6S8X25RFR
	560	312605-0318	-		13	NUT M6M8RFR
	570	315115-0165	-		30	WASHER TBRB8,4X16RFR
Machine space C/C 2000mm Last Machine						
		C- 751900-0104				**Railing, Ass'y**
	010	751888	-		1	RAILING
	040	751893	-		1	RAILING
	050	751894	-		1	RAILING
	060	751948	-		4	RAILING
	070	751954	-		1	RAILING
	110	751895	-		1	RAILING
	150	751484	-		14	CLAMPING RING
	160	751485	-		14	SCREW
	510	312105-0449	-		37	SCREW M6S8X16RFR
	540	312105-0453	-		2	SCREW M6S8X25RFR
	560	312605-0318	-		13	NUT M6M8RFR
	570	315115-0165	-		34	WASHER TBRB8,4X16RFR
Machine space C/C 2150mm Single Machine						
		C- 751900-0105				**Railing, Ass'y**
	010	751888	-		1	RAILING
	020	751889	-		1	RAILING
	030	751890	-		2	RAILING
	060	751948	-		3	RAILING
	150	751484	-		10	CLAMPING RING
	160	751485	-		10	SCREW
	510	312105-0449	-		29	SCREW M6S8X16RFR
	560	312605-0318	-		11	NUT M6M8RFR
	570	315115-0165	-		24	WASHER TBRB8,4X16RFR
Machine space C/C 2150mm First Machine						
		C- 751900-0106				**Railing, Ass'y**
	020	751889	-		1	RAILING
	030	751890	-		2	RAILING
	060	751948	-		3	RAILING
	080	751927	-		2	RAILING
	150	751484	-		12	CLAMPING RING
	160	751485	-		12	SCREW
	510	312105-0449	-		25	SCREW M6S8X16RFR
	560	312605-0318	-		11	NUT M6M8RFR
	570	315115-0165	-		20	WASHER TBRB8,4X16RFR
Machine space C/C 2150mm Intermediate Machine						
		C- 751900-0107				**Railing, Ass'y**
	040	751893	-		1	RAILING
	050	751894	-		1	RAILING
	060	751948	-		4	RAILING
	070	751954	-		1	RAILING
	080	751927	-		6	RAILING
	110	751895	-		1	RAILING
	150	751484	-		20	CLAMPING RING
	160	751485	-		20	SCREW
	510	312105-0449	-		33	SCREW M6S8X16RFR
	540	312105-0453	-		2	SCREW M6S8X25RFR
	560	312605-0318	-		13	NUT M6M8RFR
	570	315115-0165	-		30	WASHER TBRB8,4X16RFR
Machine space C/C 2150mm Last Machine						
		C- 751900-0108				**Railing, Ass'y**
	010	751888	-		1	RAILING
	040	751893	-		1	RAILING
	050	751894	-		1	RAILING
	060	751948	-		4	RAILING

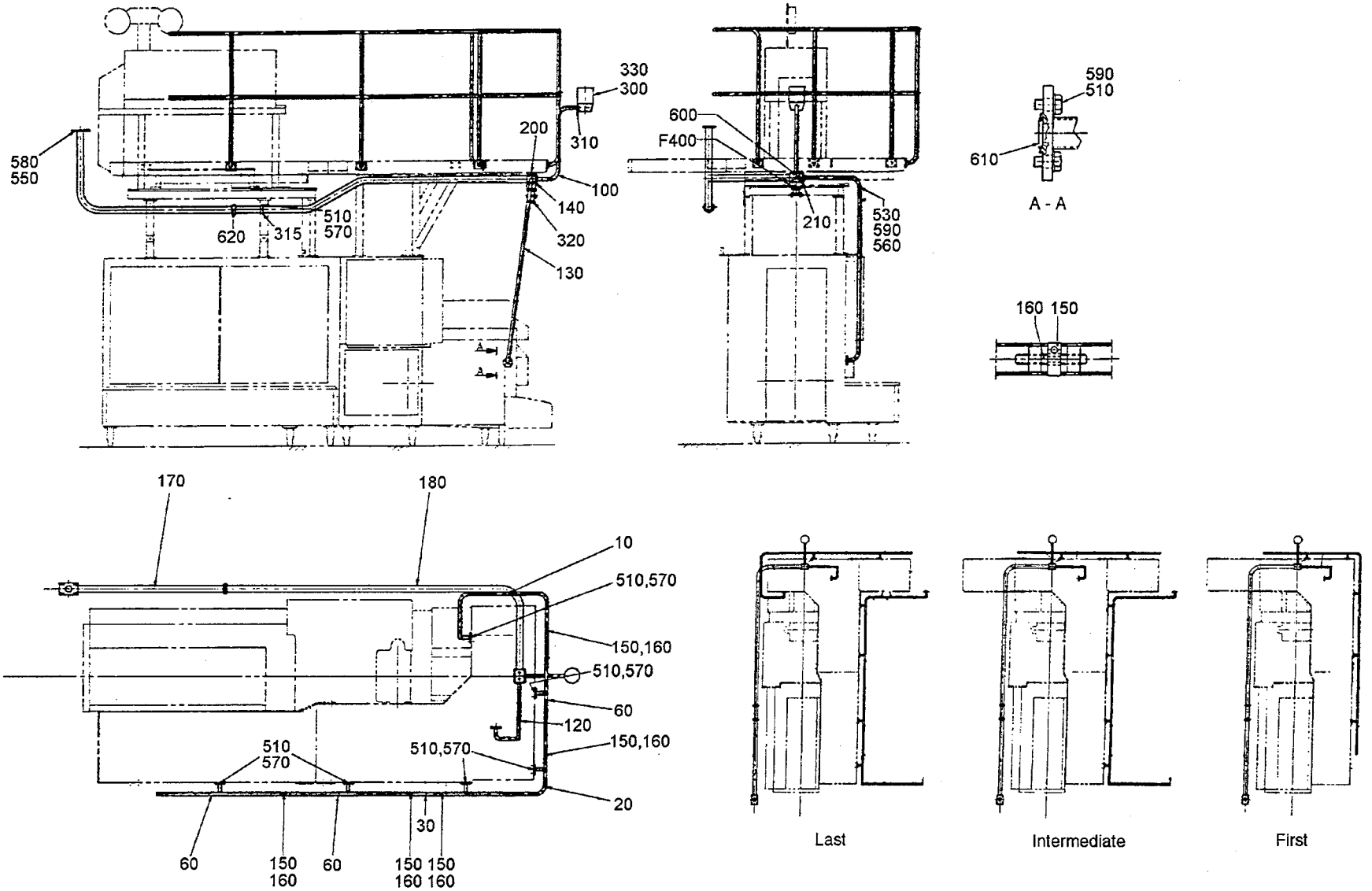

75190001.TIF
751900-1
AM 14198

From	Pos	Part No	SP	UN	Qty	Description
	070	751954	-		1	RAILING
	080	751927	-		4	RAILING
	110	751895	-		1	RAILING
	150	751484	-		18	CLAMPING RING
	160	751485	-		18	SCREW
	510	312105-0449	-		37	SCREW M6S8X16RFR
	540	312105-0453	-		2	SCREW M6S8X25RFR
	560	312605-0318	-		13	NUT M6M8RFR
	570	315115-0165	-		34	WASHER TBRB8,4X16RFR
Common parts						
	F400	**C- 751332-0101**	**-**		**1**	**BRACKET**
	100	751896	-		1	HOLDER
	120	751056	-		1	STRUT END
	130	751055	-		1	STRUT
	140	751183	-		1	GASKET
	170	751848	-		1	CABLE CONDUIT
	180	751827	-		1	CABLE CONDUIT
	200	469026	-		1	INTERMEDIATE PART
	210	751182	-		1	GASKET
	300	90036-0038	-		1	BULB
	310	90099-0002	-		1	NUT
	315	90165-0043	-		1	HOLDER
	320	90224-0234	-		1	BRACKET
	330	90419-0005	-		1	ALARM LAMP
		90419-0302	S		1	* LENS
	530	312115-0453	-		11	SCREW 8X25 A4 80
	550	312105-0370	-		4	SCREW M6S6X20RFR
	580	315115-0153	-		4	WASHER TBRB6,4X12RFR
	590	315105-0165	-		5	WASHER BRB8,4X16RFR
	600	352103-0108	-		1	CABLE GLANR.ST 13
	610	315202-0215	-		1	O-RING 19,2X3
	620	315250-0104	-		1	GASKET 61/51

From	Pos	Part No	SP	UN	Qty	Description

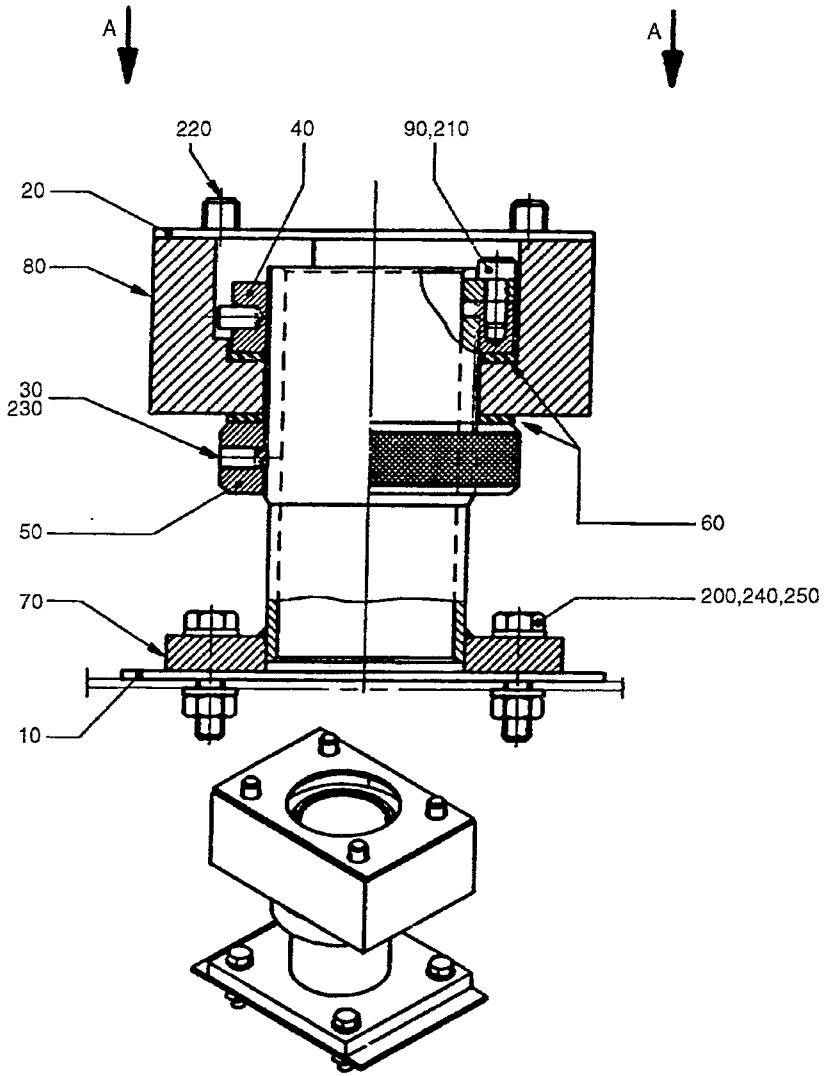

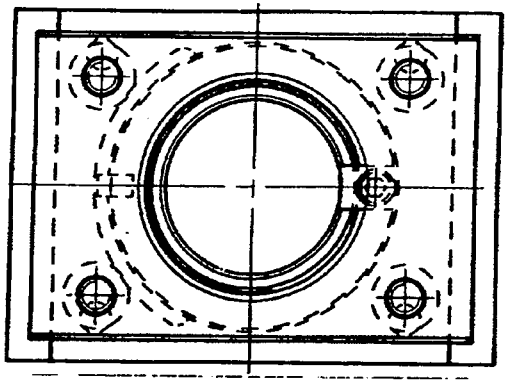

A - A

75133201.TIF
751332-1
AM 10058

From	Pos	Part No	SP	UN Qty	Description
		C- 751332-0101			**Bracket, Ass'y**
	010	441448	S	1	GASKET
	020	490500	S	1	GASKET
	030	751095	S	2	PLUG
	040	751096	C	1	LOCKING CIRCLIP
	050	751097	C	1	BRAKE RING
	060	751098	S	2	FRICTION DISC
	070	751099	C	1	LEAD-IN
	080	751100	C	1	BEARING HOUSING
	090	751108	C	1	SECURING PLATE
	200	312105-0372	-	4	SCREW M6S6X25RFR
	210	312115-0325	-	1	SCREW 5X10 A4 80
	220	312115-0459	-	4	SCREW 8X40 A4 80
	230	312318-0323	-	2	STOP SCREW SK6SS5X8RFR
	240	312605-0316	-	4	NUT M6M6RFR
	250	315105-0153	-	8	WASHER BRB6,4X12RFR

From	Pos	Part No	SP	UN Qty	Description

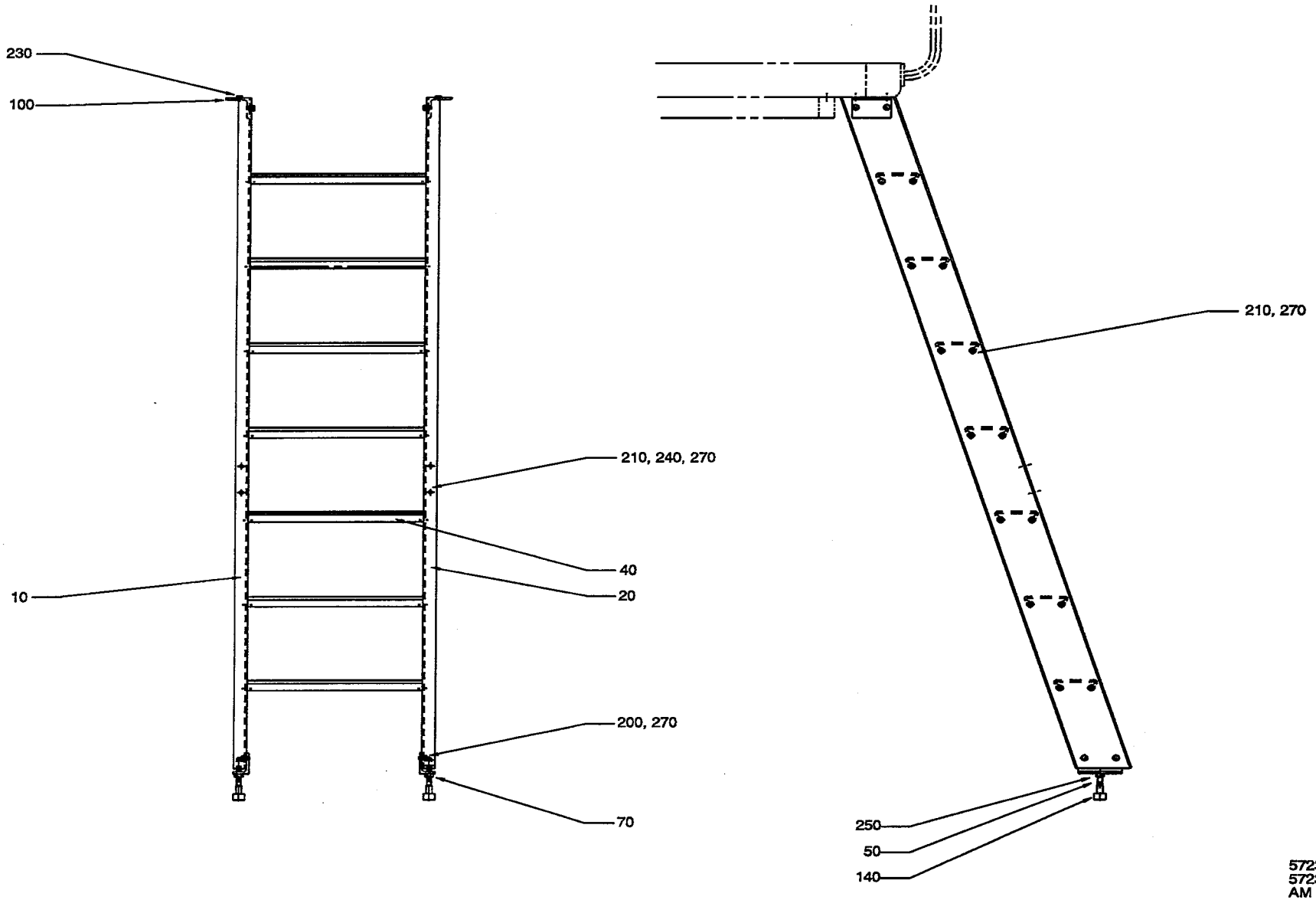

57230601.WPG
572306-1
AM 17942

From	Pos	Part No	SP	UN	Qty	Description
		C- 572306-0101				**Ladder, Ass'y**
	010	572302	-		1	SIDE PIECE
	020	572303	-		1	SIDE PIECE
	040	441679	-		7	STAIR
	050	441905	-		2	RETARD PIN
	070	572305	-		2	BRACKET
	100	572304	-		2	BRACKET
	140	90347-0004	-		2	VIBRATION DAMPER
	200	312105-0449	-		8	SCREW M6S8X16RFR
	210	312105-0451	-		32	SCREW M6S8X20RFR
	230	312155-0449	-		4	SCREW MF6S8X16RFR
	240	312605-0318	-		4	NUT M6M8RFR
	250	312605-0322	-		2	NUT M6M12RFR
	270	315105-0165	-		40	WASHER BRB8,4X16RFR

From	Pos	Part No	SP	UN	Qty	Description

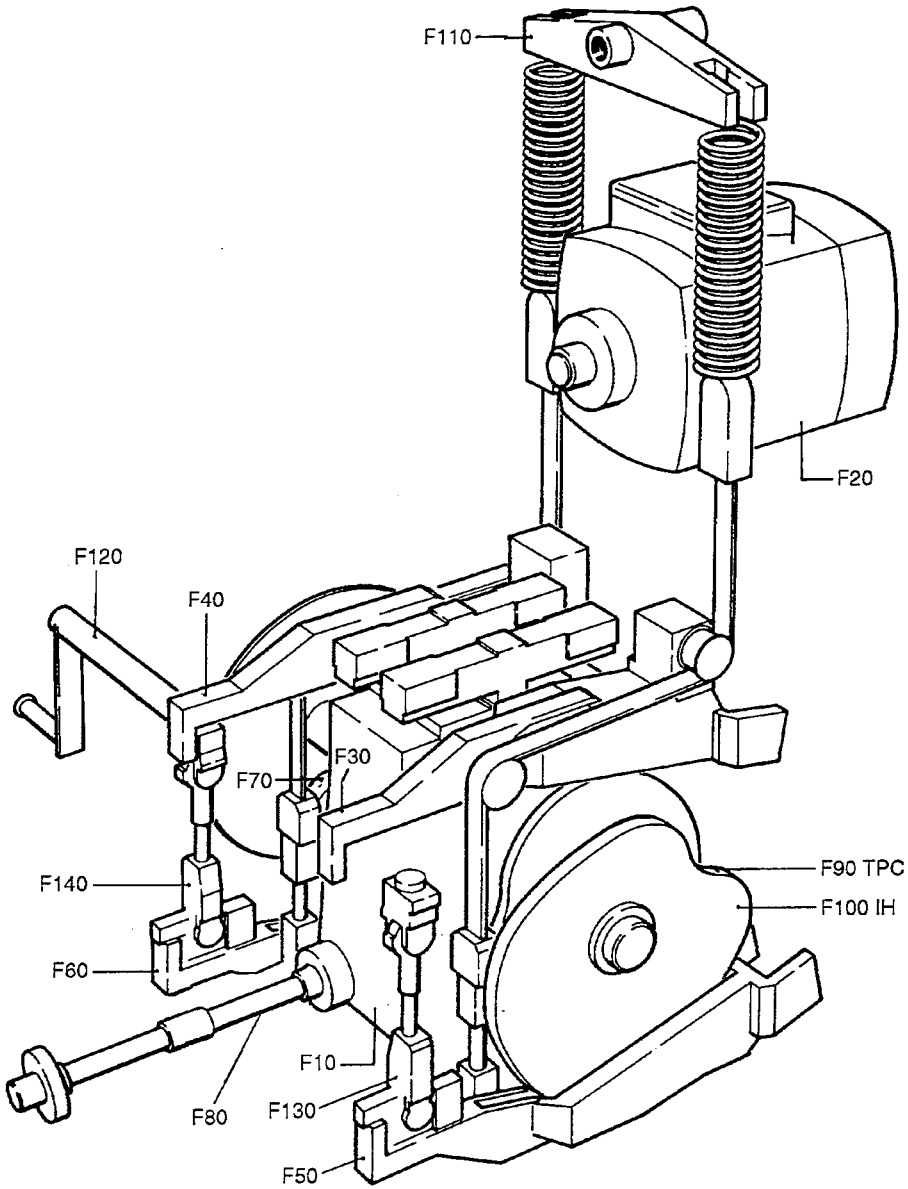

64810305.TIF
648103-5/6
AM 12577

Pos	Group No	Description	
648103-F000	648103-090V	Drive TB/TBA/9	227
648103-F010	256173-050V	Worm Gear	229
648103-F020	271128-040V	Motor	231
648103-F030	256197-050V	Arm	233
648103-F050	491814-020V	Slewing Bracket Right	235
648103-F060	491815-020V	Slewing Bracket Left	237
648103-F070	256199-040V	Belt Stretcher	239
648103-F080	256200-030V	Intermediary Shaft	241
648103-F090	256201-040V	Curve Pack TPC	243
648103-F100	256202-050V	Curve Pack IH	245
	256202-050V	Curve Pack IH	247
648103-F110	572760-010V	Hold-Down Device	249
	572750-010V	Rocker Arm	251
648103-F120	256806-030V	Crank	253
648103-F130	491787-020V	Disconnection Link Right	255
648103-F140	491788-020V	Disconnection Link Left	257

Pos	Group No	Description

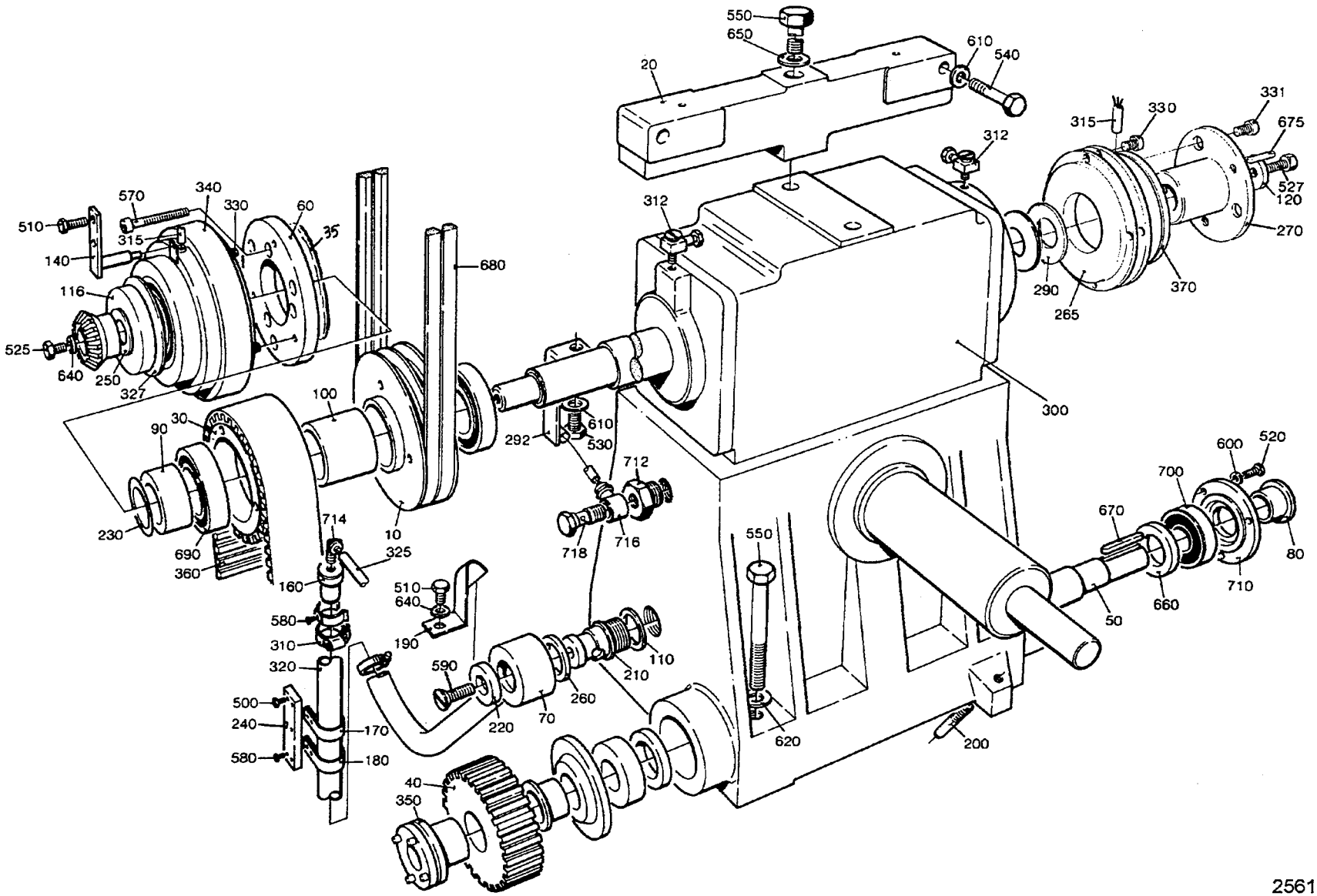

25617306.TIF
256173-6
AM 12577

From	Pos	Part No	SP	UN	Qty	Description
IH 50Hz IH 60Hz TPC 50Hz						
		C- 256173-0501				**Worm Gear, Ass'y**
	010	751742-0002	C		1	V-BELT PULLEY
TPC 60Hz						
		C- 256173-0502				**Worm Gear, Ass'y**
	010	751742-0003	C		1	V-BELT PULLEY
Common parts						
	020	G- 441356	C		2	BRACKET
	030	751243	S		1	TOOTHED PULLY
	035	751245	S		2	FLANGE
	040	256176	S		1	GEAR WHEEL
	050	256177	S		1	SHAFT
	060	256178	S		1	FIXING RING
	070	272372	S		1	HOUSE
	080	256179	-		2	SPACER SLEEVE
	090	256180	-		1	SPACER
	100	256181	-		1	SPACER PIPE
	110	257174	S		1	SEALING WASHER
	113	257179	-		1	GEAR WHEEL
	116	491409	-		1	WASHER
	120	271689	-		1	WASHER
	140	272374	S		1	CARRIER
	160	272376	-		1	SHUTTER
	170	272377-0001	-		1	CRAMP
	180	272377-0002	-		1	CRAMP
	190	272388	-		1	CRAMP
	200	295140	S		2	PEG
	210	295766	S		1	SCREW
	220	295767	S		1	SEALING WASHER
	230	441024	S		1	LACE
	240	441360	-		1	PLATE
	250	491410	S		1	LACE
	260	456934	S		1	SEALING WASHER
	265	469999	-		1	FLANGE
	270	G- 491274	-		1	HUB
	290	90016-0010	S		2	DISC SPRING
	292	469867	-		1	HOSE HOLDER
	300	90056-0072	S		1	WORM GEAR
		90091-0239	S		2	* SEAL RING
		90214-0150	S		1	* SHOULDER BEARING
		90214-0151	S		2	* ROLLER BEARING
		315221-0190	S		2	* SEAL RINCB42X72X8
		321306-0110	S		1	* BALL BEASKF6010
	310	90074-0026	-		1	CLIP

From	Pos	Part No	SP	UN	Qty	Description
	312	90134-0058	-		2	BANJO CONNECTION
	315	90142-0005	-	MM	1500	HOSE
	316	90144-0004	-	MM	X	TAPE
	317	90157-0016	-	ML	X	LOCKING FLUID
	320	90166-0060	S	MM	530	HOSE
	325	90166-0133	-	MM	500	HOSE
	327	90214-0312	S		1	NILOS RING
	330	90287-0081	-		11	SCREW
	331	90287-0149	-		6	SCREW
	334	90296-0068	-	G	X	GREASE
	336	90296-0075	-	L	4	OIL
	340	90355-0088	S		1	MAGNETIC CLUTCH
	350	90361-0011	S		1	BUSHING
	360	90417-0076	S		1	TIMING BELT
	370	90432-0018	S		1	BRAKE
	500	312101-0329	-		2	SCREW M6S5X16FZB
	510	312101-0366	-		3	SCREW M6S6X12FZB
	520	312101-0368	-		6	SCREW M6S6X16FZB
	525	312101-0370	-		1	SCREW M6S6X20FZB
	527	312101-0376	-		1	SCREW M6S6X35FZB
	530	312101-0488	-		1	SCREW M6S10X14FZB
	540	312101-0504	-		8	SCREW M6S10X65FZB
	550	312101-0550	-		6	SCREW M6S12X90FZB
	570	312111-0380	-		3	SCREW MC6S6X50FZB
	580	312121-0323	-		5	SLOTTED HEMCS5X8FZB
	590	312155-0447	-		1	SCREW MF6S8X12RFR
	600	315101-0153	-		6	WASHER BRB6,4X12FZB
	610	315111-0173	-		9	WASHER TBRB10,5X22FZB
	620	315111-0178	-		4	WASHER TBRB13X24FZB
	640	315121-0153	-		2	WASHER TBRSB6,4X22FZB
	650	315121-0178	-		2	WASHER TBRSB13X36FZB
	660	315221-0169	S		2	SEAL RING CB30X47X7
	670	315701-0239	S		1	FLAT WEDGE6X6X40
	675	315701-0268	-		1	FLAT WEDGE8X7X32
	680	90071-0027	P		1	V-BELT
	690	321308-0207	S		2	BALL BEARISKF6007-2RS
	700	321313-0105	S		2	BALL BEARISKF6205-2RS
	710	321600-0114	S		2	OIL SEAL (LL3052
	712	342701-0208	-		1	BUSHING RNI3/4"-1/4"
	714	342930-0122	-		1	ELBOW PIPE8/6-1/4
	716	342980-0122	-		1	BANJO CONNSINGEL 8/6-1/4
	718	342980-0304	-		1	BANJO CONN SINGEL 1/4
	720	342991-0104	-		2	HOSE CLIP 19-28MMRFR

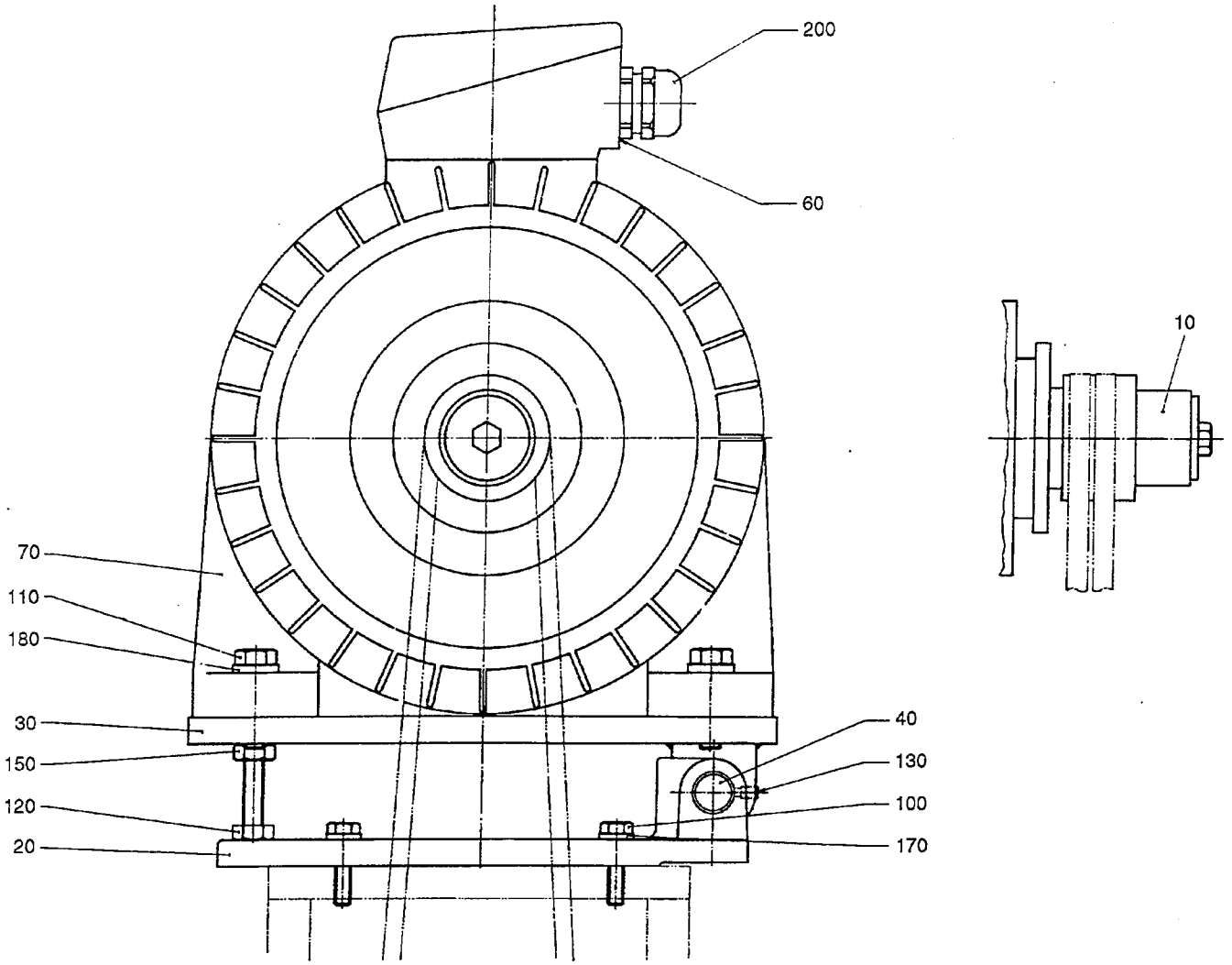

27112802.TIF
271128-2
AM 12577

Last Alteration: AM 12577 89-12-06

Corresponding group: 271128-040V
Assembly Drawing: 271128-2

Issue: **940524**

From	Pos	Part No	SP	UN	Qty	Description
TPC 50Hz						
		C- 271128-0401				**Motor, Ass'y**
	010	751741-0002	S		1	V-BELT PULLEY
IH 50Hz						
		C- 271128-0402				**Motor, Ass'y**
	010	751741-0004	S		1	V-BELT PULLEY
TPC 60Hz						
		C- 271128-0403				**Motor, Ass'y**
	010	751741-0001	S		1	V-BELT PULLEY
IH 60Hz						
		C- 271128-0404				**Motor, Ass'y**
	010	751741-0003	S		1	V-BELT PULLEY
Common parts						
	020	G- 272431	C		1	BRACKET
	030	441387	-		1	MOTOR CRADLE
	040	272434	S		1	SHAFT
	060	90002-0012	-		1	BLANK-OFF PLUG
	070	90045-0096	-		1	MOTOR
	100	312101-0457	-		4	SCREW M6S8X35FZB
	110	312101-0499	-		4	SCREW M6S10X40FZB
	120	312104-0505	-		1	SCREW M6S10X70H8.8FZB
	130	312311-0366	-		2	STOP SCREW T6SS6X12FZB
	150	312601-0320	-		1	NUT M6M10FZB
	170	315111-0165	-		4	WASHER TBRB8,4X16FZB
	180	315111-0173	-		4	WASHER TBRB10,5X22FZB
	200	352103-0116	-		1	CABLE GLANR.ST 21

From	Pos	Part No	SP	UN	Qty	Description

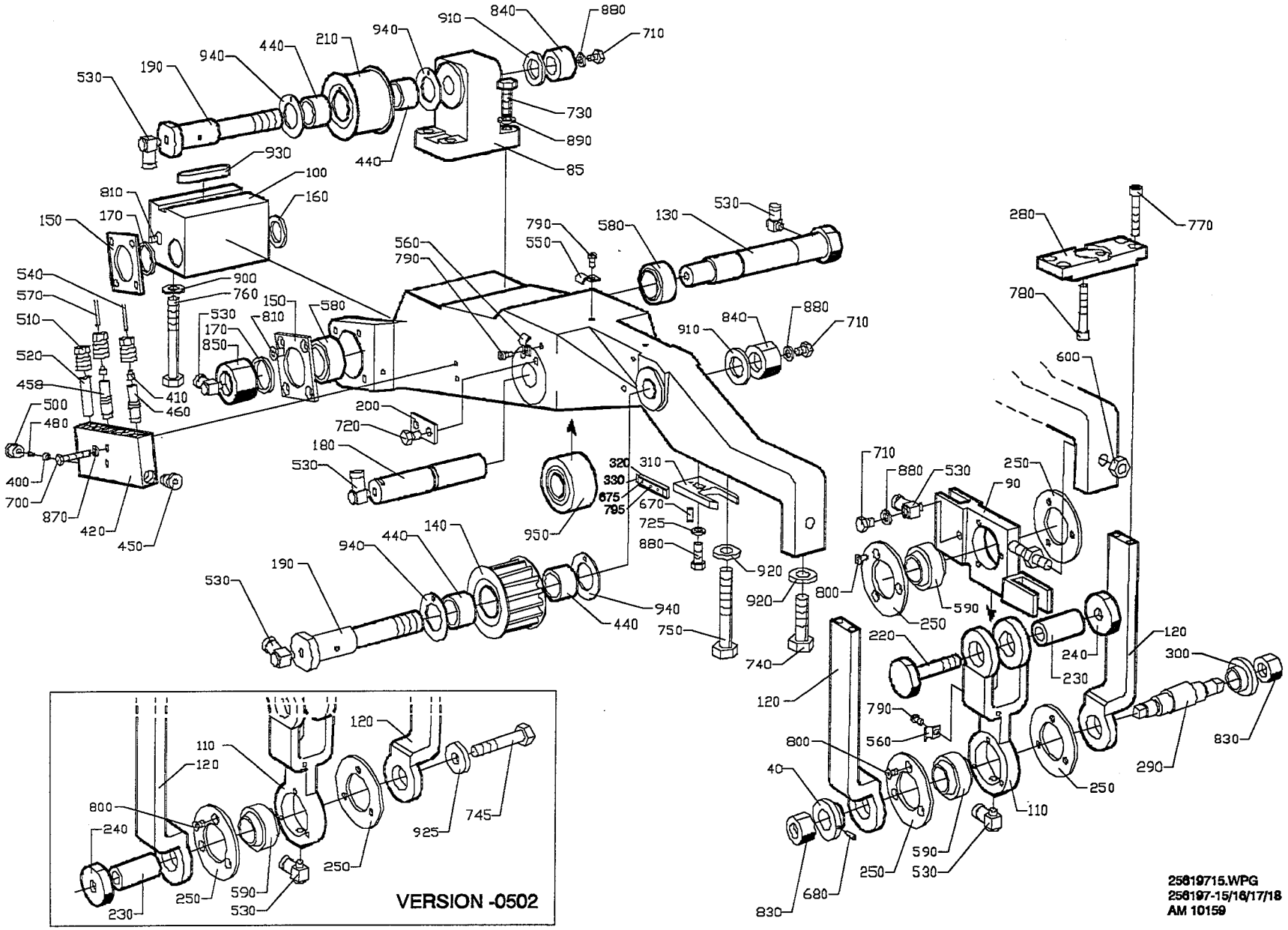
VERSION -0502
25619715.WPG
258197-15/16/17/18
AM 10159

Last Alteration: AM 19159 92-12-07

Corresponding group: 256197-050V
Assembly Drawing: 256197-15/16/17/18

Issue: 940524

From	Pos	Part No	SP	UN	Qty	Description
Right Hand Design						
		C- 256197-0501				**Arm, Ass'y**
	030	272459	S		1	WASHER
	230	257309	S		1	SHAFT
	240	257310	S		1	NUT
	290	272458	S		1	ECCENTRIC SHAFT
	300	272461	S		1	WASHER
	680	311303-0234	S		1	SLOTTED PIRPB3X12FZB
	830	312811-0322	S		2	LOCK NUT M12RFR
Left Hand Design						
		C- 256197-0502				**Arm, Ass'y**
	230	257309	S		2	SHAFT
	240	257310	S		2	NUT
	745	312101-0502	-		1	SCREW M6S10X55FZB
	925	315121-0173	-		1	WASHER BRSB10,5X28FZB
Common parts						
	080	G- 751212	C		1	ARM
	085	G- 272442	C		1	CANTILEVER
	090	978275	C		1	BEARING HOLDER
	100	272455	-		1	BEARING BRACKET
	110	G- 272456	S		1	LINK
	120	G- 272457	S		2	BOW CLAMP
	130	295770	S		1	AXLE BOLT
	140	256421	S		1	PULLEY
	150	256422	S		2	WASHER
	160	256426-0001	S		1	WASHER
	170	256426-0002	S		2	WASHER
	180	256427	S		1	SHAFT
	190	490916	S		2	AXLE PIN
	200	256472	S		1	WASHER
	210	257306	S		1	ROLL
	220	257308	S		1	SCREW
	250	257311	S		4	CAP
	280	272116	S		1	CAP
	310	978272	-		1	POINTER
	320	978273	-		1	DIAL
	330	978274	-		1	DIAL
	400	90028-0021	P		1	CONE
	410	90028-0020	P		5	CONE
	420	90032-0040	-		1	BLOCK
	430	90035-0005	-		1	COVER
	440	321531-0248	-		4	NEEDLE SLEHK2016
	450	90087-0019	-		1	PLUG
	458	90092-0052	S		4	VALVE
	460	90092-0053	S		1	VALVE
	480	90134-0031	-		1	SLEEVE
	500	90134-0038	-		1	BUSHING
	510	90134-0039	-		6	BUSHING
	520	90134-0052	-		1	PLUG
	530	90134-0058	-		7	BANJO CONNECTION
	540	90266-0019	-	MM	550	PIPE
	550	90165-0002	-		3	CLIP
	560	90165-0022	-		2	CLIP
	570	90166-0143	-	MM	1100	HOSE
	580	90240-0048	S		2	BEARING
	590	90240-0050	S		2	BEARING
	600	90157-0016	-		X	LOCKING FLUID
	670	311101-0267	-		1	CYLINDRICACP4H6X10
	675	311103-0267	-		1	CYLINDRICACP M6 4X10 RFR
	700	312101-0297	-		2	SCREW M6S4X25FZB
	710	312101-0362	-		3	SCREW M6S6X8FZB
	720	312101-0364	-		2	SCREW M6S6X10FZB
	725	312101-0374	-		1	SCREW M6S6X30FZB
	730	312101-0453	-		4	SCREW M6S8X25FZB
	740	312101-0497	-		1	SCREW M6S10X35FZB
	750	312101-0504	-		1	SCREW M6S10X65FZB
	760	312101-0507	-		2	SCREW M6S10X80FZB
	770	312111-0376	-		4	SCREW MC6S6X35FZB
	780	312111-0378	-		2	SCREW MC6S6X40FZB
	790	312121-0287	-		5	SLOTTED HEMCS4X8FZB
	795	312145-0220	-		1	SLOTTED HEMFS3X6RFR
	800	312151-0287	-		12	SCREW MF6S4X8FZB
	810	312151-0364	-		8	SCREW MF6S6X10FZB
	820	312601-0318	-		2	NUT M6M8FZB
	840	312811-0324	S		2	LOCK NUT M16RFR
	850	312811-0326	S		1	LOCK NUT M20RFR
	870	315101-0136	-		2	WASHER BRB4,3X8FZB
	880	315101-0153	-		4	WASHER BRB6,4X12FZB
	890	315101-0165	-		4	WASHER BRB8,4X16FZB
	900	315101-0173	-		2	WASHER BRB10,5X22FZB
	910	315101-0186	-		2	WASHER BRB17X30FZB
	920	315111-0173	-		2	WASHER TBRB10,5X22FZB
	930	315701-0335	-		1	FLAT WEDGE12X8X56
	940	321129-0137	S		4	THRUST WAS22/38X1,5
	950	321576-0260	S		1	SUPPORT RONUTR20

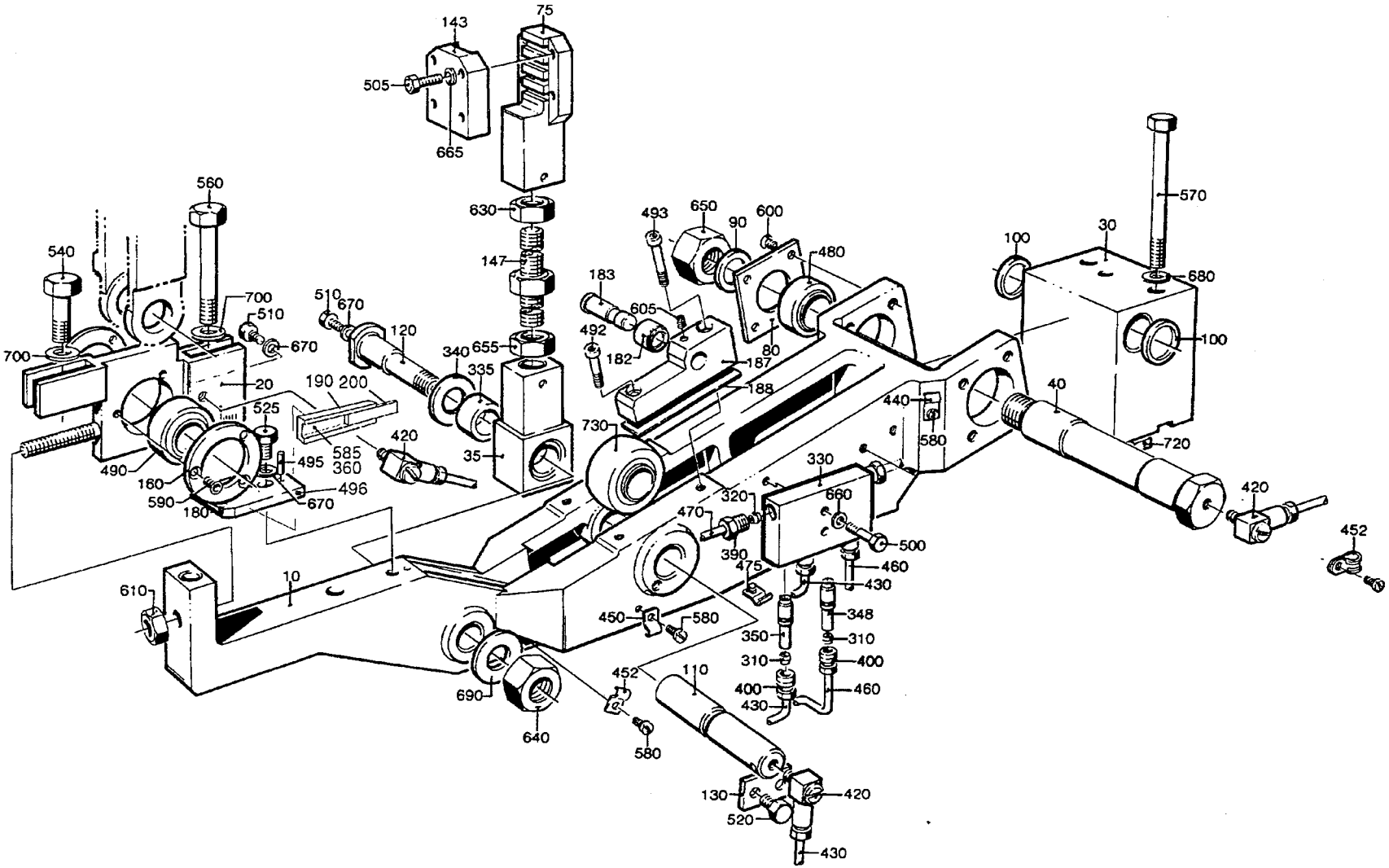

49181403.TIF
491814-3/4
AM 19159

Last Alteration: AM 19159 92-12-07

Corresponding group: 491814-020V
Assembly Drawing: 491814-3/4

Issue: **940524**

From	Pos	Part No	SP	UN	Qty	Description
		C- 491814-0201				**Slewing Bracket Right, Ass'y**
	010	G- 751212	C		1	ARM
	020	978275	C		1	BEARING HOLDER
	030	256418	C		1	BEARING BRACKET
	035	256515	S		1	END PIECE
	040	272462	S		1	AXLE BOLT
	075	272607	C		1	BELT HOLDER
	080	256422	S		2	WASHER
	090	256426-0001	S		1	WASHER
	100	256426-0002	S		2	WASHER
	110	256427	C		1	SHAFT
	120	490916	S		1	AXLE PIN
	130	256472	S		1	WASHER
	143	256516	C		1	CAP
	147	256517	C		1	SCREW
	160	257311	S		2	CAP
	180	978272	-		1	BRACKET
	182	491165	S		1	ROLL
	183	491166	S		1	SHAFT
	187	751078	S		1	BRACKET RIGHT
	188	491319	S		2	LACE
	190	978273	-		1	DIAL
	200	978274	-		1	DIAL
	310	90028-0020	P		4	CONE
	320	90028-0021	P		2	CONE
	330	90032-0039	-		1	BLOCK
	335	321531-0248	S		2	NEEDLE SLEHK2016
	340	90083-0016	S		2	PLATE
	348	90092-0052	S		3	VALVE
	350	90092-0053	S		1	VALVE
	360	90157-0016	-		X	LOCKING FLUID
	390	90134-0038	S		2	BUSHING
	400	90134-0039	S		4	BUSHING
	420	90134-0058	-		5	BANJO CONNECTION
	430	90266-0019	-	MM	350	PIPE
	440	90165-0002	-		2	CLIP
	450	90165-0022	-		1	CLIP
	452	90165-0065	-		3	CRAMP
	460	90166-0143	-	MM	1100	HOSE
	470	90166-0109	P	MM	700	HOSE
	475	90182-0005	-		2	STRAP
	480	90240-0048	S		2	BEARING
	490	90240-0050	S		1	BEARING
	492	90287-0143	-		1	SCREW
	493	90287-0144	-		1	SCREW
	495	311101-0267	-		1	CYLINDRICACP4H6X10
	498	311103-0267	-		1	CYLINDRICACP M6 4X10 RFR
	500	312101-0297	-		2	SCREW M6S4X25FZB
	505	312101-0333	-		4	SCREW M6S5X25FZB
	510	312101-0362	-		2	SCREW M6S6X8FZB
	520	312101-0364	-		2	SCREW M6S6X10FZB
	525	312105-0374	-		1	SCREW M6S6X30RFR
	540	312101-0497	-		1	SCREW M6S10X35FZB
	560	312101-0504	-		1	SCREW M6S10X65FZB
	570	312101-0515	-		2	SCREW M6S10X120FZB
	580	312121-0287	S		4	SLOTTED HEMCS4X8FZB
	585	312145-0220	-		1	SLOTTED HEMFS3X6RFR
	590	312151-0287	-		6	SCREW MF6S4X8FZB
	600	312151-0364	-		8	SCREW MF6S6X10FZB
	605	312311-0321	-		1	STOP SCREW T6SS5X6FZB
	610	312601-0318	-		2	NUT M6M8FZB
	630	312601-0324	-		1	NUT M6M16FZB
	640	312811-0324	S		1	LOCK NUT M16RFR
	650	312811-0326	S		1	LOCK NUT M20RFR
	655	312901-0324	-		1	NUT M6M16VFZB
	660	315101-0136	-		2	WASHER BRB4,3X8FZB
	665	315101-0146	-		4	WASHER BRB5,3X10FZB
	670	315101-0153	-		3	WASHER BRB6,4X12FZB
	680	315101-0173	-		2	WASHER BRB10,5X22FZB
	690	315101-0186	-		1	WASHER BRB17X30FZB
	700	315111-0173	-		2	WASHER TBRB10,5X22FZB
	720	315701-0335	-		1	FLAT WEDGE12X8X56
	730	321576-0260	S		1	SUPPORT RONUTR20

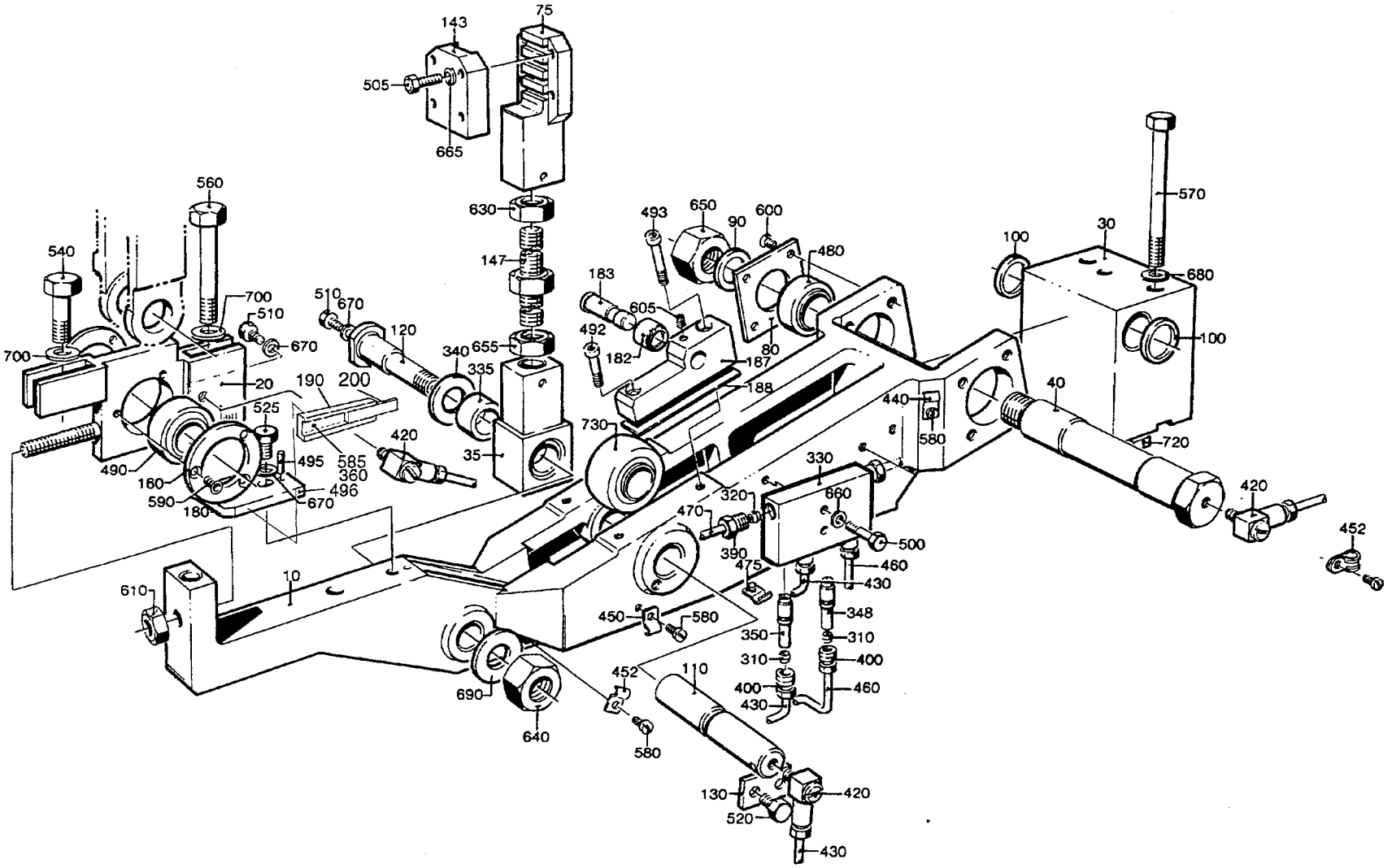

49181503.TIF
491815-3/4
AM 19159

Last Alteration: AM 19159 92-12-07

Corresponding group: 491815-020V
Assembly Drawing: 491815-3/4

Issue: **940524**

From	Pos	Part No	SP	UN	Qty	Description
		C- 491815-0201				**Slewing Bracket Left, Ass'y**
	010	G- 751212	C		1	ARM
	015	G- 751213	C		1	BEARING BRACKET
	020	978275	C		1	BEARING HOLDER
	035	256515	S		1	END PIECE
	040	272462	S		1	AXLE BOLT
	075	272607	C		1	BELT HOLDER
	080	256422	S		2	WASHER
	090	256426-0001	S		1	WASHER
	100	256426-0002	S		2	WASHER
	110	256427	C		1	SHAFT
	120	490916	S		1	AXLE PIN
	130	256472	S		1	WASHER
	143	256516	C		1	CAP
	147	256517	C		1	SCREW
	160	257311	S		2	CAP
	180	978272	-		1	BRACKET
	182	491165	S		1	ROLL
	183	491166	S		1	SHAFT
	187	751079	S		1	BRACKET LEFT
	188	491319	S		2	LACE
	190	978273	-		1	DIAL
	200	978274	-		1	DIAL
	310	90028-0020	P		4	CONE
	320	90028-0021	P		2	CONE
	330	90032-0039	-		1	BLOCK
	335	321531-0248	S		2	NEEDLE SLEHK2016
	340	90083-0016	S		2	PLATE
	348	90092-0052	S		3	VALVE
	350	90092-0053	S		1	VALVE
	360	90157-0016	-		X	LOCKING FLUID
	390	90134-0038	S		2	BUSHING
	400	90134-0039	S		4	BUSHING
	420	90134-0058	-		5	BANJO CONNECTION
	430	90266-0019	-	MM	350	PIPE
	440	90165-0002	-		2	CLIP
	450	90165-0022	-		1	CLIP
	452	90165-0065	-		4	CRAMP
	460	90166-0143	-	MM	1100	HOSE
	470	90166-0109	P	MM	700	HOSE
	475	90182-0005	-		2	STRAP
	480	90240-0048	S		2	BEARING
	490	90240-0050	S		1	BEARING
	492	90287-0143	-		1	SCREW
	493	90287-0144	-		1	SCREW
	495	311101-0267	-		1	CYLINDRICACP4H6X10
	498	311103-0267	-		1	CYLINDRICACP M6 4X10 RFR
	500	312101-0297	-		2	SCREW M6S4X25FZB
	505	312101-0333	-		4	SCREW M6S5X25FZB
	510	312101-0362	-		2	SCREW M6S6X8FZB
	520	312101-0364	-		2	SCREW M6S6X10FZB
	525	312105-0374	-		1	SCREW M6S6X30RFR
	540	312101-0497	-		1	SCREW M6S10X35FZB
	560	312101-0504	-		1	SCREW M6S10X65FZB
	570	312101-0515	-		2	SCREW M6S10X120FZB
	580	312121-0287	S		6	SLOTTED HEMCS4X8FZB
	585	312145-0220	-		1	SLOTTED HEMFS3X6RFR
	590	312151-0287	-		6	SCREW MF6S4X8FZB
	600	312151-0364	-		8	SCREW MF6S6X10FZB
	605	312311-0321	-		1	STOP SCREW T6SS5X6FZB
	610	312601-0318	-		2	NUT M6M8FZB
	630	312601-0324	-		1	NUT M6M16FZB
	640	312811-0324	S		1	LOCK NUT M16RFR
	650	312811-0326	S		1	LOCK NUT M20RFR
	655	312901-0324	-		1	NUT M6M16VFZB
	660	315101-0136	-		2	WASHER BRB4,3X8FZB
	665	315101-0146	-		4	WASHER BRB5,3X10FZB
	670	315101-0153	-		3	WASHER BRB6,4X12FZB
	680	315101-0173	-		2	WASHER BRB10,5X22FZB
	690	315101-0186	-		1	WASHER BRB17X30FZB
	700	315111-0173	-		2	WASHER TBRB10,5X22FZB
	720	315701-0335	-		1	FLAT WEDGE12X8X56
	730	321576-0260	S		1	SUPPORT RONUTR20

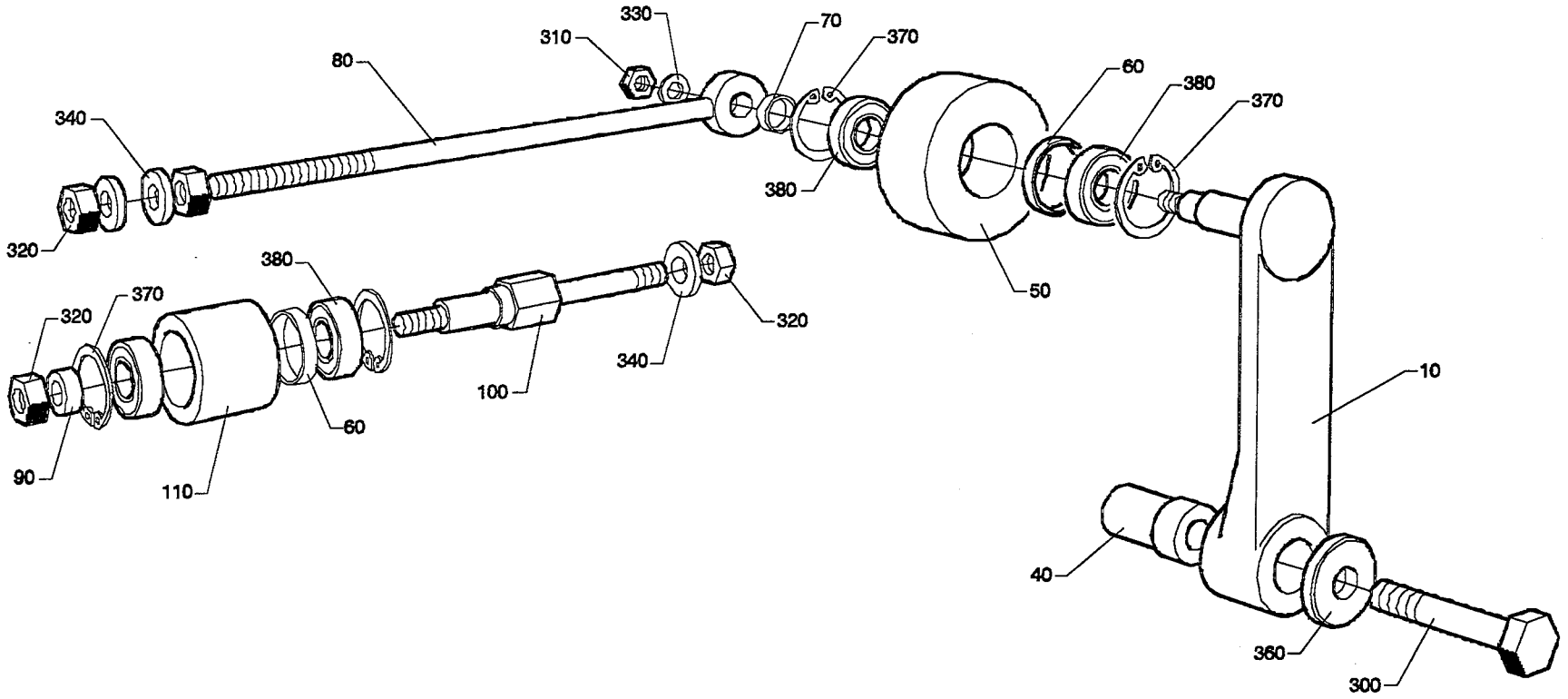

25619904.WPG
256199-4
AM 15166

Last Alteration: AM 15166 90-09-05

Corresponding group: 256199-040V
Assembly Drawing: 256199-4

Issue: **940524**

From	Pos	Part No	SP	UN	Qty	Description
		C- 256199-0401				**Belt Stretcher, Ass'y**
	010	G- 272565	C		1	ARM
	040	256912	S		1	DOWEL
	050	751254	S		1	ROLL
	060	752765	S		2	SPACER RING
	070	256915	S		1	SPACER RING
	080	256916	S		1	STRUT
	090	256918	S		1	WASHER
	100	272566	S		1	AXLE PIN
	110	751180	C		1	ROLL
	300	312101-0546	-		1	SCREW M6S12X70FZB
	310	312811-0318	S		1	LOCK NUT M8RFR
	320	312811-0320	S		4	LOCK NUT M10RFR
	330	315111-0165	-		1	WASHER TBRB8,4X16FZB
	340	315111-0173	-		4	WASHER TBRB10,5X22FZB
	360	315121-0178	-		1	WASHER TBRSB13X36FZB
	370	315752-0123	S		4	CIRCLIP SGH32
	380	321308-0202	S		4	BALL BEARISKF6002-2RS

From	Pos	Part No	SP	UN	Qty	Description

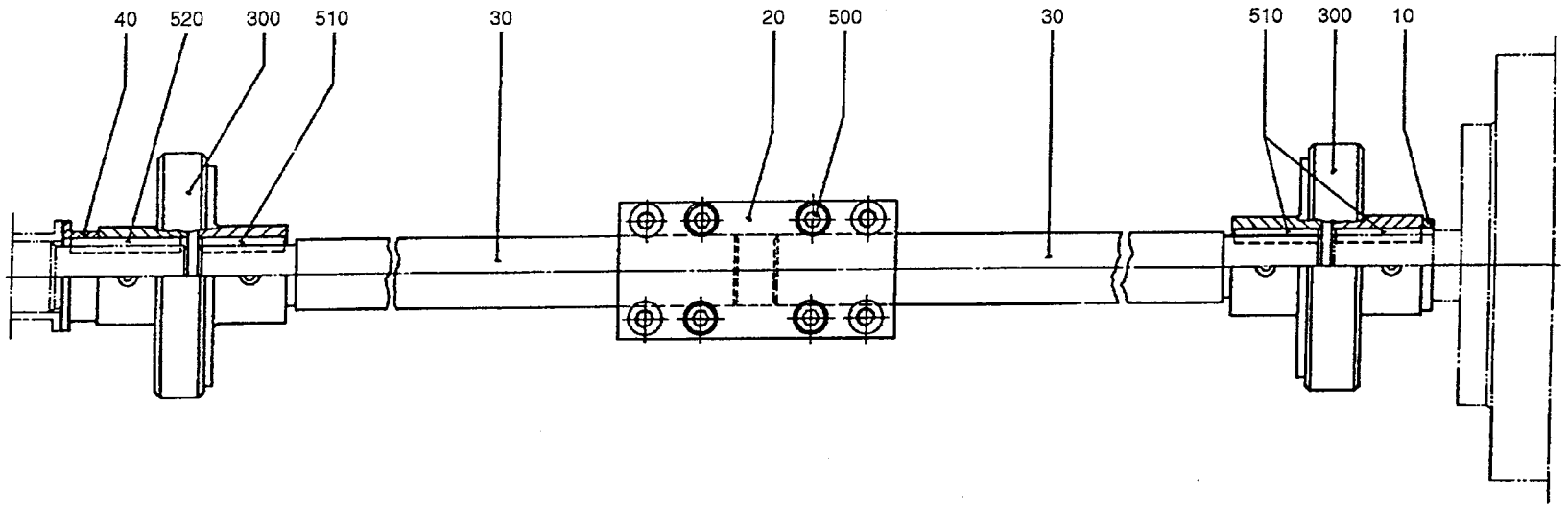

25620004.TIF
256200-4
AM 6317

Last Alteration: AM 6317 83-11-03

Corresponding group: 256200-030V
Assembly Drawing: 256200-4

Issue: **940524**

From	Pos	Part No	SP	UN Qty	Description
		C- 256200-0301			**Intermediary Shaft, Ass'y**
	010	272857	S	1	RING
	020	295983	-	1	CONNECTION
	030	441339	S	2	SHAFT
	040	441720	S	1	SPACER
	300	90355-0048	S	2	CONNECTION
	500	312111-0368	-	8	SCREW MC6S6X16FZB
	510	315701-0235	S	3	FLAT WEDGE6X6X28
	520	315701-0239	S	1	FLAT WEDGE6X6X40

From	Pos	Part No	SP	UN Qty	Description

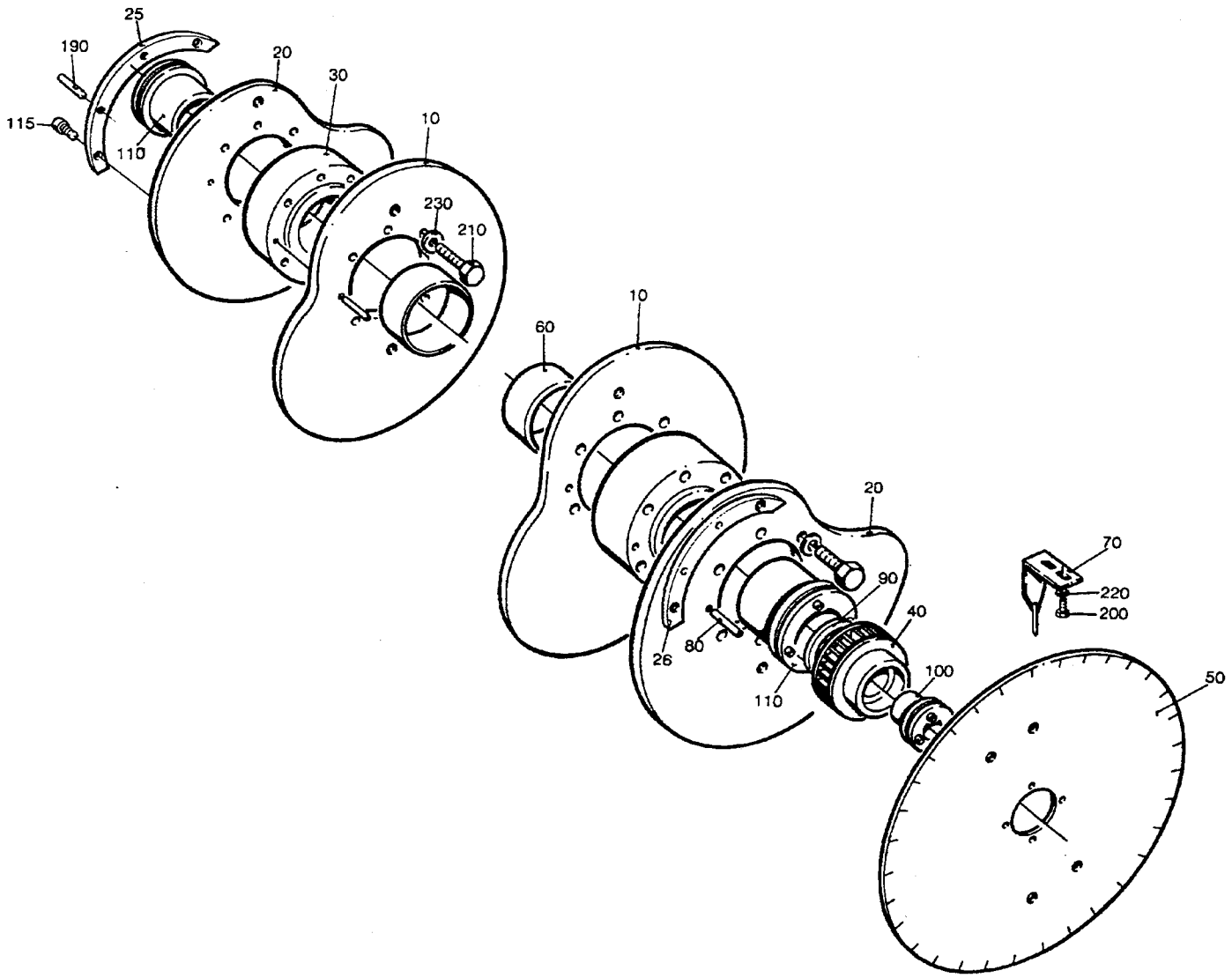

25620104.TIF
256201-4
AM 14651

Last Alteration: AM 14651 91-02-02

Corresponding group: 256201-040V
Assembly Drawing: 256201-4

Issue: **940524**

From	Pos	Part No	SP	UN Qty	Description
250ml					
		C- 256201-0401			**Curve Pack, Ass'y**
	010	272587	C	2	CURVE
	020	272588	C	2	CURVE
	025	491908	S	1	CURVE SEGMENT
	026	491909	S	1	CURVE SEGMENT
	210	312101-0500	-	24	SCREW M6S10X45FZB
	230	315101-0173	-	24	WASHER BRB10,5X22FZB
200ml					
		C- 256201-0402			**Curve Pack, Ass'y**
	010	272589	C	2	CURVE
	020	272590	C	2	CURVE
	025	491910	S	1	CURVE SEGMENT
	026	491911	S	1	CURVE SEGMENT
	210	312101-0500	-	24	SCREW M6S10X45FZB
	230	315101-0173	-	24	WASHER BRB10,5X22FZB
180ml					
		C- 256201-0403			**Curve Pack, Ass'y**
	010	272591	C	2	CURVE
	020	272592	C	2	CURVE
	025	491912	S	1	CURVE SEGMENT
	026	491913	S	1	CURVE SEGMENT
	210	312101-0500	-	24	SCREW M6S10X45FZB
	230	315101-0173	-	24	WASHER BRB10,5X22FZB
200ml Slim					
		C- 256201-0404			**Curve Pack, Ass'y**
	010	272593	C	2	CURVE
	020	272594	C	2	CURVE
	025	491914	S	1	CURVE SEGMENT
	026	491915	S	1	CURVE SEGMENT
	210	312101-0500	-	22	SCREW M6S10X45FZB
	230	315101-0173	-	22	WASHER BRB10,5X22FZB
236ml					
		C- 256201-0405			**Curve Pack, Ass'y**
	010	978172	C	2	YOKECURVE
	020	978173	C	2	ARMCURVE
	025	978174	S	1	CURVE SEGMENT
	026	978175	S	1	CURVE SEGMENT
	210	312101-0500	-	24	SCREW M6S10X45FZB
	230	315101-0173	-	24	WASHER BRB10,5X22FZB

From	Pos	Part No	SP	UN Qty	Description
Common parts					
	030	456744	S	2	HUB
	040	751176	C	1	TOOTHED PULLY
	050	272821	C	1	PROTRACTOR
	060	256653	-	2	SPACER
	070	271007	C	1	POINTER
	080	295140	S	4	PEG
	090	978340	-	1	SPACER
	100	90208-0038	S	1	BUSHING
	110	90208-0039	S	2	BUSHING
	115	90287-0145	-	4	SCREW
	190	311103-0272	-	6	CYLINDRICACP M6 4X20 RFR
	200	312101-0325	-	6	SCREW M6S5X10FZB
	220	315101-0146	-	6	WASHER BRB5,3X10FZB

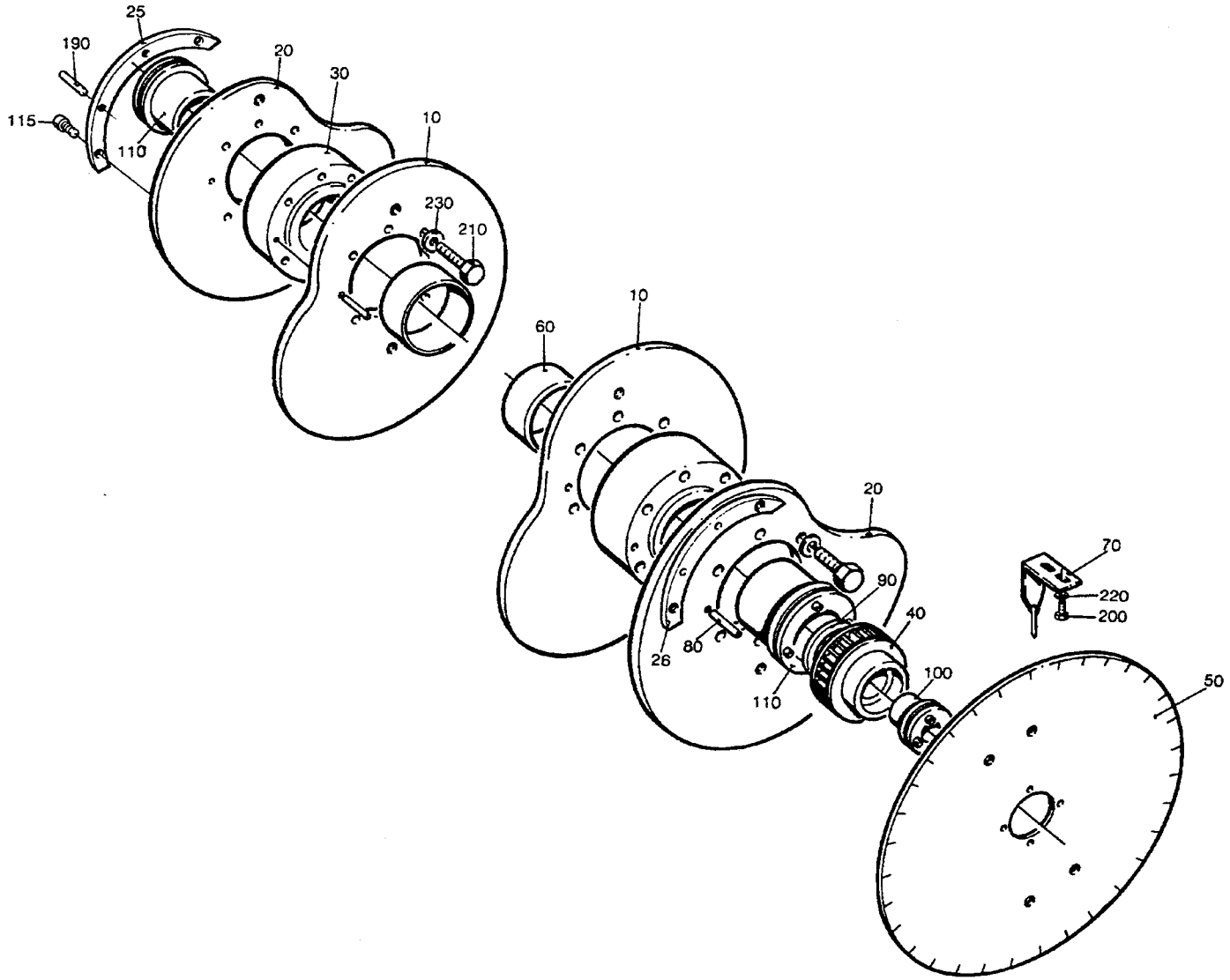

25620204.TIF
256202-4
AM 15166

Last Alteration: AM 20229 93-10-28

Corresponding group: 256202-0502,-0504,-0505,-0506,-0508
Assembly Drawing: 256202-4

Issue: **940524**

From	Pos	Part No	SP	UN	Qty	Description
236ml						
		C- 256202-0502				**Curve Pack, Ass'y**
	010	272118	C		2	CURVE
	020	272119	C		2	CURVE
	025	491916	S		1	CURVE SEGMENT
	026	491917	S		1	CURVE SEGMENT
	060	256653	-		2	SPACER
	210	312115-0500	-		24	SCREW 10X45 A4 80
	230	315101-0173	-		24	WASHER BRB10,5X22FZB
180ml						
		C- 256202-0504				**Curve Pack, Ass'y**
	010	469369	C		2	CURVE
	020	469370	C		2	CURVE
	025	491918	S		1	CURVE SEGMENT
	026	491919	S		1	CURVE SEGMENT
	060	256653	-		2	SPACER
	210	312115-0500	-		24	SCREW 10X45 A4 80
	230	315101-0173	-		24	WASHER BRB10,5X22FZB
125ml						
		C- 256202-0505				**Curve Pack, Ass'y**
	010	271317	C		2	CURVE
	020	271318	C		2	CURVE
	025	491920	S		1	CURVE SEGMENT
	026	491921	S		1	CURVE SEGMENT
	060	256653	-		2	SPACER
	210	312115-0500	-		24	SCREW 10X45 A4 80
	230	315101-0173	-		24	WASHER BRB10,5X22FZB
200ml Slim						
		C- 256202-0506				**Curve Pack, Ass'y**
	010	441411	C		2	CURVE
	020	441412	C		2	CURVE
	025	491461	S		1	CURVE SEGMENT
	026	491462	S		1	CURVE SEGMENT
	060	256653	-		2	SPACER
	210	312115-0500	-		22	SCREW 10X45 A4 80
	230	315101-0173	-		22	WASHER BRB10,5X22FZB
250ml Slim						
		C- 256202-0508				**Curve Pack, Ass'y**
	010	574355	C		2	CURVE
	020	574360	C		2	CURVE
	025	574358	S		1	CURVE SEGMENT
	026	574359	S		1	CURVE SEGMENT
	060	256653	-		2	SPACER
	210	312115-0500	-		22	SCREW 10X45 A4 80
	230	315101-0173	-		22	WASHER BRB10,5X22FZB

From	Pos	Part No	SP	UN	Qty	Description
200ml Slim						
		C- 256202-0509				**Curve Pack, Ass'y**
	010	577217	C		2	CURVE
	020	577218	C		2	CURVE
	025	577219	S		1	CURVE SEGMENT
	026	577220	S		1	CURVE SEGMENT
	060	256653	-		2	SPACER
	210	312115-0500	-		24	SCREW 10X45 A4 80
	230	315101-0173	-		24	WASHER BRB10,5X22FZB
Common Parts						
	030	456744	S		2	HUB
	040	751176	C		1	TOOTHED PULLY
	050	272821	C		1	PROTRACTOR
	070	271007	C		1	POINTER
	080	295140	S		4	PEG
	090	978340	-		1	SPACER
	100	90208-0052	S		1	CLAMPING ELEMENT
	110	90208-0091	S		2	CLAMPING ELEMENT
	115	90287-0145	-		4	SCREW
	190	311103-0272	-		6	CYLINDRICACP M6 4X20 RFR
	200	312101-0325	-		6	SCREW M6S5X10FZB
	220	315101-0146	-		6	WASHER BRB5,3X10FZB

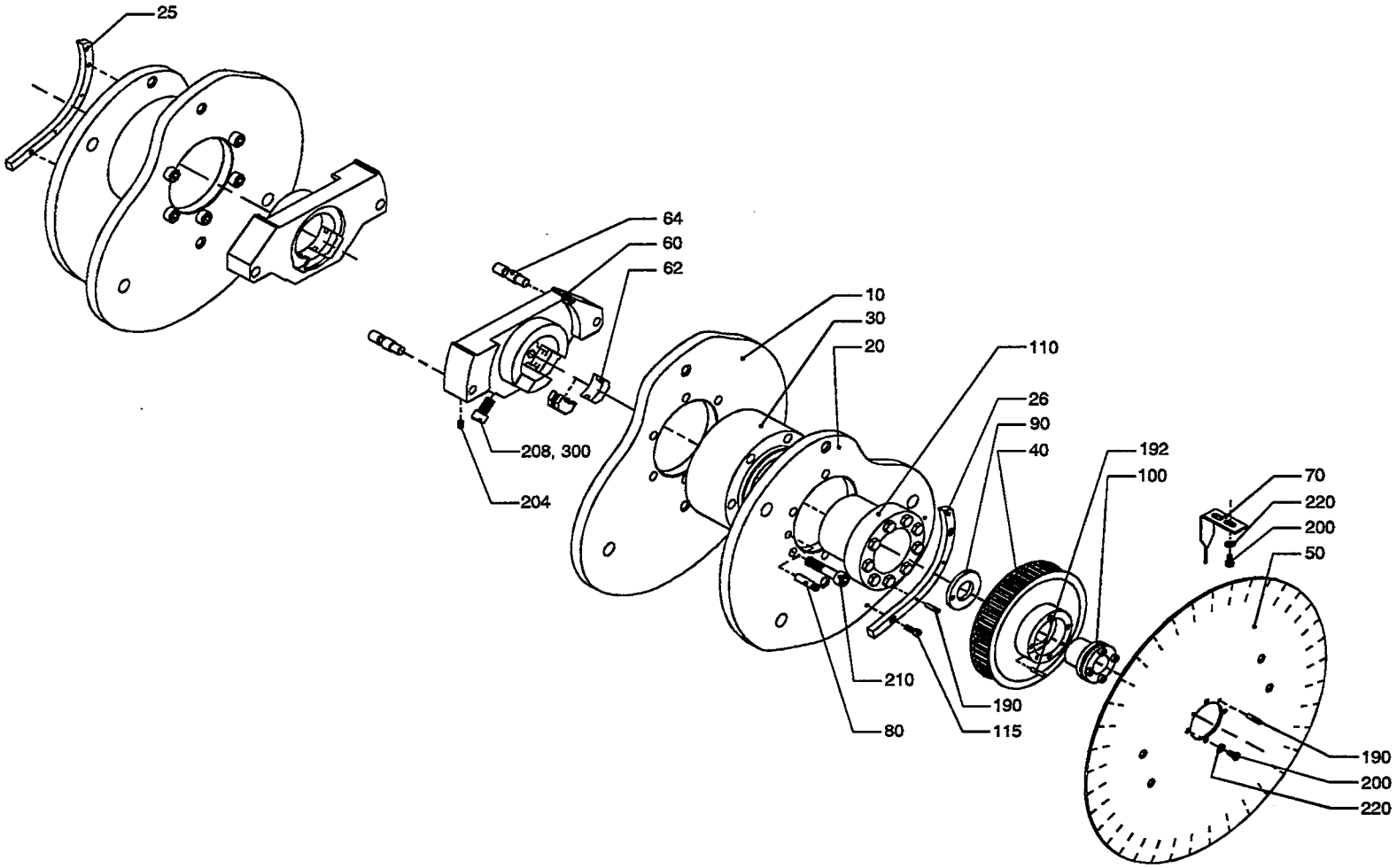
25
64
60
62
10
30
20
110
26
90
40
192
100
70
220
200
50
208, 300
204
210
190
115
80
190
200
220

Last Alteration: AM 19269 93-05-31

Corresponding group: 256202-0501,-0503,-0507
Assembly Drawing: 256202-5

Issue: **940524**

From	Pos	Part No	SP	UN Qty	Description
250ml					
		C- 256202-0501			**Curve Pack, Ass'y**
	010	271759	C	2	CURVE
	020	271760	C	2	CURVE
	025	491459	S	1	CURVE SEGMENT
	026	491460	S	1	CURVE SEGMENT
	060	752773	S	2	ALIGNMENT TEMPLATE
	062	752774	S	4	PLUNGER
	064	978262	S	4	GUIDE PIN
	192	311103-0276	-	1	CYLINDRICACP M6 4X30 RFR
	204	312318-0364	-	4	STOP SCREW SK6SS6X10RFR
	208	312115-0493	-	4	SCREW 10X25 A4 80
	210	312115-0500	-	24	SCREW 10X45 A4 80
	230	315101-0173	-	24	WASHER BRB10,5X22FZB
	300	90157-0016	-	X	LOCKING FLUID
200ml					
		C- 256202-0503			**Curve Pack, Ass'y**
	010	456373	C	2	CURVE
	020	456374	C	2	CURVE
	025	491345	S	1	CURVE SEGMENT
	026	491346	S	1	CURVE SEGMENT
	060	752773	S	2	ALIGNMENT TEMPLATE
	062	752774	S	4	PLUNGER
	064	978262	S	4	GUIDE PIN
	192	311103-0276	-	1	CYLINDRICACP M6 4X30 RFR
	204	312318-0364	-	4	STOP SCREW SK6SS6X10RFR
	208	312115-0493	-	4	SCREW 10X25 A4 80
	210	312115-0500	-	24	SCREW 10X45 A4 80
	230	315101-0173	-	24	WASHER BRB10,5X22FZB
	300	90157-0016	-	X	LOCKING FLUID
284ml					
		C- 256202-0507			**Curve Pack, Ass'y**
	010	752735	C	2	CURVE
	020	752736	C	2	CURVE
	025	752737	S	1	CURVE SEGMENT
	026	752738	S	1	CURVE SEGMENT
	060	752773	S	2	ALIGNMENT TEMPLATE
	062	752774	S	4	PLUNGER
	064	978262	S	4	GUIDE PIN
	192	311103-0276	-	1	CYLINDRICACP M6 4X30 RFR
	204	312318-0364	-	4	STOP SCREW SK6SS6X10RFR
	208	312115-0493	-	4	SCREW 10X25 A4 80
	210	312115-0500	-	22	SCREW 10X45 A4 80
	230	315101-0173	-	22	WASHER BRB10,5X22FZB
	300	90157-0016	-	X	LOCKING FLUID

From	Pos	Part No	SP	UN Qty	Description
Common Parts					
	030	456744	S	2	HUB
	040	751176	C	1	TOOTHED PULLY
	050	272821	C	1	PROTRACTOR
	070	271007	C	1	POINTER
	080	295140	S	4	PEG
	090	978340	-	1	SPACER
	100	90208-0052	S	1	CLAMPING ELEMENT
	110	90208-0091	S	2	CLAMPING ELEMENT
	115	90287-0145	-	4	SCREW
	190	311103-0272	-	6	CYLINDRICACP M6 4X20 RFR
	200	312101-0325	-	6	SCREW M6S5X10FZB
	220	315101-0146	-	6	WASHER BRB5,3X10FZB

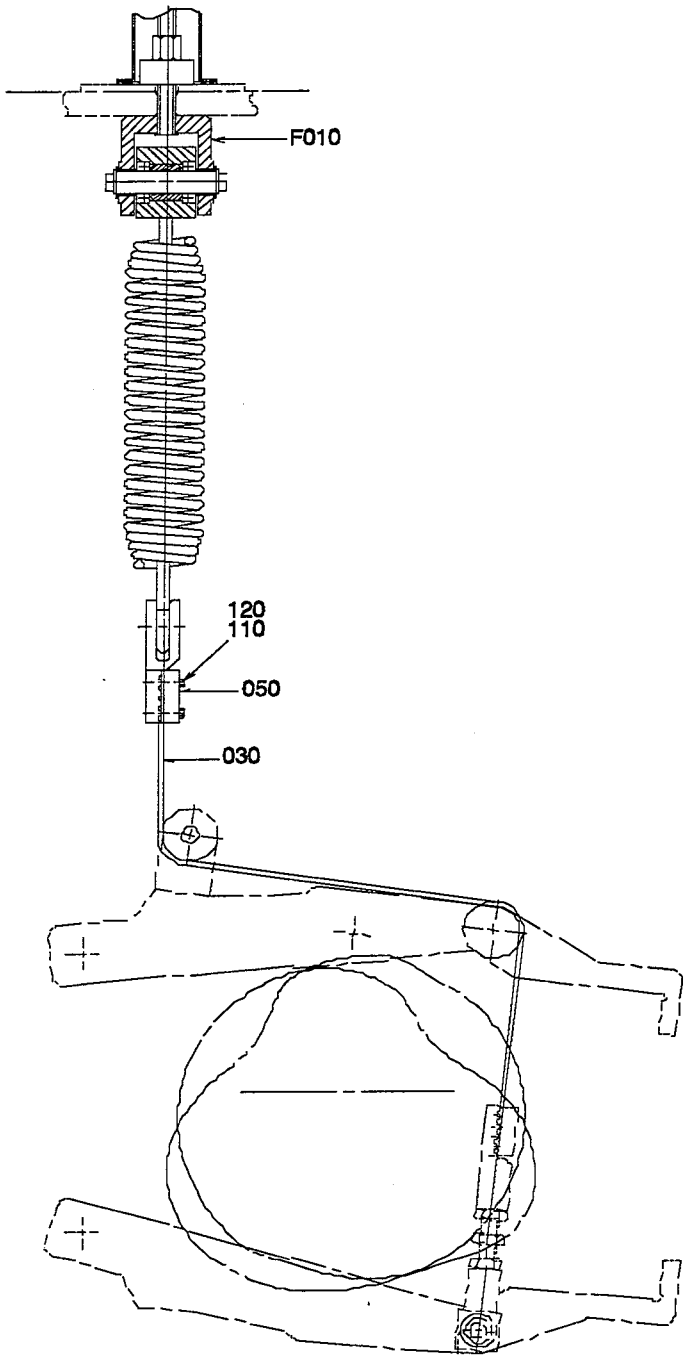
F010
120
110
050
030

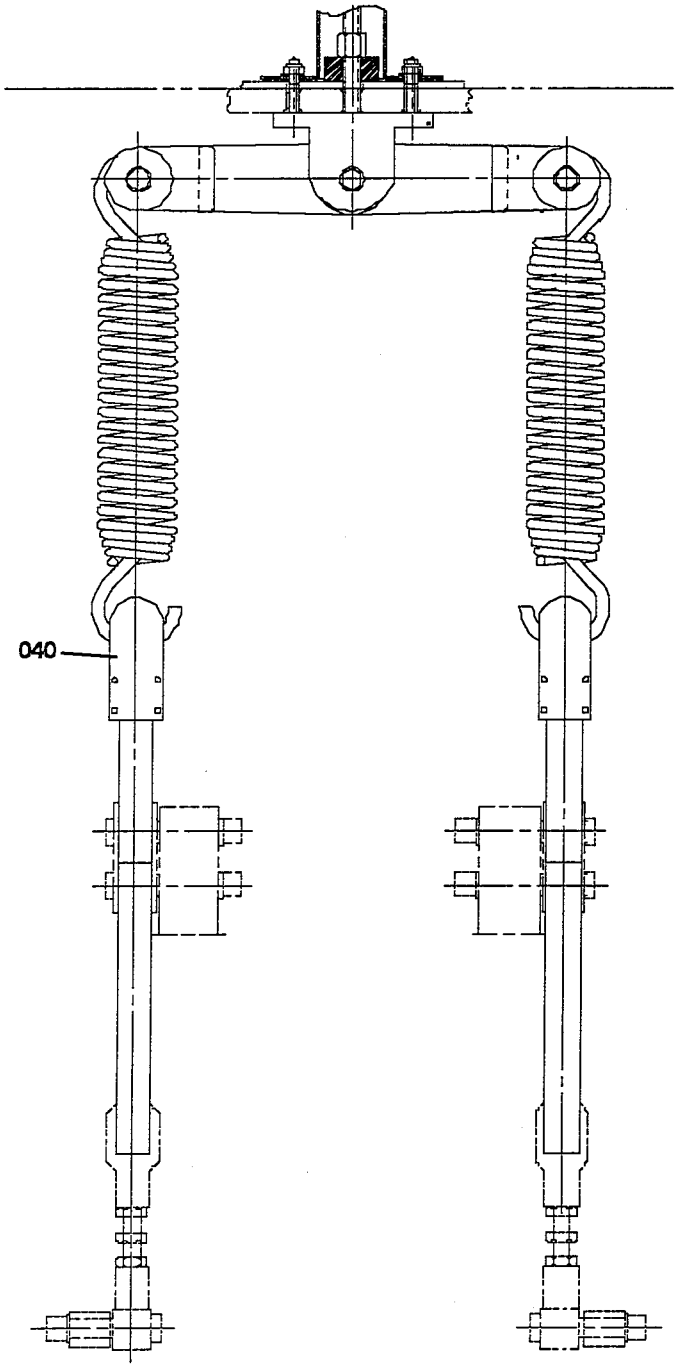
040

Last Alteration: AM 19269 93-05-31

Corresponding group: 572760-010V
Assembly Drawing: 572760-1

Issue: **940524**

From	Pos	Part No	SP	UN	Qty	Description
TPC 200ml 180ml IH 236ml - 125ml						
		C- 572760-0101				**Hold-Down Device, Ass'y**
	030	566404-0001	S		2	TIMING BELT
TPC 250ml 236ml IH 284ml 250ml 200ml Slim 250ml Slim						
		C- 572760-0102				**Hold-Down Device, Ass'y**
	030	566404-0002	S		2	TIMING BELT
TPC 200ml Slim						
		C- 572760-0103				**Hold-Down Device, Ass'y**
	030	566404-0003	S		2	TIMING BELT
Common Parts						
	F010	**C- 572750-010V**	**-**		**1**	**ROCKER ARM**
	040	272608	C		2	BELT HOLDER
	050	256516	-		2	CAP
	060	441353	S		2	TENSION SPRING
	110	312101-0333	-		8	SCREW M6S5X25FZB
	120	315101-0146	-		8	WASHER BRB5,3X10FZB

From	Pos	Part No	SP	UN	Qty	Description

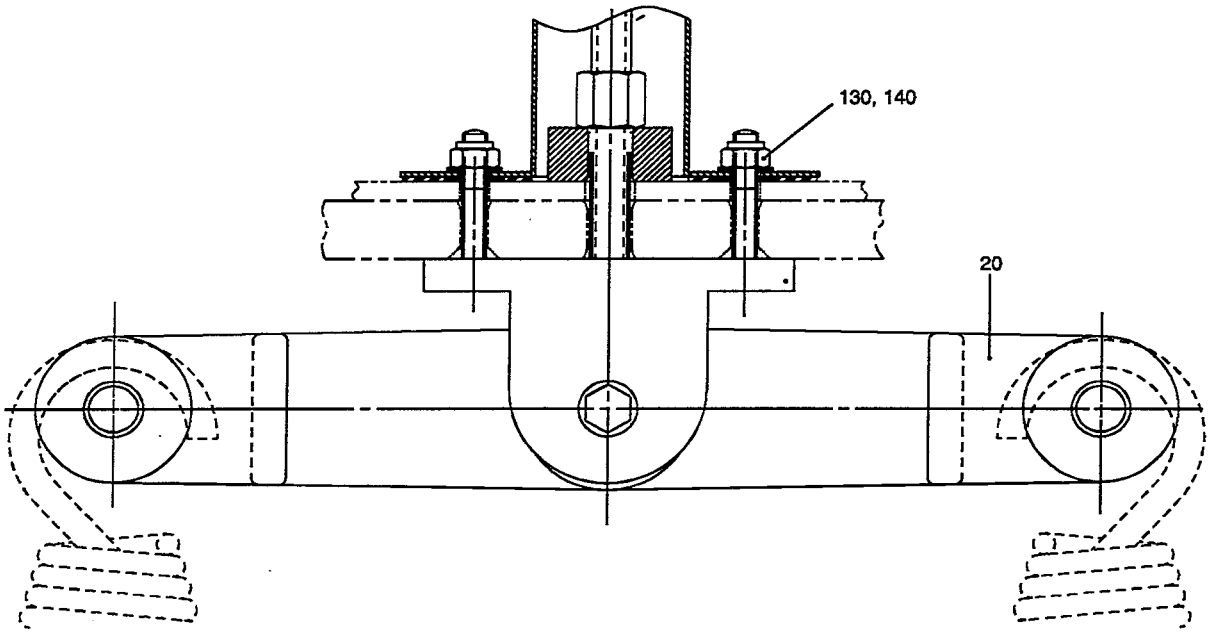
130, 140
20

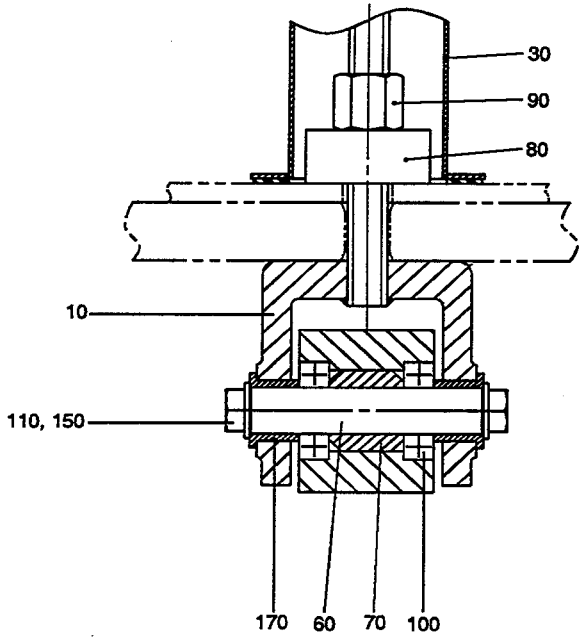
30
90
80
10
110, 150
170
60
70
100

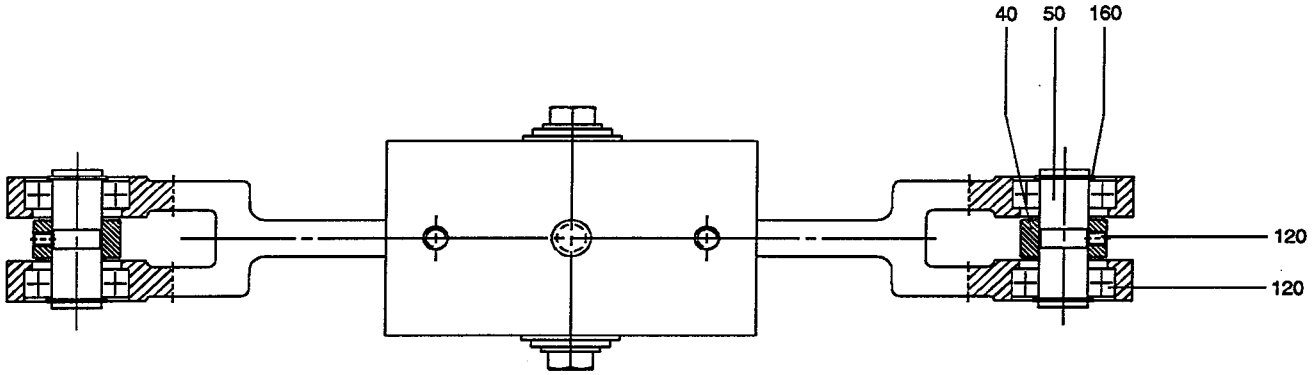
40
50
160
120
120

From	Pos	Part No	SP	UN	Qty	Description
		C- 572750-0101				**Rocker Arm, Ass'y**
	010	572751	-		1	BRACKET
	020	572752	-		1	ROCKER ARM
	030	978210	-		1	PROTECTION PLATE
	040	572753	-		2	SPRING BRACKET
	050	572754	-		2	SHAFT
	060	572755	-		1	SHAFT
	070	572756	-		1	SPACER
	080	978207	-		1	SPACER PIPE
	090	978209	-		1	NUT
	100	90214-0170	S		6	BALL BEARING
	110	312105-0532	S		2	SCREW M6S12X20RFR
	120	312318-0362	S		2	STOP SCREW SK6SS6X8RFR
	130	312812-0320	S		2	LOCK NUT A2-M10RFR
	140	315105-0173	S		4	WASHER BRB10,5X22RFR
	150	315115-0178	S		2	WASHER TBRB13X24RFR
	160	315751-0116	S		4	CIRCLIP SGA20 RFR
	170	321111-0304	S		2	FLANGE BUS 20E7X20

From	Pos	Part No	SP	UN	Qty	Description

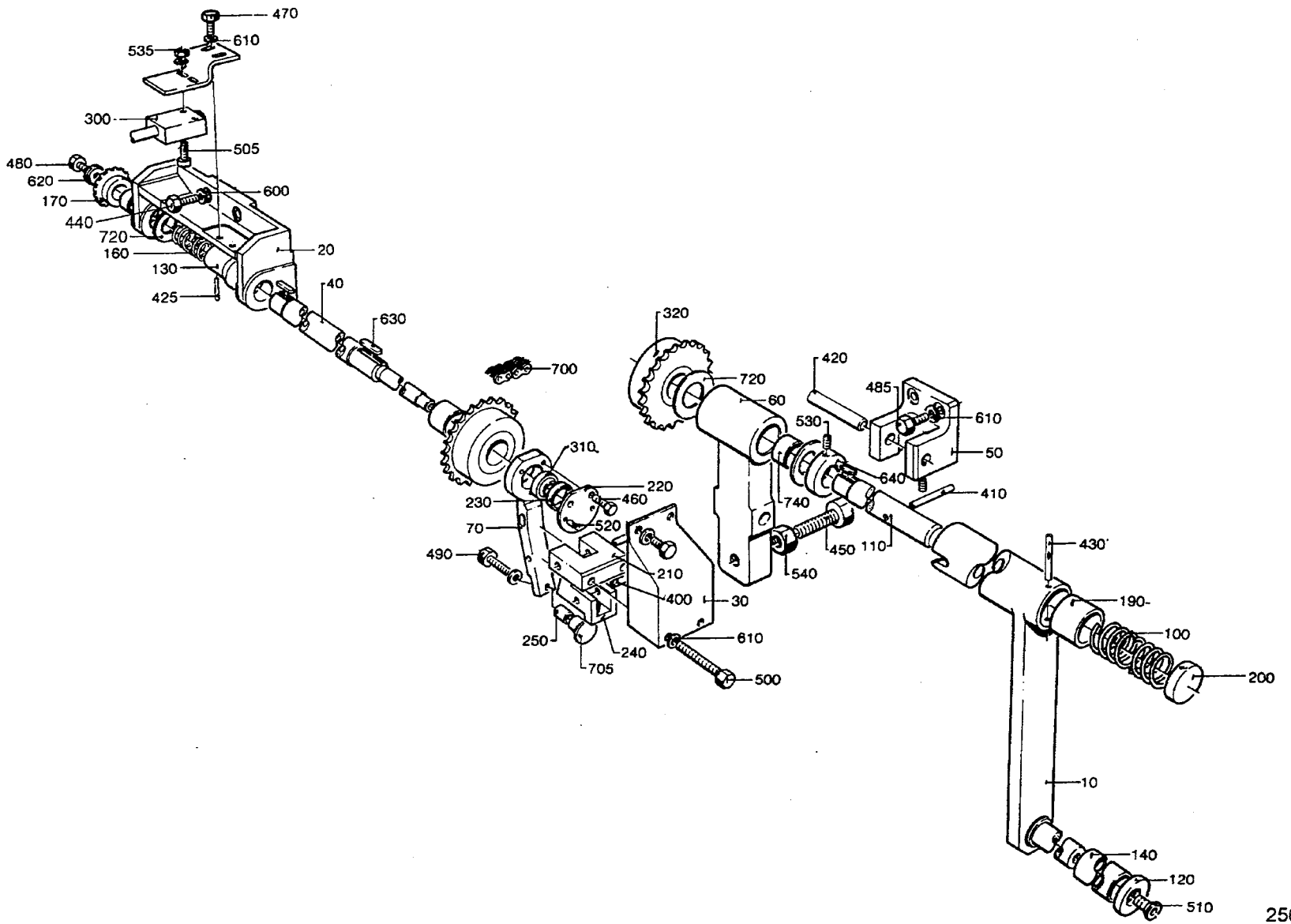

25680605.TIF
256806-5
AM 7499

Last Alteration: AM 7499 85-02-11

Corresponding group: 256806-030V
Assembly Drawing: 256806-5

Issue: **940524**

From	Pos	Part No	SP	UN Qty	Description
		C- 256806-0301			**Crank, Ass'y**
	010	257326	C	1	CRANK
	020	272664	C	1	CANTILEVER
	030	272690	-	1	COVER
	040	456343	S	1	SHAFT
	050	272736	C	1	CANTILEVER
	060	272737	C	1	BRACKET
	070	272772	C	1	ARM
	100	12228	S	1	COMPRESSION SPRING
	110	256812	S	1	SHAFT
	120	256814	-	1	WASHER
	130	456344	-	1	SLEEVE
	140	256816	-	1	PIPE
	150	456345	-	1	BRACKET
	160	256828	S	1	SPRING
	170	257179	S	1	GEAR WHEEL
	190	257327	S	1	SLIDER
	200	257328	S	1	END PIECE
	210	272691	S	1	BRACKET
	220	272692	S	1	LID
	230	272693	S	1	RING
	240	272694	-	1	BARRIER
	250	295773	-	1	SPACER
	300	90044-0084	S	1	MICRO SWITCH
	310	90240-0093	S	1	PLAIN BEARING
	320	90344-0022	S	2	SPROCKET
	400	311103-0355	-	2	CYLINDRICACP M6 6X25 RFR
	410	311103-0361	-	1	CYLINDRICACP M6 6X40 RFR
	420	311103-0470	-	1	CYLINDRICACP M6 10X60 RFR
	425	311305-0274	-	1	SLOTTED PIRPC4X25FZB
	430	311307-0275	-	1	SLOTTED PIRPD4X28FZB
	440	312101-0453	-	4	SCREW M6S8X25FZB
	450	312104-0499	-	1	SCREW M6S10X40H8.8FZB
	460	312105-0293	-	3	SCREW M6S4X16 A2 80
	470	312105-0366	-	4	SCREW M6S6X12RFR
	480	312105-0368	-	1	SCREW M6S6X16RFR
	485	312105-0370	-	3	SCREW M6S6X20RFR
	490	312105-0374	-	1	SCREW M6S6X30RFR
	500	312105-0382	-	2	SCREW M6S6X60RFR
	505	312115-0331	-	2	SCREW 5X20 A4 80
	510	312151-0366	-	1	SCREW MF6S6X12FZB
	520	312318-0287	-	2	STOP SCREW SK6SS4X8RFR
	530	312318-0362	-	3	STOP SCREW SK6SS6X8RFR
	535	312605-0314	-	2	NUT M6M5RFR
	540	312605-0320	-	1	NUT M6M10RFR
	600	315101-0165	-	4	WASHER BRB8,4X16FZB
	605	315105-0146	-	2	WASHER BRB5,3X10RFR
	610	315105-0153	-	10	WASHER BRB6,4X12RFR
	620	315121-0153	-	1	WASHER TBRSB6,4X22FZB
	630	315701-0232	-	3	FLAT WEDGE6X6X20
	640	315740-0116	-	1	RETAINING 20SMS199
	700	318201-0150	S	1	ROLLER CHA3/8"
	705	90051-0082	-	1	KNOB
	710	321120-0138	S	4	BUSHING 20/23X20
	720	321129-0131	S	4	THRUST WAS20/36X1,5

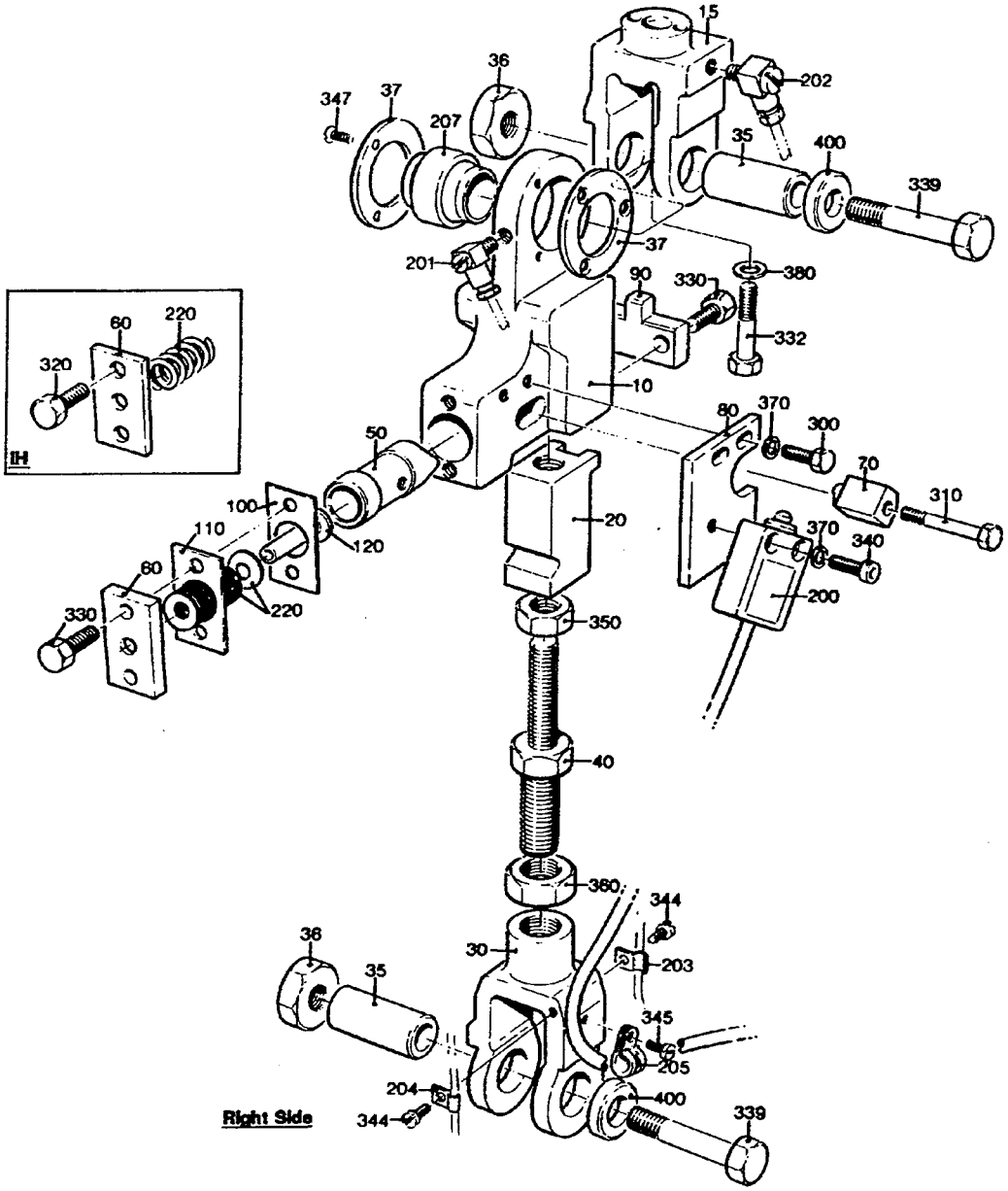

49178702.TIF
491789-2
AM 19159

From	Pos	Part No	SP	UN Qty	Description
		C- 491787-0201			**Disconnection Link Right, Ass'y**
	010	G- 491194	C	1	LINK HEAD
	015	272472	-	1	END PIECE
	020	491195	S	1	SLIDER
	030	G- 491196	S	1	FORKED LINK
	035	257309	S	2	SHAFT
	036	257310	S	2	NUT
	037	257311	S	2	CAP
	040	751659	S	1	ADJUSTING SCREW
	050	491198	S	1	PISTON
	060	752677	-	1	BACK PIECE
	070	491200	S	1	CARRIER
	080	491456	-	1	PLATE
	090	491375	-	1	CROSS PIECE
	100	752674-0001	S	1	SHIM
	110	752674-0006	S	1	SHIM
	120	752685	-	1	GUIDE PIN
	200	90044-0123	S	1	MICROSWITCH
	201	90134-0058	-	1	BANJO CONNECTION
	202	90134-0068	-	1	BANJO CONNECTION
	203	90165-0002	-	1	CLIP
	204	90165-0022	-	1	CLIP
	205	90165-0065	-	1	CRAMP
	207	90240-0050	-	1	BEARING
	210	90296-0012	-	X	LUBRICANT
	220	90016-0056	S	42	DISC SPRING
	300	312101-0329	-	2	SCREW M6S5X16FZB
	310	312101-0337	-	1	SCREW M6S5X35FZB
	330	312101-0371	-	4	SCREW M6S6X22FZB
	332	312101-0376	-	2	SCREW M6S6X35FZB
	339	312101-0502	-	2	SCREW M6S10X55FZB
	340	312111-0329	-	2	SCREW MC6S5X16FZB
	344	312121-0287	-	2	SLOTTED HEMCS4X8FZB
	345	312121-0289	-	1	SLOTTED HEMCS4X10FZB
	347	312151-0287	-	6	SCREW MF6S4X8FZB
	350	312621-0322	-	1	NUT ML6M12FZB
	360	312621-0324	-	1	NUT ML6M16FZB
	370	315101-0146	-	4	WASHER BRB5,3X10FZB
	380	315101-0153	-	2	WASHER BRB6,4X12FZB
	400	315121-0173	-	2	WASHER BRSB10,5X28FZB

From	Pos	Part No	SP	UN Qty	Description

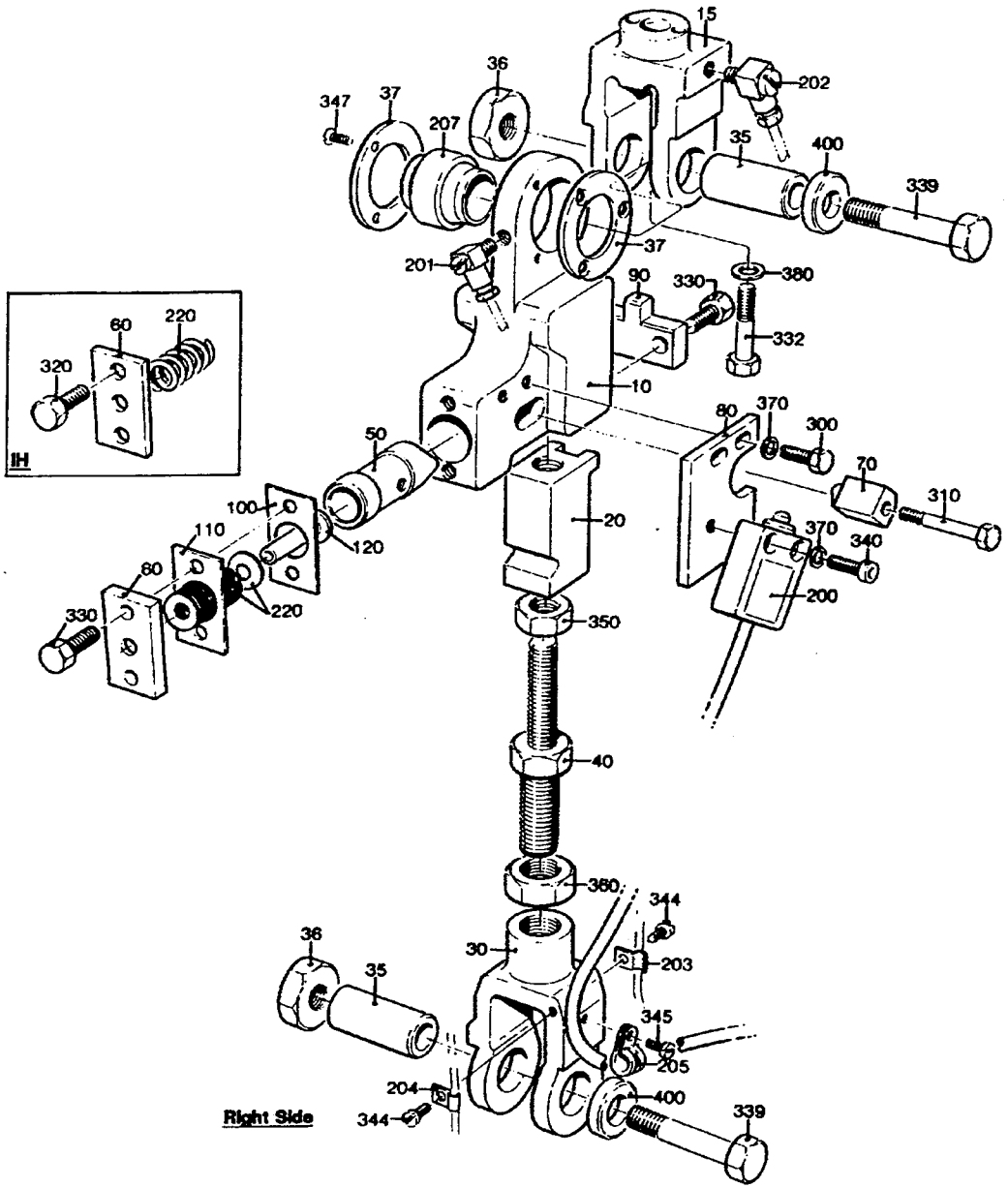

49178802.TIF
491788-2
AM 19159

Last Alteration: AM 19159 92-12-07

Corresponding group: 491788-020V
Assembly Drawing: 491788-2

Issue: **940524**

From	Pos	Part No	SP	UN	Qty	Description
		C- 491788-0201				**Disconnection Link Left, Ass'y**
	010	G- 491194	C		1	LINK HEAD
	015	272472	-		1	END PIECE
	020	491195	S		1	SLIDER
	030	G- 491196	S		1	FORKED LINK
	035	257309	S		2	SHAFT
	036	257310	S		2	NUT
	037	257311	S		2	CAP
	040	751659	S		1	ADJUSTING SCREW
	050	491198	S		1	PISTON
	060	752677	-		1	BACK PIECE
	070	491200	S		1	CARRIER
	080	491456	-		1	PLATE
	090	491375	-		1	CROSS PIECE
	100	752674-0001	S		1	SHIM
	110	752674-0006	S		1	SHIM
	120	752685	-		1	GUIDE PIN
	200	90044-0123	S		1	MICROSWITCH
	201	90134-0058	-		1	BANJO CONNECTION
	202	90134-0068	-		1	BANJO CONNECTION
	203	90165-0002	-		1	CLIP
	204	90165-0022	-		1	CLIP
	205	90165-0065	-		1	CRAMP
	207	90240-0050	-		1	BEARING
	210	90296-0012	-		X	LUBRICANT
	220	90016-0056	S		42	DISC SPRING
	300	312101-0329	-		2	SCREW M6S5X16FZB
	310	312101-0337	-		1	SCREW M6S5X35FZB
	330	312101-0371	-		4	SCREW M6S6X22FZB
	332	312101-0376	-		2	SCREW M6S6X35FZB
	339	312101-0502	-		2	SCREW M6S10X55FZB
	340	312111-0329	-		2	SCREW MC6S5X16FZB
	344	312121-0287	-		2	SLOTTED HEMCS4X8FZB
	345	312121-0289	-		1	SLOTTED HEMCS4X10FZB
	347	312151-0287	-		6	SCREW MF6S4X8FZB
	350	312621-0322	-		1	NUT ML6M12FZB
	360	312621-0324	-		1	NUT ML6M16FZB
	370	315101-0146	-		4	WASHER BRB5,3X10FZB
	380	315101-0153	-		2	WASHER BRB6,4X12FZB
	400	315121-0173	-		2	WASHER BRSB10,5X28FZB

From	Pos	Part No	SP	UN	Qty	Description

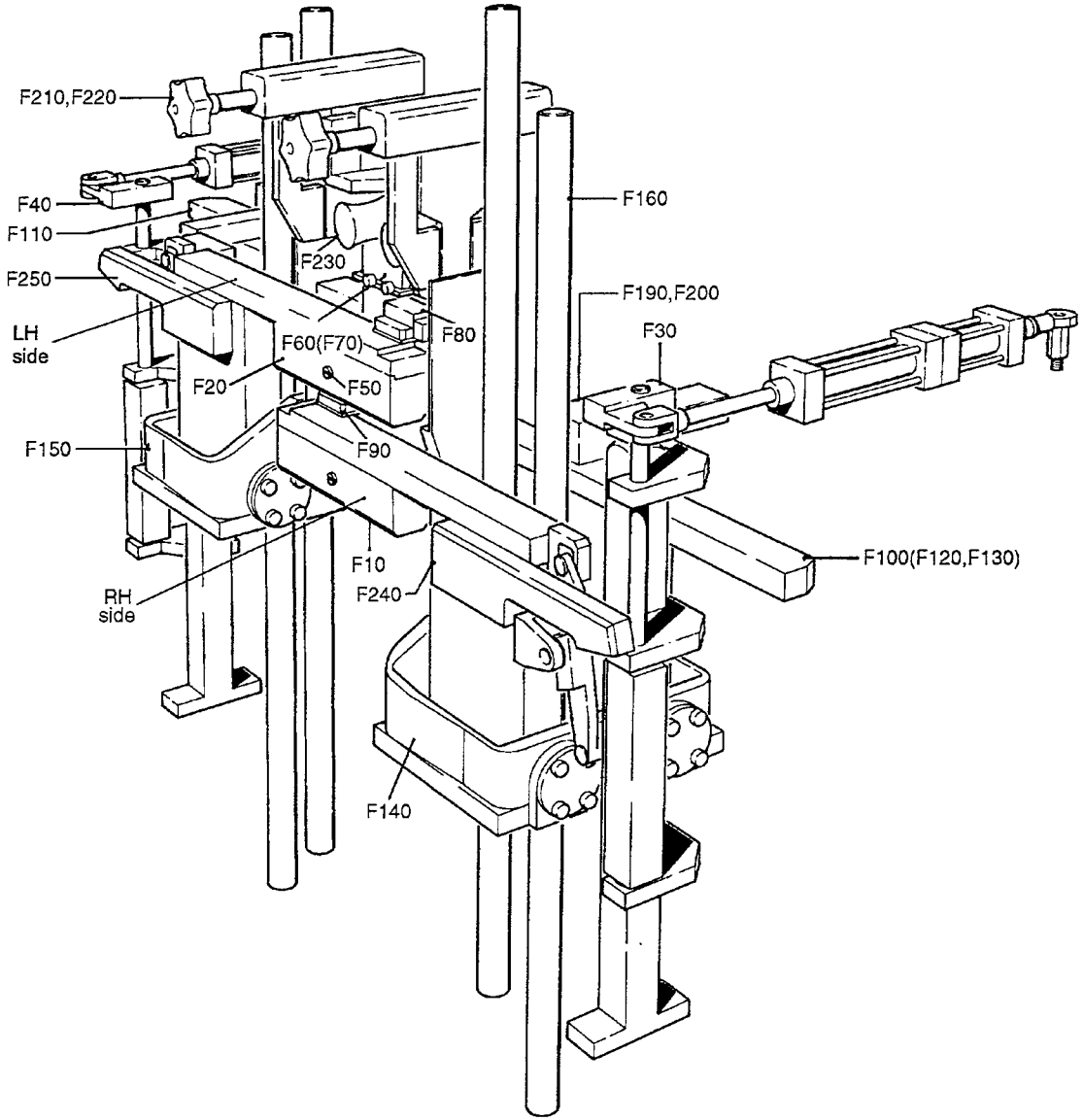

64810404.TIF
648104-4/5
AM 12578

Pos	Group No	Description	
648104-F000	648104-100V	Jaw System	261
648104-F010	256204-050V	Cutting Jaw TPC	263
	256204-050V	Cutting Jaw IH	265
	256204-050V	Cutting Jaw IH	267
648104-F020	256205-050V	Cutting Jaw TPC	269
	256205-050V	Cutting Jaw IH	271
	256205-050V	Cutting Jaw IH	273
648104-F030	256206-020V	Design Correction Device	275
	256206-020V	Design Correction Device	277
648104-F040	256207-020V	Design Correction Device	279
	256207-020V	Design Correction Device	281
648104-F050	256208-040V	Knife Holder	283
256208-F010	978763-010V	Cutting Piece	285
648104-F060	256209-030V	Volume Flap	287
648104-F070	256210-030V	Volume Flap	289
648104-F080	752671-010V	Shock Absorber Version 1	291
648104-F090	752672-010V	Shock Absorber Version 2	293
648104-F100	256212-050V	Pressure Jaw Right	295
648104-F110	256213-050V	Pressure Jaw Left	297
648104-F120	256214-040V	Pressure Rail IH	299
648104-F130	256215-040V	Pressure Rail TPC	301
648104-F140	256951-040V	Yoke	303
648104-F150	256952-040V	Yoke	305
648104-F160	256217-040V	Way	307
648104-F190	256219-030V	Transmission Right	309
648104-F190	572642-010V	Transmission IH Right	311
572642-F100	67379-010V	IH Transformator I	31
67379-F130/F210	68474-010V	Coil	315
648104-F200	256220-030V	Transmission Left	317
648104-F200	572643-010V	Transmission IH Left	319
572643-F100	67379-010V	IH Transformator I	321
67379-F130/F210	68474-010V	Coil	323
648104-F210	256221-020V	Volume Curve Piece	325
648104-F220	256222-020V	Volume Curve Piece	327
648104-F230	256223-040V	Support Roller	329
648104-F240	257381-030V	Connection Block	331
648104-F250	257382-030V	Connection Block	333
648104-F300	295523-040V	Start-Up Kit	335

Pos	Group No	Description

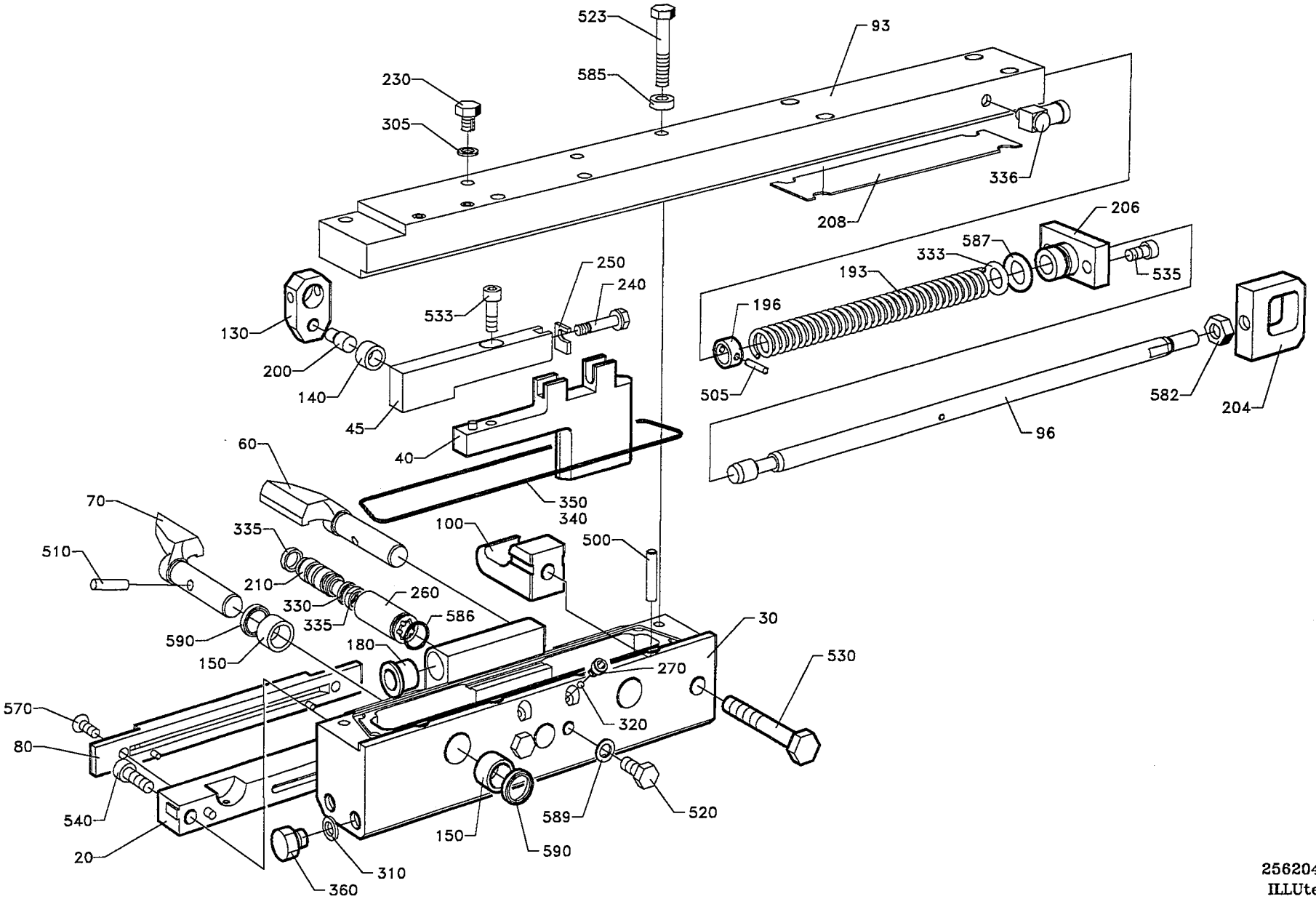

2562045A
ILLUtec®

Last Alteration: AM 20225 93-10-28

Corresponding group: 256204-0501,-0502
Assembly Drawing: 256204-12/16

Issue: **940524**

From	Pos	Part No	SP	UN	Qty	Description
TPC 250ml 236ml 200ml 180ml						
		C- 256204-0501				**Cutting Jaw, Ass'y**
	020	271728	S		1	CUTTING JAW
	030	752113	S		1	BEARING HOUSING
	040	G- 751575	S		1	RULERPART R
	045	751577	S		1	RULERPART R
	060	G- 272422	S		1	FOLDING FLAP
	070	G- 272423	S		1	FOLDING FLAP
	080	456819	S		1	CUTTING JAW OUTER
	130	272419	S		2	CARRIER
	540	312115-0370	-		2	SCREW 6X20 A4 80
	570	312155-0327	-		2	SCREW MF6S5X12RFR
TPC 200ml Slim						
		C- 256204-0502				**Cutting Jaw, Ass'y**
	020	272264	S		1	CUTTING JAW
	030	752225	S		1	BEARING HOUSING
	040	G- 752009	S		1	RULERPART R
	045	752010	S		1	RULERPART R
	060	G- 272424	S		1	FOLDING FLAP
	070	G- 272425	S		1	FOLDING FLAP
	080	752715	S		1	CUTTING JAW OUTER
	130	272419	S		2	CARRIER
	540	312115-0370	-		2	SCREW 6X20 A4 80
	570	312155-0327	-		2	SCREW MF6S5X12RFR
Common parts						
	093	977815	S		1	CARRIER
	096	256659	S		1	OPERATING ROD
	100	752116	S		2	CATCH
	140	22463	S		2	ROLL
	150	33408	S		4	BEARING
	180	255653	S		2	FLANGE BUSHING
	193	255742	P		1	COMPRESSION SPRING
	196	255801	S		1	RETAINING RING
	200	256607	S		2	AXLE PIN
	204	256626	S		1	EAR
	206	256706	S		1	BEARING PLATE
	208	257362	S		2	LACE
	210	752115	S		2	PLUNGER
	240	751579	S		1	ADJUSTING SCREW
	250	751580	S		1	SHIM
	260	752288	S		2	SLEEVE
	270	752476	S		2	SCREW
	305	315237-0106	-		2	GASKET
	310	315237-0109	P		3	SEAL RING 1/8"

From	Pos	Part No	SP	UN	Qty	Description
	320	90090-0005	P		2	STEEL BALL
	330	90091-0216	P		2	SEALING RING
	333	90091-0091	P		1	SEAL RING
	335	90091-0169	P		4	GUIDE RING
	336	90134-0058	-		1	BANJO CONNECTION
	340	90153-0015	-	ML	X	ADHESIVE
	350	90242-0093	P	MM	450	O-RING
	360	90330-0066	-		3	PLUG
	500	311103-0312	-		1	CYLINDRICACP M6 5X25 RFR
	505	311111-0207	S		1	SLOTTED TUFRP3X14
	510	311111-0308	S		2	SLOTTED TUFRP5X20
	515	312105-0362	-		2	SCREW M6S6X8RFR
	520	312105-0367	-		2	SCREW M6S6X14RFR
	523	312105-0376	-		8	SCREW M6S6X35RFR
	530	312105-0462	-		2	SCREW M6S8X55RFR
	533	312115-0329	-		1	SCREW 5X16 A4 80
	535	312115-0366	-		2	SCREW 6X12 A4 80
	582	312605-0318	-		1	NUT M6M8RFR
	585	315115-0153	-		8	WASHER TBRB6,4X12RFR
	586	315202-0110	S		2	O-RING 12,1X1,6
	587	315202-0265	S		1	O-RING 12,3X2,4
	589	315211-0103	P		2	SEALING WA
	590	315230-0157	P		4	SEAL RING G12X16X3

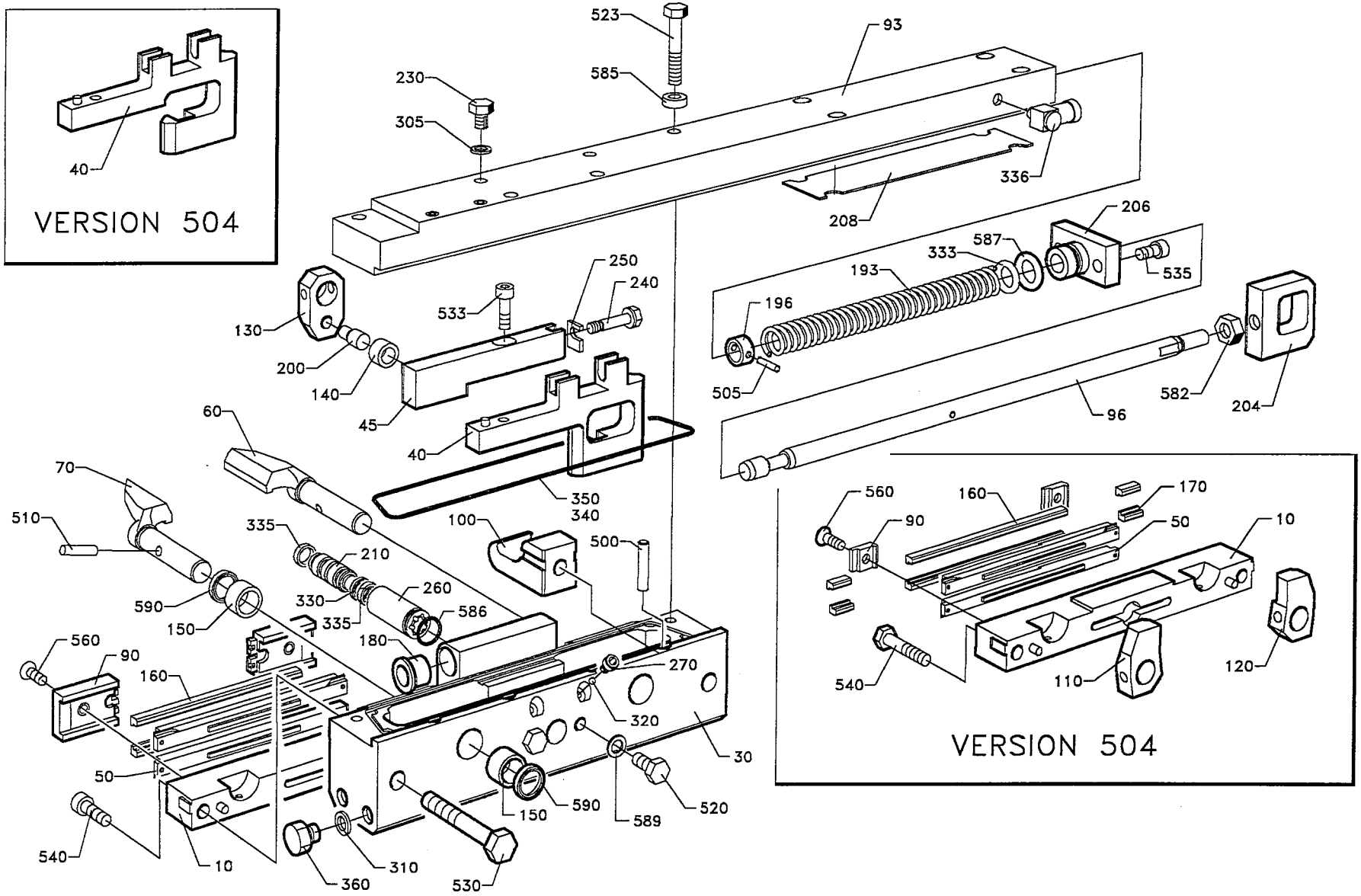

ILLUtec®
2562045c

From	Pos	Part No	SP	UN	Qty	Description
IH 284ml 250ml 236ml 200ml 180ml						
		C- 256204-0503				**Cutting Jaw, Ass'y**
	010	256769	S		1	CUTTING JAW
	030	752113	S		1	BEARING HOUSING
	040	G- 751575	S		1	RULERPART R
	045	751577	S		1	RULERPART R
	050	295757	P		2	CUTTING RAIL
	060	G- 272422	S		1	FOLDING FLAP
	070	G- 272423	S		1	FOLDING FLAP
	090	491018	S		2	BRACKET
	130	272419	S		2	CARRIER
	160	295758	UP		2	DOLLY
	540	312115-0370	-		2	SCREW 6X20 A4 80
	560	312145-0291	-		2	SLOTTED HEMFS4X12RFR
125ml						
		C- 256204-0504				**Cutting Jaw, Ass'y**
	010	256487	S		1	CUTTING JAW
	030	752226	S		1	BEARING HOUSING
	040	G- 752014	S		1	RULERPART R
	045	752015	S		1	RULERPART R
	050	566661	P		2	CUTTING RAIL
	060	G- 272420	S		1	FOLDING FLAP
	070	G- 272421	S		1	FOLDING FLAP
	090	272427	S		2	BRACKET
	110	G- 272416	S		1	CARRIER
	120	272417	S		1	CARRIER
	160	978454	UP		2	DOLLY
	170	978455	P		4	END PIECE
	540	312105-0374	-		2	SCREW M6S6X30RFR
	560	312145-0289	-		2	SLOTTED HEMFS4X10RFR
Common parts						
	093	977815	S		1	CARRIER
	096	256659	S		1	OPERATING ROD
	100	752116	S		2	CATCH
	140	22463	S		2	ROLL
	150	33408	S		4	BEARING
	180	255653	S		2	FLANGE BUSHING
	193	255742	P		1	COMPRESSION SPRING
	196	255801	S		1	RETAINING RING
	200	256607	S		2	AXLE PIN
	204	256626	S		1	EAR
	206	256706	S		1	BEARING PLATE
	208	257362	S		2	LACE
	210	752115	S		2	PLUNGER
	240	751579	S		1	ADJUSTING SCREW
	250	751580	S		1	SHIM
	260	752288	S		2	SLEEVE
	270	752476	S		2	SCREW
	305	315237-0106	-		2	GASKET
	310	315237-0109	P		3	SEAL RING 1/8"
	320	90090-0005	P		2	STEEL BALL
	330	90091-0216	P		2	SEALING RING
	333	90091-0091	P		1	SEAL RING
	335	90091-0169	P		4	GUIDE RING
	336	90134-0058	-		1	BANJO CONNECTION
	340	90153-0015	-	ML	X	ADHESIVE
	350	90242-0093	P	MM	450	O-RING
	360	90330-0066	-		3	PLUG
	500	311103-0312	-		1	CYLINDRICACP M6 5X25 RFR
	505	311111-0207	S		1	SLOTTED TUFRP3X14
	510	311111-0308	S		2	SLOTTED TUFRP5X20
	515	312105-0362	-		2	SCREW M6S6X8RFR
	520	312105-0367	-		2	SCREW M6S6X14RFR
	523	312105-0376	-		8	SCREW M6S6X35RFR
	530	312105-0462	-		2	SCREW M6S8X55RFR
	533	312115-0329	-		1	SCREW 5X16 A4 80
	535	312115-0366	-		2	SCREW 6X12 A4 80
	582	312605-0318	-		1	NUT M6M8RFR
	585	315115-0153	-		8	WASHER TBRB6,4X12RFR
	586	315202-0110	S		2	O-RING 12,1X1,6
	587	315202-0265	S		1	O-RING 12,3X2,4
	589	315211-0103	P		2	SEALING WA
	590	315230-0157	P		4	SEAL RING G12X16X3

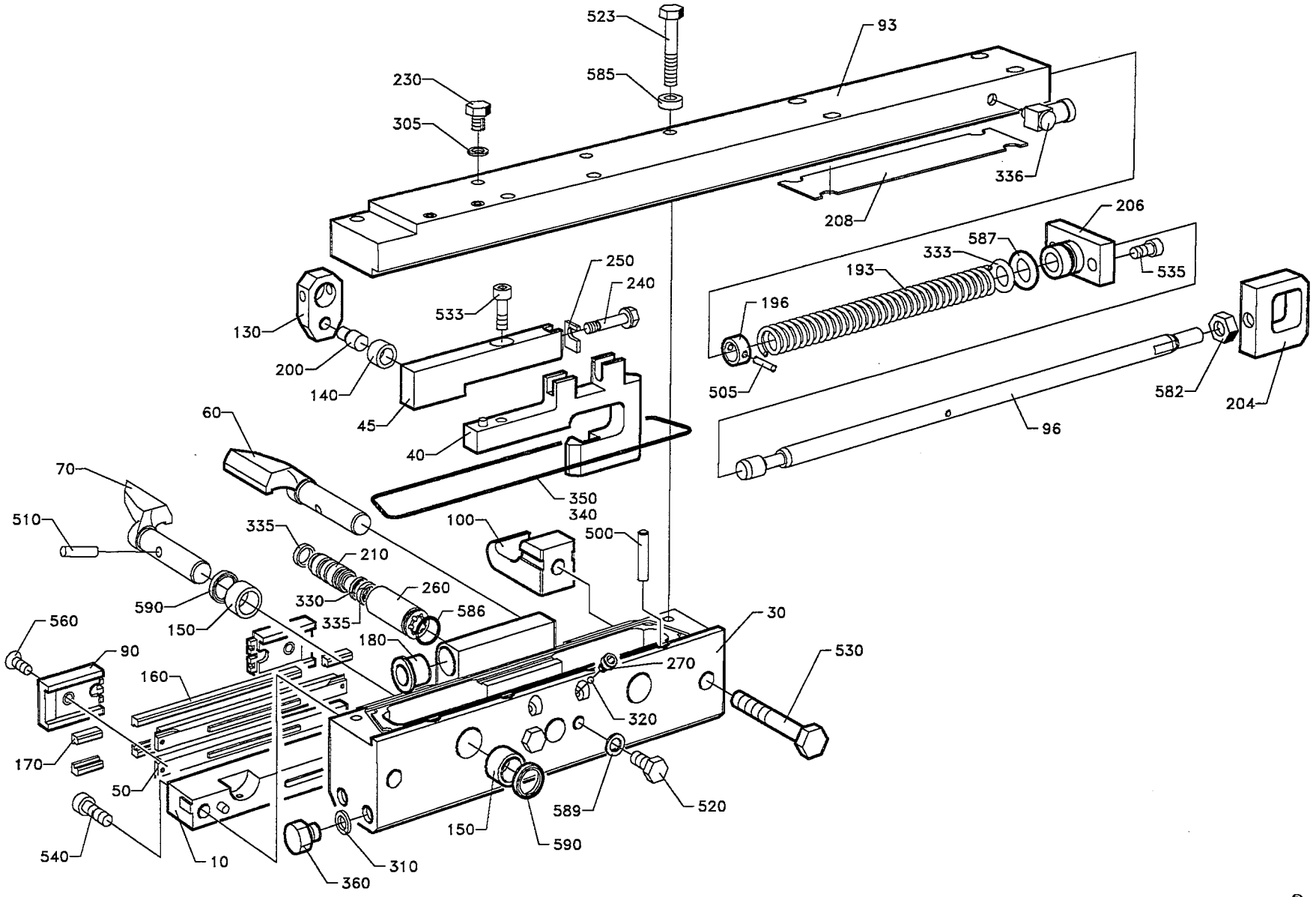
523
93
585
230
305
336
208
206
587
333
193
535
250
240
533
130
196
200
140
45
505
582
204
40
96
60
350
340
70
100
500
510
335
210
260
330
590
586
150
180
560
30
530
90
270
160
320
170
50
589
520
150
590
540
10
310
360

Last Alteration: AM 20225 93-10-28

Corresponding group: 256204-0505,-0506
Assembly Drawing: 256204-12/17

Issue: **940524**

From	Pos	Part No	SP	UN	Qty	Description
IH 160ml 200ml Slim						
		C- 256204-0505				**Cutting Jaw, Ass'y**
	010	441727	S		1	CUTTING JAW
	030	752225	S		1	BEARING HOUSING
	040	G- 752009	S		1	RULERPART R
	045	752010	S		1	RULERPART R
	050	295757	P		2	CUTTING RAIL
	060	G- 272424	S		1	FOLDING FLAP
	070	G- 272425	S		1	FOLDING FLAP
	090	491018	S		2	BRACKET
	130	272419	S		2	CARRIER
	160	752575	UP		2	DOLLY
	170	752574	P		4	END PIECE
	540	312115-0370	-		2	SCREW 6X20 A4 80
	560	312145-0291	-		2	SLOTTED HEMFS4X12RFR
IH 250ml Slim						
		C- 256204-0506				**Cutting Jaw, Ass'y**
	010	574386	S		1	CUTTING JAW
	030	574368	S		1	BEARING HOUSING
	040	G- 574369	S		1	RULERPART R
	045	574370	S		1	RULERPART R
	050	295757	P		2	CUTTING RAIL
	060	G- 272424	S		1	FOLDING FLAP
	070	G- 272425	S		1	FOLDING FLAP
	090	491018	S		2	BRACKET
	130	272419	S		2	CARRIER
	160	574387	UP		2	DOLLY
	170	574388	P		4	END PIECE
	540	312115-0370	-		2	SCREW 6X20 A4 80
	560	312145-0291	-		2	SLOTTED HEMFS4X12RFR
Common parts						
	093	977815	S		1	CARRIER
	096	256659	S		1	OPERATING ROD
	100	752116	S		2	CATCH
	140	22463	S		2	ROLL
	150	33408	S		4	BEARING
	180	255653	S		2	FLANGE BUSHING
	193	255742	P		1	COMPRESSION SPRING
	196	255801	S		1	RETAINING RING
	200	256607	S		2	AXLE PIN
	204	256626	S		1	EAR
	206	256706	S		1	BEARING PLATE
	208	257362	S		2	LACE
	210	752115	S		2	PLUNGER
	240	751579	S		1	ADJUSTING SCREW

From	Pos	Part No	SP	UN	Qty	Description
	250	751580	S		1	SHIM
	260	752288	S		2	SLEEVE
	270	752476	S		2	SCREW
	305	315237-0106	-		2	GASKET
	310	315237-0109	P		3	SEAL RING 1/8"
	320	90090-0005	P		2	STEEL BALL
	330	90091-0216	P		2	SEALING RING
	333	90091-0091	P		1	SEAL RING
	335	90091-0169	P		4	GUIDE RING
	336	90134-0058	-		1	BANJO CONNECTION
	340	90153-0015	-	ML	X	ADHESIVE
	350	90242-0093	P	MM	450	O-RING
	360	90330-0066	-		3	PLUG
	500	311103-0312	-		1	CYLINDRICACP M6 5X25 RFR
	505	311111-0207	S		1	SLOTTED TUFRP3X14
	510	311111-0308	S		2	SLOTTED TUFRP5X20
	515	312105-0362	-		2	SCREW M6S6X8RFR
	520	312105-0367	-		2	SCREW M6S6X14RFR
	523	312105-0376	-		8	SCREW M6S6X35RFR
	530	312105-0462	-		2	SCREW M6S8X55RFR
	533	312115-0329	-		1	SCREW 5X16 A4 80
	535	312115-0366	-		2	SCREW 6X12 A4 80
	582	312605-0318	-		1	NUT M6M8RFR
	585	315115-0153	-		8	WASHER TBRB6,4X12RFR
	586	315202-0110	S		2	O-RING 12,1X1,6
	587	315202-0265	S		1	O-RING 12,3X2,4
	589	315211-0103	P		2	SEALING WA
	590	315230-0157	P		4	SEAL RING G12X16X3

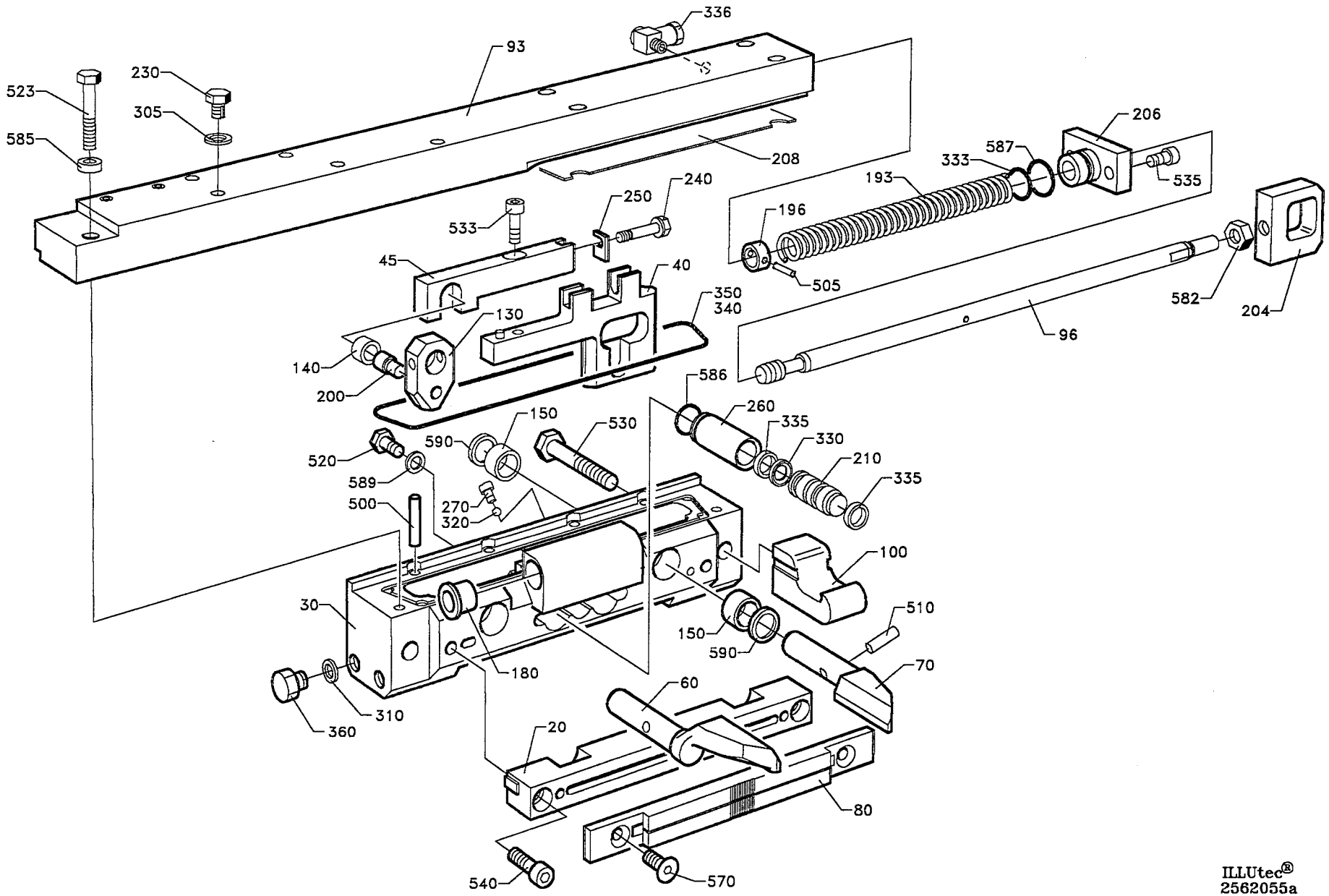

ILLUtec®
2562055a

Last Alteration: AM 20225 93-10-28

Corresponding group: 256205-0501,-0502
Assembly Drawing: 256205-12/16

Issue: 940524

From	Pos	Part No	SP	UN	Qty	Description
TPC 250ml 236ml 200ml 180ml						
		C- 256205-0501				**Cutting Jaw, Ass'y**
	020	271728	S		1	CUTTING JAW
	030	752113	S		1	BEARING HOUSING
	040	G- 751576	S		1	RULERPART L
	045	751578	S		1	RULERPART L
	060	G- 272422	S		1	FOLDING FLAP
	070	G- 272423	S		1	FOLDING FLAP
	080	456819	S		1	CUTTING JAW OUTER
	130	272419	S		2	CARRIER
	540	312115-0370	-		2	SCREW 6X20 A4 80
	570	312155-0327	-		2	SCREW MF6S5X12RFR
TPC 200ml Slim						
		C- 256205-0502				**Cutting Jaw, Ass'y**
	020	272264	S		1	CUTTING JAW
	030	752225	S		1	BEARING HOUSING
	040	G- 752011	S		1	RULERPART L
	045	752012	S		1	RULERPART L
	060	G- 272424	S		1	FOLDING FLAP
	070	G- 272425	S		1	FOLDING FLAP
	080	752715	S		1	CUTTING JAW OUTER
	130	272419	S		2	CARRIER
	540	312115-0370	-		2	SCREW 6X20 A4 80
	570	312155-0327	-		2	SCREW MF6S5X12RFR
Common parts						
	093	978714	S		1	CARRIER
	096	256659	S		1	OPERATING ROD
	100	752116	S		2	CATCH
	140	22463	S		2	ROLL
	150	33408	S		4	BEARING
	180	255653	S		2	FLANGE BUSHING
	193	255742	P		1	COMPRESSION SPRING
	196	255801	S		1	RETAINING RING
	200	256607	S		2	AXLE PIN
	204	256626	S		1	EAR
	206	256706	S		1	BEARING PLATE
	208	257362	S		2	LACE
	210	752115	S		2	PLUNGER
	240	751579	S		1	ADJUSTING SCREW
	250	751580	S		1	SHIM
	260	752288	S		2	SLEEVE
	270	752476	S		2	SCREW
	305	315237-0106	-		2	GASKET
	310	315237-0109	P		3	SEAL RING 1/8"

From	Pos	Part No	SP	UN	Qty	Description
	320	90090-0005	P		2	STEEL BALL
	330	90091-0216	P		2	SEALING RING
	333	90091-0091	P		1	SEAL RING
	335	90091-0169	P		4	GUIDE RING
	336	90134-0058	-		1	BANJO CONNECTION
	340	90153-0015	-	ML	X	ADHESIVE
	350	90242-0093	P	MM	450	O-RING
	360	90330-0066	-		3	PLUG
	500	311103-0312	-		1	CYLINDRICACP M6 5X25 RFR
	505	311111-0207	S		1	SLOTTED TUFRP3X14
	510	311111-0308	S		2	SLOTTED TUFRP5X20
	515	312105-0362	-		2	SCREW M6S6X8RFR
	520	312105-0367	-		2	SCREW M6S6X14RFR
	523	312105-0376	-		8	SCREW M6S6X35RFR
	530	312105-0462	-		2	SCREW M6S8X55RFR
	533	312115-0329	-		1	SCREW 5X16 A4 80
	535	312115-0366	-		2	SCREW 6X12 A4 80
	582	312605-0318	-		1	NUT M6M8RFR
	585	315115-0153	-		8	WASHER TBRB6,4X12RFR
	586	315202-0110	S		2	O-RING 12,1X1,6
	587	315202-0265	S		1	O-RING 12,3X2,4
	589	315211-0103	P		2	SEALING WA
	590	315230-0157	P		4	SEAL RING G12X16X3

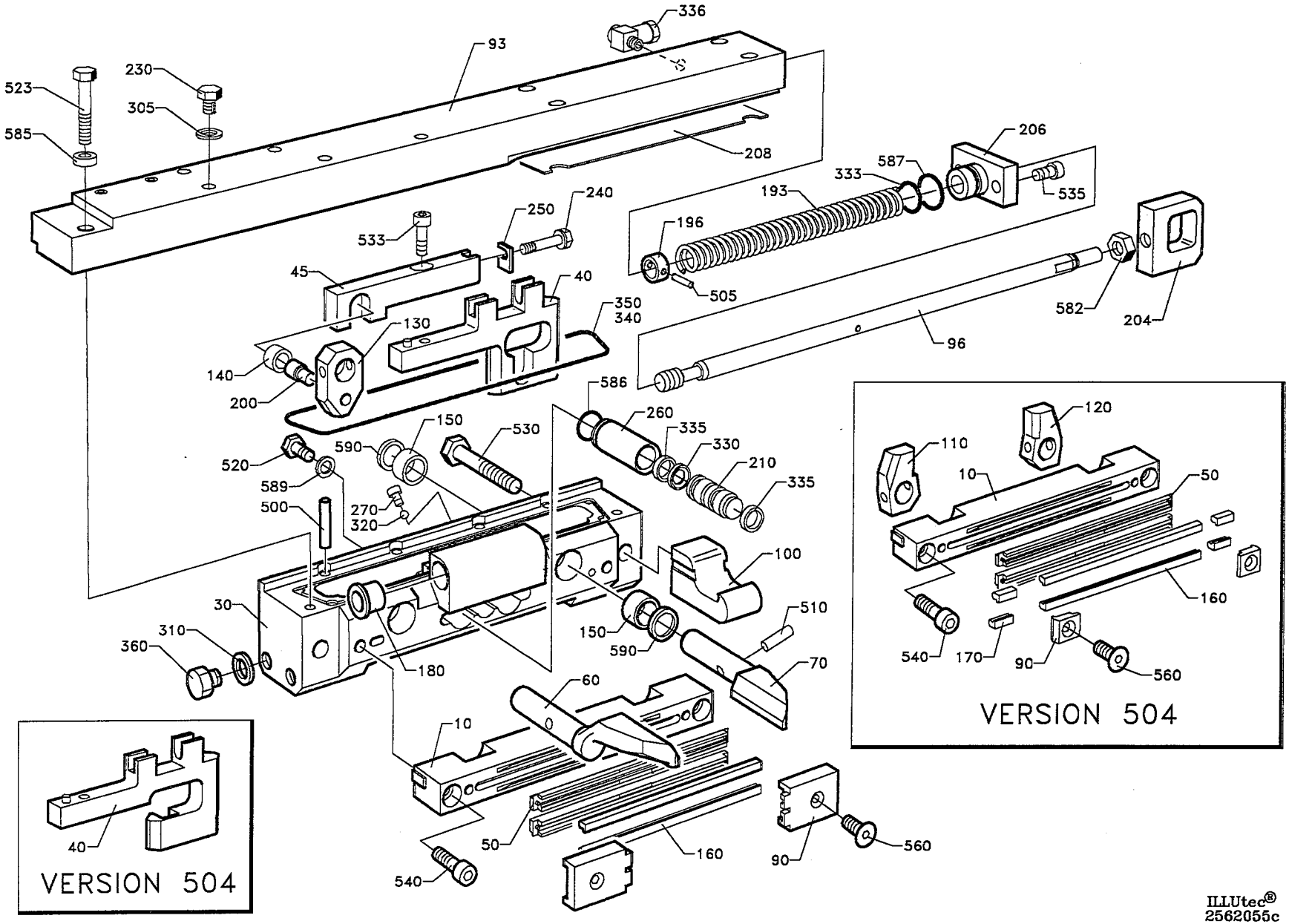

ILLUtec®
2562055c

From	Pos	Part No	SP	UN	Qty	Description
IH 284ml 250ml 236ml 200ml 180ml						
		C- 256205-0503				**Cutting Jaw, Ass'y**
	010	256769	S		1	CUTTING JAW
	030	752113	S		1	BEARING HOUSING
	040	G- 751576	S		1	RULERPART L
	045	751578	S		1	RULERPART L
	050	295757	P		2	CUTTING RAIL
	060	G- 272422	S		1	FOLDING FLAP
	070	G- 272423	S		1	FOLDING FLAP
	090	491018	S		2	BRACKET
	130	272419	S		2	CARRIER
	160	295758	UP		2	DOLLY
	540	312115-0370	-		2	SCREW 6X20 A4 80
	560	312145-0291	-		2	SLOTTED HEMFS4X12RFR
IH 125ml						
		C- 256205-0504				**Cutting Jaw, Ass'y**
	010	256487	S		1	CUTTING JAW
	030	752226	S		1	BEARING HOUSING
	040	G- 752016	S		1	RULERPART L
	045	752017	S		1	RULERPART L
	050	566661	P		2	CUTTING RAIL
	060	G- 272420	S		1	FOLDING FLAP
	070	G- 272421	S		1	FOLDING FLAP
	090	272427	S		2	BRACKET
	110	G- 272416	S		1	CARRIER
	120	272417	S		1	CARRIER
	160	978454	UP		2	DOLLY
	170	978455	P		4	END PIECE
	540	312105-0374	-		2	SCREW M6S6X30RFR
	560	312145-0289	-		2	SLOTTED HEMFS4X10RFR
Common parts						
	093	978714	S		1	CARRIER
	096	256659	S		1	OPERATING ROD
	100	752116	S		2	CATCH
	140	22463	S		2	ROLL
	150	33408	S		4	BEARING
	180	255653	S		2	FLANGE BUSHING
	193	255742	P		1	COMPRESSION SPRING
	196	255801	S		1	RETAINING RING
	200	256607	S		2	AXLE PIN
	204	256626	S		1	EAR
	206	256706	S		1	BEARING PLATE
	208	257362	S		2	LACE
	210	752115	S		2	PLUNGER

From	Pos	Part No	SP	UN	Qty	Description
	240	751579	S		1	ADJUSTING SCREW
	250	751580	S		1	SHIM
	260	752288	S		2	SLEEVE
	270	752476	S		2	SCREW
	305	315237-0106	-		2	GASKET
	310	315237-0109	P		3	SEAL RING 1/8"
	320	90090-0005	P		2	STEEL BALL
	330	90091-0216	P		2	SEALING RING
	333	90091-0091	P		1	SEAL RING
	335	90091-0169	P		4	GUIDE RING
	336	90134-0058	-		1	BANJO CONNECTION
	340	90153-0015	-	ML	X	ADHESIVE
	350	90242-0093	P	MM	450	O-RING
	360	90330-0066	-		3	PLUG
	500	311103-0312	-		1	CYLINDRICACP M6 5X25 RFR
	505	311111-0207	S		1	SLOTTED TUFRP3X14
	510	311111-0308	S		2	SLOTTED TUFRP5X20
	515	312105-0362	-		2	SCREW M6S6X8RFR
	520	312105-0367	-		2	SCREW M6S6X14RFR
	523	312105-0376	-		8	SCREW M6S6X35RFR
	530	312105-0462	-		2	SCREW M6S8X55RFR
	533	312115-0329	-		1	SCREW 5X16 A4 80
	535	312115-0366	-		2	SCREW 6X12 A4 80
	582	312605-0318	-		1	NUT M6M8RFR
	585	315115-0153	-		8	WASHER TBRB6,4X12RFR
	586	315202-0110	S		2	O-RING 12,1X1,6
	587	315202-0265	S		1	O-RING 12,3X2,4
	589	315211-0103	P		2	SEALING WA
	590	315230-0157	P		4	SEAL RING G12X16X3

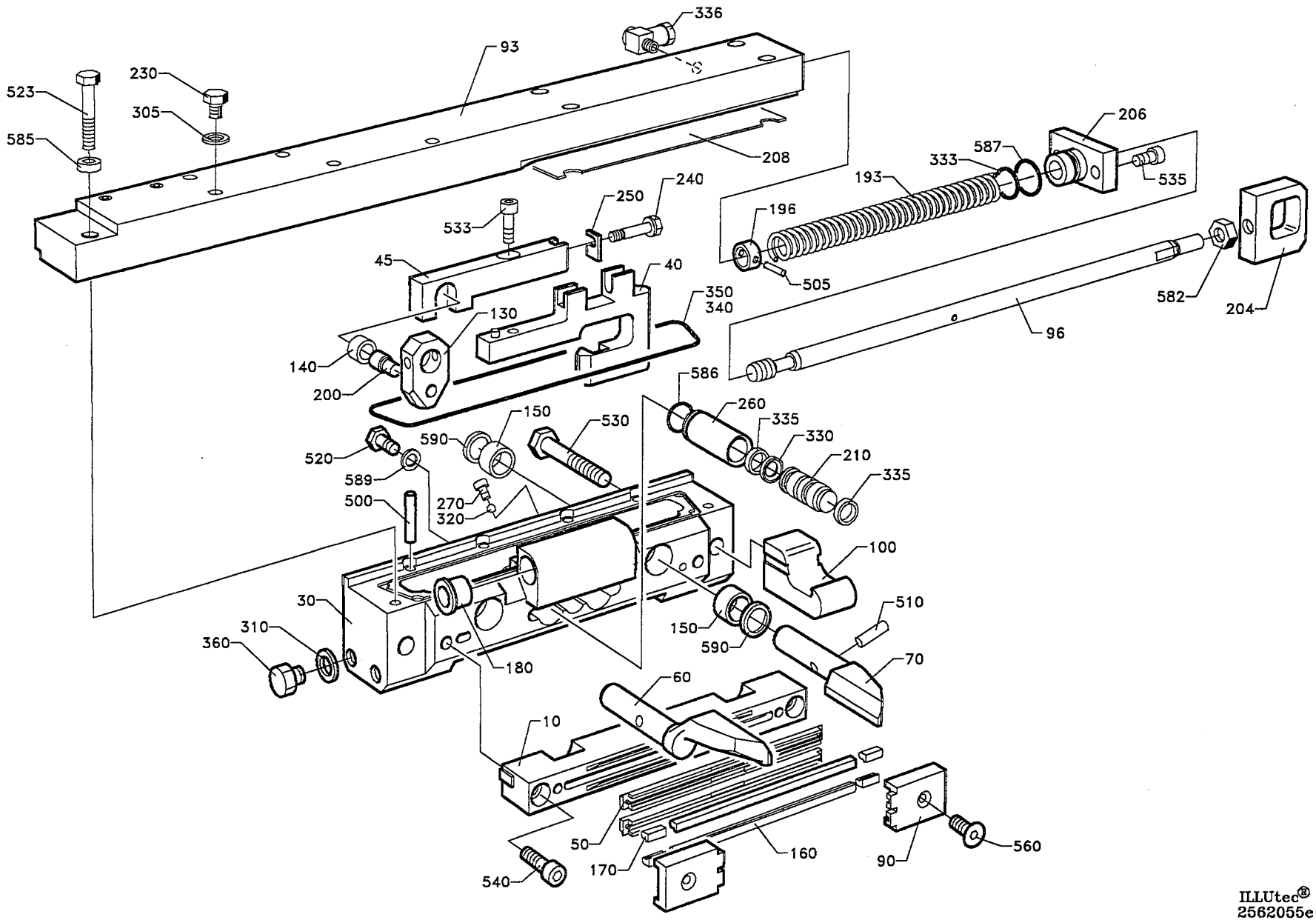

ILLUtec®
2562055e

Last Alteration: AM 20225 93-10-28

Corresponding group: 256205-0505,-0506
Assembly Drawing: 256205-12/17

Issue: **940524**

From	Pos	Part No	SP	UN	Qty	Description
IH 160ml 200ml Slim						
		C- 256205-0505				**Cutting Jaw, Ass'y**
	010	441727	S		1	CUTTING JAW
	030	752225	S		1	BEARING HOUSING
	040	G- 752011	S		1	RULERPART L
	045	752012	S		1	RULERPART L
	050	295757	P		2	CUTTING RAIL
	060	G- 272424	S		1	FOLDING FLAP
	070	G- 272425	S		1	FOLDING FLAP
	090	491018	S		2	BRACKET
	130	272419	S		2	CARRIER
	160	752575	UP		2	DOLLY
	170	752574	P		4	END PIECE
	540	312115-0370	-		2	SCREW 6X20 A4 80
	560	312145-0291	-		2	SLOTTED HEMFS4X12RFR
IH 250ml Slim						
		C- 256205-0506				**Cutting Jaw, Ass'y**
	010	574386	S		1	CUTTING JAW
	030	574368	S		1	BEARING HOUSING
	040	G- 574371	S		1	RULERPART L
	045	574372	S		1	RULERPART L
	050	295757	P		2	CUTTING RAIL
	060	G- 272424	S		1	FOLDING FLAP
	070	G- 272425	S		1	FOLDING FLAP
	090	491018	S		2	BRACKET
	130	272419	S		2	CARRIER
	160	574387	UP		2	DOLLY
	170	574388	P		4	END PIECE
	540	312115-0370	-		2	SCREW 6X20 A4 80
	560	312145-0291	-		2	SLOTTED HEMFS4X12RFR
Common parts						
	093	978714	S		1	CARRIER
	096	256659	S		1	OPERATING ROD
	100	752116	S		2	CATCH
	140	22463	S		2	ROLL
	150	33408	S		4	BEARING
	180	255653	S		2	FLANGE BUSHING
	193	255742	P		1	COMPRESSION SPRING
	196	255801	S		1	RETAINING RING
	200	256607	S		2	AXLE PIN
	204	256626	S		1	EAR
	206	256706	S		1	BEARING PLATE
	208	257362	S		2	LACE
	210	752115	S		2	PLUNGER
	240	751579	S		1	ADJUSTING SCREW
	250	751580	S		1	SHIM
	260	752288	S		2	SLEEVE
	270	752476	S		2	SCREW
	305	315237-0106	-		2	GASKET
	310	315237-0109	P		3	SEAL RING 1/8"
	320	90090-0005	P		2	STEEL BALL
	330	90091-0216	P		2	SEALING RING
	333	90091-0091	P		1	SEAL RING
	335	90091-0169	P		4	GUIDE RING
	336	90134-0058	-		1	BANJO CONNECTION
	340	90153-0015	-	ML	X	ADHESIVE
	350	90242-0093	P	MM	450	O-RING
	360	90330-0066	-		3	PLUG
	500	311103-0312	-		1	CYLINDRICACP M6 5X25 RFR
	505	311111-0207	S		1	SLOTTED TUFRP3X14
	510	311111-0308	S		2	SLOTTED TUFRP5X20
	515	312105-0362	-		2	SCREW M6S6X8RFR
	520	312105-0367	-		2	SCREW M6S6X14RFR
	523	312105-0376	-		8	SCREW M6S6X35RFR
	530	312105-0462	-		2	SCREW M6S8X55RFR
	533	312115-0329	-		1	SCREW 5X16 A4 80
	535	312115-0366	-		2	SCREW 6X12 A4 80
	582	312605-0318	-		1	NUT M6M8RFR
	585	315115-0153	-		8	WASHER TBRB6,4X12RFR
	586	315202-0110	S		2	O-RING 12,1X1,6
	587	315202-0265	S		1	O-RING 12,3X2,4
	589	315211-0103	P		2	SEALING WA
	590	315230-0157	P		4	SEAL RING G12X16X3

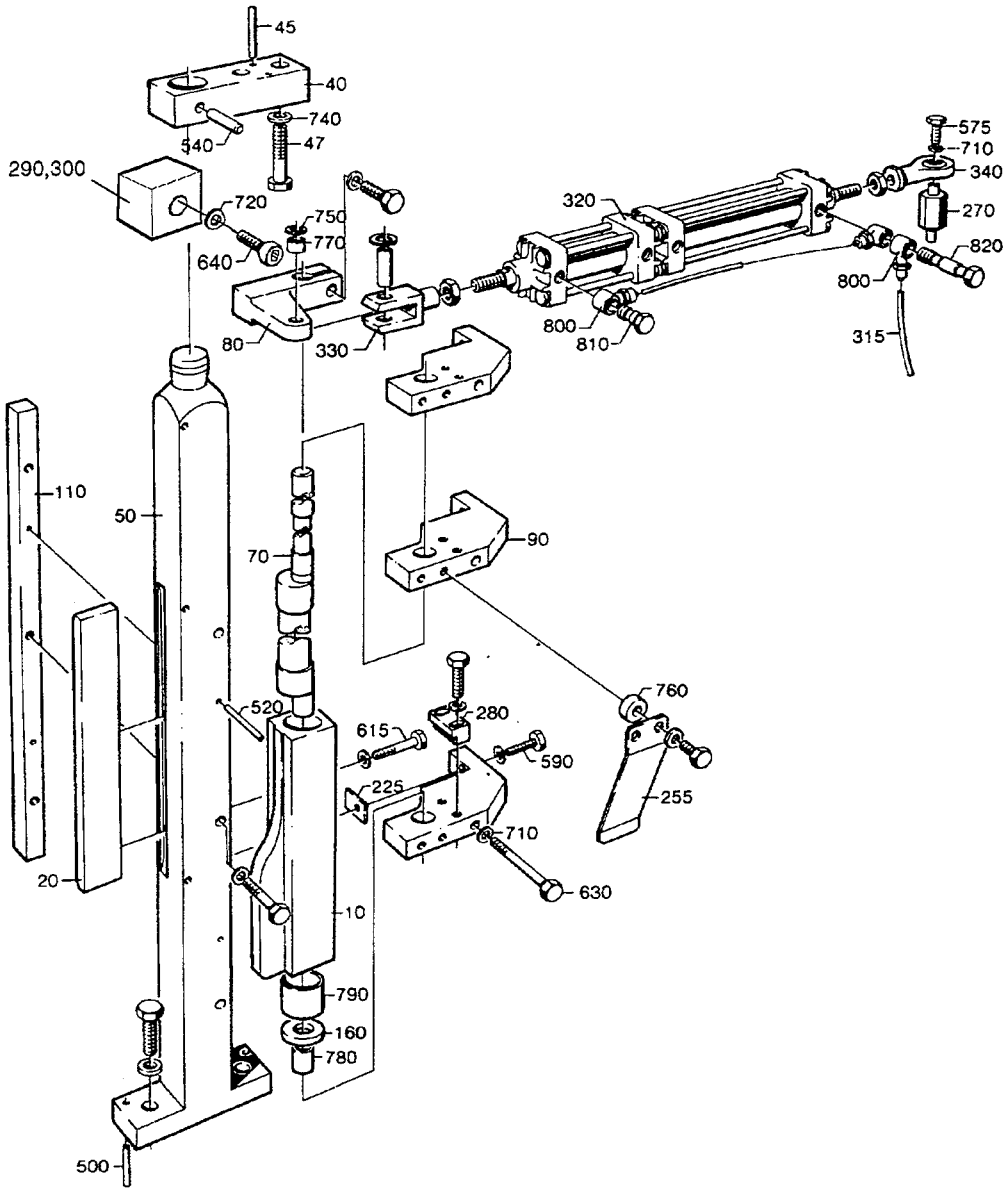

25620705.TIF
256207-5/6
AM 27920

From	Pos	Part No	SP	UN	Qty	Description
TPC 250ml IH 284ml						
		C- 256206-0201				**Design Correction Device, Ass'y**
	010	456760-0001	S		1	FOLDING FLAP CAM
	020	272640-0001	S		1	COUNTER CAM
	040	256707	-		1	BRACKET
	045	311103-0316	S		2	CYLINDRICACP M6 5X35 RFR
	047	312105-0459	-		2	SCREW M6S8X40RFR
	070	272654	S		1	ECCENTRIC SHAFT
	160	256621	S		2	WASHER
IH 250ml						
		C- 256206-0202				**Design Correction Device, Ass'y**
	010	456760-0003	S		1	FOLDING FLAP CAM
	020	272640-0002	S		1	COUNTER CAM
	040	256707	-		1	BRACKET
	045	311103-0316	S		2	CYLINDRICACP M6 5X35 RFR
	047	312105-0459	-		2	SCREW M6S8X40RFR
	070	272654	S		1	ECCENTRIC SHAFT
	160	256621	S		2	WASHER
IH 236ml						
		C- 256206-0203				**Design Correction Device, Ass'y**
	010	456760-0011	S		1	FOLDING FLAP CAM
	020	272640-0003	S		1	COUNTER CAM
	040	256707	-		1	BRACKET
	045	311103-0316	S		2	CYLINDRICACP M6 5X35 RFR
	047	312105-0459	-		2	SCREW M6S8X40RFR
	070	272654	S		1	ECCENTRIC SHAFT
	160	256621	S		2	WASHER
TPC 200ml						
		C- 256206-0204				**Design Correction Device, Ass'y**
	010	456760-0006	S		1	FOLDING FLAP CAM
	020	272640-0004	S		1	COUNTER CAM
	040	256707	-		1	BRACKET
	045	311103-0316	S		2	CYLINDRICACP M6 5X35 RFR
	047	312105-0459	-		2	SCREW M6S8X40RFR
	070	272654	S		1	ECCENTRIC SHAFT
	160	256621	S		2	WASHER
IH 200ml						
		C- 256206-0205				**Design Correction Device, Ass'y**
	010	456760-0007	S		1	FOLDING FLAP CAM
	020	272640-0005	S		1	COUNTER CAM
	040	256707	-		1	BRACKET
	045	311103-0316	S		2	CYLINDRICACP M6 5X35 RFR
	047	312105-0459	-		2	SCREW M6S8X40RFR
	070	272654	S		1	ECCENTRIC SHAFT
	160	256621	S		2	WASHER

From	Pos	Part No	SP	UN	Qty	Description
TPC 180ml						
		C- 256206-0206				**Design Correction Device, Ass'y**
	010	456760-0006	S		1	FOLDING FLAP CAM
	020	272640-0006	S		1	COUNTER CAM
	040	256707	-		1	BRACKET
	045	311103-0316	S		2	CYLINDRICACP M6 5X35 RFR
	047	312105-0459	-		2	SCREW M6S8X40RFR
	070	272654	S		1	ECCENTRIC SHAFT
	160	256621	S		2	WASHER
IH 180ml						
		C- 256206-0207				**Design Correction Device, Ass'y**
	010	456760-0010	S		1	FOLDING FLAP CAM
	020	272640-0007	S		1	COUNTER CAM
	040	256707	-		1	BRACKET
	045	311103-0316	S		2	CYLINDRICACP M6 5X35 RFR
	047	312105-0459	-		2	SCREW M6S8X40RFR
	070	272654	S		1	ECCENTRIC SHAFT
	160	256621	S		2	WASHER
TPC 200ml Slim						
		C- 256206-0208				**Design Correction Device, Ass'y**
	010	456760-0008	S		1	FOLDING FLAP CAM
	020	272640-0008	S		1	COUNTER CAM
	040	295774	-		1	BRACKET
	045	311103-0310	S		2	CYLINDRICACP M6 5X20 RFR
	047	312105-0453	-		2	SCREW M6S8X25RFR
	070	272654	S		1	ECCENTRIC SHAFT
	160	256621	S		2	WASHER
IH 200ml Slim						
		C- 256206-0209				**Design Correction Device, Ass'y**
	010	456760-0002	S		1	FOLDING FLAP CAM
	020	272640-0009	S		1	COUNTER CAM
	040	256707	-		1	BRACKET
	045	311103-0316	S		2	CYLINDRICACP M6 5X35 RFR
	047	312105-0459	-		2	SCREW M6S8X40RFR
	070	272654	S		1	ECCENTRIC SHAFT
	160	256621	S		2	WASHER
IH 125ml						
		C- 256206-0210				**Design Correction Device, Ass'y**
	010	456760-0007	S		1	FOLDING FLAP CAM
	020	272640-0005	S		1	COUNTER CAM
	040	256707	-		1	BRACKET
	045	311103-0316	S		2	CYLINDRICACP M6 5X35 RFR
	047	312105-0459	-		2	SCREW M6S8X40RFR
	070	272654	S		1	ECCENTRIC SHAFT
	160	256621	S		2	WASHER

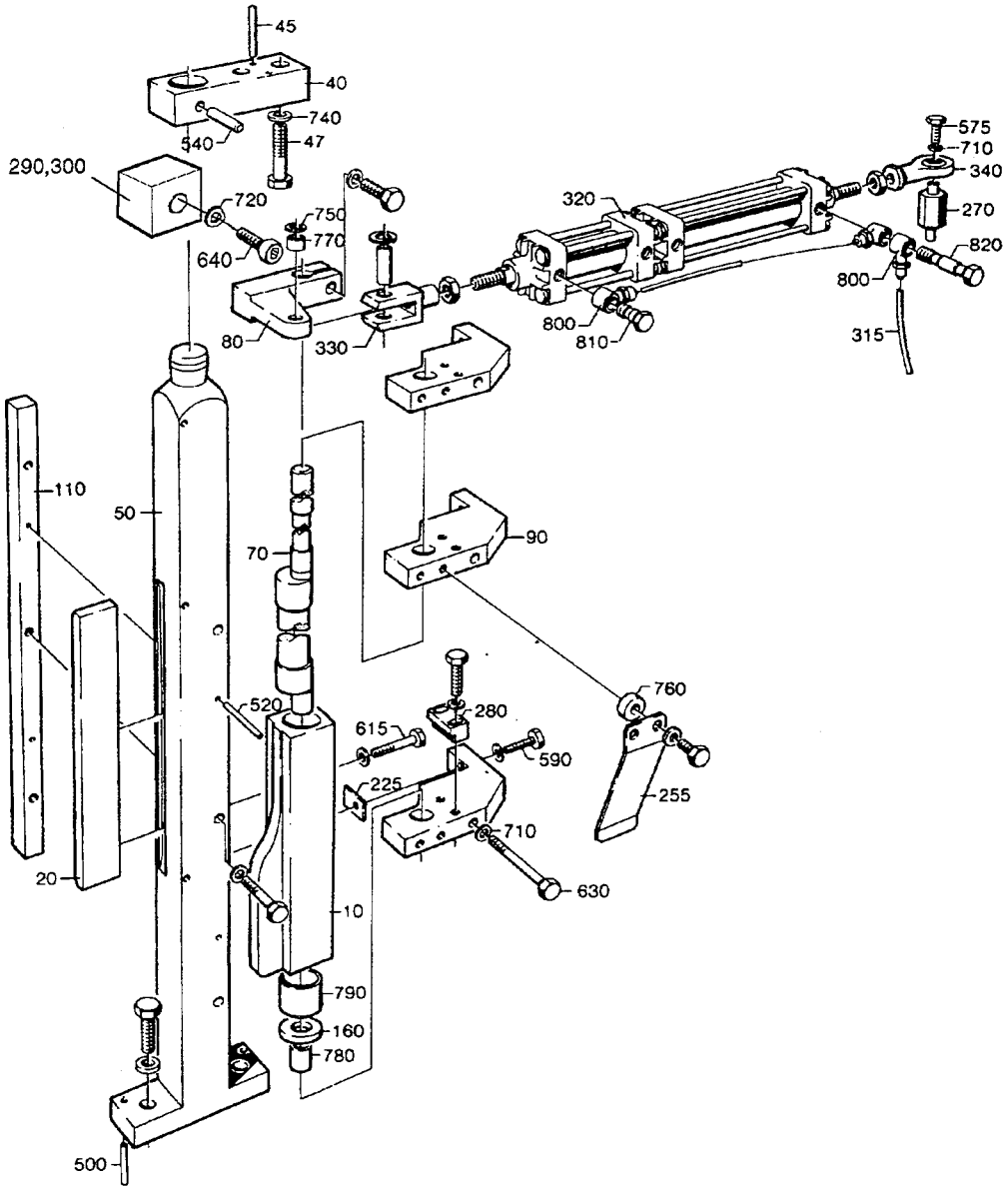

25620705.TIF
256207-5/6
AM 27920

From	Pos	Part No	SP	UN	Qty	Description
TPC 236ml						
		C- 256206-0211				**Design Correction Device, Ass'y**
	010	456760-0002	S		1	FOLDING FLAP CAM
	020	272640-0009	S		1	COUNTER CAM
	040	256707	-		1	BRACKET
	045	311103-0316	S		2	CYLINDRICACP M6 5X35 RFR
	047	312105-0459	-		2	SCREW M6S8X40RFR
	070	272654	S		1	ECCENTRIC SHAFT
	160	256621	S		2	WASHER
IH 250ml Slim						
		C- 256206-0212				**Design Correction Device, Ass'y**
	010	574364	S		1	FOLDING FLAP CAM
	020	272640-0009	S		1	COUNTER CAM
	040	256707	-		1	BRACKET
	045	311103-0316	S		2	CYLINDRICACP M6 5X35 RFR
	047	312105-0459	-		2	SCREW M6S8X40RFR
	070	574375	S		1	ECCENTRIC SHAFT
	160	256621	S		1	WASHER
	165	574374	S		1	WASHER
IH 160ml						
		C- 256206-0213				**Design Correction Device, Ass'y**
	010	577225	S		1	FOLDING FLAP CAM
	020	272640-0006	S		1	COUNTER CAM
	040	256707	-		1	BRACKET
	045	311103-0316	S		2	CYLINDRICACP M6 5X35 RFR
	047	312105-0459	-		2	SCREW M6S8X40RFR
	070	272654	S		1	ECCENTRIC SHAFT
	160	256621	S		2	WASHER
Common parts						
	050	272641	-		1	PILLAR
	080	272429	S		1	ARM
	090	G- 272491	-		3	BRACKET
	110	272645	S		1	RAIL
	225	256705	S		6	LACE
	255	257334	S		3	LEAF SPRING
	270	271132	-		1	SPACER
	280	271284	-		1	BLOCKING PIECE
	290	978184	-		1	STOPPER
	300	978185	-		1	SHIM
	315	90166-0132	P	MM	890	HOSE
	320	90450-0096	S		1	CYLINDER
	330	90239-0357	S		1	BRACKET
	340	90239-0405	S		1	LINK HEAD
	500	311103-0314	-		2	CYLINDRICACP M6 5X30 RFR
	520	311103-0320	-		2	CYLINDRICACP M6 5X45 RFR
	540	311103-0409	-		1	CYLINDRICACP M6 8X40 RFR
	575	312105-0368	-		3	SCREW M6S6X16RFR
	590	312105-0372	-		5	SCREW M6S6X25RFR
	615	312105-0379	-		5	SCREW M6S6X45RFR
	630	312105-0384	-		3	SCREW M6S6X70RFR
	640	312105-0455	-		3	SCREW M6S8X30RFR
	650	312115-0453	-		1	SCREW 8X25 A4 80
	710	315105-0153	-		16	WASHER BRB6,4X12RFR
	720	315105-0165	-		3	WASHER BRB8,4X16RFR
	740	315115-0165	-		4	WASHER TBRB8,4X16RFR
	750	315233-0109	S		1	SEAL RING R1/8"
	760	315742-0102	-		2	RETAINING 6SMS199RFR
	770	321120-0098	S		1	BUSHING 10/12,0X8
	780	321120-0118	S		3	BUSHING 14/16X15
	790	321120-0153	S		2	BUSHING 24/27X20
	800	342980-0113	S		5	BANJO CONNSINGEL 6/4-1/8
	810	342980-0303	S		3	BANJO CONN SINGEL 1/8"
	820	342980-0313	S		1	BANJO CONN DUBBEL 1/8

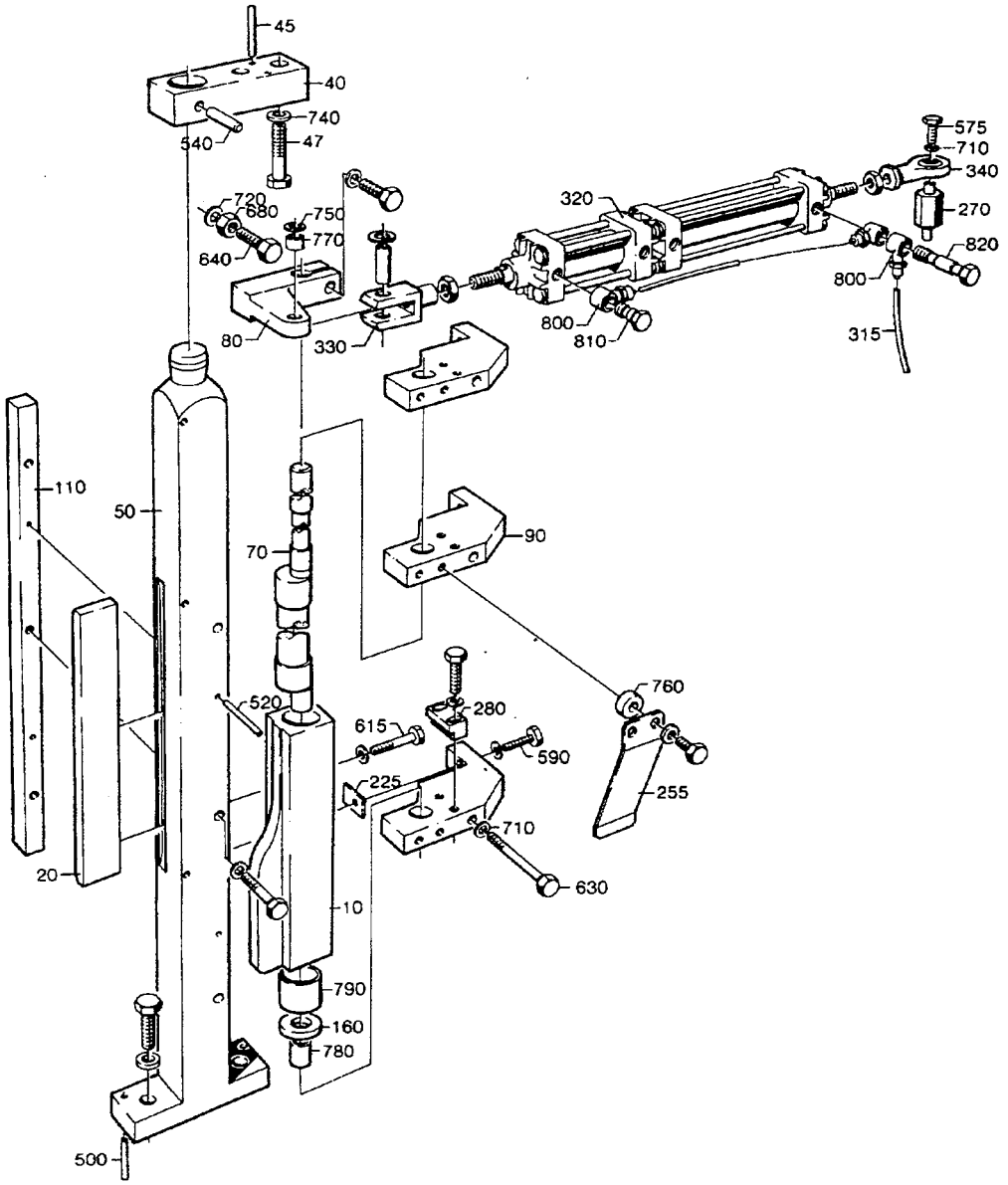

25620705.TIF
256207-5/6
AM 14652

From	Pos	Part No	SP	UN	Qty	Description
TPC 250ML IH 284ML						
		C- 256207-0201				**Design Correction Device, Ass'y**
	010	456760-0001	S		1	FOLDING FLAP CAM
	020	272640-0001	S		1	COUNTER CAM
	040	256707	-		1	BRACKET
	045	311103-0316	S		2	CYLINDRICACP M6 5X35 RFR
	047	312105-0459	-		2	SCREW M6S8X40RFR
	070	272654	S		1	ECCENTRIC SHAFT
	160	256621	S		2	WASHER
IH 250ML						
		C- 256207-0202				**Design Correction Device, Ass'y**
	010	456760-0003	S		1	FOLDING FLAP CAM
	020	272640-0002	S		1	COUNTER CAM
	040	256707	-		1	BRACKET
	045	311103-0316	S		2	CYLINDRICACP M6 5X35 RFR
	047	312105-0459	-		2	SCREW M6S8X40RFR
	070	272654	S		1	ECCENTRIC SHAFT
	160	256621	S		2	WASHER
IHC 236ML						
		C- 256207-0203				**Design Correction Device, Ass'y**
	010	456760-0011	S		1	FOLDING FLAP CAM
	020	272640-0003	S		1	COUNTER CAM
	040	256707	-		1	BRACKET
	045	311103-0316	S		2	CYLINDRICACP M6 5X35 RFR
	047	312105-0459	-		2	SCREW M6S8X40RFR
	070	272654	S		1	ECCENTRIC SHAFT
	160	256621	S		2	WASHER
TPC 200ML						
		C- 256207-0204				**Design Correction Device, Ass'y**
	010	456760-0006	S		1	FOLDING FLAP CAM
	020	272640-0004	S		1	COUNTER CAM
	040	256707	-		1	BRACKET
	045	311103-0316	S		2	CYLINDRICACP M6 5X35 RFR
	047	312105-0459	-		2	SCREW M6S8X40RFR
	070	272654	S		1	ECCENTRIC SHAFT
	160	256621	S		2	WASHER
IH 200ML						
		C- 256207-0205				**Design Correction Device, Ass'y**
	010	456760-0007	S		1	FOLDING FLAP CAM
	020	272640-0005	S		1	COUNTER CAM
	040	256707	-		1	BRACKET
	045	311103-0316	S		2	CYLINDRICACP M6 5X35 RFR
	047	312105-0459	-		2	SCREW M6S8X40RFR
	070	272654	S		1	ECCENTRIC SHAFT
	160	256621	S		2	WASHER

From	Pos	Part No	SP	UN	Qty	Description
TPC 180ML						
		C- 256207-0206				**Design Correction Device, Ass'y**
	010	456760-0006	S		1	FOLDING FLAP CAM
	020	272640-0006	S		1	COUNTER CAM
	040	256707	-		1	BRACKET
	045	311103-0316	S		2	CYLINDRICACP M6 5X35 RFR
	047	312105-0459	-		2	SCREW M6S8X40RFR
	070	272654	S		1	ECCENTRIC SHAFT
	160	256621	S		2	WASHER
IH 180ML						
		C- 256207-0207				**Design Correction Device, Ass'y**
	010	456760-0010	S		1	FOLDING FLAP CAM
	020	272640-0007	S		1	COUNTER CAM
	040	256707	-		1	BRACKET
	045	311103-0316	S		2	CYLINDRICACP M6 5X35 RFR
	047	312105-0459	-		2	SCREW M6S8X40RFR
	070	272654	S		1	ECCENTRIC SHAFT
	160	256621	S		2	WASHER
TPC 200ML Slim						
		C- 256207-0208				**Design Correction Device, Ass'y**
	010	456760-0008	S		1	FOLDING FLAP CAM
	020	272640-0008	S		1	COUNTER CAM
	040	295774	-		1	BRACKET
	045	311103-0310	S		2	CYLINDRICACP M6 5X20 RFR
	047	312105-0453	-		2	SCREW M6S8X25RFR
	070	272654	S		1	ECCENTRIC SHAFT
	160	256621	S		2	WASHER
IH 200ML Slim						
		C- 256207-0209				**Design Correction Device, Ass'y**
	010	456760-0002	S		1	FOLDING FLAP CAM
	020	272640-0009	S		1	COUNTER CAM
	040	256707	-		1	BRACKET
	045	311103-0316	S		2	CYLINDRICACP M6 5X35 RFR
	047	312105-0459	-		2	SCREW M6S8X40RFR
	070	272654	S		1	ECCENTRIC SHAFT
	160	256621	S		2	WASHER
IH 125ML						
		C- 256207-0210				**Design Correction Device, Ass'y**
	010	456760-0007	S		1	FOLDING FLAP CAM
	020	272640-0005	S		1	COUNTER CAM
	040	256707	-		1	BRACKET
	045	311103-0316	S		2	CYLINDRICACP M6 5X35 RFR
	047	312105-0459	-		2	SCREW M6S8X40RFR
	070	272654	S		1	ECCENTRIC SHAFT
	160	256621	S		2	WASHER

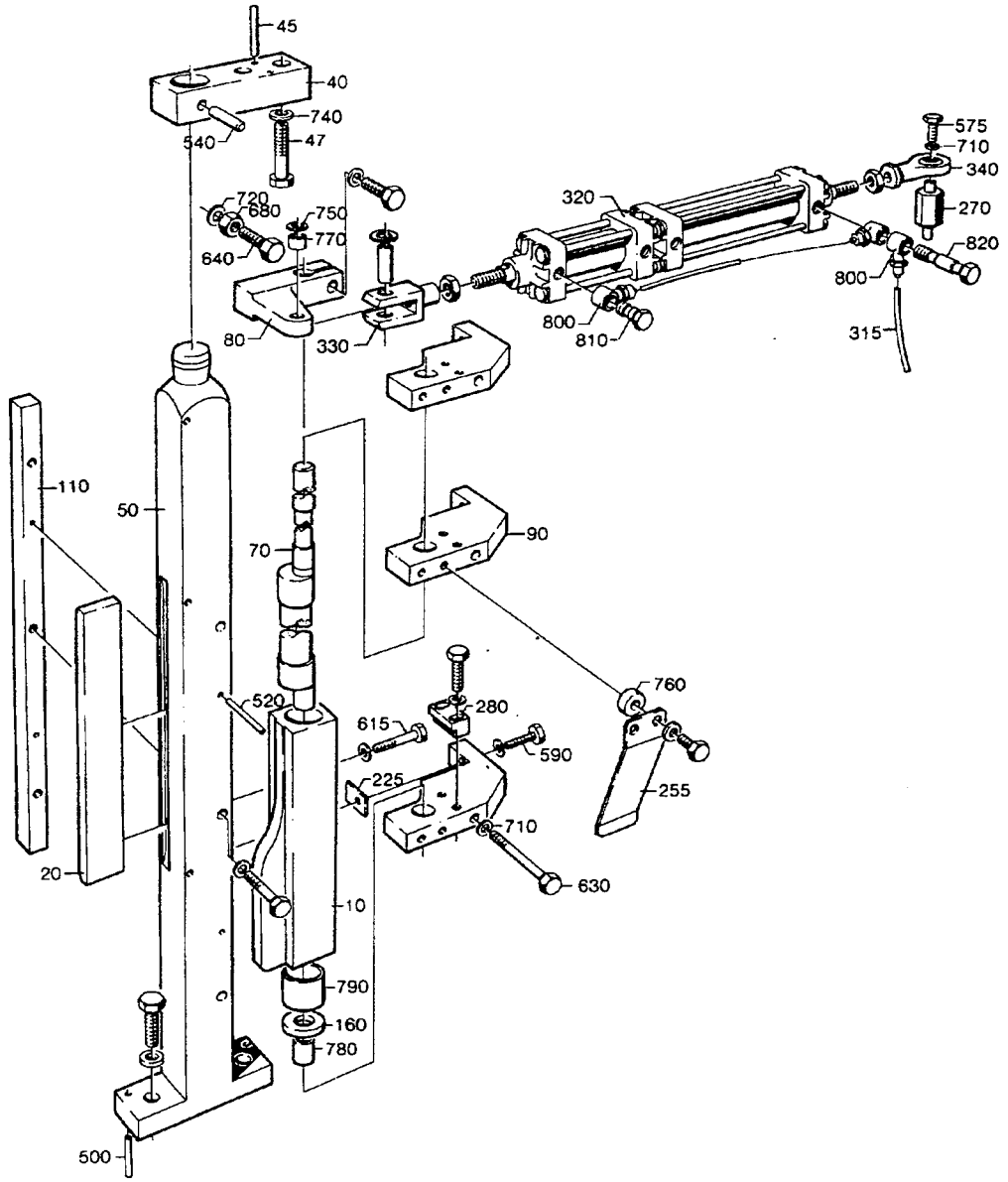

25620705.TIF
256207-5/6
AM 14652

Last Alteration: AM 20225 93-10-28

Corresponding group: 256207-020V
Assembly Drawing: 256207-5/6

Issue: **940524**

From	Pos	Part No	SP	UN	Qty	Description
TPC 236ML						
		C- 256207-0211				**Design Correction Device, Ass'y**
	010	456760-0002	S		1	FOLDING FLAP CAM
	020	272640-0009	S		1	COUNTER CAM
	040	256707	-		1	BRACKET
	045	311103-0316	S		2	CYLINDRICACP M6 5X35 RFR
	047	312105-0459	-		2	SCREW M6S8X40RFR
	070	272654	S		1	ECCENTRIC SHAFT
	160	256621	S		2	WASHER
IH 250ML Slim						
		C- 256207-0212				**Design Correction Device, Ass'y**
	010	574364	S		1	FOLDING FLAP CAM
	020	272640-0009	S		1	COUNTER CAM
	040	256707	-		1	BRACKET
	045	311103-0316	S		2	CYLINDRICACP M6 5X35 RFR
	047	312105-0459	-		2	SCREW M6S8X40RFR
	070	574375	S		1	ECCENTRIC SHAFT
	160	256621	S		1	WASHER
	165	574374	S		1	WASHER
IH 160ml						
		C- 256207-0213				**Design Correction Device, Ass'y**
	010	577225	S		1	FOLDING FLAP CAM
	020	272640-0006	S		1	COUNTER CAM
	040	256707	-		1	BRACKET
	045	311103-0316	S		2	CYLINDRICACP M6 5X35 RFR
	047	312105-0459	-		2	SCREW M6S8X40RFR
	070	272654	S		1	ECCENTRIC SHAFT
	160	256621	S		1	WASHER
Common Parts						
	050	272642	-		1	PILLAR
	080	272429	S		1	ARM
	090	G- 272491	-		3	BRACKET
	110	272645	S		1	RAIL
	225	256705	S		6	LACE
	255	257334	S		3	LEAF SPRING
	270	271132	-		1	SPACER
	280	271284	-		1	BLOCKING PIECE
	290	978184	-		1	STOPPER
	300	978185	-		1	SHIM
	315	90166-0132	P	MM	890	HOSE
	320	90450-0096	S		1	CYLINDER
	330	90239-0357	S		1	BRACKET
	340	90239-0405	S		1	LINK HEAD
	500	311103-0314	-		2	CYLINDRICACP M6 5X30 RFR
	520	311103-0320	-		2	CYLINDRICACP M6 5X45 RFR

From	Pos	Part No	SP	UN	Qty	Description
	540	311103-0409	-		1	CYLINDRICACP M6 8X40 RFR
	575	312105-0368	-		3	SCREW M6S6X16RFR
	590	312105-0372	-		5	SCREW M6S6X25RFR
	615	312105-0379	-		5	SCREW M6S6X45RFR
	630	312105-0384	-		3	SCREW M6S6X70RFR
	640	312105-0455	-		3	SCREW M6S8X30RFR
	650	312115-0453	-		1	SCREW 8X25 A4 80
	710	315105-0153	-		16	WASHER BRB6,4X12RFR
	720	315105-0165	-		3	WASHER BRB8,4X16RFR
	740	315115-0165	-		4	WASHER TBRB8,4X16RFR
	750	315233-0109	S		1	SEAL RING R1/8"
	760	315742-0102	-		2	RETAINING 6SMS199RFR
	770	321120-0098	S		1	BUSHING 10/12,0X8
	780	321120-0118	S		3	BUSHING 14/16X15
	790	321120-0153	S		2	BUSHING 24/27X20
	800	342980-0113	S		5	BANJO CONNSINGEL 6/4-1/8
	810	342980-0303	S		3	BANJO CONN SINGEL 1/8"
	820	342980-0313	S		1	BANJO CONN DUBBEL 1/8

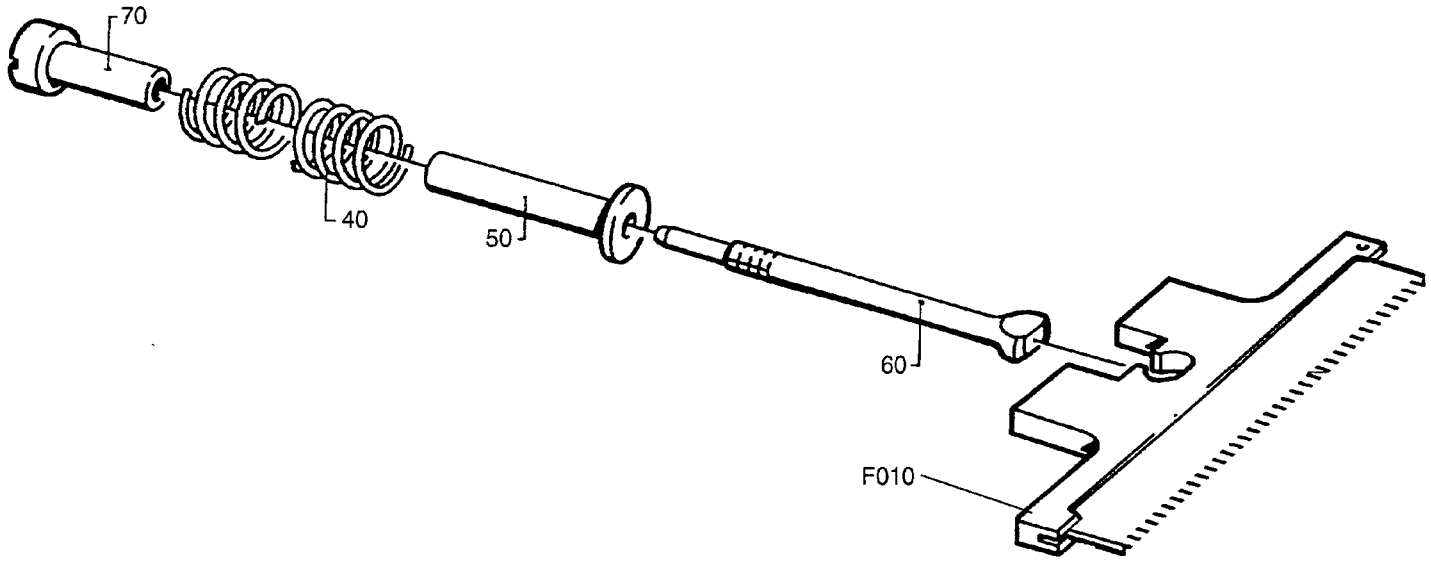

25620812.TIF
256208-12/13/14
AM 17920

Last Alteration: AM 20225 93-10-28

Corresponding group: 256208-040V
Assembly Drawing: 256208-12/13/14

Issue: **940524**

From	Pos	Part No	SP	UN	Qty	Description
IH 180ml TPC 284ml - 180ml						
		C- 256208-0401				**Knife Holder, Ass'y**
	F010	**C- 978763-0101**	**P**		**1**	**CUTTING PIECE**
IH 125ml 100ml						
		C- 256208-0402				**Knife Holder, Ass'y**
	F010	**C- 978763-0102**	**P**		**1**	**CUTTING PIECE**
IH 160ml 250ml Slim 200ml Slim						
		C- 256208-0403				**Knife Holder, Ass'y**
	F010	**C- 978763-0103**	**P**		**1**	**CUTTING PIECE**
TPC 200ml Slim						
		C- 256208-0404				**Knife Holder, Ass'y**
	F010	**C- 978763-0104**	**P**		**1**	**CUTTING PIECE**
Common Parts						
	040	441726	P		1	COMPRESSION SPRING
	050	272753	P		1	STEERING
	060	456009	P		1	LINK
	070	272755	P		1	NUT

From	Pos	Part No	SP	UN	Qty	Description

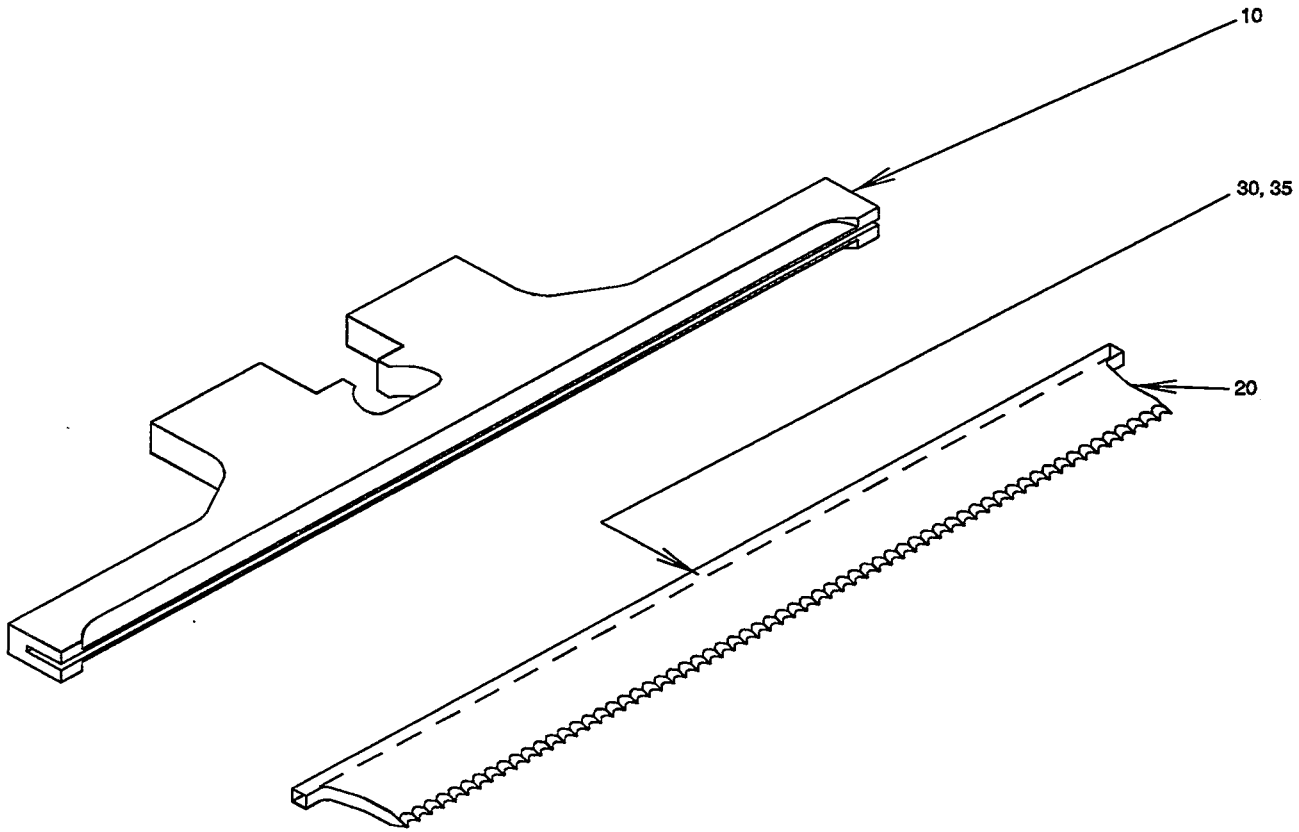
10
30, 35
20

Last Alteration: AM 20702 93-12-06

Corresponding group: 978763-010V
Assembly Drawing: 978763-1

Issue: **940524**

From	Pos	Part No	SP	UN Qty	Description
284ml -200ml IH 180ml TPC					
		C- 978763-0101			**Cutting Piece, Ass'y**
	010	978764	-	1	KNIFE HOLDER
	020	271738	-	1	KNIFE
125ml IH					
		C- 978763-0102			**Cutting Piece, Ass'y**
	010	978766	-	1	KNIFE HOLDER
	020	272762	-	1	KNIFE
200ml Slim 250ml Slim 160ml IH					
		C- 978763-0103			**Cutting Piece, Ass'y**
	010	978765	-	1	KNIFE HOLDER
	020	271738	-	1	KNIFE
200ml Slim TPC					
		C- 978763-0104			**Cutting Piece, Ass'y**
	010	978765	-	1	KNIFE HOLDER
	020	978713	-	1	KNIFE
Common Parts					
	030	90153-0054	-	X	ADHESIVE
	035	90153-0055	-	X	ADHESIVE

From	Pos	Part No	SP	UN Qty	Description

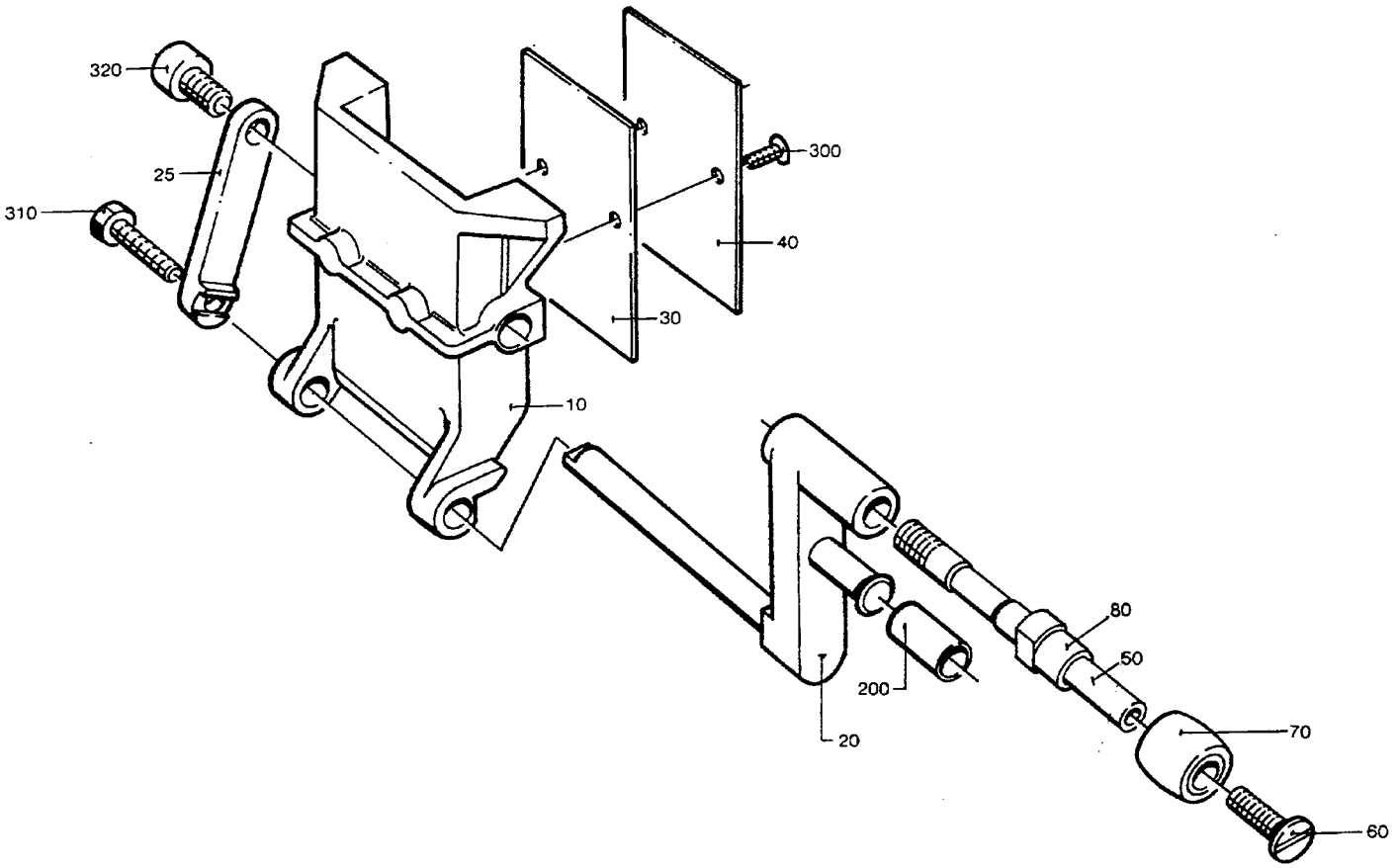

25620908.TIF
256209-8
AM 15106

From	Pos	Part No	SP	UN	Qty	Description
250ml						
		C- 256209-0301				**Volume Flap, Ass'y**
	010	G- 978366	S		1	VOLUME FLAP
	020	G- 752612-0001	S		1	CARRIER
	025	272985-0001	S		1	ARM
	030	272986-0001	S		3	VOLUME SHIM
	040	456005-0001	S		1	VOLUME BULGE
236ml						
		C- 256209-0302				**Volume Flap, Ass'y**
	010	G- 272498	S		1	VOLUME FLAP
	020	G- 752612-0001	S		1	CARRIER
	025	272985-0001	S		1	ARM
	030	272986-0002	S		3	VOLUME SHIM
	040	272988-0002	S		1	VOLUME BULGE
200ml						
		C- 256209-0303				**Volume Flap, Ass'y**
	010	G- 752212	S		1	VOLUME FLAP
	020	G- 752612-0001	S		1	CARRIER
	025	272985-0001	S		1	ARM
	030	272986-0003	S		3	VOLUME SHIM
	040	456005-0003	S		1	VOLUME BULGE
180ml						
		C- 256209-0304				**Volume Flap, Ass'y**
	010	G- 752292	S		1	VOLUME FLAP
	020	G- 752612-0002	S		1	CARRIER
	025	272985-0002	S		1	ARM
	030	272986-0004	S		3	VOLUME SHIM
	040	272988-0004	S		1	VOLUME BULGE
125ml						
		C- 256209-0305				**Volume Flap, Ass'y**
	010	G- 256849	S		1	VOLUME FLAP
	020	G- 752612-0001	S		1	CARRIER
	025	272985-0001	S		1	ARM
	030	272987	S		3	VOLUME SHIM
	040	491868	S		1	VOLUME BULGE
200ml Slim						
		C- 256209-0306				**Volume Flap, Ass'y**
	010	G- 752999	S		1	VOLUME FLAP
	020	G- 752612-0001	S		1	CARRIER
	025	272985-0001	S		1	ARM
	030	272991	S		3	VOLUME SHIM
	040	272990	S		1	VOLUME BULGE

From	Pos	Part No	SP	UN	Qty	Description
284ml						
		C- 256209-0307				**Volume Flap, Ass'y**
	010	G- 978031	S		1	VOLUME FLAP
	020	G- 752612-0001	S		1	CARRIER
	025	272985-0001	S		1	ARM
	030	272986-0005	S		3	VOLUME SHIM
	040	752739	S		1	VOLUME BULGE
250ml Slim						
		C- 256209-0308				**Volume Flap, Ass'y**
	010	G- 574365	S		1	VOLUME FLAP
	020	G- 752612-0001	S		1	CARRIER
	025	272985-0001	S		1	ARM
	030	574366	S		3	VOLUME SHIM
	040	574367	S		1	VOLUME BULGE
160ml						
		C- 256209-0309				**Volume Flap, Ass'y**
	010	G- 577211	S		1	VOLUME FLAP
	020	G- 752612-0001	S		1	CARRIER
	025	272985-0001	S		1	ARM
	030	577212	S		3	VOLUME SHIM
	040	577213	S		1	VOLUME BULGE
Common Parts						
	050	752598	S		1	SHAFT
	060	256859	S		1	SCREW
	070	256860	S		1	ROLL
	080	752615	S		1	SPACER
	200	90166-0159	P	MM	21	RUBBER HOSE
	300	312145-0291	P		2	SLOTTED HEMFS4X12RFR
	310	312105-0376	-		1	SCREW M6S6X35RFR
	320	312115-0449	-		1	SCREW 8X16 A4 80

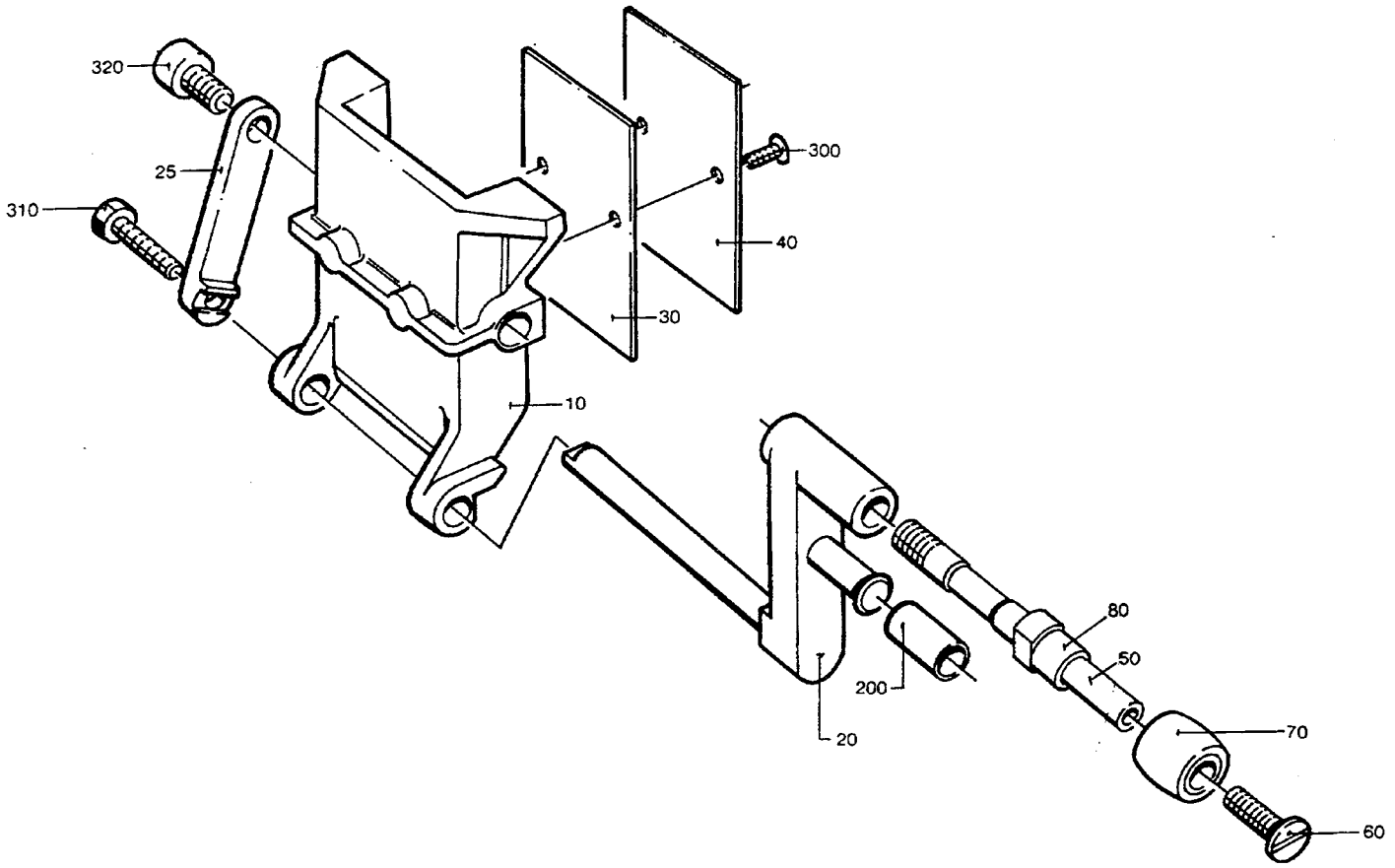

25621008.TIF
256210-8
AM 15106

From	Pos	Part No	SP	UN	Qty	Description
250ml						
		C- 256210-0301				**Volume Flap, Ass'y**
	010	G- 978366	S		1	VOLUME FLAP
	020	G- 752612-0001	S		1	CARRIER
	025	272985-0001	S		1	ARM
	030	272986-0001	S		3	VOLUME SHIM
	040	456005-0001	S		1	VOLUME BULGE
236ml						
		C- 256210-0302				**Volume Flap, Ass'y**
	010	G- 272498	S		1	VOLUME FLAP
	020	G- 752612-0001	S		1	CARRIER
	025	272985-0001	S		1	ARM
	030	272986-0002	S		3	VOLUME SHIM
	040	272988-0002	S		1	VOLUME BULGE
200ml						
		C- 256210-0303				**Volume Flap, Ass'y**
	010	G- 752212	S		1	VOLUME FLAP
	020	G- 752612-0001	S		1	CARRIER
	025	272985-0001	S		1	ARM
	030	272986-0003	S		3	VOLUME SHIM
	040	456005-0003	S		1	VOLUME BULGE
180ml						
		C- 256210-0304				**Volume Flap, Ass'y**
	010	G- 752292	S		1	VOLUME FLAP
	020	G- 752612-0002	S		1	CARRIER
	025	272985-0002	S		1	ARM
	030	272986-0004	S		3	VOLUME SHIM
	040	272988-0004	S		1	VOLUME BULGE
125ml						
		C- 256210-0305				**Volume Flap, Ass'y**
	010	G- 256849	S		1	VOLUME FLAP
	020	G- 752612-0001	S		1	CARRIER
	025	272985-0001	S		1	ARM
	030	272987	S		3	VOLUME SHIM
	040	491868	S		1	VOLUME BULGE
200ml Slim						
		C- 256210-0306				**Volume Flap, Ass'y**
	010	G- 752999	S		1	VOLUME FLAP
	020	G- 752612-0001	S		1	CARRIER
	025	272985-0001	S		1	ARM
	030	272991	S		3	VOLUME SHIM
	040	272990	S		1	VOLUME BULGE

From	Pos	Part No	SP	UN	Qty	Description
284ml						
		C- 256210-0307				**Volume Flap, Ass'y**
	010	G- 978031	S		1	VOLUME FLAP
	020	G- 752612-0001	S		1	CARRIER
	025	272985-0001	S		1	ARM
	030	272986-0005	S		3	VOLUME SHIM
	040	752739	S		1	VOLUME BULGE
250ml Slim						
		C- 256210-0308				**Volume Flap, Ass'y**
	010	G- 574365	S		1	VOLUME FLAP
	020	G- 752612-0001	S		1	CARRIER
	025	272985-0001	S		1	ARM
	030	574366	S		3	VOLUME SHIM
	040	574367	S		1	VOLUME BULGE
160ml						
		C- 256210-0309				**Volume Flap, Ass'y**
	010	G- 577211	S		1	VOLUME FLAP
	020	G- 752612-0001	S		1	CARRIER
	025	272985-0001	S		1	ARM
	030	577212	S		3	VOLUME SHIM
	040	577213	S		1	VOLUME BULGE
Common Parts						
	050	752598	S		1	SHAFT
	060	256859	S		1	SCREW
	070	256860	S		1	ROLL
	080	752615	S		1	SPACER
	200	90166-0159	P	MM	21	RUBBER HOSE
	300	312145-0291	P		2	SLOTTED HEMFS4X12RFR
	310	312105-0376	-		1	SCREW M6S6X35RFR
	320	312115-0449	-		1	SCREW 8X16 A4 80

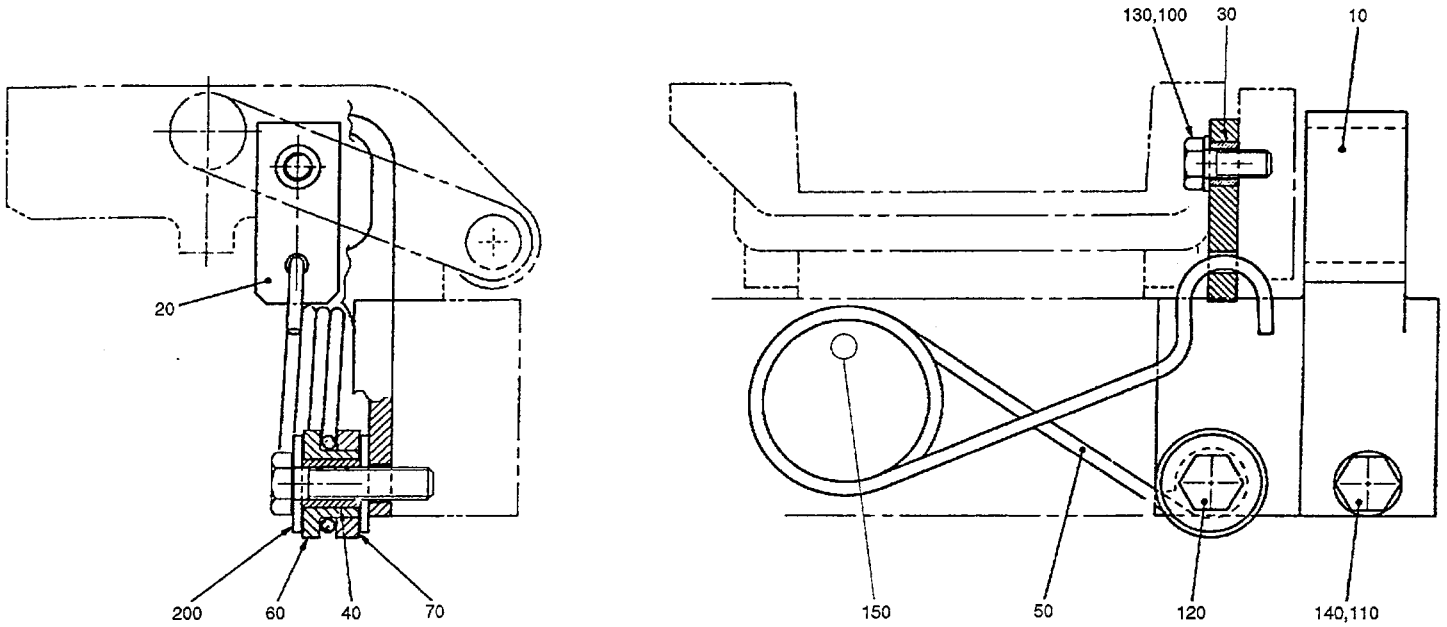

75267101.TIF
752671-1
AM 20702

Last Alteration: AM 20702 93-12-06

Corresponding group: 752671-010V
Assembly Drawing: 752671-1

Issue: **940524**

From	Pos	Part No	SP	UN	Qty	Description
284ml - 160ml 250ml Slim 200ml Sl						
		C- 752671-0101				**Shock Absorber Version 1, Ass'y**
	010	752559	S		1	STOP
180ml						
		C- 752671-0102				**Shock Absorber Version 1, Ass'y**
	010	752561	S		1	STOP
125ml						
		C- 752671-0103				**Shock Absorber Version 1, Ass'y**
	010	752563	S		1	STOP
Common Parts						
	020	752425	S		1	LINK
	030	752556	S		1	SPACER
	040	752673	S		1	SPACER
	050	752678	S		1	SPRING PERF 1
	060	752680	S		1	SLEEVE
	070	752681	S		1	WASHER
	100	312105-0327	-		1	SCREW M6S5X12 A2 80
	110	312105-0368	-		1	SCREW M6S6X16RFR
	120	312105-0372	-		1	SCREW M6S6X25RFR
	130	315105-0146	-		1	WASHER BRB5,3X10RFR
	140	315105-0153	-		1	WASHER BRB6,4X12RFR
	150	311103-0280	-		1	CYLINDRICACP M6 4X40 RFR
	200	90005-0060	-		2	WASHER

From	Pos	Part No	SP	UN	Qty	Description

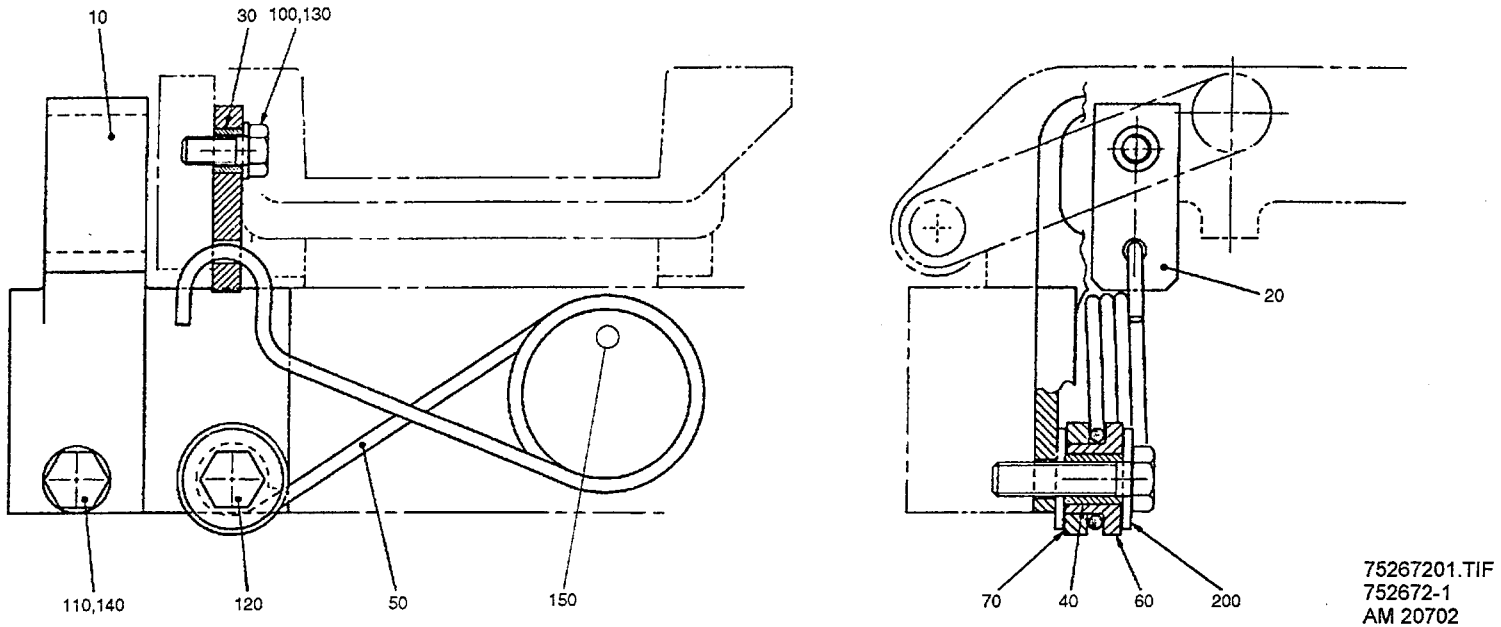

75267201.TIF
752672-1
AM 20702

From	Pos	Part No	SP	UN	Qty	Description
284ml - 160ml 250ml Slim 200ml Sl						
		C- 752672-0101				**Shock Absorber Version 2, Ass'y**
	010	752560	S		1	STOP
180ml						
		C- 752672-0102				**Shock Absorber Version 2, Ass'y**
	010	752562	S		1	STOP
125ml						
		C- 752672-0103				**Shock Absorber Version 2, Ass'y**
	010	752564	S		1	STOP
Common Parts						
	020	752425	S		1	LINK
	030	752556	S		1	SPACER
	040	752673	S		1	SPACER
	050	752679	S		1	SPRING
	060	752680	S		1	SLEEVE
	070	752681	S		1	WASHER
	100	312105-0327	-		1	SCREW M6S5X12 A2 80
	110	312105-0368	-		1	SCREW M6S6X16RFR
	120	312105-0372	-		1	SCREW M6S6X25RFR
	130	315105-0146	-		1	WASHER BRB5,3X10RFR
	140	315105-0153	-		1	WASHER BRB6,4X12RFR
	150	311103-0280	-		1	CYLINDRICACP M6 4X40 RFR
	200	90005-0060	-		2	WASHER

From	Pos	Part No	SP	UN	Qty	Description

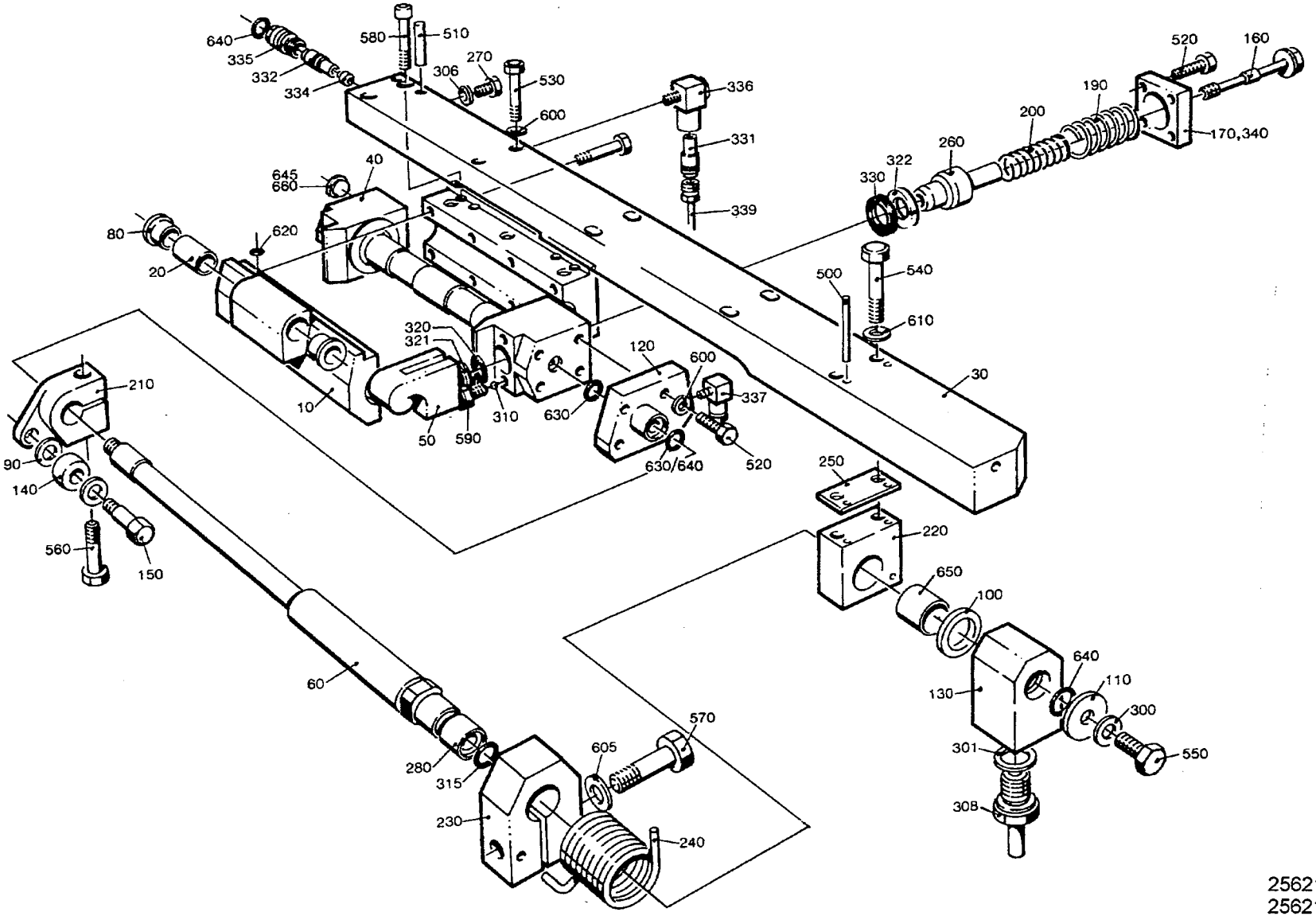

25621213.TIF
256212-13
AM 15000

From	Pos	Part No	SP	UN	Qty	Description
284ml - 180ml IH						
		C- 256212-0501				**Pressure Jaw Right, Ass'y**
	010	441710	C		1	BEARING HOUSING
	030	565950	S		1	CARRIER RIGHT
125ml IH						
		C- 256212-0502				**Pressure Jaw Right, Ass'y**
	010	441711	C		1	BEARING HOUSING
	030	565950	S		1	CARRIER RIGHT
160ml 200ml Slim IH						
		C- 256212-0503				**Pressure Jaw Right, Ass'y**
	010	441712	C		1	BEARING HOUSING
	030	565950	S		1	CARRIER RIGHT
284ml - 180ml TPC						
		C- 256212-0504				**Pressure Jaw Right, Ass'y**
	010	441710	C		1	BEARING HOUSING
	030	491549	S		1	CARRIER RIGHT
200ml Slim TPC						
		C- 256212-0505				**Pressure Jaw Right, Ass'y**
	010	441712	C		1	BEARING HOUSING
	030	491549	S		1	CARRIER RIGHT
200ml Slim IH						
		C- 256212-0506				**Pressure Jaw Right, Ass'y**
	010	574373	C		1	BEARING HOUSE 250S
	030	565950	S		1	CARRIER RIGHT
Common Parts						
	040	490940	C		1	CYLINDER
	050	752117	S		2	CATCH
	060	752284	S		1	SHAFT
	080	255653	S		2	FLANGE BUSHING
	090	256557-0001	S		2	WASHER
	100	256557-0002	S		1	WASHER
	110	256557-0003	S		1	WASHER
	120	752282	S		1	CONNECTION RIGHT
	130	441385	S		1	HUB
	140	256576	P		1	ROLL
	150	441764	S		1	SHAFT
	160	257249	S		2	SCREW
	170	G- 257250	-		2	LID
	190	490942	S		2	COMPRESSION SPRING
	200	490943	S		2	COMPRESSION SPRING
	210	G- 752289	-		1	CLAMP RIGHT
	220	272501	S		1	BRACKET RIGHT
	230	272503	-		1	CLAMPING PIECE
	240	456311	S		1	TORSION SPRING RIGHT
	250	272506	-		2	LACE

From	Pos	Part No	SP	UN	Qty	Description
	260	751743	S		2	PISTON
	270	441355	-		2	BLEEDING SCREW
	280	751769	S		2	SLEEVE
	300	315237-0107	S		1	GASKET
	306	315237-0106	-		2	GASKET
	308	90030-0065	S		1	PIPE CONNECTION
	310	90090-0005	P		4	STEEL BALL
	315	90091-0089	P		2	SEAL RING
	320	90091-0214	P		2	SEALING RING
	321	90091-0162	P		2	GUIDE RING
	322	90091-0170	P		2	GUIDE RING
	330	90091-0215	P		2	SEALING RING
	331	90092-0052	-		1	VALVE
	332	90092-0053	-		1	VALVE
	334	90134-0042	-		2	SPACER
	335	90134-0045	-		1	PLUG
	336	90134-0047	-		1	CONNECTION
	337	90134-0058	-		1	BANJO CONNECTION
	339	90166-0143	-	MM	160	HOSE
	340	90296-0068	-	G	25	GREASE
	500	311103-0242	S		2	CYLINDRICACP M6 3X30 RFR
	510	311103-0312	S		1	CYLINDRICACP M6 5X25 RFR
	520	312105-0370	-		11	SCREW M6S6X20RFR
	530	312105-0374	-		2	SCREW M6S6X30RFR
	540	312105-0376	-		6	SCREW M6S6X35RFR
	550	312105-0447	-		1	SCREW M6S8X12RFR
	560	312105-0453	-		1	SCREW M6S8X25RFR
	570	312105-0455	-		1	SCREW M6S8X30RFR
	580	312115-0371	-		2	SCREW 6X22 A4 80
	590	752476	S		4	SCREW
	600	315105-0153	-		5	WASHER BRB6,4X12RFR
	605	315105-0165	-		1	WASHER BRB8,4X16RFR
	610	315115-0153	-		6	WASHER TBRB6,4X12RFR
	620	315202-0102	P		8	O-RING 4,1X1,6
	630	315202-0106	P		1	O-RING 8,1X1,6
	640	315202-0108	P		3	O-RING 10,1X1,6
	645	315234-0109	P		2	SEAL RING R1/8"
	650	321120-0132	S		1	BUSHING 18/20X20
	660	342713-0209	-		2	BLIND PLUG

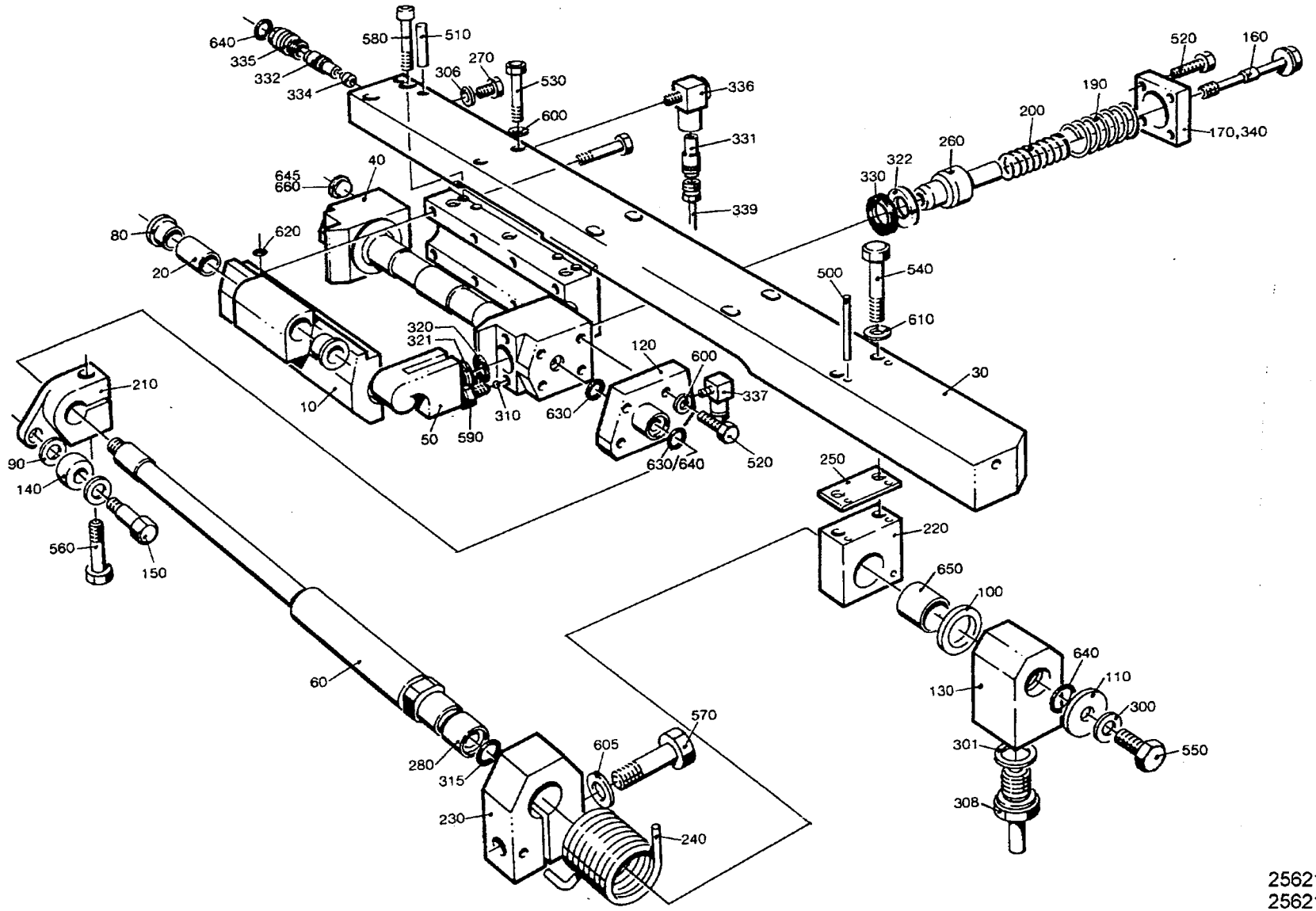

25621313.TIF
256213-13
AM 15000

From	Pos	Part No	SP	UN	Qty	Description
284ml - 180ml IH						
		C -256213-0501				**Pressure Jaw Left, Ass'y**
	010	441710	C		1	BEARING HOUSING
	030	565951	S		1	CARRIER LEFT
125ml IH						
		C -256213-0502				**Pressure Jaw Left, Ass'y**
	010	441711	C		1	BEARING HOUSING
	030	565951	S		1	CARRIER LEFT
160ml 200ml Slim IH						
		C -256213-0503				**Pressure Jaw Left, Ass'y**
	010	441712	C		1	BEARING HOUSING
	030	565951	S		1	CARRIER LEFT
284ml - 180ml TPC						
		C -256213-0504				**Pressure Jaw Left, Ass'y**
	010	441710	C		1	BEARING HOUSING
	030	491550	S		1	CARRIER LEFT
200ml Slim TPC						
		C -256213-0505				**Pressure Jaw Left, Ass'y**
	010	441712	C		1	BEARING HOUSING
	030	491550	S		1	CARRIER LEFT
200ml Slim IH						
		C -256213-0506				**Pressure Jaw Left, Ass'y**
	010	574373	C		1	BEARING HOUSE 250S
	030	565951	S		1	CARRIER LEFT
Common Parts						
	040	490940	C		1	CYLINDER
	050	752117	S		2	CATCH
	060	752284	S		1	SHAFT
	080	255653	S		2	FLANGE BUSHING
	090	256557-0001	S		2	WASHER
	100	256557-0002	S		1	WASHER
	110	256557-0003	S		1	WASHER
	120	752283	S		1	CONNECTION LEFT
	130	441385	S		1	HUB
	140	256576	P		1	ROLL
	150	441764	S		1	SHAFT
	160	257249	S		2	SCREW
	170	G- 257250	-		2	LID
	190	490942	S		2	COMPRESSION SPRING
	200	490943	S		2	COMPRESSION SPRING
	210	G- 752290	-		1	CLAMP LEFT
	220	272502	S		1	BRACKET LEFT
	230	272503	-		1	CLAMPING PIECE
	240	456312	S		1	TORSION SPRING LEFT
	250	272506	-		2	LACE

From	Pos	Part No	SP	UN	Qty	Description
	260	751743	S		2	PISTON
	270	441355	-		2	BLEEDING SCREW
	280	751769	S		2	SLEEVE
	300	315237-0107	S		1	GASKET
	306	315237-0106	-		2	GASKET
	308	90030-0065	S		1	PIPE CONNECTION
	310	90090-0005	P		4	STEEL BALL
	315	90091-0089	P		2	SEAL RING
	320	90091-0214	P		2	SEALING RING
	321	90091-0162	P		2	GUIDE RING
	322	90091-0170	P		2	GUIDE RING
	330	90091-0215	P		2	SEALING RING
	331	90092-0052	-		1	VALVE
	332	90092-0053	-		1	VALVE
	334	90134-0042	-		2	SPACER
	335	90134-0045	-		1	PLUG
	336	90134-0047	-		1	CONNECTION
	337	90134-0058	-		1	BANJO CONNECTION
	339	90166-0143	-	MM	160	HOSE
	340	90296-0068	-	G	25	GREASE
	500	311103-0242	S		2	CYLINDRICACP M6 3X30 RFR
	510	311103-0312	S		1	CYLINDRICACP M6 5X25 RFR
	520	312105-0370	-		11	SCREW M6S6X20RFR
	530	312105-0374	-		2	SCREW M6S6X30RFR
	540	312105-0376	-		6	SCREW M6S6X35RFR
	550	312105-0447	-		1	SCREW M6S8X12RFR
	560	312105-0453	-		1	SCREW M6S8X25RFR
	570	312105-0455	-		1	SCREW M6S8X30RFR
	580	312115-0371	-		2	SCREW 6X22 A4 80
	590	752476	S		4	SCREW
	600	315105-0153	-		5	WASHER BRB6,4X12RFR
	605	315105-0165	-		1	WASHER BRB8,4X16RFR
	610	315115-0153	-		6	WASHER TBRB6,4X12RFR
	620	315202-0102	P		8	O-RING 4,1X1,6
	630	315202-0106	P		1	O-RING 8,1X1,6
	640	315202-0108	P		3	O-RING 10,1X1,6
	645	315234-0109	P		2	SEAL RING R1/8"
	650	321120-0132	S		1	BUSHING 18/20X20
	660	342713-0209	-		2	BLIND PLUG

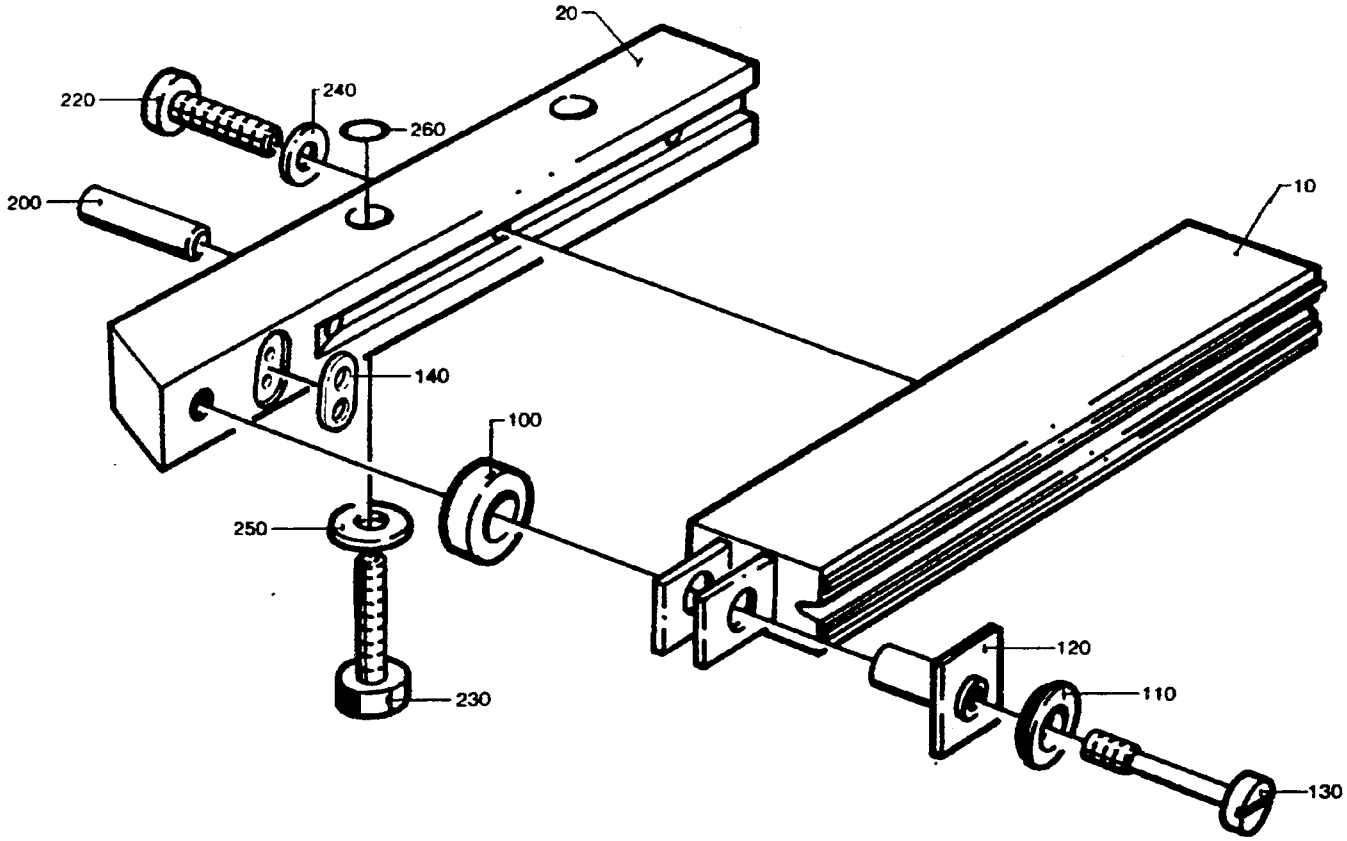

25621406.TIF
256214-6
AM 15000

Last Alteration: AM 20225 93-10-28

Corresponding group: 256214-040V
Assembly Drawing: 256214-6

Issue: **940524**

From	Pos	Part No	SP	UN	Qty	Description
284ml - 180ml						
		C- 256214-0401				**Pressure Rail IH, Ass'y**
	010	978747	UP		1	INDUCTOR 180-284ML
	020	491954	S		1	RAIL
	220	312115-0293	-		3	SCREW 4 X 16 A4 80
	230	312115-0331	-		2	SCREW 5X20 A4 80
	240	315105-0136	-		3	WASHER BRB4,3X8RFR
	260	315202-0102	P		2	O-RING 4,1X1,6
125ml						
		C- 256214-0402				**Pressure Rail IH, Ass'y**
	010	978751	UP		1	INDUCTOR 125ML
	020	491886	S		1	RAIL
	220	312115-0293	-		3	SCREW 4 X 16 A4 80
	230	312105-0331	-		2	SCREW M6S5X20 A2 80
	240	315105-0136	-		3	WASHER BRB4,3X8RFR
160ml 200ml Slim						
		C- 256214-0403				**Pressure Rail IH, Ass'y**
	010	978749	UP		1	INDUCTOR 200SLIM
	020	491962	S		1	RAIL
	220	312115-0293	-		2	SCREW 4 X 16 A4 80
	230	312115-0331	-		2	SCREW 5X20 A4 80
	240	315105-0136	-		2	WASHER BRB4,3X8RFR
	260	315202-0102	P		2	O-RING 4,1X1,6
250ml Slim						
		C- 256214-0404				**Pressure Rail IH, Ass'y**
	010	978797	UP		1	INDUCTOR 250SL
	020	491962	S		1	RAIL
	220	312115-0293	-		2	SCREW 4 X 16 A4 80
	230	312115-0331	-		2	SCREW 5X20 A4 80
	240	315105-0136	-		2	WASHER BRB4,3X8RFR
	260	315202-0102	P		2	O-RING 4,1X1,6
Common Parts						
	100	32644	P		1	WASHER
	110	256882	S		1	WASHER
	120	271846	P		1	INSULATION NUT
	130	271848	P		1	SCREW
	140	491681	P		1	GASKET
	200	311103-0270	-		2	CYLINDRICACP M6 4X16 RFR
	250	315105-0146	-		2	WASHER BRB5,3X10RFR

From	Pos	Part No	SP	UN	Qty	Description

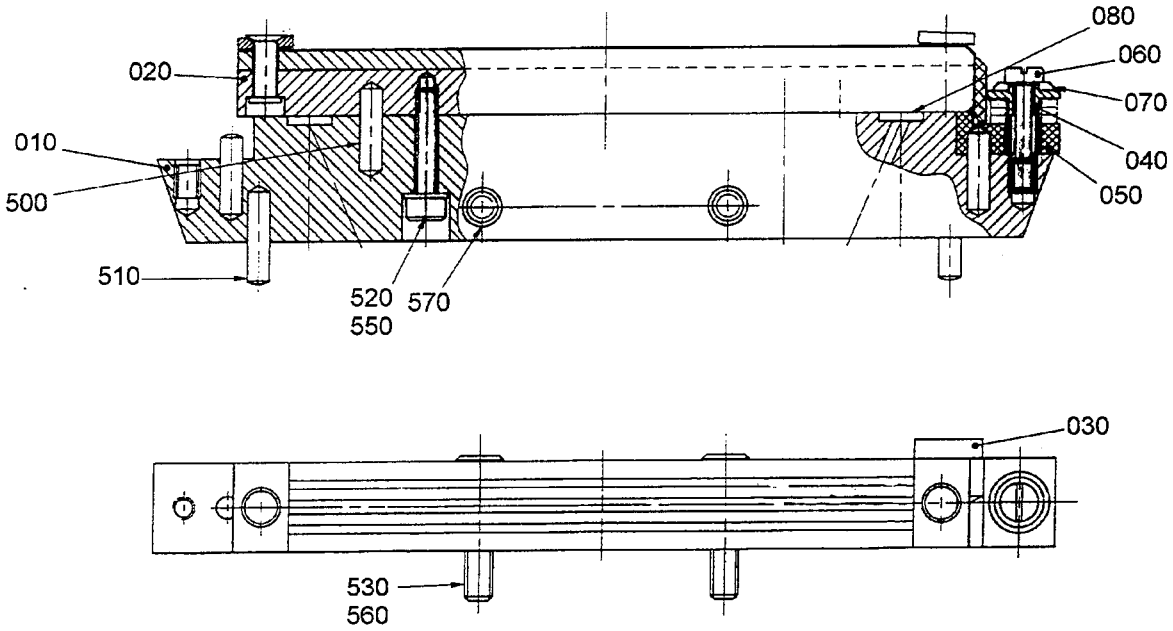

25621506.TIF
256215-6
AM 19603

Last Alteration: AM 19603 93-04-07

Corresponding group: 256215-040V
Assembly Drawing: 256215-6

Issue: **940524**

From	Pos	Part No	SP	UN	Qty	Description
284ml - 180ml						
		C- 256215-0401				**Pressure Rail TPC, Ass'y**
	010	575933	S		1	RAIL
	020	573452	UP		1	TPC BAR
200ml Slim						
		C- 256215-0402				**Pressure Rail TPC, Ass'y**
	010	573578	S		1	RAIL
	020	573576	UP		1	TPC BAR
Common Parts						
	030	573579	P		1	INSULATING PLATE
	040	271846	P		1	INSULATION NUT
	050	271847	P		1	INSULATION
	060	271848	P		1	SCREW
	070	256882	P		1	WASHER
	080	491681	P		2	GASKET
	500	311103-0269	P		4	CYLINDRICACP M6 4X14 RFR
	510	311103-0270	P		2	CYLINDRICACP M6 4X16 RFR
	520	312115-0295	-		2	SCREW S 4X20 A4 80
	530	312115-0331	-		2	SCREW 5X20 A4 80
	550	315105-0136	-		2	WASHER BRB4,3X8RFR
	560	315105-0146	-		2	WASHER BRB5,3X10RFR
	570	315202-0102	P		2	O-RING 4,1X1,6

From	Pos	Part No	SP	UN	Qty	Description

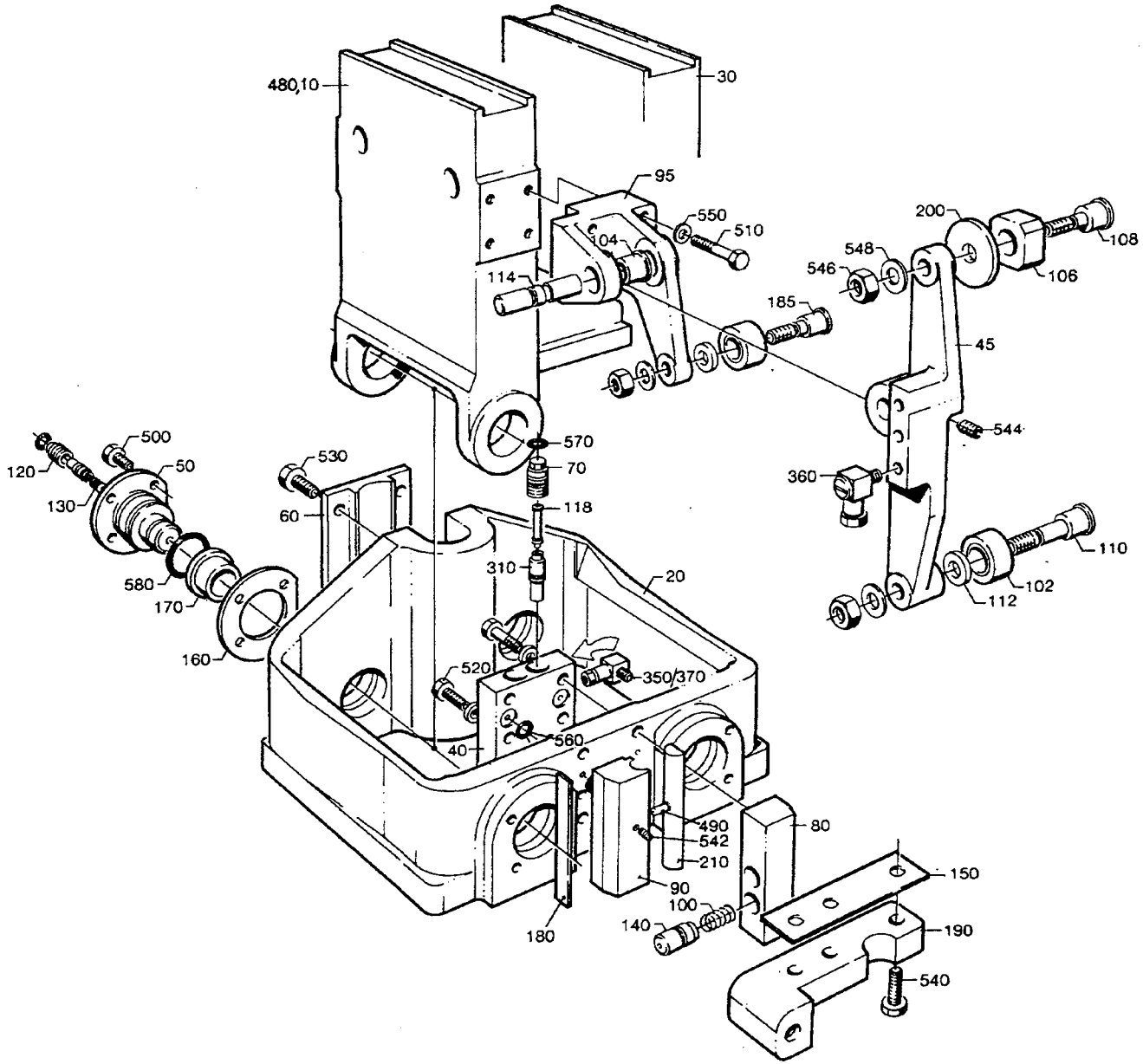

25695104.TIF
256951-4
AM 15484

Last Alteration: AM 17920 93-01-25

Corresponding group: 256951-040V
Assembly Drawing: 256951-4/5

Issue: **940524**

From	Pos	Part No	SP	UN Qty	Description
TPC					
		C- 256951-0501			**Yoke, Ass'y**
	030	G- 256869	S	1	ARM PRESSURE JAW
IH					
		C- 256951-0502			**Yoke, Ass'y**
	030	G- 562120	S	1	ARM PRESSURE JAW
Common Parts					
	010	G- 255609	S	1	ARM CUTTING JAW
	020	G- 256834	S	1	YOKE
	040	256953	S	1	BLOCK RIGHT
	045	G- 272492	C	1	ARM RIGHT
	050	272454	S	4	PIVOT PIN
	060	256082	S	1	CAP
	070	256829	S	6	SCREW
	080	256870	S	1	BRACKET
	090	491349	S	1	BEARING SEAT
	095	G- 272496	C	1	BRACKET RIGHT
	100	20239	S	2	COMPRESSION SPRING
	102	22475	S	2	CURVE ROLLER
	104	255653	S	2	FLANGE BUSHING
	106	256628	S	1	PIECE
	108	256629-0001	S	1	AXLE PIN
	110	256629-0003	S	1	AXLE PIN
	112	256704	S	2	WASHER
	114	256710	S	1	SHAFT
	118	256831-0001	S	2	SPACER
	120	256831-0002	S	4	SPACER
	130	256831-0003	S	4	SPACER
	140	256889	S	2	PLUNGER
	150	256890	-	2	LACE
	160	256891	-	6	LACE
	170	257213	S	4	BUSHING
	180	257317	-	1	LACE
	185	271100	S	1	DOWEL
	190	272415	S	2	ARM
	200	441706	S	1	WASHER
	210	491350	S	1	SLIDER
	310	90092-0052	S	6	VALVE
	360	90134-0058	-	4	BANJO CONNECTION
	370	90134-0068	-	1	BANJO CONNECTION
	480	311103-0268	-	2	CYLINDRICACP M6 4X12 RFR
	490	311103-0401	-	1	CYLINDRICACP M6 8X20 RFR
	500	312105-0368	-	16	SCREW M6S6X16RFR
	510	312105-0376	-	6	SCREW M6S6X35RFR
	520	312105-0380	-	4	SCREW M6S6X50RFR
	530	312105-0453	-	6	SCREW M6S8X25RFR
	540	312105-0455	-	6	SCREW M6S8X30RFR
	542	312318-0360	-	1	STOP SCREW SK6SS6X6RFR
	544	312318-0368	-	1	STOP SCREW SK6SS6X16RFR
	546	312811-0318	-	3	LOCK NUT M8RFR
	548	315105-0165	-	3	WASHER BRB8,4X16RFR
	550	315115-0153	-	10	WASHER TBRB6,4X12RFR
	560	315202-0206	S	5	O-RING 7,3X2,4
	570	315202-0207	S	6	O-RING 8,3X2,4
	580	315202-0219	S	8	O-RING 29,2X3

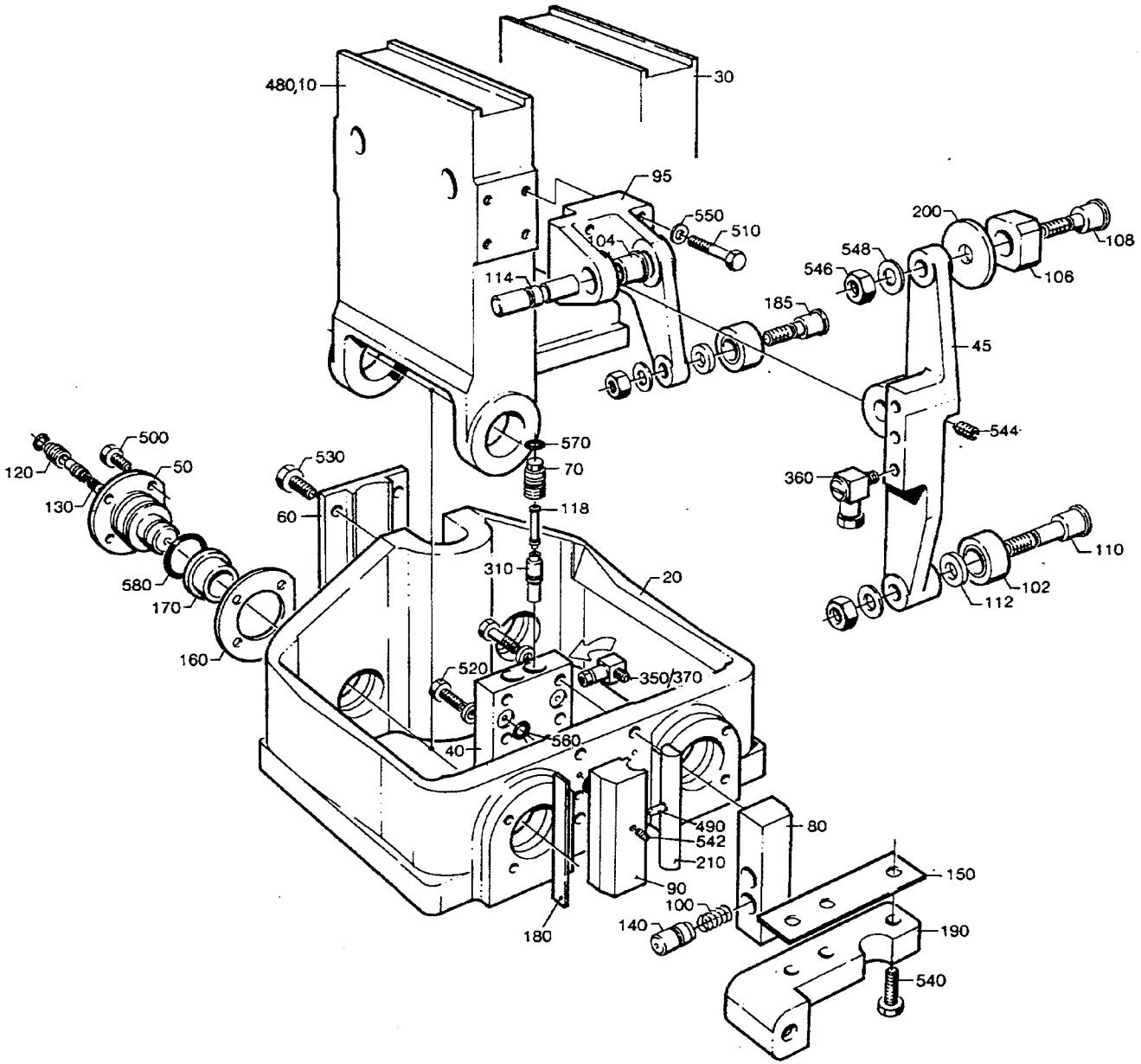

25695204.TIF
256952-4
AM 15484

Last Alteration: AM 17920 93-01-25

Corresponding group: 256952-050V
Assembly Drawing: 256952-4

Issue: **940524**

From	Pos	Part No	SP	UN Qty	Description
TPC					
		C- 256952-0501			**Yoke, Ass'y**
	030	G- 256869	S	1	ARM PRESSURE JAW
IH					
		C- 256952-0502			**Yoke, Ass'y**
	030	G- 256869	S	1	ARM PRESSURE JAW
Common Parts					
	010	G- 255609	S	1	ARM CUTTING JAW
	020	G- 256834	S	1	YOKE
	040	256954	S	1	BLOCK LEFT
	045	G- 272493	C	1	ARM LEFT
	050	272454	S	4	PIVOT PIN
	060	256082	S	1	CAP
	070	256829	S	6	SCREW
	080	256870	S	1	BRACKET
	090	491349	S	1	BEARING SEAT
	095	G- 272497	C	1	BRACKET LEFT
	100	20239	S	2	COMPRESSION SPRING
	102	22475	S	2	CURVE ROLLER
	104	255653	S	2	FLANGE BUSHING
	106	256628	S	1	PIECE
	108	256629-0001	S	1	AXLE PIN
	110	256629-0003	S	1	AXLE PIN
	112	256704	S	2	WASHER
	114	256710	S	1	SHAFT
	118	256831-0001	S	2	SPACER
	120	256831-0002	S	4	SPACER
	130	256831-0003	S	4	SPACER
	140	256889	S	2	PLUNGER
	150	256890	-	2	LACE
	160	256891	-	6	LACE
	170	257213	S	4	BUSHING
	180	257317	-	1	LACE
	185	271100	S	1	DOWEL
	190	272415	S	2	ARM
	200	441706	S	1	WASHER
	210	491350	S	1	SLIDER
	310	90092-0052	S	6	VALVE
	360	90134-0058	-	4	BANJO CONNECTION
	370	90134-0068	-	1	BANJO CONNECTION
	480	311103-0268	-	2	CYLINDRICACP M6 4X12 RFR
	490	311103-0401	-	1	CYLINDRICACP M6 8X20 RFR
	500	312105-0368	-	16	SCREW M6S6X16RFR
	510	312105-0376	-	6	SCREW M6S6X35RFR
	520	312105-0380	-	4	SCREW M6S6X50RFR
	530	312105-0453	-	6	SCREW M6S8X25RFR
	540	312105-0455	-	6	SCREW M6S8X30RFR
	542	312318-0360	-	1	STOP SCREW SK6SS6X6RFR
	544	312318-0368	-	1	STOP SCREW SK6SS6X16RFR
	546	312811-0318	-	3	LOCK NUT M8RFR
	548	315105-0165	-	3	WASHER BRB8,4X16RFR
	550	315115-0153	-	10	WASHER TBRB6,4X12RFR
	560	315202-0206	S	5	O-RING 7,3X2,4
	570	315202-0207	S	6	O-RING 8,3X2,4
	580	315202-0219	S	8	O-RING 29,2X3

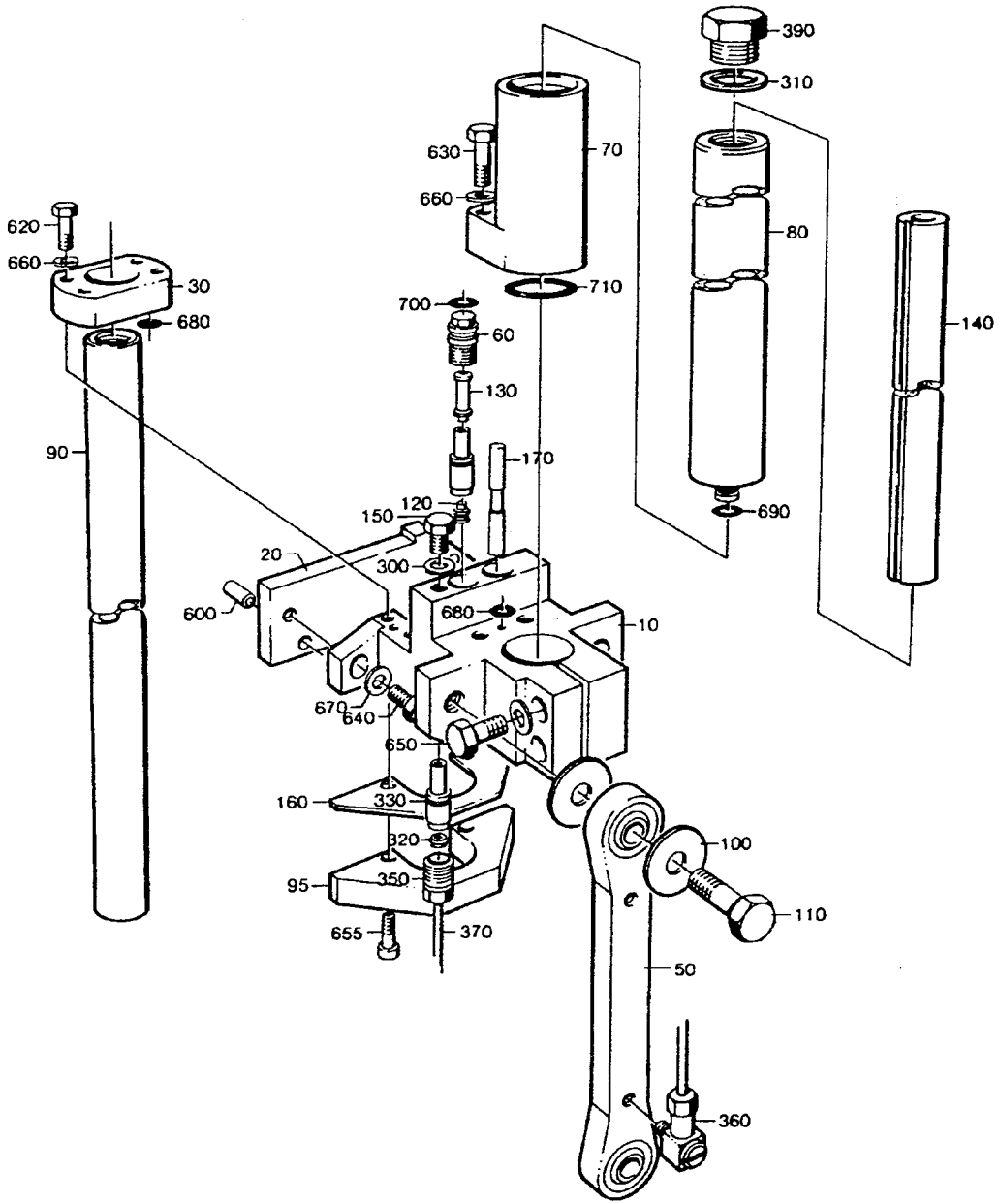

25621704.TIF
256217-4
AM 7033

From	Pos	Part No	SP	UN Qty	Description
		C- 256217-040V			**Way, Ass'y**
	010	G- 272689	C	2	BRACKET
	020	441749	S	2	CURVE
	030	456002	S	2	BEARING
	050	441031	S	4	LINK BEARING
	060	256829	S	4	SCREW
	070	G- 272490	C	2	SLEEVE
	080	441269	C	2	WAY
	090	441268	C	2	WAY
	095	441750	S	2	YOKE
	100	256738	S	16	WASHER
	110	256739	S	8	SCREW
	120	256831-0003	S	2	SPACER
	130	256831-0004	S	2	SPACER
	140	272840	-	2	ROD
	150	441355	-	2	BLEEDING SCREW
	160	441751	S	4	LACE
	170	456004	-	2	SPACER
	300	90005-0003	S	2	WASHER
	310	90005-0014	S	4	WASHER
	320	90028-0020	P	8	CONE
	330	90092-0052	S	10	VALVE
	350	90134-0039	-	8	BUSHING
	360	90134-0058	-	8	BANJO CONNECTION
	370	90166-0143	-	MM 1240	HOSE
	390	90330-0037	-	4	PLUG
	600	311103-0401	-	4	CYLINDRICACP M6 8X20 RFR
	620	312105-0372	-	6	SCREW M6S6X25RFR
	630	312105-0374	-	4	SCREW M6S6X30RFR
	640	312105-0452	-	4	SCREW M6S8X22RFR
	650	312105-0455	-	4	SCREW M6S8X30RFR
	655	312115-0372	-	4	SCREW MC6S6X25 A4 80
	660	315105-0153	-	10	WASHER BRB6,4X12RFR
	670	315105-0165	-	8	WASHER BRB8,4X16RFR
	680	315202-0106	S	6	O-RING 8,1X1,6
	690	315202-0204	S	2	O-RING 5,3X2,4
	700	315202-0207	S	4	O-RING 8,3X2,4
	710	315202-0219	S	4	O-RING 29,2X3

From	Pos	Part No	SP	UN Qty	Description

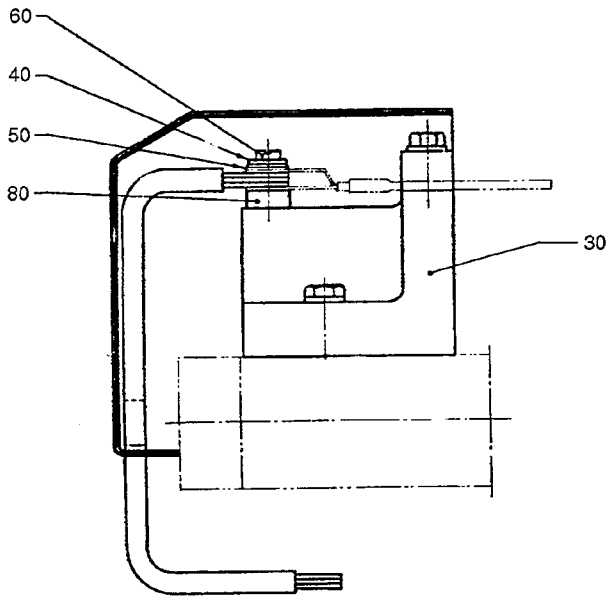

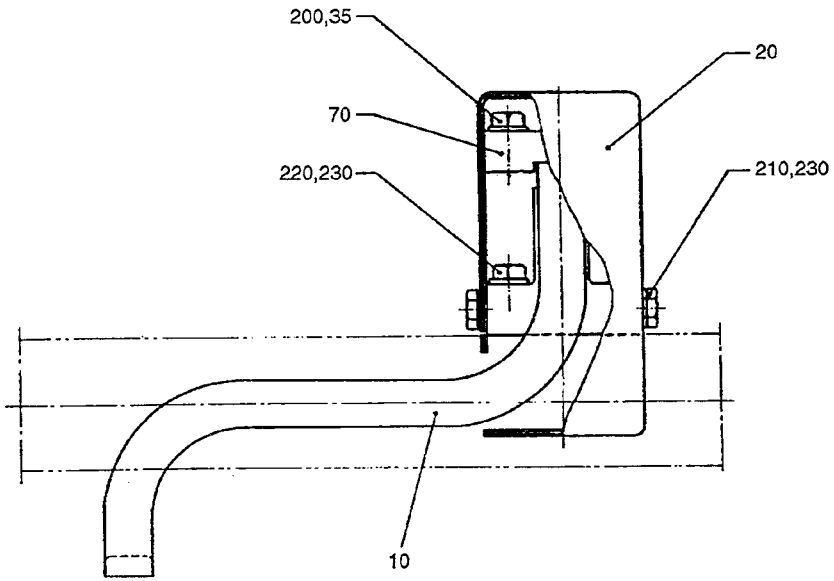

25621902.TIF
256219-2
AM 15000

From	Pos	Part No	SP	UN	Qty	Description
180ml - 284ml						
		C- 256219-0301				**Transmission Right, Ass'y**
	010	271849-0001	S		1	BUSBAR RIGHT
125ml						
		C- 256219-0302				**Transmission Right, Ass'y**
	010	271849-0002	S		1	BUSBAR RIGHT
Common parts						
	020	255843	C		1	GUARD RIGHT
	030	456847	S		1	SUPPORT PLATE
	035	6427	P		2	WASHER
	040	28509	P		1	WASHER
	050	271846	P		1	INSULATION NUT
	060	271848	P		1	SCREW
	070	456846	S		1	CRAMP
	080	295056	P		1	WASHER
	200	312105-0295	-		2	SCREW M6S4X20 A2 80
	210	312105-0364	-		4	SCREW M6S6X10RFR
	220	312105-0374	-		2	SCREW M6S6X30RFR
	230	315105-0153	-		6	WASHER BRB6,4X12RFR

From	Pos	Part No	SP	UN	Qty	Description

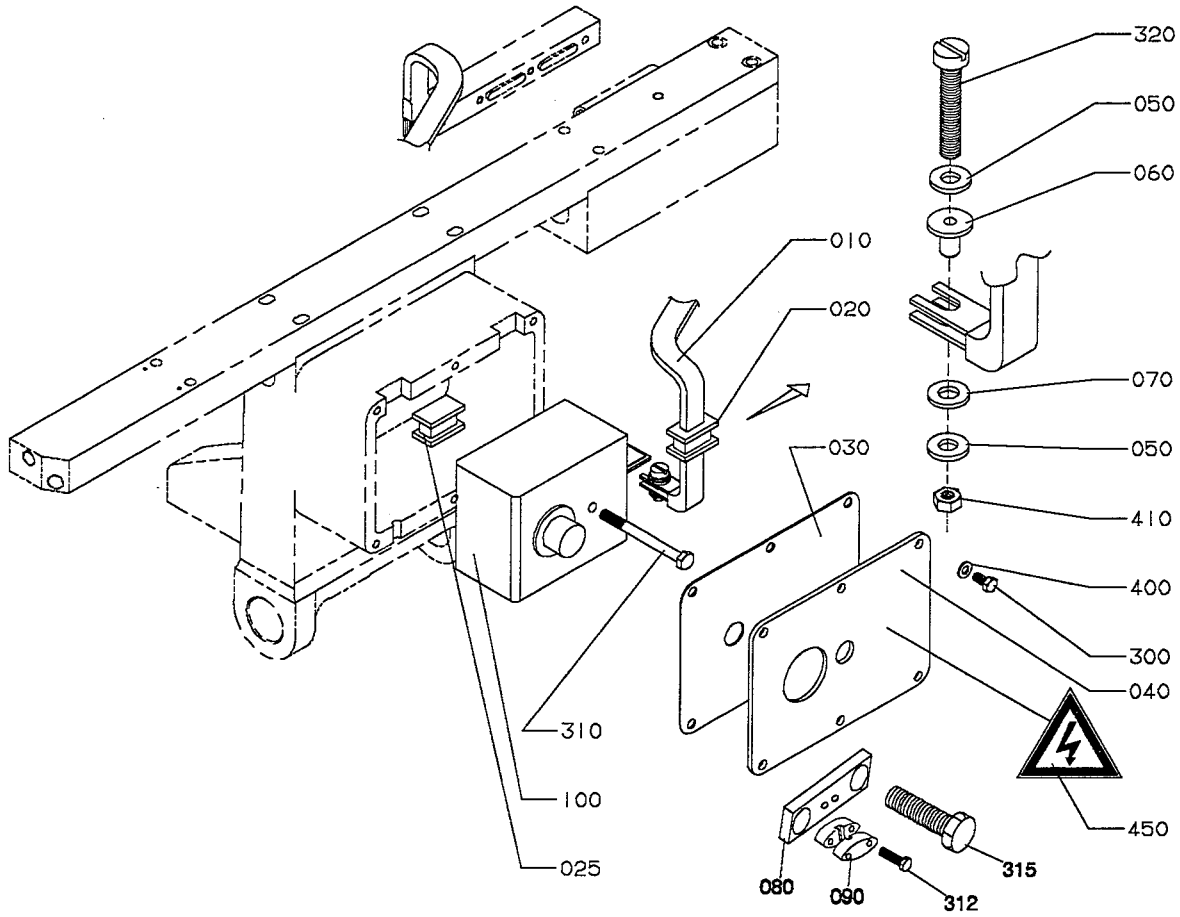

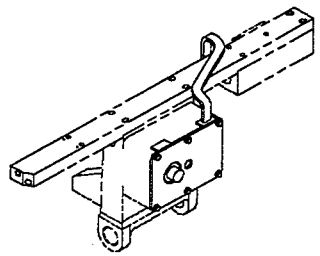

57264201.WPG
572642-1
AM 20702

From	Pos	Part No	SP	UN	Qty	Description
284ml - 180ml						
		C- 572642-0101				**Transmission IH Right, Ass'y**
	F100	**C- 67379-0114**	**-**		**1**	**IH TRANSFORMER I**
		C- 68474-0101				. COIL 5 TURN
	010	571871	S		1	BUSBAR,RIGHT
125ml						
		C- 572642-0102				**Transmission IH Right, Ass'y**
	F100	**C- 67379-0113**	**-**		**1**	**IH TRANSFORMER I**
		C- 68474-0101				. COIL 5 TURN
	010	571869	S		1	BUSBAR,RIGHT
250ml Slim 200ml Slim 160ml						
		C- 572642-0103				**Transmission IH Right, Ass'y**
	F100	**C- 67379-0105**	**-**		**1**	**IH TRANSFORMER I**
		C- 68474-0101				. COIL 5 TURN
	010	571871	S		1	BUSBAR,RIGHT
Common parts						
	020	571873	S		1	SEAL
	025	571874	S		1	SEALING PLUG
	030	562119	S		1	GASKET
	040	562118	S		1	LID
	050	28509	S		2	WASHER
	060	32544	S		1	INSULATION NUT
	070	32079	S		1	WASHER
	080	578104	-		1	SHEET
	090	464368	-		2	CRAMP
	300	312105-0325	-		4	SCREW M6S5X10 A2 80
	310	312101-0343	-		1	SCREW M6S5X60FZB
	312	312105-0328	-		2	SCREW M6S5X14 A2 80
	315	312105-0335	-		2	SCREW M6S5X30 A2 80
	320	312122-0294	-		1	SLOTTED HEMCS4X18MSGFN
	400	315105-0146	-		8	WASHER BRB5,3X10RFR
	410	312602-0312	-		1	NUT M6M4MSGFN
	450	90194-0016	S		1	SIGN"FLASH SIGN"

From	Pos	Part No	SP	UN	Qty	Description

From	Pos	Part No	SP	UN	Qty	Description
Secondary=1turn, Primary=5turn						
	F000	**C- 67379-0101**				**IH Transformator I, Ass'y**
	F130	**C- 68474-0101**	**-**		**1**	**COIL 5 TURN**
	350	556518-0001	-		1	COMPONENTS WITHOUT TP-NO
Secondary=1turn, Primary=4turn						
	F000	**C- 67379-0102**				**IH Transformator I, Ass'y**
	F210	**C- 68474-0103**	**-**		**1**	**COIL 4 TURN**
	360	556518-0002	-		1	COMPONENTS WITHOUT TP-NO
Secondary=1turn, Primary=4turn						
	F000	**C- 67379-0103**				**IH Transformator I, Ass'y**
	F210	**C- 68474-0103**	**-**		**1**	**COIL 4 TURN**
	370	556518-0003	-		1	COMPONENTS WITHOUT TP-NO
Secondary=1turn, Primary=6turn						
	F000	**C- 67379-0104**				**IH Transformator I, Ass'y**
	F140	**C- 68474-0102**	**-**		**1**	**COIL 6 TURN**
	380	556518-0004	-		1	COMPONENTS WITHOUT TP-NO
Secondary=1turn, Primary=5turn						
	F000	**C- 67379-0105**				**IH Transformator I, Ass'y**
	F130	**C- 68474-0101**	**-**		**1**	**COIL 5 TURN**
	390	556518-0005	-		1	COMPONENTS WITHOUT TP-NO
Secondary=1turn, Primary=4turn						
	F000	**C- 67379-0106**				**IH Transformator I, Ass'y**
	F210	**C- 68474-0103**	**-**		**1**	**COIL 4 TURN**
	400	556518-0006	-		1	COMPONENTS WITHOUT TP-NO
Secondary=1turn, Primary=4turn						
	F000	**C- 67379-0107**				**IH Transformator I, Ass'y**
	F210	**C- 68474-0103**	**-**		**1**	**COIL 4 TURN**
	410	556518-0007	-		1	COMPONENTS WITHOUT TP-NO
Secondary=1turn, Primary=5turn						
	F000	**C- 67379-0108**				**IH Transformator I, Ass'y**
	F130	**C- 68474-0101**	**-**		**1**	**COIL 5 TURN**
	420	556518-0008	-		1	COMPONENTS WITHOUT TP-NO
Secondary=1turn, Primary=5turn						
	F000	**C- 67379-0109**				**IH Transformator I, Ass'y**
	F130	**C- 68474-0101**	**-**		**1**	**COIL 5 TURN**
	430	556518-0009	-		1	COMPONENTS WITHOUT TP-NO
Secondary=1turn, Primary=4turn						
	F000	**C- 67379-0110**				**IH Transformator I, Ass'y**
	F210	**C- 68474-0103**	**-**		**1**	**COIL 4 TURN**
	440	556518-0010	-		1	COMPONENTS WITHOUT TP-NO
Common Parts						
	060	532701	-		1	FASTENING WASHER
	070	543111	-		1	PRINTED CIRCUIT BOARD
	080	551828	-		1	CABLE
	100	532699	-		1	TRANSFORMER COVER
	150	532704	-		1	MOUNTING DRAWING, CABLE
	220	532700	-		1	BUSBAR, SECONDARY
	230	532714	-		1	SPACER PIECE
	280	532715	-		1	SPACER
	300	543115	-		1	FASTENING PLATE
	320	542036	-		1	SIGN BOARD
	330	532698	-		1	ASSEMBLY INSTRUCTION
	340	57204-01:01	-		1	PACKING INSTRUCTION

Last Alteration: AM 14663 91-06-20

Corresponding group: 68474-010V
Assembly Drawing

Issue: **940524**

From	Pos	Part No	SP	UN	Qty	Description
COIL 5 TURN						
	F000	**C- 68474-0101**				**Coil, Ass'y**
	120	556519-0001	-		1	COMPONENTS WITHOUT TP-NO
COIL 6 TURN						
	F000	**C- 68474-0102**				**Coil, Ass'y**
	130	556519-0002	-		1	COMPONENTS WITHOUT TP-NO
COIL 4 TURN						
	F000	**C- 68474-0103**				**Coil, Ass'y**
	140	556519-0003	-		1	COMPONENTS WITHOUT TP-NO
Common Parts						
	100	532707	-		1	COIL FORMER
	110	532708	-		1	WINDING SPECIFICATION

From	Pos	Part No	SP	UN	Qty	Description

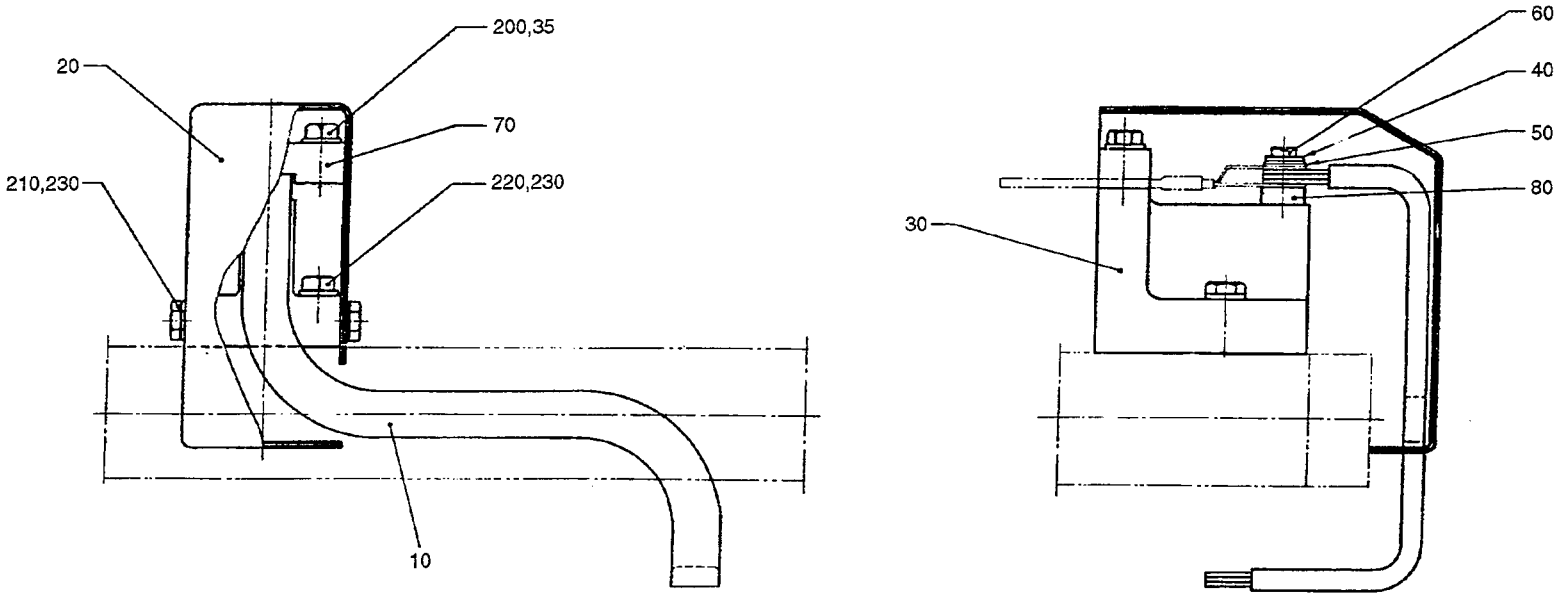

25622002.TIF
256220-2
AM 15000

From	Pos	Part No	SP	UN	Qty	Description
180ml - 284ml						
		C- 256220-0301				**Transmission Left, Ass'y**
	010	271850-0001	S		1	BUSBAR LEFT
125ml						
		C- 256220-0302				**Transmission Left, Ass'y**
	010	271850-0002	S		1	BUSBAR LEFT
Common parts						
	020	255844	C		1	GUARD LEFT
	030	456847	S		1	SUPPORT PLATE
	035	6427	P		2	WASHER
	040	28509	P		1	WASHER
	050	271846	P		1	INSULATION NUT
	060	271848	P		1	SCREW
	070	456846	S		1	CRAMP
	080	295056	P		1	WASHER
	200	312105-0295	-		2	SCREW M6S4X20 A2 80
	210	312105-0364	-		4	SCREW M6S6X10RFR
	220	312105-0374	-		2	SCREW M6S6X30RFR
	230	315105-0153	-		6	WASHER BRB6,4X12RFR

From	Pos	Part No	SP	UN	Qty	Description

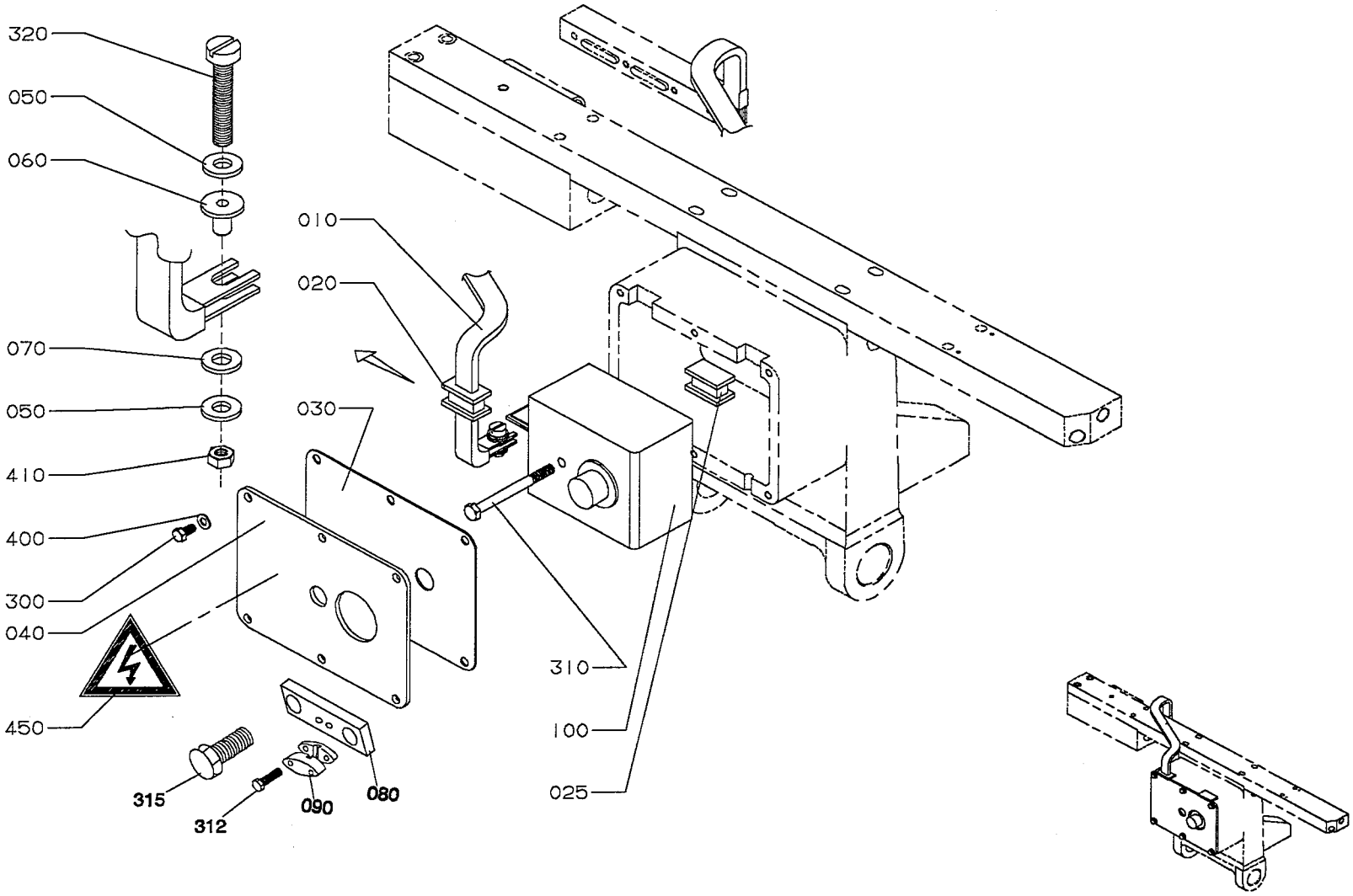

57264301.WPG
572643-1
AM 20702

Last Alteration: AM 20702 93-12-06

Corresponding group: 572643-010V
Assembly Drawing: 572643-1

Issue: **940524**

From	Pos	Part No	SP	UN	Qty	Description
284ml -180ml						
		C- 572643-0101				**Transmission IH Left, Ass'y**
	F100	**C- 67379-0114**	**-**		**1**	**IH TRANSFORMER I**
		C- 68474-0101				. COIL 5 TURN
	010	571872	S		1	BUSBAR,LEFT
125ml						
		C- 572643-0102				**Transmission IH Left, Ass'y**
	F100	**C- 67379-0113**	**-**		**1**	**IH TRANSFORMER I**
		C- 68474-0101				. COIL 5 TURN
	010	571870	S		1	BUSBAR,LEFT
250ml Slim 200ml Slim 160ml						
		C- 572643-0103				**Transmission IH Left, Ass'y**
	F100	**C- 67379-0105**	**-**		**1**	**IH TRANSFORMER I**
		C- 68474-0101				. COIL 5 TURN
	010	571872	S		1	BUSBAR,LEFT
Common Parts						
	020	571873	S		1	SEAL
	025	571874	S		1	SEALING PLUG
	030	562119	S		1	GASKET
	040	562118	S		1	LID
	050	28509	S		2	WASHER
	060	32544	S		1	INSULATION NUT
	070	32079	S		1	WASHER
	080	578104	-		1	SHEET
	090	464368	-		2	CRAMP
	300	312105-0325	-		4	SCREW M6S5X10 A2 80
	310	312101-0343	-		1	SCREW M6S5X60FZB
	312	312105-0328	-		2	SCREW M6S5X14 A2 80
	315	312105-0335	-		2	SCREW M6S5X30 A2 80
	320	312122-0294	-		1	SLOTTED HEMCS4X18MSGFN
	400	315105-0146	-		8	WASHER BRB5,3X10RFR
	410	312602-0312	-		1	NUT M6M4MSGFN
	450	90194-0016	S		1	SIGN"FLASH SIGN"

From	Pos	Part No	SP	UN	Qty	Description

From	Pos	Part No	SP	UN	Qty	Description
Secondary=1turn, Primary=5turn						
	F000	**C- 67379-0101**				**IH Transformator I, Ass'y**
	F130	**C- 68474-0101**	**-**		**1**	**COIL 5 TURN**
	350	556518-0001	-		1	COMPONENTS WITHOUT TP-NO
Secondary=1turn, Primary=4turn						
	F000	**C- 67379-0102**				**IH Transformator I, Ass'y**
	F210	**C- 68474-0103**	**-**		**1**	**COIL 4 TURN**
	360	556518-0002	-		1	COMPONENTS WITHOUT TP-NO
Secondary=1turn, Primary=4turn						
	F000	**C- 67379-0103**				**IH Transformator I, Ass'y**
	F210	**C- 68474-0103**	**-**		**1**	**COIL 4 TURN**
	370	556518-0003	-		1	COMPONENTS WITHOUT TP-NO
Secondary=1turn, Primary=6turn						
	F000	**C- 67379-0104**				**IH Transformator I, Ass'y**
	F140	**C- 68474-0102**	**-**		**1**	**COIL 6 TURN**
	380	556518-0004	-		1	COMPONENTS WITHOUT TP-NO
Secondary=1turn, Primary=5turn						
	F000	**C- 67379-0105**				**IH Transformator I, Ass'y**
	F130	**C- 68474-0101**	**-**		**1**	**COIL 5 TURN**
	390	556518-0005	-		1	COMPONENTS WITHOUT TP-NO
Secondary=1turn, Primary=4turn						
	F000	**C- 67379-0106**				**IH Transformator I, Ass'y**
	F210	**C- 68474-0103**	**-**		**1**	**COIL 4 TURN**
	400	556518-0006	-		1	COMPONENTS WITHOUT TP-NO
Secondary=1turn, Primary=4turn						
	F000	**C- 67379-0107**				**IH Transformator I, Ass'y**
	F210	**C- 68474-0103**	**-**		**1**	**COIL 4 TURN**
	410	556518-0007	-		1	COMPONENTS WITHOUT TP-NO
Secondary=1turn, Primary=5turn						
	F000	**C- 67379-0108**				**IH Transformator I, Ass'y**
	F130	**C- 68474-0101**	**-**		**1**	**COIL 5 TURN**
	420	556518-0008	-		1	COMPONENTS WITHOUT TP-NO
Secondary=1turn, Primary=5turn						
	F000	**C- 67379-0109**				**IH Transformator I, Ass'y**
	F130	**C- 68474-0101**	**-**		**1**	**COIL 5 TURN**
	430	556518-0009	-		1	COMPONENTS WITHOUT TP-NO
Secondary=1turn, Primary=4turn						
	F000	**C- 67379-0110**				**IH Transformator I, Ass'y**
	F210	**C- 68474-0103**	**-**		**1**	**COIL 4 TURN**
	440	556518-0010	-		1	COMPONENTS WITHOUT TP-NO
Common Parts						
	060	532701	-		1	FASTENING WASHER
	070	543111	-		1	PRINTED CIRCUIT BOARD
	080	551828	-		1	CABLE
	100	532699	-		1	TRANSFORMER COVER
	150	532704	-		1	MOUNTING DRAWING, CABLE
	220	532700	-		1	BUSBAR, SECONDARY
	230	532714	-		1	SPACER PIECE
	280	532715	-		1	SPACER
	300	543115	-		1	FASTENING PLATE
	320	542036	-		1	SIGN BOARD
	330	532698	-		1	ASSEMBLY INSTRUCTION
	340	57204-01:01	-		1	PACKING INSTRUCTION

From	Pos	Part No	SP	UN	Qty	Description
COIL 5 TURN						
	F000	**C- 68474-0101**				**Coil, Ass'y**
	120	556519-0001	-		1	COMPONENTS WITHOUT TP-NO
COIL 6 TURN						
	F000	**C- 68474-0102**				**Coil, Ass'y**
	130	556519-0002	-		1	COMPONENTS WITHOUT TP-NO
COIL 4 TURN						
	F000	**C- 68474-0103**				**Coil, Ass'y**
	140	556519-0003	-		1	COMPONENTS WITHOUT TP-NO
Common Parts						
	100	532707	-		1	COIL FORMER
	110	532708	-		1	WINDING SPECIFICATION

From	Pos	Part No	SP	UN	Qty	Description

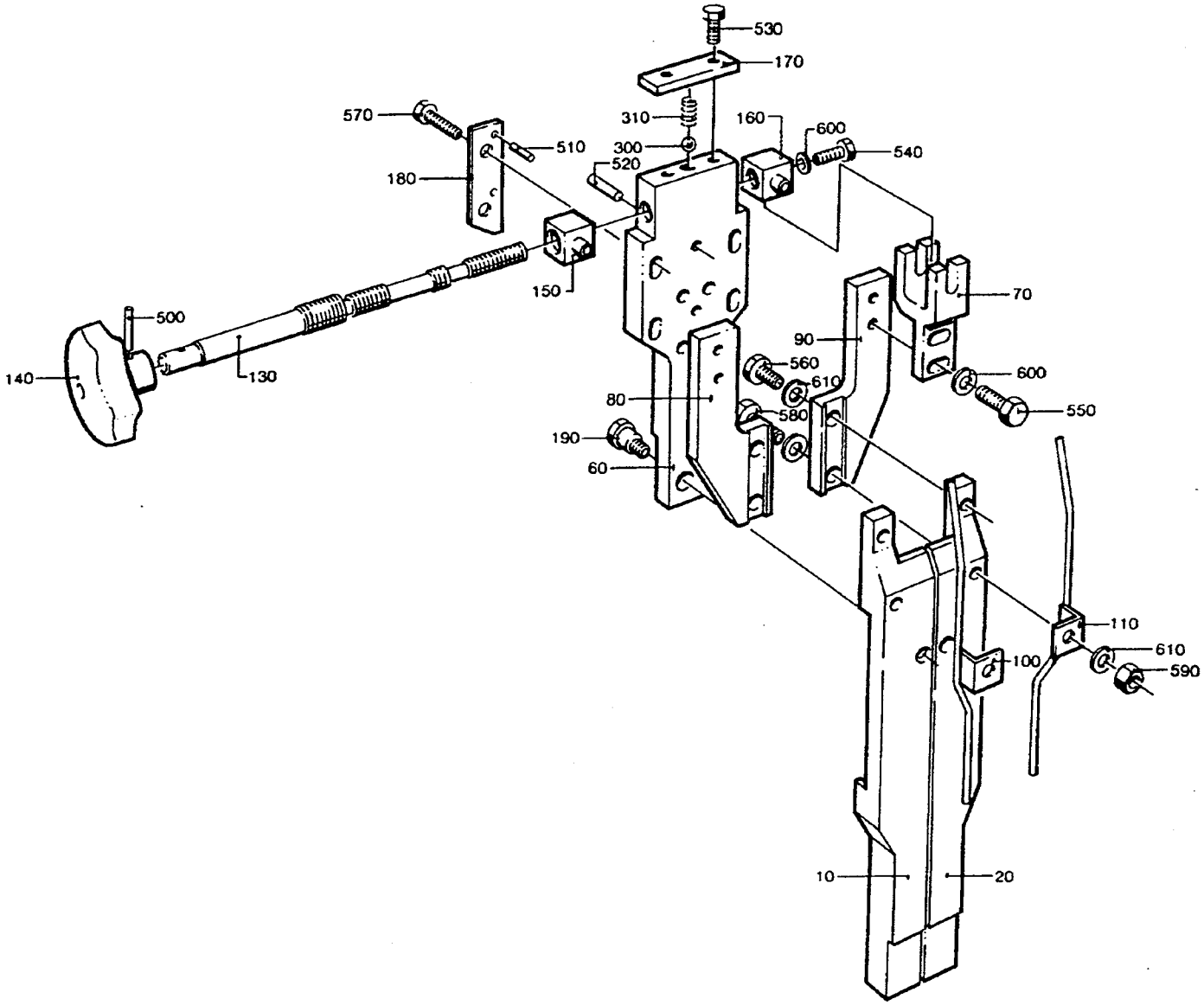

25622103.TIF
256221-3
AM 14652

Last Alteration: AM 14652 91-02-04

Corresponding group: 256221-020V
Assembly Drawing: 256221-3

Issue: **940524**

From	Pos	Part No	SP	UN	Qty	Description
250ml						
		C- 256221-0201				**Volume Curve Piece, Ass'y**
	010	272949	S		2	VOLUME CAM LEFT
	020	272957	S		2	VOLUME CAM RIGHT
200ml						
		C- 256221-0202				**Volume Curve Piece, Ass'y**
	010	272950	S		2	VOLUME CAM LEFT
	020	272958	S		2	VOLUME CAM RIGHT
180ml						
		C- 256221-0203				**Volume Curve Piece, Ass'y**
	010	272951	S		2	VOLUME CAM LEFT
	020	272959	S		2	VOLUME CAM RIGHT
200ml Slim						
		C- 256221-0204				**Volume Curve Piece, Ass'y**
	010	272952	S		2	VOLUME CAM LEFT
	020	272960	S		2	VOLUME CAM RIGHT
236ml						
		C- 256221-0205				**Volume Curve Piece, Ass'y**
	010	491436	S		2	VOLUME CAM LEFT
	020	491434	S		2	VOLUME CAM RIGHT
Common parts						
	060	272969	-		2	BRACKET
	070	272761	S		4	FORK
	080	272970	-		2	ARM LEFT
	090	272971	-		2	ARM RIGHT
	100	441758	S		2	PIPE RIGHT
	110	441759	S		2	PIPE LEFT
	130	272978	S		2	SPINDLE
	140	240797	-		2	HANDLE
	150	257393-0001	S		2	NUT
	160	257393-0002	S		2	NUT
	170	257395	-		2	WASHER
	180	272972	-		4	RULER
	190	272973	S		4	DOWEL
	300	90090-0014	S		2	STEEL BALL
	305	90157-0021	-		X	LOCKING FLUID
	310	90335-0011	S		2	SPRING
	500	311103-0238	-		2	CYLINDRICACP M6 3X20 RFR
	510	311103-0234	-		4	CYLINDRICACP M6 3X12 RFR
	520	311103-0355	-		4	CYLINDRICACP M6 6X25 RFR
	530	312105-0325	-		4	SCREW M6S5X10 A2 80
	540	312105-0366	-		2	SCREW M6S6X12RFR
	550	312105-0370	-		8	SCREW M6S6X20RFR
	560	312105-0451	-		4	SCREW M6S8X20RFR
	570	312105-0457	-		8	SCREW M6S8X35RFR
	580	312109-0459	-		4	SCREW M6S8X40H A4 80
	590	312605-0318	-		4	NUT M6M8RFR
	600	315105-0153	-		10	WASHER BRB6,4X12RFR
	610	315105-0165	-		12	WASHER BRB8,4X16RFR

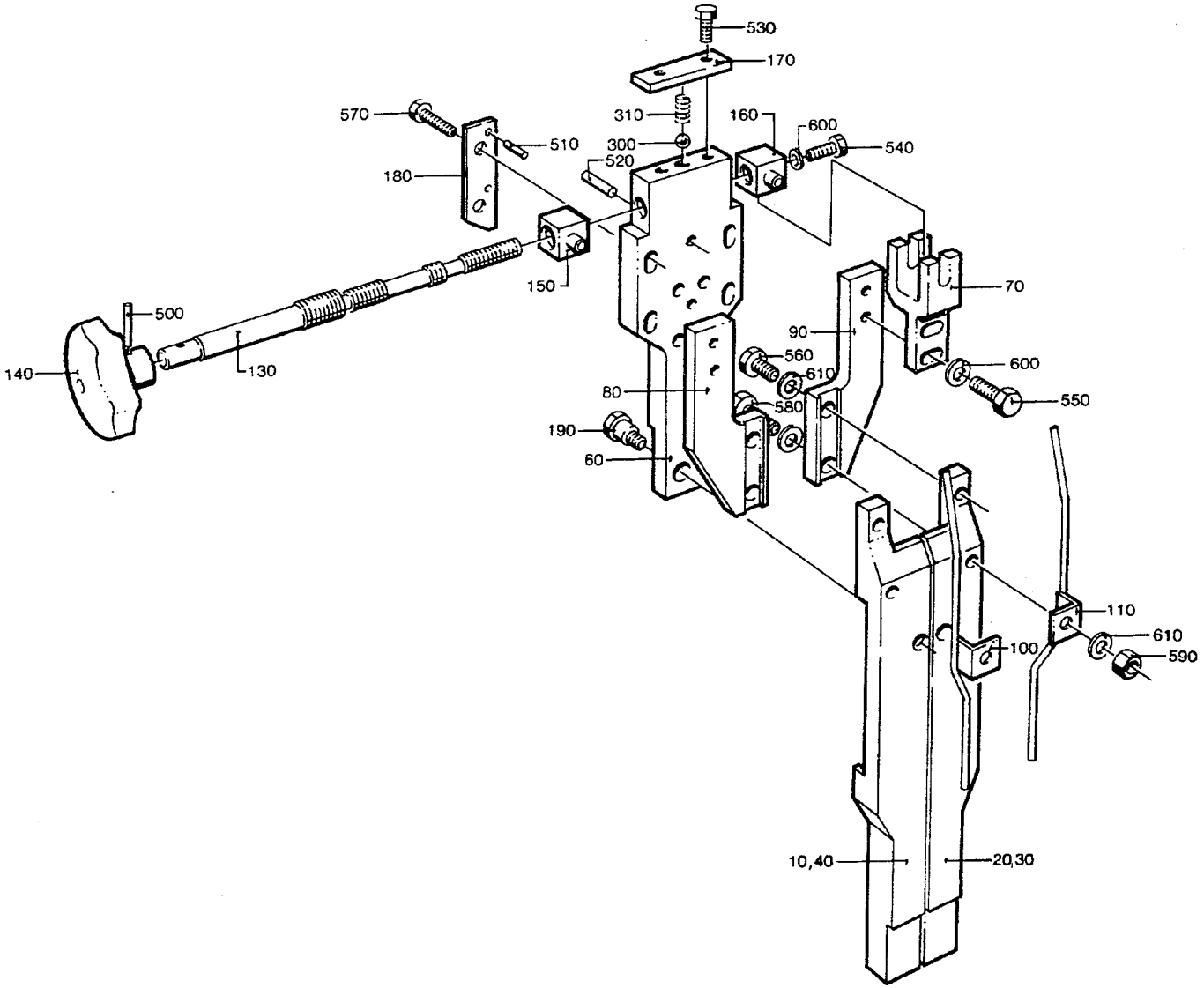

25622203.TIF
256222-3
AM 15484

Last Alteration: AM 20225 93-10-28

Corresponding group: 256222-020V
Assembly Drawing: 256222-3

Issue: **940524**

From	Pos	Part No	SP	UN	Qty	Description
250ml						
		C- 256222-0201				**Volume Curve Piece, Ass'y**
	010	272953	S		2	VOLUME CAM LEFT
	020	272961	S		2	VOLUME CAM RIGHT
236ml						
		C- 256222-0202				**Volume Curve Piece, Ass'y**
	010	272954	S		2	VOLUME CAM LEFT
	020	272962	S		2	VOLUME CAM RIGHT
200ml						
		C- 256222-0203				**Volume Curve Piece, Ass'y**
	010	272955	S		2	VOLUME CAM LEFT
	020	272963	S		2	VOLUME CAM RIGHT
180ml						
		C- 256222-0204				**Volume Curve Piece, Ass'y**
	010	272956	S		1	VOLUME CAM LEFT
	020	272964	S		1	VOLUME CAM RIGHT
	030	272965	S		1	VOLUME CAM LEFT, WIDE
	040	272967	S		1	VOLUME CAM RIGHT, WIDE
125ml						
		C- 256222-0205				**Volume Curve Piece, Ass'y**
	010	272955	S		1	VOLUME CAM LEFT
	020	272963	S		1	VOLUME CAM RIGHT
	030	272966	S		1	VOLUME CAM LEFT, WIDE
	040	272968	S		1	VOLUME CAM RIGHT, WIDE
200ml Slim						
		C- 256222-0206				**Volume Curve Piece, Ass'y**
	010	491436	S		1	VOLUME CAM LEFT
	020	491434	S		1	VOLUME CAM RIGHT
	030	491433	S		1	VOLUME CAM LEFT, WIDE
	040	491435	S		1	VOLUME CAM RIGHT, WIDE
284ml						
		C- 256222-0207				**Volume Curve Piece, Ass'y**
	010	272949	S		2	VOLUME CAM LEFT
	020	272957	S		2	VOLUME CAM RIGHT
250ml Slim						
		C- 256222-0208				**Volume Curve Piece, Ass'y**
	010	574380	S		1	VOLUME CAM LEFT
	020	574378	S		1	VOLUME CAM RIGHT
	030	574379	S		1	VOLUME CAM LEFT, WIDE
	040	574377	S		1	VOLUME CAM RIGHT, WIDE
160ml						
		C- 256222-0209				**Volume Curve Piece, Ass'y**
	010	577221	S		1	VOLUME CAM LEFT
	020	577222	S		1	VOLUME CAM RIGHT
	030	577223	S		1	VOLUME CAM LEFT, WIDE
	040	577224	S		1	VOLUME CAM RIGHT, WIDE

From	Pos	Part No	SP	UN	Qty	Description
Common Parts						
	060	272969	-		2	BRACKET
	070	272761	S		4	FORK
	080	272970	-		2	ARM LEFT
	090	272971	-		2	ARM RIGHT
	100	441758	S		2	PIPE RIGHT
	110	441759	S		2	PIPE LEFT
	130	272978	S		2	SPINDLE
	140	240797	-		2	HANDLE
	150	257393-0001	S		2	NUT
	160	257393-0002	S		2	NUT
	170	257395	-		2	WASHER
	180	272972	-		4	RULER
	190	272973	S		4	DOWEL
	300	90090-0014	S		2	STEEL BALL
	305	90157-0021	-		X	LOCKING FLUID
	310	90335-0011	S		2	SPRING
	500	311103-0238	-		2	CYLINDRICACP M6 3X20 RFR
	510	311103-0234	-		8	CYLINDRICACP M6 3X12 RFR
	520	311103-0355	-		4	CYLINDRICACP M6 6X25 RFR
	530	312105-0325	-		4	SCREW M6S5X10 A2 80
	540	312105-0366	-		2	SCREW M6S6X12RFR
	550	312105-0370	-		8	SCREW M6S6X20RFR
	560	312105-0451	-		4	SCREW M6S8X20RFR
	570	312105-0457	-		8	SCREW M6S8X35RFR
	580	312109-0459	-		4	SCREW M6S8X40H A4 80
	590	312605-0318	-		4	NUT M6M8RFR
	600	315105-0153	-		10	WASHER BRB6,4X12RFR
	610	315105-0165	-		12	WASHER BRB8,4X16RFR

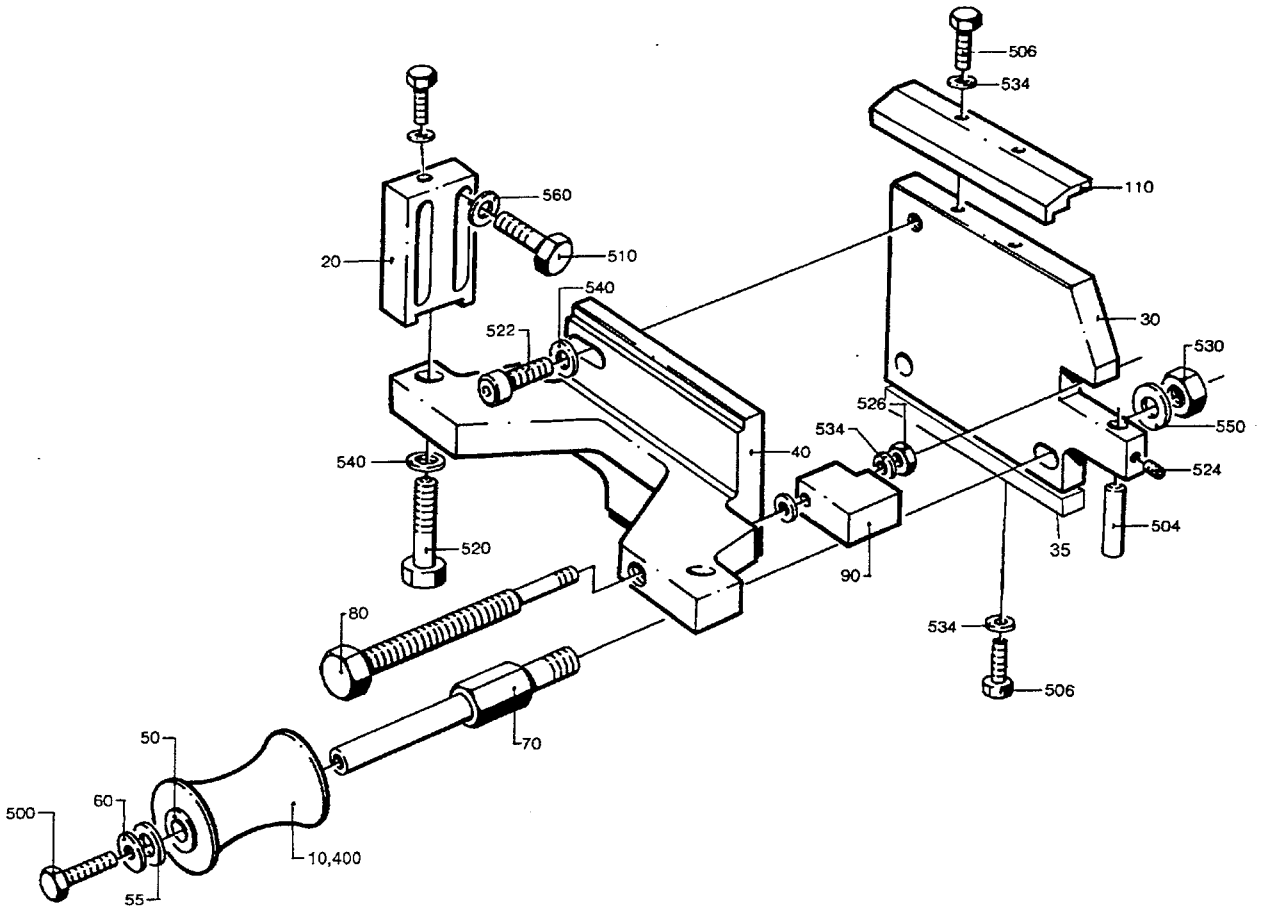

25622307.TIF
256223-7/8/9/10
AM 20702

From	Pos	Part No	SP	UN	Qty	Description
180ml - 284ml without Pull-Tab						
		C- 256223-0401				**Support Roller, Ass'y**
	010	978757	S		2	ROLLER 180-284ML
	020	272974-0001	-		2	BRACKET
	030	295748-0001	-		1	BACK PIECE
125ml without Pull-Tab						
		C- 256223-0402				**Support Roller, Ass'y**
	010	978758	S		2	ROLLER 125ML
	020	272974-0002	-		2	BRACKET
	030	295748-0002	-		1	BACK PIECE
200ml Slim TPC						
		C- 256223-0403				**Support Roller, Ass'y**
	010	978759	S		2	ROLLER TB200SL
	020	272974-0001	-		2	BRACKET
	030	295748-0003	-		1	BACK PIECE
100ml Slim 160ml IH without Pull-Tab						
		C- 256223-0404				**Support Roller, Ass'y**
	010	978760	S		2	ROLLER TBA200SL
	020	272974-0001	-		2	BRACKET
	030	295748-0003	-		1	BACK PIECE
250ml Slim IH without Pull-Tab						
		C- 256223-0405				**Support Roller, Ass'y**
	010	574385	S		2	ROLLER TBA250SL
	020	272974-0001	-		2	BRACKET
	030	574408	-		1	BACK PIECE
180ml - 284ml with Pull-Tab						
		C- 256223-0406				**Support Roller, Ass'y**
	010	978757	S		2	ROLLER 180-284ML
	020	272974-0001	-		2	BRACKET
	030	295748-0001	-		1	BACK PIECE
	035	752651	-		1	STEERING RAIL
125ml with Pull-Tab						
		C- 256223-0407				**Support Roller, Ass'y**
	010	978758	S		2	ROLLER 125ML
	020	272974-0002	-		2	BRACKET
	030	295748-0002	-		1	BACK PIECE
	035	752651	-		1	STEERING RAIL
200ml Slim TPC						
		C- 256223-0408				**Support Roller, Ass'y**
	010	978759	S		2	ROLLER TB200SL
	020	272974-0001	-		2	BRACKET
	030	295748-0003	-		1	BACK PIECE
	035	752651	-		1	STEERING RAIL

From	Pos	Part No	SP	UN	Qty	Description
200ml Slim 160ml IH with Pull-Tab						
		C- 256223-0409				**Support Roller, Ass'y**
	010	978760	S		2	ROLLER TBA200SL
	020	272974-0001	-		2	BRACKET
	030	295748-0003	-		1	BACK PIECE
	035	752651	-		1	STEERING RAIL
250ml Slim IH with Pull-Tab						
		C- 256223-0410				**Support Roller, Ass'y**
	010	574385	S		2	ROLLER TBA250SL
	020	272974-0001	-		2	BRACKET
	030	574408	-		1	BACK PIECE
	035	752651	-		1	STEERING RAIL
Common Parts						
	040	752649	-		1	CANTILEVER
	050	2033-0009	P		16	WASHER
	055	2033-0014	P		6	WASHER
	060	27815	S		2	WASHER
	070	978756	-		2	PIN
	080	295744	C		1	SCREW
	090	295749	-		1	ADJUSTING BLOCK
	110	295750-0002	-		1	STEERING RAIL
	400	90240-0180	-		4	FLANGE BUSHING
	500	312105-0333	-		2	SCREW M6S5X25 A2 80
	501	312105-0366	-		2	SCREW M6S6X12RFR
	504	311103-0405	-		1	CYLINDRICACP M6 8X30 RFR
	506	312105-0370	-		4	SCREW M6S6X20RFR
	510	312105-0457	-		4	SCREW M6S8X35RFR
	520	312105-0459	-		2	SCREW M6S8X40RFR
	522	312115-0453	-		1	SCREW 8X25 A4 80
	524	312318-0321	-		1	STOP SCREW SK6SS5X6RFR
	526	312625-0316	-		2	NUT M 6
	530	312811-0320	-		2	LOCK NUT M10RFR
	534	315105-0153	-		8	WASHER BRB6,4X12RFR
	540	315105-0165	-		3	WASHER BRB8,4X16RFR
	550	315105-0173	-		2	WASHER BRB10,5X22RFR
	560	315115-0165	-		4	WASHER TBRB8,4X16RFR

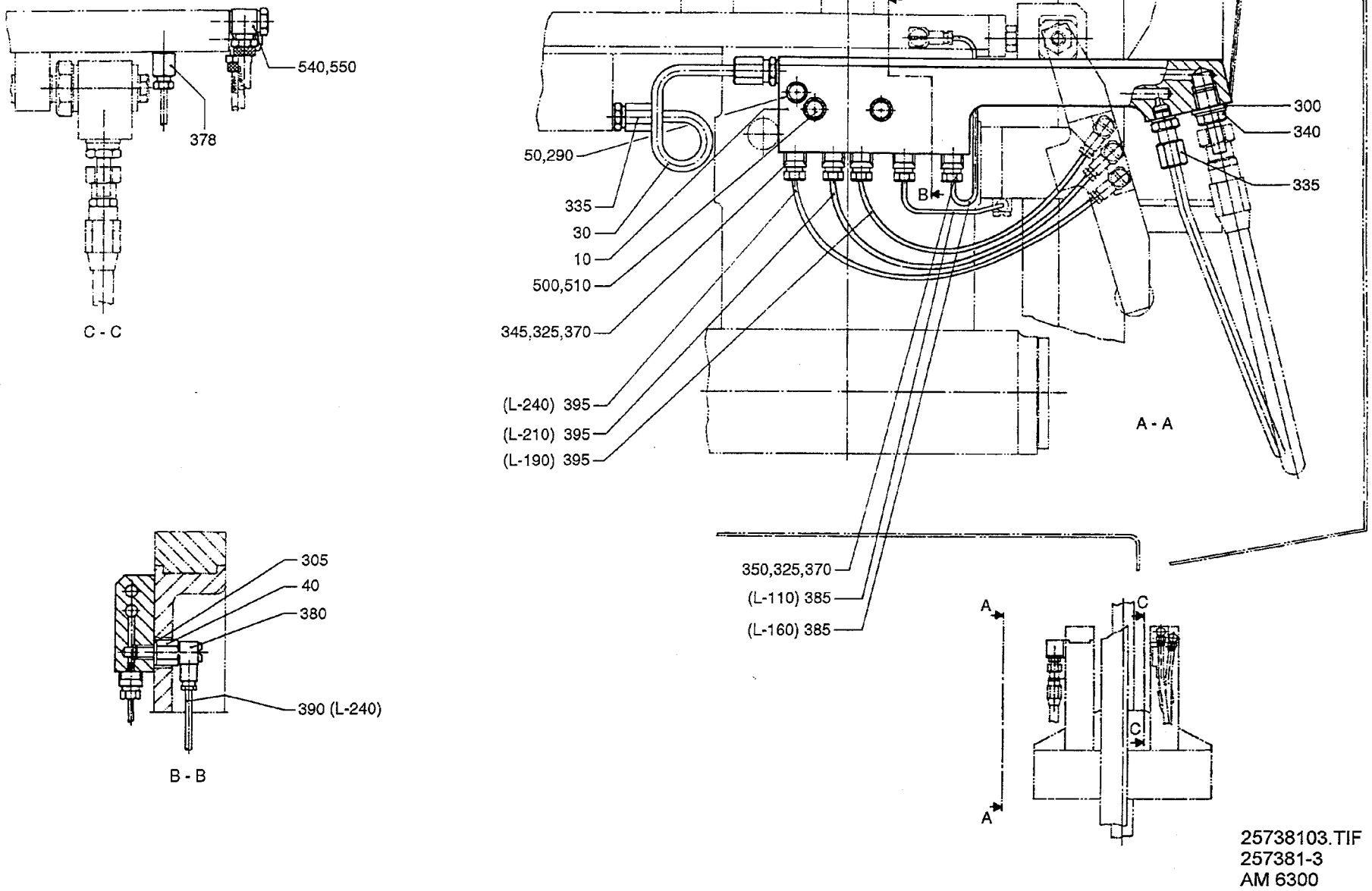

25738103.TIF
257381-3
AM 6300

From	Pos	Part No	SP	UN	Qty	Description
		C- 257381-0301				**Connection Block, Ass'y**
	010	456017	S		1	HOSE HOLDER RIGHT
	030	257379	-		1	HYDRAULIC PIPE RIGHT
	040	257000	S		1	NIPPLE
	050	441355	-		1	BLEEDING SCREW
	290	90005-0003	-		1	WASHER
	300	90005-0005	P		1	WASHER
	305	90005-0007	-		1	WASHER
	325	90028-0020	P		5	CONE
	335	90030-0184	-		3	PIPE CONNECTION
	340	90030-0065	-		1	PIPE CONNECTION
	345	90092-0052	P		4	VALVE
	350	90092-0053	-		1	VALVE
	370	90134-0039	P		5	BUSHING
	378	90134-0066	-		1	CONNECTION
	380	90134-0068	-		1	BANJO CONNECTION
	385	90266-0019	-	MM	270	PIPE
	390	90166-0109	P	MM	240	HOSE
	395	90166-0143	-	MM	640	HOSE
	500	312105-0376	-		2	SCREW M6S6X35RFR
	510	315115-0153	-		2	WASHER TBRB6,4X12RFR
	540	342980-0121	-		2	BANJO CONNINGEL 8/6-1/8"
	550	342980-0303	-		2	BANJO CONN SINGEL 1/8"

From	Pos	Part No	SP	UN	Qty	Description

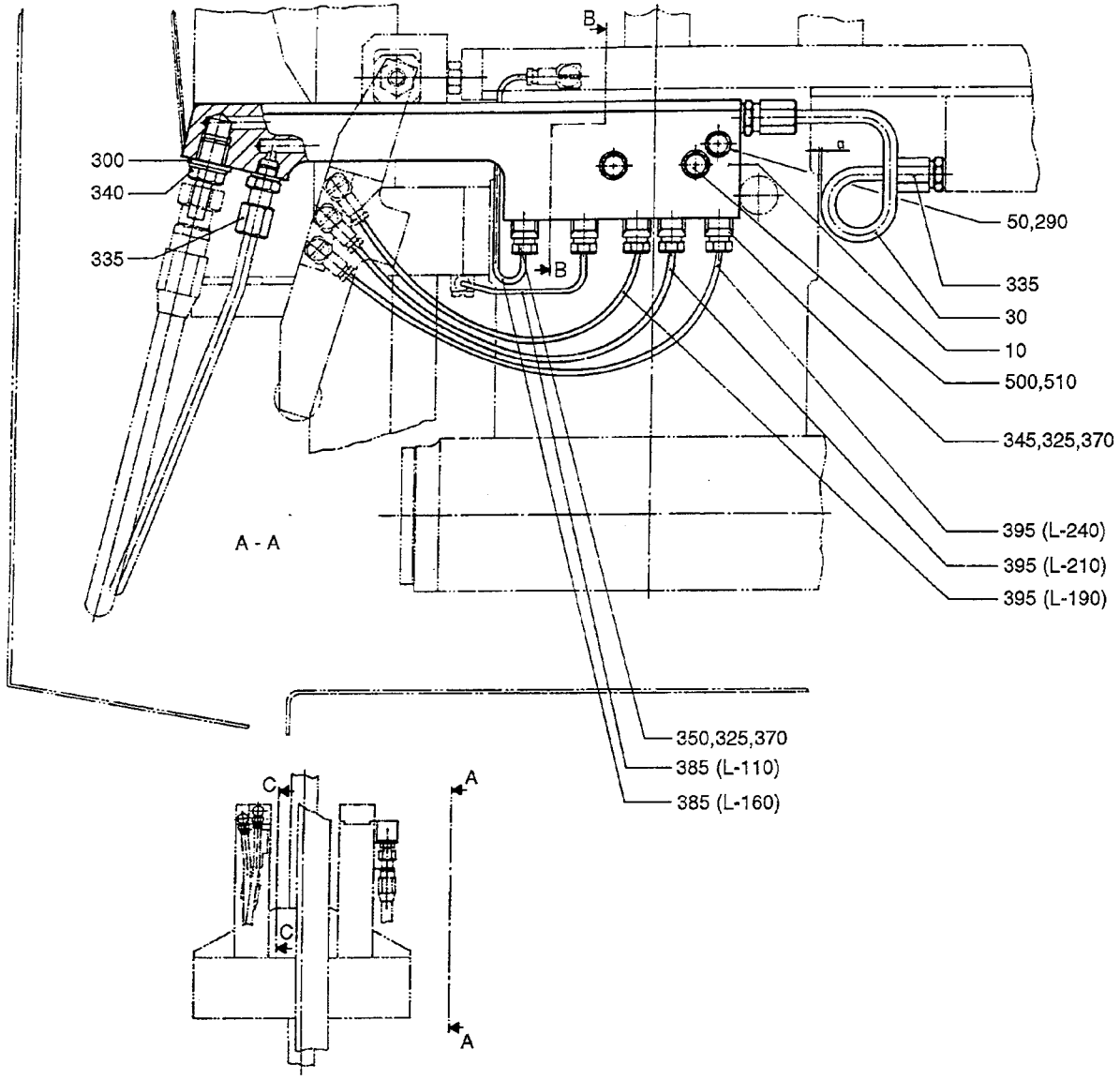

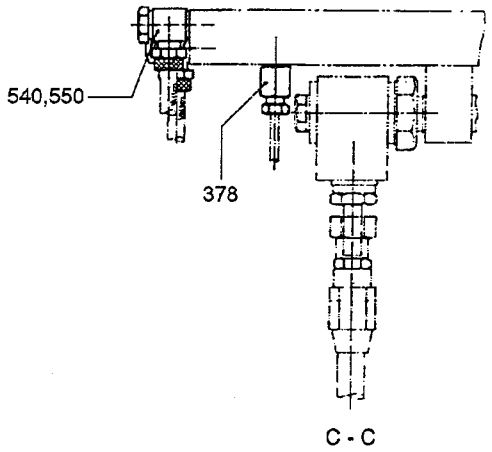

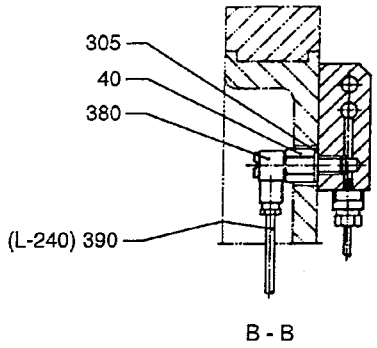

25738203.TIF
257382-3
AM 6300

From	Pos	Part No	SP	UN	Qty	Description
		C- 257382-0301				**Connection Block, Ass'y**
	010	456018	S		1	HOSE HOLDER LEFT
	030	257380	-		1	HYDRAULIC PIPE LEFT
	040	257000	S		1	NIPPLE
	050	441355	-		1	BLEEDING SCREW
	290	90005-0003	-		1	WASHER
	300	90005-0005	P		1	WASHER
	305	90005-0007	-		1	WASHER
	325	90028-0020	P		5	CONE
	335	90030-0184	-		3	PIPE CONNECTION
	340	90030-0065	-		1	PIPE CONNECTION
	345	90092-0052	P		4	VALVE
	350	90092-0053	-		1	VALVE
	370	90134-0039	P		5	BUSHING
	378	90134-0066	-		1	CONNECTION
	380	90134-0068	-		1	BANJO CONNECTION
	385	90266-0019	-	MM	270	PIPE
	390	90166-0109	P	MM	240	HOSE
	395	90166-0143	-	MM	640	HOSE
	500	312105-0376	-		2	SCREW M6S6X35RFR
	510	315115-0153	-		2	WASHER TBRB6,4X12RFR
	540	342980-0121	-		2	BANJO CONNINGEL 8/6-1/8"
	550	342980-0303	-		2	BANJO CONN SINGEL 1/8"

From	Pos	Part No	SP	UN	Qty	Description

From	Pos	Part No	SP	UN	Qty	Description
TPC 284ml - 180ml 200ml Slim						
		C- 295523-0401				**Start-Up Kit, Ass'y**
	030	441733	-		2	TPC BAR
IH 284ml - 180ml						
		C- 295523-0402				**Start-Up Kit, Ass'y**
	010	978747	-		2	INDUCTOR 180-284ML
	050	295758	-		4	DOLLY
IH 125ml 100ml						
		C- 295523-0403				**Start-Up Kit, Ass'y**
	020	978751	-		2	INDUCTOR 125ML
	040	978454	-		4	DOLLY
IH 200ml Slim 160ml						
		C- 295523-0404				**Start-Up Kit, Ass'y**
	025	978749	-		2	INDUCTOR 200SLIM
	055	752575	-		4	DOLLY
IH 250ml Slim						
		C- 295523-0405				**Start-Up Kit, Ass'y**
	028	978797	-		2	INDUCTOR 250SL
	060	574387	-		4	DOLLY

From	Pos	Part No	SP	UN	Qty	Description

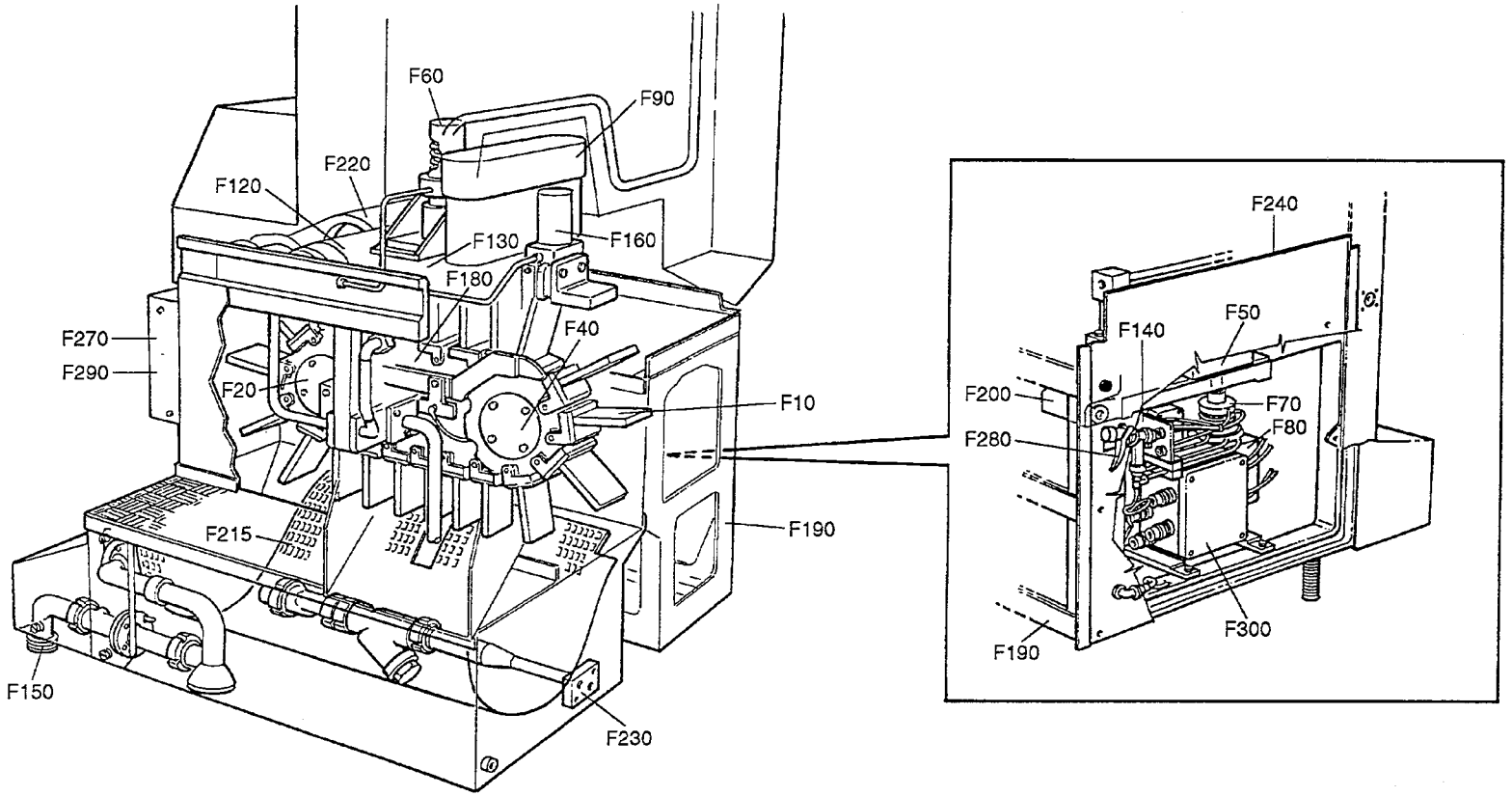

64810503.TIF
648105-3
AM 19186

Last Alteration: AM 19186 93-01-26

Corresponding group: 648105-100V
Assembly Drawing: 648105-3

Issue: **940524**

Pos	Group No	Description	
648105-F000	648105-100V	Final Folder TB/TBA/9	339
648105-F010	491225-010V	Station Chain	341
648105-F020	491850-010V	Drive Wheel	343
648105-F040	491846-020V	Tension Sprocket	345
648105-F050	256410-060V	Indexing Unit	347
648105-F060	256436-060V	Pressure Device	349
	256436-060V	Pressure Device	351
648105-F075	256437-020V	Disc Coupling	353
648105-F080	256438-020V	Worm Gear	355
648105-F090	256547-040V	Element	357
	256547-040V	Element	359
256547-F010	31390-010V	Element	361
	31390-011V	Element	363
	31390-012V	Element	365
648105-F120	295211-010V	Frame	367
648105-F130	295218-010V	Folding Bar	369
648105-F140	456455-030V	Pipe Work	371
648105-F150	256674-030V	Bottom Valve	373
648105-F160	256712-050V	Pull-Down Device	375
	256712-050V	Pull-Down Device	377
256712-F200	752664-010V	Steering	379
648105-F180	491259-020V	Way	381
648105-F190	441695-020V	Machine Body	383
648105-F200	272765-070V	Cantilever	385
272765-F150	441798-010V	Rotor	387
272765-F160	272652-030V	Chain Tensioner	389
272765-F170	978048-010V	Clamping Element	391
648105-F215	456567-010V	Separation Insert	393
648105-F220	295310-070V	Discharge Unit	395
	295310-070V	Discharge Unit	397
295310-F130	978720-010V	Finger	399
295310-F225	491871-010V	Chain Tensioner	401
648105-F230	456588-030V	Cleaning System	403
456588-F235	441811-010V	Rotor	405
648105-F240	271114-050V	Covering Panel	407
648105-F270	456560-010V	Discharge Chute	409
648105-F280	271387-030V	Spray Gun	411
648105-F290	456103-010V	Side Feeder	413
648105-F300	441850-040V	Cable Assembly	415
441850-F010	456435-040V	Connection Box	417

Pos	Group No	Description

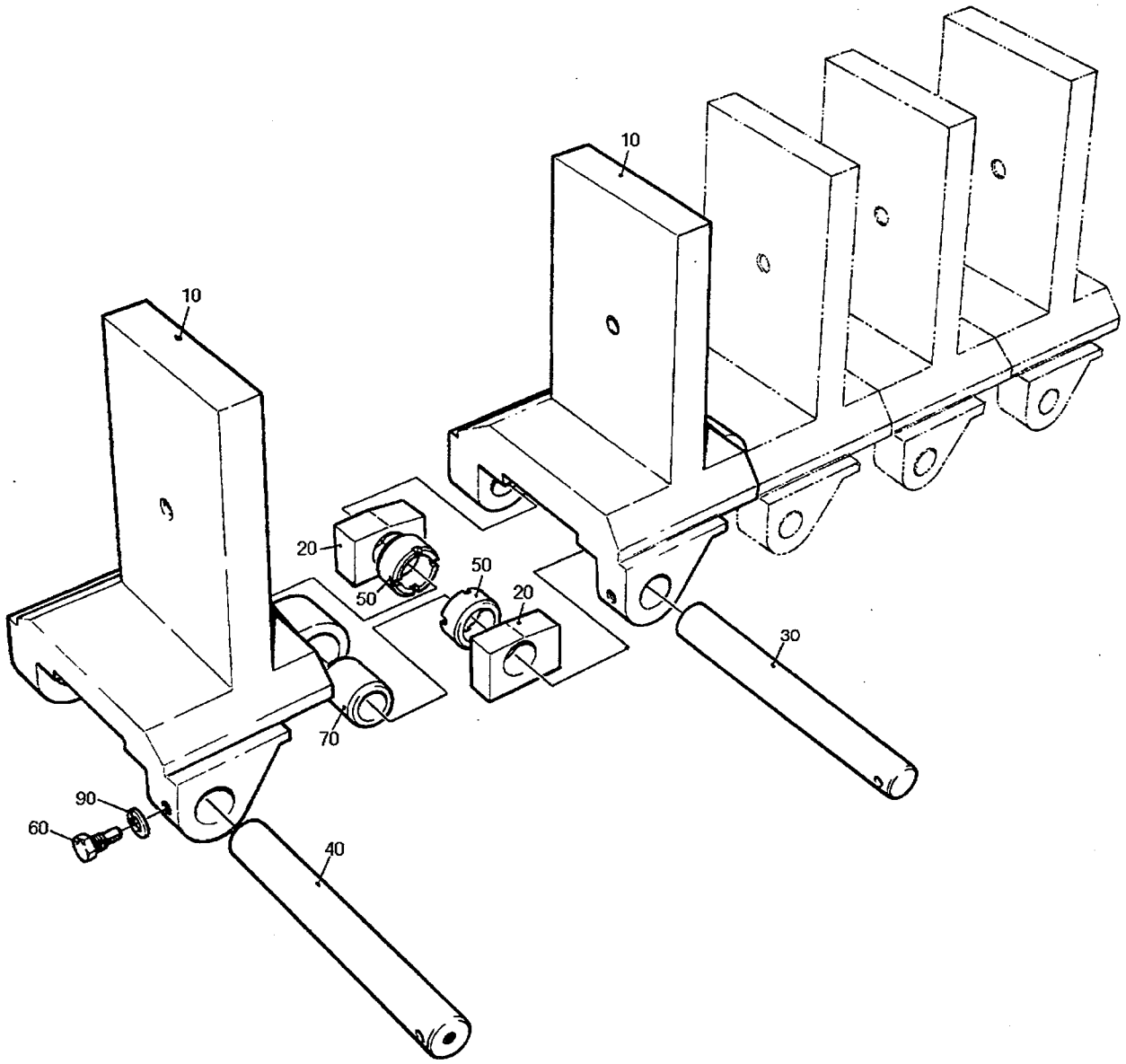

49122501.TIF
491225-1
AM 14707

From	Pos	Part No	SP	UN Qty	Description
284ml					
		C- 491225-0101			**Station Chain ,Ass'y**
	010	752048-0001	S	21	CARTON STATION WITH BEVEL
250ml					
		C- 491225-0102			**Station Chain ,Ass'y**
	010	752048-0002	S	21	CARTON STATION WITH BEVEL
236ml					
		C- 491225-0103			**Station Chain ,Ass'y**
	010	752048-0003	S	21	CARTON STATION WITH BEVEL
200ml					
		C- 491225-0104			**Station Chain ,Ass'y**
	010	752048-0004	S	21	CARTON STATION WITH BEVEL
187ml					
		C- 491225-0105			**Station Chain ,Ass'y**
	010	752048-0005	S	21	CARTON STATION WITH BEVEL
180ml					
		C- 491225-0106			**Station Chain ,Ass'y**
	010	752048-0006	S	21	CARTON STATION WITH BEVEL
125ml					
		C- 491225-0107			**Station Chain ,Ass'y**
	010	751472	S	21	CARTON STATION WITH BEVEL
200ml Slim					
		C- 491225-0108			**Station Chain ,Ass'y**
	010	751490	S	21	CARTON STATION WITH BEVEL
250ml Slim					
		C- 491225-0109			**Station Chain ,Ass'y**
	010	574344	S	21	CARTON STATION WITH BEVEL
160ml					
		C- 491225-0110			**Station Chain ,Ass'y**
	010	577206	S	21	CARTON STATION WITH BEVEL
Common Parts					
	020	491227	S	42	SLIDER
	030	491228-0001	S	18	SHAFT
	040	491228-0002	S	3	SHAFT
	050	491229	S	42	BUSHING
	060	491230	S	21	GRUB SCREW
	070	491231	S	21	BUSHING
	090	315233-0101	S	21	SEAL RING M5

From	Pos	Part No	SP	UN Qty	Description

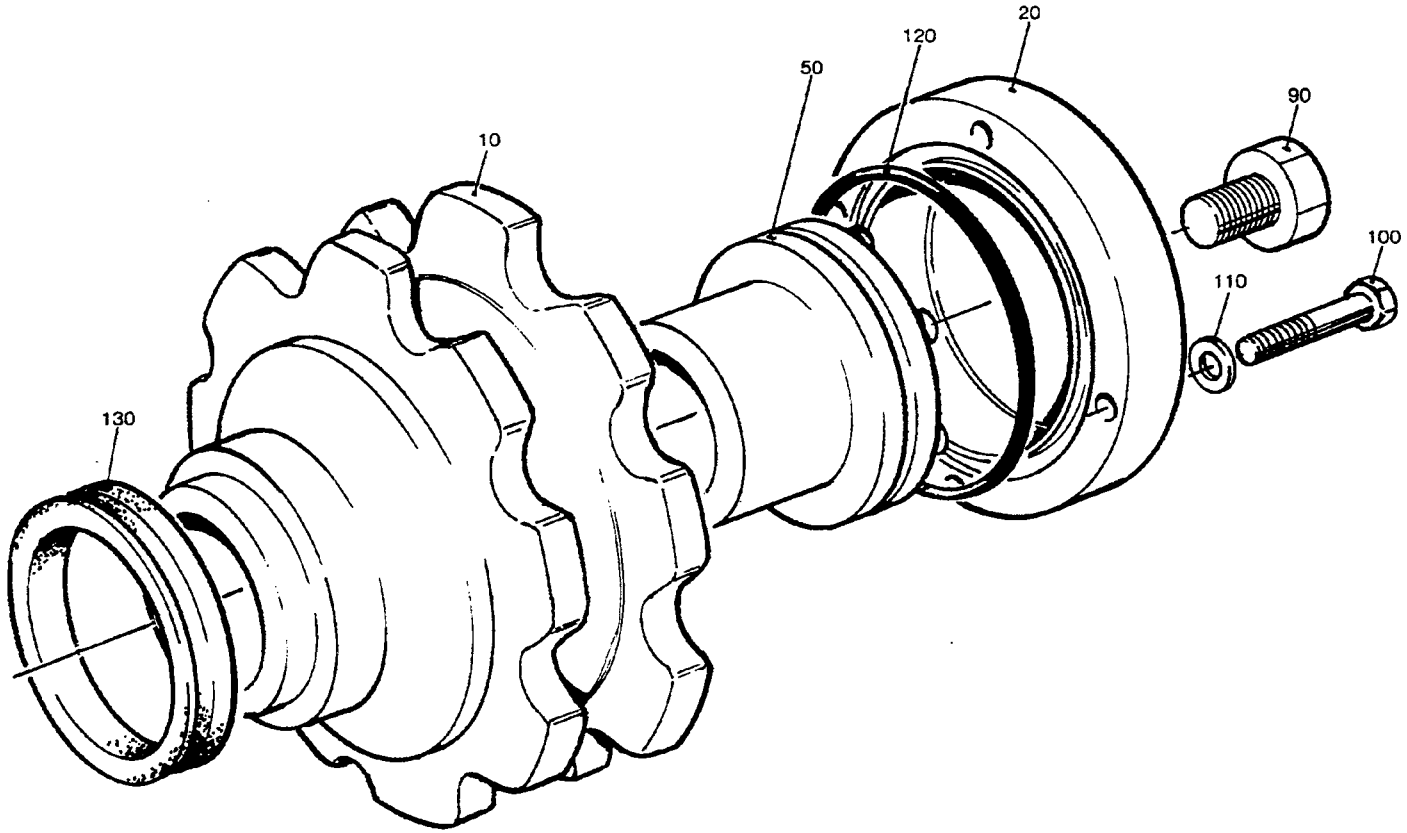

49185001.TIF
491850-1
AM 14278

Last Alteration: AM 14278 90-01-05

Corresponding group: 491850-010V
Assembly Drawing: 491850-1

Issue: 940524

From	Pos	Part No	SP	UN	Qty	Description
		C- 491850-0101				**Drive Wheel, Ass'y**
	010	491258	C		1	DRIVE WHEEL
	020	491851	C		1	LID
	050	90208-0031	S		1	BUSHING
	090	312101-0530	S		1	SCREW M6S12X16FZB
	100	312105-0335	S		4	SCREW M6S5X30 A2 80
	110	315105-0146	S		4	WASHER BRB5,3X10RFR
	120	315202-0306	S		1	O-RING 74,5X3
	130	315220-0210	S		1	SEAL RING V-60S

From	Pos	Part No	SP	UN	Qty	Description

Last Alteration: AM 8267 85-10-14

Corresponding group: 256438-020V
Assembly Drawing: 256438-3/4

Issue: **940524**

From	Pos	Part No	SP	UN	Qty	Description
		C- 256438-0201				**Worm Gear, Ass'y**
	010	272758	S		1	TIMING BELT PULLEY
	300	90056-0071	S		1	WORM GEAR
	303	90163-0052	-		1	NIPPLE
	305	90166-0113	-	MM	500	HOSE
	308	90257-0002	-		1	FILTER PLUG
	309	90261-0018	-		1	PIPE PLUG
	310	90296-0076	-	L	2	OIL
	320	90330-0085	-		1	BUSHING
	500	312101-0329	-		1	SCREW M6S5X16FZB
	520	312101-0552	-		3	SCREW M6S12X100FZB
	530	315101-0178	-		3	WASHER BRB13X24FZB
	540	315121-0153	-		1	WASHER TBRSB6,4X22FZB
	550	315234-0110	-		1	SEAL RING R1/4"
	560	315234-0113	-		1	SEAL RING R1/2"
	570	342991-0101	-		1	HOSE CLIP 11-17MMRFR
	580	352110-0103	-		1	CRAMP TK 14-20

From	Pos	Part No	SP	UN	Qty	Description

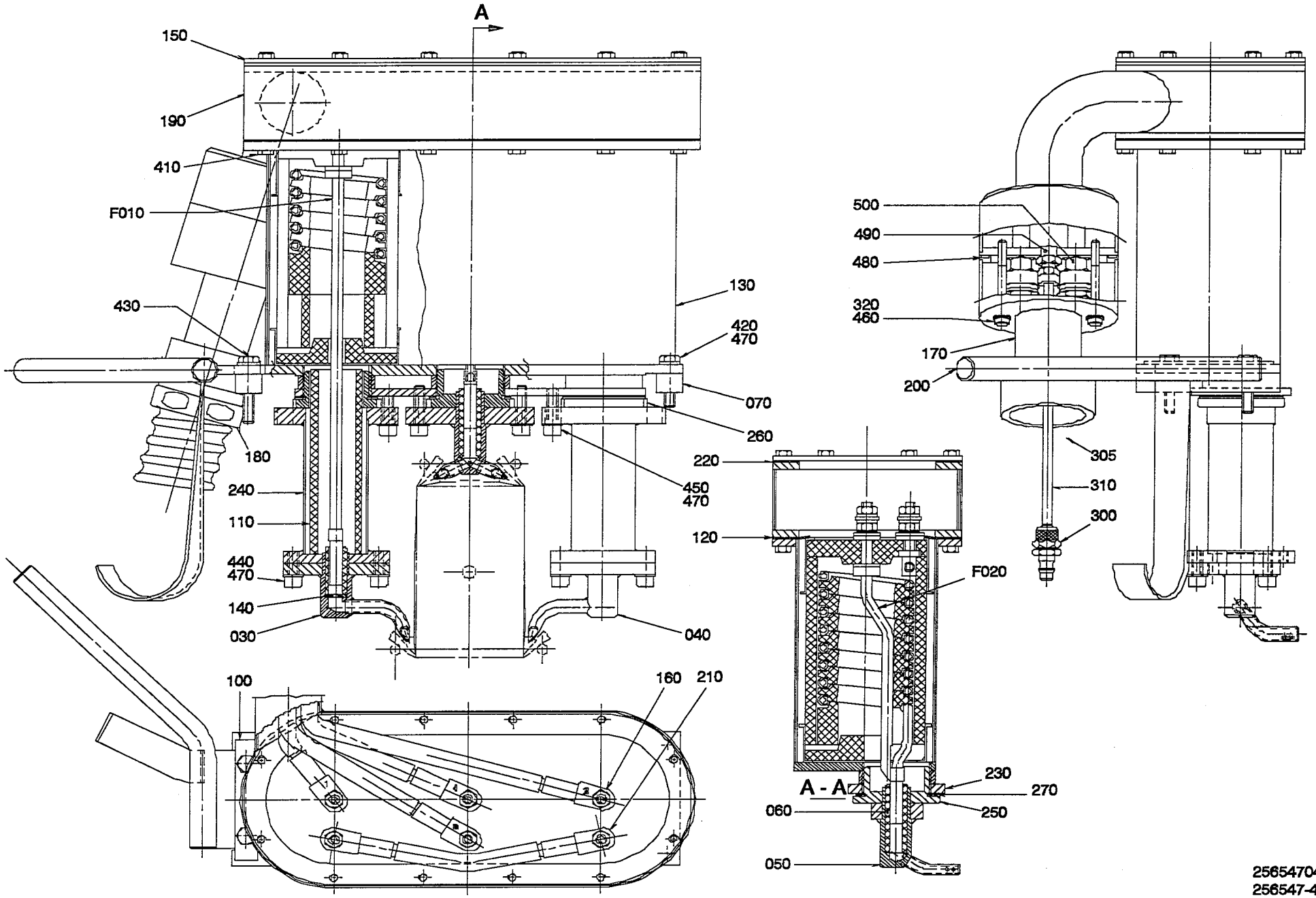

25654704.WPG
256547-4
AM 19267

From	Pos	Part No	SP	UN Qty	Description
250ml					
		C- 256547-0401			**Element, Ass'y**
	030	978882	S	1	AIR NOZZLE, LEFT
	040	978885	S	1	AIR NOZZLE, RIGHT
	050	978781	S	1	AIR NOZZLE, BOTTOM
	060	252766-0001	P	3	INSULATING PIPE
	420	312105-0368	-	2	SCREW M6S6X16RFR
	430	312105-0372	-	2	SCREW M6S6X25RFR
236ml					
		C- 256547-0402			**Element, Ass'y**
	030	978882	S	1	AIR NOZZLE, LEFT
	040	978885	S	1	AIR NOZZLE, RIGHT
	050	978887	S	1	AIR NOZZLE, BOTTOM
	060	252766-0001	P	3	INSULATING PIPE
	420	312105-0368	-	2	SCREW M6S6X16RFR
	430	312105-0372	-	2	SCREW M6S6X25RFR
200ml					
		C- 256547-0403			**Element, Ass'y**
	030	978882	S	1	AIR NOZZLE, LEFT
	040	978885	S	1	AIR NOZZLE, RIGHT
	050	978888	S	1	AIR NOZZLE, BOTTOM
	060	252766-0001	P	4	INSULATING PIPE
	420	312105-0368	-	2	SCREW M6S6X16RFR
	430	312105-0372	-	2	SCREW M6S6X25RFR
180ml					
		C- 256547-0404			**Element, Ass'y**
	030	978882	S	1	AIR NOZZLE, LEFT
	040	978885	S	1	AIR NOZZLE, RIGHT
	050	978889	S	1	AIR NOZZLE, BOTTOM
	060	252766-0001	P	4	INSULATING PIPE
	420	312105-0368	-	2	SCREW M6S6X16RFR
	430	312105-0372	-	2	SCREW M6S6X25RFR
125ml					
		C- 256547-0405			**Element, Ass'y**
	030	978883	S	1	AIR NOZZLE, LEFT
	040	978886	S	1	AIR NOZZLE, RIGHT
	050	978890	S	1	AIR NOZZLE, BOTTOM
	060	252766-0001	P	4	INSULATING PIPE
	420	312105-0368	-	2	SCREW M6S6X16RFR
	430	312105-0372	-	2	SCREW M6S6X25RFR
200ml Slim					
		C- 256547-0406			**Element, Ass'y**
	030	978881	S	1	AIR NOZZLE, LEFT
	040	978884	S	1	AIR NOZZLE, RIGHT
	050	978780	S	1	AIR NOZZLE, BOTTOM
	060	252766-0001	P	3	INSULATING PIPE
	420	312105-0368	-	2	SCREW M6S6X16RFR
	430	312105-0372	-	2	SCREW M6S6X25RFR
284ml					
		C- 256547-0407			**Element, Ass'y**
	030	978882	S	1	AIR NOZZLE, LEFT
	040	978885	S	1	AIR NOZZLE, RIGHT
	050	978891	S	1	AIR NOZZLE, BOTTOM
	060	252766-0001	P	3	INSULATING PIPE
	420	312105-0368	-	2	SCREW M6S6X16RFR
	430	312105-0372	-	2	SCREW M6S6X25RFR
250ml Slim					
		C- 256547-0408			**Element, Ass'y**
	030	574466	S	1	AIR NOZZLE LEFT
	040	574467	S	1	AIR NOZZLE RIGHT
	050	574468	S	1	AIR NOZZLE BOTTOM
	060	252766-0001	P	1	INSULATING PIPE
	060	252766-0002	P	2	INSULATING PIPE
	070	574422	-	2	SPACER BLOCK
	420	312109-0374	-	2	SCREW M6S6X30HRFR
	430	312109-0378	-	2	SCREW M6S6X40H RFR
160ml					
		C- 256547-0409			**Element, Ass'y**
	030	978881	S	1	AIR NOZZLE LEFT
	040	978884	S	1	AIR NOZZLE RIGHT
	050	577210	S	1	AIR NOZZLE BOTTOM
	060	252766-0001	P	2	INSULATING PIPE
	060	252766-0002	P	1	INSULATING PIPE
	420	312109-0368	-	2	SCREW M6S6X30HRFR
	430	312109-0372	-	2	SCREW M6S6X40H RFR
Common Parts					
	F010	**CR- 31390-0102**	**S**	**2**	**ELEMENT**
	F020	**CR- 31390-011V**	**S**	**1**	**ELEMENT**
	100	20702	-	1	COVERING PLATE
	110	23765-0002	S	2	INSULATING PIPE
	120	23769	S	1	STOP PLATE
	130	256548	-	1	HEATING CHAMBER
	140	259807	S	2	WASHER
	150	271191	-	1	LID
	160	271499	S	4	ELECTRICAL CONNECTION
	170	295306	-	1	COVER
	180	295307	-	1	FLEXIBLE CONDUIT
	190	441143	-	1	SPACER PIECE
	200	441693	-	1	HANDLE
	210	469977	S	1	ELECTRICAL CONNECTION

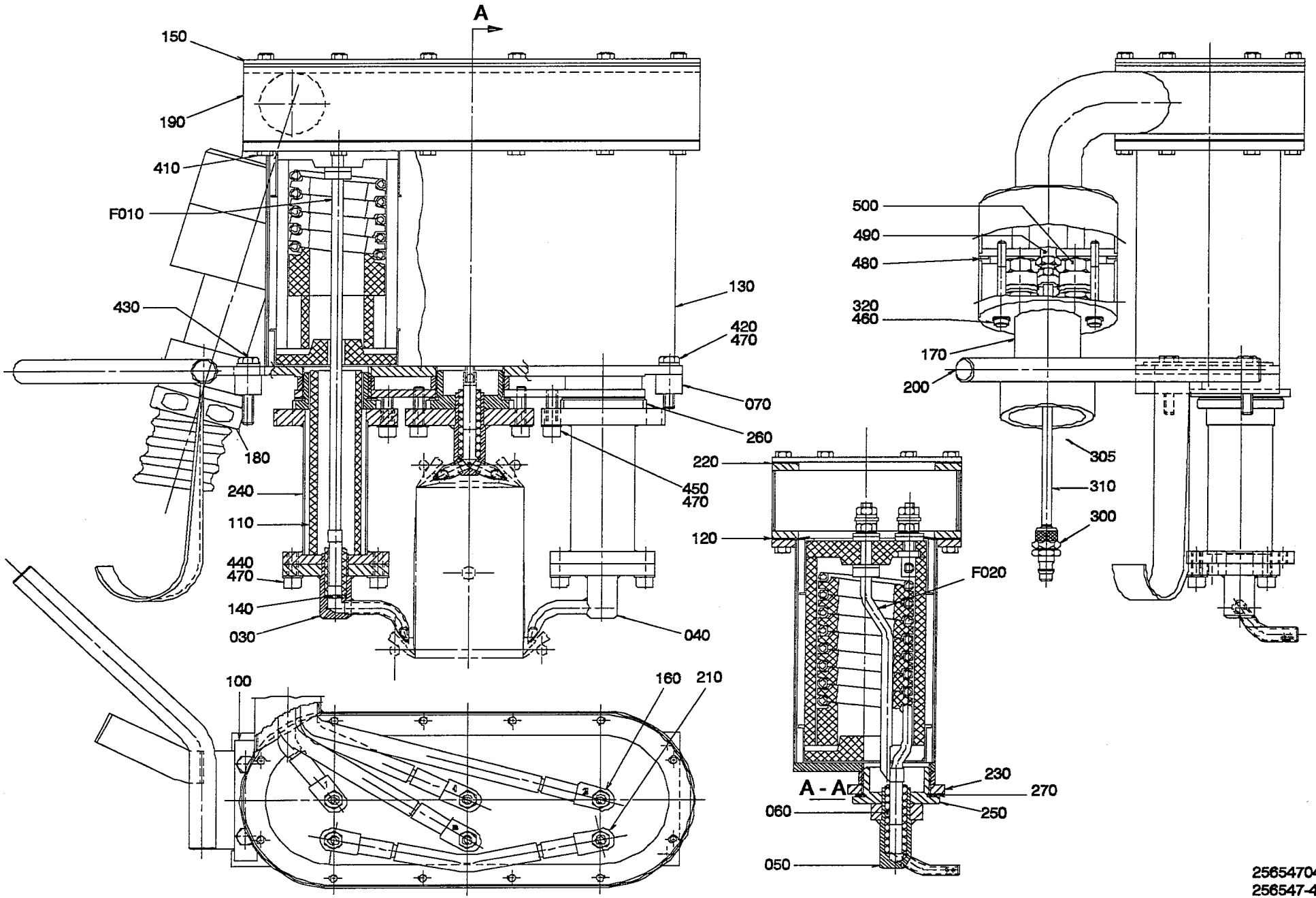
A
150
190
410
F010
430
130
420
470
070
260
180
240
110
440
470
140
030
040
450
470
100
160
210
500
490
480
320
460
170
200
305
310
300
220
120
F020
A - A
230
270
250
060
050

From	Pos	Part No	SP	UN	Qty	Description
	220	531730	P		3	FLANGE SEAL
	230	978517	C		1	FASTENING PLATE
	240	978518	-		2	SIDE PIPE
	250	978520	C		1	NUT
	260	978521	C		2	NUT
	270	978527	S		10	GASKET
	300	90163-0080	S		1	NIPPLE
	305	90166-0023	S	MM	1000	SHRINKABLE HOSE
	310	90166-0133	P	MM	1200	HOSE
	320	90287-0208	-		2	SCREW
	410	312105-0327	-		24	SCREW M6S5X12 A2 80
	440	312115-0368	S		4	SCREW 6X16 A4 80
	450	312115-0372	S		6	SCREW MC6S6X25 A4 80
	460	315105-0146	-		2	WASHER BRB5,3X10RFR
	470	315105-0153	S		12	WASHER BRB6,4X12RFR
	480	315204-0305	S		1	O-RING 69,5X3
	490	342920-0122	-		1	PIPE COUPL8/6-1/4
	500	352100-0107	-		4	CABLE GLANR.18,6-12

From	Pos	Part No	SP	UN	Qty	Description

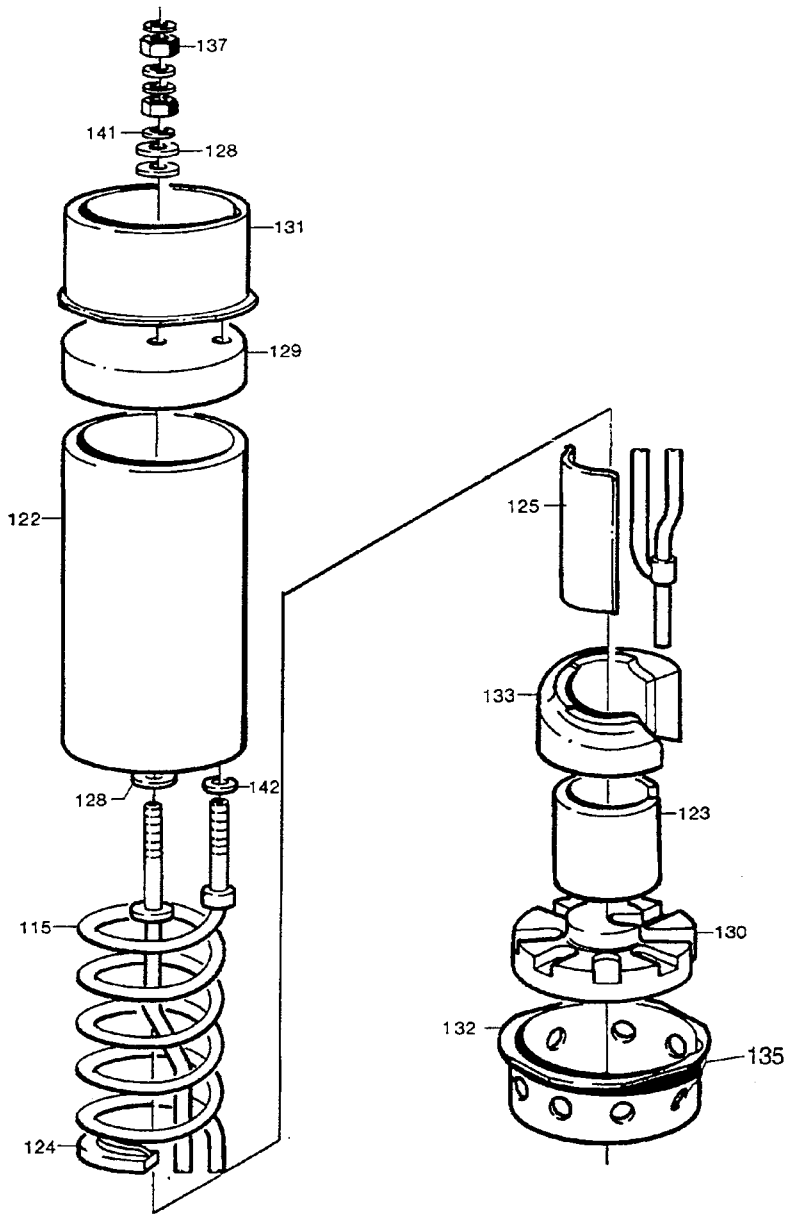

03139001.TIF
31390-1
AM 13601

From	Pos	Part No	SP	UN	Qty	Description
640005/648005 1136ml 1000ml						
648025 1000ml						
648035 1136ml-1000ml 1000ml Slim 1000ml SQU 750ml Slim						
		C- 31390-0101				**Element, Ass'y**
	115	30310-0001	S		1	HEATING COIL
640005/648005 568ml-180ml						
648025 568ml 500ml						
648035 750ml-250ml 500ml Slim 400ml						
648105 284ml-100ml 200ml Slim						
		C- 31390-0102				**Element, Ass'y**
	115	30310-0002	P		1	HEATING COIL
648035 236ml-180ml 355ml						
		C- 31390-0103				**Element, Ass'y**
	115	30310-0003	-		1	HEATING COIL
Common parts						
	122	20705-0001	S		1	INSULATING PIPE
	123	29411	S		1	SPACER PIPE
	124	29413	S		12	LACE
	125	31653-0001	S		1	SHEET
	128	525233	S		5	GASKET
	129	20772	S		1	INSULATOR BODY
	130	37536	S		1	INSULATOR BODY
	131	23771	S		1	SPACER RING
	132	37537	S		1	SPACER RING
	133	37535	S		1	SUPPORTING PART
	135	90145-0005	-	M	1	WIRE
	137	312605-0316	-		6	NUT M6M6RFR
	141	315105-0153	-		4	WASHER BRB6,4X12RFR
	142	315115-0153	-		1	WASHER TBRB6,4X12RFR

From	Pos	Part No	SP	UN	Qty	Description

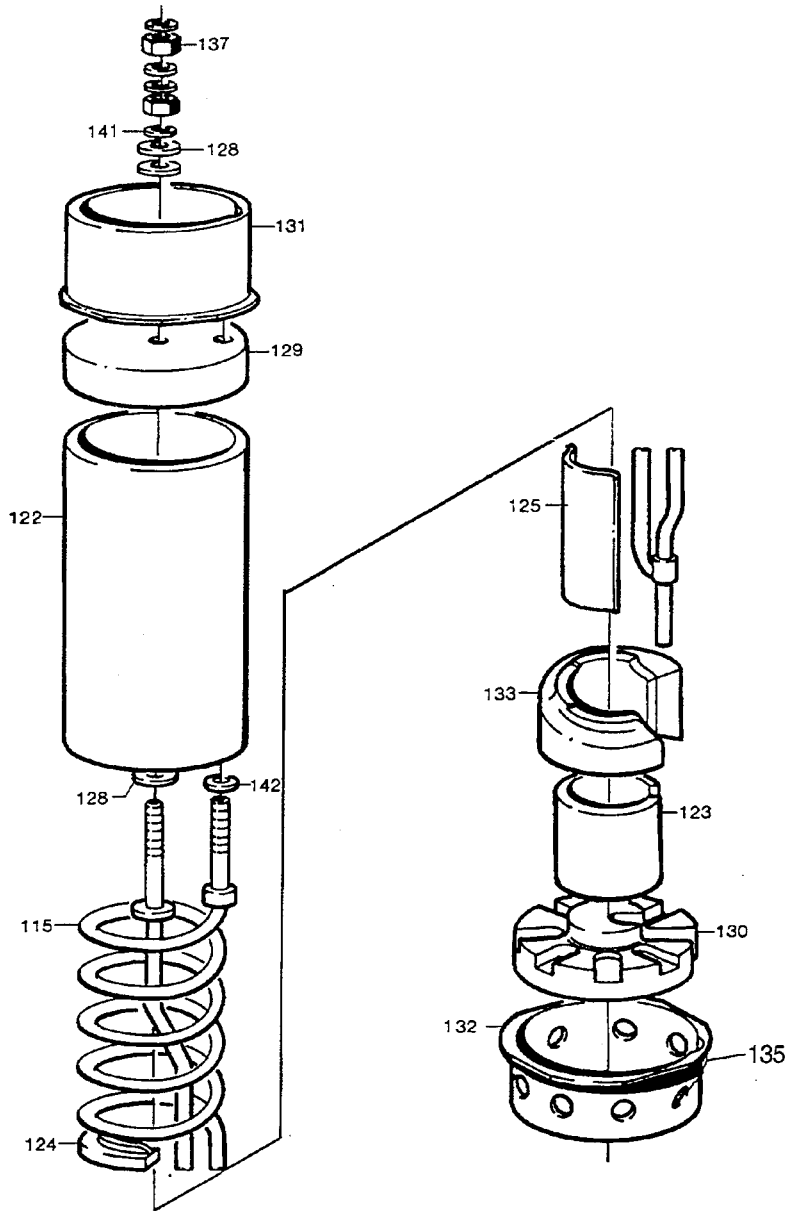

03139001.TIF
31390-1
AM 13601

From	Pos	Part No	SP	UN	Qty	Description
640005/648005 1136ml-236ml						
648025 568ml250ml 236ml						
648035 1000ml SQU 750ml-236ml 500ml Slim 400ml						
648105 284ml-236ml 200ml Slim						
		C- 31390-0113				**Element, Ass'y**
	115	30311-0001	P		1	HEATING COIL
640005/648005 1000ml 500ml 200ml 180ml 189ml						
648025 1000ml 500ml						
648035 1136ml-500ml 1000ml Slim 750ml Slim						
648105 200ml-100ml						
		C- 31390-0114				**Element, Ass'y**
	115	30311-0002	P		1	HEATING COIL
Common parts						
	122	20705-0001	S		1	INSULATING PIPE
	124	29413	S		21	LACE
	125	31653-0002	S		1	SHEET
	128	525233	S		5	GASKET
	129	20772	S		1	INSULATOR BODY
	130	37536	S		1	INSULATOR BODY
	131	23771	S		1	SPACER RING
	132	37537	S		1	SPACER RING
	133	37535	S		1	SUPPORTING PART
	137	312605-0316	-		6	NUT M6M6RFR
	141	315105-0153	-		4	WASHER BRB6,4X12RFR
	142	315111-0153	-		1	WASHER TBRB6,4X12FZB

From	Pos	Part No	SP	UN	Qty	Description

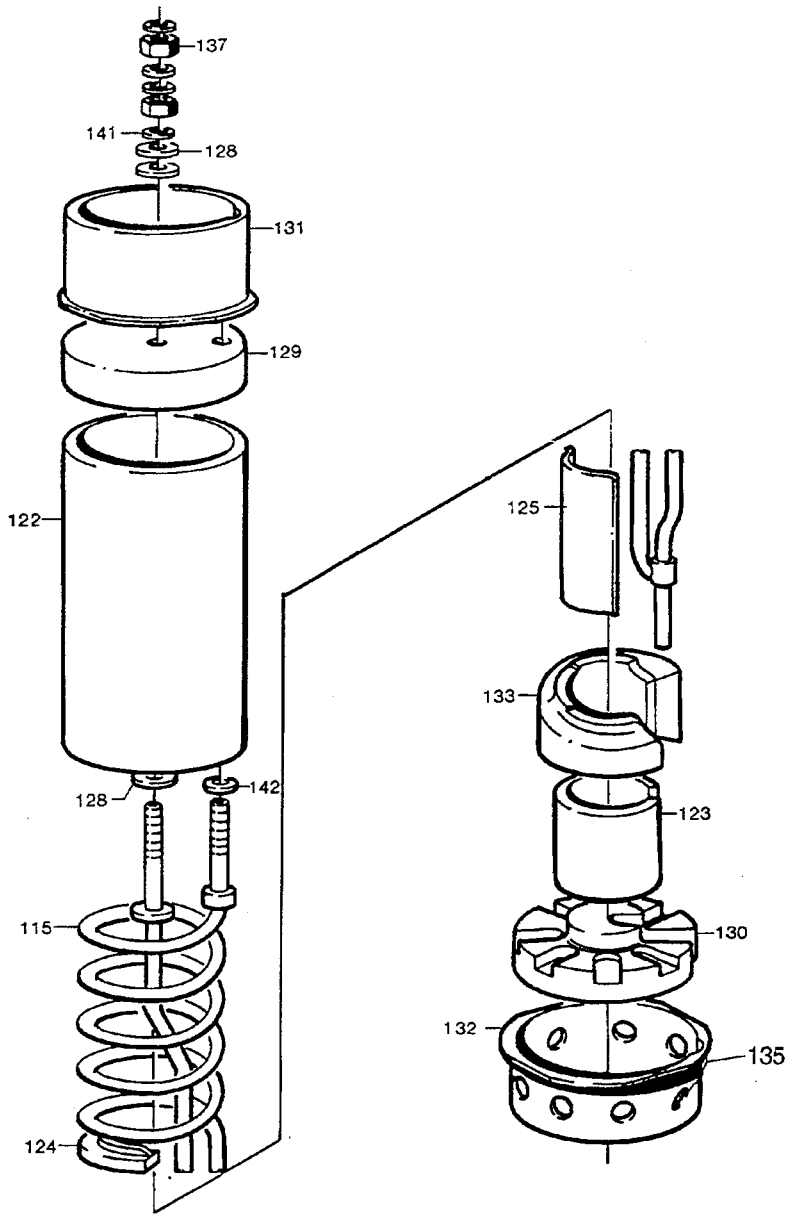

03139001.TIF
31390-1
AM 13601

From	Pos	Part No	SP	UN Qty	Description
		C- 31390-0125			**Element, Ass'y**
	115	30312	S	1	HEATING COIL
	122	20705-0002	S	1	INSULATING PIPE
	124	29413	S	33	LACE
	125	31653-0003	S	1	SHEET
	128	525233	S	5	GASKET
	129	20772	S	1	INSULATOR BODY
	130	37536	S	1	INSULATOR BODY
	131	23771	S	1	SPACER RING
	132	37537	S	1	SPACER RING
	133	37535	S	1	SUPPORTING PART
	137	312605-0316	-	6	NUT M6M6RFR
	141	315105-0153	-	4	WASHER BRB6,4X12RFR
	142	315111-0153	-	1	WASHER TBRB6,4X12FZB

From	Pos	Part No	SP	UN Qty	Description

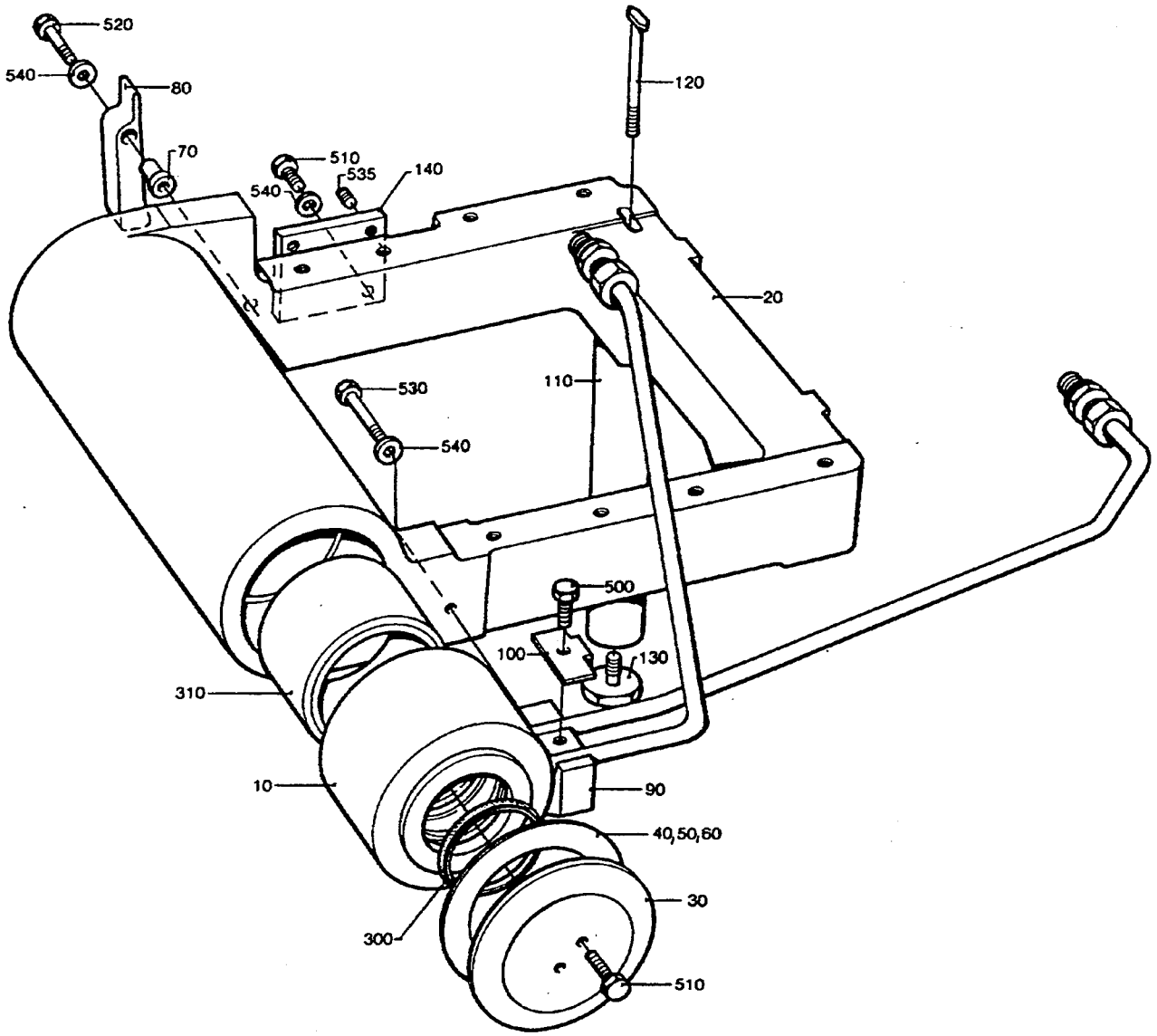

29521101.TIF
295211-1
AM 13634

From	Pos	Part No	SP	UN	Qty	Description
284ml 250ml 200ml Slim						
		C- 295211-0101				**Frame, Ass'y**
	010	295202-0001	C		1	SWIVEL
236ml - 125ml						
		C- 295211-0102				**Frame, Ass'y**
	010	295202-0002	C		1	SWIVEL
250ml Slim						
		C- 295211-0103				**Frame, Ass'y**
	010	295202-0003	C		1	SWIVEL
Common parts						
	020	G- 295201	C		1	FRAME
	030	295203	C		1	LID
	040	295204-0001	S		2	SHIM
	050	295204-0002	S		2	SHIM
	060	295204-0003	S		2	SHIM
	070	295205	-		1	SPACER SLEEVE
	080	G- 295206	-		1	FLAP
	090	295207	-		1	HOLDER
	100	295208	-		1	SECURING PLATE
	110	295430	-		1	SUPPORT
	120	295431	-		1	SCREW
	130	295432	-		1	SCREW
	140	469527	-		1	SETTING PLATE
	300	90091-0136	S		3	SEAL RING
	310	90240-0094	S		2	PLAIN BEARING
	500	312105-0366	-		1	SCREW M6S6X12RFR
	510	312105-0370	-		4	SCREW M6S6X20RFR
	520	312105-0374	-		1	SCREW M6S6X30RFR
	530	312105-0376	-		1	SCREW M6S6X35RFR
	535	312318-0323	-		2	STOP SCREW SK6SS5X8RFR
	540	315105-0153	-		4	WASHER BRB6,4X12RFR

From	Pos	Part No	SP	UN	Qty	Description

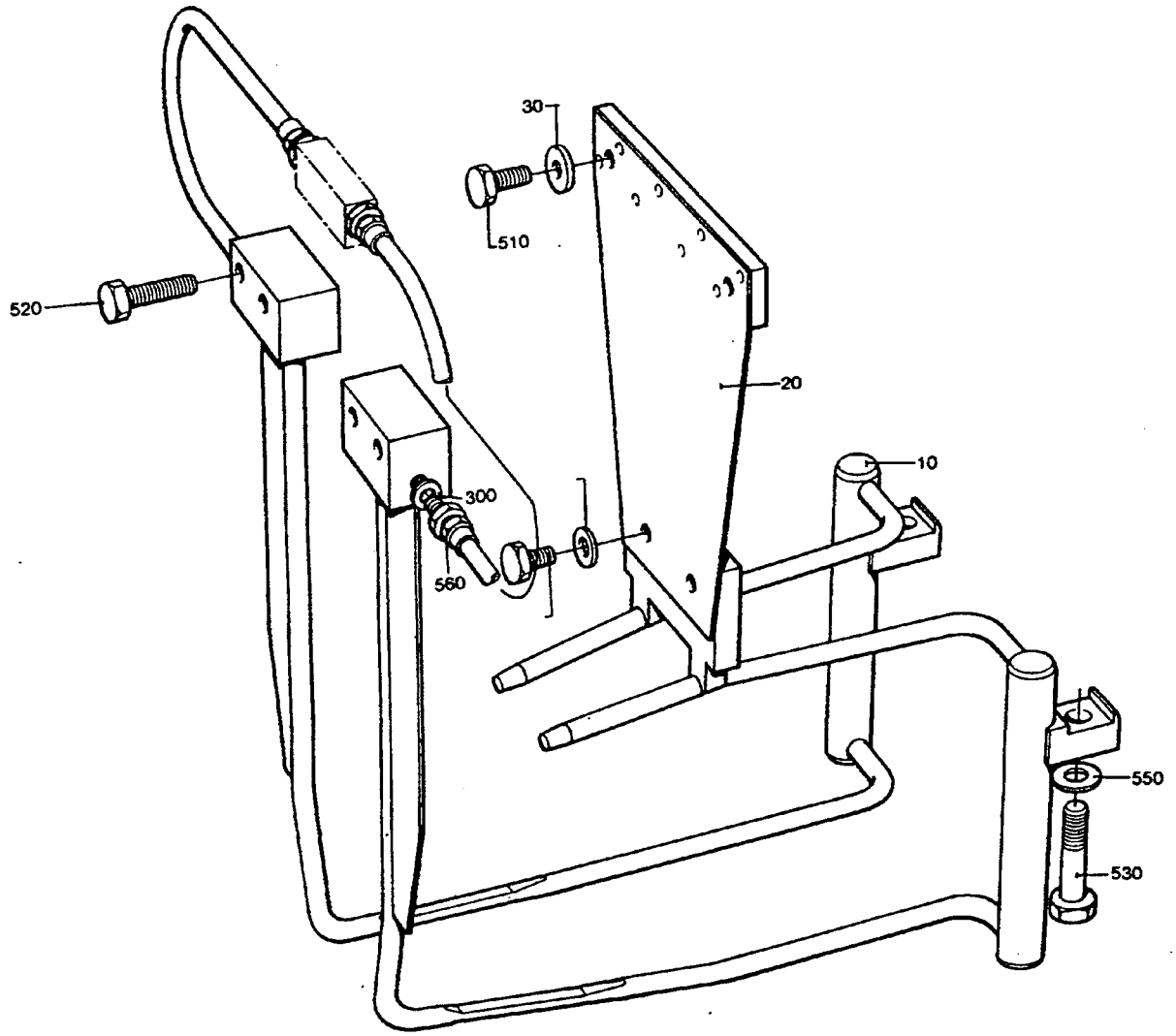

29521804.TIF
295218-4
AM 13634

From	Pos	Part No	SP	UN	Qty	Description
250ml						
		C- 295218-0101				**Folding Bar, Ass'y**
	010	295862-0001	S		1	FOLDING BAR
	020	295871-0002	C		1	BRACKET
236ml						
		C- 295218-0102				**Folding Bar, Ass'y**
	010	295862-0002	S		1	FOLDING BAR
	020	295871-0003	C		1	BRACKET
200ml						
		C- 295218-0103				**Folding Bar, Ass'y**
	010	295862-0003	S		1	FOLDING BAR
	020	295871-0004	C		1	BRACKET
180ml						
		C- 295218-0104				**Folding Bar, Ass'y**
	010	295862-0004	S		1	FOLDING BAR
	020	295871-0005	C		1	BRACKET
125ml						
		C- 295218-0105				**Folding Bar, Ass'y**
	010	295863	S		1	FOLDING BAR
	020	295871-0006	C		1	BRACKET
200ml Slim						
		C- 295218-0106				**Folding Bar, Ass'y**
	010	295864	S		1	FOLDING BAR
	020	295871-0001	C		1	BRACKET
284ml						
		C- 295218-0107				**Folding Bar, Ass'y**
	010	295862-0005	-		1	FOLDING BAR
	020	295871-0001	C		1	BRACKET
250ml Slim						
		C- 295218-0108				**Folding Bar, Ass'y**
	010	574465	S		1	FOLDING BAR
	020	295871-0007	C		1	BRACKET
160ml						
		C- 295218-0109				**Folding Bar, Ass'y**
	010	577207	S		1	FOLDING BAR
	020	295871-0008	C		1	BRACKET

From	Pos	Part No	SP	UN	Qty	Description
Common Parts						
	030	271587	-		2	WASHER
	300	90005-0056	-		2	WASHER
	500	312105-0364	-		2	SCREW M6S6X10RFR
	510	312105-0368	-		2	SCREW M6S6X16RFR
	520	312105-0372	-		4	SCREW M6S6X25RFR
	530	312105-0457	-		2	SCREW M6S8X35RFR
	540	315105-0153	-		2	WASHER BRB6,4X12RFR
	550	315105-0165	-		2	WASHER BRB8,4X16RFR
	560	342921-0112	S		2	PIPE COUPL6/4-6M

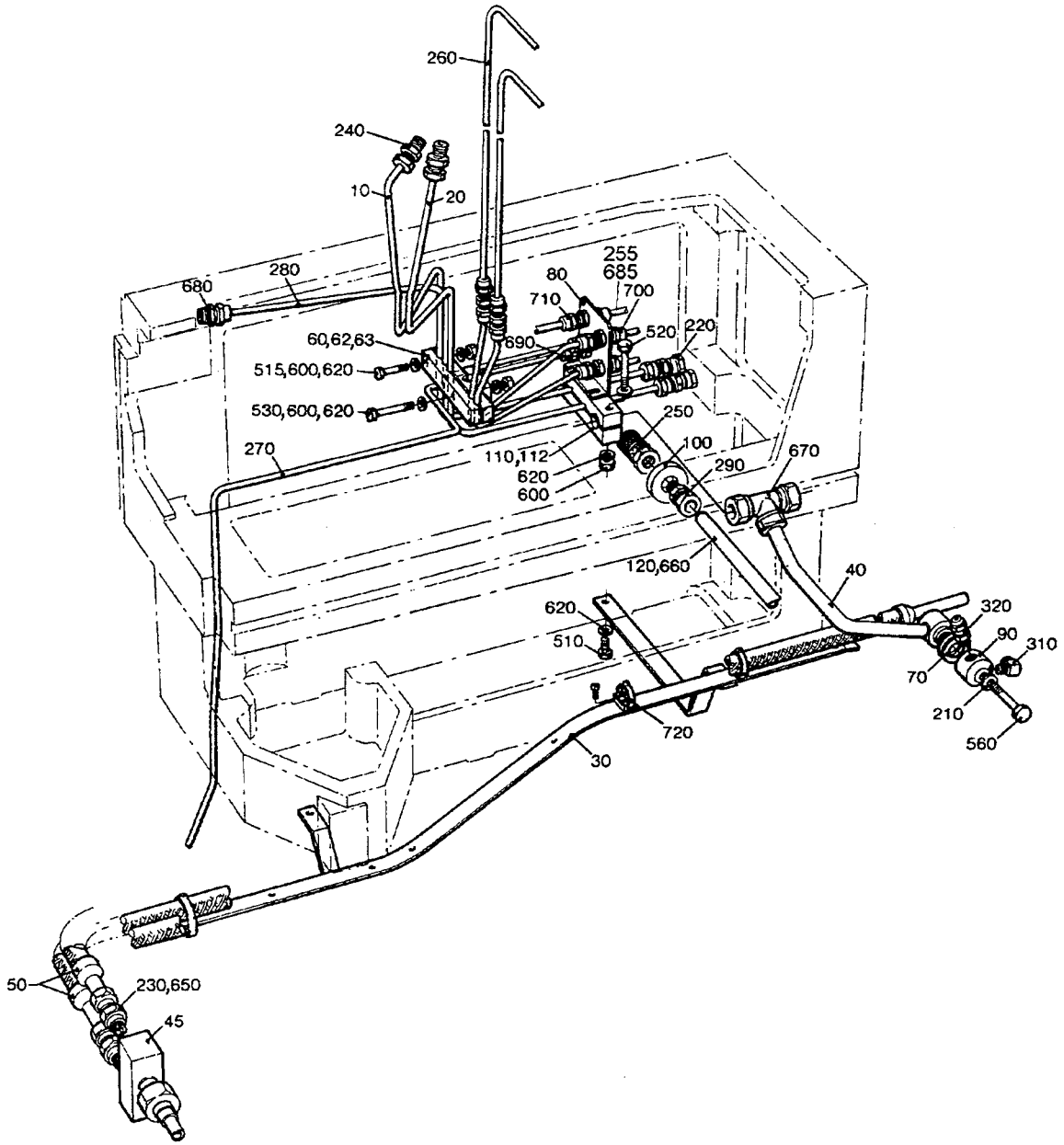

45645502.TIF
456455-2
AM 19186

From	Pos	Part No	SP	UN	Qty	Description
TBA/9						
		C- 456455-0301				**Pipe Work, Ass'y**
	045	490618	-		1	BRANCH
	050	441500	-		2	HOSE
	230	90030-0151	-		2	CONNECTION
	650	315233-0113	-		2	SEAL RING R1/2"
TB/9 TBA/9 C						
		C- 456455-0302				**Pipe Work, Ass'y**
	050	441500	-		1	HOSE
	230	90030-0151	-		1	CONNECTION
	650	315233-0113	-		1	SEAL RING R1/2"
Common Parts						
	010	295471	-		1	PIPE
	020	295472	-		1	PIPE
	030	441499	-		1	HOLDER
	040	574439	-		1	DISTRIBUTOR
	060	456853-0001	-		1	PIPE CLAMP
	062	456853-0002	-		1	PIPE CLAMP
	063	456853-0003	-		1	PIPE CLAMP
	070	256907	-		2	WASHER
	080	271478	-		1	PLATE
	090	272191	-		1	DISTRIBUTOR
	100	272741	S		1	SEAL
	110	456854-0001	-		1	CRAMP
	112	456854-0002	-		1	CRAMP
	120	491807	-		1	PIPE
	210	90005-0007	S		1	WASHER
	220	90030-0091	-		2	PIPE CONNECTION
	240	90030-0185	-		2	PIPE CONNECTION
	245	90157-0034	-		X	SEALING COMPOUND
	250	90163-0028	-		1	SLEEVE
	255	90163-0062	S		1	SLEEVE
	260	90166-0117	P	MM	1640	HOSE
	270	90166-0132	P	MM	1800	HOSE
	280	90166-0133	P	MM	520	HOSE
	290	90224-0186	-		1	NIPPLE
	310	90424-0009	S		1	NOZZLE
	320	90424-0016	S		1	NOZZLE
	510	312105-0372	-		4	SCREW M6S6X25RFR
	515	312105-0374	-		1	SCREW M6S6X30RFR
	520	312105-0378	-		3	SCREW M6S6X40RFR
	530	312105-0380	-		2	SCREW M6S6X50RFR
	560	312105-0463	-		1	SCREW M6S8X60RFR
	600	312605-0316	-		6	NUT M6M6RFR
	620	315105-0153	-		12	WASHER BRB6,4X12RFR
	660	342708-0107	-		2	SLEEVE 12X1/MS
	670	342746-0114	-		1	T-CONNECTI T-15
	680	342920-0122	-		1	PIPE COUPL8/6-1/4
	685	342921-0121	S		1	PIPE COUPL8/6-1/8"
	690	342960-0112	-		1	BULKHEAD L6/4
	700	342960-0121	-		2	BULKHEAD L8/6-6/4
	710	342960-0122	-		2	BULKHEAD L8/6
	720	342991-0106	-		7	HOSE CLIP 26-38MMRFR

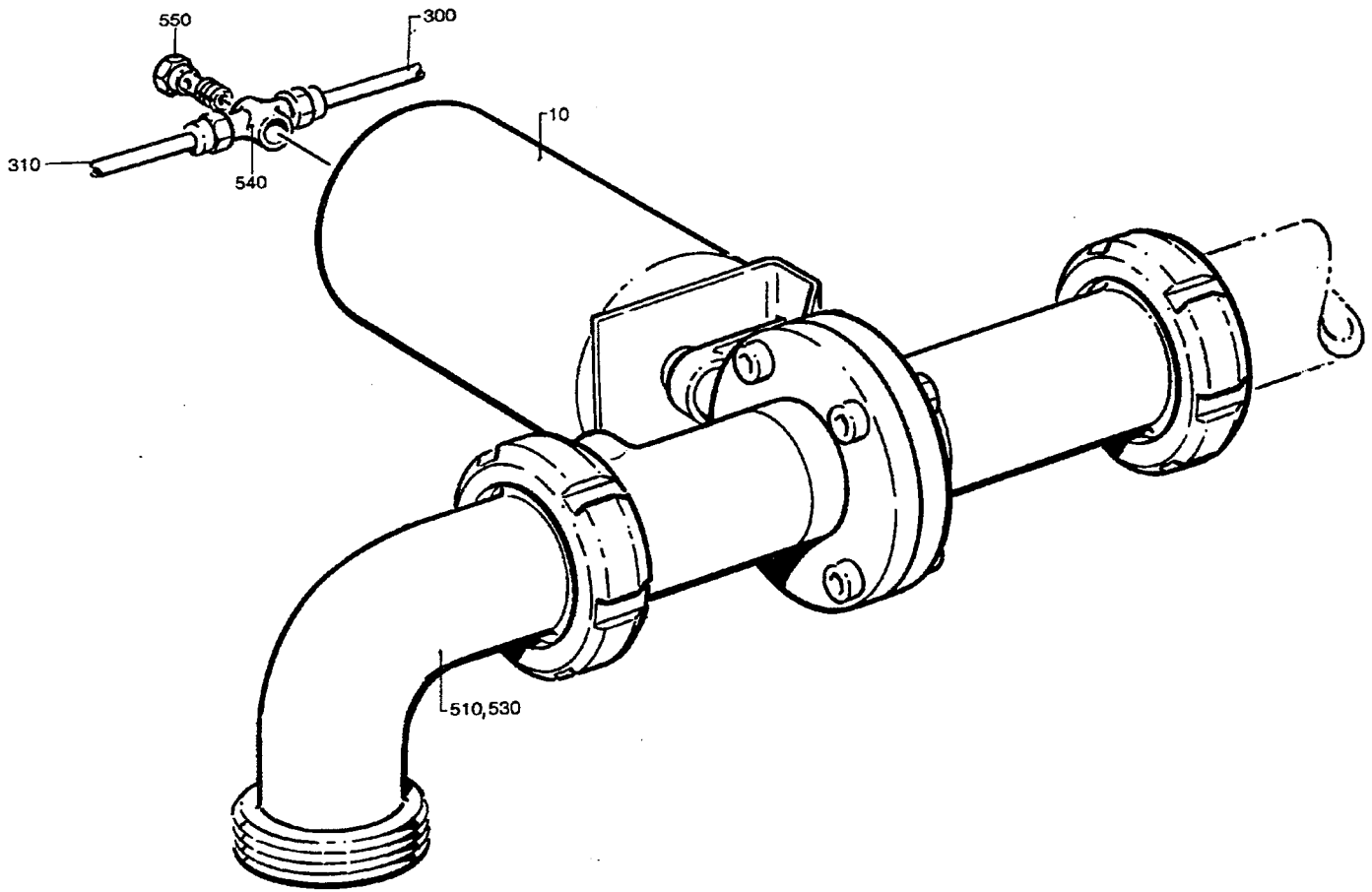

25667403.TIF
256674-3
AM 12530

Last Alteration: AM 12530 90-01-05

Corresponding group: 256674-030V
Assembly Drawing: 256674-3

Issue: **940524**

From	Pos	Part No	SP	UN Qty	Description
		C- 256674-0301			**Bottom Valve, Ass'y**
	010	272751	C	1	BOTTOM VALVE
	300	90166-0089	-	MM 1100	HOSE
	510	315250-0104	-	1	GASKET 61/51
	530	342807-0104	-	1	ELBOW PIPE51
	540	342980-0113	-	1	BANJO CONNSINGEL 6/4-1/8
	550	342980-0303	-	1	BANJO CONN SINGEL 1/8"

From	Pos	Part No	SP	UN Qty	Description

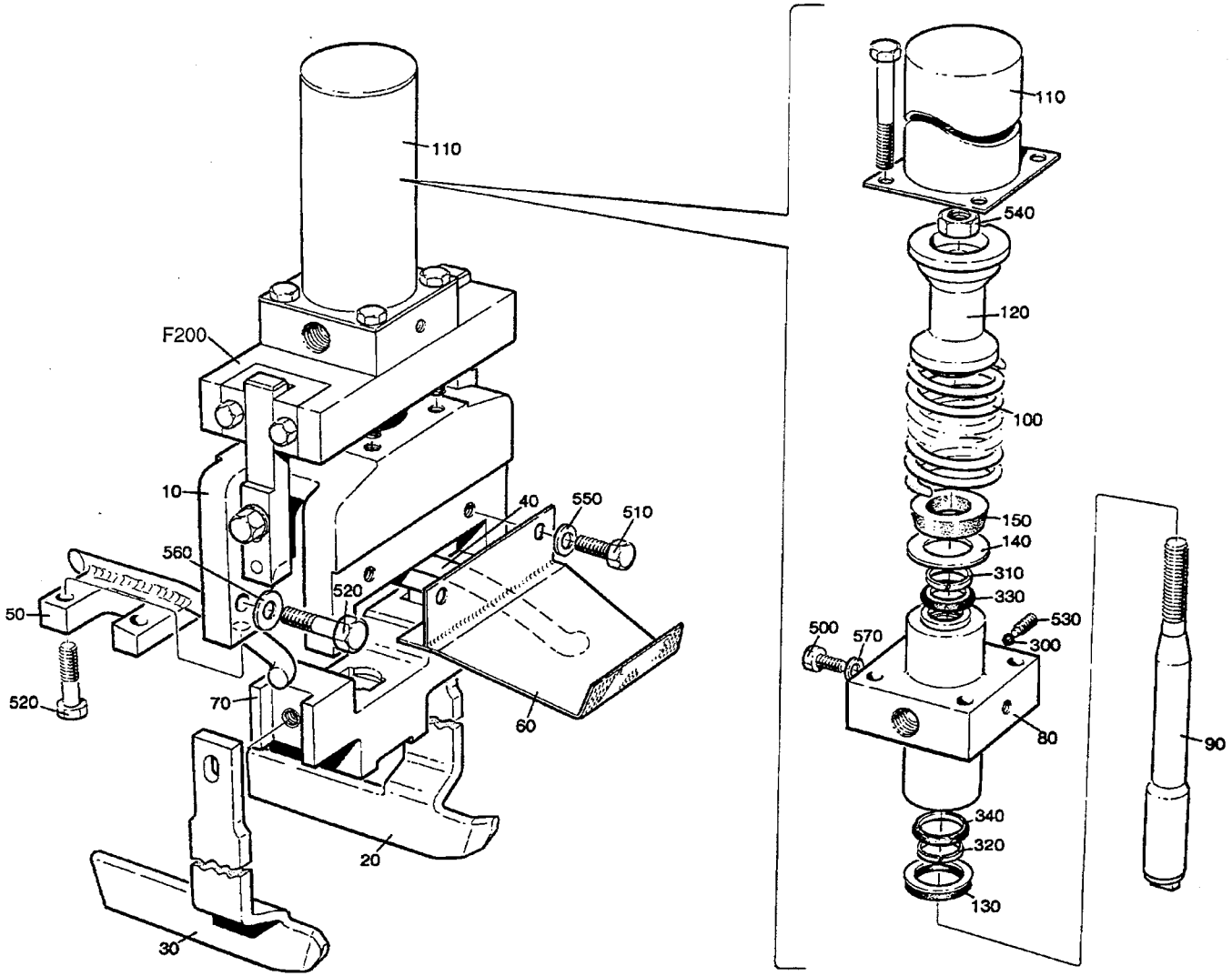

25671210.TIF
256712-10
AM 14782

Last Alteration: AM 20222 93-10-28

Corresponding group: 256712-050V
Assembly Drawing: 256712-10

Issue: **940524**

From	Pos	Part No	SP	UN	Qty	Description
250ml						
		C- 256712-0501				**Pull-Down Device, Ass'y**
	010	G- 295843-0001	S		1	BRACKET
	020	G- 272905-0001	S		1	ARM
	030	G- 272906-0001	S		1	ARM
	040	295057-0001	C		1	RAIL
	050	295058-0001	C		1	RAIL
	060	272045-0002	S		1	SLIDE SHEET
	070	G- 491804	S		1	BLOCKING PIECE
236ml						
		C- 256712-0502				**Pull-Down Device, Ass'y**
	010	G- 295843-0002	S		1	BRACKET
	020	G- 272905-0002	S		1	ARM
	030	G- 272906-0002	S		1	ARM
	040	295057-0001	C		1	RAIL
	050	295058-0001	C		1	RAIL
	060	272045-0002	S		1	SLIDE SHEET
	070	G- 491804	S		1	BLOCKING PIECE
200ml						
		C- 256712-0503				**Pull-Down Device, Ass'y**
	010	G- 295843-0003	S		1	BRACKET
	020	G- 272905-0003	S		1	ARM
	030	G- 272906-0003	S		1	ARM
	040	295057-0002	C		1	RAIL
	050	295058-0002	C		1	RAIL
	060	272045-0003	S		1	SLIDE SHEET
	070	G- 491804	S		1	BLOCKING PIECE
180ml						
		C- 256712-0504				**Pull-Down Device, Ass'y**
	010	G- 295843-0004	S		1	BRACKET
	020	G- 272905-0004	S		1	ARM
	030	G- 272906-0004	S		1	ARM
	040	295057-0003	C		1	RAIL
	050	295058-0003	C		1	RAIL
	060	272045-0004	S		1	SLIDE SHEET
	070	G- 491804	S		1	BLOCKING PIECE
125ml						
		C- 256712-0505				**Pull-Down Device, Ass'y**
	010	G- 295843-0005	S		1	BRACKET
	020	G- 272905-0005	S		1	ARM
	030	G- 272906-0005	S		1	ARM
	040	295059	C		1	RAIL LEFT
	050	295060	C		1	RAIL
	060	271939-0001	S		1	SLIDE SHEET
	070	G- 491805	S		1	BLOCKING PIECE

From	Pos	Part No	SP	UN	Qty	Description
200ml Slim						
		C- 256712-0506				**Pull-Down Device, Ass'y**
	010	G- 295843-0006	S		1	BRACKET
	020	G- 272905-0006	S		1	ARM
	030	G- 272906-0006	S		1	ARM
	040	295061	C		1	RAIL
	050	295062	C		1	RAIL
	060	272045-0001	S		1	SLIDE SHEET
	070	G- 491806	S		1	BLOCKING PIECE
284ml						
		C- 256712-0507				**Pull-Down Device, Ass'y**
	010	G- 295843-0006	S		1	BRACKET
	020	G- 272905-0006	S		1	ARM
	030	G- 272906-0006	S		1	ARM
	040	295057-0001	C		1	RAIL
	050	295058-0001	C		1	RAIL
	060	272045-0001	S		1	SLIDE SHEET
	070	G- 491804	S		1	BLOCKING PIECE
250ml Slim						
		C- 256712-0508				**Pull-Down Device, Ass'y**
	010	G- 295843-0007	S		1	BRACKET
	020	G- 272905-0008	S		1	ARM
	030	G- 272906-0008	S		1	ARM
	040	574348	C		1	RAIL LEFT
	050	574349	C		1	RAIL RIGHT
	060	272045-0001	S		1	SLIDE SHEET
	070	G- 574350	S		1	BLOCKING PIECE
160ml						
		C- 256712-0509				**Pull-Down Device, Ass'y**
	010	G- 295843-0008	S		1	BRACKET
	020	G- 272905-0009	S		1	ARM
	030	G- 272906-0009	S		1	ARM
	040	295059	C		1	RAIL LEFT
	050	295060	C		1	RAIL
	060	271939-0001	S		1	SLIDE SHEET
	070	G- 491806	S		1	BLOCKING PIECE
Common parts						
	F200	**C- 752664-0101**	**-**		**1**	**STEERING**
	080	G- 490980	S		1	CYLINDER
	090	752083	S		1	PISTON
	100	271731	P		1	COMPRESSION SPRING
	110	751163	C		1	COVER
	120	441894	S		1	SLEEVE
	130	295072	S		1	BUFFER RING
	140	441896	C		1	WASHER

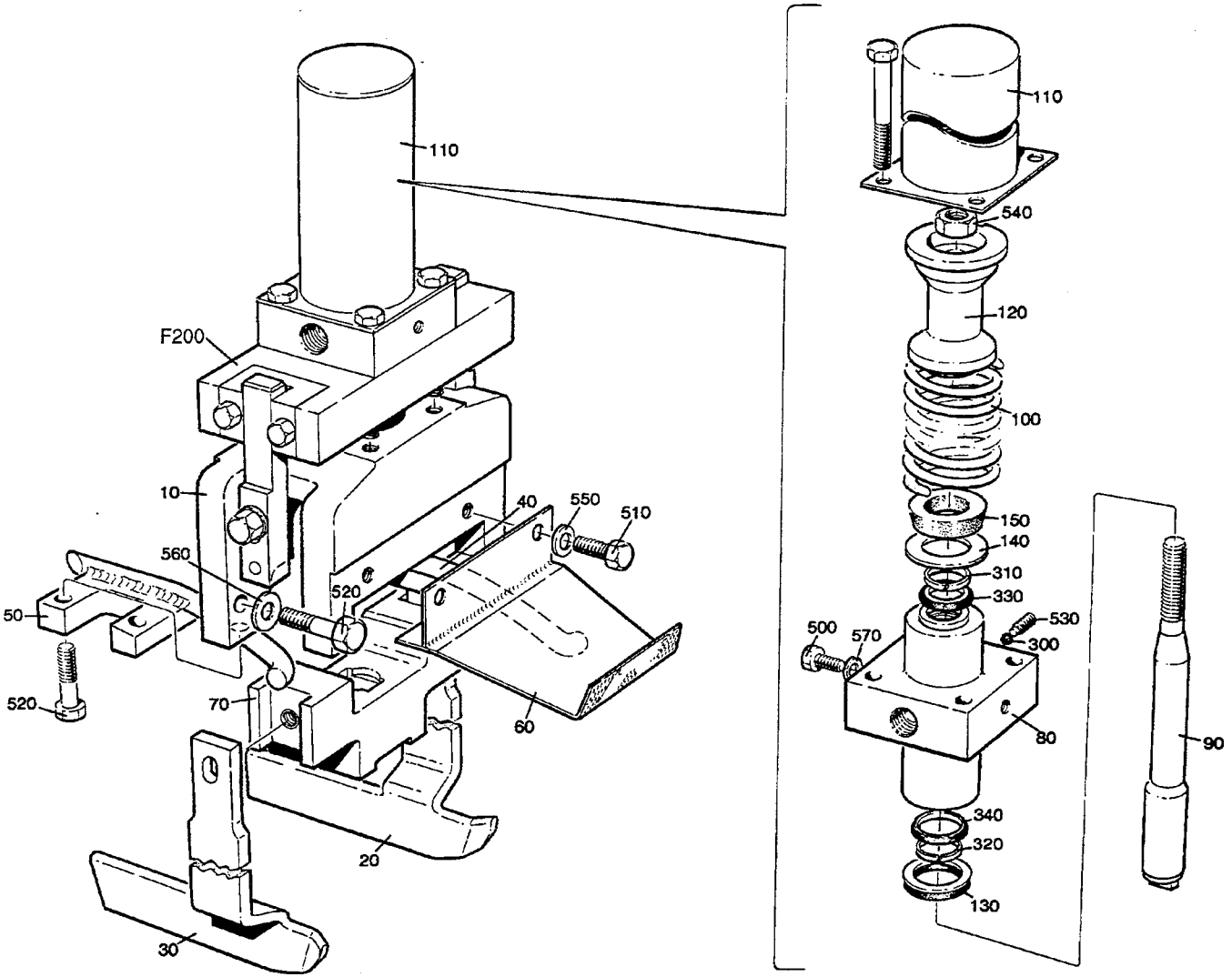

25671210.TIF
256712-10
AM 14782

Last Alteration: AM 20222 93-10-28

Corresponding group: 256712-050V
Assembly Drawing: 256712-10

Issue: **940524**

From	Pos	Part No	SP	UN	Qty	Description
	150	441895	P		1	BUFFER RING
	300	90090-0013	P		1	STEEL BALL
	310	90091-0162	P		1	GUIDE RING
	320	90091-0163	P		1	GUIDE RING
	330	90091-0160	P		1	SEAL RING
	340	90091-0165	P		1	SEAL RING
	500	312105-0325	-		1	SCREW M6S5X10 A2 80
	510	312105-0368	-		2	SCREW M6S6X16RFR
	520	312105-0455	-		6	SCREW M6S8X30RFR
	530	312311-0327	-		1	STOP SCREW T6SS5X12FZB
	540	312605-0320	-		1	NUT M6M10RFR
	550	315105-0153	-		2	WASHER BRB6,4X12RFR
	560	315105-0165	-		2	WASHER BRB8,4X16RFR
	570	315234-0101	-		1	SEAL RING M5

From	Pos	Part No	SP	UN	Qty	Description

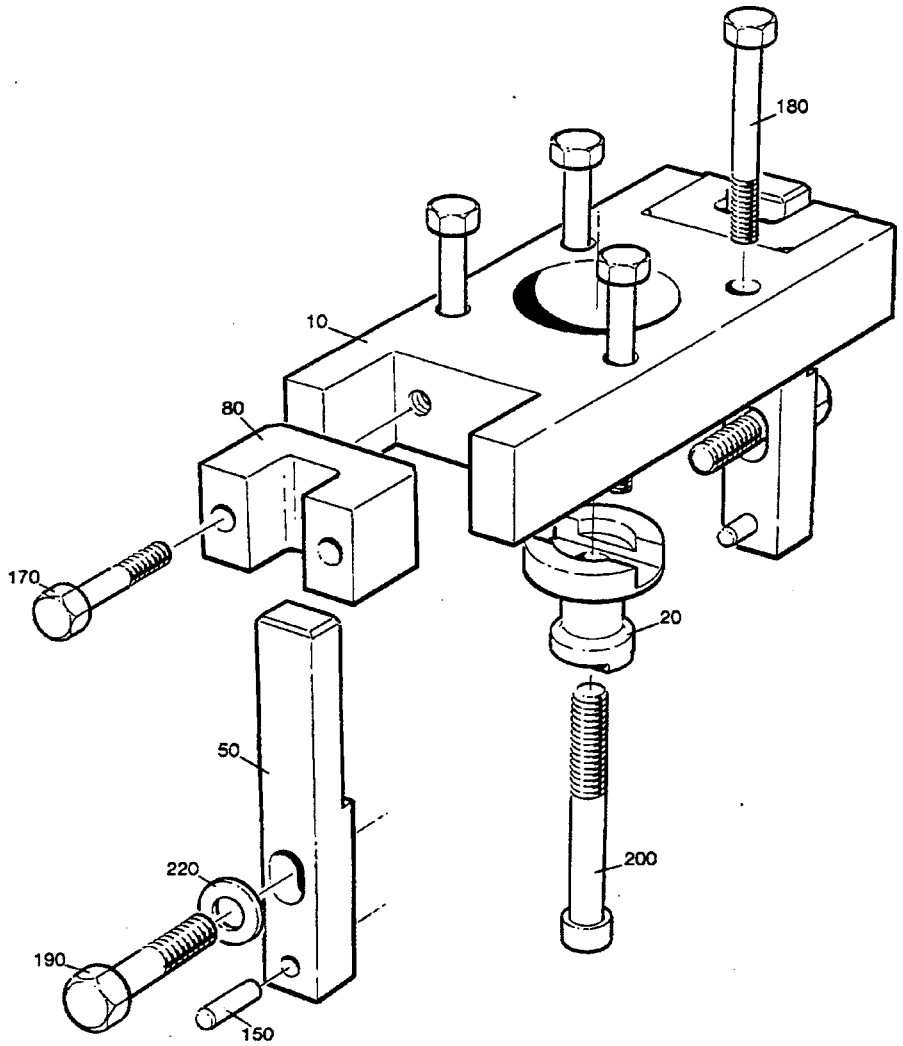

75266401.TIF
752664-1
AM 12530

Last Alteration: AM 12530 90-01-05

Corresponding group: 752664-010V
Assembly Drawing: 752664-1

Issue: **940524**

From	Pos	Part No	SP	UN	Qty	Description
		C- 752664-0101				**Steering, Ass'y**
	010	752656	-		1	STEER PLATE
	020	752657	-		1	SPACER SLEEVE
	050	752655	-		2	GUIDE PIN
	080	752658	-		2	GUIDE LUG
	150	311103-0309	-		2	CYLINDRICACP M6 5X18 RFR
	170	312105-0376	-		4	SCREW M6S6X35RFR
	180	312105-0381	-		4	SCREW M6S6X55RFR
	190	312105-0457	-		2	SCREW M6S8X35RFR
	200	312115-0463	-		1	SCREW 8X60 A4 80
	220	315115-0165	-		2	WASHER TBRB8,4X16RFR

From	Pos	Part No	SP	UN	Qty	Description

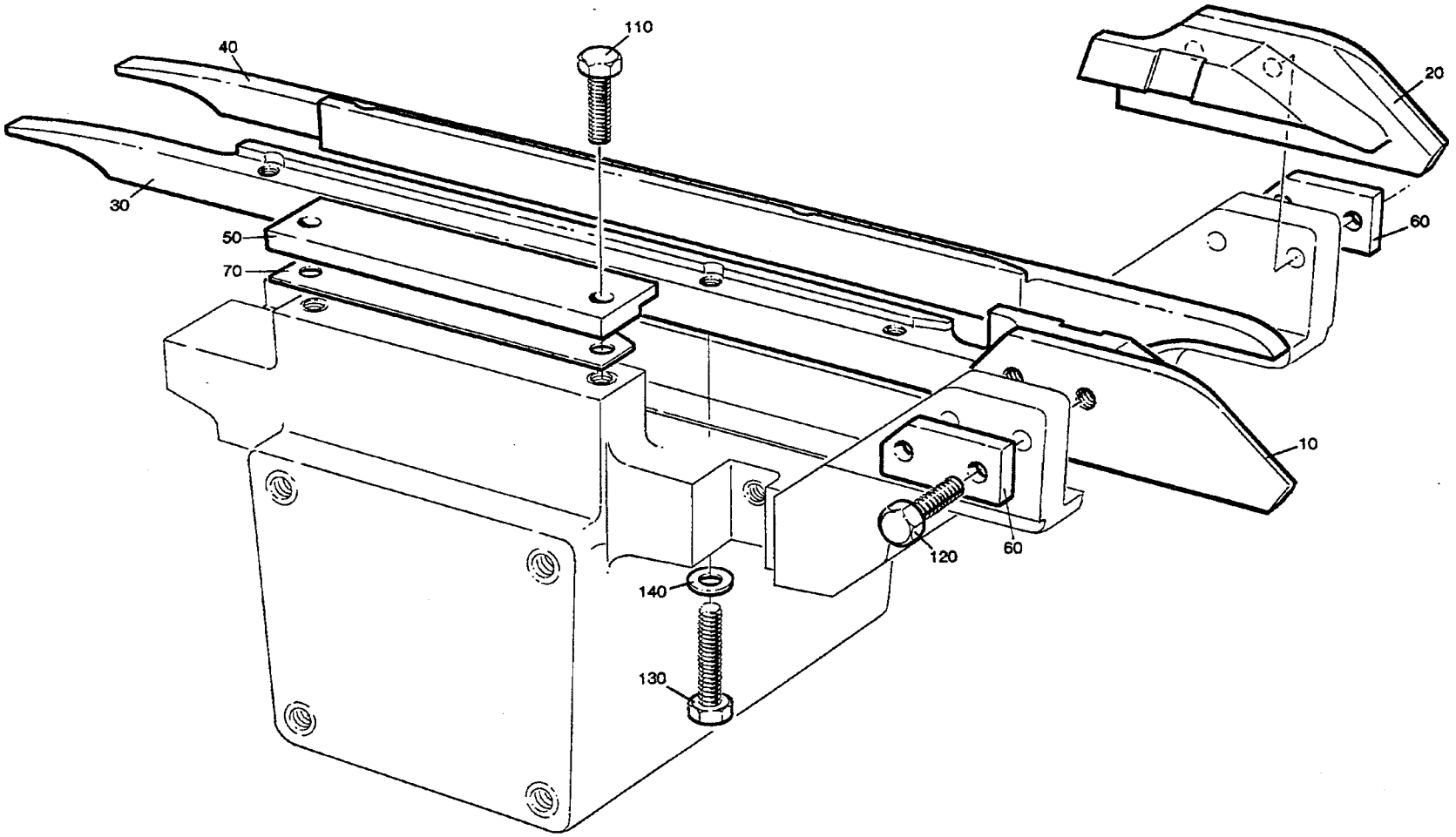

49125902.TIF
491259-2
AM 12530

From	Pos	Part No	SP	UN	Qty	Description
284ml - 180ml						
		C- 491259-0201				**Way, Ass'y**
	010	751707	S		1	FOLDING BAR RIGHT
	020	751708	S		1	FOLDING BAR LEFT
125ml						
		C- 491259-0202				**Way, Ass'y**
	010	751697	S		1	FOLDING BAR RIGHT
	020	751696	S		1	FOLDING BAR LEFT
160ml 200ml Slim						
		C- 491259-0203				**Way, Ass'y**
	010	751709	S		1	FOLDING BAR RIGHT
	020	751710	S		1	FOLDING BAR LEFT
250ml Slim						
		C- 491259-0204				**Way, Ass'y**
	010	574342	S		1	FOLDING BAR RIGHT
	020	574343	S		1	FOLDING BAR LEFT
Common parts						
	030	751109	S		1	RAIL RIGHT
	040	751110	S		1	RAIL LEFT
	050	491265	S		2	PLATE
	060	295729	C		2	WASHER
	070	491266	S		4	SHIM
	110	312105-0370	S		4	SCREW M6S6X20RFR
	120	312105-0372	S		4	SCREW M6S6X25RFR
	130	312105-0374	S		6	SCREW M6S6X30RFR
	140	315105-0153	S		6	WASHER BRB6,4X12RFR

From	Pos	Part No	SP	UN	Qty	Description

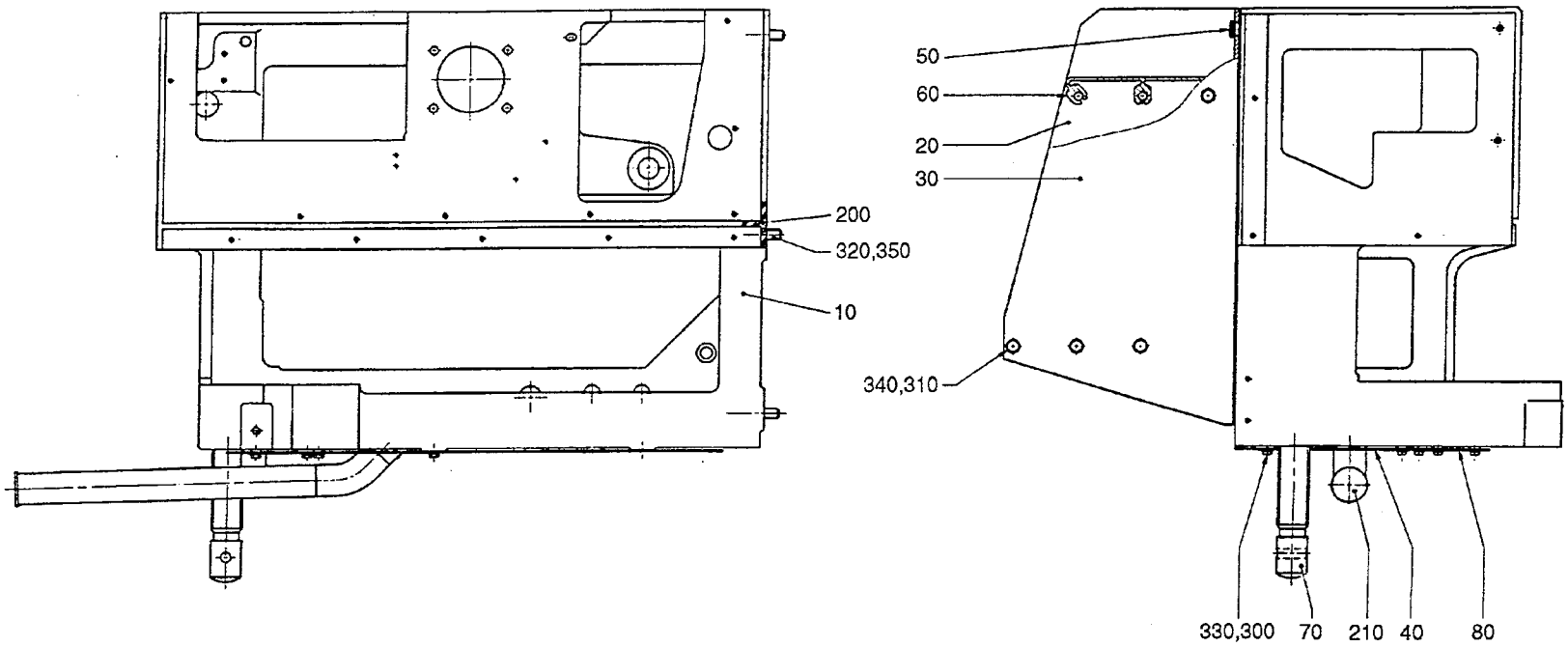

44169502.TIF
441695-2
AM 14151

Last Alteration: AM 14151 89-11-10

Corresponding group: 441695-020V
Assembly Drawing: 441695-2

Issue: 940524

From	Pos	Part No	SP	UN Qty	Description
		C- 441695-0201			**Machine Body, Ass'y**
	010	G- 752215	-	1	MACHINE BODY
	020	272659	-	1	SIDE PIECE
	030	272660	-	1	SIDE PIECE
	040	752213	-	1	BOTTOM PANEL
	050	271591	-	2	BUTTON
	060	272661	-	2	STAIR
	070	272673	-	1	LEG
	080	272743	-	1	LID
	200	90143-0028	S	MM 2700	STRIP
	210	90261-0025	-	2	PIPE PLUG
	300	312105-0367	-	7	SCREW M6S6X14RFR
	310	312105-0451	-	12	SCREW M6S8X20RFR
	320	312105-0544	-	6	SCREW M6S12X60RFR
	330	315105-0153	-	7	WASHER BRB6,4X12RFR
	340	315105-0165	-	12	WASHER BRB8,4X16RFR
	350	315105-0178	-	6	WASHER BRB13X24RFR

From	Pos	Part No	SP	UN Qty	Description

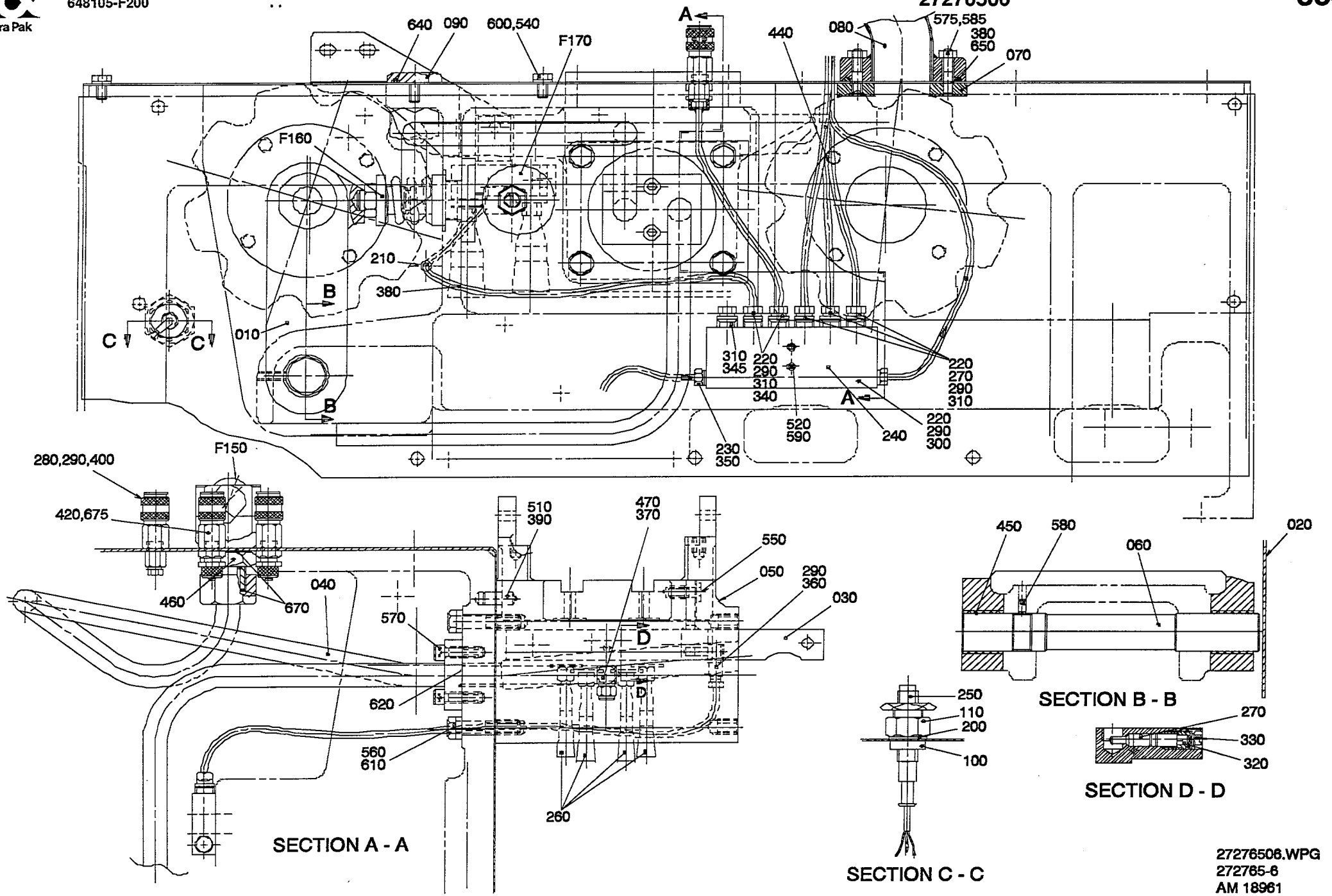

27276506.WPG
272765-6
AM 18961

Last Alteration: AM 18961 93-01-25

Corresponding group: 272765-070V
Assembly Drawing: 272765-6

Issue: **940524**

From	Pos	Part No	SP	UN	Qty	Description
		C- 272765-0701				**Cantilever, Ass'y**
	F150	**C- 441798-0101**	**C**		**1**	**ROTOR**
	F160	**C- 272652-0301**	**C**		**1**	**CHAIN TENSIONER**
	F170	**C- 978048-0101**	**C**		**1**	**CLAMPING ELEMENT**
	010	G- 441600	C		1	LINK ARM
	020	978572	-		1	SHIELD PLATE
	030	751070	C		1	DISTRIBUTOR BLOCK
	040	751082	C		1	PIPE CONNECTION
	050	G- 752485	C		1	SUPPORTING ARM
	060	256276	C		1	SHAFT
	070	978190	C		1	WASHER
	080	978191	C		1	LEAD-IN
	090	272997	C		1	STOPPER
	100	490932	C		1	SLEEVE
	110	490933	C		1	NUT
	200	90005-0048	C		1	WASHER
	210	90015-0028	S		1	LEAD-IN BUSHING
	220	90028-0021	S		6	CONE
	230	90028-0025	S		1	CONE
	240	90032-0040	C		1	BLOCK
	250	90044-0085	S		1	SENSOR
	260	90092-0048	S		4	OIL BRUSH
	270	90092-0054	S		7	VALVE
	280	90134-0004	S		1	PIPE CONNECTION
	290	90134-0031	S		10	SLEEVE
	300	90134-0038	S		1	BUSHING
	310	90134-0040	S		6	BUSHING
	320	90134-0042	S		4	SPACER
	330	90134-0045	S		4	PLUG
	340	90134-0051	S		2	SPACER COLLOR
	345	90134-0052	S		1	PLUG
	350	90134-0055	S		1	BUSHING
	360	90134-0068	S		1	BANJO CONNECTION
	370	90144-0004	S		X	TAPE
	380	90153-0020	S		X	ADHESIVE
	390	90157-0022	S		X	SEALING COMPOUND
	400	90163-0046	S		1	SLEEVE
	420	90163-0062	S		3	SLEEVE
	440	90166-0109	S	MM	2000	HOSE
	450	90240-0055	S		2	RICTION BEARING
	460	90330-0078	C		1	BUSHING
	470	90424-0009	S		1	NOZZLE
	510	311103-0401	C		1	CYLINDRICACP M6 8X20 RFR
	520	312105-0297	S		2	SCREW M6S4X25 A2 80
	530	312105-0364	S		2	SCREW M6S6X10RFR
	540	312105-0366	S		15	SCREW M6S6X12RFR
	550	312105-0368	S		1	SCREW M6S6X16RFR
	560	312105-0459	S		4	SCREW M6S8X40RFR
	570	312115-0372	S		2	SCREW MC6S6X25 A4 80
	575	312303-0374	S		2	STUD SCREWMPS 6X25 RFR
	580	312318-0325	S		1	STOP SCREW SK6SS5X10RFR
	585	312605-0316	S		2	NUT M6M6RFR
	590	315105-0136	S		2	WASHER BRB4,3X8RFR
	600	315105-0153	S		17	WASHER BRB6,4X12RFR
	610	315111-0165	S		4	WASHER TBRB8,4X16FZB
	615	315115-0165	S		1	WASHER TBRB8,4X16RFR
	620	315202-0118	S		2	O-RING 22,1X1,6
	640	315202-0215	S		1	O-RING 19,2X3
	650	315202-0304	S		1	O-RING 64,5X3
	660	315233-0109	S		3	SEAL RING R1/8"
	670	315233-0111	S		2	SEAL RING R3/8"
	675	342921-0113	S		4	PIPE COUPL6/4-1/8"
	680	342960-0112	S		2	BULKHEAD L6/4

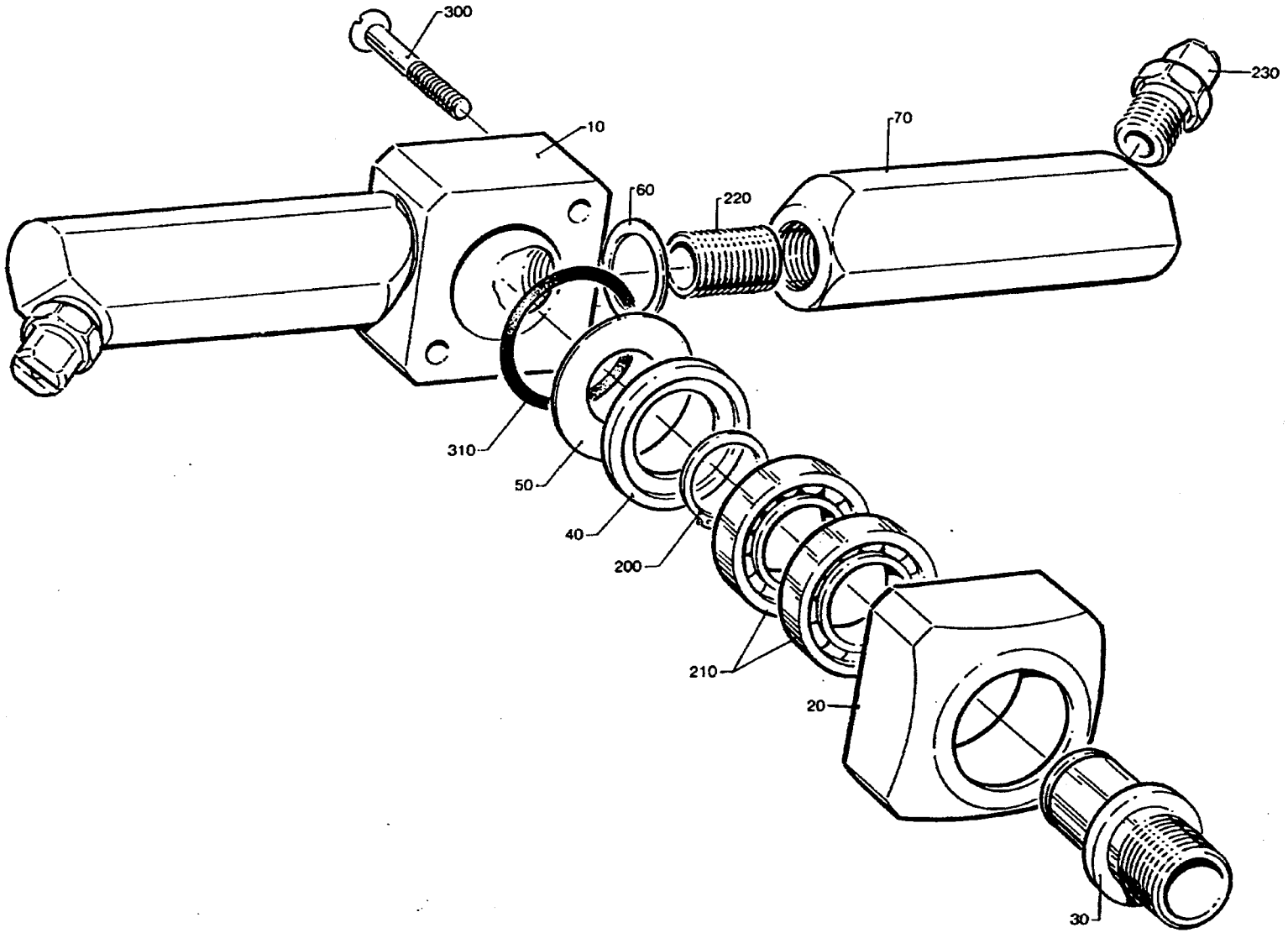

44179801.TIF
441798-1
AM 6625

Last Alteration: AM 6626 84-03-20

Corresponding group: 441798-010V
Assembly Drawing: 441798-1

Issue: **940524**

From	Pos	Part No	SP	UN	Qty	Description
		C- 441798-0101				**Rotor, Ass'y**
	010	441792	C		1	HEAD
	020	441793	C		1	BEARING HOUSING
	030	441794	C		1	PIVOT PIN
	040	441795	C		1	WASHER
	050	441796	P		1	SEAL
	060	441797	S		2	SHIM
	070	441799	S		2	ATTACHMENT
	200	90141-0017	S		1	LOCK RING
	210	90214-0092	S		2	BALL BEARING
	220	90330-0101	S		2	NIPPLE
	230	90424-0035	S		2	NOZZLE
	300	312155-0299	-		2	SCREW MF6S 4X30 A4 80
	310	315202-0217	S		1	O-RING 24,2X3

From	Pos	Part No	SP	UN	Qty	Description

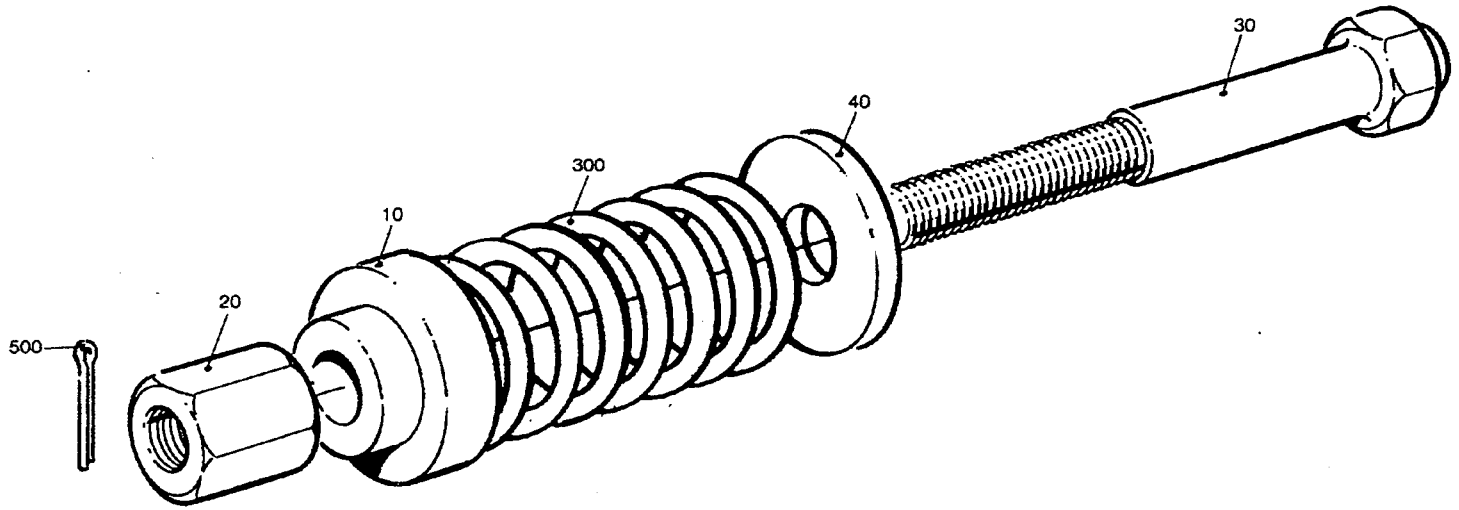

27265203.TIF
272652-3
AM 8667

Last Alteration: AM 8667 86-02-17

Corresponding group: 272652-030V
Assembly Drawing: 272652-3

Issue: **940524**

From	Pos	Part No	SP	UN Qty	Description
		C- 272652-0301			**Chain Tensioner, Ass'y**
	010	491731	-	1	WASHER
	020	256190	-	1	NUT
	030	441328	-	1	GUIDE PIN
	040	491732	-	1	WASHER
	300	90335-0096	S	1	SPRING
	500	311411-0152	S	1	SPLIT PIN SP2X16RFR

From	Pos	Part No	SP	UN Qty	Description

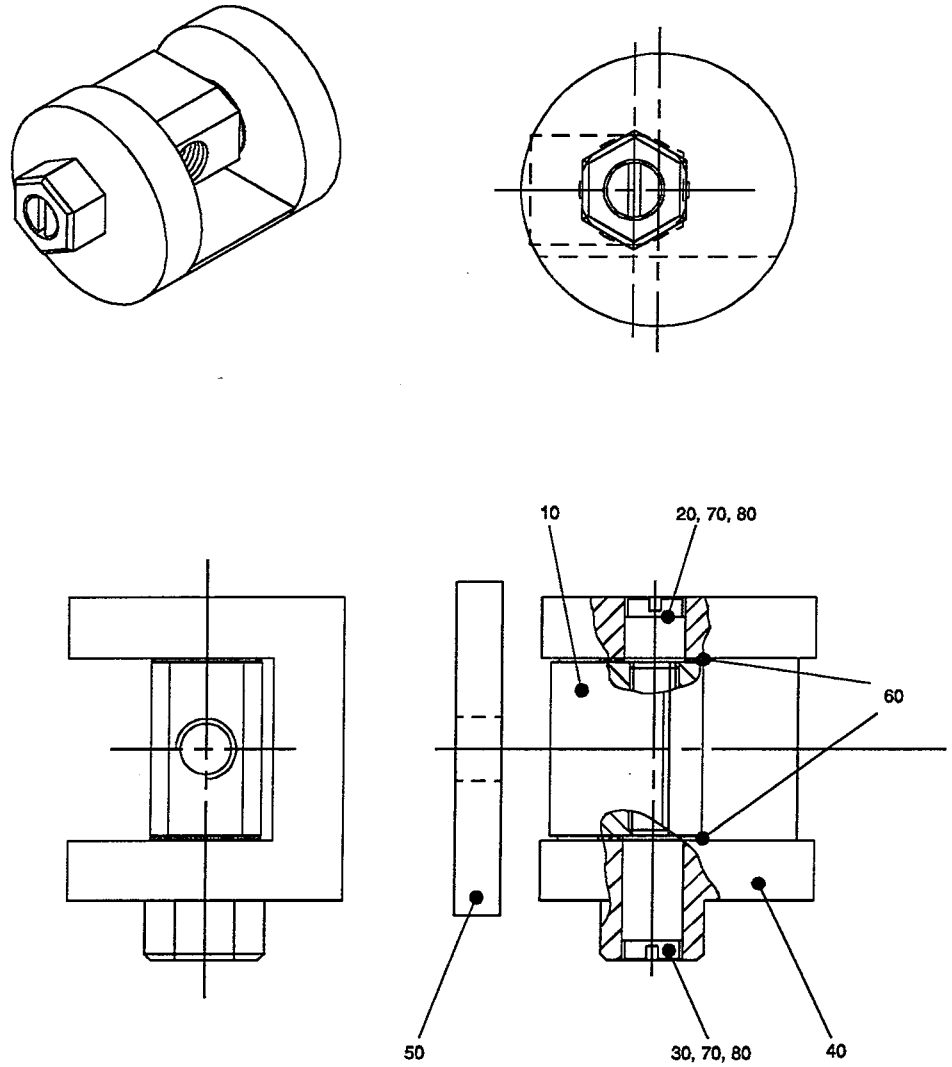
10
20, 70, 80
60
50
30, 70, 80
40

Last Alteration: AM 15018 90-05-31

Corresponding group: 978048-010V
Assembly Drawing: 978048-1

Issue: **940524**

From	Pos	Part No	SP	UN	Qty	Description
		C- 978048-0101				**Clamping Element, Ass'y**
	010	978049	C		1	NUT
	020	978050-0001	C		1	SCREW
	030	978050-0002	C		1	SCREW
	040	978051	C		1	ECCENTRIC
	050	978052	C		1	WASHER
	060	2033-0009	C		2	WASHER
	070	90157-0016	-		X	LOCKING FLUID
	080	90296-0012	-		X	LUBRICANT

From	Pos	Part No	SP	UN	Qty	Description

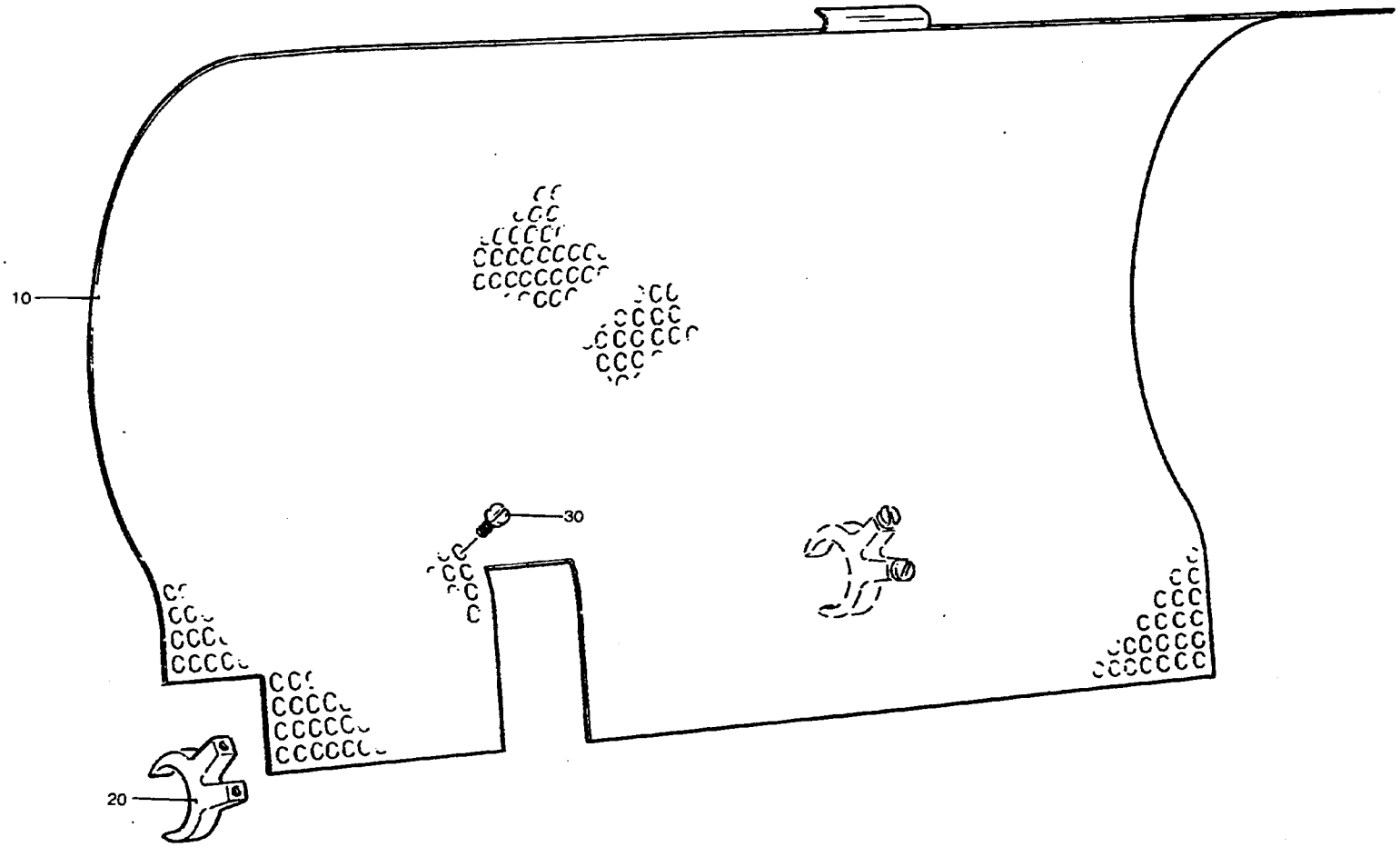

45656701.TIF
456567-1
AM 6626

Last Alteration: AM 6626 84-03-20

Corresponding group: 456567-010V
Assembly Drawing: 456567-1

Issue: **940524**

From	Pos	Part No	SP	UN	Qty	Description
		C- 456567-0101				**Separation Insert, Ass'y**
	010	456568	-		1	SHEET
	020	456569	-		2	BRACKET
	030	90287-0134	-		4	SCREW

From	Pos	Part No	SP	UN	Qty	Description

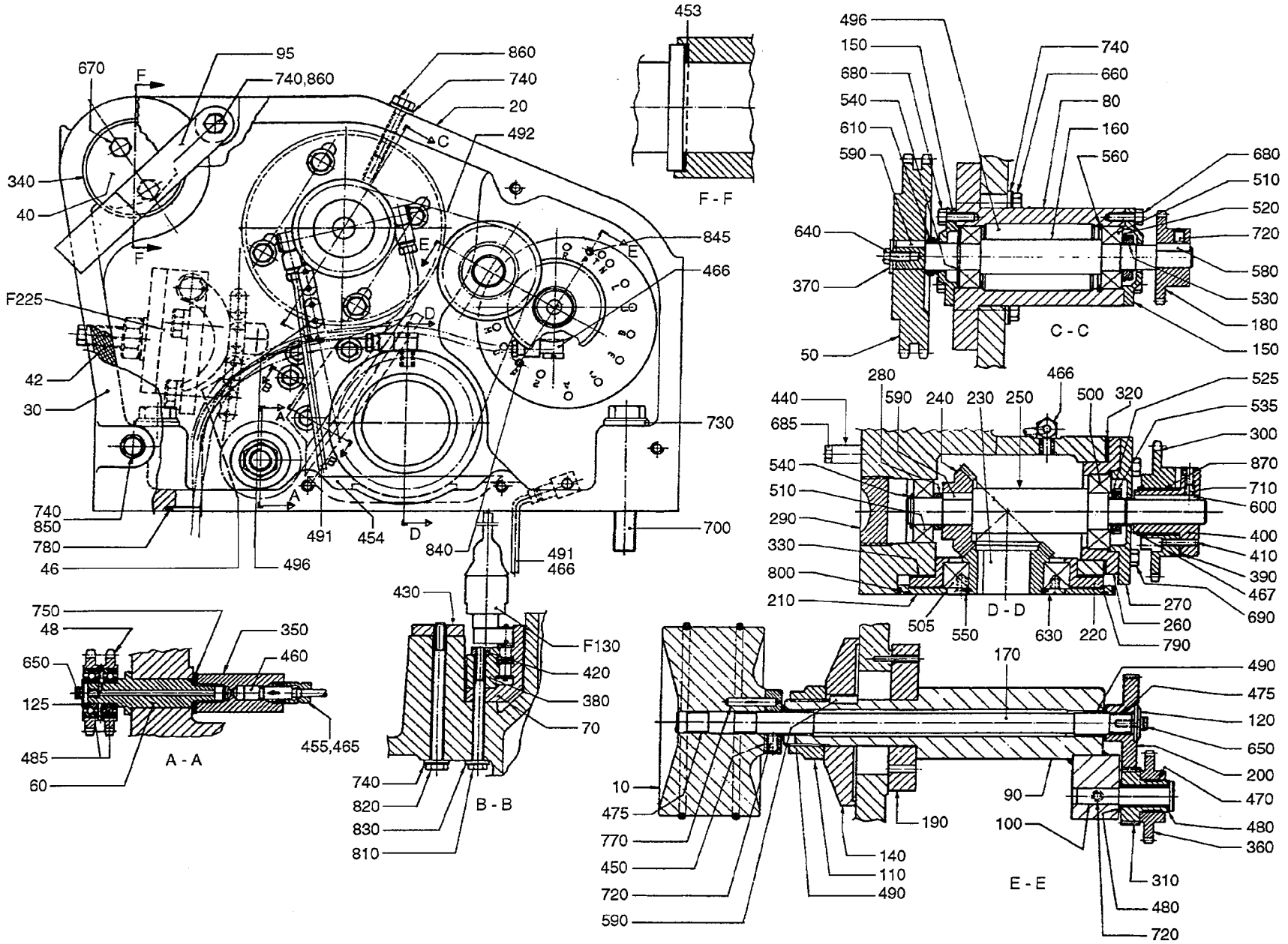

29531006.TIF
295310-6
AM 19186

Last Alteration: AM 20232 93-12-30

Corresponding group: 295310-070V
Assembly Drawing: 295310-6

Issue: 940524

From	Pos	Part No	SP	UN	Qty	Description
284ml - 180ml						
		C- 295310-0701				**Discharge Unit, Ass'y**
	010	456451	S		1	ROLL
		315202-0306	S		2	* O-RING 74,5X3
	190	469393	-		1	SETTING PLATE
160ml 125ml						
		C- 295310-0702				**Discharge Unit, Ass'y**
	010	469433	S		1	ROLL
		315202-0311	S		2	* O-RING 99,5X3
	190	469393	-		1	SETTING PLATE
200ml SI						
		C- 295310-0703				**Discharge Unit, Ass'y**
	010	469434	S		1	ROLL
		315202-0306	S		2	* O-RING 74,5X3
	190	469393	-		1	SETTING PLATE
250ml SI						
		C- 295310-0704				**Discharge Unit, Ass'y**
	010	574354	S		1	ROLL
		315202-0305	S		2	* O-RING 69,5X3
		315202-0306	S		2	* O-RING 74,5X3
	190	469393	-		1	SETTING PLATE
Common parts						
	F130	**C- 978720-0101**	**S**		**1**	**FINGER**
	F225	**C- 491871-0101**	**-**		**1**	**CHAIN TENSIONER**
	020	G- 295311	-		1	DISCHARGE HOUSE
	030	G- 456175	C		1	LID
	040	295313	-		1	SHAFT
	042	456176	S		1	GASKET
	046	272068	S		1	CARRIER CHAIN
	048	978566	S		1	SPROCKET
	050	295314	S		1	SPROCKET
	060	978570	S		1	SHAFT
	070	295316	S		1	RIM
	080	G- 295092	-		1	BEARING HOUSING
	090	441978	C		1	BEARING
	095	491193	-		1	HOLDER
	100	271975	S		1	SHAFT
	110	271978	S		1	NUT
	120	272534	S		1	WASHER
	125	978568	S		1	WASHER
	140	295842	-		1	WASHER
	150	295093	-		2	LID
	160	978753	S		1	SHAFT
	170	441979	S		1	SHAFT
	180	295116	S		1	SPROCKET

From	Pos	Part No	SP	UN	Qty	Description
	200	441980	S		1	GEAR WHEEL
	210	491746	-		1	WASHER
	220	295163	-		1	SHOULDER RING
	230	295164	S		1	GEAR WHEEL
	240	295165	S		1	GEAR WHEEL
	250	295166	C		1	SHAFT
	260	491733	-		1	SHOULDER RING
	270	295168	-		1	LID
	280	295169	S		1	SPACER RING
	290	295170	S		1	PLUG
	300	491751	S		1	SPROCKET
	310	295299	S		1	GEARING
	320	295308	S		1	LACE
	330	295309	S		1	LACE
	340	295317	-		1	WASHER
	350	295318	-		1	GREASE NIPPLE
	360	295319	S		1	SPROCKET
	370	106758	S		1	WASHER
	380	295321	S		1	RIM
	390	491753	C		1	WASHER
	400	491752	S		1	HUB
	410	491754	P		1	SHEAR PIN
	420	295323	-		1	WASHER
	430	491872	-		1	COVER PLATE
	440	456064	-		1	SPACER
	450	295326	-		1	RETAINING RING
	453	751567	-		1	SPACER RING
	454	978550	-		1	SEALING WASHER
	455	90028-0021	P		1	CONE
	460	90092-0054	P		1	VALVE
	465	90134-0040	P		1	BUSHING
	466	90134-0068	S		5	BANJO CONNECTION
	467	90141-0018	-		1	LOCK RING
	470	90208-0050	S		1	COLLAR
	475	90208-0047	S		3	COLLAR
	480	90240-0090	S		2	RICTION BEARING
	485	90214-0093	S		2	BALL BEARING
	490	90240-0092	S		2	RICTION BEARING
	491	90266-0165	S	MM	250	BRASS PIPE
	492	90288-0036	S		1	ROLLER CHAIN
	500	321308-0204	S		1	BALL BEARISKF6004-2RS
	505	321308-0208	S		1	BALL BEARISKF6008-2RS
	510	321313-0102	S		3	BALL BEARISKF6202-2RS

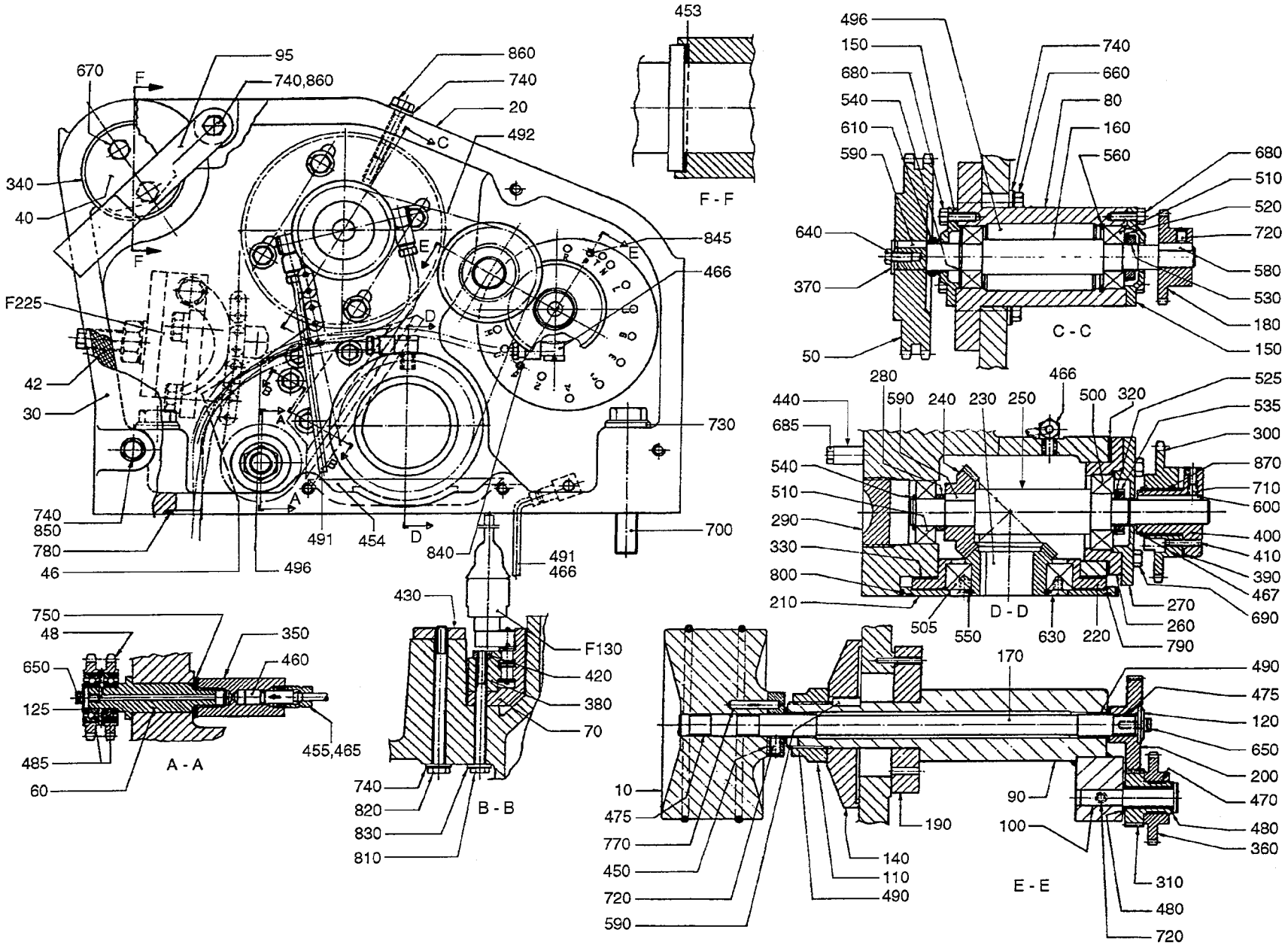

29531006.TIF
295310-6
AM 19186

From	Pos	Part No	SP	UN	Qty	Description
	520	315410-0102	S		1	LOCK WASHESKFMB2
	525	315410-0103	S		1	LOCK WASHESKFMB3
	530	312805-0102	-		1	ROUND NUT KM2
	535	312805-0103	-		1	ROUND NUT KM3
	540	315750-0112	S		2	CIRCLIP SGA15
	550	315750-0127	S		1	CIRCLIP SGA40
	560	315752-0124	S		1	CIRCLIP SGH35
	580	315701-0170	-		1	FLAT WEDGE4X4X20
	590	315701-0198	-		2	FLAT WEDGE5X5X14
	600	315701-0207	-		1	FLAT WEDGE5X5X36
	610	315220-0121	S		1	SEAL RING V-14S
	630	312145-0331	-		4	SLOTTED HEMFS5X20RFR
	640	312105-0327	-		1	SCREW M6S5X12 A2 80
	650	312115-0287	-		2	SCREW 4X8 A4 80
	660	312105-0374	-		4	SCREW M6S6X30RFR
	670	312105-0370	-		2	SCREW M6S6X20RFR
	680	312105-0329	-		6	SCREW M6S5X16 A2 80
	685	312105-0333	-		1	SCREW M6S5X25 A2 80
	690	312105-0331	-		4	SCREW M6S5X20 A2 80
	700	312105-0546	-		4	SCREW M6S12X70RFR
	710	312318-0321	-		2	STOP SCREW SK6SS5X6RFR
	720	312318-0362	-		3	STOP SCREW SK6SS6X8RFR
	730	315115-0178	-		4	WASHER TBRB13X24RFR
	740	315115-0153	-		13	WASHER TBRB6,4X12RFR
	750	315105-0173	-		1	WASHER BRB10,5X22RFR
	770	311305-0312	-		1	SLOTTED PIRPC5X25FZB
	780	315202-0220	S		1	O-RING 32,2X3
	790	315202-0312	S		1	O-RING 104,5X3
	800	315202-0314	S		1	O-RING 114,5X3
	810	312105-0382	-		2	SCREW M6S6X60RFR
	820	312105-0384	-		2	SCREW M6S6X70RFR
	830	315105-0153	-		2	WASHER BRB6,4X12RFR
	840	311103-0235	-		1	CYLINDRICACP M6 3X14 RFR
	845	311103-0240	-		1	CYLINDRICACP M6 3X25 RFR
	850	312105-0372	-		5	SCREW M6S6X25RFR
	860	312105-0378	-		2	SCREW M6S6X40RFR
	870	321120-0153	S		1	BUSHING 24/27X20

From	Pos	Part No	SP	UN	Qty	Description

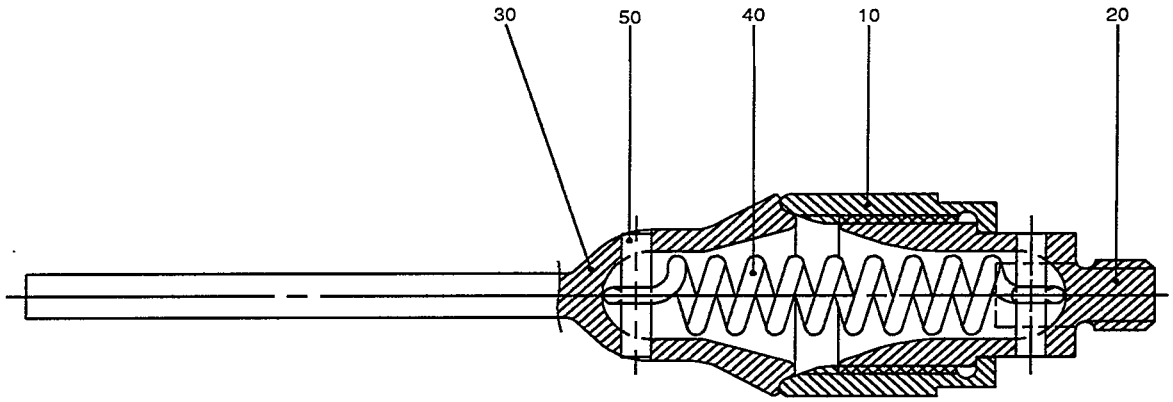
30
50
40
10
20

Last Alteration: AM 19186 93-01-26

Corresponding group: 978720-010V
Assembly Drawing: 978720-1

Issue: **940524**

From	Pos	Part No	SP	UN	Qty	Description
		C- 978720-0101				**Finger, Ass'y**
	010	978717	S		1	SLEEVE
	020	978718	S		1	END SLEEVE
	030	978719	S		1	PEG
	040	90335-0155	S		1	TENSION SPRING
	050	311103-0235	S		2	CYLINDRICACP M6 3X14 RFR

From	Pos	Part No	SP	UN	Qty	Description

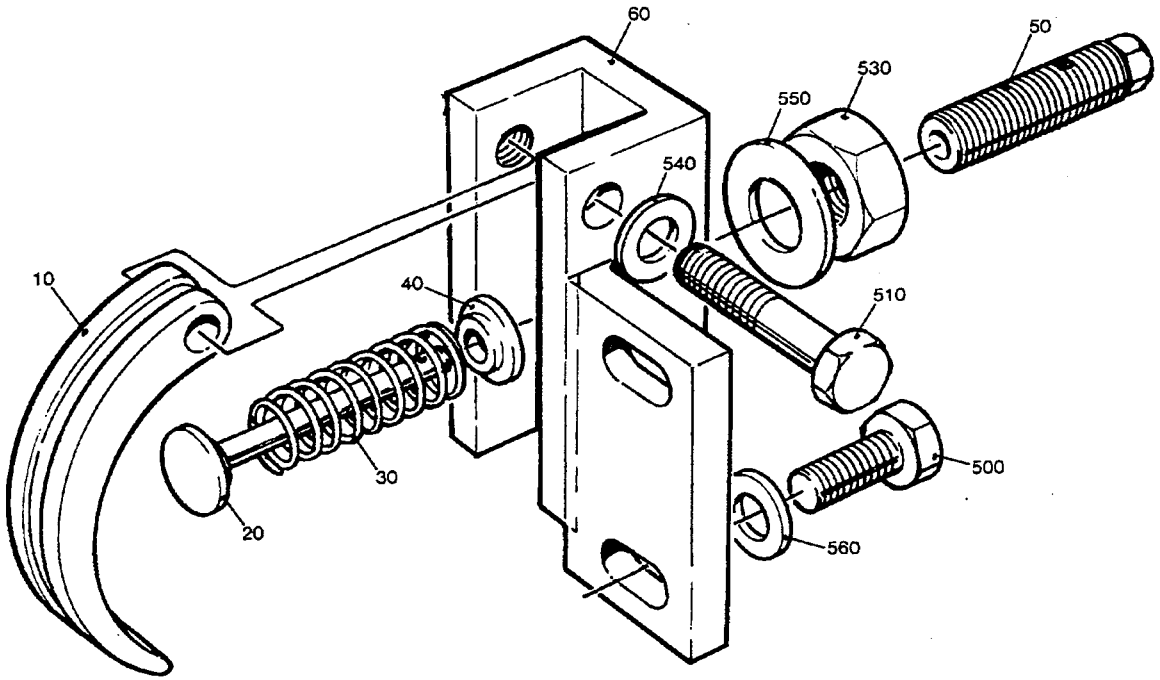

49187101.TIF
491871-1
AM 10781

Last Alteration: AM 10781 88-05-04

Corresponding group: 491871-010V
Assembly Drawing: 491871-1

Issue: **940524**

From	Pos	Part No	SP	UN Qty	Description
		C- 491871-0101			**Chain Tensioner, Ass'y**
	010	272546	S	1	SLIDER
	020	272547	C	1	TACK
	030	118582	S	1	COMPRESSION SPRING
	040	272549	C	1	WASHER
	050	272550	C	1	ADJUSTING SCREW
	060	491240	C	1	BRACKET
	500	312105-0451	-	2	SCREW M6S8X20RFR
	510	312105-0461	-	1	SCREW M6S8X50RFR
	530	312605-0322	-	1	NUT M6M12RFR
	540	315105-0165	-	1	WASHER BRB8,4X16RFR
	550	315105-0178	-	1	WASHER BRB13X24RFR
	560	315115-0165	-	2	WASHER TBRB8,4X16RFR

From	Pos	Part No	SP	UN Qty	Description

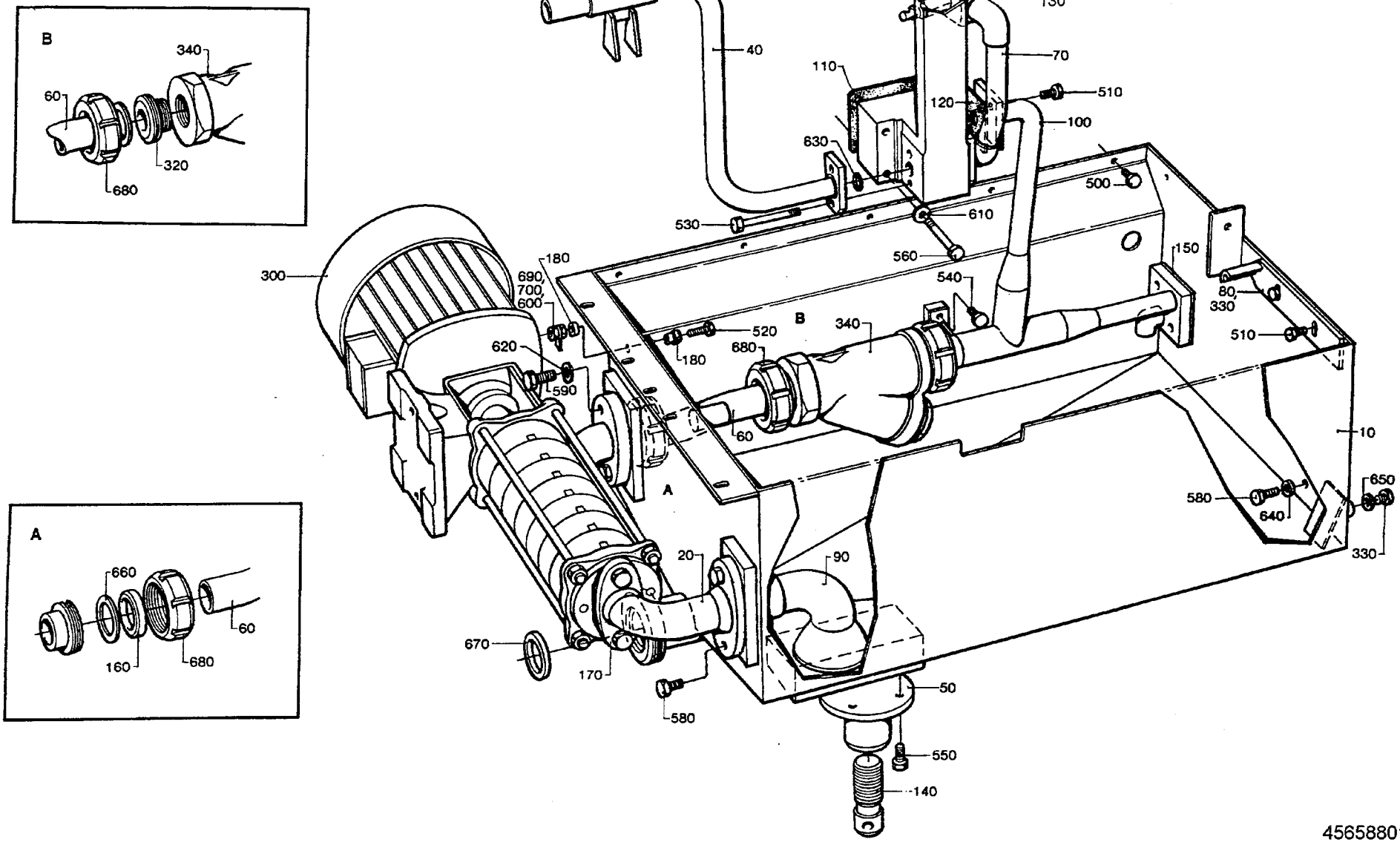

45658801.TIF
456588-1
AM 6235

From	Pos	Part No	SP	UN	Qty	Description
50Hz						
		C- 456588-0301				**Cleaning System, Ass'y**
	300	90321-0015	C		1	PUMP
		90321-0466	S		1	* SPARE PART KIT
		90321-0481	S		1	* GASKET
60Hz						
		C- 456588-0302				**Cleaning System, Ass'y**
	300	90321-0034	C		1	PUMP
		90321-0466	S		1	* SPARE PART KIT
		90321-0481	S		1	* GASKET
Common parts						
	F235	**C- 441811-0101**	**-**		**1**	**ROTOR**
	010	491808	-		1	CLEANING EQUIPMENT
	020	G- 751162	-		1	INLET PIPE
	030	G- 441603	-		1	BRACKET
	040	441839	C		1	JUNCTION PIPE
	050	256640	-		1	HOLDER
	060	271433	-		1	PIPE
	070	456393	-		1	PIPE
	080	525386	C		1	PROTECTIVE GRATING
	090	295412	-		1	PIPE
	100	456293	-		1	PIPE
	110	456395	S		1	GASKET
	120	456396	S		1	GASKET
	130	456394	S		1	SEALING WASHER
	140	256641	-		1	LEG
	150	295417	S		1	GASKET
	160	271435	-		1	WASHER
	170	751017	S		3	GASKET
	180	295434	-		2	BUSHING
	310	90005-0067	-		1	WASHER
	320	90217-0041	-		2	NIPPLE
	330	90261-0033	S		4	PLUG
	340	90415-0022	-		1	FILTER
		90415-0320	S		0	* FILTER INSERT
	500	312105-0368	-		7	SCREW M6S6X16RFR
	510	312105-0370	-		4	SCREW M6S6X20RFR
	520	312105-0372	-		1	SCREW M6S6X25RFR
	530	312105-0384	-		2	SCREW M6S6X70RFR
	550	312105-0451	-		4	SCREW M6S8X20RFR
	560	312105-0464	-		4	SCREW M6S8X65RFR
	570	312105-0491	-		1	SCREW M6S10X20RFR
	580	312105-0532	-		5	SCREW M6S12X20RFR
	590	312105-0538	-		2	SCREW M6S12X35RFR
	600	312605-0316	-		2	NUT M6M6RFR
	610	315105-0165	-		4	WASHER BRB8,4X16RFR
	620	315105-0178	-		2	WASHER BRB13X24RFR
	630	315202-0215	-		2	O-RING 19,2X3
	640	315211-0107	-		1	SEALING WA
	660	315250-0103	-		3	GASKET 48/38
	670	315250-0104	-		1	GASKET 61/51
	680	342803-0103	-		2	NUT 38
	690	353101-0123	S		1	CABLE SHOE
	700	353101-0126	S		1	CABLE SHOE

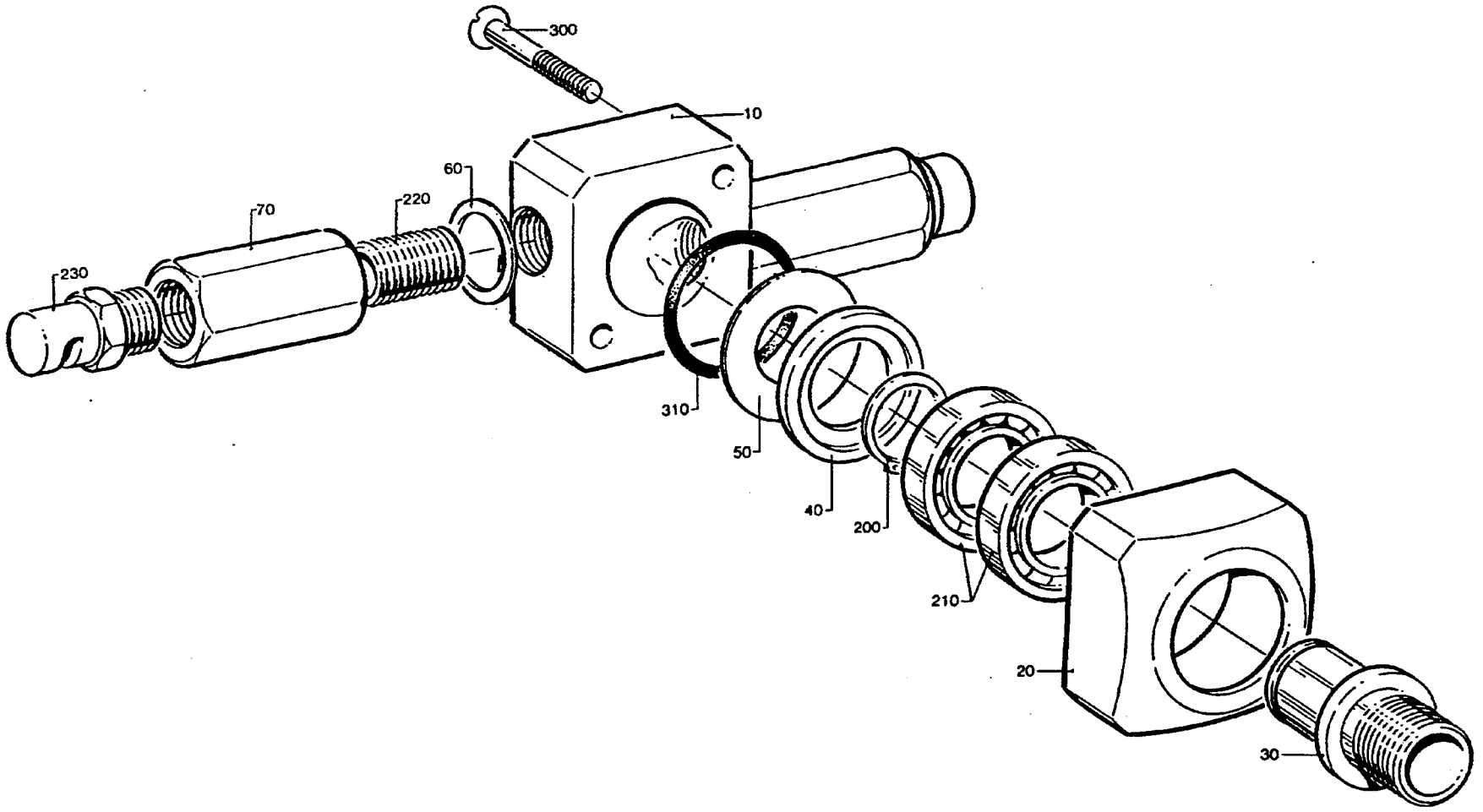

44181101.TIF
441811-1
AM 6626

Last Alteration: AM 6626 84-03-20

Corresponding group: 441811-010V
Assembly Drawing: 441811-1

Issue: **940524**

From	Pos	Part No	SP	UN	Qty	Description
		C- 441811-0101				**Rotor, Ass'y**
	010	441792	C		1	HEAD
	020	441793	C		1	BEARING HOUSING
	030	441794	C		1	PIVOT PIN
	040	441795	C		1	WASHER
	050	441796	P		1	SEAL
	060	441797	S		2	SHIM
	070	441800	S		2	STRAIGHT FITTING
	200	90141-0017	S		1	LOCK RING
	210	90214-0092	S		2	BALL BEARING
	220	90330-0101	S		2	NIPPLE
	230	90424-0025	S		2	NOZZLE
	300	312155-0299	-		2	SCREW MF6S 4X30 A4 80
	310	315202-0217	S		1	O-RING 24,2X3

From	Pos	Part No	SP	UN	Qty	Description

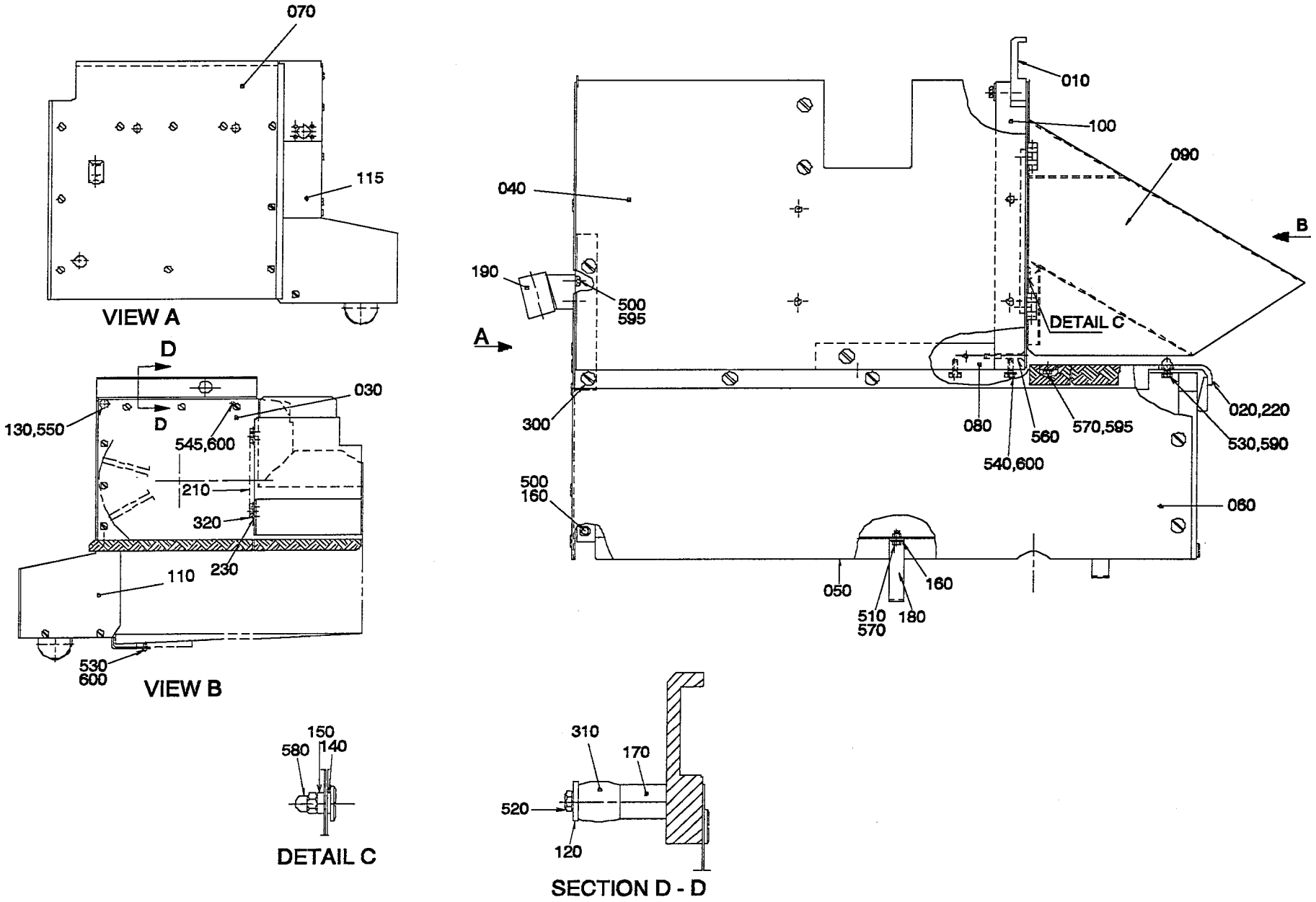

27111405.WPG
271114-5
AM 18961

Last Alteration: AM 18961 93-01-25

Corresponding group: 271114-050V
Assembly Drawing: 271114-5

Issue: **940524**

From	Pos	Part No	SP	UN	Qty	Description
		C- 271114-0501				**Covering Panel, Ass'y**
	010	295332	-		1	RAIL
	020	525392	-		1	CHECKER PLATE
	030	295334	-		1	SIDE PLATE
	040	456284	-		1	FRONT PLATE
	050	295336	-		1	BOTTOM PANEL
	060	456285	-		1	COVER
	070	978607	-		1	SIDE PLATE, LEFT
	080	456289	-		1	BLOCKING PIECE
	090	525387	C		1	WASTE CHUTE
	100	456287	-		1	PILLAR
	110	295340	-		1	GABLE PLATE
	115	456290	-		1	GUSSET PLATE
	120	38087	-		1	WASHER
	130	271585	-		1	WASHER
	140	271586-0001	C		2	WASHER
	150	271586-0002	C		2	WASHER
	160	271587	-		6	WASHER
	170	295341	-		1	SPACER
	180	295342	-		1	CRAMP
	190	752093	-		1	HOLDER
	210	525388	C		1	FASTENING IRON
	220	525393	C		1	CHECKER PLATE
	230	566015	-		2	WASHER
	300	90287-0062	-		34	SCREW
	310	90347-0035	S		1	DAMPER
	320	90248-0022	C		2	HINGE
	500	312105-0366	-		4	SCREW M6S6X12RFR
	510	312105-0368	-		2	SCREW M6S6X16RFR
	520	312105-0382	-		1	SCREW M6S6X60RFR
	530	312105-0449	-		2	SCREW M6S8X16RFR
	540	312105-0451	-		3	SCREW M6S8X20RFR
	545	312105-0457	-		1	SCREW M6S8X35RFR
	550	312105-0459	-		1	SCREW M6S8X40RFR
	560	312155-0461	-		1	SCREW MF6S8X50RFR
	570	312605-0316	-		3	NUT M6M6RFR
	580	312705-0316	-		2	CAP NUT MHM 6 A2
	590	312705-0318	-		1	CAP NUT MHM 8 A2
	595	315105-0153	-		3	WASHER BRB6,4X12RFR
	600	315105-0165	-		5	WASHER BRB8,4X16RFR

From	Pos	Part No	SP	UN	Qty	Description

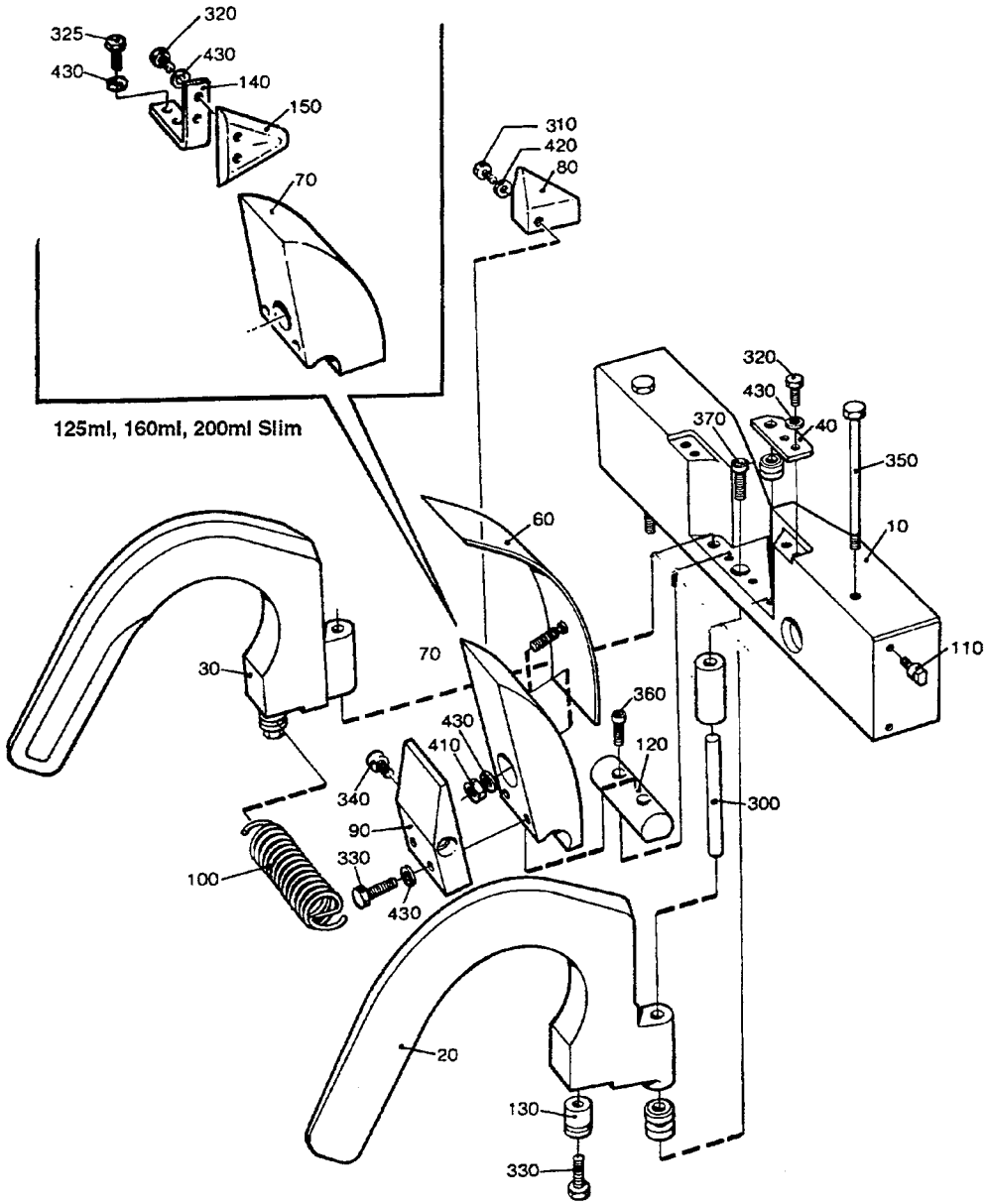

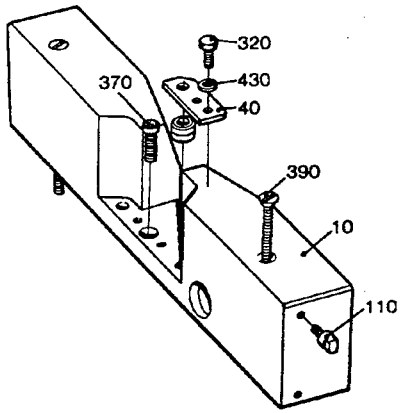

125ml, 160ml, 200ml Slim

45656004.TIF
456560-4/5
AM 17964

From	Pos	Part No	SP	UN	Qty	Description
284ml - 236ml						
		C- 456560-0105				**Discharge Chute, Ass'y**
	010	751154	-		1	LEAD RAIL
	020	G- 456503	-		1	SIDE GUIDE LEFT
	030	G- 456506	-		1	SIDE GUIDE RIGHT
	040	295498	-		2	HOLDER
	060	469449	-		1	SLIDE PLANE
	070	456513	-		1	LINKPIECE OUTER
	080	456514	-		1	WEDGE
	090	295511-0004	-		1	STOP LUG
	100	295512	S		1	TENSION SPRING
	300	311103-0421	-		2	CYLINDRICACP M6 8X75 RFR
	310	312105-0328	-		1	SCREW M6S5X14 A2 80
	350	312105-0471	-		2	SCREW M6S8X100RFR
	420	315105-0146	-		1	WASHER BRB5,3X10RFR
	430	315105-0153	-		7	WASHER BRB6,4X12RFR
	440	315105-0165	-		2	WASHER BRB8,4X16RFR
200ml 180ml						
		C- 456560-0106				**Discharge Chute, Ass'y**
	010	751154	-		1	LEAD RAIL
	020	G- 456504	-		1	SIDE GUIDE LEFT
	030	G- 456507	-		1	SIDE GUIDE RIGHT
	040	295498	-		2	HOLDER
	060	469449	-		1	SLIDE PLANE
	070	456513	-		1	LINKPIECE OUTER
	090	295511-0004	-		1	STOP LUG
	100	295512	S		1	TENSION SPRING
	300	311103-0421	-		2	CYLINDRICACP M6 8X75 RFR
	350	312105-0471	-		2	SCREW M6S8X100RFR
	430	315105-0153	-		7	WASHER BRB6,4X12RFR
	440	315105-0165	-		2	WASHER BRB8,4X16RFR
160ml 200ml Slim						
		C- 456560-0108				**Discharge Chute, Ass'y**
	010	469891	-		1	LEAD RAIL
	020	G- 456505	-		1	SIDE GUIDE LEFT
	030	G- 456508	-		1	SIDE GUIDE RIGHT
	040	295495	-		2	HOLDER
	060	491565	-		1	SLIDE PLANE
	070	491564	-		1	LINKPIECE OUTER
	090	295511-0003	-		1	STOP LUG
	100	295513	S		1	TENSION SPRING
	140	491479	-		1	HOLDER
	150	491480	-		1	LOCATING PIECE
	300	311103-0420	-		2	CYLINDRICACP M6 8X70 RFR
	325	312105-0370	-		2	SCREW M6S6X20RFR
	390	312145-0467	-		2	SCREW MFS8X80RFR
	430	315105-0153	-		9	WASHER BRB6,4X12RFR
125ml						
		C- 456560-0109				**Discharge Chute, Ass'y**
	010	469891	-		1	LEAD RAIL
	020	G- 490854-0001	-		1	SIDE GUIDE LEFT
	030	G- 490854-0002	-		1	SIDE GUIDE RIGHT
	040	295495	-		2	HOLDER
	060	491565	-		1	SLIDE PLANE
	070	491564	-		1	LINKPIECE OUTER
	090	295511-0003	-		1	STOP LUG
	100	295513	S		1	TENSION SPRING
	140	491479	-		1	HOLDER
	150	491628	-		1	LOCATING PIECE
	300	311103-0420	-		2	CYLINDRICACP M6 8X70 RFR
	325	312105-0370	-		2	SCREW M6S6X20RFR
	390	312145-0467	-		2	SCREW MFS8X80RFR
	430	315105-0153	-		9	WASHER BRB6,4X12RFR
250ml Slim						
		C- 456560-0110				**Discharge Chute, Ass'y**
	010	574383	-		1	LEAD RAIL
	020	G- 456505	-		1	SIDE GUIDE LEFT
	030	G- 456508	-		1	SIDE GUIDE RIGHT
	040	295495	-		2	HOLDER
	060	574483	-		1	CHUTE
	070	574482	-		1	LINKPIECE OUTER
	090	295511-0003	-		1	STOP LUG
	100	295513	S		1	TENSION SPRING
	140	491479	-		1	HOLDER
	150	491480	-		1	LOCATING PIECE
	300	311103-0420	-		2	CYLINDRICACP M6 8X70 RFR
	325	312105-0370	-		2	SCREW M6S6X20RFR
	390	312145-0467	-		2	SCREW MFS8X80RFR
	430	315105-0153	-		9	WASHER BRB6,4X12RFR
Common parts						
	110	295480	-		2	GUIDE STUD
	120	469338	-		1	LINKPIECE INNER
	130	295515	-		2	SPRING BRACKET
	320	312105-0368	-		4	SCREW M6S6X16RFR
	330	312105-0372	-		4	SCREW M6S6X25RFR
	340	312115-0366	-		2	SCREW 6X12 A4 80
	360	312115-0368	-		2	SCREW 6X16 A4 80
	370	312115-0452	-		1	SCREW 8X22 A4 80
	410	312605-0316	-		1	NUT M6M6RFR
	450	315115-0165	-		8	WASHER TBRB8,4X16RFR

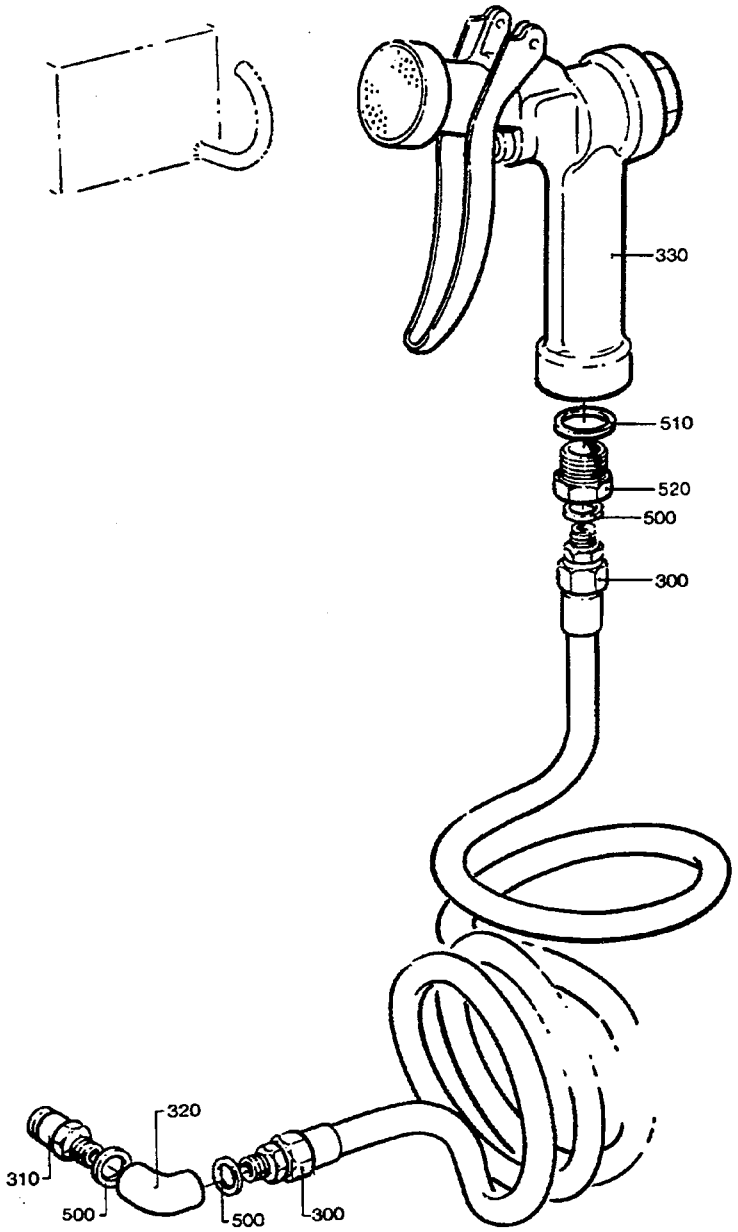

27138702.TIF
271387-2
AM 7122

Last Alteration: AM 7122 84-10-31

Corresponding group: 271387-030V
Assembly Drawing: 271387-2

Issue: **940524**

From	Pos	Part No	SP	UN	Qty	Description
		C- 271387-0301				**Spray Gun, Ass'y**
	300	90152-0017	-		1	HOSE
	310	90163-0014	-		1	NIPPLE
	320	90330-0081	-		1	ELBOW PIPE
	330	90426-0003	S		1	HAND SHOWER
	500	315233-0110	-		3	SEAL RING R1/4"
	510	315233-0113	-		1	SEAL RING R1/2"
	520	342701-0205	-		1	BUSHING RNI1/2"-1/4"

From	Pos	Part No	SP	UN	Qty	Description

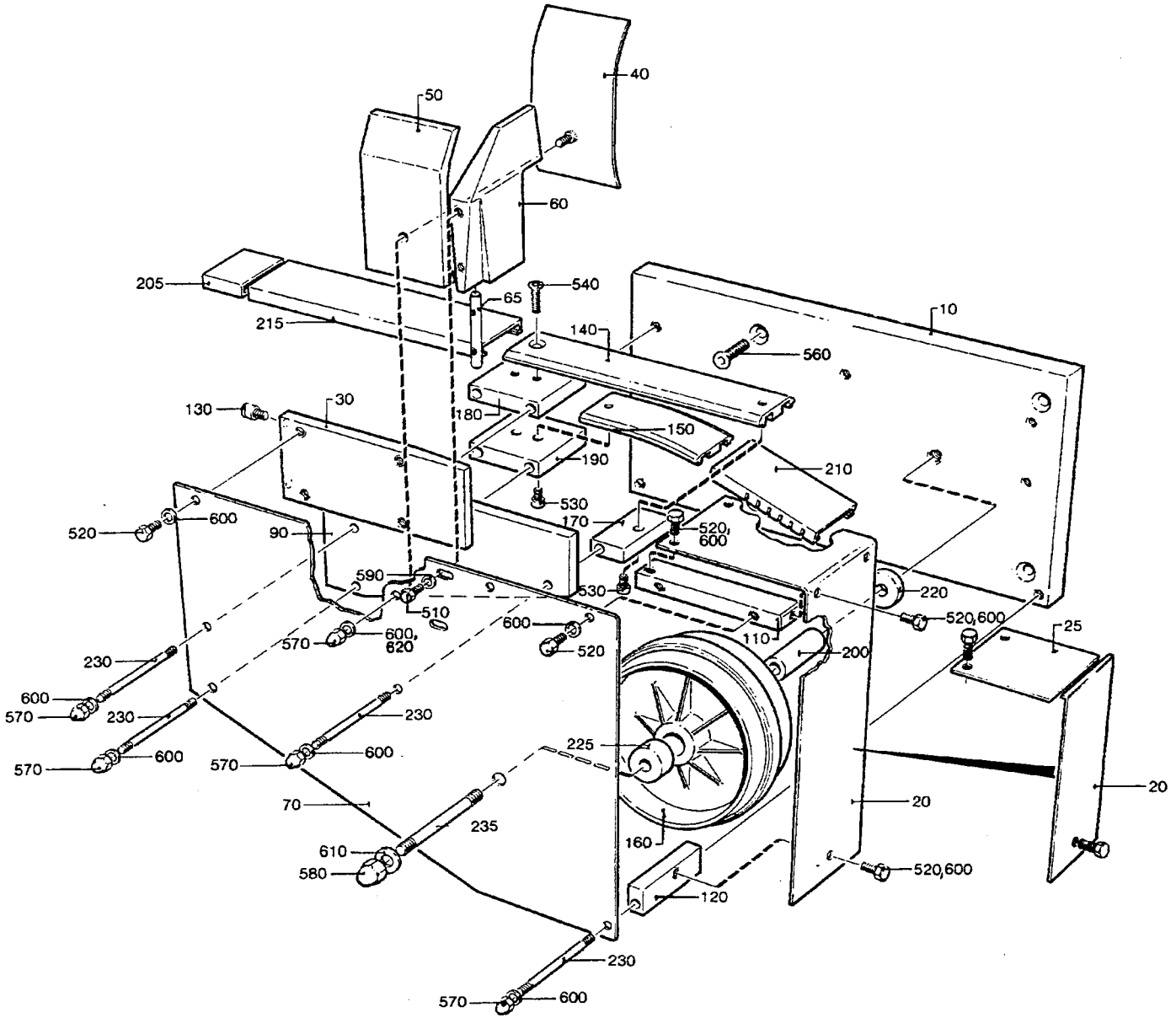
40
50
60
205
65
540
215
140
560
10
130
30
180
150
190
210
530
520
600
90
170
520,
600
590
530
220
510
520,600
600
570
600,
620
520
110
25
200
230
600
570
230
230
225
570
600
570
600
70
235
20
20
610
580
160
520,600
120
230
570
600
45610304.TIF
456103-4/5/6
AM 17964

From	Pos	Part No	SP	UN	Qty	Description
284ml						
		C- 456103-0106				**Side Feeder, Ass'y**
	020	456105	-		1	PROTECTION
	030	456109	-		1	STEERING RAIL
	040	978170	-		1	SLIDE SHEET
	050	978171	-		1	SUPPORT BLOCK
	060	295475-0002	-		1	STEERING
	070	456106	-		1	SIDE PLATE
	110	456112	-		1	BRACKET
	120	295479	-		1	MOUNTING BLOCK
250ml - 180ml						
		C- 456103-0107				**Side Feeder, Ass'y**
	020	456105	-		1	PROTECTION
	030	456109	-		1	STEERING RAIL
	040	441782	-		1	SLIDE SHEET
	050	441783	-		1	LOCATING PIECE
	060	295475-0002	-		1	STEERING
	070	456106	-		1	SIDE PLATE
	110	456112	-		1	BRACKET
	120	295479	-		1	MOUNTING BLOCK
125ml						
		C- 456103-0109				**Side Feeder, Ass'y**
	020	491478	-		1	SHEET
	025	491482	-		1	SHEET
	030	490855	-		1	STEERING RAIL
	040	469887	-		1	SLIDE SHEET
	050	490856	-		1	LOCATING PIECE
	060	490857	-		1	STEERING
	065	441139	-		1	NUT
	070	456107	-		1	SIDE PLATE
	110	456113	-		1	BRACKET
	120	491586	-		1	MOUNTING BLOCK
160ml 200ml Slim						
		C- 456103-0111				**Side Feeder, Ass'y**
	020	491478	-		1	SHEET
	025	491482	-		1	SHEET
	030	469886	-		1	STEERING RAIL
	040	491629	-		1	SLIDE SHEET
	050	469888	-		1	LOCATING PIECE
	060	469890	-		1	STEERING
	065	441139	-		1	NUT
	070	456107	-		1	SIDE PLATE
	110	456113	-		1	BRACKET
	120	491586	-		1	MOUNTING BLOCK
	620	315115-0153	-		1	WASHER TBRB6,4X12RFR

From	Pos	Part No	SP	UN	Qty	Description
250ml Slim						
		C- 456103-0112				**Side Feeder, Ass'y**
	020	491478	-		1	SHEET
	025	574463	-		1	SHEET
	030	574363	-		1	STEERING RAIL
	040	574470	-		1	SLIDE SHEET
	050	574469	-		1	LOCATING PIECE
	060	469890	-		1	STEERING
	065	441139	-		1	NUT
	070	456107	-		1	SIDE PLATE
	110	574474	-		1	BRACKET
	120	491586	-		1	MOUNTING BLOCK
	620	315115-0153	-		1	WASHER TBRB6,4X12RFR
Common parts						
	010	G- 441791	-		1	FASTENING PLATE
	090	456108	-		1	LACE
	130	295480	-		2	GUIDE STUD
	140	441807	-		1	CARRYING BAR
	150	239399	-		1	CARRYING BAR
	160	245039	-		1	GUIDE WHEEL
	170	228844	-		1	MOUNTING BLOCK
	180	228845	-		1	MOUNTING BLOCK
	190	229202	-		1	MOUNTING BLOCK
	200	229207	-		1	BEARING SLEEVE
	205	230706	-		1	SLIDE RAIL
	210	239403	-		1	SLIDE RAIL
	215	228850-0018	-		1	SLIDE RAIL
	220	229201-0001	-		1	SPACER
	225	229201-0025	-		1	SPACER
	230	229508-0033	-		4	STUD SCREW
	235	229760-0014	-		1	STUD SCREW
	510	312105-0327	-		2	SCREW M6S5X12 A2 80
	520	312105-0367	-		10	SCREW M6S6X14RFR
	530	312115-0366	-		2	SCREW 6X12 A4 80
	540	312155-0370	-		2	SCREW MF6S6X20RFR
	560	312145-0463	-		4	SCREW MFS8X60RFR
	570	312705-0316	-		4	CAP NUT MHM 6 A2
	580	312705-0320	-		1	CAP NUT MHM 10 A2
	590	315105-0146	-		2	WASHER BRB5,3X10RFR
	600	315105-0153	-		14	WASHER BRB6,4X12RFR
	610	315105-0173	-		1	WASHER BRB10,5X22RFR

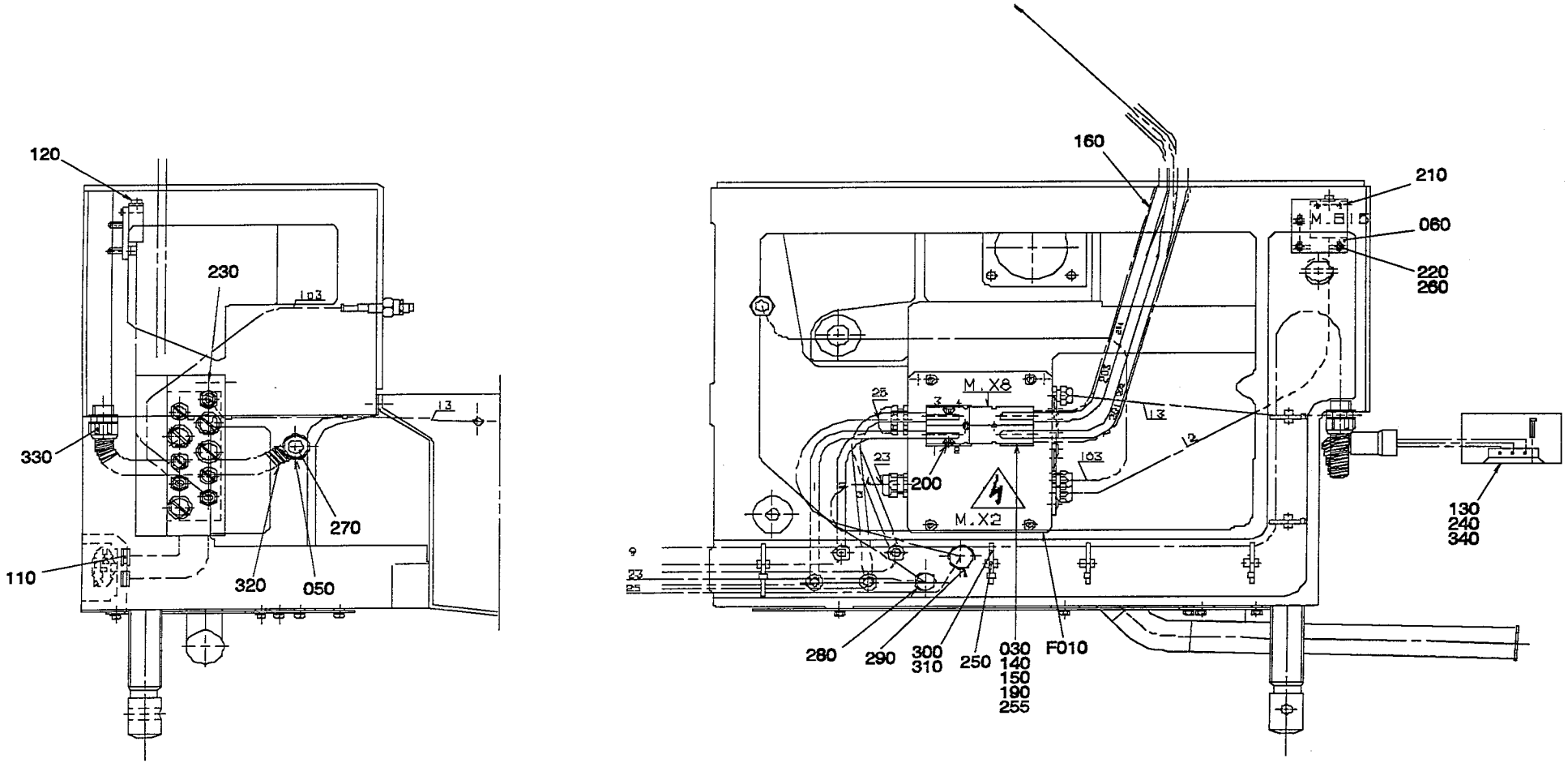

44185004.WPG
441850-4
AM 20130

Last Alteration: AM 20130 93-06-11

Corresponding group: 441850-040V
Assembly Drawing: 44185004

Issue: **940524**

From	Pos	Part No	SP	UN	Qty	Description
		C- 441850-0401				**Cable Assembly, Ass'y**
	F010	**C- 456435-0401**	**-**		**1**	**CONNECTION BOX**
	030	978193	C		1	FASTENING PLATE
	050	456249	S		1	PROTECTIVE COVER
	060	752571	-		1	WASHER
	110	90015-0023	-		4	BUSHING
	120	90044-0101	-		1	LIMIT SWITCH
	130	90077-0102	-		2	TERMINAL BLOCK
	140	90110-0114	S		12	CONTACT HOUSING
	150	90110-0116	S		12	CONTACT PIN
	160	90166-0023	C	MM	1000	SHRINKABLE HOSE
	190	312101-0305	S		1	SCREW M6S4X50FZB
	200	312105-0366	S		2	SCREW M6S6X12RFR
	210	312115-0329	-		2	SCREW 5X16 A4 80
	220	312115-0372	-		3	SCREW MC6S6X25 A4 80
	230	312115-0374	-		2	SCREW 6X30 A4 80
	240	312125-0230	-		4	SLOTTED HEMCS3X20RFR
	250	312125-0287	-		10	SLOTTED HEMCS4X8RFR
	255	315101-0136	S		1	WASHER BRB4,3X8FZB
	260	315115-0153	-		3	WASHER TBRB6,4X12RFR
	270	352103-0108	-		1	CABLE GLANR.ST 13
	280	352103-0111	S		1	CABLE GLAND ST 16
	290	352103-0116	S		1	CABLE GLANR.ST 21
	300	352113-0102	-		8	RIBBON CLA
	310	352113-0202	-		8	ARMATURE S8-M
	320	352135-0106	-	MM	350	HOSE .016
	330	352136-0129	-		1	GLAND FITT
	340	353001-0102	-		6	END SLEEVE0,75

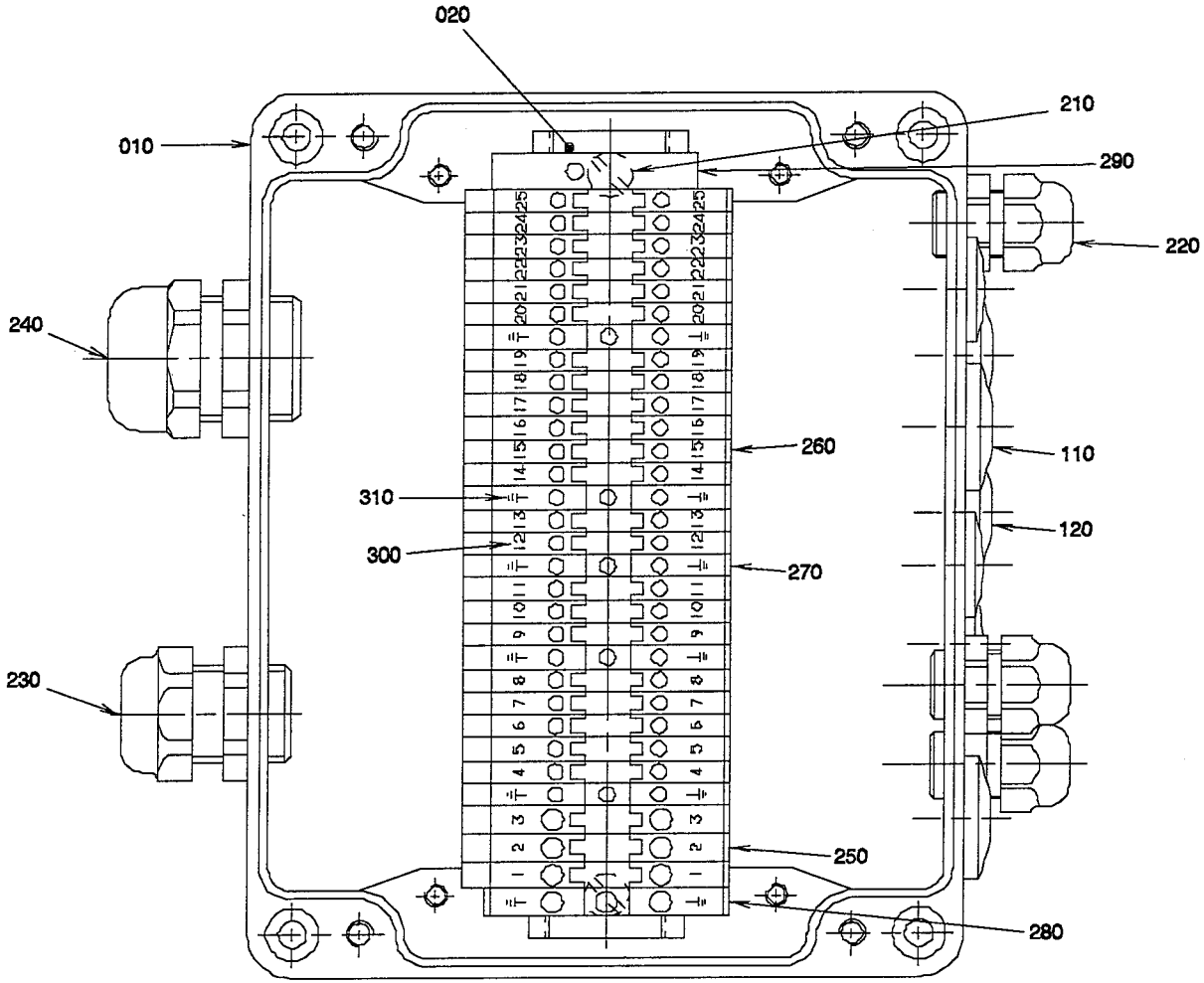

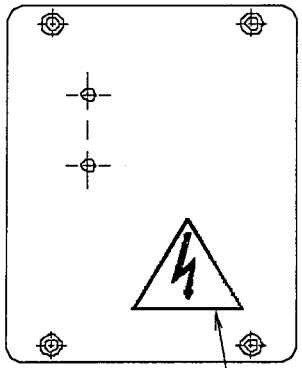

Drawn without lid

Last Alteration: AM 18961 93-01-25

Corresponding group: 456435-040V
Assembly Drawing: 456435-4

Issue: **940524**

From	Pos	Part No	SP	UN Qty	Description
		C- 456435-0401			**Connection Box, Ass'y**
	010	978595	C	1	CONNECTION BOX
	020	751125-0002	C	1	RAIL
	110	90002-0004	C	4	BLANK-OFF PLUG 22,5
	120	90002-0013	C	3	BLANK-OFF PLUG 15,2
	130	90194-0016	C	1	SIGN"FLASH SIGN"
	210	312125-0364	S	2	SLOTTED HEMCS6X10RFR
	220	352103-0101	S	3	CABLE GLAND ST 9
	230	352103-0111	S	1	CABLE GLAND ST 16
	240	352103-0116	S	1	CABLE GLANR.ST 21
	250	353021-0213	S	3	FEED THROUGH TERM.WDU 4
	260	353021-0216	S	22	FEED TRHOUGH TERM.WDU 2,5
	270	353024-0204	S	5	EARTH TERMINAL WPE 2.5
	280	353024-0205	S	1	EARTH TERMINAL WPE 4
	290	353031-0201	S	1	END BRACKET EW 35
	300	359011-0807	S	2	SET OF SIG5-FW 1-50
	310	359011-0819	S	1	SET OF SIG5-GW (JORD)

From	Pos	Part No	SP	UN Qty	Description

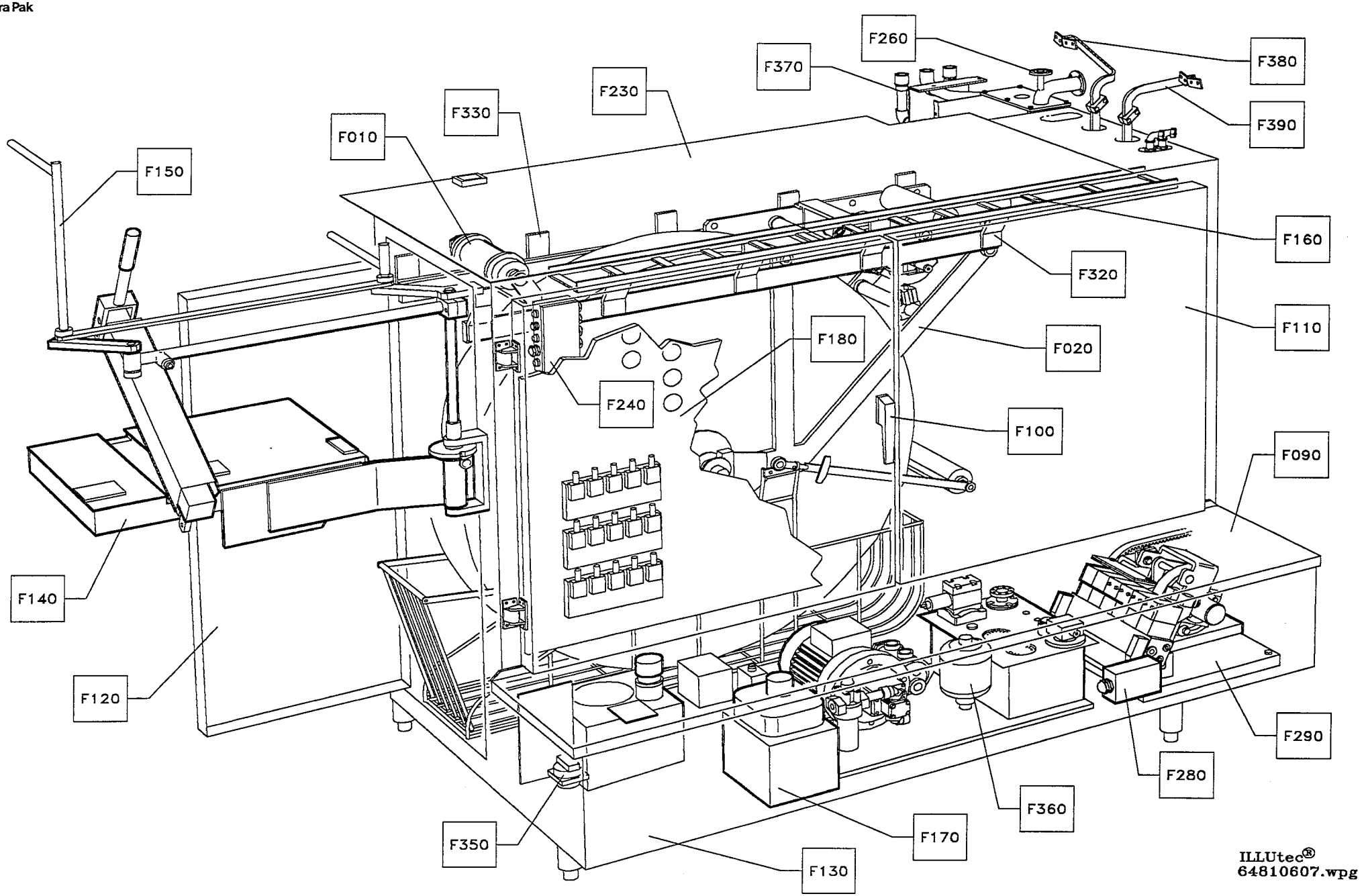
F260
F370
F380
F230
F330
F390
F010
F150
F160
F320
F110
F180
F020
F240
F100
F090
F140
F120
F290
F280
F360
F350
F170
F130
ILLUtec®
64810607.wpg

Pos	Group No	Description	
648106-F000	648106-100V	Service Unit	421
648106-F010	272359-020V	Bending Roller	423
648106-F020	272404-070V	Carriage	425
272404-F025	272788-010V	Carriage	427
272404-F030	272473-010V	Bending Roller	429
272404-F040	272084-030V	Stretcher	431
272404-F050	271017-030V	Bending Roller	433
272404-F052	271934-030V	Paper Guide Plate	435
272404-F054	751968-010V	Paper Guide	437
272404-F060	458383-020V	Paper Reel Holder	439
272404-F060	458384-010V	Paper Reel Holder	441
272404-F070	271454-020V	Catch Handle	443
272404-F080	978604-010V	Connection Box	445
272404-F090	751478-020V	Brake	447
648106-F090	257146-020V	Lid	449
648106-F100	256873-040V	Door	451
648106-F110	256875-020V	Opening	453
648106-F120	469535-010V	Door	455
648106-F130	271513-060V	Covering Plate	457
	271513-060V	Covering Plate	459
271513-F005	752567-010V	Protective Casing TBA/9	461
648106-F130	751885-030V	Cover Plates TBA/9 C	463
648106-F140	271699-040V	Splicing Device	465
271699-F010	37877-030V	Heating Block	467
271699-F020	37894-010V	Counter Rail	469
271699-F030	450101-020V	Tearing Device	471
271699-F040	271626-030V	Suspension Arm	473
271699-F050	271641-020V	Table	475
648106-F150	271992-020V	Paper Holder	477
648106-F160	271569-0501	Cable Track TBA/9	479
	271569-0502	Cable Track TBA/9C	481
	271569-0503	Cable Track TB/9	483
648106-F170	490761-010V	Detergent Pump	485
648106-F180	978738-010V	Valve Panel TBA/9	487
	978738-010V	Valve Panel TBA/9	489
	978738-010V	Valve Panel TB/9	491
	978738-010V	Valve Panel TB/9	493
978738-F001	978739-010V	Water Panel TBA/9	495
	978739-010V	Water Panel TBA/9	497
	978739-010V	Water Panel TB/9	499
	978739-010V	Water Panel	501
978739-F001	456757-020V	Air Injector	503
	491536-010V	Non-Return Valve	505
978739-F002	456882-010V	Push Button Box	507
978739-F003	469118-020V	Flow Meter	509
978739-F004	469121-020V	Junction Block	511
978738-F002	978740-010V	Air Panel TBA/9	513
	978740-010V	Air Panel TBA/9	515
	978740-010V	Air Panel TB/9	517
	978740-010V	Air Panel TB/9	519
648106-F230	256843-060V	Machine Body, Service Unit	521
	256843-060V	Machine Body, Service Unit	523
	256843-060V	Machine Body, Service Unit	525
256843-F005	295883-050V	Spacer Piece TBA/9	527
	295883-050V	Spacer Piece TB/9	529
648106-F260	751352-020V	Hydrogen Peroxide	531
751352-F020	491207-030V	Pipe Work TBA/9	533
	491207-030V	Pipe Work TBA/9 C	535
751352-F030	751373-010V	Peroxide Tank	537
751373-F005	751393-010V	Peroxide Pump	539
751373-F007	493652-010V	Lid	541
751352-F040	751398-020V	Peroxide Tank	543
751398-F005	493652-010V	Lid	545
751352-F050	751406-010V	Connection Housing	547
751406-F005	751410-010V	Valve Panel	549
751352-F060	527898-010V	Container	551
751352-F070	553657-010V	Door	553
648106-F280	752784-010V	Connection Box	555
752784-F010	451348-020V	Connection Box	557
	68917-010V	Angle indicator	559
648106-F290	751691-010V	Impulse Transmitter	561
751691-F105	271168-040V	Block	563
751691-F115	751689-010V	Curve Pack	565
648106-F320	271468-040V	Way	567
648106-F330	271469-020V	Way	569
648106-F350	491890-010V	Oil Tank	571
648106-F360	491894-010V	Hydraulic System	573
648106-F370	271866-060V	Pipe Work	575
	271866-060V	Pipe Work	577
	271866-060V	Pipe Work	579
	271866-060V	Pipe Work	581
	271866-060V	Pipe Work	583
	271866-060V	Pipe Work	585
	271866-060V	Pipe Work	587
648106-F600	469384-010V	Start-Up Kit	589

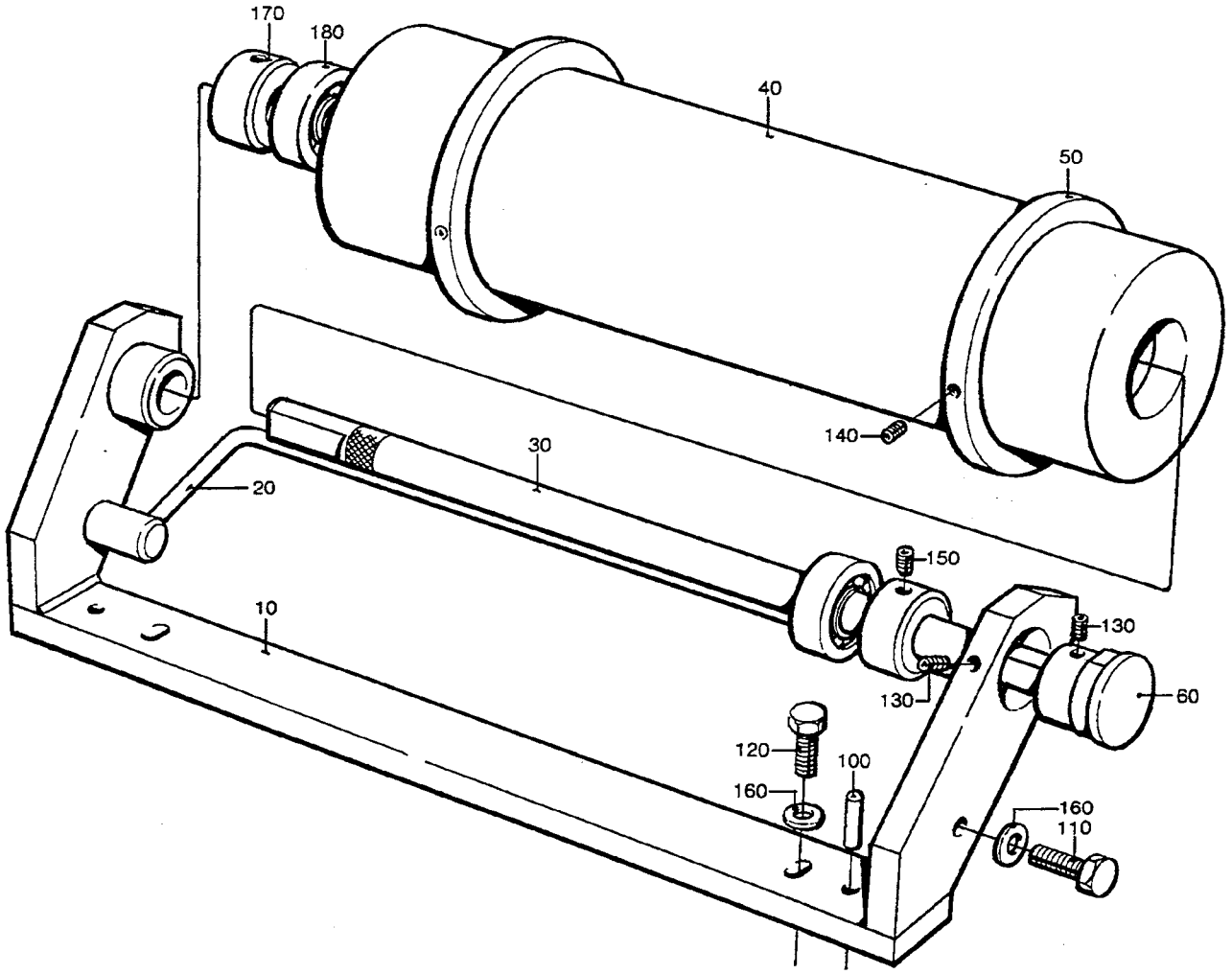

27235902.TIF
272359-2
AM 7397

From	Pos	Part No	SP	UN	Qty	Description
		C- 272359-0201				**Bending Roller, Ass'y**
	010	272360	-		1	CANTILEVER
	020	272361	C		1	BOW CLAMP
	030	271753	S		1	SHAFT
	040	456544	S		1	BENDING ROLLER
	050	456545	-		2	FLANGE
	060	272362	S		2	BEARING
	100	311103-0351	-		2	CYLINDRICACP M6 6X16 RFR
	110	312105-0449	-		2	SCREW M6S8X16RFR
	120	312105-0451	-		2	SCREW M6S8X20RFR
	130	312318-0321	-		4	STOP SCREW SK6SS5X6RFR
	140	312318-0323	-		4	STOP SCREW SK6SS5X8RFR
	150	312318-0360	-		2	STOP SCREW SK6SS6X6RFR
	160	315105-0165	-		4	WASHER BRB8,4X16RFR
	170	315742-0111	-		2	RETAINING 15SMS199RFR
	180	321308-0202	S		2	BALL BEARISKF6002-2RS

From	Pos	Part No	SP	UN	Qty	Description

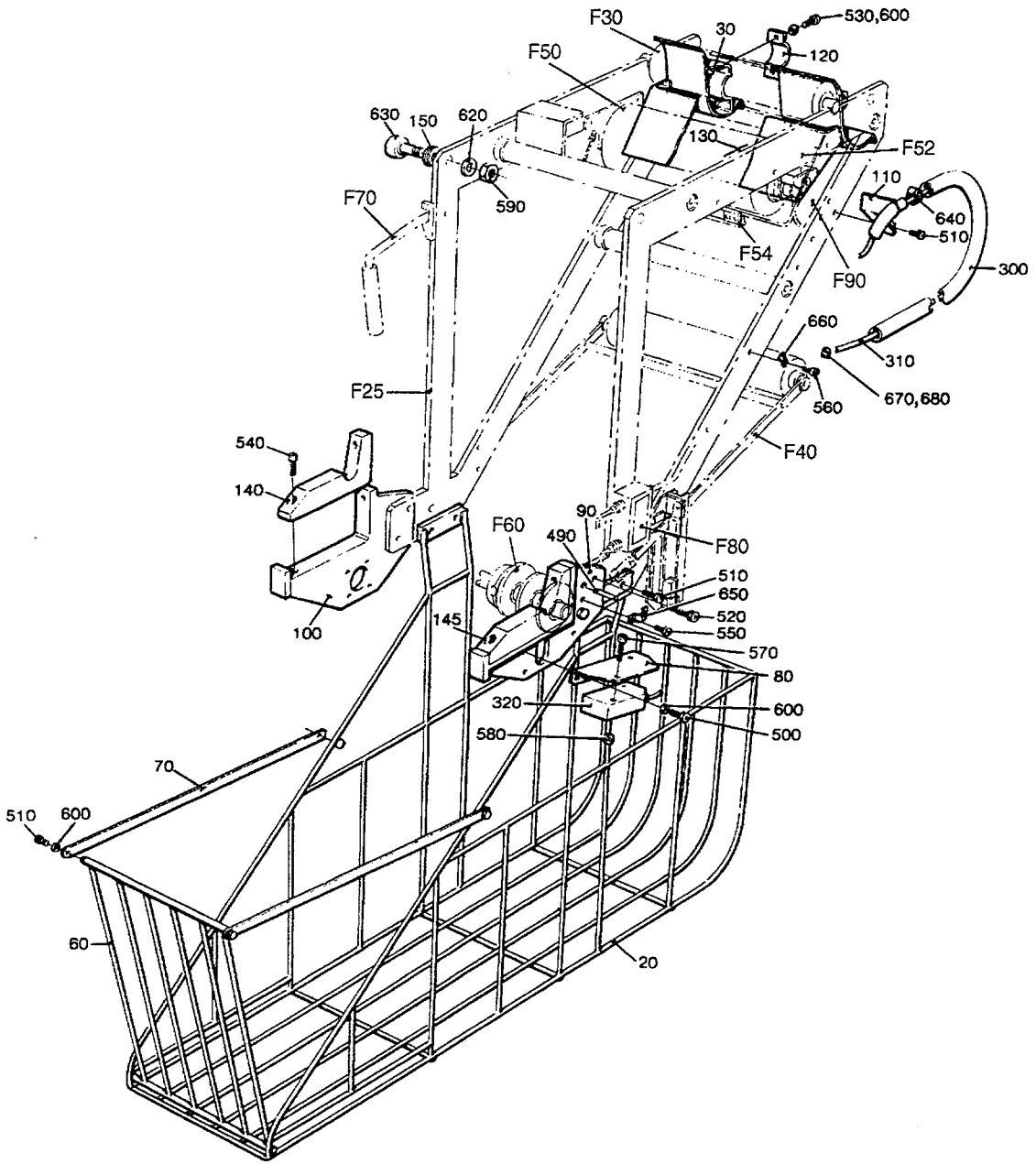

27240407.TIF
272404-7
AM 17888

From	Pos	Part No	SP	UN	Qty	Description
284ml - 180ml						
		C- 272404-0701				**Carriage, Ass'y**
160ml 250ml Slim 200ml Slim						
		C- 272404-0702				**Carriage, Ass'y**
125ml						
		C- 272404-0703				**Carriage, Ass'y**
Common Parts						
	F025	**C- 272788-0101**	**-**		**1**	**CARRIAGE**
	F030	**C- 272473-0101**	**-**		**1**	**BENDING ROLLER**
	F040	**C- 272084-0301**	**-**		**1**	**STRETCHER**
	F050	**C- 271017-0301**	**-**		**1**	**BENDING ROLLER**
	F052	**C- 271934-0301**	**-**		**1**	**PAPER GUIDE PLATE**
	F054	**C- 751968-010V**	**-**		**1**	**PAPER GUIDE**
	F060	**C- 458383-020V**	**-**		**2**	**PAPER REEL HOLDER**
	F060	**C- 458384-010V**	**-**		**2**	**PAPER REEL HOLDER**
	F070	**C- 271454-0201**	**-**		**1**	**CATCH HANDLE**
	F080	**C- 978604-0101**	**-**		**1**	**CONNECTION BOX**
	F090	**C- 751478-0201**	**-**		**1**	**BRAKE**
	020	271546	C		1	BASKET
	030	441907	-		1	RULING GUIDE
	060	271547	C		1	DOOR
	070	271548	C		2	LINK
	080	271558	C		1	BRACKET
	090	G- 490779	C		1	BRACKET LEFT
	100	G- 490780	C		1	BRACKET RIGHT
	110	978606	C		1	BRACKET
	120	441908	-		2	BOW CLAMP
	130	751724	C		1	PIECE
	140	272564	-		1	BEARING
	145	751586	-		1	BEARING
	150	456072	S		24	WASHER
	300	90166-0049	S	MM	1350	HOSE
	310	90166-0081	-	M	4	HOSE
	320	90232-0039	-		1	PHOTOCELL
	490	311112-0255	-		4	SLOTTED TURP 4X18 RFR
	500	312105-0364	-		4	SCREW M6S6X10RFR
	510	312105-0368	-		4	SCREW M6S6X16RFR
	515	312105-0449	-		8	SCREW M6S8X16RFR
	520	312105-0491	-		4	SCREW M6S10X20RFR
	530	312115-0368	-		4	SCREW 6X16 A4 80
	540	312115-0449	-		4	SCREW 8X16 A4 80
	550	312125-0285	-		11	SLOTTED HEMCS4X6RFR
	560	312125-0289	-		4	SLOTTED HEMCS4X10RFR
	570	312125-0297	-		2	SLOTTED HEMCS4X25RFR
	580	312605-0312	-		2	NUT M6M4RFR

From	Pos	Part No	SP	UN	Qty	Description
	590	312631-0324	-		8	NUT M6M16X1,5FZB
	600	315105-0153	-		10	WASHER BRB6,4X12RFR
	610	315105-0165	-		12	WASHER BRB8,4X16RFR
	620	315105-0186	-		8	WASHER BRB17X30RFR
	630	321582-0212	S		8	CURVE ROLLNUKR35
	640	342991-0105	-		2	HOSE CLIP 22-32MMRFR
	650	352110-0100	-		12	CRAMP TK 5-7
	655	352113-0102	-		4	RIBBON CLA
	660	352113-0203	-		4	ARMATURE M3S10-M
	670	359000-0400	-		4	MARKING CO2/4"0"
	680	359000-0404	-		2	MARKING CO2/4"4"

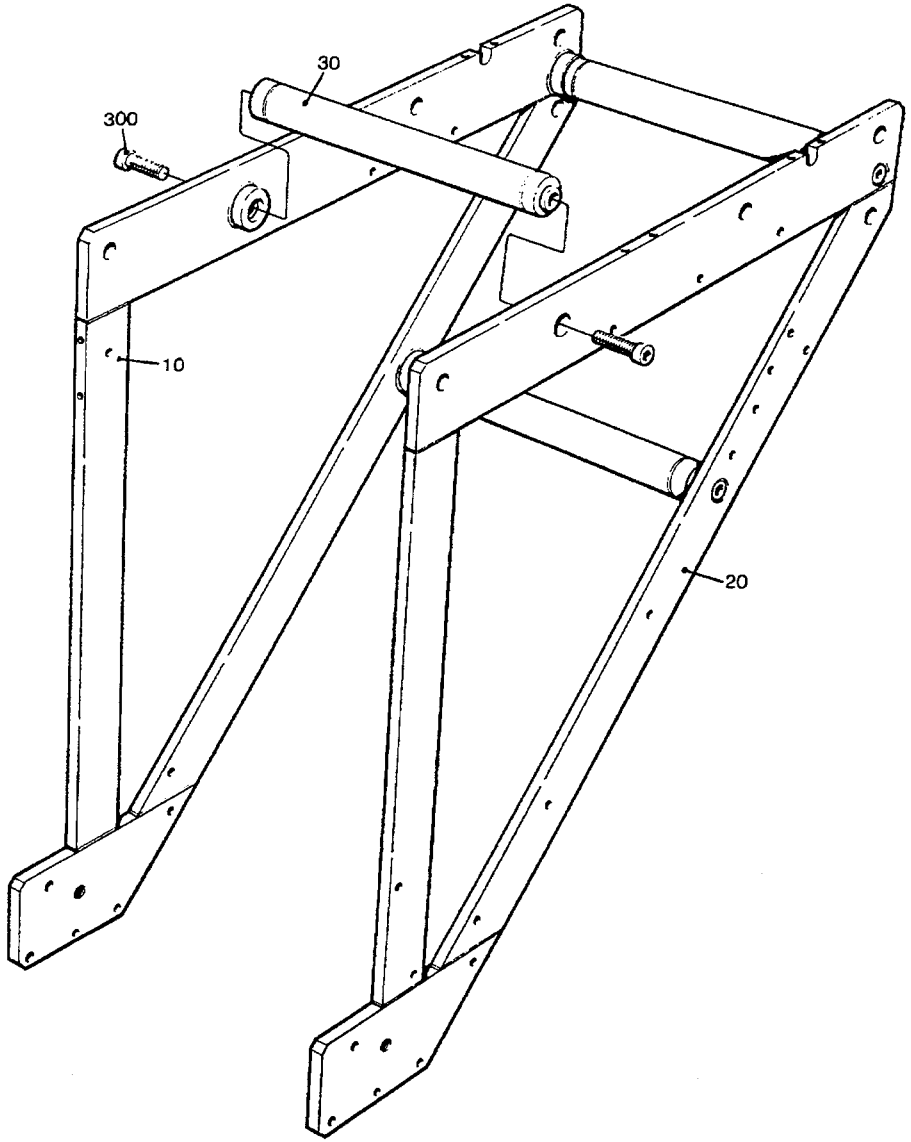

27278801.TIF
272788-1
AM 6317

Last Alteration: AM 17888 93-01-27

Corresponding group: 272788-010V
Assembly Drawing: 272788-1

Issue: **940524**

From	Pos	Part No	SP	UN	Qty	Description
		C- 272788-0101				**Carriage, Ass'y**
	010	272789	-		1	SIDE PIECE
	020	272790	-		1	SIDE PIECE
	030	272791	C		3	SPACER ROD
	300	312115-0536	-		6	SCREW 12X30 A4 80

From	Pos	Part No	SP	UN	Qty	Description

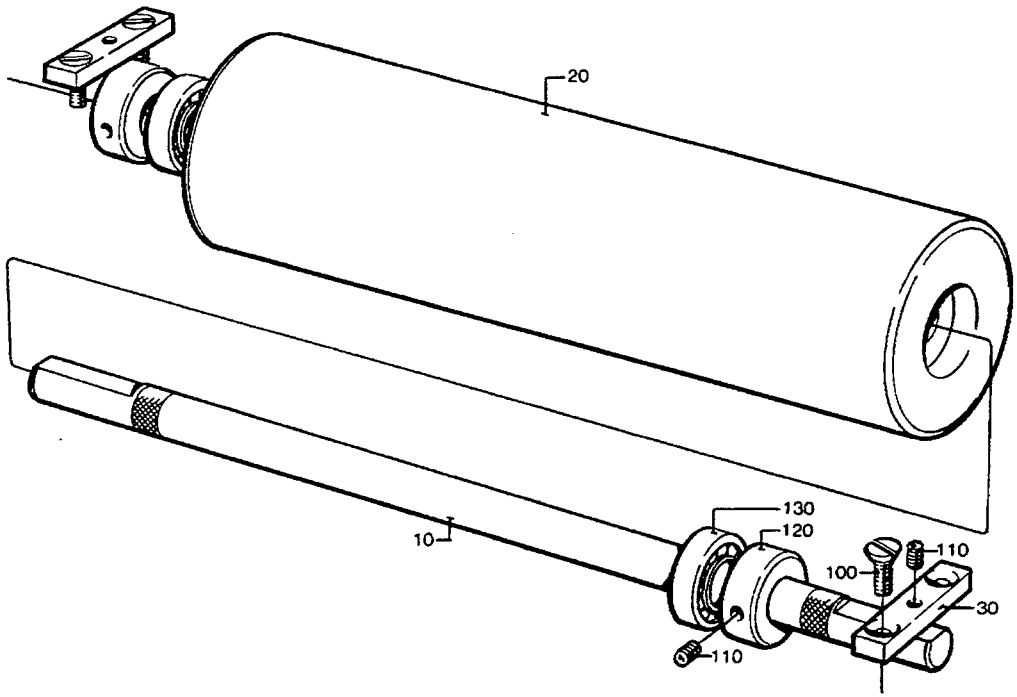

27247301.TIF
272473-1
AM 6904

Last Alteration: AM 6904 84-06-29

Corresponding group: 272473-010V
Assembly Drawing: 272473-1

Issue: **940524**

From	Pos	Part No	SP	UN Qty	Description
		C- 272473-0101			**Bending Roller, Ass'y**
	010	272474	S	1	SHAFT
	020	456544	S	1	BENDING ROLLER
	030	272475	-	2	CAP
	100	312155-0366	-	4	SCREW MF6S6X12RFR
	110	312318-0360	-	4	STOP SCREW SK6SS6X6RFR
	120	315742-0111	-	2	RETAINING 15SMS199RFR
	130	321308-0202	S	2	BALL BEARISKF6002-2RS

From	Pos	Part No	SP	UN Qty	Description

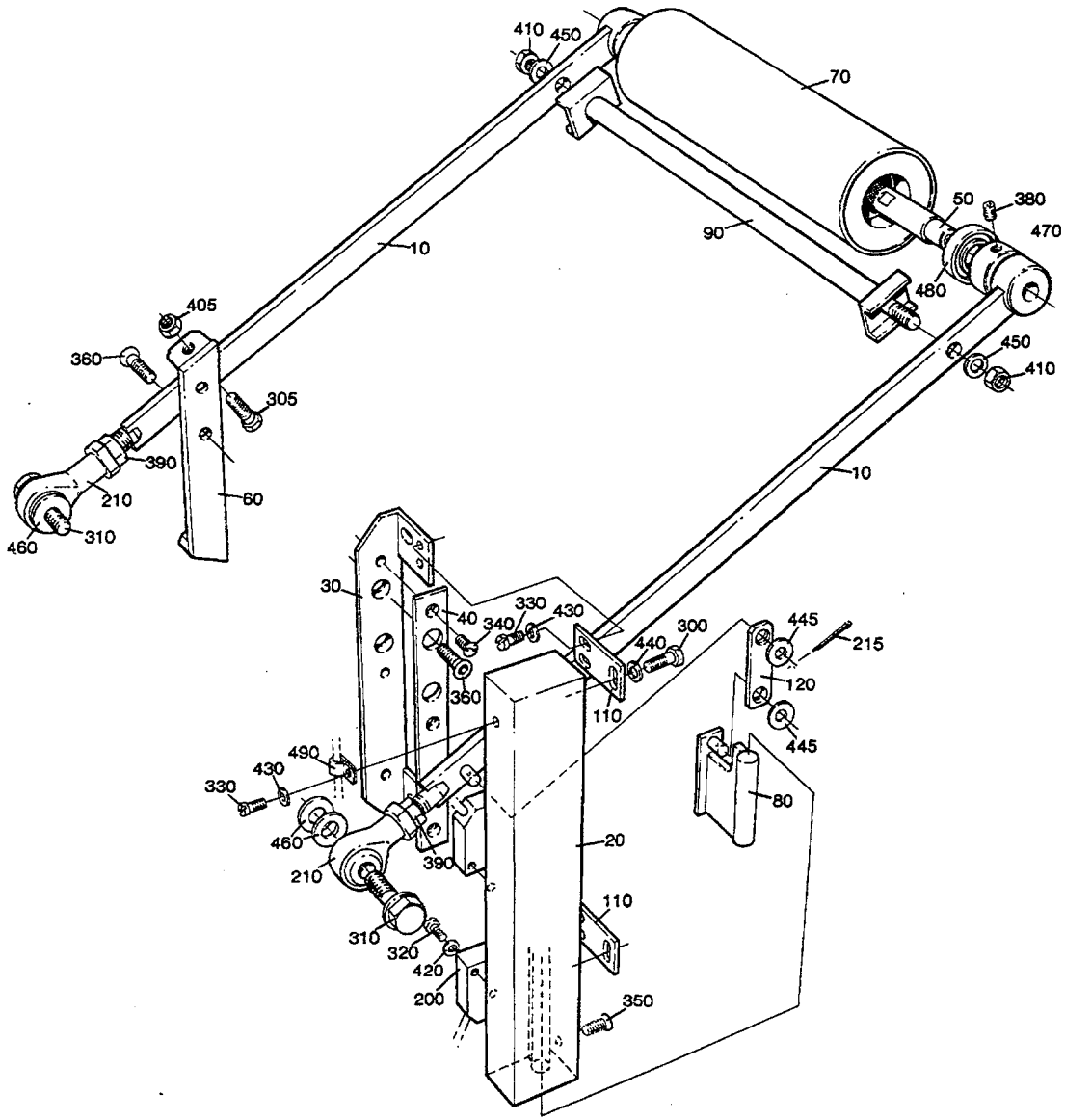

27208403.TIF
272084-3/4
AM 16230

From	Pos	Part No	SP	UN Qty	Description
		C- 272084-0301			**Stretcher, Ass'y**
	010	752552	C	2	PENDULUM ARM
	020	751979	C	1	RAIL
	030	272087	-	1	HOLDER
	040	272089	S	1	SLIDE RAIL
	050	272476	S	1	SHAFT
	060	752553	C	1	HOLDER
	070	456544	S	1	BENDING ROLLER
	080	751981	C	1	SADDLE
	090	751984	C	1	STRUT
	110	751980	-	2	HOLDER
	120	751982	-	1	LINK ARM
	200	90044-0104	P	2	INDUCTIVE SWITCH
	210	90115-0133	S	2	JOINT
	215	311411-0151	-	2	SPLIT PIN SP2X14RFR
	300	312105-0329	-	2	SCREW M6S5X16 A2 80
	305	312105-0453	-	2	SCREW M6S8X25RFR
	310	312105-0536	-	2	SCREW M6S12X30RFR
	320	312125-0230	-	4	SLOTTED HEMCS3X20RFR
	330	312125-0287	-	5	SLOTTED HEMCS4X8RFR
	340	312145-0287	-	3	SLOTTED HEMFS4X8RFR
	350	312145-0293	-	1	SLOTTED HEMFS4X16RFR
	360	312155-0368	-	4	SCREW MF6S6X16RFR
	380	312318-0360	-	2	STOP SCREW SK6SS6X6RFR
	390	312605-0322	-	2	NUT M6M12RFR
	405	312621-0318	-	2	NUT ML6M8FZB
	410	312812-0318	-	2	LOCK NUT A2-M8RFR
	420	315105-0124	-	4	WASHER BRB3,2X6RFR
	430	315105-0136	-	7	WASHER BRB4,3X8RFR
	440	315105-0146	-	2	WASHER BRB5,3X10RFR
	445	315105-0153	-	2	WASHER BRB6,4X12RFR
	450	315105-0165	-	2	WASHER BRB8,4X16RFR
	460	315105-0178	-	4	WASHER BRB13X24RFR
	470	315742-0111	-	2	RETAINING 15SMS199RFR
	480	321308-0202	S	2	BALL BEARISKF6002-2RS
	490	352110-0099	-	1	CRAMP TK 3-5

From	Pos	Part No	SP	UN Qty	Description

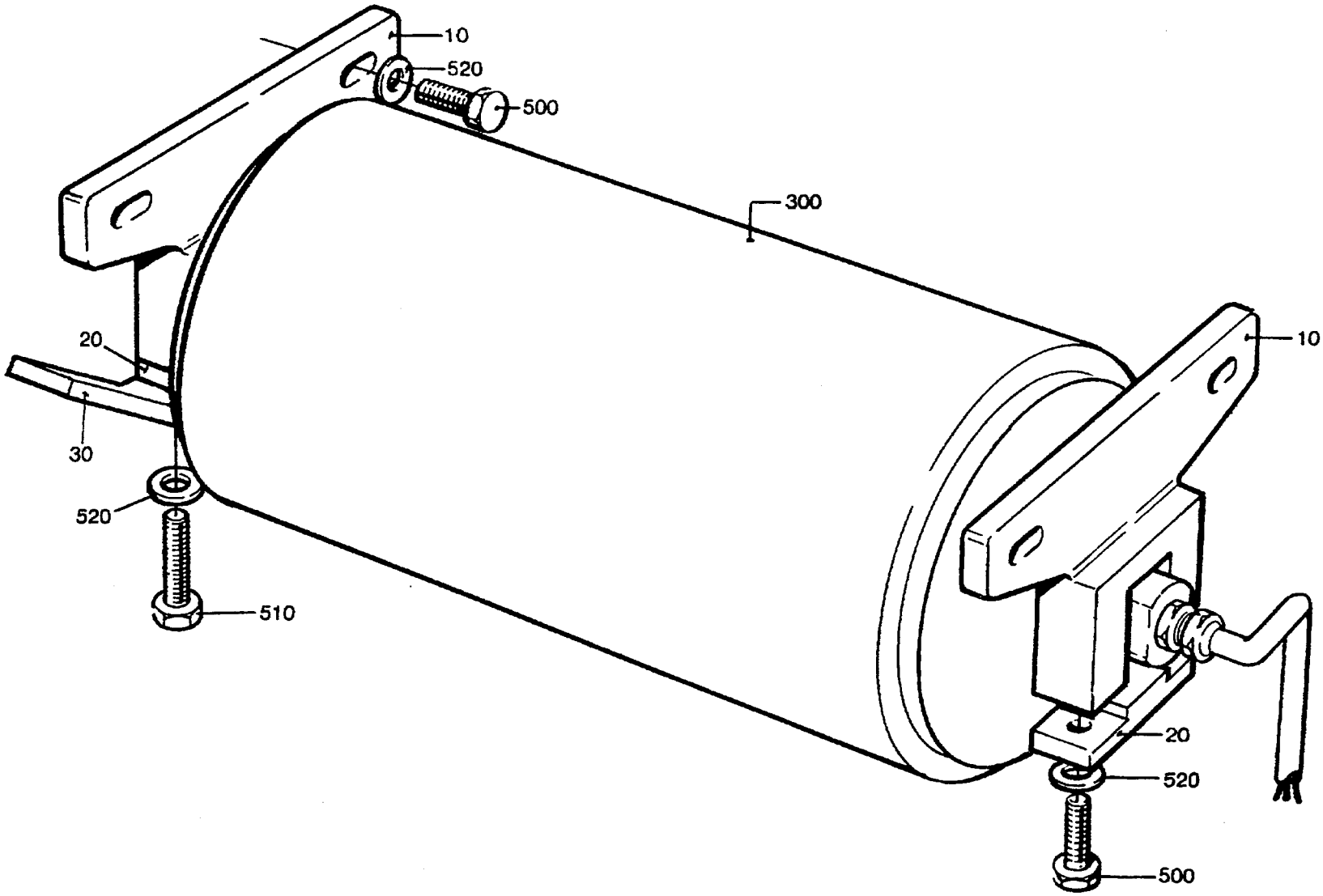

27101704.TIF
271017-4
AM 17192

From	Pos	Part No	SP	UN	Qty	Description
		C- 271017-0301				**Bending Roller, Ass'y**
	010	570524	S		2	BEARING
	020	570523	S		2	CAP
	030	752057	S		1	STOP
	300	90045-0134	S		1	MOTOR
	500	312105-0451	-		6	SCREW M6S8X20RFR
	510	312105-0453	-		2	SCREW M6S8X25RFR
	520	315105-0165	-		8	WASHER BRB8,4X16RFR

From	Pos	Part No	SP	UN	Qty	Description

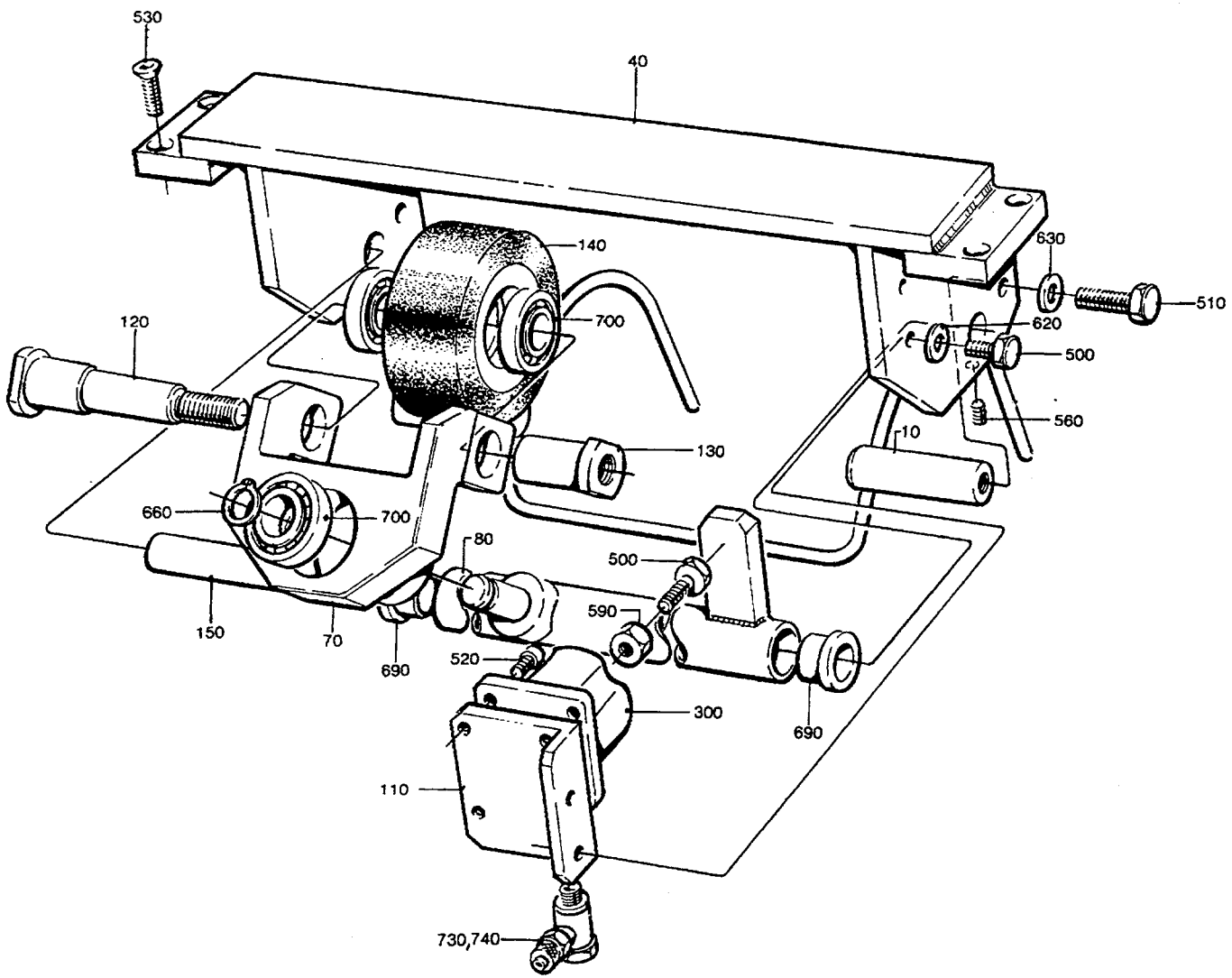

27193403.TIF
271934-3
AM 10626

From	Pos	Part No	SP	UN	Qty	Description
		C- 271934-0301				**Paper Guide Plate, Ass'y**
	010	295716	C		1	BOW CLAMP
	040	295717	C		1	CANTILEVER
	070	263150	C		1	BRACKET
	080	271911	C		1	SHAFT
	110	295873	C		1	BRACKET
	120	263152	S		1	SHAFT
	130	263153	S		1	NUT
	140	266710	S		1	WHEEL
	150	271912	S		1	SHAFT
	300	90239-0750	C		1	CYLINDER
	500	312105-0368	-		3	SCREW M6S6X16RFR
	510	312105-0451	-		2	SCREW M6S8X20RFR
	520	312115-0327	-		4	SCREW MC6S5X12 A4 80
	530	312155-0368	-		4	SCREW MF6S6X16RFR
	560	312318-0323	-		2	STOP SCREW SK6SS5X8RFR
	590	312605-0316	-		1	NUT M6M6RFR
	620	315105-0153	-		2	WASHER BRB6,4X12RFR
	630	315105-0165	-		2	WASHER BRB8,4X16RFR
	660	315750-0112	P		1	CIRCLIP SGA15
	690	321101-0202	S		2	FLANGE BUS 16F7X12
	700	321308-0202	S		4	BALL BEARISKF6002-2RS
	730	342980-0113	-		2	BANJO CONNSINGEL 6/4-1/8
	740	342980-0313	-		1	BANJO CONN DUBBEL 1/8

From	Pos	Part No	SP	UN	Qty	Description

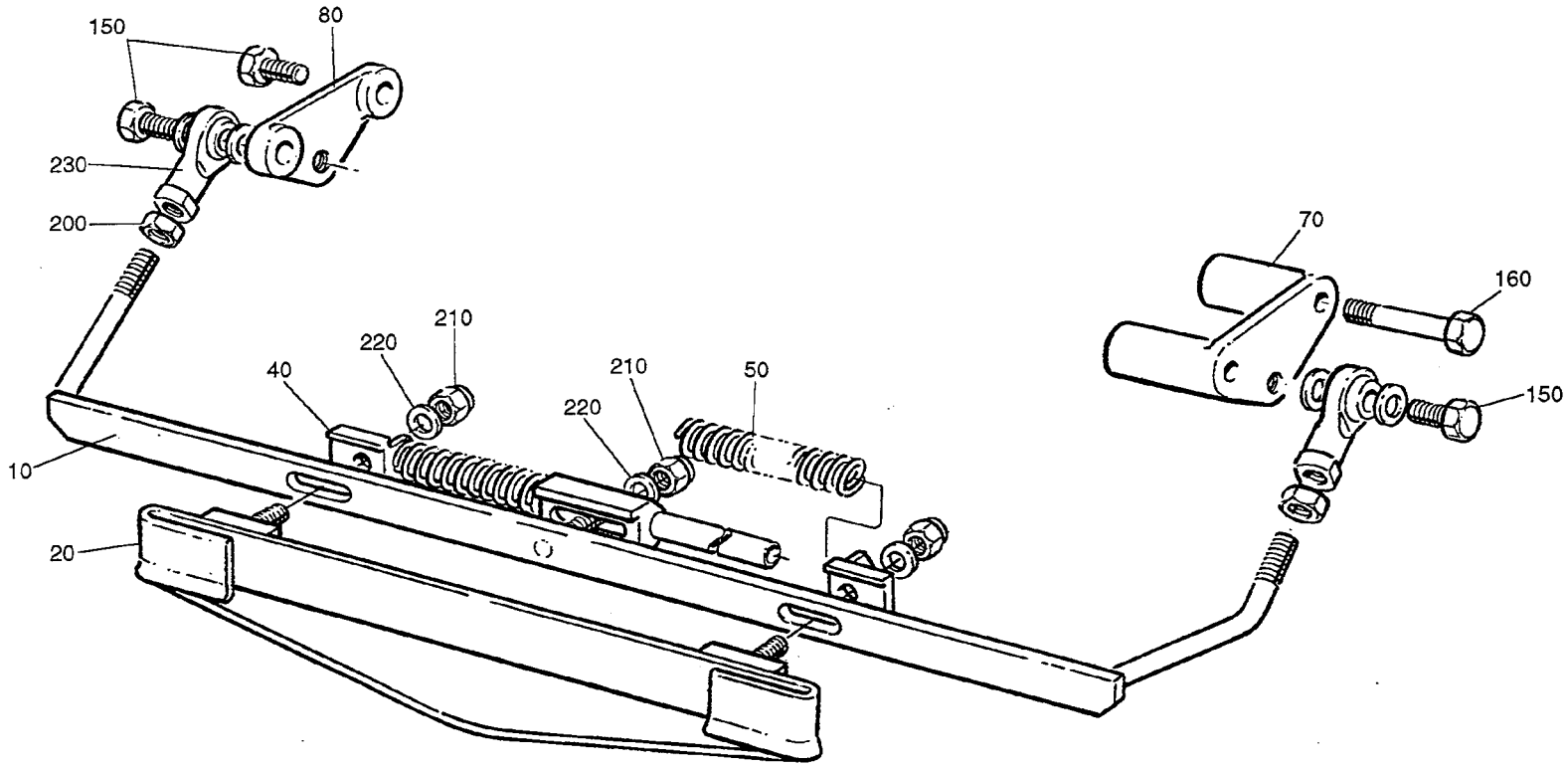

75196801.TIF
751968-1
AM

From	Pos	Part No	SP	UN	Qty	Description
284ml - 180ml						
		C- 751968-0101				**Pare Guide, Ass'y**
	010	752178	-		1	BOW CLAMP
	020	752180	-		1	GUIDING ARBOR
	030	752183	-		1	SPRING HOLDER
	050	752084	-		2	SPRING
160ml 200ml Slim						
		C- 751968-0102				**Pare Guide, Ass'y**
	010	752179	-		1	BOW CLAMP
	020	752181	-		1	GUIDING ARBOR
	030	752184	-		1	SPRING HOLDER
	050	752085	-		2	SPRING
125ml						
		C- 751968-0103				**Pare Guide, Ass'y**
	010	752179	-		1	BOW CLAMP
	020	752182	-		1	GUIDING ARBOR
	030	752184	-		1	SPRING HOLDER
	050	752085	-		2	SPRING
250ml Slim						
		C- 751968-0104				**Pare Guide, Ass'y**
	010	752178	-		1	BOW CLAMP
	020	574433	-		1	GUIDING ARBOR
	030	752183	-		1	SPRING HOLDER
	050	752084	-		2	SPRING
Common Parts						
	040	751972	-		2	SPRING HOLDER
	070	G- 295015	-		1	BRACKET
	080	G- 295016	-		1	BRACKET
	100	90115-0068	-		2	JOINT
	150	312105-0368	-		4	SCREW M6S6X16RFR
	160	312105-0378	-		2	SCREW M6S6X40RFR
	200	312605-0316	-		2	NUT M6M6RFR
	210	312812-0314	-		3	LOCK NUT A2-M5RFR
	220	315105-0146	-		3	WASHER BRB5,3X10RFR
	230	315105-0153	-		10	WASHER BRB6,4X12RFR

From	Pos	Part No	SP	UN	Qty	Description

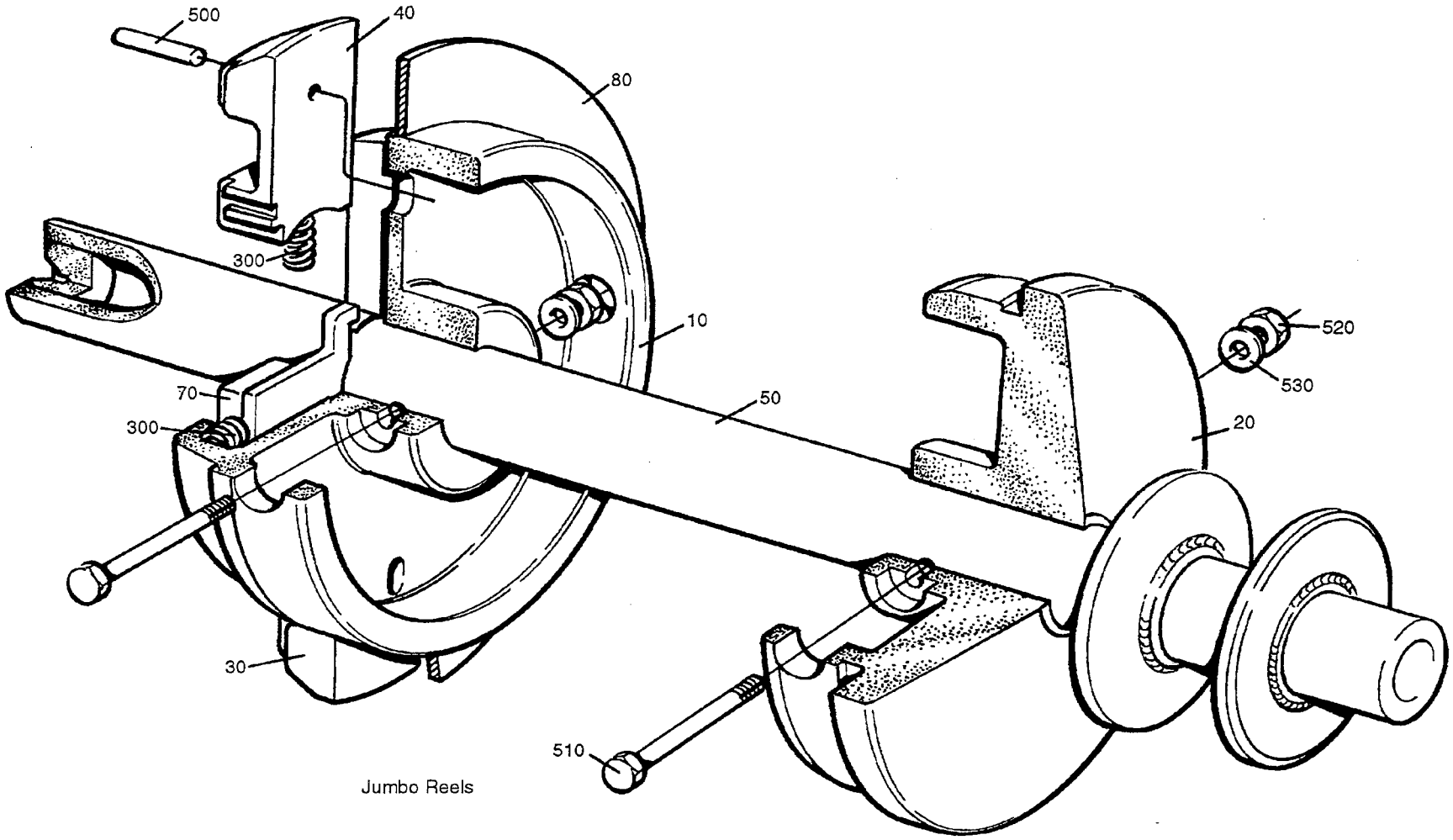

Jumbo Reels

45838302.TIF
458383-2
AM 17117

Last Alteration: AM 20224 93-10-28

Corresponding group: 458383-020V
Assembly Drawing: 458383-2

Issue: **940524**

From	Pos	Part No	SP	UN	Qty	Description
284ml - 180ml						
		C- 458383-0201				**Paper Reel Holder, Ass'y**
	020	G- 272815-0001	S		1	SLEEVE
	050	272816-0001	S		1	SHAFT
125ml						
		C- 458383-0202				**Paper Reel Holder, Ass'y**
	020	G- 272815-0002	S		1	SLEEVE
	050	272816-0002	S		1	SHAFT
160ml 200ml Slim						
		C- 458383-0203				**Paper Reel Holder, Ass'y**
	020	G- 272815-0003	S		1	SLEEVE
	050	272816-0003	S		1	SHAFT
250ml Slim						
		C- 458383-0204				**Paper Reel Holder, Ass'y**
	020	574434	S		1	SLEEVE
	050	272816-0004	S		1	SHAFT
Common Parts						
	010	G- 272814	S		1	SLEEVE
	030	G- 575002	S		1	PLUNGER
	040	G- 575002	S		1	PLUNGER
	070	G- 272728	S		1	BARRIER
	080	752001	S		1	GUIDE RING
	300	90335-0025	S		3	SPRING
	500	311103-0274	S		2	CYLINDRICACP 4X25 RFR
	510	312101-0381	-		2	SCREW M6S6X55FZB
	520	312812-0316	-		2	LOCK NUT A2-M6RFR
	530	315101-0153	-		2	WASHER BRB6,4X12FZB

From	Pos	Part No	SP	UN	Qty	Description

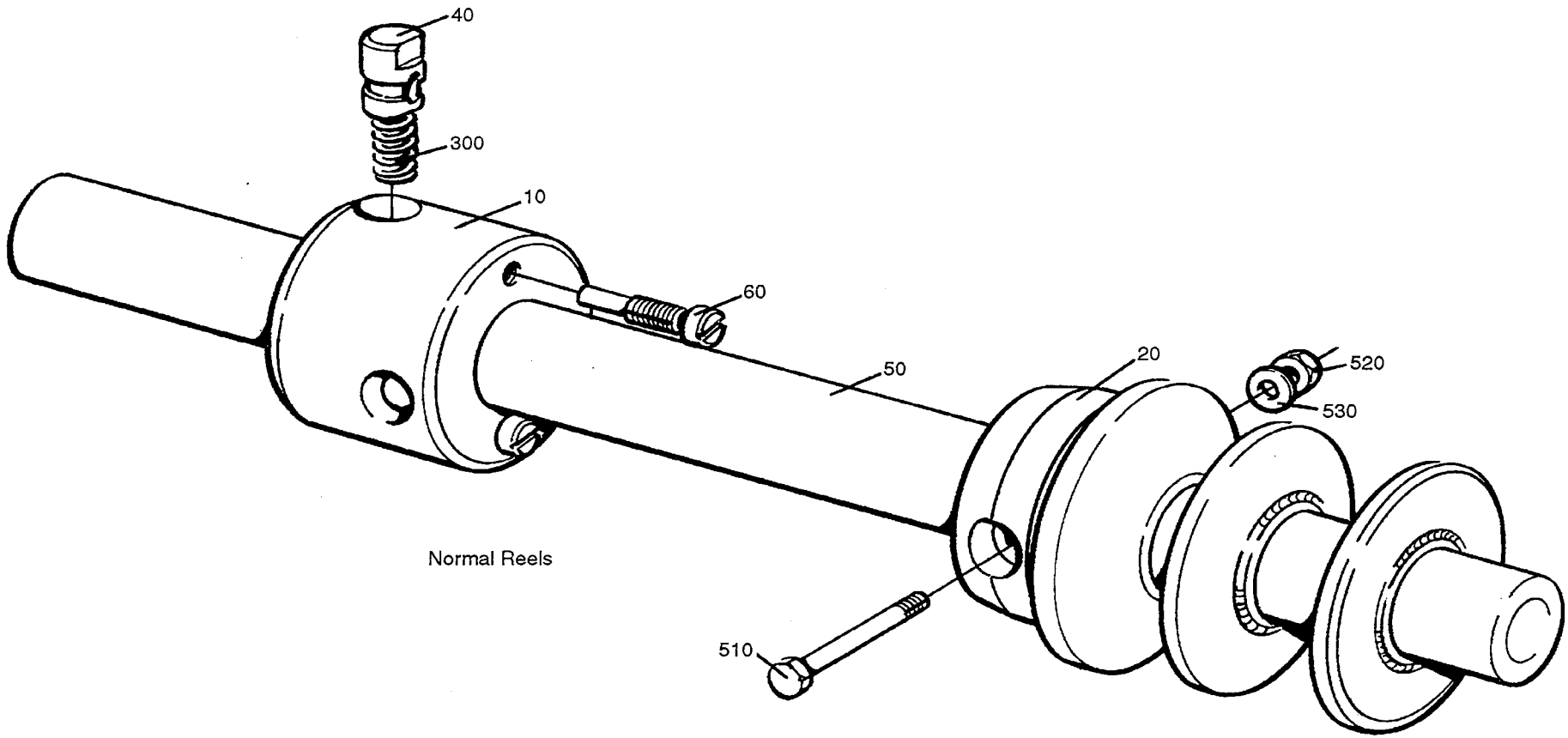

Normal Reels

45838401.TIF
458384-1
AM 16988

From	Pos	Part No	SP	UN	Qty	Description
284ml - 180ml						
		C- 458384-0101				**Paper Reel Holder, Ass'y**
	020	272810-0001	S		1	SLEEVE
	050	272816-0001	S		1	SHAFT
125ml						
		C- 458384-0102				**Paper Reel Holder, Ass'y**
	020	272810-0002	S		1	SLEEVE
	050	272816-0002	S		1	SHAFT
160ml 200ml Slim						
		C- 458384-0103				**Paper Reel Holder, Ass'y**
	020	272810-0003	S		1	SLEEVE
	050	272816-0003	S		1	SHAFT
250ml Slim						
		C- 458384-0104				**Paper Reel Holder, Ass'y**
	020	574435	S		1	SLEEVE
	050	272816-0004	S		1	SHAFT
Common parts						
	010	271239	S		1	SLEEVE
	040	272813	S		2	PLUNGER
	060	271241	S		2	SCREW
	300	90335-0025	S		2	SPRING
	510	312101-0381	-		2	SCREW M6S6X55FZB
	520	312812-0316	-		2	LOCK NUT A2-M6RFR
	530	315101-0153	-		2	WASHER BRB6,4X12FZB

From	Pos	Part No	SP	UN	Qty	Description

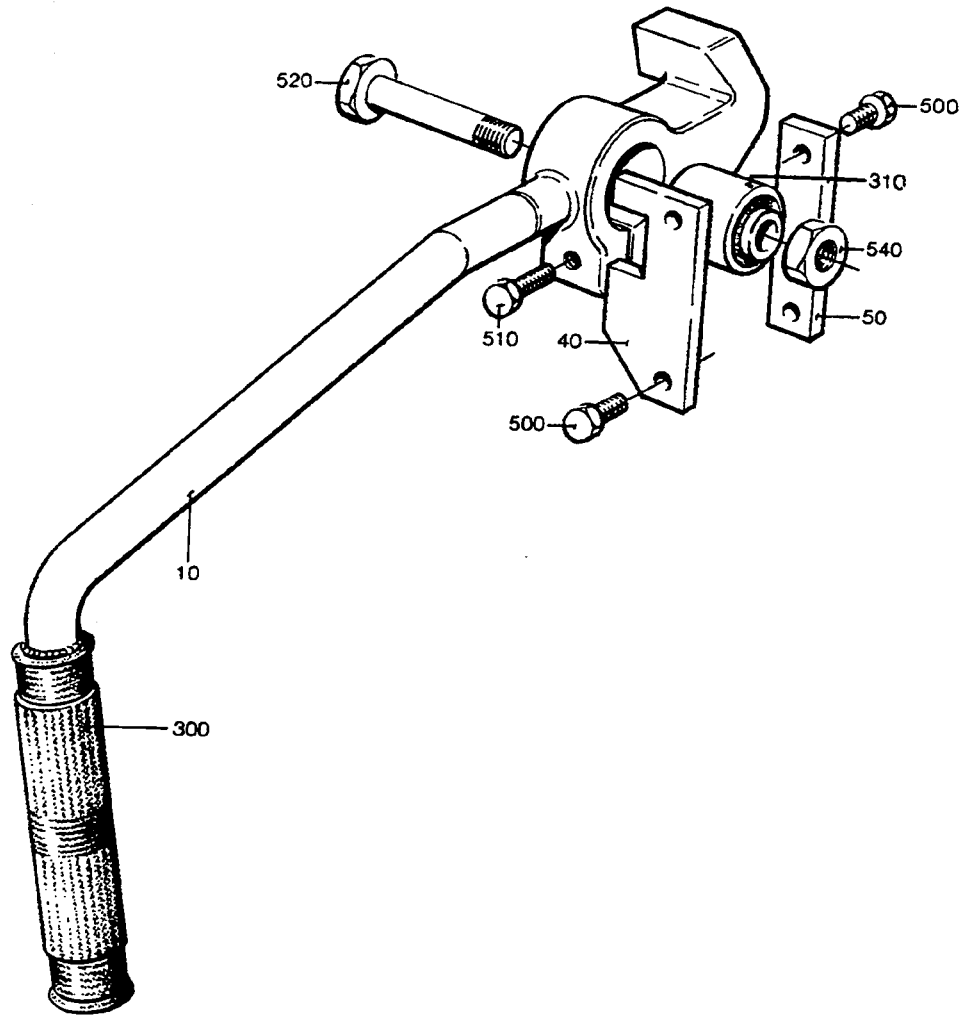

27145402.TIF
271454-2
AM 6317

From	Pos	Part No	SP	UN	Qty	Description
		C- 271454-0201				**Catch Handle, Ass'y**
	010	G- 272569	-		1	CATCH HANDLE
	040	272603	-		1	STOP LUG
	050	272604	-		1	GUIDE LUG
	300	90017-0001	-		1	HANDLE
	310	90347-0012	S		1	DAMPER
	500	312105-0366	-		4	SCREW M6S6X12RFR
	510	312105-0370	-		1	SCREW M6S6X20RFR
	520	312105-0500	-		1	SCREW M6S10X45RFR
	540	312605-0320	-		1	NUT M6M10RFR

From	Pos	Part No	SP	UN	Qty	Description

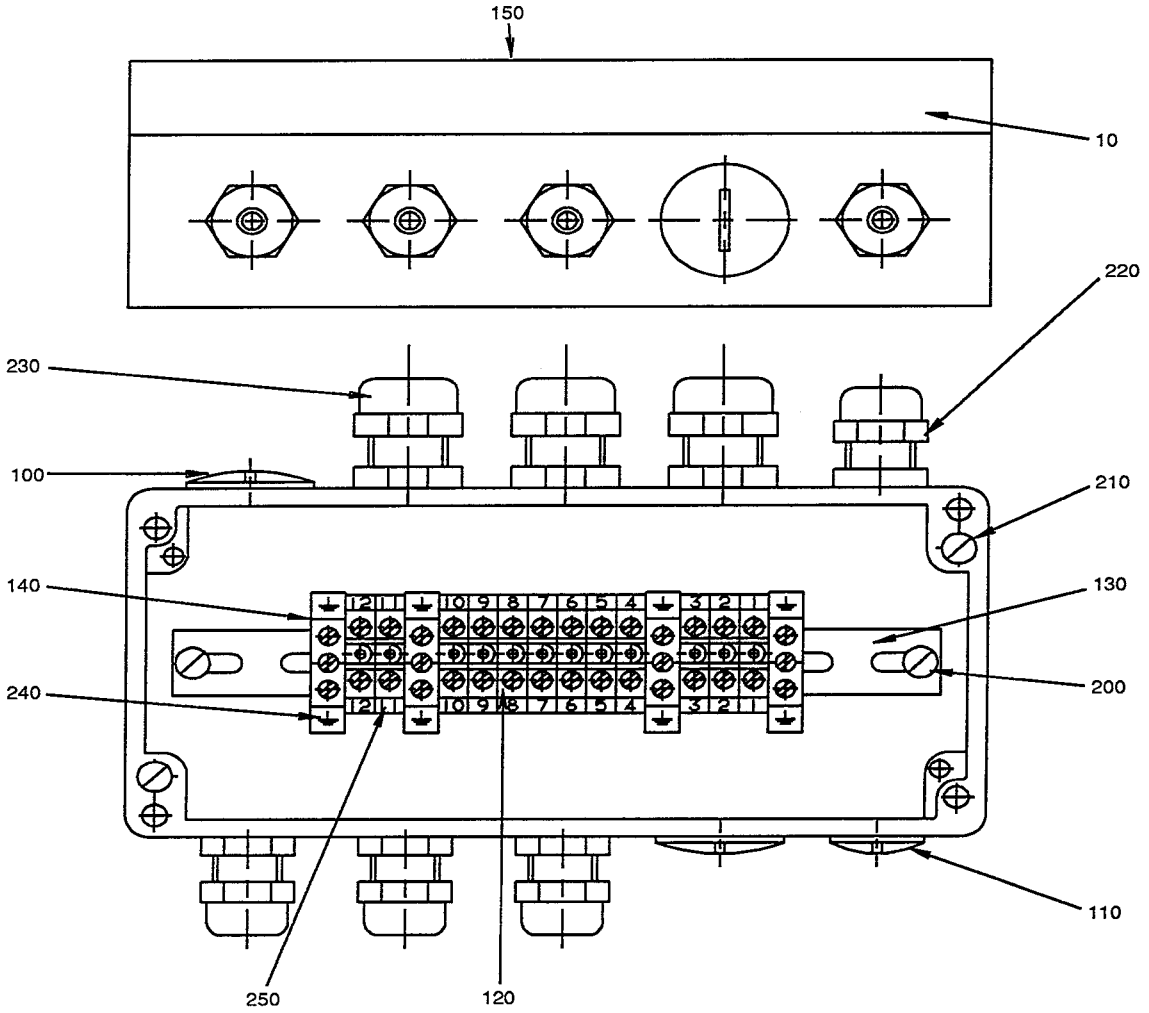

97860401.WPG
978604-1
AM 17888

Last Alteration: AM 17888 93-01-27

Corresponding group: 978604-010V
Assembly Drawing: 978604-1

Issue: 940524

From	Pos	Part No	SP	UN	Qty	Description
		C- 978604-0101				**Connection Box, ass'y**
	010	295913	-		1	CONNECTION BOX
	100	90002-0004	-		2	BLANK-OFF PLUG 22,5
	110	90002-0013	-		1	BLANK-OFF PLUG 15,2
	120	90077-0079	-		12	FEED THROUGH TERMINAL
	130	90077-0328	-	MM	156	RAIL
	140	90135-0026	-		4	EARTHING CLAMP
	150	90194-0016	-		1	SIGN"FLASH SIGN"
	200	312121-0285	-		2	SLOTTED HEMCS4X6FZB
	210	312121-0293	-		2	SLOTTED HEMCS4X16FZB
	220	352103-0101	-		4	CABLE GLAND ST 9
	230	352103-0110	-		3	CABLE GLAND STR 16
	240	359011-0202	-		6	SIGN BOARD(GROUND)
	250	359011-0802	-		1	SIGN BOARDBSFW 11-20

From	Pos	Part No	SP	UN	Qty	Description

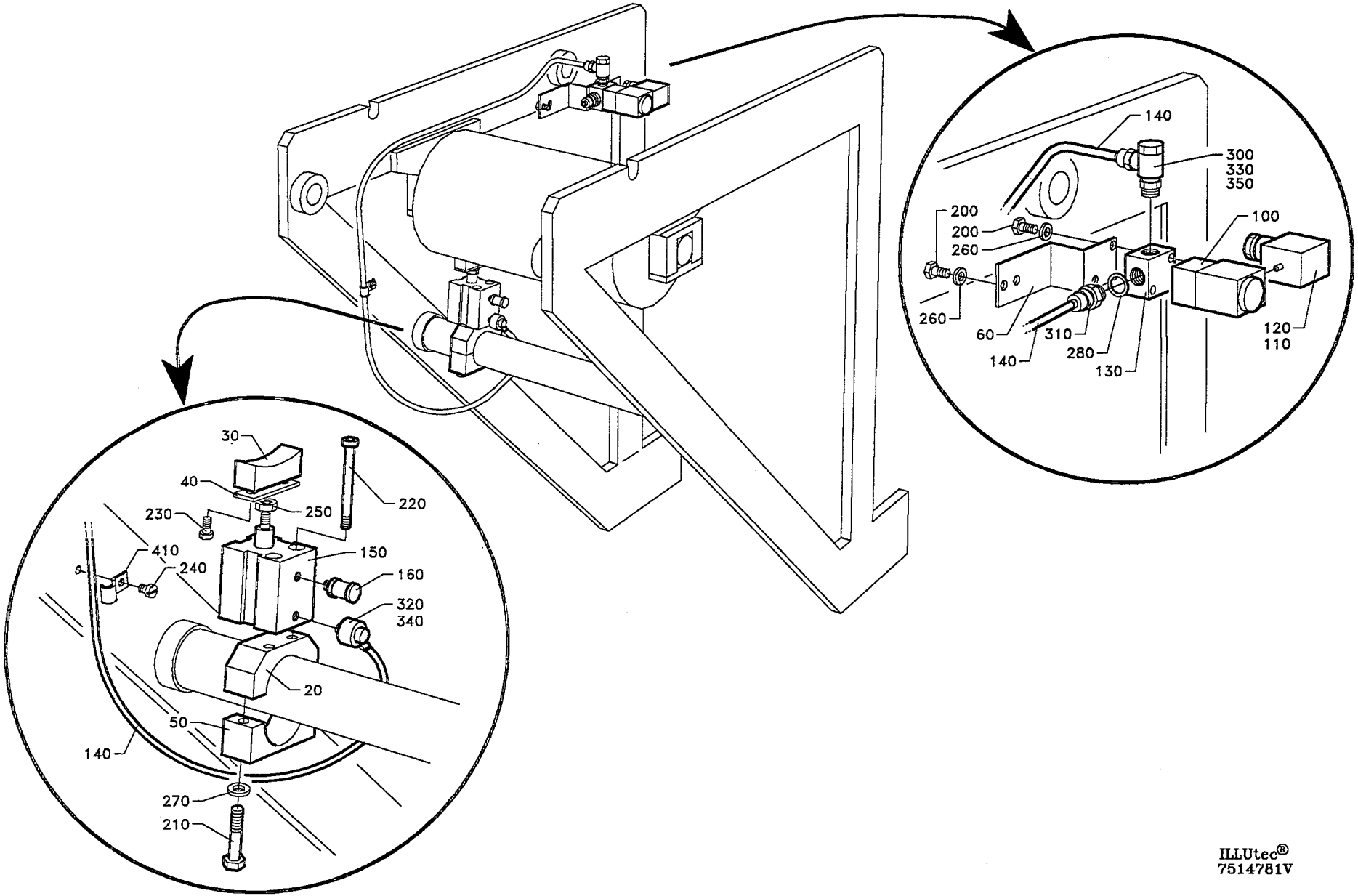
140
300
330
350
200
200
260
100
260
60
310
280
140
130
120
110
30
40
230
250
220
410
240
150
160
320
340
20
50
140
270
210

From	Pos	Part No	SP	UN	Qty	Description
		C- 751478-0201				**Brake, Ass'y**
	020	751322	-		1	BRACKET
	030	751323	P		1	BRAKE BLOCK
	040	751324	-		1	HOLDER
	050	751325	-		1	BRACKET
	060	751326	-		1	BRACKET
	100	90042-0109	-		1	SOLENOID VALVE
	110	90042-0345	S		1	COIL
	120	90042-0366	-		1	CONTACT
	130	90042-0438	-		1	CONNECTION RAMP
	140	90166-0132	-	M	1	HOSE
	150	90239-0983	-		1	CYLINDER
	160	90328-0020	-		1	SILENCER
	200	312105-0325	-		4	SCREW M6S5X10 A2 80
	210	312105-0374	-		2	SCREW M6S6X30RFR
	220	312111-0340	-		2	SCREW MC6S5X45FZB
	230	312122-0287	-		2	SLOTTED HEMCS4X8MSGFN
	240	312125-0285	-		1	SLOTTED HEMCS4X6RFR
	250	312605-0314	-		1	NUT M6M5RFR
	260	315105-0146	-		4	WASHER BRB5,3X10RFR
	270	315105-0153	-		2	WASHER BRB6,4X12RFR
	280	315233-0109	P		1	SEAL RING R1/8"
	300	342903-0111	-		1	NUT J#DER 1723-6/4
	310	342921-0113	-		1	PIPE COUPL6/4-1/8"
	320	342980-0111	-		1	BANJO CONNSINGEL 6/4-5M
	330	342980-0113	-		1	BANJO CONNSINGEL 6/4-1/8
	340	342980-0301	-		1	BANJO CONN SINGEL 5M
		315233-0101	P		0	* SEAL RINM5
	350	342980-0303	-		1	BANJO CONN SINGEL 1/8"
	410	352110-0100	-		1	CRAMP TK 5-7

From	Pos	Part No	SP	UN	Qty	Description

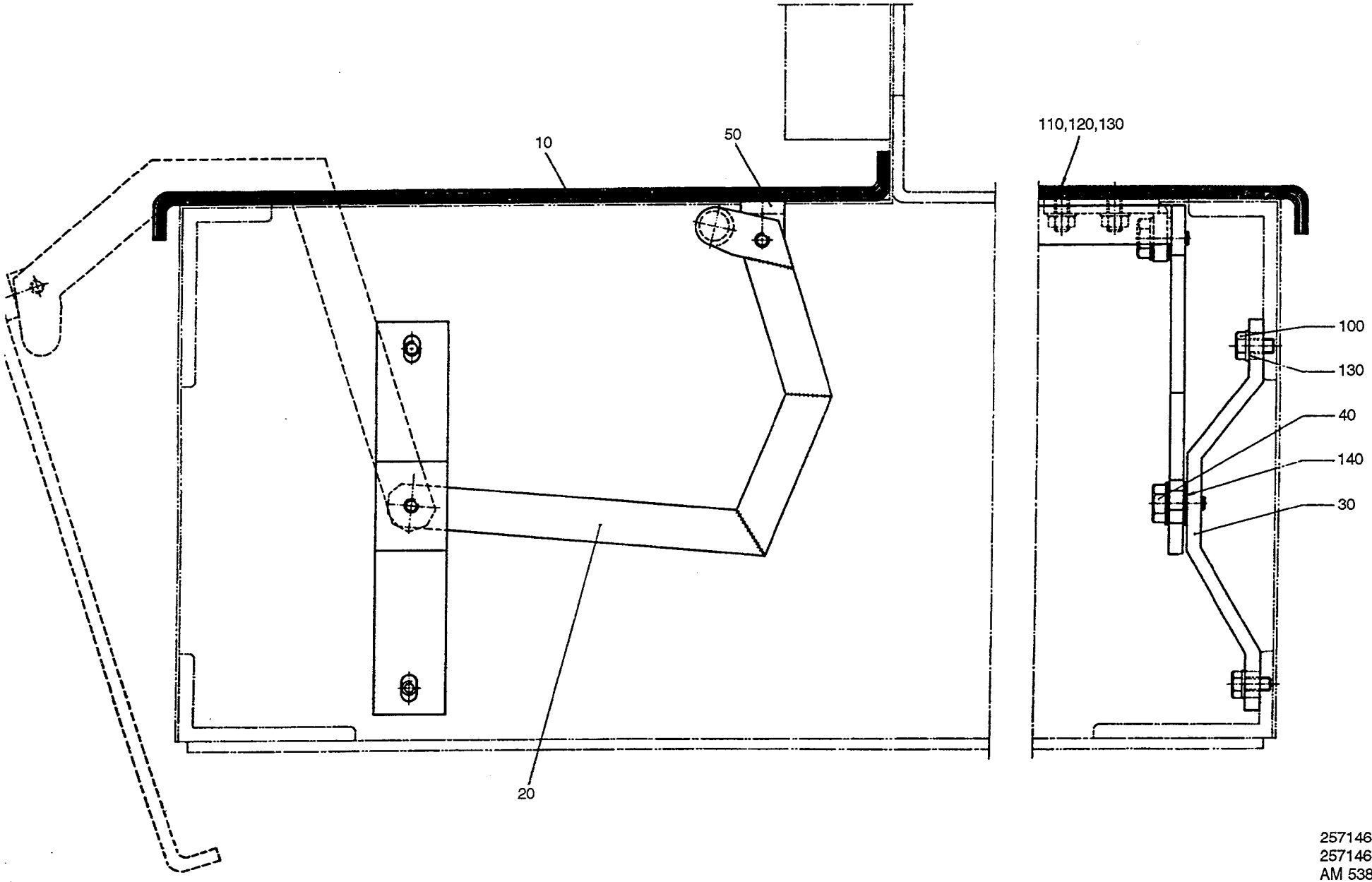

25714602.TIF
257146-2
AM 5385

Last Alteration: AM 19553 93-04-16

Corresponding group: 257146-020V
Assembly Drawing: 257146-2

Issue: **940524**

From	Pos	Part No	SP	UN	Qty	Description
		C- 257146-0201				**Lid, Ass'y**
	010	295156	-		1	LID
	020	295157	-		1	ARM
	030	256148	-		2	HOLDER
	040	256150	-		4	SCREW
	050	272552	-		2	BRACKET
	100	312105-0449	-		4	SCREW M6S8X16RFR
	110	312145-0453	-		4	SLOTTED HEMFS8X25RFR
	120	312605-0318	-		4	NUT M6M8RFR
	130	315105-0165	-		8	WASHER BRB8,4X16RFR
	140	90005-0126	-		8	WASHER

From	Pos	Part No	SP	UN	Qty	Description

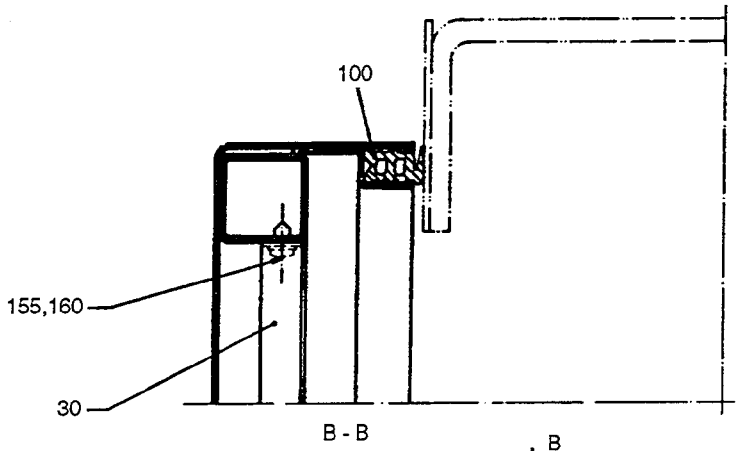

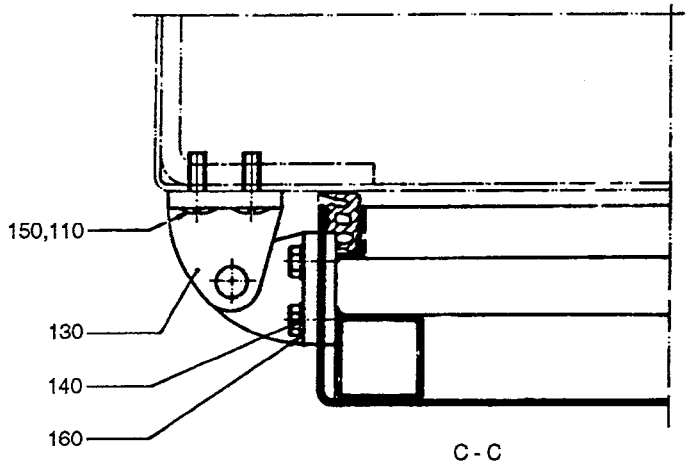

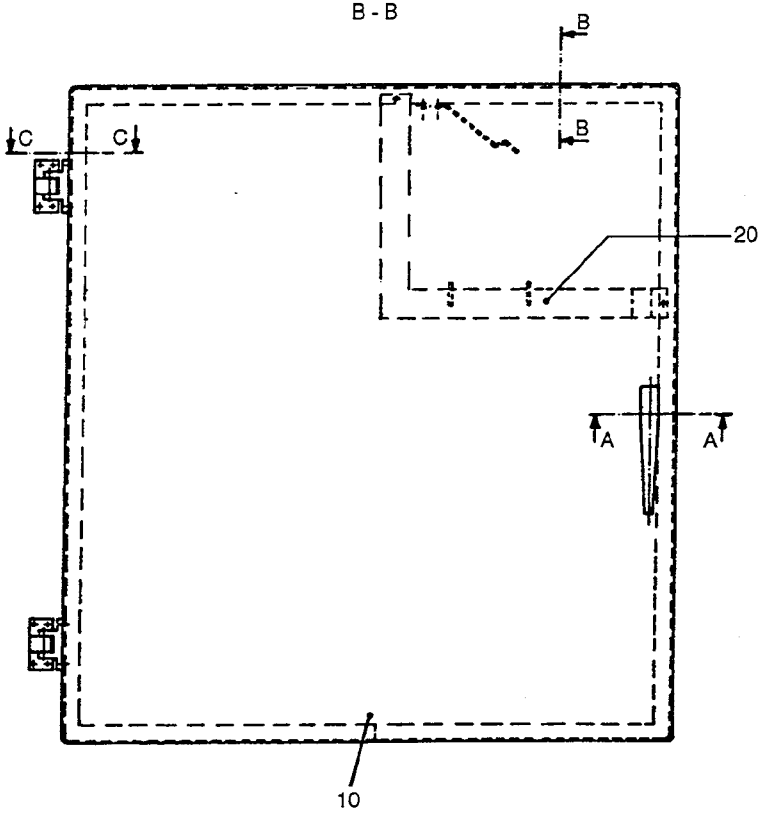

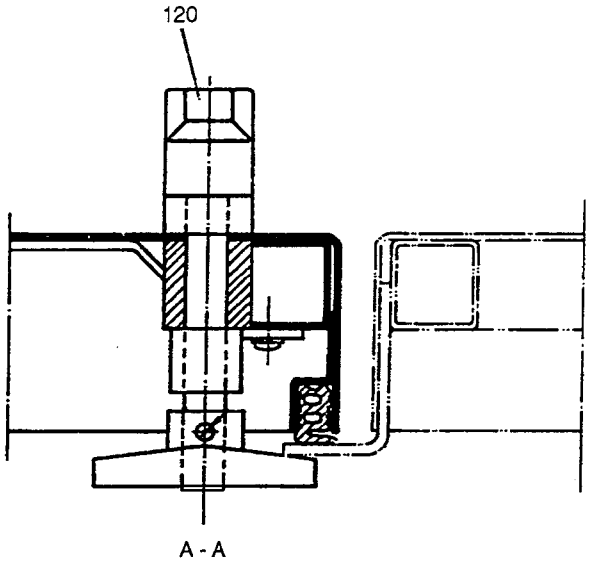

25687304.TIF
256873-4
AM 13806

From	Pos	Part No	SP	UN Qty	Description
		C- 256873-0401			**Door, Ass'y**
	010	295158	-	1	DOOR
	020	752621	-	1	HOLDER
	030	295247	-	1	LEAF SPRING
	100	90143-0049	-	MM 3700	STRIP
	120	90237-0044	-	1	DOOR HANDLE
		90237-0310	R	0	* LOWER SECTION
		90237-0311	R	0	* CURVE SECTION
	130	90248-0013	-	2	HINGE
	140	312105-0325	-	8	SCREW M6S5X10 A2 80
	150	312165-0329	-	6	SLOTTED HEMKFS5X16RFR
	155	312503-0410	-	4	DRIVE SCRERXKB10X13FZB
	160	315105-0146	-	12	WASHER BRB5,3X10RFR

From	Pos	Part No	SP	UN Qty	Description

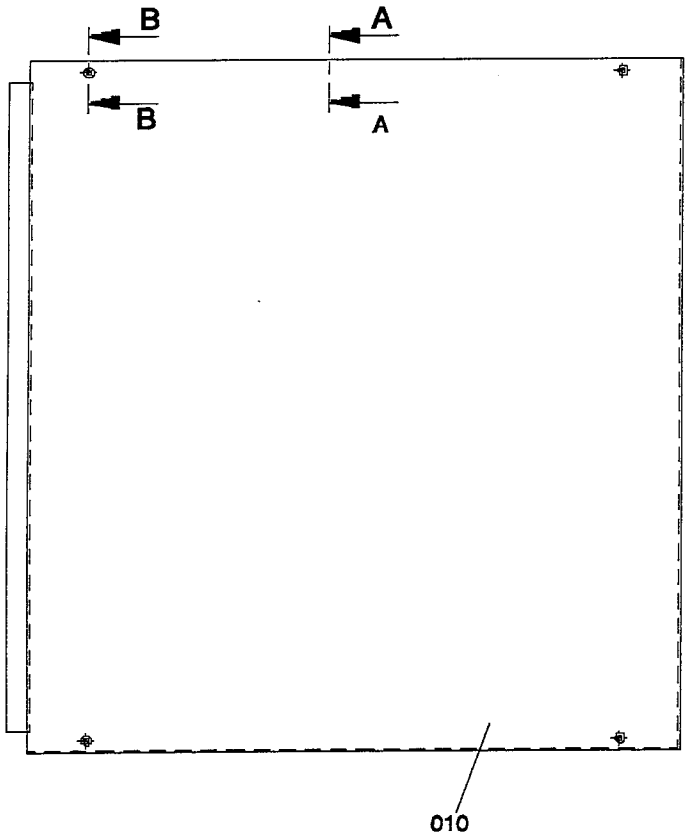

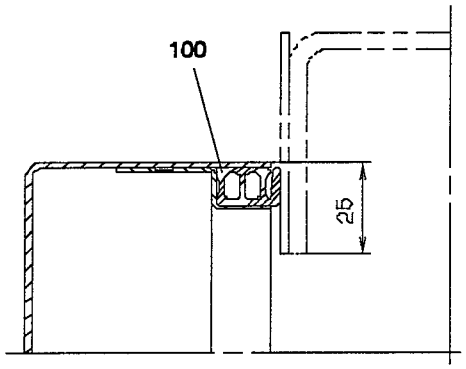

A - A

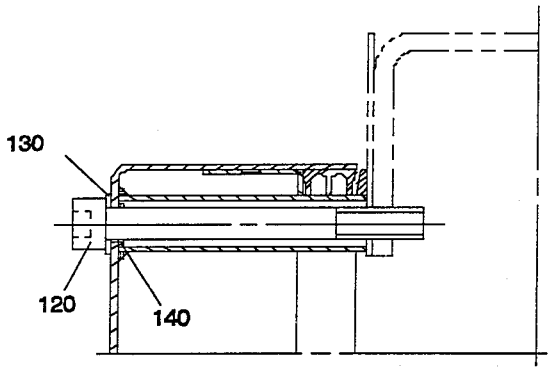

B - B

Last Alteration: AM 17888 93-01-27

Corresponding group: 256875-020V
Assembly Drawing: 256875-4

Issue: 940524

From	Pos	Part No	SP	UN Qty	Description
		C- 256875-0201			**Opening, Ass'y**
	010	572345	-	1	OPENING
	100	90143-0049	-	MM 2300	STRIP
	120	312115-0467	-	4	SCREW MC6S8X80RFR
	130	315105-0165	-	4	WASHER BRB8,4X16RFR
	140	315202-0104	-	4	O-RING 6,1X1,6

From	Pos	Part No	SP	UN Qty	Description

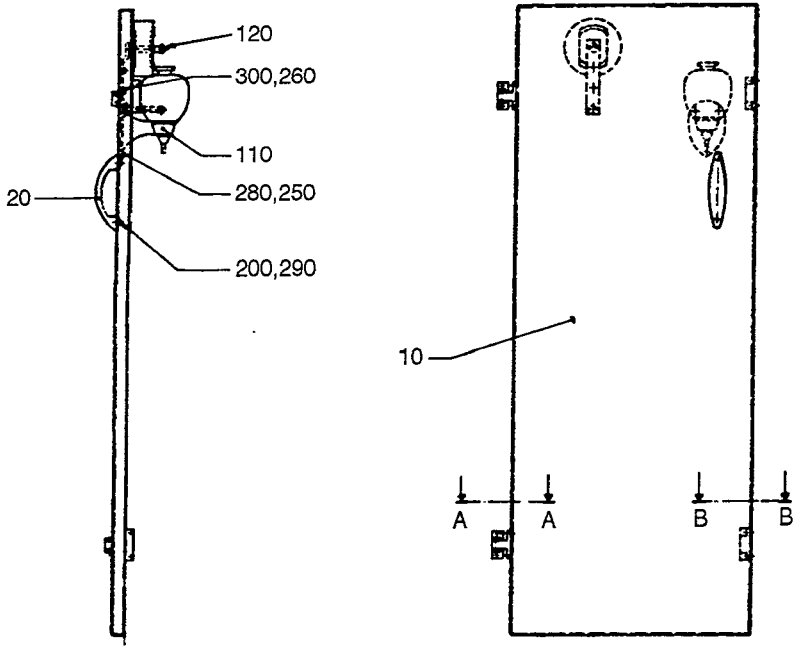
120
300,260
110
280,250
200,290
20
10
A
A
B
B

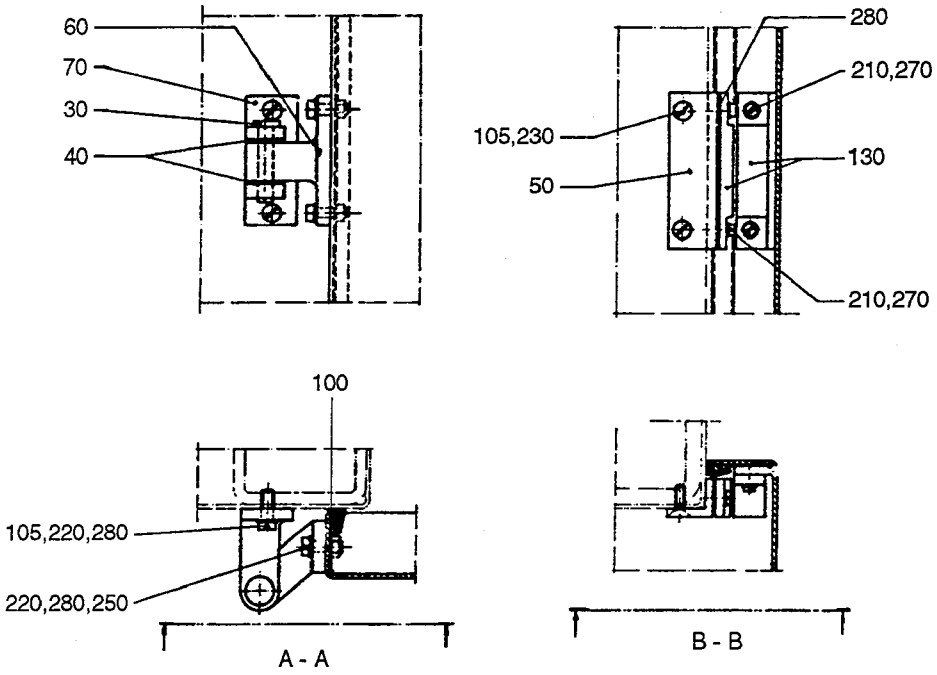
60
70
30
40
105,230
50
280
210,270
130
210,270
100
105,220,280
220,280,250
A - A
B - B

Last Alteration: AM 15170 90-09-20

Corresponding group: 469535-010V
Assembly Drawing: 469535-1

Issue: **940524**

From	Pos	Part No	SP	UN	Qty	Description
		C- 469535-0101				**Door, Ass'y**
	010	469526	-		1	DOOR
	020	7309	-		1	HANDLE
	030	257397	-		2	PEG
	040	271011	-		4	WASHER
	050	272453	-		2	SPACER
	060	272510	-		2	HINGE
	070	272511	-		2	HINGE
	105	90157-0016	-		X	LOCKING FLUID
	110	90243-0133	-		1	CONTAINER
	120	90256-0001	S		1	TAPE HOLDER
	130	90339-0004	-		2	MAGNETIC LOCK
	200	312105-0364	-		2	SCREW M6S6X10RFR
	210	312125-0222	-		8	SLOTTED HEMCS3X8RFR
	220	312125-0291	-		8	SLOTTED HEMCS4X12RFR
	230	312145-0291	-		4	SLOTTED HEMFS4X12RFR
	250	312605-0312	-		7	NUT M6M4RFR
	260	312605-0314	-		2	NUT M6M5RFR
	270	315105-0124	-		8	WASHER BRB3,2X6RFR
	280	315105-0136	-		15	WASHER BRB4,3X8RFR
	290	315105-0153	-		2	WASHER BRB6,4X12RFR
	300	315115-0153	-		2	WASHER TBRB6,4X12RFR
	100	90143-0047	-	MM	3500	STRIP

From	Pos	Part No	SP	UN	Qty	Description

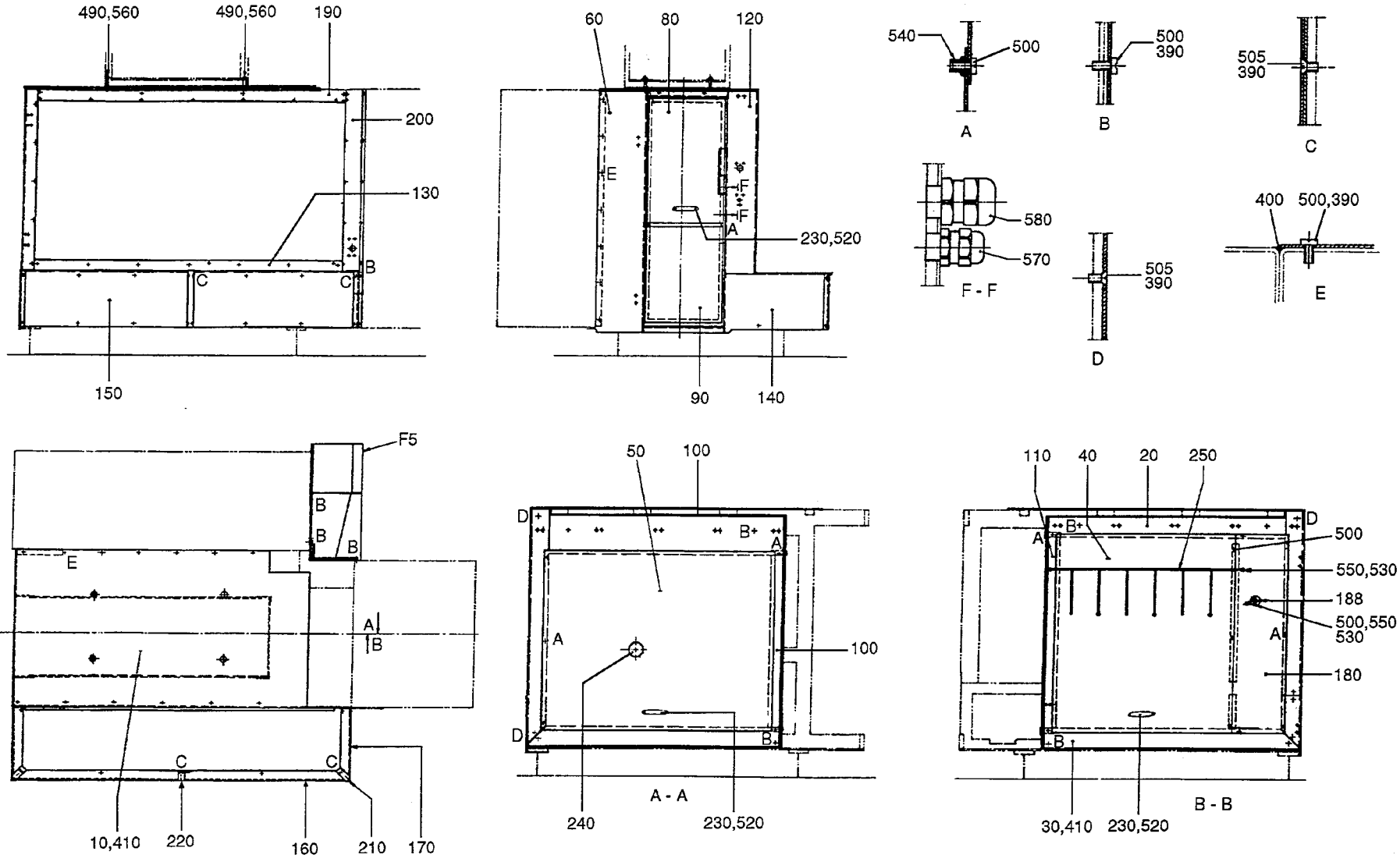

27151307.TIF
271513-7
AM 17888

From	Pos	Part No	SP	UN	Qty	Description
TBA/9 With PullTab						
		C- 271513-0601				**Covering Plate, Ass'y**
	F005	**C- 752567-010V**	-		1	**PROTECTIVE CASING**
	010	571922	-		1	COVERING PLATE
	060	469034	-		1	GUSSET PLATE
	490	312105-0451	-		4	SCREW M6S8X20RFR
	500	312125-0325	-		64	SLOTTED HEMCS5X10RFR
	505	312145-0323	-		79	SLOTTED HEMFS5X8RFR
	520	312105-0364	-		4	SCREW M6S6X10RFR
	560	315105-0165	-		4	WASHER BRB8,4X16RFR
	580	352103-0106	-		1	CABLE GLANR.ST 11
TBA/9 Without PullTab						
		C- 271513-0602				**Covering Plate, Ass'y**
	F005	**C- 752567-010V**	-		1	**PROTECTIVE CASING**
	010	571921	-		1	COVERING PLATE
	060	469034	-		1	GUSSET PLATE
	490	312105-0451	-		4	SCREW M6S8X20RFR
	500	312125-0325	-		64	SLOTTED HEMCS5X10RFR
	505	312145-0323	-		79	SLOTTED HEMFS5X8RFR
	520	312105-0364	-		4	SCREW M6S6X10RFR
	560	315105-0165	-		4	WASHER BRB8,4X16RFR
	580	352103-0106	-		1	CABLE GLANR.ST 11
TB/9 Without PullTab						
		C- 271513-0603				**Covering Plate, Ass'y**
	015	978003	-		1	COVERING PLATE
	016	978004	-		1	COVERING PLATE
	017	978005	-		1	COVERING PLATE
	060	752796	-		1	SHEET
	065	752804	-		1	COVERING PLATE
	067	752805	-		1	CABLE DUCT
	070	751874	-		1	COVERING PLATE
	075	752797	-		1	SHEET
	085	751873	-		1	COVERING PLATE
	205	751884	-		1	COVERING PLATE
	252	342960-0112	-		10	BULKHEAD L6/4
	253	90143-0060	-	MM	200	STRIP
	254	90261-0001	-		2	PIPE PLUG
	282	752806	-		1	SPACER
	283	752807	-		1	SPACER
	284	752808	-		1	SPACER
	375	90001-0030	-		1	WALL SOCKET
	380	90066-0020	-		1	PUSCH BUTTON BOX
	405	90287-0076	-		39	SCREW
	420	352103-0110	-		1	CABLE GLAND STR 16
	430	90064-0085	-		1	PUSH BUTTON RED
	440	90064-0105	-		1	EMERGENCY STOP
	450	486826-0001	-		1	SIGN
	452	90265-0045	-		1	CONNECTION BOX
	460	359301-0110	-		1	SIGN"SHORT STOP"
	492	312105-0465	-		13	SCREW M6S8X70RFR
	493	312105-0462	-		2	SCREW M6S8X55RFR
	498	312125-0285	-		2	SLOTTED HEMCS4X6RFR
	500	312125-0325	-		40	SLOTTED HEMCS5X10RFR
	502	312145-0224	-		2	SLOTTED HEMFS3X10RFR
	503	312145-0291	-		4	SLOTTED HEMFS4X12RFR
	505	312145-0323	-		91	SLOTTED HEMFS5X8RFR
	520	312105-0364	-		7	SCREW M6S6X10RFR
	525	312155-0368	-		6	SCREW MF6S6X16RFR
	565	315125-0165	-		15	WASHER SB 8,4X26X5 RFR
	580	352103-0106	-		2	CABLE GLANR.ST 11
	590	352101-0103	-		1	LEAD-IN G 18,6
	600	352113-0202	-		4	ARMATURE S8-M
	610	312125-0287	-		4	SLOTTED HEMCS4X8RFR
	620	352113-0102	-		4	RIBBON CLA
TB/9 With PullTab						
		C- 271513-0604				**Covering Plate, Ass'y**
	015	978003	-		1	COVERING PLATE
	016	978004	-		1	COVERING PLATE
	017	978005	-		1	COVERING PLATE
	060	752796	-		1	SHEET
	065	752804	-		1	COVERING PLATE
	067	752805	-		1	CABLE DUCT
	070	751874	-		1	COVERING PLATE
	075	752797	-		1	SHEET
	085	751873	-		1	COVERING PLATE
	205	751884	-		1	COVERING PLATE
	252	342960-0112	-		10	BULKHEAD L6/4
	253	90143-0060	-	MM	200	STRIP
	254	90261-0001	-		2	PIPE PLUG
	282	752806	-		1	SPACER
	283	752807	-		1	SPACER
	284	752808	-		1	SPACER
	375	90001-0030	-		1	WALL SOCKET
	380	90066-0020	-		1	PUSCH BUTTON BOX
	405	90287-0076	-		39	SCREW
	420	352103-0110	-		1	CABLE GLAND STR 16
	430	90064-0085	-		1	PUSH BUTTON RED
	440	90064-0105	-		1	EMERGENCY STOP
	450	486826-0001	-		1	SIGN
	452	90265-0045	-		1	CONNECTION BOX

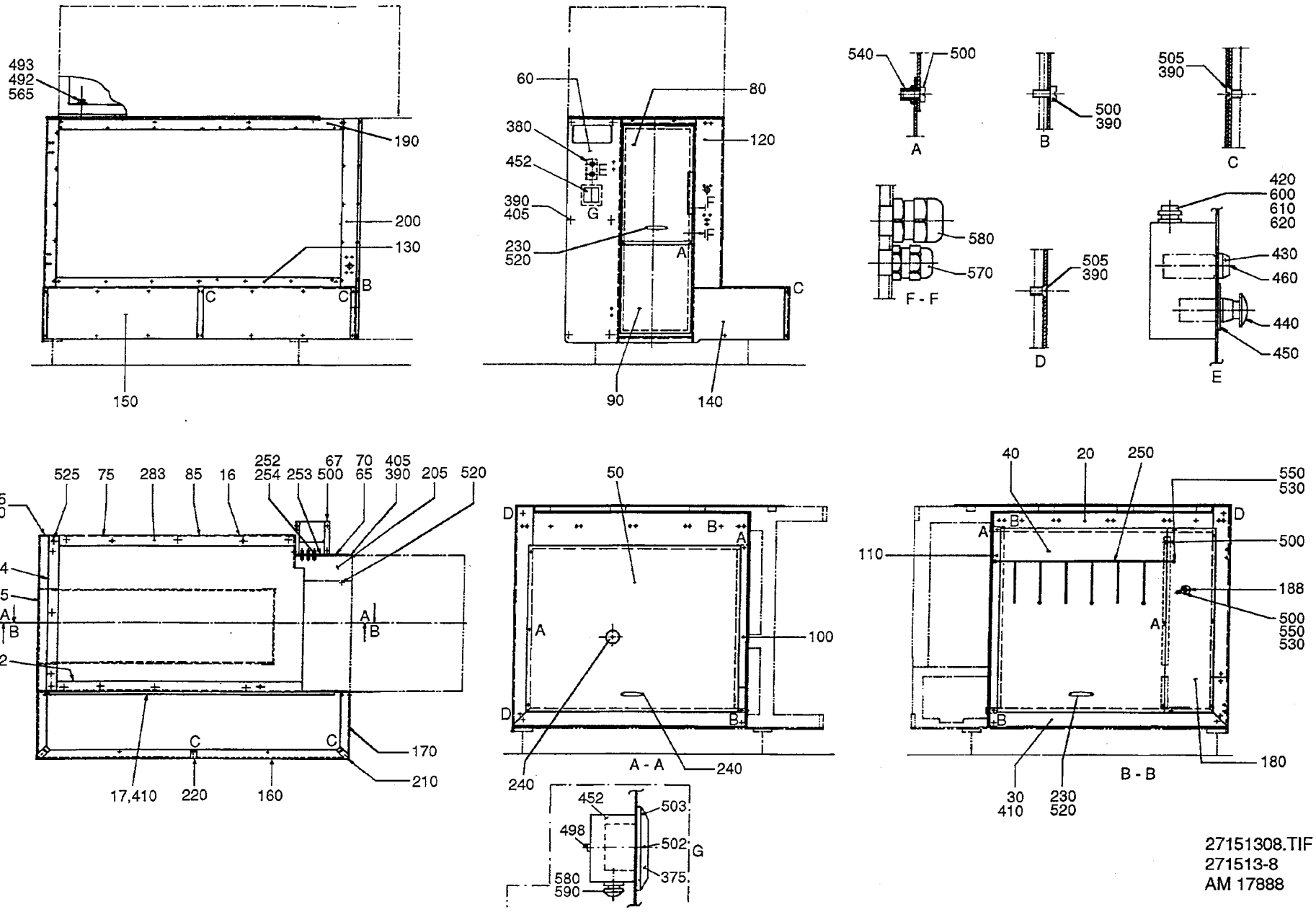

27151308.TIF
271513-8
AM 17888

From	Pos	Part No	SP	UN	Qty	Description
	460	359301-0110	-		1	SIGN"SHORT STOP"
	492	312105-0465	-		13	SCREW M6S8X70RFR
	493	312105-0462	-		2	SCREW M6S8X55RFR
	498	312125-0285	-		2	SLOTTED HEMCS4X6RFR
	500	312125-0325	-		40	SLOTTED HEMCS5X10RFR
	502	312145-0224	-		2	SLOTTED HEMFS3X10RFR
	503	312145-0291	-		4	SLOTTED HEMFS4X12RFR
	505	312145-0323	-		91	SLOTTED HEMFS5X8RFR
	520	312105-0364	-		7	SCREW M6S6X10RFR
	525	312155-0368	-		6	SCREW MF6S6X16RFR
	565	315125-0165	-		15	WASHER SB 8,4X26X5 RFR
	580	352103-0106	-		2	CABLE GLANR.ST 11
	590	352101-0103	-		1	LEAD-IN G 18,6
	600	352113-0202	-		4	ARMATURE S8-M
	610	312125-0287	-		4	SLOTTED HEMCS4X8RFR
	620	352113-0102	-		4	RIBBON CLA
Common Parts						
	020	469033	-		1	COVERING PLATE
	030	295639	-		1	BOTTOM PANEL
	040	572339	-		1	SIDE COVER LEFT
	050	572340	-		1	SIDE PLATE RIGHT
	080	572341	-		1	COVER UPPER
	090	572342	-		1	COVER LOWER
	100	295647	-		1	CORNER STRIP
	110	295648	-		1	CORNER STRIP
	120	469035	-		1	GUSSET PLATE
	130	295650	-		1	COVERING PLATE
	140	295651	-		1	COVERING PLATE
	150	295652	-		1	COVERING PLATE
	160	295653	-		1	COVERING PLATE
	170	295654	-		1	COVERING PLATE
	180	572343	-		1	SIDEPLATE LEFT
	188	978605	-		1	BRACKET
	190	469038	-		1	COVERING PLATE
	200	469039	-		1	COVERING PLATE
	210	295658	-		2	COVER SLIP
	220	295659	-		1	COVER SLIP
	230	7309	-		2	HANDLE
	240	491286	-		1	REFLECTOR
	250	978767	-		1	HOLDER
	390	90157-0016	-	ML	X	LOCKING FLUID
	400	90157-0022	-	G	X	SEALING COMPOUND
	410	90298-0012	-		X	INHIBITOR
	530	312605-0314	-		8	NUT M6M5RFR
	540	312923-0122	-		14	NUT FO M5X11,6 RFR
	550	315105-0146	-		8	WASHER BRB5,3X10RFR
	570	352103-0101	-		1	CABLE GLAND ST 9

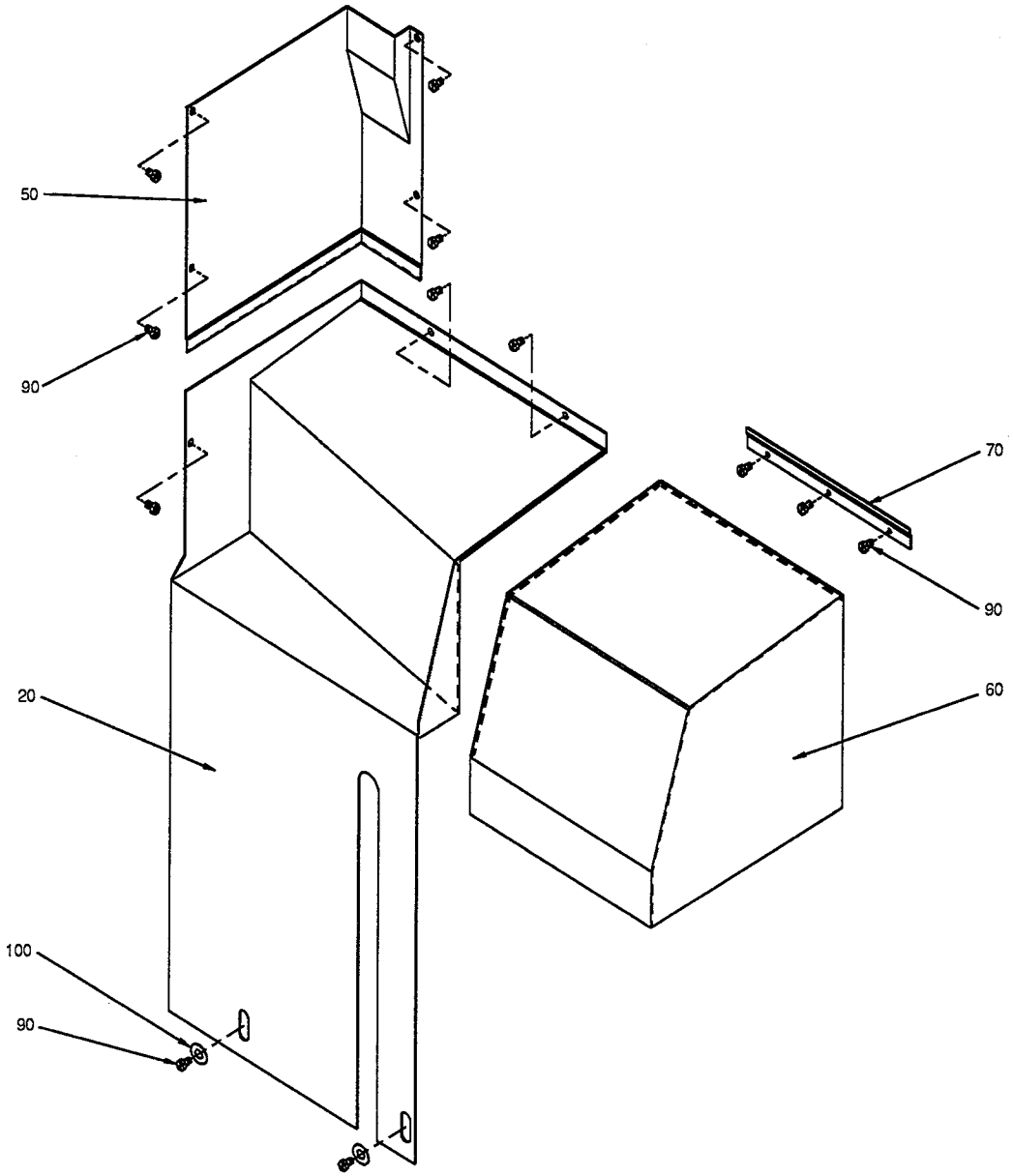

75256701.WPG
752567-1
AM 14654

Last Alteration: AM 14654 90-11-16

Corresponding group: 752567-010V
Assembly Drawing: 752567-1

Issue: **940524**

From	Pos	Part No	SP	UN	Qty	Description
		C- 752567-0101				**Protective Casing, Ass'y**
	020	752502	-		1	PROTECTIVE CASING
	050	752504	-		1	COVERING PLATE
	060	752503	-		1	PROTECTIVE CASING
	070	752505	-		1	BRACKET
	090	312125-0325	-		12	SLOTTED HEMCS5X10RFR
	100	544864	-		2	WASHER

From	Pos	Part No	SP	UN	Qty	Description

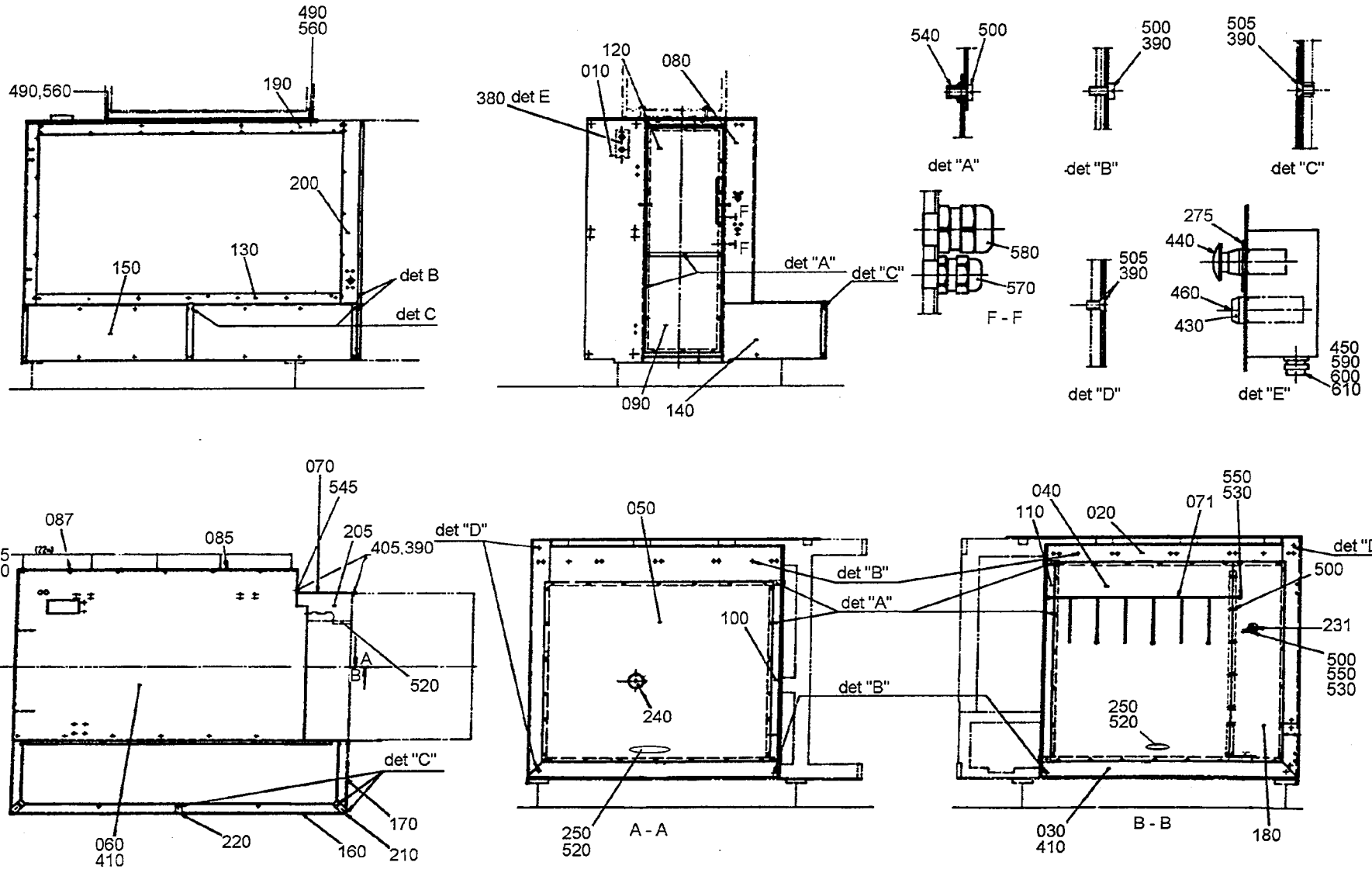

75188503.TIF
751885-3
AM 17888

Last Alteration: AM 17888 93-01-27

Corresponding group: 751885-030V
Assembly Drawing: 751885-3

Issue: 940524

From	Pos	Part No	SP	UN Qty	Description
		C- 751885-0301			**Cover Plates, Ass'y**
	010	555436	-	1	SHEET
	020	469033	-	1	COVERING PLATE
	030	295639	-	1	BOTTOM PANEL
	040	572339	-	1	SIDE COVER LEFT
	050	572340	-	1	SIDE PLATE RIGHT
	060	978608	-	1	COVERING PLATE
	070	553656	-	1	COVERING PLATE
	071	272696	-	1	HOLDER
	080	469035	-	1	GUSSET PLATE
	085	555439	-	1	SHEET
	087	555438	-	1	SHEET
	090	572342	-	1	COVER LOWER
	100	295647	-	1	CORNER STRIP
	110	295648	-	1	CORNER STRIP
	120	572341	-	1	COVER UPPER
	130	295650	-	1	COVERING PLATE
	140	295651	-	1	COVERING PLATE
	150	295652	-	1	COVERING PLATE
	160	295653	-	1	COVERING PLATE
	170	295654	-	1	COVERING PLATE
	180	572343	-	1	SIDEPLATE LEFT
	190	469038	-	1	COVERING PLATE
	200	469039	-	1	COVERING PLATE
	205	751884	-	1	COVERING PLATE
	210	295658	-	2	COVER SLIP
	220	295659	-	1	COVER SLIP
	230	441069-0001	-	1	BRACKET
	231	978605	-	1	BRACKET
	235	441069-0002	-	1	BRACKET
	240	491286	-	1	REFLECTOR
	250	7309	-	3	HANDLE
	275	486826-0001	-	1	SIGN
	380	90066-0020	-	1	PUSCH BUTTON BOX
	390	90157-0016	-	X	LOCKING FLUID
	405	90287-0076	-	34	SCREW
	410	90298-0012	-	X	INHIBITOR
	430	90064-0085	-	1	PUSH BUTTON RED
	440	90064-0105	-	1	EMERGENCY STOP
	450	352103-0110	-	1	CABLE GLAND STR 16
	460	359301-0110	-	1	SIGN"SHORT STOP"
	490	312105-0451	-	4	SCREW M6S8X20RFR
	500	312125-0325	-	64	SLOTTED HEMCS5X10RFR
	505	312145-0323	-	79	SLOTTED HEMFS5X8RFR
	520	312105-0364	-	9	SCREW M6S6X10RFR
	530	312605-0314	-	8	NUT M6M5RFR
	540	312923-0122	-	14	NUT FO M5X11,6 RFR
	545	312923-0131	-	3	NUT FO M6X15,0RFR
	550	315105-0146	-	8	WASHER BRB5,3X10RFR
	560	315105-0165	-	4	WASHER BRB8,4X16RFR
	570	352103-0101	-	1	CABLE GLAND ST 9
	580	352103-0106	-	1	CABLE GLANR.ST 11
	590	352113-0202	-	4	ARMATURE S8-M
	600	312125-0287	-	4	SLOTTED HEMCS4X8RFR
	610	352113-0102	-	4	RIBBON CLA

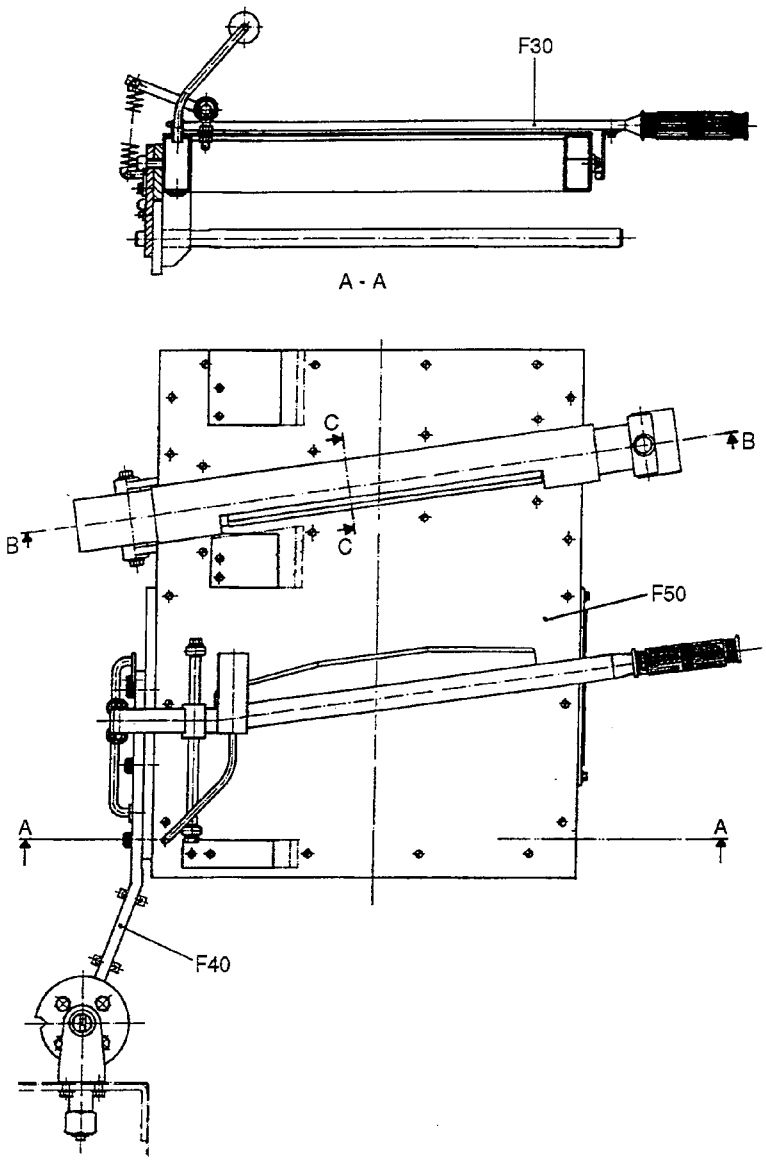

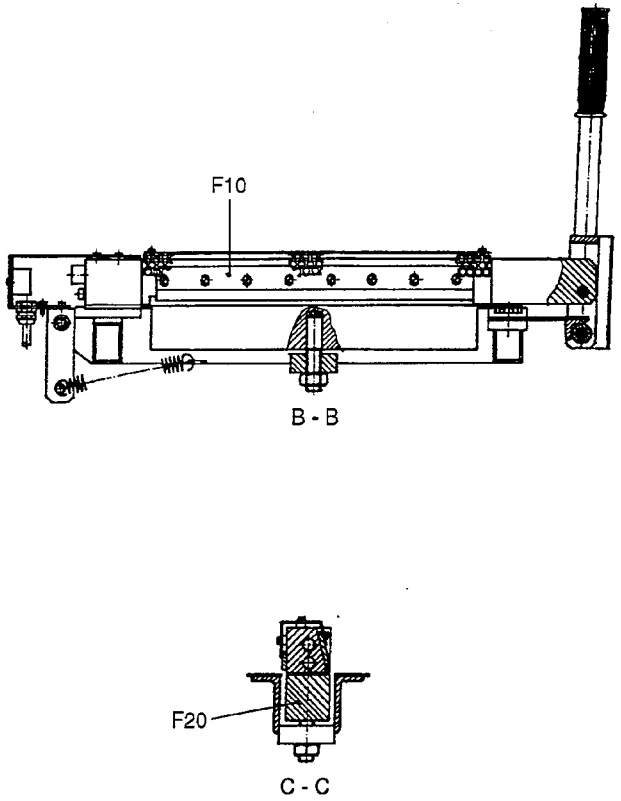

27169904.TIF
271699-4
AM 17888

Last Alteration: AM 20224 93-10-28

Corresponding group: 271699-040V
Assembly Drawing: 271699-4

Issue: **940524**

From	Pos	Part No	SP	UN	Qty	Description
284ml - 180ml						
		C- 271699-0401				Splicing Device, Ass'y
125ml						
		C- 271699-0402				Splicing Device, Ass'y
200ml Slim 160ml						
		C- 271699-0403				Splicing Device, Ass'y
250ml Slim						
		C- 271699-0404				Splicing Device, Ass'y
	F010	C- 37877-0301	-		1	HEATING BLOCK
	F020	C- 37894-0101	-		1	COUNTER RAIL
	F030	C- 450101-0201	-		1	TEARING DEVICE
	F040	C- 271626-0301	-		1	SUSPENSION ARM
	F050	C- 271641-020V	-		1	TABLE

From	Pos	Part No	SP	UN	Qty	Description

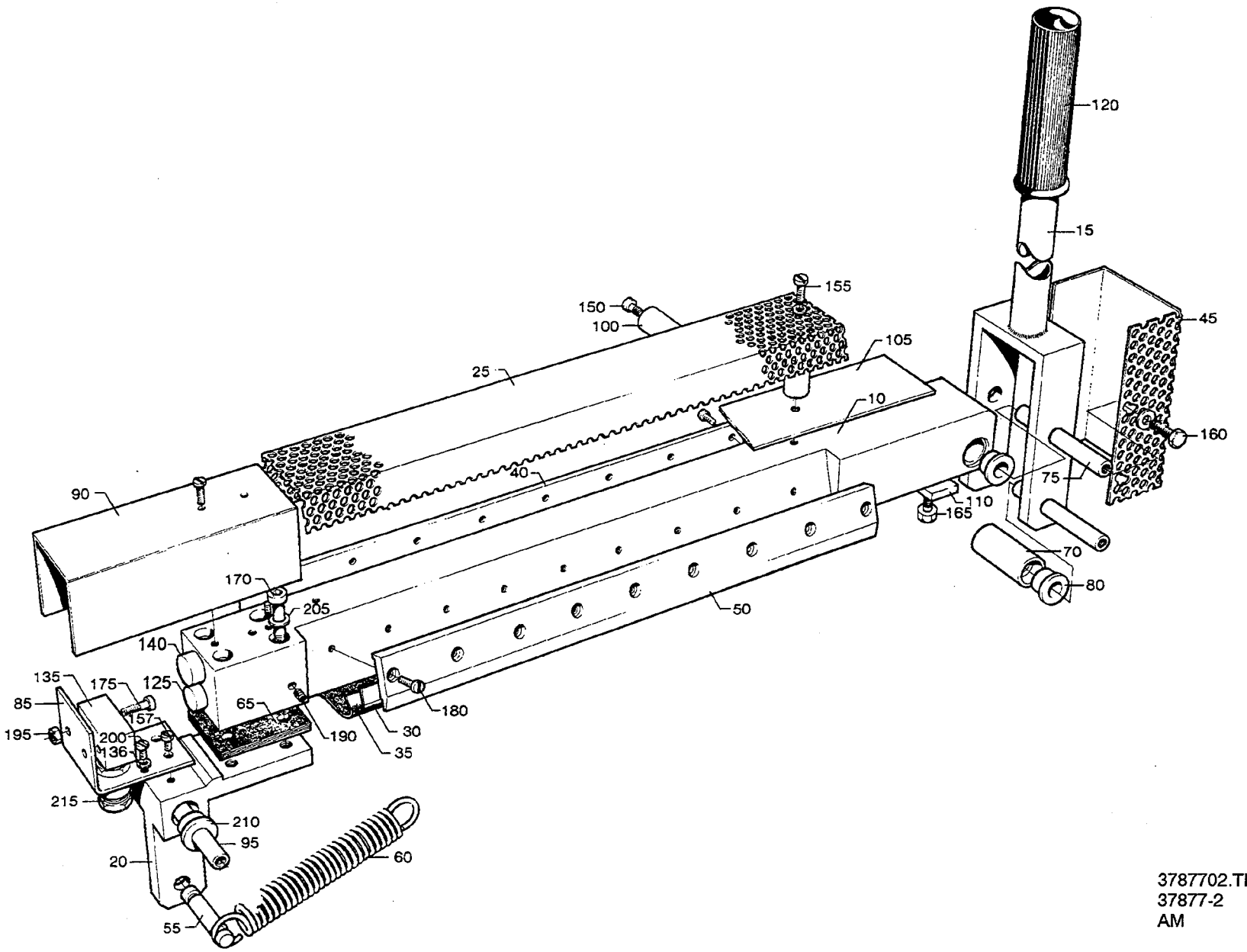

3787702.TIF
37877-2
AM

Last Alteration: AM 17888 93-01-27

Corresponding group: 37877-030V
Assembly Drawing: 37877-2

Issue: **940524**

From	Pos	Part No	SP	UN	Qty	Description
		C- 37877-0301				**Heating Block, Ass'y**
	010	255301	-		1	HEATING RAIL
	015	37879	-		1	LOCKING ARM
	020	37880	-		1	HINGE
	025	243132	-		1	PROTECTION PLATE
	030	31017	S		1	KNIFE
	035	31723	P		1	TEFLON STRIP
	040	31724	-		1	LOCK BAR
	045	37882	-		1	PROTECTION PLATE
	050	37883	-		1	LOCK BAR
	055	37884	S		1	SHAFT
	060	37885	S		2	TENSION SPRING
	065	37886	S		1	INSULATING DISK
	070	37888	S		1	ROLL
	075	37889	S		2	SHAFT
	080	37890	S		4	FLANGE ROLLER
	085	37892	-		1	CONNECTION BOX
	090	37893	-		1	LID
	095	208173	S		1	SHAFT
	100	229775	-		6	SPACER
	105	243133	-		1	SHIELD PLATE
	110	245221	-		1	STOP
	120	90017-0001	S		1	HANDLE
	125	90059-0001	S		1	THERMOSTAT
	130	90099-0002	-		1	NUT
	135	90077-0102	-		1	TERMINAL BLOCK
	137	90194-0016	-		1	SIGN"FLASH SIGN"
	140	90206-0053	S		1	HEATING ELEMENT
	150	312101-0297	-		2	SCREW M6S4X25FZB
	155	312101-0304	-		2	SCREW M6S4X45FZB
	157	312101-0323	-		2	SCREW M6S5X8FZB
	160	312105-0364	-		4	SCREW M6S6X10RFR
	165	312105-0449	-		2	SCREW M6S8X16RFR
	170	312115-0380	-		4	SCREW 6X50 A4 80
	175	312125-0230	-		2	SLOTTED HEMCS3X20RFR
	180	312125-0287	-		19	SLOTTED HEMCS4X8RFR
	190	312316-0287	S		2	STOP SCREW SK6SS4X8FZB
	195	312605-0310	-		2	NUT M6M3RFR
	200	315105-0136	-		5	WASHER BRB4,3X8RFR
	205	315105-0153	-		8	WASHER BRB6,4X12RFR
	210	321101-0173	S		2	FLANGE BUS 12F7X12
	215	352103-0106	-		1	CABLE GLANR.ST 11

From	Pos	Part No	SP	UN	Qty	Description

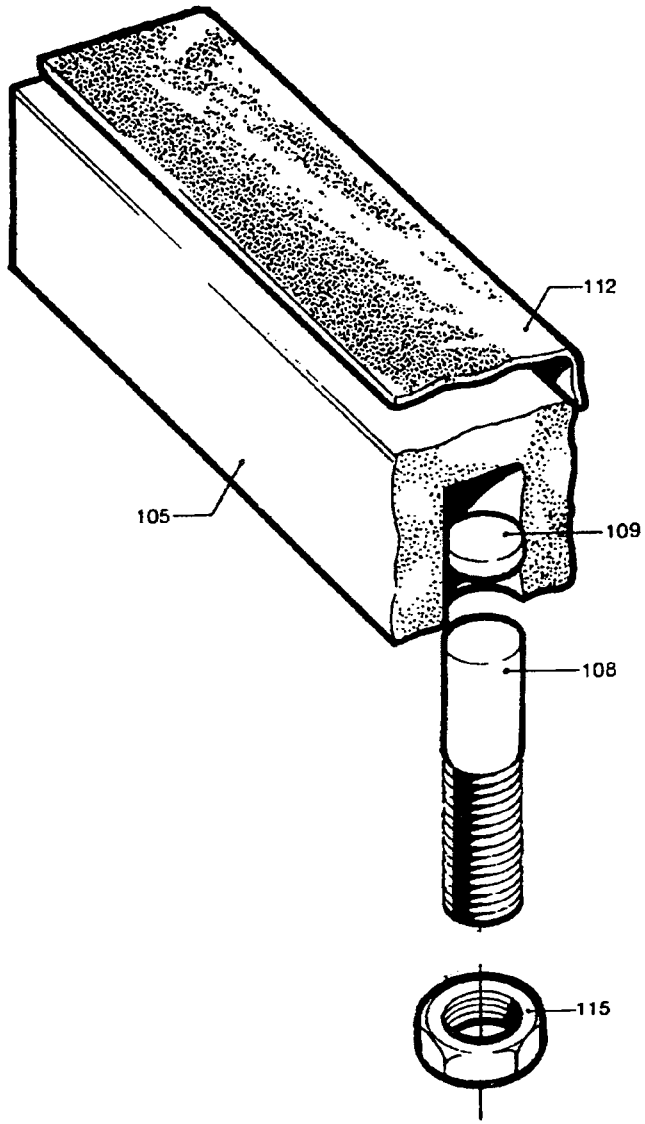

03789401.TIF
37894-1
AM 5061

Last Alteration: AM 5061 81-11-06

Corresponding group: 37894-010V
Assembly Drawing: 37894-1

Issue: **940524**

From	Pos	Part No	SP	UN	Qty	Description
		C- 37894-0101				**Counter Rail, Ass'y**
	105	37895	-		1	RAIL
	108	37896	-		1	DOWEL
	109	37897	-		1	WASHER
	112	90144-0030	P	MM	360	TAPE
	115	312601-0324	-		1	NUT M6M16FZB

From	Pos	Part No	SP	UN	Qty	Description

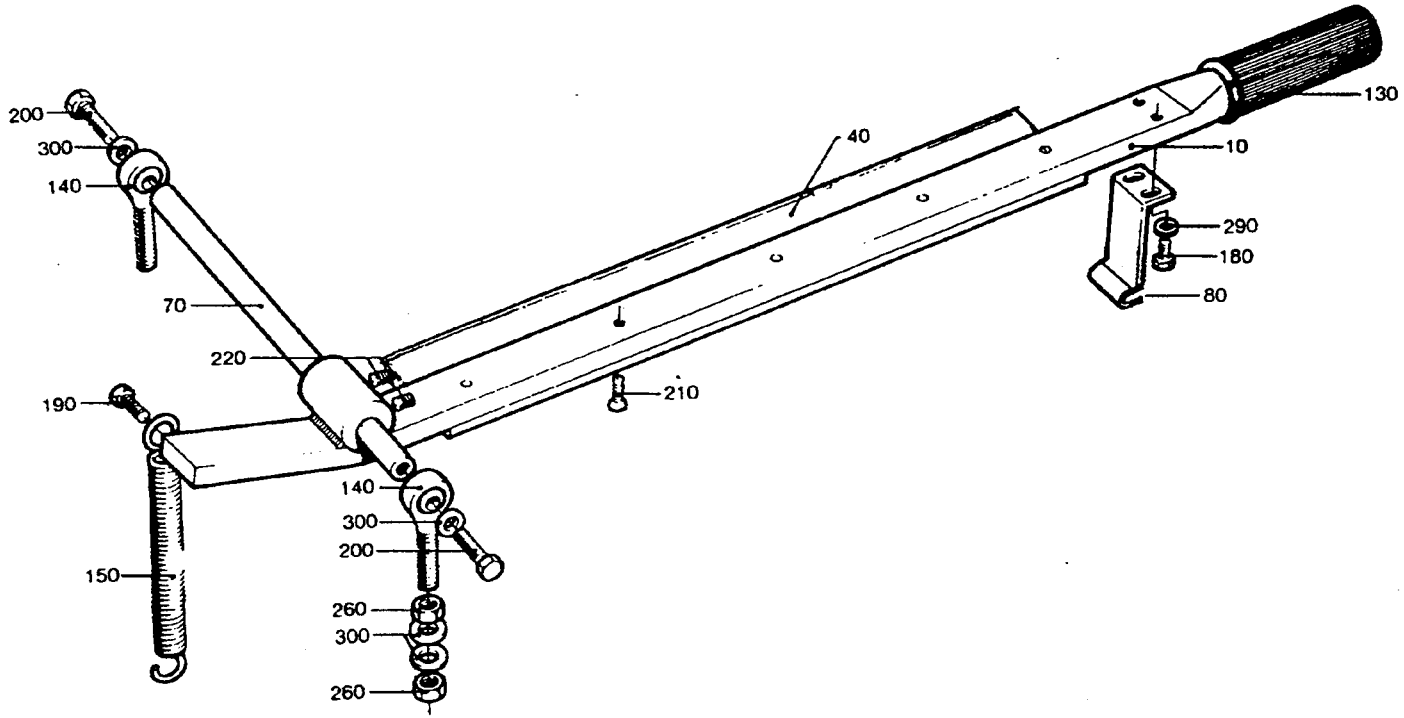

45010101.TIF
450101-1
AM 6886

Last Alteration: AM 17888 93-01-27

Corresponding group: 450101-020V
Assembly Drawing: 450101-2

Issue: **940524**

From	Pos	Part No	SP	UN	Qty	Description
		C- 450101-0201				**Tearing Device, Ass'y**
	010	571920	-		1	PRESSURE ARM
	040	37900	-		1	KNIFE
	070	37901	-		1	SHAFT
	080	206913	-		1	LOCKING LOOP
	130	90017-0001	-		1	HANDLE
	140	90115-0054	-		2	JOINT
	150	90335-0004	S		2	SPRING
	180	312101-0327	-		2	SCREW M6S5X12FZB
	190	312101-0329	-		2	SCREW M6S5X16FZB
	200	312105-0455	-		2	SCREW M6S8X30RFR
	210	312145-0291	-		5	SLOTTED HEMFS4X12RFR
	220	312316-0321	-		2	STOP SCREW SK6SS5X6FZB
	260	312605-0318	-		4	NUT M6M8RFR
	290	315101-0146	-		2	WASHER BRB5,3X10FZB
	300	315105-0165	-		6	WASHER BRB8,4X16RFR

From	Pos	Part No	SP	UN	Qty	Description

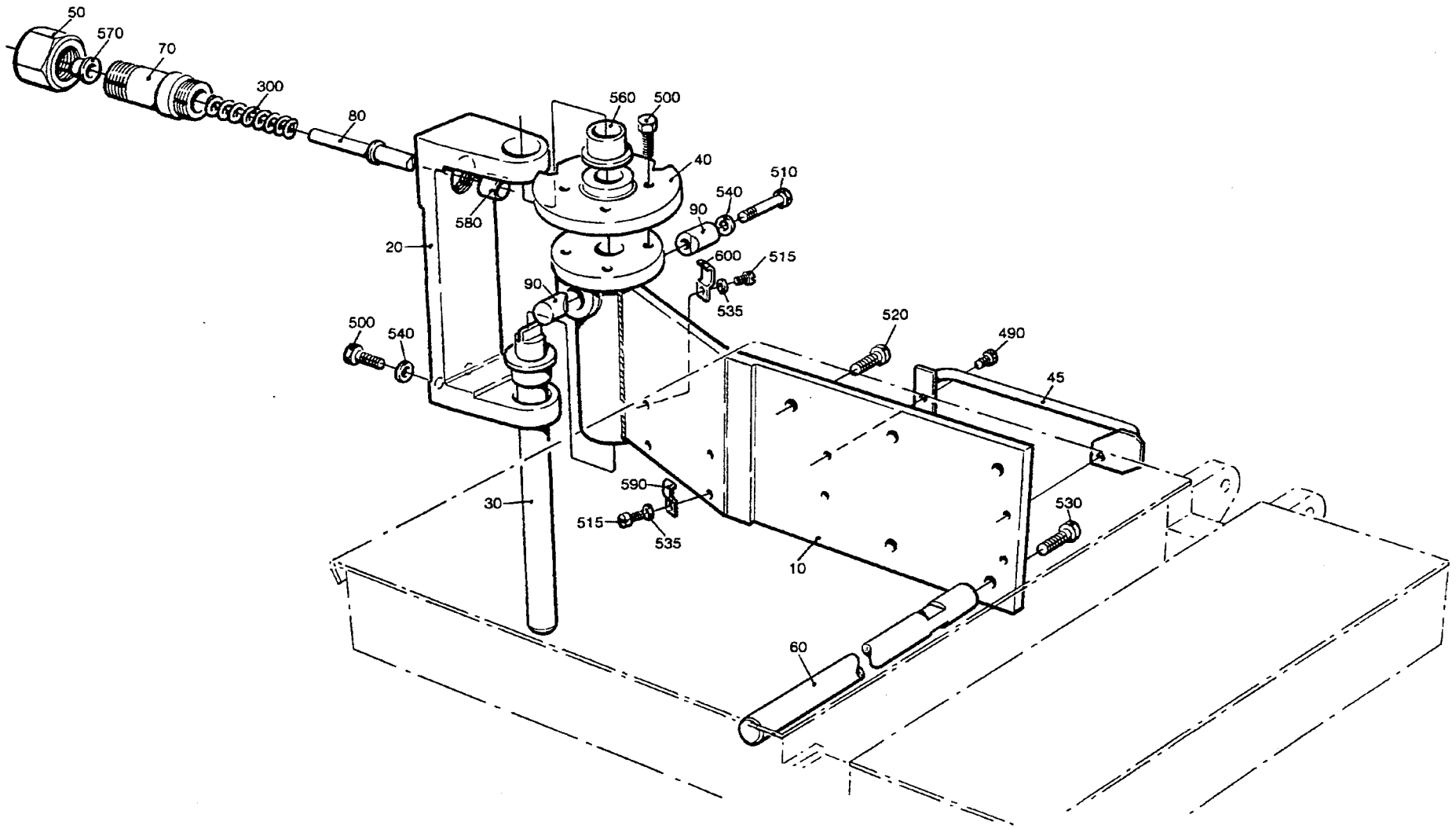

27162603.TIF
271626-3
AM 6793

Last Alteration: AM 6793 84-05-03

Corresponding group: 271626-030V
Assembly Drawing: 271626-3

Issue: **940524**

From	Pos	Part No	SP	UN Qty	Description
		C- 271626-0301			**Suspension Arm, Ass'y**
	010	469076	-	1	ARM
	020	272864	-	1	BRACKET
	030	272865	-	1	SHAFT
	040	272866	S	1	LOCKING FLANGE
	045	458380	-	1	BOW CLAMP
	050	271632	S	1	HOOD
	060	272862	C	1	HOLDER
	070	272867	S	1	SPRING HOUSING
	080	272868	S	1	STOPPER DOWEL
	090	272869-0001	S	1	FLAP
	090	272869-0002	S	1	FLAP
	300	37927	S	1	COMPRESSION SPRING
	490	312105-0364	-	2	SCREW M6S6X10RFR
	500	312105-0451	-	8	SCREW M6S8X20RFR
	510	312105-0459	-	1	SCREW M6S8X40RFR
	515	312125-0291	-	6	SLOTTED HEMCS4X12RFR
	520	312115-0491	-	4	SCREW 10X20 A4 80
	530	312115-0495	-	1	SCREW 10X30 A4 80
	535	315105-0136	-	6	WASHER BRB4,3X8RFR
	540	315105-0165	-	5	WASHER BRB8,4X16RFR
	560	321101-0233	S	2	FLANGE BUS 20F7X20
	570	321111-0134	S	1	FLANGE BUS 10E7X8
	580	321116-0151	-	1	BUSHING 12E7/16X12
	590	352110-0100	-	2	CRAMP TK 5-7
	600	352110-0102	-	4	CRAMP TK 10-14

From	Pos	Part No	SP	UN Qty	Description

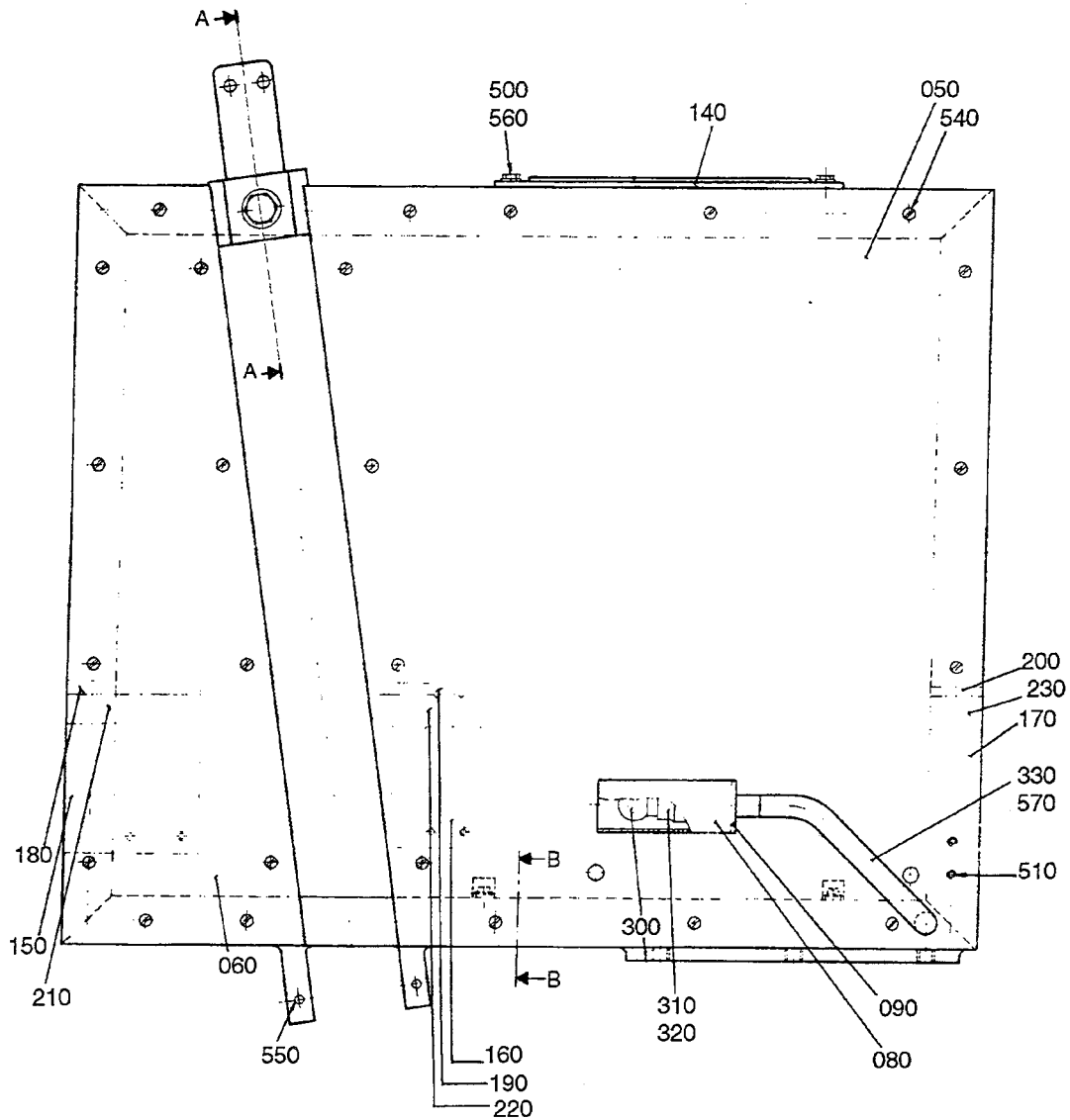

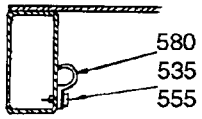

B - B

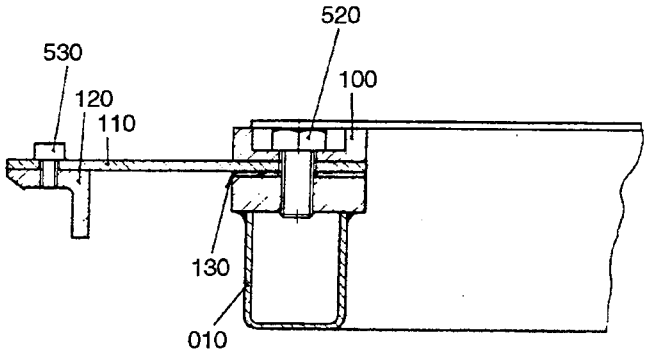

A - A

27164102.TIF
271641-2
AM 19271

From	Pos	Part No	SP	UN Qty	Description
236ml - 180ml					
		C- 271641-0201			**Table, Ass'y**
	150	37913	-	1	RULER
	160	37916	-	1	RULER
	170	37917	-	1	RULER
125ml					
		C- 271641-0202			**Table, Ass'y**
	180	271642	-	1	RULER
	190	271643	-	1	RULER
	200	271644	-	1	RULER
160ml 200ml Slim					
		C- 271641-0203			**Table, Ass'y**
	210	272886	-	1	RULER
	220	272887	-	1	RULER
	230	272888	-	1	RULER
250ml Slim					
		C- 271641-0204			**Table, Ass'y**
	240	574426	-	1	RULER
	250	574427	-	1	RULER
	260	574428	-	1	RULER

From	Pos	Part No	SP	UN Qty	Description
Common Parts					
	010	37905	-	1	FRAME
	050	37906	-	1	SHEET
	060	37907	-	1	SHEET
	080	37774	-	1	PROTECTIVE COVER
	090	37775	-	1	LAMP HOLDER
	100	37908	-	1	PLATE
	110	37909	S	1	SPRING
	120	37910	-	1	LOCK
	130	37911	S	1	LACE
	140	37912	-	1	LOCK PLATE
	300	90036-0009	P	1	BULB
	310	90037-0001	-	1	LAMPHOLDER
	320	90086-0001	-	1	NIPPLE
	330	90152-0001	-	MM 200	HOSE
	500	312105-0325	-	2	SCREW M6S5X10 A2 80
	510	312105-0362	-	6	SCREW M6S6X8RFR
	520	312105-0491	-	1	SCREW M6S10X20RFR
	530	312115-0323	-	2	SCREW 5X8 A4 80
	535	312125-0287	-	2	SLOTTED HEMCS4X8RFR
	540	312145-0220	-	25	SLOTTED HEMFS3X6RFR
	550	312318-0362	-	2	STOP SCREW SK6SS6X8RFR
	555	315105-0136	-	2	WASHER BRB4,3X8RFR
	560	315105-0146	-	2	WASHER BRB5,3X10RFR
	570	352101-0102	-	1	LEAD-IN G 15,2
	580	352110-0102	-	2	CRAMP TK 10-14

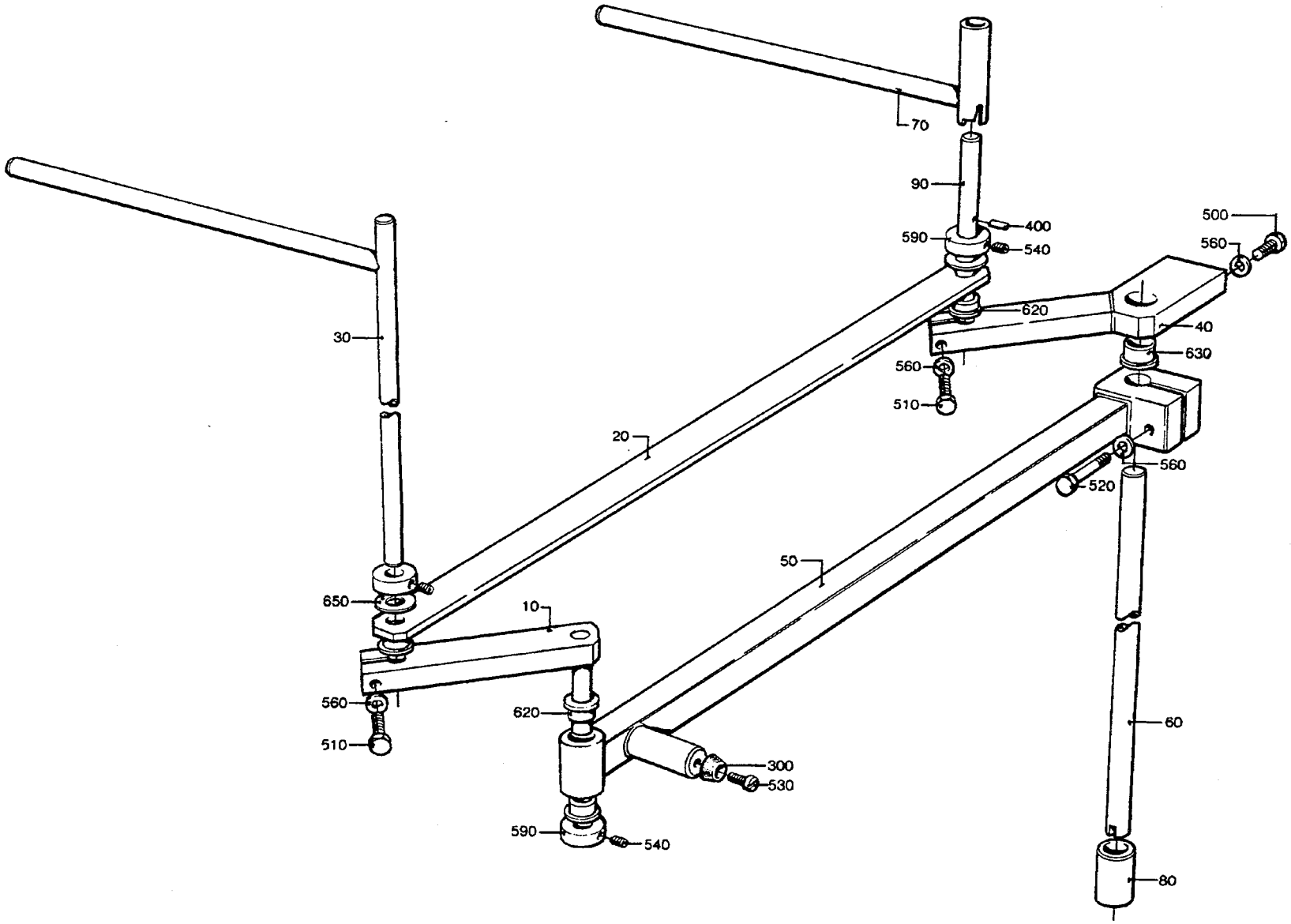

27199202.TIF
271992-2
AM 6808

Last Alteration: AM 6808 84-05-10

Corresponding group: 271992-020V
Assembly Drawing: 271992-2

Issue: **940524**

From	Pos	Part No	SP	UN	Qty	Description
		C- 271992-0201				**Paper Holder, Ass'y**
	010	271380	-		1	LINK
	020	271381	-		1	STRUT
	030	271428	-		1	HOLDER
	040	271993	-		1	BEARING
	050	295408	-		1	ARM
	060	295409	-		1	SHAFT
	070	469141	-		1	HOLDER
	080	271995	-		1	SLEEVE
	090	295661	-		1	SHAFT
	300	90347-0005	S		1	VIBRATION DAMPER
	400	311103-0267	S		1	CYLINDRICACP M6 4X10 RFR
	500	312105-0451	-		2	SCREW M6S8X20RFR
	510	312105-0455	-		2	SCREW M6S8X30RFR
	520	312105-0459	-		1	SCREW M6S8X40RFR
	530	312125-0291	-		1	SLOTTED HEMCS4X12RFR
	540	312318-0362	-		3	STOP SCREW SK6SS6X8RFR
	560	315105-0165	-		5	WASHER BRB8,4X16RFR
	590	315742-0112	-		3	RETAINING 16SMS199RFR
	620	321101-0202	S		4	FLANGE BUS 16F7X12
	630	321101-0233	S		1	FLANGE BUS 20F7X20
	650	321129-0117	S		2	THRUST WAS16/30X1,5

From	Pos	Part No	SP	UN	Qty	Description

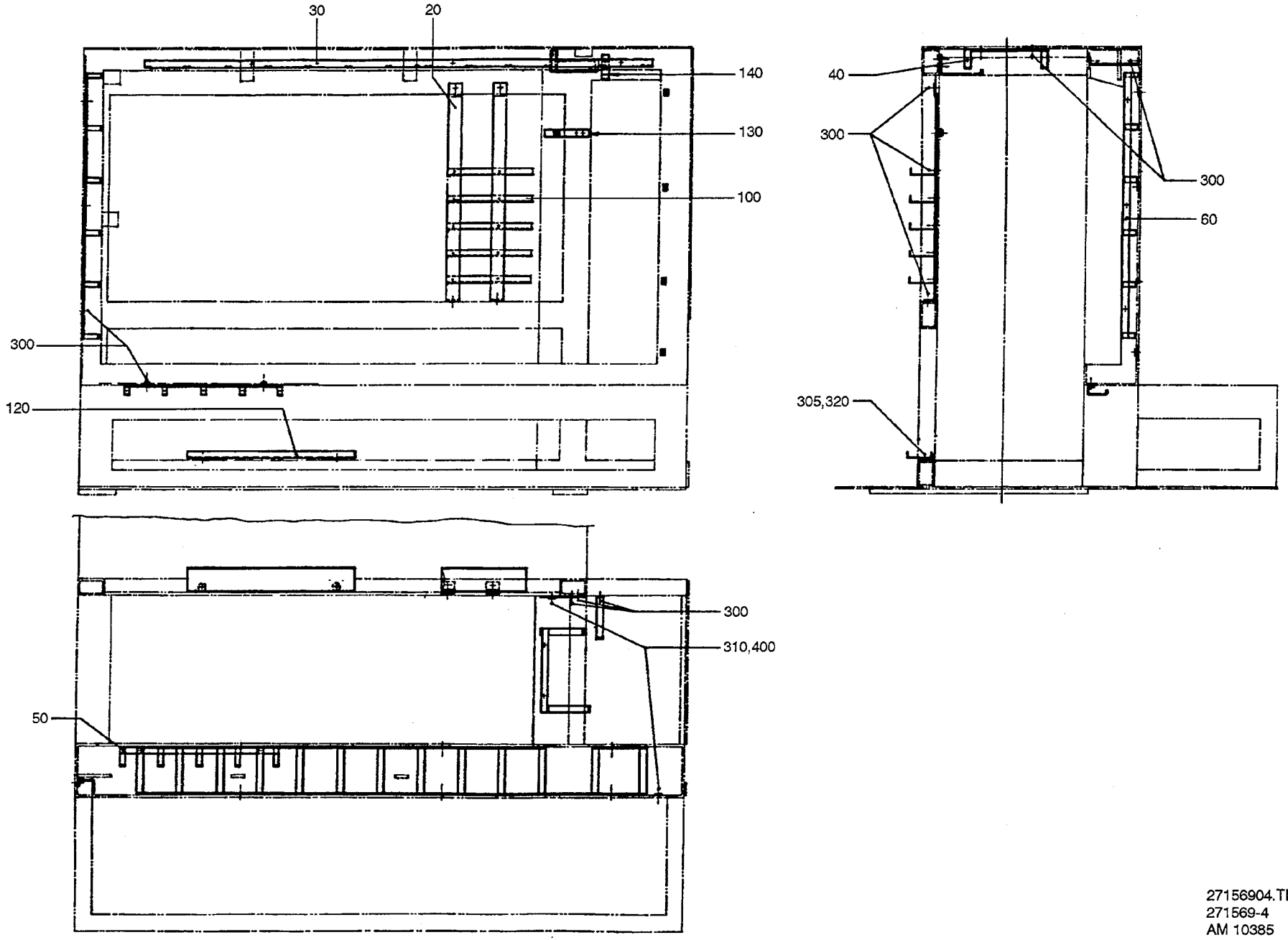

27156904.TIF
271569-4
AM 10385

From	Pos	Part No	SP	UN	Qty	Description
TBA/9						
		C- 271569-0501				**Cable Track, Ass'y**
	100	295616	-		5	CABLE TRENCH
	120	469432	-		1	CABLE TRENCH
	305	312101-0368	-		2	SCREW M6S6X16FZB
	320	315121-0173	-		2	WASHER BRSB10,5X28FZB
Common parts						
	020	295615	-		2	BRACKET
	030	272559	-		1	CABLE TRACK
	040	295296	-		1	CABLE TRACK
	050	491945	-		1	CABLE TRACK
	060	491946	-		1	CABLE TRACK
	130	751059	-		1	BRACKET
	140	751060	-		1	BRACKET
	300	312101-0364	-		31	SCREW M6S6X10FZB
	310	312121-0285	-		5	SLOTTED HEMCS4X6FZB
	400	352113-0202	-		5	ARMATURE -TM2-S8

From	Pos	Part No	SP	UN	Qty	Description

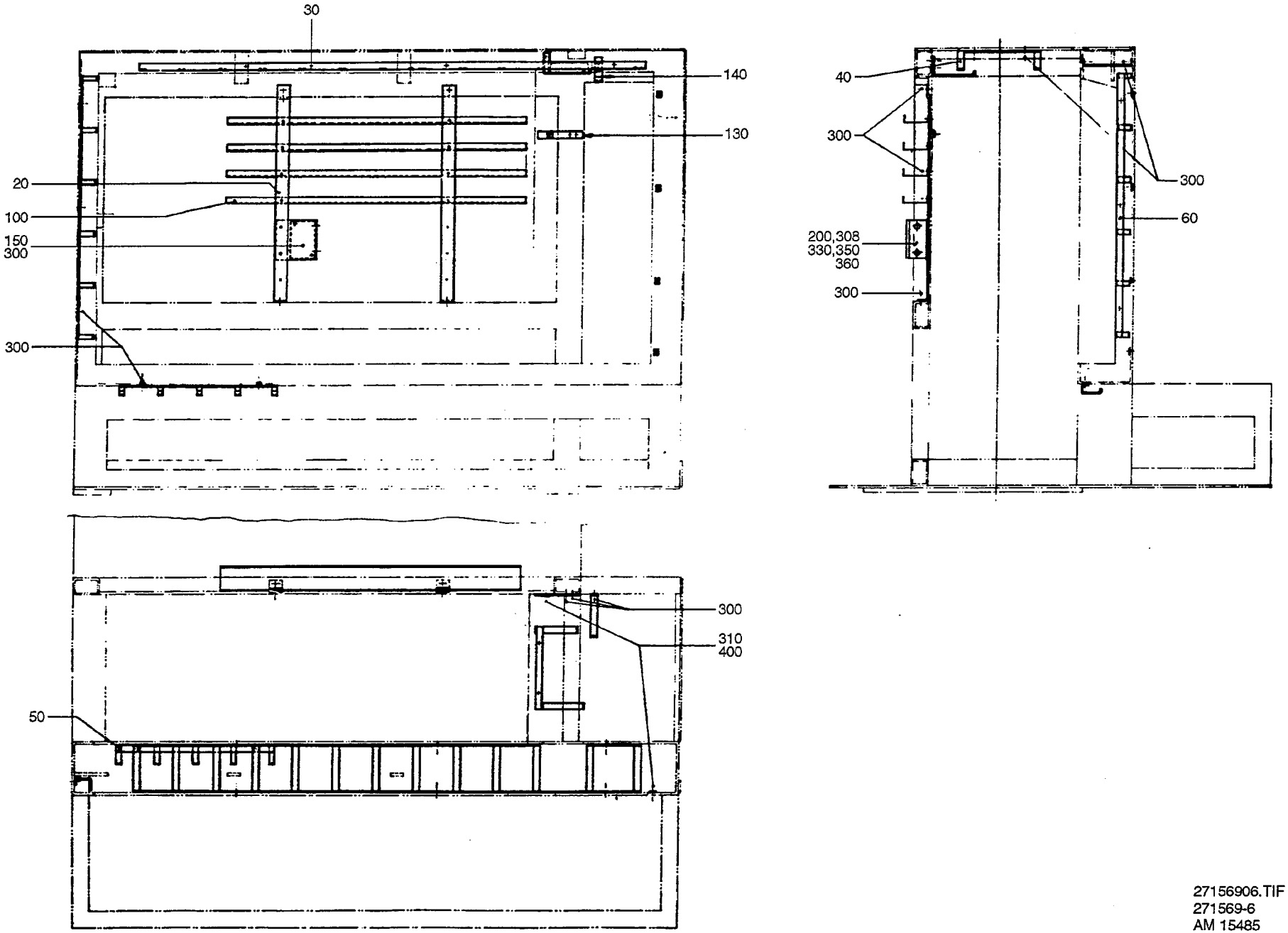

27156906.TIF
271569-6
AM 15485

From	Pos	Part No	SP	UN Qty	Description
TBA/9 C					
		C- 271569-0502			**Cable Track, Ass'y**
	100	751877	-	4	CABLE TRENCH
	150	552847	-	1	SHEET
	200	90265-0020	-	1	CONNECTION BOX
	308	315105-0136	-	2	WASHER BRB4,3X8RFR
	330	352103-0105	-	4	CABLE GLANR.STR 11
	350	312125-0293	-	2	SLOTTED HEMCS4X16RFR
	360	312602-0312	-	2	NUT M6M4MSGFN
Common parts					
	020	295615	-	2	BRACKET
	030	272559	-	1	CABLE TRACK
	040	295296	-	1	CABLE TRACK
	050	491945	-	1	CABLE TRACK
	060	491946	-	1	CABLE TRACK
	130	751059	-	1	BRACKET
	140	751060	-	1	BRACKET
	300	312101-0364	-	31	SCREW M6S6X10FZB
	310	312121-0285	-	5	SLOTTED HEMCS4X6FZB
	400	352113-0202	-	5	ARMATURE -TM2-S8

From	Pos	Part No	SP	UN Qty	Description

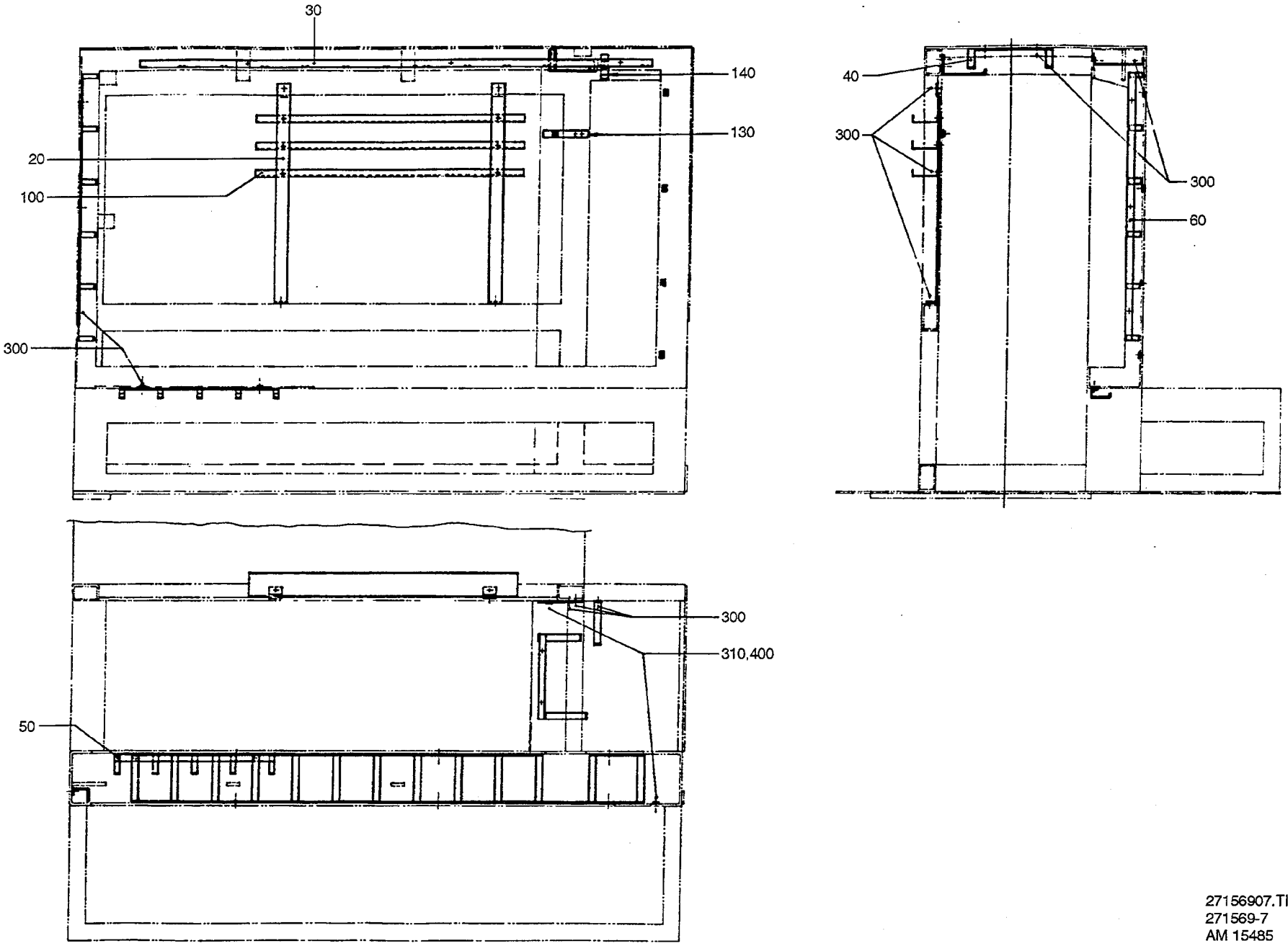

27156907.TIF
271569-7
AM 15485

From	Pos	Part No	SP	UN Qty	Description
TB/9					
		C- 271569-0503			Cable Track, Ass'y
	100	978355	-	3	CABLE TRENCH
Common parts					
	020	295615	-	2	BRACKET
	030	272559	-	1	CABLE TRACK
	040	295296	-	1	CABLE TRACK
	050	491945	-	1	CABLE TRACK
	060	491946	-	1	CABLE TRACK
	130	751059	-	1	BRACKET
	140	751060	-	1	BRACKET
	300	312101-0364	-	31	SCREW M6S6X10FZB
	310	312121-0285	-	5	SLOTTED HEMCS4X6FZB
	400	352113-0202	-	5	ARMATURE -TM2-S8

From	Pos	Part No	SP	UN Qty	Description

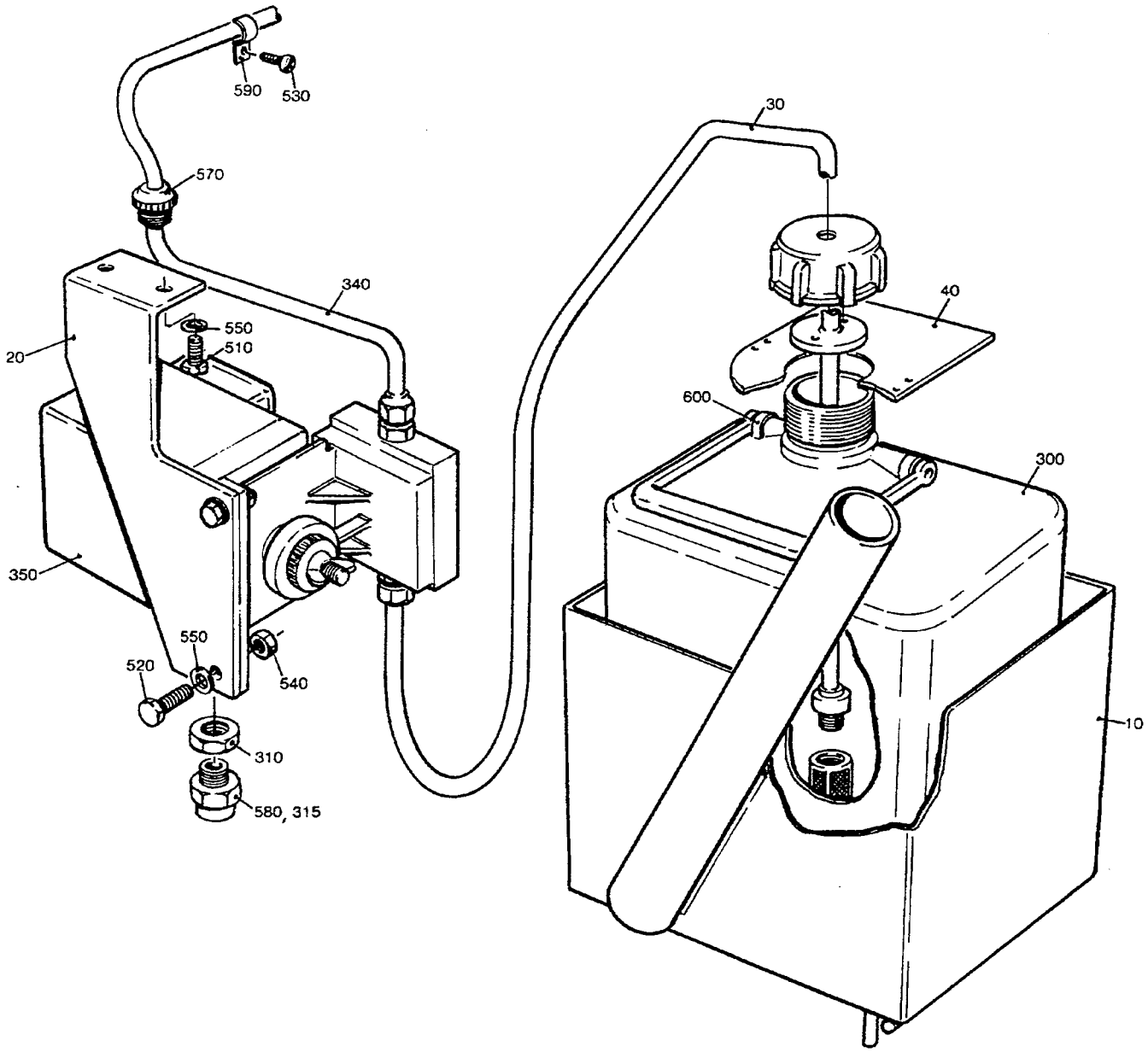

49076101.TIF
490761-1
AM 20090

From	Pos	Part No	SP	UN	Qty	Description
		C-490761-0101				**Detergent Pump, Ass'y**
	010	490768	-		1	BOX
	020	490769	-		1	BRACKET
	030	979217	-		1	TUBE
	040	295387	-		1	SIGN BOARD
	050	35962	S		1	LID
	300	90050-0011	S		1	BOTTLE
	310	90099-0003	-		1	NUT
	315	90195-0020	-		1	TERMINAL BLOCK
	340	90166-0008	-	MM	2000	HOSE
	350	90321-0037	-		1	UMP
		90166-0157	S	MM	1500	* HOSE
		90321-0380	S		0	* DIAPHRAGM
		90321-0396	S		0	* FILTER
	510	312105-0366	-		2	SCREW M6S6X12RFR
	520	312105-0370	-		2	SCREW M6S6X20RFR
	530	312125-0285	-		1	SLOTTED HEMCS4X6RFR
	540	312605-0316	-		2	NUT M6M6RFR
	550	315105-0153	-		4	WASHER BRB6,4X12RFR
	570	352101-0105	-		1	LEAD-IN G 22,5
	580	352103-0110	-		1	CABLE GLAND STR 16
	590	352110-0102	-		1	CRAMP TK 10-14
	600	352113-0101	-		2	RIBBON CLA

From	Pos	Part No	SP	UN	Qty	Description

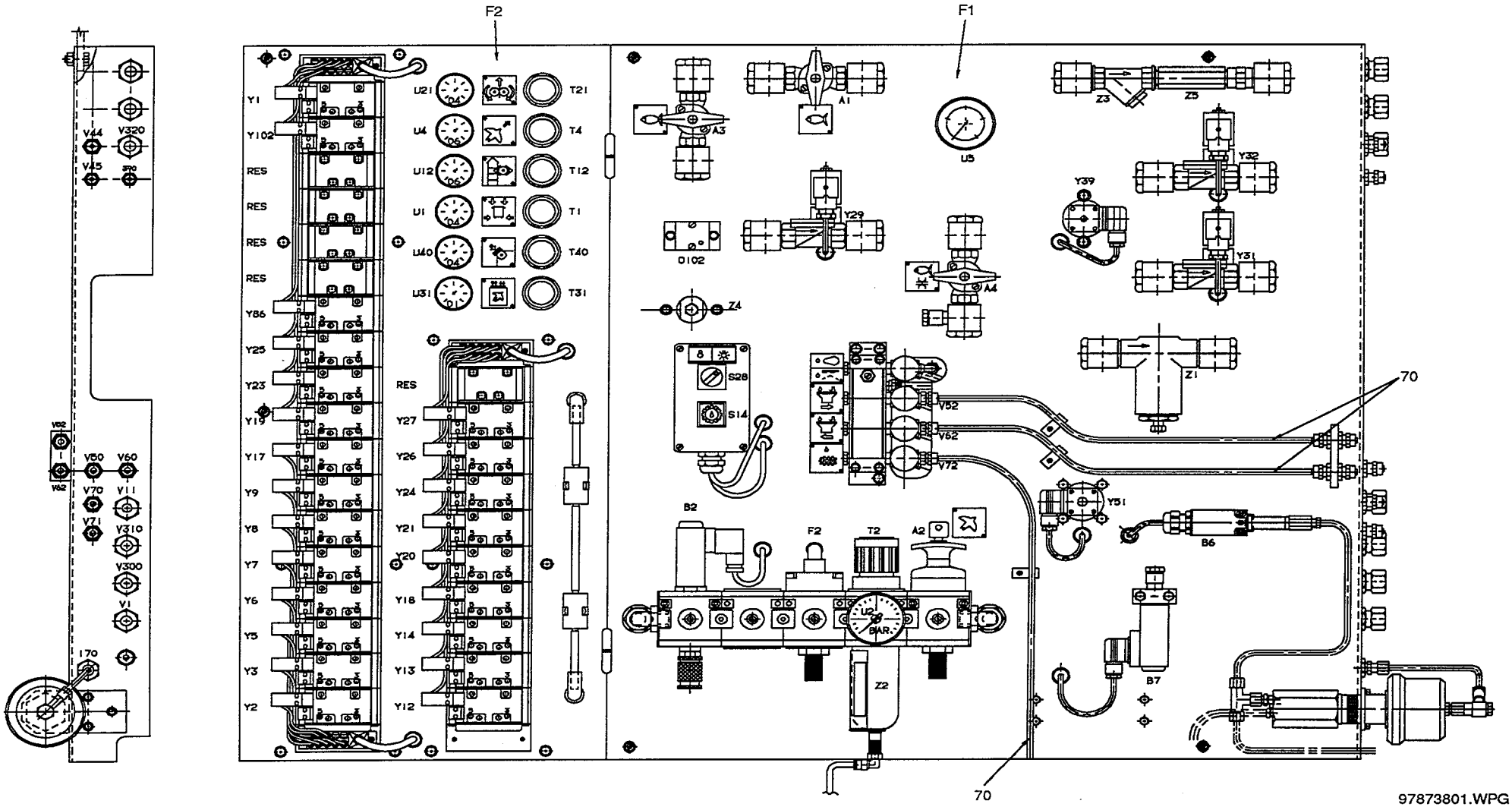
F2
F1
Y1
Y102
RES
RES
RES
RES
Y86
Y25
Y23
Y19
Y17
Y9
Y8
Y7
Y6
Y5
Y3
Y2
U21
U4
U12
U1
U40
U31
T21
T4
T12
T1
T40
T31
RES
Y27
Y26
Y24
Y21
Y20
Y18
Y14
Y13
Y12
A1
A3
U5
Z3
Z5
Y32
Y39
Y29
D102
A4
Y31
Z4
S28
S14
Z1
V52
V62
V72
70
Y51
B6
B2
F2
T2
A2
U2
BAR
Z2
B7
70
V44
V320
V45
V50
V60
V70
Y11
V71
Y310
Y300
V1
170
97873801.WPG
978738-1
AM 20300

From	Pos	Part No	SP	UN	Qty	Description
TBA/9						
		C- 978738-0101				**Valve Panel, Ass'y**
	290	359000-0404	-		10	MARKING CO2/4"4"
	290	359000-0400	-		26	MARKING CO2/4"0"
Common parts						
	F001	**C- 978739-010V**	**-**		**1**	**WATER PANEL**
		C- 456757-0201				. AIR INJECTOR
		C- 491536-0101				. . NON-RETURN VALVE
		C- 456882-0101				. PUSH BUTTON BOX
		C- 469118-0201				. FLOW METER
		C- 469121-0201				. JUNCTION BLOCK
	F002	**C- 978740-010V**	**-**		**1**	**AIR PANEL**
	050	90166-0013	-	M	3	HOSE
	060	90166-0068	-	M	1	HOSE
	070	90166-0118	-	MM	3400	HOSE
	080	90166-0119	-	MM	1500	HOSE
	100	90230-0028	-		1	NON-RETURN VALVE
	200	312121-0285	-		5	SLOTTED HEMCS4X6FZB
	210	342921-0115	-		1	PIPE COUPL 6/4-3/8"
	215	342735-0103	-		1	ELBOW PIPE D=8
	220	342735-0109	-		3	ELBOW PIPE D=12
	230	342940-0115	-		1	T-CONNECTI 6/4-3/8"
	240	342946-0112	-		1	T-CONNECTI 6/4
	250	342748-0103	-		1	T-CONNECTI D=8
	260	352113-0101	-		20	RIBBON CLA
	270	352113-0104	-		20	RIBBON CLA
	280	352113-0202	-		5	ARMATURE S8-M
	290	359000-0401	-		13	MARKING CO2/4"1"
	290	359000-0402	-		19	MARKING CO2/4"2"
	290	359000-0403	-		7	MARKING CO2/4"3"
	290	359000-0405	-		9	MARKING CO2/4"5"
	290	359000-0406	-		5	MARKING CO2/4"6"
	290	359000-0407	-		5	MARKING CO2/4"7"
	290	359000-0409	-		4	MARKING CO2/4"9"
	290	359000-0771	-		28	MARKING CO2/4"V"

From	Pos	Part No	SP	UN	Qty	Description

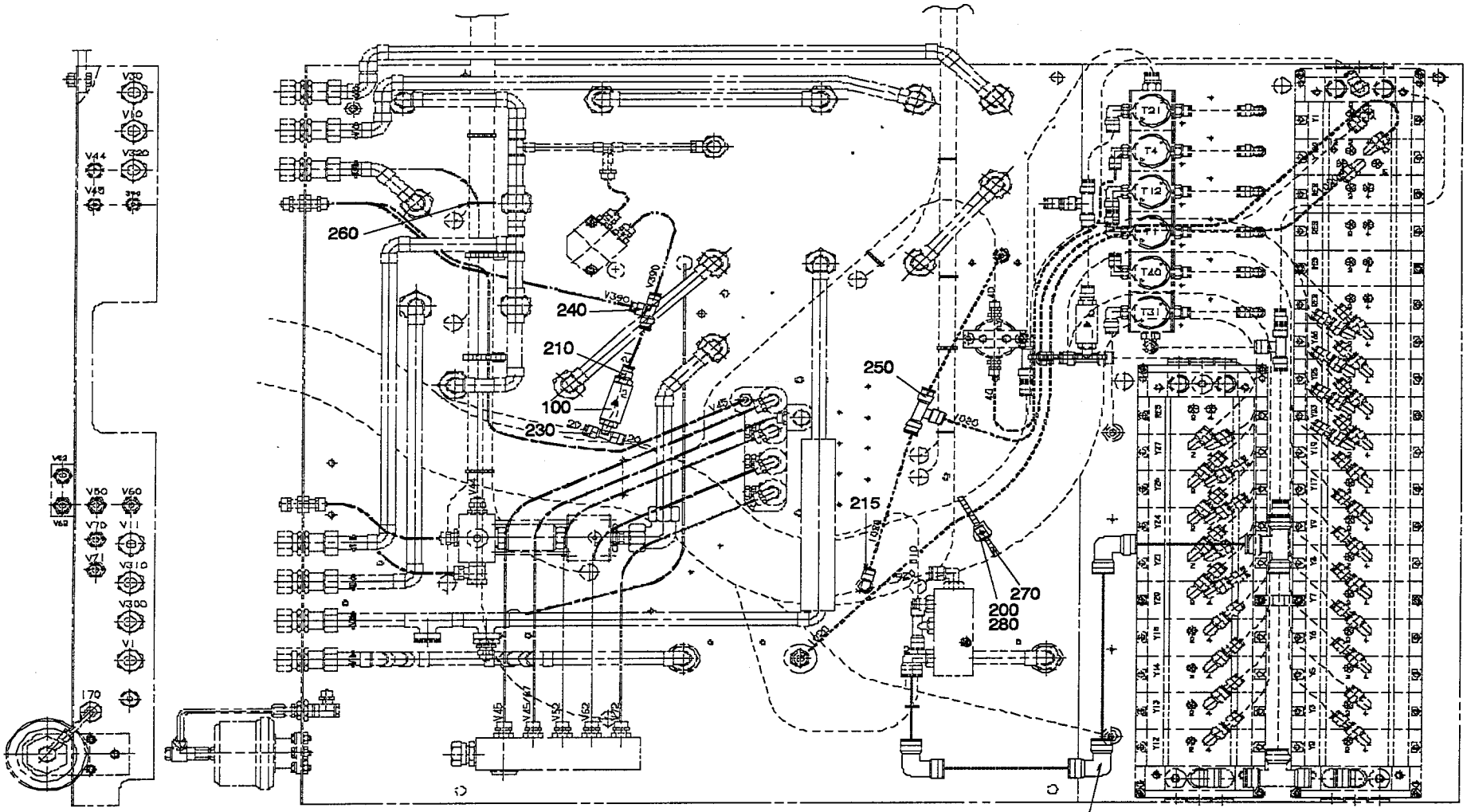
260
240
210
100
230
250
215
270
200
280
220
170
HOSES SEE C-271562-080V
C-271866-060V
C-272404-040V
050
060
070
080
290

Last Alteration: AM 20476 93-12-13

Corresponding group: 978738-0101
Assembly Drawing: 978738-1/2

Issue: **940524**

From	Pos	Part No	SP	UN	Qty	Description
TBA/9						
		C- 978738-0101				**Valve Panel, Ass'y**
	290	359000-0404	-		10	MARKING CO2/4"4"
	290	359000-0400	-		26	MARKING CO2/4"0"
TB/9						
		C- 978738-0102				**Valve Panel, Ass'y**
	290	359000-0404	-		8	MARKING CO2/4"4"
	290	359000-0400	-		24	MARKING CO2/4"0"
Common parts						
	F001	**C- 978739-010V**	**-**		**1**	**WATER PANEL**
		C- 456757-0201				. AIR INJECTOR
		C- 491536-0101				. . NON-RETURN VALVE
		C- 456882-0101				. PUSH BUTTON BOX
		C- 469118-0201				. FLOW METER
		C- 469121-0201				. JUNCTION BLOCK
	F002	**C- 978740-010V**	**-**		**1**	**AIR PANEL**
	050	90166-0013	-	M	3	HOSE
	060	90166-0068	-	M	1	HOSE
	070	90166-0118	-	MM	3400	HOSE
	080	90166-0119	-	MM	1500	HOSE
	100	90230-0028	-		1	NON-RETURN VALVE
	200	312121-0285	-		5	SLOTTED HEMCS4X6FZB
	210	342921-0115	-		1	PIPE COUPL 6/4-3/8"
	215	342735-0103	-		1	ELBOW PIPE D=8
	220	342735-0109	-		3	ELBOW PIPE D=12
	230	342940-0115	-		1	T-CONNECTI 6/4-3/8"
	240	342946-0112	-		1	T-CONNECTI 6/4
	250	342748-0103	-		1	T-CONNECTI D=8
	260	352113-0101	-		20	RIBBON CLA
	270	352113-0104	-		20	RIBBON CLA
	280	352113-0202	-		5	ARMATURE S8-M
	290	359000-0401	-		13	MARKING CO2/4"1"
	290	359000-0402	-		19	MARKING CO2/4"2"
	290	359000-0403	-		7	MARKING CO2/4"3"
	290	359000-0405	-		9	MARKING CO2/4"5"
	290	359000-0406	-		5	MARKING CO2/4"6"
	290	359000-0407	-		5	MARKING CO2/4"7"
	290	359000-0409	-		4	MARKING CO2/4"9"
	290	359000-0771	-		28	MARKING CO2/4"V"

From	Pos	Part No	SP	UN	Qty	Description

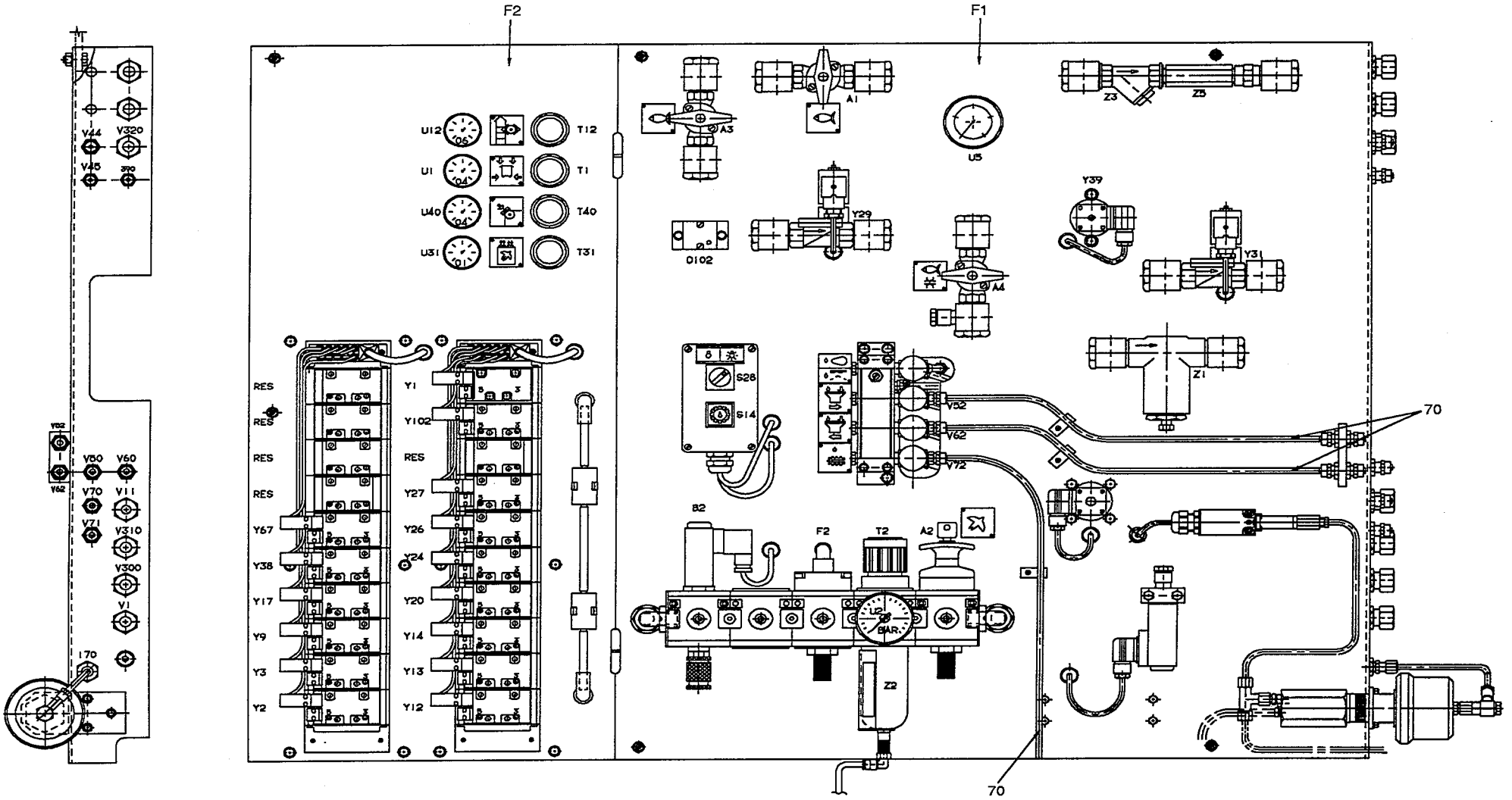

97873803.WPG
978738-3
AM 20300

Last Alteration: AM 20476 93-12-13

Corresponding group: 978738-0102
Assembly Drawing: 978738-3/4

Issue: **940524**

From	Pos	Part No	SP	UN	Qty	Description
TB/9						
		C- 978738-0102				**Valve Panel, Ass'y**
	290	359000-0404	-		8	MARKING CO2/4"4"
	290	359000-0400	-		24	MARKING CO2/4"0"
Common parts						
	F001	**C- 978739-010V**	**-**		**1**	**WATER PANEL**
		C- 456757-0201				. AIR INJECTOR
		C- 491536-0101				. . NON-RETURN VALVE
		C- 456882-0101				. PUSH BUTTON BOX
		C- 469118-0201				. FLOW METER
		C- 469121-0201				. JUNCTION BLOCK
	F002	**C- 978740-010V**	**-**		**1**	**AIR PANEL**
	050	90166-0013	-	M	3	HOSE
	060	90166-0068	-	M	1	HOSE
	070	90166-0118	-	MM	3400	HOSE
	080	90166-0119	-	MM	1500	HOSE
	100	90230-0115	-		1	NON-RETURN VALVE
	200	312121-0285	-		5	SLOTTED HEMCS4X6FZB
	210	342921-0115	-		1	PIPE COUPL 6/4-3/8"
	215	342735-0103	-		1	ELBOW PIPE D=8
	220	342735-0109	-		3	ELBOW PIPE D=12
	230	342940-0115	-		1	T-CONNECTI 6/4-3/8"
	240	342946-0112	-		1	T-CONNECTI 6/4
	250	342748-0103	-		1	T-CONNECTI D=8
	260	352113-0101	-		20	RIBBON CLA
	270	352113-0104	-		20	RIBBON CLA
	280	352113-0202	-		5	ARMATURE S8-M
	290	359000-0401	-		13	MARKING CO2/4"1"
	290	359000-0402	-		19	MARKING CO2/4"2"
	290	359000-0403	-		7	MARKING CO2/4"3"
	290	359000-0405	-		9	MARKING CO2/4"5"
	290	359000-0406	-		5	MARKING CO2/4"6"
	290	359000-0407	-		5	MARKING CO2/4"7"
	290	359000-0409	-		4	MARKING CO2/4"9"
	290	359000-0771	-		28	MARKING CO2/4"V"

From	Pos	Part No	SP	UN	Qty	Description

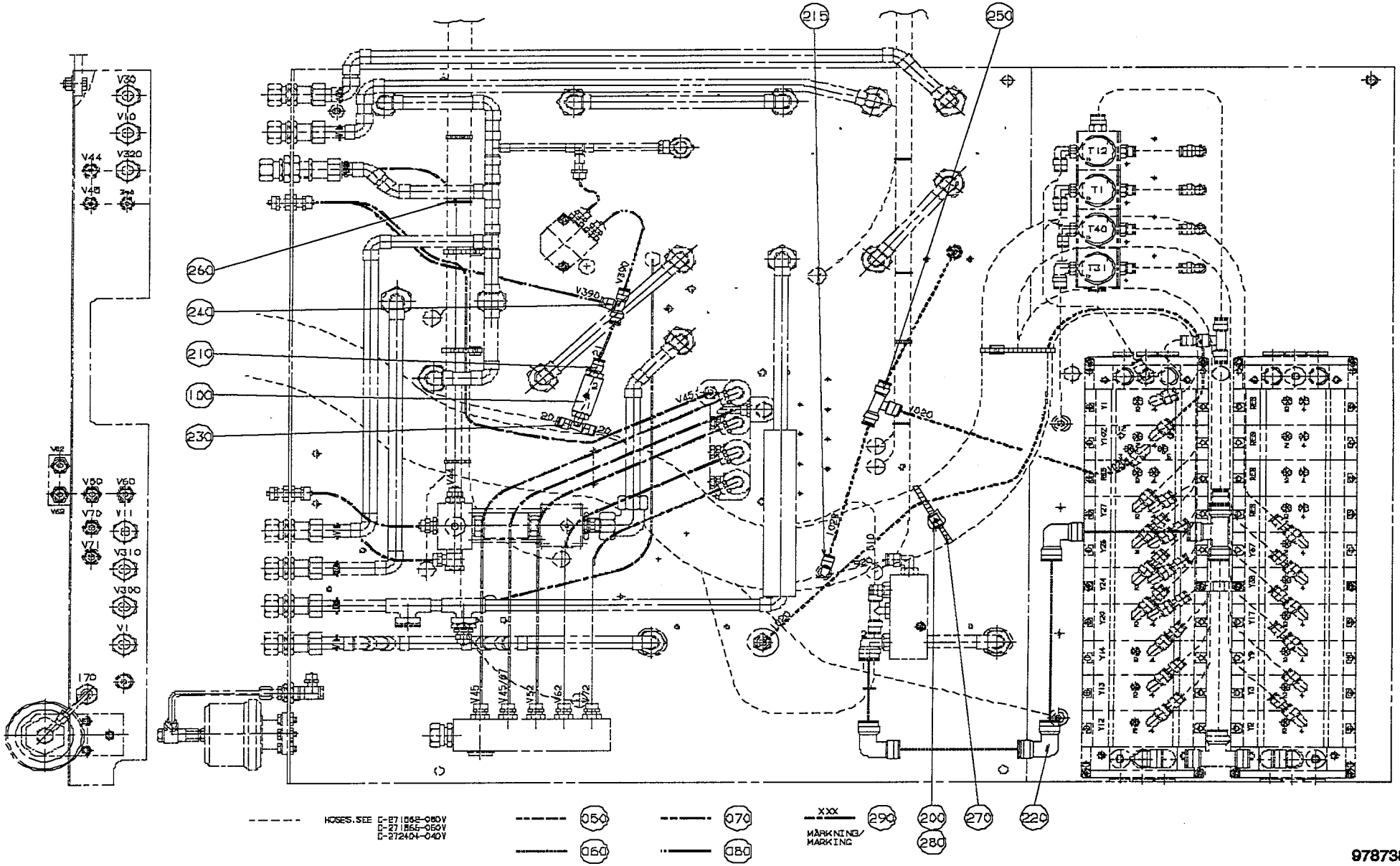

97873804.WPG
978738-4
AM 17874

Last Alteration: AM 20476 93-12-13

Corresponding group: 978738-0102
Assembly Drawing: 978738-3/4

Issue: **940524**

From	Pos	Part No	SP	UN	Qty	Description
TB/9						
		C- 978738-0102				**Valve Panel, Ass'y**
	290	359000-0404	-		8	MARKING CO2/4"4"
	290	359000-0400	-		24	MARKING CO2/4"0"
Common parts						
	F001	**C- 978739-010V**	**-**		**1**	**WATER PANEL**
		C- 456757-0201				. AIR INJECTOR
		C- 491536-0101				. . NON-RETURN VALVE
		C- 456882-0101				. PUSH BUTTON BOX
		C- 469118-0201				. FLOW METER
		C- 469121-0201				. JUNCTION BLOCK
	F002	**C- 978740-010V**	**-**		**1**	**AIR PANEL**
	050	90166-0013	-	M	3	HOSE
	060	90166-0068	-	M	1	HOSE
	070	90166-0118	-	MM	3400	HOSE
	080	90166-0119	-	MM	1500	HOSE
	100	90230-0028	-		1	NON-RETURN VALVE
	200	312121-0285	-		5	SLOTTED HEMCS4X6FZB
	210	342921-0115	-		1	PIPE COUPL 6/4-3/8"
	215	342735-0103	-		1	ELBOW PIPE D=8
	220	342735-0109	-		3	ELBOW PIPE D=12
	230	342940-0115	-		1	T-CONNECTI 6/4-3/8"
	240	342946-0112	-		1	T-CONNECTI 6/4
	250	342748-0103	-		1	T-CONNECTI D=8
	260	352113-0101	-		20	RIBBON CLA
	270	352113-0104	-		20	RIBBON CLA
	280	352113-0202	-		5	ARMATURE S8-M
	290	359000-0401	-		13	MARKING CO2/4"1"
	290	359000-0402	-		19	MARKING CO2/4"2"
	290	359000-0403	-		7	MARKING CO2/4"3"
	290	359000-0405	-		9	MARKING CO2/4"5"
	290	359000-0406	-		5	MARKING CO2/4"6"
	290	359000-0407	-		5	MARKING CO2/4"7"
	290	359000-0409	-		4	MARKING CO2/4"9"
	290	359000-0771	-		28	MARKING CO2/4"V"

From	Pos	Part No	SP	UN	Qty	Description

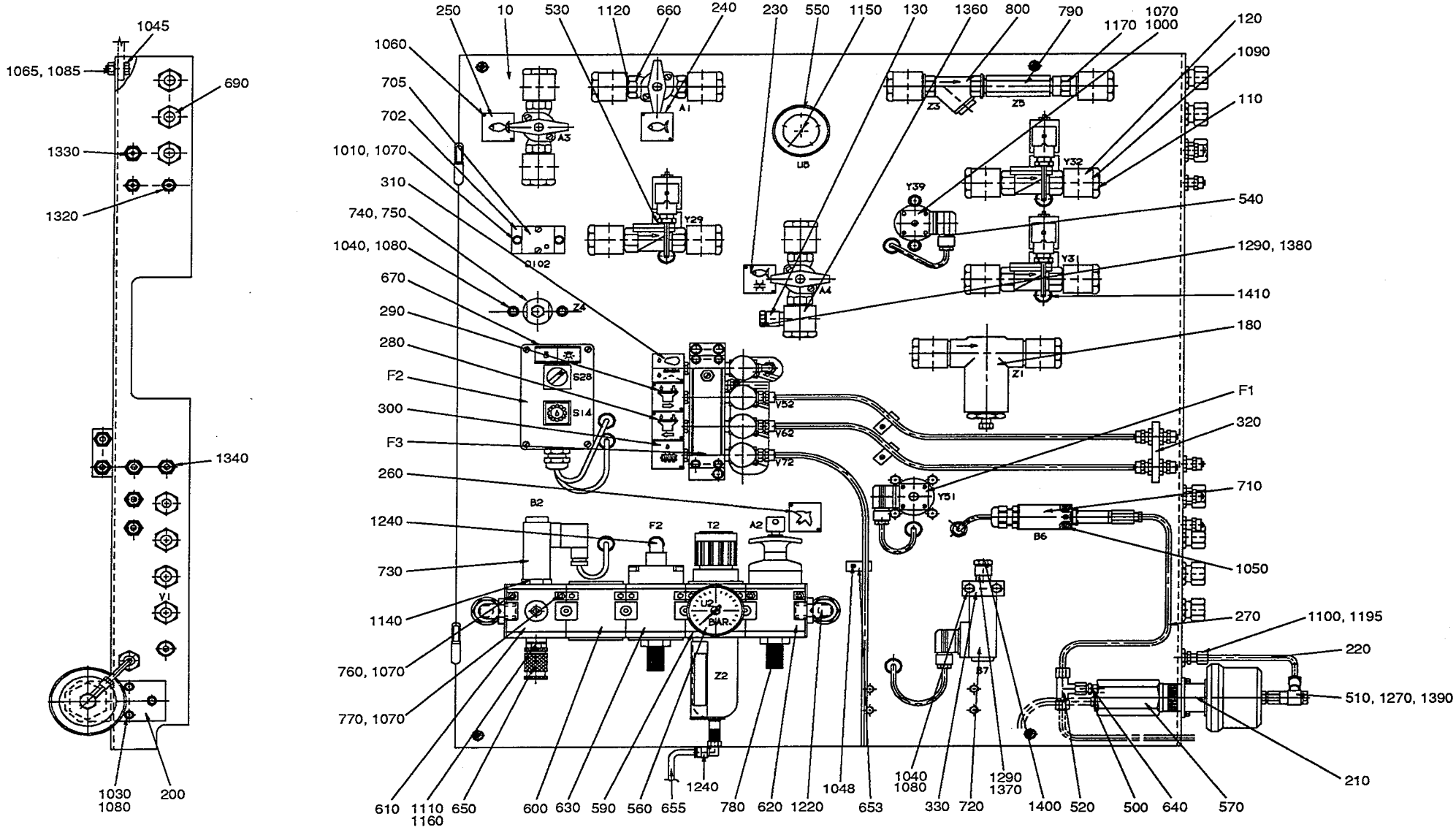

97873901.WPG
978739-1
AM 20300

From	Pos	Part No	SP	UN	Qty	Description
TBA/9						
		C- 978739-0101				**Water Panel, Ass'y**
	010	571876	-		1	SHEET
	060	978589	-		1	PIPE
	1010	312101-0329	-		4	SCREW M6S5X16FZB
	1040	312101-0380	-		4	SCREW M6S6X50FZB
	1070	315101-0146	-		10	WASHER BRB5,3X10FZB
	1080	315101-0153	-		9	WASHER BRB6,4X12FZB
	1090	315202-0710	-		16	O-RING 25,12X1,78
	110	271950	-		16	HOLLOW SCREW
	1120	315233-0113	-		17	SEAL RING R1/2"
	1130	315233-0115	-		32	SEAL RING R3/4"
	120	469328	-		15	BANJO CONNECTION
	1295	342920-0114	-		2	PIPE COUPL6/4-1/4
	1410	352101-0103	-		10	LEAD-IN G 18,6
	170	978586	-		1	PIPE
	190	271949	-		16	NUT
	340	491649	-		1	BRACKET
	505	90005-0061	-		16	WASHER
	530	90042-0172	-		3	SOLENOID VALVE
		90042-0467	P		0	* COIL
	690	90224-0296	-		7	GROMMET
	740	90277-0323	-		1	FILTER HOUSING
	750	90277-0324	-		1	FILTER CARTRIDGE
Common Parts						
	F001	**C- 456757-0201**	**-**		**1**	**AIR INJECTOR**
		C- 491536-0101				. NON-RETURN VALVE
	F002	**C- 456882-0101**	**-**		**1**	**PUSH BUTTON BOX**
	F003	**C- 469118-0201**	**-**		**1**	**FLOW METER**
	F004	**C- 469121-0201**	**-**		**1**	**JUNCTION BLOCK**
	020	978583	-		1	PIPE
	030	978584	-		1	PIPE
	040	978587	-		1	PIPE
	050	978588	-		1	PIPE
	070	978590	-		1	PIPE
	090	978592	-		1	PIPE
	100	978593	-		1	JUNCTION BLOCK
	115	295496	-		1	BLOCKING PIECE
	117	456137	-		1	HOSE
	130	491951	-		1	BANJO CONNECTION
	140	978585-0001	-		1	PIPE
	150	978585-0002	-		1	PIPE
	160	978585-0003	-		1	PIPE
	180	271823	-		1	FILTER
		90415-0314	P		0	* FILTERINSERT
		90415-0325	P		0	* GASKET
	200	272129	-		1	BRACKET
	210	272130	-		1	SPACER
	220	272340	-		1	PIPE
	230	273454	-		1	SIGN
	240	273455	-		1	LABEL (COLD WATER)
	250	273456	-		1	SIGN
	260	273458	-		1	LABEL (AIR)
	270	979133	-		1	PIPE
	280	445533	-		1	SIGN
	290	445534	-		1	SIGN
	300	445535	-		1	SIGN
	310	469330	-		1	SIGN
	320	469331	-		1	HOLDER
	330	469332	-		1	ATTACHMENT
	500	90005-0045	-		1	WASHER
	510	90030-0116	-		1	REDUCER
	520	90030-0127	-		1	PIPE CONNECITON
	540	90042-0173	-		1	SOLENOID VALVE
	550	90043-0006	-		1	PRESSURE GAUGE
	560	90043-0036	-		1	PRESSURE GAUGE
	570	90048-0041	-		1	OIL PUMP
	575	90062-0016	-		1	LOCK WASHER
	590	90113-0072	-		1	PRESSURE REGULATOR
	600	90113-0374	-		1	SLOW STARTING VALVE
	610	90113-0375	-		1	PRESURE DISRIBUTION
	620	90113-0377	-		1	SHUT-OFF VALVE
	630	90113-0378	-		1	SHUT-OFF VALVE
	640	90134-0019	-		1	GLAND
	645	90153-0035	-		X	ADHESIVE
	650	90163-0016	-		1	SLEEVE
	653	90165-0044	-		3	CLIP
	655	90166-0081	-	M	2	HOSE
	660	90187-0029	-		3	VALVE
	670	90194-0016	-		2	SIGN"FLASH SIGN"
	680	90224-0094	-		1	NIPPLE
	700	90224-0297	-		1	REDUCER
	702	90235-0450	-		1	PLATE
	705	90235-0708	-		1	VALVE
	710	90274-0084	-		1	GUARD
	720	90274-0056	-		1	PRESSURE SWITCH
	730	90274-0074	-		1	PRESSURE SWITCH
	760	90287-0212	-		3	SCREW

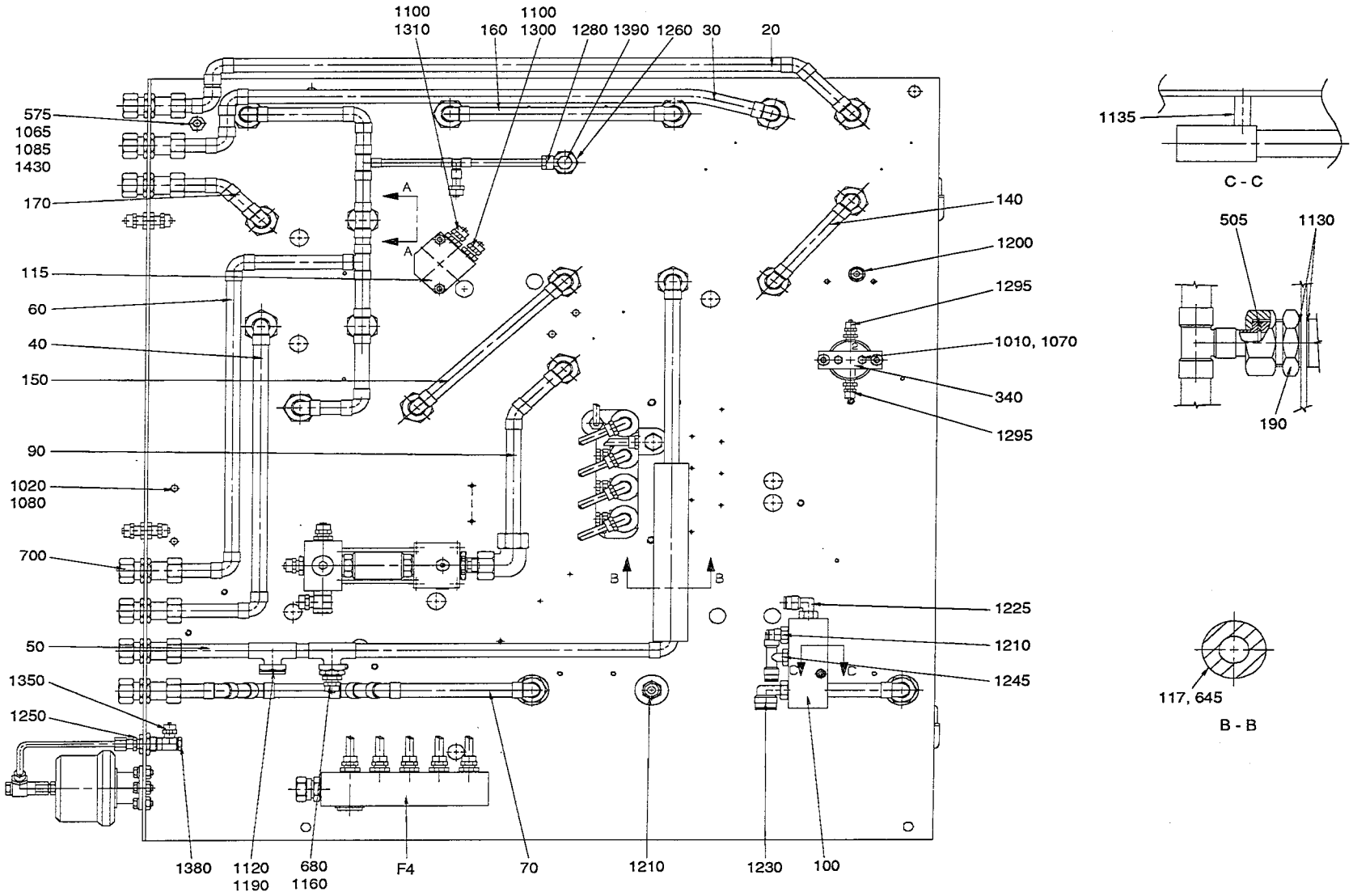
1100
1310
1100
160
1300
1280
1390
1260
30
20
575
1065
1085
1430
170
115
60
40
150
90
1020
1080
700
50
1350
1250
140
1200
1295
1010, 1070
340
1295
1225
1210
1245
1380
1120
1190
680
1160
F4
70
1210
1230
100
A
A
B
B
C
C
1135
C - C
505
1130
190
117, 645
B - B

Last Alteration: AM 20300 93-10-12

Corresponding group: 978739-0101
Assembly Drawing: 978739-1/2

Issue: **940524**

From	Pos	Part No	SP	UN	Qty	Description
	770	90287-0215	-		1	SCREW
	780	90328-0001	-		1	SILENCER
	790	90415-0018	-		1	FILTER
	800	90415-0019	-		1	FILTER
	1000	312101-0327	-		2	SCREW M6S5X12FZB
	1020	312101-0367	-		2	SCREW M6S6X14FZB
	1030	312101-0368	-		3	SCREW M6S6X16FZB
	1045	312101-0451	-		4	SCREW M6S8X20FZB
	1048	312121-0287	-		3	SLOTTED HEMCS4X8FZB
	1050	312121-0291	-		2	SLOTTED HEMCS4X12FZB
	1060	312502-0120	-		16	DRIVE SCREKDS0X5FNB
	1065	312601-0318	-		5	NUT M6M8FZB
	1085	315101-0165	-		5	WASHER BRB8,4X16FZB
	1100	315233-0109	-		3	SEAL RING R1/8"
	1110	315233-0110	-		1	SEAL RING R1/4"
	1135	341001-0148	-	MM	17	PIPE
	1140	342700-0205	-		1	NIPPLE RNA1/4"-1/2"
	1150	342701-0201	-		1	BUSHING RNI1/4"-1/8"
	1160	342701-0205	-		2	BUSHING RNI1/2"-1/4"
	1170	342707-0113	-		1	MUFF
	1190	342713-0213	-		1	BLIND PLUG
	1195	342720-0102	-		1	PIPE COUPLGA-6-1/8"
	1200	342722-0204	-		1	PIPE COUPLD=8-R1/8"
	1210	342722-0205	-		2	PIPE COUPLD=8-R1/4"
	1220	342730-0114	-		2	ELBOW PIPE WA-15-1/2"
	1225	342732-0103	-		1	ELBOW PIPE D6-R1/4"
	1230	342732-0110	-		1	ELBOW PIPE D12-R3/8"
	1240	342732-0801	-		2	ELBOW PIPE D8-R1/8"
	1245	342742-0104	-		1	T-CONNECTI D8-R1/4"
	1250	342767-0100	-		1	BULKHEAD LR1/8
	1260	342767-0104	-		1	BULKHEAD LR1/4
	1270	342797-0122	-		1	BANJO CONNSINGEL 6-1/4
	1280	342797-0132	-		1	BANJO CONNSINGEL 8-1/4
	1290	342903-0121	-		2	NUT JÇDER 1723-8/6
	1300	342921-0113	-		1	PIPE COUPL6/4-1/8"
	1310	342921-0121	-		1	PIPE COUPL8/6-1/8"
	1320	342960-0112	-		2	BULKHEAD L6/4
	1330	342960-0121	-		1	BULKHEAD L8/6-6/4
	1340	342960-0122	-		6	BULKHEAD L8/6
	1350	342980-0113	-		1	BANJO CONNSINGEL 6/4-1/8
	1360	342980-0121	-		1	BANJO CONNINGEL 8/6-1/8"
	1370	342980-0122	-		1	BANJO CONNSINGEL 8/6-1/4
	1380	342980-0303	-		2	BANJO CONN SINGEL 1/8"
	1390	342980-0304	-		2	BANJO CONN SINGEL 1/4
	1400	342980-0314	-		1	BANJO CONN DUBBEL 1/4
	1420	352103-0106	-		1	CABLE GLANR.ST 11
	1430	353104-0144	-		1	CABLE SHOEYAV 06 M 8*

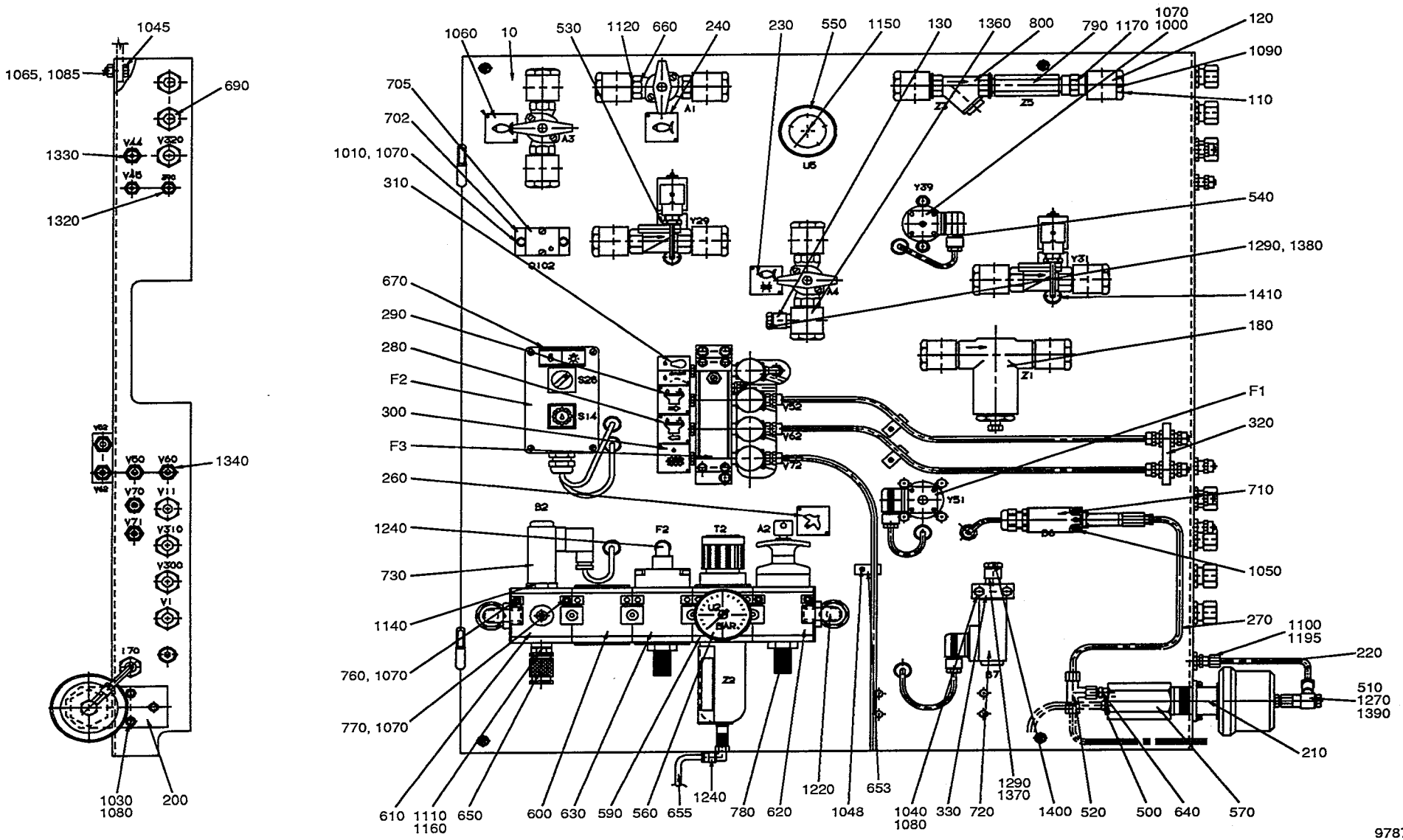

97873903.WPG
978739-3
AM 20300

From	Pos	Part No	SP	UN	Qty	Description
TB/9						
		C- 978739-0102				**Water Panel, Ass'y**
	010	571875	-		1	SHEET
	080	978591	-		1	PIPE
	1010	312101-0329	-		2	SCREW M6S5X16FZB
	1040	312101-0380	-		2	SCREW M6S6X50FZB
	1070	315101-0146	-		8	WASHER BRB5,3X10FZB
	1080	315101-0153	-		7	WASHER BRB6,4X12FZB
	1090	315202-0710	-		14	O-RING 25,12X1,78
	110	271950	-		14	HOLLOW SCREW
	1120	315233-0113	-		16	SEAL RING R1/2"
	1130	315233-0115	-		28	SEAL RING R3/4"
	1197	342720-0114	-		1	PIPE COUPLGA-15-1/2"
	120	469328	-		13	BANJO CONNECTION
	1265	342767-0114	-		1	BULKHEAD LR1/2
	1410	352101-0103	-		9	LEAD-IN G 18,6
	190	271949	-		14	NUT
	505	90005-0061	-		14	WASHER
	530	90042-0172	-		2	SOLENOID VALVE
		90042-0467	P		0	* COIL
	690	90224-0296	-		6	GROMMET
Common Parts						
	F001	**C- 456757-0201**	**-**		**1**	**AIR INJECTOR**
		C- 491536-0101				. NON-RETURN VALVE
	F002	**C- 456882-0101**	**-**		**1**	**PUSH BUTTON BOX**
	F003	**C- 469118-0201**	**-**		**1**	**FLOW METER**
	F004	**C- 469121-0201**	**-**		**1**	**JUNCTION BLOCK**
	020	978583	-		1	PIPE
	030	978584	-		1	PIPE
	040	978587	-		1	PIPE
	050	978588	-		1	PIPE
	070	978590	-		1	PIPE
	090	978592	-		1	PIPE
	100	978593	-		1	JUNCTION BLOCK
	115	295496	-		1	BLOCKING PIECE
	117	456137	-		1	HOSE
	130	491951	-		1	BANJO CONNECTION
	140	978585-0001	-		1	PIPE
	150	978585-0002	-		1	PIPE
	160	978585-0003	-		1	PIPE
	180	271823	-		1	FILTER
		90415-0314	P		0	* FILTERINSERT
		90415-0325	P		0	* GASKET
	200	272129	-		1	BRACKET
	210	272130	-		1	SPACER
	220	272340	-		1	PIPE
	230	273454	-		1	SIGN
	240	273455	-		1	LABEL (COLD WATER)
	250	273456	-		1	SIGN
	260	273458	-		1	LABEL (AIR)
	270	979133	-		1	PIPE
	280	445533	-		1	SIGN
	290	445534	-		1	SIGN
	300	445535	-		1	SIGN
	310	469330	-		1	SIGN
	320	469331	-		1	HOLDER
	330	469332	-		1	ATTACHMENT
	500	90005-0045	-		1	WASHER
	510	90030-0116	-		1	REDUCER
	520	90030-0127	-		1	PIPE CONNECITON
	540	90042-0173	-		1	SOLENOID VALVE
	550	90043-0006	-		1	PRESSURE GAUGE
	560	90043-0036	-		1	PRESSURE GAUGE
	570	90048-0041	-		1	OIL PUMP
	575	90062-0016	-		1	LOCK WASHER
	590	90113-0072	-		1	PRESSURE REGULATOR
	600	90113-0374	-		1	SLOW STARTING VALVE
	610	90113-0375	-		1	PRESURE DISRIBUTION
	620	90113-0377	-		1	SHUT-OFF VALVE
	630	90113-0378	-		1	SHUT-OFF VALVE
	640	90134-0019	-		1	GLAND
	645	90153-0035	-		X	ADHESIVE
	650	90163-0016	-		1	SLEEVE
	653	90165-0044	-		3	CLIP
	655	90166-0081	-	M	2	HOSE
	660	90187-0029	-		3	VALVE
	670	90194-0016	-		2	SIGN"FLASH SIGN"
	680	90224-0094	-		1	NIPPLE
	700	90224-0297	-		1	REDUCER
	702	90235-0450	-		1	PLATE
	705	90235-0708	-		1	VALVE
	710	90274-0084	-		1	GUARD
	720	90274-0056	-		1	PRESSURE SWITCH
	730	90274-0074	-		1	PRESSURE SWITCH
	760	90287-0212	-		3	SCREW
	770	90287-0215	-		1	SCREW
	780	90328-0001	-		1	SILENCER
	790	90415-0018	-		1	FILTER
	800	90415-0019	-		1	FILTER

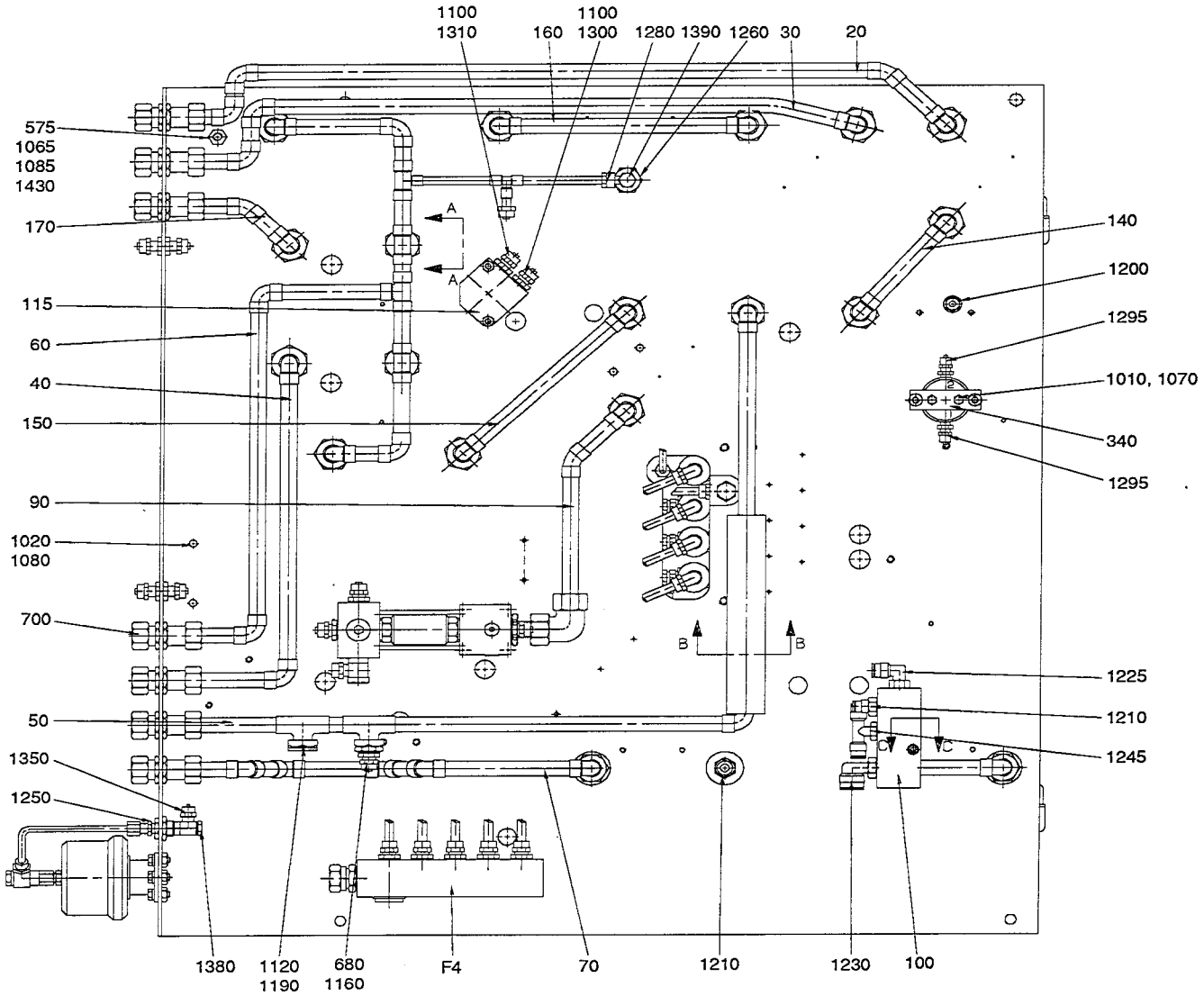

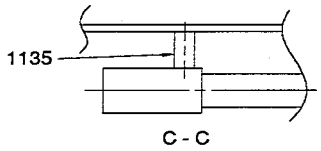

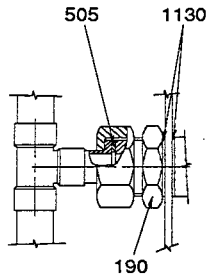

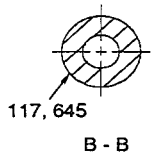

97873902.WPG
978739-2
AM 20112

From	Pos	Part No	SP	UN	Qty	Description
	1000	312101-0327	-		2	SCREW M6S5X12FZB
	1020	312101-0367	-		2	SCREW M6S6X14FZB
	1030	312101-0368	-		3	SCREW M6S6X16FZB
	1045	312101-0451	-		4	SCREW M6S8X20FZB
	1048	312121-0287	-		3	SLOTTED HEMCS4X8FZB
	1050	312121-0291	-		2	SLOTTED HEMCS4X12FZB
	1060	312502-0120	-		16	DRIVE SCREKDS0X5FNB
	1065	312601-0318	-		5	NUT M6M8FZB
	1085	315101-0165	-		5	WASHER BRB8,4X16FZB
	1100	315233-0109	-		3	SEAL RING R1/8"
	1110	315233-0110	-		1	SEAL RING R1/4"
	1135	341001-0148	-	MM	17	PIPE
	1140	342700-0205	-		1	NIPPLE RNA1/4"-1/2"
	1150	342701-0201	-		1	BUSHING RNI1/4"-1/8"
	1160	342701-0205	-		2	BUSHING RNI1/2"-1/4"
	1170	342707-0113	-		1	MUFF
	1190	342713-0213	-		1	BLIND PLUG
	1195	342720-0102	-		1	PIPE COUPLGA-6-1/8"
	1200	342722-0204	-		1	PIPE COUPLD=8-R1/8"
	1210	342722-0205	-		2	PIPE COUPLD=8-R1/4"
	1220	342730-0114	-		2	ELBOW PIPE WA-15-1/2"
	1225	342732-0103	-		1	ELBOW PIPE D6-R1/4"
	1230	342732-0110	-		1	ELBOW PIPE D12-R3/8"
	1240	342732-0801	-		2	ELBOW PIPE D8-R1/8"
	1245	342742-0104	-		1	T-CONNECTI D8-R1/4"
	1250	342767-0100	-		1	BULKHEAD LR1/8
	1260	342767-0104	-		1	BULKHEAD LR1/4
	1270	342797-0122	-		1	BANJO CONNSINGEL 6-1/4
	1280	342797-0132	-		1	BANJO CONNSINGEL 8-1/4
	1290	342903-0121	-		2	NUT JÇDER 1723-8/6
	1300	342921-0113	-		1	PIPE COUPL6/4-1/8"
	1310	342921-0121	-		1	PIPE COUPL8/6-1/8"
	1320	342960-0112	-		2	BULKHEAD L6/4
	1330	342960-0121	-		1	BULKHEAD L8/6-6/4
	1340	342960-0122	-		6	BULKHEAD L8/6
	1350	342980-0113	-		1	BANJO CONNSINGEL 6/4-1/8
	1360	342980-0121	-		1	BANJO CONNINGEL 8/6-1/8"
	1370	342980-0122	-		1	BANJO CONNSINGEL 8/6-1/4
	1380	342980-0303	-		2	BANJO CONN SINGEL 1/8"
	1390	342980-0304	-		2	BANJO CONN SINGEL 1/4
	1400	342980-0314	-		1	BANJO CONN DUBBEL 1/4
	1420	352103-0106	-		1	CABLE GLANR.ST 11
	1430	353104-0144	-		1	CABLE SHOEYAV 06 M 8*

From	Pos	Part No	SP	UN	Qty	Description

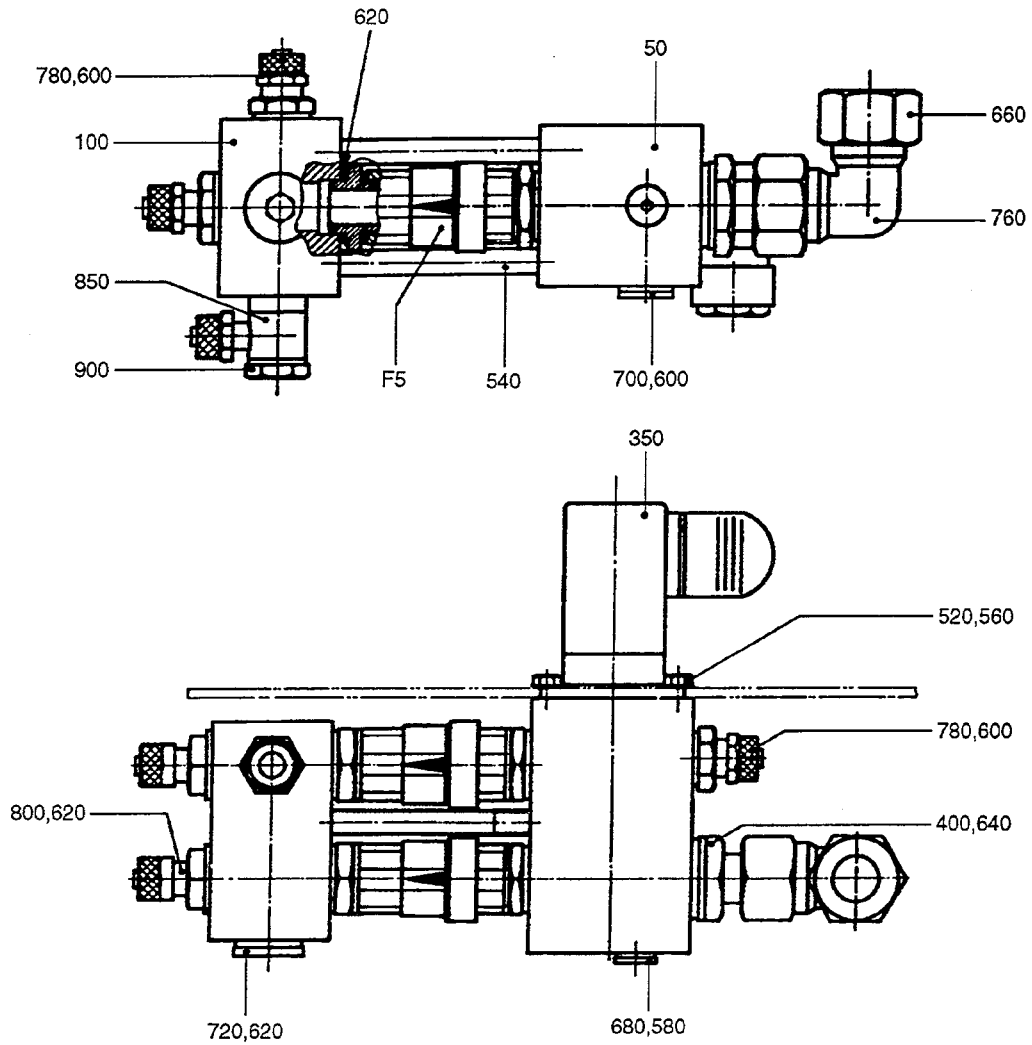

45675701.TIF
456757-1
AM 14200

From	Pos	Part No	SP	UN Qty	Description
		C- 456757-0201			**Air Injector, Ass'y**
	F005	**C- 491536-0101**	**-**	**2**	**NON-RETURN VALVE**
	050	456756	-	1	BLOCK
	100	456755	-	1	BLOCK
	350	90042-0173	S	1	SOLENOID VALVE
	400	90224-0078	-	1	CONNECTION
	520	312101-0327	-	4	SCREW M6S5X12FZB
	540	312111-0471	-	2	SCREW MC6S8X100FZB
	560	315101-0146	-	4	WASHER BRB5,3X10FZB
	580	315233-0109	S	1	SEAL RING R1/8"
	600	315233-0110	S	3	SEAL RING R1/4"
	620	315233-0111	S	7	SEAL RING R3/8"
	640	315233-0113	S	1	SEAL RING R1/2"
	660	342704-0114	-	1	CUTTING RIR-15 MSG
	680	342713-0209	-	1	BLIND PLUG
	700	342713-0210	-	1	BLIND PLUG
	720	342713-0211	-	1	BLIND PLUG
	760	342736-0115	-	1	ELBOW PIPEW16
	780	342921-0122	-	2	PIPE COUPL8/6-1/4"
	800	342921-0123	-	2	PIPE COUPL8/6-3/8"
	850	342980-0122	-	1	BANJO CONNSINGEL 8/6-1/4
	900	342980-0304	S	1	BANJO CONN SINGEL 1/4

From	Pos	Part No	SP	UN Qty	Description

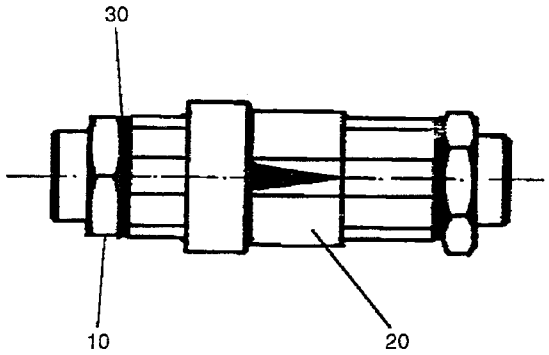

49153601.TIF
491536-1
AM9513

Last Alteration: AM 11934 88-06-10

Corresponding group: 491536-010V
Assembly Drawing: 491536-1

Issue: **940524**

From	Pos	Part No	SP	UN Qty	Description
		C- 491536-0101			**Non-Return Valve, Ass'y**
	010	751086	-	2	NIPPLE
	020	90230-0028	S	1	NON-RETURN VALVE
	030	315233-0111	P	2	SEAL RING R3/8"

From	Pos	Part No	SP	UN Qty	Description

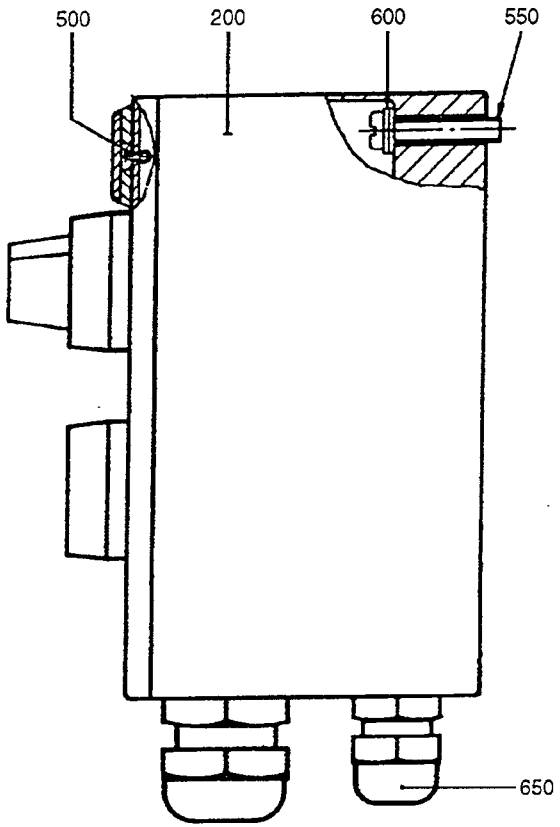

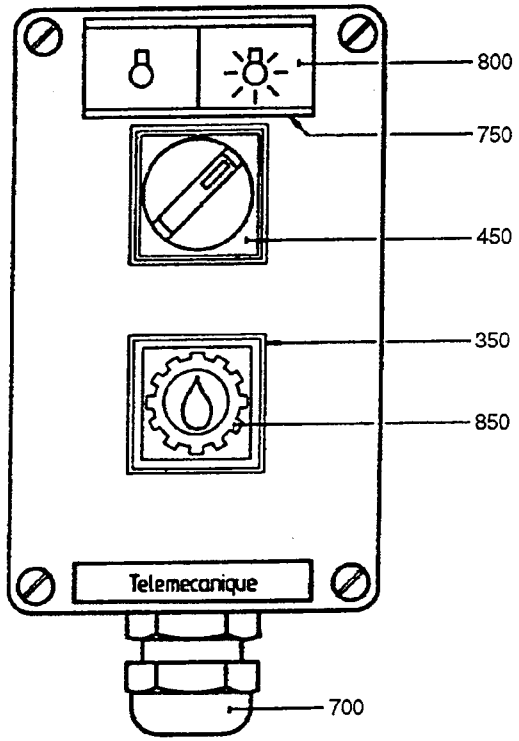

45688201.TIF
456882-1
AM 6850

Last Alteration: AM 6850 84-05-18

Corresponding group: 456882-010V
Assembly Drawing: 456882-1

Issue: **940524**

From	Pos	Part No	SP	UN	Qty	Description
		C- 456882-0101				**Push Button Box, Ass'y**
	200	456883	-		1	PUSH BUTTON BOX
	350	90064-0084	S		1	PUSH BUTTON YELLOW
	450	90111-0120	S		1	SWITCH
	500	311520-0329	-		2	BLANK RIVE2,4X8
	550	312121-0333	-		2	SLOTTED HEMCS5X25FZB
	600	315101-0146	-		2	WASHER BRB5,3X10FZB
	650	352103-0101	-		1	CABLE GLAND ST 9
	700	352103-0110	-		1	CABLE GLAND STR 16
	750	359240-0100	-		1	SIGN HOLDER
	800	359241-0140	-		1	SIGN"LIGHT MACHINE"
	850	359301-0125	-		1	SIGN"LUBRICATION"

From	Pos	Part No	SP	UN	Qty	Description

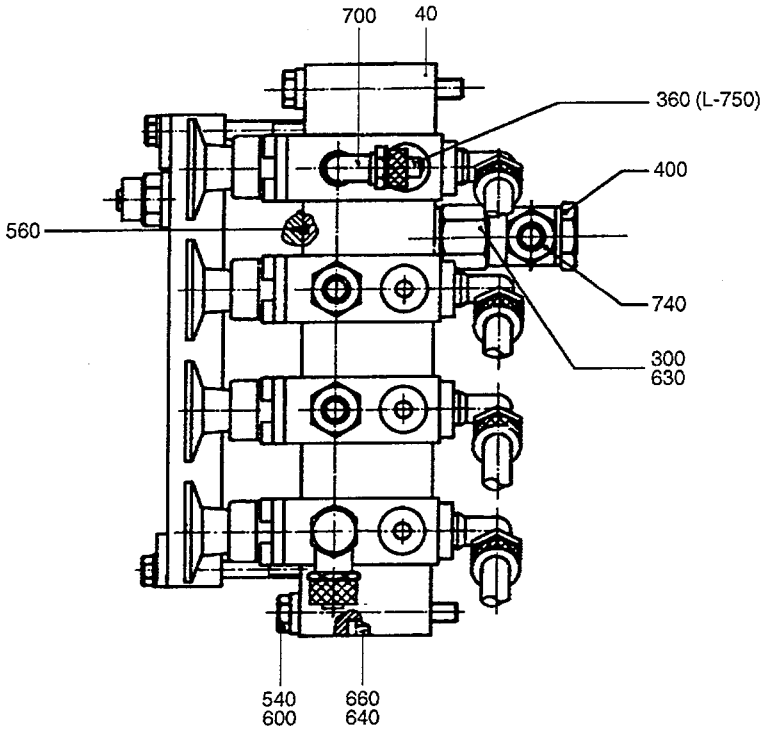

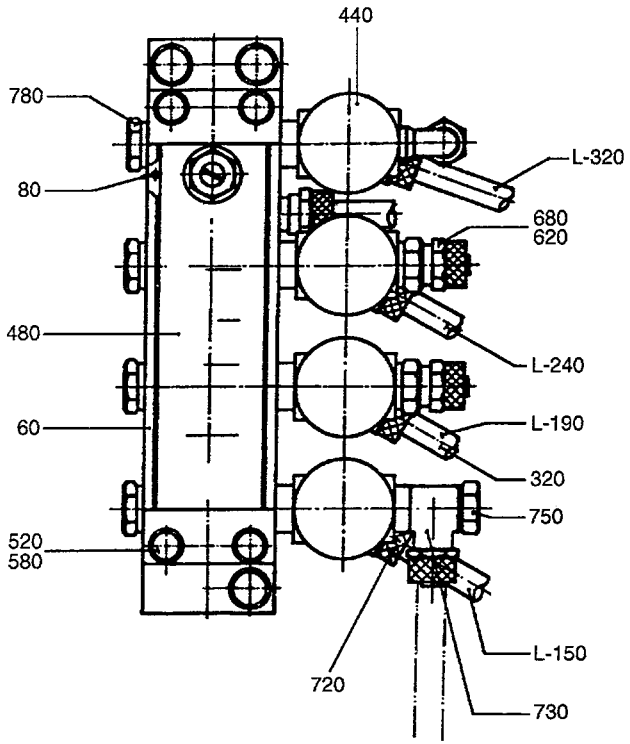

46911802.TIF
469118-2
AM 9123

From	Pos	Part No	SP	UN	Qty	Description
		C- 469118-0201				**Flow Meter, Ass'y**
	040	469119	-		1	BLOCK
	060	469120	-		1	HOLDER
	080	456011	S		6	PEG
	300	90030-0166	-		1	REDUCER
	320	90166-0118	-	MM	1250	HOSE
	360	90166-0119	-	MM	750	HOSE
	400	90230-0018	S		1	NON RETURN VALVE
	440	90235-0064	S		4	VALVE
		90235-0311	S		1	* WEAR & TEAR PARTS KIT
	480	90243-0134	S		1	FLOW METER
	520	312105-0341	-		4	SCREW M6S5X50 A2 80
	540	312105-0380	-		4	SCREW M6S6X50RFR
	560	315202-0116	-		2	O-RING 18,1X1,6
	580	315105-0146	-		4	WASHER BRB5,3X10RFR
	600	315115-0153	-		3	WASHER TBRB6,4X12RFR
	620	315233-0109	S		2	SEAL RING R1/8"
	630	315233-0110	S		1	SEAL RING R1/4"
	640	315233-0111	S		1	SEAL RING R3/8"
	660	342713-0211	-		1	BLIND PLUG
	680	342921-0121	S		2	PIPE COUPL8/6-1/8"
	700	342930-0113	S		1	ELBOW PIPE6/4-1/8
	720	342930-0121	-		4	ELBOW PIPE8/6-1/8
	730	342980-0121	-		1	BANJO CONNINGEL 8/6-1/8"
	740	342980-0122	-		1	BANJO CONNSINGEL 8/6-1/4
	750	342980-0303	S		1	BANJO CONN SINGEL 1/8"
	780	342980-0313	S		8	BANJO CONN DUBBEL 1/8

From	Pos	Part No	SP	UN	Qty	Description

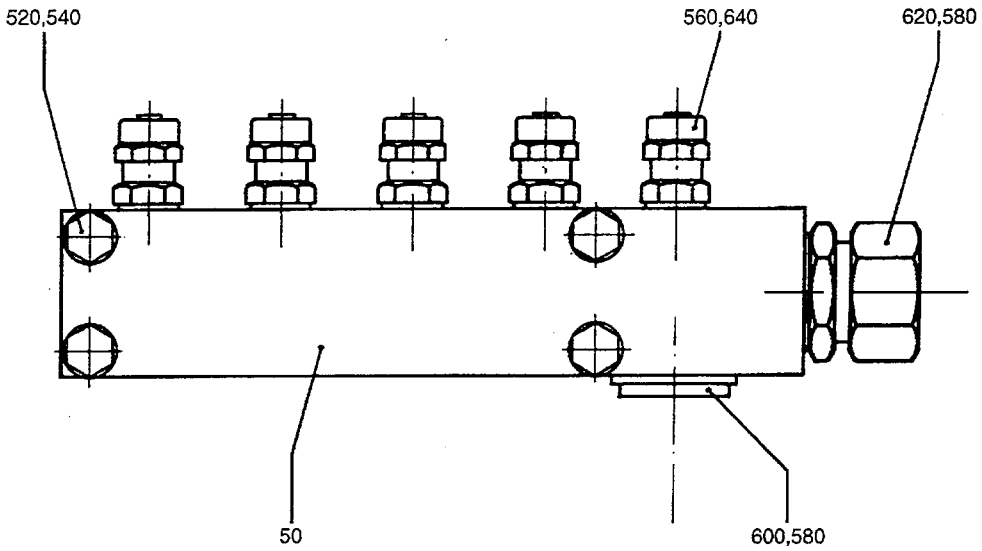

46912102.TIF
469121-2
AM 8437

Last Alteration: AM 8437 86-02-18

Corresponding group: 469121-020V
Assembly Drawing: 469121-2

Issue: **940524**

From	Pos	Part No	SP	UN Qty	Description
		C- 469121-0201			**Junction Block, Ass'y**
	050	469122	-	1	BLOCK
	520	312105-0368	-	4	SCREW M6S6X16RFR
	540	315105-0153	-	4	WASHER BRB6,4X12RFR
	560	315233-0109	S	5	SEAL RING R1/8"
	580	315233-0113	S	1	SEAL RING R1/2"
	600	342713-0213	-	1	BLIND PLUG
	620	342720-0114	-	1	PIPE COUPLGA-15-1/2"
	640	342921-0121	-	5	PIPE COUPL8/6-1/8"

From	Pos	Part No	SP	UN Qty	Description

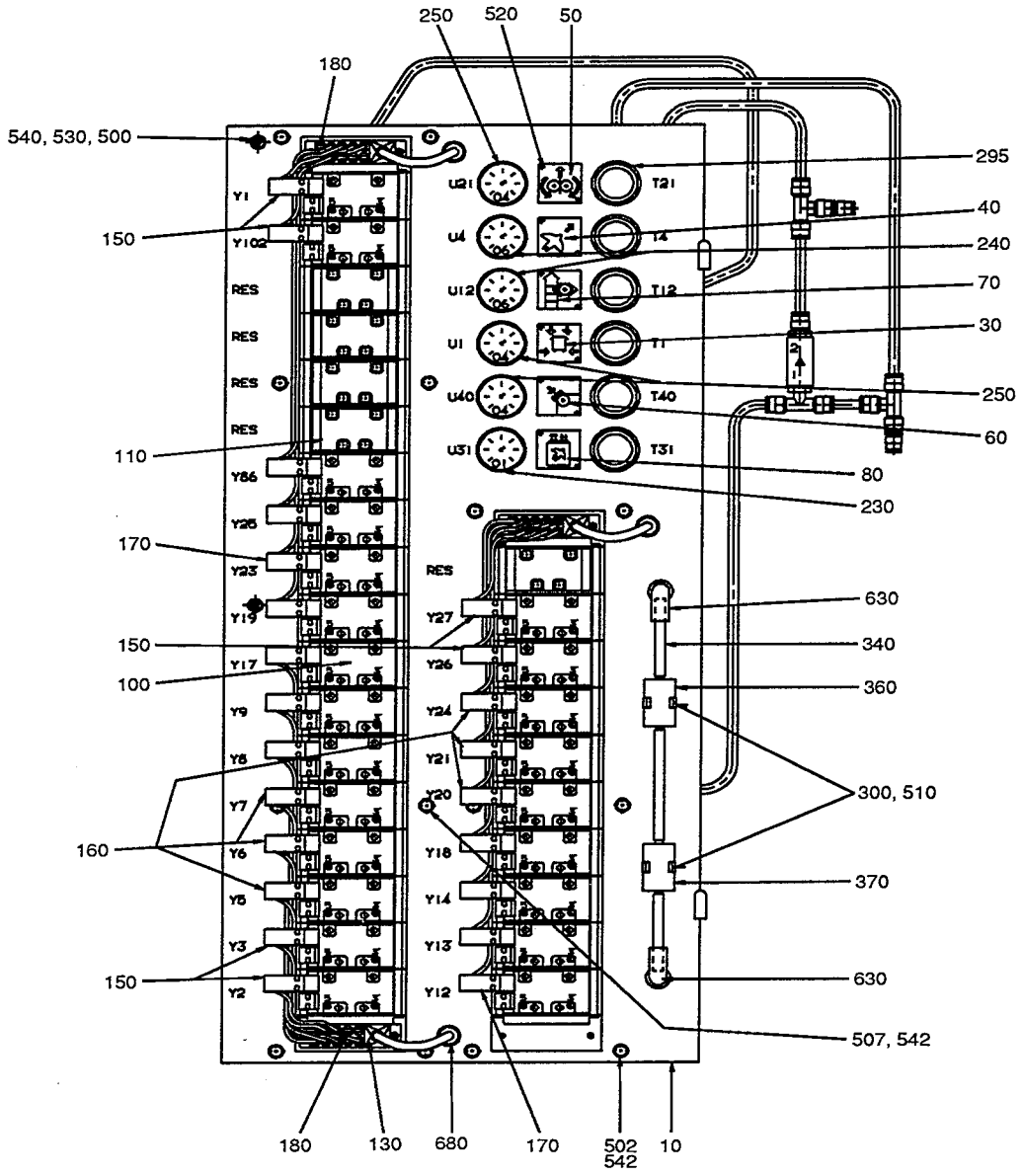

97874001.WPG
978740-1
AM 19553

Last Alteration: AM 20090 94-02-03

Corresponding group: 978740-0101
Assembly Drawing: 978740-1/2

Issue: **940524**

From	Pos	Part No	SP	UN	Qty	Description
TBA/9						
		C- 978740-0101				**Air Panel, Ass'y**
	010	978742	-		1	SHEET
	040	273450	-		1	SIGN
	050	273452	-		1	SIGN
	095	979219	-		14	SPACER
	100	90042-0215	-		23	SOLENOID VALVE
	130	90042-0521	-		3	ELECTRICAL CONNECTION
	150	90042-0523	-		6	EL.COIL
	160	90042-0524	-		6	EL.COIL
	170	90042-0525	-		11	EL.COIL
	180	90042-0526	-		7	PROTECTIVE SLEEVE
	220	90042-0532	-		27	CONNECTION TABLE
	240	90043-0068	-		2	PRESSURE GAUGE
	250	90043-0069	-		3	PRESSURE GAUGE
	260	90055-0117	-		6	ELBOW PIPE JOINT
	270	90055-0118	-		33	ELBOW PIPE JOINT
	275	90087-0036	-		1	PLUG
	280	90113-0069	-		5	PRESSURE REGULATOR
	295	90113-0379	-		6	NUT
	310	90166-0013	-	M	3	HOSE
	350	90235-0151	-		1	NON-RETURN VALVE
	502	312105-0376	-		12	SCREW M6S6X35RFR
	520	312502-0120	-		12	DRIVE SCREKDS0X5FNB
	535	312605-0316	-		14	NUT M6M6RFR
	542	315105-0153	-		16	WASHER BRB6,4X12RFR
	555	342715-0103	-		26	PLUG D=8
	560	342716-0203	-		30	REDUCER 6-8
	570	342722-0202	-		6	PIPE COUPLD=6-R1/8"
	575	342722-0205	-		1	PIPE COUPLD=8-R1/4"
	580	342732-0103	-		2	ELBOW PIPE D6-R1/4"
	590	342732-0104	-		6	ELBOW PIPE D8-R1/4"
	620	342732-0801	-		4	ELBOW PIPE D8-R1/8"
	640	342742-0104	-		1	T-CONNECTI D8-R1/4"
	650	342748-0103	-		3	T-CONNECTI D=8
	670	342770-0105	-		6	HOSE COUPL
	680	352101-0103	-		3	LEAD-IN G 18,6
	690	359000-0402	-		5	MARKING CO2/4"2"
	690	359000-0400	-		4	MARKING CO2/4"0"
	690	359000-0401	-		8	MARKING CO2/4"1"
	690	359000-0403	-		2	MARKING CO2/4"3"

From	Pos	Part No	SP	UN	Qty	Description
Common Parts						
	030	273449	-		1	SIGN
	060	295424	-		1	SIGN
	070	295425	-		1	SIGN
	080	978603	-		1	SIGN
	090	978744	-		1	HOLDER
	110	90042-0519	-		5	COVER PLATE
	120	90042-0520	-		1	CONNECTION TABLE
	140	90042-0522	-		4	END PIECE
	200	90042-0528	-		1	SEALING DISC
	230	90043-0021	-		1	PRESSURE GAUGE
	290	90113-0076	-		1	PRESSURE REGULATOR
	300	90165-0019	-		2	CLIP
	320	90166-0068	-	M	1	HOSE
	330	90166-0081	-	M	2	HOSE
	340	90166-0194	-	M	1	PLASTIC HOSE
	360	90277-0045	-		1	FILTER
	370	90277-0046	-		1	FILTER
	380	90328-0007	-		4	SILENCER
	500	312101-0451	-		2	SCREW M6S8X20FZB
	507	312105-0382	-		2	SCREW M6S6X60RFR
	510	312125-0220	-		2	SLOTTED HEMCS3X6RFR
	530	312601-0318	-		2	NUT M6M8FZB
	540	315101-0165	-		2	WASHER BRB8,4X16FZB
	543	315101-0153	-		16	WASHER TBRB6,4X12RFR
	550	342713-0211	-		5	BLIND PLUG
	553	342715-0100	-		2	PLUG D=4
	554	342715-0102	-		1	PLUG D=6
	565	342716-0209	-		1	REDUCER 8-12
	600	342732-0105	-		1	ELBOW PIPE D8-R3/8"
	610	342732-0110	-		2	ELBOW PIPE D12-R3/8"
	630	342735-0103	-		2	ELBOW PIPE D=8
	660	342748-0109	-		2	T-CONNECTI D=12

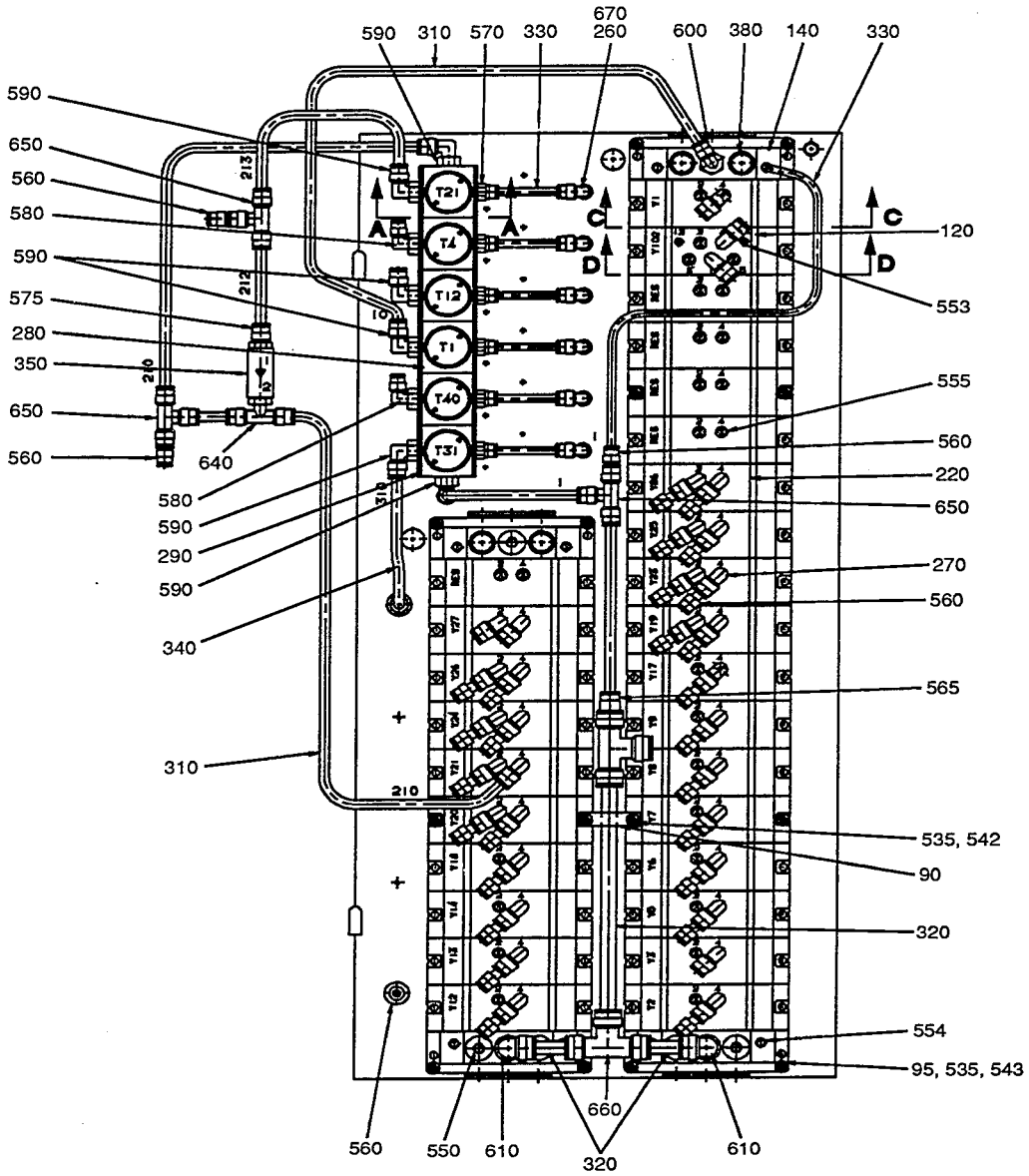

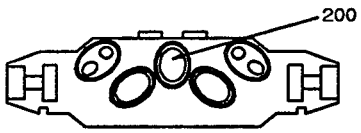

C - C
D - D

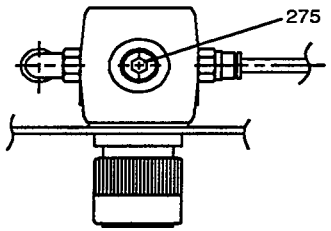

A - A

97874002.WPG
978740-2
AM 20090

From	Pos	Part No	SP	UN	Qty	Description
TBA/9						
		C- 978740-0101				Air Panel, Ass'y
	010	978742	-		1	SHEET
	040	273450	-		1	SIGN
	050	273452	-		1	SIGN
	095	979219	-		14	SPACER
	100	90042-0215	-		23	SOLENOID VALVE
	130	90042-0521	-		3	ELECTRICAL CONNECTION
	150	90042-0523	-		6	EL.COIL
	160	90042-0524	-		6	EL.COIL
	170	90042-0525	-		11	EL.COIL
	180	90042-0526	-		7	PROTECTIVE SLEEVE
	220	90042-0532	-		27	CONNECTION TABLE
	240	90043-0068	-		2	PRESSURE GAUGE
	250	90043-0069	-		3	PRESSURE GAUGE
	260	90055-0117	-		6	ELBOW PIPE JOINT
	270	90055-0118	-		33	ELBOW PIPE JOINT
	275	90087-0036	-		1	PLUG
	280	90113-0069	-		5	PRESSURE REGULATOR
	295	90113-0379	-		6	NUT
	310	90166-0013	-	M	3	HOSE
	350	90235-0151	-		1	NON-RETURN VALVE
	502	312105-0376	-		12	SCREW M6S6X35RFR
	520	312502-0120	-		12	DRIVE SCREKDS0X5FNB
	535	312605-0316	-		14	NUT M6M6RFR
	542	315105-0153	-		16	WASHER BRB6,4X12RFR
	555	342715-0103	-		26	PLUG D=8
	560	342716-0203	-		30	REDUCER 6-8
	570	342722-0202	-		6	PIPE COUPLD=6-R1/8"
	575	342722-0205	-		1	PIPE COUPLD=8-R1/4"
	580	342732-0103	-		2	ELBOW PIPE D6-R1/4"
	590	342732-0104	-		6	ELBOW PIPE D8-R1/4"
	620	342732-0801	-		4	ELBOW PIPE D8-R1/8"
	640	342742-0104	-		1	T-CONNECTI D8-R1/4"
	650	342748-0103	-		3	T-CONNECTI D=8
	670	342770-0105	-		6	HOSE COUPL
	680	352101-0103	-		3	LEAD-IN G 18,6
	690	359000-0402	-		5	MARKING CO2/4"2"
	690	359000-0400	-		4	MARKING CO2/4"0"
	690	359000-0401	-		8	MARKING CO2/4"1"
	690	359000-0403	-		2	MARKING CO2/4"3"

From	Pos	Part No	SP	UN	Qty	Description
Common Parts						
	030	273449	-		1	SIGN
	060	295424	-		1	SIGN
	070	295425	-		1	SIGN
	080	978603	-		1	SIGN
	090	978744	-		1	HOLDER
	110	90042-0519	-		5	COVER PLATE
	120	90042-0520	-		1	CONNECTION TABLE
	140	90042-0522	-		4	END PIECE
	200	90042-0528	-		1	SEALING DISC
	230	90043-0021	-		1	PRESSURE GAUGE
	290	90113-0076	-		1	PRESSURE REGULATOR
	300	90165-0019	-		2	CLIP
	320	90166-0068	-	M	1	HOSE
	330	90166-0081	-	M	2	HOSE
	340	90166-0194	-	M	1	PLASTIC HOSE
	360	90277-0045	-		1	FILTER
	370	90277-0046	-		1	FILTER
	380	90328-0007	-		4	SILENCER
	500	312101-0451	-		2	SCREW M6S8X20FZB
	507	312105-0382	-		2	SCREW M6S6X60RFR
	510	312125-0220	-		2	SLOTTED HEMCS3X6RFR
	530	312601-0318	-		2	NUT M6M8FZB
	540	315101-0165	-		2	WASHER BRB8,4X16FZB
	543	315101-0153	-		16	WASHER TBRB6,4X12RFR
	550	342713-0211	-		5	BLIND PLUG
	553	342715-0100	-		2	PLUG D=4
	554	342715-0102	-		1	PLUG D=6
	565	342716-0209	-		1	REDUCER 8-12
	600	342732-0105	-		1	ELBOW PIPE D8-R3/8"
	610	342732-0110	-		2	ELBOW PIPE D12-R3/8"
	630	342735-0103	-		2	ELBOW PIPE D=8
	660	342748-0109	-		2	T-CONNECTI D=12

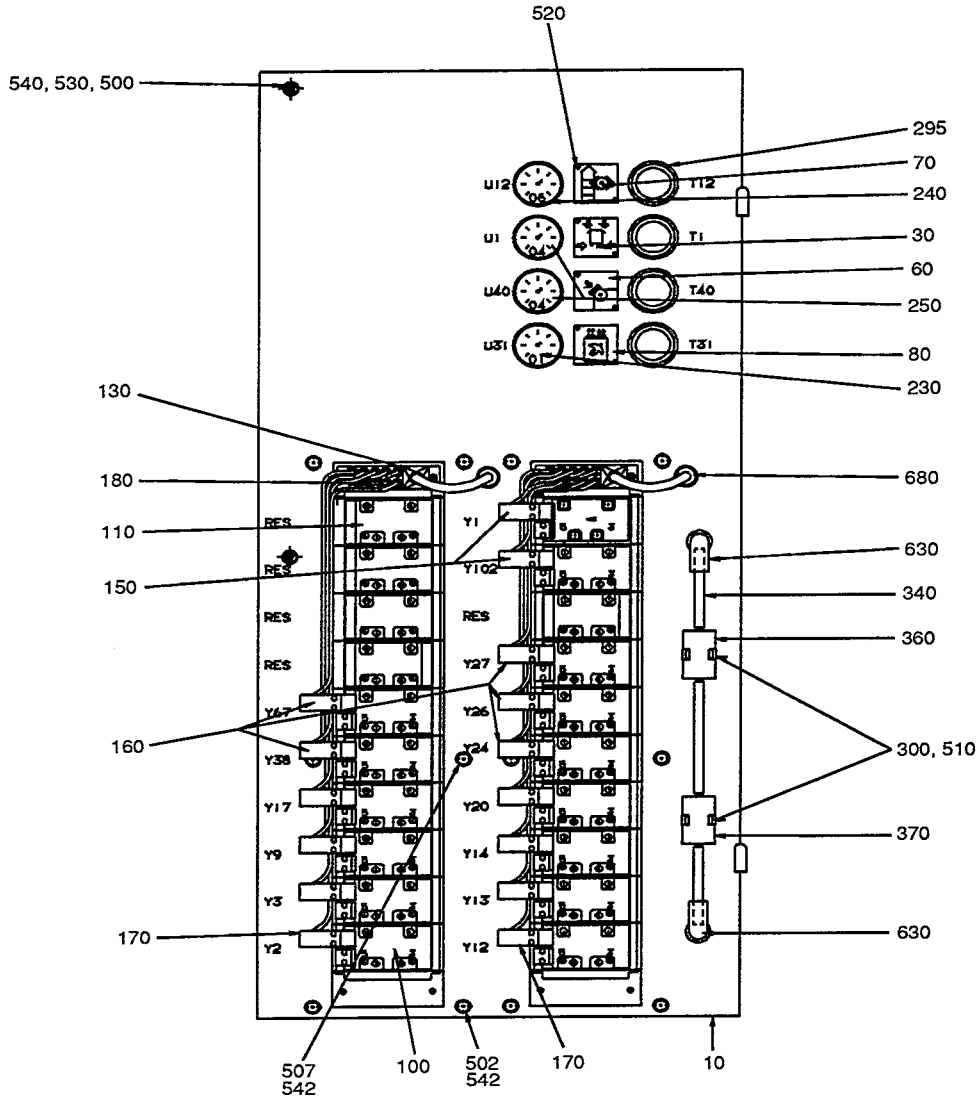
520
540, 530, 500
295
70
240
30
60
250
80
230
130
180
110
150
160
170
680
630
340
360
300, 510
370
630
U12
U1
U40
U31
T12
T1
T40
T31
RES
Y1
Y102
Y27
Y26
Y24
Y67
Y38
Y17
Y9
Y3
Y2
Y20
Y14
Y13
Y12
507
542
100
502
542
170
10

From	Pos	Part No	SP	UN	Qty	Description
TB/9						
		C- 978740-0102				Air Panel, Ass'y
	010	978743	-		1	SHEET
	095	979219	-		12	SPACER
	100	90042-0215	-		15	SOLENOID VALVE
	130	90042-0521	-		2	ELECTRICAL CONNECTION
	150	90042-0523	-		2	EL.COIL
	160	90042-0524	-		5	EL.COIL
	170	90042-0525	-		8	EL.COIL
	180	90042-0526	-		5	PROTECTIVE SLEEVE
	220	90042-0532	-		19	CONNECTION TABLE
	240	90043-0068	-		1	PRESSURE GAUGE
	250	90043-0069	-		2	PRESSURE GAUGE
	260	90055-0117	-		4	ELBOW PIPE JOINT
	270	90055-0118	-		20	ELBOW PIPE JOINT
	280	90113-0069	-		3	PRESSURE REGULATOR
	295	90113-0379	-		4	NUT
	310	90166-0013	-	M	2	HOSE
	502	312105-0376	-		10	SCREW M6S6X35RFR
	520	312502-0120	-		8	DRIVE SCREKDS0X5FNB
	535	312605-0316	-		12	NUT M6M6RFR
	542	315105-0153	-		14	WASHER BRB6,4X12RFR
	545	342713-0210	-		1	BLIND PLUG
	555	342715-0103	-		23	PLUG D=8
	560	342716-0203	-		16	REDUCER 6-8
	570	342722-0202	-		4	PIPE COUPLD=6-R1/8"
	580	342732-0103	-		1	ELBOW PIPE D6-R1/4"
	590	342732-0104	-		4	ELBOW PIPE D8-R1/4"
	620	342732-0801	-		3	ELBOW PIPE D8-R1/8"
	650	342748-0103	-		1	T-CONNECTI D=8
	670	342770-0105	-		4	HOSE COUPL
	680	352101-0103	-		2	LEAD-IN G 18,6
	690	359000-0401	-		4	MARKING CO2/4"1"
	690	359000-0403	-		1	MARKING CO2/4"3"
	690	359000-0400	-		2	MARKING CO2/4"0"

From	Pos	Part No	SP	UN	Qty	Description
Common Parts						
	030	273449	-		1	SIGN
	060	295424	-		1	SIGN
	070	295425	-		1	SIGN
	080	978603	-		1	SIGN
	090	978744	-		1	HOLDER
	110	90042-0519	-		5	COVER PLATE
	120	90042-0520	-		1	CONNECTION TABLE
	140	90042-0522	-		4	END PIECE
	200	90042-0528	-		1	SEALING DISC
	230	90043-0021	-		1	PRESSURE GAUGE
	290	90113-0076	-		1	PRESSURE REGULATOR
	300	90165-0019	-		2	CLIP
	320	90166-0068	-	M	1	HOSE
	330	90166-0081	-	M	2	HOSE
	340	90166-0194	-	M	1	PLASTIC HOSE
	360	90277-0045	-		1	FILTER
	370	90277-0046	-		1	FILTER
	380	90328-0007	-		4	SILENCER
	500	312101-0451	-		2	SCREW M6S8X20FZB
	507	312105-0382	-		2	SCREW M6S6X60RFR
	510	312125-0220	-		2	SLOTTED HEMCS3X6RFR
	530	312601-0318	-		2	NUT M6M8FZB
	540	315101-0165	-		2	WASHER BRB8,4X16FZB
	543	315101-0153	-		16	WASHER TBRB6,4X12RFR
	550	342713-0211	-		5	BLIND PLUG
	553	342715-0100	-		2	PLUG D=4
	554	342715-0102	-		1	PLUG D=6
	565	342716-0209	-		1	REDUCER 8-12
	600	342732-0105	-		1	ELBOW PIPE D8-R3/8"
	610	342732-0110	-		2	ELBOW PIPE D12-R3/8"
	630	342735-0103	-		2	ELBOW PIPE D=8
	660	342748-0109	-		2	T-CONNECTI D=12

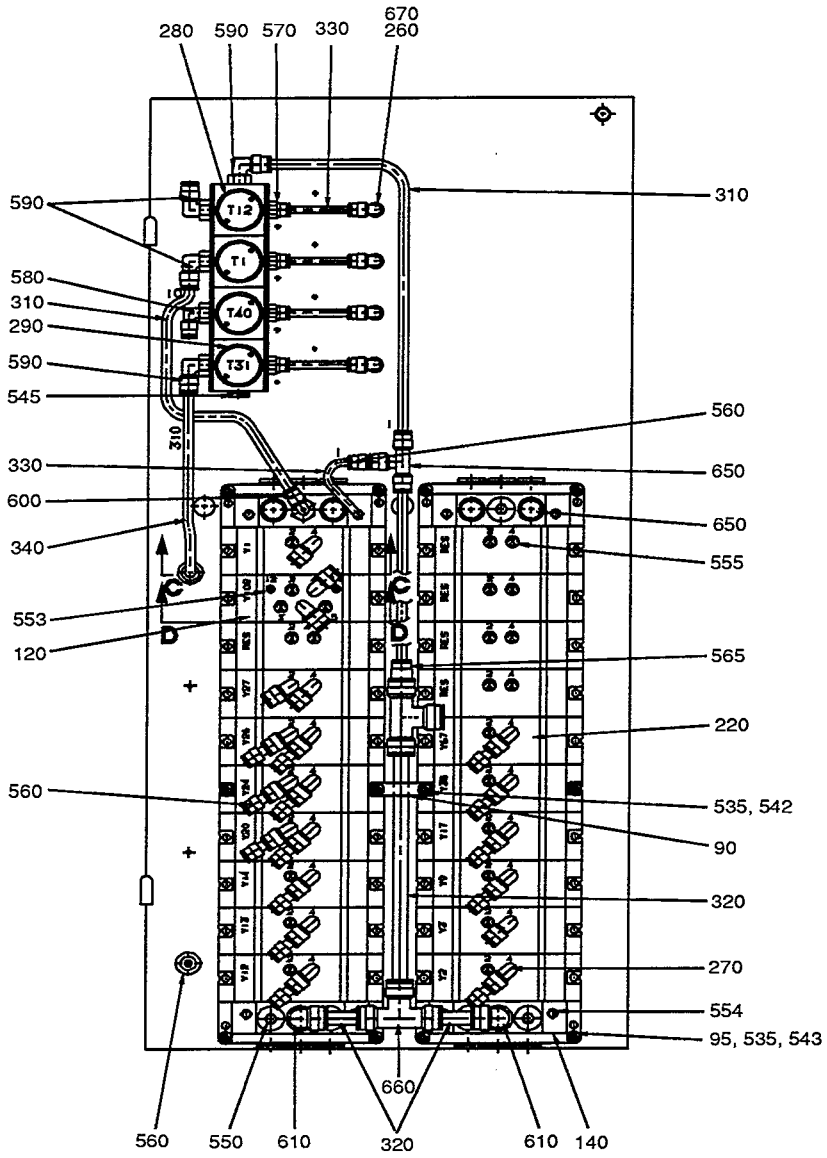
280
590
570
330
670
260
590
580
310
290
590
545
310
330
600
340
553
120
560
560
650
650
555
565
220
535, 542
90
320
270
554
95, 535, 543
660
560
550
610
320
610
140
T12
T1
T40
T31

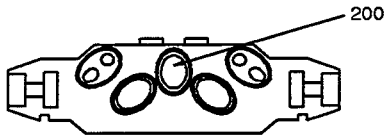
200

C - C
D - D

From	Pos	Part No	SP	UN	Qty	Description
TB/9						
		C- 978740-0102				**Air Panel, Ass'y**
	010	978743	-		1	SHEET
	095	979219	-		12	SPACER
	100	90042-0215	-		15	SOLENOID VALVE
	130	90042-0521	-		2	ELECTRICAL CONNECTION
	150	90042-0523	-		2	EL.COIL
	160	90042-0524	-		5	EL.COIL
	170	90042-0525	-		8	EL.COIL
	180	90042-0526	-		5	PROTECTIVE SLEEVE
	220	90042-0532	-		19	CONNECTION TABLE
	240	90043-0068	-		1	PRESSURE GAUGE
	250	90043-0069	-		2	PRESSURE GAUGE
	260	90055-0117	-		4	ELBOW PIPE JOINT
	270	90055-0118	-		20	ELBOW PIPE JOINT
	280	90113-0069	-		3	PRESSURE REGULATOR
	295	90113-0379	-		4	NUT
	310	90166-0013	-	M	2	HOSE
	502	312105-0376	-		10	SCREW M6S6X35RFR
	520	312502-0120	-		8	DRIVE SCREKDS0X5FNB
	535	312605-0316	-		12	NUT M6M6RFR
	542	315105-0153	-		14	WASHER BRB6,4X12RFR
	545	342713-0210	-		1	BLIND PLUG
	555	342715-0103	-		23	PLUG D=8
	560	342716-0203	-		16	REDUCER 6-8
	570	342722-0202	-		4	PIPE COUPLD=6-R1/8"
	580	342732-0103	-		1	ELBOW PIPE D6-R1/4"
	590	342732-0104	-		4	ELBOW PIPE D8-R1/4"
	620	342732-0801	-		3	ELBOW PIPE D8-R1/8"
	650	342748-0103	-		1	T-CONNECTI D=8
	670	342770-0105	-		4	HOSE COUPL
	680	352101-0103	-		2	LEAD-IN G 18,6
	690	359000-0401	-		4	MARKING CO2/4"1"
	690	359000-0403	-		1	MARKING CO2/4"3"
	690	359000-0400	-		2	MARKING CO2/4"0"

From	Pos	Part No	SP	UN	Qty	Description
Common Parts						
	030	273449	-		1	SIGN
	060	295424	-		1	SIGN
	070	295425	-		1	SIGN
	080	978603	-		1	SIGN
	090	978744	-		1	HOLDER
	110	90042-0519	-		5	COVER PLATE
	120	90042-0520	-		1	CONNECTION TABLE
	140	90042-0522	-		4	END PIECE
	200	90042-0528	-		1	SEALING DISC
	230	90043-0021	-		1	PRESSURE GAUGE
	290	90113-0076	-		1	PRESSURE REGULATOR
	300	90165-0019	-		2	CLIP
	320	90166-0068	-	M	1	HOSE
	330	90166-0081	-	M	2	HOSE
	340	90166-0194	-	M	1	PLASTIC HOSE
	360	90277-0045	-		1	FILTER
	370	90277-0046	-		1	FILTER
	380	90328-0007	-		4	SILENCER
	500	312101-0451	-		2	SCREW M6S8X20FZB
	507	312105-0382	-		2	SCREW M6S6X60RFR
	510	312125-0220	-		2	SLOTTED HEMCS3X6RFR
	530	312601-0318	-		2	NUT M6M8FZB
	540	315101-0165	-		2	WASHER BRB8,4X16FZB
	543	315101-0153	-		16	WASHER TBRB6,4X12RFR
	550	342713-0211	-		5	BLIND PLUG
	553	342715-0100	-		2	PLUG D=4
	554	342715-0102	-		1	PLUG D=6
	565	342716-0209	-		1	REDUCER 8-12
	600	342732-0105	-		1	ELBOW PIPE D8-R3/8"
	610	342732-0110	-		2	ELBOW PIPE D12-R3/8"
	630	342735-0103	-		2	ELBOW PIPE D=8
	660	342748-0109	-		2	T-CONNECTI D=12

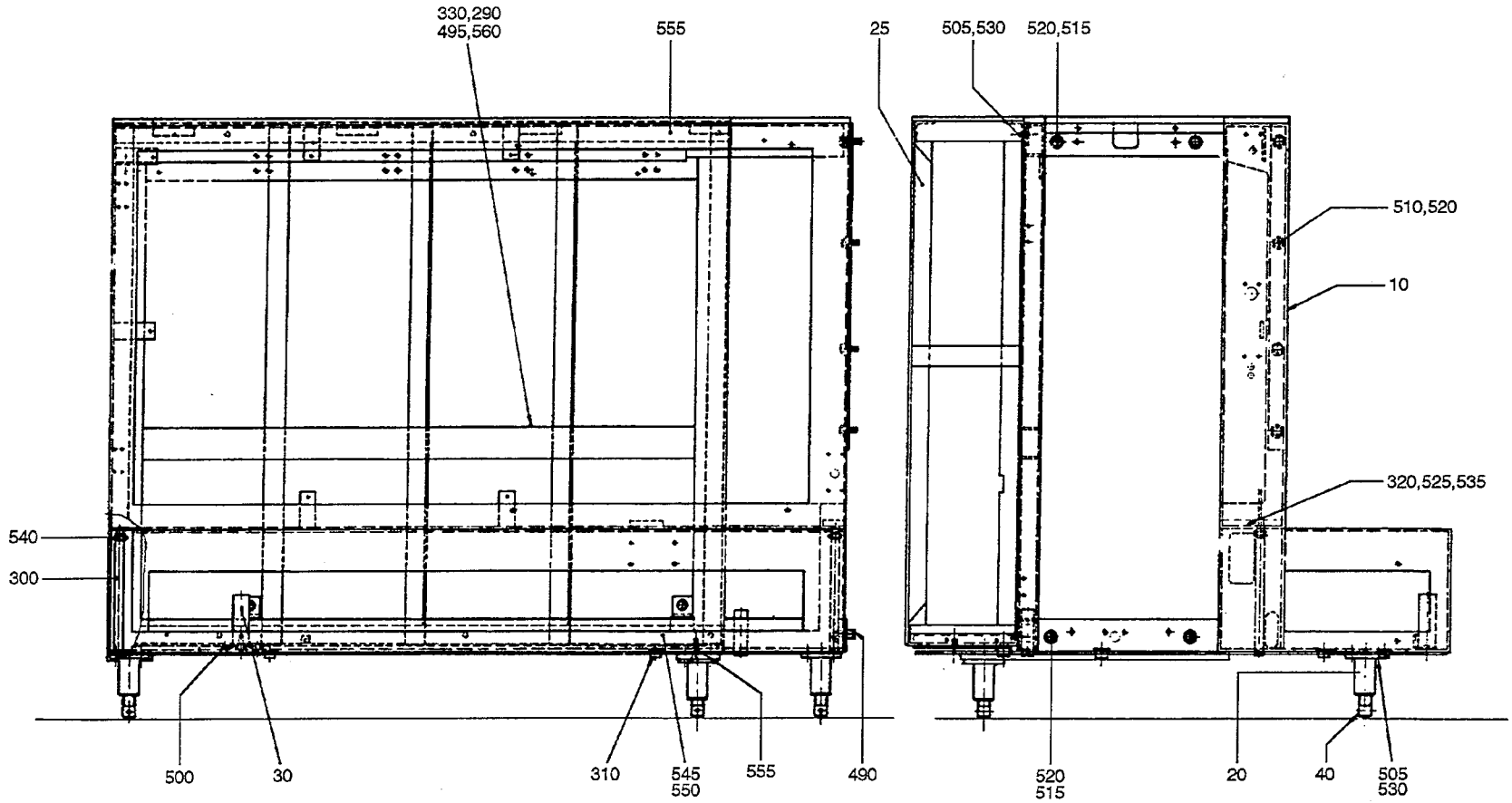

25684305.TIF
256843-5
AM 17888

From	Pos	Part No	SP	UN	Qty	Description
Without Pull-Tab TBA/9						
		C- 256843-0601				**Machine Body, Service Unit, Ass'y**
	F005	**C- 295883-050V**	**-**		**1**	**SPACER PIECE**
	010	571923	-		1	MACHINE BODY
	320	352113-0202	-		2	ARMATURE S8-M
	330	353104-0169	-		1	CABLE SHOEYAV 16 M8*
	505	312105-0453	-		16	SCREW M6S8X25RFR
	525	312145-0291	-		2	SLOTTED HEMFS4X12RFR
	530	315115-0165	-		16	WASHER TBRB8,4X16RFR
	535	312605-0312	-		2	NUT M6M4RFR
With Pull-Tab TBA/9						
		C- 256843-0602				**Machine Body, Service Unit, Ass'y**
	F005	**C- 295883-050V**	**-**		**1**	**SPACER PIECE**
	010	571923	-		1	MACHINE BODY
	015	469963	-		1	CANTILEVER
	320	352113-0202	-		2	ARMATURE S8-M
	330	353104-0169	-		1	CABLE SHOEYAV 16 M8*
	505	312105-0453	-		19	SCREW M6S8X25RFR
	525	312145-0291	-		2	SLOTTED HEMFS4X12RFR
	530	315115-0165	-		19	WASHER TBRB8,4X16RFR
	535	312605-0312	-		2	NUT M6M4RFR
Without Pull-Tab TBA/9 C						
		C- 256843-0603				**Machine Body, Service Unit, Ass'y**
	010	571928	-		1	MACHINE BODY
	025	571931	-		1	SPACER PIECE
	320	352113-0202	-		2	ARMATURE S8-M
	330	353104-0169	-		1	CABLE SHOEYAV 16 M8*
	505	312105-0453	-		6	SCREW M6S8X25RFR
	525	312145-0291	-		2	SLOTTED HEMFS4X12RFR
	530	315115-0165	-		6	WASHER TBRB8,4X16RFR
	535	312605-0312	-		2	NUT M6M4RFR
	545	312105-0495	-		2	SCREW M6S10X30RFR
	550	312605-0320	-		2	NUT M6M10RFR
	555	311103-0399	-		4	CYLINDRICACP M6 8X16 RFR
TB/9						
		C- 256843-0604				**Machine Body, Service Unit, Ass'y**
	F005	**C- 295883-050V**	**-**		**1**	**SPACER PIECE**
	010	571930	-		1	MACHINE BODY
	330	353104-0162	-		1	CABLE SHOEAV 10 M8*
	505	312105-0453	-		6	SCREW M6S8X25RFR
	530	315115-0165	-		6	WASHER TBRB8,4X16RFR
	545	312105-0495	-		2	SCREW M6S10X30RFR
	550	312605-0320	-		2	NUT M6M10RFR
	555	311103-0399	-		4	CYLINDRICACP M6 8X16 RFR

From	Pos	Part No	SP	UN	Qty	Description
Common Parts						
	020	469095	-		4	HOLDER
	030	295259	-		1	HOLDER
	040	469096	-		4	LEG
	290	90062-0016	-		1	LOCK WASHER
	300	90166-0087	-	MM	630	HOSE
	310	90261-0008	-		3	PIPE PLUG
	490	311103-0407	-		4	CYLINDRICACP M6 8X35 RFR
	495	312101-0447	-		1	SCREW M6S8X12FZB
	500	312105-0368	-		2	SCREW M6S6X16RFR
	510	312105-0536	-		4	SCREW M6S12X30RFR
	515	312105-0540	-		4	SCREW M6S12X40 A4 80
	520	90005-0126	-		8	WASHER
	540	342991-0104	-		2	HOSE CLIP 19-28MMRFR
	560	315111-0165	-		1	WASHER TBRB8,4X16FZB

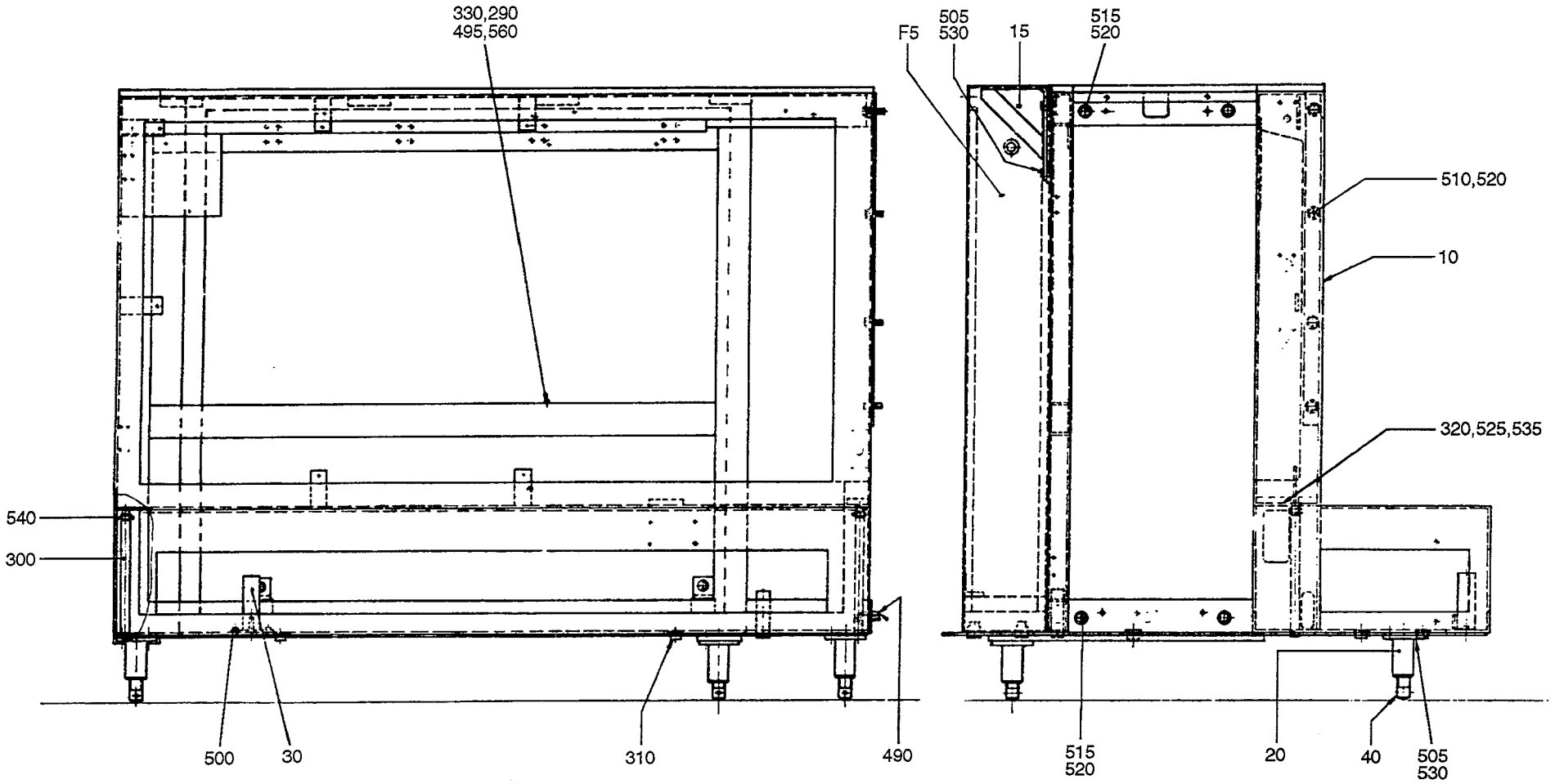

25684306.TIF
256843-6
AM 17888

From	Pos	Part No	SP	UN	Qty	Description
Without Pull-Tab TBA/9						
		C- 256843-0601				**Machine Body, Service Unit, Ass'y**
	F005	**C- 295883-050V**	**-**		**1**	**SPACER PIECE**
	010	571923	-		1	MACHINE BODY
	320	352113-0202	-		2	ARMATURE S8-M
	330	353104-0169	-		1	CABLE SHOEYAV 16 M8*
	505	312105-0453	-		16	SCREW M6S8X25RFR
	525	312145-0291	-		2	SLOTTED HEMFS4X12RFR
	530	315115-0165	-		16	WASHER TBRB8,4X16RFR
	535	312605-0312	-		2	NUT M6M4RFR
With Pull-Tab TBA/9						
		C- 256843-0602				**Machine Body, Service Unit, Ass'y**
	F005	**C- 295883-050V**	**-**		**1**	**SPACER PIECE**
	010	571923	-		1	MACHINE BODY
	015	469963	-		1	CANTILEVER
	320	352113-0202	-		2	ARMATURE S8-M
	330	353104-0169	-		1	CABLE SHOEYAV 16 M8*
	505	312105-0453	-		19	SCREW M6S8X25RFR
	525	312145-0291	-		2	SLOTTED HEMFS4X12RFR
	530	315115-0165	-		19	WASHER TBRB8,4X16RFR
	535	312605-0312	-		2	NUT M6M4RFR
Without Pull-Tab TBA/9 C						
		C- 256843-0603				**Machine Body, Service Unit, Ass'y**
	010	571928	-		1	MACHINE BODY
	025	571931	-		1	SPACER PIECE
	320	352113-0202	-		2	ARMATURE S8-M
	330	353104-0169	-		1	CABLE SHOEYAV 16 M8*
	505	312105-0453	-		6	SCREW M6S8X25RFR
	525	312145-0291	-		2	SLOTTED HEMFS4X12RFR
	530	315115-0165	-		6	WASHER TBRB8,4X16RFR
	535	312605-0312	-		2	NUT M6M4RFR
	545	312105-0495	-		2	SCREW M6S10X30RFR
	550	312605-0320	-		2	NUT M6M10RFR
	555	311103-0399	-		4	CYLINDRICACP M6 8X16 RFR
TB/9						
		C- 256843-0604				**Machine Body, Service Unit, Ass'y**
	F005	**C- 295883-050V**	**-**		**1**	**SPACER PIECE**
	010	571930	-		1	MACHINE BODY
	330	353104-0162	-		1	CABLE SHOEAV 10 M8*
	505	312105-0453	-		6	SCREW M6S8X25RFR
	530	315115-0165	-		6	WASHER TBRB8,4X16RFR
	545	312105-0495	-		2	SCREW M6S10X30RFR
	550	312605-0320	-		2	NUT M6M10RFR
	555	311103-0399	-		4	CYLINDRICACP M6 8X16 RFR

From	Pos	Part No	SP	UN	Qty	Description
Common Parts						
	020	469095	-		4	HOLDER
	030	295259	-		1	HOLDER
	040	469096	-		4	LEG
	290	90062-0016	-		1	LOCK WASHER
	300	90166-0087	-	MM	630	HOSE
	310	90261-0008	-		3	PIPE PLUG
	490	311103-0407	-		4	CYLINDRICACP M6 8X35 RFR
	495	312101-0447	-		1	SCREW M6S8X12FZB
	500	312105-0368	-		2	SCREW M6S6X16RFR
	510	312105-0536	-		4	SCREW M6S12X30RFR
	515	312105-0540	-		4	SCREW M6S12X40 A4 80
	520	90005-0126	-		8	WASHER
	540	342991-0104	-		2	HOSE CLIP 19-28MMRFR
	560	315111-0165	-		1	WASHER TBRB8,4X16FZB

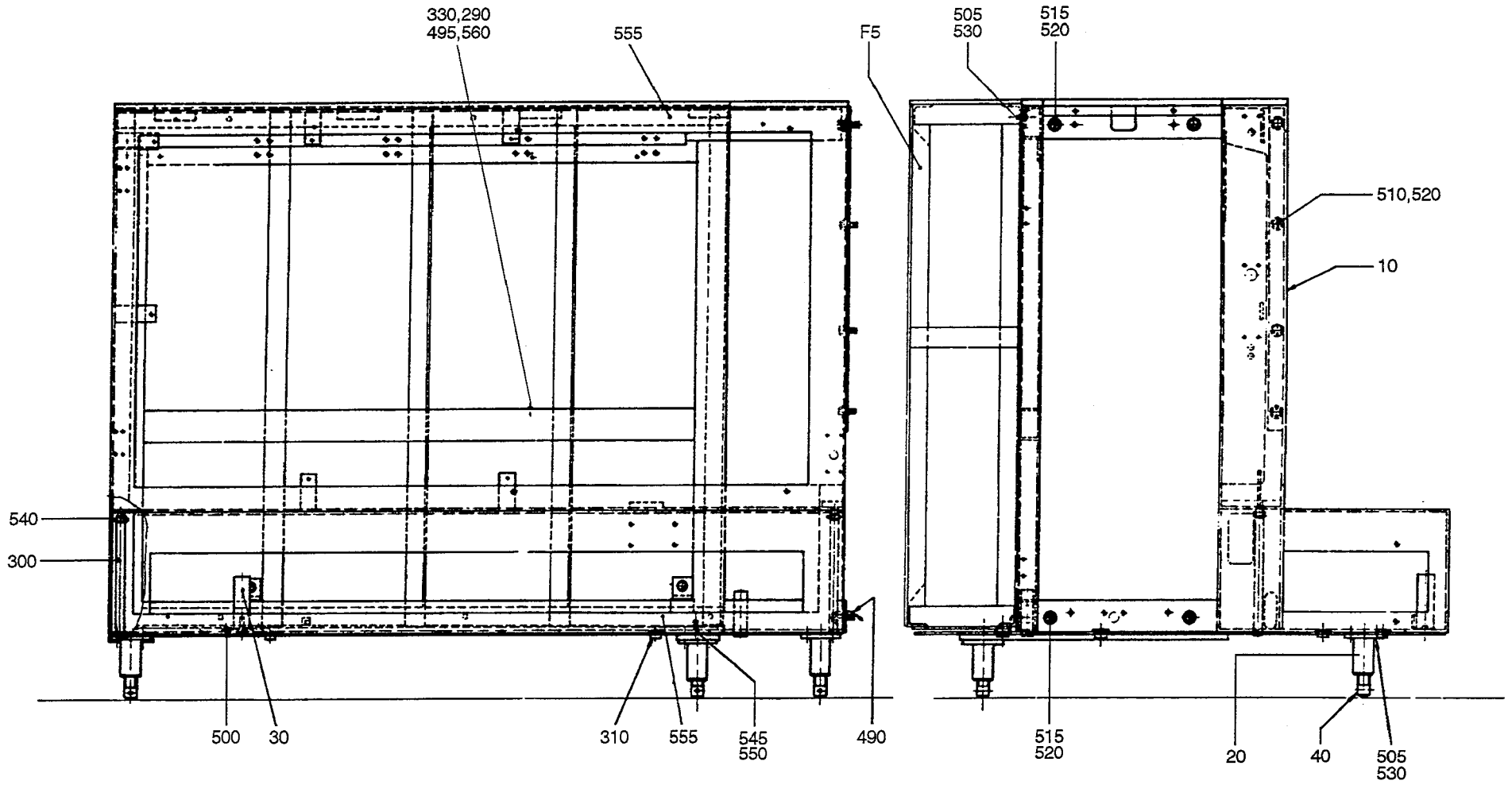

25684308.TIF
256843-8
AM 19553

From	Pos	Part No	SP	UN	Qty	Description
Without Pull-Tab TBA/9						
		C- 256843-0601				**Machine Body, Service Unit, Ass'y**
	F005	**C- 295883-050V**	**-**		**1**	**SPACER PIECE**
	010	571923	-		1	MACHINE BODY
	320	352113-0202	-		2	ARMATURE S8-M
	330	353104-0169	-		1	CABLE SHOEYAV 16 M8*
	505	312105-0453	-		16	SCREW M6S8X25RFR
	525	312145-0291	-		2	SLOTTED HEMFS4X12RFR
	530	315115-0165	-		16	WASHER TBRB8,4X16RFR
	535	312605-0312	-		2	NUT M6M4RFR
With Pull-Tab TBA/9						
		C- 256843-0602				**Machine Body, Service Unit, Ass'y**
	F005	**C- 295883-050V**	**-**		**1**	**SPACER PIECE**
	010	571923	-		1	MACHINE BODY
	015	469963	-		1	CANTILEVER
	320	352113-0202	-		2	ARMATURE S8-M
	330	353104-0169	-		1	CABLE SHOEYAV 16 M8*
	505	312105-0453	-		19	SCREW M6S8X25RFR
	525	312145-0291	-		2	SLOTTED HEMFS4X12RFR
	530	315115-0165	-		19	WASHER TBRB8,4X16RFR
	535	312605-0312	-		2	NUT M6M4RFR
Without Pull-Tab TBA/9 C						
		C- 256843-0603				**Machine Body, Service Unit, Ass'y**
	010	571928	-		1	MACHINE BODY
	025	571931	-		1	SPACER PIECE
	320	352113-0202	-		2	ARMATURE S8-M
	330	353104-0169	-		1	CABLE SHOEYAV 16 M8*
	505	312105-0453	-		6	SCREW M6S8X25RFR
	525	312145-0291	-		2	SLOTTED HEMFS4X12RFR
	530	315115-0165	-		6	WASHER TBRB8,4X16RFR
	535	312605-0312	-		2	NUT M6M4RFR
	545	312105-0495	-		2	SCREW M6S10X30RFR
	550	312605-0320	-		2	NUT M6M10RFR
	555	311103-0399	-		4	CYLINDRICACP M6 8X16 RFR
TB/9						
		C- 256843-0604				**Machine Body, Service Unit, Ass'y**
	F005	**C- 295883-050V**	**-**		**1**	**SPACER PIECE**
	010	571930	-		1	MACHINE BODY
	330	353104-0162	-		1	CABLE SHOEAV 10 M8*
	505	312105-0453	-		6	SCREW M6S8X25RFR
	530	315115-0165	-		6	WASHER TBRB8,4X16RFR
	545	312105-0495	-		2	SCREW M6S10X30RFR
	550	312605-0320	-		2	NUT M6M10RFR
	555	311103-0399	-		4	CYLINDRICACP M6 8X16 RFR

From	Pos	Part No	SP	UN	Qty	Description
Common Parts						
	020	469095	-		4	HOLDER
	030	295259	-		1	HOLDER
	040	469096	-		4	LEG
	290	90062-0016	-		1	LOCK WASHER
	300	90166-0087	-	MM	630	HOSE
	310	90261-0008	-		3	PIPE PLUG
	490	311103-0407	-		4	CYLINDRICACP M6 8X35 RFR
	495	312101-0447	-		1	SCREW M6S8X12FZB
	500	312105-0368	-		2	SCREW M6S6X16RFR
	510	312105-0536	-		4	SCREW M6S12X30RFR
	515	312105-0540	-		4	SCREW M6S12X40 A4 80
	520	90005-0126	-		8	WASHER
	540	342991-0104	-		2	HOSE CLIP 19-28MMRFR
	560	315111-0165	-		1	WASHER TBRB8,4X16FZB

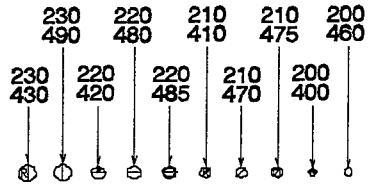
230
490
220
480
210
410
210
475
200
460
230
430
220
420
220
485
210
470
200
400

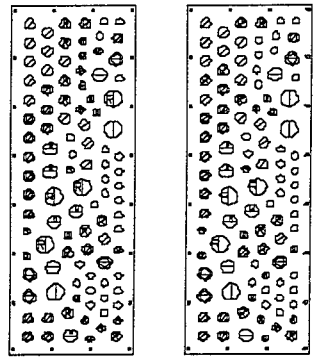
VARIANT 01
VARIANT 02

C - C

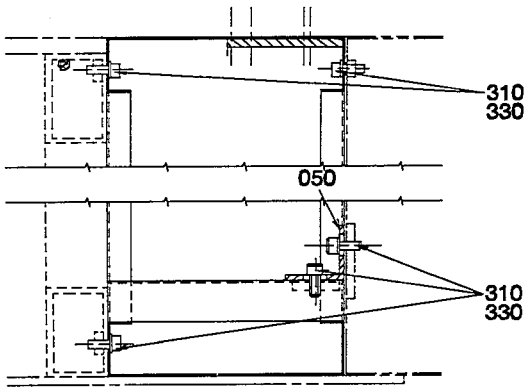
310
330
050
310
330

B - B

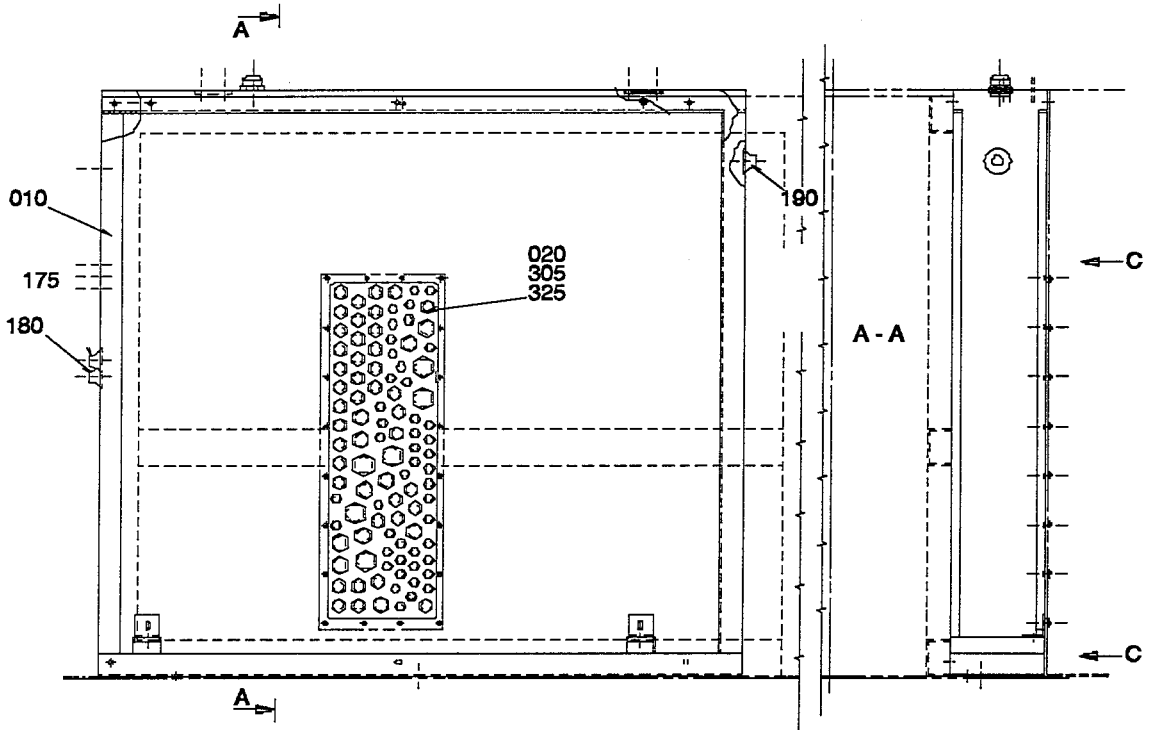
A
010
175
180
020
305
325
190
A - A
C
C
A

A - A

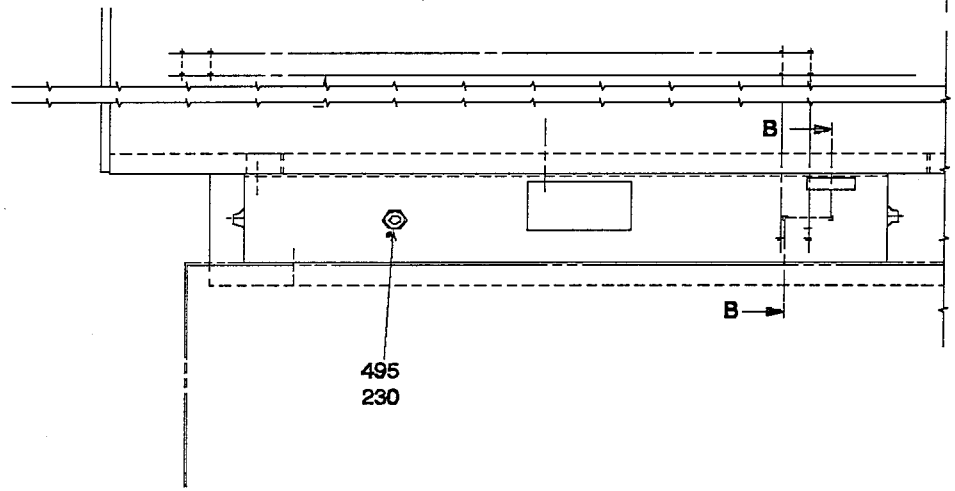
B
B
495
230

TBA/9 Without Pull-Tab

From	Pos	Part No	SP	UN Qty	Description
		C- 295883-0501			Spacer Piece, Ass'y
	010	571924	-	1	SPACER PIECE
	020	571919	-	1	CABLE LEAD-IN
	050	441239	-	2	ANGLE BRACKET
	175	90015-0020	-	2	BUSHING
	180	90015-0021	-	1	BUSHING
	190	90015-0024	-	1	BUSHING
	200	90099-0001	-	46	NUT
	210	90099-0003	-	39	NUT
	220	90099-0004	-	11	NUT
	230	90099-0011	-	7	NUT
	305	312105-0327	-	18	SCREW M6S5X12 A2 80
	310	312115-0451	-	11	SCREW 8X20 A4 80
	325	315105-0146	-	18	WASHER BRB5,3X10RFR
	330	315105-0165	-	11	WASHER BRB8,4X16RFR
	400	352101-0102	-	18	LEAD-IN G 15,2
	410	352101-0105	-	10	LEAD-IN G 22,5
	420	352101-0106	-	5	LEAD-IN G 28,3
	430	352101-0107	-	4	LEAD-IN G 37
	460	352103-0101	-	28	CABLE GLAND ST 9
	470	352103-0110	-	14	CABLE GLAND STR 16
	475	352103-0111	-	15	CABLE GLAND ST 16
	480	352103-0115	-	2	CABLE GLANR.STR 21
	485	352103-0116	-	4	CABLE GLANR.ST 21
	490	352103-0121	-	2	CABLE GLANR.ST 29
	495	352103-0120	-	1	CABLE GLANR.STR 29

TBA/9 With Pull-Tab

From	Pos	Part No	SP	UN Qty	Description
		C- 295883-0502			Spacer Piece, Ass'y
	010	571924	-	1	SPACER PIECE
	020	571919	-	1	CABLE LEAD-IN
	050	441239	-	2	ANGLE BRACKET
	175	90015-0020	-	2	BUSHING
	180	90015-0021	-	1	BUSHING
	190	90015-0024	-	1	BUSHING
	200	90099-0001	-	46	NUT
	210	90099-0003	-	39	NUT
	220	90099-0004	-	11	NUT
	230	90099-0011	-	7	NUT
	305	312105-0327	-	18	SCREW M6S5X12 A2 80
	310	312115-0451	-	11	SCREW 8X20 A4 80
	325	315105-0146	-	18	WASHER BRB5,3X10RFR
	330	315105-0165	-	11	WASHER BRB8,4X16RFR
	400	352101-0102	-	14	LEAD-IN G 15,2
	410	352101-0105	-	10	LEAD-IN G 22,5
	420	352101-0106	-	4	LEAD-IN G 28,3
	430	352101-0107	-	3	LEAD-IN G 37
	460	352103-0101	-	32	CABLE GLAND ST 9
	470	352103-0110	-	14	CABLE GLAND STR 16
	475	352103-0111	-	15	CABLE GLAND ST 16
	480	352103-0115	-	3	CABLE GLANR.STR 21
	485	352103-0116	-	4	CABLE GLANR.ST 21
	490	352103-0121	-	3	CABLE GLANR.ST 29
	495	352103-0120	-	1	CABLE GLANR.STR 29

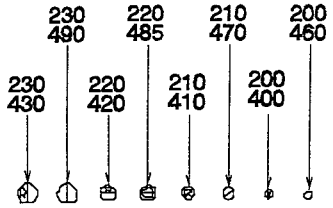
230
490
220
485
210
470
200
460
230
430
220
420
210
410
200
400

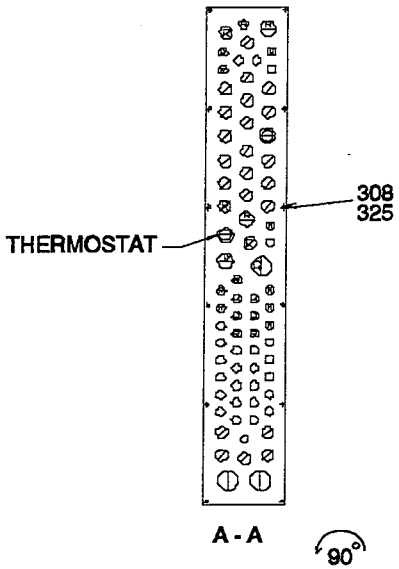
THERMOSTAT
308
325
A - A
90°

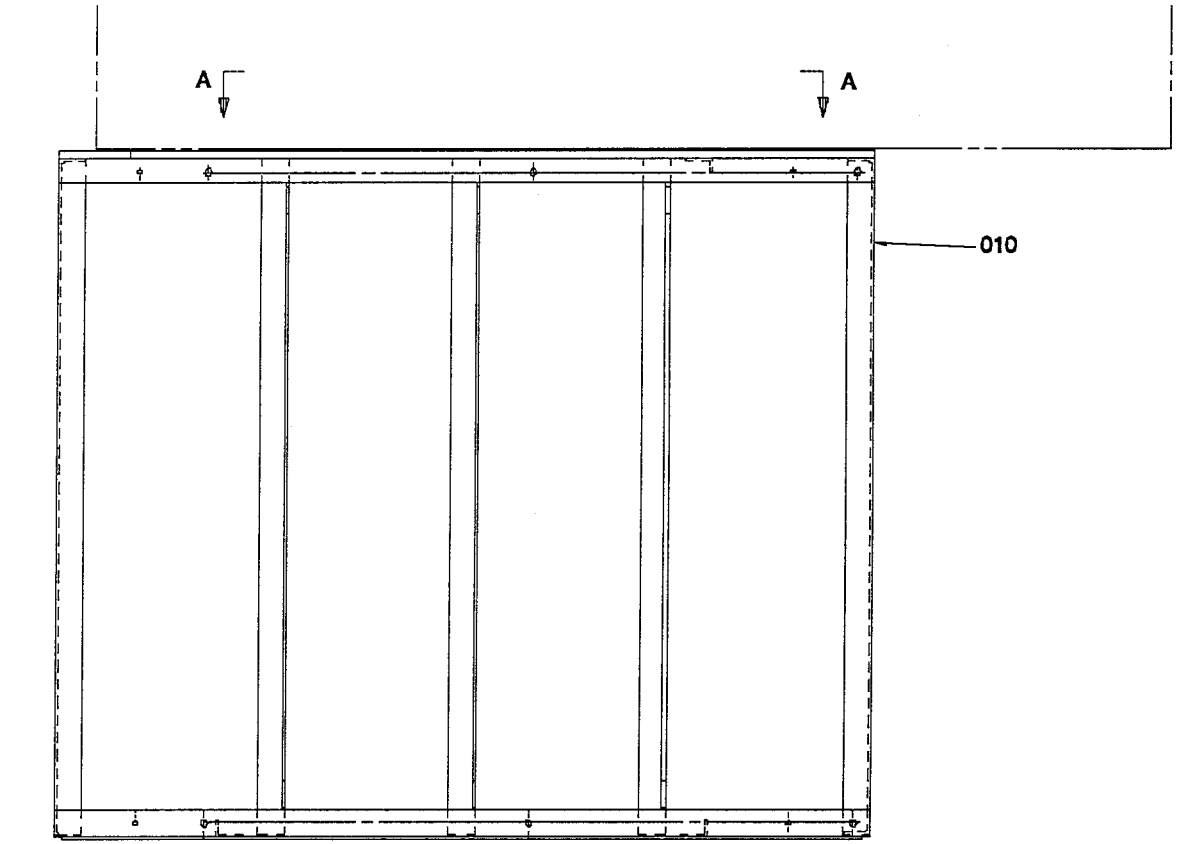
A
A
010

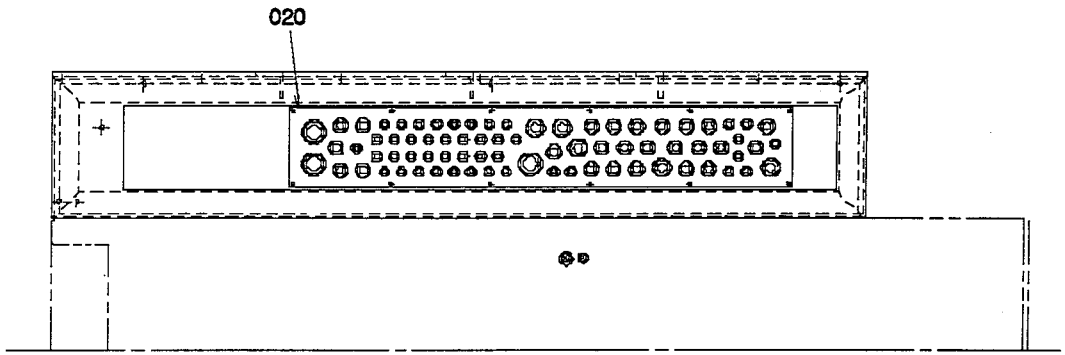
020

Last Alteration: AM 17888 93-01-27

Corresponding group: 295883-050V
Assembly Drawing: 295883-7

Issue: **940524**

From	Pos	Part No	SP	UN Qty	Description
TB/9 Without Pull-Tab 250ml 200ml 180ml					
		C- 295883-0503			**Spacer Piece, Ass'y**
	010	752695	-	1	MACHINE BODY
	020	978577	-	1	CABLE LEAD-IN
	200	90099-0001	-	43	NUT
	210	90099-0003	-	25	NUT
	220	90099-0004	-	4	NUT
	230	90099-0011	-	3	NUT
	308	312125-0325	-	10	SLOTTED HEMCS5X10RFR
	325	315105-0146	-	10	WASHER BRB5,3X10RFR
	400	352101-0102	-	17	LEAD-IN G 15,2
	410	352101-0105	-	3	LEAD-IN G 22,5
	420	352101-0106	-	3	LEAD-IN G 28,3
	430	352101-0107	-	1	LEAD-IN G 37
	460	352103-0101	-	26	CABLE GLAND ST 9
	470	352103-0110	-	22	CABLE GLAND STR 16
	485	352103-0116	-	1	CABLE GLANR.ST 21
	490	352103-0121	-	2	CABLE GLANR.ST 29
TB/9 With Pull-Tab 200ml Slim					
		C- 295883-0504			**Spacer Piece, Ass'y**
	010	752695	-	1	MACHINE BODY
	020	978577	-	1	CABLE LEAD-IN
	200	90099-0001	-	43	NUT
	210	90099-0003	-	25	NUT
	220	90099-0004	-	4	NUT
	230	90099-0011	-	3	NUT
	308	312125-0325	-	10	SLOTTED HEMCS5X10RFR
	325	315105-0146	-	10	WASHER BRB5,3X10RFR
	400	352101-0102	-	17	LEAD-IN G 15,2
	410	352101-0105	-	3	LEAD-IN G 22,5
	420	352101-0106	-	3	LEAD-IN G 28,3
	430	352101-0107	-	1	LEAD-IN G 37
	460	352103-0101	-	26	CABLE GLAND ST 9
	470	352103-0110	-	22	CABLE GLAND STR 16
	485	352103-0116	-	1	CABLE GLANR.ST 21
	490	352103-0121	-	2	CABLE GLANR.ST 29

From	Pos	Part No	SP	UN Qty	Description

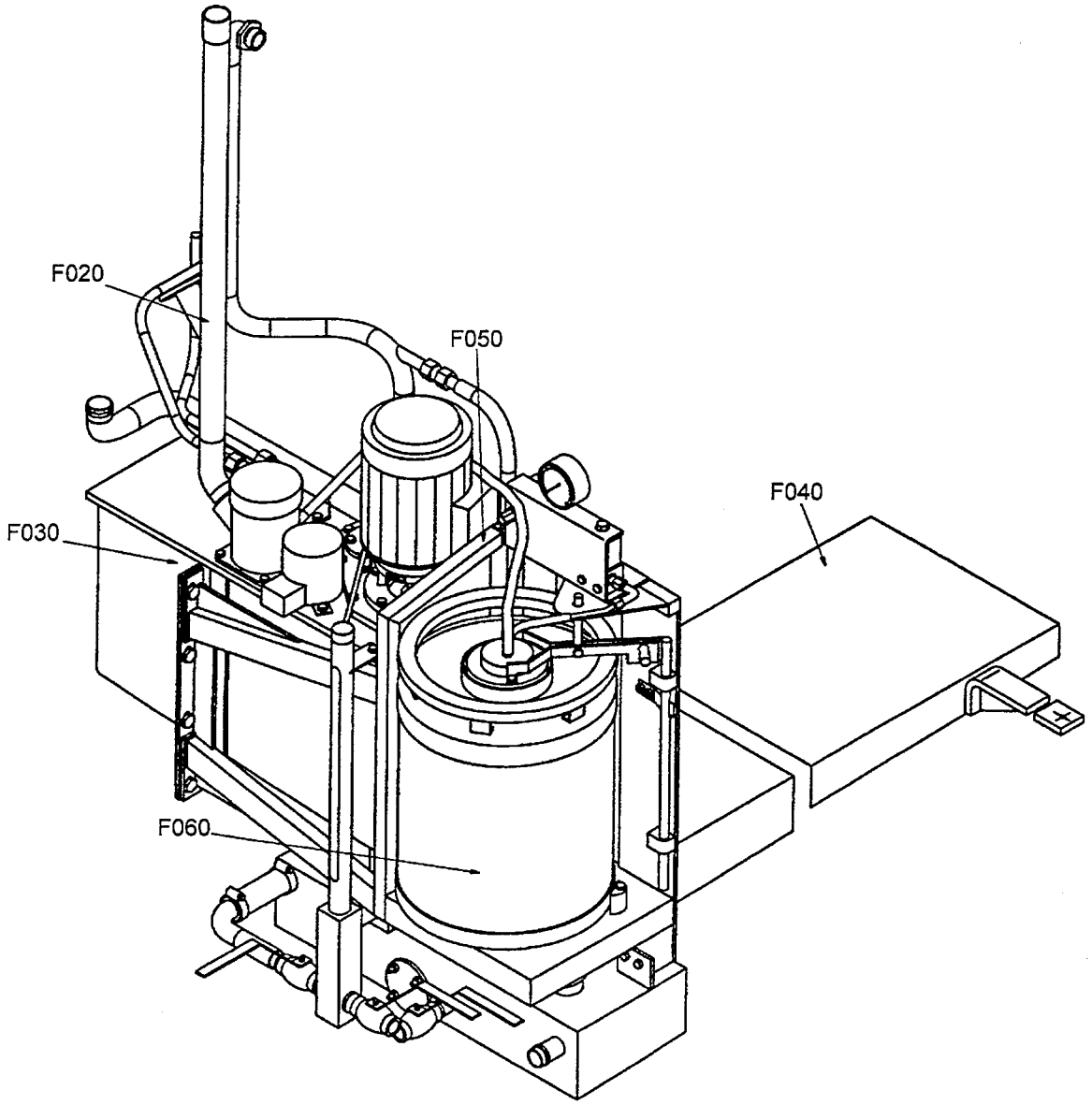

75135203.TIF
751352-1/3
AM 17888

From	Pos	Part No	SP	UN	Qty	Description
TBA/9						
		C- 751352-0201				**Hydrogen Peroxide, Ass'y**
TBA/9 C						
		C- 751352-0202				**Hydrogen Peroxide, Ass'y**
	F070	**C- 553657-0101**	**-**		**1**	**DOOR**
Common Parts						
	F020	**C- 491207-030V**	**-**		**1**	**PIPE WORK**
	F030	**C- 751373-010V**	**-**		**1**	**PEROXIDE TANK**
		C- 493652-0102				. LID
		C- 751393-0101				. PEROXIDE PUMP
	F040	**C- 751398-020V**	**-**		**1**	**PEROXIDE TANK**
		C- 493652-0102				. LID
	F050	**C- 751406-010V**	**-**		**1**	**CONNECTION HOUSING**
		C- 751410-0101				. VALVE PANEL
	F060	**C- 527898-0101**	**-**		**2**	**CONTAINER**

From	Pos	Part No	SP	UN	Qty	Description

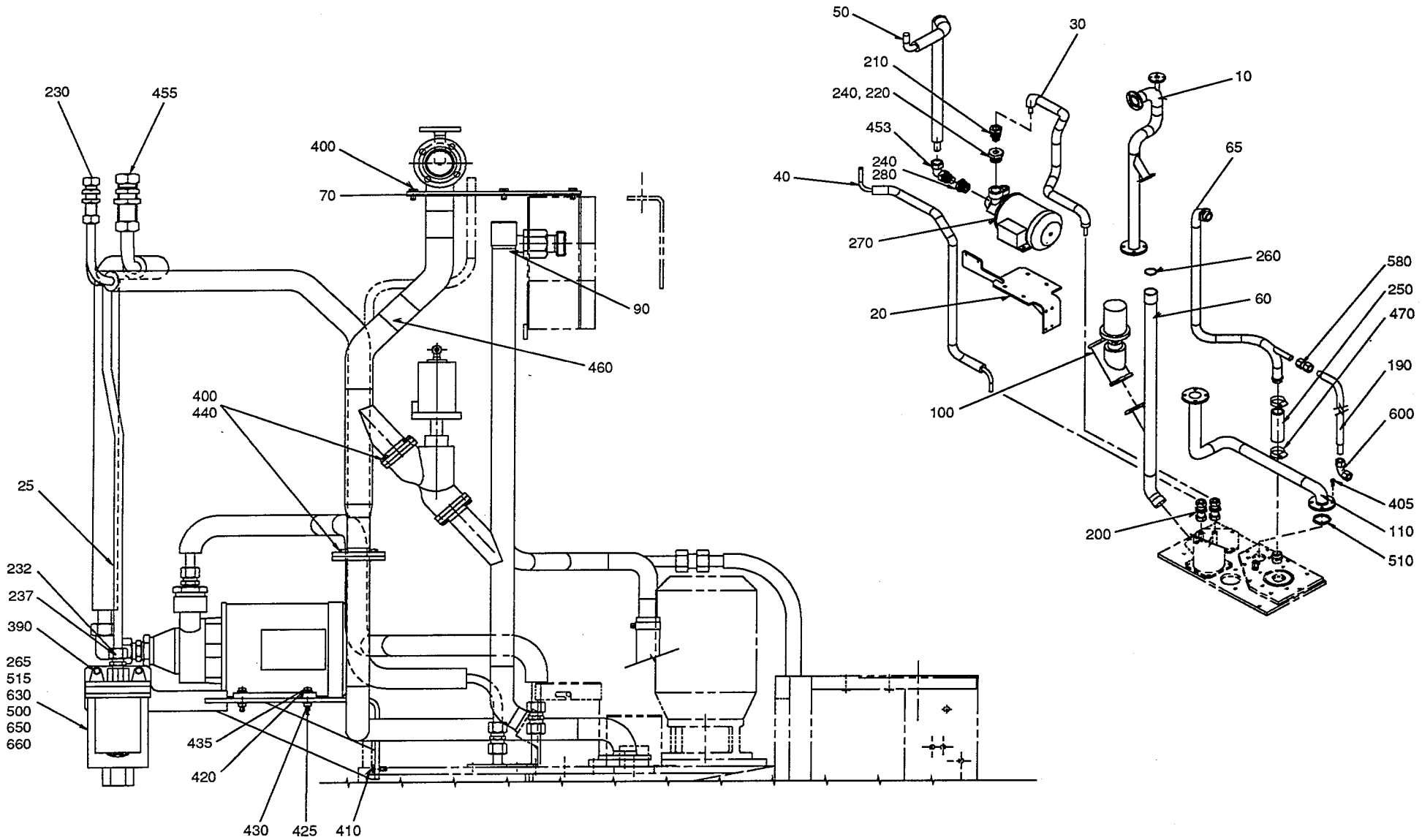

49120706.WPG
491207-6
AM 20090

From	Pos	Part No	SP	UN	Qty	Description
TBA/9						
		C- 491207-0301				**Pipe Work, Ass'y**
	010	566704	-		1	PIPE
	030	572466	-		1	PIPE
	040	572467	-		1	PIPE
	060	751362	-		1	RETURN PIPE
	065	752566	-		1	PIPE
	110	566703	-		1	PIPE
	190	752864	-		1	HOSE
	250	90166-0208	S	MM	200	RUBBER HOSE
	400	312105-0366	-		18	SCREW M6S6X12RFR
	410	312105-0368	-		8	SCREW M6S6X16RFR
	430	315105-0153	-		4	WASHER BRB6,4X12RFR
	440	315204-0223	P		3	O-RING 39,2X3VITON
	470	342991-0106	-		2	HOSE CLIP 26-38MMRFR
	500	352113-0102	-		2	RIBBON CLA
	510	315204-0224	-		1	O-RING 2X3 VITON
	580	342727-0214	-		1	PIPE COUPLG 15-L/SY
	600	342737-0221	-		1	ELBOW PIPE W 15-L RFR
TBA/9 C						
		C- 491207-0302				**Pipe Work, Ass'y**
	010	553128	-		1	PIPE
	015	563278	-		1	PIPE
	030	572473	-		1	PIPE
	040	572474	-		1	PIPE
	055	553651	-		1	PIPE
	060	553653	-		1	RETURN PIPE
	080	469993	-		1	HOSE COUPLING
	095	553658	-		1	CANTILEVER
	150	555435	-		1	PIPE
	160	563281	-		1	T-PIPE
	245	90166-0110	-	MM	1500	HOSE
	250	90166-0208	S	MM	1500	RUBBER HOSE
	255	90166-0161	-	MM	800	HOSE
	400	312105-0366	-		30	SCREW M6S6X12RFR
	410	312105-0368	-		6	SCREW M6S6X16RFR
	430	315105-0153	-		6	WASHER BRB6,4X12RFR
	440	315204-0223	P		5	O-RING 39,2X3VITON
	500	352113-0102	-		6	RIBBON CLA
	555	90187-0059	-		1	VALVE
	565	90330-0020	-		1	ELBOW PIPE
	575	90330-0021	-		2	NIPPLE
	610	342731-0221	-		2	ELBOW PIPE WA15-LK RFR
	620	342991-0101	-		4	HOSE CLIP 11-17MMRFR

From	Pos	Part No	SP	UN	Qty	Description
Common Parts						
	020	572465	-		1	CANTILEVER
	025	572472	-		1	PIPE
	050	572470	-		1	PIPE
	070	272818	S		1	GASKET
	090	469994	-		1	ATTACHMENT
	100	499501	S		1	VALVE
	200	90030-0106	-		2	PIPE CONNECTION
	210	90030-0187	-		2	PIPE CONNECTION
	220	90030-0209	-		2	REDUCER
	230	90030-0030	-		2	PIPE CONNECTION
	232	90030-0253	-		1	PIPE COUPLING
	237	90089-0018	-		1	TRANSITIONAL NIPPLE
	240	90157-0037	-		X	THREAD SEAL TYPE 542
	260	90242-0065	P		1	O-RING
	265	90274-0065	-		1	PRESSURE SWITCH
	270	90321-0100	S		1	PUMP
	280	90330-0128	-		1	REDUCER
	390	312105-0327	-		2	SCREW M6S5X12 A2 80
	420	312105-0374	-		4	SCREW M6S6X30RFR
	425	312605-0316	-		4	NUT M6M6RFR
	435	315115-0153	-		4	WASHER TBRB6,4X12RFR
	453	342738-0225	-		1	ELBOW PIPESY
	455	342762-0218	-		1	BULKHEAD LSV 18-L/SY
	460	342930-0114	-		1	ELBOW PIPE6/4-1/4
	515	352103-0110	-		1	COMPR GLAND STR 16
	630	352113-0202	-		2	ARMATURE S8-M
	650	312125-0291	-		2	SLOTTED HEMCS4X12RFR
	660	312605-0312	-		2	NUT M6M4RFR

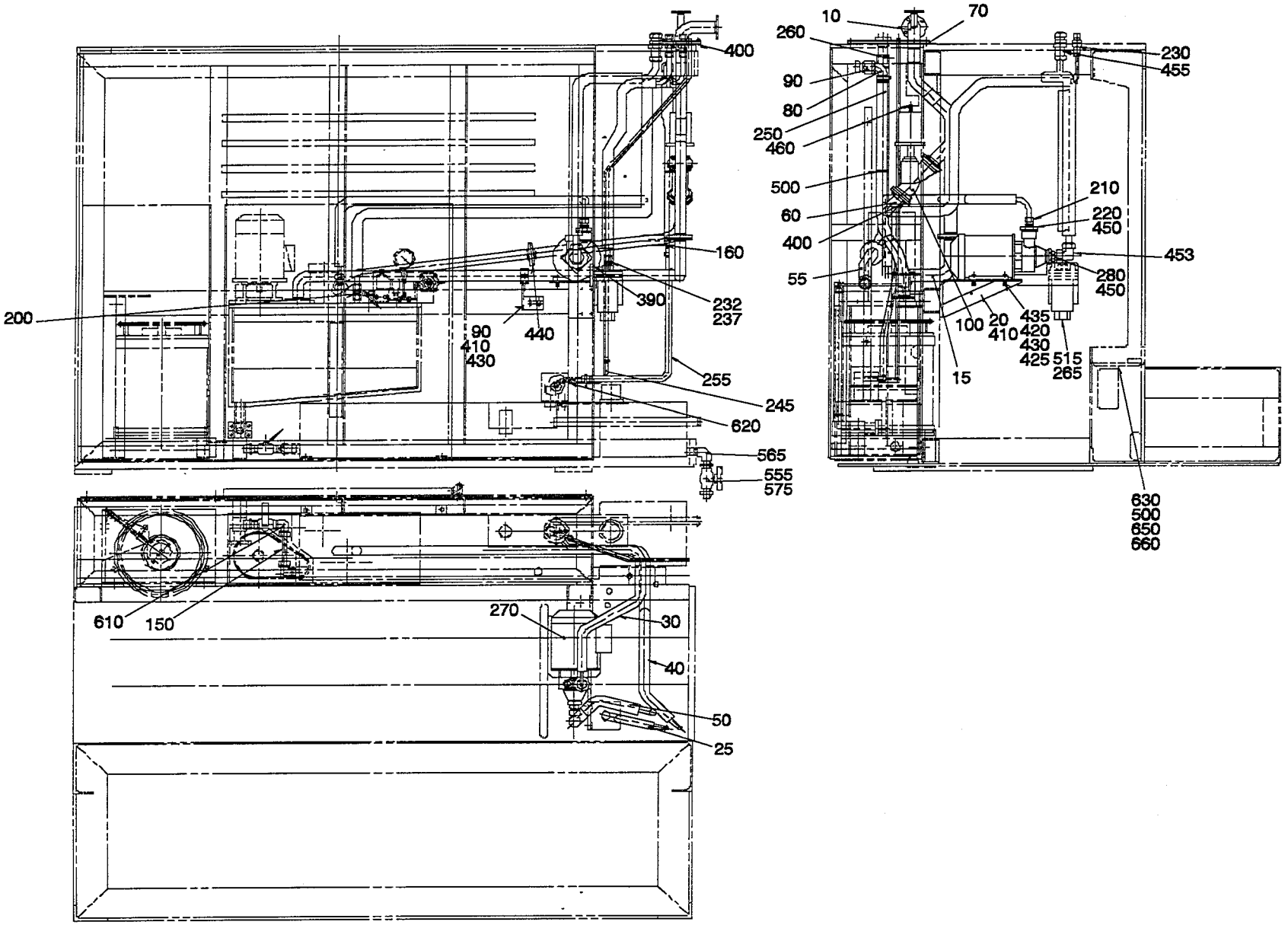
400
160
390
232
237
200
90
410
430
440
255
245
620
565
555
575
610
150
270
30
40
50
25
10
70
260
230
455
90
80
250
460
500
60
400
55
210
220
450
453
280
450
100
20
410
435
420
430
425
515
265
15
630
500
650
660

From	Pos	Part No	SP	UN	Qty	Description
TBA/9 C						
		C- 491207-0302				Pipe Work, Ass'y
	010	553128	-		1	PIPE
	015	563278	-		1	PIPE
	030	572473	-		1	PIPE
	040	572474	-		1	PIPE
	055	553651	-		1	PIPE
	060	553653	-		1	RETURN PIPE
	080	469993	-		1	HOSE COUPLING
	095	553658	-		1	CANTILEVER
	150	555435	-		1	PIPE
	160	563281	-		1	T-PIPE
	245	90166-0110	-	MM	1500	HOSE
	250	90166-0208	S	MM	1500	RUBBER HOSE
	255	90166-0161	-	MM	800	HOSE
	400	312105-0366	-		30	SCREW M6S6X12RFR
	410	312105-0368	-		6	SCREW M6S6X16RFR
	430	315105-0153	-		6	WASHER BRB6,4X12RFR
	440	315204-0223	P		5	O-RING 39,2X3VITON
	500	352113-0102	-		6	RIBBON CLA
	555	90187-0059	-		1	VALVE
	565	90330-0020	-		1	ELBOW PIPE
	575	90330-0021	-		2	NIPPLE
	610	342731-0221	-		2	ELBOW PIPE WA15-LK RFR
	620	342991-0101	-		4	HOSE CLIP 11-17MMRFR

From	Pos	Part No	SP	UN	Qty	Description
Common Parts						
	020	572465	-		1	CANTILEVER
	025	572472	-		1	PIPE
	050	572470	-		1	PIPE
	070	272818	S		1	GASKET
	090	469994	-		1	ATTACHMENT
	100	499501	S		1	VALVE
	200	90030-0106	-		2	PIPE CONNECTION
	210	90030-0187	-		2	PIPE CONNECTION
	220	90030-0209	-		2	REDUCER
	230	90030-0030	-		2	PIPE CONNECTION
	232	90030-0253	-		1	PIPE COUPLING
	237	90089-0018	-		1	TRANSITIONAL NIPPLE
	260	90242-0065	P		1	O-RING
	265	90274-0065	-		1	PRESSURE SWITCH
	270	90321-0062	S		1	PUMP
		90321-0506	S		1	* IMPELLER
		90321-0507	S		1	* SEAL
		90321-0508	S		1	* WASHER
		90321-0509	S		1	* O-RING
		90321-0510	S		1	* BALL BEARING
		90321-0511	S		1	* LOCKING CIRCLIP
	280	90330-0128	-		1	REDUCER
	390	312105-0327	-		2	SCREW M6S5X12 A2 80
	420	312105-0374	-		4	SCREW M6S6X30RFR
	425	312605-0316	-		4	NUT M6M6RFR
	435	315115-0153	-		4	WASHER TBRB6,4X12RFR
	450	90005-0020	-		2	WASHER
	453	342738-0225	-		1	ELBOW PIPESY
	455	342762-0218	-		1	BULKHEAD LSV 18-L/SY
	460	342930-0114	-		1	ELBOW PIPE6/4-1/4
	515	352103-0110	-		1	COMPR GLAND STR 16
	630	352113-0202	-		2	ARMATURE S8-M
	650	312125-0291	-		2	SLOTTED HEMCS4X12RFR
	660	312605-0312	-		2	NUT M6M4RFR

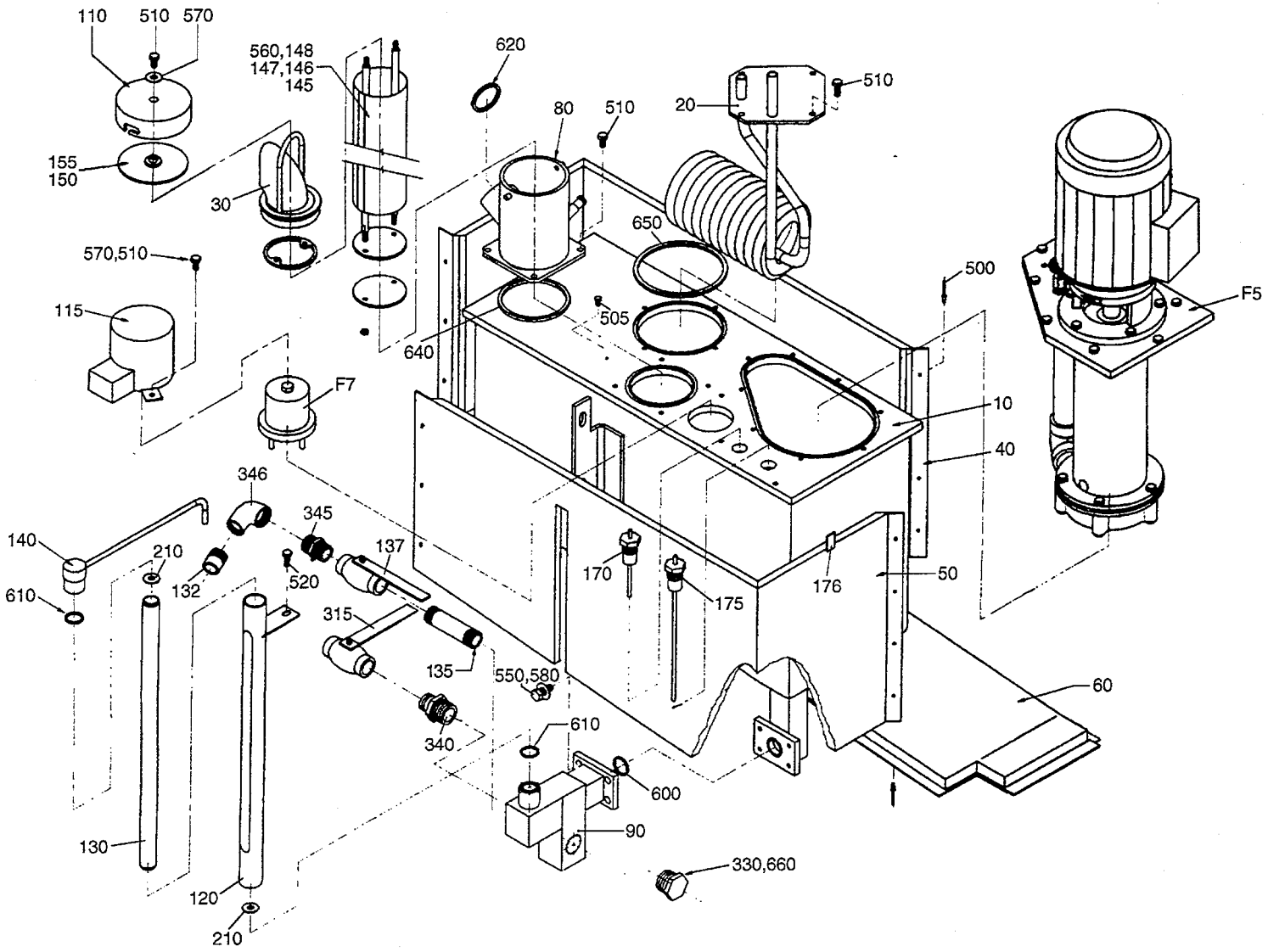

75137301.TIF
751373-1/2
AM 17147

Last Alteration: AM 17147 92-01-13

Corresponding group: 751373-010V
Assembly Drawing: 751373-1/2

Issue: **940524**

From	Pos	Part No	SP	UN	Qty	Description
TBA/9						
		C- 751373-0101				**Peroxide Tank, Ass'y**
	010	751374	-		1	PEROXIDE TANK
	060	751378	-		1	INSULATING PLATE
	090	751381	-		1	ATTACHMENT
	140	751221	-		1	PIPE
TBA/9 C						
		C- 751373-0102				**Peroxide Tank, Ass'y**
	010	553126	-		1	PEROXIDE TANK
	060	553652	-		1	INSULATING PLATE
	090	553120	-		1	ATTACHMENT
	132	978370	-		1	PIPE
	135	978371	-		1	PIPE
	140	553127	-		1	PIPE
	330	90330-0046	-		1	PLUG
	660	315233-0115	-		1	SEAL RING R3/4"
Common parts						
	F005	**C- 751393-0101**	**-**		**1**	**PEROXIDE PUMP**
	F007	**C- 493652-0102**	**-**		**1**	**LID**
	020	751375	-		1	PIPE COIL
	030	752614	-		1	HOLDER
	040	751376	-		1	INSULATING PLATE
	050	751377	-		1	INSULATING PLATE
	080	751380	-		1	FILLER TUBE
	110	751220	-		1	FILLER CAP
	115	751357	-		1	PROTECTION
	120	751382	-		1	PROTECTION PIPE
	130	751383	-		1	LEVEL TUBE
	145	257202	C		1	STRAINER
	146	491203	-		2	STRUT
	147	491304	-		2	WASHER
	148	491303	-		1	WASHER
	150	563286	-		1	GASKET
	155	563287	-		1	WASHER
	170	567070-0016	C		1	ELECTRODE
	175	567070-0017	C		1	ELECTRODE
	176	560931	-		2	BRACKET
	177	315204-0213	-		2	O-RING 15,3X2,4VITON
	178	312605-0312	-		4	NUT M6M4RFR
	179	315105-0136	-		6	WASHER BRB4,3X8RFR
	300	90144-0004	-		X	TAPE
	315	484536	-		2	VALVE
	340	90330-0080	-		2	REDUCTION NIPPLE
	345	90330-0021	-		1	NIPPLE
	346	90330-0020	-		1	ELBOW PIPE

From	Pos	Part No	SP	UN	Qty	Description
	500	311521-0142	-		9	BLANK RIVE2X6,0 RFR
	505	312105-0287	-		1	SCREW M6S4X8 A2 80
	510	312105-0366	-		12	SCREW M6S6X12RFR
	520	312105-0368	-		1	SCREW M6S6X16RFR
	550	312105-0451	-		6	SCREW M6S8X20RFR
	560	312605-0314	-		2	NUT M6M5RFR
	570	315105-0153	-		14	WASHER BRB6,4X12RFR
	580	315115-0165	-		6	WASHER TBRB8,4X16RFR
	600	315204-0217	P		1	O-RING 24,2X3VITON
	610	315204-0117	P		2	O-RING 1X1,6 VITON
	620	315204-0221	P		1	O-RING 34,2X3VITON
	640	315204-0307	P		1	O-RING 79,5X3 VITON
	650	315204-0313	P		1	O-RING 109,5X3VITON

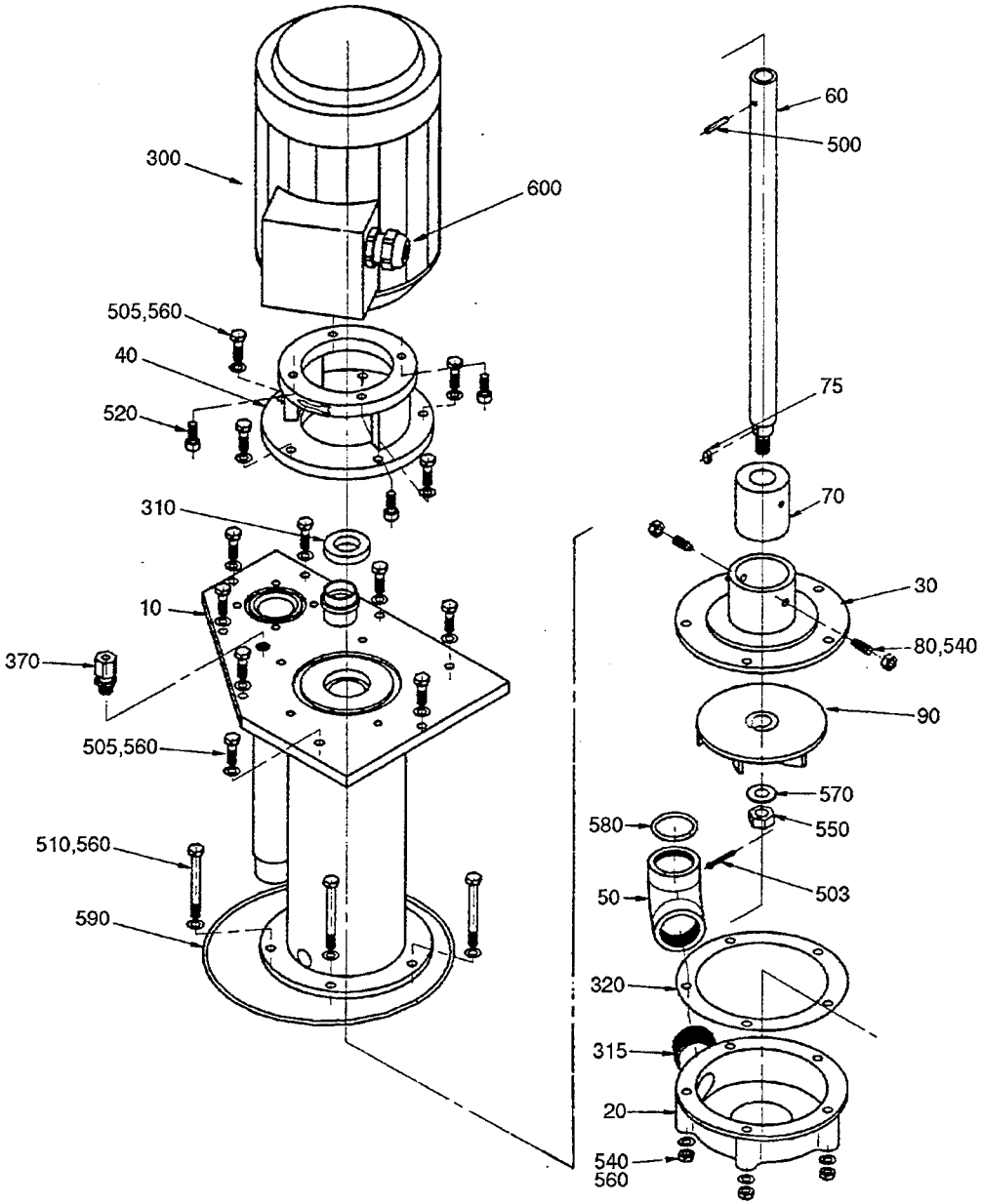

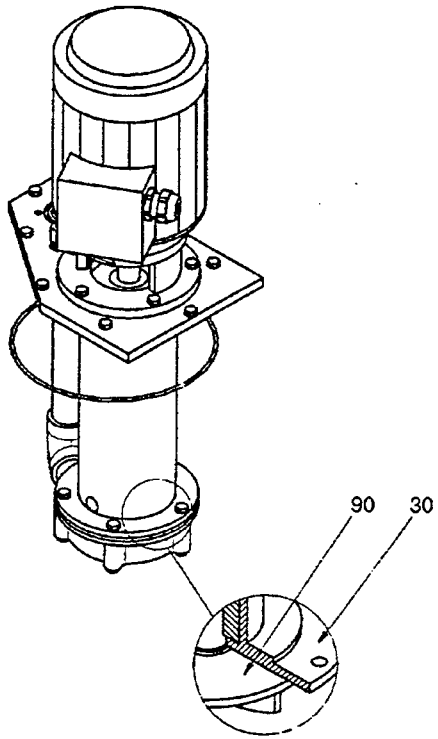

75139301.tif
751393-1
AM 16818

Last Alteration: AM 17824 92-09-25

Corresponding group: 751393-010V
Assembly Drawing: 751393-1

Issue: **940524**

From	Pos	Part No	SP	UN	Qty	Description
		C- 751393-0101				**Peroxide Pump, Ass'y**
	010	751394	-		1	EXTENSION PIPE
	020	G- 292449	-		1	PUMP HOUSING
	030	292456	-		1	BEARING COVER
	040	G- 751395	-		1	FLANGE
	050	751316	-		1	ELBOW PIPE
	060	978561	S		1	SHAFT
	070	491770	S		1	BUSHING
	075	315705-0196	S		1	FLAT WEDGE
	080	90287-0159	-		2	GRUB SCREW
	090	G- 491929	-		1	IMPELLER WHEEL
	300	90045-0087	S		1	MOTOR
	310	90091-0137	P		1	SEAL RING
	315	90144-0004	-	MM	X	TAPE
	320	90321-0411	P		1	GASKET
	370	90030-0184	-		1	PIPE CONNECTION
	500	311112-0256	-		1	SLOTTED TURP 4X20 RFR
	503	311411-0169	P		1	SPLIT PIN SP2,5X25RFR
	505	312105-0370	-		13	SCREW M6S6X20RFR
	510	312105-0382	-		5	SCREW M6S6X60RFR
	520	312115-0368	-		4	SCREW 6X16 A4 80
	540	312811-0316	-		7	LOCK NUT M6RFR
	550	312605-0320	-		1	NUT M6M10RFR
	560	315105-0153	-		23	WASHER BRB6,4X12RFR
	570	315105-0173	-		1	WASHER BRB10,5X22RFR
	580	315204-0219	P		1	O-RING 29,2X3VITON
	590	90242-0153	P		1	O-RING
	600	352103-0110	-		1	CABLE GLAND STR 16

From	Pos	Part No	SP	UN	Qty	Description

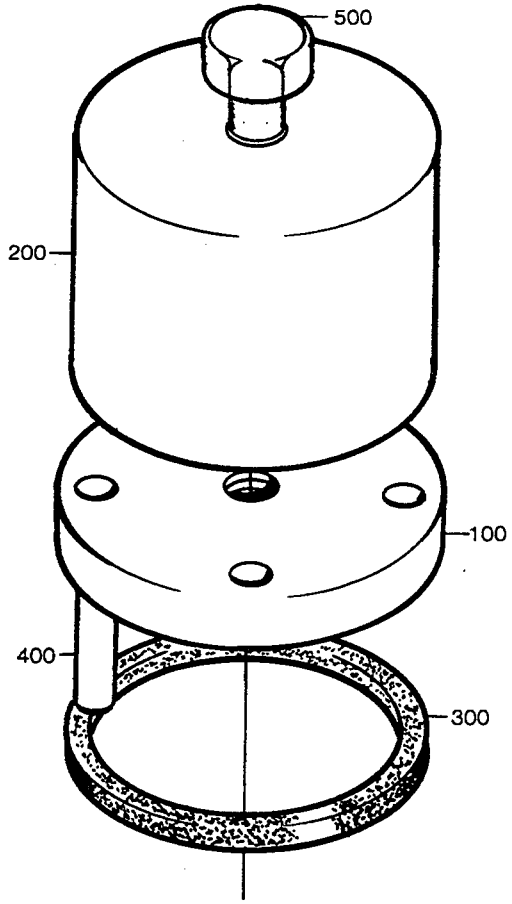
500
200
100
400
300

Last Alteration: AM 8328 85-10-22

Corresponding group: 493652-010V
Assembly Drawing: 493652-1/2

Issue: **940524**

From	Pos	Part No	SP	UN	Qty	Description
Weight Down						
		C- 493652-0101				**Lid, Ass'y**
	500	312105-0467	-		1	SCREW M6S8X80RFR
	600	312605-0318	-		1	NUT M6M8RFR
	700	312705-0318	-		1	CAP NUT MHM 8 A2
Weight Up						
		C- 493652-0102				**Lid, Ass'y**
	500	312105-0461	-		1	SCREW M6S8X50RFR
Common Parts						
	100	273964	-		1	LID
	200	273965-0001	-		1	WEIGHT
	300	90143-0020	-	MM	190	STRIP
	400	311103-0357	-		4	CYLINDRICACP M6 6X30 RFR

From	Pos	Part No	SP	UN	Qty	Description

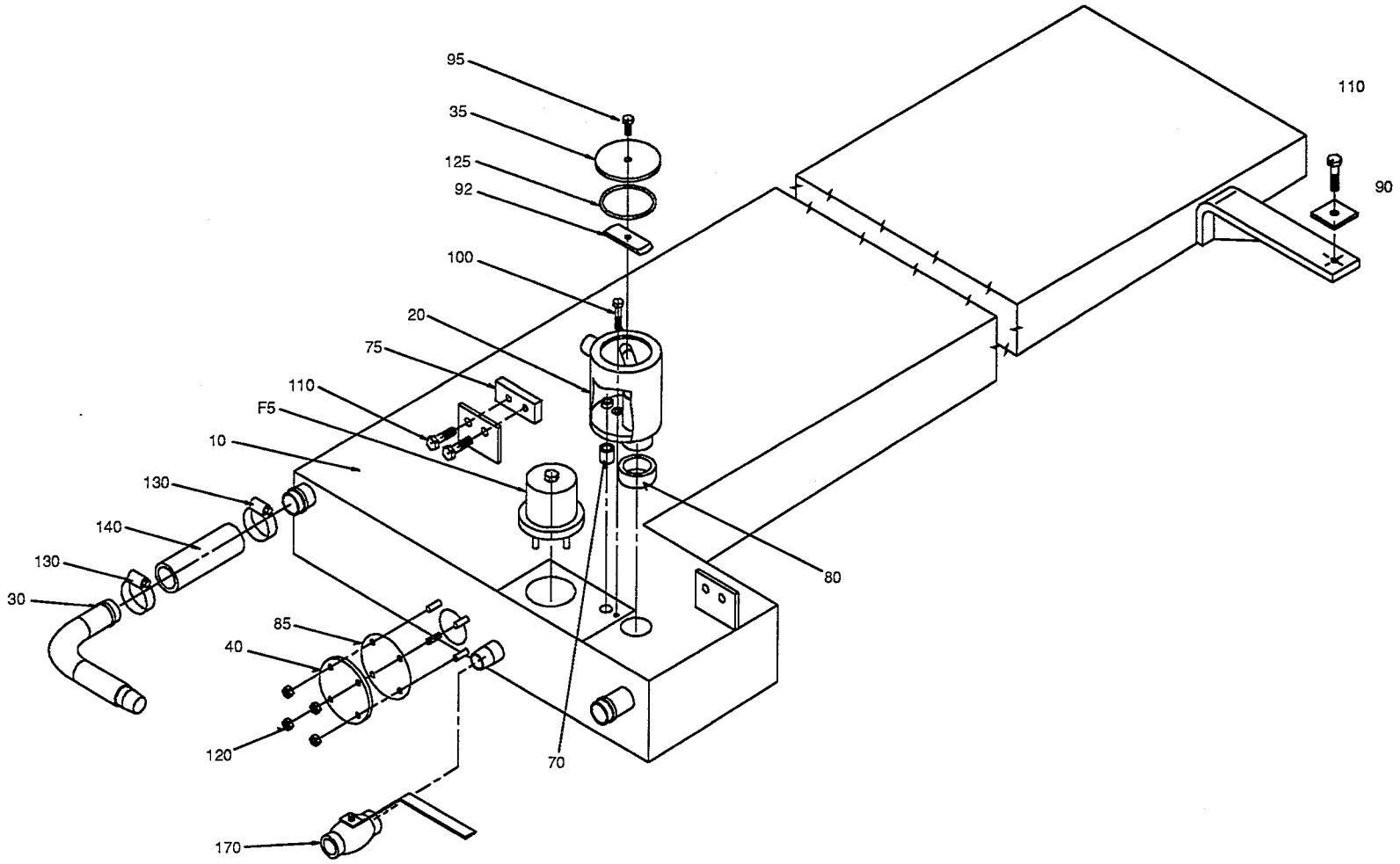

75139803.WPG
751398-3
AM 20300

Last Alteration: AM 20300 93-10-12

Corresponding group: 751398-020V
Assembly Drawing: 751398-2/3

Issue: **940524**

From	Pos	Part No	SP	UN	Qty	Description
TBA/9						
		C- 751398-0201				**Peroxide Tank, Ass'y**
	010	751399	-		1	TANK
	030	751400	-		1	ATTACHMENT PIPE
	090	751402	-		1	WASHER
	110	312105-0451	-		3	SCREW M6S8X20RFR
	130	342991-0106	-		2	HOSE CLIP 26-38MMRFR
	140	90166-0049	-	MM	100	HOSE
	170	90187-0059	-		1	VALVE
TBA/9 C						
		C- 751398-0202				**Peroxide Tank, Ass'y**
	010	553123	-		1	TANK
	110	312105-0451	-		2	SCREW M6S8X20RFR
	115	315125-0165	-		2	WASHER SB 8,4X26X5 RFR
Common Parts						
	F005	**C- 493652-0102**	**-**		**1**	**LID**
	020	752810	-		1	METERING DEVICE
	035	751223	-		1	LID
	040	532205	-		1	LID
	070	527906	C		1	GASKET
	080	527905	C		1	GASKET
	085	532206	S		1	GASKET
	092	751403	-		1	BRACKET
	095	312105-0368	-		1	SCREW M6S6X16RFR
	100	312105-0374	-		2	SCREW M6S6X30RFR
	120	312605-0316	-		4	NUT M6M6RFR
	125	315204-0302	-		1	O-RING 54,5X3VITON

From	Pos	Part No	SP	UN	Qty	Description

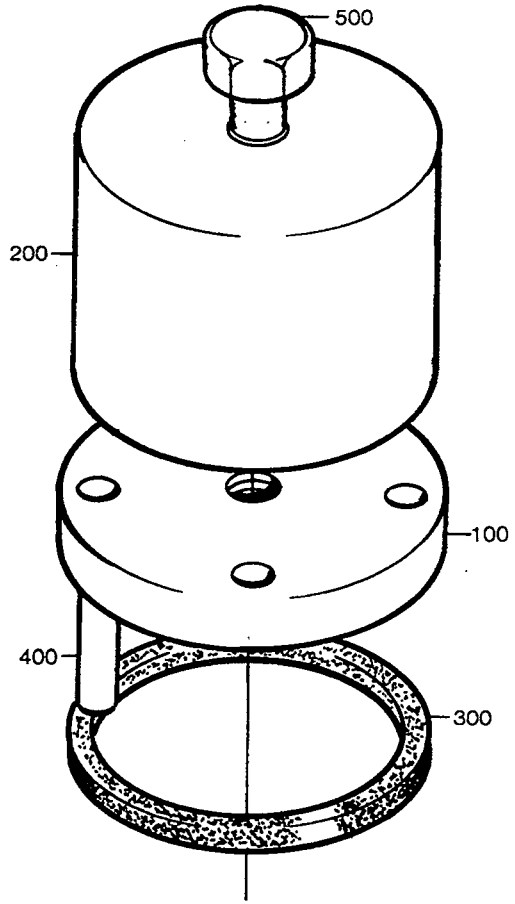
500
200
100
400
300

Last Alteration: AM 8328 85-10-22

Corresponding group: 493652-010V
Assembly Drawing: 493652-1/2

Issue: **940524**

From	Pos	Part No	SP	UN	Qty	Description
Weight Down						
		C- 493652-0101				**Lid, Ass'y**
	500	312105-0467	-		1	SCREW M6S8X80RFR
	600	312605-0318	-		1	NUT M6M8RFR
	700	312705-0318	-		1	CAP NUT MHM 8 A2
Weight Up						
		C- 493652-0102				**Lid, Ass'y**
	500	312105-0461	-		1	SCREW M6S8X50RFR
Common Parts						
	100	273964	-		1	LID
	200	273965-0001	-		1	WEIGHT
	300	90143-0020	-	MM	190	STRIP
	400	311103-0357	-		4	CYLINDRICACP M6 6X30 RFR

From	Pos	Part No	SP	UN	Qty	Description

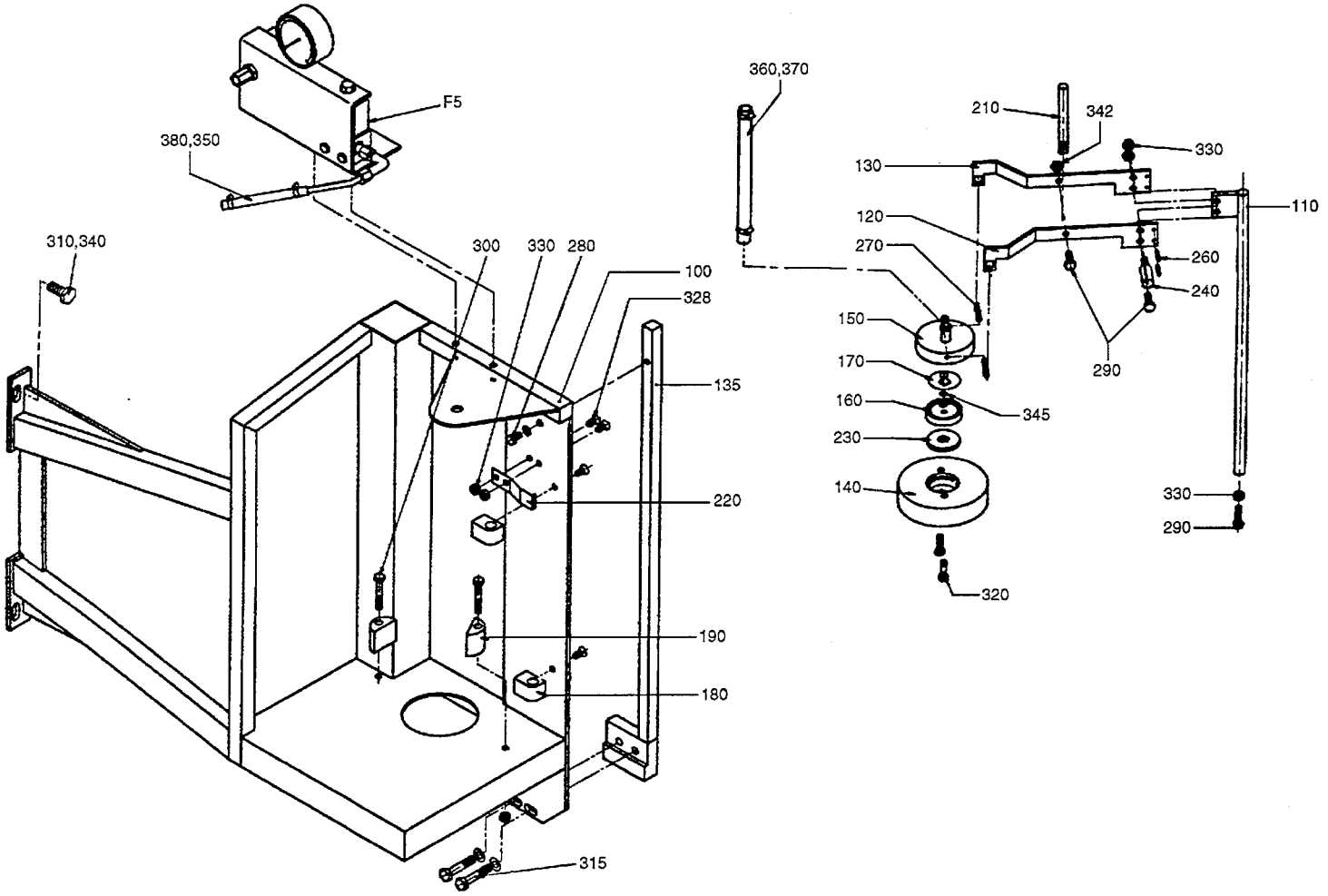

75140601.TIF
751406-1/2
AM 16125

Last Alteration: AM 16125 91-02-20

Corresponding group: 751406-010V
Assembly Drawing: 751406-1/2

Issue: **940524**

From	Pos	Part No	SP	UN	Qty	Description
TBA/9						
		C- 751406-0101				**Connection Housing, Ass'y**
	100	751407	-		1	FRAME
	135	751222	-		1	SPACER
	280	312105-0366	-		1	SCREW M6S6X12RFR
	310	312105-0453	-		2	SCREW M6S8X25RFR
	315	312105-0459	-		2	SCREW M6S8X40RFR
	328	312155-0364	-		4	SCREW MF6S6X10RFR
	340	315115-0165	-		4	WASHER TBRB8,4X16RFR
	350	90166-0101	-	MM	300	HOSE
TBA/9 C						
		C- 751406-0102				**Connection Housing, Ass'y**
	105	555440	-		1	CANTILEVER
	350	90166-0101	-	MM	900	HOSE
Common parts						
	F005	**C- 751410-0101**	**-**		**1**	**VALVE PANEL**
	360	90166-0138	-	MM	800	HOSE
	110	527120	-		1	STEERING
	120	527121-0001	-		1	BOW CLAMP
	130	527121-0002	-		1	BOW CLAMP
	140	273982	-		1	WEIGHT
	150	527122	-		1	ATTACHMENT
	160	530551	-		1	WASHER
	170	527912	S		1	NON-RETURN VALVE
	180	527124	-		2	BEARING
	190	527125	-		2	STEERING
	210	527128	-		1	GUIDE PIN
	220	527126	C		1	LEAF SPRING
	230	273981	S		1	GASKET
	240	527127	-		1	DOWEL
	260	311103-0234	-		2	CYLINDRICACP M6 3X12 RFR
	270	311103-0273	-		2	CYLINDRICAM6 4X22 RFR
	290	312105-0370	-		3	SCREW M6S6X20RFR
	300	312105-0378	-		2	SCREW M6S6X40RFR
	320	312125-0370	-		2	SLOTTED HEMCS6X20RFR
	330	312605-0316	-		7	NUT M6M6RFR
	342	312811-0316	-		1	LOCK NUT M6RFR
	345	315204-0103	-		1	O-RING 5,1X1,6VITON
	370	90132-0023	-		2	HOSE CLIP
	380	90132-0021	-		2	HOSE CLIP

From	Pos	Part No	SP	UN	Qty	Description

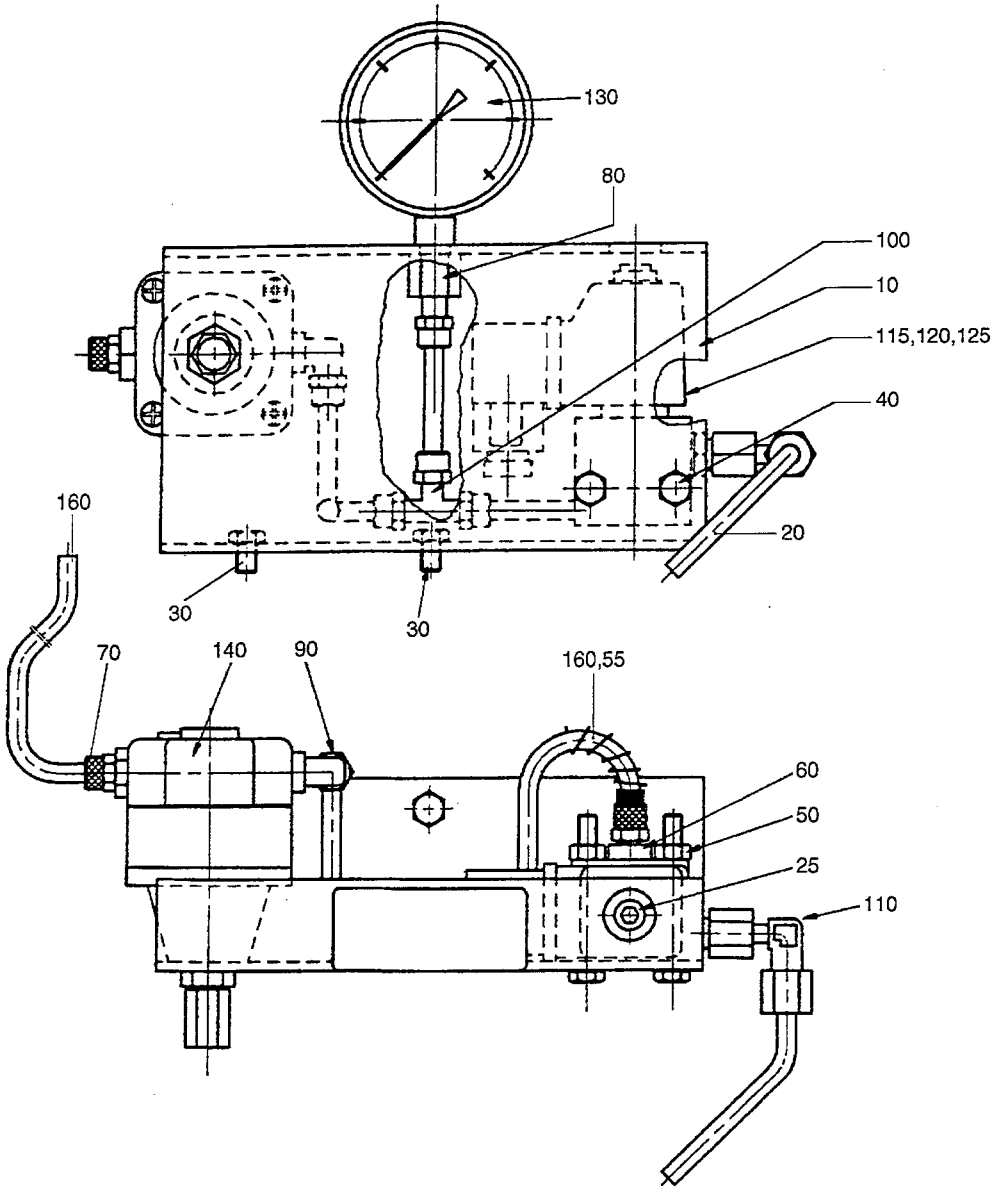

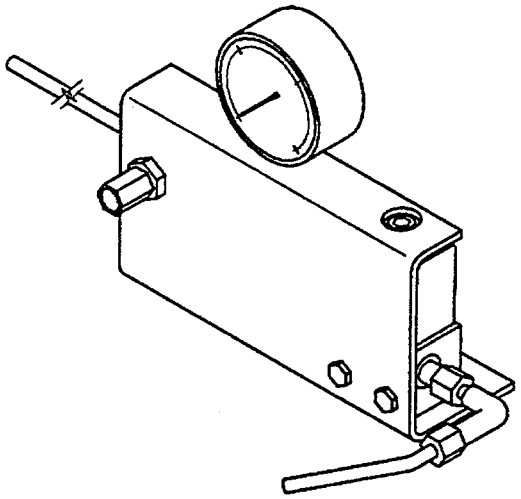

75141001.TIF
751410-1
AM 17787

From	Pos	Part No	SP	UN Qty	Description
		C- 751410-0101			**Valve Holder, Ass'y**
	010	751411	-	1	HOLDER
	020	751372	-	1	PIPE
	025	563285	-	1	BLIND PLUG
	027	571119	-	1	PROTECTION PLATE
	030	312105-0370	-	2	SCREW M6S6X20RFR
	040	312105-0380	-	2	SCREW M6S6X50RFR
	050	312605-0316	-	2	NUT M6M6RFR
	055	342903-0111	-	3	NUT J#DER 1723-6/4
	060	342930-0113	-	1	ELBOW PIPE6/4-1/8
	070	342921-0114	-	1	PIPE COUPL6/4-1/4"
	080	342923-0114	-	1	PIPE COUPL6/4-1/4
	090	342920-0114	-	1	PIPE COUPL6/4-1/4
	100	342946-0112	-	1	T-CONNECTI6/4
	110	90030-0171	-	1	CONNECTION
	115	90110-0095	-	1	CONTAKT
	120	90042-0206	-	1	SOLENOID VALVE
	125	90042-0487	-	1	COIL
	130	90043-0004	-	1	PRESSURE GAUGE
	140	90113-0056	-	1	REGULATOR
	160	90166-0132	-	MM 3200	HOSE

From	Pos	Part No	SP	UN Qty	Description

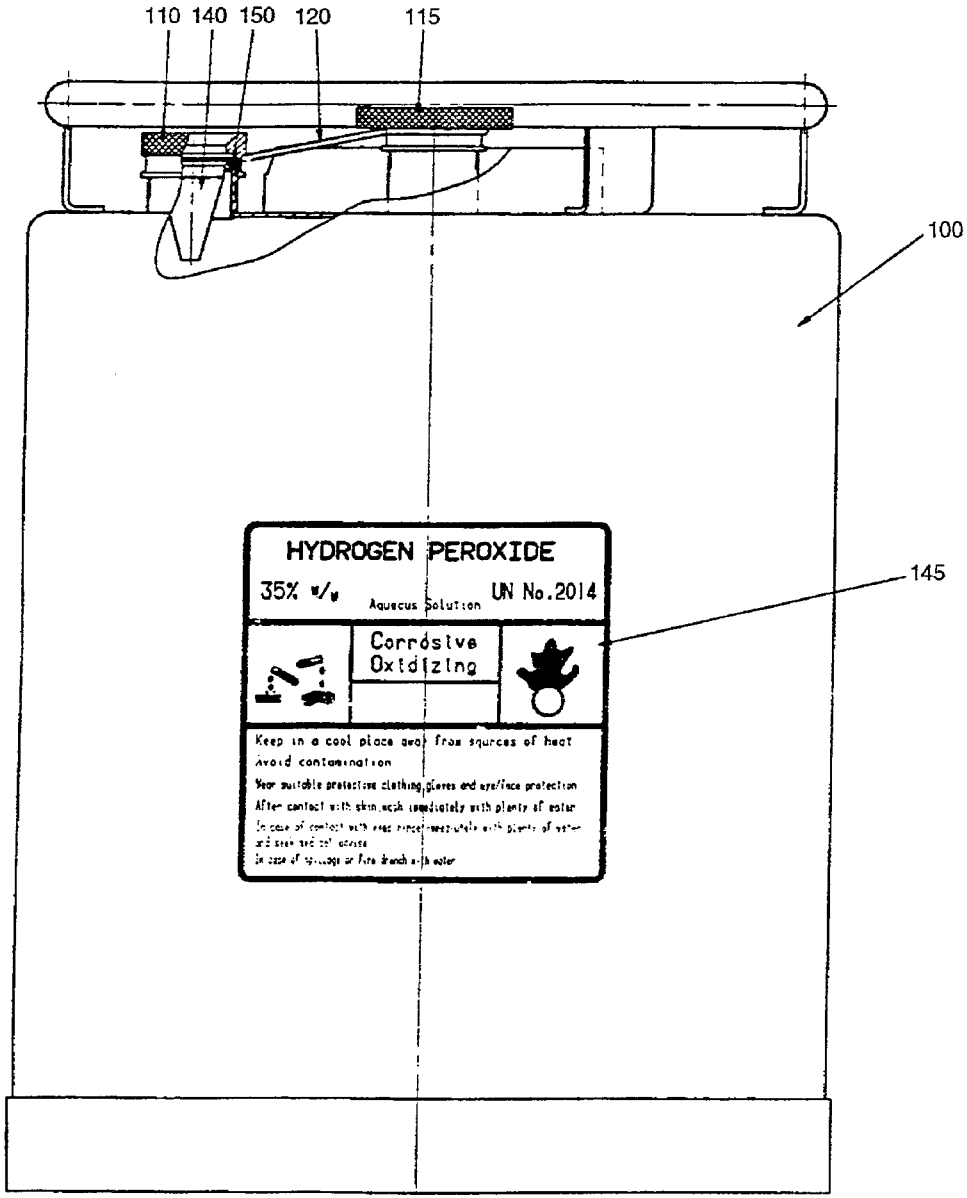

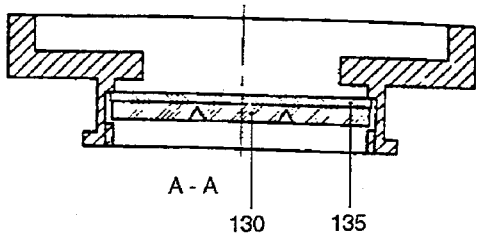

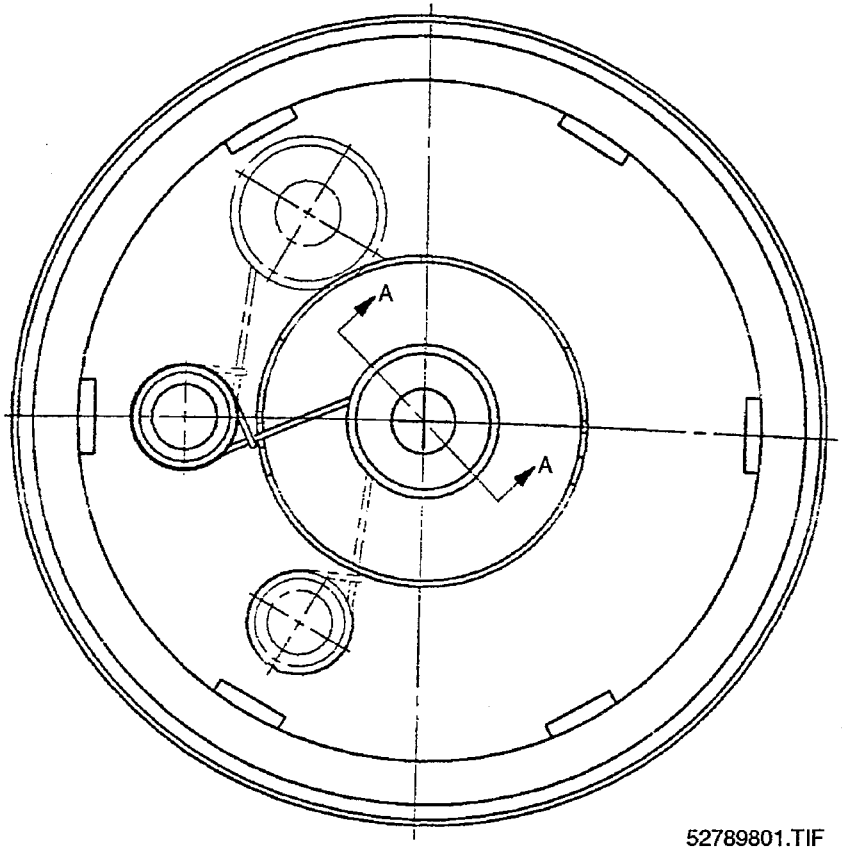

52789801.TIF
527898-1
AM

Last Alteration: AM 15566 90-12-07

Corresponding group: 527898-010V
Assembly Drawing: 527898-1

Issue: **940524**

From	Pos	Part No	SP	UN	Qty	Description
		C- 527898-0101				**Container, Ass'y**
	100	561427	C		1	CONTAINER
	110	273977	C		1	NUT
	115	273996	C		1	NUT
	120	273980	C		1	SPRING
	130	565250	S		1	WASHER
	135	565251	S		1	VALVE
	140	273978	C		1	LEVEL GLASS
	145	532655	C		1	CAUTION SIGN
	150	315204-0217	-		1	O-RING 24,2X3VITON

From	Pos	Part No	SP	UN	Qty	Description

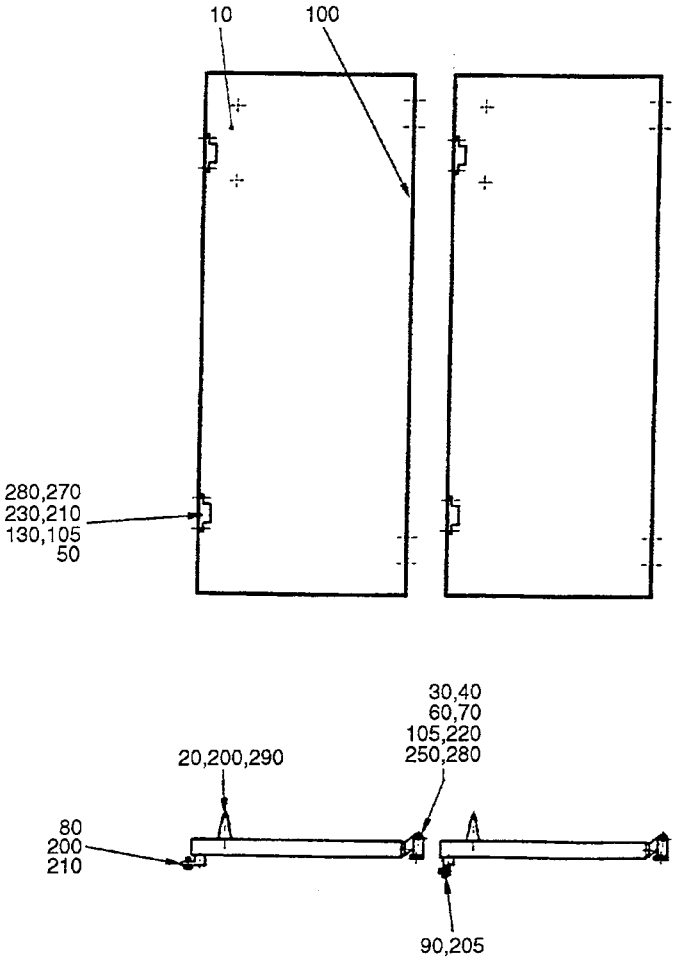

55365701.TIF
553657-1
AM 15632

Last Alteration: AM 15632 90-12-05

Corresponding group: 553657-010V
Assembly Drawing: 553657-1

Issue: **940524**

From	Pos	Part No	SP	UN	Qty	Description
		C- 553657-0101				**Door, Ass'y**
	010	563283	-		2	DOOR
	020	7309	-		2	HANDLE
	030	257397	-		4	PEG
	040	271011	-		8	WASHER
	050	272453	-		4	SPACER
	060	272510	-		4	HINGE
	070	272511	-		4	HINGE
	080	563280	-		2	CANTILEVER
	090	563284	-		2	CANTILEVER
	100	90143-0047	-	MM	5000	STRIP
	105	90157-0016	-		X	LOCKING FLUID
	130	90339-0004	-		4	MAGNETIC LOCK
	200	312105-0364	-		6	SCREW M6S6X10RFR
	205	312105-0366	-		4	SCREW M6S6X12RFR
	210	312125-0222	-		16	SLOTTED HEMCS3X8RFR
	220	312125-0291	-		16	SLOTTED HEMCS4X12RFR
	230	312145-0291	-		8	SLOTTED HEMFS4X12RFR
	250	312605-0312	-		8	NUT M6M4RFR
	270	315105-0124	-		16	WASHER BRB3,2X6RFR
	280	315105-0136	-		30	WASHER BRB4,3X8RFR
	290	315105-0153	-		4	WASHER BRB6,4X12RFR

From	Pos	Part No	SP	UN	Qty	Description

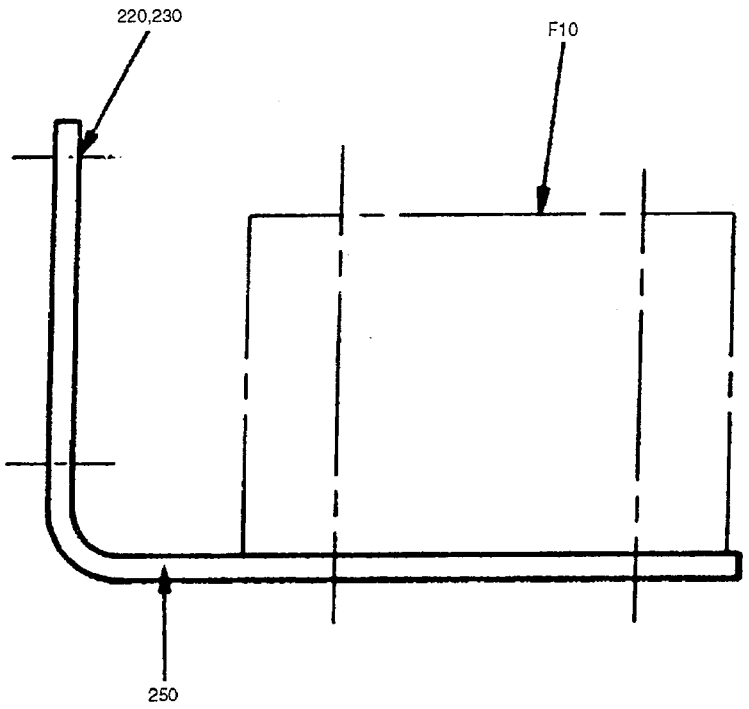

75278401.TIF
752784-1
AM 13806

Last Alteration: AM 13806 89-11-22

Corresponding group: 752784-010V
Assembly Drawing: 752784-1

Issue: **940524**

From	Pos	Part No	SP	UN	Qty	Description
		C- 752784-0101				**Connection Box, Ass'y**
	F010	**C- 451348-0201**	**-**		**1**	**CONNECTION BOX**
		C- 68917-0101				. ANGLE INDICATOR
	050	752056	-		1	HOLDER
	120	312101-0289	-		4	SCREW M6S4X10FZB
	130	315101-0136	-		4	WASHER BRB4,3X8FZB

From	Pos	Part No	SP	UN	Qty	Description

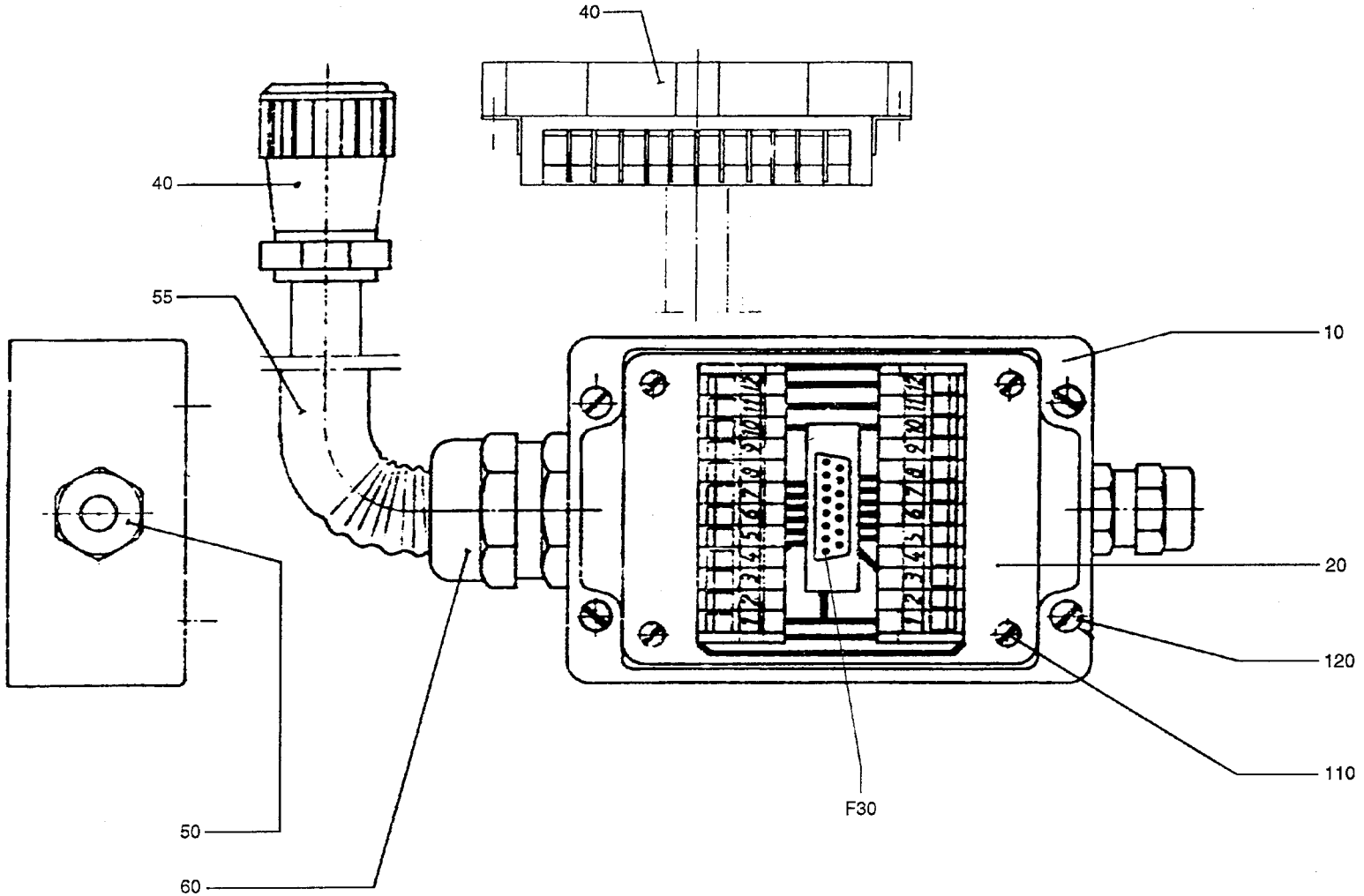

45134801.TIF
451348-1/2
AM

From	Pos	Part No	SP	UN	Qty	Description
TBA/9 TB/9						
		C- 451348-0201				**Connection Box.**
	F030	**C- 68917-0101**	**C**		**1**	**ANGLE INDICATOR**
	010	751631	C		1	CONNECTION BOX
	050	352103-0106	S		1	CABLE GLANR.ST 11
	060	352103-0110	S		1	CABLE GLANR.STR 16
TBA/8 TB/8						
		C- 451348-0202				**Connection Box.**
	F030	**C- 68917-0101**	**C**		**1**	**ANGLE INDICATOR**
	010	464297	C		1	CONNECTION BOX
	040	90110-0128	S		1	PLUG 24-POL
	050	352103-0106	S		1	CABLE GLANR.ST 11
	055	352135-0106	C	MM	1400	HOSE .016
	060	352136-0127	S		1	GLAND FITT
Tetra King TT/1 TTA/5						
		C- 451348-0203				**Connection Box.**
	010	451409	C		1	CONNECTION BOX
	050	352103-0101	S		1	CABLE GLANR.ST 9
	060	352103-0115	S		1	CABLE GLANR.STR 21
TT/2						
		C- 451348-0204				**Connection Box.**
	F030	**C- 68917-0101**	**C**		**1**	**ANGLE INDICATOR**
	010	451409	C		1	CONNECTION BOX
	050	352103-0101	S		1	CABLE GLANR.ST 9
	060	352103-0115	S		1	CABLE GLANR.STR 21
Common Parts						
	020	451423	S		1	CIRCUIT BOARD
	110	312125-0220	S		4	SLOTTED HEMCS3X6RFR
	120	312125-0291	S		4	SLOTTED HEMCS4X12RFR

From	Pos	Part No	SP	UN	Qty	Description

From	Pos	Part No	SP	UN	Qty	Description
		C- 68917-0101				**Angle Indicator, ass'y**
	D001	49915-01:0	-		X	CIRCUIT DIAGRAM
	D002	49916-01:0	-		X	COMPONENT LAYOUT
	D003	57008-01:0	-		X	BACKPLANE
	010	540306-0001	-		1	COMPONENTS WITHOUT TP-NO
	020	540307	-		1	PRINTED CIRCUIT BOARD

From	Pos	Part No	SP	UN	Qty	Description

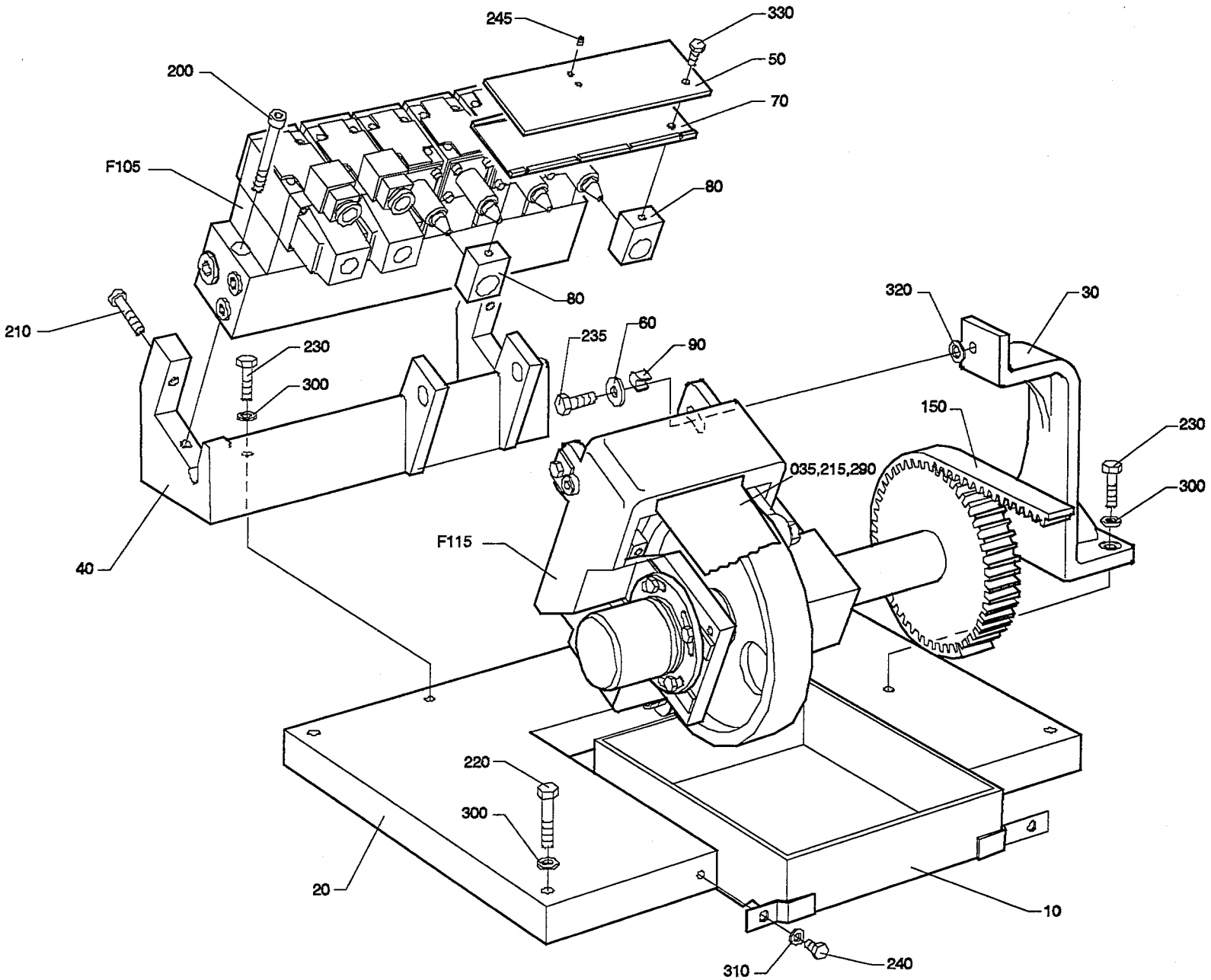

75169101.WPG
751691-1
AM 17888

From	Pos	Part No	SP	UN	Qty	Description
		C- 751691-0101				**Impulse Transmitter, Ass'y**
	F105	**C- 271168-0401**	**-**		**1**	**BLOCK**
	F115	**C- 751689-010V**	**-**		**1**	**CURVE PACK**
	010	751667	-		1	TROUGH
	020	751668	-		1	FASTENING PLATE
	030	G- 751669	-		1	ARM
	035	567684	-		1	COVER
	040	G- 751670	-		1	BRACKET
	050	752603	-		1	WASHER
	060	28036	-		1	WASHER
	070	752604	-		1	PIPE HOLDER
	080	752491	-		2	TIGHTENING PIECE
	090	752622	-		1	STOP
	150	90417-0139	-		1	TOOTHED BELT
	200	312115-0465	-		2	SCREW 8X70 A4 80
	210	312109-0459	-		2	SCREW M6S8X40H A4 80
	215	312105-0325	-		1	screw M6S8X10 A2 80
	220	312105-0459	-		4	SCREW M6S8X40RFR
	230	312105-0455	-		4	SCREW M6S8X30RFR
	235	312105-0453	-		1	SCREW M6S8X25RFR
	240	312105-0366	-		2	SCREW M6S6X12RFR
	245	312318-0360	-		2	STOP SCREW SK6SS6X6RFR
	290	315105-0146	-		1	WASHER BRB5,3X10RFR
	300	315105-0165	-		8	WASHER BRB8,4X16RFR
	310	315105-0153	-		2	WASHER BRB6,4X12RFR
	320	315105-0171	-		1	WASHER BRB10X18RFR
	330	312105-0368	-		2	SCREW M6S6X16RFR

From	Pos	Part No	SP	UN	Qty	Description

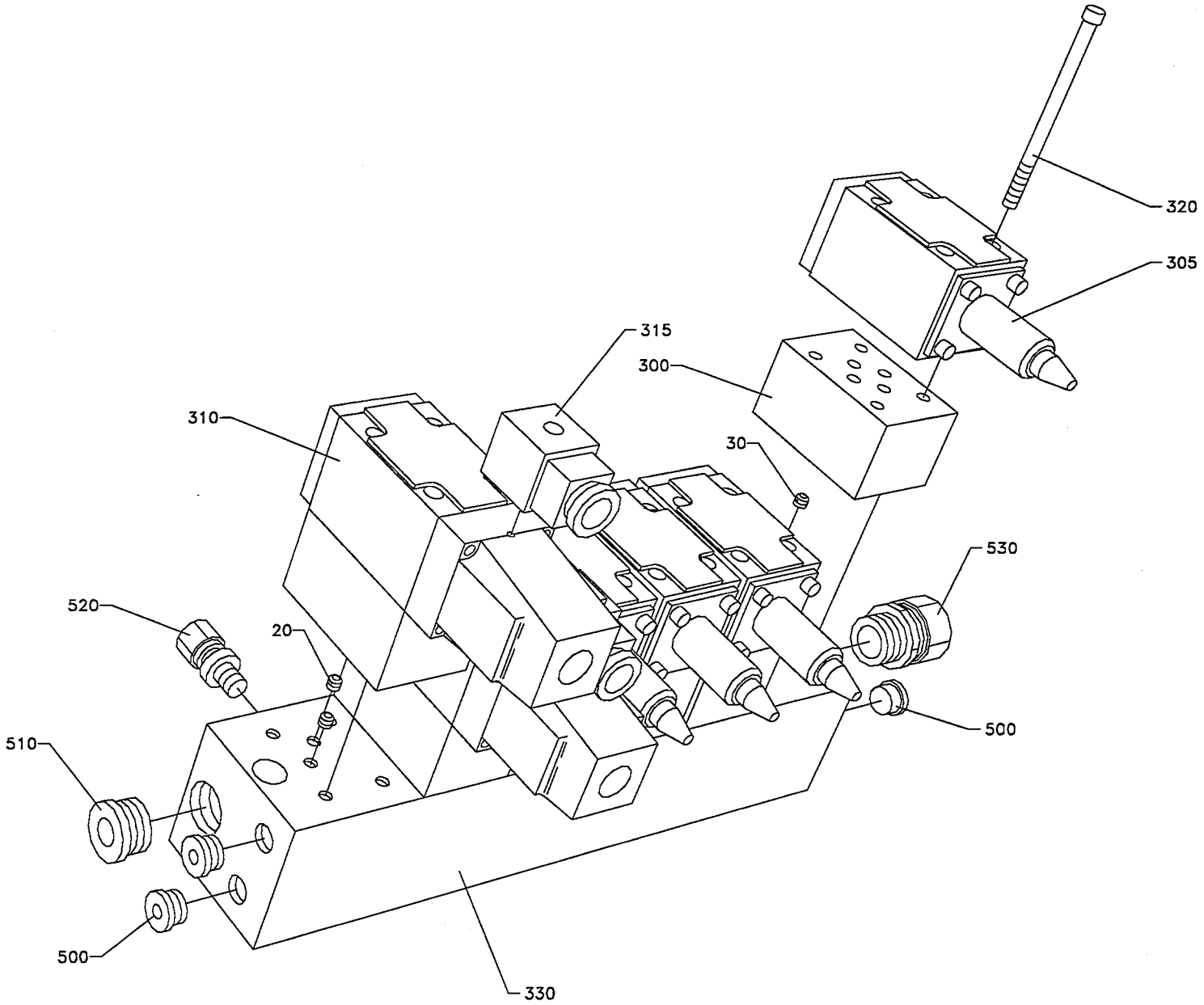

271168DA
ILLUtec®

From	Pos	Part No	SP	UN	Qty	Description
		C- 271168-0401				**Block, Ass'y**
	020	295391-0002	S		4	THROTTLE SCREW
	030	295391-0003	S		2	THROTTLE SCREW
	300	90201-0010	S		6	VALVE
		90201-0300	R		0	* PLATE
		90201-0301	R		0	* SPRING
		90201-0302	R		0	* WASHER
		90201-0303	R		0	* SPARE PARTS KIT
	305	90201-0057	S		4	VALVE
	310	90201-0058	S		2	SOLENOID VALVE
		90201-0334	S		1	* COIL
	315	90110-0095	S		2	CONTAKT
	320	90201-0303	-		6	SPARE PARTS KIT
	330	90201-0306	-		1	BLOCK
	500	342713-0310	-		3	BLIND PLUG BPS14
	510	342713-0313	-		1	BLIND PLUG BPS12
	520	342752-0103	-		8	STRAIGHT C
	530	342752-0114	-		1	STRAIGHT C

From	Pos	Part No	SP	UN	Qty	Description

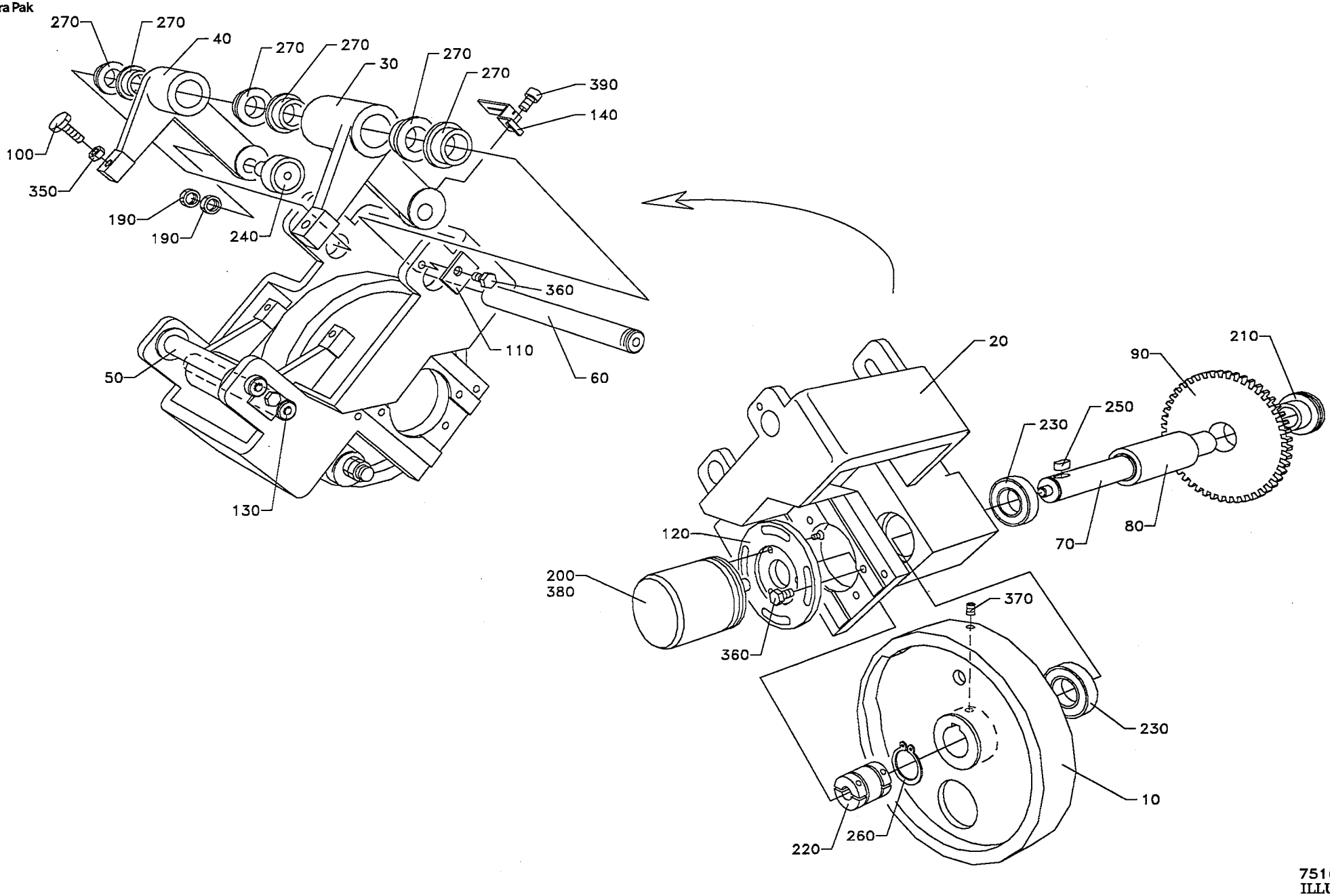
270
270
40
270
270
30
270
270
390
140
100
350
190
190
240
360
110
60
50
130
20
210
90
230
250
70
80
120
200
380
360
370
230
10
220
260

From	Pos	Part No	SP	UN	Qty	Description
IH						
		C- 751689-0101				**Curve Pack, Ass'y**
	010	751171	-		1	CAM DISC
TPC						
		C- 751689-0102				**Curve Pack, Ass'y**
	010	752690	-		1	CAM DISC
IH 160ml 250ml Slim						
		C- 751689-0103				**Curve Pack, Ass'y**
	010	978716	-		1	CAM (IH)
Common Parts						
	020	G- 292473	-		1	CANTILEVER
	030	G- 297091	-		2	ARM
	040	G- 297092	-		2	ARM
	050	292477	-		1	SHAFT
	060	751682	-		1	SHAFT
	070	751671	-		1	SHAFT
	080	751672	-		1	SPACER SLEEVE
	090	751177	-		1	TIMING BELT PULLEY
	100	479354	-		4	SCREW
	110	292482	-		2	WASHER
	120	542063	-		1	FLANGE
	130	751703	-		1	SHAFT
	140	752767	-		1	SETTING SHEET
	190	90099-0015	-		8	NUT
	200	90061-0018	-		1	ANGLE ENCODER
	210	90208-0080	-		1	CLAMPING ELEMENT
	220	90355-0031	-		1	FLEXIBLE COUPLING
	230	321308-0205	-		2	BALL BEARISKF6005-2RS
	240	321580-0165	-		4	CURVE ROLLKR30
	250	315701-0262	-		1	FLAT WEDGE8X7X18
	260	315750-0119	-		1	CIRCLIP SGA25
	270	321111-0240	-		14	FLANGE BUS 16E7X12
	350	312601-0316	-		4	NUT M6M6FZB
	360	312101-0366	-		4	SCREW M6S6X12FZB
	370	312316-0362	-		1	STOP SCREW SK6SS6X8FZB
	380	312151-0287	-		3	SCREW MF6S4X8FZB
	390	312115-0364	-		1	SCREW 6X10 A4 80
	400	315101-0153	-		2	WASHER BRB6,4X12FZB

From	Pos	Part No	SP	UN	Qty	Description

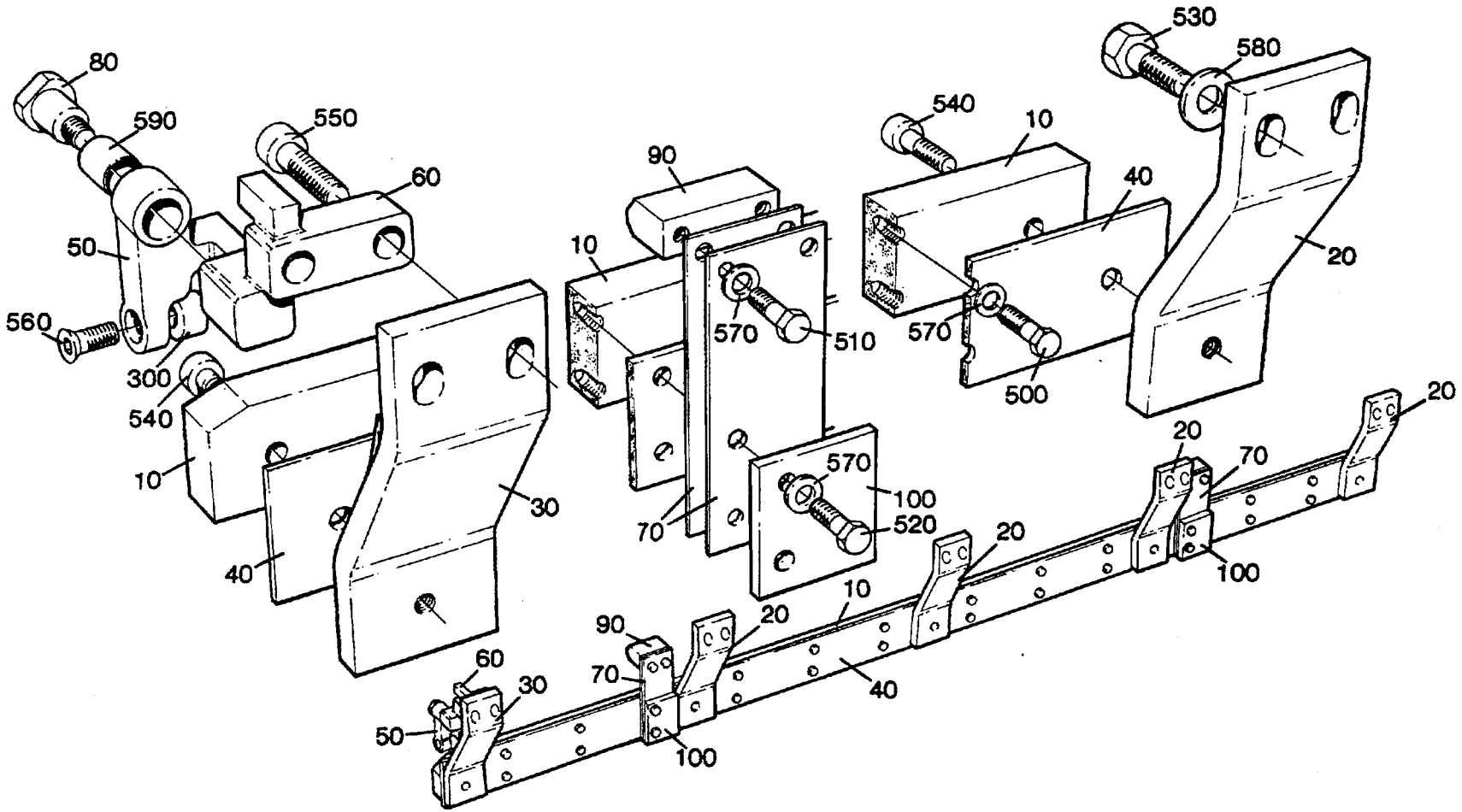

Left Side

27146804.TIF
271468-4
AM 13632

From	Pos	Part No	SP	UN Qty	Description
		C- 271468-0401			**Way, Ass'y**
	010	272620	S	1	WAY
	020	271472	S	4	BRACKET
	030	271959	S	1	BRACKET
	040	272621	S	1	STEERING RAIL
	050	272630	S	1	BARRIER
	060	272631	S	1	BRACKET
	070	751725	S	4	SHEET
	080	271961	S	1	SCREW
	090	751727	S	2	SLIDER
	100	751729	S	2	WASHER
	300	90347-0011	S	1	VIBRATION DAMPER
	500	312105-0366	-	20	SCREW M6S6X12RFR
	510	312105-0368	-	4	SCREW M6S6X16RFR
	520	312105-0371	-	4	SCREW M6S6X22RFR
	530	312105-0495	-	8	SCREW M6S10X30RFR
	540	312115-0453	-	5	SCREW 8X25 A4 80
	550	312115-0497	S	2	SCREW 10X35 A4 80
	560	312155-0366	-	1	SCREW MF6S6X12RFR
	570	315105-0153	-	28	WASHER BRB6,4X12RFR
	580	315105-0173	-	8	WASHER BRB10,5X22RFR
	590	321120-0112	S	1	BUSHING 12/14X20

From	Pos	Part No	SP	UN Qty	Description

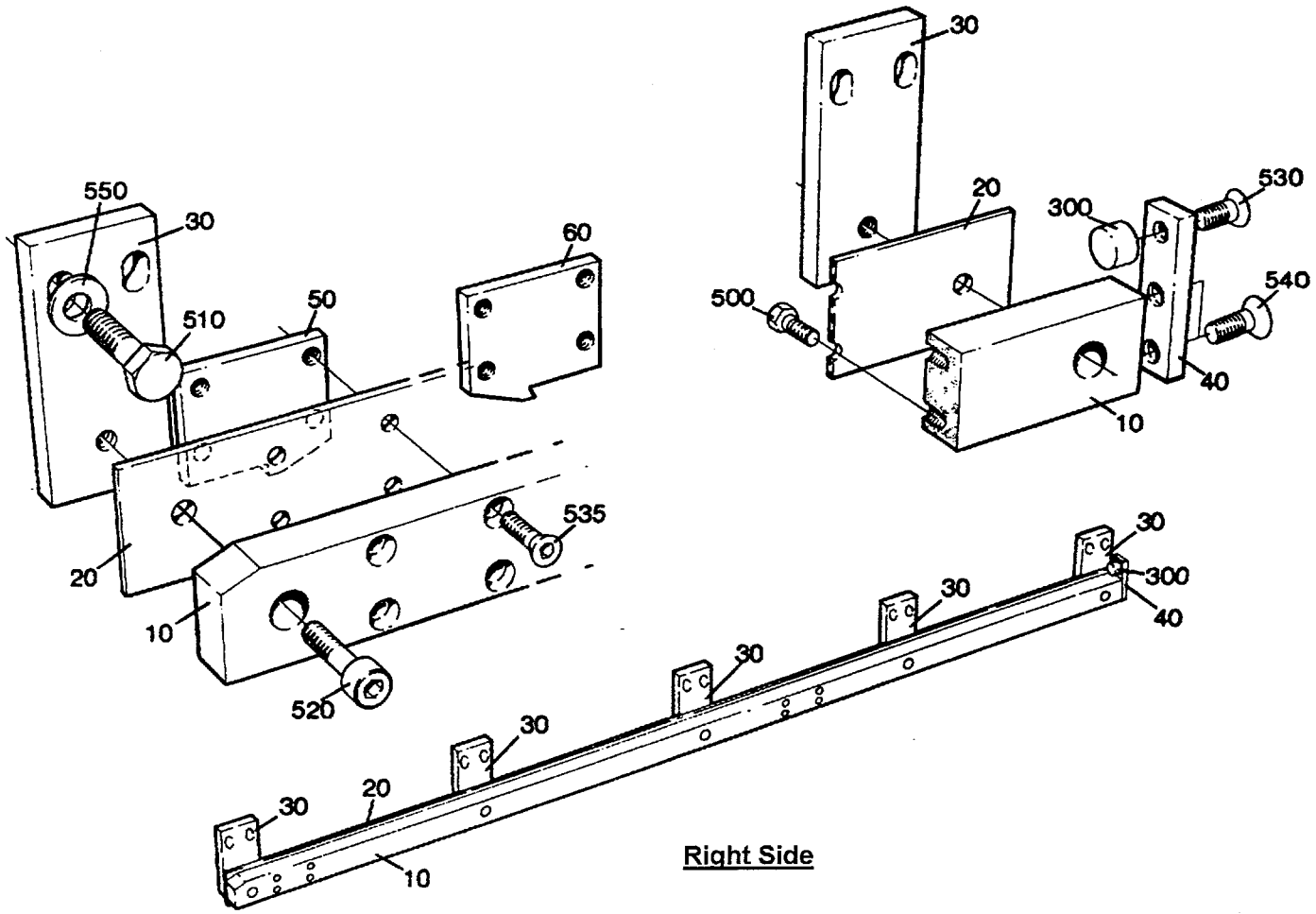

Right Side

27146901.TIF
271469-1
AM 6317

From	Pos	Part No	SP	UN Qty	Description
		C- 271469-0201			**Way, Ass'y**
	010	272596	S	1	WAY
	020	272597	-	1	STEERING RAIL
	030	257151	-	5	BRACKET
	040	257271	S	1	STOP
	050	271456	S	1	CATCH LEVER
	060	271457	S	1	CATCH LEVER
	300	90347-0011	P	1	VIBRATION DAMPER
	500	312105-0366	-	20	SCREW M6S6X12RFR
	510	312105-0493	-	10	SCREW M6S10X25RFR
	520	312115-0453	-	5	SCREW 8X25 A4 80
	530	312155-0366	-	1	SCREW MF6S6X12RFR
	535	312155-0374	-	8	SCREW MF6S6X30RFR
	540	312155-0449	-	2	SCREW MF6S8X16RFR
	550	315105-0173	-	10	WASHER BRB10,5X22RFR

From	Pos	Part No	SP	UN Qty	Description

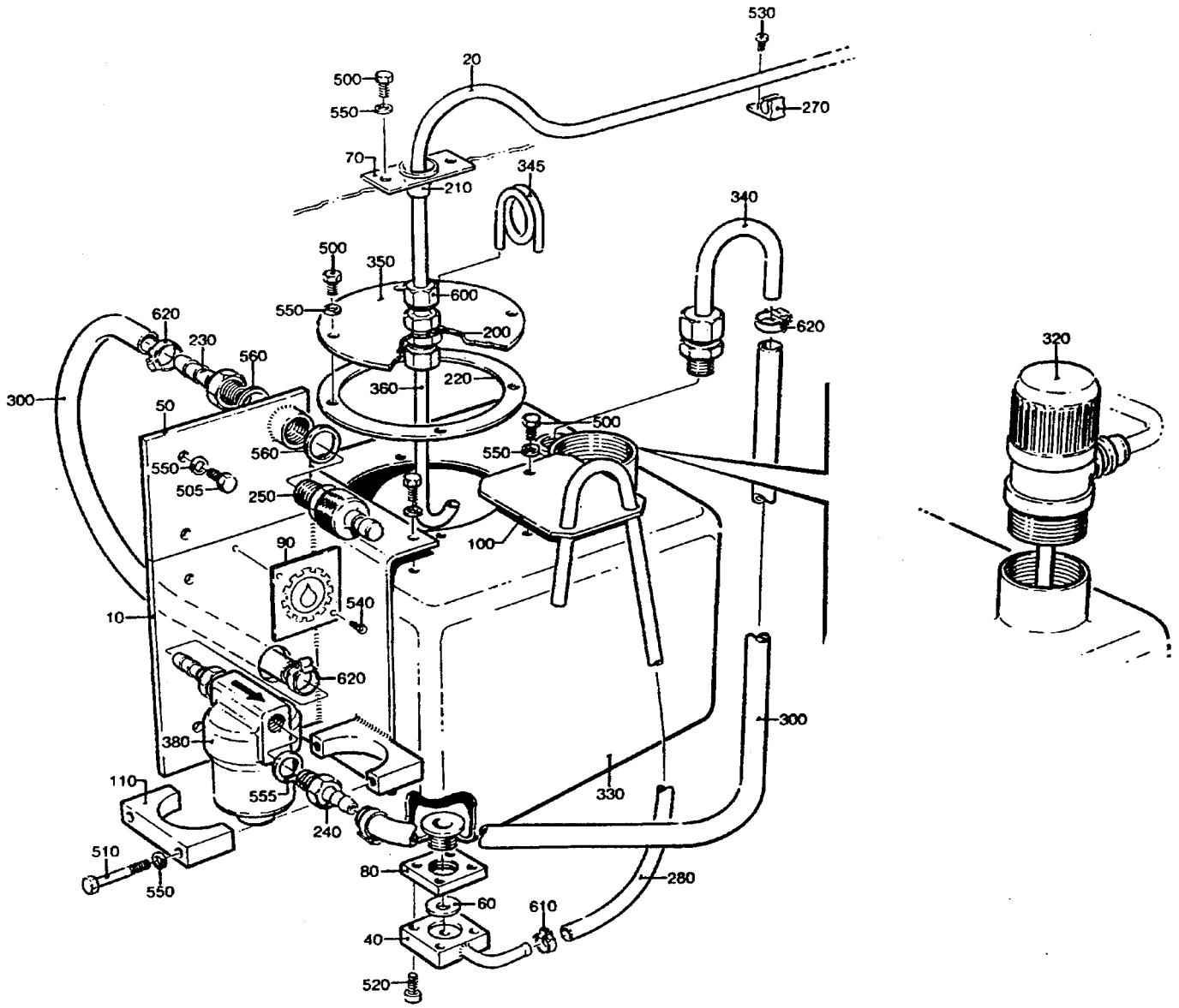

49189001.TIF
491890-1
AM 16642

Last Alteration: AM 16642 91-06-06

Corresponding group: 491890-010V
Assembly Drawing: 491890-1

Issue: **940524**

From	Pos	Part No	SP	UN	Qty	Description
		C- 491890-0101				**Oil-Tank, Ass'y**
	010	491889	-		1	HOLDER
	020	491892	-		1	HOSE
	040	469410	-		1	HOSE ATTACHMENT
	050	490777	-		1	BRACKET
	060	279515	-		1	WASHER
	070	456272	-		1	PLATE
	080	469409	-		1	PLATE
	090	469523	-		1	SIGN
	100	469761	-		1	HOLDER
	110	491891	-		1	BOW CLAMP
	200	90005-0044	-		2	WASHER
	210	90015-0021	-		1	BUSHING
	220	90048-0440	S		1	GASKET
	230	90163-0050	-		1	NIPPLE
	240	90163-0052	-		2	NIPPLE
	250	90163-0066	-		1	NIPPLE
	270	90165-0044	-		4	CLIP
	280	90166-0008	-	MM	400	HOSE
	300	90166-0113	-	MM	1100	HOSE
	320	90274-0029	S		1	GUARD
	330	90304-0013	-		1	CONTAINER
	340	90304-0301	-		1	PIPE
	345	90304-0302	-		1	PIPE FITTING
	350	90304-0303	-		1	COVER
	360	90304-0305	-		1	PIPE
	380	90415-0033	-		1	OIL FILTER
		90415-0330	S		1	* FILTER INSERT
	500	312105-0366	-		9	SCREW M6S6X12RFR
	505	312105-0368	-		4	SCREW M6S6X16RFR
	510	312105-0378	-		2	SCREW M6S6X40RFR
	520	312115-0329	-		4	SCREW 5X16 A4 80
	530	312125-0287	-		4	SLOTTED HEMCS4X8RFR
	540	312502-0221	-		2	DRIVE SCREKDS4X6FNB
	550	315105-0153	-		15	WASHER BRB6,4X12RFR
	555	315233-0110	S		2	SEAL RING R1/4"
	560	315233-0111	S		2	SEAL RING R3/8"
	570	342701-0201	-		1	BUSHING RNI1/4"-1/8"
	600	342762-0103	-		1	BULKHEAD LSV8-LFZB
	610	342991-0100	-		1	HOSE CLIP 8-14MMRFR
	620	342991-0101	-		4	HOSE CLIP 11-17MMRFR

From	Pos	Part No	SP	UN	Qty	Description

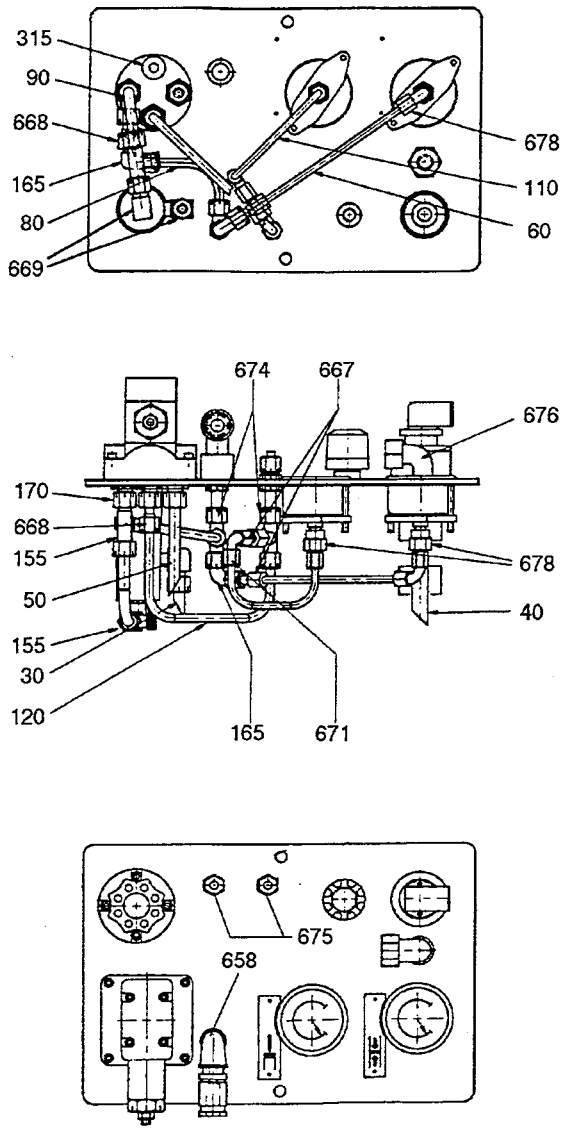

49189401.tif
491894-1/2
AM 16815

Last Alteration: AM 16815 91-10-09

Corresponding group: 491894-010V
Assembly Drawing: 491894-1/2

Issue: 940524

From	Pos	Part No	SP	UN	Qty	Description
Hyraulic Unit, Assembled.						
		C- 491894-0101				**Hydraulic System, Ass'y**
Spare Parts (only tp-registered).						
		C- 491894-0102				**Hydraulic System, Ass'y**
	004	978478	-		1	TANK
	005	978479	-		1	LID
	006	978480	-		1	LEVEL TUBE
	007	978481	-		1	BLOCK
	008	568932	-		1	PIPE
	009	568933	-		1	PIPE
	010	247385	-		1	SIGN
	020	247386	-		1	SIGN
	030	568921	-		1	PIPE
	040	568922	-		1	PIPE
	050	568923	-		1	PIPE
	060	568924	-		1	PIPE
	070	568926	-		1	PIPE
	080	568927	-		1	PIPE
	090	568928	-		1	PIPE
	100	568929	-		1	PIPE
	110	568930	-		1	PIPE
	120	568931	-		1	PIPE
	150	90030-0112	-		1	NIPPLE
	155	90030-0120	-		3	PIPE CONNECTION
	160	90030-0121	-		2	PIPE CONNECTION
	165	90030-0140	-		2	PIPE CONNECTION
	170	90030-0157	-		5	CONNECTION
	175	90030-0178	-		1	CONNECTION
	180	90030-0339	-		1	PIPE COUPLING
	185	90030-0340	-		1	DOUBLE NIPPLE
	190	90030-0341	-		1	STRAIGHT PIPE UNION
	300	90043-0062	S		2	MANOMETER
	310	90045-0079	S		1	MOTOR
	315	90087-0023	-		1	PLUG
	320	90091-0159	S		1	GASKET
	330	90113-0044	S		1	PRESSURE REGULATOR
	335	90148-0036	S		1	HOSE
	340	90163-0076	-		1	SLEEVE
	345	90187-0120	-		1	PUSH VALVE
	350	90201-0014	S		1	VALVE
	360	90201-0307	-		1	PLATE
	370	90201-0308	-		1	PLATE
	380	90230-0017	S		1	NON RETURN VALVE
	390	90274-0053	S		1	LEVEL PROBE
	400	90277-0041	S		1	FILTER
	410	90321-0018	S		1	PUMP
	420	90321-0381	S		1	ACCUMULATOR
	425	90321-0382	-		1	FLANGE
	426	90321-0383	-		1	FLANGE
	430	90321-0384	-		1	DISTANCE PIECE
	440	90321-0385	S		1	COUPLING
	450	90415-0029	S		1	FILTER
		90415-0323	R		0	* FILTER INSERT
	460	90422-0008	S		1	COOLER
		315202-0612	P		1	* O-RING 75,80X3,53
	600	312101-0451	-		4	SCREW M6S8X20FZB
	610	312111-0333	-		4	SCREW MC6S5X25FZB
	620	312111-0343	-		4	SCREW MC6S5X60FZB
	625	312502-0171	-		4	DRIVE SCREKDS2X6FNB
	630	315101-0165	-		4	WASHER BRB8,4X16FZB
	650	315202-0225	S		1	O-RING 44,2X3
	655	342221-0110	-		1	ELBOW PIPEANSL.8
	658	342221-0113	-		1	ELBOW PIPEANSL.15
	660	342701-0208	S		2	BUSHING RNI3/4"-1/4"
	665	342712-0205	-		1	REDUCER RI1/2"-1/4"
	667	342714-0201	-		2	REDUCER KOR8/6-LFZB
	668	342714-0203	-		2	REDUCER KOR10/8-LFZB
	669	342731-0108	-		3	ELBOW PIPE WE10-LRFZB
	670	342732-0104	-		1	ELBOW PIPE D8-R1/4"
	671	342744-0102	-		2	ELBOW PIPE
	672	342752-0114	-		1	STRAIGHT C
	674	342761-0103	-		2	ELBOW FITT L-KOPPLING
	675	342762-0103	-		2	BULKHEAD LSV8-LFZB
	676	342764-0114	-		1	BULKHEAD LWSV15-LFZB
	678	342790-0102	-		2	GAUGE CONN MAV6-LRFZB
	679	342792-0114	-		3	BANJO CONNING
	680	342980-0122	S		2	BANJO CONNSINGEL 8/6-1/4
	690	342980-0304	S		2	BANJO CONN SINGEL 1/4
	710	352103-0111	-		1	CABLE GLAND ST 16

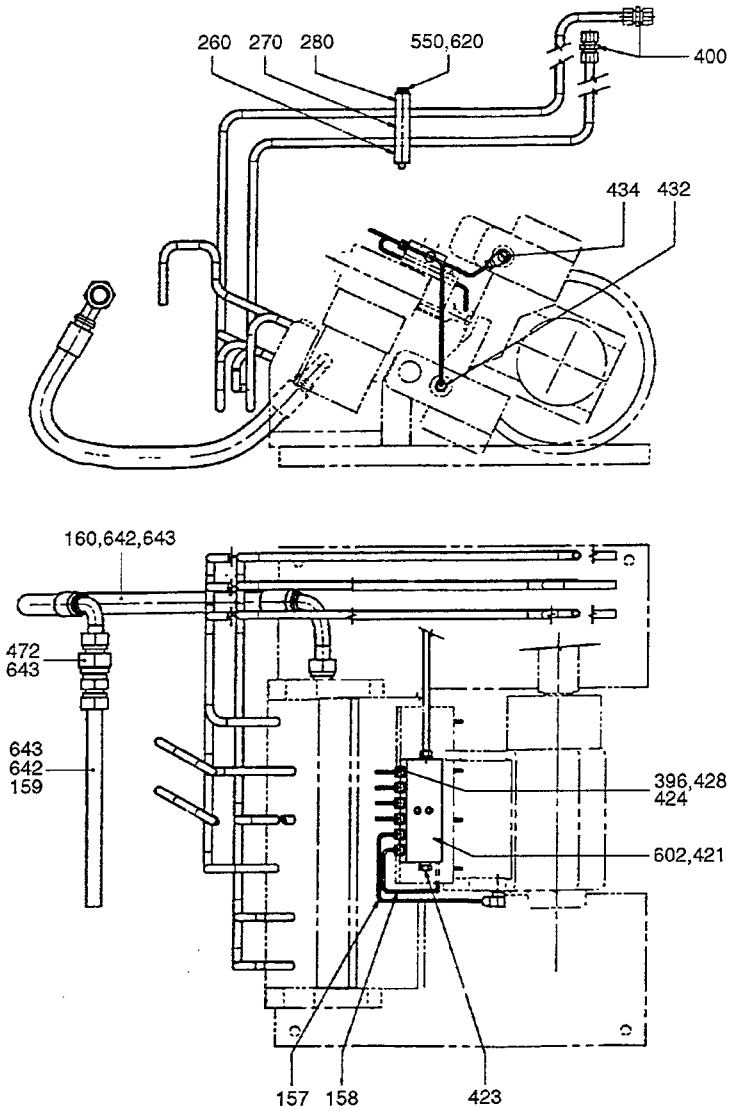

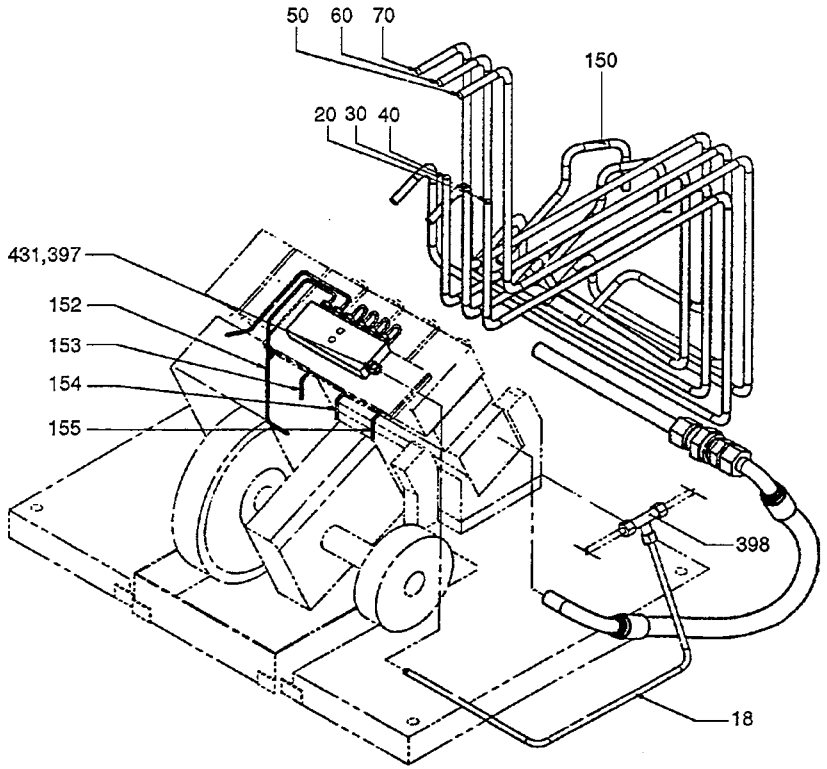

27186619.TIF
271866-19
AM 15719

From	Pos	Part No	SP	UN	Qty	Description
TBA/9 Without Pull-Tab						
		C- 271866-0601				**Pipe Work, Ass'y**
	010	456597	-		1	ATTACHMENT PIPE
	019	978789	-		1	PIPE
	080	295529	-		1	PIPE
	090	295530	-		1	PIPE
	100	295531	-		1	PIPE
	130	456599	-		1	PIPE
	145	751994	-		1	PIPE
	147	456598	-		1	CABLE CONDUIT
	170	456823	-		1	PIPE
	180	456824	-		1	PIPE
	190	295536	-		1	PIPE
	200	456978	-		1	PIPE
	210	456821	-		1	PIPE
	220	295539	-		1	PIPE
	230	456758	-		1	ATTACHMENT
	235	456825	-		1	BRACKET
	250	315125-0153	S		2	WASHER SB 6,4X22X4 RFR
	290	295540	-		1	FASTENING PLATE
	320	90165-0009	-		4	CLIP
	340	295549	-		1	CRAMP
	342	456826	-		1	PIPE CLAMP
	365	978799	-		1	HOLDER
	368	469550	-		2	SLEEVE
	380	90015-0021	-		1	BUSHING
	385	90015-0022	-		2	BUSHING
	390	90030-0030	-		2	PIPE CONNECTION
	395	90030-0058	-		1	CONNECTION
	410	90030-0106	-		3	PIPE CONNECTION
	433	90166-0119	-	M	8	HOSE
	435	90166-0081	-	M	95	HOSE
	437	90166-0013	-	M	3	HOSE
	438	90187-0069	-	MM	1000	HOSE
	470	90224-0305	-		9	PIPE CONNECTION
	495	90330-0037	-		2	PLUG
	515	90330-0093	-		2	NUT
	560	312105-0364	-		13	SCREW M6S6X10RFR
	570	312105-0368	-		4	SCREW M6S6X16RFR
	575	312105-0371	-		2	SCREW M6S6X22RFR
	580	312105-0374	-		3	SCREW M6S6X30RFR
	607	312605-0316	-		12	NUT M6M6RFR
	630	315105-0153	-		30	WASHER BRB6,4X12RFR
	645	90005-0016	S		3	WASHER
	708	342714-0110	-		1	REDUCER KOR 15/12-L/SY
	710	342723-0114	-		1	PIPE COUPLGI-15-1/2"
	715	342725-0114	-		1	STRAIGHT PGI 15LR/RO RFR
	727	342991-0103	-		2	HOSE CLAMP 15-24MM RFR
	740	352113-0102	-		12	RIBBON CLA
	750	359000-0400	-		54	MARKING CO2/4"0"
	760	359000-0401	-		38	MARKING CO2/4"1"
	770	359000-0402	-		40	MARKING CO2/4"2"
	780	359000-0403	-		8	MARKING CO2/4"3"
	790	359000-0404	-		16	MARKING CO2/4"4"
	800	359000-0405	-		8	MARKING CO2/4"5"
	810	359000-0406	-		10	MARKING CO2/4"6"
	830	359000-0408	-		8	MARKING CO2/4"8"
	840	359000-0409	-		10	MARKING CO2/4"9"
	850	359000-0771	-		10	MARKING CO2/4"V"
TB/9 With Pull-Tab						
		C- 271866-0602				**Pipe Work, Ass'y**
	006	752785	-		1	PIPE
	007	752786	-		1	PIPE
	008	752787	-		1	PIPE
	010	752809	-		1	PIPE CONNECTION
	080	752791	-		1	PIPE
	090	752790	-		1	PIPE
	100	752789	-		1	PIPE
	125	752813	-		2	BRACKET
	140	752812	-		1	PIPE
	146	752794-0001	-		1	PIPE
	148	752794-0002	-		1	PIPE
	149	752794-0003	-		1	PIPE
	190	752792	-		1	PIPE
	200	752788	-		1	PIPE
	210	752811	-		1	PIPE
	220	752793	-		1	PIPE
	245	295945	-		1	PROTECTION
	249	752863	-		1	BRACKET
	256	978006	-		1	PIPE HOLDER
	257	978007	-		1	PIPE HOLDER
	258	978008	-		2	PIPE HOLDER
	282	271949	-		1	NUT
	345	295970	-		1	RING
	355	752795	-		1	PIPE
	426	90030-0181	-		1	PIPE CONNECTION
	427	90030-0182	-		1	NIPPLE
	429	90140-0020	-		1	ELBOW PIPE
	433	90166-0119	-	M	2	HOSE
	435	90166-0081	-	M	35	HOSE

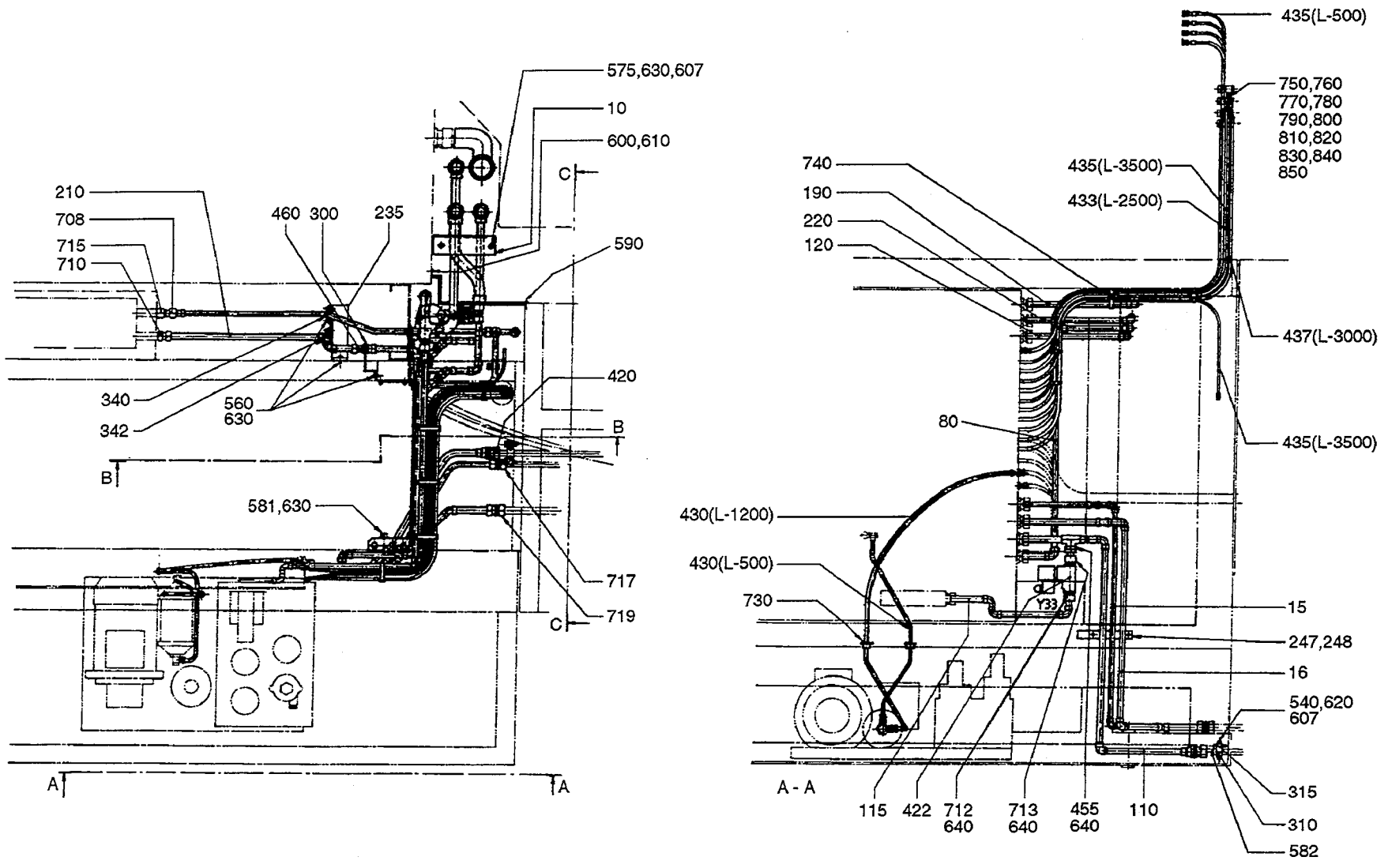

27186624.TIF
271866-24
AM 20300

From	Pos	Part No	SP	UN	Qty	Description
	436	90165-0051	-		4	CLIP
	437	90166-0013	-	M	3	HOSE
	440	90187-0069	-		1	VALVE
	450	90187-0311	-		1	HOLDER
	470	90224-0305	-		6	PIPE CONNECTION
	475	90270-0347	-		1	VALVE
	560	312105-0364	-		4	SCREW M6S6X10RFR
	565	312105-0447	-		4	SCREW M6S8X12RFR
	575	312105-0371	-		8	SCREW M6S6X22RFR
	584	312115-0378	-		12	SCREW 6X40 A4 80
	607	312605-0316	-		23	NUT M6M6RFR
	630	315105-0153	-		39	WASHER BRB6,4X12RFR
	637	315233-0111	-		2	SEAL RING R3/8"
	641	315105-0165	-		4	WASHER BRB8,4X16RFR
	645	90005-0016	S		4	WASHER
	690	342700-0111	-		1	NIPPLE RNA3/8"-3/8"
	700	90224-0297	-		1	REDUCER
	720	342730-0109	-		3	ELBOW PIPE WA-12-3/8"
	722	342736-0114	-		6	ELBOW PIPE W-15
	723	342746-0114	-		1	T-CONNECTI T-15
	724	342759-0114	-		2	ELBOW FITT
	750	359000-0400	-		34	MARKING CO2/4"0"
	760	359000-0401	-		16	MARKING CO2/4"1"
	770	359000-0402	-		22	MARKING CO2/4"2"
	780	359000-0403	-		6	MARKING CO2/4"3"
	790	359000-0404	-		8	MARKING CO2/4"4"
	810	359000-0406	-		6	MARKING CO2/4"6"
	830	359000-0408	-		2	MARKING CO2/4"8"
	840	359000-0409	-		4	MARKING CO2/4"9"
	850	359000-0771	-		6	MARKING CO2/4"V"
TBA/9 With Pull-Tab						
		C- 271866-0603				**Pipe Work, Ass'y**
	010	456597	-		1	ATTACHMENT PIPE
	019	978789	-		1	PIPE
	080	295529	-		1	PIPE
	090	295530	-		1	PIPE
	100	295531	-		1	PIPE
	130	456599	-		1	PIPE
	145	751994	-		1	PIPE
	147	456598	-		1	CABLE CONDUIT
	170	456823	-		1	PIPE
	180	456824	-		1	PIPE
	190	295536	-		1	PIPE
	200	456978	-		1	PIPE
	210	456821	-		1	PIPE
	220	295539	-		1	PIPE
	230	456758	-		1	ATTACHMENT
	235	456825	-		1	BRACKET
	250	315125-0153	S		2	WASHER SB 6,4X22X4 RFR
	290	295540	-		1	FASTENING PLATE
	320	90165-0009	-		4	CLIP
	340	295549	-		1	CRAMP
	342	456826	-		1	PIPE CLAMP
	365	978799	-		1	HOLDER
	368	469550	-		2	SLEEVE
	380	90015-0021	-		1	BUSHING
	385	90015-0022	-		2	BUSHING
	390	90030-0030	-		2	PIPE CONNECTION
	395	90030-0058	-		1	CONNECTION
	410	90030-0106	-		3	PIPE CONNECTION
	433	90166-0119	-	M	8	HOSE
	435	90166-0081	-	M	95	HOSE
	437	90166-0013	-	M	3	HOSE
	438	90166-0121	-	MM	1000	HOSE
	470	90224-0305	-		9	PIPE CONNECTION
	495	90330-0037	-		2	PLUG
	515	90330-0093	-		2	NUT
	560	312105-0364	-		13	SCREW M6S6X10RFR
	570	312105-0368	-		4	SCREW M6S6X16RFR
	575	312105-0371	-		2	SCREW M6S6X22RFR
	580	312105-0374	-		3	SCREW M6S6X30RFR
	607	312605-0316	-		12	NUT M6M6RFR
	630	315105-0153	-		30	WASHER BRB6,4X12RFR
	645	90005-0016	S		3	WASHER
	708	342714-0110	-		1	REDUCER KOR 15/12-L/SY
	710	342723-0114	-		1	PIPE COUPLGI-15-1/2"
	715	342725-0114	-		1	STRAIGHT PGI 15LR/RO RFR
	727	342991-0103	-		2	HOSE CLAMP 15-24MM RFR
	740	352113-0102	-		12	RIBBON CLA
	750	359000-0400	-		54	MARKING CO2/4"0"
	760	359000-0401	-		38	MARKING CO2/4"1"
	770	359000-0402	-		40	MARKING CO2/4"2"
	780	359000-0403	-		8	MARKING CO2/4"3"
	790	359000-0404	-		16	MARKING CO2/4"4"
	800	359000-0405	-		8	MARKING CO2/4"5"
	810	359000-0406	-		10	MARKING CO2/4"6"
	830	359000-0408	-		8	MARKING CO2/4"8"
	840	359000-0409	-		10	MARKING CO2/4"9"
	850	359000-0771	-		10	MARKING CO2/4"V"

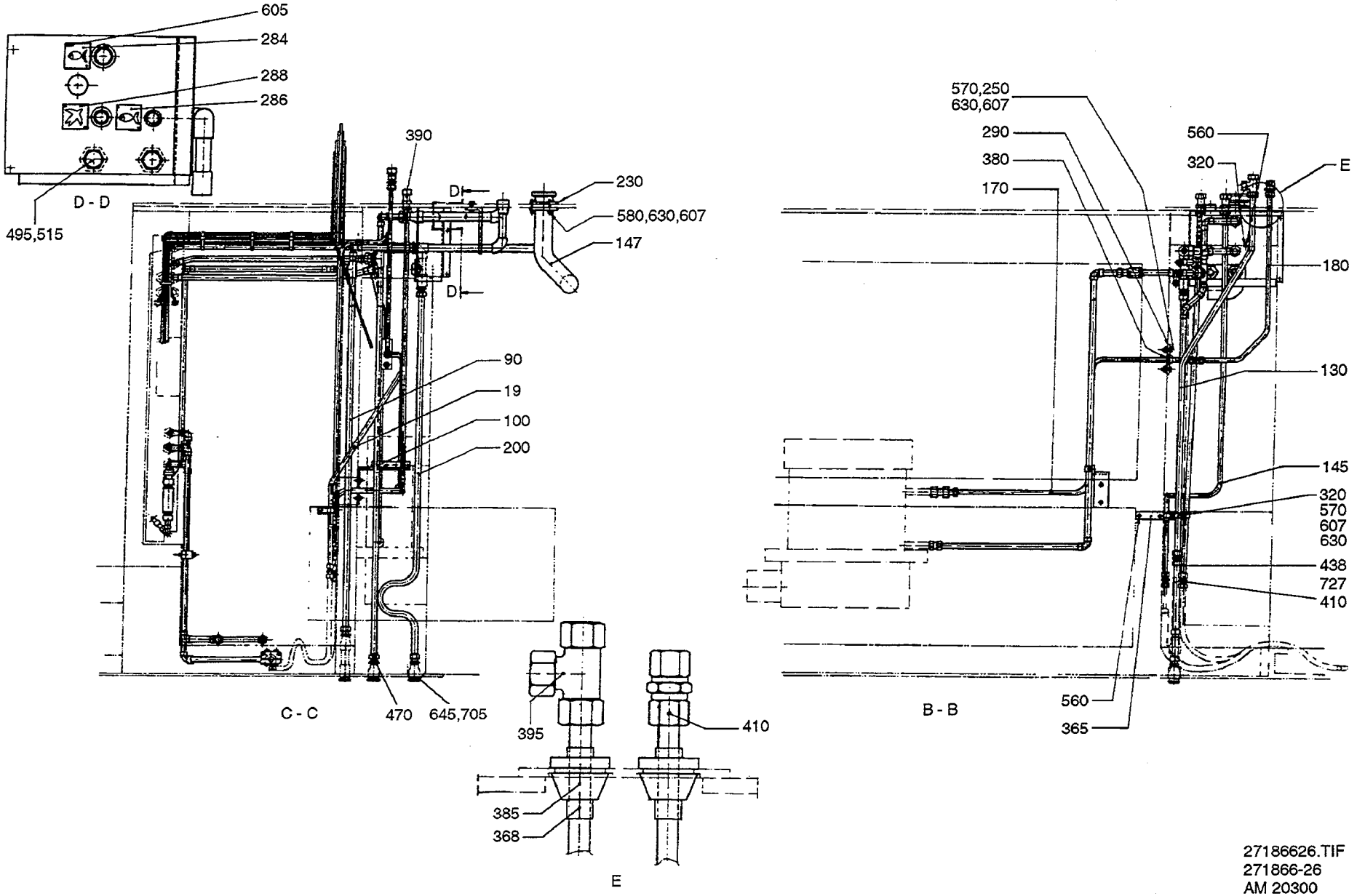

27186626.TIF
271866-26
AM 20300

Last Alteration: AM 20090 94-02-03

Corresponding group: 271866-060V
Assembly Drawing: 271866-19/24/25/26/27/28/29

Issue: **940524**

From	Pos	Part No	SP	UN	Qty	Description
	410	90030-0106	-		3	PIPE CONNECTION
	415	90224-0176	-		1	GLAND FITTING
	433	90166-0119	-	M	8	HOSE
	435	90166-0081	-	M	95	HOSE
	437	90166-0013	-	M	3	HOSE
	438	90166-0121	-	MM	1000	HOSE
	470	90224-0305	-		9	PIPE CONNECTION
	490	90030-0187	-		2	PIPE CONNECTION
	492	90330-0019	-		2	REDUCTION NIPPLE
	495	90330-0037	-		2	PLUG
	515	90330-0093	-		2	NUT
	560	312105-0364	-		15	SCREW M6S6X10RFR
	570	312105-0368	-		2	SCREW M6S6X16RFR
	575	312105-0371	-		2	SCREW M6S6X22RFR
	607	312605-0316	-		6	NUT M6M6RFR
	630	315105-0153	-		31	WASHER BRB6,4X12RFR
	645	90005-0016	S		3	WASHER
	727	342991-0103	-		2	HOSE CLAMP 15-24MM RFR
	740	352113-0102	-		12	RIBBON CLA
	750	359000-0400	-		54	MARKING CO2/4"0"
	760	359000-0401	-		38	MARKING CO2/4"1"
	770	359000-0402	-		40	MARKING CO2/4"2"
	780	359000-0403	-		8	MARKING CO2/4"3"
	790	359000-0404	-		16	MARKING CO2/4"4"
	800	359000-0405	-		8	MARKING CO2/4"5"
	810	359000-0406	-		10	MARKING CO2/4"6"
	830	359000-0408	-		8	MARKING CO2/4"8"
	840	359000-0409	-		10	MARKING CO2/4"9"
	850	359000-0771	-		10	MARKING CO2/4"V"
Common Parts						
	015	491187	-		1	PIPE
	016	491866	-		1	PIPE
	018	752728	-		1	LUBRICATING PIPE
	020	751662	-		1	PIPE
	030	751661	-		1	PIPE
	040	751664	-		1	PIPE
	050	751663	-		1	PIPE
	060	751665	-		1	PIPE
	070	751666	-		1	PIPE
	110	491183	-		1	PIPE
	115	491463	-		1	PIPE
	120	295533	-		1	PIPE
	150	751660	-		2	PIPE
	152	752599	-		1	LUBRICATING PIPE
	153	752600	-		1	LUBRICATING PIPE
	154	752601	-		1	LUBRICATING PIPE
	155	752602	-		1	LUBRICATING PIPE
	157	752662	-		1	LUBRICATING PIPE
	158	752663	-		1	LUBRICATING PIPE
	159	752652	-		1	PIPE
	160	752775	-		1	HOSE
	247	491241	-		1	HOLDER
	248	491242	-		1	HOLDER
	260	271320	-		1	HOLDER
	270	271321	-		1	HOLDER
	280	271322	-		1	HOLDER
	284	273455	-		1	LABEL (COLD WATER)
	286	273456	-		1	SIGN
	288	273458	-		1	LABEL (AIR)
	300	295541	-		1	BRACKET
	310	441295	-		1	HOLDER
	315	441296	-		1	HOLDER
	396	90028-0020	-		6	CONE
	397	90028-0025	-		1	CONE
	398	90030-0076	-		1	CONNECTION
	400	90030-0091	-		6	PIPE CONNECTION
	420	90030-0188	-		1	PIPE CONNECTION
	421	90032-0040	-		1	BLOCK
	422	90042-0134	S		1	SOLENOID VALVE
		90042-0428	S		0	* COIL
	423	90087-0019	-		1	PLUG
	424	90092-0052	-		6	VALVE
	428	90134-0039	-		6	BUSHING
	430	90166-0118	-	MM	1700	HOSE
	431	90134-0055	-		1	BUSHING
	432	90134-0065	-		1	CONNECTION
	434	90134-0058	-		1	BANJO CONNECTION
	455	90224-0078	-		1	CONNECTION
	460	90224-0296	-		1	GROMMET
	472	90230-0011	-		1	NON RETURN VALVE
	540	312101-0378	-		2	SCREW M6S6X40FZB
	550	312101-0388	-		2	SCREW M6S6X90FZB
	581	312105-0378	-		2	SCREW M6S6X40RFR
	582	312105-0453	-		2	SCREW M6S8X25RFR
	590	312125-0325	-		2	SLOTTED HEMCS5X10RFR
	600	312125-0329	-		2	SLOTTED HEMCS5X16RFR
	602	312155-0297	-		2	SCREW MF6S4X25RFR
	605	312502-0120	-		6	DRIVE SCREKDS0X5FNB
	610	312605-0314	-		2	NUT M6M5RFR
	620	315101-0153	-		6	WASHER BRB6,4X12FZB

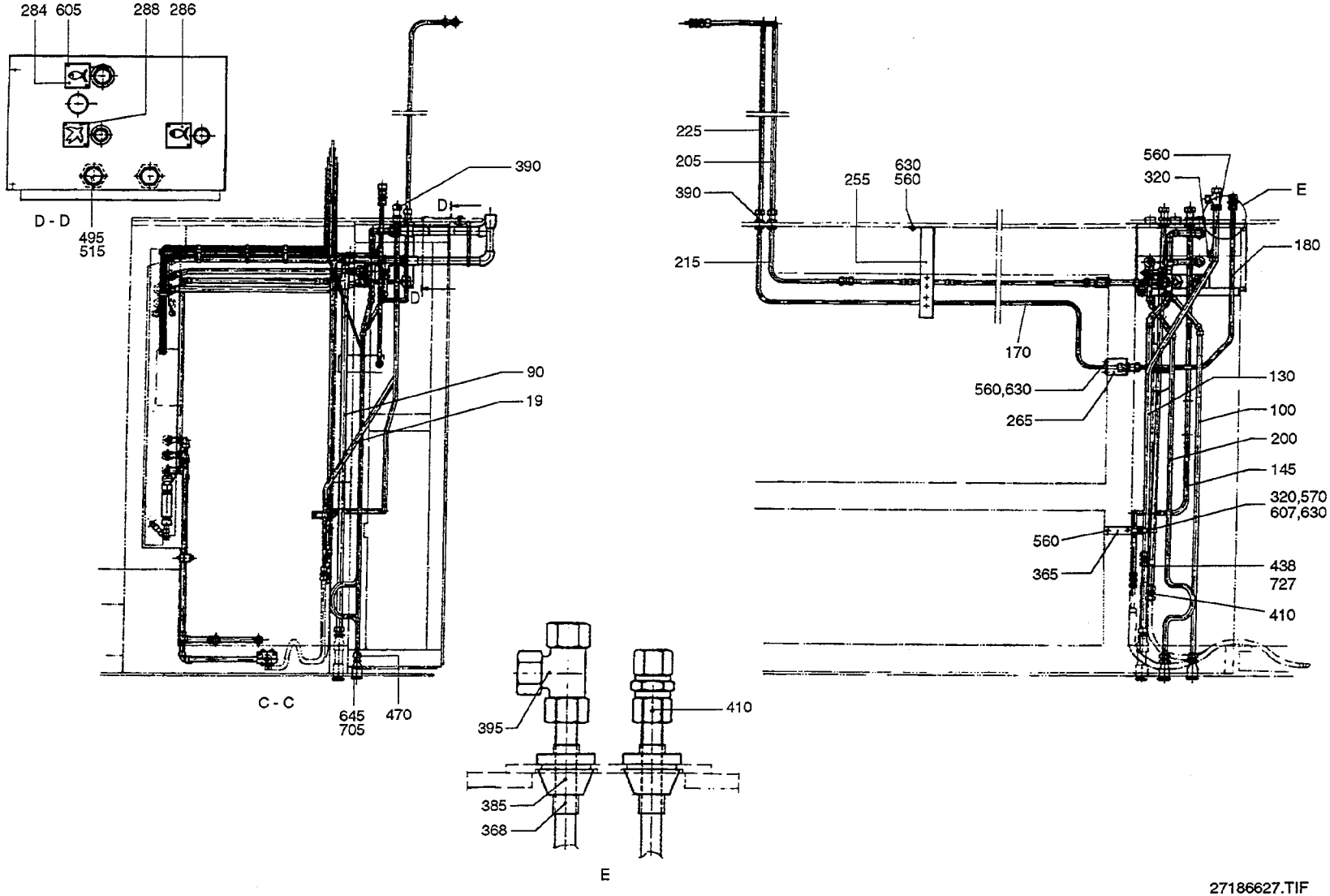

27186627.TIF
271866-27
AM 20300

Last Alteration: AM 20090 94-02-03

Corresponding group: 271866-060V
Assembly Drawing: 271866-19/24/25/26/27/28/29

Issue: **940524**

From	Pos	Part No	SP	UN	Qty	Description
	640	315233-0113	S		4	SEAL RING R1/2"
	642	342703-0114	-		2	NUT M15-LFZB
	643	342705-0114	-		4	CUTTING RIR15-LFZB
	705	342713-0215	-		3	BLIND PLUG
	712	342720-0114	-		1	PIPE COUPLGA-15-1/2"
	713	342720-0115	-		1	PIPE COUPLGA-16-1/2"
	717	342726-0109	-		1	PIPE COUPLG-12
	719	342726-0114	-		1	PIPE COUPLG-15
	730	352101-0105	-		2	LEAD-IN G 22,5
	820	359000-0407	-		6	MARKING CO2/4"7"

From	Pos	Part No	SP	UN	Qty	Description

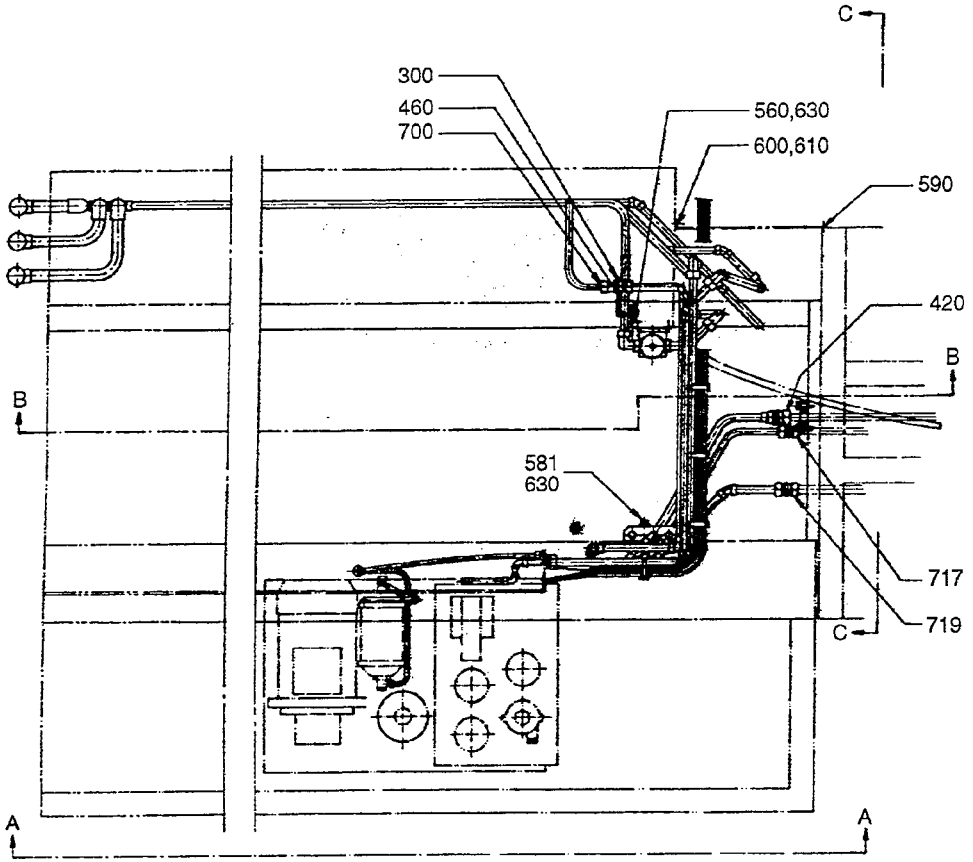

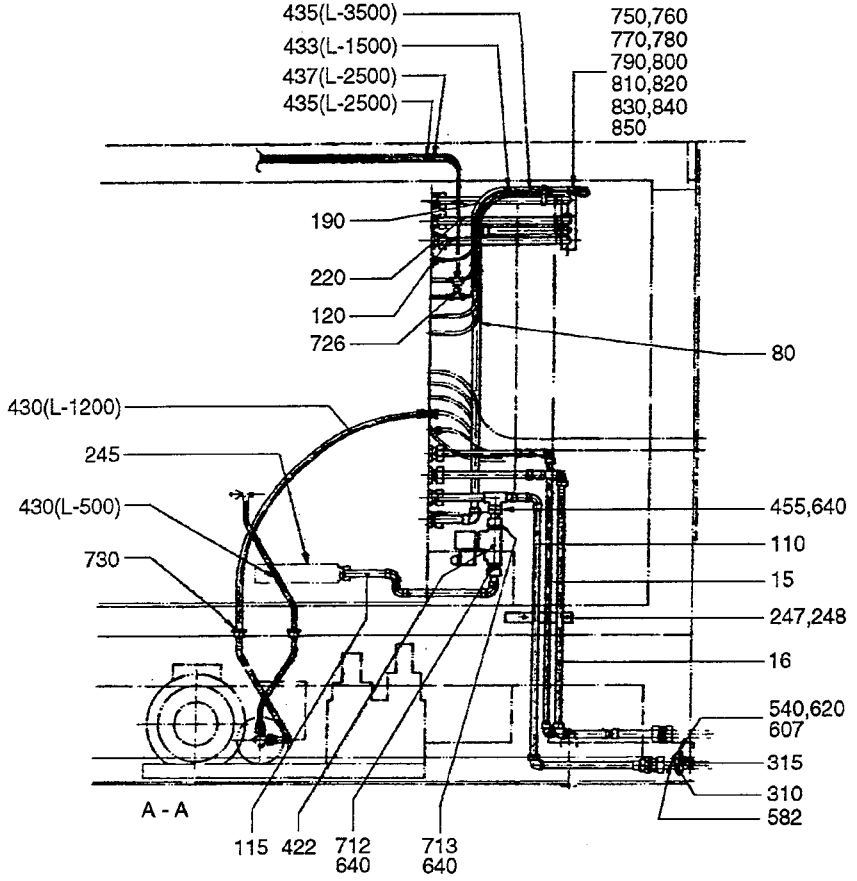

27186628.TIF
271866-28
AM 17888

From	Pos	Part No	SP	UN	Qty	Description
TBA/9 Without Pull-Tab						
		C- 271866-0601				**Pipe Work, Ass'y**
	010	456597	-		1	ATTACHMENT PIPE
	019	978789	-		1	PIPE
	080	295529	-		1	PIPE
	090	295530	-		1	PIPE
	100	295531	-		1	PIPE
	130	456599	-		1	PIPE
	145	751994	-		1	PIPE
	147	456598	-		1	CABLE CONDUIT
	170	456823	-		1	PIPE
	180	456824	-		1	PIPE
	190	295536	-		1	PIPE
	200	456978	-		1	PIPE
	210	456821	-		1	PIPE
	220	295539	-		1	PIPE
	230	456758	-		1	ATTACHMENT
	235	456825	-		1	BRACKET
	250	315125-0153	S		2	WASHER SB 6,4X22X4 RFR
	290	295540	-		1	FASTENING PLATE
	320	90165-0009	-		4	CLIP
	340	295549	-		1	CRAMP
	342	456826	-		1	PIPE CLAMP
	365	978799	-		1	HOLDER
	368	469550	-		2	SLEEVE
	380	90015-0021	-		1	BUSHING
	385	90015-0022	-		2	BUSHING
	390	90030-0030	-		2	PIPE CONNECTION
	395	90030-0058	-		1	CONNECTION
	410	90030-0106	-		3	PIPE CONNECTION
	433	90166-0119	-	M	8	HOSE
	435	90166-0081	-	M	95	HOSE
	437	90166-0013	-	M	3	HOSE
	438	90187-0069	-	MM	1000	HOSE
	470	90224-0305	-		9	PIPE CONNECTION
	495	90330-0037	-		2	PLUG
	515	90330-0093	-		2	NUT
	560	312105-0364	-		13	SCREW M6S6X10RFR
	570	312105-0368	-		4	SCREW M6S6X16RFR
	575	312105-0371	-		2	SCREW M6S6X22RFR
	580	312105-0374	-		3	SCREW M6S6X30RFR
	607	312605-0316	-		12	NUT M6M6RFR
	630	315105-0153	-		30	WASHER BRB6,4X12RFR
	645	90005-0016	S		3	WASHER
	708	342714-0110	-		1	REDUCER KOR 15/12-L/SY
	710	342723-0114	-		1	PIPE COUPLGI-15-1/2"
	715	342725-0114	-		1	STRAIGHT PGI 15LR/RO RFR
	727	342991-0103	-		2	HOSE CLAMP 15-24MM RFR
	740	352113-0102	-		12	RIBBON CLA
	750	359000-0400	-		54	MARKING CO2/4"0"
	760	359000-0401	-		38	MARKING CO2/4"1"
	770	359000-0402	-		40	MARKING CO2/4"2"
	780	359000-0403	-		8	MARKING CO2/4"3"
	790	359000-0404	-		16	MARKING CO2/4"4"
	800	359000-0405	-		8	MARKING CO2/4"5"
	810	359000-0406	-		10	MARKING CO2/4"6"
	830	359000-0408	-		8	MARKING CO2/4"8"
	840	359000-0409	-		10	MARKING CO2/4"9"
	850	359000-0771	-		10	MARKING CO2/4"V"
TB/9 With Pull-Tab						
		C- 271866-0602				**Pipe Work, Ass'y**
	006	752785	-		1	PIPE
	007	752786	-		1	PIPE
	008	752787	-		1	PIPE
	010	752809	-		1	PIPE CONNECTION
	080	752791	-		1	PIPE
	090	752790	-		1	PIPE
	100	752789	-		1	PIPE
	125	752813	-		2	BRACKET
	140	752812	-		1	PIPE
	146	752794-0001	-		1	PIPE
	148	752794-0002	-		1	PIPE
	149	752794-0003	-		1	PIPE
	190	752792	-		1	PIPE
	200	752788	-		1	PIPE
	210	752811	-		1	PIPE
	220	752793	-		1	PIPE
	245	295945	-		1	PROTECTION
	249	752863	-		1	BRACKET
	256	978006	-		1	PIPE HOLDER
	257	978007	-		1	PIPE HOLDER
	258	978008	-		2	PIPE HOLDER
	282	271949	-		1	NUT
	345	295970	-		1	RING
	355	752795	-		1	PIPE
	426	90030-0181	-		1	PIPE CONNECTION
	427	90030-0182	-		1	NIPPLE
	429	90140-0020	-		1	ELBOW PIPE
	433	90166-0119	-	M	2	HOSE
	435	90166-0081	-	M	35	HOSE

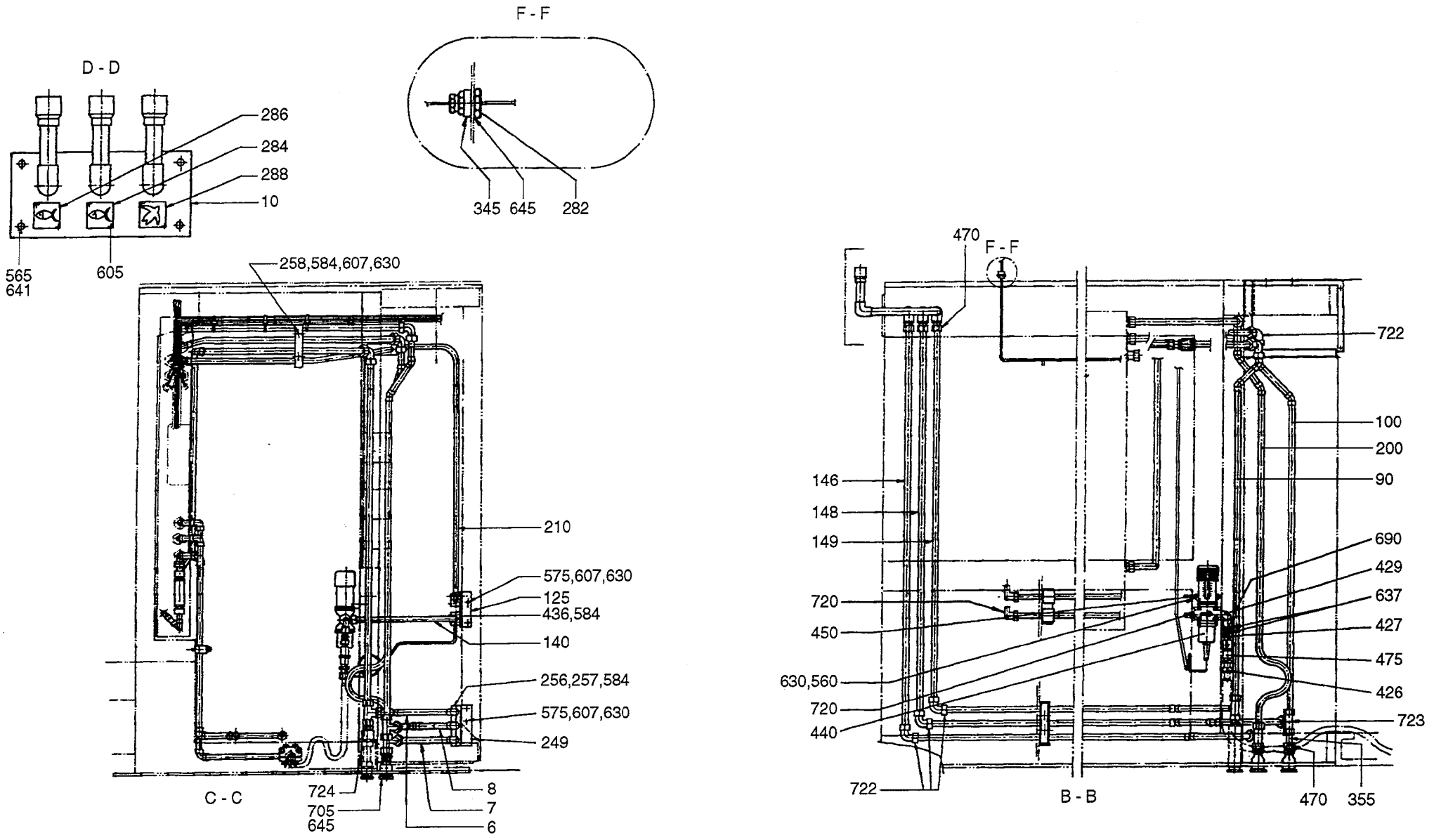

27186629.TIF
271866-29
AM 17888

From	Pos	Part No	SP	UN	Qty	Description
	436	90165-0051	-		4	CLIP
	437	90166-0013	-	M	3	HOSE
	440	90187-0069	-		1	VALVE
	450	90187-0311	-		1	HOLDER
	470	90224-0305	-		6	PIPE CONNECTION
	475	90270-0347	-		1	VALVE
	560	312105-0364	-		4	SCREW M6S6X10RFR
	565	312105-0447	-		4	SCREW M6S8X12RFR
	575	312105-0371	-		8	SCREW M6S6X22RFR
	584	312115-0378	-		12	SCREW 6X40 A4 80
	607	312605-0316	-		23	NUT M6M6RFR
	630	315105-0153	-		39	WASHER BRB6,4X12RFR
	637	315233-0111	-		2	SEAL RING R3/8"
	641	315105-0165	-		4	WASHER BRB8,4X16RFR
	645	90005-0016	S		4	WASHER
	690	342700-0111	-		1	NIPPLE RNA3/8"-3/8"
	700	90224-0297	-		1	REDUCER
	720	342730-0109	-		3	ELBOW PIPE WA-12-3/8"
	722	342736-0114	-		6	ELBOW PIPE W-15
	723	342746-0114	-		1	T-CONNECTI T-15
	724	342759-0114	-		2	ELBOW FITT
	750	359000-0400	-		34	MARKING CO2/4"0"
	760	359000-0401	-		16	MARKING CO2/4"1"
	770	359000-0402	-		22	MARKING CO2/4"2"
	780	359000-0403	-		6	MARKING CO2/4"3"
	790	359000-0404	-		8	MARKING CO2/4"4"
	810	359000-0406	-		6	MARKING CO2/4"6"
	830	359000-0408	-		2	MARKING CO2/4"8"
	840	359000-0409	-		4	MARKING CO2/4"9"
	850	359000-0771	-		6	MARKING CO2/4"V"
TBA/9 With Pull-Tab						
		C- 271866-0603				**Pipe Work, Ass'y**
	010	456597	-		1	ATTACHMENT PIPE
	019	978789	-		1	PIPE
	080	295529	-		1	PIPE
	090	295530	-		1	PIPE
	100	295531	-		1	PIPE
	130	456599	-		1	PIPE
	145	751994	-		1	PIPE
	147	456598	-		1	CABLE CONDUIT
	170	456823	-		1	PIPE
	180	456824	-		1	PIPE
	190	295536	-		1	PIPE
	200	456978	-		1	PIPE
	210	456821	-		1	PIPE
	220	295539	-		1	PIPE
	230	456758	-		1	ATTACHMENT
	235	456825	-		1	BRACKET
	250	315125-0153	S		2	WASHER SB 6,4X22X4 RFR
	290	295540	-		1	FASTENING PLATE
	320	90165-0009	-		4	CLIP
	340	295549	-		1	CRAMP
	342	456826	-		1	PIPE CLAMP
	365	978799	-		1	HOLDER
	368	469550	-		2	SLEEVE
	380	90015-0021	-		1	BUSHING
	385	90015-0022	-		2	BUSHING
	390	90030-0030	-		2	PIPE CONNECTION
	395	90030-0058	-		1	CONNECTION
	410	90030-0106	-		3	PIPE CONNECTION
	433	90166-0119	-	M	8	HOSE
	435	90166-0081	-	M	95	HOSE
	437	90166-0013	-	M	3	HOSE
	438	90166-0121	-	MM	1000	HOSE
	470	90224-0305	-		9	PIPE CONNECTION
	495	90330-0037	-		2	PLUG
	515	90330-0093	-		2	NUT
	560	312105-0364	-		13	SCREW M6S6X10RFR
	570	312105-0368	-		4	SCREW M6S6X16RFR
	575	312105-0371	-		2	SCREW M6S6X22RFR
	580	312105-0374	-		3	SCREW M6S6X30RFR
	607	312605-0316	-		12	NUT M6M6RFR
	630	315105-0153	-		30	WASHER BRB6,4X12RFR
	645	90005-0016	S		3	WASHER
	708	342714-0110	-		1	REDUCER KOR 15/12-L/SY
	710	342723-0114	-		1	PIPE COUPLGI-15-1/2"
	715	342725-0114	-		1	STRAIGHT PGI 15LR/RO RFR
	727	342991-0103	-		2	HOSE CLAMP 15-24MM RFR
	740	352113-0102	-		12	RIBBON CLA
	750	359000-0400	-		54	MARKING CO2/4"0"
	760	359000-0401	-		38	MARKING CO2/4"1"
	770	359000-0402	-		40	MARKING CO2/4"2"
	780	359000-0403	-		8	MARKING CO2/4"3"
	790	359000-0404	-		16	MARKING CO2/4"4"
	800	359000-0405	-		8	MARKING CO2/4"5"
	810	359000-0406	-		10	MARKING CO2/4"6"
	830	359000-0408	-		8	MARKING CO2/4"8"
	840	359000-0409	-		10	MARKING CO2/4"9"
	850	359000-0771	-		10	MARKING CO2/4"V"

Last Alteration: AM 6882 84-06-07

Corresponding group: 469384-010V
Assembly Drawing:

Issue: **940524**

From	Pos	Part No	SP	UN	Qty	Description
		C- 469384-0101				**Start-Up Kit, Ass'y**
	010	90296-0053	-	L	10	OIL
	020	90296-0075	-	ML	2500	OIL
	030	90298-0019	-		1	DETERGENT
	040	90144-0003	-		1	TAPE

From	Pos	Part No	SP	UN	Qty	Description

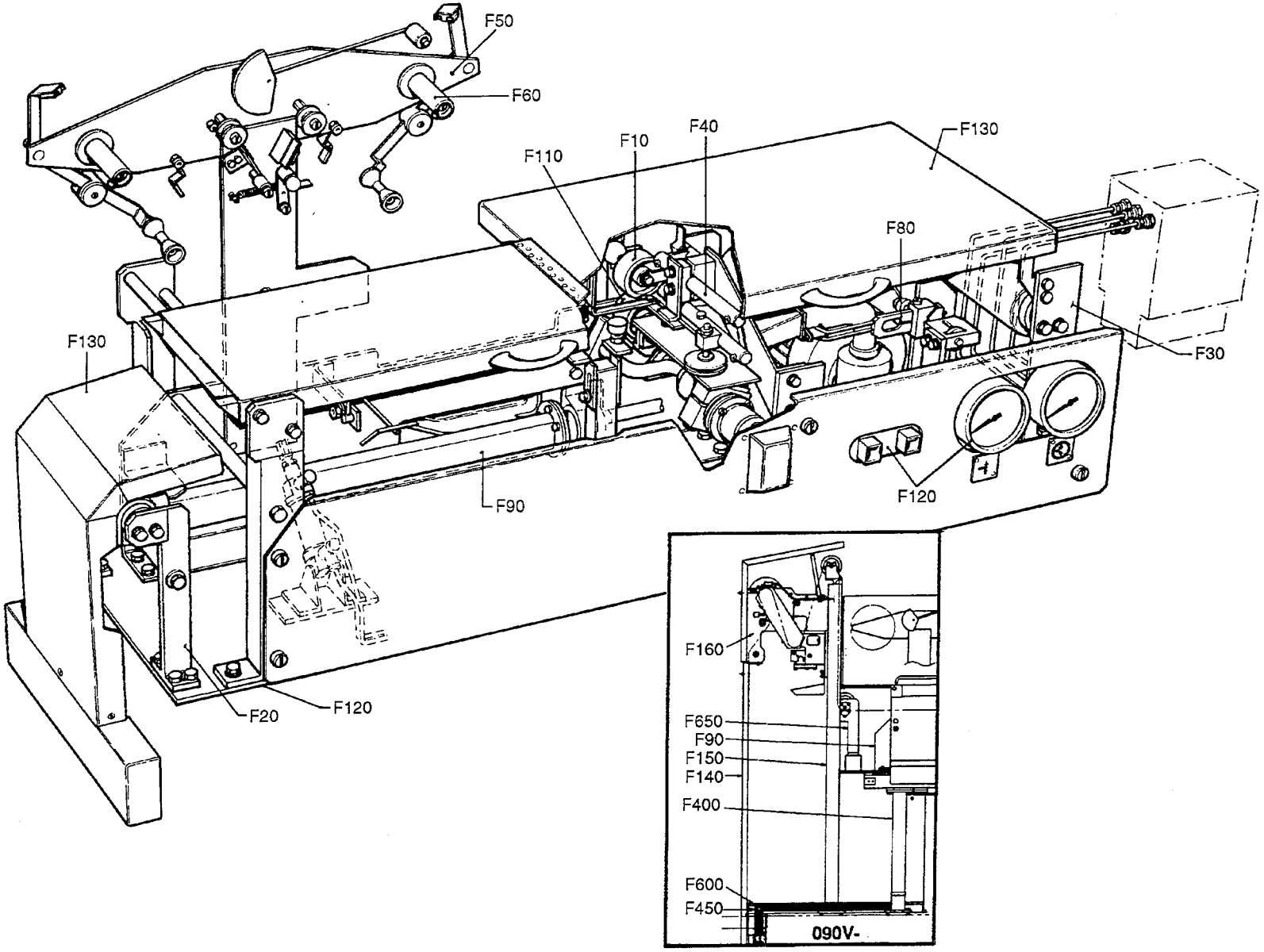

64810711.TIF
648107-11/12
AM 14853

Pos	Group No	Description	
648107-F000	648107-100V	Strip Applicator TB/9	593
648107-F010	246388-060V	Pressure Roller	597
648107-F030	752628-020V	Bending Roller Front	601
648107-F040	456032-010V	Strip Guide	603
648107-F050	441000-050V	Strip Holder	605
441000-F060	7003-010V	Bobbin	607
441000-F065	563088-010V	Connection Box	609
648107-F090	295891-030V	Strip Applicator	611
648107-F110	272343-050V	Pressure Roller	613
648107-F130	978162-010V	Paper Guard TB/9	617
978162-F005	978367-010V	Hood	619
648107-F140	978179-010V	Paper Guard (rear)	623
648107-F150	752247-010V	Frame Dating Unit	625
648107-F160	752913-010V	Dating Unit TB/9 ST-R	627
	752913-010V	Dating Unit TB/9 ST-R	629
752913-F001	293685-020V	Printing Wheel	631
752913-F002	434774-030V	Ink Unit	633
752913-F003	751718-010V	Dating Wheel Holder	635
752913-F004	543143-010V	Adjustment Device	637
648107-F160	752914-010V	Dating Unit TB/9 ST-ER	639
	752914-010V	Dating Unit TB/9 ST-ER	641
752914-F001	293684-020V	Printing Wheel	643
752914-F002	434074-030V	Ink Unit	645
752914-F003	751718-010V	Dating Wheel Holder	647
752914-F004	543143-010V	Adjustment Device	649
648107-F400	456923-030V	Machine Body TB/TBA/9	679
648107-F450	752898-010V	Tube Assembling TB/9	681
648107-F500	295668-030V	Start-Up Kit	685
648107-F600	752889-010V	Cable Duct	687
648107-F650	560202-010V	Bending Roller Rear TB/9	689

Pos	Group No	Description

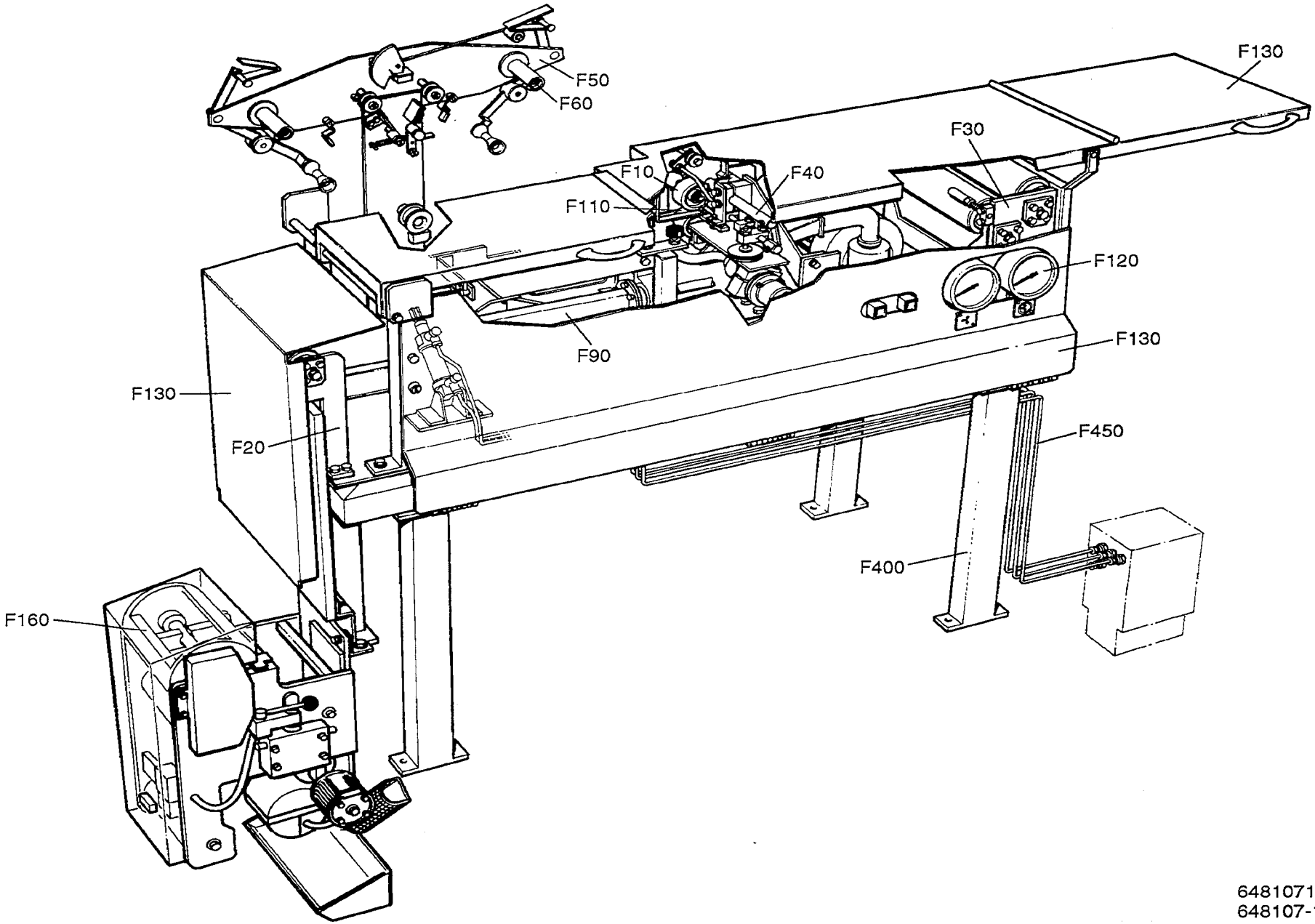

64810713.TIF
648107-13/14
AM 14853

Pos	Group No	Description	
648107-F000	648107-100V	Strip Applicator TBA/9	595
648107-F010	246388-060V	Pressure Roller	597
648107-F020	752627-010V	Bending Roller Rear	599
648107-F030	752628-020V	Bending Roller Front	601
648107-F040	456032-010V	Strip Guide	603
648107-F050	441000-050V	Strip Holder	605
441000-F060	7003-010V	Bobbin	607
441000-F065	563088-010V	Connection Box	609
648107-F090	295891-030V	Strip Applicator	611
648107-F110	272343-050V	Pressure Roller	613
648107-F120	272408-050V	Mounting Plate	615
648107-F130	752244-020V	Paper Guard TBA/9	621
648107-F160	752645-020V	Dating Unit	651
	752645-020V	Dating Unit	653
	752645-020V	Dating Unit	655
752645-F001	293685-020V	Printing Wheel	657
752645-F002	434774-030V	Ink Unit	659
752645-F003	751718-010V	Dating Wheel Holder	661
752645-F004	543143-010V	Adjustment Device	663
648107-F160	752646-020V	Dating Unit	665
	752646-020V	Dating Unit	667
	752646-020V	Dating Unit	669
752646-F001	293684-020V	Printing Wheel	671
752646-F002	434074-030V	Ink Unit	673
752646-F003	751718-010V	Dating Wheel Holder	675
752646-F004	543143-010V	Adjustment Device	677
648107-F400	456923-030V	Machine Body TB/TBA/9	679
648107-F450	456935-030V	Pipe Work TBA/9	683
648107-F500	295668-030V	Start-Up Kit	685

Pos	Group No	Description

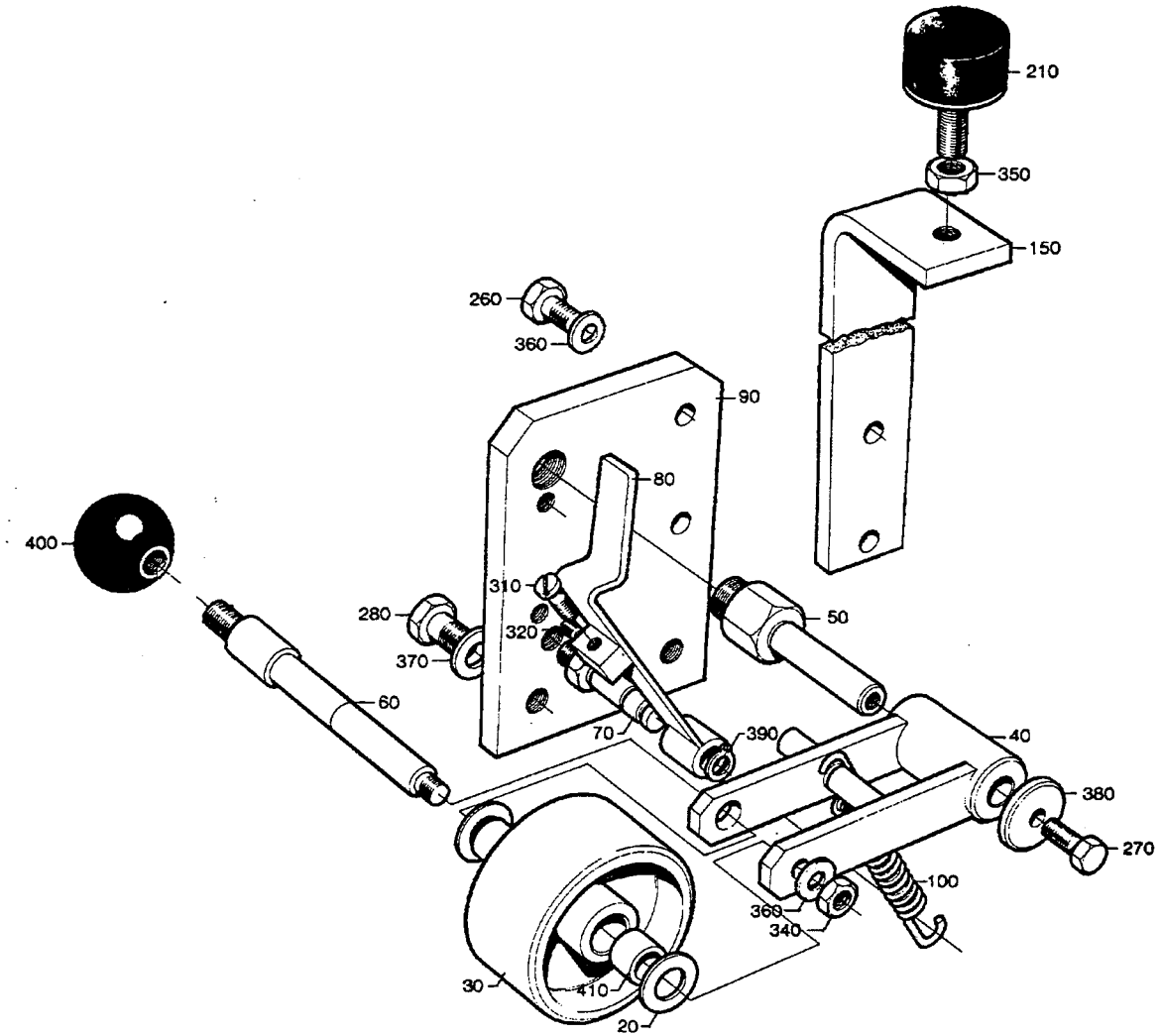

24638806.TIF
246388-6
AM 17887

From	Pos	Part No	SP	UN	Qty	Description
		C- 246388-0601				**Pressure Roller, Ass'y**
	020	2033-0009	-		2	WASHER
	030	21903	-		1	ROLL
	040	251493	-		1	FORK
	050	251494	-		1	SHAFT
	060	251495	-		1	SHAFT
	070	251496	-		1	SHAFT
	080	251498	-		1	BARRIER
	090	266752	-		1	MOUNTING SHEET
	100	279074	-		1	TENSION SPRING
	150	572346	-		1	BRACKET
	210	90347-0004	-		1	VIBRATION DAMPER
	270	312105-0368	-		1	SCREW M6S6X16RFR
	275	312105-0372	-		2	SCREW M6S6X25RFR
	280	312105-0449	-		2	SCREW M6S8X16RFR
	310	312125-0329	-		1	SLOTTED HEMCS5X16RFR
	320	312318-0285	-		1	STOP SCREW SK6SS4X6RFR
	340	312605-0316	-		3	NUT M6M6RFR
	350	312605-0318	-		1	NUT M6M8RFR
	360	315105-0153	-		5	WASHER BRB6,4X12RFR
	370	315105-0165	-		2	WASHER BRB8,4X16RFR
	380	315121-0153	-		1	WASHER TBRSB6,4X22FZB
	390	315750-0105	-		1	CIRCLIP SGA8
	400	318800-0104	-		1	HANDLE BALLA D.30-M8
	410	321120-0104	-		2	BUSHING 10/12X10

From	Pos	Part No	SP	UN	Qty	Description

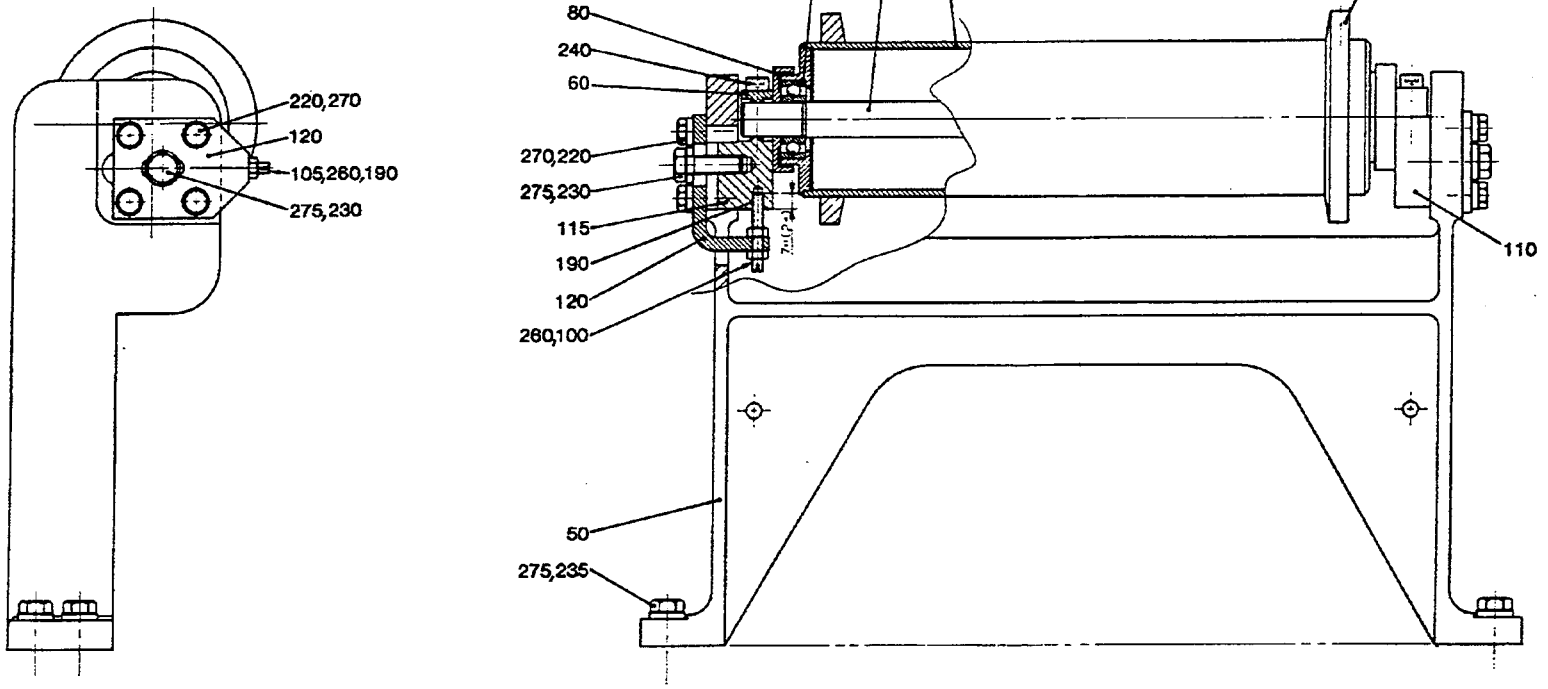

75262701.TIF
752627-1
AM 19273

Last Alteration: AM 20227 93-10-28

Corresponding group: 752627-010V
Assembly Drawing: 752627-1

Issue: **940524**

From	Pos	Part No	SP	UN	Qty	Description
284ml - 180ml						
		C- 752627-0101				**Bending Roller Rear, Ass'y**
	010	752637-0001	C		1	BENDING ROLLER
125ml						
		C- 752627-0102				**Bending Roller Rear, Ass'y**
	010	752637-0002	C		1	BENDING ROLLER
160ml 200ml Slim						
		C- 752627-0103				**Bending Roller Rear, Ass'y**
	010	752637-0003	C		1	BENDING ROLLER
250ml Slim						
		C- 752627-0104				**Bending Roller Rear, Ass'y**
	010	752637-0004	C		1	BENDING ROLLER
Common parts						
	050	G- 752197	-		1	CANTILEVER
	060	752639	-		2	CAP
	070	250588	C		2	FLANGE
	075	256985	S		1	SHAFT
	080	265568	-		2	DUST COVER
	100	751527-0001	-		1	ADJUSTING SCREW
	105	751527-0003	-		1	ADJUSTING SCREW
	110	752194	-		1	MOUNTING LUG
	115	752195	-		1	MOUNTING LUG
	120	752199	-		2	PLATE
	190	90157-0021	-		X	LOCKING FLUID
	200	90214-0098	S		2	BALL BEARING
	220	312105-0370	-		8	SCREW M6S6X20RFR
	230	312105-0453	-		6	SCREW M6S8X25RFR
	240	312115-0370	S		4	SCREW 6X20 A4 80
	250	312318-0325	S		4	STOP SCREW SK6SS5X10RFR
	260	312605-0314	-		4	NUT M6M5RFR
	270	315115-0153	-		8	WASHER TBRB6,4X12RFR
	275	315115-0165	-		6	WASHER TBRB8,4X16RFR

From	Pos	Part No	SP	UN	Qty	Description

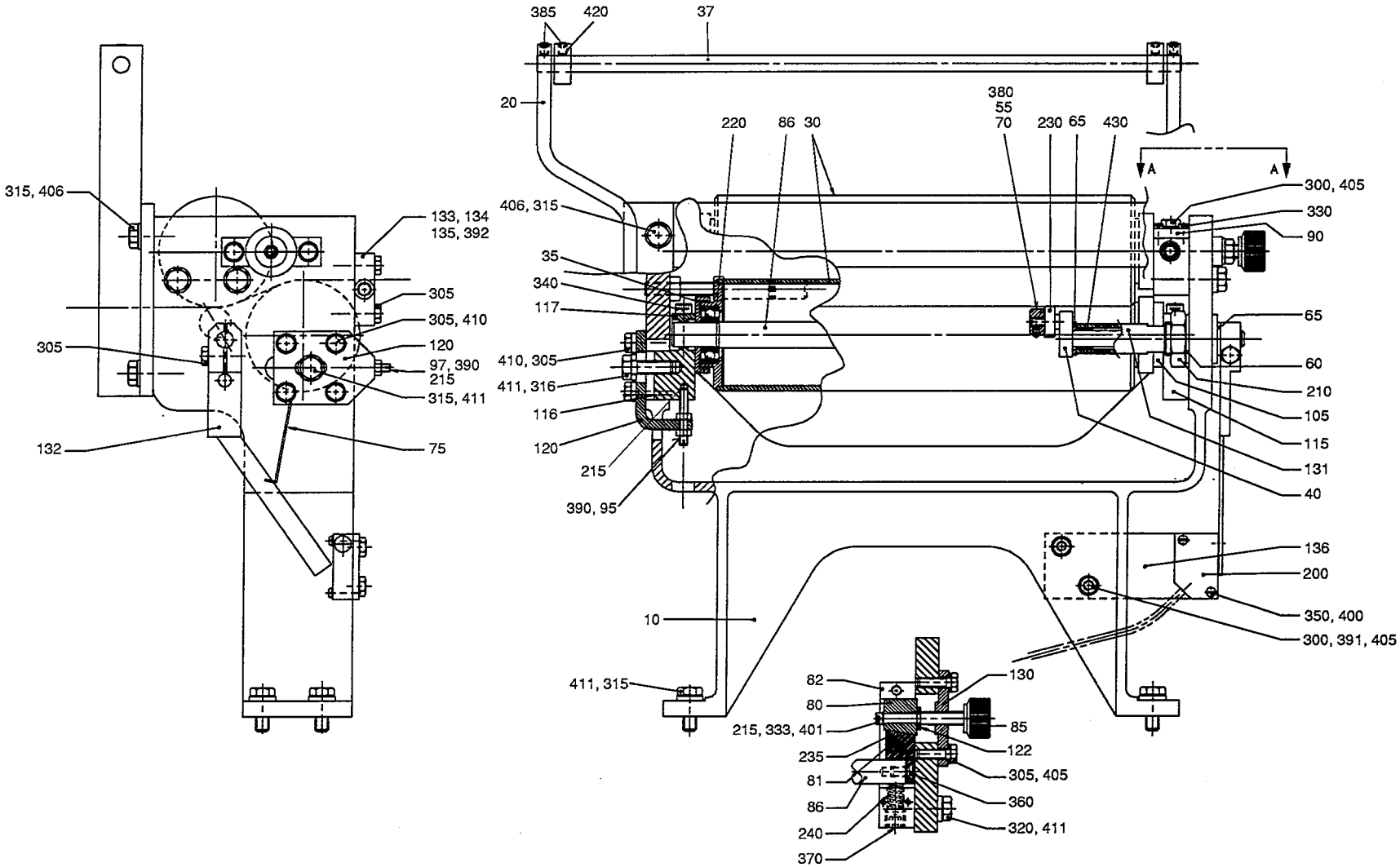

75262802.WPG
752628-2
AM 20097

Last Alteration: AM 20097 93-06-15

Corresponding group: 752628-020V
Assembly Drawing: 752628-2

Issue: **940524**

From	Pos	Part No	SP	UN	Qty	Description
		C- 752628-0201				**Bending Roller Front, Ass'y**
	010	G- 550480	-		1	CANTILEVER
	020	556720	-		1	HOLDER
	030	256984	C		2	BENDING ROLLER
	035	265568	-		4	DUST COVER
	037	401201	-		1	SHAFT
	040	469979	C		1	HOLDER
	055	24356	C		1	PIECE
	060	118344	-		1	WASHER
	065	271211	-		2	WASHER
	070	271654	-		1	RETAINING RING
	075	491149	C		1	SPRING
	080	751509	-		1	SLIDER
	081	751510	-		1	SLIDER
	082	751511	-		1	MOUNTING LUG
	085	751514	C		1	ADJUSTING SCREW
	086	751515	S		2	SHAFT
	090	751522	-		1	FASTENING PLATE
	095	751527-0001	S		2	ADJUSTING SCREW
	097	751527-0003	S		1	ADJUSTING SCREW
	105	751986	-		1	SPACER RING
	115	752194	-		1	MOUNTING LUG
	116	752195	-		2	MOUNTING LUG
	117	752196	-		3	CAP
	120	752199	-		3	PLATE
	122	752243	-		1	WASHER
	130	752630	C		1	PLATE
	131	752631	-		1	BRACKET
	132	752632	-		1	ARM
	133	752633	-		1	BRACKET
	134	752634	-		1	SLEEVE
	135	G- 752635	-		1	STUD SCREW
	136	752636	-		1	PLATE
	200	90044-0104	C		1	INDUCTIVE SWITCH
	210	90099-0057	-		1	NUT
	215	90157-0021	-		X	LOCKING FLUID
	220	90214-0098	S		4	BALL BEARING
	230	90214-0138	C		1	BALL BEARING
	235	90296-0068	-		X	GREASE
	240	90335-0067	S		1	SPRING
	300	312105-0368	-		3	SCREW M6S6X16RFR
	305	312105-0370	-		17	SCREW M6S6X20RFR
	315	312105-0452	-		8	SCREW M6S8X22RFR
	316	312105-0453	-		3	SCREW M6S8X25RFR
	320	312105-0455	-		2	SCREW M6S8X30RFR
	330	312115-0226	-		2	SCREW S 3X12 A4 80
	333	312115-0287	-		1	SCREW 4X8 A4 80
	340	312115-0370	S		6	SCREW 6X20 A4 80
	350	312125-0230	-		2	SLOTTED HEMCS3X20RFR
	360	312155-0366	-		1	SCREW MF6S6X12RFR
	370	312316-0528	-		1	STOP SCREW SK6SS12X12FZB
	380	312318-0283	-		1	STOP SCREW SK6SS4X4RFR
	385	312318-0323	-		4	STOP SCREW SK6SS5X8RFR
	390	312605-0314	S		6	NUT M6M5RFR
	391	312605-0316	-		2	NUT M6M6RFR
	392	312605-0318	-		2	NUT M6M8RFR
	400	315105-0124	-		2	WASHER BRB3,2X6RFR
	401	315105-0136	-		1	WASHER BRB4,3X8RFR
	405	315105-0153	-		5	WASHER BRB6,4X12RFR
	406	315105-0165	-		4	WASHER BRB8,4X16RFR
	410	315115-0153	-		12	WASHER TBRB6,4X12RFR
	411	315115-0165	-		9	WASHER TBRB8,4X16RFR
	420	315742-0106	-		2	RETAINING 10SMS199RFR
	430	321127-0100	C		2	BUSHING 10/13X10

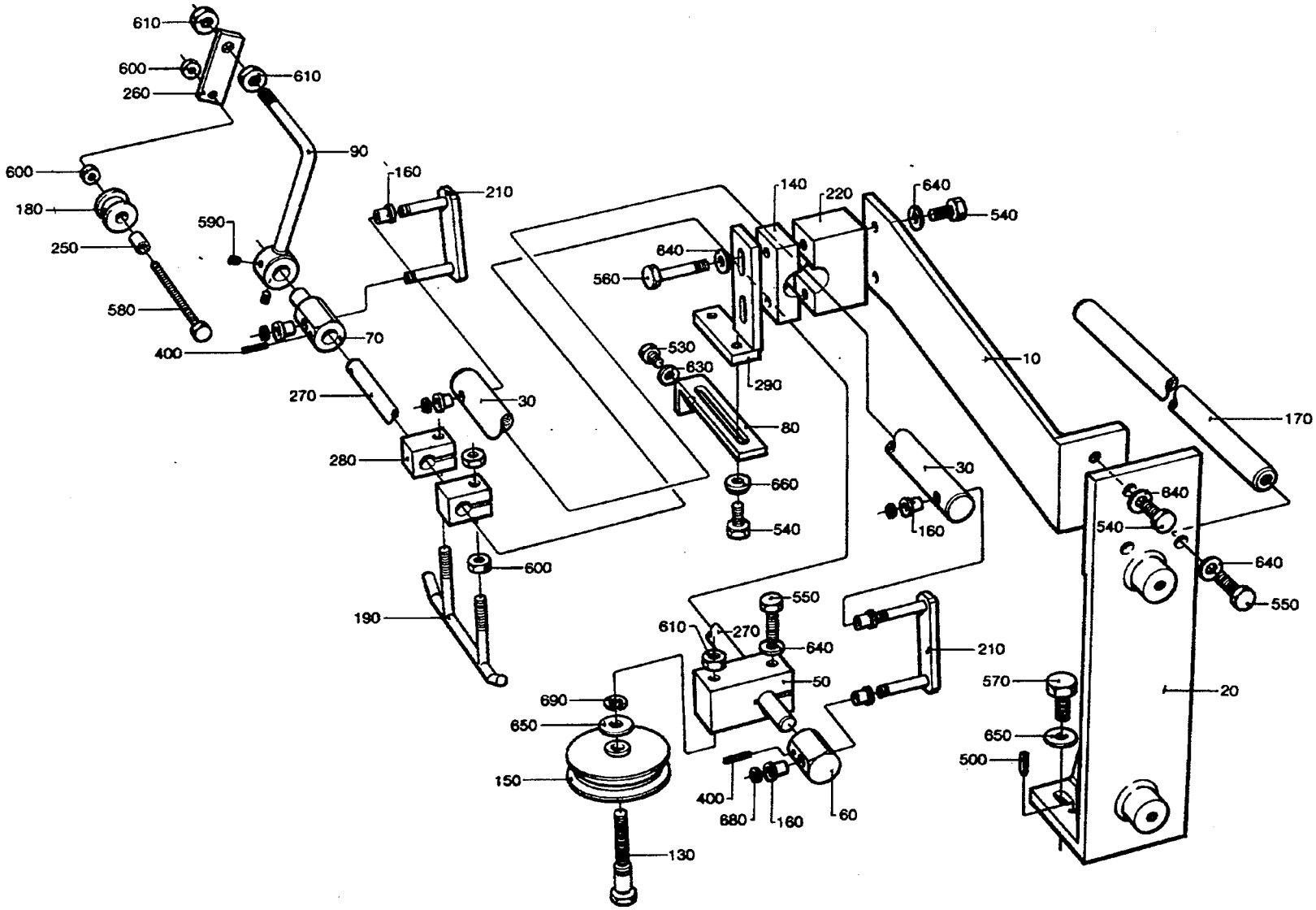

45603201.TIF
456032-1/2
AM 15660

From	Pos	Part No	SP	UN Qty	Description
284ml -180ml					
		C- 456032-0101			**Strip Guide, Ass'y**
	170	256986-0002	-	1	STRUT
	190	266049	-	1	SUPPORT
200ml SI					
		C- 456032-0102			**Strip Guide, Ass'y**
	170	256986-0003	-	1	STRUT
	190	266049	-	1	SUPPORT
125ml					
		C- 456032-0103			**Strip Guide, Ass'y**
	170	256986-0004	-	1	STRUT
	190	491654	-	1	SUPPORT
160ml 250ml SI					
		C- 456032-0104			**Strip Guide, Ass'y**
	170	574436-0001	-	1	STRUT
	190	266049	-	1	SUPPORT
Common Parts					
	010	243218	-	1	CANTILEVER
	020	272173	-	1	CANTILEVER
	030	243151	C	1	SHAFT
	050	456027	C	1	CLAMP HOLDER
	060	456028	C	1	JOINT
	070	456029	C	1	JOINT
	080	456030	-	1	FASTENING BRACKET
	090	456031	-	1	BRACKET
	130	31418	S	1	SHAFT
	140	31423	-	1	MOUNTING LUG
	150	31425	S	1	GUIDE WHEEL
	160	255064	P	8	BUSHING
	180	257923	S	1	GUIDE WHEEL
	210	272177	S	2	LINK
	220	266761	-	1	MOUNTING LUG
	250	456022	S	1	SLEEVE
	260	456023	-	1	JOINT
	270	456024	C	1	GUIDE SHAFT
	280	456025	C	2	CLAMP HOLDER
	290	456026	-	1	BRACKET
	400	90258-0031	P	2	HOLLOW PIN
	500	311305-0308	-	2	SLOTTED PIRPC5X16FZB
	530	312105-0368	-	1	SCREW M6S6X16RFR
	540	312105-0451	-	6	SCREW M6S8X20RFR
	550	312105-0453	-	3	SCREW M6S8X25RFR
	560	312105-0459	-	2	SCREW M6S8X40RFR
	570	312105-0491	-	4	SCREW M6S10X20RFR
	580	312109-0386	-	1	SCREW M6S6X80RFR
	590	312318-0362	-	2	STOP SCREW SK6SS6X8RFR
	600	312605-0316	-	7	NUT M6M6RFR
	610	312605-0318	-	3	NUT M6M8RFR
	620	315105-0146	-	2	WASHER BRB5,3X10RFR
	630	315105-0153	-	2	WASHER BRB6,4X12RFR
	640	315105-0165	-	9	WASHER BRB8,4X16RFR
	650	315105-0173	-	5	WASHER BRB10,5X22RFR
	660	315115-0165	-	2	WASHER TBRB8,4X16RFR
	680	315754-0107	P	4	LOCKING WAE 5
	690	315754-0110	P	1	LOCKING WAE 9

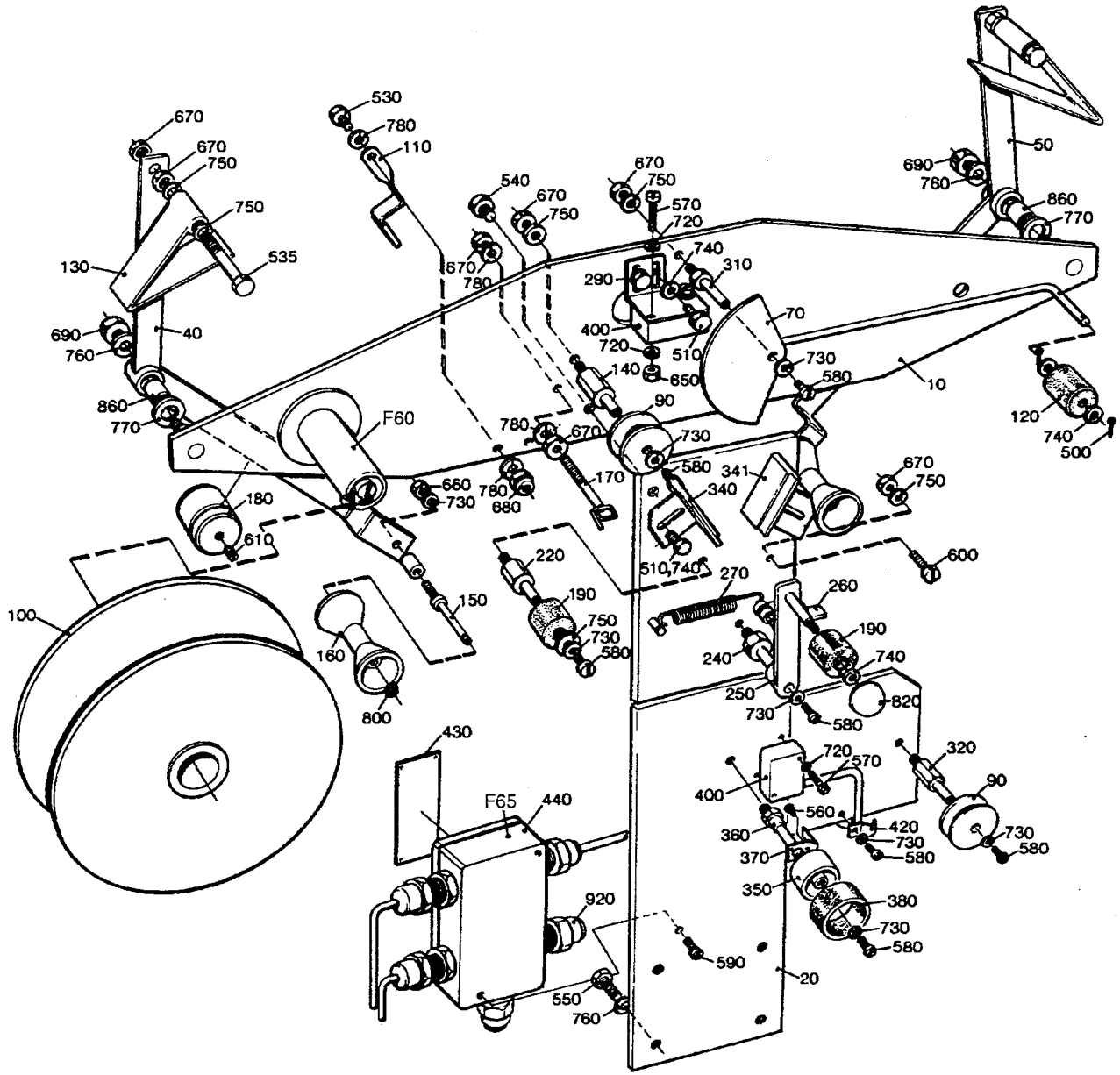

44100009.TIF
441000-9/10
AM 15202

Last Alteration: AM 15202 90-10-12

Corresponding group: 441000-050V
Assembly Drawing: 441000-9/10

Issue: 940524

From	Pos	Part No	SP	UN Qty	Description
		C- 441000-0501			**Strip Holder TB/9, Ass'y**
		C- 441000-0502			**Strip Holder TBA/9, Ass'y**
	F060	**C- 7003-0101**	**-**	**2**	**BOBBIN**
	F065	**C- 563088-010V**	**-**	**1**	**CONNECTION BOX**
	010	441005	C	1	MOUNTING SHEET
	020	555923	-	1	HOLDER
	040	491832	-	1	BOBBIN BRAKE
	050	491833	-	1	BOBBIN BRAKE
	070	441034	-	1	ARM
	090	544730	P	2	ROLL
	100	7814	-	X	BOBBIN
	110	14846	S	2	BARRIER
	120	14966	P	1	ROLL
	130	491834	-	2	BRAKE PLATE
	140	18880	S	2	AXLE PIN
	150	19453	S	2	SHAFT
	160	552528	P	2	ROLL
	180	19893	C	2	WEIGHT
	190	232979	P	2	PRESSURE ROLLER
	220	269053-0001	S	1	SHAFT
	240	269053-0003	S	1	SHAFT
	250	269054	S	1	ARM
	260	269056	-	1	CATCH
	270	269057	S	1	TENSION SPRING
	290	295760	-	1	FASTENING BRACKET
	310	441010	S	1	SHAFT
	340	469874	-	1	STEERING RAIL
	341	469875	-	1	STEERING RAIL
	350	751504	-	1	ROLL
	360	491762	-	1	SHAFT
	370	751505	-	1	TINPLATE
	400	90044-0104	P	2	INDUCTIVE SWITCH
	420	90165-0024	-	3	CLIP
	500	311411-0137	P	2	SS 2343
	510	312105-0325	-	6	SCREW M6S5X10 A2 80
	530	312105-0368	-	2	SCREW M6S6X16RFR
	535	312105-0380	-	2	SCREW M6S6X50RFR
	540	312105-0447	-	2	SCREW M6S8X12RFR
	550	312105-0453	-	4	SCREW M6S8X25RFR
	560	312125-0222	-	1	SLOTTED HEMCS3X8RFR
	570	312125-0230	-	4	SLOTTED HEMCS3X20RFR
	580	312125-0285	-	8	SLOTTED HEMCS4X6RFR
	592	312125-0297	-	1	SLOTTED HEMCS4X25RFR
	600	312125-0374	-	1	SLOTTED HEMCS6X30RFR
	610	312318-0360	-	2	STOP SCREW SK6SS6X6RFR
	650	312605-0310	-	3	NUT M6M3RFR
	660	312605-0312	-	2	NUT M6M4RFR
	670	312605-0316	-	8	NUT M6M6RFR
	680	312811-0316	-	2	LOCK NUT M6RFR
	690	312811-0318	-	2	LOCK NUT M8RFR
	720	315105-0124	-	6	WASHER BRB3,2X6RFR
	730	315105-0136	-	13	WASHER BRB4,3X8RFR
	740	315105-0146	-	9	WASHER BRB5,3X10RFR
	750	315105-0153	-	10	WASHER BRB6,4X12RFR
	760	315105-0165	-	6	WASHER BRB8,4X16RFR
	770	315105-0178	-	2	WASHER BRB13X24RFR
	780	315402-0156	-	4	WASHER FBB6,5RFR
	800	315750-0101	P	2	CIRCLIP SGA4
	820	318800-0102	-	1	HANDLE BALLA D.20-M5
	860	321120-0111	S	2	BUSHING 12/14X15

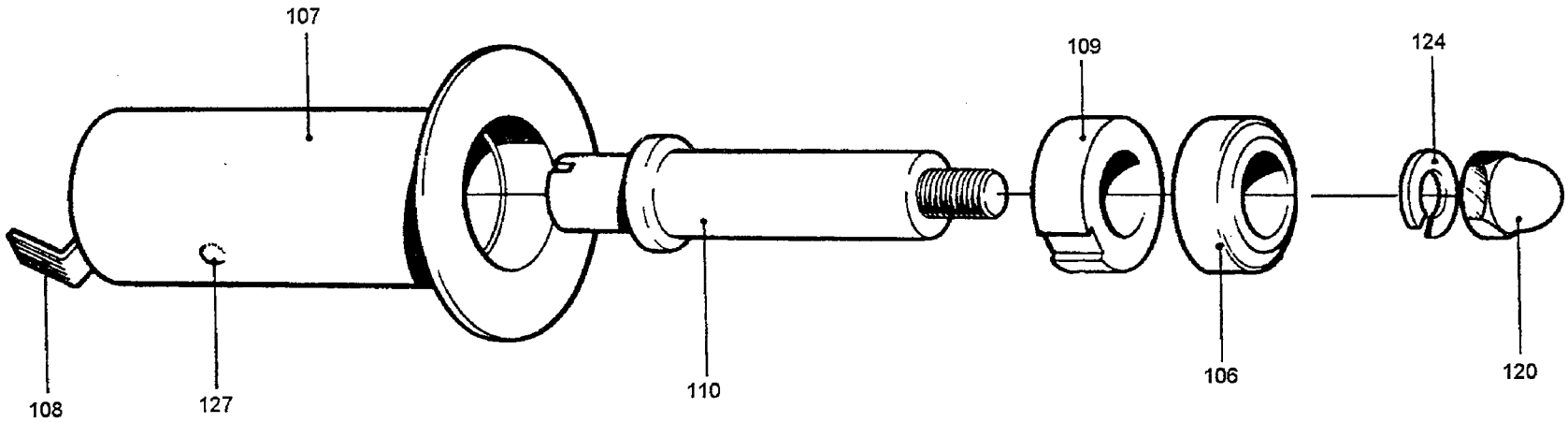

00700301.TIF
7003-1
AM

From	Pos	Part No	SP	UN	Qty	Description
		C- 7003-0101				**Bobbin, Ass'y**
	106	5486	S		1	BEARING
	107	6157	-		1	BOBBIN
	108	6158	S		1	SPRING
	109	6159	S		1	BEARING
	110	6160	-		1	SHAFT
	120	312701-0318	-		1	CAP NUT MHM8 FZB
	124	315402-0165	-		1	WASHER FBB8,2RFR
	127	311506-0278	S		1	RIVET KN2,6X6KPR

From	Pos	Part No	SP	UN	Qty	Description

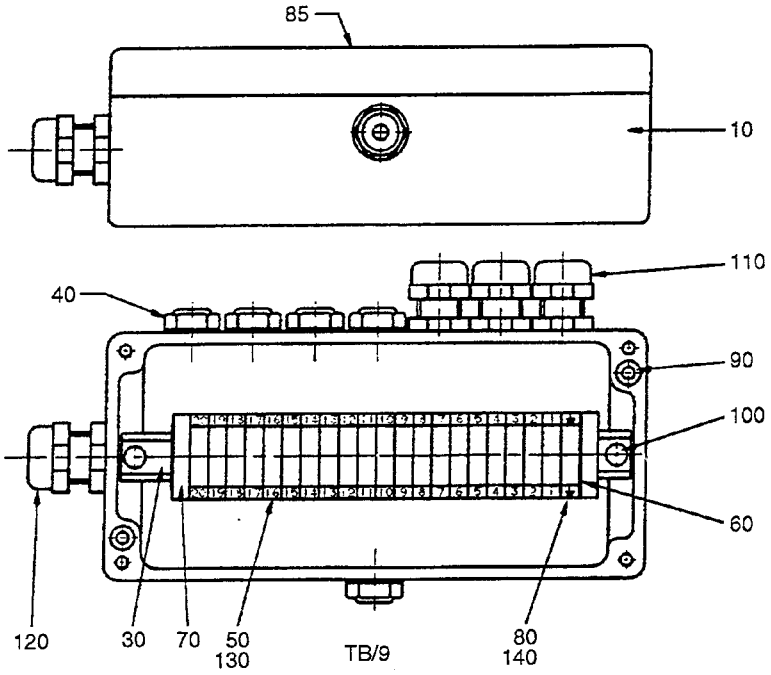

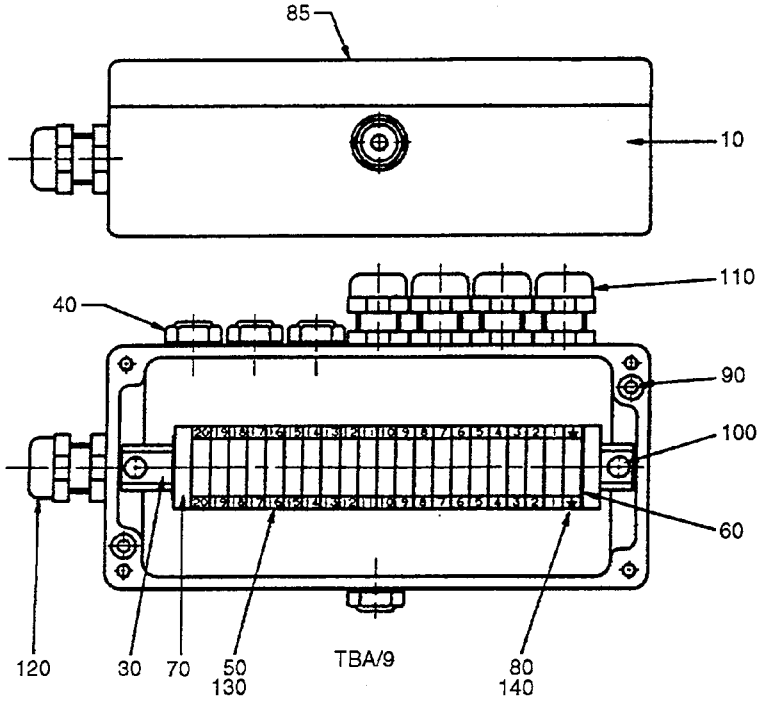

56308801.TIF
563088-1
AM 15202

Last Alteration: AM 15202 90-10-12

Corresponding group: 563088-010V
Assembly Drawing: 563088-1/2

Issue: **940524**

From	Pos	Part No	SP	UN	Qty	Description
TB/9						
		C- 563088-0101				**Connection Box, Ass'y**
	040	90002-0013	-		5	BLANK-OFF PLUG 15,2
	110	352103-0100	-		3	CABLE GLANR.STR 9
TBA/9						
		C- 563088-0102				**Connection Box, Ass'y**
	040	90002-0013	-		4	BLANK-OFF PLUG 15,2
	110	352103-0100	-		4	CABLE GLANR.STR 9
Common parts						
	010	563089	-		1	APPLIANCE BOX
	030	552015	-		1	MOUNTING RAIL
	050	90077-0079	-		20	FEED THROUGH TERMINAL
	060	90077-0307	-		1	END PLATE
	070	90077-0308	-		1	END BRACKET
	080	90135-0026	-		1	EARTHING CLAMP
	085	90194-0016	-		1	SIGN"FLASH SIGN"
	090	312125-0295	-		2	SLOTTED HEMCS4X20RFR
	100	312132-0284	-		2	SLOTTED HEMSCS4X5MSGFN
	120	352103-0111	-		1	CABLE GLAND ST 16
	130	359011-0807	-		2	SET OF SIG5-FW 1-50
	140	359011-0202	-		2	SIGN BOARD(GROUND)

From	Pos	Part No	SP	UN	Qty	Description

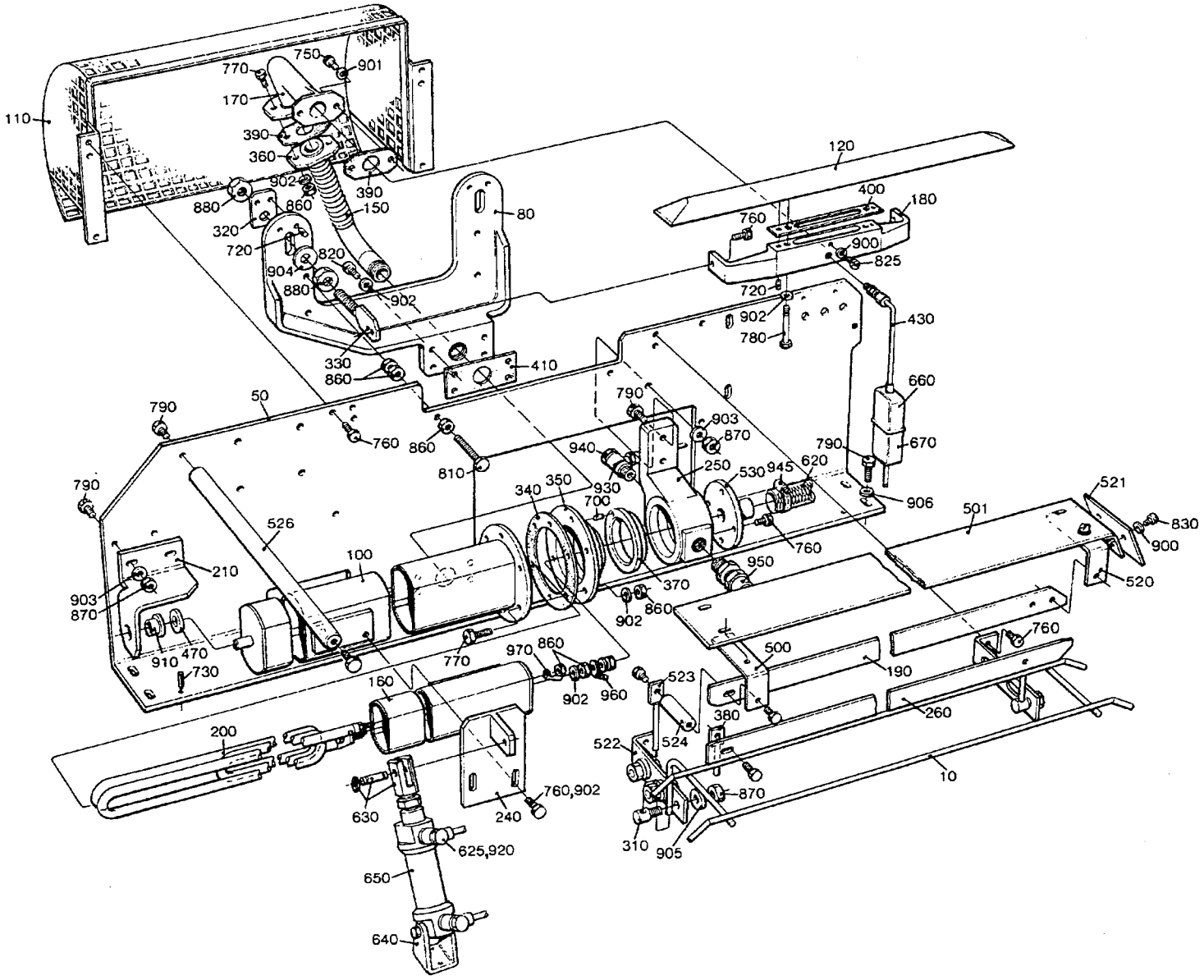

29589104.TIF
295891-4
AM 9785

From	Pos	Part No	SP	UN	Qty	Description
284ml-180ml						
		C- 295891-0301				**Strip Applicator, Ass'y**
	010	36316	S		1	PAPER SUPPORT
	526	256986-0005	-		1	STRUT
160ml 200ml SI						
		C- 295891-0302				**Strip Applicator, Ass'y**
	010	456918	S		1	PAPER SUPPORT
	526	256986-0006	-		1	STRUT
125ml						
		C- 295891-0305				**Strip Applicator, Ass'y**
	010	456918	S		1	PAPER SUPPORT
	526	256986-0007	-		1	STRUT
250ml SI						
		C- 295891-0306				**Strip Applicator, Ass'y**
	010	456918	S		1	PAPER SUPPORT
	526	574436-0002	-		1	STRUT
Common Parts						
	050	751093	-		1	MOUNTING SHEET
	080	32668	-		1	ARM
	100	36749	-		1	MANTLE
	110	267306	-		1	TOUCH GUARD
	120	283361	S		1	AIR NOZZLE
	150	32451	C		1	AIR DUCT
	160	32453	-		1	MANTLE
	170	32474	-		1	ATTACHMENT
	180	245189-0001	-		1	ATTACHMENT
	190	246342	-		1	PAPER SUPPORT
	200	251279	PU		1	COIL HEATER
	210	251490	C		1	FASTENING BRACKET
	240	751087	C		1	BRACKET
	250	283172	-		1	BEARING HOUSING
	260	441348	-		1	PAPER SUPPORT
	310	22559	P		5	GRUB SCREW
	320	32213	-		2	WASHER
	330	32215	C		2	HOLDER
	340	531733	PU		1	GASKET
	350	32217	-		1	BOTTOM SECTION
	360	32219	-		1	WASHER
	370	32223	S		1	BEARING
	380	32400	-		2	HOLDER
	390	531734	PU		2	GASKET
	400	531735	PU		1	GASKET
	410	531736	PU		1	GASKET
	430	37768	P		1	THERMOCOUPLE
	470	230107	P		1	WASHER

From	Pos	Part No	SP	UN	Qty	Description
	500	246343	-		1	FASTENING BRACKET
	501	246344	-		1	HEAT GUARD
	520	251501	-		1	FASTENING BRACKET
	521	251502	-		1	HEAT GUARD
	522	251503	-		2	HOLDER
	523	251504	-		1	HOLDER
	524	251505	-		1	SPACER
	530	279672	-		1	ATTACHMENT
	620	90166-0087	-	MM	300	HOSE
	625	90235-0274	P		2	VALVE
	630	90239-0516	S		1	PISTON ROD HEAD
	640	90239-0488	S		1	BRACKET
	650	90239-0858	S		1	CYLINDER
	660	90326-0012	P		1	PROTECTIVE COVER
	670	90326-0020	P		1	SOCKET
	700	311103-0232	-		1	CYLINDRICACP M6 3X8 RFR
	720	311103-0267	-		10	CYLINDRICACP M6 4X10 RFR
	730	311305-0308	-		2	SLOTTED PIRPC5X16FZB
	750	312105-0325	-		2	SCREW M6S5X10 A2 80
	760	312105-0366	-		16	SCREW M6S6X12RFR
	770	312105-0368	-		12	SCREW M6S6X16RFR
	780	312105-0378	-		2	SCREW M6S6X40RFR
	790	312105-0451	-		12	SCREW M6S8X20RFR
	810	312109-0381	-		2	SCREW M6S6X55HA480
	820	312115-0368	-		4	SCREW 6X16 A4 80
	825	312125-0285	-		1	SLOTTED HEMCS4X6RFR
	830	312125-0287	-		6	SLOTTED HEMCS4X8RFR
	860	312605-0316	-		14	NUT M6M6RFR
	870	312605-0318	-		9	NUT M6M8RFR
	880	312605-0320	-		4	NUT M6M10RFR
	900	315105-0136	-		7	WASHER BRB4,3X8RFR
	901	315105-0146	-		2	WASHER BRB5,3X10RFR
	902	315105-0153	-		21	WASHER BRB6,4X12RFR
	903	315105-0165	-		4	WASHER BRB8,4X16RFR
	904	315105-0173	-		2	WASHER BRB10,5X22RFR
	905	315115-0165	-		5	WASHER TBRB8,4X16RFR
	906	315125-0165	-		6	WASHER SB 8,4X26X5 RFR
	910	321101-0173	P		1	FLANGE BUS 12F7X12
	920	342797-0121	-		2	BANJO CONNSINGEL 6-1/8
	930	342797-0122	-		1	BANJO CONNSINGEL 6-1/4
	940	342980-0304	-		1	BANJO CONN SINGEL 1/4
	945	342991-0103	-		2	HOSE CLIP 15-24MMRFR
	950	352103-0106	-		1	CABLE GLANR.ST 11
	960	353101-0134	-		1	CABLE SHOE
	970	353104-0130	-		2	CABLE SHOEYAV 025 M 4*

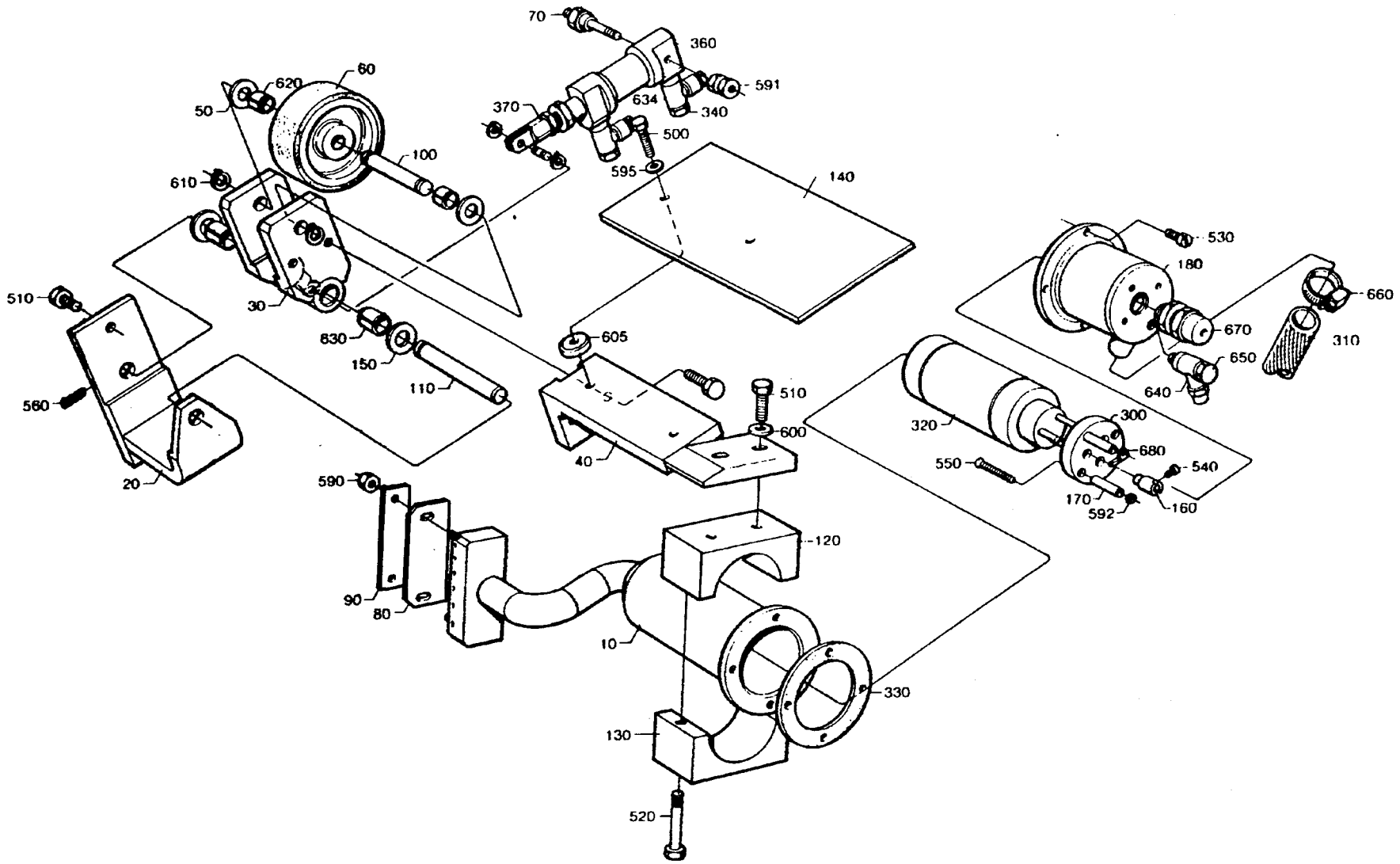

27234304.TIF
272343-4
AM 13966

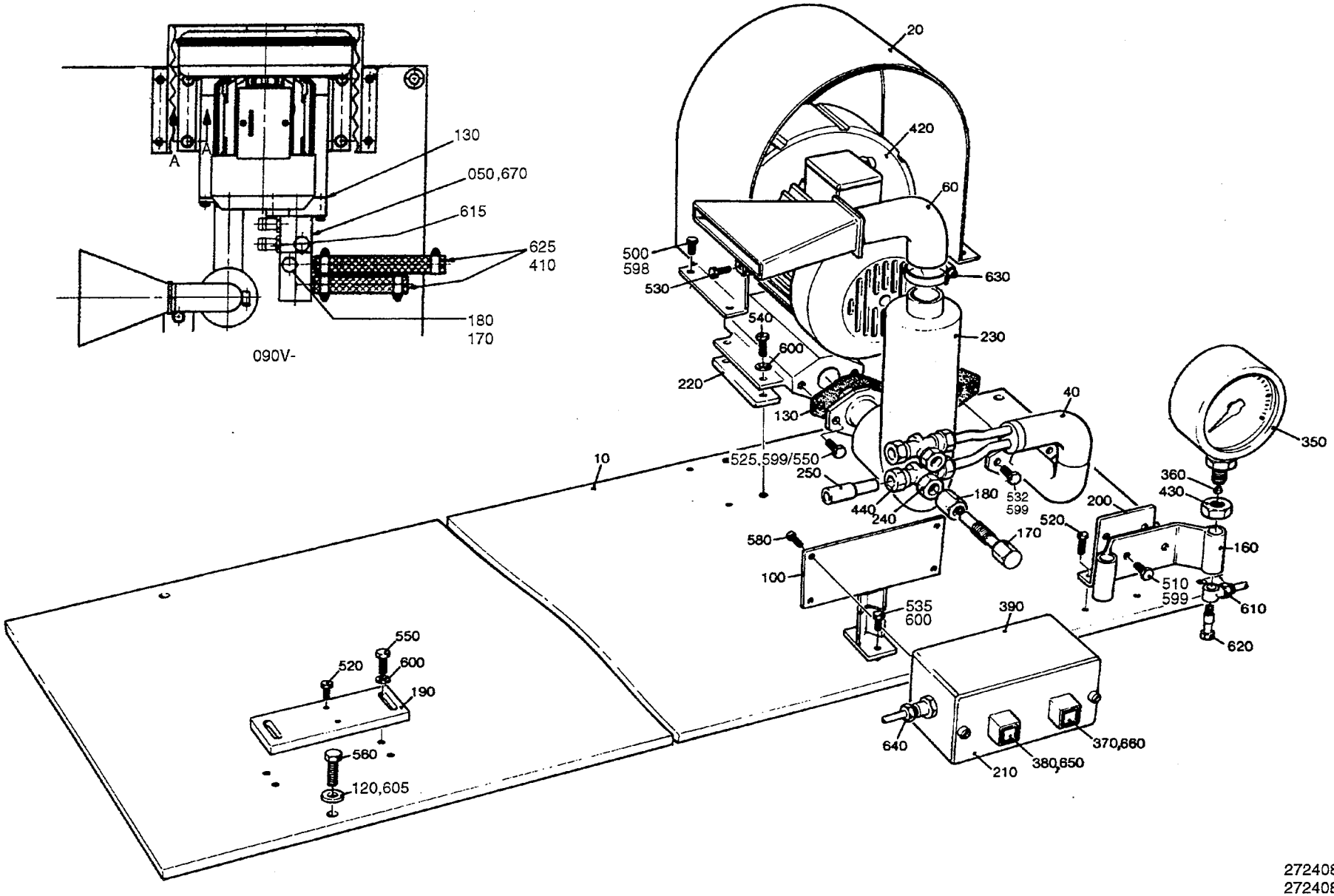

27240808.TIF
272408-8/9
AM 15202

Last Alteration: AM 20097 93-06-15

Corresponding group: 272408-050V
Assembly Drawing: 272408-8/9

Issue: **940524**

From	Pos	Part No	SP	UN	Qty	Description
TB/9						
		C- 272408-0501				**Mounting Plate, Ass'y**
	010	560134	-		1	PLATE
	050	556309	-		1	BRANCH PIPE
	170	293364	-		4	THROTTLE SCREW
	180	293363	-		4	BARRIER NUT
	410	90166-0087	-	MM	370	HOSE
	525	312105-0370	-		2	SCREW M6S6X20RFR
	532	312105-0378	-		2	SCREW M6S6X40RFR
	560	312105-0453	-		6	SCREW M6S8X25RFR
	598	315105-0146	-		4	WASHER BRB5,3X10RFR
	599	315105-0153	-		10	WASHER BRB6,4X12RFR
	600	315105-0165	-		8	WASHER BRB8,4X16RFR
	605	315125-0165	-		6	WASHER SB 8,4X26X5 RFR
	615	342901-0106	-		4	HOSE NIPPL
	625	342991-0103	-		4	HOSE CLIP 15-24MMRFR
TBA/9						
		C- 272408-0502				**Mounting Plate, Ass'y**
	010	751092	-		1	PLATE
	040	751465	-		1	ATTACHMENT
	120	28036	-		4	WASHER
	170	209145	-		2	THROTTLE SCREW
	180	209146	-		2	BARRIER NUT
	240	279589	-		2	NUT
	250	279590	-		2	REDUCTION
	440	90030-0058	-		2	CONNECTION
	525	312105-0370	-		4	SCREW M6S6X20RFR
	560	312105-0453	-		4	SCREW M6S8X25RFR
	600	315105-0165	-		6	WASHER BRB8,4X16RFR
Common parts						
	020	272184	-		1	COVER
	060	272622	-		1	DRINKING STRAW
	100	456973	-		1	BRACKET
	130	531732	P		2	GASKET
	160	33577	-		1	CANTILEVER
	190	751083	-		1	FASTENING PLATE
	200	272188	-		1	BRACKET
	210	272189	-		1	LID
	220	272190	-		2	LACE
	230	272632	S		1	SILENCER
	350	90043-0034	S		2	PRESSURE GAUGE
	360	90043-0302	-		2	SCREW
	370	90064-0085	-		1	PUSH BUTTON RED
	380	90064-0084	-		1	PUSH BUTTON YELLOW

From	Pos	Part No	SP	UN	Qty	Description
	390	90066-0020	-		1	PUSCH BUTTON BOX
	420	90264-0042	C		1	FAN
	430	90330-0038	-		2	NUT
	500	312105-0325	-		4	SCREW M6S5X10 A2 80
	510	312105-0364	-		2	SCREW M6S6X10RFR
	520	312105-0366	-		4	SCREW M6S6X12RFR
	530	312105-0372	-		1	SCREW M6S6X25RFR
	535	312105-0448	-		2	SCREW M6S8X14RFR
	540	312105-0449	-		4	SCREW M6S8X16RFR
	550	312105-0451	-		2	SCREW M6S8X20RFR
	580	312125-0325	-		4	SLOTTED HEMCS5X10RFR
	610	342797-0122	S		2	BANJO CONNSINGEL 6-1/4
	620	342980-0304	S		2	BANJO CONN SINGEL 1/4
	630	342991-0108	-		1	HOSE CLIP 38-50MMRFR
	640	352103-0110	-		1	CABLE GLAND STR 16
	650	359301-0100	-		1	SIGN
	660	359301-0110	-		1	SIGN"SHORT STOP"
	670	342713-0210	-		2	BLIND PLUG

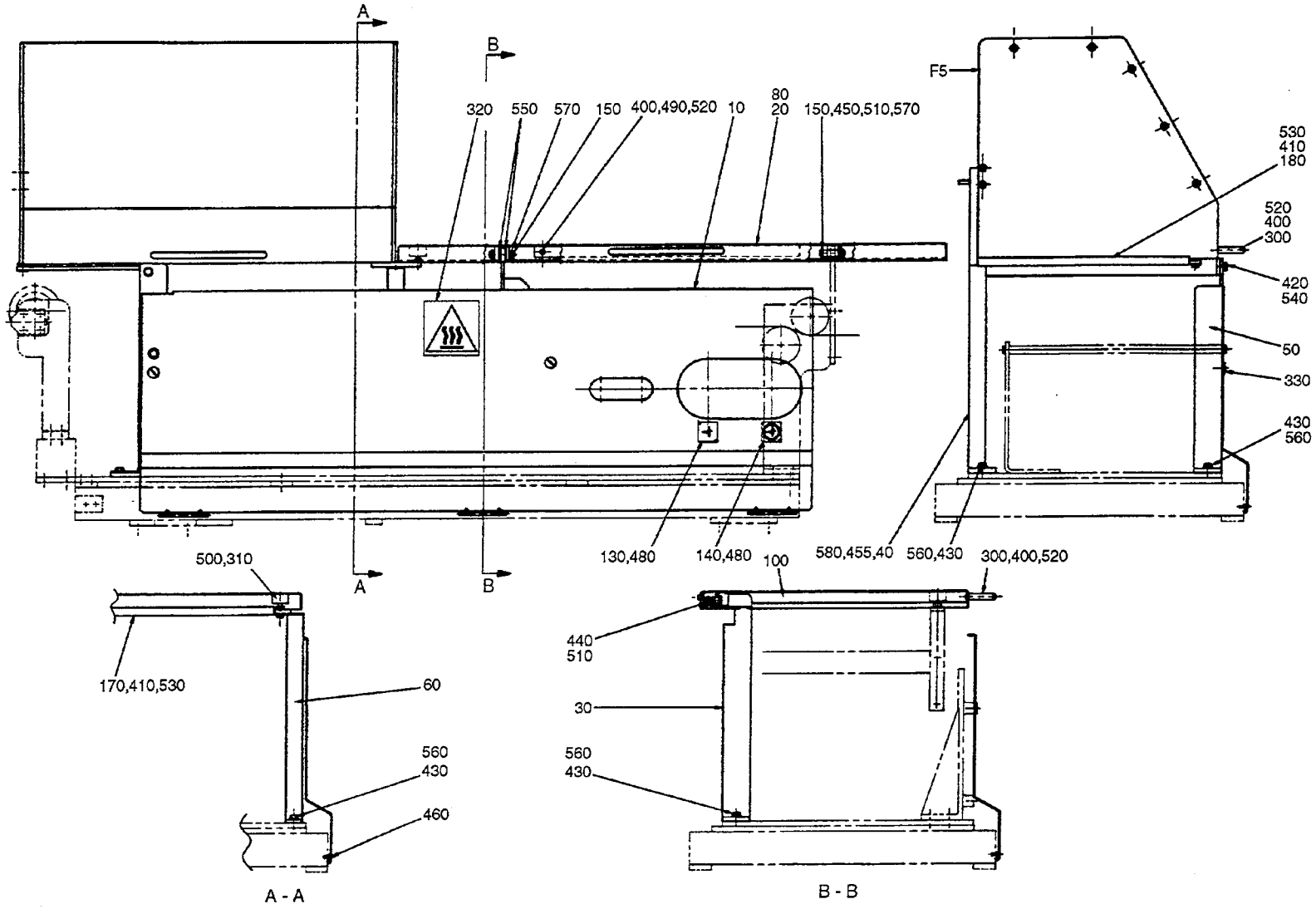

97816201.TIF
978162-1
AM 15587

Last Alteration: AM 15587 90-11-27

Corresponding group: 978162-010V
Assembly Drawing: 978162-1

Issue: **940524**

From	Pos	Part No	SP	UN	Qty	Description
		C- 978162-0101				**Paper Guard, Ass'y**
	F005	**C- 978367-0101**	-		1	**HOOD**
	010	752697	-		1	PROTECTION PLATE
	020	978163	-		1	OPENING
	030	751525	-		1	BRACKET
	040	978164	-		1	HOLDER
	050	978165	-		1	LEG
	060	978166	-		1	SUPPORT
	080	561402	-		1	SIGN
	100	978167	-		1	STRUT
	130	464176	-		1	SIGN
	140	464177	-		1	SIGN
	150	751519	-		2	SHAFT
	170	978168	-		1	CHUTE
	180	978169	-		1	CHUTE
	300	90017-0012	-		1	HANDLE
	310	90347-0004	-		1	VIBRATION DAMPER
	320	90194-0075	-		1	SIGN
	330	90287-0062	-		2	SCREW
	400	312105-0328	-		4	SCREW M6S5X14 A2 80
	410	312105-0362	-		4	SCREW M6S6X8RFR
	420	312105-0449	-		1	SCREW M6S8X16RFR
	430	312105-0451	-		8	SCREW M6S8X20RFR
	440	312115-0459	-		1	SCREW 8X40 A4 80
	450	312115-0460	-		1	SCREW 8X45 A4 80
	455	312125-0285	-		2	SLOTTED HEMCS4X6RFR
	460	312125-0323	-		6	SLOTTED HEMCS5X8RFR
	480	312502-0120	-		4	DRIVE SCREKDS0X5FNB
	490	312605-0314	-		2	NUT M6M5RFR
	500	312605-0318	-		1	NUT M6M8RFR
	510	312812-0318	-		2	LOCK NUT A2-M8RFR
	520	315105-0146	-		6	WASHER BRB5,3X10RFR
	530	315105-0153	-		4	WASHER BRB6,4X12RFR
	540	315105-0165	-		1	WASHER BRB8,4X16RFR
	550	315105-0178	-		2	WASHER BRB13X24RFR
	560	315115-0165	-		8	WASHER TBRB8,4X16RFR
	570	315755-0110	-		4	LOCKING WAE 9RFR
	580	352113-0203	-		2	ARMATURE M3-S8

From	Pos	Part No	SP	UN	Qty	Description

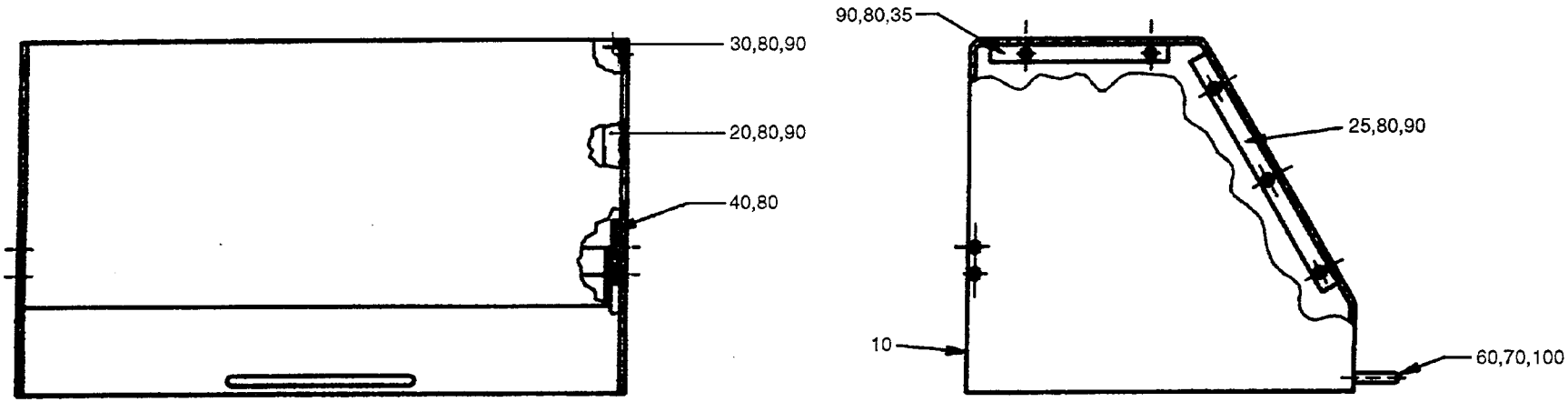

97836701.TIF
978367-1
AM 16176

Last Alteration: AM 16176 91-03-25

Corresponding group: 978367-010V
Assembly Drawing: 978367-1

Issue: **940524**

From	Pos	Part No	SP	UN	Qty	Description
		C- 978367-0101				**Hood, Ass'y**
	010	978044	-		1	HOOD
	020	978342	-		1	ANGLE BAR
	025	566377	-		1	ANGLE BAR
	030	978343	-		1	ANGLE BAR
	035	566378	-		1	ANGLE BAR
	040	978037	-		2	BRACKET
	060	90017-0012	-		1	HANDLE
	070	312105-0328	-		2	SCREW M6S5X14 A2 80
	080	312155-0368	-		24	SCREW MF6S6X16RFR
	090	312812-0316	-		20	LOCK NUT A2-M6RFR
	100	315105-0146	-		2	WASHER BRB5,3X10RFR

From	Pos	Part No	SP	UN	Qty	Description

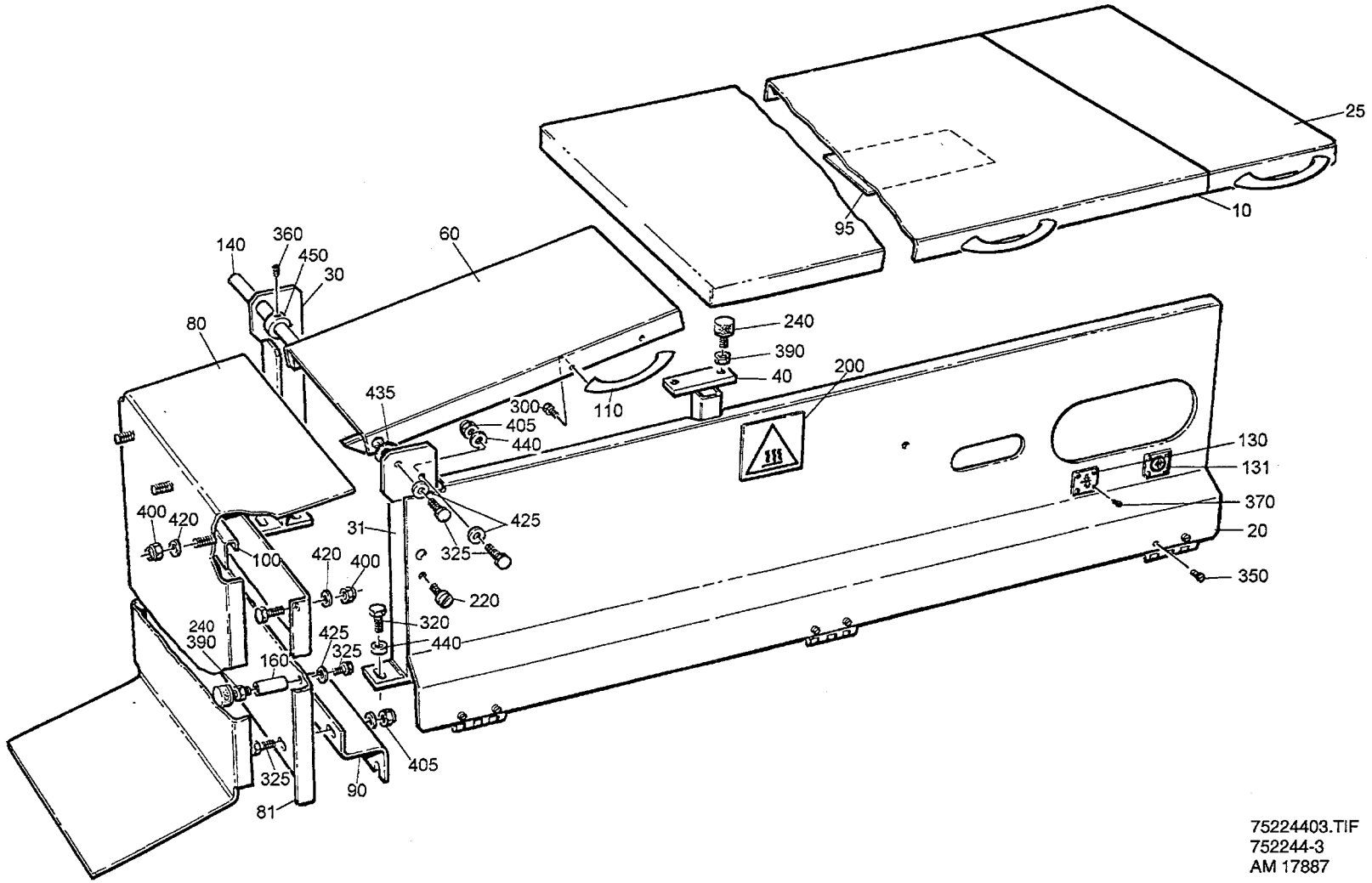

75224403.TIF
752244-3
AM 17887

Last Alteration: AM 17887 93-01-27

Corresponding group: 752244-020V
Assembly Drawing: 752244-3

Issue: **940524**

From	Pos	Part No	SP	UN	Qty	Description
		C- 752244-0201				**Paper Guard, Ass'y**
	010	556721-0001	-		1	OPENING
	020	572322	-		1	PROTECTION PLATE
	025	556722-0001	-		1	OPENING
	030	905167	-		1	LEG
	031	905166	-		1	LEG
	040	491734	-		1	SUPPORT
	060	905081	-		1	COVER
	080	572256	-		1	PROTECTION
	081	752917	-		1	PLATE
	090	491552	-		1	MOUNTING SHEET
	095	561402	-		1	SIGN
	100	752550	-		1	BRACKET
	110	7309	-		3	HANDLE
	130	464176	-		1	SIGN
	131	464177	-		1	SIGN
	140	469847	-		1	SHAFT
	160	752549	-		2	SPACER
	200	90194-0075	-		1	SIGN
	220	90287-0062	-		2	SCREW
	240	90347-0004	-		4	VIBRATION DAMPER
	300	312105-0366	-		6	SCREW M6S6X12RFR
	305	312105-0372	-		2	SCREW M6S6X25RFR
	320	312105-0451	-		8	SCREW M6S8X20RFR
	325	312105-0453	-		7	SCREW M6S8X25RFR
	350	312125-0323	-		6	SLOTTED HEMCS5X8RFR
	360	312318-0362	-		1	STOP SCREW SK6SS6X8RFR
	370	312502-0120	-		4	DRIVE SCREKDS0X5FNB
	390	312605-0318	-		4	NUT M6M8RFR
	400	312812-0316	-		5	LOCK NUT A2-M6RFR
	405	312812-0318	-		3	LOCK NUT A2-M8RFR
	420	315105-0153	-		7	WASHER BRB6,4X12RFR
	425	315105-0165	-		9	WASHER BRB8,4X16RFR
	435	315105-0186	-		1	WASHER BRB17X30RFR
	440	315115-0165	-		9	WASHER TBRB8,4X16RFR
	450	315742-0112	-		1	RETAINING 16SMS199RFR

From	Pos	Part No	SP	UN	Qty	Description

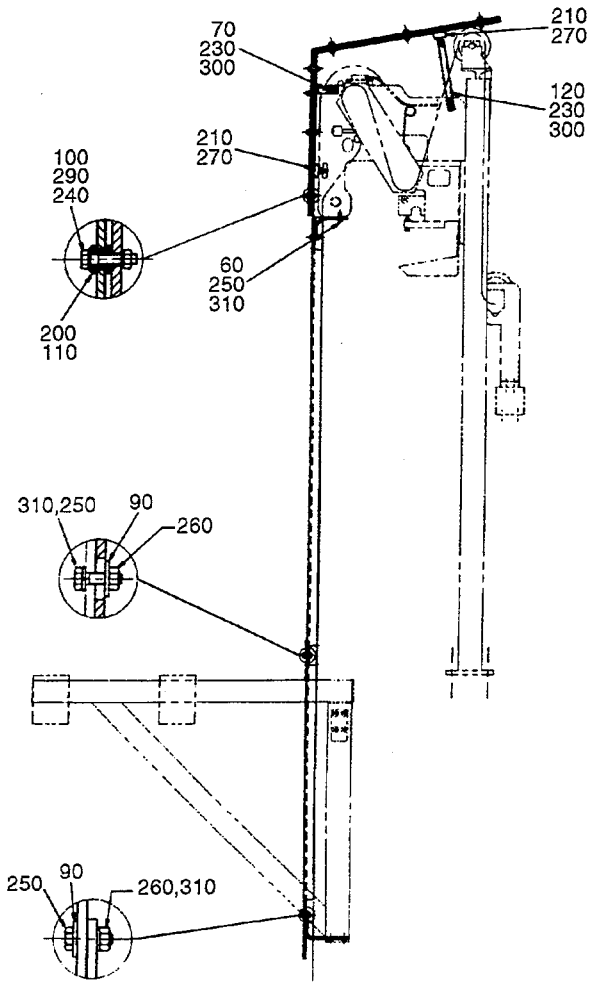

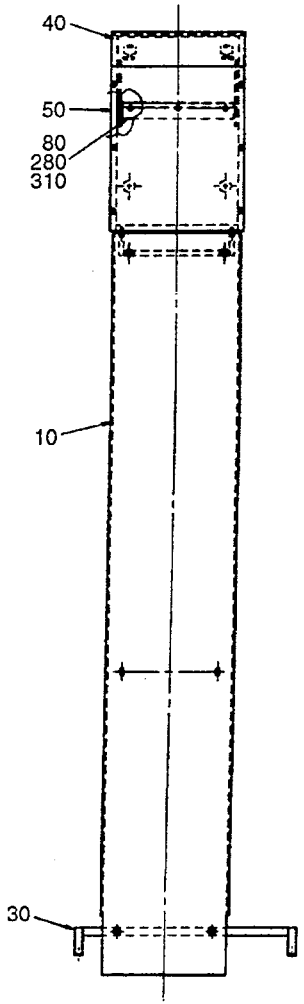

97817901.TIF
978179-1
AM 15202

Last Alteration: AM 15202 90-10-12

Corresponding group: 978179-010V
Assembly Drawing: 978179-1

Issue: **940524**

From	Pos	Part No	SP	UN Qty	Description
		C- 978179-0101			**Paper Guard (rear), Ass'y**
	010	554412	-	1	PROTECTION
	030	554413	-	1	HOLDER
	040	978345	-	1	COVER
	050	978346	-	1	FRAME
	060	554414	-	1	HOLDER
	070	978181	-	1	VERTICAL HOLDER
	080	978182	-	1	HOOK
	090	6278	-	6	WASHER
	100	28509	-	12	WASHER
	110	740654	-	12	SPACER
	120	978183	-	2	ANGLE BRACKET
	200	90015-0032	-	12	LEAD-IN BUSHING
	210	90347-0004	-	4	VIBRATION DAMPER
	230	312105-0328	-	8	SCREW M6S5X14 A2 80
	240	312105-0333	-	12	SCREW M6S5X25 A2 80
	250	312105-0370	-	8	SCREW M6S6X20RFR
	260	312605-0316	-	6	NUT M6M6RFR
	270	312621-0318	-	6	NUT ML6M8FZB
	280	312705-0316	-	3	CAP NUT MHM 6 A2
	290	312812-0314	-	12	LOCK NUT A2-M5RFR
	300	315105-0146	-	8	WASHER BRB5,3X10RFR
	310	315105-0153	-	11	WASHER BRB6,4X12RFR

From	Pos	Part No	SP	UN Qty	Description

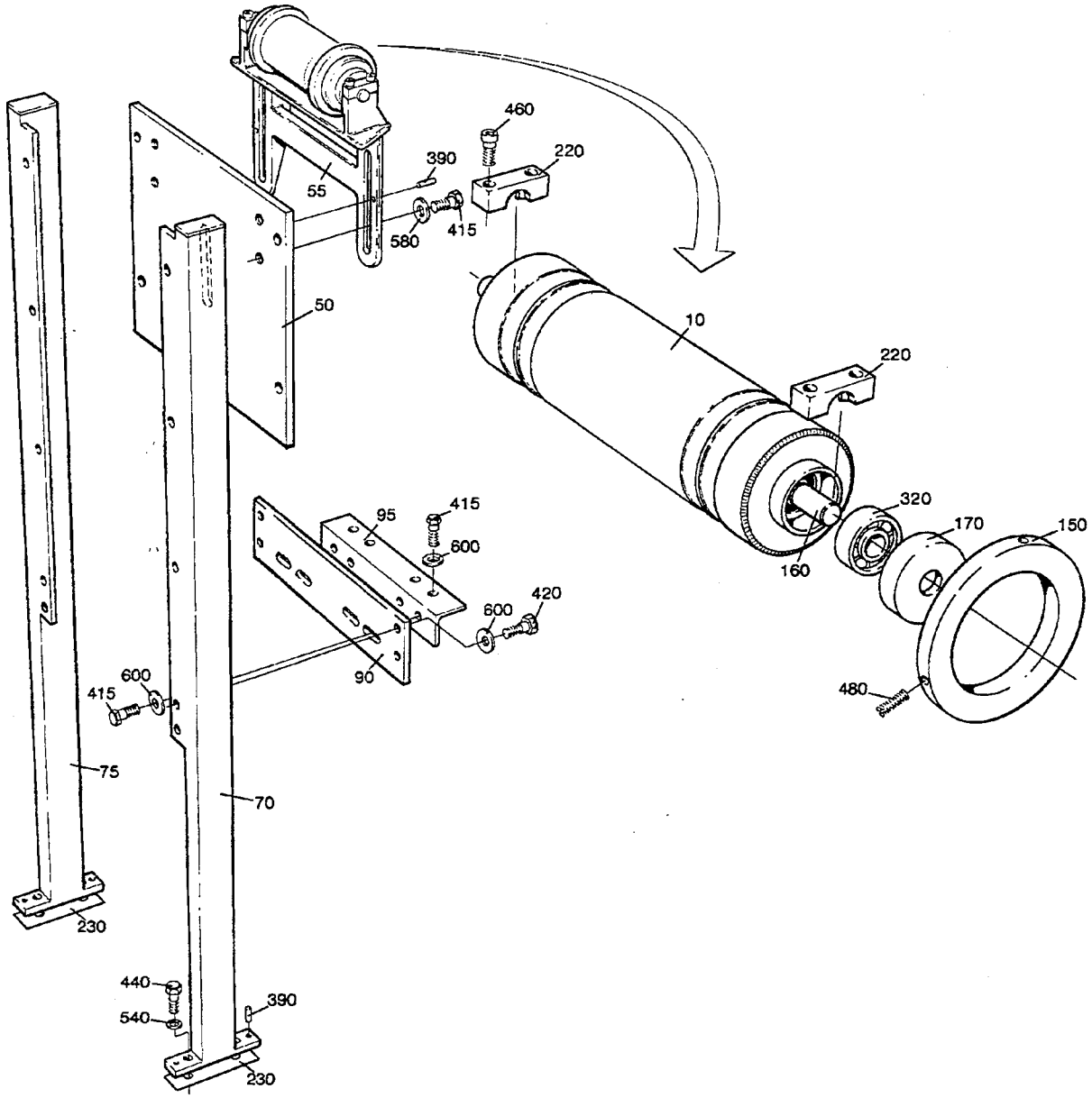

75224701.TIF
752247-1
AM 16176

From	Pos	Part No	SP	UN	Qty	Description
284ml - 180ml						
		C- 752247-0101				**Frame Dating Unit, Ass'y**
	010	752637-0001	C		1	BENDING ROLLER
125ml						
		C- 752247-0102				**Frame Dating Unit, Ass'y**
	010	752637-0002	C		1	BENDING ROLLER
200ml Slim						
		C- 752247-0103				**Frame Dating Unit, Ass'y**
	010	752637-0003	C		1	BENDING ROLLER
Common parts						
	050	752862	-		1	SHEET
	055	G- 752867	-		1	BENDING ROLLER BRACKET
	070	752870	-		1	LEG
	075	752871	-		1	LEG
	090	560186	-		1	SHEET
	095	560187	-		1	BAR
	150	250588	C		2	FLANGE
	160	256985	S		1	SHAFT
	170	265568	-		2	DUST COVER
	220	752196	-		2	CAP
	230	752987	-		2	LACE
	320	90214-0098	S		2	BBEARING
	390	311103-0310	-		6	CYLINDRICACP M6 5X20 RFR
	415	312105-0453	-		12	SCREW M6S8X25RFR
	420	312105-0455	-		8	SCREW M6S8X30RFR
	440	312105-0493	-		4	SCREW M6S10X25RFR
	460	312115-0370	S		4	SCREW 6X20 A4 80
	480	312318-0325	S		4	STOP SCREW SK6SS5X10RFR
	540	315105-0173	-		4	WASHER BRB10,5X22RFR
	600	315125-0165	-		20	WASHER SB 8,4X26X5 RFR

From	Pos	Part No	SP	UN	Qty	Description

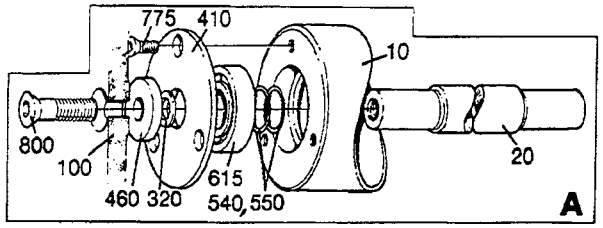

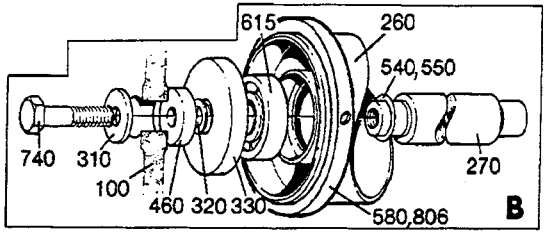

Strip Side

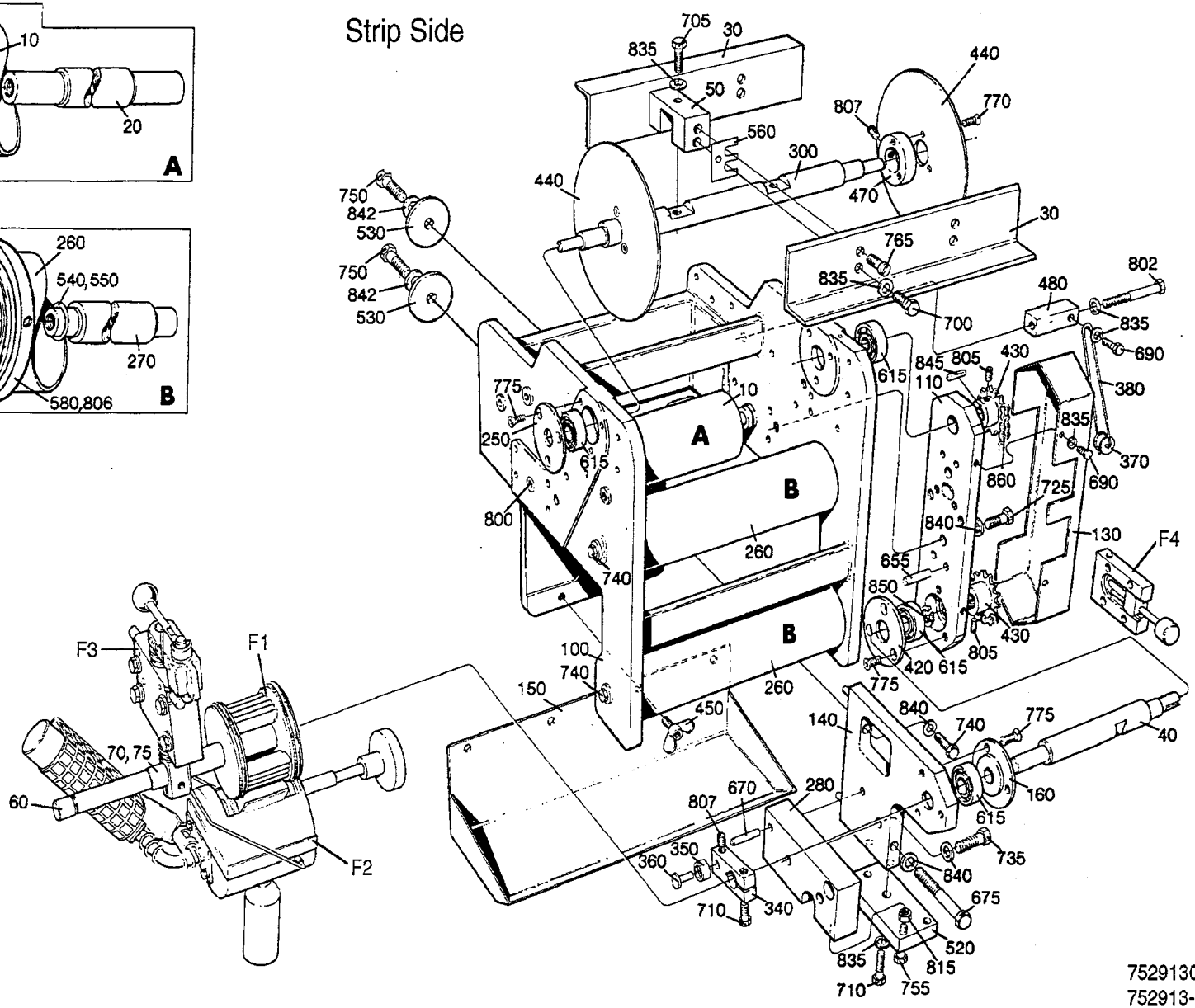

75291301.TIF
752913-1/2
AM 15660

Last Alteration: AM 15660 91-02-01

Corresponding group: 752913-010V
Assembly Drawing: 752913-1/2

Issue: **940524**

From	Pos	Part No	SP	UN	Qty	Description
250ml						
		C- 752913-0101				**Dating Unit, Ass'y**
	010	752542-0001	C		1	BENDING ROLLER
	020	752543-0001	C		1	SHAFT
	030	456767	C		2	CREASE BAR
	040	752536-0001	C		1	SHAFT
	050	441556-0002	C		2	SPACER
	060	256400	C		1	SHAFT
	070	90166-0059	P	MM	24	HOSE
	075	90166-0059	P	MM	24	HOSE
236ml						
		C- 752913-0102				**Dating Unit, Ass'y**
	010	752542-0001	C		1	BENDING ROLLER
	020	752543-0001	C		1	SHAFT
	030	456767	C		2	CREASE BAR
	040	752536-0001	C		1	SHAFT
	050	441556-0003	C		2	SPACER
	060	256400	C		1	SHAFT
	070	90166-0059	P	MM	24	HOSE
	075	90166-0059	P	MM	24	HOSE
200ml						
		C- 752913-0103				**Dating Unit, Ass'y**
	010	752542-0001	C		1	BENDING ROLLER
	020	752543-0001	C		1	SHAFT
	030	456767	C		2	CREASE BAR
	040	752536-0001	C		1	SHAFT
	050	441556-0004	C		2	SPACER
	060	256400	C		1	SHAFT
	070	90166-0059	P	MM	24	HOSE
	075	90166-0059	P	MM	24	HOSE
180ml						
		C- 752913-0104				**Dating Unit, Ass'y**
	010	752542-0001	C		1	BENDING ROLLER
	020	752543-0001	C		1	SHAFT
	030	456767	C		2	CREASE BAR
	040	752536-0001	C		1	SHAFT
	050	441556-0006	C		2	SPACER
	060	256400	C		1	SHAFT
	070	90166-0059	P	MM	24	HOSE
	075	90166-0059	P	MM	24	HOSE

From	Pos	Part No	SP	UN	Qty	Description
125ml						
		C- 752913-0105				**Dating Unit, Ass'y**
	010	752542-0002	C		1	BENDING ROLLER
	020	752543-0002	C		1	SHAFT
	030	456327	C		2	CREASE BAR
	040	752536-0002	C		1	SHAFT
	050	441556-0007	C		2	SPACER
	060	456334	C		1	SHAFT
	070	90166-0059	P	MM	37	HOSE
	075	90166-0059	P	MM	37	HOSE
200ml Slim						
		C- 752913-0106				**Dating Unit, Ass'y**
	010	752542-0002	C		1	BENDING ROLLER
	020	752543-0002	C		1	SHAFT
	030	441554	C		2	CREASE BAR
	040	752536-0002	C		1	SHAFT
	050	441556-0009	C		2	SPACER
	060	456334	C		1	SHAFT
	070	90166-0059	P	MM	37	HOSE
	075	90166-0059	P	MM	37	HOSE
Common parts						
	F001	**C- 293685-0201**	**-**		**2**	**PRINTING WHEEL**
	F002	**C- 434774-0302**	**-**		**1**	**INK UNIT**
	F003	**C- 751718-0101**	**-**		**1**	**DATING WHEEL HOLDER**
	F004	**C- 543143-0101**	**-**		**1**	**ADJUSTMENTMENT DEVICE**
	100	G- 752200	-		1	CANTILEVER
	110	752526	-		1	PLATE
	130	752528	-		1	COVER
	140	752527	-		1	CANTILEVER
	150	491723	-		1	SPLASH PLATE
	160	752529	C		1	BEARING COVER
	250	752240	-		1	LID
	260	752537	C		2	BENDING ROLLER
	270	752538	C		2	SHAFT
	280	752642	-		1	BRACKET
	300	752535	C		1	SHAFT
	310	28036	-		4	WASHER
	320	2033-0011	C		20	WASHER
	330	265568	S		4	DUST COVER
	340	32925	C		1	CARRIER
	350	32926	C		1	ROLL
	360	32927	C		1	SHAFT
	370	33182	S		1	ROLL

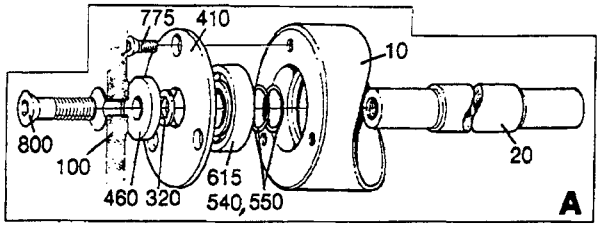

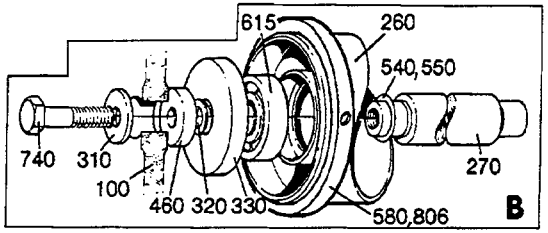

Strip Side

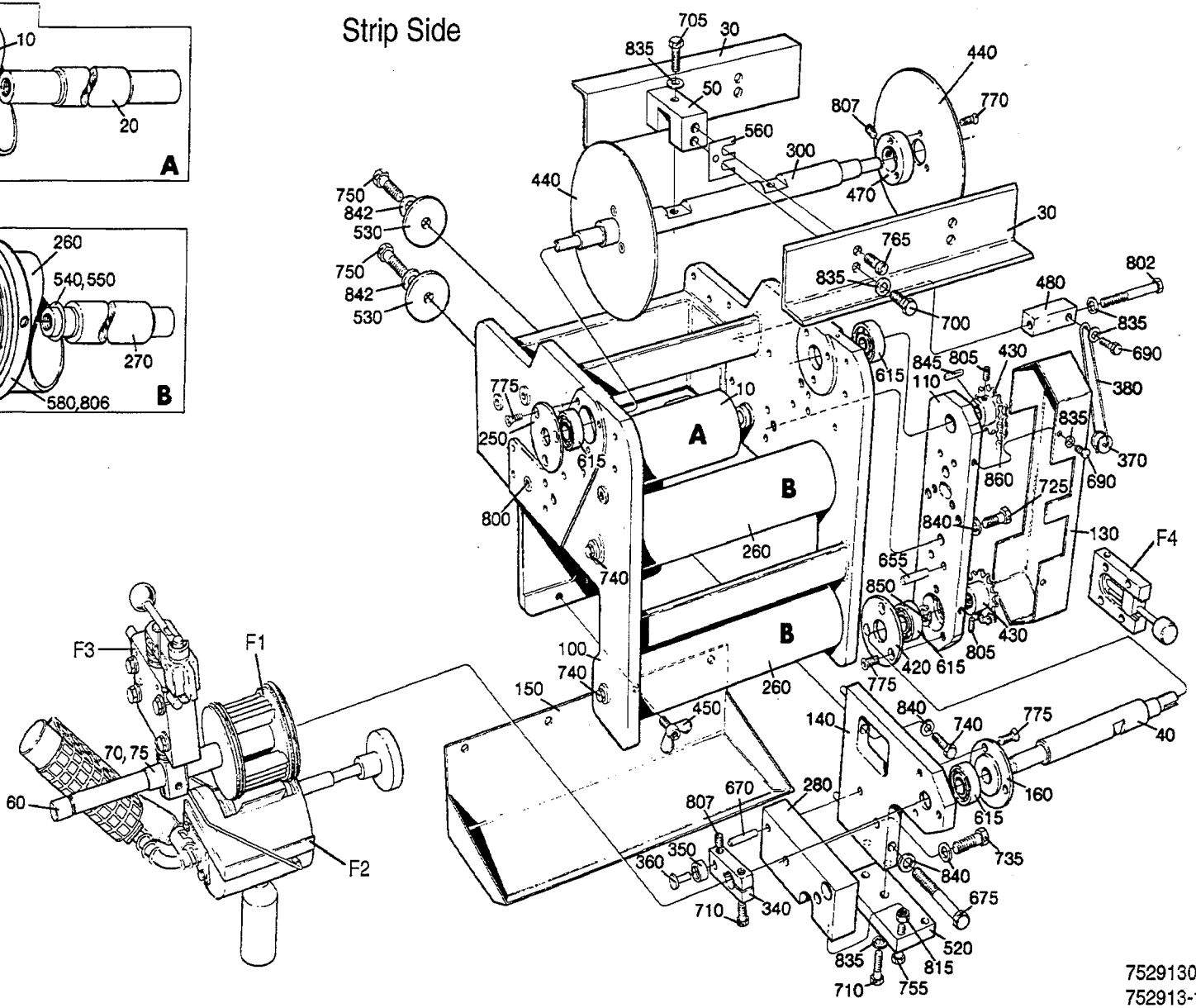

75291301.TIF
752913-1/2
AM 15660

Last Alteration: AM 15660 91-02-01

Corresponding group: 752913-010V
Assembly Drawing: 752913-1/2

Issue: 940524

From	Pos	Part No	SP	UN Qty	Description
	380	752237	S	1	SPRING
	410	256248-0001	C	2	LID
	420	256398	C	1	LID
	430	752530	S	2	SPROCKET
	440	256406	-	2	GABLE PLATE
	450	752644	-	2	SCREW
	460	256409	-	6	WASHER
	470	257141	-	2	RETAINING RING
	480	752531	-	1	BRACKET
	520	752541	-	1	CANTILEVER
	530	253107	C	2	WASHER
	540	752544-0001	C	6	SHIM
	550	752544-0002	C	8	SHIM
	560	456817-0001	S	8	SHIM
	580	456545	-	2	FLANGE
	615	90214-0098	P	10	BALL BEARING
	655	311103-0312	-	2	CYLINDRICACP M6 5X25 RFR
	670	311103-0357	-	1	CYLINDRICACP M6 6X30 RFR
	675	312101-0466	-	1	SCREW M6S8X75FZB
	680	312105-0327	-	2	SCREW M6S5X12 A2 80
	690	312105-0364	-	3	SCREW M6S6X10RFR
	700	312105-0366	-	4	SCREW M6S6X12RFR
	705	312105-0370	-	2	SCREW M6S6X20RFR
	710	312105-0372	-	3	SCREW M6S6X25RFR
	725	312105-0453	-	2	SCREW M6S8X25RFR
	735	312105-0457	-	1	SCREW M6S8X35RFR
	740	312105-0459	-	5	SCREW M6S8X40RFR
	750	312105-0493	-	2	SCREW M6S10X25RFR
	755	312109-0376	-	1	SCREW 6X35 H RFR
	765	312125-0366	-	4	SLOTTED HEMCS6X12RFR
	770	312155-0291	-	6	SCREW MF6S4X12RFR
	775	312155-0327	-	15	SCREW MF6S5X12RFR
	800	312155-0457	-	2	SCREW MF6S8X35RFR
	802	312105-0382	-	1	SCREW M6S6X60RFR
	805	312318-0287	-	2	STOP SCREW SK6SS4X8RFR
	806	312318-0325	-	4	STOP SCREW SK6SS5X10RFR
	807	312318-0362	-	3	STOP SCREW SK6SS6X8RFR
	815	312605-0316	-	1	NUT M6M6RFR
	835	315105-0153	-	12	WASHER BRB6,4X12RFR
	840	315105-0165	-	5	WASHER BRB8,4X16RFR
	842	315105-0173	-	2	WASHER BRB10,5X22RFR
	845	315701-0169	S	2	FLAT WEDGE4X4X18
	850	315751-0112	P	1	CIRCLIP SGA15 RFR
	860	318207-0168	S	1	ROLLER CHA6MM

From	Pos	Part No	SP	UN Qty	Description

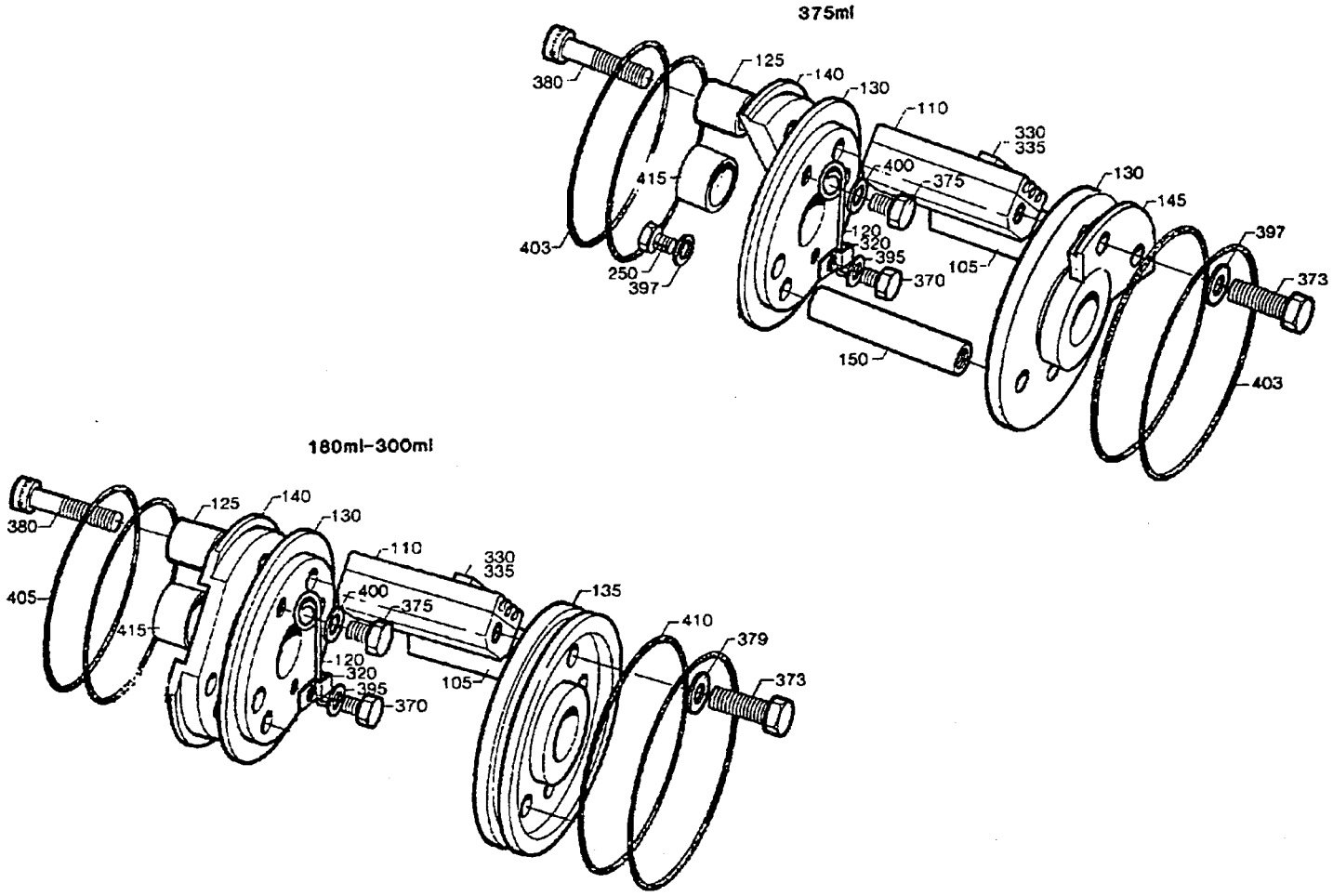

29368502.TIF
293685-2
AM

From	Pos	Part No	SP	UN Qty	Description
300ml-125ml					
		C- 293685-0201			**Printing Wheel, Ass'y**
	105	293395-0002	P	2	TYPE HOLDER
	110	293395-0001	P	2	TYPE HOLDER
	130	292412	C	1	END SECTION
	135	292413	C	1	END SECTION
	140	292414	C	1	CARRIER
	373	312101-0331	-	7	SCREW M6S5X20FZB
	397	315101-0146	-	7	WASHER BRB5,3X10FZB
	405	315202-0304	P	2	O-RING 64,5X3
	410	315202-0305	P	2	O-RING 69,5X3
375ml					
		C- 293685-0202			**Printing Wheel, Ass'y**
	105	293395-0002	P	1	TYPE HOLDER
	110	293395-0001	P	1	TYPE HOLDER
	130	479236	C	2	END SECTION
	140	479239	C	1	CARRIER
	145	479240	C	1	CARRIER
	150	293671	C	1	SPACER
	250	312101-0329	-	2	SCREW M6S5X16FZB
	373	312101-0331	-	3	SCREW M6S5X20FZB
	397	315101-0146	-	5	WASHER BRB5,3X10FZB
	403	315202-0224	P	4	O-RING 42,2X3
Common parts					
	120	32691	P	1	LOCKING SPRING
	125	33011	S	1	SLEEVE
	320	90165-0010	-	1	CLIP
	330	90413-0033	P	1	CODE INSERT SET
	330	90413-0043	P	1	CODE INSERT SET
	335	90413-0044	P	1	CODE INSERT SET
	335	90413-0047	P	1	CODE INSERT SET
	370	312101-0287	-	1	SCREW M6S4X8FZB
	375	312101-0364	-	1	SCREW M6S6X10FZB
	380	312111-0335	-	1	SCREW MC6S5X30FZB
	395	315101-0136	-	1	WASHER BRB4,3X8FZB
	400	315111-0153	-	1	WASHER TBRB6,4X12FZB
	415	321120-0122	S	2	BUSHING 15/17X15

From	Pos	Part No	SP	UN Qty	Description

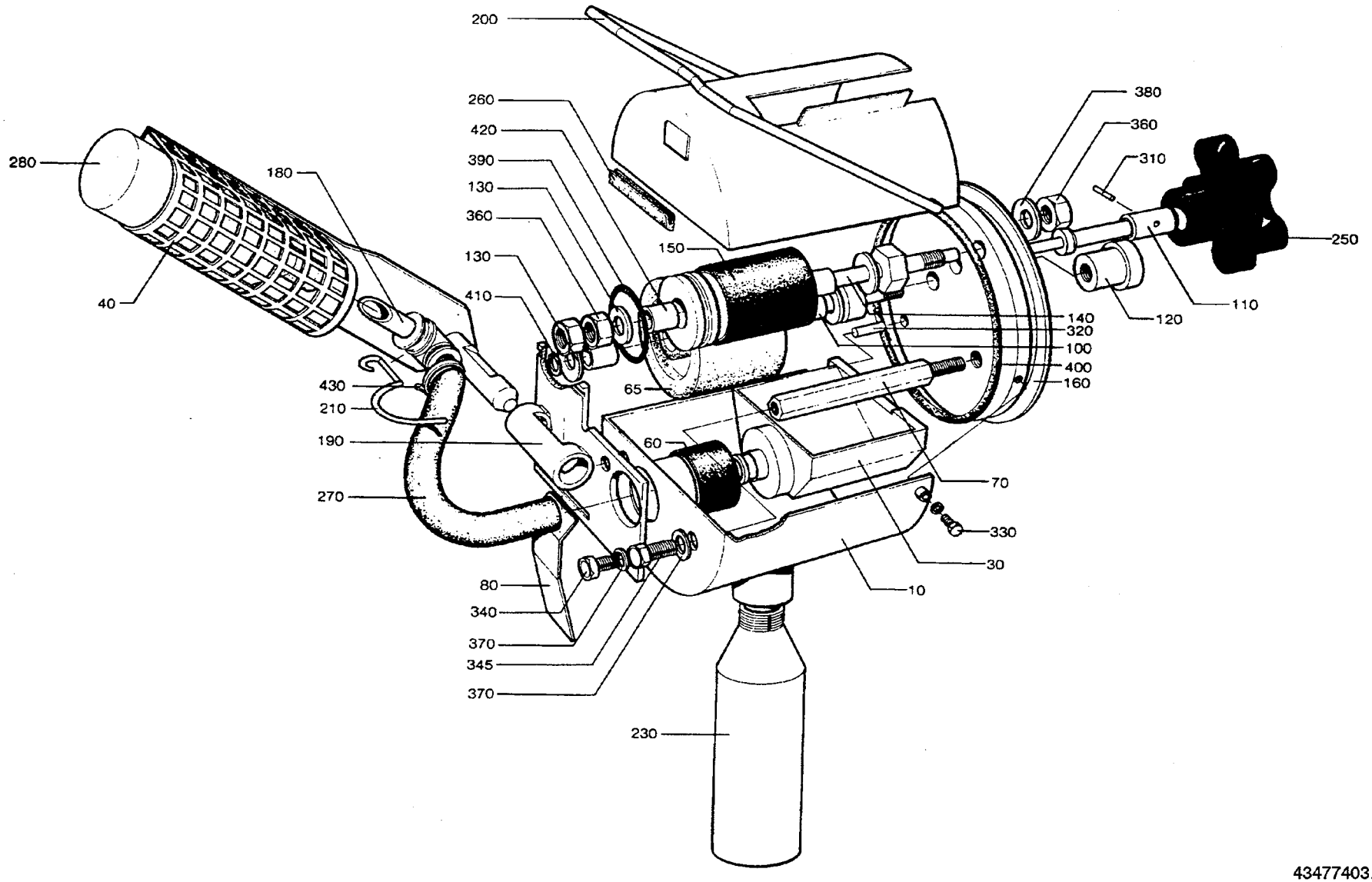

43477403.TIF
434774-3
AM

Last Alteration: AM 16183 91-04-08

Corresponding group: 434774-030V
Assembly Drawing: 434774-3

Issue: **940524**

From	Pos	Part No	SP	UN	Qty	Description
TBA/3 TBA/3R TB/8 TB/9						
	F000	**C- 434774-0301**				**Ink Unit, Ass'y**
	230	90050-0008	P		1	BOTTLE
TBA/9						
	F000	**C- 434774-0302**				**Ink Unit, Ass'y**
	230	90050-0012	P		1	BOTTLE
Common parts						
	010	297989	-		1	COVER
	030	297210	-		1	INK WELL
	040	476356	C		1	HOLDER FOR INK BOTTLE
	060	445542	P		1	MANTEL RUBBER
	065	450355	S		1	INK ROLLER
	070	33010	-		1	SCREW
	080	35547	S		1	SPRING
	100	292044	P		1	SHAFT
	110	293667	S		1	DOWEL
	120	436927	C		1	NUT
	130	293669-0001	P		4	WASHER
	130	293669-0002	P		2	WASHER
	130	293669-0003	P		2	WASHER
	130	293669-0004	P		2	WASHER
	140	293670	P		1	SHAFT
	150	543135	P		1	INK TRANSFER ROLLER
	160	297213	S		1	END SECTION
	180	476355	S		1	CANNULAR TUBE
	190	456772	C		1	PIVOT BRACKET
	200	434747	S		1	BOW CLAMP
	210	537308	-		1	SPRING
	250	90051-0077	S		1	HANDLE
	260	90143-0029	S	MM	295	STRIP
	270	90166-0138	P	MM	100	HOSE
	280	90299-0013	P		X	INK
		90299-0300	R		0	# COVER
	300	311103-0236	-		2	CYLINDRICACP M6 3X16 RFR
	310	311103-0238	-		1	CYLINDRICACP M6 3X20 RFR
	320	311103-0270	-		1	CYLINDRICACP M6 4X16 RFR
	330	312105-0291	-		3	SCREW M6S4X12RFR
	340	312105-0327	-		2	SCREW M6S5X12 A4 80
	345	312105-0329	-		1	SCREW M6S5X16 A4 80
	347	312115-0287	-		2	SCREW 4X8 A4 80
	350	312605-0314	-		2	NUT M6M5RFR
	360	312605-0318	-		3	NUT M6M8RFR
	370	315105-0146	-		3	WASHER BRB5,3X10RFR
	380	315105-0165	-		2	WASHER BRB8,4X16RFR
	390	315202-0218	P		1	O-RING 26,2X3
	400	315202-0309	P		1	O-RING 89,5X3
	410	315750-0105	P		1	CIRCLIP SGA8
	420	321120-0100	S		4	BUSHING 8/10X12
	425	321120-0109	S		2	BUSHING 12/14X10
	430	352113-0101	P		1	RIBBON CLA

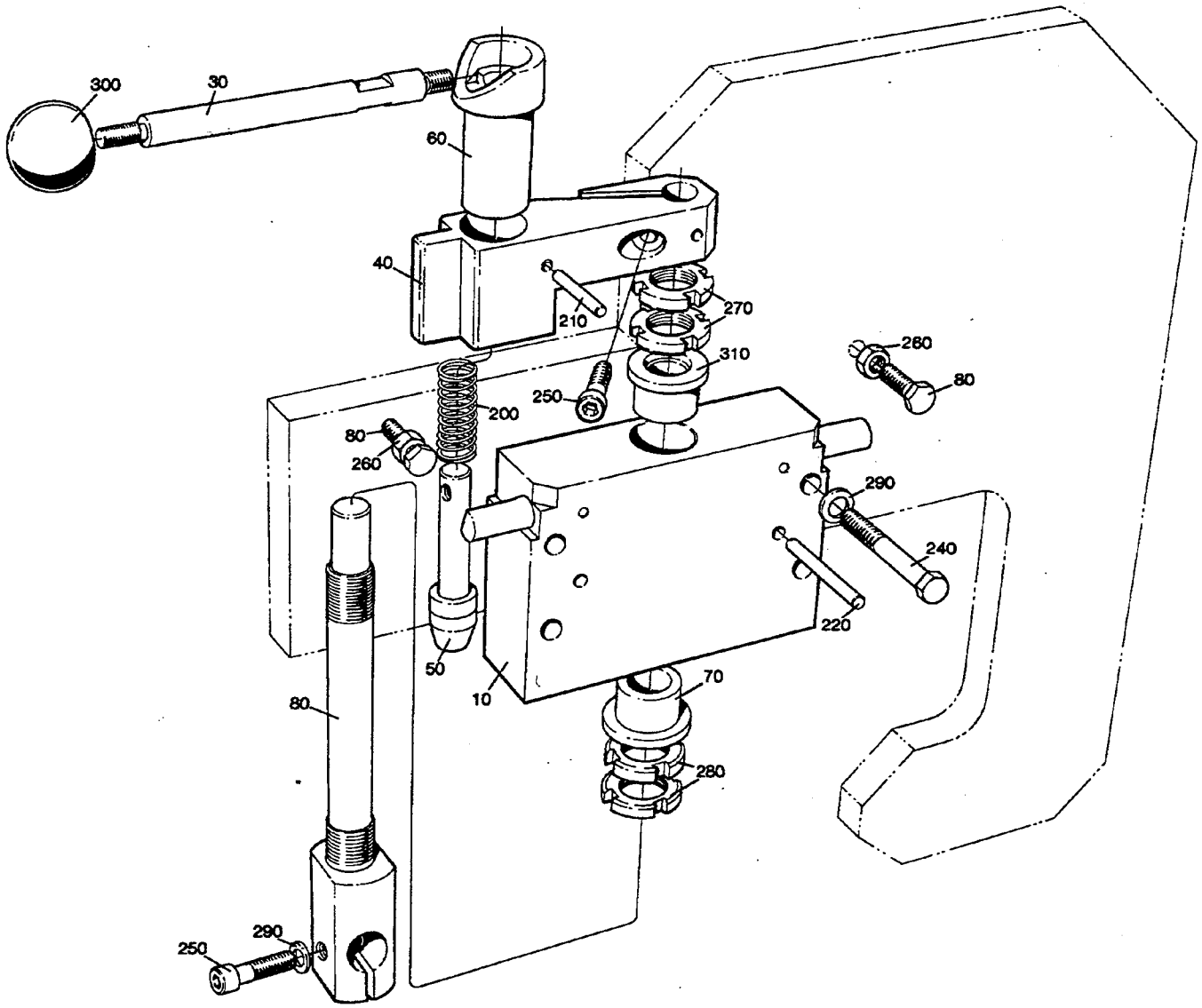

75171801.TIF
751718-1
AM 12932

Last Alteration: AM 12932 89-06-05

Corresponding group: 751718-010V
Assembly Drawing: 751718-1

Issue: **940524**

From	Pos	Part No	SP	UN	Qty	Description
		C- 751718-0101				**Dating Wheel Holder, Ass'y**
	010	464009-0003	-		1	BLOCKING PIECE
	020	450497	-		1	SHAFT
	030	450500	-		1	DOWEL
	040	464010	-		1	ARM
	050	464011	-		1	LOCK STUD
	060	464012	-		1	CURVE
	070	466430	-		1	BUSHING
	080	476377	-		2	SCREW
	200	90335-0064	-		1	SPRING
	210	311103-0274	-		2	CYLINDRICACP 4X25 RFR
	220	311103-0318	-		2	CYLINDRICACP M6 5X40 RFR
	240	312105-0378	-		4	SCREW M6S6X40RFR
	250	312115-0370	-		2	SCREW 6X20 A4 80
	260	312605-0316	-		2	NUT M6M6RFR
	270	312805-0102	-		2	ROUND NUT KM2
	280	312805-0103	-		2	ROUND NUT KM3
	290	315105-0153	-		5	WASHER BRB6,4X12RFR
	300	318800-0103	-		1	HANDLE BALLA D.25-M6
	310	321111-0212	-		1	FLANGE BUS 15E7X15

From	Pos	Part No	SP	UN	Qty	Description

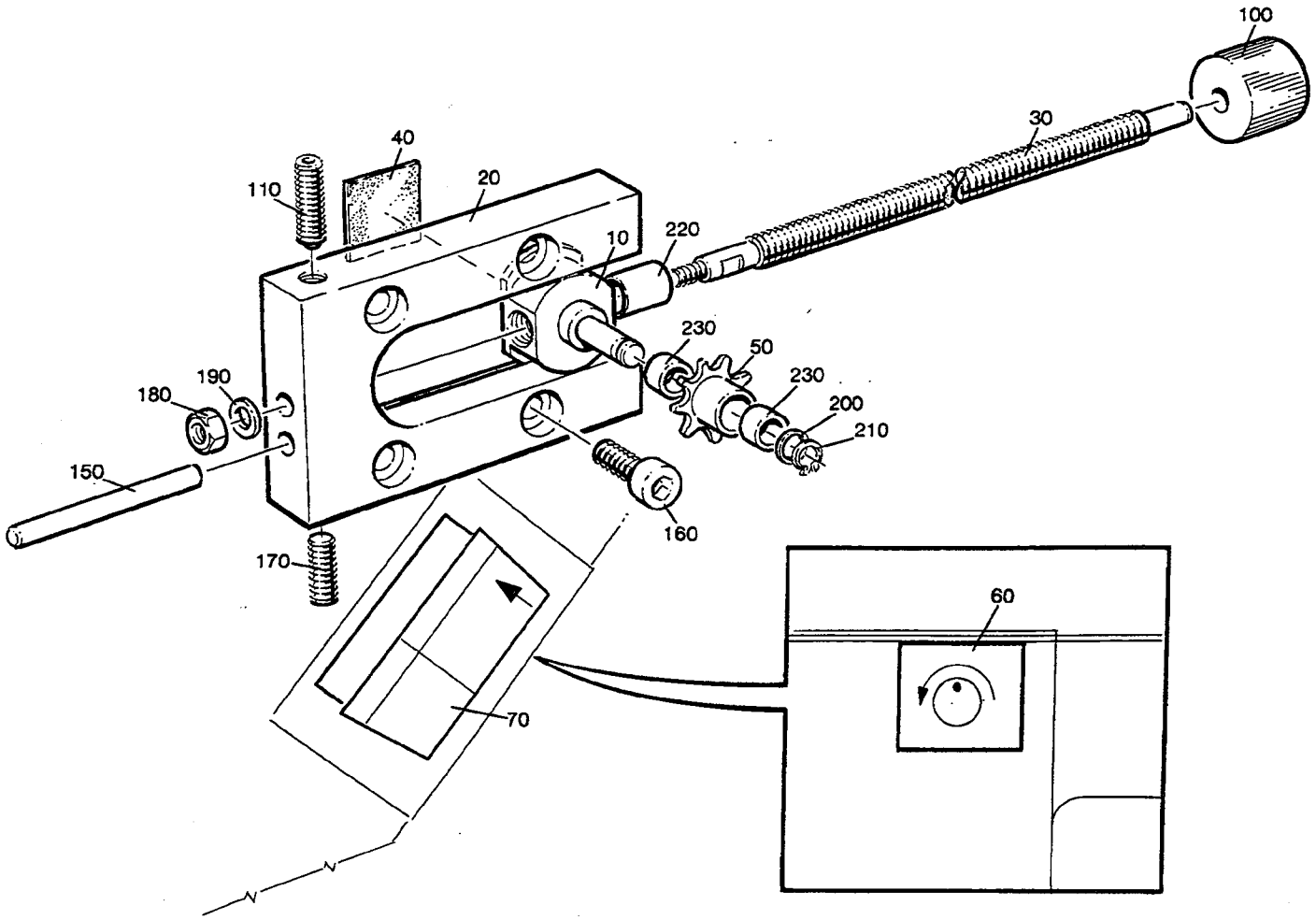

54314301.TIF
543143-1
AM 10835

Last Alteration: AM 10835 88-09-30

Corresponding group: 543143-010V
Assembly Drawing: 543143-1

Issue: **940524**

From	Pos	Part No	SP	UN	Qty	Description
		C- 543143-0101				**Adjustment Device, Ass'y**
	010	526984	-		1	SADDLE
	020	526985	-		1	PLATE
	030	526986-0001	-		1	SHAFT
	040	527649	-		1	DISTANCE RUBBER
	050	529362	-		1	SPROCKET
	060	543141	-		1	SIGN
	070	543142	-		1	SIGN
	100	90051-0089	-		1	SHIFTER HANDLE
	110	90287-0167	-		1	SPRINGLOADED SCREW
	150	311103-0365	-		1	CYLINDRICACP M6 6X50 RFR
	160	312115-0368	-		2	SCREW 6X16 A4 80
	170	312318-0368	-		1	STOP SCREW SK6SS6X16RFR
	180	312605-0312	-		1	NUT M6M4RFR
	190	315105-0136	-		1	WASHER BRB4,3X8RFR
	200	315105-0153	-		1	WASHER BRB6,4X12RFR
	210	315751-0103	-		1	CIRCLIP SGA 6 RFR
	220	321120-0100	-		1	BUSHING 8/10X12
	230	321120-0101	-		2	BUSHING 6/8X6

From	Pos	Part No	SP	UN	Qty	Description

Opposite Strip side

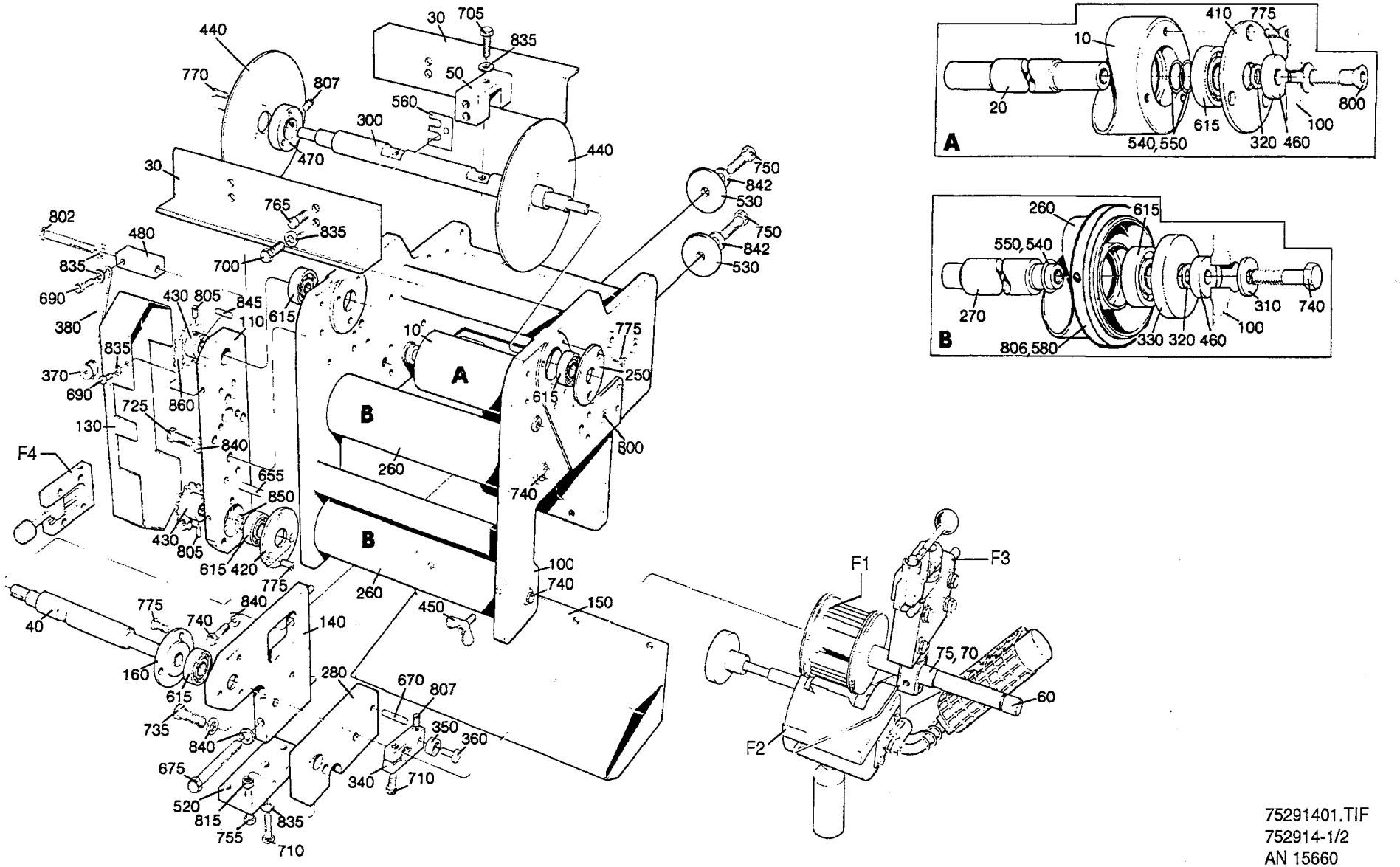

75291401.TIF
752914-1/2
AN 15660

Last Alteration: AM 15660 91-02-01

Corresponding group: 752914-010V
Assembly Drawing: 752914-1/2

Issue: **940524**

From	Pos	Part No	SP	UN	Qty	Description
250ml						
		C- 752914-0101				**Dating Unit, Ass'y**
	010	752542-0001	C		1	BENDING ROLLER
	020	752543-0001	C		1	SHAFT
	030	456767	C		2	CREASE BAR
	040	752536-0001	C		1	SHAFT
	050	441556-0002	C		2	SPACER
	060	256400	C		1	SHAFT
	070	90166-0059	P	MM	24	HOSE
	075	90166-0059	P	MM	24	HOSE
236ml						
		C- 752914-0102				**Dating Unit, Ass'y**
	010	752542-0001	C		1	BENDING ROLLER
	020	752543-0001	C		1	SHAFT
	030	456767	C		2	CREASE BAR
	040	752536-0001	C		1	SHAFT
	050	441556-0003	C		2	SPACER
	060	256400	C		1	SHAFT
	070	90166-0059	P	MM	24	HOSE
	075	90166-0059	P	MM	24	HOSE
200ml						
		C- 752914-0103				**Dating Unit, Ass'y**
	010	752542-0001	C		1	BENDING ROLLER
	020	752543-0001	C		1	SHAFT
	030	456767	C		2	CREASE BAR
	040	752536-0001	C		1	SHAFT
	050	441556-0004	C		2	SPACER
	060	256400	C		1	SHAFT
	070	90166-0059	P	MM	24	HOSE
	075	90166-0059	P	MM	24	HOSE
180ml						
		C- 752914-0104				**Dating Unit, Ass'y**
	010	752542-0001	C		1	BENDING ROLLER
	020	752543-0001	C		1	SHAFT
	030	456767	C		2	CREASE BAR
	040	752536-0001	C		1	SHAFT
	050	441556-0006	C		2	SPACER
	060	256400	C		1	SHAFT
	070	90166-0059	P	MM	24	HOSE
	075	90166-0059	P	MM	24	HOSE

From	Pos	Part No	SP	UN	Qty	Description
125ml						
		C- 752914-0105				**Dating Unit, Ass'y**
	010	752542-0002	C		1	BENDING ROLLER
	020	752543-0002	C		1	SHAFT
	030	456327	C		2	CREASE BAR
	040	752536-0002	C		1	SHAFT
	050	441556-0007	C		2	SPACER
	060	456334	C		1	SHAFT
	070	90166-0059	P	MM	37	HOSE
	075	90166-0059	P	MM	37	HOSE
200ml Slim						
		C- 752914-0106				**Dating Unit, Ass'y**
	010	752542-0002	C		1	BENDING ROLLER
	020	752543-0002	C		1	SHAFT
	030	441554	C		2	CREASE BAR
	040	752536-0002	C		1	SHAFT
	050	441556-0009	C		2	SPACER
	060	456334	C		1	SHAFT
	070	90166-0059	P	MM	37	HOSE
	075	90166-0059	P	MM	37	HOSE
Common parts						
	F001	**C- 293684-0204**	**-**		**2**	**PRINTING WHEEL**
	F002	**C- 434074-0302**	**-**		**1**	**INK UNIT**
	F003	**C- 751718-0101**	**-**		**1**	**DATING WHEEL HOLDER**
	F004	**C- 543143-0101**	**-**		**1**	**ADJUSTMENTMENT DEVICE**
	100	G- 752200	-		1	CANTILEVER
	110	752526	-		1	PLATE
	130	752528	-		1	COVER
	140	752527	-		1	CANTILEVER
	150	491723	-		1	SPLASH PLATE
	160	752529	C		1	BEARING COVER
	250	752240	-		1	LID
	260	752537	C		2	BENDING ROLLER
	270	752538	C		2	SHAFT
	280	752642	-		1	BRACKET
	300	752535	C		1	SHAFT
	310	28036	-		4	WASHER
	320	2033-0011	C		20	WASHER
	330	265568	S		4	DUST COVER
	340	32925	C		1	CARRIER
	350	32926	C		1	ROLL
	360	32927	C		1	SHAFT
	370	33182	S		1	ROLL
	380	752237	S		1	SPRING

Opposite Strip side

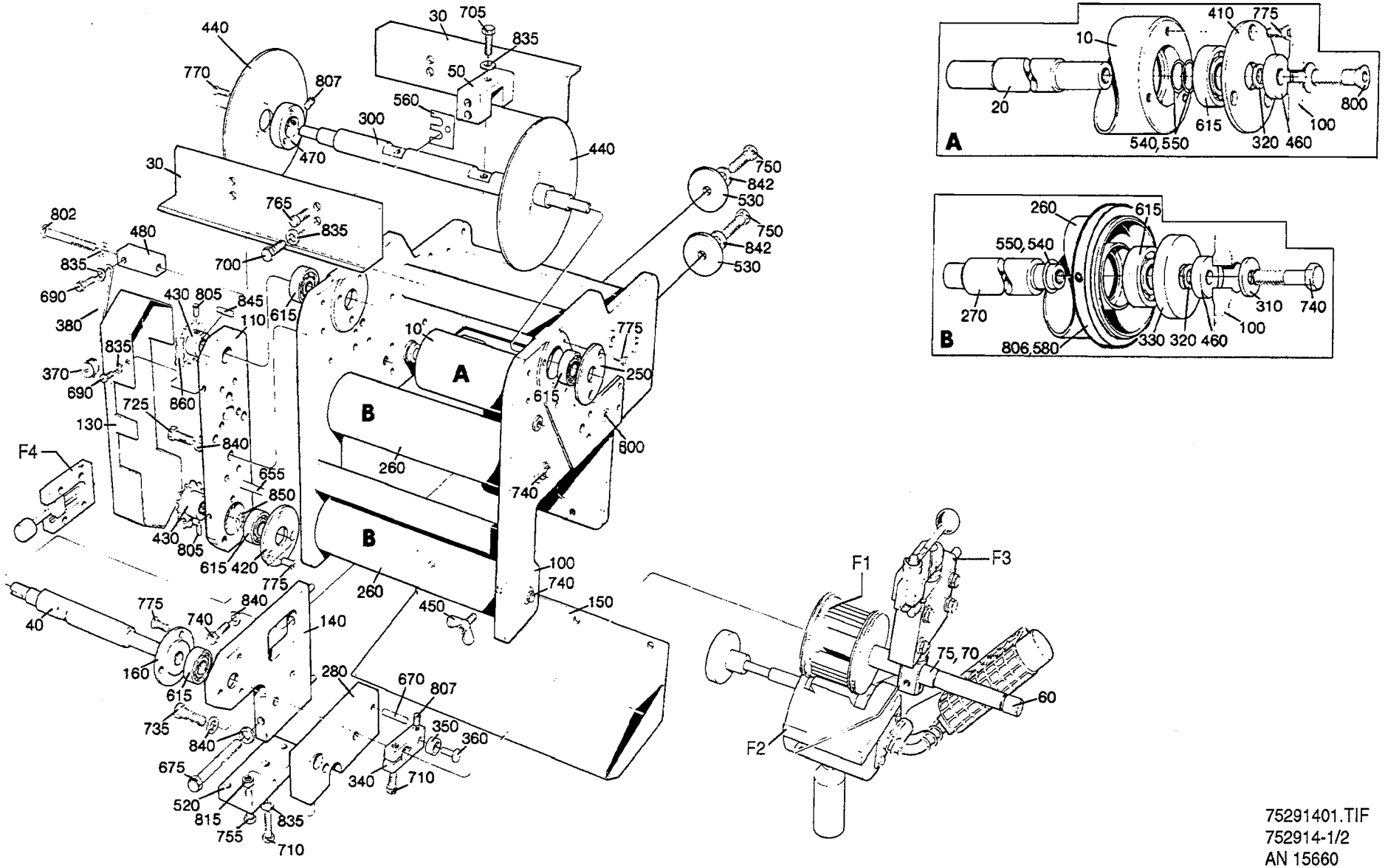

75291401.TIF
752914-1/2
AN 15660

From	Pos	Part No	SP	UN Qty	Description
	410	256248-0001	C	2	LID
	420	256398	C	1	LID
	430	752530	S	2	SPROCKET
	440	256406	-	2	GABLE PLATE
	450	752644	-	2	SCREW
	460	256409	-	6	WASHER
	470	257141	-	2	RETAINING RING
	480	752531	-	1	BRACKET
	520	752541	-	1	CANTILEVER
	530	253107	C	2	WASHER
	540	752544-0001	C	6	SHIM
	550	752544-0002	C	8	SHIM
	560	456817-0001	S	8	SHIM
	580	456545	-	2	FLANGE
	615	90214-0098	P	10	BALL BEARING
	655	311103-0312	-	2	CYLINDRICACP M6 5X25 RFR
	670	311103-0357	-	1	CYLINDRICACP M6 6X30 RFR
	675	312101-0466	-	1	SCREW M6S8X75FZB
	680	312105-0327	-	2	SCREW M6S5X12 A2 80
	690	312105-0364	-	3	SCREW M6S6X10RFR
	700	312105-0366	-	4	SCREW M6S6X12RFR
	705	312105-0370	-	2	SCREW M6S6X20RFR
	710	312105-0372	-	3	SCREW M6S6X25RFR
	725	312105-0453	-	2	SCREW M6S8X25RFR
	735	312105-0457	-	1	SCREW M6S8X35RFR
	740	312105-0459	-	5	SCREW M6S8X40RFR
	750	312105-0493	-	2	SCREW M6S10X25RFR
	755	312109-0376	-	1	SCREW 6X35 H RFR
	765	312125-0366	-	4	SLOTTED HEMCS6X12RFR
	770	312155-0291	-	6	SCREW MF6S4X12RFR
	775	312155-0327	-	15	SCREW MF6S5X12RFR
	800	312155-0457	-	2	SCREW MF6S8X35RFR
	802	312105-0382	-	1	SCREW M6S6X60RFR
	805	312318-0287	-	2	STOP SCREW SK6SS4X8RFR
	806	312318-0325	-	4	STOP SCREW SK6SS5X10RFR
	807	312318-0362	-	3	STOP SCREW SK6SS6X8RFR
	815	312605-0316	-	1	NUT M6M6RFR
	835	315105-0153	-	12	WASHER BRB6,4X12RFR
	840	315105-0165	-	5	WASHER BRB8,4X16RFR
	842	315105-0173	-	2	WASHER BRB10,5X22RFR
	845	315701-0169	S	2	FLAT WEDGE4X4X18
	850	315751-0112	P	1	CIRCLIP SGA15 RFR
	860	318207-0168	S	1	ROLLER CHA6MM

From	Pos	Part No	SP	UN Qty	Description

1000ml Slim
1000ml Square
1000ml-750ml

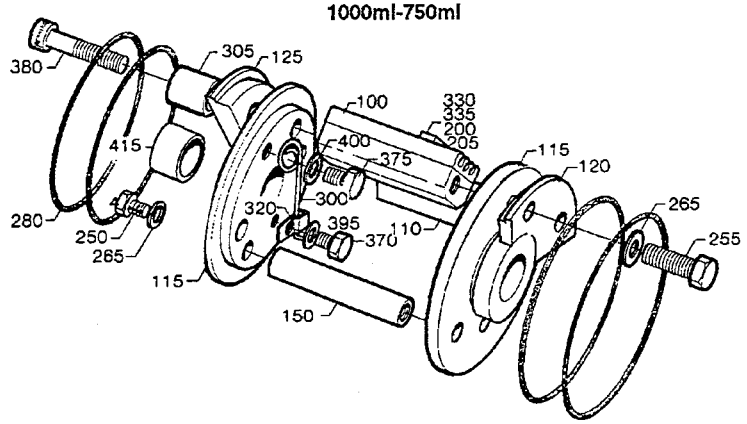

750ml Slim
500ml Slim
400ml-355ml

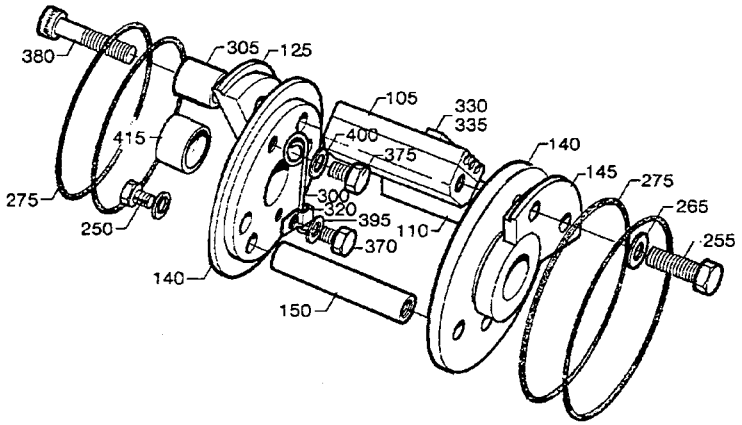

500ml-568ml

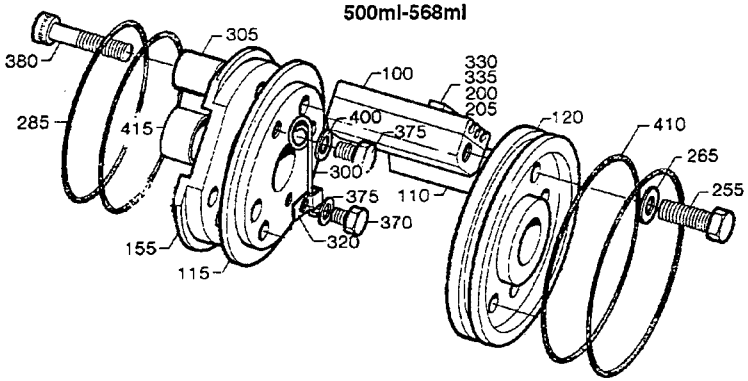

200ml Slim
160ml-300ml

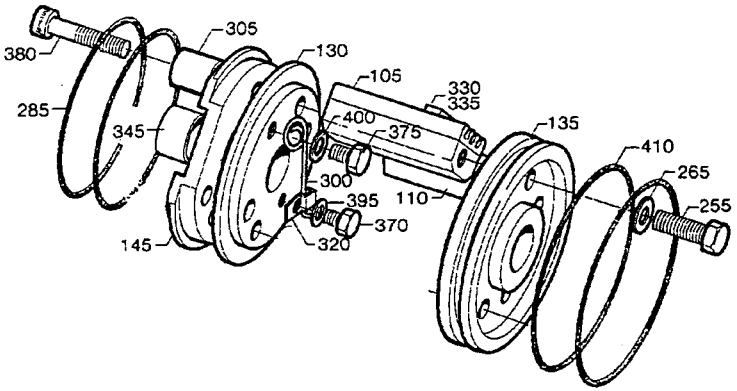

29368403.TIF
293684-3
AM

Last Alteration: AM 20227 93-10-28

Corresponding group: 293684-020V
Assembly Drawing: 293684-3/4

Issue: **940524**

From	Pos	Part No	SP	UN	Qty	Description
1000ml LoFin 1136ml - 750ml 1000ml Slim 1000ml Square						
		C- 293684-0201				**Printing Wheel, Ass'y**
	100	293395-0003	P		1	TYPE HOLDER
	110	293395-0001	P		1	TYPE HOLDER
	115	292409	C		2	END SECTION
	120	442072	C		1	CARRIER
	125	292411	C		1	CARRIER
	150	293671	C		1	SPACER
	200	90413-0048	P		1	CODE INSERT SET
	205	90413-0049	P		1	CODE INSERT SET
	250	312101-0329	-		2	SCREW M6S5X16FZB
	255	312101-0331	-		3	SCREW M6S5X20FZB
	265	315101-0146	-		5	WASHER BRB5,3X10FZB
	280	315202-0301	P		4	O-RING 49,5X3
568ml 500ml						
		C- 293684-0202				**Printing Wheel, Ass'y**
	100	293395-0003	P		2	TYPE HOLDER
	110	293395-0001	P		2	TYPE HOLDER
	115	434787	C		1	END SECTION
	120	292410	C		1	END SECTION
	155	293676	C		1	CARRIER
	200	90413-0048	P		1	CODE INSERT SET
	205	90413-0049	P		1	CODE INSERT SET
	255	312101-0331	-		7	SCREW M6S5X20FZB
	265	315101-0146	-		7	WASHER BRB5,3X10FZB
	285	315202-0304	P		2	O-RING 64,5X3
	410	315202-0305	P		2	O-RING 69,5X3
750ml Slim 500ml Slim 400ml - 355ml						
		C- 293684-0203				**Printing Wheel, Ass'y**
	105	293395-0002	P		1	TYPE HOLDER
	110	293395-0001	P		1	TYPE HOLDER
	125	479237	C		1	CARRIER
	140	479236	C		2	END SECTION
	145	479238	C		1	CARRIER
	150	293671	C		1	SPACER
	250	312101-0329	-		2	SCREW M6S5X16FZB
	255	312101-0331	-		3	SCREW M6S5X20FZB
	265	315101-0146	-		5	WASHER BRB5,3X10FZB
	275	315202-0224	P		4	O-RING 42,2X3
300ml - 160ml 250ml Slim 200ml Slim						
		C- 293684-0204				**Printing Wheel, Ass'y**
	105	293395-0002	P		2	TYPE HOLDER
	110	293395-0001	P		2	TYPE HOLDER
	130	292412	C		1	END SECTION
	135	292413	C		1	END SECTION
	145	293659	C		1	CARRIER
	255	312101-0331	-		7	SCREW M6S5X20FZB
	265	315101-0146	-		7	WASHER BRB5,3X10FZB
	285	315202-0304	P		2	O-RING 64,5X3
	410	315202-0305	P		2	O-RING 69,5X3
1000ml HiFin						
		C- 293684-0205				**Printing Wheel, Ass'y**
	100	293395-0003	P		1	TYPE HOLDER
	110	293395-0001	P		1	TYPE HOLDER
	115	293690	C		2	END SECTION
	120	442431	C		1	CARRIER
	125	293688	C		1	CARRIER
	150	293671	C		1	SPACER
	200	90413-0048	P		1	CODE INSERT SET
	205	90413-0049	P		1	CODE INSERT SET
	250	312101-0329	-		2	SCREW M6S5X16FZB
	255	312101-0331	-		3	SCREW M6S5X20FZB
	265	315101-0146	-		5	WASHER BRB5,3X10FZB
	280	315202-0301	P		4	O-RING 49,5X3
Common Parts						
	300	32691	P		1	LOCKING SPRING
	305	33011	S		1	SLEEVE
	320	90165-0010	-		1	CLIP
	330	90413-0033	P		1	CODE INSERT SET
	330	90413-0043	P		1	CODE INSERT SET
	335	90413-0047	P		1	CODE INSERT SET
	335	90413-0044	P		1	CODE INSERT SET
	370	312101-0287	-		1	SCREW M6S4X8FZB
	375	312101-0364	-		1	SCREW M6S6X10FZB
	380	312111-0335	-		1	SCREW MC6S5X30FZB
	395	315101-0136	-		1	WASHER BRB4,3X8FZB
	400	315111-0153	-		1	WASHER TBRB6,4X12FZB
	415	321120-0122	S		2	BUSHING 15/17X15

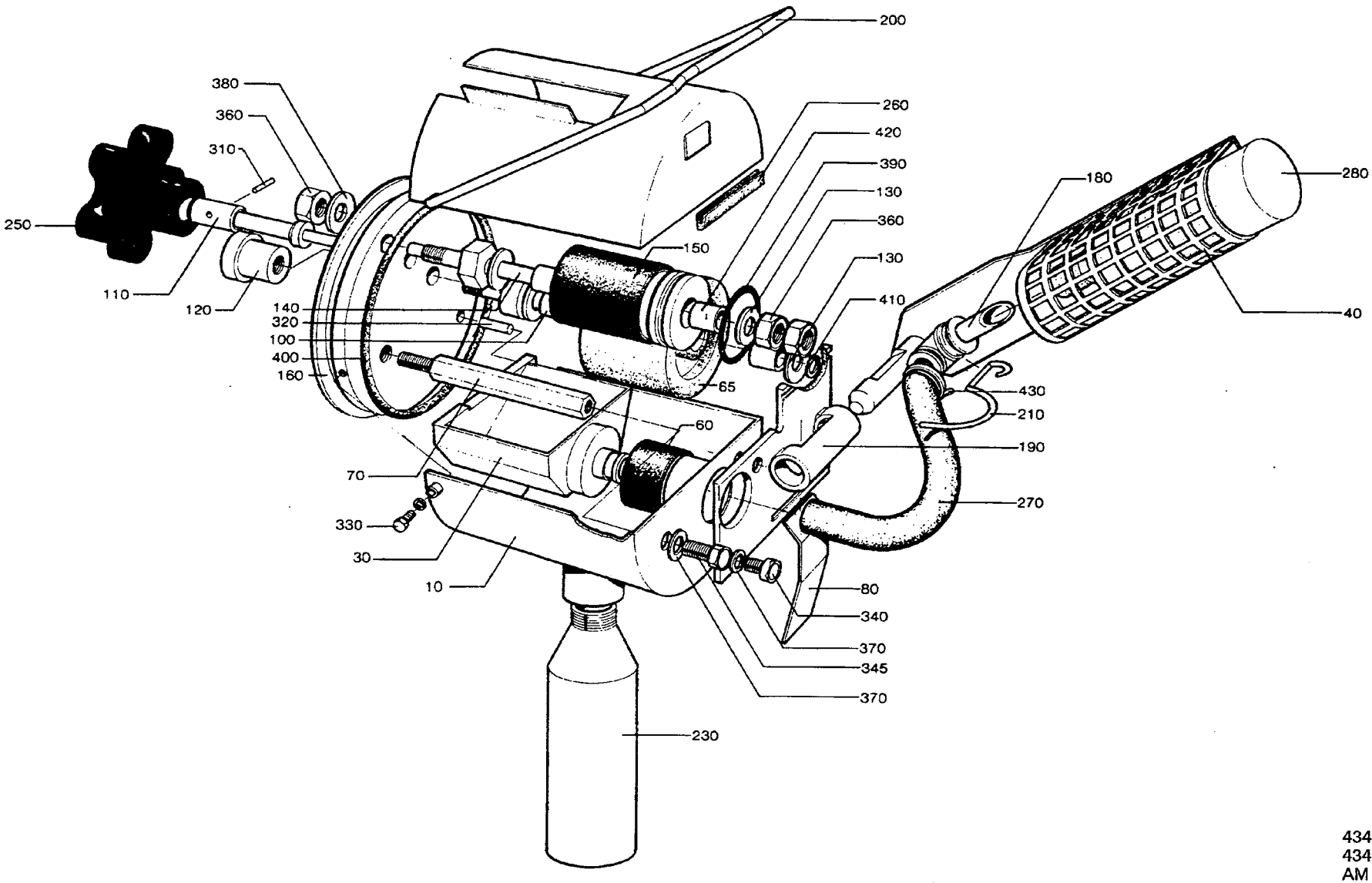

43407403.TIF
434074-3
AM

Last Alteration: AM 16183 91-04-08

Corresponding group: 434074-030V
Assembly Drawing: 434074-3

Issue: **940524**

From	Pos	Part No	SP	UN	Qty	Description
TBA/3 TBA/3R TB/8 TB/9						
	F000	**C- 434074-0301**				**Ink Unit, Ass'y**
	230	90050-0008	P		1	BOTTLE
TBA/9						
	F000	**C- 434074-0302**				**Ink Unit, ass'y**
	230	90050-0012	P		1	BOTTLE
Common parts						
	010	297988	-		1	COVER
	030	297211	-		1	INK WELL
	040	476356	C		1	HOLDER FOR INK BOTTLE
	060	445542	P		1	MANTEL RUBBER
	065	450355	S		1	INK ROLLER
	070	33010	-		1	SCREW
	080	35547	S		1	SPRING
	100	292044	P		1	SHAFT
	110	293667	S		1	DOWEL
	120	436927	C		1	NUT
	130	293669-0001	P		4	WASHER
	130	293669-0002	P		2	WASHER
	130	293669-0003	P		2	WASHER
	130	293669-0004	P		2	WASHER
	140	293670	P		1	SHAFT
	150	543135	P		1	INK TRANSFER ROLLER
	160	293697	S		1	END SECTION
	180	476354	S		1	CANNULAR TUBE
	190	456773	C		1	PIVOT BRACKET
	200	434747	S		1	BOW CLAMP
	210	537308	-		1	SPRING
	250	90051-0077	S		1	HANDLE
	260	90143-0029	S	MM	295	STRIP
	270	90166-0138	P	MM	100	HOSE
	280	90299-0013	P		X	INK
		90299-0300	R		0	# COVER
	300	311103-0236	-		2	CYLINDRICACP M6 3X16 RFR
	310	311103-0238	-		1	CYLINDRICACP M6 3X20 RFR
	320	311103-0270	-		1	CYLINDRICACP M6 4X16 RFR
	330	312105-0291	-		3	SCREW M6S4X12RFR
	340	312105-0327	-		2	SCREW M6S5X12 A4 80
	345	312105-0329	-		1	SCREW M6S5X16 A4 80
	347	312115-0287	-		2	SCREW 4X8 A4 80
	350	312605-0314	-		2	NUT M6M5RFR
	360	312605-0318	-		3	NUT M6M8RFR
	370	315105-0146	-		3	WASHER BRB5,3X10RFR
	380	315105-0165	-		2	WASHER BRB8,4X16RFR
	390	315202-0218	P		1	O-RING 26,2X3
	400	315202-0309	P		1	O-RING 89,5X3
	410	315750-0105	P		1	CIRCLIP SGA8
	420	321120-0100	S		4	BUSHING 8/10X12
	425	321120-0109	S		2	BUSHING 12/14X10
	430	352113-0101	P		1	RIBBON CLA

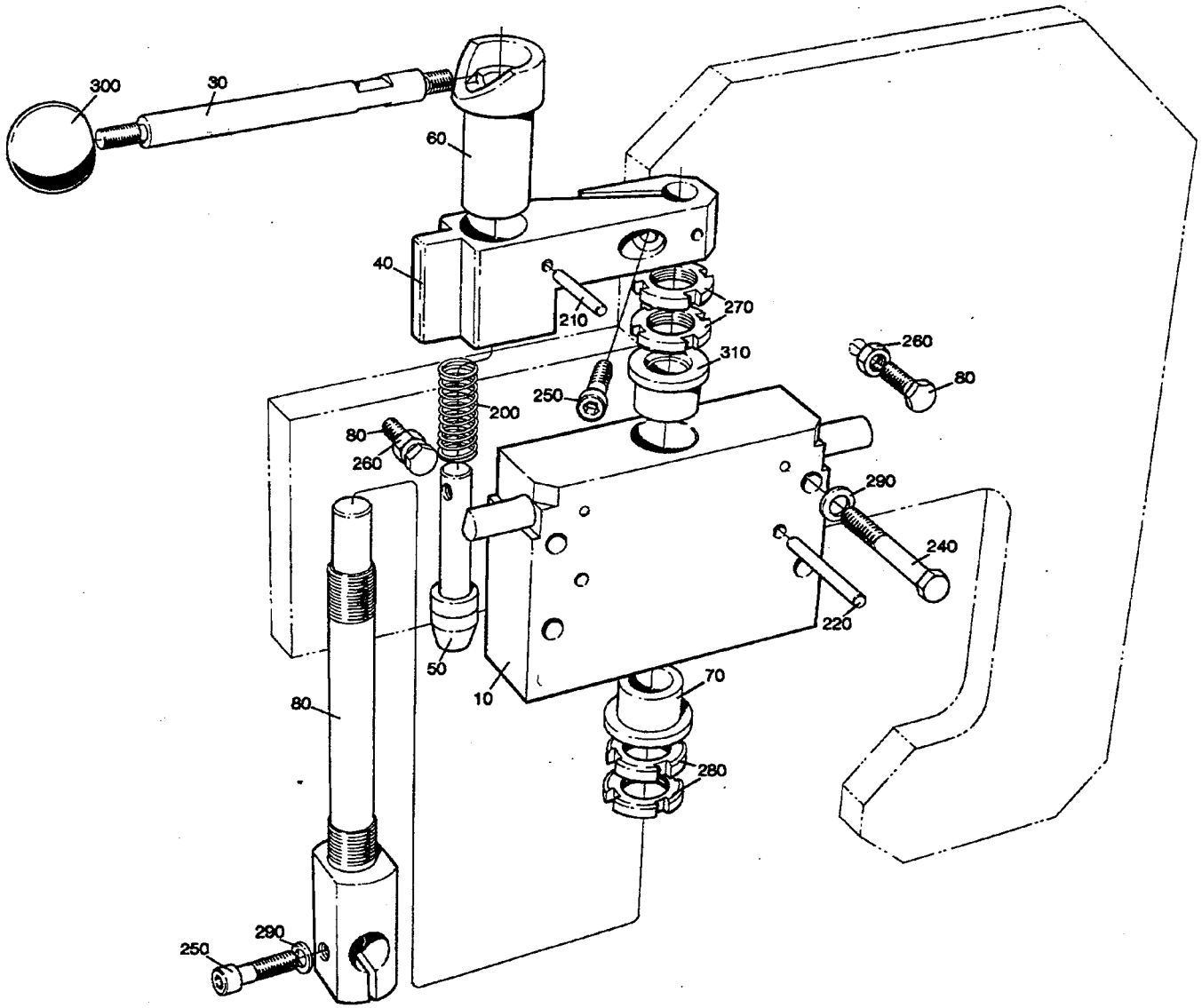

75171801.TIF
751718-1
AM 12932

Last Alteration: AM 12932 89-06-05

Corresponding group: 751718-010V
Assembly Drawing: 751718-1

Issue: **940524**

From	Pos	Part No	SP	UN	Qty	Description
		C- 751718-0101				**Dating Wheel Holder, Ass'y**
	010	464009-0003	-		1	BLOCKING PIECE
	020	450497	-		1	SHAFT
	030	450500	-		1	DOWEL
	040	464010	-		1	ARM
	050	464011	-		1	LOCK STUD
	060	464012	-		1	CURVE
	070	466430	-		1	BUSHING
	080	476377	-		2	SCREW
	200	90335-0064	-		1	SPRING
	210	311103-0274	-		2	CYLINDRICACP 4X25 RFR
	220	311103-0318	-		2	CYLINDRICACP M6 5X40 RFR
	240	312105-0378	-		4	SCREW M6S6X40RFR
	250	312115-0370	-		2	SCREW 6X20 A4 80
	260	312605-0316	-		2	NUT M6M6RFR
	270	312805-0102	-		2	ROUND NUT KM2
	280	312805-0103	-		2	ROUND NUT KM3
	290	315105-0153	-		5	WASHER BRB6,4X12RFR
	300	318800-0103	-		1	HANDLE BALLA D.25-M6
	310	321111-0212	-		1	FLANGE BUS 15E7X15

From	Pos	Part No	SP	UN	Qty	Description

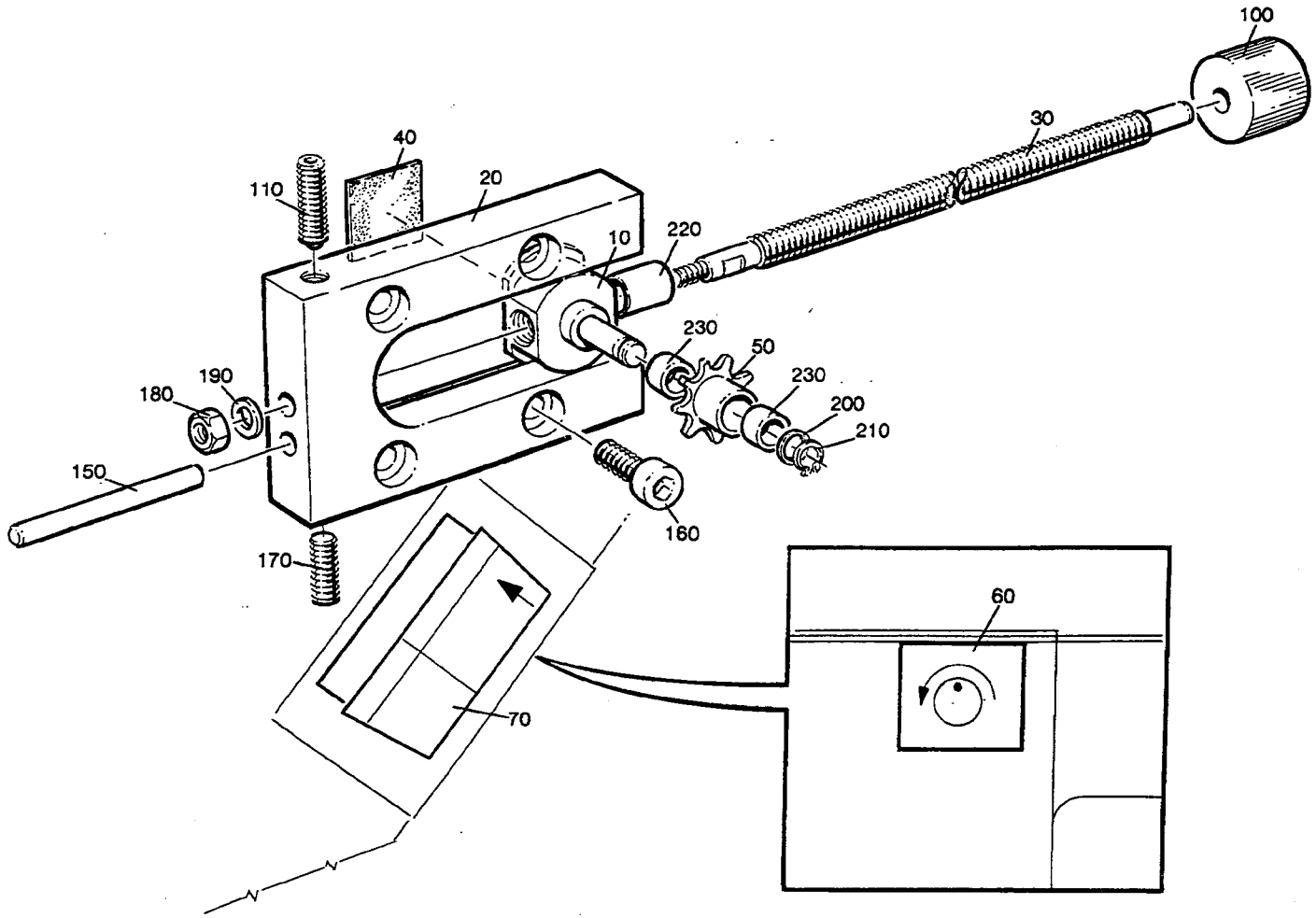

54314301.TIF
543143-1
AM 10835

Last Alteration: AM 10835 88-09-30

Corresponding group: 543143-010V
Assembly Drawing: 543143-1

Issue: **940524**

From	Pos	Part No	SP	UN	Qty	Description
		C- 543143-0101				**Adjustment Device, Ass'y**
	010	526984	-		1	SADDLE
	020	526985	-		1	PLATE
	030	526986-0001	-		1	SHAFT
	040	527649	-		1	DISTANCE RUBBER
	050	529362	-		1	SPROCKET
	060	543141	-		1	SIGN
	070	543142	-		1	SIGN
	100	90051-0089	-		1	SHIFTER HANDLE
	110	90287-0167	-		1	SPRINGLOADED SCREW
	150	311103-0365	-		1	CYLINDRICACP M6 6X50 RFR
	160	312115-0368	-		2	SCREW 6X16 A4 80
	170	312318-0368	-		1	STOP SCREW SK6SS6X16RFR
	180	312605-0312	-		1	NUT M6M4RFR
	190	315105-0136	-		1	WASHER BRB4,3X8RFR
	200	315105-0153	-		1	WASHER BRB6,4X12RFR
	210	315751-0103	-		1	CIRCLIP SGA 6 RFR
	220	321120-0100	-		1	BUSHING 8/10X12
	230	321120-0101	-		2	BUSHING 6/8X6

From	Pos	Part No	SP	UN	Qty	Description

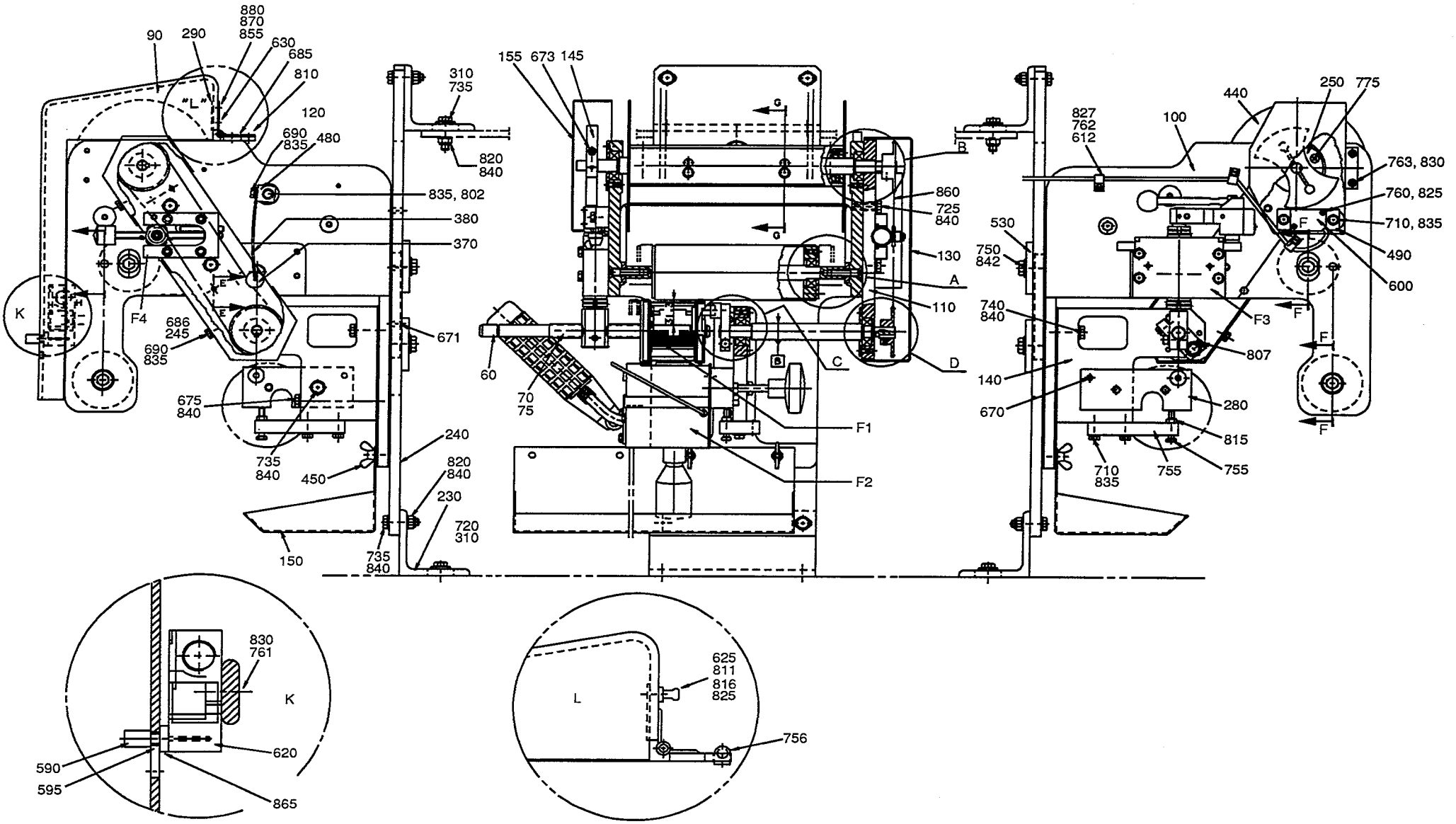

75264503.WPG
752645-3
AM 20097

From	Pos	Part No	SP	UN	Qty	Description
250ml						
		C- 752645-0201				**Dating Unit, Ass'y**
	010	752542-0001	C		1	BENDING ROLLER
	020	752543-0001	C		1	SHAFT
	030	456767	C		2	CREASE BAR
	040	752536-0001	C		1	SHAFT
	050	441556-0002	C		2	SPACER
	060	256400	C		1	SHAFT
	065	299643	-		2	WASHER
	070	90166-0059	P	MM	24	HOSE
	075	90166-0059	P	MM	24	HOSE
	520	752541	-		1	CANTILEVER
	670	311103-0357	-		1	CYLINDRICACP M6 6X30 RFR
	735	312105-0457	-		7	SCREW M6S8X35RFR
236ml						
		C- 752645-0202				**Dating Unit, Ass'y**
	010	752542-0001	C		1	BENDING ROLLER
	020	752543-0001	C		1	SHAFT
	030	456767	C		2	CREASE BAR
	040	752536-0001	C		1	SHAFT
	050	441556-0003	C		2	SPACER
	060	256400	C		1	SHAFT
	070	90166-0059	P	MM	24	HOSE
	075	90166-0059	P	MM	24	HOSE
	520	752541	-		1	CANTILEVER
	670	311103-0357	-		1	CYLINDRICACP M6 6X30 RFR
	735	312105-0457	-		7	SCREW M6S8X35RFR
200ml						
		C- 752645-0203				**Dating Unit, Ass'y**
	010	752542-0001	C		1	BENDING ROLLER
	020	752543-0001	C		1	SHAFT
	030	456767	C		2	CREASE BAR
	040	752536-0001	C		1	SHAFT
	050	441556-0004	C		2	SPACER
	060	256400	C		1	SHAFT
	070	90166-0059	P	MM	24	HOSE
	075	90166-0059	P	MM	24	HOSE
	520	752541	-		1	CANTILEVER
	670	311103-0357	-		1	CYLINDRICACP M6 6X30 RFR
	735	312105-0457	-		7	SCREW M6S8X35RFR
180ml						
		C- 752645-0204				**Dating Unit, Ass'y**
	010	752542-0001	C		1	BENDING ROLLER
	020	752543-0001	C		1	SHAFT
	030	456767	C		2	CREASE BAR
	040	752536-0001	C		1	SHAFT
	050	441556-0006	C		2	SPACER
	060	256400	C		1	SHAFT
	070	90166-0059	P	MM	24	HOSE
	075	90166-0059	P	MM	24	HOSE
	520	752541	-		1	CANTILEVER
	670	311103-0357	-		1	CYLINDRICACP M6 6X30 RFR
	735	312105-0457	-		7	SCREW M6S8X35RFR
125ml						
		C- 752645-0205				**Dating Unit, Ass'y**
	010	752542-0002	C		1	BENDING ROLLER
	020	752543-0002	C		1	SHAFT
	030	456327	C		2	CREASE BAR
	040	752536-0002	C		1	SHAFT
	050	441556-0007	C		2	SPACER
	060	456334	C		1	SHAFT
	070	90166-0059	P	MM	37	HOSE
	075	90166-0059	P	MM	37	HOSE
	520	752541	-		1	CANTILEVER
	670	311103-0357	-		1	CYLINDRICACP M6 6X30 RFR
	735	312105-0457	-		7	SCREW M6S8X35RFR
200ml Slim						
		C- 752645-0206				**Dating Unit, Ass'y**
	010	752542-0002	C		1	BENDING ROLLER
	020	752543-0002	C		1	SHAFT
	030	441554	C		2	CREASE BAR
	040	752536-0002	C		1	SHAFT
	050	441556-0009	C		2	SPACER
	060	456334	C		1	SHAFT
	070	90166-0059	P	MM	37	HOSE
	075	90166-0059	P	MM	37	HOSE
	520	752541	-		1	CANTILEVER
	670	311103-0357	-		1	CYLINDRICACP M6 6X30 RFR
	735	312105-0457	-		7	SCREW M6S8X35RFR
284ml						
		C- 752645-0207				**Dating Unit, Ass'y**
	010	752542-0001	C		1	BENDING ROLLER
	020	752543-0001	C		1	SHAFT
	030	456767	C		2	CREASE BAR
	040	752536-0001	C		1	SHAFT
	050	441556-0001	C		2	SPACER
	060	256400	C		1	SHAFT
	070	90166-0059	P	MM	24	HOSE
	075	90166-0059	P	MM	24	HOSE

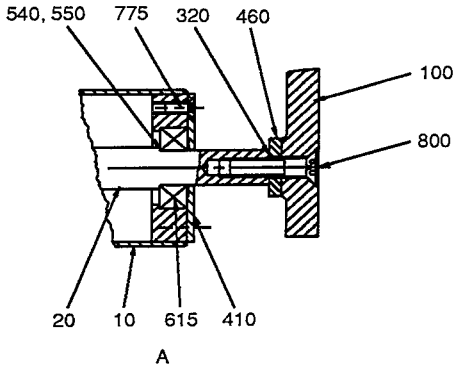

A

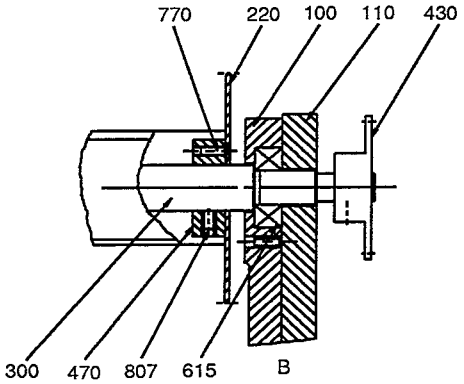

B

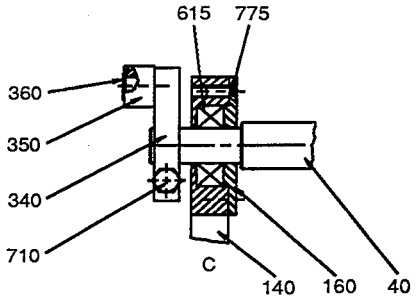

C

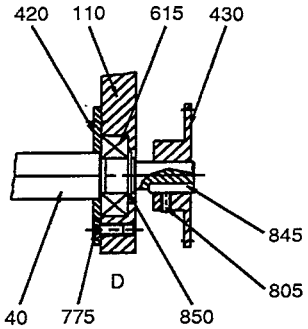

D

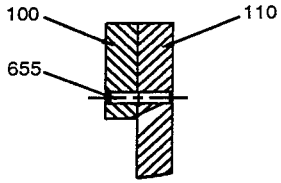

E - E

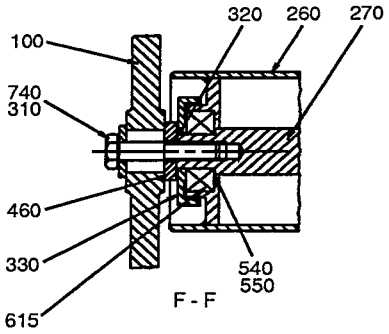

F - F

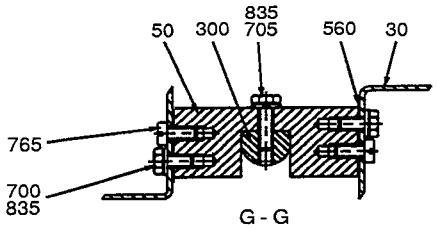

G - G

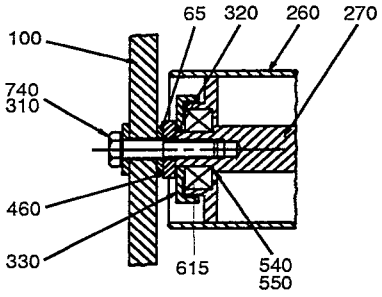

H - H

Last Alteration: AM 20227 93-10-28

Corresponding group: 752645-020V
Assembly Drawing: 752645-2/3

Issue: **940524**

From	Pos	Part No	SP	UN	Qty	Description
	520	752541	-		1	CANTILEVER
	670	311103-0357	-		1	CYLINDRICACP M6 6X30 RFR
	735	312105-0457	-		7	SCREW M6S8X35RFR
250ml Slim						
		C- 752645-0208				**Dating Unit, Ass'y**
	010	752542-0003	C		1	BENDING ROLLER
	020	752543-0003	C		1	SHAFT
	030	441554	C		2	CREASE BAR
	040	752536-0003	C		1	SHAFT
	050	441556-0010	C		2	SPACER
	060	574443	C		1	SHAFT
	070	90166-0059	P	MM	30	HOSE
	075	90166-0059	P	MM	30	HOSE
	080	574444	-		1	SPACER
	520	574445	-		1	CANTILEVER
	670	311103-0361	-		1	CYLINDRICACP M6 6X40 RFR
	735	312105-0457	-		6	SCREW M6S8X35RFR
	736	312105-0460	-		1	SCREW M6S8X45RFR
160ml						
		C- 752645-0209				**Dating Unit, Ass'y**
	010	752542-0002	C		1	BENDING ROLLER
	020	752543-0002	C		1	SHAFT
	030	441554	C		2	CREASE BAR
	040	752536-0002	C		1	SHAFT
	050	441556-0011	C		2	SPACER
	060	456334	C		1	SHAFT
	070	90166-0059	P	MM	37	HOSE
	075	90166-0059	P	MM	37	HOSE
	520	752541	-		1	CANTILEVER
	670	311103-0357	-		1	CYLINDRICACP M6 6X30 RFR
	735	312105-0457	-		7	SCREW M6S8X35RFR
Common Parts						
	F001	**C- 293685-0201**	**-**		**2**	**PRINTING WHEEL**
	F002	**C- 434774-0302**	**-**		**1**	**INK UNIT**
	F003	**C- 751718-0101**	**-**		**1**	**DATING WHEEL HOLDER**
	F004	**C- 543143-0101**	**-**		**1**	**ADJUSTMENTMENT DEVICE**
	090	572251	-		1	COVER
	100	G- 752200	-		1	CANTILEVER
	110	752526	-		1	PLATE
	120	572252	-		1	BRACKET
	130	752528	-		1	COVER
	140	752527	-		1	CANTILEVER
	145	491965	-		1	CAM
	150	491723	-		1	SPLASH PLATE
	155	556422	-		1	PROTECTION

From	Pos	Part No	SP	UN	Qty	Description
	160	752529	C		1	BEARING COVER
	230	456331	-		2	ANGLE BRACKET
	240	752539	-		1	PLATE
	245	572460	-		1	SHEET
	250	752240	-		1	LID
	260	752537	C		2	BENDING ROLLER
	270	752538	C		2	SHAFT
	280	752642	-		1	BRACKET
	290	572253	-		1	SHEET
	300	752535	C		1	SHAFT
	310	28036	-		8	WASHER
	320	2033-0011	C		20	WASHER
	330	265568	S		4	DUST COVER
	340	32925	C		1	CARRIER
	350	32926	C		1	ROLL
	360	32927	C		1	SHAFT
	370	33182	S		1	ROLL
	380	752237	S		1	SPRING
	410	256248-0001	C		2	LID
	420	256398	C		1	LID
	430	752530	S		2	SPROCKET
	440	256406	-		2	GABLE PLATE
	450	752644	-		2	SCREW
	460	256409	-		6	WASHER
	470	257141	-		2	RETAINING RING
	480	752531	-		1	BRACKET
	490	752534	-		1	PLATE
	530	253107	C		2	WASHER
	540	752544-0001	C		6	SHIM
	550	752544-0002	C		8	SHIM
	560	456817-0001	S		8	SHIM
	590	572254	-		1	HANDLE
	595	572255	-		2	SPACER
	600	90044-0104	P		1	INDUCTIVE SWITCH
	612	90074-0001	-		6	CLIP
	615	90214-0098	P		10	BALL BEARING
	620	90044-0103	-		1	LIMIT SWITCH
	625	90184-0001	-		1	LOCK
	630	90248-0026	-		2	HINGE
	655	311103-0312	-		2	CYLINDRICACP M6 5X25 RFR
	671	311103-0353	-		2	CYLINDRICACP M6 6X20 RFR
	673	312115-0333	-		2	SCREW A4 80
	675	312111-0471	-		1	SCREW MC6S8X100FZB
	680	312105-0327	-		2	SCREW M6S5X12 A2 80
	685	312105-0329	-		2	SCREW M6S5X16 A2 80

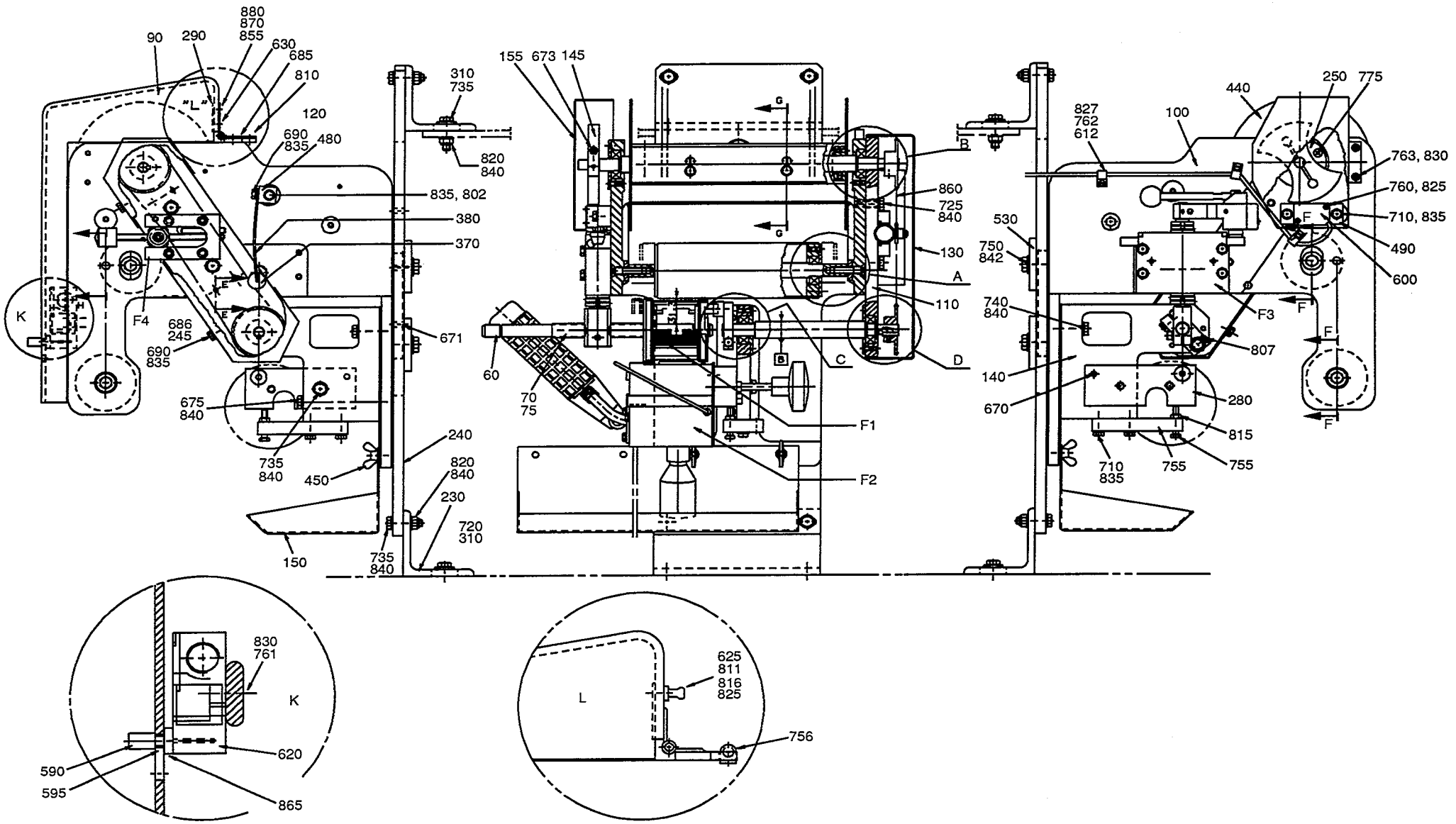

75264503.WPG
752645-3
AM 20097

From	Pos	Part No	SP	UN Qty	Description
	686	312105-0331	-	3	SCREW M6S5X20 A2 80
	690	312105-0364	-	3	SCREW M6S6X10RFR
	700	312105-0366	-	4	SCREW M6S6X12RFR
	705	312105-0370	-	2	SCREW M6S6X20RFR
	710	312105-0372	-	5	SCREW M6S6X25RFR
	720	312105-0451	-	2	SCREW M6S8X20RFR
	725	312105-0453	-	2	SCREW M6S8X25RFR
	740	312105-0459	-	5	SCREW M6S8X40RFR
	750	312105-0493	-	2	SCREW M6S10X25RFR
	755	312109-0376	-	1	SCREW 6X35 H RFR
	756	312125-0224	-	2	SLOTTED HEMCS3X10RFR
	760	312125-0230	-	2	SLOTTED HEMCS3X20RFR
	761	312125-0329	-	2	SLOTTED HEMCS5X16RFR
	762	312125-0289	-	6	SLOTTED HEMCS4X10RFR
	763	312125-0325	-	2	SLOTTED HEMCS5X10RFR
	765	312125-0366	-	4	SLOTTED HEMCS6X12RFR
	770	312155-0291	-	6	SCREW MF6S4X12RFR
	775	312155-0327	-	15	SCREW MF6S5X12RFR
	800	312155-0457	-	2	SCREW MF6S8X35RFR
	802	312105-0382	-	1	SCREW M6S6X60RFR
	805	312318-0287	-	2	STOP SCREW SK6SS4X8RFR
	807	312318-0362	-	3	STOP SCREW SK6SS6X8RFR
	810	312145-0285	-	6	SLOTTED HEMFS4X6RFR
	811	312145-0228	-	2	SLOTTED HEMFS3X16RFR
	815	312605-0316	-	1	NUT M6M6RFR
	816	312812-0310	-	2	LOCK NUT A2-M3RFR
	820	312812-0318	-	6	LOCK NUT A2-M8RFR
	825	315105-0124	-	4	WASHER BRB3,2X6RFR
	827	315105-0136	-	6	WASHER BRB4,3X8RFR
	830	315105-0146	-	6	WASHER BRB5,3X10RFR
	835	315105-0153	-	14	WASHER BRB6,4X12RFR
	840	315105-0165	-	15	WASHER BRB8,4X16RFR
	842	315105-0173	-	2	WASHER BRB10,5X22RFR
	845	315701-0169	S	2	FLAT WEDGE4X4X18
	850	315751-0112	P	1	CIRCLIP SGA15 RFR
	855	312145-0293	-	6	SLOTTED HEMFS4X16RFR
	860	318207-0168	S	1	ROLLER CHA6MM
	870	312812-0312	-	6	LOCK NUT A2-M4RFR
	880	315101-0136	-	6	WASHER BRB4,3X8FZB
	900	352101-0102	-	1	LEAD-IN G 15,2

From	Pos	Part No	SP	UN Qty	Description

375ml

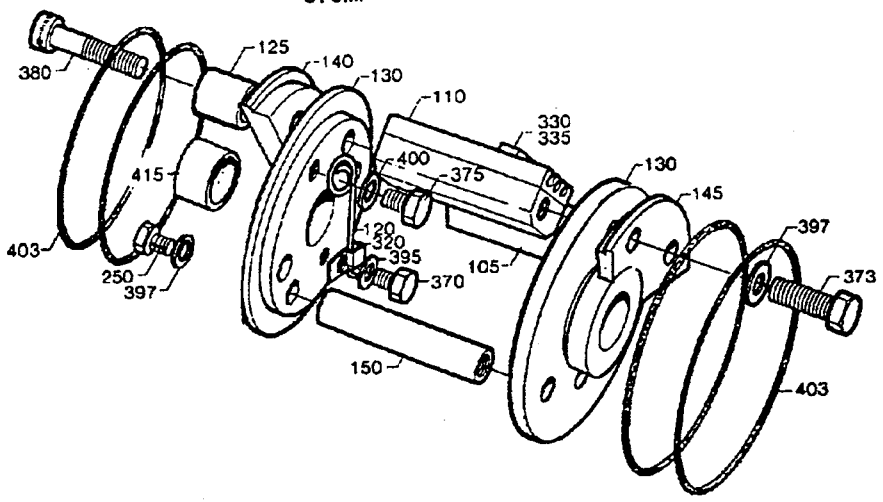

180ml-300ml

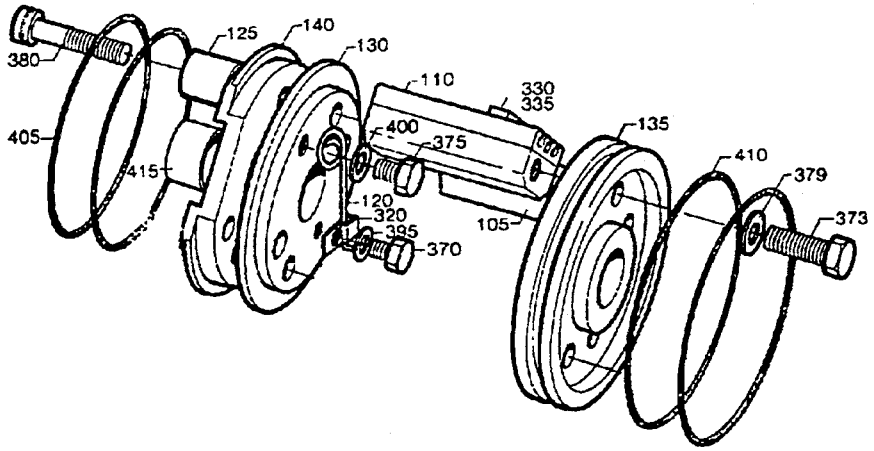

29368502.TIF
293685-2
AM

From	Pos	Part No	SP	UN	Qty	Description
300ml-125ml						
		C- 293685-0201				**Printing Wheel, Ass'y**
	105	293395-0002	P		2	TYPE HOLDER
	110	293395-0001	P		2	TYPE HOLDER
	130	292412	C		1	END SECTION
	135	292413	C		1	END SECTION
	140	292414	C		1	CARRIER
	373	312101-0331	-		7	SCREW M6S5X20FZB
	397	315101-0146	-		7	WASHER BRB5,3X10FZB
	405	315202-0304	P		2	O-RING 64,5X3
	410	315202-0305	P		2	O-RING 69,5X3
375ml						
		C- 293685-0202				**Printing Wheel, Ass'y**
	105	293395-0002	P		1	TYPE HOLDER
	110	293395-0001	P		1	TYPE HOLDER
	130	479236	C		2	END SECTION
	140	479239	C		1	CARRIER
	145	479240	C		1	CARRIER
	150	293671	C		1	SPACER
	250	312101-0329	-		2	SCREW M6S5X16FZB
	373	312101-0331	-		3	SCREW M6S5X20FZB
	397	315101-0146	-		5	WASHER BRB5,3X10FZB
	403	315202-0224	P		4	O-RING 42,2X3
Common parts						
	120	32691	P		1	LOCKING SPRING
	125	33011	S		1	SLEEVE
	320	90165-0010	-		1	CLIP
	330	90413-0033	P		1	CODE INSERT SET
	330	90413-0043	P		1	CODE INSERT SET
	335	90413-0044	P		1	CODE INSERT SET
	335	90413-0047	P		1	CODE INSERT SET
	370	312101-0287	-		1	SCREW M6S4X8FZB
	375	312101-0364	-		1	SCREW M6S6X10FZB
	380	312111-0335	-		1	SCREW MC6S5X30FZB
	395	315101-0136	-		1	WASHER BRB4,3X8FZB
	400	315111-0153	-		1	WASHER TBRB6,4X12FZB
	415	321120-0122	S		2	BUSHING 15/17X15

From	Pos	Part No	SP	UN	Qty	Description

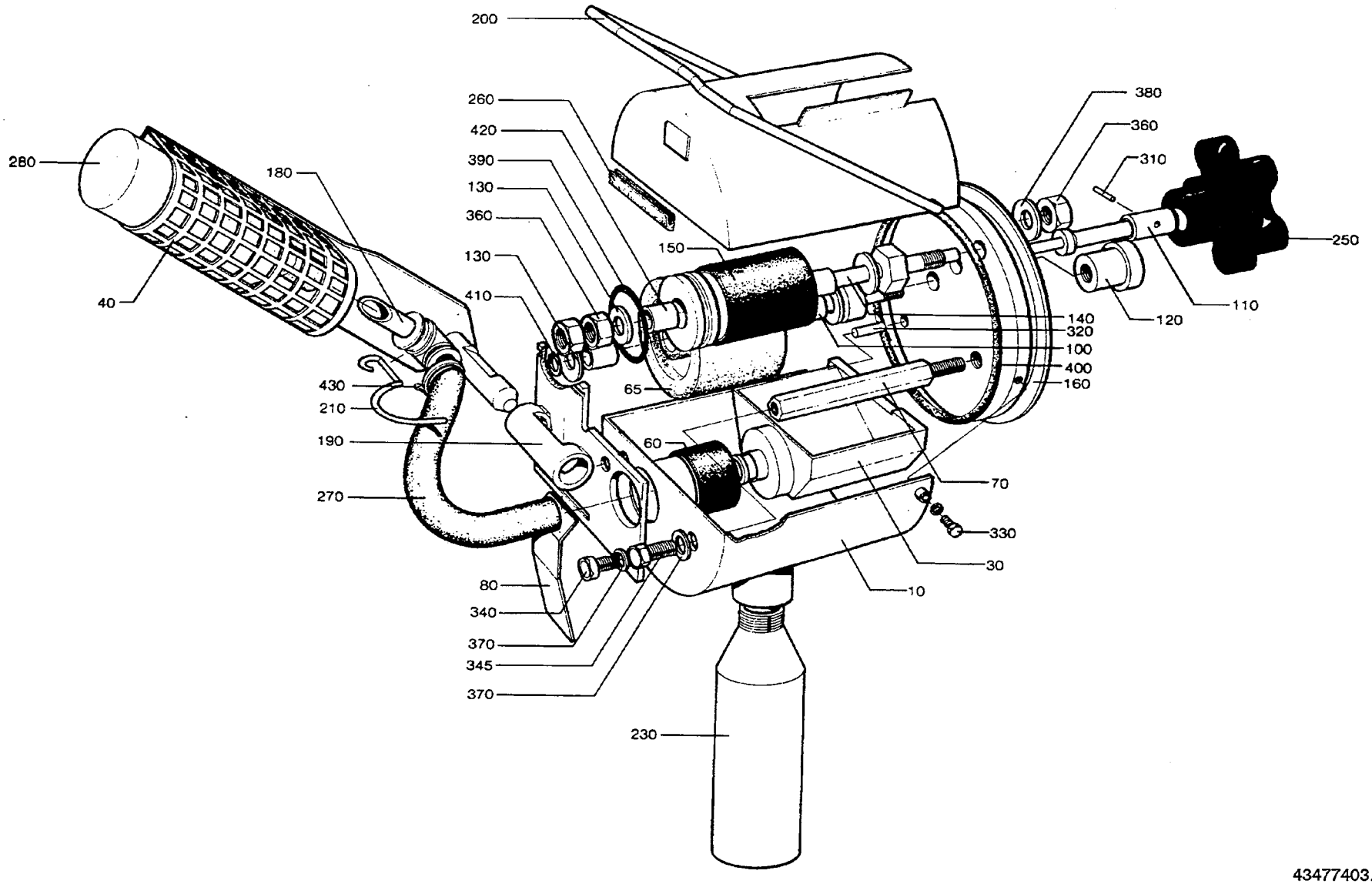

43477403.TIF
434774-3
AM

Last Alteration: AM 16183 91-04-08

Corresponding group: 434774-030V
Assembly Drawing: 434774-3

Issue: **940524**

From	Pos	Part No	SP	UN	Qty	Description
TBA/3 TBA/3R TB/8 TB/9						
	F000	**C- 434774-0301**				**Ink Unit, Ass'y**
	230	90050-0008	P		1	BOTTLE
TBA/9						
	F000	**C- 434774-0302**				**Ink Unit, Ass'y**
	230	90050-0012	P		1	BOTTLE
Common parts						
	010	297989	-		1	COVER
	030	297210	-		1	INK WELL
	040	476356	C		1	HOLDER FOR INK BOTTLE
	060	445542	P		1	MANTEL RUBBER
	065	450355	S		1	INK ROLLER
	070	33010	-		1	SCREW
	080	35547	S		1	SPRING
	100	292044	P		1	SHAFT
	110	293667	S		1	DOWEL
	120	436927	C		1	NUT
	130	293669-0001	P		4	WASHER
	130	293669-0002	P		2	WASHER
	130	293669-0003	P		2	WASHER
	130	293669-0004	P		2	WASHER
	140	293670	P		1	SHAFT
	150	543135	P		1	INK TRANSFER ROLLER
	160	297213	S		1	END SECTION
	180	476355	S		1	CANNULAR TUBE
	190	456772	C		1	PIVOT BRACKET
	200	434747	S		1	BOW CLAMP
	210	537308	-		1	SPRING
	250	90051-0077	S		1	HANDLE
	260	90143-0029	S	MM	295	STRIP
	270	90166-0138	P	MM	100	HOSE
	280	90299-0013	P		X	INK
		90299-0300	R		0	# COVER
	300	311103-0236	-		2	CYLINDRICACP M6 3X16 RFR
	310	311103-0238	-		1	CYLINDRICACP M6 3X20 RFR
	320	311103-0270	-		1	CYLINDRICACP M6 4X16 RFR
	330	312105-0291	-		3	SCREW M6S4X12RFR
	340	312105-0327	-		2	SCREW M6S5X12 A4 80
	345	312105-0329	-		1	SCREW M6S5X16 A4 80
	347	312115-0287	-		2	SCREW 4X8 A4 80
	350	312605-0314	-		2	NUT M6M5RFR
	360	312605-0318	-		3	NUT M6M8RFR
	370	315105-0146	-		3	WASHER BRB5,3X10RFR
	380	315105-0165	-		2	WASHER BRB8,4X16RFR
	390	315202-0218	P		1	O-RING 26,2X3
	400	315202-0309	P		1	O-RING 89,5X3
	410	315750-0105	P		1	CIRCLIP SGA8
	420	321120-0100	S		4	BUSHING 8/10X12
	425	321120-0109	S		2	BUSHING 12/14X10
	430	352113-0101	P		1	RIBBON CLA

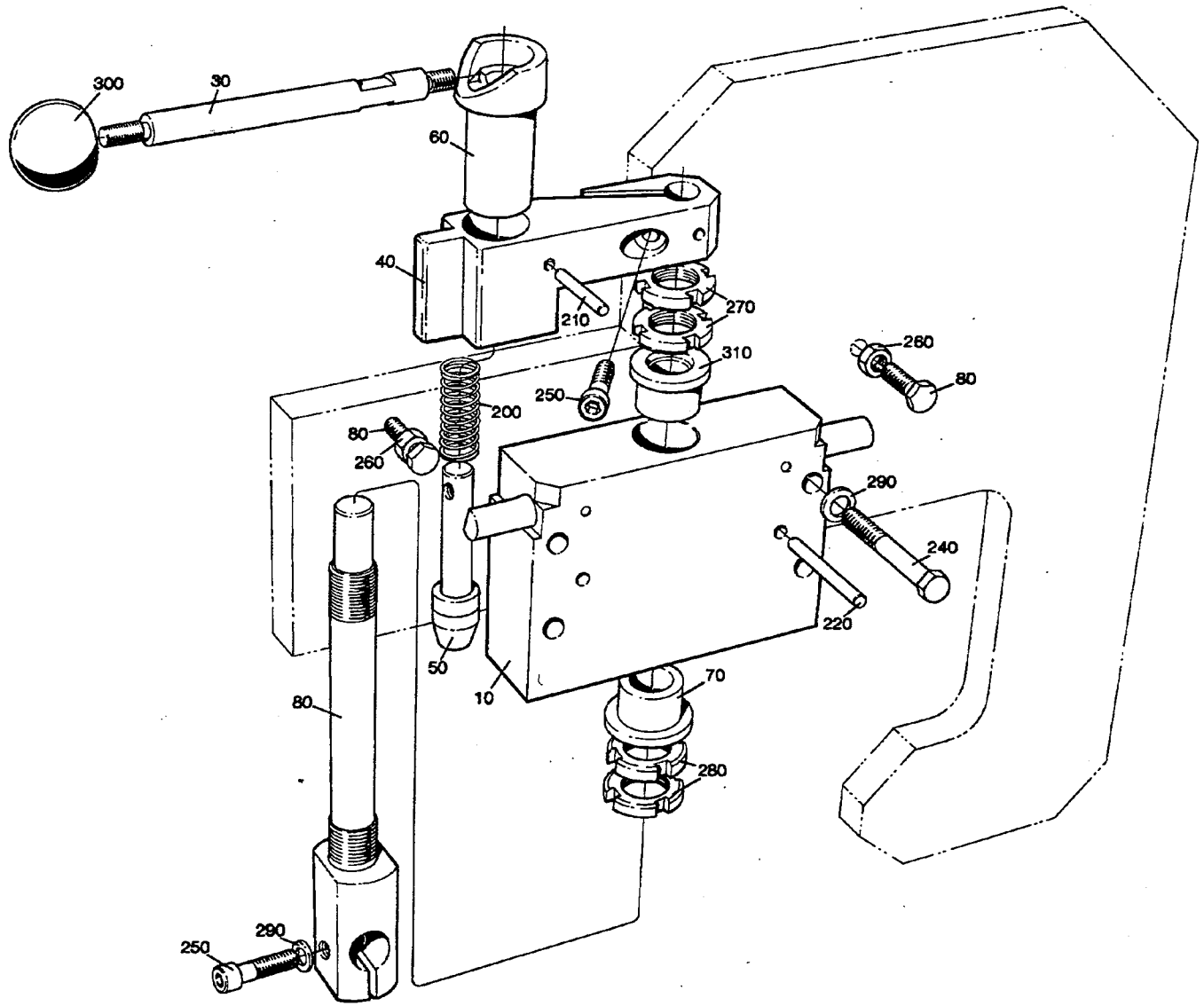

75171801.TIF
751718-1
AM 12932

Last Alteration: AM 12932 89-06-05

Corresponding group: 751718-010V
Assembly Drawing: 751718-1

Issue: 940524

From	Pos	Part No	SP	UN	Qty	Description
		C- 751718-0101				**Dating Wheel Holder, Ass'y**
	010	464009-0003	-		1	BLOCKING PIECE
	020	450497	-		1	SHAFT
	030	450500	-		1	DOWEL
	040	464010	-		1	ARM
	050	464011	-		1	LOCK STUD
	060	464012	-		1	CURVE
	070	466430	-		1	BUSHING
	080	476377	-		2	SCREW
	200	90335-0064	-		1	SPRING
	210	311103-0274	-		2	CYLINDRICACP 4X25 RFR
	220	311103-0318	-		2	CYLINDRICACP M6 5X40 RFR
	240	312105-0378	-		4	SCREW M6S6X40RFR
	250	312115-0370	-		2	SCREW 6X20 A4 80
	260	312605-0316	-		2	NUT M6M6RFR
	270	312805-0102	-		2	ROUND NUT KM2
	280	312805-0103	-		2	ROUND NUT KM3
	290	315105-0153	-		5	WASHER BRB6,4X12RFR
	300	318800-0103	-		1	HANDLE BALLA D.25-M6
	310	321111-0212	-		1	FLANGE BUS 15E7X15

From	Pos	Part No	SP	UN	Qty	Description

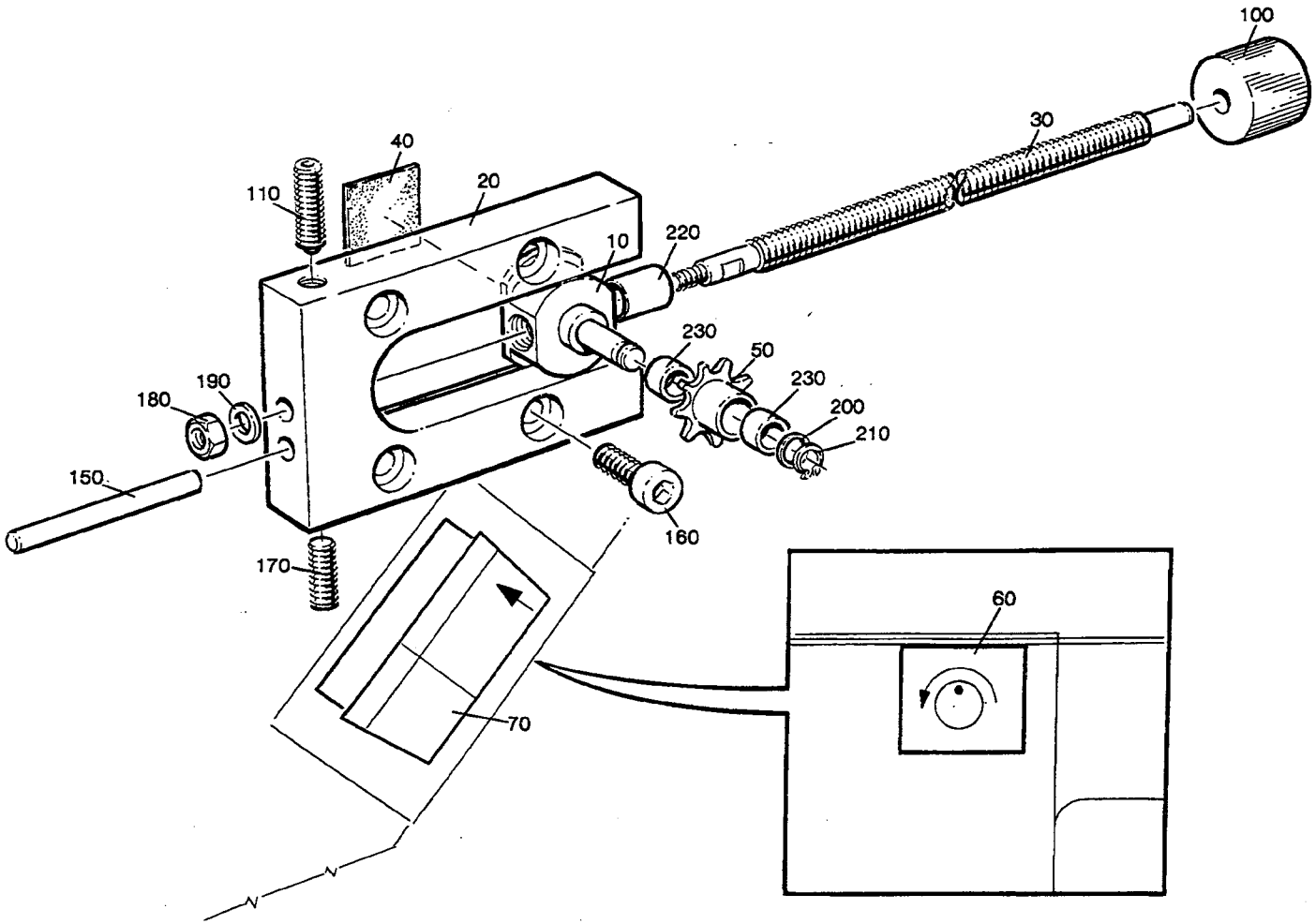

54314301.TIF
543143-1
AM 10835

Last Alteration: AM 10835 88-09-30

Corresponding group: 543143-010V
Assembly Drawing: 543143-1

Issue: 940524

From	Pos	Part No	SP	UN	Qty	Description
		C- 543143-0101				**Adjustment Device, Ass'y**
	010	526984	-		1	SADDLE
	020	526985	-		1	PLATE
	030	526986-0001	-		1	SHAFT
	040	527649	-		1	DISTANCE RUBBER
	050	529362	-		1	SPROCKET
	060	543141	-		1	SIGN
	070	543142	-		1	SIGN
	100	90051-0089	-		1	SHIFTER HANDLE
	110	90287-0167	-		1	SPRINGLOADED SCREW
	150	311103-0365	-		1	CYLINDRICACP M6 6X50 RFR
	160	312115-0368	-		2	SCREW 6X16 A4 80
	170	312318-0368	-		1	STOP SCREW SK6SS6X16RFR
	180	312605-0312	-		1	NUT M6M4RFR
	190	315105-0136	-		1	WASHER BRB4,3X8RFR
	200	315105-0153	-		1	WASHER BRB6,4X12RFR
	210	315751-0103	-		1	CIRCLIP SGA 6 RFR
	220	321120-0100	-		1	BUSHING 8/10X12
	230	321120-0101	-		2	BUSHING 6/8X6

From	Pos	Part No	SP	UN	Qty	Description

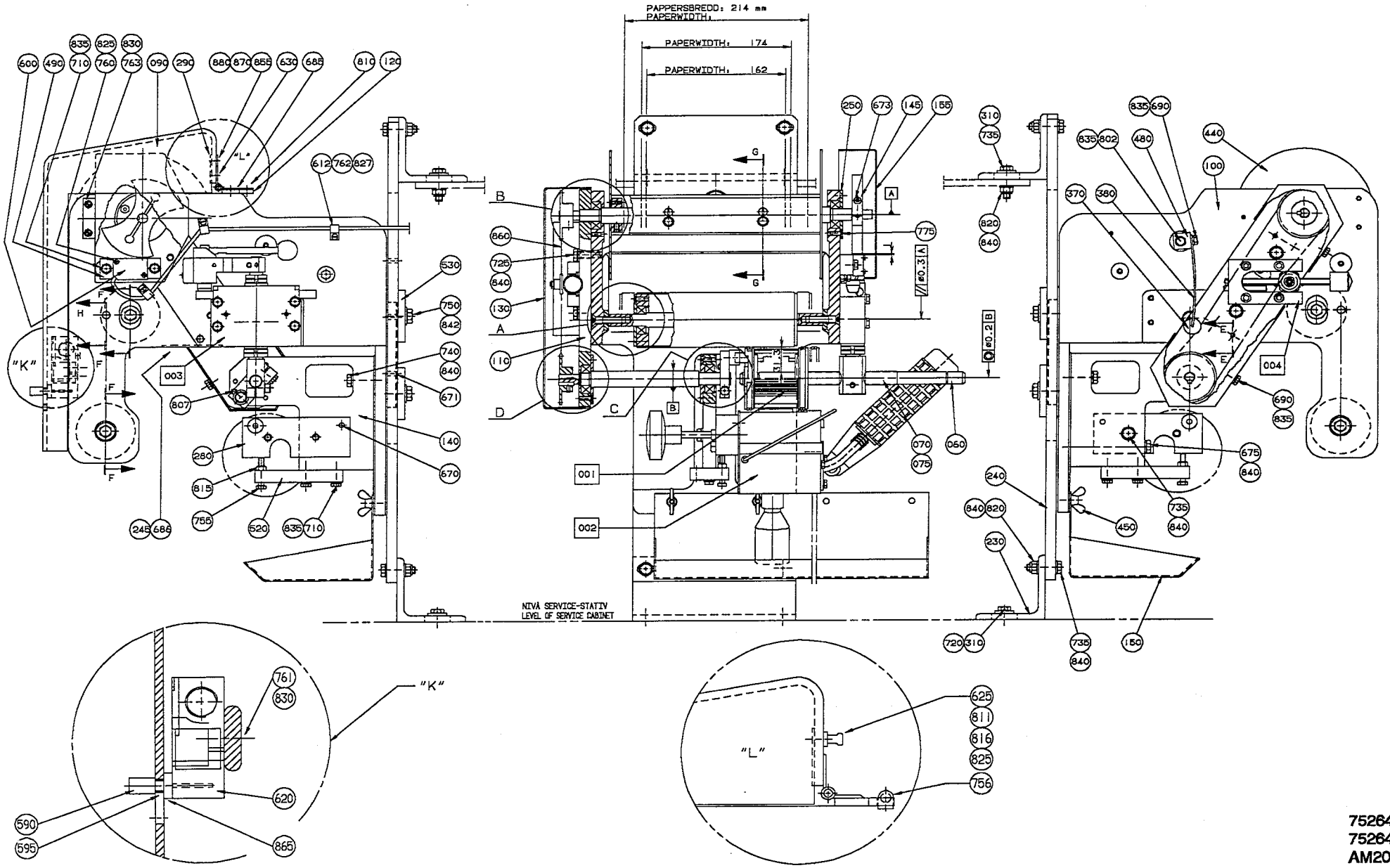

75264603.WPG
752646-3
AM20097

From	Pos	Part No	SP	UN	Qty	Description
250ml						
		C- 752646-0201				**Dating Unit, Ass'y**
	010	752542-0001	C		1	BENDING ROLLER
	020	752543-0001	C		1	SHAFT
	030	456767	C		2	CREASE BAR
	040	752536-0001	C		1	SHAFT
	050	441556-0002	C		2	SPACER
	060	256400	C		1	SHAFT
	065	299643	-		2	WASHER
	070	90166-0059	P	MM	24	HOSE
	075	90166-0059	P	MM	24	HOSE
	520	752541	-		1	CANTILEVER
	670	311103-0357	-		1	CYLINDRICACP M6 6X30 RFR
	735	312105-0457	-		7	SCREW M6S8X35RFR
236ml						
		C- 752646-0202				**Dating Unit, Ass'y**
	010	752542-0001	C		1	BENDING ROLLER
	020	752543-0001	C		1	SHAFT
	030	456767	C		2	CREASE BAR
	040	752536-0001	C		1	SHAFT
	050	441556-0003	C		2	SPACER
	060	256400	C		1	SHAFT
	070	90166-0059	P	MM	24	HOSE
	075	90166-0059	P	MM	24	HOSE
	520	752541	-		1	CANTILEVER
	670	311103-0357	-		1	CYLINDRICACP M6 6X30 RFR
	735	312105-0457	-		7	SCREW M6S8X35RFR
200ml						
		C- 752646-0203				**Dating Unit, Ass'y**
	010	752542-0001	C		1	BENDING ROLLER
	020	752543-0001	C		1	SHAFT
	030	456767	C		2	CREASE BAR
	040	752536-0001	C		1	SHAFT
	050	441556-0004	C		2	SPACER
	060	256400	C		1	SHAFT
	070	90166-0059	P	MM	24	HOSE
	075	90166-0059	P	MM	24	HOSE
	520	752541	-		1	CANTILEVER
	670	311103-0357	-		1	CYLINDRICACP M6 6X30 RFR
	735	312105-0457	-		7	SCREW M6S8X35RFR
180ml						
		C- 752646-0204				**Dating Unit, Ass'y**
	010	752542-0001	C		1	BENDING ROLLER
	020	752543-0001	C		1	SHAFT
	030	456767	C		2	CREASE BAR
	040	752536-0001	C		1	SHAFT
	050	441556-0006	C		2	SPACER
	060	256400	C		1	SHAFT
	070	90166-0059	P	MM	24	HOSE
	075	90166-0059	P	MM	24	HOSE
	520	752541	-		1	CANTILEVER
	670	311103-0357	-		1	CYLINDRICACP M6 6X30 RFR
	735	312105-0457	-		7	SCREW M6S8X35RFR
125ml						
		C- 752646-0205				**Dating Unit, Ass'y**
	010	752542-0002	C		1	BENDING ROLLER
	020	752543-0002	C		1	SHAFT
	030	456327	C		2	CREASE BAR
	040	752536-0002	C		1	SHAFT
	050	441556-0007	C		2	SPACER
	060	456334	C		1	SHAFT
	070	90166-0059	P	MM	37	HOSE
	075	90166-0059	P	MM	37	HOSE
	520	752541	-		1	CANTILEVER
	670	311103-0357	-		1	CYLINDRICACP M6 6X30 RFR
	735	312105-0457	-		7	SCREW M6S8X35RFR
200ml Slim						
		C- 752646-0206				**Dating Unit, Ass'y**
	010	752542-0002	C		1	BENDING ROLLER
	020	752543-0002	C		1	SHAFT
	030	441554	C		2	CREASE BAR
	040	752536-0002	C		1	SHAFT
	050	441556-0009	C		2	SPACER
	060	456334	C		1	SHAFT
	070	90166-0059	P	MM	37	HOSE
	075	90166-0059	P	MM	37	HOSE
	520	752541	-		1	CANTILEVER
	670	311103-0357	-		1	CYLINDRICACP M6 6X30 RFR
	735	312105-0457	-		7	SCREW M6S8X35RFR
284ml						
		C- 752646-0207				**Dating Unit, Ass'y**
	010	752542-0001	C		1	BENDING ROLLER
	020	752543-0001	C		1	SHAFT
	030	456767	C		2	CREASE BAR
	040	752536-0001	C		1	SHAFT
	050	441556-0001	C		2	SPACER
	060	256400	C		1	SHAFT
	070	90166-0059	P	MM	24	HOSE
	075	90166-0059	P	MM	24	HOSE
	520	752541	-		1	CANTILEVER

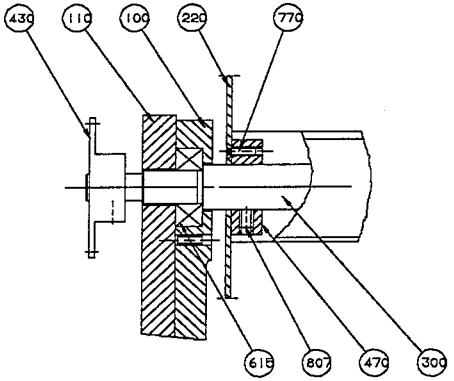

DET.B

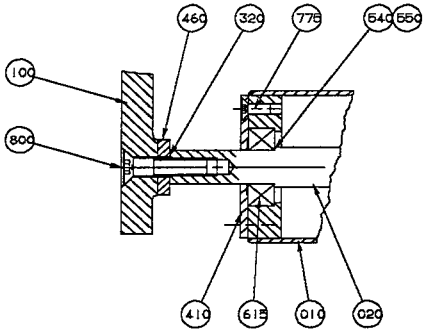

DET.A

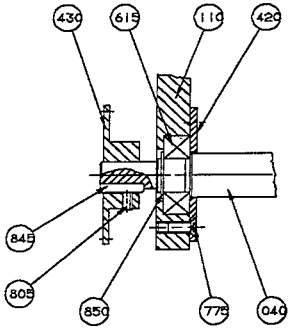

DET.D

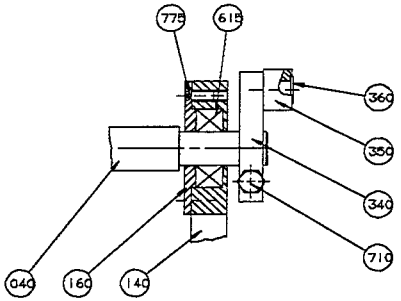

DET.C

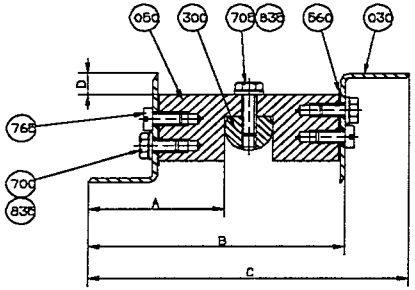

G-G

250 SLIM	67.6	130.2	155.2	8.16
284	62.7	118.9	145.4	9.86
200 SLIM	61.8	118.8	143.6	8.16
250	56.25	106	132.5	9.86
236	52.45	98.4	124.9	9.86
200	44.75	83	109.5	9.86
180	41	75.5	102	9.86
125	43	86	106	4.1
V (ml)	A	B	C	D
MEASURES ARE THEORETICAL				

POS. 320,540,550 - ANTAL EFTER BEHOV.
POS. 320,540,550 - NUMBER AS REQUIRED.

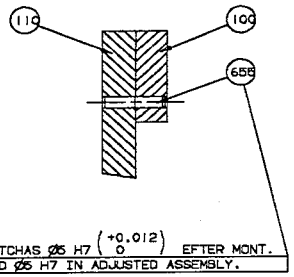

SAMBORRAS OCH BROTCHAS Ø6 H7 $\binom{+0.012}{0}$ EFTER MONT.
DRILLED AND REAMED Ø6 H7 IN ADJUSTED ASSEMBLY.

E-E

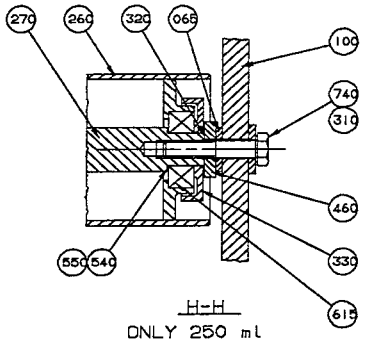

H-H
ONLY 250 ml

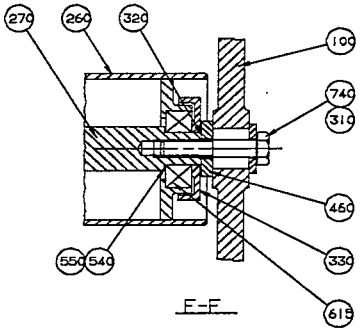

F-F

75264602.WPG
752646-2
AM 20154

Last Alteration: AM 20227 93-10-28

Corresponding group: 752646-020V
Assembly Drawing: 752646-2/3

Issue: 940524

From	Pos	Part No	SP	UN	Qty	Description
	670	311103-0357	-		1	CYLINDRICACP M6 6X30 RFR
	735	312105-0457	-		7	SCREW M6S8X35RFR
250ml Slim						
		C- 752646-0208				**Dating Unit, Ass'y**
	010	752542-0003	C		1	BENDING ROLLER
	020	752543-0003	C		1	SHAFT
	030	441554	C		2	CREASE BAR
	040	752536-0003	C		1	SHAFT
	050	441556-0010	C		2	SPACER
	060	574443	-		1	SHAFT
	070	90166-0059	P	MM	30	HOSE
	075	90166-0059	P	MM	30	HOSE
	080	574444	-		1	SPACER
	520	574445	-		1	CANTILEVER
	670	311103-0361	-		1	CYLINDRICACP M6 6X40 RFR
	735	312105-0457	-		6	SCREW M6S8X35RFR
	736	312105-0460	-		1	SCREW M6S8X45RFR
160ml						
		C- 752646-0209				**Dating Unit, Ass'y**
	010	752542-0002	C		1	BENDING ROLLER
	020	752543-0002	C		1	SHAFT
	030	441554	C		2	CREASE BAR
	040	752536-0002	C		1	SHAFT
	050	441556-0011	C		2	SPACER
	060	456334	C		1	SHAFT
	070	90166-0059	P	MM	37	HOSE
	075	90166-0059	P	MM	37	HOSE
	520	752541	-		1	CANTILEVER
	670	311103-0357	-		1	CYLINDRICACP M6 6X30 RFR
	735	312105-0457	-		7	SCREW M6S8X35RFR
Common Parts						
	F001	**C- 293684-0204**	**-**		**2**	**PRINTING WHEEL**
	F002	**C- 434074-0302**	**-**		**1**	**INK UNIT**
	F003	**C- 751718-0101**	**-**		**1**	**DATING WHEEL HOLDER**
	F004	**C- 543143-0101**	**-**		**1**	**ADJUSTMENTMENT DEVICE**
	090	572251	-		1	COVER
	100	G- 752200	-		1	CANTILEVER
	110	752526	-		1	PLATE
	120	572252	-		1	BRACKET
	130	752528	-		1	COVER
	140	752527	-		1	CANTILEVER
	145	491965	-		1	CAM
	150	491723	-		1	SPLASH PLATE
	155	556422	-		1	PROTECTION
	160	752529	C		1	BEARING COVER

From	Pos	Part No	SP	UN	Qty	Description
	230	456331	-		2	ANGLE BRACKET
	240	752539	-		1	PLATE
	245	572460	-		1	SHEET
	250	752240	-		1	LID
	260	752537	C		2	BENDING ROLLER
	270	752538	C		2	SHAFT
	280	752642	-		1	BRACKET
	290	572253	-		1	SHEET
	300	752535	C		1	SHAFT
	310	28036	-		8	WASHER
	320	2033-0011	C		20	WASHER
	330	265568	S		4	DUST COVER
	340	32925	C		1	CARRIER
	350	32926	C		1	ROLL
	360	32927	C		1	SHAFT
	370	33182	S		1	ROLL
	380	752237	S		1	SPRING
	410	256248-0001	C		2	LID
	420	256398	C		1	LID
	430	752530	S		2	SPROCKET
	440	256406	-		2	GABLE PLATE
	450	752644	-		2	SCREW
	460	256409	-		6	WASHER
	470	257141	-		2	RETAINING RING
	480	752531	-		1	BRACKET
	490	752534	-		1	PLATE
	530	253107	C		2	WASHER
	540	752544-0001	C		6	SHIM
	550	752544-0002	C		8	SHIM
	560	456817-0001	S		8	SHIM
	590	572254	-		1	HANDLE
	595	572255	-		2	SPACER
	600	90044-0104	P		1	INDUCTIVE SWITCH
	612	90074-0001	-		6	CLIP
	615	90214-0098	P		10	BALL BEARING
	620	90044-0103	-		1	LIMIT SWITCH
	625	90184-0001	-		1	LOCK
	630	90248-0026	-		2	HINGE
	655	311103-0312	-		2	CYLINDRICACP M6 5X25 RFR
	671	311103-0353	-		2	CYLINDRICACP M6 6X20 RFR
	673	312115-0333	-		2	SCREW A4 80
	675	312101-0466	-		1	SCREW M6S8X75FZB
	680	312105-0327	-		2	SCREW M6S5X12 A2 80
	685	312105-0329	-		2	SCREW M6S5X16 A2 80
	686	312105-0331	-		3	SCREW M6S5X20 A2 80

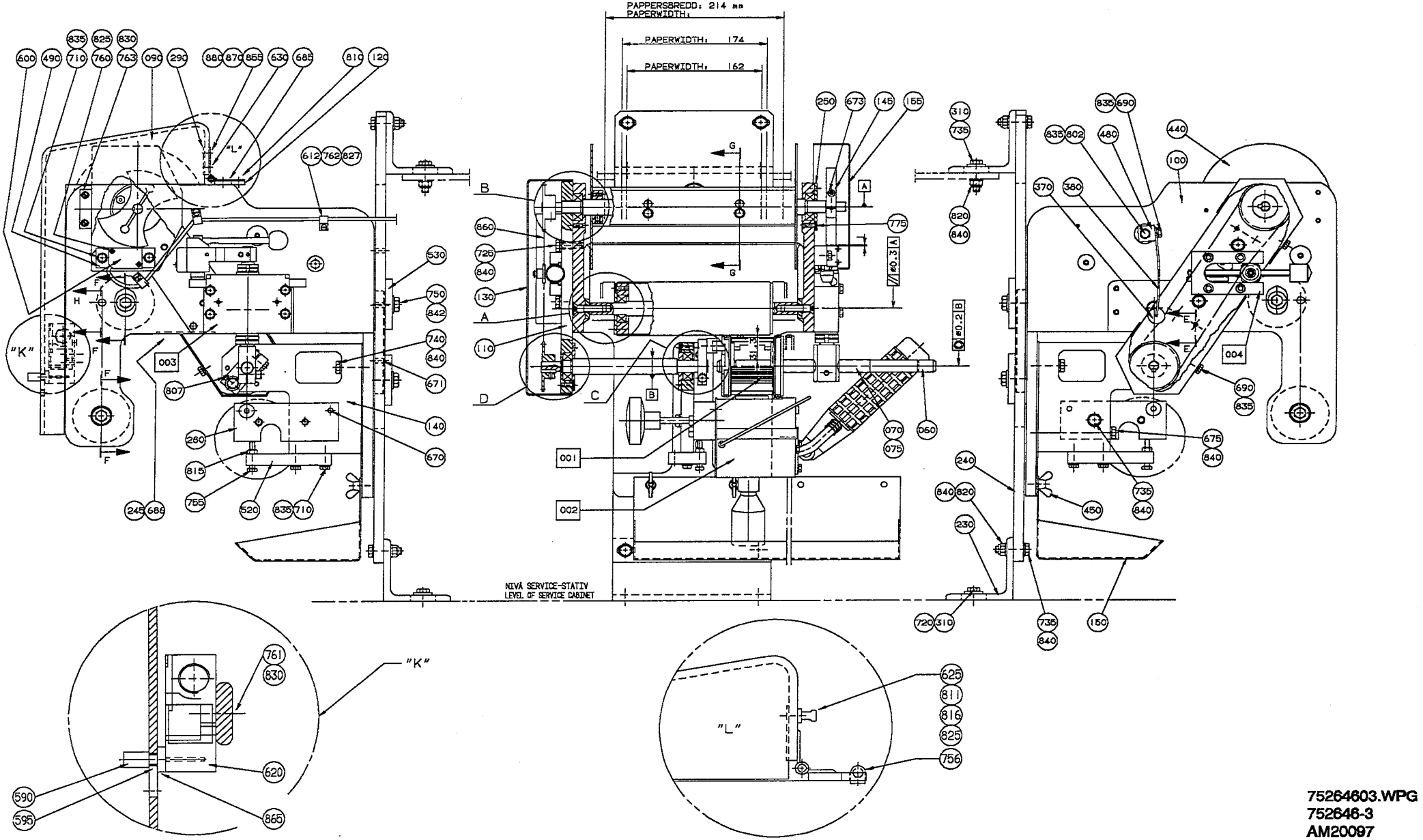
PAPPERSBREDD: 214 mm
PAPERWIDTH:
PAPERWIDTH: 174
PAPERWIDTH: 162
NIVÅ SERVICE-STATIV
LEVEL OF SERVICE CABINET
"K"
"L"

From	Pos	Part No	SP	UN	Qty	Description
	690	312105-0364	-		3	SCREW M6S6X10RFR
	700	312105-0366	-		4	SCREW M6S6X12RFR
	705	312105-0370	-		2	SCREW M6S6X20RFR
	710	312105-0372	-		5	SCREW M6S6X25RFR
	720	312105-0451	-		2	SCREW M6S8X20RFR
	725	312105-0453	-		2	SCREW M6S8X25RFR
	740	312105-0459	-		5	SCREW M6S8X40RFR
	750	312105-0493	-		2	SCREW M6S10X25RFR
	755	312109-0376	-		1	SCREW 6X35 H RFR
	756	312125-0224	-		2	SLOTTED HEMCS3X10RFR
	760	312125-0230	-		2	SLOTTED HEMCS3X20RFR
	761	312125-0329	-		2	SLOTTED HEMCS5X16RFR
	762	312125-0289	-		6	SLOTTED HEMCS4X10RFR
	763	312125-0325	-		2	SLOTTED HEMCS5X10RFR
	765	312125-0366	-		4	SLOTTED HEMCS6X12RFR
	770	312155-0291	-		6	SCREW MF6S4X12RFR
	775	312155-0327	-		15	SCREW MF6S5X12RFR
	800	312155-0457	-		2	SCREW MF6S8X35RFR
	802	312105-0382	-		1	SCREW M6S6X60RFR
	805	312318-0287	-		2	STOP SCREW SK6SS4X8RFR
	807	312318-0362	-		3	STOP SCREW SK6SS6X8RFR
	810	312145-0285	-		6	SLOTTED HEMFS4X6RFR
	811	312145-0228	-		2	SLOTTED HEMFS3X16RFR
	815	312605-0316	-		1	NUT M6M6RFR
	816	312812-0310	-		2	LOCK NUT A2-M3RFR
	820	312812-0318	-		6	LOCK NUT A2-M8RFR
	825	315105-0124	-		4	WASHER BRB3,2X6RFR
	827	315105-0136	-		6	WASHER BRB4,3X8RFR
	830	315105-0146	-		6	WASHER BRB5,3X10RFR
	835	315105-0153	-		14	WASHER BRB6,4X12RFR
	840	315105-0165	-		15	WASHER BRB8,4X16RFR
	842	315105-0173	-		2	WASHER BRB10,5X22RFR
	845	315701-0169	S		2	FLAT WEDGE4X4X18
	850	315751-0112	P		1	CIRCLIP SGA15 RFR
	855	312145-0293	-		6	SLOTTED HEMFS4X16RFR
	860	318207-0168	S		1	ROLLER CHA6MM
	870	312812-0312	-		6	LOCK NUT A2-M4RFR
	880	315101-0136	-		6	WASHER BRB4,3X8FZB
	900	352101-0102	-		1	LEAD-IN G 15,2

From	Pos	Part No	SP	UN	Qty	Description

1000ml Slim
1000ml Square
1000ml-750ml

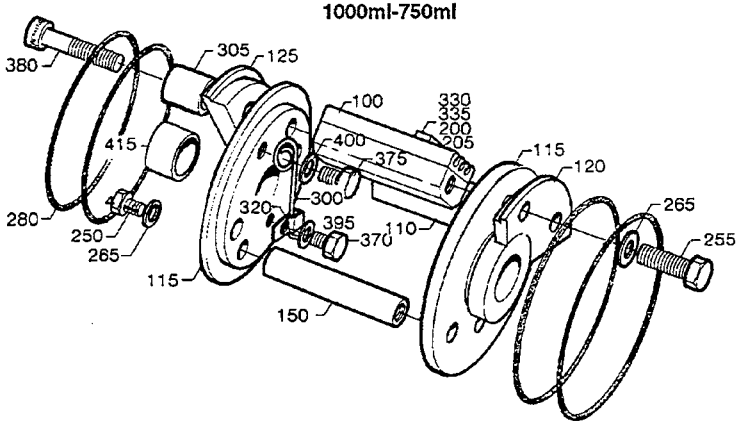

750ml Slim
500ml Slim
400ml-355ml

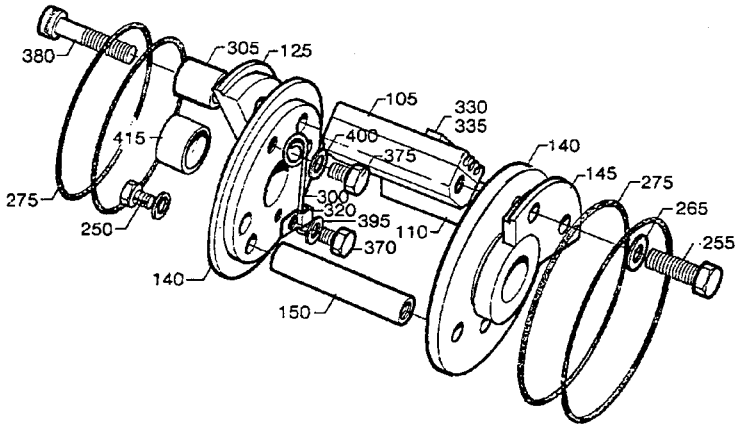

500ml-568ml

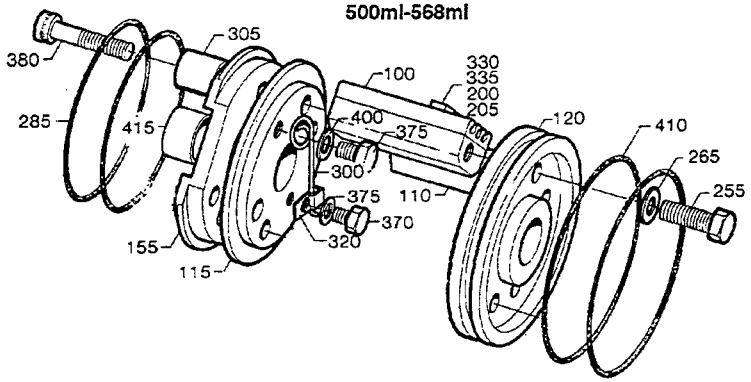

200ml Slim
160ml-300ml

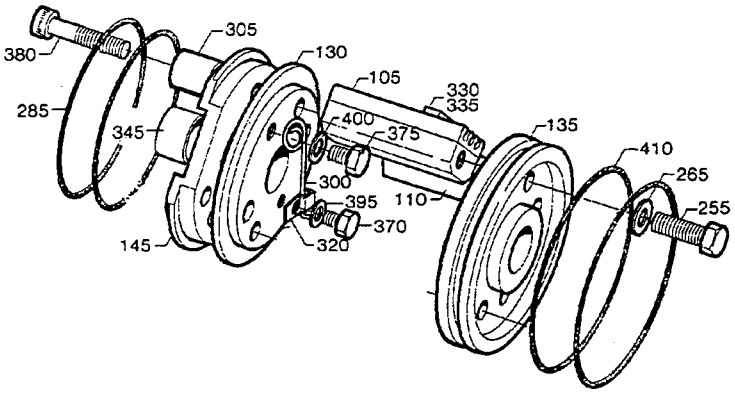

29368403.TIF
293684-3
AM

Last Alteration: AM 20227 93-10-28

Corresponding group: 293684-020V
Assembly Drawing: 293684-3/4

Issue: **940524**

From	Pos	Part No	SP	UN	Qty	Description
1000ml LoFin 1136ml - 750ml 1000ml Slim 1000ml Square						
		C- 293684-0201				**Printing Wheel, Ass'y**
	100	293395-0003	P		1	TYPE HOLDER
	110	293395-0001	P		1	TYPE HOLDER
	115	292409	C		2	END SECTION
	120	442072	C		1	CARRIER
	125	292411	C		1	CARRIER
	150	293671	C		1	SPACER
	200	90413-0048	P		1	CODE INSERT SET
	205	90413-0049	P		1	CODE INSERT SET
	250	312101-0329	-		2	SCREW M6S5X16FZB
	255	312101-0331	-		3	SCREW M6S5X20FZB
	265	315101-0146	-		5	WASHER BRB5,3X10FZB
	280	315202-0301	P		4	O-RING 49,5X3
568ml 500ml						
		C- 293684-0202				**Printing Wheel, Ass'y**
	100	293395-0003	P		2	TYPE HOLDER
	110	293395-0001	P		2	TYPE HOLDER
	115	434787	C		1	END SECTION
	120	292410	C		1	END SECTION
	155	293676	C		1	CARRIER
	200	90413-0048	P		1	CODE INSERT SET
	205	90413-0049	P		1	CODE INSERT SET
	255	312101-0331	-		7	SCREW M6S5X20FZB
	265	315101-0146	-		7	WASHER BRB5,3X10FZB
	285	315202-0304	P		2	O-RING 64,5X3
	410	315202-0305	P		2	O-RING 69,5X3
750ml Slim 500ml Slim 400ml - 355ml						
		C- 293684-0203				**Printing Wheel, Ass'y**
	105	293395-0002	P		1	TYPE HOLDER
	110	293395-0001	P		1	TYPE HOLDER
	125	479237	C		1	CARRIER
	140	479236	C		2	END SECTION
	145	479238	C		1	CARRIER
	150	293671	C		1	SPACER
	250	312101-0329	-		2	SCREW M6S5X16FZB
	255	312101-0331	-		3	SCREW M6S5X20FZB
	265	315101-0146	-		5	WASHER BRB5,3X10FZB
	275	315202-0224	P		4	O-RING 42,2X3
300ml - 160ml 250ml Slim 200ml Slim						
		C- 293684-0204				**Printing Wheel, Ass'y**
	105	293395-0002	P		2	TYPE HOLDER
	110	293395-0001	P		2	TYPE HOLDER
	130	292412	C		1	END SECTION
	135	292413	C		1	END SECTION
	145	293659	C		1	CARRIER
	255	312101-0331	-		7	SCREW M6S5X20FZB
	265	315101-0146	-		7	WASHER BRB5,3X10FZB
	285	315202-0304	P		2	O-RING 64,5X3
	410	315202-0305	P		2	O-RING 69,5X3
1000ml HiFin						
		C- 293684-0205				**Printing Wheel, Ass'y**
	100	293395-0003	P		1	TYPE HOLDER
	110	293395-0001	P		1	TYPE HOLDER
	115	293690	C		2	END SECTION
	120	442431	C		1	CARRIER
	125	293688	C		1	CARRIER
	150	293671	C		1	SPACER
	200	90413-0048	P		1	CODE INSERT SET
	205	90413-0049	P		1	CODE INSERT SET
	250	312101-0329	-		2	SCREW M6S5X16FZB
	255	312101-0331	-		3	SCREW M6S5X20FZB
	265	315101-0146	-		5	WASHER BRB5,3X10FZB
	280	315202-0301	P		4	O-RING 49,5X3
Common Parts						
	300	32691	P		1	LOCKING SPRING
	305	33011	S		1	SLEEVE
	320	90165-0010	-		1	CLIP
	330	90413-0033	P		1	CODE INSERT SET
	330	90413-0043	P		1	CODE INSERT SET
	335	90413-0047	P		1	CODE INSERT SET
	335	90413-0044	P		1	CODE INSERT SET
	370	312101-0287	-		1	SCREW M6S4X8FZB
	375	312101-0364	-		1	SCREW M6S6X10FZB
	380	312111-0335	-		1	SCREW MC6S5X30FZB
	395	315101-0136	-		1	WASHER BRB4,3X8FZB
	400	315111-0153	-		1	WASHER TBRB6,4X12FZB
	415	321120-0122	S		2	BUSHING 15/17X15

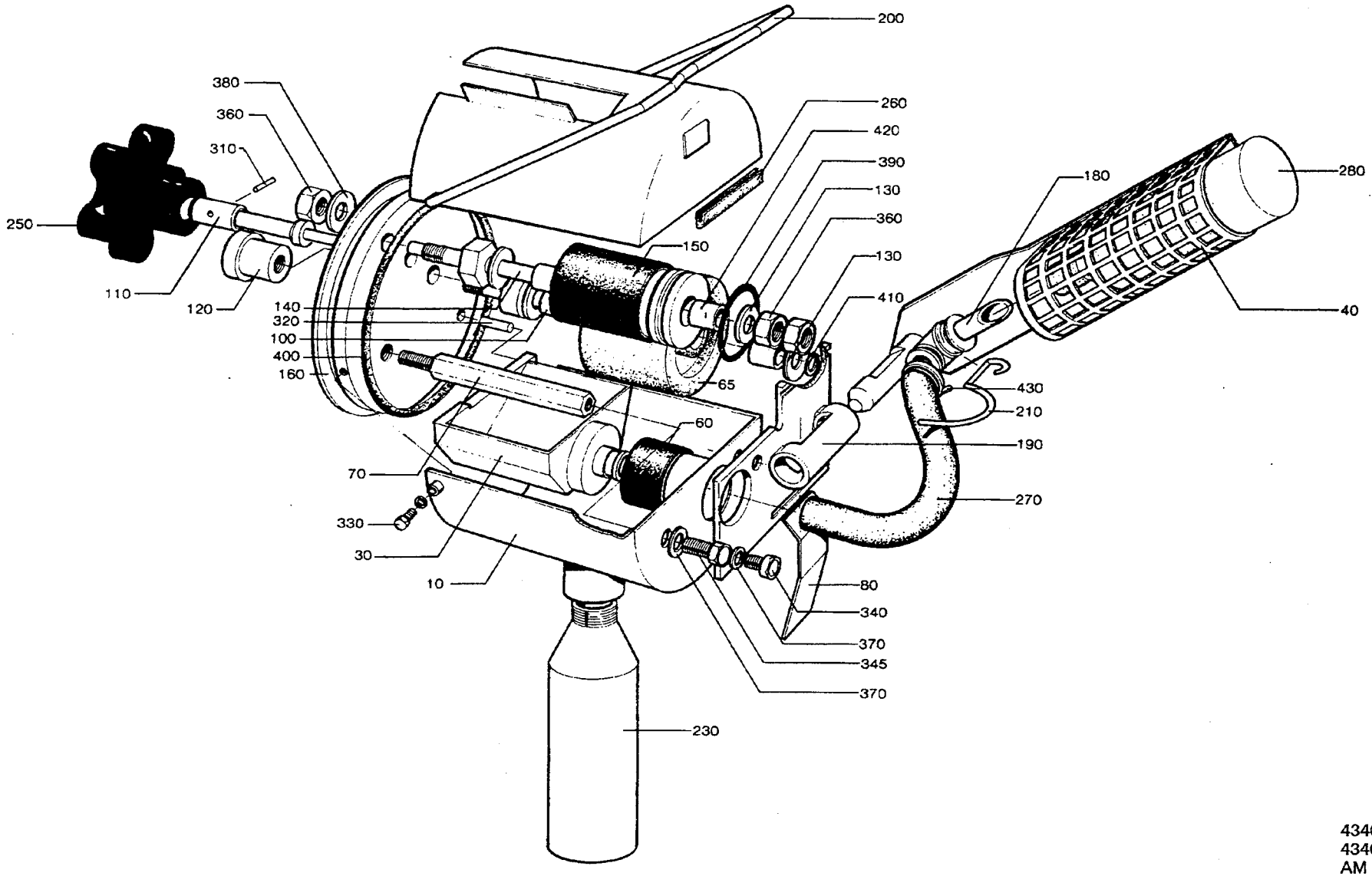

43407403.TIF
434074-3
AM

Last Alteration: AM 16183 91-04-08

Corresponding group: 434074-030V
Assembly Drawing: 434074-3

Issue: **940524**

From	Pos	Part No	SP	UN	Qty	Description
TBA/3 TBA/3R TB/8 TB/9						
	F000	**C- 434074-0301**				**Ink Unit, Ass'y**
	230	90050-0008	P		1	BOTTLE
TBA/9						
	F000	**C- 434074-0302**				**Ink Unit, ass'y**
	230	90050-0012	P		1	BOTTLE
Common parts						
	010	297988	-		1	COVER
	030	297211	-		1	INK WELL
	040	476356	C		1	HOLDER FOR INK BOTTLE
	060	445542	P		1	MANTEL RUBBER
	065	450355	S		1	INK ROLLER
	070	33010	-		1	SCREW
	080	35547	S		1	SPRING
	100	292044	P		1	SHAFT
	110	293667	S		1	DOWEL
	120	436927	C		1	NUT
	130	293669-0001	P		4	WASHER
	130	293669-0002	P		2	WASHER
	130	293669-0003	P		2	WASHER
	130	293669-0004	P		2	WASHER
	140	293670	P		1	SHAFT
	150	543135	P		1	INK TRANSFER ROLLER
	160	293697	S		1	END SECTION
	180	476354	S		1	CANNULAR TUBE
	190	456773	C		1	PIVOT BRACKET
	200	434747	S		1	BOW CLAMP
	210	537308	-		1	SPRING
	250	90051-0077	S		1	HANDLE
	260	90143-0029	S	MM	295	STRIP
	270	90166-0138	P	MM	100	HOSE
	280	90299-0013	P		X	INK
		90299-0300	R		0	# COVER
	300	311103-0236	-		2	CYLINDRICACP M6 3X16 RFR
	310	311103-0238	-		1	CYLINDRICACP M6 3X20 RFR
	320	311103-0270	-		1	CYLINDRICACP M6 4X16 RFR
	330	312105-0291	-		3	SCREW M6S4X12RFR
	340	312105-0327	-		2	SCREW M6S5X12 A4 80
	345	312105-0329	-		1	SCREW M6S5X16 A4 80
	347	312115-0287	-		2	SCREW 4X8 A4 80
	350	312605-0314	-		2	NUT M6M5RFR
	360	312605-0318	-		3	NUT M6M8RFR
	370	315105-0146	-		3	WASHER BRB5,3X10RFR
	380	315105-0165	-		2	WASHER BRB8,4X16RFR
	390	315202-0218	P		1	O-RING 26,2X3
	400	315202-0309	P		1	O-RING 89,5X3
	410	315750-0105	P		1	CIRCLIP SGA8
	420	321120-0100	S		4	BUSHING 8/10X12
	425	321120-0109	S		2	BUSHING 12/14X10
	430	352113-0101	P		1	RIBBON CLA

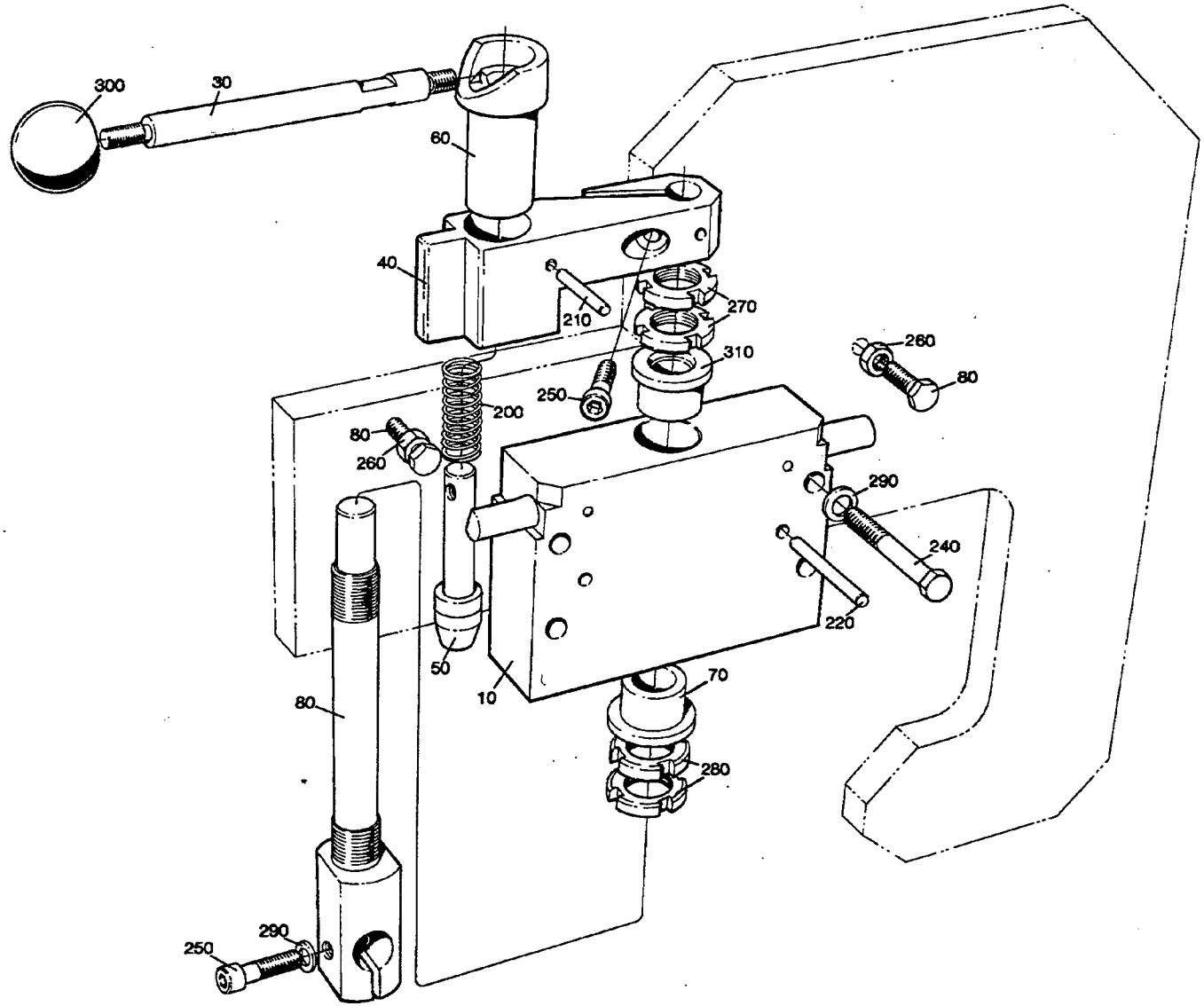

75171801.TIF
751718-1
AM 12932

Last Alteration: AM 12932 89-06-05

Corresponding group: 751718-010V
Assembly Drawing: 751718-1

Issue: **940524**

From	Pos	Part No	SP	UN	Qty	Description
		C- 751718-0101				**Dating Wheel Holder, Ass'y**
	010	464009-0003	-		1	BLOCKING PIECE
	020	450497	-		1	SHAFT
	030	450500	-		1	DOWEL
	040	464010	-		1	ARM
	050	464011	-		1	LOCK STUD
	060	464012	-		1	CURVE
	070	466430	-		1	BUSHING
	080	476377	-		2	SCREW
	200	90335-0064	-		1	SPRING
	210	311103-0274	-		2	CYLINDRICACP 4X25 RFR
	220	311103-0318	-		2	CYLINDRICACP M6 5X40 RFR
	240	312105-0378	-		4	SCREW M6S6X40RFR
	250	312115-0370	-		2	SCREW 6X20 A4 80
	260	312605-0316	-		2	NUT M6M6RFR
	270	312805-0102	-		2	ROUND NUT KM2
	280	312805-0103	-		2	ROUND NUT KM3
	290	315105-0153	-		5	WASHER BRB6,4X12RFR
	300	318800-0103	-		1	HANDLE BALLA D.25-M6
	310	321111-0212	-		1	FLANGE BUS 15E7X15

From	Pos	Part No	SP	UN	Qty	Description

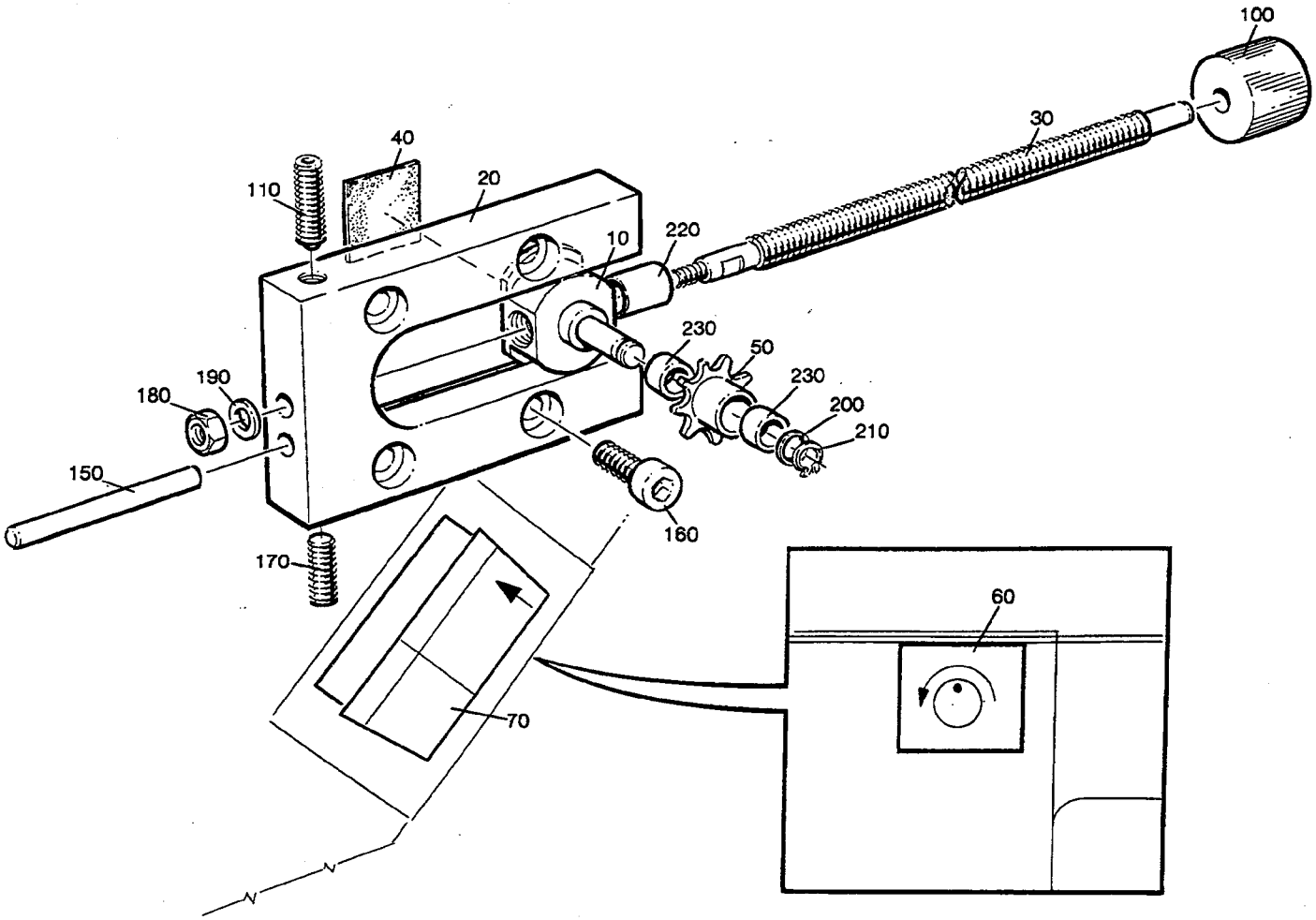

54314301.TIF
543143-1
AM 10835

Last Alteration: AM 10835 88-09-30

Corresponding group: 543143-010V
Assembly Drawing: 543143-1

Issue: **940524**

From	Pos	Part No	SP	UN	Qty	Description
		C- 543143-0101				**Adjustment Device, Ass'y**
	010	526984	-		1	SADDLE
	020	526985	-		1	PLATE
	030	526986-0001	-		1	SHAFT
	040	527649	-		1	DISTANCE RUBBER
	050	529362	-		1	SPROCKET
	060	543141	-		1	SIGN
	070	543142	-		1	SIGN
	100	90051-0089	-		1	SHIFTER HANDLE
	110	90287-0167	-		1	SPRINGLOADED SCREW
	150	311103-0365	-		1	CYLINDRICACP M6 6X50 RFR
	160	312115-0368	-		2	SCREW 6X16 A4 80
	170	312318-0368	-		1	STOP SCREW SK6SS6X16RFR
	180	312605-0312	-		1	NUT M6M4RFR
	190	315105-0136	-		1	WASHER BRB4,3X8RFR
	200	315105-0153	-		1	WASHER BRB6,4X12RFR
	210	315751-0103	-		1	CIRCLIP SGA 6 RFR
	220	321120-0100	-		1	BUSHING 8/10X12
	230	321120-0101	-		2	BUSHING 6/8X6

From	Pos	Part No	SP	UN	Qty	Description

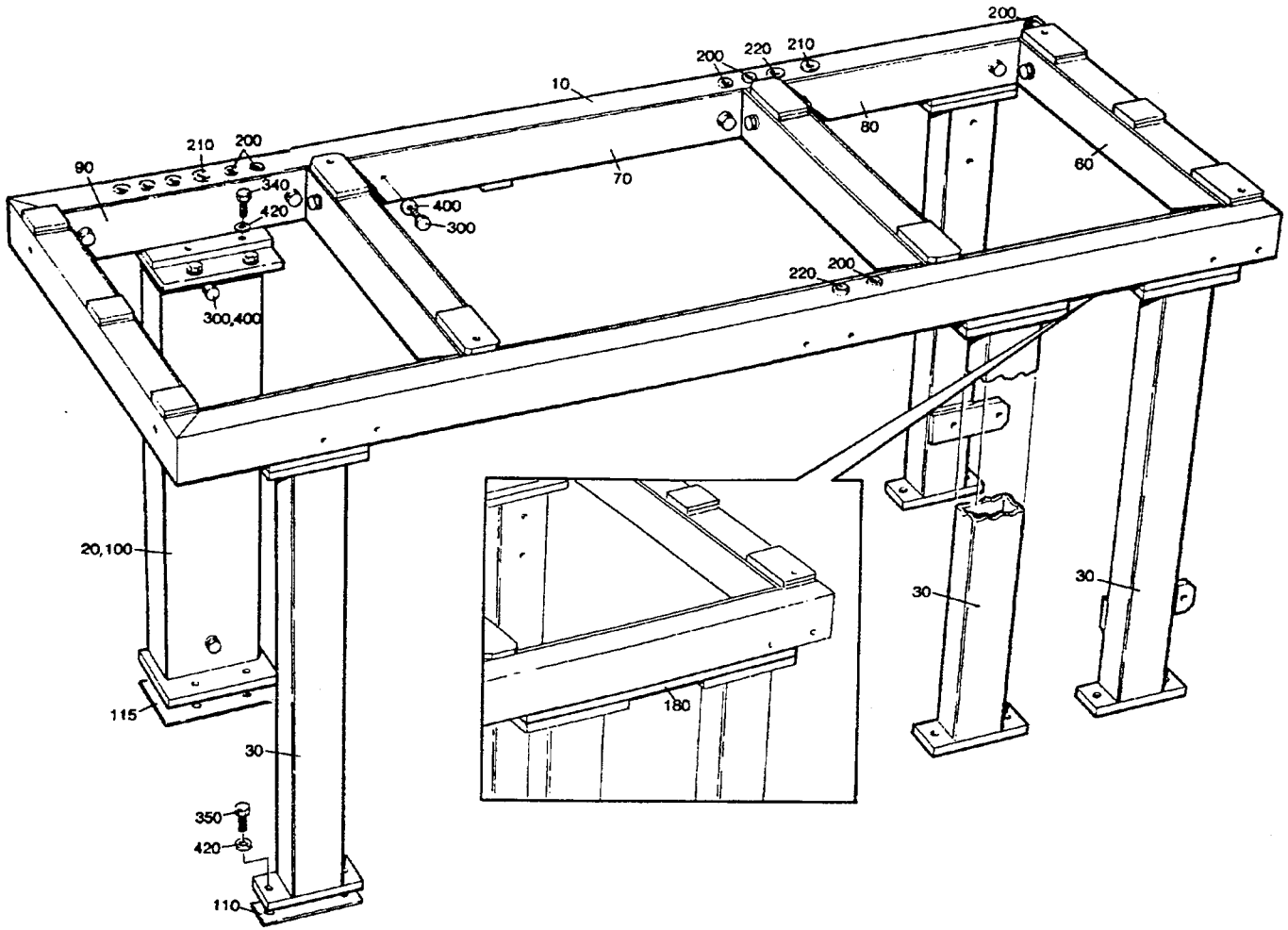

45692304.TIF
456923-4/5
AM 15660

Last Alteration: AM 15660 91-02-01

Corresponding group: 456923-030V
Assembly Drawing: 456923-4/5

Issue: **940524**

From	Pos	Part No	SP	UN Qty	Description
TBA/9					
		C- 456923-0301			**Machine Body, Ass'y**
	020	491725	-	1	LEG
	100	456933	-	1	LID
TB/9					
		C- 456923-0302			**Machine Body, Ass'y**
	020	752895	-	1	LEG
	100	752896	-	1	LID
Common parts					
	010	456924	-	1	FRAME
	030	491726	-	3	LEG
	060	456929	-	4	LID
	070	456930	-	2	LID
	080	456931	-	2	LID
	090	456932	-	2	LID
	110	752245	C	3	LACE
	115	752246	C	1	LACE
	180	311103-0310	-	3	CYLINDRICACP M6 5X20 RFR
	200	90015-0020	-	6	BUSHING
	210	90015-0021	-	5	BUSHING
	220	90015-0023	-	2	BUSHING
	300	312105-0366	-	22	SCREW M6S6X12RFR
	340	312105-0491	-	2	SCREW M6S10X20RFR
	350	312105-0493	-	14	SCREW M6S10X25RFR
	400	315105-0153	-	22	WASHER BRB6,4X12RFR
	420	315105-0173	-	16	WASHER BRB10,5X22RFR

From	Pos	Part No	SP	UN Qty	Description

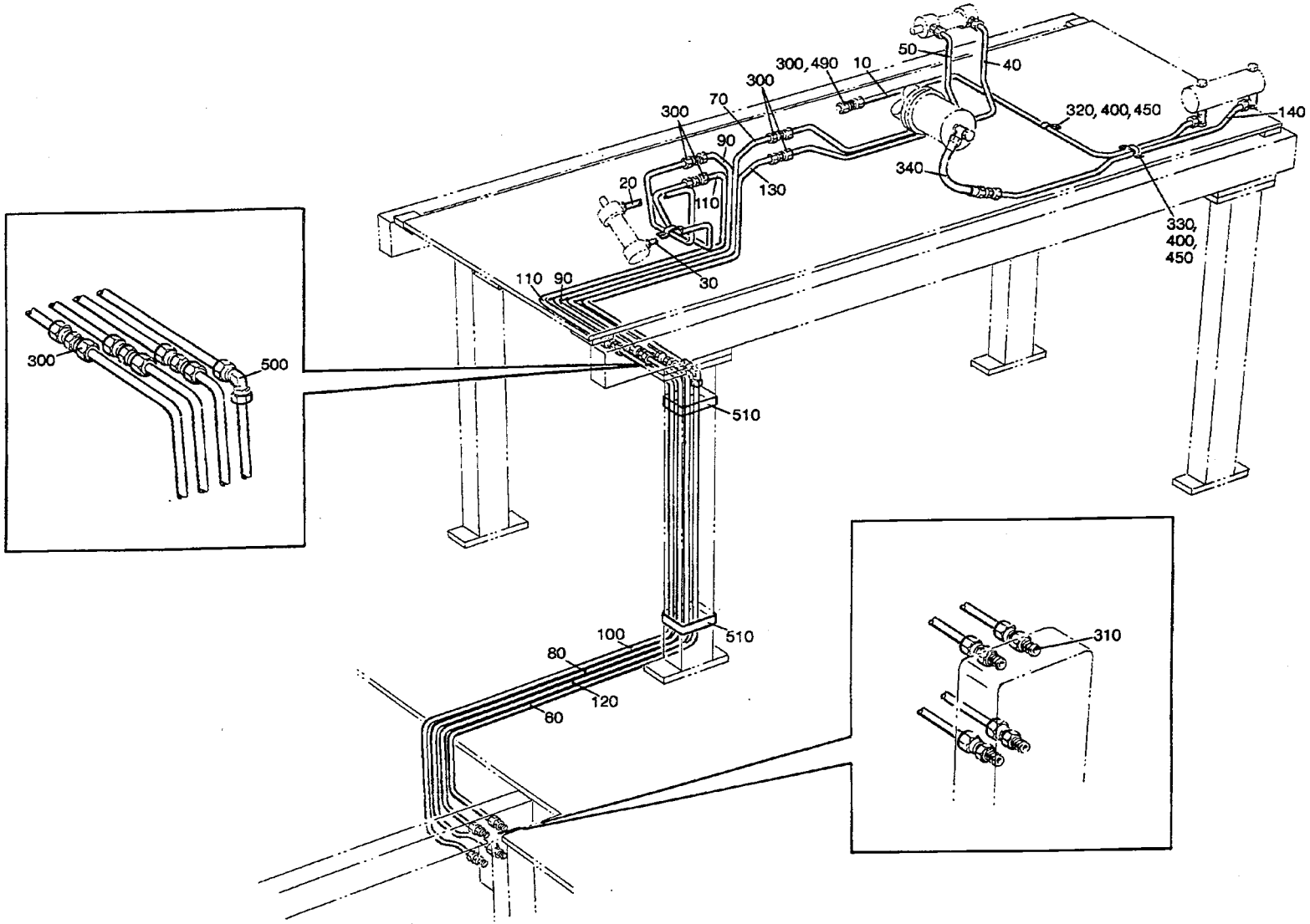

75289801.TIF
752898-1
AM 14614

Last Alteration: AM 14614 90-03-21

Corresponding group: 752898-010V
Assembly Drawing: 752898-1

Issue: **940524**

From	Pos	Part No	SP	UN	Qty	Description
250ml - 180ml						
		C- 752898-0101				**Tube Assembling TB/9, Ass'y**
	010	456731-0001	-		1	PIPE
	020	751073-0001	-		1	PIPE 240
	030	751074-0001	-		1	PIPE 241
	040	751080-0001	-		1	PIPE 200
	050	751144-0001	-		1	PIPE 201
200ml Slim						
		C- 752898-0102				**Tube Assembling TB/9, Ass'y**
	010	456731-0002	-		1	PIPE
	020	751073-0002	-		1	PIPE 240
	030	751074-0002	-		1	PIPE 241
	040	751080-0002	-		1	PIPE 200
	050	751144-0002	-		1	PIPE 201
125ml						
		C- 752898-0103				**Tube Assembling TB/9, Ass'y**
	010	456731-0003	-		1	PIPE
	020	751073-0002	-		1	PIPE 240
	030	751074-0002	-		1	PIPE 241
	040	751080-0003	-		1	PIPE 200
	050	751144-0003	-		1	PIPE 201

From	Pos	Part No	SP	UN	Qty	Description
Common parts						
	060	752899	-		1	PIPE
	070	752900	-		1	PIPE
	080	752901	-		1	PIPE
	090	752902	-		1	PIPE
	100	752903	-		1	PIPE
	110	752904	-		1	PIPE
	120	752905	-		1	PIPE
	130	752906	-		1	PIPE
	140	456732	-		1	PIPE
	300	90030-0075	-		8	PIPE CONNECTION
	310	90030-0184	-		4	PIPE CONNECTION
	320	90165-0005	-		1	CLIP
	330	90165-0006	-		2	CLIP
	340	90166-0132	-	MM	350	HOSE
	400	312125-0285	-		5	SLOTTED HEMCS4X6RFR
	450	315105-0136	-		5	WASHER BRB4,3X8RFR
	490	342708-0101	-		1	SLEEVE 6X1/MS
	500	342737-0204	-		1	ELBOW PIPE W 6-L RFR
	510	342991-0110	-		2	HOSE CLIP 50-65MMRFR
	520	359000-0064	-		16	MARKING CO2/4 OM#RKT
	530	359000-0400	-		8	MARKING CO2/4"0"
	540	359000-0401	-		4	MARKING CO2/4"1"
	550	359000-0402	-		8	MARKING CO2/4"2"
	560	359000-0404	-		4	MARKING CO2/4"4"

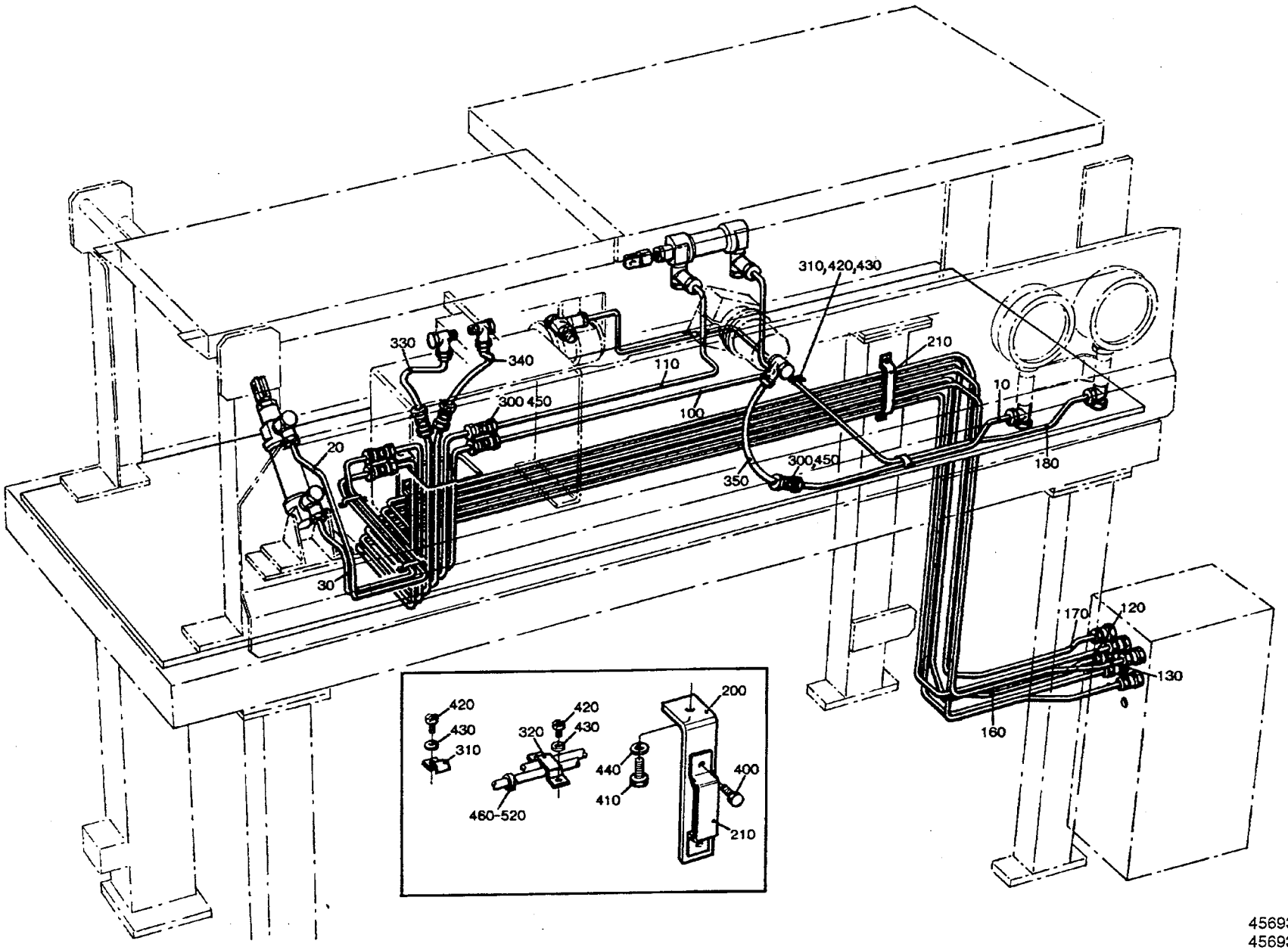

45693503.TIF
456935-3
AM 15660

From	Pos	Part No	SP	UN	Qty	Description
284ml-180ml						
		C- 456935-0301				**Pipe Work, Ass'y**
	010	456731-0001	-		1	PIPE
	020	751073-0001	-		1	PIPE 240
	030	751074-0001	-		1	PIPE 241
	100	751080-0001	-		1	PIPE 200
	110	751144-0001	-		1	PIPE 201
160ml 200ml Slim 250ml Slim						
		C- 456935-0302				**Pipe Work, Ass'y**
	010	456731-0002	-		1	PIPE
	020	751073-0002	-		1	PIPE 240
	030	751074-0002	-		1	PIPE 241
	100	751080-0002	-		1	PIPE 200
	110	751144-0002	-		1	PIPE 201
125ml						
		C- 456935-0303				**Pipe Work, Ass'y**
	010	456731-0003	-		1	PIPE
	020	751073-0002	-		1	PIPE 240
	030	751074-0002	-		1	PIPE 241
	100	751080-0003	-		1	PIPE 200
	110	751144-0003	-		1	PIPE 201
Common parts						
	120	456938	-		1	PIPE 241
	130	456939	-		1	PIPE 240
	160	456942	-		1	PIPE 201
	170	456943	-		1	PIPE 200
	180	456732	-		1	PIPE
	200	456936	-		1	FASTENING BRACKET
	210	456937	-		2	CRAMP
	300	90224-0304	-		5	CONNECTION
	310	90165-0005	-		1	CLIP
	320	90165-0006	-		2	CLIP
	350	90166-0132	-	MM	350	HOSE
	400	312105-0364	-		4	SCREW M6S6X10RFR
	410	312105-0451	-		1	SCREW M6S8X20RFR
	420	312125-0285	-		5	SLOTTED HEMCS4X6RFR
	430	315105-0136	-		5	WASHER BRB4,3X8RFR
	440	315105-0165	-		1	WASHER BRB8,4X16RFR
	450	342708-0101	-		1	SLEEVE 6X1/MS
	460	359000-0064	-		60	MARKING CO2/4 OM#RKT
	470	359000-0400	-		20	MARKING CO2/4"0"
	480	359000-0401	-		10	MARKING CO2/4"1"
	490	359000-0402	-		20	MARKING CO2/4"2"
	500	359000-0404	-		15	MARKING CO2/4"4"

From	Pos	Part No	SP	UN	Qty	Description

Last Alteration: AM 9628 86-10-16

Corresponding group: 295668-030V
Assembly Drawing:

Issue: **940524**

From	Pos	Part No	SP	UN Qty	Description
		C- 295668-0301			**Start-Up Kit, Ass'y**
	010	251279	-	1	COIL HEATER
	020	21903	-	1	ROLL
	030	531733	-	1	GASKET
	040	531734	-	2	GASKET
	050	531735	-	1	GASKET
	060	531736	-	1	GASKET
	070	90206-0031	-	1	HEATING ELEMENT

From	Pos	Part No	SP	UN Qty	Description

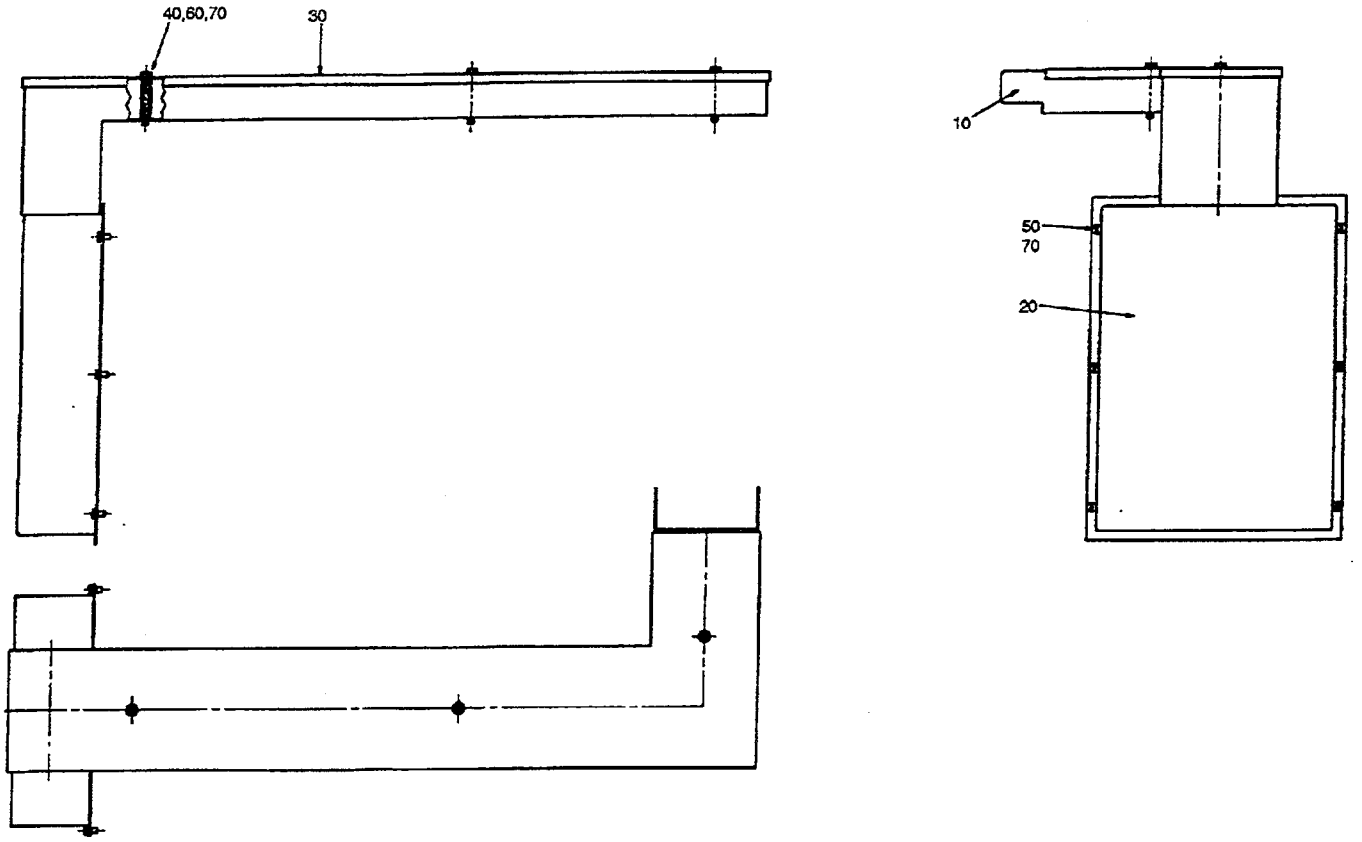

75288901.TIF
752889-1
AM 13966

Last Alteration: AM 13966 89-12-04

Corresponding group: 752889-010V
Assembly Drawing: 752889-1

Issue: **940524**

From	Pos	Part No	SP	UN	Qty	Description
		C- 752889-0101				**Cable Duct, Ass'y**
	010	752890	-		1	CABLE DUCT
	020	552039	-		1	COVER
	030	752891	-		1	LID
	040	552042	-		3	SCREW
	050	312125-0364	-		6	SLOTTED HEMCS6X10RFR
	060	312605-0316	-		3	NUT M6M6RFR
	070	315105-0153	-		9	WASHER BRB6,4X12RFR

From	Pos	Part No	SP	UN	Qty	Description

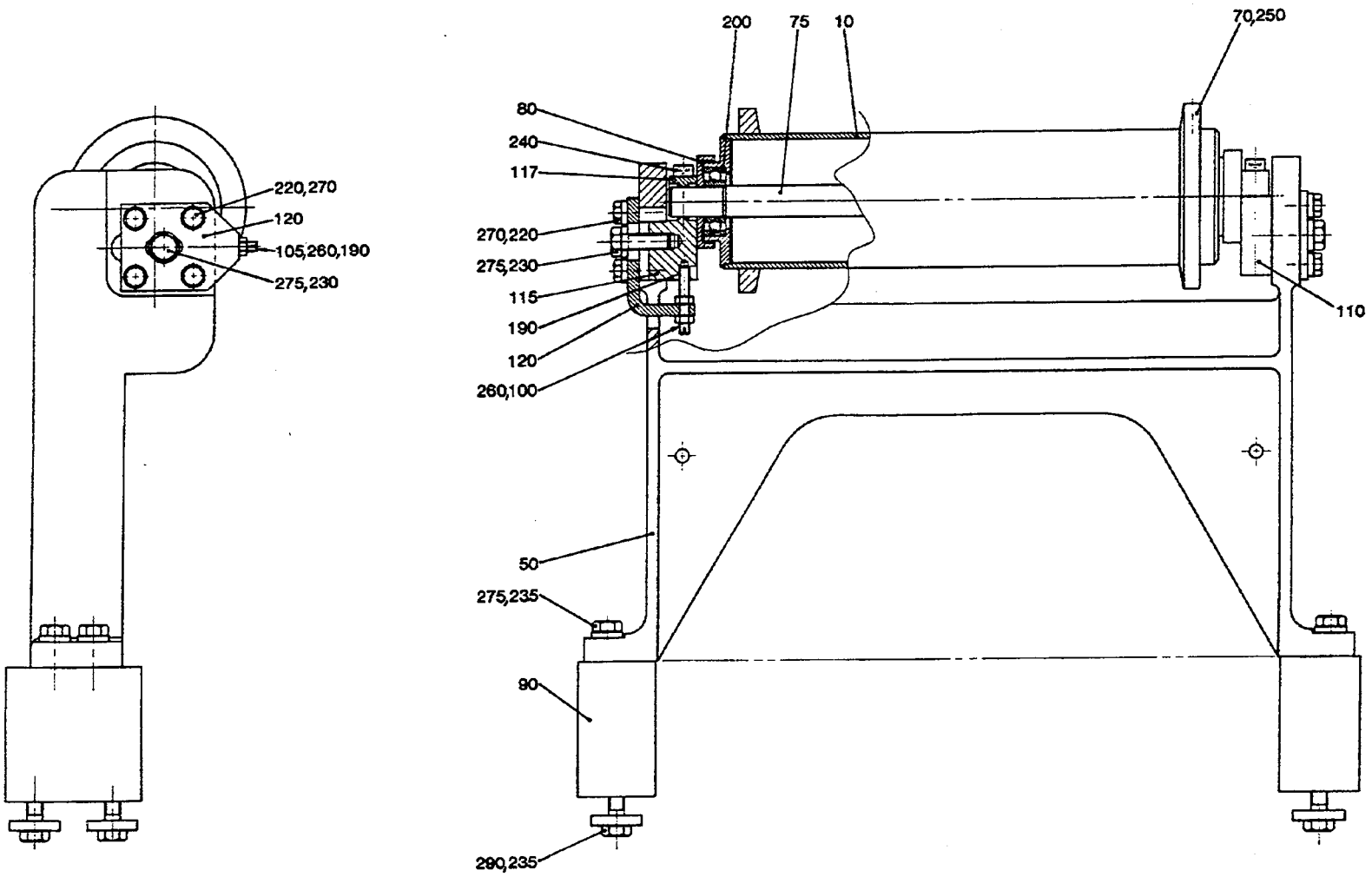

560202001.TIF
560202-1
AM 14614

Last Alteration: AM 14614 90-03-21

Corresponding group: 560202-010V
Assembly Drawing: 560202-1

Issue: 940524

From	Pos	Part No	SP	UN	Qty	Description
		C- 560202-0101				**Bending roller Rear, Ass'y**
	010	256984	C		1	BENDING ROLLER
	050	G- 752197	-		1	CANTILEVER
	070	250588	C		2	FLANGE
	075	256985	S		1	SHAFT
	080	265568	-		2	DUST COVER
	090	560185	-		2	HOLDER
	100	751527-0001	-		1	ADJUSTING SCREW
	105	751527-0003	-		1	ADJUSTING SCREW
	110	752194	-		1	MOUNTING LUG
	115	752195	-		1	MOUNTING LUG
	117	752196	-		2	CAP
	120	752199	-		2	PLATE
	190	90157-0021	-		X	LOCKING FLUID
	200	90214-0098	S		2	BALL BEARING
	220	312105-0370	-		8	SCREW M6S6X20RFR
	230	312105-0453	-		2	SCREW M6S8X25RFR
	235	312105-0455	-		4	SCREW M6S8X30RFR
	240	312115-0370	S		4	SCREW 6X20 A4 80
	250	312318-0325	S		4	STOP SCREW SK6SS5X10RFR
	260	312605-0314	-		4	NUT M6M5RFR
	270	315115-0153	-		8	WASHER TBRB6,4X12RFR
	275	315115-0165	-		6	WASHER TBRB8,4X16RFR
	290	315125-0165	-		4	WASHER SB 8,4X26X5 RFR

From	Pos	Part No	SP	UN	Qty	Description

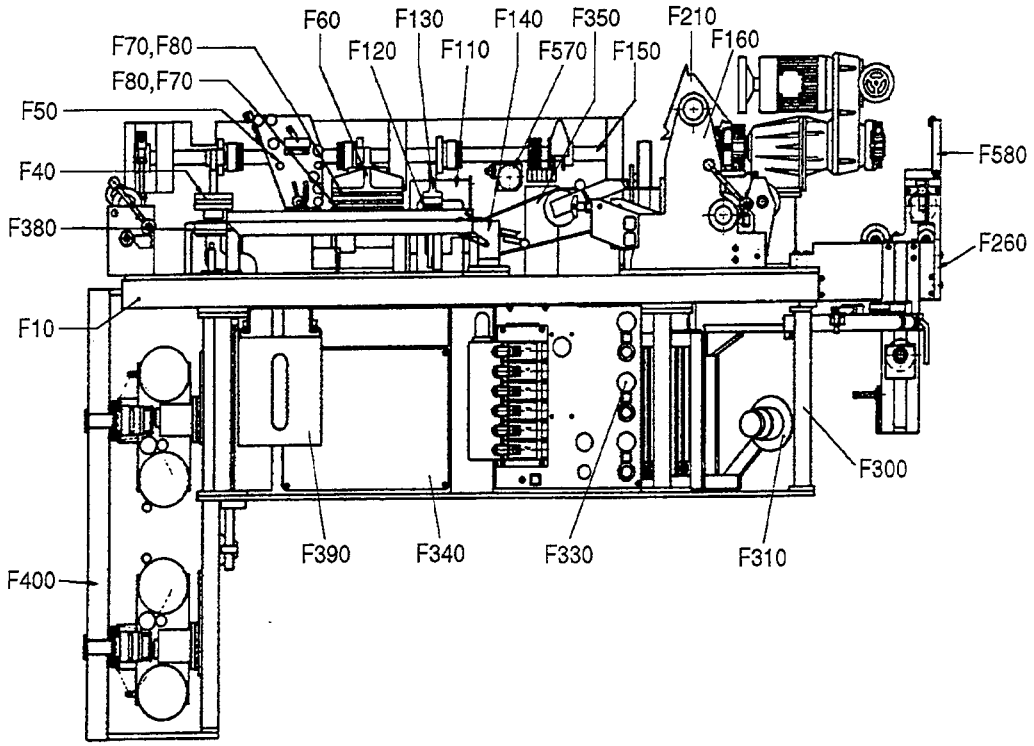

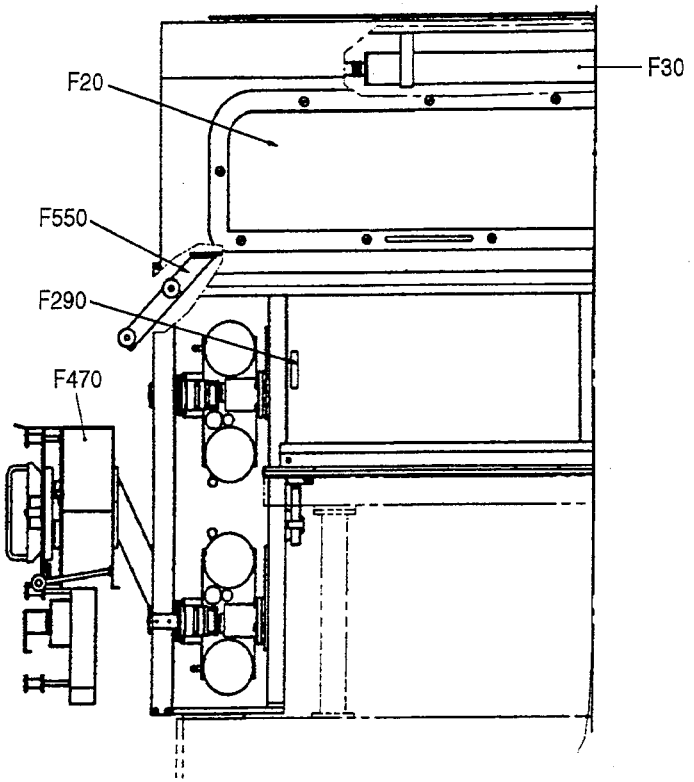

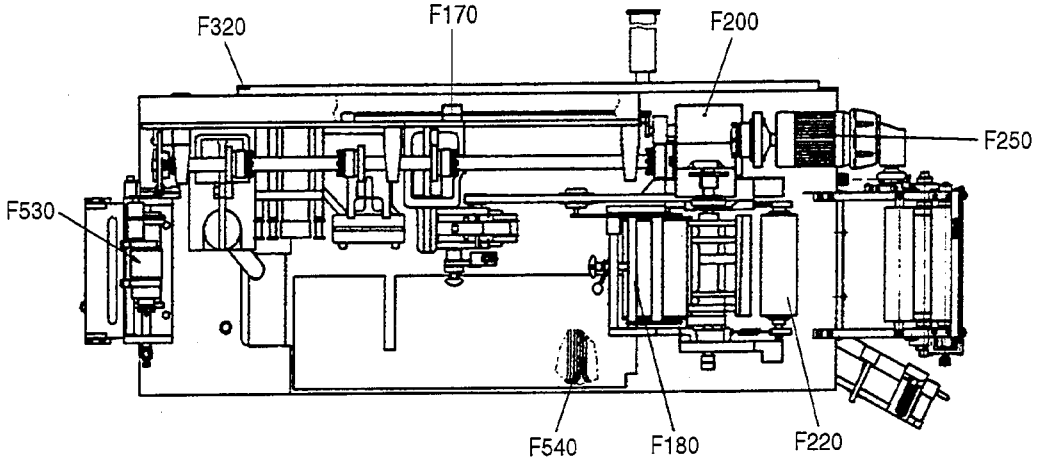

64811810.TIF
648118-10/11/12/13
AM 15550

Last Alteration: AM 20446 93-11-01

Corresponding group: 648118-090V
Assembly Drawing: 648118-8/9/10/13/14/15

Issue: **940524**

Pos	Group No	Description	
648118-F000	648118-090V	PullTab Device	693
648118-F010	457867-020V	Machine Body	695
	457867-020V	Machine Body	697
648118-F020	457853-030V	Hood	699
648118-F030	469299-020V	Fluorescent Lamp	701
648118-F040	548040-010V	Punch	703
648118-F050	547913-010V	Strip Guide	705
648118-F050	566280-010V	Strip Guide	707
648118-F060	283612-020V	Strip Sealer	709
648118-F070	457866-030V	Sealing Jaw TBA/9	711
	457866-030V	Sealing Jaw TBA/9	713
648118-F070	531657-020V	Sealing Jaw	715
648118-F080	497534-030V	Counter Jaw	717
648118-F080	283614-020V	Counter Jaw	719
648118-F110	283605-010V	Pull Tab Sealing Unit	721
648118-F120	283606-020V	Sealing Jaw Pulltab	723
648118-F130	283607-020V	Counter Jaw	725
648118-F130	283607-030V	Counter Jaw	727
	283607-030V	Counter Jaw, Hole 21 250ml	729
648118-F140	548331-010V	Pull Tab Feed	731
648118-F150	476349-030V	Drive Shaft	733
648118-F160	550128-010V	Lifter	735
648118-F170	469634-010V	Busbar	737
648118-F180	533844-010V	Bending Roller	739
533844-F190	476080-020V	Belt Tightener	741
648118-F200	294695-010V	Back Feeder	743
648118-F210	469173-010V	Reel	745
648118-F220	456696-030V	Paper Feed	747
456696-F230	456688-020V	Drive Roller	749
456696-F240	283604-020V	Pressure Roller	751
648118-F250	283626-040V	Drive Unit	753
648118-F260	552030-010V	Paper Magazine TBA/9	755
552030-F280	283629-020V	Roller	757
648118-F260	552036-010V	Paper Magazine TB/9	759
552036-F280	283629-020V	Roller	761
648118-F290	457937-020V	Sliding Glass	763
648118-F300	457881-030V	Leg TBA/9	765
648118-F300	552017-010V	Leg	767
648118-F310	546285-010V	Magazine	769
546285-F315	544420-010V	Splicing Device	771
648118-F320	469635-010V	Covering Plate	773
648118-F330	536859-020V	Panel TB/9	775
	536859-020V	Panel TBA/9	777
648118-F340	457856-020V	Connection Box	779
648118-F350	457857-030V	Upper Cable Duct	781

Pos	Group No	Description	
648118-F380	547601-010V	Paper Guide	783
648118-F390	456679-010V	Waste Box	785
648118-F400	548057-010V	Dating Unit	787
548057-F005	544390-010V	Connection Box	789
548057-F010	544389-010V	Control Panel	791
648118-F470	490600-040V	Strip Magazine Complete	793
490600-F480	469736-040V	Strip Magazine	795
490600-F490	484858-030V	Bobbin	797
490600-F490	547756-010V	Bobbin	799
	7003-010V	Bobbin	801
490600-F500	484984-020V	Splicing Device	803
	484984-020V	Splicing Device	805
490600-F510	484950-020V	Cantilever	807
490600-F520	552013-010V	Connection Box	809
648118-F530	554360-010V	Brake	811
	554360-010V	Brake	813
648118-F540	548031-020V	Hose Installation TBA/9	815
	548031-020V	Hose Installation TB/9	817
648118-F550	490610-040V	Bending Rollers, LS-Strip	819
648118-F570	554341-010V	Switch (monitor)	821
648118-F580	554346-010V	Black Tape Detector	823
648118-F600	469316-020V	Start-Up Kit	825
	469316-020V	Start-Up Kit	827
648118-F610	486955-020V	Start-Up Kit	829
	486955-020V	Start-Up Kit	831

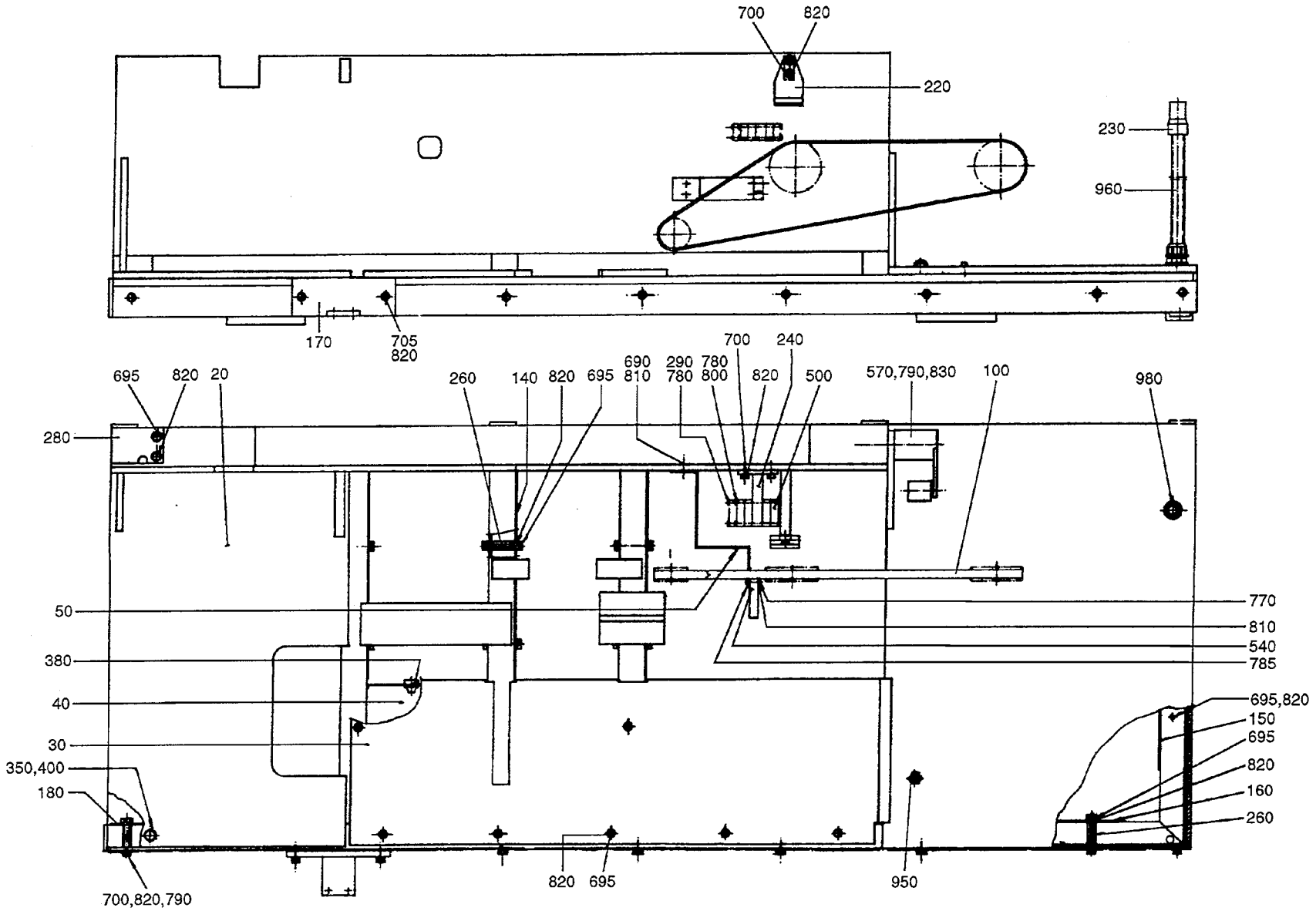

45786702.TIF
457867-2
AM 16054

From	Pos	Part No	SP	UN	Qty	Description
TBA/9 284ml						
		C- 457867-0201				**Machine Body, Ass'y**
	020	548026	-		1	MACHINE BODY
	030	546318	-		1	LID
	040	556536	-		1	BOTTOM
	050	554372	-		1	HOLDER
	100	90417-0144	S		1	TOOTHED BELT
	290	312125-0238	-		2	SLOTTED HEMCS3X40 A4
	500	90044-0104	PU		5	INDUCTIVE SWITCH
	780	312125-0234	-		2	SLOTTED HEMCS3X30RFR
TBA/9 250ml						
		C- 457867-0202				**Machine Body, Ass'y**
	020	548025	-		1	MACHINE BODY
	030	546316	-		1	LID
	040	556534	-		1	BOTTOM
	050	554371	-		1	HOLDER
	100	90417-0146	S		1	TOOTHED BELT
	290	312125-0238	-		2	SLOTTED HEMCS3X40 A4
	500	90044-0104	PU		5	INDUCTIVE SWITCH
	780	312125-0234	-		2	SLOTTED HEMCS3X30RFR
TBA/9 236ml						
		C- 457867-0203				**Machine Body, Ass'y**
	020	548024	-		1	MACHINE BODY
	030	546317	-		1	LID
	040	556535	-		1	BOTTOM
	050	554370	-		1	HOLDER
	100	90417-0145	S		1	TOOTHED BELT
	290	312125-0238	-		2	SLOTTED HEMCS3X40 A4
	500	90044-0104	PU		5	INDUCTIVE SWITCH
	780	312125-0234	-		2	SLOTTED HEMCS3X30RFR
TBA/9 200ml						
		C- 457867-0204				**Machine Body, Ass'y**
	020	548023	-		1	MACHINE BODY
	030	546316	-		1	LID
	040	556534	-		1	BOTTOM
	050	554370	-		1	HOLDER
	100	90417-0146	S		1	TOOTHED BELT
	290	312125-0238	-		2	SLOTTED HEMCS3X40 A4
	500	90044-0104	PU		5	INDUCTIVE SWITCH
	780	312125-0234	-		2	SLOTTED HEMCS3X30RFR
TBA/9 180ml						
		C- 457867-0206				**Machine Body, Ass'y**
	020	548022	-		1	MACHINE BODY
	030	546317	-		1	LID
	040	556535	-		1	BOTTOM
	050	554369	-		1	HOLDER
	100	90417-0145	S		1	TOOTHED BELT
	290	312125-0238	-		2	SLOTTED HEMCS3X40 A4
	500	90044-0104	PU		5	INDUCTIVE SWITCH
	780	312125-0234	-		2	SLOTTED HEMCS3X30RFR
TBA/9 125ml						
		C- 457867-0207				**Machine Body, Ass'y**
	020	548021	-		1	MACHINE BODY
	030	546317	-		1	LID
	040	556535	-		1	BOTTOM
	050	554368	-		1	HOLDER
	100	90417-0145	S		1	TOOTHED BELT
	290	312125-0238	-		2	SLOTTED HEMCS3X40 A4
	500	90044-0104	PU		5	INDUCTIVE SWITCH
	780	312125-0234	-		2	SLOTTED HEMCS3X30RFR
TBA/9 200ml Slim						
		C- 457867-0209				**Machine Body, Ass'y**
	020	548027	-		1	MACHINE BODY
	030	546318	-		1	LID
	040	556536	-		1	BOTTOM
	050	554368	-		1	HOLDER
	100	90417-0144	S		1	TOOTHED BELT
	290	312125-0238	-		2	SLOTTED HEMCS3X40 A4
	500	90044-0104	PU		5	INDUCTIVE SWITCH
	780	312125-0234	-		2	SLOTTED HEMCS3X30RFR
TB/9 284ml						
		C- 457867-0211				**Machine Body, Ass'y**
	020	548026	-		1	MACHINE BODY
	030	546318	-		1	LID
	040	556536	-		1	BOTTOM
	050	554372	-		1	HOLDER
	100	90417-0144	S		1	TOOTHED BELT
	500	90044-0104	PU		4	INDUCTIVE SWITCH
	780	312125-0234	-		4	SLOTTED HEMCS3X30RFR
TB/9 250ml						
		C- 457867-0212				**Machine Body, Ass'y**
	020	548025	-		1	MACHINE BODY
	030	546316	-		1	LID
	040	556534	-		1	BOTTOM
	050	554371	-		1	HOLDER
	100	90417-0146	S		1	TOOTHED BELT
	500	90044-0104	PU		4	INDUCTIVE SWITCH
	780	312125-0234	-		4	SLOTTED HEMCS3X30RFR

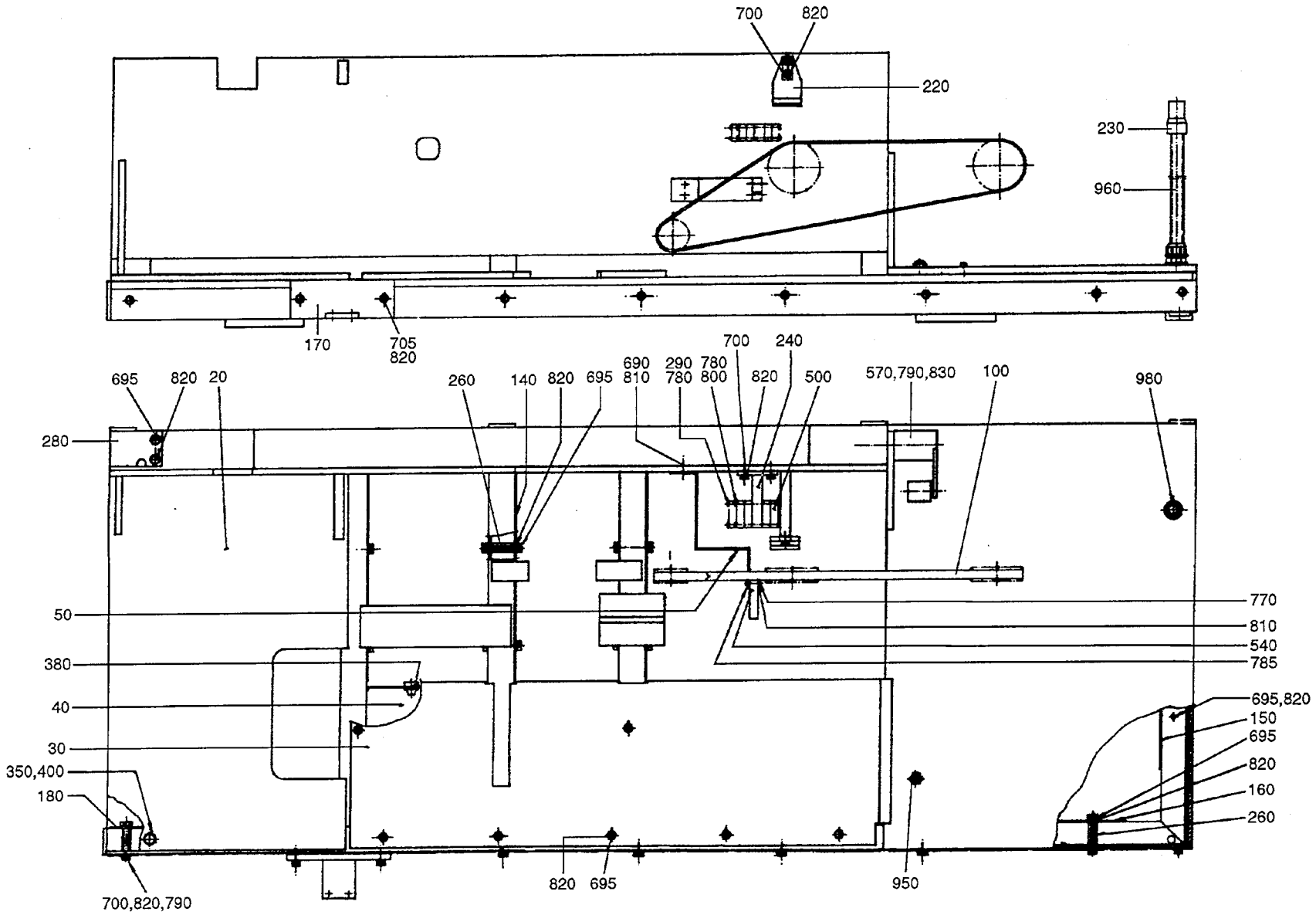

45786702.TIF
457867-2
AM 16054

From	Pos	Part No	SP	UN	Qty	Description
TB/9 236ml						
		C- 457867-0213				**Machine Body, Ass'y**
	020	548024	-		1	MACHINE BODY
	030	546317	-		1	LID
	040	556535	-		1	BOTTOM
	050	554370	-		1	HOLDER
	100	90417-0145	S		1	TOOTHED BELT
	500	90044-0104	PU		4	INDUCTIVE SWITCH
	780	312125-0234	-		4	SLOTTED HEMCS3X30RFR
TB/9 200ml						
		C- 457867-0214				**Machine Body, Ass'y**
	020	548023	-		1	MACHINE BODY
	030	546316	-		1	LID
	040	556534	-		1	BOTTOM
	050	554370	-		1	HOLDER
	100	90417-0146	S		1	TOOTHED BELT
	500	90044-0104	PU		4	INDUCTIVE SWITCH
	780	312125-0234	-		4	SLOTTED HEMCS3X30RFR
TB/9 180ml						
		C- 457867-0216				**Machine Body, Ass'y**
	020	548022	-		1	MACHINE BODY
	030	546317	-		1	LID
	040	556535	-		1	BOTTOM
	050	554369	-		1	HOLDER
	100	90417-0145	S		1	TOOTHED BELT
	500	90044-0104	PU		4	INDUCTIVE SWITCH
	780	312125-0234	-		4	SLOTTED HEMCS3X30RFR
TB/9 125ml						
		C- 457867-0217				**Machine Body, Ass'y**
	020	548021	-		1	MACHINE BODY
	030	546317	-		1	LID
	040	556535	-		1	BOTTOM
	050	554368	-		1	HOLDER
	100	90417-0145	S		1	TOOTHED BELT
	500	90044-0104	PU		4	INDUCTIVE SWITCH
	780	312125-0234	-		4	SLOTTED HEMCS3X30RFR
TB/9 200ml Slim						
		C- 457867-0219				**Machine Body, Ass'y**
	020	548027	-		1	MACHINE BODY
	030	546318	-		1	LID
	040	556536	-		1	BOTTOM
	050	554368	-		1	HOLDER
	100	90417-0144	S		1	TOOTHED BELT
	500	90044-0104	PU		4	INDUCTIVE SWITCH
	780	312125-0234	-		4	SLOTTED HEMCS3X30RFR

From	Pos	Part No	SP	UN	Qty	Description
Common parts						
	140	469629	-		3	LID
	150	469606	-		1	LID
	160	469607	-		1	LID
	170	554373	-		1	BRACKET
	180	554374	-		1	LID
	220	294748	-		1	POINTER
	230	456249	C		1	PROTECTIVE COVER
	240	457812	-		1	BRACKET
	260	457815	-		10	SPACER
	280	556569	-		1	SHEET
	350	352136-0107	-		2	GLAND FITT
	380	90015-0020	-		10	BUSHING
	400	352135-0102	-	MM	350	HOSE .010
	540	90232-0038	S		1	PHOTOCELL
	570	90344-0035	C		1	BELT TENSIONER
	690	312105-0293	-		2	SCREW M6S4X16 A2 80
	695	312105-0366	-		33	SCREW M6S6X12RFR
	700	312105-0368	-		16	SCREW M6S6X16RFR
	705	312105-0372	-		2	SCREW M6S6X25RFR
	750	312105-0464	-		1	SCREW M6S8X65RFR
	770	312125-0295	-		2	SLOTTED HEMCS4X20RFR
	785	312605-0312	-		2	NUT M6M4RFR
	790	312605-0316	-		18	NUT M6M6RFR
	800	315105-0124	-		4	WASHER BRB3,2X6RFR
	810	315105-0136	-		4	WASHER BRB4,3X8RFR
	820	315105-0153	-		67	WASHER BRB6,4X12RFR
	830	315115-0165	-		1	WASHER TBRB8,4X16RFR
	950	352101-0102	-		1	LEAD-IN G 15,2
	960	352135-0106	-	MM	325	HOSE .016
	980	352136-0127	-		1	GLAND FITT

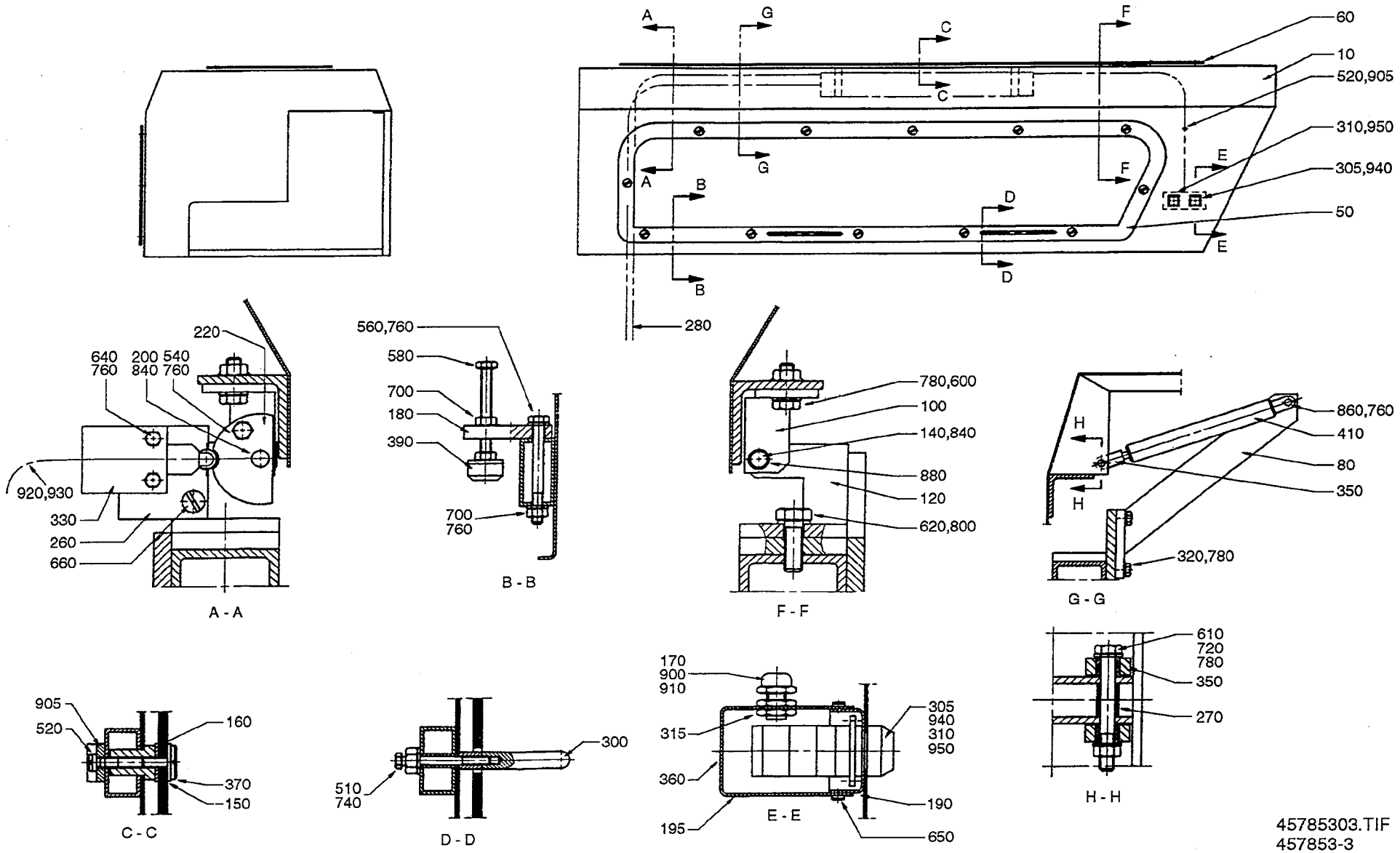

45785303.TIF
457853-3
AM 20096

From	Pos	Part No	SP	UN Qty	Description
		C- 457853-0301			**Hood, Ass'y**
	010	546310	-	1	HOOD
	050	457843	S	1	GLASS PANE
	060	457844	S	1	GLASS PANE
	080	457845	-	2	CANTILEVER
	100	294776	C	2	BRACKET
	120	294787	C	2	HANGER
	140	278995	C	1	SHAFT
	150	294734	C	48	WASHER
	160	294735	C	24	SPACER
	170	456245	-	1	PROTECTIVE COVER
	180	469205	-	2	BRACKET
	190	556537	-	1	BRACKET
	195	556538	-	1	PROTECTION
	200	294826	C	1	SHAFT
	220	294827	C	1	CAM
	260	457846	-	1	FASTENING PLATE
	270	531652	-	2	SPACER
	280	90012-0063	-	1	GLAND
	300	90017-0012	C	2	HANDLE
	305	90064-0084	C	1	PUSH BUTTON YELLOW
	310	90064-0085	C	1	PUSH BUTTON RED
	315	90099-0002	-	1	NUT
	320	312105-0453	-	8	SCREW M6S8X25RFR
	330	90044-0094	S	1	LIMIT SWITCH
	350	90115-0020	C	4	LINK HEAD
	360	90194-0016	-	1	SIGN"FLASH SIGN"
	370	90287-0062	C	24	SCREW
	390	90347-0011	C	2	VIBRATION DAMPER
	410	90347-0041	C	4	DAMPER
	510	312105-0341	-	4	SCREW M6S5X50 A2 80
	520	312125-0366	-	5	SLOTTED HEMCS6X12RFR
	540	312105-0374	-	1	SCREW M6S6X30RFR
	560	312105-0382	-	4	SCREW M6S6X60RFR
	580	312109-0381	-	2	SCREW M6S6X55HA480
	600	312105-0452	-	12	SCREW M6S8X22RFR
	610	312105-0465	-	2	SCREW M6S8X70RFR
	620	312105-0495	-	4	SCREW M6S10X30RFR
	640	312115-0331	-	2	SCREW 5X20 A4 80
	650	312115-0287	-	4	SCREW 4X8 A4 80
	660	312155-0374	-	2	SCREW MF6S6X30RFR
	700	312605-0316	-	8	NUT M6M6RFR
	720	312605-0318	-	6	NUT M6M8RFR
	740	315105-0146	-	2	WASHER BRB5,3X10RFR
	760	315105-0153	-	13	WASHER BRB6,4X12RFR
	780	315105-0165	-	20	WASHER BRB8,4X16RFR
	800	315105-0173	-	4	WASHER BRB10,5X22RFR
	840	315755-0801	S	3	LOCKING WAE 8RFR
	860	315754-0107	S	4	LOCKING WAE 5
	880	321120-0104	-	4	BUSHING 10/12X10
	900	352103-0106	-	1	CABLE GLANR.ST 11
	905	352113-0204	-	5	ARMATURE M3-S25
	910	90152-0033	-	MM3100	HOSE
	920	352135-0102	-	MM 850	HOSE .010
	930	352136-0107	-	1	GLAND FITT
	940	359301-0051	-	1	SIGN"STRIP SPLICE"
	950	359301-0110	-	1	SIGN"SHORT STOP"

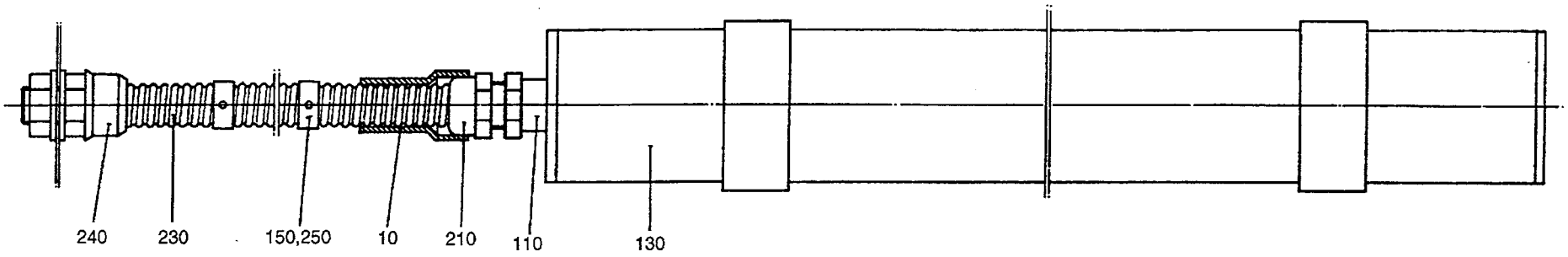

46929902.TIF
469299-2
AM 14969

Last Alteration: AM 14969 90-08-08

Corresponding group: 469299-020V
Assembly Drawing: 469299-2

Issue: 940524

From	Pos	Part No	SP	UN Qty	Description
		C- 469299-0201			**Fluorescent Lamp, Ass'y**
	010	456245	C	1	PROTECTIVE COVER
	130	90164-0003	-	1	LIGHT FIXTURE
		90297-0002	P	0	* FLUORESCENT TUBE
	150	312125-0366	-	3	SLOTTED HEMCS6X12RFR
	210	352103-0106	-	1	CABLE GLANR.ST 11
	230	352135-0102	-	MM 1750	HOSE .010
	240	352136-0107	-	1	GLAND FITT
	250	352113-0204	-	3	ARMATURE M3-S25

From	Pos	Part No	SP	UN Qty	Description

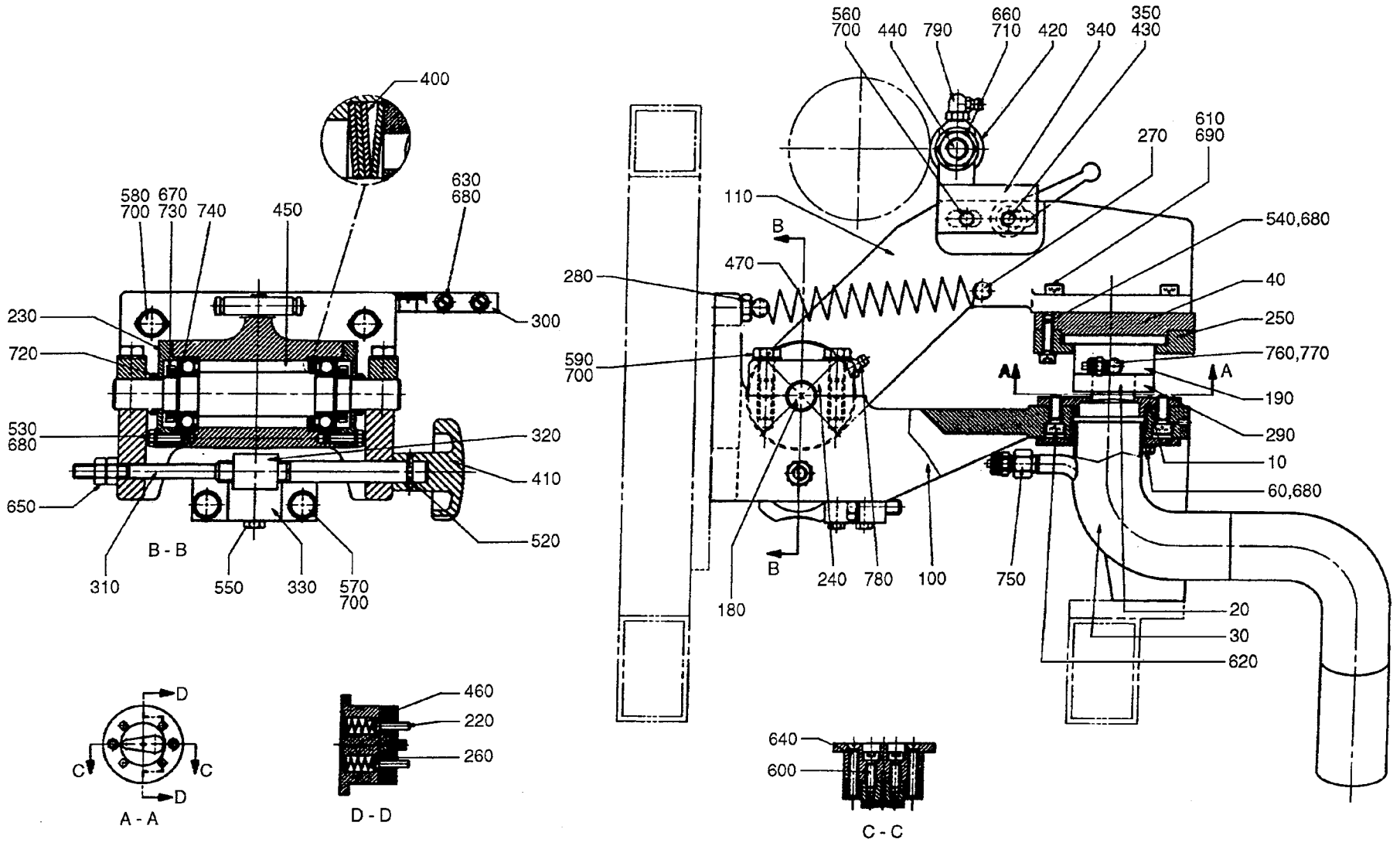

54804001.TIF
548040-1
AM 15121

From	Pos	Part No	SP	UN	Qty	Description
Hole 21						
		C- 548040-0101				**Punch, Ass'y**
	010	533812	PU		1	DIE (HOLE 21)
	020	533811	PU		1	PUNCH (HOLE 21)
	040	255520	S		1	RING
Hole 11						
		C- 548040-0102				**Punch, Ass'y**
	010	536488	PU		1	DIE
	020	536489	PU		1	PUNCH
	040	536487	S		1	FITTING RING
Hole 20						
		C- 548040-0103				**Punch, Ass'y**
	010	457827	PU		1	DIE
	020	457826	PU		1	PUNCH
	040	255520	S		1	RING
Hole 10						
		C- 548040-0104				**Punch, Ass'y**
	010	457825	PU		1	DIE
	020	457824	PU		1	PUNCH
	040	255520	S		1	RING
Common parts						
	030	449398	-		1	OVERFLOW PIPE
	060	312105-0327	-		2	SCREW M6S5X12 A2 80
	100	G- 449276	-		1	CANTILEVER
	110	G- 449277	C		1	ARM
	180	255513	S		1	SHAFT
	190	267534	C		1	HOLDER
	220	234517	P		4	TACK
	230	255515	-		2	LID
	240	255516	-		2	BRACKET
	250	255519	-		1	RING
	260	268691	P		4	WASHER
	270	268692	-		1	PEG
	280	273781	-		1	SPRING BRACKET
	290	283555	S		1	PLATE
	300	294971	-		1	INDICATION
	310	294973	-		1	SHAFT
	320	294974	-		1	BLOCKING PIECE
	330	294975	-		1	BRACKET
	340	543092	-		1	ROLLER BRACKET
	350	544464	-		1	WASHER
	400	90016-0042	S		4	DISC SPRING
	410	90051-0064	-		1	HANDLE
	420	90083-0014	S		1	ROLLER
	430	90117-0008	-		1	HANDLE
	440	90136-0003	-		1	PLUG
	450	90296-0068	-		X	GREASE
	460	90335-0005	P		4	SPRING
	470	90335-0127	P		2	SPRING
	520	311103-0238	-		1	CYLINDRICACP M6 3X20 RFR
	530	312105-0329	-		6	SCREW M6S5X16 A2 80
	540	312105-0331	-		3	SCREW M6S5X20 A2 80
	550	312105-0372	-		2	SCREW M6S6X25RFR
	570	312105-0453	-		2	SCREW M6S8X25RFR
	580	312105-0455	-		2	SCREW M6S8X30RFR
	590	312105-0457	-		4	SCREW M6S8X35RFR
	600	312115-0329	-		4	SCREW 5X16 A4 80
	610	312115-0370	-		4	SCREW 6X20 A4 80
	620	312115-0367	-		4	SCREW 6X14 A4 80
	630	312125-0323	-		2	SLOTTED HEMCS5X8RFR
	640	312145-0335	-		2	SLOTTED HEMFS5X30RFR
	650	312605-0318	-		2	NUT M6M8RFR
	660	312631-0322	-		1	NUT M6M12X1,5FZB
	670	312805-0104	S		2	ROUND NUT KM4
	680	315105-0146	-		14	WASHER BRB5,3X10RFR
	690	315105-0153	-		6	WASHER BRB6,4X12RFR
	700	315115-0165	-		7	WASHER TBRB8,4X16RFR
	710	315105-0178	-		2	WASHER BRB13X24RFR
	720	315220-0130	S		2	SEAL RING V-16S
	730	315410-0104	S		2	LOCK WASHESKFMB4
	740	321308-0104	S		2	BALL BEARISKF6004RS
	750	342923-0113	-		1	PIPE COUPL6/4-1/8
	760	342980-0111	P		1	BANJO CONNSINGEL 6/4-5M
	770	342980-0301	P		1	BANJO CONN SINGEL 5M
		315233-0101	P		0	* SEAL RINM5
	780	344502-0026	P		1	NIPPLE L AHKR1/8"
	790	344502-0061	P		1	NIPPLE L M6AL.

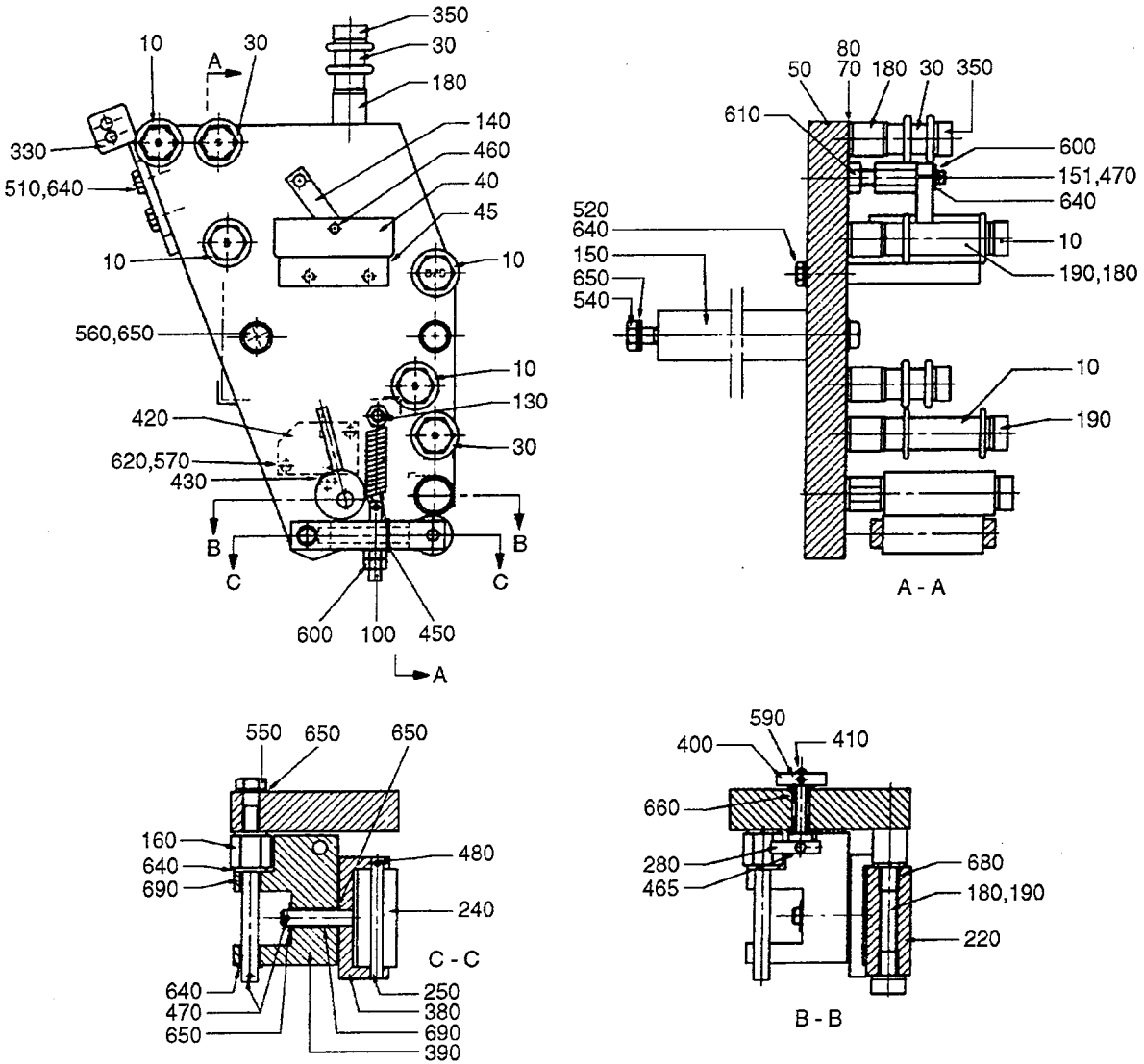

54791301.TIF
547913-1
AM 15283

From	Pos	Part No	SP	UN Qty	Description
Hole 21					
		C- 547913-0101			**Strip Guide, Ass'y**
	010	537876	S	4	ROLL
	030	547912	S	3	ROLL
Hole 11					
		C- 547913-0102			**Strip Guide, Ass'y**
	010	536497	S	4	ROLL
	030	543094	S	3	ROLL
Hole 20					
		C- 547913-0103			**Strip Guide, Ass'y**
	010	449230	S	4	ROLL
	030	547912	S	3	ROLL
Hole 10					
		C- 547913-0104			**Strip Guide, Ass'y**
	010	499192	S	4	ROLL
	030	543094	S	3	ROLL
Common parts					
	040	543194	-	1	PRESSURE JAW
	045	563735	-	1	COUNTER JAW
	050	549001	-	1	PLATE
	070	1883-0005	-	9	WASHER
	080	1883-0008	-	9	WASHER
	100	19997	-	1	ADJUSTING SCREW
	130	269582-0001	-	1	SPRING BRACKET
	140	449226	-	1	ARM
	150	449381-0001	-	2	SPACER
	151	449382	-	1	PEG
	160	449384-0002	C	1	SHAFT
	180	499190	C	8	NUT
	190	499191	C	5	FITTING BOLT
	220	542044	S	1	ROLL
	240	542084	S	1	PRESSURE ROLLER
	250	542085	-	1	PEG
	280	543088	-	1	COCK HANDLE
	330	543711	-	1	FORK
	350	547911	-	3	FITTING BOLT
	380	548411	-	1	FORK
	390	549000	-	1	BRACKET
	400	554339	-	1	CURVE
	410	554342	-	1	AXLE PIN
	420	90044-0104	S	1	INDUCTIVE SWITCH
	430	90287-0112	S	1	SPRINGLOADED SCREW
	450	90335-0014	P	1	SPRING
	460	311103-0314	-	1	CYLINDRICACP M6 5X30 RFR
	465	311112-0207	-	1	SLOTTED TURP 3X14 RFR

From	Pos	Part No	SP	UN Qty	Description
	470	311411-0152	-	3	SPLIT PIN SP2X16RFR
	480	311411-0154	-	1	SPLIT PIN SP2X20RFR
	510	312105-0370	-	2	SCREW M6S6X20RFR
	520	312105-0376	-	2	SCREW M6S6X35RFR
	540	312105-0455	-	2	SCREW M6S8X30RFR
	550	312105-0457	-	1	SCREW M6S8X35RFR
	560	312105-0459	-	2	SCREW M6S8X40RFR
	570	312125-0230	-	2	SLOTTED HEMCS3X20RFR
	590	312318-0220	-	1	STOP SCREW SK6SS3X6RFR
	600	312605-0316	-	2	NUT M6M6RFR
	610	312605-0318	-	1	NUT M6M8RFR
	620	315105-0124	-	2	WASHER BRB3,2X6RFR
	640	315105-0153	-	6	WASHER BRB6,4X12RFR
	650	315105-0165	-	6	WASHER BRB8,4X16RFR
	660	321111-0049	S	2	FLANGE BUS 5E7X8
	680	321120-0100	S	2	BUSHING 8/10X12
	690	321120-0107	S	4	BUSHING 8/10X10

Last Alteration: AM 17186 92-03-31

Corresponding group: 566280-010V
Assembly Drawing: 566280-1

Issue: **940524**

From	Pos	Part No	SP	UN	Qty	Description
Hole 21 284ml - 180ml						
		C- 566280-0101				**Strip Guide, Ass'y**
	010	571112	S		1	STEER PLATE
	020	560428	-		2	SPACER
	030	560436	-		2	SPACER NUT
	040	537876	-		1	ROLL
	050	560437	-		2	FITTING BOLT
	070	560442	-		1	BRACKET
	080	560423	-		1	SHAFT
	085	570792-0004	-		1	ROLL
	090	311103-0372	-		1	STRAIGHT PIN
Hole 11 125ml 200ml Slim						
		C- 566280-0102				**Strip Guide, Ass'y**
	010	571110	S		1	STEER PLATE
	020	449381-0001	-		2	SPACER
	030	499190	-		2	NUT
	040	536497	-		1	ROLL
	050	499191	-		2	FITTING BOLT
	060	560446-0002	-		2	SPACER
	070	549000	-		1	BRACKET
	080	449384-0002	-		1	SHAFT
	085	570792-0002	-		1	ROLL
	090	311103-0369	-		1	CYLINDRICACP M6 6X60 RFR
Hole 20 284ml - 180ml						
		C- 566280-0103				**Strip Guide, Ass'y**
	010	571111	S		1	STEER PLATE
	020	560428	-		2	SPACER
	030	560436	-		2	SPACER NUT
	040	449230	-		1	ROLL
	050	560437	-		2	FITTING BOLT
	060	560446-0003	-		2	SPACER
	070	560442	-		1	BRACKET
	080	560423	-		1	SHAFT
	085	570792-0003	-		1	ROLL
	090	311103-0371	-		1	STRAIGTH PIN
Hole 10 125ml 200ml Slim						
		C- 566280-0104				**Strip Guide, Ass'y**
	010	571109	S		1	STEER PLATE
	020	449381-0001	-		2	SPACER
	030	499190	-		2	NUT
	040	499192	-		1	ROLL
	050	499191	-		2	FITTING BOLT
	060	560446-0001	-		2	SPACER
	070	549000	-		1	BRACKET
	080	449384-0002	-		1	SHAFT
	085	570792-0001	-		1	ROLL
	090	311103-0367	-		1	CYLINDRICACP M6 6X55 RFR

From	Pos	Part No	SP	UN	Qty	Description
Common Parts						
	100	560421	-		1	SHAFT
	110	560422	-		1	SHAFT
	120	560430	-		1	FASTENING PLATE
	130	542044	-		1	ROLL
	140	543088	-		1	COCK HANDLE
	150	554339	-		1	CURVE
	160	554342	-		1	AXLE PIN
	170	542084	-		1	PRESSURE ROLLER
	180	542085	-		1	PEG
	190	548411	-		1	FORK
	200	19997	-		1	ADJUSTING SCREW
	210	269582-0001	-		1	SPRING BRACKET
	220	1883-0005	-		4	WASHER
	230	1883-0008	-		4	WASHER
	240	1883-0009	-		6	WASHER
	250	1883-0010	-		2	WASHER
	260	15529	-		1	WASHER
	300	90044-0104	-		1	INDUCTIVE SWITCH
	310	90099-0016	-		1	NUT
	320	90287-0112	-		3	SPRINGLOADED SCREW
	330	90335-0014	-		1	SPRING
	340	311112-0207	-		1	SLOTTED TURP 3X14 RFR
	350	311411-0152	-		2	SPLIT PIN SP2X16RFR
	360	311411-0154	-		2	SPLIT PIN SP2X20RFR
	380	312105-0364	-		2	SCREW M6S6X10RFR
	390	312105-0455	-		2	SCREW M6S8X30RFR
	400	312105-0457	-		1	SCREW M6S8X35RFR
	410	312105-0459	-		2	SCREW M6S8X40RFR
	420	312125-0230	-		2	SLOTTED HEMCS3X20RFR
	430	312318-0220	-		1	STOP SCREW SK6SS3X6RFR
	435	312318-0283	-		1	STOP SCREW SK6SS4X4RFR
	440	312318-0321	-		4	STOP SCREW SK6SS5X6RFR
	450	312605-0316	-		2	NUT M6M6RFR
	460	312605-0320	-		1	NUT M6M10RFR
	470	315105-0124	-		2	WASHER BRB3,2X6RFR
	490	315105-0153	-		4	WASHER BRB6,4X12RFR
	500	315105-0165	-		1	WASHER BRB8,4X16RFR
	510	315105-0173	-		1	WASHER BRB10,5X22RFR
	520	315202-0105	-		4	O-RING 7,1X1,6
	530	315233-0109	-		2	SEAL RING R1/8"
	540	321111-0049	-		2	FLANGE BUS 5E7X8
	550	321120-0100	-		2	BUSHING 8/10X12
	560	321120-0107	-		4	BUSHING 8/10X10
	600	342980-0113	-		1	BANJO CONNSINGEL 6/4-1/8
	620	342980-0303	-		1	BANJO CONN SINGEL 1/8"

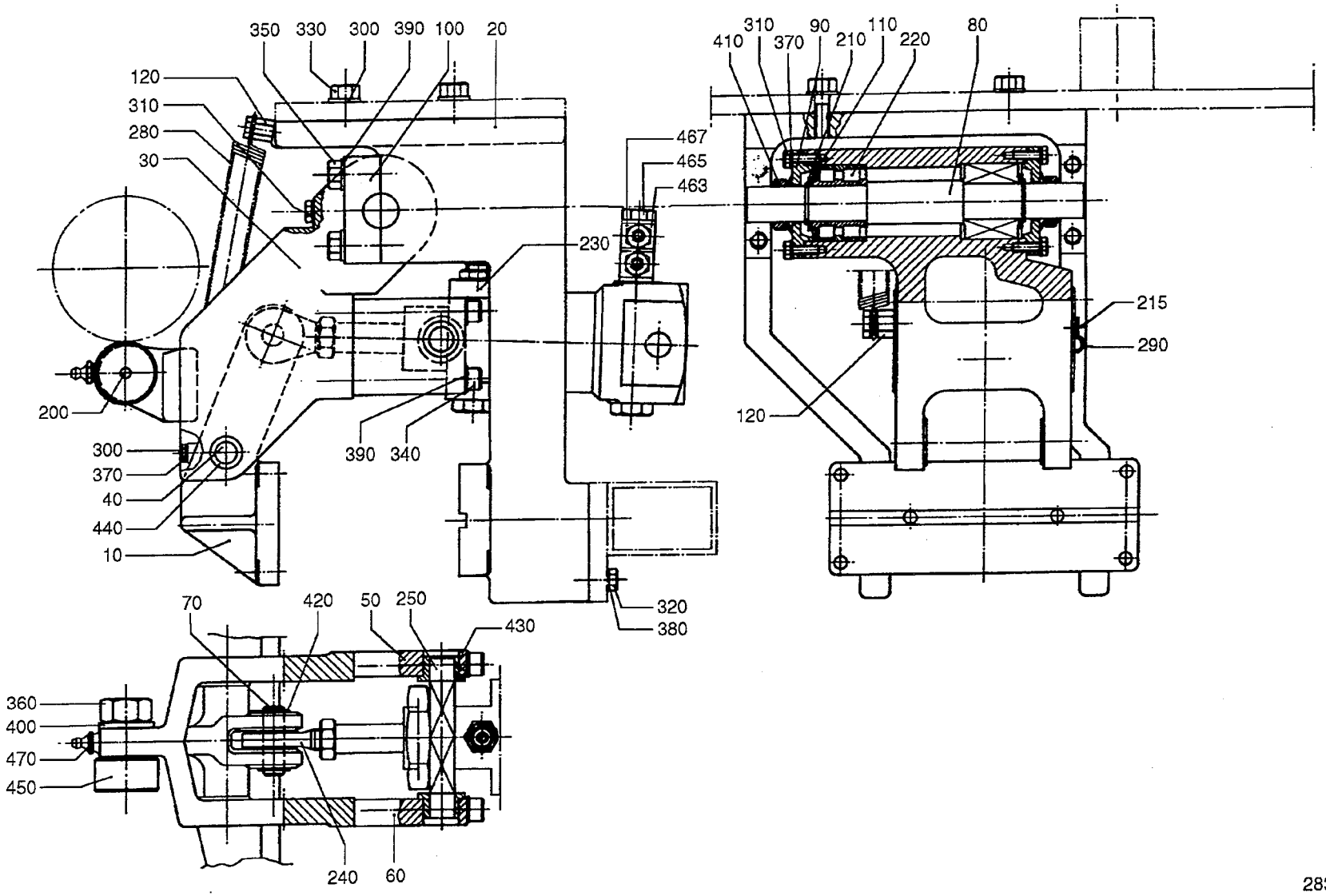

28361201.TIF
283612-1
AM 14859

Last Alteration: AM 14859 90-05-23

Corresponding group: 283612-020V
Assembly Drawing: 283612-1

Issue: **940524**

From	Pos	Part No	SP	UN Qty	Description
		C- 283612-0201			**Strip Sealer,Ass'y**
	010	G- 283535	C	1	BRACKET
	020	283658	-	1	CANTILEVER
	030	G- 283659	C	1	ARM
	040	255593	S	1	SHAFT
	050	266358	C	1	BRACKET
	060	266359	C	1	BRACKET
	070	266507	S	1	SHAFT
	080	268583	S	1	SHAFT
	090	268585	-	2	LID
	100	268587	-	2	BRACKET
	110	268588	P	2	WASHER
	120	283676-0001	-	2	SPRING BRACKET
	200	90136-0003	P	1	PLUG
	210	315750-0116	P	2	CIRCLIP SGA20
	215	90165-0057	-	1	CLIP
	220	90214-0068	S	2	BEARING
	230	90239-0188	S	1	CYLINDER
	240	90239-0321	-	1	BRACKET
	250	90239-0384	-	1	BRACKET
	255	90296-0068	-	X	GREASE
	260	90335-0122	S	1	SPRING
	290	312105-0287	-	1	SCREW M6S4X8 A2 80
	300	312105-0329	-	6	SCREW M6S5X16 A2 80
	305	312105-0333	-	1	SCREW M6S5X25 A2 80
	310	312105-0362	-	2	SCREW M6S6X8RFR
	320	312105-0370	-	2	SCREW M6S6X20RFR
	330	312105-0453	-	4	SCREW M6S8X25RFR
	340	312111-0466	-	4	SCREW MC6S8X75FZB
	350	312115-0457	-	4	SCREW A4 80
	360	312631-0324	-	1	NUT M6M16X1,5FZB
	370	315105-0146	-	7	WASHER BRB5,3X10RFR
	380	315105-0153	-	2	WASHER BRB6,4X12RFR
	390	315105-0165	-	12	WASHER BRB8,4X16RFR
	400	315105-0186	-	1	WASHER BRB17X30RFR
	410	315220-0143	S	2	SEAL RING V-20S
	420	315754-0110	P	2	LOCKING WAE 9
	430	321111-0185	S	2	FLANGE BUS 14E7X14
	440	321116-0159	S	2	BUSHING 12E7/18X12
	450	321582-0212	P	1	CURVE ROLLNUKR35
	463	342980-0115	-	2	BANJO CONNSINGEL 6/4-3/8
	467	342980-0305	-	2	BANJO CONN SINGEL 3/8
	470	344502-0021	P	1	NIPPLE L AHM6

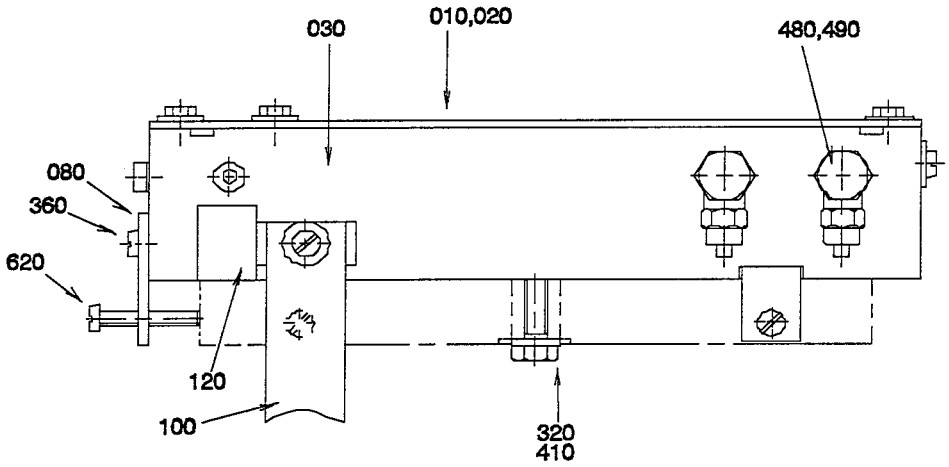
030
010,020
480,490
080
360
620
120
100
320
410

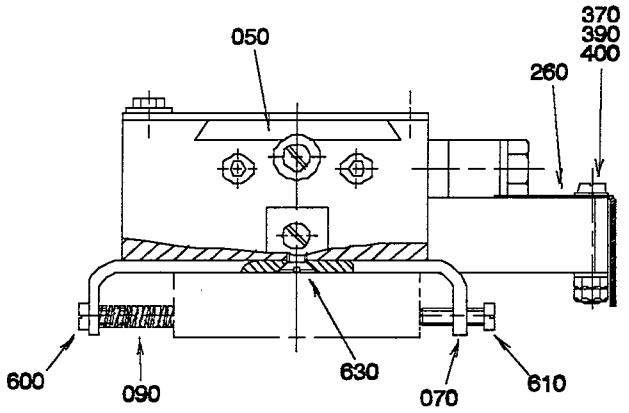
050
370
390
400
260
600
090
630
070
610

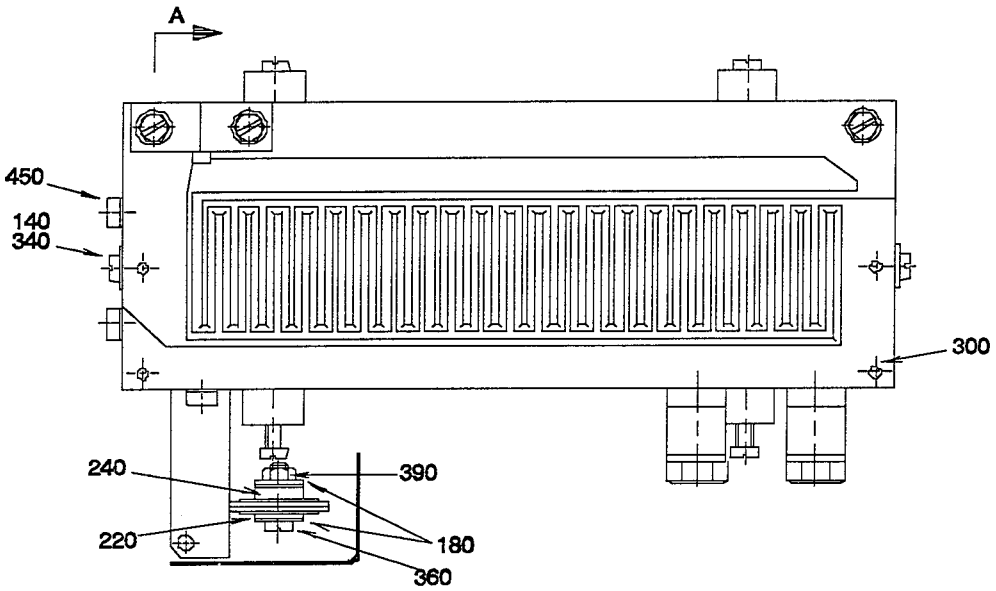
A
450
140
340
300
240
390
220
180
360

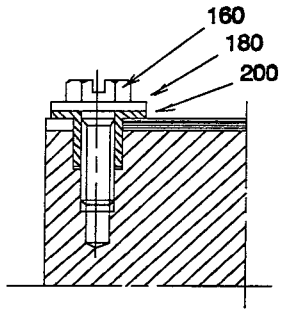
160
180
200

A - A

From	Pos	Part No	SP	UN	Qty	Description
Hole 21 250ml						
		C- 457866-0301				**Sealing Jaw TBA/9, Ass'y**
	010	543578	PU		1	INDUCTOR
	020	552044	PU		1	INDUCTOR
	030	563745	-		1	INDUCTOR BRACKET
	050	539642-0002	S		1	DOLLY
	070	563746	-		2	BOW CLAMP
	080	563748	-		1	BRACKET
	090	90335-0031	-		2	SPRING
	600	312125-0289	-		2	SLOTTED HEMCS4X10RFR
	610	312125-0293	-		2	SLOTTED HEMCS4X16RFR
	620	312125-0297	-		1	SLOTTED HEMCS4X25RFR
	630	312155-0325	-		2	SCREW MF6S5X10RFR
Hole 21 236ml						
		C- 457866-0303				**Sealing Jaw TBA/9, Ass'y**
	030	541246	S		1	BRACKET
	050	539642-0002	S		1	DOLLY
	010	567052	PU		1	INDUCTOR
Hole 21 200ml						
		C- 457866-0304				**Sealing Jaw TBA/9, Ass'y**
	020	567061	PU		1	INDUCTOR
	030	549006	S		1	INDUKTOR BRACKET
	050	539642-0001	S		1	DOLLY
Hole 21 180ml						
		C- 457866-0306				**Sealing Jaw TBA/9, Ass'y**
	030	549006	S		1	INDUKTOR BRACKET
	050	539642-0001	S		1	DOLLY
Hole 11 125ml						
		C- 457866-0307				**Sealing Jaw TBA/9, Ass'y**
	010	552027	PU		1	INDUCTOR
	020	549016	PU		1	INDUCTOR
	030	449399	S		1	INDUCTOR BRACKET
	050	469301-0001	S		1	DOLLY
Hole 11 200ml Slim						
		C- 457866-0309				**Sealing Jaw TBA/9, Ass'y**
	010	536900	PU		1	INDUCTOR
	020	544414	PU		1	INDUCTOR
	030	457850	S		1	INDUCTOR BRACKET
	050	469301-0002	S		1	DOLLY
Hole 20 250ml						
		C- 457866-0312				**Sealing Jaw TBA/9, Ass'y**
	010	457841-0002	P		1	* FABRIC
	010	469683	PU		1	INDUCTOR
	020	554376	PU		1	INDUCTOR
	030	457850	S		1	INDUCTOR BRACKET
	050	469301-0002	S		1	DOLLY
Hole 20 236ml						
		C- 457866-0313				**Sealing Jaw TBA/9, Ass'y**
	030	457850	S		1	INDUCTOR BRACKET
	050	469301-0002	S		1	DOLLY
Hole 20 200ml						
		C- 457866-0314				**Sealing Jaw TBA/9, Ass'y**
	010	535528	PU		1	INDUCTOR
	010	457841-0001	P		1	* FABRIC
	020	554378	PU		1	INDUCTOR
	030	449399	S		1	INDUCTOR BRACKET
	050	469301-0001	S		1	DOLLY
Hole 20 180ml						
		C- 457866-0316				**Sealing Jaw TBA/9, Ass'y**
	010	567048	PU		1	INDUCTOR
	020	567056	PU		1	INDUCTOR
	030	449399	S		1	INDUCTOR BRACKET
	050	469301-0001	S		1	DOLLY
Hole 10 125ml						
		C- 457866-0317				**Sealing Jaw TBA/9, Ass'y**
	010	456665	PU		1	INDUCTOR
	010	457841-0001	P		1	* FABRIC
	020	549016	PU		1	INDUCTOR
	030	449399	S		1	INDUCTOR BRACKET
	050	469301-0001	S		1	DOLLY
Hole 10 200ml Slim						
		C- 457866-0319				**Sealing Jaw TBA/9, Ass'y**
	010	457841-0002	P		1	* FABRIC
	010	456663	PU		1	INDUCTOR
	020	544414	PU		1	INDUCTOR
	030	457850	S		1	INDUCTOR BRACKET
	050	469301-0002	S		1	DOLLY
Common Parts						
	100	490529	S		1	CABLE
	120	457855	S		1	BUSBAR
	140	2033-0005	P		2	WASHER
	160	28508	P		3	SCREW
	180	28509	P		5	WASHER
	200	28510	P		3	INSULATION NUT
	220	32544	P		1	INSULATION NUT
	240	32644	P		1	WASHER
	260	457820	-		1	PROTECTION
	300	311103-0234	-		2	CYLINDRICACP M6 3X12 RFR
	320	312105-0374	-		1	SCREW M6S6X30RFR
	340	312125-0287	-		2	SLOTTED HEMCS4X8RFR

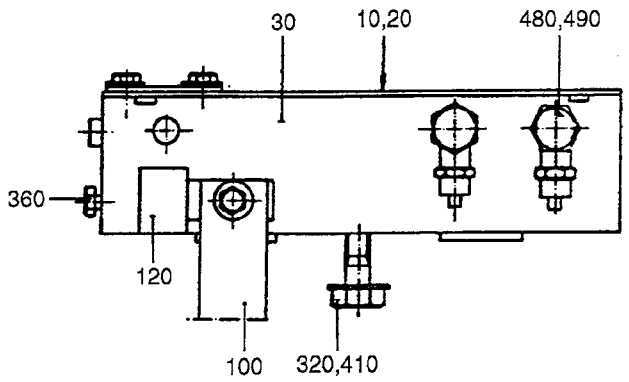
30
10,20
480,490
360
120
100
320,410

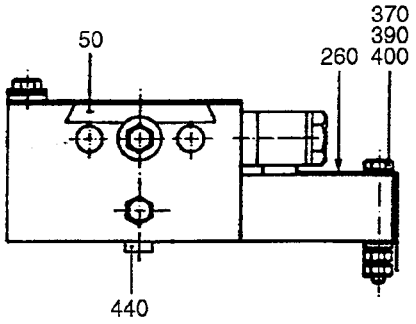
50
370
390
400
260
440

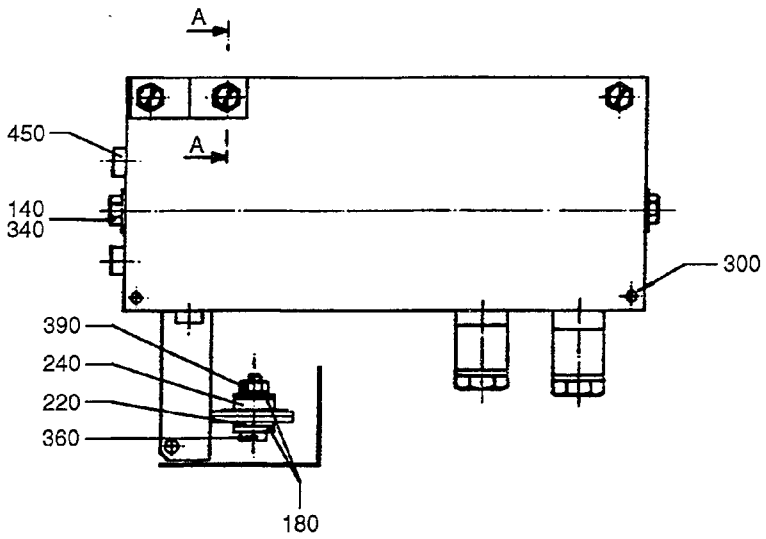
A
A
450
140
340
300
390
240
220
360
180

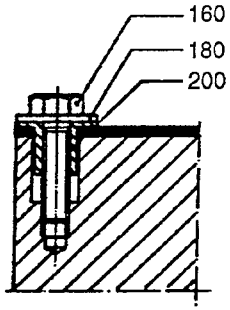
160
180
200

A - A

From	Pos	Part No	SP	UN Qty	Description
	360	312125-0295	-	2	SLOTTED HEMCS4X20RFR
	370	312125-0299	-	1	SLOTTED HEMCS4X30RFR
	390	312605-0312	-	3	NUT M6M4RFR
	400	315105-0136	-	2	WASHER BRB4,3X8RFR
	410	315105-0153	-	1	WASHER BRB6,4X12RFR
	440	315701-0265	-	2	FLAT WEDGE8X7X25
	450	342713-0208	S	3	BLIND PLUG
	480	342980-0113	-	2	BANJO CONNSINGEL 6/4-1/8
	490	342980-0303	-	2	BANJO CONN SINGEL 1/8"

From	Pos	Part No	SP	UN Qty	Description

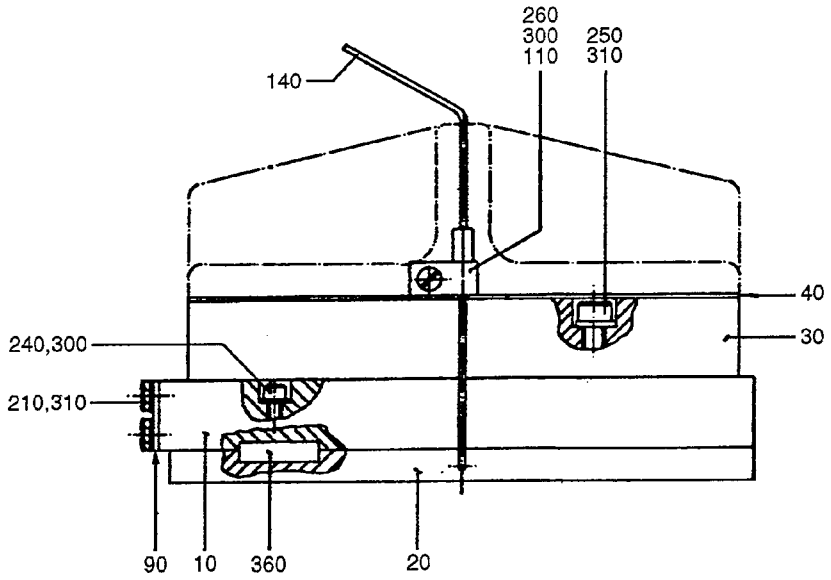

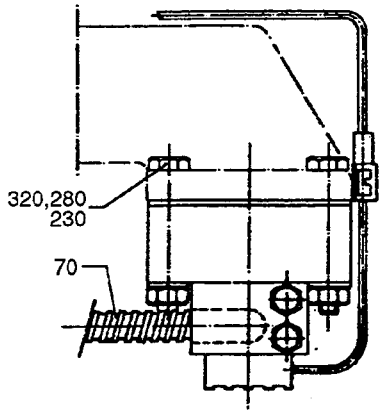

53165701.TIF
531657-1
AM 15121

Last Alteration: AM 15121 90-09-26

Corresponding group: 531657-020V
Assembly Drawing: 531657-1

Issue: **940524**

From	Pos	Part No	SP	UN	Qty	Description
Hole 21 250ml		**C- 531657-0202**				**Sealing Jaw, Ass'y**
Hole 21 236ml		**C- 531657-0203**				**Sealing Jaw, Ass'y**
Hole 21 200ml		**C- 531657-0204**				**Sealing Jaw, Ass'y**
Hole 21 180ml		**C- 531657-0206**				**Sealing Jaw, Ass'y**
Hole 11 125ml		**C- 531657-0207**				**Sealing Jaw, Ass'y**
Hole 20 250ml		**C- 531657-0212**				**Sealing Jaw, Ass'y**
Hole 20 236ml		**C- 531657-0213**				**Sealing Jaw, Ass'y**
Hole 20 200ml		**C- 531657-0214**				**Sealing Jaw, Ass'y**
Hole 20 180ml		**C- 531657-0216**				**Sealing Jaw, Ass'y**
Hole 10 125ml		**C- 531657-0217**				**Sealing Jaw, Ass'y**
Hole 11 200ml Slim		**C- 531657-0209**				**Sealing Jaw, Ass'y**
	010	531658	S		1	HEATING JAW
	020	552025	P		1	HEATING RAIL
Hole 10 200ml Slim		**C- 531657-0219**				**Sealing Jaw, Ass'y**
	010	531658	S		1	HEATING JAW
	020	294918	P		1	HEATING RAIL
Common parts	030	283668	S		1	INSULATING PLATE
	040	283669	S		1	LACE
	070	531656	PU		1	HEATING ELEMENT
	090	283684	-		1	COVER DISC
	110	90165-0057	-		1	CLIP
	140	90326-0060	PU		1	THERMOCOUPLE
	210	312105-0325	-		2	SCREW M6S5X10 A2 80
	230	312105-0378	-		4	SCREW M6S6X40RFR
	240	312115-0295	-		4	SCREW S 4X20 A4 80
	250	312115-0372	-		4	SCREW MC6S6X25 A4 80
	260	312125-0289	-		1	SLOTTED HEMCS4X10RFR
	280	312605-0316	-		4	NUT M6M6RFR
	300	315105-0136	-		5	WASHER BRB4,3X8RFR
	310	315105-0146	-		2	WASHER BRB5,3X10RFR
	320	315105-0153	-		12	WASHER BRB6,4X12RFR
	350	315705-0234	S		2	FLAT WEDGE6X6X25RFR

From	Pos	Part No	SP	UN	Qty	Description

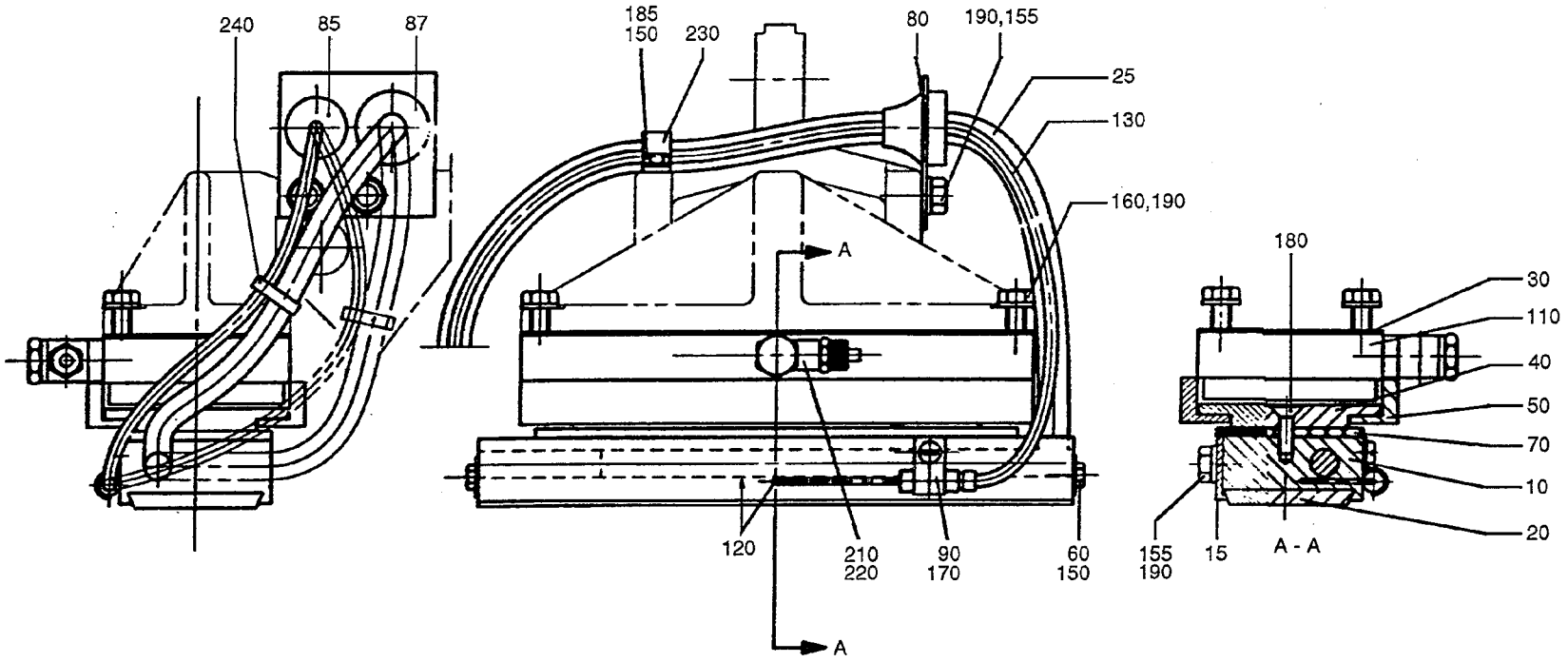

49753402.TIF
497534-2/3
AM 15121

From	Pos	Part No	SP	UN	Qty	Description
Hole 21 250ml						
		C- 497534-0302				**Counter Jaw, Ass'y**
	010	542829	C		1	HOLDER
	015	542828	C		1	PLATE
	020	554353	S		1	DOLLY
Hole 21 236ml						
		C- 497534-0303				**Counter Jaw, Ass'y**
	010	542829	C		1	HOLDER
	015	542828	C		1	PLATE
	020	539642-0002	S		1	DOLLY
Hole 21 200ml						
		C- 497534-0304				**Counter Jaw, Ass'y**
	010	549004	C		1	HOLDER
	015	556546	C		1	PLATE
	020	539642-0001	S		1	DOLLY
Hole 21 180ml						
		C- 497534-0306				**Counter Jaw, Ass'y**
	010	549004	C		1	HOLDER
	015	556546	C		1	PLATE
	020	539642-0001	S		1	DOLLY
Hole 11 125ml						
		C- 497534-0307				**Counter Jaw, Ass'y**
	010	549002	C		1	HOLDER
	015	549003	C		1	PLATE
	020	469301-0001	S		1	DOLLY
Hole 11 200ml Slim						
		C- 497534-0309				**Counter Jaw, Ass'y**
	010	549005	C		1	HOLDER
	015	556545	C		1	PLATE
	020	469301-0002	S		1	DOLLY
Hole 20 250ml						
		C- 497534-0312				**Counter Jaw, Ass'y**
	010	538977	C		1	COUNTER JAW
	020	469301-0002	S		1	DOLLY
Hole 20 236ml						
		C- 497534-0313				**Counter Jaw, Ass'y**
	010	538977	C		1	COUNTER JAW
	020	469301-0002	S		1	DOLLY
Hole 20 200ml						
		C- 497534-0314				**Counter Jaw, Ass'y**
	010	538976	C		1	COUNTER JAW
	020	469301-0001	S		1	DOLLY
Hole 20 180ml						
		C- 497534-0316				**Counter Jaw, Ass'y**
	010	538976	C		1	COUNTER JAW
	020	469301-0001	S		1	DOLLY

From	Pos	Part No	SP	UN	Qty	Description
Hole 10 125ml						
		C- 497534-0317				**Counter Jaw, Ass'y**
	010	538976	C		1	COUNTER JAW
	020	469301-0001	S		1	DOLLY
Hole 10 200ml Slim						
		C- 497534-0319				**Counter Jaw, Ass'y**
	010	538977	C		1	COUNTER JAW
	020	469301-0002	S		1	DOLLY
Common parts						
	025	534762	S		1	HEATING CARTRIDGE
	030	283669	S		2	LACE
	040	284698	S		1	PLATE
	050	284699	S		1	BRACKET
	060	2033-0005	P		2	WASHER
	070	484602	S		1	INSULATING PLATE
	080	534888	-		1	BRACKET
	085	90015-0020	C		1	BUSHING
	087	90015-0023	C		1	BUSHING
	090	90165-0057	-		1	CLIP
	110	90239-0734	P		1	CYLINDER
	120	90298-0033	P		X	WATLUBE HEAT LIQUID
	130	90326-0060	P		1	THERMOCOUPLE
	150	312105-0287	-		3	SCREW M6S4X8 A2 80
	155	312105-0364	-		4	SCREW M6S6X10RFR
	160	312105-0378	-		4	SCREW M6S6X40RFR
	170	312125-0287	-		1	SLOTTED HEMCS4X8RFR
	180	312155-0329	-		3	SCREW MF6S5X16RFR
	185	315105-0136	-		1	WASHER BRB4,3X8RFR
	190	315105-0153	-		8	WASHER BRB6,4X12RFR
	210	342980-0113	-		1	BANJO CONNSINGEL 6/4-1/8
	220	342980-0303	-		1	BANJO CONN SINGEL 1/8"
	230	90165-0008	-		1	CLIP
	240	352113-0101	S		3	RIBBON CLA

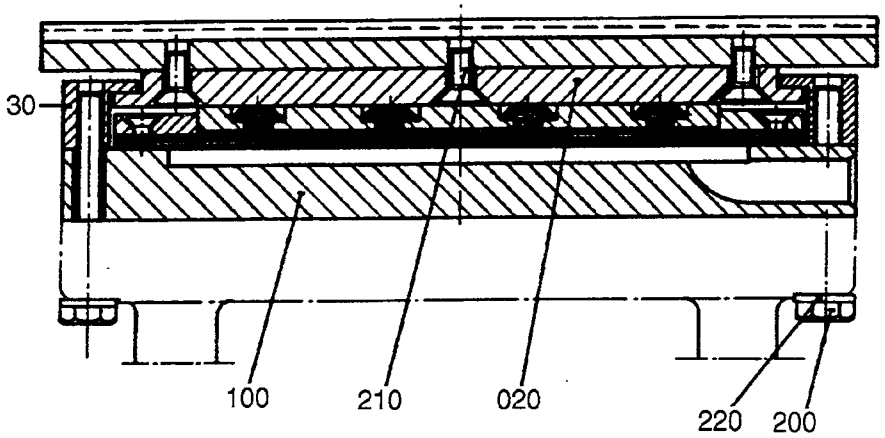

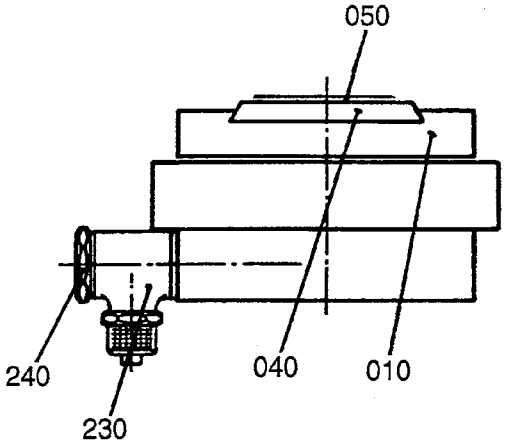

28361401.TIF
283614-1
AM 15121

Last Alteration: AM 15121 90-09-26

Corresponding group: 283614-020V
Assembly Drawing: 283614-1

Issue: **940524**

From	Pos	Part No	SP	UN	Qty	Description
Hole 21 250ml		**C- 283614-0202**				**Counter Jaw, Ass'y**
Hole 21 236ml		**C- 283614-0203**				**Counter Jaw, Ass'y**
Hole 21 200ml		**C- 283614-0204**				**Counter Jaw, Ass'y**
Hole 21 185ml		**C- 283614-0206**				**Counter Jaw, Ass'y**
Hole 11 125ml		**C- 283614-0207**				**Counter Jaw, Ass'y**
Hole 20 250ml		**C- 283614-0212**				**Counter Jaw, Ass'y**
Hole 20 236ml		**C- 283614-0213**				**Counter Jaw, Ass'y**
Hole 20 200ml		**C- 283614-0214**				**Counter Jaw, Ass'y**
Hole 20 180ml		**C- 283614-0216**				**Counter Jaw, Ass'y**
Hole 10 125ml		**C- 283614-0217**				**Counter Jaw, Ass'y**
Hole 11 200ml Slim		**C- 283614-0209**				**Counter Jaw, Ass'y**
	010	552026	S		1	RAIL
	040	266098-0002	PU		1	DOLLY
	050	457841-0002	PU		1	FABRIC
Hole 10 200ml Slim		**C- 283614-0219**				**Counter Jaw, Ass'y**
	010	283677	S		1	RAIL
	040	266098-0002	PU		1	DOLLY
	050	457841-0002	PU		1	FABRIC
Common parts	020	284698	S		1	PLATE
	030	284699	S		1	BRACKET
	100	90239-0734	S		1	CYLINDER
	200	312115-0378	-		4	SCREW 6X40 A4 80
	210	312155-0327	-		3	SCREW MF6S5X12RFR
	220	315105-0153	-		4	WASHER BRB6,4X12RFR
	230	342980-0113	-		1	BANJO CONNSINGEL 6/4-1/8
	240	342980-0303	-		1	BANJO CONN SINGEL 1/8"

From	Pos	Part No	SP	UN	Qty	Description

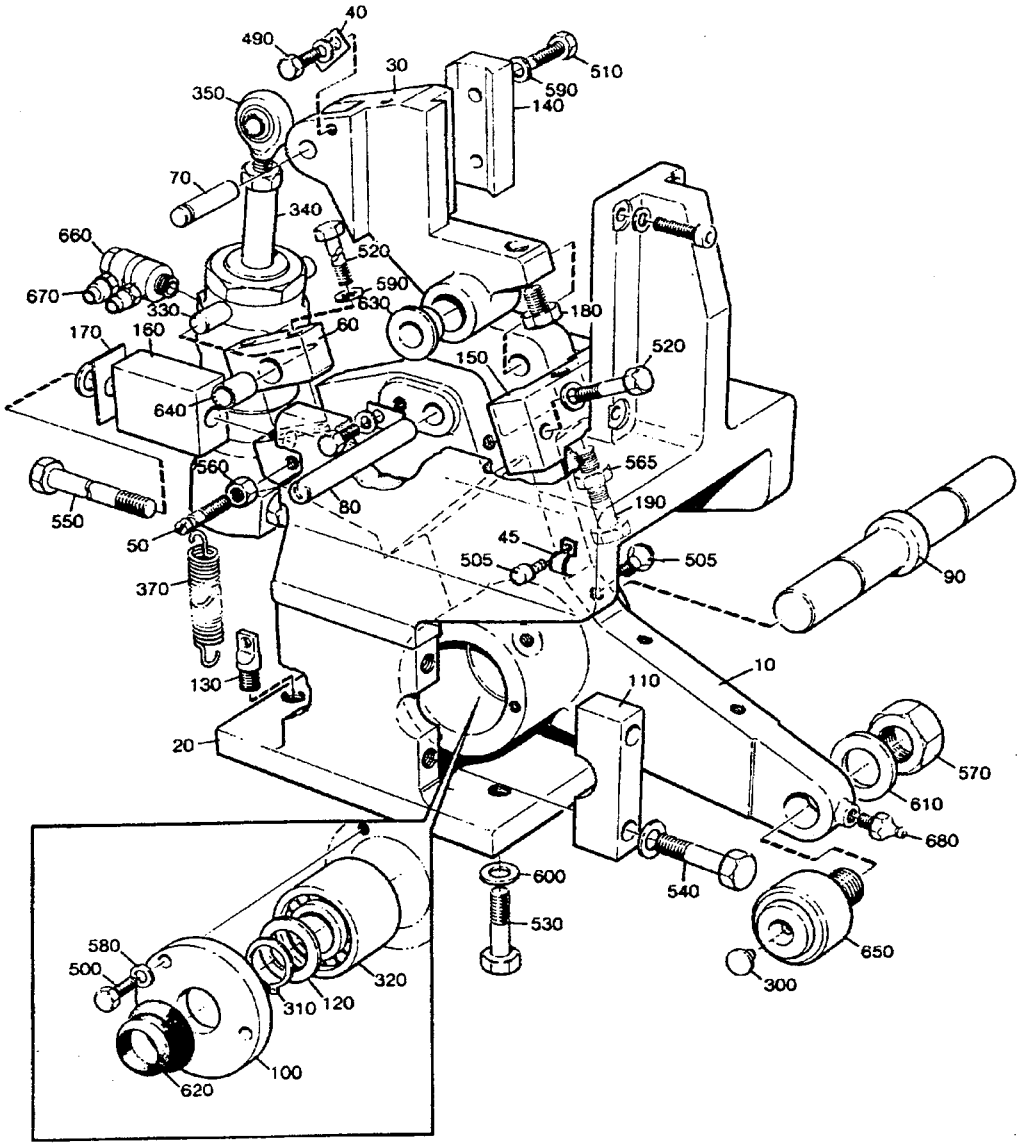

28360501.TIF
283605-1
AM 14584

Last Alteration: AM 14584 90-03-09

Corresponding group: 283605-010V
Assembly Drawing: 283605-1

Issue: **940524**

From	Pos	Part No	SP	UN	Qty	Description
TBA/3 TBA/8						
	F000	**CR- 283605-0101**				**Pull Tab Sealing Unit, Ass'y**
	660	342980-0114	-		4	BANJO CONNSINGEL 6/4-1/4
	670	342980-0314	-		2	BANJO CONN DUBBEL 1/4
TB/9 TBA/9						
	F000	**CR- 283605-0102**				**Pull Tab Sealing Unit, Ass'y**
	660	342980-0114	-		2	BANJO CONNSINGEL 6/4-1/4
	670	342980-0304	-		2	BANJO CONN SINGEL 1/4
Common parts						
	010	268580	C		1	ARM
	020	G- 283564	-		1	CANTILEVER
	030	G- 294576	-		1	ARM
	040	18135	-		2	WASHER
	045	24755	-		1	CLAMPING PIECE
	050	257710	C		2	PEG
	060	257711	-		2	BLOCKING PIECE
	070	257712	C		1	SHAFT
	080	263156	C		1	SHAFT
	090	268584	C		1	SHAFT
	100	268585	-		2	LID
	110	268587	-		2	BRACKET
	120	268588	-		2	WASHER
	130	276194	-		2	SPRING BRACKET
	140	294578	C		1	LOCKING LUG
	150	294584	C		1	DOLLY
	160	294660	C		2	BLOCKING PIECE
	170	294871	S		4	LACE
	180	294881	C		1	SCREW
	190	312109-0460	-		1	SCREW M6S8X45H A4 80
	300	90136-0003	-		1	PLUG
	310	315750-0116	-		2	CIRCLIP SGA20
	320	90214-0068	S		2	BEARING
	330	90239-0126	-		1	BRACKET
	340	90239-0189	S		1	CYLINDER
		90285-0094	S		0	* SEAL
	350	90239-0320	S		1	BRACKET
	360	90296-0068	-		1	GREASE
	370	90335-0044	P		2	SPRING
	490	312105-0327	-		2	SCREW M6S5X12 A4 80
	500	312105-0329	-		6	SCREW M6S5X16 A4 80
	505	312105-0362	-		3	SCREW M6S6X8RFR
	510	312105-0370	-		2	SCREW M6S6X20RFR
	520	312105-0374	-		6	SCREW M6S6X30RFR
	530	312105-0453	-		4	SCREW M6S8X25RFR
	540	312105-0457	-		4	SCREW M6S8X35RFR
	550	312105-0464	-		2	SCREW M6S8X65RFR
	560	312605-0316	-		2	NUT M6M6RFR
	565	312605-0318	-		1	NUT M6M8RFR
	570	312631-0324	-		1	NUT M6M16X1,5FZB
	580	315105-0146	-		8	WASHER BRB5,3X10RFR
	590	315105-0153	-		10	WASHER BRB6,4X12RFR
	600	315105-0165	-		10	WASHER BRB8,4X16RFR
	610	315105-0186	-		1	WASHER BRB17X30RFR
	620	315220-0143	-		2	SEAL RING V-20S
	630	321111-0135	S		2	FLANGE BUS 10E7X10
	640	321120-0099	-		2	BUSHING 10/12,0X12
	650	321582-0212	S		1	CURVE ROLLNUKR35
	680	344502-0021	S		1	NIPPLE L AHM6

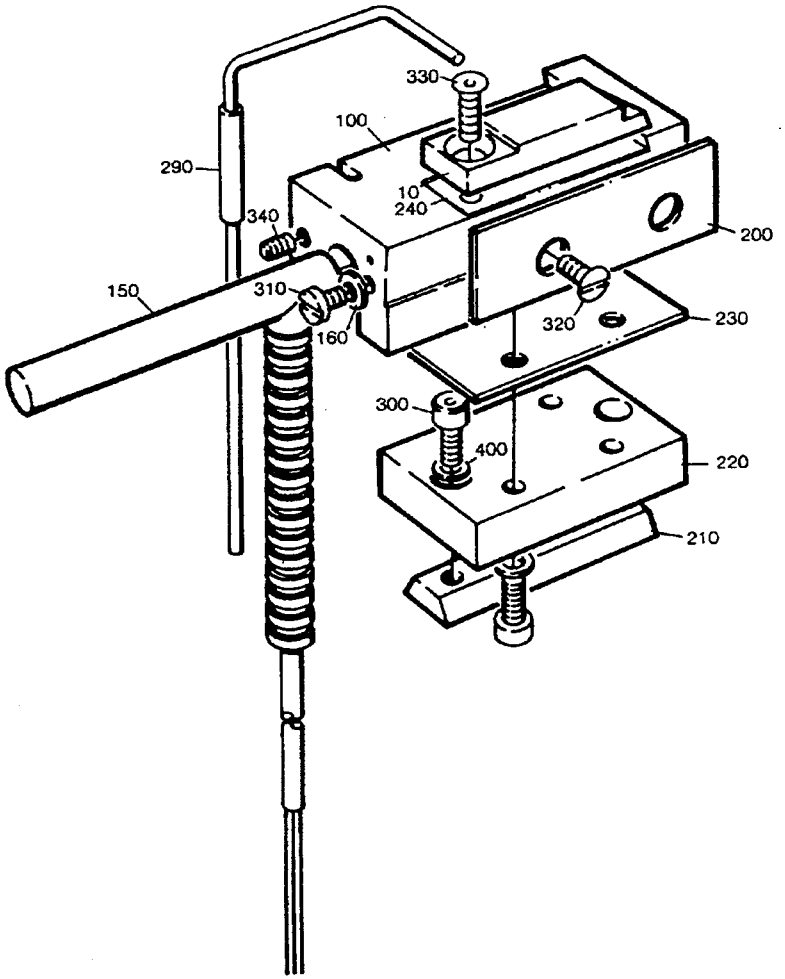

28360601.TIF
283606-1
AM 14584

From	Pos	Part No	SP	UN	Qty	Description
Hole 21 284ml - 180ml						
		C- 283606-0201				**Sealing Jaw Pulltab, Ass'y**
	010	538191	PU		1	HEATING RAIL
Hole 11 125ml 200ml Slim						
		C- 283606-0202				**Sealing Jaw Pulltab, Ass'y**
	010	543196	PU		1	HEATING RAIL
Hole 20 284ml - 180ml						
		C- 283606-0203				**Sealing Jaw Pulltab, Ass'y**
	010	499633	PU		1	HEATING RAIL
Hole 10 125ml 200ml Slim						
		C- 283606-0204				**Sealing Jaw Pulltab, Ass'y**
	010	499632	PU		1	HEATING RAIL
Common parts						
	100	499560	S		1	HEATING BLOCK
	150	90206-0083	PU		1	HEATING CARTRIDGE
	160	6427	-		1	WASHER
	200	553137	PU		1	KNIFE
	210	294579	C		1	WEDGE
	220	294580	S		1	INSULATING PLATE
	230	294870	S		1	LACE
	270	90298-0033	PU		X	WATLUBE HEAT LIQUID
	290	90326-0060	PU		1	THERMOCOUPLE
	300	312115-0289	-		6	SCREW S4X10 A4 80
	310	312105-0287	-		2	SCREW M6S4X8 A2 80
	320	312145-0287	-		2	SLOTTED HEMFS4X8RFR
	330	312155-0289	-		1	SCREW MF6S4X10RFR
	340	312318-0287	-		1	STOP SCREW SK6SS4X8RFR
	400	315105-0136	-		6	WASHER BRB4,3X8RFR

From	Pos	Part No	SP	UN	Qty	Description

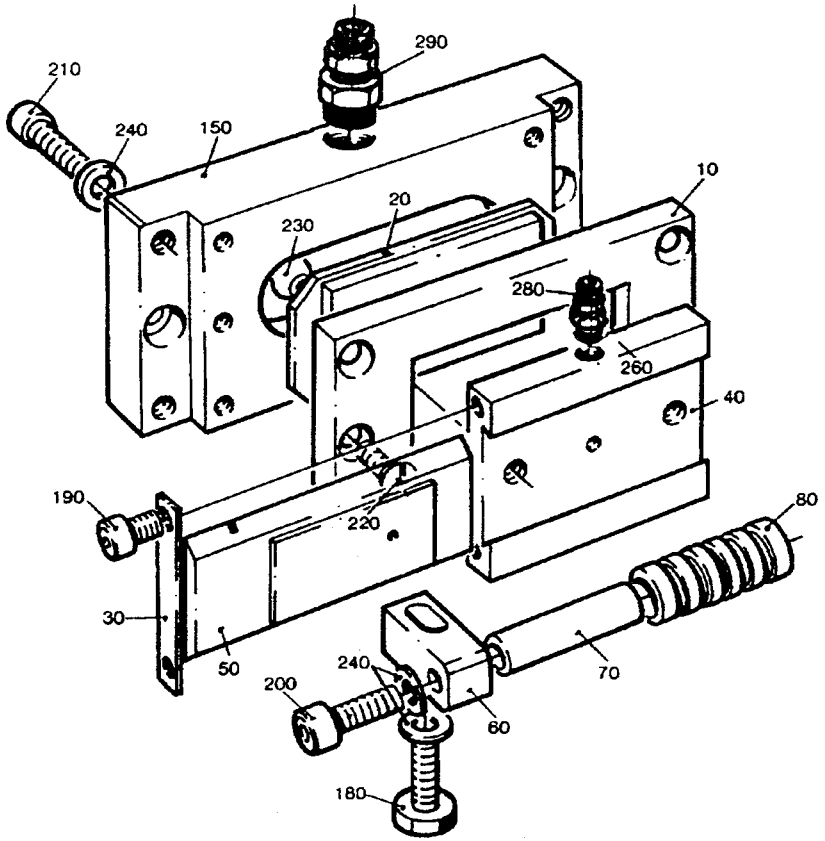

28360701.TIF
283607-1
AM 10738

From	Pos	Part No	SP	UN	Qty	Description
Hole 21 284ml-180ml						
		C- 283607-0201				**Counter Jaw, Ass'y**
	050	541126	PU		1	COUNTER RUBBER
Hole 11 125ml 200ml Slim						
		C- 283607-0202				**Counter Jaw, Ass'y**
	050	469206	PU		1	COUNTER RUBBER
Hole 20 284ml-180ml						
		C- 283607-0203				**Counter Jaw, Ass'y**
	050	469206	PU		1	COUNTER RUBBER
Hole 10 125ml 200ml Slim						
		C- 283607-0204				**Counter Jaw, Ass'y**
	050	294868	PU		1	COUNTER RUBBER
Common parts						
	010	257707	C		1	BRACKET
	020	257708	C		1	PLATE
	030	268694	-		2	TINPLATE
	040	283588	S		1	RAIL
	060	294594	C		2	BRACKET
	070	294595	C		1	SHAFT
	080	294596	P		1	ROLL
	150	90239-0732	S		1	CYLINDER
	180	312105-0329	-		2	SCREW M6S5X16 A2 80
	190	312115-0285	-		4	SCREW S 4X6 A4 80
	200	312115-0329	-		2	SCREW 5X16 A4 80
	210	312115-0331	-		4	SCREW 5X20 A4 80
	220	312145-0295	-		6	SLOTTED HEMFS4X20RFR
	230	312145-0327	-		2	SLOTTED HEMFS5X12RFR
	240	315105-0146	-		8	WASHER BRB5,3X10RFR
	280	342921-0111	-		1	PIPE COUPL6/4-5M
	290	342921-0113	-		1	PIPE COUPL6/4-1/8"

From	Pos	Part No	SP	UN	Qty	Description

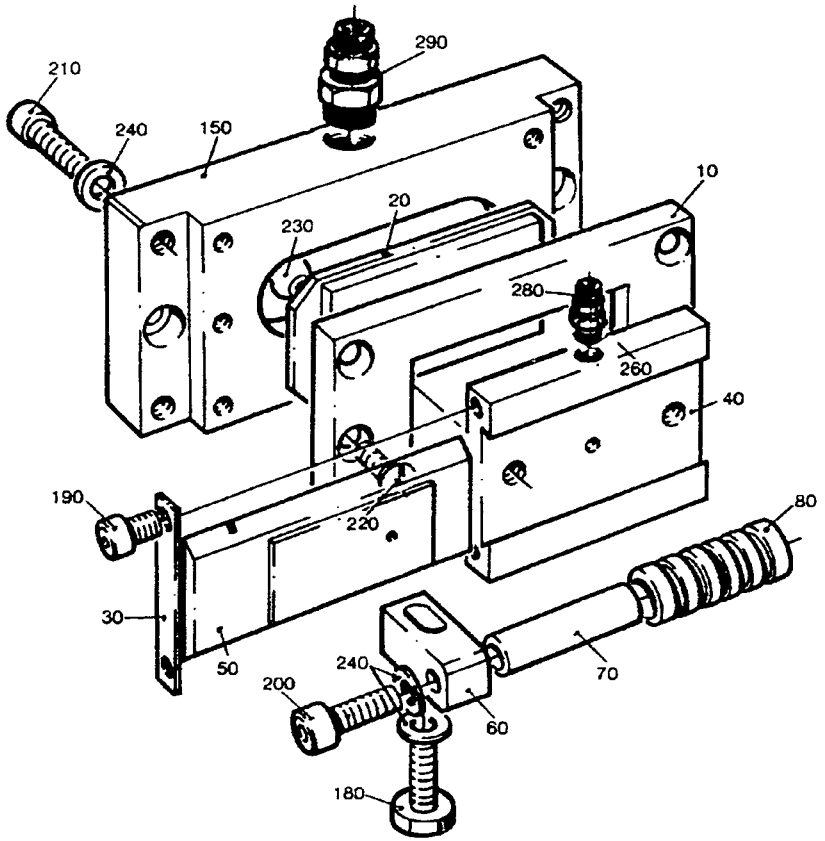

28360701.TIF
283607-1
AM 10738

From	Pos	Part No	SP	UN	Qty	Description
Hole 21 284ml - 180ml						
		C- 283607-0301				**Counter Jaw, Ass'y**
	030	268694	-		2	TINPLATE
	040	283588	S		1	RAIL
	050	541126	PU		1	COUNTER RUBBER
	060	294594	C		2	BRACKET
	070	294595	C		1	SHAFT
	080	294596	P		1	ROLL
	180	312105-0329	-		2	SCREW M6S5X16 A2 80
	190	312115-0285	-		4	SCREW S 4X6 A4 80
	200	312115-0329	-		2	SCREW 5X16 A4 80
	240	315105-0146	-		8	WASHER BRB5,3X10RFR
Hole 11 125ml 200ml Slim						
		C- 283607-0302				**Counter Jaw, Ass'y**
	030	268694	-		2	TINPLATE
	040	283588	S		1	RAIL
	050	469206	PU		1	COUNTER RUBBER
	060	294594	C		2	BRACKET
	070	294595	C		1	SHAFT
	080	294596	P		1	ROLL
	180	312105-0329	-		2	SCREW M6S5X16 A2 80
	190	312115-0285	-		4	SCREW S 4X6 A4 80
	200	312115-0329	-		2	SCREW 5X16 A4 80
	240	315105-0146	-		8	WASHER BRB5,3X10RFR
Hole 20 284ml - 180ml						
		C- 283607-0303				**Counter Jaw, Ass'y**
	030	268694	-		2	TINPLATE
	040	283588	S		1	RAIL
	050	469206	PU		1	COUNTER RUBBER
	060	294594	C		2	BRACKET
	070	294595	C		1	SHAFT
	080	294596	P		1	ROLL
	180	312105-0329	-		2	SCREW M6S5X16 A2 80
	190	312115-0285	-		4	SCREW S 4X6 A4 80
	200	312115-0329	-		2	SCREW 5X16 A4 80
	240	315105-0146	-		8	WASHER BRB5,3X10RFR

From	Pos	Part No	SP	UN	Qty	Description
Hole 10 125ml 200ml Slim						
		C- 283607-0304				**Counter Jaw, Ass'y**
	030	268694	-		2	TINPLATE
	040	283588	S		1	RAIL
	050	294868	PU		1	COUNTER RUBBER
	060	294594	C		2	BRACKET
	070	294595	C		1	SHAFT
	080	294596	P		1	ROLL
	180	312105-0329	-		2	SCREW M6S5X16 A2 80
	190	312115-0285	-		4	SCREW S 4X6 A4 80
	200	312115-0329	-		2	SCREW 5X16 A4 80
	240	315105-0146	-		8	WASHER BRB5,3X10RFR
Common Parts						
	010	257707	C		1	BRACKET
	020	257708	C		1	PLATE
	150	90239-0732	S		1	CYLINDER
	210	312115-0331	-		4	SCREW 5X20 A4 80
	220	312145-0295	-		6	SLOTTED HEMFS4X20RFR
	230	312145-0327	-		2	SLOTTED HEMFS5X12RFR
	280	342921-0111	-		1	PIPE COUPL6/4-5M
	290	342921-0113	-		1	PIPE COUPL6/4-1/8"

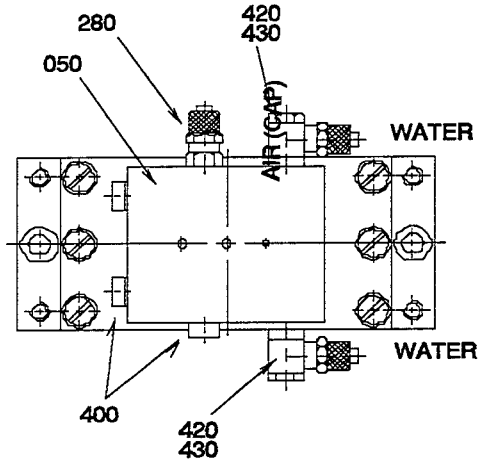
280
420
430
050
AIR (CIP)
WATER
WATER
400
420
430

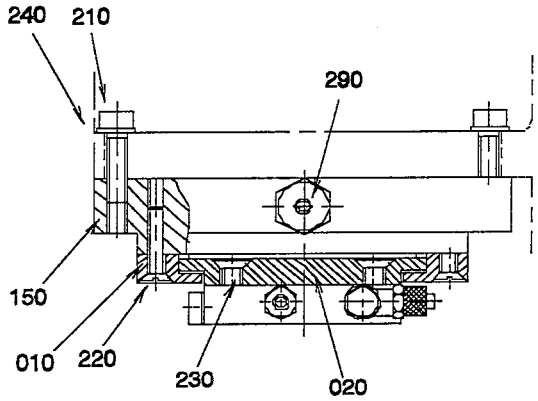
240
210
290
150
010
220
230
020

From	Pos	Part No	SP	UN	Qty	Description
Hole 21 250ml						
		C- 283607-0305				**Counter Jaw, Ass'y**
	050	553153	PU		1	DOLLY
	240	315105-0146	-		4	WASHER BRB5,3X10RFR
	400	342713-0208	-		3	BLIND PLUG
	420	342980-0111	-		2	BANJO CONNSINGEL 6/4-5M
	430	342980-0301	-		2	BANJO CONN SINGEL 5M
		315233-0101	P		0	* SEAL RINM5
Common Parts						
	010	257707	C		1	BRACKET
	020	257708	C		1	PLATE
	150	90239-0732	S		1	CYLINDER
	210	312115-0331	-		4	SCREW 5X20 A4 80
	220	312145-0295	-		6	SLOTTED HEMFS4X20RFR
	230	312145-0327	-		2	SLOTTED HEMFS5X12RFR
	280	342921-0111	-		1	PIPE COUPL6/4-5M
	290	342921-0113	-		1	PIPE COUPL6/4-1/8"

From	Pos	Part No	SP	UN	Qty	Description

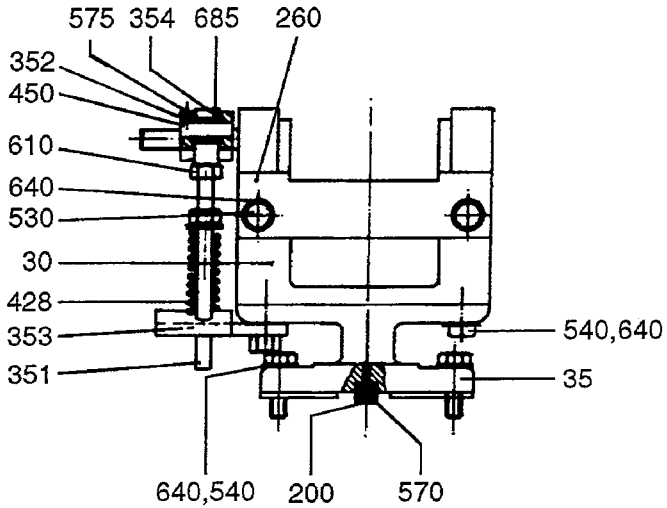

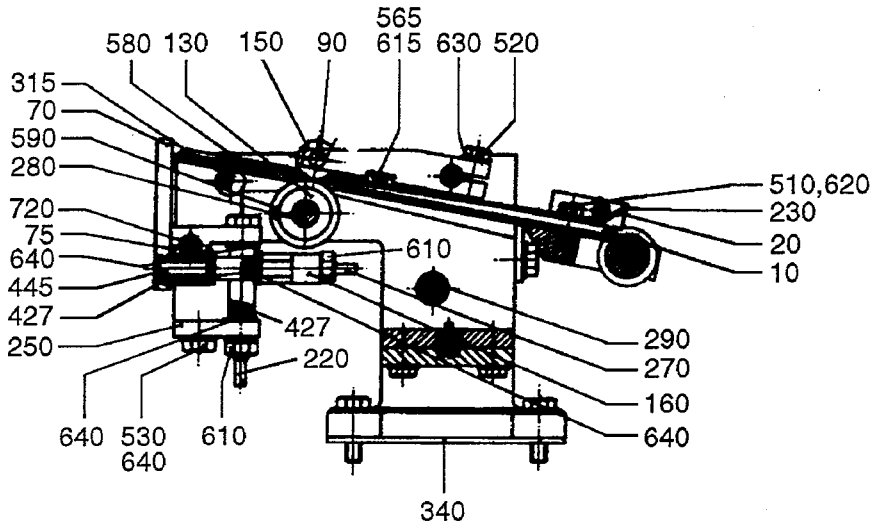

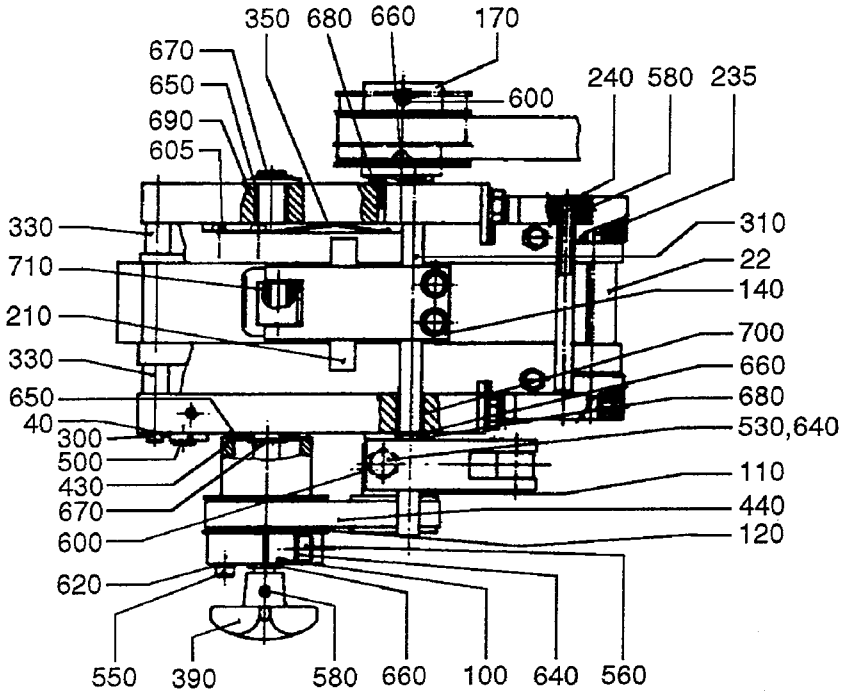

54833101.TIF
548331-1
AM 15283

Last Alteration: AM 15283 90-10-31

Corresponding group: 548331-010V
Assembly Drawing: 548331-1

Issue: 940524

From	Pos	Part No	SP	UN	Qty	Description
Hole 11						
		C- 548331-0101				**Pull-Tab Feed, Ass'y**
	010	536485	C		1	CHUTE
	020	536486	C		1	HEAD PLATE
	022	540892	P		1	ROLL
Hole 21						
		C- 548331-0102				**Pull-Tab Feed, Ass'y**
	010	499542	C		1	CHUTE
	020	490775	C		1	HEAD PLATE
	022	457910	P		1	ROLL
Hole 10						
		C- 548331-0103				**Pull-Tab Feed, Ass'y**
	010	499642	C		1	CHUTE
	020	499646	C		1	HEAD PLATE
	022	457909	P		1	ROLL
Hole 20						
		C- 548331-0104				**Pull-Tab Feed, Ass'y**
	010	499542	C		1	CHUTE
	020	490775	C		1	HEAD PLATE
	022	457910	P		1	ROLL
Common parts						
	030	G- 476108	-		1	BRACKET
	035	G- 476109	-		1	CANTILEVER
	040	19135	-		1	LOCK WASHER
	070	526936	P		1	KNIFE
	075	550167	P		1	KNIFE HOLDER
	090	257690	P		1	SHAFT
	100	257696	C		1	CLAMP HUB
	110	259761	S		1	TOOTHED PULLY
	120	259762	S		1	TOOTHED PULLY
	130	259816	P		1	ROLL
	140	546126	S		1	HOLDER
	150	263701	P		1	ROLL
	160	266422	-		2	NUT
	170	456687	S		1	TOOTHED PULLY
	200	276143	-		4	WEDGE
	210	283545	P		1	SPRING
	220	283546	S		1	SCREW
	230	533373	C		1	BRACKET
	235	499580	-		1	SHAFT
	240	499581	S		1	SHAFT
	250	457913	-		1	BRACKET
	260	457914	-		1	HOLDER
	270	283551	C		2	SCREW
	280	457899	S		1	SHAFT
	290	457900	S		1	SHAFT

From	Pos	Part No	SP	UN	Qty	Description
	300	457898	S		1	SHAFT
	310	457896	S		1	SHAFT
	315	456609	P		1	SHAFT
	330	456605-0003	-		2	SPACER
	340	499822	P		2	SHIM
	350	499543	S		1	SPRING
	351	548332	S		1	SHAFT
	352	548333	S		1	ARM
	353	548334	S		1	LUG
	354	548335	C		1	BRACKET
	390	90051-0076	-		1	WHEEL
	427	90335-0067	P		3	SPRING
	428	90335-0082	S		1	SPRING
	430	90340-0014	S		1	FREE WHEEL COUPLING
		90340-0309	P		0	* SPRING
	440	90417-0073	P		1	TOOTHED BELT
	445	311103-0310	-		1	CYLINDRICACP M6 5X20 RFR
	450	311103-0353	-		1	CYLINDRICACP M6 6X20 RFR
	500	312105-0291	-		1	SCREW M6S4X12 A2 80
	510	312115-0293	-		2	SCREW 4 X 16 A4 80
	520	312105-0327	-		2	SCREW M6S5X12 A2 80
	530	312105-0368	-		5	SCREW M6S6X16RFR
	540	312105-0370	-		8	SCREW M6S6X20RFR
	550	312115-0297	-		3	SCREW 4X25 A4 80
	560	312115-0372	-		1	SCREW MC6S6X25 A4 80
	565	312125-0222	-		1	SLOTTED HEMCS3X8RFR
	570	312145-0226	-		4	SLOTTED HEMFS3X12RFR
	575	312318-0218	-		1	STOP SCREW SK6SS3X4RFR
	580	312318-0285	-		6	STOP SCREW SK6SS4X6RFR
	590	312318-0321	P		1	STOP SCREW SK6SS5X6RFR
	600	312318-0323	-		2	STOP SCREW SK6SS5X8RFR
	605	312504-0221	-		2	SCREW A4
	610	312605-0316	-		5	NUT M6M6RFR
	615	315105-0124	-		1	WASHER BRB3,2X6RFR
	620	315105-0136	-		5	WASHER BRB4,3X8RFR
	630	315105-0146	-		2	WASHER BRB5,3X10RFR
	640	315105-0153	-		21	WASHER BRB6,4X12RFR
	650	315105-0173	-		2	WASHER BRB10,5X22RFR
	660	315754-0108	P		5	LOCKING WAE 6
	670	315754-0109	P		2	LOCKING WAE 7
	680	321111-0159	S		2	FLANGE BUS 12E7X12
	685	321116-0066	S		1	BUSHING 6E7/10X10
	690	321120-0099	S		2	BUSHING 10/12,0X12
	700	321120-0100	S		2	BUSHING 8/10X12
	710	321120-0101	S		2	BUSHING 6/8X6
	720	321120-0102	S		2	BUSHING 6/8X10

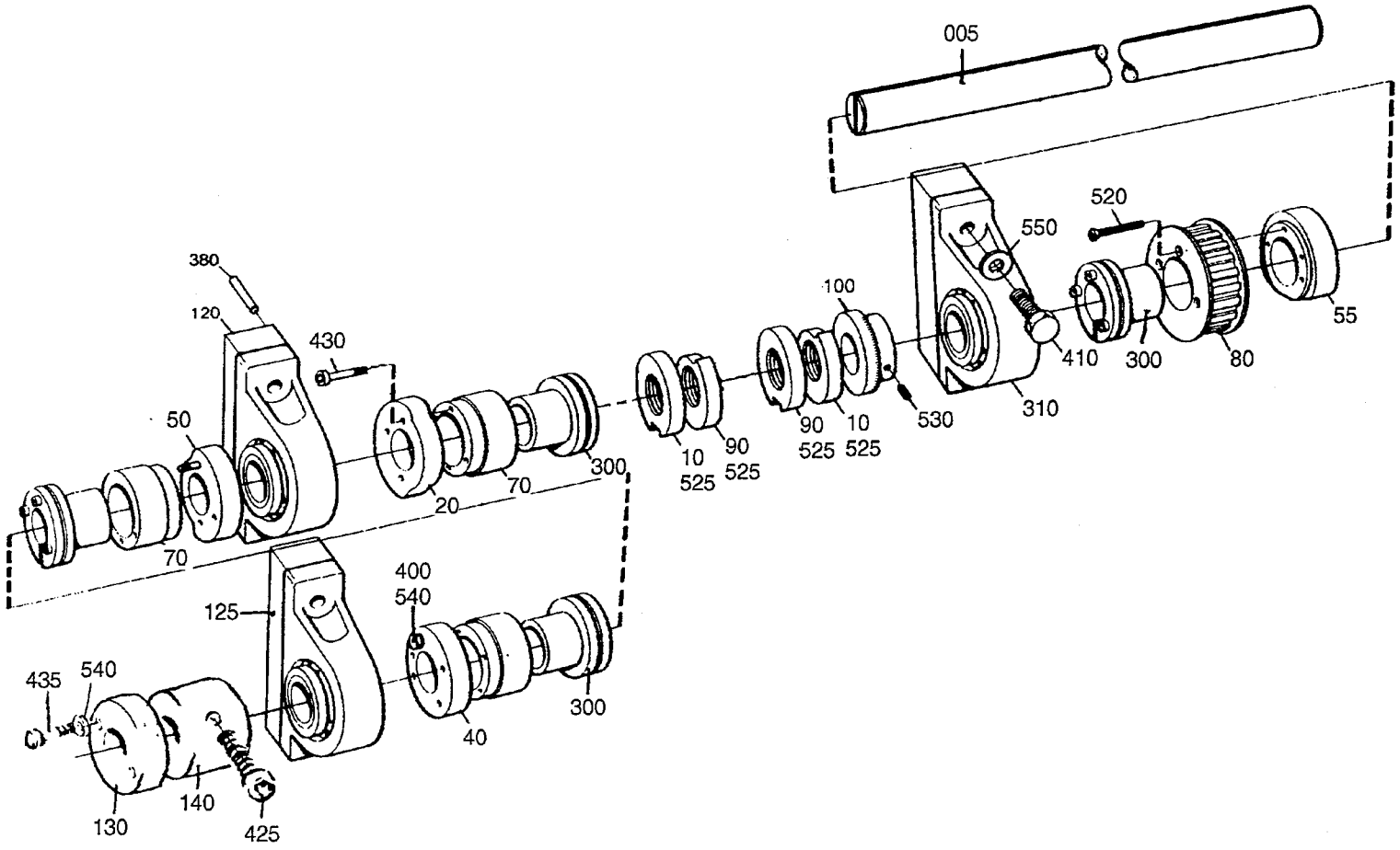

47634905.TIF
476349-5
AM 12943

Last Alteration: AM 12943 89-05-29

Corresponding group: 476349-030V
Assembly Drawing: 476349-5

Issue: 940524

From	Pos	Part No	SP	UN	Qty	Description
TBA/9						
		C- 476349-0301				**Drive Shaft, Ass'y**
	010	484988	C		3	CURVE
	525	312318-0323	-		5	STOP SCREW SK6SS5X8RFR
TB/9						
		C- 476349-0302				**Drive Shaft, Ass'y**
	010	484988	C		2	CURVE
	525	312318-0323	-		4	STOP SCREW SK6SS5X8RFR
Common parts						
	005	533396-0007	-		1	SHAFT
	090	484989	C		2	CURVE
	120	449347	-		2	SPACER
	125	531908	-		1	SPACER
	410	312105-0546	-		6	SCREW M6S12X70RFR
	020	456675	C		1	CURVE PT-SEALING
	040	543197	C		1	CAM BEND
	050	456677	C		1	CURVE LS-SEALING
	055	456678	C		1	CURVE
	070	266506	C		3	HUB
	080	268056	S		1	TOOTHED PULLY
	100	268915	C		1	PROTRACTOR
	130	531638	C		1	CURVE
	140	531976	-		1	HUB
	300	90208-0053	P		4	CLAMPING ELEMENT
	310	90345-0007	S		3	BEARING
	400	312105-0374	-		6	SCREW M6S6X30RFR
	425	312115-0453	-		1	SCREW 8X25 A4 80
	430	312115-0372	-		2	SCREW MC6S6X25 A4 80
	435	312105-0370	-		2	SCREW M6S6X20RFR
	520	312145-0339	-		3	SLOTTED HEMFS5X40RFR
	530	312318-0364	-		1	STOP SCREW SK6SS6X10RFR
	540	315105-0153	-		8	WASHER BRB6,4X12RFR
	550	315105-0178	-		6	WASHER BRB13X24RFR

From	Pos	Part No	SP	UN	Qty	Description

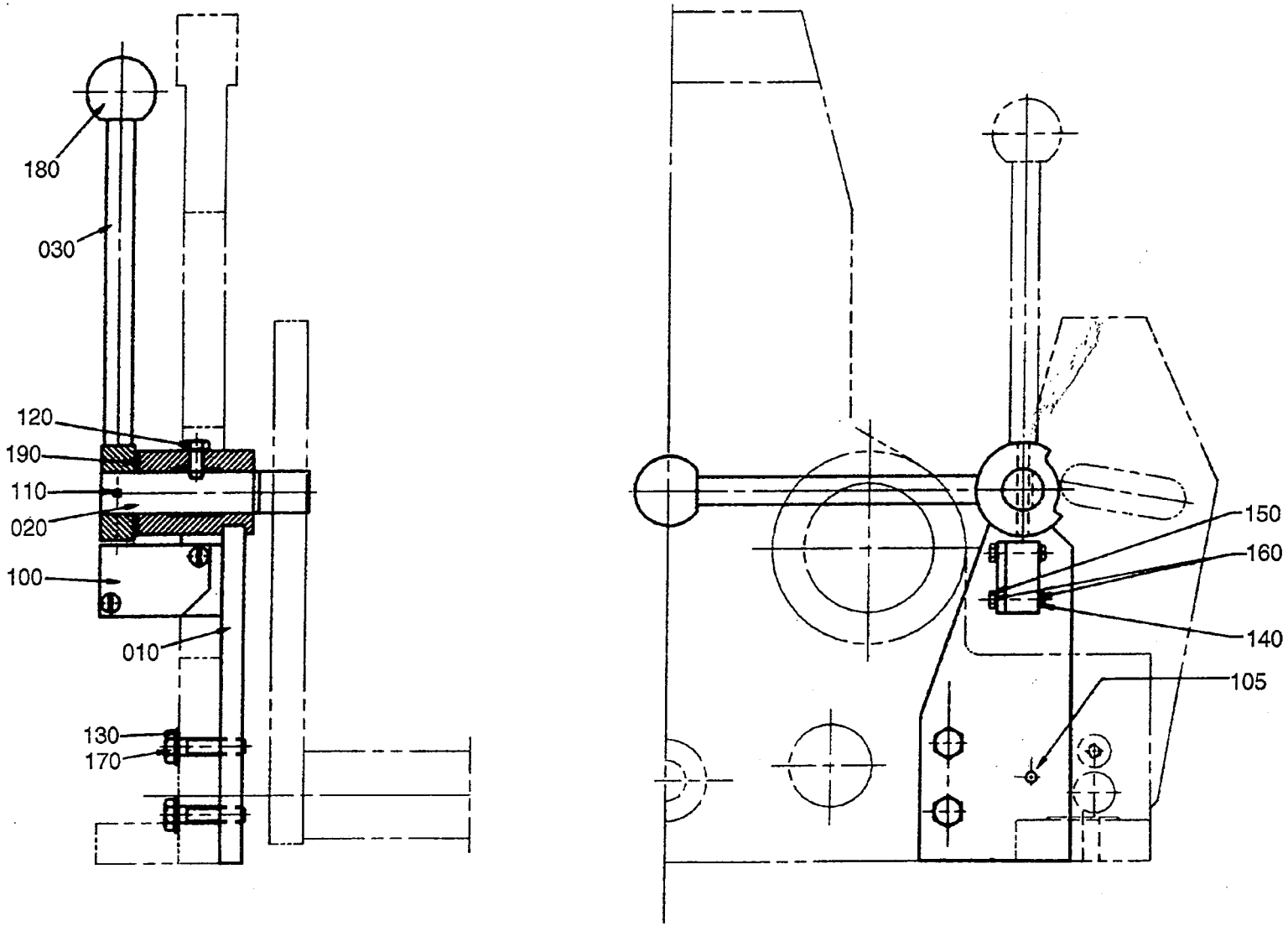

55012801.TIF
550128-1
AM 15283

Last Alteration: AM 15283 90-10-31

Corresponding group: 550128-010V
Assembly Drawing: 550128-1

Issue: **940524**

From	Pos	Part No	SP	UN	Qty	Description
		C- 550128-0101				**Lifter, Ass'y**
	010	550125	-		1	CANTILEVER
	020	550126	C		1	SHAFT
	030	550127	-		1	HANDSPIKE
	100	90044-0104	-		1	INDUCTIVE SWITCH
	105	311112-0258	-		1	SLOTTED TURP 4X24 RFR
	110	311112-0262	-		1	SLOTTED TURP 4X32 RFR
	120	312105-0323	-		1	SCREW M6S5X8 A2 80
	130	312105-0372	-		2	SCREW M6S6X25RFR
	140	312125-0230	-		2	SLOTTED HEMCS3X20RFR
	150	312605-0310	-		2	NUT M6M3RFR
	160	315105-0124	-		4	WASHER BRB3,2X6RFR
	170	315105-0153	-		2	WASHER BRB6,4X12RFR
	180	318800-0103	-		1	HANDLE BALLA D.25-M6
	190	321129-0117	-		1	THRUST WAS16/30X1,5

From	Pos	Part No	SP	UN	Qty	Description

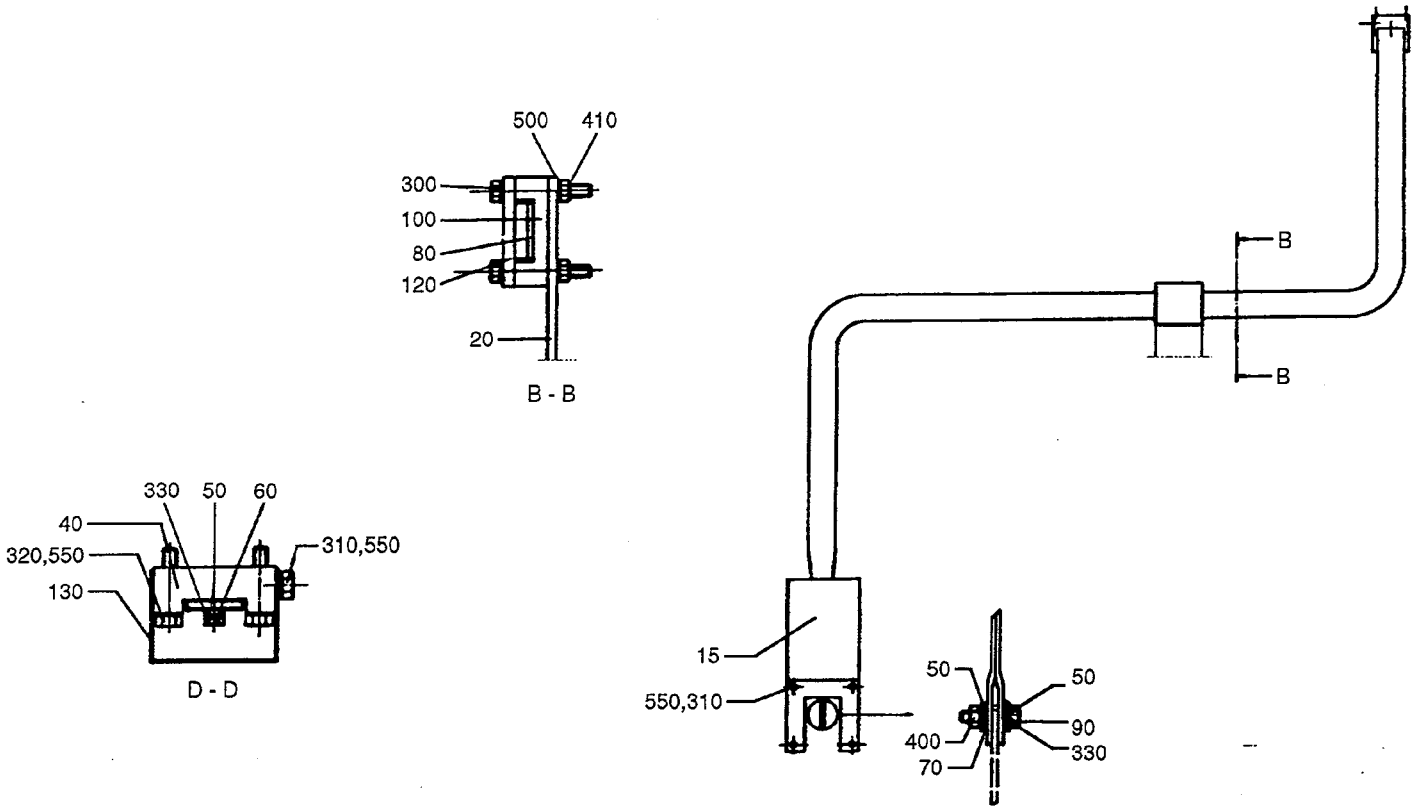

46963401.TIF
469634-3
AM

Last Alteration: AM 10407 87-06-10

Corresponding group: 469634-010V
Assembly Drawing: 469634-3/4

Issue: **940524**

From	Pos	Part No	SP	UN Qty	Description
		C- 469634-0101			**Busbar, Ass'y**
	010	490741	S	1	BUSBAR
	015	490729	-	1	PROTECTIVE CASING
	020	469622	-	1	BRACKET
	030	469630	-	1	HOLDER
	040	490735	-	1	BRACKET
	050	28509	S	3	WASHER
	060	28510	S	1	INSULATION NUT
	070	32079	S	1	WASHER
	080	32136	S	1	LACE
	090	32544	S	1	INSULATION NUT
	100	276182	S	1	CABLE CLAMP
	120	457848	S	1	LACE
	130	490765	C	1	PROTECTION
	300	312105-0339	-	2	SCREW M6S5X40 A2 80
	310	312105-0366	-	12	SCREW M6S6X12RFR
	320	312105-0374	-	2	SCREW M6S6X30RFR
	330	312122-0295	-	2	SLOTTED HEMCS4X20MSGFN
	400	312605-0312	-	1	NUT M6M4RFR
	410	312605-0314	-	2	NUT M6M5RFR
	500	315105-0146	-	4	WASHER BRB5,3X10RFR
	550	315105-0153	-	14	WASHER BRB6,4X12RFR

From	Pos	Part No	SP	UN Qty	Description

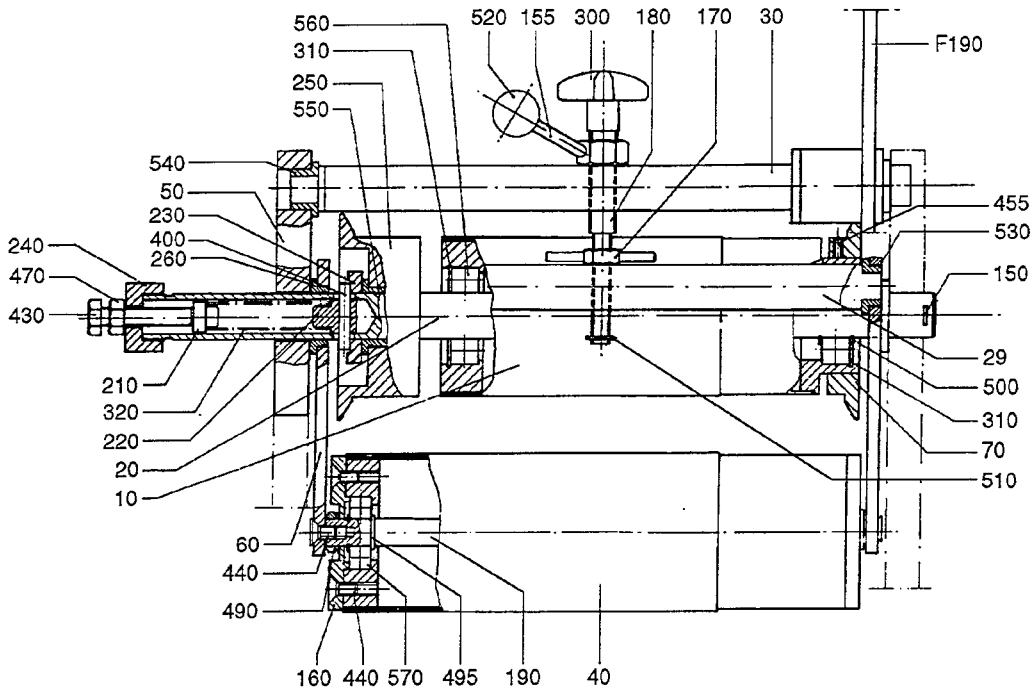

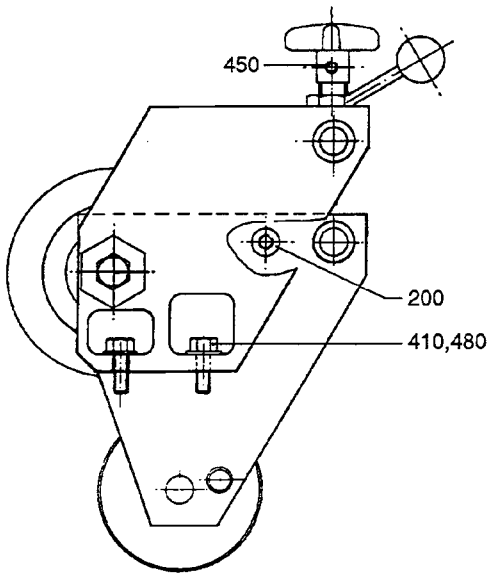

53384401.TIF
533844-1
AM 9438

From	Pos	Part No	SP	UN Qty	Description
284ml - 180ml					
		C- 533844-0101			**Bending Roller, Ass'y**
	010	532183-0001	C	1	BENDING ROLLER
	020	532184-0001	C	1	SHAFT
200ml Slim					
		C- 533844-0102			**Bending Roller, Ass'y**
	010	532183-0002	C	1	BENDING ROLLER
	020	532184-0002	C	1	SHAFT
125ml					
		C- 533844-0103			**Bending Roller, Ass'y**
	010	532183-0003	C	1	BENDING ROLLER
	020	532231	C	1	SHAFT
Common parts					
	F190	**C- 476080-020V**	**-**	**1**	**BELT TIGHTENER**
	029	269798-0004	-	1	SHAFT
	030	269799-0005	-	1	SHAFT
	040	294829-0003	-	1	BENDING ROLLER
	050	532185	-	1	BRACKET
	060	532186	-	2	END SECTION
	070	532187	-	1	FLANGE
	150	18135	-	1	WASHER
	155	269803	-	1	LOCK NUT
	160	294830	-	2	LID
	170	294938	C	1	NUT
	180	449281	C	1	SCREW
	190	456613-0001	-	1	SHAFT
	200	456614-0001	-	1	SPACER
	210	486974	-	1	STEERING
	220	486978	-	1	STEERING
	230	486980	-	1	RING
	240	522429	-	1	MUFF
	250	532188	-	1	FLANGE
	260	532245	S	2	BUSHING
	300	90051-0076	C	1	WHEEL
	310	90141-0020	-	2	LOCK RING
	320	90335-0064	S	1	SPRING
	400	311103-0314	-	1	CYLINDRICACP M6 5X30 RFR
	410	312105-0370	-	2	SCREW M6S6X20RFR
	430	312109-0459	-	1	SCREW M6S8X40H A4 80
	440	312155-0366	-	10	SCREW MF6S6X12RFR
	450	312316-0283	-	1	STOP SCREW SK6SS4X4FZB
	455	312318-0321	-	1	STOP SCREW SK6SS5X6RFR
	470	312605-0318	-	1	NUT M6M8RFR
	480	315105-0153	-	2	WASHER BRB6,4X12RFR
	490	315220-0117	S	2	SEAL RING V-12S
	495	315750-0109	-	4	CIRCLIP SGA12
	500	315751-0116	-	2	CIRCLIP SGA20 RFR
	510	315755-0107	-	1	LOCKING WAE 5RFR
	520	318800-0102	C	1	HANDLE BALLA D.20-M5
	530	321111-0157	S	2	FLANGE BUS 12E7X8
	540	321111-0159	S	2	FLANGE BUS 12E7X12
	550	321111-0306	S	1	FLANGE BUS 20E7X25
	560	321308-0104	S	2	BALL BEARISKF6004RS
	570	321313-0101	S	2	BALL BEARISKF6201-2RS

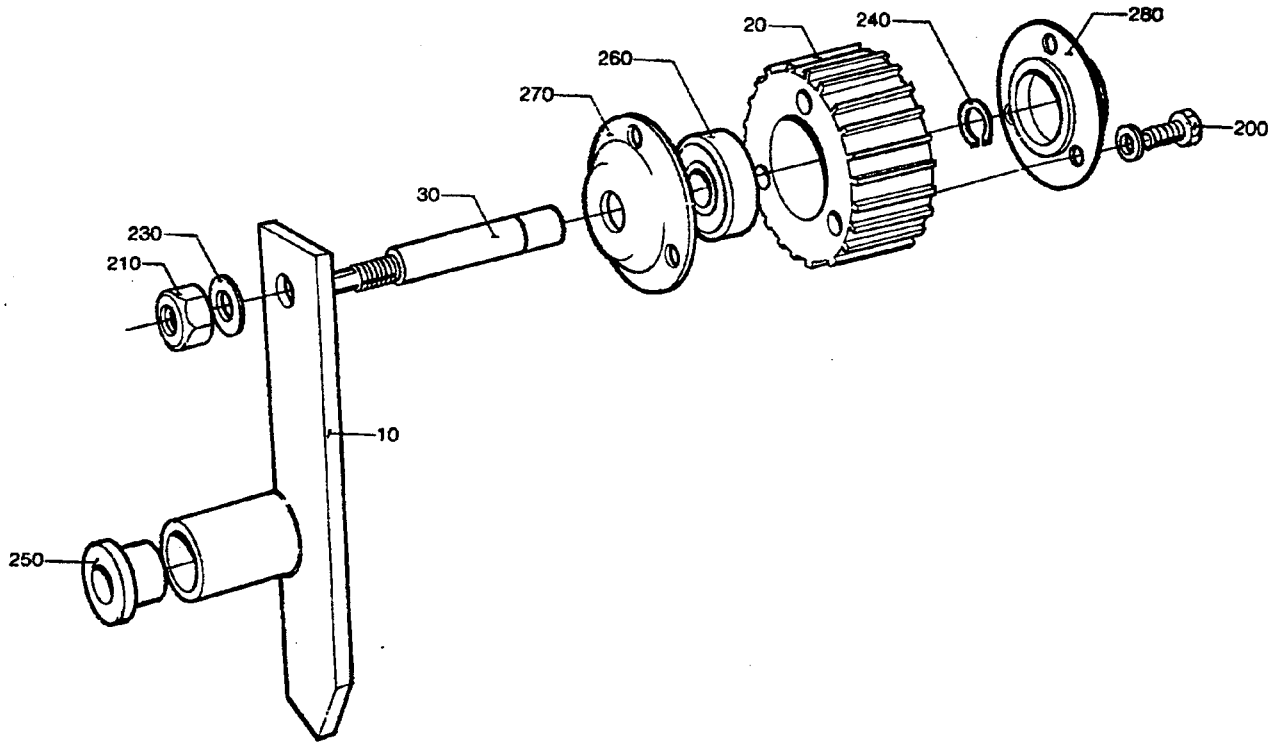

47608002.TIF
476080-2
AM 8653

Last Alteration: AM 8653 86-11-21

Corresponding group: 476080-020V
Assembly Drawing: 476080-2

Issue: 940524

From	Pos	Part No	SP	UN	Qty	Description
TBA/9						
		C- 476080-0201				**Belt Tightener, Ass'y**
	010	532330-0001	-		1	ARM
TBA/3						
		C- 476080-0202				**Belt Tightener, Ass'y**
	010	532330-0002	-		1	ARM
Common parts						
	020	284997	C		1	TOOTHED PULLY
	030	284998	C		1	SHAFT
	200	312115-0327	-		6	SCREW MC6S5X12 A4 80
	210	312605-0320	-		1	NUT M6M10RFR
	230	315105-0173	-		1	WASHER BRB10,5X22RFR
	240	315750-0112	-		1	CIRCLIP SGA15
	250	321101-0222	S		2	FLANGE BUS 18F7X12
	260	321312-0102	S		2	BALL BEARISKF6202RS
	270	469642	-		1	LID
	280	469646	-		1	LID

From	Pos	Part No	SP	UN	Qty	Description

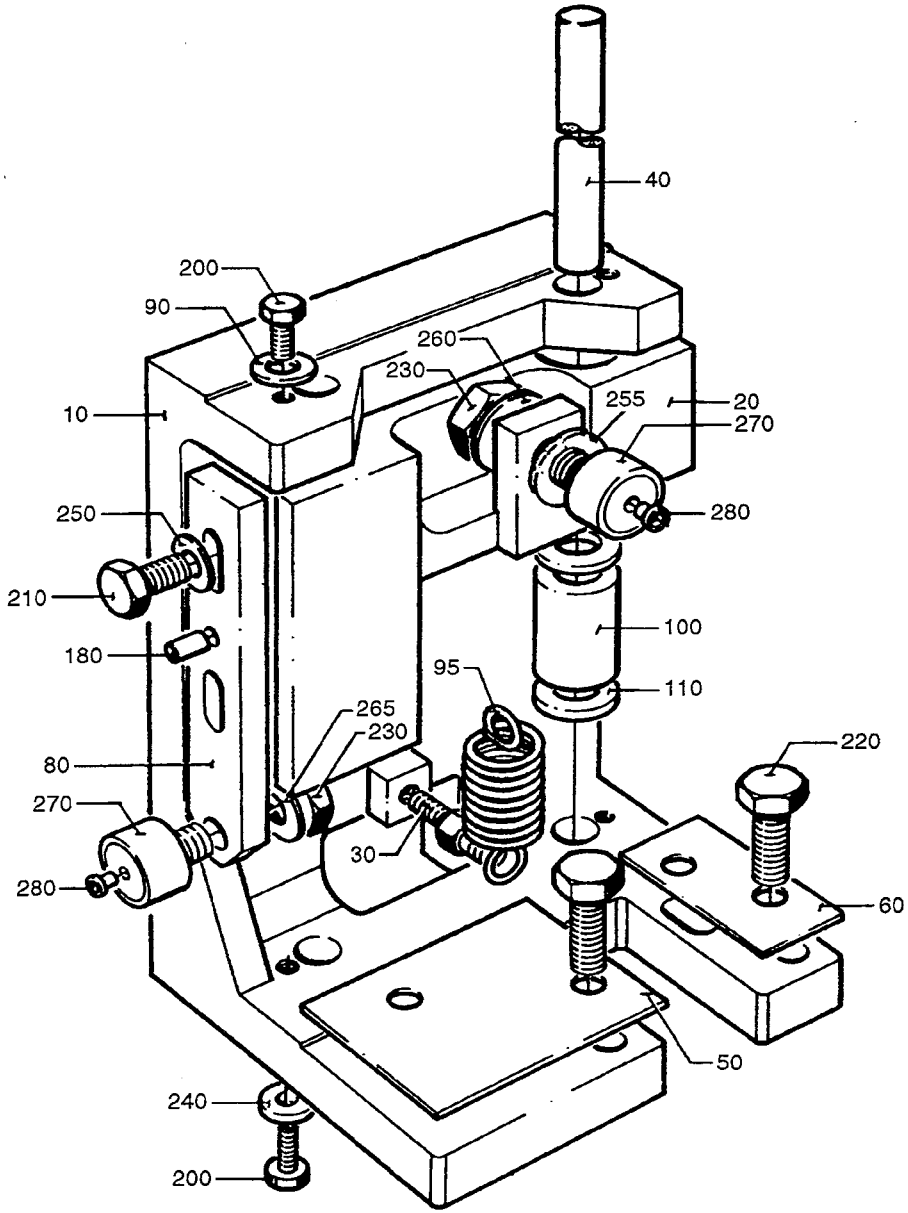
40
200
90
260
230
255
20
270
10
280
250
210
100
180
95
110
265
230
220
80
270
30
280
60
50
240
200

From	Pos	Part No	SP	UN	Qty	Description
		C- 294695-0101				**Back Feeder, Ass'y**
	010	G- 294674	C		1	CANTILEVER
	020	G- 294675	C		1	STEERING
	030	456684	C		2	SPRING BRACKET
	040	294628	S		2	SHAFT
	050	294676	-		1	WASHER
	060	294677	-		1	WASHER
	080	294680	-		1	ARM
	090	456685	-		4	WASHER
	095	456695	P		1	SPRING
	100	90189-0021	P		3	BALL BUSHING
	110	90189-0024	P		4	SEAL RING
	180	311103-0350	-		1	CYLINDRICACP M6 6X14 RFR
	200	312105-0327	-		4	SCREW M6S5X12 A2 80
	210	312105-0451	-		2	SCREW M6S8X20RFR
	220	312105-0455	-		4	SCREW M6S8X30RFR
	230	312630-0320	-		2	NUT M6M10X1FZB
	250	315105-0165	-		6	WASHER BRB8,4X16RFR
	255	315105-0171	-		1	WASHER BRB10X18RFR
	260	315105-0173	-		1	WASHER BRB10,5X22RFR
	265	315115-0173	-		1	WASHER B 10,5X22 RFR
	270	321582-0149	P		2	CURVE ROLLKR22PP
	280	344510-0101	P		2	GREASE NIPL 1

From	Pos	Part No	SP	UN	Qty	Description

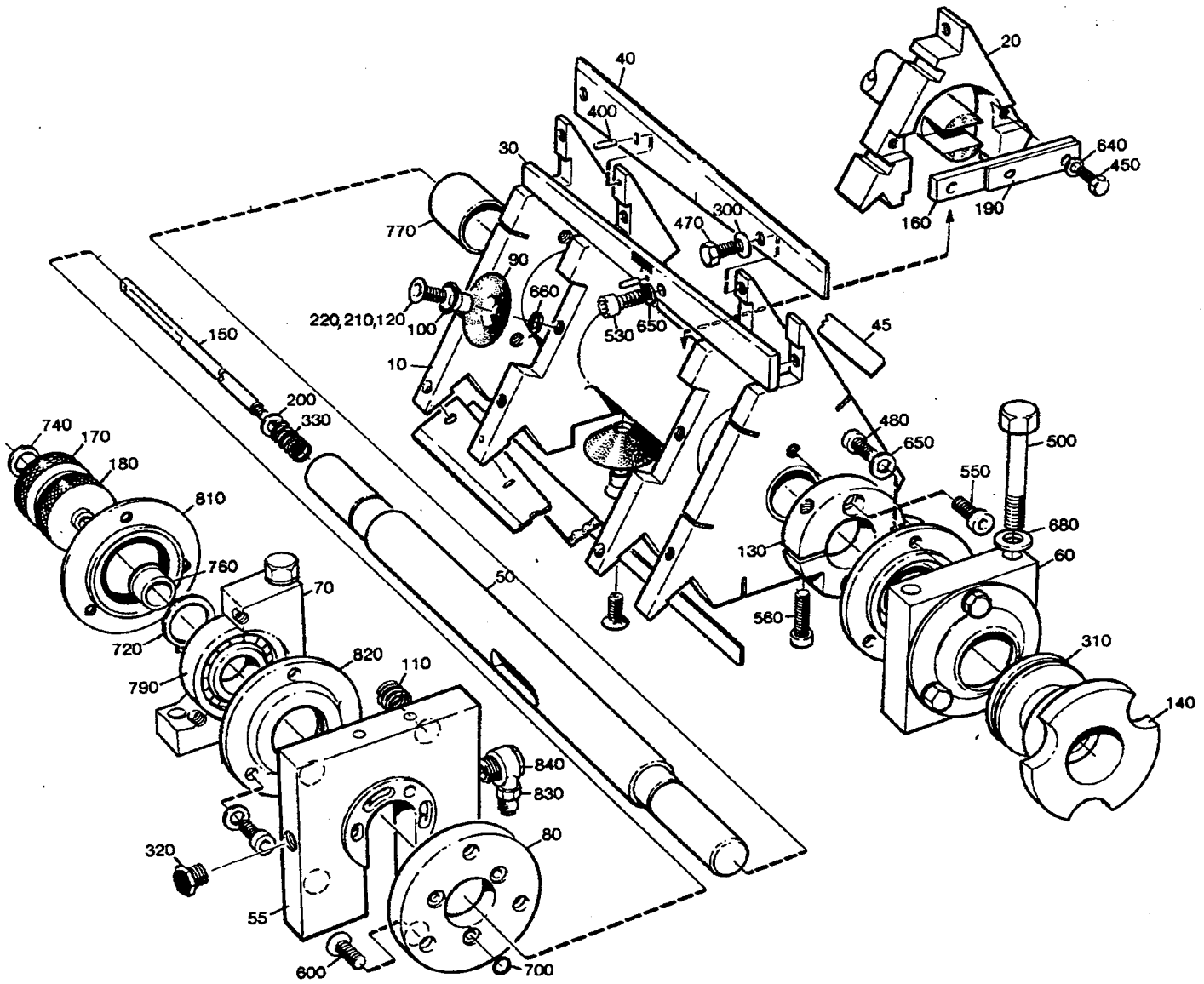

46917301.TIF
469173-1
AM 16054

Last Alteration: AM 16054 91-03-12

Corresponding group: 469173-010V
Assembly Drawing: 469173-1

Issue: **940524**

From	Pos	Part No	SP	UN	Qty	Description
250ml						
		C- 469173-0102				**Reel, Ass'y**
	010	G- 456650	C		1	REEL
	020	456643	C		1	BOW CLAMP
	030	456636	-		3	RULER
	040	490791	S		3	CARRIER
	045	283692-0003	-		6	RULER
236ml						
		C- 469173-0103				**Reel, Ass'y**
	010	G- 456649	C		1	REEL
	020	469174	C		1	BOW CLAMP
	030	456636	-		3	RULER
	040	490791	S		3	CARRIER
	045	283692-0003	-		6	RULER
200ml						
		C- 469173-0104				**Reel, Ass'y**
	010	G- 456648	C		1	REEL
	020	469175	C		1	BOW CLAMP
	030	456636	-		3	RULER
	040	490791	S		3	CARRIER
	045	283692-0003	-		6	RULER
180ml						
		C- 469173-0106				**Reel, Ass'y**
	010	G- 456647	C		1	REEL
	020	469176	C		1	BOW CLAMP
	030	456636	-		3	RULER
	040	490791	S		3	CARRIER
	045	283692-0003	-		6	RULER
125ml						
		C- 469173-0107				**Reel, Ass'y**
	010	G- 456646	C		1	REEL
	020	469177	C		1	BOW CLAMP
	030	456635	-		3	RULER
	040	490714	S		3	CARRIER
	045	283692-0002	-		6	RULER
200ml Slim						
		C- 469173-0109				**Reel, Ass'y**
	010	G- 456652	C		1	REEL
	020	456645	C		1	BOW CLAMP
	030	456635	-		3	RULER
	040	490714	S		3	CARRIER
	045	283692-0002	-		6	RULER
Common parts						
	050	456621	C		1	SHAFT
	055	490671	P		1	DISTRIBUTOR BLOCK
	060	456624	-		1	BEARING HOUSING
	070	456625	-		1	BEARING HOUSING
	080	284806	C		1	HUB
	090	120902	PU		6	SUCTION CUP
	100	120904	S		6	BUSHING
	110	252926	P		4	COMPRESSION SPRING
	120	265603	S		6	SCREW
	130	283853	S		1	CLAMP HUB
	140	294632	C		1	CURVE
	150	456626	-		1	ROD
	160	456627	-		1	ROD
	170	456628	C		1	SHIFTER HANDLE
	180	456629	C		1	SHIFTER HANDLE
	190	456630	C		1	LOCK WASHER
	200	490660	-		1	WASHER
	210	2033-0013	-		18	WASHER
	220	255119	-		18	WASHER
	300	90016-0052	P		6	DISC SPRING
	310	90208-0051	S		1	CLAMPING ELEMENT
	320	90257-0003	S		1	FILTER PLUG
	325	90258-0002	S		3	HOLLOW PIN
	330	90335-0027	P		1	SPRING
	400	311103-0208	S		3	CYLINDRICACP M6 2,5X12RFR
	450	312105-0291	-		2	SCREW M6S4X12 A2 80
	470	312125-0323	-		6	SLOTTED HEMCS5X8RFR
	480	312105-0327	-		12	SCREW M6S5X12 A2 80
	500	312105-0469	-		4	SCREW M6S8X90RFR
	530	312115-0325	-		3	SCREW 5X10 A4 80
	550	312115-0367	-		2	SCREW 6X14 A4 80
	560	312115-0370	-		1	SCREW 6X20 A4 80
	600	312155-0368	-		3	SCREW MF6S6X16RFR
	640	315105-0136	-		2	WASHER BRB4,3X8RFR
	650	315105-0146	-		16	WASHER BRB5,3X10RFR
	660	315105-0153	-		19	WASHER BRB6,4X12RFR
	680	315105-0165	-		4	WASHER BRB8,4X16RFR
	700	315202-0103	S		3	O-RING 5,1X1,6
	720	315750-0116	S		2	CIRCLIP SGA20
	740	315755-0105	S		1	LOCKING WAE 3,2 RFR
	760	321101-0163	-		1	FLANGE BUS 10F7X10
	770	321120-0159	-		2	BUSHING 25/28X25
	790	321313-0104	S		2	BALL BEARISKF6204-2RS
	810	469644	-		2	LID
	820	469645	-		2	LID
	830	342980-0114	P		1	BANJO CONNSINGEL 6/4-1/4
	840	342980-0304	P		1	BANJO CONN SINGEL 1/4

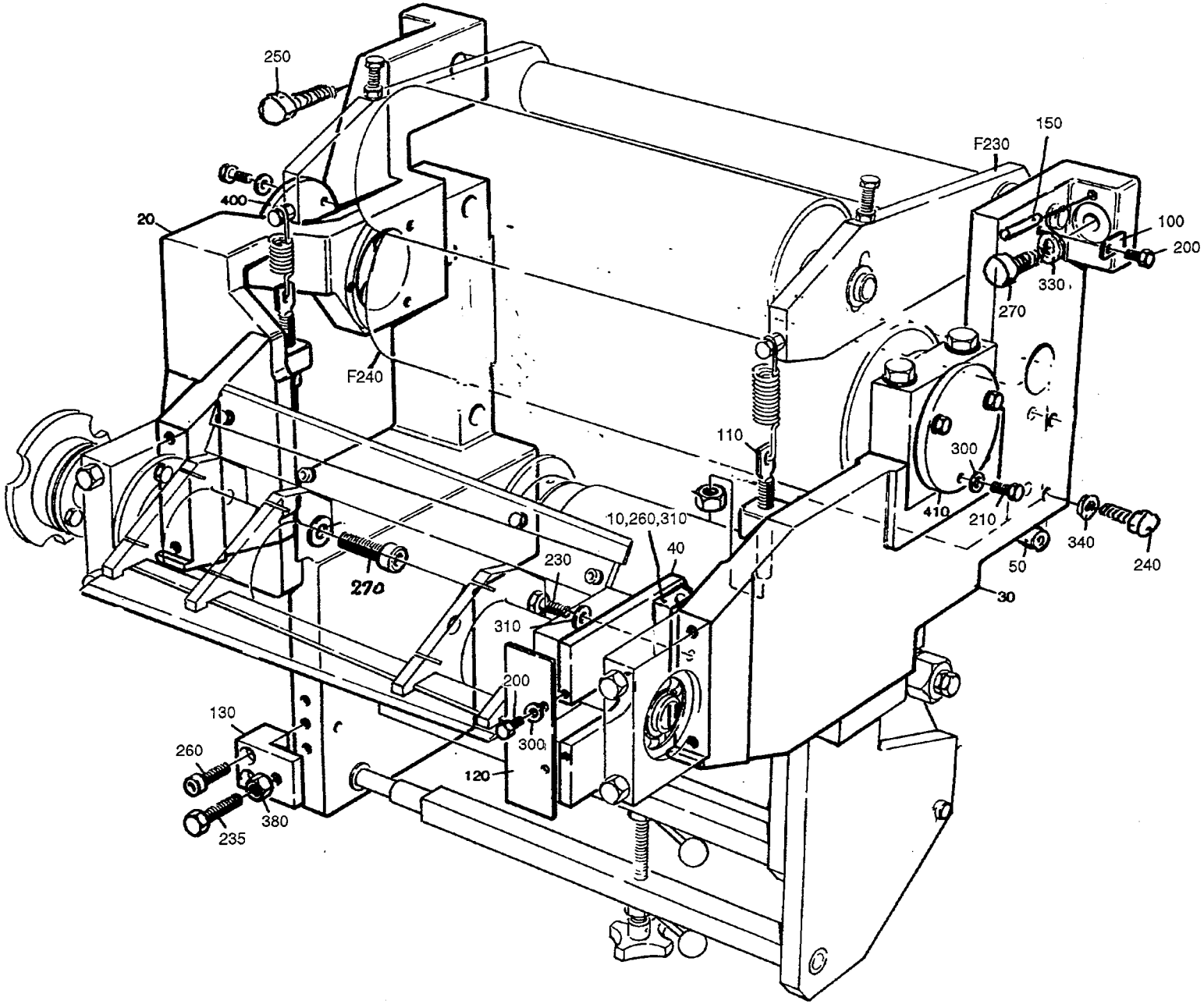

45669602.TIF
456696-2
AM 12944

From	Pos	Part No	SP	UN	Qty	Description
284ml - 180ml						
		C- 456696-0301				**Paper Feed, Ass'y**
125ml 200ml Slim						
		C- 456696-0302				**Paper Feed, Ass'y**
	010	456631	-		1	SPACER
Common parts						
	F230	**C- 456688-020V**	**-**		**1**	**DRIVE ROLLER**
	F240	**C- 283604-0201**	**-**		**1**	**PRESSURE ROLLER**
	020	G- 457956	C		1	GABLE PLATE
	030	G- 457955	C		1	END SECTION
	040	269439	-		1	PLATE
	050	456622	-		1	TIE ROD
	060	456623	-		1	TIE ROD
	100	18135	-		1	WASHER
	110	476930	-		2	SPRING BRACKET
	120	269440	-		1	SHEET
	130	529400-0002	-		1	LUG
	150	90258-0007	-		2	TAPER PIN
	200	312105-0325	-		3	SCREW M6S5X10 A2 80
	210	312105-0327	-		6	SCREW M6S5X12 A2 80
	230	312105-0368	-		1	SCREW M6S6X16RFR
	235	312109-0463	-		1	SCREW
	240	312105-0449	-		4	SCREW M6S8X16RFR
	250	312105-0495	-		3	SCREW M6S10X30RFR
	260	312115-0374	-		4	SCREW 6X30 A4 80
	270	312115-0495	-		5	SCREW 10X30 A4 80
	300	315105-0146	-		8	WASHER BRB5,3X10RFR
	310	315105-0153	-		3	WASHER BRB6,4X12RFR
	330	315105-0173	-		8	WASHER BRB10,5X22RFR
	340	315121-0165	-		4	WASHER TBRSB8,4X26FZB
	380	312605-0318	-		1	NUT M6M8RFR
	400	469644	-		1	LID
	410	469647	-		1	LID

From	Pos	Part No	SP	UN	Qty	Description

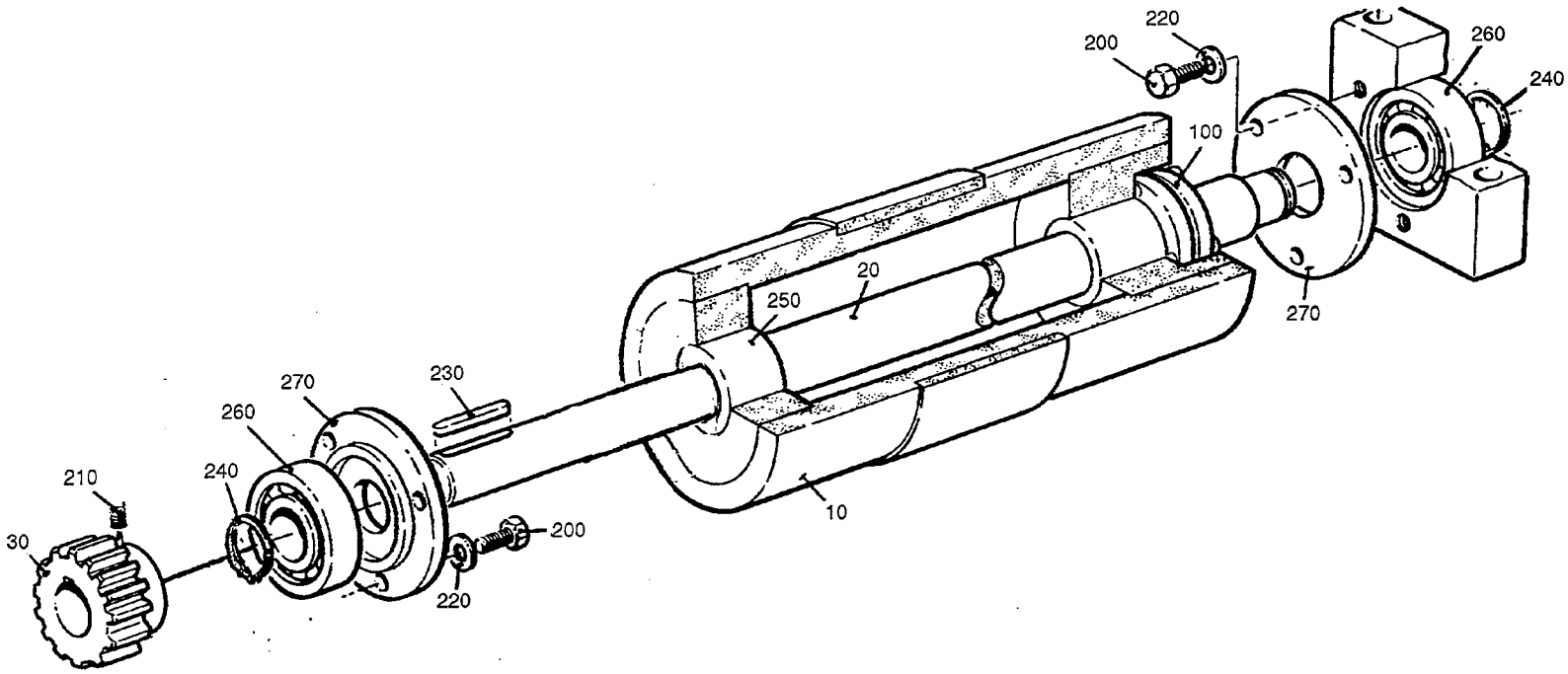
220
200
260
240
100
20
250
270
270
230
260
210
240
30
200
220
10

From	Pos	Part No	SP	UN	Qty	Description
250ml						
		C- 456688-0202				**Drive Roller, Ass'y**
	010	548405	S		1	DRIVE ROLLER
236ml						
		C- 456688-0204				**Drive Roller, Ass'y**
	010	550113	S		1	DRIVE ROLLER
200ml						
		C- 456688-0206				**Drive Roller, Ass'y**
	010	550112	S		1	DRIVE ROLLER
125ml						
		C- 456688-0207				**Drive Roller, Ass'y**
	010	548404	S		1	DRIVE ROLLER
200ml Slim						
		C- 456688-0209				**Drive Roller, Ass'y**
	010	544463	S		1	DRIVE ROLLER
Common parts						
	020	269173-0003	S		1	SHAFT
	030	401463	S		1	GEAR
	100	90208-0052	S		1	CLAMPING ELEMENT
	200	312105-0327	-		6	SCREW M6S5X12 A2 80
	210	312318-0321	-		2	STOP SCREW SK6SS5X6RFR
	220	315105-0146	-		6	WASHER BRB5,3X10RFR
	230	315701-0234	S		1	FLAT WEDGE6X6X25
	240	315750-0116	S		2	CIRCLIP SGA20
	250	321105-0253	S		1	BUSHING 25F7X35X25
	260	321313-0104	S		2	BALL BEARISKF6204-2RS
	270	469645	-		2	LID

From	Pos	Part No	SP	UN	Qty	Description

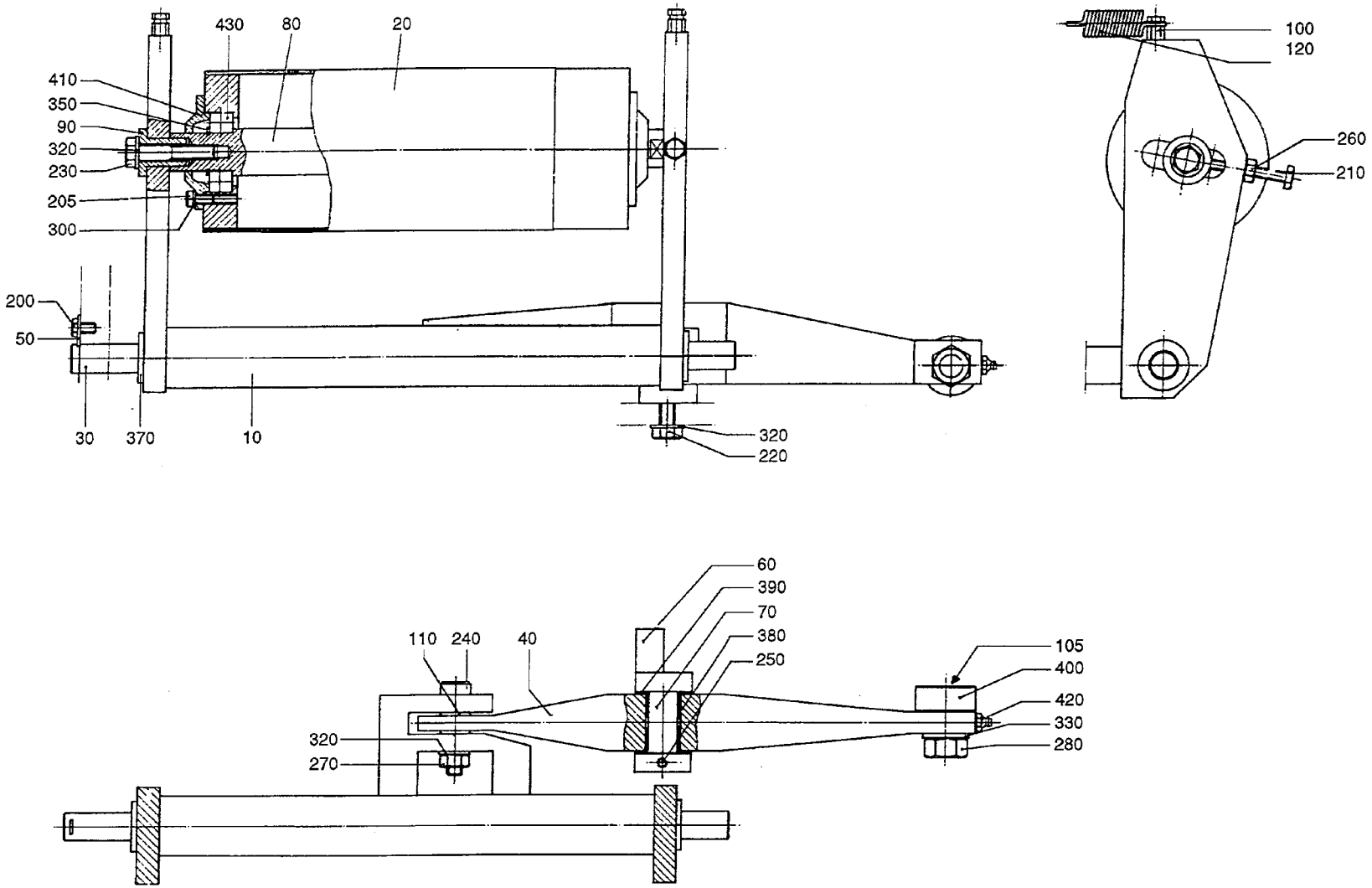

28360401.TIF
283604-1
AM 14584

From	Pos	Part No	SP	UN	Qty	Description
		C- 283604-0201				**Pressure Roller, Ass'y**
	010	449200-0001	C		1	HOLDER
	020	283587-0003	S		1	PRESSURE ROLLER
	030	449202-0001	S		1	SHAFT
	040	449201	C		1	ARM
	050	18135	-		1	WASHER
	060	449205	C		1	HOLDER
	070	449206	S		1	SHAFT
	080	449203-0001	S		1	SHAFT
	090	449204	S		2	HUB
	100	532095	S		2	SPRING BRACKET
	105	90136-0003	-		1	PLUG
	110	90240-0093	S		1	PLAIN BEARING
	120	532016	P		2	SPRING
	200	312105-0325	-		7	SCREW M6S5X10 A2 80
	210	312104-0378	-		2	SCREW M6S6X40H8.8FZB
	220	312105-0451	-		2	SCREW M6S8X20RFR
	230	312105-0459	-		2	SCREW M6S8X40RFR
	240	312180-0495	-		1	REAMED BOL
	250	312318-0325	-		1	STOP SCREW SK6SS5X10RFR
	260	312605-0316	-		2	NUT M6M6RFR
	270	312605-0318	-		1	NUT M6M8RFR
	280	312631-0322	-		1	NUT M6M12X1,5FZB
	300	315105-0146	-		6	WASHER BRB5,3X10RFR
	320	315105-0165	-		4	WASHER BRB8,4X16RFR
	330	315105-0178	-		1	WASHER BRB13X24RFR
	350	315750-0116	-		1	CIRCLIP SGA20
	370	321111-0212	S		2	FLANGE BUS 15E7X15
	380	321120-0123	S		2	BUSHING 16/18X12
	390	321129-0117	S		2	THRUST WAS16/30X1,5
	400	321582-0166	-		1	CURVE ROLLKR32PP
	410	469643	-		2	LID
	420	344502-0021	S		1	NIPPLE L AHM6
	430	321308-0204	S		2	BALL BEARISKF6004-2RS

From	Pos	Part No	SP	UN	Qty	Description

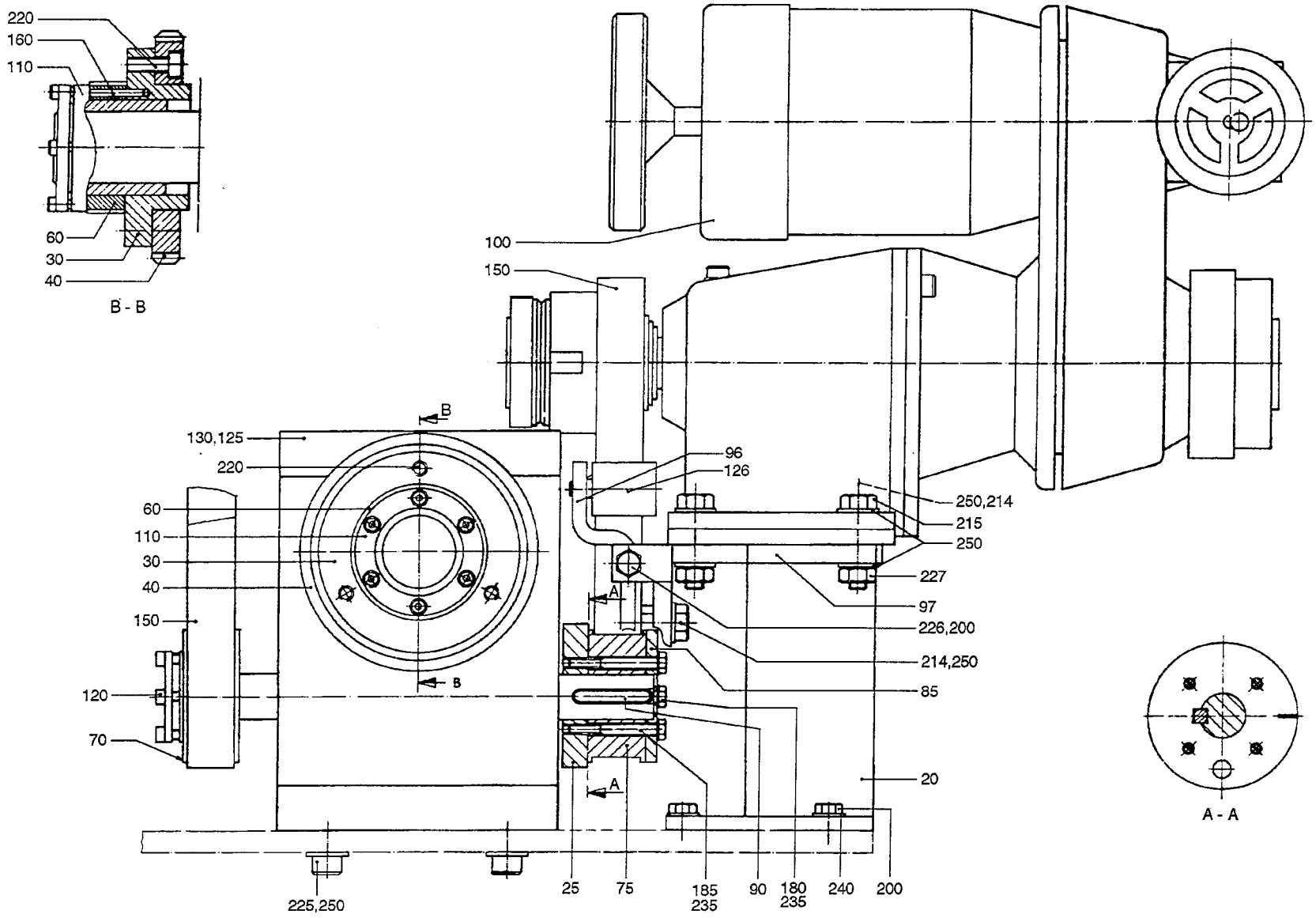

28362603.TIF
283626-3
AM 16054

Last Alteration: AM 16650 91-09-09

Corresponding group: 283626-040V
Assembly Drawing: 283626-3

Issue: 940524

From	Pos	Part No	SP	UN	Qty	Description
		C- 283626-0401				**Drive Unit, Ass'y**
	020	294519	-		1	CANTILEVER
	025	469178	C		1	CURVE
	030	257875	C		1	HUB
	040	401462	C		1	GEAR
	060	257883	S		1	TIMING BELT PULLEY
	070	265914	S		1	TOOTHED PULLY
	075	469179	S		1	TOOTHED PULLY
	085	469180	C		1	PLATE
	090	469181	C		1	WEDGE
	096	497934	-		1	HOLDER
	097	497935	-		1	BRACKET
	100	566506	S		1	VARIATOR
	110	90208-0054	S		1	CLAMPING ELEMENT
	120	90208-0052	S		1	CLAMPING ELEMENT
	125	90296-0072	-	ML	X	OIL
	126	90344-0300	-		1	ROLLER
	130	90416-0011	C		1	INDEXING DEVICE
	150	90417-0120	P		2	TOOTHED BELT
	160	311103-0276	-		3	CYLINDRICACP M6 4X30 RFR
	180	312105-0368	-		1	SCREW M6S6X16RFR
	185	312105-0380	-		4	SCREW M6S6X50RFR
	200	312105-0453	-		5	SCREW M6S8X25RFR
	214	312105-0495	-		3	SCREW M6S10X30RFR
	215	312104-0501	-		2	SCREW M6S10X50H8.8FZB
	220	312115-0451	-		3	SCREW 8X20 A4 80
	225	312115-0493	-		4	SCREW 10X25 A4 80
	226	312605-0318	-		1	NUT M6M8RFR
	227	312605-0320	-		2	NUT M6M10RFR
	235	315105-0153	-		5	WASHER BRB6,4X12RFR
	240	315105-0165	-		4	WASHER BRB8,4X16RFR
	250	315105-0173	-		11	WASHER BRB10,5X22RFR

From	Pos	Part No	SP	UN	Qty	Description

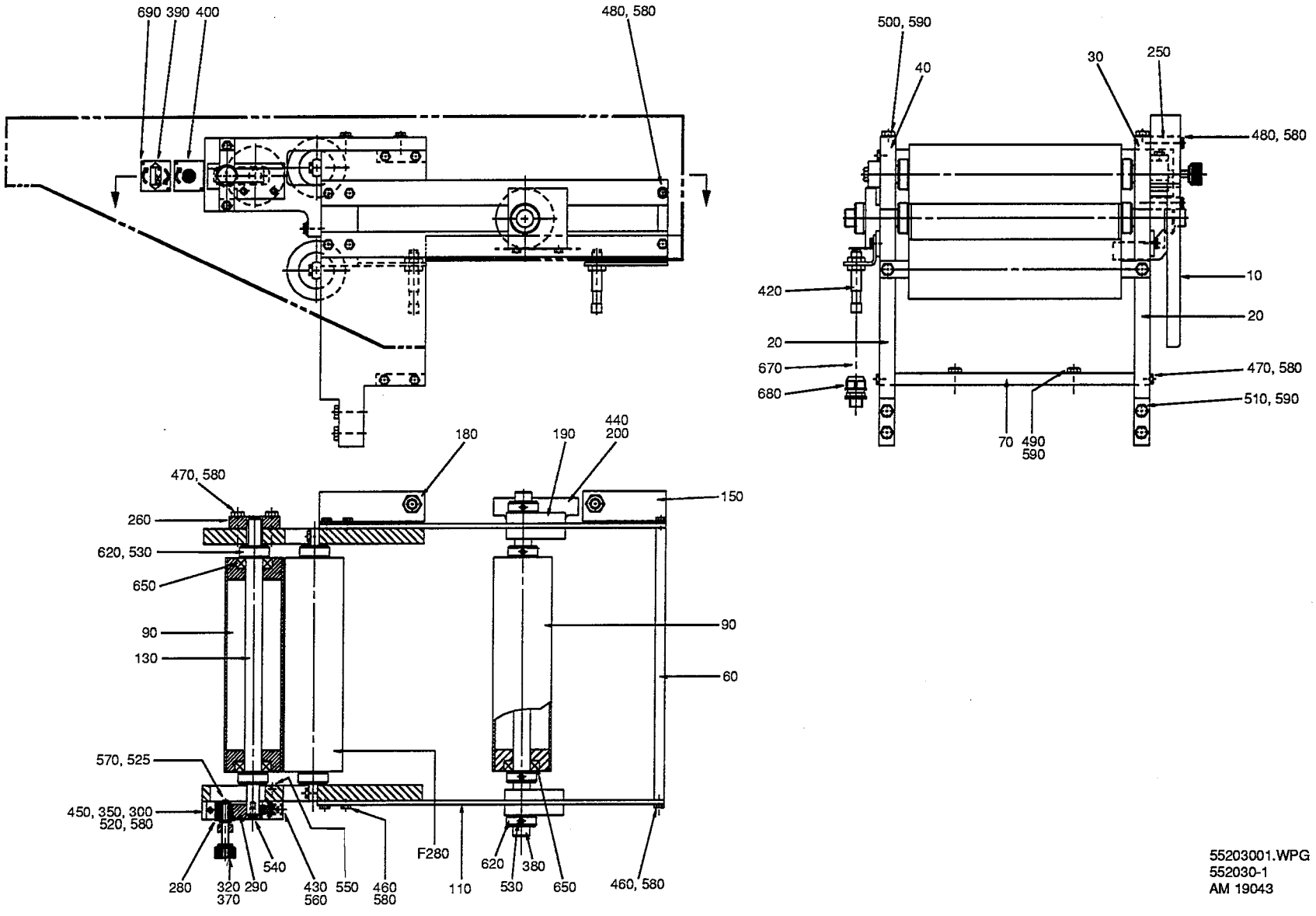

55203001.WPG
552030-1
AM 19043

Last Alteration: AM 19043 92-12-21

Corresponding group: 552030-010V
Assembly Drawing: 552030-1

Issue: **940524**

From	Pos	Part No	SP	UN Qty	Description
		C- 552030-0101			**Paper Magazine TBA/9, Ass'y**
	F280	**C- 283629-0201**	**-**	**2**	**ROLLER**
	010	572248	-	1	PROTECTION
	020	552031	-	2	BRACKET
	030	552032	-	1	BRACKET
	040	552033	-	1	BRACKET
	060	449332	-	1	SUPPORT
	070	449334	-	2	SUPPORT
	090	449295	-	2	ROLL
	110	456686	-	4	BRACKET
	130	552029	-	1	SHAFT
	150	449336	-	1	BRACKET
	180	554380	-	1	BRACKET
	190	457929	-	2	BLOCKING PIECE
	200	457930	-	1	FLAG
	250	552034	-	1	BOW CLAMP
	260	552035	-	1	HOLDER
	280	751509	-	1	SLIDER
	290	751510	-	1	SLIDER
	300	751511	-	1	MOUNTING LUG
	320	751514	-	1	ADJUSTING SCREW
	350	751522	-	1	FASTENING PLATE
	370	752243	-	1	WASHER
	380	554343	-	1	SHAFT
	390	572249	-	1	SIGN
	400	572250	-	1	SIGN
	420	90044-0085	S	2	SENSOR
	430	90335-0067	C	1	SPRING
	440	312105-0327	-	2	SCREW M6S5X12 A2 80
	450	312105-0368	-	1	SCREW M6S6X16RFR
	460	312105-0370	-	11	SCREW M6S6X20RFR
	470	312105-0374	-	10	SCREW M6S6X30RFR
	480	312105-0380	-	3	SCREW M6S6X50RFR
	490	312105-0453	-	2	SCREW M6S8X25RFR
	500	312105-0455	-	6	SCREW M6S8X30RFR
	510	312105-0460	-	4	SCREW M6S8X45RFR
	520	312115-0226	-	2	SCREW S 3X12 A4 80
	525	312125-0287	-	1	SLOTTED HEMCS4X8RFR
	530	312318-0362	-	12	STOP SCREW SK6SS6X8RFR
	540	312155-0366	-	1	SCREW MF6S6X12RFR
	550	312155-0457	-	2	SCREW MF6S8X35RFR
	560	312316-0528	-	1	STOP SCREW SK6SS12X12FZB
	570	315105-0136	-	1	WASHER BRB4,3X8RFR
	580	315105-0153	-	25	WASHER BRB6,4X12RFR
	590	315105-0165	-	9	WASHER BRB8,4X16RFR
	620	315742-0116	-	6	RETAINING 20SMS199RFR
	650	321308-0204	-	4	BALL BEARISKF6004-2RS
	670	352135-0102	-	MM1500	HOSE .010
	680	352136-0107	-	2	GLAND FITT
	690	312502-0169	-	4	SCREW KDS2X5FNB

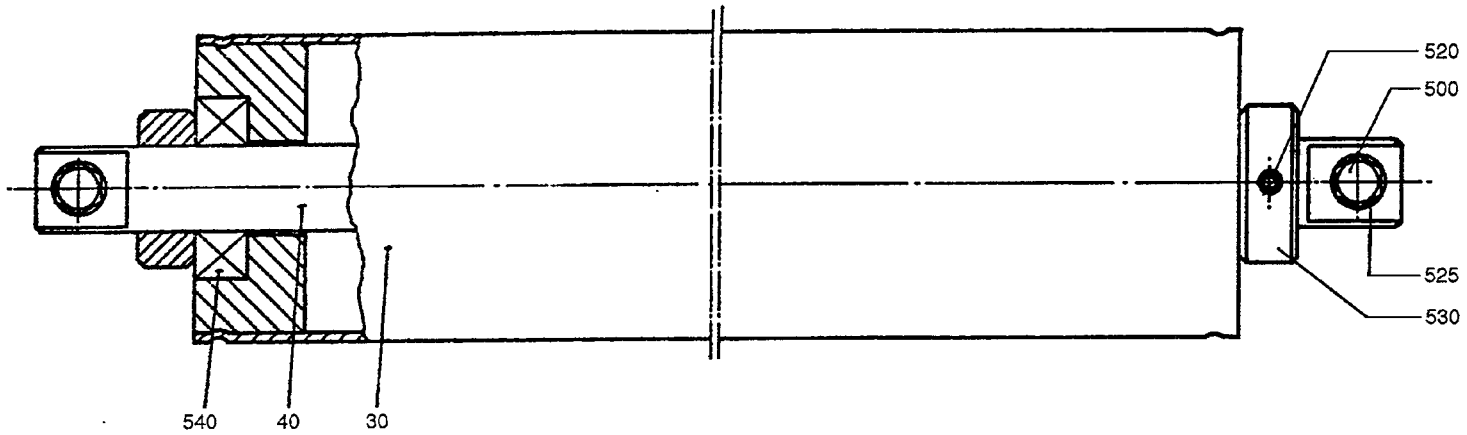

28362902.TIF
283629-2
AM 12403

Last Alteration: AM 12403 89-01-10

Corresponding group: 283629-020V
Assembly Drawing: 283629-2

Issue: **940524**

From	Pos	Part No	SP	UN	Qty	Description
		C- 283629-0201				**Roller, Ass'y**
	030	449295	C		1	ROLL
	040	449296	-		1	SHAFT
	500	312105-0370	-		2	SCREW M6S6X20RFR
	520	312318-0362	-		2	STOP SCREW SK6SS6X8RFR
	525	315105-0153	-		2	WASHER BRB6,4X12RFR
	530	315742-0116	-		2	RETAINING 20SMS199RFR
	540	321308-0204	S		2	BALL BEARISKF6004-2RS

From	Pos	Part No	SP	UN	Qty	Description

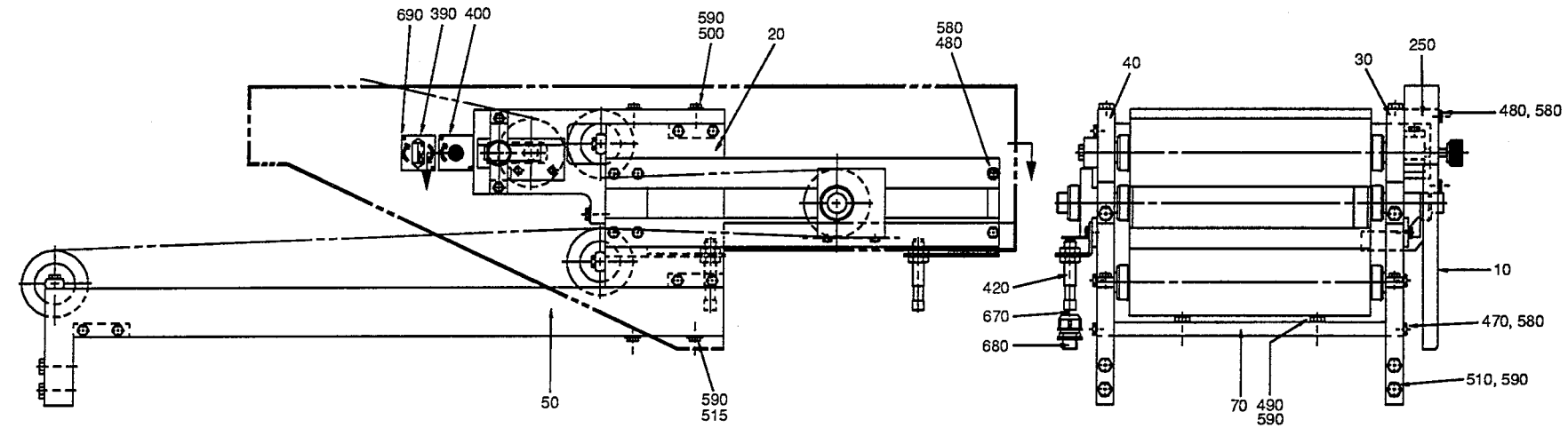

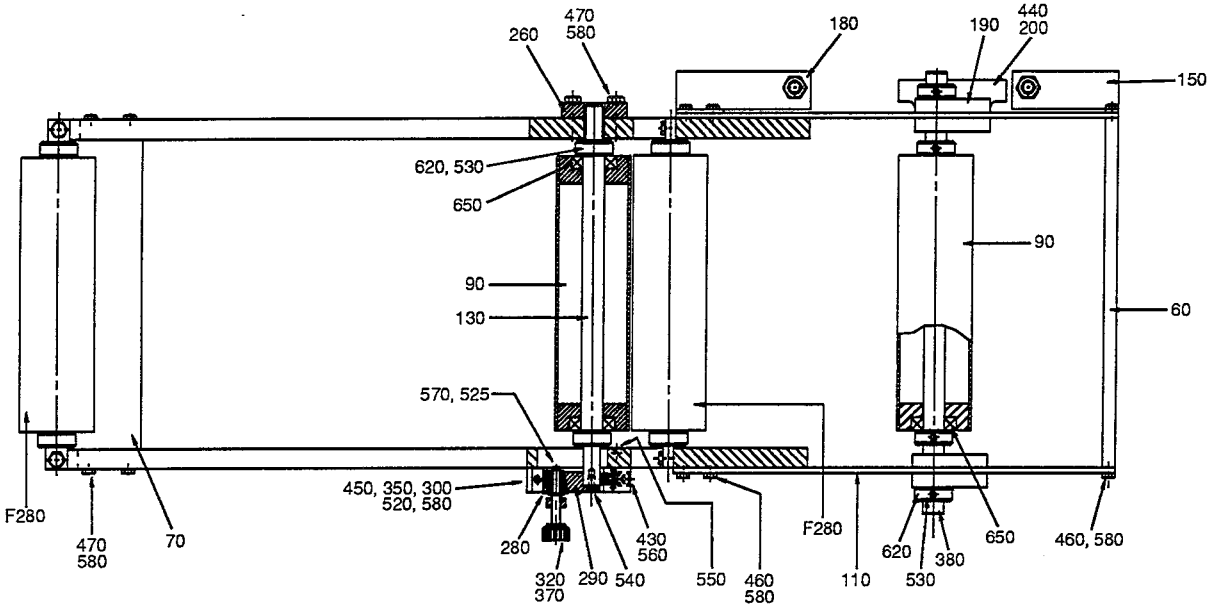

55203601.WPG
552036-1
AM 19043

Last Alteration: AM 19043 92-12-21

Corresponding group: 552036-010V
Assembly Drawing: 552036-1

Issue: **940524**

From	Pos	Part No	SP	UN	Qty	Description
		C- 552036-0101				**Paper Magazine TB/9, Ass'y**
	F280	**C- 283629-0201**	**-**		**3**	**ROLLER**
	010	572248	-		1	PROTECTION
	020	552037	-		2	BRACKET
	030	552032	-		1	BRACKET
	040	552033	-		1	BRACKET
	050	552038	-		2	CANTILEVER
	060	449332	-		1	SUPPORT
	070	449334	-		3	SUPPORT
	090	449295	-		2	ROLL
	110	456686	-		4	BRACKET
	130	552029	-		1	SHAFT
	150	449336	-		1	BRACKET
	180	554380	-		1	BRACKET
	190	457929	-		2	BLOCKING PIECE
	200	457930	-		1	FLAG
	250	552034	-		1	BOW CLAMP
	260	552035	-		1	HOLDER
	280	751509	-		1	SLIDER
	290	751510	-		1	SLIDER
	300	751511	-		1	MOUNTING LUG
	320	751514	-		1	ADJUSTING SCREW
	350	751522	-		1	FASTENING PLATE
	370	752243	-		1	WASHER
	380	554343	-		1	SHAFT
	390	572249	-		1	SIGN
	400	572250	-		1	SIGN
	420	90044-0085	S		2	SENSOR
	430	90335-0067	C		1	SPRING
	440	312105-0327	-		2	SCREW M6S5X12 A2 80
	450	312105-0368	-		1	SCREW M6S6X16RFR
	460	312105-0370	-		11	SCREW M6S6X20RFR
	470	312105-0374	-		14	SCREW M6S6X30RFR
	480	312105-0380	-		3	SCREW M6S6X50RFR
	490	312105-0453	-		2	SCREW M6S8X25RFR
	500	312105-0455	-		6	SCREW M6S8X30RFR
	510	312105-0460	-		4	SCREW M6S8X45RFR
	515	312105-0464	-		4	SCREW M6S8X65RFR
	520	312115-0226	-		2	SCREW S 3X12 A4 80
	525	312125-0287	-		1	SLOTTED HEMCS4X8RFR
	530	312318-0362	-		12	STOP SCREW SK6SS6X8RFR
	540	312155-0366	-		1	SCREW MF6S6X12RFR
	550	312155-0457	-		2	SCREW MF6S8X35RFR
	560	312316-0528	-		1	STOP SCREW SK6SS12X12FZB
	570	315105-0136	-		1	WASHER BRB4,3X8RFR
	580	315105-0153	-		30	WASHER BRB6,4X12RFR
	590	315105-0165	-		13	WASHER BRB8,4X16RFR
	620	315742-0116	-		6	RETAINING 20SMS199RFR
	650	321308-0204	-		4	BALL BEARISKF6004-2RS
	670	352135-0102	-	MM	1500	HOSE .010
	680	352136-0107	-		2	GLAND FITT
	690	312502-0169	-		4	SCREW KDS2X5FNB

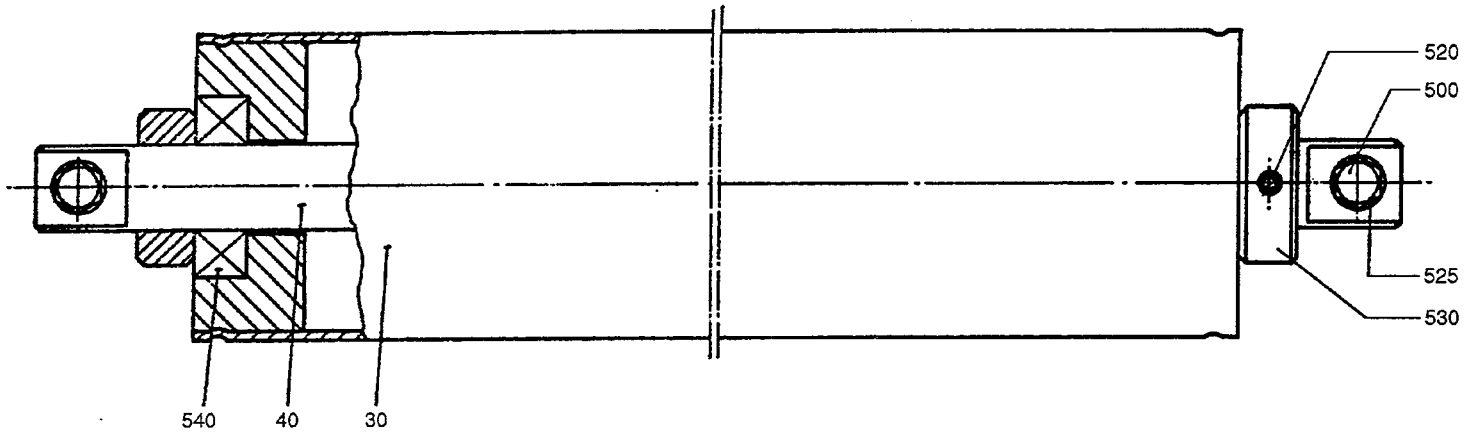

28362902.TIF
283629-2
AM 12403

Last Alteration: AM 12403 89-01-10

Corresponding group: 283629-020V
Assembly Drawing: 283629-2

Issue: **940524**

From	Pos	Part No	SP	UN	Qty	Description
		C- 283629-0201				**Roller, Ass'y**
	030	449295	C		1	ROLL
	040	449296	-		1	SHAFT
	500	312105-0370	-		2	SCREW M6S6X20RFR
	520	312318-0362	-		2	STOP SCREW SK6SS6X8RFR
	525	315105-0153	-		2	WASHER BRB6,4X12RFR
	530	315742-0116	-		2	RETAINING 20SMS199RFR
	540	321308-0204	S		2	BALL BEARISKF6004-2RS

From	Pos	Part No	SP	UN	Qty	Description

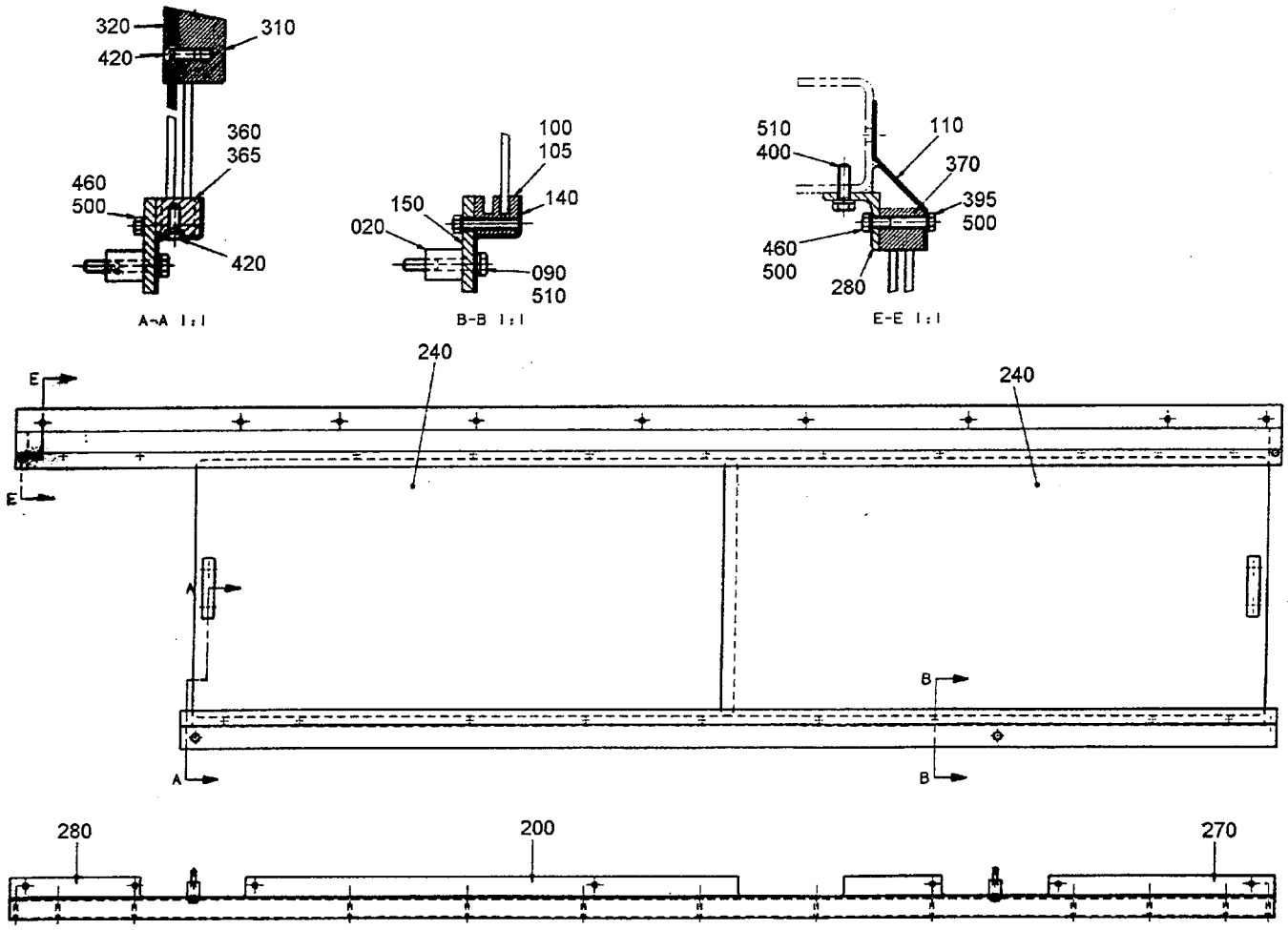

45793702.TIF
457937-2
AM 15283

From	Pos	Part No	SP	UN Qty	Description
284ml - 180ml					
		C- 457937-0201			**Sliding Glass, Ass'y**
	090	312105-0372	-	2	SCREW M6S6X25RFR
125ml					
		C- 457937-0202			**Sliding Glass, Ass'y**
	020	457954	-	2	SPACER
	090	312105-0378	-	2	SCREW M6S6X40RFR
200ml Slim					
		C- 457937-0203			**Sliding Glass, Ass'y**
	020	457953	-	2	SPACER
	090	312105-0376	-	2	SCREW M6S6X35RFR
Common parts					
	100	547928	-	1	RAIL
	105	548986	-	1	RAIL LOWER
	110	547929	-	1	SUPPORT UPPER
	140	547931	-	1	SUPPORT LOWER
	150	547932	-	1	FLATBAR LOWER
	200	563731	-	1	ANGLE BAR UPPER
	240	547934	-	2	GLASS PANE
	270	563730	-	1	ANGLE BAR UPPER
	280	563732	-	1	ANGLE BAR UPPER
	310	457950	-	2	HANDLE
	320	457951	-	2	WASHER
	360	490727	-	1	STOP
	365	490728	-	1	STOP
	370	547935	-	2	END PIECE
	395	312105-0337	-	2	SCREW M6S5X35RFR
	400	312105-0370	-	10	SCREW M6S6X20RFR
	420	312155-0368	-	6	SCREW MF6S6X16RFR
	460	312605-0314	-	22	NUT M6M5RFR
	500	315105-0146	-	24	WASHER BRB5,3X10RFR
	510	315105-0153	-	12	WASHER BRB6,4X12RFR

From	Pos	Part No	SP	UN Qty	Description

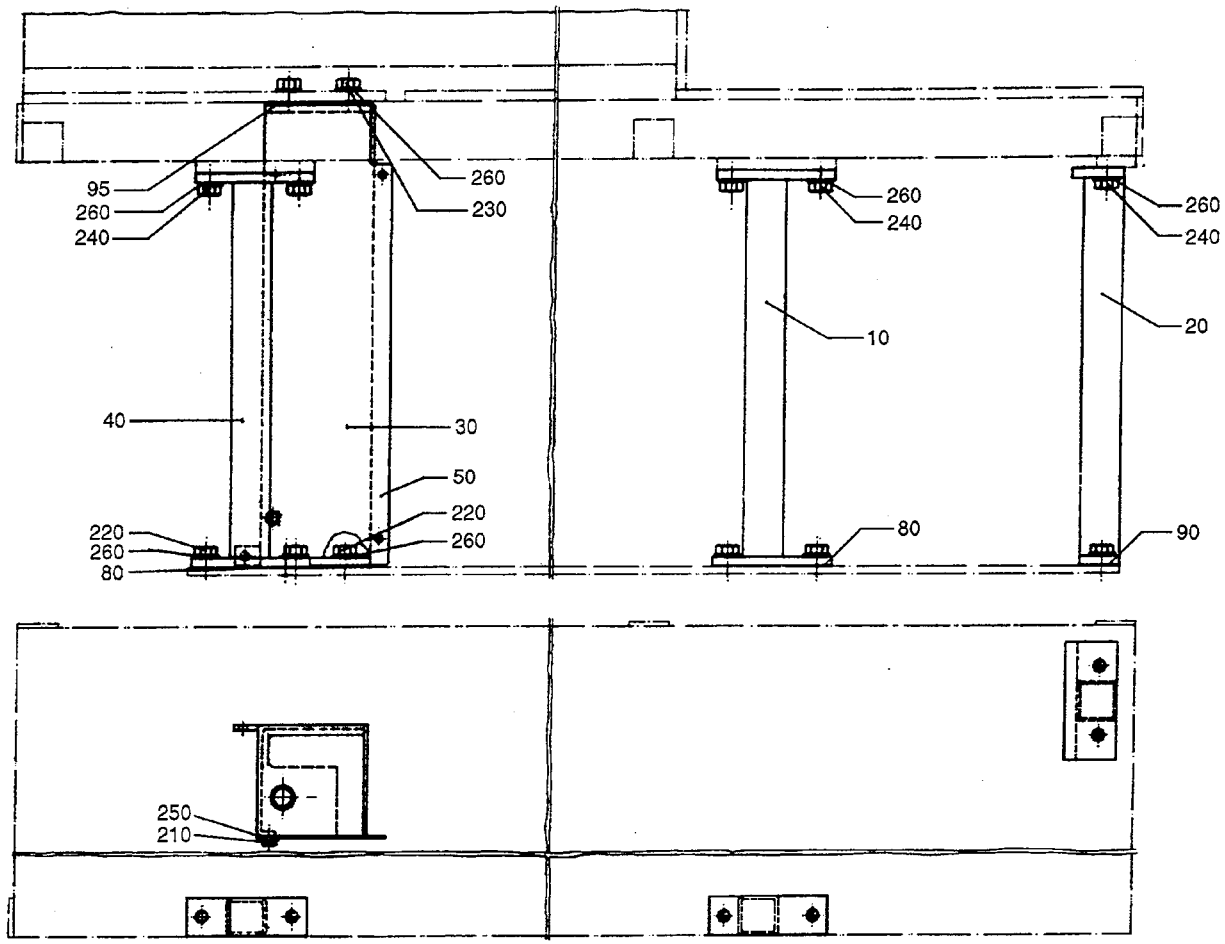

45788103.TIF
457881-3
AM 16357

From	Pos	Part No	SP	UN Qty	Description
		C- 457881-0301			**Leg TBA/9, Ass'y**
	010	469620	-	1	LEG
	020	554344	-	1	RIGHT LEG FRONT
	030	546313	-	1	RIGHT LEG REAR
	040	546311	-	1	LEFT LEG REAR
	050	546315	-	1	LID
	080	469631	-	2	LACE
	090	469632	-	1	LACE
	095	567047	-	1	LACE
	210	312105-0364	-	2	SCREW M6S6X10RFR
	220	312105-0491	-	6	SCREW M6S10X20RFR
	230	312105-0492	-	2	SCREW M6S10X22RFR
	240	312105-0493	-	8	SCREW M6S10X25RFR
	250	315105-0153	-	2	WASHER BRB6,4X12RFR
	260	315105-0173	-	16	WASHER BRB10,5X22RFR

From	Pos	Part No	SP	UN Qty	Description

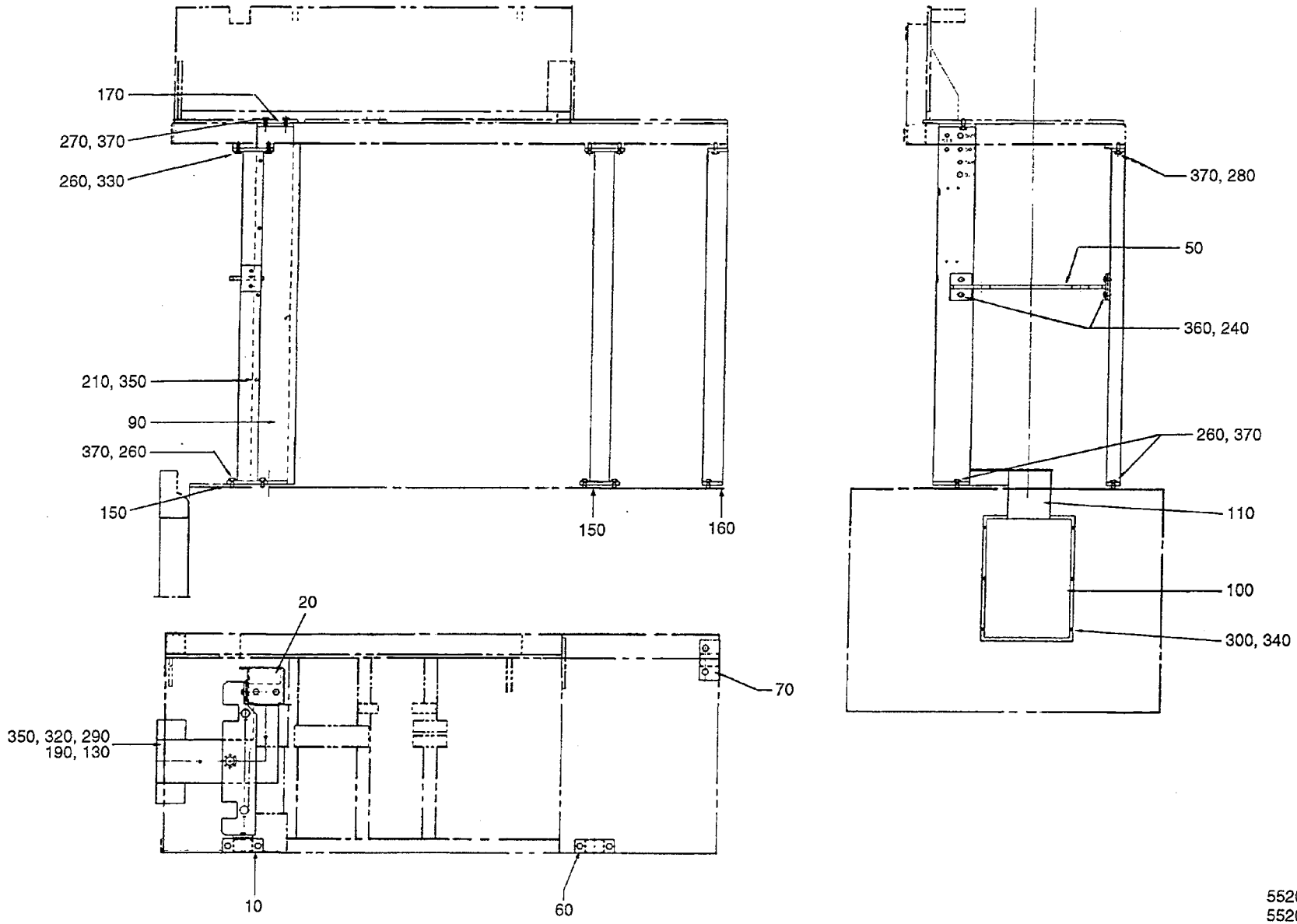

55201701.TIF
552017-1
AM16357

From	Pos	Part No	SP	UN Qty	Description
		C- 552017-0101			**Leg, Ass'y**
	010	546312	-	1	LEFT LEG REAR
	020	546314	-	1	RIGHT LEG REAR
	050	552016	-	1	BEAM
	060	552018	-	1	LEFT LEG FRONT
	070	552019	-	1	RIGHT LEG FRONT
	090	552022	-	1	LID
	100	552039	-	1	COVER
	110	552040	-	1	CABLE DUCT
	130	552041	-	1	LID
	150	469631	-	2	LACE
	160	469632	-	1	LACE
	170	567047	-	1	LACE
	190	552042	-	2	SCREW
	210	312105-0364	-	8	SCREW M6S6X10RFR
	240	312105-0449	-	4	SCREW M6S8X16RFR
	260	312105-0491	-	8	SCREW M6S10X20RFR
	270	312105-0492	-	2	SCREW M6S10X22RFR
	280	312105-0493	-	6	SCREW M6S10X25RFR
	290	312125-0364	-	6	SLOTTED HEMCS6X10RFR
	300	312605-0314	-	6	NUT M6M5RFR
	310	312705-0316	-	2	CAP NUT MHM 6 A2
	340	315105-0146	-	6	WASHER BRB5,3X10RFR
	350	315105-0153	-	10	WASHER BRB6,4X12RFR
	360	315105-0165	-	4	WASHER BRB8,4X16RFR
	370	315105-0173	-	16	WASHER BRB10,5X22RFR

From	Pos	Part No	SP	UN Qty	Description

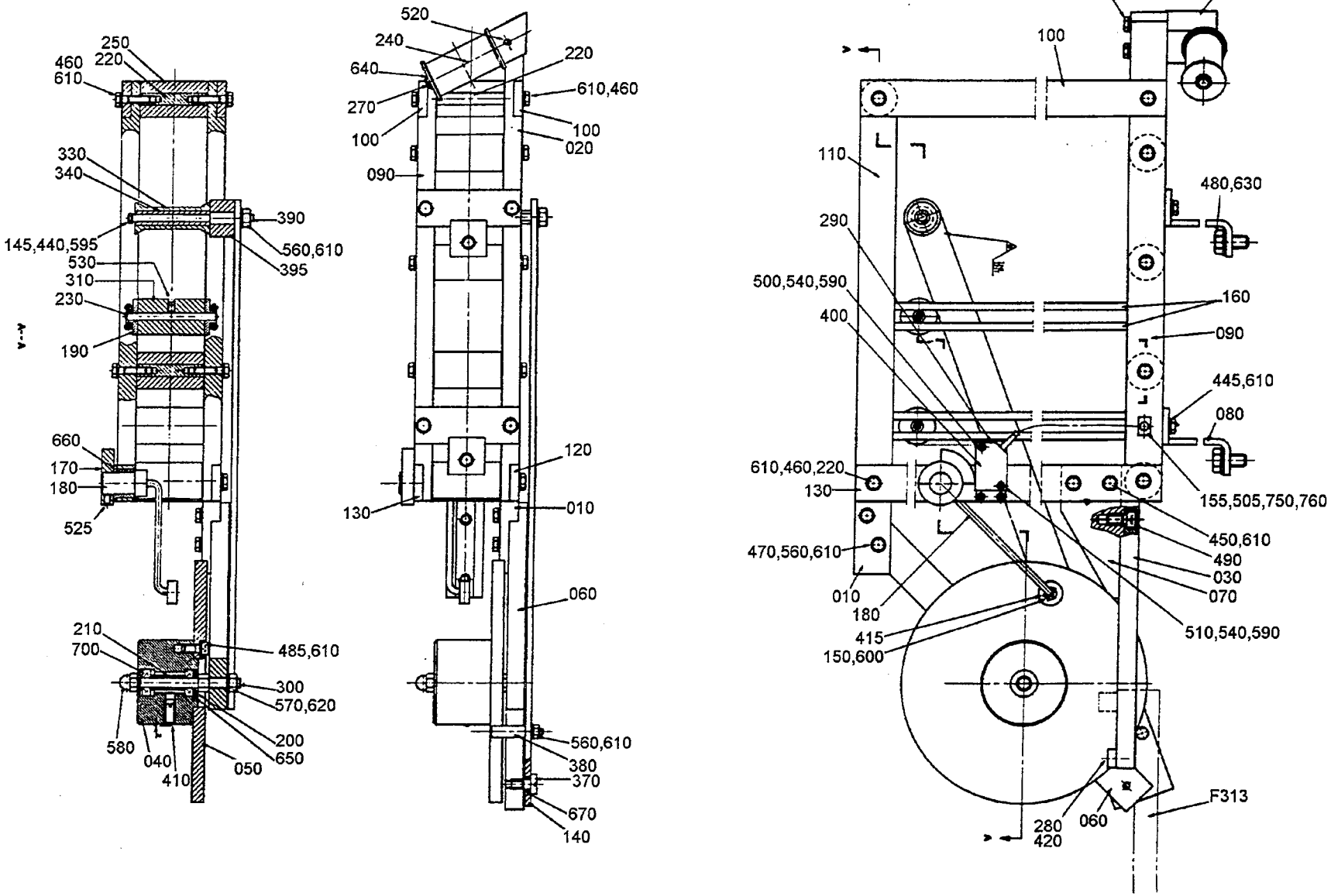

54628501.TIF
546285-1/2
AM 15283

From	Pos	Part No	SP	UN	Qty	Description
		C- 546285-0101				**Magazine, Ass'y**
	F315	**C- 544420-0101**	**-**		**1**	**Splicing Device**
	010	546286	-		1	BEAM
	020	546287	-		1	BEAM
	030	546288	-		1	SLIDE RAIL
	040	546256	-		1	BOBBIN HOLDER
	050	556539	-		1	BRAKE DISC
	060	546290	-		1	BEAM
	070	546291	-		1	BRACKET
	080	546292	-		2	BRACKET
	090	546293	-		1	BEAM
	100	546294	-		2	BEAM
	110	546295	-		1	BEAM
	120	546296	-		1	BEAM
	130	546297	-		1	BEAM
	140	556540	-		1	ARM
	145	2033-0013	-		1	WASHER
	150	234844	-		1	WHEEL
	155	456256	-		1	PROTECTIVE COVER
	160	533183	-		8	POST
	170	533972	-		1	INDICATOR CURVE
	180	533973	-		1	ARM
	190	534497	-		4	SPACER
	200	538726	-		2	WASHER
	210	538740-0003	-		1	SPACER
	220	546298	-		7	SHAFT
	230	546299	-		2	SHAFT
	240	546300	-		1	ROLL
	250	546301	-		5	ROLL
	260	546302	-		1	BLOCKING PIECE
	270	546303	-		1	SHAFT
	280	546304	-		1	STOP LUG
	290	546305	-		1	SHEET
	300	546306	-		1	SHAFT
	310	546307	-		2	ROLL
	330	547745	-		1	ROLL
	340	547746	-		1	ROLL
	370	556541	-		1	SCREW
	380	556542	-		1	PEG
	390	556543	-		1	SHAFT
	395	556544	-		1	SPACER
	400	90044-0104	S		1	INDUCTIVE SWITCH
	410	90287-0009	C		1	SPRINGLOADED SCREW
	415	311411-0138	-		2	SPLIT PIN SP1,6X12RFR
	420	312155-0329	-		2	SCREW MF6S5X16RFR
	430	312105-0339	-		2	SCREW M6S5X40 A2 80
	440	312105-0287	-		1	SCREW M6S4X8 A2 80
	445	312105-0368	-		4	SCREW M6S6X16RFR
	450	312105-0370	-		4	SCREW M6S6X20RFR
	460	312105-0372	-		18	SCREW M6S6X25RFR
	470	312105-0376	-		2	SCREW M6S6X35RFR
	480	312105-0491	-		2	SCREW M6S10X20RFR
	485	312115-0368	-		2	SCREW 6X16 A4 80
	490	312115-0449	-		2	SCREW 8X16 A4 80
	500	312125-0230	-		3	SLOTTED HEMCS3X20RFR
	505	312125-0289	-		1	SLOTTED HEMCS4X10RFR
	510	90287-0069	-		1	SCREW
	520	312318-0285	-		1	STOP SCREW SK6SS4X6RFR
	525	312318-0323	-		1	STOP SCREW SK6SS5X8RFR
	530	312318-0364	-		2	STOP SCREW SK6SS6X10RFR
	540	312605-0310	-		4	NUT M6M3RFR
	560	312605-0316	-		4	NUT M6M6RFR
	570	312605-0318	-		3	NUT M6M8RFR
	580	312705-0318	-		1	CAP NUT MHM 8 A2
	590	315105-0124	-		4	WASHER BRB3,2X6RFR
	595	315105-0136	-		1	WASHER BRB4,3X8RFR
	600	315105-0146	-		4	WASHER BRB5,3X10RFR
	610	315105-0153	-		28	WASHER BRB6,4X12RFR
	620	315105-0165	-		1	WASHER BRB8,4X16RFR
	630	315105-0173	-		2	WASHER BRB10,5X22RFR
	640	315750-0107	-		1	CIRCLIP SGA10
	650	315753-0117	-		1	CIRCLIP GH 22 RFR
	660	321111-0274	-		1	FLANGE BUS 18E7X18
	670	321116-0095	-		1	BUSHING 8E7/12X6
	700	321300-0098	-		2	BALL BEARISKF608
	750	352113-0202	-		1	ARMATURE -TM2-S8
	760	352135-0102	-	MM	650	HOSE .010

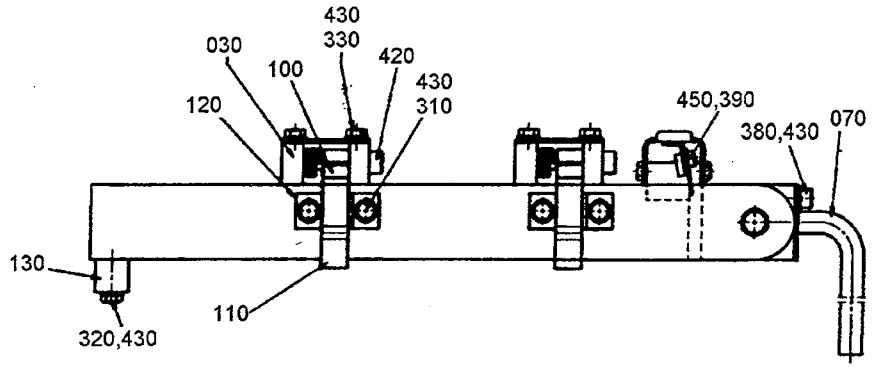

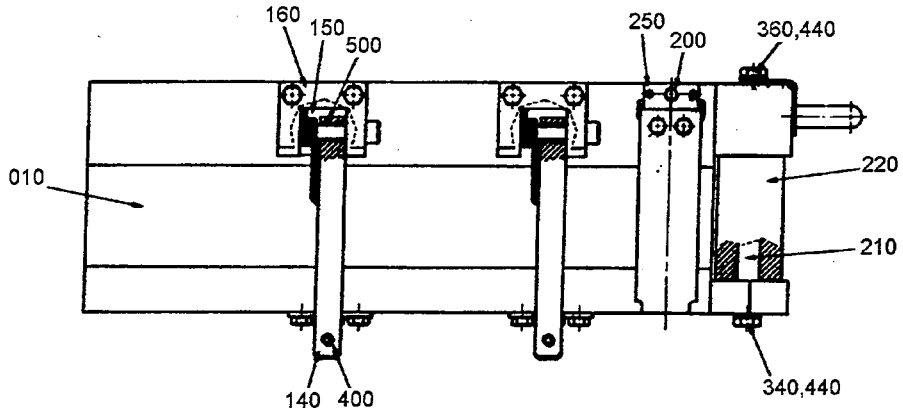

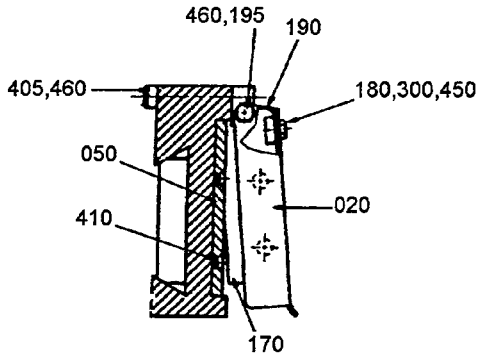

54442001.TIF
544420-1
AM 15283

Last Alteration: AM 15283 90-10-31

Corresponding group: 544420-010V
Assembly Drawing: 544420-1

Issue: **940524**

From	Pos	Part No	SP	UN	Qty	Description
		C- 544420-0101				**Splicing Device, Ass'y**
	010	544421	-		1	SPLICING TABLE
	020	522376	-		1	KNIFE HOLDER
	030	532017	-		2	MOUNTING LUG
	050	544422	S		1	KNIFE
	070	544424	-		1	HANDLE
	100	532020	-		2	LOCK WASHER
	110	532021	-		2	LOCKING LOOP
	120	532022	-		2	LOCK BAR
	130	544425	-		1	STOP LUG
	140	544426	-		2	LOCK GRIP
	150	544427	S		2	TURN SPRING
	160	544428	-		2	SHEET
	170	522388-0002	S		1	KNIFE
	180	522393	-		1	NUT
	190	522394	S		1	SPRING
	195	522395	-		2	SCREW
	200	552049	-		1	LUG
	210	546298	-		1	SHAFT
	220	546301	-		1	ROLL
	250	90258-0031	-		2	HOLLOW PIN
	300	312105-0287	-		2	SCREW M6S4X8 A2 80
	310	312105-0327	-		4	SCREW M6S5X12 A2 80
	320	312105-0333	-		2	SCREW M6S5X25 A2 80
	330	312105-0335	-		4	SCREW M6S5X30 A2 80
	340	312105-0372	-		1	SCREW M6S6X25RFR
	360	312105-0379	-		1	SCREW M6S6X45RFR
	380	312105-0364	-		1	SCREW M6S6X10RFR
	390	312115-0287	-		4	SCREW 4X8 A4 80
	400	312155-0291	-		2	SCREW MF6S4X12RFR
	405	312115-0379	-		1	SCREW 6X45 A4 80
	410	312155-0325	-		2	SCREW MF6S5X10RFR
	420	312180-0374	-		2	REAMED BOL
	430	315105-0146	-		10	WASHER BRB5,3X10RFR
	440	315105-0153	-		5	WASHER BRB6,4X12RFR
	450	315402-0136	-		4	WASHER FBB4,1RFR
	460	315402-0156	-		3	WASHER FBB6,5RFR
	500	321120-0102	-		2	BUSHING 6/8X10

From	Pos	Part No	SP	UN	Qty	Description

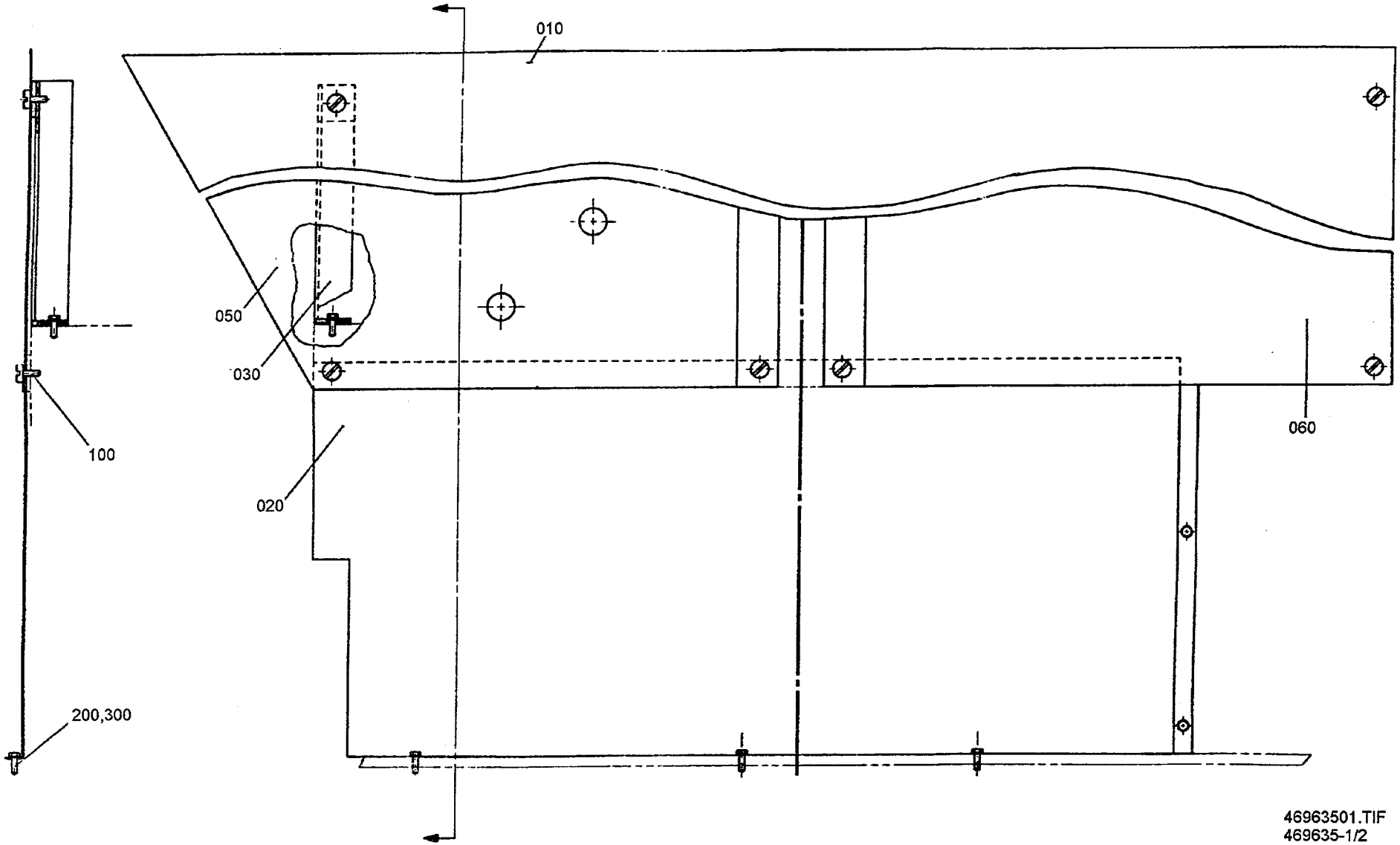

46963501.TIF
469635-1/2
AM 16357

Last Alteration: AM 16357 91-06-11

Corresponding group: 469635-010V
Assembly Drawing: 469635-1/2

Issue: 940524

From	Pos	Part No	SP	UN	Qty	Description
TB/9						
		C- 469635-0101				**Covering Plate, Ass'y**
	020	531661	-		1	COVERING PLATE
	050	469693	-		1	COVERING PLATE
	060	469694	-		1	COVERING PLATE
TBA/9						
		C- 469635-0102				**Covering Plate, Ass'y**
	010	469636	-		1	COVERING PLATE
	020	469637	-		1	COVERING PLATE
Common parts						
	030	469639	-		1	BRACKET
	080	567046	-		1	LACE
	100	90287-0062	-		8	SCREW
	200	312105-0368	-		6	SCREW M6S6X16RFR
	300	315105-0153	-		6	WASHER BRB6,4X12RFR

From	Pos	Part No	SP	UN	Qty	Description

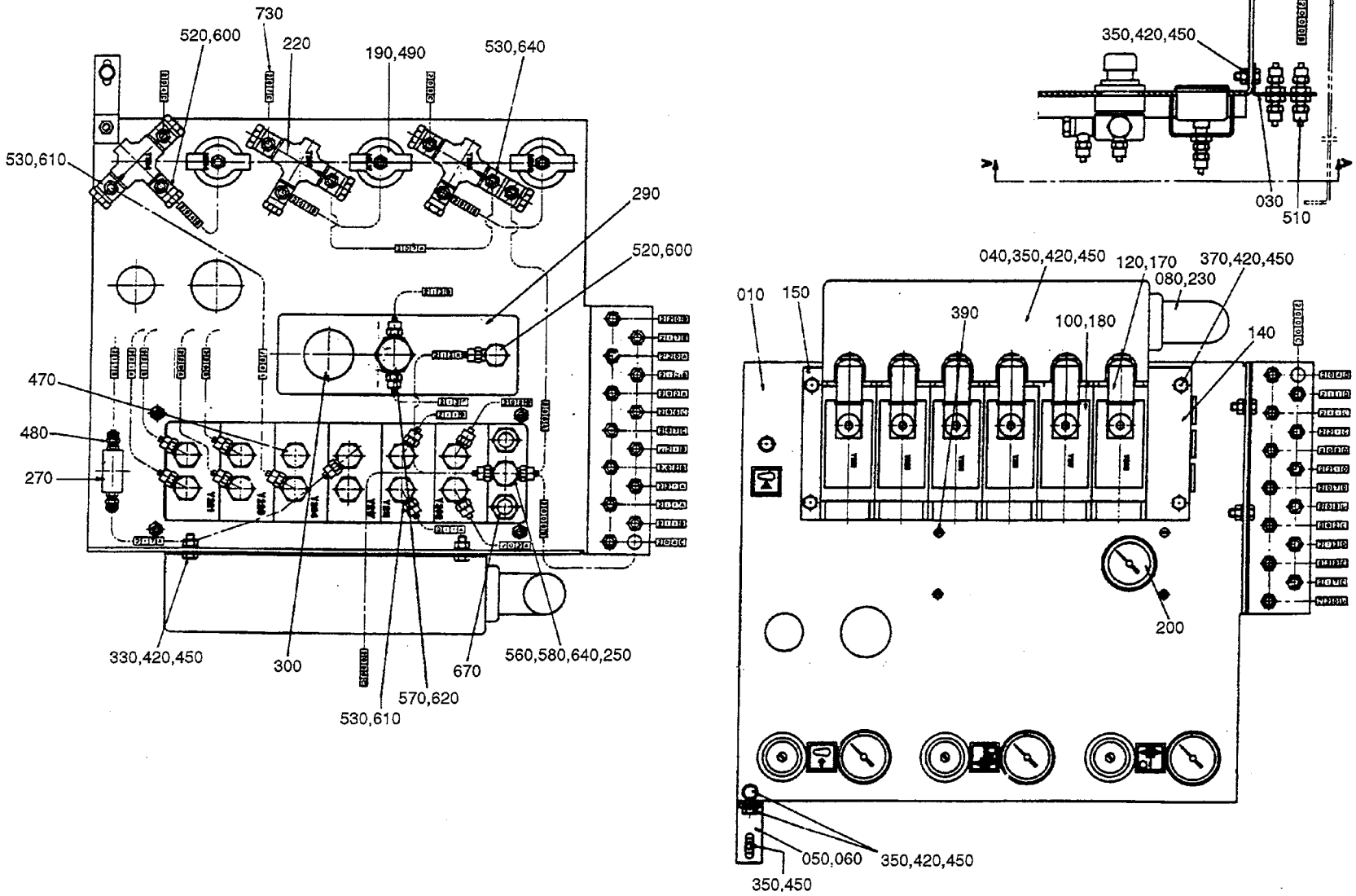

53685901.TIF
536859-1/2
AM 16357

Last Alteration: AM 19421 93-03-09

Corresponding group: 536859-0201
Assembly Drawing: 536859-1/2

Issue: **940524**

From	Pos	Part No	SP	UN	Qty	Description
TB/9						
		C- 536859-0201				**Panel, Ass'y**
	200	90043-0076	S		1	MANOMETER
	240	90166-0132	-	M	10	HOSE
	350	312105-0368	-		10	SCREW M6S6X16RFR
	420	312605-0316	-		10	NUT M6M6RFR
	450	315105-0153	-		15	WASHER BRB6,4X12RFR
	470	342713-0210	-		2	BLIND PLUG
	490	342923-0113	-		3	PIPE COUPL6/4-1/8
	520	342980-0113	-		4	BANJO CONNSINGEL 6/4-1/8
	530	342980-0114	-		17	BANJO CONNSINGEL 6/4-1/4
	600	342980-0303	-		4	BANJO CONN SINGEL 1/8"
	610	342980-0304	-		15	BANJO CONN SINGEL 1/4
Common parts						
	010	536858	-		1	SHEET
	030	536860	-		1	BRACKET
	040	548987	-		1	CABLE TRENCH
	050	563733	-		1	BRACKET
	060	563734	-		1	BRACKET
	080	90012-0062	-		2	GLAND
	100	90042-0108	S		6	SOLENOID VALVE
		90042-0451	SP		1	* WEAR & TEAR PARTS KIT
	120	90042-0345	P		6	COIL
	140	90042-0368	-		1	CONNECTION
	150	90042-0369	-		1	END PIECE
	170	90042-0392	S		6	CONTACT
	180	90042-0431	-		6	PLATE
	190	90043-0065	S		3	PRESSURE GAUGE
	220	90113-0021	S		3	REGULATOR
	225	90134-0027	-		1	CONNECTION
	230	90152-0031	-	MM	400	HOSE
	235	90166-0109	-	MM	1500	HOSE
	250	90224-0154	-		2	SLEEVE
	270	90235-0251	-		1	VALVE
	290	90364-0023	S		1	PUMP
	300	90364-0346	C		1	SILENCER
	370	312105-0378	-		4	SCREW M6S6X40RFR
	390	312125-0327	-		4	SLOTTED HEMCS5X12RFR
	460	342245-0102	-		1	T-PIPE
	465	342701-0201	-		1	BUSHING RNI1/4"-1/8"
	466	342701-0210	-		1	BUSHING RNI3/4"-1/2"
	480	342921-0113	-		2	PIPE COUPL6/4-1/8"
	510	342960-0112	-		13	BULKHEAD L6/4
	560	342980-0214	-		1	BANJO CONNDUBBEL 6/4-1/4
	570	342980-0216	-		1	BANJO CONNDUBBEL 6/4-1/2
	580	342980-0122	-		1	BANJO CONNSINGEL 8/6-1/4
	620	342980-0306	-		1	BANJO CONN SINGEL 1/2
	640	342980-0314	-		2	BANJO CONN DUBBEL 1/4
	660	346800-0110	-		1	SILENCER FILTER R1/4"
	670	346800-0111	C		1	SILENCER FILTER R3/8"
	750	359000-0400	-		100	MARKING CO2/4"0"
	750	359000-0401	-		55	MARKING CO2/4"1"
	750	359000-0402	-		140	MARKING CO2/4"2"
	750	359000-0403	-		10	MARKING CO2/4"3"
	750	359000-0404	-		30	MARKING CO2/4"4"
	750	359000-0405	-		5	MARKING CO2/4"5"
	750	359000-0406	-		5	MARKING CO2/4"6"
	750	359000-0407	-		25	MARKING CO2/4"7"
	750	359000-0408	-		10	MARKING CO2/4"8"
	750	359000-0750	-		30	MARKING CO2/4"A"
	750	359000-0751	-		25	MARKING CO2/4"B"
	750	359000-0752	-		20	MARKING CO2/4"C"
	750	359000-0753	-		10	MARKING CO2/4"D"
	750	359000-0754	-		10	MARKING CO2/4"E"
	750	359000-0755	-		10	MARKING CO2/4"F"
	750	359000-0756	-		5	MARKING CO2/4"G"
	750	359000-0757	-		10	MARKING CO2/4"H"

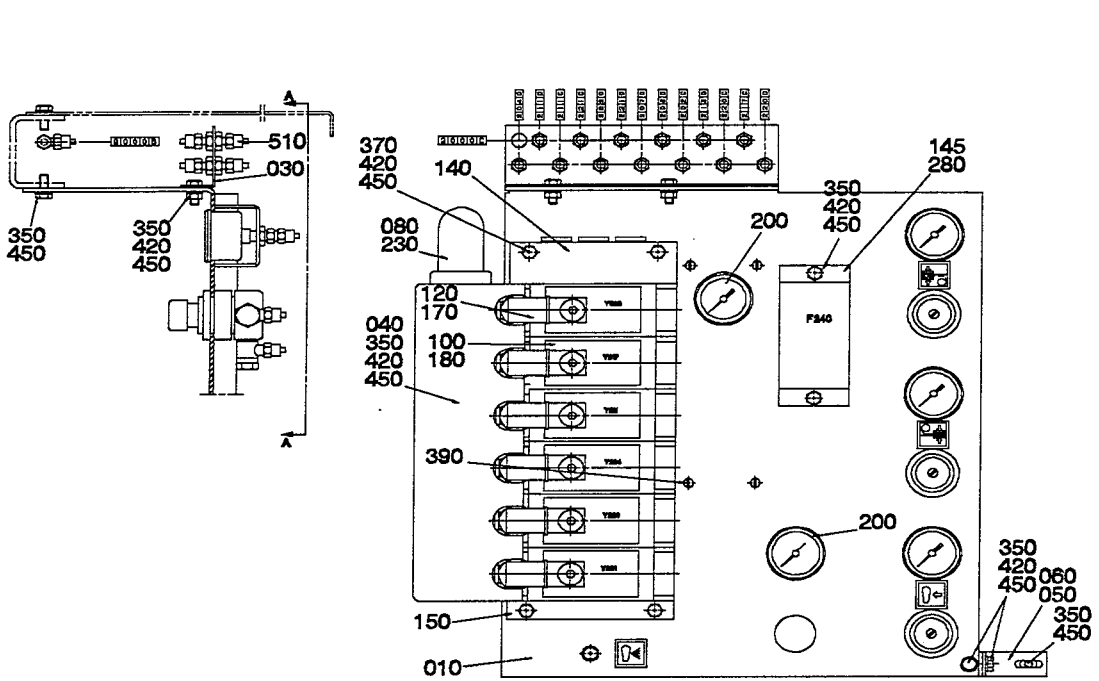
A
510
030
350
450
350
420
450
A
370
420
450
140
080
230
120
170
040
350
420
450
100
180
390
150
010
200
145
280
350
420
450
200
350
420
450
060
050
350
450

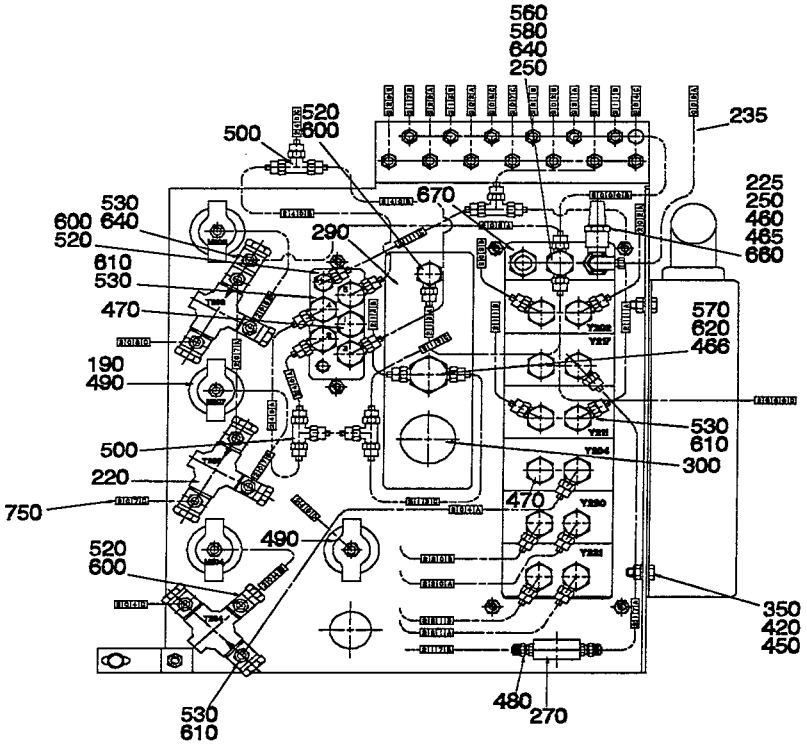
560
580
640
250
500
520
600
235
225
250
460
465
660
530
600
640
520
610
530
470
190
490
500
220
750
520
600
530
610
670
290
570
620
466
530
610
300
470
490
350
420
450
480
270

Last Alteration: AM 19421 93-03-09

Corresponding group: 536859-0202
Assembly Drawing: 536859-3/4

Issue: 940524

From	Pos	Part No	SP	UN	Qty	Description
TBA/9						
		C- 536859-0202				Panel, Ass'y
	145	90042-0360	-		1	PLATE
	200	90043-0076	S		2	MANOMETER
	240	90166-0132	-	M	12	HOSE
	280	90235-0276	-		1	VALVE
	350	312105-0368	-		12	SCREW M6S6X16RFR
	420	312605-0316	-		12	NUT M6M6RFR
	450	315105-0153	-		17	WASHER BRB6,4X12RFR
	470	342713-0210	-		3	BLIND PLUG
	490	342923-0113	-		4	PIPE COUPL6/4-1/8
	500	342946-0112	-		4	T-CONNECTI6/4
	520	342980-0113	-		5	BANJO CONNSINGEL 6/4-1/8
	530	342980-0114	-		21	BANJO CONNSINGEL 6/4-1/4
	600	342980-0303	-		5	BANJO CONN SINGEL 1/8"
	610	342980-0304	-		19	BANJO CONN SINGEL 1/4
Common parts						
	010	536858	-		1	SHEET
	030	536860	-		1	BRACKET
	040	548987	-		1	CABLE TRENCH
	050	563733	-		1	BRACKET
	060	563734	-		1	BRACKET
	080	90012-0062	-		2	GLAND
	100	90042-0108	S		6	SOLENOID VALVE
		90042-0451	SP		1	* WEAR & TEAR PARTS KIT
	120	90042-0345	P		6	COIL
	140	90042-0368	-		1	CONNECTION
	150	90042-0369	-		1	END PIECE
	170	90042-0392	S		6	CONTACT
	180	90042-0431	-		6	PLATE
	190	90043-0065	S		3	PRESSURE GAUGE
	220	90113-0021	S		3	REGULATOR
	225	90134-0027	-		1	CONNECTION
	230	90152-0031	-	MM	400	HOSE
	235	90166-0109	-	MM	1500	HOSE
	250	90224-0154	-		2	SLEEVE
	270	90235-0251	-		1	VALVE
	290	90364-0023	S		1	PUMP
	300	90364-0346	C		1	SILENCER
	370	312105-0378	-		4	SCREW M6S6X40RFR
	390	312125-0327	-		4	SLOTTED HEMCS5X12RFR
	460	342245-0102	-		1	T-PIPE
	465	342701-0201	-		1	BUSHING RNI1/4"-1/8"
	466	342701-0210	-		1	BUSHING RNI3/4"-1/2"

From	Pos	Part No	SP	UN	Qty	Description
	480	342921-0113	-		2	PIPE COUPL6/4-1/8"
	510	342960-0112	-		13	BULKHEAD L6/4
	560	342980-0214	-		1	BANJO CONNDUBBEL 6/4-1/4
	570	342980-0216	-		1	BANJO CONNDUBBEL 6/4-1/2
	580	342980-0122	-		1	BANJO CONNSINGEL 8/6-1/4
	620	342980-0306	-		1	BANJO CONN SINGEL 1/2
	640	342980-0314	-		2	BANJO CONN DUBBEL 1/4
	660	346800-0110	-		1	SILENCER FILTER R1/4"
	670	346800-0111	C		1	SILENCER FILTER R3/8"
	750	359000-0400	-		100	MARKING CO2/4"0"
	750	359000-0401	-		55	MARKING CO2/4"1"
	750	359000-0402	-		140	MARKING CO2/4"2"
	750	359000-0403	-		10	MARKING CO2/4"3"
	750	359000-0404	-		30	MARKING CO2/4"4"
	750	359000-0405	-		5	MARKING CO2/4"5"
	750	359000-0406	-		5	MARKING CO2/4"6"
	750	359000-0407	-		25	MARKING CO2/4"7"
	750	359000-0408	-		10	MARKING CO2/4"8"
	750	359000-0750	-		30	MARKING CO2/4"A"
	750	359000-0751	-		25	MARKING CO2/4"B"
	750	359000-0752	-		20	MARKING CO2/4"C"
	750	359000-0753	-		10	MARKING CO2/4"D"
	750	359000-0754	-		10	MARKING CO2/4"E"
	750	359000-0755	-		10	MARKING CO2/4"F"
	750	359000-0756	-		5	MARKING CO2/4"G"
	750	359000-0757	-		10	MARKING CO2/4"H"

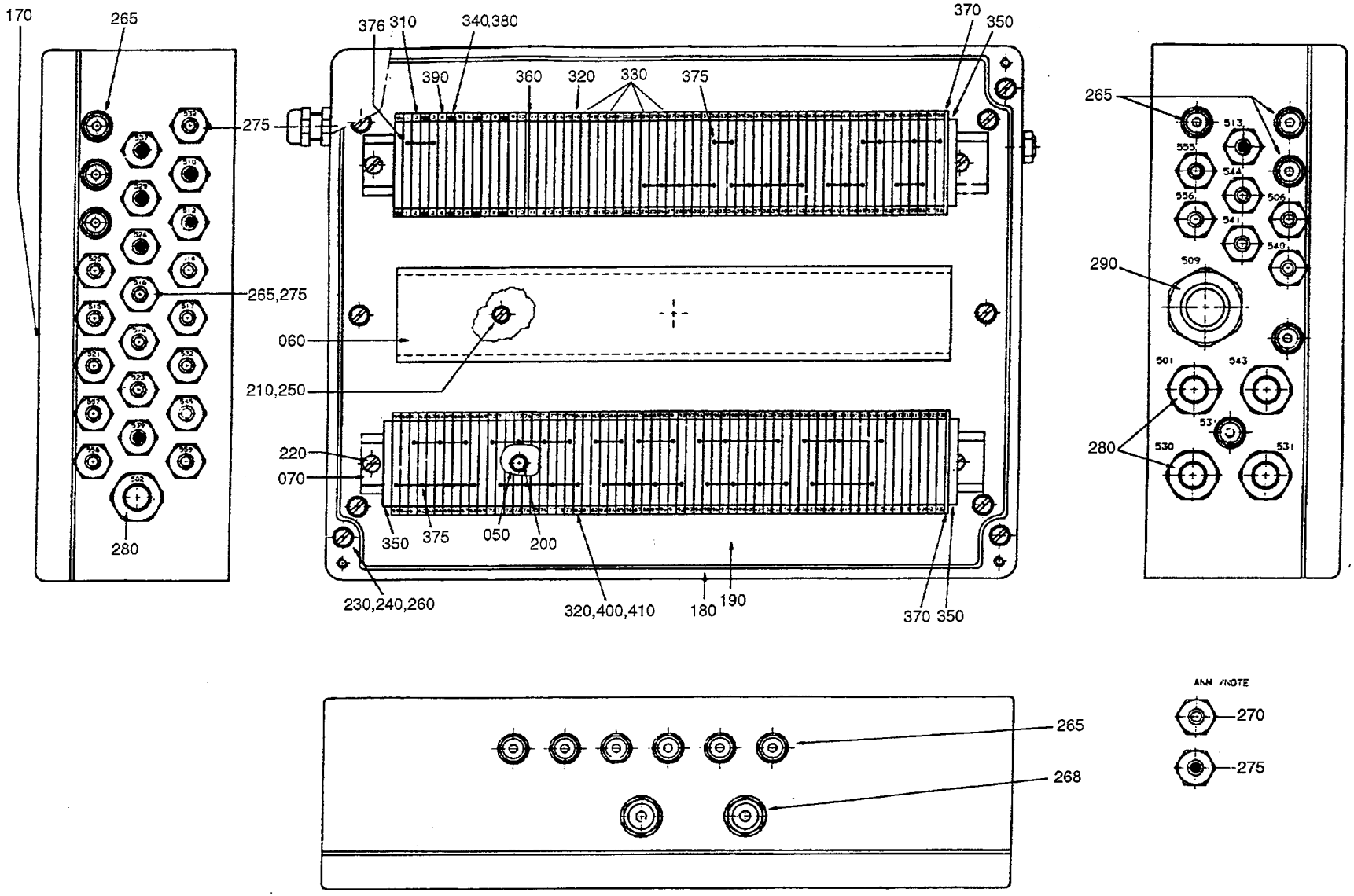

45785602.TIF
457865-2
AM 19421

Last Alteration: AM 19421 93-03-09

Corresponding group: 457856-020V
Assembly Drawing: 457856-2

Issue: **940524**

From	Pos	Part No	SP	UN	Qty	Description
		C- 457856-0201				**Connection Box, Ass'y**
	050	457821	-		2	BRACKET
	060	556570	-		1	CABLE DUCT
	070	469304	-		2	MOUNTING RAIL
	170	90194-0016	-		1	SIGN"FLASH SIGN"
	180	554363	-		1	APPLIANCE BOX
	190	90265-0320	-		1	PLATE
	200	311520-0649	-		4	BLANK RIVE4,8X12,0
	210	312125-0287	-		2	SLOTTED HEMCS4X8RFR
	220	312125-0325	-		4	SLOTTED HEMCS5X10RFR
	230	312125-0378	-		4	SLOTTED HEMCS6X40RFR
	240	312605-0316	-		4	NUT M6M6RFR
	250	315105-0136	-		2	WASHER BRB4,3X8RFR
	260	315105-0153	-		4	WASHER BRB6,4X12RFR
	265	352101-0102	-		15	LEAD-IN G 15,2
	268	352101-0105	-		2	LEAD-IN G 22,5
	270	352103-0100	-		20	CABLE GLANR.STR 9
	275	352103-0101	-		8	CABLE GLAND ST 9
	280	352103-0110	-		5	CABLE GLAND STR 16
	290	352103-0121	-		1	CABLE GLANR.ST 29
	310	353021-0213	-		6	TERMINAL
	320	353021-0216	-		108	TERMINAL
	330	353024-0204	-		13	EARTH TERMINAL WPE 2,5
	340	353024-0205	-		3	EARTH TERMINAL WPE 4
	350	353031-0201	-		3	END PLATE 35
	360	353032-0004	-		1	END PLATE
	370	353032-0005	-		2	END PLATE
	375	353034-0030	-		15	BRIDGE CONNECTOR
	376	353034-0031	-		1	BRIDGE CONNECTOR
	380	359011-0819	-		1	SET OF SIG5-GW (JORD)
	390	359011-0807	-		2	SET OF SIG5-FW 1-50
	400	359011-0808	-		2	SET OF SIG5-FW 51-100
	410	359011-0809	-		2	SET OF SIG5-FW 101-150

From	Pos	Part No	SP	UN	Qty	Description

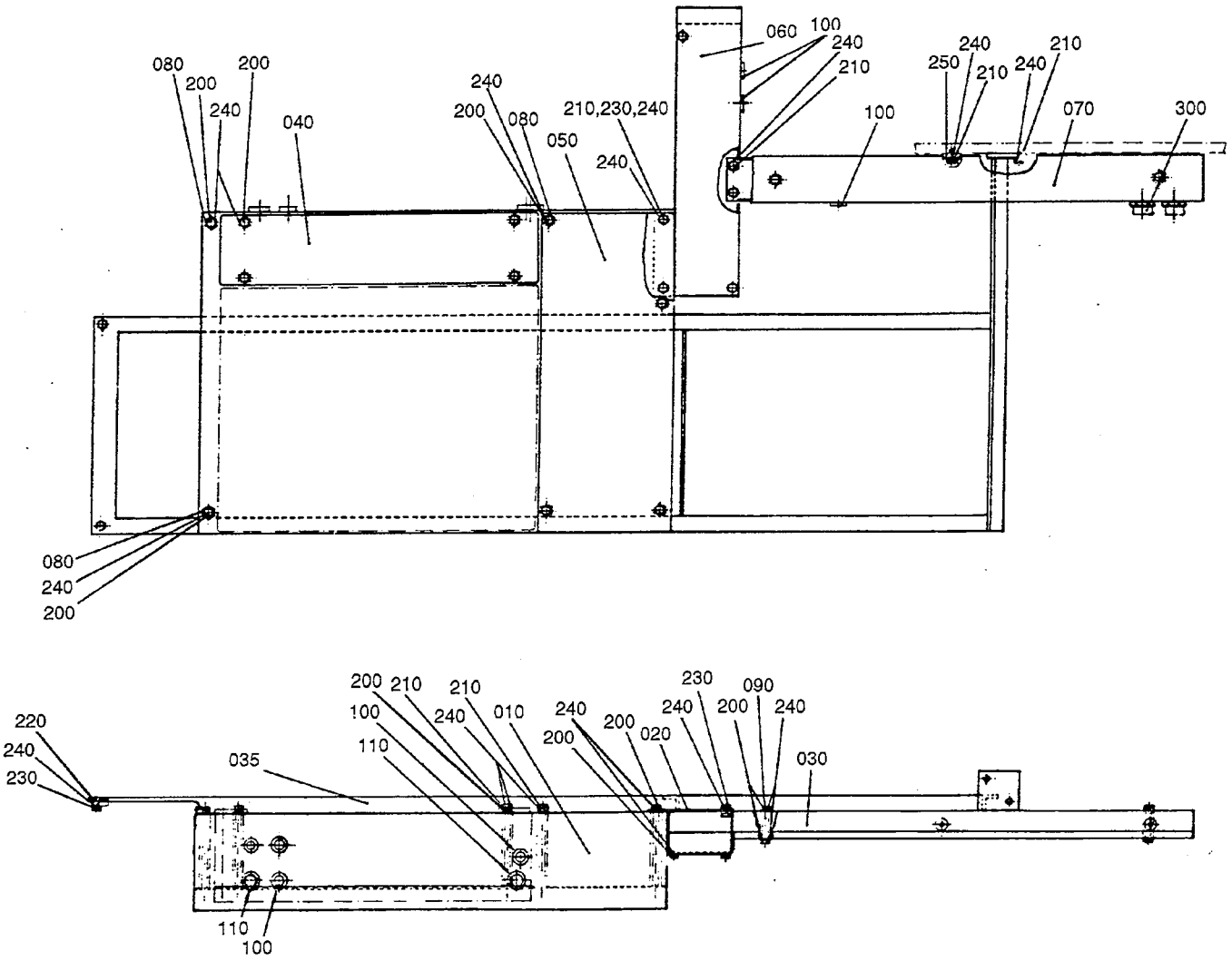

45785702.TIF
457857-2
AM 14969

Last Alteration: AM 14969 90-08-08

Corresponding group: 457857-030V
Assembly Drawing: 457857-2

Issue: 940524

From	Pos	Part No	SP	UN	Qty	Description
TB/9						
		C- 457857-0301				**Upper Cable Duct, Ass'y**
	060	531672	-		1	LID
TBA/9						
		C- 457857-0302				**Upper Cable Duct, Ass'y**
	060	531671	-		1	LID
Common parts						
	010	556566	-		1	PROTECTIVE CASING
	020	556568	-		1	CABLE DUCT
	030	556567	-		1	CABLE DUCT
	035	457960	-		1	FRAME
	040	457806	-		1	LID
	050	457807	-		1	LID
	070	457814	-		1	LID
	080	457808	-		10	SPACER
	090	457815	-		2	SPACER
	100	90015-0020	-		4	BUSHING
	110	90015-0023	-		2	BUSHING
	200	312105-0366	-		22	SCREW M6S6X12RFR
	210	312105-0368	-		12	SCREW M6S6X16RFR
	220	312155-0370	-		2	SCREW MF6S6X20RFR
	230	312605-0316	-		6	NUT M6M6RFR
	240	315105-0153	-		42	WASHER BRB6,4X12RFR
	250	315121-0153	-		2	WASHER TBRSB6,4X22FZB
	300	352136-0107	-		2	GLAND FITT

From	Pos	Part No	SP	UN	Qty	Description

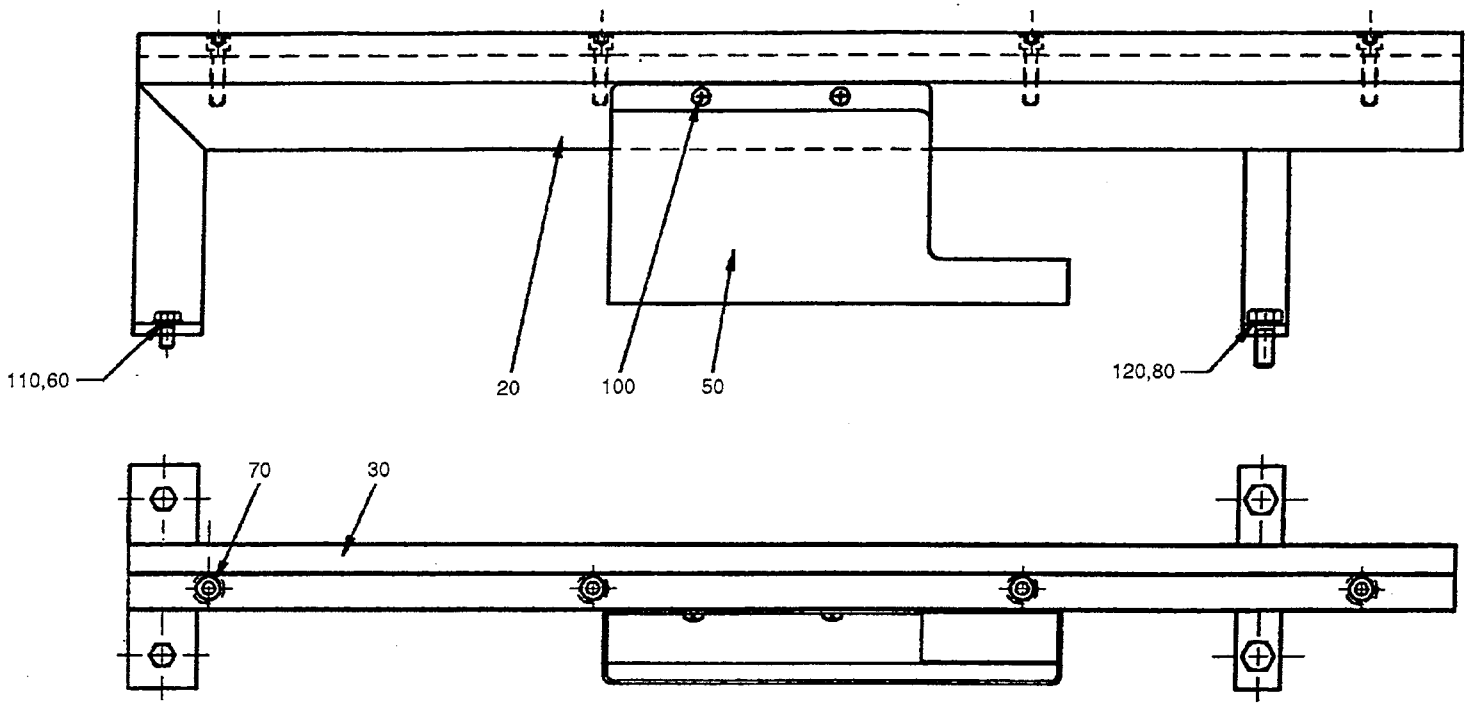

54760101.TIF
547601-1
AM 15550

From	Pos	Part No	SP	UN	Qty	Description
200ml Slim 284ml						
		C- 547601-0101				**Paper Guide, Ass'y**
	020	548037	-		1	SUPPORT
	030	547602	-		1	STEERING RAIL
236ml 180ml 125ml						
		C- 547601-0102				**Paper Guide, Ass'y**
	020	548038	-		1	SUPPORT
	030	547603	-		1	STEERING RAIL
250ml 200ml						
		C- 547601-0103				**Paper Guide, Ass'y**
	020	548039	-		1	SUPPORT
	030	547604	-		1	STEERING RAIL
Common parts						
	050	560447	-		1	BOX
	060	312105-0366	-		2	SCREW M6S6X12RFR
	070	312115-0372	-		4	SCREW MC6S6X25 A4 80
	080	312105-0449	-		2	SCREW M6S8X16RFR
	100	311521-0152	-		2	BLANK RIVE0X8,0 RFR
	110	315105-0153	-		2	WASHER BRB6,4X12RFR
	120	315105-0165	-		2	WASHER BRB8,4X16RFR

From	Pos	Part No	SP	UN	Qty	Description

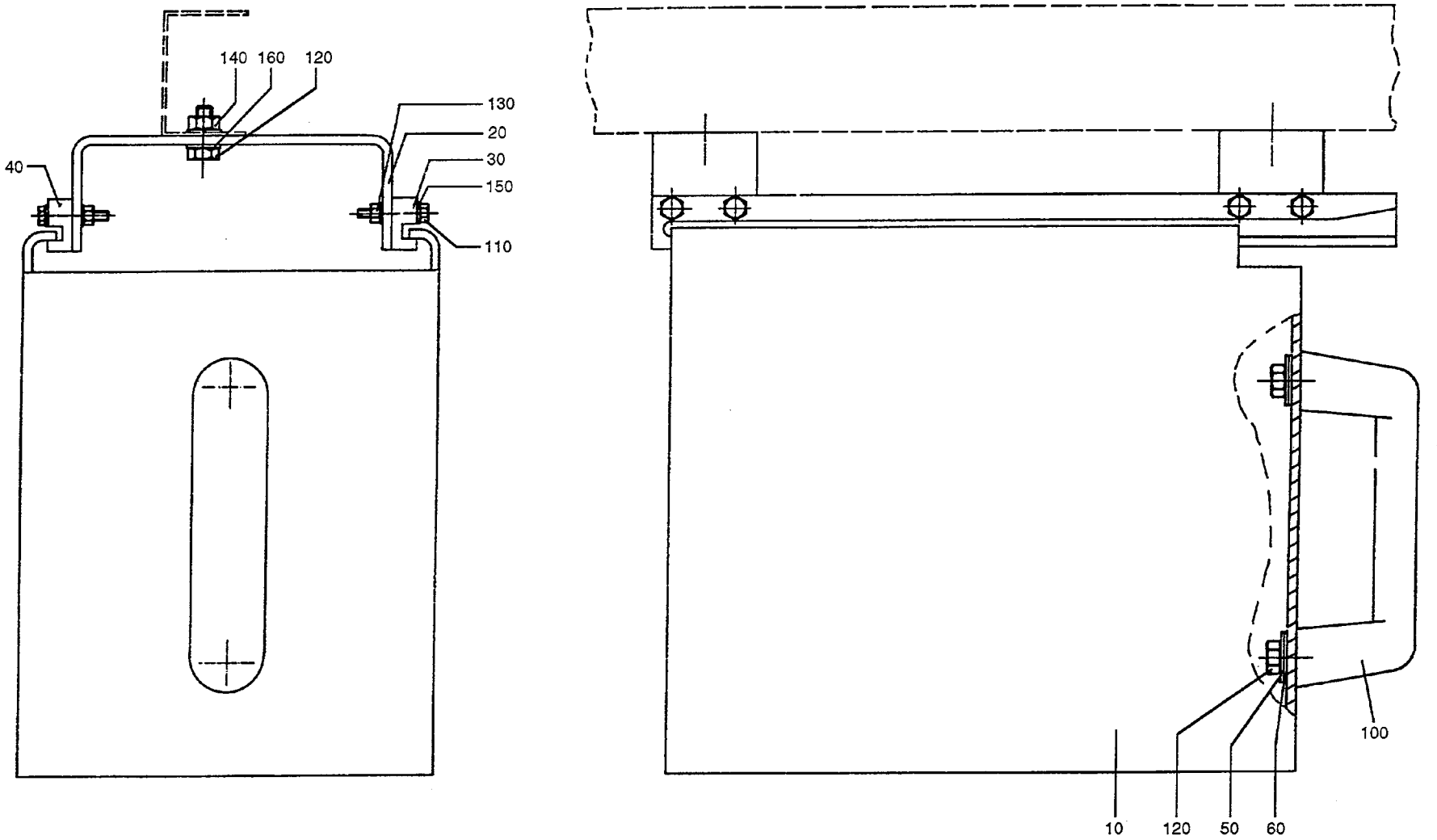

45667901.TIF
456679-1
AM 6295

Last Alteration: AM 6295 84-04-17

Corresponding group: 456679-010V
Assembly Drawing: 456679-1

Issue: **940524**

From	Pos	Part No	SP	UN Qty	Description
		C- 456679-010V			**Waste Box, Ass'y**
	010	457999	-	1	BOX
	020	449391	-	2	HOLDER
	030	449392	-	1	RAIL
	040	449393	-	1	RAIL
	050	28036	-	2	WASHER
	060	294734	-	2	WASHER
	100	90017-0014	-	1	HANDLE
	110	312105-0374	-	8	SCREW M6S6X30RFR
	120	312105-0451	-	4	SCREW M6S8X20RFR
	130	312605-0316	-	8	NUT M6M6RFR
	140	312605-0318	-	2	NUT M6M8RFR
	150	315105-0153	-	16	WASHER BRB6,4X12RFR
	160	315105-0165	-	4	WASHER BRB8,4X16RFR

From	Pos	Part No	SP	UN Qty	Description

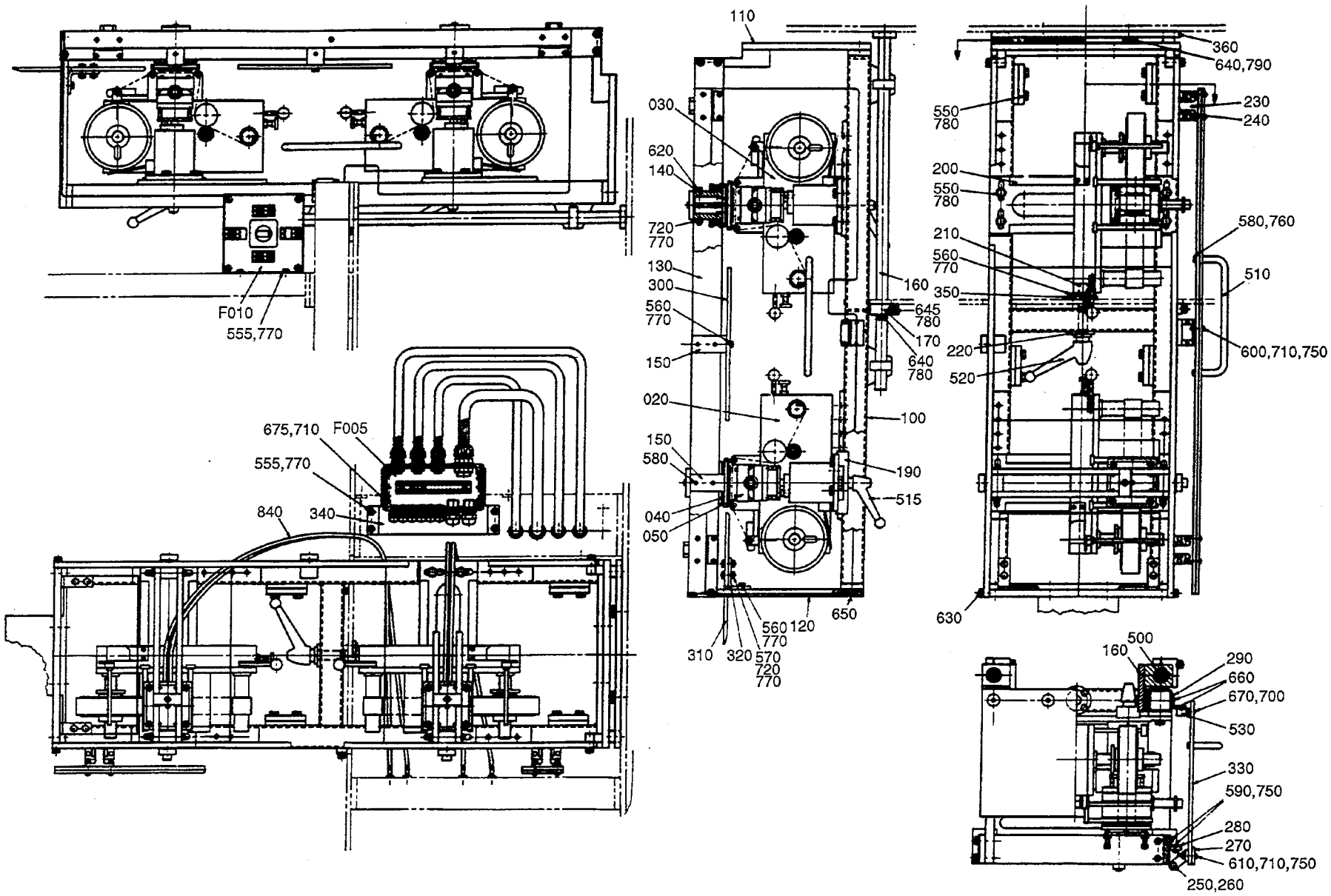

548057-1
548057-1/2
AM 15550

Last Alteration: AM 15550 91-01-09

Corresponding group: 548057-010V
Assembly Drawing: 548057-1/2

Issue: **940524**

From	Pos	Part No	SP	UN	Qty	Description
284ml - 200ml 200ml Slim						
		C- 548057-0101				**Dating Unit, Ass'y**
	020	90427-0005	-		1	DATING UNIT
		90044-0104	S		2	* INDUCTIVE SWITCH
		90206-0099	S		1	* HEATING ELEMENT
		90326-0063	S		1	* THERMOCOUPLE
		90427-0509	S		1	* GASKET
	030	90427-0006	-		1	DATING UNIT
180ml 125ml						
		C- 548057-0102				**Dating Unit, Ass'y**
	030	90427-0006	-		2	DATING UNIT
		90044-0104	S		2	* INDUCTIVE SWITCH
		90206-0099	S		1	* HEATING ELEMENT
		90326-0063	S		1	* THERMOCOUPLE
		90427-0509	S		1	* GASKET
Common parts						
	F005	**C- 544390-0101**	**-**		**1**	**CONNECTION BOX**
	F010	**C- 544389-0101**	**-**		**1**	**CONTROL PANEL**
	000	90413-0504	-		1	CODE INSERT SET
	040	90427-0507	-		2	DOLLY
		90427-0510	S		1	* COUNTER RUBBER
	050	90427-0506	-		2	TYPE HOLDER
	100	546321	-		1	MACHINE BODY
	110	548049	-		1	PLATE
	120	548028	-		1	PLATE
	130	548046	-		2	ROD
	140	548047	-		4	ROD
	150	548041	-		6	BRACKET
	160	548048	-		2	ROD
	170	548043	-		2	CLAMPING PIECE
	180	548029	-		4	BEARING BRACKET
	190	548051	-		2	PLATE
	200	548030	-		2	PLATE
	210	549602	-		1	SCREW
	220	548044	-		1	WASHER BEARING
	230	272510	-		2	HINGE
	240	272511	-		2	HINGE
	250	257397	-		2	PEG
	260	271011	-		4	WASHER
	270	544370	-		1	RIM
	280	544371	-		2	BRACKET
	290	544372	-		1	BRACKET
	300	544373	-		1	PROTECTION
	310	544374	-		1	PROTECTION
	320	544375	-		2	BRACKET

From	Pos	Part No	SP	UN	Qty	Description
	330	544376	-		1	DOOR
	340	544378	-		1	CANTILEVER
	350	449243	-		1	ADJUSTING SHIM
	360	563736	-		1	BRACKET
	500	321116-0302	-		4	BUSHING 20E7/26X15
	510	90017-0012	-		1	HANDLE
	515	90117-0001	-		2	HANDLE
	520	90117-0003	-		1	HANDLE
	530	90339-0011	-		1	LOCK
	540	312105-0492	-		2	SCREW M6S10X22RFR
	550	312105-0451	-		16	SCREW M6S8X20RFR
	555	312105-0364	-		6	SCREW M6S6X10RFR
	560	312105-0368	-		8	SCREW M6S6X16RFR
	570	312105-0370	-		4	SCREW M6S6X20RFR
	580	312105-0328	-		2	SCREW M6S5X14 A2 80
	590	312105-0289	-		8	SCREW M6S4X10 A2 80
	600	312105-0295	-		1	SCREW M6S4X20 A2 80
	610	312105-0297	-		4	SCREW M6S4X25 A2 80
	620	312115-0382	-		8	SCREW 6X60 A4 80
	630	312115-0451	-		8	SCREW 8X20 A4 80
	640	312115-0455	-		2	SCREW 8X30 A4 80
	645	312115-0459	-		2	SCREW 8X40 A4 80
	650	312155-0493	-		8	SCREW MF6S10X25RFR
	660	312125-0222	-		4	SLOTTED HEMCS3X8RFR
	670	312125-0226	-		2	SLOTTED HEMCS3X12RFR
	675	312125-0293	-		2	SLOTTED HEMCS4X16RFR
	680	312318-0364	-		12	STOP SCREW SK6SS6X10RFR
	700	312605-0310	-		2	NUT M6M3RFR
	710	312605-0312	-		7	NUT M6M4RFR
	720	312605-0316	-		12	NUT M6M6RFR
	750	315105-0136	-		13	WASHER BRB4,3X8RFR
	760	315105-0146	-		2	WASHER BRB5,3X10RFR
	770	315105-0153	-		28	WASHER BRB6,4X12RFR
	780	315105-0165	-		20	WASHER BRB8,4X16RFR
	790	315105-0173	-		2	WASHER BRB10,5X22RFR

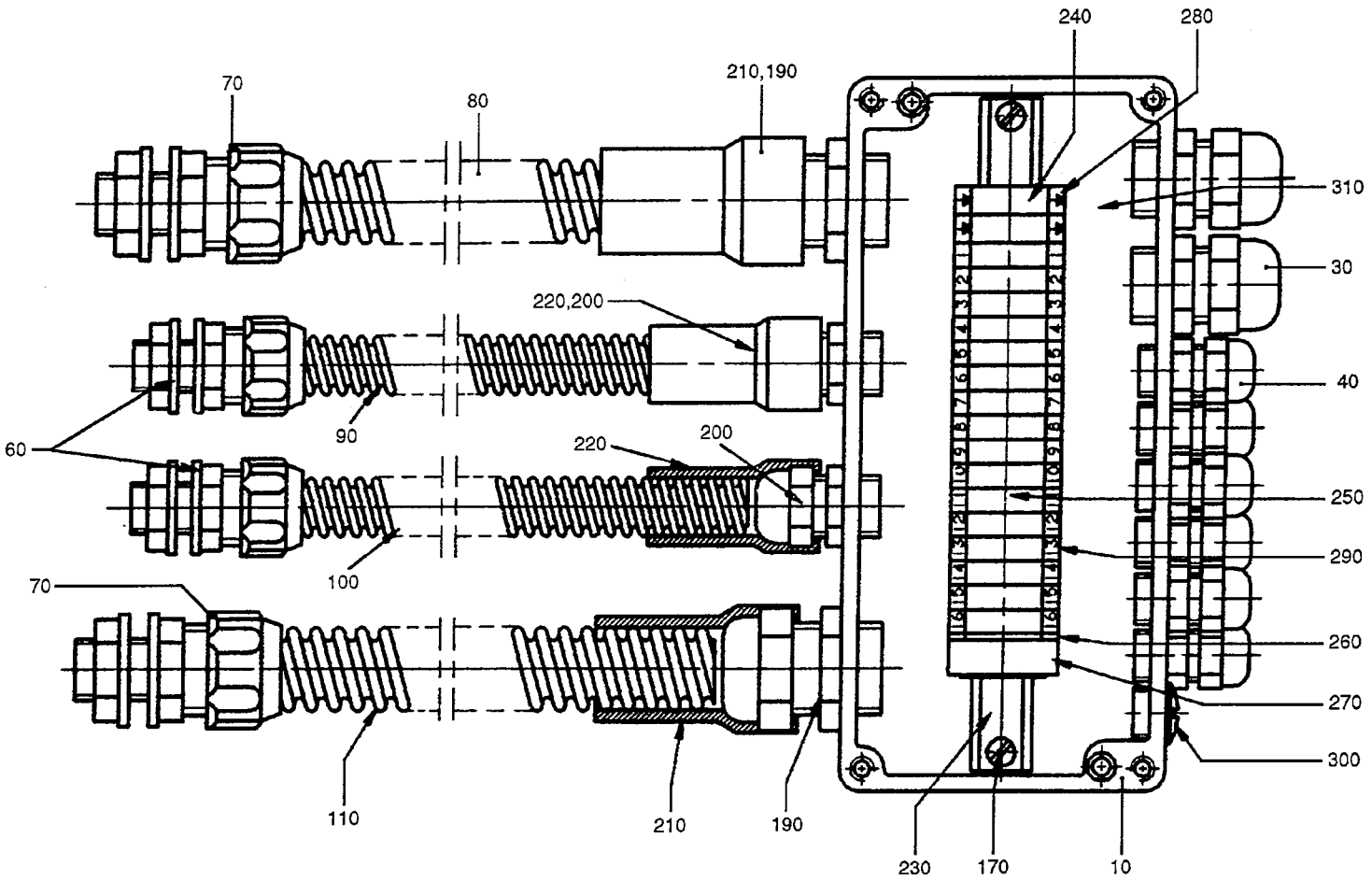

54439001.TIF
544390-1
AM 15283

Last Alteration: AM 15283 90-10-31

Corresponding group: 544390-010V
Assembly Drawing: 544390-1

Issue: **940524**

From	Pos	Part No	SP	UN	Qty	Description
		C- 544390-0101				**Connection Box, Ass'y**
	010	561551	-		1	APPLIANCE BOX
	030	352103-0106	-		2	CABLE GLANR.ST 11
	040	352103-0096	-		6	CABLE GLANR.ST 7
	060	352136-0107	-		2	GLAND FITT
	070	352136-0127	-		2	GLAND FITT
	080	352135-0106	-	MM	400	HOSE .016
	090	352135-0102	-	MM	400	HOSE .010
	100	352135-0102	-	MM	500	HOSE .010
	110	352135-0106	-	MM	600	HOSE .016
	170	312125-0285	-		2	SLOTTED HEMCS4X6RFR
	190	352103-0110	-		2	CABLE GLAND STR 16
	200	352103-0100	-		2	CABLE GLANR.STR 9
	210	456249	-		2	PROTECTIVE COVER
	220	456244	-		2	PROTECTIVE COVER
	230	552015	-		1	MOUNTING RAIL
	240	90135-0026	-		2	EARTHING CLAMP
	250	90077-0079	-		16	FEED THROUGH TERMINAL
	260	90077-0307	-		1	END PLATE
	270	90077-0308	-		1	END BRACKET
	280	359011-0202	-		4	SIGN BOARD(GROUND)
	290	359011-0807	-		2	SET OF SIG5-FW 1-50
	300	90002-0018	-		1	BLIND PLUG
	310	90194-0016	-		1	SIGN"FLASH SIGN"

From	Pos	Part No	SP	UN	Qty	Description

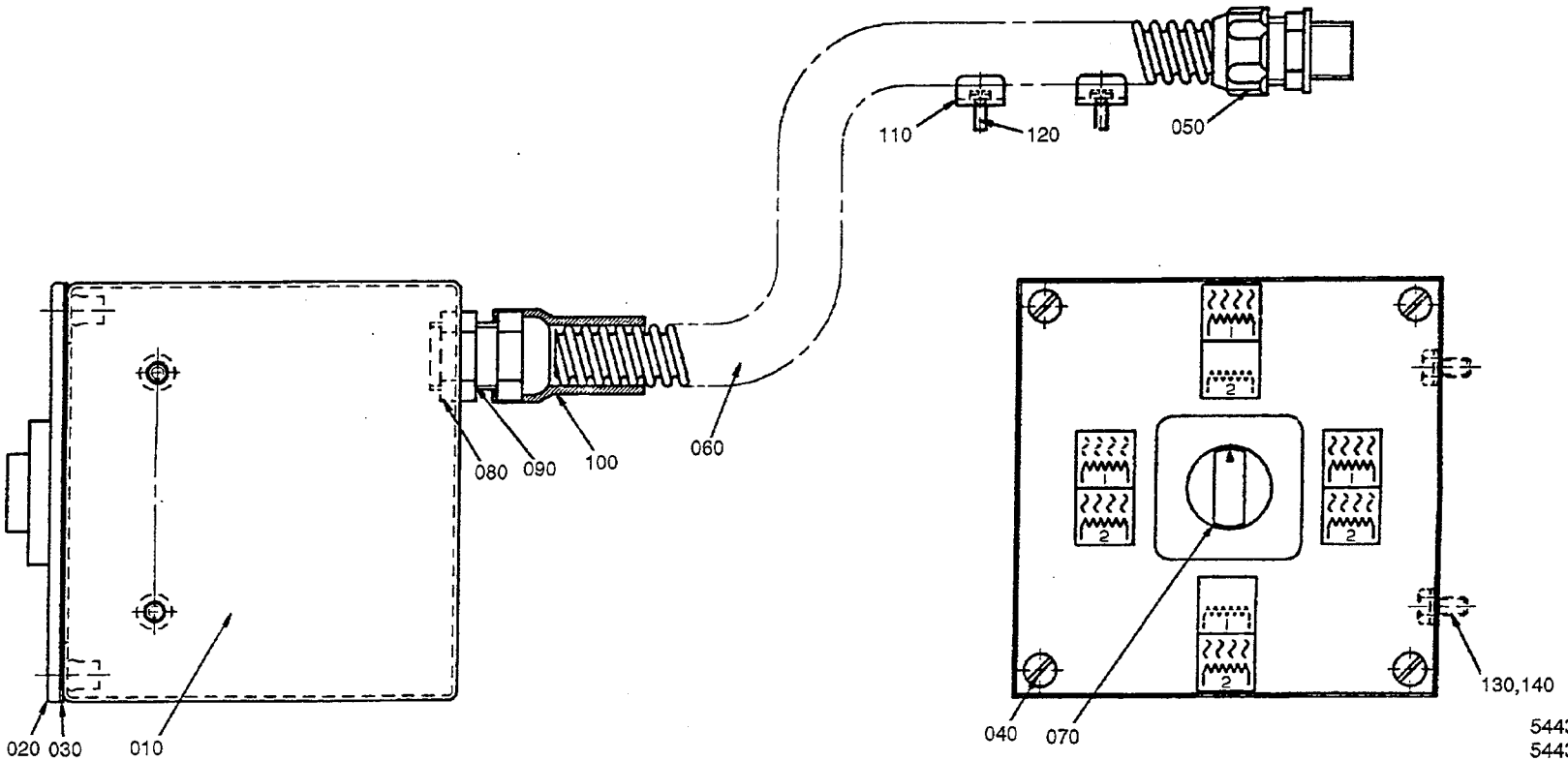

54438901.TIF
544389-1
AM 14969

Last Alteration: AM 14969 90-08-08

Corresponding group: 544389-010V
Assembly Drawing: 544389-1

Issue: **940524**

From	Pos	Part No	SP	UN	Qty	Description
		C- 544389-0101				**Control Panel, Ass'y**
	010	544386	-		1	BOX
	020	544387	-		1	PANEL
	030	544388	-		1	GASKET
	040	312145-0370	-		4	SLOTTED HEMFS6X20RFR
	050	352136-0127	-		1	GLAND FITT
	060	352135-0106	-	MM	500	HOSE .016
	070	90111-0137	-		1	SWITCH
	080	90099-0003	-		1	NUT
	090	352103-0110	-		1	CABLE GLAND STR 16
	100	456249	-		1	PROTECTIVE COVER
	110	352113-0203	-		2	ARMATURE M3-S8
	120	312125-0289	-		2	SLOTTED HEMCS4X10RFR
	130	312105-0366	-		2	SCREW M6S6X12RFR
	140	315105-0153	-		2	WASHER BRB6,4X12RFR

From	Pos	Part No	SP	UN	Qty	Description

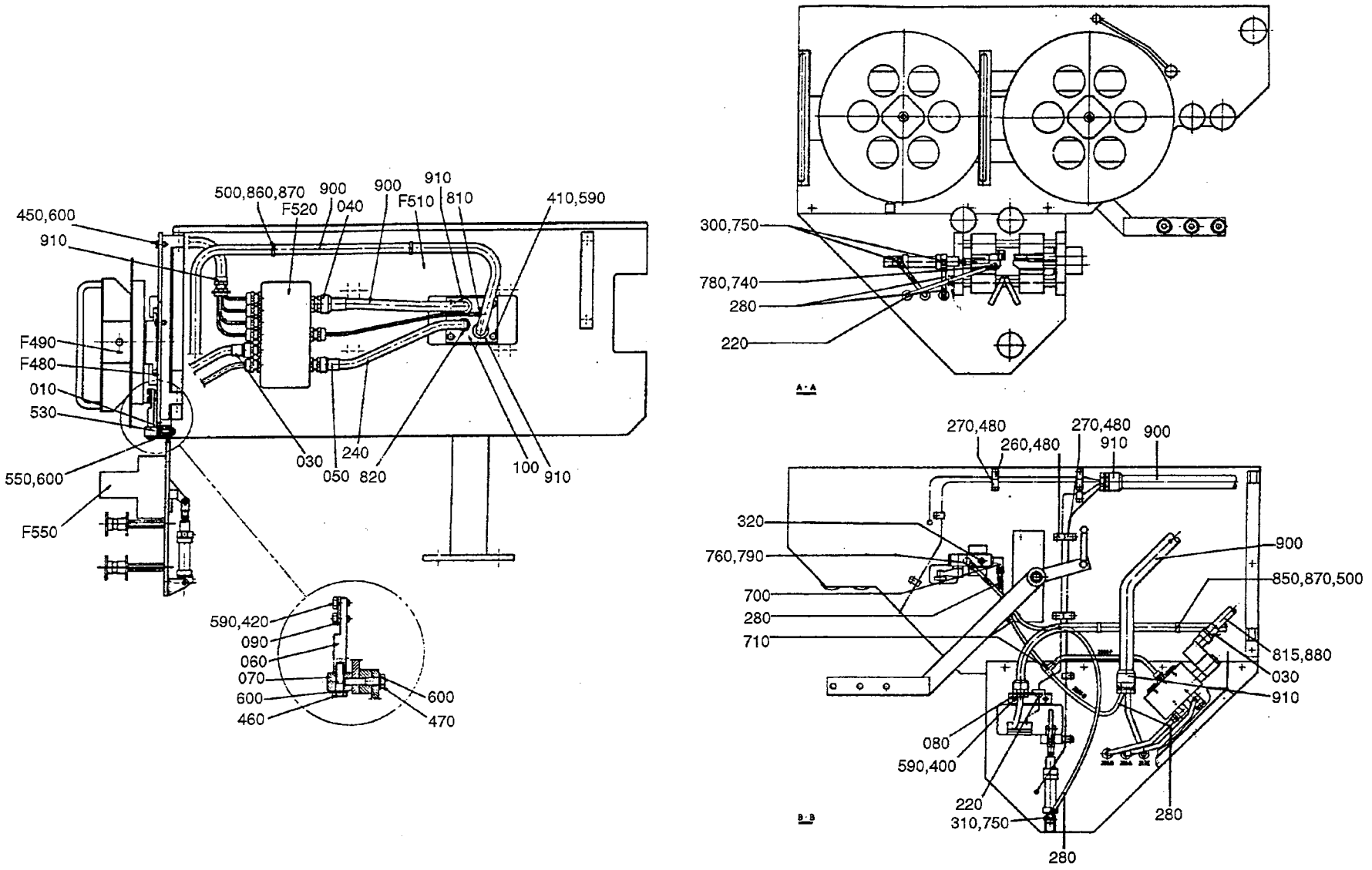

49060004.TIF
490600-4/5
AM 16357

From	Pos	Part No	SP	UN	Qty	Description
		C- 490600-0301				**Strip Magazine Complete, Ass'y**
	F480	**C- 469736-040V**	**-**		**1**	**STRIP MAGAZINE**
	F490	**C- 484858-0301**	**-**		**2**	**BOBBIN**
	F490	**C- 547756-0101**	**-**		**2**	**BOBBIN**
		C- 7003-0101				**. BOBBIN**
	F500	**C- 484984-020V**	**-**		**1**	**SPLICING DEVICE**
	F510	**C- 484950-0201**	**-**		**1**	**CANTILEVER**
	F520	**C- 552013-0101**	**-**		**1**	**CONNECTION BOX**
	010	484911	-		1	SPACER
	030	456244	-		2	PROTECTIVE COVER
	040	456249	-		1	PROTECTIVE COVER
	050	456245	-		1	PROTECTIVE COVER
	060	544449	-		1	BRACKET
	070	544450	-		1	BRACKET
	080	490605	-		1	FASTENING BRACKET
	090	490606	S		1	LIP
	100	553155	-		1	PLATE
	220	90015-0020	-		4	BUSHING
	240	90152-0033	-	MM	300	HOSE
	260	90165-0056	-		5	CLIP
	270	90165-0060	-		8	CLAMP
	280	90166-0132	-	M	6	HOSE
	300	90235-0290	-		2	VALVE
	310	90235-0760	-		1	THROTTLE VALVE
	320	90328-0003	-		1	SILENCER
	400	312105-0325	-		2	SCREW M6S5X10 A2 80
	410	312105-0327	-		4	SCREW M6S5X12 A2 80
	420	312105-0329	-		2	SCREW M6S5X16 A2 80
	450	312105-0367	-		2	SCREW M6S6X14RFR
	460	312105-0372	-		1	SCREW M6S6X25RFR
	470	312105-0376	-		1	SCREW M6S6X35RFR
	480	312125-0285	-		13	SLOTTED HEMCS4X6RFR
	500	312125-0287	-		4	SLOTTED HEMCS4X8RFR
	530	312155-0376	-		3	SCREW MF6X35RFR
	550	312605-0316	-		3	NUT M6M6RFR
	590	315105-0146	-		8	WASHER BRB5,3X10RFR
	600	315105-0153	-		7	WASHER BRB6,4X12RFR
	700	342930-0113	-		1	ELBOW PIPE6/4-1/8
	710	342946-0112	-		1	T-CONNECTI6/4
	740	342980-0111	-		1	BANJO CONNSINGEL 6/4-5M
	750	342980-0112	-		3	BANJO CONNSINGEL
	760	342980-0113	-		1	BANJO CONNSINGEL 6/4-1/8
	780	342980-0301	-		1	BANJO CONN SINGEL 5M
		315233-0101	P		0	* SEAL RINM5
	790	342980-0303	-		1	BANJO CONN SINGEL 1/8"

From	Pos	Part No	SP	UN	Qty	Description
	810	352103-0100	-		1	CABLE GLANR.STR 9
	815	352103-0101	-		1	CABLE GLAND ST 9
	820	90012-0063	-		1	GLAND
	860	352113-0102	-		4	RIBBON CLA
	870	352113-0202	-		4	ARMATURE -TM2-S8
	880	352135-0102	-	MM	200	HOSE .010
	900	352135-0106	-	MM	1730	HOSE .016
	910	352136-0127	-		5	GLAND FITT

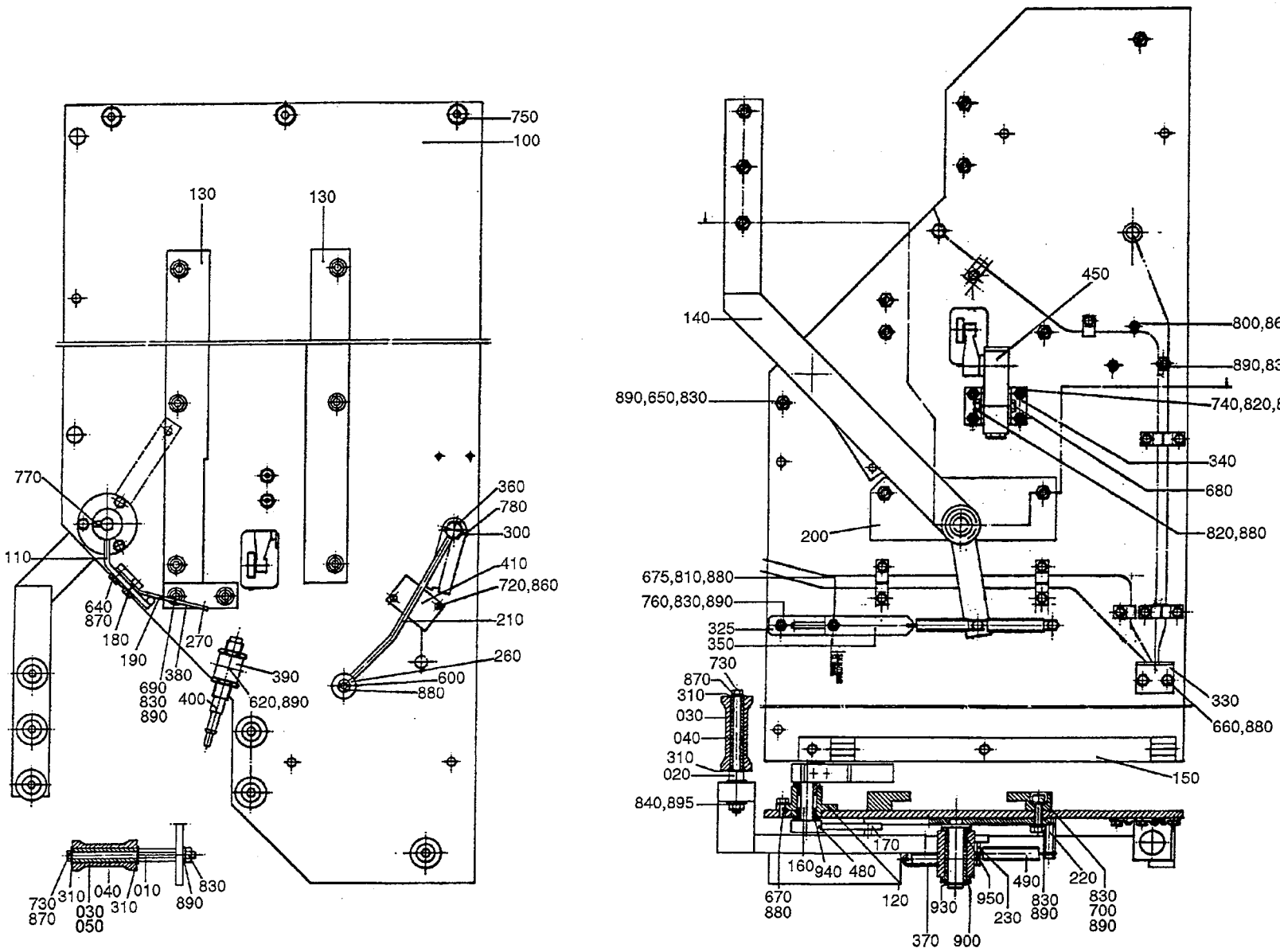

46973610.TIF
469736-6/10
AM 19421

Last Alteration: AM 19421 93-03-09

Corresponding group: 469736-040V
Assembly Drawing: 469736-6/10

Issue: 940524

From	Pos	Part No	SP	UN	Qty	Description
Hole 21 TB/9 284ml - 180ml TBA/9 284ml - 180ml						
		C- 469736-0401				**Strip Magazine, Ass'y**
	010	547747	-		3	SHAFT
	020	547748	C		3	SHAFT
	030	547745	C		5	ROLL
	040	547746	-		6	ROLL
	050	565652	C		1	ROLL
Hole 20 TB/9 284ml - 180ml TBA/9 284ml - 180ml						
Hole 11 TB/9 125ml 200ml Slim TBA/9 125ml 200ml Slim						
		C- 469736-0402				**Strip Magazine, Ass'y**
	010	545466	-		3	SHAFT
	020	545467	C		3	SHAFT
	030	545464	C		5	ROLL
	040	545465	-		6	ROLL
	050	565653	C		1	ROLL
Hole 10 TB/9 125ml 200ml Slim TBA/9 125ml 200ml Slim						
		C- 469736-0403				**Strip Magazine, Ass'y**
	010	547742	-		3	SHAFT
	020	547743	C		3	SHAFT
	030	547741	C		5	ROLL
	040	547740	-		6	ROLL
	050	565651	C		1	ROLL
Common Parts						
	100	550122	-		1	SHEET
	110	538673	-		1	ARM
	120	538681	-		1	HUB
	130	469282	-		2	WAY
	140	553150	C		1	BRAKE ARM
	150	469712	-		1	HINGE
	160	538683	-		1	SHAFT
	170	538684	-		1	ARM
	180	538686	-		1	PLATE
	190	538741	PU		1	LIP
	200	538674	-		1	BRACKET
	210	469703	-		1	ARM
	220	539197	-		1	SPRING BRACKET
	230	544461	-		1	SPRING BRACKET
	260	234844	C		1	WHEEL
	270	469288	-		1	BLOCKING PIECE
	300	469708	-		1	SCREW
	310	2033-0013	PU		12	WASHER
	325	544459	-		1	BRACKET
	330	469720	-		1	ANGLE
	340	490754	-		2	FASTENING BRACKET
	350	544460	-		1	BOW CLAMP
	360	544458	-		1	ARM
	370	90335-0120	PU		1	SPRING
	380	543612	PU		1	SPRING
	390	544454	-		1	BRACKET
	400	90044-0085	PU		1	SENSOR
	410	90044-0104	S		1	INDUCTIVE SWITCH
	450	90235-0041	C		1	VALVE
		90235-0311	S		1	* WEAR & TEAR PARTS KIT
	480	90258-0031	-		1	HOLLOW PIN
	490	90335-0030	P		1	SPRING
	600	311411-0137	-		3	SS 2343
	620	312105-0367	-		1	SCREW M6S6X14RFR
	640	312105-0291	-		2	SCREW M6S4X12 A2 80
	650	312105-0378	-		1	SCREW M6S6X40RFR
	660	312105-0325	-		2	SCREW M6S5X10 A2 80
	670	312105-0327	-		3	SCREW M6S5X12 A2 80
	675	312105-0329	-		1	SCREW M6S5X16 A2 80
	680	312105-0335	-		2	SCREW M6S5X30 A2 80
	690	312115-0370	-		8	SCREW 6X20 A4 80
	700	312115-0372	-		3	SCREW MC6S6X25 A4 80
	720	312125-0232	-		2	SLOTTED HEMCS3X25RFR
	730	312105-0287	-		6	SCREW M6S4X8 A2 80
	740	312155-0329	-		6	SCREW MF6S5X16RFR
	750	312155-0449	-		3	SCREW MF6S8X16RFR
	760	312155-0378	-		1	SCREW MF6S6X40RFR
	770	312318-0323	-		2	STOP SCREW SK6SS5X8RFR
	780	312318-0220	-		1	STOP SCREW SK6SS3X6RFR
	800	312605-0310	-		2	NUT M6M3RFR
	810	312812-0314	-		1	LOCK NUT A2-M5RFR
	820	312605-0314	-		8	NUT M6M5RFR
	830	312605-0316	-		14	NUT M6M6RFR
	840	312605-0318	-		3	NUT M6M8RFR
	860	315105-0124	-		4	WASHER BRB3,2X6RFR
	870	315105-0136	-		6	WASHER BRB4,3X8RFR
	880	315105-0146	-		20	WASHER BRB5,3X10RFR
	890	315105-0153	-		29	WASHER BRB6,4X12RFR
	895	315105-0165	-		6	WASHER BRB8,4X16RFR
	900	315105-0178	-		1	WASHER BRB13X24RFR
	930	315751-0109	-		1	CIRCLIP SGA12 RFR
	940	321111-0135	S		2	FLANGE BUS 10E7X10
	950	321111-0163	S		2	FLANGE BUS 12E7X20

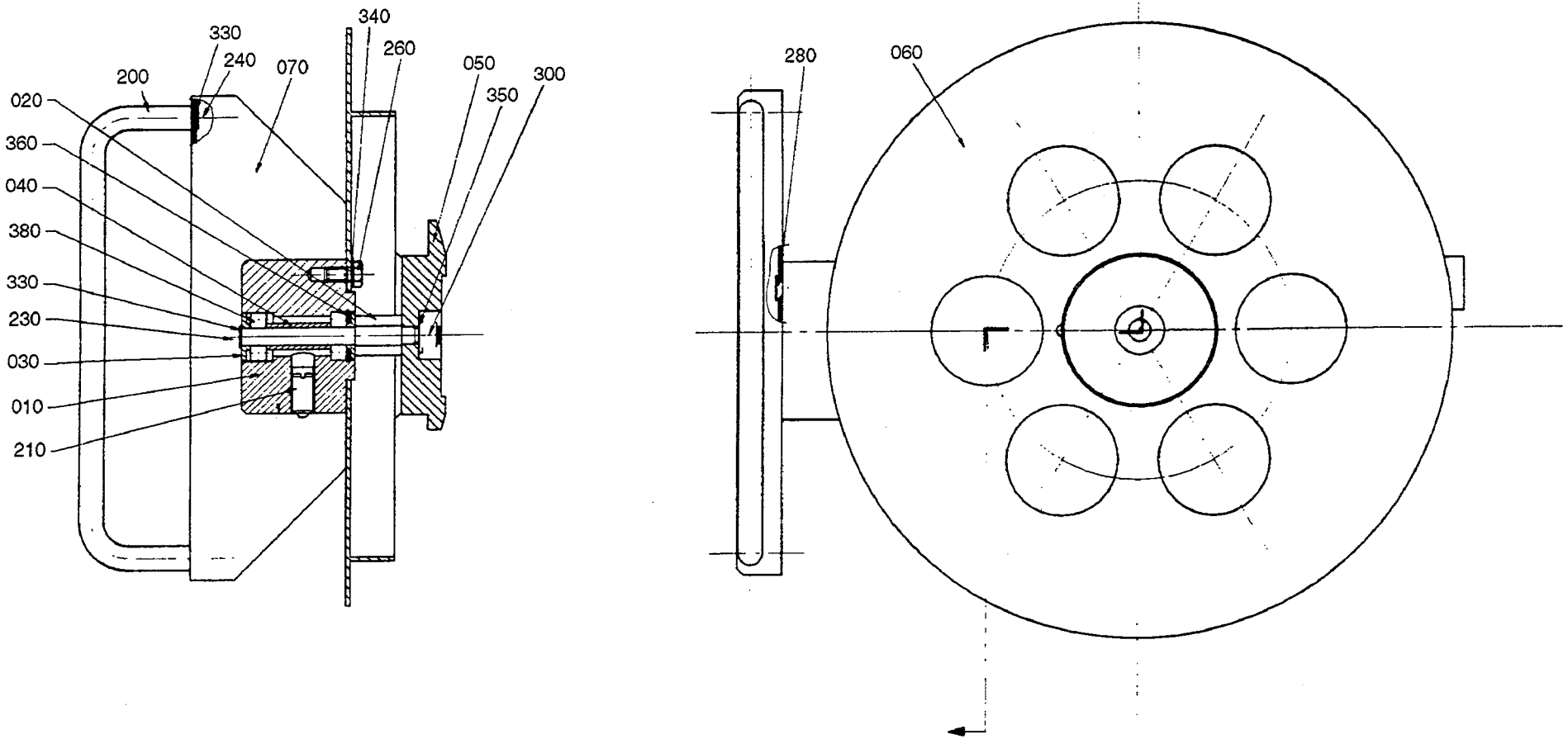

48485803.TIF
484858-3
AM 14366

From	Pos	Part No	SP	UN	Qty	Description
	F000	**C- 484858-0301**				**Bobbin, Ass'y**
	010	546256	C		1	BOBBIN HOLDER
	020	538725-0003	-		1	SHAFT
	030	538726	-		2	WASHER
	040	538740-0003	-		1	SPACER
	050	484859	C		1	SLIDE
	060	283569	C		1	BRAKE DRUM
	070	564537	-		1	ANGLE
	200	90017-0012	-		1	HANDLE
	210	90287-0106	-		1	SPRINGLOADED SCREW
	230	312105-0325	-		1	SCREW M6S5X10 A4 80
	240	312105-0327	-		2	SCREW M6S5X12 A4 80
	260	312105-0366	-		2	SCREW M6S6X12RFR
	280	312155-0366	-		2	SCREW MF6S6X12RFR
	300	312605-0318	-		1	NUT M6M8RFR
	330	315105-0146	-		3	WASHER BRB5,3X10RFR
	340	315105-0153	-		2	WASHER BRB6,4X12RFR
	350	315105-0165	-		2	WASHER BRB8,4X16RFR
	360	315753-0117	-		1	CIRCLIP GH 22 RFR
	380	321300-0098	-		2	BALL BEARISKF608

From	Pos	Part No	SP	UN	Qty	Description

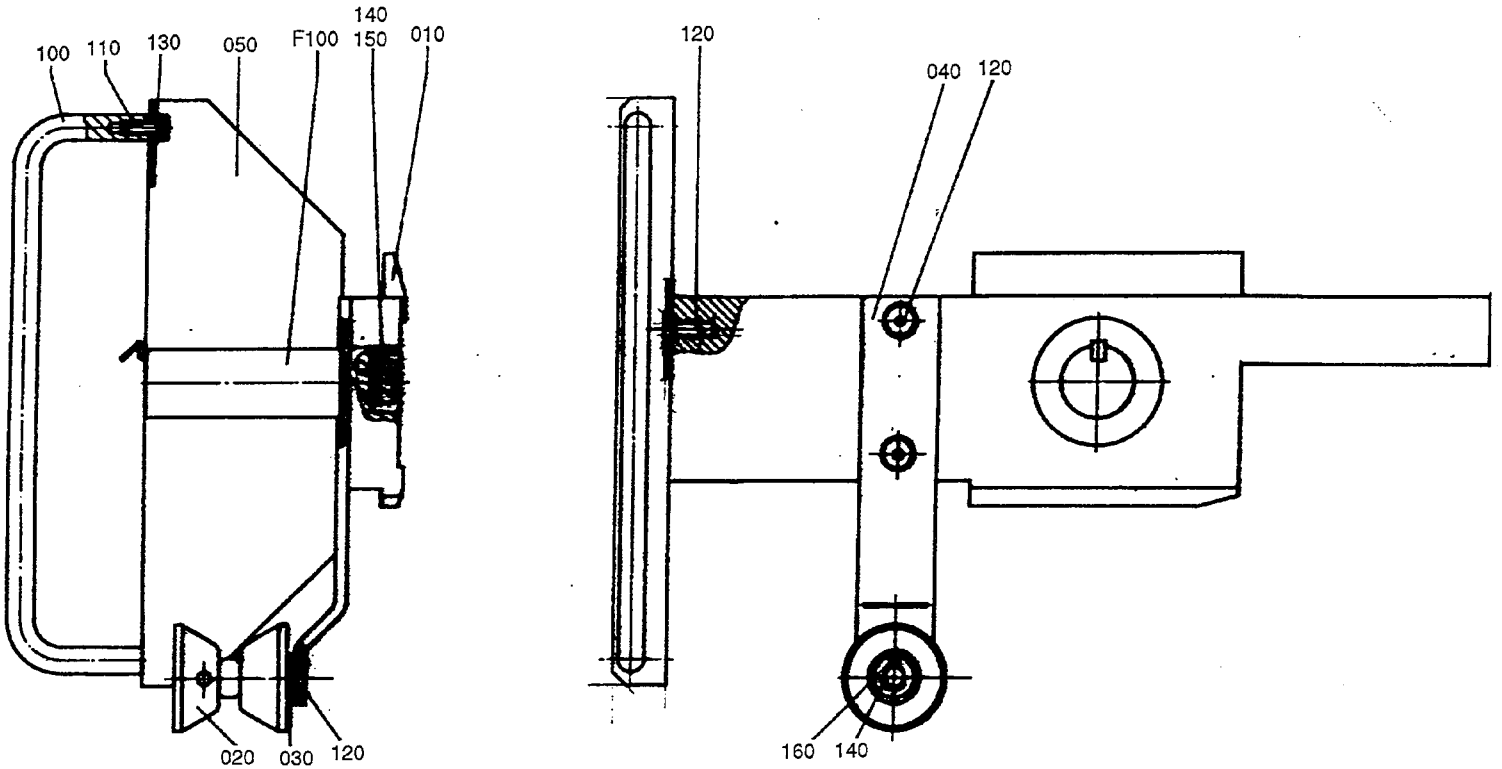

54775601.TIF
547756-1
AM 15550

Last Alteration: AM 15550 91-01-09

Corresponding group: 547756-010V
Assembly Drawing: 547756-1

Issue: **940524**

From	Pos	Part No	SP	UN	Qty	Description
		C- 547756-0101				**Bobbin, Ass'y**
	F100	**C- 7003-0101**	**-**		**1**	**BOBBIN**
	010	545455	-		1	SLIDE
	020	521166	C		1	ROLL
	030	543182	C		1	SHAFT
	040	543181	-		1	BRACKET
	050	564537	-		1	ANGLE
	100	90017-0012	-		1	HANDLE
	110	312115-0327	-		2	SCREW MC6S5X12 A4 80
	120	312155-0366	-		5	SCREW MF6S6X12RFR
	130	315105-0146	-		2	WASHER BRB5,3X10RFR
	140	315105-0165	-		2	WASHER BRB8,4X16RFR
	150	312605-0318	-		1	NUT M6M8RFR
	160	311411-0152	-		1	SPLIT PIN SP2X16RFR

From	Pos	Part No	SP	UN	Qty	Description

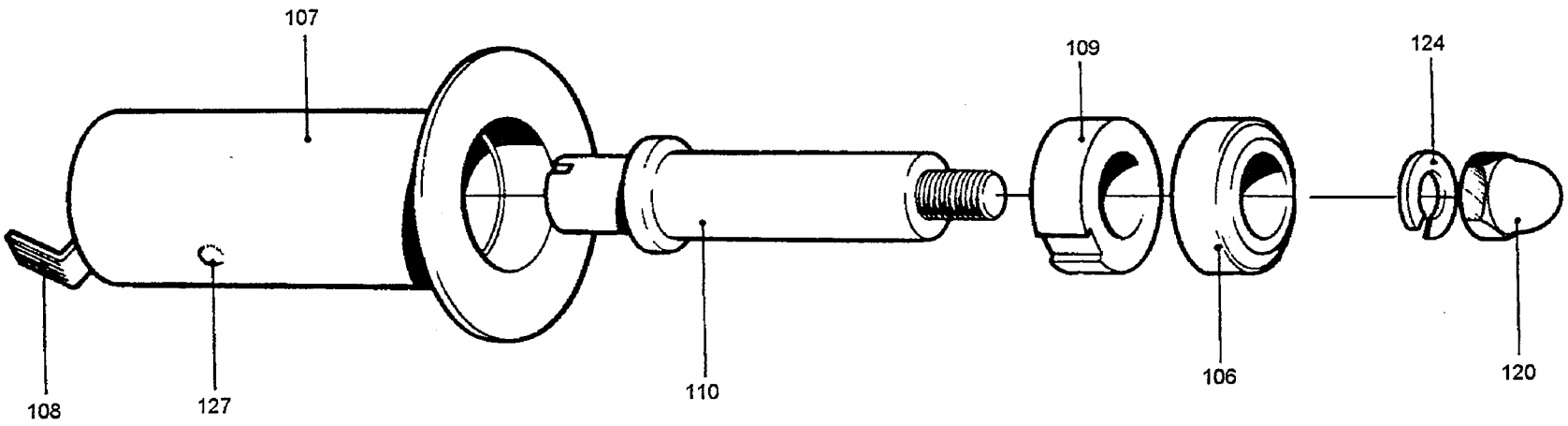

00700301.TIF
7003-1
AM

From	Pos	Part No	SP	UN	Qty	Description
		C- 7003-0101				**Bobbin, Ass'y**
	106	5486	S		1	BEARING
	107	6157	-		1	BOBBIN
	108	6158	S		1	SPRING
	109	6159	S		1	BEARING
	110	6160	-		1	SHAFT
	120	312701-0318	-		1	CAP NUT MHM8 FZB
	124	315402-0165	-		1	WASHER FBB8,2RFR
	127	311506-0278	S		1	RIVET KN2,6X6KPR

From	Pos	Part No	SP	UN	Qty	Description

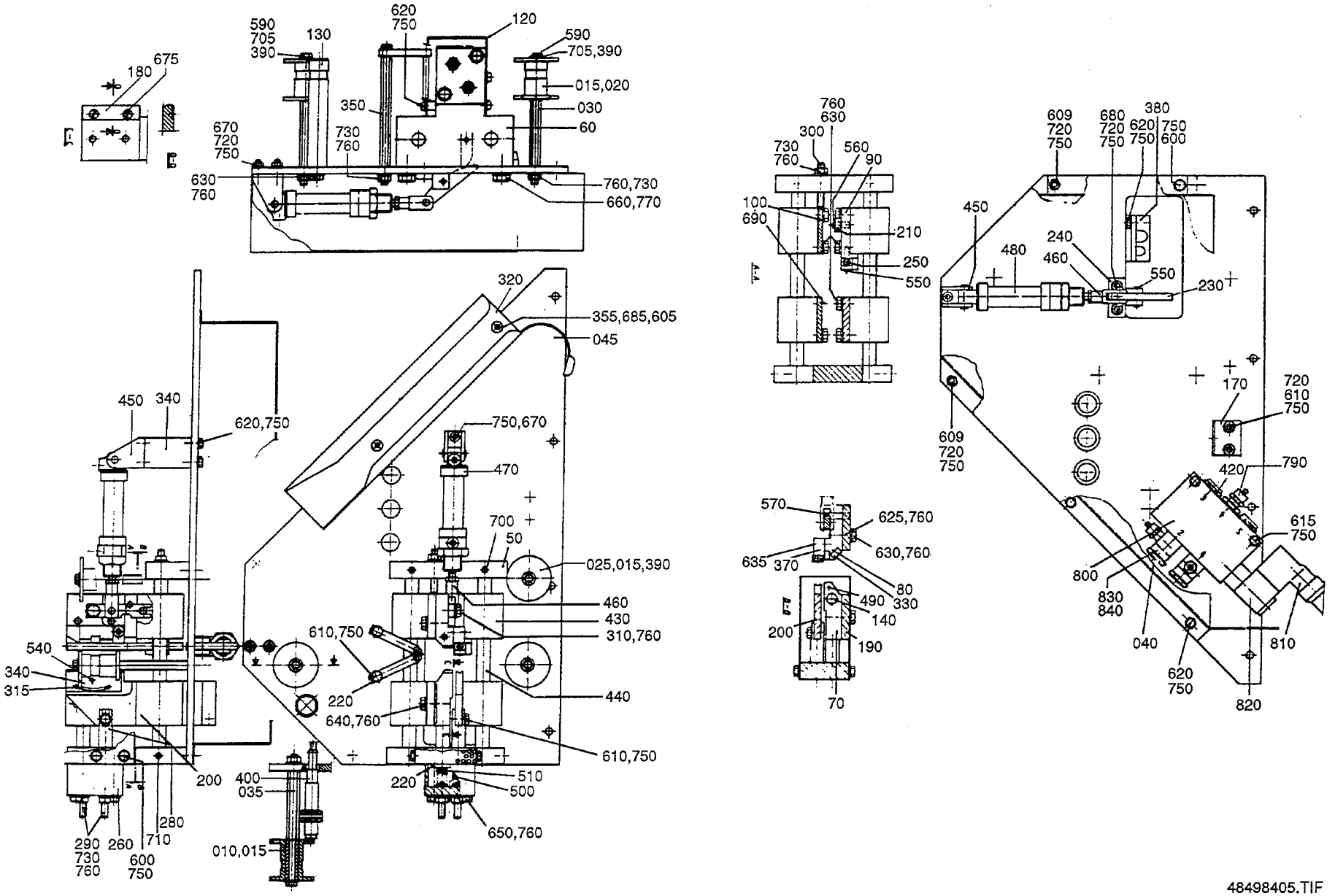

48498405.TIF
484984-5/6
AM 15283

From	Pos	Part No	SP	UN	Qty	Description
Hole 21						
		C- 484984-0201				**Splicing Device, Ass'y**
	010	550116	C		1	ROLL
	015	545446	-		3	ROLL
	020	545444	C		1	ROLL
	025	545445	-		1	ROLL
	030	550114	S		2	SHAFT
	035	550115	-		1	SHAFT
	070	550117	S		1	HEATING BLOCK
	080	550118	S		1	COUNTER JAW
	180	545456	-		1	KNIFE
	200	545454	-		1	PLATE
	250	544448	C		1	PEG
	320	545450	-		1	CHUTE
	330	537889	PU		1	FABRIC
	340	545453	-		1	DOLLY
	370	545452	-		1	STEERING RAIL
Hole 11						
		C- 484984-0202				**Splicing Device, Ass'y**
	010	548400	C		1	ROLL
	015	543180	-		3	ROLL
	020	548396	C		1	ROLL
	025	543178	-		1	ROLL
	030	548394	S		2	SHAFT
	035	548395	-		1	SHAFT
	070	545461	S		1	HEATING JAW
	080	543175	S		1	COUNTER JAW
	180	544457	-		1	KNIFE
	200	543173	-		1	PLATE
	250	484922	C		1	PEG
	320	548399	-		1	CHUTE
	330	550119	PU		1	FABRIC
	340	543174	-		1	DOLLY
	370	548403	-		1	STEERING RAIL
Hole 20						
		C- 484984-0203				**Splicing Device, Ass'y**
	010	553132	C		1	ROLL
	015	553133	-		3	ROLL
	020	553131	C		1	ROLL
	025	553130	-		1	ROLL
	030	553134	S		2	SHAFT
	035	553135	-		1	SHAFT
	070	545461	S		1	HEATING JAW
	080	543175	S		1	COUNTER JAW
	180	544457	-		1	KNIFE
	200	543173	-		1	PLATE
	250	484922	C		1	PEG
	320	548399	-		1	CHUTE
	330	550119	PU		1	FABRIC
	340	543174	-		1	DOLLY
	370	553149	-		1	STEERING RAIL
Hole 10						
		C- 484984-0204				**Splicing Device, Ass'y**
	010	545460	C		1	ROLL
	015	543186	-		3	ROLL
	020	543188	C		1	ROLL
	025	543191	-		1	ROLL
	030	550139	S		2	SHAFT
	035	550138	-		1	SHAFT
	070	545461	S		1	HEATING JAW
	080	543175	S		1	COUNTER JAW
	180	544457	-		1	KNIFE
	200	543173	-		1	PLATE
	250	484922	C		1	PEG
	320	544781	-		1	CHUTE
	330	550119	PU		1	FABRIC
	340	543174	-		1	DOLLY
	370	543192	-		1	STEERING RAIL
Common parts						
	040	484903	-		1	PROTECTIVE CASING
	045	550123	-		1	SHEET
	050	484905	-		1	END SECTION
	060	484906	-		1	END SECTION
	090	484909	S		1	HINGE
	100	484910	-		1	FASTENING PLATE
	120	484912	-		1	TOUCH GUARD
	130	544451	-		1	PEG
	140	484914	PU		1	HEATING ELEMENT
	170	469720	-		1	ANGLE
	190	484916	-		1	FASTENING PLATE
	210	550120	-		1	ARM
	220	484919	-		2	ARM
	230	484920	-		1	ARM
	240	484921	-		1	HOLDER
	260	484923	-		1	SPRING HOUSING
	270	484924	-		1	SLEEVE
	280	484925	C		1	SLEEVE
	290	484926	-		2	SCREW
	300	484927	-		1	SCREW
	310	484928	-		1	REAMED BOLT

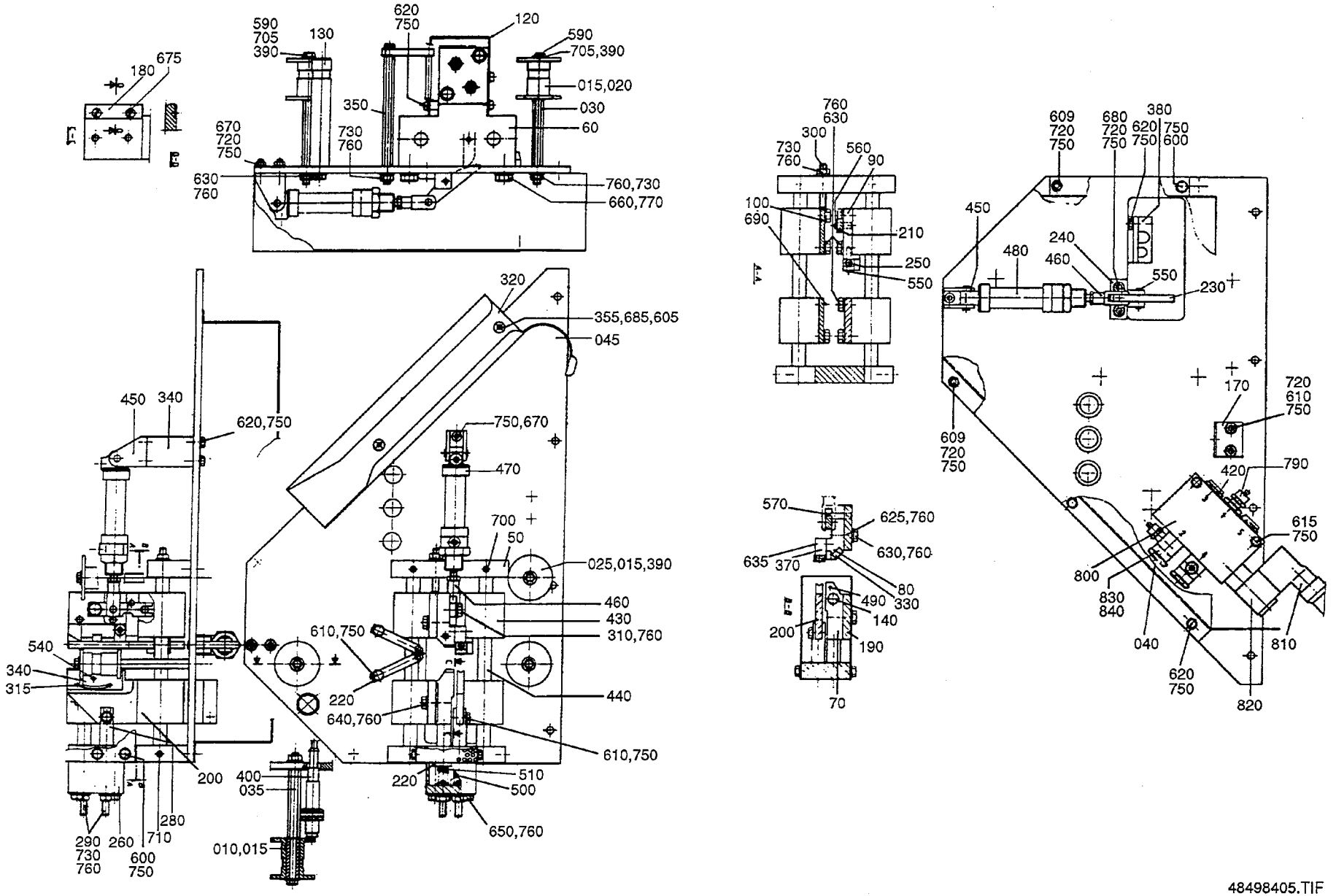

48498405.TIF
484984-5/6
AM 15283

From	Pos	Part No	SP	UN Qty	Description
	315	543185	PU	1	LOCKING WIRE
	350	484932	-	2	SPACER
	355	544782	-	2	NUT
	360	484933	-	1	SPACER
	380	484935	-	1	CRAMP
	390	2033-0013	-	6	WASHER
	400	90044-0085	-	1	SENSOR
	420	90257-0001	-	2	FILTER PLUG
	430	90189-0030	S	4	BALL BUSHING
	440	90189-0031	S	2	AXLE
	450	90239-0486	-	2	BRACKET
	460	90239-0489	-	2	BRACKET
	470	90239-0816	S	1	CYLINDER
	480	90239-0910	S	1	CYLINDER
		90239-0562	S	1	* PLASTIC PLUG
	490	90326-0060	P	1	THERMOCOUPLE
	500	90335-0005	S	1	SPRING
	510	90335-0100	S	1	COMPR. SPRING
	540	311103-0232	-	1	CYLINDRICACP M6 3X8 RFR
	550	311103-0271	-	2	CYLINDRICACP M6 4X18 RFR
	560	311103-0351	-	1	CYLINDRICACP M6 6X16 RFR
	570	311103-0311	-	1	CYLINDRICACP M6 5X22 RFR
	590	312105-0287	-	3	SCREW M6S4X8 A2 80
	600	312105-0323	-	3	SCREW M6S5X8 A2 80
	605	312105-0325	-	3	SCREW M6S5X10 A2 80
	609	312105-0328	-	4	SCREW M6S5X14 A2 80
	610	312105-0327	-	5	SCREW M6S5X12 A2 80
	615	312105-0337	-	2	SCREW M6S5X35RFR
	620	312105-0329	-	8	SCREW M6S5X16 A2 80
	625	312105-0366	-	1	SCREW M6S6X12RFR
	630	312105-0368	-	9	SCREW M6S6X16RFR
	635	312155-0331	-	1	SCREW MF6S5X20RFR
	640	312105-0370	-	2	SCREW M6S6X20RFR
	650	312105-0378	-	2	SCREW M6S6X40RFR
	660	312105-0451	-	4	SCREW M6S8X20RFR
	670	312115-0329	-	4	SCREW 5X16 A4 80
	675	312151-0287	-	2	SCREW MF6S4X8FZB
	680	312155-0329	-	2	SCREW MF6S5X16RFR
	685	312155-0325	-	2	SCREW MF6S5X10RFR
	690	312155-0366	-	1	SCREW MF6S6X12RFR
	700	312318-0323	-	2	STOP SCREW SK6SS5X8RFR
	705	315105-0136	-	3	WASHER BRB4,3X8RFR
	710	312318-0327	-	2	STOP SCREW SK6SS5X12RFR
	720	312605-0314	-	12	NUT M6M5RFR
	730	312605-0316	-	8	NUT M6M6RFR
	750	315105-0146	-	28	WASHER BRB5,3X10RFR
	760	315105-0153	-	25	WASHER BRB6,4X12RFR
	770	315105-0165	-	4	WASHER BRB8,4X16RFR
	790	342921-0114	-	1	PIPE COUPL6/4-1/4"
	800	90042-0167	-	1	SOLENOID VALVE
	810	90042-0392	-	1	CONTACT
	820	90042-0345	-	1	COIL
	830	342980-0114	-	2	BANJO CONNSINGEL 6/4-1/4
	840	342980-0304	-	2	BANJO CONN SINGEL 1/4

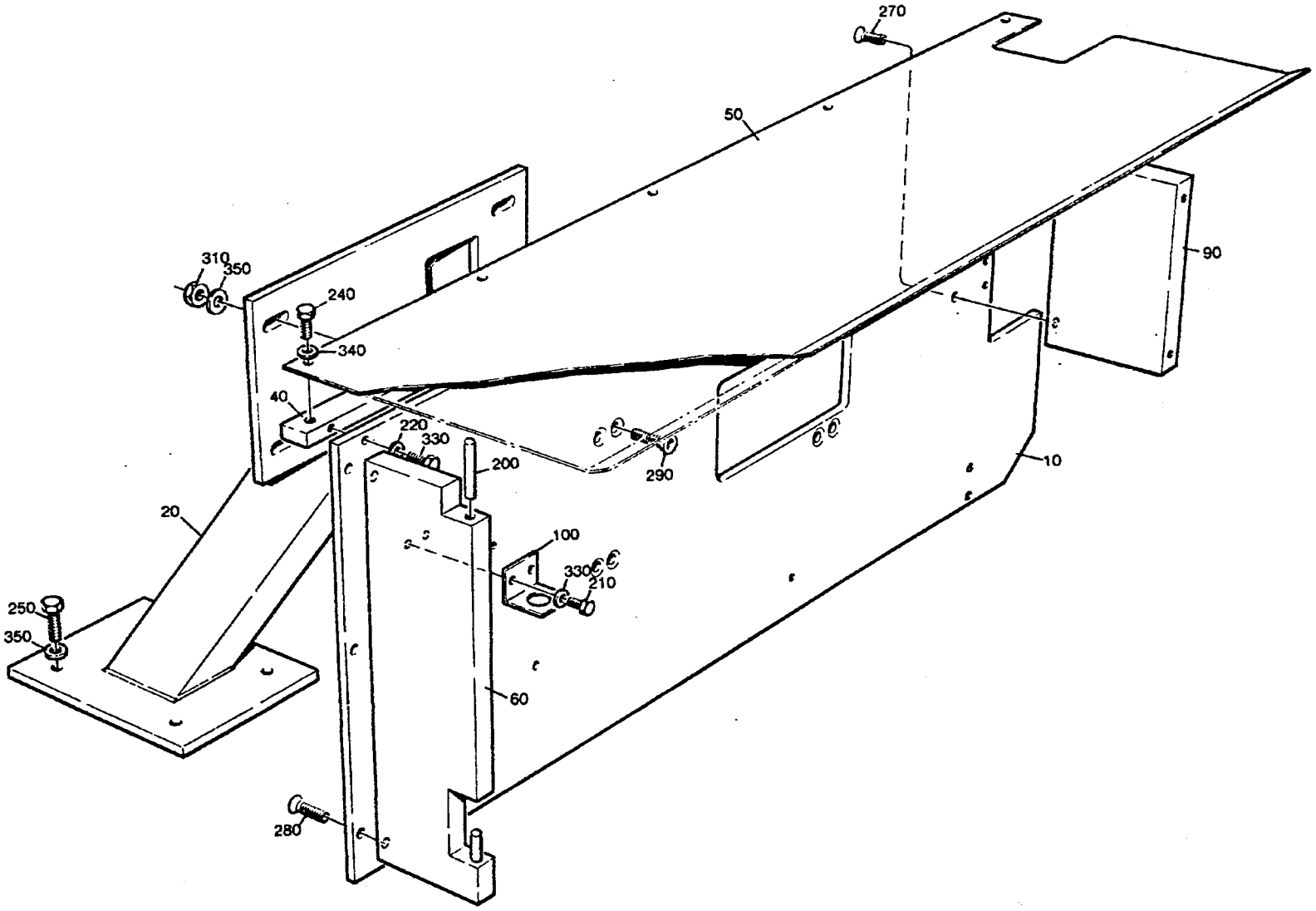

48495001.TIF
484950-1
AM 12944

Last Alteration: AM 12944 89-08-29

Corresponding group: 484950-020V
Assembly Drawing: 484950-1

Issue: **940524**

From	Pos	Part No	SP	UN	Qty	Description
		C- 484950-0201				**Cantilever, Ass'y**
	010	484951	-		1	MOUNTING SHEET
	020	549014	-		1	CANTILEVER
	040	484952	-		1	MOUNTING BAR
	050	484953	-		1	SHEET
	060	484954	-		1	HANGER
	090	484955	-		1	SPACER
	100	469720	-		1	ANGLE
	200	311103-0411	-		2	CYLINDRICACP M6 8X45 RFR
	210	312105-0325	-		2	SCREW M6S5X10 A2 80
	220	312105-0329	-		6	SCREW M6S5X16 A2 80
	240	312105-0364	-		5	SCREW M6S6X10RFR
	250	312105-0453	-		4	SCREW M6S8X25RFR
	270	312155-0451	-		5	SCREW MF6S8X20RFR
	290	312155-0455	-		4	SCREW MF6S8X30RFR
	310	312605-0318	-		4	NUT M6M8RFR
	330	315105-0146	-		8	WASHER BRB5,3X10RFR
	340	315105-0153	-		5	WASHER BRB6,4X12RFR
	350	315105-0165	-		8	WASHER BRB8,4X16RFR

From	Pos	Part No	SP	UN	Qty	Description

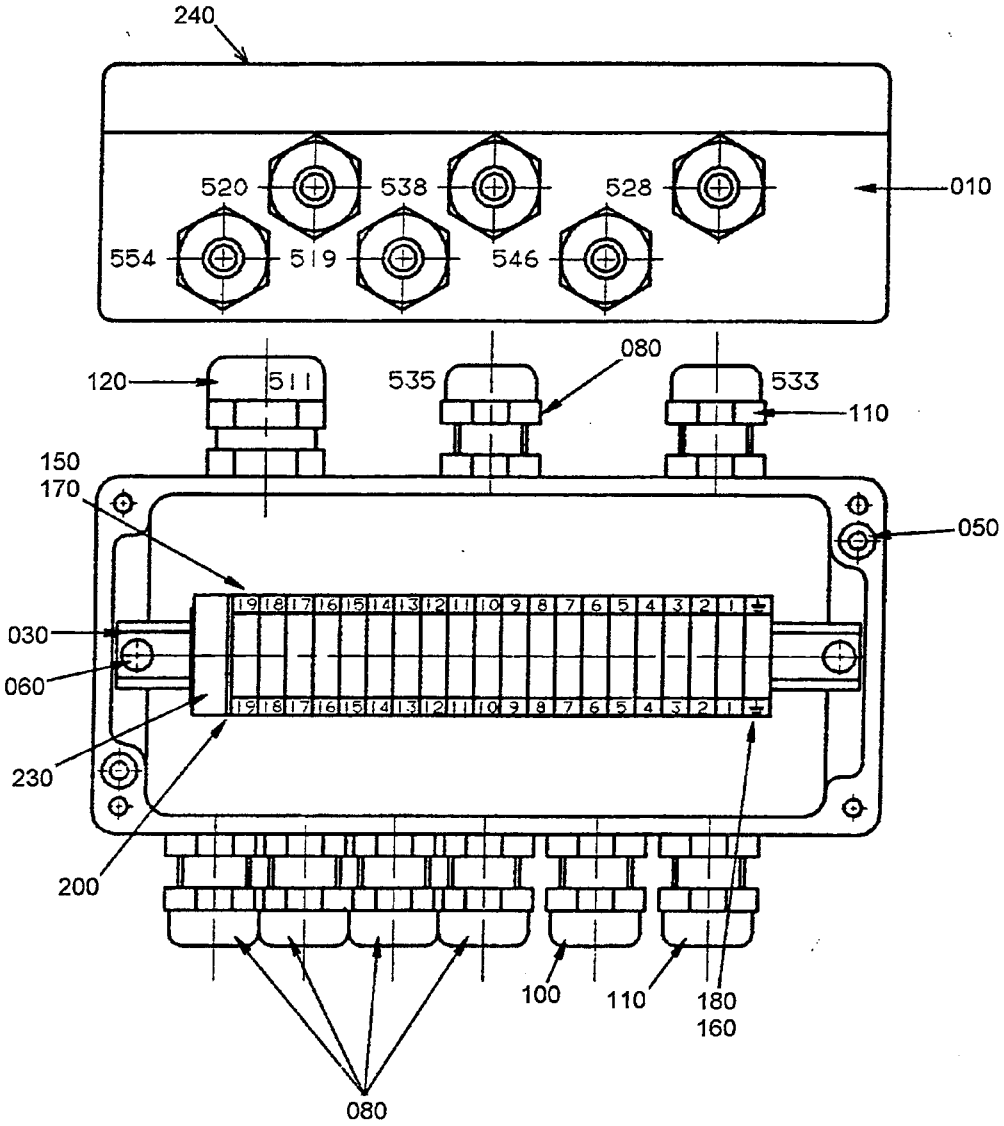

55201301.TIF
552013-1
AM 20096

Last Alteration: AM 20096 93-06-11

Corresponding group: 552013-010V
Assembly Drawing: 552013-1

Issue: **940524**

From	Pos	Part No	SP	UN	Qty	Description
		C- 552013-0101				**Connection Box, Ass'y**
	010	552014	-		1	APPLIANCE BOX
	030	552015	-		1	MOUNTING RAIL
	050	312125-0295	-		2	SLOTTED HEMCS4X20RFR
	060	312132-0284	-		2	SLOTTED HEMSCS4X5MSGFN
	080	352103-0100	-		5	CABLE GLANR.STR 9
	100	352103-0101	-		1	CABLE GLAND ST 9
	110	352103-0106	-		2	CABLE GLANR.ST 11
	120	352103-0110	-		1	CABLE GLAND STR 16
	150	90077-0079	-		19	FEED THROUGH TERMINAL
	160	90135-0026	-		3	EARTHING CLAMP
	170	359011-0807	-		2	SET OF SIG5-FW 1-50
	180	359011-0202	-		1	SIGN BOARD(GROUND)
	200	90077-0307	-		1	END PLATE
	230	90077-0308	-		1	END BRACKET
	240	90194-0016	-		1	SIGN"FLASH SIGN"

From	Pos	Part No	SP	UN	Qty	Description

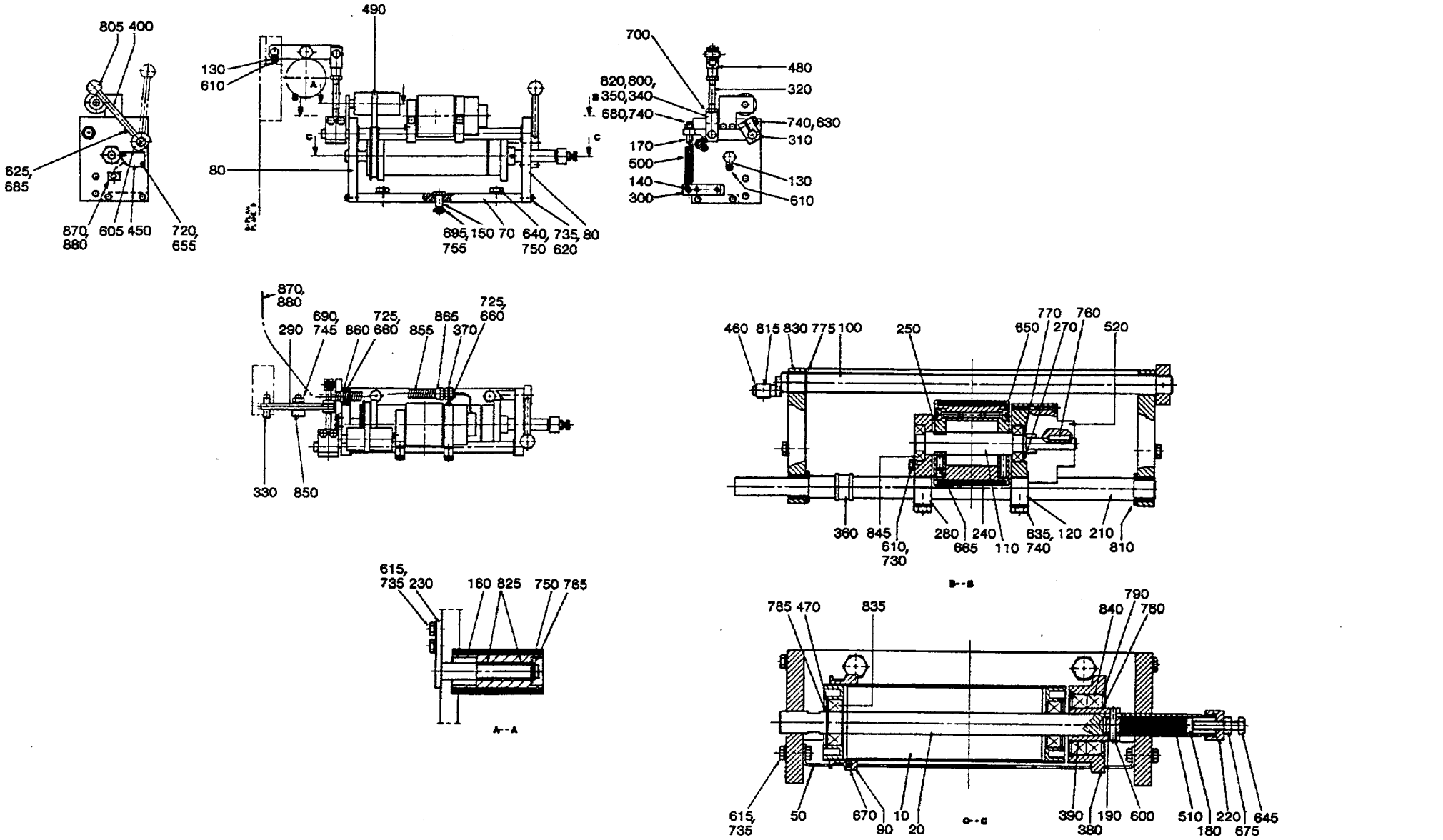

55436001.TIF
554360-1/2
AM 15283

Last Alteration: AM 15283 90-10-31

Corresponding group: 554360-010V
Assembly Drawing: 554360-1/2

Issue: **940524**

From	Pos	Part No	SP	UN	Qty	Description
125ml						
		C- 554360-0101				**Brake, Ass'y**
	010	522413-0001	C		1	ROLL
	020	522415-0001	C		1	SHAFT
	230	522430	C		1	HOLDER
200ml Slim						
		C- 554360-0102				**Brake, Ass'y**
	010	522413-0002	C		1	ROLL
	020	522415-0002	C		1	SHAFT
	230	522430	C		1	HOLDER
284ml - 180ml						
		C- 554360-0103				**Brake, Ass'y**
	010	522413-0003	C		1	ROLL
	020	522415-0003	C		1	SHAFT
	230	469668	C		1	HOLDER
Common parts						
	050	534890	-		1	HEAD PLATE
	070	449288	-		1	PLATE
	080	554375	-		2	END SECTION
	090	544456	C		1	FLANGE
	100	554355	-		1	SHAFT
	110	554361	-		1	SHAFT
	120	555632	-		1	END SECTION
	130	18135	-		2	WASHER
	140	269582-0001	C		1	SPRING BRACKET
	150	449284	C		1	REAMED BOLT
	160	469688	S		1	ROLL
	170	476930	C		1	SPRING BRACKET
	180	486974	C		1	STEERING
	190	486978	C		1	STEERING
	210	522425	C		1	SHAFT
	220	522429	-		1	MUFF
	240	531641	S		1	BRAKE SLEEVE
	250	531642	-		2	HUB
	270	531644	C		1	SPACER
	280	531909	-		1	END SECTION
	290	531911	C		1	ARM
	300	531974-0001	-		1	BRACKET
	310	531975-0001	C		1	ARM
	320	531978	C		1	STUD BOLT
	330	531979	C		1	DOWEL
	340	539728	C		1	BOLT
	350	539729	C		1	BRACKET
	360	540708	S		1	PULLEY
	370	542270	-		1	BRACKET
	380	548385	-		1	FLANGE
	390	548386	C		1	BUSHING
	400	556547	-		1	HANDSPIKE
	450	90044-0104	PU		1	INDUCTIVE SWITCH
	460	90141-0015	-		1	LOCK RING
	470	90141-0020	-		2	LOCK RING
	480	90239-0357	C		1	BRACKET
	490	90252-0034	P		1	DRIVE BELT
	500	90335-0009	P		1	SPRING
	510	90335-0064	P		1	SPRING
	520	90432-0012	C		1	BRAKE
	600	311103-0314	-		1	CYLINDRICACP M6 5X30 RFR
	605	311112-0262	-		1	SLOTTED TURP 4X32 RFR
	610	312105-0323	-		4	SCREW M6S5X8 A2 80
	615	312105-0370	-		2	SCREW M6S6X20RFR
	620	312105-0372	-		8	SCREW M6S6X25RFR
	625	312105-0378	-		1	SCREW M6S6X40RFR
	630	312105-0453	-		4	SCREW M6S8X25RFR
	635	312105-0455	-		2	SCREW M6S8X30RFR
	640	312105-0536	-		2	SCREW M6S12X30RFR
	645	312109-0459	-		1	SCREW M6S8X40H A4 80
	650	312115-0329	-		8	SCREW 5X16 A4 80
	655	312125-0232	-		2	SLOTTED HEMCS3X25RFR
	660	312125-0291	-		4	SLOTTED HEMCS4X12RFR
	665	312311-0368	-		2	STOP SCREW T6SS6X16FZB
	670	312318-0321	-		2	STOP SCREW SK6SS5X6RFR
	675	312605-0318	-		1	NUT M6M8RFR
	680	312621-0318	-		2	NUT ML6M8FZB
	685	312625-0316	-		1	NUT M 6
	690	312635-0320	-		1	NUT 10X1 RFR
	695	312805-0100	-		1	ROUND NUT KM0
	700	312902-0320	-		1	NUT M6M10VRFR
	720	315105-0124	-		2	WASHER BRB3,2X6RFR
	725	315105-0136	-		4	WASHER BRB4,3X8RFR
	730	315105-0146	-		2	WASHER BRB5,3X10RFR
	735	315105-0153	-		10	WASHER BRB6,4X12RFR
	740	315105-0165	-		6	WASHER BRB8,4X16RFR
	745	315105-0173	-		1	WASHER BRB10,5X22RFR
	750	315105-0178	-		3	WASHER BRB13X24RFR
	755	315410-0100	-		1	LOCK WASHESKFMB0
	760	315701-0138	-		1	FLAT WEDGE3X3X18
	765	315751-0109	-		1	CIRCLIP SGA12 RFR
	770	315751-0112	-		1	CIRCLIP SGA15 RFR
	775	315751-0113	-		2	CIRCLIP SGA16 RFR
	780	315751-0122	-		2	CIRCLIP SGA30 RFR
	785	315751-0116	-		2	CIRCLIP SGA20 RFR
	790	315753-0133	-		2	CIRCLIP GH 55 RFR

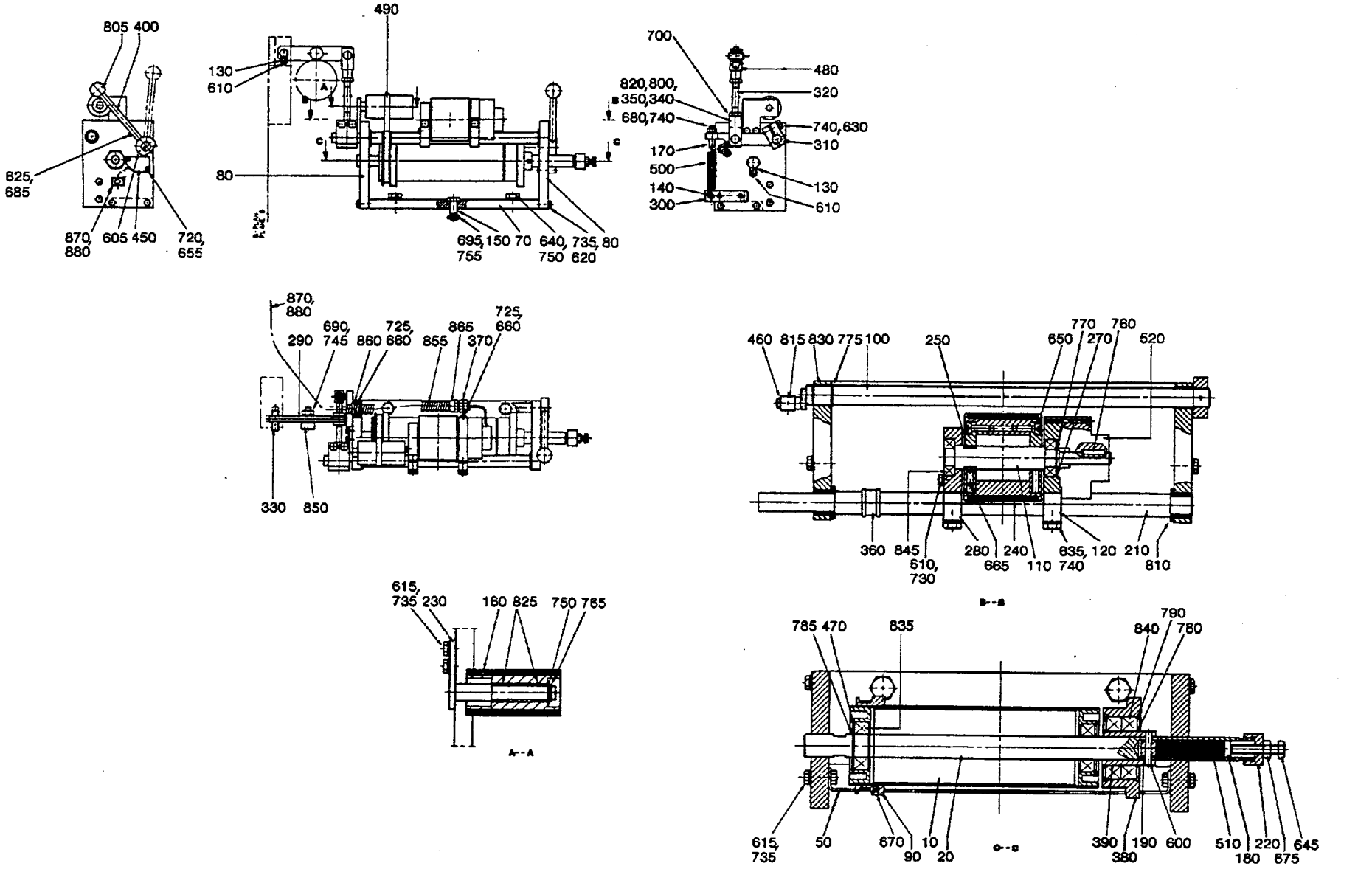

55436001.TIF
554360-1/2
AM 15283

From	Pos	Part No	SP	UN	Qty	Description
	800	315755-0801	-		2	LOCKING WAE 8RFR
	805	318800-0103	-		1	HANDLE BALLA D.25-M6
	810	321111-0241	-		2	FLANGE BUS 16E7X16
	815	321116-0097	-		1	BUSHING 8E7/12X12
	820	321116-0127	-		3	BUSHING 10E7/14X10
	825	321116-0151	-		2	BUSHING 12E7/16X12
	830	321120-0125	-		2	BUSHING 16/18X15
	835	321308-0104	-		2	BALL BEARISKF6004RS
	840	321308-0106	-		2	BALL BEARISKF6006RS
	845	321308-0202	-		2	BALL BEARISKF6002-2RS
	850	321582-0149	-		1	CURVE ROLLKR22PP
	855	352135-0102	-	MM	800	HOSE .010
	860	352135-0200	-		1	CRAMP 10
	865	352136-0107	-		1	GLAND FITT
	870	312125-0289	-		2	SLOTTED HEMCS4X10RFR
	880	352113-0202	-		2	ARMATURE -TM2-S8

From	Pos	Part No	SP	UN	Qty	Description

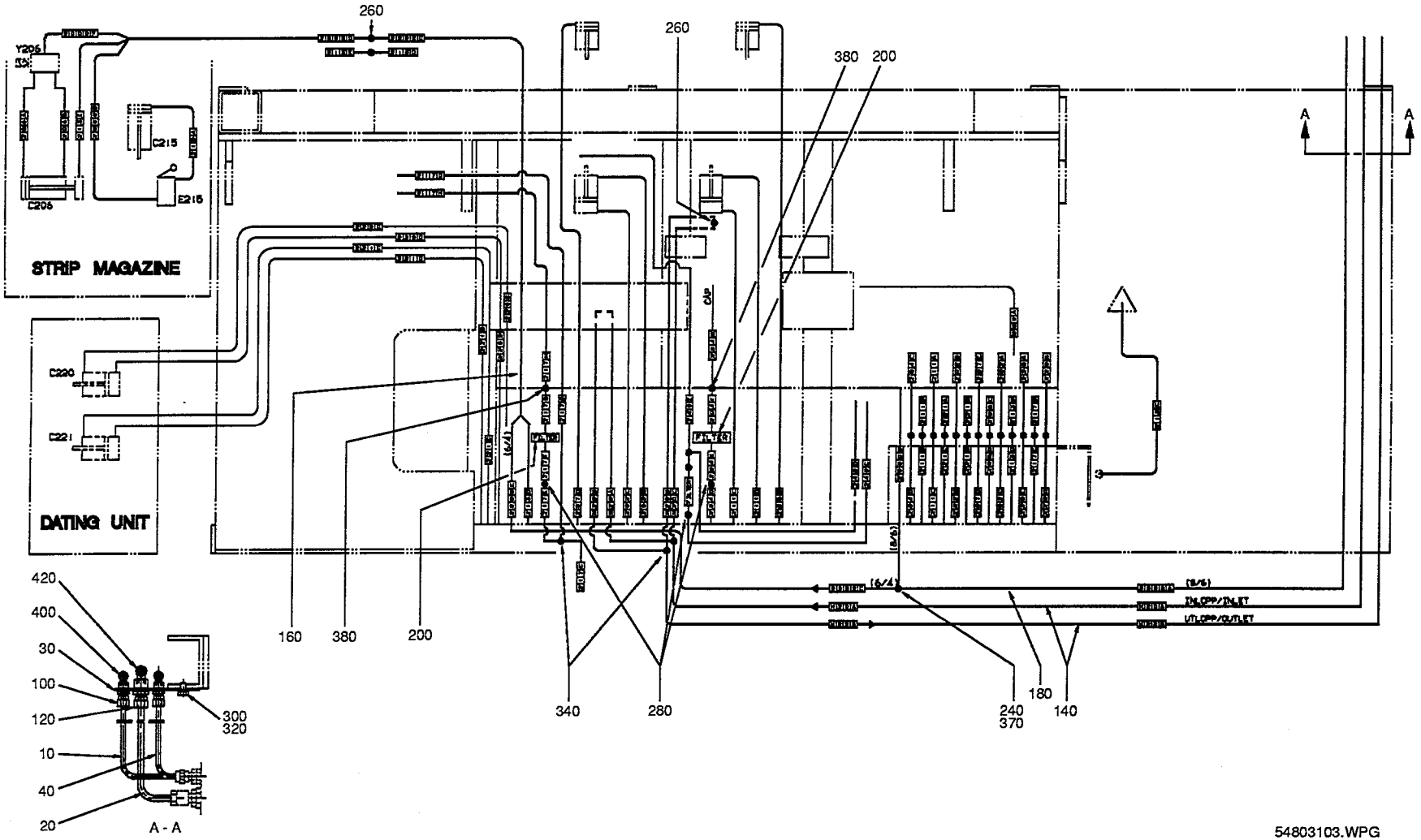

54803103.WPG
548031-3
AM 19421

Last Alteration: AM 19421 93-03-09

Corresponding group: 548031-0201
Assembly Drawing: 548031-3

Issue: **940524**

From	Pos	Part No	SP	UN	Qty	Description
		C- 548031-0201				**Hose Installtion, Ass'y**
	010	548033	-		1	PIPE
	020	548034	-		1	PIPE
	030	548035	-		1	BRACKET
	040	548036	-		1	PIPE
	100	90030-0184	-		2	PIPE CONNECTION
	140	90166-0119	-	M	8	HOSE
	200	90277-0035	S		3	AIR-PRESSURE FILTER
	240	342923-0114	-		1	PIPE COUPL6/4-1/4
	260	342926-0112	-		3	PIPE COUPL6/4
	280	342926-0121	-		4	PIPE COUPL8/6-6/4
	300	312105-0364	-		2	SCREW M6S6X10RFR
	320	315105-0153	-		2	WASHER BRB6,4X12RFR
	340	342946-0112	-		4	T-CONNECTI6/4
	370	342950-0122	-		1	ELBOW FITT8/6-1/4
	400	342933-0113	-		2	ELBOW PIPE6/4-1/8
Common Parts						
	120	90030-0185	-		1	PIPE CONNECTION
	160	90166-0132	-	M	50	HOSE
	180	90166-0133	-	M	3	HOSE
	380	342960-0121	-		2	BULKHEAD L8/6-6/4
	420	342933-0122	-		1	ELBOW PIPE8/6-1/4

From	Pos	Part No	SP	UN	Qty	Description

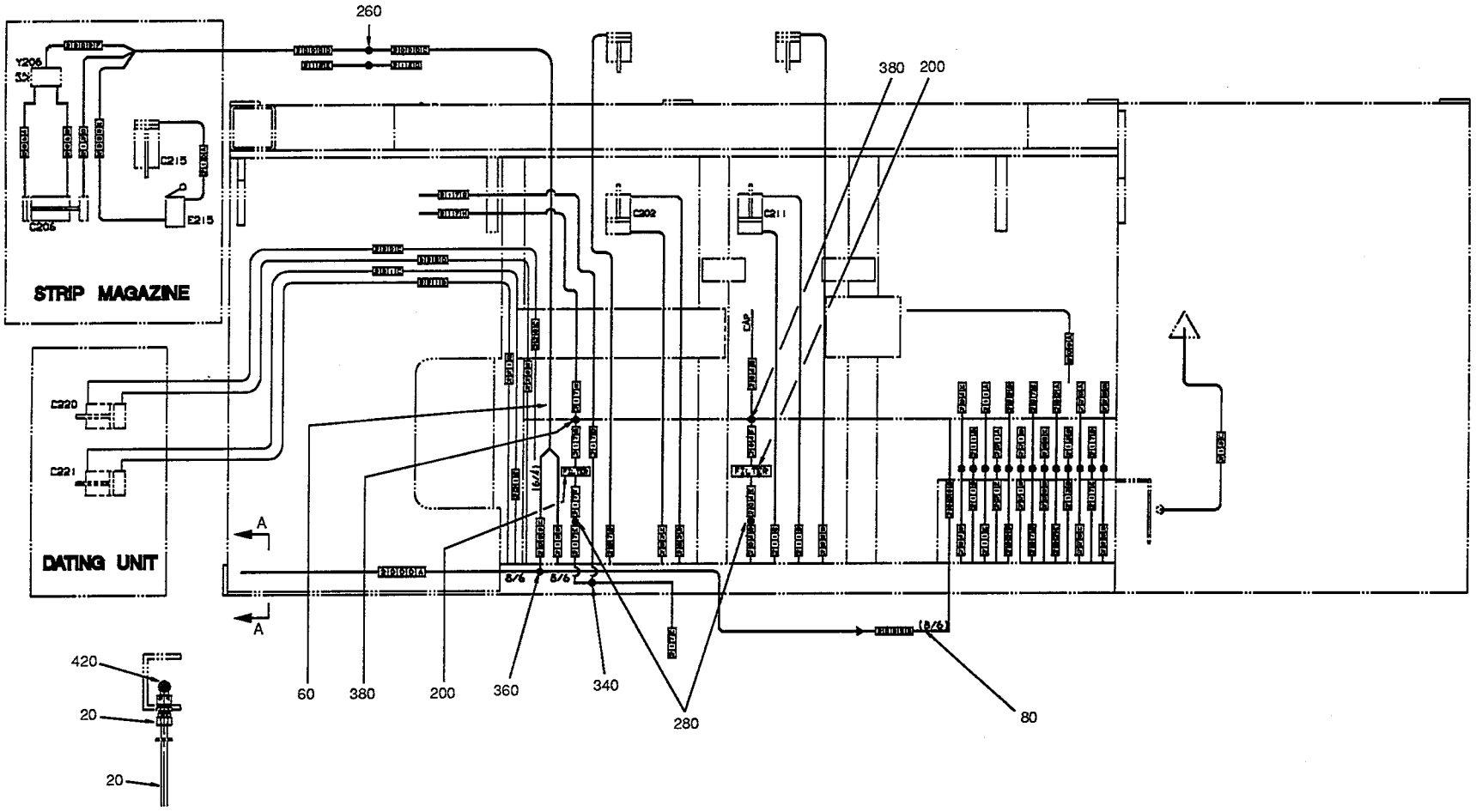

54803102.WPG
548031-2
AM 14584

From	Pos	Part No	SP	UN	Qty	Description
		C- 548031-0202				**Hose Installtion, Ass'y**
	020	554345	-		1	PIPE
	200	90277-0035	S		2	AIR-PRESSURE FILTER
	260	342926-0112	-		2	PIPE COUPL6/4
	280	342926-0121	-		2	PIPE COUPL8/6-6/4
	340	342946-0112	-		1	T-CONNECTI6/4
	360	342946-0121	-		1	T-CONNECTI8/6-6/4
Common Parts						
	120	90030-0185	-		1	PIPE CONNECTION
	160	90166-0132	-	M	50	HOSE
	180	90166-0133	-	M	3	HOSE
	380	342960-0121	-		2	BULKHEAD L8/6-6/4
	420	342933-0122	-		1	ELBOW PIPE8/6-1/4

From	Pos	Part No	SP	UN	Qty	Description

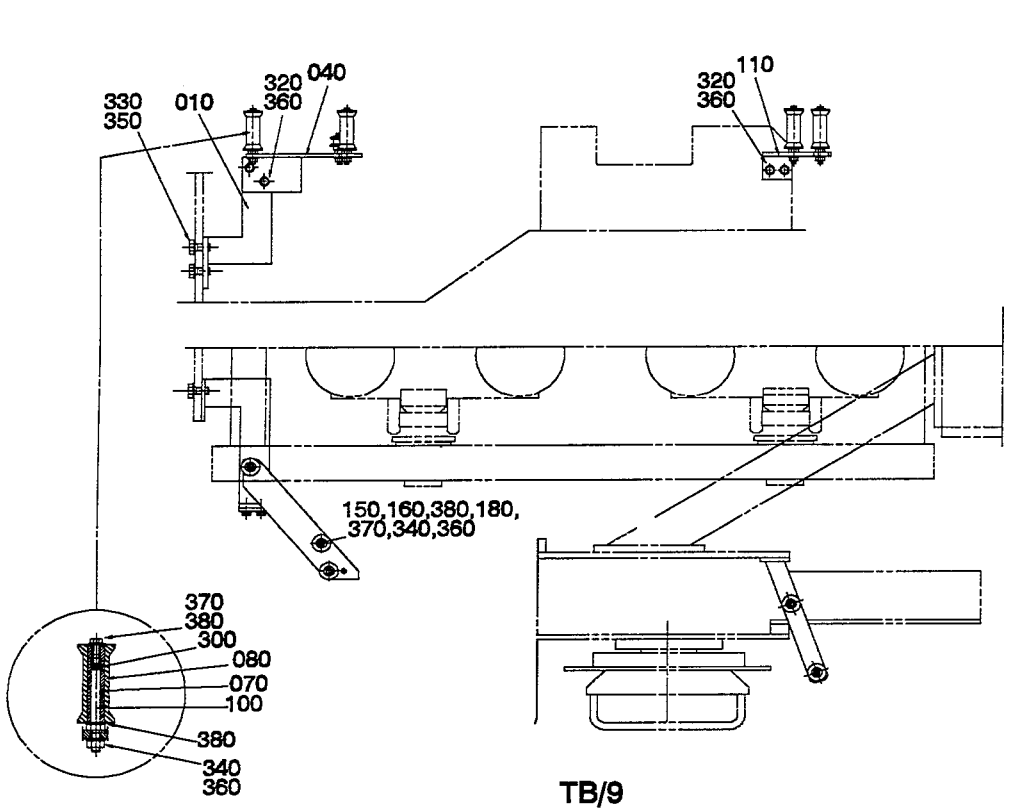
330
350
010
320
360
040
320
360
110
150,160,380,180,
370,340,360
370
380
300
080
070
100
380
340
360

TB/9

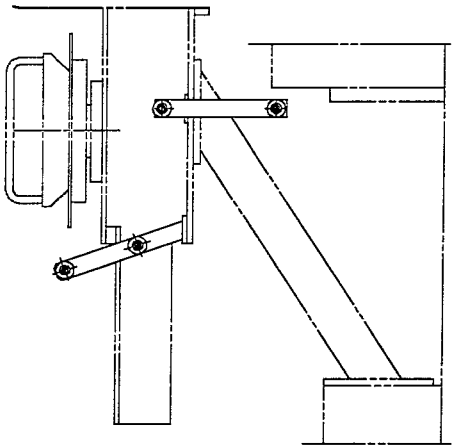

TBA/9

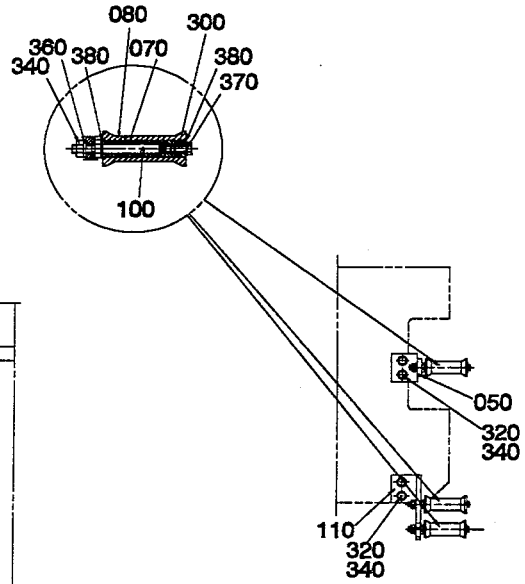
080
300
360
340
380
070
380
370
100
050
320
340
110
320
340

Last Alteration: AM 19421 93-03-09

Corresponding group: 490610-040V
Assembly Drawing: 490610-4/6

Issue: **940524**

From	Pos	Part No	SP	UN	Qty	Description
TB/9 Hole 21 284ml - 180ml						
		C- 490610-0401				**Bending Roller, LS_Strip, Ass'y**
	050	490613	-		1	CANTILEVER
	070	547746	C		3	ROLL
	080	547745	C		3	ROLL
	100	547749	C		3	SHAFT
	300	312105-0287	-		3	SCREW M6S4X8 A2 80
	340	312605-0316	-		3	NUT M6M6RFR
	370	315105-0136	-		3	WASHER BRB4,3X8RFR
	380	2033-0013	-		6	WASHER
TB/9 Hole 11 200ml Slim						
		C- 490610-0402				**Bending Roller, LS_Strip, Ass'y**
	050	490613	-		1	CANTILEVER
	070	545465	C		3	ROLL
	080	545464	C		3	ROLL
	100	545468	C		3	SHAFT
	300	312105-0287	-		3	SCREW M6S4X8 A2 80
	340	312605-0316	-		3	NUT M6M6RFR
	370	315105-0136	-		3	WASHER BRB4,3X8RFR
	380	2033-0013	-		6	WASHER
TBA/9 Hole 21 284ml - 180ml						
		C- 490610-0403				**Bending Roller, LS_Strip, Ass'y**
	010	499527	-		1	CANTILEVER
	040	539213	-		1	HOLDER
	070	547746	C		4	ROLL
	080	547745	C		4	ROLL
	100	547749	C		4	SHAFT
	150	565650	-		1	SHAFT
	160	565651	-		1	ROLL
	180	312125-0289	-		1	SLOTTED HEMCS4X10RFR
	300	312105-0287	-		4	SCREW M6S4X8 A2 80
	330	312105-0491	-		2	SCREW M6S10X20RFR
	340	312605-0316	-		5	NUT M6M6RFR
	350	315105-0173	-		2	WASHER BRB10,5X22RFR
	370	315105-0136	-		5	WASHER BRB4,3X8RFR
	380	2033-0013	-		10	WASHER
TBA/9 Hole 11 125ml 200ml Slim						
TBA/9 Hole 20 284ml - 180ml						
		C- 490610-0404				**Bending Roller, LS_Strip, Ass'y**
	010	499527	-		1	CANTILEVER
	040	539213	-		1	HOLDER
	070	545465	C		4	ROLL
	080	545464	C		4	ROLL
	100	545468	C		4	SHAFT
	150	565650	-		1	SHAFT
	160	565651	-		1	ROLL
	180	312125-0289	-		1	SLOTTED HEMCS4X10RFR
	300	312105-0287	-		4	SCREW M6S4X8 A2 80
	330	312105-0491	-		2	SCREW M6S10X20RFR
	340	312605-0316	-		5	NUT M6M6RFR
	350	315105-0173	-		2	WASHER BRB10,5X22RFR
	370	315105-0136	-		5	WASHER BRB4,3X8RFR
	380	2033-0013	-		10	WASHER
TBA/9 Hole 10 125ml 200ml Slim						
		C- 490610-0405				**Bending Roller, LS_Strip, Ass'y**
	010	499527	-		1	CANTILEVER
	040	539213	-		1	HOLDER
	070	547741	C		4	ROLL
	080	547740	C		4	ROLL
	100	547744	C		4	SHAFT
	150	565650	-		1	SHAFT
	160	565651	-		1	ROLL
	180	312125-0289	-		1	SLOTTED HEMCS4X10RFR
	300	312105-0287	-		4	SCREW M6S4X8 A2 80
	330	312105-0491	-		2	SCREW M6S10X20RFR
	340	312605-0316	-		5	NUT M6M6RFR
	350	315105-0173	-		2	WASHER BRB10,5X22RFR
	370	315105-0136	-		5	WASHER BRB4,3X8RFR
	380	2033-0013	-		10	WASHER
Common Parts						
	110	490612	-		1	CANTILEVER
	320	312105-0370	-		4	SCREW M6S6X20RFR
	360	315105-0153	-		9	WASHER BRB6,4X12RFR

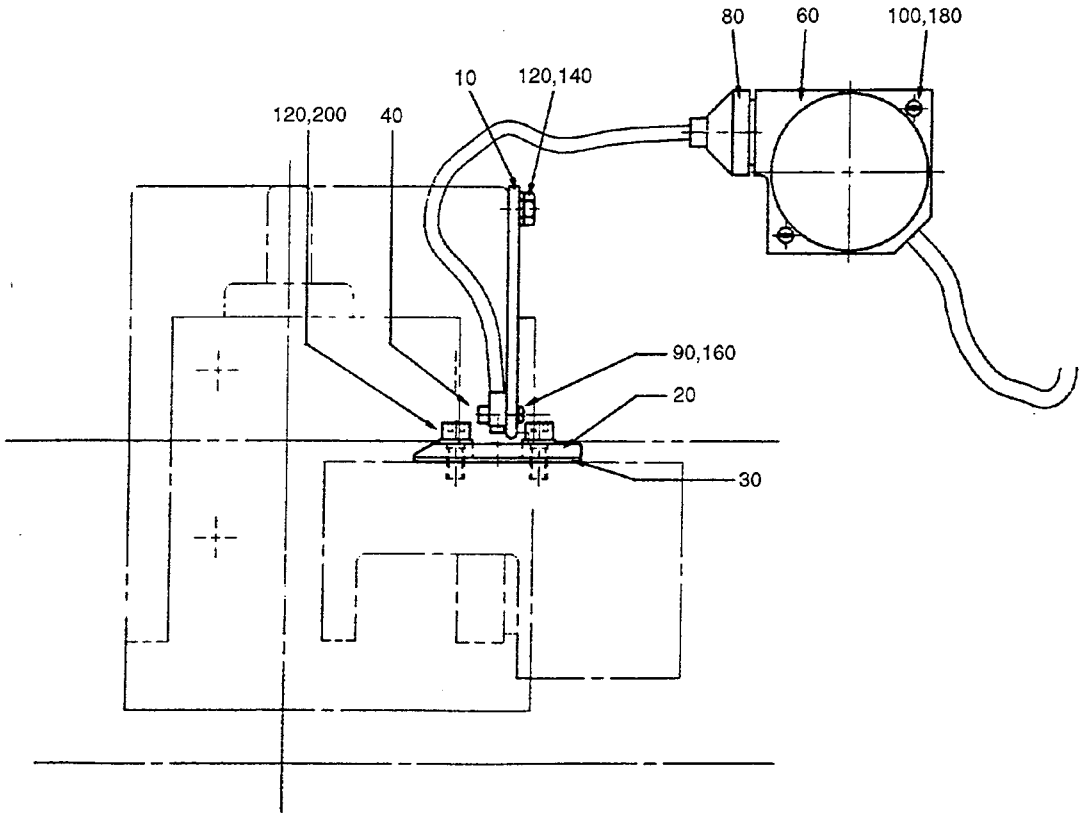

55434101.TIF
554341-1
AM 16054

Last Alteration: AM 16054 91-03-12

Corresponding group: 554341-010V
Assembly Drawing: 554341-1

Issue: **940524**

From	Pos	Part No	SP	UN Qty	Description
		C- 554341-0101			**Switch (monitor), Ass'y**
	010	552047	-	1	BRACKET
	020	552048	-	1	PLATE
	030	552050	-	1	LACE
	040	554340	-	1	LOCK PLATE
	060	90232-0074	S	1	PHOTOCELL
	080	90232-0324	S	1	CABLE
	090	315105-0124	-	1	WASHER BRB3,2X6RFR
	100	315105-0136	-	2	WASHER BRB4,3X8RFR
	120	315105-0153	-	4	WASHER BRB6,4X12RFR
	140	312105-0368	-	2	SCREW M6S6X16RFR
	160	312125-0228	-	2	SLOTTED HEMCS3X16RFR
	180	312125-0297	-	2	SLOTTED HEMCS4X25RFR
	200	312115-0368	-	2	SCREW 6X16 A4 80

From	Pos	Part No	SP	UN Qty	Description

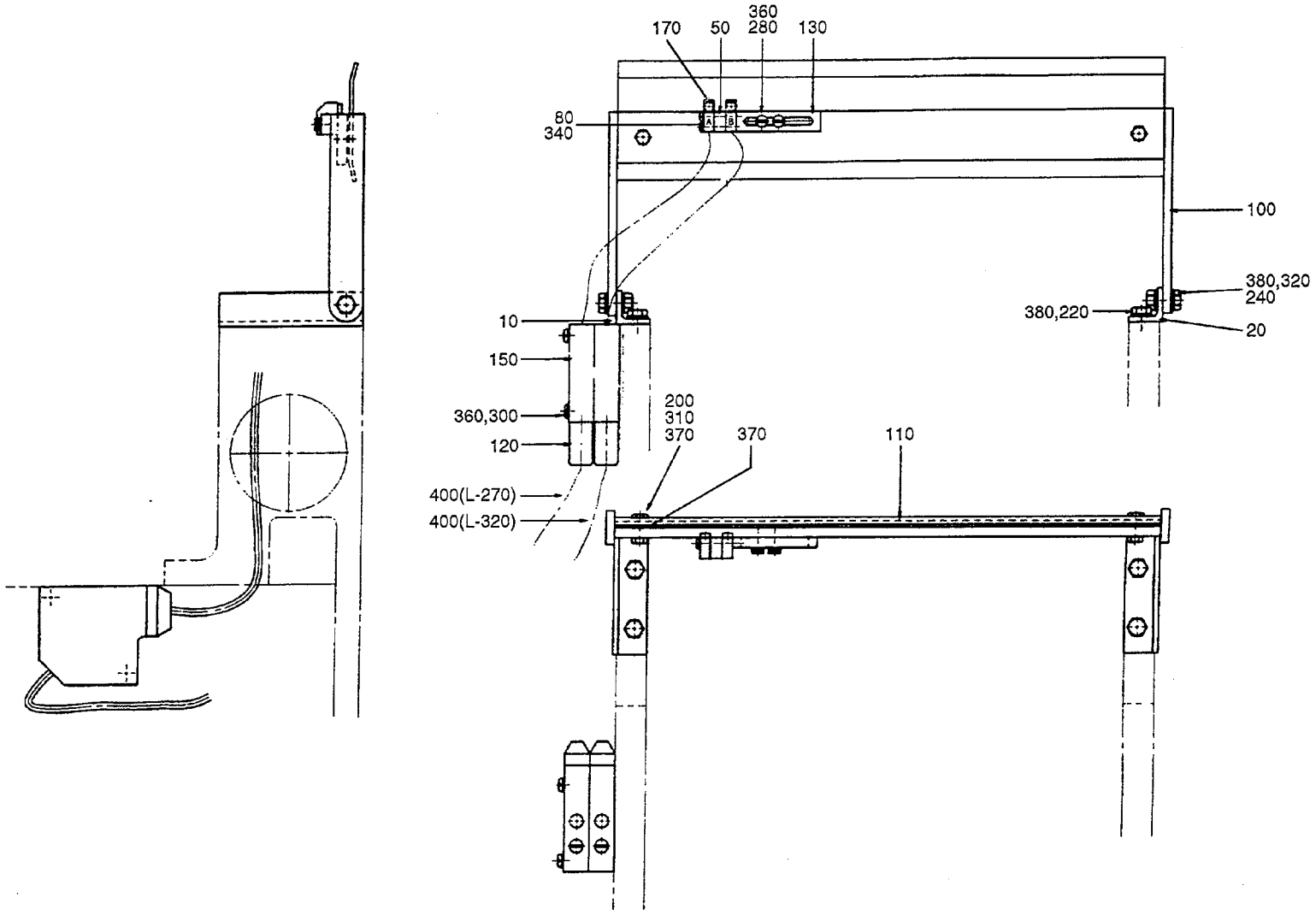

55434601.TIF
554346-1
AM 15550

Last Alteration: AM 15550 91-01-09

Corresponding group: 554346-010V
Assembly Drawing: 554346-1

Issue: 940524

From	Pos	Part No	SP	UN	Qty	Description
TBA/9 250ml - 180ml						
		C- 554346-0101				**Black Tape Detector, Ass'y**
	010	554349	-		1	BRACKET LEFT
	020	554350	-		1	BRACKET RIGHT
	050	554364	-		1	SPACER
	080	312125-0232	-		2	SLOTTED HEMCS3X25RFR
TBA/9 125ml 200ml Slim						
		C- 554346-0102				**Black Tape Detector, Ass'y**
	010	554349	-		1	BRACKET LEFT
	020	554350	-		1	BRACKET RIGHT
	080	312125-0228	-		2	SLOTTED HEMCS3X16RFR
TB/9 250ml - 180ml						
		C- 554346-0103				**Black Tape Detector, Ass'y**
	010	554351	-		1	BRACKET LEFT
	020	554352	-		1	BRACKET RIGHT
	050	554364	-		1	SPACER
	080	312125-0232	-		2	SLOTTED HEMCS3X25RFR
TB/9 125ml 200ml Slim						
		C- 554346-0104				**Black Tape Detector, Ass'y**
	010	554351	-		1	BRACKET LEFT
	020	554352	-		1	BRACKET RIGHT
	080	312125-0228	-		2	SLOTTED HEMCS3X16RFR
Common parts						
	100	554347	-		1	ARM
	110	563738	-		1	RAIL
	120	456256	-		2	PROTECTIVE COVER
	130	554365	-		1	BRACKET
	150	90232-0074	S		2	PHOTOCELL
	170	90232-0324	S		2	CABLE
	200	312105-0329	-		2	SCREW M6S5X16 A2 80
	220	312105-0366	-		4	SCREW M6S6X12RFR
	240	312105-0368	-		2	SCREW M6S6X16RFR
	280	312125-0291	-		2	SLOTTED HEMCS4X12RFR
	300	312125-0303	-		2	SLOTTED HEMCS4X40RFR
	310	312605-0314	-		2	NUT M6M5RFR
	320	312605-0316	-		2	NUT M6M6RFR
	340	315105-0124	-		2	WASHER BRB3,2X6RFR
	360	315105-0136	-		4	WASHER BRB4,3X8RFR
	370	315105-0146	-		6	WASHER BRB5,3X10RFR
	380	315105-0153	-		8	WASHER BRB6,4X12RFR
	400	352135-0102	-	MM	600	HOSE .010

From	Pos	Part No	SP	UN	Qty	Description

From	Pos	Part No	SP	UN	Qty	Description
Hole 21 250ml						
		C- 469316-0202				**Start-Up Kit, Ass'y**
	010	543578	-		1	INDUCTOR
	012	552044	-		1	INDUCTOR
	015	533812	-		1	DIE (HOLE 21)
	020	538191	-		1	HEATING RAIL
	030	539642-0002	-		1	DOLLY
	035	554353	-		1	DOLLY
	040	541126	-		1	COUNTER RUBBER
	050	533811	-		1	PUNCH (HOLE 21)
	120	537889	-		1	FABRIC
	170	90144-0052	-		1	TAPE
Hole 21 236ml						
		C- 469316-0203				**Start-Up Kit, Ass'y**
	015	533812	-		1	DIE (HOLE 21)
	020	538191	-		1	HEATING RAIL
	030	539642-0002	-		1	DOLLY
	040	541126	-		1	COUNTER RUBBER
	050	533811	-		1	PUNCH (HOLE 21)
	120	537889	-		1	FABRIC
	170	90144-0052	-		1	TAPE
Hole 21 200ml						
		C- 469316-0204				**Start-Up Kit, Ass'y**
	010	567052	-		1	INDUCTOR
	012	567061	-		1	INDUCTOR
	015	533812	-		1	DIE (HOLE 21)
	020	538191	-		1	HEATING RAIL
	030	539642-0001	-		1	DOLLY
	040	541126	-		1	COUNTER RUBBER
	050	533811	-		1	PUNCH (HOLE 21)
	120	537889	-		1	FABRIC
	170	90144-0052	-		1	TAPE
Hole 21 180ml						
		C- 469316-0206				**Start-Up Kit, Ass'y**
	015	533812	-		1	DIE (HOLE 21)
	020	538191	-		1	HEATING RAIL
	030	539642-0001	-		1	DOLLY
	040	541126	-		1	COUNTER RUBBER
	050	533811	-		1	PUNCH (HOLE 21)
	120	537889	-		1	FABRIC
	170	90144-0052	-		1	TAPE
Hole 11 125ml						
		C- 469316-0207				**Start-Up Kit, Ass'y**
	010	552027	-		1	INDUCTOR
	012	549016	-		1	INDUCTOR
	015	536488	-		1	DIE
	020	543196	-		1	HEATING RAIL
	030	469301-0001	-		1	DOLLY
	040	469206	-		1	COUNTER RUBBER
	050	536489	-		1	PUNCH
	130	550119	-		1	FABRIC
	170	90144-0052	-		1	TAPE
Hole 11 200ml Slim						
		C- 469316-0209				**Start-Up Kit, Ass'y**
	010	536900	-		1	INDUCTOR
	012	544414	-		1	INDUCTOR
	015	536488	-		1	DIE
	020	543196	-		1	HEATING RAIL
	030	469301-0002	-		1	DOLLY
	040	469206	-		1	COUNTER RUBBER
	050	536489	-		1	PUNCH
	130	550119	-		1	FABRIC
	170	90144-0052	-		1	TAPE
Hole 20 250ml						
		C- 469316-0212				**Start-Up Kit, Ass'y**
	010	469683	-		1	INDUCTOR
		457841-0002	P		1	* FABRIC
	012	554376	-		1	INDUCTOR
	015	457827	-		1	DIE
	020	499633	-		1	HEATING RAIL
	030	469301-0002	-		1	DOLLY
	040	469206	-		1	COUNTER RUBBER
	050	457826	-		1	PUNCH
	130	550119	-		1	FABRIC
	170	90144-0054	-		1	TAPE
Hole 20 236ml						
		C- 469316-0213				**Start-Up Kit, Ass'y**
	015	457827	-		1	DIE
	020	499633	-		1	HEATING RAIL
	030	469301-0002	-		1	DOLLY
	040	469206	-		1	COUNTER RUBBER
	050	457826	-		1	PUNCH
	130	550119	-		1	FABRIC
	170	90144-0054	-		1	TAPE
Hole 20 200ml						
		C- 469316-0214				**Start-Up Kit, Ass'y**
	010	535528	-		1	INDUCTOR
		457841-0001	P		1	* FABRIC
	012	554378	-		1	INDUCTOR
	015	457827	-		1	DIE

From	Pos	Part No	SP	UN	Qty	Description
	020	499633	-		1	HEATING RAIL
	030	469301-0001	-		1	DOLLY
	040	469206	-		1	COUNTER RUBBER
	050	457826	-		1	PUNCH
	130	550119	-		1	FABRIC
	170	90144-0054	-		1	TAPE
Hole 20 180ml						
		C- 469316-0216				**Start-Up Kit, Ass'y**
	010	567048	-		1	INDUCTOR
	012	567056	-		1	INDUCTOR
	015	457827	-		1	DIE
	020	499633	-		1	HEATING RAIL
	030	469301-0001	-		1	DOLLY
	040	469206	-		1	COUNTER RUBBER
	050	457826	-		1	PUNCH
	130	550119	-		1	FABRIC
	170	90144-0054	-		1	TAPE
Hole 10 125ml						
		C- 469316-0217				**Start-Up Kit, Ass'y**
	010	456665	-		1	INDUCTOR
		457841-0001	P		1	* FABRIC
	012	549016	-		1	INDUCTOR
	015	457825	-		1	DIE
	020	499632	-		1	HEATING RAIL
	030	469301-0001	-		1	DOLLY
	040	294868	-		1	COUNTER RUBBER
	050	457824	-		1	PUNCH
	130	550119	-		1	FABRIC
	170	90144-0054	-		1	TAPE
Hole 10 200ml Slim						
		C- 469316-0219				**Start-Up Kit, Ass'y**
	010	456663	-		1	INDUCTOR
		457841-0002	P		1	* FABRIC
	012	544414	-		1	INDUCTOR
	015	457825	-		1	DIE
	020	499632	-		1	HEATING RAIL
	030	469301-0002	-		1	DOLLY
	040	294868	-		1	COUNTER RUBBER
	050	457824	-		1	PUNCH
	130	550119	-		1	FABRIC
	170	90144-0054	-		1	TAPE

From	Pos	Part No	SP	UN	Qty	Description
Common parts						
	070	538741	-		1	LIP
	100	543612	-		1	SPRING
	110	484914	-		1	HEATING ELEMENT
	140	120902	-		1	SUCTION CUP
	150	553137	-		1	KNIFE
	160	543185	-		1	LOCKING WIRE
	300	90038-0034	-		1	RECTIFIER
	320	90044-0085	-		1	SENSOR
	340	90044-0104	-		1	INDUCTIVE SWITCH
	350	90144-0050	-		1	TAPE
	355	90144-0051	-		1	TAPE
	360	90206-0083	-		1	HEATING CARTRIDGE
	380	90206-0099	-		1	HEATING ELEMENT
	390	90298-0033	-		1	WATLUBE HEAT LIQUID
	400	90326-0060	-		1	THERMOCOUPLE
	420	90326-0063	-		1	THERMOCOUPLE
	440	90335-0120	-		1	SPRING
	500	90427-0508	-		4	INK ROLLER

From	Pos	Part No	SP	UN	Qty	Description
Hole 21 250ml						
		C- 486955-0202				**Start-Up Kit, Ass'y**
	010	533812	-		1	DIE (HOLE 21)
	020	538191	-		1	HEATING RAIL
	040	541126	-		1	COUNTER RUBBER
	045	533811	-		1	PUNCH (HOLE 21)
	085	90144-0052	-		1	TAPE
Hole 21 236ml						
		C- 486955-0203				**Start-Up Kit, Ass'y**
	010	533812	-		1	DIE (HOLE 21)
	020	538191	-		1	HEATING RAIL
	040	541126	-		1	COUNTER RUBBER
	045	533811	-		1	PUNCH (HOLE 21)
	085	90144-0052	-		1	TAPE
Hole 21 200ml						
		C- 486955-0204				**Start-Up Kit, Ass'y**
	010	533812	-		1	DIE (HOLE 21)
	020	538191	-		1	HEATING RAIL
	040	541126	-		1	COUNTER RUBBER
	045	533811	-		1	PUNCH (HOLE 21)
	085	90144-0052	-		1	TAPE
Hole 21 180ml						
		C- 486955-0206				**Start-Up Kit, Ass'y**
	010	533812	-		1	DIE (HOLE 21)
	020	538191	-		1	HEATING RAIL
	040	541126	-		1	COUNTER RUBBER
	045	533811	-		1	PUNCH (HOLE 21)
	085	90144-0052	-		1	TAPE
Hole 11 125ml						
		C- 486955-0207				**Start-Up Kit, Ass'y**
	010	536488	-		1	DIE
	040	469206	-		1	COUNTER RUBBER
	045	536489	-		1	PUNCH
	085	90144-0052	-		1	TAPE
Hole 11 200ml Slim						
		C- 486955-0209				**Start-Up Kit, Ass'y**
	010	536488	-		1	DIE
	020	543196	-		1	HEATING RAIL
	040	469206	-		1	COUNTER RUBBER
	045	536489	-		1	PUNCH
	050	457841-0002	-		1	FABRIC
	080	531656	-		1	HEATING ELEMENT
	085	90144-0052	-		1	TAPE
Hole 20 250ml						
		C- 486955-0212				**Start-Up Kit, Ass'y**
	010	457827	-		1	DIE
	020	499633	-		1	HEATING RAIL
	040	469206	-		1	COUNTER RUBBER
	045	457826	-		1	PUNCH
	085	90144-0054	-		1	TAPE
Hole 20 236ml						
		C- 486955-0213				**Start-Up Kit, Ass'y**
	010	457827	-		1	DIE
	020	499633	-		1	HEATING RAIL
	040	469206	-		1	COUNTER RUBBER
	045	457826	-		1	PUNCH
	085	90144-0054	-		1	TAPE
Hole 20 200ml						
		C- 486955-0214				**Start-Up Kit, Ass'y**
	010	457827	-		1	DIE
	020	499633	-		1	HEATING RAIL
	040	469206	-		1	COUNTER RUBBER
	045	457826	-		1	PUNCH
	085	90144-0054	-		1	TAPE
Hole 20 180ml						
		C- 486955-0216				**Start-Up Kit, Ass'y**
	010	457827	-		1	DIE
	020	499633	-		1	HEATING RAIL
	040	469206	-		1	COUNTER RUBBER
	045	457826	-		1	PUNCH
	085	90144-0054	-		1	TAPE
Hole 10 125ml						
		C- 486955-0217				**Start-Up Kit, Ass'y**
	010	457825	-		1	DIE
	020	499632	-		1	HEATING RAIL
	040	294868	-		1	COUNTER RUBBER
	045	457824	-		1	PUNCH
	085	90144-0054	-		1	TAPE
Hole 10 200ml Slim						
		C- 486955-0219				**Start-Up Kit, Ass'y**
	010	457825	-		1	DIE
	020	499632	-		1	HEATING RAIL
	040	294868	-		1	COUNTER RUBBER
	045	457824	-		1	PUNCH
	050	457841-0002	-		1	FABRIC
	080	531656	-		1	HEATING ELEMENT
	085	90144-0054	-		1	TAPE
Common parts						
	070	266098-0002	-		1	DOLLY
	090	538741	-		1	LIP

Last Alteration: AM 15550 91-01-09

Corresponding group: 486955-020V
Assembly Drawing:

Issue: **940524**

From	Pos	Part No	SP	UN Qty	Description
	100	543612	-	1	SPRING
	110	484914	-	1	HEATING ELEMENT
	120	537889	-	1	FABRIC
	130	550119	-	1	FABRIC
	140	120902	-	1	SUCTION CUP
	150	553137	-	1	KNIFE
	160	543185	-	1	LOCKING WIRE
	300	90038-0034	-	1	RECTIFIER
	320	90044-0085	-	1	SENSOR
	340	90044-0104	-	1	INDUCTIVE SWITCH
	350	90144-0050	-	1	TAPE
	350	90144-0051	-	1	TAPE
	360	90206-0083	-	1	HEATING CARTRIDGE
	380	90206-0099	-	1	HEATING ELEMENT
	390	90298-0033	-	1	WATLUBE HEAT LIQUID
	400	90326-0060	-	1	THERMOCOUPLE
	420	90326-0063	-	1	THERMOCOUPLE
	440	90335-0120	-	1	SPRING
	500	90427-0508	-	4	INK ROLLER

From	Pos	Part No	SP	UN Qty	Description

Last Alteration: AM 17889 93-01-23

Corresponding group: 648109-100V
Assembly Drawing:

Issue: **940524**

Pos	Group No	Description	
648109-F000	648109-100V	Regular Accessories	835
648109-F005	560846-010V	Conveyor Frame	837
648109-F020	295262-060V	Cleaning Pipe	839
648109-F040	491942-010V	(Paper)Reel Trolley	841
648109-F050	295904-010V	Clamping Piece	843
648109-F090	531345-010V	Personal Protect. Eq H_2O_2	845
648109-F100	77099-020V	Tool Kit	847
648109-F110	499082-010V	Adapter, Type 1	849

From Pos	Part No	SP	UN Qty	Description
500	978601	-	1	AIR-DIAGRAM TBA/9 without Pull-Tab
510	978602	-	1	AIR-DIAGRAM TBA/9 with Pull-Tab
520	978754	-	1	AIR-DIAGRAM TB/9 without Pull-Tab
530	978755	-	1	AIR-DIAGRAM TB/9 with Pull-Tab
540	978020	-	1	WATER DIAGRAM TBA/9
550	978021	-	1	WATER DIAGRAM TB/9
555	569648	-	1	WATER DIAGRAM TBA/9 C
560	978761	-	1	PANEL SURVEY TBA/9
560	978761	-	1	PANEL SURVEY
560	978761	-	1	PANEL SURVEY
570	978762	-	1	PANEL SURVEY TB/9
580	978741	-	1	LUBRICATION CHART
585	978737	-	1	ASEPTIC DIAGRAM TBA/9
590	491922	-	1	HYDRAULIC DIAGRAM
600	546320	-	1	PNEUMATIC DIAGRAM with Pull-Tab
610	564536	-	1	FUNCTION DIAGRAM TB/9 with Pull-Tab
620	548382	-	1	FUNCTION DIAGRAM TBA/9 with Pull-Tab
900	90003-0422	-	1	CORRUGATED CARDBOARD BOX
910	90347-0079	-	10	DAMPER
930	318301-0126	-	4	LIFTING EYLTM20FZB TBA/9 C
300	491092	-	1	COVERING PLATE
310	752674-0002	-	2	SHIM
320	752674-0003	-	2	SHIM
340	752674-0005	-	4	SHIM
350	752674-0007	-	2	SHIM

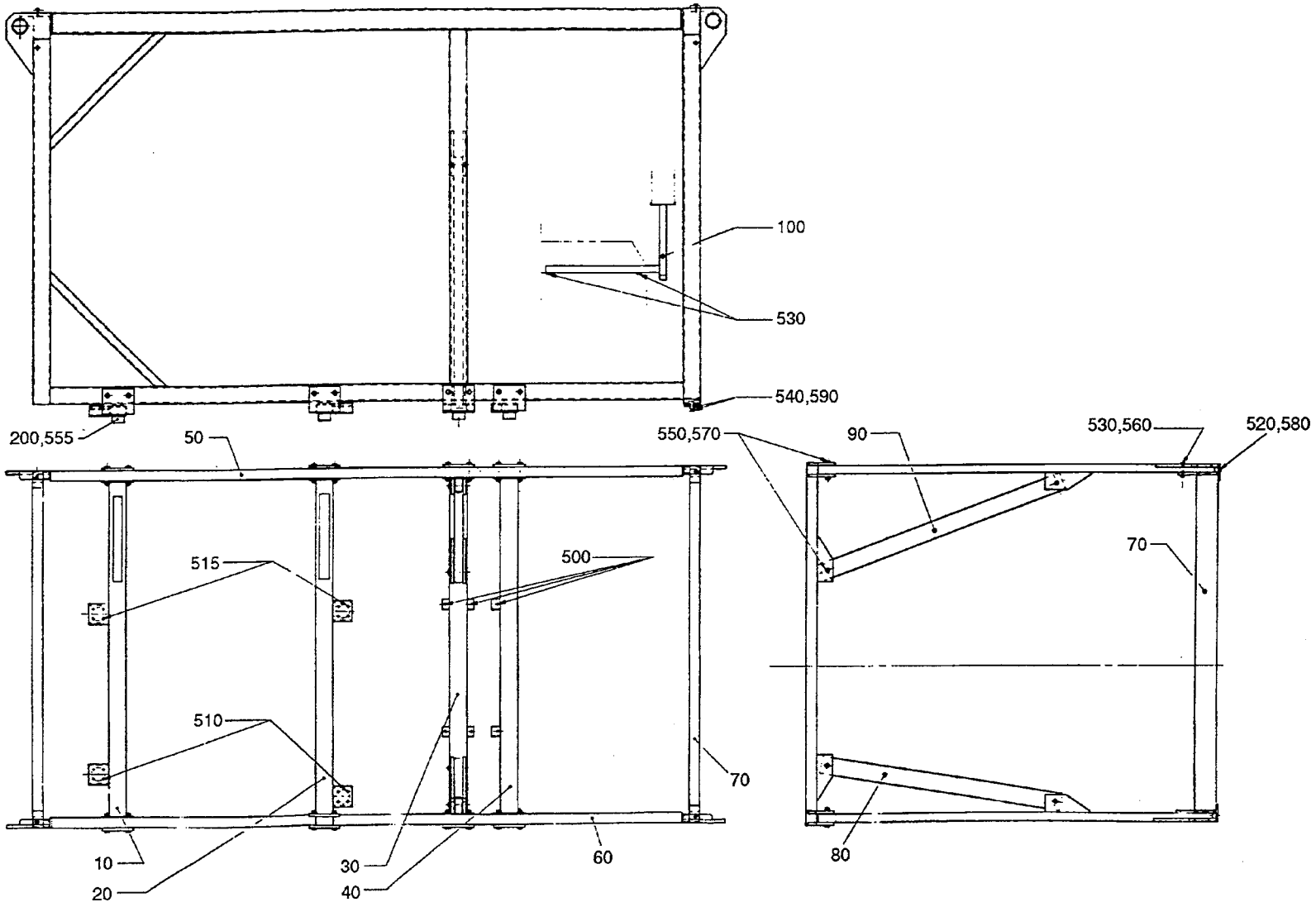

56084601.tif
560846-1
AM 15201

From	Pos	Part No	SP	UN Qty	Description
		C- 560846-0101			**Conveyor Frame, Ass'y**
	010	563451	-	1	BEAM 1
	020	563452	-	1	BEAM 2
	030	563453	-	1	BEAM 3
	040	563454	-	1	BEAM 4
	050	563455	-	1	GABLE RIGHT
	060	563456	-	1	GABLE LEFT
	070	563457	-	2	CORNER BEAM
	080	563458	-	1	CROSS BAR LEFT
	090	563459	-	1	CROSS BAR
	100	563611	-	1	SUPPORT
	200	565570	-	12	SUPPORT
	500	312101-0493	-	6	SCREW M6S10X25FZB
	510	312101-0453	-	8	SCREW M6S8X25FZB
	515	312101-0457	-	8	SCREW M6S8X35FZB
	520	312101-0538	-	4	SCREW M6S12X35FZB
	530	312101-0548	-	8	SCREW M6S12X80FZB
	540	312104-0634	-	2	SCREW M6S16X70H8.8FZB
	550	312101-0640	-	12	SCREW M6S16X100FZB
	555	312111-0451	-	1	SCREW MC6S8X20FZB
	560	312810-0322	-	4	LOCK NUT 12FZB
	570	312810-0324	-	16	LOCK NUT 16FZB
	580	315121-0179	-	4	WASHER BRSB13,5X36FZB
	590	312901-0324	-	2	NUT M6M16VFZB

From	Pos	Part No	SP	UN Qty	Description

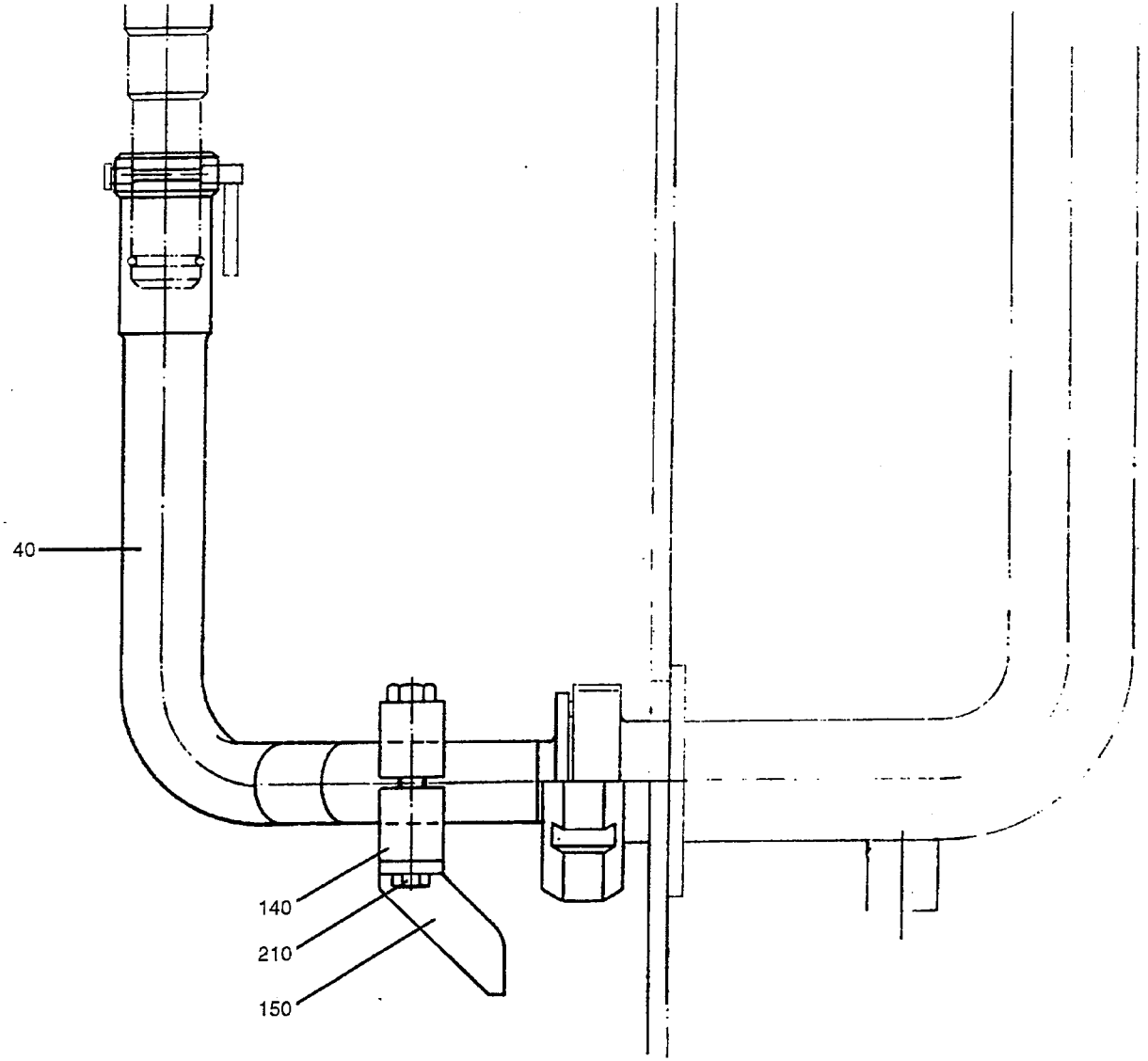

29526206.TIF
295262-6
AM 10843

Last Alteration: AM 17889 93-01-23

Corresponding group: 295262-060V
Assembly Drawing: 295262-7

Issue: **940524**

From	Pos	Part No	SP	UN	Qty	Description
		C- 295262-0601				**Cleaning Pipe, Ass'y**
	010	978538	-		1	CLEANING PIPE
	020	90187-0051	-		1	BALL VALVE
	030	342840-0103	-		2	CLAMPING P
	040	342850-0403	-		1	GASKET
	050	90074-0027	-		1	CLAMP
	060	90330-0028	-		1	NIPPLE
	070	90030-0187	-		1	PIPE CONNECTION
	080	315233-0111	-		1	SEAL RING R3/8"
	090	312105-0366	-		1	SCREW M6S6X12RFR
	100	312605-0316	-		1	NUT M6M6RFR
	110	315105-0153	-		1	WASHER BRB6,4X12RFR
	120	342850-0404	-		1	GASKET

From	Pos	Part No	SP	UN	Qty	Description

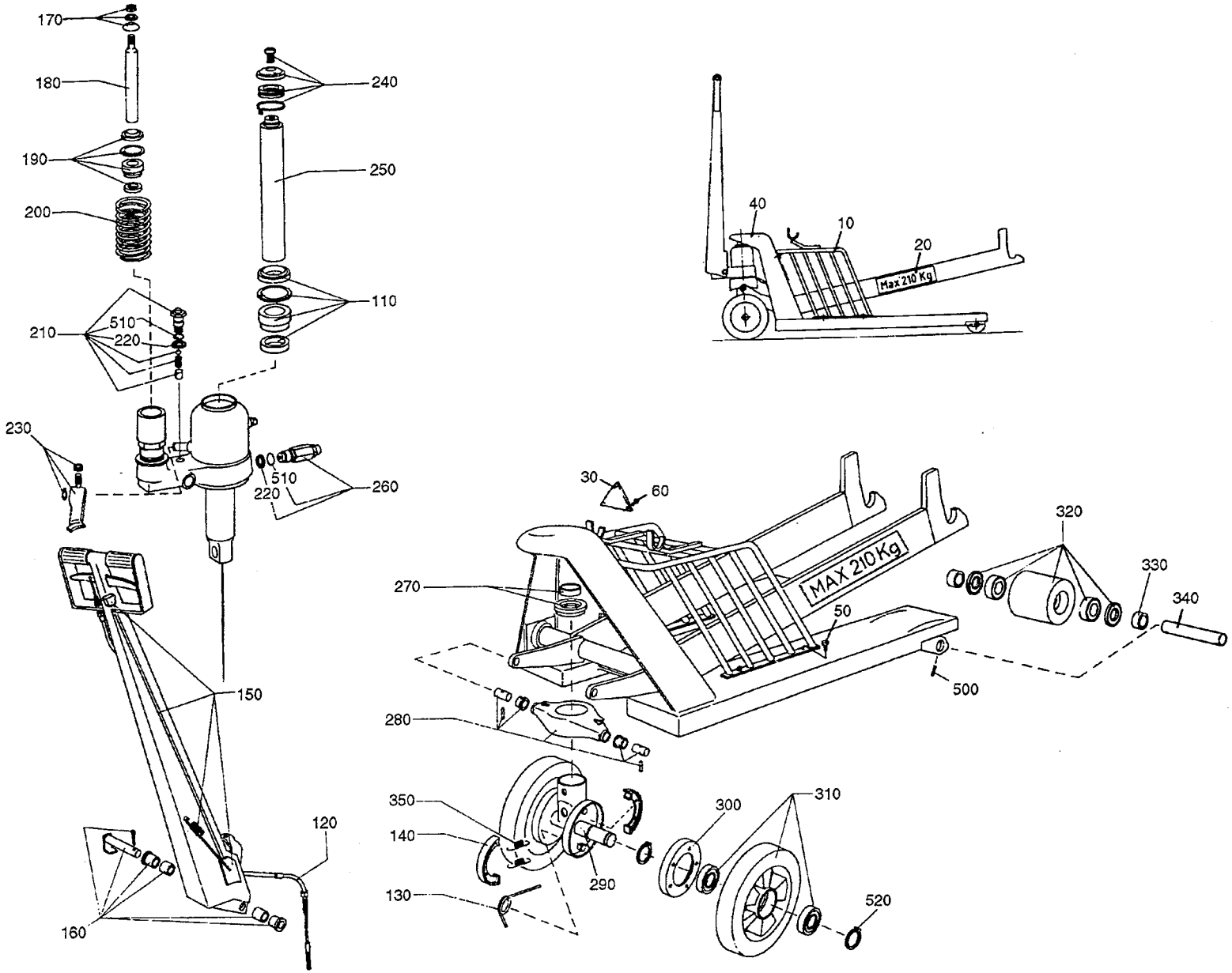

49194201.TIF
491942-1/2/3
AM 9391

Last Alteration: AM 9391 86-07-21

Corresponding group: 491942-010V
Assembly Drawing: 491942-1/2/3

Issue: 940524

From	Pos	Part No	SP	UN	Qty	Description
Paper Reel Trolley						
		C- 491942-0101				**Reel Trolley, Ass'y**
	010	295106	-		1	PROTECTION
	020	491189	-		2	SIGN
	030	3675	-		1	TETRA PAK NAME PLATE
	040	90067-0010	-		1	CARRIAGE
		90067-0300	S		0	* SPARE PARTS KIT
		90067-0301	S		0	* BRAKE WIRE
		90067-0302	S		0	* TORSION SPRING
		90067-0317	R		0	* BRAKE LINING
	050	312105-0364	-		5	SCREW M6S6X10RFR
	060	312121-0224	-		3	SLOTTED HEMCS3X10FZB
Sparepart Paper Reel Trolley						
		C- 491942-0102				**Reel Trolley, Ass'y**
	110	90067-0300	S		1	SPARE PARTS KIT
	120	90067-0301	S		1	BRAKE WIRE
	130	90067-0302	S		2	TORSION SPRING
	140	90067-0317	S		2	BRAKE LINING
	150	90067-0322	S		1	REPAIR KIT
	160	90067-0323	S		1	BEARING KIT
	170	90067-0324	S		1	REPAIR KIT
	180	90067-0325	S		1	PUMP PISTON
	190	90067-0326	S		1	REPAIR KIT
	200	90067-0327	S		1	RETURN SPRING
	210	90067-0328	S		1	VALVE
	220	90067-0329	S		2	COPPER WASHER
	230	90067-0330	S		1	VALVE ARM
	240	90067-0331	S		1	TOP BEARING KIT
	250	90067-0332	S		1	LIFT PISTON
	260	90067-0333	S		1	VALVE
	270	90067-0334	S		1	AXIAL BEARING KIT
	280	90067-0335	S		1	YOKE UNIT
	290	90067-0336	S		1	GUIDE SHAFT UNIT
	300	90067-0337	S		2	BRAKE DRUM
	310	90067-0338	S		2	GUIDE ROLLER
	320	90067-0339	S		2	WHEEL
	330	90067-0340	S		4	SLEEVE
	340	90067-0341	S		2	SHAFT
	350	90067-0342	S		4	TENSION SPRING
	500	311303-0271	S		2	SLOTTED PIRPB4X18FZB
	510	315204-0108	S		2	O-RING 10,1X1,6VITON
	520	315750-0119	S		4	CIRCLIP SGA25

From	Pos	Part No	SP	UN	Qty	Description

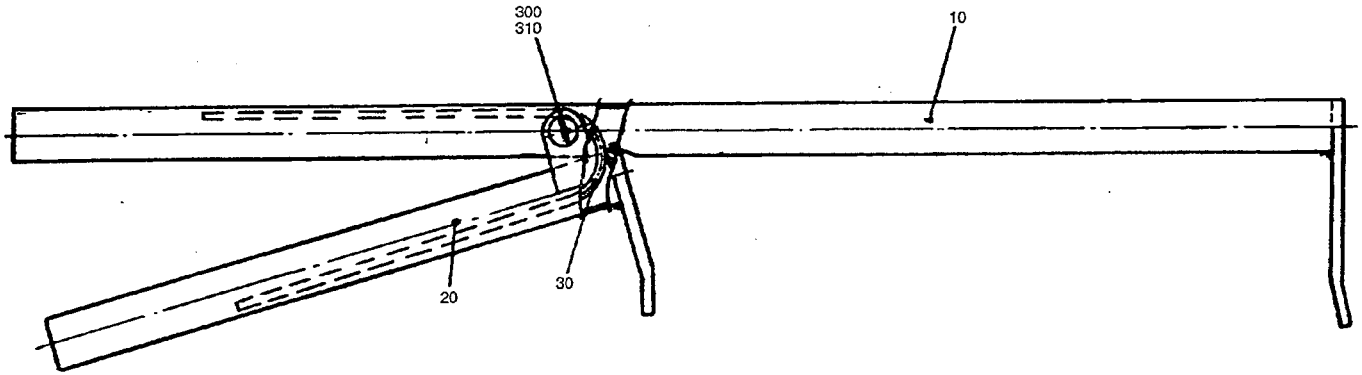

29590401.TIF
295904-1
AM 6113

Last Alteration: AM 20230 93-10-28

Corresponding group: 295904-010V
Assembly Drawing: 295904-1

Issue: **940524**

From	Pos	Part No	SP	UN	Qty	Description
284ml - 180ml						
		C- 295904-0101				**Clamping Piece, Ass'y**
	010	295905-0003	-		1	HOLDER
160ml 200ml Slim						
		C- 295904-0102				**Clamping Piece, Ass'y**
	010	295905-0002	-		1	HOLDER
125ml						
		C- 295904-0103				**Clamping Piece, Ass'y**
	010	295905-0001	-		1	HOLDER
250ml Slim						
		C- 295904-0104				**Clamping Piece, Ass'y**
	010	295905-0004	-		1	HOLDER
Common Parts						
	020	295906	-		1	HANDLE
	030	295907	-		1	SPRING
	300	312125-0295	-		1	SLOTTED HEMCS4X20RFR
	310	312605-0312	-		1	NUT M6M4RFR

From	Pos	Part No	SP	UN	Qty	Description

Last Alteration: AM 8893 86-03-18

Corresponding group: 531345-010V
Assembly Drawing:

Issue: **940524**

From	Pos	Part No	SP	UN	Qty	Description
		C- 531345-0101				**Personal Protection, Ass'y**
	010	90303-0004	-		1	GLOVES
	020	90303-0005	-		1	PROTECTIVE EQUIPMENT
	030	779130-0102	-		1	PROTECTIVE@GON

From	Pos	Part No	SP	UN	Qty	Description

Last Alteration: AM 16366 91-04-30

Corresponding group: 77099-020V
Assembly Drawing:

Issue: **940524**

From	Pos	Part No	SP	UN	Qty	Description
		C- 77099-0201				**Tool Kit, Ass'y**
	010	75665	-		1	ASSEMBLY TOOL
	020	72947	-		1	HOOK SPANNER
	030	76167	-		1	LOCKING LOOP
	040	76138	-		1	LOCKING LOOP
	050	434841	-		1	GAUGE
	060	76131	-		1	ASSEMBLY CONE
	070	76132	-		1	ASSEMBLY TOOL
	080	78801	-		1	CALIBRATION TOOL
	090	77247	-		1	ASSEMBLY PIN
	210	777120-0215	-		2	C-SPANNER
	220	777120-0220	-		2	C-SPANNER
	230	777120-0232	-		2	C-SPANNER
	240	777122-0137	-		1	C-SPANNER V=36
	250	777122-0142	-		1	C-SPANNER V=46
	260	777150-0801	-		2	KEY SET ,SEXKANT
	270	777200-0101	-		1	PIPE WRENCEL

From	Pos	Part No	SP	UN	Qty	Description

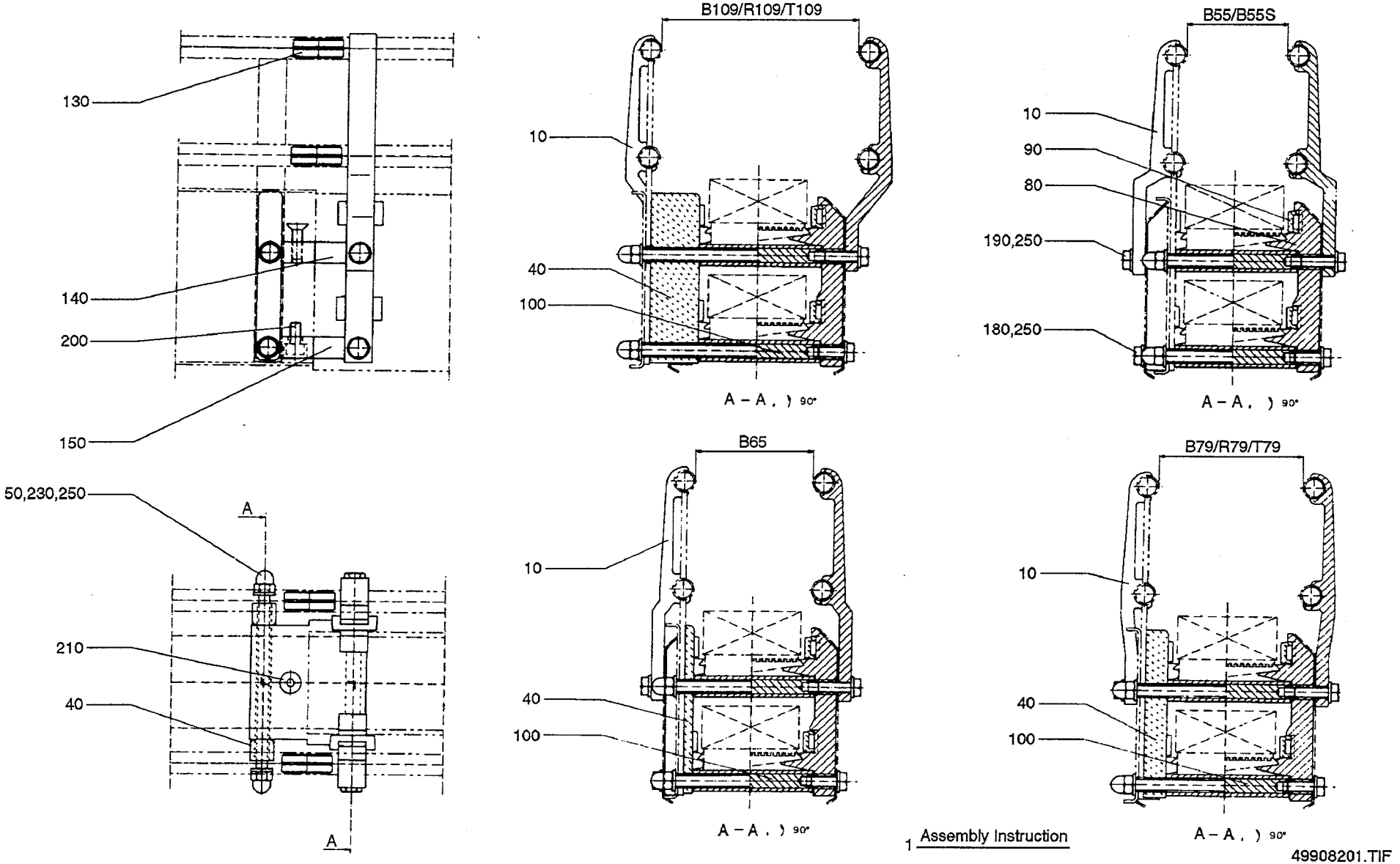

1 Assembly Instruction

49908201.TIF
499082-1/2
AM 12972

From	Pos	Part No	SP	UN	Qty	Description
CONVEYOR WIDTH B40						
		C- 499082-0101				**ADAPTER, TYPE 1, ASS'Y**
	010	476222-0001	-		2	HOLDER
	050	229508-0001	-		2	STUD SCREW
CONVEYOR WIDTH B55, B55S						
		C- 499082-0102				**ADAPTER, TYPE 1, ASS'Y**
	010	464073-0001	-		2	HOLDER
	050	229508-0001	-		2	STUD SCREW
CONVEYOR WIDTH B65						
		C- 499082-0103				**ADAPTER, TYPE 1, ASS'Y**
	010	476223-0001	-		2	HOLDER
	040	228846-0003	-		2	SPACER
	050	229508-0014	-		2	STUD SCREW
CONVEYOR WIDTH B79, R79, T79						
		C- 499082-0104				**ADAPTER, TYPE 1, ASS'Y**
	010	476224-0001	-		2	HOLDER
	040	228846-0001	-		2	SPACER
	050	229508-0002	-		2	STUD SCREW
CONVEYOR WIDTH B109, R109, T109						
		C- 499082-0106				**ADAPTER, TYPE 1, ASS'Y**
	010	529063-0001	-		2	HOLDER
	040	228846-0002	-		2	SPACER
	050	229508-0003	-		2	STUD SCREW
Common Parts						
	001	543275	-		1	ASSEMBLY INSTRUCTION
	080	464072	-		2	CLAMPING PART
	090	466074-0001	-		4	SLIDER
	100	476220	-		2	SPACER
	130	229516	-		4	PEG
	140	499746	-		1	MOUNTING BLOCK
	150	499747	-		1	MOUNTING BLOCK
	180	312105-0368	-		2	SCREW M6S6X16RFR
	190	312105-0370	-		2	SCREW M6S6X20RFR
	200	312115-0366	-		1	SCREW 6X12 A4 80
	210	312155-0370	-		1	SCREW MF6S6X20RFR
	230	312705-0316	-		4	CAP NUT MHM 6 A2
	250	315105-0153	-		8	WASHER BRB6,4X12RFR

From	Pos	Part No	SP	UN	Qty	Description

Part Number Index

648152-140V

DATE PRINTED: 93-10-13

PART NO	LAST ECN	BENÄMNING	TITLE	BENENNUNG	GROUP NO
4- 1883-0005		BRICKA	WASHER	SCHEIBE	C- 566280-010V
4- 1883-0008		BRICKA	WASHER	SCHEIBE	C- 566280-010V
4- 1883-0009		BRICKA	WASHER	SCHEIBE	C- 566280-010V
4- 1883-0010		BRICKA	WASHER	SCHEIBE	C- 566280-010V
4- 2033-0005		BRICKA	WASHER	SCHEIBE	C- 457866-030V
					C- 497534-030V
4- 2033-0007		BRICKA	WASHER	SCHEIBE	C- 272021-060V
4- 2033-0008		BRICKA	WASHER	SCHEIBE	C- 441486-040V
4- 2033-0009		BRICKA	WASHER	SCHEIBE	C- 978048-010V
					C- 256223-040V
					C- 246388-060V
					C- 272343-050V
4- 2033-0011		BRICKA	WASHER	SCHEIBE	C- 752645-020V
					C- 752646-020V
					C- 752913-010V
					C- 752914-010V
					C- 441304-040V
					C- 441307-030V
					C- 441486-040V
					C- 456309-050V
4- 2033-0013		BRICKA	WASHER	SCHEIBE	C- 469736-040V
					C- 484984-020V
					C- 566282-010V
					C- 469173-010V
					C- 490610-040V
					C- 546285-010V
4- 2033-0014		BRICKA	WASHER	SCHEIBE	C- 256223-040V
4- 3675		TETRA-SKYLT	TETRA PAK NAME PLATE	TETRA SCHILD	C- 491942-010V
4- 4623		FJÄDER	SPRING	FEDER	C- 450125-010V
4- 5486		LAGER	BEARING	LAGER	C- 7003-010V
4- 6157		BOBIN	BOBBIN	SPULE	C- 7003-010V
4- 6158		FJÄDER	SPRING	FEDER	C- 7003-010V
4- 6159		LAGER	BEARING	LAGER	C- 7003-010V
4- 6160		AXEL	SHAFT	WELLE	C- 7003-010V
4- 6278		BRICKA	WASHER	SCHEIBE	C- 456100-030V
					C- 978179-010V
4- 6427		BRICKA	WASHER	SCHEIBE	CR- 283606-020V
C- 7003-0101	6317 83-11-03	BOBIN	BOBBIN	SPULE	C- 441000-050V
					C- 547756-010V
4- 7309		HANDTAG	HANDLE	GRIFF	C- 271513-060V
					C- 469535-010V
					C- 751885-030V
					C- 752244-020V
					C- 553657-010V
					C- 752042-010V
					C- 556723-010V
4- 7814		BOBIN	BOBBIN	SPULE	C- 441000-050V
4- 12228		TRYCKFJÄDER	COMPRESSION SPRING	DRUCKFEDER	C- 256806-030V
4- 12242-0001		PACKNING	GASKET	DICHTUNG	C- 529933-010V
					C- 560858-010V
					C- 735222-020V
					C- 735265-010V
					C- 736600-020V
					C- 529933-020V
					C- 560858-010V
					C- 735265-010V
					C- 529933-010V
					C- 560858-010V
					C- 735222-020V
4- 12242-0001		PACKNING	GASKET	DICHTUNG	C- 735265-010V
					C- 736600-020V
					C- 529933-020V
					C- 560858-010V
					C- 735265-010V
					C- 529933-010V
					C- 560858-010V
					C- 735222-020V
					C- 735265-010V
					C- 736600-020V
					C- 529933-020V
					C- 560858-010V
					C- 735265-010V
					C- 736360-020V
					C- 736796-020V
					C- 794178-010V
					C- 794180-010V
					C- 794245-010V
					C- 736360-020V
					C- 736796-020V
					C- 794178-010V
					C- 794180-010V
					C- 794245-010V
					C- 272407-020V
					C- 456555-040V
					C- 456836-040V
					C- 456976-050V
					C- 469091-030V
					C- 469452-030V
					C- 751800-020V
					RK- 978238-010V
					RK- 978528-010V
					RK- 978238-010V

PART NO	LAST ECN	BENÄMNING	TITLE	BENENNUNG	GROUP NO
					RK- 978528-010V
					RK- 978238-010V
					RK- 978528-010V
4- 12242-0002		PACKNING	GASKET	DICHTUNG	C- 752495-010V
					C- 735222-020V
					C- 924314-010V
					C- 735222-020V
					C- 924314-010V
					C- 735222-020V
					C- 924314-010V
4- 12242-0003		PACKNING	GASKET	DICHTUNG	C- 752495-010V
					C- 736600-020V
					C- 736796-020V
					C- 794004-010V
					C- 794245-010V
					C- 794271-010V
					C- 736796-020V
					C- 794004-010V
					C- 794245-010V
					C- 794271-010V
					C- 256014-060V
					C- 272560-060V
					C- 295778-040V
					C- 456836-040V
					C- 456976-050V
					C- 469452-030V
4- 12242-0003		PACKNING	GASKET	DICHTUNG	C- 751800-020V
					C- 924300-010V
					C- 924991-010V
					C- 924305-010V
					C- 924662-010V
					C- 924167-010V
					C- 924305-010V
					C- 924300-010V
					C- 924991-010V
					RK- 978238-010V
					RK- 978528-010V
					RK- 978238-010V
					RK- 978528-010V
					RK- 978238-010V
					RK- 978528-010V
4- 12242-0005		PACKNING	GASKET	DICHTUNG	C- 736796-020V
					C- 794168-010V
					C- 794245-010V
					C- 736796-020V
					C- 794168-010V
					C- 794245-010V
					C- 272560-060V
4- 14846		SPÄRR	BARRIER	SPERRE	C- 441000-050V
4- 14966		RULLE	ROLL	ROLLE	C- 441000-050V
4- 15529		BRICKA	WASHER	SCHEIBE	C- 751088-030V
					C- 566280-010V
4- 18135		BRICKA	WASHER	SCHEIBE	C- 283604-020V
					CR- 283605-010V
					C- 456696-030V
					C- 533844-010V
					C- 554360-020V
4- 18542		BRICKA	WASHER	SCHEIBE	C- 271261-050V
4- 18880		AXELTAPP	AXLE PIN	ACHSENZAPFEN	C- 441000-050V
4- 19135		LÅSBRICKA	LOCK WASHER	SCHLIESSCHEIBE	CR- 548331-010V
4- 19453		AXEL	SHAFT	WELLE	C- 441000-050V
4- 19893		VIKT	WEIGHT	GEWICHT	C- 441000-050V
4- 19997		JUSTERINGSSKRUV	ADJUSTING SCREW	REGULIERSCHRAUBE	C- 566280-010V
4- 20239		TRYCKFJÄDER	COMPRESSION SPRING	DRUCKFEDER	C- 256951-050V
					C- 256952-050V
4- 20497		GRUPPSKYLT	GROUP NUMBER PLATE	GRUPPNUMMERSCHILD	C- 736360-020V
					C- 795750-010V
4- 20702		TÄCKPLÅT	COVERING PLATE	DECKBLECH	CR- 256547-040V
4- 20705-0001		ISOLERRÖR	INSULATING PIPE	ISOLIERROHR	CR- 31390-010V
					CR- 31390-011V
4- 20772		ISOLATORKROPP	INSULATOR BODY	ISOLATORKÖRPER	CR- 31390-010V
					CR- 31390-011V
4- 21047		LÅSBRICKA	LOCK WASHER	SCHLIESSCHEIBE	CR- 256436-060V
4- 21521		TRYCKFJÄDER	COMPRESSION SPRING	DRUCKFEDER	C- 476859-020V
					C- 256084-050V
4- 21903		RULLE	ROLL	ROLLE	C- 246388-060V
					C- 272343-050V
					C- 295668-030V
4- 22463		RULLE	ROLL	ROLLE	CR- 256204-050V
					CR- 256205-050V
4- 22475		KURVRULLE	CURVE ROLLER	KURVENROLLE	C- 256951-050V
					C- 256952-050V
4- 22559		LÅSSKRUV	GRUB SCREW	VERSCHLUSSCHRAUBE	C- 295891-030V
3- 23118		TRANSFORMATOR	TRANSFORMER	TRAFO	CE- 41723-010V
					CE- 41750-010V
3- 23118		TRANSFORMATOR	TRANSFORMER	TRAFO	CE- 41757-010V
					CE- 41723-010V
					CE- 41750-010V
					CE- 41757-010V
3- 23139		TRANSFORMATOR	TRANSFORMER	TRAFO	CE- 41723-010V
					CE- 41750-010V
					CE- 41757-010V

PART NO	LAST ECN	BENÄMNING	TITLE	BENENNUNG	GROUP NO
					CE- 41723-010V
					CE- 41750-010V
					CE- 41757-010V
3- 23143		TRANSFORMATOR	TRANSFORMER	TRAFO	CE- 69884-010V
					CE- 69886-010V
					CE- 69884-010V
					CE- 69886-010V
					CE- 69884-010V
					CE- 69886-010V
3- 23147		TRANSFORMATOR	TRANSFORMER	TRAFO	CE- 69884-010V
					CE- 69886-010V
					CE- 69884-010V
					CE- 69886-010V
					CE- 69884-010V
					CE- 69886-010V
4- 23765-0002		ISOLERRÖR	INSULATING PIPE	ISOLIERROHR	CR- 256547-040V
3- 23769		STOPPLÅT	STOP PLATE	STOPPBLECH	CR- 256547-040V
4- 23771		DISTANSRING	SPACER RING	DISTANZRING	CR- 31390-010V
					CR- 31390-011V
4- 24356		KUTS	PIECE	BLOCK	C- 752957-010V
					C- 752628-020V
4- 24755		KLÄMMA	CLAMPING PIECE	KLAMMER	CR- 283605-010V
4- 26490		BRICKA	WASHER	SCHEIBE	C- 441304-040V
4- 27402		MASKINSKYLT	MACHINE PLATE	MASCHINENSCHILD	CE- 41723-010V
					CE- 41750-010V
					CE- 41757-010V
					CE- 41723-010V
					CE- 41750-010V
					CE- 41757-010V
4- 27815		BRICKA	WASHER	SCHEIBE	C- 256223-040V
					C- 256014-060V
4- 28036		BRICKA	WASHER	SCHEIBE	C- 751691-010V
					C- 272408-050V
					C- 752645-020V
					C- 752646-020V
					C- 752913-010V
					C- 752914-010V
					C- 272021-060V
					C- 469501-040V
					C- 751800-020V
					C- 456679-010V
4- 28037		BRICKA	WASHER	SCHEIBE	C- 441304-040V
4- 28508		SKRUV	SCREW	SCHRAUBE	C- 457866-030V
4- 28509		BRICKA	WASHER	SCHEIBE	C- 550714-010V
					C- 572642-010V
					C- 572643-010V
					C- 978179-010V
					C- 457866-030V
					C- 469634-010V
4- 28510		ISOLERINGSMUTTER	INSULATION NUT	ISOLIERMUTTER	C- 457866-030V
					C- 469634-010V
4- 28837		PLUSRULLE 180-284 ML	TRIMMING ROLLER PLUS	TRIMMUNGSROLLE / PLUS	C- 77093-020V
4- 28838		MINUSRULLE 180-284 ML	TRIMMING ROLLER MINUS	TRIMMUNGSROLLE / MINUS	C- 77093-020V
4- 29411		DISTANSRÖR	SPACER PIPE	DISTANZROHR	CR- 31390-010V
4- 29413		MELLANLÄGG	LACE	ZWISCHENLAGE	CR- 31390-010V
					CR- 31390-011V
3- 29876		LOCK	LID	DECKEL	C- 271181-040V
4- 30298		ISOLERING	INSULATION	ISOLIERUNG	C- 271181-040V
2- 30310-0002		VÄRMESLINGA	HEATING COIL	WÄRMEELEMENT	CR- 31390-010V
2- 30311-0001		VÄRMESLINGA	HEATING COIL	WÄRMEELEMENT	CR- 31390-011V
2- 30311-0002		VÄRMESLINGA	HEATING COIL	WÄRMEELEMENT	CR- 31390-011V
4- 31017		KNIV	KNIFE	MESSER	C- 37877-030V
CR- 31390-0102	19244 93-10-06	ELEMENTENHET TOPP	ELEMENT	ELEMENT	CR- 256547-040V
CR- 31390-011V	19244 93-10-06	ELEMENTENHET BOTTEN	ELEMENT	ELEMENT	CR- 256547-040V
4- 31418		AXEL	SHAFT	WELLE	C- 456032-010V
4- 31423		FÄSTKLACK	MOUNTING LUG	BEFESTIGUNGSHACKEN	C- 456032-010V
4- 31425		STYRHJUL	GUIDE WHEEL	FUEHRUNGSROLLE	C- 456032-010V
4- 31553-0001		BRICKA	WASHER	SCHEIBE	C- 256437-020V
3- 31559		FJÄDERPLATTA	SPRING PLATE	FEDERPLATTE	C- 256437-020V
4- 31653-0001		PLÅT	SHEET	BLECH	CR- 31390-010V
4- 31653-0002		PLÅT	SHEET	BLECH	CR- 31390-011V
4- 31723		TEFLONREMSA	TEFLON STRIP	TEFLONSTREIFEN	C- 37877-030V
4- 31724		LÅSLINJAL	LOCK BAR	SPERRSCHIENE	C- 37877-030V
4- 32079		BRICKA	WASHER	SCHEIBE	C- 572642-010V
					C- 572643-010V
					C- 469634-010V
4- 32134		MELLANLÄGG	LACE	ZWISCHENLAGE	C- 456953-020V
4- 32136		MELLANLÄGG	LACE	ZWISCHENLAGE	C- 456953-020V
					C- 469634-010V
4- 32213		BRICKA	WASHER	SCHEIBE	C- 295891-030V
4- 32215		HÅLLARE	HOLDER	HALTER	C- 295891-030V
4- 32217		BOTTENDEL	BOTTOM SECTION	BODENTEIL	C- 295891-030V
4- 32219		BRICKA	WASHER	SCHEIBE	C- 295891-030V
4- 32223		LAGER	BEARING	LAGER	C- 295891-030V
4- 32400		HÅLLARE	HOLDER	HALTER	C- 295891-030V
3- 32451		LUFTLEDNING	AIR DUCT	LUFTLEITUNG	C- 295891-030V
3- 32453		MANTEL	MANTLE	MANTEL	C- 295891-030V
3- 32474		ANSLUTNING	ATTACHMENT	ANSCHLUSS	C- 295891-030V
4- 32544		ISOLERINGSMUTTER	INSULATION NUT	ISOLIERMUTTER	C- 456953-020V
					C- 550714-010V
					C- 572642-010V
					C- 572643-010V

PART NO	LAST ECN	BENÄMNING	TITLE	BENENNUNG	GROUP NO
4- 32644		BRICKA	WASHER	SCHEIBE	C- 457866-030V C- 469634-010V C- 456953-020V C- 550714-010V CR- 256214-040V
2- 32668		ARM	ARM	ARM	C- 457866-030V
4- 32691		SPÄRRFJÄDER	LOCKING SPRING	SPERRFEDER	C- 295891-030V C- 293684-020V C- 293685-020V
4- 32925		MEDBRINGARE	CARRIER	MITNEHMER	C- 293684-020V C- 293685-020V C- 293684-020V C- 752645-020V C- 752646-020V
4- 32926		RULLE	ROLL	ROLLE	C- 752913-010V C- 752914-010V C- 752645-020V C- 752646-020V
4- 32926		RULLE	ROLL	ROLLE	C- 752913-010V C- 752914-010V
4- 32927		AXEL	SHAFT	WELLE	C- 752645-020V C- 752646-020V C- 752913-010V C- 752914-010V
4- 33010		SKRUV	SCREW	SCHRAUBE	C- 434074-030V C- 434774-030V C- 434074-030V C- 434774-030V
4- 33011		HYLSA	SLEEVE	HUELSE	C- 434074-030V C- 293684-020V C- 293685-020V C- 293684-020V C- 293685-020V
4- 33182		RULLE	ROLL	ROLLE	C- 293684-020V C- 752645-020V C- 752646-020V C- 752913-010V C- 752914-010V
4- 33408		LAGER	BEARING	LAGER	CR- 256204-050V
4- 33577		KONSOL	CANTILEVER	KONSOLE	CR- 256205-050V C- 272408-050V
4- 35547		SPÄRRFJÄDER	SPRING	FEDER	C- 295045-070V C- 434074-030V C- 434774-030V C- 434074-030V C- 434774-030V C- 434074-030V
4- 35918		AXEL	SHAFT	WELLE	C- 441486-040V
4- 35919		TRYCKFJÄDER	COMPRESSION SPRING	DRUCKFEDER	C- 441486-040V
4- 35962		LOCK	LID	DECKEL	C- 490761-010V
3- 36316		PAPPERSSTÖD	PAPER SUPPORT	PAPIERSTUETZE	C- 295891-030V
4- 36325		KNOPP	KNOB	KNOPF	C- 441486-040V
4- 36489		PACKNINGSISLAGARE	ASSEMBLY TOOL	MONTAGEWERKZEUG	C- 456975-020V
2- 36749		MANTEL	MANTLE	MANTEL	C- 295891-030V
4- 36816		LÄNK	LINK	GELENK	C- 566507-010V C- 567695-010V C- 255921-040V
4- 36817		SPÄNNE	CLAMPING ELEMENT	SPANNELEMENT	C- 566507-010V C- 567695-010V C- 255921-040V
4- 36821-0002		BRYTPINNE	SHEAR PIN	SCHERSTIFT	C- 566507-010V C- 567695-010V C- 255921-040V
4- 37296		ARM	ARM	ARM	C- 566507-010V C- 567695-010V C- 255921-040V
4- 37535		STÖDKROPP	SUPPORTING PART	ST~TZKÖRPER	CR- 31390-010V CR- 31390-011V
4- 37536		ISOLERKROPP NEDRE	INSULATOR BODY	ISOLATORKÖRPER	CR- 31390-010V CR- 31390-011V
4- 37537		DISTANSRING NEDRE	SPACER RING	DISTANZRING	CR- 31390-010V CR- 31390-011V
4- 37768		TERMOELEMENT	THERMOCOUPLE	THERMOELEMENT	C- 794178-010V C- 295891-030V C- 272560-060V
4- 37774		LAMPSKYDD	PROTECTIVE COVER	SCHUTZHAUBE	C- 271641-030V C- 271641-020V
4- 37775		LAMPHÅLLARE	LAMP HOLDER	LAMPENHALTER	C- 271641-030V
4- 37775		LAMPHÅLLARE	LAMP HOLDER	LAMPENHALTER	C- 271641-020V
C- 37877-0301	17888 93-01-27	VÄRMEDON	HEATING BLOCK	HEIZKÖRPER	C- 271699-030V C- 271699-040V
2- 37879		LÅSARM	LOCKING ARM	SCHLIESSARM	C- 37877-030V
3- 37880		GÅNGJÄRN	HINGE	SCHARNIER	C- 37877-030V
4- 37882		SKYDDSPLÅT	PROTECTION PLATE	SCHUTZBLECH	C- 37877-030V
4- 37883		LÅSLINJAL	LOCK BAR	SPERRSCHIENE	C- 37877-030V
4- 37884		AXEL	SHAFT	WELLE	C- 37877-030V
4- 37885		DRAGFJÄDER	TENSION SPRING	ZUGFEDER	C- 37877-030V
4- 37886		ISOLERSKIVA	INSULATING DISK	ISOLIERSCHEIBE	C- 37877-030V
4- 37888		RULLE	ROLL	ROLLE	C- 37877-030V
4- 37889		AXEL	SHAFT	WELLE	C- 37877-030V
4- 37890		FLÄNSLAGER	FLANGE ROLLER	FLANSCHROLLE	C- 37877-030V
4- 37892		KOPPLINGSLÅDA	CONNECTION BOX	KUPPLUNGSKASTEN	C- 37877-030V

PART NO	LAST ECN	BENÄMNING	TITLE	BENENNUNG	GROUP NO
4- 37893		LOCK	LID	DECKEL	C- 37877-030V
C- 37894-0101	5061 81-11-06	MOTHÅLLSSKENA	COUNTER RAIL	GEGENSCHIENE	C- 271699-030V
					C- 271699-040V
3- 37895		SKENA	RAIL	SCHIENE	C- 37894-010V
4- 37896		TAPP	DOWEL	ZAPFEN	C- 37894-010V
4- 37897		BRICKA	WASHER	SCHEIBE	C- 37894-010V
3- 37900		KNIV	KNIFE	MESSER	C- 450101-020V
4- 37901		AXEL	SHAFT	WELLE	C- 450101-010V
					C- 450101-020V
1- 37905		RAM	FRAME	RAHMEN	C- 271641-020V
3- 37906		PLÅT	SHEET	BLECH	C- 271641-020V
3- 37907		PLÅT	SHEET	BLECH	C- 271641-020V
4- 37908		PLATTA	PLATE	PLATTE	C- 271641-030V
					C- 271641-020V
4- 37909		FJÄDER	SPRING	FEDER	C- 271641-020V
4- 37910		LÅS	LOCK	SCHLOSS	C- 271641-030V
					C- 271641-020V
4- 37911		SHIMS	LACE	ZWISCHENLAGE	C- 271641-030V
					C- 271641-020V
4- 37912		LÅSJÄRN	LOCK PLATE	VERSCHLUSSPLATTE	C- 271641-030V
					C- 271641-020V
4- 37913		LINJAL	RULER	LINEAL	C- 271641-030V
					C- 271641-020V
4- 37916		LINJAL	RULER	LINEAL	C- 271641-020V
4- 37917		LINJAL	RULER	LINEAL	C- 271641-030V
					C- 271641-020V
4- 37927		TRYCKFJÄDER	COMPRESSION SPRING	DRUCKFEDER	C- 271626-030V
4- 38087		BRICKA	WASHER	SCHEIBE	C- 271114-050V
4- 38535-0002		LÅSPINNE	LOCKING FINGER	VERSCHLUSSTIFT	C- 735192-010V
					C- 255921-040V
					C- 924808-010V
CE- 41723-0101	20398 93-10-01	CTRL CAB. TBA/9-1401 S.A	CTRL CAB. TBA/9-1401 S.A	EL-SCHRANK	CE- 41729-010V
					BE- 649205-140V
CE- 41724-0101	19260 93-03-17	PANEL TBA/9-1401 S.A	CTRL.PAN. TBA/9-1401 S.A	PANEL	CE- 41729-010V
					BE- 649205-140V
CE- 41725-0101	20080 93-09-15	MASKIN TBA/9-1401 S.A	MACHINE	MASCHINE	CE- 41729-010V
					BE- 649205-140V
CE- 41726-0101	19260 93-03-17	UTRUSTN. TBA/9-1401 S.A	EQUIPMENT TBA/9-1401 S.A	STANDARDZUBEHÖR	CE- 41729-010V
					BE- 649205-140V
CE- 41727-0101	20398 93-10-01	EXTRA UTR TBA/9-1401 S.A	EXTRA EQU TBA/9-1401 S.A	EXTRA ZUBEHÖR	CE- 41729-010V
					BE- 649205-140V
CE- 41728-0101	20080 93-09-15	RESERVDEL TBA/9-1401 S.A	SP. PARTS TBA/9-1401 S.A	ERSATZTEILSATZ	CE- 41729-010V
					BE- 649205-140V
CE- 41729-0101	20080 93-09-15	EL-DOK TBA/9-1401 S.A	EL-DOC. TBA/9-1401 S.A	EL-DOKUMENT	BE- 649205-140V
CE- 41750-0101	20399 93-10-01	ELSKÅP TBA/9-1402 P.T	ELECTRICAL CABINET	EL-SCHRANK	CE- 41756-010V
CE- 41750-0101		ELSKÅP TBA/9-1402 P.T	ELECTRICAL CABINET	EL-SCHRANK	BE- 649205-140V
CE- 41751-0101	19721 93-04-20	PANEL TBA/9-1402 P.T	CTRL.PAN. TBA/9-1402 P.T	PANEL	CE- 41756-010V
					BE- 649205-140V
CE- 41752-0101	20144 93-09-20	MASKIN TBA/9-1402 P.T	MACHINE TBA/9-1402 P.T	MASCHINE	CE- 41756-010V
					BE- 649205-140V
CE- 41753-0101	19261 93-03-17	UTRUSTN. TBA/9-1402 P.T	EQUIPMENT TBA/9-1402 P.T	STANDARDZUBEHÖR	CE- 41756-010V
					BE- 649205-140V
CE- 41754-0101	20399 93-10-01	EXTRA UTR TBA/9-1402 P.T	EXTRA EQU TBA/9-1402 P.T	EXTRA ZUBEHÖR	CE- 41756-010V
					BE- 649205-140V
CE- 41755-0101	19261 93-03-17	RESERVDEL TBA/9-1402 P.T	SP. PARTS TBA/9-1402 P.T	ERSATZTEILSATZ	CE- 41756-010V
					BE- 649205-140V
CE- 41756-0101	20144 93-09-20	EL-DOK TBA/9-1402 P.T	EL-DOC. TBA/9-1402 P.T	EL-DOKUMENT	BE- 649205-140V
CE- 41757-0101	19262 93-03-17	ELSKÅP TBA/9-1403 C.	CTRL CAB. TBA/9-1403 C.	EL-SCHRANK	CE- 41763-010V
					BE- 649205-140V
CE- 41758-0101	19262 93-03-17	PANEL TBA/9-1403 C.	CTRL.PAN. TBA/9-1403 C.	PANEL	CE- 41763-010V
					BE- 649205-140V
CE- 41759-0101	19262 93-03-17	MASKIN TBA/9-1403 C.	MACHINE TBA/9-1403 C.	MASCHINE	CE- 41763-010V
					BE- 649205-140V
CE- 41760-0101	19262 93-03-17	UTRUSTN. TBA/9-1403 C.	EQUIPMENT TBA/9-1403 C.	STANDARDZUBEHÖR	CE- 41763-010V
					BE- 649205-140V
CE- 41761-0101	19262 93-03-17	EXTRA UTR TBA/9-1403 C.	EXTRA EQU TBA/9-1403 C.	EXTRA ZUBEHÖR	CE- 41763-010V
					BE- 649205-140V
CE- 41762-0101	19262 93-03-17	RESERVDEL TBA/9-1403 C.	SP. PARTS TBA/9-1403 C.	ERSATZTEILSATZ	CE- 41763-010V
					BE- 649205-140V
CE- 41763-0101	19262 93-03-17	EL-DOK TBA/9-1403 C.	EL-DOC. TBA/9-1403 C.	EL-DOKUMENT	BE- 649205-140V
CE- 41766-0101	20080 93-09-15	EL-UTRUSTNING TPIH	EL-EQUIPMENT TPIH	EL-AUSR~STUNG	CE- 41729-010V
					CE- 41756-010V
					CE- 41763-010V
					BE- 649205-140V
RK- 41767-010V	17913 92-12-02	EL-MATERIAL	ELECTRIC MATERIALS	EL-MATERIAL	RK- 558088-010V
RK- 41767-0101	17913 92-12-02	ELECTRIC MATERIALS	ELECTRIC MATERIALS	EL-MATERIAL	RK- 41768-010V
RK- 41768-010V	17913 92-12-02	EL DOKUMENT	ELECTRICAL DOCUMENT	EL-DOKUMENT	RK- 558088-010V
RK- 41769-010V	17914 92-12-02	EL-MATERIAL	ELECTRIC MATERIALS	EL-MATERIAL	RK- 558089-010V
RK- 41769-0101	17914 92-12-02	ELECTRIC MATERIALS	ELECTRIC MATERIALS	EL-MATERIAL	RK- 41770-010V
RK- 41770-010V	17914 92-12-02	EL DOKUMENT	ELECTRICAL DOCUMENT	EL-DOKUMENT	RK- 558089-010V
K3- 43834-0222		KRETSSCHEMA POS.SMST.	CIRCUIT DIAGRAM POS.SUMM	SCHALTKARTEN POS. SMST	RK- 557235-010V
K3- 43834-0622		KRETSSCHEMA	CIRCUIT DIAGRAM	SCHALTKARTEPLAN	RK- 557235-010V
K3- 43834-1022		KRETSSCHEMA	CIRCUIT DIAGRAM	SCHALTKARTEPLAN	RK- 557235-010V
K3- 43834-2722		KRETSSCHEMA	CIRCUIT DIAGRAM	SCHALTKARTEPLAN	RK- 557235-010V
K3- 43834-3122		KRETSSCHEMA	CIRCUIT DIAGRAM	SCHALTKARTEPLAN	RK- 557235-010V
K3- 43834-3422		KRETSSCHEMA	CIRCUIT DIAGRAM	SCHALTKARTEPLAN	RK- 557235-010V
K3- 43834-3722		KRETSSCHEMA	CIRCUIT DIAGRAM	SCHALTKARTEPLAN	RK- 557235-010V
K3- 43834-6522		KRETSSCHEMA	CIRCUIT DIAGRAM	SCHALTKARTEPLAN	RK- 557235-010V
K3- 43834-9022		KRETSSCHEMA STAM SMST.	CIRCUIT DIAGRAM LINE SUM	SCHALTKARTEN LINIEN SMST	RK- 557235-010V
K3- 43834-9122		KRETSSCHEMA PLINT SMST.	CIRCUIT DIAGRAM TERM.SUM	SCHALTKARTEN SOCKEL SMST	RK- 557235-010V
K4- 43851-0203		KRETSSCHEMA POS.SMST.	CIRCUIT DIAGRAM POS.SUMM	SCHALTKARTEN POS. SMST	RK- 69995-010V
K4- 43851-0204		KRETSSCHEMA POS.SMST.	CIRCUIT DIAGRAM POS.SUMM	SCHALTKARTEN POS. SMST	RK- 557019-010V

PART NO	LAST ECN	BENÄMNING	TITLE	BENENNUNG	GROUP NO
K4- 43851-0206		KRETSSCHEMA POS.SMST.	CIRCUIT DIAGRAM POS.SUMM	SCHALTKARTEN POS. SMST	RK- 557148-010V
K4- 43851-0207		KRETSSCHEMA POS.SMST.	CIRCUIT DIAGRAM POS.SUMM	SCHALTKARTEN POS. SMST	RK- 557157-010V
K4- 43851-0208		KRETSSCHEMA POS.SMST.	CIRCUIT DIAGRAM POS.SUMM	SCHALTKARTEN POS. SMST	RK- 557546-010V
K4- 43851-0212		KRETSSCHEMA POS.SMST.	CIRCUIT DIAGRAM POS.SUMM	SCHALTKARTEN POS. SMST	RK- 557691-010V
K4- 43851-0214		KRETSSCHEMA POS.SMST.	CIRCUIT DIAGRAM POS.SUMM	SCHALTKARTEN POS. SMST	RK- 41768-010V
K4- 43851-0607		KRETSSCHEMA	CIRCUIT DIAGRAM	SCHALTKARTEPLAN	RK- 557157-010V
K4- 43851-0608		KRETSSCHEMA	CIRCUIT DIAGRAM	SCHALTKARTEPLAN	RK- 557546-010V
K4- 43851-0904		KRETSSCHEMA	CIRCUIT DIAGRAM	SCHALTKARTEPLAN	RK- 557019-010V
K4- 43851-1108		KRETSSCHEMA	CIRCUIT DIAGRAM	SCHALTKARTEPLAN	RK- 557546-010V
K4- 43851-1307		KRETSSCHEMA	CIRCUIT DIAGRAM	SCHALTKARTEPLAN	RK- 557157-010V
K4- 43851-1503		KRETSSCHEMA	CIRCUIT DIAGRAM	SCHALTKARTEPLAN	RK- 69995-010V
K4- 43851-1607		KRETSSCHEMA	CIRCUIT DIAGRAM	SCHALTKARTEPLAN	RK- 557157-010V
K4- 43851-1614		KRETSSCHEMA	CIRCUIT DIAGRAM	SCHALTKARTEPLAN	RK- 41768-010V
K4- 43851-1803		KRETSSCHEMA	CIRCUIT DIAGRAM	SCHALTKARTEPLAN	RK- 69995-010V
K4- 43851-2007		KRETSSCHEMA	CIRCUIT DIAGRAM	SCHALTKARTEPLAN	RK- 557157-010V
K4- 43851-2612		KRETSSCHEMA	CIRCUIT DIAGRAM	SCHALTKARTEPLAN	RK- 557691-010V
K4- 43851-2614		KRETSSCHEMA	CIRCUIT DIAGRAM	SCHALTKARTEPLAN	RK- 41768-010V
K4- 43851-2807		KRETSSCHEMA	CIRCUIT DIAGRAM	SCHALTKARTEPLAN	RK- 557157-010V
K4- 43851-3108		KRETSSCHEMA	CIRCUIT DIAGRAM	SCHALTKARTEPLAN	RK- 557546-010V
K4- 43851-3208		KRETSSCHEMA	CIRCUIT DIAGRAM	SCHALTKARTEPLAN	RK- 557546-010V
K4- 43851-3707		KRETSSCHEMA	CIRCUIT DIAGRAM	SCHALTKARTEPLAN	RK- 557157-010V
K4- 43851-3708		KRETSSCHEMA	CIRCUIT DIAGRAM	SCHALTKARTEPLAN	RK- 557546-010V
K4- 43851-3904		KRETSSCHEMA	CIRCUIT DIAGRAM	SCHALTKARTEPLAN	RK- 557019-010V
K4- 43851-3908		KRETSSCHEMA	CIRCUIT DIAGRAM	SCHALTKARTEPLAN	RK- 557546-010V
K4- 43851-4307		KRETSSCHEMA	CIRCUIT DIAGRAM	SCHALTKARTEPLAN	RK- 557157-010V
K4- 43851-4403		KRETSSCHEMA	CIRCUIT DIAGRAM	SCHALTKARTEPLAN	RK- 69995-010V
K4- 43851-4704		KRETSSCHEMA	CIRCUIT DIAGRAM	SCHALTKARTEPLAN	RK- 557019-010V
K4- 43851-4804		KRETSSCHEMA	CIRCUIT DIAGRAM	SCHALTKARTEPLAN	RK- 557019-010V
K4- 43851-5106		KRETSSCHEMA	CIRCUIT DIAGRAM	SCHALTKARTEPLAN	RK- 557148-010V
K4- 43851-5107		KRETSSCHEMA	CIRCUIT DIAGRAM	SCHALTKARTEPLAN	RK- 557157-010V
K4- 43851-5112		KRETSSCHEMA	CIRCUIT DIAGRAM	SCHALTKARTEPLAN	RK- 557691-010V
K4- 43851-5114		KRETSSCHEMA	CIRCUIT DIAGRAM	SCHALTKARTEPLAN	RK- 41768-010V
K4- 43851-5206		KRETSSCHEMA	CIRCUIT DIAGRAM	SCHALTKARTEPLAN	RK- 557148-010V
K4- 43851-5207		KRETSSCHEMA	CIRCUIT DIAGRAM	SCHALTKARTEPLAN	RK- 557157-010V
K4- 43851-5212		KRETSSCHEMA	CIRCUIT DIAGRAM	SCHALTKARTEPLAN	RK- 557691-010V
K4- 43851-5214		KRETSSCHEMA	CIRCUIT DIAGRAM	SCHALTKARTEPLAN	RK- 41768-010V
K4- 43851-5907		KRETSSCHEMA	CIRCUIT DIAGRAM	SCHALTKARTEPLAN	RK- 557157-010V
K4- 43851-6003		KRETSSCHEMA	CIRCUIT DIAGRAM	SCHALTKARTEPLAN	RK- 69995-010V
K4- 43851-6007		KRETSSCHEMA	CIRCUIT DIAGRAM	SCHALTKARTEPLAN	RK- 557157-010V
K4- 43851-6104		KRETSSCHEMA	CIRCUIT DIAGRAM	SCHALTKARTEPLAN	RK- 557019-010V
K4- 43851-6207		KRETSSCHEMA	CIRCUIT DIAGRAM	SCHALTKARTEPLAN	RK- 557157-010V
K4- 43851-6507		KRETSSCHEMA	CIRCUIT DIAGRAM	SCHALTKARTEPLAN	RK- 557157-010V
K4- 43851-6607		KRETSSCHEMA	CIRCUIT DIAGRAM	SCHALTKARTEPLAN	RK- 557157-010V
K4- 43851-6614		KRETSSCHEMA	CIRCUIT DIAGRAM	SCHALTKARTEPLAN	RK- 41768-010V
K4- 43851-6807		KRETSSCHEMA	CIRCUIT DIAGRAM	SCHALTKARTEPLAN	RK- 557157-010V
K4- 43851-6808		KRETSSCHEMA	CIRCUIT DIAGRAM	SCHALTKARTEPLAN	RK- 557546-010V
K4- 43851-7014		KRETSSCHEMA	CIRCUIT DIAGRAM	SCHALTKARTEPLAN	RK- 41768-010V
K4- 43851-7304		KRETSSCHEMA	CIRCUIT DIAGRAM	SCHALTKARTEPLAN	RK- 557019-010V
K4- 43851-7404		KRETSSCHEMA	CIRCUIT DIAGRAM	SCHALTKARTEPLAN	RK- 557019-010V
K4- 43851-7503		KRETSSCHEMA	CIRCUIT DIAGRAM	SCHALTKARTEPLAN	RK- 69995-010V
K4- 43851-7706		KRETSSCHEMA	CIRCUIT DIAGRAM	SCHALTKARTEPLAN	RK- 557148-010V
K4- 43851-7707		KRETSSCHEMA	CIRCUIT DIAGRAM	SCHALTKARTEPLAN	RK- 557157-010V
K4- 43851-7712		KRETSSCHEMA	CIRCUIT DIAGRAM	SCHALTKARTEPLAN	RK- 557691-010V
K4- 43851-7806		KRETSSCHEMA	CIRCUIT DIAGRAM	SCHALTKARTEPLAN	RK- 557148-010V
K4- 43851-7807		KRETSSCHEMA	CIRCUIT DIAGRAM	SCHALTKARTEPLAN	RK- 557157-010V
K4- 43851-7812		KRETSSCHEMA	CIRCUIT DIAGRAM	SCHALTKARTEPLAN	RK- 557691-010V
K4- 43851-8314		KRETSSCHEMA	CIRCUIT DIAGRAM	SCHALTKARTEPLAN	RK- 41768-010V
K4- 43851-8414		KRETSSCHEMA	CIRCUIT DIAGRAM	SCHALTKARTEPLAN	RK- 41768-010V
K4- 43851-8903		KRETSSCHEMA JORDNING	CIRCUIT DIAGRAM GROUNDIN	SCHALTKARTEN ERDUNG	RK- 69995-010V
K4- 43851-8904		KRETSSCHEMA JORDNING	CIRCUIT DIAGRAM GROUNDIN	SCHALTKARTEN ERDUNG	RK- 557019-010V
K4- 43851-9003		KRETSSCHEMA STAM SMST.	CIRCUIT DIAGRAM LINE SUM	SCHALTKARTEN LINIEN SMST	RK- 69995-010V
K4- 43851-9004		KRETSSCHEMA STAM SMST.	CIRCUIT DIAGRAM LINE SUM	SCHALTKARTEN LINIEN SMST	RK- 557019-010V
K4- 43851-9006		KRETSSCHEMA STAM SMST.	CIRCUIT DIAGRAM LINE SUM	SCHALTKARTEN LINIEN SMST	RK- 557148-010V
K4- 43851-9007		KRETSSCHEMA STAM SMST.	CIRCUIT DIAGRAM LINE SUM	SCHALTKARTEN LINIEN SMST	RK- 557157-010V
K4- 43851-9008		KRETSSCHEMA STAM SMST.	CIRCUIT DIAGRAM LINE SUM	SCHALTKARTEN LINIEN SMST	RK- 557546-010V
K4- 43851-9012		KRETSSCHEMA STAM SMST.	CIRCUIT DIAGRAM LINE SUM	SCHALTKARTEN LINIEN SMST	RK- 557691-010V
K4- 43851-9014		KRETSSCHEMA STAM SMST.	CIRCUIT DIAGRAM LINE SUM	SCHALTKARTEN LINIEN SMST	RK- 41768-010V
K4- 43851-9104		KRETSSCHEMA PLINT SMST.	CIRCUIT DIAGRAM TERM.SUM	SCHALTKARTEN SOCKEL SMST	RK- 557019-010V
K4- 43851-9106		KRETSSCHEMA PLINT SMST.	CIRCUIT DIAGRAM TERM.SUM	SCHALTKARTEN SOCKEL SMST	RK- 557148-010V
K4- 43851-9107		KRETSSCHEMA PLINT SMST.	CIRCUIT DIAGRAM TERM.SUM	SCHALTKARTEN SOCKEL SMST	RK- 557157-010V
K4- 43851-9108		KRETSSCHEMA PLINT SMST.	CIRCUIT DIAGRAM TERM.SUM	SCHALTKARTEN SOCKEL SMST	RK- 557546-010V
K4- 43851-9112		KRETSSCHEMA PLINT SMST.	CIRCUIT DIAGRAM TERM.SUM	SCHALTKARTEN SOCKEL SMST	RK- 557691-010V
K4- 43851-9114		KRETSSCHEMA PLINT SMST.	CIRCUIT DIAGRAM TERM.SUM	SCHALTKARTEN SOCKEL SMST	RK- 41768-010V
4- 43947-0501		KRETSSCHEMA	CIRCUIT DIAGRAM, IH	SCHALTKARTEPLAN	CE- 69885-010V
4- 43947-0601		KRETSSCHEMA	CIRCUIT DIAGRAM, IH	SCHALTKARTEPLAN	CE- 69885-010V
K4- 43950-0204		KRETSSCHEMA POS.SMST.	CIRCUIT DIAGRAM POS.SUMM	SCHALTKARTEN POS. SMST	RK- 557151-010V
K4- 43950-0205		KRETSSCHEMA POS.SMST.	CIRCUIT DIAGRAM POS.SUMM	SCHALTKARTEN POS. SMST	RK- 557160-010V
K4- 43950-0207		KRETSSCHEMA POS.SMST.	CIRCUIT DIAGRAM POS.SUMM	SCHALTKARTEN POS. SMST	RK- 557694-010V
K4- 43950-0209		KRETSSCHEMA POS.SMST.	CIRCUIT DIAGRAM POS.SUMM	SCHALTKARTEN POS. SMST	RK- 41770-010V
K4- 43950-0605		KRETSSCHEMA	CIRCUIT DIAGRAM	SCHALTKARTEPLAN	RK- 557160-010V
K4- 43950-1305		KRETSSCHEMA	CIRCUIT DIAGRAM	SCHALTKARTEPLAN	RK- 557160-010V
K4- 43950-1605		KRETSSCHEMA	CIRCUIT DIAGRAM	SCHALTKARTEPLAN	RK- 557160-010V
K4- 43950-1609		KRETSSCHEMA	CIRCUIT DIAGRAM	SCHALTKARTEPLAN	RK- 41770-010V
K4- 43950-2005		KRETSSCHEMA	CIRCUIT DIAGRAM	SCHALTKARTEPLAN	RK- 557160-010V
K4- 43950-2607		KRETSSCHEMA	CIRCUIT DIAGRAM	SCHALTKARTEPLAN	RK- 557694-010V
K4- 43950-2609		KRETSSCHEMA	CIRCUIT DIAGRAM	SCHALTKARTEPLAN	RK- 41770-010V
K4- 43950-2805		KRETSSCHEMA	CIRCUIT DIAGRAM	SCHALTKARTEPLAN	RK- 557160-010V
K4- 43950-3705		KRETSSCHEMA	CIRCUIT DIAGRAM	SCHALTKARTEPLAN	RK- 557160-010V
K4- 43950-4305		KRETSSCHEMA	CIRCUIT DIAGRAM	SCHALTKARTEPLAN	RK- 557160-010V
K4- 43950-5104		KRETSSCHEMA	CIRCUIT DIAGRAM	SCHALTKARTEPLAN	RK- 557151-010V
K4- 43950-5105		KRETSSCHEMA	CIRCUIT DIAGRAM	SCHALTKARTEPLAN	RK- 557160-010V
K4- 43950-5107		KRETSSCHEMA	CIRCUIT DIAGRAM	SCHALTKARTEPLAN	RK- 557694-010V

PART NO	LAST ECN	BENÄMNING	TITLE	BENENNUNG	GROUP NO
K4- 43950-5109		KRETSSCHEMA	CIRCUIT DIAGRAM	SCHALTKARTEPLAN	RK- 41770-010V
K4- 43950-5204		KRETSSCHEMA	CIRCUIT DIAGRAM	SCHALTKARTEPLAN	RK- 557151-010V
K4- 43950-5205		KRETSSCHEMA	CIRCUIT DIAGRAM	SCHALTKARTEPLAN	RK- 557160-010V
K4- 43950-5207		KRETSSCHEMA	CIRCUIT DIAGRAM	SCHALTKARTEPLAN	RK- 557694-010V
K4- 43950-5209		KRETSSCHEMA	CIRCUIT DIAGRAM	SCHALTKARTEPLAN	RK- 41770-010V
K4- 43950-5905		KRETSSCHEMA	CIRCUIT DIAGRAM	SCHALTKARTEPLAN	RK- 557160-010V
K4- 43950-6005		KRETSSCHEMA	CIRCUIT DIAGRAM	SCHALTKARTEPLAN	RK- 557160-010V
K4- 43950-6205		KRETSSCHEMA	CIRCUIT DIAGRAM	SCHALTKARTEPLAN	RK- 557160-010V
K4- 43950-6505		KRETSSCHEMA	CIRCUIT DIAGRAM	SCHALTKARTEPLAN	RK- 557160-010V
K4- 43950-6605		KRETSSCHEMA	CIRCUIT DIAGRAM	SCHALTKARTEPLAN	RK- 557160-010V
K4- 43950-6609		KRETSSCHEMA	CIRCUIT DIAGRAM	SCHALTKARTEPLAN	RK- 41770-010V
K4- 43950-6805		KRETSSCHEMA	CIRCUIT DIAGRAM	SCHALTKARTEPLAN	RK- 557160-010V
K4- 43950-7009		KRETSSCHEMA	CIRCUIT DIAGRAM	SCHALTKARTEPLAN	RK- 41770-010V
K4- 43950-7704		KRETSSCHEMA	CIRCUIT DIAGRAM	SCHALTKARTEPLAN	RK- 557151-010V
K4- 43950-7705		KRETSSCHEMA	CIRCUIT DIAGRAM	SCHALTKARTEPLAN	RK- 557160-010V
K4- 43950-7707		KRETSSCHEMA	CIRCUIT DIAGRAM	SCHALTKARTEPLAN	RK- 557694-010V
K4- 43950-7804		KRETSSCHEMA	CIRCUIT DIAGRAM	SCHALTKARTEPLAN	RK- 557151-010V
K4- 43950-7805		KRETSSCHEMA	CIRCUIT DIAGRAM	SCHALTKARTEPLAN	RK- 557160-010V
K4- 43950-7807		KRETSSCHEMA	CIRCUIT DIAGRAM	SCHALTKARTEPLAN	RK- 557694-010V
K4- 43950-8309		KRETSSCHEMA	CIRCUIT DIAGRAM	SCHALTKARTEPLAN	RK- 41770-010V
K4- 43950-8409		KRETSSCHEMA	CIRCUIT DIAGRAM	SCHALTKARTEPLAN	RK- 41770-010V
K4- 43950-9004		KRETSSCHEMA STAM SMST.	CIRCUIT DIAGRAM LINE SUM	SCHALTKARTEN LINIEN SMST	RK- 557151-010V
K4- 43950-9005		KRETSSCHEMA STAM SMST.	CIRCUIT DIAGRAM LINE SUM	SCHALTKARTEN LINIEN SMST	RK- 557160-010V
K4- 43950-9007		KRETSSCHEMA STAM SMST.	CIRCUIT DIAGRAM LINE SUM	SCHALTKARTEN LINIEN SMST	RK- 557694-010V
K4- 43950-9009		KRETSSCHEMA STAM SMST.	CIRCUIT DIAGRAM LINE SUM	SCHALTKARTEN LINIEN SMST	RK- 41770-010V
K4- 43950-9104		KRETSSCHEMA PLINT SMST.	CIRCUIT DIAGRAM TERM.SUM	SCHALTKARTEN SOCKEL SMST	RK- 557151-010V
K4- 43950-9105		KRETSSCHEMA PLINT SMST.	CIRCUIT DIAGRAM TERM.SUM	SCHALTKARTEN SOCKEL SMST	RK- 557160-010V
K4- 43950-9107		KRETSSCHEMA PLINT SMST.	CIRCUIT DIAGRAM TERM.SUM	SCHALTKARTEN SOCKEL SMST	RK- 557694-010V
K4- 43950-9109		KRETSSCHEMA PLINT SMST.	CIRCUIT DIAGRAM TERM.SUM	SCHALTKARTEN SOCKEL SMST	RK- 41770-010V
K4- 43951-0202		KRETSSCHEMA POS.SMST.	CIRCUIT DIAGRAM POS.SUMM	SCHALTKARTEN POS. SMST	RK- 557022-010V
K4- 43951-0204		KRETSSCHEMA POS.SMST.	CIRCUIT DIAGRAM POS.SUMM	SCHALTKARTEN POS. SMST	RK- 557154-010V
K4- 43951-0209		KRETSSCHEMA POS.SMST.	CIRCUIT DIAGRAM POS.SUMM	SCHALTKARTEN POS. SMST	RK- 557552-010V
K4- 43951-0609		KRETSSCHEMA	CIRCUIT DIAGRAM	SCHALTKARTEPLAN	RK- 557552-010V
K4- 43951-0902		KRETSSCHEMA	CIRCUIT DIAGRAM	SCHALTKARTEPLAN	RK- 557022-010V
K4- 43951-1109		KRETSSCHEMA	CIRCUIT DIAGRAM	SCHALTKARTEPLAN	RK- 557552-010V
K4- 43951-3109		KRETSSCHEMA	CIRCUIT DIAGRAM	SCHALTKARTEPLAN	RK- 557552-010V
K4- 43951-3209		KRETSSCHEMA	CIRCUIT DIAGRAM	SCHALTKARTEPLAN	RK- 557552-010V
K4- 43951-3709		KRETSSCHEMA	CIRCUIT DIAGRAM	SCHALTKARTEPLAN	RK- 557552-010V
K4- 43951-3902		KRETSSCHEMA	CIRCUIT DIAGRAM	SCHALTKARTEPLAN	RK- 557022-010V
K4- 43951-3909		KRETSSCHEMA	CIRCUIT DIAGRAM	SCHALTKARTEPLAN	RK- 557552-010V
K4- 43951-4702		KRETSSCHEMA	CIRCUIT DIAGRAM	SCHALTKARTEPLAN	RK- 557022-010V
K4- 43951-4802		KRETSSCHEMA	CIRCUIT DIAGRAM	SCHALTKARTEPLAN	RK- 557022-010V
K4- 43951-5104		KRETSSCHEMA	CIRCUIT DIAGRAM	SCHALTKARTEPLAN	RK- 557154-010V
K4- 43951-5204		KRETSSCHEMA	CIRCUIT DIAGRAM	SCHALTKARTEPLAN	RK- 557154-010V
K4- 43951-6102		KRETSSCHEMA	CIRCUIT DIAGRAM	SCHALTKARTEPLAN	RK- 557022-010V
K4- 43951-6809		KRETSSCHEMA	CIRCUIT DIAGRAM	SCHALTKARTEPLAN	RK- 557552-010V
K4- 43951-7302		KRETSSCHEMA	CIRCUIT DIAGRAM	SCHALTKARTEPLAN	RK- 557022-010V
K4- 43951-7402		KRETSSCHEMA	CIRCUIT DIAGRAM	SCHALTKARTEPLAN	RK- 557022-010V
K4- 43951-7704		KRETSSCHEMA	CIRCUIT DIAGRAM	SCHALTKARTEPLAN	RK- 557154-010V
K4- 43951-7804		KRETSSCHEMA	CIRCUIT DIAGRAM	SCHALTKARTEPLAN	RK- 557154-010V
K4- 43951-8902		KRETSSCHEMA	CIRCUIT DIAGRAM	SCHALTKARTEPLAN	RK- 557022-010V
K4- 43951-9002		KRETSSCHEMA STAM SMST.	CIRCUIT DIAGRAM LINE SUM	SCHALTKARTEN LINIEN SMST	RK- 557022-010V
K4- 43951-9004		KRETSSCHEMA STAM SMST.	CIRCUIT DIAGRAM LINE SUM	SCHALTKARTEN LINIEN SMST	RK- 557154-010V
K4- 43951-9009		KRETSSCHEMA STAM SMST.	CIRCUIT DIAGRAM LINE SUM	SCHALTKARTEN LINIEN SMST	RK- 557552-010V
K4- 43951-9102		KRETSSCHEMA PLINT SMST.	CIRCUIT DIAGRAM TERM.SUM	SCHALTKARTEN SOCKEL SMST	RK- 557022-010V
K4- 43951-9104		KRETSSCHEMA PLINT SMST.	CIRCUIT DIAGRAM TERM.SUM	SCHALTKARTEN SOCKEL SMST	RK- 557154-010V
K4- 43951-9109		KRETSSCHEMA PLINT SMST.	CIRCUIT DIAGRAM TERM.SUM	SCHALTKARTEN SOCKEL SMST	RK- 557552-010V
4- 43965-0501		KRETSSCHEMA	CIRCUIT DIAGRAM, IH	SCHALTKARTEPLAN	CE- 69887-010V
4- 43965-0601		KRETSSCHEMA	CIRCUIT DIAGRAM, IH	SCHALTKARTEPLAN	CE- 69887-010V
4- 43978-0201		KRETSSCHEMA POS.SMST.	CIRCUIT DIAGRAM POS.SUMM	SCHALTKARTEN POS. SMST	CE- 557226-010V
4- 43978-0501		KRETSSCHEMA	CIRCUIT DIAGRAM	SCHALTKARTEPLAN	CE- 557226-010V
4- 43978-0601		KRETSSCHEMA	CIRCUIT DIAGRAM	SCHALTKARTEPLAN	CE- 557226-010V
4- 43978-0701		KRETSSCHEMA	CIRCUIT DIAGRAM	SCHALTKARTEPLAN	CE- 557226-010V
4- 43978-0801		KRETSSCHEMA	CIRCUIT DIAGRAM	SCHALTKARTEPLAN	CE- 557226-010V
4- 43978-0901		KRETSSCHEMA	CIRCUIT DIAGRAM	SCHALTKARTEPLAN	CE- 557226-010V
4- 43978-1001		KRETSSCHEMA	CIRCUIT DIAGRAM	SCHALTKARTEPLAN	CE- 557226-010V
4- 43978-1101		KRETSSCHEMA	CIRCUIT DIAGRAM	SCHALTKARTEPLAN	CE- 557226-010V
4- 43978-1201		KRETSSCHEMA	CIRCUIT DIAGRAM	SCHALTKARTEPLAN	CE- 557226-010V
4- 43978-8901		KRETSSCHEMA	CIRCUIT DIAGRAM	SCHALTKARTEPLAN	CE- 557226-010V
4- 43978-9001		KRETSSCHEMA STAM SMST.	CIRCUIT DIAGRAM LINE SUM	SCHALTKARTEN LINIEN SMST	CE- 557226-010V
4- 43978-9101		KRETSSCHEMA PLINT SMST.	CIRCUIT DIAGRAM TERM.SUM	SCHALTKARTEN SOCKEL SMST	CE- 557226-010V
4- 44093-0201		POSITIONS SAMMANSTÄLLNIN	POSITION SUMMARY	SCHALTKARTEN STELLUNGEN	CE- 41729-010V
K4- 44093-0202		POSITIONS SAMMANSTÄLLNIN	POSITION SUMMARY	SCHALTKARTEN STELLUNGEN	RK- 558303-010V
K4- 44093-0203		POSITIONS SAMMANSTÄLLNIN	POSITION SUMMARY	SCHALTKARTEN STELLUNGEN	RK- 558312-010V
K4- 44093-0206		POSITIONS SAMMANSTÄLLNIN	POSITION SUMMARY	SCHALTKARTEN STELLUNGEN	RK- 558334-010V
K4- 44093-0207		POSITIONS SAMMANSTÄLLNIN	POSITION SUMMARY	SCHALTKARTEN STELLUNGEN	RK- 558338-010V
4- 44093-0501		KRESTSCHEMA	CIRCUIT DIAGRAM	SCHALTKARTEPLAN	CE- 41729-010V
4- 44093-0601		KRESTSCHEMA	CIRCUIT DIAGRAM	SCHALTKARTEPLAN	CE- 41729-010V
K4- 44093-0603		KRESTSCHEMA	CIRCUIT DIAGRAM	SCHALTKARTEPLAN	RK- 558312-010V
4- 44093-0701		KRESTSCHEMA	CIRCUIT DIAGRAM	SCHALTKARTEPLAN	CE- 41729-010V
4- 44093-0801		KRESTSCHEMA	CIRCUIT DIAGRAM	SCHALTKARTEPLAN	CE- 41729-010V
4- 44093-1001		KRESTSCHEMA	CIRCUIT DIAGRAM	SCHALTKARTEPLAN	CE- 41729-010V
K4- 44093-1003		KRESTSCHEMA	CIRCUIT DIAGRAM	SCHALTKARTEPLAN	RK- 558312-010V
4- 44093-1101		KRESTSCHEMA	CIRCUIT DIAGRAM	SCHALTKARTEPLAN	CE- 41729-010V
4- 44093-1201		KRESTSCHEMA	CIRCUIT DIAGRAM	SCHALTKARTEPLAN	CE- 41729-010V
4- 44093-1301		KRESTSCHEMA	CIRCUIT DIAGRAM	SCHALTKARTEPLAN	CE- 41729-010V
4- 44093-1401		KRESTSCHEMA	CIRCUIT DIAGRAM	SCHALTKARTEPLAN	CE- 41729-010V
4- 44093-1601		KRESTSCHEMA	CIRCUIT DIAGRAM	SCHALTKARTEPLAN	CE- 41729-010V
4- 44093-1701		KRESTSCHEMA	CIRCUIT DIAGRAM	SCHALTKARTEPLAN	CE- 41729-010V
4- 44093-1801		KRESTSCHEMA	CIRCUIT DIAGRAM	SCHALTKARTEPLAN	CE- 41729-010V
4- 44093-1901		KRESTSCHEMA	CIRCUIT DIAGRAM	SCHALTKARTEPLAN	CE- 41729-010V
4- 44093-2001		KRESTSCHEMA	CIRCUIT DIAGRAM	SCHALTKARTEPLAN	CE- 41729-010V

PART NO	LAST ECN	BENÄMNING	TITLE	BENENNUNG	GROUP NO
4- 44093-2101		KRESTSCHEMA	CIRCUIT DIAGRAM	SCHALTKARTEPLAN	CE- 41729-010V
K4- 44093-2202		KRETSSCHEMA	CIRCUIT DIAGRAM	SCHALTKARTEPLAN	RK- 558303-010V
4- 44093-2401		KRESTSCHEMA	CIRCUIT DIAGRAM	SCHALTKARTEPLAN	CE- 41729-010V
4- 44093-2501		KRESTSCHEMA	CIRCUIT DIAGRAM	SCHALTKARTEPLAN	CE- 41729-010V
4- 44093-2601		KRESTSCHEMA	CIRCUIT DIAGRAM	SCHALTKARTEPLAN	CE- 41729-010V
K4- 44093-2602		KRETSSCHEMA	CIRCUIT DIAGRAM	SCHALTKARTEPLAN	RK- 558303-010V
4- 44093-2701		KRESTSCHEMA	CIRCUIT DIAGRAM	SCHALTKARTEPLAN	CE- 41729-010V
4- 44093-2901		KRESTSCHEMA	CIRCUIT DIAGRAM	SCHALTKARTEPLAN	CE- 41729-010V
4- 44093-3001		KRESTSCHEMA	CIRCUIT DIAGRAM	SCHALTKARTEPLAN	CE- 41729-010V
4- 44093-3101		KRESTSCHEMA	CIRCUIT DIAGRAM	SCHALTKARTEPLAN	CE- 41729-010V
4- 44093-3201		KRESTSCHEMA	CIRCUIT DIAGRAM	SCHALTKARTEPLAN	CE- 41729-010V
K4- 44093-3203		KRESTSCHEMA	CIRCUIT DIAGRAM	SCHALTKARTEPLAN	RK- 558312-010V
K4- 44093-3303		KRESTSCHEMA	CIRCUIT DIAGRAM	SCHALTKARTEPLAN	RK- 558312-010V
4- 44093-3401		KRESTSCHEMA	CIRCUIT DIAGRAM	SCHALTKARTEPLAN	CE- 41729-010V
4- 44093-3501		KRESTSCHEMA	CIRCUIT DIAGRAM	SCHALTKARTEPLAN	CE- 41729-010V
K4- 44093-3503		KRESTSCHEMA	CIRCUIT DIAGRAM	SCHALTKARTEPLAN	RK- 558312-010V
4- 44093-3601		KRESTSCHEMA	CIRCUIT DIAGRAM	SCHALTKARTEPLAN	CE- 41729-010V
4- 44093-3701		KRESTSCHEMA	CIRCUIT DIAGRAM	SCHALTKARTEPLAN	CE- 41729-010V
4- 44093-3801		KRESTSCHEMA	CIRCUIT DIAGRAM	SCHALTKARTEPLAN	CE- 41729-010V
K4- 44093-3806		KRESTSCHEMA	CIRCUIT DIAGRAM	SCHALTKARTEPLAN	RK- 558334-010V
K4- 44093-3807		KRESTSCHEMA	CIRCUIT DIAGRAM	SCHALTKARTEPLAN	RK- 558338-010V
4- 44093-3901		KRESTSCHEMA	CIRCUIT DIAGRAM	SCHALTKARTEPLAN	CE- 41729-010V
K4- 44093-3903		KRESTSCHEMA	CIRCUIT DIAGRAM	SCHALTKARTEPLAN	RK- 558312-010V
4- 44093-4001		KRESTSCHEMA	CIRCUIT DIAGRAM	SCHALTKARTEPLAN	CE- 41729-010V
4- 44093-4101		KRESTSCHEMA	CIRCUIT DIAGRAM	SCHALTKARTEPLAN	CE- 41729-010V
K4- 44093-4103		KRESTSCHEMA	CIRCUIT DIAGRAM	SCHALTKARTEPLAN	RK- 558312-010V
4- 44093-4201		KRESTSCHEMA	CIRCUIT DIAGRAM	SCHALTKARTEPLAN	CE- 41729-010V
4- 44093-4301		KRESTSCHEMA	CIRCUIT DIAGRAM	SCHALTKARTEPLAN	CE- 41729-010V
4- 44093-4401		KRESTSCHEMA	CIRCUIT DIAGRAM	SCHALTKARTEPLAN	CE- 41729-010V
4- 44093-4501		KRESTSCHEMA	CIRCUIT DIAGRAM	SCHALTKARTEPLAN	CE- 41729-010V
4- 44093-4601		KRESTSCHEMA	CIRCUIT DIAGRAM	SCHALTKARTEPLAN	CE- 41729-010V
K4- 44093-5102		KRETSSCHEMA	CIRCUIT DIAGRAM	SCHALTKARTEPLAN	RK- 558303-010V
K4- 44093-5202		KRETSSCHEMA	CIRCUIT DIAGRAM	SCHALTKARTEPLAN	RK- 558303-010V
4- 44093-5701		KRESTSCHEMA	CIRCUIT DIAGRAM	SCHALTKARTEPLAN	CE- 41729-010V
4- 44093-5801		KRESTSCHEMA	CIRCUIT DIAGRAM	SCHALTKARTEPLAN	CE- 41729-010V
4- 44093-6101		KRESTSCHEMA	CIRCUIT DIAGRAM	SCHALTKARTEPLAN	CE- 41729-010V
4- 44093-6201		KRESTSCHEMA	CIRCUIT DIAGRAM	SCHALTKARTEPLAN	CE- 41729-010V
4- 44093-6301		KRESTSCHEMA	CIRCUIT DIAGRAM	SCHALTKARTEPLAN	CE- 41729-010V
K4- 44093-6303		KRESTSCHEMA	CIRCUIT DIAGRAM	SCHALTKARTEPLAN	RK- 558312-010V
4- 44093-6401		KRESTSCHEMA	CIRCUIT DIAGRAM	SCHALTKARTEPLAN	CE- 41729-010V
4- 44093-6501		KRESTSCHEMA	CIRCUIT DIAGRAM	SCHALTKARTEPLAN	CE- 41729-010V
K4- 44093-6503		KRESTSCHEMA	CIRCUIT DIAGRAM	SCHALTKARTEPLAN	RK- 558312-010V
4- 44093-6601		KRESTSCHEMA	CIRCUIT DIAGRAM	SCHALTKARTEPLAN	CE- 41729-010V
4- 44093-6701		KRESTSCHEMA	CIRCUIT DIAGRAM	SCHALTKARTEPLAN	CE- 41729-010V
4- 44093-6801		KRESTSCHEMA	CIRCUIT DIAGRAM	SCHALTKARTEPLAN	CE- 41729-010V
4- 44093-6901		KRESTSCHEMA	CIRCUIT DIAGRAM	SCHALTKARTEPLAN	CE- 41729-010V
4- 44093-7001		KRESTSCHEMA	CIRCUIT DIAGRAM	SCHALTKARTEPLAN	CE- 41729-010V
K4- 44093-7002		KRETSSCHEMA	CIRCUIT DIAGRAM	SCHALTKARTEPLAN	RK- 558303-010V
4- 44093-7101		KRESTSCHEMA	CIRCUIT DIAGRAM	SCHALTKARTEPLAN	CE- 41729-010V
K4- 44093-7103		KRESTSCHEMA	CIRCUIT DIAGRAM	SCHALTKARTEPLAN	RK- 558312-010V
4- 44093-7201		KRESTSCHEMA	CIRCUIT DIAGRAM	SCHALTKARTEPLAN	CE- 41729-010V
K4- 44093-7203		KRESTSCHEMA	CIRCUIT DIAGRAM	SCHALTKARTEPLAN	RK- 558312-010V
K4- 44093-7206		KRESTSCHEMA	CIRCUIT DIAGRAM	SCHALTKARTEPLAN	RK- 558334-010V
K4- 44093-7207		KRESTSCHEMA	CIRCUIT DIAGRAM	SCHALTKARTEPLAN	RK- 558338-010V
K4- 44093-7502		KRETSSCHEMA	CIRCUIT DIAGRAM	SCHALTKARTEPLAN	RK- 558303-010V
K4- 44093-7602		KRETSSCHEMA	CIRCUIT DIAGRAM	SCHALTKARTEPLAN	RK- 558303-010V
4- 44093-8501		KRESTSCHEMA	CIRCUIT DIAGRAM	SCHALTKARTEPLAN	CE- 41729-010V
4- 44093-8601		KRESTSCHEMA	CIRCUIT DIAGRAM	SCHALTKARTEPLAN	CE- 41729-010V
4- 44093-8701		KRESTSCHEMA	CIRCUIT DIAGRAM	SCHALTKARTEPLAN	CE- 41729-010V
4- 44093-8801		KRESTSCHEMA	CIRCUIT DIAGRAM	SCHALTKARTEPLAN	CE- 41729-010V
4- 44093-8901		JORDSAMMANSTÄLLNING	EARTH SUMMARY	SCHALTKARTEPLAN	CE- 41729-010V
4- 44093-9001		STAM SAMMANSTÄLLNING	LINE SUMMARY	SCHALTKARTEN LINIEN SMST	CE- 41729-010V
K4- 44093-9002		STAM SAMMANSTÄLLNING	LINE SUMMARY	SCHALTKARTEN LINIEN SMST	RK- 558303-010V
K4- 44093-9003		STAM SAMMANSTÄLLNING	LINE SUMMARY	SCHALTKARTEN LINIEN SMST	RK- 558312-010V
K4- 44093-9006		STAM SAMMANSTÄLLNING	LINE SUMMARY	SCHALTKARTEN LINIEN SMST	RK- 558334-010V
K4- 44093-9007		STAM SAMMANSTÄLLNING	LINE SUMMARY	SCHALTKARTEN LINIEN SMST	RK- 558338-010V
4- 44093-9101		PLINT SAMMANSTÄLLNING	TERMINAL SUMMARY	SCHALTKARTEN SOCKEL SMST	CE- 41729-010V
K4- 44093-9102		PLINT SAMMANSTÄLLNING	TERMINAL SUMMARY	SCHALTKARTEN SOCKEL SMST	RK- 558303-010V
K4- 44093-9103		PLINT SAMMANSTÄLLNING	TERMINAL SUMMARY	SCHALTKARTEN SOCKEL SMST	RK- 558312-010V
4- 44093-9901		ÄNDRINGSMEDDELANDEN	ALTERATION MESSAGES	SCHALTKARTEPLAN	CE- 41729-010V
K4- 44093-9902		ÄNDRINGSMEDDELANDEN	ALTERATION MESSAGES	SCHALTKARTEPLAN	RK- 558303-010V
K4- 44093-9903		ÄNDRINGSMEDDELANDEN	ALTERATION MESSAGES	SCHALTKARTEPLAN	RK- 558312-010V
K4- 44093-9906		ÄNDRINGSMEDDELANDEN	ALTERATION MESSAGES	SCHALTKARTEPLAN	RK- 558334-010V
K4- 44093-9907		ÄNDRINGSMEDDELANDEN	ALTERATION MESSAGES	SCHALTKARTEPLAN	RK- 558338-010V
4- 44097-0201		POSITIONSSAMMANSTÄLLNING	POSITION SUMMARY	SCHALTKARTEN STELLUNGEN	CE- 41756-010V
K4- 44097-0202		POSITIONSSAMMANSTÄLLNING	POSITION SUMMARY	SCHALTKARTEN STELLUNGEN	RK- 558306-010V
4- 44097-0501		KRETSSCHEMA	CIRCUIT DIAGRAM	SCHALTKARTEPLAN	CE- 41756-010V
4- 44097-0601		KRETSSCHEMA	CIRCUIT DIAGRAM	SCHALTKARTEPLAN	CE- 41756-010V
4- 44097-0701		KRETSSCHEMA	CIRCUIT DIAGRAM	SCHALTKARTEPLAN	CE- 41756-010V
4- 44097-0801		KRETSSCHEMA	CIRCUIT DIAGRAM	SCHALTKARTEPLAN	CE- 41756-010V
4- 44097-0901		KRETSSCHEMA	CIRCUIT DIAGRAM	SCHALTKARTEPLAN	CE- 41756-010V
4- 44097-1001		KRETSSCHEMA	CIRCUIT DIAGRAM	SCHALTKARTEPLAN	CE- 41756-010V
4- 44097-1101		KRETSSCHEMA	CIRCUIT DIAGRAM	SCHALTKARTEPLAN	CE- 41756-010V
4- 44097-1201		KRETSSCHEMA	CIRCUIT DIAGRAM	SCHALTKARTEPLAN	CE- 41756-010V
4- 44097-1301		KRETSSCHEMA	CIRCUIT DIAGRAM	SCHALTKARTEPLAN	CE- 41756-010V
4- 44097-1401		KRETSSCHEMA	CIRCUIT DIAGRAM	SCHALTKARTEPLAN	CE- 41756-010V
4- 44097-1501		KRETSSCHEMA	CIRCUIT DIAGRAM	SCHALTKARTEPLAN	CE- 41756-010V
4- 44097-1601		KRETSSCHEMA	CIRCUIT DIAGRAM	SCHALTKARTEPLAN	CE- 41756-010V
4- 44097-1701		KRETSSCHEMA	CIRCUIT DIAGRAM	SCHALTKARTEPLAN	CE- 41756-010V
4- 44097-1801		KRETSSCHEMA	CIRCUIT DIAGRAM	SCHALTKARTEPLAN	CE- 41756-010V
4- 44097-1901		KRETSSCHEMA	CIRCUIT DIAGRAM	SCHALTKARTEPLAN	CE- 41756-010V
4- 44097-2001		KRETSSCHEMA	CIRCUIT DIAGRAM	SCHALTKARTEPLAN	CE- 41756-010V

PART NO	LAST ECN	BENÄMNING	TITLE	BENENNUNG	GROUP NO
4- 44097-2101		KRETSSCHEMA	CIRCUIT DIAGRAM	SCHALTKARTEPLAN	CE- 41756-010V
4- 44097-2201		KRETSSCHEMA	CIRCUIT DIAGRAM	SCHALTKARTEPLAN	CE- 41756-010V
4- 44097-2301		KRETSSCHEMA	CIRCUIT DIAGRAM	SCHALTKARTEPLAN	CE- 41756-010V
4- 44097-2401		KRETSSCHEMA	CIRCUIT DIAGRAM	SCHALTKARTEPLAN	CE- 41756-010V
4- 44097-2501		KRETSSCHEMA	CIRCUIT DIAGRAM	SCHALTKARTEPLAN	CE- 41756-010V
4- 44097-2601		KRETSSCHEMA	CIRCUIT DIAGRAM	SCHALTKARTEPLAN	CE- 41756-010V
4- 44097-2701		KRETSSCHEMA	CIRCUIT DIAGRAM	SCHALTKARTEPLAN	CE- 41756-010V
K4- 44097-2802		KRETSSCHEMA	CIRCUIT DIAGRAM	SCHALTKARTEPLAN	RK- 558306-010V
4- 44097-2901		KRETSSCHEMA	CIRCUIT DIAGRAM	SCHALTKARTEPLAN	CE- 41756-010V
4- 44097-3001		KRETSSCHEMA	CIRCUIT DIAGRAM	SCHALTKARTEPLAN	CE- 41756-010V
4- 44097-3101		KRETSSCHEMA	CIRCUIT DIAGRAM	SCHALTKARTEPLAN	CE- 41756-010V
4- 44097-3201		KRETSSCHEMA	CIRCUIT DIAGRAM	SCHALTKARTEPLAN	CE- 41756-010V
4- 44097-3401		KRETSSCHEMA	CIRCUIT DIAGRAM	SCHALTKARTEPLAN	CE- 41756-010V
4- 44097-3501		KRETSSCHEMA	CIRCUIT DIAGRAM	SCHALTKARTEPLAN	CE- 41756-010V
4- 44097-3601		KRETSSCHEMA	CIRCUIT DIAGRAM	SCHALTKARTEPLAN	CE- 41756-010V
4- 44097-3701		KRETSSCHEMA	CIRCUIT DIAGRAM	SCHALTKARTEPLAN	CE- 41756-010V
4- 44097-3801		KRETSSCHEMA	CIRCUIT DIAGRAM	SCHALTKARTEPLAN	CE- 41756-010V
4- 44097-3901		KRETSSCHEMA	CIRCUIT DIAGRAM	SCHALTKARTEPLAN	CE- 41756-010V
4- 44097-4001		KRETSSCHEMA	CIRCUIT DIAGRAM	SCHALTKARTEPLAN	CE- 41756-010V
4- 44097-4101		KRETSSCHEMA	CIRCUIT DIAGRAM	SCHALTKARTEPLAN	CE- 41756-010V
4- 44097-4201		KRETSSCHEMA	CIRCUIT DIAGRAM	SCHALTKARTEPLAN	CE- 41756-010V
4- 44097-4301		KRETSSCHEMA	CIRCUIT DIAGRAM	SCHALTKARTEPLAN	CE- 41756-010V
4- 44097-4401		KRETSSCHEMA	CIRCUIT DIAGRAM	SCHALTKARTEPLAN	CE- 41756-010V
4- 44097-4501		KRETSSCHEMA	CIRCUIT DIAGRAM	SCHALTKARTEPLAN	CE- 41756-010V
4- 44097-4601		KRETSSCHEMA	CIRCUIT DIAGRAM	SCHALTKARTEPLAN	CE- 41756-010V
4- 44097-4701		KRETSSCHEMA	CIRCUIT DIAGRAM	SCHALTKARTEPLAN	CE- 41756-010V
4- 44097-4801		KRETSSCHEMA	CIRCUIT DIAGRAM	SCHALTKARTEPLAN	CE- 41756-010V
4- 44097-4901		KRETSSCHEMA	CIRCUIT DIAGRAM	SCHALTKARTEPLAN	CE- 41756-010V
4- 44097-5001		KRETSSCHEMA	CIRCUIT DIAGRAM	SCHALTKARTEPLAN	CE- 41756-010V
K4- 44097-5102		KRETSSCHEMA	CIRCUIT DIAGRAM	SCHALTKARTEPLAN	RK- 558306-010V
K4- 44097-5202		KRETSSCHEMA	CIRCUIT DIAGRAM	SCHALTKARTEPLAN	RK- 558306-010V
4- 44097-5701		KRETSSCHEMA	CIRCUIT DIAGRAM	SCHALTKARTEPLAN	CE- 41756-010V
4- 44097-5801		KRETSSCHEMA	CIRCUIT DIAGRAM	SCHALTKARTEPLAN	CE- 41756-010V
4- 44097-6101		KRETSSCHEMA	CIRCUIT DIAGRAM	SCHALTKARTEPLAN	CE- 41756-010V
4- 44097-6201		KRETSSCHEMA	CIRCUIT DIAGRAM	SCHALTKARTEPLAN	CE- 41756-010V
4- 44097-6301		KRETSSCHEMA	CIRCUIT DIAGRAM	SCHALTKARTEPLAN	CE- 41756-010V
4- 44097-6401		KRETSSCHEMA	CIRCUIT DIAGRAM	SCHALTKARTEPLAN	CE- 41756-010V
4- 44097-6501		KRETSSCHEMA	CIRCUIT DIAGRAM	SCHALTKARTEPLAN	CE- 41756-010V
4- 44097-6601		KRETSSCHEMA	CIRCUIT DIAGRAM	SCHALTKARTEPLAN	CE- 41756-010V
4- 44097-6701		KRETSSCHEMA	CIRCUIT DIAGRAM	SCHALTKARTEPLAN	CE- 41756-010V
4- 44097-6801		KRETSSCHEMA	CIRCUIT DIAGRAM	SCHALTKARTEPLAN	CE- 41756-010V
4- 44097-6901		KRETSSCHEMA	CIRCUIT DIAGRAM	SCHALTKARTEPLAN	CE- 41756-010V
4- 44097-7001		KRETSSCHEMA	CIRCUIT DIAGRAM	SCHALTKARTEPLAN	CE- 41756-010V
K4- 44097-7002		KRETSSCHEMA	CIRCUIT DIAGRAM	SCHALTKARTEPLAN	RK- 558306-010V
4- 44097-7101		KRETSSCHEMA	CIRCUIT DIAGRAM	SCHALTKARTEPLAN	CE- 41756-010V
4- 44097-7201		KRETSSCHEMA	CIRCUIT DIAGRAM	SCHALTKARTEPLAN	CE- 41756-010V
4- 44097-7301		KRETSSCHEMA	CIRCUIT DIAGRAM	SCHALTKARTEPLAN	CE- 41756-010V
4- 44097-7401		KRETSSCHEMA	CIRCUIT DIAGRAM	SCHALTKARTEPLAN	CE- 41756-010V
K4- 44097-7502		KRETSSCHEMA	CIRCUIT DIAGRAM	SCHALTKARTEPLAN	RK- 558306-010V
K4- 44097-7602		KRETSSCHEMA	CIRCUIT DIAGRAM	SCHALTKARTEPLAN	RK- 558306-010V
4- 44097-8501		KRETSSCHEMA	CIRCUIT DIAGRAM	SCHALTKARTEPLAN	CE- 41756-010V
4- 44097-8601		KRETSSCHEMA	CIRCUIT DIAGRAM	SCHALTKARTEPLAN	CE- 41756-010V
4- 44097-8701		KRETSSCHEMA	CIRCUIT DIAGRAM	SCHALTKARTEPLAN	CE- 41756-010V
4- 44097-8801		KRETSSCHEMA	CIRCUIT DIAGRAM	SCHALTKARTEPLAN	CE- 41756-010V
4- 44097-8901		JORDSAMMANSTÄLLNING	EARTH SUMMARY	SCHALTKARTEPLAN	CE- 41756-010V
4- 44097-9001		STAMÖVERSIKT	LINE SUMMARY	SCHALTKARTEN LINIEN SMST	CE- 41756-010V
K4- 44097-9002		STAMÖVERSIKT	LINE SUMMARY	SCHALTKARTEN LINIEN SMST	RK- 558306-010V
4- 44097-9101		PLINTSAMMANSTÄLLNING	TERMINAL SUMMARY	SCHALTKARTEN SOCKEL SMST	CE- 41756-010V
K4- 44097-9102		PLINTSAMMANSTÄLLNING	TERMINAL SUMMARY	SCHALTKARTEN SOCKEL SMST	RK- 558306-010V
4- 44097-9901		ÄNDRINGSMEDDELANDEN	ALTERATION MESSAGES	SCHALTKARTEPLAN	CE- 41756-010V
K4- 44097-9902		ÄNDRINGSMEDDELANDEN	ALTERATION MESSAGES	SCHALTKARTEPLAN	RK- 558306-010V
4- 44098-0201		KRETSSCHEMA POSITIONER	CIRCUIT DIAGRAM POSITION	SCHALTKARTEN STELLUNGEN	CE- 41763-010V
K4- 44098-0202		KRETSSCHEMA POSITIONER	CIRCUIT DIAGRAM POSITION	SCHALTKARTEN STELLUNGEN	RK- 558309-010V
K4- 44098-0203		KRETSSCHEMA POSITIONER	CIRCUIT DIAGRAM POSITION	SCHALTKARTEN STELLUNGEN	RK- 558315-010V
K4- 44098-0205		KRETSSCHEMA POSITIONER	CIRCUIT DIAGRAM POSITION	SCHALTKARTEN STELLUNGEN	RK- 558332-010V
K4- 44098-0206		KRETSSCHEMA POSITIONER	CIRCUIT DIAGRAM POSITION	SCHALTKARTEN STELLUNGEN	RK- 558336-010V
4- 44098-0501		KRETSSCHEMA	CIRCUIT DIAGRAM	SCHALTKARTEPLAN	CE- 41763-010V
4- 44098-0601		KRETSSCHEMA	CIRCUIT DIAGRAM	SCHALTKARTEPLAN	CE- 41763-010V
K4- 44098-0603		KRETSSCHEMA	CIRCUIT DIAGRAM	SCHALTKARTEPLAN	RK- 558315-010V
4- 44098-0701		KRETSSCHEMA	CIRCUIT DIAGRAM	SCHALTKARTEPLAN	CE- 41763-010V
4- 44098-0801		KRETSSCHEMA	CIRCUIT DIAGRAM	SCHALTKARTEPLAN	CE- 41763-010V
4- 44098-1001		KRETSSCHEMA	CIRCUIT DIAGRAM	SCHALTKARTEPLAN	CE- 41763-010V
K4- 44098-1003		KRETSSCHEMA	CIRCUIT DIAGRAM	SCHALTKARTEPLAN	RK- 558315-010V
4- 44098-1101		KRETSSCHEMA	CIRCUIT DIAGRAM	SCHALTKARTEPLAN	CE- 41763-010V
4- 44098-1201		KRETSSCHEMA	CIRCUIT DIAGRAM	SCHALTKARTEPLAN	CE- 41763-010V
4- 44098-1301		KRETSSCHEMA	CIRCUIT DIAGRAM	SCHALTKARTEPLAN	CE- 41763-010V
4- 44098-1401		KRETSSCHEMA	CIRCUIT DIAGRAM	SCHALTKARTEPLAN	CE- 41763-010V
4- 44098-1601		KRETSSCHEMA	CIRCUIT DIAGRAM	SCHALTKARTEPLAN	CE- 41763-010V
4- 44098-1701		KRETSSCHEMA	CIRCUIT DIAGRAM	SCHALTKARTEPLAN	CE- 41763-010V
4- 44098-1801		KRETSSCHEMA	CIRCUIT DIAGRAM	SCHALTKARTEPLAN	CE- 41763-010V
4- 44098-1901		KRETSSCHEMA	CIRCUIT DIAGRAM	SCHALTKARTEPLAN	CE- 41763-010V
4- 44098-2001		KRETSSCHEMA	CIRCUIT DIAGRAM	SCHALTKARTEPLAN	CE- 41763-010V
4- 44098-2101		KRETSSCHEMA	CIRCUIT DIAGRAM	SCHALTKARTEPLAN	CE- 41763-010V
K4- 44098-2202		KRETSSCHEMA	CIRCUIT DIAGRAM	SCHALTKARTEPLAN	RK- 558309-010V
4- 44098-2401		KRETSSCHEMA	CIRCUIT DIAGRAM	SCHALTKARTEPLAN	CE- 41763-010V
4- 44098-2501		KRETSSCHEMA	CIRCUIT DIAGRAM	SCHALTKARTEPLAN	CE- 41763-010V
4- 44098-2601		KRETSSCHEMA	CIRCUIT DIAGRAM	SCHALTKARTEPLAN	CE- 41763-010V
K4- 44098-2602		KRETSSCHEMA	CIRCUIT DIAGRAM	SCHALTKARTEPLAN	RK- 558309-010V
4- 44098-2701		KRETSSCHEMA	CIRCUIT DIAGRAM	SCHALTKARTEPLAN	CE- 41763-010V
4- 44098-2901		KRETSSCHEMA	CIRCUIT DIAGRAM	SCHALTKARTEPLAN	CE- 41763-010V
4- 44098-3001		KRETSSCHEMA	CIRCUIT DIAGRAM	SCHALTKARTEPLAN	CE- 41763-010V
4- 44098-3101		KRETSSCHEMA	CIRCUIT DIAGRAM	SCHALTKARTEPLAN	CE- 41763-010V

PART NO	LAST ECN	BENÄMNING	TITLE	BENENNUNG	GROUP NO
4- 44098-3201		KRETSSCHEMA	CIRCUIT DIAGRAM	SCHALTKARTEPLAN	CE- 41763-010V
K4- 44098-3203		KRETSSCHEMA	CIRCUIT DIAGRAM	SCHALTKARTEPLAN	RK- 558315-010V
K4- 44098-3303		KRETSSCHEMA	CIRCUIT DIAGRAM	SCHALTKARTEPLAN	RK- 558315-010V
4- 44098-3401		KRETSSCHEMA	CIRCUIT DIAGRAM	SCHALTKARTEPLAN	CE- 41763-010V
4- 44098-3501		KRETSSCHEMA	CIRCUIT DIAGRAM	SCHALTKARTEPLAN	CE- 41763-010V
K4- 44098-3503		KRETSSCHEMA	CIRCUIT DIAGRAM	SCHALTKARTEPLAN	RK- 558315-010V
4- 44098-3601		KRETSSCHEMA	CIRCUIT DIAGRAM	SCHALTKARTEPLAN	CE- 41763-010V
4- 44098-3701		KRETSSCHEMA	CIRCUIT DIAGRAM	SCHALTKARTEPLAN	CE- 41763-010V
4- 44098-3801		KRETSSCHEMA	CIRCUIT DIAGRAM	SCHALTKARTEPLAN	CE- 41763-010V
K4- 44098-3805		KRETSSCHEMA	CIRCUIT DIAGRAM	SCHALTKARTEPLAN	RK- 558332-010V
K4- 44098-3806		KRETSSCHEMA	CIRCUIT DIAGRAM	SCHALTKARTEPLAN	RK- 558336-010V
4- 44098-3901		KRETSSCHEMA	CIRCUIT DIAGRAM	SCHALTKARTEPLAN	CE- 41763-010V
K4- 44098-3903		KRETSSCHEMA	CIRCUIT DIAGRAM	SCHALTKARTEPLAN	RK- 558315-010V
4- 44098-4001		KRETSSCHEMA	CIRCUIT DIAGRAM	SCHALTKARTEPLAN	CE- 41763-010V
4- 44098-4101		KRETSSCHEMA	CIRCUIT DIAGRAM	SCHALTKARTEPLAN	CE- 41763-010V
K4- 44098-4103		KRETSSCHEMA	CIRCUIT DIAGRAM	SCHALTKARTEPLAN	RK- 558315-010V
4- 44098-4201		KRETSSCHEMA	CIRCUIT DIAGRAM	SCHALTKARTEPLAN	CE- 41763-010V
4- 44098-4301		KRETSSCHEMA	CIRCUIT DIAGRAM	SCHALTKARTEPLAN	CE- 41763-010V
4- 44098-4401		KRETSSCHEMA	CIRCUIT DIAGRAM	SCHALTKARTEPLAN	CE- 41763-010V
4- 44098-4501		KRETSSCHEMA	CIRCUIT DIAGRAM	SCHALTKARTEPLAN	CE- 41763-010V
4- 44098-4601		KRETSSCHEMA	CIRCUIT DIAGRAM	SCHALTKARTEPLAN	CE- 41763-010V
K4- 44098-5102		KRETSSCHEMA	CIRCUIT DIAGRAM	SCHALTKARTEPLAN	RK- 558309-010V
K4- 44098-5202		KRETSSCHEMA	CIRCUIT DIAGRAM	SCHALTKARTEPLAN	RK- 558309-010V
4- 44098-5701		KRETSSCHEMA	CIRCUIT DIAGRAM	SCHALTKARTEPLAN	CE- 41763-010V
4- 44098-5801		KRETSSCHEMA	CIRCUIT DIAGRAM	SCHALTKARTEPLAN	CE- 41763-010V
4- 44098-6101		KRETSSCHEMA	CIRCUIT DIAGRAM	SCHALTKARTEPLAN	CE- 41763-010V
4- 44098-6201		KRETSSCHEMA	CIRCUIT DIAGRAM	SCHALTKARTEPLAN	CE- 41763-010V
4- 44098-6301		KRETSSCHEMA	CIRCUIT DIAGRAM	SCHALTKARTEPLAN	CE- 41763-010V
K4- 44098-6303		KRETSSCHEMA	CIRCUIT DIAGRAM	SCHALTKARTEPLAN	RK- 558315-010V
4- 44098-6401		KRETSSCHEMA	CIRCUIT DIAGRAM	SCHALTKARTEPLAN	CE- 41763-010V
4- 44098-6501		KRETSSCHEMA	CIRCUIT DIAGRAM	SCHALTKARTEPLAN	CE- 41763-010V
K4- 44098-6503		KRETSSCHEMA	CIRCUIT DIAGRAM	SCHALTKARTEPLAN	RK- 558315-010V
4- 44098-6601		KRETSSCHEMA	CIRCUIT DIAGRAM	SCHALTKARTEPLAN	CE- 41763-010V
4- 44098-6701		KRETSSCHEMA	CIRCUIT DIAGRAM	SCHALTKARTEPLAN	CE- 41763-010V
4- 44098-6801		KRETSSCHEMA	CIRCUIT DIAGRAM	SCHALTKARTEPLAN	CE- 41763-010V
4- 44098-6901		KRETSSCHEMA	CIRCUIT DIAGRAM	SCHALTKARTEPLAN	CE- 41763-010V
4- 44098-7001		KRETSSCHEMA	CIRCUIT DIAGRAM	SCHALTKARTEPLAN	CE- 41763-010V
K4- 44098-7002		KRETSSCHEMA	CIRCUIT DIAGRAM	SCHALTKARTEPLAN	RK- 558309-010V
4- 44098-7101		KRETSSCHEMA	CIRCUIT DIAGRAM	SCHALTKARTEPLAN	CE- 41763-010V
K4- 44098-7103		KRETSSCHEMA	CIRCUIT DIAGRAM	SCHALTKARTEPLAN	RK- 558315-010V
4- 44098-7201		KRETSSCHEMA	CIRCUIT DIAGRAM	SCHALTKARTEPLAN	CE- 41763-010V
K4- 44098-7203		KRETSSCHEMA	CIRCUIT DIAGRAM	SCHALTKARTEPLAN	RK- 558315-010V
K4- 44098-7205		KRETSSCHEMA	CIRCUIT DIAGRAM	SCHALTKARTEPLAN	RK- 558332-010V
K4- 44098-7206		KRETSSCHEMA	CIRCUIT DIAGRAM	SCHALTKARTEPLAN	RK- 558336-010V
K4- 44098-7502		KRETSSCHEMA	CIRCUIT DIAGRAM	SCHALTKARTEPLAN	RK- 558309-010V
K4- 44098-7602		KRETSSCHEMA	CIRCUIT DIAGRAM	SCHALTKARTEPLAN	RK- 558309-010V
4- 44098-8501		KRETSSCHEMA	CIRCUIT DIAGRAM	SCHALTKARTEPLAN	CE- 41763-010V
4- 44098-8601		KRETSSCHEMA	CIRCUIT DIAGRAM	SCHALTKARTEPLAN	CE- 41763-010V
4- 44098-8701		KRETSSCHEMA	CIRCUIT DIAGRAM	SCHALTKARTEPLAN	CE- 41763-010V
4- 44098-8801		KRETSSCHEMA	CIRCUIT DIAGRAM	SCHALTKARTEPLAN	CE- 41763-010V
4- 44098-8901		JORDSAMMANSTÄLLNING	EARTH SUMMARY	SCHALTKARTEPLAN	CE- 41763-010V
4- 44098-9001		KRETSSCHEMA STAM SMST.	CIRCUIT DIAGRAM LINE SUM	SCHALTKARTEN LINIEN SMST	CE- 41763-010V
K4- 44098-9002		KRETSSCHEMA STAM SMST.	CIRCUIT DIAGRAM LINE SUM	SCHALTKARTEN LINIEN SMST	RK- 558309-010V
K4- 44098-9003		KRETSSCHEMA STAM SMST.	CIRCUIT DIAGRAM LINE SUM	SCHALTKARTEN LINIEN SMST	RK- 558315-010V
K4- 44098-9005		KRETSSCHEMA STAM SMST.	CIRCUIT DIAGRAM LINE SUM	SCHALTKARTEN LINIEN SMST	RK- 558332-010V
K4- 44098-9006		KRETSSCHEMA STAM SMST.	CIRCUIT DIAGRAM LINE SUM	SCHALTKARTEN LINIEN SMST	RK- 558336-010V
4- 44098-9101		KRETSSCHEMA PLINT SMST.	CIRCUIT DIAGRAM TERM.SUM	SCHALTKARTEN SOCKEL SMST	CE- 41763-010V
K4- 44098-9102		KRETSSCHEMA PLINT SMST.	CIRCUIT DIAGRAM TERM.SUM	SCHALTKARTEN SOCKEL SMST	RK- 558309-010V
K4- 44098-9103		KRETSSCHEMA PLINT SMST.	CIRCUIT DIAGRAM TERM.SUM	SCHALTKARTEN SOCKEL SMST	RK- 558315-010V
4- 44098-9901		ÄNDRINGSMEDDELANDEN	ALTERATION MESSAGES	SCHALTKARTEPLAN	CE- 41763-010V
K4- 44098-9902		ÄNDRINGSMEDDELANDEN	ALTERATION MESSAGES	SCHALTKARTEPLAN	RK- 558309-010V
K4- 44098-9903		ÄNDRINGSMEDDELANDEN	ALTERATION MESSAGES	SCHALTKARTEPLAN	RK- 558315-010V
K4- 44098-9905		ÄNDRINGSMEDDELANDEN	ALTERATION MESSAGES	SCHALTKARTEPLAN	RK- 558332-010V
K4- 44098-9906		ÄNDRINGSMEDDELANDEN	ALTERATION MESSAGES	SCHALTKARTEPLAN	RK- 558336-010V
K4- 44174-0203		KRETSSCHEMA POSITIONER	CIRCUIT DIAGRAM POSITION	SCHALTKARTEN STELLUNGEN	RK- 558344-010V
K4- 44174-0603		KRETSSCHEMA	CIRCUIT DIAGRAM	SCHALTKARTEPLAN	RK- 558344-010V
K4- 44174-1003		KRETSSCHEMA	CIRCUIT DIAGRAM	SCHALTKARTEPLAN	RK- 558344-010V
K4- 44174-2403		KRETSSCHEMA	CIRCUIT DIAGRAM	SCHALTKARTEPLAN	RK- 558344-010V
K4- 44174-2803		KRETSSCHEMA	CIRCUIT DIAGRAM	SCHALTKARTEPLAN	RK- 558344-010V
K4- 44174-3103		KRETSSCHEMA	CIRCUIT DIAGRAM	SCHALTKARTEPLAN	RK- 558344-010V
K4- 44174-3303		KRETSSCHEMA	CIRCUIT DIAGRAM	SCHALTKARTEPLAN	RK- 558344-010V
K4- 44174-5603		KRETSSCHEMA	CIRCUIT DIAGRAM	SCHALTKARTEPLAN	RK- 558344-010V
K4- 44174-5703		KRETSSCHEMA	CIRCUIT DIAGRAM	SCHALTKARTEPLAN	RK- 558344-010V
K4- 44174-6003		KRETSSCHEMA	CIRCUIT DIAGRAM	SCHALTKARTEPLAN	RK- 558344-010V
K4- 44174-8503		KRETSSCHEMA	CIRCUIT DIAGRAM	SCHALTKARTEPLAN	RK- 558344-010V
K4- 44174-9003		STAMSAMMANSTÄLLNING	LINE SUMMARY	SCHALTKARTEN LINIEN SMST	RK- 558344-010V
K4- 44174-9103		KRETSSCHEMA PLINT SMST.	CIRCUIT DIAGRAM TERM.SUM	SCHALTKARTEN SOCKEL SMST	RK- 558344-010V
K4- 44174-9903		ÄNDRINGSMEDELANDEN	ALTERATION MESSAGES	SCHALTKARTEPLAN	RK- 558344-010V
K4- 47332-0104		TPMC BLOCKLISTA	TPMC LIST OF BLOCKS	TPMC BLOCKLISTE	RK- 557019-010V
K4- 47332-0106		TPMC BLOCKLISTA	TPMC LIST OF BLOCKS	TPMC BLOCKLISTE	RK- 557148-010V
K4- 47332-0112		TPMC BLOCKLISTA	TPMC LIST OF BLOCKS	TPMC BLOCKLISTE	RK- 557691-010V
K4- 47332-0114		TPMC BLOCKLISTA	TPMC LIST OF BLOCKS	TPMC BLOCKLISTE	RK- 41768-010V
K4- 47332-0204		TPMC ADRESSLISTA	TPMC LIST OF ADDRESSES	TPMC ADRESSELISTE	RK- 557019-010V
K4- 47332-0206		TPMC ADRESSLISTA	TPMC LIST OF ADDRESSES	TPMC ADRESSELISTE	RK- 557148-010V
K4- 47332-0207		TPMC ADRESSLISTA	TPMC LIST OF ADDRESSES	TPMC ADRESSELISTE	RK- 557157-010V
K4- 47332-0212		TPMC ADRESSLISTA	TPMC LIST OF ADDRESSES	TPMC ADRESSELISTE	RK- 557691-010V
K4- 47332-0214		TPMC ADRESSLISTA	TPMC LIST OF ADDRESSES	TPMC ADRESSELISTE	RK- 41768-010V
K4- 47332-0304		TPMC VOLUME ADOPT.DOC.	TPMC VOLUME ADOPT.DOC.	PROGRAMM	RK- 557019-010V
K4- 47332-0306		TPMC VOLUME ADOPT.DOC.	TPMC VOLUME ADOPT.DOC.	PROGRAMM	RK- 557148-010V
K4- 47332-0307		TPMC VOLUME ADOPT.DOC.	TPMC VOLUME ADOPT.DOC.	PROGRAMM	RK- 557157-010V
K4- 47332-0312		PROGRAM	TPMC VOLUME ADAPT.DOC.	PROGRAMM	RK- 557691-010V
K4- 47332-0404		TPMC SCHEMA	TPMC SEQUENCE DIAGRAM	TPMC SCHEMA	RK- 557019-010V

PART NO	LAST ECN	BENÄMNING	TITLE	BENENNUNG	GROUP NO
K4- 47332-0406		TPMC SCHEMA	TPMC SEQUENCE DIAGRAM	TPMC SCHEMA	RK- 557148-010V
K4- 47332-0407		TPMC SCHEMA	TPMC SEQUENCE DIAGRAM	TPMC SCHEMA	RK- 557157-010V
K4- 47332-0412		TPMC SCHEMA	TPMC SEQUENCE DIAGRAM	TPMC SCHEMA	RK- 557691-010V
K4- 47332-0507		TPMC PROGRAMMLISTA	TPMC PROGRAM LIST	TPMC PROGRAMM LISTE	RK- 557157-010V
K4- 47332-0606		TPMC PROGRAMMLISTA	TPMC PROGRAM LIST	TPMC PROGRAMM LISTE	RK- 557148-010V
K4- 47332-0607		TPMC PROGRAMMLISTA	TPMC PROGRAM LIST	TPMC PROGRAMM LISTE	RK- 557157-010V
K4- 47332-0612		TPMC PROGRAMMLISTA	TPMC PROGRAM LIST	TPMC PROGRAMM LISTE	RK- 557691-010V
K4- 47332-0614		TPMC PROGRAMMLISTA	TPMC PROGRAM LIST	TPMC PROGRAMM LISTE	RK- 41768-010V
K4- 47332-1006		TPMC PROGRAMMLISTA	TPMC PROGRAM LIST	TPMC PROGRAMM LISTE	RK- 557148-010V
K4- 47332-1007		TPMC PROGRAMMLISTA	TPMC PROGRAM LIST	TPMC PROGRAMM LISTE	RK- 557157-010V
K4- 47332-1012		TPMC PROGRAMMLISTA	TPMC PROGRAM LIST	TPMC PROGRAMM LISTE	RK- 557691-010V
K4- 47332-1014		TPMC PROGRAMMLISTA	TPMC PROGRAM LIST	TPMC PROGRAMM LISTE	RK- 41768-010V
K4- 47332-1107		TPMC PROGRAMMLISTA	TPMC PROGRAM LIST	TPMC PROGRAMM LISTE	RK- 557157-010V
K4- 47332-1307		TPMC PROGRAMMLISTA	TPMC PROGRAM LIST	TPMC PROGRAMM LISTE	RK- 557157-010V
K4- 47332-1606		TPMC PROGRAMMLISTA	TPMC PROGRAM LIST	TPMC PROGRAMM LISTE	RK- 557148-010V
K4- 47332-1607		TPMC PROGRAMMLISTA	TPMC PROGRAM LIST	TPMC PROGRAMM LISTE	RK- 557157-010V
K4- 47332-1612		TPMC PROGRAMMLISTA	TPMC PROGRAM LIST	TPMC PROGRAMM LISTE	RK- 557691-010V
K4- 47332-1614		TPMC PROGRAMMLISTA	TPMC PROGRAM LIST	TPMC PROGRAMM LISTE	RK- 41768-010V
K4- 47332-1707		TPMC PROGRAMMLISTA	TPMC PROGRAM LIST	TPMC PROGRAMM LISTE	RK- 557157-010V
K4- 47332-1904		TPMC PROGRAMMLISTA	TPMC PROGRAM LIST	TPMC PROGRAMM LISTE	RK- 557019-010V
K4- 47332-1906		TPMC PROGRAMMLISTA	TPMC PROGRAM LIST	TPMC PROGRAMM LISTE	RK- 557148-010V
K4- 47332-1907		TPMC PROGRAMMLISTA	TPMC PROGRAM LIST	TPMC PROGRAMM LISTE	RK- 557157-010V
K4- 47332-1912		TPMC PROGRAMMLISTA	TPMC PROGRAM LIST	TPMC PROGRAMM LISTE	RK- 557691-010V
K4- 47332-2007		TPMC PROGRAMMLISTA	TPMC PROGRAM LIST	TPMC PROGRAMM LISTE	RK- 557157-010V
K4- 47332-2207		TPMC PROGRAMMLISTA	TPMC PROGRAM LIST	TPMC PROGRAMM LISTE	RK- 557157-010V
K4- 47332-2306		TPMC PROGRAMMLISTA	TPMC PROGRAM LIST	TPMC PROGRAMM LISTE	RK- 557148-010V
K4- 47332-2307		TPMC PROGRAMMLISTA	TPMC PROGRAM LIST	TPMC PROGRAMM LISTE	RK- 557157-010V
K4- 47332-2312		TPMC PROGRAMMLISTA	TPMC PROGRAM LIST	TPMC PROGRAMM LISTE	RK- 557691-010V
K4- 47332-2314		TPMC PROGRAMMLISTA	TPMC PROGRAM LIST	TPMC PROGRAMM LISTE	RK- 41768-010V
K4- 47332-2406		TPMC PROGRAMMLISTA	TPMC PROGRAM LIST	TPMC PROGRAMM LISTE	RK- 557148-010V
K4- 47332-2412		TPMC PROGRAMMLISTA	TPMC PROGRAM LIST	TPMC PROGRAMM LISTE	RK- 557691-010V
K4- 47332-2414		TPMC PROGRAMMLISTA	TPMC PROGRAM LIST	TPMC PROGRAMM LISTE	RK- 41768-010V
K4- 47332-2507		TPMC PROGRAMMLISTA	TPMC PROGRAM LIST	TPMC PROGRAMM LISTE	RK- 557157-010V
K4- 47332-2806		TPMC PROGRAMMLISTA	TPMC PROGRAM LIST	TPMC PROGRAMM LISTE	RK- 557148-010V
K4- 47332-2807		TPMC PROGRAMMLISTA	TPMC PROGRAM LIST	TPMC PROGRAMM LISTE	RK- 557157-010V
K4- 47332-2812		TPMC PROGRAMMLISTA	TPMC PROGRAM LIST	TPMC PROGRAMM LISTE	RK- 557691-010V
K4- 47332-2814		TPMC PROGRAMMLISTA	TPMC PROGRAM LIST	TPMC PROGRAMM LISTE	RK- 41768-010V
K4- 47332-2906		TPMC PROGRAMMLISTA	TPMC PROGRAM LIST	TPMC PROGRAMM LISTE	RK- 557148-010V
K4- 47332-2907		TPMC PROGRAMMLISTA	TPMC PROGRAM LIST	TPMC PROGRAMM LISTE	RK- 557157-010V
K4- 47332-2912		TPMC PROGRAMMLISTA	TPMC PROGRAM LIST	TPMC PROGRAMM LISTE	RK- 557691-010V
K4- 47332-2914		TPMC PROGRAMMLISTA	TPMC PROGRAM LIST	TPMC PROGRAMM LISTE	RK- 41768-010V
K4- 47332-3004		TPMC PROGRAMMLISTA	TPMC PROGRAM LIST	TPMC PROGRAMM LISTE	RK- 557019-010V
K4- 47332-3006		TPMC PROGRAMMLISTA	TPMC PROGRAM LIST	TPMC PROGRAMM LISTE	RK- 557148-010V
K4- 47332-3007		TPMC PROGRAMMLISTA	TPMC PROGRAM LIST	TPMC PROGRAMM LISTE	RK- 557157-010V
K4- 47332-3012		TPMC PROGRAMMLISTA	TPMC PROGRAM LIST	TPMC PROGRAMM LISTE	RK- 557691-010V
K4- 47332-3014		TPMC PROGRAMMLISTA	TPMC PROGRAM LIST	TPMC PROGRAMM LISTE	RK- 41768-010V
K4- 47332-3106		TPMC PROGRAMMLISTA	TPMC PROGRAM LIST	TPMC PROGRAMM LISTE	RK- 557148-010V
K4- 47332-3112		TPMC PROGRAMMLISTA	TPMC PROGRAM LIST	TPMC PROGRAMM LISTE	RK- 557691-010V
K4- 47332-3114		TPMC PROGRAMMLISTA	TPMC PROGRAM LIST	TPMC PROGRAMM LISTE	RK- 41768-010V
K4- 47332-3206		TPMC PROGRAMMLISTA	TPMC PROGRAM LIST	TPMC PROGRAMM LISTE	RK- 557148-010V
K4- 47332-3207		TPMC PROGRAMMLISTA	TPMC PROGRAM LIST	TPMC PROGRAMM LISTE	RK- 557157-010V
K4- 47332-3212		TPMC PROGRAMMLISTA	TPMC PROGRAM LIST	TPMC PROGRAMM LISTE	RK- 557691-010V
K4- 47332-3504		TPMC PROGRAMMLISTA	TPMC PROGRAM LIST	TPMC PROGRAMM LISTE	RK- 557019-010V
K4- 47347-0222		TPMC ADRESSLISTA	TPMC LIST OF ADRESSES	TPMC ADRESSELISTE	RK- 557235-010V
K4- 47347-0722		TPMC PROGRAMMLISTA	TPMC PROGRAM LIST	TPMC PROGRAMM LISTE	RK- 557235-010V
K4- 47347-1422		TPMC PROGRAMMLISTA	TPMC PROGRAM LIST	TPMC PROGRAMM LISTE	RK- 557235-010V
K4- 47347-1522		TPMC PROGRAMMLISTA	TPMC PROGRAM LIST	TPMC PROGRAMM LISTE	RK- 557235-010V
K4- 47347-1622		TPMC PROGRAMMLISTA	TPMC PROGRAM LIST	TPMC PROGRAMM LISTE	RK- 557235-010V
K4- 47347-1922		TPMC PROGRAMMLISTA	TPMC PROGRAM LIST	TPMC PROGRAMM LISTE	RK- 557235-010V
K4- 47347-2122		TPMC PROGRAMMLISTA	TPMC PROGRAM LIST	TPMC PROGRAMM LISTE	RK- 557235-010V
K4- 47347-2822		TPMC PROGRAMMLISTA	TPMC PROGRAM LIST	TPMC PROGRAMM LISTE	RK- 557235-010V
K4- 47347-3322		TPMC PROGRAMMLISTA	TPMC PROGRAM LIST	TPMC PROGRAMM LISTE	RK- 557235-010V
K4- 47429-0104		TPMC BLOCKLISTA	LIST OF TPMC BLOCKS	TPMC BLOCKLISTE	RK- 557151-010V
K4- 47429-0107		TPMC BLOCKLISTA	LIST OF TPMC BLOCKS	TPMC BLOCKLISTE	RK- 557694-010V
K4- 47429-0109		TPMC BLOCKLISTA	TPMC LIST OF BLOCKS	TPMC BLOCKLISTE	RK- 41770-010V
K4- 47429-0204		TPMC ADRESSLISTA	TPMC LIST OF ADDRESSES	TPMC ADRESSELISTE	RK- 557151-010V
K4- 47429-0205		TPMC ADRESSLISTA	TPMC LIST OF ADDRESSES	TPMC ADRESSELISTE	RK- 557160-010V
K4- 47429-0207		TPMC ADRESSLISTA	TPMC LIST OF ADDRESSES	TPMC ADRESSELISTE	RK- 557694-010V
K4- 47429-0209		TPMC ADRESSLISTA	TPMC LIST OF ADDRESSES	TPMC ADRESSELISTE	RK- 41770-010V
K4- 47429-0304		VOLYMBEROENDE DOKUMENT	VOLUME ADAPTION DOCUMENT	VOLUMABHÄNGIG DOKUMENT	RK- 557151-010V
K4- 47429-0305		VOLYMBEROENDE DOKUMENT	VOLUME ADAPTION DOCUMENT	VOLUMABHÄNGIG DOKUMENT	RK- 557160-010V
K4- 47429-0307		VOLYMBEROENDE DOKUMENT	VOLUME ADAPTION DOCUMENT	VOLUMABHÄNGIG DOKUMENT	RK- 557694-010V
K4- 47429-0404		TPMC SEQUENCE DIAGRAM	TPMC SEQUENCE DIAGRAM	TPMC SCHEMA	RK- 557151-010V
K3- 47429-0405		TPMC SEQUENCE DIAGRAM	TPMC SEQUENCE DIAGRAM	TPMC SCHEMA	RK- 557160-010V
K4- 47429-0407		TPMC SCHEMA	TPMC SEQUENCE DIAGRAM	TPMC SCHEMA	RK- 557694-010V
K4- 47429-0505		TPMC PROGRAMMLISTA	TPMC PROGRAM LIST	TPMC PROGRAMM LISTE	RK- 557160-010V
K4- 47429-0604		TPMC PROGRAMMLISTA	TPMC PROGRAM LIST	TPMC PROGRAMM LISTE	RK- 557151-010V
K4- 47429-0605		TPMC PROGRAMMLISTA	TPMC PROGRAM LIST	TPMC PROGRAMM LISTE	RK- 557160-010V
K4- 47429-0607		TPMC PROGRAMMLISTA	TPMC PROGRAM LIST	TPMC PROGRAMM LISTE	RK- 557694-010V
K4- 47429-0609		TPMC PROGRAMMLISTA	TPMC PROGRAM LIST	TPMC PROGRAMM LISTE	RK- 41770-010V
K4- 47429-1004		TPMC PROGRAMMLISTA	TPMC PROGRAM LIST	TPMC PROGRAMM LISTE	RK- 557151-010V
K4- 47429-1005		TPMC PROGRAMMLISTA	TPMC PROGRAM LIST	TPMC PROGRAMM LISTE	RK- 557160-010V
K4- 47429-1007		TPMC PROGRAMMLISTA	TPMC PROGRAM LIST	TPMC PROGRAMM LISTE	RK- 557694-010V
K4- 47429-1009		TPMC PROGRAMMLISTA	TPMC PROGRAM LIST	TPMC PROGRAMM LISTE	RK- 41770-010V
K4- 47429-1105		TPMC PROGRAMMLISTA	TPMC PROGRAM LIST	TPMC PROGRAMM LISTE	RK- 557160-010V
K4- 47429-1305		TPMC PROGRAMMLISTA	TPMC PROGRAM LIST	TPMC PROGRAMM LISTE	RK- 557160-010V
K4- 47429-1604		TPMC PROGRAMMLISTA	TPMC PROGRAM LIST	TPMC PROGRAMM LISTE	RK- 557151-010V
K4- 47429-1605		TPMC PROGRAMMLISTA	TPMC PROGRAM LIST	TPMC PROGRAMM LISTE	RK- 557160-010V
K4- 47429-1607		TPMC PROGRAMMLISTA	TPMC PROGRAM LIST	TPMC PROGRAMM LISTE	RK- 557694-010V
K4- 47429-1609		TPMC PROGRAMMLISTA	TPMC PROGRAM LIST	TPMC PROGRAMM LISTE	RK- 41770-010V
K4- 47429-1904		TPMC PROGRAMMLISTA	TPMC PROGRAM LIST	TPMC PROGRAMM LISTE	RK- 557151-010V
K4- 47429-1905		TPMC PROGRAMMLISTA	TPMC PROGRAM LIST	TPMC PROGRAMM LISTE	RK- 557160-010V

PART NO	LAST ECN	BENÄMNING	TITLE	BENENNUNG	GROUP NO
K4- 47429-1907		TPMC PROGRAMMLISTA	TPMC PROGRAM LIST	TPMC PROGRAMM LISTE	RK- 557694-010V
K4- 47429-2005		TPMC PROGRAMMLISTA	TPMC PROGRAM LIST	TPMC PROGRAMM LISTE	RK- 557160-010V
K4- 47429-2205		TPMC PROGRAMMLISTA	TPMC PROGRAM LIST	TPMC PROGRAMM LISTE	RK- 557160-010V
K4- 47429-2304		TPMC PROGRAMMLISTA	TPMC PROGRAM LIST	TPMC PROGRAMM LISTE	RK- 557151-010V
K4- 47429-2305		TPMC PROGRAMMLISTA	TPMC PROGRAM LIST	TPMC PROGRAMM LISTE	RK- 557160-010V
K4- 47429-2307		TPMC PROGRAMMLISTA	TPMC PROGRAM LIST	TPMC PROGRAMM LISTE	RK- 557694-010V
K4- 47429-2309		TPMC PROGRAMMLISTA	TPMC PROGRAM LIST	TPMC PROGRAMM LISTE	RK- 41770-010V
K4- 47429-2404		TPMC PROGRAMMLISTA	TPMC PROGRAM LIST	TPMC PROGRAMM LISTE	RK- 557151-010V
K4- 47429-2407		TPMC PROGRAMMLISTA	TPMC PROGRAM LIST	TPMC PROGRAMM LISTE	RK- 557694-010V
K4- 47429-2409		TPMC PROGRAMMLISTA	TPMC PROGRAM LIST	TPMC PROGRAMM LISTE	RK- 41770-010V
K4- 47429-2505		TPMC PROGRAMMLISTA	TPMC PROGRAM LIST	TPMC PROGRAMM LISTE	RK- 557160-010V
K4- 47429-2804		TPMC PROGRAMMLISTA	TPMC PROGRAM LIST	TPMC PROGRAMM LISTE	RK- 557151-010V
K4- 47429-2805		TPMC PROGRAMMLISTA	TPMC PROGRAM LIST	TPMC PROGRAMM LISTE	RK- 557160-010V
K4- 47429-2807		TPMC PROGRAMMLISTA	TPMC PROGRAM LIST	TPMC PROGRAMM LISTE	RK- 557694-010V
K4- 47429-2809		TPMC PROGRAMMLISTA	TPMC PROGRAM LIST	TPMC PROGRAMM LISTE	RK- 41770-010V
K4- 47429-2904		TPMC PROGRAMMLISTA	TPMC PROGRAM LIST	TPMC PROGRAMM LISTE	RK- 557151-010V
K4- 47429-2905		TPMC PROGRAMMLISTA	TPMC PROGRAM LIST	TPMC PROGRAMM LISTE	RK- 557160-010V
K4- 47429-2907		TPMC PROGRAMMLISTA	TPMC PROGRAM LIST	TPMC PROGRAMM LISTE	RK- 557694-010V
K4- 47429-2909		TPMC PROGRAMMLISTA	TPMC PROGRAM LIST	TPMC PROGRAMM LISTE	RK- 41770-010V
K4- 47429-3004		TPMC PROGRAMMLISTA	TPMC PROGRAM LIST	TPMC PROGRAMM LISTE	RK- 557151-010V
K4- 47429-3005		TPMC PROGRAMMLISTA	TPMC PROGRAM LIST	TPMC PROGRAMM LISTE	RK- 557160-010V
K4- 47429-3007		TPMC PROGRAMMLISTA	TPMC PROGRAM LIST	TPMC PROGRAMM LISTE	RK- 557694-010V
K4- 47429-3009		TPMC PROGRAMMLISTA	TPMC PROGRAM LIST	TPMC PROGRAMM LISTE	RK- 41770-010V
K4- 47429-3204		TPMC PROGRAMMLISTA	TPMC PROGRAM LIST	TPMC PROGRAMM LISTE	RK- 557151-010V
K4- 47429-3205		TPMC PROGRAMMLISTA	TPMC PROGRAM LIST	TPMC PROGRAMM LISTE	RK- 557160-010V
K4- 47429-3207		TPMC PROGRAMMLISTA	TPMC PROGRAM LIST	TPMC PROGRAMM LISTE	RK- 557694-010V
K4- 47429-3209		TPMC PROGRAMMLISTA	TPMC PROGRAM LIST	TPMC PROGRAMM LISTE	RK- 41770-010V
K4- 47429-3304		TPMC PROGRAMMLISTA	TPMC PROGRAM LIST	TPMC PROGRAMM LISTE	RK- 557151-010V
K4- 47429-3305		TPMC PROGRAMMLISTA	TPMC PROGRAM LIST	TPMC PROGRAMM LISTE	RK- 557160-010V
K4- 47429-3307		TPMC PROGRAMMLISTA	TPMC PROGRAM LIST	TPMC PROGRAMM LISTE	RK- 557694-010V
K4- 47429-3405		TPMC PROGRAMMLISTA	TPMC PROGRAM LIST	TPMC PROGRAMM LISTE	RK- 557160-010V
K4- 47430-0102		TPMC BLOCKLISTA	LIST OF TPMC BLOCKS	TPMC BLOCKLISTE	RK- 557022-010V
K4- 47430-0202		TPMC ADRESSLISTA	TPMC LIST OF ADDRESSES	TPMC ADRESSELISTE	RK- 557022-010V
K4- 47430-0302		TPMC VOLUME ADOPTION DOC	TPMC VOLUME ADOPTION DOC	PROGRAMM	RK- 557022-010V
K4- 47430-0402		FUNKTIONSDIAGRAM	FUNCTION DIAGRAM	FUNKTIONSDIAGRAM	RK- 557022-010V
K4- 47430-1902		TPMC PROGRAMMLISTA	TPMC PROGRAM LIST	TPMC PROGRAMM LISTE	RK- 557022-010V
K4- 47430-3002		TPMC PROGRAMMLISTA	TPMC PROGRAM LIST	TPMC PROGRAMM LISTE	RK- 557022-010V
K4- 47430-3502		TPMC PROGRAMMLISTA	TPMC PROGRAM LIST	TPMC PROGRAMM LISTE	RK- 557022-010V
4- 47615-0001		TPMC-DISKETT	TPMC-DISCETTE	TPMC DISKETT	CE- 41726-010V
					CE- 41760-010V
					CE- 41726-010V
					CE- 41760-010V
4- 47615-0101		TPMC PROGRAMMLISTA	TPMC LIST OF BLOCKS	TPMC PROGRAMM LISTE	CE- 41729-010V
K4- 47615-0102		TPMC	TPMC-LIST OF BLOCKS	TPMC	RK- 558303-010V
4- 47615-0201		TPMC ADRESSLISTA	TPMC LIST OF ADDRESSES	TPMC ADRESSELISTE	CE- 41729-010V
K4- 47615-0202		TPMC ADRESSLISTA	TPMC LIST OF ADDRESSES	TPMC ADRESSELISTE	RK- 558303-010V
4- 47615-0301		VOLYMBEROENDE DOKUMENT	VOLUME ADAPTION DOCUMENT	VOLUMABHÄNGIG DOKUMENT	CE- 41729-010V
K4- 47615-0302		VOLYMBEROENDE DOKUMENT	VOLUME ADAPTION DOCUMENT	VOLUMABHÄNGIG DOKUMENT	RK- 558303-010V
4- 47615-0401		TPMC SCHEMA	TPMC SEQUENCE DIAGRAM	TPMC SCHEMA	CE- 41729-010V
4- 47615-0501		TPMC PROGRAMMLISTA	TPMC PROGRAM LIST	TPMC PROGRAMM LISTE	CE- 41729-010V
4- 47615-0601		TPMC PROGRAMMLISTA	TPMC PROGRAM LIST	TPMC PROGRAMM LISTE	CE- 41729-010V
K4- 47615-0602		TPMC PROGRAMMLISTA	TPMC PROGRAM LIST	TPMC PROGRAMM LISTE	RK- 558303-010V
4- 47615-0701		TPMC PROGRAMMLISTA	TPMC PROGRAM LIST	TPMC PROGRAMM LISTE	CE- 41729-010V
4- 47615-0801		TPMC PROGRAMMLISTA	TPMC PROGRAM LIST	TPMC PROGRAMM LISTE	CE- 41729-010V
4- 47615-0901		TPMC PROGRAMMLISTA	TPMC PROGRAM LIST	TPMC PROGRAMM LISTE	CE- 41729-010V
4- 47615-1001		TPMC PROGRAMMLISTA	TPMC PROGRAM LIST	TPMC PROGRAMM LISTE	CE- 41729-010V
4- 47615-1101		TPMC PROGRAMMLISTA	TPMC PROGRAM LIST	TPMC PROGRAMM LISTE	CE- 41729-010V
4- 47615-1201		TPMC PROGRAMMLISTA	TPMC PROGRAM LIST	TPMC PROGRAMM LISTE	CE- 41729-010V
4- 47615-1301		TPMC PROGRAMMLISTA	TPMC PROGRAM LIST	TPMC PROGRAMM LISTE	CE- 41729-010V
4- 47615-1401		TPMC PROGRAMMLISTA	TPMC PROGRAM LIST	TPMC PROGRAMM LISTE	CE- 41729-010V
4- 47615-1701		TPMC PROGRAMMLISTA	TPMC PROGRAM LIST	TPMC PROGRAMM LISTE	CE- 41729-010V
4- 47615-1801		TPMC PROGRAMMLISTA	TPMC PROGRAM LIST	TPMC PROGRAMM LISTE	CE- 41729-010V
4- 47615-1901		TPMC PROGRAMMLISTA	TPMC PROGRAM LIST	TPMC PROGRAMM LISTE	CE- 41729-010V
K4- 47615-1902		TPMC PROGRAMMLISTA	TPMC PROGRAM LIST	TPMC PROGRAMM LISTE	RK- 558303-010V
4- 47615-2001		TPMC PROGRAMMLISTA	TPMC PROGRAM LIST	TPMC PROGRAMM LISTE	CE- 41729-010V
K4- 47615-2002		TPMC PROGRAMMLISTA	TPMC PROGRAM LIST	TPMC PROGRAMM LISTE	RK- 558303-010V
4- 47615-2301		TPMC PROGRAMMLISTA	TPMC PROGRAM LIST	TPMC PROGRAMM LISTE	CE- 41729-010V
K4- 47615-2302		TPMC PROGRAMMLISTA	TPMC PROGRAM LIST	TPMC PROGRAMM LISTE	RK- 558303-010V
4- 47615-2401		TPMC PROGRAMMLISTA	TPMC PROGRAM LIST	TPMC PROGRAMM LISTE	CE- 41729-010V
4- 47615-2501		TPMC PROGRAMMLISTA	TPMC PROGRAM LIST	TPMC PROGRAMM LISTE	CE- 41729-010V
4- 47615-2601		TPMC PROGRAMMLISTA	TPMC PROGRAM LIST	TPMC PROGRAMM LISTE	CE- 41729-010V
4- 47615-2701		TPMC PROGRAMMLISTA	TPMC PROGRAM LIST	TPMC PROGRAMM LISTE	CE- 41729-010V
4- 47615-2801		TPMC PROGRAMMLISTA	TPMC PROGRAM LIST	TPMC PROGRAMM LISTE	CE- 41729-010V
4- 47615-2901		TPMC PROGRAMMLISTA	TPMC PROGRAM LIST	TPMC PROGRAMM LISTE	CE- 41729-010V
4- 47615-3001		TPMC PROGRAMMLISTA	TPMC PROGRAM LIST	TPMC PROGRAMM LISTE	CE- 41729-010V
4- 47615-3101		TPMC PROGRAMMLISTA	TPMC PROGRAM LIST	TPMC PROGRAMM LISTE	CE- 41729-010V
4- 47615-3201		TPMC PROGRAMMLISTA	TPMC PROGRAM LIST	TPMC PROGRAMM LISTE	CE- 41729-010V
4- 47615-3301		TPMC PROGRAMMLISTA	TPMC PROGRAM LIST	TPMC PROGRAMM LISTE	CE- 41729-010V
K4- 47615-3602		TPMC PROGRAMMLISTA	TPMC PROGRAM LIST	TPMC PROGRAMM LISTE	RK- 558303-010V
4- 47615-9001		TPMC PROGRAMMLISTA	TPMC PROGRAM LIST	TPMC PROGRAMM LISTE	CE- 41729-010V
4- 47615-9901		TPMC PROGRAMMLISTA	TPMC PROGRAM LIST	TPMC PROGRAMM LISTE	CE- 41729-010V
4- 47629-0001		TPMC-DISKETT	TPMC-DISCETTE	TPMC DISKETT	CE- 41753-010V
4- 47629-0101		TPMC	TPMC LIST OF BLOCKS	TPMC	CE- 41756-010V
4- 47629-0201		TPMC ADRESSLISTA	TPMC LIST OF ADDRESSES	TPMC ADRESSELISTE	CE- 41756-010V
4- 47629-0301		VOLYMBEROENDE DOKUMENT	VOLUME ADAPTION DOCUMENT	VOLUMABHÄNGIG DOKUMENT	CE- 41756-010V
4- 47629-0401		TPMC SCHEMA	TPMC SEQUENCE DIAGRAM	TPMC SCHEMA	CE- 41756-010V
4- 47629-0501		TPMC PROGRAMMLISTA	TPMC PROGRAM LIST	TPMC PROGRAMM LISTE	CE- 41756-010V
4- 47629-0601		TPMC PROGRAMMLISTA	TPMC PROGRAM LIST	TPMC PROGRAMM LISTE	CE- 41756-010V
4- 47629-0701		TPMC PROGRAMMLISTA	TPMC PROGRAM LIST	TPMC PROGRAMM LISTE	CE- 41756-010V
4- 47629-0801		TPMC PROGRAMMLISTA	TPMC PROGRAM LIST	TPMC PROGRAMM LISTE	CE- 41756-010V
4- 47629-0901		TPMC PROGRAMMLISTA	TPMC PROGRAM LIST	TPMC PROGRAMM LISTE	CE- 41756-010V
4- 47629-1001		TPMC PROGRAMMLISTA	TPMC PROGRAM LIST	TPMC PROGRAMM LISTE	CE- 41756-010V

PART NO	LAST ECN	BENÄMNING	TITLE	BENENNUNG	GROUP NO
4- 47629-1101		TPMC PROGRAMMLISTA	TPMC PROGRAM LIST	TPMC PROGRAMM LISTE	CE- 41756-010V
4- 47629-1201		TPMC PROGRAMMLISTA	TPMC PROGRAM LIST	TPMC PROGRAMM LISTE	CE- 41756-010V
4- 47629-1301		TPMC PROGRAMMLISTA	TPMC PROGRAM LIST	TPMC PROGRAMM LISTE	CE- 41756-010V
4- 47629-1401		TPMC PROGRAMMLISTA	TPMC PROGRAM LIST	TPMC PROGRAMM LISTE	CE- 41756-010V
4- 47629-1501		TPMC PROGRAMMLISTA	TPMC PROGRAM LIST	TPMC PROGRAMM LISTE	CE- 41756-010V
4- 47629-1701		TPMC PROGRAMMLISTA	TPMC PROGRAM LIST	TPMC PROGRAMM LISTE	CE- 41756-010V
4- 47629-1801		TPMC PROGRAMMLISTA	TPMC PROGRAM LIST	TPMC PROGRAMM LISTE	CE- 41756-010V
4- 47629-1901		TPMC PROGRAMMLISTA	TPMC PROGRAM LIST	TPMC PROGRAMM LISTE	CE- 41756-010V
4- 47629-2001		TPMC PROGRAMMLISTA	TPMC PROGRAM LIST	TPMC PROGRAMM LISTE	CE- 41756-010V
4- 47629-2301		TPMC PROGRAMMLISTA	TPMC PROGRAM LIST	TPMC PROGRAMM LISTE	CE- 41756-010V
4- 47629-2401		TPMC PROGRAMMLISTA	TPMC PROGRAM LIST	TPMC PROGRAMM LISTE	CE- 41756-010V
4- 47629-2501		TPMC PROGRAMMLISTA	TPMC PROGRAM LIST	TPMC PROGRAMM LISTE	CE- 41756-010V
4- 47629-2601		TPMC PROGRAMMLISTA	TPMC PROGRAM LIST	TPMC PROGRAMM LISTE	CE- 41756-010V
4- 47629-2701		TPMC PROGRAMMLISTA	TPMC PROGRAM LIST	TPMC PROGRAMM LISTE	CE- 41756-010V
4- 47629-2801		TPMC PROGRAMMLISTA	TPMC PROGRAM LIST	TPMC PROGRAMM LISTE	CE- 41756-010V
4- 47629-2901		TPMC PROGRAMMLISTA	TPMC PROGRAM LIST	TPMC PROGRAMM LISTE	CE- 41756-010V
4- 47629-3001		TPMC PROGRAMMLISTA	TPMC PROGRAM LIST	TPMC PROGRAMM LISTE	CE- 41756-010V
4- 47629-3101		TPMC PROGRAMMLISTA	TPMC PROGRAM LIST	TPMC PROGRAMM LISTE	CE- 41756-010V
4- 47629-3201		TPMC PROGRAMMLISTA	TPMC PROGRAM LIST	TPMC PROGRAMM LISTE	CE- 41756-010V
4- 47629-3301		TPMC PROGRAMMLISTA	TPMC PROGRAM LIST	TPMC PROGRAMM LISTE	CE- 41756-010V
4- 47629-3401		TPMC PROGRAMMLISTA	TPMC PROGRAM LIST	TPMC PROGRAMM LISTE	CE- 41756-010V
4- 47629-9001		TPMC PROGRAMMLISTA	TPMC PROGRAM LIST	TPMC PROGRAMM LISTE	CE- 41756-010V
4- 47629-9901		TPMC PROGRAMMLISTA	TPMC PROGRAM LIST	TPMC PROGRAMM LISTE	CE- 41756-010V
3- 49673-0100		KRETSSCHEMA	CIRCUIT DIAGRAM	SCHALTKARTEPLAN	C- 68256-010V
3- 49673-0200		KRETSSCHEMA	CIRCUIT DIAGRAM	SCHALTKARTEPLAN	C- 68256-010V
3- 49673-0300		KRETSSCHEMA	CIRCUIT DIAGRAM	SCHALTKARTEPLAN	C- 68256-010V
3- 49674-0100		KOMPONENTLAYOUT	COMPONENT LAYOUT	KOMPONENTELAYOUT	C- 68256-010V
4- 49675-0100		FUNKTIONSBESKRIVNING	FUNCTION DESCRIPTION	FUNKTIONSBESCHREIBUNG	C- 68256-010V
					C- 68123-020V
4- 49739-0100		KRETSSCHEMA	CIRCUIT DIAGRAM	SCHALTKARTEPLAN	C- 67062-020V
4- 49740-0100		KOMPONENTLAYOUT	COMPONENT LAYOUT	KOMPONENTELAYOUT	C- 67062-020V
4- 49743-0100		MONTERINGSINSTRUKTION	ASSEMBLY INSTRUCTION	MONTIERUNGSINSTRUKTION	C- 67062-020V
4- 49744-0100		TESTINSTRUKTION	TEST INSTRUCTION	TESTINSTRUKTION	C- 67062-020V
3- 49754-0100		KRETSSCHEMA	CIRCUIT DIAGRAM	SCHALTKARTEPLAN	C- 67058-030V
3- 49755-0100		KOMPONENTLAYOUT	COMPONENT LAYOUT	KOMPONENTELAYOUT	C- 67058-030V
4- 49756-0100		KOMPONENTLAYOUT PANEL	COMPONENT LAYOUT PANEL	KOMPONENTELAYOUT	C- 67058-030V
4- 49779-0100		TESTINSTRUKTION	TEST INSTRUCTION	TESTINSTRUKTION	C- 67058-030V
3- 49780-0100		===SMST.RITN.===	===ASSEMBLY DRAWING===	ZUSAMMENST.ZEICHNUNG	C- 67058-030V
3- 49793-0100		KRETSSCHEMA	CIRCUIT DIAGRAM	SCHALTKARTEPLAN	C- 67347-010V
4- 49857-0101		SORTERINGSINSTRUKTION	SORTING INSTRUCTION	KOMPONENTELAYOUT	C- 67573-010V
					C- 67581-010V
4- 49880-0100		KOMPONENTLAYOUT	COMPONENT LAYOUT PANEL	KOMPONENTELAYOUT	C- 67347-010V
4- 49881-0100		TESTINSTRUKTION	TEST INSTRUCTION	TESTINSTRUKTION	C- 67347-010V
3- 49884-0100		MONTERINGSINSTRUKTION	ASSEMBLY DRAWING	MONTIERUNGSINSTRUKTION	C- 67347-010V
3- 49896-0100		KOMPONENTLAYOUT	COMPONENT LAYOUT	KOMPONENTELAYOUT	C- 67347-010V
3- 49915-0100		KRETSSCHEMA	CIRCUIT DIAGRAM	SCHALTKARTEPLAN	C- 68917-010V
3- 49916-0100		KOMPONENTLAYOUT	COMPONENT LAYOUT	KOMPONENTELAYOUT	C- 68917-010V
3- 49926-0100		MONTERINGSINSTRUKTION	ASS. DRAWING CABLE CONN.	MONTIERUNGSINSTRUKTION	C- 68161-010V
3- 49929-0100		EL-SPOLE	COIL CORE ASSEMBLY	EL-SPULE	C- 68161-010V
3- 49931-0100		EL-SPOLE	COIL WINDING SPEC.	EL-SPULE	C- 68161-010V
3- 49931-0200		EL-SPOLE	COIL WINDING ORIENTATION	EL-SPULE	C- 68161-010V
2- 49933-0100		MONTERINGSINSTRUKTION	ASSEMBLY DRAWING	MONTIERUNGSINSTRUKTION	C- 67388-010V
3- 49934-0100		MONTERINGSINSTRUKTION	ASS. DRAWING ASSEMBLY	MONTIERUNGSINSTRUKTION	C- 68161-010V
3- 49934-0200		MONTERINGSINSTRUKTION	ASS. DRAWING ASSEMBLY	MONTIERUNGSINSTRUKTION	C- 68161-010V
3- 49934-0300		MONTERINGSINSTRUKTION	ASS. DRAWING ASSEMBLY	MONTIERUNGSINSTRUKTION	C- 68161-010V
3- 49934-0400		MONTERINGSINSTRUKTION	ASS. DRAWING ASSEMBLY	MONTIERUNGSINSTRUKTION	C- 68161-010V
3- 49935-0100		MONTERINGSINSTRUKTION	ASS. DRAWING CASTING	MONTIERUNGSINSTRUKTION	C- 68161-010V
3- 49936-0100		MONTERINGSINSTRUKTION	ASS. DRAWING MARKING	MONTIERUNGSINSTRUKTION	C- 68161-010V
4- 49938-0100		TESTINSTRUKTION	USER MANUAL	TESTINSTRUKTION	C- 68161-010V
3- 49939-0100		EL-SPOLE	COIL FORMER ASSEMBLY	EL-SPULE	C- 68161-010V
3- 49940-0100		MONTERINGSINSTRUKTION	ASSEMBLY DRAWING	MONTIERUNGSINSTRUKTION	C- 67386-010V
4- 49941-0100		KRETSSCHEMA	CIRCUIT DIAGRAM	SCHALTKARTEPLAN	C- 67386-010V
4- 49943-0100		FUNKTIONSBESKRIVNING	USER MANUAL	FUNKTIONSBESCHREIBUNG	C- 67386-010V
4- 49944-0100		EMBALLAGEINSTRUKTION	PACKING INSTRUCTION	EMBALLAGEINSTRUKTION	C- 67386-010V
3- 49946-0100		KRETSSCHEMA	CIRCUIT DIAGRAM	SCHALTKARTEPLAN	C- 67389-010V
3- 49946-0200		KRETSSCHEMA	CIRCUIT DIAGRAM	SCHALTKARTEPLAN	C- 67389-010V
3- 49946-0300		KRETSSCHEMA	CIRCUIT DIAGRAM	SCHALTKARTEPLAN	C- 67389-010V
3- 49947-0100		KOMPONENTLAYOUT	COMPONENT LAYOUT	KOMPONENTELAYOUT	C- 67389-010V
4- 49948-0100		FUNKTIONSBESKRIVNING	FUNCTION DESCRIPTION	FUNKTIONSBESCHREIBUNG	C- 67389-010V
3- 49949-0100		MONTERINGSINSTRUKTION	ASSEMBLY DRAWING	MONTIERUNGSINSTRUKTION	C- 68123-020V
4- 49950-0100		KRETSSCHEMA	CIRCUIT DIAGRAM	SCHALTKARTEPLAN	C- 68123-020V
4- 49952-0100		FUNKTIONSBESKRIVNING	USER MANUAL	FUNKTIONSBESCHREIBUNG	C- 68123-020V
4- 49953-0100		EMBALLAGEINSTRUKTION	PACKING INSTRUCTION	EMBALLAGEINSTRUKTION	C- 68123-020V
3- 49963-0100		KRETSSCHEMA	CIRCUIT DIAGRAM	SCHALTKARTEPLAN	C- 68510-010V
3- 49964-0100		KOMPONENTLAYOUT	COMPONENT LAYOUT	KOMPONENTELAYOUT	C- 68510-010V
4- 49965-0100		TESTINSTRUKTION	TEST INSTRUCTION	TESTINSTRUKTION	C- 68510-010V
4- 49971-0100		MONTERINGSINSTRUKTION	ASSEMBLY INSTRUCTION	MONTIERUNGSINSTRUKTION	C- 67388-010V
K3- 51860-0622		MONTAGERITNING ,SKÅP	MOUNTING DRAWING,CABINET	MONTAGEZEICHNUNG	RK- 557235-010V
K3- 51860-1022		MONTAGERITNING,EL-SKÅP	MOUNTING DRAWING,CABINET	MONTAGEZEICHNUNG	RK- 557235-010V
K3- 51860-1522		MONTAGERITNING,MASKIN	MOUNTING DRAWING,MACHINE	MONTAGEZEICHNUNG	RK- 557235-010V
K4- 51891-0504		MONTAGERITNING	MOUNTING DRAWING,CABINET	MONTAGEZEICHNUNG	RK- 557019-010V
K4- 51891-0506		MONTAGERITNING	MOUNTING DRAWING,CABINET	MONTAGEZEICHNUNG	RK- 557148-010V
K4- 51891-0507		MONTAGERITNING	MOUNTING DRAWING,CABINET	MONTAGEZEICHNUNG	RK- 557157-010V
K4- 51891-0512		MONTAGERITNING	MOUNTING DRAWING,CABINET	MONTAGEZEICHNUNG	RK- 557691-010V
K4- 51891-0514		MONTAGERITNING	MOUNTING DRAWING,CABINET	MONTAGEZEICHNUNG	RK- 41768-010V
K4- 51891-0604		MONTAGERITNING	MOUNTING DRAWING,CABINET	MONTAGEZEICHNUNG	RK- 557019-010V
K4- 51891-0606		MONTAGERITNING	MOUNTING DRAWING,CABINET	MONTAGEZEICHNUNG	RK- 557148-010V
K4- 51891-0607		MONTAGERITNING	MOUNTING DRAWING,CABINET	MONTAGEZEICHNUNG	RK- 557157-010V
K4- 51891-0608		MONTAGERITNING	MOUNTING DRAWING,CABINET	MONTAGEZEICHNUNG	RK- 557546-010V
K4- 51891-0612		MONTAGERITNING	MOUNTING DRAWING,CABINET	MONTAGEZEICHNUNG	RK- 557691-010V
K4- 51891-0614		MONTAGERITNING	MOUNTING DRAWING,CABINET	MONTAGEZEICHNUNG	RK- 41768-010V
K4- 51891-0703		MONTAGERITNING	MOUNTING DRAWING,CABINET	MONTAGEZEICHNUNG	RK- 69995-010V

PART NO	LAST ECN	BENÄMNING	TITLE	BENENNUNG	GROUP NO
K4- 51891-0704		MONTAGERITNING	MOUNTING DRAWING,CABINET	MONTAGEZEICHNUNG	RK- 557019-010V
K3- 51891-1306		MONTAGERITNING	MOUNTING DRAWING,PANEL	MONTAGEZEICHNUNG	RK- 557148-010V
K3- 51891-1307		MONTAGERITNING	MOUNTING DRAWING,PANEL	MONTAGEZEICHNUNG	RK- 557157-010V
K3- 51891-1312		MONTAGERITNING	MOUNTING DRAWING,PANEL	MONTAGEZEICHNUNG	RK- 557691-010V
K4- 51891-1314		MONTAGERITNING	MOUNTING DRAWING, PANEL	MONTAGEZEICHNUNG	RK- 41768-010V
K4- 51891-1403		MONTAGERITNING	MOUNTING DRAWING,MACHINE	MONTAGEZEICHNUNG	RK- 69995-010V
K4- 51891-1404		MONTAGERITNING	MOUNTING DRAWING,MACHINE	MONTAGEZEICHNUNG	RK- 557019-010V
K4- 51891-1406		MONTAGERITNING	MOUNTING DRAWING,MACHINE	MONTAGEZEICHNUNG	RK- 557148-010V
K4- 51891-1407		MONTAGERITNING	MOUNTING DRAWING,MACHINE	MONTAGEZEICHNUNG	RK- 557157-010V
K4- 51891-1412		MONTAGERITNING	MOUNTING DRAWING,MACHINE	MONTAGEZEICHNUNG	RK- 557691-010V
K4- 51891-1503		MONTAGERITNING	MOUNTING DRAWING,MACHINE	MONTAGEZEICHNUNG	RK- 69995-010V
K4- 51891-1504		MONTAGERITNING	MOUNTING DRAWING,MACHINE	MONTAGEZEICHNUNG	RK- 557019-010V
K4- 51891-1506		MONTAGERITNING	MOUNTING DRAWING,MACHINE	MONTAGEZEICHNUNG	RK- 557148-010V
K4- 51891-1507		MONTAGERITNING	MOUNTING DRAWING,MACHINE	MONTAGEZEICHNUNG	RK- 557157-010V
K4- 51891-1508		MONTAGERITNING	MOUNTING DRAWING,MACHINE	MONTAGEZEICHNUNG	RK- 557546-010V
K4- 51891-1512		MONTAGERITNING	MOUNTING DRAWING,MACHINE	MONTAGEZEICHNUNG	RK- 557691-010V
K4- 51891-1603		MONTAGERITNING	MOUNTING DRAWING,MACHINE	MONTAGEZEICHNUNG	RK- 69995-010V
K4- 51891-1604		MONTAGERITNING	MOUNTING DRAWING,MACHINE	MONTAGEZEICHNUNG	RK- 557019-010V
K4- 51891-1606		MONTAGERITNING	MOUNTING DRAWING,MACHINE	MONTAGEZEICHNUNG	RK- 557148-010V
K4- 51891-1612		MONTAGERITNING	MOUNTING DRAWING,MACHINE	MONTAGEZEICHNUNG	RK- 557691-010V
K4- 51891-1614		MONTAGERITNING	MOUNTING DRAWING,MACHINE	MONTAGEZEICHNUNG	RK- 41768-010V
K4- 51891-1704		MONTAGERITNING	MOUNTING DRAWING,MACHINE	MONTAGEZEICHNUNG	RK- 557019-010V
K4- 51891-1706		MONTAGERITNING	MOUNTING DRAWING,MACHINE	MONTAGEZEICHNUNG	RK- 557148-010V
K4- 51891-1707		MONTAGERITNING	MOUNTING DRAWING,MACHINE	MONTAGEZEICHNUNG	RK- 557157-010V
K4- 51891-1708		MONTAGERITNING	MOUNTING DRAWING,MACHINE	MONTAGEZEICHNUNG	RK- 557546-010V
K4- 51891-1712		MONTAGERITNING	MOUNTING DRAWING,MACHINE	MONTAGEZEICHNUNG	RK- 557691-010V
K4- 51891-1714		MONTAGERITNING	MOUNTING DRAWING,MACHINE	MONTAGEZEICHNUNG	RK- 41768-010V
K4- 51891-2114		MONTAGERITNING	MOUNTING DRAWING, RACK	MONTAGEZEICHNUNG	RK- 41768-010V
3- 52184-0501		MONTAGERITNING	MONTING DRAWING,BASIC UN	MONTAGEZEICHNUNG	CE- 69885-010V CE- 69887-010V
3- 52184-0601		MONTAGERITNING	MONTING DRAWING,BASIC UN	MONTAGEZEICHNUNG	CE- 69885-010V CE- 69887-010V
3- 52184-0602		MONTAGERITNING	MONTING DRAWING,BASIC UN	MONTAGEZEICHNUNG	CE- 69885-010V CE- 69887-010V
K4- 52187-0504		MONTAGERITNING	MOUNTING DRAWING, CABINE	MONTAGEZEICHNUNG	RK- 557151-010V
K4- 52187-0505		MONTAGERITNING	MOUNTING DRAWING, CABINE	MONTAGEZEICHNUNG	RK- 557160-010V
K4- 52187-0507		MONTAGERITNING	MOUNTING DRAWING, CABINE	MONTAGEZEICHNUNG	RK- 557694-010V
K4- 52187-0509		MONTAGERITNING	MOUNTING DRAWING, CABINE	MONTAGEZEICHNUNG	RK- 41770-010V
K4- 52187-0604		MONTAGERITNING	MOUNTING DRAWING, CABINE	MONTAGEZEICHNUNG	RK- 557151-010V
K4- 52187-0605		MONTAGERITNING	MOUNTING DRAWING, CABINE	MONTAGEZEICHNUNG	RK- 557160-010V
K4- 52187-0607		MONTAGERITNING	MOUNTING DRAWING, CABINE	MONTAGEZEICHNUNG	RK- 557694-010V
K4- 52187-0609		MONTAGERITNING	MOUNTING DRAWING, CABINE	MONTAGEZEICHNUNG	RK- 41770-010V
K3- 52187-1304		MONTAGERITNING	MOUNTING DRAWING, PANEL	MONTAGEZEICHNUNG	RK- 557151-010V
K3- 52187-1305		MONTAGERITNING	MOUNTING DRAWING, PANEL	MONTAGEZEICHNUNG	RK- 557160-010V
K3- 52187-1307		MONTAGERITNING	MOUNTING DRAWING, PANEL	MONTAGEZEICHNUNG	RK- 557694-010V
K4- 52187-1309		MONTAGERITNING	MOUNTING DRAWING, PANEL	MONTAGEZEICHNUNG	RK- 41770-010V
K4- 52187-1404		MONTAGERITNING	MOUNTING DRAWING, MACHIN	MONTAGEZEICHNUNG	RK- 557151-010V
K4- 52187-1405		MONTAGERITNING	MOUNTING DRAWING, MACHIN	MONTAGEZEICHNUNG	RK- 557160-010V
K4- 52187-1407		MONTAGERITNING	MOUNTING DRAWING, MACHIN	MONTAGEZEICHNUNG	RK- 557694-010V
K4- 52187-1504		MONTAGERITNING	MOUNTING DRAWING, MACHIN	MONTAGEZEICHNUNG	RK- 557151-010V
K4- 52187-1505		MONTAGERITNING	MOUNTING DRAWING, MACHIN	MONTAGEZEICHNUNG	RK- 557160-010V
K4- 52187-1507		MONTAGERITNING	MOUNTING DRAWING, MACHIN	MONTAGEZEICHNUNG	RK- 557694-010V
K4- 52187-1604		MONTAGERITNING	MOUNTING DRAWING, MACHIN	MONTAGEZEICHNUNG	RK- 557151-010V
K4- 52187-1607		MONTAGERITNING	MOUNTING DRAWING, MACHIN	MONTAGEZEICHNUNG	RK- 557694-010V
K4- 52187-1609		MONTAGERITNING	MOUNTING DRAWING, MACHIN	MONTAGEZEICHNUNG	RK- 41770-010V
K4- 52187-1704		MONTAGERITNING	MOUNTING DRAWING, MACHIN	MONTAGEZEICHNUNG	RK- 557151-010V
K4- 52187-1705		MONTAGERITNING	MOUNTING DRAWING, MACHIN	MONTAGEZEICHNUNG	RK- 557160-010V
K4- 52187-1707		MONTAGERITNING	MOUNTING DRAWING, MACHIN	MONTAGEZEICHNUNG	RK- 557694-010V
K4- 52187-1709		MONTAGERITNING	MOUNTING DRAWING, MACHIN	MONTAGEZEICHNUNG	RK- 41770-010V
K4- 52187-2109		MONTAGERITNING	MOUNTING DRAWING, RACK	MONTAGEZEICHNUNG	RK- 41770-010V
K4- 52188-0502		MONTAGERITNING	MOUNTING DRAWING,CABINET	MONTAGEZEICHNUNG	RK- 557022-010V
K4- 52188-0504		MONTAGERITNING	MOUNTING DRAWING,CABINET	MONTAGEZEICHNUNG	RK- 557154-010V
K4- 52188-0602		MONTAGERITNING	MOUNTING DRAWING,CABINET	MONTAGEZEICHNUNG	RK- 557022-010V
K4- 52188-0604		MONTAGERITNING	MOUNTING DRAWING,CABINET	MONTAGEZEICHNUNG	RK- 557154-010V
K4- 52188-0609		MONTAGERITNING	MOUNTING DRAWING,CABINET	MONTAGEZEICHNUNG	RK- 557552-010V
K4- 52188-0702		MONTAGERITNING	MOUNTING DRAWING,CABINET	MONTAGEZEICHNUNG	RK- 557022-010V
K3- 52188-1304		MONTAGERITNING	MOUNTING DRAWING,PANEL	MONTAGEZEICHNUNG	RK- 557154-010V
K4- 52188-1402		MONTAGERITNING	MOUNTING DRAWING,MACHINE	MONTAGEZEICHNUNG	RK- 557022-010V
K4- 52188-1404		MONTAGERITNING	MOUNTING DRAWING,MACHINE	MONTAGEZEICHNUNG	RK- 557154-010V
K4- 52188-1502		MONTAGERITNING	MOUNTING DRAWING,MACHINE	MONTAGEZEICHNUNG	RK- 557022-010V
K4- 52188-1504		MONTAGERITNING	MOUNTING DRAWING,MACHINE	MONTAGEZEICHNUNG	RK- 557154-010V
K4- 52188-1509		MONTAGERITNING	MOUNTING DRAWING,MACHINE	MONTAGEZEICHNUNG	RK- 557552-010V
K4- 52188-1602		MONTAGERITNING	MOUNTING DRAWING,MACHINE	MONTAGEZEICHNUNG	RK- 557022-010V
K4- 52188-1604		MONTAGERITNING	MOUNTING DRAWING,MACHINE	MONTAGEZEICHNUNG	RK- 557154-010V
K4- 52188-1702		MONTAGERITNING	MOUNTING DRAWING,MACHINE	MONTAGEZEICHNUNG	RK- 557022-010V
K4- 52188-1704		MONTAGERITNING	MOUNTING DRAWING,MACHINE	MONTAGEZEICHNUNG	RK- 557154-010V
K4- 52188-1709		MONTAGERITNING	MOUNTING DRAWING,MACHINE	MONTAGEZEICHNUNG	RK- 557552-010V
3- 52200-0501		MONTAGERITNING	MOUNTING DRAWING,MOD. A4	MONTAGEZEICHNUNG	CE- 69885-010V
3- 52201-0501		MONTAGERITNING	MOUNTING DRAWING,MOD. A4	MONTAGEZEICHNUNG	CE- 69887-010V
4- 52209-0100		OMBYGGNADSBESKRIVNING	REBUILDING DESCRIPTION	UMBAUBESCHREIBUNG	RK- 69995-010V
K4- 52219-0101		OMBYGGNADSBESKRIVNING	REBUILDING DESCRIPTION	UMBAUBESCHREIBUNG	RK- 557019-010V
K4- 52219-0201		OMBYGGNADSBESKRIVNING	REBUILDING DESCRIPTION	UMBAUBESCHREIBUNG	RK- 557019-010V
K4- 52219-0301		OMBYGGNADSBESKRIVNING	REBUILDING DESCRIPTION	UMBAUBESCHREIBUNG	RK- 557019-010V
K4- 52220-0101		OMBYGGNADSBESKRIVNING	REBUILDING DESCRIPTION	UMBAUBESCHREIBUNG	RK- 557022-010V
K4- 52220-0201		OMBYGGNADSBESKRIVNING	REBUILDING DESCRIPTION	UMBAUBESCHREIBUNG	RK- 557022-010V
K4- 52220-0301		OMBYGGNADSBESKRIVNING	REBUILDING DESCRIPTION	UMBAUBESCHREIBUNG	RK- 557022-010V
4- 52234-0100		KONVERTERINGSBESKRIVNING	CONVERSION DESCRIPTION	UMBAUBESCHREIBUNG	RK- 557148-010V
4- 52235-0100		KONVERTERINGSBESKRIVNING	CONVERSION DESCRIPTION	REBUILDING DESCR. EL	RK- 557151-010V
4- 52236-0100		KONVERTERINGSBESKRIVNING	CONVERSION DESCRIPTION	REBUILDING DESCR. EL	RK- 557154-010V
4- 52237-0100		KONVERTERINGSBESKRIVNING	CONVERSION DESCRIPTION	REBUILDING DESCR. EL	RK- 557157-010V
4- 52238-0100		KONVERTERINGSBESKRIVNING	CONVERSION DESCRIPTION	REBUILDING DESCR. EL	RK- 557160-010V
4- 52273-0501		MONTAGERITNING	MOUNTING DRAWING	MONTAGEZEICHNUNG	CE- 557222-010V

PART NO	LAST ECN	BENÄMNING	TITLE	BENENNUNG	GROUP NO
					CE- 557226-010V
					CE- 557222-010V
4- 52273-0601		MONTAGERITNING	MOUNTING DRAWING	MONTAGEZEICHNUNG	CE- 557222-010V
					CE- 557226-010V
					CE- 557222-010V
4- 52273-0701		MONTAGERITNING	MOUNTING DRAWING	MONTAGEZEICHNUNG	CE- 557222-010V
					CE- 557226-010V
					CE- 557222-010V
4- 52273-0801		MONTAGERITNING	MOUNTING DRAWING	MONTAGEZEICHNUNG	CE- 557222-010V
					CE- 557226-010V
4- 52273-0801		MONTAGERITNING	MOUNTING DRAWING	MONTAGEZEICHNUNG	CE- 557222-010V
4- 52273-1001		MONTAGERITNING	MOUNTING DRAWING	MONTAGEZEICHNUNG	CE- 557226-010V
4- 52273-1101		MONTAGERITNING	MOUNTING DRAWING	MONTAGEZEICHNUNG	CE- 557226-010V
4- 52273-1201		MONTAGERITNING	MOUNTING DRAWING	MONTAGEZEICHNUNG	CE- 557226-010V
4- 52273-2101		MONTAGERITNING	MOUNTING DRAWING	MONTAGEZEICHNUNG	CE- 557226-010V
4- 52275-0100		KONVERTERINGSBESKRIVNING	CONVERSION DESCRIPTION	REBUILDING DESCR. EL	RK- 557235-010V
K4- 52365-0100		OMBYGGNADSBESKRIVNING	CONVERSION DESCRIPTION	UMBAUBESCHREIBUNG	RK- 557691-010V
K4- 52366-0100		OMBYGGNADSBESKRIVNING	CONVERSION DESCRIPTION	UMBAUBESCHREIBUNG	RK- 557694-010V
4- 52469-0100		OMBYGGNADSBESKRIVNING EL	CONVERSION DESCRIPTION	REBUILDING DESCR. EL	RK- 557546-010V
4- 52471-0501		MONTAGERITNING, ELSKÅP	MOUNTING DRAWING, CABINE	MONTAGEZEICHNUNG	CE- 41723-010V
					CE- 41729-010V
4- 52471-0601		MONTAGERITNING, ELSKÅP	MOUNTING DRAWING, CABINE	MONTAGEZEICHNUNG	CE- 41723-010V
					CE- 41729-010V
4- 52471-0701		MONTAGERITNING, ELSKÅP	MOUNTING DRAWING, CABINE	MONTAGEZEICHNUNG	CE- 41723-010V
					CE- 41729-010V
4- 52471-0801		MONTAGERITNING, ELSKÅP	MOUNTING DRAWING, CABINE	MONTAGEZEICHNUNG	CE- 41723-010V
					CE- 41729-010V
K4- 52471-0803		MONTAGERITNING, ELSKÅP	MOUNTING DRAWING, CABINE	MONTAGEZEICHNUNG	RK- 558312-010V
4- 52471-0901		MONTAGERITNING, ELSKÅP	MOUNTING DRAWING, CABINE	MONTAGEZEICHNUNG	CE- 41723-010V
					CE- 41729-010V
K4- 52471-0902		MONTAGERITNING, ELSKÅP	MOUNTING DRAWING, CABINE	MONTAGEZEICHNUNG	RK- 558303-010V
K4- 52471-0906		MONTAGERITNING, ELSKÅP	MOUNTING DRAWING, CABINE	MONTAGEZEICHNUNG	RK- 558334-010V
K4- 52471-0907		MONTAGERITNING, ELSKÅP	MOUNTING DRAWING, CABINE	MONTAGEZEICHNUNG	RK- 558338-010V
4- 52471-1001		MONTAGERITNING, ELSKÅP	MOUNTING DRAWING, CABINE	MONTAGEZEICHNUNG	CE- 41723-010V
					CE- 41729-010V
K4- 52471-1002		MONTAGERITNING, ELSKÅP	MOUNTING DRAWING, CABINE	MONTAGEZEICHNUNG	RK- 558303-010V
4- 52471-1101		MONTAGERITNING, RACK	MOUNTING DRAWING, RACK	MONTAGEZEICHNUNG	CE- 41723-010V
					CE- 41729-010V
4- 52471-1201		MONTAGERITNING, PANEL	MOUNTING DRAWING, PANEL	MONTAGEZEICHNUNG	CE- 41724-010V
					CE- 41729-010V
3- 52471-1301		MONTAGERITNING, PANEL	MOUNTING DRAWING, PANEL	MONTAGEZEICHNUNG	CE- 41724-010V
					CE- 41729-010V
3- 52471-1401		MONTAGERITNING, PANEL	MOUNTING DRAWING, PANEL	MONTAGEZEICHNUNG	CE- 41724-010V
					CE- 41729-010V
4- 52471-1501		MONTAGERITNING, MASKIN	MOUNTING DRAWING, MACHIN	MONTAGEZEICHNUNG	CE- 41729-010V
K4- 52471-1503		MONTAGERITNING, MASKIN	MOUNTING DRAWING, MACHIN	MONTAGEZEICHNUNG	RK- 558312-010V
4- 52471-1601		MONTAGERITNING, MASKIN	MOUNTING DRAWING, MACHIN	MONTAGEZEICHNUNG	CE- 41729-010V
K4- 52471-1602		MONTAGERITNING, MASKIN	MOUNTING DRAWING, MACHIN	MONTAGEZEICHNUNG	RK- 558303-010V
K4- 52471-1603		MONTAGERITNING, MASKIN	MOUNTING DRAWING, MACHIN	MONTAGEZEICHNUNG	RK- 558312-010V
4- 52471-1701		MONTAGERITNING, MASKIN	MOUNTING DRAWING, MACHIN	MONTAGEZEICHNUNG	CE- 41729-010V
K4- 52471-1702		MONTAGERITNING, MASKIN	MOUNTING DRAWING, MACHIN	MONTAGEZEICHNUNG	RK- 558303-010V
4- 52471-1801		MONTAGERITNING, MASKIN	MOUNTING DRAWING, MACHIN	MONTAGEZEICHNUNG	CE- 41729-010V
K4- 52471-1802		MONTAGERITNING, MASKIN	MOUNTING DRAWING, MACHIN	MONTAGEZEICHNUNG	RK- 558303-010V
K4- 52471-1803		MONTAGERITNING, MASKIN	MOUNTING DRAWING, MACHIN	MONTAGEZEICHNUNG	RK- 558312-010V
4- 52471-2001		MONTAGERITNING, TPIH	MOUNTING DRAWING, TPIH	MONTAGEZEICHNUNG	CE- 41766-010V
					CE- 41729-010V
					CE- 41756-010V
					CE- 41763-010V
4- 52471-2101		MONTAGERITNING, TPIH	MOUNTING DRAWING, TPIH	MONTAGEZEICHNUNG	CE- 41766-010V
					CE- 41766-010V
					CE- 41729-010V
					CE- 41756-010V
					CE- 41763-010V
4- 52471-2201		MONTAGERITNING, TPIH	MOUNTING DRAWING, TPIH	MONTAGEZEICHNUNG	CE- 41766-010V
					CE- 41766-010V
					CE- 41729-010V
					CE- 41756-010V
					CE- 41763-010V
4- 52471-2301		MONTAGERITNING, TPIH	MOUNTING DRAWING, TPIH	MONTAGEZEICHNUNG	CE- 41766-010V
					CE- 41766-010V
					CE- 41729-010V
					CE- 41756-010V
					CE- 41763-010V
4- 52471-2401		MONTAGERITNING, TPIH	MOUNTING DRAWING, TPIH	MONTAGEZEICHNUNG	CE- 41766-010V
					CE- 41766-010V
					CE- 41729-010V
					CE- 41756-010V
					CE- 41763-010V
4- 52471-2501		MONTAGERITNING, TPIH	MOUNTING DRAWING, TPIH	MONTAGEZEICHNUNG	CE- 41766-010V
					CE- 41766-010V
					CE- 41729-010V
					CE- 41756-010V
					CE- 41763-010V
					CE- 41766-010V
4- 52482-0501		MONTAGERITNING, ELSKÅP	MOUNTING DRAWING, CABINE	MONTAGEZEICHNUNG	CE- 41750-010V
					CE- 41756-010V
4- 52482-0601		MONTAGERITNING, ELSKÅP	MOUNTING DRAWING, CABINE	MONTAGEZEICHNUNG	CE- 41750-010V
					CE- 41756-010V
4- 52482-0701		MONTAGERITNING, ELSKÅP	MOUNTING DRAWING, CABINE	MONTAGEZEICHNUNG	CE- 41750-010V
					CE- 41756-010V
4- 52482-0801		MONTAGERITNING, ELSKÅP	MOUNTING DRAWING, CABINE	MONTAGEZEICHNUNG	CE- 41750-010V
					CE- 41756-010V

PART NO	LAST ECN	BENÄMNING	TITLE	BENENNUNG	GROUP NO
4- 52482-0901		MONTAGERITNING, ELSKÅP	MOUNTING DRAWING, CABINE	MONTAGEZEICHNUNG	CE- 41750-010V
					CE- 41756-010V
K4- 52482-0902		MONTAGERITNING, ELSKÅP	MOUNTING DRAWING, CABINE	MONTAGEZEICHNUNG	RK- 558306-010V
4- 52482-1001		MONTAGERITNING, ELSKÅP	MOUNTING DRAWING, CABINE	MONTAGEZEICHNUNG	CE- 41750-010V
					CE- 41756-010V
K4- 52482-1002		MONTAGERITNING, ELSKÅP	MOUNTING DRAWING, CABINE	MONTAGEZEICHNUNG	RK- 558306-010V
4- 52482-1101		MONTAGERITNING, RACK	MOUNTING DRAWING, RACK	MONTAGEZEICHNUNG	CE- 41750-010V
					CE- 41756-010V
4- 52482-1201		MONTAGERITNING, PANEL	MOUNTING DRAWING, PANEL	MONTAGEZEICHNUNG	CE- 41751-010V
					CE- 41756-010V
3- 52482-1301		MONTAGERITNING, PANEL	MOUNTING DRAWING, PANEL	MONTAGEZEICHNUNG	CE- 41751-010V
					CE- 41756-010V
3- 52482-1401		MONTAGERITNING, PANEL	MOUNTING DRAWING, PANEL	MONTAGEZEICHNUNG	CE- 41751-010V
					CE- 41756-010V
4- 52482-1501		MONTAGERITNING, MASKIN	MOUNTING DRAWING, MACHIN	MONTAGEZEICHNUNG	CE- 41756-010V
4- 52482-1601		MONTAGERITNING, MASKIN	MOUNTING DRAWING, MACHIN	MONTAGEZEICHNUNG	CE- 41756-010V
K4- 52482-1602		MONTAGERITNING, MASKIN	MOUNTING DRAWING, MACHIN	MONTAGEZEICHNUNG	RK- 558306-010V
4- 52482-1701		MONTAGERITNING, MASKIN	MOUNTING DRAWING, MACHIN	MONTAGEZEICHNUNG	CE- 41756-010V
K4- 52482-1702		MONTAGERITNING, MASKIN	MOUNTING DRAWING, MACHIN	MONTAGEZEICHNUNG	RK- 558306-010V
4- 52482-1801		MONTAGERITNING, MASKIN	MOUNTING DRAWING, MACHIN	MONTAGEZEICHNUNG	CE- 41756-010V
K4- 52482-1802		MONTAGERITNING, MASKIN	MOUNTING DRAWING, MACHIN	MONTAGEZEICHNUNG	RK- 558306-010V
4- 52483-0501		MONTAGERITNING, ELSKÅP	MOUNTING DRAWING, CABINE	MONTAGEZEICHNUNG	CE- 41757-010V
					CE- 41763-010V
4- 52483-0601		MONTAGERITNING, ELSKÅP	MOUNTING DRAWING, CABINE	MONTAGEZEICHNUNG	CE- 41757-010V
					CE- 41763-010V
4- 52483-0701		MONTAGERITNING, ELSKÅP	MOUNTING DRAWING, CABINE	MONTAGEZEICHNUNG	CE- 41757-010V
					CE- 41763-010V
4- 52483-0801		MONTAGERITNING, ELSKÅP	MOUNTING DRAWING, CABINE	MONTAGEZEICHNUNG	CE- 41757-010V
					CE- 41763-010V
K4- 52483-0803		MONTAGERITNING, ELSKÅP	MOUNTING DRAWING, CABINE	MONTAGEZEICHNUNG	RK- 558315-010V
4- 52483-0901		MONTAGERITNING, ELSKÅP	MOUNTING DRAWING, CABINE	MONTAGEZEICHNUNG	CE- 41757-010V
					CE- 41763-010V
K4- 52483-0902		MONTAGERITNING, ELSKÅP	MOUNTING DRAWING, CABINE	MONTAGEZEICHNUNG	RK- 558309-010V
K4- 52483-0905		MONTAGERITNING, ELSKÅP	MOUNTING DRAWING, CABINE	MONTAGEZEICHNUNG	RK- 558332-010V
K4- 52483-0906		MONTAGERITNING, ELSKÅP	MOUNTING DRAWING, CABINE	MONTAGEZEICHNUNG	RK- 558336-010V
4- 52483-1001		MONTAGERITNING, ELSKÅP	MOUNTINGDRAWING, CABINET	MONTAGEZEICHNUNG	CE- 41757-010V
4- 52483-1001		MONTAGERITNING, ELSKÅP	MOUNTINGDRAWING, CABINET	MONTAGEZEICHNUNG	CE- 41763-010V
K4- 52483-1002		MONTAGERITNING, ELSKÅP	MOUNTINGDRAWING, CABINET	MONTAGEZEICHNUNG	RK- 558309-010V
4- 52483-1101		MONTAGERITNING, RACK	MOUNTING DRAWING, RACK	MONTAGEZEICHNUNG	CE- 41757-010V
					CE- 41763-010V
4- 52483-1201		MONTAGERITNING, PANEL	MOUNTING DRAWING, PANEL	MONTAGEZEICHNUNG	CE- 41758-010V
					CE- 41763-010V
3- 52483-1301		MONTAGERITNING, PANEL	MOUNTING DRAWING, PANEL	MONTAGEZEICHNUNG	CE- 41758-010V
					CE- 41763-010V
3- 52483-1401		MONTAGERITNING, PANEL	MOUNTING DRAWING, PANEL	MONTAGEZEICHNUNG	CE- 41758-010V
					CE- 41763-010V
4- 52483-1501		MONTAGERITNING, MASKIN	MOUNTING DRAWING, MACHIN	MONTAGEZEICHNUNG	CE- 41763-010V
K4- 52483-1503		MONTAGERITNING, MASKIN	MOUNTING DRAWING, MACHIN	MONTAGEZEICHNUNG	RK- 558315-010V
4- 52483-1601		MONTAGERITNING, MASKIN	MOUNTING DRAWING, MACHIN	MONTAGEZEICHNUNG	CE- 41763-010V
K4- 52483-1602		MONTAGERITNING, MASKIN	MOUNTING DRAWING, MACHIN	MONTAGEZEICHNUNG	RK- 558309-010V
K4- 52483-1603		MONTAGERITNING, MASKIN	MOUNTING DRAWING, MACHIN	MONTAGEZEICHNUNG	RK- 558315-010V
4- 52483-1701		MONTAGERITNING, MASKIN	MOUNTING DRAWING, MACHIN	MONTAGEZEICHNUNG	CE- 41763-010V
K4- 52483-1702		MONTAGERITNING, MASKIN	MOUNTING DRAWING, MACHIN	MONTAGEZEICHNUNG	RK- 558309-010V
4- 52483-1801		MONTAGERITNING, MASKIN	MOUNTING DRAWING, MACHIN	MONTAGEZEICHNUNG	CE- 41763-010V
K4- 52483-1802		MONTAGERITNING, MASKIN	MOUNTING DRAWING, MACHIN	MONTAGEZEICHNUNG	RK- 558309-010V
K4- 52483-1803		MONTAGERITNING, MASKIN	MOUNTING DRAWING, MACHIN	MONTAGEZEICHNUNG	RK- 558315-010V
K4- 52525-0100		OMBYGGNADSBESKRIVNING	CONVERSION DESCRIPTION	UMBAUBESCHREIBUNG	RK- 41768-010V
K4- 52526-0100		OMBYGGNADSBESKRIVNING	CONVERSION DESCRIPTION	UMBAUBESCHREIBUNG	RK- 41770-010V
K4- 52535-0703		MONTAGERITNING	MOUNTING DRAWING	MONTAGEZEICHNUNG	RK- 558344-010V
K4- 52535-1503		MONTAGERITNING	MOUNTING DRAWING	MONTAGEZEICHNUNG	RK- 558344-010V
K4- 52535-1603		MONTAGERITNING	MOUNTING DRAWING	MONTAGEZEICHNUNG	RK- 558344-010V
K4- 52535-1803		MONTAGERITNING	MOUNTING DRAWING	MONTAGEZEICHNUNG	RK- 558344-010V
4- 57008-0100		SCHEMA	BACKPLANE	SCHEMA	C- 68917-010V
3- 57012-0100		MONTERINGSINSTRUKTION	ASSEMBLY INSTRUCTION	MONTIERUNGSINSTRUKTION	C- 68445-010V
2- 57028-0101		MONTERINGSINSTRUKTION	ASSEMBLY DRAWING	MONTIERUNGSINSTRUKTION	C- 68447-020V
4- 57029-0101		KRETSSCHEMA	APPARATUS CONNECTION	SCHALTKARTEPLAN	C- 68447-020V
4- 57031-0101		TESTINSTRUKTION	USER MANUAL	TESTINSTRUKTION	C- 68447-020V
4- 57032-0101		EMBALLAGEINSTRUKTION	PACKING INSTRUCTION	EMBALLAGEINSTRUKTION	C- 68447-020V
3- 57033-0101		KRETSSCHEMA	CIRCUIT DIAGRAM	SCHALTKARTEPLAN	C- 68448-020V
3- 57033-0201		KRETSSCHEMA	CIRCUIT DIAGRAM	SCHALTKARTEPLAN	C- 68448-020V
3- 57033-0301		KRETSSCHEMA	CIRCUIT DIAGRAM	SCHALTKARTEPLAN	C- 68448-020V
3- 57033-0401		KRETSSCHEMA	CIRCUIT DIAGRAM	SCHALTKARTEPLAN	C- 68448-020V
3- 57033-0501		KRETSSCHEMA	CIRCUIT DIAGRAM	SCHALTKARTEPLAN	C- 68448-020V
3- 57034-0101		KOMPONENTLAYOUT	COMPONENT LAYOUT	KOMPONENTELAYOUT	C- 68448-020V
3- 57034-0201		KOMPONENTLAYOUT	COMPONENT LAYOUT	KOMPONENTELAYOUT	C- 68448-020V
4- 57035-0101		FUNKTIONSBESKRIVNING	FUNCTION DESCRIPTION	FUNKTIONSBESCHREIBUNG	C- 68448-020V
3- 57036-0101		KRETSSCHEMA	CIRCUIT DIAGRAM	SCHALTKARTEPLAN	C- 68449-020V
3- 57036-0201		KRETSSCHEMA	CIRCUIT DIAGRAM	SCHALTKARTEPLAN	C- 68449-020V
3- 57036-0301		KRETSSCHEMA	CIRCUIT DIAGRAM	SCHALTKARTEPLAN	C- 68449-020V
3- 57036-0401		KRETSSCHEMA	CIRCUIT DIAGRAM	SCHALTKARTEPLAN	C- 68449-020V
3- 57037-0101		KOMPONENTLAYOUT	COMPONENT LAYOUT	KOMPONENTELAYOUT	C- 68449-020V
4- 57042-0100		TESTINSTRUKTION	TEST INSTRUCTION	TESTINSTRUKTION	C- 68123-020V
4- 57043-0100		TESTINSTRUKTION	TEST INSTRUCTION	TESTINSTRUKTION	C- 68161-010V
4- 57046-0100		TESTINSTRUKTION	TEST INSTRUCTION	TESTINSTRUKTION	C- 67386-010V
3- 57051-0101		===SMST.RITN.===	===ASSEMBLY DRAWING===	ZUSAMMENST.ZEICHNUNG	C- 68450-010V
3- 57052-0101		KRETSSCHEMA	APPARATUS CONNECTION	SCHALTKARTEPLAN	C- 68450-010V
4- 57054-0101		EMBALLAGEINSTRUKTION	PACKING INSTRUCTION	EMBALLAGEINSTRUKTION	C- 68450-010V
3- 57055-0101		KRETSSCHEMA	CIRCUIT DIAGRAM	SCHALTKARTEPLAN	C- 68451-010V
3- 57055-0201		KRETSSCHEMA	CIRCUIT DIAGRAM	SCHALTKARTEPLAN	C- 68451-010V
3- 57055-0301		KRETSSCHEMA	CIRCUIT DIAGRAM	SCHALTKARTEPLAN	C- 68451-010V
3- 57055-0401		KRETSSCHEMA	CIRCUIT DIAGRAM	SCHALTKARTEPLAN	C- 68451-010V
3- 57056-0101		KOMPONENTLAYOUT	COMPONENT LAYOUT	KOMPONENTELAYOUT	C- 68451-010V

PART NO	LAST ECN	BENÄMNING	TITLE	BENENNUNG	GROUP NO
4- 57057-0101		FUNKTIONSBESKRIVNING	FUNCTION DESCRIPTION	FUNKTIONSBESCHREIBUNG	C- 68451-010V
3- 57058-0101		MONTERINGSINSTRUKTION	ASSEMBLY INSTRUCTION	MONTIERUNGSINSTRUKTION	C- 68452-010V
4- 57066-0101		===SMST.RITN.===	===ASSEMBLY DRAWING===	ZUSAMMENST.ZEICHNUNG	C- 68264-010V
4- 57067-0101		KOMPONENTLAYOUT	COMPONENT LAYOUT	KOMPONENTELAYOUT	C- 68264-010V
4- 57068-0101		===SMST.RITN.===	===ASSEMBLY DRAWING===	ZUSAMMENST.ZEICHNUNG	C- 68263-010V
4- 57069-0101		KOMPONENTLAYOUT	COMPONENT LAYOUT	KOMPONENTELAYOUT	C- 68263-010V
4- 57070-0101		===SMST.RITN.===	===ASSEMBLY DRAWING===	ZUSAMMENST.ZEICHNUNG	C- 68262-010V
4- 57071-0101		KOMPONENTLAYOUT	COMPONENT LAYOUT	KOMPONENTELAYOUT	C- 68262-010V
4- 57082-0101		INSTRUKTION	PRESET AREA DESCRIPTION	INSTRUKTION	C- 68447-020V
4- 57090-0101		ANVÄNDAR MANUAL	USER MANUAL	FUNKTIONSBESCHREIBUNG	C- 68450-010V
4- 57125-0101		KRETSSCHEMA	CIRCUIT DIAGRAM	SCHALTKARTEPLAN	C- 68473-020V
4- 57126-0101		KOMPONENTLAYOUT	COMPONENT LAYOUT	KOMPONENTELAYOUT	C- 68473-020V
4- 57135-0101		MONTAGERITNING	MOUNTING INSTRUCTION	MONTAGEZEICHNUNG	C- 68471-010V
4- 57136-0101		EMBALLAGEINSTRUKTION	PACKING INSTRUCTION	EMBALLAGEINSTRUKTION	C- 68471-010V
3- 57139-0101		MONTERINGSINSTRUKTION	ASSEMBLY DRAWING	MONTIERUNGSINSTRUKTION	C- 68471-010V
4- 57140-0101		TESTINSTRUKTION	TEST INSTRUCTION	TESTINSTRUKTION	C- 68471-010V
4- 57141-0101		ANVÄNDARMANUAL	APPARATUS CONNECTION	VERWENDERMANUAL	C- 68471-010V
4- 57142-0101		TESTINSTRUKTION	TEST AND FINAL CHECK	TESTINSTRUKTION	C- 68471-010V
3- 57147-0101		===SMST.RITN.===	===ASSEMBLY DRAWING===	ZUSAMMENST.ZEICHNUNG	C- 68123-030V
4- 57148-0101		APPARATINKOPPLING	APPARATUS CONNECTION	APPARATEINSCHALTUNG	C- 68123-030V
4- 57149-0101		ANVÄNDARMANUAL	USER MANUAL	VERWENDERMANUAL	C- 68123-030V
4- 57150-0101		EMBALLAGEINSTRUKTION	PACKING INSTRUCTION	EMBALLAGEINSTRUKTION	C- 68123-030V
4- 57203-0101		TESTINSTRUKTION	TEST INSTRUCTION	TESTINSTRUKTION	C- 67600-050V
4- 57204-0101		PACKNINGSBESKRIVNING	PACKING INSTRUCTION	VERS.PACKUNGSBESCHREIBUN	C- 67379-010V
4- 57371-0101		EMBALLAGEINSTRUKTION	PACKING INSTRUCTION	EMBALLAGEINSTRUKTION	C- 67600-050V
K3- 60887-0622		FÖRBINDNINGSSCHEMA	CONNECTION DRAWING	VERBINDUNGSPLAN	RK- 557235-010V
K3- 60887-0722		FÖRBINDNINGSSCHEMA	CONNECTION DRAWING	VERBINDUNGSPLAN	RK- 557235-010V
K3- 60887-2022		FÖRBINDNINGSSCHEMA	CONNECTION DRAWING	VERBINDUNGSPLAN	RK- 557235-010V
K3- 60887-2722		FÖRBINDNINGSSCHEMA	CONNECTION DRAWING	VERBINDUNGSPLAN	RK- 557235-010V
K4- 60888-0504		KABELLISTA	CABLE DIAGRAM	KABELANSCHLUSS	RK- 557019-010V
K4- 60888-0608		FÖRBINDNINGSSCHEMA	CONNECTION DRAWING	VERBINDUNGSPLAN	RK- 557546-010V
K4- 60888-0808		FÖRBINDNINGSSCHEMA	CONNECTION DRAWING	VERBINDUNGSPLAN	RK- 557546-010V
K4- 60888-1007		FÖRBINDNINGSSCHEMA	CONNECTION DRAWING	VERBINDUNGSPLAN	RK- 557157-010V
K4- 60888-1107		FÖRBINDNINGSSCHEMA	CONNECTION DRAWING	VERBINDUNGSPLAN	RK- 557157-010V
K4- 60888-1307		FÖRBINDNINGSSCHEMA	CONNECTION DRAWING	VERBINDUNGSPLAN	RK- 557157-010V
K4- 60888-1607		FÖRBINDNINGSSCHEMA	CONNECTION DRAWING	VERBINDUNGSPLAN	RK- 557157-010V
K4- 60888-2308		FÖRBINDNINGSSCHEMA	CONNECTION DRAWING	VERBINDUNGSPLAN	RK- 557546-010V
K4- 60888-2408		FÖRBINDNINGSSCHEMA	CONNECTION DRAWING	VERBINDUNGSPLAN	RK- 557546-010V
K4- 60888-2607		FÖRBINDNINGSSCHEMA	CONNECTION DRAWING	VERBINDUNGSPLAN	RK- 557157-010V
K4- 60888-2707		FÖRBINDNINGSSCHEMA	CONNECTION DRAWING	VERBINDUNGSPLAN	RK- 557157-010V
K4- 60888-3008		FÖRBINDNINGSSCHEMA	CONNECTION DRAWING	VERBINDUNGSPLAN	RK- 557546-010V
K4- 60888-3304		KABELLISTA	CABLE DIAGRAM	KABELANSCHLUSS	RK- 557019-010V
K4- 60888-3404		KABELLISTA	CABLE DIAGRAM	KABELANSCHLUSS	RK- 557019-010V
K4- 60888-3504		KABELLISTA	CABLE DIAGRAM	KABELANSCHLUSS	RK- 557019-010V
K4- 60888-3704		KABELLISTA	CABLE DIAGRAM	KABELANSCHLUSS	RK- 557019-010V
K4- 60888-3804		KABELLISTA	CABLE DIAGRAM	KABELANSCHLUSS	RK- 557019-010V
K4- 60888-4004		KABELLISTA	CABLE DIAGRAM	KABELANSCHLUSS	RK- 557019-010V
K4- 60888-4104		KABELLISTA	CABLE DIAGRAM	KABELANSCHLUSS	RK- 557019-010V
K4- 60888-4106		FÖRBINDNINGSSCHEMA	CONNECTION DRAWING	VERBINDUNGSPLAN	RK- 557148-010V
K4- 60888-4112		FÖRBINDNINGSSCHEMA	CONNECTION DRAWING	VERBINDUNGSPLAN	RK- 557691-010V
K4- 60888-4114		FÖRBINDNINGSSCHEMA	CONNECTION DRAWING	VERBINDUNGSPLAN	RK- 41768-010V
K4- 60888-4212		FÖRBINDNINGSSCHEMA	CONNECTION DRAWING	VERBINDUNGSPLAN	RK- 557691-010V
K4- 60888-4214		FÖRBINDNINGSSCHEMA	CONNECTION DRAWING	VERBINDUNGSPLAN	RK- 41768-010V
K4- 60888-4407		FÖRBINDNINGSSCHEMA	CONNECTION DRAWING	VERBINDUNGSPLAN	RK- 557157-010V
K4- 60888-4507		FÖRBINDNINGSSCHEMA	CONNECTION DRAWING	VERBINDUNGSPLAN	RK- 557157-010V
K4- 60888-4607		FÖRBINDNINGSSCHEMA	CONNECTION DRAWING	VERBINDUNGSPLAN	RK- 557157-010V
K4- 61065-1005		FÖRBINDNINGSSCHEMA	CONNECTION DRAWING	VERBINDUNGSPLAN	RK- 557160-010V
K4- 61065-1105		FÖRBINDNINGSSCHEMA	CONNECTION DRAWING	VERBINDUNGSPLAN	RK- 557160-010V
K4- 61065-1305		FÖRBINDNINGSSCHEMA	CONNECTION DRAWING	VERBINDUNGSPLAN	RK- 557160-010V
K4- 61065-1605		FÖRBINDNINGSSCHEMA	CONNECTION DRAWING	VERBINDUNGSPLAN	RK- 557160-010V
K4- 61065-2605		FÖRBINDNINGSSCHEMA	CONNECTION DRAWING	VERBINDUNGSPLAN	RK- 557160-010V
K4- 61065-2705		FÖRBINDNINGSSCHEMA	CONNECTION DRAWING	VERBINDUNGSPLAN	RK- 557160-010V
K4- 61065-4104		FÖRBINDNINGSSCHEMA	CONNECTION DRAWING	VERBINDUNGSPLAN	RK- 557151-010V
K4- 61065-4207		FÖRBINDNINGSSCHEMA	CONNECTION DRAWING	VERBINDUNGSPLAN	RK- 557694-010V
K4- 61065-4209		FÖRBINDNINGSSCHEMA	CONNECTION DRAWING	VERBINDUNGSPLAN	RK- 41770-010V
K4- 61065-4307		FÖRBINDNINGSSCHEMA	CONNECTION DRAWING	VERBINDUNGSPLAN	RK- 557694-010V
K4- 61065-4405		FÖRBINDNINGSSCHEMA	CONNECTION DRAWING	VERBINDUNGSPLAN	RK- 557160-010V
K4- 61065-4505		FÖRBINDNINGSSCHEMA	CONNECTION DRAWING	VERBINDUNGSPLAN	RK- 557160-010V
K4- 61065-4605		FÖRBINDNINGSSCHEMA	CONNECTION DRAWING	VERBINDUNGSPLAN	RK- 557160-010V
K4- 61065-4609		FÖRBINDNINGSSCHEMA	CONNECTION DRAWING	VERBINDUNGSPLAN	RK- 41770-010V
K4- 61066-0502		KABELLISTA	CABLE DIAGRAM	KABELANSCHLUSS	RK- 557022-010V
K4- 61066-0609		FÖRBINDNINGSSCHEMA	CONNECTION DRAWING	VERBINDUNGSPLAN	RK- 557552-010V
K4- 61066-0809		FÖRBINDNINGSSCHEMA	CONNECTION DRAWING	VERBINDUNGSPLAN	RK- 557552-010V
K4- 61066-2309		FÖRBINDNINGSSCHEMA	CONNECTION DRAWING	VERBINDUNGSPLAN	RK- 557552-010V
K4- 61066-2409		FÖRBINDNINGSSCHEMA	CONNECTION DRAWING	VERBINDUNGSPLAN	RK- 557552-010V
K4- 61066-3009		FÖRBINDNINGSSCHEMA	CONNECTION DRAWING	VERBINDUNGSPLAN	RK- 557552-010V
K4- 61066-3302		KABELLISTA	CABLE DIAGRAM	KABELANSCHLUSS	RK- 557022-010V
K4- 61066-3402		KABELLISTA	CABLE DIAGRAM	KABELANSCHLUSS	RK- 557022-010V
K4- 61066-3502		KABELLISTA	CABLE DIAGRAM	KABELANSCHLUSS	RK- 557022-010V
K4- 61066-3702		KABELLISTA	CABLE DIAGRAM	KABELANSCHLUSS	RK- 557022-010V
K4- 61066-3802		KABELLISTA	CABLE DIAGRAM	KABELANSCHLUSS	RK- 557022-010V
K4- 61066-4002		KABELLISTA	CABLE DIAGRAM	KABELANSCHLUSS	RK- 557022-010V
K4- 61066-4102		KABELLISTA	CABLE DIAGRAM	KABELANSCHLUSS	RK- 557022-010V
K4- 61066-4104		FÖRBINDNINGSSCHEMA	CONNECTION DRAWING	VERBINDUNGSPLAN	RK- 557154-010V
4- 61097-0501		KABELLISTA	CABLE DIAGRAM	KABELANSCHLUSS	CE- 557226-010V
4- 61097-0601		KABELLISTA	CABLE DIAGRAM	KABELANSCHLUSS	CE- 557226-010V
4- 61097-0701		KABELLISTA	CABLE DIAGRAM	KABELANSCHLUSS	CE- 557226-010V
4- 61097-0801		KABELLISTA	CABLE DIAGRAM	KABELANSCHLUSS	CE- 557226-010V
4- 61097-0901		KABELLISTA	CABLE DIAGRAM	KABELANSCHLUSS	CE- 557226-010V
4- 61097-1001		KABELLISTA	CABLE DIAGRAM	KABELANSCHLUSS	CE- 557226-010V
4- 61232-0501		FÖRBINDNINGSSCHEMA	CONNECTION DRAWING	VERBINDUNGSPLAN	CE- 41729-010V
4- 61232-0601		FÖRBINDNINGSSCHEMA	CONNECTION DRAWING	VERBINDUNGSPLAN	CE- 41729-010V

PART NO	LAST ECN	BENÄMNING	TITLE	BENENNUNG	GROUP NO
K4- 61232-0603		FÖRBINDNINGSSCHEMA	CONNECTION DRAWING	VERBINDUNGSPLAN	RK- 558312-010V
4- 61232-0701		FÖRBINDNINGSSCHEMA	CONNECTION DRAWING	VERBINDUNGSPLAN	CE- 41729-010V
4- 61232-0801		FÖRBINDNINGSSCHEMA	CONNECTION DRAWING	VERBINDUNGSPLAN	CE- 41729-010V
K4- 61232-0803		FÖRBINDNINGSSCHEMA	CONNECTION DRAWING	VERBINDUNGSPLAN	RK- 558312-010V
4- 61232-0901		FÖRBINDNINGSSCHEMA	CONNECTION DRAWING	VERBINDUNGSPLAN	CE- 41729-010V
4- 61232-1001		FÖRBINDNINGSSCHEMA	CONNECTION DRAWING	VERBINDUNGSPLAN	CE- 41729-010V
4- 61232-1201		FÖRBINDNINGSSCHEMA	CONNECTION DRAWING	VERBINDUNGSPLAN	CE- 41729-010V
4- 61232-1301		FÖRBINDNINGSSCHEMA	CONNECTION DRAWING	VERBINDUNGSPLAN	CE- 41729-010V
4- 61232-1401		FÖRBINDNINGSSCHEMA	CONNECTION DRAWING	VERBINDUNGSPLAN	CE- 41729-010V
4- 61232-1501		FÖRBINDNINGSSCHEMA	CONNECTION DRAWING	VERBINDUNGSPLAN	CE- 41729-010V
4- 61232-1601		FÖRBINDNINGSSCHEMA	CONNECTION DRAWING	VERBINDUNGSPLAN	CE- 41729-010V
4- 61232-1701		FÖRBINDNINGSSCHEMA	CONNECTION DRAWING	VERBINDUNGSPLAN	CE- 41729-010V
4- 61232-1801		FÖRBINDNINGSSCHEMA	CONNECTION DRAWING	VERBINDUNGSPLAN	CE- 41729-010V
4- 61232-1901		FÖRBINDNINGSSCHEMA	CONNECTION DRAWING	VERBINDUNGSPLAN	CE- 41729-010V
4- 61232-2001		FÖRBINDNINGSSCHEMA	CONNECTION DRAWING	VERBINDUNGSPLAN	CE- 41729-010V
4- 61232-2101		FÖRBINDNINGSSCHEMA	CONNECTION DRAWING	VERBINDUNGSPLAN	CE- 41729-010V
4- 61232-2201		FÖRBINDNINGSSCHEMA	CONNECTION DRAWING	VERBINDUNGSPLAN	CE- 41729-010V
4- 61232-2301		FÖRBINDNINGSSCHEMA	CONNECTION DRAWING	VERBINDUNGSPLAN	CE- 41729-010V
4- 61232-2401		FÖRBINDNINGSSCHEMA	CONNECTION DRAWING	VERBINDUNGSPLAN	CE- 41729-010V
K4- 61232-2403		FÖRBINDNINGSSCHEMA	CONNECTION DRAWING	VERBINDUNGSPLAN	RK- 558312-010V
4- 61232-2501		FÖRBINDNINGSSCHEMA	CONNECTION DRAWING	VERBINDUNGSPLAN	CE- 41729-010V
4- 61232-2701		FÖRBINDNINGSSCHEMA	CONNECTION DRAWING	VERBINDUNGSPLAN	CE- 41729-010V
4- 61232-2801		FÖRBINDNINGSSCHEMA	CONNECTION DRAWING	VERBINDUNGSPLAN	CE- 41729-010V
4- 61232-2901		FÖRBINDNINGSSCHEMA	CONNECTION DRAWING	VERBINDUNGSPLAN	CE- 41729-010V
K4- 61232-2902		FÖRBINDNINGSSCHEMA	CONNECTION DIAGRAM	VERBINDUNGSPLAN	RK- 558303-010V
4- 61232-3001		FÖRBINDNINGSSCHEMA	CONNECTION DRAWING	VERBINDUNGSPLAN	CE- 41729-010V
K4- 61232-3002		FÖRBINDNINGSSCHEMA	CONNECTION DIAGRAM	VERBINDUNGSPLAN	RK- 558303-010V
4- 61232-3101		FÖRBINDNINGSSCHEMA	CONNECTION DRAWING	VERBINDUNGSPLAN	CE- 41729-010V
4- 61232-3201		FÖRBINDNINGSSCHEMA	CONNECTION DRAWING	VERBINDUNGSPLAN	CE- 41729-010V
K4- 61232-3203		FÖRBINDNINGSSCHEMA	CONNECTION DRAWING	VERBINDUNGSPLAN	RK- 558312-010V
4- 61232-3301		FÖRBINDNINGSSCHEMA	CONNECTION DRAWING	VERBINDUNGSPLAN	CE- 41729-010V
4- 61232-3401		FÖRBINDNINGSSCHEMA	CONNECTION DRAWING	VERBINDUNGSPLAN	CE- 41729-010V
4- 61232-3501		FÖRBINDNINGSSCHEMA	CONNECTION DRAWING	VERBINDUNGSPLAN	CE- 41729-010V
4- 61232-3601		FÖRBINDNINGSSCHEMA	CONNECTION DRAWING	VERBINDUNGSPLAN	CE- 41729-010V
4- 61232-4301		FÖRBINDNINGSSCHEMA	CONNECTION DRAWING	VERBINDUNGSPLAN	CE- 41729-010V
4- 61232-4401		FÖRBINDNINGSSCHEMA	CONNECTION DRAWING	VERBINDUNGSPLAN	CE- 41729-010V
4- 61232-4501		FÖRBINDNINGSSCHEMA	CONNECTION DRAWING	VERBINDUNGSPLAN	CE- 41729-010V
4- 61232-4601		FÖRBINDNINGSSCHEMA	CONNECTION DRAWING	VERBINDUNGSPLAN	CE- 41729-010V
4- 61232-4701		FÖRBINDNINGSSCHEMA	CONNECTION DRAWING	VERBINDUNGSPLAN	CE- 41729-010V
4- 61232-4801		FÖRBINDNINGSSCHEMA	CONNECTION DRAWING	VERBINDUNGSPLAN	CE- 41729-010V
4- 61232-4901		FÖRBINDNINGSSCHEMA	CONNECTION DRAWING	VERBINDUNGSPLAN	CE- 41729-010V
4- 61249-0501		FÖRBINDNINGSSCHEMA	CONNECTION DIAGRAM	VERBINDUNGSPLAN	CE- 41756-010V
4- 61249-0601		FÖRBINDNINGSSCHEMA	CONNECTION DIAGRAM	VERBINDUNGSPLAN	CE- 41756-010V
4- 61249-0701		FÖRBINDNINGSSCHEMA	CONNECTION DIAGRAM	VERBINDUNGSPLAN	CE- 41756-010V
4- 61249-0801		FÖRBINDNINGSSCHEMA	CONNECTION DIAGRAM	VERBINDUNGSPLAN	CE- 41756-010V
4- 61249-0901		FÖRBINDNINGSSCHEMA	CONNECTION DIAGRAM	VERBINDUNGSPLAN	CE- 41756-010V
4- 61249-1001		FÖRBINDNINGSSCHEMA	CONNECTION DIAGRAM	VERBINDUNGSPLAN	CE- 41756-010V
4- 61249-1101		FÖRBINDNINGSSCHEMA	CONNECTION DIAGRAM	VERBINDUNGSPLAN	CE- 41756-010V
4- 61249-1201		FÖRBINDNINGSSCHEMA	CONNECTION DIAGRAM	VERBINDUNGSPLAN	CE- 41756-010V
4- 61249-1301		FÖRBINDNINGSSCHEMA	CONNECTION DIAGRAM	VERBINDUNGSPLAN	CE- 41756-010V
4- 61249-1401		FÖRBINDNINGSSCHEMA	CONNECTION DIAGRAM	VERBINDUNGSPLAN	CE- 41756-010V
4- 61249-1501		FÖRBINDNINGSSCHEMA	CONNECTION DIAGRAM	VERBINDUNGSPLAN	CE- 41756-010V
4- 61249-1601		FÖRBINDNINGSSCHEMA	CONNECTION DIAGRAM	VERBINDUNGSPLAN	CE- 41756-010V
4- 61249-1701		FÖRBINDNINGSSCHEMA	CONNECTION DIAGRAM	VERBINDUNGSPLAN	CE- 41756-010V
4- 61249-1801		FÖRBINDNINGSSCHEMA	CONNECTION DIAGRAM	VERBINDUNGSPLAN	CE- 41756-010V
4- 61249-1901		FÖRBINDNINGSSCHEMA	CONNECTION DIAGRAM	VERBINDUNGSPLAN	CE- 41756-010V
4- 61249-2001		FÖRBINDNINGSSCHEMA	CONNECTION DIAGRAM	VERBINDUNGSPLAN	CE- 41756-010V
4- 61249-2101		FÖRBINDNINGSSCHEMA	CONNECTION DIAGRAM	VERBINDUNGSPLAN	CE- 41756-010V
4- 61249-2201		FÖRBINDNINGSSCHEMA	CONNECTION DIAGRAM	VERBINDUNGSPLAN	CE- 41756-010V
4- 61249-2301		FÖRBINDNINGSSCHEMA	CONNECTION DIAGRAM	VERBINDUNGSPLAN	CE- 41756-010V
4- 61249-2401		FÖRBINDNINGSSCHEMA	CONNECTION DIAGRAM	VERBINDUNGSPLAN	CE- 41756-010V
4- 61249-2501		FÖRBINDNINGSSCHEMA	CONNECTION DIAGRAM	VERBINDUNGSPLAN	CE- 41756-010V
4- 61249-2701		FÖRBINDNINGSSCHEMA	CONNECTION DIAGRAM	VERBINDUNGSPLAN	CE- 41756-010V
4- 61249-2801		FÖRBINDNINGSSCHEMA	CONNECTION DIAGRAM	VERBINDUNGSPLAN	CE- 41756-010V
4- 61249-2901		FÖRBINDNINGSSCHEMA	CONNECTION DIAGRAM	VERBINDUNGSPLAN	CE- 41756-010V
K4- 61249-2902		FÖRBINDNINGSSCHEMA	CONNECTION DRAWING	VERBINDUNGSPLAN	RK- 558306-010V
4- 61249-3001		FÖRBINDNINGSSCHEMA	CONNECTION DIAGRAM	VERBINDUNGSPLAN	CE- 41756-010V
K4- 61249-3002		FÖRBINDNINGSSCHEMA	CONNECTION DRAWING	VERBINDUNGSPLAN	RK- 558306-010V
4- 61249-3101		FÖRBINDNINGSSCHEMA	CONNECTION DIAGRAM	VERBINDUNGSPLAN	CE- 41756-010V
4- 61249-3201		FÖRBINDNINGSSCHEMA	CONNECTION DIAGRAM	VERBINDUNGSPLAN	CE- 41756-010V
4- 61249-3301		FÖRBINDNINGSSCHEMA	CONNECTION DIAGRAM	VERBINDUNGSPLAN	CE- 41756-010V
4- 61249-3401		FÖRBINDNINGSSCHEMA	CONNECTION DIAGRAM	VERBINDUNGSPLAN	CE- 41756-010V
4- 61249-3501		FÖRBINDNINGSSCHEMA	CONNECTION DIAGRAM	VERBINDUNGSPLAN	CE- 41756-010V
4- 61249-3601		FÖRBINDNINGSSCHEMA	CONNECTION DIAGRAM	VERBINDUNGSPLAN	CE- 41756-010V
4- 61249-3701		FÖRBINDNINGSSCHEMA	CONNECTION DIAGRAM	VERBINDUNGSPLAN	CE- 41756-010V
4- 61249-3801		FÖRBINDNINGSSCHEMA	CONNECTION DIAGRAM	VERBINDUNGSPLAN	CE- 41756-010V
4- 61249-3901		FÖRBINDNINGSSCHEMA	CONNECTION DIAGRAM	VERBINDUNGSPLAN	CE- 41756-010V
4- 61249-4001		FÖRBINDNINGSSCHEMA	CONNECTION DIAGRAM	VERBINDUNGSPLAN	CE- 41756-010V
4- 61249-4101		FÖRBINDNINGSSCHEMA	CONNECTION DIAGRAM	VERBINDUNGSPLAN	CE- 41756-010V
4- 61249-4201		FÖRBINDNINGSSCHEMA	CONNECTION DIAGRAM	VERBINDUNGSPLAN	CE- 41756-010V
4- 61249-4301		FÖRBINDNINGSSCHEMA	CONNECTION DIAGRAM	VERBINDUNGSPLAN	CE- 41756-010V
4- 61249-4401		FÖRBINDNINGSSCHEMA	CONNECTION DIAGRAM	VERBINDUNGSPLAN	CE- 41756-010V
4- 61249-4501		FÖRBINDNINGSSCHEMA	CONNECTION DIAGRAM	VERBINDUNGSPLAN	CE- 41756-010V
4- 61249-4601		FÖRBINDNINGSSCHEMA	CONNECTION DIAGRAM	VERBINDUNGSPLAN	CE- 41756-010V
4- 61249-4701		FÖRBINDNINGSSCHEMA	CONNECTION DIAGRAM	VERBINDUNGSPLAN	CE- 41756-010V
4- 61249-4801		FÖRBINDNINGSSCHEMA	CONNECTION DIAGRAM	VERBINDUNGSPLAN	CE- 41756-010V
4- 61249-4901		FÖRBINDNINGSSCHEMA	CONNECTION DIAGRAM	VERBINDUNGSPLAN	CE- 41756-010V
4- 61250-0501		FÖRBINDNINGSSCHEMA	CONNECTION DRAWING	VERBINDUNGSPLAN	CE- 41763-010V
4- 61250-0601		FÖRBINDNINGSSCHEMA	CONNECTION DRAWING	VERBINDUNGSPLAN	CE- 41763-010V
K4- 61250-0603		FÖRBINDNINGSSCHEMA	CONNECTION DRAWING	VERBINDUNGSPLAN	RK- 558315-010V
4- 61250-0701		FÖRBINDNINGSSCHEMA	CONNECTION DRAWING	VERBINDUNGSPLAN	CE- 41763-010V
4- 61250-0801		FÖRBINDNINGSSCHEMA	CONNECTION DRAWING	VERBINDUNGSPLAN	CE- 41763-010V

PART NO	LAST ECN	BENÄMNING	TITLE	BENENNUNG	GROUP NO
K4- 61250-0803		FÖRBINDNINGSSCHEMA	CONNECTION DRAWING	VERBINDUNGSPLAN	RK- 558315-010V
4- 61250-0901		FÖRBINDNINGSSCHEMA	CONNECTION DRAWING	VERBINDUNGSPLAN	CE- 41763-010V
4- 61250-1001		FÖRBINDNINGSSCHEMA	CONNECTION DRAWING	VERBINDUNGSPLAN	CE- 41763-010V
4- 61250-1101		FÖRBINDNINGSSCHEMA	CONNECTION DRAWING	VERBINDUNGSPLAN	CE- 41763-010V
4- 61250-1201		FÖRBINDNINGSSCHEMA	CONNECTION DRAWING	VERBINDUNGSPLAN	CE- 41763-010V
4- 61250-1301		FÖRBINDNINGSSCHEMA	CONNECTION DRAWING	VERBINDUNGSPLAN	CE- 41763-010V
4- 61250-1401		FÖRBINDNINGSSCHEMA	CONNECTION DRAWING	VERBINDUNGSPLAN	CE- 41763-010V
4- 61250-1501		FÖRBINDNINGSSCHEMA	CONNECTION DRAWING	VERBINDUNGSPLAN	CE- 41763-010V
4- 61250-1601		FÖRBINDNINGSSCHEMA	CONNECTION DRAWING	VERBINDUNGSPLAN	CE- 41763-010V
4- 61250-1701		FÖRBINDNINGSSCHEMA	CONNECTION DRAWING	VERBINDUNGSPLAN	CE- 41763-010V
4- 61250-1801		FÖRBINDNINGSSCHEMA	CONNECTION DRAWING	VERBINDUNGSPLAN	CE- 41763-010V
4- 61250-1901		FÖRBINDNINGSSCHEMA	CONNECTION DRAWING	VERBINDUNGSPLAN	CE- 41763-010V
4- 61250-2001		FÖRBINDNINGSSCHEMA	CONNECTION DRAWING	VERBINDUNGSPLAN	CE- 41763-010V
4- 61250-2101		FÖRBINDNINGSSCHEMA	CONNECTION DRAWING	VERBINDUNGSPLAN	CE- 41763-010V
4- 61250-2201		FÖRBINDNINGSSCHEMA	CONNECTION DRAWING	VERBINDUNGSPLAN	CE- 41763-010V
4- 61250-2301		FÖRBINDNINGSSCHEMA	CONNECTION DRAWING	VERBINDUNGSPLAN	CE- 41763-010V
4- 61250-2401		FÖRBINDNINGSSCHEMA	CONNECTION DRAWING	VERBINDUNGSPLAN	CE- 41763-010V
K4- 61250-2403		FÖRBINDNINGSSCHEMA	CONNECTION DRAWING	VERBINDUNGSPLAN	RK- 558315-010V
4- 61250-2501		FÖRBINDNINGSSCHEMA	CONNECTION DRAWING	VERBINDUNGSPLAN	CE- 41763-010V
4- 61250-2701		FÖRBINDNINGSSCHEMA	CONNECTION DRAWING	VERBINDUNGSPLAN	CE- 41763-010V
4- 61250-2801		FÖRBINDNINGSSCHEMA	CONNECTION DRAWING	VERBINDUNGSPLAN	CE- 41763-010V
4- 61250-2901		FÖRBINDNINGSSCHEMA	CONNECTION DRAWING	VERBINDUNGSPLAN	CE- 41763-010V
K4- 61250-2902		FÖRBINDNINGSSCHEMA	CONNECTION DRAWING	VERBINDUNGSPLAN	RK- 558309-010V
4- 61250-3001		FÖRBINDNINGSSCHEMA	CONNECTION DRAWING	VERBINDUNGSPLAN	CE- 41763-010V
K4- 61250-3002		FÖRBINDNINGSSCHEMA	CONNECTION DRAWING	VERBINDUNGSPLAN	RK- 558309-010V
4- 61250-3101		FÖRBINDNINGSSCHEMA	CONNECTION DRAWING	VERBINDUNGSPLAN	CE- 41763-010V
4- 61250-3201		FÖRBINDNINGSSCHEMA	CONNECTION DRAWING	VERBINDUNGSPLAN	CE- 41763-010V
K4- 61250-3203		FÖRBINDNINGSSCHEMA	CONNECTION DRAWING	VERBINDUNGSPLAN	RK- 558315-010V
4- 61250-3301		FÖRBINDNINGSSCHEMA	CONNECTION DRAWING	VERBINDUNGSPLAN	CE- 41763-010V
4- 61250-3401		FÖRBINDNINGSSCHEMA	CONNECTION DRAWING	VERBINDUNGSPLAN	CE- 41763-010V
4- 61250-3501		FÖRBINDNINGSSCHEMA	CONNECTION DRAWING	VERBINDUNGSPLAN	CE- 41763-010V
4- 61250-3601		FÖRBINDNINGSSCHEMA	CONNECTION DRAWING	VERBINDUNGSPLAN	CE- 41763-010V
4- 61250-3701		FÖRBINDNINGSSCHEMA	CONNECTION DRAWING	VERBINDUNGSPLAN	CE- 41763-010V
4- 61250-4301		FÖRBINDNINGSSCHEMA	CONNECTION DRAWING	VERBINDUNGSPLAN	CE- 41763-010V
4- 61250-4401		FÖRBINDNINGSSCHEMA	CONNECTION DRAWING	VERBINDUNGSPLAN	CE- 41763-010V
4- 61250-4501		FÖRBINDNINGSSCHEMA	CONNECTION DRAWING	VERBINDUNGSPLAN	CE- 41763-010V
4- 61250-4601		FÖRBINDNINGSSCHEMA	CONNECTION DRAWING	VERBINDUNGSPLAN	CE- 41763-010V
4- 61250-4701		FÖRBINDNINGSSCHEMA	CONNECTION DRAWING	VERBINDUNGSPLAN	CE- 41763-010V
4- 61250-4801		FÖRBINDNINGSSCHEMA	CONNECTION DRAWING	VERBINDUNGSPLAN	CE- 41763-010V
4- 61250-4901		FÖRBINDNINGSSCHEMA	CONNECTION DRAWING	VERBINDUNGSPLAN	CE- 41763-010V
4- 61252-0501		NÄTINKOPPLING	MAINS CONNECTION	VERBINDUNGSPLAN	CE- 41729-010V
4- 61252-0601		NÄTINKOPPLING	MAINS CONNECTION	VERBINDUNGSPLAN	CE- 41729-010V
4- 61253-0501		NÄTINKOPPLING	MAINS CONNECTION	VERBINDUNGSPLAN	CE- 41756-010V
4- 61253-0601		NÄTINKOPPLING	MAINS CONNECTION	VERBINDUNGSPLAN	CE- 41756-010V
4- 61254-0501		NÄTINKOPPLING	MAINS CONNECTION	VERBINDUNGSPLAN	CE- 41763-010V
4- 61254-0601		NÄTINKOPPLING	MAINS CONNECTION	VERBINDUNGSPLAN	CE- 41763-010V
K4- 61336-0503		FÖRBINDNINGSSCHEMA	CONNECTION DRAWING	VERBINDUNGSPLAN	RK- 558344-010V
K4- 61336-0703		FÖRBINDNINGSSCHEMA	CONNECTION DRAWING	VERBINDUNGSPLAN	RK- 558344-010V
K4- 61336-1503		FÖRBINDNINGSSCHEMA	CONNECTION DRAWING	VERBINDUNGSPLAN	RK- 558344-010V
K4- 61336-2803		FÖRBINDNINGSSCHEMA	CONNECTION DRAWING	VERBINDUNGSPLAN	RK- 558344-010V
C- 67058-0301	11438 88-11-24	DIG BRYTADAPT / FCELL AV	CIRCUIT BOARD	SCHALTKARTE	CE- 41723-010V
					CE- 41750-010V
					CE- 41757-010V
C- 67062-0201	8897 86-07-11	POTENTIOMETER	POTENTIOMETER	POTENTIOMETER	CE- 41724-010V
					CE- 41751-010V
C- 67062-0201		POTENTIOMETER	POTENTIOMETER	POTENTIOMETER	CE- 41758-010V
C- 67347-0101	9248 88-03-17	BROMS	BRAKE	BREMSE	CE- 41750-010V
C- 67379-0105	15340 93-05-17	IH-UTRUSTNING	IH TRANSFORMER I	IH-AUSR~STUNG	C- 572642-010V
					C- 572643-010V
C- 67379-0107	15340 93-05-17	IH-UTRUSTNING	IH TRANSFORMER I	IH-AUSR~STUNG	C- 550714-010V
C- 67379-0113	15340 93-05-17	IH-UTRUSTNING	IH TRANSFORMER I	IH-AUSR~STUNG	C- 572642-010V
					C- 572643-010V
C- 67379-0114	15340 93-05-17	IH-UTRUSTNING	IH TRANSFORMER I	IH-AUSR~STUNG	C- 572642-010V
					C- 572643-010V
C- 67386-0101	15335 93-04-01	FLOW CONTROLLER	FLOW CONTROLLER	SCHALTKARTE	RK- 41767-010V
					RK- 41769-010V
					CE- 557222-010V
					CE- 557223-010V
C- 67388-0102	14657 90-03-21	RACK	RACK	RACK	CE- 41723-010V
					CE- 41750-010V
					CE- 41757-010V
C- 67389-010V	10492 89-02-03	KRETSKORT	CIRCUIT BOARD	SCHALTKARTE	C- 67386-010V
C- 67564-0101	15362 91-06-26	TOROID SPOLE 1	TOROID COIL 1	SPULE	C- 67577-050V
C- 67565-0101	15362 91-06-26	TOROID SPOLE 2	TOROID COIL 2	SPULE	C- 67577-050V
C- 67566-0101	15362 91-06-26	TOROID SPOLE 3	TOROID COIL 3	SPULE	C- 67577-050V
C- 67567-0101	15362 91-06-26	TERMOSTATKABEL	THERMOSTAT CABLE	KABEL	C- 67577-050V
C- 67568-0101	15362 91-06-26	SPOLE ENKEL LAGRING	COIL SINGLE LAYER	SPULE	C- 67577-050V
C- 67569-0101	15362 91-06-26	TANKSPOLE	TANK COIL	SPULE	C- 67577-050V
C- 67570-0101	15362 91-06-26	KONDENSATORKORT	CAPACITOR CARD	SCHALTKARTE	C- 67577-050V
C- 67573-0101	15362 91-06-26	TRANSISTOR PAKET	TRANSISTOR PACKAGE R	SCHALTKARTE	C- 67577-050V
C- 67574-0401	15362 91-06-26	UTGÅNGS TRANSFORMATOR	OUTPUT TRANSFORMER	TRAFO	C- 67577-050V
C- 67575-0101	15362 91-06-26	TRANSFORMATOR	TRANSFORMER	TRAFO	C- 67578-010V
C- 67576-0101	15362 91-06-26	TRANSFORMATOR STYRKORT	TRANSFORMER CONT. CARD	TRAFO	C- 67579-050V
C- 67577-0501	15339 93-05-10	EFFEKT KORT	POWER CARD	SCHALTKARTE	C- 67600-050V
C- 67578-0101	15362 91-06-26	FLÄKTHÅLLARE	FAN HOLDER	HALTER	C- 67600-050V
C- 67579-0501	15339 93-05-10	STYRKORT	CONTROL CARD	SCHALTKARTE	C- 67600-050V
C- 67580-0201	15362 91-06-26	FRONT PANEL	FRONT PANEL	FRONTBLECH	C- 67600-050V
C- 67581-0101	15362 91-06-26	TRANSISTOR PACKET V	TRANSISTOR PACKAGE L	SCHALTKARTE	C- 67577-050V
C- 67582-0101	15339 93-05-10	HEAT SINK PREREGULATOR	HEAT SINK PREREGULATOR	SCHALTKARTE	C- 67577-050V
C- 67600-0501	15339 93-05-10	KRETSKORT	TPIH 2000 GENERATOR	SCHALTKARTE	CE- 41766-010V
C- 68123-0201	15335 93-04-01	LEVEL METER	LEVEL METER	SCHALTKARTE	CE- 557222-010V
					CE- 557223-010V

PART NO	LAST ECN	BENÄMNING	TITLE	BENENNUNG	GROUP NO
C- 68123-0301	14142 93-03-31	LEVEL METER	LEVEL METER	SCHALTKARTE	RK- 41767-010V RK- 41769-010V
C- 68161-0102	15300 90-11-05	COIL ELEMENT	COIL ELEMENT	SPULE	C- 794092-010V C- 924808-010V
C- 68256-010V	10488 88-12-19	KRETSKORT	CIRCUIT BOARD	SCHALTKARTE	C- 68123-020V C- 68123-030V
C- 68262-0101	12863 89-09-13	KRETSKORT	BACKPLANE FRONT RACK 8TE	SCHALTKARTE	CE- 41723-010V CE- 41750-010V CE- 41757-010V RK- 41767-010V RK- 41769-010V
C- 68263-0101	12863 89-09-13	KRETSKORT	BACKPLANE FRONT RACK 6TE	SCHALTKARTE	RK- 41767-010V RK- 41769-010V
C- 68264-0101	12863 89-09-13	KRETSKORT	BACKPLANE FRONT RACK 5TE	SCHALTKARTE	RK- 41767-010V RK- 41769-010V
C- 68444-0101	11437 89-08-02	KRETSKORT	SHUNT RESISTOR FOR SSR	SCHALTKARTE	CE- 41723-010V CE- 41750-010V CE- 41757-010V
C- 68445-0101	14665 90-05-04	FRONT PANEL 4TE	FRONT PLATE	FRONTBLECH	CE- 41723-010V CE- 41750-010V CE- 41757-010V
C- 68445-0102	14665 90-05-04	FRONT PANEL 5TE	FRONT PLATE	FRONTBLECH	CE- 41723-010V
C- 68445-0102		FRONT PANEL 5TE	FRONT PLATE	FRONTBLECH	CE- 41750-010V CE- 41757-010V
C- 68445-0103	14665 90-05-04	FRONT PANEL 6TE	FRONT PLATE	FRONTBLECH	CE- 557222-010V CE- 41723-010V CE- 41750-010V CE- 41757-010V
C- 68445-0104	14665 90-05-04	FRONT PANEL 8TE	FRONT PLATE	FRONTBLECH	CE- 41723-010V CE- 41750-010V CE- 41757-010V
C- 68445-0105	14665 90-05-04	FRONT PANEL 10TE	FRONT PLATE	FRONTBLECH	CE- 557222-010V CE- 41723-010V CE- 41750-010V CE- 41757-010V
C- 68445-0106	14665 90-05-04	FRONT PANEL 2TE	FRONT PLATE	FRONTBLECH	CE- 557222-010V CE- 41723-010V CE- 41750-010V CE- 41757-010V RK- 41767-010V RK- 41769-010V
C- 68447-0202	15336 93-03-31	VALVE POSITIONER	VALVE POS: ASSEMBLY	SCHALTKARTE	RK- 41767-010V RK- 41769-010V
C- 68448-020V	15336 93-03-31	VALVE POS.: MAIN CARD	VALVE POS.: MAIN CARD	LEITERPLATTE	C- 68447-020V
C- 68449-020V	14669 90-11-05	VALVE POS.: AUX. CARD I	VALVE POS.: AUX. CARD I	LEITERPLATTE	C- 68447-020V
C- 68450-0101	19109 93-03-31	STEPPER MOTOR DRIVER	STEPPER MOTOR DRIVER	SCHALTKARTE	RK- 41767-010V RK- 41769-010V
C- 68451-0101	19109 93-03-31	STEP. MOT. DR. MAIN CARD	STEP. MOT. DR. MAIN CARD	SCHALTKARTE	C- 68450-010V
C- 68452-0101	14667 90-11-05	STEP. MOT. DR. AUX. CARD	STEP. MOT. DR. AUX. CARD	SCHALTKARTE	C- 68450-010V
C- 68471-0101	14676 90-11-28	DEKORJUSTERINGS LOGIK	PRINTED DESIGN CORR.LOGI	SCHALTKARTE	CE- 41723-010V CE- 41750-010V CE- 41757-010V
C- 68473-020V	14669 90-11-05	VALVE POS.: AUX. CARD II	VALVE POS.: AUX. CARD II	LEITERPLATTE	C- 68447-020V
C- 68474-0101	14663 91-06-20	SPOLE 5 VARV	COIL	SPULE	C- 67379-010V
C- 68474-0103	14663 91-06-20	SPOLE	COIL	SPULE	C- 67379-010V
C- 68510-0101	11436 88-11-15	MULTIPLEXPRINT	MULTIPLEXPRINT	SCHALTKARTE	CE- 41751-010V
BE- 68701-0201	17624 92-03-26	EL-UTRUSTNING H.V.A. KI	ELECTRIC EQUIPMENT	EL-AUSR~STUNG	C- 563210-010V C- 563211-010V
C- 68917-0101	10472 89-01-25	KRETSKORT	ANGLE INDICATOR	SCHALTKARTE	C- 451348-020V
CE- 69884-0101	14293 90-04-02	EL-MATERIAL	ELECTRIC MATERIALS	EL-MATERIAL	CE- 69885-010V BE- 649205-140V BE- 649411-010V
CE- 69885-010V	14293 90-04-02	EL DOKUMENT	ELECTRICAL DOCUMENT	EL-DOKUMENT	BE- 649411-010V
CE- 69885-0101	14293 90-04-02	EL DOKUMENT	ELECTRICAL DOCUMENT	EL-DOKUMENT	BE- 649205-140V
CE- 69886-0101	14293 90-04-02	EL-MATERIAL	ELECTRIC MATERIALS	EL-MATERIAL	CE- 69887-010V BE- 649205-140V BE- 649411-010V
CE- 69887-0101	14293 90-04-02	EL DOKUMENT	ELECTRICAL DOCUMENT	EL-DOKUMENT	BE- 649205-140V BE- 649411-010V
RK- 69993-0101	15506 90-11-05	"PERFORATION HEATER"	"PERFORATION HEATER"	EL-AUSR~STUNG	C- 456953-020V
RK- 69994-010V	15506 90-11-05	EL-MATERIAL "PERF.HEATER	EL-MATERIAL "PERF.HEATER	EL-MATERIAL	RK- 69995-010V
RK- 69994-0101	15506 90-11-05	EL-MATERIAL "PERF.HEATER	EL-MATERIAL "PERF.HEATER	EL-MATERIAL	RK- 69993-010V
RK- 69995-0101	15506 90-11-05	"PERFORATION HEATER	EL DOCUMENT "PERF.HEATER	EL-DOKUMENT	RK- 69993-010V
4- 72947		HAKNYCKEL FAST	HOOK SPANNER	HAKENSCHLUESSEL	C- 77099-020V
C- 74767-0102	8017 85-07-02	DYNAMOMETER TRYCKRULLE	DYNAMOMETER	DYNAMOMETER	C- 77092-030V
4- 74768		HYLSA	SLEEVE	HUELSE	C- 74767-010V
4- 74769		HYLSA	SLEEVE	HUELSE	C- 74767-010V
4- 74770		STÅNG	ROD	STANGE	C- 74767-010V
4- 74771		STYRNING	STEERING	FUEHRUNG	C- 74767-010V
4- 74772		SKALA	DIAL	MASSTAB	C- 74767-010V
4- 74912		TAPP	DOWEL	ZAPFEN	C- 74767-010V
4- 75451		STYRPINNE	GUIDE PIN	FUEHRUNGSBOLZEN	C- 75467-020V C- 76460-010V
2- 75453		HÅLLARE	HOLDER	HALTER	C- 75466-030V
4- 75454		STÅNG	ROD	STANGE	C- 75466-030V
C- 75466-0301	16292 91-04-30	INST.VERKTYG SNÄCKVÄXEL	SETTING TOOL	EINSTELLWERKZEUG	C- 77092-030V
C- 75467-0201	8296 85-10-09	INST.VERKTYG KURVOR	SETTING TOOL CURVES	EINSTELLWERKZEUG	C- 77092-030V
C- 75469-0201	5504 82-09-17	INST.VERKTYG VOLYMJUST.	SETTING TOOL	EINSTELLWERKZEUG	C- 76335-010V
4- 75470		MALL	TEMPLATE	MALL	C- 75469-020V
4- 75471		FÄSTE	BRACKET	BEFESTIGUNGSHALTER	C- 75469-020V
4- 75472		SPÄNNPLATTA	CLAMP IRON	SPANNEISEN	C- 75469-020V
4- 75514		MONT.STÅNG MOTHÅLLSANORD	MOUNTING PLIERS	MONTAGEZANGE	C- 77094-010V

PART NO	LAST ECN	BENÄMNING	TITLE	BENENNUNG	GROUP NO
C- 75525-030V	20135 93-06-11	INST. OCH KONTROLLMALLAR	TEMPLATE	MALL	C- 77092-030V
C- 75542-0101	5688 83-01-14	LYFTVERKTYG	LIFTING UNIT	HEBEANORDNUNG	C- 77091-040V
1- 75543		HÅLLARE	HOLDER	HALTER	C- 75542-010V
4- 75544		FÄSTE	BRACKET	BEFESTIGUNGSHALTER	C- 75542-010V
4- 75545		MALL	TEMPLATE	MALL	C- 75525-030V
4- 75665		MONTERINGSVERKTYG	ASSEMBLY TOOL	MONTAGEWERKZEUG	C- 77099-020V
3- 75931-0001		INSTÄLLNINGSMALL	SETTING TEMPLATE	EINSTELLEHRE	C- 76335-010V
3- 75931-0002		INSTÄLLNINGSMALL	SETTING TEMPLATE	EINSTELLEHRE	C- 76335-010V
3- 75931-0003		INSTÄLLNINGSMALL	SETTING TEMPLATE	EINSTELLEHRE	C- 76335-010V
3- 75931-0004		INSTÄLLNINGSMALL	SETTING TEMPLATE	EINSTELLEHRE	C- 76335-010V
3- 75931-0005		INSTÄLLNINGSMALL	SETTING TEMPLATE	EINSTELLEHRE	C- 76335-010V
					C- 978443-010V
3- 75931-0006		INSTÄLLNINGSMALL	SETTING TEMPLATE	EINSTELLEHRE	C- 76335-010V
3- 75931-0008		INSTÄLLNINGSMALL	SETTING TEMPLATE	EINSTELLEHRE	C- 76335-010V
3- 75931-0009		INSTÄLLNINGSMALL	SETTING TEMPLATE	EINSTELLEHRE	C- 76335-010V
3- 75931-0010		INSTÄLLNINGSMALL	SETTING TEMPLATE	EINSTELLEHRE	C- 76335-010V
3- 75931-0011		INSTÄLLNINGSMALL	SETTING TEMPLATE	EINSTELLEHRE	C- 76335-010V
					C- 978259-010V
					C- 978443-010V
3- 75931-0012		INSTÄLLN.MALL VÄNDLÄGE	SETTING TEMPLATE	EINSTELLEHRE	C- 76335-010V
					C- 978259-010V
3- 75931-0013		INSTÄLLNINGSMALL	SETTING TEMPLATE	EINSTELLEHRE	C- 76335-010V
4- 75936		MALL	TEMPLATE	MALL	C- 76335-010V
4- 75937		MALL	TEMPLATE	MALL	C- 76335-010V
4- 75938		MALL	TEMPLATE	MALL	C- 76335-010V
4- 75939		MALL	TEMPLATE	MALL	C- 76335-010V
4- 75943		MALL	TEMPLATE	MALL	C- 76335-010V
4- 75944		MALL	TEMPLATE	MALL	C- 76335-010V
4- 75945		KURVMALL	CAM TEMPLATE	MALL	C- 76335-010V
3- 75994		JORDNINGSKLÄMMA	EARTH TERMINAL	ERDUNGSKLEMME	CE- 41755-010V
					CE- 41762-010V
					CE- 41755-010V
					CE- 41762-010V
2- 76128		VINKELMALL	TEMPLATE	MALL	C- 77092-030V
2- 76130		INSTÄLLNINGSVERKTYG	SETTING TOOL	EINSTELLWERKZEUG	C- 77092-030V
4- 76131		MONTERINGSKONA	ASSEMBLY CONE	KONUS	C- 77099-020V
4- 76132		MONTERINGSVERKTYG	ASSEMBLY TOOL	MONTAGEWERKZEUG	C- 77099-020V
1- 76137		PLATTFORM TRANSPORT	PLATFORM TRANSPORT	PLATTFORM	C- 76200-010V
3- 76138		LÅSBYGEL	LOCKING LOOP	SCHLIESSB~GEL	C- 77099-020V
3- 76156		ANSLAG 200ML SLIM	STOP 200ML SLIM	ANSCHLAG	C- 76492-010V
3- 76157		ANSLAG 125ML	STOP 125ML	ANSCHLAG	C- 76492-010V
2- 76158		ANSLAG 200ML SLIM	STOP 200ML SLIM	ANSCHLAG	C- 76492-010V
2- 76159		ANSLAG 125ML	STOP 125ML	ANSCHLAG	C- 76492-010V
3- 76165		INSTÄLLNINGSVERKTYG	SETTING TOOL	EINSTELLWERKZEUG	C- 77094-010V
4- 76166		STYRPLATTA	STEER PLATE	FUEHRUNGSPLATTE	C- 76175-010V
3- 76167		LÅSBYGEL	LOCKING LOOP	SCHLIESSB~GEL	C- 77099-020V
C- 76175-0101	8296 85-10-09	AVDRAGARE	PULLER	ABZIEHER	C- 77092-030V
4- 76176		MALL	TEMPLATE	MALL	C- 76335-010V
4- 76180		MALL	TEMPLATE	MALL	C- 77094-010V
4- 76181		MALL	TEMPLATE	MALL	C- 77094-010V
4- 76187		MALL-PÅFYLLNINGSRÖR	TEMPLATE FILLING TUBE	MALL	C- 77092-030V
4- 76188		MALL-PÅFYLLNINGSRÖR	TEMPLATE FILLING TUBE	MALL	C- 77092-030V
1- 76195		LYFTDON	LIFTING UNIT	HEBEANORDNUNG	C- 77094-010V
1- 76196		RAM	FRAME	RAHMEN	C- 76197-010V
C- 76197-0101	9341 86-07-21	UPPRIKTNINGSFIXTUR	JIG	SPANNVORRICHTUNG	C- 77094-010V
C- 76200-0101	7948 85-05-24	TRANSPORTDEL ÖVERDEL	CONVEYOR SECTION	TRANSPORTTEIL	C- 77094-010V
1- 76201		BOTTENPLATTA	BOTTOM PLATE	GRUNDPLATTE	C- 76200-010V
1- 76202		RAM	FRAME	RAHMEN	C- 76200-010V
3- 76203		STÖDBEN	SUPPORT LEG	ST~TZBEIN	C- 76200-010V
4- 76204		ARM	ARM	ARM	C- 76200-010V
4- 76205		ARM	ARM	ARM	C- 76200-010V
4- 76206		LEDARM	JOINTED ARM	GELENKARM	C- 76200-010V
4- 76207		ANSLAG	STOPPER	ANSCHLAG	C- 76200-010V
4- 76208		UNDERLÄGG	CUSHION	UNTERLAGE	C- 76200-010V
4- 76209		STÖD	SUPPORT	STUETZE	C- 76200-010V
4- 76210		FÄSTE	BRACKET	BEFESTIGUNGSHALTER	C- 76200-010V
4- 76211		STÖD	SUPPORT	STUETZE	C- 76200-010V
4- 76212		AXEL	SHAFT	WELLE	C- 76200-010V
4- 76213		STÖD	SUPPORT	STUETZE	C- 76200-010V
4- 76214		ARM	ARM	ARM	C- 76200-010V
4- 76215		BRICKA	WASHER	SCHEIBE	C- 76200-010V
4- 76216		STAG	STRUT	VERSTREBUNG	C- 76200-010V
4- 76217		STÖD	SUPPORT	STUETZE	C- 76200-010V
C- 76291-0101	6457 84-01-09	OK	YOKE	JOCH	C- 76335-010V
1- 76292		OK	YOKE	JOCH	C- 76291-010V
3- 76293		KONSOL	CANTILEVER	KONSOLE	C- 76291-010V
3- 76294		STYRKLOTS	LOCATING PIECE	FUEHRUNGSKLOTZ	C- 76291-010V
3- 76295		DISTANS	SPACER	DISTANZ	C- 76291-010V
4- 76296		KROK	HOOK	HAKEN	C- 76291-010V
4- 76297		SKRUV	SCREW	SCHRAUBE	C- 76291-010V
2- 76298		LINJAL	RULER	LINEAL	C- 76335-010V
2- 76299		MALL-STÖDRULLAR	TEMPLATE SUPPORT ROLLERS	MALL	C- 76335-010V
C- 76301-0101	6847 84-05-11	MALL-OK	TEMPLATE	MALL	C- 76335-010V
2- 76302		FÄSTE	BRACKET	BEFESTIGUNGSHALTER	C- 76301-010V
C- 76304-0101	6457 84-01-09	TRYCKFJÄDER	COMPRESSION SPRING	DRUCKFEDER	C- 76335-010V
4- 76305		FJÄDERFÄSTE	BRACKET	BEFESTIGUNGSHALTER	C- 76304-010V
3- 76307-0001		MALL	TEMPLATE	MALL	C- 75525-030V
3- 76307-0002		MALL	TEMPLATE	MALL	C- 75525-030V
3- 76307-0003		MALL	TEMPLATE	MALL	C- 75525-030V
3- 76307-0004		MALL	TEMPLATE	MALL	C- 75525-030V
3- 76307-0005		MALL	TEMPLATE	MALL	C- 75525-030V
3- 76307-0006		MALL	TEMPLATE	MALL	C- 75525-030V

PART NO	LAST ECN	BENÄMNING	TITLE	BENENNUNG	GROUP NO
3- 76307-0007		MALL	TEMPLATE	MALL	C- 75525-030V
3- 76307-0008		MALL	TEMPLATE	MALL	C- 75525-030V
3- 76307-0009		MALL	TEMPLATE	MALL	C- 75525-030V
4- 76308		MALL	TEMPLATE	MALL	C- 75525-030V
C- 76335-010V	19272 93-05-31	INST.VERKTYG BACKSYSTEM	SETTING TOOL	EINSTELLWERKZEUG	C- 76600-010V
1- 76337		VÄSKTILLSATS	PONCH	TASCHE	C- 76591-010V
2- 76338		INSTÄLLNINGSVERKTYG	SETTING TOOL	EINSTELLWERKZEUG	C- 75467-020V
3- 76349		KURVMALL	CAM TEMPLATE	MALL	C- 76335-010V
C- 76350-0201	15195 90-08-29	INSTÄLLNINGSINSTRUMENT	SETTING TOOL	EINSTELLWERKZEUG	C- 77092-030V
1- 76394		KONSOL	CANTILEVER	KONSOLE	C- 76485-010V
3- 76396		VINKEL	ANGLE	WINKEL	C- 76485-010V
4- 76398		MALL-PÅFYLLNINGSRÖR	TEMPLATE	MALL	C- 77092-030V
C- 76402-0101	12764 89-05-30	MALL DRIVEN BRYTRULLE	TEMPLATE	MALL	C- 76600-010V
2- 76403		V-BLOCK	V-BLOCK	BLOCK	C- 76402-010V
3- 76404		AXEL	SHAFT	WELLE	C- 76402-010V
2- 76406		MALL-PELARE	TEMPLATE COLUMN	MALL-SÄULE	C- 77092-030V
C- 76411-0101	6847 84-05-11	INST.VERKTYG PELARE	SETTING TOOL	EINSTELLWERKZEUG	C- 77094-010V
1- 76412		LINJAL	RULER	LINEAL	C- 76411-010V
1- 76413		LINJAL	RULER	LINEAL	C- 76411-010V
3- 76414		ARM	ARM	ARM	C- 76411-010V
4- 76415		LÅSPLATTA	LOCK PLATE	VERSCHLUSSPLATTE	C- 76411-010V
C- 76416-0101	7278 84-12-14	MÄTPUNKTSKLÄMMA	CLAMPING PIECE	KLAMMER	C- 77092-030V
4- 76417		KLÄMMA	CLAMPING PIECE	KLAMMER	C- 76416-010V
4- 76418		KLÄMMA	CLAMPING PIECE	KLAMMER	C- 76416-010V
C- 76447-0101	6847 84-05-11	INST.VERKTYG ÖVERHUS	SETTING TOOL	EINSTELLWERKZEUG	C- 77094-010V
1- 76448		PLATTA	PLATE	PLATTE	C- 76447-010V
3- 76449		V-BLOCK	BLOCK	BLOCK	C- 76447-010V
3- 76450		V-BLOCK	BLOCK	BLOCK	C- 76447-010V
4- 76451-0001		DISTANS	SPACER	DISTANZ	C- 76447-010V
4- 76451-0002		DISTANS	SPACER	DISTANZ	C- 76447-010V
4- 76451-0003		DISTANS	SPACER	DISTANZ	C- 76447-010V
4- 76451-0004		DISTANS	SPACER	DISTANZ	C- 76447-010V
4- 76452		STÖD	SUPPORT	STUETZE	C- 76447-010V
4- 76453		KLO	CLAW	KLAUE	C- 76447-010V
4- 76454		DISTANS	SPACER	DISTANZ	C- 76447-010V
4- 76455		FÄSTE	BRACKET	BEFESTIGUNGSHALTER	C- 76447-010V
4- 76456		KROK	HOOK	HAKEN	C- 76447-010V
4- 76457		AXEL	SHAFT	WELLE	C- 76447-010V
C- 76460-0101	7204 84-10-20	INST.VERKTYG KURVOR	SETTING TOOL	EINSTELLWERKZEUG	C- 77094-010V
1- 76461		STÖDARM	SUPPORT ARM	ST~TZARM	C- 76460-010V
2- 76462		MALL	TEMPLATE	MALL	C- 76460-010V
4- 76463		BUSSNING	BUSHING	BUCHSE	C- 76460-010V
4- 76464		KONSOL	CANTILEVER	KONSOLE	C- 76301-010V
4- 76465		SKRUV	SCREW	SCHRAUBE	C- 76301-010V
4- 76466		AXEL	SHAFT	WELLE	C- 76416-010V
4- 76467		MALL-BOTTENFLIKSMUNSTYCK	TEMPLATE	MALL	C- 77092-030V
C- 76468-0101	12333 88-12-15	MALL TUBFORMNING	TEMPLATE	MALL	C- 76600-010V
3- 76469		FÄSTE	BRACKET	BEFESTIGUNGSHALTER	C- 76468-010V
C- 76470-0101	7383 85-01-22	KOMBIVÄSKA	PONCH	TASCHE	C- 76350-020V
1- 76471		VÄSKTILLSATS	PONCH	TASCHE	C- 76470-010V
1- 76484		LOCK	LID	DECKEL	C- 76470-010V
					C- 76591-010V
C- 76485-0101	7613 85-03-26	INST.VERKTYG SERVICEENHE	SETTING TOOL	EINSTELLWERKZEUG	C- 77094-010V
1- 76486		LINJAL	RULER	LINEAL	C- 76485-010V
2- 76487-0001		ARM	ARM	ARM	C- 76485-010V
2- 76487-0002		ARM	ARM	ARM	C- 76485-010V
2- 76487-0003		ARM	ARM	ARM	C- 76485-010V
4- 76488		MALL	TEMPLATE	MALL	C- 76485-010V
4- 76489		MALL	TEMPLATE	MALL	C- 76485-010V
C- 76492-010V	14723 90-05-18	MONTERINGSFIXTUR	ASSEMBLY JIG	MONTAGEMALL	C- 77094-010V
1- 76493		PLATTA	PLATE	PLATTE	C- 76492-010V
3- 76494		ANSLAG	STOPPER	ANSCHLAG	C- 76492-010V
3- 76495		BLOCK	BLOCK	BLOCK	C- 76492-010V
4- 76496		KROK	HOOK	HAKEN	C- 76492-010V
4- 76499		MALL	TEMPLATE	MALL	C- 77094-010V
C- 76500-0101	7186 84-10-16	LYFTDON ASEPTIKHUS	LIFTING UNIT	HEBEANORDNUNG	C- 77091-040V
2- 76501		LYFTARM	LIFTING ARM	HEBARM	C- 76500-010V
3- 76502		AXEL	SHAFT	WELLE	C- 76500-010V
4- 76503		STOPPINNE	RETARD PIN	STOPPSTIFT	C- 76500-010V
C- 76504-0101	12095 88-07-01	LYFTDON PELARE B9	LIFTING UNIT	HEBEANORDNUNG	C- 77091-040V
2- 76505		LYFTSTÅNG	LIFTING ROD	HEBESTANGE	C- 76504-010V
C- 76580-0101	7204 84-10-20	INST.VERKTYG SLUTVIK.	SETTING TOOL	EINSTELLWERKZEUG	C- 77094-010V
3- 76581		STÅNDARE	VERTICAL PILLAR	STAENDER	C- 76580-010V
3- 76582		KLOTS	BLOCKING PIECE	KLOTZ	C- 76580-010V
3- 76583		KLOTS	BLOCKING PIECE	KLOTZ	C- 76580-010V
2- 76584		ANSLAG	STOPPER	ANSCHLAG	C- 76492-010V
3- 76585		ANSLAG	STOPPER	ANSCHLAG	C- 76492-010V
4- 76586		LÅSPINNE	LOCKING FINGER	VERSCHLUSSTIFT	C- 76492-010V
4- 76587		HYLSA	SLEEVE	HUELSE	C- 76492-010V
4- 76588		KROK	HOOK	HAKEN	C- 76492-010V
1- 76589		VÄSKTILLSATS	PONCH	TASCHE	C- 76470-010V
1- 76590		VÄSKTILLSATS	PONCH	TASCHE	C- 76591-010V
C- 76591-0101	7383 85-01-22	KOMBIVÄSKA	PONCH	TASCHE	C- 76600-010V
C- 76594-0201	19338 93-01-30	INSTÄLLNINGSINSTRUMENT	SETTING TOOL	EINSTELLWERKZEUG	C- 76350-020V
C- 76600-0101	13991 89-11-16	INSTÄLLNINGSVERKTYG	SETTING TOOL	EINSTELLWERKZEUG	C- 77092-030V
3- 76602		TOLK	GAUGE	GRENZLEHRE	C- 77092-030V
2- 76603		FÄSTE	BRACKET	BEFESTIGUNGSHALTER	C- 76485-010V
3- 76604		AXEL	SHAFT	WELLE	C- 77094-010V
C- 77091-040V	19732 93-06-24	TILLVALSDETALJER	OPTIONAL PARTS	WAHLFREIESDETAIL	B- 648119-100V
C- 77092-030V	20326 93-09-14	SERVICEDETALJER	SERVICE PARTS	SERVICEDETAIL	B- 648119-100V
C- 77093-020V	19272 93-05-31	TRIMDETALJER	TRIMMING PARTS	TRIMMEN DETAIL	B- 648119-100V
C- 77094-010V	14947 90-12-04	PRODUKTIONSDETALJER	PRODUCTION PARTS	PRODUKTION DETAIL	B- 648119-100V

PART NO	LAST ECN	BENÄMNING	TITLE	BENENNUNG	GROUP NO
C- 77099-0201	16366 91-04-30	VERKTYGSSATS	TOOL KIT	WERKZEUGSATZ	B- 648109-100V
4- 77163		HYLSA	SLEEVE	HUELSE	C- 77165-010V
4- 77164		PINNSKRUV	STUD SCREW	STIFTBOLZEN	C- 77165-010V
C- 77165-0101	9933 87-02-07	AVDRAGARE	EXTRACTOR	ABZIEHER	C- 77092-030V
4- 77221		SPÄNNVERKTYG	TIGHTENING TOOL	WERKZEUGE	C- 456975-020V
4- 77247		MONTERINGSTAPP	ASSEMBLY PIN	ZAPFEN	C- 77099-020V
3- 77248		INSTÄLLNINGSMALL	SETTING TEMPLATE	EINSTELLEHRE	C- 75525-030V
3- 77249		INSTÄLLNINGSMALL	SETTING TEMPLATE	EINSTELLEHRE	C- 75525-030V
3- 77250		INSTÄLLNINGSMALL	SETTING TEMPLATE	EINSTELLEHRE	C- 75525-030V
3- 77251		INSTÄLLNINGSMALL	SETTING TEMPLATE	EINSTELLEHRE	C- 75525-030V
3- 78322		FIXTUR F.KEDJA	TEMPLATE F.CHAIN	SPANNVORRICHTUNG	C- 978192-020V
					C- 570079-020V
					C- 567681-020V
					C- 978192-020V
4- 78801		KALIBRERINGSVERKTYG	CALIBRATION TOOL	WERKZEUGE	C- 77099-020V
4- 79003		SKYDDSPLÅT	PROTECTION PLATE	SCHUTZBLECH	C- 77092-030V
4- 79201		AVDRAGARBULT	EXTRACTOR BOLT	ABZIEHBOLZE	C- 77092-030V
3- 79223		INSTÄLLNINGSMALL	SETTING TEMPLATE	EINSTELLEHRE	C- 75525-030V
3- 79224		INSTÄLLNINGSMALL	SETTING TEMPLATE	EINSTELLEHRE	C- 75525-030V
90000-0028		AMPEREMETER	AMMETER	AMPEREMETER	CE- 69884-010V
					CE- 69886-010V
					CE- 69884-010V
					CE- 69886-010V
					CE- 69884-010V
					CE- 69886-010V
90001-0004		KABELKONTAKT	CABLE CONTACT	KABELKONTAKT	C- 924662-010V
3- 90001-0028		VÄGGUTTAG	WALL SOCKET	WANDSTECKDOSE	CE- 41723-010V
					CE- 41750-010V
					CE- 41757-010V
					CE- 41723-010V
					CE- 41750-010V
					CE- 41757-010V
90001-0030		VÄGGUTTAG	WALL SOCKET	WANDSTECKDOSE	C- 271513-060V
4- 90002-0004		BLINDPROPP 22,5	BLANK-OFF PLUG 22,5	BLINDPFROPFEN	CE- 41723-010V
					CE- 41766-010V
					C- 978604-010V
					C- 456435-040V
					CE- 41723-010V
					CE- 41766-010V
90002-0009		BLINDPROPP	BLANK-OFF PLUG	BLINDPFROPFEN	CE- 41750-010V
					CE- 41757-010V
90002-0009		BLINDPROPP	BLANK-OFF PLUG	BLINDPFROPFEN	RK- 557018-010V
					RK- 557021-010V
					C- 794145-010V
					C- 794272-010V
					C- 794145-010V
					C- 794272-010V
					CE- 41750-010V
					CE- 41757-010V
90002-0012		BLINDPROPP	BLANK-OFF PLUG	BLINDPFROPFEN	C- 271128-040V
90002-0013		BLINDPROPP 15,2	BLANK-OFF PLUG 15,2	BLINDPFROPFEN	C- 978604-010V
					C- 563088-010V
					C- 456435-040V
					RK- 557018-010V
					RK- 557021-010V
					C- 794168-010V
					C- 794272-010V
					C- 794168-010V
					C- 794272-010V
					C- 565419-010V
					C- 295470-050V
90002-0014		BLINDPROPP	BLANK-OFF PLUG	BLINDPFROPFEN	CE- 41723-010V
					CE- 41750-010V
					CE- 41757-010V
					C- 924585-010V
					CE- 41723-010V
					CE- 41750-010V
					CE- 41757-010V
90002-0018		BLINDPROPP	BLIND PLUG	BLINDPFROPFEN	C- 544390-010V
P- 90003-0013		LÅDA	BOX	KASTEN	C- 978280-010V
90003-0300		MELLANVÄGG	BULKHEAD	ZWISCHENWAND	C- 978280-010V
90003-0422		WELLPAPPLÅDA	CORRUGATED CARDBOARD BOX	WELLPAPPKASTEN	B- 648109-100V
90005-0003		BRICKA	WASHER	SCHEIBE	C- 256217-040V
					C- 257381-030V
					C- 257382-030V
90005-0005		TÄTNINGSBRICKA	WASHER	DICHTUNGSSCHEIBE	C- 257381-030V
					C- 257382-030V
90005-0006		TÄTNINGSRING	SEAL RING	DICHTUNGSRING	C- 469452-030V
					C- 751800-020V
90005-0007		BRICKA	WASHER	SCHEIBE	C- 257381-030V
					C- 257382-030V
					C- 456455-030V
90005-0014		TÄTNINGSBRICKA	WASHER	DICHTUNGSSCHEIBE	C- 256217-040V
90005-0016		TÄTNINGSBRICKA	WASHER	DICHTUNGSSCHEIBE	C- 271866-060V
90005-0019		KOPPARBRICKA	WASHER	KUPFERSCHEIBE	C- 491083-030V
90005-0020		BRICKA	WASHER	SCHEIBE	C- 491207-030V
90005-0044		BRICKA	WASHER	SCHEIBE	C- 529621-010V
					C- 491890-010V
90005-0045		BRICKA	WASHER	SCHEIBE	C- 491650-010V
					C- 978739-010V
90005-0048		BRICKA	WASHER	SCHEIBE	C- 272765-070V
90005-0056		BRICKA	WASHER	SCHEIBE	CR- 256436-060V

PART NO	LAST ECN	BENÄMNING	TITLE	BENENNUNG	GROUP NO
					C- 295218-010V
					CR- 256436-060V
					C- 295218-010V
					CR- 256436-060V
					C- 295218-010V
					CR- 256436-060V
					C- 295218-010V
90005-0060		BRICKA	WASHER	SCHEIBE	C- 752671-010V
90005-0060		BRICKA	WASHER	SCHEIBE	C- 752672-010V
90005-0061		BRICKA	WASHER	SCHEIBE	C- 491767-020V
					C- 978739-010V
90005-0067		TÄTNINGSBRICKA	WASHER	SCHEIBE	C- 456588-030V
90005-0082		BRICKA DIN 9021-A2	WASHER	SCHEIBE	RK- 978234-010V
90005-0112		WASHER	WASHER	SCHEIBE	C- 736796-020V
4- 90005-0126		BRICKA	WASHER	SCHEIBE	C- 256843-060V
					C- 257146-020V
90006-0020		DISTANSRÖR	SPACER PIPE	DISTANZROHR	RK- 978234-010V
P3- 90007-0030		SÄKRING BBC 1P 6A K	FUSE BBC 1P 6A K	SICHERUNG	RK- 41767-010V
					RK- 41769-010V
					RK- 41767-010V
					RK- 41769-010V
3- 90007-0032		SÄKRING BBC 1P 16A K	FUSE BBC 1P 16A K	SICHERUNG	CE- 557222-010V
					RK- 557018-010V
					RK- 557021-010V
					RK- 557156-010V
					RK- 557159-010V
90007-0118		SÄKRING H.MANN 2P 80A 2	FUSE H.MANN 2P 80A 2	SICHERUNG	CE- 557222-010V
					CE- 41723-010V
					CE- 41750-010V
					CE- 41757-010V
					CE- 41723-010V
					CE- 41750-010V
					CE- 41757-010V
3- 90007-0128		AUTOMATSÄKRING 1P 6A K	FUSE 1P 6A K	AUTOMATSICHERUNG	CE- 41723-010V
					CE- 41750-010V
					CE- 41757-010V
					CE- 41723-010V
					CE- 41750-010V
					CE- 41757-010V
3- 90007-0129		AUTOMATSÄKRING 1P 10A K	FUSE 1P 10A K	AUTOMATSICHERUNG	CE- 41723-010V
					CE- 41750-010V
					CE- 41757-010V
					CE- 41723-010V
					CE- 41750-010V
					CE- 41757-010V
3- 90007-0131		AUTOMATSÄKRING 1P 16A K	FUSE 1P 16A K	AUTOMATSICHERUNG	CE- 41723-010V
					CE- 41750-010V
					CE- 41757-010V
					CE- 41723-010V
					CE- 41750-010V
					CE- 41757-010V
3- 90007-0147		AUTOMATSÄKRING 3P 10A K	FUSE 3P 10A K	AUTOMATSICHERUNG	CE- 41723-010V
					CE- 41750-010V
					CE- 41757-010V
					CE- 41723-010V
					CE- 41750-010V
					CE- 41757-010V
90007-0305		KLÄMMA BBC	CLAMP BBC	KLAMMER	RK- 557018-010V
					RK- 557021-010V
90007-0307		SAMLINGSSKENA	ONE-PHASE BAR	SCHIENE	RK- 557018-010V
					RK- 557021-010V
90012-0059		FÖRSKRUVNING	GLAND	VERSCHRAUBUNG	RK- 978234-010V
90012-0060		FÖRSKRUVNING	GLAND	VERSCHRAUBUNG	RK- 978234-010V
90012-0062		FÖRSKRUVNING	GLAND	VERSCHRAUBUNG	C- 536859-020V
4- 90012-0063		FÖRSKRUVNING	GLAND	VERSCHRAUBUNG	C- 736360-020V
					C- 794092-010V
					C- 794145-010V
4- 90012-0063		FÖRSKRUVNING	GLAND	VERSCHRAUBUNG	C- 794272-010V
					C- 736360-020V
					C- 794092-010V
					C- 794145-010V
					C- 794272-010V
					C- 457853-030V
					C- 490600-040V
					C- 735031-010V
					C- 735183-020V
					C- 795750-010V
					C- 924662-010V
4- 90012-0064		FÖRSKRUVNING	GLAND	VERSCHRAUBUNG	C- 529621-010V
					C- 735031-010V
					C- 795750-010V
					C- 924329-010V
2- 90013-0018		TÄCKPROFIL	COVER STRIP	DECKLEISTE	C- 550639-010V
2- 90013-0019		LAGERENHET	DOUBLE-BEARING	LAGERKONSOL	C- 550639-010V
2- 90013-0020		LAGERENHET	DOUBLE-BEARING	LAGERKONSOL	C- 550639-010V
2- 90013-0021		FÄSTSATS	FASTENING SET	BEFESTIGUNGSANORDNUNG	C- 550639-010V
2- 90013-0022		LOCK	END CAP	DECKEL	C- 550639-010V
2- 90013-0023		LOCK	CAP	DECKEL	C- 550639-010V
4- 90015-0020		BUSSNING	BUSHING	BUCHSE	C- 752960-010V
					C- 752971-010V
					C- 978239-020V
					C- 978240-020V

PART NO	LAST ECN	BENÄMNING	TITLE	BENENNUNG	GROUP NO
					C- 978241-020V
					C- 295883-050V
					C- 456457-040V
					C- 456458-040V
					C- 456923-030V
					C- 469374-040V
					C- 457857-030V
					C- 457867-020V
					C- 490600-040V
					C- 497534-030V
					RK- 520069-010V
					RK- 978238-010V
					RK- 520069-010V
					RK- 978238-010V
					RK- 520069-010V
					RK- 978238-010V
90015-0021		BUSSNING	BUSHING	BUCHSE	C- 295883-050V
					C- 271866-060V
					C- 491890-010V
					C- 456923-030V
					C- 469374-040V
90015-0022		BUSSNING	BUSHING	BUCHSE	C- 271866-060V
4- 90015-0023		BUSSNING	BUSHING	BUCHSE	C- 441850-040V
					C- 456923-030V
					C- 469374-040V
					C- 457857-030V
					C- 497534-030V
90015-0024		BUSSNING	BUSHING	BUCHSE	C- 295883-050V
					C- 456556-020V
					C- 469374-040V
90015-0028		GENOMFÖRINGSBUSSNING	LEAD-IN BUSHING	DURCHF~HRUNGSBUCHSE	C- 272765-070V
90015-0032		GENOMFÖRINGSBUSSNING	LEAD-IN BUSHING	DURCHF~HRUNGSBUCHSE	C- 978179-010V
90016-0010		TALLRIKSFJÄDER	DISC SPRING	TELLERFEDER	C- 256173-050V
90016-0040		TALLRIKSFJÄDER	DISC SPRING	TELLERFEDER	C- 232781-040V
90016-0042		TALLRIKSFJÄDER	DISC SPRING	TELLERFEDER	CR- 548040-010V
4- 90016-0052		TALLRIKSFJÄDER	DISC SPRING	TELLERFEDER	C- 469173-010V
90016-0056		TALLRIKSFJÄDER	DISC SPRING	TELLERFEDER	C- 491787-020V
					C- 491788-020V
90017-0001		HANDTAG	HANDLE	GRIFF	C- 37877-030V
					C- 450101-010V
					C- 37877-030V
					C- 450101-020V
					C- 271454-020V
90017-0012		HANDTAG	HANDLE	GRIFF	C- 484858-030V
					C- 547756-010V
					C- 978162-010V
					C- 457853-030V
					C- 548057-010V
					C- 978367-010V
3- 90017-0014		HANDTAG	HANDLE	GRIFF	C- 456679-010V
90017-0017		HANDTAG	HANDLE	GRIFF	C- 554890-010V
					C- 554891-010V
90018-0005		VOLTMÄTARE	VOLTMETER	VOLTMETER	CE- 69884-010V
					CE- 69886-010V
					CE- 69884-010V
					CE- 69886-010V
					CE- 69884-010V
					CE- 69886-010V
90020-0027		MANSCHETT	SLEEVE	MANSCHETTE	C- 539211-010V
					C- 794243-010V
					C- 924991-010V
90020-0028		MANSCHETT	SLEEVE	MANSCHETTE	C- 539209-010V
					C- 539210-010V
					C- 794213-010V
					C- 794244-010V
90023-0070		AGGREGAT	SWITCH UNIT	AGGREGAT	CE- 41723-010V
					CE- 41750-010V
					CE- 41757-010V
					CE- 41723-010V
					CE- 41750-010V
					CE- 41757-010V
90024-0020		TRANSIENTSKYDD	INTERFERENCE PROTECTION	TRANSIENSCHUTZ	CE- 69884-010V
					CE- 69886-010V
					CE- 69884-010V
					CE- 69886-010V
					CE- 69884-010V
					CE- 69886-010V
90024-0029		VARISTOR	VARISTOR	VARISTOR	CE- 69884-010V
					CE- 69886-010V
					CE- 69884-010V
					CE- 69886-010V
					CE- 69884-010V
					CE- 69886-010V
2- 90025-0016		ENCODER MODUL	ENCODER MODULE	MODUL	CE- 41723-010V
					CE- 41750-010V
					CE- 41757-010V
					CE- 41723-010V
					CE- 41750-010V
					CE- 41757-010V
2- 90025-0017		INPUT MODUL	INPUT MODULE	MODUL	CE- 41723-010V
					CE- 41750-010V
					CE- 41757-010V

PART NO	LAST ECN	BENÄMNING	TITLE	BENENNUNG	GROUP NO
2- 90025-0017		INPUT MODUL	INPUT MODULE	MODUL	RK- 41767-010V RK- 41769-010V RK- 557018-010V RK- 557021-010V RK- 557147-010V RK- 557150-010V RK- 557153-010V RK- 557156-010V RK- 557159-010V RK- 557690-010V RK- 557693-010V RK- 557696-010V RK- 41767-010V RK- 41769-010V RK- 558304-010V RK- 558307-010V RK- 558310-010V CE- 41723-010V CE- 41750-010V CE- 41757-010V
3- 90025-0024		KOPPLINGSPLINT	TERMINAL BLOCK	KUPPLUNGSSOCKEL	CE- 41723-010V CE- 41750-010V CE- 41757-010V RK- 41767-010V RK- 41769-010V RK- 557147-010V RK- 557150-010V RK- 557153-010V RK- 557156-010V RK- 557159-010V RK- 557690-010V RK- 557693-010V RK- 557696-010V RK- 41767-010V RK- 41769-010V RK- 558304-010V RK- 558307-010V RK- 558310-010V CE- 41723-010V CE- 41750-010V CE- 41757-010V
3- 90025-0025		KOPPLINGSPLINT	TERMINAL BLOCK	KUPPLUNGSSOCKEL	CE- 41723-010V CE- 41750-010V CE- 41757-010V CE- 41723-010V CE- 41750-010V CE- 41757-010V
3- 90025-0029		KOPPLINGSPLINT	TERMINAL PLINTH	KUPPLUNGSSOCKEL	CE- 41724-010V CE- 41751-010V CE- 41758-010V CE- 41724-010V CE- 41751-010V CE- 41758-010V
3- 90025-0030		KOPPLINGSPLINT	TERMINAL PLINTH	KUPPLUNGSSOCKEL	CE- 41724-010V CE- 41751-010V CE- 41758-010V CE- 41724-010V CE- 41751-010V CE- 41758-010V
3- 90025-0031		KOPPLINGSPLINT	TERMINAL PLINTH	KUPPLUNGSSOCKEL	CE- 41723-010V
3- 90025-0031		KOPPLINGSPLINT	TERMINAL PLINTH	KUPPLUNGSSOCKEL	CE- 41724-010V CE- 41750-010V CE- 41751-010V CE- 41757-010V CE- 41758-010V CE- 41723-010V CE- 41724-010V CE- 41750-010V CE- 41751-010V CE- 41757-010V
1- 90025-0042		PANELINTERFACE 24V DC	PROGRAM CARD	DATENKARTE	CE- 41758-010V CE- 41724-010V CE- 41751-010V CE- 41758-010V CE- 41724-010V CE- 41751-010V
1- 90025-0052		RACK	RACK	RACK	CE- 41758-010V CE- 41723-010V CE- 41750-010V CE- 41757-010V CE- 41723-010V CE- 41750-010V
2- 90025-0053		MODUL	OUTPUT MODULE	MODUL	CE- 41757-010V CE- 41723-010V CE- 41750-010V CE- 41757-010V RK- 557018-010V RK- 557021-010V RK- 557147-010V RK- 557150-010V RK- 557153-010V RK- 557156-010V

PART NO	LAST ECN	BENÄMNING	TITLE	BENENNUNG	GROUP NO
					RK- 557159-010V RK- 557690-010V RK- 557693-010V RK- 557696-010V RK- 558304-010V RK- 558307-010V RK- 558310-010V CE- 41723-010V CE- 41750-010V CE- 41757-010V
3- 90025-0054		KOPPLINGSPLINT	TERMINAL PLINTH	KUPPLUNGSSOCKEL	CE- 41723-010V CE- 41750-010V CE- 41757-010V RK- 557147-010V RK- 557150-010V RK- 557153-010V RK- 557156-010V RK- 557159-010V RK- 557690-010V RK- 557693-010V RK- 557696-010V RK- 558304-010V RK- 558307-010V RK- 558310-010V CE- 41723-010V CE- 41750-010V CE- 41757-010V
2- 90025-0055		NÄTAGGREGAT	POWER SUPPLY UNIT	NETZANSCHLUSSGERÄT	CE- 41723-010V CE- 41750-010V CE- 41757-010V CE- 41723-010V CE- 41750-010V CE- 41757-010V
1- 90025-0058		RACK	RACK	RACK	CE- 41723-010V CE- 41750-010V CE- 41757-010V CE- 41723-010V CE- 41750-010V CE- 41757-010V
1- 90025-0070		PROCESSOR	PROCESSOR	PROZESSOR	CE- 41723-010V CE- 41750-010V CE- 41757-010V CE- 41723-010V CE- 41750-010V CE- 41757-010V
3- 90025-0096		ADAPTER	ADAPTER	ADAPTER	CE- 41723-010V CE- 41750-010V CE- 41757-010V CE- 41723-010V CE- 41750-010V CE- 41757-010V
90028-0001		KONA	CONE	KONUS	C- 271562-080V
90028-0020		KONA	CONE	KONUS	CR- 256436-060V C- 271562-080V C- 256197-050V C- 491814-020V C- 491815-020V C- 256217-040V C- 257381-030V C- 257382-030V CR- 256436-060V
90028-0021		KONA	CONE	KONUS	C- 271866-060V C- 491650-010V CR- 256436-060V C- 271562-080V C- 256197-050V C- 491814-020V C- 491815-020V CR- 256436-060V
90028-0025		KONA	CONE	KONUS	C- 272765-070V C- 295310-070V C- 272765-070V C- 271866-060V
4- 90030-0030		RÖRKOPPLING	PIPE CONNECTION	ROHRKUPPLUNG	C- 924572-010V C- 794178-010V C- 271866-060V C- 491207-030V C- 924572-010V
4- 90030-0051		RÖRKOPPLING	PIPE CONNECTION	ROHRKUPPLUNG	C- 271562-080V
4- 90030-0058		KOPPLING	CONNECTION	KUPPLUNG	C- 924572-010V C- 736797-010V C- 794178-010V C- 736797-010V C- 794178-010V C- 271866-060V C- 272408-050V
4- 90030-0058		KOPPLING	CONNECTION	KUPPLUNG	C- 456976-050V C- 469452-030V C- 751800-020V C- 924572-010V
90030-0062		KOPPLING	CONNECTION	ROHRKUPPLUNG	C- 272407-020V
90030-0065		RÖRKOPPLING	PIPE CONNECTION	ROHRKUPPLUNG	C- 491650-010V

PART NO	LAST ECN	BENÄMNING	TITLE	BENENNUNG	GROUP NO
					CR- 256212-050V
					CR- 256213-050V
					C- 257381-030V
					C- 257382-030V
90030-0071		RÖRKOPPLING	PIPE CONNECTION	ROHRKUPPLUNG	C- 795750-010V
90030-0075		RÖRKOPPLING	PIPE CONNECTION	ROHRKUPPLUNG	C- 978239-020V
					C- 978240-020V
					C- 978241-020V
					C- 560921-010V
					C- 752898-010V
4- 90030-0076		KOPPLING	CONNECTION	ROHRKUPPLUNG	C- 271866-060V
					C- 272623-050V
					C- 491083-030V
90030-0088		RÖRKOPPLING	PIPE CONNECTION	ROHRKUPPLUNG	C- 794178-010V
					C- 272560-060V
					C- 735183-020V
					C- 795750-010V
90030-0091		RÖRKOPPLING	PIPE CONNECTION	ROHRKUPPLUNG	C- 456455-030V
					C- 271866-060V
90030-0092		RÖRKOPPLING	PIPE CONNECTION	ROHRKUPPLUNG	C- 295045-070V
4- 90030-0096		RÖRKOPPLING	PIPE CONNECTION	ROHRKUPPLUNG	C- 924572-010V
90030-0097		KONA	CONE	KONUS	C- 978239-020V
					C- 978240-020V
					C- 978241-020V
90030-0098		KONA	CONE	KONUS	C- 271562-080V
90030-0106		RÖRKOPPLING	PIPE CONNECTION	ROHRKUPPLUNG	C- 794178-010V
					C- 271866-060V
					C- 491207-030V
90030-0109		RÖRKOPPLING	PIPE CONNECTION	ROHRKUPPLUNG	C- 272560-060V
					C- 469452-030V
					C- 751800-020V
90030-0115		RÖRKOPPLING	PIPE CONNECTION	ROHRKUPPLUNG	C- 794178-010V
90030-0116		REDUCERING	REDUCER	REDUZIERUNG	C- 978739-010V
90030-0127		T-KOPPLING	PIPE CONNECITON	T-KUPPLUNG	C- 978739-010V
90030-0132		PLUGG	PLUG	PFROPFEN	C- 271562-080V
90030-0137		KOPPLING	CONNECTION	KUPPLUNG	C- 794178-010V
					C- 795750-010V
					RK- 978238-010V
90030-0138		REDUCERING	REDUCER	REDUZIERUNG	C- 794178-010V
90030-0151		KOPPLING	CONNECTION	KUPPLUNG	C- 271261-050V
					C- 456455-030V
4- 90030-0159		SKOTTGENOMGÅNG	GROMMET	ANSCHLUSSHUELSE	C- 491767-020V
90030-0162		KOPPLING	CONNECTION	KUPPLUNG	C- 271562-080V
90030-0166		REDUCERINGSNIPPEL	REDUCER	REDUZIERUNG	C- 794145-010V
					C- 469118-020V
90030-0167		REDUCERING	REDUCER	REDUZIERUNG	C- 736797-010V
					C- 794178-010V
					C- 736797-010V
					C- 794178-010V
90030-0169		NIPPEL	NIPPLE	NIPPEL	C- 735183-020V
90030-0171		KOPPLING	CONNECTION	KUPPLUNG	C- 491650-010V
					C- 751410-010V
90030-0172		MUTTER	NUT	MUTTER	C- 271562-080V
90030-0180		RÖRKOPPLING	PIPE CONNECTION	ROHRKUPPLUNG	C- 735014-010V
					C- 272560-060V
90030-0181		RÖRKOPPLING	PIPE CONNECTION	ROHRKUPPLUNG	C- 271866-060V
90030-0182		NIPPEL	NIPPLE	NIPPEL	C- 271866-060V
4- 90030-0184		RÖRKOPPLING	PIPE CONNECTION	ROHRKUPPLUNG	C- 563740-010V
					C- 257381-030V
					C- 257382-030V
					C- 752898-010V
					C- 256095-050V
					C- 272623-050V
					C- 295045-070V
					C- 456556-020V
					C- 548031-020V
					C- 751393-010V
4- 90030-0185		RÖRKOPPLING	PIPE CONNECTION	ROHRKUPPLUNG	C- 491650-010V
					C- 456455-030V
					C- 548031-020V
4- 90030-0187		RÖRKOPPLING	PIPE CONNECTION	ROHRKUPPLUNG	C- 924572-010V
					C- 271866-060V
					C- 295262-060V
					C- 256014-060V
					C- 256055-060V
					C- 256084-050V
					C- 256095-050V
					C- 272560-060V
					C- 456976-050V
					C- 469452-030V
					C- 751800-020V
					C- 491207-030V
					C- 924572-010V
3- 90030-0188		RÖRKOPPLING	PIPE CONNECTION	ROHRKUPPLUNG	C- 491767-020V
					C- 271866-060V
					C- 456556-020V
3- 90030-0191		RÖRKOPPLING	PIPE CONNECTION	ROHRKUPPLUNG	C- 256014-060V
90030-0200		VINKELKOPPLING	PIPE JOINT	WINKELROHRVERBINDUNG	C- 271562-080V
4- 90030-0202		RÖRKOPPLING	PIPE CONNECTION	ROHRKUPPLUNG	C- 272623-050V
90030-0203		RÖRKOPPLING	PIPE CONNECTION	ROHRKUPPLUNG	C- 272623-050V
90030-0207		NIPPEL	NIPPLE	NIPPEL	C- 794110-010V
90030-0209		REDUCERING	REDUCER	REDUZIERUNG	C- 491207-030V

PART NO	LAST ECN	BENÄMNING	TITLE	BENENNUNG	GROUP NO
90030-0223		REDUCERNIPPEL	NIPPLE	REDUZIERNIPPEL	C- 533014-010V
90030-0224		REDUCERNIPPEL	NIPPLE	REDUZIERNIPPEL	C- 533014-010V
90030-0225		REDUCERNIPPEL	REDUCTION NIPPEL	REDUZIERNIPPEL	C- 533014-010V
90030-0230		SKOTTGENOMGÅNG .	BULKHEAD UNION	ANSCHLUSSHUELSE	RK- 978234-010V
90030-0233		RAK KOPPLING	MALE CONNECTOR	ROHRKUPPLUNG	RK- 978234-010V
90030-0234		VINKELKOPPLING	MALE CONNECTOR	ROHRKUPPLUNG	C- 978239-020V
					C- 978240-020V
					C- 978241-020V
					RK- 978234-010V
90030-0245		MALE ELBOW	MALE ELBOW	WINKELROHRVERBINDUNG	RK- 978212-010V
4- 90030-0253		RÖRKOPPLING	PIPE COUPLING	ROHRKUPPLUNG	C- 491207-030V
90030-0257		VINKELKOPPLING	ELBOW PIPE JOINT	WINKELROHRVERBINDUNG	C- 794004-010V
90030-0258		RÖRANSLUTNING	PIPE CONNECTION	ROHRANSCHLUSS	C- 794004-010V
90030-0259		REDUCERING	REDUCER	REDUZIERUNG	C- 794110-010V
90030-0265		HÅLSKRUV	HOLLOW SCREW	HALTESCHRAUBE	C- 491976-020V
90030-0266		HÅLSKRUV	HOLLOW SCREW	HALTESCHRAUBE	C- 491976-020V
3- 90032-0014		BLOCK	JUNCTION BLOCK	VERTEILUNGSBLOCK	C- 271562-080V
3- 90032-0026		BLOCK	JUNCTION BLOCK	VERTEILUNGSBLOCK	C- 271562-080V
3- 90032-0030		BLOCK	JUNCTION BLOCK	VERTEILUNGSBLOCK	C- 271562-080V
3- 90032-0031		BLOCK	JUNCTION BLOCK	VERTEILUNGSBLOCK	C- 271562-080V
3- 90032-0038		BLOCK	BLOCK	BLOCK	C- 271562-080V
3- 90032-0039		BLOCK	BLOCK	BLOCK	C- 271562-080V
					C- 491814-020V
					C- 491815-020V
3- 90032-0040		BLOCK	BLOCK	BLOCK	CR- 256436-060V
					C- 256197-050V
					CR- 256436-060V
					C- 272765-070V
					C- 271866-060V
90035-0002		KÅPA	COVER	DECKEL	CE- 69884-010V
					CE- 69886-010V
					CE- 69884-010V
					CE- 69886-010V
					CE- 69884-010V
					CE- 69886-010V
90035-0005		KÅPA	COVER	DECKEL	C- 256197-050V
90036-0009		GLÖDLAMPA	BULB	GLUEHBIRNE	C- 271641-030V
					C- 271641-020V
					C- 232781-040V
90036-0035		GLÖDLAMPA	BULB	GLUEHBIRNE	C- 229400-070V
90036-0038		GLÖDLAMPA	BULB	GLUEHBIRNE	C- 752960-010V
					C- 752971-010V
					C- 456459-040V
					C- 456460-040V
					C- 751900-010V
90036-0057		GLÖDLAMPA BA9S 28V	LIGHT BULB BA9S 28V	GLUEHBIRNE	CE- 41724-010V
					CE- 41728-010V
					CE- 41751-010V
					CE- 41755-010V
					CE- 41758-010V
					CE- 41762-010V
					CE- 41724-010V
					CE- 41728-010V
					CE- 41751-010V
					CE- 41755-010V
					CE- 41758-010V
					CE- 41762-010V
90037-0001		LAMPHÅLLARE	LAMPHOLDER	LAMPENHALTER	C- 271641-030V
					C- 271641-020V
3- 90038-0024		LIKRIKTARE	RECTIFIER	GLEICHRICHTER	CE- 41723-010V
					CE- 41750-010V
					CE- 41757-010V
					CE- 41723-010V
					CE- 41750-010V
					CE- 41757-010V
90038-0028		DIOD	DIODE	DIODE	CE- 69884-010V
					CE- 69886-010V
					CE- 69884-010V
					CE- 69886-010V
					CE- 69884-010V
					CE- 69886-010V
90038-0031		LIKRIKTARE	RECTIFIER	GLEICHRICHTER	C- 469316-020V
1- 90039-0016		TRUCK FÖR STORRULLE	JUMBO REEL TRUCK	STAPLER FUR GROSSE ROLLE	C- 570500-010V
1- 90039-0018		TRUCK FÖR STORRULLE	JUMBO REEL TRUCK	STAPLER FUR GROSSE ROLLE	C- 570500-010V
P3- 90042-0074		MAGNETVENTIL 581-211-100	SOLENOID VALVE	MAGNETVENTIL	C- 794145-010V
					C- 735183-020V
					C- 795750-010V
P- 90042-0104		MAGNETVENTIL	SOLENOID VALVE	MAGNETVENTIL	C- 794145-010V
P3- 90042-0108		MAGNETVENTIL 581-111-100	SOLENOID VALVE	MAGNETVENTIL	C- 536859-020V
3- 90042-0109		MAGNETVENTIL 553-121-000	SOLENOID VALVE	MAGNETVENTIL	C- 751478-020V
P2- 90042-0134		MAGNETVENTIL	SOLENOID VALVE	MAGNETVENTIL	C- 271866-060V
90042-0162		SOLENOID VALVE	SOLENOID VALVE	MAGNETVENTIL	C- 556723-010V
90042-0167		MAGNETVENTIL	SOLENOID VALVE	MAGNETVENTIL	C- 484984-020V
P- 90042-0171		MAGNETVENTIL	SOLENOID VALVE	MAGNETVENTIL	C- 272623-050V
					RK- 978234-010V
P- 90042-0172		MAGNETVENTIL	SOLENOID VALVE	MAGNETVENTIL	C- 794180-010V
					C- 978739-010V
90042-0173		MAGNETVENTIL	SOLENOID VALVE	MAGNETVENTIL	C- 978739-010V
					C- 456757-020V
90042-0201		MAGNETVENTIL	SOLENOID VALVE	MAGNETVENTIL	RK- 978234-010V
90042-0206		MAGNETVENTIL	SOLENOID VALVE	MAGNETVENTIL	C- 735183-020V
					C- 751410-010V

PART NO	LAST ECN	BENÄMNING	TITLE	BENENNUNG	GROUP NO
3- 90042-0210		MAGNETVENTIL	SOLENOID VALVE	MAGNETVENTIL	C- 795750-010V
3- 90042-0211		MAGNETVENTIL	SOLENOID VALVE	MAGNETVENTIL	C- 795750-010V
3- 90042-0212		MAGNETVENTIL	SOLENOID VALVE	MAGNETVENTIL	C- 795750-010V
3- 90042-0215		MAGNETVENTIL	SOLENOID VALVE	MAGNETVENTIL	C- 978740-010V
90042-0345		SPOLE	COIL	SPULE	C- 751478-020V
					C- 484984-020V
					C- 794145-010V
					C- 536859-020V
					C- 735183-020V
					C- 795750-010V
90042-0347		PLATTA	PLATE	PLATTE	C- 794145-010V
90042-0348		MONTERINGSENHET	ASSEMBLY UNIT	MONTIERUNGSEINHEIT	C- 794145-010V
90042-0360		PLATTA	PLATE	PLATTE	C- 536859-020V
90042-0364		PLATTA	PLATE	PLATTE	C- 794145-010V
90042-0366		KONTAKT	CONTACT	KONTAKT	C- 751478-020V
					C- 794145-010V
90042-0367		PLATTA	PLATE	PLATTE	C- 735183-020V
					C- 794145-010V
					C- 735183-020V
90042-0368		CONNECTION	CONNECTION	PLATTE	C- 795750-010V
					C- 794145-010V
					C- 536859-020V
					C- 735183-020V
90042-0369		ÄNDSTYCKE	END PIECE	ENDST~CK	C- 795750-010V
					C- 794145-010V
					C- 536859-020V
					C- 735183-020V
90042-0370		PLATTA	PLATE	PLATTE	C- 795750-010V
					C- 735183-020V
4- 90042-0392		KONTAKT	CONTACT	KONTAKT	C- 795750-010V
					C- 484984-020V
					C- 536859-020V
4- 90042-0398		KONTAKT	CONTACT	KONTAKT	C- 795750-010V
3- 90042-0431		PLATTA 580-175-000	PLATE	PLATTE	C- 795750-010V
90042-0438		PLATTA 553-400-001	CONNECTION RAMP	ANSCHLUSSRAMPE	C- 536859-020V
90042-0461		ANSLUTNINGSPLATTA	CONNECTION TABLE	GRUNDPLATTE	C- 751478-020V
90042-0487		SPOLE 24VDC	COIL	SPULE	C- 556723-010V
					C- 735183-020V
3- 90042-0512		SPOLE	EL.COIL	EL-SPULE	C- 751410-010V
3- 90042-0519		TÄCKPLATTA	COVER PLATE	DECKPLATTE	C- 795750-010V
3- 90042-0520		ANSLUTNINGSPLATTA	CONNECTION TABLE	GRUNDPLATTE	C- 978740-010V
3- 90042-0521		EL-ANSLUTNING	ELECTRICAL CONNECTION	EL-ANSCHLUSS	C- 978740-010V
3- 90042-0522		ÄNDSTYCKE	END PIECE	ENDST~CK	C- 978740-010V
4- 90042-0523		EL-SPOLE	EL.COIL	EL-SPULE	C- 978740-010V
4- 90042-0524		EL-SPOLE	EL.COIL	EL-SPULE	C- 978740-010V
4- 90042-0525		EL-SPOLE	EL.COIL	EL-SPULE	C- 978740-010V
4- 90042-0526		SKYDDSHYLSA	PROTECTIVE SLEEVE	SCHUTZHUELSE	C- 978740-010V
4- 90042-0528		AVTÄTNINGSSATS	SEALING DISC	ABDICHTUNGSSCHEIBE	C- 978740-010V
3- 90042-0532		ANSLUTNINGSPLATTA	CONNECTION TABLE	GRUNDPLATTE	C- 978740-010V
4- 90043-0004		MANOMETER	PRESSURE GAUGE	MANOMETER	C- 751410-010V
3- 90043-0006		MANOMETER	PRESSURE GAUGE	MANOMETER	C- 563740-010V
					C- 978739-010V
90043-0021		MANOMETER	PRESSURE GAUGE	MANOMETER	C- 533014-010V
					C- 565536-010V
					C- 978740-010V
90043-0034		MANOMETER	PRESSURE GAUGE	MANOMETER	C- 272408-050V
					C- 295045-070V
90043-0036		MANOMETER	PRESSURE GAUGE	MANOMETER	C- 978739-010V
90043-0043		MANOMETER	PRESSURE GAUGE	MANOMETER	C- 533014-010V
90043-0050		MANOMETER	PRESSURE GAUGE	MANOMETER	C- 266215-010V
					C- 77091-040V
3- 90043-0065		MANOMETER	PRESSURE GAUGE	MANOMETER	C- 536859-020V
					RK- 978234-010V
90043-0068		MANOMETER	PRESSURE GAUGE	MANOMETER	C- 978740-010V
90043-0069		MANOMETER	PRESSURE GAUGE	MANOMETER	C- 978740-010V
90043-0076		MANOMETER	MANOMETER	MANOMETER	C- 536859-020V
90043-0078		TRYCKMÄTARE	PRESSURE GAUGE	MANOMETER	C- 735183-020V
90043-0082		GAUGE	GAUGE	MANOMETER	C- 794178-010V
90043-0095		TRYCKMÄTARE	PRESSURE GAUGE	MANOMETER	C- 491083-030V
3- 90043-0096		MANOMETER	MANOMETER	MANOMETER	C- 795750-010V
90043-0302		SKRUV	SCREW	SCHRAUBE	C- 272408-050V
					C- 295045-070V
P- 90044-0003		MIKROBRYTARE	MICRO SWITCH	MICROSCHALTER	C- 229400-070V
90044-0007		MIKROBRYTARE	MICRO SWITCH	MICROSCHALTER	CE- 69884-010V
					CE- 69886-010V
					CE- 69884-010V
					CE- 69886-010V
					CE- 69884-010V
					CE- 69886-010V
4- 90044-0084		MIKROBRYTARE	MICRO SWITCH	MICROSCHALTER	C- 256806-030V
					C- 256014-060V
90044-0085		GIVARE	SENSOR	GEBER	C- 469736-040V
					C- 484984-020V
					C- 550714-010V
					C- 554888-010V
					C- 272765-070V
					C- 469316-020V
					C- 552030-010V
4- 90044-0094		GRÄNSLÄGESBRYTARE	LIMIT SWITCH	BEGRENZUNGSSCHALTER	C- 457853-030V
90044-0095		INDUKTIV GIVARE	PROXIMITY SWITCH	INDUKTIVER EMITTER	C- 456180-010V
90044-0101		GRÄNSLÄGESBRYTARE	LIMIT SWITCH	BEGRENZUNGSSCHALTER	C- 456100-030V

PART NO	LAST ECN	BENÄMNING	TITLE	BENENNUNG	GROUP NO
3- 90044-0103		GRÄNSLÄGESBRYTARE	LIMIT SWITCH	BEGRENZUNGSSCHALTER	C- 441850-040V C- 562679-010V C- 752645-020V C- 752646-020V
4- 90044-0104		IND.GIVARE	INDUCTIVE SWITCH	INDUKTIVER EMITTER	C- 272021-060V C- 752957-010V C- 272084-030V C- 469736-040V C- 560858-010V C- 736529-010V C- 560858-010V C- 924300-010V
4- 90044-0104		IND.GIVARE	INDUCTIVE SWITCH	INDUKTIVER EMITTER	C- 560858-010V C- 736529-010V C- 560858-010V C- 924300-010V C- 560858-010V C- 736529-010V C- 560858-010V C- 924300-010V C- 562679-010V C- 794110-010V C- 550757-020V C- 554887-010V C- 554888-010V C- 441000-050V C- 752628-020V C- 752645-020V C- 752646-020V C- 256014-060V C- 256084-050V C- 272021-060V C- 272024-040V C- 272025-030V C- 272337-040V C- 272560-060V C- 456836-040V C- 457867-020V C- 469316-020V C- 546285-010V C- 550128-010V C- 554360-020V C- 566280-010V C- 556723-010V C- 924300-010V C- 924991-010V C- 924300-010V C- 924991-010V RK- 520069-010V RK- 978212-010V RK- 978238-010V RK- 520069-010V RK- 978212-010V RK- 978238-010V RK- 520069-010V RK- 978212-010V RK- 978238-010V
90044-0111		INDUKTIV GIVARE	INDUCTIVE SWITCH	INDUKTIVER EMITTER	C- 924662-010V C- 924167-010V
90044-0112		GIVARE	PROXIMITY SWITCH	GEBER	C- 529621-010V
4- 90044-0122		INDUKTIV GIVARE	INDUCTIVE SWITCH	INDUKTIVER EMITTER	C- 554889-020V
3- 90044-0123		MIKROBRYTARE	MICROSWITCH	MICROSCHALTER	C- 491787-020V C- 491788-020V
1- 90045-0087		MOTOR	MOTOR	MOTOR	C- 751393-010V
90045-0096		MOTOR	MOTOR	MOTOR	C- 271128-040V
90045-0123		MOTOR	MOTOR	MOTOR	C- 794004-010V
3- 90045-0134		ELTRUMMA	MOTOR	MOTOR	C- 271017-030V
3- 90046-0017		LIKSTRÖMSMOTOR	MOTOR	MOTOR	C- 554886-010V
P- 90048-0022		OLJEPUMP	OIL PUMP	OELPUMPE	C- 77091-040V
90048-0041		OLJEPUMP	OIL PUMP	OELPUMPE	C- 978739-010V
3- 90048-0440		PACKNING	GASKET	DICHTUNG	C- 491890-010V
90049-0010		KEMISKT ANKARE	EXPANDING PLUG	EXPANDERPFROPFEN	C- 562656-010V
3- 90050-0011		FLASKA	BOTTLE	FLASCHE	C- 490761-010V
90050-0012		FLASKA	BOTTLE	FLASCHE	C- 434074-030V C- 434774-030V C- 434074-030V C- 434774-030V C- 434074-030V
90051-0040		VRED	HANDLE	GRIFF	C- 76291-010V C- 76411-010V C- 76447-010V C- 76492-010V
90051-0045		VRED	HANDLE	GRIFF	C- 751088-030V
4- 90051-0053		VRED	HANDLE	GRIFF	C- 76301-010V
90051-0059		VRED	HANDLE	GRIFF	C- 76335-010V C- 76402-010V
4- 90051-0064		VRED	HANDLE	GRIFF	CR- 548040-010V
90051-0076		RATT	WHEEL	RAD	C- 533844-010V CR- 548331-010V
90051-0077		VRED	HANDLE	GRIFF	C- 434074-030V C- 434774-030V C- 434074-030V

PART NO	LAST ECN	BENÄMNING	TITLE	BENENNUNG	GROUP NO
					C- 434774-030V
					C- 434074-030V
90051-0082		KNOPP	KNOB	KNOPF	C- 256806-030V
4- 90051-0083		VRED	HANDLE	GRIFF	C- 76301-010V
					C- 76416-010V
					C- 76447-010V
					C- 76485-010V
90051-0084		VRED	HANDLE	GRIFF	C- 76485-010V
90051-0089		RATT	SHIFTER HANDLE	RAD	C- 543143-010V
90053-0024		RÄKNEVERK	COUNTER	ZÄHLWERK	CE- 41724-010V
					CE- 41751-010V
					CE- 41758-010V
					CE- 41724-010V
					CE- 41751-010V
					CE- 41758-010V
90053-0029		RÄKNEVERK	COUNTING APPARATUS	ZÄHLWERK	CE- 41723-010V
					CE- 41750-010V
					CE- 41757-010V
					RK- 558333-010V
					RK- 558335-010V
					RK- 558337-010V
					RK- 558339-010V
					CE- 41723-010V
					CE- 41750-010V
					CE- 41757-010V
90053-0305		RAM	FRAME	RAHMEN	CE- 41724-010V
					CE- 41751-010V
					CE- 41758-010V
					CE- 41724-010V
					CE- 41751-010V
					CE- 41758-010V
4- 90055-0117		VINKELKOPPLING	ELBOW PIPE JOINT	WINKELROHRVERBINDUNG	C- 978740-010V
4- 90055-0118		VINKELKOPPLING	ELBOW PIPE JOINT	WINKELROHRVERBINDUNG	C- 978740-010V
1- 90056-0071		SNÄCKVÄXEL	WORM GEAR	SCHNECKENGETRIEBE	C- 256438-020V
P1- 90056-0072		SNÄCKVÄXEL	WORM GEAR	SCHNECKENGETRIEBE	C- 256173-050V
2- 90056-0109		KUGGVÄXEL	GEAR REDUCTION	ZAHNRADGETRIEBE	C- 554886-010V
90059-0001		TERMOSTAT	THERMOSTAT	THERMOSTAT	C- 37877-030V
90059-0013		TERMOSTAT	TEMPERATURE MONITOR	THERMOSTAT	CE- 69884-010V
					CE- 69886-010V
90059-0013		TERMOSTAT	TEMPERATURE MONITOR	THERMOSTAT	CE- 69884-010V
					CE- 69886-010V
					CE- 69884-010V
					CE- 69886-010V
90060-0075		TIDRELÄ	TIME RELAY	ZEITRELAIS	CE- 41750-010V
4- 90061-0018		VINKELGIVARE	ANGLE ENCODER	WINKELGEBER	C- 751689-010V
90062-0016		LÅSBRICKA	LOCK WASHER	SCHLIESSCHEIBE	C- 256843-060V
					C- 978739-010V
P- 90064-0041		TRYCKKNAPP RÖD	PUSH BUTTON	DRUCKKNOPF	C- 232781-040V
P- 90064-0045		TRYCKKNAPP GUL	PUSH BUTTON	DRUCKKNOPF	C- 232781-040V
90064-0052		TRYCKKNAPP	PUSH BUTTON	DRUCKKNOPF	C- 469374-040V
					C- 232781-040V
P- 90064-0054		TRYCKKNAPP GRÖN	PUSH BUTTON	DRUCKKNOPF	C- 232781-040V
3- 90064-0082		TRYCKKNAPP VIT	PUSH BUTTON WHITE	DRUCKKNOPF	CE- 41724-010V
					CE- 41751-010V
					CE- 41758-010V
					C- 905401-010V
					CE- 41724-010V
					CE- 41751-010V
					CE- 41758-010V
3- 90064-0083		TRYCKKNAPP GRÖN	PUSH BUTTON GREEN	DRUCKKNOPF	CE- 41750-010V
					RK- 978234-010V
3- 90064-0084		TRYCKKNAPP GUL	PUSH BUTTON YELLOW	DRUCKKNOPF	CE- 41724-010V
					CE- 41728-010V
					CE- 41751-010V
					CE- 41755-010V
					CE- 41758-010V
					CE- 41762-010V
					C- 905401-010V
					C- 272408-050V
					C- 457853-030V
					CE- 41724-010V
					CE- 41728-010V
					CE- 41751-010V
					CE- 41755-010V
					CE- 41758-010V
					CE- 41762-010V
					C- 456882-010V
3- 90064-0085		TRYCKKNAPP RÖD	PUSH BUTTON RED	DRUCKKNOPF	CE- 41723-010V
					CE- 41724-010V
					CE- 41750-010V
					CE- 41751-010V
					CE- 41758-010V
					C- 271513-060V
					C- 751885-030V
					C- 272408-050V
					C- 457853-030V
					CE- 41723-010V
					CE- 41724-010V
					CE- 41750-010V
					CE- 41751-010V
					CE- 41758-010V
3- 90064-0087		TRYCKKNAPP GRÖN	PUSH BUTTON GREEN	DRUCKKNOPF	C- 905401-010V

PART NO	LAST ECN	BENÄMNING	TITLE	BENENNUNG	GROUP NO
3- 90064-0089		TRYCKKNAPP RÖD	PUSH BUTTON RED	DRUCKKNOPF	C- 905401-010V
3- 90064-0093		LAMPTRYCKKNAPP GRÖN	PUSH BUTTON"GREEN"	DRUCKKNOPF	CE- 41724-010V
					CE- 41751-010V
					CE- 41758-010V
					CE- 41724-010V
					CE- 41751-010V
3- 90064-0093		LAMPTRYCKKNAPP GRÖN	PUSH BUTTON"GREEN"	DRUCKKNOPF	CE- 41758-010V
3- 90064-0098		TRYCKKNAPP	PUSH BUTTON	DRUCKKNOPF	CE- 41724-010V
					CE- 41751-010V
					CE- 41758-010V
					CE- 41724-010V
					CE- 41751-010V
3- 90064-0105		NÖDSTOPP	EMERGENCY STOP	NOTSTOPP	CE- 41758-010V
					CE- 41723-010V
					CE- 41724-010V
					CE- 41750-010V
					CE- 41751-010V
					CE- 41758-010V
					C- 271513-060V
					C- 751885-030V
					CE- 41723-010V
					CE- 41724-010V
					CE- 41750-010V
					CE- 41751-010V
90064-0315		VERKTYG	TOOL	WERKZEUGE	CE- 41758-010V
					CE- 41728-010V
					CE- 41755-010V
					CE- 41762-010V
					CE- 41728-010V
					CE- 41755-010V
					CE- 41762-010V
90064-0317		BERÖRINGSSKYDD	TOUCH GUARD	BERUEHRUNGSSCHUTZ	CE- 41723-010V
					CE- 41750-010V
					C- 905401-010V
					CE- 41723-010V
					CE- 41750-010V
3- 90066-0013		TRYCKKNAPPSLÅDA	PUSH BUTTON BOX	DRUCKKNOPFKASTEN	C- 469374-040V
90066-0018		TRYCKKNAPPSLÅDA	PUSH BUTTON BOX	DRUCKKNOPFKASTEN	C- 232781-040V
90066-0020		TRYCKKNAPPSLÅDA	PUSCH BUTTON BOX	DRUCKKNOPFKASTEN	C- 271513-060V
					C- 751885-030V
					C- 272408-050V
P- 90067-0010		VAGN	CARRIAGE	WAGEN	C- 491942-010V
90069-0069		SNÄCKVÄXELMOTOR	WORM GEAR MOTOR	MOTOR MIT SCHNECKENGETR.	C- 752029-010V
					C- 229400-070V
					C- 752029-010V
90069-0098		SNÄCKVÄXELMOTOR	WORM GEAR MOTOR	MOTOR MIT SCHNECKENGETR.	C- 752029-010V
					C- 229400-070V
					C- 752029-010V
P3- 90069-0099		SNÄCKVÄXELMOTOR	WORM GEAR MOTOR	MOTOR MIT SCHNECKENGETR.	C- 272028-060V
90071-0027		KILREM DUBBEL 2/3V X 450	V-BELT	KEILRIEMEN	C- 256173-050V
90074-0001		KLAMMER 10 MM	CLIP	KLAMMER	C- 905331-010V
					C- 794004-010V
					C- 491976-020V
90074-0004		KLAMMER	CLIP	KLAMMER	C- 794178-010V
90074-0005		KLAMMER	CLIP	KLAMMER	C- 491767-020V
90074-0015		KLAMMER	CLIP	KLAMMER	C- 794069-010V
4- 90074-0026		KLAMMER	CLIP	KLAMMER	C- 256173-050V
90074-0027		RÖRKLAMMER	CLAMP	ROHRKLAMMER	C- 295262-060V
90075-0111		KONTAKTOR	CONTACTOR	KONTAKTOR	CE- 557222-010V
2- 90075-0124		KONTAKTOR 4KW	CONTACTOR 4KW	KONTAKTOR	CE- 41723-010V
					CE- 41750-010V
					CE- 41757-010V
					CE- 41723-010V
					CE- 41750-010V
					CE- 41757-010V
2- 90075-0125		KONTAKTOR 7,5KW	CONTACTOR 7,5KW	KONTAKTOR	CE- 41723-010V
					CE- 41750-010V
					CE- 41757-010V
					CE- 41723-010V
					CE- 41750-010V
					CE- 41757-010V
2- 90075-0126		KONTAKTOR	CONTACTOR	KONTAKTOR	CE- 41723-010V
					CE- 41750-010V
					CE- 41757-010V
					CE- 41723-010V
					CE- 41750-010V
					CE- 41757-010V
2- 90075-0127		KONTAKTOR 4KW	CONTACTOR 4KW	KONTAKTOR	CE- 41723-010V
					CE- 41728-010V
					CE- 41750-010V
					CE- 41755-010V
					CE- 41757-010V
					CE- 41762-010V
					CE- 41723-010V
					CE- 41728-010V
					CE- 41750-010V
					CE- 41755-010V
					CE- 41757-010V
					CE- 41762-010V
2- 90075-0128		KONTAKTOR 7,5KW	CONTACTOR 7,5KW	KONTAKTOR	CE- 41723-010V
					CE- 41728-010V
					CE- 41750-010V

PART NO	LAST ECN	BENÄMNING	TITLE	BENENNUNG	GROUP NO
					CE- 41755-010V CE- 41757-010V CE- 41762-010V CE- 41723-010V CE- 41728-010V CE- 41750-010V CE- 41755-010V CE- 41757-010V
3- 90075-0313		HJÄLPKONTAKT	AUXILIARY CONTACT	KONTAKTOR	CE- 41762-010V CE- 41728-010V CE- 41755-010V CE- 41762-010V CE- 41728-010V CE- 41755-010V CE- 41762-010V
3- 90077-0030		KOPPLINGSLIST	TERMINAL STRIP	KUPPLUNGSLEISTE	CE- 557222-010V C- 794092-010V
90077-0042		KOPPLINGSLIST	TERMINAL BLOCK	KUPPLUNGSLEISTE	CE- 69884-010V CE- 69886-010V CE- 69884-010V CE- 69886-010V CE- 69884-010V CE- 69886-010V
90077-0079		GENOMGÅNGSKLÄMMA	FEED THROUGH TERMINAL	DURCHGANGSKLEMME	C- 978604-010V C- 563088-010V C- 552013-010V C- 544390-010V C- 924585-010V C- 924727-010V
90077-0090		GENOMGÅNGSKLÄMMA	FEED THROUGH TERMINAL	DURCHGANGSKLEMME	RK- 978234-010V C- 735031-010V C- 924329-010V
4- 90077-0102		APPARATPLINT	TERMINAL BLOCK	KUPPLUNGSSOCKEL	CE- 41723-010V CE- 41750-010V CE- 41757-010V C- 37877-030V C- 441850-040V
90077-0106		APPARATPLINT	STRIP	KUPPLUNGSKLAMMER	CE- 41723-010V CE- 41750-010V CE- 41757-010V C- 232781-040V
3- 90077-0112		SÄKRINGSHÅLLARE	FUSE HOLDER	SICHERUNGSHALTER	CE- 41723-010V CE- 41750-010V CE- 41757-010V CE- 41723-010V CE- 41750-010V CE- 41757-010V CE- 41723-010V CE- 41750-010V CE- 41757-010V
3- 90077-0115		DIODKLÄMMA	FEED THROUGH TERMINAL	DURCHGANGSKLEMME	RK- 557018-010V RK- 557021-010V CE- 41723-010V CE- 41750-010V CE- 41757-010V RK- 557018-010V RK- 557021-010V
90077-0302		MONTAGESKENA	RAIL	MONTAGESCHIENE	C- 905401-010V
90077-0307		ÄNDPLATTA	END PLATE	ABSCHLUSSPLATTE	C- 565419-010V C- 563088-010V C- 552013-010V
90077-0308		ÄNDSTÖD	END BRACKET	ENDWINKEL	C- 544390-010V C- 563088-010V C- 552013-010V C- 544390-010V C- 924585-010V
90077-0309		ÄNDPLATTA	END PLATE	ABSCHLUSSPLATTE	C- 924727-010V C- 735031-010V C- 924329-010V
90077-0316		ÖVERKOPPLINGSBLECK	BRIDGE CONNECTOR	QUERVERBINDUNG	C- 735031-010V C- 924329-010V
90077-0328		MONTAGESKENA	RAIL	MONTAGESCHIENE	C- 978604-010V
90077-0342		DIODHÅLLARE	HOLDER	HALTER	RK- 557018-010V RK- 557021-010V
90081-0026		MAGNET	MAGNET	MAGNET	C- 476189-010V
90081-0027		MAGNETSKIVA	MAGNET DISC	MAGNETSCHEIBE	C- 476189-010V
90083-0014		KURVRULLE	ROLLER	KURVENROLLE	CR- 548040-010V
90083-0016		SKIVA	PLATE	SCHEIBE	C- 491814-020V C- 491815-020V
90083-0020		AXIALNÅLLAGER	NEEDLE BEARING	NADELLAGER	C- 794128-010V
90083-0021		AXIALLAGERSKIVA	PLATE	SCHEIBE	C- 794128-010V
90084-0012		ISOLATOR	INSULATOR	ISOLATOR	CE- 69884-010V CE- 69886-010V CE- 69884-010V CE- 69886-010V CE- 69884-010V CE- 69886-010V
90086-0001		NIPPEL	NIPPLE	NIPPEL	C- 271641-030V C- 271641-020V
90087-0002		RÖRPLUGG	PIPE PLUG	ROHRPROPFEN	C- 456100-030V
4- 90087-0019		PROPP	PLUG	SICHERUNG	CR- 256436-060V
4- 90087-0019		PROPP	PLUG	SICHERUNG	C- 256197-050V

PART NO	LAST ECN	BENÄMNING	TITLE	BENENNUNG	GROUP NO
					CR- 256436-060V
					C- 271866-060V
90087-0036		PLUGG	PLUG	PFROPFEN	C- 978740-010V
90089-0003		MUFF	SLEEVE	MUFFE	C- 469374-040V
90089-0006		MUFF	SLEEVE	MUFFE	C- 229400-070V
90089-0017		FÖRSTOR.MUFF PR18,6/22,5	TRANSITIONAL MUFF	~BERGANGSMUFFE	C- 272028-060V
90089-0018		ÖVERGÅNG 3/4NPT-PG16	TRANSITIONAL NIPPLE	~BERGANGSNIPPEL	C- 491207-030V
90090-0005		STÅLKULA	STEEL BALL	STAHLKUGEL	CR- 256204-050V
					CR- 256205-050V
					CR- 256212-050V
					CR- 256213-050V
90090-0008		STÅLKULA	STEEL BALL	STAHLKUGEL	C- 271562-080V
90090-0012		STÅLKULA RB 20 RS	STEEL BALL	STAHLKUGEL	C- 232781-040V
90090-0013		STÅLKULA	STEEL BALL	STAHLKUGEL	CR- 256436-060V
					CR- 256712-050V
					CR- 256436-060V
					CR- 256712-050V
					CR- 256436-060V
					CR- 256712-050V
					CR- 256436-060V
					CR- 256712-050V
90090-0014		STÅLKULA RB 7,9389 RJ	STEEL BALL	STAHLKUGEL	C- 256222-020V
90090-0016		STÅLKULA RB15 RS	BALL	STAHLKUGEL	C- 491976-020V
90091-0079		KOLVTÄTNING	SEAL	KOLBENDICHTUNG	C- 735271-020V
					C- 736600-020V
					C- 735271-020V
					C- 736600-020V
					C- 735271-020V
					C- 736600-020V
90091-0089		TÄTNINGSRING	SEAL RING	DICHTUNGSRING	CR- 256212-050V
					CR- 256213-050V
90091-0091		TÄTNINGSRING	SEAL RING	DICHTUNGSRING	CR- 256204-050V
					CR- 256205-050V
90091-0106		TÄTRING	SEALED RING	DICHTUNGSRING	C- 456100-030V
90091-0136		TÄTRING	SEAL RING	DICHTUNGSRING	C- 295211-010V
90091-0137		TÄTRING	SEAL RING	DICHTUNGSRING	C- 751393-010V
90091-0160		TÄTRING	SEAL RING	DICHTUNGSRING	CR- 256436-060V
					CR- 256712-050V
					CR- 256436-060V
					CR- 256712-050V
					CR- 256436-060V
					CR- 256712-050V
					CR- 256436-060V
					CR- 256712-050V
90091-0162		STYRRING	GUIDE RING	FUEHRUNGSRING	CR- 256436-060V
					CR- 256712-050V
					CR- 256436-060V
					CR- 256712-050V
					CR- 256436-060V
					CR- 256712-050V
					CR- 256212-050V
					CR- 256213-050V
					CR- 256436-060V
90091-0163		STYRRING	GUIDE RING	FUEHRUNGSRING	CR- 256712-050V
					CR- 256436-060V
					CR- 256712-050V
					CR- 256436-060V
90091-0163		STYRRING	GUIDE RING	FUEHRUNGSRING	CR- 256712-050V
					CR- 256436-060V
					CR- 256712-050V
					CR- 256436-060V
90091-0165		TÄTRING	SEAL RING	DICHTUNGSRING	CR- 256712-050V
					CR- 256436-060V
					CR- 256712-050V
					CR- 256436-060V
					CR- 256712-050V
					CR- 256436-060V
					CR- 256712-050V
					CR- 256436-060V
90091-0169		STYRRING	GUIDE RING	FUEHRUNGSRING	CR- 256712-050V
					CR- 256204-050V
90091-0170		STYRRING	GUIDE RING	FUEHRUNGSRING	CR- 256205-050V
					CR- 256212-050V
90091-0180		PACKNING	GASKET	DICHTUNG	CR- 256213-050V
					C- 271169-040V
					C- 272337-040V
90091-0182		PACKNING	GASKET	DICHTUNG	C- 456555-040V
90091-0214		TÄTRING AXELDIA.16	SEALING RING	DICHTUNGSRING	C- 272337-040V
					CR- 256212-050V
90091-0215		TÄTRING AXELDIA.25	SEALING RING	DICHTUNGSRING	CR- 256213-050V
					CR- 256212-050V
90091-0216		TÄTRING HÅLDIA.12	SEALING RING	DICHTUNGSRING	CR- 256213-050V
					CR- 256204-050V
3- 90091-0275		PACKNING	GASKET	DICHTUNG	CR- 256205-050V
					C- 924592-010V
					C- 924811-010V
					C- 924662-010V
					C- 924167-010V
					C- 924811-010V
4- 90092-0048		SMÖRJBORSTE	OIL BRUSH	OELBUERSTE	C- 272765-070V
4- 90092-0052		VENTIL	VALVE	VENTIL	C- 271562-080V
					C- 256197-050V

PART NO	LAST ECN	BENÄMNING	TITLE	BENENNUNG	GROUP NO
					C- 491814-020V C- 491815-020V CR- 256212-050V CR- 256213-050V C- 256217-040V C- 256951-050V C- 256952-050V C- 257381-030V C- 257382-030V C- 271866-060V
4- 90092-0053		VENTIL	VALVE	VENTIL	C- 271562-080V C- 256197-050V C- 491814-020V C- 491815-020V CR- 256212-050V CR- 256213-050V C- 257381-030V C- 257382-030V
4- 90092-0054		DOSERVENTIL	VALVE	VENTIL	CR- 256436-060V C- 272765-070V C- 295310-070V
4- 90099-0001		MUTTER	NUT	MUTTER	C- 295883-050V C- 905401-010V C- 736865-010V C- 924585-010V
4- 90099-0001		MUTTER	NUT	MUTTER	C- 736865-010V C- 924585-010V C- 736865-010V C- 924585-010V C- 794272-010V C- 735031-010V C- 924329-010V C- 924727-010V C- 924808-010V C- 924727-010V C- 924808-010V
90099-0002		MUTTER	NUT	MUTTER	C- 752960-010V C- 752971-010V C- 37877-030V C- 441534-010V C- 924585-010V C- 794145-010V C- 794272-010V C- 794145-010V C- 794272-010V C- 456459-040V C- 456460-040V C- 751900-010V C- 457853-030V
90099-0003		MUTTER	NUT	MUTTER	C- 924727-010V C- 295883-050V C- 544389-010V C- 905401-010V C- 794272-010V C- 490761-010V
90099-0004		MUTTER	NUT	MUTTER	C- 295883-050V RK- 557147-010V RK- 557150-010V RK- 557153-010V RK- 557690-010V RK- 557693-010V RK- 557696-010V
90099-0011		MUTTER	NUT	MUTTER	C- 295883-050V C- 469374-040V
4- 90099-0015		MUTTER ML6M 12X1,5 FZB	NUT	MUTTER	C- 751689-010V
90099-0016		MUTTER	NUT	MUTTER	C- 566280-010V
90099-0050		MUTTER	NUT	MUTTER	C- 557826-010V
4- 90099-0057		MUTTER	NUT	MUTTER	C- 752628-020V
90099-0087		MUTTER	NUT	MUTTER	C- 441535-010V
90099-0092		MUTTER	NUT	MUTTER	C- 550711-020V
90099-0110		KONTRAMUTTER	NUT	MUTTER	CE- 41723-010V CE- 41766-010V CE- 41723-010V CE- 41766-010V
90099-0128		MUTTER	NUT	MUTTER	C- 905131-010V
90099-0130		SPÅRMUTTER M8	NUT	MUTTER	C- 550639-010V
3- 90101-0004		RÖRFÄSTE	HOLDER	ROHRBEFESTIGUNG	C- 456555-040V
90110-0003		STIFTTAG	PLUG	STIFTKONTAKT	C- 924727-010V
90110-0028		KONTAKTDON	CONTACT UNIT	KONTAKTANORDNUNG	CE- 41723-010V CE- 41750-010V CE- 41757-010V CE- 41723-010V CE- 41750-010V CE- 41757-010V
90110-0029		KONTAKTDON	CONTACT UNIT	KONTAKTANORDNUNG	CE- 41723-010V CE- 41750-010V CE- 41757-010V CE- 41723-010V CE- 41750-010V CE- 41757-010V
90110-0044		CHASSIKONTAKT	CONNECTOR	STECKER	CE- 69884-010V CE- 69886-010V

PART NO	LAST ECN	BENÄMNING	TITLE	BENENNUNG	GROUP NO
					CE- 69884-010V
					CE- 69886-010V
					CE- 69884-010V
					CE- 69886-010V
90110-0089		HÅLLARE	HOLDER	HALTER	CE- 69884-010V
					CE- 69886-010V
					CE- 69884-010V
					CE- 69886-010V
					CE- 69884-010V
					CE- 69886-010V
4- 90110-0095		KONTAKT	CONTAKT	KONTAKT	C- 735183-020V
					C- 751410-010V
					C- 271168-040V
90110-0114		KONTAKTHUS	CONTACT HOUSING	KONTAKTGEHÄUSE	C- 441850-040V
90110-0116		KONTAKTSTIFT	CONTACT PIN	KONTAKTSTIFT	C- 441850-040V
90110-0121		KONTAKTDON	CONTACT UNIT	KONTAKTANORDNUNG	CE- 41766-010V
90110-0122		KÅPA	COVER	DECKEL	CE- 41766-010V
3- 90110-0134		KABELKONTAKT	CABLE CONTACT	KABELKONTAKT	C- 924662-010V
					C- 924167-010V
3- 90110-0135		KABELKONTAKT	CABLE CONTACT	KABELKONTAKT	C- 924585-010V
					C- 924727-010V
4- 90110-0338		GASKET	SLAB GASKET	KLINGERITDICHTUNG	C- 924585-010V
					C- 924727-010V
4- 90110-0339		GASKET	SLAB GASKET	KLINGERITDICHTUNG	C- 924585-010V
					C- 924727-010V
90111-0104		STRÖMSTÄLLARE	SWITCH	STROMUMSTELLER	C- 232781-040V
3- 90111-0120		STRÖMSTÄLLARE	SWITCH	STROMUMSTELLER	CE- 41724-010V
					CE- 41750-010V
					CE- 41751-010V
					CE- 41758-010V
					CE- 557222-010V
					CE- 41724-010V
					CE- 41750-010V
					CE- 41751-010V
					CE- 41758-010V
					C- 456882-010V
3- 90111-0121		STRÖMSTÄLLARE	SWITCH	STROMUMSTELLER	RK- 557147-010V
					RK- 557150-010V
					RK- 557153-010V
					RK- 557690-010V
					RK- 557693-010V
					RK- 557696-010V
3- 90111-0122		NYCKELSTRÖMSTÄLLARE	KEY SWITCH	STROMUMSTELLER	CE- 41723-010V
					CE- 41750-010V
					CE- 41757-010V
					RK- 558333-010V
					RK- 558335-010V
					RK- 558337-010V
					RK- 558339-010V
					CE- 41723-010V
					CE- 41750-010V
3- 90111-0122		NYCKELSTRÖMSTÄLLARE	KEY SWITCH	STROMUMSTELLER	CE- 41757-010V
3- 90111-0124		STRÖMSTÄLLARE	SWITCH	STROMUMSTELLER	CE- 41723-010V
					CE- 41750-010V
					CE- 41757-010V
					CE- 41723-010V
					CE- 41750-010V
					CE- 41757-010V
2- 90111-0135		STRÖMSTÄLLARE	SWITCH	STROMUMSTELLER	CE- 41723-010V
					CE- 41750-010V
					CE- 41757-010V
					CE- 41723-010V
					CE- 41750-010V
					CE- 41757-010V
90111-0137		STRÖMSTÄLLARE	SWITCH	STROMUMSTELLER	C- 544389-010V
3- 90111-0147		STRÖMSTÄLLARE	CIRCUIT CLOSER	STROMUMSTELLER	CE- 69884-010V
90111-0332		KONTAKT	CONTACT	KONTAKT	CE- 41757-010V
4- 90113-0021		REGULATOR	REGULATOR	REGULATOR	C- 563740-010V
					C- 536859-020V
90113-0054		REGULATOR	REGULATOR	REGULATOR	RK- 978234-010V
2- 90113-0056		REGULATOR	REGULATOR	REGULATOR	C- 565536-010V
					C- 735183-020V
					C- 751410-010V
3- 90113-0059		REGULATOR	REGULATOR	REGULATOR	C- 533014-010V
90113-0063		TRYCKREGULATOR	PRESSURE REGULATOR	DRUCKREGLER	C- 794178-010V
90113-0064		TRYCKREGULATOR	PRESSURE REGULATOR	DRUCKREGLER	C- 794178-010V
2- 90113-0067		TRYCKREGULATOR	PRESSURE REGULATOR	DRUCKREGLER	C- 795750-010V
3- 90113-0069		TRYCKREGULATOR	PRESSURE REGULATOR	DRUCKREGLER	C- 978740-010V
1- 90113-0072		TRYCKREGULATOR	PRESSURE REGULATOR	DRUCKREGLER	C- 978739-010V
3- 90113-0076		TRYCKREGULATOR	PRESSURE REGULATOR	DRUCKREGLER	C- 978740-010V
2- 90113-0374		VENTIL	SLOW STARTING VALVE	VENTIL	C- 978739-010V
2- 90113-0375		TRYCKOMVANDLARE	PRESURE DISRIBUTION	DRUCKOMFORMER	C- 978739-010V
2- 90113-0377		AVSTÄNGNINGSVENTIL	SHUT-OFF VALVE	ABSPERRVENTIL	C- 978739-010V
2- 90113-0378		AVSTÄNGNINGSVENTIL	SHUT-OFF VALVE	ABSPERRVENTIL	C- 978739-010V
4- 90113-0379		PANELMUTTER	NUT	MUTTER	C- 978740-010V
4- 90115-0020		LÄNKHUVUD	LINK HEAD	GELENKKOPF	C- 457853-030V
4- 90115-0054		LÄNKHUVUD	JOINT	GELENKKOPF	C- 450101-010V
					C- 450101-020V
4- 90115-0068		LÄNKHUVUD	JOINT	GELENKKOPF	C- 751968-010V
4- 90115-0133		LÄNKHUVUD	JOINT	GELENKKOPF	C- 272084-030V
90117-0001		LÅSSPAK	HANDLE	VERSCHLUSSHEBEL	C- 548057-010V
90117-0003		LÅSSPAK	HANDLE	VERSCHLUSSHEBEL	C- 548057-010V

PART NO	LAST ECN	BENÄMNING	TITLE	BENENNUNG	GROUP NO
4- 90117-0008		LÅSSPAK	HANDLE	VERSCHLUSSHEBEL	CR- 548040-010V
90119-0042		RELÄ	OVERLOAD RELAY	RELAIS	CE- 69886-010V
3- 90119-0043		OPTOKOPPLARE	OPTO SWITCH	RELAIS	CE- 41723-010V
					CE- 41750-010V
					CE- 41757-010V
					CE- 41723-010V
					CE- 41750-010V
					CE- 41757-010V
3- 90119-0052		RELÄ	RELAY	RELAIS	RK- 557234-010V
90119-0053		RELÄ	RELAY	RELAIS	CE- 69884-010V
3- 90119-0056		RELÄ	RELAY	RELAIS	CE- 41723-010V
					CE- 41728-010V
					CE- 41750-010V
					CE- 41755-010V
					CE- 41757-010V
					CE- 41762-010V
					RK- 557545-010V
3- 90119-0056		RELÄ	RELAY	RELAIS	RK- 557551-010V
					RK- 558313-010V
					RK- 558316-010V
					RK- 558345-010V
					CE- 41723-010V
					CE- 41728-010V
					CE- 41750-010V
					CE- 41755-010V
					CE- 41757-010V
3- 90119-0063		OPTOKOPPLARE	OPTO-RELAY	RELAIS	CE- 41762-010V
					CE- 41723-010V
					CE- 41750-010V
					CE- 41757-010V
					CE- 41723-010V
					CE- 41750-010V
3- 90119-0067		SOLID-STATE RELÄ	SOLID-STATE RELAY	RELAIS	CE- 41757-010V
					CE- 41723-010V
					CE- 41728-010V
					CE- 41750-010V
					CE- 41755-010V
					CE- 41757-010V
					CE- 41762-010V
					CE- 41723-010V
					CE- 41728-010V
					CE- 41750-010V
					CE- 41755-010V
					CE- 41757-010V
					CE- 41762-010V
3- 90119-0070		STRÖMMÄTRELÄ	RELAY	RELAIS	CE- 41723-010V
					CE- 41750-010V
					CE- 41757-010V
					CE- 41723-010V
					CE- 41750-010V
					CE- 41757-010V
2- 90119-0072		SÄKERHETSRELÄ	SAFETY RELAY	RELAIS	CE- 41723-010V
					CE- 41750-010V
					CE- 41757-010V
					CE- 41723-010V
					CE- 41750-010V
					CE- 41757-010V
90119-0312		BYGEL	CLAMP	BUEGEL	CE- 41723-010V
					CE- 41750-010V
					CE- 41723-010V
					CE- 41750-010V
90121-0051		MOTSTÅND	RESISTANCE	WIDERSTAND	CE- 69884-010V
					CE- 69886-010V
					CE- 69884-010V
					CE- 69886-010V
					CE- 69884-010V
					CE- 69886-010V
90121-0052		MOTSTÅND	RESISTOR	WIDERSTAND	CE- 69884-010V
					CE- 69886-010V
					CE- 69884-010V
					CE- 69886-010V
					CE- 69884-010V
					CE- 69886-010V
90121-0054		MOTSTÅND	RESISTOR	WIDERSTAND	CE- 69884-010V
					CE- 69886-010V
					CE- 69884-010V
90121-0054		MOTSTÅND	RESISTOR	WIDERSTAND	CE- 69886-010V
					CE- 69884-010V
90121-0074		MOTSTÅND	RESISTANCE	WIDERSTAND	CE- 69886-010V
					CE- 69884-010V
					CE- 69886-010V
					CE- 69884-010V
					CE- 69886-010V
					CE- 69884-010V
					CE- 69886-010V
90121-0099		MOTSTÅND	RESISTANCE	WIDERSTAND	C- 556662-010V
90121-0101		MOTSTÅND	RESISTANCE	WIDERSTAND	CE- 69884-010V
90121-0102		MOTSTÅND	RESISTANCE	WIDERSTAND	CE- 69884-010V
					CE- 69886-010V
					CE- 69884-010V
					CE- 69886-010V
					CE- 69884-010V

PART NO	LAST ECN	BENÄMNING	TITLE	BENENNUNG	GROUP NO
90121-0104		MOTSTÅND	RESISTOR	WIDERSTAND	CE- 69886-010V CE- 69884-010V CE- 69886-010V CE- 69884-010V CE- 69886-010V CE- 69884-010V CE- 69886-010V
90121-0110		MOTSTÅND	RESISTANCE	WIDERSTAND	RK- 557018-010V RK- 557021-010V
90124-0027		LAMPHÅLLARE BA9S	LAMP HOLDER BA9S	LAMPENHALTER	CE- 41724-010V CE- 41751-010V CE- 41758-010V CE- 41724-010V CE- 41751-010V CE- 41758-010V
P4- 90125-0020		SOCKELPLATTA	PLATE	SOCKELPLATTE	C- 272343-050V C- 256095-050V
3- 90129-0006		SOCKEL	BASE	SOCKEL	CE- 41723-010V CE- 41750-010V CE- 41757-010V RK- 557234-010V RK- 557545-010V RK- 557551-010V RK- 558313-010V RK- 558316-010V RK- 558345-010V
3- 90129-0014		KRETSKORTHÅLLARE	HOLDER	HALTER	CE- 41723-010V CE- 41750-010V CE- 41757-010V
90130-0017		POTENTIOMETER	POTENTIOMETER	POTENTIOMETER	C- 557826-010V CE- 41723-010V CE- 41750-010V CE- 41757-010V RK- 557018-010V RK- 557021-010V
90130-0301		INSTÄLLNINGSRATT	KNOB	STELLRAD	CE- 41723-010V CE- 41750-010V CE- 41757-010V CE- 41723-010V CE- 41750-010V CE- 41757-010V RK- 557018-010V RK- 557021-010V
90130-0301		INSTÄLLNINGSRATT	KNOB	STELLRAD	CE- 41723-010V CE- 41750-010V CE- 41757-010V
90132-0021		SLANGKLÄMMA	HOSE CLIP	SCHLAUCHKLAMMER	C- 751406-010V
90132-0023		SLANGKLÄMMA	HOSE CLIP	SCHLAUCHKLAMMER	C- 751406-010V
90134-0003		BUSSNING	BUSHING	BUCHSE	C- 271562-080V
90134-0004		RÖRKOPPLING	PIPE CONNECTION	ROHRKUPPLUNG	CR- 256436-060V C- 272765-070V
90134-0019		KOPPLING	GLAND	KUPPLUNG	C- 491650-010V C- 978739-010V
4- 90134-0027		KOPPLING	CONNECTION	KUPPLUNG	C- 536859-020V
90134-0030		INSTICKSHYLSA	SLEEVE	HUELSE	C- 271562-080V
90134-0031		HYLSA	SLEEVE	HUELSE	C- 491650-010V CR- 256436-060V C- 271562-080V C- 256197-050V
90134-0034		NIPPEL	NIPPLE	NIPPEL	CR- 256436-060V C- 272765-070V C- 491650-010V
4- 90134-0038		BUSSNING	BUSHING	BUCHSE	C- 271562-080V C- 491650-010V CR- 256436-060V C- 271562-080V C- 256197-050V C- 491814-020V C- 491815-020V
4- 90134-0039		BUSSNING	BUSHING	BUCHSE	CR- 256436-060V C- 272765-070V CR- 256436-060V C- 271562-080V C- 256197-050V C- 491814-020V C- 491815-020V C- 256217-040V C- 257381-030V C- 257382-030V
4- 90134-0040		BUSSNING	BUSHING	BUCHSE	CR- 256436-060V C- 271866-060V C- 272765-070V
90134-0042		DISTANS	SPACER	DISTANZ	C- 295310-070V CR- 256212-050V CR- 256213-050V
90134-0045		PLUGG	PLUG	PFROPFEN	C- 272765-070V CR- 256212-050V CR- 256213-050V
3- 90134-0047		KOPPLING	CONNECTION	KUPPLUNG	C- 272765-070V CR- 256212-050V CR- 256213-050V
90134-0051		DISTANSRÖR	SPACER COLLOR	DISTANZROHR	C- 272765-070V

PART NO	LAST ECN	BENÄMNING	TITLE	BENENNUNG	GROUP NO
90134-0052		PLUGG	PLUG	PFROPFEN	C- 256197-050V
					C- 272765-070V
4- 90134-0055		BUSSNING	BUSHING	BUCHSE	C- 272765-070V
					C- 271866-060V
4- 90134-0058		BANJOKOPPLING	BANJO CONNECTION	SCHWENKANSCHLUSS	CR- 256436-060V
					C- 256173-050V
					C- 256197-050V
					C- 491787-020V
					C- 491788-020V
					C- 491814-020V
					C- 491815-020V
4- 90134-0058		BANJOKOPPLING	BANJO CONNECTION	SCHWENKANSCHLUSS	CR- 256204-050V
					CR- 256205-050V
					CR- 256212-050V
					CR- 256213-050V
					C- 256217-040V
					C- 256951-050V
					C- 256952-050V
					CR- 256436-060V
4- 90134-0065		KOPPLING	CONNECTION	KUPPLUNG	C- 271866-060V
4- 90134-0066		KOPPLING	CONNECTION	KUPPLUNG	C- 271866-060V
					C- 257381-030V
4- 90134-0068		BANJOKOPPLING	BANJO CONNECTION	SCHWENKANSCHLUSS	C- 257382-030V
					C- 491787-020V
					C- 491788-020V
					C- 256951-050V
					C- 256952-050V
					C- 257381-030V
					C- 257382-030V
					C- 272765-070V
90135-0022		JORDNINGSKLÄMMA	EARTHING CLAMP	ERDUNGSKLEMME	C- 295310-070V
					C- 735031-010V
90135-0026		JORDNINGSKLÄMMA	EARTHING CLAMP	ERDUNGSKLEMME	C- 924329-010V
					C- 978604-010V
					C- 563088-010V
					C- 552013-010V
					C- 544390-010V
					C- 924585-010V
					C- 924727-010V
90136-0001		PROPP	PLUG	SICHERUNG	RK- 978234-010V
4- 90136-0003		PROPP	PLUG	SICHERUNG	C- 736796-020V
					C- 283604-020V
					CR- 283605-010V
					C- 283612-020V
4- 90137-0010		VINKELKOPPLING	PIPE JOINT	WINKELROHRVERBINDUNG	CR- 548040-010V
4- 90140-0013		VINKELRÖR	ELBOW PIPE	WINKELROHR	C- 456100-030V
					C- 736796-020V
					C- 736797-010V
					C- 736796-020V
90140-0015		T-KOPPLING	T-PIECE	T-KUPPLUNG	C- 736797-010V
					C- 533014-010V
90140-0018		T-KOPPLING	T-PIECE	T-KUPPLUNG	RK- 978234-010V
90140-0019		VINKELRÖR	BRACKET	WINKELROHR	C- 565536-010V
90140-0020		VINKELRÖR	ELBOW PIPE	WINKELROHR	C- 735183-020V
90140-0021		VINKELRÖR	ELBOW PIPE	WINKELROHR	C- 271866-060V
					C- 736797-010V
					C- 794110-010V
					C- 794179-010V
					C- 736797-010V
					C- 794110-010V
90140-0032		HATTMUTTER G 1/8	SCREW CAP G 1/8 ISO	HAUBENMUTTER	C- 794179-010V
90141-0011		RING	RING	RING	C- 735183-020V
4- 90141-0015		SPÅRRING	LOCK RING	SEEGERRING	C- 751088-030V
					C- 905331-010V
					C- 554360-020V
4- 90141-0016		SPÅRRING	LOCK RING	SEEGERRING	C- 556723-010V
					C- 905131-010V
					C- 905331-010V
					C- 550757-020V
90141-0017		SPÅRRING	LOCK RING	SEEGERRING	C- 256055-060V
					C- 441798-010V
					C- 441811-010V
90141-0018		SPÅRRING	LOCK RING	SEEGERRING	RK- 978212-010V
90141-0020		SPÅRRING	LOCK RING	SEEGERRING	C- 295310-070V
					C- 533844-010V
90141-0022		RING	RING	RING	C- 554360-020V
					C- 271169-040V
90141-0025		STOPPRING 5/10 X 6 RFR	RETAINING RING	SICHERUNGSRING	C- 272337-040V
90142-0005		SLANG	HOSE	SCHLAUCH	C- 566282-010V
90143-0010		LIST	STRIP	LEISTE	C- 256173-050V
90143-0012		LIST	STRIP	LEISTE	C- 456100-030V
					C- 456458-040V
90143-0016		LIST	STRIP	LEISTE	C- 751860-020V
					C- 752960-010V
					C- 752971-010V
					C- 456457-040V
4- 90143-0020		LIST	STRIP	LEISTE	C- 271115-040V
90143-0028		LIST	STRIP	LEISTE	C- 493652-010V
90143-0029		LIST	STRIP	LEISTE	C- 441695-020V
					C- 434074-030V
					C- 434774-030V
					C- 434074-030V

PART NO	LAST ECN	BENÄMNING	TITLE	BENENNUNG	GROUP NO
					C- 434774-030V
					C- 434074-030V
90143-0039		LIST	STRIP	LEISTE	C- 271115-040V
90143-0047		LIST	STRIP	LEISTE	C- 554890-010V
					C- 469535-010V
					C- 553657-010V
					C- 752042-010V
90143-0049		LIST	STRIP	LEISTE	C- 256665-020V
					C- 271442-030V
					C- 271443-030V
					C- 271115-040V
					C- 256873-040V
					C- 256875-020V
90143-0057		LIST	STRIP	LEISTE	C- 554891-010V
90143-0059		LIST	STRIP	LEISTE	RK- 978234-010V
4- 90143-0060		LIST	STRIP	LEISTE	C- 978192-020V
					C- 570079-020V
					C- 567681-020V
					C- 271442-030V
					C- 271443-030V
					C- 271513-060V
					C- 556723-010V
4- 90143-0069		GUMMILIST	RUBBER STRIP	GUMMILEISTE	C- 978192-020V
90144-0003		TEJP	TAPE	TAPE	C- 469374-040V
90144-0004		TEJP	TAPE	TAPE	C- 469384-010V
					C- 561425-010V
					C- 924593-010V
					C- 561425-010V
					C- 924593-010V
					C- 561425-010V
					C- 924593-010V
					C- 736796-020V
					C- 794004-010V
					C- 794178-010V
					C- 736796-020V
					C- 794004-010V
90144-0004		TEJP	TAPE	TAPE	C- 794178-010V
					C- 256173-050V
					C- 272765-070V
					C- 469452-030V
					C- 751800-020V
					C- 751373-010V
					C- 751393-010V
90144-0010		TEJP	TAPE	TAPE	RK- 978234-010V
90144-0030		TEJP	TAPE	TAPE	C- 37894-010V
90144-0044		TAPE	TAPE	TAPE	RK- 978234-010V
90144-0050		SKARVTEJP 7 X 14 MM	TAPE	TAPE	C- 469316-020V
90144-0051		SKARVTEJP 14 X 14 MM	TAPE	TAPE	C- 469316-020V
90144-0052		SKARVTEJP 33 X 14 MM	TAPE	TAPE	C- 469316-020V
90144-0054		SKARVTEJP 27 X 14 MM	TAPE	TAPE	C- 469316-020V
90145-0005		TRÅD	WIRE	DRAHT	CR- 31390-010V
90145-0014		STÅLLINA	CABLE ROPE	STAHLDRAHTSEIL	C- 554888-010V
90148-0037		SLANG	HOSE	SCHLAUCH	C- 271562-080V
90148-0038		SLANG	HOSE	SCHLAUCH	C- 271562-080V
90151-0001		MÄSSINGSRÖR	BRASS PIPE	MESSINGROHR	C- 271562-080V
90152-0001		SLANG	HOSE	SCHLAUCH	C- 271641-030V
					C- 271641-020V
90152-0016		SLANG	HOSE	SCHLAUCH	C- 271414-020V
1- 90152-0017		SLANG	HOSE	SCHLAUCH	C- 271387-030V
90152-0029		SLANG	HOSE	SCHLAUCH	RK- 978234-010V
90152-0031		SLANG	HOSE	SCHLAUCH	C- 536859-020V
90152-0033		SLANG	HOSE	SCHLAUCH	RK- 557147-010V
					RK- 557150-010V
					RK- 557153-010V
					C- 736360-020V
					C- 794092-010V
					C- 794145-010V
					C- 794180-010V
					C- 736360-020V
					C- 794092-010V
					C- 794145-010V
					C- 794180-010V
					C- 457853-030V
					C- 490600-040V
					C- 735183-020V
					C- 795750-010V
90153-0008		LIM	ADHESIVE	LEIM	C- 924662-010V
90153-0015		LIM	ADHESIVE	LEIM	C- 562678-010V
					C- 978763-010V
					C- 978192-020V
					C- 570079-020V
					C- 567681-020V
					CR- 256204-050V
					CR- 256205-050V
90153-0016		LIM	ADHESIVE	LEIM	C- 978192-020V
90153-0017		LIM	ADHESIVE	LEIM	C- 256014-060V
					C- 752960-010V
					C- 752971-010V
					C- 456457-040V
					C- 456458-040V
90153-0020		LIM	ADHESIVE	LEIM	C- 751860-020V
					C- 794245-010V

PART NO	LAST ECN	BENÄMNING	TITLE	BENENNUNG	GROUP NO
90153-0023		LIM	ADHESIVE	LEIM	C- 272765-070V C- 271181-040V RK- 69994-010V
90153-0035		LIM	ADHESIVE	LEIM	C- 752173-010V
90153-0043		LIM	ADHESIVE	LEIM	C- 978739-010V C- 978239-020V C- 978240-020V C- 978241-020V
90155-0008		KÄTTING	CHAIN	KETTE	RK- 978234-010V C- 456836-040V
90157-0016		LÅSVÄTSKA	LOCKING FLUID	LOCTITE	RK- 978212-010V C- 978048-010V C- 978259-010V C- 978443-010V C- 554890-010V C- 456100-030V C- 256173-050V C- 256197-050V C- 256202-050V C- 491814-020V C- 491815-020V C- 271513-060V C- 469535-010V C- 751885-030V C- 491976-020V C- 553657-010V C- 752042-010V
90157-0021		LÅSVÄTSKA	LOCKING FLUID	LOCTITE	C- 905130-010V C- 256222-020V C- 490761-010V C- 560202-010V C- 752627-010V
90157-0022		TÄTNINGSMEDEL	SEALING COMPOUND	DICHTUNGSMITTEL	C- 752628-020V C- 752960-010V C- 752971-010V C- 256665-020V C- 456100-030V C- 456457-040V C- 456458-040V C- 751860-020V C- 271115-040V C- 272765-070V C- 271513-060V
90157-0034		TÄTNINGSMEDEL	SEALING COMPOUND	DICHTUNGSMITTEL	C- 456455-030V
90157-0037		GÄNGTÄTNING TYP 542	SEALING COMPOUND	DICHTUNGSMITTEL	C- 794110-010V C- 794179-010V C- 794110-010V C- 794179-010V
90159-0014		KONDENSATOR	CAPACITOR	KONDENSATOR	CE- 69884-010V CE- 69886-010V CE- 69884-010V CE- 69886-010V
90159-0026		KONDENSATOR	CAPACITOR	KONDENSATOR	CE- 69884-010V CE- 69886-010V CE- 69884-010V CE- 69886-010V CE- 69884-010V CE- 69886-010V
90159-0032		KONDENSATOR	CAPACITOR	KONDENSATOR	CE- 69884-010V CE- 69886-010V CE- 69884-010V CE- 69886-010V
90159-0032		KONDENSATOR	CAPACITOR	KONDENSATOR	CE- 69884-010V CE- 69886-010V CE- 69884-010V CE- 69886-010V
90159-0033		KONDENSATOR	CAPACITOR	KONDENSATOR	CE- 69884-010V CE- 69886-010V CE- 69884-010V CE- 69886-010V CE- 69884-010V CE- 69886-010V
90159-0050		KONDENSATOR	CAPACITOR	KONDENSATOR	CE- 69884-010V CE- 69886-010V CE- 69884-010V CE- 69886-010V CE- 69884-010V CE- 69886-010V
90159-0059		KONDENSATOR	CAPACITOR	KONDENSATOR	CE- 69884-010V CE- 69886-010V CE- 69884-010V CE- 69886-010V CE- 69884-010V CE- 69886-010V
90159-0061		KONDENSATOR	CAPACITOR	KONDENSATOR	CE- 69884-010V CE- 69886-010V CE- 69884-010V CE- 69886-010V CE- 69884-010V CE- 69886-010V
90159-0068		KONDENSATOR	CAPACITOR	KONDENSATOR	CE- 69884-010V CE- 69886-010V

PART NO	LAST ECN	BENÄMNING	TITLE	BENENNUNG	GROUP NO
					CE- 69884-010V
					CE- 69886-010V
					CE- 69884-010V
					CE- 69886-010V
90159-0069		KONDENSATOR	CAPACITOR	KONDENSATOR	CE- 69884-010V
90159-0070		KONDENSATOR	CAPACITOR	KONDENSATOR	CE- 69884-010V
					CE- 69886-010V
					CE- 69884-010V
					CE- 69886-010V
					CE- 69884-010V
					CE- 69886-010V
90161-0001		LIST	STRIP	LEISTE	C- 456180-010V
90163-0007		KOPPLING	CONNECTION	KUPPLUNG	RK- 529345-010V
					C- 565536-010V
90163-0014		NIPPEL	NIPPLE	NIPPEL	C- 563740-010V
					C- 271387-030V
90163-0016		HYLSA	SLEEVE	HUELSE	C- 565536-010V
					C- 978739-010V
90163-0028		HYLSA	SLEEVE	HUELSE	C- 456455-030V
90163-0042		NIPPEL	NIPPLE	NIPPEL	C- 905331-010V
90163-0046		HYLSA	SLEEVE	HUELSE	C- 272765-070V
90163-0048		NIPPEL	NIPPLE	NIPPEL	CR- 256436-060V
90163-0050		NIPPEL	NIPPLE	NIPPEL	C- 491890-010V
90163-0052		NIPPEL	NIPPLE	NIPPEL	C- 256438-020V
					C- 491890-010V
90163-0056		HYLSA	SLEEVE	HUELSE	C- 533014-010V
90163-0057		NIPPEL	NIPPLE	NIPPEL	C- 533014-010V
					C- 794110-010V
					C- 272560-060V
4- 90163-0062		HYLSA	SLEEVE	HUELSE	C- 794110-010V
4- 90163-0062		HYLSA	SLEEVE	HUELSE	C- 272765-070V
					C- 456455-030V
					C- 272560-060V
4- 90163-0063		NIPPEL	NIPPLE	NIPPEL	CR- 256436-060V
90163-0066		NIPPEL	NIPPLE	NIPPEL	C- 491890-010V
4- 90163-0080		NIPPEL	NIPPLE	NIPPEL	CR- 256547-040V
90163-0087		KOPPL.NIPPEL	NIPPLE	NIPPEL	C- 533014-010V
90163-0113		SNABBKOPPLING HANE	QUICK-RELEASE COUPLING	SCHNELLKUPPLUNG	C- 565536-010V
P- 90164-0003		BELYSNINGSARMATUR	LIGHT FIXTURE	BELEUCHTUNGSARMATUR	C- 469299-020V
3- 90164-0301		LAMPHÅLLARE	HOLDING FIXTURE	LAMPENHALTER	CE- 41723-010V
					CE- 41750-010V
					CE- 41757-010V
					C- 441534-010V
					C- 441535-010V
					CE- 41723-010V
					CE- 41750-010V
					CE- 41757-010V
90165-0002		KLAMMER	CLIP	KLAMMER	C- 441535-010V
					C- 271562-080V
					C- 256197-050V
					C- 491787-020V
					C- 491788-020V
					C- 491814-020V
90165-0005		KLAMMER	CLIP	KLAMMER	C- 491815-020V
					C- 978239-020V
					C- 978240-020V
					C- 978241-020V
					C- 456935-030V
90165-0006		KLAMMER	CLIP	KLAMMER	C- 752898-010V
					C- 456935-030V
90165-0007		KLAMMER	CLIP	KLAMMER	C- 752898-010V
90165-0008		KLAMMER	CLIP	KLAMMER	C- 271562-080V
90165-0009		KLAMMER	CLIP	KLAMMER	C- 497534-030V
90165-0010		KLAMMER	CLIP	KLAMMER	C- 271866-060V
					C- 293684-020V
					C- 293685-020V
					C- 293684-020V
					C- 293685-020V
4- 90165-0013		KLAMMER	CLIP	KLAMMER	C- 293684-020V
90165-0019		KLAMMER	CLIP	KLAMMER	C- 978280-010V
4- 90165-0022		KLAMMER	CLIP	KLAMMER	C- 978740-010V
					C- 271562-080V
					C- 256197-050V
					C- 491787-020V
					C- 491788-020V
					C- 491814-020V
					C- 491815-020V
					RK- 978212-010V
90165-0023		KLAMMER	CLIP	KLAMMER	C- 271562-080V
90165-0024		KLAMMER	CLIP	KLAMMER	C- 441000-050V
90165-0039		KLAMMER	CLIP	KLAMMER	C- 271562-080V
3- 90165-0043		RÖRFÄSTE	HOLDER	ROHRBEFESTIGUNG	C- 751900-010V
90165-0044		KLAMMER	CLIP	KLAMMER	C- 491890-010V
					C- 978739-010V
90165-0051		KLAMMER	CLIP	KLAMMER	C- 271866-060V
90165-0056		KLAMMER	CLIP	KLAMMER	C- 752645-020V
					C- 752646-020V
					C- 490600-040V
90165-0057		KLAMMER	CLIP	KLAMMER	C- 283612-020V
90165-0057		KLAMMER	CLIP	KLAMMER	C- 497534-030V
90165-0060		KLAMMER	CLAMP	KLAMMER	C- 490600-040V
90165-0065		RÖRKLAMMER	CRAMP	KLAMMER	C- 491787-020V

PART NO	LAST ECN	BENÄMNING	TITLE	BENENNUNG	GROUP NO
					C- 491788-020V
					C- 491814-020V
					C- 491815-020V
90165-0086		KLAMMER	CRAMP	KLAMMER	C- 544536-010V
90166-0007		SLANG	HOSE	SCHLAUCH	C- 924572-010V
90166-0008		SLANG	HOSE	SCHLAUCH	C- 490761-010V
					C- 491890-010V
90166-0011		SLANG	HOSE	SCHLAUCH	C- 256410-060V
90166-0013		SLANG	HOSE	SCHLAUCH	C- 562650-010V
					C- 271562-080V
					C- 271866-060V
					C- 978738-010V
					C- 978740-010V
90166-0018		KRYMPSLANG	SHRINKABLE HOSE	SCHRUMPFSCHLAUCH	C- 978280-010V
90166-0023		KRYMPSLANG	SHRINKABLE HOSE	SCHRUMPFSCHLAUCH	CR- 256547-040V
					C- 441850-040V
90166-0045		SLANG	HOSE	SCHLAUCH	RK- 529345-010V
90166-0049		SLANG	HOSE	SCHLAUCH	C- 794180-010V
					C- 272404-070V
					C- 751398-020V
90166-0050		SLANG	HOSE	SCHLAUCH	C- 256438-020V
90166-0059		SLANG	HOSE	SCHLAUCH	C- 752645-020V
					C- 752646-020V
					C- 752913-010V
					C- 752914-010V
90166-0060		SLANG	HOSE	SCHLAUCH	C- 256173-050V
90166-0068		SLANG	HOSE	SCHLAUCH	C- 562650-010V
					C- 978738-010V
90166-0081		SLANG	HOSE	SCHLAUCH	C- 978740-010V
					C- 550714-010V
					C- 562650-010V
					C- 271562-080V
					C- 271866-060V
					C- 272404-070V
					C- 232781-040V
					C- 978739-010V
90166-0087		SLANG	HOSE	SCHLAUCH	C- 978740-010V
					C- 256843-060V
					C- 272343-050V
					C- 272408-050V
90166-0089		SLANG	HOSE	SCHLAUCH	C- 295891-030V
90166-0090		SLANG	HOSE	SCHLAUCH	C- 256674-030V
90166-0101		SLANG	HOSE	SCHLAUCH	C- 401419-010V
90166-0105		SLANG	HOSE	SCHLAUCH	C- 751406-010V
90166-0108		SLANG	HOSE	SCHLAUCH	C- 556723-010V
90166-0109		SLANG	HOSE	SCHLAUCH	C- 271562-080V
					CR- 256436-060V
					C- 271562-080V
					C- 491814-020V
					C- 491815-020V
					C- 257381-030V
					C- 257382-030V
					CR- 256436-060V
					C- 272765-070V
90166-0110		SLANG	HOSE	SCHLAUCH	C- 536859-020V
90166-0110		SLANG	HOSE	SCHLAUCH	C- 491207-030V
90166-0111		KRYMPSLANG	SHRINKABLE HOSE	SCHRUMPFSCHLAUCH	C- 751398-020V
90166-0113		SLANG	HOSE	SCHLAUCH	C- 736803-010V
					RK- 529345-010V
90166-0117		SLANG	HOSE	SCHLAUCH	C- 491890-010V
					C- 563740-010V
					CR- 256436-060V
90166-0118		SLANG	HOSE	SCHLAUCH	C- 456455-030V
					C- 271562-080V
					C- 271866-060V
					C- 978738-010V
90166-0119		SLANG	HOSE	SCHLAUCH	C- 469118-020V
					C- 736865-010V
					C- 736797-010V
					C- 271866-060V
					C- 978738-010V
					C- 295045-070V
					C- 469781-030V
					C- 548031-020V
90166-0124		SLANG	HOSE	SCHLAUCH	C- 469118-020V
					C- 533014-010V
					C- 736797-010V
					C- 456555-040V
					C- 469781-030V
90166-0132		SLANG	HOSE	SCHLAUCH	C- 491976-020V
					C- 456953-020V
					C- 978239-020V
					C- 978240-020V
					C- 978241-020V
					C- 491650-010V
					C- 751478-020V
					C- 736865-010V
					C- 794145-010V
					C- 794179-010V
					C- 794145-010V
					C- 794179-010V
					C- 564120-010V

PART NO	LAST ECN	BENÄMNING	TITLE	BENENNUNG	GROUP NO
					C- 256206-020V C- 256207-020V C- 456455-030V C- 456935-030V C- 752898-010V C- 295045-070V C- 490600-040V C- 536859-020V C- 548031-020V C- 751410-010V C- 752030-010V
90166-0133		SLANG 8/6 TRANSPARENT	HOSE	SCHLAUCH	RK- 978234-010V C- 735014-010V C- 794145-010V CR- 256547-040V C- 256173-050V CR- 256547-040V C- 456455-030V C- 548031-020V C- 735183-020V
90166-0138		SLANG	HOSE	SCHLAUCH	C- 795750-010V C- 434074-030V
90166-0138		SLANG	HOSE	SCHLAUCH	C- 434774-030V C- 751406-010V C- 434774-030V C- 434074-030V C- 434774-030V
90166-0143		SLANG	HOSE	SCHLAUCH	C- 434074-030V CR- 256436-060V C- 256197-050V C- 491814-020V C- 491815-020V CR- 256212-050V CR- 256213-050V C- 256217-040V C- 257381-030V C- 257382-030V
90166-0159		GUMMISLANG	RUBBER HOSE	GUMMISCHLAUCH	CR- 256436-060V CR- 256209-030V CR- 256210-030V
90166-0161		SLANG	HOSE	SCHLAUCH	C- 491207-030V
90166-0179		KRYMPSLANG	SHRINKABLE HOSE	SCHRUMPFSCHLAUCH	C- 978280-010V
90166-0194		POLYURETANSLANG 8/5,5	PLASTIC HOSE	PLASTSCHLAUCH	C- 978740-010V
3- 90166-0208		GUMMISLANG	RUBBER HOSE	GUMMISCHLAUCH	C- 491207-030V
90171-0306		ELEKTRONRÖR	OSCILLATOR TUBE	ELEKTRONENRÖHRE	CE- 69886-010V
90171-0328		RELÄ	PHASE MONITOR	RELAIS	CE- 69884-010V CE- 69886-010V CE- 69884-010V CE- 69886-010V CE- 69884-010V CE- 69886-010V

PART NO	LAST ECN	BENÄMNING	TITLE	BENENNUNG	GROUP NO
90171-0394		SPOLE	COIL	SPULE	CE- 69884-010V
90171-0395		SPOLE	COIL	SPULE	CE- 69886-010V
90171-0396		SPOLE	COIL	SPULE	CE- 69886-010V
					CE- 69884-010V
					CE- 69884-010V
					CE- 69886-010V
					CE- 69884-010V
					CE- 69886-010V
90171-0397		SPOLE	COIL	SPULE	CE- 69884-010V
					CE- 69886-010V
					CE- 69884-010V
					CE- 69886-010V
					CE- 69884-010V
					CE- 69886-010V
					CE- 69884-010V
90171-0401		HÅLLARE	INSULATOR	HALTER	CE- 69886-010V
					CE- 69884-010V
					CE- 69886-010V
					CE- 69884-010V
					CE- 69886-010V
					CE- 69884-010V
90171-0402		MÄTPLINT	COMPONENT CARD	GRUNDPLATTE	CE- 69886-010V
					CE- 69884-010V
					CE- 69886-010V
					CE- 69884-010V
					CE- 69886-010V
					CE- 69884-010V
90171-0412		GENOMFÖRING	FEED-THROUGH CONN.	ANSCHLUSS	CE- 69886-010V
					CE- 69884-010V
					CE- 69886-010V
					CE- 69884-010V
					CE- 69886-010V
					CE- 69884-010V
90171-0422		DÄMPKRETS	ATTENUATE CIRCUIT	SPULE	CE- 69884-010V
90171-0429		KRETSKORT	CIRCUIT BOARD	SCHALTKARTE	RK- 978234-010V
90178-0007		DRIFTTIDMÄTARE	HOUR METER	ZEITUHR	CE- 41723-010V
					CE- 41750-010V
					CE- 41757-010V
					CE- 41723-010V
					CE- 41750-010V
					CE- 41757-010V
90182-0005		FÖRLÄGGNINGSBAND	STRAP	VERLÄNGERUNGSBAND	C- 736604-010V
					C- 562650-010V
					C- 491814-020V
					C- 491815-020V
90182-0008		FÖRLÄGGNINGSBAND	BUNDLING STRIP	VERLÄNGERUNGSBAND	C- 736604-010V
90184-0001		LÅS	LOCK	SCHLOSS	C- 556723-010V
90184-0001		LÅS	LOCK	SCHLOSS	C- 752645-020V
					C- 752646-020V
4- 90187-0028		VENTIL	VALVE	VENTIL	C- 229400-070V
3- 90187-0029		KULVENTIL	VALVE	KUGELVENTIL	C- 736797-010V
					C- 256014-060V
3- 90187-0045		KULVENTIL	VALVE	KUGELVENTIL	C- 978739-010V
					RK- 529345-010V
					C- 565536-010V
3- 90187-0051		VALVE	BALL VALVE	KUGELVENTIL	C- 736796-020V
					C- 794271-010V
					C- 295262-060V
3- 90187-0059		KULVENTIL	VALVE	KUGELVENTIL	C- 456836-040V
					C- 794178-010V
					C- 491207-030V
90187-0066		VENTIL	VALVE	VENTIL	C- 751398-020V
1- 90187-0069		VENTIL	VALVE	VENTIL	C- 736865-010V
3- 90187-0082		KULVENTIL	BALL VALVE	KUGELVENTIL	C- 271866-060V
90187-0110		SAUNDERSVENTIL, STÄNGD	SAUNDERS VALVE	SAUNDERVENTIL	C- 272560-060V
90187-0111		SAUNDERSVENTIL, ÖPPEN	SAUNDERS VALVE	SAUNDERVENTIL	C- 794245-010V
90187-0112		KRAN	COCK	HAHN	C- 794245-010V
2- 90187-0115		STYRDON	GUIDING ARBOR	FUEHRUNGSANORDNUNG	C- 794178-010V
90187-0311		HÅLLARE	HOLDER	HALTER	RK- 978238-010V
90187-0312		MEMBRAN	DIAPHRAGM	MEMBRANE	C- 271866-060V
					C- 736796-020V
					C- 794245-010V
					C- 736796-020V
90187-0315		MEMBRAN	DIAPHRAGM	MEMBRANE	C- 794245-010V
90189-0019		KULBUSSNING	BALL BUSHING	KUGELBUCHSE	RK- 978238-010V
90189-0021		KULBUSSNING	BALL BUSHING	KUGELBUCHSE	C- 271115-040V
90189-0024		TÄTRING	SEAL RING	DICHTUNGSRING	CR- 294695-010V
90189-0030		KULBUSSNING	BALL BUSHING	KUGELBUCHSE	CR- 294695-010V
90189-0031		AXEL	AXLE	WELLE	C- 484984-020V
2- 90189-0061		STÖD	SUPPORT	STUETZE	C- 484984-020V
90191-0047		GUMMIHJUL	WHEEL	RAD	C- 550743-010V
90191-0059		HJUL	WHEEL	RAD	RK- 532210-010V
90191-0060		LÄNKHJUL	WHEEL	RAD	C- 554886-010V
90191-0062		LÄNKHJUL	WHEEL	RAD	RK- 532210-010V
90194-0016		SKYLT	SIGN"FLASH SIGN"	SCHILD	C- 271635-030V
					CE- 41723-010V
					CE- 41724-010V
					CE- 41766-010V
					CE- 41750-010V
					CE- 41751-010V
					CE- 41766-010V

PART NO	LAST ECN	BENÄMNING	TITLE	BENENNUNG	GROUP NO
					CE- 41757-010V
					CE- 41758-010V
					CE- 41766-010V
					C- 37877-030V
					C- 978604-010V
					C- 563088-010V
					C- 456435-040V
					C- 456827-020V
					C- 552013-010V
					C- 544390-010V
					C- 567733-010V
					C- 924585-010V
					C- 572642-010V
					C- 572643-010V
					C- 295470-050V
90194-0016		SKYLT	SIGN"FLASH SIGN"	SCHILD	C- 469374-040V
					C- 457853-030V
					C- 457856-020V
					CE- 41723-010V
					CE- 41724-010V
					CE- 41750-010V
					CE- 41751-010V
					CE- 41757-010V
					CE- 41758-010V
					CE- 41766-010V
					C- 735031-010V
					C- 924329-010V
					C- 924727-010V
90194-0075		SKYLT	SIGN	SCHILD	C- 978739-010V
					C- 752244-020V
90194-0080		SKYLT	SIGN"IDENTIF. OF WIRING"	SCHILD	C- 978162-010V
					CE- 41723-010V
					CE- 41750-010V
					CE- 41757-010V
					CE- 41723-010V
					CE- 41750-010V
					CE- 41757-010V
90194-0109		SKYLT	SIGN	SCHILD	CE- 557793-010V
3- 90194-0113		SJÄLVHÄFTANDE SKYLT	SIGN	SCHILD	CE- 557793-010V
90194-0302		MONTAGESTS F.KONVERTINGA	MOUNTING KIT F.CONVERTIN	UMBAUSATZ	RK- 41767-010V
					RK- 41769-010V
					RK- 557018-010V
					RK- 557021-010V
					RK- 557234-010V
					RK- 557545-010V
					RK- 557551-010V
					RK- 41767-010V
					RK- 41769-010V
					RK- 558304-010V
					RK- 558307-010V
					RK- 558310-010V
90195-0010		KOPPLINGSPLINT	TERMINAL BLOCK	KUPPLUNGSSOCKEL	C- 925492-010V
					CE- 41723-010V
					CE- 41750-010V
					CE- 41757-010V
					CE- 41723-010V
					CE- 41750-010V
3- 90195-0017		KOPPLINGSPLINT	TERMINAL BLOCK	KUPPLUNGSSOCKEL	CE- 41757-010V
					CE- 69884-010V
					CE- 69886-010V
					CE- 69884-010V
					CE- 69886-010V
					CE- 69884-010V
4- 90195-0020		KOPPLINGSPLINT	TERMINAL BLOCK	KUPPLUNGSSOCKEL	CE- 69886-010V
					CE- 41723-010V
					CE- 41750-010V
					CE- 41757-010V
					C- 441534-010V
					C- 441535-010V
					C- 490761-010V
					CE- 41723-010V
					CE- 41750-010V
					CE- 41757-010V
					C- 441535-010V
90195-0028		MOTORPLINT	TERMINAL BLOCK	MOTORKLEMMEANSCHLUSS	C- 271181-040V
90195-0029		KOPPLINGSBLECK	COUPLING STRIP	QUERVERBINDUNG	C- 271181-040V
90199-0010		NIVÅGLAS	LEVEL GLASS	NIVEAUGLAS	C- 256014-060V
90201-0010		VENTIL	VALVE	VENTIL	C- 271168-040V
2- 90201-0057		VENTIL	VALVE	VENTIL	C- 271168-040V
P2- 90201-0058		MAGNETVENTIL 24 VDC	SOLENOID VALVE	MAGNETVENTIL	C- 271168-040V
90201-0303		RESERVDELSSATS	SPARE PARTS KIT	ERSATZTEILSATZ	C- 271168-040V
90201-0306		BLOCK	BLOCK	BLOCK	C- 271168-040V
P- 90202-0011		CYLINDER	CYLINDER	ZYLINDER	C- 256206-020V
					C- 256207-020V
90206-0031		VÄRMEELEMENT	HEATING ELEMENT	HEIZELEMENT	C- 272343-050V
					C- 295668-030V
					C- 256095-050V
					C- 295778-040V
90206-0053		VÄRMEPATRON	HEATING ELEMENT	HEIZPATRONE	C- 37877-030V
90206-0070		VÄRMEELEMENT	HEATING ELEMENT	HEIZELEMENT	C- 256014-060V
					C- 295778-040V
90206-0083		VÄRMEPATRON	HEATING CARTRIDGE	HEIZPATRONE	CR- 283606-020V

PART NO	LAST ECN	BENÄMNING	TITLE	BENENNUNG	GROUP NO
90206-0099		VÄRMEELEMENT 300W	HEATING ELEMENT	HEIZELEMENT	C- 469316-020V
90206-0322		PACKNING	GASKET	DICHTUNG	C- 469316-020V
					C- 272343-050V
90206-0326		KOPPLINGSDOSA	CONNECTION BOX	KUPPLUNGSDOSE	C- 256095-050V
90207-0363		PACKNING	GASKET	DICHTUNG	C- 256014-060V
					C- 440630-020V
					SP- 499255-020V
90207-0365		PACKNING	GASKET	DICHTUNG	C- 794245-010V
					C- 440630-020V
					SP- 499255-020V
90208-0031		SPÄNNELEMENT	BUSHING	SPANNELEMENT	C- 924991-010V
90208-0047		PASSHYLSA	COLLAR	PASSHUELSE	C- 491850-010V
					C- 271115-040V
90208-0050		PASSHYLSA	COLLAR	PASSHUELSE	C- 295310-070V
90208-0051		SPÄNNELEMENT	CLAMPING ELEMENT	SPANNELEMENT	C- 295310-070V
4- 90208-0052		SPÄNNELEMENT	CLAMPING ELEMENT	SPANNELEMENT	C- 469173-010V
					C- 456688-020V
					C- 256202-050V
90208-0053		SPÄNNELEMENT	CLAMPING ELEMENT	SPANNELEMENT	C- 283626-040V
90208-0054		SPÄNNELEMENT	CLAMPING ELEMENT	SPANNELEMENT	C- 476349-030V
3- 90208-0077		SPÄNNELEMENT	CLAMPING ELEMENT	SPANNELEMENT	C- 283626-040V
3- 90208-0080		SPÄNNELEMENT	CLAMPING ELEMENT	SPANNELEMENT	C- 554886-010V
3- 90208-0091		SPÄNNELEMENT	CLAMPING ELEMENT	SPANNELEMENT	C- 751689-010V
90211-0009		LÅSBLECK	SECURING PLATE	SCHLIESSBLECH	C- 256202-050V
90214-0040		KULLAGER	BALL BEARING	KUGELLAGER	C- 554888-010V
90214-0068		LAGER	BEARING	LAGER	C- 272024-040V
					CR- 283605-010V
90214-0092		KULLAGER	BALL BEARING	KUGELLAGER	C- 283612-020V
					C- 441798-010V
4- 90214-0093		KULLAGER	BALL BEARING	KUGELLAGER	C- 441811-010V
90214-0098		KULLAGER	BALL BEARING	KUGELLAGER	C- 295310-070V
					C- 560202-010V
					C- 752247-010V
					C- 752627-010V
					C- 752628-020V
					C- 752645-020V
					C- 752646-020V
					C- 752913-010V
					C- 752914-010V
					C- 272004-040V
					C- 272024-040V
90214-0098		KULLAGER	BALL BEARING	KUGELLAGER	C- 272028-060V
90214-0122		KULLAGER 4306ATN9	BALL BEARING	KUGELLAGER	C- 751088-030V
90214-0138		KULLAGER	BALL BEARING	KUGELLAGER	C- 491846-020V
					C- 752957-010V
2- 90214-0160		LÖPRULLE	RUNNER	LAUFROLLE	C- 752628-020V
4- 90214-0170		KULLAGER	BALL BEARING	KUGELLAGER	C- 550757-020V
90214-0303		RING	RING	RING	C- 572750-010V
					C- 256014-060V
					C- 272004-040V
					C- 272024-040V
					C- 272028-060V
90214-0312		NILOSRING	NILOS RING	NILORING	C- 751088-030V
90217-0026		MUTTER	NUT	MUTTER	C- 256173-050V
					C- 469452-030V
					C- 751800-020V
90217-0035		MUTTER	NUT	MUTTER	RK- 978238-010V
					C- 736796-020V
90217-0041		NIPPEL	NIPPLE	NIPPEL	C- 256014-060V
90217-0305		KLÄMMA	CLAMP	KLAMMER	C- 456588-030V
90220-0036		KABEL	CABLE	KABEL	C- 456976-050V
					CE- 41723-010V
					CE- 41750-010V
					CE- 41757-010V
					CE- 557225-010V
					CE- 41723-010V
					CE- 41750-010V
					CE- 41757-010V
90220-0050		KABEL	CABLE	KABEL	CE- 557224-010V
90220-0057		KABEL	CABLE	KABEL	C- 556662-010V
90220-0058		KABEL	CABLE	KABEL	C- 556667-010V
90220-0059		KABEL	CABLE	KABEL	CE- 41723-010V
					CE- 41725-010V
					CE- 41750-010V
					CE- 41752-010V
					CE- 41757-010V
					CE- 41759-010V
					CE- 557224-010V
					RK- 557156-010V
					RK- 557159-010V
					CE- 557224-010V
					RK- 558304-010V
					RK- 558307-010V
					RK- 558310-010V
					CE- 41723-010V
					CE- 41725-010V
					CE- 41750-010V
					CE- 41752-010V
					CE- 41757-010V
					CE- 41759-010V
90220-0069		KABEL+ANSLUTNINGAR	CABLE	KABEL	RK- 978234-010V
90220-0073		DATAKABEL	DATA CABLE	KABEL	CE- 41725-010V

PART NO	LAST ECN	BENÄMNING	TITLE	BENENNUNG	GROUP NO
					CE- 41752-010V
					CE- 41759-010V
					CE- 41725-010V
					CE- 41752-010V
					CE- 41759-010V
3- 90220-0077		POWER CORD	POWER CORD	KABELKONTAKT	CE- 557793-010V
3- 90220-0078		LAB KABEL	LAB. FLEX	KABEL	CE- 557793-010V
3- 90220-0079		LAB KABEL	LAB. FLEX	KABEL	CE- 557793-010V
3- 90220-0080		TEST PROBE MED GRIPKLO	TEST PROBE WITH GRAB HOO	MESSKOPF	CE- 557793-010V
3- 90220-0081		TEST PROBE MED GRIPKLO	TEST PROBE WITH GRAB HOO	MESSKOPF	CE- 557793-010V
4- 90220-0085		KABEL 4 X 0.75	CABLE 4 X 0.75	KABEL	RK- 41767-010V
					RK- 41769-010V
					RK- 41767-010V
					RK- 41769-010V
3- 90224-0078		ANSLUTNING	CONNECTION	ANSCHLUSS	C- 271866-060V
					C- 256014-060V
90224-0094		NIPPEL	NIPPLE	NIPPEL	C- 456757-020V
					C- 490761-010V
90224-0154		MUFF	SLEEVE	MUFFE	C- 978739-010V
90224-0176		KOPPLING	GLAND FITTING	VERSCHRAUBUNG	C- 536859-020V
90224-0186		NIPPEL	NIPPLE	NIPPEL	C- 271866-060V
90224-0234		VINKEL	BRACKET	WINKEL	C- 456455-030V
					C- 752960-010V
					C- 752971-010V
					C- 456459-040V
					C- 456460-040V
90224-0296		SKOTTGENOMGÅNG	GROMMET	ANSCHLUSSHUELSE	C- 751900-010V
					C- 271866-060V
90224-0297		REDUCERING	REDUCER	REDUZIERUNG	C- 978739-010V
					C- 271866-060V
90224-0303		KOPPLING	CONNECTION	KUPPLUNG	C- 978739-010V
					C- 533014-010V
90224-0304		KOPPLING	CONNECTION	KUPPLUNG	C- 736797-010V
					C- 456953-020V
					C- 794179-010V
					C- 456935-030V
90224-0305		RÖRKOPPLING	PIPE CONNECTION	KUPPLUNG	C- 295045-070V
90224-0307		KOPPLING	CONNECTION	KUPPLUNG	C- 271866-060V
					C- 456953-020V
					C- 736797-010V
					C- 794110-010V
					C- 736797-010V
					C- 794110-010V
					C- 272560-060V
90224-0308		BANJOKOPPLING	BANJO CONNECTION	SCHWENKANSCHLUSS	C- 295045-070V
90224-0310		KOPPLING	CONNECTION	KUPPLUNG	C- 272560-060V
90224-0319		KOPPLING	CONNECTION	KUPPLUNG	C- 295045-070V
					C- 736797-010V
					C- 794179-010V
					C- 794180-010V
					C- 736797-010V
					C- 794179-010V
					C- 794180-010V
90224-0324		KOPPLING	CONNECTION	KUPPLUNG	C- 295045-070V
3- 90224-0329		VINKELKOPPLING	ELBOW PIPE JOINT	WINKELROHRVERBINDUNG	RK- 978234-010V
90224-0349		SKOTTGENOMGÅNG DIA. 6	BULKHEAD LEAD-IN	ANSCHLUSSHUELSE	C- 794179-010V
90224-0350		SKOTTGENOMGÅNG DIA. 8	BULKHEAD CONNECTION	ANSCHLUSSHUELSE	C- 736797-010V
					C- 794179-010V
					C- 794180-010V
					C- 736797-010V
					C- 794179-010V
					C- 794180-010V
90226-0004		SKÅP	CABINET	SCHRANK	C- 456975-020V
90226-0452		MONTERINGSSKRUV	MOUNTING SCREW	MONTAGESCHRAUBEN	RK- 978234-010V
3- 90230-0011		BACKVENTIL	NON RETURN VALVE	RUECKSCHLAGVENTIL	C- 271866-060V
90230-0018		BACKVENTIL	NON RETURN VALVE	RUECKSCHLAGVENTIL	C- 469118-020V
90230-0025		BACKVENTIL	NON-RETURN VALVE	RUECKSCHLAGVENTIL	C- 794178-010V
90230-0028		BACKVENTIL	NON-RETURN VALVE	RUECKSCHLAGVENTIL	C- 491536-010V
90232-0026		FOTOCELL	PHOTOCELL	FOTOZELLE	C- 554889-020V
90232-0038		FOTOCELL	PHOTOCELL	FOTOZELLE	C- 457867-020V
90232-0039		FOTOCELL	PHOTOCELL	FOTOZELLE	C- 272404-070V
2- 90232-0055		FOTOCELL	PHOTOCELL	FOTOZELLE	C- 554885-010V
					C- 491976-020V
90232-0066		FOTOCELL ET3-1783	PHOTOCELL	FOTOZELLE	C- 905131-010V
2- 90232-0069		FOTOCELL WT 18-P115 S14	PHOTOCELL	FOTOZELLE	C- 554889-020V
3- 90232-0074		FOTOCELL WLL 10-930	PHOTOCELL	FOTOZELLE	C- 554341-010V
					C- 554346-010V
3- 90232-0077		FOTOCELL	PHOTOCELL	FOTOZELLE	C- 232781-040V
90232-0304		REFLEXSPEGEL	REFLECTOR MIRROR	REFLEKTOR	C- 550714-010V
90232-0307		REFLEKTOR	REFLECTOR	REFLEKTOR	C- 232781-040V
90232-0324		KABEL	CABLE	KABEL	C- 554341-010V
					C- 554346-010V
90233-0009		RÖRSÄKRING	TUBE FUSE	ROHRSICHERUNG	CE- 41728-010V
					CE- 41755-010V
					CE- 41762-010V
					CE- 41728-010V
					CE- 41755-010V
					CE- 41762-010V
90233-0019		RÖRSÄKRING	TUBE FUSE	ROHRSICHERUNG	CE- 41728-010V
					CE- 41755-010V
					CE- 41762-010V
					CE- 41728-010V

PART NO	LAST ECN	BENÄMNING	TITLE	BENENNUNG	GROUP NO
90233-0020		RÖRSÄKRING	TUBE FUSE	ROHRSICHERUNG	CE- 41755-010V CE- 41762-010V CE- 41728-010V
4- 90233-0027		RÖRSÄKRING 16A	TUBE FUSE 16A	ROHRSICHERUNG	CE- 41755-010V CE- 41762-010V CE- 41728-010V CE- 41755-010V CE- 41762-010V CE- 41723-010V CE- 41728-010V CE- 41750-010V CE- 41755-010V CE- 41757-010V CE- 41762-010V RK- 557018-010V RK- 557021-010V
4- 90233-0028		RÖRSÄKRING 10A	TUBE FUSE 10A	ROHRSICHERUNG	CE- 41723-010V CE- 41728-010V CE- 41750-010V CE- 41755-010V CE- 41757-010V CE- 41762-010V CE- 41723-010V CE- 41728-010V CE- 41750-010V CE- 41755-010V CE- 41757-010V CE- 41762-010V CE- 41723-010V CE- 41728-010V CE- 41750-010V CE- 41755-010V CE- 41757-010V CE- 41762-010V
4- 90233-0029		RÖRSÄKRING 25A	TUBE FUSE	ROHRSICHERUNG	CE- 41723-010V
4- 90233-0029		RÖRSÄKRING 25A	TUBE FUSE	ROHRSICHERUNG	CE- 41728-010V CE- 41750-010V CE- 41755-010V CE- 41757-010V CE- 41762-010V CE- 41723-010V CE- 41728-010V CE- 41750-010V CE- 41755-010V CE- 41757-010V CE- 41762-010V
P- 90235-0041		VENTIL	VALVE	VENTIL	C- 469736-040V
90235-0048		VENTIL	VALVE	VENTIL	C- 794179-010V
P- 90235-0064		VENTIL	VALVE	VENTIL	C- 469118-020V
90235-0151		BACKVENTIL	NON-RETURN VALVE	RUECKSCHLAGVENTIL	C- 978738-010V C- 978740-010V
90235-0241		VENTIL	VALVE	VENTIL	C- 556723-010V
90235-0251		VENTIL	VALVE	VENTIL	C- 536859-020V
90235-0259		VENTIL	VALVE	VENTIL	C- 794110-010V C- 295045-070V
90235-0261		VENTIL	VALVE	VENTIL	C- 794178-010V
90235-0267		VENTIL	VALVE	VENTIL	C- 794178-010V
4- 90235-0274		VENTIL	VALVE	VENTIL	C- 272343-050V C- 295891-030V C- 272024-040V C- 272025-030V RK- 520069-010V
90235-0276		VENTIL	VALVE	VENTIL	C- 536859-020V
90235-0280		VENTIL	VALVE	VENTIL	C- 736865-010V C- 469781-030V
4- 90235-0282		VENTIL	VALVE	VENTIL	C- 256055-060V C- 256095-050V C- 456309-050V
90235-0289		VENTIL	VALVE	VENTIL	C- 905331-010V C- 556723-010V
90235-0290		VENTIL	VALVE	VENTIL	C- 490600-040V
3- 90235-0450		PLATTA	PLATE	PLATTE	C- 978739-010V
4- 90235-0708		LUFTDOSA 551-003-000	VALVE	VENTIL	C- 978739-010V
90235-0723		STRYPVENTIL	THROTTLE VALVE	DROSSELVENTIL	C- 905331-010V
90235-0732		STRYP-BACKVENTIL	THROTTLE CHECK VALVE	DROSSELRUECKSCHLAGVENTIL	C- 905131-010V
4- 90235-0760		STRYPVENTIL	THROTTLE VALVE	DROSSELVENTIL	C- 490600-040V
90236-0012		KONSOL	BRACKET	KONSOLE	RK- 978234-010V
90236-0028		KONSOL	CANTILEVER	KONSOLE	C- 533014-010V
P- 90237-0044		DÖRRHANDTAG	DOOR HANDLE	TUERGRIFF	C- 256873-040V
P- 90237-0047		DÖRRHANDTAG	DOOR HANDLE	TUERGRIFF	C- 978280-010V
90237-0071		LÅS	LOCK	SCHLOSS	C- 271442-030V C- 271443-030V
90237-0114		LÅS	LOCK	SCHLOSS	C- 794145-010V
90237-0308		BRICKA	WASHER	SCHEIBE	C- 794145-010V
90237-0311		KURVSTYCKE	CURVE SECTION	KURVENTEIL	C- 978280-010V
90237-0315		LÅS	LOCK	SCHLOSS	C- 978280-010V
90239-0088		BRACKET	BRACKET	KOLBENSTANGENFESTE	C- 272343-050V
90239-0126		BRACKET	BRACKET	ZYLINDERBEFESTIGUNG	CR- 283605-010V
90239-0127		BRACKET	BRACKET	KOLBENSTANGENFESTE	C- 229400-070V
90239-0181		KOLVSTÅNGSFÄSTE	CONNECTION	KOLBENSTANGENFESTE	C- 232781-040V
90239-0188		CYLINDER	CYLINDER	ZYLINDER	C- 283612-020V
P- 90239-0189		CYLINDER	CYLINDER	ZYLINDER	CR- 283605-010V

PART NO	LAST ECN	BENÄMNING	TITLE	BENENNUNG	GROUP NO
					C- 229400-070V
					C- 232781-040V
90239-0241		CYLINDER	CYLINDER	ZYLINDER	C- 554886-010V
P- 90239-0298		CYLINDER	CYLINDER	ZYLINDER	C- 456180-010V
90239-0320		BRACKET	BRACKET	KOLBENSTANGENFESTE	CR- 283605-010V
90239-0321		BRACKET	BRACKET	KOLBENSTANGENFESTE	C- 283612-020V
3- 90239-0347		LÄNKHUVUD	LINK HEAD	GELENKKOPF	C- 550757-020V
3- 90239-0357		KOLVSTÅNGSFÄSTE	BRACKET	KOLBENSTANGENFESTE	C- 550757-020V
					C- 256206-020V
					C- 256207-020V
90239-0384		BRACKET	BRACKET	ZYLINDERBEFESTIGUNG	C- 554360-020V
90239-0405		LÄNKHUVUD	LINK HEAD	GELENKKOPF	C- 283612-020V
					C- 456180-010V
					C- 256206-020V
					C- 256207-020V
90239-0422		CYLINDERFÄSTE	CYLINDERBRACKET	ZYLINDERBEFESTIGUNG	C- 272024-040V
90239-0453		BRACKET	BRACKET	ZYLINDERBEFESTIGUNG	C- 550757-020V
					C- 476859-020V
					C- 256084-050V
					C- 272024-040V
					C- 272025-030V
90239-0460		CYLINDERFÄSTE	BRACKET	ZYLINDERBEFESTIGUNG	C- 456309-050V
90239-0473		CYLINDERFÄSTE	BRACKET	ZYLINDERBEFESTIGUNG	C- 256055-060V
90239-0486		BRACKET	BRACKET	ZYLINDERBEFESTIGUNG	C- 550757-020V
4- 90239-0487		BRACKET	BRACKET	ZYLINDERBEFESTIGUNG	C- 484984-020V
90239-0488		BRACKET	BRACKET	ZYLINDERBEFESTIGUNG	C- 256095-050V
90239-0489		BRACKET	BRACKET	KOLBENSTANGENFESTE	C- 295891-030V
4- 90239-0491		LÄNKHUVUD	BRACKET	GELENKKOPF	C- 484984-020V
90239-0492		LÄNKHUVUD	BRACKET	GELENKKOPF	C- 905331-010V
90239-0516		KOLVSTÅNGSFÄSTE	PISTON ROD HEAD	KOLBENSTANGENFESTE	C- 556723-010V
					C- 476859-020V
					C- 295891-030V
					C- 256055-060V
					C- 256084-050V
					C- 272025-030V
90239-0532		KOLVSTÅNGSFÄSTE		KOLBENSTANGENFESTE	C- 456309-050V
					C- 256055-060V
					C- 256095-050V
3- 90239-0732		CYLINDER	CYLINDER	ZYLINDER	CR- 283607-030V
90239-0734		CYLINDER	CYLINDER	ZYLINDER	C- 497534-030V
P- 90239-0741		CYLINDER	CYLINDER	ZYLINDER	C- 550757-020V
90239-0750		CYLINDER	CYLINDER	ZYLINDER	C- 271934-030V
					C- 564120-010V
					C- 752030-010V
P- 90239-0773		CYLINDER 167/32/25	CYLINDER	ZYLINDER	C- 560858-010V
					C- 272024-040V
					C- 272025-030V
P- 90239-0779		CYLINDER 167/32/50	CYLINDER	ZYLINDER	C- 476859-020V
					C- 550757-020V
					C- 256055-060V
					C- 256084-050V
					C- 271169-040V
					C- 272337-040V
					C- 456309-050V
90239-0816		CYLINDER 16-25	CYLINDER	ZYLINDER	C- 484984-020V
90239-0819		CYLINDER 16-100	CYLINDER	ZYLINDER	C- 556723-010V
90239-0824		CYLINDER 20-100	CYLINDER	ZYLINDER	C- 556723-010V
90239-0840		CYLINDER	CYLINDER	ZYLINDER	C- 456555-040V
3- 90239-0846		CYLINDER	CYLINDER	ZYLINDER	C- 272343-050V
3- 90239-0847		CYLINDER	CYLINDER	ZYLINDER	C- 256095-050V
90239-0858		CYLINDER	CYLINDER	ZYLINDER	C- 295891-030V
P- 90239-0910		CYLINDER	CYLINDER	ZYLINDER	C- 484984-020V
3- 90239-0983		CYLINDER	CYLINDER	ZYLINDER	C- 751478-020V
3- 90239-0984		CYLINDER	CYLINDER	ZYLINDER	C- 905331-010V
90240-0048		LAGER	BEARING	LAGER	C- 256197-050V
					C- 491814-020V
					C- 491815-020V
90240-0050		LAGER	BEARING	LAGER	C- 256197-050V
					C- 491787-020V
					C- 491788-020V
					C- 491814-020V
					C- 491815-020V
90240-0052		GLIDLAGER	RICTION BEARING	GLEITLAGER	C- 271115-040V
90240-0055		GLIDLAGER	RICTION BEARING	GLEITLAGER	C- 272765-070V
90240-0073		GLIDLAGER	RICTION BEARING	GLEITLAGER	C- 456180-010V
90240-0076		GLIDLAGER	RICTION BEARING	GLEITLAGER	C- 271115-040V
90240-0083		GLIDLAGER	RICTION BEARING	GLEITLAGER	C- 271115-040V
90240-0090		FLÄNSLAGER	RICTION BEARING	FLANSCHLAGER	C- 295310-070V
90240-0092		FLÄNSLAGER	RICTION BEARING	FLANSCHLAGER	C- 295310-070V
90240-0093		LEDLAGER	PLAIN BEARING	GLEITLAGER	C- 283604-020V
					C- 256806-030V
90240-0094		GLIDLAGER	PLAIN BEARING	GLEITLAGER	C- 295211-010V
90240-0146		FLÄNSBUSSNING	FLANGE BUSHING	FLANSCHBUCHSE	C- 256014-060V
90240-0172		FLÄNSBUSSNING	FLANGE BUSHING	FLANSCHBUCHSE	C- 441304-040V
					C- 441307-030V
					C- 441486-040V
90240-0180		FLÄNSBUSSNING	FLANGE BUSHING	FLANSCHBUCHSE	C- 456309-050V
90242-0033		O-RING	O-RING	O-RING	C- 256223-040V
					RK- 978212-010V
					RK- 978528-010V
					RK- 978212-010V
					RK- 978528-010V

PART NO	LAST ECN	BENÄMNING	TITLE	BENENNUNG	GROUP NO
					RK- 978212-010V
					RK- 978528-010V
90242-0064		O-RING	O-RING	O-RING	C- 529933-010V
					C- 529933-020V
					C- 529933-010V
					C- 529933-020V
					C- 529933-010V
					C- 529933-020V
90242-0065		O-RING	O-RING	O-RING	C- 491207-030V
90242-0084		O-RING	O-RING	O-RING	C- 295778-040V
					C- 469452-030V
90242-0093		O-RING	O-RING	O-RING	C- 751800-020V
					CR- 256204-050V
90242-0153		O-RING	O-RING	O-RING	CR- 256205-050V
90242-0162		O-RING	O-RING	O-RING	C- 751393-010V
90242-0163		O-RING	O-RING	O-RING	RK- 978528-010V
90242-0168		O-RING	O-RING	O-RING	C- 751406-010V
					C- 256014-060V
					C- 272623-050V
					C- 469452-030V
					C- 751373-010V
90242-0171		O-RING	O-RING	O-RING	SP- 567189-010V
					C- 527898-010V
90242-0172		O-RING	O-RING	O-RING	C- 751373-010V
					C- 295778-040V
					C- 456556-020V
90242-0173		O-RING	O-RING	O-RING	C- 751393-010V
90242-0174		O-RING	O-RING	O-RING	C- 491207-030V
90242-0176		O-RING	O-RING	O-RING	C- 751398-020V
90242-0178		O-RING	O-RING	O-RING	C- 272623-050V
90242-0182		O-RING 50 X 4 VITON	O-RING	O-RING	C- 752495-010V
90242-0184		O-RING 14,1X2 PTFE	O-RING	O-RING	C- 272623-050V
90242-0185		O-RING 18,1X2 PTFE	O-RING	O-RING	C- 295778-040V
90242-0186		O-RING 35,2X2,5 PTFE	O-RING	O-RING	C- 751373-010V
90242-0187		O-RING 40,2X2,5 PTFE	O-RING	O-RING	C- 295778-040V
					C- 456556-020V
					C- 491207-030V
90242-0188		O-RING 80,5X2,5 PTFE	O-RING	O-RING	C- 751373-010V
90242-0189		O-RING 110,5X2,5 PTFE	O-RING	O-RING	C- 751373-010V
90243-0061		BLÅSMUNSTYCKE	FAN NOZZLE	BLASMUNDSTUECK	C- 271414-020V
90243-0099		MÄTINSTRUMENT	MEASURING INSTRUMENT	MESSINSTRUMENT	CE- 557793-010V
90243-0118		VERKTYGSVÄSKA	TOOL BAG	WERKZEUGTASCHE	C- 533905-010V
90243-0125		VATTENPASS	SPIRIT LEVEL	WASSERWAGE	C- 76402-010V
90243-0126		SKYDDSGLASÖGON	PROTECTIVE GOGGLES	SCHUTZBRILLE	C- 76594-020V
90243-0133		TVÅLAUTOMAT	CONTAINER	FL~SSIGKEITBEHÄLTER	C- 469535-010V
3- 90243-0134		FLÖDESMÄTARE	FLOW METER	DURCHFLUSSMETER	C- 469118-020V
90243-0136		VATTENPASS	SPIRIT LEVEL	WASSERWAGE	C- 456975-020V
90243-0137		MÄTINSTRUMENT	MEASURING INSTRUMENT	MESSINSTRUMENT	C- 533014-010V
90243-0147		FLÖDESMÄTARE	FLOW METER	DURCHFLUSSMETER	C- 533014-010V
P- 90243-0155		FLÖDESMÄTARE	FLOW METER	DURCHFLUSSMETER	RK- 978234-010V
90243-0164		HAKNYCKEL STÄLLBAR DIA 4	HOOK SPANNER ADJUST.DIA.	HAKENSCHLUESSEL	C- 561425-010V
					C- 924593-010V
					C- 561425-010V
					C- 924593-010V
					C- 561425-010V
					C- 924593-010V
90243-0165		VATTENPASS	SPIRIT LEVEL	WASSERWAGE	C- 561425-010V
					C- 924593-010V
					C- 561425-010V
					C- 924593-010V
					C- 561425-010V
					C- 924593-010V
90243-0169		RINGMEKANISM DIA. 29	PAPER HOLDER	PAPIERHALTER	C- 736796-020V
90243-0173		SKRUVHÅLSSTANS 30,5 MM	PARTING TOOL 30,5 MM	STANZE	C- 795750-010V
90243-0186		SKRUVHÅLSSTANS 28,6 MM	PUNCH	STANZE	C- 561425-010V
					C- 978239-020V
					C- 978240-020V
					C- 978241-020V
4- 90243-0208		SKRUVMEJSEL	SCREWDRIVER	SCHRAUBENZIEHER	CE- 557793-010V
90243-0317		LASER	LASER	LASER	C- 556662-010V
90243-0318		GLASSTAV	GLASS ROD	GLASSTAB	C- 556662-010V
90243-0319		SPÄNNINGSAGGREGAT	VOLTAGE SUPPLY UNIT	SPANNUNGSAGGREGAT	C- 556662-010V
90245-0015		TRANSFORMATOR	TRANSFORMER	TRAFO	CE- 69884-010V
					CE- 69886-010V
					CE- 69884-010V
					CE- 69886-010V
					CE- 69884-010V
					CE- 69886-010V
2- 90245-0019		MANÖVERTRANSFORMATOR	TRANSFORMER	TRAFO	CE- 41723-010V
					CE- 41750-010V
					CE- 41757-010V
					CE- 41723-010V
					CE- 41750-010V
					CE- 41757-010V
90248-0013		GÅNGJÄRN	HINGE	SCHARNIER	C- 256873-040V
4- 90248-0022		GÅNGJÄRN	HINGE	SCHARNIER	C- 271114-050V
90248-0026		GÅNGJÄRN	HINGE	SCHARNIER	C- 752645-020V
90248-0026		GÅNGJÄRN	HINGE	SCHARNIER	C- 752646-020V
3- 90256-0001		TEJPHÅLLARE	TAPE HOLDER	TAPEHALTER	C- 469535-010V
90257-0001		FILTERPLUGG	FILTER PLUG	FILTERPFROPFEN	C- 484984-020V
					RK- 978234-010V
90257-0002		FILTERPLUGG	FILTER PLUG	FILTERPFROPFEN	C- 256438-020V

PART NO	LAST ECN	BENÄMNING	TITLE	BENENNUNG	GROUP NO
90257-0003		FILTERPLUGG	FILTER PLUG	FILTERPFROPFEN	C- 469173-010V
4- 90257-0006		FILTERPLUGG	FILTER PLUG	FILTERPFROPFEN	C- 735183-020V
					C- 795750-010V
90258-0002		RÖRPINNE FRP2X12	HOLLOW PIN	ROHRSTIFT	C- 469173-010V
90258-0007		KON.PINNE	TAPER PIN	KONISCHERSTIFT	C- 456696-030V
90258-0031		RÖRPINNE	HOLLOW PIN	ROHRSTIFT	C- 469736-040V
					C- 544420-010V
					C- 456032-010V
3- 90259-0017		MOTORBRYTARE 1-1,6A	MOTOR SWITCH 1-1,6A	MOTORSCHALTER	CE- 41723-010V
					CE- 41750-010V
					CE- 41757-010V
					CE- 41723-010V
					CE- 41750-010V
3- 90259-0021		MOTORBRYTARE	MOTOR SWITCH	MOTORSCHALTER	CE- 41757-010V
					CE- 41723-010V
					CE- 41750-010V
					CE- 41757-010V
					CE- 41723-010V
					CE- 41750-010V
3- 90259-0022		MOTORBRYTARE	MOTOR SWITCH	MOTORSCHALTER	CE- 41757-010V
					CE- 41723-010V
					CE- 41750-010V
					CE- 41757-010V
					CE- 41723-010V
					CE- 41750-010V
3- 90259-0023		MOTORBRYTARE 1,6-2,4A	MOTOR SWITCH 1,6-2,4A	MOTORSCHALTER	CE- 41757-010V
					CE- 41723-010V
					CE- 41750-010V
					CE- 41757-010V
					CE- 41723-010V
					CE- 41750-010V
3- 90259-0024		MOTORBRYTARE 2-4A	MOTOR SWITCH 2-4A	MOTORSCHALTER	CE- 41757-010V
					CE- 41723-010V
					CE- 41750-010V
					CE- 41757-010V
					CE- 41723-010V
					CE- 41750-010V
3- 90259-0026		MOTORBRYTARE 6-10A	MOTOR SWITCH 6-10A	MOTORSCHALTER	CE- 41757-010V
					CE- 41723-010V
					CE- 41750-010V
					CE- 41757-010V
					CE- 557222-010V
					CE- 41723-010V
					CE- 41750-010V
3- 90259-0027		MOTORBRYTARE	MOTOR SWITCH	MOTORSCHALTER	CE- 41757-010V
					CE- 41723-010V
					CE- 41727-010V
					CE- 41750-010V
					CE- 41754-010V
					CE- 41723-010V
					CE- 41727-010V
					CE- 41750-010V
3- 90259-0029		MOTORBRYTARE	MOTOR SWITCH	MOTORSCHALTER	CE- 41754-010V
3- 90259-0029		MOTORBRYTARE	MOTOR SWITCH	MOTORSCHALTER	CE- 41723-010V
					CE- 41750-010V
					CE- 41757-010V
					CE- 41723-010V
					CE- 41750-010V
2- 90259-0030		MOTORBRYTARE	MOTOR SWITCH	MOTORSCHALTER	CE- 41757-010V
					CE- 41723-010V
					CE- 41750-010V
					CE- 41757-010V
					CE- 41723-010V
					CE- 41750-010V
3- 90259-0306		HJÄLPKONTAKT NHI 20-PKZM	AUXILIARY CONTACT	MOTORSCHALTER	CE- 41757-010V
					CE- 41723-010V
					CE- 41750-010V
					CE- 41757-010V
					CE- 41723-010V
					CE- 41750-010V
3- 90259-0307		HJÄLPKONTAKT NHI 11-PKZM	MOTOR SWITCH	MOTORSCHALTER	CE- 41757-010V
90261-0001		RÖR PLUGG	PIPE PLUG	ROHRPROPFEN	CE- 557222-010V
90261-0008		RÖRPLUGG	PIPE PLUG	ROHRPROPFEN	C- 271513-060V
90261-0018		RÖRPLUGG	PIPE PLUG	ROHRPROPFEN	C- 256843-060V
90261-0019		RÖRPLUGG	PIPE PLUG	ROHRPROPFEN	C- 256438-020V
					C- 752960-010V
					C- 752971-010V
90261-0025		RÖRPLUGG	PIPE PLUG	ROHRPROPFEN	C- 458457-040V
90261-0033		PLUGG	PLUG	PFROPFEN	C- 441695-020V
90261-0037		RÖRPLUGG	PIPE PLUG	ROHRPROPFEN	C- 456588-030V
90261-0049		PLASTPLUGG	PLASTIC PLUG	PLASTPROPFEN	C- 736796-020V
90264-0019		FLÄKT	FAN	VENTILATOR	C- 905130-010V
					CE- 69884-010V
					CE- 69886-010V
					CE- 69884-010V
					CE- 69886-010V
					CE- 69884-010V
					CE- 69886-010V
90264-0025		FLÄKT	FAN	VENTILATOR	CE- 41766-010V
					CE- 557222-010V
					CE- 41766-010V
90264-0026		FLÄKT	FAN	VENTILATOR	CE- 41723-010V

PART NO	LAST ECN	BENÄMNING	TITLE	BENENNUNG	GROUP NO
					CE- 41750-010V
					CE- 41757-010V
					CE- 41723-010V
					CE- 41750-010V
					CE- 41757-010V
1- 90264-0042		FLÄKT	FAN	VENTILATOR	C- 272408-050V
90265-0020		KOPPLINGSLÅDA	CONNECTION BOX	KUPPLUNGSKASTEN	C- 271569-050V
3- 90265-0045		KOPPLINGSLÅDA	CONNECTION BOX	KUPPLUNGSKASTEN	C- 271513-060V
90265-0320		PLÅT	PLATE	BLECH	C- 457856-020V
90266-0006		RÖR	TUBE	ROHR	C- 271562-080V
90266-0019		MÄSSINGSRÖR	PIPE	MESSINGROHR	C- 271562-080V
					C- 256197-050V
					C- 491814-020V
					C- 491815-020V
					C- 257381-030V
					C- 257382-030V
90266-0022		MEJERIRÖR	DAIRY PIPE	MOLKEREIROHR	C- 237776-040V
90266-0165		MÄSSINGSRÖR	BRASS PIPE	MESSINGROHR	C- 295310-070V
P- 90270-0011		KOMPRESSOR	COMPRESSOR	KOMPRESSOR	C- 469452-030V
					C- 751800-020V
90270-0347		VENTIL	VALVE	VENTIL	C- 271866-060V
90270-0347		VENTIL	VALVE	VENTIL	C- 469452-030V
					C- 751800-020V
P3- 90274-0003		TRYCKVAKT	PRESSURE GUARD	DRUCKWACHT	C- 735183-020V
90274-0027		VAKT	GUARD	WACHT	C- 978739-010V
90274-0029		NIVÅVAKT	GUARD	WACHT	C- 491890-010V
90274-0040		VAKT	GUARD	WACHT	C- 795750-010V
90274-0045		VAKT	GUARD	WACHT	C- 491083-030V
3- 90274-0056		TRYCKVAKT	PRESSURE SWITCH	DRUCKWACHT	C- 978739-010V
2- 90274-0065		TRYCKVAKT	PRESSURE SWITCH	DRUCKWACHT	C- 491207-030V
90274-0066		TRYCKVAKT	PRESSURE SWITCH	DRUCKWACHT	RK- 978234-010V
3- 90274-0074		TRYCKVAKT	PRESSURE SWITCH	DRUCKWACHT	C- 978739-010V
90277-0035		TRYCKLUFTFILTER	AIR-PRESSURE FILTER	DRUCKLUFTFILTER	C- 548031-020V
P- 90277-0040		FILTER	FILTER	FILTER	RK- 978234-010V
90277-0045		FILTER	FILTER	FILTER	C- 978740-010V
90277-0046		FILTER	FILTER	FILTER	C- 978740-010V
90277-0055		FILTER	FILTER	FILTER	C- 794178-010V
P- 90277-0062		FILTERHUS	FILTER HOUSING	FILTERGEHÄUSE	RK- 978212-010V
3- 90277-0323		FILTERHUS	FILTER HOUSING	FILTERGEHÄUSE	RK- 978234-010V
					C- 978739-010V
90277-0324		FILTERPATRON	FILTER CARTRIDGE	FILTERPATRONE	RK- 978234-010V
					C- 978739-010V
90277-0331		FILTER	FILTER	FILTER	C- 735265-010V
					C- 735271-020V
					C- 735265-010V
					C- 924592-010V
					C- 735265-010V
					C- 735271-020V
					C- 735265-010V
					C- 924592-010V
					C- 735265-010V
					C- 735271-020V
					C- 735265-010V
					C- 924592-010V
90277-0333		O-RING	O-RING	O-RING	C- 735271-020V
					C- 924592-010V
					C- 735271-020V
					C- 924592-010V
					C- 735271-020V
					C- 924592-010V
					C- 736796-020V
90277-0336		FILTERPATRON	FILTER	FILTER	C- 794178-010V
90277-0347		FILTER	FILTER	FILTER	RK- 978528-010V
90278-0001		PUMP	PUMP	PUMPE	C- 456975-020V
90279-0001		OLJEKANNA	OIL CAN	OELKANNE	C- 456975-020V
90287-0009		FJÄDRANDE TRYCKSTIFT	SPRINGLOADED SCREW	FEDERNDE DRUCKSCHRAUBE	C- 546285-010V
					C- 905130-010V
90287-0056		SKRUV MC6S TT 8X40 FZB	SCREW	SCHRAUBE	C- 560670-010V
					C- 560671-010V
					C- 560672-010V
90287-0062		SKRUV	SCREW	SCHRAUBE	C- 550757-020V
					C- 271114-050V
					C- 271115-040V
					C- 752244-020V
					C- 978162-010V
					C- 457853-030V
					C- 469635-010V
90287-0069		SKRUV MCS 3X35 A4	SCREW	SCHRAUBE	C- 546285-010V
90287-0075		SKRUV LKCS 6X12	SCREW	SCHRAUBE	C- 736360-020V
					C- 554859-010V
90287-0076		SKRUV LKCS 6X20	SCREW	SCHRAUBE	C- 271513-060V
					C- 751885-030V
					C- 752958-010V
					C- 752959-010V
90287-0081		SKRUV MC6S 6X10 12.9FZB	SCREW	SCHRAUBE	C- 256173-050V
90287-0105		EXPANDERBULT	EXPANSION BOLT	EXPANDERBOLZEN	C- 229400-070V
4- 90287-0106		FJÄDRANDE TRYCKSTIFT	SPRINGLOADED SCREW	FEDERNDE DRUCKSCHRAUBE	C- 484858-030V
					C- 256014-060V
4- 90287-0112		FJÄDRANDE TRYCKSTIFT	SPRINGLOADED SCREW	FEDERNDE DRUCKSCHRAUBE	C- 566280-010V
90287-0117		EXPANDERBULT	EXPANSIONSBOLT	EXPANDERBOLZEN	C- 232781-040V
					C- 479821-010V
90287-0119		SKRUV P6SS 5X12 A2	SCREW	SCHRAUBE	CR- 256436-060V

PART NO	LAST ECN	BENÄMNING	TITLE	BENENNUNG	GROUP NO
90287-0134		RXS B10X13 A4	SCREW	SCHRAUBE	C- 456567-010V
90287-0143		SKRUV 6X25-12.9	SCREW	SCHRAUBE	C- 491814-020V
					C- 491815-020V
90287-0144		SKRUV 6X35-12.9	SCREW	SCHRAUBE	C- 491814-020V
					C- 491815-020V
90287-0145		SKRUV 5X16-12.9	SCREW	SCHRAUBE	C- 978258-020V
					C- 978442-020V
					C- 256202-050V
					C- 978258-020V
90287-0147		EXP.SKRUV HSA M8X115 FZ	EXPANDING PLUG	EXPANDERPFROPFEN	C- 229400-070V
90287-0149		SKRUV MLC6S 6X8-10.9	SCREW	SCHRAUBE	C- 256173-050V
90287-0159		STOPPSKRUV	GRUB SCREW	SPERRSCHRAUBE	C- 751393-010V
90287-0167		FJÄDRANDE TRYCKSTIFT	SPRINGLOADED SCREW	FEDERNDE DRUCKSCHRAUBE	C- 543143-010V
90287-0170		DISTANSBULT	DISTANCE SCREW	DISTANZBOLZEN	C- 556672-010V
90287-0208		SEXKANTSKRUV M5X70 A4-80	SCREW	SCHRAUBE	CR- 256547-040V
2- 90287-0210		SKRUV	SCREW	SCHRAUBE	C- 550639-010V
4- 90287-0212		SKRUV	SCREW	SCHRAUBE	C- 978739-010V
4- 90287-0215		SKRUV	SCREW	SCHRAUBE	C- 978739-010V
2- 90287-0216		SKRUV	SCREW	SCHRAUBE	C- 550743-010V
4- 90287-0221		SKRUV	SCREW	SCHRAUBE	C- 557826-010V
90288-0036		RULLKEDJA SINGLE	ROLLER CHAIN	ROLLENKETTE	C- 295310-070V
90296-0009		FETT	GREASE	FETT	C- 272024-040V
					C- 272028-060V
					C- 751088-030V
90296-0012		SMÖRJMEDEL	LUBRICANT	SCHMIERMITTEL	C- 978048-010V
					C- 491787-020V
					C- 491788-020V
90296-0016		SMÖRJMEDEL	LUBRICANT	SCHMIERMITTEL	C- 562678-010V
90296-0028		OLJA	OIL	ÖL	C- 256410-060V
90296-0053		OLJA	OIL	ÖL	C- 469384-010V
90296-0068		FETT	GREASE	FETT	C- 256173-050V
					CR- 256212-050V
					CR- 256213-050V
					C- 752628-020V
					CR- 283605-010V
					C- 283612-020V
					CR- 548040-010V
90296-0070		FETT	GREASE	FETT	C- 491846-020V
90296-0072		OLJA	OIL	ÖL	C- 283626-040V
90296-0075		OLJA	OIL	ÖL	C- 256173-050V
					C- 469384-010V
90296-0076		OLJA	OIL	ÖL	C- 256438-020V
90297-0006		LYSRÖR 9W	FLUORESCENT TUBE 9W	LEUCHTROHR	C- 441534-010V
90297-0007		LYSRÖR 11W	FLUORESCENT TUBE 11W	LEUCHTROHR	CE- 41723-010V
					CE- 41750-010V
					CE- 41757-010V
					C- 441535-010V
90297-0007		LYSRÖR 11W	FLUORESCENT TUBE 11W	LEUCHTROHR	CE- 41723-010V
					CE- 41750-010V
					CE- 41757-010V
					C- 441535-010V
90297-0301		DROSSEL 60HZ	BALLAST COIL 60HZ	DROSSEL	CE- 41750-010V
90297-0306		DROSSEL 50/60 HZ	BALLAST COIL 50/60HZ	DROSSEL	CE- 41723-010V
					CE- 41750-010V
					CE- 41757-010V
					CE- 41723-010V
					CE- 41750-010V
					CE- 41757-010V
90298-0012		ROSTSKYDDSMEDEL	INHIBITOR	ROSTSCHUTZMITTEL	C- 271513-060V
					C- 751885-030V
90298-0019		DISKMEDEL	DETERGENT	REINIGUNGSMITTEL	C- 469384-010V
90298-0033		VÄRMEÖVERFÖRINGSVÄTSKA	WATLUBE HEAT LIQUID	FL~SSIGKEIT	CR- 283606-020V
					C- 469316-020V
					C- 497534-030V
P- 90299-0013		STÄMPELFÄRG	INK	STEMPELFARBE	C- 434074-030V
					C- 434774-030V
					C- 434074-030V
					C- 434774-030V
					C- 434074-030V
90303-0004		SKYDDSHANDSKAR	GLOVES	SCHUTZHANDSCHUHE	C- 531345-010V
90303-0005		SKYDDSFÖRKLÄDE	PROTECTIVE EQUIPMENT	SCHUTZAUSRUESTUNG	C- 531345-010V
90304-0013		BEHÅLLARE	CONTAINER	BEHÄLTER	C- 491890-010V
90304-0301		RÖR	PIPE	ROHR	C- 491890-010V
90304-0302		RÖRDEL	PIPE FITTING	ROHRTEIL	C- 491890-010V
90304-0303		LOCK	COVER	DECKEL	C- 491890-010V
90304-0305		RÖR	PIPE	ROHR	C- 491890-010V
2- 90314-0021		NIVÅREGULATOR	LEVEL REGULATOR	NIVEAUREGULATOR	CE- 41723-010V
					CE- 41750-010V
					CE- 41757-010V
					RK- 41767-010V
					RK- 41769-010V
					RK- 557690-010V
					RK- 557693-010V
					RK- 557696-010V
					RK- 41767-010V
					RK- 41769-010V
					RK- 558304-010V
					RK- 558307-010V
					RK- 558310-010V
					CE- 41723-010V
					CE- 41750-010V
					CE- 41757-010V

PART NO	LAST ECN	BENÄMNING	TITLE	BENENNUNG	GROUP NO
4- 90316-0002		DISTANSRÖR	SPACER PIPE	DISTANZROHR	C- 557826-010V
P- 90321-0015		PUMP	PUMP	PUMPE	C- 456588-030V
P- 90321-0034		PUMP	PUMP	PUMPE	C- 456588-030V
P- 90321-0037		PUMP	UMP	PUMPE	C- 490761-010V
P- 90321-0059		PUMP	PUMP	PUMPE	C- 794004-010V
P1- 90321-0062		PUMP	PUMP	PUMPE	C- 491207-030V
90321-0411		PACKNING	GASKET	DICHTUNG	C- 751393-010V
90321-0490		O-RING	O-RING	O-RING	C- 736796-020V
90321-0491		O-RING	O-RING	O-RING	C- 736796-020V
90321-0492		O-RING	O-RING	O-RING	C- 736796-020V
90321-0493		O-RING	O-RING	O-RING	C- 736796-020V
90321-0496		O-RING	O-RING	O-RING	C- 736796-020V
90321-0498		O-RING	O-RING	O-RING	C- 736796-020V
90321-0500		O-RING	O-RING	O-RING	C- 736796-020V
90321-0504		O-RING	O-RING	O-RING	C- 736796-020V
90321-0553		DORN	MANDREL	DORN	C- 736796-020V
90321-0554		NYCKEL	KEY	SCHLUESSEL	C- 736796-020V
90321-0555		AVDRAGARE	PULLER	ABZIEHER	C- 736796-020V
4- 90321-0558		ROTOR	ROTOR	ROTOR	C- 736796-020V
4- 90326-0012		SKYDDSKÅPA	PROTECTIVE COVER	SCHUTZKAPPE	C- 794178-010V C- 295891-030V C- 256014-060V C- 256055-060V C- 271181-040V C- 272337-040V C- 272560-060V C- 456976-050V RK- 978238-010V
90326-0017		FÖRSKRUVNING	GLAND	VERSCHRAUBUNG	C- 256014-060V C- 256055-060V
3- 90326-0019		TERMOELEMENT	THERMOELEMENT	THERMOELEMENT	C- 256014-060V
4- 90326-0020		HONKONTAKT	SOCKET	STECKDOSE	C- 794178-010V C- 295891-030V C- 256014-060V C- 256055-060V C- 271181-040V C- 272337-040V C- 272560-060V C- 456976-050V RK- 978238-010V
4- 90326-0022		KONTAKT,HANE	PLUG	KONTAKT	RK- 978238-010V
3- 90326-0048		TERMOELEMENT	THERMOELEMENT	THERMOELEMENT	C- 256055-060V
3- 90326-0051		TERMOELEMENT	THERMO COUPLE	THERMOELEMENT	C- 271181-040V C- 272337-040V C- 456976-050V
3- 90326-0052		TERMOELEMENT	THERMO ELEMENT	THERMOELEMENT	C- 256014-060V
3- 90326-0057		TERMOELEMENT	THERMOELEMENT	THERMOELEMENT	C- 256055-060V
90326-0060		TERMOELEMENT	THERMOCOUPLE	THERMOELEMENT	C- 484984-020V CR- 283606-020V C- 469316-020V C- 497534-030V RK- 978238-010V
90326-0063		TERMOELEMENT	THERMOCOUPLE	THERMOELEMENT	C- 469316-020V
90326-0304		GENOMFÖRING	LEAD IN	DURCHF~HRUNG	C- 256055-060V
3- 90326-0308		TERMOKABEL + HANKONTAKT	THERMO-CABLE	THERMOKABEL	CE- 557793-010V
3- 90326-0309		TERMOKABEL + HONKONTAKT	THERMO-CABLE	THERMOKABEL	CE- 557793-010V
3- 90326-0310		TEMPERATURREFERENSGIVARE	TEMPERATURE TRANSMITTER	TEMPERATURGEBER	CE- 557793-010V
3- 90326-0311		HUS FÖR TEMPERATURREF.-	HOUSE	GEHAEUSE	CE- 557793-010V
3- 90326-0312		HUS FÖR TEMPERATURTEST-	HOUSE	GEHAEUSE	CE- 557793-010V
4- 90328-0001		LJUDDÄMPARE	SILENCER	SCHALLDÄMPFER	C- 978739-010V
4- 90328-0003		LJUDDÄMPARE	SILENCER	SCHALLDÄMPFER	C- 794110-010V C- 272560-060V C- 490600-040V
4- 90328-0007		LJUDDÄMPARE	SILENCER	SCHALLDÄMPFER	C- 978740-010V
90328-0012		LJUDDÄMPARE	SILENCER	SCHALLDÄMPFER	RK- 978238-010V
90328-0020		LJUDDÄMPARE	SILENCER	SCHALLDÄMPFER	C- 751478-020V
90328-0025		LJUDDÄMPARE	SILENCER	SCHALLDÄMPFER	RK- 529345-010V
90330-0012		FÖRMINSKNINGSMUFF	REDUCTION SLEEVE	VERMINDERUNGSMUFFE	C- 491083-030V
90330-0013		FÖRMINSKNINGSNIPPEL	REDUCTION NIPPLE	VERMINDERUNGSNIPPEL	C- 978239-020V C- 978240-020V C- 978241-020V
90330-0019		FÖRMINSKNINGSNIPPEL	REDUCTION NIPPLE	VERMINDERUNGSNIPPEL	C- 271866-060V C- 795750-010V
4- 90330-0020		VINKELRÖR	ELBOW PIPE	WINKELROHR	C- 794178-010V C- 491207-030V C- 751373-010V
90330-0021		NIPPEL	NIPPLE	NIPPEL	C- 794178-010V C- 272560-060V C- 491207-030V C- 751373-010V
90330-0025		BUSSNING	BUSHING	BUCHSE	C- 794178-010V C- 295045-070V C- 795750-010V RK- 978234-010V
90330-0026		PROPP	PLUG	SICHERUNG	C- 795750-010V RK- 978234-010V
90330-0028		NIPPEL	NIPPLE	NIPPEL	C- 794271-010V C- 295262-060V C- 456836-040V
90330-0029		PROPP	PLUG	SICHERUNG	C- 533014-010V C- 469452-030V C- 751800-020V

PART NO	LAST ECN	BENÄMNING	TITLE	BENENNUNG	GROUP NO
90330-0032		NIPPEL	NIPPLE	NIPPEL	C- 978239-020V
					C- 978240-020V
					C- 978241-020V
					C- 794179-010V
					RK- 978234-010V
90330-0037		PROPP	PLUG	SICHERUNG	C- 561425-010V
					C- 256217-040V
					C- 271866-060V
90330-0038		MUTTER	NUT	MUTTER	C- 272408-050V
90330-0042		BUSSNING	BUSHING	BUCHSE	C- 794145-010V
					C- 735183-020V
					C- 795750-010V
90330-0043		NIPPEL	NIPPLE	NIPPEL	RK- 978234-010V
90330-0046		PROPP	PLUG	SICHERUNG	C- 751373-010V
90330-0048		BUSSNING	BUSHING	BUCHSE	C- 794178-010V
90330-0061		RAK KOPPLING	COUPLING	GERADE KUPPLUNG	C- 794178-010V
90330-0064		KOPPLING	CONNECTION	KUPPLUNG	C- 794178-010V
90330-0066		PROPP	PLUG	PFROPFEN	CR- 256204-050V
					CR- 256205-050V
					C- 295045-070V
					C- 735183-020V
90330-0078		BUSSNING	BUSHING	BUCHSE	C- 272765-070V
90330-0080		FÖRMINSKNINGSNIPPEL	REDUCTION NIPPLE	VERMINDERUNGSNIPPEL	C- 751373-010V
90330-0081		VINKELRÖR	ELBOW PIPE	WINKELROHR	C- 271387-030V
					RK- 978234-010V
90330-0083		NIPPEL	NIPPLE	NIPPEL	RK- 978234-010V
90330-0085		BUSSNING	BUSHING	BUCHSE	C- 794180-010V
					C- 256438-020V
90330-0093		MUTTER	NUT	MUTTER	C- 271866-060V
90330-0095		T-RÖR	T-PIECE	T-ROHR	C- 978239-020V
					C- 978240-020V
					C- 978241-020V
90330-0097		NIPPEL	NIPPLE	NIPPEL	C- 271261-050V
90330-0099		VINKELRÖR	ELBOW PIPE	WINKELROHR	C- 271261-050V
90330-0101		NIPPEL	NIPPLE	NIPPEL	C- 441798-010V
					C- 441811-010V
90330-0105		MUTTER FTHNUT R-3/8" E	NUT	MUTTER	C- 295045-070V
90330-0106		RÖRKOPPLING	PIPE COUPLING	ROHRKUPPLUNG	C- 794178-010V
					C- 272560-060V
90330-0120		MUTTER	NUT	MUTTER	C- 491083-030V
3- 90330-0128		REDUCERING	REDUCER	REDUZIERUNG	C- 491207-030V
90392-0007		SKRIVARE 50HZ	RECORDER 50HZ	SCHREIBER	CE- 41723-010V
					CE- 41750-010V
					CE- 41757-010V
					CE- 41723-010V
					CE- 41750-010V
					CE- 41757-010V
90332-0008		SKRIVARE	RECORDER	SCHREIBER	CE- 41727-010V
					CE- 41754-010V
					CE- 41761-010V
					CE- 41727-010V
					CE- 41754-010V
					CE- 41761-010V
90333-0004		DIAGRAMPAPPER	GRAPH PAPER	DIAGRAMMPAPIER	CE- 41728-010V
					CE- 41755-010V
					CE- 41762-010V
					C- 736796-020V
					CE- 41728-010V
					CE- 41755-010V
					CE- 41762-010V
90335-0004		FJÄDER	SPRING	FEDER	C- 450101-010V
					C- 450101-020V
90335-0005		FJÄDER	SPRING	FEDER	C- 484984-020V
					CR- 548040-010V
90335-0008		FJÄDER	SPRING	FEDER	C- 441304-040V
90335-0009		FJÄDER	SPRING	FEDER	C- 554360-020V
90335-0011		FJÄDER	SPRING	FEDER	C- 256222-020V
90335-0014		FJÄDER	SPRING	FEDER	C- 566280-010V
4- 90335-0024		FJÄDER	SPRING	FEDER	C- 271115-040V
90335-0025		FJÄDER	SPRING	FEDER	C- 458383-020V
					C- 458384-010V
90335-0027		FJÄDER	SPRING	FEDER	C- 469173-010V
90335-0030		FJÄDER	SPRING	FEDER	C- 469736-040V
90335-0031		FJÄDER	SPRING	FEDER	C- 457866-030V
90335-0036		FJÄDER	SPRING	FEDER	C- 456100-030V
90335-0044		FJÄDER	SPRING	FEDER	CR- 283605-010V
90335-0052		FJÄDER	SPRING	FEDER	C- 76304-010V
90335-0055		FJÄDER	SPRING	FEDER	C- 271115-040V
90335-0064		FJÄDER	SPRING	FEDER	C- 533844-010V
					C- 554360-020V
					C- 751718-010V
90335-0067		FJÄDER	SPRING	FEDER	C- 752628-020V
					CR- 548331-010V
					C- 552030-010V
90335-0082		FJÄDER	SPRING	FEDER	C- 550712-020V
					CR- 548331-010V
90335-0092		DRAGFJÄDER	SPRING	FEDER	C- 566282-010V
90335-0096		TRYCKFJÄDER	SPRING	FEDER	C- 272652-030V
90335-0100		TRYCKFJÄDER	COMPR. SPRING	FEDER	C- 484984-020V
90335-0120		DRAGFJÄDER	SPRING	FEDER	C- 469736-040V
					C- 469316-020V
90335-0122		DRAGFJÄDER	SPRING	FEDER	C- 283612-020V

PART NO	LAST ECN	BENÄMNING	TITLE	BENENNUNG	GROUP NO
90335-0127		FJÄDER	SPRING	FEDER	CR- 548040-010V
4- 90335-0142		TRYCKFJÄDER	COMPRESSION SPRING	DRUCKFEDER	C- 550712-020V
4- 90335-0143		VERKTYGSFJÄDER	COMPRESSION SPRING	FEDER	C- 550711-020V
4- 90335-0155		DRAGFJÄDER	TENSION SPRING	ZUGFEDER	C- 978720-010V
90337-0315		FILTER	FILTER	FILTER	C- 272560-060V
90337-0331		FILTERHUS	FILTER HOUSING	FILTERGEHÄUSE	C- 272560-060V
90337-0342		FÖNSTER	WINDOW	FENSTER	C- 556662-010V
90339-0004		MAGNETLÅS	MAGNETIC LOCK	MAGNETSCHLOSS	C- 554890-010V
					C- 469535-010V
					C- 553657-010V
					C- 752042-010V
90339-0011		LÅS	LOCK	SCHLOSS	C- 548057-010V
P- 90340-0014		FRIHJULSKOPPLING	FREE WHEEL COUPLING	FREILAUFKUPPLUNG	CR- 548331-010V
4- 90342-0013		BÄLG	BELLOWS	BALGEN	C- 556723-010V
90344-0022		KEDJEHJUL	SPROCKET	KETTENRAD	C- 256806-030V
3- 90344-0035		REMSTRÄCKARE	BELT TENSIONER	STREIFENSTRECKER	C- 457867-020V
90344-0300		RULLE	ROLLER	ROLLE	C- 283626-040V
90345-0006		STÅLAGER SY 20 TF	BEARING HOUSING	LAGERGEHÄUSE	C- 554886-010V
90345-0007		LAGER	BEARING	LAGER	C- 476349-030V
90347-0004		VIBRATIONSDÄMPARE	VIBRATION DAMPER	VIBRATIONSDÄMPFER	C- 752960-010V
					C- 752971-010V
					C- 567034-010V
					C- 538421-010V
					C- 572306-010V
					C- 246388-060V
					C- 752244-020V
					C- 978162-010V
					C- 978179-010V
					C- 751923-010V
					C- 751924-010V
					C- 751923-010V
					C- 751924-010V
					C- 556723-010V
90347-0005		VIBRATIONSDÄMPARE	VIBRATION DAMPER	VIBRATIONSDÄMPFER	C- 271992-020V
90347-0011		VIBRATIONSDÄMPARE	VIBRATION DAMPER	VIBRATIONSDÄMPFER	C- 271468-040V
					C- 271469-020V
					C- 457853-030V
90347-0012		DÄMPARE	DAMPER	DAEMPFER	C- 271454-020V
90347-0035		DÄMPARE	DAMPER	DAEMPFER	C- 271114-050V
90347-0041		DÄMPARE	DAMPER	DAEMPFER	C- 457853-030V
90347-0079		DÄMPARE	DAMPER	DAEMPFER	C- 736360-020V
					C- 554889-020V
					B- 648109-100V
3- 90347-0089		DÄMPARE NOVIBRA RA 40EM-	DAMPER	DAEMPFER	C- 469452-030V
90347-0110		MASKINSKO	MACHINE SHOE	DAEMPFER	C- 560670-010V
					C- 560671-010V
					C- 560672-010V
90347-0113		GASFJÄDER	DAMPER	DAEMPFER	C- 554891-010V
90347-0114		VIBRATIONSDÄMPARE	DAMPER	DAEMPFER	C- 562656-010V
90347-0116		DÄMPDON	SHOCK ABSORBER	DÄMPFUNGSANORDNUNG	C- 550757-020V
90347-0305		SKYDDSHUV	PROTECTIVE COVER	SCHUTZHAUBE	C- 550757-020V
4- 90348-0007		FRIHJULSKOPPLING	FREE WHEEL COUPLING	FREILAUFKUPPLUNG	C- 272028-060V
90348-0015		KOPPLING	CLUTCH	KUPPLUNG	C- 566282-010V
4- 90355-0031		ELASTISK KOPPLING	FLEXIBLE COUPLING	ELASTISCHE KOPPLUNG	C- 751689-010V
3- 90355-0048		AXELKOPPLING	CONNECTION	ACHSENKUPPLUNG	C- 256200-030V
2- 90355-0088		MAGNETKOPPLING	MAGNETIC CLUTCH	MAGNETKUPPLUNG	C- 256173-050V
90360-0005		KONDENSATAVLEDARE	STEAM TRAP	DAMPFKLAPPE	C- 794178-010V
90360-0006		ANSLUTNING R 1/2"	ATTACHMENT	ANSCHLUSS	C- 794178-010V
90360-0009		ÅNGFÄLLA 1/4 TD 18	STEAM TRAP	DAMPFKLAPPE	C- 272560-060V
90360-0011		ÅNGFÄLLA	STEAM TRAP	DAMPFKLAPPE	C- 272560-060V
90361-0011		SPÄNNELEMENT	BUSHING	SPANNELEMENT	C- 256173-050V
2- 90364-0023		VAKUUMPUMP	PUMP	PUMPE	C- 536859-020V
3- 90364-0346		LJUDDÄMPARE	SILENCER	SCHALLDÄMPFER	C- 536859-020V
90410-0034		RELÄ	RELAY	RELAIS	CE- 557222-010V
2- 90410-0044		TEMPERATURREGULATOR	TEMPERATURE REGULATOR	TEMP.REGLER	CE- 41723-010V
					CE- 41750-010V
2- 90410-0044		TEMPERATURREGULATOR	TEMPERATURE REGULATOR	TEMP.REGLER	CE- 41757-010V
					RK- 558304-010V
					RK- 558307-010V
					RK- 558310-010V
					CE- 41723-010V
					CE- 41750-010V
					CE- 41757-010V
3- 90410-0337		KALIBRERINGSINSTRUMENT	INSTRUMENT	INSTRUMENT	CE- 557793-010V
3- 90410-0338		PORTABEL INDIKATOR	INDICATOR	ANZEIGER	CE- 557793-010V
3- 90410-0339		ADAPTER	ADAPTER	ADAPTER	CE- 557793-010V
3- 90410-0340		AC-ADAPTER	ADAPTER	ADAPTER	CE- 557793-010V
90411-0005		ISOLERING	INSULATOR	ISOLIERUNG	C- 271181-040V
90413-0033		STÄMPELSATS	CODE INSERT SET	STEMPELSATZ	C- 293684-020V
					C- 293685-020V
					C- 293684-020V
					C- 293685-020V
					C- 293684-020V
90413-0043		STÄMPELSATS	CODE INSERT SET	STEMPELSATZ	C- 293684-020V
					C- 293685-020V
					C- 293684-020V
					C- 293685-020V
					C- 293684-020V
90413-0044		STÄMPELSATS	CODE INSERT SET	STEMPELSATZ	C- 293684-020V
					C- 293685-020V
					C- 293684-020V
					C- 293685-020V

PART NO	LAST ECN	BENÄMNING	TITLE	BENENNUNG	GROUP NO
90413-0047		STÄMPELSATS	CODE INSERT SET	STEMPELSATZ	C- 293684-020V C- 293684-020V C- 293685-020V C- 293684-020V C- 293685-020V C- 293684-020V
90413-0187		STÄMPELSATS	CODE INSERT SET	STEMPELSATZ	C- 77091-040V
90413-0188		STÄMPELSATS	CODE INSERT SET	STEMPELSATZ	C- 77091-040V
90413-0189		STÄMPELSATS	CODE INSERT SET	STEMPELSATZ	C- 77091-040V
90413-0190		STÄMPELSATS	CODE INSERT SET	STEMPELSATZ	C- 77091-040V
90413-0195		STÄMPELSATS	CODE INSERT SET	STEMPELSATZ	C- 77091-040V
90413-0196		STÄMPELSATS	CODE INSERT SET	STEMPELSATZ	C- 77091-040V
90413-0421		STÄMPEL "1"	STAMP	STEMPEL	C- 544393-010V
90413-0422		STÄMPEL "2"	STAMP	STEMPEL	C- 544393-010V
90413-0423		STÄMPEL "3"	STAMP	STEMPEL	C- 544393-010V
90413-0424		STÄMPEL "4"	STAMP	STEMPEL	C- 544393-010V
90413-0425		STÄMPEL "5"	STAMP	STEMPEL	C- 544393-010V
90413-0426		STÄMPEL "6"	STAMP	STEMPEL	C- 544393-010V
90413-0427		STÄMPEL "7"	STAMP	STEMPEL	C- 544393-010V
90413-0428		STÄMPEL "8"	STAMP	STEMPEL	C- 544393-010V
90413-0429		STÄMPEL "9"	STAMP	STEMPEL	C- 544393-010V
90413-0430		STÄMPEL "0"	STAMP	STEMPEL	C- 544393-010V
90413-0431		STÄMPELSATS "0-9"	CODE INSERT SET	STEMPELSATZ	C- 544393-010V
90413-0432		STÄMPEL "A"	STAMP	STEMPEL	C- 544393-010V
90413-0433		STÄMPEL "B"	STAMP	STEMPEL	C- 544393-010V
90413-0434		STÄMPEL "C"	STAMP	STEMPEL	C- 544393-010V
90413-0435		STÄMPEL "D"	STAMP	STEMPEL	C- 544393-010V
90413-0436		STÄMPEL "E"	STAMP	STEMPEL	C- 544393-010V
90413-0437		STÄMPEL "F"	STAMP	STEMPEL	C- 544393-010V
90413-0438		STÄMPEL "G"	STAMP	STEMPEL	C- 544393-010V
90413-0439		STÄMPEL "H"	STAMP	STEMPEL	C- 544393-010V
90413-0440		STÄMPEL "I"	STAMP	STEMPEL	C- 544393-010V
90413-0441		STÄMPEL "J"	STAMP	STEMPEL	C- 544393-010V
90413-0442		STÄMPEL "K"	STAMP	STEMPEL	C- 544393-010V
90413-0443		STÄMPEL "L"	STAMP	STEMPEL	C- 544393-010V
90413-0444		STÄMPEL "M"	STAMP	STEMPEL	C- 544393-010V
90413-0445		STÄMPEL "N"	STAMP	STEMPEL	C- 544393-010V
90413-0446		STÄMPEL "O"	STAMP	STEMPEL	C- 544393-010V
90413-0447		STÄMPEL "P"	STAMP	STEMPEL	C- 544393-010V
90413-0448		STÄMPEL "Q"	STAMP	STEMPEL	C- 544393-010V
90413-0449		STÄMPEL "R"	STAMP	STEMPEL	C- 544393-010V
90413-0450		STÄMPEL "S"	STAMP	STEMPEL	C- 544393-010V
90413-0451		STÄMPEL "T"	STAMP	STEMPEL	C- 544393-010V
90413-0452		STÄMPEL "U"	STAMP	STEMPEL	C- 544393-010V
90413-0453		STÄMPEL "V"	STAMP	STEMPEL	C- 544393-010V
90413-0454		STÄMPEL "X"	STAMP	STEMPEL	C- 544393-010V
90413-0455		STÄMPEL "Y"	STAMP	STEMPEL	C- 544393-010V
90413-0456		STÄMPEL "Z"	STAMP	STEMPEL	C- 544393-010V
90413-0457		STÄMPELSATS "A-Z"	CODE INSERT SET	STEMPELSATZ	C- 544393-010V
90413-0458		STÄMPEL "Å"	STAMP	STEMPEL	C- 544393-010V
90413-0459		STÄMPEL "Ä"	STAMP	STEMPEL	C- 544393-010V
90413-0460		STÄMPEL "Ö"	STAMP	STEMPEL	C- 544393-010V
90413-0461		STÄMPEL "W"	STAMP	STEMPEL	C- 544393-010V
90413-0462		STÄMPEL DANSKT Ö	STAMP	STEMPEL	C- 544393-010V
90413-0463		STÄMPEL "."	STAMP	STEMPEL	C- 544393-010V
90413-0464		STÄMPEL "-"	STAMP	STEMPEL	C- 544393-010V
90413-0465		STÄMPEL, BLIND B=2 MM	STAMP	STEMPEL	C- 544393-010V
90413-0466		STÄMPEL BLIND B=4 MM	STAMP	STEMPEL	C- 544393-010V
90413-0467		STÄMPEL BLIND B=6 MM	STAMP	STEMPEL	C- 544393-010V
90413-0468		STÄMPEL "1" ARABISK	STAMP	STEMPEL	C- 544393-010V
90413-0469		STÄMPEL "2" ARABISK	STAMP	STEMPEL	C- 544393-010V
90413-0470		STÄMPEL "3" ARABISK	STAMP	STEMPEL	C- 544393-010V
90413-0471		STÄMPEL "4" ARABISK	STAMP	STEMPEL	C- 544393-010V
90413-0472		STÄMPEL "5" ARABISK	STAMP	STEMPEL	C- 544393-010V
90413-0473		STÄMPEL "6" ARABISK	STAMP	STEMPEL	C- 544393-010V
90413-0474		STÄMPEL "7" ARABISK	STAMP	STEMPEL	C- 544393-010V
90413-0475		STÄMPEL "8" ARABISK	STAMP	STEMPEL	C- 544393-010V
90413-0476		STÄMPEL "9" ARABISK	STAMP	STEMPEL	C- 544393-010V
90413-0477		STÄMPEL "0" ARABISK	STAMP	STEMPEL	C- 544393-010V
90413-0478		STÄMPELSATS "0-9" ARABIS	CODE INSERT SET	STEMPELSATZ	C- 544393-010V
90413-0479		STÄMPEL "JAN"	STAMP	STEMPEL	C- 544393-010V
90413-0480		STÄMPEL "FEB"	STAMP	STEMPEL	C- 544393-010V
90413-0481		STÄMPEL "MAR"	STAMP	STEMPEL	C- 544393-010V
90413-0482		STÄMPEL "APR"	STAMP	STEMPEL	C- 544393-010V
90413-0483		STÄMPEL "MAJ"	STAMP	STEMPEL	C- 544393-010V
90413-0484		STÄMPEL "JUN"	STAMP	STEMPEL	C- 544393-010V
90413-0485		STÄMPEL "JUL"	STAMP	STEMPEL	C- 544393-010V
90413-0486		STÄMPEL "AUG"	STAMP	STEMPEL	C- 544393-010V
90413-0487		STÄMPEL "SEP"	STAMP	STEMPEL	C- 544393-010V
90413-0488		STÄMPEL "OKT"	STAMP	STEMPEL	C- 544393-010V
90413-0489		STÄMPEL "NOV"	STAMP	STEMPEL	C- 544393-010V
90413-0490		STÄMPEL "DEC"	STAMP	STEMPEL	C- 544393-010V
90413-0491		STÄMPELSATS"JAN-DEC" SVE	CODE INSERT SET	STEMPELSATZ	C- 544393-010V
90413-0492		STÄMPELSATS"JAN-DEC" ENG	CODE INSERT SET	STEMPELSATZ	C- 544393-010V
90413-0493		STÄMPELSATS"JAN-DEC" TYS	CODE INSERT SET	STEMPELSATZ	C- 544393-010V
90413-0494		STÄMPELSATS"JAN-DEC" FRA	CODE INSERT SET	STEMPELSATZ	C- 544393-010V
90413-0495		STÄMPELSATS"JAN-DEC" SPA	CODE INSERT SET	STEMPELSATZ	C- 544393-010V
90413-0496		STÄMPEL "MAY"	STAMP	STEMPEL	C- 544393-010V
90413-0497		STÄMPEL "OCT"	STAMP	STEMPEL	C- 544393-010V
90413-0498		STÄMPEL "JANV"	STAMP	STEMPEL	C- 544393-010V
90413-0499		STÄMPEL "FEVR"	STAMP	STEMPEL	C- 544393-010V
90413-0500		STÄMPEL "MARS"	STAMP	STEMPEL	C- 544393-010V

PART NO	LAST ECN	BENÄMNING	TITLE	BENENNUNG	GROUP NO
90413-0501		STÄMPEL "AVR"	STAMP	STEMPEL	C- 544393-010V
90413-0502		STÄMPEL "MAI"	STAMP	STEMPEL	C- 544393-010V
90413-0503		STÄMPEL "JUIN"	STAMP	STEMPEL	C- 544393-010V
90413-0504		STÄMPELSATS	CODE INSERT SET	STEMPELSATZ	C- 544393-010V
					C- 548057-010V
90413-0505		STÄMPELSATS"JAN-DEC" ITA	CODE INSERT SET	STEMPELSATZ	C- 544393-010V
90413-0506		STÄMPEL "JUIL"	STAMP	STEMPEL	C- 544393-010V
90413-0507		STÄMPEL "AOUT"	STAMP	STEMPEL	C- 544393-010V
90413-0508		STÄMPEL "MÄR"	STAMP	STEMPEL	C- 544393-010V
90413-0509		STÄMPEL "DEZ"	STAMP	STEMPEL	C- 544393-010V
90413-0510		STÄMPEL "EN"	STAMP	STEMPEL	C- 544393-010V
90413-0511		STÄMPEL "MAYO"	STAMP	STEMPEL	C- 544393-010V
90413-0512		STÄMPEL "AGO"	STAMP	STEMPEL	C- 544393-010V
90413-0513		STÄMPEL "SEPT"	STAMP	STEMPEL	C- 544393-010V
90413-0514		STÄMPEL "DIC"	STAMP	STEMPEL	C- 544393-010V
90413-0515		STÄMPEL "MAGG"	STAMP	STEMPEL	C- 544393-010V
90413-0516		STÄMPEL "GIU"	STAMP	STEMPEL	C- 544393-010V
90413-0517		STÄMPEL "LUGL"	STAMP	STEMPEL	C- 544393-010V
90413-0518		STÄMPEL "SETT"	STAMP	STEMPEL	C- 544393-010V
90413-0519		STÄMPEL "OTT"	STAMP	STEMPEL	C- 544393-010V
90415-0018		FILTER	FILTER	FILTER	C- 978739-010V
90415-0019		FILTER	FILTER	FILTER	C- 978739-010V
P- 90415-0022		FILTER	FILTER	FILTER	C- 456588-030V
P- 90415-0033		OLJEFILTER	OIL FILTER	OELFILTER	C- 491890-010V
90415-0316		FILTER	FILTER	FILTER	C- 295778-040V
90416-0011		INDEXERINGSMEKANISM	INDEXING DEVICE	INDEXIERUNGSAPPARAT	C- 283626-040V
P- 90416-0021		INDEXERINGSAPPARAT	INDEXING DEVICE	INDEXIERUNGSAPPARAT	C- 256410-060V
90417-0073		KUGGREM	TOOTHED BELT	ZAHNRIEMEN	CR- 548331-010V
90417-0076		KUGGREM	TIMING BELT	ZAHNRIEMEN	C- 256173-050V
90417-0120		KUGGREM	TOOTHED BELT	ZAHNRIEMEN	C- 283626-040V
90417-0139		KUGGREM	TOOTHED BELT	ZAHNRIEMEN	C- 751691-010V
90417-0144		KUGGREM	TOOTHED BELT	ZAHNRIEMEN	C- 457867-020V
90417-0145		KUGGREM	TOOTHED BELT	ZAHNRIEMEN	C- 457867-020V
90417-0146		KUGGREM	TOOTHED BELT	ZAHNRIEMEN	C- 457867-020V
90417-0232		KUGGREM 300H100	TIMING BELT	ZAHNRIEMEN	C- 794004-010V
P- 90419-0005		VARNINGSLAMPA	ALARM LAMP	WARNLAMPE	C- 752960-010V
					C- 752971-010V
					C- 554891-010V
					C- 456459-040V
					C- 456460-040V
					C- 751900-010V
					C- 229400-070V
90424-0009		MUNSTYCKE	NOZZLE	DUESE	C- 272765-070V
					C- 456455-030V
90424-0016		MUNSTYCKE	NOZZLE	DUESE	C- 456455-030V
P- 90424-0017		MUNSTYCKE	NOZZLE	DUESE	C- 272407-020V
3- 90424-0025		MUNSTYCKE	NOZZLE	DUESE	C- 441811-010V
90424-0027		MUNSTYCKE	NOZZLE	DUESE	C- 978260-020V
					C- 978444-020V
					C- 456100-030V
90424-0032		MUNSTYCKE	NOZZLE	DUESE	C- 271261-050V
					C- 736865-010V
					C- 736797-010V
3- 90424-0033		MUNSTYCKE	NOZZLE	DUESE	C- 271261-050V
3- 90424-0035		MUNSTYCKE	NOZZLE	DUESE	C- 271261-050V
					C- 441798-010V
					C- 271115-040V
3- 90424-0036		MUNSTYCKE	NOZZLE	DUESE	C- 271115-040V
90424-0304		PACKNING	GASKET	DICHTUNG	C- 295778-040V
90425-0016		EJEKTOR	EJECTOR	EJEKTOR	RK- 529345-010V
2- 90426-0003		HANDDUSCH	HAND SHOWER	HANDDUSCHE	C- 271387-030V
P- 90427-0005		DATUMVERK M-80 HÖGER	DATING UNIT	DATUMWERK	C- 548057-010V
P- 90427-0006		DATUMVERK M-80 VÄNSTER	DATING UNIT	DATUMWERK	C- 548057-010V
90427-0506		TYPHÅLLARE	TYPE HOLDER	TYPENHALTER	C- 548057-010V
P- 90427-0507		MOTHÅLLPLATTA	DOLLY	GEGENHALTER	C- 548057-010V
90427-0508		VARMPRÄGLINGSFOLIE 28 MM	INK ROLLER	FARBROLLE	C- 469316-020V
90430-0032		MOTORSTYRNING	THYRISTOR UNIT	MOTORSTEUERKONTROLLE	RK- 557018-010V
					RK- 557021-010V
2- 90430-0037		MOTORSTYRNING	MOTOR DRIVE CONTROL	MOTORSTEUERKONTROLLE	CE- 41723-010V
					CE- 41750-010V
					CE- 41757-010V
					CE- 41723-010V
					CE- 41750-010V
					CE- 41757-010V
1- 90430-0038		FREKVENSOMRIKTARE	MOTOR DRIVE CONTROL	MOTORSTEUERKONTROLLE	CE- 557222-010V
90432-0012		BROMS	BRAKE	BREMSE	C- 554360-020V
3- 90432-0018		BROMS	BRAKE	BREMSE	C- 256173-050V
2- 90450-0065		CYLINDER	CYLINDER	ZYLINDER	C- 905131-010V
90450-0153		CYLINDER	CYLINDER	ZYLINDER	C- 554888-010V
90450-0155		CYLINDER	CYLINDER	ZYLINDER	C- 550757-020V
90450-0156		CYLINDER	CYLINDER	ZYLINDER	C- 550714-010V
90450-0157		CYLINDER	CYLINDER	ZYLINDER	C- 550714-010V
90450-0158		CYLINDER	CYLINDER	ZYLINDER	C- 562679-010V
90450-0160		CYLINDER	CYLINDER	ZYLINDER	C- 563740-010V
90450-0652		GAVELVINKEL	CYLINDER BRACKET	ZYLINDERBEFESTIGUNG	C- 554888-010V
90450-0653		MIDJESTÖD	CYLINDER BRACKET	ZYLINDERBEFESTIGUNG	C- 554888-010V
4- 106758		BRICKA	WASHER	SCHEIBE	C- 295310-070V
4- 107000		FJÄDER	SPRING	FEDER	C- 74767-010V
4- 111426		TRYCKFJÄDER	COMPRESSION SPRING	DRUCKFEDER	C- 232781-040V
4- 118327		TRYCKFJÄDER	COMPRESSION SPRING	DRUCKFEDER	C- 550711-020V
4- 118344		BRICKA	WASHER	SCHEIBE	C- 752628-020V
4- 118582		TRYCKFJÄDER	COMPRESSION SPRING	DRUCKFEDER	C- 491871-010V

PART NO	LAST ECN	BENÄMNING	TITLE	BENENNUNG	GROUP NO
4- 120902		SUGKOPP	SUCTION CUP	SAUGKLETTE	C- 469173-010V
					C- 469316-020V
4- 120904		BUSSNING	BUSHING	BUCHSE	C- 469173-010V
4- 179595		SLUTARE	CLOSING DEVICE	VERSCHLUSS	C- 469452-030V
					C- 751800-020V
4- 179596		FLOTTÖR	FLOAT	SCHWIMMER	C- 469452-030V
					C- 751800-020V
4- 180671		BRICKA	WASHER	SCHEIBE	C- 562679-010V
4- 206913		LÅSBYGEL	LOCKING LOOP	SCHLIESSB~GEL	C- 450101-010V
					C- 450101-020V
4- 207658-0001		VARNINGSSKYLT	CAUTION SIGN	WARNSCHILD	C- 469374-040V
4- 208173		AXEL	SHAFT	WELLE	C- 37877-030V
3- 208361-0002		TRAPPSTEG	STAIR	STUFE	C- 560671-010V
4- 209145		STRYPSKRUV	THROTTLE SCREW	DROSSELSCHRAUBE	C- 272408-050V
					C- 456976-050V
4- 209146		KONTRAMUTTER	BARRIER NUT	KONTRAMUTTER	C- 272408-050V
					C- 456976-050V
4- 209181		LOCK	LID	DECKEL	C- 456836-040V
4- 209183		RING	RING	RING	C- 456836-040V
					RK- 978212-010V
4- 209331-0001		KUGGHJUL	GEAR WHEEL	ZAHNRAD	C- 567695-010V
					C- 272028-060V
4- 209331-0005		KUGGHJUL	GEAR WHEEL	ZAHNRAD	C- 272028-060V
4- 209331-0006		KUGGHJUL	GEAR WHEEL	ZAHNRAD	C- 272028-060V
4- 209331-0009		KUGGHJUL	GEAR WHEEL	ZAHNRAD	C- 272028-060V
4- 209331-0011		KUGGHJUL	GEAR WHEEL	ZAHNRAD	C- 566507-010V
4- 209331-0011		KUGGHJUL	GEAR WHEEL	ZAHNRAD	C- 272028-060V
4- 222531-0001		AXEL	SHAFT	WELLE	C- 978280-010V
3- 226097-0002		BRYTRULLE	BENDING ROLLER	UMLENKROLLE	C- 554888-010V
4- 226098		LAGER	BEARING	LAGER	C- 554888-010V
4- 228844		FÄSTKLOTS	MOUNTING BLOCK	BEFESTIGUNGSKLOTZ	C- 456103-010V
4- 228845		FÄSTKLOTS	MOUNTING BLOCK	BEFESTIGUNGSKLOTZ	C- 456103-010V
4- 228846-0001		DISTANS	SPACER	DISTANZ	C- 499082-010V
4- 228846-0002		DISTANS	SPACER	DISTANZ	C- 499082-010V
4- 228846-0003		DISTANS	SPACER	DISTANZ	C- 499082-010V
3- 228850-0018		GLIDSKENA	SLIDE RAIL	GLEITSCHIENE	C- 456103-010V
4- 229201-0001		DISTANS	SPACER	DISTANZ	C- 456103-010V
4- 229201-0025		DISTANS	SPACER	DISTANZ	C- 456103-010V
4- 229202		FÄSTKLOTS	MOUNTING BLOCK	BEFESTIGUNGSKLOTZ	C- 456103-010V
4- 229207		LAGERHYLSA	BEARING SLEEVE	LAGERHUELSE	C- 456103-010V
C- 229400-070V	13242 89-10-12	HASPELDON	UNREELING DEVICE	HASPELEINHEIT	C- 751796-030V
3- 229402		MATARVALS	ROLLER	WALZE	C- 229400-070V
3- 229403		ARM	ARM	ARM	C- 229400-070V
3- 229404		BYGEL	BOW CLAMP	BUEGEL	C- 229400-070V
4- 229405		LAGERHUS	BEARING BRACKET	LAGERBOCK	C- 229400-070V
4- 229406		TRYCKRULLE	PRESSURE ROLLER	DRUCKROLLE	C- 229400-070V
4- 229408		STÅNG	ROD	STANGE	C- 229400-070V
4- 229409		LAGER	BEARING	LAGER	C- 229400-070V
4- 229410		SPÄRR	BARRIER	SPERRE	C- 229400-070V
4- 229411		AXEL	SHAFT	WELLE	C- 229400-070V
4- 229412		AXEL	SHAFT	WELLE	C- 229400-070V
4- 229413		AXEL	SHAFT	WELLE	C- 229400-070V
4- 229414		VIKT	WEIGHT	GEWICHT	C- 229400-070V
4- 229508-0001		PINNSKRUV	STUD SCREW	STIFTBOLZEN	C- 499082-010V
4- 229508-0002		PINNSKRUV	STUD SCREW	STIFTBOLZEN	C- 499082-010V
4- 229508-0003		PINNSKRUV	STUD SCREW	STIFTBOLZEN	C- 499082-010V
4- 229508-0014		PINNSKRUV	STUD SCREW	STIFTBOLZEN	C- 499082-010V
4- 229508-0033		PINNSKRUV	STUD SCREW	STIFTBOLZEN	C- 456103-010V
4- 229516		PINNE	PEG	STIFT	C- 736796-020V
					C- 499082-010V
4- 229760-0014		PINNSKRUV	STUD SCREW	STIFTBOLZEN	C- 456103-010V
4- 229775		DISTANS	SPACER	DISTANZ	C- 37877-030V
4- 230007		MUFF	MUFF	MUFFE	C- 735183-020V
4- 230107		BRICKA	WASHER	SCHEIBE	C- 295891-030V
4- 230551		PACKNING	GASKET	DICHTUNG	C- 295778-040V
					C- 469452-030V
					C- 751800-020V
4- 230706		GLIDSKENA	SLIDE RAIL	GLEITSCHIENE	C- 456103-010V
4- 230918		BRICKA	WASHER	SCHEIBE	C- 566318-010V
					C- 752960-010V
					C- 752971-010V
					C- 456457-040V
					C- 751860-020V
3- 232772		FÄSTVINKEL	FASTENING BRACKET	BEFESTIGUNGSWINKEL	C- 229400-070V
C- 232781-040V	17188 92-02-03	REVOLVERSTÄLL	REVOLVING HEAD	REVOLVER	C- 751796-030V
1- 232784		LAGERHUS	BEARING HOUSING	LAGERGEHÄUSE	C- 232781-040V
3- 232786		INDEXFLÄNS	FLANGE	FLANSCH	C- 232781-040V
3- 232787		AXELTAPP	AXLE PIN	ACHSENZAPFEN	C- 232781-040V
4- 232788		LOCK	LID	DECKEL	C- 232781-040V
4- 232789		FJÄDERHUS	SPRING HOUSING	FEDERHAUS	C- 232781-040V
4- 232790		DISTANSRÖR	SPACER PIPE	DISTANZROHR	C- 232781-040V
4- 232791		DISTANSRING	SPACER RING	DISTANZRING	C- 232781-040V
4- 232792		CYLINDERFÄSTE	CYLINDER BRACKET	ZYLINDERBEFESTIGUNG	C- 232781-040V
4- 232793		TÄCKPLÅT	COVERING PLATE	DECKBLECH	C- 232781-040V
4- 232794		LÅSKON	CONE	KEGEL	C- 232781-040V
2- 232918		MANOMETERRÖR	PRESSURE GAUGE TUBE	MANOMETERROHR	C- 266215-010V
4- 232979		TRYCKRULLE	PRESSURE ROLLER	DRUCKROLLE	C- 441000-050V
4- 234517		STIFT	TACK	STIFT	CR- 548040-010V
4- 234844		HJUL	WHEEL	RAD	C- 469736-040V
					C- 546285-010V
3- 236628		KONSOL	CANTILEVER	KONSOLE	C- 237776-040V
3- 236629		VÄGGKONSOL	WALL BRACKET	WANDKONSOLE	C- 237776-040V

PART NO	LAST ECN	BENÄMNING	TITLE	BENENNUNG	GROUP NO
3- 236631		HANDTAG	HANDLE	GRIFF	C- 237776-040V
4- 236633		VRED	COCK HANDLE	GRIFF	C- 237776-040V
4- 236634		AXEL	SHAFT	WELLE	C- 237776-040V
C- 237776-040V	12422 89-05-23	PAPPERSSKYDD	PAPER GUARD	PAPIERSCHUTZ	C- 570501-010V
					C- 751796-030V
4- 237810		LEDPLÅT	SHEET	BLECH	C- 229400-070V
4- 237812		TOPPLÅT	SHEET	BLECH	C- 229400-070V
3- 237825		LAGER	BEARING	LAGER	C- 232781-040V
3- 237826		LAGER	BEARING	LAGER	C- 232781-040V
3- 237827-0001		RULLAXEL	ROLLER SHAFT	ROLLENACHSE	C- 232781-040V
3- 237827-0002		RULLAXEL	ROLLER SHAFT	ROLLENACHSE	C- 232781-040V
4- 238309		FJÄDER	SPRING	FEDER	C- 565417-010V
3- 239399		BÄRSKENA	CARRYING BAR	TRAGSCHIENE	C- 456103-010V
4- 239403		GLIDSKENA	SLIDE RAIL	GLEITSCHIENE	C- 456103-010V
4- 239440		AXEL	SHAFT	WELLE	C- 456309-050V
4- 240797		HANDTAG	HANDLE	GRIFF	C- 256222-020V
4- 243073		LÅSMUTTER	LOCK NUT	KONTRAMUTTER	C- 450125-010V
4- 243075		RATT	SHIFTER HANDLE	RAD	C- 450125-010V
4- 243076		STÄLLSKRUV	SCREW	SCHRAUBE	C- 450125-010V
4- 243077		SKRUV	SCREW	SCHRAUBE	C- 450125-010V
4- 243078		STYRAXEL	GUIDE SHAFT	FUEHRUNGSACHSE	C- 450125-010V
4- 243081		LÅSBLECK	SECURING PLATE	SCHLIESSBLECH	C- 450125-010V
4- 243084		DISTANSHYLSA	SPACER SLEEVE	DISTANZHUELSE	C- 450125-010V
3- 243132		SKYDDSPLÅT	PROTECTION PLATE	SCHUTZBLECH	C- 37877-030V
4- 243133		SKÄRMPLÅT	SHIELD PLATE	ABSCHIRMBLECH	C- 37877-030V
3- 243151		AXEL	SHAFT	WELLE	C- 456032-010V
1- 243218		KONSOL	CANTILEVER	KONSOLE	C- 456032-010V
2- 243234		RAM	FRAME	RAHMEN	C- 232781-040V
3- 245039		STYRHJUL	GUIDE WHEEL	FUEHRUNGSROLLE	C- 456103-010V
3- 245189-0001		ANSLUTNING	ATTACHMENT	ANSCHLUSS	C- 295891-030V
4- 245221		STOPP	STOP	STOPP	C- 37877-030V
3- 246342		PAPPERSSTÖD	PAPER SUPPORT	PAPIERSTUETZE	C- 295891-030V
4- 246343		FÄSTVINKEL	FASTENING BRACKET	BEFESTIGUNGSWINKEL	C- 295891-030V
4- 246344		VÄRMESKYDD	HEAT GUARD	WÄRMESCHUTZ	C- 295891-030V
C- 246388-0601	17887 93-01-27	TRYCKRULLE ÖVRE	PRESSURE ROLLER	DRUCKROLLE	B- 648107-100V
4- 247170		LAGERLOCK	BEARING COVER	LAGERDECKEL	C- 272004-040V
					C- 272024-040V
4- 247172		DISTANSRING	SPACER RING	DISTANZRING	C- 256014-060V
					C- 272028-060V
					C- 751088-030V
4- 247173		LAGERSÄTE	BEARING SEAT	LAGERSITZ	C- 272028-060V
4- 247239		HJUL	WHEEL	RAD	C- 256014-060V
4- 247248		PINNE	PEG	STIFT	C- 256014-060V
4- 247349		STYRNING	STEERING	FUEHRUNG	C- 272021-060V
4- 247355		LÅSBRICKA	LOCK WASHER	SCHLIESSCHEIBE	C- 272021-060V
4- 247357		KEDJEHJUL	SPROCKET	KETTENRAD	C- 272021-060V
4- 247358		RATT	SHIFTER HANDLE	RAD	C- 272021-060V
4- 250588		FLÄNS	FLANGE	FLANSCH	C- 560202-010V
					C- 752247-010V
4- 250590		LAGERLOCK	BEARING COVER	LAGERDECKEL	C- 752627-010V
4- 250592		BRICKA	WASHER	SCHEIBE	C- 272028-060V
3- 251279		ELEMENTRÖR 2330W	COIL HEATER	ELEMENTROHR	C- 272028-060V
					C- 295668-030V
4- 251358		FLÄNS	FLANGE	FLANSCH	C- 295891-030V
					C- 237776-040V
					C- 229400-070V
1- 251440		RAM	FRAME	RAHMEN	C- 237776-040V
1- 251449		KÅPA	COVER	DECKEL	C- 229400-070V
3- 251490		FÄSTVINKEL	FASTENING BRACKET	BEFESTIGUNGSWINKEL	C- 229400-070V
4- 251493		GAFFEL	FORK	GABEL	C- 295891-030V
4- 251494		AXEL	SHAFT	WELLE	C- 246388-060V
4- 251495		AXEL	SHAFT	WELLE	C- 246388-060V
4- 251496		AXEL	SHAFT	WELLE	C- 246388-060V
4- 251498		SPÄRR	BARRIER	SPERRE	C- 246388-060V
4- 251501		FÄSTVINKEL	FASTENING BRACKET	BEFESTIGUNGSWINKEL	C- 246388-060V
4- 251502		VÄRMESKYDD	HEAT GUARD	WÄRMESCHUTZ	C- 295891-030V
4- 251503		HÅLLARE	HOLDER	HALTER	C- 295891-030V
4- 251504		HÅLLARE	HOLDER	HALTER	C- 295891-030V
4- 251505		DISTANS	SPACER	DISTANZ	C- 295891-030V
1- 251539		KLYKA	HOLDER	HALTER	C- 295891-030V
4- 252766-0001		ISOLERRÖR	INSULATING PIPE	ISOLIERROHR	C- 232781-040V
4- 252766-0002		ISOLERRÖR	INSULATING PIPE	ISOLIERROHR	CR- 256547-040V
4- 252926		TRYCKFJÄDER	COMPRESSION SPRING	DRUCKFEDER	CR- 256547-040V
4- 253107		BRICKA	WASHER	SCHEIBE	C- 469173-010V
					C- 752645-020V
					C- 752646-020V
					C- 752913-010V
					C- 752914-010V
4- 255064		BUSSNING	BUSHING	BUCHSE	C- 456032-010V
4- 255119		BRICKA	WASHER	SCHEIBE	C- 469173-010V
1- 255301		VÄRMESKENA	HEATING RAIL	WÄRMESCHIENE	C- 37877-030V
3- 255368		MANOMETERRÖR	PRESSURE GAUGE TUBE	MANOMETERROHR	C- 272560-060V
4- 255416		PLATTA	PLATE	PLATTE	C- 272343-050V
4- 255417		BRICKA	WASHER	SCHEIBE	C- 272343-050V
4- 255420		BRYTRULLE	BENDING ROLLER	UMLENKROLLE	C- 237776-040V
					C- 229400-070V
					C- 237776-040V
3- 255513		AXEL	SHAFT	WELLE	CR- 548040-010V
4- 255515		LOCK	LID	DECKEL	CR- 548040-010V
4- 255516		LAGERFÄSTE	BRACKET	BEFESTIGUNGSHALTER	CR- 548040-010V
4- 255519		RING	RING	RING	CR- 548040-010V
4- 255520		PASSRING	RING	RING	CR- 548040-010V

PART NO	LAST ECN	BENÄMNING	TITLE	BENENNUNG	GROUP NO
4- 255593		AXEL	SHAFT	WELLE	C- 283612-020V
G1- 255609		ARM KLIPPBACK	ARM CUTTING JAW	ARM	C- 256951-050V
					C- 256952-050V
4- 255653		FLÄNSBUSSNING	FLANGE BUSHING	FLANSCHBUCHSE	CR- 256204-050V
					CR- 256205-050V
					CR- 256212-050V
					CR- 256213-050V
					C- 256951-050V
					C- 256952-050V
4- 255742		TRYCKFJÄDER	COMPRESSION SPRING	DRUCKFEDER	CR- 256204-050V
					CR- 256205-050V
4- 255801		STOPPRING	RETAINING RING	SICHERUNGSRING	CR- 256204-050V
					CR- 256205-050V
2- 255870		VENTILHUS	VALVE HOUSING	VENTILGEHÄUSE	C- 256084-050V
3- 255871		KUTS	PIECE	BLOCK	C- 256084-050V
3- 255874		LAGERLOCK	BEARING COVER	LAGERDECKEL	C- 476859-020V
4- 255875		BUSSNING	BUSHING	BUCHSE	C- 476859-020V
					C- 256084-050V
3- 255879		RÖR	PIPE	ROHR	C- 456555-040V
3- 255897-0004		KUGGHJUL	GEAR WHEEL	ZAHNRAD	C- 566507-010V
					C- 272028-060V
3- 255897-0005		KUGGHJUL	GEAR WHEEL	ZAHNRAD	C- 272028-060V
3- 255897-0007		KUGGHJUL	GEAR WHEEL	ZAHNRAD	C- 567695-010V
					C- 272028-060V
3- 255897-0008		KUGGHJUL	GEAR WHEEL	ZAHNRAD	C- 272028-060V
					C- 978260-020V
4- 255898		NAV	HUB	NABE	C- 272028-060V
4- 255899		NAV	HUB	NABE	C- 272028-060V
3- 255905		RÖR	PIPE	ROHR	C- 456555-040V
C- 255921-040V	19266 93-06-01	NEDRE PÅFYLLNINGSRÖR	LOWER FILLING TUBE	FUELLROHR	B- 648111-100V
4- 255939		BRICKA	WASHER	SCHEIBE	C- 456180-010V
4- 255940		DISTANS	SPACER	DISTANZ	C- 456180-010V
3- 255942		GLIDKLOTS	SLIDER	GLEITKLOTZ	C- 456180-010V
3- 255943		HÅLLARE	HOLDER	HALTER	C- 456180-010V
4- 255969		AXEL	SHAFT	WELLE	C- 456309-050V
4- 255970		BUSSNING	BUSHING	BUCHSE	C- 456309-050V
4- 255977		AXEL	SHAFT	WELLE	C- 469091-030V
2- 255978		GAFFEL	FORK	GABEL	C- 469091-030V
4- 255981		MUTTER	NUT	MUTTER	C- 529933-010V
					C- 529933-020V
					C- 529933-010V
					C- 529933-020V
					C- 529933-010V
					C- 529933-020V
					C- 469091-030V
4- 255986		HJUL	WHEEL	RAD	C- 272021-060V
4- 255995		SKRUV	SCREW	SCHRAUBE	C- 272025-030V
4- 256005		PACKNING	GASKET	DICHTUNG	C- 256014-060V
4- 256006		AXELFÄSTE	AXLE SUPPORT	ACHSENHALTER	C- 256014-060V
4- 256007		AXELFÄSTE	AXLE SUPPORT	ACHSENHALTER	C- 256014-060V
4- 256010		MUTTER	NUT	MUTTER	C- 256014-060V
C- 256014-060V	19335 93-02-22	BAD	BATH	BAD	B- 648111-100V
4- 256022		BUSSNING	BUSHING	BUCHSE	C- 272025-030V
C- 256055-060V	19542 93-04-05	VARMLUFTELEMENT LS	HOT AIR ELEMENT	WARMLUFTSELEMENT	B- 648111-100V
3- 256082		ÖVERFALL	CAP	UEBERFALL	C- 256951-050V
					C- 256952-050V
C- 256084-050V	18737 92-12-04	VÄXELVENTIL	CHANGE-OVER VALVE	WECHSELVENTIL	B- 648111-100V
C- 256095-0501	17875 92-11-24	VARMLUFTELEMENT KS	HOT AIR ELEMENT	WARMLUFTSELEMENT	B- 648111-100V
3- 256112		FÄSTE	BRACKET	BEFESTIGUNGSHALTER	C- 256095-050V
3- 256148		HÅLLARE	HOLDER	HALTER	C- 257146-020V
4- 256150		SKRUV	SCREW	SCHRAUBE	C- 257146-020V
4- 256163		AXEL	SHAFT	WELLE	C- 272021-060V
4- 256170		DROPPLÅT	DRIP PLATE	TROPFBLECH	C- 272021-060V
C- 256173-050V	19159 92-12-07	SNÄCKVÄXEL	WORM GEAR	SCHNECKENGETRIEBE	B- 648103-090V
3- 256176		KUGGREMHJUL	GEAR WHEEL	ZAHNRAD	C- 256173-050V
3- 256177		AXEL	SHAFT	WELLE	C- 256173-050V
3- 256178		FÄSTRING	FIXING RING	BEFESTIGUNGSRING	C- 256173-050V
4- 256179		DISTANSHYLSA	SPACER SLEEVE	DISTANZHUELSE	C- 256173-050V
4- 256180		DISTANS	SPACER	DISTANZ	C- 256173-050V
4- 256181		DISTANSRÖR	SPACER PIPE	DISTANZROHR	C- 256173-050V
4- 256190		MUTTER	NUT	MUTTER	C- 272652-030V
C- 256197-0501	19159 92-12-07	OKLYFTARARM HÖGER	ARM	ARM	B- 648103-090V
C- 256197-0502	19159 92-12-07	OKLYFTARARM VÄNSTER	ARM	ARM	B- 648103-090V
C- 256199-0401	15166 90-09-05	REMSTRÄCKARE	BELT STRETCHER	STREIFENSTRECKER	B- 648103-090V
C- 256200-0301	6317 83-11-03	MELLANAXEL	INTERMEDIARY SHAFT	ZWISCHENWELLE	B- 648103-090V
C- 256202-050V	19269 93-05-31	KURVPAKET IH	CURVE PACK	KURVENPAKET	B- 648103-090V
CR- 256204-050V	19270 93-05-31	KLIPPBACK HÖGER	CUTTING JAW	SCHNEIDBACKE	B- 648104-100V
CR- 256205-050V	19270 93-05-31	KLIPPBACK VÄNSTER	CUTTING JAW	SCHNEIDBACKE	B- 648104-100V
C- 256206-020V	19270 93-05-31	STEGNINGSANORDNING HÖGER	DESIGN CORRECTION DEVICE	KORRIGIERUNGSGERÄT	B- 648104-100V
C- 256207-020V	19270 93-05-31	STEGNINGSANORDNING VNSTR	DESIGN CORRECTION DEVICE	KORRIGIERUNGSGERÄT	B- 648104-100V
CR- 256208-040V	19270 93-05-31	KNIVHÅLLARE	KNIFE HOLDER	MESSERHALTER	B- 648104-100V
CR- 256209-030V	19270 93-05-31	VOLYMKLAFF MONT.UTF.1	VOLUME FLAP	VOLUMENKLAPPE	B- 648104-100V
CR- 256210-030V	19270 93-05-31	VOLYMKLAFF MONT.UTF.2	VOLUME FLAP	VOLUMENKLAPPE	B- 648104-100V
CR- 256212-050V	19270 93-05-31	TRYCKBACK HÖGER	PRESSURE JAW RIGHT	DRUCKBACKE	B- 648104-100V
CR- 256213-050V	19270 93-05-31	TRYCKBACK VÄNSTER	PRESSURE JAW LEFT	DRUCKBACKE	B- 648104-100V
CR- 256214-040V	19270 93-05-31	TRYCKSKENA IH	PRESSURE RAIL	DRUCKSCHIENE	B- 648104-100V
C- 256217-0401	7033 84-08-08	GEJDRAR	WAY	FUEHRUNG	B- 648104-100V
C- 256222-020V	19270 93-05-31	VOLYMKURVDEL IH	VOLUM CURVE PIECE	VOLUM KURVENTEIL	B- 648104-100V
C- 256223-040V	19270 93-05-31	STÖDRULLAR	SUPPORT ROLLER	ST~TZROLLE	B- 648104-100V
4- 256248-0001		LOCK	LID	DECKEL	C- 752645-020V
					C- 752646-020V
					C- 752913-010V

PART NO	LAST ECN	BENÄMNING	TITLE	BENENNUNG	GROUP NO
3- 256276		AXEL	SHAFT	WELLE	C- 752914-010V
4- 256279		VINKEL	ANGLE	WINKEL	C- 272765-070V
4- 256280		TAPP	DOWEL	ZAPFEN	C- 441307-030V
					C- 441304-040V
4- 256309		AXEL	SHAFT	WELLE	C- 441307-030V
4- 256312		BRICKA	WASHER	SCHEIBE	C- 441304-040V
4- 256398		LOCK	LID	DECKEL	C- 441304-040V
					C- 752645-020V
					C- 752646-020V
4- 256400		AXEL	SHAFT	WELLE	C- 752913-010V
					C- 752914-010V
					C- 752645-020V
					C- 752646-020V
4- 256406		GAVELPLÅT	GABLE PLATE	STIRNWANDBLECH	C- 752913-010V
					C- 752914-010V
					C- 752645-020V
					C- 752646-020V
4- 256409		BRICKA	WASHER	SCHEIBE	C- 752913-010V
					C- 752914-010V
					C- 752645-020V
					C- 752646-020V
C- 256410-0601	18961 93-01-25	INDEXERINGSENHET	INDEXING UNIT	INDEXIERUNGSEINHEIT	C- 752913-010V
3- 256418		LAGERBOCK	BEARING BRACKET	LAGERBOCK	C- 752914-010V
4- 256421		REMHJUL	PULLEY	RIEMENSCHEIBE	B- 648105-100V
4- 256422		BRICKA	WASHER	SCHEIBE	C- 491814-020V
					C- 256197-050V
					C- 256197-050V
4- 256426-0001		BRICKA	WASHER	SCHEIBE	C- 491814-020V
					C- 491815-020V
					C- 256197-050V
					C- 491814-020V
4- 256426-0002		BRICKA	WASHER	SCHEIBE	C- 491815-020V
					C- 256197-050V
					C- 491814-020V
					C- 491815-020V
4- 256427		AXEL	SHAFT	WELLE	C- 256197-050V
					C- 491814-020V
					C- 491815-020V
CR- 256436-060V	19267 93-05-31	TRYCKDON	PRESSURE DEVICE	ANPRESSER	B- 648105-100V
CR- 256436-0601	19267 93-05-31	TRYCKDON	PRESSURE DEVICE	ANPRESSER	C- 570143-020V
CR- 256436-0603	19267 93-05-31	TRYCKDON	PRESSURE DEVICE	ANPRESSER	C- 570141-020V
CR- 256436-0607	19267 93-05-31	TRYCKDON	PRESSURE DEVICE	ANPRESSER	C- 570145-020V
C- 256437-0201	7911 85-06-11	LAMELLAXEL	DISC COUPLING	LAMELLENWELLE	B- 648105-100V
C- 256438-0201	8267 85-10-14	SNÄCKVÄXEL	WORM GEAR	SCHNECKENGETRIEBE	B- 648105-100V
4- 256461		TAPP	DOWEL	ZAPFEN	CR- 256436-060V
4- 256462		SKRUV	SCREW	SCHRAUBE	CR- 256436-060V
4- 256463		BRICKA	WASHER	SCHEIBE	CR- 256436-060V
4- 256472		BRICKA	WASHER	SCHEIBE	C- 256197-050V
					C- 491814-020V
1- 256487		KLIPPBACK	CUTTING JAW	SCHNEIDBACKE	C- 491815-020V
					CR- 256204-050V
3- 256515		ÄNDSTYCKE	END PIECE	ENDST~CK	CR- 256205-050V
					C- 491814-020V
4- 256516		ÖVERFALL	CAP	UEBERFALL	C- 491815-020V
					C- 491814-020V
					C- 491815-020V
4- 256517		SKRUV	SCREW	SCHRAUBE	C- 572760-010V
					C- 491814-020V
					C- 491815-020V
CR- 256547-040V	19267 93-05-31	FF-ELEMENT	ELEMENT	ELEMENT	B- 648105-100V
CR- 256547-0401	19267 93-05-31	FF-ELEMENT	ELEMENT	ELEMENT	C- 570143-020V
CR- 256547-0403	19267 93-05-31	FF-ELEMENT	ELEMENT	ELEMENT	C- 570141-020V
CR- 256547-0407	19267 93-05-31	FF-ELEMENT	ELEMENT	ELEMENT	C- 570145-020V
1- 256548		VÄRMEKAMMARE	HEATING CHAMBER	HEIZKAMMER	CR- 256547-040V
4- 256557-0001		BRICKA	WASHER	SCHEIBE	CR- 256212-050V
					CR- 256213-050V
4- 256557-0002		BRICKA	WASHER	SCHEIBE	CR- 256212-050V
					CR- 256213-050V
4- 256557-0003		BRICKA	WASHER	SCHEIBE	CR- 256212-050V
					CR- 256213-050V
4- 256576		RULLE	ROLL	ROLLE	CR- 256212-050V
					CR- 256213-050V
4- 256607		AXELTAPP	AXLE PIN	ACHSENZAPFEN	CR- 256204-050V
					CR- 256205-050V
4- 256621		BRICKA	WASHER	SCHEIBE	C- 256206-020V
					C- 256207-020V
4- 256626		ÖRA	EAR	OHR	CR- 256204-050V
					CR- 256205-050V
4- 256628		KUTS	PIECE	BLOCK	C- 256951-050V
					C- 256952-050V
4- 256629-0001		AXELTAPP	AXLE PIN	ACHSENZAPFEN	C- 256951-050V
					C- 256952-050V
4- 256629-0003		AXELTAPP	AXLE PIN	ACHSENZAPFEN	C- 256951-050V
					C- 256952-050V
3- 256640		HÅLLARE	HOLDER	HALTER	C- 456588-030V
4- 256641		BEN	LEG	BEIN	C- 456588-030V
4- 256653		DISTANS	SPACER	DISTANZ	C- 256202-050V
3- 256659		MANÖVERSTÅNG	OPERATING ROD	MANÖVERSTANGE	CR- 256204-050V
					CR- 256205-050V
C- 256665-0201	10505 87-06-22	LUCKA VÄNSTER	OPENING	DECKEL	B- 648102-100V
C- 256665-0202	10505 87-06-22	LUCKA HÖGER	OPENING	DECKEL	B- 648102-100V
C- 256674-0301	12530 90-01-05	BOTTENVENTIL	BOTTOM VALVE	BODENVENTIL	B- 648105-100V

PART NO	LAST ECN	BENÄMNING	TITLE	BENENNUNG	GROUP NO
3- 256689		BLÅSMUNSTYCKE	AIR NOZZLE	BLASMUNDSTUECK	C- 256095-050V
4- 256704		BRICKA	WASHER	SCHEIBE	C- 256951-050V
					C- 256952-050V
4- 256705		MELLANLÄGG	LACE	ZWISCHENLAGE	C- 256206-020V
					C- 256207-020V
4- 256706		LAGERPLATTA	BEARING PLATE	LAGERPLATTE	CR- 256204-050V
					CR- 256205-050V
4- 256707		FÄSTE	BRACKET	BEFESTIGUNGSHALTER	C- 256206-020V
					C- 256207-020V
4- 256710		AXEL	SHAFT	WELLE	C- 256951-050V
					C- 256952-050V
CR- 256712-050V	19267 93-05-31	NEDDRAGARE	PULL-DOWN DEVICE	ABZIEHER	B- 648105-100V
CR- 256712-0501	19267 93-05-31	NEDDRAGARE	PULL-DOWN DEVICE	ABZIEHER	C- 570143-020V
CR- 256712-0503	19267 93-05-31	NEDDRAGARE	PULL-DOWN DEVICE	ABZIEHER	C- 570141-020V
CR- 256712-0507	19267 93-05-31	NEDDRAGARE	PULL-DOWN DEVICE	ABZIEHER	C- 570145-020V
4- 256738		BRICKA	WASHER	SCHEIBE	C- 256217-040V
4- 256739		SKRUV	SCREW	SCHRAUBE	C- 256217-040V
1- 256769		KLIPPBACK	CUTTING JAW	SCHNEIDBACKE	CR- 256204-050V
					CR- 256205-050V
C- 256806-0301	7499 85-02-11	VEVMEKANISM	CRANK	KURBEL	B- 648103-090V
4- 256812		AXEL	SHAFT	WELLE	C- 256806-030V
4- 256814		BRICKA	WASHER	SCHEIBE	C- 256806-030V
4- 256816		RÖR	PIPE	ROHR	C- 256806-030V
4- 256828		FJÄDER	SPRING	FEDER	C- 256806-030V
3- 256829		SKRUV	SCREW	SCHRAUBE	C- 256217-040V
					C- 256951-050V
					C- 256952-050V
4- 256831-0001		DISTANS	SPACER	DISTANZ	C- 256951-050V
					C- 256952-050V
4- 256831-0002		DISTANS	SPACER	DISTANZ	C- 256951-050V
					C- 256952-050V
4- 256831-0003		DISTANS	SPACER	DISTANZ	C- 256217-040V
					C- 256951-050V
					C- 256952-050V
4- 256831-0004		DISTANS	SPACER	DISTANZ	C- 256217-040V
G1- 256834		OK	YOKE	JOCH	C- 256951-050V
					C- 256952-050V
C- 256843-060V	17888 93-01-27	STATIV, SERVICEENHET	MACHINE BODY,SERVICE UNI	STATIV	B- 648106-100V
G1- 256849		VOLYMKLAFF 125 ML	VOLUMEFLAP 125 ML	VOLUMENKLAPPE	CR- 256209-030V
					CR- 256210-030V
4- 256859		SKRUV	SCREW	SCHRAUBE	CR- 256209-030V
					CR- 256210-030V
4- 256860		RULLE	ROLL	ROLLE	CR- 256209-030V
					CR- 256210-030V
G1- 256869		ARM TRYCKBACK	ARM PRESSURE JAW	ARM	C- 256951-050V
					C- 256952-050V
3- 256870		FÄSTE	BRACKET	BEFESTIGUNGSHALTER	C- 256951-050V
					C- 256952-050V
C- 256873-0401	13806 89-11-22	DÖRR	DOOR	TUER	B- 648106-100V
C- 256875-0201	17888 93-01-27	LUCKA	OPENING	DECKEL	B- 648106-100V
4- 256882		BRICKA	WASHER	SCHEIBE	CR- 256214-040V
4- 256889		PLUNGE	PLUNGER	PLUNGER	C- 256951-050V
					C- 256952-050V
4- 256890		MELLANLÄGG	LACE	ZWISCHENLAGE	C- 256951-050V
					C- 256952-050V
4- 256891		MELLANLÄGG	LACE	ZWISCHENLAGE	C- 256951-050V
					C- 256952-050V
4- 256899		AXEL	SHAFT	WELLE	C- 469501-040V
4- 256907		BRICKA	WASHER	SCHEIBE	C- 456455-030V
4- 256912		TAPP	DOWEL	ZAPFEN	C- 256199-040V
4- 256915		DISTANSRING	SPACER RING	DISTANZRING	C- 256199-040V
4- 256916		STAG	STRUT	VERSTREBUNG	C- 256199-040V
4- 256918		BRICKA	WASHER	SCHEIBE	C- 256199-040V
C- 256951-050V	17920 93-01-25	OK HÖGER	YOKE	JOCH	B- 648104-100V
C- 256952-050V	17920 93-01-25	OK VÄNSTER	YOKE	JOCH	B- 648104-100V
2- 256953		BLOCK HÖGER	BLOCK RIGHT	BLOCK	C- 256951-050V
2- 256954		BLOCK VÄNSTER	BLOCK LEFT	BLOCK	C- 256952-050V
3- 256975		SKYDD	PROTECTION	SCHUTZ	C- 571918-010V
3- 256984		BRYTRULLE	BENDING ROLLER	UMLENKROLLE	C- 560202-010V
					C- 752628-020V
4- 256985		AXEL	SHAFT	WELLE	C- 560202-010V
4- 256985		AXEL	SHAFT	WELLE	C- 752247-010V
					C- 752627-010V
4- 256986-0002		STAG	STRUT	VERSTREBUNG	C- 456032-010V
4- 256986-0003		STAG	STRUT	VERSTREBUNG	C- 456032-010V
4- 256986-0004		STAG	STRUT	VERSTREBUNG	C- 456032-010V
4- 256986-0005		STAG	STRUT	VERSTREBUNG	C- 295891-030V
4- 256986-0006		STAG	STRUT	VERSTREBUNG	C- 295891-030V
4- 256986-0007		STAG	STRUT	VERSTREBUNG	C- 295891-030V
4- 257000		NIPPEL	NIPPLE	NIPPEL	C- 257381-030V
					C- 257382-030V
3- 257040		GAFFEL	FORK	GABEL	C- 456309-050V
3- 257041		GAFFEL	FORK	GABEL	C- 456309-050V
4- 257042		FÄSTE	BRACKET	BEFESTIGUNGSHALTER	C- 456309-050V
4- 257043		VINKELFÄSTE	ANGLE BRACKET	WINKELBEFESTIGUNG	C- 456309-050V
4- 257044		RULLE	ROLL	ROLLE	C- 456309-050V
4- 257090		RATT	SHIFTER HANDLE	RAD	C- 441304-040V
4- 257141		STOPPRING	RETAINING RING	SICHERUNGSRING	C- 752645-020V
					C- 752646-020V
					C- 752913-010V
					C- 752914-010V
C- 257146-0201	19553 93-04-16	LOCK	LID	DECKEL	B- 648106-100V

PART NO	LAST ECN	BENÄMNING	TITLE	BENENNUNG	GROUP NO
4- 257151		FÄSTE	BRACKET	BEFESTIGUNGSHALTER	C- 271469-020V
4- 257174		TÄTNINGSBRICKA	SEALING WASHER	DICHTUNGSSCHEIBE	C- 256173-050V
4- 257175		BRICKA	WASHER	SCHEIBE	C- 441486-040V
4- 257179		KUGGHJUL	GEAR WHEEL	ZAHNRAD	C- 256173-050V
					C- 256806-030V
4- 257190		FÖRDELNINGSBLOCK	SEPARATION BLOCK	VERTEILUNGSBLOCK	C- 271261-050V
4- 257202		SIL	STRAINER	SIEB	C- 751373-010V
4- 257213		BUSSNING	BUSHING	BUCHSE	C- 256951-050V
					C- 256952-050V
4- 257231		FÖNSTER	WINDOW	FENSTER	C- 256665-020V
4- 257249		SKRUV	SCREW	SCHRAUBE	CR- 256212-050V
					CR- 256213-050V
G4- 257250		LOCK	LID	DECKEL	CR- 256212-050V
					CR- 256213-050V
4- 257271		STOPP	STOP	STOPP	C- 271469-020V
4- 257306		RULLE	ROLL	ROLLE	C- 256197-050V
4- 257308		SKRUV	SCREW	SCHRAUBE	C- 256197-050V
4- 257309		AXEL	SHAFT	WELLE	C- 256197-050V
					C- 491787-020V
4- 257310		MUTTER	NUT	MUTTER	C- 491788-020V
					C- 256197-050V
					C- 491787-020V
4- 257311		ÖVERFALL	CAP	UEBERFALL	C- 491788-020V
					C- 256197-050V
					C- 491787-020V
					C- 491788-020V
					C- 491814-020V
4- 257317		MELLANLÄGG	LACE	ZWISCHENLAGE	C- 491815-020V
					C- 256951-050V
2- 257326		VEV	CRANK	KURBEL	C- 256952-050V
4- 257327		GLIDSTYCKE	SLIDER	GLEITKLOTZ	C- 256806-030V
4- 257328		ÄNDSTYCKE	END PIECE	ENDST~CK	C- 256806-030V
4- 257330		TRYCKRULLE	PRESSURE ROLLER	DRUCKROLLE	C- 256806-030V
					C- 529933-010V
					C- 529933-020V
					C- 529933-010V
					C- 529933-020V
4- 257330		TRYCKRULLE	PRESSURE ROLLER	DRUCKROLLE	C- 529933-010V
					C- 529933-020V
					C- 295778-040V
4- 257334		BLADFJÄDER	LEAF SPRING	BLATTFEDER	C- 469091-030V
					C- 256206-020V
4- 257362		MELLANLÄGG	LACE	ZWISCHENLAGE	C- 256207-020V
					CR- 256204-050V
3- 257379		HYDRAULRÖR HÖGER	HYDRAULIC PIPE RIGHT	HYDRAULROHR	CR- 256205-050V
3- 257380		HYDRAULRÖR VÄNSTER	HYDRAULIC PIPE LEFT	HYDRAULROHR	C- 257381-030V
C- 257381-0301	6300 84-01-09	ANSLUTNINGSBLOCK HÖGER	MANIFOLD	ANSCHLUSSBLOCK	C- 257382-030V
C- 257382-0301	6300 84-01-09	ANSLUTNINGSBLOCK VÄNSTER	MANIFOLD	ANSCHLUSSBLOCK	B- 648104-100V
4- 257393-0001		MUTTER	NUT	MUTTER	B- 648104-100V
4- 257393-0002		MUTTER	NUT	MUTTER	C- 256222-020V
4- 257395		BRICKA	WASHER	SCHEIBE	C- 256222-020V
4- 257397		PINNE	PEG	STIFT	C- 256222-020V
					C- 554890-010V
					C- 469535-010V
					C- 548057-010V
					C- 553657-010V
4- 257690		AXEL	SHAFT	WELLE	C- 752042-010V
4- 257696		KLÄMNAV	CLAMP HUB	KLEMMNABE	CR- 548331-010V
4- 257707		FÄSTE	BRACKET	BEFESTIGUNGSHALTER	CR- 548331-010V
4- 257708		PLATTA	PLATE	PLATTE	CR- 283607-030V
4- 257710		PINNE	PEG	STIFT	CR- 283607-030V
4- 257711		KLOTS	BLOCKING PIECE	KLOTZ	CR- 283605-010V
4- 257712		AXEL	SHAFT	WELLE	CR- 283605-010V
3- 257875		NAV	HUB	NABE	CR- 283605-010V
4- 257883		KUGGREMSSKIVA	TIMING BELT PULLEY	ZAHNRIEMENSCHEIBE	C- 283626-040V
4- 257923		STYRHJUL	GUIDE WHEEL	FUEHRUNGSROLLE	C- 283626-040V
4- 259242		BRICKA	WASHER	SCHEIBE	C- 456032-010V
4- 259761		KUGGREMHJUL	TOOTHED PULLY	ZAHNRIEMENRAD	C- 566282-010V
4- 259762		KUGGREMHJUL	TOOTHED PULLY	ZAHNRIEMENRAD	CR- 548331-010V
4- 259807		BRICKA	WASHER	SCHEIBE	CR- 548331-010V
4- 259816		RULLE	ROLL	ROLLE	CR- 256547-040V
4- 260427		BRICKA	WASHER	SCHEIBE	CR- 548331-010V
3- 263150		FÄSTE	BRACKET	BEFESTIGUNGSHALTER	CR- 256436-060V
					C- 271934-030V
					C- 564120-010V
4- 263152		AXEL	SHAFT	WELLE	C- 752030-010V
					C- 271934-030V
					C- 564120-010V
4- 263153		MUTTER	NUT	MUTTER	C- 752030-010V
					C- 271934-030V
					C- 564120-010V
					C- 752030-010V
4- 263156		AXEL	SHAFT	WELLE	CR- 283605-010V
4- 263311		BRICKA	WASHER	SCHEIBE	C- 272025-030V
4- 263655-0006		AXEL	SHAFT	WELLE	C- 272021-060V
4- 263701		RULLE	ROLL	ROLLE	CR- 548331-010V
4- 265568		DAMMSKYDD	DUST COVER	STAUBSCHUTZ	C- 560202-010V
					C- 752247-010V
					C- 752627-010V
					C- 752628-020V
					C- 752645-020V
					C- 752646-020V

PART NO	LAST ECN	BENÄMNING	TITLE	BENENNUNG	GROUP NO
					C- 752913-010V
					C- 752914-010V
4- 265603		SKRUV	SCREW	SCHRAUBE	C- 469173-010V
4- 265914		KUGGREMHJUL	TOOTHED PULLY	ZAHNRIEMENRAD	C- 283626-040V
4- 266049		STÖD	SUPPORT	STUETZE	C- 456032-010V
C- 266215-010V	19372 93-01-30	PRODUKTMANOMETER	MANOMETER	MANOMETER	C- 77091-040V
4- 266358		FÄSTE	BRACKET	BEFESTIGUNGSHALTER	C- 283612-020V
4- 266359		FÄSTE	BRACKET	BEFESTIGUNGSHALTER	C- 283612-020V
4- 266389		KOLVSTÅNG	PISTON ROD	KOLBENSTANGE	C- 271169-040V
					C- 272337-040V
4- 266390		MUTTER	NUT	MUTTER	C- 271169-040V
					C- 272337-040V
4- 266391		RING	RING	RING	C- 271169-040V
					C- 272337-040V
4- 266422		MUTTER	NUT	MUTTER	CR- 548331-010V
4- 266506		NAV	HUB	NABE	C- 476349-030V
4- 266507		AXEL	SHAFT	WELLE	C- 283612-020V
4- 266710		HJUL	WHEEL	RAD	C- 271934-030V
2- 266727		BLÅSMUNSTYCKE	AIR NOZZLE	BLASMUNDSTUECK	C- 272343-050V
3- 266728		KONSOL	CANTILEVER	KONSOLE	C- 272343-050V
3- 266730		HÅLLARE	HOLDER	HALTER	C- 272343-050V
4- 266731		AXEL	SHAFT	WELLE	C- 272343-050V
4- 266732		AXEL	SHAFT	WELLE	C- 272343-050V
4- 266733		FÄSTKLOTS	MOUNTING BLOCK	BEFESTIGUNGSKLOTZ	C- 272343-050V
4- 266734		ÖVERFALL	CAP	UEBERFALL	C- 272343-050V
4- 266737		BRICKA	WASHER	SCHEIBE	C- 476859-020V
					C- 272343-050V
					C- 256084-050V
4- 266739		KABELFÖRSKRUVNING	CABLE GLAND	KABELVERSCHRAUBUNG	C- 272343-050V
					C- 256095-050V
4- 266740-0003		DISTANS	SPACER	DISTANZ	C- 272343-050V
4- 266752		FÄSTPLÅT	MOUNTING SHEET	BEFESTIGUNGSBLECH	C- 246388-060V
4- 267033		BRICKA	WASHER	SCHEIBE	C- 272021-060V
2- 267306		BERÖRINGSSKYDD	TOUCH GUARD	BERUEHRUNGSSCHUTZ	C- 295891-030V
3- 267534		HÅLLARE	HOLDER	HALTER	CR- 548040-010V
3- 267732		FÄSTPLATTA	BRACKET	BEFESTIGUNGSHALTER	C- 232781-040V
3- 267733		FÄSTVINKEL	ANGLE	WINKEL	C- 232781-040V
4- 268056		KUGGREMHJUL	TOOTHED PULLY	ZAHNRIEMENRAD	C- 476349-030V
1- 268580		ARM	ARM	ARM	CR- 283605-010V
4- 268583		AXEL	SHAFT	WELLE	C- 283612-020V
4- 268584		AXEL	SHAFT	WELLE	CR- 283605-010V
4- 268585		LOCK	LID	DECKEL	CR- 283605-010V
					C- 283612-020V
4- 268587		FÄSTE	BRACKET	BEFESTIGUNGSHALTER	CR- 283605-010V
					C- 283612-020V
4- 268588		BRICKA	WASHER	SCHEIBE	CR- 283605-010V
					C- 283612-020V
3- 268640		FÖRLÄNGNINGSSTYCKE	EXTENSION PIECE	VERLÄNGERUNGSSTUECK	C- 232781-040V
4- 268670		GUMMIDÄMPARE	RUBBER DAMPER	GUMMIDÄMPFER	C- 550757-020V
4- 268691		BRICKA	WASHER	SCHEIBE	CR- 548040-010V
4- 268692		PINNE	PEG	STIFT	CR- 548040-010V
4- 268694		BLECK	TINPLATE	BLECH	CR- 283607-030V
4- 268915		GRADSKIVA	PROTRACTOR	TEILKREISSCHEIBE	C- 476349-030V
4- 269053-0001		AXEL	SHAFT	WELLE	C- 441000-050V
4- 269053-0003		AXEL	SHAFT	WELLE	C- 441000-050V
4- 269054		ARM	ARM	ARM	C- 441000-050V
4- 269056		HAKE	CATCH	HAKEN	C- 441000-050V
4- 269057		DRAGFJÄDER	TENSION SPRING	ZUGFEDER	C- 441000-050V
4- 269166		KONSOL	CANTILEVER	KONSOLE	C- 237776-040V
2- 269173-0003		AXEL	SHAFT	WELLE	C- 456688-020V
3- 269401		HUS	HOUSE	GEHAEUSE	C- 271169-040V
4- 269425		FÄSTPLÅT	SHEET	BLECH	C- 229400-070V
3- 269439		PLATTA	PLATE	PLATTE	C- 456696-030V
4- 269440		PLÅT	SHEET	BLECH	C- 456696-030V
3- 269443		FÄSTE	BRACKET	BEFESTIGUNGSHALTER	C- 469452-030V
					C- 751800-020V
3- 269461		BEHÅLLARE	CONTAINER	BEHÄLTER	C- 469452-030V
					C- 751800-020V
4- 269582-0001		FJÄDERFÄSTE	SPRING BRACKET	FEDERHALTER	C- 566282-010V
					C- 554360-020V
					C- 566280-010V
3- 269798-0004		AXEL	SHAFT	WELLE	C- 533844-010V
3- 269799-0005		AXEL	SHAFT	WELLE	C- 533844-010V
4- 269803		LÅSMUTTER	LOCK NUT	KONTRAMUTTER	C- 533844-010V
4- 269859		FÄSTE	BRACKET	BEFESTIGUNGSHALTER	C- 751800-020V
3- 269961		KONSOL	CANTILEVER	KONSOLE	C- 237776-040V
4- 269962		STYRNING	THROTTLING	DROSSELUNG	C- 237776-040V
4- 271007		VISARE	POINTER	ZEIGER	C- 256202-050V
4- 271011		BRICKA	WASHER	SCHEIBE	C- 554890-010V
					C- 469535-010V
					C- 548057-010V
					C- 553657-010V
					C- 752042-010V
C- 271017-0301	17192 92-02-07	DRIVEN BRYTRULLE	BENDING ROLLER	UMLENKROLLE	C- 272404-070V
4- 271051-0001		KLOTS VÄNSTER	BLOCK LEFT	KLOTZ	CR- 256436-060V
3- 271051-0002		KLOTS VÄNSTER	BLOCK LEFT	KLOTZ	CR- 256436-060V
3- 271051-0003		KLOTS VÄNSTER	BLOCK LEFT	KLOTZ	CR- 256436-060V
4- 271052-0001		KLOTS HÖGER	BLOCK RIGHT	KLOTZ	CR- 256436-060V
3- 271052-0002		KLOTS HÖGER	BLOCK RIGHT	KLOTZ	CR- 256436-060V
3- 271052-0003		KLOTS HÖGER	BLOCK RIGHT	KLOTZ	CR- 256436-060V
4- 271088		DISTANS	SPACER	DISTANZ	C- 491650-010V
4- 271100		EXCENTERTAPP	DOWEL	ZAPFEN	C- 256951-050V

PART NO	LAST ECN	BENÄMNING	TITLE	BENENNUNG	GROUP NO
					C- 256952-050V
C- 271114-0501	18961 93-01-25	BEKLÄDNADSPLÅTAR	COVERING PANEL	VERKLEIDUNGSBLECH	B- 648105-100V
C- 271115-0401	14278 90-01-05	SKYDDSHUV	PROTECTIVE COVER	SCHUTZHAUBE	B- 648105-100V
3- 271121		SPOLRÖR	FORCE SPRING	SPUEHLROHR	C- 271261-050V
C- 271128-040V	12577 89-12-06	DRIVMOTOR	MOTOR	MOTOR	B- 648103-090V
4- 271132		DISTANS	SPACER	DISTANZ	C- 256206-020V
					C- 256207-020V
1- 271163		KONSOL	CANTILEVER	KONSOLE	C- 456180-010V
2- 271167		VENTILHUS	VALVE HOUSING	VENTILGEHÄUSE	C- 272337-040V
C- 271168-0401	15322 91-02-01	VENTILBLOCK	BLOCK	BLOCK	C- 751691-010V
C- 271169-0401	12366 89-11-22	VENTIL	VALVE	VENTIL	B- 648111-100V
C- 271181-0401	16686 91-10-15	LUFTÖVERHETTARE	AIR SUPER-HEATER	LUFT-ERHITZER	B- 648111-100V
3- 271184		PLÅTFÅNG	DISCHARGE TRAY	BLECHHAUBE	C- 271181-040V
3- 271185		PLÅTFÅNG	DISCHARGE TRAY	BLECHHAUBE	C- 271181-040V
3- 271191		LOCK	LID	DECKEL	CR- 256547-040V
4- 271211		BRICKA	WASHER	SCHEIBE	C- 752957-010V
					C- 752628-020V
3- 271219		GÅNGJÄRN	HINGE	SCHARNIER	C- 271442-030V
					C- 271443-030V
G3- 271220		GÅNGJÄRN	HINGE	SCHARNIER	C- 271442-030V
					C- 271443-030V
4- 271221		PINNE	PEG	STIFT	C- 271442-030V
					C- 271443-030V
3- 271239		HYLSA	SLEEVE	HUELSE	C- 458384-010V
4- 271241		SKRUV	SCREW	SCHRAUBE	C- 458384-010V
C- 271261-050V	19268 93-05-31	DISKSYSTEM	CLEANING SYSTEM	REINIGUNGSSYSTEM	C- 271562-080V
4- 271269		BUSSNING	BUSHING	BUCHSE	C- 256055-060V
					C- 256095-050V
					C- 272024-040V
4- 271284		KLOTS	BLOCKING PIECE	KLOTZ	C- 256206-020V
					C- 256207-020V
1- 271317		OKKURVA	CURVE	KURVE	C- 256202-050V
1- 271318		ARMKURVA	CURVE	KURVE	C- 256202-050V
4- 271320		HÅLLARE	HOLDER	HALTER	C- 271866-060V
4- 271321		HÅLLARE	HOLDER	HALTER	C- 271866-060V
4- 271322		HÅLLARE	HOLDER	HALTER	C- 271866-060V
4- 271323		HÅLLARE	HOLDER	HALTER	C- 491650-010V
4- 271343		HÅLLARE	HOLDER	HALTER	C- 491650-010V
4- 271344		HÅLLARE	HOLDER	HALTER	C- 491650-010V
4- 271347		ARM	ARM	ARM	C- 255921-040V
4- 271348		LÄNK	LINK	GELENK	C- 255921-040V
4- 271349		LÄNK	LINK	GELENK	C- 255921-040V
4- 271350		SPJÄLL	THROTTLE	DROSSELVENTIL	C- 255921-040V
4- 271351		BRYTPINNE	SHEAR PIN	SCHERSTIFT	C- 735192-010V
					C- 255921-040V
3- 271380		LÄNK	LINK	GELENK	C- 271992-020V
3- 271381		STAG	STRUT	VERSTREBUNG	C- 271992-020V
C- 271387-0301	7122 84-10-31	SPRUTPISTOL MED SLANG	SPRAY GUN	SPRITZPISTOLE	B- 648105-100V
C- 271414-0201	6317 83-11-03	RENBLÅSNINGSPISTOL	AIR JET GUN	BLASPISTOLE	B- 648102-100V
3- 271428		HÅLLARE	HOLDER	HALTER	C- 271992-020V
3- 271433		UTLOPPSRÖR	PIPE	ROHR	C- 456588-030V
4- 271435		BRICKA	WASHER	SCHEIBE	C- 456588-030V
C- 271442-0301	16094 91-02-01	SIDODÖRR V	DOOR	TUER	B- 648102-100V
C- 271443-0301	16094 91-02-01	SIDODÖRR H	DOOR	TUER	B- 648102-100V
C- 271454-0201	6317 83-11-03	SPÄRRHANDTAG	CATCH HANDLE	SPERRRGRIFF	C- 272404-070V
4- 271456		SPÄRRHAKE	CATCH LEVER	SPERRHAKEN	C- 271469-020V
4- 271457		SPÄRRHAKE	CATCH LEVER	SPERRHAKEN	C- 271469-020V
4- 271461		PACKNING	GASKET	DICHTUNG	C- 295778-040V
					C- 469452-030V
					C- 751800-020V
C- 271468-0401	13632 89-11-17	GEJD VÄNSTER	WAY	FUEHRUNG	B- 648106-100V
C- 271469-0201	6317 83-11-03	GEJD HÖGER	WAY	FUEHRUNG	B- 648106-100V
3- 271472		FÄSTE	BRACKET	BEFESTIGUNGSHALTER	C- 271468-040V
4- 271478		PLÅT	PLATE	PLATTE	C- 456455-030V
4- 271499		ELANSLUTNING	ELECTRICAL CONNECTION	EL-ANSCHLUSS	CR- 256547-040V
4- 271508		FÄSTE	BRACKET	BEFESTIGUNGSHALTER	C- 469374-040V
4- 271509		KOPPLINGSBLOCK	JUNCTION BLOCK	KUPPLUNGSBLOCK	C- 469781-030V
C- 271513-060V	17888 93-01-27	TÄCKPLÅTAR	COVERING PLATE	DECKBLECH	B- 648106-100V
1- 271546		KORG	BASKET	KORB	C- 272404-070V
3- 271547		GRIND	DOOR	TUER	C- 272404-070V
3- 271548		LÄNK	LINK	GELENK	C- 272404-070V
3- 271558		FÄSTE	BRACKET	BEFESTIGUNGSHALTER	C- 272404-070V
C- 271562-080V	17890 93-01-23	RÖRDRAGNING STATIV	PIPE WORK MACHINE BODY	ROHRSYSTEM	B- 648102-100V
C- 271569-050V	15485 90-11-05	KABELSTEGE OCH RÄNNA	CABLE TRACK	KABELTRÄGER	B- 648106-100V
4- 271585		BRICKA	WASHER	SCHEIBE	C- 271114-050V
4- 271586-0001		BRICKA	WASHER	SCHEIBE	C- 271114-050V
4- 271586-0002		BRICKA	WASHER	SCHEIBE	C- 271114-050V
4- 271587		BRICKA	WASHER	SCHEIBE	C- 295218-010V
					C- 271114-050V
					C- 295218-010V
4- 271591		KNAPP	BUTTON	KNOPF	C- 441695-020V
4- 271608		KLÄMSKRUV	CLAMP SCREW	KLEMMSCHRAUBE	C- 271115-040V
4- 271622		MELLANLÄGG	LACE	ZWISCHENLAGE	C- 271562-080V
4- 271623		MELLANLÄGG	LACE	ZWISCHENLAGE	C- 271562-080V
C- 271626-0301	6793 84-05-03	UPPHÄNGNINGSARM	SUSPENSION ARM	AUFHAENGUNGSARM	C- 271699-030V
					C- 271699-040V
4- 271632		SEXKANTHUV	HOOD	HAUBE	C- 271626-030V
C- 271635-0301	16574 91-06-25	TRANSPORTDEL	CONVEYOR SECTION	TRANSPORTTEIL	C- 77091-040V
2- 271640		LOCK	LID	DECKEL	C- 469452-030V
					C- 751800-020V
C- 271641-0201	19271 93-05-31	SKARVBORD	TABLE	TISCH	C- 271699-040V
C- 271641-0202	19271 93-05-31	SKARVBORD	TABLE	TISCH	C- 271699-040V

PART NO	LAST ECN	BENÄMNING	TITLE	BENENNUNG	GROUP NO
C- 271641-0203	19271 93-05-31	SKARVBORD	TABLE	TISCH	C- 271699-040V
C- 271641-0301	16958 91-11-01	SKARVBORD	TABLE	TISCH	C- 271699-030V
C- 271641-0302	16958 91-11-01	SKARVBORD	TABLE	TISCH	C- 271699-030V
C- 271641-0303	16958 91-11-01	SKARVBORD	TABLE	TISCH	C- 271699-030V
4- 271642		LINJAL	RULER	LINEAL	C- 271641-030V
					C- 271641-020V
4- 271643		LINJAL	RULER	LINEAL	C- 271641-020V
4- 271644		LINJAL	RULER	LINEAL	C- 271641-030V
					C- 271641-020V
4- 271654		STOPPRING	RETAINING RING	SICHERUNGSRING	C- 752957-010V
					C- 752628-020V
4- 271656		BRICKA	WASHER	SCHEIBE	C- 751088-030V
4- 271689		BRICKA	WASHER	SCHEIBE	C- 256173-050V
C- 271699-030V	19540 93-04-05	SKARVAPPARAT	SPLICING APPARATUS	VERBINDUNGSANORDNUNG	C- 77091-040V
C- 271699-040V	17888 93-01-27	SKARVAPPARAT	SPLICING APPARATUS	VERBINDUNGSANORDNUNG	B- 648106-100V
4- 271708		GLIDSKENA	SLIDE RAIL	GLEITSCHIENE	C- 271115-040V
1- 271728		KLIPPBACK INRE	CUTTING JAW	SCHNEIDBACKE	CR- 256204-050V
					CR- 256205-050V
4- 271731		TRYCKFJÄDER	COMPRESSION SPRING	DRUCKFEDER	CR- 256436-060V
					CR- 256712-050V
					CR- 256436-060V
					CR- 256712-050V
					CR- 256436-060V
					CR- 256712-050V
					CR- 256436-060V
					CR- 256712-050V
3- 271738		KNIV	KNIFE	MESSER	C- 978763-010V
					C- 295523-030V
2- 271742		RÖR	PIPE	ROHR	C- 271562-080V
2- 271743		RÖR	PIPE	ROHR	C- 271562-080V
3- 271753		AXEL	SHAFT	WELLE	C- 564119-010V
					C- 564120-010V
					C- 272359-020V
					C- 752030-010V
1- 271759		OKKURVA	CURVE	KURVE	C- 978442-020V
					C- 256202-050V
1- 271760		ARMKURVA	CURVE	KURVE	C- 978442-020V
					C- 256202-050V
4- 271762		MUTTER	NUT	MUTTER	C- 491767-020V
4- 271777		BYGEL	BOW CLAMP	BUEGEL	C- 271635-030V
4- 271784		KNOPP	KNOB	KNOPF	C- 271115-040V
3- 271820-0001		STYRSKENA	STEERING RAIL	FUEHRUNGSSCHIENE	C- 272025-030V
3- 271820-0002		STYRSKENA	STEERING RAIL	FUEHRUNGSSCHIENE	C- 272025-030V
P4- 271823		FILTER	FILTER	FILTER	C- 978739-010V
1- 271824		LUFTKNIV RÖRLIG	AIR KNIFE, MOVABLE	LUFTMESSER	C- 272025-030V
1- 271825		LUFTKNIV FAST	FIXED AIR KNIFE	LUFTMESSER	C- 272025-030V
4- 271827-0001		STYRPLÅT	HEAD PLATE	FUEHRUNGSBLECH	C- 272025-030V
4- 271827-0002		STYRPLÅT	HEAD PLATE	FUEHRUNGSBLECH	C- 272025-030V
3- 271835		FÄSTE	BRACKET	BEFESTIGUNGSHALTER	C- 751088-030V
4- 271844		BRICKA	WASHER	SCHEIBE	C- 751088-030V
4- 271846		ISOLERINGSMUTTER	INSULATION NUT	ISOLIERMUTTER	CR- 256214-040V
4- 271848		SKRUV	SCREW	SCHRAUBE	CR- 256214-040V
3- 271858		FLÄNS	FLANGE	FLANSCH	C- 272025-030V
4- 271860		SPÄNNKLOTS	CLAMP BLOCK	SPANNKLOTZ	C- 491570-020V
					C- 491579-020V
4- 271863		AXEL	SHAFT	WELLE	C- 272021-060V
4- 271864		BRICKA	WASHER	SCHEIBE	C- 272021-060V
C- 271866-060V	20112 93-07-01	RÖRDRAGNING SERVICEENHET	PIPE WORK	ROHRSYSTEM	B- 648106-100V
3- 271893		AXEL	SHAFT	WELLE	C- 272024-040V
4- 271898		SKRUV	SCREW	SCHRAUBE	C- 272024-040V
4- 271899		SKRUV	SCREW	SCHRAUBE	C- 272024-040V
3- 271911		PIVÅAXEL	SHAFT	WELLE	C- 271934-030V
					C- 752030-010V
4- 271912		AXEL	SHAFT	WELLE	C- 271934-030V
					C- 564120-010V
					C- 752030-010V
C- 271934-0301	10626 87-09-04	PAPPERSTILLHÅLLARE	PAPER GUIDE PLATE	PAPIERZUHALTER	C- 272404-070V
3- 271939-0001		GLIDPLÅT	SLIDE SHEET	GLEITBLECH	CR- 256712-050V
1- 271941-0001		RAM	FRAME	RAHMEN	C- 272025-030V
1- 271941-0002		RAM	FRAME	RAHMEN	C- 272025-030V
1- 271942-0001		LUFTSTYRARE	AIR GUIDE	LUFTFUEHRUNG	C- 272025-030V
1- 271942-0002		LUFTSTYRARE	AIR GUIDE	LUFTFUEHRUNG	C- 272025-030V
4- 271949		MUTTER	NUT	MUTTER	C- 271866-060V
					C- 978739-010V
3- 271950		HÅLSKRUV	HOLLOW SCREW	HALTESCHRAUBE	C- 978739-010V
3- 271959		FÄSTE	BRACKET	BEFESTIGUNGSHALTER	C- 271468-040V
4- 271961		SKRUV	SCREW	SCHRAUBE	C- 271468-040V
4- 271975		DREVAXEL	SHAFT	WELLE	C- 295310-070V
4- 271978		MUTTER	NUT	MUTTER	C- 295310-070V
C- 271992-0201	6808 84-05-10	PAPPERSHÅLLARE	PAPER HOLDER	PAPIERHALTER	B- 648106-100V
3- 271993		LAGER	BEARING	LAGER	C- 271992-020V
4- 271995		HYLSA	SLEEVE	HUELSE	C- 271992-020V
4- 272001		TRYCKFJÄDER	COMPRESSION SPRING	DRUCKFEDER	C- 751088-030V
4- 272002		SKYDD VÄNSTER	PROTECTIVE COVER LEFT	SCHUTZ	C- 272021-060V
4- 272003		SKYDD HÖGER	PROTECTIVE COVER RIGHT	SCHUTZ	C- 272021-060V
C- 272004-0401	19266 93-06-01	BRYTRULLE	BENDING ROLLER	UMLENKROLLE	B- 648111-100V
3- 272005		BRYTRULLE	BENDING ROLLER	UMLENKROLLE	C- 272004-040V
4- 272018		AXELFÄSTE	AXLE SUPPORT	ACHSENHALTER	C- 272004-040V
C- 272021-060V	19266 93-06-01	ASEPTIKHUS	ASEPTIC CHAMBER	ASEPTIKGEHÄUSE	B- 648111-100V
1- 272022		LUFTKNIV RÖRLIG	AIR KNIFE, MOVABLE	LUFTMESSER	C- 272025-030V
1- 272023		LUFTKNIV FAST	FIXED AIR KNIFE	LUFTMESSER	C- 272025-030V
C- 272024-0401	17862 92-09-30	MANGELVALS	CALENDER ROLLER	MANGELWALZE	B- 648111-100V

PART NO	LAST ECN	BENÄMNING	TITLE	BENENNUNG	GROUP NO
C- 272025-030V	19266 93-06-01	LUFTKNIV	AIR KNIFE	LUFTMESSER	B- 648111-100V
2- 272026-0001		LUFTFÖRDELARE	AIR DISTRIBUTOR	LUFTVERTEILER	C- 272025-030V
2- 272026-0002		LUFTFÖRDELARE	AIR DISTRIBUTOR	LUFTVERTEILER	C- 272025-030V
4- 272027-0001		GLASRUTA	GLASS PANE	GLASSCHEIBE	C- 272025-030V
4- 272027-0002		GLASRUTA	GLASS PANE	GLASSCHEIBE	C- 272025-030V
C- 272028-060V	19266 93-06-01	DRIVEN BRYTRULLE	BENDING ROLLER	UMLENKROLLE	B- 648111-100V
4- 272033		FÄSTE	BRACKET	BEFESTIGUNGSHALTER	C- 272024-040V
3- 272045-0001		GLIDPLÅT	SLIDE SHEET	GLEITBLECH	CR- 256712-050V
3- 272045-0002		GLIDPLÅT	SLIDE SHEET	GLEITBLECH	CR- 256712-050V
3- 272045-0003		GLIDPLÅT	SLIDE SHEET	GLEITBLECH	CR- 256712-050V
3- 272045-0004		GLIDPLÅT	SLIDE SHEET	GLEITBLECH	CR- 256712-050V
3- 272056		FLOTTÖR	FLOAT	SCHWIMMER	C- 255921-040V
3- 272068		MEDBRINGAREKEDJA	CARRIER CHAIN	KETTE	C- 295310-070V
C- 272084-0301	16230 91-04-19	PAPPERSSTRÄCKARE	STRETCHER	STRECKER	C- 272404-070V
3- 272087		HÅLLARE	HOLDER	HALTER	C- 272084-030V
3- 272089		GLIDSKENA	SLIDE RAIL	GLEITSCHIENE	C- 272084-030V
4- 272095		AXEL	SHAFT	WELLE	C- 469501-040V
2- 272114		VÄRMESKYDD	HEAT GUARD	WÄRMESCHUTZ	C- 256055-060V
4- 272116		ÖVERFALL	CAP	UEBERFALL	C- 256197-050V
1- 272118		OKKURVA	CURVE	KURVE	C- 256202-050V
1- 272119		ARMKURVA	CURVE	KURVE	C- 256202-050V
4- 272129		FÄSTE	BRACKET	BEFESTIGUNGSHALTER	C- 978739-010V
4- 272130		DISTANS	SPACER	DISTANZ	C- 978739-010V
3- 272140-0001		STYRPLÅT	HEAD PLATE	FUEHRUNGSBLECH	C- 272025-030V
3- 272140-0002		STYRPLÅT	HEAD PLATE	FUEHRUNGSBLECH	C- 272025-030V
4- 272141-0001		FILTER	FILTER	FILTER	C- 272025-030V
4- 272141-0002		FILTER	FILTER	FILTER	C- 272025-030V
4- 272158		TAPP	DOWEL	ZAPFEN	C- 456100-030V
2- 272173		KONSOL	CANTILEVER	KONSOLE	C- 456032-010V
4- 272177		LÄNK	LINK	GELENK	C- 456032-010V
4- 272178		FÄSTKLACK	MOUNTING LUG	BEFESTIGUNGSHACKEN	C- 456032-010V
2- 272184		KÅPA	COVER	DECKEL	C- 272408-050V
4- 272188		FÄSTE	BRACKET	BEFESTIGUNGSHALTER	C- 272408-050V
4- 272189		LOCK	LID	DECKEL	C- 272408-050V
4- 272190		MELLANLÄGG	LACE	ZWISCHENLAGE	C- 272408-050V
4- 272191		FÖRDELARE FRÄMRE	DISTRIBUTOR	VERTEILER	C- 456455-030V
1- 272264		KLIPPBACK INRE	CUTTING JAW	SCHNEIDBACKE	CR- 256204-050V CR- 256205-050V
1- 272274		BEHÅLLARE	CONTAINER	BEHÄLTER	C- 272407-020V
3- 272275		LOCK	LID	DECKEL	C- 272407-020V
3- 272276		BOTTEN	BOTTOM	BODEN	C- 272407-020V
3- 272277		PACKNING	GASKET	DICHTUNG	C- 272407-020V
4- 272286		AXELFÄSTE	AXLE SUPPORT	ACHSENHALTER	C- 256055-060V
4- 272287		AXELFÄSTE	AXLE SUPPORT	ACHSENHALTER	C- 256095-050V
2- 272319		PLÅTFÅNG	DISCHARGE TRAY	BLECHHAUBE	C- 272407-020V
2- 272320		PLÅTFÅNG	DISCHARGE TRAY	BLECHHAUBE	C- 272407-020V
2- 272325		SPIRAL	SPIRAL	SPIRALE	C- 272407-020V
4- 272329-0001		MELLANLÄGG	LACE	ZWISCHENLAGE	C- 272025-030V
4- 272329-0002		MELLANLÄGG	LACE	ZWISCHENLAGE	C- 272025-030V
C- 272337-0401	12648 89-11-14	VENTIL	VALVE	VENTIL	B- 648111-100V
4- 272340		RÖR	PIPE	ROHR	C- 978739-010V
C- 272343-050V	19273 93-05-31	TRYCKRULLE NEDRE	PRESSURE ROLLER	DRUCKROLLE	B- 648107-100V
4- 272349-0004		RÖR	PIPE	ROHR	C- 456976-050V
C- 272359-020V	7397 85-01-10	BRYTRULLE	BENDING ROLLER	UMLENKROLLE	B- 648106-100V
1- 272360		KONSOL	CANTILEVER	KONSOLE	C- 272359-020V
2- 272361		BYGEL	BOW CLAMP	BUEGEL	C- 272359-020V
4- 272362		LAGER	BEARING	LAGER	C- 272359-020V C- 752030-010V
3- 272372		BANJOHUS	HOUSE	GEHAEUSE	C- 256173-050V
4- 272374		MEDBRINGARE	CARRIER	MITNEHMER	C- 256173-050V
4- 272376		PROPP	SHUTTER	SICHERUNG	C- 256173-050V
4- 272377-0001		KLAMMER	CRAMP	KLAMMER	C- 256173-050V
4- 272377-0002		KLAMMER	CRAMP	KLAMMER	C- 256173-050V
4- 272388		KLAMMER	CRAMP	KLAMMER	C- 256173-050V
C- 272404-0701	17888 93-01-27	KASSETTVAGN	CARRIAGE	WAGEN	B- 648106-100V
C- 272407-0201	9415 86-10-17	PEROXIDGENERATOR	GENERATOR	GENERATOR	B- 648111-100V
C- 272408-0501	20097 93-06-15	MONTERINGSPLATTA	MOUNTING PLATE	MONTAGEPLATTE	B- 648107-100V
C- 272408-0502	20097 93-06-15	MONTERINGSPLATTA	MOUNTING PLATE	MONTAGEPLATTE	B- 648107-100V
3- 272415		ARM	ARM	ARM	C- 256951-050V
G3- 272416		MEDBRINGARE VÄNSTER	CARRIER	MITNEHMER	C- 256952-050V CR- 256204-050V CR- 256205-050V
3- 272417		MEDBRINGARE HÖGER	CARRIER	MITNEHMER	CR- 256204-050V CR- 256205-050V
3- 272419		MEDBRINGARE	CARRIER	MITNEHMER	CR- 256204-050V CR- 256205-050V
G2- 272420		VIKKLAFF HÖGER	FOLDING FLAP	FALTKLAPPE	CR- 256204-050V CR- 256205-050V
G2- 272421		VIKKLAFF VÄNSTER	FOLDING FLAP	FALTKLAPPE	CR- 256204-050V CR- 256205-050V
G2- 272422		VIKKLAFF HÖGER	FOLDING FLAP	FALTKLAPPE	CR- 256204-050V CR- 256205-050V
G2- 272423		VIKKLAFF VÄNSTER	FOLDING FLAP	FALTKLAPPE	CR- 256204-050V
G2- 272423		VIKKLAFF VÄNSTER	FOLDING FLAP	FALTKLAPPE	CR- 256205-050V
G2- 272424		VIKKLAFF HÖGER	FOLDING FLAP	FALTKLAPPE	CR- 256204-050V CR- 256205-050V
G2- 272425		VIKKLAFF VÄNSTER	FOLDING FLAP	FALTKLAPPE	CR- 256204-050V CR- 256205-050V
4- 272427		FÄSTE	BRACKET	BEFESTIGUNGSHALTER	CR- 256204-050V CR- 256205-050V
3- 272429		ARM	ARM	ARM	C- 256206-020V C- 256207-020V

PART NO	LAST ECN	BENÄMNING	TITLE	BENENNUNG	GROUP NO
G2- 272431		FÄSTE	BRACKET	BEFESTIGUNGSHALTER	C- 271128-040V
4- 272434		AXEL	SHAFT	WELLE	C- 271128-040V
G2- 272442		KONSOL	CANTILEVER	KONSOLE	C- 256197-050V
4- 272453		DISTANS	SPACER	DISTANZ	C- 554890-010V
					C- 469535-010V
					C- 553657-010V
					C- 752042-010V
2- 272454		LAGERTAPP	PIVOT PIN	LAGERZAPFEN	C- 256951-050V
					C- 256952-050V
3- 272455		LAGERBOCK	BEARING BRACKET	LAGERBOCK	C- 256197-050V
G3- 272456		LÄNK	LINK	GELENK	C- 256197-050V
G3- 272457		BYGELHALVA	BOW CLAMP	BUEGEL	C- 256197-050V
4- 272458		EXCENTERAXEL	ECCENTRIC SHAFT	EXZENTERWELLE	C- 256197-050V
4- 272459		BRICKA H	WASHER	SCHEIBE	C- 256197-050V
4- 272461		BRICKA	WASHER	SCHEIBE	C- 256197-050V
3- 272462		AXELBULT	AXLE BOLT	ACHSBOLZEN	C- 491814-020V
					C- 491815-020V
3- 272464		VINKELFÄSTE	ANGLE BRACKET	WINKELBEFESTIGUNG	C- 272025-030V
3- 272472		ÄNDSTYCKE	END PIECE	ENDST~CK	C- 491787-020V
					C- 491788-020V
C- 272473-0101	6904 84-06-29	BRYTRULLE	BENDING ROLLER	UMLENKROLLE	C- 272404-070V
3- 272474		AXEL	SHAFT	WELLE	C- 272473-010V
4- 272475		ÖVERFALL	CAP	UEBERFALL	C- 272473-010V
3- 272476		AXEL	SHAFT	WELLE	C- 272084-030V
4- 272479		TRYCKRULLE	PRESSURE ROLLER	DRUCKROLLE	C- 295778-040V
					C- 469091-030V
G3- 272490		HYLSA	SLEEVE	HUELSE	C- 256217-040V
G3- 272491		FÄSTE	BRACKET	BEFESTIGUNGSHALTER	C- 256206-020V
					C- 256207-020V
G2- 272492		ARM HÖGER	ARM RIGHT	ARM	C- 256951-050V
G2- 272493		ARM VÄNSTER	ARM LEFT	ARM	C- 256952-050V
G3- 272496		KONSOL HÖGER	BRACKET RIGHT	KONSOLE	C- 256951-050V
G3- 272497		KONSOL VÄNSTER	BRACKET LEFT	KONSOLE	C- 256952-050V
G1- 272498		VOLYMKLAFF 236 ML	VOLUME FLAP 236 ML	VOLUMENKLAPPE	CR- 256209-030V
					CR- 256210-030V
4- 272501		HÅLLARE HÖGER	BRACKET RIGHT	HALTER	CR- 256212-050V
4- 272502		HÅLLARE VÄNSTER	BRACKET LEFT	HALTER	CR- 256213-050V
4- 272503		KLÄMMA	CLAMPING PIECE	KLAMMER	CR- 256212-050V
					CR- 256213-050V
4- 272506		MELLANLÄGG	LACE	ZWISCHENLAGE	CR- 256212-050V
					CR- 256213-050V
4- 272510		GÅNGJÄRN	HINGE	SCHARNIER	C- 554890-010V
					C- 469535-010V
					C- 548057-010V
					C- 553657-010V
4- 272511		GÅNGJÄRN	HINGE	SCHARNIER	C- 752042-010V
					C- 554890-010V
					C- 469535-010V
					C- 548057-010V
					C- 553657-010V
4- 272511		GÅNGJÄRN	HINGE	SCHARNIER	C- 752042-010V
4- 272534		BRICKA	WASHER	SCHEIBE	C- 295310-070V
4- 272546		GLIDSTYCKE	SLIDER	GLEITKLOTZ	C- 491871-010V
4- 272547		TRYCKSTIFT	TACK	STIFT	C- 491871-010V
4- 272549		BRICKA	WASHER	SCHEIBE	C- 491871-010V
4- 272550		STÄLLSKRUV	ADJUSTING SCREW	SCHRAUBE	C- 491871-010V
4- 272552		FÄSTE	BRACKET	BEFESTIGUNGSHALTER	C- 257146-020V
2- 272554		BERÖRINGSSKYDD	TOUCH GUARD	BERUEHRUNGSSCHUTZ	C- 272560-060V
1- 272555		BERÖRINGSSKYDD	TOUCH GUARD	BERUEHRUNGSSCHUTZ	C- 272560-060V
2- 272556-0001		BERÖRINGSSKYDD	TOUCH GUARD	BERUEHRUNGSSCHUTZ	C- 456976-050V
1- 272557-0001		BERÖRINGSSKYDD	TOUCH GUARD	BERUEHRUNGSSCHUTZ	C- 456976-050V
2- 272559		KABELSTEGE	CABLE TRACK	KABELTRÄGER	C- 271569-050V
C- 272560-060V	19542 93-04-05	PRODUKTVENTIL	PRODUCT VALVE	PRODUKT VENTIL	B- 648111-100V
4- 272564		LAGER	BEARING	LAGER	C- 272404-070V
G3- 272565		ARM	ARM	ARM	C- 256199-040V
4- 272566		AXELTAPP	AXLE PIN	ACHSENZAPFEN	C- 256199-040V
G2- 272569		SPÄRRHANDTAG	CATCH HANDLE	SPERRRGRIFF	C- 271454-020V
2- 272576		FÄSTE	BRACKET	BEFESTIGUNGSHALTER	CR- 256436-060V
2- 272596		GEJD	WAY	FUEHRUNG	C- 271469-020V
3- 272597		STYRSKENA	STEERING RAIL	FUEHRUNGSSCHIENE	C- 271469-020V
3- 272600		ARM	ARM	ARM	C- 456180-010V
4- 272602		SKRUV	SCREW	SCHRAUBE	C- 456180-010V
4- 272603		STOPPKLACK	STOP LUG	STOPPABSATZ	C- 271454-020V
4- 272604		STYRKLACK	GUIDE LUG	FUEHRUNGSABSATZ	C- 271454-020V
3- 272607		REMFÄSTE	BELT HOLDER	RIEMENHALTER	C- 491814-020V
					C- 491815-020V
3- 272608		REMFÄSTE	BELT HOLDER	RIEMENHALTER	C- 572760-010V
2- 272620		GEJD	WAY	FUEHRUNG	C- 271468-040V
3- 272621		STYRSKENA	STEERING RAIL	FUEHRUNGSSCHIENE	C- 271468-040V
2- 272622		SUGRÖR	DRINKING STRAW	STROHHALM	C- 272408-050V
C- 272623-0501	16334 91-06-24	SPRAYSYSTEM	SPRAY SYSTEM	SPRUEHSYSTEM	B- 648111-100V
3- 272630		SPÄRR	BARRIER	SPERRE	C- 271468-040V
3- 272631		FÄSTE	BRACKET	BEFESTIGUNGSHALTER	C- 271468-040V
4- 272632		LJUDDÄMPARE	SILENCER	SCHALLDÄMPFER	C- 272408-050V
4- 272640-0001		MOTHÅLLSKURVA	COUNTER CAM	GEGENHALTERKURVE	C- 256206-020V
					C- 256207-020V
					C- 978259-010V
4- 272640-0002		MOTHÅLLSKURVA	COUNTER CAM	GEGENHALTERKURVE	C- 978443-010V
					C- 256206-020V
					C- 256207-020V
4- 272640-0003		MOTHÅLLSKURVA	COUNTER CAM	GEGENHALTERKURVE	C- 256206-020V
					C- 256207-020V

PART NO	LAST ECN	BENÄMNING	TITLE	BENENNUNG	GROUP NO
4- 272640-0004		MOTHÅLLSKURVA	COUNTER CAM	GEGENHALTERKURVE	C- 256206-020V C- 256207-020V
4- 272640-0005		MOTHÅLLSKURVA	COUNTER CAM	GEGENHALTERKURVE	C- 978259-010V C- 256206-020V C- 256207-020V
4- 272640-0006		MOTHÅLLSKURVA	COUNTER CAM	GEGENHALTERKURVE	C- 256206-020V C- 256207-020V
4- 272640-0007		MOTHÅLLSKURVA	COUNTER CAM	GEGENHALTERKURVE	C- 256206-020V C- 256207-020V
4- 272640-0008		MOTHÅLLSKURVA	COUNTER CAM	GEGENHALTERKURVE	C- 256206-020V C- 256207-020V
4- 272640-0009		MOTHÅLLSKURVA	COUNTER CAM	GEGENHALTERKURVE	C- 256206-020V C- 256207-020V
2- 272641		PELARE	PILLAR	SÄULE	C- 256206-020V
2- 272642		PELARE VÄNSTER	PILLAR	SÄULE	C- 256207-020V
3- 272645		SKENA	RAIL	SCHIENE	C- 256206-020V C- 256207-020V
C- 272652-0301	8667 86-02-17	KEDJESPÄNNARE	CHAIN TENSIONER	KETTENSPANNER	C- 272765-070V
3- 272654		EXCENTERAXEL	ECCENTRIC SHAFT	EXZENTERWELLE	C- 256206-020V C- 256207-020V
2- 272659		VANGSTYCKE V	SIDE PIECE	SEITENSTUECK	C- 441695-020V
2- 272660		VANGSTYCKE H	SIDE PIECE	SEITENSTUECK	C- 441695-020V
4- 272661		STEGPROFIL	STAIR	STUFE	C- 441695-020V
2- 272664		KONSOL	CANTILEVER	KONSOLE	C- 256806-030V
2- 272671		RÄNNA	CHUTE	RINNE	C- 456100-030V
4- 272673		BEN	LEG	BEIN	C- 441695-020V
4- 272679		RÖR	PIPE	ROHR	C- 271261-050V
G1- 272689		FÄSTE	BRACKET	BEFESTIGUNGSHALTER	C- 256217-040V
3- 272690		KÅPA	COVER	DECKEL	C- 256806-030V
4- 272691		FÄSTE	BRACKET	BEFESTIGUNGSHALTER	C- 256806-030V
4- 272692		LOCK	LID	DECKEL	C- 256806-030V
4- 272693		RING	RING	RING	C- 256806-030V
4- 272694		SPÄRR	BARRIER	SPERRE	C- 256806-030V
2- 272696		HÅLLARE	HOLDER	HALTER	C- 751885-030V
G4- 272728		SPÄRR	BARRIER	SPERRE	C- 458383-020V
3- 272736		KONSOL	CANTILEVER	KONSOLE	C- 256806-030V
3- 272737		FÄSTE	BRACKET	BEFESTIGUNGSHALTER	C- 256806-030V
4- 272741		TÄTNING	SEAL	DICHTUNG	C- 456455-030V
4- 272742		UTMATARFINGER	FINGER	FINGER	C- 456180-010V
4- 272743		LOCK	LID	DECKEL	C- 441695-020V
3- 272746		STÅNG	ROD	STANGE	C- 256437-020V
3- 272747		KOPPLING	CONNECTION	KUPPLUNG	C- 256437-020V
3- 272751		BOTTENVENTIL	BOTTOM VALVE	BODENVENTIL	C- 256674-030V
4- 272753		STYRNING	STEERING	FUEHRUNG	CR- 256208-040V
4- 272755		MUTTER	NUT	MUTTER	CR- 256208-040V
4- 272758		KUGGREMSSKIVA	TIMING BELT PULLEY	ZAHNRIEMENSCHEIBE	C- 256438-020V
3- 272761		GAFFEL	FORK	GABEL	C- 256222-020V
3- 272762		KNIV	KNIFE	MESSER	C- 978763-010V C- 295523-030V
C- 272765-0701	18961 93-01-25	KONSOL	CANTILEVER	KONSOLE	B- 648105-100V
3- 272772		ARM	ARM	ARM	C- 256806-030V
3- 272780		TÄCKLIST	COVER SLIP	DECKLEISTE	C- 491570-020V
4- 272781-0002		TÄCKLIST	COVER SLIP	DECKLEISTE	C- 491579-020V
4- 272782		TÄCKLIST	COVER SLIP	DECKLEISTE	C- 491570-020V C- 491579-020V
4- 272783-0002		GLASRUTA	GLASS PANE	GLASSCHEIBE	C- 491579-020V
4- 272783-0003		GLASRUTA	GLASS PANE	GLASSCHEIBE	C- 491570-020V
3- 272784-0002		GUMMILIST	RUBBER STRIP	GUMMILEISTE	C- 491579-020V
3- 272785		GUMMILIST	RUBBER STRIP	GUMMILEISTE	C- 491570-020V
C- 272788-0101	17888 93-01-27	VAGN	CARRIAGE	WAGEN	C- 272404-070V
2- 272789		SIDOSTYCKE HÖGER	SIDE PIECE	SEITENSTUECK	C- 272788-010V
2- 272790		SIDOSTYCKE VÄNSTER	SIDE PIECE	SEITENSTUECK	C- 272788-010V
3- 272791		DISTANSAXEL	SPACER ROD	DISTANZACHSE	C- 272788-010V
3- 272794		STÖD	SUPPORT	STUETZE	C- 271181-040V
3- 272810-0001		HYLSA	SLEEVE	HUELSE	C- 458384-010V
3- 272810-0002		HYLSA	SLEEVE	HUELSE	C- 458384-010V
3- 272810-0003		HYLSA	SLEEVE	HUELSE	C- 458384-010V
3- 272811		PLUNGE HÖGER	PLUNGER RIGHT	PLUNGER	C- 458383-020V
3- 272812		PLUNGE VÄNSTER	PLUNGER LEFT	PLUNGER	C- 458383-020V
3- 272813		PLUNGE	PLUNGER	PLUNGER	C- 458384-010V
G2- 272814		HYLSA	SLEEVE	HUELSE	C- 458383-020V
G2- 272815-0001		HYLSA	SLEEVE	HUELSE	C- 458383-020V
G2- 272815-0002		HYLSA	SLEEVE	HUELSE	C- 458383-020V
G2- 272815-0003		HYLSA	SLEEVE	HUELSE	C- 458383-020V
3- 272816-0001		AXEL	SHAFT	WELLE	C- 458383-020V C- 458384-010V
3- 272816-0002		AXEL	SHAFT	WELLE	C- 458383-020V C- 458384-010V
3- 272816-0003		AXEL	SHAFT	WELLE	C- 458383-020V C- 458384-010V
3- 272816-0004		AXEL	SHAFT	WELLE	C- 458383-020V C- 458384-010V
3- 272818		PACKNING	GASKET	DICHTUNG	C- 491207-030V
3- 272821		GRADSKIVA	PROTRACTOR	TEILKREISSCHEIBE	C- 256202-050V
4- 272840		STÅNG	ROD	STANGE	C- 256217-040V
3- 272844		FÄSTE	BRACKET	BEFESTIGUNGSHALTER	C- 272623-050V
3- 272852		HÅLLARE	HOLDER	HALTER	C- 456180-010V
4- 272853		SKRUV	SCREW	SCHRAUBE	C- 456180-010V
4- 272857		RING	RING	RING	C- 256200-030V
4- 272862		HÅLLARE	HOLDER	HALTER	C- 271626-030V
2- 272864		FÄSTE	BRACKET	BEFESTIGUNGSHALTER	C- 271626-030V
3- 272865		AXEL	SHAFT	WELLE	C- 271626-030V

PART NO	LAST ECN	BENÄMNING	TITLE	BENENNUNG	GROUP NO
3- 272866		SPÄRRSKIVA	LOCKING FLANGE	SPERRSCHEIBE	C- 271626-030V
4- 272867		FJÄDERHUS	SPRING HOUSING	FEDERHAUS	C- 271626-030V
4- 272868		SPÄRRTAPP	STOPPER DOWEL	SPERRZAPFEN	C- 271626-030V
4- 272869-0001		KLÄMSTYCKE	FLAP	KLAPPE	C- 271626-030V
4- 272869-0002		KLÄMSTYCKE	FLAP	KLAPPE	C- 271626-030V
4- 272886		LINJAL	RULER	LINEAL	C- 271641-030V
					C- 271641-020V
4- 272887		LINJAL	RULER	LINEAL	C- 271641-020V
4- 272888		LINJAL	RULER	LINEAL	C- 271641-030V
					C- 271641-020V
G3- 272905-0001		ARM VÄNSTER	ARM	ARM	CR- 256712-050V
G3- 272905-0002		ARM VÄNSTER	ARM	ARM	CR- 256712-050V
G3- 272905-0003		ARM VÄNSTER	ARM	ARM	CR- 256712-050V
G3- 272905-0004		ARM VÄNSTER	ARM	ARM	CR- 256712-050V
G3- 272905-0005		ARM VÄNSTER	ARM	ARM	CR- 256712-050V
G3- 272905-0006		ARM VÄNSTER	ARM	ARM	CR- 256712-050V
G3- 272905-0008		ARM VÄNSTER	ARM	ARM	CR- 256712-050V
G3- 272906-0001		ARM HÖGER	ARM	ARM	CR- 256712-050V
G3- 272906-0002		ARM HÖGER	ARM	ARM	CR- 256712-050V
G3- 272906-0003		ARM HÖGER	ARM	ARM	CR- 256712-050V
G3- 272906-0004		ARM HÖGER	ARM	ARM	CR- 256712-050V
G3- 272906-0005		ARM HÖGER	ARM	ARM	CR- 256712-050V
G3- 272906-0006		ARM HÖGER	ARM	ARM	CR- 256712-050V
G3- 272906-0008		ARM HÖGER	ARM	ARM	CR- 256712-050V
G2- 272926		GAFFEL	FORK	GABEL	C- 272024-040V
3- 272927		TRYCKARM	PRESSURE ARM	DRUCKARM	C- 272024-040V
G3- 272935		KLOTS HÖGER	BLOCK RIGHT	KLOTZ	CR- 256436-060V
G3- 272936		KLOTS VÄNSTER	BLOCK LEFT	KLOTZ	CR- 256436-060V
4- 272945		LÅS	LOCK	SCHLOSS	C- 469374-040V
3- 272948-0003		AXEL	SHAFT	WELLE	C- 256095-050V
2- 272949		VOLYMKURVA V	VOLUME CAM LEFT	VOLUMENKURVE	C- 256222-020V
2- 272953		VOLYMKURVA V	VOLUME CAM LEFT	VOLUMENKURVE	C- 978443-010V
					C- 256222-020V
2- 272954		VOLYMKURVA V	VOLUME CAM LEFT	VOLUMENKURVE	C- 256222-020V
2- 272955		VOLYMKURVA V	VOLUME CAM LEFT	VOLUMENKURVE	C- 978259-010V
					C- 256222-020V
2- 272956		VOLYMKURVA V	VOLUME CAM LEFT	VOLUMENKURVE	C- 256222-020V
2- 272957		VOLYMKURVA H	VOLUME CAM RIGHT	VOLUMENKURVE	C- 256222-020V
2- 272961		VOLYMKURVA H	VOLUME CAM RIGHT	VOLUMENKURVE	C- 978443-010V
					C- 256222-020V
2- 272962		VOLYMKURVA H	VOLUME CAM RIGHT	VOLUMENKURVE	C- 256222-020V
2- 272963		VOLYMKURVA H	VOLUME CAM RIGHT	VOLUMENKURVE	C- 978259-010V
					C- 256222-020V
2- 272964		VOLYMKURVA H	VOLUME CAM RIGHT	VOLUMENKURVE	C- 256222-020V
2- 272965		VOLYMKURVA V BRED	VOLUME CAM LEFT, WIDE	VOLUMENKURVE	C- 256222-020V
2- 272966		VOLYMKURVA V BRED	VOLUME CAM LEFT, WIDE	VOLUMENKURVE	C- 256222-020V
2- 272967		VOLYMKURVA H BRED	VOLUME CAM RIGHT, WIDE	VOLUMENKURVE	C- 256222-020V
2- 272968		VOLYMKURVA H BRED	VOLUME CAM RIGHT, WIDE	VOLUMENKURVE	C- 256222-020V
2- 272969		FÄSTE	BRACKET	BEFESTIGUNGSHALTER	C- 256222-020V
3- 272970		ARM VÄNSTER	ARM LEFT	ARM	C- 256222-020V
3- 272971		ARM HÖGER	ARM RIGHT	ARM	C- 256222-020V
4- 272972		LINJAL	RULER	LINEAL	C- 256222-020V
4- 272973		TAPP	DOWEL	ZAPFEN	C- 256222-020V
4- 272974-0001		FÄSTE	BRACKET	BEFESTIGUNGSHALTER	C- 256223-040V
4- 272974-0002		FÄSTE	BRACKET	BEFESTIGUNGSHALTER	C- 256223-040V
3- 272978		SPINDEL	SPINDLE	SPINDEL	C- 256222-020V
4- 272985-0001		ARM	ARM	ARM	CR- 256209-030V
					CR- 256210-030V
4- 272985-0002		ARM	ARM	ARM	CR- 256209-030V
					CR- 256210-030V
4- 272986-0001		VOLYMMELLANLÄGG	VOLUME SHIM	VOLUMENUNTERLAGE	C- 978443-010V
					CR- 256209-030V
					CR- 256210-030V
4- 272986-0002		VOLYMMELLANLÄGG	VOLUME SHIM	VOLUMENUNTERLAGE	CR- 256209-030V
					CR- 256210-030V
4- 272986-0003		VOLYMMELLANLÄGG	VOLUME SHIM	VOLUMENUNTERLAGE	C- 978259-010V
					CR- 256209-030V
					CR- 256210-030V
4- 272986-0004		VOLYMMELLANLÄGG	VOLUME SHIM	VOLUMENUNTERLAGE	CR- 256209-030V
					CR- 256210-030V
4- 272986-0005		VOLYMMELLANLÄGG	VOLUME SHIM	VOLUMENUNTERLAGE	CR- 256209-030V
					CR- 256210-030V
4- 272987		VOLYMMELLANLÄGG	VOLUME SHIM	VOLUMENUNTERLAGE	C- 978259-010V
					CR- 256209-030V
					CR- 256210-030V
3- 272988-0002		VOLYMKUDDE	VOLUME BULGE	VOLUMENKISSEN	CR- 256209-030V
					CR- 256210-030V
3- 272988-0004		VOLYMKUDDE	VOLUME BULGE	VOLUMENKISSEN	CR- 256209-030V
					CR- 256210-030V
3- 272990		VOLYMKUDDE	VOLUME BULGE	VOLUMENKISSEN	CR- 256209-030V
					CR- 256210-030V
4- 272991		VOLYMMELLANLÄGG	VOLUME SHIM	VOLUMENUNTERLAGE	CR- 256209-030V
					CR- 256210-030V
4- 272997		ANSLAG	STOPPER	ANSCHLAG	C- 272765-070V
4- 273429		BRICKA	WASHER	SCHEIBE	C- 256055-060V
4- 273449		SKYLT	SIGN	SCHILD	C- 978740-010V
4- 273450		SKYLT	SIGN	SCHILD	C- 978740-010V
4- 273452		SKYLT	SIGN	SCHILD	C- 978740-010V
4- 273454		SKYLT	SIGN	SCHILD	C- 978739-010V
4- 273455		SKYLT(KALLT VATTEN)	LABEL (COLD WATER)	SCHILD	C- 271866-060V
					C- 978739-010V
4- 273456		SKYLT	SIGN	SCHILD	C- 271866-060V

PART NO	LAST ECN	BENÄMNING	TITLE	BENENNUNG	GROUP NO
4- 273458		SKYLT(LUFT)	LABEL (AIR)	SCHILD	C- 978739-010V C- 271866-060V C- 978739-010V
4- 273781		FJÄDERFÄSTE	SPRING BRACKET	FEDERHALTER	CR- 548040-010V
4- 273937		MEMBRAN	DIAPHRAGM	MEMBRANE	C- 752173-010V
3- 273953		TÄTNING	SEAL	DICHTUNG	C- 272021-060V
2- 273954		TÄTNING	SEAL	DICHTUNG	C- 752173-010V
4- 273964		LOCK	LID	DECKEL	C- 493652-010V
4- 273965-0001		VIKT	WEIGHT	GEWICHT	C- 493652-010V
4- 273977		MUTTER	NUT	MUTTER	C- 527898-010V
4- 273978		NIVÅGLAS	LEVEL GLASS	NIVEAUGLAS	C- 527898-010V
4- 273980		FJÄDER	SPRING	FEDER	C- 527898-010V
4- 273981		PACKNING	GASKET	DICHTUNG	C- 751406-010V
4- 273982		VIKT	WEIGHT	GEWICHT	C- 751406-010V
1- 273985		VAGN	CARRIAGE	WAGEN	RK- 532210-010V
4- 273996		MUTTER	NUT	MUTTER	C- 527898-010V
3- 276069		TRANSIENTSKYDD	INTERFERENCE PROTECTION	TRANSIENSCHUTZ	CE- 41724-010V CE- 41751-010V CE- 41758-010V CE- 41724-010V CE- 41751-010V CE- 41758-010V
4- 276143		KIL	WEDGE	KEIL	CR- 548331-010V
4- 276182		KABELKLÄMMA	CABLE CLAMP	KABELKLEMME	C- 456953-020V C- 469634-010V
4- 276194		FJÄDERFÄSTE	SPRING BRACKET	FEDERHALTER	CR- 283605-010V
4- 278995		AXEL	SHAFT	WELLE	C- 457853-030V
4- 279008		BUSSNING	BUSHING	BUCHSE	C- 272021-060V
4- 279010		LAGERPLATTA	BEARING PLATE	LAGERPLATTE	C- 272021-060V
4- 279074		DRAGFJÄDER	TENSION SPRING	ZUGFEDER	C- 246388-060V
4- 279515		BRICKA	WASHER	SCHEIBE	C- 491890-010V
4- 279589		MUTTER	NUT	MUTTER	C- 272408-050V C- 456976-050V
4- 279590		FÖRMINSKNING	REDUCTION	VERMINDERUNG	C- 272408-050V
4- 279672		ANSLUTNING	ATTACHMENT	ANSCHLUSS	C- 295891-030V
3- 283011		V-BLOCK	V-BLOCK	BLOCK	C- 76197-010V
4- 283020		ANSLAG	STOPPER	ANSCHLAG	C- 76197-010V
3- 283172		LAGERHUS	BEARING HOUSING	LAGERGEHÄUSE	C- 295891-030V
2- 283361		BLÅSMUNSTYCKE	AIR NOZZLE	BLASMUNDSTUECK	C- 295891-030V
G1- 283535		LEDFÄSTE	BRACKET	BEFESTIGUNGSHALTER	C- 283612-020V
4- 283545		FJÄDER	SPRING	FEDER	CR- 548331-010V
4- 283546		SKRUV	SCREW	SCHRAUBE	CR- 548331-010V
4- 283551		SKRUV	SCREW	SCHRAUBE	CR- 548331-010V
4- 283555		PLATTA	PLATE	PLATTE	CR- 548040-010V
G1- 283564		KONSOL	CANTILEVER	KONSOLE	CR- 283605-010V
3- 283569		BROMSTRUMMA	BRAKE DRUM	BREMSTROMMEL	C- 484858-030V
2- 283587-0003		TRYCKRULLE	PRESSURE ROLLER	DRUCKROLLE	C- 283604-020V
4- 283588		SKENA	RAIL	SCHIENE	CR- 283607-030V
C- 283604-0201	14584 90-03-09	MOTTRYCKSRULLE	PRESSURE ROLLER	DRUCKROLLE	C- 456696-030V
CR- 283605-0102	14584 90-03-09	PULLTABFÖRSEGLARE	PULL TAB SEALING UNIT	VERSIEGL.EINHEIT PULLTAB	B- 648118-090V
CR- 283606-020V	15121 90-09-26	FÖRSEGLINGSBACK PULLTAB	SEALING JAW PULLTAB	VERSIEGELUNGSBACKE	B- 648118-090V
CR- 283607-030V	19421 93-03-09	MOTBACK	COUNTER JAW	GEGGEN BACKE	B- 648118-090V
C- 283612-0201	14859 90-05-23	REMSFÖRSEGLARE	STRIP SEALER	STREIFENVERSIEGLER	B- 648118-090V
C- 283626-0401	16650 91-09-09	DRIVAGGREGAT	DRIVE UNIT	ANTRIEBSEINHEIT	B- 648118-090V
C- 283629-0201	12403 89-01-10	VALS	ROLLER	WALZE	C- 552030-010V
1- 283658		KONSOL	CANTILEVER	KONSOLE	C- 283612-020V
G1- 283659		ARM	ARM	ARM	C- 283612-020V
3- 283669		MELLANLÄGG	LACE	ZWISCHENLAGE	C- 497534-030V
4- 283676-0001		FJÄDERFÄSTE	SPRING BRACKET	FEDERHALTER	C- 283612-020V
3- 283692-0002		LINJAL	RULER	LINEAL	C- 469173-010V
3- 283692-0003		LINJAL	RULER	LINEAL	C- 469173-010V
4- 283795		VIKT	WEIGHT	GEWICHT	C- 229400-070V
4- 283853		KLÄMNAV	CLAMP HUB	KLEMMNABE	C- 469173-010V
4- 283885-0001		PNEUMATIKSCHEMA	DIAGRAM	SCHEMA	C- 751796-030V
3- 284698		PLATTA	PLATE	PLATTE	C- 497534-030V
3- 284699		FÄSTE	BRACKET	BEFESTIGUNGSHALTER	C- 497534-030V
4- 284806		NAV	HUB	NABE	C- 469173-010V
4- 284997		KUGGREMHJUL	TOOTHED PULLY	ZAHNRIEMENRAD	C- 476080-020V
4- 284998		AXEL	SHAFT	WELLE	C- 476080-020V
4- 292044		AXEL,FÄRGRULLE	SHAFT	WELLE	C- 434074-030V C- 434774-030V C- 434074-030V C- 434774-030V C- 434074-030V
4- 292412		GAVEL	END SECTION	STIRNWAND	C- 293684-020V C- 293685-020V C- 293684-020V C- 293685-020V C- 293684-020V
4- 292413		GAVEL	END SECTION	STIRNWAND	C- 293684-020V C- 293685-020V C- 293684-020V C- 293685-020V C- 293684-020V
4- 292414		MEDBRINGARE	CARRIER	MITNEHMER	C- 293685-020V
G2- 292449		PUMPHUS	PUMP HOUSING	PUMPENGEHÄUSE	C- 751393-010V
3- 292456		LAGERLOCK	BEARING COVER	LAGERDECKEL	C- 751393-010V
G1- 292473		KONSOL	CANTILEVER	KONSOLE	C- 751689-010V
4- 292477		AXEL	SHAFT	WELLE	C- 751689-010V
4- 292482		BRICKA	WASHER	SCHEIBE	C- 751689-010V
4- 293363		KONTRAMUTTER	BARRIER NUT	KONTRAMUTTER	C- 272408-050V
4- 293364		STRYPSKRUV	THROTTLE SCREW	DROSSELSCHRAUBE	C- 272408-050V

PART NO	LAST ECN	BENÄMNING	TITLE	BENENNUNG	GROUP NO
2- 293395-0001		TYPHÅLLARE	TYPE HOLDER	TYPENHALTER	C- 293684-020V C- 293685-020V
2- 293395-0002		TYPHÅLLARE	TYPE HOLDER	TYPENHALTER	C- 293684-020V C- 293685-020V C- 293684-020V C- 293685-020V C- 293684-020V C- 293684-020V
4- 293659		MEDBRINGARE	CARRIER	MITNEHMER	C- 293684-020V
4- 293667		TAPP	DOWEL	ZAPFEN	C- 434074-030V C- 434774-030V
4- 293669-0001		BRICKA	WASHER	SCHEIBE	C- 434074-030V C- 434774-030V C- 434074-030V C- 434074-030V C- 434774-030V
4- 293669-0002		BRICKA	WASHER	SCHEIBE	C- 434074-030V C- 434074-030V C- 434774-030V C- 434074-030V C- 434774-030V
4- 293669-0003		BRICKA	WASHER	SCHEIBE	C- 434074-030V C- 434074-030V C- 434774-030V C- 434074-030V C- 434774-030V
4- 293669-0004		BRICKA	WASHER	SCHEIBE	C- 434074-030V C- 434074-030V C- 434774-030V C- 434074-030V C- 434774-030V
4- 293670		AXEL	SHAFT	WELLE	C- 434074-030V C- 434074-030V C- 434774-030V C- 434074-030V C- 434774-030V C- 434074-030V
C- 293684-0204	19242 93-09-14	DATUMHJUL ST-ER	PRINTING WHEEL	DATUMRAD	C- 77091-040V C- 752646-020V C- 752914-010V
C- 293685-0201	14947 90-12-04	DATUMHJUL ST-R	PRINTING WHEEL	DATUMRAD	C- 77091-040V C- 752645-020V C- 752913-010V
4- 293697		GAVEL	END SECTION	STIRNWAND	C- 434074-030V
2- 294519		KONSOL	CANTILEVER	KONSOLE	C- 283626-040V
G3- 294576		ARM	ARM	ARM	CR- 283605-010V
4- 294578		LÅSKLACK	LOCKING LUG	SCHLIESSNOCKE	CR- 283605-010V
4- 294579		KIL	WEDGE	KEIL	CR- 283606-020V
4- 294580		ISOLERPLATTA	INSULATING PLATE	ISOLIERPLATTE	CR- 283606-020V
4- 294584		MOTHÅLL	DOLLY	GEGENHALTER	CR- 283605-010V
4- 294594		FÄSTE	BRACKET	BEFESTIGUNGSHALTER	CR- 283607-030V
4- 294595		AXEL	SHAFT	WELLE	CR- 283607-030V
4- 294596		RULLE	ROLL	ROLLE	CR- 283607-030V
4- 294628		AXEL	SHAFT	WELLE	CR- 294695-010V
4- 294632		KURVA	CURVE	KURVE	C- 469173-010V
4- 294660		KLOTS	BLOCKING PIECE	KLOTZ	CR- 283605-010V
G1- 294674		KONSOL	CANTILEVER	KONSOLE	CR- 294695-010V
G2- 294675		STYRNING	STEERING	FUEHRUNG	CR- 294695-010V
4- 294676		BRICKA	WASHER	SCHEIBE	CR- 294695-010V
4- 294677		BRICKA	WASHER	SCHEIBE	CR- 294695-010V
4- 294680		ARM	ARM	ARM	CR- 294695-010V
CR- 294695-0101	10738 87-08-21	TILLBAKAMATNING	BACK FEEDER	VORSCHIEBER	B- 648118-090V
4- 294734		BRICKA	WASHER	SCHEIBE	C- 456679-010V C- 457853-030V
4- 294735		DISTANS	SPACER	DISTANZ	C- 457853-030V
4- 294748		VISARE	POINTER	ZEIGER	C- 457867-020V
3- 294776		FÄSTE	BRACKET	BEFESTIGUNGSHALTER	C- 457853-030V
3- 294787		HÄNGSLA	HANGER	HALTERUNG	C- 457853-030V
3- 294800		VINKEL	ANGLE	WINKEL	C- 456953-020V
3- 294801		VINKEL	ANGLE	WINKEL	C- 456953-020V
4- 294802		VINKEL	ANGLE	WINKEL	C- 456953-020V
4- 294826		AXEL	SHAFT	WELLE	C- 457853-030V
4- 294827		KAM	CAM	NOCKE	C- 457853-030V
3- 294829-0003		BRYTRULLE	BENDING ROLLER	UMLENKROLLE	C- 533844-010V
4- 294830		LOCK	LID	DECKEL	C- 533844-010V
4- 294868		MOTGUMMI	COUNTER RUBBER	DRUCKGUMMI	CR- 283607-030V C- 469316-020V
4- 294870		MELLANLÄGG	LACE	ZWISCHENLAGE	CR- 283606-020V
4- 294871		MELLANLÄGG	LACE	ZWISCHENLAGE	CR- 283605-010V
4- 294881		SKRUV	SCREW	SCHRAUBE	CR- 283605-010V
4- 294938		MUTTER	NUT	MUTTER	C- 533844-010V
4- 294971		INDIKERING	INDICATION	INDIKIERUNG	CR- 548040-010V
4- 294973		AXEL	SHAFT	WELLE	CR- 548040-010V
4- 294974		KLOTS	BLOCKING PIECE	KLOTZ	CR- 548040-010V
4- 294975		FÄSTE	BRACKET	BEFESTIGUNGSHALTER	CR- 548040-010V
4- 295005		MOTHÅLL	DOLLY	GEGENHALTER	C- 295523-030V
4- 295010		STYRHYLSA	GUIDE SLEEVE	FUEHRUNGSHUELSE	C- 751088-030V
G3- 295015		FÄSTE	BRACKET	BEFESTIGUNGSHALTER	C- 751968-010V

PART NO	LAST ECN	BENÄMNING	TITLE	BENENNUNG	GROUP NO
G3- 295016		FÄSTE	BRACKET	BEFESTIGUNGSHALTER	C- 751968-010V
C- 295045-070V	17886 93-01-19	RÖRDRAGNING-PNEUMATIK	PIPE WORK-PNEUMATIC	ROHRSYSTEM - PNEUMATIK	B- 648111-100V
3- 295057-0001		SKENA VÄNSTER	RAIL	SCHIENE	CR- 256712-050V
3- 295057-0002		SKENA VÄNSTER	RAIL	SCHIENE	CR- 256712-050V
3- 295057-0003		SKENA VÄNSTER	RAIL	SCHIENE	CR- 256712-050V
3- 295058-0001		SKENA HÖGER	RAIL	SCHIENE	CR- 256712-050V
3- 295058-0002		SKENA HÖGER	RAIL	SCHIENE	CR- 256712-050V
3- 295058-0003		SKENA HÖGER	RAIL	SCHIENE	CR- 256712-050V
3- 295059		SKENA VÄNSTER	RAIL LEFT	SCHIENE	CR- 256712-050V
3- 295060		SKENA HÖGER	RAIL	SCHIENE	CR- 256712-050V
3- 295061		SKENA VÄNSTER	RAIL	SCHIENE	CR- 256712-050V
3- 295062		SKENA HÖGER	RAIL	SCHIENE	CR- 256712-050V
4- 295072		DÄMPRING	BUFFER RING	DÄMPFUNGSRING	CR- 256436-060V
					CR- 256712-050V
					CR- 256436-060V
					CR- 256712-050V
					CR- 256436-060V
					CR- 256712-050V
					CR- 256436-060V
					CR- 256712-050V
2- 295075		SKYDD	PROTECTION	SCHUTZ	C- 456180-010V
G3- 295092		LAGERHUS	BEARING HOUSING	LAGERGEHÄUSE	C- 295310-070V
4- 295093		LOCK	LID	DECKEL	C- 295310-070V
2- 295097		GLIDKLOTS	SLIDER	GLEITKLOTZ	C- 456180-010V
1- 295106		KLÄMSKYDD	PROTECTION	SCHUTZ	C- 491942-010V
3- 295111		BRYTRULLE	BENDING ROLLER	UMLENKROLLE	C- 256014-060V
4- 295116		KEDJEHJUL	SPROCKET	KETTENRAD	C- 295310-070V
4- 295140		PINNE	PEG	STIFT	C- 256173-050V
					C- 256202-050V
1- 295156		LOCK	LID	DECKEL	C- 257146-020V
2- 295157		ARM	ARM	ARM	C- 257146-020V
1- 295158		DÖRR	DOOR	TUER	C- 256873-040V
4- 295160		PACKNING	GASKET	DICHTUNG	C- 271169-040V
					C- 272337-040V
4- 295163		ANSATSRING	SHOULDER RING	ANSATZRING	C- 295310-070V
4- 295164		KUGGHJUL	GEAR WHEEL	ZAHNRAD	C- 295310-070V
4- 295165		KUGGHJUL	GEAR WHEEL	ZAHNRAD	C- 295310-070V
4- 295166		AXEL	SHAFT	WELLE	C- 295310-070V
4- 295168		LOCK	LID	DECKEL	C- 295310-070V
4- 295169		DISTANSRING	SPACER RING	DISTANZRING	C- 295310-070V
4- 295170		PLUGG	PLUG	PFROPFEN	C- 295310-070V
2- 295197		LUCKA	OPENING	DECKEL	C- 256665-020V
2- 295198		LUCKA	OPENING	DECKEL	C- 256665-020V
G1- 295201		SVÄNGRAM	FRAME	RAHMEN	C- 295211-010V
2- 295202-0001		RÖRSVIVEL	SWIVEL	DREHGELENK	C- 295211-010V
2- 295202-0002		RÖRSVIVEL	SWIVEL	DREHGELENK	C- 295211-010V
4- 295203		LOCK	LID	DECKEL	C- 295211-010V
4- 295204-0001		SHIMS	SHIM	SHIMS	C- 295211-010V
4- 295204-0002		SHIMS	SHIM	SHIMS	C- 295211-010V
4- 295204-0003		SHIMS	SHIM	SHIMS	C- 295211-010V
4- 295205		DISTANSHYLSA	SPACER SLEEVE	DISTANZHUELSE	C- 295211-010V
G4- 295206		KLÄPP	FLAP	KLAPPE	C- 295211-010V
4- 295207		HÅLLARE	HOLDER	HALTER	C- 295211-010V
4- 295208		LÅSBLECK	SECURING PLATE	SCHLIESSBLECH	C- 295211-010V
C- 295211-010V	13634 90-02-27	SVÄNGRAM	FRAME	RAHMEN	B- 648105-100V
C- 295211-0101	13634 90-02-27	SVÄNGRAM	FRAME	RAHMEN	C- 570143-020V
					C- 570145-020V
C- 295211-0102	13634 90-02-27	SVÄNGRAM	FRAME	RAHMEN	C- 570141-020V
C- 295218-010V	19267 93-05-31	VIKSKENA	FOLDING BAR	FALTSCHIENE	B- 648105-100V
C- 295218-0101	19267 93-05-31	VIKSKENA	FOLDING BAR	FALTSCHIENE	C- 570143-020V
C- 295218-0103	19267 93-05-31	VIKSKENA	FOLDING BAR	FALTSCHIENE	C- 570141-020V
C- 295218-0107	19267 93-05-31	VIKSKENA	FOLDING BAR	FALTSCHIENE	C- 570145-020V
3- 295247		BLADFJÄDER	LEAF SPRING	BLATTFEDER	C- 256873-040V
3- 295259		HÅLLARE FÖR VEV	HOLDER	HALTER	C- 256843-060V
C- 295262-0601	17889 93-01-23	DISKRÖR	CLEANING PIPE	REINIGUNGSROHR	B- 648109-100V
3- 295273		FÄSTPLATTA	FASTENING PLATE	BEFESTIGUNGSPLATTE	C- 529933-010V
3- 295296		KABELSTEGE	CABLE TRACK	KABELTRÄGER	C- 271569-050V
4- 295299		KUGGDREV	GEARING	ZAHNGETRIEBE	C- 295310-070V
4- 295302		LUCKA	OPENING	DECKEL	C- 456100-030V
3- 295306		KÅPA	COVER	DECKEL	CR- 256547-040V
3- 295307		SPIRALSLANG	FLEXIBLE CONDUIT	SPIRALSCHLAUCH	CR- 256547-040V
4- 295308		PASSMELLANLÄGG	LACE	ZWISCHENLAGE	C- 295310-070V
4- 295309		PASSMELLANLÄGG	LACE	ZWISCHENLAGE	C- 295310-070V
C- 295310-070V	19267 93-05-31	UTMATNINGSENHET	DISCHARGE UNIT	AUSSTOSSANORDNUNG	B- 648105-100V
G1- 295311		UTMATAREHUS	DISCHARGE HOUSE	GEHAEUSE	C- 295310-070V
2- 295313		AXEL	SHAFT	WELLE	C- 295310-070V
3- 295314		KEDJEHJUL	SPROCKET	KETTENRAD	C- 295310-070V
3- 295316		GLIDLIST	RIM	LEISTE	C- 295310-070V
4- 295317		BRICKA	WASHER	SCHEIBE	C- 295310-070V
4- 295318		SMÖRJNIPPEL	GREASE NIPPLE	SCHMIERNIPPEL	C- 295310-070V
4- 295319		KEDJEHJUL	SPROCKET	KETTENRAD	C- 295310-070V
4- 295321		GLIDLIST	RIM	LEISTE	C- 295310-070V
4- 295323		BRICKA	WASHER	SCHEIBE	C- 295310-070V
4- 295326		STOPPRING	RETAINING RING	SICHERUNGSRING	C- 295310-070V
2- 295332		SKENA	RAIL	SCHIENE	C- 271114-050V
2- 295334		SIDOPLÅT HÖGER	SIDE PLATE	SEITENBLECH	C- 271114-050V
2- 295336		BOTTENPLÅT	BOTTOM PANEL	BODENBLECH	C- 271114-050V
3- 295340		GAVELPLÅT	GABLE PLATE	STIRNWANDBLECH	C- 271114-050V
4- 295341		DISTANS	SPACER	DISTANZ	C- 271114-050V
4- 295342		KLAMMER	CRAMP	KLAMMER	C- 271114-050V
G2- 295347		LAGERBOCK	BEARING BRACKET	LAGERBOCK	C- 271115-040V
3- 295348		FRONTRUTA	GLASS	GLAS	C- 271115-040V

PART NO	LAST ECN	BENÄMNING	TITLE	BENENNUNG	GROUP NO
G3- 295349		LAGERBOCK	BEARING BRACKET	LAGERBOCK	C- 271115-040V
3- 295353		SKENA	RAIL	SCHIENE	C- 271115-040V
4- 295354		LOCK	LID	DECKEL	C- 271115-040V
4- 295355		LAGERBOCK	BEARING BRACKET	LAGERBOCK	C- 271115-040V
G4- 295356		AXELBOCK	HOUSING	BOCK	C- 271115-040V
4- 295357		STÅNG	ROD	STANGE	C- 271115-040V
4- 295358		LINJAL	RULER	LINEAL	C- 271115-040V
4- 295375		GAFFEL	FORK	GABEL	C- 529933-010V
					C- 529933-020V
					C- 529933-010V
					C- 529933-020V
					C- 529933-010V
					C- 529933-020V
4- 295376		AXEL	SHAFT	WELLE	C- 529933-010V
					C- 529933-020V
					C- 529933-010V
					C- 529933-020V
					C- 529933-010V
					C- 529933-020V
					C- 469091-030V
4- 295377-0001		HUV	HOOD	HAUBE	C- 469091-030V
4- 295377-0002		HUV	HOOD	HAUBE	C- 529933-010V
					C- 529933-020V
					C- 529933-010V
					C- 529933-020V
					C- 529933-010V
					C- 529933-020V
					C- 469091-030V
3- 295384		SUGLEDNING	SUCTION PIPE	SAUGLEITNUNG	C- 490761-010V
3- 295387		MÄRKSKYLT	SIGN BOARD	SCHILD	C- 490761-010V
4- 295388		PACKNING	GASKET	DICHTUNG	C- 256014-060V
					C- 295778-040V
4- 295390		SKYLT	SIGN	SCHILD	C- 490761-010V
3- 295391-0002		STRYPSKRUV	THROTTLE SCREW	DROSSELSCHRAUBE	C- 271168-040V
3- 295391-0003		STRYPSKRUV	THROTTLE SCREW	DROSSELSCHRAUBE	C- 271168-040V
2- 295399		HÅLLARE	HOLDER	HALTER	C- 456180-010V
3- 295408		ARM	ARM	ARM	C- 271992-020V
3- 295409		AXEL	SHAFT	WELLE	C- 271992-020V
3- 295412		INSUGNINGSRÖR	PIPE	ROHR	C- 456588-030V
4- 295417		PACKNING	GASKET	DICHTUNG	C- 271261-050V
					C- 456588-030V
4- 295423		HATTÄTNING	SEAL	DICHTUNG	C- 271115-040V
4- 295424		SKYLT	SIGN	SCHILD	C- 978740-010V
4- 295425		SKYLT	SIGN	SCHILD	C- 978740-010V
3- 295426		ÖVERFALL	CAP	UEBERFALL	C- 272021-060V
3- 295427		LÅS	LOCK	SCHLOSS	C- 272021-060V
3- 295428		GÅNGJÄRN	HINGE	SCHARNIER	C- 272021-060V
4- 295429		HANDTAG	HANDLE	GRIFF	C- 272021-060V
4- 295430		STÖD	SUPPORT	STUETZE	C- 295211-010V
4- 295431		SKRUV	SCREW	SCHRAUBE	C- 295211-010V
4- 295432		SKRUV	SCREW	SCHRAUBE	C- 295211-010V
4- 295434		BUSSNING	BUSHING	BUCHSE	C- 456588-030V
4- 295466		LÅS	LOCK	SCHLOSS	C- 469374-040V
C- 295470-050V	19293 93-01-22	EL-LÅDA	EL.CONNECTION BOX	EL-KASTEN	B- 648111-100V
2- 295471		RÖR	PIPE	ROHR	C- 456455-030V
2- 295472		RÖR	PIPE	ROHR	C- 456455-030V
4- 295473		RÖR	PIPE	ROHR	C- 978739-010V
4- 295475-0002		STYRNING	STEERING	FUEHRUNG	C- 456103-010V
4- 295479		FÄSTKLOTS	MOUNTING BLOCK	BEFESTIGUNGSKLOTZ	C- 456103-010V
4- 295480		STYRTAPP	GUIDE STUD	FUEHRUNGSZAPFEN	C- 456103-010V
					C- 456560-010V
4- 295495		AXELHÅLLARE	HOLDER	HALTER	C- 456560-010V
3- 295496		KLOTS	BLOCKING PIECE	KLOTZ	C- 978739-010V
4- 295498		AXELHÅLLARE	HOLDER	HALTER	C- 456560-010V
4- 295511-0003		STOPPKLACK	STOP LUG	STOPPABSATZ	C- 456560-010V
4- 295511-0004		STOPPKLACK	STOP LUG	STOPPABSATZ	C- 456560-010V
4- 295512		DRAGFJÄDER	TENSION SPRING	ZUGFEDER	C- 456560-010V
4- 295513		DRAGFJÄDER	TENSION SPRING	ZUGFEDER	C- 456560-010V
4- 295515		FJÄDERFÄSTE	SPRING BRACKET	FEDERHALTER	C- 456560-010V
C- 295523-030V	19148 92-12-07	UPPSTARTSATS BACKSYSTEM	START-UP KIT	STARTSATZ	B- 648104-100V
2- 295529		RÖR	PIPE	ROHR	C- 271866-060V
2- 295530		RÖR	PIPE	ROHR	C- 271866-060V
2- 295531		RÖR	PIPE	ROHR	C- 271866-060V
2- 295533		RÖR	PIPE	ROHR	C- 271866-060V
3- 295536		RÖR	PIPE	ROHR	C- 271866-060V
3- 295539		RÖR	PIPE	ROHR	C- 271866-060V
4- 295540		FÄSTPLATTA	FASTENING PLATE	BEFESTIGUNGSPLATTE	C- 271866-060V
4- 295541		FÄSTE	BRACKET	BEFESTIGUNGSHALTER	C- 271866-060V
4- 295549		KLAMMER	CRAMP	KLAMMER	C- 271866-060V
					C- 456976-050V
2- 295568		RÖR 80	PIPE	ROHR	C- 295045-070V
2- 295590		RÖR V390	PIPE	ROHR	C- 295045-070V
3- 295591		RÖR 60	PIPE	ROHR	C- 295045-070V
3- 295594		RÖR 180	PIPE	ROHR	C- 295045-070V
4- 295604		KLAMMER	CRAMP	KLAMMER	C- 295045-070V
4- 295605		FÄSTE	BRACKET	BEFESTIGUNGSHALTER	C- 295045-070V
3- 295615		FÄSTE	BRACKET	BEFESTIGUNGSHALTER	C- 271569-050V
4- 295616		KABELRÄNNA	CABLE TRENCH	KABELRINNE	C- 271569-050V
2- 295624		LOCK	LID	DECKEL	C- 295470-050V
2- 295639		BOTTENPLÅT	BOTTOM PANEL	BODENBLECH	C- 271513-060V
					C- 751885-030V
3- 295647		HÖRNLIST	CORNER STRIP	ECKLEISTE	C- 271513-060V

PART NO	LAST ECN	BENÄMNING	TITLE	BENENNUNG	GROUP NO
3- 295648		HÖRNLIST VÄNSTER	CORNER STRIP	ECKLEISTE	C- 751885-030V C- 271513-060V
3- 295650		TÄCKPLÅT	COVERING PLATE	DECKBLECH	C- 751885-030V C- 271513-060V
3- 295651		TÄCKPLÅT	COVERING PLATE	DECKBLECH	C- 751885-030V C- 271513-060V
3- 295652		TÄCKPLÅT	COVERING PLATE	DECKBLECH	C- 751885-030V C- 271513-060V
3- 295653		TÄCKPLÅT	COVERING PLATE	DECKBLECH	C- 751885-030V C- 271513-060V
3- 295654		TÄCKPLÅT	COVERING PLATE	DECKBLECH	C- 751885-030V C- 271513-060V
3- 295658		TÄCKLIST HÖRN	COVER SLIP	DECKLEISTE	C- 751885-030V C- 271513-060V
3- 295659		TÄCKLIST	COVER SLIP	DECKLEISTE	C- 751885-030V C- 271513-060V
4- 295661		AXEL	SHAFT	WELLE	C- 751885-030V C- 271992-020V
C- 295668-0301	9628 86-10-16	UPPSTARTSATS	START-UP KIT	STARTSATZ	B- 648107-100V
1- 295716		BYGEL	BOW CLAMP	BUEGEL	C- 271934-030V
2- 295717		KONSOL	CANTILEVER	KONSOLE	C- 271934-030V
4- 295729		BRICKA	WASHER	SCHEIBE	C- 491259-020V
4- 295730		DISTANSPLÅT	SPACER SHEET	DISTANZBLECH	C- 736796-020V
1- 295734		RÖR 40	PIPE	ROHR	C- 295045-070V
1- 295735		RÖR 70	PIPE	ROHR	C- 295045-070V
1- 295736		RÖR 190	PIPE	ROHR	C- 295045-070V
1- 295737		RÖR 191	PIPE	ROHR	C- 295045-070V
1- 295738		RÖR 210	PIPE	ROHR	C- 295045-070V
1- 295739		RÖR 211	PIPE	ROHR	C- 295045-070V
3- 295740		RÖR 40	PIPE	ROHR	C- 295045-070V
3- 295741		RÖR 70	PIPE	ROHR	C- 295045-070V
4- 295744		JUSTERSKRUV	SCREW	SCHRAUBE	C- 256223-040V
3- 295748-0001		BAKSTYCKE	BACK PIECE	HINTERTEIL	C- 256223-040V
3- 295748-0002		BAKSTYCKE	BACK PIECE	HINTERTEIL	C- 256223-040V
3- 295748-0003		BAKSTYCKE	BACK PIECE	HINTERTEIL	C- 256223-040V
4- 295749		JUSTERKLOTS	ADJUSTING BLOCK	KLOTZ	C- 256223-040V
4- 295750-0002		STYRSKENA	STEERING RAIL	FUEHRUNGSSCHIENE	C- 256223-040V
2- 295757		KLIPPSKENA	CUTTING RAIL	SCHNEIDSCHIENE	CR- 256204-050V CR- 256205-050V
4- 295758		MOTHÅLL	DOLLY	GEGENHALTER	CR- 256204-050V CR- 256205-050V
4- 295760		FÄSTVINKEL	FASTENING BRACKET	BEFESTIGUNGSWINKEL	C- 295523-030V
4- 295766		BANJOSKRUV	SCREW	SCHRAUBE	C- 441000-050V
4- 295767		TÄTNINGSBRICKA	SEALING WASHER	DICHTUNGSSCHEIBE	C- 256173-050V
3- 295770		AXELBULT	AXLE BOLT	ACHSBOLZEN	C- 256173-050V
4- 295773		DISTANS	SPACER	DISTANZ	C- 256197-050V
4- 295774		FÄSTE	BRACKET	BEFESTIGUNGSHALTER	C- 256806-030V C- 256206-020V C- 256207-020V
C- 295778-040V	16128 91-02-21	UPPSTARTSATS	START-UP KIT	STARTSATZ	B- 648111-100V
2- 295782		KABELRÄNNA	CABLE TRENCH	KABELRINNE	C- 469374-040V
2- 295783		LOCK	LID	DECKEL	C- 469374-040V
2- 295785		SPOLRÖR HÖGER	FORCE SPRING	SPUEHLROHR	C- 271261-050V
4- 295819-0003		LOCK	LID	DECKEL	C- 469374-040V
4- 295842		BRICKA	WASHER	SCHEIBE	C- 295310-070V
G2- 295843-0001		FÄSTE	BRACKET	BEFESTIGUNGSHALTER	CR- 256712-050V
G2- 295843-0002		FÄSTE	BRACKET	BEFESTIGUNGSHALTER	CR- 256712-050V
G2- 295843-0003		FÄSTE	BRACKET	BEFESTIGUNGSHALTER	CR- 256712-050V
G2- 295843-0004		FÄSTE	BRACKET	BEFESTIGUNGSHALTER	CR- 256712-050V
G2- 295843-0005		FÄSTE	BRACKET	BEFESTIGUNGSHALTER	CR- 256712-050V
G2- 295843-0006		FÄSTE	BRACKET	BEFESTIGUNGSHALTER	CR- 256712-050V
G2- 295843-0007		FÄSTE	BRACKET	BEFESTIGUNGSHALTER	CR- 256712-050V
1- 295862-0001		VIKSKENA	FOLDING BAR	FALTSCHIENE	C- 295218-010V
1- 295862-0002		VIKSKENA	FOLDING BAR	FALTSCHIENE	C- 295218-010V
1- 295862-0003		VIKSKENA	FOLDING BAR	FALTSCHIENE	C- 295218-010V
1- 295862-0004		VIKSKENA	FOLDING BAR	FALTSCHIENE	C- 295218-010V
1- 295862-0005		VIKSKENA	FOLDING BAR	FALTSCHIENE	C- 295218-010V
1- 295863		VIKSKENA	FOLDING BAR	FALTSCHIENE	C- 295218-010V
1- 295864		VIKSKENA	FOLDING BAR	FALTSCHIENE	C- 295218-010V
3- 295871-0001		FÄSTE	BRACKET	BEFESTIGUNGSHALTER	C- 295218-010V
3- 295871-0002		FÄSTE	BRACKET	BEFESTIGUNGSHALTER	C- 295218-010V
3- 295871-0003		FÄSTE	BRACKET	BEFESTIGUNGSHALTER	C- 295218-010V
3- 295871-0004		FÄSTE	BRACKET	BEFESTIGUNGSHALTER	C- 295218-010V
3- 295871-0005		FÄSTE	BRACKET	BEFESTIGUNGSHALTER	C- 295218-010V
3- 295871-0006		FÄSTE	BRACKET	BEFESTIGUNGSHALTER	C- 295218-010V
3- 295871-0007		FÄSTE	BRACKET	BEFESTIGUNGSHALTER	C- 295218-010V
4- 295873		FÄSTE	BRACKET	BEFESTIGUNGSHALTER	C- 271934-030V C- 564120-010V
C- 295883-050V	17888 93-01-27	MELLANSTYCKE	SPACER PIECE	ZWISCHENSTUECK	C- 752030-010V
C- 295891-030V	19273 93-05-31	REMSPÅLÄGGARE	STRIP APPLICATOR	STREIFENAUFLEGER	C- 256843-060V
C- 295904-010V	19274 93-05-31	KLÄMMA	CLAMPING PIECE	KLAMMER	B- 648107-100V
3- 295905-0001		HÅLLARE	HOLDER	HALTER	B- 648109-100V
3- 295905-0002		HÅLLARE	HOLDER	HALTER	C- 295904-010V
3- 295905-0003		HÅLLARE	HOLDER	HALTER	C- 295904-010V
3- 295905-0004		HÅLLARE	HOLDER	HALTER	C- 295904-010V
3- 295906		HANDTAG	HANDLE	GRIFF	C- 295904-010V
4- 295907		FJÄDER	SPRING	FEDER	C- 295904-010V
4- 295909		BUSSNING	BUSHING	BUCHSE	C- 256055-060V
4- 295910		BUSSNING	BUSHING	BUCHSE	C- 256095-050V
3- 295913		KOPPLINGSLÅDA	CONNECTION BOX	KUPPLUNGSKASTEN	C- 978604-010V
4- 295936		BUSSNING	BUSHING	BUCHSE	C- 256095-050V

PART NO	LAST ECN	BENÄMNING	TITLE	BENENNUNG	GROUP NO
3- 295945		SKYDD	PROTECTION	SCHUTZ	C- 271866-060V
4- 295970		RING	RING	RING	C- 271866-060V
2- 295978		FÖRDELNINGSRÖR	PIPE	ROHR	C- 271261-050V
4- 295983		AXELKOPPLING	CONNECTION	KUPPLUNG	C- 256200-030V
3- 295984		DROPPSKYDD	DRIP GUARD	TROPFSCHUTZ	C- 529933-010V
					C- 529933-020V
					C- 529933-010V
					C- 529933-020V
					C- 529933-010V
					C- 529933-020V
					C- 469091-030V
3- 295985		SPOLRÖR	FORCE SPRING	SPUEHLROHR	C- 271261-050V
4- 295986		HÅLLARE	HOLDER	HALTER	C- 271562-080V
4- 295987		SPJÄLL	THROTTLE	DROSSELVENTIL	C- 566507-010V
					C- 567695-010V
					C- 255921-040V
4- 295993		PACKNINGSHÅLLARE	GASKET HOLDER	DICHTUNGSHALTER	C- 272407-020V
G3- 297091		ARM	ARM	ARM	C- 751689-010V
G3- 297092		ARM	ARM	ARM	C- 751689-010V
4- 297195		DISTANS	SPACER	DISTANZ	C- 272560-060V
3- 297210		FÄRGKAR	INK WELL	FARBWANNE	C- 434774-030V
3- 297211		FÄRGKAR DATUMVERK	INK WELL	FARBWANNE	C- 434074-030V
4- 297213		GAVEL	END SECTION	STIRNWAND	C- 434774-030V
4- 297349		LAGERFÄSTE	BRACKET	BEFESTIGUNGSHALTER	C- 237776-040V
					C- 229400-070V
					C- 237776-040V
2- 297394		LEDPLÅT	LEAD PLATE	FUEHRUNGSBLECH	C- 229400-070V
2- 297395		PAPPERSSKYDD	PAPER GUARD	PAPIERSCHUTZ	C- 229400-070V
3- 297959		SLANGFLÄNS	FLANGE	FLANSCH	C- 237776-040V
3- 297960		ANSLUTNING	ATTACHMENT	ANSCHLUSS	C- 237776-040V
2- 297988		KÅPA	COVER	DECKEL	C- 434074-030V
2- 297989		KÅPA	COVER	DECKEL	C- 434774-030V
4- 299643		BRICKA	WASHER	SCHEIBE	C- 752645-020V
					C- 752646-020V
311101-0267		CYL.PINNE CP4H6X10	CYLINDRICAL PIN	ZYLINDERSTIFT	C- 256197-050V
					C- 491814-020V
					C- 491815-020V
311101-0308		CYL.PINNE CP5H6X16	CYLINDRICAL PIN	ZYLINDERSTIFT	C- 76468-010V
311101-0314		CYL.PINNE CP5H6X30	CYLINDRICAL PIN	ZYLINDERSTIFT	C- 76447-010V
311101-0405		CYL.PINNE CP8H6X30	CYLINDRICAL PIN	ZYLINDERSTIFT	C- 76485-010V
311102-0308		CYL.PINNE CP M6 5X16	CYLINDRICAL PIN	ZYLINDERSTIFT	C- 556662-010V
311102-0350		CYL.PINNE CP M6 6X14	CYLINDRICAL PIN	ZYLINDERSTIFT	C- 794128-010V
311102-0351		CYL.PINNE CP M6 6X16	CYLINDRICAL PIN	ZYLINDERSTIFT	C- 556662-010V
311102-0413		CYL.PINNE CP M6 8X50	CYLINDRICAL PIN	ZYLINDERSTIFT	C- 76460-010V
311102-0460		CYL.PINNE CP M6 10X35	CYLINDRICAL PIN	ZYLINDERSTIFT	C- 76200-010V
311103-0208		CYL.PINNE CP M6 2,5X12RF	CYLINDRICAL PIN	ZYLINDERSTIFT	C- 469173-010V
311103-0232		CYL.PINNE CP M6 3X8 RFR	CYLINDRICAL PIN	ZYLINDERSTIFT	C- 484984-020V
					C- 562678-010V
					C- 295891-030V
311103-0233		CYL.PINNE CP M6 3X10 RFR	CYLINDRICAL PIN	ZYLINDERSTIFT	C- 272025-030V
311103-0234		CYL.PINNE CP M6 3X12 RFR	CYLINDRICAL PIN	ZYLINDERSTIFT	C- 556672-010V
					C- 256222-020V
					C- 751088-030V
					C- 457866-030V
					C- 751406-010V
311103-0235		CYL.PINNE CP M6 3X14 RFR	CYLINDRICAL PIN	ZYLINDERSTIFT	RK- 529345-010V
					C- 978720-010V
					C- 295310-070V
311103-0236		CYL.PINNE CP M6 3X16 RFR	CYLINDRICAL PIN	ZYLINDERSTIFT	C- 434074-030V
					C- 434774-030V
					C- 256014-060V
					C- 272407-020V
					C- 434774-030V
					C- 434074-030V
					C- 434774-030V
					C- 434074-030V
311103-0238		CYL.PINNE CP M6 3X20 RFR	CYLINDRICAL PIN	ZYLINDERSTIFT	C- 434074-030V
					C- 434774-030V
					C- 450125-010V
					C- 256222-020V
					C- 456309-050V
					C- 751088-030V
					CR- 548040-010V
					C- 434774-030V
					C- 434074-030V
					C- 434774-030V
					C- 434074-030V
311103-0239		CYL.PINNE CP M6 3X22 RFR	CYLINDRICAL PIN	ZYLINDERSTIFT	C- 556672-010V
311103-0240		CYL.PINNE CP M6 3X25 RFR	CYLINDRICAL PIN	ZYLINDERSTIFT	C- 295310-070V
311103-0242		CYL.PINNE CP M6 3X30 RFR	CYLINDRICAL PIN	ZYLINDERSTIFT	CR- 256212-050V
					CR- 256213-050V
311103-0267		CYL.PINNE CP M6 4X10 RFR	CYLINDRICAL PIN	ZYLINDERSTIFT	C- 256197-050V
					C- 491814-020V
					C- 491815-020V
					C- 271992-020V
					C- 295891-030V
311103-0268		CYL.PINNE CP M6 4X12 RFR	CYLINDRICAL PIN	ZYLINDERSTIFT	C- 256951-050V
					C- 256952-050V
311103-0269		CYL.PINNE CP M6 4X14 RFR	CYLINDRICAL PIN	ZYLINDERSTIFT	C- 76447-010V
311103-0270		CYL.PINNE CP M6 4X16 RFR	CYLINDRICAL PIN	ZYLINDERSTIFT	C- 434074-030V
					C- 434774-030V
					CR- 256214-040V

PART NO	LAST ECN	BENÄMNING	TITLE	BENENNUNG	GROUP NO
					C- 256014-060V
					C- 434774-030V
					C- 434074-030V
					C- 434774-030V
					C- 434074-030V
311103-0271		CYL.PINNE CP M6 4X18 RFR	CYLINDRICAL PIN	ZYLINDERSTIFT	C- 484984-020V
311103-0272		CYL.PINNE CP M6 4X20 RFR	CYLINDRICAL PIN	ZYLINDERSTIFT	C- 271261-050V
					C- 978258-020V
					C- 978442-020V
					C- 256202-050V
					C- 272021-060V
311103-0273		CYL.PINNE M6 4X22 RFR	CYLINDRICAL PIN	ZYLINDERSTIFT	C- 978258-020V
311103-0274		CYL.PINNE CP 4X25 RFR	CYLINDRICAL PIN	ZYLINDERSTIFT	C- 751406-010V
					C- 458383-020V
311103-0276		CYL.PINNE CP M6 4X30 RFR	CYLINDRICAL PIN	ZYLINDERSTIFT	C- 751718-010V
					C- 978258-020V
					C- 978442-020V
					CR- 256436-060V
					C- 256202-050V
					CR- 256436-060V
					C- 272021-060V
					C- 283626-040V
311103-0308		CYL.PINNE CP M6 5X16 RFR	CYLINDRICAL PIN	ZYLINDERSTIFT	C- 978258-020V
311103-0309		CYL.PINNE CP M6 5X18 RFR	CYLINDRICAL PIN	ZYLINDERSTIFT	C- 272021-060V
311103-0310		CYL.PINNE CP M6 5X20 RFR	CYLINDRICAL PIN	ZYLINDERSTIFT	C- 752664-010V
					C- 550711-020V
					C- 256206-020V
					C- 256207-020V
					C- 456923-030V
					C- 752247-010V
					C- 256014-060V
					C- 272021-060V
					C- 272028-060V
					C- 469452-030V
311103-0311		CYL.PINNE CP M6 5X22 RFR	CYLINDRICAL PIN	ZYLINDERSTIFT	CR- 548331-010V
					C- 484984-020V
311103-0312		CYL.PINNE CP M6 5X25 RFR	CYLINDRICAL PIN	ZYLINDERSTIFT	C- 550757-020V
					CR- 256204-050V
					CR- 256205-050V
					CR- 256212-050V
					CR- 256213-050V
					C- 752645-020V
					C- 752646-020V
					C- 752913-010V
					C- 752914-010V
					C- 441486-040V
311103-0313		CYL.PINNE CP M6 5X28 RFR	CYLINDRICAL PIN	ZYLINDERSTIFT	C- 272021-060V
311103-0314		CYL.PINNE CP M6 5X30 RFR	CYLINDRICAL PIN	ZYLINDERSTIFT	C- 256206-020V
311103-0314		CYL.PINNE CP M6 5X30 RFR	CYLINDRICAL PIN	ZYLINDERSTIFT	C- 256207-020V
					C- 533844-010V
311103-0316		CYL.PINNE CP M6 5X35 RFR	CYLINDRICAL PIN	ZYLINDERSTIFT	C- 554360-020V
					C- 256206-020V
311103-0318		CYL.PINNE CP M6 5X40 RFR	CYLINDRICAL PIN	ZYLINDERSTIFT	C- 256207-020V
311103-0320		CYL.PINNE CP M6 5X45 RFR	CYLINDRICAL PIN	ZYLINDERSTIFT	C- 751718-010V
					C- 256206-020V
311103-0350		CYL.PINNE CP M6 6X14 RFR	CYLINDRICAL PIN	ZYLINDERSTIFT	C- 256207-020V
311103-0351		CYL.PINNE CP M6 6X16 RFR	CYLINDRICAL PIN	ZYLINDERSTIFT	CR- 294695-010V
					C- 484984-020V
					C- 272359-020V
311103-0353		CYL.PINNE CP M6 6X20 RFR	CYLINDRICAL PIN	ZYLINDERSTIFT	C- 752030-010V
					C- 794069-010V
					C- 752645-020V
					C- 752646-020V
					CR- 548331-010V
311103-0354		CYL.PINNE CP M6 6X22 RFR	CYLINDRICAL PIN	ZYLINDERSTIFT	C- 556723-010V
311103-0355		CYL.PINNE CP M6 6X25 RFR	CYLINDRICAL PIN	ZYLINDERSTIFT	C- 978280-010V
					C- 76485-010V
					C- 550714-010V
					C- 256806-030V
311103-0357		CYL.PINNE CP M6 6X30 RFR	CYLINDRICAL PIN	ZYLINDERSTIFT	C- 256222-020V
					C- 76291-010V
					C- 76492-010V
					C- 752645-020V
					C- 752646-020V
					C- 752913-010V
					C- 752914-010V
311103-0361		CYL.PINNE CP M6 6X40 RFR	CYLINDRICAL PIN	ZYLINDERSTIFT	C- 493652-010V
					C- 256806-030V
					C- 752645-020V
					C- 752646-020V
					C- 469452-030V
					C- 751800-020V
311103-0365		CYL.PINNE CP M6 6X50 RFR	CYLINDRICAL PIN	ZYLINDERSTIFT	C- 543143-010V
311103-0367		CYL.PINNE CP M6 6X55 RFR	CYLINDRICAL PIN	ZYLINDERSTIFT	C- 566280-010V
311103-0369		CYL.PINNE CP M6 6X60 RFR	CYLINDRICAL PIN	ZYLINDERSTIFT	C- 566280-010V
311103-0371		CYL.PINNE M6 6X65 RFR	STRAIGTH PIN	ZYLINDERSTIFT	C- 566280-010V
311103-0372		CYL.PINNE M6 6X70 RFR	STRAIGHT PIN	ZYLINDERSTIFT	C- 566280-010V
311103-0399		CYL.PINNE CP M6 8X16 RFR	CYLINDRICAL PIN	ZYLINDERSTIFT	C- 256843-060V
311103-0401		CYL.PINNE CP M6 8X20 RFR	CYLINDRICAL PIN	ZYLINDERSTIFT	C- 256217-040V
					C- 256951-050V
					C- 256952-050V
					C- 272765-070V

PART NO	LAST ECN	BENÄMNING	TITLE	BENENNUNG	GROUP NO
311103-0405		CYL.PINNE CP M6 8X30 RFR	CYLINDRICAL PIN	ZYLINDERSTIFT	C- 256223-040V
					C- 751702-010V
311103-0407		CYL.PINNE CP M6 8X35 RFR	CYLINDRICAL PIN	ZYLINDERSTIFT	C- 271115-040V
					C- 256843-060V
311103-0409		CYL.PINNE CP M6 8X40 RFR	CYLINDRICAL PIN	ZYLINDERSTIFT	C- 256206-020V
					C- 256207-020V
311103-0411		CYL.PINNE CP M6 8X45 RFR	CYLINDRICAL PIN	ZYLINDERSTIFT	C- 484950-020V
311103-0413		CYL.PINNE CP M6 8X50 RFR	CYLINDRICAL PIN	ZYLINDERSTIFT	C- 491570-020V
					C- 491579-020V
311103-0415		CYL.PINNE CP M6 8X55 RFR	CYLINDRICAL PIN	ZYLINDERSTIFT	C- 456100-030V
311103-0420		CYL.PINNE CP M6 8X70 RFR	CYLINDRICAL PIN	ZYLINDERSTIFT	C- 456560-010V
311103-0421		CYL.PINNE CP M6 8X75 RFR	CYLINDRICAL PIN	ZYLINDERSTIFT	C- 456560-010V
311103-0470		CYL.PINNE CP M6 10X60 RF	CYLINDRICAL PIN	ZYLINDERSTIFT	C- 76447-010V
					C- 256806-030V
311111-0207		RÖRPINNE FRP3X14	SLOTTED TUBUL.SPRING PIN	ROHRSTIFT	CR- 256204-050V
311111-0207		RÖRPINNE FRP3X14	SLOTTED TUBUL.SPRING PIN	ROHRSTIFT	CR- 256205-050V
311111-0308		RÖRPINNE FRP5X20	SLOTTED TUBUL.SPRING PIN	ROHRSTIFT	CR- 256204-050V
					CR- 256205-050V
311112-0164		RÖRPINNE FRP 2X8 RFR	SLOTTED TUBUL.SPRING PIN	ROHRSTIFT	C- 550714-010V
311112-0165		RÖRPINNE FRP 2X10 RFR	SLOTTED TUBUL.SPRING PIN	ROHRSTIFT	C- 554889-020V
311112-0207		RÖRPINNE FRP 3X14 RFR	SLOTTED TUBUL.SPRING PIN	ROHRSTIFT	C- 566280-010V
311112-0251		RÖRPINNE FRP 4X10 RFR	SLOTTED TUBUL.SPRING PIN	ROHRSTIFT	C- 565417-010V
311112-0255		RÖRPINNE FRP 4X18 RFR	SLOTTED TUBUL.SPRING PIN	ROHRSTIFT	C- 272404-070V
311112-0256		RÖRPINNE FRP 4X20 RFR	SLOTTED TUBUL.SPRING PIN	ROHRSTIFT	C- 751393-010V
311112-0258		RÖRPINNE FRP 4X24 RFR	SLOTTED TUBUL.SPRING PIN	ROHRSTIFT	C- 550128-010V
311112-0262		RÖRPINNE FRP 4X32 RFR	SLOTTED TUBUL.SPRING PIN	ROHRSTIFT	C- 550128-010V
					C- 554360-020V
311303-0234		RÄFFPINNE RPB3X12FZB	SLOTTED PIN	KERBSTIFT	C- 256197-050V
311305-0274		RÄFFPINNE RPC4X25FZB	SLOTTED PIN	KERBSTIFT	C- 256806-030V
311305-0308		RÄFFPINNE RPC5X16FZB	SLOTTED PIN	KERBSTIFT	C- 295891-030V
					C- 456032-010V
311305-0312		RÄFFPINNE RPC5X25FZB	SLOTTED PIN	KERBSTIFT	C- 295310-070V
311307-0275		RÄFFPINNE RPD4X28FZB	SLOTTED PIN	KERBSTIFT	C- 256806-030V
311401-0165		SAXPINNE SP2,5X16FZB	SPLIT PIN	SCHLITZSTIFT	C- 229400-070V
311411-0137		SAXPINNE SP1,6X10RFR	SS 2343	SCHLITZSTIFT	C- 469736-040V
					C- 441000-050V
311411-0138		SAXPINNE SP1,6X12RFR	SPLIT PIN	SCHLITZSTIFT	C- 546285-010V
311411-0140		SAXPINNE SP1,6X16RFR	SPLIT PIN	SCHLITZSTIFT	C- 456309-050V
311411-0150		SAXPINNE SP2X12RFR	SPLIT PIN	SCHLITZSTIFT	C- 441486-040V
311411-0151		SAXPINNE SP2X14RFR	SPLIT PIN	SCHLITZSTIFT	C- 272084-030V
311411-0152		SAXPINNE SP2X16RFR	SPLIT PIN	SCHLITZSTIFT	C- 272652-030V
					C- 547756-010V
					C- 566280-010V
311411-0154		SAXPINNE SP2X20RFR	SPLIT PIN	SCHLITZSTIFT	C- 566280-010V
311411-0165		SAXPINNE SP2,5X16RFR	SPLIT PIN	SCHLITZSTIFT	C- 441486-040V
311411-0169		SAXPINNE SP2,5X25RFR	SPLIT PIN	SCHLITZSTIFT	C- 751393-010V
311506-0278		NIT KN2,6X6KPR	RIVET	NIET	C- 7003-010V
311520-0320		BLINDNIT 2,4X6	BLANK RIVET	BLINDNIETE	C- 795750-010V
311520-0329		BLINDNIT 2,4X8	BLANK RIVET	BLINDNIETE	C- 490761-010V
					C- 456882-010V
311520-0420		BLINDNIT 3,2X4	BLANK RIVET	BLINDNIETE	C- 978280-010V
311520-0423		BLINDNIT 3,2X6	BLANK RIVET	BLINDNIETE	C- 554891-010V
311520-0435		BLINDNIT 3,2X10	BLANK RIVET	BLINDNIETE	C- 271442-030V
311520-0649		BLINDNIT 4,8X12,0	BLANK RIVET	BLINDNIETE	C- 457856-020V
311521-0142		POP NIT 3,2X6,0 RFR	BLANK RIVET	BLINDNIETE	C- 751373-010V
311521-0143		POP NIT 3,2X8,0 RFR	BLANK RIVET	BLINDNIETE	C- 794178-010V
					C- 905541-010V
311521-0152		POP NIT 4,0X8,0 RFR	BLANK RIVET	BLINDNIETE	C- 547601-010V
311521-0154		POP NIT 4,0X10,0RFR	BLANK RIVET	BLINDNIETE	C- 978280-010V
312101-0287		SKRUV M6S4X8FZB	SCREW	SCHRAUBE	C- 293684-020V
					C- 293685-020V
					C- 293684-020V
					C- 293685-020V
					C- 293684-020V
312101-0289		SKRUV M6S4X10FZB	SCREW	SCHRAUBE	C- 752784-010V
312101-0297		SKRUV M6S4X25FZB	SCREW	SCHRAUBE	C- 37877-030V
					C- 256197-050V
					C- 491814-020V
					C- 491815-020V
312101-0304		SKRUV M6S4X45FZB	SCREW	SCHRAUBE	C- 37877-030V
312101-0305		SKRUV M6S4X50FZB	SCREW	SCHRAUBE	C- 441850-040V
312101-0323		SKRUV M6S5X8FZB	SCREW	SCHRAUBE	C- 37877-030V
					C- 229400-070V
312101-0325		SKRUV M6S5X10FZB	SCREW	SCHRAUBE	C- 256202-050V
312101-0325		SKRUV M6S5X10FZB	SCREW	SCHRAUBE	C- 229400-070V
312101-0327		SKRUV M6S5X12FZB	SCREW	SCHRAUBE	C- 450101-010V
					C- 450101-020V
					C- 752029-010V
					C- 229400-070V
					C- 752029-010V
					C- 978739-010V
					C- 456757-020V
312101-0329		SKRUV M6S5X16FZB	SCREW	SCHRAUBE	C- 450101-010V
					C- 450101-020V
					C- 256173-050V
					C- 491787-020V
					C- 491788-020V
					C- 256438-020V
					C- 978739-010V
312101-0331		SKRUV M6S5X20FZB	SCREW	SCHRAUBE	C- 293684-020V
					C- 293685-020V
					C- 456180-010V

PART NO	LAST ECN	BENÄMNING		TITLE	BENENNUNG	GROUP NO
312101-0333		SKRUV	M6S5X25FZB	SCREW	SCHRAUBE	C- 293685-020V C- 293684-020V C- 293685-020V C- 293684-020V C- 491814-020V C- 491815-020V C- 572760-010V C- 794128-010V
312101-0337		SKRUV	M6S5X35FZB	SCREW	SCHRAUBE	C- 271562-080V C- 491787-020V C- 491788-020V
312101-0341		SKRUV	M6S5X50FZB	SCREW	SCHRAUBE	C- 232781-040V
312101-0343		SKRUV	M6S5X60FZB	SCREW	SCHRAUBE	C- 572642-010V C- 572643-010V
312101-0362		SKRUV	M6S6X8FZB	SCREW	SCHRAUBE	C- 469586-010V C- 256197-050V C- 491814-020V
312101-0364		SKRUV	M6S6X10FZB	SCREW	SCHRAUBE	C- 491815-020V C- 293684-020V C- 293685-020V C- 256197-050V C- 491814-020V C- 491815-020V C- 271569-050V C- 232781-040V C- 293685-020V C- 293684-020V C- 293685-020V C- 293684-020V
312101-0366		SKRUV	M6S6X12FZB	SCREW	SCHRAUBE	C- 271635-030V C- 256173-050V
312101-0367		SKRUV	M6S6X14FZB	SCREW	SCHRAUBE	C- 751689-010V C- 76200-010V C- 229400-070V
312101-0368		SKRUV	M6S6X16FZB	SCREW	SCHRAUBE	C- 978739-010V C- 456827-020V C- 256173-050V C- 271569-050V C- 229400-070V C- 479821-010V
312101-0370		SKRUV	M6S6X20FZB	SCREW	SCHRAUBE	C- 978739-010V C- 469586-010V C- 256173-050V C- 229400-070V
312101-0371		SKRUV	M6S6X22FZB	SCREW	SCHRAUBE	C- 491787-020V C- 491788-020V
312101-0372		SKRUV	M6S6X25FZB	SCREW	SCHRAUBE	C- 491650-010V
312101-0376		SKRUV	M6S6X35FZB	SCREW	SCHRAUBE	C- 256173-050V C- 491787-020V C- 491788-020V
312101-0378		SKRUV	M6S6X40FZB	SCREW	SCHRAUBE	C- 271866-060V
312101-0379		SKRUV	M6S6X45FZB	SCREW	SCHRAUBE	C- 229400-070V
312101-0380		SKRUV	M6S6X50FZB	SCREW	SCHRAUBE	C- 232781-040V C- 978739-010V
312101-0381		SKRUV	M6S6X55FZB	SCREW	SCHRAUBE	C- 458383-020V C- 458384-010V
312101-0385		SKRUV	M6S6X75FZB	SCREW	SCHRAUBE	C- 491650-010V
312101-0388		SKRUV	M6S6X90FZB	SCREW	SCHRAUBE	C- 491650-010V C- 271866-060V
312101-0447		SKRUV	M6S8X12FZB	SCREW	SCHRAUBE	C- 469586-010V C- 256843-060V
312101-0449		SKRUV	M6S8X16FZB	SCREW	SCHRAUBE	C- 76200-010V
312101-0451		SKRUV	M6S8X20FZB	SCREW	SCHRAUBE	C- 469586-010V C- 491894-010V C- 978739-010V C- 978740-010V
312101-0453		SKRUV	M6S8X25FZB	SCREW	SCHRAUBE	C- 256197-050V C- 256806-030V C- 256437-020V C- 560846-010V
312101-0455		SKRUV	M6S8X30FZB	SCREW	SCHRAUBE	C- 271635-030V C- 256437-020V
312101-0457		SKRUV	M6S8X35FZB	SCREW	SCHRAUBE	C- 271128-040V C- 560846-010V C- 794128-010V
312101-0459		SKRUV	M6S8X40FZB	SCREW	SCHRAUBE	C- 256437-020V C- 479821-010V
312101-0461		SKRUV	M6S8X50FZB	SCREW	SCHRAUBE	C- 75469-020V
312101-0465		SKRUV	M6S8X70FZB	SCREW	SCHRAUBE	C- 794128-010V
312101-0466		SKRUV	M6S8X75FZB	SCREW	SCHRAUBE	C- 752646-020V C- 752913-010V C- 752914-010V
312101-0467		SKRUV	M6S8X80FZB	SCREW	SCHRAUBE	C- 794070-010V
312101-0488		SKRUV	M6S10X14FZB	SCREW	SCHRAUBE	C- 469586-010V C- 256173-050V
312101-0491		SKRUV	M6S10X20FZB	SCREW	SCHRAUBE	C- 469586-010V
312101-0493		SKRUV	M6S10X25FZB	SCREW	SCHRAUBE	C- 560846-010V C- 479821-010V
312101-0495		SKRUV	M6S10X30FZB	SCREW	SCHRAUBE	C- 75542-010V C- 794070-010V
312101-0497		SKRUV	M6S10X35FZB	SCREW	SCHRAUBE	C- 256197-050V C- 491814-020V

PART NO	LAST ECN	BENÄMNING	TITLE	BENENNUNG	GROUP NO
312101-0499		SKRUV M6S10X40FZB	SCREW	SCHRAUBE	C- 491815-020V C- 456180-010V
312101-0502		SKRUV M6S10X55FZB	SCREW	SCHRAUBE	C- 271128-040V C- 256197-050V C- 491787-020V
312101-0503		SKRUV M6S10X60FZB	SCREW	SCHRAUBE	C- 491788-020V C- 271635-030V
312101-0504		SKRUV M6S10X65FZB	SCREW	SCHRAUBE	C- 256173-050V
312101-0504		SKRUV M6S10X65FZB	SCREW	SCHRAUBE	C- 256197-050V C- 491814-020V
312101-0507		SKRUV M6S10X80FZB	SCREW	SCHRAUBE	C- 491815-020V C- 256197-050V
312101-0509		SKRUV M6S10X90FZB	SCREW	SCHRAUBE	C- 479821-010V
312101-0515		SKRUV M6S10X120FZB	SCREW	SCHRAUBE	C- 491814-020V C- 491815-020V
312101-0517		SKRUV M6S10X130FZB	SCREW	SCHRAUBE	C- 794070-010V
312101-0530		SKRUV M6S12X16FZB	SCREW	SCHRAUBE	C- 469586-010V C- 562656-010V
312101-0536		SKRUV M6S12X30FZB	SCREW	SCHRAUBE	C- 491850-010V C- 271635-030V C- 76200-010V
312101-0538		SKRUV M6S12X35FZB	SCREW	SCHRAUBE	C- 232781-040V C- 560846-010V C- 794070-010V
312101-0544		SKRUV M6S12X60FZB	SCREW	SCHRAUBE	C- 232781-040V C- 76200-010V
312101-0546		SKRUV M6S12X70FZB	SCREW	SCHRAUBE	C- 256199-040V
312101-0548		SKRUV M6S12X80FZB	SCREW	SCHRAUBE	C- 76200-010V C- 560846-010V
312101-0550		SKRUV M6S12X90FZB	SCREW	SCHRAUBE	C- 256173-050V
312101-0552		SKRUV M6S12X100FZB	SCREW	SCHRAUBE	C- 256438-020V
312101-0640		SKRUV M6S16X100FZB	SCREW	SCHRAUBE	C- 560846-010V
312104-0378		SKRUV M6S6X40H8.8FZB	SCREW	SCHRAUBE	C- 283604-020V
312104-0463		SKRUV M6S8X60H8.8 FZ	SCREW	SCHRAUBE	C- 563740-010V
312104-0499		SKRUV M6S10X40H8.8FZ	SCREW	SCHRAUBE	C- 256806-030V
312104-0501		SKRUV M6S10X50H8.8FZ	SCREW	SCHRAUBE	C- 283626-040V
312104-0505		SKRUV M6S10X70H8.8FZ	SCREW	SCHRAUBE	C- 271128-040V
312104-0552		SKRUV M6S12X100H8.8FZ	SCREW	SCHRAUBE	C- 794004-010V
312104-0634		SKRUV M6S16X70H8.8FZ	SCREW	SCHRAUBE	C- 560846-010V
312105-0287		SKRUV M6S4X8 A2 80	SCREW	SCHRAUBE	C- 491767-020V C- 469736-040V C- 484984-020V C- 544420-010V C- 562678-010V C- 554890-010V C- 256095-050V C- 271181-040V C- 272028-060V C- 469452-030V C- 469501-040V C- 491976-020V C- 751800-020V CR- 283606-020V
312105-0289		SKRUV M6S4X10 A2 80	SCREW	SCHRAUBE	C- 283612-020V C- 490610-040V C- 497534-030V C- 546285-010V C- 751373-010V C- 794178-010V C- 554891-010V C- 271562-080V C- 548057-010V C- 794213-010V C- 556723-010V
312105-0291		SKRUV M6S4X12 A2 80	SCREW	SCHRAUBE	C- 434074-030V C- 434774-030V
312105-0291		SKRUV M6S4X12 A2 80	SCREW	SCHRAUBE	C- 469736-040V C- 794069-010V C- 469173-010V CR- 548331-010V
312105-0293		SKRUV M6S4X16 A2 80	SCREW	SCHRAUBE	C- 434774-030V C- 434074-030V C- 434774-030V C- 434074-030V C- 256806-030V C- 272025-030V
312105-0295		SKRUV M6S4X20 A2 80	SCREW	SCHRAUBE	C- 457867-020V C- 456951-010V C- 550714-010V
312105-0297		SKRUV M6S4X25 A2 80	SCREW	SCHRAUBE	C- 271562-080V C- 548057-010V C- 794179-010V C- 271562-080V C- 272765-070V C- 548057-010V
312105-0303		SKRUV M6S 4X40 A2 80	SCREW	SCHRAUBE	C- 751928-020V
312105-0323		SKRUV M6S5X8 A2 80	SCREW	SCHRAUBE	C- 484984-020V C- 562679-010V C- 271115-040V C- 550128-010V C- 554360-020V C- 795750-010V

PART NO	LAST ECN	BENÄMNING	TITLE	BENENNUNG	GROUP NO
312105-0325		SKRUV M6S5X10 A2 80	SCREW	SCHRAUBE	RK- 978234-010V C- 76500-010V C- 533014-010V C- 271641-030V C- 271641-020V C- 751478-020V C- 441534-010V C- 283604-020V C- 469736-040V C- 484858-030V C- 484950-020V C- 484984-020V C- 794004-010V C- 794145-010V C- 794004-010V C- 794145-010V CR- 256436-060V CR- 256712-050V CR- 256436-060V CR- 256712-050V CR- 256436-060V CR- 256712-050V C- 476189-010V C- 554889-020V C- 751860-020V C- 256222-020V C- 572642-010V C- 572643-010V CR- 256436-060V CR- 256712-050V C- 256873-040V C- 751691-010V C- 272408-050V
312105-0325		SKRUV M6S5X10 A2 80	SCREW	SCHRAUBE	C- 295891-030V C- 441000-050V C- 271181-040V C- 272407-020V C- 441486-040V C- 469501-040V C- 491976-020V C- 456696-030V C- 490600-040V C- 476189-010V
312105-0327		SKRUV M6S5X12 A2 80	SCREW	SCHRAUBE	C- 434074-030V C- 434774-030V C- 456953-020V C- 295883-050V C- 271261-050V C- 456688-020V C- 469736-040V C- 484858-030V C- 484984-020V C- 544420-010V C- 736797-010V CR- 256547-040V C- 237776-040V C- 456100-030V C- 752671-010V C- 752672-010V CR- 256547-040V C- 271115-040V C- 295310-070V C- 456103-010V C- 752645-020V C- 752646-020V C- 752913-010V C- 752914-010V C- 256055-060V C- 272021-060V C- 751800-020V CR- 283605-010V CR- 294695-010V C- 456696-030V C- 469173-010V C- 490600-040V CR- 548040-010V CR- 548331-010V C- 552030-010V C- 491207-030V C- 237776-040V C- 434774-030V C- 434074-030V C- 434774-030V C- 434074-030V
312105-0328		SKRUV M6S5X14 A2 80	SCREW	SCHRAUBE	C- 484984-020V C- 554885-010V C- 554888-010V C- 456560-010V C- 978162-010V C- 978179-010V C- 548057-010V C- 978367-010V

PART NO	LAST ECN	BENÄMNING	TITLE	BENENNUNG	GROUP NO
312105-0329		SKRUV M6S5X16 A2 80	SCREW	SCHRAUBE	RK- 978238-010V C- 434074-030V C- 434774-030V C- 272084-030V C- 469736-040V C- 484950-020V C- 484984-020V C- 562679-010V C- 736360-020V C- 736796-020V C- 794069-010V C- 736360-020V C- 736796-020V C- 794069-010V C- 271442-030V C- 271443-030V C- 271115-040V C- 295310-070V C- 752645-020V C- 752646-020V C- 272560-060V C- 441486-040V C- 491976-020V CR- 283605-010V CR- 283607-030V C- 283612-020V C- 490600-040V CR- 548040-010V C- 554346-010V C- 434774-030V C- 434074-030V C- 434774-030V C- 434074-030V
312105-0331		SKRUV M6S5X20 A2 80	SCREW	SCHRAUBE	C- 736360-020V CR- 256214-040V C- 295310-070V C- 491846-020V C- 752645-020V C- 752646-020V C- 271169-040V C- 272025-030V C- 272337-040V C- 456309-050V
312105-0332		SKRUV M6S5X22RFR	SCREW	SCHRAUBE	CR- 548040-010V C- 271115-040V C- 256014-060V C- 441304-040V
312105-0333		SKRUV M6S5X25 A2 80	SCREW	SCHRAUBE	C- 441486-040V C- 751928-020V C- 544420-010V C- 256223-040V C- 295310-070V C- 978179-010V C- 272560-060V C- 469501-040V
312105-0335		SKRUV M6S5X30 A2 80	SCREW	SCHRAUBE	C- 283612-020V C- 456953-020V C- 469736-040V C- 544420-010V C- 491850-010V
312105-0335		SKRUV M6S5X30 A2 80	SCREW	SCHRAUBE	RK- 978234-010V
312105-0337		SKRUV M6S5X35RFR	SCREW	SCHRAUBE	C- 484984-020V C- 457937-020V
312105-0339		SKRUV M6S5X40 A2 80	SCREW	SCHRAUBE	C- 469634-010V C- 546285-010V
312105-0341		SKRUV M6S5X50 A2 80	SCREW	SCHRAUBE	C- 795750-010V C- 457853-030V C- 469118-020V
312105-0362		SKRUV M6S6X8RFR	SCREW	SCHRAUBE	C- 751928-020V C- 752173-010V C- 271641-030V C- 271641-020V C- 565393-010V C- 794179-010V C- 562650-010V C- 565402-010V CR- 256204-050V CR- 256205-050V C- 271115-040V C- 978162-010V C- 272021-060V C- 456555-040V C- 469374-040V CR- 283605-010V C- 283612-020V C- 556723-010V C- 795750-010V
312105-0364		SKRUV M6S6X10RFR	SCREW	SCHRAUBE	C- 978239-020V C- 978240-020V C- 978241-020V C- 271261-050V C- 37877-030V

PART NO	LAST ECN	BENÄMNING		TITLE	BENENNUNG	GROUP NO
						C- 271626-030V C- 37877-030V C- 271626-030V C- 476859-020V C- 484950-020V C- 544420-010V C- 566282-010V C- 529933-010V C- 529933-020V C- 529933-010V C- 529933-020V C- 529933-010V C- 529933-020V C- 736360-020V C- 736797-010V C- 736360-020V C- 736797-010V C- 295218-010V C- 476189-010V C- 550714-010V C- 554886-010V C- 550757-020V C- 554887-010V C- 554888-010V C- 456180-010V C- 456458-040V
312105-0364		SKRUV	M6S6X10RFR	SCREW	SCHRAUBE	C- 571918-010V C- 271115-040V C- 272765-070V C- 295218-010V C- 271513-060V C- 271866-060V C- 272404-070V C- 469535-010V C- 751885-030V C- 272408-050V C- 456935-030V C- 752645-020V C- 752646-020V C- 752913-010V C- 752914-010V C- 491942-010V C- 256095-050V C- 272024-040V C- 272025-030V C- 456309-050V C- 456836-040V C- 456976-050V C- 469091-030V C- 469374-040V C- 751088-030V C- 457881-030V C- 497534-030V C- 548031-020V C- 548057-010V C- 566280-010V C- 553657-010V C- 476189-010V C- 752042-010V C- 924991-010V
312105-0366		SKRUV	M6S6X12RFR	SCREW	SCHRAUBE	RK- 978234-010V C- 491767-020V C- 271454-020V C- 450125-010V C- 484858-030V C- 484984-020V C- 544389-010V C- 566282-010V C- 735270-010V C- 924330-010V C- 735270-010V C- 924330-010V C- 735270-010V C- 924330-010V C- 562680-010V C- 736797-010V C- 794004-010V C- 794069-010V C- 794145-010V C- 794245-010V C- 736797-010V C- 794004-010V C- 794069-010V C- 794145-010V C- 794245-010V
312105-0366		SKRUV	M6S6X12RFR	SCREW	SCHRAUBE	C- 978192-020V C- 570079-020V C- 567681-020V C- 295211-010V C- 237776-040V C- 554889-020V C- 565402-010V

PART NO	LAST ECN	BENÄMNING	TITLE	BENENNUNG	GROUP NO
					C- 456100-030V C- 256806-030V C- 256222-020V C- 256223-040V C- 271114-050V C- 272765-070V C- 295211-010V C- 441850-040V C- 271468-040V C- 271469-020V C- 490761-010V C- 491890-010V C- 751691-010V C- 272408-050V C- 295891-030V C- 456923-030V C- 752244-020V C- 752645-020V C- 752646-020V C- 752913-010V C- 752914-010V C- 295262-060V C- 256014-060V C- 256084-050V C- 256095-050V C- 271169-040V C- 272004-040V C- 272024-040V C- 272025-030V C- 272337-040V C- 272623-050V C- 295045-070V C- 295470-050V C- 456555-040V C- 456556-020V C- 456976-050V C- 469374-040V C- 469452-030V C- 469501-040V C- 469781-030V C- 491083-030V C- 491570-020V C- 491579-020V C- 491976-020V C- 751800-020V C- 457857-030V C- 457867-020V C- 469634-010V C- 547601-010V C- 554346-010V C- 491207-030V C- 553657-010V
312105-0366		SKRUV M6S6X12RFR	SCREW	SCHRAUBE	C- 751373-010V C- 751406-010V C- 229400-070V C- 237776-040V C- 924808-010V
312105-0367		SKRUV M6S6X14RFR	SCREW	SCHRAUBE	C- 978192-020V C- 469736-040V C- 550714-010V C- 554887-010V C- 751860-020V CR- 256204-050V CR- 256205-050V C- 441695-020V C- 456103-010V C- 272028-060V C- 456976-050V
312105-0368		SKRUV M6S6X16RFR	SCREW	SCHRAUBE	C- 490600-040V C- 978239-020V C- 978240-020V C- 978241-020V C- 752957-010V C- 271934-030V C- 751968-010V C- 565462-010V C- 476859-020V C- 484984-020V C- 550743-010V C- 565393-010V C- 736360-020V C- 736797-010V C- 794092-010V C- 794178-010V C- 736360-020V C- 736797-010V C- 794092-010V C- 794178-010V C- 564120-010V CR- 256436-060V CR- 256547-040V CR- 256712-050V

PART NO	LAST ECN	BENÄMNING		TITLE	BENENNUNG	GROUP NO
						C- 295218-010V CR- 256436-060V CR- 256547-040V CR- 256712-050V C- 295218-010V CR- 256436-060V CR- 256547-040V CR- 256712-050V C- 295218-010V C- 237776-040V C- 564307-010V C- 554891-010V C- 565417-010V C- 456100-030V C- 456180-010V C- 256806-030V C- 256206-020V C- 256207-020V C- 256951-050V C- 256952-050V
312105-0368		SKRUV	M6S6X16RFR	SCREW	SCHRAUBE	C- 752671-010V C- 752672-010V CR- 256436-060V CR- 256547-040V CR- 256712-050V C- 271114-050V C- 272765-070V C- 295218-010V C- 456560-010V C- 456588-030V C- 256843-060V C- 271468-040V C- 271866-060V C- 272404-070V C- 491890-010V C- 751691-010V C- 246388-060V C- 295891-030V C- 441000-050V C- 456032-010V C- 752628-020V C- 499082-010V C- 256014-060V C- 256055-060V C- 256095-050V C- 271181-040V C- 272021-060V C- 272025-030V C- 272407-020V C- 441304-040V C- 441307-030V C- 441486-040V C- 456309-050V C- 456555-040V C- 751702-010V C- 283626-040V C- 456696-030V C- 457857-030V C- 457867-020V C- 469635-010V C- 536859-020V C- 546285-010V C- 548057-010V CR- 548331-010V C- 552030-010V C- 554341-010V C- 554346-010V C- 491207-030V C- 751373-010V C- 751398-020V C- 229400-070V C- 237776-040V C- 752030-010V C- 556723-010V
312105-0370		SKRUV	M6S6X20RFR	SCREW	SCHRAUBE	C- 469121-020V C- 752957-010V C- 271454-020V C- 565462-010V
312105-0370		SKRUV	M6S6X20RFR	SCREW	SCHRAUBE	C- 476859-020V C- 484984-020V C- 283629-020V C- 560858-010V C- 564119-010V C- 564120-010V C- 978259-010V C- 978280-010V C- 978259-010V C- 978280-010V C- 978443-010V C- 295211-010V C- 554889-020V C- 456100-030V

PART NO	LAST ECN	BENÄMNING		TITLE	BENENNUNG	GROUP NO
						C- 751900-010V C- 256806-030V CR- 256212-050V CR- 256213-050V C- 256222-020V C- 256223-040V C- 295211-010V C- 295310-070V C- 456560-010V C- 456588-030V C- 491259-020V C- 490761-010V C- 272343-050V C- 272408-050V C- 560202-010V C- 752627-010V C- 752628-020V C- 752645-020V C- 752646-020V C- 752913-010V C- 752914-010V C- 978179-010V C- 499082-010V C- 256014-060V C- 256055-060V C- 256084-050V C- 256095-050V C- 271181-040V C- 272004-040V C- 272025-030V C- 272337-040V C- 441486-040V C- 456309-050V C- 456555-040V C- 456976-050V C- 491976-020V CR- 283605-010V C- 283612-020V C- 457937-020V C- 476349-030V C- 490610-040V C- 533844-010V C- 546285-010V C- 548057-010V CR- 548331-010V
312105-0370		SKRUV	M6S6X20RFR	SCREW	SCHRAUBE	C- 552030-010V C- 751406-010V C- 751393-010V C- 751410-010V C- 752030-010V C- 556723-010V C- 978259-010V C- 978280-010V
312105-0371		SKRUV	M6S6X22RFR	SCREW	SCHRAUBE	C- 752495-010V C- 554887-010V C- 271468-040V C- 271866-060V C- 272004-040V C- 441304-040V C- 751088-030V RK- 978238-010V
312105-0372		SKRUV	M6S6X25RFR	SCREW	SCHRAUBE	C- 752173-010V C- 490912-010V C- 751332-010V C- 544420-010V C- 529933-010V C- 735270-010V C- 736529-010V C- 529933-020V C- 924330-010V C- 529933-010V C- 735270-010V C- 736529-010V C- 529933-020V C- 924330-010V C- 529933-010V C- 735270-010V C- 736529-010V C- 529933-020V C- 924330-010V C- 736360-020V C- 752029-010V CR- 256436-060V CR- 256547-040V C- 295218-010V CR- 256436-060V CR- 256547-040V C- 295218-010V CR- 256436-060V CR- 256547-040V C- 295218-010V C- 271562-080V

PART NO	LAST ECN	BENÄMNING		TITLE	BENENNUNG	GROUP NO
						C- 456180-010V C- 256206-020V C- 256207-020V C- 256217-040V C- 752671-010V C- 752672-010V CR- 256436-060V CR- 256547-040V C- 295218-010V C- 295310-070V C- 456455-030V C- 456560-010V C- 456588-030V
312105-0372		SKRUV	M6S6X25RFR	SCREW	SCHRAUBE	C- 491259-020V C- 246388-060V C- 272408-050V C- 752244-020V C- 752645-020V C- 752646-020V C- 752913-010V C- 752914-010V C- 256055-060V C- 256095-050V C- 272021-060V C- 272028-060V C- 456309-050V C- 456555-040V C- 469091-030V C- 751088-030V C- 457867-020V C- 457937-020V C- 490600-040V C- 546285-010V CR- 548040-010V C- 550128-010V C- 554360-020V C- 751332-010V C- 752029-010V
312105-0374		SKRUV	M6S6X30RFR	SCREW	SCHRAUBE	C- 751332-010V RK- 529345-010V C- 751478-020V C- 736865-010V C- 794178-010V CR- 256436-060V C- 295211-010V CR- 256436-060V C- 295211-010V CR- 256436-060V C- 295211-010V C- 237776-040V C- 456100-030V C- 256197-050V C- 256806-030V C- 491814-020V C- 491815-020V CR- 256204-050V CR- 256205-050V CR- 256212-050V CR- 256213-050V C- 256217-040V CR- 256436-060V C- 295211-010V C- 295310-070V C- 456455-030V C- 491259-020V C- 271866-060V C- 271181-040V C- 491976-020V CR- 283605-010V C- 456679-010V C- 457853-030V
312105-0374		SKRUV	M6S6X30RFR	SCREW	SCHRAUBE	C- 457866-030V C- 469634-010V C- 476349-030V C- 552030-010V C- 491207-030V C- 751398-020V C- 237776-040V
312105-0376		SKRUV	M6S6X35RFR	SCREW	SCHRAUBE	C- 752664-010V C- 295211-010V C- 564307-010V C- 456180-010V CR- 256204-050V CR- 256205-050V CR- 256209-030V CR- 256210-030V CR- 256212-050V CR- 256213-050V C- 256951-050V C- 256952-050V C- 257381-030V C- 257382-030V

PART NO	LAST ECN	BENÄMNING	TITLE	BENENNUNG	GROUP NO
					C- 295211-010V C- 256055-060V C- 457937-020V C- 490600-040V C- 546285-010V RK- 978212-010V
312105-0378		SKRUV M6S6X40RFR	SCREW	SCHRAUBE	C- 978740-010V C- 271261-050V C- 751968-010V C- 469736-040V C- 484984-020V C- 565393-010V C- 794145-010V C- 271115-040V C- 295310-070V C- 456455-030V C- 271866-060V C- 491890-010V C- 272408-050V C- 295891-030V C- 272021-060V C- 469781-030V C- 457937-020V C- 497534-030V C- 536859-020V C- 554360-020V C- 751406-010V C- 751718-010V
312105-0379		SKRUV M6S6X45RFR	SCREW	SCHRAUBE	C- 795750-010V C- 491767-020V C- 544420-010V C- 256206-020V
312105-0380		SKRUV M6S6X50RFR	SCREW	SCHRAUBE	C- 256207-020V C- 539375-010V C- 736529-010V C- 456180-010V C- 256951-050V C- 256952-050V
312105-0380		SKRUV M6S6X50RFR	SCREW	SCHRAUBE	C- 456455-030V C- 441000-050V C- 283626-040V C- 552030-010V C- 751410-010V
312105-0381		SKRUV M6S6X55RFR	SCREW	SCHRAUBE	C- 469118-020V C- 752664-010V C- 564307-010V C- 554859-010V
312105-0382		SKRUV M6S6X60RFR	SCREW	SCHRAUBE	C- 441486-040V C- 256806-030V C- 271114-050V C- 295310-070V C- 752645-020V C- 752646-020V C- 752913-010V C- 752914-010V C- 457853-030V C- 751393-010V
312105-0383		SKRUV M6S6X65RFR	SCREW	SCHRAUBE	C- 978740-010V C- 533014-010V C- 735265-010V
312105-0384		SKRUV M6S6X70RFR	SCREW	SCHRAUBE	C- 550714-010V C- 736593-010V C- 256206-020V C- 256207-020V C- 295310-070V C- 456588-030V
312105-0386		SKRUV M6S6X80RFR	SCREW	SCHRAUBE	C- 272021-060V
312105-0388		SKRUV M6S 6X90 RFR	SCREW	SCHRAUBE	C- 272021-060V C- 554889-020V
312105-0447		SKRUV M6S8X12RFR	SCREW	SCHRAUBE	C- 237776-040V C- 476189-010V CR- 256212-050V CR- 256213-050V C- 271866-060V C- 441000-050V C- 272024-040V C- 272025-030V C- 456309-050V C- 469452-030V C- 751800-020V C- 237776-040V C- 476189-010V RK- 520069-010V
312105-0448		SKRUV M6S8X14RFR	SCREW	SCHRAUBE	C- 272408-050V
312105-0449		SKRUV M6S8X16RFR	SCREW	SCHRAUBE	C- 456953-020V RK- 532210-010V C- 751928-020V C- 752960-010V C- 752971-010V C- 37877-030V C- 794004-010V C- 794110-010V

PART NO	LAST ECN	BENÄMNING		TITLE	BENENNUNG	GROUP NO
						C- 794004-010V
						C- 794110-010V
						C- 752029-010V
						C- 560670-010V
						C- 560671-010V
						C- 560672-010V
312105-0449		SKRUV	M6S8X16RFR	SCREW	SCHRAUBE	C- 237776-040V
						C- 476189-010V
						C- 550757-020V
						C- 554888-010V
						C- 456458-040V
						C- 456459-040V
						C- 456460-040V
						C- 572306-010V
						C- 751860-020V
						C- 751900-010V
						C- 271114-050V
						C- 257146-020V
						C- 272359-020V
						C- 272404-070V
						C- 246388-060V
						C- 272408-050V
						C- 978162-010V
						C- 256014-060V
						C- 256055-060V
						C- 295470-050V
						C- 491083-030V
						C- 491976-020V
						C- 456696-030V
						C- 547601-010V
						C- 237776-040V
						C- 476189-010V
						C- 752029-010V
						C- 752049-010V
						C- 752958-010V
						C- 752959-010V
312105-0451		SKRUV	M6S8X20RFR	SCREW	SCHRAUBE	C- 751928-020V
						C- 752960-010V
						C- 752971-010V
						C- 271626-030V
						C- 271017-030V
						C- 271934-030V
						C- 491871-010V
						C- 283604-020V
						C- 484984-020V
						C- 794004-010V
						C- 794168-010V
						C- 794004-010V
						C- 794168-010V
						C- 237776-040V
						C- 476189-010V
						C- 550757-020V
						C- 550711-020V
						C- 456100-030V
						C- 456180-010V
						C- 456459-040V
						C- 572306-010V
						C- 256222-020V
						C- 271114-050V
						C- 441695-020V
						C- 456588-030V
						C- 271513-060V
						C- 271992-020V
						C- 272359-020V
312105-0451		SKRUV	M6S8X20RFR	SCREW	SCHRAUBE	C- 751885-030V
						C- 272343-050V
						C- 272408-050V
						C- 295891-030V
						C- 456032-010V
						C- 456935-030V
						C- 752244-020V
						C- 752645-020V
						C- 752646-020V
						C- 978162-010V
						C- 256014-060V
						C- 271169-040V
						C- 272021-060V
						C- 272028-060V
						C- 272337-040V
						C- 272560-060V
						C- 295470-050V
						C- 441304-040V
						C- 441307-030V
						C- 456309-050V
						C- 469452-030V
						C- 491570-020V
						C- 491579-020V
						C- 751800-020V
						CR- 294695-010V
						C- 456679-010V
						C- 548057-010V
						C- 751373-010V

PART NO	LAST ECN	BENÄMNING	TITLE	BENENNUNG	GROUP NO
312105-0452		SKRUV M6S8X22RFR	SCREW	SCHRAUBE	C- 751398-020V C- 237776-040V C- 476189-010V C- 752030-010V C- 752960-010V C- 752971-010V C- 560858-010V C- 554885-010V C- 550757-020V C- 554888-010V C- 456457-040V C- 256217-040V C- 752628-020V C- 457853-030V C- 556723-010V
312105-0453		SKRUV M6S8X25RFR	SCREW	SCHRAUBE	C- 566318-010V C- 751928-020V C- 752960-010V C- 752971-010V C- 491650-010V C- 271017-030V C- 272084-030V C- 484950-020V C- 924300-010V C- 794004-010V C- 794168-010V C- 794004-010V C- 794168-010V C- 978280-010V C- 237776-040V C- 554888-010V
312105-0453		SKRUV M6S8X25RFR	SCREW	SCHRAUBE	C- 456457-040V C- 456458-040V C- 751860-020V C- 751900-010V C- 256206-020V C- 256207-020V CR- 256212-050V CR- 256213-050V C- 256951-050V C- 256952-050V C- 256843-060V C- 271866-060V C- 751691-010V C- 272408-050V C- 441000-050V C- 456032-010V C- 560202-010V C- 752244-020V C- 752247-010V C- 752627-010V C- 752628-020V C- 752645-020V C- 752646-020V C- 752913-010V C- 752914-010V C- 271181-040V C- 272021-060V C- 456309-050V C- 469452-030V CR- 283605-010V C- 283612-020V C- 283626-040V C- 457853-030V CR- 548040-010V C- 552030-010V C- 554360-020V C- 751406-010V C- 237776-040V C- 924300-010V C- 752958-010V C- 752959-010V C- 978280-010V
312105-0455		SKRUV M6S8X30RFR	SCREW	SCHRAUBE	RK- 529345-010V C- 752960-010V C- 752971-010V C- 450101-010V C- 450101-020V C- 450125-010V C- 794004-010V C- 794271-010V C- 794004-010V C- 794271-010V CR- 256712-050V C- 554885-010V C- 554886-010V C- 550757-020V C- 456180-010V C- 456458-040V C- 456460-040V C- 751860-020V
312105-0455		SKRUV M6S8X30RFR	SCREW	SCHRAUBE	C- 256206-020V

PART NO	LAST ECN	BENÄMNING		TITLE	BENENNUNG	GROUP NO
						C- 256207-020V CR- 256212-050V CR- 256213-050V C- 256217-040V C- 256951-050V C- 256952-050V CR- 256712-050V C- 271115-040V C- 271992-020V C- 751691-010V C- 560202-010V C- 752247-010V C- 752628-020V C- 256055-060V C- 256095-050V C- 271181-040V C- 441307-030V C- 456836-040V CR- 294695-010V CR- 548040-010V C- 552030-010V C- 554360-020V C- 566280-010V C- 752958-010V C- 752959-010V
312105-0457		SKRUV	M6S8X35RFR	SCREW	SCHRAUBE	RK- 978238-010V C- 563740-010V C- 752664-010V C- 538421-010V C- 295218-010V C- 554886-010V C- 256222-020V C- 256223-040V C- 271114-050V C- 295218-010V C- 752645-020V C- 752646-020V C- 752913-010V C- 752914-010V C- 441307-030V C- 469452-030V CR- 283605-010V CR- 548040-010V
312105-0459		SKRUV	M6S8X40RFR	SCREW	SCHRAUBE	C- 566280-010V RK- 532210-010V C- 751928-020V C- 752960-010V C- 752971-010V C- 271261-050V C- 271626-030V C- 567034-010V C- 283604-020V C- 794092-010V C- 554888-010V C- 456459-040V C- 256206-020V
312105-0459		SKRUV	M6S8X40RFR	SCREW	SCHRAUBE	C- 256207-020V C- 256223-040V C- 271114-050V C- 272765-070V C- 271992-020V C- 751691-010V C- 272343-050V C- 456032-010V C- 752645-020V C- 752646-020V C- 752913-010V C- 752914-010V C- 566280-010V
312105-0460		SKRUV	M6S8X45RFR	SCREW	SCHRAUBE	C- 751406-010V C- 924808-010V C- 752960-010V C- 752971-010V C- 456457-040V C- 752645-020V C- 752646-020V C- 552030-010V C- 751923-010V C- 751924-010V
312105-0461		SKRUV	M6S8X50RFR	SCREW	SCHRAUBE	C- 751923-010V C- 751924-010V C- 491871-010V
312105-0462		SKRUV	M6S8X55RFR	SCREW	SCHRAUBE	C- 493652-010V C- 978239-020V C- 978240-020V C- 978241-020V CR- 256204-050V CR- 256205-050V
312105-0463		SKRUV	M6S8X60RFR	SCREW	SCHRAUBE	C- 271513-060V C- 256055-060V C- 736529-010V C- 554888-010V

PART NO	LAST ECN	BENÄMNING		TITLE	BENENNUNG	GROUP NO
312105-0464		SKRUV	M6S8X65RFR	SCREW	SCHRAUBE	C- 456455-030V C- 456588-030V C- 272025-030V CR- 283605-010V
312105-0465		SKRUV	M6S8X70RFR	SCREW	SCHRAUBE	C- 457867-020V C- 271513-060V
312105-0466		SKRUV	M6S8X75RFR	SCREW	SCHRAUBE	C- 457853-030V C- 736797-010V
312105-0469		SKRUV	M6S8X90RFR	SCREW	SCHRAUBE	C- 538421-010V C- 564119-010V
312105-0471		SKRUV	M6S8X100RFR	SCREW	SCHRAUBE	C- 469173-010V C- 752049-010V
312105-0489		SKRUV	M6S10X16RFR	SCREW	SCHRAUBE	C- 456560-010V C- 560670-010V C- 560671-010V C- 560672-010V C- 550757-020V C- 456100-030V C- 469452-030V
312105-0491		SKRUV	M6S10X20RFR	SCREW	SCHRAUBE	C- 76504-010V RK- 532210-010V C- 271641-030V C- 271641-020V C- 456588-030V
312105-0491		SKRUV	M6S10X20RFR	SCREW	SCHRAUBE	C- 272404-070V C- 456032-010V C- 456923-030V C- 469452-030V C- 751800-020V C- 457881-030V C- 490610-040V
312105-0492		SKRUV	M6S10X22RFR	SCREW	SCHRAUBE	C- 546285-010V C- 271115-040V C- 457881-030V
312105-0493		SKRUV	M6S10X25RFR	SCREW	SCHRAUBE	C- 548057-010V C- 560670-010V C- 560671-010V C- 560672-010V C- 237776-040V C- 550757-020V C- 554887-010V C- 271469-020V C- 456923-030V C- 752247-010V C- 752645-020V C- 752646-020V C- 752913-010V C- 752914-010V C- 469452-030V C- 457881-030V C- 237776-040V C- 556723-010V C- 752958-010V C- 752959-010V
312105-0495		SKRUV	M6S10X30RFR	SCREW	SCHRAUBE	C- 736360-020V C- 794004-010V C- 736360-020V C- 794004-010V C- 550714-010V C- 554886-010V C- 550757-020V C- 256843-060V C- 271468-040V C- 272024-040V C- 441486-040V C- 469452-030V C- 751800-020V C- 283626-040V C- 456696-030V
312105-0497		SKRUV	M6S10X35RFR	SCREW	SCHRAUBE	C- 457853-030V C- 794004-010V C- 752958-010V C- 752959-010V
312105-0499		SKRUV	M6S10X40RFR	SCREW	SCHRAUBE	C- 272021-060V
312105-0500		SKRUV	M6S10X45RFR	SCREW	SCHRAUBE	C- 271454-020V
312105-0501		SKRUV	M6S10X50RFR	SCREW	SCHRAUBE	C- 751928-020V
312105-0505		SKRUV	M6S10X70RFR	SCREW	SCHRAUBE	C- 736360-020V
312105-0507		SKRUV	M6S10X80RFR	SCREW	SCHRAUBE	C- 560670-010V C- 560671-010V C- 560672-010V
312105-0532		SKRUV	M6S12X20RFR	SCREW	SCHRAUBE	C- 572750-010V C- 456588-030V
312105-0536		SKRUV	M6S12X30RFR	SCREW	SCHRAUBE	C- 272084-030V C- 736360-020V
312105-0536		SKRUV	M6S12X30RFR	SCREW	SCHRAUBE	C- 794004-010V C- 736360-020V C- 794004-010V C- 256843-060V C- 272024-040V C- 441486-040V C- 456309-050V C- 456555-040V

PART NO	LAST ECN	BENÄMNING	TITLE	BENENNUNG	GROUP NO
					C- 554360-020V
					C- 752958-010V
					C- 752959-010V
312105-0538		SKRUV M6S12X35RFR	SCREW	SCHRAUBE	C- 560670-010V
					C- 560671-010V
					C- 560672-010V
					C- 456588-030V
312105-0540		SKRUV M6S12X40 A4 80	SCREW	SCHRAUBE	C- 256843-060V
312105-0544		SKRUV M6S12X60RFR	SCREW	SCHRAUBE	C- 441695-020V
312105-0546		SKRUV M6S12X70RFR	SCREW	SCHRAUBE	C- 295310-070V
					C- 476349-030V
312105-0547		SKRUV M6S12X75RFR	SCREW	SCHRAUBE	C- 256410-060V
312105-0548		SKRUV M6S12X80RFR	SCREW	SCHRAUBE	C- 554889-020V
312109-0335		SKRUV M6S5X30HRFR	SCREW	SCHRAUBE	C- 562680-010V
					C- 491976-020V
312109-0374		SKRUV M6S6X30HRFR	SCREW	SCHRAUBE	C- 736529-010V
					CR- 256547-040V
					C- 924662-010V
312109-0376		SKRUV M6S 6X35 H RFR	SCREW	SCHRAUBE	C- 566282-010V
					C- 752645-020V
					C- 752646-020V
					C- 752913-010V
					C- 752914-010V
312109-0378		SKRUV M6S6X40H RFR	SCREW	SCHRAUBE	CR- 256547-040V
312109-0381		SKRUV M6S6X55HA480	SCREW	SCHRAUBE	C- 295891-030V
					C- 457853-030V
312109-0386		SKRUV M6S6X80RFR	SCREW	SCHRAUBE	C- 456032-010V
312109-0457		SKRUV M6S 8X35 H A4 80	SCREW	SCHRAUBE	C- 550757-020V
					C- 456457-040V
					C- 751860-020V
					C- 256055-060V
312109-0459		SKRUV M6S8X40H A4 80	SCREW	SCHRAUBE	C- 256222-020V
					C- 751691-010V
					C- 533844-010V
					C- 554360-020V
					C- 752958-010V
312109-0460		SKRUV	SCREW	SCHRAUBE	CR- 283605-010V
312109-0461		SKRUV M6S8X50H A4 80	SCREW	SCHRAUBE	C- 554885-010V
					C- 554886-010V
312109-0463		SKRUV	SCREW	SCHRAUBE	C- 256014-060V
					C- 256084-050V
					C- 456696-030V
312109-0541		SKRUV M6S 12X45 H RFR	SCREW	SCHRAUBE	RK- 520069-010V
312109-0544		SKRUV M6S 12X60 H RFR	SCREW	SCHRAUBE	C- 794004-010V
312111-0329		SKRUV MC6S5X16FZB	SCREW	SCHRAUBE	C- 491787-020V
					C- 491788-020V
312111-0331		SKRUV MC6S5X20FZB	SCREW	SCHRAUBE	C- 76468-010V
					C- 456100-030V
312111-0335		SKRUV MC6S5X30FZB	SCREW	SCHRAUBE	C- 293684-020V
					C- 293685-020V
					C- 293684-020V
312111-0335		SKRUV MC6S5X30FZB	SCREW	SCHRAUBE	C- 293685-020V
					C- 293684-020V
312111-0340		SKRUV MC6S5X45FZB	SCREW	SCHRAUBE	C- 751478-020V
312111-0341		SKRUV MC6S5X50FZB	SCREW	SCHRAUBE	C- 538421-010V
312111-0364		SKRUV MC6S6X10FZB	SCREW	SCHRAUBE	C- 232781-040V
312111-0366		SKRUV MC6S6X12FZB	SCREW	SCHRAUBE	C- 794128-010V
312111-0368		SKRUV MC6S6X16FZB	SCREW	SCHRAUBE	C- 256200-030V
312111-0370		SKRUV MC6S6X20FZB	SCREW	SCHRAUBE	C- 229400-070V
312111-0372		SKRUV MC6S6X25FZB	SCREW	SCHRAUBE	C- 456827-020V
312111-0376		SKRUV MC6S6X35FZB	SCREW	SCHRAUBE	C- 256197-050V
312111-0378		SKRUV MC6S6X40FZB	SCREW	SCHRAUBE	C- 256197-050V
					C- 232781-040V
312111-0380		SKRUV MC6S6X50FZB	SCREW	SCHRAUBE	C- 256173-050V
312111-0385		SKRUV MC6S6X75FZB	SCREW	SCHRAUBE	C- 456827-020V
312111-0451		SKRUV MC6S8X20FZB	SCREW	SCHRAUBE	C- 76200-010V
					C- 560846-010V
312111-0455		SKRUV MC6S8X30FZB	SCREW	SCHRAUBE	C- 76492-010V
312111-0457		SKRUV MC6S8X35FZB	SCREW	SCHRAUBE	C- 76460-010V
312111-0463		SKRUV MC6S8X60FZB	SCREW	SCHRAUBE	C- 794128-010V
312111-0466		SKRUV MC6S8X75FZB	SCREW	SCHRAUBE	C- 283612-020V
312111-0471		SKRUV MC6S8X100FZB	SCREW	SCHRAUBE	C- 76411-010V
					C- 491650-010V
					C- 752645-020V
					C- 456757-020V
312111-0491		SKRUV MC6S10X20FZB	SCREW	SCHRAUBE	C- 76200-010V
312111-0493		SKRUV MC6S10X25FZB	SCREW	SCHRAUBE	C- 232781-040V
312111-0533		SKRUV MC6S12X22FZB	SCREW	SCHRAUBE	C- 232781-040V
312111-0536		SKRUV MC6S12X30FZB	SCREW	SCHRAUBE	C- 232781-040V
312115-0220		SKRUV MC6S 3X6 A4 80	SCREW	SCHRAUBE	C- 556662-010V
					C- 556667-010V
					C- 556672-010V
312115-0222		SKRUV MC6S3X8 A4 80	SCREW	SCHRAUBE	C- 978239-020V
					C- 978240-020V
					C- 978241-020V
					C- 550714-010V
312115-0224		SKRUV MC6S 3X10 A4 80	SCREW	SCHRAUBE	C- 476859-020V
312115-0226		SKRUV MC6S 3X12 A4 80	SCREW	SCHRAUBE	C- 752628-020V
					C- 552030-010V
312115-0228		SKRUV MC6S 3X16 A4 80	SCREW	SCHRAUBE	C- 556672-010V
					C- 978239-020V
					C- 978240-020V

PART NO	LAST ECN	BENÄMNING	TITLE	BENENNUNG	GROUP NO
					C- 978241-020V
					C- 752957-010V
					C- 736529-010V
					C- 550757-020V
					C- 272560-060V
312115-0230		SKRUV MC6S 3X20 A4 80	SCREW	SCHRAUBE	C- 554888-010V
312115-0285		SKRUV MC6S 4X6 A4 80	SCREW	SCHRAUBE	C- 456180-010V
					CR- 283607-030V
					C- 924991-010V
312115-0287		SKRUV MC6S 4X8 A4 80	SCREW	SCHRAUBE	C- 434074-030V
					C- 434774-030V
					C- 544420-010V
					C- 905131-010V
					C- 295310-070V
					C- 752628-020V
					C- 457853-030V
					C- 434774-030V
					C- 434074-030V
312115-0287		SKRUV MC6S 4X8 A4 80	SCREW	SCHRAUBE	C- 434774-030V
					C- 434074-030V
312115-0289		SKRUV MC6S4X10 A4 80	SCREW	SCHRAUBE	C- 76447-010V
					C- 736593-010V
					C- 271562-080V
					CR- 283606-020V
					C- 905130-010V
					C- 905541-010V
					C- 795750-010V
312115-0291		SKRUV MC6S4X12 A4 80	SCREW	SCHRAUBE	C- 539210-010V
312115-0293		SKRUV MC6S 4 X 16 A4 80	SCREW	SCHRAUBE	CR- 256214-040V
					CR- 548331-010V
312115-0295		SKRUV MC6S 4X20 A4 80	SCREW	SCHRAUBE	C- 905331-010V
312115-0297		SKRUV MC6S 4X25 A4 80	SCREW	SCHRAUBE	C- 554889-020V
					CR- 548331-010V
312115-0303		SKRUV MC6S 4X40 A4 80	SCREW	SCHRAUBE	C- 550714-010V
312115-0304		SKRUV MC6S 4X45 A4 80	SCREW	SCHRAUBE	C- 794243-010V
312115-0305		SKRUV MC6S 4X50 A4 80	SCREW	SCHRAUBE	C- 272560-060V
312115-0323		SKRUV MC6S 5X8 A4 80	SCREW	SCHRAUBE	C- 271641-030V
					C- 271641-020V
					C- 905331-010V
					C- 272028-060V
					C- 272623-050V
312115-0325		SKRUV MC6S 5X10 A4 80	SCREW	SCHRAUBE	C- 556662-010V
					C- 751332-010V
					C- 905131-010V
					C- 905331-010V
					C- 736360-020V
					C- 272025-030V
					C- 469173-010V
					C- 751332-010V
					C- 924662-010V
					RK- 978234-010V
312115-0327		SKRUV MC6S5X12 A4 80	SCREW	SCHRAUBE	C- 271934-030V
					C- 547756-010V
					C- 476080-020V
					C- 538421-010V
					C- 566282-010V
					C- 564120-010V
					C- 978258-020V
					C- 978442-020V
					C- 272028-060V
					C- 752030-010V
					C- 978258-020V
312115-0329		SKRUV MC6S 5X16 A4 80	SCREW	SCHRAUBE	C- 484984-020V
					C- 905331-010V
					C- 736593-010V
					C- 794069-010V
					C- 550714-010V
					CR- 256204-050V
					CR- 256205-050V
					C- 441850-040V
					C- 491890-010V
					C- 256014-060V
					C- 272021-060V
					C- 272560-060V
					C- 456976-050V
					CR- 283607-030V
					CR- 548040-010V
312115-0329		SKRUV MC6S 5X16 A4 80	SCREW	SCHRAUBE	C- 554360-020V
					C- 924662-010V
312115-0331		SKRUV MC6S 5X20 A4 80	SCREW	SCHRAUBE	C- 441534-010V
					C- 560858-010V
					C- 736865-010V
					C- 560858-010V
					C- 736865-010V
					C- 924300-010V
					C- 560858-010V
					C- 736865-010V
					C- 560858-010V
					C- 736865-010V
					C- 924300-010V
					C- 560858-010V
					C- 736865-010V

PART NO	LAST ECN	BENÄMNING	TITLE	BENENNUNG	GROUP NO
					C- 560858-010V C- 736865-010V C- 924300-010V C- 562679-010V C- 256806-030V CR- 256214-040V CR- 283607-030V C- 457853-030V
312115-0333		SKRUV 5X25 A4 80	SCREW	SCHRAUBE	C- 924300-010V C- 538421-010V C- 752645-020V C- 752646-020V
312115-0335		SKRUV MC6S 5X30 A4 80	SCREW	SCHRAUBE	C- 538421-010V
312115-0339		SKRUV MC6S 5X40 A4 80	SCREW	SCHRAUBE	C- 538421-010V
312115-0364		SKRUV MC6S 6X10 A4 80	SCREW	SCHRAUBE	C- 271261-050V C- 476859-020V C- 550712-020V
312115-0366		SKRUV MC6S 6X12 A4 80	SCREW	SCHRAUBE	C- 751689-010V C- 752173-010V C- 736600-020V C- 736865-010V C- 736600-020V C- 736865-010V C- 736600-020V C- 736865-010V CR- 256204-050V CR- 256205-050V C- 456103-010V C- 456560-010V C- 499082-010V C- 272025-030V
312115-0367		SKRUV MC6S 6X14 A4 80	SCREW	SCHRAUBE	C- 735183-020V C- 469173-010V CR- 548040-010V
312115-0368		SKRUV MC6S 6X16 A4 80	SCREW	SCHRAUBE	C- 450125-010V C- 905131-010V C- 905331-010V CR- 256547-040V C- 476189-010V C- 554886-010V C- 550712-020V
312115-0368		SKRUV MC6S 6X16 A4 80	SCREW	SCHRAUBE	CR- 256547-040V C- 456560-010V C- 272404-070V C- 295891-030V C- 469452-030V C- 751800-020V C- 546285-010V C- 554341-010V C- 751393-010V C- 476189-010V C- 543143-010V C- 924305-010V C- 924662-010V
312115-0370		SKRUV MC6S 6X20 A4 80	SCREW	SCHRAUBE	C- 924305-010V C- 469736-040V C- 566282-010V C- 905131-010V C- 736593-010V C- 550757-020V C- 554891-010V CR- 256204-050V CR- 256205-050V C- 560202-010V C- 752247-010V C- 752627-010V C- 752628-020V C- 272021-060V C- 469173-010V CR- 548040-010V
312115-0371		SKRUV MC6S 6X22 A4 80	SCREW	SCHRAUBE	C- 751718-010V CR- 256212-050V CR- 256213-050V
312115-0372		SKRUV MC6S6X25 A4 80	SCREW	SCHRAUBE	C- 76485-010V C- 469736-040V C- 735261-010V C- 736600-020V C- 735261-010V C- 736600-020V C- 735261-010V C- 736600-020V C- 735261-010V C- 794069-010V CR- 256547-040V C- 256217-040V CR- 256547-040V C- 272765-070V C- 441850-040V C- 272021-060V C- 476349-030V C- 547601-010V CR- 548331-010V

PART NO	LAST ECN	BENÄMNING	TITLE	BENENNUNG	GROUP NO
312115-0374		SKRUV MC6S 6X30 A4 80	SCREW	SCHRAUBE	C- 924167-010V C- 565419-010V C- 550757-020V C- 554888-010V C- 271115-040V C- 441850-040V C- 456696-030V C- 752049-010V
312115-0376		SKRUV MC6S 6X35 A4 80	SCREW	SCHRAUBE	C- 924662-010V C- 450125-010V
312115-0378		SKRUV MC6S 6X40 A4 80	SCREW	SCHRAUBE	C- 76291-010V
312115-0378		SKRUV MC6S 6X40 A4 80	SCREW	SCHRAUBE	C- 550714-010V C- 271866-060V
312115-0379		SKRUV MC6S 6X45 A4 80	SCREW	SCHRAUBE	C- 735183-020V C- 544420-010V C- 905131-010V
312115-0380		SKRUV MC6S 6X50 A4 80	SCREW	SCHRAUBE	C- 560858-010V C- 37877-030V
312115-0382		SKRUV MC6S 6X60 A4 80	SCREW	SCHRAUBE	C- 548057-010V
312115-0447		SKRUV MC6S 8X12 A4 80	SCREW	SCHRAUBE	C- 560671-010V
312115-0449		SKRUV MC6S 8X16 A4 80	SCREW	SCHRAUBE	CR- 256436-060V CR- 256209-030V CR- 256210-030V CR- 256436-060V C- 272404-070V
312115-0451		SKRUV MC6S 8X20 A4 80	SCREW	SCHRAUBE	C- 546285-010V C- 295883-050V CR- 256436-060V C- 272028-060V C- 283626-040V C- 548057-010V
312115-0452		SKRUV MC6S 8X22 A4 80	SCREW	SCHRAUBE	C- 456560-010V
312115-0453		SKRUV MC6S 8X25 A4 80	SCREW	SCHRAUBE	C- 751928-020V C- 752960-010V C- 752971-010V C- 924300-010V C- 456459-040V C- 456460-040V C- 751900-010V C- 256206-020V C- 256207-020V C- 256223-040V C- 271468-040V C- 271469-020V C- 476349-030V
312115-0455		SKRUV MC6S 8X30 A4 80	SCREW	SCHRAUBE	C- 924300-010V C- 529933-010V C- 529933-020V C- 529933-010V C- 529933-020V C- 529933-010V C- 529933-020V CR- 256436-060V C- 469091-030V
312115-0457		MC6S 8X35 A4 80	SCREW	SCHRAUBE	C- 548057-010V C- 76580-010V C- 476189-010V C- 283612-020V
312115-0459		SKRUV MC6S 8X40 A4 80	SCREW	SCHRAUBE	C- 476189-010V C- 76291-010V C- 541163-010V C- 541164-010V C- 751332-010V C- 978162-010V C- 548057-010V C- 751332-010V C- 541163-010V C- 541164-010V
312115-0460		SKRUV MC6S 8X45 A4 80	SCREW	SCHRAUBE	C- 978162-010V
312115-0463		SKRUV MC6S 8X60 A4 80	SCREW	SCHRAUBE	C- 752664-010V
312115-0463		SKRUV MC6S 8X60 A4 80	SCREW	SCHRAUBE	C- 256665-020V
312115-0465		SKRUV MC6S 8X70 A4 80	SCREW	SCHRAUBE	C- 751691-010V
312115-0467		SKRUV MC6S8X80RFR	SCREW	SCHRAUBE	C- 256875-020V
312115-0491		SKRUV MC6S 10X20 A4 80	SCREW	SCHRAUBE	C- 271626-030V
312115-0493		SKRUV MC6S 10X25 A4 80	SCREW	SCHRAUBE	C- 256202-050V C- 283626-040V
312115-0495		SKRUV MC6S 10X30 A4 80	SCREW	SCHRAUBE	C- 271626-030V C- 456696-030V
312115-0497		SKRUV MC6S 10X35 A4 80	SCREW	SCHRAUBE	C- 271468-040V
312115-0500		SKRUV MC6S 10X45 A4 80	SCREW	SCHRAUBE	C- 978258-020V C- 978442-020V C- 256202-050V C- 978258-020V
312115-0503		SKRUV MC6S 10X60 A4 80	SCREW	SCHRAUBE	C- 456100-030V
312115-0507		SKRUV MC6S 10X80 A4 80	SCREW	SCHRAUBE	C- 550714-010V
312115-0536		SKRUV MC6S 12X30 A4 80	SCREW	SCHRAUBE	C- 272788-010V
312121-0224		SPÅRSKRUV MCS3X10FZB	SLOTTED HEAD SCREW	SCHLITZSCHRAUBE	C- 491942-010V
312121-0228		SPÅRSKRUV MCS3X16FZB	SLOTTED HEAD SCREW	SCHLITZSCHRAUBE	C- 232781-040V
312121-0285		SPÅRSKRUV MCS4X6FZB	SLOTTED HEAD SCREW	SCHLITZSCHRAUBE	C- 978604-010V C- 271569-050V C- 978738-010V
312121-0287		SPÅRSKRUV MCS4X8FZB	SLOTTED HEAD SCREW	SCHLITZSCHRAUBE	C- 76402-010V

PART NO	LAST ECN	BENÄMNING	TITLE	BENENNUNG	GROUP NO
					C- 256197-050V C- 491787-020V C- 491788-020V C- 491814-020V C- 491815-020V C- 978739-010V
312121-0289		SPÅRSKRUV MCS4X10FZB	SLOTTED HEAD SCREW	SCHLITZSCHRAUBE	C- 491787-020V C- 491788-020V
312121-0291		SPÅRSKRUV MCS4X12FZB	SLOTTED HEAD SCREW	SCHLITZSCHRAUBE	C- 978739-010V
312121-0293		SPÅRSKRUV MCS4X16FZB	SLOTTED HEAD SCREW	SCHLITZSCHRAUBE	C- 978604-010V C- 232781-040V
312121-0323		SPÅRSKRUV MCS5X8FZB	SLOTTED HEAD SCREW	SCHLITZSCHRAUBE	C- 256173-050V
312121-0333		SPÅRSKRUV MCS5X25FZB	SLOTTED HEAD SCREW	SCHLITZSCHRAUBE	C- 456882-010V
312121-0364		SPÅRSKRUV MCS6X10FZB	SLOTTED HEAD SCREW	SCHLITZSCHRAUBE	C- 735031-010V C- 924329-010V
312121-0368		SPÅRSKRUV MCS6X16FZB	SLOTTED HEAD SCREW	SCHLITZSCHRAUBE	C- 76197-010V
312121-0455		SPÅRSKRUV MCS8X30FZB	SLOTTED HEAD SCREW	SCHLITZSCHRAUBE	C- 76197-010V
312122-0287		SPÅRSKRUV MCS4X8MSGFN	SLOTTED HEAD SCREW	SCHLITZSCHRAUBE	C- 751478-020V
312122-0294		SPÅRSKRUV MCS4X18MSGFN	SLOTTED HEAD SCREW	SCHLITZSCHRAUBE	C- 572642-010V C- 572643-010V
312122-0295		SPÅRSKRUV MCS4X20MSGFN	SLOTTED HEAD SCREW	SCHLITZSCHRAUBE	C- 456953-020V C- 469634-010V
312125-0220		SPÅRSKRUV MCS3X6RFR	SLOTTED HEAD SCREW	SCHLITZSCHRAUBE	C- 441534-010V C- 441535-010V C- 978280-010V C- 272343-050V C- 256095-050V C- 441535-010V C- 451348-020V C- 441535-010V C- 978280-010V C- 978740-010V
312125-0222		SPÅRSKRUV MCS3X8RFR	SLOTTED HEAD SCREW	SCHLITZSCHRAUBE	C- 978239-020V C- 978240-020V C- 978241-020V C- 924585-010V C- 554890-010V
312125-0222		SPÅRSKRUV MCS3X8RFR	SLOTTED HEAD SCREW	SCHLITZSCHRAUBE	C- 571918-010V C- 469535-010V C- 441000-050V C- 548057-010V CR- 548331-010V C- 553657-010V C- 752042-010V C- 556723-010V C- 924727-010V C- 924662-010V C- 924727-010V
312125-0224		SPÅRSKRUV MCS3X10RFR	SLOTTED HEAD SCREW	SCHLITZSCHRAUBE	C- 752645-020V C- 752646-020V
312125-0226		SPÅRSKRUV MCS3X12RFR	SLOTTED HEAD SCREW	SCHLITZSCHRAUBE	C- 529621-010V C- 256055-060V C- 548057-010V
312125-0228		SPÅRSKRUV MCS3X16RFR	SLOTTED HEAD SCREW	SCHLITZSCHRAUBE	C- 560858-010V C- 562679-010V C- 794110-010V C- 272024-040V C- 272025-030V C- 272337-040V C- 456836-040V C- 554341-010V C- 554346-010V C- 924991-010V RK- 520069-010V RK- 978212-010V RK- 978238-010V RK- 520069-010V RK- 978212-010V RK- 978238-010V RK- 520069-010V RK- 978212-010V RK- 978238-010V
312125-0230		SPÅRSKRUV MCS3X20RFR	SLOTTED HEAD SCREW	SCHLITZSCHRAUBE	C- 37877-030V C- 272084-030V C- 441534-010V C- 441535-010V C- 794110-010V C- 441535-010V C- 554887-010V C- 441850-040V C- 441000-050V C- 752628-020V C- 752645-020V C- 752646-020V C- 256014-060V C- 256084-050V C- 272021-060V C- 546285-010V C- 550128-010V C- 566280-010V C- 441535-010V C- 556723-010V

PART NO	LAST ECN	BENÄMNING	TITLE	BENENNUNG	GROUP NO
312125-0232		SPÅRSKRUV MCS3X25RFR	SLOTTED HEAD SCREW	SCHLITZSCHRAUBE	RK- 978238-010V C- 469736-040V C- 554889-020V
312125-0232		SPÅRSKRUV MCS3X25RFR	SLOTTED HEAD SCREW	SCHLITZSCHRAUBE	C- 554346-010V C- 554360-020V RK- 978212-010V RK- 978234-010V RK- 978212-010V RK- 978234-010V RK- 978212-010V RK- 978234-010V
312125-0234		SPÅRSKRUV MCS3X30RFR	SLOTTED HEAD SCREW	SCHLITZSCHRAUBE	C- 794110-010V C- 457867-020V
312125-0238		SPÅRSKRUV MCS3X40 A4	SLOTTED HEAD SCREW	SCHLITZSCHRAUBE	C- 457867-020V
312125-0285		SPÅRSKRUV MCS4X6RFR	SLOTTED HEAD SCREW	SCHLITZSCHRAUBE	C- 74767-010V C- 751478-020V C- 450125-010V C- 544390-010V C- 924300-010V C- 924585-010V C- 924300-010V C- 924585-010V C- 924300-010V C- 924585-010V C- 271513-060V C- 272404-070V C- 490761-010V C- 295891-030V C- 441000-050V C- 456935-030V C- 752898-010V C- 978162-010V C- 256014-060V C- 256095-050V C- 272623-050V C- 469452-030V C- 751800-020V C- 490600-040V C- 924300-010V C- 924727-010V C- 924300-010V C- 924727-010V
312125-0287		SPÅRSKRUV MCS4X8RFR	SLOTTED HEAD SCREW	SCHLITZSCHRAUBE	RK- 978234-010V C- 37877-030V C- 271641-020V C- 272084-030V C- 905131-010V C- 271562-080V C- 441850-040V C- 271513-060V C- 491890-010V C- 751885-030V C- 295891-030V C- 272021-060V C- 457856-020V C- 457866-030V C- 490600-040V C- 497534-030V C- 552030-010V C- 556723-010V
312125-0289		SPÅRSKRUV MCS4X10RFR	SLOTTED HEAD SCREW	SCHLITZSCHRAUBE	RK- 978234-010V C- 544389-010V C- 272404-070V
312125-0289		SPÅRSKRUV MCS4X10RFR	SLOTTED HEAD SCREW	SCHLITZSCHRAUBE	C- 752645-020V C- 752646-020V C- 457866-030V C- 490610-040V C- 546285-010V
312125-0291		SPÅRSKRUV MCS4X12RFR	SLOTTED HEAD SCREW	SCHLITZSCHRAUBE	C- 554360-020V C- 271626-030V C- 554890-010V C- 256665-020V C- 271992-020V C- 469535-010V C- 272343-050V C- 256095-050V C- 554346-010V C- 554360-020V C- 491207-030V C- 553657-010V C- 752042-010V
312125-0293		SPÅRSKRUV MCS4X16RFR	SLOTTED HEAD SCREW	SCHLITZSCHRAUBE	C- 451348-020V C- 271569-050V C- 457866-030V
312125-0295		SPÅRSKRUV MCS4X20RFR	SLOTTED HEAD SCREW	SCHLITZSCHRAUBE	C- 548057-010V C- 563088-010V C- 552013-010V C- 295904-010V C- 457866-030V
312125-0297		SPÅRSKRUV MCS4X25RFR	SLOTTED HEAD SCREW	SCHLITZSCHRAUBE	C- 457867-020V C- 924585-010V C- 272404-070V

PART NO	LAST ECN	BENÄMNING	TITLE	BENENNUNG	GROUP NO
					C- 441000-050V
					C- 457866-030V
					C- 554341-010V
					C- 924727-010V
312125-0299		SPÅRSKRUV MCS4X30RFR	SLOTTED HEAD SCREW	SCHLITZSCHRAUBE	C- 457866-030V
					C- 556723-010V
312125-0303		SPÅRSKRUV MCS4X40RFR	SLOTTED HEAD SCREW	SCHLITZSCHRAUBE	C- 554346-010V
312125-0323		SPÅRSKRUV MCS5X8RFR	SLOTTED HEAD SCREW	SCHLITZSCHRAUBE	C- 752960-010V
					C- 752971-010V
					C- 539209-010V
					C- 539210-010V
					C- 539211-010V
					C- 905331-010V
					C- 905401-010V
					C- 271562-080V
					C- 456100-030V
					C- 456180-010V
					C- 456457-040V
					C- 456458-040V
					C- 751860-020V
					C- 752244-020V
					C- 978162-010V
					C- 256055-060V
					C- 271181-040V
					C- 469374-040V
					C- 469173-010V
					CR- 548040-010V
312125-0325		SPÅRSKRUV MCS5X10RFR	SLOTTED HEAD SCREW	SCHLITZSCHRAUBE	C- 295883-050V
					C- 752567-010V
					C- 271513-060V
312125-0325		SPÅRSKRUV MCS5X10RFR	SLOTTED HEAD SCREW	SCHLITZSCHRAUBE	C- 271866-060V
					C- 751885-030V
					C- 272408-050V
					C- 752645-020V
					C- 752646-020V
					C- 457856-020V
312125-0327		SPÅRSKRUV MCS5X12RFR	SLOTTED HEAD SCREW	SCHLITZSCHRAUBE	RK- 529345-010V
					C- 441535-010V
					C- 736796-020V
					C- 441535-010V
					C- 978280-010V
					C- 536859-020V
					C- 441535-010V
					C- 978280-010V
312125-0329		SPÅRSKRUV MCS5X16RFR	SLOTTED HEAD SCREW	SCHLITZSCHRAUBE	C- 271866-060V
					C- 246388-060V
					C- 752645-020V
					C- 752646-020V
312125-0331		SPÅRSKRUV MCS5X20RFR	SLOTTED HEAD SCREW	SCHLITZSCHRAUBE	C- 752173-010V
					C- 271181-040V
312125-0335		SPÅRSKRUV MCS5X30RFR	SLOTTED HEAD SCREW	SCHLITZSCHRAUBE	C- 456953-020V
312125-0364		SPÅRSKRUV MCS6X10RFR	SLOTTED HEAD SCREW	SCHLITZSCHRAUBE	C- 752960-010V
					C- 752971-010V
					C- 456435-040V
					C- 456827-020V
					C- 456457-040V
					C- 752889-010V
					C- 295470-050V
312125-0366		SPÅRSKRUV MCS6X12RFR	SLOTTED HEAD SCREW	SCHLITZSCHRAUBE	C- 752645-020V
					C- 752646-020V
					C- 752913-010V
					C- 752914-010V
					C- 271181-040V
					C- 457853-030V
					C- 469299-020V
312125-0368		SPÅRSKRUV MCS6X16RFR	SLOTTED HEAD SCREW	SCHLITZSCHRAUBE	C- 256665-020V
312125-0370		SPÅRSKRUV MCS6X20RFR	SLOTTED HEAD SCREW	SCHLITZSCHRAUBE	C- 751406-010V
312125-0374		SPÅRSKRUV MCS6X30RFR	SLOTTED HEAD SCREW	SCHLITZSCHRAUBE	C- 441000-050V
					C- 735031-010V
					C- 924329-010V
312125-0378		SPÅRSKRUV MCS6X40RFR	SLOTTED HEAD SCREW	SCHLITZSCHRAUBE	C- 457856-020V
312125-0380		SPÅRSKRUV MCS6X50RFR	SLOTTED HEAD SCREW	SCHLITZSCHRAUBE	C- 450125-010V
312132-0284		SPÅRSKRUV MSCS4X5MSGFN	SLOTTED HEAD SCREW	SCHLITZSCHRAUBE	C- 563088-010V
					C- 441535-010V
					C- 552013-010V
					C- 441535-010V
312132-0287		SPÅRSKRUV MSCS4X8MSGFN	SLOTTED HEAD SCREW	SCHLITZSCHRAUBE	C- 556662-010V
					C- 556723-010V
312132-0289		SPÅRSKRUV MSCS4X10MSGFN	SLOTTED HEAD SCREW	SCHLITZSCHRAUBE	C- 905331-010V
312145-0220		SPÅRSKRUV MFS3X6RFR	SLOTTED HEAD SCREW	SCHLITZSCHRAUBE	C- 271641-030V
					C- 271641-020V
					C- 905131-010V
					C- 256197-050V
					C- 491814-020V
					C- 491815-020V
312145-0222		SPÅRSKRUV MFS3X8RFR	SLOTTED HEAD SCREW	SCHLITZSCHRAUBE	C- 736360-020V
					C- 271442-030V
					C- 271443-030V
312145-0224		SPÅRSKRUV MFS3X10RFR	SLOTTED HEAD SCREW	SCHLITZSCHRAUBE	C- 271513-060V
312145-0226		SPÅRSKRUV MFS3X12RFR	SLOTTED HEAD SCREW	SCHLITZSCHRAUBE	CR- 548331-010V
312145-0228		SPÅRSKRUV MFS3X16RFR	SLOTTED HEAD SCREW	SCHLITZSCHRAUBE	C- 752645-020V
					C- 752646-020V

PART NO	LAST ECN	BENÄMNING	TITLE	BENENNUNG	GROUP NO
312145-0238		SPÅRSKRUV MFS3X40RFR	SLOTTED HEAD SCREW	SCHLITZSCHRAUBE	C- 256095-050V C- 272343-050V
312145-0285		SPÅRSKRUV MFS4X6RFR	SLOTTED HEAD SCREW	SCHLITZSCHRAUBE	C- 752645-020V C- 752646-020V
312145-0287		SPÅRSKRUV MFS4X8RFR	SLOTTED HEAD SCREW	SCHLITZSCHRAUBE	C- 272084-030V C- 751088-030V CR- 283606-020V
312145-0289		SPÅRSKRUV MFS4X10RFR	SLOTTED HEAD SCREW	SCHLITZSCHRAUBE	C- 905131-010V C- 554887-010V C- 456458-040V CR- 256204-050V CR- 256205-050V
312145-0291		SPÅRSKRUV MFS4X12RFR	SLOTTED HEAD SCREW	SCHLITZSCHRAUBE	C- 450101-010V C- 450101-020V C- 562680-010V C- 978259-010V C- 978443-010V C- 554890-010V C- 271442-030V C- 271443-030V CR- 256204-050V CR- 256205-050V CR- 256209-030V CR- 256210-030V C- 256843-060V C- 271513-060V C- 469535-010V C- 553657-010V C- 752042-010V RK- 978234-010V
312145-0293		SPÅRSKRUV MFS4X16RFR	SLOTTED HEAD SCREW	SCHLITZSCHRAUBE	C- 978259-010V C- 272084-030V C- 752645-020V C- 752646-020V
312145-0295		SPÅRSKRUV MFS4X20RFR	SLOTTED HEAD SCREW	SCHLITZSCHRAUBE	CR- 283607-030V
312145-0323		SPÅRSKRUV MFS5X8RFR	SLOTTED HEAD SCREW	SCHLITZSCHRAUBE	C- 752960-010V C- 752971-010V C- 456457-040V C- 271513-060V C- 751885-030V
312145-0325		SPÅRSKRUV MFS5X10RFR	SLOTTED HEAD SCREW	SCHLITZSCHRAUBE	RK- 978234-010V
312145-0327		SPÅRSKRUV MFS5X12RFR	SLOTTED HEAD SCREW	SCHLITZSCHRAUBE	CR- 283607-030V RK- 978234-010V
312145-0331		SPÅRSKRUV MFS5X20RFR	SLOTTED HEAD SCREW	SCHLITZSCHRAUBE	C- 295310-070V
312145-0335		SPÅRSKRUV MFS5X30RFR	SLOTTED HEAD SCREW	SCHLITZSCHRAUBE	CR- 548040-010V
312145-0339		SPÅRSKRUV MFS5X40RFR	SLOTTED HEAD SCREW	SCHLITZSCHRAUBE	C- 476349-030V
312145-0370		SPÅRSKRUV MFS6X20RFR	SLOTTED HEAD SCREW	SCHLITZSCHRAUBE	C- 544389-010V
312145-0376		SPÅRSKRUV MFS6X35RFR	SLOTTED HEAD SCREW	SCHLITZSCHRAUBE	C- 978239-020V C- 978240-020V C- 978241-020V
312145-0380		SPÅRSKRUV MFS6X50RFR	SLOTTED HEAD SCREW	SCHLITZSCHRAUBE	RK- 529345-010V
312145-0453		SPÅRSKRUV MFS8X25RFR	SLOTTED HEAD SCREW	SCHLITZSCHRAUBE	C- 257146-020V
312145-0463		SPÅRSKRUV MFS8X60RFR	SCREW	SCHRAUBE	C- 456103-010V
312145-0467		SPÅRSKRUV MFS8X80RFR	SCREW	SCHRAUBE	C- 456560-010V
312151-0220		SKRUV MF6S3X6FZB	SCREW	SCHRAUBE	C- 229400-070V
312151-0222		SKRUV MF6S3X8FZB	SCREW	SCHRAUBE	C- 556667-010V
312151-0224		SKRUV MF6S3X10FZB	SCREW	SCHRAUBE	C- 556662-010V
312151-0287		SKRUV MF6S4X8FZB	SCREW	SCHRAUBE	C- 484984-020V C- 256197-050V C- 491787-020V C- 491788-020V C- 491814-020V C- 491815-020V C- 751689-010V
312151-0364		SKRUV MF6S6X10FZB	SCREW	SCHRAUBE	C- 256197-050V C- 491814-020V C- 491815-020V
312151-0366		SKRUV MF6S6X12FZB	SCREW	SCHRAUBE	C- 256806-030V
312151-0460		SKRUV MF6S8X45FZB	SCREW	SCHRAUBE	C- 76411-010V
312155-0289		SKRUV MF6S4X10RFR	SCREW	SCHRAUBE	C- 271115-040V CR- 283606-020V
312155-0291		SKRUV MF6S4X12RFR	SCREW	SCHRAUBE	C- 544420-010V C- 550714-010V C- 752645-020V C- 752646-020V C- 752913-010V C- 752914-010V
312155-0295		SKRUV MF6S4X20RFR	SCREW	SCHRAUBE	CR- 256436-060V
312155-0297		SKRUV MF6S4X25RFR	SCREW	SCHRAUBE	C- 271866-060V
312155-0299		SKRUV MF6S 4X30 A4 8	SCREW	SCHRAUBE	C- 441798-010V C- 441811-010V
312155-0323		SKRUV MF6S5X8RFR	SCREW	SCHRAUBE	C- 794213-010V C- 794243-010V C- 794244-010V C- 924991-010V
312155-0325		SKRUV MF6S5X10RFR	SCREW	SCHRAUBE	C- 484984-020V C- 544420-010V C- 456100-030V C- 457866-030V
312155-0327		SKRUV MF6S5X12RFR	SCREW	SCHRAUBE	C- 554888-010V CR- 256204-050V CR- 256205-050V

PART NO	LAST ECN	BENÄMNING	TITLE	BENENNUNG	GROUP NO
					C- 752645-020V C- 752646-020V C- 752913-010V C- 752914-010V C- 556723-010V C- 469736-040V C- 484984-020V C- 562679-010V C- 550714-010V C- 271442-030V C- 271443-030V C- 491570-020V C- 491579-020V C- 497534-030V C- 546285-010V
312155-0329		SKRUV MF6S5X16RFR	SCREW	SCHRAUBE	
312155-0331		SKRUV MF6S5X20RFR	SCREW	SCHRAUBE	RK- 978234-010V C- 484984-020V
312155-0364		SKRUV MF6S6X10RFR	SCREW	SCHRAUBE	C- 924167-010V C- 476859-020V C- 456180-010V C- 256084-050V
312155-0366		SKRUV MF6S6X12RFR	SCREW	SCHRAUBE	C- 751406-010V
312155-0366		SKRUV MF6S6X12RFR	SCREW	SCHRAUBE	C- 272473-010V C- 484858-030V C- 484984-020V C- 547756-010V C- 978192-020V C- 570079-020V C- 567681-020V C- 554859-010V C- 456100-030V C- 271468-040V C- 271469-020V C- 752628-020V C- 533844-010V C- 552030-010V
312155-0368		SKRUV MF6S6X16RFR	SCREW	SCHRAUBE	C- 978192-020V C- 271934-030V C- 272084-030V C- 550714-010V C- 554891-010V C- 271115-040V C- 271513-060V C- 457937-020V C- 469173-010V
312155-0370		SKRUV MF6S6X20RFR	SCREW	SCHRAUBE	C- 978367-010V C- 544536-010V C- 476859-020V C- 550757-020V C- 456103-010V C- 499082-010V C- 457857-030V
312155-0372		SKRUV MF6S6X25RFR	SCREW	SCHRAUBE	C- 544536-010V C- 450125-010V
312155-0374		SKRUV MF6S6X30RFR	SCREW	SCHRAUBE	C- 271115-040V C- 271469-020V C- 256084-050V
312155-0376		SKRUV MF6X35RFR	SCREW	SCHRAUBE	C- 457853-030V
312155-0378		SKRUV MF6S6X40RFR	SCREW	SCHRAUBE	C- 490600-040V C- 469736-040V
312155-0447		SKRUV MF6S8X12RFR	SCREW	SCHRAUBE	C- 271115-040V C- 560670-010V C- 560672-010V
312155-0449		SKRUV MF6S8X16RFR	SCREW	SCHRAUBE	C- 256173-050V C- 751928-020V C- 752960-010V C- 752971-010V C- 469736-040V CR- 256436-060V C- 456457-040V C- 456458-040V C- 572306-010V C- 751860-020V CR- 256436-060V
312155-0451		SKRUV MF6S8X20RFR	SCREW	SCHRAUBE	C- 271469-020V C- 566318-010V C- 752960-010V C- 752971-010V C- 484950-020V
312155-0453		SKRUV MF6S8X25RFR	SCREW	SCHRAUBE	C- 456457-040V C- 751928-020V
312155-0453		SKRUV MF6S8X25RFR	SCREW	SCHRAUBE	C- 456458-040V C- 751860-020V
312155-0455		SKRUV MF6S8X30RFR	SCREW	SCHRAUBE	C- 752960-010V C- 752971-010V C- 484950-020V C- 456457-040V
312155-0457		SKRUV MF6S8X35RFR	SCREW	SCHRAUBE	C- 271115-040V C- 550711-020V C- 752645-020V C- 752646-020V C- 752913-010V

PART NO	LAST ECN	BENÄMNING	TITLE	BENENNUNG	GROUP NO
					C- 752914-010V
					C- 552030-010V
312155-0461		SKRUV MF6S8X50RFR	SCREW	SCHRAUBE	C- 271114-050V
312155-0493		SKRUV MF6S10X25RFR	SCREW	SCHRAUBE	C- 548057-010V
312155-0532		SKRUV MF6S12X20RFR	SCREW	SCHRAUBE	C- 272560-060V
					C- 794243-010V
312155-0538		SKRUV MF6S12X35RFR	SCREW	SCHRAUBE	C- 794213-010V
312155-0540		SKRUV MS6S12X40RFR	SCREW	SCHRAUBE	C- 924991-010V
312155-0544		SKRUV MF6S12X60RFR	SCREW	SCHRAUBE	C- 562656-010V
312165-0325		SPÅRSKRUV MKFS5X10RFR	SLOTTED HEAD SCREW	SCHLITZSCHRAUBE	C- 271562-080V
312165-0329		SPÅRSKRUV MKFS5X16RFR	SLOTTED HEAD SCREW	SCHLITZSCHRAUBE	C- 256873-040V
312165-0366		SPÅRSKRUV MKFS6X12RFR	SLOTTED HEAD SCREW	SCHLITZSCHRAUBE	RK- 978212-010V
312180-0374		PASSKRUV	REAMED BOLT	PASSCHRAUBE	C- 544420-010V
312180-0449		PASSKRUV	REAMED BOLT	PASSCHRAUBE	C- 556723-010V
312180-0459		PASSKRUV	REAMED BOLT	PASSCHRAUBE	C- 76447-010V
312180-0489		PASSKRUV	REAMED BOLT	PASSCHRAUBE	C- 237776-040V
312180-0495		PASSKRUV	REAMED BOLT	PASSCHRAUBE	C- 283604-020V
312205-0107		SKRUV U6S1/4X13RFR	SCREW	SCHRAUBE	C- 735265-010V
					C- 794178-010V
312241-0191		SPÅRSKRUV UFS3/8X19FZB	SLOTTED HEAD SCREW	SCHLITZSCHRAUBE	C- 905131-010V
312293-0106		EXP.BULT M8X10 L	EXPANSION BOLT	EXPANDERBOLZEN	C- 476189-010V
312303-0374		PINNSKRUV MPS 6X25 RFR	STUD SCREW	STIFTBOLZEN	C- 272765-070V
					C- 794128-010V
312303-0548		PINNSKRUV MPS 12X70 RFR	STUD SCREW	STIFTBOLZEN	C- 256410-060V
312306-0546		STOPPSKRUV P6SS12X70FZB	STOP SCREW	SPERRSCHRAUBE	C- 449969-010V
312311-0219		STOPPSKRUV T6SS 3X5 FZB	STOP SCREW	SPERRSCHRAUBE	C- 566282-010V
312311-0321		STOPPSKRUV T6SS5X6FZB	STOP SCREW	SPERRSCHRAUBE	C- 491814-020V
					C- 491815-020V
312311-0325		STOPPSKRUV T6SS5X10FZB	STOP SCREW	SPERRSCHRAUBE	C- 554886-010V
312311-0327		STOPPSKRUV T6SS5X12FZB	STOP SCREW	SPERRSCHRAUBE	CR- 256712-050V
312311-0366		STOPPSKRUV T6SS6X12FZB	STOP SCREW	SPERRSCHRAUBE	C- 271128-040V
312311-0368		STOPPSKRUV T6SS6X16FZB	STOP SCREW	SPERRSCHRAUBE	C- 554360-020V
312316-0283		STOPPSKRUV SK6SS4X4FZB	STOP SCREW	SPERRSCHRAUBE	C- 533844-010V
					C- 229400-070V
312316-0284		STOPPSKRUV SK6SS4X5FZB	STOP SCREW	SPERRSCHRAUBE	C- 752029-010V
312316-0287		STOPPSKRUV SK6SS4X8FZB	STOP SCREW	SPERRSCHRAUBE	C- 37877-030V
312316-0289		STOPPSKRUV SK6SS4X10FZB	STOP SCREW	SPERRSCHRAUBE	C- 556662-010V
312316-0291		STOPPSKRUV SK6SS4X12FZB	STOP SCREW	SPERRSCHRAUBE	C- 556662-010V
312316-0321		STOPPSKRUV SK6SS5X6FZB	STOP SCREW	SPERRSCHRAUBE	C- 450101-010V
					C- 450101-020V
312316-0362		STOPPSKRUV SK6SS6X8FZB	STOP SCREW	SPERRSCHRAUBE	C- 751689-010V
					C- 229400-070V
312316-0443		STOPPSKRUV SK6SS8X8FZB	STOP SCREW	SPERRSCHRAUBE	C- 237776-040V
312316-0528		STOPPSKRUV SK6SS12X12FZB	STOP SCREW	SPERRSCHRAUBE	C- 752628-020V
					C- 552030-010V
312318-0218		STOPPSKRUV SK6SS3X4RFR	STOP SCREW	SPERRSCHRAUBE	CR- 548331-010V
312318-0219		STOPPSKRUV SK6SS3X5RFR	STOP SCREW	SPERRSCHRAUBE	C- 565417-010V
312318-0220		STOPPSKRUV SK6SS3X6RFR	STOP SCREW	SPERRSCHRAUBE	C- 556672-010V
					C- 469736-040V
312318-0220		STOPPSKRUV SK6SS3X6RFR	STOP SCREW	SPERRSCHRAUBE	C- 905331-010V
					C- 566280-010V
312318-0283		STOPPSKRUV SK6SS4X4RFR	STOP SCREW	SPERRSCHRAUBE	C- 752957-010V
					C- 752628-020V
					C- 566280-010V
312318-0285		STOPPSKRUV SK6SS4X6RFR	STOP SCREW	SPERRSCHRAUBE	C- 237776-040V
					C- 246388-060V
					C- 441486-040V
					C- 456309-050V
					C- 546285-010V
					CR- 548331-010V
					C- 237776-040V
312318-0287		STOPPSKRUV SK6SS4X8RFR	STOP SCREW	SPERRSCHRAUBE	C- 256806-030V
					C- 752645-020V
					C- 752646-020V
					C- 752913-010V
					C- 752914-010V
					CR- 283606-020V
312318-0289		STOPPSKRUV SK6SS4X10RFR	STOP SCREW	SPERRSCHRAUBE	C- 566282-010V
312318-0291		STOPPSKRUV SK6SS4X12RFR	STOP SCREW	SPERRSCHRAUBE	C- 272343-050V
312318-0321		STOPPSKRUV SK6SS5X6RFR	STOP SCREW	SPERRSCHRAUBE	C- 752173-010V
					C- 456688-020V
					C- 752029-010V
					C- 256223-040V
					C- 295310-070V
					C- 272359-020V
					C- 533844-010V
					CR- 548331-010V
					C- 554360-020V
					C- 566280-010V
					C- 752029-010V
312318-0323		STOPPSKRUV SK6SS5X8RFR	STOP SCREW	SPERRSCHRAUBE	C- 271934-030V
					C- 751332-010V
					C- 469736-040V
					C- 484984-020V
					C- 905131-010V
					C- 564120-010V
					C- 295211-010V
					C- 554888-010V
					C- 295211-010V
					C- 272359-020V
					C- 752628-020V
					C- 469452-030V

PART NO	LAST ECN	BENÄMNING	TITLE	BENENNUNG	GROUP NO
					C- 751702-010V C- 751800-020V C- 476349-030V C- 546285-010V CR- 548331-010V C- 751332-010V C- 752030-010V C- 751332-010V C- 556723-010V
312318-0325		STOPPSKRUV SK6SS5X10RFR	STOP SCREW	SPERRSCHRAUBE	C- 283604-020V C- 554887-010V C- 272765-070V C- 560202-010V C- 752247-010V C- 752627-010V C- 752913-010V
312318-0325		STOPPSKRUV SK6SS5X10RFR	STOP SCREW	SPERRSCHRAUBE	C- 752914-010V C- 491976-020V
312318-0327		STOPPSKRUV SK6SS5X12RFR	STOP SCREW	SPERRSCHRAUBE	C- 484984-020V C- 272024-040V
312318-0360		STOPPSKRUV SK6SS6X6RFR	STOP SCREW	SPERRSCHRAUBE	C- 272084-030V C- 272473-010V C- 550711-020V C- 256951-050V C- 256952-050V C- 272359-020V C- 751691-010V C- 441000-050V
312318-0362		STOPPSKRUV SK6SS6X8RFR	STOP SCREW	SPERRSCHRAUBE	C- 752030-010V C- 271641-030V C- 271641-020V C- 283629-020V C- 736593-010V C- 564119-010V C- 564120-010V C- 572750-010V C- 554886-010V C- 256806-030V C- 295310-070V C- 271992-020V C- 456032-010V C- 752244-020V C- 752645-020V C- 752646-020V C- 752913-010V C- 752914-010V C- 272024-040V
312318-0364		STOPPSKRUV SK6SS6X10RFR	STOP SCREW	SPERRSCHRAUBE	C- 552030-010V C- 736600-020V C- 256202-050V C- 272028-060V C- 751088-030V C- 476349-030V C- 546285-010V C- 548057-010V
312318-0366		STOPPSKRUV SK6SS6X12RFR	STOP SCREW	SPERRSCHRAUBE	C- 736593-010V C- 564119-010V C- 564120-010V C- 554886-010V C- 554887-010V
312318-0368		STOPPSKRUV SK6SS6X16RFR	STOP SCREW	SPERRSCHRAUBE	C- 736593-010V C- 256951-050V C- 256952-050V C- 256014-060V C- 456309-050V C- 543143-010V
312318-0370		STOPPSKRUV SK6SS6X20RFR	STOP SCREW	SPERRSCHRAUBE	C- 564120-010V
312318-0372		STOPPSKRUV SK6SS6X25RFR	STOP SCREW	SPERRSCHRAUBE	C- 456309-050V
312318-0451		STOPPSKRUV SK6SS8X20RFR	STOP SCREW	SPERRSCHRAUBE	C- 456309-050V
312318-0487		STOPPSKRUV SK6SS10X12RFR	STOP SCREW	SPERRSCHRAUBE	C- 924662-010V
312401-0451		SKRUV VS8X20FZB	SCREW	SCHRAUBE	C- 75542-010V
312502-0120		DRIVSKRUV KDS0X5FNB	DRIVE SCREW	ANTRIEBSSSCHRAUBE	C- 491767-020V C- 271866-060V C- 752244-020V C- 978162-010V
312502-0120		DRIVSKRUV KDS0X5FNB	DRIVE SCREW	ANTRIEBSSSCHRAUBE	C- 295045-070V C- 978739-010V C- 978740-010V
312502-0169		DRIVSKRUV KDS2X5FNB	DRIVE SCREW	ANTRIEBSSSCHRAUBE	C- 552030-010V C- 232781-040V
312502-0221		DRIVSKRUV KDS4X6FNB	DRIVE SCREW	ANTRIEBSSSCHRAUBE	C- 491890-010V
312503-0221		DRIVSKRUV RXKB4X6,5FZB	DRIVE SCREW	ANTRIEBSSSCHRAUBE	C- 556667-010V
312503-0410		DRIVSKRUV RXKB10X13FZB	DRIVE SCREW	ANTRIEBSSSCHRAUBE	C- 256873-040V
312504-0221		RXS B4X6,5 A4	SCREW	SCHRAUBE	CR- 548331-010V
312504-0225		RXS B4X9,5	DRIVE SCREW	ANTRIEBSSSCHRAUBE	C- 562650-010V
312601-0310		MUTTER M6M3FZB	NUT	MUTTER	C- 229400-070V
312601-0312		MUTTER M6M4FZB	NUT	MUTTER	C- 232781-040V
312601-0314		MUTTER M6M5FZB	NUT	MUTTER	C- 76416-010V C- 232781-040V
312601-0316		MUTTER M6M6FZB	NUT	MUTTER	C- 499586-010V C- 794128-010V C- 751689-010V

PART NO	LAST ECN	BENÄMNING	TITLE	BENENNUNG	GROUP NO
312601-0318		MUTTER M6M8FZB	NUT	MUTTER	C- 229400-070V C- 469586-010V C- 256197-050V C- 491814-020V C- 491815-020V C- 794070-010V C- 794128-010V C- 978739-010V C- 978740-010V
312601-0320		MUTTER M6M10FZB	NUT	MUTTER	C- 76200-010V C- 469586-010V C- 456180-010V C- 271128-040V C- 479821-010V
312601-0322		MUTTER M6M12FZB	NUT	MUTTER	C- 76200-010V C- 794128-010V C- 751924-010V
312601-0324		MUTTER M6M16FZB	NUT	MUTTER	C- 37894-010V C- 491814-020V C- 491815-020V
312602-0312		MUTTER M6M4MSGFN	NUT	MUTTER	C- 533014-010V C- 572642-010V C- 572643-010V
312605-0310		MUTTER M6M3RFR	NUT	MUTTER	C- 271569-050V C- 556667-010V C- 37877-030V C- 469736-040V C- 529621-010V C- 736797-010V C- 794110-010V C- 794178-010V C- 736797-010V C- 794110-010V C- 794178-010V C- 554888-010V C- 571918-010V C- 441000-050V C- 256014-060V C- 256084-050V C- 546285-010V C- 548057-010V C- 550128-010V
312605-0312		MUTTER M6M4RFR	NUT	MUTTER	C- 456953-020V C- 924300-010V C- 924585-010V C- 924300-010V C- 924585-010V C- 924300-010V C- 924585-010V C- 794069-010V C- 978280-010V C- 550714-010V C- 554889-020V C- 554890-010V C- 256665-020V C- 256843-060V C- 272404-070V C- 469535-010V C- 441000-050V C- 295904-010V C- 256014-060V C- 272623-050V C- 469452-030V C- 469501-040V C- 751800-020V C- 457866-030V C- 457867-020V C- 469634-010V C- 548057-010V C- 491207-030V C- 553657-010V C- 751373-010V C- 752042-010V C- 543143-010V C- 795750-010V C- 924300-010V C- 924727-010V C- 924300-010V C- 924727-010V SP- 567189-010V
312605-0314		MUTTER M6M5RFR	NUT	MUTTER	C- 978280-010V C- 434074-030V C- 434774-030V C- 456953-020V C- 533014-010V C- 271261-050V C- 751478-020V C- 469736-040V C- 484984-020V C- 905331-010V C- 562679-010V C- 441535-010V

PART NO	LAST ECN	BENÄMNING	TITLE	BENENNUNG	GROUP NO
					C- 476189-010V
					C- 550714-010V
					C- 271442-030V
					C- 271443-030V
					C- 256806-030V
					C- 271513-060V
					C- 271866-060V
					C- 469535-010V
					C- 751885-030V
312605-0314		MUTTER M6M5RFR	NUT	MUTTER	C- 272343-050V
					C- 560202-010V
					C- 752627-010V
					C- 752628-020V
					C- 978162-010V
					C- 256014-060V
					C- 272025-030V
					C- 272407-020V
					C- 272560-060V
					C- 491570-020V
					C- 491579-020V
					C- 457937-020V
					C- 469634-010V
					C- 554346-010V
					C- 751373-010V
					C- 476189-010V
					C- 434774-030V
					C- 434074-030V
					C- 434774-030V
					C- 434074-030V
					C- 795750-010V
					RK- 978234-010V
312605-0316		MUTTER M6M6RFR	NUT	MUTTER	C- 533014-010V
					C- 752173-010V
					CR- 31390-010V
					CR- 31390-011V
					C- 271934-030V
					C- 751968-010V
					C- 751332-010V
					C- 283604-020V
					C- 450125-010V
					C- 469736-040V
					C- 484984-020V
					C- 566282-010V
					C- 735261-010V
					C- 735265-010V
					C- 736593-010V
					C- 735261-010V
					C- 735265-010V
					C- 736593-010V
					C- 735261-010V
					C- 735265-010V
					C- 736593-010V
					C- 735261-010V
					C- 735265-010V
					C- 736593-010V
					C- 735261-010V
					C- 735265-010V
					C- 736593-010V
					C- 735261-010V
					C- 735265-010V
					C- 736593-010V
					C- 562678-010V
					C- 562680-010V
					C- 736797-010V
					C- 794004-010V
					C- 794069-010V
					C- 794145-010V
					C- 794178-010V
312605-0316		MUTTER M6M6RFR	NUT	MUTTER	C- 736797-010V
					C- 794004-010V
					C- 794069-010V
					C- 794145-010V
					C- 794178-010V
					C- 564120-010V
					CR- 256436-060V
					C- 237776-040V
					C- 550714-010V
					C- 564307-010V
					C- 550757-020V
					C- 554859-010V
					C- 554889-020V
					C- 554891-010V
					CR- 256436-060V
					C- 271114-050V
					C- 271115-040V
					C- 272765-070V
					C- 456455-030V
					C- 456560-010V
					C- 456588-030V
					C- 271866-060V
					C- 490761-010V
					C- 246388-060V

PART NO	LAST ECN	BENÄMNING	TITLE	BENENNUNG	GROUP NO
					C- 295891-030V C- 441000-050V C- 456032-010V C- 752628-020V C- 752645-020V C- 752646-020V C- 752889-010V C- 752913-010V C- 752914-010V C- 978179-010V C- 295262-060V C- 272004-040V C- 272021-060V C- 272025-030V C- 272028-060V C- 456309-050V C- 456976-050V C- 469374-040V CR- 283605-010V C- 456679-010V C- 457853-030V C- 457856-020V C- 457857-030V C- 457867-020V C- 490600-040V C- 490610-040V C- 536859-020V C- 546285-010V C- 548057-010V CR- 548331-010V C- 554346-010V C- 566280-010V C- 735031-010V C- 735183-020V
312605-0316		MUTTER M6M6RFR	NUT	MUTTER	C- 491207-030V C- 751398-020V C- 751406-010V C- 751410-010V C- 229400-070V C- 237776-040V C- 751332-010V C- 752030-010V C- 751718-010V C- 751332-010V C- 556723-010V C- 795750-010V C- 924329-010V C- 924662-010V RK- 978212-010V
312605-0318		MUTTER M6M8RFR	NUT	MUTTER	C- 978740-010V C- 434074-030V C- 434774-030V RK- 529345-010V RK- 532210-010V C- 566318-010V C- 751928-020V C- 752960-010V C- 752971-010V C- 77165-010V C- 563740-010V C- 76492-010V C- 450101-010V C- 450101-020V C- 283604-020V C- 450125-010V C- 469736-040V C- 484858-030V C- 484950-020V C- 547756-010V C- 566282-010V C- 529933-010V C- 529933-020V C- 529933-010V C- 529933-020V C- 529933-010V C- 529933-020V C- 794178-010V C- 794271-010V C- 794178-010V C- 794271-010V C- 237776-040V C- 476189-010V C- 554885-010V C- 554886-010V C- 554888-010V C- 554891-010V C- 550711-020V C- 456180-010V C- 456457-040V C- 456458-040V C- 456459-040V C- 456460-040V

PART NO	LAST ECN	BENÄMNING	TITLE	BENENNUNG	GROUP NO
312605-0318		MUTTER M6M8RFR	NUT	MUTTER	C- 572306-010V C- 751860-020V C- 751900-010V CR- 256204-050V CR- 256205-050V C- 256222-020V C- 257146-020V C- 246388-060V C- 272343-050V C- 295891-030V C- 456032-010V C- 752244-020V C- 752628-020V C- 978162-010V C- 256014-060V C- 256055-060V C- 256084-050V C- 441307-030V C- 456309-050V C- 469091-030V C- 469501-040V C- 751800-020V CR- 283605-010V C- 283626-040V C- 456679-010V C- 456696-030V C- 457853-030V C- 533844-010V C- 546285-010V CR- 548040-010V C- 554360-020V C- 237776-040V C- 476189-010V C- 434774-030V C- 434074-030V C- 434774-030V C- 434074-030V C- 556723-010V C- 752958-010V C- 752959-010V
312605-0320		MUTTER M6M10RFR	NUT	MUTTER	C- 751928-020V C- 271454-020V C- 476080-020V C- 736360-020V C- 560670-010V C- 560671-010V C- 560672-010V CR- 256436-060V CR- 256712-050V CR- 256436-060V CR- 256712-050V CR- 256436-060V CR- 256712-050V C- 237776-040V C- 256806-030V CR- 256436-060V CR- 256712-050V C- 256843-060V C- 295891-030V C- 256014-060V C- 272024-040V C- 456309-050V C- 751800-020V C- 283626-040V C- 566280-010V C- 751393-010V C- 237776-040V C- 905130-010V C- 905541-010V C- 556723-010V C- 752958-010V C- 752959-010V
312605-0322		MUTTER M6M12RFR	NUT	MUTTER	C- 272084-030V C- 491871-010V C- 567034-010V C- 905331-010V C- 794004-010V C- 560670-010V C- 560671-010V C- 560672-010V C- 572306-010V C- 256410-060V C- 456555-040V RK- 520069-010V
312605-0326		MUTTER M6M20RFR	NUT	MUTTER	C- 752957-010V
312605-0328		MUTTER M6M24RFR	NUT	MUTTER	C- 550714-010V
312621-0318		MUTTER ML6M8FZB	NUT	MUTTER	C- 272084-030V C- 978179-010V
312621-0322		MUTTER ML6M12FZB	NUT	MUTTER	C- 554360-020V C- 491787-020V
312621-0324		MUTTER ML6M16FZB	NUT	MUTTER	C- 491788-020V C- 491787-020V

PART NO	LAST ECN	BENÄMNING	TITLE	BENENNUNG	GROUP NO
312625-0316		MUTTER ML6M 6	NUT	MUTTER	C- 491788-020V C- 562678-010V C- 550757-020V C- 256223-040V C- 554360-020V
312630-0320		MUTTER M6M10X1FZB	NUT	MUTTER	CR- 294695-010V
312631-0322		MUTTER M6M12X1,5FZB	NUT	MUTTER	C- 283604-020V CR- 548040-010V
312631-0324		MUTTER M6M16X1,5FZB	NUT	MUTTER	C- 272404-070V CR- 283605-010V
312635-0320		MUTTER M6M 10X1 RFR	NUT	MUTTER	C- 283612-020V C- 554360-020V
312701-0318		HATTMUTTER MHM8 FZB	CAP NUT	HAUBENMUTTER	C- 7003-010V
312705-0312		HATTMUTTERMHM 4 A2	CAP NUT	HAUBENMUTTER	C- 752960-010V C- 752971-010V
312705-0314		HATTMUTTERMHM 5 A2	CAP NUT	HAUBENMUTTER	C- 456457-040V C- 441535-010V
312705-0316		HATTMUTTERMHM 6 A2	CAP NUT	HAUBENMUTTER	C- 751860-020V C- 271114-050V C- 456103-010V C- 978179-010V C- 499082-010V C- 469374-040V
312705-0318		HATTMUTTERMHM 8 A2	CAP NUT	HAUBENMUTTER	C- 556723-010V C- 751860-020V C- 271114-050V
312705-0320		HATTMUTTERMHM 10 A2	CAP NUT	HAUBENMUTTER	C- 546285-010V C- 456103-010V
312705-0324		HATTMUTTERMHM 16 A2	CAP NUT	HAUBENMUTTER	C- 550711-020V
312711-0120		VINGMUTTER VM10FZB	WING NUT	FLUEGELMUTTER	C- 75542-010V
312805-0100		RUNDMUTTER KM0	ROUND NUT	RUNDMUTTER	C- 554360-020V
312805-0102		RUNDMUTTER KM2	ROUND NUT	RUNDMUTTER	C- 295310-070V C- 751718-010V
312805-0103		RUNDMUTTER KM3	ROUND NUT	RUNDMUTTER	C- 295310-070V C- 751718-010V
312805-0104		RUNDMUTTER KM4	ROUND NUT	RUNDMUTTER	CR- 548040-010V
312805-0106		RUNDMUTTER KM6	ROUND NUT	RUNDMUTTER	C- 491846-020V
312810-0314		LÅSMUTTER 5FZB	LOCK NUT	KONTRAMUTTER	C- 256665-020V
312810-0322		LÅSMUTTER 12FZB	LOCK NUT	KONTRAMUTTER	C- 560846-010V
312810-0324		LÅSMUTTER 16FZB	LOCK NUT	KONTRAMUTTER	C- 491846-020V C- 560846-010V
312811-0316		LÅSMUTTER M6RFR	LOCK NUT	KONTRAMUTTER	C- 752495-010V C- 441000-050V C- 751406-010V
312811-0318		LÅSMUTTER M8RFR	LOCK NUT	KONTRAMUTTER	C- 751393-010V C- 256199-040V C- 256951-050V C- 256952-050V
312811-0320		LÅSMUTTER M10RFR	LOCK NUT	KONTRAMUTTER	C- 441000-050V C- 256199-040V C- 256223-040V
312811-0322		LÅSMUTTER M12RFR	LOCK NUT	KONTRAMUTTER	C- 256197-050V
312811-0324		LÅSMUTTER M16RFR	LOCK NUT	KONTRAMUTTER	C- 256197-050V C- 491814-020V
312811-0326		LÅSMUTTER M20RFR	LOCK NUT	KONTRAMUTTER	C- 491815-020V C- 256197-050V C- 491814-020V
312812-0310		LÅSMUTTER A2-M3RFR	LOCK NUT	KONTRAMUTTER	C- 491815-020V C- 978239-020V C- 978240-020V C- 978241-020V
312812-0312		LÅSMUTTER A2-M4RFR	LOCK NUT	KONTRAMUTTER	C- 752645-020V C- 752646-020V
312812-0314		LÅSMUTTER A2-M5RFR	LOCK NUT	KONTRAMUTTER	C- 752645-020V C- 752646-020V C- 751968-010V C- 469736-040V C- 978179-010V C- 491570-020V
312812-0316		LÅSMUTTER A2-M6RFR	LOCK NUT	KONTRAMUTTER	C- 491579-020V RK- 529345-010V C- 978239-020V C- 978240-020V C- 978241-020V C- 458383-020V C- 458384-010V C- 544536-010V C- 736529-010V C- 736865-010V C- 736529-010V C- 736865-010V C- 736529-010V C- 736865-010V C- 978259-010V C- 978443-010V C- 271115-040V
312812-0316		LÅSMUTTER A2-M6RFR	LOCK NUT	KONTRAMUTTER	C- 752244-020V C- 491976-020V C- 544536-010V C- 978367-010V RK- 978238-010V C- 978259-010V

PART NO	LAST ECN	BENÄMNING	TITLE	BENENNUNG	GROUP NO
312812-0318		LÅSMUTTER A2-M8RFR	LOCK NUT	KONTRAMUTTER	C- 272084-030V C- 736600-020V C- 752244-020V C- 752645-020V C- 752646-020V C- 978162-010V C- 469452-030V C- 491976-020V
312812-0320		LÅSMUTTER A2-M10RFR	LOCK NUT	KONTRAMUTTER	C- 572750-010V
312812-0326		LÅSMUTTER A2-M20RFR	LOCK NUT	KONTRAMUTTER	C- 978239-020V C- 978240-020V C- 978241-020V
312901-0324		MUTTER M6M16VFZB	NUT	MUTTER	C- 491814-020V C- 491815-020V C- 560846-010V
312902-0318		MUTTER M6M8VRFR	NUT	MUTTER	C- 564119-010V C- 752049-010V
312902-0320		MUTTER M6M10VRFR	NUT	MUTTER	C- 554360-020V
312910-0113		GÄNGINSATS M5X1,0D	THREADED INSERT	GEWINDEEINSATZ	C- 556672-010V
312923-0122		NITMUTTER FO M5X11,6 RFR	NUT	MUTTER	C- 271513-060V C- 751885-030V
312923-0131		NITMUTTER FO M6X15,0RFR	NUT	MUTTER	C- 751885-030V
315101-0136		BRICKA BRB4,3X8FZB	WASHER	SCHEIBE	C- 293684-020V C- 293685-020V C- 256197-050V C- 491814-020V C- 491815-020V C- 441850-040V C- 752784-010V C- 752645-020V C- 752646-020V C- 232781-040V C- 293685-020V C- 293684-020V C- 293685-020V C- 293684-020V
315101-0146		BRICKA BRB5,3X10FZB	WASHER	SCHEIBE	C- 293684-020V C- 293685-020V C- 450101-010V C- 450101-020V C- 752029-010V C- 271562-080V C- 256202-050V C- 491787-020V C- 491788-020V C- 491814-020V C- 491815-020V C- 572760-010V C- 229400-070V C- 232781-040V C- 752029-010V C- 293685-020V C- 293684-020V C- 293685-020V
315101-0146		BRICKA BRB5,3X10FZB	WASHER	SCHEIBE	C- 293684-020V C- 978739-010V C- 456757-020V C- 456882-010V
315101-0153		BRICKA BRB6,4X12FZB	WASHER	SCHEIBE	C- 556662-010V C- 271635-030V C- 751928-020V C- 491650-010V C- 458383-020V C- 458384-010V C- 456827-020V C- 256173-050V C- 256197-050V C- 491787-020V C- 491788-020V C- 491814-020V C- 491815-020V C- 271866-060V C- 794128-010V C- 751689-010V C- 229400-070V C- 232781-040V C- 479821-010V C- 978739-010V
315101-0165		BRICKA BRB8,4X16FZB	WASHER	SCHEIBE	C- 256197-050V C- 256806-030V C- 491894-010V C- 794070-010V C- 794128-010V C- 479821-010V C- 978739-010V C- 978740-010V
315101-0173		BRICKA BRB10,5X22FZB	WASHER	SCHEIBE	C- 256197-050V C- 256202-050V C- 491814-020V C- 491815-020V C- 794070-010V
315101-0178		BRICKA BRB13X24FZB	WASHER	SCHEIBE	C- 256410-060V

PART NO	LAST ECN	BENÄMNING	TITLE	BENENNUNG	GROUP NO
					C- 256438-020V
					C- 794070-010V
315101-0186		BRICKA BRB17X30FZB	WASHER	SCHEIBE	C- 256197-050V
					C- 491814-020V
					C- 491815-020V
315103-0136		BRICKA BRB4,3X8MSGFN	WASHER	SCHEIBE	C- 533014-010V
315105-0124		BRICKA BRB3,2X6RFR	WASHER	SCHEIBE	C- 272084-030V
					C- 441534-010V
					C- 441535-010V
					C- 469736-040V
					C- 529621-010V
					C- 560858-010V
					C- 736529-010V
					C- 529621-010V
					C- 560858-010V
					C- 529621-010V
					C- 560858-010V
					C- 736529-010V
					C- 529621-010V
					C- 560858-010V
315105-0124		BRICKA BRB3,2X6RFR	WASHER	SCHEIBE	C- 529621-010V
					C- 560858-010V
					C- 736529-010V
					C- 529621-010V
					C- 560858-010V
					C- 736797-010V
					C- 794110-010V
					C- 794178-010V
					C- 736797-010V
					C- 794110-010V
					C- 794178-010V
					C- 441535-010V
					C- 550714-010V
					C- 554887-010V
					C- 554888-010V
					C- 554889-020V
					C- 554890-010V
					C- 571918-010V
					C- 469535-010V
					C- 272343-050V
					C- 441000-050V
					C- 752628-020V
					C- 752645-020V
					C- 752646-020V
					C- 256014-060V
					C- 256084-050V
					C- 272021-060V
					C- 272560-060V
					C- 457867-020V
					C- 546285-010V
					CR- 548331-010V
					C- 550128-010V
					C- 554341-010V
					C- 554346-010V
					C- 554360-020V
					C- 566280-010V
					C- 553657-010V
					C- 441535-010V
					C- 752042-010V
					C- 441535-010V
					C- 556723-010V
					C- 924991-010V
					C- 924662-010V
315105-0136		BRICKA BRB4,3X8RFR	WASHER	SCHEIBE	C- 924991-010V
					C- 456953-020V
					C- 491767-020V
					C- 752960-010V
					C- 752971-010V
					C- 37877-030V
					C- 271626-030V
					C- 37877-030V
					C- 271626-030V
					C- 271641-020V
					C- 272084-030V
					C- 456951-010V
					C- 469736-040V
					C- 484984-020V
					C- 905131-010V
					C- 905331-010V
315105-0136		BRICKA BRB4,3X8RFR	WASHER	SCHEIBE	C- 924300-010V
					C- 924585-010V
					C- 924300-010V
					C- 924585-010V
					C- 924300-010V
					C- 924585-010V
					C- 562678-010V
					C- 794069-010V
					C- 794178-010V
					C- 794179-010V
					C- 794069-010V
					C- 794178-010V
					C- 794179-010V

PART NO	LAST ECN	BENÄMNING		TITLE	BENENNUNG	GROUP NO
						C- 978280-010V C- 550714-010V C- 554889-020V C- 554890-010V C- 554891-010V C- 271562-080V C- 456180-010V C- 456457-040V CR- 256214-040V C- 272765-070V C- 271569-050V C- 469535-010V C- 295891-030V C- 441000-050V C- 456935-030V C- 752628-020V C- 752645-020V C- 752646-020V C- 752898-010V C- 256014-060V C- 272560-060V C- 272623-050V C- 441486-040V C- 469452-030V CR- 283606-020V C- 457856-020V C- 457866-030V C- 457867-020V C- 469173-010V C- 490610-040V C- 497534-030V C- 546285-010V C- 548057-010V CR- 548331-010V C- 552030-010V C- 554341-010V C- 554346-010V C- 554360-020V C- 553657-010V C- 751373-010V C- 752042-010V C- 543143-010V C- 794213-010V C- 794243-010V C- 556723-010V C- 795750-010V
315105-0136		BRICKA	BRB4,3X8RFR	WASHER	SCHEIBE	C- 924300-010V C- 924727-010V C- 924991-010V C- 924300-010V C- 924727-010V C- 924991-010V SP- 567189-010V RK- 978234-010V
315105-0146		BRICKA	BRB5,3X10RFR	WASHER	SCHEIBE	C- 978280-010V C- 434074-030V C- 434774-030V C- 456953-020V C- 533014-010V C- 752960-010V C- 752971-010V C- 295883-050V C- 271261-050V C- 271641-030V C- 271641-020V C- 272084-030V C- 751478-020V C- 751968-010V C- 441534-010V C- 283604-020V C- 456688-020V C- 469736-040V C- 484858-030V C- 484950-020V C- 484984-020V C- 547756-010V C- 544420-010V C- 566282-010V C- 905131-010V C- 905331-010V C- 562679-010V C- 736360-020V C- 736797-010V C- 794004-010V C- 794145-010V C- 736360-020V C- 736797-010V C- 794004-010V C- 794145-010V C- 441535-010V C- 978258-020V C- 978442-020V

PART NO	LAST ECN	BENÄMNING	TITLE	BENENNUNG	GROUP NO
					CR- 256547-040V C- 237776-040V C- 476189-010V C- 550714-010V C- 554885-010V C- 554888-010V C- 554889-020V C- 256665-020V C- 271442-030V C- 271443-030V C- 456100-030V C- 456180-010V C- 456457-040V C- 751860-020V
315105-0146		BRICKA BRB5,3X10RFR	WASHER	SCHEIBE	C- 256806-030V CR- 256214-040V C- 572642-010V C- 572643-010V C- 752671-010V C- 752672-010V CR- 256547-040V C- 271115-040V C- 456103-010V C- 456560-010V C- 491846-020V C- 491850-010V C- 256873-040V C- 271513-060V C- 751691-010V C- 751885-030V C- 272408-050V C- 295891-030V C- 441000-050V C- 456032-010V C- 752645-020V C- 752646-020V C- 978162-010V C- 978179-010V C- 256014-060V C- 271181-040V C- 272025-030V C- 272028-060V C- 272407-020V C- 272560-060V C- 491976-020V C- 751800-020V CR- 283605-010V CR- 283607-030V C- 283612-020V C- 456696-030V C- 457853-030V C- 457937-020V C- 469173-010V C- 469634-010V C- 490600-040V C- 546285-010V CR- 548040-010V C- 548057-010V CR- 548331-010V C- 554346-010V C- 554360-020V C- 237776-040V C- 476189-010V C- 434774-030V C- 434074-030V C- 434774-030V C- 434074-030V C- 556723-010V C- 795750-010V C- 924662-010V C- 978367-010V RK- 978234-010V
315105-0146		BRICKA BRB5,3X10RFR	WASHER	SCHEIBE	RK- 978238-010V RK- 978234-010V RK- 978238-010V RK- 978234-010V RK- 978238-010V C- 978258-020V C- 469118-020V
315105-0153		BRICKA BRB6,4X12RFR	WASHER	SCHEIBE	C- 76291-010V C- 491767-020V RK- 529345-010V C- 533014-010V C- 978239-020V C- 978240-020V C- 978241-020V C- 752957-010V CR- 31390-010V CR- 31390-011V C- 490912-010V C- 271261-050V C- 37877-030V

PART NO	LAST ECN	BENÄMNING	TITLE	BENENNUNG	GROUP NO
					C- 271934-030V
					C- 272084-030V
					C- 751478-020V
					C- 751968-010V
					C- 751332-010V
					C- 476859-020V
					C- 469736-040V
					C- 484858-030V
					C- 484950-020V
					C- 484984-020V
					C- 544420-010V
					C- 544389-010V
					C- 539375-010V
					C- 550743-010V
					C- 283629-020V
					C- 566282-010V
					C- 905131-010V
					C- 905331-010V
					C- 735261-010V
					C- 735265-010V
					C- 735270-010V
					C- 735261-010V
					C- 735265-010V
					C- 924330-010V
					C- 735261-010V
					C- 735265-010V
					C- 735270-010V
					C- 735261-010V
					C- 735265-010V
					C- 924330-010V
					C- 735261-010V
					C- 735265-010V
					C- 735270-010V
					C- 735261-010V
					C- 735265-010V
					C- 924330-010V
					C- 562678-010V
					C- 562680-010V
					C- 565393-010V
315105-0153		BRICKA BRB6,4X12RFR	WASHER	SCHEIBE	C- 736360-020V
					C- 736797-010V
					C- 794004-010V
					C- 794069-010V
					C- 794092-010V
					C- 794145-010V
					C- 794178-010V
					C- 794179-010V
					C- 794245-010V
					C- 736360-020V
					C- 736797-010V
					C- 794004-010V
					C- 794069-010V
					C- 794092-010V
					C- 794145-010V
					C- 794178-010V
					C- 794179-010V
					C- 794245-010V
					C- 564119-010V
					C- 564120-010V
					C- 752029-010V
					C- 978280-010V
					CR- 256547-040V
					CR- 256712-050V
					C- 295211-010V
					C- 295218-010V
					CR- 256547-040V
					CR- 256712-050V
					C- 295211-010V
					C- 295218-010V
					CR- 256547-040V
					CR- 256712-050V
					C- 295211-010V
					C- 295218-010V
					C- 237776-040V
					C- 476189-010V
					C- 550714-010V
					C- 554886-010V
					C- 564307-010V
					C- 550757-020V
					C- 554859-010V
					C- 554887-010V
					C- 554888-010V
					C- 554889-020V
					C- 554891-010V
					C- 562650-010V
					C- 565402-010V
					C- 456100-030V
					C- 456180-010V
					C- 456458-040V
					C- 571918-010V
					C- 256806-030V
					C- 256206-020V

PART NO	LAST ECN	BENÄMNING	TITLE	BENENNUNG	GROUP NO
315105-0153		BRICKA BRB6,4X12RFR	WASHER	SCHEIBE	C- 256207-020V CR- 256212-050V CR- 256213-050V C- 256217-040V C- 256222-020V C- 256223-040V C- 752671-010V C- 752672-010V CR- 256547-040V CR- 256712-050V C- 271114-050V C- 271115-040V C- 272765-070V C- 295211-010V C- 295218-010V C- 295310-070V C- 441695-020V C- 456103-010V C- 456455-030V C- 456560-010V C- 491259-020V C- 271468-040V C- 271866-060V C- 272404-070V C- 469535-010V C- 490761-010V C- 491890-010V C- 751691-010V C- 246388-060V C- 272343-050V C- 272408-050V C- 295891-030V C- 441000-050V C- 456032-010V C- 456923-030V C- 752244-020V C- 752628-020V C- 752645-020V C- 752646-020V C- 752889-010V C- 752913-010V C- 752914-010V C- 978162-010V C- 978179-010V C- 295262-060V C- 499082-010V C- 256014-060V C- 256084-050V C- 256095-050V C- 272004-040V C- 272021-060V C- 272024-040V C- 272025-030V C- 272028-060V C- 272623-050V C- 456309-050V C- 456555-040V C- 456836-040V C- 456976-050V C- 469374-040V C- 469452-030V C- 469501-040V C- 469781-030V C- 491976-020V C- 751800-020V
315105-0153		BRICKA BRB6,4X12RFR	WASHER	SCHEIBE	CR- 283605-010V C- 283612-020V C- 283626-040V C- 456679-010V C- 456696-030V C- 457853-030V C- 457856-020V C- 457857-030V C- 457866-030V C- 457867-020V C- 457881-030V C- 457937-020V C- 469173-010V C- 469634-010V C- 469635-010V C- 476349-030V C- 490600-040V C- 490610-040V C- 497534-030V C- 533844-010V C- 536859-020V C- 546285-010V C- 547601-010V C- 548031-020V CR- 548040-010V C- 548057-010V CR- 548331-010V

PART NO	LAST ECN	BENÄMNING	TITLE	BENENNUNG	GROUP NO
					C- 550128-010V
					C- 552030-010V
					C- 554341-010V
					C- 554346-010V
					C- 554360-020V
					C- 566280-010V
					C- 735031-010V
					C- 735183-020V
					C- 491207-030V
					C- 553657-010V
					C- 751373-010V
					C- 751393-010V
					C- 229400-070V
					C- 237776-040V
					C- 476189-010V
					C- 751332-010V
					C- 752029-010V
					C- 752030-010V
					C- 752042-010V
					C- 543143-010V
					C- 751718-010V
					C- 543143-010V
					C- 751718-010V
					C- 543143-010V
					C- 751718-010V
					C- 543143-010V
					C- 751718-010V
					C- 751332-010V
					C- 556723-010V
					C- 795750-010V
					C- 924329-010V
					C- 924808-010V
315105-0153		BRICKA BRB6,4X12RFR	WASHER	SCHEIBE	C- 924991-010V
					C- 924808-010V
					C- 924991-010V
					RK- 978212-010V
					RK- 978234-010V
					RK- 978212-010V
					RK- 978234-010V
					RK- 978212-010V
					RK- 978234-010V
					C- 978280-010V
					C- 978740-010V
					C- 469121-020V
315105-0156		BRICKA BRB6,7X14RFR	WASHER	SCHEIBE	C- 450125-010V
					C- 736529-010V
					C- 565417-010V
315105-0165		BRICKA BRB8,4X16RFR	WASHER	SCHEIBE	C- 76291-010V
					C- 434074-030V
					C- 434774-030V
					C- 456953-020V
					C- 566318-010V
					C- 751928-020V
					C- 752960-010V
					C- 752971-010V
					C- 978239-020V
					C- 978240-020V
					C- 978241-020V
					C- 295883-050V
					C- 491650-010V
					C- 271626-030V
					C- 450101-010V
					C- 271626-030V
					C- 450101-020V
					C- 271017-030V
					C- 271934-030V
					C- 272084-030V
					C- 491871-010V
					C- 567034-010V
					C- 283604-020V
					C- 450125-010V
					C- 469736-040V
					C- 484858-030V
					C- 484950-020V
					C- 484984-020V
					C- 547756-010V
					C- 538421-010V
					C- 566282-010V
					C- 736529-010V
					C- 924300-010V
					C- 736529-010V
					C- 924300-010V
					C- 736529-010V
					C- 924300-010V
					C- 794004-010V
					C- 794092-010V
					C- 794168-010V
					C- 794178-010V
					C- 794271-010V
					C- 794004-010V
					C- 794092-010V
					C- 794168-010V

PART NO	LAST ECN	BENÄMNING	TITLE	BENENNUNG	GROUP NO
315105-0165		BRICKA BRB8,4X16RFR	WASHER	SCHEIBE	C- 794178-010V C- 794271-010V C- 752029-010V C- 560670-010V C- 560671-010V C- 560672-010V C- 978280-010V CR- 256712-050V C- 295218-010V CR- 256712-050V C- 295218-010V CR- 256712-050V C- 295218-010V C- 237776-040V C- 476189-010V C- 554885-010V C- 554886-010V C- 554888-010V C- 554891-010V C- 550711-020V C- 256665-020V C- 456100-030V C- 456180-010V C- 456457-040V C- 456458-040V C- 456459-040V C- 456460-040V C- 572306-010V C- 751860-020V C- 751900-010V C- 256206-020V C- 256207-020V CR- 256212-050V CR- 256213-050V C- 256217-040V C- 256222-020V C- 256223-040V C- 256951-050V C- 256952-050V CR- 256712-050V C- 271114-050V C- 295218-010V C- 441695-020V C- 456560-010V C- 456588-030V C- 256875-020V C- 257146-020V C- 271513-060V C- 271866-060V C- 271992-020V C- 272359-020V C- 272404-070V C- 751691-010V C- 751885-030V C- 246388-060V C- 272343-050V C- 272408-050V C- 295891-030V C- 441000-050V
315105-0165		BRICKA BRB8,4X16RFR	WASHER	SCHEIBE	C- 456032-010V C- 456935-030V C- 752244-020V C- 752628-020V C- 752645-020V C- 752646-020V C- 752913-010V C- 752914-010V C- 978162-010V C- 256014-060V C- 256055-060V C- 441304-040V C- 441486-040V C- 456309-050V C- 456836-040V C- 469452-030V C- 751800-020V CR- 283605-010V C- 283612-020V C- 283626-040V CR- 294695-010V C- 456679-010V C- 457853-030V C- 469173-010V C- 546285-010V C- 547601-010V C- 548057-010V C- 552030-010V C- 554360-020V C- 566280-010V C- 237776-040V C- 476189-010V C- 752029-010V

PART NO	LAST ECN	BENÄMNING	TITLE	BENENNUNG	GROUP NO
					C- 752030-010V C- 434774-030V C- 434074-030V C- 434774-030V C- 434074-030V C- 751923-010V C- 751924-010V C- 751923-010V C- 751924-010V C- 556723-010V C- 924300-010V C- 924808-010V C- 924300-010V C- 924808-010V C- 978280-010V
315105-0171		BRICKA BRB10X18RFR	WASHER	SCHEIBE	C- 751691-010V CR- 294695-010V
315105-0173		BRICKA BRB10,5X22RFR	WASHER	SCHEIBE	C- 76504-010V C- 751928-020V C- 76200-010V C- 476080-020V C- 905331-010V C- 736360-020V C- 794004-010V C- 736360-020V C- 794004-010V
315105-0173		BRICKA BRB10,5X22RFR	WASHER	SCHEIBE	C- 560670-010V C- 560671-010V C- 560672-010V C- 237776-040V C- 572750-010V C- 550714-010V C- 554886-010V C- 550757-020V C- 554887-010V C- 751860-020V C- 256223-040V C- 271115-040V C- 295310-070V C- 456103-010V C- 271468-040V C- 271469-020V C- 295891-030V C- 456032-010V C- 456923-030V C- 752247-010V C- 752645-020V C- 752646-020V C- 752913-010V C- 752914-010V C- 469452-030V C- 751800-020V C- 283626-040V CR- 294695-010V C- 456696-030V C- 457853-030V C- 457881-030V C- 490610-040V C- 546285-010V C- 548057-010V CR- 548331-010V C- 554360-020V C- 566280-010V C- 751393-010V C- 237776-040V C- 905130-010V C- 905541-010V
315105-0178		BRICKA BRB13X24RFR	WASHER	SCHEIBE	C- 556723-010V C- 272084-030V C- 491871-010V C- 283604-020V C- 469736-040V C- 560670-010V C- 560671-010V C- 560672-010V C- 476189-010V C- 550757-020V C- 554889-020V C- 562656-010V C- 441695-020V C- 456588-030V C- 441000-050V C- 978162-010V C- 476349-030V CR- 548040-010V
315105-0178		BRICKA BRB13X24RFR	WASHER	SCHEIBE	C- 554360-020V C- 476189-010V
315105-0186		BRICKA BRB17X30RFR	WASHER	SCHEIBE	C- 550711-020V C- 272404-070V C- 752244-020V CR- 283605-010V C- 283612-020V

PART NO	LAST ECN	BENÄMNING	TITLE	BENENNUNG	GROUP NO
315105-0192		BRICKA BRB21X36RFR	WASHER	SCHEIBE	RK- 532210-010V
315105-0198		BRICKA BRB25X45RFR	WASHER	SCHEIBE	C- 550714-010V
					C- 550711-020V
315111-0153		BRICKA TBRB6,4X12FZB	WASHER	SCHEIBE	C- 293684-020V
					C- 293685-020V
					CR- 31390-011V
					C- 293685-020V
					C- 293684-020V
					C- 293685-020V
					C- 293684-020V
315111-0165		BRICKA TBRB8,4X16FZB	WASHER	SCHEIBE	C- 563740-010V
					C- 256199-040V
					C- 271128-040V
					C- 272765-070V
					C- 256843-060V
315111-0173		BRICKA TBRB10,5X22FZB	WASHER	SCHEIBE	C- 271635-030V
					C- 237776-040V
					C- 256173-050V
					C- 256197-050V
					C- 256199-040V
					C- 271128-040V
					C- 491814-020V
					C- 491815-020V
					C- 229400-070V
					C- 237776-040V
					C- 479821-010V
315111-0178		BRICKA TBRB13X24FZB	WASHER	SCHEIBE	C- 271635-030V
					C- 256173-050V
					C- 232781-040V
					C- 479821-010V
315111-0186		BRICKA TBRB17X30FZB	WASHER	SCHEIBE	C- 491846-020V
315115-0153		BRICKA TBRB6,4X12RFR	WASHER	SCHEIBE	CR- 31390-010V
					C- 736593-010V
					C- 736865-010V
					C- 736593-010V
					C- 736865-010V
					C- 736593-010V
					C- 736865-010V
					C- 736593-010V
					C- 736865-010V
					C- 736593-010V
					C- 736865-010V
					C- 736593-010V
					C- 736865-010V
					C- 978259-010V
					C- 978443-010V
					CR- 256436-060V
					C- 751900-010V
					CR- 256204-050V
					CR- 256205-050V
					CR- 256212-050V
					CR- 256213-050V
315115-0153		BRICKA TBRB6,4X12RFR	WASHER	SCHEIBE	C- 256951-050V
					C- 256952-050V
					C- 257381-030V
					C- 257382-030V
					CR- 256436-060V
					C- 271115-040V
					C- 295310-070V
					C- 441850-040V
					C- 456103-010V
					C- 469535-010V
					C- 560202-010V
					C- 752627-010V
					C- 752628-020V
					C- 272021-060V
					C- 272024-040V
					C- 491976-020V
					C- 491207-030V
					C- 229400-070V
					RK- 978234-010V
					C- 978259-010V
					C- 978740-010V
					C- 469118-020V
315115-0165		BRICKA TBRB8,4X16RFR	WASHER	SCHEIBE	C- 978239-020V
					C- 978240-020V
					C- 978241-020V
					C- 77165-010V
					C- 752664-010V
					C- 491871-010V
					C- 924300-010V
					C- 736797-010V
					C- 794004-010V
					C- 736797-010V
					C- 794004-010V
					C- 564119-010V
					C- 550757-020V
					C- 456180-010V
					C- 751860-020V
					C- 751900-010V
					C- 256206-020V
					C- 256207-020V

PART NO	LAST ECN	BENÄMNING	TITLE	BENENNUNG	GROUP NO
					C- 256223-040V C- 272765-070V C- 456560-010V C- 256843-060V C- 295891-030V C- 456032-010V C- 560202-010V C- 752244-020V C- 752627-010V C- 752628-020V C- 978162-010V C- 272021-060V C- 272028-060V C- 441304-040V C- 441307-030V C- 456309-050V C- 469452-030V C- 491976-020V
315115-0165		BRICKA TBRB8,4X16RFR	WASHER	SCHEIBE	C- 457867-020V CR- 548040-010V C- 751373-010V C- 751406-010V C- 752049-010V C- 924300-010V C- 752958-010V C- 752959-010V
315115-0173		BRICKA TBRB 10,5X22 RFR	WASHER	SCHEIBE	RK- 532210-010V C- 736360-020V C- 272021-060V C- 469452-030V C- 751800-020V CR- 294695-010V
315115-0178		BRICKA TBRB13X24RFR	WASHER	SCHEIBE	C- 752958-010V C- 752959-010V C- 736360-020V C- 572750-010V C- 295310-070V C- 441486-040V C- 456309-050V
315121-0153		BRICKA TBRSB6,4X22FZB	WASHER	SCHEIBE	C- 752958-010V C- 752959-010V C- 256173-050V C- 256806-030V C- 256438-020V C- 246388-060V C- 272343-050V
315121-0165		BRICKA TBRSB8,4X26FZB	WASHER	SCHEIBE	C- 457857-030V C- 271635-030V C- 76492-010V
315121-0173		BRICKA TBRSB10,5X28FZB	WASHER	SCHEIBE	C- 456696-030V C- 256197-050V C- 491787-020V C- 491788-020V
315121-0178		BRICKA TBRSB13X36FZB	WASHER	SCHEIBE	C- 271569-050V C- 256173-050V
315121-0179		BRICKA TBRSB13,5X36FZB	WASHER	SCHEIBE	C- 256199-040V C- 560846-010V
315125-0153		BRICKA TBRSB 6,4X22X4 RF	WASHER	SCHEIBE	C- 752173-010V C- 529933-010V C- 560858-010V C- 529933-020V C- 560858-010V C- 529933-010V C- 560858-010V C- 529933-020V C- 560858-010V C- 529933-010V C- 560858-010V C- 529933-020V C- 560858-010V C- 271866-060V C- 256055-060V C- 272021-060V C- 272337-040V C- 456976-050V
315125-0165		BRICKA TBRSB 8,4X26X5 RF	WASHER	SCHEIBE	C- 469091-030V C- 456458-040V
315125-0165		BRICKA TBRSB 8,4X26X5 RF	WASHER	SCHEIBE	C- 271513-060V C- 272408-050V C- 295891-030V C- 560202-010V C- 752247-010V C- 256055-060V C- 256095-050V C- 271181-040V C- 469452-030V C- 751398-020V
315202-0101		O-RING 3,1X1,6	O-RING	O-RING	C- 456951-010V
315202-0102		O-RING 4,1X1,6	O-RING	O-RING	CR- 256212-050V CR- 256213-050V CR- 256214-040V
315202-0103		O-RING 5,1X1,6	O-RING	O-RING	C- 978192-020V

PART NO	LAST ECN	BENÄMNING	TITLE	BENENNUNG	GROUP NO
					C- 570079-020V
					C- 567681-020V
					C- 469173-010V
					C- 978192-020V
315202-0104		O-RING 6,1X1,6	O-RING	O-RING	C- 256875-020V
315202-0105		O-RING 7,1X1,6	O-RING	O-RING	C- 566280-010V
315202-0106		O-RING 8,1X1,6	O-RING	O-RING	CR- 256212-050V
					CR- 256213-050V
					C- 256217-040V
315202-0108		O-RING 10,1X1,6	O-RING	O-RING	CR- 256212-050V
					CR- 256213-050V
315202-0109		O-RING 11,1X1,6	O-RING	O-RING	C- 490761-010V
315202-0110		O-RING 12,1X1,6	O-RING	O-RING	CR- 256204-050V
					CR- 256205-050V
315202-0116		O-RING 18,1X1,6	O-RING	O-RING	C- 469118-020V
315202-0118		O-RING 22,1X1,6	O-RING	O-RING	C- 272765-070V
315202-0119		O-RING 25,1X1,6	O-RING	O-RING	C- 469452-030V
					C- 751800-020V
315202-0120		O-RING 27,1X1,6	O-RING	O-RING	C- 795750-010V
315202-0204		O-RING 5,3X2,4	O-RING	O-RING	C- 256217-040V
315202-0206		O-RING 7,3X2,4	O-RING	O-RING	C- 456180-010V
					C- 256951-050V
					C- 256952-050V
315202-0207		O-RING 8,3X2,4	O-RING	O-RING	C- 256217-040V
					C- 256951-050V
					C- 256952-050V
315202-0215		O-RING 19,2X3	O-RING	O-RING	C- 752960-010V
					C- 752971-010V
					C- 456459-040V
					C- 456460-040V
					C- 751900-010V
					C- 272765-070V
					C- 456588-030V
315202-0217		O-RING 24,2X3	O-RING	O-RING	C- 441798-010V
					C- 441811-010V
315202-0218		O-RING 26,2X3	O-RING	O-RING	C- 434074-030V
					C- 434774-030V
					C- 434074-030V
					C- 434774-030V
					C- 434074-030V
315202-0219		O-RING 29,2X3	O-RING	O-RING	C- 256217-040V
					C- 256951-050V
					C- 256952-050V
315202-0220		O-RING 32,2X3	O-RING	O-RING	C- 295310-070V
315202-0224		O-RING 42,2X3	O-RING	O-RING	C- 456975-020V
315202-0265		O-RING 12,3X2,4	O-RING	O-RING	CR- 256204-050V
					CR- 256205-050V
315202-0301		O-RING 49,5X3	O-RING	O-RING	SP- 499255-020V
315202-0304		O-RING 64,5X3	O-RING	O-RING	C- 293684-020V
					C- 293685-020V
					C- 539211-010V
					C- 272765-070V
					C- 293685-020V
					C- 293684-020V
					C- 293685-020V
					C- 293684-020V
					C- 794243-010V
					C- 924811-010V
					C- 924991-010V
					C- 924811-010V
					C- 924991-010V
315202-0305		O-RING 69,5X3	O-RING	O-RING	C- 293684-020V
					C- 293685-020V
					C- 293684-020V
					C- 293685-020V
					C- 293684-020V
315202-0306		O-RING 74,5X3	O-RING	O-RING	C- 491846-020V
					C- 491850-010V
315202-0308		O-RING 84,5X3	O-RING	O-RING	C- 539209-010V
					C- 539210-010V
					C- 794213-010V
					C- 794244-010V
315202-0309		O-RING 89,5X3	O-RING	O-RING	C- 434074-030V
					C- 434774-030V
					C- 434074-030V
					C- 434774-030V
					C- 434074-030V
315202-0312		O-RING 104,5X3	O-RING	O-RING	C- 295310-070V
315202-0314		O-RING 114,5X3	O-RING	O-RING	C- 295310-070V
315202-0710		O-RING 25,12X1,78	O-RING	O-RING	C- 978739-010V
315203-0219		O-RING 29,2X3F	O-RING	O-RING	C- 556662-010V
315204-0103		O-RING 5,1X1,6VITON	O-RING	O-RING	C- 469452-030V
					C- 751800-020V
315204-0109		O-RING 11,1X1,6VITON	O-RING	O-RING	C- 272021-060V
315204-0110		O-RING 12,1X1,6 VITON	O-RING	O-RING	C- 476859-020V
					C- 256084-050V
315204-0111		O-RING 13,1X1,6 VITON	O-RING	O-RING	C- 272024-040V
315204-0116		O-RING 18,1X1,6VITON	O-RING	O-RING	C- 491976-020V
315204-0117		O-RING 19,1X1,6 VITON	O-RING	O-RING	C- 751373-010V
315204-0119		O-RING 25,1X1,6 VITON	O-RING	O-RING	C- 456976-050V
315204-0206		O-RING 7,3X2,4VITON	O-RING	O-RING	RK- 529345-010V
315204-0207		O-RING 8,3X2,4 VITON	O-RING	O-RING	RK- 978238-010V

PART NO	LAST ECN	BENÄMNING	TITLE	BENENNUNG	GROUP NO
					RK- 978528-010V
					RK- 978238-010V
					RK- 978528-010V
					RK- 978238-010V
					RK- 978528-010V
315204-0208		O-RING 9,3X2,4VITON	O-RING	O-RING	C- 272021-060V
315204-0209		O-RING 10,3X2,4 VITON	O-RING	O-RING	RK- 978528-010V
315204-0210		O-RING 11,3X2,4VITON	O-RING	O-RING	C- 736600-020V
					C- 924592-010V
					C- 736600-020V
					C- 924592-010V
315204-0210		O-RING 11,3X2,4VITON	O-RING	O-RING	C- 736600-020V
					C- 924592-010V
315204-0213		O-RING 15,3X2,4VITON	O-RING	O-RING	C- 924167-010V
					C- 736600-020V
					C- 924300-010V
					C- 924592-010V
					C- 736600-020V
					C- 924300-010V
					C- 924592-010V
					C- 736600-020V
					C- 924300-010V
					C- 924592-010V
					C- 751800-020V
					C- 924300-010V
					C- 924167-010V
					C- 924300-010V
315204-0214		O-RING 17,3X2,4VITON	O-RING	O-RING	RK- 978528-010V
315204-0215		O-RING 19,2X3VITON	O-RING	O-RING	C- 469091-030V
					RK- 529345-010V
					SP- 499255-020V
					C- 539209-010V
					C- 539210-010V
					C- 539211-010V
					C- 794213-010V
					C- 794243-010V
					C- 794244-010V
					C- 924811-010V
					C- 924991-010V
					C- 924811-010V
					C- 924991-010V
315204-0217		O-RING 24,2X3VITON	O-RING	O-RING	C- 529933-020V
					C- 469091-030V
					C- 469452-030V
315204-0221		O-RING 34,2X3VITON	O-RING	O-RING	C- 751800-020V
					C- 736600-020V
					C- 924592-010V
					C- 736600-020V
					C- 924592-010V
					C- 736600-020V
					C- 924592-010V
					C- 924167-010V
315204-0222		O-RING 36,2X3VITON	O-RING	O-RING	C- 476859-020V
					C- 456976-050V
315204-0223		O-RING 39,2X3VITON	O-RING	O-RING	C- 272337-040V
					C- 456555-040V
315204-0301		O-RING 49,5X3VITON	O-RING	O-RING	C- 539211-010V
					C- 529933-020V
					C- 456555-040V
					C- 469091-030V
315204-0302		O-RING 54,5X3VITON	O-RING	O-RING	C- 751088-030V
					C- 476859-020V
315204-0303		O-RING 59,5X3 VITON	O-RING	O-RING	C- 256084-050V
					C- 735222-020V
					C- 924314-010V
					C- 735222-020V
					C- 924314-010V
					C- 735222-020V
315204-0305		O-RING 69,5X3	O-RING	O-RING	C- 924314-010V
					CR- 256547-040V
315204-0307		O-RING 79,5X3 VITON	O-RING	O-RING	C- 256014-060V
315204-0309		O-RING 89,5X3 VITON	O-RING	O-RING	C- 272021-060V
315204-0310		O-RING 94,5X3 VITON	O-RING	O-RING	C- 272021-060V
315204-0526		O-RING 36,1X3,53VITON	O-RING	O-RING	C- 272028-060V
315211-0103		TÄTNINGSBRICKA	SEALING WASHER	DICHTUNGSSCHEIBE	C- 752495-010V
					CR- 256204-050V
315211-0105		TÄTNINGSBRICKA	SEALING WASHER	DICHTUNGSSCHEIBE	CR- 256205-050V
315211-0107		TÄTNINGSBRICKA	SEALING WASHER	DICHTUNGSSCHEIBE	C- 491650-010V
315211-0108		TÄTNINGSBRICKA	SEALING WASHER	DICHTUNGSSCHEIBE	C- 456588-030V
315220-0117		TÄTRING V-12S	SEAL RING	DICHTUNGSRING	C- 491650-010V
315220-0121		TÄTRING V-14S	SEAL RING	DICHTUNGSRING	C- 533844-010V
315220-0130		TÄTRING V-16S	SEAL RING	DICHTUNGSRING	C- 295310-070V
315220-0143		TÄTRING V-20S	SEAL RING	DICHTUNGSRING	CR- 548040-010V
					CR- 283605-010V
315220-0210		TÄTRING V-60S	SEAL RING	DICHTUNGSRING	C- 283612-020V
					C- 491846-020V
					C- 491850-010V
315221-0169		TÄTRING CB30X47X7	SEAL RING	DICHTUNGSRING	C- 256173-050V
315221-0177		TÄTRING CB35X52X7	SEAL RING	DICHTUNGSRING	C- 491846-020V
315224-0115		TÄTRING 40/32 X 3,5	SEAL RING	DICHTUNGSRING	C- 924592-010V
					C- 924167-010V
315230-0157		TÄTRING G12X16X3	SEAL RING	DICHTUNGSRING	CR- 256204-050V

PART NO	LAST ECN	BENÄMNING	TITLE	BENENNUNG	GROUP NO
315232-0109		TÄTRING R1/8"	SEAL RING	DICHTUNGSRING	CR- 256205-050V
315233-0101		TÄTRING M5	SEAL RING	DICHTUNGSRING	C- 905131-010V
					C- 539209-010V
					C- 539210-010V
					C- 539211-010V
					CR- 491225-010V
					C- 735183-020V
					C- 795750-010V
315233-0109		TÄTRING R1/8"	SEAL RING	DICHTUNGSRING	CR- 491225-010V
					C- 533014-010V
					C- 563740-010V
					C- 751478-020V
					C- 736796-020V
					C- 736797-010V
					C- 794179-010V
					C- 736796-020V
					C- 736797-010V
					C- 794179-010V
					C- 456100-030V
					C- 256206-020V
					C- 256207-020V
					C- 272765-070V
					C- 566280-010V
					C- 735183-020V
					C- 978739-010V
					C- 456757-020V
					C- 469118-020V
315233-0110		TÄTRING R1/4"	SEAL RING	DICHTUNGSRING	C- 469121-020V
					RK- 529345-010V
					C- 533014-010V
					C- 563740-010V
					C- 565536-010V
					C- 735014-010V
					C- 736796-020V
					C- 794092-010V
					C- 794179-010V
					C- 736796-020V
315233-0110		TÄTRING R1/4"	SEAL RING	DICHTUNGSRING	C- 794092-010V
					C- 794179-010V
					C- 271115-040V
					C- 271387-030V
					C- 491890-010V
					C- 735183-020V
					C- 978739-010V
					C- 456757-020V
315233-0111		TÄTRING R3/8"	SEAL RING	DICHTUNGSRING	C- 469118-020V
					C- 533014-010V
					C- 491536-010V
					C- 554888-010V
					C- 456180-010V
					C- 271115-040V
					C- 272765-070V
					C- 271866-060V
					C- 491890-010V
					C- 295262-060V
					C- 456757-020V
315233-0113		TÄTRING R1/2"	SEAL RING	DICHTUNGSRING	C- 469118-020V
					C- 491767-020V
					RK- 529345-010V
					C- 533014-010V
					C- 271261-050V
					C- 271387-030V
					C- 456455-030V
					C- 271866-060V
					C- 978739-010V
					C- 456757-020V
315233-0115		TÄTRING R3/4"	SEAL RING	DICHTUNGSRING	C- 469121-020V
					C- 751373-010V
315234-0101		TÄTRING M5	SEAL RING	DICHTUNGSRING	C- 978739-010V
					CR- 256436-060V
					CR- 256712-050V
					CR- 256436-060V
					CR- 256712-050V
					CR- 256436-060V
					CR- 256712-050V
					CR- 256436-060V
315234-0109		TÄTRING R1/8"	SEAL RING	DICHTUNGSRING	CR- 256712-050V
					C- 271562-080V
					CR- 256212-050V
					CR- 256213-050V
					C- 256095-050V
315234-0110		TÄTRING R1/4"	SEAL RING	DICHTUNGSRING	C- 795750-010V
					C- 256438-020V
315234-0113		TÄTRING R1/2"	SEAL RING	DICHTUNGSRING	C- 795750-010V
315237-0106		6X10X1 ALU	GASKET	DICHTUNG	C- 256438-020V
					CR- 256204-050V
					CR- 256205-050V
					CR- 256212-050V
315237-0107		8X14X1 ALU	GASKET	DICHTUNG	CR- 256213-050V
					CR- 256212-050V
315237-0109		TÄTRING 1/8"	SEAL RING	DICHTUNGSRING	CR- 256213-050V
					CR- 256204-050V

PART NO	LAST ECN	BENÄMNING	TITLE	BENENNUNG	GROUP NO
315237-0110		TÄTRING 1/4 "	SEAL RING	DICHTUNGSRING	CR- 256205-050V
					RK- 978234-010V
315250-0101		PACKNING 32/25	GASKET	DICHTUNG	C- 924314-010V
					C- 924809-010V
					C- 925328-010V
315250-0101		PACKNING 32/25	GASKET	DICHTUNG	C- 924809-010V
					C- 925328-010V
315250-0103		PACKNING 48/38	GASKET	DICHTUNG	C- 266215-010V
					C- 456588-030V
315250-0104		PACKNING 61/51	GASKET	DICHTUNG	C- 751900-010V
					C- 256674-030V
					C- 456588-030V
315259-0102		FILTTÄTN. SKFFI190	FELT SEAL	FILZDICHTUNG	C- 456100-030V
315402-0136		BRICKA FBB4,1RFR	WASHER	SCHEIBE	C- 539210-010V
					C- 544420-010V
315402-0156		BRICKA FBB6,5RFR	WASHER	SCHEIBE	C- 544420-010V
					C- 441000-050V
315402-0165		BRICKA FBB8,2RFR	WASHER	SCHEIBE	C- 76447-010V
					C- 7003-010V
					C- 550743-010V
315402-0173		BRICKA FBB10,2RFR	WASHER	SCHEIBE	C- 978258-020V
					C- 978442-020V
					C- 978258-020V
315410-0100		LÅSBRICKA SKFMB0	LOCK WASHER	SCHLIESSCHEIBE	C- 554360-020V
315410-0102		LÅSBRICKA SKFMB2	LOCK WASHER	SCHLIESSCHEIBE	C- 295310-070V
315410-0103		LÅSBRICKA SKFMB3	LOCK WASHER	SCHLIESSCHEIBE	C- 295310-070V
315410-0104		LÅSBRICKA SKFMB4	LOCK WASHER	SCHLIESSCHEIBE	CR- 548040-010V
315410-0106		LÅSBRICKA SKFMB6	LOCK WASHER	SCHLIESSCHEIBE	C- 491846-020V
315701-0138		PLATTKIL	FLAT WEDGE	FLACHKEIL	C- 554360-020V
315701-0169		PLATTKIL 4X4X18	FLAT WEDGE	FLACHKEIL	C- 752645-020V
					C- 752646-020V
					C- 752913-010V
315701-0170		PLATTKIL 4X4X20	FLAT WEDGE	FLACHKEIL	C- 752914-010V
315701-0198		PLATTKIL 5X5X14	FLAT WEDGE	FLACHKEIL	C- 295310-070V
315701-0207		PLATTKIL 5X5X36	FLAT WEDGE	FLACHKEIL	C- 295310-070V
315701-0230		PLATTKIL 6X6X16	FLAT WEDGE	FLACHKEIL	C- 295310-070V
315701-0232		PLATTKIL 6X6X20	FLAT WEDGE	FLACHKEIL	C- 924167-010V
315701-0234		PLATTKIL 6X6X25	FLAT WEDGE	FLACHKEIL	C- 256806-030V
315701-0235		PLATTKIL 6X6X28	FLAT WEDGE	FLACHKEIL	C- 456688-020V
315701-0239		PLATTKIL 6X6X40	FLAT WEDGE	FLACHKEIL	C- 256200-030V
					C- 256173-050V
315701-0243		PLATTKIL 6X6X63	FLAT WEDGE	FLACHKEIL	C- 256200-030V
315701-0262		PLATTKIL 8X7X18	FLAT WEDGE	FLACHKEIL	C- 794128-010V
315701-0263		PLATTKIL 8X7X20	FLAT WEDGE	FLACHKEIL	C- 751689-010V
315701-0265		PLATTKIL 8X7X25	FLAT WEDGE	FLACHKEIL	C- 256410-060V
315701-0268		PLATTKIL 8X7X32	FLAT WEDGE	FLACHKEIL	C- 457866-030V
315701-0271		PLATTKIL 8X7X45	FLAT WEDGE	FLACHKEIL	C- 256173-050V
315701-0335		PLATTKIL 12X8X56	FLAT WEDGE	FLACHKEIL	C- 256410-060V
					C- 256197-050V
					C- 491814-020V
315705-0196		PLATTKIL	FLAT WEDGE	FLACHKEIL	C- 491815-020V
315740-0116		STOPPRING 20SMS199	RETAINING RING	SICHERUNGSRING	C- 751393-010V
315742-0102		STOPPRING 6SMS199RFR	RETAINING RING	SICHERUNGSRING	C- 256806-030V
					C- 256206-020V
315742-0104		STOPPRING 8SMS199RFR	RETAINING RING	SICHERUNGSRING	C- 256207-020V
315742-0106		STOPPRING 10SMS199RFR	RETAINING RING	SICHERUNGSRING	C- 76291-010V
					C- 554888-010V
315742-0111		STOPPRING 15SMS199RFR	RETAINING RING	SICHERUNGSRING	C- 752628-020V
					C- 556723-010V
					C- 272084-030V
					C- 272473-010V
					C- 554886-010V
315742-0112		STOPPRING 16SMS199RFR	RETAINING RING	SICHERUNGSRING	C- 272359-020V
					C- 752030-010V
					C- 271992-020V
					C- 752244-020V
315742-0116		STOPPRING 20SMS199RFR	RETAINING RING	SICHERUNGSRING	C- 272024-040V
					C- 229400-070V
315750-0101		SPÅRRING SGA4	CIRCLIP	SEEGERRING	C- 283629-020V
315750-0104		SPÅRRING SGA7	CIRCLIP	SEEGERRING	C- 552030-010V
315750-0105		SPÅRRING SGA8	CIRCLIP	SEEGERRING	C- 441000-050V
					C- 905541-010V
					C- 434074-030V
					C- 434774-030V
					C- 246388-060V
					C- 434774-030V
					C- 434074-030V
					C- 434774-030V
315750-0107		SPÅRRING SGA10	CIRCLIP	SEEGERRING	C- 434074-030V
					C- 450125-010V
					C- 272343-050V
315750-0109		SPÅRRING SGA12	CIRCLIP	SEEGERRING	C- 546285-010V
315750-0112		SPÅRRING SGA15	CIRCLIP	SEEGERRING	C- 533844-010V
					C- 271934-030V
					C- 476080-020V
					C- 564120-010V
					C- 295310-070V
315750-0116		SPÅRRING SGA20	CIRCLIP	SEEGERRING	C- 752030-010V
					C- 283604-020V
					C- 456688-020V
					CR- 283605-010V
					C- 283612-020V

PART NO	LAST ECN	BENÄMNING	TITLE	BENENNUNG	GROUP NO
					C- 469173-010V
315750-0119		SPÅRRING SGA25	CIRCLIP	SEEGERRING	C- 751689-010V
315750-0127		SPÅRRING SGA40	CIRCLIP	SEEGERRING	C- 295310-070V
315750-0135		SPÅRRING SGA60	CIRCLIP	SEEGERRING	C- 232781-040V
315751-0103		SPÅRRING SGA 6 RFR	CIRCLIP	SEEGERRING	C- 736593-010V
					C- 562678-010V
					C- 543143-010V
					C- 924662-010V
315751-0109		SPÅRRING SGA12 RFR	CIRCLIP	SEEGERRING	C- 469736-040V
					C- 550757-020V
					C- 554891-010V
315751-0112		SPÅRRING SGA15 RFR	CIRCLIP	SEEGERRING	C- 752645-020V
					C- 752646-020V
					C- 752913-010V
					C- 752914-010V
					C- 256014-060V
					C- 554360-020V
					C- 905130-010V
315751-0113		SPÅRRING SGA16 RFR	CIRCLIP	SEEGERRING	C- 554360-020V
315751-0115		SPÅRRING SGA18 RFR	CIRCLIP	SEEGERRING	C- 905331-010V
315751-0116		SPÅRRING SGA20 RFR	CIRCLIP	SEEGERRING	C- 572750-010V
					C- 550757-020V
					C- 533844-010V
					C- 554360-020V
315751-0122		SPÅRRING SGA30 RFR	CIRCLIP	SEEGERRING	C- 554360-020V
315752-0123		SPÅRRING SGH32	CIRCLIP	SEEGERRING	C- 256199-040V
315752-0124		SPÅRRING SGH35	CIRCLIP	SEEGERRING	C- 295310-070V
315753-0117		SPÅRRING SGH 22 RFR	CIRCLIP	SEEGERRING	C- 484858-030V
					C- 546285-010V
315753-0124		SPÅRRING SGH 35 RFR	CIRCLIP	SEEGERRING	C- 736600-020V
315753-0133		SPÅRRING SGH 55 RFR	CIRCLIP	SEEGERRING	C- 554360-020V
315754-0107		SPÅRRYTTARE 5	LOCKING WASHER	SEEGERRING	C- 456032-010V
					C- 457853-030V
315754-0108		SPÅRRYTTARE 6	LOCKING WASHER	SEEGERRING	CR- 548331-010V
315754-0109		SPÅRRYTTARE 7	LOCKING WASHER	SEEGERRING	CR- 548331-010V
315754-0110		SPÅRRYTTARE 9	LOCKING WASHER	SEEGERRING	C- 456032-010V
					C- 283612-020V
315754-0111		SPÅRRYTTARE 10	LOCKING WASHER	SEEGERRING	C- 794128-010V
315754-0113		SPÅRRYTTARE 15	LOCKING WASHER	SEEGERRING	C- 539209-010V
					C- 539210-010V
					C- 539211-010V
					C- 794213-010V
					C- 794243-010V
					C- 794244-010V
					C- 924991-010V
315755-0105		SPÅRRYTTARE 3,2 RFR	LOCKING WASHER	SEEGERRING	C- 469173-010V
315755-0107		SPÅRRYTTARE 5RFR	LOCKING WASHER	SEEGERRING	C- 533844-010V
315755-0110		SPÅRRYTTARE 9RFR	LOCKING WASHER	SEEGERRING	C- 978162-010V
315755-0112		SPÅRRYTTARE 12 RFR	LOCKING WASHER	SEEGERRING	C- 272028-060V
315755-0801		SPÅRRYTTARE 8RFR	LOCKING WASHER	SEEGERRING	C- 457853-030V
					C- 554360-020V
318175-0140		KUGGREM	TIMING BELT	ZAHNRIEMEN	C- 554886-010V
318201-0150		RULLKEDJA 3/8"	ROLLER CHAIN	ROLLENKETTE	C- 256806-030V
318207-0168		RULLKEDJA 6MM	ROLLER CHAIN	ROLLENKETTE	C- 752645-020V
					C- 752646-020V
					C- 752913-010V
					C- 752914-010V
318301-0124		LYFTÖGLA LTM16FZB	LIFTING EYEBOLT	HEBEOHRENSCHRAUBE	B- 613109-020V
318301-0126		LYFTÖGLA LTM20FZB	LIFTING EYEBOLT	HEBEOHRENSCHRAUBE	B- 648109-100V
318800-0102		HANDTAGSKULA D.20-M5	HANDLE BALL	HANDGRIFFKUGEL	C- 441000-050V
					C- 533844-010V
318800-0103		HANDTAGSKULA D.25-M6	HANDLE BALL	HANDGRIFFKUGEL	C- 272021-060V
					C- 550128-010V
					C- 554360-020V
					C- 751718-010V
318800-0104		HANDTAGSKULA D.30-M8	HANDLE BALL	HANDGRIFFKUGEL	C- 246388-060V
321101-0143		FLÄNSBUSSN 8F7X8	FLANGE BUSHING	FLANSCHBUCHSE	C- 491976-020V
321101-0163		FLÄNSBUSSN 10F7X10	FLANGE BUSHING	FLANSCHBUCHSE	C- 469173-010V
321101-0173		FLÄNSBUSSN 12F7X12	FLANGE BUSHING	FLANSCHBUCHSE	C- 37877-030V
					C- 295891-030V
321101-0202		FLÄNSBUSSN 16F7X12	FLANGE BUSHING	FLANSCHBUCHSE	C- 271934-030V
					C- 564120-010V
					C- 271992-020V
					C- 752030-010V
321101-0222		FLÄNSBUSSN 18F7X12	FLANGE BUSHING	FLANSCHBUCHSE	C- 449969-010V
					C- 476080-020V
321101-0233		FLÄNSBUSSN 20F7X20	FLANGE BUSHING	FLANSCHBUCHSE	C- 271626-030V
					C- 271992-020V
321105-0163		BUSSNING 10F7X16X10	BUSHING	BUCHSE	C- 237776-040V
321105-0173		BUSSNING 12F7X18X12	BUSHING	BUCHSE	C- 237776-040V
321105-0253		BUSSNING 25F7X35X25	BUSHING	BUCHSE	C- 456688-020V
321110-0143		FLÄNSBUSSN 8E7X8	FLANGE BUSHING	FLANSCHBUCHSE	C- 450125-010V
321110-0163		FLÄNSBUSSN 10E7X10	FLANGE BUSHING	FLANSCHBUCHSE	C- 450125-010V
321110-0183		FLÄNSBUSSN 14E7X12	FLANGE BUSHING	FLANSCHBUCHSE	C- 450125-010V
321110-0202		FLÄNSBUSSN 16E7X12	FLANGE BUSHING	FLANSCHBUCHSE	C- 229400-070V
321111-0049		FLÄNSBUSSN 5E7X8	FLANGE BUSHING	FLANSCHBUCHSE	C- 566280-010V
321111-0096		FLÄNSBUSSN 8E7X8	FLANGE BUSHING	FLANSCHBUCHSE	C- 271442-030V
					C- 271443-030V
321111-0097		FLÄNSBUSSN 8E7X12	FLANGE BUSHING	FLANSCHBUCHSE	C- 556723-010V
321111-0134		FLÄNSBUSSN 10E7X8	FLANGE BUSHING	FLANSCHBUCHSE	C- 271626-030V
321111-0135		FLÄNSBUSSN 10E7X10	FLANGE BUSHING	FLANSCHBUCHSE	C- 469736-040V
					C- 905131-010V

PART NO	LAST ECN	BENÄMNING	TITLE	BENENNUNG	GROUP NO
					CR- 283605-010V
					C- 556723-010V
321111-0136		FLÄNSBUSSN 10E7X16	FLANGE BUSHING	FLANSCHBUCHSE	C- 905131-010V
321111-0157		FLÄNSBUSSN 12E7X8	FLANGE BUSHING	FLANSCHBUCHSE	C- 533844-010V
321111-0159		FLÄNSBUSSN 12E7X12	FLANGE BUSHING	FLANSCHBUCHSE	C- 533844-010V
					CR- 548331-010V
321111-0163		FLÄNSBUSSN 12E7X20	FLANGE BUSHING	FLANSCHBUCHSE	C- 469736-040V
321111-0185		FLÄNSBUSSN 14E7X14	FLANGE BUSHING	FLANSCHBUCHSE	C- 283612-020V
321111-0211		FLÄNSBUSSN 15E7X10	FLANGE BUSHING	FLANSCHBUCHSE	C- 554886-010V
321111-0212		FLÄNSBUSSN 15E7X15	FLANGE BUSHING	FLANSCHBUCHSE	C- 283604-020V
					C- 751718-010V
321111-0240		FLÄNSBUSSN 16E7X12	FLANGE BUSHING	FLANSCHBUCHSE	C- 751689-010V
321111-0241		FLÄNSBUSSN 16E7X16	FLANGE BUSHING	FLANSCHBUCHSE	C- 566282-010V
					C- 554360-020V
321111-0274		FLÄNSBUSSN 18E7X18	FLANGE BUSHING	FLANSCHBUCHSE	C- 546285-010V
321111-0304		FLÄNSBUSSN 20E7X20	FLANGE BUSHING	FLANSCHBUCHSE	C- 572750-010V
321111-0306		FLÄNSBUSSN 20E7X25	FLANGE BUSHING	FLANSCHBUCHSE	C- 533844-010V
321116-0066		BUSSNING 6E7/10X10	BUSHING	BUCHSE	CR- 548331-010V
321116-0095		BUSSNING 8E7/12X6	BUSHING	BUCHSE	C- 546285-010V
321116-0097		BUSSNING 8E7/12X12	BUSHING	BUCHSE	C- 554360-020V
321116-0127		BUSSNING 10E7/14X10	BUSHING	BUCHSE	C- 554360-020V
321116-0135		BUSSNING 10E7/16X10	BUSHING	BUCHSE	C- 456100-030V
321116-0151		BUSSNING 12E7/16X12	BUSHING	BUCHSE	C- 271626-030V
321116-0159		BUSSNING 12E7/18X12	BUSHING	BUCHSE	C- 283612-020V
321116-0302		BUSSNING 20E7/26X15	BUSHING	BUCHSE	C- 548057-010V
321116-0420		BUSSNING 30E7/35X30	BUSHING	BUCHSE	C- 550714-010V
321120-0098		BUSSNING 10/12,0X8	BUSHING	BUCHSE	C- 256206-020V
					C- 256207-020V
321120-0099		BUSSNING 10/12,0X12	BUSHING	BUCHSE	CR- 283605-010V
					CR- 548331-010V
321120-0100		BUSSNING 8/10X12	BUSHING	BUCHSE	C- 434074-030V
					C- 434774-030V
					CR- 548331-010V
					C- 566280-010V
					C- 434774-030V
					C- 543143-010V
					C- 434074-030V
					C- 543143-010V
					C- 434774-030V
					C- 543143-010V
					C- 434074-030V
					C- 543143-010V
321120-0101		BUSSNING 6/8X6	BUSHING	BUCHSE	CR- 548331-010V
					C- 543143-010V
321120-0102		BUSSNING 6/8X10	BUSHING	BUCHSE	C- 544420-010V
					CR- 548331-010V
321120-0104		BUSSNING 10/12X10	BUSHING	BUCHSE	C- 246988-060V
					C- 272343-050V
					C- 457853-030V
321120-0107		BUSSNING 8/10X10	BUSHING	BUCHSE	C- 566280-010V
321120-0109		BUSSNING 12/14X10	BUSHING	BUCHSE	C- 434074-030V
					C- 434774-030V
					C- 434074-030V
					C- 434774-030V
					C- 434074-030V
321120-0110		BUSSNING 12/14X12	BUSHING	BUCHSE	C- 272343-050V
321120-0111		BUSSNING 12/14X15	BUSHING	BUCHSE	C- 441000-050V
321120-0112		BUSSNING 12/14X20	BUSHING	BUCHSE	C- 271468-040V
321120-0118		BUSSNING 14/16X15	BUSHING	BUCHSE	C- 256206-020V
					C- 256207-020V
321120-0122		BUSSNING 15/17X15	BUSHING	BUCHSE	C- 293684-020V
					C- 293685-020V
					C- 293684-020V
					C- 293685-020V
					C- 293684-020V
321120-0123		BUSSNING 16/18X12	BUSHING	BUCHSE	C- 283604-020V
321120-0125		BUSSNING 16/18X15	BUSHING	BUCHSE	C- 554360-020V
321120-0132		BUSSNING 18/20X20	BUSHING	BUCHSE	CR- 256212-050V
					CR- 256213-050V
321120-0138		BUSSNING 20/23X20	BUSHING	BUCHSE	C- 256806-030V
321120-0153		BUSSNING 24/27X20	BUSHING	BUCHSE	C- 978259-010V
					C- 978443-010V
					C- 256206-020V
					C- 256207-020V
					C- 295310-070V
321120-0159		BUSSNING 25/28X25	BUSHING	BUCHSE	C- 978259-010V
321123-0103		FLÄNSBUSSN.12/16X12	FLANGE BUSHING	FLANSCHBUCHSE	C- 469173-010V
321123-0112		FLÄNSBUSSN.20/25X20	FLANGE BUSHING	FLANSCHBUCHSE	C- 550757-020V
321127-0100		BUSSNING 10/13X10	BUSHING	BUCHSE	C- 550757-020V
					C- 752957-010V
					C- 752628-020V
321129-0117		TR.BRICKA 16/30X1,5	THRUST WASHER	DRUCKSCHEIBE	C- 751088-030V
					C- 283604-020V
					C- 271992-020V
321129-0131		TR.BRICKA 20/36X1,5	THRUST WASHER	DRUCKSCHEIBE	C- 550128-010V
321129-0137		TR.BRICKA 22/38X1,5	THRUST WASHER	DRUCKSCHEIBE	C- 256806-030V
321300-0098		KULLAGER SKF608	BALL BEARING	KUGELLAGER	C- 256197-050V
					C- 484858-030V
321302-0296		KULLAGER SKF626-2RS	BALL BEARING	KUGELLAGER	C- 546285-010V
					C- 562678-010V
					C- 924662-010V
321302-0298		KULLAGER SKF608-2RS	BALL BEARING	KUGELLAGER	C- 905541-010V

PART NO	LAST ECN	BENÄMNING	TITLE	BENENNUNG	GROUP NO
321308-0101		KULLAGER SKF6001RS	BALL BEARING	KUGELLAGER	C- 566282-010V
321308-0104		KULLAGER SKF6004RS	BALL BEARING	KUGELLAGER	C- 533844-010V
					CR- 548040-010V
					C- 554360-020V
321308-0106		KULLAGER SKF6006RS	BALL BEARING	KUGELLAGER	C- 554360-020V
321308-0112		KULLAGER SKF6012RS	BALL BEARING	KUGELLAGER	C- 232781-040V
321308-0200		KULLAGER SKF6000-2RS	BALL BEARING	KUGELLAGER	C- 450125-010V
					C- 905541-010V
					C- 924662-010V
321308-0202		KULLAGER SKF6002-2RS	BALL BEARING	KUGELLAGER	C- 271934-030V
					C- 272084-030V
					C- 272473-010V
					C- 564119-010V
					C- 564120-010V
					C- 752029-010V
					C- 237776-040V
					C- 256199-040V
					C- 272359-020V
					C- 554360-020V
					C- 229400-070V
					C- 237776-040V
					C- 752029-010V
					C- 752030-010V
					C- 905130-010V
321308-0204		KULLAGER SKF6004-2RS	BALL BEARING	KUGELLAGER	C- 283604-020V
					C- 283629-020V
					C- 295310-070V
					C- 552030-010V
321308-0205		KULLAGER SKF6005-2RS	BALL BEARING	KUGELLAGER	C- 751689-010V
321308-0207		KULLAGER SKF6007-2RS	BALL BEARING	KUGELLAGER	C- 256173-050V
321308-0208		KULLAGER SKF6008-2RS	BALL BEARING	KUGELLAGER	C- 295310-070V
321312-0102		KULLAGER SKF6202RS	BALL BEARING	KUGELLAGER	C- 476080-020V
321313-0101		KULLAGER SKF6201-2RS	BALL BEARING	KUGELLAGER	C- 533844-010V
321313-0102		KULLAGER SKF6202-2RS	BALL BEARING	KUGELLAGER	C- 554886-010V
					C- 554887-010V
					C- 550711-020V
					C- 295310-070V
321313-0104		KULLAGER SKF6204-2RS	BALL BEARING	KUGELLAGER	C- 456688-020V
					C- 550711-020V
					C- 469173-010V
321313-0105		KULLAGER SKF6205-2RS	BALL BEARING	KUGELLAGER	C- 256173-050V
321314-0104		KULLAGER SKF6304	BALL BEARING	KUGELLAGER	C- 538421-010V
321521-0178		NÅLLAGER NA4900-2RS	NEEDLE BEARING	NADELLAGER	C- 566282-010V
321531-0248		NÅLHYLSA HK2016	NEEDLE SLEEVE	NADELHUELSE	C- 256197-050V
					C- 491814-020V
					C- 491815-020V
321576-0260		STÖDRULLE NUTR20	SUPPORT ROLLER	ST~TZROLLE	C- 256197-050V
					C- 491814-020V
					C- 491815-020V
321580-0165		KURVRULLE KR30	CURVE ROLLER	KURVENROLLE	C- 751689-010V
321582-0149		KURVRULLE KR22PP	CURVE ROLLER	KURVENROLLE	CR- 294695-010V
					C- 554360-020V
321582-0166		KURVRULLE KR32PP	CURVE ROLLER	KURVENROLLE	C- 283604-020V
321582-0212		KURVRULLE NUKR35	CURVE ROLLER	KURVENROLLE	C- 272404-070V
					CR- 283605-010V
					C- 283612-020V
321582-0290		KURVRULLE NUKR62	CURVE ROLLER	KURVENROLLE	C- 550711-020V
321600-0114		LÖVA-LOCK LL3052	OIL SEAL (LÖVALOCK)	ABDICHTUNGSDECKEL	C- 256173-050V
341001-0148		KOPPARRÖR	COPPER TUBE	KUPFERROHR	C- 978739-010V
342212-0101		MUFF	MUFF	MUFFE	C- 795750-010V
342219-0201		PLUGG	PLUG	PFROPFEN	C- 794004-010V
342219-0203		PROPP	SHUTTER	SICHERUNG	C- 794178-010V
342224-0100		VINKELRÖR	ELBOW PIPE	WINKELROHR	C- 736797-010V
342245-0102		T-RÖR	T-PIPE	T-ROHR	C- 735014-010V
					C- 794179-010V
					C- 536859-020V
342700-0110		NIPPEL RNA1/4"-1/4"	NIPPLE	NIPPEL	C- 565536-010V
342700-0111		NIPPEL RNA3/8"-3/8"	NIPPLE	NIPPEL	C- 271866-060V
342700-0205		NIPPEL RNA1/4"-1/2"	NIPPLE	NIPPEL	C- 978739-010V
342701-0201		BUSSNING RNI1/4"-1/8"	BUSHING	BUCHSE	C- 565536-010V
					C- 491890-010V
					C- 536859-020V
					RK- 978234-010V
					C- 978739-010V
342701-0203		BUSSNING RNI3/8"-1/4"	BUSHING	BUCHSE	C- 554888-010V
342701-0205		BUSSNING RNI1/2"-1/4"	BUSHING	BUCHSE	C- 271387-030V
					C- 978739-010V
342701-0206		BUSSNING RNI1/2"-3/8"	BUSHING	BUCHSE	C- 550757-020V
342701-0208		BUSSNING RNI3/4"-1/4"	BUSHING	BUCHSE	C- 256173-050V
342701-0210		BUSSNING RNI3/4"-1/2"	BUSHING	BUCHSE	C- 536859-020V
342703-0114		MUTTER M15-LFZB	NUT	MUTTER	C- 271866-060V
342704-0114		SKÄRRING R-15 MSG	CUTTING RING	SCHNEIDRING	C- 456757-020V
342705-0114		SKÄRRING R15-LFZB	CUTTING RING	SCHNEIDRING	C- 271866-060V
342706-0130		INSTHYLSA SH06	INSERT SLEEVE	EINSTECKHUELSE	C- 794179-010V
342706-0148		INSTHYLSA SH08	INSERT SLEEVE	EINSTECKHUELSE	C- 795750-010V
342707-0109		MUFF	MUFF	MUFFE	RK- 520069-010V
342707-0113		MUFF	MUFF	MUFFE	C- 978739-010V
342708-0101		HYLSA VSH 6X1/MS	SLEEVE	HUELSE	C- 456953-020V
					C- 456935-030V
					C- 752898-010V
342708-0107		HYLSA VSH 12X1/MS	SLEEVE	HUELSE	C- 736797-010V
					C- 456455-030V

PART NO	LAST ECN	BENÄMNING	TITLE	BENENNUNG	GROUP NO
342708-0109		HYLSA VSH 15X1/MS	SLEEVE	HUELSE	C- 491767-020V
342710-0115		REDUCERING RBM16/8	REDUCER	REDUZIERUNG	C- 271261-050V
					C- 978260-020V
342713-0208		BLINDPROPP	BLIND PLUG	BLINDPFROPFEN	CR- 283607-030V
					C- 457866-030V
					C- 556723-010V
342713-0209		BLINDPROPP	BLIND PLUG	BLINDPFROPFEN	CR- 256212-050V
					CR- 256213-050V
					C- 456757-020V
342713-0210		BLINDPROPP	BLIND PLUG	BLINDPFROPFEN	C- 794145-010V
					C- 272408-050V
					C- 536859-020V
					C- 735183-020V
					RK- 978234-010V
					C- 978740-010V
					C- 456757-020V
342713-0211		BLINDPROPP	BLIND PLUG	BLINDPFROPFEN	C- 794145-010V
					C- 978740-010V
					C- 456757-020V
					C- 469118-020V
342713-0213		BLINDPROPP	BLIND PLUG	BLINDPFROPFEN	C- 491767-020V
					C- 978739-010V
					C- 469121-020V
342713-0215		BLINDPROPP	BLIND PLUG	BLINDPFROPFEN	C- 271866-060V
342713-0310		BLINDPROPP BPS14	BLIND PLUG	BLINDPFROPFEN	C- 271168-040V
342713-0313		BLINDPROPP BPS12	BLIND PLUG	BLINDPFROPFEN	C- 271168-040V
342714-0110		REDUCERING KOR 15/12-L/S	REDUCER	REDUZIERUNG	C- 271866-060V
342715-0100		PLUGG D=4	PLUG	PFROPFEN	C- 978740-010V
342715-0102		PLUGG D=6	PLUG	PFROPFEN	C- 978740-010V
342715-0103		PLUGG D=8	PLUG	PFROPFEN	C- 978740-010V
342716-0203		REDUCERING 6-8	REDUCER	REDUZIERUNG	C- 978740-010V
342716-0209		REDUCERING 8-12	REDUCER	REDUZIERUNG	C- 978740-010V
342720-0102		RÖRKOPPL. GA-6-1/8"	PIPE COUPLING	ROHRKUPPLUNG	C- 978739-010V
342720-0114		RÖRKOPPL. GA-15-1/2"	PIPE COUPLING	ROHRKUPPLUNG	C- 491767-020V
					C- 271261-050V
					C- 271866-060V
					C- 978739-010V
					C- 469121-020V
342720-0115		RÖRKOPPL. GA-16-1/2"	PIPE COUPLING	ROHRKUPPLUNG	C- 271866-060V
342721-0103		RÖRKOPPL. GA8-LRFZB	PIPE COUPLING	ROHRKUPPLUNG	C- 271168-040V
342721-0114		RÖRKOPPL. GA15-LRFZB	PIPE COUPLING	ROHRKUPPLUNG	C- 271168-040V
342722-0202		RÖRKOPPL. D=6-R1/8"	PIPE COUPLING	ROHRKUPPLUNG	C- 978740-010V
342722-0203		RÖRKOPPL. D=6-R1/4"	PIPE COUPLING	ROHRKUPPLUNG	C- 554888-010V
					C- 978738-010V
342722-0204		RÖRKOPPL. D=8-R1/8"	PIPE COUPLING	ROHRKUPPLUNG	C- 978739-010V
342722-0205		RÖRKOPPL. D=8-R1/4"	PIPE COUPLING	ROHRKUPPLUNG	C- 978739-010V
					C- 978740-010V
342723-0114		RÖRKOPPL. GI-15-1/2"	PIPE COUPLING	ROHRKUPPLUNG	CE- 41723-010V
					CE- 41750-010V
					CE- 41757-010V
342723-0114		RÖRKOPPL. GI-15-1/2"	PIPE COUPLING	ROHRKUPPLUNG	C- 271866-060V
					CE- 41723-010V
					CE- 41750-010V
					CE- 41757-010V
342725-0103		RAK RÖRK. GI 8 LR/RO RFR	STRAIGHT PIPE UNION	GERADES ROHRKUPPLUNG	C- 735014-010V
342725-0114		RAK RÖRK. GI 15LR/RO RFR	STRAIGHT PIPE UNION	GERADES ROHRKUPPLUNG	C- 271866-060V
342726-0109		RÖRKOPPL. G-12	PIPE COUPLING	ROHRKUPPLUNG	C- 271261-050V
					C- 271866-060V
342726-0114		RÖRKOPPL. G-15	PIPE COUPLING	ROHRKUPPLUNG	C- 271866-060V
342727-0102		RÖRKOPPL. G6-LFZB	PIPE COUPLING	ROHRKUPPLUNG	C- 271562-080V
342727-0214		RÖRKOPPL. G 15-L/SY	PIPE COUPLING	ROHRKUPPLUNG	C- 491207-030V
342730-0109		V-KOPPLING WA-12-3/8"	ELBOW PIPE JOINT	WINKELROHRVERBINDUNG	C- 271866-060V
342730-0114		V-KOPPLING WA-15-1/2"	ELBOW PIPE JOINT	WINKELROHRVERBINDUNG	C- 978739-010V
342731-0221		V-KOPPLING WA15-LK RFR	ELBOW PIPE JOINT	WINKELROHRVERBINDUNG	C- 491207-030V
342732-0102		V-KOPPLING D6-R1/8"	ELBOW PIPE JOINT	WINKELROHRVERBINDUNG	C- 550714-010V
					C- 554886-010V
342732-0103		V-KOPPLING D6-R1/4"	ELBOW PIPE JOINT	WINKELROHRVERBINDUNG	C- 550757-020V
					C- 229400-070V
					C- 232781-040V
					C- 978739-010V
342732-0104		V-KOPPLING D8-R1/4"	ELBOW PIPE JOINT	WINKELROHRVERBINDUNG	C- 978740-010V
					C- 550714-010V
342732-0105		V-KOPPLING D8-R3/8"	ELBOW PIPE JOINT	WINKELROHRVERBINDUNG	C- 978740-010V
342732-0110		V-KOPPLING D12-R3/8"	ELBOW PIPE JOINT	WINKELROHRVERBINDUNG	C- 978740-010V
					C- 550757-020V
					C- 978739-010V
342732-0801		V-KOPPLING D8-R1/8"	ELBOW PIPE JOINT	WINKELROHRVERBINDUNG	C- 978740-010V
342735-0103		V-KOPPLING D=8	ELBOW PIPE JOINT	WINKELROHRVERBINDUNG	C- 978739-010V
					C- 978738-010V
342735-0109		V-KOPPLING D=12	ELBOW PIPE JOINT	WINKELROHRVERBINDUNG	C- 978740-010V
342736-0109		V-KOPPLING W-12	ELBOW PIPE JOINT	WINKELROHRVERBINDUNG	C- 978738-010V
342736-0114		V-KOPPLING W-15	ELBOW PIPE JOINT	WINKELROHRVERBINDUNG	C- 271562-080V
					C- 271261-050V
					C- 271866-060V
342736-0115		V-KOPPL. W16	ELBOW PIPE JOINT	WINKELROHRVERBINDUNG	C- 456757-020V
342737-0204		V-KOPPLING W 6-L RFR	ELBOW PIPE JOINT	WINKELROHRVERBINDUNG	C- 752898-010V
342737-0221		V-KOPPLING W 15-L RFR	ELBOW PIPE JOINT	WINKELROHRVERBINDUNG	C- 491207-030V
342738-0208		EVW 8-LR/SY	ELBOW PIPE JOINT	WINKELROHRVERBINDUNG	C- 491650-010V
342738-0221		EVW 15-LR/SY	ELBOW PIPE JOINT	WINKELROHRVERBINDUNG	C- 491767-020V
342738-0225		EVW 18-LR/SY	ELBOW PIPE JOINT	WINKELROHRVERBINDUNG	C- 491207-030V
342741-0209		T-KOPPLING TE 12-LR/SY	T-CONNECTION	T-KUPPLUNG	C- 794178-010V
342742-0103		T-KOPPLING D6-R1/4"	T-CONNECTION	T-KUPPLUNG	C- 978738-010V

PART NO	LAST ECN	BENÄMNING	TITLE	BENENNUNG	GROUP NO
342742-0104		T-KOPPLING D8-R1/4"	T-CONNECTION	T-KUPPLUNG	C- 978739-010V C- 978740-010V
342745-0109		VINKELKOPPLING	ELBOW PIPE JOINT	WINKELROHRVERBINDUNG	C- 794178-010V
342746-0114		T-KOPPLING T-15	T-CONNECTION	T-KUPPLUNG	C- 271261-050V C- 456455-030V C- 271866-060V
342748-0102		T-KOPPLING D=6	T-CONNECTION	T-KUPPLUNG	C- 550714-010V C- 978738-010V
342748-0103		T-KOPPLING D=8	T-CONNECTION	T-KUPPLUNG	C- 978738-010V C- 978740-010V
342748-0109		T-KOPPLING D=12	T-CONNECTION	T-KUPPLUNG	C- 978740-010V
342751-0204		L-KOPPLING LE- 6-LR/SY	ELBOW FITTING	L-KUPPLUNG	C- 295045-070V
342751-0215		L-KOPPLING LE-12-LR/SY	ELBOW FITTING	L-KUPPLUNG	C- 794178-010V
342759-0114		L-KOPPLING	ELBOW FITTING	L-KUPPLUNG	C- 271866-060V
342762-0103		SKOTTGMG SV8-LFZB	BULKHEAD LEAD-IN	ANSCHLUSSHUELSE	C- 491890-010V
342762-0218		SKOTTGMG SV 18-L/SY	BULKHEAD LEAD-IN	ANSCHLUSSHUELSE	C- 491207-030V
342767-0100		SKOTTGMG R1/8	BULKHEAD LEAD-IN	ANSCHLUSSHUELSE	C- 271562-080V
342767-0100		SKOTTGMG R1/8	BULKHEAD LEAD-IN	ANSCHLUSSHUELSE	C- 978739-010V
342767-0104		SKOTTGMG R1/4	BULKHEAD LEAD-IN	ANSCHLUSSHUELSE	C- 978739-010V
342767-0114		SKOTTGMG R1/2	BULKHEAD LEAD-IN	ANSCHLUSSHUELSE	C- 978739-010V
342770-0105		SLANGKOPPLING	HOSE COUPLING	SCHLAUCHKUPPLUNG	C- 978740-010V
342790-0102		MANOMKOPPL MAV6-LRFZB	GAUGE CONNECTION	MANOMETERKUPPLUNG	C- 735183-020V
342797-0121		BANJOHUS SINGEL 6-1/8	BANJO CONNECTION	SCHWENKANSCHLUSS	C- 476859-020V C- 560921-010V C- 736796-020V C- 794110-010V C- 736796-020V C- 794110-010V C- 271562-080V C- 272343-050V C- 295891-030V C- 256055-060V C- 256084-050V C- 256095-050V C- 271169-040V C- 272024-040V C- 272025-030V C- 272337-040V C- 295045-070V C- 456309-050V C- 491083-030V C- 735183-020V
342797-0122		BANJOHUS SINGEL 6-1/4	BANJO CONNECTION	SCHWENKANSCHLUSS	RK- 520069-010V C- 272408-050V C- 295891-030V C- 456556-020V C- 491083-030V C- 735183-020V C- 978739-010V
342797-0132		BANJOHUS SINGEL 8-1/4	BANJO CONNECTION	SCHWENKANSCHLUSS	C- 978739-010V
342803-0101		KPL.MUTTER 25	NUT	MUTTER	C- 736360-020V
342803-0103		KPL.MUTTER 38	NUT	MUTTER	C- 456588-030V C- 456836-040V
342803-0104		KPL.MUTTER 51	NUT	MUTTER	C- 272560-060V
342807-0104		VINKELRÖR 51	ELBOW PIPE	WINKELROHR	C- 256674-030V
342812-0101		HYLSA ANSL.25	SLEEVE	HUELSE	C- 736360-020V
342812-0103		HYLSA ANSL.38	SLEEVE	HUELSE	C- 456836-040V
342812-0104		HYLSA ANSL.51	SLEEVE	HUELSE	C- 272560-060V
342840-0103		KLÄMMA	CLAMPING PIECE	KLAMMER	C- 295262-060V
342850-0403		PACKNING	GASKET	DICHTUNG	C- 295262-060V
342850-0404		PACKNING	GASKET	DICHTUNG	C- 295262-060V
342901-0106		SLANGNIPPEL	HOSE NIPPLE	SCHLAUCHNIPPEL	C- 272408-050V
342903-0111		MUTTER M.FJÄDER 1723-6/4	NUT	MUTTER	C- 563740-010V C- 751478-020V
342903-0121		MUTTER M.FJÄDER 1723-8/6	NUT	MUTTER	C- 751410-010V C- 456180-010V
342920-0114		RÖRKOPPL. 6/4-1/4	PIPE COUPLING	ROHRKUPPLUNG	C- 978739-010V C- 905131-010V C- 256410-060V C- 751410-010V
342920-0122		RÖRKOPPL. 8/6-1/4	PIPE COUPLING	ROHRKUPPLUNG	C- 978739-010V CR- 256547-040V C- 456455-030V
342921-0111		RÖRKOPPL. 6/4-5M	PIPE COUPLING	ROHRKUPPLUNG	C- 735183-020V C- 562679-010V CR- 283607-030V
342921-0111		RÖRKOPPL. 6/4-5M	PIPE COUPLING	ROHRKUPPLUNG	C- 556723-010V
342921-0112		RÖRKOPPL. 6/4-6M	PIPE COUPLING	ROHRKUPPLUNG	C- 295218-010V
342921-0113		RÖRKOPPL. 6/4-1/8"	PIPE COUPLING	ROHRKUPPLUNG	C- 533014-010V C- 563740-010V C- 491650-010V C- 751478-020V C- 794179-010V C- 272765-070V C- 295045-070V C- 469781-030V CR- 283607-030V C- 536859-020V C- 556723-010V C- 978739-010V
342921-0114		RÖRKOPPL. 6/4-1/4"	PIPE COUPLING	ROHRKUPPLUNG	C- 533014-010V C- 563740-010V

			C- 536859-020V
			CR- 548040-010V
			RK- 978234-010V
RÖRKOPPL. 6/4-1/4	PIPE COUPLING	ROHRKUPPLUNG	C- 563740-010V
			C- 548031-020V
			C- 751410-010V
RÖRKOPPL. 6/4	PIPE COUPLING	ROHRKUPPLUNG	C- 548031-020V
RÖRKOPPL. 8/6-6/4	PIPE COUPLING	ROHRKUPPLUNG	C- 548031-020V
V-KOPPLING6/4-1/8	ELBOW PIPE JOINT	WINKELROHRVERBINDUNG	C- 736865-010V
			C- 736796-020V
			C- 736797-010V
			C- 794179-010V
			C- 736796-020V
			C- 736797-010V
			C- 794179-010V
			C- 490600-040V
			C- 751410-010V
			RK- 978234-010V
V-KOPPLING6/4-1/4	ELBOW PIPE JOINT	WINKELROHRVERBINDUNG	C- 469118-020V
			C- 491207-030V
V-KOPPLING8/6-1/8	ELBOW PIPE JOINT	WINKELROHRVERBINDUNG	RK- 978234-010V
V-KOPPLING8/6-1/4	ELBOW PIPE JOINT	WINKELROHRVERBINDUNG	C- 469118-020V
			C- 735014-010V
			C- 256173-050V
			C- 735183-020V
V-KOPPLING8/6-3/8	ELBOW PIPE JOINT	WINKELROHRVERBINDUNG	C- 795750-010V
			C- 735183-020V
VINKELKOPPLING	ELBOW PIPE JOINT	WINKELROHRVERBINDUNG	C- 795750-010V
			C- 752960-010V
			C- 752971-010V
			C- 456457-040V
VINKELKOPPLING	ELBOW PIPE JOINT	WINKELROHRVERBINDUNG	C- 752960-010V
			C- 752971-010V
			C- 456457-040V
V-KOPPLING6/4-1/8	ELBOW PIPE JOINT	WINKELROHRVERBINDUNG	C- 548031-020V
V-KOPPLING8/6-1/4	ELBOW PIPE JOINT	WINKELROHRVERBINDUNG	C- 548031-020V
T-KOPPLING6/4-1/8	T-CONNECTION	T-KUPPLUNG	C- 736797-010V
T-KOPPLING6/4-1/4	T-CONNECTION	T-KUPPLUNG	RK- 978234-010V
T-KOPPLING8/6-1/4	T-CONNECTION	T-KUPPLUNG	C- 795750-010V
T-KOPPLING6/4	T-CONNECTION	T-KUPPLUNG	C- 736865-010V
			C- 271866-060V
			C- 490600-040V
			C- 536859-020V
			C- 548031-020V
			C- 751410-010V
			C- 556723-010V
			RK- 978234-010V
T-KOPPLING8/6-6/4	T-CONNECTION	T-KUPPLUNG	C- 978239-020V
			C- 978240-020V
			C- 978241-020V
T-KOPPLING8/6	T-CONNECTION	T-KUPPLUNG	C- 401419-010V
			C- 735183-020V
L-KOPPLING6/4-1/4	ELBOW FITTING	L-KUPPLUNG	RK- 978234-010V
L-KOPPLING8/6-1/4	ELBOW FITTING	L-KUPPLUNG	C- 548031-020V
			C- 795750-010V
SKOTTGMG 6/4	BULKHEAD LEAD-IN	ANSCHLUSSHUELSE	C- 978239-020V
			C- 978240-020V
			C- 978241-020V
			C- 736865-010V
			C- 564120-010V
			C- 272765-070V
			C- 456455-030V
			C- 271513-060V
			C- 536859-020V
			C- 752030-010V
			RK- 978234-010V
			C- 978739-010V
SKOTTGMG 8/6-6/4	BULKHEAD LEAD-IN	ANSCHLUSSHUELSE	C- 456455-030V
			C- 548031-020V
			C- 978739-010V
SKOTTGMG 8/6	BULKHEAD LEAD-IN	ANSCHLUSSHUELSE	C- 735014-010V
			C- 456455-030V
			C- 978739-010V
BANJOHUS SINGEL 6/4-5M	BANJO CONNECTION	SCHWENKANSCHLUSS	C- 751478-020V
			C- 562679-010V
			CR- 256436-060V
			C- 456555-040V
			CR- 283607-030V
			C- 490600-040V
			CR- 548040-010V

PART NO	LAST ECN	BENÄMNING	TITLE	BENENNUNG	GROUP NO
342980-0112		BANJOHUS SINGEL	BANJO CONNECTION	SCHWENKANSCHLUSS	C- 490600-040V
342980-0113		BANJOHUS SINGEL 6/4-1/8	BANJO CONNECTION	SCHWENKANSCHLUSS	C- 456953-020V
					C- 491650-010V
					C- 271934-030V
					C- 751478-020V
					C- 736865-010V
					C- 736796-020V
					C- 794179-010V
					C- 736796-020V
					C- 794179-010V
342980-0113		BANJOHUS SINGEL 6/4-1/8	BANJO CONNECTION	SCHWENKANSCHLUSS	C- 564120-010V
					CR- 256436-060V
					C- 256206-020V
					C- 256207-020V
					CR- 256436-060V
					C- 256674-030V
					C- 272343-050V
					C- 256084-050V
					C- 295045-070V
					C- 469781-030V
					C- 457866-030V
					C- 490600-040V
					C- 497534-030V
					C- 536859-020V
					C- 566280-010V
					C- 752030-010V
342980-0114		BANJOHUS SINGEL 6/4-1/4	BANJO CONNECTION	SCHWENKANSCHLUSS	C- 978739-010V
					C- 533014-010V
					C- 484984-020V
					C- 736865-010V
					C- 736796-020V
					C- 794145-010V
					C- 794179-010V
					C- 736796-020V
					C- 794145-010V
					C- 794179-010V
					C- 491976-020V
					CR- 283605-010V
					C- 469173-010V
342980-0115		BANJOHUS SINGEL 6/4-3/8	BANJO CONNECTION	SCHWENKANSCHLUSS	C- 536859-020V
342980-0121		BANJOHUS SINGEL 8/6-1/8"	BANJO CONNECTION	SCHWENKANSCHLUSS	C- 283612-020V
					C- 456180-010V
					C- 257381-030V
					C- 257382-030V
					C- 735183-020V
					C- 978739-010V
342980-0122		BANJOHUS SINGEL 8/6-1/4	BANJO CONNECTION	SCHWENKANSCHLUSS	C- 469118-020V
					C- 491650-010V
					C- 735014-010V
					C- 794145-010V
					C- 794179-010V
					C- 794145-010V
					C- 794179-010V
					C- 256173-050V
					C- 536859-020V
					C- 735183-020V
					C- 795750-010V
					C- 978739-010V
					C- 456757-020V
					C- 469118-020V
342980-0213		BANJOHUS DUBBEL 6/4-1/8	BANJO CONNECTION	SCHWENKANSCHLUSS	C- 736865-010V
342980-0214		BANJOHUS DUBBEL 6/4-1/4	BANJO CONNECTION	SCHWENKANSCHLUSS	C- 536859-020V
342980-0216		BANJOHUS DUBBEL 6/4-1/2	BANJO CONNECTION	SCHWENKANSCHLUSS	C- 536859-020V
342980-0221		BANJOHUS DUBBEL 8/6-1/8	BANJO CONNECTION	SCHWENKANSCHLUSS	C- 735183-020V
342980-0222		BANJOHUS DUBBEL 8/6-1/4	BANJO CONNECTION	SCHWENKANSCHLUSS	C- 794145-010V
P- 342980-0301		BANJOSKRUV SINGEL 5M	BANJO CONNECTION	SCHWENKANSCHLUSS	C- 751478-020V
					C- 562679-010V
					CR- 256436-060V
P- 342980-0301		BANJOSKRUV SINGEL 5M	BANJO CONNECTION	SCHWENKANSCHLUSS	C- 456555-040V
					CR- 283607-030V
					C- 490600-040V
342980-0303		BANJOSKRUV SINGEL 1/8"	BANJO CONNECTION	SCHWENKANSCHLUSS	CR- 548040-010V
					C- 456953-020V
					C- 491650-010V
					C- 751478-020V
					C- 476859-020V
					C- 560921-010V
					C- 736865-010V
					C- 560921-010V
					C- 736865-010V
					C- 560921-010V
					C- 736865-010V
					C- 560921-010V
					C- 736865-010V
					C- 560921-010V
					C- 736865-010V
					C- 736796-020V
					C- 794110-010V
					C- 794179-010V
					C- 736796-020V

PART NO	LAST ECN	BENÄMNING	TITLE	BENENNUNG	GROUP NO
					C- 794110-010V C- 794179-010V C- 564120-010V CR- 256436-060V C- 271562-080V C- 456180-010V C- 256206-020V C- 256207-020V C- 257381-030V C- 257382-030V CR- 256436-060V C- 256674-030V C- 272343-050V C- 271169-040V C- 272337-040V C- 272560-060V C- 295045-070V C- 469781-030V C- 491083-030V C- 457866-030V C- 490600-040V C- 497534-030V C- 536859-020V C- 566280-010V C- 735183-020V C- 752030-010V C- 978739-010V
342980-0304		BANJOSKRUV SINGEL 1/4	BANJO CONNECTION	SCHWENKANSCHLUSS	C- 469118-020V C- 491650-010V C- 484984-020V C- 735014-010V C- 736796-020V C- 794145-010V C- 794179-010V
342980-0304		BANJOSKRUV SINGEL 1/4	BANJO CONNECTION	SCHWENKANSCHLUSS	C- 736796-020V C- 794145-010V C- 794179-010V C- 256173-050V C- 272408-050V C- 295891-030V C- 456556-020V C- 491083-030V CR- 283605-010V C- 469173-010V C- 536859-020V C- 735183-020V C- 795750-010V C- 978739-010V
342980-0305		BANJOSKRUV SINGEL 3/8	BANJO CONNECTION	SCHWENKANSCHLUSS	C- 456757-020V C- 283612-020V
342980-0306		BANJOSKRUV SINGEL 1/2	BANJO CONNECTION	SCHWENKANSCHLUSS	C- 536859-020V
342980-0313		BANJOSKRUV DUBBEL 1/8	BANJO CONNECTION	SCHWENKANSCHLUSS	C- 271934-030V C- 256206-020V C- 256207-020V C- 256084-050V C- 295045-070V
342980-0314		BANJOSKRUV DUBBEL 1/4	BANJO CONNECTION	SCHWENKANSCHLUSS	C- 469118-020V C- 533014-010V C- 491650-010V C- 736865-010V C- 794145-010V C- 491083-030V C- 536859-020V C- 735183-020V C- 795750-010V C- 978739-010V
342991-0100		SL.KLÄMMA 8-14MMRFR	HOSE CLIP	SCHLAUCHKLAMMER	RK- 529345-010V C- 491890-010V
342991-0101		SL.KLÄMMA 11-17MMRFR	HOSE CLIP	SCHLAUCHKLAMMER	RK- 529345-010V C- 924572-010V C- 256438-020V C- 491890-010V C- 491207-030V C- 751398-020V
342991-0103		SL.KLÄMMA 15-24MMRFR	HOSE CLIP	SCHLAUCHKLAMMER	C- 924572-010V C- 272343-050V C- 272408-050V
342991-0104		SL.KLÄMMA 19-28MMRFR	HOSE CLIP	SCHLAUCHKLAMMER	C- 295891-030V C- 256173-050V C- 256843-060V
342991-0105		SL.KLÄMMA 22-32MMRFR	HOSE CLIP	SCHLAUCHKLAMMER	C- 272404-070V
342991-0106		SL.KLÄMMA 26-38MMRFR	HOSE CLIP	SCHLAUCHKLAMMER	C- 794180-010V C- 456455-030V C- 491207-030V C- 751398-020V
342991-0108		SL.KLÄMMA 38-50MMRFR	HOSE CLIP	SCHLAUCHKLAMMER	C- 272408-050V
342991-0110		SL.KLÄMMA 50-65MMRFR	HOSE CLIP	SCHLAUCHKLAMMER	C- 752898-010V
344502-0021		SMÖRJNIPPEL AHM6	NIPPLE	NIPPEL	C- 283604-020V CR- 283605-010V C- 283612-020V
344502-0026		SMÖRJNIPPEL AHKR1/8"	NIPPLE	NIPPEL	CR- 548040-010V
344502-0061		SMÖRJNIPPEL M6AL.	NIPPLE	NIPPEL	CR- 548040-010V

PART NO	LAST ECN	BENÄMNING	TITLE	BENENNUNG	GROUP NO
344510-0101		SMÖRJNIPPEL 1	GREASE NIPPLE	SCHMIERNIPPEL	CR- 294695-010V
346800-0110		LJUDDÄMP.FILTER R1/4"	SILENCER FILTER	DAMPFUNGSFILTER	C- 536859-020V
346800-0111		LJUDDÄMP.FILTER R3/8"	SILENCER FILTER	DAMPFUNGSFILTER	C- 794145-010V
346800-0111		LJUDDÄMP.FILTER R3/8"	SILENCER FILTER	DAMPFUNGSFILTER	C- 536859-020V
351120-0145		KABEL SIHF 3G2,5	CABLE	KABEL	CE- 41725-010V
					CE- 41752-010V
					CE- 41759-010V
					RK- 557018-010V
					RK- 557021-010V
					CE- 41725-010V
					CE- 41752-010V
					CE- 41759-010V
351120-0167		KABEL SIHF 4G6	CABLE	KABEL	CE- 41725-010V
					CE- 41752-010V
					CE- 41759-010V
					CE- 41725-010V
					CE- 41752-010V
					CE- 41759-010V
351120-0168		KABEL SIHF 4G10	CABLE	KABEL	CE- 41725-010V
					CE- 41752-010V
					CE- 41759-010V
					CE- 41725-010V
					CE- 41752-010V
					CE- 41759-010V
351123-0165		KABEL FKK,4X2,5	CABLE	KABEL	CE- 557224-010V
351150-0122		KABEL OILFLEX N2X0,7	CABLE	KABEL	CE- 41725-010V
					CE- 41752-010V
					CE- 41759-010V
					CE- 41725-010V
					CE- 41752-010V
					CE- 41759-010V
351150-0403		KABEL OILFLEX 3G0,75	CABLE	KABEL	CE- 41725-010V
					CE- 41752-010V
					CE- 41759-010V
					RK- 41767-010V
					RK- 41769-010V
					CE- 557224-010V
					RK- 557018-010V
					RK- 557021-010V
					RK- 557147-010V
					RK- 557150-010V
					RK- 557153-010V
					RK- 557156-010V
					RK- 557159-010V
					CE- 557224-010V
					RK- 557690-010V
					RK- 557693-010V
					RK- 557696-010V
					RK- 41767-010V
					RK- 41769-010V
					CE- 41725-010V
					CE- 41752-010V
					CE- 41759-010V
					RK- 978234-010V
351150-0404		KABEL OILFLEX 4G0,75	CABLE	KABEL	CE- 41725-010V
					CE- 41752-010V
					CE- 41759-010V
					CE- 41725-010V
					CE- 41752-010V
					CE- 41759-010V
					RK- 978234-010V
351150-0405		KABEL OILFLEX 5G0,75	CABLE	KABEL	CE- 41725-010V
351150-0405		KABEL OILFLEX 5G0,75	CABLE	KABEL	CE- 41752-010V
					CE- 41759-010V
					CE- 41725-010V
					CE- 41752-010V
					CE- 41759-010V
351150-0406		KABEL OILFLEX 7G0,75	CABLE	KABEL	CE- 41725-010V
					CE- 41752-010V
					CE- 41759-010V
					RK- 41767-010V
					RK- 41769-010V
					RK- 557690-010V
					RK- 557693-010V
					RK- 557696-010V
					RK- 41767-010V
					RK- 41769-010V
					CE- 41725-010V
					CE- 41752-010V
					CE- 41759-010V
351150-0407		KABEL OILFLEX 12G0,7	CABLE	KABEL	CE- 41724-010V
					CE- 41725-010V
					CE- 41751-010V
					CE- 41752-010V
					CE- 41758-010V
					CE- 41759-010V
					RK- 558313-010V
					RK- 558316-010V
					RK- 558345-010V
					CE- 41724-010V
					CE- 41725-010V
					CE- 41751-010V

PART NO	LAST ECN	BENÄMNING	TITLE	BENENNUNG	GROUP NO
351150-0408		KABEL OILFLEX 16G0,7	CABLE	KABEL	CE- 41752-010V CE- 41758-010V CE- 41759-010V CE- 41725-010V CE- 41752-010V CE- 41759-010V RK- 557018-010V RK- 557021-010V RK- 557147-010V RK- 557150-010V RK- 557153-010V RK- 557690-010V RK- 557693-010V RK- 557696-010V
351150-0409		KABEL OILFLEX 27G0,7	CABLE	KABEL	CE- 41725-010V CE- 41752-010V CE- 41759-010V CE- 41725-010V CE- 41752-010V CE- 41759-010V RK- 558304-010V RK- 558307-010V RK- 558310-010V
351150-0410		KABEL OILFLEX 36G0,7	CABLE	KABEL	CE- 41725-010V CE- 41752-010V CE- 41759-010V RK- 557156-010V RK- 557159-010V
351150-0411		KABEL OILFLEX 52G0,7	CABLE	KABEL	CE- 41725-010V
351150-0411		KABEL OILFLEX 52G0,7	CABLE	KABEL	CE- 41752-010V CE- 41759-010V
351150-0412		KABEL OILFLEX 3G1,5	CABLE	KABEL	CE- 41725-010V CE- 41752-010V CE- 41759-010V CE- 41725-010V CE- 41752-010V CE- 41759-010V
351150-0417		KABEL OILFLEX 3G2,5	CABLE	KABEL	CE- 41725-010V CE- 41752-010V CE- 41759-010V CE- 41725-010V CE- 41752-010V CE- 41759-010V RK- 557156-010V RK- 557159-010V
351150-0418		KABEL OILFLEX 4G2,5	CABLE	KABEL	CE- 41725-010V CE- 41752-010V CE- 41759-010V CE- 41725-010V CE- 41752-010V CE- 41759-010V
351150-0419		KABEL OILFLEX 5G2,5	CABLE	KABEL	CE- 41725-010V CE- 41752-010V CE- 41759-010V CE- 41725-010V CE- 41752-010V CE- 41759-010V
351150-0420		KABEL OILFLEX 7G2,5	CABLE	KABEL	CE- 41725-010V CE- 41752-010V CE- 41759-010V CE- 41725-010V CE- 41752-010V CE- 41759-010V
351172-0102		KABEL MÖRKBLÅ 0,75MM2	CABLE AWM DARKBLUE 0.75	KABEL	CE- 41723-010V CE- 41750-010V CE- 41757-010V RK- 41767-010V RK- 41769-010V RK- 557147-010V RK- 557150-010V RK- 557153-010V RK- 557156-010V RK- 557159-010V RK- 557234-010V RK- 557545-010V RK- 557551-010V RK- 557690-010V RK- 557693-010V RK- 557696-010V
351172-0102		KABEL MÖRKBLÅ 0,75MM2	CABLE AWM DARKBLUE 0.75	KABEL	RK- 41767-010V RK- 41769-010V RK- 558304-010V RK- 558307-010V RK- 558310-010V RK- 558313-010V RK- 558316-010V RK- 558333-010V RK- 558335-010V RK- 558337-010V

PART NO	LAST ECN	BENÄMNING	TITLE	BENENNUNG	GROUP NO
351172-0106		KABEL MÖRKBLÅ 4MM2	CABLE AWM DARKBLUE 4,0	KABEL	RK- 558339-010V RK- 558345-010V CE- 41723-010V CE- 41750-010V CE- 41757-010V CE- 41723-010V CE- 41750-010V CE- 41757-010V RK- 41767-010V RK- 41769-010V RK- 41767-010V RK- 41769-010V CE- 41723-010V CE- 41750-010V CE- 41757-010V CE- 557225-010V RK- 557156-010V RK- 557159-010V
351173-0102		KABEL LJUSBLÅ 0,75MM2	CABLE AWM LIGTBLUE 0,75	KABEL	CE- 557225-010V CE- 41723-010V CE- 41750-010V CE- 41757-010V CE- 41723-010V CE- 41750-010V CE- 41757-010V CE- 41723-010V CE- 41750-010V CE- 41757-010V RK- 557018-010V RK- 557021-010V RK- 557156-010V RK- 557159-010V
351173-0104		KABEL LJUSBLÅ 1,5MM2	CABLE AWM LIGHTBLUE 1,5	KABEL	CE- 41723-010V CE- 41750-010V CE- 41757-010V CE- 41723-010V CE- 41750-010V CE- 41757-010V CE- 41723-010V CE- 41750-010V CE- 41757-010V CE- 41723-010V CE- 41750-010V CE- 41757-010V CE- 41723-010V CE- 41750-010V CE- 41757-010V CE- 41723-010V CE- 41750-010V CE- 41757-010V RK- 41767-010V RK- 41769-010V CE- 557225-010V RK- 41767-010V RK- 41769-010V
351173-0105		KABEL LJUSBLÅ 2,5MM2	CABLE AWM LIGHTBLUE 2,5	KABEL	CE- 41723-010V CE- 41750-010V CE- 41757-010V CE- 41723-010V CE- 41750-010V CE- 41757-010V CE- 41723-010V CE- 41750-010V CE- 41757-010V CE- 41723-010V CE- 41750-010V CE- 41757-010V CE- 41723-010V CE- 41750-010V CE- 41757-010V RK- 557018-010V RK- 557021-010V
351173-0107		KABEL LJUSBLÅ 6MM2	CABLE AWM LIGHTBLUE 6,0	KABEL	CE- 41723-010V CE- 41750-010V CE- 41757-010V CE- 41723-010V CE- 41750-010V CE- 41757-010V CE- 41723-010V CE- 41750-010V CE- 41757-010V CE- 41723-010V CE- 41750-010V CE- 41757-010V CE- 41723-010V CE- 41750-010V CE- 41757-010V CE- 41723-010V CE- 41750-010V CE- 41757-010V RK- 41767-010V RK- 41769-010V
351173-0110		KABEL LJUSBLÅ 25MM2	CABLE AWM LIGHTBLUE 25,0	KABEL	CE- 557225-010V RK- 41767-010V RK- 41769-010V CE- 41723-010V CE- 41750-010V CE- 41757-010V CE- 41723-010V CE- 41750-010V CE- 41757-010V CE- 41723-010V CE- 41750-010V CE- 41757-010V CE- 41723-010V CE- 41750-010V CE- 41757-010V RK- 557018-010V RK- 557021-010V
351175-0102		KABEL GULGRÖN 0,75MM2	CABLE AWM YELL/GREEN 0.7	KABEL	CE- 41723-010V CE- 41750-010V CE- 41757-010V CE- 41723-010V CE- 41750-010V CE- 41757-010V RK- 41767-010V RK- 41769-010V CE- 557225-010V RK- 41767-010V RK- 41769-010V
351175-0104		KABEL GULGRÖN 1,5MM2	CABLE AWM YELL/GREEN 1,5	KABEL	CE- 41723-010V CE- 41750-010V CE- 41757-010V CE- 41723-010V CE- 41750-010V CE- 41757-010V CE- 41723-010V CE- 41750-010V CE- 41757-010V CE- 41723-010V CE- 41750-010V CE- 41757-010V CE- 41723-010V CE- 41750-010V CE- 41757-010V RK- 557018-010V RK- 557021-010V
351175-0105		KABEL GULGRÖN 2,5MM2	CABLE AWM YELL/GREEN 2,5	KABEL	CE- 41723-010V CE- 41750-010V CE- 41757-010V CE- 41723-010V CE- 41725-010V CE- 41750-010V CE- 41752-010V CE- 41757-010V CE- 41759-010V CE- 41723-010V CE- 41725-010V CE- 41750-010V CE- 41752-010V CE- 41757-010V CE- 41759-010V CE- 41723-010V CE- 41750-010V CE- 41757-010V CE- 41723-010V CE- 41750-010V CE- 41757-010V CE- 41723-010V CE- 41725-010V
351175-0106		KABEL GULGRÖN 4MM2	CABLE AWM YELL/GREEN 4,0	KABEL	
351175-0107		KABEL GULGRÖN 6MM2	CABLE AWM YELL/GREEN 6,0	KABEL	
351175-0109		KABEL GULGRÖN 16MM2	CABLE AWM YELL/GREEN 16,	KABEL	

PART NO	LAST ECN	BENÄMNING	TITLE	BENENNUNG	GROUP NO
					CE- 41750-010V CE- 41752-010V CE- 41757-010V CE- 41759-010V CE- 41723-010V CE- 41725-010V CE- 41750-010V CE- 41752-010V CE- 41757-010V CE- 41759-010V
351176-0102		KABEL RÖD 0,75MM2	CABLE AWM RED 0,75	KABEL	CE- 41723-010V CE- 41750-010V CE- 41757-010V RK- 41767-010V RK- 41769-010V CE- 557225-010V RK- 557156-010V RK- 557159-010V
351176-0102		KABEL RÖD 0,75MM2	CABLE AWM RED 0,75	KABEL	CE- 557225-010V RK- 41767-010V RK- 41769-010V RK- 558304-010V RK- 558307-010V RK- 558310-010V
351176-0106		KABEL RÖD 4MM2	CABLE AWM RED 4,0	KABEL	CE- 41723-010V CE- 41750-010V CE- 41757-010V CE- 41723-010V CE- 41750-010V CE- 41757-010V
351179-0102		KABEL SVART 0,75MM2	CABLE AWM BLACK 0,75	KABEL	CE- 41723-010V CE- 41750-010V CE- 41757-010V C- 567733-010V
351179-0104		KABEL SVART 1,5MM2	CABLE AWM BLACK 1,5	KABEL	CE- 41723-010V CE- 41750-010V CE- 41757-010V RK- 557156-010V RK- 557159-010V
351179-0105		KABEL SVART 2,5MM2	CABLE AWM BLACK 2,5	KABEL	CE- 41723-010V CE- 41750-010V CE- 41757-010V CE- 41723-010V CE- 41750-010V CE- 41757-010V RK- 557018-010V RK- 557021-010V RK- 557156-010V RK- 557159-010V
351179-0107		KABEL SVART 6MM2	CABLE AWM BLACK 6,0	KABEL	CE- 41723-010V CE- 41750-010V CE- 41757-010V CE- 41723-010V CE- 41750-010V CE- 41757-010V
351179-0110		KABEL SVART 25MM2	CABLE AWM BLACK 25,0	KABEL	CE- 41723-010V CE- 41725-010V CE- 41750-010V CE- 41752-010V CE- 41757-010V CE- 41759-010V CE- 41723-010V CE- 41725-010V CE- 41750-010V CE- 41752-010V CE- 41757-010V CE- 41759-010V
351180-0102		KABEL AWM ORANGE 0,75	CABLE AWM ORANGE 0,75	KABEL	CE- 41723-010V CE- 41750-010V CE- 41757-010V CE- 41723-010V CE- 41750-010V CE- 41757-010V
352030-0122		KABELKANAL A2	CABLE DUCT	KABELKANAL	C- 229400-070V
352100-0105		KABELFÖRSKR.18,6-8,5	CABLE GLAND	KABELVERSCHRAUBUNG	C- 229400-070V
352100-0106		KABELFÖRSKR.18,6-10,5	CABLE GLAND	KABELVERSCHRAUBUNG	C- 256055-060V
352100-0107		KABELFÖRSKR.18,6-12	CABLE GLAND	KABELVERSCHRAUBUNG	CR- 256547-040V
352100-0121		KABELFÖRSKR. 37-23,5	CABLE GLAND	KABELVERSCHRAUBUNG	C- 271181-040V
352101-0102		GENOMFÖRING 15,2	LEAD-IN	DURCHF~HRUNG	C- 295883-050V C- 271641-030V C- 271641-020V C- 456827-020V C- 752645-020V C- 752646-020V C- 469374-040V C- 457856-020V C- 457867-020V C- 735031-010V C- 229400-070V

PART NO	LAST ECN	BENÄMNING	TITLE	BENENNUNG	GROUP NO
352101-0103		GENOMFÖRING 18,6	LEAD-IN	DURCHF~HRUNG	C- 924329-010V C- 924585-010V C- 271513-060V C- 469374-040V C- 978739-010V C- 978740-010V
352101-0105		GENOMFÖRING 22,5	LEAD-IN	DURCHF~HRUNG	C- 295883-050V C- 271866-060V C- 490761-010V C- 469374-040V C- 457856-020V
352101-0106		GENOMFÖRING 28,3	LEAD-IN	DURCHF~HRUNG	C- 295883-050V C- 469374-040V
352101-0107		GENOMFÖRING 37	LEAD-IN	DURCHF~HRUNG	C- 295883-050V C- 469374-040V
352103-0096		KABELFÖRSKR.ST 7	CABLE GLAND	KABELVERSCHRAUBUNG	C- 556662-010V C- 544390-010V C- 529621-010V C- 794092-010V C- 68161-010V
352103-0100		KABELFÖRSKR.STR 9	CABLE GLAND	KABELVERSCHRAUBUNG	C- 563088-010V C- 552013-010V C- 544390-010V C- 905401-010V C- 456100-030V C- 456460-040V C- 295470-050V C- 457856-020V C- 490600-040V
352103-0101		KABELFÖRSKR.ST 9	CABLE GLAND ST 9	KABELVERSCHRAUBUNG	C- 232781-040V C- 295883-050V C- 978604-010V C- 456435-040V C- 456827-020V C- 552013-010V RK- 557156-010V RK- 557159-010V
352103-0101		KABELFÖRSKR.ST 9	CABLE GLAND ST 9	KABELVERSCHRAUBUNG	C- 736865-010V C- 924585-010V C- 736865-010V C- 924585-010V C- 736865-010V C- 924585-010V C- 794272-010V C- 565419-010V C- 271513-060V C- 751885-030V C- 272021-060V C- 295470-050V C- 457856-020V C- 490600-040V C- 735031-010V C- 924329-010V C- 924727-010V C- 924808-010V C- 925492-010V C- 924662-010V C- 924727-010V C- 924808-010V
352103-0105		KABELFÖRSKR.STR 11	CABLE GLAND	KABELVERSCHRAUBUNG	C- 456882-010V C- 271641-030V
352103-0106		KABELFÖRSKR.ST 11	CABLE GLAND	KABELVERSCHRAUBUNG	C- 271569-050V C- 37877-030V C- 441534-010V C- 552013-010V C- 544390-010V C- 271513-060V C- 751885-030V C- 272343-050V C- 295891-030V C- 256095-050V C- 457853-030V C- 469299-020V C- 451348-020V C- 924727-010V C- 924662-010V C- 924727-010V
352103-0108		KABELFÖRSKR.ST 13	CABLE GLAND	KABELVERSCHRAUBUNG	C- 978739-010V C- 752960-010V C- 752971-010V C- 441535-010V C- 456459-040V C- 456460-040V C- 751900-010V C- 441850-040V
352103-0110		KABELFÖRSKR.STR 16	CABLE GLAND STR 16	KABELVERSCHRAUBUNG	C- 441535-010V C- 295883-050V C- 978604-010V C- 552013-010V C- 544389-010V C- 544390-010V RK- 557234-010V

PART NO	LAST ECN	BENÄMNING	TITLE	BENENNUNG	GROUP NO
					RK- 557545-010V
					RK- 557551-010V
					C- 271513-060V
					C- 490761-010V
					C- 751885-030V
					C- 272408-050V
					C- 457856-020V
					C- 491207-030V
					C- 751393-010V
					C- 451348-020V
					C- 925492-010V
					C- 456882-010V
352103-0111		KABELFÖRSKR.ST 16	CABLE GLAND ST 16	KABELVERSCHRAUBUNG	C- 295883-050V
					C- 563088-010V
					C- 456435-040V
352103-0111		KABELFÖRSKR.ST 16	CABLE GLAND ST 16	KABELVERSCHRAUBUNG	C- 905401-010V
					C- 794004-010V
					C- 794272-010V
					C- 794004-010V
					C- 794272-010V
					C- 441850-040V
					C- 272028-060V
					C- 469452-030V
					C- 751800-020V
352103-0115		KABELFÖRSKR.STR 21	CABLE GLAND	KABELVERSCHRAUBUNG	C- 295883-050V
					C- 456827-020V
					RK- 557147-010V
					RK- 557150-010V
					RK- 557153-010V
					RK- 557690-010V
					RK- 557693-010V
					RK- 557696-010V
352103-0116		KABELFÖRSKR.ST 21	CABLE GLAND	KABELVERSCHRAUBUNG	C- 295883-050V
					C- 456435-040V
					C- 565419-010V
					C- 271128-040V
					C- 441850-040V
					C- 232781-040V
352103-0120		KABELFÖRSKR.STR 29	CABLE GLAND	KABELVERSCHRAUBUNG	C- 295883-050V
352103-0121		KABELFÖRSKR.ST 29	CABLE GLAND	KABELVERSCHRAUBUNG	C- 295883-050V
					C- 295470-050V
					C- 457856-020V
352103-0122		KABELFÖRSKR.ST 36	CABLE GLAND	KABELVERSCHRAUBUNG	CE- 41723-010V
					CE- 41750-010V
					CE- 41757-010V
					CE- 41723-010V
					CE- 41750-010V
					CE- 41757-010V
352110-0099		KLAMMER TK 3-5	CRAMP	KLAMMER	C- 272084-030V
352110-0100		KLAMMER TK 5-7	CRAMP	KLAMMER	C- 271626-030V
					C- 751478-020V
					C- 272404-070V
					C- 272021-060V
352110-0102		KLAMMER TK 10-14	CRAMP	KLAMMER	C- 271626-030V
					C- 271641-020V
					C- 490761-010V
352110-0103		KLAMMER TK 14-20	CRAMP	KLAMMER	C- 256438-020V
352113-0101		BANDKLAMMER	RIBBON CLAMP	BANDSCHELLE	C- 434074-030V
					C- 434774-030V
					C- 271562-080V
					C- 490761-010V
					C- 978738-010V
					C- 497534-030V
					C- 736803-010V
					C- 434774-030V
					C- 434074-030V
					C- 434774-030V
					C- 434074-030V
352113-0102		BANDKLAMMER	RIBBON CLAMP	BANDSCHELLE	RK- 529345-010V
					C- 561425-010V
					C- 441850-040V
					C- 271513-060V
					C- 271866-060V
					C- 272404-070V
352113-0102		BANDKLAMMER	RIBBON CLAMP	BANDSCHELLE	C- 751885-030V
					C- 490600-040V
					C- 736803-010V
					C- 491207-030V
352113-0103		BANDKLAMMER	RIBBON CLAMP	BANDSCHELLE	C- 736803-010V
352113-0104		BANDKLAMMER	RIBBON CLAMP	BANDSCHELLE	C- 978738-010V
352113-0202		ANKARE TM2S8-M	ARMATURE	ANKER	C- 562650-010V
					C- 441850-040V
					C- 256843-060V
					C- 271513-060V
					C- 271569-050V
					C- 751885-030V
					C- 978738-010V
					C- 490600-040V
					C- 546285-010V
					C- 554360-020V
					C- 491207-030V
352113-0203		ANKARE TM3S10-M	ARMATURE	ANKER	C- 544389-010V

PART NO	LAST ECN	BENÄMNING	TITLE	BENENNUNG	GROUP NO
					C- 456458-040V
					C- 272404-070V
					C- 978162-010V
					C- 556723-010V
352113-0204		ANKARE TM3S25-M	ARMATURE	ANKER	C- 457853-030V
					C- 469299-020V
352130-0107		SPIRALSLANG 37,5	FLEXIBLE CONDUIT	SPIRALSCHLAUCH	C- 237776-040V
352131-0107		MUFF 37	MUFF	MUFFE	C- 237776-040V
352135-0102		SLANG 155.010	HOSE	SCHLAUCH	C- 544390-010V
					C- 457853-030V
					C- 457867-020V
					C- 469299-020V
					C- 490600-040V
					C- 546285-010V
					C- 552030-010V
					C- 554346-010V
352135-0106		SLANG 155.016	HOSE	SCHLAUCH	C- 554360-020V
					C- 544389-010V
					C- 544390-010V
					RK- 557147-010V
					RK- 557150-010V
					RK- 557153-010V
					RK- 557690-010V
					RK- 557693-010V
					RK- 557696-010V
					C- 924585-010V
					C- 441850-040V
					C- 457867-020V
					C- 490600-040V
352135-0109		SLANG 155.022	HOSE	SCHLAUCH	CE- 41723-010V
					CE- 41750-010V
					CE- 41757-010V
					RK- 69994-010V
					CE- 41723-010V
					CE- 41750-010V
					CE- 41757-010V
					RK- 978234-010V
352135-0200		KLAMMER D=10	CRAMP	KLAMMER	C- 554360-020V
352135-0204		KLAMMER D=28	CRAMP	KLAMMER	C- 736360-020V
352136-0107		FÖRSKRUVNING	GLAND FITTING	VERSCHRAUBUNG	C- 544390-010V
					C- 457853-030V
352136-0107		FÖRSKRUVNING	GLAND FITTING	VERSCHRAUBUNG	C- 457857-030V
					C- 457867-020V
					C- 469299-020V
					C- 552030-010V
					C- 554360-020V
352136-0113		FÖRSKRUVNING	GLAND FITTING	VERSCHRAUBUNG	C- 794180-010V
					C- 924662-010V
352136-0114		FÖRSKRUVNING	GLAND FITTING	VERSCHRAUBUNG	C- 735183-020V
352136-0127		FÖRSKRUVNING	GLAND FITTING	VERSCHRAUBUNG	C- 544389-010V
					C- 544390-010V
					C- 924585-010V
					C- 457867-020V
					C- 490600-040V
					C- 924329-010V
352136-0129		FÖRSKRUVNING	GLAND FITTING	VERSCHRAUBUNG	RK- 557147-010V
					RK- 557150-010V
					RK- 557153-010V
					C- 735014-010V
					C- 441850-040V
					C- 735031-010V
					C- 924329-010V
352136-0142		FÖRSKRUVNING	GLAND FITTING	VERSCHRAUBUNG	CE- 41723-010V
					CE- 41766-010V
					CE- 41750-010V
					CE- 41766-010V
					CE- 41757-010V
					CE- 41766-010V
					CE- 41723-010V
					CE- 41750-010V
					CE- 41757-010V
					CE- 41766-010V
352136-0143		FÖRSKRUVNING	GLAND FITTING	VERSCHRAUBUNG	RK- 69994-010V
352137-0143		FÖRSKRUVNING	GLAND FITTING	VERSCHRAUBUNG	RK- 978234-010V
3- 352550-0133		FINSÄKRING 1,6 A	FINE-WIRE FUSE	FEINSICHERUNG	CE- 41723-010V
					CE- 41750-010V
					CE- 41757-010V
					CE- 41723-010V
					CE- 41750-010V
					CE- 41757-010V
3- 352551-0120		FINSÄKRING 315 MA	FINE-WIRE FUSE	FEINSICHERUNG	CE- 69884-010V
					CE- 69886-010V
					CE- 69884-010V
					CE- 69886-010V
					CE- 69884-010V
					CE- 69886-010V
353001-0102		ÄNDHYLSA 0,75	END SLEEVE	ENDH~LSE	C- 441850-040V
					C- 925492-010V
353001-0103		ÄNDHYLSA 1	END SLEEVE	ENDH~LSE	C- 736803-010V
353001-0113		ÄNDHYLSA	END SLEEVE	ENDH~LSE	C- 736803-010V
353001-0116		ÄNDHYLSA H0.5/14	ENDSLEEVE	ENDH~LSE	C- 736803-010V
					C- 925492-010V

PART NO	LAST ECN	BENÄMNING	TITLE	BENENNUNG	GROUP NO
353001-0117		ÄNDHYLSA H4 / 17	ENDSLEEVE	ENDH~LSE	C- 736803-010V
353001-0118		ÄNDHYLSA H6.0/20	ENDSLEEVE	ENDH~LSE	C- 736803-010V
3- 353012-0010		HANKONTAKT	MALE PLUG	STECKKONTAKT	C- 567733-010V
3- 353012-0011		HONKONTAKT	SOCKET	STECKDOSE	C- 567733-010V
3- 353021-0122		GENOMGÅNGSKLÄMMA WTRD 2,	FEED THROUGH TERMINAL	DURCHGANGSKLEMME	CE- 41723-010V
					CE- 41750-010V
					CE- 41757-010V
3- 353021-0122		GENOMGÅNGSKLÄMMA WTRD 2,	FEED THROUGH TERMINAL	DURCHGANGSKLEMME	CE- 41723-010V
					CE- 41750-010V
353021-0204		3-VÄGS KLÄMMA DKIS 4 PA	CONNECTION CLAMP	KUPPLUNGSKLAMMER	CE- 41757-010V
					RK- 557156-010V
3- 353021-0213		GENOMGÅNGSKLÄMMA WDU 4	FEED THROUGH TERM.WDU 4	DURCHGANGSKLEMME	RK- 557159-010V
					C- 456435-040V
					C- 905401-010V
3- 353021-0216		GENOMGÅNGSKLÄMMA WDU 2,5	FEED TRHOUGH TERM.WDU 2,	DURCHGANGSKLEMME	C- 457856-020V
					C- 456435-040V
					C- 456827-020V
					C- 905401-010V
					RK- 557156-010V
					RK- 557159-010V
					C- 565419-010V
					C- 295470-050V
353021-0227		JORDNINGSKLÄMMA WPE 2.5	EARTH TERMINAL WPE 2.5	ERDUNGSKLEMME	C- 457856-020V
353023-0102		SÄKRINGSKLÄMMA WSI 6	FUSE TERMINAL	SICHERUNGSKLEMME	C- 456827-020V
					CE- 41723-010V
					CE- 41750-010V
					CE- 41757-010V
					CE- 41723-010V
					CE- 41750-010V
					CE- 41757-010V
3- 353024-0204		JORDNINGSKLÄMMA WPE 2,5	EARTH TERMINAL WPE 2.5	ERDUNGSKLEMME	C- 456435-040V
					C- 565419-010V
					C- 295470-050V
3- 353024-0205		JORDNINGSKLÄMMA WPE 4	EARTH TERMINAL WPE 4	ERDUNGSKLEMME	C- 457856-020V
					C- 456435-040V
3- 353031-0201		ÄNDSTÖD EW 35	END BRACKET EW 35	ENDWINKEL	C- 457856-020V
					C- 456435-040V
					C- 456827-020V
					C- 905401-010V
4- 353032-0004		ÄNDPLATTA WAP 2,5-10	END PLATE	ABSCHLUSSPLATTE	C- 457856-020V
4- 353032-0005		ÄNDPLATTA 2,5-10	END PLATE	ABSCHLUSSPLATTE	C- 457856-020V
					C- 456827-020V
					C- 905401-010V
					C- 565419-010V
353034-0013		KOPPLINGSBLECK QL2	BRIDGE CONNECTOR	QUERVERBINDUNG	C- 457856-020V
4- 353034-0030		KOPPLINGSBLECK WQV 2,5/1	BRIDGE CONN. WQV 2,5/10	QUERVERBINDUNG	C- 905401-010V
					C- 456827-020V
					C- 565419-010V
					C- 295470-050V
353034-0031		KOPPLINGSBLECK WQV 4/10	BRIDGE CONNECTOR	QUERVERBINDUNG	C- 457856-020V
353101-0118		KABELSKO	CABLE SHOE	KABELSCHUH	C- 457856-020V
353101-0120		KABELSKO	CABLE SHOE	KABELSCHUH	C- 925492-010V
353101-0123		KABELSKO	CABLE SHOE	KABELSCHUH	C- 556662-010V
353101-0126		KABELSKO	CABLE SHOE	KABELSCHUH	C- 456588-030V
353101-0129		KABELSKO	CABLE SHOE	KABELSCHUH	C- 456588-030V
353101-0130		KABELSKO	CABLE SHOE	KABELSCHUH	C- 441535-010V
353101-0132		KABELSKO	CABLE SHOE	KABELSCHUH	C- 905331-010V
353101-0134		KABELSKO	CABLE SHOE	KABELSCHUH	C- 256055-060V
353103-0120		KABELSKO 1,25 MM2	CABLE SHOE	KABELSCHUH	C- 295891-030V
					C- 736604-010V
353104-0130		KABELSKO YAV 025 M 4*	CABLE SHOE	KABELSCHUH	RK- 978528-010V
					C- 272343-050V
					C- 295891-030V
353104-0144		KABELSKO YAV 06 M 8*	CABLE SHOE	KABELSCHUH	C- 256095-050V
353104-0162		KABELSKO YAV 10 M8*	CABLE SHOE	KABELSCHUH	C- 978739-010V
353104-0169		KABELSKO YAV 16 M8*	CABLE SHOE	KABELSCHUH	C- 256843-060V
353105-0117		STIFTKABELSKO A1519SR	CABLE SHOE	KABELSCHUH	C- 256843-060V
359000-0064		MÄRKHYLSA 2/4 OMÄRKT	MARKING COLLAR	MARKIERHUELSE	C- 736604-010V
					C- 456935-030V
359000-0300		MÄRKHYLSA 1/3"0"	MARKING COLLAR	MARKIERHUELSE	C- 752898-010V
					C- 736604-010V
					C- 736803-010V
359000-0301		MÄRKHYLSA 1/3"1"	MARKING COLLAR	MARKIERHUELSE	C- 736604-010V
					C- 736604-010V
					C- 736803-010V
359000-0302		MÄRKHYLSA 1/3"2"	MARKING COLLAR	MARKIERHUELSE	C- 736604-010V
					C- 736604-010V
					C- 736803-010V
359000-0303		MÄRKHYLSA 1/3"3"	MARKING COLLAR	MARKIERHUELSE	C- 736604-010V
					C- 736604-010V
					C- 736803-010V
359000-0304		MÄRKHYLSA 1/3"4"	MARKING COLLAR	MARKIERHUELSE	C- 736604-010V
					C- 736604-010V
					C- 736803-010V
359000-0305		MÄRKHYLSA 1/3"5"	MARKING COLLAR	MARKIERHUELSE	C- 736604-010V
					C- 736604-010V
					C- 736803-010V
359000-0306		MÄRKHYLSA 1/3"6"	MARKING COLLAR	MARKIERHUELSE	C- 736604-010V
					C- 736604-010V
					C- 736803-010V
359000-0307		MÄRKHYLSA 1/3"7"	MARKING COLLAR	MARKIERHUELSE	C- 736604-010V
					C- 736604-010V

PART NO	LAST ECN	BENÄMNING	TITLE	BENENNUNG	GROUP NO
					C- 736803-010V
					C- 736604-010V
359000-0308		MÄRKHYLSA 1/3"8"	MARKING COLLAR	MARKIERHUELSE	C- 736604-010V
					C- 736803-010V
					C- 736604-010V
359000-0309		MÄRKHYLSA 1/3"9"	MARKING COLLAR	MARKIERHUELSE	C- 736604-010V
					C- 736803-010V
					C- 736604-010V
359000-0400		MÄRKHYLSA 2/4"0"	MARKING COLLAR	MARKIERHUELSE	C- 560921-010V
					C- 735014-010V
					C- 736865-010V
					C- 560921-010V
					C- 735014-010V
					C- 736865-010V
					C- 560921-010V
					C- 735014-010V
					C- 736865-010V
					C- 560921-010V
					C- 735014-010V
					C- 736865-010V
					C- 560921-010V
					C- 735014-010V
					C- 736865-010V
					C- 560921-010V
					C- 735014-010V
					C- 736865-010V
					C- 736797-010V
					C- 794145-010V
					C- 794179-010V
					C- 794180-010V
					C- 736797-010V
					C- 794145-010V
					C- 794179-010V
					C- 794180-010V
359000-0400		MÄRKHYLSA 2/4"0"	MARKING COLLAR	MARKIERHUELSE	C- 271562-080V
					C- 271866-060V
					C- 272404-070V
					C- 978738-010V
					C- 456935-030V
					C- 752898-010V
					C- 295045-070V
					C- 456555-040V
					C- 469781-030V
					C- 536859-020V
					C- 735183-020V
					C- 795750-010V
					C- 978740-010V
359000-0401		MÄRKHYLSA 2/4"1"	MARKING COLLAR	MARKIERHUELSE	C- 560921-010V
					C- 736865-010V
					C- 560921-010V
					C- 736865-010V
					C- 560921-010V
					C- 736865-010V
					C- 560921-010V
					C- 736865-010V
					C- 560921-010V
					C- 736865-010V
					C- 560921-010V
					C- 736865-010V
					C- 736797-010V
					C- 794145-010V
					C- 794179-010V
					C- 794180-010V
					C- 736797-010V
					C- 794145-010V
					C- 794179-010V
					C- 794180-010V
					C- 271562-080V
					C- 271866-060V
					C- 978738-010V
					C- 456935-030V
					C- 752898-010V
					C- 295045-070V
					C- 456555-040V
					C- 469781-030V
					C- 536859-020V
					C- 735183-020V
					C- 795750-010V
					C- 978740-010V
359000-0402		MÄRKHYLSA 2/4"2"	MARKING COLLAR	MARKIERHUELSE	C- 736865-010V
					C- 736797-010V
					C- 794145-010V
					C- 794179-010V
					C- 794180-010V
					C- 736797-010V
					C- 794145-010V
					C- 794179-010V
					C- 794180-010V
					C- 271562-080V
					C- 271866-060V
					C- 978738-010V
					C- 456935-030V

PART NO	LAST ECN	BENÄMNING	TITLE	BENENNUNG	GROUP NO
359000-0402		MÄRKHYLSA 2/4"2"	MARKING COLLAR	MARKIERHUELSE	C- 752898-010V C- 295045-070V C- 456555-040V C- 469781-030V C- 536859-020V C- 735183-020V C- 795750-010V
359000-0403		MÄRKHYLSA 2/4"3"	MARKING COLLAR	MARKIERHUELSE	C- 978740-010V C- 560921-010V C- 794145-010V C- 794179-010V C- 794145-010V C- 794179-010V C- 271562-080V C- 271866-060V C- 978738-010V C- 295045-070V C- 456555-040V C- 469781-030V C- 536859-020V
359000-0404		MÄRKHYLSA 2/4"4"	MARKING COLLAR	MARKIERHUELSE	C- 978740-010V C- 456953-020V C- 560921-010V C- 735014-010V C- 560921-010V C- 735014-010V C- 560921-010V C- 735014-010V C- 560921-010V C- 735014-010V C- 560921-010V C- 735014-010V C- 560921-010V C- 735014-010V C- 794145-010V C- 271562-080V C- 271866-060V C- 272404-070V C- 978738-010V C- 456935-030V
359000-0405		MÄRKHYLSA 2/4"5"	MARKING COLLAR	MARKIERHUELSE	C- 752898-010V C- 295045-070V C- 536859-020V C- 456953-020V C- 560921-010V C- 735014-010V C- 736865-010V C- 560921-010V C- 735014-010V C- 736865-010V C- 560921-010V C- 735014-010V C- 736865-010V C- 560921-010V C- 735014-010V C- 736865-010V C- 560921-010V C- 735014-010V C- 736865-010V
359000-0405		MÄRKHYLSA 2/4"5"	MARKING COLLAR	MARKIERHUELSE	C- 560921-010V C- 735014-010V C- 736865-010V C- 736797-010V C- 794145-010V C- 794179-010V C- 794180-010V C- 736797-010V C- 794145-010V C- 794179-010V C- 794180-010V C- 271562-080V C- 271866-060V C- 978738-010V C- 295045-070V C- 536859-020V
359000-0406		MÄRKHYLSA 2/4"6"	MARKING COLLAR	MARKIERHUELSE	C- 735183-020V C- 795750-010V C- 736797-010V C- 794145-010V C- 794179-010V C- 794180-010V C- 736797-010V C- 794145-010V C- 794179-010V C- 794180-010V C- 271562-080V C- 271866-060V C- 978738-010V C- 295045-070V C- 536859-020V
359000-0407		MÄRKHYLSA 2/4"7"	MARKING COLLAR	MARKIERHUELSE	C- 735183-020V C- 794145-010V

PART NO	LAST ECN	BENÄMNING	TITLE	BENENNUNG	GROUP NO
					C- 794179-010V C- 794145-010V C- 794179-010V C- 271562-080V C- 271866-060V C- 978738-010V C- 295045-070V C- 536859-020V
359000-0408		MÄRKHYLSA 2/4"8"	MARKING COLLAR	MARKIERHUELSE	C- 795750-010V C- 794145-010V C- 794179-010V C- 794145-010V C- 794179-010V C- 271866-060V C- 295045-070V C- 536859-020V
359000-0409		MÄRKHYLSA 2/4"9"	MARKING COLLAR	MARKIERHUELSE	C- 794145-010V C- 271866-060V C- 978738-010V C- 295045-070V C- 469781-030V
359000-0700		MÄRKHYLSA 1/3"A"	MARKING COLLAR	MARKIERHUELSE	C- 736604-010V C- 736803-010V C- 736604-010V
359000-0701		MÄRKHYLSA 1/3"B"	MARKING COLLAR	MARKIERHUELSE	C- 736604-010V C- 736803-010V C- 736604-010V
359000-0702		MÄRKHYLSA 1/3"C"	MARKING COLLAR	MARKIERHUELSE	RK- 557018-010V RK- 557021-010V
359000-0710		MÄRKHYLSA 1/3"K"	MARKING COLLAR	MARKIERHUELSE	C- 736604-010V C- 736803-010V C- 736604-010V
359000-0711		MÄRKHYLSA 1/3"L"	MARKING COLLAR	MARKIERHUELSE	RK- 557018-010V RK- 557021-010V
359000-0712		MÄRKHYLSA 1/3"M"	MARKING COLLAR	MARKIERHUELSE	C- 736803-010V
359000-0713		MÄRKHYLSA 1/3"N"	MARKING COLLAR	MARKIERHUELSE	RK- 557018-010V RK- 557021-010V
359000-0718		MÄRKHYLSA 1/3"S"	MARKING COLLAR	MARKIERHUELSE	C- 736604-010V
359000-0723		MÄRKHYLSA 1/3"X"	MARKING COLLAR	MARKIERHUELSE	C- 736803-010V
359000-0750		MÄRKHYLSA 2/4"A"	MARKING COLLAR	MARKIERHUELSE	C- 536859-020V
359000-0751		MÄRKHYLSA 2/4"B"	MARKING COLLAR	MARKIERHUELSE	C- 536859-020V
359000-0752		MÄRKHYLSA 2/4"C"	MARKING COLLAR	MARKIERHUELSE	C- 536859-020V
359000-0753		MÄRKHYLSA 2/4"D"	MARKING COLLAR	MARKIERHUELSE	C- 536859-020V
359000-0754		MÄRKHYLSA 2/4"E"	MARKING COLLAR	MARKIERHUELSE	C- 536859-020V
359000-0755		MÄRKHYLSA 2/4"F"	MARKING COLLAR	MARKIERHUELSE	C- 536859-020V
359000-0756		MÄRKHYLSA 2/4"G"	MARKING COLLAR	MARKIERHUELSE	C- 536859-020V
359000-0757		MÄRKHYLSA 2/4"H"	MARKING COLLAR	MARKIERHUELSE	C- 536859-020V
359000-0771		MÄRKHYLSA 2/4"V"	MARKING COLLAR	MARKIERHUELSE	C- 456953-020V C- 736797-010V C- 794180-010V C- 736797-010V C- 794180-010V C- 271562-080V C- 271866-060V C- 978738-010V C- 295045-070V
359002-0028		MÄRKHYLSA 1/3(OMÄRKT)	MARKING COLLAR	MARKIERHUELSE	C- 469781-030V C- 736604-010V C- 736803-010V C- 736604-010V
359003-0033		MÄRKHYLSA 1/3(JORD)	MARKING COLLAR	MARKIERHUELSE	C- 736803-010V
359009-0100		KABELMÄRKE PK 2/4"0"	CABLE MARKING	KABELMARKIERUNG	C- 736604-010V C- 794110-010V C- 794145-010V C- 794110-010V C- 794145-010V C- 736803-010V C- 736604-010V
359009-0101		KABELMÄRKE PK 2/4"1"	CABLE MARKING	KABELMARKIERUNG	C- 736604-010V C- 794145-010V C- 794178-010V C- 794145-010V C- 794178-010V C- 736803-010V C- 736604-010V
359009-0102		KABELMÄRKE PK 2/4"2"	CABLE MÄRKING	KABELMARKIERUNG	C- 736604-010V C- 794110-010V C- 794145-010V C- 794178-010V C- 794180-010V C- 794110-010V C- 794145-010V C- 794178-010V C- 794180-010V C- 736803-010V
359009-0103		KABELMÄRKE PK 2/4"3"	CABLE MARKING	KABELMARKIERUNG	C- 736604-010V C- 736604-010V C- 794110-010V C- 794145-010V C- 794110-010V C- 794145-010V C- 736803-010V

PART NO	LAST ECN	BENÄMNING	TITLE	BENENNUNG	GROUP NO
359009-0104		KABELMÄRKE PK 2/4"4"	CABLE MARKING	KABELMARKIERUNG	C- 736604-010V C- 736604-010V C- 794092-010V C- 794110-010V C- 794145-010V C- 794178-010V C- 794092-010V C- 794110-010V C- 794145-010V C- 794178-010V C- 736803-010V
359009-0105		KABELMÄRKE PK 2/4"5"	CABLE MARKING	KABELMARKIERUNG	C- 736604-010V C- 736604-010V C- 794004-010V C- 794092-010V C- 794110-010V C- 794145-010V C- 794004-010V C- 794092-010V C- 794110-010V C- 794145-010V C- 736803-010V
359009-0106		KABELMÄRKE PK 2/4"6"	CABLE MARKING	KABELMARKIERUNG	C- 736604-010V C- 736604-010V C- 794145-010V C- 794178-010V C- 794145-010V C- 794178-010V C- 736803-010V
359009-0107		KABELMÄRKE PK 2/4"7"	CABLE MARKING	KABELMARKIERUNG	C- 736604-010V C- 736604-010V C- 794092-010V C- 794110-010V C- 794145-010V C- 794178-010V C- 794180-010V C- 794092-010V C- 794110-010V C- 794145-010V C- 794178-010V C- 794180-010V C- 736803-010V
359009-0108		KABELMÄRKE PK 2/4"8"	CABLE MARKING	KABELMARKIERUNG	C- 736604-010V C- 736604-010V C- 794004-010V C- 794092-010V C- 794110-010V C- 794145-010V C- 794178-010V C- 794180-010V C- 794004-010V C- 794092-010V C- 794110-010V
359009-0108		KABELMÄRKE PK 2/4"8"	CABLE MARKING	KABELMARKIERUNG	C- 794145-010V C- 794178-010V C- 794180-010V C- 736803-010V
359009-0109		KABELMÄRKE PK 2/4"9"	CABLE MARKING	KABELMARKIERUNG	C- 736604-010V C- 736604-010V C- 794004-010V C- 794092-010V C- 794145-010V C- 794004-010V C- 794092-010V C- 794145-010V C- 736803-010V
359011-0202		MÄRKSKYLT (GROUND)	SIGN BOARD	SCHILD	C- 736604-010V C- 978604-010V C- 563088-010V C- 552013-010V C- 544390-010V C- 924585-010V C- 735031-010V C- 924329-010V C- 924727-010V RK- 978234-010V
359011-0801		MÄRKSKYLT BSFW 1-50	SIGN BOARD	SCHILD	C- 735031-010V C- 924329-010V
359011-0802		MÄRKSKYLT BSFW 11-20	SIGN BOARD	SCHILD	C- 978604-010V
359011-0807		SKYLTSATS 5-FW 1-50	SET OF SIGNS	SCHILDERSATZ	C- 563088-010V C- 456435-040V C- 456827-020V C- 552013-010V C- 544390-010V C- 905401-010V C- 924585-010V C- 565419-010V C- 295470-050V C- 457856-020V C- 924727-010V RK- 978234-010V
359011-0808		SKYLTSATS 5-FW 51-100	SET OF SIGNS	SCHILDERSATZ	C- 565419-010V

PART NO	LAST ECN	BENÄMNING	TITLE	BENENNUNG	GROUP NO
					C- 295470-050V
					C- 457856-020V
359011-0809		SKYLTSATS 5-FW 101-150	SET OF SIGNS	SCHILDERSATZ	C- 457856-020V
359011-0819		SKYLTSATS 5-GW (JORD)	SET OF SIGNS	SCHILDERSATZ	C- 456435-040V
					C- 456827-020V
					C- 565419-010V
					C- 295470-050V
					C- 457856-020V
359011-0820		SKYLTSATS 5-FW 501-550	MARKING PLATE KITS	SCHILDERSATZ	RK- 557156-010V
					RK- 557159-010V
359011-0840		SKYLTSATS 5-FW	SET OF SIGNS	SCHILDERSATZ	RK- 557156-010V
					RK- 557159-010V
359020-0001		SKYLT	SIGN	SCHILD	C- 794092-010V
					C- 736803-010V
359020-0002		SKYLT	SIGN	SCHILD	C- 794178-010V
					C- 736803-010V
359020-0003		SKYLT	SIGN	SCHILD	C- 794110-010V
					C- 794178-010V
					C- 794110-010V
					C- 794178-010V
359020-0003		SKYLT	SIGN	SCHILD	C- 736803-010V
359020-0004		SKYLT	SIGN	SCHILD	C- 794092-010V
					C- 794110-010V
					C- 794092-010V
359020-0005		SKYLT	SIGN	SCHILD	C- 794110-010V
					C- 794004-010V
					C- 794092-010V
					C- 794110-010V
					C- 794178-010V
					C- 794004-010V
					C- 794092-010V
					C- 794110-010V
					C- 794178-010V
					C- 736803-010V
359020-0006		SKYLT	SIGN	SCHILD	C- 794110-010V
359020-0007		SKYLT	SIGN	SCHILD	C- 736803-010V
359020-0010		SKYLT	SIGN	SCHILD	C- 794004-010V
					C- 794092-010V
					C- 794178-010V
					C- 794004-010V
					C- 794092-010V
					C- 794178-010V
					C- 736803-010V
359020-0101		SKYLT	SIGN	SCHILD	C- 794110-010V
					C- 794178-010V
					C- 794110-010V
					C- 794178-010V
					C- 736803-010V
359020-0110		SKYLT	SIGN	SCHILD	C- 736803-010V
359020-0111		SKYLT	SIGN	SCHILD	C- 794092-010V
359020-0112		SKYLT	SIGN	SCHILD	C- 794004-010V
					C- 794092-010V
					C- 794110-010V
					C- 794178-010V
					C- 794004-010V
					C- 794092-010V
					C- 794110-010V
					C- 794178-010V
359020-0122		SKYLT	SIGN	SCHILD	C- 794092-010V
					C- 794178-010V
					C- 794092-010V
					C- 794178-010V
4- 359240-0001		OGRAVERAD SKYLT	SIGN, UNENGRAVED	SCHILD	CE- 41723-010V
					CE- 41750-010V
					CE- 41757-010V
					CE- 41723-010V
					CE- 41750-010V
					CE- 41757-010V
2- 359240-0100		SKYLTHÅLLARE	SIGN HOLDER	SCHILDHALTER	CE- 41723-010V
					CE- 41766-010V
					CE- 41750-010V
					CE- 41766-010V
					CE- 41757-010V
					CE- 41766-010V
					CE- 69884-010V
					CE- 69886-010V
					RK- 557018-010V
					RK- 557021-010V
2- 359240-0100		SKYLTHÅLLARE	SIGN HOLDER	SCHILDHALTER	RK- 557147-010V
					RK- 557150-010V
					RK- 557153-010V
					RK- 557690-010V
					RK- 557693-010V
					RK- 557696-010V
					RK- 558333-010V
					RK- 558335-010V
					RK- 558337-010V
					RK- 558339-010V
					CE- 41723-010V
					CE- 41750-010V
					CE- 41757-010V
					CE- 41766-010V

PART NO	LAST ECN	BENÄMNING	TITLE	BENENNUNG	GROUP NO
					CE- 69884-010V CE- 69886-010V CE- 69884-010V CE- 69886-010V C- 232781-040V C- 456882-010V
359241-0121		GRAVERAD SKYLT	SIGN"STEAM"	SCHILD	CE- 41723-010V CE- 41750-010V CE- 41757-010V
359241-0122		GRAVERAD SKYLT	SIGN"CL.OF ST.BARRIER SP	SCHILD	CE- 41723-010V CE- 41750-010V CE- 41757-010V
359241-0123		GRAVERAD SKYLT	SIGN"PRESTERILISATION V.	SCHILD	CE- 41723-010V CE- 41750-010V CE- 41757-010V
359241-0124		GRAVERAD SKYLT	SIGN	SCHILD	CE- 41723-010V CE- 41750-010V CE- 41757-010V CE- 557222-010V
359241-0125		SKYLT"TEMP PEROXIDBAD"	SIGN"TEMP.PEROXIDE BATH"	SCHILD	CE- 41723-010V CE- 41750-010V CE- 41757-010V
359241-0126		SKYLT"TEMP LUFTKNIV"	SIGN"TEMP.AIR KNIFE"	SCHILD	CE- 41723-010V CE- 41750-010V CE- 41757-010V
359241-0128		SKYLT"ANODSTRÖM(IH)"	SIGN"ANODE VOLTAGE"	SCHILD	CE- 41723-010V CE- 41750-010V CE- 41757-010V CE- 69884-010V CE- 69886-010V
359241-0128		SKYLT"ANODSTRÖM(IH)"	SIGN"ANODE VOLTAGE"	SCHILD	CE- 69884-010V CE- 69886-010V
359241-0129		SKYLT"ANODSPÄNNING(IH)"	SIGN"ANODE VOLTAGE(IH)"	SCHILD	CE- 69884-010V CE- 69886-010V CE- 69884-010V CE- 69886-010V CE- 69884-010V CE- 69886-010V
359241-0130		SKYLT"LUFTÖVERHETTARE"	SIGN"AIR SUPER HEATER"	SCHILD	CE- 41723-010V CE- 41750-010V CE- 41757-010V
359241-0131		SKYLT"TEMP.LS"	SIGN"LONGITUDINAL SEALIN	SCHILD	CE- 41723-010V CE- 41750-010V CE- 41757-010V
359241-0132		SKYLT"REMSPÅLÄGGARE"	SIGN"STRIP APPLICATOR"	SCHILD	CE- 41723-010V CE- 41750-010V CE- 41757-010V
359241-0133		SKYLT"SERVICEOMKOPPLARE"	SIGN"SERVICE SWITCH"	SCHILD	CE- 41723-010V CE- 41750-010V CE- 41757-010V
359241-0137		SKYLT"INV REMSA ÖPPN."	SIGN"INT STRIP OPENING"	SCHILD	CE- 41723-010V CE- 41750-010V CE- 41757-010V
359241-0138		SKYLT"UTV REMSA ÖPPN"	SIGN"EXT STRIP OPENING"	SCHILD	CE- 41750-010V
359241-0140		SKYLT"BELYSNING MASKIN"	SIGN"LIGHT MACHINE"	SCHILD	CE- 41750-010V
359241-0141		SKYLT"PEROXID VATTENBAD"	SIGN"PEROXIDE BATH WATER	SCHILD	C- 456882-010V CE- 41723-010V CE- 41750-010V CE- 41757-010V
359241-0142		SKYLT"DATUMVERK 1"	SIGN"DATE UNIT 1"	SCHILD	CE- 41723-010V CE- 41750-010V CE- 41757-010V
359241-0143		SKYLT"DATUMVERK 2"	SIGN"DATE UNIT 2"	SCHILD	CE- 41750-010V
359241-0144		SKYLT"INV REMSA AUT SKAR	SIGN"INT STRIP AUTOSPLIC	SCHILD	CE- 41750-010V RK- 557018-010V RK- 557021-010V CE- 41750-010V

PART NO	LAST ECN	BENÄMNING	TITLE	BENENNUNG	GROUP NO
359241-0175		SKYLT"FÖRVÄRMD MOTBACK"	SIGN"PREHEATED COUNTERJA	SCHILD	CE- 41750-010V
359241-0199		SKYLT"FÖRP.RÄKNARE L 1"	SIGN"PACKAGE COUNTER L 1	SCHILD	CE- 41723-010V
					CE- 41750-010V
					CE- 41723-010V
					CE- 41750-010V
359241-0252		GRAVERAD SKYLT	SIGN	SCHILD	CE- 69884-010V
359241-0260		SKYLT	SIGN	SCHILD	CE- 41723-010V
					CE- 41750-010V
					CE- 41757-010V
					CE- 41723-010V
					CE- 41750-010V
					CE- 41757-010V
359241-0261		SKYLT	SIGN	SCHILD	CE- 41723-010V
359241-0261		SKYLT	SIGN	SCHILD	CE- 41766-010V
					CE- 41750-010V
					CE- 41766-010V
					CE- 41757-010V
					CE- 41766-010V
					CE- 41723-010V
					CE- 41750-010V
					CE- 41757-010V
					CE- 41766-010V
359241-0264		SKYLT	SIGN	SCHILD	CE- 557225-010V
359241-0265		SKYLT	SIGN	SCHILD	CE- 557225-010V
359241-0266		SKYLT	SIGN	SCHILD	CE- 557222-010V
359241-0267		SKYLT	SIGN	SCHILD	CE- 557222-010V
359241-0268		SKYLT	SIGN	SCHILD	RK- 558304-010V
					RK- 558307-010V
					RK- 558310-010V
359241-0275		SKYLT	SIGN	SCHILD	CE- 41750-010V
4- 359241-0297		SKYLT,VOLTAGE/FREQ./CURR	SIGN,VOLTAGE/FREQ./CURR.	SCHILD	CE- 41723-010V
					CE- 41750-010V
					CE- 41757-010V
					CE- 41723-010V
					CE- 41750-010V
					CE- 41757-010V
4- 359241-0298		SKYLT,VOLTAGE/FREQ./CURR	SIGN,VOLTAGE/FREQ./CURR.	SCHILD	CE- 41727-010V
					CE- 41754-010V
					CE- 41761-010V
					CE- 41727-010V
					CE- 41754-010V
					CE- 41761-010V
359242-0838		SKYLT SWEDISH TEX	SIGN	SCHILD	RK- 558333-010V
					RK- 558335-010V
					RK- 558337-010V
					RK- 558339-010V
4- 359242-0851		SKYLT	SIGN	SCHILD	RK- 558333-010V
					RK- 558335-010V
					RK- 558337-010V
					RK- 558339-010V
4- 359242-0852		SKYLT	SIGN	SCHILD	RK- 558333-010V
					RK- 558335-010V
					RK- 558337-010V
					RK- 558339-010V
359301-0001		SKYLT"UPP"	SIGN"UP"	SCHILD	CE- 41724-010V
					CE- 41751-010V
					CE- 41758-010V
					CE- 41724-010V
					CE- 41751-010V
359301-0005		SKYLT"NED"	SIGN"DOWN"	SCHILD	CE- 41758-010V
					CE- 41724-010V
					CE- 41751-010V
					CE- 41758-010V
					CE- 41724-010V
					CE- 41751-010V
359301-0050		SYMBOLSKYLT	SIGN	SCHILD	CE- 41758-010V
					CE- 41724-010V
					CE- 41751-010V
					CE- 41758-010V
					CE- 41724-010V
					CE- 41751-010V
					CE- 41758-010V
359301-0051		SKYLT	SIGN"STRIP SPLICE"	SCHILD	C- 457853-030V
359301-0090		SKYLT"BAXNING"	SIGN"INCHING"	SCHILD	CE- 41724-010V
					CE- 41751-010V
					CE- 41758-010V
					CE- 41724-010V
					CE- 41751-010V
					CE- 41758-010V
359301-0100		SYMBOLSKYLT	SIGN	SCHILD	C- 905401-010V
					C- 272408-050V
359301-0101		SYMBOLSKYLT	SIGN	SCHILD	CE- 41750-010V
359301-0105		SKYLT"ALARM STOPP"	SIGN"ALARM STOP"	SCHILD	CE- 41724-010V
					CE- 41751-010V
					CE- 41758-010V
					C- 905401-010V
					CE- 41724-010V
					CE- 41751-010V
					CE- 41758-010V
359301-0106		SYMBOLSKYLT	SIGN	SCHILD	C- 905401-010V
359301-0110		SYMBOLSKYLT	SIGN"SHORT STOP"	SCHILD	CE- 41723-010V
					CE- 41724-010V

PART NO	LAST ECN	BENÄMNING	TITLE	BENENNUNG	GROUP NO
					CE- 41750-010V
					CE- 41751-010V
					CE- 41758-010V
					C- 905401-010V
					C- 271513-060V
					C- 751885-030V
					C- 272408-050V
					C- 457853-030V
					CE- 41723-010V
					CE- 41724-010V
					CE- 41750-010V
					CE- 41751-010V
					CE- 41758-010V
359301-0125		SKYLT"SMÖRJNING"	SIGN"LUBRICATION"	SCHILD	C- 456882-010V
359301-0130		SKYLT"LAMPTEST"	SIGN"LAMP TEST"	SCHILD	CE- 41724-010V
					CE- 41751-010V
					CE- 41758-010V
					CE- 41724-010V
					CE- 41751-010V
359301-0170		SYMBOLSKYLT	SIGN	SCHILD	CE- 41758-010V
					CE- 41724-010V
					CE- 41751-010V
					CE- 41758-010V
					CE- 41724-010V
					CE- 41751-010V
359320-0002		SKYLT	SIGN	SCHILD	CE- 41758-010V
					CE- 41723-010V
					CE- 41750-010V
					CE- 41757-010V
					CE- 41723-010V
					CE- 41750-010V
					CE- 41757-010V
2- 400645		ARM	ARM	ARM	C- 905331-010V
4- 400791		AXEL	AXLE	WELLE	C- 556723-010V
4- 400800		FJÄDER	SPRING	FEDER	C- 556723-010V
4- 400828		FJÄDER	SPRING	FEDER	C- 905331-010V
4- 400833		PLUNGE	PLUNGER	PLUNGER	C- 905331-010V
4- 400864		FÄSTSKENA	MOUNTING BAR	BEFESTIGUNGSSCHIENE	C- 905331-010V
4- 400866		VÄRME KUDDE	HEATING PAD	KISSEN	C- 905131-010V
4- 400932		BYGEL	BOW CLAMP	BUEGEL	C- 905131-010V
4- 401022		RULLE	ROLL	ROLLE	C- 905331-010V
					C- 556723-010V
3- 401023		ANSATSSKRUV	SHOULDER SCREW	ANSATZSCHRAUBE	C- 905131-010V
3- 401042-0001		AXEL	AXLE	WELLE	C- 905331-010V
3- 401043		NAV	HUB	NABE	C- 556723-010V
1- 401128		SKARVBLOCK	SPLICE BLOCK	BLOCK	C- 905331-010V
3- 401129		LÄGESSTÄLLARE	LOCATOR	LAGEEINSTELLER	C- 905331-010V
3- 401130		LÄGESSTÄLLARE	POSITIONING DEVICE	LAGEEINSTELLER	C- 905131-010V
2- 401139		BLOCK	BLOCK	BLOCK	C- 905331-010V
3- 401140		STYRBYGEL	STEERING GUIDE	FUEHRUNGSBUEGEL	C- 905331-010V
2- 401148		KÅPA	COVER	DECKEL	C- 905331-010V
4- 401157		FJÄDER	SPRING	FEDER	C- 905131-010V
2- 401174		PLÅT	SHEET	BLECH	C- 556723-010V
3- 401179		AXEL	AXLE	WELLE	C- 556723-010V
2- 401181		FÄSTE	BRACKET	BEFESTIGUNGSHALTER	C- 556723-010V
2- 401182		ARM	ARM	ARM	C- 556723-010V
3- 401183		STYRAXEL	GUIDE AXLE	FUEHRUNGSACHSE	C- 556723-010V
4- 401184		AXEL	AXLE	WELLE	C- 556723-010V
3- 401185-0001		AXEL	SHAFT	WELLE	C- 556723-010V
4- 401186		SEXKANT MUTTER	HEX NUT	MUTTER	C- 556723-010V
3- 401201		AXEL	SHAFT	WELLE	C- 752628-020V
					C- 556723-010V
3- 401203		HÅLLARE	HOLDER	HALTER	C- 556723-010V
3- 401231		BLOCK	BLOCK	BLOCK	C- 905331-010V
3- 401232		BLOCK	BLOCK	BLOCK	C- 905331-010V
3- 401233		BLOCK	BLOCK	BLOCK	C- 905331-010V
4- 401240		RULLE	ROLL	ROLLE	C- 905131-010V
1- 401251		SCHEMA LUFT LS-REMSA	AIR DIAGRAM LS-STRIP	SCHEMA LUFT	C- 556723-010V
3- 401258		PLÅT	SHEET	BLECH	C- 556723-010V
4- 401370		BUSSNING	BUSHING	BUCHSE	C- 556723-010V
4- 401371		BUSSNING	BUSHING	BUCHSE	C- 556723-010V
4- 401372		BUSSNING	BUSHING	BUCHSE	C- 556723-010V
C- 401419-0101	10631 87-12-29	RÖRMONTAGE LS-STRIP	PIPING ASSEMBLY LS-STRI	ROHRSYSTEM	C- 556723-010V
2- 401424		PLÅT	SHEET	BLECH	C- 556723-010V
3- 401462		KUGGHJUL	GEAR	ZAHNRAD	C- 283626-040V
3- 401463		KUGGHJUL	GEAR	ZAHNRAD	C- 456688-020V
4- 434003		PLUGG	PLUG	PFROPFEN	C- 560858-010V
4- 434004		TÄTNINGSRING	SEALING RING	DICHTUNGSRING	C- 560858-010V
C- 434074-0302	16183 91-04-08	FÄRGVERK ST-ER	INK UNIT	FARBENWERK	C- 77091-040V
					C- 752646-020V
					C- 752914-010V
3- 434436-0001		RITN.FÖR TRYCKKNAPPSLÅDA	MOUNTING DRAWING	MONTAGEZEICHNUNG	C- 232781-040V
4- 434437		KABELSKYDD	PROTECTION	SCHUTZ	C- 232781-040V
3- 434448		VERKTYG FÖR FÄRGRULLE	TOOL	WERKZEUGE	C- 77092-030V
1- 434453		STATIV	MACHINE BODY	STATIV	C- 232781-040V
2- 434454		BORDSFÄSTE	BRACKET	BEFESTIGUNGSHALTER	C- 232781-040V
4- 434747		BYGEL	BOW CLAMP	BUEGEL	C- 434074-030V
					C- 434774-030V
					C- 434074-030V
					C- 434774-030V
					C- 434074-030V
C- 434774-0302	16183 91-04-08	FÄRGVERK ST-R	INK UNIT	FARBENWERK	C- 77091-040V

PART NO	LAST ECN	BENÄMNING	TITLE	BENENNUNG	GROUP NO
					C- 752645-020V
					C- 752913-010V
4- 434841		TOLK	GAUGE	GRENZLEHRE	C- 77099-020V
3- 436469		HAKE	CATCH	HAKEN	C- 76197-010V
3- 436470		HAKE	CATCH	HAKEN	C- 76197-010V
4- 436927		MUTTER	NUT	MUTTER	C- 434074-030V
4- 436927		MUTTER	NUT	MUTTER	C- 434774-030V
					C- 434074-030V
					C- 434774-030V
3- 439813		PLATTA	PLATE	PLATTE	C- 434074-030V
4- 439818-0002		PACKNING	GASKET	DICHTUNG	C- 529933-010V
					C- 735192-010V
					C- 735271-020V
					C- 735192-010V
					C- 924592-010V
					C- 735192-010V
					C- 735271-020V
					C- 735192-010V
					C- 924592-010V
					C- 735192-010V
					C- 735271-020V
					C- 735192-010V
4- 439854		TRYCKFJÄDER	COMPRESSION SPRING	DRUCKFEDER	C- 924592-010V
1- 439963		ÖVRE PÅFYLLNINGSRÖR	UPPER FILLING TUBE	FUELLROHR	C- 736600-020V
4- 440138		LÅSRING	LOCKING CIRCLIP	VERSCHLUSSRING	C- 529933-010V
					C- 564119-010V
					C- 564120-010V
					C- 554886-010V
4- 440180		BRICKA	WASHER	SCHEIBE	C- 554887-010V
P- 440630-0201	10455 87-11-11	AP-VENTIL	AP-VALVE	VENTIL	C- 554887-010V
1- 440631		VENTILHUS 51	VALVE BODY 51	VENTILGEHÄUSE 51	C- 272560-060V
2- 440632		CYLINDERHUS	CYLINDER HOUSING	ZYLINDERGEHÄUSE	C- 440630-020V
					C- 539209-010V
					C- 539210-010V
					C- 794213-010V
2- 440633		CYLINDERHUS	CYLINDER HOUSING	ZYLINDERGEHÄUSE	C- 794244-010V
					C- 539211-010V
					C- 794243-010V
2- 440634		ÅNGHUS	HOUSE	GEHAEUSE	C- 924991-010V
					C- 440630-020V
3- 440635		KOLVSTÅNG	PISTON ROD	KOLBENSTANGE	C- 794245-010V
3- 440636		KOLVSTÅNG	PISTON ROD	KOLBENSTANGE	C- 539210-010V
3- 440637		KOLVSTÅNG	PISTON ROD	KOLBENSTANGE	C- 539211-010V
					C- 539209-010V
3- 440638		KOLV	PISTON	KOLBEN	C- 794244-010V
					C- 539209-010V
					C- 539210-010V
4- 440646		KOLV	PISTON	KOLBEN	C- 794244-010V
					C- 539211-010V
					C- 794243-010V
4- 440647		HYLSA	SLEEVE	HUELSE	C- 924991-010V
					C- 272560-060V
4- 440648		TÄTNINGSBRICKA	SEALING WASHER	DICHTUNGSSCHEIBE	C- 794243-010V
					C- 539210-010V
4- 440650		BRICKA	WASHER	SCHEIBE	C- 794213-010V
4- 440651		BRICKA	WASHER	SCHEIBE	C- 539210-010V
					C- 539209-010V
					C- 539210-010V
					C- 794213-010V
4- 440652		BRICKA	WASHER	SCHEIBE	C- 794244-010V
					C- 539211-010V
					C- 794243-010V
4- 440654		DISTANSHYLSA	SPACER SLEEVE	DISTANZHUELSE	C- 924991-010V
					C- 539211-010V
4- 440655		RING	RING	RING	C- 794243-010V
					C- 539209-010V
4- 440656		BRICKA	WASHER	SCHEIBE	C- 794244-010V
					C- 539211-010V
					C- 794243-010V
4- 440659		CYL. PINNE	CYLINDRICAL PIN	ZYLINDERSTIFT	C- 924991-010V
4- 440660		TRYCKFJÄDER	COMPRESSION SPRING	DRUCKFEDER	C- 539210-010V
4- 440661		TRYCKFJÄDER	COMPRESSION SPRING	DRUCKFEDER	C- 539210-010V
4- 440662		TRYCKFJÄDER	COMPRESSION SPRING	DRUCKFEDER	C- 539211-010V
					C- 794243-010V
4- 440663		TRYCKFJÄDER	COMPRESSION SPRING	DRUCKFEDER	C- 924991-010V
					C- 539209-010V
					C- 539210-010V
					C- 794213-010V
4- 440664		TÄTNINGSBRICKA	SEALING WASHER	DICHTUNGSSCHEIBE	C- 794244-010V
3- 440695		GAVEL	END SECTION	STIRNWAND	C- 539211-010V
					C- 539211-010V
					C- 794243-010V
4- 440731		PLATTA	PLATE	PLATTE	C- 924991-010V
					C- 272560-060V
					C- 794243-010V
3- 440978		RÖRBÖJ	PIPE BEND	ROHRBOGEN	C- 272560-060V
C- 441000-0501	15202 90-10-12	REMSHÅLLARE	STRIP HOLDER	STREIFENHALTER	B- 648107-100V
C- 441000-0502	15202 90-10-12	REMSHÅLLARE	STRIP HOLDER	STREIFENHALTER	B- 648107-100V
1- 441005		FÄSTPLÅT	MOUNTING SHEET	BEFESTIGUNGSBLECH	C- 441000-050V
4- 441010		AXEL	SHAFT	WELLE	C- 441000-050V
4- 441024		MELLANLÄGG	LACE	ZWISCHENLAGE	C- 256173-050V

PART NO	LAST ECN	BENÄMNING	TITLE	BENENNUNG	GROUP NO
3- 441031		LÄNKLAGER	LINK BEARING	LAGER	C- 256217-040V
3- 441034		ARM	ARM	ARM	C- 441000-050V
4- 441069-0001		FÄSTE	BRACKET	BEFESTIGUNGSHALTER	C- 751885-030V
4- 441069-0002		FÄSTE	BRACKET	BEFESTIGUNGSHALTER	C- 751885-030V
4- 441077		MUNSTYCKSFÄSTE	NOZZLE BRACKET	D~SENBEFESTIGUNG	C- 978260-020V
					C- 456100-030V
4- 441139		PINNMUTTER	NUT	MUTTER	C- 456103-010V
1- 441143		MELLANSTYCKE	SPACER PIECE	ZWISCHENSTUECK	CR- 256547-040V
4- 441162		STÄNKSKYDDSPLÅT	PROTECTION PLATE	SCHUTZBLECH	C- 456100-030V
3- 441212		HÅLLARE	HOLDER	HALTER	C- 456100-030V
G2- 441217		BUSSNING NEDRE	BUSHING LOWER	BUCHSE	C- 456100-030V
G2- 441218		BUSSNING ÖVRE	BUSHING UPPER	BUCHSE	C- 456100-030V
4- 441221		BRICKA	WASHER	SCHEIBE	C- 456100-030V
4- 441239		VINKELFÄSTE	ANGLE BRACKET	WINKELBEFESTIGUNG	C- 295883-050V
3- 441268		OKGEJD	WAY	FUEHRUNG	C- 256217-040V
3- 441269		LÄNKGEJD	WAY	FUEHRUNG	C- 256217-040V
4- 441286		MUTTER	NUT	MUTTER	C- 560858-010V
					C- 271169-040V
					C- 272337-040V
4- 441295		HÅLLARE	HOLDER	HALTER	C- 271866-060V
4- 441296		HÅLLARE	HOLDER	HALTER	C- 271866-060V
C- 441304-040V	20303 93-09-06	RÖRLIG FORMRING	MOVABLE FORMING RING	BEWEGLICHER FORMRING	B- 648111-100V
C- 441307-030V	20303 93-09-06	ÖVRE FORMBYGEL	UPPER TUBE SUPPORT	OBERE FORMB~GEL	B- 648111-100V
4- 441328		STYRPINNE	GUIDE PIN	FUEHRUNGSBOLZEN	C- 272652-030V
4- 441339		AXEL	SHAFT	WELLE	C- 256200-030V
3- 441348		PAPPERSSTÖD	PAPER SUPPORT	PAPIERSTUETZE	C- 295891-030V
4- 441353		DRAGFJÄDER	TENSION SPRING	ZUGFEDER	C- 572760-010V
4- 441354		VÄRMESKYDD	HEAT GUARD	WÄRMESCHUTZ	C- 272343-050V
4- 441355		LUFTNINGSSKRUV	BLEEDING SCREW	SCHRAUBE	CR- 256212-050V
					CR- 256213-050V
					C- 256217-040V
					C- 257381-030V
4- 441355		LUFTNINGSSKRUV	BLEEDING SCREW	SCHRAUBE	C- 257382-030V
G2- 441356		FÄSTE	BRACKET	BEFESTIGUNGSHALTER	C- 256173-050V
4- 441359		GEJD	WAY	FUEHRUNG	C- 271115-040V
4- 441360		PLATTA	PLATE	PLATTE	C- 256173-050V
4- 441385		NAV	HUB	NABE	CR- 256212-050V
					CR- 256213-050V
2- 441387		MOTORVAGGA	MOTOR CRADLE	MOTORWIEGE	C- 271128-040V
1- 441411		OKKURVA	CURVE	KURVE	C- 256202-050V
1- 441412		ARMKURVA	CURVE	KURVE	C- 256202-050V
4- 441448		PACKNING	GASKET	DICHTUNG	C- 751332-010V
4- 441474		AVSKALNINGSSHIMS	SHIM	SHIMS	C- 256014-060V
4- 441483		CYLINDERFÄSTE	CYLINDER BRACKET	ZYLINDERBEFESTIGUNG	C- 476859-020V
					C- 456309-050V
C- 441486-040V	20303 93-09-06	DELAD FORMRING	DIVIDED FORMING RING	GETEILTER FORMRING	B- 648111-100V
2- 441499		HÅLLARE	HOLDER	HALTER	C- 456455-030V
3- 441500		SLANG	HOSE	SCHLAUCH	C- 456455-030V
4- 441501		ISOLERING	INSULATION	ISOLIERUNG	C- 272407-020V
C- 441534-0101	9085 86-05-18	BELYSNINGSARMATUR 9W	LIGHT FIXTURE	BELEUCHTUNGSARMATUR	C- 456100-030V
C- 441535-0101	19104 92-12-21	BELYSNINGSARMATUR 11W	LIGHT FIXTURE	BELEUCHTUNGSARMATUR	C- 565402-010V
C- 441535-0102	19104 92-12-21	BELYSNINGSARMATUR 11W	LIGHT FIXTURE	BELEUCHTUNGSARMATUR	C- 456457-040V
					C- 456458-040V
					C- 751860-020V
					C- 752960-010V
					C- 752971-010V
3- 441536		PACKNING	GASKET	DICHTUNG	C- 441534-010V
					C- 441535-010V
2- 441546		BRYTRULLE	BENDING ROLLER	UMLENKROLLE	C- 272028-060V
2- 441547		BRYTRULLE	BENDING ROLLER	UMLENKROLLE	C- 272028-060V
3- 441554		BIGSKENA	CREASE BAR	PRÄGESCHIENE	C- 752645-020V
					C- 752646-020V
					C- 752913-010V
					C- 752914-010V
4- 441556-0001		DISTANS	SPACER	DISTANZ	C- 752645-020V
					C- 752646-020V
					C- 978260-020V
4- 441556-0002		DISTANS	SPACER	DISTANZ	C- 978444-020V
					C- 752645-020V
					C- 752646-020V
					C- 752913-010V
					C- 752914-010V
4- 441556-0003		DISTANS	SPACER	DISTANZ	C- 752645-020V
					C- 752646-020V
					C- 752913-010V
					C- 752914-010V
4- 441556-0004		DISTANS	SPACER	DISTANZ	C- 978260-020V
					C- 752645-020V
					C- 752646-020V
					C- 752913-010V
					C- 752914-010V
4- 441556-0006		DISTANS	SPACER	DISTANZ	C- 752645-020V
					C- 752646-020V
					C- 752913-010V
					C- 752914-010V
4- 441556-0007		DISTANS	SPACER	DISTANZ	C- 752645-020V
					C- 752646-020V
					C- 752913-010V
					C- 752914-010V
4- 441556-0009		DISTANS	SPACER	DISTANZ	C- 752645-020V
					C- 752646-020V
4- 441556-0009		DISTANS	SPACER	DISTANZ	C- 752913-010V

PART NO	LAST ECN	BENÄMNING	TITLE	BENENNUNG	GROUP NO
					C- 752914-010V
4- 441556-0010		DISTANS	SPACER	DISTANZ	C- 752645-020V
					C- 752646-020V
4- 441576		DISTANS	SPACER	DISTANZ	C- 272025-030V
3- 441578-0001		CYLINDERFÄSTE	CYLINDER BRACKET	ZYLINDERBEFESTIGUNG	C- 272025-030V
3- 441578-0002		CYLINDERFÄSTE	CYLINDER BRACKET	ZYLINDERBEFESTIGUNG	C- 272024-040V
4- 441589		AVSKALNINGSSHIMS	SHIM	SHIMS	C- 491846-020V
4- 441593		PACKNING	GASKET	DICHTUNG	C- 456100-030V
G1- 441600		LÄNKARM	LINK ARM	GELENKARM	C- 272765-070V
G2- 441603		FÄSTE	BRACKET	BEFESTIGUNGSHALTER	C- 456588-030V
4- 441636		AXEL	SHAFT	WELLE	C- 256014-060V
4- 441637		TAPP	DOWEL	ZAPFEN	C- 256014-060V
3- 441658		FRONTPLÅT	FRONT PLATE	FRONTBLECH	C- 456100-030V
1- 441659		FRONTPLÅT	FRONT PLATE	FRONTBLECH	C- 456100-030V
2- 441665		SPOLRÖR UNDRE	FORCE SPRING	SPUEHLROHR	C- 271261-050V
1- 441667		SIDODÖRR VÄNSTER	DOOR	TUER	C- 271442-030V
4- 441668		HÅLLARE VÄNSTER	HOLDER	HALTER	C- 271442-030V
1- 441669		SIDODÖRR HÖGER	DOOR	TUER	C- 271443-030V
4- 441677		FRONTPLÅT	FRONT PLATE	FRONTBLECH	C- 456100-030V
3- 441679		TRAPPSTEG	STAIR	STUFE	C- 751928-020V
					C- 752960-010V
					C- 752971-010V
					C- 567034-010V
					C- 572306-010V
					C- 751924-010V
4- 441691		PLATTA	PLATE	PLATTE	C- 271442-030V
					C- 271443-030V
4- 441692		HÅLLARE HÖGER	HOLDER	HALTER	C- 271443-030V
3- 441693		HANDTAG	HANDLE	GRIFF	CR- 256547-040V
C- 441695-0201	14151 89-11-10	STATIV	MACHINE BODY	STATIV	B- 648105-100V
4- 441706		BRICKA	WASHER	SCHEIBE	C- 256951-050V
					C- 256952-050V
1- 441710		LAGERHUS	BEARING HOUSING	LAGERGEHÄUSE	CR- 256212-050V
					CR- 256213-050V
1- 441711		LAGERHUS	BEARING HOUSING	LAGERGEHÄUSE	CR- 256212-050V
					CR- 256213-050V
1- 441712		LAGERHUS	BEARING HOUSING	LAGERGEHÄUSE	CR- 256212-050V
					CR- 256213-050V
4- 441718		DISTANS	SPACER	DISTANZ	C- 491570-020V
					C- 491579-020V
4- 441720		DISTANS	SPACER	DISTANZ	C- 256200-030V
4- 441721		PACKNING	GASKET	DICHTUNG	C- 295778-040V
					C- 456976-050V
3- 441725		TÄCKPLÅT	COVERING PLATE	DECKBLECH	C- 77094-010V
4- 441726		TRYCKFJÄDER	COMPRESSION SPRING	DRUCKFEDER	CR- 256208-040V
1- 441727		KLIPPBACK	CUTTING JAW	SCHNEIDBACKE	CR- 256204-050V
					CR- 256205-050V
3- 441733		TPC-SKENA	TPC BAR	TPC SCHIENE	C- 295523-030V
4- 441737		BRICKA	WASHER	SCHEIBE	C- 272021-060V
					C- 491570-020V
					C- 491579-020V
4- 441739		BRICKA	WASHER	SCHEIBE	C- 491570-020V
					C- 491579-020V
G4- 441740		GÅNGJÄRNSHALVA	HINGE FLANGE	ANGELHÄLFTE	C- 491570-020V
					C- 491579-020V
G4- 441741		GÅNGJÄRNSHALVA	HINGE FLANGE	ANGELHÄLFTE	C- 491570-020V
					C- 491579-020V
3- 441743		FÄSTE	BRACKET	BEFESTIGUNGSHALTER	C- 456953-020V
2- 441749		KURVA	CURVE	KURVE	C- 256217-040V
3- 441750		OK	YOKE	JOCH	C- 256217-040V
4- 441751		MELLANLÄGG	LACE	ZWISCHENLAGE	C- 256217-040V
3- 441758		RÖR HÖGER	PIPE RIGHT	ROHR	C- 978443-010V
					C- 256222-020V
3- 441759		RÖR VÄNSTER	PIPE LEFT	ROHR	C- 978443-010V
					C- 256222-020V
4- 441764		AXEL	SHAFT	WELLE	CR- 256212-050V
					CR- 256213-050V
4- 441782		GLIDPLÅT	SLIDE SHEET	GLEITBLECH	C- 456103-010V
4- 441783		STYRKLOTS	LOCATING PIECE	FUEHRUNGSKLOTZ	C- 456103-010V
G1- 441791		FÄSTPLATTA	FASTENING PLATE	BEFESTIGUNGSPLATTE	C- 456103-010V
3- 441792		ROTORHUVUD	HEAD	KOPF	C- 441798-010V
					C- 441811-010V
4- 441793		LAGERHUS	BEARING HOUSING	LAGERGEHÄUSE	C- 441798-010V
					C- 441811-010V
4- 441794		LAGERTAPP	PIVOT PIN	LAGERZAPFEN	C- 441798-010V
					C- 441811-010V
4- 441795		BRICKA	WASHER	SCHEIBE	C- 441798-010V
					C- 441811-010V
4- 441796		TÄTNING	SEAL	DICHTUNG	C- 441798-010V
					C- 441811-010V
4- 441797		AVSKALNINGSSHIMS	SHIM	SHIMS	C- 441798-010V
					C- 441811-010V
C- 441798-0101	6626 84-03-20	DISKROTOR	ROTOR	ROTOR	C- 272765-070V
4- 441799		VINKLAD ANSLUTNING	ATTACHMENT	ANSCHLUSS	C- 441798-010V
4- 441800		RAK ANSLUTNING	STRAIGHT FITTING	GERADER ANSCHLUSS	C- 441811-010V
2- 441804		ELEMENTRÖR	COIL HEATER	ELEMENTROHR	C- 256055-060V
					C- 295778-040V
G1- 441806		KRAGE	COLLAR	KRAGEN	C- 456100-030V
3- 441807		BÄRSKENA	CARRYING BAR	TRAGSCHIENE	C- 456103-010V
2- 441809		FRONTPLÅT	FRONT PLATE	FRONTBLECH	C- 456100-030V
3- 441810		PACKNING	GASKET	DICHTUNG	C- 456100-030V
C- 441811-0101	6626 84-03-20	DISKROTOR	ROTOR	ROTOR	C- 456588-030V

PART NO	LAST ECN	BENÄMNING	TITLE	BENENNUNG	GROUP NO
1- 441829		RÖRSYSTEM	PIPE	ROHR	C- 271115-040V
2- 441839		KOPPLINGSRÖR	JUNCTION PIPE	KUPPLUNGSROHR	C- 456588-030V
3- 441843		FÄSTE	BRACKET	BEFESTIGUNGSHALTER	C- 271169-040V
C- 441850-0401	20305 93-08-23	KABELDRAGNING	CABLE ASSEMBLY	KABEL	B- 648105-100V
4- 441871		PENDELFÄSTE	PENDULUM SUSPENSION	PENDELBEFESTIGUNG	C- 271169-040V
4- 441876		RULLE	ROLL	ROLLE	C- 272021-060V
4- 441894		HYLSA	SLEEVE	HUELSE	CR- 256436-060V
					CR- 256712-050V
					CR- 256436-060V
					CR- 256712-050V
					CR- 256436-060V
					CR- 256712-050V
					CR- 256436-060V
					CR- 256712-050V
4- 441895		DÄMPRING	BUFFER RING	DÄMPFUNGSRING	CR- 256436-060V
					CR- 256712-050V
					CR- 256436-060V
					CR- 256712-050V
					CR- 256436-060V
					CR- 256712-050V
					CR- 256436-060V
4- 441896		UTJÄMNINGSBRICKA	WASHER	SCHEIBE	CR- 256712-050V
					CR- 256436-060V
					CR- 256712-050V
4- 441896		UTJÄMNINGSBRICKA	WASHER	SCHEIBE	CR- 256436-060V
					CR- 256712-050V
					CR- 256436-060V
					CR- 256712-050V
					CR- 256436-060V
					CR- 256712-050V
4- 441903		ARM	ARM	ARM	C- 272025-030V
G4- 441904		ARM	ARM	ARM	C- 272024-040V
3- 441905		STOPPINNE	RETARD PIN	STOPPSTIFT	C- 751928-020V
					C- 752960-010V
					C- 752971-010V
					C- 567034-010V
					C- 572306-010V
					C- 751924-010V
1- 441907		INSTYRNING	RULING GUIDE	EINF~HRUNG	C- 272404-070V
3- 441908		BYGEL	BOW CLAMP	BUEGEL	C- 272404-070V
4- 441918		FÄSTE	BRACKET	BEFESTIGUNGSHALTER	C- 441486-040V
3- 441957		LAGERLOCK	BEARING COVER	LAGERDECKEL	C- 256084-050V
3- 441978		TAPPLAGER	BEARING	LAGER	C- 295310-070V
4- 441979		AXEL	SHAFT	WELLE	C- 295310-070V
4- 441980		KUGGHJUL	GEAR WHEEL	ZAHNRAD	C- 295310-070V
3- 442084		RING	RING	RING	C- 556662-010V
3- 442085		STRÅLDELARE 90 GRADER	JET DIVERTER	STRAHLDREHER	C- 556662-010V
3- 442086		REFLEKTOR 90 GRADER	REFLECTOR	REFLEKTOR	C- 556662-010V
3- 442088-0001		ELSCHEMA LASER	DIAGRAM	SCHEMA	C- 556662-010V
3- 442113		STOPP	STOP	STOPP	C- 76402-010V
4- 442237		MUTTER	NUT	MUTTER	C- 456976-050V
					C- 469452-030V
					C- 751800-020V
3- 445503		LÅSPINNE UNDRE	LOCKING PIN LOWER	VERSCHLUSSTIFT	C- 794092-010V
					C- 566507-010V
					C- 567695-010V
3- 445505		LÅSPINNE ÖVRE	LOCKING PIN UPPER	VERSCHLUSSTIFT	C- 794092-010V
					C- 566507-010V
					C- 567695-010V
4- 445533		SKYLT	SIGN	SCHILD	C- 978739-010V
4- 445534		SKYLT	SIGN	SCHILD	C- 978739-010V
4- 445535		SKYLT	SIGN	SCHILD	C- 978739-010V
4- 445542		MANTELGUMMI	MANTEL RUBBER	MANTELGUMMI	C- 434074-030V
					C- 434774-030V
					C- 434074-030V
					C- 434774-030V
					C- 434074-030V
4- 445638		BOTTENPLATTA	BOTTOM PLATE	GRUNDPLATTE	C- 450125-010V
4- 445639		VALSAXEL	SHAFT	WELLE	C- 450125-010V
4- 445640		LEDAXEL	SHAFT	WELLE	C- 450125-010V
4- 445641		VALS	ROLLER	WALZE	C- 450125-010V
					C- 491273-010V
3- 445645		VALSRAM	FRAME	RAHMEN	C- 450125-010V
3- 445646		BÄRRAM	SUPPORTING FRAME	RAHMEN	C- 450125-010V
3- 445647		LAGERHUS	BEARING HOUSING	LAGERGEHÄUSE	C- 450125-010V
3- 449193		MANOMETERRÖR	PRESSURE GAUGE TUBE	MANOMETERROHR	C- 266215-010V
3- 449194		MANOMETERRÖR	PRESSURE GAUGE TUBE	MANOMETERROHR	C- 266215-010V
2- 449200-0001		HÅLLARE	HOLDER	HALTER	C- 283604-020V
3- 449201		ARM	ARM	ARM	C- 283604-020V
3- 449202-0001		AXEL	SHAFT	WELLE	C- 283604-020V
3- 449203-0001		AXEL	SHAFT	WELLE	C- 283604-020V
4- 449204		NAV	HUB	NABE	C- 283604-020V
4- 449205		HÅLLARE	HOLDER	HALTER	C- 283604-020V
4- 449206		AXEL	SHAFT	WELLE	C- 283604-020V
4- 449230		RULLE	ROLL	ROLLE	C- 566280-010V
4- 449243		JUSTERBRICKA	ADJUSTING SHIM	EINSTELLSCHEIBE	C- 548057-010V
G1- 449276		KONSOL	CANTILEVER	KONSOLE	CR- 548040-010V
G1- 449277		ARM	ARM	ARM	CR- 548040-010V
4- 449281		SKRUV	SCREW	SCHRAUBE	C- 533844-010V
4- 449284		PASSKRUV	REAMED BOLT	PASSCHRAUBE	C- 554360-020V
3- 449288		PLATTA	PLATE	PLATTE	C- 554360-020V
3- 449295		RULLE	ROLL	ROLLE	C- 283629-020V

PART NO	LAST ECN	BENÄMNING	TITLE	BENENNUNG	GROUP NO
					C- 552030-010V
4- 449296		AXEL	SHAFT	WELLE	C- 283629-020V
3- 449332		STÖD	SUPPORT	STUETZE	C- 552030-010V
3- 449334		STÖD	SUPPORT	STUETZE	C- 552030-010V
4- 449336		FÄSTE	BRACKET	BEFESTIGUNGSHALTER	C- 552030-010V
4- 449347		DISTANS	SPACER	DISTANZ	C- 476349-030V
4- 449381-0001		DISTANS	SPACER	DISTANZ	C- 566280-010V
4- 449384-0002		AXEL	SHAFT	WELLE	C- 566280-010V
3- 449391		HÅLLARE	HOLDER	HALTER	C- 456679-010V
3- 449392		SKENA	RAIL	SCHIENE	C- 456679-010V
3- 449393		SKENA	RAIL	SCHIENE	C- 456679-010V
2- 449398		SPILLRÖR	OVERFLOW PIPE	UEBERLAUFROHR	CR- 548040-010V
2- 449399		INDUKTORFÄSTE	INDUCTOR BRACKET	BEFESTIGUNGSHALTER	C- 457866-030V
P1- 449939-0001		VÄRMEPATRON 15KW	HEATING ELEMENT 15KW	HEIZPATRONE	C- 271181-040V
C- 449969-0101	6514 84-03-22	DEMONTERINGSVERKTYG	TOOL	WERKZEUGE	C- 77092-030V
					C- 77094-010V
3- 449970		HÅLLARE	HOLDER	HALTER	C- 449969-010V
4- 449971		SPINDEL	SPINDLE	SPINDEL	C- 449969-010V
3- 450015		STYRHUS	HOUSE	GEHAEUSE	C- 450125-010V
4- 450016		MUTTER	NUT	MUTTER	C- 450125-010V
3- 450061-0002		INDUKTOR	INDUCTOR	INDUKTOR	C- 456951-010V
					C- 491273-010V
3- 450065-0002		INDUKTORFÄSTE	BRACKET	BEFESTIGUNGSHALTER	C- 456951-010V
3- 450065-0003		INDUKTORFÄSTE	BRACKET	BEFESTIGUNGSHALTER	C- 456951-010V
3- 450098		PLÅT	SHEET	BLECH	C- 271641-030V
3- 450099		PLÅT	SHEET	BLECH	C- 271641-030V
4- 450100		FJÄDER	SPRING	FEDER	C- 271641-030V
C- 450101-0101	6886 84-06-04	AVRIVNINGSANORDNING	TEARING DEVICE	ABREISSGERÄT	C- 271699-030V
C- 450101-0201	17888 93-01-27	AVRIVNINGSANORDNING	TEARING DEVICE	ABREISSGERÄT	C- 271699-040V
2- 450102		TRYCKARM	PRESSURE ARM	DRUCKARM	C- 450101-010V
3- 450103		KNIV	KNIFE	MESSER	C- 450101-010V
4- 450123		FÄSTE	BRACKET	BEFESTIGUNGSHALTER	C- 450125-010V
3- 450124		KONSOL	CANTILEVER	KONSOLE	C- 450125-010V
C- 450125-0102	15051 90-08-20	UPPVÄRMNINGSENHET	HEATING DEVICE	ERHITZER	C- 456953-020V
4- 450278		LINJAL	RULER	LINEAL	C- 271641-030V
4- 450355		FÄRGRULLE	INK ROLLER	FARBROLLE	C- 434074-030V
					C- 434774-030V
					C- 434074-030V
					C- 434774-030V
					C- 434074-030V
4- 450497		AXEL	SHAFT	WELLE	C- 751718-010V
4- 450500		TAPP	DOWEL	ZAPFEN	C- 751718-010V
4- 450833		FILTER	FILTER	FILTER	C- 272623-050V
4- 450837		LOCK	LID	DECKEL	C- 272623-050V
4- 451117		RULLE	ROLL	ROLLE	C- 441486-040V
3- 451140		FLOTTÖR	FLOAT	SCHWIMMER	C- 978239-020V
					C- 978240-020V
					C- 978241-020V
4- 451148		FÄSTE	BRACKET	BEFESTIGUNGSHALTER	C- 441486-040V
4- 451149		AXEL	SHAFT	WELLE	C- 441486-040V
C- 451348-0201	15258 91-05-16	KOPPLINGSLÅDA-IMPULSGIV.	CONNECTION BOX	KUPPLUNGSKASTEN	C- 752784-010V
4- 451423		KRETSKORT	CIRCUIT BOARD	SCHALTKARTE	C- 451348-020V
2- 451430		KOPPLINGSDOSA	CONNECTION HOUS.(MINOR)	KUPPLUNGSDOSE	C- 271181-040V
2- 456002		LAGER	BEARING	LAGER	C- 256217-040V
4- 456004		DISTANS	SPACER	DISTANZ	C- 256217-040V
4- 456005-0001		VOLYMKUDDE	VOLUME BULGE	VOLUMENKISSEN	C- 978443-010V
					CR- 256209-030V
					CR- 256210-030V
4- 456005-0003		VOLYMKUDDE	VOLUME BULGE	VOLUMENKISSEN	C- 978259-010V
					CR- 256209-030V
					CR- 256210-030V
4- 456009		LÄNK	LINK	GELENK	CR- 256208-040V
4- 456011		PINNE	PEG	STIFT	C- 295523-030V
					C- 469118-020V
3- 456012		LAGERSÄTE	BEARING SEAT	LAGERSITZ	C- 751088-030V
4- 456013		LAGERLOCK	BEARING COVER	LAGERDECKEL	C- 751088-030V
2- 456017		SLANGHÅLLARE HÖGER	HOSE HOLDER RIGHT	SCHLAUCHHALTER	C- 257381-030V
2- 456018		SLANGHÅLLARE VÄNSTER	HOSE HOLDER LEFT	SCHLAUCHHALTER	C- 257382-030V
4- 456022		HYLSA	SLEEVE	HUELSE	C- 456032-010V
4- 456023		LED	JOINT	GELENK	C- 456032-010V
4- 456024		STYRAXEL	GUIDE SHAFT	FUEHRUNGSACHSE	C- 456032-010V
4- 456025		KLÄMHÅLLARE	CLAMP HOLDER	KLEMMHALTER	C- 456032-010V
4- 456026		FÄSTE	BRACKET	BEFESTIGUNGSHALTER	C- 456032-010V
3- 456027		KLÄMHÅLLARE	CLAMP HOLDER	KLEMMHALTER	C- 456032-010V
3- 456028		LED	JOINT	GELENK	C- 456032-010V
3- 456029		LED	JOINT	GELENK	C- 456032-010V
3- 456030		FÄSTVINKEL	FASTENING BRACKET	BEFESTIGUNGSWINKEL	C- 456032-010V
3- 456031		FÄSTE	BRACKET	BEFESTIGUNGSHALTER	C- 456032-010V
C- 456032-010V	19273 93-05-31	AUTOMATISK REMSTYRARE	STRIP GUIDE	STREIFENFUEHRUNG	B- 648107-100V
4- 456042		SKRUV	SCREW	SCHRAUBE	C- 441304-040V
4- 456064		DISTANS	SPACER	DISTANZ	C- 295310-070V
4- 456072		BRICKA	WASHER	SCHEIBE	C- 272404-070V
C- 456100-030V	19268 93-05-31	STATIV	MACHINE BODY	STATIV	B- 648102-100V
C- 456103-010V	19267 93-05-31	SIDOMATARE	SIDE FEEDER	SEITENZUFUEHRUNG	B- 648105-100V
2- 456105		PLÅTSKYDD	PROTECTION	SCHUTZ	C- 456103-010V
2- 456106		SIDOPLÅT	SIDE PLATE	SEITENBLECH	C- 456103-010V
1- 456107		SIDOPLÅT	SIDE PLATE	SEITENBLECH	C- 456103-010V
3- 456108		MELLANLÄGG	LACE	ZWISCHENLAGE	C- 456103-010V
3- 456109		STYRSKENA	STEERING RAIL	FUEHRUNGSSCHIENE	C- 456103-010V
4- 456112		FÄSTE	BRACKET	BEFESTIGUNGSHALTER	C- 456103-010V
4- 456113		FÄSTE	BRACKET	BEFESTIGUNGSHALTER	C- 456103-010V
4- 456121		ARM	ARM	ARM	C- 752957-010V

PART NO	LAST ECN	BENÄMNING	TITLE	BENENNUNG	GROUP NO
3- 456123		STÖD	SUPPORT	STUETZE	C- 271181-040V
4- 456125		FÄSTPLATTA	FASTENING PLATE	BEFESTIGUNGSPLATTE	C- 271181-040V
1- 456128		SPOLRÖR VÄNSTER	FORCE SPRING	SPUEHLROHR	C- 271261-050V
2- 456129-0001		SPOLRÖR ÖVRE	FORCE SPRING	SPUEHLROHR	C- 271261-050V
2- 456129-0002		SPOLRÖR ÖVRE	FORCE SPRING	SPUEHLROHR	C- 271261-050V
3- 456137		SLANG	HOSE	SCHLAUCH	C- 978739-010V
4- 456139		LÅSPLATTA	LOCK PLATE	VERSCHLUSSPLATTE	C- 441304-040V
1- 456144-0004		FALLRÄNNA TBA/9	DROP CHUTE	FALLRINNE	C- 978260-020V
1- 456145		FALLRÄNNA TBA/9 V0125	DROP CHUTE	FALLRINNE	C- 456180-010V
1- 456146		FALLRÄNNA TBA/9 V200 SLI	DROP CHUTE	FALLRINNE	C- 456180-010V
1- 456147		STYRPLÅT AB9 V0250	HEAD PLATE	FUEHRUNGSBLECH	C- 978444-020V C- 456180-010V
1- 456148		STYRPLÅT AB9 V0236	HEAD PLATE	FUEHRUNGSBLECH	C- 456180-010V
1- 456149		STYRPLÅT AB9 V0200	HEAD PLATE	FUEHRUNGSBLECH	C- 978260-020V C- 456180-010V
1- 456150		STYRPLÅT AB9 V0180	HEAD PLATE	FUEHRUNGSBLECH	C- 456180-010V
1- 456151		STYRPLÅT AB9 V0125	HEAD PLATE	FUEHRUNGSBLECH	C- 456180-010V
1- 456152		STYRPLÅT	HEAD PLATE	FUEHRUNGSBLECH	C- 456180-010V
1- 456152		STYRPLÅT	HEAD PLATE	FUEHRUNGSBLECH	C- 978260-020V
1- 456158		FALLRÄNNA TB/9 V200 SLI	DROP CHUTE	FALLRINNE	C- 456180-010V
1- 456159		STYRPLÅT B9 V0250	HEAD PLATE	FUEHRUNGSBLECH	C- 456180-010V
1- 456160		STYRPLÅT B9 V0236	HEAD PLATE	FUEHRUNGSBLECH	C- 456180-010V
1- 456161		STYRPLÅT B9 V0200	HEAD PLATE	FUEHRUNGSBLECH	C- 456180-010V
1- 456162		STYRPLÅT B9 V0180	HEAD PLATE	FUEHRUNGSBLECH	C- 456180-010V
1- 456163		STYRPLÅT B9 V200 SLIM	HEAD PLATE	FUEHRUNGSBLECH	C- 456180-010V
4- 456164		BLADFJÄDER	LEAF SPRING	BLATTFEDER	C- 456180-010V
4- 456165		BLADFJÄDER	LEAF SPRING	BLATTFEDER	C- 456180-010V
4- 456166		BLADFJÄDER	LEAF SPRING	BLATTFEDER	C- 456180-010V
4- 456167		BLADFJÄDER	LEAF SPRING	BLATTFEDER	C- 456180-010V
G1- 456175		LOCK	LID	DECKEL	C- 295310-070V
2- 456176		PACKNING	GASKET	DICHTUNG	C- 295310-070V
C- 456180-010V	19268 93-05-31	NEDSLÄPPSRÄNNA	DROP CHUTE	NIEDERFALL	B- 648102-100V
4- 456181		DISTANS	SPACER	DISTANZ	C- 441486-040V
4- 456182		PLATTA	PLATE	PLATTE	C- 441486-040V
4- 456183		LÅSPLATTA	LOCK PLATE	VERSCHLUSSPLATTE	C- 441486-040V
4- 456184		LÅSPLATTA	LOCK PLATE	VERSCHLUSSPLATTE	C- 441486-040V
4- 456185		LÅSPLATTA	LOCK PLATE	VERSCHLUSSPLATTE	C- 441486-040V
4- 456186		LÅSPLATTA	LOCK PLATE	VERSCHLUSSPLATTE	C- 441486-040V
4- 456187		LÅSPLATTA	LOCK PLATE	VERSCHLUSSPLATTE	C- 441486-040V
4- 456188		LÅSPLATTA	LOCK PLATE	VERSCHLUSSPLATTE	C- 441486-040V
4- 456198		LÅSPLATTA	LOCK PLATE	VERSCHLUSSPLATTE	C- 441486-040V
4- 456199		LÅSPLATTA	LOCK PLATE	VERSCHLUSSPLATTE	C- 441486-040V
G3- 456230		VINKELFÄSTE	ANGLE BRACKET	WINKELBEFESTIGUNG	C- 441486-040V
4- 456244		SKYDDSHUV	PROTECTIVE COVER	SCHUTZHAUBE	C- 544390-010V C- 490600-040V
4- 456245		SKYDDSHUV	PROTECTIVE COVER	SCHUTZHAUBE	C- 457853-030V C- 469299-020V C- 490600-040V
4- 456249		SKYDDSHUV	PROTECTIVE COVER	SCHUTZHAUBE	C- 544389-010V C- 544390-010V C- 441850-040V C- 457867-020V C- 490600-040V
4- 456256		SKYDDSHUV	PROTECTIVE COVER	SCHUTZHAUBE	C- 546285-010V C- 554346-010V
2- 456259		KÅPA	COVER	DECKEL	C- 441535-010V
2- 456260		KÅPA	COVER	DECKEL	C- 441535-010V
2- 456261		PLÅT	SHEET	BLECH	C- 441535-010V
2- 456262		PLÅT	SHEET	BLECH	C- 441535-010V
2- 456263		PLÅT	SHEET	BLECH	C- 441534-010V
3- 456264		GLAS	GLASS	GLAS	C- 441534-010V
4- 456269		RÖR	PIPE	ROHR	C- 751800-020V
4- 456270		RÖR	PIPE	ROHR	C- 469452-030V
4- 456271		RÖR	PIPE	ROHR	C- 469452-030V
4- 456272		PLATTA	PLATE	PLATTE	C- 491890-010V
2- 456284		FRONTPLÅT	FRONT PLATE	FRONTBLECH	C- 271114-050V
2- 456285		KÅPA	COVER	DECKEL	C- 271114-050V
3- 456287		PELARE	PILLAR	SÄULE	C- 271114-050V
3- 456289		KLOTS	BLOCKING PIECE	KLOTZ	C- 271114-050V
4- 456290		HÖRNPLÅT	GUSSET PLATE	ECKBLECH	C- 271114-050V
2- 456293		FÖRDELNINGSRÖR	PIPE	ROHR	C- 456588-030V
C- 456309-050V	19266 93-06-01	NEDRE FORMRING	LOWER FORMING RING	UNTERE FORMRING	B- 648111-100V
4- 456311		VRIDFJÄDER HÖGER	TORSION SPRING RIGHT	DREHFEDER	CR- 256212-050V
4- 456312		VRIDFJÄDER VÄNSTER	TORSION SPRING LEFT	DREHFEDER	CR- 256213-050V
3- 456327		BIGSKENA	CREASE BAR	PRÄGESCHIENE	C- 752645-020V C- 752646-020V C- 752913-010V
3- 456327		BIGSKENA	CREASE BAR	PRÄGESCHIENE	C- 752914-010V
3- 456331		VINKELFÄSTE	ANGLE BRACKET	WINKELBEFESTIGUNG	C- 752645-020V C- 752646-020V
4- 456334		AXEL	SHAFT	WELLE	C- 752645-020V C- 752646-020V C- 752913-010V C- 752914-010V
1- 456339		SKYDD	PROTECTION	SCHUTZ	C- 456953-020V
2- 456340		STRÖMSKENA	BUSBAR	STROMSCHIENE	C- 456953-020V
3- 456341		KABEL	CABLE	KABEL	C- 456953-020V
3- 456343		AXEL	SHAFT	WELLE	C- 256806-030V
4- 456344		HYLSA	SLEEVE	HUELSE	C- 256806-030V
4- 456345		FÄSTE	BRACKET	BEFESTIGUNGSHALTER	C- 256806-030V
1- 456373		OKKURVA	CURVE	KURVE	C- 978258-020V C- 256202-050V

PART NO	LAST ECN	BENÄMNING	TITLE	BENENNUNG	GROUP NO
1- 456374		ARMKURVA	CURVE	KURVE	C- 978258-020V
					C- 256202-050V
3- 456393		FÄSTRÖR	PIPE	ROHR	C- 456588-030V
4- 456394		TÄTNINGSBRICKA	SEALING WASHER	DICHTUNGSSCHEIBE	C- 456588-030V
4- 456395		PACKNING	GASKET	DICHTUNG	C- 456588-030V
4- 456396		PACKNING	GASKET	DICHTUNG	C- 456588-030V
4- 456407		MELLANLÄGG	LACE	ZWISCHENLAGE	C- 271562-080V
2- 456411		LOCK	LID	DECKEL	C- 295045-070V
C- 456435-0401	18961 93-01-25	KOPPLINGSLÅDA	CONNECTION BOX	KUPPLUNGSKASTEN	C- 441850-040V
P4- 456451		VÄNDRULLE	ROLL	ROLLE	C- 295310-070V
C- 456455-030V	19186 93-01-26	RÖRDRAGNINGSSYSTEM	PIPE WORK	ROHRSYSTEM	B- 648105-100V
C- 456457-040V	16428 91-06-26	PLATTFORM TB/9	PLATFORM	PLATTFORM	B- 648102-100V
C- 456458-040V	19463 93-03-03	PLATTFORM TBA/9	PLATFORM	PLATTFORM	B- 648102-100V
C- 456459-0401	16138 91-03-20	RÄCKE TB/9	RAILING TB/9	HANDLEISTE	B- 648102-100V
C- 456460-040V	17942 93-01-19	RÄCKE TBA/9	RAILING TBA/9	HANDLEISTE	B- 648102-100V
4- 456472		VINKEL	ANGLE	WINKEL	C- 256014-060V
4- 456474		JUSTERINGSPLATTA	ADJUSTMENT PLATE	EINSTELLPLATTE	C- 256014-060V
G1- 456475		STATIV	MACHINE BODY	STATIV	C- 456100-030V
G3- 456503		SIDOSTYRNING VÄNSTER	SIDE GUIDE LEFT	FUEHRUNG	C- 567681-020V
					C- 456560-010V
G3- 456504		SIDOSTYRNING VÄNSTER	SIDE GUIDE LEFT	FUEHRUNG	C- 978192-020V
					C- 570079-020V
					C- 456560-010V
G3- 456505		SIDOSTYRNING VÄNSTER	SIDE GUIDE LEFT	FUEHRUNG	C- 456560-010V
G3- 456506		SIDOSTYRNING HÖGER	SIDE GUIDE RIGHT	FUEHRUNG	C- 567681-020V
					C- 456560-010V
G3- 456507		SIDOSTYRNING HÖGER	SIDE GUIDE RIGHT	FUEHRUNG	C- 978192-020V
					C- 570079-020V
					C- 456560-010V
G3- 456508		SIDOSTYRNING HÖGER	SIDE GUIDE RIGHT	FUEHRUNG	C- 456560-010V
4- 456513		YTTRE LEDSTYCKE	LINKPIECE OUTER	GELENKST~CK	C- 456560-010V
4- 456514		STYRKIL	WEDGE	KEIL	C- 456560-010V
3- 456515		AXEL	SHAFT	WELLE	C- 272028-060V
4- 456516		LAGERLOCK	BEARING COVER	LAGERDECKEL	C- 256014-060V
					C- 272028-060V
3- 456527		BRYTRULLE	BENDING ROLLER	UMLENKROLLE	C- 272028-060V
3- 456544		BRYTRULLE	BENDING ROLLER	UMLENKROLLE	C- 272084-030V
					C- 272473-010V
					C- 564119-010V
					C- 564120-010V
					C- 752029-010V
					C- 272359-020V
					C- 752029-010V
					C- 752030-010V
4- 456545		FLÄNS	FLANGE	FLANSCH	C- 564120-010V
					C- 752029-010V
					C- 272359-020V
					C- 752913-010V
					C- 752914-010V
					C- 752029-010V
					C- 752030-010V
2- 456554		KONSOL	CANTILEVER	KONSOLE	C- 295470-050V
C- 456555-0401	20303 93-09-06	SUGLEDNINGAR	SUCTION PIPE	SAUGLEITNUNG	B- 648111-100V
C- 456556-0201	16128 91-02-21	PEROXIDLEDNINGAR	PEROXIDE PIPE	PEROXIDLEITUNG	B- 648111-100V
C- 456560-010V	19267 93-05-31	UTSLÄPPSRÄNNA	DISCHARGE CHUTE	AUSLASSRINNE	B- 648105-100V
4- 456561		FÄSTE	BRACKET	BEFESTIGUNGSHALTER	C- 491650-010V
C- 456567-0101	6626 84-03-20	SEPARATIONSINSATS	SEPARATION INSERT	SEPARAT EINSATZ	B- 648105-100V
1- 456568		SEPERATIONSPLÅT	SHEET	BLECH	C- 456567-010V
4- 456569		FÄSTE	BRACKET	BEFESTIGUNGSHALTER	C- 456567-010V
1- 456573		FRONTPLÅT	FRONT PLATE	FRONTBLECH	C- 456100-030V
C- 456588-030V	16235 91-05-13	DISKSYSTEM	CLEANING SYSTEM	REINIGUNGSSYSTEM	B- 648105-100V
2- 456591-0003		RÖR	PIPE	ROHR	C- 456976-050V
2- 456592-0002		RÖR	PIPE	ROHR	C- 456976-050V
1- 456597		ANSLUTNINGSRÖR	ATTACHMENT PIPE	ANSCHLUSSROHR	C- 271866-060V
2- 456598		KABELRÖR	CABLE CONDUIT	KABELROHR	C- 271866-060V
2- 456599		RÖR	PIPE	ROHR	C- 271866-060V
4- 456605-0003		DISTANS	SPACER	DISTANZ	CR- 548331-010V
4- 456609		AXEL	SHAFT	WELLE	CR- 548331-010V
4- 456613-0001		AXEL	SHAFT	WELLE	C- 533844-010V
4- 456614-0001		DISTANS	SPACER	DISTANZ	C- 533844-010V
2- 456621		AXEL	SHAFT	WELLE	C- 469173-010V
3- 456622		DRAGSTÅNG	TIE ROD	ZUGSTANGE	C- 456696-030V
3- 456623		DRAGSTÅNG	TIE ROD	ZUGSTANGE	C- 456696-030V
3- 456624		LAGERHUS	BEARING HOUSING	LAGERGEHÄUSE	C- 469173-010V
3- 456625		LAGERHUS	BEARING HOUSING	LAGERGEHÄUSE	C- 469173-010V
3- 456626		STÅNG	ROD	STANGE	C- 469173-010V
4- 456627		STÅNG	ROD	STANGE	C- 469173-010V
4- 456628		RATT	SHIFTER HANDLE	RAD	C- 469173-010V
4- 456629		RATT	SHIFTER HANDLE	RAD	C- 469173-010V
4- 456630		LÅSBRICKA	LOCK WASHER	SCHLIESSCHEIBE	C- 469173-010V
4- 456631		DISTANS	SPACER	DISTANZ	C- 456696-030V
3- 456635		LINJAL	RULER	LINEAL	C- 469173-010V
3- 456636		LINJAL	RULER	LINEAL	C- 469173-010V
3- 456643		BYGEL	BOW CLAMP	BUEGEL	C- 469173-010V
3- 456645		BYGEL	BOW CLAMP	BUEGEL	C- 469173-010V
G2- 456646		VINDA V0125	REEL	WINDE	C- 469173-010V
G2- 456647		VINDA V0180	REEL	WINDE	C- 469173-010V
G2- 456648		VINDA V0200	REEL	WINDE	C- 469173-010V
G2- 456649		VINDA V0236	REEL	WINDE	C- 469173-010V
G2- 456650		VINDA V0250	REEL	WINDE	C- 469173-010V
G2- 456652		VINDA 200ML SLIM	REEL	WINDE	C- 469173-010V
P3- 456663		INDUKTOR	INDUCTOR	INDUKTOR	C- 457866-030V

PART NO	LAST ECN	BENÄMNING	TITLE	BENENNUNG	GROUP NO
P3- 456665		INDUKTOR	INDUCTOR	INDUKTOR	C- 469316-020V C- 457866-030V
2- 456675		KURVA PT-FÖRSEGLING	CURVE PT-SEALING	KURVE	C- 469316-020V C- 476349-030V
2- 456677		KURVA LS-FÖRSEGLING	CURVE LS-SEALING	KURVE	C- 476349-030V
2- 456678		KURVA TILLBAKAMATNING	CURVE	KURVE	C- 476349-030V
C- 456679-0101	6295 84-04-17	SPILLÅDA	WASTE BOX	ABFALLS KASTEN	B- 648118-090V
4- 456684		FJÄDERFÄSTE	SPRING BRACKET	FEDERHALTER	CR- 294695-010V
4- 456685		BRICKA	WASHER	SCHEIBE	CR- 294695-010V
3- 456686		FÄSTE	BRACKET	BEFESTIGUNGSHALTER	C- 552030-010V
4- 456687		KUGGREMHJUL	TOOTHED PULLY	ZAHNRIEMENRAD	CR- 548331-010V
C- 456688-020V	12944 89-08-29	DRIVRULLE	DRIVE ROLLER	TRIEBROLLE	C- 456696-030V
4- 456695		FJÄDER	SPRING	FEDER	CR- 294695-010V
C- 456696-030V	12944 89-08-29	PAPPERSMATNING	PAPER FEED	PAPIERVORSCHUB	B- 648118-090V
2- 456731-0001		RÖR	PIPE	ROHR	C- 456935-030V C- 752898-010V
2- 456731-0002		RÖR	PIPE	ROHR	C- 456935-030V C- 752898-010V
2- 456731-0003		RÖR	PIPE	ROHR	C- 456935-030V C- 752898-010V
3- 456732		RÖR	PIPE	ROHR	C- 456935-030V C- 752898-010V
3- 456744		NAV	HUB	NABE	C- 978258-020V C- 978442-020V C- 256202-050V C- 978258-020V
1- 456750		APPARATLÅDA	APPLIANCE BOX	APPARATKASTEN	C- 456827-020V
3- 456751		FÄSTE	BRACKET	BEFESTIGUNGSHALTER	C- 456827-020V
4- 456753		DISTANS	SPACER	DISTANZ	C- 456827-020V
2- 456755		BLOCK	BLOCK	BLOCK	C- 456757-020V
1- 456756		BLOCK	BLOCK	BLOCK	C- 456757-020V
C- 456757-0201	14200 90-02-13	LUFTBLÅSARE	AIR INJECTOR	LUFT INJECTOR	C- 978739-010V
3- 456758		ANSLUTNING	ATTACHMENT	ANSCHLUSS	C- 271866-060V
3- 456759		TPC-SKENA	TPC BAR	TPC SCHIENE	C- 77091-040V
3- 456760-0001		VIKKLAFFSKURVA	FOLDING FLAP CAM	FALTKLAPPEKURVE	C- 256206-020V C- 256207-020V
3- 456760-0002		VIKKLAFFSKURVA	FOLDING FLAP CAM	FALTKLAPPEKURVE	C- 978259-010V C- 256206-020V
3- 456760-0003		VIKKLAFFSKURVA	FOLDING FLAP CAM	FALTKLAPPEKURVE	C- 256207-020V C- 978443-010V
3- 456760-0006		VIKKLAFFSKURVA	FOLDING FLAP CAM	FALTKLAPPEKURVE	C- 256206-020V C- 256207-020V
3- 456760-0007		VIKKLAFFSKURVA	FOLDING FLAP CAM	FALTKLAPPEKURVE	C- 256206-020V C- 256207-020V C- 978259-010V
3- 456760-0008		VIKKLAFFSKURVA	FOLDING FLAP CAM	FALTKLAPPEKURVE	C- 256206-020V C- 256207-020V
3- 456760-0010		VIKKLAFFSKURVA	FOLDING FLAP CAM	FALTKLAPPEKURVE	C- 256206-020V C- 256207-020V
3- 456760-0011		VIKKLAFFSKURVA	FOLDING FLAP CAM	FALTKLAPPEKURVE	C- 256206-020V C- 256207-020V
3- 456767		BIGSKENA	CREASE BAR	PRÄGESCHIENE	C- 752645-020V C- 752646-020V C- 752913-010V C- 752914-010V
4- 456772		SVÄNGFÄSTE	PIVOT BRACKET	SCHWENKBEFESTIGUNG	C- 434774-030V
4- 456773		SVÄNGFÄSTE	PIVOT BRACKET	SCHWENKBEFESTIGUNG	C- 434074-030V
3- 456784		LOCK	LID	DECKEL	C- 752173-010V
3- 456794		RING	RING	RING	C- 272021-060V
4- 456796		RULLE	ROLL	ROLLE	C- 272021-060V
4- 456797		AXELFÄSTE	AXLE SUPPORT	ACHSENHALTER	C- 272021-060V
4- 456798		TAPP	DOWEL	ZAPFEN	C- 735222-020V C- 924314-010V C- 735222-020V C- 924314-010V C- 735222-020V C- 924314-010V
4- 456801		ARM	ARM	ARM	C- 272021-060V
4- 456803		LAGERTAPP	PIVOT PIN	LAGERZAPFEN	C- 272021-060V
3- 456809		AXEL	SHAFT	WELLE	C- 751702-010V
4- 456817-0001		SHIMS	SHIM	SHIMS	C- 752645-020V C- 752646-020V C- 752913-010V C- 752914-010V
2- 456819		KLIPPBACK YTTRE	CUTTING JAW OUTER	SCHNEIDBACKE	CR- 256204-050V CR- 256205-050V
3- 456821		RÖR	PIPE	ROHR	C- 271866-060V
3- 456823		RÖR	PIPE	ROHR	C- 271866-060V
3- 456824		RÖR	PIPE	ROHR	C- 271866-060V
3- 456825		FÄSTE	BRACKET	BEFESTIGUNGSHALTER	C- 271866-060V
4- 456826		RÖRKLAMMER	PIPE CLAMP	ROHRKLAMMER	C- 271866-060V
C- 456827-0201	17890 93-01-23	KOPPLINGSLÅDA	CONNECTION BOX	KUPPLUNGSKASTEN	C- 456100-030V
4- 456829		SHIMS	SHIM	SHIMS	C- 271442-030V C- 271443-030V
C- 456836-0401	17012 91-11-07	DISKSYSTEM	CLEANING SYSTEM	REINIGUNGSSYSTEM	B- 648111-100V
1- 456837		HÅLLARE	HOLDER	HALTER	C- 456309-050V
4- 456838		LÅSPLATTA	LOCK PLATE	VERSCHLUSSPLATTE	C- 456309-050V
4- 456839		LÅSPLATTA	LOCK PLATE	VERSCHLUSSPLATTE	C- 456309-050V
4- 456840		LÅSPLATTA	LOCK PLATE	VERSCHLUSSPLATTE	C- 456309-050V
2- 456852		FÖRDELARE BAKRE	DISTRIBUTOR	VERTEILER	C- 456455-030V

PART NO	LAST ECN	BENÄMNING	TITLE	BENENNUNG	GROUP NO
3- 456853-0001		RÖRKLAMMER	PIPE CLAMP	ROHRKLAMMER	C- 456455-030V
3- 456853-0002		RÖRKLAMMER	PIPE CLAMP	ROHRKLAMMER	C- 456455-030V
3- 456853-0003		RÖRKLAMMER	PIPE CLAMP	ROHRKLAMMER	C- 456455-030V
4- 456854-0001		KLAMMER	CRAMP	KLAMMER	C- 456455-030V
4- 456854-0002		KLAMMER	CRAMP	KLAMMER	C- 456455-030V
4- 456857		FÄSTE	BRACKET	BEFESTIGUNGSHALTER	C- 456836-040V
					C- 924991-010V
2- 456858		RÖR	PIPE	ROHR	C- 456836-040V
2- 456859-0002		RÖR	PIPE	ROHR	C- 456836-040V
3- 456860		RÖR	PIPE	ROHR	C- 735222-020V
4- 456864-0001		KLOTS HÖGER	BLOCK RIGHT	KLOTZ	CR- 256436-060V
4- 456864-0002		KLOTS HÖGER	BLOCK RIGHT	KLOTZ	CR- 256436-060V
4- 456865-0001		KLOTS VÄNSTER	BLOCK LEFT	KLOTZ	CR- 256436-060V
4- 456865-0002		KLOTS VÄNSTER	BLOCK LEFT	KLOTZ	CR- 256436-060V
4- 456869		LÅSPLATTA	LOCK PLATE	VERSCHLUSSPLATTE	C- 441486-040V
4- 456870		LÅSPLATTA	LOCK PLATE	VERSCHLUSSPLATTE	C- 441486-040V
4- 456871		LÅSPLATTA	LOCK PLATE	VERSCHLUSSPLATTE	C- 441486-040V
4- 456872		LÅSPLATTA	LOCK PLATE	VERSCHLUSSPLATTE	C- 441486-040V
4- 456873		LÅSPLATTA	LOCK PLATE	VERSCHLUSSPLATTE	C- 441486-040V
4- 456874		LÅSPLATTA	LOCK PLATE	VERSCHLUSSPLATTE	C- 441486-040V
C- 456882-0101	6850 84-05-18	TRYCKKNAPPSLÅDA	PUSH BUTTON BOX	DRUCKKNOPFKASTEN	C- 978739-010V
3- 456883		TRYCKKNAPPSLÅDA	PUSH BUTTON BOX	DRUCKKNOPFKASTEN	C- 456882-010V
3- 456897		RÖR	PIPE	ROHR	C- 272623-050V
4- 456900		RÖR	PIPE	ROHR	C- 272623-050V
4- 456902		RÖR	PIPE	ROHR	C- 456836-040V
4- 456904		RÖR	PIPE	ROHR	C- 456976-050V
2- 456905		FÄSTPLATTA	FASTENING PLATE	BEFESTIGUNGSPLATTE	C- 441304-040V
4- 456906		LÅSPLATTA	LOCK PLATE	VERSCHLUSSPLATTE	C- 441304-040V
4- 456907		LÅSPLATTA	LOCK PLATE	VERSCHLUSSPLATTE	C- 441304-040V
1- 456912		BERÖRINGSSKYDD	TOUCH GUARD	BERUEHRUNGSSCHUTZ	C- 456976-050V
1- 456913		BERÖRINGSSKYDD	TOUCH GUARD	BERUEHRUNGSSCHUTZ	C- 456976-050V
3- 456914		VIPPARM	ROCKER ARM	WIPPARM	C- 272343-050V
4- 456917		VÄRMESKYDD	HEAT GUARD	WÄRMESCHUTZ	C- 272343-050V
3- 456918		PAPPERSSTÖD	PAPER SUPPORT	PAPIERSTUETZE	C- 295891-030V
C- 456923-0301	15660 91-02-01	STATIV TBA/9	MACHINE BODY TB/TBA/9	STATIV	B- 648107-100V
C- 456923-0302	15660 91-02-01	STATIV TB/9	MACHINE BODY TB/TBA/9	STATIV	B- 648107-100V
1- 456924		RAM	FRAME	RAHMEN	C- 456923-030V
3- 456929		LOCK	LID	DECKEL	C- 456923-030V
3- 456930		LOCK	LID	DECKEL	C- 456923-030V
3- 456931		LOCK	LID	DECKEL	C- 456923-030V
3- 456932		LOCK	LID	DECKEL	C- 456923-030V
3- 456933		LOCK	LID	DECKEL	C- 456923-030V
4- 456934		TÄTNINGSBRICKA	SEALING WASHER	DICHTUNGSSCHEIBE	C- 256173-050V
C- 456935-030V	19273 93-05-31	RÖRDRAGNING TBA/9	PIPE WORK TBA/9	ROHRSYSTEM	B- 648107-100V
4- 456936		FÄSTVINKEL	FASTENING BRACKET	BEFESTIGUNGSWINKEL	C- 456935-030V
4- 456937		KLAMMER	CRAMP	KLAMMER	C- 456935-030V
2- 456938		RÖR 241	PIPE 241	ROHR	C- 456935-030V
2- 456939		RÖR 240	PIPE 240	ROHR	C- 456935-030V
2- 456940		RÖR V45	PIPE V45	ROHR	C- 456953-020V
2- 456941		RÖR V44	PIPE V44	ROHR	C- 456953-020V
2- 456942		RÖR 201	PIPE 201	ROHR	C- 456935-030V
2- 456943		RÖR 200	PIPE 200	ROHR	C- 456935-030V
3- 456950		HÅLLARE	HOLDER	HALTER	C- 450125-010V
C- 456951-010V	8296 85-10-09	INDUKTORENHET	INDUCTOR UNIT	INDUKTOR EINHET	C- 456953-020V
C- 456953-0201	14947 90-12-04	SNITTUPPHETTARE TBA/9	PERFORATION HEATER TBA/9	SCHNITTERHITZER	C- 77091-040V
2- 456973		FÄSTE	BRACKET	BEFESTIGUNGSHALTER	C- 272408-050V
C- 456975-0201	11870 88-05-24	VERKTYGSSKÅP	CABINET	SCHRANK	C- 77091-040V
C- 456976-050V	19266 93-06-01	TRYCKLEDNINGAR	CONDUIT	LEITUNGSROHR	B- 648111-100V
3- 456978		RÖR	PIPE	ROHR	C- 271866-060V
3- 456995		MEDBRINGARE	CARRIER	MITNEHMER	C- 256014-060V
4- 456996		RULLE	ROLL	ROLLE	C- 272021-060V
4- 457367		AXEL	SHAFT	WELLE	C- 491976-020V
4- 457368		FJÄDER	SPRING	FEDER	C- 491976-020V
3- 457614-0001		KLÄMMA	CLAMPING PIECE	KLAMMER	C- 736360-020V
3- 457614-0002		KLÄMMA	CLAMPING PIECE	KLAMMER	C- 736360-020V
2- 457806		LOCK	LID	DECKEL	C- 457857-030V
2- 457807		LOCK	LID	DECKEL	C- 457857-030V
4- 457808		DISTANS	SPACER	DISTANZ	C- 457857-030V
4- 457812		FÄSTE	BRACKET	BEFESTIGUNGSHALTER	C- 457867-020V
2- 457814		LOCK	LID	DECKEL	C- 457857-030V
4- 457815		DISTANS	SPACER	DISTANZ	C- 457857-030V
					C- 457867-020V
4- 457820		SKYDD	PROTECTION	SCHUTZ	C- 457866-030V
3- 457821		FÄSTE	BRACKET	BEFESTIGUNGSHALTER	C- 457856-020V
4- 457824		STANS	PUNCH	STANZE	C- 469316-020V
					CR- 548040-010V
3- 457825		DYNA	DIE	SCHNITTPLATTE	C- 469316-020V
					CR- 548040-010V
4- 457826		STANS	PUNCH	STANZE	C- 469316-020V
					CR- 548040-010V
3- 457827		DYNA	DIE	SCHNITTPLATTE	C- 469316-020V
					CR- 548040-010V
2- 457843		GLASRUTA	GLASS PANE	GLASSCHEIBE	C- 457853-030V
2- 457844		GLASRUTA	GLASS PANE	GLASSCHEIBE	C- 457853-030V
2- 457845		KONSOL	CANTILEVER	KONSOLE	C- 457853-030V
4- 457846		FÄSTPLATTA	FASTENING PLATE	BEFESTIGUNGSPLATTE	C- 457853-030V
4- 457848		MELLANLÄGG	LACE	ZWISCHENLAGE	C- 469634-010V
2- 457850		INDUKTORFÄSTE	INDUCTOR BRACKET	BEFESTIGUNGSHALTER	C- 457866-030V
C- 457853-0301	20096 93-06-11	HUV	HOOD	HAUBE	B- 648118-090V
3- 457855		STRÖMSKENA	BUSBAR	STROMSCHIENE	C- 457866-030V
C- 457856-0201	19421 93-03-09	KOPPLINGSLÅDA	CONNECTION BOX	KUPPLUNGSKASTEN	B- 648118-090V
C- 457857-0302	14969 90-08-08	ÖVRE KABELKANAL	UPPER CABLE DUCT	KABELKANAL	B- 648118-090V

PART NO	LAST ECN	BENÄMNING	TITLE	BENENNUNG	GROUP NO
C- 457866-030V	19421 93-03-09	FÖRSEGLINGSBACK TBA/9	SEALING JAW TBA/9	VERSIEGELUNGSBACKE	B- 648118-090V
C- 457867-020V	16054 91-03-12	STATIV	MACHINE BODY	STATIV	B- 648118-090V
C- 457881-0301	16357 91-06-11	BEN TBA/9	LEG TBA/9	BEIN	B- 648118-090V
4- 457896		AXEL	SHAFT	WELLE	CR- 548331-010V
4- 457898		AXEL	SHAFT	WELLE	CR- 548331-010V
4- 457899		AXEL	SHAFT	WELLE	CR- 548331-010V
4- 457900		AXEL	SHAFT	WELLE	CR- 548331-010V
4- 457909		RULLE	ROLL	ROLLE	CR- 548331-010V
4- 457910		RULLE	ROLL	ROLLE	CR- 548331-010V
4- 457913		FÄSTE	BRACKET	BEFESTIGUNGSHALTER	CR- 548331-010V
4- 457914		HÅLLARE	HOLDER	HALTER	CR- 548331-010V
4- 457929		KLOTS	BLOCKING PIECE	KLOTZ	C- 552030-010V
4- 457930		FLAGGA	FLAG	FLAGGE	C- 552030-010V
C- 457937-020V	15283 90-10-31	SKJUTGLAS	SLIDING GLASS	SCHIEBEFENSTER	B- 648118-090V
4- 457950		HANDTAG	HANDLE	GRIFF	C- 457937-020V
4- 457951		BRICKA	WASHER	SCHEIBE	C- 457937-020V
4- 457953		DISTANS	SPACER	DISTANZ	C- 457937-020V
4- 457954		DISTANS	SPACER	DISTANZ	C- 457937-020V
G1- 457955		GAVEL	END SECTION	STIRNWAND	C- 456696-030V
G1- 457956		GAVELPLÅT	GABLE PLATE	STIRNWANDBLECH	C- 456696-030V
1- 457960		RAM	FRAME	RAHMEN	C- 457857-030V
1- 457999		SPILLÅDA	BOX	KASTEN	C- 456679-010V
1- 458379		RAM	FRAME	RAHMEN	C- 271641-030V
3- 458380		BYGEL	BOW CLAMP	BUEGEL	C- 271626-030V
C- 458383-020V	19271 93-05-31	PAPPERSRULLEHÅLLARE JUMB	PAPER REEL HOLDER	PAPIERROLLENHALTER	C- 272404-070V
C- 458384-010V	19271 93-05-31	PAPPERSRULLEHÅLLARE NORM	PAPER REEL HOLDER	PAPIERROLLENHALTER	C- 272404-070V
2- 458486		VENTILHUS VÄXELVENTIL 25	CHANGE-OVER VALVE BODY	VENTILGEHÄUSE	C- 924991-010V
4- 458962-0001		ELEKTROD	ELECTRODE	ELEKTRODE	C- 751800-020V
3- 464009-0003		KLOTS	BLOCKING PIECE	KLOTZ	C- 751718-010V
4- 464010		ARM	ARM	ARM	C- 751718-010V
4- 464011		LÅSTAPP	LOCK STUD	VERSCHLUSSZAPFEN	C- 751718-010V
4- 464012		KURVA	CURVE	KURVE	C- 751718-010V
3- 464072		KLÄMSTYCKE	CLAMPING PART	KLEMMSTUECK	C- 499082-010V
3- 464073-0001		HÅLLARE	HOLDER	HALTER	C- 499082-010V
4- 464173		SKYLTHÅLLARE	LABEL HOLDER	SCHILDHALTER	C- 295045-070V
4- 464174		SKYLT	SIGN	SCHILD	C- 295045-070V
4- 464175		SKYLT	SIGN	SCHILD	C- 295045-070V
4- 464176		SKYLT	SIGN	SCHILD	C- 752244-020V C- 978162-010V
4- 464177		SKYLT	SIGN	SCHILD	C- 752244-020V C- 978162-010V
3- 466074-0001		GLIDKLOTS	SLIDER	GLEITKLOTZ	C- 499082-010V
4- 466430		BUSSNING	BUSHING	BUCHSE	C- 751718-010V
2- 466474		VENTILHUS	VALVE HOUSING	VENTILGEHÄUSE	C- 476859-020V
3- 466477		INNERRÖR	INNER PIPE	ROHR	C- 476859-020V
4- 466478		YTTERRÖR	OUTER PIPE	AUSSENROHR	C- 476859-020V
3- 466479		KUTS	PIECE	BLOCK	C- 476859-020V
4- 466483		KLÄMMA	CLAMPING PIECE	KLAMMER	C- 476859-020V
4- 466484		NÄT	NET	NETZ	C- 476859-020V
4- 469000		HÅLLARE	HOLDER	HALTER	C- 491650-010V
4- 469001		HÅLLARE	HOLDER	HALTER	C- 491650-010V
1- 469005		PLATTFORM	PLATFORM	PLATTFORM	C- 456458-040V
1- 469007		STATIVDEL	FRAME SECTION	STATIVTEIL	C- 456458-040V C- 751860-020V
2- 469016		STATIVDEL	FRAME SECTION	STATIVTEIL	C- 752960-010V C- 752971-010V C- 456457-040V C- 456458-040V C- 751860-020V
3- 469019		BEN	LEG	BEIN	C- 751860-020V
3- 469020		BEN	LEG	BEIN	C- 751860-020V
4- 469026		MELLANBIT	INTERMEDIATE PART	ZWICHENSTUECK	C- 752960-010V C- 752971-010V
4- 469026		MELLANBIT	INTERMEDIATE PART	ZWICHENSTUECK	C- 456459-040V C- 456460-040V C- 751900-010V
4- 469027		DISTANS	SPACER	DISTANZ	C- 752960-010V C- 752971-010V C- 456457-040V C- 751860-020V
4- 469028		PACKNING	GASKET	DICHTUNG	C- 794168-010V C- 456460-040V
2- 469033		TAKPLÅT	COVERING PLATE	DECKBLECH	C- 271513-060V C- 751885-030V
2- 469034		HÖRNPLÅT	GUSSET PLATE	ECKBLECH	C- 271513-060V
2- 469035		HÖRNPLÅT	GUSSET PLATE	ECKBLECH	C- 271513-060V C- 751885-030V
3- 469038		TÄCKPLÅT	COVERING PLATE	DECKBLECH	C- 271513-060V C- 751885-030V
3- 469039		TÄCKPLÅT	COVERING PLATE	DECKBLECH	C- 271513-060V C- 751885-030V
2- 469041		HÅLLARE	HOLDER	HALTER	C- 441307-030V
4- 469042		LÅSPLATTA	LOCK PLATE	VERSCHLUSSPLATTE	C- 441307-030V
4- 469043		LÅSPLATTA	LOCK PLATE	VERSCHLUSSPLATTE	C- 441307-030V
4- 469044		LÅSPLATTA	LOCK PLATE	VERSCHLUSSPLATTE	C- 565462-010V
4- 469047		VINKEL	ANGLE	WINKEL	C- 441307-030V
1- 469050		FRONTSKYDD	FRONT GUARD	FRONTSCHUTZ	C- 271115-040V
1- 469051		HUV	HOOD	HAUBE	C- 271115-040V
3- 469053		DURKPLATTA	CHECKER PLATE	RIFFELBLECH	C- 271115-040V
3- 469054		SPÅRPLATTA	PLATE	PLATTE	C- 271115-040V
3- 469056		PLAN	CHECKER PLATE	RIFFELBLECH	C- 271115-040V
3- 469057		STEGPLAN	CHECKER PLATE	RIFFELBLECH	C- 271115-040V

PART NO	LAST ECN	BENÄMNING	TITLE	BENENNUNG	GROUP NO
G3- 469058		HANDTAG	HANDLE	GRIFF	C- 271115-040V
4- 469061		PLATTA	PLATE	PLATTE	C- 271115-040V
4- 469063		STÅNGHUVUD	HEAD	KOPF	C- 271115-040V
4- 469066		AXEL	SHAFT	WELLE	C- 271115-040V
4- 469068		INSTYRNINGSHYLSA	SLEEVE	HUELSE	C- 271115-040V
4- 469069		PLATTA	PLATE	PLATTE	C- 271115-040V
4- 469071		DISTANS	SPACER	DISTANZ	C- 491650-010V
1- 469076		ARM	ARM	ARM	C- 271626-030V
2- 469078		HÅLLARE	HOLDER	HALTER	C- 441307-030V
4- 469079		LÅSPLATTA	LOCK PLATE	VERSCHLUSSPLATTE	C- 441307-030V
4- 469080		LÅSPLATTA	LOCK PLATE	VERSCHLUSSPLATTE	C- 441307-030V
4- 469081		LÅSPLATTA	LOCK PLATE	VERSCHLUSSPLATTE	C- 565462-010V
4- 469084		LINJAL	RULER	LINEAL	C- 271641-030V
4- 469085		LINJAL	RULER	LINEAL	C- 271641-030V
C- 469091-030V	19266 93-06-01	ÖVRE PÅFYLLNINGSRÖR	FILLER TUBE	FUELLROHR	B- 648111-100V
3- 469092		AVSKALNINGSSHIMS	SHIM	SHIMS	C- 272021-060V
3- 469095		HÅLLARE	HOLDER	HALTER	C- 456100-030V
					C- 256843-060V
4- 469096		BEN	LEG	BEIN	C- 736360-020V
					C- 554889-020V
					C- 456100-030V
					C- 256843-060V
C- 469118-0201	9123 86-07-22	FLÖDESMÄTARE	FLOW METER	DURCHFLUSSMETER	C- 978739-010V
2- 469119		BLOCK	BLOCK	BLOCK	C- 469118-020V
3- 469120		HÅLLARE	HOLDER	HALTER	C- 469118-020V
C- 469121-0201	8437 86-02-18	KOPPLINGSBLOCK	JUNCTION BLOCK	KUPPLUNGSBLOCK	C- 978739-010V
3- 469122		BLOCK	BLOCK	BLOCK	C- 469121-020V
4- 469131		MELLANLÄGG	LACE	ZWISCHENLAGE	C- 271562-080V
3- 469132		RÖR	PIPE	ROHR	C- 271562-080V
2- 469133		RÖR	PIPE	ROHR	C- 271562-080V
4- 469134		FÄSTE	BRACKET	BEFESTIGUNGSHALTER	C- 271261-050V
4- 469135		HÅLLARE	HOLDER	HALTER	C- 271261-050V
3- 469141		HÅLLARE	HOLDER	HALTER	C- 271992-020V
3- 469146		SLANG	HOSE	SCHLAUCH	C- 271261-050V
2- 469153		UTLOPPSRÖR	PIPE	ROHR	C- 751800-020V
2- 469154		UTLOPPSRÖR	PIPE	ROHR	C- 751800-020V
3- 469156		RÖR	PIPE	ROHR	C- 469452-030V
4- 469159		PINNE	PEG	STIFT	C- 272021-060V
4- 469160		VIBRATIONSDÄMPARE	VIBRATION DAMPER	VIBRATIONSDÄMPFER	C- 751800-020V
C- 469173-010V	16054 91-03-12	VINDA	REEL	WINDE	B- 648118-090V
3- 469174		BYGEL	BOW CLAMP	BUEGEL	C- 469173-010V
3- 469175		BYGEL	BOW CLAMP	BUEGEL	C- 469173-010V
3- 469176		BYGEL	BOW CLAMP	BUEGEL	C- 469173-010V
3- 469177		BYGEL	BOW CLAMP	BUEGEL	C- 469173-010V
2- 469178		KURVA PAPPERSFRAMMATNING	CURVE	KURVE	C- 283626-040V
4- 469179		KUGGREMHJUL	TOOTHED PULLY	ZAHNRIEMENRAD	C- 283626-040V
4- 469180		PLATTA	PLATE	PLATTE	C- 283626-040V
4- 469181		KIL	WEDGE	KEIL	C- 283626-040V
4- 469205		FÄSTE	BRACKET	BEFESTIGUNGSHALTER	C- 457853-030V
4- 469206		MOTGUMMI	COUNTER RUBBER	DRUCKGUMMI	CR- 283607-030V
					C- 469316-020V
2- 469282		GEJD	WAY	FUEHRUNG	C- 469736-040V
4- 469288		KLOTS	BLOCKING PIECE	KLOTZ	C- 469736-040V
C- 469299-0201	14969 90-08-08	LYSRÖR	FLUORESCENT LAMP	LEUCHTROHR	B- 648118-090V
3- 469301-0001		MOTHÅLL	DOLLY	GEGENHALTER	C- 457866-030V
					C- 469316-020V
					C- 497534-030V
3- 469301-0002		MOTHÅLL	DOLLY	GEGENHALTER	C- 457866-030V
					C- 469316-020V
					C- 497534-030V
3- 469304		MONTAGESKENA	MOUNTING RAIL	MONTAGESCHIENE	C- 457856-020V
C- 469316-020V	16649 92-05-08	UPPSTARTSATS TBA/9	START-UP KIT	STARTSATZ	B- 648118-090V
3- 469328		BANJOKOPPLING	BANJO CONNECTION	SCHWENKANSCHLUSS	C- 978739-010V
4- 469330		SKYLT	SIGN	SCHILD	C- 978739-010V
4- 469331		HÅLLARE	HOLDER	HALTER	C- 978739-010V
4- 469332		ANSLUTNING	ATTACHMENT	ANSCHLUSS	C- 978739-010V
2- 469336		KÅPA	COVER	DECKEL	C- 441534-010V
3- 469337		REFLEKTOR	REFLECTOR	REFLEKTOR	C- 441534-010V
4- 469338		INRE LEDSTYCKE	LINKPIECE INNER	GELENKST~CK	C- 456560-010V
1- 469347		LOCK	LID	DECKEL	C- 469374-040V
2- 469350		LOCK	LID	DECKEL	C- 469374-040V
2- 469351		LOCK	LID	DECKEL	C- 469374-040V
3- 469352		LOCK	LID	DECKEL	C- 469374-040V
3- 469353		LOCK	LID	DECKEL	C- 469374-040V
3- 469354		LOCK	LID	DECKEL	C- 469374-040V
4- 469355		LOCK	LID	DECKEL	C- 469374-040V
1- 469369		OKKURVA	CURVE	KURVE	C- 256202-050V
1- 469370		ARMKURVA	CURVE	KURVE	C- 256202-050V
C- 469374-0401	19334 93-02-22	KABELRÄNNA	CABLE TRENCH	KABELRINNE	B- 648111-100V
C- 469384-0101	6882 84-06-07	UPPSTARTSATS	START-UP KIT	STARTSATZ	B- 648106-100V
2- 469385		RÖR	PIPE	ROHR	C- 456976-050V
4- 469393		STÄLLPLATTA	SETTING PLATE	EINSTELLPLATTE	C- 295310-070V
4- 469405		KLOTS VÄNSTER	BLOCKING PIECE	KLOTZ	CR- 256436-060V
4- 469406		KLOTS HÖGER	BLOCKING PIECE	KLOTZ	CR- 256436-060V
4- 469409		PLATTA	PLATE	PLATTE	C- 491890-010V
3- 469410		SLANGANSLUTNING	HOSE ATTACHMENT	SCHLAUCHANSCHLUSS	C- 491890-010V
4- 469432		KABELRÄNNA	CABLE TRENCH	KABELRINNE	C- 271569-050V
P4- 469433		VÄNDRULLE	ROLL	ROLLE	C- 295310-070V
P4- 469434		VÄNDRULLE	ROLL	ROLLE	C- 295310-070V
4- 469449		GLIDBANA	SLIDE PLANE	RUTSCHE	C- 456560-010V
C- 469452-030V	19465 93-03-05	KOMPRESSORAGGREGAT	COMPRESSOR UNIT	KOMPRESSOR AGGREGAT	B- 648111-100V
4- 469458		FÄSTE	BRACKET	BEFESTIGUNGSHALTER	C- 469501-040V

PART NO	LAST ECN	BENÄMNING	TITLE	BENENNUNG	GROUP NO
4- 469459		FÄSTE	BRACKET	BEFESTIGUNGSHALTER	C- 469501-040V
4- 469460		FÄSTE	BRACKET	BEFESTIGUNGSHALTER	C- 469501-040V
4- 469461		RULLE	ROLL	ROLLE	C- 469501-040V
4- 469463		AXEL	SHAFT	WELLE	C- 469501-040V
4- 469464		RULLE	ROLL	ROLLE	C- 469501-040V
4- 469492		DISTANS	SPACER	DISTANZ	C- 271442-030V
					C- 271443-030V
3- 469497		RÖR	PIPE	ROHR	C- 295045-070V
3- 469498		RÖR	PIPE	ROHR	C- 295045-070V
2- 469499		SPOLRÖR	FORCE SPRING	SPUEHLROHR	C- 469781-030V
C- 469501-040V	19266 93-06-01	BLÅSMUNSTYCKE	AIR NOZZLE	BLASMUNDSTUECK	B- 648111-100V
3- 469502		GLIDKLOTS	SLIDER	GLEITKLOTZ	C- 456180-010V
4- 469503		VINKELRÖR	ELBOW PIPE	WINKELROHR	C- 272560-060V
2- 469511		BOTTEN	BOTTOM	BODEN	C- 469452-030V
					C- 751800-020V
4- 469521		LAGERPLATTA	BEARING PLATE	LAGERPLATTE	C- 272021-060V
2- 469522		SPOLRÖR	FORCE SPRING	SPUEHLROHR	C- 469781-030V
4- 469523		SKYLT	SIGN	SCHILD	C- 491890-010V
2- 469526		DÖRR	DOOR	TUER	C- 469535-010V
4- 469527		STÄLLPLATTA	SETTING PLATE	EINSTELLPLATTE	C- 295211-010V
C- 469535-010V	15170 90-09-20	KASSETTDÖRR	DOOR	TUER	B- 648106-100V
4- 469550		HYLSA	SLEEVE	HUELSE	C- 271866-060V
3- 469572		MÅLNINGSMALL	TEMPLATE	MALL	C- 469586-010V
3- 469573		MÅLNINGSMALL	TEMPLATE	MALL	C- 469586-010V
3- 469574		MÅLNINGSMALL	TEMPLATE	MALL	C- 469586-010V
3- 469575		MÅLNINGSMALL	TEMPLATE	MALL	C- 469586-010V
4- 469576		MÅLNINGSMALL	TEMPLATE	MALL	C- 469586-010V
4- 469577		MÅLNINGSMALL	TEMPLATE	MALL	C- 469586-010V
4- 469578		MÅLNINGSMALL	TEMPLATE	MALL	C- 469586-010V
4- 469579		MÅLNINGSMALL	TEMPLATE	MALL	C- 469586-010V
4- 469580		MÅLNINGSMALL	TEMPLATE	MALL	C- 469586-010V
4- 469581		MÅLNINGSMALL	TEMPLATE	MALL	C- 469586-010V
4- 469582		MÅLNINGSMALL	TEMPLATE	MALL	C- 469586-010V
4- 469583		MÅLNINGSMALL	TEMPLATE	MALL	C- 469586-010V
4- 469584		MÅLNINGSMALL	TEMPLATE	MALL	C- 469586-010V
C- 469586-0101	7204 84-10-20	MALLAR MÅLNING Ö.A.	TEMPLATE	MALL	C- 77094-010V
3- 469606		LOCK	LID	DECKEL	C- 457867-020V
4- 469607		LOCK	LID	DECKEL	C- 457867-020V
1- 469620		VÄNSTER BEN FRAM	LEG	BEIN	C- 457881-030V
3- 469622		FÄSTE	BRACKET	BEFESTIGUNGSHALTER	C- 469634-010V
3- 469629		LOCK	LID	DECKEL	C- 457867-020V
3- 469630		HÅLLARE	HOLDER	HALTER	C- 469634-010V
4- 469631		MELLANLÄGG	LACE	ZWISCHENLAGE	C- 457881-030V
4- 469632		MELLANLÄGG	LACE	ZWISCHENLAGE	C- 457881-030V
C- 469634-0101	10407 87-06-10	STRÖMSKENA	BUSBAR	STROMSCHIENE	B- 648118-090V
C- 469635-010V	16357 91-06-11	TÄCKPLÅT	COVERING PLATE	DECKBLECH	B- 648118-090V
1- 469636		TÄCKPLÅT	COVERING PLATE	DECKBLECH	C- 469635-010V
1- 469637		TÄCKPLÅT	COVERING PLATE	DECKBLECH	C- 469635-010V
2- 469639		FÄSTE	BRACKET	BEFESTIGUNGSHALTER	C- 469635-010V
4- 469642		LOCK	LID	DECKEL	C- 476080-020V
4- 469643		LOCK	LID	DECKEL	C- 283604-020V
4- 469644		LOCK	LID	DECKEL	C- 456696-030V
					C- 469173-010V
4- 469645		LOCK	LID	DECKEL	C- 456688-020V
					C- 469173-010V
4- 469646		LOCK	LID	DECKEL	C- 476080-020V
4- 469647		LOCK	LID	DECKEL	C- 456696-030V
P3- 469683		INDUKTOR	INDUCTOR	INDUKTOR	C- 457866-030V
					C- 469316-020V
4- 469688		RULLE	ROLL	ROLLE	C- 554360-020V
2- 469693		TÄCKPLÅT	COVERING PLATE	DECKBLECH	C- 469635-010V
2- 469694		TÄCKPLÅT	COVERING PLATE	DECKBLECH	C- 469635-010V
3- 469703		ARM	ARM	ARM	C- 469736-040V
4- 469708		SKRUV	SCREW	SCHRAUBE	C- 469736-040V
2- 469712		GÅNGJÄRN	HINGE	SCHARNIER	C- 469736-040V
4- 469720		VINKEL	ANGLE	WINKEL	C- 469736-040V
					C- 484950-020V
					C- 484984-020V
C- 469736-040V	19421 93-03-09	REMSMAGASIN	STRIP MAGAZINE	STREIFENMAGASIN	C- 490600-040V
1- 469745		FÄSTE	BRACKET	BEFESTIGUNGSHALTER	C- 441486-040V
4- 469761		HÅLLARE	HOLDER	HALTER	C- 491890-010V
2- 469778		SPOLRÖR	FORCE SPRING	SPUEHLROHR	C- 469781-030V
C- 469781-030V	18737 92-12-04	TUBSPOLARE	TUBE FLUSHING DEVICE	ROHRSPULER	B- 648111-100V
4- 469811		AXEL	SHAFT	WELLE	C- 271115-040V
4- 469812		LAGER	BEARING	LAGER	C- 271115-040V
4- 469813		KLÄMSTYCKE	CLAMPING PART	KLEMMSTUECK	C- 271115-040V
4- 469814		LÄNKARM	LINK ARM	GELENKARM	C- 271115-040V
4- 469815		ÄNDSTYCKE	END PIECE	ENDST~CK	C- 271115-040V
4- 469816		ÖVERFALL	CAP	UEBERFALL	C- 271115-040V
4- 469817		PINNE	PEG	STIFT	C- 271115-040V
4- 469818		STÅNG	ROD	STANGE	C- 271115-040V
4- 469819		AVSKALNINGSSHIMS	PEEL-OFF SHIM	ABSCHÄLSHIMS	C- 271115-040V
4- 469820		FÄSTE	BRACKET	BEFESTIGUNGSHALTER	C- 271115-040V
3- 469821		HAKE	CATCH	HAKEN	C- 490912-010V
4- 469822		AXELTAPP	AXLE PIN	ACHSENZAPFEN	C- 490912-010V
1- 469831-0003		KÅPA	COVER	DECKEL	C- 456100-030V
1- 469831-0004		KÅPA	COVER	DECKEL	C- 978260-020V
					C- 456100-030V
1- 469831-0006		KÅPA	COVER	DECKEL	C- 456100-030V
1- 469831-0007		KÅPA	COVER	DECKEL	C- 456100-030V
1- 469832-0001		KÅPA	COVER	DECKEL	C- 978260-020V

PART NO	LAST ECN	BENÄMNING	TITLE	BENENNUNG	GROUP NO
1- 469832-0002		KÅPA	COVER	DECKEL	C- 978444-020V
					C- 456100-030V
1- 469832-0003		KÅPA	COVER	DECKEL	C- 456100-030V
4- 469847		AXEL	SHAFT	WELLE	C- 752244-020V
4- 469867		SLANGHÅLLARE	HOSE HOLDER	SCHLAUCHHALTER	C- 256173-050V
4- 469874		STYRSKENA	STEERING RAIL	FUEHRUNGSSCHIENE	C- 441000-050V
4- 469875		STYRSKENA	STEERING RAIL	FUEHRUNGSSCHIENE	C- 441000-050V
3- 469886		STYRSKENA	STEERING RAIL	FUEHRUNGSSCHIENE	C- 456103-010V
3- 469887		GLIDPLÅT	SLIDE SHEET	GLEITBLECH	C- 456103-010V
4- 469888		STYRKLOTS	LOCATING PIECE	FUEHRUNGSKLOTZ	C- 456103-010V
3- 469890		STYRNING	STEERING	FUEHRUNG	C- 456103-010V
2- 469891		LEDSKENA	LEAD RAIL	LEITSCHIENE	C- 456560-010V
3- 469894		FÄSTE	BRACKET	BEFESTIGUNGSHALTER	C- 456953-020V
3- 469895		VÄRMESKYDD	HEAT GUARD	WÄRMESCHUTZ	C- 456953-020V
3- 469922		FJÄDER	SPRING	FEDER	C- 751702-010V
4- 469927		LIST	RIM	LEISTE	C- 751702-010V
4- 469937		RÖR	PIPE	ROHR	C- 456100-030V
2- 469963		KONSOL	CANTILEVER	KONSOLE	C- 256843-060V
4- 469964		LOCK	LID	DECKEL	C- 256665-020V
3- 469968		KANTLIST	EDGE STRIP	KANTENLEISTE	C- 271115-040V
2- 469972-0001		PÅFYLLNINGSRÖR NEDRE	FILLING TUBE LOWER	FUELLROHR	C- 566507-010V
					C- 255921-040V
2- 469972-0002		PÅFYLLNINGSRÖR NEDRE	FILLING TUBE LOWER	FUELLROHR	C- 567695-010V
2- 469972-0002		PÅFYLLNINGSRÖR NEDRE	FILLING TUBE LOWER	FUELLROHR	C- 255921-040V
3- 469973		TRYCKFLÄNS	PRESSURE FLANGE	DRUCKFLANSCH	C- 566507-010V
					C- 567695-010V
					C- 255921-040V
4- 469977		EL-ANSLUTNING	ELECTRICAL CONNECTION	EL-ANSCHLUSS	CR- 256547-040V
3- 469979		HÅLLARE	HOLDER	HALTER	C- 752957-010V
					C- 752628-020V
4- 469981		FÄSTE	BRACKET	BEFESTIGUNGSHALTER	C- 752957-010V
4- 469982		BRICKA	WASHER	SCHEIBE	C- 752173-010V
2- 469987		BEHÅLLARE	CONTAINER	BEHÄLTER	C- 735222-020V
					C- 924314-010V
					C- 735222-020V
					C- 924314-010V
					C- 735222-020V
					C- 924314-010V
2- 469991		SKENA	RAIL	SCHIENE	C- 272025-030V
2- 469992		RÖR	PIPE	ROHR	C- 456555-040V
3- 469993		SLANGKOPPLING	HOSE COUPLING	SCHLAUCHKUPPLUNG	C- 491207-030V
3- 469994		ANSLUTNING	ATTACHMENT	ANSCHLUSS	C- 491207-030V
3- 469999		FLÄNS	FLANGE	FLANSCH	C- 256173-050V
C- 476080-020V	8653 86-11-21	REMSPÄNNARE	BELT TIGHTENER	RIEMENSPANNER	C- 533844-010V
G1- 476108		FÄSTE	BRACKET	BEFESTIGUNGSHALTER	CR- 548331-010V
G2- 476109		KONSOL	CANTILEVER	KONSOLE	CR- 548331-010V
4- 476185		VENTILKÄGLA	VALVE CONE	VENTILKEGEL	C- 539211-010V
					C- 794243-010V
C- 476189-010V	12503 89-04-14	VÄGGENOMFÖRING	WALL LEAD-IN	WANDDURCHF~HRUNG	C- 924991-010V
					C- 570501-010V
2- 476190		RAM	FRAME	RAHMEN	C- 751796-030V
2- 476191		RAM	FRAME	RAHMEN	C- 476189-010V
2- 476192		TÄCKPLÅT	COVERING PLATE	DECKBLECH	C- 476189-010V
2- 476193		TÄCKPLÅT	COVERING PLATE	DECKBLECH	C- 476189-010V
2- 476194		TÄCKPLÅT	COVERING PLATE	DECKBLECH	C- 476189-010V
2- 476195		KÅPA	COVER	DECKEL	C- 476189-010V
3- 476196		LÖPSKENA	GUIDE RAIL	LAUFSCHIENE	C- 476189-010V
3- 476197		FALLPLÅT	DROP WING	FALLBLECH	C- 476189-010V
3- 476198-0001		KONSOL	CANTILEVER	KONSOLE	C- 476189-010V
3- 476198-0002		KONSOL	CANTILEVER	KONSOLE	C- 476189-010V
4- 476199		MELLANPLATTA	PLATE	PLATTE	C- 476189-010V
4- 476200		DISTANS	SPACER	DISTANZ	C- 476189-010V
4- 476201		HYLSA	SLEEVE	HUELSE	C- 476189-010V
4- 476202		SKRUV	SCREW	SCHRAUBE	C- 476189-010V
3- 476203		SKYDD	PROTECTION	SCHUTZ	C- 539209-010V
					C- 794244-010V
3- 476220		DISTANS	SPACER	DISTANZ	C- 499082-010V
3- 476222-0001		HÅLLARE	HOLDER	HALTER	C- 499082-010V
3- 476223-0001		HÅLLARE	HOLDER	HALTER	C- 499082-010V
3- 476224-0001		HÅLLARE	HOLDER	HALTER	C- 499082-010V
C- 476349-030V	12943 89-05-29	DRIVAXEL	DRIVE SHAFT	ANTRIEBWELLE	B- 648118-090V
4- 476354		KANYLRÖR	CANNULAR TUBE	KANUELE	C- 434074-030V
4- 476355		KANYLRÖR	CANNULAR TUBE	KANUELE	C- 434774-030V
3- 476356		HÅLLARE FÖR FÄRGFLASKA	HOLDER FOR INK BOTTLE	HALTER	C- 434074-030V
					C- 434774-030V
					C- 434074-030V
					C- 434774-030V
					C- 434074-030V
4- 476377		SKRUV	SCREW	SCHRAUBE	C- 751718-010V
4- 476398		LOCK	LID	DECKEL	C- 256014-060V
4- 476600		RÖRFÄSTE	PIPE HOLDER	ROHRBEFESTIGUNG	C- 533014-010V
C- 476859-0201	17647 92-05-25	VÄXELVENTIL(FÖRVÄRMNING)	CHANGE-OVER VALVE	WECHSELVENTIL	C- 456976-050V
4- 476930		FJÄDERFÄSTE	SPRING BRACKET	FEDERHALTER	C- 456696-030V
					C- 554360-020V
3- 479182		PAPPERSTILLHÅLLARE	PAPER GUIDE PLATE	PAPIERZUHALTER	C- 229400-070V
4- 479185-0001		ROTATIONSSATSER TB/TBA/9	ROTATION KITS TB/9, TBA/	ROTATIONSSÄTZE TB/TBA/9	A- 648152-140V
4- 479354		SKRUV	SCREW	SCHRAUBE	C- 751689-010V
1- 479626-0002		FÖRPACKNINGSMATERIAL RIT	PACKAGING MATERIAL DRAW.	VERPACKERUNGSMAT.ZEICHN.	A- 648152-140V
C- 479821-0101	8541 86-04-29	FRISTÅENDE STÄLLNING	FREE STAND	GESTELL	C- 751796-030V
2- 479822		PELARE	PILLAR	SÄULE	C- 479821-010V
3- 479823		STAG	STRUT	VERSTREBUNG	C- 479821-010V

PART NO	LAST ECN	BENÄMNING	TITLE	BENENNUNG	GROUP NO
3- 479824		FÄSTPLATTA	FASTENING PLATE	BEFESTIGUNGSPLATTE	C- 479821-010V
4- 479825		TVÄRSTAG	CROSS BAR	QUERSTREBE	C- 479821-010V
4- 479826		TÄCKPLÅT	COVERING PLATE	DECKBLECH	C- 476189-010V
4- 479871		POTENTIOMETER	POTENTIOMETER	POTENTIOMETER	C- 67062-020V
4- 479872		DISTANSPLÅT	SPACER SHEET	DISTANZBLECH	C- 67062-020V
4- 479873		TÄCKPLÅT	COVERING PLATE	DECKBLECH	C- 67062-020V
4- 479876		SKYLT	SIGN	SCHILD	C- 67062-020V
					CE- 41724-010V
					C- 67062-020V
					CE- 41751-010V
					C- 67062-020V
					CE- 41758-010V
					CE- 41724-010V
					CE- 41751-010V
					CE- 41758-010V
4- 479880-0100		MONTAGERITNING	MOUNTING DRAWING	MONTAGEZEICHNUNG	C- 68444-010V
4- 479881		TEJP	TAPE	TAPE	C- 67062-020V
4- 479882		SHIMS	SHIM	SHIMS	C- 67062-020V
4- 479901		MONTAGEBYGEL	MOUNTING BRACKET	MONTAGEBUEGEL	C- 68444-010V
4- 479909		MÖNSTERKORT	PRINTED CIRCUIT BOARD	LEITERPLATTE	C- 67058-030V
4- 479910		SCREENTRYCKNING PANEL	SCREENPRINTING PANEL	PANEL	C- 67058-030V
4- 479911		BORRMALL PANEL	DRILLING PATTERN PANEL	MALL	C- 67058-030V
4- 479921		KRETSKORTSSKYDD	CIRCUIT BOARD PROTECTION	SCHUTZ	C- 67058-030V
4- 479949		MÖNSTERKORT	PRINTED CIRCUIT BOARD	LEITERPLATTE	C- 67062-020V
4- 479957-0001		KOMPONENTER UTAN TP-NR	COMPONENTS WITHOUT TP-NO	KOMPONENTEN OHNE TP-NR	C- 67062-020V
3- 484190		KULLAGER	BALL BEARING	KUGELLAGER	C- 256014-060V
3- 484192		VENTIL	VALVE	VENTIL	C- 456556-020V
P3- 484196		FILTER	FILTER	FILTER	C- 272623-050V
3- 484536		VENTIL	VALVE	VENTIL	C- 751373-010V
P3- 484538		VENTIL	VALVE	VENTIL	C- 456556-020V
4- 484602		ISOLERPLATTA	INSULATING PLATE	ISOLIERPLATTE	C- 497534-030V
C- 484858-0301	15550 91-01-09	BOBIN	BOBBIN	SPULE	C- 490600-040V
2- 484859		SLID	SLIDE	SCHIEBER	C- 484858-030V
1- 484903		SKYDDSKÅPA	PROTECTIVE CASING	SCHUTZKAPPE	C- 484984-020V
3- 484905		GAVEL	END SECTION	STIRNWAND	C- 484984-020V
3- 484906		GAVEL	END SECTION	STIRNWAND	C- 484984-020V
3- 484909		GÅNGJÄRN	HINGE	SCHARNIER	C- 484984-020V
3- 484910		FÄSTPLATTA	FASTENING PLATE	BEFESTIGUNGSPLATTE	C- 484984-020V
3- 484911		DISTANS	SPACER	DISTANZ	C- 490600-040V
3- 484912		BERÖRINGSSKYDD	TOUCH GUARD	BERUEHRUNGSSCHUTZ	C- 484984-020V
3- 484914		VÄRMEELEMENT	HEATING ELEMENT	HEIZELEMENT	C- 484984-020V
					C- 469316-020V
4- 484916		FÄSTPLATTA	FASTENING PLATE	BEFESTIGUNGSPLATTE	C- 484984-020V
4- 484919		ARM	ARM	ARM	C- 484984-020V
4- 484920		ARM	ARM	ARM	C- 484984-020V
4- 484921		HÅLLARE	HOLDER	HALTER	C- 484984-020V
4- 484922		PINNE	PEG	STIFT	C- 484984-020V
4- 484923		FJÄDERHUS	SPRING HOUSING	FEDERHAUS	C- 484984-020V
4- 484924		HYLSA	SLEEVE	HUELSE	C- 484984-020V
4- 484925		HYLSA	SLEEVE	HUELSE	C- 484984-020V
4- 484926		SKRUV	SCREW	SCHRAUBE	C- 484984-020V
4- 484927		SKRUV	SCREW	SCHRAUBE	C- 484984-020V
4- 484928		PASSKRUV	REAMED BOLT	PASSCHRAUBE	C- 484984-020V
4- 484932		DISTANS	SPACER	DISTANZ	C- 484984-020V
4- 484933		DISTANS	SPACER	DISTANZ	C- 484984-020V
4- 484935		KLAMMER	CRAMP	KLAMMER	C- 484984-020V
C- 484950-0201	12944 89-08-29	KONSOL	CANTILEVER	KONSOLE	C- 490600-040V
1- 484951		FÄSTPLÅT	MOUNTING SHEET	BEFESTIGUNGSBLECH	C- 484950-020V
2- 484952		FÄSTSKENA	MOUNTING BAR	BEFESTIGUNGSSCHIENE	C- 484950-020V
2- 484953		PLÅT	SHEET	BLECH	C- 484950-020V
2- 484954		HÄNGSLE	HANGER	HALTERUNG	C- 484950-020V
3- 484955		DISTANS	SPACER	DISTANZ	C- 484950-020V
4- 484975		BRICKA	WASHER	SCHEIBE	C- 539209-010V
					C- 539210-010V
C- 484984-020V	15283 90-10-31	SKARVDON	SPLICING DEVICE	VERBINDUNGSGERÄT	C- 794244-010V
4- 484988		KURVA	CURVE	KURVE	C- 490600-040V
4- 484989		KURVA	CURVE	KURVE	C- 476349-030V
4- 484995		MÖNSTERKORT	PRINTED CIRCUIT BOARD	LEITERPLATTE	C- 476349-030V
2- 484998		GAVEL	END SECTION	STIRNWAND	C- 67570-010V
					C- 539209-010V
					C- 539210-010V
					C- 794213-010V
4- 486826-0001		SKYLT	SIGN	SCHILD	C- 794244-010V
					CE- 41723-010V
					CE- 41724-010V
					CE- 41750-010V
					CE- 41751-010V
					CE- 41758-010V
					C- 271513-060V
					C- 751885-030V
					CE- 41723-010V
					CE- 41724-010V
					CE- 41750-010V
					CE- 41751-010V
					CE- 41758-010V
4- 486974		STYRNING	STEERING	FUEHRUNG	C- 533844-010V
					C- 554360-020V
4- 486978		STYRNING	STEERING	FUEHRUNG	C- 533844-010V
					C- 554360-020V
4- 486980		RING	RING	RING	C- 533844-010V
3- 490076-0002		MANÖVERMEMBRAN	PACKING MEMBRANE	MANÖVERMEMBRANE	C- 735192-010V
					C- 735271-020V

PART NO	LAST ECN	BENÄMNING	TITLE	BENENNUNG	GROUP NO
					C- 735192-010V
					C- 924592-010V
					C- 735192-010V
					C- 735271-020V
					C- 735192-010V
					C- 924592-010V
					C- 735192-010V
					C- 735271-020V
					C- 735192-010V
					C- 924592-010V
2- 490178		STÖD	SUPPORT	STUETZE	C- 736797-010V
4- 490252		SKENA	RAIL	SCHIENE	C- 735031-010V
					C- 924329-010V
4- 490303		KLÄMMA	CLAMPING PIECE	KLAMMER	C- 794178-010V
3- 490336		FLOTTÖR	FLOAT	SCHWIMMER	C- 735192-010V
4- 490500		PACKNING	GASKET	DICHTUNG	C- 751332-010V
2- 490506		SLANG	HOSE	SCHLAUCH	C- 491767-020V
2- 490508		SKYDD	PROTECTION	SCHUTZ	C- 491767-020V
4- 490509		DISTANS	SPACER	DISTANZ	C- 491767-020V
4- 490510		LÅSBLECK	SECURING PLATE	SCHLIESSBLECH	C- 491767-020V
4- 490512		HÅLLARE	HOLDER	HALTER	C- 491767-020V
4- 490513		HÅLLARE	HOLDER	HALTER	C- 491767-020V
4- 490514		HÅLLARE	HOLDER	HALTER	C- 491767-020V
G1- 490518		HÅLLARE	HOLDER	HALTER	C- 456309-050V
3- 490529		KABEL	CABLE	KABEL	C- 457866-030V
G4- 490538		LÅSPLATTA	LOCK PLATE	VERSCHLUSSPLATTE	C- 456309-050V
G4- 490539		LÅSPLATTA	LOCK PLATE	VERSCHLUSSPLATTE	C- 456309-050V
G4- 490540		LÅSPLATTA	LOCK PLATE	VERSCHLUSSPLATTE	B- 648118-090V
C- 490600-0401	19421 93-03-09	REMSMAGASIN KOMPLETT	STRIP MAGAZINE COMPLETE	STREIFENMAGASIN	C- 490600-040V
4- 490605		FÄSTVINKEL	FASTENING BRACKET	BEFESTIGUNGSWINKEL	C- 490600-040V
4- 490606		LÄPP	LIP	LIPPE	C- 491767-020V
3- 490608		SKYLT	SIGN	SCHILD	C- 491767-020V
4- 490609		TÄTNINGSBRICKA	SEALING WASHER	DICHTUNGSSCHEIBE	B- 648118-090V
C- 490610-040V	19421 93-03-09	BRYTRULLAR, LS-REMSA	BENDING ROLLERS, LS-STRI	BRECHROLLEN, LS-STREIFE	C- 490610-040V
3- 490612		KONSOL	CANTILEVER	KONSOLE	C- 490610-040V
3- 490613		KONSOL	CANTILEVER	KONSOLE	C- 456455-030V
2- 490618		FÖRGRENING	BRANCH	VERZWEIGUNG	C- 469173-010V
4- 490660		BRICKA	WASHER	SCHEIBE	C- 469173-010V
3- 490671		FÖRDELNINGSKLOTS	DISTRIBUTOR BLOCK	VERTEILERBLOCK	C- 469173-010V
3- 490714		MEDBRINGARE	CARRIER	MITNEHMER	C- 457937-020V
4- 490727		STOPP	STOP	STOPP	C- 457937-020V
4- 490728		STOPP	STOP	STOPP	C- 469634-010V
2- 490729		SKYDDSKÅPA	PROTECTIVE CASING	SCHUTZKAPPE	C- 469634-010V
3- 490735		FÄSTE	BRACKET	BEFESTIGUNGSHALTER	C- 469634-010V
1- 490741		STRÖMSKENA	BUSBAR	STROMSCHIENE	C- 469736-040V
4- 490754		FÄSTVINKEL	FASTENING BRACKET	BEFESTIGUNGSWINKEL	B- 648106-100V
C- 490761-0101	12427 88-12-08	DISKMEDELSPUMP	DETERGENT PUMP	WASCHMITTELPUMPE	C- 469634-010V
4- 490765		SKYDD	PROTECTION	SCHUTZ	C- 490761-010V
2- 490768		LÅDA	BOX	KASTEN	C- 490761-010V
3- 490769		FÄSTE	BRACKET	BEFESTIGUNGSHALTER	CR- 548331-010V
3- 490775		STYRPLÅT	HEAD PLATE	FUEHRUNGSBLECH	C- 491890-010V
3- 490777		FÄSTE	BRACKET	BEFESTIGUNGSHALTER	C- 272404-070V
G2- 490779		HÅLLARE VÄNSTER	BRACKET LEFT	HALTER	C- 272404-070V
G2- 490780		HÅLLARE HÖGER	BRACKET RIGHT	HALTER	C- 469173-010V
3- 490791		MEDBRINGARE	CARRIER	MITNEHMER	C- 255921-040V
3- 490850		TRYCKFLÄNS	PRESSURE FLANGE	DRUCKFLANSCH	C- 456560-010V
G2- 490854-0001		SIDOSTYRNING VÄNSTER	SIDE GUIDE LEFT	FUEHRUNG	C- 456560-010V
G2- 490854-0002		SIDOSTYRNING HÖGER	SIDE GUIDE RIGHT	FUEHRUNG	C- 456103-010V
3- 490855		STYRSKENA	STEERING RAIL	FUEHRUNGSSCHIENE	C- 456103-010V
4- 490856		STYRKLOTS	LOCATING PIECE	FUEHRUNGSKLOTZ	C- 456103-010V
3- 490857		STYRNING	STEERING	FUEHRUNG	C- 272025-030V
4- 490867		FÄSTE	BRACKET	BEFESTIGUNGSHALTER	C- 255921-040V
2- 490869		PÅFYLLNINGSRÖR NEDRE	FILLING TUBE LOWER	FUELLROHR	C- 794092-010V
3- 490871		LÅSPINNE ÖVRE	LOCKING PIN UPPER	VERSCHLUSSTIFT	C- 491976-020V
3- 490876		FÄSTE	BRACKET	BEFESTIGUNGSHALTER	C- 751088-030V
2- 490882		RULLE	ROLL	ROLLE	C- 272337-040V
2- 490884		GRENRÖR	BRANCH PIPE	ABZWEIGROHR	C- 456100-030V
4- 490890		MUTTERPLATTA	NUT PLATE	MUTTERPLATTE	C- 456100-030V
4- 490891		PINNE	PEG	STIFT	C- 272021-060V
3- 490900		TÄTNINGSRING	SEALING RING	DICHTUNGSRING	C- 272021-060V
3- 490901		TÄTNINGSRING	SEALING RING	DICHTUNGSRING	C- 272021-060V
4- 490902		AXELFÄSTE	AXLE SUPPORT	ACHSENHALTER	C- 272021-060V
4- 490903		AXEL	SHAFT	WELLE	C- 456100-030V
3- 490910		PLATTA	PLATE	PLATTE	C- 456100-030V
3- 490911		PLATTA	PLATE	PLATTE	C- 271115-040V
C- 490912-0101	7648 85-03-06	HAKE	CATCH	HAKEN	C- 256197-050V
4- 490916		AXELTAPP	AXLE PIN	ACHSENZAPFEN	C- 491814-020V
					C- 491815-020V
4- 490932		HYLSA	SLEEVE	HUELSE	C- 272765-070V
4- 490933		MUTTER	NUT	MUTTER	C- 272765-070V
1- 490940		CYLINDER	CYLINDER	ZYLINDER	CR- 256212-050V
					CR- 256213-050V
4- 490942		TRYCKFJÄDER	COMPRESSION SPRING	DRUCKFEDER	CR- 256436-060V
					CR- 256212-050V
					CR- 256213-050V
					CR- 256436-060V
4- 490943		TRYCKFJÄDER	COMPRESSION SPRING	DRUCKFEDER	CR- 256212-050V
					CR- 256213-050V
3- 490964		KÅPA	COVER	DECKEL	C- 272021-060V
1- 490966		RÖR	PIPE	ROHR	C- 456556-020V
3- 490967		FÄSTE	BRACKET	BEFESTIGUNGSHALTER	C- 456555-040V

PART NO	LAST ECN	BENÄMNING	TITLE	BENENNUNG	GROUP NO
4- 490979		RÖR	PIPE	ROHR	C- 456556-020V
G2- 490980		CYLINDER	CYLINDER	ZYLINDER	CR- 256436-060V
					CR- 256712-050V
					CR- 256436-060V
					CR- 256712-050V
					CR- 256436-060V
					CR- 256712-050V
					CR- 256436-060V
					CR- 256712-050V
2- 490983		RÖR	PIPE	ROHR	C- 272560-060V
3- 490986		PLÅT	SHEET	BLECH	C- 456100-030V
3- 490991		SLANG	HOSE	SCHLAUCH	C- 456556-020V
2- 490994		RÖR	PIPE	ROHR	C- 456556-020V
2- 490996		RÖR	PIPE	ROHR	C- 456556-020V
4- 490998		STRYPSKRUV	THROTTLE SCREW	DROSSELSCHRAUBE	C- 456976-050V
					C- 469452-030V
					C- 751800-020V
4- 491016		HÅLLARE	HOLDER	HALTER	C- 752960-010V
					C- 752971-010V
					C- 456457-040V
					C- 751860-020V
3- 491018		FÄSTE	BRACKET	BEFESTIGUNGSHALTER	CR- 256204-050V
					CR- 256205-050V
3- 491022		CYLINDERFÄSTE	CYLINDER BRACKET	ZYLINDERBEFESTIGUNG	C- 456309-050V
C- 491083-030V	17886 93-01-19	MANOMETERGRUPP	GAUGE GROUP	MANOMETERGRUPPE	B- 648111-100V
1- 491086		KONSOL	CANTILEVER	KONSOLE	C- 491083-030V
2- 491089		RÖR	PIPE	ROHR	C- 456976-050V
1- 491090		RÖR	PIPE	ROHR	C- 469452-030V
1- 491092		TÄCKPLÅT	COVERING PLATE	DECKBLECH	B- 648109-100V
3- 491095		RÖR	PIPE	ROHR	C- 469452-030V
					C- 751800-020V
4- 491097		VÄRMESKYDD	HEAT GUARD	WÄRMESCHUTZ	C- 256095-050V
3- 491101		HUS	HOUSE	GEHAEUSE	C- 272337-040V
4- 491126		SKRUV	SCREW	SCHRAUBE	C- 752173-010V
4- 491128		PACKNING	GASKET	DICHTUNG	C- 272021-060V
4- 491141		SPJÄLL	THROTTLE	DROSSELVENTIL	C- 255921-040V
3- 491142		FLOTTÖR	FLOAT	SCHWIMMER	C- 255921-040V
4- 491143		FÄSTE	BRACKET	BEFESTIGUNGSHALTER	C- 469501-040V
4- 491149		FJÄDER	SPRING	FEDER	C- 752957-010V
					C- 752628-020V
4- 491150		DOKUMENTMAPP	DOCUMENT FOLDER	DOKUMENTMAPPE	C- 456953-020V
4- 491153		TÄTNINGSHYLSA	COMPRESSION GLAND	DICHTUNGSHUELSE	C- 441304-040V
1- 491154		RÖR	PIPE	ROHR	C- 456976-050V
4- 491165		RULLE	ROLL	ROLLE	C- 491814-020V
					C- 491815-020V
4- 491166		AXEL	SHAFT	WELLE	C- 491814-020V
					C- 491815-020V
1- 491169		SVÄNGARM	PIVOT ARM	SCHWENKARM	C- 256055-060V
3- 491170		KÅPA	COVER	DECKEL	C- 256055-060V
3- 491171		LAGERKLOTS	BEARING BLOCK	LAGERKLOTZ	C- 256055-060V
4- 491172		PACKNING	GASKET	DICHTUNG	C- 256055-060V
4- 491173		FÄSTE	BRACKET	BEFESTIGUNGSHALTER	C- 256055-060V
4- 491174		ARM	ARM	ARM	C- 256055-060V
4- 491175		LÄNK	LINK	GELENK	C- 256055-060V
4- 491177		ARM	ARM	ARM	C- 256055-060V
1- 491183		RÖR	PIPE	ROHR	C- 271866-060V
2- 491185		SLANG	HOSE	SCHLAUCH	C- 491767-020V
1- 491187		RÖR	PIPE	ROHR	C- 271866-060V
3- 491189		SKYLT	SIGN	SCHILD	C- 491942-010V
3- 491190		RÖR	PIPE	ROHR	C- 491767-020V
3- 491193		HÅLLARE	HOLDER	HALTER	C- 295310-070V
G2- 491194		LÄNKHUVUD	LINK HEAD	GELENKKOPF	C- 491787-020V
					C- 491788-020V
3- 491195		GLIDKLOTS	SLIDER	GLEITKLOTZ	C- 491787-020V
					C- 491788-020V
G3- 491196		GAFFELLÄNK	FORKED LINK	GABELGELENK	C- 491787-020V
					C- 491788-020V
3- 491198		KOLV	PISTON	KOLBEN	C- 491787-020V
					C- 491788-020V
4- 491200		MEDBRINGARE	CARRIER	MITNEHMER	C- 491787-020V
					C- 491788-020V
4- 491203		STAG	STRUT	VERSTREBUNG	C- 751373-010V
C- 491207-030V	20112 93-07-01	RÖRDRAGNINGSSYSTEM	PIPE WORK	ROHRSYSTEM	C- 751352-020V
4- 491209-0001		RÖR	PIPE	ROHR	C- 456976-050V
3- 491218		STÖD	SUPPORT	STUETZE	C- 271181-040V
1- 491219		RÖR	PIPE	ROHR	C- 456976-050V
3- 491220		RÖR	PIPE	ROHR	C- 456976-050V
4- 491221		RÖR	PIPE	ROHR	C- 456976-050V
3- 491223		KÅPA	COVER	DECKEL	C- 256095-050V
3- 491224		FÄSTE	BRACKET	BEFESTIGUNGSHALTER	C- 256095-050V
CR- 491225-010V	19267 93-05-31	STATIONSKEDJA	STATION CHAIN	STATIONKETTE	B- 648105-100V
CR- 491225-0101	19267 93-05-31	STATIONSKEDJA	STATION CHAIN	STATIONKETTE	C- 978192-020V
CR- 491225-0102	19267 93-05-31	STATIONSKEDJA	STATION CHAIN	STATIONKETTE	C- 567681-020V
CR- 491225-0104	19267 93-05-31	STATIONSKEDJA	STATION CHAIN	STATIONKETTE	C- 570079-020V
					C- 978192-020V
4- 491227		GLIDSTYCKE	SLIDER	GLEITKLOTZ	CR- 491225-010V
4- 491228-0001		AXEL	SHAFT	WELLE	CR- 491225-010V
4- 491228-0002		AXEL	SHAFT	WELLE	CR- 491225-010V
4- 491229		BUSSNING	BUSHING	BUCHSE	CR- 491225-010V
4- 491230		LÅSSKRUV	GRUB SCREW	VERSCHLUSSCHRAUBE	CR- 491225-010V
4- 491231		BUSSNING	BUSHING	BUCHSE	CR- 491225-010V
4- 491233		STYRKLACK	GUIDE LUG	FUEHRUNGSABSATZ	C- 271442-030V

PART NO	LAST ECN	BENÄMNING	TITLE	BENENNUNG	GROUP NO
4- 491235		BRICKA	WASHER	SCHEIBE	C- 271443-030V C- 271442-030V C- 271443-030V
3- 491240		FÄSTE	BRACKET	BEFESTIGUNGSHALTER	C- 491871-010V
3- 491241		HÅLLARE	HOLDER	HALTER	C- 271866-060V
3- 491242		HÅLLARE	HOLDER	HALTER	C- 271866-060V
2- 491244		RÖR VATTEN	PIPE WATER	ROHR	C- 491650-010V
2- 491245		RÖR CENTRALSMÖRJNING	PIPE CENTRAL LUBRICATION	ROHR	C- 491650-010V
2- 491246		RÖR CENTRALSMÖRJNING	PIPE CENTRAL LUBRICATION	ROHR	C- 491650-010V
3- 491247		RÖR VATTEN	PIPE WATER	ROHR	C- 491650-010V
1- 491248		RÖR VATTEN	PIPE WATER	ROHR	C- 491650-010V
3- 491249		RÖR HYDRAUL	PIPE HYDRAULIC	ROHR	C- 491650-010V
1- 491250		RÖR HYDRAUL	PIPE HYDRAULIC	ROHR	C- 491650-010V
3- 491251		RÖR VATTEN	PIPE WATER	ROHR	C- 491650-010V
1- 491252		RÖR HYDRAUL	PIPE HYDRAULIC	ROHR	C- 491650-010V
2- 491253		RÖR HYDRAUL	PIPE HYDRAULIC	ROHR	C- 491650-010V
1- 491254		FÖRDELARBLOCK HÖGER	DISTRIBUTOR BLOCK RIGHT	VERTEILERBLOCK	C- 491650-010V
1- 491255		FÖRDELARBLOCK VÄNSTER	DISTRIBUTOR BLOCK LEFT	VERTEILERBLOCK	C- 491650-010V
2- 491256		FÖRDELARBLOCK VÄNSTER	DISTRIBUTOR BLOCK LEFT	VERTEILERBLOCK	C- 491650-010V
3- 491258		DRIVHJUL	DRIVE WHEEL	TRIEBRAD	C- 491850-010V
C- 491259-020V	19267 93-05-31	GEJDGRUPP	WAY	FUEHRUNG	B- 648105-100V
3- 491265		PLATTA	PLATE	PLATTE	C- 491259-020V
4- 491266		SHIMS	SHIM	SHIMS	C- 491259-020V
2- 491270		PÅFYLLNINGSRÖR NEDRE	FILLING TUBE LOWER	FUELLROHR	C- 255921-040V
3- 491271		TRYCKFLÄNS	PRESSURE FLANGE	DRUCKFLANSCH	C- 255921-040V
3- 491272		LÅSPINNE NEDRE	LOCKING PIN LOWER	VERSCHLUSSTIFT	C- 794092-010V
C- 491273-0101	8296 85-10-09	UPPSTARTSATS	START-UP KIT	STARTSATZ	C- 456953-020V
G3- 491274		NAV	HUB	NABE	C- 256173-050V
4- 491286		REFLEKTOR	REFLECTOR	REFLEKTOR	C- 271513-060V C- 751885-030V
4- 491291		LOCK	LID	DECKEL	C- 491846-020V
1- 491299		BERÖRINGSSKYDD	TOUCH GUARD	BERUEHRUNGSSCHUTZ	C- 456976-050V
4- 491303		BRICKA	WASHER	SCHEIBE	C- 751373-010V
4- 491304		BRICKA	WASHER	SCHEIBE	C- 751373-010V
4- 491305		KOPPLINGSSCHEMA	WIRING DIAGRAM	KUPPLUNGSSCHALTPLAN	C- 271181-040V
4- 491314		SKRUV	SCREW	SCHRAUBE	C- 272021-060V
4- 491319		MELLANLÄGG	LACE	ZWISCHENLAGE	C- 491814-020V C- 491815-020V
4- 491333		DISTANSRING	SPACER RING	DISTANZRING	C- 272028-060V
3- 491345		KURVSEGMENT	CURVE SEGMENT	KURVENSEGMENT	C- 978258-020V C- 256202-050V
3- 491346		KURVSEGMENT	CURVE SEGMENT	KURVENSEGMENT	C- 978258-020V C- 256202-050V
3- 491349		LAGERSÄTE	BEARING SEAT	LAGERSITZ	C- 256951-050V C- 256952-050V
4- 491350		GLIDKLOTS	SLIDER	GLEITKLOTZ	C- 256951-050V C- 256952-050V
1- 491360		RÖR	PIPE	ROHR	C- 456555-040V
4- 491363		MUTTER	NUT	MUTTER	C- 256014-060V
4- 491364		LAGERHÅLLARE	BEARING HOLDER	LAGERHALTER	C- 256014-060V
4- 491365		AXIALLAGER	THRUST BEARING	ACHSIALLAGER	C- 256014-060V
4- 491375		TVÄRSTYCKE	CROSS PIECE	QUERSTUECK	C- 491787-020V C- 491788-020V
2- 491390		RÖR CENTRALSMÖRJNING	PIPE CENTRAL LUBRICATION	ROHR	C- 271562-080V
3- 491392		AXEL	SHAFT	WELLE	C- 272004-040V
4- 491393		AXELFÄSTE	AXLE SUPPORT	ACHSENHALTER	C- 272004-040V
3- 491396		MANGELVALS	CALENDER ROLLER	MANGELWALZE	C- 272024-040V
3- 491397		MANGELVALS	CALENDER ROLLER	MANGELWALZE	C- 272024-040V
1- 491398		RÖR	PIPE	ROHR	C- 456556-020V
2- 491399		RÖR	PIPE	ROHR	C- 456556-020V
4- 491409		BRICKA	WASHER	SCHEIBE	C- 256173-050V
4- 491410		MELLANLÄGG	LACE	ZWISCHENLAGE	C- 256173-050V
2- 491414		PLATTA	PLATE	PLATTE	C- 469091-030V
3- 491415		FÄSTPLATTA	FASTENING PLATE	BEFESTIGUNGSPLATTE	C- 529933-020V C- 469091-030V
4- 491418-0001		O-RING	O-RING	O-RING	C- 529933-010V C- 529933-020V
4- 491418-0001		O-RING	O-RING	O-RING	C- 529933-010V C- 529933-020V C- 529933-010V C- 529933-020V
4- 491418-0002		O-RING	O-RING	O-RING	C- 469091-030V
2- 491423		LOCK	LID	DECKEL	C- 272021-060V
2- 491433		VOLYMKURVA V BRED	VOLUME CAM LEFT, WIDE	VOLUMENKURVE	C- 295045-070V
2- 491434		VOLYMKURVA H	VOLUME CAM RIGHT	VOLUMENKURVE	C- 256222-020V
2- 491435		VOLYMKURVA H BRED	VOLUME CAM RIGHT, WIDE	VOLUMENKURVE	C- 256222-020V
2- 491436		VOLYMKURVA V	VOLUME CAM LEFT	VOLUMENKURVE	C- 256222-020V
4- 491441		HUV	HOOD	HAUBE	C- 469091-030V
4- 491456		PLATTA	PLATE	PLATTE	C- 491787-020V C- 491788-020V
4- 491458		LÄNK	LINK	GELENK	C- 255921-040V
3- 491459		KURVSEGMENT	CURVE SEGMENT	KURVENSEGMENT	C- 978442-020V C- 256202-050V
3- 491460		KURVSEGMENT	CURVE SEGMENT	KURVENSEGMENT	C- 978442-020V C- 256202-050V
3- 491461		KURVSEGMENT	CURVE SEGMENT	KURVENSEGMENT	C- 256202-050V
3- 491462		KURVSEGMENT	CURVE SEGMENT	KURVENSEGMENT	C- 256202-050V
3- 491463		RÖR	PIPE	ROHR	C- 271866-060V
3- 491478		PLÅT	SHEET	BLECH	C- 456103-010V
3- 491479		HÅLLARE	HOLDER	HALTER	C- 456560-010V
3- 491480		STYRKLOTS	LOCATING PIECE	FUEHRUNGSKLOTZ	C- 456560-010V

PART NO	LAST ECN	BENÄMNING	TITLE	BENENNUNG	GROUP NO
4- 491482		PLÅT	SHEET	BLECH	C- 456103-010V
4- 491487		BUSSNING	BUSHING	BUCHSE	C- 256055-060V
C- 491536-0101	11934 88-06-10	BACKVENTIL	NON-RETURN VALVE	RUECKSCHLAGVENTIL	C- 456757-020V
4- 491545		FÄSTE	BRACKET	BEFESTIGUNGSHALTER	C- 256095-050V
1- 491549		MEDBRINGARE HÖGER	CARRIER RIGHT	MITNEHMER	CR- 256212-050V
1- 491550		MEDBRINGARE VÄNSTER	CARRIER LEFT	MITNEHMER	CR- 256213-050V
3- 491552		FÄSTPLÅT	MOUNTING SHEET	BEFESTIGUNGSBLECH	C- 752244-020V
3- 491564		YTTRE LEDSTYCKE	LINKPIECE OUTER	GELENKST~CK	C- 456560-010V
3- 491565		GLIDBANA	SLIDE PLANE	RUTSCHE	C- 456560-010V
C- 491570-0201	17862 92-09-30	DÖRR	DOOR	TUER	B- 648111-100V
1- 491576		SCHEMA VATTEN TBA/9	WATER DIAGRAM TBA/9	SCHEMA WASSER	C- 491767-020V
3- 491578		FÄSTE	BRACKET	BEFESTIGUNGSHALTER	C- 752957-010V
C- 491579-0201	17862 92-09-30	DÖRR	DOOR	TUER	B- 648111-100V
4- 491586		FÄSTKLOTS	MOUNTING BLOCK	BEFESTIGUNGSKLOTZ	C- 456103-010V
1- 491593		KÅPA	COVER	DECKEL	C- 256014-060V
3- 491594		BRYTRULLE	BENDING ROLLER	UMLENKROLLE	C- 256014-060V
2- 491595		LOCK	LID	DECKEL	C- 752173-010V
3- 491598		LAGERSÄTE	BEARING SEAT	LAGERSITZ	C- 256014-060V
3- 491600		KONSOL	CANTILEVER	KONSOLE	C- 256014-060V
P3- 491601		RULLKEDJA	ROLLER CHAIN	ROLLENKETTE	C- 256014-060V
4- 491602		PACKNINGSHÅLLARE	GASKET HOLDER	DICHTUNGSHALTER	C- 272021-060V
3- 491628		STYRKLOTS	LOCATING PIECE	FUEHRUNGSKLOTZ	C- 456560-010V
3- 491629		GLIDPLÅT	SLIDE SHEET	GLEITBLECH	C- 456103-010V
1- 491637		RÖR	PIPE	ROHR	C- 456976-050V
1- 491638		RÖR	PIPE	ROHR	C- 456976-050V
4- 491649		FÄSTE	BRACKET	BEFESTIGUNGSHALTER	C- 978739-010V
C- 491650-0101	12270 88-10-20	FÖRDELARBLOCK	DISTRIBUTOR BLOCK	VERTEILERBLOCK	C- 271562-080V
4- 491654		STÖD	SUPPORT	STUETZE	C- 456032-010V
2- 491655		RÖR 190	PIPE 190	ROHR	C- 295045-070V
2- 491656		RÖR 191	PIPE 191	ROHR	C- 295045-070V
1- 491657		RÖR 200	PIPE 200	ROHR	C- 295045-070V
1- 491658		RÖR 201	PIPE 201	ROHR	C- 295045-070V
1- 491659		RÖR 212	PIPE 212	ROHR	C- 295045-070V
1- 491660		RÖR 230	PIPE 230	ROHR	C- 295045-070V
1- 491661		RÖR 231	PIPE 231	ROHR	C- 295045-070V
1- 491662		RÖR 240	PIPE 240	ROHR	C- 295045-070V
1- 491663		RÖR 241	PIPE 241	ROHR	C- 295045-070V
1- 491664		RÖR 250	PIPE 250	ROHR	C- 295045-070V
1- 491665		RÖR 251	PIPE 251	ROHR	C- 295045-070V
1- 491666		RÖR 260	PIPE 260	ROHR	C- 295045-070V
1- 491667		RÖR 261	PIPE 261	ROHR	C- 295045-070V
2- 491668		RÖR 210	PIPE 210	ROHR	C- 295045-070V
2- 491669		RÖR 211	PIPE 211	ROHR	C- 295045-070V
4- 491670		RÖR 210	PIPE 210	ROHR	C- 295045-070V
4- 491671		RÖR 211	PIPE 211	ROHR	C- 295045-070V
4- 491672		RÖR 210 (211)	PIPE 210 (211)	ROHR	C- 295045-070V
4- 491681		PACKNING	GASKET	DICHTUNG	CR- 256214-040V
2- 491723		SPILLPLÅT	SPLASH PLATE	UEBERLAUFBLECH	C- 752645-020V
					C- 752646-020V
					C- 752913-010V
					C- 752914-010V
2- 491725		BEN	LEG	BEIN	C- 456923-030V
3- 491726		BEN	LEG	BEIN	C- 456923-030V
4- 491731		BRICKA	WASHER	SCHEIBE	C- 272652-030V
4- 491732		BRICKA	WASHER	SCHEIBE	C- 272652-030V
3- 491733		ANSATSRING	SHOULDER RING	ANSATZRING	C- 295310-070V
2- 491734		STÖD	SUPPORT	STUETZE	C- 752244-020V
3- 491737		AXEL	SHAFT	WELLE	C- 256014-060V
4- 491746		BRICKA	WASHER	SCHEIBE	C- 295310-070V
2- 491750		STÖD	SUPPORT	STUETZE	C- 469452-030V
3- 491751		KEDJEHJUL	SPROCKET	KETTENRAD	C- 295310-070V
4- 491752		NAV	HUB	NABE	C- 295310-070V
4- 491753		BRICKA	WASHER	SCHEIBE	C- 295310-070V
4- 491754		BRYTPINNE	SHEAR PIN	SCHERSTIFT	C- 295310-070V
1- 491755		RÖR	PIPE	ROHR	C- 456976-050V
4- 491762		AXEL	SHAFT	WELLE	C- 441000-050V
C- 491767-0201	19732 93-06-24	CIRKULERANDE KYLVATTEN	CIRCULATING COOLING WATE	K~HLWASSERUMLAUF	C- 77091-040V
4- 491770		BUSSNING	BUSHING	BUCHSE	C- 751393-010V
G3- 491771		FÄSTE	BRACKET	BEFESTIGUNGSHALTER	CR- 256436-060V
3- 491772-0001		SPINDEL	SPINDLE	SPINDEL	CR- 256436-060V
3- 491772-0002		SPINDEL	SPINDLE	SPINDEL	CR- 256436-060V
3- 491772-0003		SPINDEL	SPINDLE	SPINDEL	CR- 256436-060V
3- 491772-0004		SPINDEL	SPINDLE	SPINDEL	CR- 256436-060V
3- 491772-0006		SPINDEL	SPINDLE	SPINDEL	CR- 256436-060V
3- 491772-0007		SPINDEL	SPINDLE	SPINDEL	CR- 256436-060V
2- 491779		RÖR	PIPE	ROHR	C- 491083-030V
C- 491787-0201	19159 92-12-07	URKOPPLINGSLÄNK HÖGER	DISCONNECTION LINK RIGHT	ENTKUPPLUNGSGELENK	B- 648103-090V
C- 491788-0201	19159 92-12-07	URKOPPLINGSLÄNK VÄNSTER	DISCONNECTION LINK LEFT	ENTKUPPLUNGSGELENK	B- 648103-090V
2- 491798		KLOTS	BLOCKING PIECE	KLOTZ	CR- 256436-060V
2- 491799		KLOTS	BLOCKING PIECE	KLOTZ	CR- 256436-060V
2- 491800		KLOTS	BLOCKING PIECE	KLOTZ	CR- 256436-060V
4- 491802		BRICKA	WASHER	SCHEIBE	CR- 256436-060V
G3- 491803		HUS	HOUSE	GEHAEUSE	CR- 256436-060V
G3- 491804		KLOTS	BLOCKING PIECE	KLOTZ	CR- 256712-050V
G3- 491805		KLOTS	BLOCKING PIECE	KLOTZ	CR- 256712-050V
G3- 491806		KLOTS	BLOCKING PIECE	KLOTZ	CR- 256712-050V
4- 491807		RÖR	PIPE	ROHR	C- 456455-030V
1- 491808		DISKBALJA	CLEANING EQUIPMENT	REINIGUNGSANORDNUNG	C- 456588-030V
C- 491814-0201	19159 92-12-07	LÄNKARM HÖGER	SLEWING BRACKET RIGHT	GELENKARM	B- 648103-090V
C- 491815-0201	19159 92-12-07	LÄNKARM VÄNSTER	SLEWING BRACKET LEFT	GELENKARM	B- 648103-090V
3- 491832		BOBINBROMS	BOBBIN BRAKE	SPULENBREMSE	C- 441000-050V
3- 491833		BOBINBROMS	BOBBIN BRAKE	SPULENBREMSE	C- 441000-050V

PART NO	LAST ECN	BENÄMNING	TITLE	BENENNUNG	GROUP NO
4- 491834		BROMSPLÅT	BRAKE PLATE	BREMSBLECH	C- 441000-050V
1- 491837		KABELRÄNNA	CABLE TRENCH	KABELRINNE	C- 469374-040V
3- 491838		KABELRÖR	CABLE CONDUIT	KABELROHR	C- 469374-040V
C- 491846-0201	14278 90-01-05	SPÄNNHJUL	TENSION SPROCKET	SPANNRAD	B- 648105-100V
3- 491847		SPÄNNHJUL	TENSION SPROCKET	SPANNRAD	C- 491846-020V
3- 491848		AXEL	SHAFT	WELLE	C- 491846-020V
C- 491850-0101	14278 90-01-05	DRIVHJUL	DRIVE WHEEL	TRIEBRAD	B- 648105-100V
4- 491851		LOCK	LID	DECKEL	C- 491850-010V
1- 491854		RÖR VATTEN	PIPE WATER	ROHR	C- 271562-080V
1- 491855		RÖR VATTEN	PIPE WATER	ROHR	C- 271562-080V
4- 491859		HÅLLARE	HOLDER	HALTER	C- 271562-080V
4- 491860		HÅLLARE	HOLDER	HALTER	C- 271562-080V
4- 491861		HÅLLARE	HOLDER	HALTER	C- 271562-080V
4- 491862		HÅLLARE	HOLDER	HALTER	C- 271562-080V
1- 491866		RÖR	PIPE	ROHR	C- 271866-060V
3- 491868		VOLYMKUDDE	VOLUME BULGE	VOLUMENKISSEN	CR- 256209-030V
					CR- 256210-030V
2- 491870		GRENRÖR	BRANCH PIPE	ABZWEIGROHR	C- 271261-050V
C- 491871-0101	10781 88-05-04	KEDJESPÄNNARE	CHAIN TENSIONER	KETTENSPANNER	C- 295310-070V
4- 491872		TÄCKPLATTA	COVER PLATE	DECKPLATTE	C- 295310-070V
3- 491880		FÄSTPLATTA	FASTENING PLATE	BEFESTIGUNGSPLATTE	C- 491976-020V
2- 491881-0001		SVÄNGARM	PIVOT ARM	SCHWENKARM	C- 456180-010V
2- 491881-0002		SVÄNGARM	PIVOT ARM	SCHWENKARM	C- 456180-010V
3- 491886		SKENA	RAIL	SCHIENE	CR- 256214-040V
2- 491889		HÅLLARE	HOLDER	HALTER	C- 491890-010V
C- 491890-0101	16642 91-06-06	OLJEBEHÅLLARE	OIL TANK	OELBEHÄLTER	B- 648106-100V
4- 491891		BYGEL	BOW CLAMP	BUEGEL	C- 491890-010V
2- 491892		SLANG	HOSE	SCHLAUCH	C- 491890-010V
C- 491894-0101	16815 91-10-09	HYDRAULSYSTEM	HYDRAULIC SYSTEM	HYDRAULSYSTEM	B- 648106-100V
3- 491916		KURVSEGMENT	CURVE SEGMENT	KURVENSEGMENT	C- 256202-050V
3- 491917		KURVSEGMENT	CURVE SEGMENT	KURVENSEGMENT	C- 256202-050V
3- 491918		KURVSEGMENT	CURVE SEGMENT	KURVENSEGMENT	C- 256202-050V
3- 491919		KURVSEGMENT	CURVE SEGMENT	KURVENSEGMENT	C- 256202-050V
3- 491920		KURVSEGMENT	CURVE SEGMENT	KURVENSEGMENT	C- 256202-050V
3- 491921		KURVSEGMENT	CURVE SEGMENT	KURVENSEGMENT	C- 256202-050V
1- 491922		SCHEMA HYDRAULIK	HYDRAULIC DIAGRAM	SCHEMA HYDRAULIK	B- 648109-100V
G3- 491929		PUMPHJUL	IMPELLER WHEEL	PUMPENRAD	C- 751393-010V
4- 491931		AXEL	SHAFT	WELLE	C- 256055-060V
C- 491942-0101	9391 86-07-21	PAPPERSRULLEVAGN	(PAPER)REEL TROLLEY	PAPIERROLLENWAGEN	B- 648109-100V
3- 491945		KABELSTEGE	CABLE TRACK	KABELTRÄGER	C- 271569-050V
3- 491946		KABELSTEGE	CABLE TRACK	KABELTRÄGER	C- 271569-050V
3- 491951		BANJOKOPPLING	BANJO CONNECTION	SCHWENKANSCHLUSS	C- 978739-010V
3- 491954		SKENA	RAIL	SCHIENE	CR- 256214-040V
3- 491962		SKENA	RAIL	SCHIENE	CR- 256214-040V
3- 491965		KAM	CAM	NOCKE	C- 752645-020V
					C- 752646-020V
4- 491968		PLUSRULLE	TRIMMING ROLLER PLUS	TRIMMUNGSROLLE / PLUS	C- 77093-020V
4- 491969		MINUSRULLE	TRIMMING ROLLER MINUS	TRIMMUNGSROLLE / MINUS	C- 77093-020V
C- 491976-020V	20303 93-09-06	FOTOCELLENHET	PHOTOCELL UNIT	FOTOZELLEINHEIT	B- 648111-100V
C- 493652-0102	8328 85-10-22	LOCK MED MOTVIKT	LID	DECKEL	C- 751373-010V
					C- 751398-020V
4- 493735		NIPPEL	NIPPLE	NIPPEL	C- 533014-010V
3- 495201		KYLELEMENT	COOLING ELEMENT	KUEHLBLOCK	CE- 41723-010V
					CE- 41750-010V
					CE- 41757-010V
					CE- 41723-010V
					CE- 41750-010V
					CE- 41757-010V
2- 495770		PACKNING	GASKET	DICHTUNG	C- 77094-010V
2- 495780		PLÅT	SHEET	BLECH	C- 77094-010V
C- 497534-030V	15121 90-09-26	MOTBACK TBA/9	COUNTER JAW	GEGGEN BACKE	B- 648118-090V
4- 497748		PINNE	PEG	STIFT	C- 541163-010V
					C- 541164-010V
					C- 541163-010V
					C- 541164-010V
4- 497933		BUSSNING	BUSHING	BUCHSE	C- 541164-020V
					C- 539209-010V
					C- 539210-010V
					C- 539211-010V
					C- 794213-010V
					C- 794243-010V
					C- 794244-010V
4- 497934		HÅLLARE	HOLDER	HALTER	C- 924991-010V
4- 497935		FÄSTE	BRACKET	BEFESTIGUNGSHALTER	C- 283626-040V
C- 499082-010V	12975 90-08-15	ADAPTER, TYP 1	ADAPTER, TYPE 1	ADAPTER, TYP 1	C- 283626-040V
4- 499190		MUTTER	NUT	MUTTER	B- 648109-100V
4- 499191		PASSBULT	FITTING BOLT	PASSBOLZEN	C- 566280-010V
4- 499192		RULLE	ROLL	ROLLE	C- 566280-010V
SP- 499255-0201	12429 90-08-31	TÄTNINGSSATS	SEAL KIT	DICHTUNGSSATZ	C- 566280-010V
3- 499501		VENTIL	VALVE	VENTIL	C- 295778-040V
2- 499527		KONSOL	CANTILEVER	KONSOLE	C- 491207-030V
3- 499542		RÄNNA	CHUTE	RINNE	C- 490610-040V
4- 499543		FJÄDER	SPRING	FEDER	CR- 548331-010V
3- 499560		VÄRMEKROPP	HEATING BLOCK	HEIZKÖRPER	CR- 548331-010V
4- 499580		AXEL	SHAFT	WELLE	CR- 283606-020V
4- 499581		AXEL	SHAFT	WELLE	CR- 548331-010V
3- 499632		VÄRMESKENA	HEATING RAIL	WÄRMESCHIENE	CR- 548331-010V
					CR- 283606-020V
3- 499633		VÄRMESKENA	HEATING RAIL	WÄRMESCHIENE	C- 469316-020V
					CR- 283606-020V
3- 499642		RÄNNA	CHUTE	RINNE	C- 469316-020V
					CR- 548331-010V

PART NO	LAST ECN	BENÄMNING	TITLE	BENENNUNG	GROUP NO
3- 499646		STYRPLÅT	HEAD PLATE	FUEHRUNGSBLECH	CR- 548331-010V
4- 499746		FÄSTKLOTS	MOUNTING BLOCK	BEFESTIGUNGSKLOTZ	C- 499082-010V
4- 499747		FÄSTKLOTS	MOUNTING BLOCK	BEFESTIGUNGSKLOTZ	C- 499082-010V
4- 499822		SHIMS	SHIM	SHIMS	CR- 548331-010V
1- 520043		VÄRMESLINGA	HEATING COIL	WÄRMEELEMENT	RK- 978212-010V
2- 520044		RESERVOAR	RESERVOIR	RESERVOIR	RK- 978234-010V
3- 520045		T-KOPPLING	T-CONNECTION	T-KUPPLUNG	RK- 978238-010V
3- 520046-0002		RÖR	PIPE	ROHR	RK- 978238-010V
1- 520047		SKÅP	CABINET	SCHRANK	RK- 978234-010V
1- 520048		DÖRR	DOOR	TUER	RK- 978234-010V
2- 520050		FÖNSTER	WINDOW	FENSTER	RK- 978234-010V
1- 520051-0003		ÖVERGÅNGSRÖR	TRANSITION PIPE	~BERGANGSROHR	RK- 978238-010V
3- 520053		RÖR	PIPE	ROHR	RK- 978238-010V
2- 520054		KONSOL	CANTILEVER	KONSOLE	RK- 978234-010V
1- 520055		MONTERINGSPLÅT	ASSEMBLY PLATE	MONTAGEBLECH	RK- 978234-010V
4- 520058		DISTANS	SPACER	DISTANZ	RK- 520069-010V
3- 520059		MONTAGEBYGEL	MOUNTING BRACKET	MONTAGEBUEGEL	RK- 520069-010V
3- 520063		KABELKANAL	CABLE DUCT	KABELKANAL	RK- 978234-010V
3- 520064		VENTILTALLRIK	VALVE HEAD	VENTILTELLER	RK- 978234-010V
3- 520065		SLANGHÅLLARE	HOSE HOLDER	SCHLAUCHHALTER	RK- 978234-010V
RK- 520069-0101	16055 91-04-02	A-VENTIL MODIFIERING	VALVE GROUP	VENTILGRUPPE	C- 978239-020V
					C- 978240-020V
					C- 978241-020V
4- 520072		SKYLT	SIGN BOARD	SCHILD	RK- 978234-010V
4- 520073		SKYLT	SIGN BOARD	SCHILD	RK- 978234-010V
4- 520074		FÖRLÄNGNINGSRÖR	EXTENSION PIPE	VERLÄNGERUNGSROHR	C- 978239-020V
					C- 978240-020V
					C- 978241-020V
4- 520081		FÄSTE FÖR GIVARE	PROX.SW. BRACKET	BEFESTIGUNGSHALTER	C- 272560-060V
3- 520121		SPRAYRÖR	SPRAY PIPE	SPRUEHROHR	RK- 978238-010V
3- 520122		FYLLRÖR	FILLING PIPE	FUELLROHR	RK- 978234-010V
3- 520123		RETURRÖR	RETURN PIPE	RUECKLAUFROHR	RK- 978234-010V
3- 520124		RÖR	PIPE	ROHR	RK- 978234-010V
3- 520125		KABELKANAL	CABLE DUCT	KABELKANAL	RK- 978234-010V
3- 520126		KABELKANAL	CABLE DUCT	KABELKANAL	RK- 978234-010V
3- 520127		KABELKANAL	CABLE DUCT	KABELKANAL	RK- 978234-010V
3- 520128		PLINTFÄSTE	TERMINAL HOLDER	KLEMMSCHRAUBENHALTER	RK- 978234-010V
4- 520147-0001		DISTANS	SPACER	DISTANZ	RK- 978212-010V
					RK- 978528-010V
					RK- 978212-010V
					RK- 978528-010V
					RK- 978212-010V
4- 520147-0002		DISTANS	SPACER	DISTANZ	RK- 978528-010V
					RK- 978212-010V
					RK- 978528-010V
					RK- 978212-010V
					RK- 978528-010V
					RK- 978212-010V
					RK- 978528-010V
2- 520279		FYLLRÖR H2O2	FILL PIPE H2O2	FUELLROHR	C- 978239-020V
					C- 978240-020V
					C- 978241-020V
4- 521166		RULLE	ROLL	ROLLE	C- 547756-010V
3- 522376		KNIVHÅLLARE	KNIFE HOLDER	MESSERHALTER	C- 544420-010V
4- 522388-0002		KNIV	KNIFE	MESSER	C- 544420-010V
4- 522393		MUTTER	NUT	MUTTER	C- 544420-010V
4- 522394		FJÄDER	SPRING	FEDER	C- 544420-010V
4- 522395		SKRUV	SCREW	SCHRAUBE	C- 544420-010V
3- 522413-0001		RULLE	ROLL	ROLLE	C- 554360-020V
3- 522413-0002		RULLE	ROLL	ROLLE	C- 554360-020V
3- 522413-0003		RULLE	ROLL	ROLLE	C- 554360-020V
3- 522415-0001		AXEL	SHAFT	WELLE	C- 554360-020V
3- 522415-0002		AXEL	SHAFT	WELLE	C- 554360-020V
3- 522415-0003		AXEL	SHAFT	WELLE	C- 554360-020V
4- 522425		AXEL	SHAFT	WELLE	C- 554360-020V
4- 522429		MUFF	MUFF	MUFFE	C- 533844-010V
					C- 554360-020V
4- 525233		PACKNING	GASKET	DICHTUNG	CR- 31390-010V
					CR- 31390-011V
2- 525386		SKYDDSGALLER	PROTECTIVE GRATING	SCHUTZGITTER	C- 456588-030V
1- 525387		SPILLRÄNNA	WASTE CHUTE	UEBERLAUFRINNE	C- 271114-050V
4- 525388		FÄSTJÄRN	FASTENING IRON	BEFESTIGUNGSEISEN	C- 271114-050V
1- 525389		SKYDDSKÅPA	PROTECTIVE CASING	SCHUTZKAPPE	C- 271115-040V
4- 525391		HÅLLARE	HOLDER	HALTER	C- 271115-040V
3- 525392		DURKPLÅT	CHECKER PLATE	RIFFELBLECH	C- 271114-050V
3- 525393		DURKPLÅT	CHECKER PLATE	RIFFELBLECH	C- 271114-050V
3- 526936		KNIV	KNIFE	MESSER	CR- 548331-010V
4- 526984		SLÄDE	SADDLE	SCHLITTEN	C- 543143-010V
4- 526985		PLATTA	PLATE	PLATTE	C- 543143-010V
4- 526986-0001		AXEL	SHAFT	WELLE	C- 543143-010V
3- 527120		STYRNING	STEERING	FUEHRUNG	C- 751406-010V
3- 527121-0001		BYGEL	BOW CLAMP	BUEGEL	C- 751406-010V
3- 527121-0002		BYGEL	BOW CLAMP	BUEGEL	C- 751406-010V
4- 527122		ANSLUTNING	ATTACHMENT	ANSCHLUSS	C- 751406-010V
4- 527124		ROSTFRITEFLON	BEARING	LAGER	C- 751406-010V
4- 527125		STYRNING	STEERING	FUEHRUNG	C- 751406-010V
4- 527126		BLADFJÄDER	LEAF SPRING	BLATTFEDER	C- 751406-010V
4- 527127		TAPP	DOWEL	ZAPFEN	C- 751406-010V
4- 527128		STYRPINNE	GUIDE PIN	FUEHRUNGSBOLZEN	C- 751406-010V
4- 527649		DISTANSGUMMI	DISTANCE RUBBER	DISTANZ	C- 543143-010V
C- 527898-0101	15566 90-12-07	BEHÅLLARE	CONTAINER	BEHÄLTER	C- 77091-040V

PART NO	LAST ECN	BENÄMNING	TITLE	BENENNUNG	GROUP NO
4- 527905		PACKNING	GASKET	DICHTUNG	C- 751352-020V
4- 527906		PACKNING	GASKET	DICHTUNG	C- 751398-020V
4- 527912		BACKVENTIL	NON-RETURN VALVE	RUECKSCHLAGVENTIL	C- 751398-020V
3- 529063-0001		HÅLLARE	HOLDER	HALTER	C- 751406-010V
3- 529313		STÅNG	ROD	STANGE	C- 499082-010V
3- 529314		KONSOL	CANTILEVER	KONSOLE	C- 476189-010V
RK- 529345-0101	16346 91-07-01	PÅFYLLNINGSSTATION	FILLING STATION.	FUELLANORDNUNG	C- 476189-010V
2- 529348		BAKSTYCKE, VÄGG	BACK PIECE, WALL	HINTERTEIL	C- 77091-040V
4- 529362		KEDJEHJUL	SPROCKET	KETTENRAD	C- 229400-070V
4- 529400-0002		KLACK	LUG	NOCKE	C- 543143-010V
2- 529586		ÅNGVENTILHUS	STEAM VALVE BODY	VENTILGEHÄUSE	C- 456696-030V
C- 529621-0101	14983 90-06-07	AVKÄNNINGSUTRUSTNING	READING DEVICE	GEBER	C- 794245-010V
					C- 560459-010V
					C- 560459-020V
					C- 560460-010V
					C- 560460-020V
					C- 560886-010V
4- 529622		HYLSA	SLEEVE	HUELSE	C- 560886-020V
4- 529623		HYLSA	SLEEVE	HUELSE	C- 529621-010V
4- 529657		TRYCKFJÄDER	COMPRESSION SPRING	DRUCKFEDER	C- 529621-010V
4- 529659		TRYCKFJÄDER	COMPRESSION SPRING	DRUCKFEDER	C- 736600-020V
					C- 736600-020V
P1- 529682		FILTER HUS	FILTERS HOUSING	FILTER	C- 924305-010V
1- 529763		LEDNINGSRÖR	CONDUIT	LEITUNGSROHR	C- 735265-010V
3- 529792		ÅNGVENTILHUS	STEAM VALVE BODY	VENTILGEHÄUSE	C- 794168-010V
3- 529885		FÖRDELNINGSBLOCK	SEPARATION BLOCK	VERTEILUNGSBLOCK	C- 794245-010V
4- 529890		STÖD	SUPPORT	STUETZE	C- 736797-010V
4- 529895		RÖR	PIPE	ROHR	C- 736797-010V
3- 529905		CYLINDER	CYLINDER	ZYLINDER	C- 736600-020V
4- 529908		BRICKA	WASHER	SCHEIBE	C- 736600-020V
					C- 736600-020V
4- 529910		TRYCKBRICKA	THRUST WASHER	DRUCKSCHEIBE	C- 924305-010V
					C- 736600-020V
4- 529913		KOLV	PISTON	KOLBEN	C- 924305-010V
4- 529914		RATT	SHIFTER HANDLE	RAD	C- 736600-020V
3- 529916		VENTILKROPP	LATERAL BODY VALVE	VENTIL	C- 736600-020V
3- 529925		VENTIL KROPP	VALVE BODY	VENTIL	C- 736600-020V
3- 529926		KÅPA	COVER	DECKEL	C- 560858-010V
4- 529927		KOLVSTÅNG	PISTON ROD	KOLBENSTANGE	C- 560858-010V
C- 529933-0101	15651 91-04-02	ÖVRE PÅFYLLNINGSRÖR	UPPER FILLING TUBE	FUELLROHR	C- 560858-010V
					C- 560459-010V
					C- 560460-010V
C- 529933-0201	16396 92-02-05	ÖVRE PÅFYLLNINGSRÖR	UPPER FILLING TUBE	FUELLROHR	C- 560886-010V
					C- 560459-020V
					C- 560460-020V
C- 529935-0101	14983 90-06-07	NEDRE PÅFYLLNINGSRÖR	LOWER FILLING TUBE	FUELLROHR	C- 560886-020V
					C- 560459-010V
					C- 560459-020V
					C- 560460-010V
					C- 560460-020V
					C- 560886-010V
					C- 560886-020V
4- 529937		ANSLUTNINGSPLÅT	ATTACHMENT PLATE	ANSCHLUSSBLECH	C- 735183-020V
4- 529938		ANSLUTNINGSPLÅT	ATTACHMENT PLATE	ANSCHLUSSBLECH	C- 735183-020V
3- 529941		FÄSTE	BRACKET	BEFESTIGUNGSHALTER	C- 735265-010V
2- 529943		UTJÄMNINGSRÖR	EQUALIZING PIPE	ROHR	C- 735265-010V
2- 529945		RÖR	PIPE	ROHR	C- 735265-010V
2- 529946		RÖR	PIPE	ROHR	C- 735265-010V
1- 529947		LÅDA	BOX	KASTEN	C- 735183-020V
3- 529948		LÅDA	BOX	KASTEN	C- 735031-010V
4- 529972		RÖR	PIPE	ROHR	C- 794178-010V
4- 529990		STÖD	SUPPORT	STUETZE	C- 736797-010V
4- 529993		BRICKA	WASHER	SCHEIBE	C- 736797-010V
2- 530518		DISTANS	SPACER	DISTANZ	C- 237776-040V
2- 530519		BAKSTYCKE, GOLV	BACK PIECE, FLOOR	HINTERTEIL	C- 229400-070V
4- 530551		BRICKA	WASHER	SCHEIBE	C- 751406-010V
3- 530587		BRICKA	WASHER	SCHEIBE	C- 539211-010V
3- 530588		TÄTRING	SEAL RING	DICHTUNGSRING	SP- 499255-020V
					C- 539211-010V
					C- 271169-040V
					C- 272337-040V
					C- 794243-010V
3- 530589		TÄTRING	SEAL RING	DICHTUNGSRING	C- 924991-010V
					SP- 499255-020V
					C- 539209-010V
					C- 539210-010V
					C- 794213-010V
					C- 794244-010V
3- 530590		VENTILKÄGLA	VALVE CONE	VENTILKEGEL	RK- 978528-010V
					C- 539209-010V
					C- 539210-010V
					C- 794213-010V
3- 530591		TÄTRINGSHÅLLARE	HOLDER	HALTER	C- 539210-010V
3- 530592		TÄTRINGSHÅLLARE	SEAL RING HOLDER	HALTER	C- 539209-010V
4- 530597		BRICKA	WASHER	SCHEIBE	C- 539210-010V
4- 530598		TÄTRINGSBRICKA	WASHER	SCHEIBE	C- 539210-010V
4- 530599		RING	RING	RING	C- 539210-010V
2- 530775		ÄNDSTYCKE	END PIECE	ENDST~CK	C- 237776-040V
3- 530776		PAPPERSSKYDD	PAPER GUARD	PAPIERSCHUTZ	C- 237776-040V
3- 530777		GALLER	GRILL	GITTER	C- 237776-040V
4- 530784		RÖRKLAMMER	PIPE CLAMP	ROHRKLAMMER	C- 237776-040V
3- 530785		PAPPERSSKYDD	PAPER GUARD	PAPIERSCHUTZ	C- 237776-040V

PART NO	LAST ECN	BENÄMNING	TITLE	BENENNUNG	GROUP NO
2- 531139		KONSOL	CANTILEVER	KONSOLE	C- 229400-070V
					C- 479821-010V
C- 531345-0101	8893 86-03-18	PERSONLIG SKYDDSUTR. H2O	PERSONAL PROTECT. EQ H2O	SCHUTZAUSRUESTUNG	B- 648109-100V
2- 531638		KURVA	CURVE	KURVE	C- 476349-030V
4- 531641		BROMSHYLSA	BRAKE SLEEVE	BREMSHUELSE	C- 554360-020V
4- 531642		NAV	HUB	NABE	C- 554360-020V
4- 531644		DISTANS	SPACER	DISTANZ	C- 554360-020V
4- 531652		DISTANS	SPACER	DISTANZ	C- 457853-030V
1- 531661		TÄCKPLÅT	COVERING PLATE	DECKBLECH	C- 469635-010V
2- 531671		LOCK	LID	DECKEL	C- 457857-030V
3- 531730		FLÄNSPACKNING	FLANGE SEAL	FLANSCHPACKUNG	CR- 256547-040V
4- 531731		PACKNING	GASKET	DICHTUNG	C- 271181-040V
4- 531732		PACKNING	GASKET	DICHTUNG	C- 272408-050V
4- 531733		PACKNING	GASKET	DICHTUNG	C- 295668-030V
					C- 295891-030V
4- 531734		PACKNING	GASKET	DICHTUNG	C- 295668-030V
					C- 295891-030V
4- 531735		PACKNING	GASKET	DICHTUNG	C- 295668-030V
					C- 295891-030V
4- 531736		PACKNING	GASKET	DICHTUNG	C- 295668-030V
					C- 295891-030V
4- 531742		PACKNING	GASKET	DICHTUNG	C- 560858-010V
					C- 272337-040V
					C- 272407-020V
					C- 295778-040V
					C- 456976-050V
					C- 469452-030V
3- 531908		DISTANS	SPACER	DISTANZ	C- 751800-020V
4- 531909		GAVEL	END SECTION	STIRNWAND	C- 476349-030V
4- 531911		ARM	ARM	ARM	C- 554360-020V
4- 531974-0001		FÄSTE	BRACKET	BEFESTIGUNGSHALTER	C- 554360-020V
4- 531975-0001		ARM	ARM	ARM	C- 554360-020V
4- 531976		NAV	HUB	NABE	C- 554360-020V
4- 531978		PINNBULT	STUD BOLT	STIFTBOLZEN	C- 476349-030V
4- 531979		TAPP	DOWEL	ZAPFEN	C- 554360-020V
4- 532016		FJÄDER	SPRING	FEDER	C- 554360-020V
3- 532017		FÄSTKLACK	MOUNTING LUG	BEFESTIGUNGSHACKEN	C- 283604-020V
4- 532020		LÅSBRICKA	LOCK WASHER	SCHLIESSCHEIBE	C- 544420-010V
4- 532021		LÅSBYGEL	LOCKING LOOP	SCHLIESSB~GEL	C- 544420-010V
4- 532022		LÅSLINJAL	LOCK BAR	SPERRSCHIENE	C- 544420-010V
4- 532095		FJÄDERFÄSTE	SPRING BRACKET	FEDERHALTER	C- 544420-010V
G1- 532117		KLÄMRING	CLAMP RING	KLEMMRING	C- 283604-020V
G1- 532118		KLÄMRING	CLAMP RING	KLEMMRING	C- 541163-010V
					C- 541164-010V
3- 532183-0001		BRYTRULLE	BENDING ROLLER	UMLENKROLLE	C- 541164-020V
3- 532183-0002		BRYTRULLE	BENDING ROLLER	UMLENKROLLE	C- 533844-010V
3- 532183-0003		BRYTRULLE	BENDING ROLLER	UMLENKROLLE	C- 533844-010V
3- 532184-0001		AXEL	SHAFT	WELLE	C- 533844-010V
3- 532184-0002		AXEL	SHAFT	WELLE	C- 533844-010V
3- 532185		FÄSTGAVEL	BRACKET	BEFESTIGUNGSHALTER	C- 533844-010V
3- 532186		GAVEL	END SECTION	STIRNWAND	C- 533844-010V
3- 532187		FLÄNS	FLANGE	FLANSCH	C- 533844-010V
4- 532188		FLÄNS	FLANGE	FLANSCH	C- 533844-010V
4- 532205		LOCK	LID	DECKEL	C- 751398-020V
4- 532206		PACKNING	GASKET	DICHTUNG	C- 751398-020V
3- 532208		AXEL	SHAFT	WELLE	RK- 532210-010V
3- 532209		PLÅT	SHEET	BLECH	RK- 532210-010V
RK- 532210-0101	16356 91-05-15	TRANSPORTVAGN	TROLLEY	TRANSPORTWAGEN	C- 77091-040V
4- 532211		TAPP	DOWEL	ZAPFEN	RK- 532210-010V
3- 532231		AXEL	SHAFT	WELLE	C- 533844-010V
4- 532245		BUSSNING	BUSHING	BUCHSE	C- 533844-010V
3- 532330-0001		ARM	ARM	ARM	C- 476080-020V
3- 532330-0002		ARM	ARM	ARM	C- 476080-020V
4- 532348		SPINDELSTYRNING	SPINDLE GUIDE	SPINDELFUEHRUNG	C- 271169-040V
					C- 272337-040V
4- 532349		GLIDLAGER	PLAIN BEARING	GLEITLAGER	C- 271169-040V
					C- 272337-040V
4- 532443-0001		KOMPONENTER UTAN TP-NR	COMPONENTS WITHOUT TP-NO	KOMPONENTEN OHNE TP-NR	C- 67347-010V
3- 532655		VARNINGSSKYLT	CAUTION SIGN	WARNSCHILD	C- 527898-010V
2- 532676		PLÅT	SHEET	BLECH	C- 533014-010V
4- 532677		RÖR	PIPE	ROHR	C- 533014-010V
4- 532678		TAPP	DOWEL	ZAPFEN	C- 533014-010V
4- 532679		PLATTA	PLATE	PLATTE	C- 533014-010V
4- 532687		TOROIDSPOLE 1	TOROID COIL 1	SPULE	C- 67564-010V
4- 532688		TOROIDSPOLE 2	TOROID COIL 2	SPULE	C- 67565-010V
4- 532689		TOROIDSPOLE 3	TOROID COIL 3	SPULE	C- 67566-010V
4- 532690		TERMOSTATKABEL	THERMOSTAT CABLE	KABEL	C- 67567-010V
4- 532691		SPOLKROPP	COIL FORMER	SPULE	C- 67568-010V
4- 532692		SPOLE ENKELLAGRING	COIL SINGLE LAYER	SPULE	C- 67568-010V
3- 532693		BOTTENGAVEL	BOTTOM GABLE	STIRNWAND	C- 67569-010V
2- 532694		TANKSPOLE	TANK COIL	SPULE	C- 67569-010V
3- 532695		GAVEL	GABLE	STIRNWAND	C- 67569-010V
4- 532696		FJÄDERRING	RING SPRING	FEDERRING	C- 67569-010V
4- 532697		LINDNINGSHÅLLARE	WINDING HOLDER	HALTER	C- 67569-010V
3- 532698		MONTERINGSINSTRUKTION	ASSEMBLY INSTRUCTION	MONTIERUNGSINSTRUKTION	C- 67379-010V
4- 532699		TRANSFORMATORKÅPA	TRANSFORMER COVER	DECKEL	C- 67379-010V
4- 532700		STRÖMSKENA	BUSBAR, SECONDARY	STROMSCHIENE	C- 67379-010V
4- 532701		FÄSTBRICKA	FASTENING WASHER	SCHEIBE	C- 67379-010V
4- 532703		KYLFLÄNS V2	HEAT SINK V2	KUEHLBLECH	C- 67582-010V
4- 532704		MONTAGERITNING	MOUNTING DRAWING, CABLE	MONTAGEZEICHNUNG	C- 67379-010V
4- 532707		SPOLE	COIL FORMER	SPULE	C- 68474-010V

PART NO	LAST ECN	BENÄMNING	TITLE	BENENNUNG	GROUP NO
4- 532708		SPOLE	WINDING SPECIFICATION	SPULE	C- 68474-010V
4- 532709		GAVEL HÖGER	GABLE RIGHT	STIRNWAND	C- 67573-010V
					C- 67581-010V
4- 532710		PINNSKRUV	STUDSCREW	STIFTBOLZEN	C- 67573-010V
					C- 67581-010V
4- 532711		KYLPLÅT PLAN	HEAT SINK PLATE PLANE	KUEHLBLECH	C- 67573-010V
					C- 67581-010V
4- 532712		DISTANSPLÅT	DISTANCE PLATE	DISTANZBLECH	C- 67573-010V
					C- 67581-010V
4- 532714		MELLANBIT	SPACER PIECE	DISTANZBLOCK	C- 67379-010V
4- 532715		DISTANS	SPACER	DISTANZ	C- 67379-010V
3- 532716		UTGÅNGSTRANSFORMATOR	OUTPUT TRANSFORMER	TRAFO	C- 67574-040V
4- 532717		TRANSFORMATOR STYRKORT	TRANSFORMER CONTROL CARD	TRAFO	C- 67576-010V
C- 533014-0101	9292 86-09-08	LÄCKSÖKNINSUTRUSTNING	LEAK FINDING EQUIPMENT	MESSINSTRUMENT	C- 77091-040V
2- 533015		KOPPLINGSSCHEMA	WIRING DIAGRAM	KUPPLUNGSSCHALTPLAN	C- 533014-010V
3- 533169		MEMBRAN	DIAPHRAGM	MEMBRANE	SP- 499255-020V
					C- 539209-010V
4- 533183		STOLPE	POST	PFOSTEN	C- 794244-010V
3- 533373		FÄSTE	BRACKET	BEFESTIGUNGSHALTER	C- 546285-010V
1- 533374		INREDNING BOTTEN	FITMENT BOTTOM	EINSATZ	CR- 548331-010V
2- 533396-0007		AXEL	SHAFT	WELLE	C- 533905-010V
3- 533811		STANS (HÅL 21)	PUNCH (HOLE 21)	STANZE	C- 476349-030V
					C- 469316-020V
3- 533812		DYNA (HÅL 21)	DIE (HOLE 21)	SCHNITTPLATTE	CR- 548040-010V
					C- 469316-020V
4- 533838		NIT	RIVET	NIET	CR- 548040-010V
4- 533839		FILTER	FILTER	FILTER	C- 67578-010V
3- 533840		TÄTNING	GASKET	DICHTUNG	C- 67578-010V
4- 533841		TÄTNING	GASKET	DICHTUNG	C- 67578-010V
3- 533842		MONTAGERITNING	MOUNTING DRAWING	MONTAGEZEICHNUNG	C- 67578-010V
C- 533844-010V	9438 86-12-12	BRYTRULLAR	BENDING ROLLER	UMLENKROLLE	C- 67578-010V
C- 533905-0101	9292 86-09-08	VÄSKA	PONCH	TASCHE	B- 648118-090V
1- 533906		INREDNING LOCK	FITMENT COVER	EINSATZ	C- 533014-010V
4- 533972		INDIKATORKURVA	INDICATOR CURVE	KURVE	C- 533905-010V
4- 533973		ARM	ARM	ARM	C- 546285-010V
4- 534497		DISTANS	SPACER	DISTANZ	C- 546285-010V
4- 534634		RÖR	PIPE	ROHR	C- 546285-010V
4- 534635		VENTIL	VALVE	VENTIL	RK- 529345-010V
4- 534636		NIVÅGLAS	LEVEL GLASS	NIVEAUGLAS	RK- 529345-010V
3- 534637		ANSLUTNING	ATTACHMENT	ANSCHLUSS	RK- 529345-010V
4- 534691		MEMBRAN	DIAPHRAGM	MEMBRANE	RK- 529345-010V
1- 534692		STATIVDEL	FRAME SECTION	STATIVTEIL	RK- 529345-010V
2- 534693		PLATTA	PLATE	PLATTE	RK- 529345-010V
3- 534694		SUGRÖR	SUCTIONPIPE	SAUGLEITNUNG	RK- 529345-010V
4- 534695		VIKT	WEIGHT	GEWICHT	RK- 529345-010V
4- 534696		VENTIL	VALVE	VENTIL	RK- 529345-010V
4- 534697		VENTILHUS	VALVE HOUSING	VENTILGEHÄUSE	RK- 529345-010V
4- 534698		NIPPEL	NIPPLE	NIPPEL	RK- 529345-010V
3- 534762		VÄRMEPATRON	HEATING CARTRIDGE	HEIZPATRONE	C- 497534-030V
4- 534867		BEN	LEG	BEIN	C- 752958-010V
					C- 752959-010V
4- 534882		AXEL	SHAFT	WELLE	C- 237776-040V
4- 534888		FÄSTE	BRACKET	BEFESTIGUNGSHALTER	C- 497534-030V
2- 534890		STYRPLÅT	HEAD PLATE	FUEHRUNGSBLECH	C- 554360-020V
P3- 535528		INDUKTOR	INDUCTOR	INDUKTOR	C- 457866-030V
					C- 469316-020V
3- 535538		FLOTTÖR	FLOAT	SCHWIMMER	C- 794092-010V
					C- 924808-010V
3- 535539		FLOTTÖR	FLOAT	SCHWIMMER	C- 794092-010V
					C- 924808-010V
3- 535543		FLOTTÖR	FLOAT	SCHWIMMER	C- 794092-010V
					C- 924808-010V
4- 536374		BRICKA	WASHER	SCHEIBE	C- 554885-010V
					C- 491976-020V
3- 536485		RÄNNA	CHUTE	RINNE	CR- 548331-010V
3- 536486		STYRPLÅT	HEAD PLATE	FUEHRUNGSBLECH	CR- 548331-010V
3- 536487		PASSRING	FITTING RING	PASSTEIL	CR- 548040-010V
3- 536488		DYNA	DIE	SCHNITTPLATTE	C- 469316-020V
					CR- 548040-010V
4- 536489		STANS	PUNCH	STANZE	C- 469316-020V
					CR- 548040-010V
4- 536497		RULLE	ROLL	ROLLE	C- 566280-010V
3- 536693		FÄSTPLATTA	FASTENING PLATE	BEFESTIGUNGSPLATTE	C- 554885-010V
1- 536858		PLÅT	SHEET	BLECH	C- 536859-020V
C- 536859-0202	19421 93-03-09	PANEL	PANEL	PANEL	B- 648118-090V
2- 536860		FÄSTE	BRACKET	BEFESTIGUNGSHALTER	C- 536859-020V
3- 536900		INDUKTOR	INDUCTOR	INDUKTOR	C- 457866-030V
					C- 469316-020V
4- 537019		SKYDDSPLÅT	CIRCUIT BOARD PROT. FRON	SCHUTZBLECH	C- 67347-010V
4- 537021		MÖNSTERKORT	CIRCUIT BOARD	LEITERPLATTE	C- 67347-010V
4- 537022		DISTANSKLOTS	COOLING DISTANCE	DISTANZKLOTZ	C- 67347-010V
4- 537023		HÅLBORRNINGSRITNING	DRILLING PATTERN PANEL	ZEICHN. LOCHBOHRUNGEN	C- 67347-010V
4- 537308		FJÄDER	SPRING	FEDER	C- 434074-030V
					C- 434774-030V
					C- 434074-030V
					C- 434774-030V
					C- 434074-030V
4- 537327		AXEL	SHAFT	WELLE	C- 905130-010V
4- 537585		VERKT.F.INST.AV DRIVAXEL	TEMPLATE	MALL	C- 539375-010V
4- 537586		VERKTYG	TOOL	WERKZEUGE	C- 539375-010V
2- 537587		PLATTA	PLATE	PLATTE	C- 538421-010V

PART NO	LAST ECN	BENÄMNING	TITLE	BENENNUNG	GROUP NO
4- 537876		RULLE	ROLL	ROLLE	C- 566280-010V
4- 537889		VÄV	FABRIC	GEWEBE	C- 484984-020V
					C- 469316-020V
3- 538191		VÄRMESKENA	HEATING RAIL	WÄRMESCHIENE	CR- 283606-020V
4- 538418-0001		DISTANS	SPACER	DISTANZ	C- 469316-020V
4- 538418-0002		DISTANS	SPACER	DISTANZ	C- 538421-010V
4- 538418-0003		DISTANS	SPACER	DISTANZ	C- 538421-010V
4- 538418-0004		DISTANS	SPACER	DISTANZ	C- 538421-010V
4- 538418-0005		DISTANS	SPACER	DISTANZ	C- 538421-010V
4- 538418-0006		DISTANS	SPACER	DISTANZ	C- 538421-010V
4- 538419		STÖD	SUPPORT	STUETZE	C- 538421-010V
4- 538420-0001		MALL	TEMPLATE	MALL	C- 538421-010V
4- 538420-0002		MALL	TEMPLATE	MALL	C- 538421-010V
C- 538421-010V	10515 89-01-19	MALL FÖR VINDA	MOULD FOR REEL	MALL	C- 548467-010V
3- 538673		ARM	ARM	ARM	C- 469736-040V
3- 538674		FÄSTE	BRACKET	BEFESTIGUNGSHALTER	C- 469736-040V
4- 538681		NAV	HUB	NABE	C- 469736-040V
4- 538683		AXEL	SHAFT	WELLE	C- 469736-040V
4- 538684		ARM	ARM	ARM	C- 469736-040V
4- 538686		PLATTA	PLATE	PLATTE	C- 469736-040V
4- 538725-0003		AXEL	SHAFT	WELLE	C- 484858-030V
4- 538726		BRICKA	WASHER	SCHEIBE	C- 484858-030V
4- 538740-0003		DISTANS	SPACER	DISTANZ	C- 546285-010V
					C- 484858-030V
4- 538741		LÄPP	LIP	LIPPE	C- 546285-010V
					C- 469736-040V
1- 538976		MOTBACK	COUNTER JAW	GEGGEN BACKE	C- 469316-020V
1- 538977		MOTBACK	COUNTER JAW	GEGGEN BACKE	C- 497534-030V
4- 539197		FJÄDERFÄSTE	SPRING BRACKET	FEDERHALTER	C- 497534-030V
C- 539209-0101	14185 91-02-05	A-CYLINDER 2"	A-CYLINDER	ZYLINDER	C- 469736-040V
C- 539210-0101	14185 91-02-05	C-CYLINDER	C-CYLINDER	ZYLINDER	C- 440630-020V
C- 539211-0101	14185 91-02-05	B-CYLINDER	B-CYLINDER	ZYLINDER	C- 440630-020V
4- 539212		PACKNING	GASKET	DICHTUNG	C- 440630-020V
					C- 440630-020V
					SP- 499255-020V
3- 539213		HÅLLARE	HOLDER	HALTER	C- 794245-010V
1- 539347-0001		STÄMPLINGSÖVERSIKT	STAMPING SUMMARY	DOKUMENT	C- 490610-040V
					C- 293684-020V
					C- 293685-020V
					C- 293684-020V
					C- 293685-020V
C- 539375-0101	10515 89-01-19	VERKTYG F. INST.AV D-AXE	TOOL, REEL ADJUSTMENT	MALL	C- 293684-020V
3- 539642-0001		MOTHÅLL	DOLLY	GEGENHALTER	C- 548467-010V
					C- 457866-030V
3- 539642-0002		MOTHÅLL	DOLLY	GEGENHALTER	C- 469316-020V
					C- 497534-030V
					C- 457866-030V
4- 539691		KABEL	CABLE	KABEL	C- 469316-020V
4- 539728		BULT	BOLT	BOLZEN	C- 497534-030V
4- 539729		FÄSTE	BRACKET	BEFESTIGUNGSHALTER	C- 556672-010V
4- 540293		FRONTPLÅT	FRONT PLATE	FRONTBLECH	C- 554360-020V
4- 540294		TÄCKPLATTA	COVER PLATE HANDLE 6TE	DECKPLATTE	C- 554360-020V
					C- 68123-020V
4- 540299		KYLBLOCK	COOLING BLOCK	KUEHLBLOCK	C- 68123-030V
4- 540306-0001		KOMPONENTER UTAN TP-NR	COMPONENTS WITHOUT TP-NO	KOMPONENTEN OHNE TP-NR	C- 68123-020V
4- 540307		MÖNSTERKORT	PRINTED CIRCUIT BOARD	LEITERPLATTE	C- 68256-010V
4- 540708		REMSKIVA	PULLEY	RIEMENSCHEIBE	C- 68917-010V
4- 540719		HJUL	WHEEL	RAD	C- 68917-010V
					C- 554360-020V
4- 540892		RULLE	ROLL	ROLLE	C- 564120-010V
4- 541126		MOTGUMMI	COUNTER RUBBER	DRUCKGUMMI	C- 752030-010V
					CR- 548331-010V
C- 541163-0101	10455 87-11-11	KLÄMRING	CLAMP RING	KLEMMRING	CR- 283607-030V
					C- 469316-020V
C- 541164-0101	10455 87-11-11	KLÄMRING	CLAMP RING	KLEMMRING	C- 440630-020V
					C- 794245-010V
C- 541164-0201	12996 91-03-22	KLÄMRING	CLAMP RING	KLEMMRING	C- 440630-020V
4- 541165		BRICKA	WASHER	SCHEIBE	C- 794245-010V
					C- 924991-010V
4- 541165		BRICKA	WASHER	SCHEIBE	C- 541163-010V
					C- 541164-010V
3- 541166		BRICKA	WASHER	SCHEIBE	C- 541163-010V
					C- 541164-010V
4- 541167		DISTANSHYLSA	SPACER SLEEVE	DISTANZHUELSE	C- 541164-020V
					C- 539209-010V
2- 541246		INDUKTORFÄSTE	BRACKET	BEFESTIGUNGSHALTER	C- 794244-010V
2- 541666		HÖLJE	CASING	HUELLE	C- 539209-010V
4- 542028		DISTANS	AIR GAP DISTANCE	DISTANZ	C- 794244-010V
4- 542029		BLAD	COIL CORE SHEET	BLATT	C- 457866-030V
4- 542031		MELLANLÄGG	COIL FORMER: SEKTION	ZWISCHENLAGE	C- 68161-010V
4- 542036		MÄRKSKYLT	SIGN BOARD	SCHILD	C- 68161-010V
					C- 68161-010V
4- 542038-0002		KOMPONENTER UTAN TP-NR	COMPONENTS WITHOUT TP-NO	KOMPONENTEN OHNE TP-NR	C- 68161-010V
3- 542039		CYLINDER	COIL FORMER: CYLINDER	ZYLINDER	C- 67600-050V
4- 542040		KABEL	CONNECTION CABLE	KABEL	C- 67379-010V
4- 542041		KABELANSLUTNING	INSIDE CONNECTION CABLE	KABELANSCHLUSS	C- 67388-010V
4- 542044		RULLE	ROLL	ROLLE	C- 68161-010V
2- 542063		FLÄNS	FLANGE	FLANSCH	C- 68161-010V
					C- 68161-010V
					C- 566280-010V
					C- 751689-010V

PART NO	LAST ECN	BENÄMNING	TITLE	BENENNUNG	GROUP NO
4- 542084		TRYCKRULLE	PRESSURE ROLLER	DRUCKROLLE	C- 566280-010V
4- 542085		PINNE	PEG	STIFT	C- 566280-010V
4- 542270		FÄSTE	BRACKET	BEFESTIGUNGSHALTER	C- 554360-020V
4- 542648-0001		PACKNINGSBESKRIVNING	PACKING DESCRIPTION	VERS.PACKUNGSBESCHREIBUN	C- 499082-010V
3- 542828		PLATTA	PLATE	PLATTE	C- 497534-030V
2- 542829		HÅLLARE	HOLDER	HALTER	C- 497534-030V
4- 543088		VRED	COCK HANDLE	GRIFF	C- 566280-010V
4- 543092		RULLFÄSTE	ROLLER BRACKET	ROLLENBEFESTIGUNG	CR- 548040-010V
3- 543111		MÖNSTERKORT	PRINTED CIRCUIT BOARD	LEITERPLATTE	C- 67379-010V
4- 543112		MODIFIERING EUROPAKONTAK	MODIFYING EUROPECONNECTO	KONTAKT	C- 67577-050V
4- 543115		FIXERINGSPLÅT	FASTENING PLATE	BLECH	C- 67379-010V
2- 543117		PANEL	PANEL	PANEL	C- 67580-020V
3- 543118		FRONTPANEL MONTERINGS RT	FRONT PANEL MOUNTING DWG	MONTAGEZEICHNUNG	C- 67580-020V
2- 543119		MELLANVÄGG	PARTITION WALL	WAND	C- 67578-010V
3- 543120		MELLANVÄGG	PARTITION WALL	WAND	C- 67578-010V
3- 543135		SPRIDARRULLE	INK TRANSFER ROLLER	SPRUEHERROLLE	C- 434074-030V
					C- 434774-030V
					C- 434074-030V
					C- 434774-030V
					C- 434074-030V
4- 543141		SKYLT	SIGN	SCHILD	C- 543143-010V
4- 543142		SKYLT	SIGN	SCHILD	C- 543143-010V
C- 543143-0101	10835 88-09-30	JUSTERINGSANORDNING	ADJUSTMENTMENT DEVICE	EINSTELLER	C- 752645-020V
					C- 752646-020V
					C- 752913-010V
					C- 752914-010V
4- 543144-0001		MONTERINGSANVISNING	ASSEMBLY DESCRIPTION	MONTIERUNGSINSTRUKTION	C- 543143-010V
3- 543173		PLATTA	PLATE	PLATTE	C- 484984-020V
4- 543174		MOTHÅLL	DOLLY	GEGENHALTER	C- 484984-020V
3- 543175		MOTBACK	COUNTER JAW	GEGGEN BACKE	C- 484984-020V
4- 543178		RULLE	ROLL	ROLLE	C- 484984-020V
4- 543180		RULLE	ROLL	ROLLE	C- 484984-020V
4- 543181		FÄSTE	BRACKET	BEFESTIGUNGSHALTER	C- 547756-010V
4- 543182		AXEL	SHAFT	WELLE	C- 547756-010V
4- 543185		LÅSTRÅD	LOCKING WIRE	VERSCHLUSSDRAHT	C- 484984-020V
					C- 469316-020V
4- 543186		RULLE	ROLL	ROLLE	C- 484984-020V
4- 543188		RULLE	ROLL	ROLLE	C- 484984-020V
4- 543191		RULLE	ROLL	ROLLE	C- 484984-020V
3- 543192		STYRSKENA	STEERING RAIL	FUEHRUNGSSCHIENE	C- 484984-020V
3- 543196		VÄRMESKENA	HEATING RAIL	WÄRMESCHIENE	CR- 283606-020V
					C- 469316-020V
2- 543197		KAMKURVA	CAM BEND	NOCKENKURVE	C- 476349-030V
4- 543275		MONTERINGSINSTRUKTION	ASSEMBLY INSTRUCTION	MONTIERUNGSINSTRUKTION	C- 499082-010V
4- 543324-0001		KOMPONENTER UTAN TP-NR	COMPONENTS WITHOUT TP-NO	KOMPONENTEN OHNE TP-NR	C- 67386-010V
4- 543325		FRONTPLÅT	FRONT PANEL 5TE	FRONTBLECH	C- 67386-010V
4- 543326		TÄCKPL. FÖR HANDTAG 5TE	COVERPLATE HANDLE 5TE	DECKPLATTE	C- 67386-010V
					C- 68450-010V
					C- 67386-010V
					C- 68450-010V
					C- 67386-010V
3- 543327		TÄCKPLATTA	COVER PLATE CIRCUIT CARD	DECKPLATTE	C- 67386-010V
4- 543329-0001		KOMPONENTER UTAN TP-NR	COMPONENTS WITHOUT TP-NO	KOMPONENTEN OHNE TP-NR	C- 67389-010V
4- 543330		MÖNSTERKORT	PRINTED CIRCUIT BOARD	LEITERPLATTE	C- 67389-010V
4- 543331		KYLBLOCK	COOLING DISTANCE BLOCK	KUEHLBLOCK	C- 67389-010V
4- 543334		MÖNSTERKORT	PRINTED CIRCUIT BOARD	LEITERPLATTE	C- 68256-010V
4- 543339-0001		KOMPONENTER UTAN TP-NR	COMPONENTS WITHOUT TP-NO	KOMPONENTEN OHNE TP-NR	C- 68510-010V
4- 543346		KRETSKORT	CIRCUIT BOARD	SCHALTKARTE	C- 68510-010V
4- 543347-0001		KOMPONENTER UTAN TP-NR	COMPONENTS WITHOUT TP-NO	KOMPONENTEN OHNE TP-NR	C- 68123-020V
3- 543348		TÄCKPLATTA	COVER PLATE	DECKPLATTE	C- 68123-020V
4- 543349-0001		KOMPONENTER UTAN TP-NR	COMPONENTS WITHOUT TP-NO	KOMPONENTEN OHNE TP-NR	C- 68256-010V
4- 543371		MÖNSTERKORT	CIRCUIT BOARD 8TE	LEITERPLATTE	C- 68262-010V
4- 543372		MÖNSTERKORT	CIRCUIT BOARD 6TE	LEITERPLATTE	C- 68263-010V
4- 543373		MÖNSTERKORT	CIRCUIT BOARD 5TE	LEITERPLATTE	C- 68264-010V
4- 543470		NIVÅGLAS	LEVEL GLASS	NIVEAUGLAS	C- 256014-060V
3- 543578		INDUKTOR	INDUCTOR	INDUKTOR	C- 457866-030V
					C- 469316-020V
4- 543612		FJÄDER	SPRING	FEDER	C- 469736-040V
					C- 469316-020V
3- 543813		PLINT X551	TERMINAL X551	GRUNDPLATTE	CE- 557222-010V
3- 543874		TÄCKPLATTA	COVER PLATE:CIRCUIT CARD	DECKPLATTE	C- 68447-020V
4- 543875-0001		KOMPONENTER UTAN TP-NR	COMPONENTS WITHOUT TP-NO	KOMPONENTEN OHNE TP-NR	C- 68448-020V
4- 543876		CIRCUIT BOARD SPEC	PRINTED CIRCUIT BOARD	LEITERPLATTE	C- 68448-020V
4- 543877-0001		KOMPONENTER UTAN TP-NR	COMPONENTS WITHOUT TP-NO	KOMPONENTEN OHNE TP-NR	C- 68449-020V
4- 543878		CIRCUIT BOARD SPEC.	PRINTED CIRCUIT BOARD	LEITERPLATTE	C- 68449-020V
4- 543879		KYLBLOCK	COOLING DISTANCE BLOCK	KUEHLBLOCK	C- 68448-020V
4- 543880		MÖNSTERKORT	PRINTED CIRCUIT BOARD	LEITERPLATTE	C- 68451-010V
4- 543881		MÖNSTERKORT	PRINTED CIRCUIT BOARD	LEITERPLATTE	C- 68452-010V
4- 543884-0001		KOMPONENTER UTAN TP-NR	COMPONENTS WITHOUT TP-NO	KOMPONENTEN OHNE TP-NR	C- 68444-010V
4- 543897-0001		KOMPONENTER UTAN TP-NR	COMPONENTS WITHOUT TP-NO	KOMPONENTEN OHNE TP-NR	C- 68450-010V
4- 543898		FRONTPLÅT	FRONT PANEL 14TE	FRONTBLECH	C- 68450-010V
3- 543899		KYLKROPP	COOLING FLANGE	KUEHLKÖRPER	C- 68450-010V
4- 543900		KYLBLOCK	COOLING FLANGE DISTANCE	KUEHLBLOCK	C- 68450-010V
4- 543901		KYLBLOCK	COOLING BLOCK	KUEHLBLOCK	C- 68450-010V
4- 543902		MÄRKSKYLT	SIGN BOARD	SCHILD	C- 68450-010V
4- 543903-0001		KOMPONENTER UTAN TP-NR	COMPONENTS WITHOUT TP-NO	KOMPONENTEN OHNE TP-NR	C- 68451-010V
4- 543921-0001		KOMPONENTER UTAN TP-NR	COMPONENTS WITHOUT TP-NO	KOMPONENTEN OHNE TP-NR	C- 68445-010V
4- 543921-0002		KOMPONENTER UTAN TP-NR	COMPONENTS WITHOUT TP-NO	KOMPONENTEN OHNE TP-NR	C- 68445-010V
4- 543921-0003		KOMPONENTER UTAN TP-NR	COMPONENTS WITHOUT TP-NO	KOMPONENTEN OHNE TP-NR	C- 68445-010V
4- 543921-0004		KOMPONENTER UTAN TP-NR	COMPONENTS WITHOUT TP-NO	KOMPONENTEN OHNE TP-NR	C- 68445-010V
4- 543921-0005		KOMPONENTER UTAN TP-NR	COMPONENTS WITHOUT TP-NO	KOMPONENTEN OHNE TP-NR	C- 68445-010V
4- 543921-0006		KOMPONENTER UTAN TP-NR	COMPONENTS WITHOUT TP-NO	KOMPONENTEN OHNE TP-NR	C- 68445-010V

PART NO	LAST ECN	BENÄMNING	TITLE	BENENNUNG	GROUP NO
4- 543924		TÄCKPLATTA	COVER PLATE:HANDLE 8TE	DECKPLATTE	C- 68471-010V
					C- 68447-020V
4- 543926-0001		KOMPONENTER UTAN TP-NR	COMPONENTS WITHOUT TP-NO	KOMPONENTEN OHNE TP-NR	C- 67058-030V
4- 543932-0001		KOMPONENTER UTAN TP-NR	COMPONENTS WITHOUT TP-NO	KOMPONENTEN OHNE TP-NR	C- 68447-020V
4- 543933		FRONTPLÅT	FRONT PANEL 8TE	FRONTBLECH	C- 68447-020V
3- 544370		LIST	RIM	LEISTE	C- 548057-010V
4- 544371		FÄSTE	BRACKET	BEFESTIGUNGSHALTER	C- 548057-010V
4- 544372		FÄSTE	BRACKET	BEFESTIGUNGSHALTER	C- 548057-010V
3- 544373		SKYDD	PROTECTION	SCHUTZ	C- 548057-010V
3- 544374		SKYDD	PROTECTION	SCHUTZ	C- 548057-010V
4- 544375		FÄSTE	BRACKET	BEFESTIGUNGSHALTER	C- 548057-010V
2- 544376		DÖRR	DOOR	TUER	C- 548057-010V
3- 544378		KONSOL	CANTILEVER	KONSOLE	C- 548057-010V
1- 544386		LÅDA	BOX	KASTEN	C- 544389-010V
3- 544387		PANEL	PANEL	PANEL	C- 544389-010V
3- 544388		PACKNING	GASKET	DICHTUNG	C- 544389-010V
C- 544389-0101	14969 90-08-08	MANÖVERPANEL	CONTROL PANEL	MANÖVERPANEL	C- 548057-010V
C- 544390-0101	15283 90-10-31	KOPPLINGSLÅDA	CONNECTION BOX	KUPPLUNGSKASTEN	C- 548057-010V
C- 544393-0101	13825 90-03-06	TILLBEHÖR VARMPRÄGLING	ACCESSORIES HOT FOIL DAT	ZUBEHÖR	C- 77091-040V
3- 544414		INDUKTOR	INDUCTOR	INDUKTOR	C- 457866-030V
					C- 469316-020V
C- 544420-0101	15283 90-10-31	SKARVAPPARAT	SPLICING APPARATUS	VERBINDUNGSANORDNUNG	C- 546285-010V
1- 544421		SKARVBORD	SPLICING TABLE	VERBINDUNGSTISCH	C- 544420-010V
3- 544422		KNIV	KNIFE	MESSER	C- 544420-010V
3- 544424		HANDTAG	HANDLE	GRIFF	C- 544420-010V
4- 544425		STOPPKLACK	STOP LUG	STOPPABSATZ	C- 544420-010V
4- 544426		LÅSHANDTAG	LOCK GRIP	SCHLIESSHANDGRIFF	C- 544420-010V
4- 544427		VRIDFJÄDER	TURN SPRING	DREHFEDER	C- 544420-010V
4- 544428		PLÅT	SHEET	BLECH	C- 544420-010V
4- 544448		PINNE	PEG	STIFT	C- 484984-020V
4- 544449		FÄSTE	BRACKET	BEFESTIGUNGSHALTER	C- 490600-040V
4- 544450		FÄSTE	BRACKET	BEFESTIGUNGSHALTER	C- 490600-040V
4- 544451		PINNE	PEG	STIFT	C- 484984-020V
4- 544454		FÄSTE	BRACKET	BEFESTIGUNGSHALTER	C- 469736-040V
3- 544456		FLÄNS	FLANGE	FLANSCH	C- 554360-020V
3- 544457		KNIV	KNIFE	MESSER	C- 484984-020V
4- 544458		ARM	ARM	ARM	C- 469736-040V
4- 544459		FÄSTE	BRACKET	BEFESTIGUNGSHALTER	C- 469736-040V
4- 544460		BYGEL	BOW CLAMP	BUEGEL	C- 469736-040V
4- 544461		FJÄDERFÄSTE	SPRING BRACKET	FEDERHALTER	C- 469736-040V
2- 544463		DRIVRULLE	DRIVE ROLLER	TRIEBROLLE	C- 456688-020V
4- 544464		BRICKA	WASHER	SCHEIBE	CR- 548040-010V
1- 544526		MASKINSKYLT TB	MACHINE PLATE TB	MASCHINENSCHILD	C- 544536-010V
1- 544527		MASKINSKYLT TBA	MACHINE PLATE TBA	MASCHINENSCHILD	C- 544536-010V
4- 544533		FÄSTDON	PLASTIC PEHD 21172-10	BEFESTIGUNGSANORDNUNG	C- 544536-010V
C- 544536-0101	14331 92-03-24	SKYLTSATS TB	SET OF SIGNS	SCHILDERSATZ	C- 456457-040V
					C- 752960-010V
					C- 752971-010V
C- 544536-0102	14331 92-03-24	SKYLTSATS TBA	SET OF SIGNS	SCHILDERSATZ	C- 456458-040V
					C- 751860-020V
3- 544539		HOUSEMARK	HOUSEMARK	SCHILD	C- 544540-010V
					C- 978280-010V
					C- 554891-010V
					C- 978280-010V
C- 544540-0101	12850 89-11-09	HOUSEMARKSSKYLTSATS	HOUSEMARKS SET OF SIGNS	SCHILDERSATZ	C- 271442-030V
4- 544730		RULLE	ROLL	ROLLE	C- 441000-050V
3- 544781		RÄNNA	CHUTE	RINNE	C- 484984-020V
4- 544782		MUTTER	NUT	MUTTER	C- 484984-020V
4- 544864		BRICKA	WASHER	SCHEIBE	C- 752567-010V
4- 544894		FJÄDER	SPRING	FEDER	C- 529933-010V
					C- 529933-020V
					C- 529933-010V
					C- 529933-020V
					C- 529933-010V
					C- 529933-020V
					C- 469091-030V
3- 544906		MAGNETVENTIL	SOLENOID VALVE	MAGNETVENTIL	C- 272623-050V
4- 545444		RULLE	ROLL	ROLLE	C- 484984-020V
4- 545445		RULLE	ROLL	ROLLE	C- 484984-020V
4- 545446		RULLE	ROLL	ROLLE	C- 484984-020V
3- 545450		RÄNNA	CHUTE	RINNE	C- 484984-020V
3- 545452		STYRSKENA	STEERING RAIL	FUEHRUNGSSCHIENE	C- 484984-020V
4- 545453		MOTHÅLL	DOLLY	GEGENHALTER	C- 484984-020V
3- 545454		PLATTA	PLATE	PLATTE	C- 484984-020V
2- 545455		SLID	SLIDE	SCHIEBER	C- 547756-010V
3- 545456		KNIV	KNIFE	MESSER	C- 484984-020V
4- 545460		RULLE	ROLL	ROLLE	C- 484984-020V
3- 545461		VÄRMEBACK	HEATING JAW	HEIZBACKE	C- 484984-020V
4- 545464		RULLE	ROLL	ROLLE	C- 469736-040V
					C- 566282-010V
					C- 490610-040V
4- 545465		RULLE	ROLL	ROLLE	C- 469736-040V
					C- 490610-040V
4- 545466		AXEL	SHAFT	WELLE	C- 469736-040V
4- 545467		AXEL	SHAFT	WELLE	C- 469736-040V
4- 545468		AXEL	SHAFT	WELLE	C- 490610-040V
3- 546126		HÅLLARE	HOLDER	HALTER	CR- 548331-010V
3- 546256		BOBINHÅLLARE	BOBBIN HOLDER	SPULENHALTER	C- 484858-030V
					C- 546285-010V
C- 546285-0101	15283 90-10-31	MAGASIN	MAGAZINE	MAGASIN	B- 648118-090V
2- 546286		BALK	BEAM	BALKEN	C- 546285-010V
2- 546287		BALK	BEAM	BALKEN	C- 546285-010V

PART NO	LAST ECN	BENÄMNING	TITLE	BENENNUNG	GROUP NO
2- 546288		GLIDSKENA	SLIDE RAIL	GLEITSCHIENE	C- 546285-010V
3- 546290		BALK	BEAM	BALKEN	C- 546285-010V
3- 546291		FÄSTE	BRACKET	BEFESTIGUNGSHALTER	C- 546285-010V
3- 546292		FÄSTE	BRACKET	BEFESTIGUNGSHALTER	C- 546285-010V
3- 546293		BALK	BEAM	BALKEN	C- 546285-010V
3- 546294		BALK	BEAM	BALKEN	C- 546285-010V
3- 546295		BALK	BEAM	BALKEN	C- 546285-010V
3- 546296		BALK	BEAM	BALKEN	C- 546285-010V
3- 546297		BALK	BEAM	BALKEN	C- 546285-010V
4- 546298		AXEL	SHAFT	WELLE	C- 544420-010V
					C- 546285-010V
4- 546299		AXEL	SHAFT	WELLE	C- 546285-010V
4- 546300		RULLE	ROLL	ROLLE	C- 546285-010V
4- 546301		RULLE	ROLL	ROLLE	C- 544420-010V
					C- 546285-010V
4- 546302		KLOTS	BLOCKING PIECE	KLOTZ	C- 546285-010V
4- 546303		AXEL	SHAFT	WELLE	C- 546285-010V
4- 546304		STOPPKLACK	STOP LUG	STOPPABSATZ	C- 546285-010V
4- 546305		PLÅT	SHEET	BLECH	C- 546285-010V
4- 546306		AXEL	SHAFT	WELLE	C- 546285-010V
4- 546307		RULLE	ROLL	ROLLE	C- 546285-010V
1- 546310		HUV	HOOD	HAUBE	C- 457853-030V
1- 546311		VÄNSTER BEN BAK	LEFT LEG REAR	BEIN	C- 457881-030V
1- 546313		HÖGER BEN BAK	RIGHT LEG REAR	BEIN	C- 457881-030V
2- 546315		LOCK	LID	DECKEL	C- 457881-030V
2- 546316		LOCK	LID	DECKEL	C- 457867-020V
2- 546317		LOCK	LID	DECKEL	C- 457867-020V
2- 546318		LOCK	LID	DECKEL	C- 457867-020V
1- 546320		SCHEMA PNEUMATIK	PNEUMATIC DIAGRAM	PNEUMATIKPLAN	B- 648109-100V
1- 546321		STATIV	MACHINE BODY	STATIV	C- 548057-010V
C- 547601-010V	15550 91-01-09	PAPPERSSTYRNING	PAPER GUIDE	PAPIERSTUETZE	B- 648118-090V
3- 547602		STYRSKENA	STEERING RAIL	FUEHRUNGSSCHIENE	C- 547601-010V
3- 547603		STYRSKENA	STEERING RAIL	FUEHRUNGSSCHIENE	C- 547601-010V
3- 547604		STYRSKENA	STEERING RAIL	FUEHRUNGSSCHIENE	C- 547601-010V
4- 547740		RULLE	ROLL	ROLLE	C- 469736-040V
					C- 566282-010V
4- 547741		RULLE	ROLL	ROLLE	C- 490610-040V
					C- 469736-040V
4- 547742		AXEL	SHAFT	WELLE	C- 490610-040V
4- 547743		AXEL	SHAFT	WELLE	C- 469736-040V
4- 547744		AXEL	SHAFT	WELLE	C- 469736-040V
4- 547745		RULLE	ROLL	ROLLE	C- 490610-040V
					C- 469736-040V
					C- 566282-010V
4- 547746		RULLE	ROLL	ROLLE	C- 490610-040V
					C- 546285-010V
					C- 469736-040V
4- 547747		AXEL	SHAFT	WELLE	C- 490610-040V
4- 547748		AXEL	SHAFT	WELLE	C- 546285-010V
4- 547749		AXEL	SHAFT	WELLE	C- 469736-040V
C- 547756-0101	15550 91-01-09	BOBIN	BOBBIN	SPULE	C- 469736-040V
2- 547907		GAVEL HÖGER	GABLE RIGHT	STIRNWAND	C- 490610-040V
2- 547908		GAVEL VÄNSTER	GABLE LEFT	STIRNWAND	C- 490600-040V
2- 547909		GALLER	GRILL	GITTER	C- 229400-070V
1- 547928		SKENA	RAIL	SCHIENE	C- 229400-070V
1- 547929		STÖD ÖVRE	SUPPORT UPPER	STUETZE	C- 229400-070V
1- 547931		STÖD NEDRE	SUPPORT LOWER	STUETZE	C- 457937-020V
1- 547932		PLATTJÄRN NEDRE	FLATBAR LOWER	FLACHEISEN	C- 457937-020V
3- 547934		GLASRUTA	GLASS PANE	GLASSCHEIBE	C- 457937-020V
4- 547935		ÄNDSTYCKE	END PIECE	ENDST~CK	C- 457937-020V
1- 548021		STATIV V0125	MACHINE BODY	STATIV	C- 457937-020V
1- 548022		STATIV V0180	MACHINE BODY	STATIV	C- 457867-020V
1- 548023		STATIV V0200	MACHINE BODY	STATIV	C- 457867-020V
1- 548024		STATIV V0236	MACHINE BODY	STATIV	C- 457867-020V
1- 548025		STATIV V0250	MACHINE BODY	STATIV	C- 457867-020V
1- 548026		STATIV V0284	MACHINE BODY	STATIV	C- 457867-020V
1- 548027		STATIV V0200ML SLIM	MACHINE BODY	STATIV	C- 457867-020V
2- 548028		PLATTA	PLATE	PLATTE	C- 457867-020V
3- 548029		LAGERBOCK	BEARING BRACKET	LAGERBOCK	C- 548057-010V
3- 548030		PLATTA	PLATE	PLATTE	C- 548057-010V
C- 548031-0201	19421 93-03-09	SLANGDRAGNING	HOSE INSTALLATION	SCHLAUCH INSTALLATION	C- 548057-010V
3- 548033		RÖR	PIPE	ROHR	B- 648118-090V
3- 548034		RÖR	PIPE	ROHR	C- 548031-020V
3- 548035		FÄSTE	BRACKET	BEFESTIGUNGSHALTER	C- 548031-020V
4- 548036		RÖR	PIPE	ROHR	C- 548031-020V
2- 548037		STÖD	SUPPORT	STUETZE	C- 548031-020V
2- 548038		STÖD	SUPPORT	STUETZE	C- 547601-010V
2- 548039		STÖD	SUPPORT	STUETZE	C- 547601-010V
CR- 548040-010V	15121 90-09-26	STANS	PUNCH	STANZE	C- 547601-010V
3- 548041		FÄSTE	BRACKET	BEFESTIGUNGSHALTER	B- 648118-090V
4- 548043		KLÄMMA	CLAMPING PIECE	KLAMMER	C- 548057-010V
4- 548044		LAGERBRICKA	WASHER BEARING	LAGERSCHEIBE	C- 548057-010V
3- 548046		STÅNG	ROD	STANGE	C- 548057-010V
4- 548047		STÅNG	ROD	STANGE	C- 548057-010V
4- 548048		STÅNG	ROD	STANGE	C- 548057-010V
2- 548049		PLATTA	PLATE	PLATTE	C- 548057-010V
4- 548051		PLATTA	PLATE	PLATTE	C- 548057-010V
C- 548057-010V	15550 91-01-09	DATUMVERK	DATING UNIT	DATUMWERK	B- 648118-090V
CR- 548331-010V	15283 90-10-31	PULLTABMATARE	PULL TAB FEED	PULLTAB ZUSCHIEBER	B- 648118-090V
4- 548332		AXEL	SHAFT	WELLE	CR- 548331-010V

PART NO	LAST ECN	BENÄMNING	TITLE	BENENNUNG	GROUP NO
4- 548333		ARM	ARM	ARM	CR- 548331-010V
4- 548334		KLACK	LUG	NOCKE	CR- 548331-010V
4- 548335		FÄSTE	BRACKET	BEFESTIGUNGSHALTER	CR- 548331-010V
4- 548336		BRICKA	WASHER	SCHEIBE	C- 491976-020V
4- 548337		BUSSNING	BUSHING	BUCHSE	C- 491976-020V
1- 548382		FUNKTIONSDIAGRAM TBA/9	FUNCTION DIAGRAM TBA/9	FUNKTIONSDIAGRAM	B- 648109-100V
					B- 648118-090V
4- 548385		FLÄNS	FLANGE	FLANSCH	C- 554360-020V
4- 548386		BUSSNING	BUSHING	BUCHSE	C- 554360-020V
4- 548394		AXEL	SHAFT	WELLE	C- 484984-020V
4- 548395		AXEL	SHAFT	WELLE	C- 484984-020V
4- 548396		RULLE	ROLL	ROLLE	C- 484984-020V
3- 548399		RÄNNA	CHUTE	RINNE	C- 484984-020V
4- 548400		RULLE	ROLL	ROLLE	C- 484984-020V
3- 548403		STYRSKENA	STEERING RAIL	FUEHRUNGSSCHIENE	C- 484984-020V
2- 548404		DRIVRULLE	DRIVE ROLLER	TRIEBROLLE	C- 456688-020V
2- 548405		DRIVRULLE	DRIVE ROLLER	TRIEBROLLE	C- 456688-020V
4- 548411		GAFFEL	FORK	GABEL	C- 566280-010V
C- 548467-0101	10515 89-01-19	INSTÄLLNINGSVERKTYG Ö.A.	SETTING TOOL	EINSTELLWERKZEUG	B- 648119-100V
2- 548688		GALLER	GRILL	GITTER	C- 229400-070V
2- 548689		GALLER	GRILL	GITTER	C- 229400-070V
4- 548770-0005		KOAXIALKABEL L= 400 MM	COAXIAL CABLE L= 400 MM	KABEL	CE- 41725-010V
					CE- 41752-010V
					CE- 41759-010V
					CE- 41725-010V
					CE- 41752-010V
					CE- 41759-010V
1- 548986		SKENA NEDRE	RAIL LOWER	SCHIENE	C- 457937-020V
2- 548987		KABELRÄNNA	CABLE TRENCH	KABELRINNE	C- 536859-020V
4- 549000		FÄSTE	BRACKET	BEFESTIGUNGSHALTER	C- 566280-010V
2- 549002		HÅLLARE	HOLDER	HALTER	C- 497534-030V
3- 549003		PLATTA	PLATE	PLATTE	C- 497534-030V
2- 549004		HÅLLARE	HOLDER	HALTER	C- 497534-030V
2- 549005		HÅLLARE	HOLDER	HALTER	C- 497534-030V
2- 549006		INDUKTORFÄSTE	INDUKTOR BRACKET	BEFESTIGUNGSHALTER	C- 457866-030V
1- 549014		KONSOL	CANTILEVER	KONSOLE	C- 484950-020V
3- 549016		INDUKTOR	INDUCTOR	INDUKTOR	C- 457866-030V
					C- 469316-020V
4- 549602		SKRUV	SCREW	SCHRAUBE	C- 548057-010V
4- 549858		ISOLERRÖR	INSULATING PIPE	ISOLIERROHR	C- 550714-010V
2- 550112		DRIVRULLE	DRIVE ROLLER	TRIEBROLLE	C- 456688-020V
2- 550113		DRIVRULLE	DRIVE ROLLER	TRIEBROLLE	C- 456688-020V
4- 550114		AXEL	SHAFT	WELLE	C- 484984-020V
4- 550115		AXEL	SHAFT	WELLE	C- 484984-020V
4- 550116		RULLE	ROLL	ROLLE	C- 484984-020V
3- 550117		VÄRMEKROPP	HEATING BLOCK	HEIZKÖRPER	C- 484984-020V
3- 550118		MOTBACK	COUNTER JAW	GEGGEN BACKE	C- 484984-020V
4- 550119		VÄV	FABRIC	GEWEBE	C- 484984-020V
					C- 469316-020V
4- 550120		ARM	ARM	ARM	C- 484984-020V
1- 550122		PLÅT	SHEET	BLECH	C- 469736-040V
2- 550123		PLÅT	SHEET	BLECH	C- 484984-020V
3- 550125		KONSOL	CANTILEVER	KONSOLE	C- 550128-010V
4- 550126		AXEL	SHAFT	WELLE	C- 550128-010V
4- 550127		SPAK	HANDSPIKE	HEBEL	C- 550128-010V
C- 550128-0101	15283 90-10-31	LYFTARE	LIFTER	HEBER	B- 648118-090V
4- 550138		AXEL	SHAFT	WELLE	C- 484984-020V
4- 550139		AXEL	SHAFT	WELLE	C- 484984-020V
3- 550167		KNIVHÅLLARE	KNIFE HOLDER	MESSERHALTER	CR- 548331-010V
G1- 550480		KONSOL	CANTILEVER	KONSOLE	C- 752628-020V
3- 550487		FLOTTÖR	FLOAT	SCHWIMMER	C- 566507-010V
					C- 567695-010V
					C- 255921-040V
1- 550590		TRYCKBACK	PRESSURE JAW	DRUCKBACKE	C- 550714-010V
1- 550591		TRYCKPLATTA	STRESS PLATE	DRUCKPLATTE	C- 550714-010V
3- 550594		DRAGSTÅNG	TIE ROD	ZUGSTANGE	C- 550714-010V
4- 550595		BRICKA	WASHER	SCHEIBE	C- 550711-020V
2- 550596		KNIVHÅLLARE	KNIFE HOLDER	MESSERHALTER	C- 550714-010V
4- 550597		TRYCKSTÅNG	COMPRESSION ROD	DRUCKSTANGE	C- 550714-010V
3- 550598		KNIV	KNIFE	MESSER	C- 550714-010V
					C- 565417-010V
4- 550600		FRIKTIONSKUTS	FRICTION BLOCK	FRIKTIONSKLOTZ	C- 550714-010V
3- 550601		FÄSTE	BRACKET	BEFESTIGUNGSHALTER	C- 550714-010V
4- 550605		FJÄDERHUS	SPRING HOUSING	FEDERHAUS	C- 550712-020V
4- 550606		LOCKHUS	COVER HOUSING	DECKELGEHÄUSE	C- 550712-020V
4- 550607		FJÄDERTAPP	SPRING AN	FEDERZAPFEN	C- 550712-020V
1- 550608		CYLINDERHUS	CYLINDER HOUSING	ZYLINDERGEHÄUSE	C- 550712-020V
1- 550610		KOLV	PISTON	KOLBEN	C- 550712-020V
4- 550613		TRYCKFJÄDER	COMPRESSION SPRING	DRUCKFEDER	C- 550712-020V
3- 550614		AXEL	SHAFT	WELLE	C- 550711-020V
4- 550615		LOCK	LID	DECKEL	C- 550712-020V
4- 550616		BRICKA	WASHER	SCHEIBE	C- 550712-020V
G4- 550617		ARM	ARM	ARM	C- 550712-020V
2- 550618		AXEL	SHAFT	WELLE	C- 550757-020V
3- 550619		HÄVARM	LEVER	HEBEL	C- 550757-020V
3- 550622		LAGERHUS	BEARING HOUSING	LAGERGEHÄUSE	C- 550757-020V
4- 550623		BRICKA	WASHER	SCHEIBE	C- 550757-020V
1- 550626		MEDBRINGARE	CARRIER	MITNEHMER	C- 550757-020V
2- 550627		FÄSTE	BRACKET	BEFESTIGUNGSHALTER	C- 550757-020V
1- 550628		GEJD	WAY	FUEHRUNG	C- 550757-020V
4- 550629		FÄSTE	BRACKET	BEFESTIGUNGSHALTER	C- 554889-020V
4- 550630		FÄSTE	BRACKET	BEFESTIGUNGSHALTER	C- 554889-020V

PART NO	LAST ECN	BENÄMNING	TITLE	BENENNUNG	GROUP NO
2- 550632		FÄSTE	BRACKET	BEFESTIGUNGSHALTER	C- 550757-020V
1- 550633		PLATTA	PLATE	PLATTE	C- 550757-020V
4- 550635		VINKEL	ANGLE	WINKEL	C- 554888-010V
C- 550639-0101	16360 92-02-03	SIDOMATARE	SIDE FEEDER	SEITENZUFUEHRUNG	C- 550757-020V
2- 550640		BERÖRINGSSKYDD	TOUCH GUARD	BERUEHRUNGSSCHUTZ	C- 554886-010V
3- 550649		ARM	ARM	ARM	C- 554886-010V
3- 550650		ARM	ARM	ARM	C- 554886-010V
4- 550651		DISTANSRING	SPACER RING	DISTANZRING	C- 554886-010V
3- 550652		HÅLLARE	HOLDER	HALTER	C- 554889-020V
4- 550654		BUSSNING	BUSHING	BUCHSE	C- 550711-020V
4- 550662		PLUNGE	PLUNGER	PLUNGER	C- 550711-020V
1- 550663		RULLBÄRARE	REEL HOLDER	PAPIERROLLENHALTER	C- 550711-020V
4- 550664		DISTANS	SPACER	DISTANZ	C- 550711-020V
2- 550665-0001		RULLAXEL	ROLLER SHAFT	ROLLENACHSE	C- 550711-020V
2- 550665-0002		RULLAXEL	ROLLER SHAFT	ROLLENACHSE	C- 550711-020V
2- 550665-0003		RULLAXEL	ROLLER SHAFT	ROLLENACHSE	C- 550711-020V
2- 550665-0004		RULLAXEL	ROLLER SHAFT	ROLLENACHSE	C- 550711-020V
2- 550665-0005		RULLAXEL	ROLLER SHAFT	ROLLENACHSE	C- 550711-020V
2- 550665-0006		RULLAXEL	ROLLER SHAFT	ROLLENACHSE	C- 550711-020V
3- 550681		JUSTERINGSPLATTA	ADJUSTMENT PLATE	EINSTELLPLATTE	C- 554885-010V
3- 550682		HÅLLARE	HOLDER	HALTER	C- 554885-010V
4- 550685		AXEL	SHAFT	WELLE	C- 554886-010V
4- 550686		AXEL	SHAFT	WELLE	C- 554886-010V
2- 550687		DRIVRULLE	DRIVE ROLLER	TRIEBROLLE	C- 554886-010V
2- 550688		BRYTRULLE	BENDING ROLLER	UMLENKROLLE	C- 554887-010V
					C- 550711-020V
3- 550689		AXEL	SHAFT	WELLE	C- 554887-010V
3- 550690		FLÄNS	FLANGE	FLANSCH	C- 554887-010V
3- 550691		HÅLLARE	HOLDER	HALTER	C- 554887-010V
3- 550694		GLIDKLOTS	SLIDER	GLEITKLOTZ	C- 554888-010V
2- 550695		RAM	FRAME	RAHMEN	C- 554888-010V
3- 550696		PLÅT	SHEET	BLECH	C- 554888-010V
4- 550697		PLATTA	PLATE	PLATTE	C- 554888-010V
4- 550698		AXEL	SHAFT	WELLE	C- 554888-010V
4- 550700		DISTANSKLOTS	SPACER LUG	DISTANZKLOTZ	C- 554888-010V
2- 550702		GEJD	WAY	FUEHRUNG	C- 554888-010V
3- 550703		HÅLLARE	HOLDER	HALTER	C- 554888-010V
4- 550704		LINHJUL	ROPE PULLEY	SEILRAD	C- 554888-010V
1- 550705		KONSOL	CANTILEVER	KONSOLE	C- 554886-010V
3- 550706		FÄSTE	BRACKET	BEFESTIGUNGSHALTER	C- 554885-010V
1- 550708		KONSOL	CANTILEVER	KONSOLE	C- 554887-010V
C- 550711-020V	16241 91-03-28	RULLBÄRARE	REEL HOLDER	PAPIERROLLENHALTER	B- 613109-020V
					B- 613119-020V
C- 550712-0201	16241 91-03-28	PAPPERSHÅLLARE	PAPER HOLDER	PAPIERHALTER	B- 613109-020V
					B- 613119-020V
C- 550714-0101	17104 92-02-03	SKARVDON	SPLICING DEVICE	VERBINDUNGSGERÄT	B- 613101-020V
4- 550721		LÄNKHUVUD	LINK HEAD	GELENKKOPF	C- 550714-010V
3- 550722		STYRPLÅT	HEAD PLATE	FUEHRUNGSBLECH	C- 554886-010V
4- 550724		KLACK	LUG	NOCKE	C- 550714-010V
2- 550726		STYRPLÅT	HEAD PLATE	FUEHRUNGSBLECH	C- 554886-010V
1- 550727		STYRNING	STEERING	FUEHRUNG	C- 554889-020V
1- 550728		STYRNING	STEERING	FUEHRUNG	C- 554889-020V
4- 550731		FÄSTE	BRACKET	BEFESTIGUNGSHALTER	C- 554889-020V
2- 550735		STYRPLÅT	HEAD PLATE	FUEHRUNGSBLECH	C- 554887-010V
1- 550742		SKENA	RAIL	SCHIENE	C- 550757-020V
C- 550743-0101	16240 91-03-28	STYRAXEL	GUIDE SHAFT	FUEHRUNGSACHSE	C- 550757-020V
3- 550744		TÄCKPLÅT	COVERING PLATE	DECKBLECH	C- 554859-010V
4- 550751		HÅLLARE	HOLDER	HALTER	C- 550757-020V
2- 550752		HÅLLARE	HOLDER	HALTER	C- 550757-020V
4- 550753		BRICKA	WASHER	SCHEIBE	C- 550757-020V
4- 550754		FÄSTE	BRACKET	BEFESTIGUNGSHALTER	C- 554889-020V
2- 550755		KONSOL	CANTILEVER	KONSOLE	C- 550757-020V
2- 550756		FÄSTE	BRACKET	BEFESTIGUNGSHALTER	C- 550757-020V
C- 550757-0201	16360 92-02-03	SIDOMATARE	SIDE FEEDER	SEITENZUFUEHRUNG	B- 613102-020V
4- 550759		AXEL	SHAFT	WELLE	C- 550757-020V
4- 550760		AXEL	SHAFT	WELLE	C- 550757-020V
4- 550761		SKENA	RAIL	SCHIENE	C- 550757-020V
3- 550762		BALK	BEAM	BALKEN	C- 550639-010V
4- 550763		STÖD	SUPPORT	STUETZE	C- 550743-010V
3- 550764		STÖD	SUPPORT	STUETZE	C- 550757-020V
2- 550774		TRYCKSTÅNG	COMPRESSION ROD	DRUCKSTANGE	C- 550712-020V
4- 550775		SHIMS	SHIM	SHIMS	C- 550712-020V
3- 550776		KOPPARLITZ	COPPER BRAID	KUPFERLITZE	C- 550714-010V
3- 550778		HJUL	WHEEL	RAD	C- 550711-020V
4- 550779		AXEL	SHAFT	WELLE	C- 550711-020V
1- 551219		KRETSSCHEMA	CIRCUIT DIAGRAM	SCHALTKARTEPLAN	C- 67579-050V
4- 551827		TRANSFORMATOR	TRANSFORMER	TRAFO	C- 67575-010V
4- 551828		KABEL	CABLE	KABEL	C- 67379-010V
4- 551913-0001		KOMPONENTER UTAN TP-NR	COMPONENTS WITHOUT TP-NO	KOMPONENTEN OHNE TP-NR	C- 68452-010V
4- 551914		KYLBLOCK	MACHINING OF DRIVER MODU	KUEHLBLOCK	C- 68452-010V
4- 551923-0001		KOMPONENTER UTAN TP-NR	COMPONENTS WITHOUT TP-NO	KOMPONENTEN OHNE TP-NR	C- 68264-010V
4- 551924		MÄRKSKYLT	TERMINAL LABLES 5TE	SCHILD	C- 68264-010V
4- 551925-0001		KOMPONENTER UTAN TP-NR	COMPONENTS WITHOUT TP-NO	KOMPONENTEN OHNE TP-NR	C- 68263-010V
4- 551926		MÄRKSKYLT	TERMINAL LABELS 6TE	SCHILD	C- 68263-010V
4- 551927-0001		KOMPONENTER UTAN TP-NR	COMPONENTS WITHOUT TP-NO	KOMPONENTEN OHNE TP-NR	C- 68262-010V
4- 551928		MÄRKSKYLT	TERMINAL LABELS 8TE	SCHILD	C- 68262-010V
3- 551930		FLOTTÖR	FLOAT	SCHWIMMER	C- 68161-010V
4- 551969-0003		KOAXIALKABEL L= 1150 MM	COAXIAL CABLE L= 1150 MM	KABEL	CE- 41766-010V
4- 551969-0004		KOAXIALKABEL L= 2500 MM	COAXIAL CABLE L= 2500 MM	KABEL	CE- 41725-010V
					CE- 41752-010V
					CE- 41759-010V
					CE- 41725-010V

PART NO	LAST ECN	BENÄMNING	TITLE	BENENNUNG	GROUP NO
					CE- 41752-010V
					CE- 41759-010V
C- 552013-0101	20096 93-06-11	KOPPLINGSLÅDA	CONNECTION BOX	KUPPLUNGSKASTEN	C- 490600-040V
2- 552014		APPARATLÅDA	APPLIANCE BOX	APPARATKASTEN	C- 552013-010V
4- 552015		MONTAGESKENA	MOUNTING RAIL	MONTAGESCHIENE	C- 563088-010V
					C- 552013-010V
					C- 544390-010V
3- 552027		INDUKTOR	INDUCTOR	INDUKTOR	C- 457866-030V
					C- 469316-020V
3- 552029		AXEL	SHAFT	WELLE	C- 552030-010V
C- 552030-0101	19043 92-12-21	PAPPERSMAGASIN TBA/9	PAPER MAGAZINE TBA/9	PAPIERMAGAZIN	B- 648118-090V
2- 552031		FÄSTE	BRACKET	BEFESTIGUNGSHALTER	C- 552030-010V
2- 552032		FÄSTE	BRACKET	BEFESTIGUNGSHALTER	C- 552030-010V
2- 552033		FÄSTE	BRACKET	BEFESTIGUNGSHALTER	C- 552030-010V
4- 552034		BYGEL	BOW CLAMP	BUEGEL	C- 552030-010V
4- 552035		HÅLLARE	HOLDER	HALTER	C- 552030-010V
2- 552039		KÅPA	COVER	DECKEL	C- 752889-010V
4- 552042		SKRUV	SCREW	SCHRAUBE	C- 752889-010V
3- 552044		INDUKTOR	INDUCTOR	INDUKTOR	C- 457866-030V
					C- 469316-020V
4- 552047		FÄSTE	BRACKET	BEFESTIGUNGSHALTER	C- 554341-010V
4- 552048		PLATTA	PLATE	PLATTE	C- 554341-010V
4- 552049		KLACK	LUG	NOCKE	C- 544420-010V
4- 552050		MELLANLÄGG	LACE	ZWISCHENLAGE	C- 554341-010V
4- 552528		RULLE	ROLL	ROLLE	C- 441000-050V
4- 552847		PLÅT	SHEET	BLECH	C- 271569-050V
2- 553120		ANSLUTNING	ATTACHMENT	ANSCHLUSS	C- 751373-010V
1- 553123		TANK	TANK	TANK	C- 751398-020V
1- 553126		PEROXIDTANK	PEROXIDE TANK	PEROXIDTANK	C- 751373-010V
3- 553127		RÖR	PIPE	ROHR	C- 751373-010V
1- 553128		RÖR	PIPE	ROHR	C- 491207-030V
4- 553130		RULLE	ROLL	ROLLE	C- 484984-020V
4- 553131		RULLE	ROLL	ROLLE	C- 484984-020V
4- 553132		RULLE	ROLL	ROLLE	C- 484984-020V
4- 553133		RULLE	ROLL	ROLLE	C- 484984-020V
4- 553134		AXEL	SHAFT	WELLE	C- 484984-020V
4- 553135		AXEL	SHAFT	WELLE	C- 484984-020V
4- 553137		KNIV	KNIFE	MESSER	CR- 283606-020V
					C- 469316-020V
3- 553149		STYRSKENA	STEERING RAIL	FUEHRUNGSSCHIENE	C- 484984-020V
2- 553150		BROMSARM	BRAKE ARM	BREMSARM	C- 469736-040V
3- 553153		MOTHÅLL	DOLLY	GEGENHALTER	CR- 283607-030V
4- 553155		PLATTA	PLATE	PLATTE	C- 490600-040V
4- 553183		PENDELFÄSTE	PENDULUM SUSPENSION	PENDELBEFESTIGUNG	C- 560858-010V
					C- 272337-040V
2- 553184		FÄSTE	BRACKET	BEFESTIGUNGSHALTER	C- 560858-010V
					C- 272337-040V
4- 553187		FÄSTPLÅT	MOUNTING SHEET	BEFESTIGUNGSBLECH	C- 560858-010V
					C- 272337-040V
1- 553215		KABELRÄNNA	CABLE TRENCH	KABELRINNE	C- 469374-040V
1- 553216		KABELRÄNNA	CABLE TRENCH	KABELRINNE	C- 469374-040V
1- 553217		KABELRÄNNA	CABLE TRENCH	KABELRINNE	C- 469374-040V
1- 553218		KABELRÄNNA	CABLE TRENCH	KABELRINNE	C- 469374-040V
4- 553586		DISTANS	SPACER	DISTANZ	C- 752495-010V
2- 553651		RÖR	PIPE	ROHR	C- 491207-030V
2- 553652		ISOLERPLATTA	INSULATING PLATE	ISOLIERPLATTE	C- 751373-010V
1- 553653		RETURRÖR	RETURN PIPE	RUECKLAUFROHR	C- 491207-030V
2- 553656		TÄCKPLÅT	COVERING PLATE	DECKBLECH	C- 751885-030V
C- 553657-0101	15632 90-12-05	DÖRR	DOOR	TUER	C- 751352-020V
2- 553658		KONSOL	CANTILEVER	KONSOLE	C- 491207-030V
4- 553808		ARM	ARM	ARM	C- 272021-060V
4- 553809		LAGERTAPP	PIVOT PIN	LAGERZAPFEN	C- 272021-060V
4- 553857		KOAXIALKABEL	COAXIAL CABLE	KABEL	C- 67580-020V
1- 554063		KRETSKORT	CIRCUIT BOARD TBA/9-080V	SCHALTKARTE	CE- 41724-010V
					CE- 41758-010V
					CE- 41724-010V
					CE- 41758-010V
4- 554162		SKRUV	SCREW	SCHRAUBE	C- 541164-020V
4- 554339		KURVA	CURVE	KURVE	C- 566280-010V
4- 554340		LÅSPLATTA	LOCK PLATE	VERSCHLUSSPLATTE	C- 554341-010V
C- 554341-0101	16054 91-03-12	TVISTVAKT	SWITCH (MONITOR)	WACHT	B- 648118-090V
4- 554342		AXELTAPP	AXLE PIN	ACHSENZAPFEN	C- 566280-010V
4- 554343		AXEL	SHAFT	WELLE	C- 552030-010V
1- 554344		HÖGER BEN FRAM	RIGHT LEG FRONT	BEIN	C- 457881-030V
C- 554346-010V	15550 91-01-09	BLACK TAPE DETECTOR	BLACK TAPE DETECTOR	DETEKTOR	B- 648118-090V
2- 554347		ARM	ARM	ARM	C- 554346-010V
4- 554349		FÄSTE VÄNSTER	BRACKET LEFT	BEFESTIGUNGSHALTER	C- 554346-010V
4- 554350		FÄSTE HÖGER	BRACKET RIGHT	BEFESTIGUNGSHALTER	C- 554346-010V
4- 554351		FÄSTE VÄNSTER	BRACKET LEFT	BEFESTIGUNGSHALTER	C- 554346-010V
4- 554352		FÄSTE HÖGER	BRACKET RIGHT	BEFESTIGUNGSHALTER	C- 554346-010V
2- 554353		MOTHÅLL	DOLLY	GEGENHALTER	C- 469316-020V
					C- 497534-030V
3- 554355		AXEL	SHAFT	WELLE	C- 554360-020V
C- 554360-020V	19421 93-03-09	BROMS	BRAKE	BREMSE	B- 648118-090V
3- 554361		AXEL	SHAFT	WELLE	C- 554360-020V
1- 554363		APPARATLÅDA	APPLIANCE BOX	APPARATKASTEN	C- 457856-020V
4- 554364		DISTANS	SPACER	DISTANZ	C- 554346-010V
4- 554365		FÄSTE	BRACKET	BEFESTIGUNGSHALTER	C- 554346-010V
3- 554368		HÅLLARE 125 ML-200 ML S	HOLDER	HALTER	C- 457867-020V
3- 554369		HÅLLARE 180 ML	HOLDER	HALTER	C- 457867-020V
3- 554370		HÅLLARE 200 ML-236 ML	HOLDER	HALTER	C- 457867-020V
3- 554371		HÅLLARE 250 ML	HOLDER	HALTER	C- 457867-020V

PART NO	LAST ECN	BENÄMNING	TITLE	BENENNUNG	GROUP NO
3- 554372		HÅLLARE 284	HOLDER	HALTER	C- 457867-020V
3- 554373		FÄSTE	BRACKET	BEFESTIGUNGSHALTER	C- 457867-020V
4- 554374		LOCK	LID	DECKEL	C- 457867-020V
3- 554375		GAVEL	END SECTION	STIRNWAND	C- 554360-020V
3- 554376		INDUKTOR SMAL LS	INDUCTOR	INDUKTOR	C- 457866-030V
					C- 469316-020V
3- 554378		INDUKTOR SMAL LS	INDUCTOR	INDUKTOR	C- 457866-030V
					C- 469316-020V
4- 554380		FÄSTE	BRACKET	BEFESTIGUNGSHALTER	C- 552030-010V
1- 554412		SKYDD	PROTECTION	SCHUTZ	C- 978179-010V
2- 554413		HÅLLARE	HOLDER	HALTER	C- 978179-010V
3- 554414		HÅLLARE	HOLDER	HALTER	C- 978179-010V
C- 554859-0101	15603 90-12-06	BEKLÄDNADSPLÅT	COVERING PANEL	VERKLEIDUNGSBLECH	B- 613102-020V
3- 554860		TÄCKPLÅT	COVERING PLATE	DECKBLECH	C- 554859-010V
2- 554861		TÄCKPLÅT	COVERING PLATE	DECKBLECH	C- 554859-010V
2- 554862		TÄCKPLÅT	COVERING PLATE	DECKBLECH	C- 554859-010V
2- 554863		TÄCKPLÅT	COVERING PLATE	DECKBLECH	C- 554859-010V
2- 554864		TÄCKPLÅT	COVERING PLATE	DECKBLECH	C- 554859-010V
2- 554865		TÄCKPLÅT	COVERING PLATE	DECKBLECH	C- 554859-010V
3- 554866		TÄCKPLÅT	COVERING PLATE	DECKBLECH	C- 554859-010V
1- 554868		KÅPA	COVER	DECKEL	C- 554859-010V
1- 554869		KÅPA	COVER	DECKEL	C- 554859-010V
1- 554870		HUV	HOOD	HAUBE	C- 554891-010V
1- 554871		HUV	HOOD	HAUBE	C- 554859-010V
1- 554872		HUV	HOOD	HAUBE	C- 554859-010V
1- 554873		HANDTAG	HANDLE	GRIFF	C- 554859-010V
3- 554874		FÄSTE	BRACKET	BEFESTIGUNGSHALTER	C- 554891-010V
3- 554875		FÄSTE	BRACKET	BEFESTIGUNGSHALTER	C- 554891-010V
3- 554876		FÄSTE	BRACKET	BEFESTIGUNGSHALTER	C- 554891-010V
4- 554877		AXEL	SHAFT	WELLE	C- 554891-010V
2- 554878		DÖRR	DOOR	TUER	C- 554890-010V
C- 554885-0101	15604 90-11-16	FOTOCELLENHET	PHOTOCELL UNIT	FOTOZELLEINHEIT	B- 613101-020V
C- 554886-0101	17104 92-02-03	DRIVENHET	DRIVE UNIT	ANTRIEBSEINHEIT	B- 613101-020V
C- 554887-0101	15590 90-11-15	BRYTRULLEENHET	BENDING ROLLER UNIT	BRECHEINHEIT	B- 613102-020V
C- 554888-0101	16360 92-02-03	MAGASIN	MAGAZINE	MAGASIN	B- 613102-020V
C- 554889-0201	16240 91-03-28	STATIV	MACHINE BODY	STATIV	B- 613102-020V
C- 554890-0101	15619 90-12-04	DÖRR MAGASIN	DOOR MAGAZINE	TUER	B- 613102-020V
C- 554891-0101	16360 92-02-03	HUV	HOOD	HAUBE	B- 613102-020V
3- 554892		AXEL	SHAFT	WELLE	C- 550743-010V
3- 554894		AXEL	SHAFT	WELLE	C- 550639-010V
3- 554895		KLÄMSTYCKE	CLAMPING PART	KLEMMSTUECK	C- 550639-010V
4- 554896		BALK	BEAM	BALKEN	C- 550639-010V
4- 554897		BALK	BEAM	BALKEN	C- 550639-010V
3- 554898		HÅLLARE	HOLDER	HALTER	C- 554889-020V
3- 554939		FRONTPLÅT	FRONT PLATE	FRONTBLECH	C- 554889-020V
2- 554947		BEN	LEG	BEIN	C- 560670-010V
					C- 560671-010V
					C- 560672-010V
1- 554956		STYRSKENA	STEERING RAIL	FUEHRUNGSSCHIENE	C- 562656-010V
1- 554957		STYRSKENA	STEERING RAIL	FUEHRUNGSSCHIENE	C- 562656-010V
4- 555435		RÖR	PIPE	ROHR	C- 491207-030V
1- 555436		PLÅT	SHEET	BLECH	C- 751885-030V
2- 555438		PLÅT	SHEET	BLECH	C- 751885-030V
2- 555439		PLÅT	SHEET	BLECH	C- 751885-030V
1- 555440		KONSOL	CANTILEVER	KONSOLE	C- 751406-010V
4- 555540		DISTANS	SPACER	DISTANZ	C- 476859-020V
3- 555541		FÄSTE	BRACKET	BEFESTIGUNGSHALTER	C- 476859-020V
3- 555542		FÄSTE	BRACKET	BEFESTIGUNGSHALTER	C- 476859-020V
1- 555568		VÅSKA	PONCH	TASCHE	C- 567732-010V
3- 555632		GAVEL	END SECTION	STIRNWAND	C- 554360-020V
4- 555764		ARM	ARM	ARM	C- 272021-060V
3- 555777		PLINT	TERMINAL X1,IH-GENERATOR	GRUNDPLATTE	CE- 69884-010V
					CE- 69886-010V
					CE- 69884-010V
					CE- 69885-010V
					CE- 69886-010V
					CE- 69887-010V
					CE- 69884-010V
					CE- 69885-010V
					CE- 69886-010V
					CE- 69887-010V
1- 555923		HÅLLARE	HOLDER	HALTER	C- 441000-050V
1- 556309		GRENRÖR	BRANCH PIPE	ABZWEIGROHR	C- 272408-050V
2- 556422		SKYDD	PROTECTION	SCHUTZ	C- 752645-020V
					C- 752646-020V
3- 556502		DISKETT FÖR LAYOUTER	LAYOUTS FOR PLATES,LABLE	DISKETT FÜR LAYOUTS	C- 68450-010V
4- 556504		DISKETT FÖR LAYOUTER	LAYOUTS:PLATES AND LABEL	DISKETT FÜR LAYOUTS	C- 68447-020V
4- 556505		DISKETT FÖR LAYOUTER	LAYOUTS:PLATES AND LABLE	DISKETT FÜR LAYOUTS	C- 68123-020V
4- 556506		DISKETT FÖR LAYOUTER	LAYOUTS:PLATES AND LABLE	DISKETT FÜR LAYOUTS	C- 67386-010V
4- 556509		MÖNSTERKORT	PRINTED CIRCUIT BOARD	LEITERPLATTE	C- 68473-020V
4- 556510-0001		KOMPONENTER UTAN TP-NR	COMPONENTS WITHOUT TP-NO	KOMPONENTEN OHNE TP-NR	C- 68473-020V
4- 556514		MÅTTRITNING	MEASURE DRAWING	MASS ZEICHNUNG	C- 68445-010V
4- 556518-0005		KOMPONENTER UTAN TP-NR	COMPONENTS WITHOUT TP-NO	KOMPONENTEN OHNE TP-NR	C- 67379-010V
4- 556518-0007		KOMPONENTER UTAN TP-NR	COMPONENTS WITHOUT TP-NO	KOMPONENTEN OHNE TP-NR	C- 67379-010V
4- 556518-0013		KOMPONENTER UTAN TP-NR	COMPONENTS WITHOUT TP-NO	KOMPONENTEN OHNE TP-NR	C- 67379-010V
4- 556518-0014		KOMPONENTER UTAN TP-NR	COMPONENTS WITHOUT TP-NO	KOMPONENTEN OHNE TP-NR	C- 67379-010V
4- 556519-0001		KOMPONENTER UTAN TP-NR	COMPONENTS WITHOUT TP-NO	KOMPONENTEN OHNE TP-NR	C- 68474-010V
4- 556519-0003		KOMPONENTER UTAN TP-NR	COMPONENTS WITHOUT TP-NO	KOMPONENTEN OHNE TP-NR	C- 68474-010V
4- 556523		DISKETT FÖR LAYOUTER	DISCETTE FOR LAYOUTS	DISKETT FÜR LAYOUTS	C- 68471-010V
4- 556524-0001		KOMPONENTER UTAN TP-NR	COMPONENTS WITHOUT TP-NO	KOMPONENTEN OHNE TP-NR	C- 68471-010V
4- 556525		FRONTPLÅT	FRONT PANEL 8TE	FRONTBLECH	C- 68471-010V
3- 556534		BOTTEN 200-250 ML	BOTTOM	BODEN	C- 457867-020V

PART NO	LAST ECN	BENÄMNING	TITLE	BENENNUNG	GROUP NO
3- 556535		BOTTEN 125-180-236 ML	BOTTOM	BODEN	C- 457867-020V
3- 556536		BOTTEN 284-200 SLIM	BOTTOM	BODEN	C- 457867-020V
4- 556537		FÄSTE	BRACKET	BEFESTIGUNGSHALTER	C- 457853-030V
4- 556538		SKYDD	PROTECTION	SCHUTZ	C- 457853-030V
3- 556539		BROMSSKIVA	BRAKE DISC	BREMSSCHEIBE	C- 546285-010V
3- 556540		ARM	ARM	ARM	C- 546285-010V
4- 556541		SKRUV	SCREW	SCHRAUBE	C- 546285-010V
4- 556542		PINNE	PEG	STIFT	C- 546285-010V
4- 556543		AXEL	SHAFT	WELLE	C- 546285-010V
4- 556544		DISTANS	SPACER	DISTANZ	C- 546285-010V
3- 556545		PLATTA	PLATE	PLATTE	C- 497534-030V
3- 556546		PLATTA	PLATE	PLATTE	C- 497534-030V
4- 556547		SPAK	HANDSPIKE	HEBEL	C- 554360-020V
1- 556566		SKYDDSKÅPA	PROTECTIVE CASING	SCHUTZKAPPE	C- 457857-030V
2- 556567		KABELKANAL	CABLE DUCT	KABELKANAL	C- 457857-030V
1- 556568		KABELKANAL	CABLE DUCT	KABELKANAL	C- 457857-030V
4- 556569		PLÅT	SHEET	BLECH	C- 457867-020V
3- 556570		KABELKANAL	CABLE DUCT	KABELKANAL	C- 457856-020V
C- 556662-0101	14967 90-08-29	LASER	LASER	LASER	C- 76594-020V
2- 556663		HUS	HOUSE	GEHAEUSE	C- 556662-010V
1- 556664		HUVUD	HEAD	KOPF	C- 556662-010V
3- 556665		GAVEL	END SECTION	STIRNWAND	C- 556662-010V
3- 556666		HÅLLARE	HOLDER	HALTER	C- 556662-010V
C- 556667-0101	14967 90-08-29	DISPLAYBOX	DISPLAY	DISPLAY	C- 76594-020V
2- 556668		LÅDA	BOX	KASTEN	C- 556667-010V
3- 556669-0001		ELEKTRONIK.KOPPL.	ELECTRONIC CONNECTION	KOMPONENTELAYOUT	C- 556667-010V
					C- 556672-010V
C- 556672-0101	14967 90-08-29	DETEKTORHUS	HOUSE	GEHAEUSE	C- 76594-020V
1- 556673		HUS	HOUSE	GEHAEUSE	C- 556672-010V
2- 556674		LOCK	LID	DECKEL	C- 556672-010V
3- 556675-0001		KOPPLINGSSCHEMA	WIRING DIAGRAM	KUPPLUNGSSCHALTPLAN	C- 556667-010V
					C- 556672-010V
3- 556676-0001		KOMPONENTLISTA	COMPONENT LIST	KOMPONENTLISTE	C- 556667-010V
					C- 556672-010V
3- 556677		MÖNSTERKORT	PRINTED CIRCUIT BOARD	LEITERPLATTE	C- 556667-010V
3- 556678		MÖNSTERKORT	PRINTED CIRCUIT BOARD	LEITERPLATTE	C- 556667-010V
3- 556679		MÖNSTERKORT	PRINTED CIRCUIT BOARD	LEITERPLATTE	C- 556672-010V
3- 556680		MÖNSTERKORT	PRINTED CIRCUIT BOARD	LEITERPLATTE	C- 556672-010V
4- 556681		MÖNSTERKORT	PRINTED CIRCUIT BOARD	LEITERPLATTE	C- 556672-010V
2- 556720		FÄSTE	HOLDER	BEFESTIGUNGSHALTER	C- 752628-020V
					C- 556723-010V
1- 556721-0001		LUCKA	OPENING	DECKEL	C- 752244-020V
					C- 556723-010V
1- 556721-0002		LUCKA	OPENING	DECKEL	C- 556723-010V
1- 556722-0001		LUCKA	OPENING	DECKEL	C- 752244-020V
1- 556722-0001		LUCKA	OPENING	DECKEL	C- 556723-010V
1- 556722-0002		LUCKA	OPENING	DECKEL	C- 556723-010V
C- 556723-0101	15074 90-11-22	LS-REMSA A.S.U.(TBA/9)	LS-STRIP A.S.U. (TBA/9)	LS-AUSRUESTUNG	RK- 905722-010V
C- 556723-0102	15074 90-11-22	LS-REMSA A.S.U.(TBA/9)	LS-STRIP A.S.U. (TBA/9)	LS-AUSRUESTUNG	RK- 905722-010V
C- 556723-0103	15074 90-11-22	LS-REMSA A.S.U.(TBA/9)	LS-STRIP A.S.U. (TBA/9)	LS-AUSRUESTUNG	RK- 905722-010V
C- 556723-0104	15074 90-11-22	LS-REMSA A.S.U.(TBA/9)	LS-STRIP A.S.U. (TBA/9)	LS-AUSRUESTUNG	RK- 905722-010V
RK- 557017-010V	17057 92-01-20	"A.S.S.U."	"A.S.S.U."	ELECTRICAL CONVERSION	RK- 905722-010V
RK- 557018-0101	17057 92-01-20	EL-MATERIAL	ELECTRIC MATERIALS	EL-MATERIAL	RK- 557017-010V
					RK- 557019-010V
RK- 557019-0101	16123 91-02-12	EL DOKUMENT	ELECTRICAL DOCUMENT	EL-DOKUMENT	RK- 557017-010V
RK- 557020-010V	17058 92-01-20	"A.S.S.U."	"A.S.S.U."	ELECTRICAL CONVERSION	RK- 905722-010V
RK- 557021-010V	17058 92-01-20	EL-MATERIAL	ELECTRIC MATERIALS	EL-MATERIAL	RK- 557022-010V
RK- 557021-0101	17058 92-01-20	EL-MATERIAL	ELECTRIC MATERIALS	EL-MATERIAL	RK- 557020-010V
RK- 557022-0101	16124 91-02-12	ELECTRICAL DOKUMENT	ELECTRICAL DOKUMENT	EL-DOKUMENT	RK- 557020-010V
C- 557063-0101	16570 91-12-12	TEMP.REG.ADAPT: MAIN CAR	TEMP.REG.ADAPT: MAIN CAR	SCHALTKARTE	C- 557826-010V
RK- 557146-0101	16762 91-08-14	"LOW LEVEL FILLING H.L."	"LOW LEVEL FILLING-H.L."	EL-AUSR~STUNG	C- 560459-010V
RK- 557147-0101	16383 91-06-19	EL-MATERIAL	ELECTRIC MATERIALS	EL-MATERIAL	RK- 557146-010V
					RK- 557148-010V
RK- 557148-0101	15108 91-02-21	EL-DOKUMENT	EL-DOCUMENT	EL-DOKUMENT	RK- 557146-010V
RK- 557149-0101	16763 91-08-14	"LOW LEVEL FILLING H.L."	"LOW LEVEL FILLING-H.L."	EL-AUSR~STUNG	C- 560460-010V
RK- 557150-0101	15109 91-06-19	EL-MATERIAL	ELECTRIC MATERIALS	EL-MATERIAL	RK- 557149-010V
					RK- 557151-010V
RK- 557151-0101	15109 91-06-19	EL-DOKUMENT	EL-DOCUMENT	EL-DOKUMENT	RK- 557149-010V
RK- 557152-0101	14752 90-10-15	"LOW LEVEL FILLING H.S."	"LOW LEVEL FILLING-H.L."	EL-AUSR~STUNG	C- 560886-010V
RK- 557153-0101	14752 90-10-15	EL-MATERIAL	ELECTRIC MATERIALS	EL-MATERIAL	RK- 557152-010V
					RK- 557154-010V
RK- 557154-0101	14752 90-10-15	EL-DOKUMENT	EL-DOCUMENT	EL-DOKUMENT	RK- 557152-010V
RK- 557155-010V	17761 92-07-01	"H.V.A. KIT"	"H.V.A. KIT"	EL-AUSR~STUNG	C- 563210-010V
RK- 557156-010V	16597 91-09-16	EL-MATERIAL	ELECTRIC MATERIALS	EL-MATERIAL	RK- 557157-010V
RK- 557156-0101	16597 91-09-16	EL-MATERIAL	ELECTRIC MATERIALS	EL-MATERIAL	RK- 557155-010V
RK- 557157-0101	15111 91-05-14	EL-DOKUMENT	EL-DOCUMENT	EL-DOKUMENT	RK- 557155-010V
RK- 557158-010V	17762 92-07-01	"H.V.A. KIT"	"H.V.A. KIT"	EL-AUSR~STUNG	C- 563211-010V
RK- 557159-010V	14756 90-11-09	EL-MATERIAL	ELECTRIC MATERIALS	EL-MATERIAL	RK- 557160-010V
RK- 557159-0101	14756 90-11-09	EL-MATERIAL	ELECTRIC MATERIALS	EL-MATERIAL	RK- 557158-010V
RK- 557160-0101	16887 91-09-23	EL-DOKUMENT	EL-DOCUMENT	EL-DOKUMENT	RK- 557158-010V
CE- 557222-0101	17624 92-03-26	EL-SKÅP H.V.P. KI	ELECTRICAL CABINET	EL-SCHRANK	BE- 68701-020V
					CE- 557226-010V
CE- 557223-0101	15373 90-11-06	SPARE PART H.V.A. KI	SPARE PART H.V.A. KI	ERSATZTEIL	BE- 68701-020V
					CE- 557226-010V
CE- 557224-0101	15025 90-08-24	MASKIN H.V.A. KI	MACHINE	MASCHINE	BE- 68701-020V
					CE- 557226-010V
CE- 557225-010V	15025 90-08-24	EXTRA UTRUSTN. H.V.A. KI	EXTRA EQUIPMENT H.V.A.KI	EXTRA ZUBEHÖR	CE- 557226-010V
CE- 557225-0101	15025 90-08-24	EXTRA UTRUSTN. H.V.A. KI	EXTRA EQUIPMENT H.V.A.KI	EXTRA ZUBEHÖR	BE- 68701-020V
CE- 557226-0101	16895 91-10-03	EL-DOKUMENT H.V.A. KI	EL-DOCUMENT H.V.A. KI	EL-DOKUMENT	BE- 68701-020V
RK- 557233-010V	17603 92-03-11	"ASU-FLEX"	"ASU-FLEX"	ELECTRICAL CONVERSION	C- 570501-010V
RK- 557234-010V	15059 91-04-30	EL-MATERIAL	EL-MATERIAL	EL-MATERIAL	RK- 557235-010V
RK- 557234-0101	15059 91-04-30	ASU-FLEX	EL-MATERIAL	EL-MATERIAL	RK- 557233-010V

PART NO	LAST ECN	BENÄMNING	TITLE	BENENNUNG	GROUP NO
RK- 557235-0101	15059 91-04-30	EL-DOKUMENT	EL-DOCUMENT	EL-DOKUMENT	RK- 557233-010V
RK- 557544-010V	15708 92-02-27	EL-KONVERTERING	"ASU-FLEX"	ELECTRICAL CONVERSION	C- 570501-010V
RK- 557545-010V	15708 92-02-27	EL-MATERIAL	ELECTRIC MATERIALS	EL-MATERIAL	RK- 557544-010V
RK- 557546-010V	15708 92-02-27	EL DOKUMENT	ELECTRICAL DOCUMENT	EL-DOKUMENT	RK- 557544-010V
RK- 557550-010V	16656 92-02-27	"ASU-FLEX"	ELECTRICAL CONVERSION	ELECTRICAL CONVERSION	C- 570501-010V
RK- 557551-010V	15712 90-12-20	EL-MATERIAL	ELECTRICAL MATERIAL	EL-MATERIAL	RK- 557550-010V
					RK- 557552-010V
RK- 557552-010V	15712 90-12-20	EL DOKUMENT	ELECTRICAL DOCUMENT	EL-DOKUMENT	RK- 557550-010V
K4- 557555-0101		OMBYGGNADSBESKRIVNING EL	REBUILDING DESCR. EL	REBUILDING DESCR. EL	RK- 557552-010V
K4- 557555-0201		OMBYGGNADSBESKRIVNING EL	REBUILDING DESCR. EL	REBUILDING DESCR. EL	RK- 557552-010V
K4- 557555-0301		OMBYGGNADSBESKRIVNING EL	REBUILDING DESCR. EL	REBUILDING DESCR. EL	RK- 557552-010V
RK- 557689-0101	17652 92-02-18	"LOW LEVEL FILLING H.L."	"LOW LEVEL FILLING-HL"	EL-AUSR~STUNG	C- 560459-020V
RK- 557690-0101	16599 92-01-23	EL-MATERIAL	ELECTRIC MATERIALS	EL-MATERIAL	RK- 557689-010V
					RK- 557691-010V
RK- 557691-0101	16599 92-01-23	EL-DOKUMENT	EL-DOCUMENT	EL-DOKUMENT	RK- 557689-010V
RK- 557692-0101	17653 92-02-19	"LOW LEVEL FILLING-HL"	"LOW LEVEL FILLING-HL"	EL-AUSR~STUNG	C- 560460-020V
RK- 557693-0101	16600 92-02-04	ELECTRIC MATERIALS	ELECTRIC MATERIALS	EL-MATERIAL	RK- 557692-010V
					RK- 557694-010V
RK- 557694-0101	16600 92-02-04	EL-DOCUMENT	EL-DOCUMENT	EL-DOKUMENT	RK- 557692-010V
RK- 557695-0101	16601 92-02-05	"LOW LEVEL FILLING-HL"	"LOW LEVEL FILLING-HL"	EL-AUSR~STUNG	C- 560886-020V
RK- 557696-0101	16601 92-02-05	EL-MATERIAL	ELECTRIC MATERIALS	EL-MATERIAL	RK- 557695-010V
CE- 557793-0101	16570 91-12-12	KALIBRERINGSUTRUSTNING	CALIBRATION EQUIPMENT	EL-AUSR~STUNG	C- 567732-010V
C- 557826-0101	16570 91-12-12	TEMPERATUR REG. ADAPTER	TEMPERATURE REG. ADAPTER	KALIBRIERAUSRUESTUNG	CE- 557793-010V
RK- 558088-0101	17913 92-12-02	LEVEL CONTROLLED FILLING	LEVEL CONTROLLED FILLING	ELECTRICAL CONVERSION	C- 924725-010V
RK- 558089-0101	17914 92-12-02	LEVEL CONTROLLED FILLING	LEVEL CONTROLLED FILLING	ELECTRICAL CONVERSION	C- 925173-010V
RK- 558303-0101	20357 93-09-10	EL-DOK. HEADSPACE BY INJ	EL-DOC. HEADSPACE BY INJ	EL-DOKUMENT	C- 978239-020V
RK- 558304-0101	19336 93-04-02	EL-MAT. HEADSPACE BY INJ	EL-MAT. HEADSPACE BY INJ	EL-MATERIAL	RK- 558303-010V
RK- 558306-0101	19336 93-04-02	EL-DOK. HEADSPACE BY INJ	EL-DOC. HEADSPACE BY INJ	EL-DOKUMENT	C- 978240-020V
RK- 558307-0101	19336 93-04-02	EL-MAT. HEADSPACE BY INJ	EL-MAT. HEADSPACE BY INJ	EL-MATERIAL	RK- 558306-010V
RK- 558309-0101	19336 93-04-02	EL-DOK. HEADSPACE BY INJ	EL-DOC. HEADSPACE BY INJ	EL-DOKUMENT	C- 978241-020V
RK- 558310-0101	19336 93-04-02	EL-MAT. HEADSPACE BY INJ	EL-MAT. HEADSPACE BY INJ	EL-MATERIAL	RK- 558309-010V
RK- 558312-0101	19433 93-04-02	"JUMBO REEL"	EL-DOC. JUMBO REEL	EL-DOKUMENT	C- 751796-030V
RK- 558313-0101	19433 93-04-02	EL-MAT. JUMBO REEL	EL-MAT. JUMBO REEL	EL-MATERIAL	RK- 558312-010V
RK- 558315-0101	19433 93-04-02	EL-DOK. JUMBO REEL	EL-DOC. JUMBO REEL	EL-DOKUMENT	C- 751796-030V
RK- 558316-0101	19433 93-04-02	EL-MAT. JUMBO REEL	EL-MAT. JUMBO REEL	EL-MATERIAL	RK- 558315-010V
RK- 558332-0101	19435 93-04-02	EL-DOC."CONV.KIT 250/284	EL-DOC. 250/284	EL-DOKUMENT	C- 978270-020V
RK- 558333-0101	19435 93-04-02	EL-MAT. 250/284	EL-MAT. 250/284	EL-MATERIAL	RK- 558332-010V
RK- 558334-0101	19436 93-04-02	EL-DOK. 250/200	EL-DOC. 250/200	EL-DOKUMENT	C- 567704-020V
					C- 567705-020V
RK- 558335-0101	19436 93-04-02	EL-MAT. 250/200	EL-MAT. 250/200	EL-MATERIAL	RK- 558334-010V
RK- 558336-0101	19436 93-04-02	EL-DOC. 250/200	EL-DOC. 250/200	EL-DOKUMENT	C- 567704-020V
RK- 558337-0101	19436 93-04-02	EL-MAT. 250/200	EL-MAT. 250/200	EL-MATERIAL	RK- 558336-010V
RK- 558338-0101	19437 93-04-02	EL-DOK. 200/250	EL-DOC. 200/250	EL-DOKUMENT	C- 567707-020V
RK- 558339-0101	19437 93-04-02	EL-MAT. 200/250	EL-MAT. 200/250	EL-MATERIAL	RK- 558338-010V
RK- 558344-010V	19612 93-04-02	EL-DOKUMENT JUMBO REEL	EL-DOCUMENT JUMBO REEL	EL-DOKUMENT	C- 751796-030V
RK- 558345-0101	19612 93-04-02	EL-MATERIAL JUMBO REEL	EL-MATERIAL JUMBO REEL	EL-MATERIAL	RK- 558344-010V
1- 560134		PLATTA	PLATE	PLATTE	C- 272408-050V
4- 560185		FÄSTE	HOLDER	BEFESTIGUNGSHALTER	C- 560202-010V
3- 560186		PLÅT	SHEET	BLECH	C- 752247-010V
3- 560187		VINKEL	BAR	WINKEL	C- 752247-010V
C- 560202-0101	14614 90-03-21	BRYTRULLE BAKRE	BENDING ROLLER REAR	UMLENKROLLE	B- 648107-100V
3- 560420		PENDELARM	PENDULUM ARM	PENDELARM	C- 566282-010V
3- 560421		AXEL	SHAFT	WELLE	C- 566280-010V
3- 560422		AXEL	SHAFT	WELLE	C- 566280-010V
4- 560423		AXEL	SHAFT	WELLE	C- 566280-010V
4- 560424		AXELTAPP	AXLE PIN	ACHSENZAPFEN	C- 566282-010V
4- 560425		BRICKA	WASHER	SCHEIBE	C- 566282-010V
4- 560428		DISTANS	SPACER	DISTANZ	C- 566280-010V
3- 560429		FÄSTE	BRACKET	BEFESTIGUNGSHALTER	C- 566282-010V
2- 560430		FÄSTPLATTA	FASTENING PLATE	BEFESTIGUNGSPLATTE	C- 566280-010V
4- 560431		FÄSTE	BRACKET	BEFESTIGUNGSHALTER	C- 566282-010V
4- 560432		AXEL	SHAFT	WELLE	C- 566282-010V
4- 560433		LAGERHUS	BEARING HOUSING	LAGERGEHÄUSE	C- 566282-010V
4- 560435		AXEL	SHAFT	WELLE	C- 566282-010V
4- 560436		DISTANSMUTTER	SPACER NUT	DISTANZMUTTER	C- 566280-010V
4- 560437		PASSBULT	FITTING BOLT	PASSBOLZEN	C- 566280-010V
4- 560438		RULLE	ROLL	ROLLE	C- 566282-010V
4- 560442		FÄSTE	BRACKET	BEFESTIGUNGSHALTER	C- 566280-010V
4- 560446-0001		DISTANS	SPACER	DISTANZ	C- 566280-010V
4- 560446-0002		DISTANS	SPACER	DISTANZ	C- 566280-010V
4- 560446-0003		DISTANS	SPACER	DISTANZ	C- 566282-010V
4- 560446-0003		DISTANS	SPACER	DISTANZ	C- 566280-010V
2- 560447		LÅDA	BOX	KASTEN	C- 547601-010V
C- 560459-010V	16594 91-06-14	HEAD SPACE BY HL	REBUILDING KITS BRIK	UMBAUSÄTZE BRIK	C- 77091-040V
C- 560459-020V	16396 92-02-05	OMBYGGNADSSATSER BRIK	HEAD SPACE BY HL	UMBAUSÄTZE BRIK	C- 77091-040V
C- 560460-010V	16594 91-06-14	HEAD SPACE BY HL	REBUILDING KITS BRIK	UMBAUSÄTZE BRIK	C- 77091-040V
C- 560460-020V	16396 92-02-05	OMBYGGNADSSATSER BRIK	HEAD SPACE BY HL	UMBAUSÄTZE BRIK	C- 77091-040V
2- 560582-0001		INSTALLATIONSRITNING	INSTALLATION DRAWING	INSTALLATIONSZEICHNUNG	B- 648109-100V
2- 560582-0002		INSTALLATIONSRITNING	INSTALLATION DRAWING	INSTALLATIONSZEICHNUNG	B- 648109-100V
2- 560583-0001		INSTALLATIONSRITNING	INSTALLATION DRAWING	INSTALLATIONSZEICHNUNG	B- 648109-100V
2- 560583-0002		INSTALLATIONSRITNING	INSTALLATION DRAWING	INSTALLATIONSZEICHNUNG	B- 648109-100V
1- 560635		STÖD	SUPPORT	STUETZE	C- 562656-010V
2- 560658		STYRPLÅT	HEAD PLATE	FUEHRUNGSBLECH	C- 554888-010V
3- 560668		KUGGREMSSKIVA	TIMING BELT PULLEY	ZAHNRIEMENSCHEIBE	C- 554886-010V
3- 560669		KUGGREMSSKIVA	TIMING BELT PULLEY	ZAHNRIEMENSCHEIBE	C- 554886-010V
C- 560670-0101	16377 91-05-07	PLATTFORM HÖGER	PLATFORM RIGHT	PLATTFORM	C- 565400-010V
C- 560671-0101	16240 91-03-28	PLATTFORM MITTEN	PLATFORM BETWEEN	PLATTFORM	C- 565400-010V
C- 560672-0101	16377 91-05-07	PLATTFORM VÄNSTER	PLATFORM LEFT	PLATTFORM	C- 565400-010V
C- 560846-010V	15201 91-08-14	TRANSPORTSTATIV	CONVEYOR FRAME	TRANSPORTSTATIV	B- 648109-100V
C- 560858-0101	14983 90-06-07	LUFTVENTIL	AIR VALVE	LUFTVENTIL	C- 560459-010V
					C- 560459-020V
					C- 560460-010V

PART NO	LAST ECN	BENÄMNING	TITLE	BENENNUNG	GROUP NO
					C- 560460-020V
					C- 560886-010V
					C- 560886-020V
1- 560860		PNEUMATIKSCHEMA	PNEUMATIC CHART	PNEUMATIKSCHEMA	B- 613109-020V
1- 560868		KRETSKORT	CIRCUIT BOARD	SCHALTKARTE	CE- 41751-010V
C- 560886-010V	16594 91-06-14	HEAD SPACE BY HL	REBUILDING KITS BRIK	UMBAUSÄTZE BRIK	C- 77091-040V
C- 560886-020V	16396 92-02-05	OMBYGGNADSSATSER BRIK	HEAD SPACE BY HL	UMBAUSÄTZE BRIK	C- 77091-040V
4- 560887		DOKUMENTMAPP	DOCUMENT FOLDER	DOKUMENTMAPPE	C- 560459-010V
4- 560888		DOKUMENTMAPP	DOCUMENT FOLDER	DOKUMENTMAPPE	C- 560460-010V
4- 560889		DOKUMENTMAPP	DOCUMENT FOLDER	DOKUMENTMAPPE	C- 560886-010V
C- 560921-0101	14983 90-06-07	PNEUMATIKUTRUSTNING	PNEUMATIC EQUIPMENT	PNEUMATIKEINHEIT	C- 560459-010V
					C- 560459-020V
					C- 560460-010V
					C- 560460-020V
					C- 560886-010V
					C- 560886-020V
4- 560931		FÄSTE	BRACKET	BEFESTIGUNGSHALTER	C- 256014-060V
					C- 272623-050V
					C- 469452-030V
					C- 751373-010V
					SP- 567189-010V
1- 561214		PLATTA	PLATE	PLATTE	C- 76492-010V
3- 561215		BLOCK	BLOCK	BLOCK	C- 76492-010V
4- 561216		KROK	HOOK	HAKEN	C- 76492-010V
4- 561398		SÄKRINGSÖVERSIKT	DEVICE DIAGRAM	SCHILD	CE- 557222-010V
					CE- 557226-010V
					CE- 557222-010V
3- 561402		SKYLT	SIGN	SCHILD	C- 752244-020V
					C- 978162-010V
					C- 556723-010V
4- 561419		MÄRKSKYLT	LABEL EL-MANUAL	SCHILD	CE- 557226-010V
C- 561425-0101	14983 90-06-07	MONTERINGSVERKTYG	ASSEMBLY TOOL	MONTAGEWERKZEUG	C- 560459-010V
					C- 560460-010V
					C- 560886-010V
1- 561427		BEHÅLLARE	CONTAINER	BEHÄLTER	C- 527898-010V
1- 561537		KRETSKORT	CIRCUIT BOARD	SCHALTKARTE	RK- 557156-010V
1- 561538		DISPLAY	DISPLAY	DISPLAY	RK- 557159-010V
1- 561539		KRETSKORT	CIRCUIT BOARD	SCHALTKARTE	RK- 557159-010V
3- 561551		APPARATLÅDA	APPLIANCE BOX	APPARATKASTEN	C- 544390-010V
4- 561577		KIL	WEDGE	KEIL	C- 905131-010V
4- 561578		SKYLT	FUSE PANEL LABEL	SCHILD	RK- 557018-010V
					RK- 557019-010V
					RK- 557018-010V
3- 562118		LOCK	LID	DECKEL	C- 572642-010V
					C- 572643-010V
3- 562119		PACKNING	GASKET	DICHTUNG	C- 572642-010V
					C- 572643-010V
G1- 562120		ARM TRYCKBACK	ARM PRESSURE JAW	ARM	C- 256951-050V
					C- 256952-050V
3- 562606		TRAPPSTEG	STAIR	STUFE	C- 560670-010V
					C- 560672-010V
3- 562607		DURKPLÅT	CHECKER PLATE	RIFFELBLECH	C- 560670-010V
					C- 560671-010V
					C- 560672-010V
1- 562608		DURKPLÅT	CHECKER PLATE	RIFFELBLECH	C- 560670-010V
					C- 560672-010V
1- 562609		DURKPLÅT	CHECKER PLATE	RIFFELBLECH	C- 560671-010V
4- 562610		FÄSTE	BRACKET	BEFESTIGUNGSHALTER	C- 560670-010V
					C- 560671-010V
					C- 560672-010V
3- 562611		SIDOSTYCKE	SIDE PIECE	SEITENSTUECK	C- 560670-010V
					C- 560671-010V
					C- 560672-010V
3- 562612		KANTPLÅT	EDGE PLATE	KANTENBLECH	C- 560670-010V
					C- 560671-010V
					C- 560672-010V
3- 562613		FÄSTE	BRACKET	BEFESTIGUNGSHALTER	C- 560670-010V
					C- 560671-010V
					C- 560672-010V
2- 562614		KONSOL	CANTILEVER	KONSOLE	C- 560670-010V
					C- 560671-010V
					C- 560672-010V
3- 562616		SKARVSTYCKE	JOINT PIECE	VERBINDUNGSSTUECK	C- 560670-010V
					C- 560671-010V
					C- 560672-010V
1- 562617		STATIV	MACHINE BODY	STATIV	C- 554889-020V
2- 562618		LUCKA	OPENING	DECKEL	C- 554859-010V
4- 562619		HÅLLARE	HOLDER	HALTER	C- 554859-010V
C- 562650-0101	16360 92-02-03	RÖRDRAGNING-PNEUMATIK	PIPE WORK-PNEUMATIC	ROHRSYSTEM - PNEUMATIK	B- 613102-020V
3- 562653		RÖR	PIPE	ROHR	C- 562650-010V
3- 562655		RÖR	PIPE	ROHR	C- 562650-010V
					C- 565402-010V
C- 562656-0101	16240 91-03-28	STÖD	SUPPORT	STUETZE	B- 613102-020V
2- 562657		PAPPERSSTÖD	PAPER SUPPORT	PAPIERSTUETZE	C- 564307-010V
2- 562658		FÄSTE	BRACKET	BEFESTIGUNGSHALTER	C- 564307-010V
1- 562659		STYRSKENA	STEERING RAIL	FUEHRUNGSSCHIENE	C- 564307-010V
1- 562660		STYRSKENA	STEERING RAIL	FUEHRUNGSSCHIENE	C- 564307-010V
2- 562661		AXEL	SHAFT	WELLE	C- 554888-010V
4- 562662		STYRKLOTS	LOCATING PIECE	FUEHRUNGSKLOTZ	C- 550714-010V
4- 562672		BRICKA	WASHER	SCHEIBE	C- 565417-010V
C- 562677-0101	15728 91-01-04	DÖRR FRONT	DOOR FRONT	TUER	B- 613102-020V
C- 562678-0101	16360 92-02-03	DÖRR	DOOR	TUER	C- 562677-010V

PART NO	LAST ECN	BENÄMNING	TITLE	BENENNUNG	GROUP NO
C- 562678-0102	16360 92-02-03	DÖRR	DOOR	TUER	C- 562677-010V
C- 562679-0101	16240 91-03-28	CYLINDER	CYLINDER	ZYLINDER	C- 562677-010V
C- 562679-0102	16240 91-03-28	CYLINDER	CYLINDER	ZYLINDER	C- 562677-010V
C- 562680-0101	16174 91-03-08	SKENA	RAIL	SCHIENE	C- 562677-010V
3- 562682		TÄCKPLÅT	COVERING PLATE	DECKBLECH	C- 554859-010V
2- 562685		RUTA	PANE	GLASSCHEIBE	C- 562678-010V
3- 562686		PLÅT	SHEET	BLECH	C- 562678-010V
3- 562689		PROFIL ÖVRE	PROFILE UPPER	PROFIL	C- 562678-010V
3- 562691		PROFIL	PROFILE	PROFIL	C- 562678-010V
3- 562692		PROFIL	PROFILE	PROFIL	C- 562678-010V
3- 562693		FÄSTE	BRACKET	BEFESTIGUNGSHALTER	C- 562678-010V
3- 562694		FÄSTE	BRACKET	BEFESTIGUNGSHALTER	C- 562678-010V
4- 562695		VINKELFÄSTE	ANGLE BRACKET	WINKELBEFESTIGUNG	C- 562678-010V
4- 562696		SKRUV	SCREW	SCHRAUBE	C- 562678-010V
4- 562697		SKRUV	SCREW	SCHRAUBE	C- 562678-010V
4- 562698		SKRUV	SCREW	SCHRAUBE	C- 562678-010V
4- 562699		BUSSNING	BUSHING	BUCHSE	C- 562678-010V
4- 562700		RULLENHET	ROLLER UNIT	ROLLENEINHEIT	C- 562678-010V
4- 562959		INDEX	INDEX	INDEX	CE- 557226-010V
C- 563088-010V	15202 90-10-12	KOPPLINGSLÅDA	CONNECTION BOX	KUPPLUNGSKASTEN	C- 441000-050V
2- 563089		APPARATLÅDA	APPLIANCE BOX	APPARATKASTEN	C- 563088-010V
C- 563210-010V	16404 92-07-06	TJOCKA PRODUKTER KIT HVA	HIGHLY VISC.PROD.KIT HVA	UMBAUSATZ	C- 77091-040V
C- 563211-010V	16404 92-07-06	TJOCKA PRODUKTER KIT HVA	HIGHLY VISC.PROD.KIT HVA	UMBAUSATZ	C- 77091-040V
1- 563213		SCHEMA LUFT	PNEUMATIC DIAGRAM AIR	SCHEMA LUFT	C- 736796-020V
1- 563214		SCHEMA LUFT	PNEUMATIC DIAGRAM AIR	SCHEMA LUFT	C- 736796-020V
1- 563215		SCHEMA ASEPTIK	ASEPTIC DIAGRAM	SCHEMA ASEPTIK	C- 736796-020V
4- 563274		DOKUMENTMAPP	DOCUMENT FOLDER	DOKUMENTMAPPE	C- 563210-010V
4- 563275		DOKUMENTMAPP	DOCUMENT FOLDER	DOKUMENTMAPPE	C- 563211-010V
2- 563278		RÖR	PIPE	ROHR	C- 491207-030V
4- 563280		KONSOL	CANTILEVER	KONSOLE	C- 553657-010V
3- 563281		T-RÖR	T-PIPE	T-ROHR	C- 491207-030V
2- 563283		DÖRR	DOOR	TUER	C- 553657-010V
4- 563284		KONSOL	CANTILEVER	KONSOLE	C- 553657-010V
4- 563285		BLINDPROPP	BLIND PLUG	BLINDPFROPFEN	C- 751410-010V
4- 563286		PACKNING	GASKET	DICHTUNG	C- 751373-010V
4- 563287		BRICKA	WASHER	SCHEIBE	C- 751373-010V
1- 563451		BALK 1	BEAM 1	BALKEN	C- 560846-010V
1- 563452		BALK 2	BEAM 2	BALKEN	C- 560846-010V
1- 563453		BALK 3	BEAM 3	BALKEN	C- 560846-010V
1- 563454		BALK 4	BEAM 4	BALKEN	C- 560846-010V
1- 563455		GAVEL HÖGER	GABLE RIGHT	STIRNWAND	C- 560846-010V
1- 563456		GAVEL VÄNSTER	GABLE LEFT	STIRNWAND	C- 560846-010V
2- 563457		HÖRNSTAG	CORNER BEAM	BALKEN	C- 560846-010V
3- 563458		TVÄRSTAG VÄNSTER	CROSS BAR LEFT	QUERSTREBE	C- 560846-010V
3- 563459		TVÄRSTAG HÖGER	CROSS BAR	QUERSTREBE	C- 560846-010V
3- 563461		TRANSFORMATOR	TRANSFORMER	TRAFO	RK- 557018-010V RK- 557021-010V
4- 563478		SKYLT	SIGN	SCHILD	RK- 557021-010V RK- 557022-010V RK- 557021-010V
3- 563611		STÖD	SUPPORT	STUETZE	C- 560846-010V
3- 563711		LED FÖRBINDN. KABEL	LED CONNECTION CABLE	KABEL	CE- 41751-010V
3- 563730		VINKELJÄRN ÖVRE	ANGLE BAR UPPER	WINKELSTAHL	C- 457937-020V
2- 563731		VINKELJÄRN ÖVRE	ANGLE BAR UPPER	WINKELSTAHL	C- 457937-020V
3- 563732		VINKELJÄRN ÖVRE	ANGLE BAR UPPER	WINKELSTAHL	C- 457937-020V
4- 563733		FÄSTE	BRACKET	BEFESTIGUNGSHALTER	C- 536859-020V
4- 563734		FÄSTE	BRACKET	BEFESTIGUNGSHALTER	C- 536859-020V
3- 563736		FÄSTE	BRACKET	BEFESTIGUNGSHALTER	C- 548057-010V
3- 563738		SKENA	RAIL	SCHIENE	C- 554346-010V
4- 563739		ANSLUTNING	ATTACHMENT	ANSCHLUSS	C- 563740-010V
C- 563740-0101	15707 91-08-30	VERKTYG FÖR BRYTLÄNK	TOOL FOR JAW OVERLOAD	WERKZEUGE	C- 77092-030V
2- 563745		INDUKTORFÄSTE	INDUCTOR BRACKET	BEFESTIGUNGSHALTER	C- 457866-030V
4- 563746		BYGEL	BOW CLAMP	BUEGEL	C- 457866-030V
4- 563748		FÄSTE	BRACKET	BEFESTIGUNGSHALTER	C- 457866-030V
1- 563756		PNEUMATIKSCHEMA	PNEUMATIC CHART	PNEUMATIKSCHEMA	B- 648118-090V
1- 564114-0001		MOD. AV SKYDD	MOD. OFF COVER	ANPASSUNGSZEICHNUNG	C- 564122-010V
1- 564115		KONSOL	CANTILEVER	KONSOLE	C- 564120-010V
1- 564116		BRYTRULLEFÄSTE	BENDING ROLLER BRACKET	BRECHROLLENHALTER	C- 564119-010V
3- 564117		AXEL	SHAFT	WELLE	C- 564120-010V
C- 564119-0101	15726 91-01-31	BRYTRULLEFÄSTE	BENDING ROLLER BRACKET	BRECHROLLENHALTER	C- 564122-010V
C- 564120-0101	15726 91-01-31	BROMS	BRAKE	BREMSE	C- 564122-010V
4- 564121		LÅSRING	LOCKING CIRCLIP	VERSCHLUSSRING	C- 564119-010V C- 564120-010V
C- 564122-0101	15726 91-01-31	KOMPL UTRUSTN F STORRULL	ROLLER UNIT	ROLLENEINHEIT	C- 751796-030V
4- 564237-0001		KOMPONENTER UTAN TP-NR	COMPONENTS WITHOUT TP-NO	KOMPONENTEN OHNE TP-NR	C- 68123-030V
4- 564238		DISKETT FÖR LAYOUTER	DISCETTE FOR LAYOUTS	DISKETT FÜR LAYOUTS	C- 68123-030V
4- 564239		FRONT PLATE 6TE	FRONT PLATE 6TE	FRONTBLECH	C- 68123-030V
3- 564240		TÄCKPLÅT	COVER PLATE CIRCUIT CARD	DECKBLECH	C- 68123-030V
3- 564246		TÄCKPLÅT	COVERING PLATE	DECKBLECH	C- 68471-010V
4- 564253-0001		KOMPONENTER UTAN TP-NR	COMPONENTS WITHOUT TP-NO	KOMPONENTEN OHNE TP-NR	C- 67564-010V
4- 564254-0001		KOMPONENTER UTAN TP-NR	COMPONENTS WITHOUT TP-NO	KOMPONENTEN OHNE TP-NR	C- 67565-010V
4- 564255-0001		KOMPONENTER UTAN TP-NR	COMPONENTS WITHOUT TP-NO	KOMPONENTEN OHNE TP-NR	C- 67566-010V
4- 564256-0001		KOMPONENTER UTAN TP-NR	COMPONENTS WITHOUT TP-NO	KOMPONENTEN OHNE TP-NR	C- 67567-010V
4- 564257-0001		KOMPONENTER UTAN TP-NR	COMPONENTS WITHOUT TP-NO	KOMPONENTEN OHNE TP-NR	C- 67568-010V
4- 564260-0001		KOMPONENTER UTAN TP-NR	COMPONENTS WITHOUT TP-NO	KOMPONENTEN OHNE TP-NR	C- 67569-010V
4- 564261-0001		KOMPONENTER UTAN TP-NR	COMPONENTS WITHOUT TP-NO	KOMPONENTEN OHNE TP-NR	C- 67570-010V
4- 564264-0001		KOMPONENTER UTAN TP-NR	COMPONENTS WITHOUT TP-NO	KOMPONENTEN OHNE TP-NR	C- 67573-010V
4- 564288		KONTAKTBRICKA	CONTACT WASHER	KONTAKTSCHEIBE	C- 554888-010V
2- 564289		STYRPLATTA	STEER PLATE	FUEHRUNGSPLATTE	C- 554888-010V
4- 564290		BUSSNING	BUSHING	BUCHSE	C- 554888-010V
4- 564291		FÄSTPLÅT	MOUNTING SHEET	BEFESTIGUNGSBLECH	C- 554888-010V
3- 564292		SKENA	RAIL	SCHIENE	C- 562680-010V

PART NO	LAST ECN	BENÄMNING	TITLE	BENENNUNG	GROUP NO
4- 564294		FÄSTÖRA	HOOK HOLDER	BEFESTIGUNGSROHR	C- 562680-010V
4- 564295		SKRUV	SCREW	SCHRAUBE	C- 562680-010V
G3- 564296		TRYCKFINGER	PRESSURE FINGER	DRUCKFINGER	C- 550712-020V
4- 564297		BUSSNING	BUSHING	BUCHSE	C- 562678-010V
1- 564298		RÄCKE	RAILING	HANDLEISTE	C- 560670-010V
					C- 560672-010V
1- 564299		RÄCKE	RAILING	HANDLEISTE	C- 560671-010V
1- 564300		RÄCKE	RAILING	HANDLEISTE	C- 560670-010V
					C- 560672-010V
4- 564301		FÄSTE	BRACKET	BEFESTIGUNGSHALTER	C- 560670-010V
					C- 560671-010V
					C- 560672-010V
3- 564302		RÄCKE	RAILING	HANDLEISTE	C- 560672-010V
3- 564303		RÄCKE	RAILING	HANDLEISTE	C- 560670-010V
3- 564304		RÄCKE	RAILING	HANDLEISTE	C- 560670-010V
3- 564305		RÄCKE	RAILING	HANDLEISTE	C- 560671-010V
3- 564306		RÄCKE	RAILING	HANDLEISTE	C- 560672-010V
C- 564307-0101	15623 91-01-14	PAPPERSSTYRARE	PAPER GUIDE	PAPIERSTEUERUNG	B- 613101-020V
3- 564308		RÄCKE	RAILING	HANDLEISTE	C- 560670-010V
3- 564309		RÄCKE	RAILING	HANDLEISTE	C- 560672-010V
3- 564310		RÄCKE	RAILING	HANDLEISTE	C- 560671-010V
3- 564311		FÄSTE	BRACKET	BEFESTIGUNGSHALTER	C- 554888-010V
4- 564312		BRICKA	WASHER	SCHEIBE	C- 554888-010V
4- 564313-0001		BORSTE	BRUSH	BUERSTE	C- 562678-010V
4- 564313-0002		BORSTE	BRUSH	BUERSTE	C- 562678-010V
2- 564314		BYGEL	BOW CLAMP	BUEGEL	C- 550711-020V
1- 564315		PAPPERSLEDARE	PAPER LEADER	PAPIERFUEHRUNG	C- 550711-020V
4- 564316		PINNE	PEG	STIFT	C- 550711-020V
3- 564317		KONSOL	CANTILEVER	KONSOLE	C- 550714-010V
4- 564318		STOPPSKRUV	STOP SCREW	SPERRSCHRAUBE	C- 550712-020V
3- 564319		HÅLLARE	HOLDER	HALTER	C- 550714-010V
3- 564322		HÄVARM	LEVER	HEBEL	C- 562678-010V
3- 564323		HÄVARM	LEVER	HEBEL	C- 562678-010V
2- 564324		STYRSKENA	STEERING RAIL	FUEHRUNGSSCHIENE	C- 562680-010V
4- 564325		HÅLLARE	HOLDER	HALTER	C- 562680-010V
4- 564326		HÅLLARE	HOLDER	HALTER	C- 562680-010V
3- 564327		STYRKLACK	GUIDE LUG	FUEHRUNGSABSATZ	C- 565393-010V
1- 564536		FUNKTIONSDIAGRAM TB/9	FUNCTION DIAGRAM	FUNKTIONSDIAGRAM	B- 648109-100V
3- 564537		VINKEL	ANGLE	WINKEL	C- 484858-030V
					C- 547756-010V
3- 564543		DISKRÖR	CLEANING PIPE	REINIGUNGSROHR	C- 456836-040V
3- 564931		AXEL	SHAFT	WELLE	C- 556723-010V
4- 565095		FUSE PANEL LABEL	FUSE PANEL LABEL	SCHILD	RK- 557157-010V
4- 565096		FUSE PANEL LABEL	FUSE PANEL LABEL	SCHILD	RK- 557160-010V
4- 565102		AXEL	SHAFT	WELLE	C- 978192-020V
					C- 570079-020V
					C- 567681-020V
					C- 978192-020V
2- 565103		SKYDDSKÅPA	PROTECTIVE CASING	SCHUTZKAPPE	C- 978192-020V
					C- 570079-020V
					C- 567681-020V
					C- 978192-020V
4- 565134-0001		KOMPONENTER UTAN TP-NR	COMPONENTS WITHOUT TP-NO	KOMPONENTEN OHNE TP-NR	C- 67574-040V
4- 565136-0001		KOMPONENTER UTAN TP-NR	COMPONENTS WITHOUT TP-NO	KOMPONENTEN OHNE TP-NR	C- 67578-010V
4- 565137-0001		KOMPONENTER UTAN TP-NR	COMPONENTS WITHOUT TP-NO	KOMPONENTEN OHNE TP-NR	C- 67576-010V
4- 565138-0001		KOMPONENTER UTAN TP-NR	COMPONENTS WITHOUT TP-NO	KOMPONENTEN OHNE TP-NR	C- 67580-020V
4- 565140-0001		KOMPONENTER UTAN TP-NR	COMPONENTS WITHOUT TP-NO	KOMPONENTEN OHNE TP-NR	C- 67600-050V
4- 565141-0001		KOMPONENTER UTAN TP-NR	COMPONENTS WITHOUT TP-NO	KOMPONENTEN OHNE TP-NR	C- 67575-010V
2- 565143		PANEL	PANEL	PANEL	C- 67580-020V
4- 565144		SKYLT LED	LABEL LED	SCHILD	C- 67600-050V
4- 565145		SKYLT X1/X2	LABEL X1/X2	SCHILD	C- 67600-050V
4- 565146		MELLANLÄGG	INSULATION SPACER	ISOLIERUNG	C- 67600-050V
4- 565147		STYRSKENA V	GUIDE RAIL LEFT	SCHIENE	C- 67600-050V
4- 565148		STYRSKENA H	GUIDE RAIL RIGHT	SCHIENE	C- 67600-050V
4- 565149		STYRSKENA	GUIDE RAIL BACK	SCHIENE	C- 67600-050V
3- 565150		FRONTGREPP	FRONT HANDLE	GRIFF	C- 67600-050V
1- 565151		LÅD-BOTTEN	BOX BOTTOM	KASTEN	C- 67600-050V
1- 565152		RAM	FRAME	RAHMEN	C- 67600-050V
1- 565153		KOMPL. LÅDA	COMPLETE BOX	KASTEN	C- 67600-050V
1- 565154		LÅDÖVERDEL	BOX UPPER PART	KASTEN	C- 67600-050V
4- 565250		BRICKA	WASHER	SCHEIBE	C- 527898-010V
4- 565251		VENTIL	VALVE	VENTIL	C- 527898-010V
4- 565286		LINDNINGSHÅLLARE	WINDING HOLDER	HALTER	C- 67569-010V
4- 565287		DISTANS	SPACER	DISTANZ	C- 67569-010V
3- 565289		KOMPONENTLAYOUT	COMPONENT REFERENCE	KOMPONENTELAYOUT	C- 67570-010V
4- 565290		KYLFLÄNS V1	HEAT SINK V1	KUEHLBLECH	C- 67582-010V
4- 565291		KYLFLÄNS V3	HEAT SINK V3	KUEHLBLECH	C- 67582-010V
4- 565295		GAVEL VÄNSTER	GABLE LEFT	STIRNWAND	C- 67573-010V
					C- 67581-010V
4- 565296		BRICKA	WASHER	SCHEIBE	C- 67573-010V
					C- 67581-010V
3- 565297		TRANSISTORPAKET H	TRANSISTOR PACKAGE R	SCHALTKARTE	C- 67573-010V
3- 565298		TRANSISTORPAKET V	TRANSISTOR PACKAGE L	SCHALTKARTE	C- 67581-010V
3- 565299		SORTERINGS INSTRUKTION	SORTING INSTRUCTION	INSTRUKTION	C- 67577-050V
4- 565300		KONDENSATOR KABEL SVART	CAPACITOR CABLE BLACK	KABEL	C- 67577-050V
4- 565301		KONDENSATOR KABEL RÖD	CAPACITOR CABLE RED	KABEL	C- 67577-050V
4- 565312-0001		KOMPONENTER UTAN TP-NR	COMPONENTS WITHOUT TP-NO	KOMPONENTEN OHNE TP-NR	C- 67581-010V
4- 565389		BRICKA	WASHER	SCHEIBE	C- 562678-010V
4- 565390		KLACK	LUG	NOCKE	C- 550712-020V
3- 565391		PROFIL	PROFILE	PROFIL	C- 562678-010V
4- 565392		LAGERTAPP	PIVOT PIN	LAGERZAPFEN	C- 562678-010V
C- 565393-0101	15728 91-01-04	FOTPLATTA	FOOT PLATE	FUSSPLATTE	C- 562677-010V

PART NO	LAST ECN	BENÄMNING	TITLE	BENENNUNG	GROUP NO
3- 565394		FOTPLATTA	FOOT PLATE	FUSSPLATTE	C- 565393-010V
2- 565395		BALK	BEAM	BALKEN	C- 565393-010V
4- 565396		KON	CONE	KEGEL	C- 550757-020V
1- 565398		GAVEL	END SECTION	STIRNWAND	C- 550714-010V
1- 565399		KLIPPBACK	CUTTING JAW	SCHNEIDBACKE	C- 550714-010V
C- 565400-010V	15620 91-01-31	PLATTFORM ASU-FLEX	PLATFORM ASU-FLEX	PLATTFORM	B- 613102-020V
1- 565401-0001		INSTALLATIONSRITNING	INSTALLATION DRAWING	INSTALLATIONSZEICHNUNG	B- 613109-020V
C- 565402-0101	16360 92-02-03	KABELKANAL	CABLE DUCT	KABELKANAL	B- 613102-020V
3- 565403		KONSOL	CANTILEVER	KONSOLE	C- 554889-020V
4- 565405		BRICKA	WASHER	SCHEIBE	C- 550711-020V
2- 565406		RÖR	PIPE	ROHR	C- 562650-010V
					C- 565402-010V
3- 565407		RÖR	PIPE	ROHR	C- 565402-010V
3- 565408		RÖR	PIPE	ROHR	C- 565402-010V
3- 565409		RÖR	PIPE	ROHR	C- 565402-010V
2- 565411		KNIVHÅLLARE	KNIFE HOLDER	MESSERHALTER	C- 565417-010V
4- 565413		PINNE	PEG	STIFT	C- 565417-010V
C- 565417-0101	16080 91-02-04	RIVDON	TEAR DEVICE	ABREISSBLECH	B- 613109-020V
2- 565418		SKYDDSPLÅT	PROTECTION PLATE	SCHUTZBLECH	C- 565417-010V
C- 565419-0101	16360 92-02-03	KOPPLINGSLÅDA	CONNECTION BOX	KUPPLUNGSKASTEN	C- 565402-010V
1- 565420		APPARATLÅDA	APPLIANCE BOX	APPARATKASTEN	C- 565419-010V
3- 565421		HÅLLARE	HOLDER	HALTER	C- 565419-010V
3- 565422		HÄVARM	LEVER	HEBEL	C- 562679-010V
3- 565423		HÄVARM	LEVER	HEBEL	C- 562679-010V
3- 565424		FÄSTE	BRACKET	BEFESTIGUNGSHALTER	C- 562679-010V
3- 565425		FÄSTÖRA	HOOK HOLDER	BEFESTIGUNGSROHR	C- 562680-010V
4- 565427		BEN	LEG	BEIN	C- 560670-010V
					C- 560671-010V
					C- 560672-010V
4- 565434		BRICKA	WASHER	SCHEIBE	C- 550757-020V
4- 565435		FÄSTE	BRACKET	BEFESTIGUNGSHALTER	C- 550757-020V
3- 565439		RÖR	PIPE	ROHR	C- 554888-010V
4- 565440		PASSKRUV	REAMED BOLT	PASSCHRAUBE	C- 550714-010V
1- 565461		PÅFYLLNINGSRÖR ÖVRE	FILLING TUBE UPPER	FUELLROHR	C- 469091-030V
C- 565462-0101	19266 93-06-01	LÅSPLATTA	LOCK PLATE	VERSCHLUSSPLATTE	C- 441307-030V
C- 565462-0102	19266 93-06-01	LÅSPLATTA	LOCK PLATE	VERSCHLUSSPLATTE	C- 441307-030V
C- 565462-0103	19266 93-06-01	LÅSPLATTA	LOCK PLATE	VERSCHLUSSPLATTE	C- 441307-030V
C- 565462-0104	19266 93-06-01	LÅSPLATTA	LOCK PLATE	VERSCHLUSSPLATTE	C- 441307-030V
4- 565532		BLINDFLÄNS	BLANK-OFF FLANGE	BLINDFLANSCH	C- 565536-010V
4- 565533		BLINDFLÄNS	BLANK-OFF FLANGE	BLINDFLANSCH	C- 565536-010V
4- 565534		FLÄNS	FLANGE	FLANSCH	C- 565536-010V
4- 565535		FLÄNS	FLANGE	FLANSCH	C- 565536-010V
C- 565536-0101	15727 91-05-08	PROVTRYCKN.UTRUSTNING	PRESSURE TEST EQUIPMENT	TESTAUSR~STUNG	C- 77092-030V
4- 565570		STÖD	SUPPORT	STUETZE	C- 560846-010V
4- 565641		LÅSPLATTA	LOCK PLATE	VERSCHLUSSPLATTE	C- 491976-020V
G2- 565642		KONSOL	CANTILEVER	KONSOLE	C- 491976-020V
4- 565647		GUMMIHYLSA	RUBBER SLEEVE	GUMMIHUELSE	C- 566282-010V
3- 565649		SKYDDSKÅPA	PROTECTIVE CASING	SCHUTZKAPPE	C- 566282-010V
4- 565650		AXEL	SHAFT	WELLE	C- 490610-040V
4- 565651		RULLE	ROLL	ROLLE	C- 469736-040V
					C- 490610-040V
4- 565652		RULLE	ROLL	ROLLE	C- 469736-040V
4- 565653		RULLE	ROLL	ROLLE	C- 469736-040V
4- 565670		DISTANS	SPACER	DISTANZ	C- 491976-020V
4- 565671		DISTANS	SPACER	DISTANZ	C- 491976-020V
1- 565684		INDUKTOR	INDUCTOR	INDUKTOR	C- 550714-010V
1- 565950		MEDBRINGARE HÖGER	CARRIER RIGHT	MITNEHMER	CR- 256212-050V
1- 565951		MEDBRINGARE VÄNSTER	CARRIER LEFT	MITNEHMER	CR- 256213-050V
4- 566015		BRICKA	WASHER	SCHEIBE	C- 271114-050V
1- 566174		ANSLUTNINGSRÖR	ATTACHMENT PIPE	ANSCHLUSSROHR	C- 456976-050V
2- 566175		VINKELRÖR	ELBOW PIPE	WINKELROHR	C- 456976-050V
C- 566280-010V	17186 92-03-31	REMSSTYRARE	STRIP GUIDE	STREIFENFUEHRUNG	B- 648118-090V
C- 566282-010V	17186 92-03-31	REMSMATNING	STRIP FEEDER	VORSCHIEBER	C- 554360-020V
1- 566298		PLATTFORM	PLATFORM	PLATTFORM	C- 456457-040V
1- 566299		PLATTFORM	PLATFORM	PLATTFORM	C- 456457-040V
1- 566300		RÄCKE	RAILING	HANDLEISTE	C- 456459-040V
1- 566301		RÄCKE	RAILING	HANDLEISTE	C- 456459-040V
1- 566302		RÄCKE	RAILING	HANDLEISTE	C- 456459-040V
1- 566303		RÄCKE	RAILING	HANDLEISTE	C- 456459-040V
1- 566304		RÄCKE	RAILING	HANDLEISTE	C- 456459-040V
1- 566305		RÄCKE	RAILING	HANDLEISTE	C- 456459-040V
1- 566306		PLÅT	SHEET	BLECH	C- 456457-040V
1- 566307		PLÅT	SHEET	BLECH	C- 456457-040V
1- 566308		PLÅT	SHEET	BLECH	C- 456457-040V
1- 566309		PLÅT	SHEET	BLECH	C- 456457-040V
C- 566318-010V	16202 91-06-07	PLATTFORM/RÄCKE	PLATFORM/RAILING	ZUSAMMENST.ZEICHNUNG	C- 77091-040V
3- 566377		VINKELSTÅNG	ANGLE BAR	WINKELSTAHL	C- 978367-010V
3- 566378		VINKELSTÅNG	ANGLE BAR	WINKELSTAHL	C- 978367-010V
3- 566404-0001		KUGGREM	TIMING BELT	ZAHNRIEMEN	C- 572760-010V
3- 566404-0002		KUGGREM	TIMING BELT	ZAHNRIEMEN	C- 572760-010V
3- 566404-0003		KUGGREM	TIMING BELT	ZAHNRIEMEN	C- 572760-010V
2- 566506		VARIATORENHET	VARIATOR	VARIATOR	C- 283626-040V
C- 566507-0101	16171 91-03-26	KONV.SATS ÖVERDEL 250/20	CONV.KIT SUPER.ST.250/20	UMWANDLUNGSATZ	C- 567704-020V
					C- 567705-020V
1- 566651		PLATTFORM	PLATFORM	PLATTFORM	C- 566318-010V
1- 566652		PLATTFORM	PLATFORM	PLATTFORM	C- 566318-010V
1- 566653		PLATTFORM	PLATFORM	PLATTFORM	C- 566318-010V
1- 566654		PLATTFORM	PLATFORM	PLATTFORM	C- 566318-010V
1- 566655		RÄCKE	RAILING	HANDLEISTE	C- 566318-010V
2- 566656		RÄCKE	RAILING	HANDLEISTE	C- 566318-010V
2- 566657		RÄCKE	RAILING	HANDLEISTE	C- 456459-040V
2- 566658		PLÅT	SHEET	BLECH	C- 566318-010V

PART NO	LAST ECN	BENÄMNING	TITLE	BENENNUNG	GROUP NO
2- 566659		PLÅT	SHEET	BLECH	C- 566318-010V
2- 566660		PLÅT	SHEET	BLECH	C- 566318-010V
2- 566661		KLIPPSKENA	CUTTING RAIL	SCHNEIDSCHIENE	CR- 256204-050V
					CR- 256205-050V
2- 566662		RÄCKE	RAILING	HANDLEISTE	C- 566318-010V
4- 566669		NIPPEL	NIPPLE	NIPPEL	C- 456555-040V
1- 566676		PLATTFORM	PLATFORM	PLATTFORM	C- 456457-040V
3- 566695		AXEL	SHAFT	WELLE	C- 272024-040V
3- 566696		STYRKONSOL	GUIDE CONSOLE	FUEHRUNGSKONSOL	C- 272024-040V
4- 566697		AXELFÄSTE	AXLE SUPPORT	ACHSENHALTER	C- 272024-040V
2- 566703		RÖR	PIPE	ROHR	C- 491207-030V
1- 566704		RÖR	PIPE	ROHR	C- 491207-030V
C- 567034-0101	16371 91-05-23	STEGE	LADDER	LEITER	C- 456457-040V
4- 567035		KUGGHJUL	GEAR WHEEL	ZAHNRAD	C- 566282-010V
4- 567046		MELLANLÄGG	LACE	ZWISCHENLAGE	C- 469635-010V
4- 567047		MELLANLÄGG	LACE	ZWISCHENLAGE	C- 457881-030V
3- 567048		INDUKTOR	INDUCTOR	INDUKTOR	C- 457866-030V
					C- 469316-020V
3- 567052		INDUKTOR	INDUCTOR	INDUKTOR	C- 457866-030V
					C- 469316-020V
3- 567056		INDUKTOR	INDUCTOR	INDUKTOR	C- 457866-030V
					C- 469316-020V
4- 567060		STÖD	SUPPORT	STUETZE	C- 563740-010V
3- 567061		INDUKTOR	INDUCTOR	INDUKTOR	C- 457866-030V
3- 567061		INDUKTOR	INDUCTOR	INDUKTOR	C- 469316-020V
1- 567069		PLATTFORM	PLATFORM	PLATTFORM	C- 456458-040V
4- 567070-0010		ELEKTROD	ELECTRODE	ELEKTRODE	C- 272623-050V
4- 567070-0012		ELEKTROD	ELECTRODE	ELEKTRODE	C- 256014-060V
					C- 469452-030V
4- 567070-0013		ELEKTROD	ELECTRODE	ELEKTRODE	C- 924300-010V
					C- 272623-050V
					C- 924300-010V
4- 567070-0014		ELEKTROD	ELECTRODE	ELEKTRODE	SP- 567189-010V
4- 567070-0016		ELEKTROD	ELECTRODE	ELEKTRODE	C- 751373-010V
4- 567070-0017		ELEKTROD	ELECTRODE	ELEKTRODE	C- 751373-010V
SP- 567189-0107	16302 91-05-15	ELEKTROD	ELECTRODE	ELEKTRODE	RK- 978234-010V
4- 567288		DISTANS	SPACER	DISTANZ	C- 566318-010V
4- 567372		BRUKSANVISNING	INSTRUCTION FOR USE	INSTRUKTION	C- 565536-010V
C- 567681-0201	19540 93-04-05	KONVERTERINGSSATS SV	CONVERTING KIT FF 200/25	UMWANDLUNGSATZ	C- 567707-020V
2- 567684		SKYDD	PROTECTION	SCHUTZ	C- 751691-010V
C- 567695-0101	16559 91-05-27	KONV.SATS ÖVERDEL 200/25	CONVERTING KIT	UMWANDLUNGSATZ	C- 567707-020V
C- 567704-020V	19540 93-04-05	KONVERTERINGSSATS 250/20	CONVERTING KIT 250/200	UMWANDLUNGSATZ	C- 77091-040V
C- 567705-0201	19540 93-04-05	KONVERTERINGSSATS 250/20	CONVERTING KIT 250/200	UMWANDLUNGSATZ	C- 77091-040V
C- 567707-0201	19540 93-04-05	KONVERTERINGSSATS 200/25	CONVERTING KIT 200/250	UMWANDLUNGSATZ	C- 77091-040V
2- 567731		ADAPTER	ADAPTER	ADAPTER	C- 567733-010V
C- 567732-0101	17600 92-02-20	KALIBRERINGSUTRUSTNING	CALIBRATION EQUIPMENT	KALIBRIERAUSRUESTUNG	C- 77092-030V
C- 567733-0101	17600 92-02-20	ADAPTER	ADAPTER	ADAPTER	CE- 557793-010V
4- 567745		PACKNINGSBESKRIVNING	PACKING DESCRIPTION	VERS.PACKUNGSBESCHREIBUN	C- 567732-010V
1- 567769		BALK	BEAM	BALKEN	C- 271635-030V
1- 567770		BALK	BEAM	BALKEN	C- 271635-030V
4- 568289		LÅSPLATTA	LOCK PLATE	VERSCHLUSSPLATTE	C- 565462-010V
4- 568575		RULLE	ROLL	ROLLE	C- 469501-040V
1- 568577		BLÅSMUNSTYCKE	AIR NOZZLE	BLASMUNDSTUECK	C- 469501-040V
2- 568578		BLÅSMUNSTYCKE	AIR NOZZLE	BLASMUNDSTUECK	C- 469501-040V
3- 568581		FÖRDELARPLÅT	DISTRIBUTOR WING	VERTEILERBLECH	C- 469501-040V
2- 568583		GAFFEL	FORK	GABEL	C- 469091-030V
1- 568975		DISPLAY H.V.A. KIT -801	DISPLAY H.V.A. KIT -801	DISPLAY	RK- 557156-010V
4- 569016		PACKNING	GASKET	DICHTUNG	C- 256014-060V
3- 569101		MÖNSTERKORT	TEMP.REG.ADAPT: MAIN CAR	LEITERPLATTE	C- 557063-010V
2- 569109		MUNSTYCKE	NOZZLE	DUESE	C- 469781-030V
2- 569392		INDUKTOR 125CC	INDUCTOR 125CC	INDUKTOR	C- 295523-030V
1- 569648		SCHEMA VATTEN	WATER DIAGRAM	SCHEMA WASSER	B- 648109-100V
1- 569702		SCHEMA VATTEN TBA/9 C	WATER DIAGRAM TBA/9 C	SCHEMA WASSER	C- 491767-020V
C- 570079-0201	19540 93-04-05	KONVERTERINGSSATS SV	CONV. KIT FF 250/200	UMWANDLUNGSATZ	C- 567705-020V
4- 570127		SKYDD	PROTECTION	SCHUTZ	C- 557826-010V
4- 570128		SKYDD	PROTECTION	SCHUTZ	C- 557826-010V
4- 570131		SOCKEL	BASE	SOCKEL	C- 557063-010V
1- 570133		DISPLAY	DISPLAY	DISPLAY	CE- 41724-010V
					CE- 41758-010V
					CE- 41724-010V
					CE- 41758-010V
C- 570141-0201	19540 93-04-05	SVÄNGRAMSENHET	PIVOT FRAME UNIT	SCHWENKARM	C- 570079-020V
					C- 978192-020V
C- 570143-0201	19540 93-04-05	SVÄNGRAMSENHET	PIVOT FRAME UNIT	SCHWENKARM	C- 567681-020V
C- 570145-0201	19540 93-04-05	SVÄNGRAMSENHET	PIVOT FRAME UNIT	SCHWENKARM	C- 978192-020V
C- 570500-010V	17208 92-02-28	ABB TRUCK	ABB INDUSTRIAL TRUCK	STAPLER FUR GROSSE ROLLE	C- 570501-010V
C- 570501-010V	17208 92-02-28	ASU-FLEX MED KRINGUTR.	ASU-FLEX W. PERIPHERALS	ROLLENEINHEIT	C- 77091-040V
4- 570523		ÖVERFALL	CAP	UEBERFALL	C- 271017-030V
3- 570524		LAGER	BEARING	LAGER	C- 271017-030V
4- 570564-0001		RULLE	ROLL	ROLLE	C- 566282-010V
4- 570564-0002		RULLE	ROLL	ROLLE	C- 566282-010V
4- 570564-0003		RULLE	ROLL	ROLLE	C- 566282-010V
4- 570564-0004		RULLE	ROLL	ROLLE	C- 566282-010V
4- 570565		RULLE	ROLL	ROLLE	C- 566282-010V
4- 570771		MS-SUPPLEMENT	MS-SUPPLEMENT	DOKUMENT	C- 567704-020V
					C- 567705-020V
					C- 567707-020V
4- 570788-0001		MS-KALIBRERINGSUTRUSTNIN	MS-CALIBRATION EQUIPMENT	DOKUMENT	C- 567732-010V
4- 570789-0001		MS-KALIBRERINGSUTRUSTNIN	MS-CALIBRATION EQUIPMENT	DOKUMENT	C- 567732-010V
4- 570790-0001		MS-KALIBRERINGSUTRUSTNIN	MS-CALIBRATION EQUIPMENT	DOKUMENT	C- 567732-010V
4- 570791-0001		MS-KALIBRERINGSUTRUSTNIN	MS-CALIBRATION EQUIPMENT	DOKUMENT	C- 567732-010V
4- 570792-0001		RULLE	ROLL	ROLLE	C- 566280-010V

PART NO	LAST ECN	BENÄMNING	TITLE	BENENNUNG	GROUP NO
4- 570792-0002		RULLE	ROLL	ROLLE	C- 566280-010V
4- 570792-0003		RULLE	ROLL	ROLLE	C- 566280-010V
4- 570792-0004		RULLE	ROLL	ROLLE	C- 566280-010V
4- 570926-0001		PLINTRITNING X001, X011	TERMINAL DRWG X001, X011	GRUNDPLATTE	CE- 41723-010V CE- 41729-010V
4- 570926-0002		PLINTRITNING X001	TERMINAL DRAWING X001	GRUNDPLATTE	CE- 41723-010V CE- 41729-010V
4- 570926-0003		PLINTRITNING X001	TERMINAL DRAWING X001	GRUNDPLATTE	CE- 41723-010V CE- 41729-010V
4- 570926-0004		PLINTRITNING X001	TERMINAL DRAWING X001	GRUNDPLATTE	CE- 41723-010V CE- 41729-010V
4- 570927-0001		PLINTRITNING X001, X011	TERMINAL DRWG X001, X011	GRUNDPLATTE	CE- 41750-010V CE- 41756-010V
4- 570927-0002		PLINTRITNING X001	TERMINAL DRAWING X001	GRUNDPLATTE	CE- 41750-010V CE- 41756-010V
4- 570927-0003		PLINTRITNING X001	TERMINAL DRAWING X001	GRUNDPLATTE	CE- 41750-010V CE- 41756-010V
4- 570927-0004		PLINTRITNING X001	TERMINAL DRAWING X001	GRUNDPLATTE	CE- 41750-010V CE- 41756-010V
4- 570928-0001		PLINTRITNING X001, X011	TERMINAL DRWG X001, X011	GRUNDPLATTE	CE- 41757-010V CE- 41763-010V
4- 570928-0002		PLINTRITNING X001	TERMINAL DRAWING X001	GRUNDPLATTE	CE- 41757-010V CE- 41763-010V
4- 570928-0003		PLINTRITNING X001	TERMINAL DRAWING X001	GRUNDPLATTE	CE- 41757-010V CE- 41763-010V
4- 570928-0004		PLINTRITNING X001	TERMINAL DRAWING X001	GRUNDPLATTE	CE- 41757-010V CE- 41763-010V
4- 570929		SKYLT EL-MANUAL	LABEL EL-MANUAL	SCHILD	CE- 41723-010V CE- 41729-010V
1- 571013		DISPLAY	DISPLAY	DISPLAY	CE- 41751-010V
2- 571103		MUNSTYCKE	NOZZLE	DUESE	C- 469781-030V
2- 571109		STYRPLATTA	STEER PLATE	FUEHRUNGSPLATTE	C- 566280-010V
2- 571110		STYRPLATTA	STEER PLATE	FUEHRUNGSPLATTE	C- 566280-010V
2- 571111		STYRPLATTA	STEER PLATE	FUEHRUNGSPLATTE	C- 566280-010V
2- 571112		STYRPLATTA	STEER PLATE	FUEHRUNGSPLATTE	C- 566280-010V
4- 571119		SKYDDSPLÅT	PROTECTION PLATE	SCHUTZBLECH	C- 751410-010V
4- 571516		INDEX EL-MANUAL	INDEX EL-MANUAL	INDEX	CE- 41723-010V CE- 41729-010V
4- 571517		SÄKRINGSÖVERSIKT	FUSE PANEL LABEL	SCHILD	CE- 41723-010V CE- 41729-010V
4- 571518		PLINTRITNING X003	TERMINAL DRAWING X003	GRUNDPLATTE	CE- 41723-010V CE- 41750-010V CE- 41757-010V CE- 41723-010V CE- 41729-010V CE- 41750-010V CE- 41756-010V CE- 41757-010V CE- 41763-010V
4- 571519		PLINTRITNING XL, X009	TERMINAL DRAWING XL, X00	GRUNDPLATTE	CE- 41723-010V
4- 571519		PLINTRITNING XL, X009	TERMINAL DRAWING XL, X00	GRUNDPLATTE	CE- 41750-010V CE- 41757-010V CE- 41723-010V CE- 41729-010V CE- 41750-010V CE- 41756-010V CE- 41757-010V CE- 41763-010V
4- 571520		PLINTRITNING P.X1, P.X2	TERMINAL BLOCK P.X1, P.X	GRUNDPLATTE	CE- 41724-010V CE- 41751-010V CE- 41758-010V CE- 41724-010V CE- 41729-010V CE- 41751-010V CE- 41756-010V CE- 41758-010V CE- 41763-010V
4- 571521		SÄKRINGSÖVERSIKT	FUSE PANEL LABEL	SCHILD	CE- 41750-010V CE- 41756-010V
4- 571522		INDEX EL-MANUAL	INDEX EL-MANUAL	INDEX	CE- 41750-010V CE- 41756-010V
4- 571523		SKYLT EL-MANUAL	LABEL EL-MANUAL	SCHILD	CE- 41750-010V CE- 41756-010V
4- 571524		PLINTRITNING X100, TPIH	TERMINAL DRWG X100, TPIH	GRUNDPLATTE	CE- 41766-010V CE- 41729-010V CE- 41756-010V CE- 41763-010V CE- 41766-010V
4- 571525		PLINTRITNING XL1-3	TERMINAL DRAWING XL1-3	GRUNDPLATTE	CE- 41723-010V CE- 41750-010V CE- 41757-010V CE- 41723-010V CE- 41729-010V CE- 41750-010V CE- 41756-010V CE- 41757-010V CE- 41763-010V
4- 571527		SÄKRINGSÖVERSIKT	FUSE PANEL LABEL	SCHILD	CE- 41757-010V CE- 41763-010V
4- 571528		INDEX EL-MANUAL	INDEX EL-MANUAL	INDEX	CE- 41757-010V CE- 41763-010V
4- 571529		SKYLT EL-MANUAL	LABEL EL-MANUAL	SCHILD	CE- 41757-010V

PART NO	LAST ECN	BENÄMNING	TITLE	BENENNUNG	GROUP NO
					CE- 41763-010V
4- 571534		PLATTA	PLATE	PLATTE	C- 441304-040V
3- 571535		KONSOL	CANTILEVER	KONSOLE	C- 441304-040V
3- 571536		KONSOL	CANTILEVER	KONSOLE	C- 441304-040V
3- 571537		RING	RING	RING	C- 272021-060V
3- 571538		RING	RING	RING	C- 272021-060V
3- 571539		RING	RING	RING	C- 272021-060V
4- 571540		PINNE	PEG	STIFT	C- 272021-060V
1- 571541		PELARE	PILLAR	SÄULE	C- 272021-060V
1- 571542		ÖVERHUS	HOUSE	GEHAEUSE	C- 272021-060V
4- 571543		LAGERPLATTA	BEARING PLATE	LAGERPLATTE	C- 456309-050V
4- 571544		LAGERPLATTA	BEARING PLATE	LAGERPLATTE	C- 456309-050V
2- 571545		MOTORPLATTA	MOTOR PLATE	MOTORPLATTE	C- 272028-060V
2- 571869		STRÖMSKENA,HÖGER	BUSBAR,RIGHT	STROMSCHIENE	C- 572642-010V
2- 571870		STRÖMSKENA,VÄNSTER	BUSBAR,LEFT	STROMSCHIENE	C- 572643-010V
2- 571871		STRÖMSKENA,HÖGER	BUSBAR,RIGHT	STROMSCHIENE	C- 572642-010V
2- 571872		STRÖMSKENA,VÄNSTER	BUSBAR,LEFT	STROMSCHIENE	C- 572643-010V
4- 571873		TÄTNING	SEAL	DICHTUNG	C- 572642-010V C- 572643-010V
4- 571874		TÄTNINGSKUTS	SEALING PLUG	DICHTUNGSPROPFEN	C- 572642-010V C- 572643-010V
1- 571875		PLÅT	SHEET	BLECH	C- 978739-010V
1- 571876		PLÅT	SHEET	BLECH	C- 978739-010V
C- 571918-010V	17890 93-01-23	TRANSMISSION	TRANSMISSION	TRANSMISSION	B- 648102-100V
1- 571919		KABELGENOMFÖRINGSPLÅT	CABLE LEAD-IN	BLECH	C- 295883-050V
2- 571920		TRYCKARM	PRESSURE ARM	DRUCKARM	C- 450101-020V
1- 571921		TÄCKPLÅT	COVERING PLATE	DECKBLECH	C- 271513-060V
1- 571922		TÄCKPLÅT	COVERING PLATE	DECKBLECH	C- 271513-060V
1- 571923		STATIV	MACHINE BODY	STATIV	C- 256843-060V
1- 571924		MELLANSTYCKE	SPACER PIECE	ZWISCHENSTUECK	C- 295883-050V
1- 571925		PLÅT	SHEET	BLECH	C- 456458-040V C- 751860-020V
1- 571926		PLÅT	SHEET	BLECH	C- 456458-040V
1- 571927		PLÅT	SHEET	BLECH	C- 751860-020V
1- 571928		STATIV	MACHINE BODY	STATIV	C- 256843-060V
3- 571929		SKENA	RAIL	SCHIENE	C- 456827-020V
1- 571930		STATIV	MACHINE BODY	STATIV	C- 256843-060V
1- 571931		MELLANSTYCKE	SPACER PIECE	ZWISCHENSTUECK	C- 256843-060V
2- 571936		LUFTRÖR	AIR PIPE	LUFTROHR	C- 295045-070V
2- 571937		LUFTRÖR	AIR PIPE	LUFTROHR	C- 295045-070V
4- 571938		PLÅT	SHEET	BLECH	C- 469501-040V
4- 571939		PLÅT	SHEET	BLECH	C- 469501-040V
2- 572156		MOTORPLATTA	MOTOR PLATE	MOTORPLATTE	C- 272028-060V
3- 572157		LAGERPLÅT	BEARING PANEL	LAGERBLECH	C- 272028-060V
3- 572158		LAGERPLÅT	BEARING PANEL	LAGERBLECH	C- 272028-060V
4- 572159		FÄSTE	BRACKET	BEFESTIGUNGSHALTER	C- 751088-030V
4- 572160		LAGERSÄTE	BEARING SEAT	LAGERSITZ	C- 751088-030V
4- 572231		LAGERLOCK	BEARING COVER	LAGERDECKEL	C- 751088-030V
1- 572248		SKYDD	PROTECTION	SCHUTZ	C- 552030-010V
4- 572249		SKYLT	SIGN	SCHILD	C- 552030-010V
4- 572250		SKYLT	SIGN	SCHILD	C- 552030-010V
1- 572251		KÅPA	COVER	DECKEL	C- 752645-020V C- 752646-020V
2- 572252		FÄSTE	BRACKET	BEFESTIGUNGSHALTER	C- 752645-020V C- 752646-020V
3- 572253		PLÅT	SHEET	BLECH	C- 752645-020V C- 752646-020V
4- 572254		HANDTAG	HANDLE	GRIFF	C- 752645-020V C- 752646-020V
4- 572255		DISTANS	SPACER	DISTANZ	C- 752645-020V C- 752646-020V
1- 572256		SKYDD	PROTECTION	SCHUTZ	C- 752244-020V
1- 572299		RÄCKE	RAILING	HANDLEISTE	C- 456460-040V
1- 572300		RÄCKE	RAILING	HANDLEISTE	C- 456460-040V
2- 572301		LEDSTÅNG	HAND RAIL	GELÄNDER	C- 456460-040V
2- 572302		SIDOSTYCKE	SIDE PIECE	SEITENSTUECK	C- 572306-010V
2- 572303		SIDOSTYCKE	SIDE PIECE	SEITENSTUECK	C- 572306-010V
4- 572304		FÄSTE	BRACKET	BEFESTIGUNGSHALTER	C- 572306-010V
3- 572305		FÄSTE	BRACKET	BEFESTIGUNGSHALTER	C- 572306-010V
C- 572306-010V	17942 93-01-19	STEGE	LADDER	LEITER	B- 648102-100V
1- 572307		PLATTFORM	PLATFORM	PLATTFORM	C- 456458-040V
1- 572308		RÄCKE	RAILING	HANDLEISTE	C- 456460-040V
2- 572309		LEDSTÅNG	HAND RAIL	GELÄNDER	C- 456460-040V
1- 572310		RAM	FRAME	RAHMEN	C- 456458-040V
3- 572311		FÄSTE	BRACKET	BEFESTIGUNGSHALTER	C- 456460-040V
3- 572312		LOCK	LID	DECKEL	C- 456458-040V
1- 572313		RÄCKE	RAILING	HANDLEISTE	C- 456460-040V
3- 572319		FÄSTE	BRACKET	BEFESTIGUNGSHALTER	C- 751928-020V
4- 572320		BLOCK	BLOCK	BLOCK	C- 751928-020V
4- 572321		PINNE	PEG	STIFT	C- 751928-020V
1- 572322		SKYDDSPLÅT	PROTECTION PLATE	SCHUTZBLECH	C- 752244-020V
2- 572324		PLATTFORM	PLATFORM	PLATTFORM	C- 456458-040V
2- 572339		SIDOLUCKA VÄNSTER	SIDE COVER LEFT	SEITENBLECH	C- 271513-060V C- 751885-030V
2- 572340		SIDOPLÅT HÖGER	SIDE PLATE RIGHT	SEITENBLECH	C- 271513-060V C- 751885-030V
3- 572341		LUCKA ÖVRE	COVER UPPER	DECKEL	C- 271513-060V C- 751885-030V
3- 572342		LUCKA UNDRE	COVER LOWER	DECKEL	C- 271513-060V C- 751885-030V
3- 572343		SIDOPLÅTVÄNSTER	SIDEPLATE LEFT	SEITENBLECH	C- 271513-060V C- 751885-030V

PART NO	LAST ECN	BENÄMNING	TITLE	BENENNUNG	GROUP NO
4- 572344		HÅLLARE	HOLDER	HALTER	C- 456458-040V
1- 572345		LUCKA	OPENING	DECKEL	C- 256875-020V
4- 572346		FÄSTE	BRACKET	BEFESTIGUNGSHALTER	C- 246388-060V
3- 572460		PLÅT	SHEET	BLECH	C- 752645-020V
					C- 752646-020V
2- 572465		KONSOL	CANTILEVER	KONSOLE	C- 491207-030V
1- 572466		RÖR	PIPE	ROHR	C- 491207-030V
1- 572467		RÖR	PIPE	ROHR	C- 491207-030V
1- 572468		RÖR	PIPE	ROHR	C- 256014-060V
1- 572469		RÖR	PIPE	ROHR	C- 256014-060V
1- 572470		RÖR	PIPE	ROHR	C- 491207-030V
1- 572471		RÖR	PIPE	ROHR	C- 256014-060V
1- 572472		RÖR	PIPE	ROHR	C- 491207-030V
1- 572473		RÖR	PIPE	ROHR	C- 491207-030V
1- 572474		RÖR	PIPE	ROHR	C- 491207-030V
4- 572485		FÄSTE	BRACKET	BEFESTIGUNGSHALTER	C- 456555-040V
4- 572486		KOLV	PISTON	KOLBEN	C- 456555-040V
3- 572487		STRYPNING	THROTTLING	DROSSELUNG	C- 456555-040V
C- 572642-010V	19270 93-05-31	ELÖVERFÖRING IH HÖGER	TRANSMISSION IH RIGHT	~BERTRAGUNG	B- 648104-100V
C- 572643-010V	19270 93-05-31	ELÖVERFÖRING IH VÄNSTER	TRANSMISSION IH LEFT	~BERTRAGUNG	B- 648104-100V
1- 572745		RAMSTATIV	FRAME	RAHMEN	C- 456458-040V
3- 572746		LOCK	LID	DECKEL	C- 456458-040V
C- 572750-010V	17945 93-01-27	VIPPARM	ROCKER ARM	WIPPARM	C- 572760-010V
1- 572751		FÄSTE	BRACKET	BEFESTIGUNGSHALTER	C- 572750-010V
1- 572752		VIPPARM	ROCKER ARM	WIPPARM	C- 572750-010V
3- 572753		FJÄDERFÄSTE	SPRING BRACKET	FEDERHALTER	C- 572750-010V
4- 572754		AXEL	SHAFT	WELLE	C- 572750-010V
4- 572755		AXEL	SHAFT	WELLE	C- 572750-010V
4- 572756		DISTANS	SPACER	DISTANZ	C- 572750-010V
C- 572760-010V	19269 93-05-31	MOTHÅLLSANORDNING	HOLD-DOWN DEVICE	GEGENHALTERUNG	B- 648103-090V
4- 573134-0001		KOMPONENTER UTAN TP-NR	COMPONENTS WITHOUT TP-NO	KOMPONENTEN OHNE TP-NR	C- 67582-010V
4- 573135		KYLARE FÖRREGULATOR	HEAT SINK PREREGULATOR	KUEHLER	C- 67582-010V
4- 573136-0001		KOMPONENTER UTAN TP-NR	COMPONENTS WITHOUT TP-NO	KOMPONENTEN OHNE TP-NR	C- 67579-050V
4- 573137-0001		KOMPONENTER UTAN TP-NR	COMPONENTS WITHOUT TP-NO	KOMPONENTEN OHNE TP-NR	C- 67577-050V
4- 573138		KYLARE	HEAT SINK L	KUEHLER	C- 67577-050V
4- 574333		RULLE	ROLL	ROLLE	C- 272021-060V
3- 574334		RING	RING	RING	C- 272021-060V
3- 574335		RING	RING	RING	C- 272021-060V
3- 574336		TÄTNING	SEAL	DICHTUNG	C- 272021-060V
1- 574337		FÄSTE	BRACKET	BEFESTIGUNGSHALTER	C- 456309-050V
4- 574338		LÅSPLATTA	LOCK PLATE	VERSCHLUSSPLATTE	C- 456309-050V
4- 574339		LÅSPLATTA	LOCK PLATE	VERSCHLUSSPLATTE	C- 456309-050V
4- 574340		LÅSPLATTA	LOCK PLATE	VERSCHLUSSPLATTE	C- 456309-050V
3- 574341		GAFFEL	FORK	GABEL	C- 456309-050V
3- 574342		VIKSKENA	FOLDING BAR RIGHT	FALTSCHIENE	C- 491259-020V
3- 574343		VIKSKENA VÄNSTER	FOLDING BAR LEFT	FALTSCHIENE	C- 491259-020V
2- 574344		PAKETSTATION MED FAS	CARTON STATION WITH BEVE	PAKETSTATION	CR- 491225-010V
1- 574345		VIKSKENA	FOLDING BAR	FALTSCHIENE	C- 295218-010V
3- 574346		RULLE	ROLL	ROLLE	C- 456309-050V
3- 574347		MOTRULLE	COUNTER ROLLER	GEGENROLLE	C- 456309-050V
3- 574348		SKENA VÄNSTER	RAIL LEFT	SCHIENE	CR- 256712-050V
3- 574349		SKENA RÄTT	RAIL RIGHT	SCHIENE	CR- 256712-050V
G3- 574350		KLOTS	BLOCKING PIECE	KLOTZ	CR- 256712-050V
2- 574351		KLOTS	BLOCKING PIECE	KLOTZ	CR- 256436-060V
3- 574352		KLOTS HÖGER	BLOCK RIGHT	KLOTZ	CR- 256436-060V
3- 574353		KLOTS VÄNSTER	BLOCK LEFT	KLOTZ	CR- 256436-060V
P3- 574354		VÄNDRULLE	ROLL	ROLLE	C- 295310-070V
1- 574355		KURVA	CURVE	KURVE	C- 256202-050V
2- 574358		KURVSEGMENT	CURVE SEGMENT	KURVENSEGMENT	C- 256202-050V
2- 574359		KURVSEGMENT	CURVE SEGMENT	KURVENSEGMENT	C- 256202-050V
1- 574360		KURVA	CURVE	KURVE	C- 256202-050V
3- 574361		STYRKLOTS	LOCATING PIECE	FUEHRUNGSKLOTZ	C- 456103-010V
3- 574362		GLIDPLÅT	SLIDE PLATE	GLEITBLECH	C- 456103-010V
3- 574363		STYRSKENA	GUIDE RAIL	FUEHRUNGSSCHIENE	C- 456103-010V
3- 574364		VIKKLAFFSKURVA	FOLDING FLAP CAM	FALTKLAPPEKURVE	C- 256206-020V
					C- 256207-020V
G1- 574365		VOLYMKLAFF 250S	VOLUMEFLAP 250S	VOLUMENKLAPPE	CR- 256209-030V
					CR- 256210-030V
4- 574366		VOLYMMELLANLÄGG	VOLUME SHIM	VOLUMENUNTERLAGE	CR- 256209-030V
					CR- 256210-030V
3- 574367		VOLYMKUDDE 250S	VOLYMEBULGE 250S	VOLUMENKISSEN	CR- 256209-030V
					CR- 256210-030V
1- 574368		LAGERHUS 250S	BEARINGHOUSING 250S	LAGERGEHÄUSE	CR- 256204-050V
					CR- 256205-050V
G2- 574369		LINJALHALVA HÖ	CARRIER RULER RIGHT	LINEAL	CR- 256204-050V
2- 574370		LINJALHALVA HÖ	CARRIER RULER RIGHT	LINEAL	CR- 256204-050V
G2- 574371		LINJALHALVA VÄ	CARRIER RULER LEFT	LINEAL	CR- 256205-050V
2- 574372		LINJALHALVA VÄ	CARRIER RULER LEFT	LINEAL	CR- 256205-050V
1- 574373		LAGERHUS 250S	BEARING HOUSE 250S	LAGERGEHÄUSE	CR- 256212-050V
					CR- 256213-050V
4- 574374		BRICKA	WASHER	SCHEIBE	C- 256206-020V
					C- 256207-020V
2- 574375		EXCENTERAXEL	ECCENTRIC SHAFT	EXZENTERWELLE	C- 256206-020V
					C- 256207-020V
1- 574377		VOLYMKURVA	VOLUME CAM RIGHT, WIDE	VOLUMENKURVE	C- 256222-020V
1- 574378		VOLYMKURVA	VOLUME CAM RIGHT	VOLUMENKURVE	C- 256222-020V
1- 574379		VOLYMKURVA	VOLUME CAM LEFT, WIDE	VOLUMENKURVE	C- 256222-020V
1- 574380		VOLYMKURVA	VOLUME CAM LEFT	VOLUMENKURVE	C- 256222-020V
3- 574381		LEDSTYCKE	LINKPIECE OUTER	GELENKST~CK	C- 456560-010V
3- 574382		RÄNNA	CHUTE	RINNE	C- 456560-010V
1- 574383		LEDSKENA	LEAD RAIL	LEITSCHIENE	C- 456560-010V
1- 574384		PÅFYLLNINGSRÖR 250S	FILLING TUBE 250S	FUELLROHR	C- 469091-030V

PART NO	LAST ECN	BENÄMNING	TITLE	BENENNUNG	GROUP NO
4- 574385		VALS	ROLLER TBA250SL	WALZE	C- 256223-040V
1- 574386		KLIPPBACK	CUTTING JAW	SCHNEIDBACKE	CR- 256204-050V
					CR- 256205-050V
4- 574387		MOTHÅLL	DOLLY	GEGENHALTER	CR- 256204-050V
					CR- 256205-050V
4- 574388		ÄNDSTYCKE	END PIECE	ENDST~CK	CR- 256204-050V
					CR- 256205-050V
4- 574389		LÅSPLATTA	LOCK PLATE	VERSCHLUSSPLATTE	C- 441486-040V
4- 574390		LÅSPLATTA	LOCK PLATE	VERSCHLUSSPLATTE	C- 441486-040V
4- 574391		LÅSPLATTA	LOCK PLATE	VERSCHLUSSPLATTE	C- 441486-040V
4- 574392		LÅSPLATTA	LOCK PLATE	VERSCHLUSSPLATTE	C- 441486-040V
4- 574393		LÅSPLATTA	LOCK PLATE	VERSCHLUSSPLATTE	C- 441486-040V
4- 574394		LÅSPLATTA	LOCK PLATE	VERSCHLUSSPLATTE	C- 441486-040V
4- 574395		AXEL	SHAFT	WELLE	C- 441486-040V
1- 574396		FÄSTE	BRACKET	BEFESTIGUNGSHALTER	C- 441486-040V
3- 574397		RULLE	ROLL	ROLLE	C- 441486-040V
3- 574398		RULLE	ROLL	ROLLE	C- 441486-040V
3- 574399		RULLE	ROLL	ROLLE	C- 441486-040V
3- 574400		RULLE	ROLL	ROLLE	C- 441486-040V
3- 574401		RULLE	ROLL	ROLLE	C- 441486-040V
3- 574402		RULLE	ROLL	ROLLE	C- 441486-040V
3- 574403		RULLE	ROLL	ROLLE	C- 441486-040V
2- 574404		FÄSTE	BRACKET	BEFESTIGUNGSHALTER	C- 441304-040V
4- 574405		LÅSPLATTA	LOCK PLATE	VERSCHLUSSPLATTE	C- 441304-040V
4- 574406		LÅSPLATTA	LOCK PLATE	VERSCHLUSSPLATTE	C- 441304-040V
4- 574407		LÅSPLATTA	LOCK PLATE	VERSCHLUSSPLATTE	C- 441304-040V
3- 574408		BAKSTYCKE	BACK PIECE	HINTERTEIL	C- 256223-040V
3- 574409		RULLE	ROLL	ROLLE	C- 441304-040V
3- 574410		RULLE	ROLL	ROLLE	C- 441304-040V
3- 574411		RULLE	ROLL	ROLLE	C- 441304-040V
2- 574412		PÅFYLLNINGSRÖR 250S	FILLING TUBE 250S	FUELLROHR	C- 255921-040V
3- 574413		TRYCKFLÄNS 250S	PRESSURE FLANGE 250S	DRUCKFLANSCH	C- 255921-040V
3- 574414		FLOTTÖR 250S	FLOATER 250S	SCHWIMMER	C- 255921-040V
2- 574416		FÄSTE	BRACKET	BEFESTIGUNGSHALTER	C- 441307-030V
3- 574417		RULLE	ROLL	ROLLE	C- 441307-030V
3- 574418		RULLE	ROLL	ROLLE	C- 441307-030V
4- 574419		LÅSPLATTA	LOCK PLATE	VERSCHLUSSPLATTE	C- 565462-010V
4- 574420		LÅSPLATTA	LOCK PLATE	VERSCHLUSSPLATTE	C- 441307-030V
4- 574421		LÅSPLATTA	LOCK PLATE	VERSCHLUSSPLATTE	C- 441307-030V
4- 574422		DISTANSBLOCK	SPACER BLOCK	DISTANZBLOCK	CR- 256547-040V
2- 574423		BLÅSMUNSTYCKE	AIR NOZZLE LEFT	BLASMUNDSTUECK	CR- 256547-040V
2- 574424		BLÅSMUNSTYCKE	AIR NOZZLE RIGHT	BLASMUNDSTUECK	CR- 256547-040V
2- 574425		BLÅSMUNSTYCKE	AIR NOZZLE BOTTOM	BLASMUNDSTUECK	CR- 256547-040V
1- 574429		KÅPA	COVER	DECKEL	C- 456100-030V
3- 574430		PACKNING	GASKET	DICHTUNG	C- 456100-030V
2- 574431		DISKRÖR	CLEANING PIPE	REINIGUNGSROHR	C- 752495-010V
2- 574433		STYRDON	GUIDING ARBOR	FUEHRUNGSANORDNUNG	C- 751968-010V
2- 574434		HYLSA	SLEEVE	HUELSE	C- 458383-020V
3- 574435		HYLSA	SLEEVE	HUELSE	C- 458384-010V
4- 574436-0001		STAG	STRUT	VERSTREBUNG	C- 456032-010V
4- 574436-0002		STAG	STRUT	VERSTREBUNG	C- 295891-030V
4- 574438		VÄRMESKYDD	HEAT GUARD	WÄRMESCHUTZ	C- 272343-050V
4- 574441		GAVELPLÅT	GABLE PLATE	STIRNWANDBLECH	C- 752645-020V
					C- 752646-020V
4- 574442		MALL	TEMPLATE	MALL	C- 75525-030V
4- 574443		AXEL	SHAFT	WELLE	C- 752645-020V
					C- 752646-020V
4- 574444		DISTANS	SPACER	DISTANZ	C- 752645-020V
					C- 752646-020V
4- 574445		KONSOL	CANTILEVER	KONSOLE	C- 752645-020V
					C- 752646-020V
3- 574446		PLUSRULLE	TRIMMING ROLLER PLUS	TRIMMUNGSROLLE / PLUS	C- 77093-020V
3- 574447		MINUSRULLE	TRIMMING ROLLER MINUS	TRIMMUNGSROLLE / MINUS	C- 77093-020V
1- 574448		FALLRÄNNA	DROP SHUTE TBA/9 V0250SL	FALLRINNE	C- 456180-010V
3- 574449		GLIDKLOTS	SLIDER	GLEITKLOTZ	C- 456180-010V
1- 574450		STYRPLÅT	HEAD PLATE	FUEHRUNGSBLECH	C- 456180-010V
2- 574452		SKYDD	PROTECTION	SCHUTZ	C- 456180-010V
4- 574454		MALL	TEMPLATE	MALL	C- 76335-010V
4- 574455		MALL	TEMPLATE	MALL	C- 76335-010V
1- 575980		KRETSSCHEMA	CIRCUIT DIAGRAM	SCHALTKARTEPLAN	C- 67577-050V
4- 576221		DOKUMENTMAPP	DOCUMENT FOLDER	DOKUMENTMAPPE	C- 491767-020V
4- 577333		DOKUMENTMAPP	DOCUMENT FOLDER	DOKUMENTMAPPE	C- 577427-010V
C- 577427-0101	20326 93-09-14	INSTR.INVÄGN.+LASERMALLN	MACH.ALIG.TOOLS+LASER EQ	INSTRUKTION	C- 77092-030V
B- 613101-0201	15623 91-01-14	SKARV-OCH DRIVENHET	SPLICE-AND DRIVEUNIT	ANTRIEB	A- 613151-020V
B- 613102-0201	16122 91-03-12	STATIV	MACHINE BODY	STATIV	A- 613151-020V
B- 613109-0201	13811 91-05-07	ORDINARIE TILLBEHÖR	REGULAR ACCESSORIES	ZUBEHÖR	A- 613151-020V
B- 613119-0201	13811 91-05-07	EXTRA UTRUSTNING	EXTRA EQUIPMENT	EXTRA ZUBEHÖR	A- 613151-020V
A- 613151-020V	13811 91-05-07	AUT.SKARVN.ENHET ASU-FLE	AUT.SPLICINGUNIT ASU-FLE	AUT.VERLASCHUNGSEINHEIT	C- 570501-010V
B- 648102-100V	17946 93-01-25	STATIV TB/TBA/9	MACHINE BODY TB/TBA/9	STATIV	A- 648152-140V
B- 648103-0902	19337 93-01-29	DRIVNING TB/TBA/9	DRIVE TB/TBA/9	ANTRIEB TB/TBA/9	A- 648152-140V
B- 648104-1002	19603 93-04-07	BACKSYSTEM TB/TBA/9	JAW SYSTEM	BACKENSYSTEM	A- 648152-140V
B- 648105-1001	19186 93-01-26	SLUTVIKARE TB/TBA/9	FINAL FOLDER TB/TBA/9	ENDFALTER	A- 648152-140V
B- 648106-100V	17888 93-01-27	SERVICEENHET TB/TBA/9	SERVICE UNIT	SERVICEEINHEIT	A- 648152-140V
B- 648107-100V	17887 93-01-27	REMSPÅLÄGGARE TB/TBA/9	STRIP APPLICATOR	STREIFENAUFLEGER	A- 648152-140V
B- 648109-100V	17889 93-01-23	ORDINARIE TILLB. TB/TBA/	REGULAR ACCESSORIES	ZUBEHÖR	A- 648152-140V
B- 648111-100V	19293 93-01-22	ÖVERDEL TBA/9	SUPERSTRUCTURE TBA/9	OBERTEIL	A- 648152-140V
B- 648118-0902	19421 93-03-09	ÖPPNINGSAGGREGAT TB/TBA/	OPENING ARRANGEMENT	ÖFFNUNGSANORDNUNG	A- 648152-140V
B- 648119-1001	20135 93-06-11	EXTRA UTRUSTNING TB/TBA/	EXTRA EQUIPMENT	EXTRA ZUBEHÖR	A- 648152-140V
V4- 648150-0008		VALTABELL TBA/9	SELECTION TABLE TBA/9	WAHLTABELLE	A- 648152-140V
V4- 648150-0009		VALTABELL TBA/9 C	SELECTION TABLE TBA/9 C	WAHLTABELLE	A- 648152-140V
AE- 649045-010V	12623 90-04-23	EL-UTRUSTNING	EL. EQUIPMENT JUMBO REEL	EL-AUSR~STUNG	C- 751796-030V
BE- 649205-1401	20080 93-09-15	EL-UTRUSTN.TBA/9-1401 S.	EL-EQUIPMENT TBA/9-140	EL-AUSR~STUNG	A- 648152-140V

PART NO	LAST ECN	BENÄMNING	TITLE	BENENNUNG	GROUP NO
BE- 649205-1402	20080 93-09-15	EL-UTRUSTN.TBA/9-1402 P.	EL-EQUIPMENT TBA/9-140	EL-AUSR~STUNG	A- 648152-140V
BE- 649205-1403	20080 93-09-15	EL-UTRUSTN.TBA/9-1403 C.	EL-EQUIPMENT TBA/9-140	EL-AUSR~STUNG	A- 648152-140V
BE- 649411-010V	19083 92-10-30	EL-UTRUSTNING	EL-EQUIPMENT IH-GENERATO	EL-AUSR~STUNG	CE- 41756-010V
BE- 649411-0101	19083 92-10-30	EL-UTRUSTNING	EL-EQUIPMENT IH-GENERATO	EL-AUSR~STUNG	BE- 649205-140V
BE- 649411-0102	19083 92-10-30	EL-UTRUSTNING	EL-EQUIPMENT IH-GENERATO	EL-AUSR~STUNG	RK- 69994-010V
					RK- 69995-010V
2- 733165		RACK	RACK	RACK	CE- 557222-010V
2- 735005		RÖR	PIPE	ROHR	C- 735014-010V
2- 735006		RÖR	PIPE	ROHR	C- 735014-010V
C- 735014-0101	14983 90-06-07	LUFT OCH GAS SYSTEM	AIR AND INERT GAS SYSTEM	LUFTTEIL	C- 560459-010V
					C- 560459-020V
					C- 560460-010V
					C- 560460-020V
					C- 560886-010V
					C- 560886-020V
4- 735018		HYLSELEMENT	SLEEVE ELEMENT	HUELSELEMENT	C- 736593-010V
4- 735029		RÖR	PIPE	ROHR	C- 735183-020V
C- 735031-0102	14983 90-06-07	ANSLUTNINGSLÅDA	CONNECTIONS BOX	KASTEN	C- 735270-010V
4- 735034		RÖR	PIPE	ROHR	C- 735183-020V
4- 735041		KOPPLINGSKLÄMMA	CONNECTION CLAMP	KUPPLUNGSKLAMMER	C- 735265-010V
4- 735050		KOPPLINGSKLÄMMA	CONNECTION CLAMP	KUPPLUNGSKLAMMER	C- 736593-010V
4- 735052		FÄSTE	BRACKET	BEFESTIGUNGSHALTER	C- 529621-010V
4- 735053		HYLSELEMENT	SLEEVE ELEMENT	HUELSELEMENT	C- 735183-020V
					C- 795750-010V
4- 735055		BRICKA	WASHER	SCHEIBE	C- 736600-020V
3- 735056		CENTRAL VENTILKROPP	BODY CENTRAL VALVE	VENTIL	C- 736600-020V
3- 735057		RÖR	TUBE	ROHR	C- 560921-010V
3- 735058		RÖR	TUBE	ROHR	C- 560921-010V
3- 735059		RÖR	TUBE	ROHR	C- 560921-010V
3- 735060		RÖR	TUBE	ROHR	C- 560921-010V
3- 735074		HÅLLARE	HOLDER	HALTER	C- 735192-010V
4- 735150		TRYCKFJÄDER	COMPRESSION SPRING	DRUCKFEDER	C- 736600-020V
1- 735176		RAM	FRAME	RAHMEN	C- 736360-020V
C- 735183-0201	16167 91-03-28	PNEUMATIK LÅDA	BOX	KASTEN	C- 735270-010V
3- 735185		SKYLT	LABEL	SCHILD	RK- 557147-010V
					RK- 557150-010V
3- 735185		SKYLT	LABEL	SCHILD	RK- 557153-010V
					RK- 557690-010V
					RK- 557693-010V
					RK- 557696-010V
C- 735192-0101	14983 90-06-07	NEDRE PÅFYLLNINGSRÖR	FILLER TUBE	FUELLROHR	C- 560459-010V
					C- 560459-020V
					C- 560460-010V
					C- 560460-020V
					C- 560886-010V
C- 735192-0102	14983 90-06-07	NEDRE PÅFYLLNINGSRÖR	FILLER TUBE	FUELLROHR	C- 560886-020V
					C- 560459-010V
					C- 560459-020V
					C- 560460-010V
					C- 560460-020V
					C- 560886-010V
3- 735193-0001		PÅFYLLNINGSRÖR	FILLING TUBE	FUELLROHR	C- 560886-020V
3- 735193-0002		PÅFYLLNINGSRÖR	FILLING TUBE	FUELLROHR	C- 735192-010V
4- 735210		DISTANS	SPACER	DISTANZ	C- 735192-010V
4- 735219		FÄSTE	BRACKET	BEFESTIGUNGSHALTER	C- 736529-010V
C- 735222-0201	15729 91-02-07	DISKRÖR	CLEANING PIPE	REINIGUNGSROHR	C- 735014-010V
					C- 560459-010V
					C- 560460-010V
3- 735254		RÖR	TUBE	ROHR	C- 560886-010V
C- 735261-0101	14983 90-06-07	RÄCKE	RAILING	HANDLEISTE	C- 560921-010V
					C- 560459-010V
					C- 560459-020V
					C- 560460-010V
					C- 560460-020V
					C- 560886-010V
4- 735263		RÄCKE	RAILING	HANDLEISTE	C- 560886-020V
4- 735264		PLUGG	PLUG	PFROPFEN	C- 735261-010V
C- 735265-0102	14983 90-06-07	RÖRLEDNING	PIPE-LINE	ROHRLEITUNG	C- 735261-010V
					C- 560459-010V
					C- 560459-020V
					C- 560460-010V
					C- 560460-020V
					C- 560886-010V
1- 735269		BERÖRINGSSKYDD	TOUCH GUARD	BERUEHRUNGSSCHUTZ	C- 560886-020V
					C- 561425-010V
					C- 924593-010V
					C- 561425-010V
					C- 924593-010V
					C- 561425-010V
					C- 924593-010V
C- 735270-0101	15115 90-06-26	SMST,ANSLUT.-O PNEU.LÅDO	ASSEM. OF C. AND P. BOXE	KASTEN	C- 560459-010V
					C- 560460-010V
					C- 560886-010V
C- 735271-0201	14983 90-06-07	UPPSTARTSATS	START-UP KIT	STARTSATZ	C- 560459-010V
					C- 560460-010V
					C- 560886-010V
4- 735279-0002		STYRSPINDEL	GUIDE SPINDLE	FUEHRUNGSSPINDEL	C- 736593-010V
1- 735342		VENTILHUS 2"	VALVE BODY 2"	VENTILGEHÄUSE	C- 794245-010V
3- 735503		GÅNGJÄRN	HINGE	SCHARNIER	C- 794145-010V
1- 735509		DÖRR	DOOR	TUER	C- 736360-020V
4- 735510		STÖD	SUPPORT	STUETZE	C- 736797-010V
4- 735515		SKARVKOPPLING RÄCKE	RAILING CONNECTION	VERBINDUNGSKUPPLUNG	C- 794069-010V

PART NO	LAST ECN	BENÄMNING	TITLE	BENENNUNG	GROUP NO
4- 735516		SKARVKOPPLING RÄCKE	RAILING CONNECTION	VERBINDUNGSKUPPLUNG	C- 794069-010V
3- 735517-0002		RÖRBÖJ	PIPE BEND	ROHRBOGEN	C- 794271-010V
4- 735521		STOPPLUGG	BLANK NUT	STOPPROPFEN	C- 794245-010V
3- 735549		FÄSTÖRA	HOOK HOLDER	BEFESTIGUNGSROHR	C- 794213-010V
4- 735550		BUSSNING	BUSHING	BUCHSE	C- 794213-010V
3- 735602		VATTENSCHEMA	WATER DIAGRAM	SCHEMA	C- 736796-020V
2- 735603		LUFTSCHEMA	AIR DIAGRAM	SCHEMA	C- 736796-020V
4- 735630		RING	RING	RING	C- 794243-010V
					C- 924991-010V
3- 735632		KOLVSTÅNG	PISTON ROD	KOLBENSTANGE	C- 794243-010V
					C- 924991-010V
2- 735663		KOLVSTÅNG	PISTON ROD	KOLBENSTANGE	C- 794213-010V
2- 735684		VENTILPANEL	VALVE PANEL	VENTILPANEL	C- 736796-020V
4- 735738		MUTTER	NUT	MUTTER	C- 736360-020V
4- 735824		SPÄNNBYGEL	TIGHTENING CLAMP	SPANNBUEGEL	C- 794069-010V
4- 735825		BUSSNING	BUSHING	BUCHSE	C- 794069-010V
4- 735846		HATTMUTTER	CAP NUT	HAUBENMUTTER	C- 794226-010V
2- 735858		HVA-SCHEMA	HVA DIAGRAM	SCHEMA	C- 736796-020V
1- 735891		VENTILHUS	VALVE HOUSING	VENTILGEHÄUSE	C- 794245-010V
2- 735900		POOL	POOL	BAD	C- 736797-010V
3- 735904		RÖR	PIPE	ROHR	C- 736797-010V
3- 735905		RÖR	PIPE	ROHR	C- 736797-010V
3- 735907		RÖR	PIPE	ROHR	C- 736797-010V
2- 735908		RÖR	PIPE	ROHR	C- 736797-010V
2- 735909		POOL	POOL	BAD	C- 736797-010V
3- 735911		VENTIL 1/2"	VALVE 1/2"	VENTIL	C- 794226-010V
2- 735919		KOLONN	COLUMN	KOLONNE	C- 736360-020V
1- 735920		STÖD	SUPPORT	STUETZE	C- 794004-010V
4- 735921		SKRUV	SCREW	SCHRAUBE	C- 794004-010V
4- 735922		BRICKA	WASHER	SCHEIBE	C- 794004-010V
2- 735924		PRODUKTRÖR	PRODUCT PIPE	ROHR	C- 794004-010V
2- 735925		PRODUKTRÖR	PRODUCT PIPE	ROHR	C- 794004-010V
2- 735926		LEDNINGSRÖR	CONDUIT	LEITUNGSROHR	C- 794168-010V
3- 735927		LEDNINGSRÖR	CONDUIT	LEITUNGSROHR	C- 794168-010V
2- 735928		RÖR	PIPE	ROHR	C- 794271-010V
2- 735929		RÖR	PIPE	ROHR	C- 794271-010V
1- 735931		RAM	FRAME	RAHMEN	C- 736360-020V
1- 735933		STÖD	SUPPORT	STUETZE	C- 794004-010V
4- 735934		DISTANS	SPACER	DISTANZ	C- 736796-020V
					C- 794004-010V
					C- 736796-020V
					C- 794004-010V
1- 735936		STÖD	SUPPORT	STUETZE	C- 794004-010V
4- 735967		DISTANS	SPACER	DISTANZ	C- 794004-010V
4- 735968		BRICKA	WASHER	SCHEIBE	C- 794004-010V
4- 735970		DISTANS	SPACER	DISTANZ	C- 794004-010V
3- 735971-0001		FJÄDERSKIVA	SPRING PULLEY	SCHEIBENFEDER	C- 794004-010V
3- 735972		FJÄDERSKIVA	SPRING PULLEY	SCHEIBENFEDER	C- 794004-010V
2- 735998		STÖD	SUPPORT	STUETZE	C- 794145-010V
4- 735999		SPÄNNBYGEL	TIGHTENING CLAMP	SPANNBUEGEL	C- 736360-020V
4- 736000		SPÄNNBYGEL	TIGHTENING CLAMP	SPANNBUEGEL	C- 736360-020V
2- 736013		STÖD	SUPPORT	STUETZE	C- 794178-010V
2- 736015		STÖD	SUPPORT	STUETZE	C- 794178-010V
3- 736040		FILTERSTÖD	FILTER SUPPORT	STUETZE	C- 794178-010V
2- 736041		UPPSAMLARE	OUTLET COLLECTOR	ROHR	C- 794178-010V
2- 736062		RÖR	PIPE	ROHR	C- 794179-010V
4- 736063		RÖR	PIPE	ROHR	C- 794180-010V
3- 736064		RÖR	PIPE	ROHR	C- 794180-010V
3- 736065		RÖR	PIPE	ROHR	C- 794180-010V
3- 736066-0003		RÖR	PIPE	ROHR	C- 794178-010V
4- 736067-0001		RÖR	PIPE	ROHR	C- 794178-010V
4- 736067-0002		RÖR	PIPE	ROHR	C- 794178-010V
4- 736067-0003		RÖR	PIPE	ROHR	C- 794178-010V
4- 736067-0004		RÖR	PIPE	ROHR	C- 794178-010V
2- 736069		RÖR	PIPE	ROHR	C- 794178-010V
2- 736070		RÖR	PIPE	ROHR	C- 794179-010V
2- 736071		RÖR	PIPE	ROHR	C- 794180-010V
1- 736073		RÖR	PIPE	ROHR	C- 794180-010V
4- 736074		DISTANS	SPACER	DISTANZ	C- 794180-010V
3- 736082		RÖR	PIPE	ROHR	C- 794178-010V
3- 736083		RÖR	PIPE	ROHR	C- 794178-010V
3- 736085		RÖR	PIPE	ROHR	C- 736360-020V
1- 736088		RÖR	PIPE	ROHR	C- 794178-010V
1- 736105		RÖR	PIPE	ROHR	C- 794178-010V
2- 736106		RÖR	PIPE	ROHR	C- 794178-010V
2- 736111		RÄCKE	RAILING	HANDLEISTE	C- 794069-010V
3- 736112		PANEL	PANEL	PANEL	C- 736360-020V
3- 736113		PANEL	PANEL	PANEL	C- 736360-020V
4- 736114		RÖR	PIPE	ROHR	C- 736797-010V
3- 736118		RÖR	PIPE	ROHR	C- 794178-010V
3- 736119		RÖR	PIPE	ROHR	C- 794178-010V
3- 736120		RÖR	PIPE	ROHR	C- 794178-010V
3- 736127		RÖR	PIPE	ROHR	C- 736797-010V
3- 736128		RÖR	PIPE	ROHR	C- 736797-010V
3- 736129		RÖR	PIPE	ROHR	C- 736797-010V
3- 736130		RÖR	PIPE	ROHR	C- 736797-010V
4- 736141		SKYLT	SIGN	SCHILD	C- 736797-010V
4- 736142		SKYLT	SIGN	SCHILD	C- 736797-010V
4- 736143		SKYLT	SIGN	SCHILD	C- 736797-010V
4- 736144		SKYLT	SIGN	SCHILD	C- 736797-010V
4- 736145		SKYLT	SIGN	SCHILD	C- 736797-010V
4- 736146		MÄRKSKYLT	SIGN BOARD	SCHILD	C- 794178-010V

PART NO	LAST ECN	BENÄMNING	TITLE	BENENNUNG	GROUP NO
4- 736165		LÅSBLECK	SECURING PLATE	SCHLIESSBLECH	C- 736797-010V
4- 736168		FÖRDELNINGSBLOCK	SEPARATION BLOCK	VERTEILUNGSBLOCK	C- 736797-010V
4- 736169		STÖD	SUPPORT	STUETZE	C- 736797-010V
3- 736171		STÖD	SUPPORT	STUETZE	C- 736797-010V
4- 736200		PLATTA	PLATE	PLATTE	C- 736797-010V
4- 736230		REDUCERINGSNIPPEL	REDUCING NIPPLE	REDUZIERNIPPEL	C- 794092-010V
3- 736231		KOPPLINGSLÅDA	CONNECTION BOX	KUPPLUNGSKASTEN	C- 794092-010V
2- 736316		BERÖRINGSSKYDD	TOUCH GUARD	BERUEHRUNGSSCHUTZ	C- 794145-010V
2- 736350		RÖR	PIPE	ROHR	C- 794178-010V
3- 736352		RÖR	PIPE	ROHR	C- 794179-010V
2- 736353		RÖR	PIPE	ROHR	C- 794179-010V
2- 736354		RÖR	PIPE	ROHR	C- 794179-010V
3- 736355		RÖR	PIPE	ROHR	C- 794179-010V
3- 736356		RÖR	PIPE	ROHR	C- 794179-010V
3- 736357		RÖR	PIPE	ROHR	C- 794179-010V
4- 736358		KLÄMMA	CLAMPING PIECE	KLAMMER	C- 794179-010V
2- 736359		RÖR	PIPE	ROHR	C- 794178-010V
C- 736360-0202	16400 92-06-30	RAM-GRUPP	FRAME GROUP	RAHMEN	C- 563210-010V
					C- 563211-010V
4- 736378		SOCKEL	BASE	SOCKEL	C- 736360-020V
3- 736379		RÖR	PIPE	ROHR	C- 794179-010V
2- 736380		RÖR	PIPE	ROHR	C- 794179-010V
3- 736381		RÖR	PIPE	ROHR	C- 794179-010V
2- 736385		BERÖRINGSSKYDD	TOUCH GUARD	BERUEHRUNGSSCHUTZ	C- 794069-010V
2- 736386		BERÖRINGSSKYDD	TOUCH GUARD	BERUEHRUNGSSCHUTZ	C- 794069-010V
4- 736387		SPÄNNBYGEL	TIGHTENING CLAMP	SPANNBUEGEL	C- 794069-010V
2- 736398		BERÖRINGSSKYDD	TOUCH GUARD	BERUEHRUNGSSCHUTZ	C- 794004-010V
1- 736399		SKYDD	PROTECTION	SCHUTZ	C- 736360-020V
4- 736501		VÄXEL	GEAR	GANG	C- 736593-010V
4- 736502		RATT	SHIFTER HANDLE	RAD	C- 736593-010V
3- 736508-0001		MEMBRAN	MEMBRANE	MEMBRANE	C- 735271-020V
					C- 736600-020V
					C- 924592-010V
					C- 735271-020V
					C- 736600-020V
					C- 924592-010V
					C- 735271-020V
					C- 736600-020V
					C- 924592-010V
					C- 924811-010V
					C- 924662-010V
					C- 924167-010V
4- 736514		DÄMPDON	SHOCK ABSORBER	DÄMPFUNGSANORDNUNG	C- 924811-010V
					C- 735271-020V
					C- 736600-020V
					C- 924592-010V
					C- 735271-020V
					C- 736600-020V
					C- 924592-010V
					C- 735271-020V
					C- 736600-020V
					C- 924592-010V
					C- 924811-010V
					C- 924305-010V
3- 736519		SCHEMA PNEUMATIK	HS BY LLF PNEUM. DIAGRAM	PNEUMATIKPLAN	C- 924811-010V
3- 736525		SCHEMA PNEUMATIK	PNEUMATIC BOX SURVEY	PNEUMATIKPLAN	C- 561425-010V
4- 736526		FLÖDESMÄTARE	FLOW METER	DURCHFLUSSMETER	C- 561425-010V
					C- 735183-020V
C- 736529-0101	14983 90-06-07	VENTILÖVERFALL	VALVE HOLDER	VENTILHALTER	C- 795750-010V
					C- 560459-010V
					C- 560460-010V
3- 736530		VENTILÖVERFALL	VALVE HOLDER	VENTILHALTER	C- 560886-010V
3- 736531		HÅLLARE	HOLDER	HALTER	C- 736529-010V
4- 736532		SKRUV	SCREW	SCHRAUBE	C- 736529-010V
1- 736533		RÖR	TUBE	ROHR	C- 736529-010V
3- 736534		DISKRÖR	CLEANING PIPE	REINIGUNGSROHR	C- 735265-010V
3- 736535		DISKRÖR	CLEANING PIPE	REINIGUNGSROHR	C- 735222-020V
3- 736552		NEDRE PÅFYLLNINGSRÖR	LOWER FILLING TUBE	FUELLROHR	C- 735222-020V
3- 736554		PRODUKTRÖR	PRODUCT PIPE	ROHR	C- 529935-010V
3- 736555		SIDOSTÄLLD RÖRKROPP	LATERAL BODY	KOERPER	C- 736600-020V
					C- 736600-020V
3- 736557		MEMBRAN	MEMBRANE	MEMBRANE	C- 924305-010V
					C- 735271-020V
					C- 736600-020V
					C- 924592-010V
					C- 735271-020V
					C- 736600-020V
					C- 924592-010V
					C- 735271-020V
					C- 736600-020V
					C- 924592-010V
					C- 924811-010V
					C- 924305-010V
					C- 924811-010V
3- 736558		MÄTVENTIL	DOSING VALVE BODY	MESSVENTIL	C- 736600-020V
3- 736564		VENTILKROPP	VALVE BODY	VENTIL	C- 736600-020V
4- 736565		AXEL	SHAFT	WELLE	C- 736600-020V
4- 736568		SKRUV	SCREW	SCHRAUBE	C- 736600-020V
4- 736575		FÄSTE	BRACKET	BEFESTIGUNGSHALTER	C- 736593-010V
3- 736581		HYLSA	COUPLING BOX	HUELSE	C- 736593-010V
3- 736582-0001		AXEL	SHAFT SLIDE GUIDE	WELLE	C- 736593-010V
4- 736585		PINNE	PEG	STIFT	C- 736593-010V

PART NO	LAST ECN	BENÄMNING	TITLE	BENENNUNG	GROUP NO
4- 736587		AXEL	SHAFT	FUEHRUNGSSPINDEL	C- 736593-010V
4- 736588-0001		AXEL	SHAFT	FUEHRUNGSSPINDEL	C- 736593-010V
C- 736593-0101	14983 90-06-07	CFV KONTROLL UTRUSTNING	CFV CONTROL DEVICE	AUSRUESTUNG	C- 560459-010V
					C- 560459-020V
					C- 560460-010V
					C- 560460-020V
					C- 560886-010V
					C- 560886-020V
3- 736595		RÖR	TUBE	ROHR	C- 560921-010V
4- 736599		DUBBEL KOPPLINGSKLÄMMA	DOUBLE CLAMP	KUPPLUNGSKLAMMER	C- 736593-010V
C- 736600-0201	16167 91-03-28	FAST FLÖDESVENTIL	VALVE	VENTIL	C- 560459-010V
					C- 560460-010V
C- 736600-0202	16167 91-03-28	FAST FLÖDESVENTIL	VALVE	VENTIL	C- 560886-010V
					C- 560459-010V
					C- 560460-010V
4- 736602		BRICKA	WASHER	SCHEIBE	C- 560886-010V
C- 736604-0101	14983 90-06-07	ELEKTRISK INST.MTRL.	ELECTRIC MATERIALS	EL-MATERIAL	C- 736600-020V
					C- 561425-010V
4- 736606		BORR 15 MM	DRILL 15 MM	BOHRER	C- 924593-010V
					C- 561425-010V
					C- 924593-010V
					C- 561425-010V
					C- 924593-010V
					C- 561425-010V
					C- 924593-010V
4- 736619		BRICKA	WASHER	SCHEIBE	C- 924662-010V
4- 736624		SPINDEL	SPINDLE	SPINDEL	C- 924662-010V
4- 736629		TRYCKFJÄDER	COMPRESSION SPRING	DRUCKFEDER	C- 924662-010V
4- 736664		KOPPLINGSKLÄMMA	CONNECTION CLAMP	KUPPLUNGSKLAMMER	C- 736865-010V
3- 736705		FÄSTE	BRACKET	BEFESTIGUNGSHALTER	C- 735270-010V
					C- 924330-010V
					C- 735270-010V
					C- 924330-010V
					C- 735270-010V
					C- 924330-010V
4- 736716		DOSERINGSKOLV	DOSING PISTON	KOLBEN	C- 736600-020V
3- 736730-0001		LEDPLÅT	LEAD PLATE	FUEHRUNGSBLECH	C- 736797-010V
3- 736730-0002		LEDPLÅT	LEAD PLATE	FUEHRUNGSBLECH	C- 736865-010V
					C- 736797-010V
3- 736730-0003		LEDPLÅT	LEAD PLATE	FUEHRUNGSBLECH	C- 736865-010V
					C- 736797-010V
3- 736730-0004		LEDPLÅT	LEAD PLATE	FUEHRUNGSBLECH	C- 736865-010V
					C- 736797-010V
3- 736734		LEDPLÅT	LEAD PLATE	FUEHRUNGSBLECH	C- 736797-010V
1- 736748		RÖR	PIPE	ROHR	C- 735265-010V
4- 736749		KOPPLINGSKLÄMMA	CONNECTION CLAMP	KUPPLUNGSKLAMMER	C- 735261-010V
					C- 736593-010V
					C- 735261-010V
					C- 736593-010V
					C- 735261-010V
					C- 736593-010V
					C- 735261-010V
					C- 736593-010V
					C- 735261-010V
					C- 736593-010V
4- 736749		KOPPLINGSKLÄMMA	CONNECTION CLAMP	KUPPLUNGSKLAMMER	C- 735261-010V
					C- 736593-010V
C- 736796-0201	16400 92-06-30	UPPSTARTSATS	START-UP KIT	STARTSATZ	C- 563210-010V
					C- 563211-010V
C- 736796-0202	16400 92-06-30	UPPSTARTSATS	START-UP KIT	STARTSATZ	C- 563210-010V
					C- 563211-010V
C- 736796-0203	16400 92-06-30	UPPSTARTSATS	START-UP KIT	STARTSATZ	C- 563210-010V
					C- 563211-010V
C- 736796-0204	16400 92-06-30	UPPSTARTSATS	START-UP KIT	STARTSATZ	C- 563210-010V
					C- 563211-010V
C- 736797-0101	16400 92-06-30	YTTRE RENGÖRING	PACKAGE EXTERNAL CLEANIN	AUSSENAUSRUESTUNG	C- 563210-010V
					C- 563211-010V
C- 736797-0102	16400 92-06-30	YTTRE RENGÖRING	PACKAGE EXTERNAL CLEANIN	AUSSENAUSRUESTUNG	C- 563210-010V
					C- 563211-010V
C- 736797-0103	16400 92-06-30	YTTRE RENGÖRING	PACKAGE EXTERNAL CLEANIN	AUSSENAUSRUESTUNG	C- 563210-010V
					C- 563211-010V
C- 736797-0104	16400 92-06-30	YTTRE RENGÖRING	PACKAGE EXTERNAL CLEANIN	AUSSENAUSRUESTUNG	C- 563210-010V
					C- 563211-010V
C- 736797-0105	16400 92-06-30	YTTRE RENGÖRING	PACKAGE EXTERNAL CLEANIN	AUSSENAUSRUESTUNG	C- 563210-010V
					C- 563211-010V
C- 736803-0101	15141 90-09-19	EL-MATERIAL	ELECTRIC MATERIALS	EL-MATERIAL	C- 736796-020V
4- 736848		ARM	ARM	ARM	C- 736865-010V
4- 736850		ARM	ARM	ARM	C- 736865-010V
4- 736851		HÅLLARE	HOLDER	HALTER	C- 736865-010V
C- 736865-0101	16390 91-10-17	TUBKYLNING FÖR LS	REBUILDING KITS BRIK	UMBAUSÄTZE BRIK	C- 560459-010V
					C- 560459-020V
					C- 560460-010V
					C- 560460-020V
					C- 560886-010V
C- 736865-0102	16390 91-10-17	TUBKYLNING FÖR LS	REBUILDING KITS BRIK	UMBAUSÄTZE BRIK	C- 560886-020V
					C- 560459-010V
					C- 560459-020V
					C- 560460-010V
					C- 560460-020V
					C- 560886-010V
C- 736865-0103	16390 91-10-17	TUBKYLNING FÖR LS	REBUILDING KITS BRIK	UMBAUSÄTZE BRIK	C- 560886-020V
					C- 560459-010V

PART NO	LAST ECN	BENÄMNING	TITLE	BENENNUNG	GROUP NO
					C- 560459-020V
					C- 560460-010V
					C- 560460-020V
					C- 560886-010V
					C- 560886-020V
4- 736999		FÄSTE	BRACKET	BEFESTIGUNGSHALTER	C- 736865-010V
4- 740654		DISTANS	SPACER	DISTANZ	C- 978179-010V
1- 751002		PLATTA	PLATE	PLATTE	C- 469452-030V
4- 751009		ISOLERING	INSULATION	ISOLIERUNG	C- 271181-040V
4- 751010		PACKNING	GASKET	DICHTUNG	C- 469501-040V
4- 751015		PACKNING	GASKET	DICHTUNG	C- 256095-050V
4- 751016		PACKNING	GASKET	DICHTUNG	C- 271181-040V
					RK- 978212-010V
4- 751017		PACKNING	GASKET	DICHTUNG	C- 456588-030V
4- 751018		BRICKA	WASHER	SCHEIBE	C- 256095-050V
4- 751019		BRICKA	WASHER	SCHEIBE	C- 256055-060V
4- 751020		PACKNING	GASKET	DICHTUNG	C- 256055-060V
4- 751023		PACKNING	GASKET	DICHTUNG	C- 256055-060V
					C- 256095-050V
4- 751024		PACKNING	GASKET	DICHTUNG	C- 469501-040V
G1- 751038		VOLYMKLAFF 250 ML	VOLUME FLAP 250 ML	VOLUMENKLAPPE	C- 978443-010V
4- 751044		FÄSTE	BRACKET	BEFESTIGUNGSHALTER	C- 469452-030V
1- 751052		RÄCKE	RAILING	HANDLEISTE	C- 456460-040V
1- 751053		RÄCKE	RAILING	HANDLEISTE	C- 456460-040V
2- 751055		STAG	STRUT	VERSTREBUNG	C- 456460-040V
					C- 751900-010V
3- 751056		STAGÄNDA	STRUT END	VERSTREBUNGSENDE	C- 752960-010V
					C- 752971-010V
					C- 456459-040V
					C- 456460-040V
					C- 751900-010V
2- 751057		RÄCKE	RAILING	HANDLEISTE	C- 456460-040V
4- 751059		FÄSTE	BRACKET	BEFESTIGUNGSHALTER	C- 271569-050V
4- 751060		FÄSTE	BRACKET	BEFESTIGUNGSHALTER	C- 271569-050V
1- 751064		KÅPA	COVER	DECKEL	C- 469452-030V
1- 751070		FÖRDELARBLOCK	DISTRIBUTOR BLOCK	VERTEILERBLOCK	C- 272765-070V
2- 751071		RÖR	PIPE	ROHR	C- 295045-070V
2- 751073-0001		RÖR 240	PIPE 240	ROHR	C- 456935-030V
					C- 752898-010V
2- 751073-0002		RÖR 240	PIPE 240	ROHR	C- 456935-030V
					C- 752898-010V
2- 751074-0001		RÖR 241	PIPE 241	ROHR	C- 456935-030V
					C- 752898-010V
2- 751074-0002		RÖR 241	PIPE 241	ROHR	C- 456935-030V
					C- 752898-010V
1- 751075-0002		KABELRÖR	CABLE CONDUIT	KABELROHR	C- 456460-040V
2- 751077		LOCK	LID	DECKEL	C- 469374-040V
4- 751078		FÄSTE HÖGER	BRACKET RIGHT	BEFESTIGUNGSHALTER	C- 491814-020V
4- 751079		FÄSTE VÄNSTER	BRACKET LEFT	BEFESTIGUNGSHALTER	C- 491815-020V
2- 751080-0001		RÖR 200	PIPE 200	ROHR	C- 456935-030V
					C- 752898-010V
2- 751080-0002		RÖR 200	PIPE 200	ROHR	C- 456935-030V
					C- 752898-010V
2- 751080-0003		RÖR 200	PIPE 200	ROHR	C- 456935-030V
					C- 752898-010V
1- 751082		RÖRANSLUTNING	PIPE CONNECTION	ROHRANSCHLUSS	C- 272765-070V
4- 751083		FÄSTPLATTA	FASTENING PLATE	BEFESTIGUNGSPLATTE	C- 272408-050V
4- 751085		BUSSNING	BUSHING	BUCHSE	C- 456100-030V
3- 751086		NIPPEL	NIPPLE	NIPPEL	C- 491536-010V
3- 751087		FÄSTE	BRACKET	BEFESTIGUNGSHALTER	C- 295891-030V
C- 751088-0301	17875 92-11-24	BIGVALS	CREASE ROLLER	PRÄGEWALZE	B- 648111-100V
1- 751092		PLATTA	PLATE	PLATTE	C- 272408-050V
1- 751093		FÄSTPLÅT	MOUNTING SHEET	BEFESTIGUNGSBLECH	C- 295891-030V
4- 751095		PLUGG	PLUG	PFROPFEN	C- 751332-010V
4- 751096		LÅSRING	LOCKING CIRCLIP	VERSCHLUSSRING	C- 751332-010V
4- 751097		BROMSRING	BRAKE RING	BREMSRING	C- 751332-010V
4- 751098		FRIKTIONSSKIVA	FRICTION DISC	FRIKTIONSSCHEIBE	C- 751332-010V
3- 751099		GENOMFÖRING	LEAD-IN	DURCHF~HRUNG	C- 751332-010V
3- 751100		LAGERHUS	BEARING HOUSING	LAGERGEHÄUSE	C- 751332-010V
4- 751108		LÅSBLECK	SECURING PLATE	SCHLIESSBLECH	C- 751332-010V
2- 751109		GLIDSKENA HÖGER	RAIL RIGHT	GLEITSCHIENE	C- 491259-020V
2- 751110		GLIDSKENA VÄNSTER	RAIL LEFT	GLEITSCHIENE	C- 491259-020V
1- 751121		DISKRÖR	CLEANING PIPE	REINIGUNGSROHR	C- 456836-040V
4- 751125-0002		SKENA	RAIL	SCHIENE	C- 456435-040V
4- 751125-0003		SKENA	RAIL	SCHIENE	C- 295470-050V
4- 751131		AXEL	SHAFT	WELLE	C- 272021-060V
4- 751132		AXEL	SHAFT	WELLE	C- 272024-040V
4- 751143		CYLINDERFÄSTE	CYLINDER BRACKET	ZYLINDERBEFESTIGUNG	C- 272343-050V
2- 751144-0001		RÖR 201	PIPE 201	ROHR	C- 456935-030V
					C- 752898-010V
2- 751144-0002		RÖR 201	PIPE 201	ROHR	C- 456935-030V
2- 751144-0002		RÖR 201	PIPE 201	ROHR	C- 752898-010V
2- 751144-0003		RÖR 201	PIPE 201	ROHR	C- 456935-030V
					C- 752898-010V
2- 751154		LEDSKENA	LEAD RAIL	LEITSCHIENE	C- 456560-010V
G2- 751162		TILLOPPSRÖR	INLET PIPE	ZULAUFROHR	C- 456588-030V
4- 751163		KÅPA	COVER	DECKEL	CR- 256436-060V
					CR- 256712-050V
					CR- 256436-060V
					CR- 256712-050V
					CR- 256436-060V
					CR- 256712-050V

PART NO	LAST ECN	BENÄMNING	TITLE	BENENNUNG	GROUP NO
					CR- 256436-060V
					CR- 256712-050V
4- 751165		BUSSNING	BUSHING	BUCHSE	C- 272025-030V
1- 751171		KAMSKIVA	CAM DISC	NOCKENSCHEIBE	C- 751689-010V
3- 751176		KUGGREMHJUL	TOOTHED PULLY	ZAHNRIEMENRAD	C- 256202-050V
3- 751177		KUGGREMSSKIVA	TIMING BELT PULLEY	ZAHNRIEMENSCHEIBE	C- 751689-010V
4- 751180		RULLE	ROLL	ROLLE	C- 256199-040V
4- 751182		PACKNING	GASKET	DICHTUNG	C- 752960-010V
					C- 752971-010V
					C- 456459-040V
					C- 456460-040V
4- 751183		PACKNING	GASKET	DICHTUNG	C- 751900-010V
					C- 752960-010V
					C- 752971-010V
					C- 456459-040V
					C- 456460-040V
G1- 751212		ARM	ARM	ARM	C- 751900-010V
					C- 256197-050V
					C- 491814-020V
G2- 751213		LAGERBOCK	BEARING BRACKET	LAGERBOCK	C- 491815-020V
2- 751215		RÖR	PIPE	ROHR	C- 491815-020V
2- 751216		RÖR	PIPE	ROHR	C- 469452-030V
3- 751220		PÅFYLLNINGSLOCK	FILLER CAP	F~LLDECKEL	C- 469452-030V
3- 751221		RÖR	PIPE	ROHR	C- 751373-010V
3- 751222		DISTANS	SPACER	DISTANZ	C- 751373-010V
4- 751223		LOCK	LID	DECKEL	C- 751406-010V
4- 751230		GLIDLAGER	PLAIN BEARING	GLEITLAGER	C- 751398-020V
2- 751235		ISOLERING	INSULATION	ISOLIERUNG	C- 272021-060V
					C- 469452-030V
3- 751243		KUGGREMHJUL	TOOTHED PULLY	ZAHNRIEMENRAD	C- 751800-020V
3- 751245		FLÄNS	FLANGE	FLANSCH	C- 256173-050V
3- 751246		SLANG	HOSE	SCHLAUCH	C- 256173-050V
3- 751247		SLANG	HOSE	SCHLAUCH	C- 469452-030V
3- 751248		SLANG	HOSE	SCHLAUCH	C- 469452-030V
1- 751250		RÖR	PIPE	ROHR	C- 469452-030V
1- 751251		RÖR	PIPE	ROHR	C- 469452-030V
4- 751254		RULLE	ROLL	ROLLE	C- 256199-040V
4- 751265		SKRUV	SCREW	SCHRAUBE	C- 441304-040V
3- 751267		KONSOL	CANTILEVER	KONSOLE	C- 441307-030V
3- 751283		RULLE	ROLL	ROLLE	C- 441307-030V
3- 751284		RULLE	ROLL	ROLLE	C- 441307-030V
4- 751287		PLATTA	PLATE	PLATTE	C- 441307-030V
4- 751288		PLATTA	PLATE	PLATTE	C- 441307-030V
3- 751316		VINKELRÖR	ELBOW PIPE	WINKELROHR	C- 751393-010V
4- 751318		AXEL	SHAFT	WELLE	C- 441486-040V
4- 751322		FÄSTE	BRACKET	BEFESTIGUNGSHALTER	C- 751478-020V
4- 751323		BROMSKLOTS	BRAKE BLOCK	BREMSKLOTZ	C- 751478-020V
4- 751324		HÅLLARE	HOLDER	HALTER	C- 751478-020V
4- 751325		FÄSTE	BRACKET	BEFESTIGUNGSHALTER	C- 751478-020V
4- 751326		FÄSTE	BRACKET	BEFESTIGUNGSHALTER	C- 751478-020V
3- 751331		PACKNING	GASKET	DICHTUNG	C- 752173-010V
C- 751332-0101	10058 87-08-06	FÄSTE	BRACKET	BEFESTIGUNGSHALTER	C- 456459-040V
					C- 456460-040V
					C- 751900-010V
					C- 752960-010V
3- 751333		STÄLLPLATTA	SETTING PLATE	EINSTELLPLATTE	C- 752971-010V
4- 751334		DISTANS	SPACER	DISTANZ	C- 441304-040V
1- 751337		KONSOL	CANTILEVER	KONSOLE	C- 441304-040V
3- 751350-0001		RULLAXEL	ROLLER SHAFT	ROLLENACHSE	C- 752030-010V
3- 751350-0002		RULLAXEL	ROLLER SHAFT	ROLLENACHSE	C- 232781-040V
3- 751350-0003		RULLAXEL	ROLLER SHAFT	ROLLENACHSE	C- 232781-040V
C- 751352-020V	17888 93-01-27	PEROXID HANTERING	HYDROGEN PEROXIDE	WASSERSTOFFPEROXYD	C- 232781-040V
3- 751357		SKYDD	PROTECTION	SCHUTZ	B- 648106-100V
2- 751362		RETURRÖR	RETURN PIPE	RUECKLAUFROHR	C- 751373-010V
4- 751372		RÖR	PIPE	ROHR	C- 491207-030V
C- 751373-010V	17147 92-01-13	PEROXIDTANK	PEROXIDE TANK	PEROXIDTANK	C- 751410-010V
1- 751374		PEROXIDTANK	PEROXIDE TANK	PEROXIDTANK	C- 751352-020V
1- 751375		RÖRSLINGA	PIPE COIL	ROHRSCHLINGE	C- 751373-010V
2- 751376		ISOLERPLATTA	INSULATING PLATE	ISOLIERPLATTE	C- 751373-010V
2- 751377		ISOLERPLATTA	INSULATING PLATE	ISOLIERPLATTE	C- 751373-010V
2- 751378		ISOLERPLATTA	INSULATING PLATE	ISOLIERPLATTE	C- 751373-010V
2- 751380		PÅFYLLNINGSRÖR	FILLER TUBE	FUELLROHR	C- 751373-010V
2- 751381		ANSLUTNING	ATTACHMENT	ANSCHLUSS	C- 751373-010V
3- 751382		SKYDDSRÖR	PROTECTION PIPE	SCHUTZROHR	C- 751373-010V
3- 751383		NIVÅRÖR	LEVEL TUBE	NIVEAUROHR	C- 751373-010V
C- 751393-0101	17824 92-09-25	PEROXIDPUMP	PEROXIDE PUMP	PEROXIDPUMP	C- 751373-010V
1- 751394		FÖRLÄNGNINGSRÖR	EXTENSION PIPE	VERLÄNGERUNGSROHR	C- 751393-010V
G2- 751395		FLÄNS	FLANGE	FLANSCH	C- 751393-010V
C- 751398-020V	20112 93-07-01	AVTAPPNING PEROXID	PEROXIDE TANK	PEROXIDTANK	C- 751352-020V
1- 751399		TANK	TANK	TANK	C- 751398-020V
3- 751400		ANSLUTNINGSRÖR	ATTACHMENT PIPE	ANSCHLUSSROHR	C- 751398-020V
4- 751402		BRICKA	WASHER	SCHEIBE	C- 751398-020V
4- 751403		FÄSTE	BRACKET	BEFESTIGUNGSHALTER	C- 751398-020V
C- 751406-010V	16125 91-02-20	KOPPLINGSHUS	CONNECTION HOUSING	KUPPLUNGSGEHÄUSE	C- 751352-020V
1- 751407		RAM	FRAME	RAHMEN	C- 751406-010V
C- 751410-0101	17787 92-04-10	VENTILPANEL	VALVE PANEL	VENTILPANEL	C- 751406-010V
2- 751411		HÅLLARE	HOLDER	HALTER	C- 751410-010V
G2- 751456		HÅLLARE	HOLDER	HALTER	C- 491976-020V
G2- 751457		KONSOL	CANTILEVER	KONSOLE	C- 491976-020V
2- 751465		ANSLUTNING	ATTACHMENT	ANSCHLUSS	C- 272408-050V

PART NO	LAST ECN	BENÄMNING	TITLE	BENENNUNG	GROUP NO
4- 751467		AXEL	SHAFT	WELLE	C- 751088-030V
2- 751472		PAKETSTATION MED FAS	CARTON STATION WITH BEVE	PAKETSTATION	CR- 491225-010V
G2- 751476		KONSOL	CANTILEVER	KONSOLE	C- 491976-020V
C- 751478-0201	14366 90-02-26	BROMS JOKIMOTOR	BRAKE	BREMSE	C- 272404-070V
4- 751484		SPÄNNRING	CLAMPING RING	SPANNRING	C- 566318-010V
					C- 751928-020V
					C- 752960-010V
					C- 752971-010V
					C- 560670-010V
					C- 560671-010V
					C- 560672-010V
					C- 456459-040V
					C- 456460-040V
					C- 751900-010V
4- 751484		SPÄNNRING	CLAMPING RING	SPANNRING	C- 752958-010V
4- 751485		SKRUV	SCREW	SCHRAUBE	C- 752959-010V
					C- 566318-010V
					C- 751928-020V
					C- 752960-010V
					C- 752971-010V
					C- 560670-010V
					C- 560671-010V
					C- 560672-010V
					C- 456459-040V
					C- 456460-040V
					C- 751900-010V
					C- 752958-010V
					C- 752959-010V
2- 751490		PAKETSTATION MED FAS	CARTON STATION WITH BEVE	PAKETSTATION	CR- 491225-010V
3- 751491		RULLE	ROLL	ROLLE	C- 441304-040V
3- 751492		RULLE	ROLL	ROLLE	C- 441304-040V
3- 751493		RULLE	ROLL	ROLLE	C- 441304-040V
3- 751494		RULLE	ROLL	ROLLE	C- 441304-040V
3- 751495		RULLE	ROLL	ROLLE	C- 441486-040V
3- 751496		RULLE	ROLL	ROLLE	C- 441486-040V
3- 751497		RULLE	ROLL	ROLLE	C- 441486-040V
3- 751498		RULLE	ROLL	ROLLE	C- 441486-040V
3- 751499		RULLE	ROLL	ROLLE	C- 441486-040V
3- 751500		RULLE	ROLL	ROLLE	C- 441486-040V
3- 751501		RULLE	ROLL	ROLLE	C- 441486-040V
3- 751502		RULLE	ROLL	ROLLE	C- 456309-050V
3- 751503		MOTRULLE	COUNTER ROLLER	GEGENROLLE	C- 456309-050V
4- 751504		RULLE	ROLL	ROLLE	C- 441000-050V
4- 751505		BLECK	TINPLATE	BLECH	C- 556723-010V
					C- 441000-050V
4- 751509		GLIDKLOTS	SLIDER	GLEITKLOTZ	C- 556723-010V
					C- 752628-020V
4- 751510		GLIDKLOTS	SLIDER	GLEITKLOTZ	C- 552030-010V
					C- 752628-020V
4- 751511		FÄSTKLACK	MOUNTING LUG	BEFESTIGUNGSHACKEN	C- 552030-010V
					C- 752628-020V
4- 751514		JUSTERINGSSKRUV	ADJUSTING SCREW	REGULIERSCHRAUBE	C- 552030-010V
					C- 752628-020V
4- 751515		AXEL	SHAFT	WELLE	C- 552030-010V
4- 751519		AXEL	SHAFT	WELLE	C- 752628-020V
4- 751522		FÄSTPLATTA	FASTENING PLATE	BEFESTIGUNGSPLATTE	C- 978162-010V
					C- 752628-020V
2- 751525		FÄSTE	BRACKET	BEFESTIGUNGSHALTER	C- 552030-010V
4- 751527-0001		JUSTERINGSSKRUV	ADJUSTING SCREW	REGULIERSCHRAUBE	C- 978162-010V
					C- 560202-010V
					C- 752627-010V
4- 751527-0003		JUSTERINGSSKRUV	ADJUSTING SCREW	REGULIERSCHRAUBE	C- 752628-020V
					C- 560202-010V
					C- 752627-010V
					C- 752628-020V
G2- 751552		ARM	ARM	ARM	CR- 256436-060V
3- 751553		ARM	ARM	ARM	CR- 256436-060V
4- 751554-0001		AXEL	SHAFT	WELLE	CR- 256436-060V
4- 751554-0002		AXEL	SHAFT	WELLE	CR- 256436-060V
4- 751555		BUSSNING	BUSHING	BUCHSE	CR- 256436-060V
4- 751557		HYLSA	SLEEVE	HUELSE	CR- 256436-060V
4- 751567		DISTANSRING	SPACER RING	DISTANZRING	C- 295310-070V
G2- 751575		LINJALHALVA H	RULERPART R	LINEAL	CR- 256204-050V
G2- 751576		LINJALHALVA V	RULERPART L	LINEAL	CR- 256205-050V
2- 751577		LINJALHALVA H	RULERPART R	LINEAL	CR- 256204-050V
2- 751578		LINJALHALVA V	RULERPART L	LINEAL	CR- 256205-050V
4- 751579		JUSTERINGSSKRUV	ADJUSTING SCREW	REGULIERSCHRAUBE	CR- 256204-050V
					CR- 256205-050V
4- 751580		SHIMS	SHIM	SHIMS	CR- 256204-050V
					CR- 256205-050V
2- 751586		LAGER	BEARING	LAGER	C- 272404-070V
1- 751598		KONSOL	CANTILEVER	KONSOLE	C- 469452-030V
4- 751604		FJÄDER	SPRING	FEDER	C- 469091-030V
3- 751616		FLOTTÖR	FLOAT	SCHWIMMER	C- 978239-020V
					C- 978240-020V
					C- 978241-020V
4- 751631		KOPPLINGSLÅDA	CONNECTION BOX	KUPPLUNGSKASTEN	C- 451348-020V
4- 751659		JUSTERINGSSKRUV	ADJUSTING SCREW	REGULIERSCHRAUBE	C- 491787-020V
					C- 491788-020V
3- 751660		RÖR	PIPE	ROHR	C- 271866-060V
3- 751661		RÖR	PIPE	ROHR	C- 271866-060V
3- 751662		RÖR	PIPE	ROHR	C- 271866-060V

PART NO	LAST ECN	BENÄMNING	TITLE	BENENNUNG	GROUP NO
3- 751663		RÖR	PIPE	ROHR	C- 271866-060V
3- 751664		RÖR	PIPE	ROHR	C- 271866-060V
3- 751665		RÖR	PIPE	ROHR	C- 271866-060V
3- 751666		RÖR	PIPE	ROHR	C- 271866-060V
2- 751667		TRÅG	TROUGH	TROG	C- 751691-010V
1- 751668		FÄSTPLATTA	FASTENING PLATE	BEFESTIGUNGSPLATTE	C- 751691-010V
G1- 751669		ARM	ARM	ARM	C- 751691-010V
G2- 751670		FÄSTE	BRACKET	BEFESTIGUNGSHALTER	C- 751691-010V
3- 751671		AXEL	SHAFT	WELLE	C- 751689-010V
3- 751672		DISTANSHYLSA	SPACER SLEEVE	DISTANZHUELSE	C- 751689-010V
2- 751674		LUCKA	OPENING	DECKEL	C- 751702-010V
4- 751679		AXEL	SHAFT	WELLE	C- 752173-010V
4- 751680		SKRUV	SCREW	SCHRAUBE	C- 752173-010V
3- 751682		AXEL	SHAFT	WELLE	C- 751689-010V
4- 751684		STOPPKLACK	STOP LUG	STOPPABSATZ	C- 272021-060V
C- 751689-010V	19271 93-05-31	KURVPAKET	CURVE PACK	KURVENPAKET	C- 751691-010V
C- 751691-0101	17888 93-01-27	IMPULSGIVARE	IMPULSE TRANSMITTER	IMPULSGEBER	B- 648106-100V
3- 751696		VIKSKENA VÄNSTER	FOLDING BAR LEFT	FALTSCHIENE	C- 491259-020V
3- 751697		VIKSKENA HÖGER	FOLDING BAR RIGHT	FALTSCHIENE	C- 491259-020V
4- 751698		HÅLLARE	HOLDER	HALTER	C- 256014-060V
4- 751699		BRICKA	WASHER	SCHEIBE	C- 256014-060V
C- 751702-0101	17870 92-08-31	LUCKA	OPENING	DECKEL	B- 648111-100V
3- 751703		AXEL	SHAFT	WELLE	C- 751689-010V
3- 751707		VIKSKENA HÖGER	FOLDING BAR RIGHT	FALTSCHIENE	C- 491259-020V
3- 751708		VIKSKENA VÄNSTER	FOLDING BAR LEFT	FALTSCHIENE	C- 491259-020V
3- 751709		VIKSKENA HÖGER	FOLDING BAR RIGHT	FALTSCHIENE	C- 491259-020V
3- 751710		VIKSKENA VÄNSTER	FOLDING BAR LEFT	FALTSCHIENE	C- 491259-020V
C- 751718-0101	12932 89-06-05	HÅLLARE FÖR DATUMHJUL	DATING WHEEL HOLDER	HALTER	C- 752645-020V
					C- 752646-020V
					C- 752913-010V
					C- 752914-010V
4- 751719		DISTANS	SPACER	DISTANZ	RK- 978212-010V
					RK- 978238-010V
					RK- 978212-010V
					RK- 978238-010V
					RK- 978212-010V
					RK- 978238-010V
2- 751722		RÖRLEDNING	PIPE-LINE	ROHRLEITUNG	C- 469501-040V
3- 751724		KUTS	PIECE	BLOCK	C- 272404-070V
3- 751725		PLÅT	SHEET	BLECH	C- 271468-040V
4- 751727		GLIDKLOTS	SLIDER	GLEITKLOTZ	C- 271468-040V
4- 751729		BRICKA	WASHER	SCHEIBE	C- 271468-040V
4- 751730		LÅSRING	LOCKING CIRCLIP	VERSCHLUSSRING	C- 272021-060V
3- 751731		LAGERLOCK	BEARING COVER	LAGERDECKEL	C- 256084-050V
3- 751732		FÄSTE	BRACKET	BEFESTIGUNGSHALTER	C- 256084-050V
3- 751733		VÄRMERÖR	HEATING PIPE	HEIZROHR	C- 256095-050V
2- 751736		RÖR	PIPE	ROHR	C- 256084-050V
4- 751740		STOPP	STOP	STOPP	C- 256084-050V
3- 751741-0001		KILREMSSKIVA	V-BELT PULLEY	KEILRIEMENSCHEIBE	C- 271128-040V
3- 751741-0002		KILREMSSKIVA	V-BELT PULLEY	KEILRIEMENSCHEIBE	C- 271128-040V
3- 751741-0003		KILREMSSKIVA	V-BELT PULLEY	KEILRIEMENSCHEIBE	C- 271128-040V
3- 751741-0004		KILREMSSKIVA	V-BELT PULLEY	KEILRIEMENSCHEIBE	C- 271128-040V
3- 751742-0002		KILREMSSKIVA	V-BELT PULLEY	KEILRIEMENSCHEIBE	C- 256173-050V
3- 751742-0003		KILREMSSKIVA	V-BELT PULLEY	KEILRIEMENSCHEIBE	C- 256173-050V
3- 751743		KOLV	PISTON	KOLBEN	CR- 256212-050V
					CR- 256213-050V
1- 751745		KABELRÖR	CABLE CONDUIT	KABELROHR	C- 456460-040V
2- 751756		LOCK	LID	DECKEL	C- 752173-010V
2- 751757		FÄSTE	BRACKET	BEFESTIGUNGSHALTER	C- 752173-010V
3- 751759		PACKNING	GASKET	DICHTUNG	C- 752173-010V
4- 751760		CYLINDERFÄSTE	CYLINDER BRACKET	ZYLINDERBEFESTIGUNG	C- 256084-050V
3- 751761		ARM	ARM	ARM	C- 256014-060V
4- 751762		AXEL	SHAFT	WELLE	C- 256014-060V
4- 751763		FÄSTE	BRACKET	BEFESTIGUNGSHALTER	C- 256014-060V
4- 751769		HYLSA	SLEEVE	HUELSE	CR- 256212-050V
					CR- 256213-050V
C- 751796-030V	19540 93-04-05	STORRULLEUTRUSTNING	JUMBO REEL EQUIPMENT	ROLLENEINHEIT	C- 77091-040V
C- 751800-020V	8833 89-12-02	KOMPRESSORAGGREGAT	COMPRESSOR UNIT	KOMPRESSOR AGGREGAT	B- 648111-100V
1- 751801		KONSOL	CANTILEVER	KONSOLE	C- 751800-020V
1- 751802		RÖR	PIPE	ROHR	C- 751800-020V
1- 751803		RÖR	PIPE	ROHR	C- 751800-020V
1- 751804		RÖR	PIPE	ROHR	C- 751800-020V
1- 751805		KONSOL	CANTILEVER	KONSOLE	C- 751800-020V
3- 751806		BEN	LEG	BEIN	C- 751860-020V
1- 751807		RAM	FRAME	RAHMEN	C- 751860-020V
1- 751808		KÅPA	COVER	DECKEL	C- 751800-020V
3- 751809		RÖR	PIPE	ROHR	C- 751800-020V
3- 751810		RÖR	PIPE	ROHR	C- 751800-020V
4- 751811		RÖR	PIPE	ROHR	C- 751800-020V
3- 751812		RÖR	PIPE	ROHR	C- 751800-020V
3- 751813		RÖR	PIPE	ROHR	C- 751800-020V
1- 751827		KABELRÖR	CABLE CONDUIT	KABELROHR	C- 751900-010V
1- 751828		ANSLUTNINGSRÖR	ATTACHMENT PIPE	ANSCHLUSSROHR	C- 271866-060V
2- 751829		RAMPLÅT	FRAME SHEET	RAHMENBLECH	C- 751860-020V
1- 751838		RÖR	TUBE	ROHR	C- 271866-060V
3- 751839		RÖR	TUBE	ROHR	C- 271866-060V
2- 751840		RÖR	TUBE	ROHR	C- 271866-060V
1- 751841		RÖR	TUBE	ROHR	C- 271866-060V
2- 751842		RÖR	TUBE	ROHR	C- 271866-060V
2- 751843		RÖR	TUBE	ROHR	C- 271866-060V
3- 751844		KONSOL	CANTILEVER	KONSOLE	C- 271866-060V
1- 751848		KABELRÖR	CABLE CONDUIT	KABELROHR	C- 751900-010V

PART NO	LAST ECN	BENÄMNING	TITLE	BENENNUNG	GROUP NO
1- 751850		RAM	FRAME	RAHMEN	C- 751860-020V
1- 751851		PLATTFORM	PLATFORM	PLATTFORM	C- 751860-020V
1- 751852		PLATTFORM	PLATFORM	PLATTFORM	C- 751860-020V
1- 751853		PLATTFORM	PLATFORM	PLATTFORM	C- 751860-020V
2- 751854		PLÅT	SHEET	BLECH	C- 566318-010V
					C- 752960-010V
					C- 752971-010V
					C- 456457-040V
2- 751854		PLÅT	SHEET	BLECH	C- 751860-020V
2- 751855		PLÅT	SHEET	BLECH	C- 752960-010V
					C- 752971-010V
					C- 456457-040V
2- 751856		PLÅT	SHEET	BLECH	C- 751860-020V
					C- 566318-010V
					C- 752960-010V
					C- 752971-010V
1- 751857		PLATTFORM	PLATFORM	PLATTFORM	C- 751860-020V
1- 751858		PLATTFORM	PLATFORM	PLATTFORM	C- 751860-020V
1- 751859		PLATTFORM	PLATFORM	PLATTFORM	C- 751860-020V
C- 751860-020V	17946 93-01-25	PLATTFORM-FRÄMRE	PLATFORM	PLATTFORM	C- 751860-020V
4- 751862		STÅNDARE	VERTICAL PILLAR	STAENDER	B- 648102-100V
1- 751863		KABELRÄNNA	CABLE TRENCH	KABELRINNE	C- 751860-020V
1- 751864		KABELRÄNNA	CABLE TRENCH	KABELRINNE	C- 751860-020V
2- 751865		LOCK	LID	DECKEL	C- 751860-020V
2- 751866		LOCK	LID	DECKEL	C- 751860-020V
4- 751867		DISTANS	SPACER	DISTANZ	C- 751860-020V
4- 751868		DISTANS	SPACER	DISTANZ	C- 752312-010V
2- 751873		TÄCKPLÅT	COVERING PLATE	DECKBLECH	C- 271513-060V
2- 751874		TÄCKPLÅT	COVERING PLATE	DECKBLECH	C- 271513-060V
4- 751877		KABELRÄNNA	CABLE TRENCH	KABELRINNE	C- 271569-050V
2- 751878		KABELRÄNNA	CABLE TRENCH	KABELRINNE	C- 751860-020V
2- 751879		LOCK	LID	DECKEL	C- 751860-020V
2- 751880		RÖR	TUBE	ROHR	C- 271866-060V
2- 751881		RÖR	TUBE	ROHR	C- 271866-060V
3- 751884		TÄCKPLÅT	COVERING PLATE	DECKBLECH	C- 271513-060V
					C- 751885-030V
C- 751885-0301	17888 93-01-27	TÄCKPLÅTAR	COVER PLATES	DECKBLECH	B- 648106-100V
1- 751886		RÖR	PIPE	ROHR	C- 491083-030V
2- 751887		HÅLLARE	HOLDER	HALTER	C- 237776-040V
1- 751888		RÄCKE	RAILING	HANDLEISTE	C- 752960-010V
					C- 752971-010V
1- 751889		RÄCKE	RAILING	HANDLEISTE	C- 751900-010V
					C- 752960-010V
					C- 752971-010V
2- 751890		RÄCKE	RAILING	HANDLEISTE	C- 751900-010V
					C- 752959-010V
					C- 752960-010V
					C- 752971-010V
1- 751891		RÄCKE	RAILING	HANDLEISTE	C- 751900-010V
					C- 752958-010V
1- 751893		RÄCKE	RAILING	HANDLEISTE	C- 752959-010V
					C- 566318-010V
					C- 752960-010V
					C- 752971-010V
1- 751894		RÄCKE	RAILING	HANDLEISTE	C- 751900-010V
1- 751895		RÄCKE	RAILING	HANDLEISTE	C- 751900-010V
1- 751896		HÅLLARE	HOLDER	HALTER	C- 751900-010V
					C- 752960-010V
					C- 752971-010V
					C- 456459-040V
1- 751897		RÄCKE	RAILING	HANDLEISTE	C- 751900-010V
					C- 752958-010V
1- 751898		LEDSTÅNG HÖGER	RAIL RIGHT	GELÄNDER	C- 752959-010V
					C- 752958-010V
1- 751899		LEDSTÅNG VÄNSTER	RAIL LEFT	GELÄNDER	C- 752959-010V
1- 751899		LEDSTÅNG VÄNSTER	RAIL LEFT	GELÄNDER	C- 752958-010V
C- 751900-010V	14198 90-03-06	RÄCKE, FRÄMRE	RAILING	HANDLEISTE	C- 752959-010V
1- 751903		RÄCKE	RAILING	HANDLEISTE	B- 648102-100V
					C- 752958-010V
1- 751904		SIDOSTYCKE	SIDE PIECE	SEITENSTUECK	C- 752959-010V
1- 751905		SIDOSTYCKE	SIDE PIECE	SEITENSTUECK	C- 751923-010V
1- 751908		PLATTFORM	PLATFORM	PLATTFORM	C- 751924-010V
					C- 752958-010V
2- 751918		KONSOL	CANTILEVER	KONSOLE	C- 752959-010V
1- 751919		BEN	LEG	BEIN	C- 271866-060V
					C- 752958-010V
3- 751921-0001		TRAPPSTEG	STAIR	STUFE	C- 752959-010V
3- 751921-0002		TRAPPSTEG	STAIR	STUFE	C- 751924-010V
C- 751923-0101	12423 89-02-13	STEGE	LADDER	LEITER	C- 751923-010V
					C- 752958-010V
C- 751924-0101	12423 89-02-13	STEGE	LADDER	LEITER	C- 752959-010V
					C- 752958-010V
C- 751924-0102	12423 89-02-13	STEGE	LADDER	LEITER	C- 752959-010V
3- 751925		FÄSTJÄRN	FASTENING IRON	BEFESTIGUNGSEISEN	C- 752958-010V
					C- 752958-010V
2- 751926		FÄSTJÄRN	FASTENING IRON	BEFESTIGUNGSEISEN	C- 752959-010V
					C- 752958-010V
2- 751927		RÄCKE	RAILING	HANDLEISTE	C- 752959-010V
					C- 566318-010V
					C- 752971-010V
					C- 751900-010V

PART NO	LAST ECN	BENÄMNING	TITLE	BENENNUNG	GROUP NO
					C- 752959-010V
C- 751928-020V	19540 93-04-05	PLATTFORM	PLATFORM	PLATTFORM	C- 77091-040V
1- 751938		BALK	BEAM	BALKEN	C- 751928-020V
2- 751940		BALK	BEAM	BALKEN	C- 751928-020V
3- 751941		BALK	BEAM	BALKEN	C- 751928-020V
2- 751943		PLATTFORM	PLATFORM	PLATTFORM	C- 751928-020V
1- 751944		PLATTFORM	PLATFORM	PLATTFORM	C- 751928-020V
1- 751945		PLATTFORM	PLATFORM	PLATTFORM	C- 751928-020V
2- 751946		PLATTFORM	PLATFORM	PLATTFORM	C- 751928-020V
1- 751948		RÄCKE	RAILING	HANDLEISTE	C- 566318-010V
					C- 751928-020V
					C- 752960-010V
					C- 752971-010V
					C- 456459-040V
					C- 751900-010V
					C- 752958-010V
3- 751949		RÄCKE	RAILING	HANDLEISTE	C- 752959-010V
1- 751950		RÄCKE	RAILING	HANDLEISTE	C- 751928-020V
3- 751951		RÄCKE	RAILING	HANDLEISTE	C- 751928-020V
					C- 751928-020V
1- 751952		RÄCKE	RAILING	HANDLEISTE	C- 752959-010V
					C- 751928-020V
					C- 752960-010V
					C- 752971-010V
1- 751953		RÄCKE	RAILING	HANDLEISTE	C- 752958-010V
1- 751954		RÄCKE	RAILING	HANDLEISTE	C- 751928-020V
					C- 566318-010V
					C- 751928-020V
					C- 752960-010V
					C- 752971-010V
1- 751955		RÄCKE	RAILING	HANDLEISTE	C- 751900-010V
1- 751956		LEDSTÅNG	HAND RAIL	GELÄNDER	C- 751928-020V
					C- 751928-020V
1- 751956		LEDSTÅNG	HAND RAIL	GELÄNDER	C- 752960-010V
					C- 752971-010V
1- 751957		LEDSTÅNG	HAND RAIL	GELÄNDER	C- 456459-040V
					C- 751928-020V
					C- 752960-010V
					C- 752971-010V
1- 751958		SIDOSTYCKE	SIDE PIECE	SEITENSTUECK	C- 456459-040V
					C- 751928-020V
					C- 752960-010V
					C- 752971-010V
3- 751964		FLOTTÖR	FLOAT	SCHWIMMER	C- 567034-010V
					C- 978239-020V
					C- 978240-020V
					C- 978241-020V
C- 751968-010V	19271 93-05-31	PAPPERSSTYRARE	PAPER GUIDE	PAPIERSTEUERUNG	C- 272404-070V
4- 751972		FJÄDERHÅLLARE	SPRING HOLDER	SPRING HOLDER	C- 751968-010V
2- 751979		SKENA	RAIL	SCHIENE	C- 272084-030V
4- 751980		HÅLLARE	HOLDER	HALTER	C- 272084-030V
3- 751981		SLÄDE	SADDLE	SCHLITTEN	C- 272084-030V
4- 751982		LÄNKARM	LINK ARM	GELENKARM	C- 272084-030V
3- 751984		STAG	STRUT	VERSTREBUNG	C- 272084-030V
4- 751986		DISTANSRING	SPACER RING	DISTANZRING	C- 752628-020V
2- 751994		RÖR	PIPE	ROHR	C- 271866-060V
4- 752001		STYRRING	GUIDE RING	FUEHRUNGSRING	C- 458383-020V
3- 752002		FÄSTE	BRACKET	BEFESTIGUNGSHALTER	C- 469452-030V
1- 752003		STYRBYGEL	STEERING GUIDE	FUEHRUNGSBUEGEL	C- 752030-010V
4- 752004		FÄSTE	BRACKET	BEFESTIGUNGSHALTER	C- 751928-020V
4- 752007		HÅLLARE	HOLDER	HALTER	C- 76402-010V
G2- 752009		LINJALHALVA H	RULERPART R	LINEAL	CR- 256204-050V
2- 752010		LINJALHALVA H	RULERPART R	LINEAL	CR- 256204-050V
G2- 752011		LINJALHALVA V	RULERPART L	LINEAL	CR- 256205-050V
2- 752012		LINJALHALVA V	RULERPART L	LINEAL	CR- 256205-050V
G2- 752014		LINJALHALVA H	RULERPART R	LINEAL	CR- 256204-050V
2- 752015		LINJALHALVA H	RULERPART R	LINEAL	CR- 256204-050V
G2- 752016		LINJALHALVA V	RULERPART L	LINEAL	CR- 256205-050V
2- 752017		LINJALHALVA V	RULERPART L	LINEAL	CR- 256205-050V
1- 752018		HÅLLARE	HOLDER	HALTER	C- 752029-010V
4- 752019		FÄSTDON	FASTENER	BEFESTIGUNGSANORDNUNG	C- 752029-010V
2- 752020		DÖRR	DOOR	TUER	C- 752042-010V
3- 752021		AXEL	SHAFT	WELLE	C- 752029-010V
4- 752022		STÖD	SUPPORT	STUETZE	C- 752029-010V
1- 752023		STATIV	MACHINE BODY	STATIV	C- 752049-010V
4- 752027		FÄSTE	BRACKET	BEFESTIGUNGSHALTER	C- 751928-020V
1- 752028-0002		INST.RITN. PLATTFORM	INST.DRWG. PLATFORM	PLATTFORM	C- 751928-020V
1- 752028-0003		INST.RITN. PLATTFORM	INST.DRWG. PLATFORM	PLATTFORM	C- 751928-020V
1- 752028-0004		INST.RITN. PLATTFORM	INST.DRWG. PLATFORM	PLATTFORM	C- 751928-020V
1- 752028-0005		INST.RITN. PLATTFORM	INST. DRWG. PLATFORM	PLATTFORM	C- 751928-020V
C- 752029-010V	17188 92-02-03	KONVERT.HASPEL.STORRULLE	ROLLER UNIT	ROLLENEINHEIT	C- 564122-010V
					C- 752046-020V
C- 752030-0101	11776 88-06-14	BROMS	BRAKE	BREMSE	C- 752046-020V
4- 752038		SHIMS	SHIM	SHIMS	C- 456309-050V
C- 752042-0101	11776 88-06-14	DÖRR	DOOR	TUER	C- 752046-020V
1- 752045-0001		INST.RITN.STORRULLE	INST.DRW.JUMBO REEL	ROLLENEINHEIT	C- 751796-030V
1- 752045-0002		INST.RITN.STORRULLE	INST.DRW.JUMBO REEL	ROLLENEINHEIT	C- 751796-030V
C- 752046-020V	19540 93-04-05	KOMPL UTRUSTN F STORRULL	ROLLER UNIT	ROLLENEINHEIT	C- 751796-030V
4- 752047		BUSSNING	BUSHING	BUCHSE	C- 456309-050V
2- 752048-0001		PAKETSTATION MED FAS	CARTON STATION WITH BEVE	PAKETSTATION	CR- 491225-010V
2- 752048-0002		PAKETSTATION MED FAS	CARTON STATION WITH BEVE	PAKETSTATION	CR- 491225-010V
2- 752048-0003		PAKETSTATION MED FAS	CARTON STATION WITH BEVE	PAKETSTATION	CR- 491225-010V

PART NO	LAST ECN	BENÄMNING	TITLE	BENENNUNG	GROUP NO
2- 752048-0004		PAKETSTATION MED FAS	CARTON STATION WITH BEVE	PAKETSTATION	CR- 491225-010V
2- 752048-0005		PAKETSTATION MED FAS	CARTON STATION WITH BEVE	PAKETSTATION	CR- 491225-010V
2- 752048-0006		PAKETSTATION MED FAS	CARTON STATION WITH BEVE	PAKETSTATION	CR- 491225-010V
C- 752049-0101	12764 89-05-30	STATIV	MACHINE BODY	STATIV	C- 752046-020V
4- 752051		SKARVDON	SPLICING DEVICE	VERBINDUNGSGERÄT	C- 751928-020V
2- 752056		HÅLLARE	HOLDER	HALTER	C- 752784-010V
4- 752057		STOPP	STOP	STOPP	C- 271017-030V
3- 752083		KOLV	PISTON	KOLBEN	CR- 256436-060V
					CR- 256712-050V
					CR- 256436-060V
					CR- 256712-050V
					CR- 256436-060V
					CR- 256712-050V
					CR- 256436-060V
					CR- 256712-050V
4- 752084		FJÄDER	SPRING	FEDER	C- 751968-010V
4- 752085		FJÄDER	SPRING	FEDER	C- 751968-010V
3- 752093		HÅLLARE	HOLDER	HALTER	C- 271114-050V
3- 752099		PASSIVERINGSTÄTNING	PASSIVATINGSEAL	SCHEIBE	C- 77092-030V
1- 752113		LAGERHUS	BEARING HOUSING	LAGERGEHÄUSE	CR- 256204-050V
					CR- 256205-050V
4- 752115		PLUNGE	PLUNGER	PLUNGER	CR- 256204-050V
					CR- 256205-050V
3- 752116		HAKE	CATCH	HAKEN	CR- 256204-050V
					CR- 256205-050V
3- 752117		HAKE	CATCH	HAKEN	CR- 256212-050V
					CR- 256213-050V
3- 752126		FORMRULLE	FORMING ROLLER	FORMROLLE	C- 441304-040V
3- 752127		FORMRULLE	FORMING ROLLER	FORMROLLE	C- 441304-040V
3- 752128		FORMRULLE	FORMING ROLLER	FORMROLLE	C- 441304-040V
3- 752129		FORMRULLE	FORMING ROLLER	FORMROLLE	C- 441307-030V
3- 752130		FORMRULLE	FORMING ROLLER	FORMROLLE	C- 441307-030V
3- 752131		FORMRULLE	FORMING ROLLER	FORMROLLE	C- 441486-040V
3- 752132		FORMRULLE	FORMING ROLLER	FORMROLLE	C- 441486-040V
3- 752133		FORMRULLE	FORMING ROLLER	FORMROLLE	C- 441486-040V
3- 752134		FORMRULLE	FORMING ROLLER	FORMROLLE	C- 441486-040V
3- 752135		FORMRULLE	FORMING ROLLER	FORMROLLE	C- 441486-040V
3- 752136		FORMRULLE	FORMING ROLLER	FORMROLLE	C- 441486-040V
3- 752137		FORMRULLE	FORMING ROLLER	FORMROLLE	C- 441486-040V
3- 752138		FORMRULLE	FORMING ROLLER	FORMROLLE	C- 441486-040V
3- 752140		MOTRULLE	COUNTER ROLLER	GEGENROLLE	C- 456309-050V
3- 752141		FORMRULLE	FORMING ROLLER	FORMROLLE	C- 456309-050V
3- 752142		FORMRULLE	FORMING ROLLER	FORMROLLE	C- 441304-040V
3- 752143		FORMRULLE	FORMING ROLLER	FORMROLLE	C- 441304-040V
3- 752144		FORMRULLE	FORMING ROLLER	FORMROLLE	C- 441304-040V
3- 752145		FORMRULLE	FORMING ROLLER	FORMROLLE	C- 441307-030V
3- 752146		FORMRULLE	FORMING ROLLER	FORMROLLE	C- 441307-030V
3- 752147		FORMRULLE	FORMING ROLLER	FORMROLLE	C- 441486-040V
3- 752148		FORMRULLE	FORMING ROLLER	FORMROLLE	C- 441486-040V
3- 752149		FORMRULLE	FORMING ROLLER	FORMROLLE	C- 441486-040V
3- 752150		FORMRULLE	FORMING ROLLER	FORMROLLE	C- 441486-040V
3- 752151		FORMRULLE	FORMING ROLLER	FORMROLLE	C- 441486-040V
3- 752152		FORMRULLE	FORMING ROLLER	FORMROLLE	C- 441486-040V
3- 752153		FORMRULLE	FORMING ROLLER	FORMROLLE	C- 441486-040V
3- 752155		MOTRULLE	COUNTER ROLLER	GEGENROLLE	C- 456309-050V
4- 752156		FLÄNSBUSSNING	FLANGE BUSHING	FLANSCHBUCHSE	C- 456309-050V
					C- 441304-040V
C- 752173-010V	14880 90-08-14	LOCK	LID	DECKEL	C- 441486-040V
1- 752174		VÄRMERÖR	HEATING PIPE	HEIZROHR	C- 256014-060V
4- 752175		STAG	STRUT	VERSTREBUNG	C- 256055-060V
2- 752176		SKYDDSKÅPA	PROTECTIVE CASING	SCHUTZKAPPE	C- 456555-040V
2- 752178		BYGEL	BOW CLAMP	BUEGEL	C- 272560-060V
2- 752179		BYGEL	BOW CLAMP	BUEGEL	C- 751968-010V
2- 752180		STYRDON	GUIDING ARBOR	FUEHRUNGSANORDNUNG	C- 751968-010V
2- 752181		STYRDON	GUIDING ARBOR	FUEHRUNGSANORDNUNG	C- 751968-010V
2- 752182		STYRDON	GUIDING ARBOR	FUEHRUNGSANORDNUNG	C- 751968-010V
3- 752183		FJÄDERHÅLLARE	SPRING HOLDER	SPRING HOLDER	C- 751968-010V
3- 752184		FJÄDERHÅLLARE	SPRING HOLDER	SPRING HOLDER	C- 751968-010V
4- 752185		AXEL	SHAFT	WELLE	C- 441486-040V
4- 752186-0001		AXEL	SHAFT	WELLE	C- 441307-030V
4- 752186-0002		AXEL	SHAFT	WELLE	C- 441304-040V
4- 752186-0003		AXEL	SHAFT	WELLE	C- 441486-040V
					C- 456309-050V
4- 752186-0004		AXEL	SHAFT	WELLE	C- 441307-030V
					C- 441486-040V
					C- 456309-050V
4- 752186-0005		AXEL	SHAFT	WELLE	C- 441304-040V
					C- 441486-040V
					C- 456309-050V
4- 752186-0006		AXEL	SHAFT	WELLE	C- 441304-040V
					C- 441486-040V
4- 752186-0007		AXEL	SHAFT	WELLE	C- 441486-040V
4- 752186-0008		AXEL	SHAFT	WELLE	C- 441304-040V
4- 752186-0009		AXEL	SHAFT	WELLE	C- 441304-040V
4- 752186-0010		AXEL	SHAFT	WELLE	C- 441307-030V
4- 752186-0011		AXEL	SHAFT	WELLE	C- 441307-030V
4- 752186-0012		AXEL	SHAFT	WELLE	C- 441307-030V
					C- 456309-050V
4- 752187		AXEL	SHAFT	WELLE	C- 441304-040V
4- 752191		ADAPTER	ADAPTER	ADAPTER	RK- 978234-010V
4- 752192		MUTTER	NUT	MUTTER	RK- 978234-010V
4- 752193		MUTTER	NUT	MUTTER	RK- 978238-010V

PART NO	LAST ECN	BENÄMNING	TITLE	BENENNUNG	GROUP NO
4- 752194		FÄSTKLACK	MOUNTING LUG	BEFESTIGUNGSHACKEN	C- 560202-010V C- 752627-010V C- 752628-020V
4- 752195		FÄSTKLACK	MOUNTING LUG	BEFESTIGUNGSHACKEN	C- 560202-010V C- 752627-010V C- 752628-020V
4- 752196		ÖVERFALL	CAP	UEBERFALL	C- 560202-010V C- 752247-010V C- 752628-020V
G1- 752197		KONSOL	CANTILEVER	KONSOLE	C- 560202-010V C- 752627-010V C- 752628-020V
4- 752199		PLATTA	PLATE	PLATTE	C- 560202-010V C- 752627-010V C- 752628-020V
G1- 752200		KONSOL	CANTILEVER	KONSOLE	C- 752645-020V C- 752646-020V C- 752913-010V
G1- 752212		VOLYMKLAFF 200 ML	VOLUME FLAP 200 ML	VOLUMENKLAPPE	C- 752914-010V C- 978259-010V CR- 256209-030V
2- 752213		BOTTENPLÅT	BOTTOM PANEL	BODENBLECH	CR- 256210-030V
G1- 752215		STATIV	MACHINE BODY	STATIV	C- 441695-020V
2- 752218		ANSLUTNING	ATTACHMENT	ANSCHLUSS	C- 441695-020V
1- 752219		VÄRMEVÄXLARE	HEAT EXCHANGER	WÄRMEWECHSLER	C- 469501-040V
1- 752220		VÄRMERÖR	HEATING PIPE	HEIZROHR	C- 456976-050V
2- 752221		RÖR	PIPE	ROHR	C- 271181-040V
2- 752222		VENTIL	VALVE	VENTIL	C- 271181-040V
2- 752223		RÖR	PIPE	ROHR	C- 271169-040V
1- 752225		LAGERHUS	BEARING HOUSING	LAGERGEHÄUSE	C- 456976-050V CR- 256204-050V
1- 752226		LAGERHUS	BEARING HOUSING	LAGERGEHÄUSE	CR- 256205-050V CR- 256204-050V
4- 752237		FJÄDER	SPRING	FEDER	CR- 256205-050V C- 752645-020V C- 752646-020V
3- 752240		LOCK	LID	DECKEL	C- 752913-010V C- 752914-010V C- 752645-020V
4- 752243		BRICKA	WASHER	SCHEIBE	C- 752646-020V C- 752913-010V C- 752914-010V
C- 752244-020V	17887 93-01-27	PAPPERSSKYDD	PAPER GUARD	PAPIERSCHUTZ	C- 752628-020V C- 552030-010V
4- 752245		MELLANLÄGG	LACE	ZWISCHENLAGE	B- 648107-100V
4- 752246		MELLANLÄGG	LACE	ZWISCHENLAGE	C- 456923-030V
C- 752247-010V	16176 91-03-25	STATIV DATUMVERK	FRAME DATING UNIT	STATIVTEIL	C- 456923-030V
4- 752267		FÄSTE	BRACKET	BEFESTIGUNGSHALTER	B- 648107-100V
3- 752268		FÄSTE	BRACKET	BEFESTIGUNGSHALTER	C- 456976-050V
3- 752282		ANSLUTNING HÖGER	CONNECTION RIGHT	ANSCHLUSS	C- 456976-050V
3- 752283		ANSLUTNING VÄNSTER	CONNECTION LEFT	ANSCHLUSS	CR- 256212-050V
3- 752284		AXEL	SHAFT	WELLE	CR- 256213-050V
1- 752285		KOPPLINGSLÅDA	CONNECTION BOX	KUPPLUNGSKASTEN	CR- 256212-050V CR- 256213-050V
4- 752288		HYLSA	SLEEVE	HUELSE	C- 295045-070V
G4- 752289		KLÄMMA HÖGER	CLAMP RIGHT	KLAMMER	CR- 256204-050V
G4- 752290		KLÄMMA VÄNSTER	CLAMP LEFT	KLAMMER	CR- 256205-050V
G1- 752292		VOLYMKLAFF 180 ML	VOLUMEFLAP 180 ML	VOLUMENKLAPPE	CR- 256212-050V CR- 256213-050V CR- 256209-030V
1- 752301		PLATTFORM	PLATFORM	PLATTFORM	CR- 256210-030V
1- 752302		BEN	LEG	BEIN	C- 751860-020V C- 752958-010V
1- 752307		RÄCKE	RAILING	HANDLEISTE	C- 752959-010V
2- 752308		KONSOL	CANTILEVER	KONSOLE	C- 752959-010V
4- 752309		BEN	LEG	BEIN	C- 752959-010V
4- 752310		BEN	LEG	BEIN	C- 752312-010V
4- 752311		BEN	LEG	BEIN	C- 752312-010V
C- 752312-0101	12194 88-12-06	MASKINHÖJNINGS-KIT	MACHINERAISING-KIT	BEIN	C- 752312-010V
4- 752313		FÄSTJÄRN	FASTENING IRON	BEFESTIGUNGSEISEN	C- 77091-040V
3- 752402		LÅSPINNE	LOCKING PIN LOWER	VERSCHLUSSTIFT	C- 751800-020V
2- 752416		NEDRE PÅFYLLNINGSRÖR	LOWER FILLING TUBE	FUELLROHR	C- 794092-010V C- 978239-020V
4- 752417		BRICKA	WASHER	SCHEIBE	C- 978240-020V
3- 752419		FÄSTE	BRACKET	BEFESTIGUNGSHALTER	C- 978241-020V
4- 752425		LÄNK	LINK	GELENK	C- 752173-010V
1- 752439		KÅPA	COVER	DECKEL	C- 256084-050V
1- 752441		KABELRÄNNA	CABLE TRENCH	KABELRINNE	C- 752671-010V
3- 752462		PLUSRULLE	TRIMMING ROLLER PLUS	TRIMMUNGSROLLE / PLUS	C- 752672-010V
3- 752463		MINUSRULLE	TRIMMING ROLLER MINUS	TRIMMUNGSROLLE / MINUS	C- 469374-040V
3- 752464		PLUSRULLE	TRIMMING ROLLER PLUS	TRIMMUNGSROLLE / PLUS	C- 469374-040V
3- 752465		MINUSRULLE	TRIMMING ROLLER MINUS	TRIMMUNGSROLLE / MINUS	C- 77093-020V
3- 752466		PLUSRULLE	TRIMMING ROLLER PLUS	TRIMMUNGSROLLE / PLUS	C- 77093-020V
3- 752467		MINUSRULLE	TRIMMING ROLLER MINUS	TRIMMUNGSROLLE / MINUS	C- 77093-020V
1- 752469		RÄCKE	RAILING	HANDLEISTE	C- 77093-020V
1- 752470		RÄCKE	RAILING	HANDLEISTE	C- 751928-020V
4- 752476		SKRUV	SCREW	SCHRAUBE	C- 751928-020V CR- 256204-050V CR- 256205-050V CR- 256212-050V CR- 256213-050V

PART NO	LAST ECN	BENÄMNING	TITLE	BENENNUNG	GROUP NO
G1- 752485		BÄRARM	SUPPORTING ARM	TRAGARM	C- 272765-070V
2- 752489		INDUKTOR 180-250CC	INDUCTOR 180-250CC	INDUKTOR	C- 295523-030V
4- 752491		SPÄNNSTYCKE	TIGHTENING PIECE	SPANNSTUECK	C- 751691-010V
C- 752495-010V	19266 93-06-01	ANSLUTNING	ATTACHMENT	ANSCHLUSS	C- 456836-040V
2- 752496		DISKRÖR	CLEANING PIPE	REINIGUNGSROHR	C- 752495-010V
3- 752497		MUTTER	NUT	MUTTER	C- 752495-010V
3- 752498		HAKE	CATCH	HAKEN	C- 752495-010V
3- 752499		RING	RING	RING	C- 752495-010V
1- 752502		SKYDDSKÅPA	PROTECTIVE CASING	SCHUTZKAPPE	C- 752567-010V
2- 752503		SKYDDSKÅPA	PROTECTIVE CASING	SCHUTZKAPPE	C- 752567-010V
2- 752504		TÄCKPLÅT	COVERING PLATE	DECKBLECH	C- 752567-010V
3- 752505		FÄSTE	BRACKET	BEFESTIGUNGSHALTER	C- 752567-010V
2- 752517		DISKRÖR	CLEANING PIPE	REINIGUNGSROHR	C- 752495-010V
4- 752519-0002		PINNE	PEG	STIFT	C- 272021-060V
3- 752521		HAKE	CATCH	HAKEN	C- 752495-010V
2- 752526		PLATTA	PLATE	PLATTE	C- 752645-020V C- 752646-020V C- 752913-010V C- 752914-010V
2- 752527		KONSOL	CANTILEVER	KONSOLE	C- 752645-020V C- 752646-020V C- 752913-010V C- 752914-010V
2- 752528		KÅPA	COVER	DECKEL	C- 752645-020V C- 752646-020V C- 752913-010V C- 752914-010V
3- 752529		LAGERLOCK	BEARING COVER	LAGERDECKEL	C- 752645-020V C- 752646-020V C- 752913-010V C- 752914-010V
4- 752530		KEDJEHJUL	SPROCKET	KETTENRAD	C- 752645-020V C- 752646-020V C- 752913-010V C- 752914-010V
4- 752531		FÄSTE	BRACKET	BEFESTIGUNGSHALTER	C- 752645-020V C- 752646-020V C- 752913-010V C- 752914-010V
4- 752534		PLATTA	PLATE	PLATTE	C- 752645-020V
3- 752535		AXEL	SHAFT	WELLE	C- 752646-020V C- 752645-020V C- 752646-020V C- 752913-010V
3- 752536-0001		AXEL	SHAFT	WELLE	C- 752914-010V C- 752645-020V C- 752646-020V C- 752913-010V
3- 752536-0002		AXEL	SHAFT	WELLE	C- 752914-010V C- 752645-020V C- 752646-020V C- 752913-010V
3- 752536-0003		AXEL	SHAFT	WELLE	C- 752914-010V C- 752645-020V
3- 752537		BRYTRULLE	BENDING ROLLER	UMLENKROLLE	C- 752646-020V C- 752645-020V C- 752646-020V C- 752913-010V
3- 752538		AXEL	SHAFT	WELLE	C- 752914-010V C- 752645-020V C- 752646-020V C- 752913-010V
3- 752539		PLATTA	PLATE	PLATTE	C- 752914-010V C- 752645-020V
4- 752541		KONSOL	CANTILEVER	KONSOLE	C- 752646-020V C- 752645-020V C- 752646-020V C- 752913-010V
3- 752542-0001		BRYTRULLE	BENDING ROLLER	UMLENKROLLE	C- 752914-010V C- 752645-020V C- 752646-020V C- 752913-010V
3- 752542-0002		BRYTRULLE	BENDING ROLLER	UMLENKROLLE	C- 752914-010V C- 752645-020V C- 752646-020V C- 752913-010V
3- 752542-0003		BRYTRULLE	BENDING ROLLER	UMLENKROLLE	C- 752914-010V C- 752645-020V
3- 752543-0001		AXEL	SHAFT	WELLE	C- 752646-020V C- 752645-020V C- 752646-020V C- 752913-010V
3- 752543-0002		AXEL	SHAFT	WELLE	C- 752914-010V C- 752645-020V C- 752646-020V C- 752913-010V
3- 752543-0003		AXEL	SHAFT	WELLE	C- 752914-010V C- 752645-020V
4- 752544-0001		SHIMS	SHIM	SHIMS	C- 752646-020V C- 752645-020V C- 752646-020V C- 752913-010V

PART NO	LAST ECN	BENÄMNING	TITLE	BENENNUNG	GROUP NO
4- 752544-0002		SHIMS	SHIM	SHIMS	C- 752914-010V C- 752645-020V C- 752646-020V
4- 752549		DISTANS	SPACER	DISTANZ	C- 752913-010V C- 752914-010V
3- 752550		FÄSTE	BRACKET	BEFESTIGUNGSHALTER	C- 752244-020V C- 752244-020V
2- 752552		PENDELARM	PENDULUM ARM	PENDELARM	C- 272084-030V
3- 752553		HÅLLARE	HOLDER	HALTER	C- 272084-030V
4- 752554		DISTANS	SPACER	DISTANZ	C- 491976-020V
3- 752555		HÅLLARE	HOLDER	HALTER	C- 564119-010V
4- 752556		DISTANS	SPACER	DISTANZ	C- 752049-010V C- 752671-010V
3- 752559		ANSLAG UTF 1	STOP PERF 1	ANSCHLAG	C- 752672-010V C- 752671-010V
3- 752560		ANSLAG UTF 2	STOP PERF 2	ANSCHLAG	C- 752672-010V
3- 752561		ANSLAG UTF 1	STOP PERF 1	ANSCHLAG	C- 752671-010V
3- 752562		ANSLAG UTF 2	STOP PERF 2	ANSCHLAG	C- 752672-010V
3- 752563		ANSLAG UTF 1	STOP PERF 1	ANSCHLAG	C- 752671-010V
3- 752564		ANSLAG UTF 2	STOP PERF 2	ANSCHLAG	C- 752672-010V
2- 752566		RÖR	PIPE	ROHR	C- 491207-030V
C- 752567-010V	14654 90-11-16	SKYDDSKÅPA	PROTECTIVE CASING	SCHUTZKAPPE	C- 271513-060V
3- 752568		SKYDD	PROTECTION	SCHUTZ	C- 272028-060V
3- 752569		KÅPA	COVER	DECKEL	C- 272028-060V
4- 752571		BRICKA	WASHER	SCHEIBE	C- 441850-040V
4- 752574		ÄNDSTYCKE	END PIECE	ENDST~CK	CR- 256204-050V
4- 752575		MOTHÅLL	DOLLY	GEGENHALTER	CR- 256205-050V CR- 256204-050V CR- 256205-050V
2- 752576		BEHÅLLARE	CONTAINER	BEHÄLTER	C- 295523-030V
3- 752598		AXEL	SHAFT	WELLE	C- 272623-050V CR- 256209-030V CR- 256210-030V
3- 752599		SMÖRJRÖR	LUBRICATING PIPE	SCHMIERROHR	C- 271866-060V
3- 752600		SMÖRJRÖR	LUBRICATING PIPE	SCHMIERROHR	C- 271866-060V
3- 752601		SMÖRJRÖR	LUBRICATING PIPE	SCHMIERROHR	C- 271866-060V
3- 752602		SMÖRJRÖR	LUBRICATING PIPE	SCHMIERROHR	C- 271866-060V
3- 752603		BRICKA	WASHER	SCHEIBE	C- 751691-010V
3- 752604		RÖRFÄSTE	PIPE HOLDER	ROHRBEFESTIGUNG	C- 751691-010V
G3- 752612-0001		MEDBRINGARE	CARRIER	MITNEHMER	CR- 256209-030V CR- 256210-030V
G3- 752612-0002		MEDBRINGARE	CARRIER	MITNEHMER	CR- 256209-030V CR- 256210-030V
2- 752614		HÅLLARE	HOLDER	HALTER	C- 751373-010V
4- 752615		DISTANS	SPACER	DISTANZ	CR- 256209-030V CR- 256210-030V
2- 752621		HÅLLARE	HOLDER	HALTER	C- 256873-040V
4- 752622		STOPP	STOP	STOPP	C- 751691-010V
2- 752626		STAG	STRUT	VERSTREBUNG	C- 751928-020V
C- 752627-010V	20154 93-06-30	BRYTRULLE BAKRE	BENDING ROLLER REAR	UMLENKROLLE	B- 648107-100V
C- 752628-020V	20097 93-06-15	BRYTRULLE FRÄMRE	BENDING ROLLER FRONT	UMLENKROLLE	B- 648107-100V
4- 752630		PLATTA	PLATE	PLATTE	C- 752628-020V
4- 752631		FÄSTE	BRACKET	BEFESTIGUNGSHALTER	C- 752628-020V
4- 752632		ARM	ARM	ARM	C- 752628-020V
4- 752633		FÄSTE	BRACKET	BEFESTIGUNGSHALTER	C- 752628-020V
4- 752634		HYLSA	SLEEVE	HUELSE	C- 752628-020V
G4- 752635		PINNSKRUV	STUD SCREW	STIFTBOLZEN	C- 752628-020V
4- 752636		PLATTA	PLATE	PLATTE	C- 752628-020V
3- 752637-0001		BRYTRULLE	BENDING ROLLER	UMLENKROLLE	C- 752247-010V C- 752627-010V
3- 752637-0002		BRYTRULLE	BENDING ROLLER	UMLENKROLLE	C- 752247-010V C- 752627-010V
3- 752637-0003		BRYTRULLE	BENDING ROLLER	UMLENKROLLE	C- 752247-010V C- 752627-010V
3- 752637-0004		BRYTRULLE	BENDING ROLLER	UMLENKROLLE	C- 752627-010V
3- 752639		ÖVERFALL	CAP	UEBERFALL	C- 752627-010V
3- 752642		FÄSTE	BRACKET	BEFESTIGUNGSHALTER	C- 752645-020V C- 752646-020V
4- 752644		SKRUV	SCREW	SCHRAUBE	C- 752913-010V C- 752914-010V C- 752645-020V C- 752646-020V
C- 752645-020V	20154 93-06-30	DATUMVERK TBA/9 ST-R	DATING UNIT	DATUMWERK	C- 752913-010V C- 752914-010V
C- 752646-020V	20154 93-06-30	DATUMVERK TBA/9 ST-ER	DATING UNIT	DATUMWERK	B- 648107-100V
2- 752649		KONSOL	CANTILEVER	KONSOLE	B- 648107-100V
3- 752652		RÖR	PIPE	ROHR	C- 256223-040V
2- 752653		KABELRÖR	CABLE CONDUIT	KABELROHR	C- 271866-060V
4- 752654		MELLANBIT	INTERMEDIATE PART	ZWICHENSTUECK	C- 752049-010V
4- 752655		STYRPINNE	GUIDE PIN	FUEHRUNGSBOLZEN	C- 752049-010V
3- 752656		STYRPLATTA	STEER PLATE	FUEHRUNGSPLATTE	C- 752664-010V
3- 752657		DISTANSHYLSA	SPACER SLEEVE	DISTANZHUELSE	C- 752664-010V
4- 752658		STYRKLACK	GUIDE LUG	FUEHRUNGSABSATZ	C- 752664-010V
3- 752662		SMÖRJRÖR	LUBRICATING PIPE	SCHMIERROHR	C- 752664-010V
3- 752663		SMÖRJRÖR	LUBRICATING PIPE	SCHMIERROHR	C- 271866-060V
C- 752664-0101	12530 90-01-05	STYRNING	STEERING	FUEHRUNG	C- 271866-060V
3- 752668		HÅLLARE	HOLDER	HALTER	CR- 256712-050V
C- 752671-010V	19270 93-05-31	DÄMPDON UTFÖRANDE 1	SHOCKABSORBER PERFORM.1	DÄMPFUNGSANORDNUNG	C- 76402-010V
C- 752672-010V	19270 93-05-31	DÄMPDON UTFÖRANDE 2	SHOCKABSORBER PERFORM.2	DÄMPFUNGSANORDNUNG	B- 648104-100V
4- 752673		DISTANS	SPACER	DISTANZ	B- 648104-100V C- 752671-010V C- 752672-010V

PART NO	LAST ECN	BENÄMNING	TITLE	BENENNUNG	GROUP NO
4- 752674-0001		SHIMS	SHIM	SHIMS	C- 491787-020V
					C- 491788-020V
4- 752674-0002		SHIMS	SHIM	SHIMS	B- 648109-100V
4- 752674-0003		SHIMS	SHIM	SHIMS	B- 648109-100V
4- 752674-0005		SHIMS	SHIM	SHIMS	B- 648109-100V
4- 752674-0006		SHIMS	SHIM	SHIMS	C- 491787-020V
					C- 491788-020V
4- 752674-0007		SHIMS	SHIM	SHIMS	B- 648109-100V
4- 752675		RÖR	PIPE	ROHR	C- 272623-050V
4- 752676		RÖR	PIPE	ROHR	C- 272623-050V
4- 752677		BAKSTYCKE	BACK PIECE	HINTERTEIL	C- 491787-020V
					C- 491788-020V
4- 752678		FJÄDER UTF 1	SPRING PERF 1	FEDER	C- 752671-010V
4- 752679		FJÄDER UTF 2	SPRING PERF 2	FEDER	C- 752672-010V
4- 752680		HYLSA	SLEEVE	HUELSE	C- 752671-010V
					C- 752672-010V
4- 752681		BRICKA	WASHER	SCHEIBE	C- 752671-010V
					C- 752672-010V
4- 752685		STYRPINNE	GUIDE PIN	FUEHRUNGSBOLZEN	C- 491787-020V
					C- 491788-020V
1- 752690		KAMSKIVA	CAM DISC	NOCKENSCHEIBE	C- 751689-010V
2- 752691		RÖR	PIPE	ROHR	C- 272560-060V
3- 752692		RÖR	PIPE	ROHR	C- 272560-060V
1- 752694		PÅFYLLNINGSRÖR ÖVRE	FILLING TUBE UPPER	FUELLROHR	C- 469091-030V
1- 752695		STATIV	MACHINE BODY	STATIV	C- 295883-050V
3- 752696		RÖR	PIPE	ROHR	C- 272623-050V
1- 752697		SKYDDSPLÅT	PROTECTION PLATE	SCHUTZBLECH	C- 978162-010V
4- 752711		RÖR	PIPE	ROHR	C- 272560-060V
2- 752715		KLIPPBACK YTTRE	CUTTINGJAW OUTER	SCHNEIDBACKE	CR- 256204-050V
					CR- 256205-050V
2- 752723		PAPPERSTILLHÅLLARE	PAPER GUIDE PLATE	PAPIERZUHALTER	C- 229400-070V
3- 752726		SMÖRJRÖR	LUBRICATING PIPE	SCHMIERROHR	C- 271562-080V
1- 752727		SMÖRJRÖR	LUBRICATING PIPE	SCHMIERROHR	C- 271562-080V
1- 752728		SMÖRJRÖR	LUBRICATING PIPE	SCHMIERROHR	C- 271866-060V
C- 752734-0101	15141 90-09-19	STERILLUFTSGRUPP	STERILE AIR GROUP	STERILLUFTAGGREGAT	C- 563210-010V
					C- 563211-010V
C- 752734-0102	15141 90-09-19	STERILLUFTSGRUPP	STERILE AIR GROUP	STERILLUFTAGGREGAT	C- 563210-010V
					C- 563211-010V
1- 752735		OKKURVA	CURVE	KURVE	C- 256202-050V
					C- 978258-020V
1- 752736		ARMKURVA	CURVE	KURVE	C- 256202-050V
					C- 978258-020V
2- 752737		KURVSEGMENT	CURVE SEGMENT	KURVENSEGMENT	C- 256202-050V
					C- 978258-020V
2- 752738		KURVSEGMENT	CURVE SEGMENT	KURVENSEGMENT	C- 256202-050V
					C- 978258-020V
3- 752739		VOLYMKUDDE	VOLUME BULGE	VOLUMENKISSEN	CR- 256209-030V
					CR- 256210-030V
					C- 978259-010V
2- 752742-0001		RÖR	PIPE	ROHR	C- 256084-050V
2- 752742-0002		RÖR	PIPE	ROHR	C- 256084-050V
3- 752744		AXEL	SHAFT	WELLE	C- 751088-030V
4- 752765		DISTANSRING	SPACER RING	DISTANZRING	C- 256199-040V
4- 752767		INSTÄLLNINGSPLÅT	SETTING SHEET	EINSTELLBLECH	C- 751689-010V
1- 752773		RIKTMALL	ALIGNMENT TEMPLATE	EINSTELLMALL	C- 256202-050V
4- 752774		PLUNGE	PLUNGER	PLUNGER	C- 256202-050V
3- 752775		SLANG	HOSE	SCHLAUCH	C- 271866-060V
C- 752784-0101	13806 89-11-22	KOPPLINGSLÅDA	CONNECTION BOX	KUPPLUNGSKASTEN	B- 648106-100V
1- 752785		RÖR	PIPE	ROHR	C- 271866-060V
1- 752786		RÖR	PIPE	ROHR	C- 271866-060V
1- 752787		RÖR	PIPE	ROHR	C- 271866-060V
1- 752788		RÖR	PIPE	ROHR	C- 271866-060V
1- 752789		RÖR	PIPE	ROHR	C- 271866-060V
1- 752790		RÖR	PIPE	ROHR	C- 271866-060V
1- 752791		RÖR	PIPE	ROHR	C- 271866-060V
2- 752792		RÖR	PIPE	ROHR	C- 271866-060V
2- 752793		RÖR	PIPE	ROHR	C- 271866-060V
2- 752794-0001		RÖR	PIPE	ROHR	C- 271866-060V
2- 752794-0002		RÖR	PIPE	ROHR	C- 271866-060V
2- 752794-0003		RÖR	PIPE	ROHR	C- 271866-060V
4- 752795		RÖR	PIPE	ROHR	C- 271866-060V
2- 752796		PLÅT	SHEET	BLECH	C- 271513-060V
2- 752797		PLÅT	SHEET	BLECH	C- 271513-060V
1- 752799		PLÅT	SHEET	BLECH	C- 752960-010V
					C- 752971-010V
1- 752800		PLÅT	SHEET	BLECH	C- 456457-040V
					C- 752960-010V
					C- 752971-010V
2- 752801		PLÅT	SHEET	BLECH	C- 456457-040V
					C- 752960-010V
					C- 752971-010V
1- 752802		KABELKANAL	CABLE DUCT	KABELKANAL	C- 456457-040V
					C- 752960-010V
					C- 752971-010V
1- 752803		LOCK	LID	DECKEL	C- 456457-040V
					C- 752960-010V
					C- 752971-010V
2- 752804		TÄCKPLÅT	COVERING PLATE	DECKBLECH	C- 456457-040V
2- 752805		KABELKANAL	CABLE DUCT	KABELKANAL	C- 271513-060V
3- 752806		DISTANS	SPACER	DISTANZ	C- 271513-060V
3- 752807		DISTANS	SPACER	DISTANZ	C- 271513-060V

PART NO	LAST ECN	BENÄMNING	TITLE	BENENNUNG	GROUP NO
3- 752808		DISTANS	SPACER	DISTANZ	C- 271513-060V
1- 752809		RÖRANSLUTNING	PIPE CONNECTION	ROHRANSCHLUSS	C- 271866-060V
2- 752810		DOSERINGSENHET	METERING DEVICE	DOSIEREINHEIT	C- 751398-020V
3- 752811		RÖR	PIPE	ROHR	C- 271866-060V
3- 752812		RÖR	PIPE	ROHR	C- 271866-060V
3- 752813		FÄSTE	BRACKET	BEFESTIGUNGSHALTER	C- 271866-060V
4- 752857		VISARE	POINTER	ZEIGER	C- 272004-040V
2- 752861		RÖR	PIPE	ROHR	C- 271866-060V
1- 752862		PLÅT	SHEET	BLECH	C- 752247-010V
3- 752863		FÄSTE	BRACKET	BEFESTIGUNGSHALTER	C- 271866-060V
3- 752864		SLANG	HOSE	SCHLAUCH	C- 491207-030V
G1- 752867		BRYTRULLEFÄSTE	BENDING ROLLER BRACKET	BRECHROLLENHALTER	C- 752247-010V
2- 752870		BEN	LEG	BEIN	C- 752247-010V
2- 752871		BEN	LEG	BEIN	C- 752247-010V
1- 752874		PLATTFORM	PLATFORM	PLATTFORM	C- 752960-010V C- 752971-010V
3- 752876		MELLANLÄGG	LACE	ZWISCHENLAGE	C- 752960-010V C- 752971-010V
1- 752877		STATIVDEL	FRAME SECTION	STATIVTEIL	C- 456457-040V C- 752960-010V C- 752971-010V
1- 752878		STATIVDEL	FRAME SECTION	STATIVTEIL	C- 456457-040V C- 752960-010V C- 752971-010V
2- 752879		BALK	BEAM	BALKEN	C- 456457-040V C- 752960-010V C- 752971-010V
3- 752880		BALK	BEAM	BALKEN	C- 456457-040V C- 752960-010V C- 752971-010V
2- 752881		BALK	BEAM	BALKEN	C- 456457-040V C- 752960-010V C- 752971-010V
3- 752882		LUCKA	OPENING	DECKEL	C- 456457-040V C- 752960-010V C- 752971-010V
3- 752883		LUCKA	OPENING	DECKEL	C- 456457-040V C- 752960-010V C- 752971-010V
3- 752884		LUCKA	OPENING	DECKEL	C- 456457-040V C- 752960-010V C- 752971-010V
2- 752885		RÄCKE	RAILING	HANDLEISTE	C- 456457-040V C- 752960-010V
1- 752886		RÄCKE	RAILING	HANDLEISTE	C- 752971-010V C- 752960-010V
2- 752887		RÄCKE	RAILING	HANDLEISTE	C- 752971-010V C- 752960-010V
1- 752888		RÄCKE	RAILING	HANDLEISTE	C- 752971-010V C- 752960-010V
C- 752889-010V	13966 89-12-04	KABELKANAL	CABLE DUCT	KABELKANAL	C- 752971-010V B- 648107-100V
1- 752890		KABELKANAL	CABLE DUCT	KABELKANAL	C- 752889-010V
2- 752891		LOCK	LID	DECKEL	C- 752889-010V
4- 752893		BLADFJÄDER	LEAF SPRING	BLATTFEDER	C- 456180-010V
1- 752894		KABELRÖR	CABLE CONDUIT	KABELROHR	C- 978260-020V C- 752960-010V C- 752971-010V
1- 752895		BEN	LEG	BEIN	C- 456459-040V
3- 752896		LOCK	LID	DECKEL	C- 456923-030V
2- 752897		STAG	STRUT	VERSTREBUNG	C- 456923-030V C- 752960-010V C- 752971-010V
C- 752898-010V	14614 90-03-21	RÖRDRAGNING TB/9	TUBE ASSEMBLING TB/9	ROHRSYSTEM - PNEUMATIK	C- 456459-040V B- 648107-100V
2- 752899		RÖR	PIPE	ROHR	C- 752898-010V
2- 752900		RÖR	PIPE	ROHR	C- 752898-010V
2- 752901		RÖR	PIPE	ROHR	C- 752898-010V
2- 752902		RÖR	PIPE	ROHR	C- 752898-010V
2- 752903		RÖR	PIPE	ROHR	C- 752898-010V
2- 752904		RÖR	PIPE	ROHR	C- 752898-010V
2- 752905		RÖR	PIPE	ROHR	C- 752898-010V
2- 752906		RÖR	PIPE	ROHR	C- 752898-010V
3- 752912		KÅPA	COVER	DECKEL	C- 752898-010V
C- 752913-010V	15660 91-02-01	DATUMVERK TB/9 ST-R	DATING UNIT	DATUMWERK	C- 272343-050V
C- 752914-010V	15660 91-02-01	DATUMVERK TB/9 ST-ER	DATING UNIT	DATUMWERK	B- 648107-100V
2- 752917		PLATTA	PLATE	PLATTE	B- 648107-100V
1- 752920		RAM	FRAME	RAHMEN	C- 752244-020V
1- 752921		RAM	FRAME	RAHMEN	C- 752958-010V
1- 752922		RAM	FRAME	RAHMEN	C- 752959-010V
1- 752923		PLATTFORM	PLATFORM	PLATTFORM	C- 752958-010V C- 752958-010V
1- 752924		PLATTFORM	PLATFORM	PLATTFORM	C- 752959-010V C- 752958-010V
1- 752925		PLATTFORM	PLATFORM	PLATTFORM	C- 752959-010V C- 752958-010V
1- 752926		PLATTFORM	PLATFORM	PLATTFORM	C- 752958-010V
1- 752927		PLATTFORM	PLATFORM	PLATTFORM	C- 752958-010V
1- 752928		PLATTFORM	PLATFORM	PLATTFORM	C- 752958-010V
1- 752929		PLATTFORM	PLATFORM	PLATTFORM	C- 752958-010V C- 752959-010V
1- 752930		PLATTFORM	PLATFORM	PLATTFORM	C- 752959-010V
1- 752931		PLATTFORM	PLATFORM	PLATTFORM	C- 752958-010V

PART NO	LAST ECN	BENÄMNING	TITLE	BENENNUNG	GROUP NO
1- 752932		PLATTFORM	PLATFORM	PLATTFORM	C- 752959-010V C- 752958-010V
1- 752933		PLATTFORM	PLATFORM	PLATTFORM	C- 752959-010V C- 752959-010V
1- 752934		PLATTFORM	PLATFORM	PLATTFORM	C- 752959-010V
C- 752957-0101	13604 89-11-24	SKARVVAKT	SPLICE DETECTOR	VERBINDUNGSWACHT	C- 256014-060V
C- 752958-010V	17680 92-03-16	PLATTFORMAR BAK TBA/9-SB	RAILING / PLATFORM	HANDLEISTE / PLATTFORM	C- 978158-010V
C- 752959-010V	14198 90-03-06	PLATTFORMAR BAK TBA/9-SB	RAILING / PLATFORM	HANDLEISTE / PLATTFORM	C- 978158-010V
C- 752960-010V	16689 91-08-21	RÄCKE/PLATTFORM CC 2000	RAILING/PLATFORM CC 2000	HANDLEISTE / PLATTFORM	C- 77091-040V
1- 752961		PLATTFORM	PLATFORM	PLATTFORM	C- 752960-010V C- 752971-010V
1- 752962		PLATTFORM	PLATFORM	PLATTFORM	C- 752960-010V C- 752971-010V
1- 752963		PLATTFORM	PLATFORM	PLATTFORM	C- 752960-010V C- 752971-010V
1- 752964		PLATTFORM	PLATFORM	PLATTFORM	C- 752960-010V
1- 752965		PLATTFORM	PLATFORM	PLATTFORM	C- 752960-010V
1- 752966		PLATTFORM	PLATFORM	PLATTFORM	C- 752960-010V
1- 752967		PLATTFORM	PLATFORM	PLATTFORM	C- 752960-010V C- 752971-010V
1- 752968		RÄCKE	RAILING	HANDLEISTE	C- 752960-010V
1- 752969		PLATTFORM	PLATFORM	PLATTFORM	C- 752960-010V
1- 752970		BALK	BEAM	BALKEN	C- 752960-010V
C- 752971-010V	16689 91-08-21	RÄCKE/PLATTFORM CC 2150	RAILING/PLATFORM CC 2150	HANDLEISTE / PLATTFORM	C- 77091-040V
1- 752972		PLATTFORM	PLATFORM	PLATTFORM	C- 752971-010V
1- 752973		PLATTFORM	PLATFORM	PLATTFORM	C- 752971-010V
1- 752974		PLATTFORM	PLATFORM	PLATTFORM	C- 752971-010V
1- 752975		RÄCKE	RAILING	HANDLEISTE	C- 566318-010V C- 752971-010V
1- 752976		PLATTFORM	PLATFORM	PLATTFORM	C- 752971-010V
1- 752977		BALK	BEAM	BALKEN	C- 752971-010V
2- 752978		RÄCKE	RAILING	HANDLEISTE	C- 752959-010V
1- 752979		PLATTFORM	PLATFORM	PLATTFORM	C- 752959-010V
1- 752980		PLATTFORM	PLATFORM	PLATTFORM	C- 752959-010V
1- 752981		PLATTFORM	PLATFORM	PLATTFORM	C- 752958-010V
1- 752983-0001		INSTALLATIONSRITNING	INSTALLATION DRAWING	INSTALLATIONSZEICHNUNG	C- 752958-010V
1- 752983-0002		INSTALLATIONSRITNING	INSTALLATION DRAWING	INSTALLATIONSZEICHNUNG	C- 752958-010V
1- 752983-0003		INSTALLATIONSRITNING	INSTALLATION DRAWING	INSTALLATIONSZEICHNUNG	C- 752958-010V
1- 752983-0004		INSTALLATIONSRITNING	INSTALLATION DRAWING	INSTALLATIONSZEICHNUNG	C- 752958-010V
1- 752984-0001		INSTALLATIONSRITNING	INSTALLATION DRAWING	INSTALLATIONSZEICHNUNG	C- 752959-010V
1- 752984-0002		INSTALLATIONSRITNING	INSTALLATION DRAWING	INSTALLATIONSZEICHNUNG	C- 752959-010V
1- 752984-0003		INSTALLATIONSRITNING	INSTALLATION DRAWING	INSTALLATIONSZEICHNUNG	C- 752959-010V
1- 752984-0004		INSTALLATIONSRITNING	INSTALLATION DRAWING	INSTALLATIONSZEICHNUNG	C- 752959-010V
4- 752987		MELLANLÄGG	LACE	ZWISCHENLAGE	C- 752247-010V
1- 752988		RÄCKE	RAILING	HANDLEISTE	C- 752958-010V C- 752959-010V
1- 752989		RÄCKE	RAILING	HANDLEISTE	C- 752958-010V
1- 752990		RÄCKE	RAILING	HANDLEISTE	C- 752958-010V
1- 752991-0001		RÄCKE	RAILING	HANDLEISTE	C- 752959-010V
1- 752991-0002		RÄCKE	RAILING	HANDLEISTE	C- 752958-010V
1- 752991-0003		RÄCKE	RAILING	HANDLEISTE	C- 752959-010V
1- 752991-0004		RÄCKE	RAILING	HANDLEISTE	C- 752959-010V
2- 752992		KONSOL	CANTILEVER	KONSOLE	C- 752958-010V C- 752959-010V
G1- 752999		VOLYMKLAFF 200S	VOLUME FLAP 200S	VOLUMENKLAPPE	CR- 256209-030V CR- 256210-030V
765100-0163		SPIRALBORR	SPIRAL DRILL	SPIRALBOHRER	C- 978239-020V C- 978240-020V C- 978241-020V
765100-0177		SPIRALBORR	SPIRAL DRILL	SPIRALBOHRER	C- 736796-020V
765100-0197		SPIRALBORR	SPIRAL DRILL	SPIRALBOHRER	C- 736796-020V
765100-0219		SPIRALBORR	SPIRAL DRILL	SPIRALBOHRER	C- 978239-020V C- 978240-020V C- 978241-020V
765100-0269		SPIRALBORR	SPIRAL DRILL	SPIRALBOHRER	C- 736796-020V
765102-0183		SPIRALBORR	SPIRAL DRILL	SPIRALBOHRER	C- 567705-020V C- 567707-020V
765102-0197		SPIRALBORR	SPIRAL DRILL	SPIRALBOHRER	C- 567705-020V C- 567707-020V
765102-0221		SPIRALBORR	SPIRAL DRILL	SPIRALBOHRER	C- 567705-020V C- 567707-020V
765110-0184		SPIRALBORR	SPIRAL DRILL	SPIRALBOHRER	C- 567705-020V C- 567707-020V
765120-0387		SPIRALBORR	SPIRAL DRILL	SPIRALBOHRER	C- 567705-020V C- 567707-020V
765401-0185		BROTSCH	REAMER	REIBAHLE	C- 567705-020V C- 567707-020V
767101-0110		GÄNGTAPP	TAP	GEWINDEBOHRER	C- 978239-020V C- 978240-020V C- 978241-020V
767101-0116		HANDGÄNGTAPP	HAND TAP	GEWINDEBOHRER	C- 567705-020V C- 567707-020V
767101-0118		HANDGÄNGTAPP	HAND TAP	GEWINDEBOHRER	C- 978239-020V C- 978240-020V C- 978241-020V
767141-0106		GÄNGTAPP	TAP	GEWINDEBOHRER	C- 978239-020V C- 978240-020V C- 978241-020V
769211-0114		SÅGBLAD	SAW BLADE	SÄGEBLATT	C- 736796-020V
769211-0116		SÅGBLAD	SAW BLADE	SÄGEBLATT	C- 978239-020V C- 978240-020V C- 978241-020V

PART NO	LAST ECN	BENÄMNING	TITLE	BENENNUNG	GROUP NO
					C- 924593-010V
					C- 736796-020V
769211-0119		SÅGBLAD	SAW BLADE	SÄGEBLATT	C- 924810-010V
					C- 924593-010V
					C- 736796-020V
769211-0122		SÅGBLAD	SAW BLADE	SÄGEBLATT	C- 924810-010V
					C- 561425-010V
					C- 924593-010V
					C- 561425-010V
					C- 924593-010V
					C- 561425-010V
769211-0129		SÅGBLAD	SAW BLADE	SÄGEBLATT	C- 924593-010V
					C- 978239-020V
					C- 978240-020V
769211-0132		SÅGBLAD	SAW BLADE	SÄGEBLATT	C- 978241-020V
					C- 978239-020V
					C- 978240-020V
769211-0152		SÅGBLAD	SAW BLADE	SÄGEBLATT	C- 978241-020V
					C- 736796-020V
769211-0164		SÅGBLAD	SAW BLADE	SÄGEBLATT	C- 794128-010V
					C- 567705-020V
769219-0100		HÅLLARE	HOLDER	HALTER	C- 567707-020V
					C- 561425-010V
					C- 924593-010V
					C- 561425-010V
					C- 924593-010V
					C- 561425-010V
					C- 924593-010V
					C- 736796-020V
769219-0101		HÅLLARE	HOLDER	HALTER	C- 924810-010V
					C- 978239-020V
					C- 978240-020V
769219-0102		HANDTAGSFÄSTE	HANDLE BRACKET	GRIFFHALTER	C- 978241-020V
					C- 978239-020V
					C- 978240-020V
					C- 978241-020V
772220-0100		MONT.STUDS VOMO 6-L	ASSEMBLY TOOL	MONTAGEWERKZEUG	C- 456975-020V
772220-0101		MONT.STUDS VOMO 8-L	ASSEMBLY TOOL	MONTAGEWERKZEUG	C- 456975-020V
772220-0103		MONT.STUDS VOMO 12-L	ASSEMBLY TOOL	MONTAGEWERKZEUG	C- 456975-020V
772220-0104		MONT.STUDS VOMO 15-L	ASSEMBLY TOOL	MONTAGEWERKZEUG	C- 456975-020V
776422-0101		MÄSSINGBORSTE	BRASS WIRE BRUSH	MESSINGBUERSTE	C- 456975-020V
777100-0113		SKRUVMEJSEL	SCREWDRIVER	SCHRAUBENZIEHER	C- 456975-020V
777100-0184		SKRUVMEJSEL	SCREWDRIVER	SCHRAUBENZIEHER	C- 456975-020V
777120-0215		U-NYCKEL	C-SPANNER	U-SCHLUESSEL	C- 77099-020V
777120-0220		U-NYCKEL	C-SPANNER	U-SCHLUESSEL	C- 77099-020V
777120-0232		U-NYCKEL	C-SPANNER	U-SCHLUESSEL	C- 77099-020V
777122-0137		U-NYCKEL NV=36	C-SPANNER	U-SCHLUESSEL	C- 77099-020V
777122-0142		U-NYCKEL NV=46	C-SPANNER	U-SCHLUESSEL	C- 77099-020V
777150-0801		NYCKELSATS,SEXKANT	KEY SET	SCHLUESSELSATZ	C- 77099-020V
777200-0101		KOPPELNYCKEL	PIPE WRENCH	ROHRSCHLUESSEL	C- 77099-020V
777510-0101		SAX	SCISSORS	SCHERE	C- 456975-020V
777603-0100		AVDRAGARE	PULLER	ABZIEHER	C- 76175-010V
777603-0300		AVDRAGARE	PULLER	ABZIEHER	C- 76175-010V
779130-0102		SKYDDSGLASÖGON	PROTECTIVE GOGGLES	SCHUTZBRILLE	C- 531345-010V
779910-0101		HÄNGLÅS	PADLOCK	VORHÄNGESCHLOSS	CE- 41728-010V
					CE- 41755-010V
					CE- 41762-010V
					CE- 41728-010V
					CE- 41755-010V
					CE- 41762-010V
779911-0101		HÄNGLÅS	PADLOCK	VORHÄNGESCHLOSS	C- 76470-010V
					C- 76591-010V
783901-0106		VATTENPASS	SPIRIT LEVEL	WASSERWAGE	C- 75467-020V
4- 794000-0001		FLEX-RÖR	FLEX TUBE	ROHR	C- 794178-010V
4- 794000-0002		FLEX-RÖR	FLEX TUBE	ROHR	C- 794178-010V
4- 794000-0003		FLEX-RÖR	FLEX TUBE	ROHR	C- 794178-010V
4- 794001-0001		FLEX-RÖR	FLEX TUBE	ROHR	C- 794178-010V
4- 794001-0002		FLEX-RÖR	FLEX TUBE	ROHR	C- 794178-010V
4- 794001-0003		FLEX-RÖR	FLEX TUBE	ROHR	C- 794178-010V
4- 794002		SLANG FLEXITUBE	HOSE FLEXITUBE	STRAHLSCHLAUCH	C- 794004-010V
C- 794004-0101	16400 92-06-30	HVA KIT FRAME	LOBE PUMP	PUMPE	C- 563210-010V
					C- 563211-010V
2- 794032		BERÖRINGSSKYDD	TOUCH GUARD	BERUEHRUNGSSCHUTZ	C- 794069-010V
2- 794033		BERÖRINGSSKYDD	TOUCH GUARD	BERUEHRUNGSSCHUTZ	C- 794069-010V
4- 794034		KLÄMMA	CLAMPING PIECE	KLAMMER	C- 794271-010V
4- 794039		SLANGFÖRSKRUVNING	HOSE CONNECTION	SCHLAUCHVERCHRAUBUNG	C- 794180-010V
P4- 794040		BACKVENTIL	NON-RETURN VALVE	RUECKSCHLAGVENTIL	C- 794180-010V
4- 794042		SKYLT	SIGN	SCHILD	C- 794178-010V
4- 794043		SKYLT	SIGN	SCHILD	C- 794178-010V
4- 794044		SKYLT	SIGN	SCHILD	C- 794178-010V
2- 794057-0001		NEDRE FYLLRÖR	LOWER FILLING TUBE	FUELLROHR	C- 794092-010V
					C- 924808-010V
2- 794057-0002		NEDRE FYLLRÖR	LOWER FILLING TUBE	FUELLROHR	C- 794092-010V
					C- 924808-010V
2- 794058		NEDRE FYLLRÖR	LOWER FILLING TUBE	FUELLROHR	C- 794092-010V
					C- 924808-010V
2- 794059		NEDRE FYLLRÖR	LOWER FILLING TUBE	FUELLROHR	C- 794092-010V
					C- 924808-010V
3- 794061		TRYCKFLÄNS	PRESSURE FLANGE	DRUCKFLANSCH	C- 736796-020V
					C- 924808-010V
3- 794062		TRYCKFLÄNS	PRESSURE FLANGE	DRUCKFLANSCH	C- 736796-020V
					C- 924808-010V

PART NO	LAST ECN	BENÄMNING	TITLE	BENENNUNG	GROUP NO
3- 794063		TRYCKFLÄNS	PRESSURE FLANGE	DRUCKFLANSCH	C- 794092-010V
C- 794069-0102	15141 90-09-19	BERÖRINGSSKYDD OCH RÄCKE	TOUCH GUARD AND RAILING	BERUEHRUNGSSCHUTZ	C- 563210-010V
					C- 563211-010V
C- 794070-0101	15141 90-09-19	INSTALLATIONSUTRUSTNING	INSTALLATION DEVICE KIT	MONTAGEAUSF~HRUNG	C- 736796-020V
1- 794071		MONTERINGSSTÖD	MOUNTING SUPPORT	BEFESTIGUNGSSCHIENE	C- 794070-010V
3- 794075		TRYCKFLÄNS	PRESSURE FLANGE	DRUCKFLANSCH	C- 794092-010V
2- 794090		BERÖRINGSSKYDD	TOUCH GUARD	BERUEHRUNGSSCHUTZ	C- 794069-010V
C- 794092-0101	16595 91-06-18	NIVÅKONTROLL	LEVEL CONTROL	NIVEAUREGULATOR	C- 563210-010V
					C- 563211-010V
C- 794092-0102	16595 91-06-18	NIVÅKONTROLL	LEVEL CONTROL	NIVEAUREGULATOR	C- 563210-010V
					C- 563211-010V
C- 794092-0103	16595 91-06-18	NIVÅKONTROLL	LEVEL CONTROL	NIVEAUREGULATOR	C- 563210-010V
					C- 563211-010V
C- 794092-0104	16595 91-06-18	NIVÅKONTROLL	LEVEL CONTROL	NIVEAUREGULATOR	C- 563210-010V
					C- 563211-010V
C- 794110-0102	15141 90-09-19	PRODUKT- OCH B-C-VENTIL	PRODUCT AND B-C VALVE	PRODUKT VENTIL	C- 563210-010V
					C- 563211-010V
4- 794116		BUSSNING	BUSHING	BUCHSE	C- 794069-010V
4- 794117		KOLV	PISTON	KOLBEN	C- 794213-010V
2- 794119		RÖR	PIPE	ROHR	C- 794179-010V
C- 794128-0101	15141 90-09-19	BORRFIXTUR	DRILLING FIXTURE	BOHRVORRICHTUNG	C- 736796-020V
3- 794129		SNÄCKVÄXEL	WORM GEAR	SCHNECKENGETRIEBE	C- 794128-010V
3- 794130		PLATTA	PLATE	PLATTE	C- 794128-010V
3- 794131		SPINDEL	SPINDLE	SPINDEL	C- 794128-010V
3- 794132		FÄSTE	BRACKET	BEFESTIGUNGSHALTER	C- 794128-010V
3- 794133		HÄVSTÅNG	LEVER BAR	HEBELSTANGE	C- 794128-010V
4- 794134		BUSSNING	BUSHING	BUCHSE	C- 794128-010V
4- 794135		BRICKA	WASHER	SCHEIBE	C- 794128-010V
4- 794136		FÄSTE	BRACKET	BEFESTIGUNGSHALTER	C- 794128-010V
4- 794137		PELARE	PILLAR	SÄULE	C- 794128-010V
4- 794138		FJÄDER	SPRING	FEDER	C- 794128-010V
C- 794145-0102	15141 90-09-19	VENTILPANEL	VALVE PANEL	VENTILPANEL	C- 563210-010V
C- 794145-0102		VENTILPANEL	VALVE PANEL	VENTILPANEL	C- 563211-010V
4- 794160		STÖD	SUPPORT	STUETZE	C- 794004-010V
C- 794168-0101	15141 90-09-19	LEDNINGSRÖR	CONDUIT	LEITUNGSROHR	C- 563210-010V
					C- 563211-010V
3- 794173		RÖR	PIPE	ROHR	C- 794271-010V
C- 794178-0101	16400 92-06-30	ÅNGKRETS	STEAM CIRCUIT	DAMPFROHR	C- 563210-010V
					C- 563211-010V
C- 794179-0101	15141 90-09-19	LUFTKRETS	AIR CIRCUIT	SCHALTKARTEPLAN	C- 563210-010V
					C- 563211-010V
C- 794180-0102	15141 90-09-19	VATTENKRETS	WATER CIRCUIT	SCHALTKARTEPLAN	C- 563210-010V
					C- 563211-010V
4- 794197		SKRUV	SCREW	SCHRAUBE	C- 794178-010V
2- 794203		RÖR	PIPE	ROHR	C- 736797-010V
2- 794204		STÖD	SUPPORT	STUETZE	C- 794110-010V
2- 794205-0002		RÖR	PIPE	ROHR	C- 752734-010V
1- 794206-0002		RÖR	PIPE	ROHR	C- 752734-010V
C- 794213-0101	15141 90-09-19	C-CYLINDER	C-CYLINDER	ZYLINDER	C- 794245-010V
3- 794214		TÄTNINGSHÅLLARE	SEAL HOLDER	DICHTUNGSHALTER	C- 794213-010V
4- 794215		TÄTNINGSHÅLLARE	SEAL HOLDER	DICHTUNGSHALTER	C- 794213-010V
C- 794226-0101	15141 90-09-19	VENTIL	VALVE	VENTIL	C- 794245-010V
4- 794238		ANSLUTNING	ATTACHMENT	ANSCHLUSS	C- 794179-010V
4- 794239		ANSLUTNING	ATTACHMENT	ANSCHLUSS	C- 794179-010V
4- 794241		SKRUV	SCREW	SCHRAUBE	C- 794092-010V
C- 794243-0101	15141 90-09-19	B-CYLINDER	B-CYLINDER	ZYLINDER	C- 794245-010V
C- 794244-0101	15141 90-09-19	A-CYLINDER	A-CYLINDER	ZYLINDER	C- 794245-010V
C- 794245-0101	15141 90-09-19	VENTILGRUPP	VALVE GROUP	VENTILGRUPPE	C- 563210-010V
					C- 563211-010V
3- 794246		MEMBRAN	DIAPHRAGM	MEMBRANE	C- 736796-020V
					C- 794243-010V
					C- 924811-010V
					C- 924991-010V
					C- 924811-010V
					C- 924991-010V
3- 794247		TÄTNINGSHÅLLARE	SEAL RING HOLDER	DICHTUNGSHALTER	C- 794243-010V
3- 794248		BRICKA	WASHER	SCHEIBE	C- 794243-010V
					C- 924991-010V
3- 794262		TÄTNINGSHÅLLARE	SEAL RING HOLDER	DICHTUNGSHALTER	C- 794244-010V
3- 794263		KÅGLA	CONE (PRESSURE)	KEGEL	C- 794244-010V
3- 794268		TRYCKFLÄNS	PRESSURE FLANGE	DRUCKFLANSCH	C- 794092-010V
C- 794271-0101	15141 90-09-19	RENGÖRINGSGRUPP	CLEANING GROUP	REINIGUNGSANORDNUNG	C- 563210-010V
					C- 563211-010V
C- 794272-0101	15141 90-09-19	EL-ANSLUTNING	ELECTRICAL CONNECTION	EL-ANSCHLUSS	C- 563210-010V
					C- 563211-010V
2- 794276		STÖD	SUPPORT	STUETZE	C- 794245-010V
1- 794309		PRODUKTRÖR	PRODUCT PIPE	ROHR	C- 736796-020V
3- 794321		FÄSTE	BRACKET	BEFESTIGUNGSHALTER	C- 794092-010V
					C- 924808-010V
3- 794323		TRYCKFLÄNS	PRESSURE FLANGE	DRUCKFLANSCH	C- 736796-020V
					C- 924808-010V
1- 794342		BERÖRINGSSKYDD	TOUCH GUARD	BERUEHRUNGSSCHUTZ	C- 736796-020V
4- 794343		KLÄMMA	CLAMPING PIECE	KLAMMER	C- 736796-020V
3- 794419		FÄSTE	BRACKET	BEFESTIGUNGSHALTER	C- 794092-010V
					C- 924808-010V
4- 794420		DISTANS	SPACER	DISTANZ	C- 736796-020V
4- 794421		BORR DIAM.14	DRILL DIAM.14	BOHRER	C- 736796-020V
3- 794570		FÄSTE	BRACKET	BEFESTIGUNGSHALTER	C- 794092-010V
					C- 924808-010V
4- 795526		SKRUV	SCREW	SCHRAUBE	C- 794070-010V
C- 795750-0106	16393 92-10-08	PNEUMATIC BOX	PNEUMATIC BOX	PNEUMATIKSCHRANK	C- 924330-010V
1- 795897		RAM	FRAME	RAHMEN	C- 795900-010V

PART NO	LAST ECN	BENÄMNING	TITLE	BENENNUNG	GROUP NO
3- 795898		HANDTAG	HANDLE	GRIFF	C- 795900-010V
4- 795899		BUSSNING	BUSHING	BUCHSE	C- 795900-010V
C- 795900-0101	15141 90-09-19	VERKTYG	TOOL	WERKZEUGE	C- 736796-020V
2- 795901		TORK	DRYER	TROCKNER	C- 736796-020V
2- 795902		TORK	DRYER	TROCKNER	C- 736796-020V
2- 795903		TORK	DRYER	TROCKNER	C- 736796-020V
3- 795904		KÅPA	COVER	DECKEL	C- 736796-020V
3- 795905		BUSSNING	BUSHING	BUCHSE	C- 795900-010V
2- 795906		TORK	DRYER	TROCKNER	C- 736796-020V
2- 795930		DRAGSTÅNG	TIE ROD	ZUGSTANGE	C- 736600-020V
					C- 924305-010V
2- 795931		SLUTARE	CLOSING DEVICE	VERSCHLUSS	C- 736600-020V
					C- 924305-010V
1- 795950		SKÅP	CABINET	SCHRANK	C- 795750-010V
3- 795956		NIPPEL	NIPPLE	NIPPEL	C- 795750-010V
1- 795957		ANSLUTNINGSPLÅT	CONNECTION PLATE	ANSCHLUSSBLECH	C- 795750-010V
3- 795976		SCHEMA PNEUMATIK	AIR/INERT GAS DIAGRAM	PNEUMATIKPLAN	C- 795750-010V
3- 795977		SCHEMA PNEUMATIK	PNUEMATIC BOX SURVEY	PNEUMATIKPLAN	C- 795750-010V
3- 905012		BROMS	BRAKE	BREMSE	C- 905131-010V
1- 905013		FÄSTE	BRACKET	BEFESTIGUNGSHALTER	C- 905131-010V
2- 905016		BLOCK	BLOCK	BLOCK	C- 905131-010V
2- 905057		BROMSSKIVA	BRAKE DISC	BREMSSCHEIBE	C- 905130-010V
					C- 905541-010V
1- 905059		TÄCKPLÅT	COVERING PLATE	DECKBLECH	C- 905131-010V
2- 905060		NAV	HUB	NABE	C- 905131-010V
3- 905062		AXEL	SHAFT	WELLE	C- 905541-010V
2- 905063		SPINDEL	SPINDLE	SPINDEL	C- 905541-010V
1- 905081		KÅPA	COVER	DECKEL	C- 752244-020V
					C- 556723-010V
4- 905082		AXEL	SHAFT	WELLE	C- 905331-010V
4- 905097		BROMSSKO	BRAKE PAD	BREMSE	C- 905131-010V
2- 905098		BROMSARM	BRAKE ARM	BREMSARM	C- 905131-010V
2- 905129		NAV	HUB	NABE	C- 905130-010V
C- 905130-0101	15089 90-11-21	NAV (JUMBO RULLE)	SPINDLE (JUMBO REEL)	NABE	C- 905131-010V
C- 905131-0101	20317 93-09-22	INDEXERINGSSKIVA	INDEXING UNIT	INDEXIERUNGSEINHEIT	C- 556723-010V
C- 905131-0103	20317 93-09-22	INDEXERINGSSKIVA	INDEXING UNIT	INDEXIERUNGSEINHEIT	C- 556723-010V
4- 905138		AXEL	AXLE	WELLE	C- 905331-010V
4- 905139		AXEL	SHAFT	WELLE	C- 905131-010V
4- 905140		ARM	ARM	ARM	C- 905131-010V
4- 905141		AXEL	SHAFT	WELLE	C- 905331-010V
3- 905142		AXEL	SHAFT	WELLE	C- 556723-010V
1- 905143		DELNINGSSKIVA	INDEX PLATE	TEILKREISSCHEIBE	C- 905131-010V
2- 905166		BEN	LEG	BEIN	C- 752244-020V
					C- 556723-010V
2- 905167		BEN	LEG	BEIN	C- 752244-020V
					C- 556723-010V
1- 905315		MONTERINGSKONSOL	MOUNTING BRACKET	KONSOLE	C- 556723-010V
C- 905331-0101	15089 90-11-21	ARM	ARM	ARM	C- 556723-010V
4- 905359		FJÄDERHÅLLARE	SPRING HOLDER	SPRING HOLDER	C- 905131-010V
4- 905360		HÄNGSLE	HANGER	HALTERUNG	C- 905131-010V
C- 905401-0101	15089 90-11-21	MANÖVERTAVLA	CONTROL BOARD	MANÖVERSCHALTTAFEL	C- 556723-010V
2- 905402		LÅDA	BOX	KASTEN	C- 905401-010V
4- 905403		JUSTERINGSSKRUV	ADJUSTING SCREW	REGULIERSCHRAUBE	C- 905131-010V
4- 905470		DRAGFJÄDER	TENSION SPRING	ZUGFEDER	C- 905131-010V
3- 905528		FJÄDER	SPRING	FEDER	C- 905541-010V
C- 905541-0101	15089 90-11-21	NAV (LITEN RULLE)	SPINDLE (SMALL REEL)	NABE	C- 905131-010V
1- 905720		KÅPA	COVER	DECKEL	C- 556723-010V
RK- 905722-010V	15074 90-11-22	LS-REMSA A.S.U. (TBA/9)	LS STRIP A.S.U. (TBA/9)	LS-AUSRUESTUNG	C- 77091-040V
4- 905723		DOKUMENTMAPP	DOCUMENT FOLDER	DOKUMENTMAPPE	RK- 905722-010V
1- 924113		DISKRÖR	CLEANING PIPE	REINIGUNGSROHR	C- 924314-010V
3- 924116		RÖR	PRODUCT PIPE	ROHR	C- 924305-010V
2- 924149		VENTIL	VALVE BODY	VENTIL	C- 924167-010V
2- 924150		CYLINDER	CYLINDER	ZYLINDER	C- 924167-010V
3- 924151		AXEL	SHAFT	WELLE	C- 924167-010V
3- 924152		RATT	KNOB	RAD	C- 924167-010V
3- 924153		KOLV	PISTON	KOLBEN	C- 924167-010V
3- 924156		KOLV	DOSING PISTON	KOLBEN	C- 924662-010V
					C- 924167-010V
4- 924161		HYLSA	SLEEVE	HUELSE	C- 924167-010V
4- 924163		LÄNKSKRUV	SCREW	GELENKSCHRAUBE	C- 924167-010V
4- 924164		BRICKA	WASHER	SCHEIBE	C- 924167-010V
C- 924167-0104	16393 92-10-08	MANUAL DOSING VALVE	MANUAL DOSING VALVE	VENTIL	C- 925100-010V
4- 924170		MUTTER	NUT	MUTTER	C- 924593-010V
4- 924171		SKRUV	SCREW	SCHRAUBE	C- 924593-010V
1- 924256		PÅFYLLNINGSRÖR	UPPER FILLING TUBE	FUELLROHR	C- 529933-020V
C- 924300-0102	16391 92-12-09	VALVE HOLDER	VALVE HOLDER	HALTER	C- 560459-020V
					C- 560460-020V
					C- 560886-020V
					C- 924725-010V
C- 924300-0103	16391 92-12-09	VALVE HOLDER	VALVE HOLDER	HALTER	C- 925173-010V
					C- 924725-010V
C- 924305-0103	16393 92-10-08	COSTANT FLOW VALVE	CONSTANT FLOW VALVE	VENTIL	C- 925173-010V
					C- 924938-010V
C- 924314-0101	16390 91-10-17	DISKRÖR	CLEANING PIPE	REINIGUNGSROHR	C- 925100-010V
					C- 560459-020V
					C- 560460-020V
					C- 560886-020V
C- 924329-0101	16399 92-09-30	CONNECTION BOX	CONNECTION BOX	KASTEN	C- 924330-010V
C- 924330-0101	16390 91-10-17	ASSEM.OF C AND P BOXES	ASSEM.OF C AND P BOXES	KASTEN	C- 560459-020V
					C- 560460-020V
					C- 560886-020V
1- 924351		FÄSTE	BRACKET	BEFESTIGUNGSHALTER	C- 924300-010V

PART NO	LAST ECN	BENÄMNING	TITLE	BENENNUNG	GROUP NO
2- 924352		FÄSTE	BRACKET	BEFESTIGUNGSHALTER	C- 924300-010V
3- 924353		FÄSTE	BRACKET	BEFESTIGUNGSHALTER	C- 924300-010V
3- 924354		KOPPLINGSKLÄMMA	CLAMP	KUPPLUNGSKLAMMER	C- 924300-010V
1- 924361		CENTRAL VENTILKROPP	BODY CENTRAL VALVE	VENTIL	C- 924305-010V
1- 924365		VENTIL	DOSING VALVE BODY	VENTIL	C- 924662-010V
					C- 924167-010V
3- 924370		RÖR	PRODUCT PIPE	ROHR	C- 924662-010V
					C- 924167-010V
1- 924379		KROPP	SPRING BODY	KOERPER	C- 924662-010V
2- 924380		KAM	CAM	NOCKE	C- 924662-010V
2- 924381		AXEL	SHAFT	WELLE	C- 924662-010V
3- 924439		RÖR	FLEX TUBE	ROHR	C- 924572-010V
4- 924518		PACKNING	GASKET	DICHTUNG	C- 924300-010V
4- 924519		PACKNING	GASKET	DICHTUNG	C- 924300-010V
2- 924562		RÖR	PIPE	ROHR	C- 924572-010V
4- 924564		RÖR	PIPE	ROHR	C- 924572-010V
4- 924565		RÖR	PIPE	ROHR	C- 924572-010V
4- 924567		TRYCKFJÄDER	COMPRESSION SPRING	DRUCKFEDER	C- 924167-010V
C- 924572-0101	16391 92-12-09	DISCHARGE CIRCUIT	DISCHARGE CIRCUIT	AUSSTOSSER	C- 560459-020V
					C- 560460-020V
					C- 560886-020V
					C- 924725-010V
					C- 925173-010V
C- 924572-0102	16391 92-12-09	DISCHARGE CIRCUIT	DISCHARGE CIRCUIT	AUSSTOSSER	C- 924725-010V
					C- 925173-010V
2- 924577		PLATTA	PLATE	PLATTE	C- 529933-020V
1- 924581		LÅDA	BOX	KASTEN	C- 924585-010V
					C- 924727-010V
3- 924583		STÖD	SUPPORT	STUETZE	C- 924585-010V
					C- 924727-010V
C- 924585-0101	16399 92-09-30	CONNECTION BOX	CONNECTION BOX	KASTEN	C- 560459-020V
					C- 560460-020V
					C- 560886-020V
C- 924592-0101	16390 91-10-17	UPPSTARTSATS	START-UP KIT	STARTSATZ	C- 560459-020V
					C- 560460-020V
					C- 560886-020V
C- 924593-0101	16390 91-10-17	MONTERINGSVERKTYG	ASSEMBLY TOOL	MONTAGEWERKZEUG	C- 560459-020V
					C- 560460-020V
					C- 560886-020V
4- 924600		SKENA	RAIL	SCHIENE	C- 924585-010V
					C- 924727-010V
1- 924601		DISKRÖR	CLEANING PIPE	REINIGUNGSROHR	C- 924314-010V
4- 924625		BRICKA	WASHER	SCHEIBE	C- 924572-010V
2- 924630		TUB	TUBE	ROHR	C- 924593-010V
C- 924662-0104	16391 92-12-09	DOSING VALVE WITH S.M.	MOTORIZED DOSING VALVE	VENTIL	C- 924938-010V
4- 924664		MOTOR	MOTOR	MOTOR	C- 924662-010V
4- 924703		FÄSTE	BRACKET	BEFESTIGUNGSHALTER	C- 924300-010V
4- 924722		DOKUMENTMAPP	DOCUMENT FOLDER	DOKUMENTMAPPE	C- 560459-020V
C- 924725-010V	16391 92-12-09	NIVÅREGULATOR	LEVEL CONTROLLED FILLING	NIVEAUREGULATOR	C- 77091-040V
C- 924727-0101	16391 92-12-09	CONNECTION BOX	CONNECTION BOX	KASTEN	C- 924725-010V
					C- 925173-010V
4- 924731		DOKUMENTMAPP	DOCUMENT FOLDER	DOKUMENTMAPPE	C- 560460-020V
4- 924732		DOKUMENTMAPP	DOCUMENT FOLDER	DOKUMENTMAPPE	C- 560886-020V
C- 924808-0101	16391 92-12-09	NIVÅKONTROLL	LEVEL CONTROL	NIVEAUREGULATOR	C- 924725-010V
					C- 925173-010V
C- 924808-0102	16391 92-12-09	NIVÅKONTROLL	LEVEL CONTROL	NIVEAUREGULATOR	C- 924725-010V
					C- 925173-010V
C- 924808-0103	16391 92-12-09	NIVÅKONTROLL	LEVEL CONTROL	NIVEAUREGULATOR	C- 924725-010V
					C- 925173-010V
C- 924808-0104	16391 92-12-09	NIVÅKONTROLL	LEVEL CONTROL	NIVEAUREGULATOR	C- 924725-010V
					C- 925173-010V
C- 924809-0101	16391 92-12-09	DISKRÖR	CLEANING PIPE	REINIGUNGSROHR	C- 924725-010V
					C- 925173-010V
C- 924810-0101	16391 92-12-09	MONTERINGSVERKTYG	ASSEMBLY TOOL	MONTAGEWERKZEUG	C- 924725-010V
					C- 925173-010V
C- 924811-0101	16391 92-12-09	UPPSTARTSATS	START-UP KIT	STARTSATZ	C- 924725-010V
					C- 925173-010V
C- 924811-0102	16391 92-12-09	UPPSTARTSATS	START-UP KIT	STARTSATZ	C- 924725-010V
					C- 925173-010V
2- 924812		DISKRÖR	CLEANING PIPE	REINIGUNGSROHR	C- 924809-010V
4- 924856		BORSTE	BRUSH	BUERSTE	C- 736865-010V
					C- 924592-010V
					C- 736865-010V
					C- 924592-010V
					C- 736865-010V
					C- 924592-010V
C- 924938-0104	16391 92-12-09	VENTIL	ASSEM. OF CFV AND MOT.DV	VENTIL	C- 924725-010V
					C- 925173-010V
C- 924991-0101	16391 92-12-09	VÄXELVENTIL	PRODUCT INJECTION VALVE	WECHSELVENTIL	C- 924725-010V
					C- 925173-010V
3- 924993		RÖR	PRODUCT PIPE	ROHR	C- 924300-010V
3- 924995		RÖR	PIPE	ROHR	C- 924300-010V
3- 924996		DISTANSELEMENT	SPACER ELEMENT	DISTANZSTUECK	C- 924300-010V
3- 924997		TÄTNINGSHÅLLARE	SEAL HOLDER	DICHTUNGSHALTER	C- 924991-010V
3- 924998		KOLVSTÅNG	PISTON ROD	KOLBENSTANGE	C- 924991-010V
C- 925100-0104	16393 92-10-08	VENTIL	ASSEM. OF CFV AND MAN.DV	VENTIL	C- 560459-020V
					C- 560460-020V
					C- 560886-020V
3- 925159		LÅDA	BOX	KASTEN	C- 924329-010V
C- 925173-010V	16391 92-12-09	NIVÅREGULATOR	LEVEL CONTROLLED FILLING	NIVEAUREGULATOR	C- 77091-040V
4- 925186		HYLSA	SLEEVE	HUELSE	C- 924991-010V
3- 925187		STÖD	SUPPORT	STUETZE	C- 924991-010V

PART NO	LAST ECN	BENÄMNING	TITLE	BENENNUNG	GROUP NO
4- 925227		DOKUMENTMAPP	DOCUMENT FOLDER	DOKUMENTMAPPE	C- 924725-010V
3- 925272		DISKRÖR	CLEANING PIPE	REINIGUNGSROHR	C- 925328-010V
3- 925273		DISKRÖR	CLEANING PIPE	REINIGUNGSROHR	C- 925328-010V
4- 925278		DOKUMENTMAPP	DOCUMENT FOLDER	DOKUMENTMAPPE	C- 924725-010V
4- 925282		DOKUMENTMAPP	DOCUMENT FOLDER	DOKUMENTMAPPE	C- 925173-010V
4- 925284		DOKUMENTMAPP	DOCUMENT FOLDER	DOKUMENTMAPPE	C- 925173-010V
1- 925291		VENTILHUS	VALVE HOUSING	VENTILGEHÄUSE	C- 924991-010V
4- 925292		RÖR	PRODUCT PIPE	ROHR	C- 924991-010V
2- 925316		LEDNINGSRÖR	CONDUIT	LEITUNGSROHR	C- 736360-020V
1- 925317		LEDNINGSRÖR	CONDUIT	LEITUNGSROHR	C- 736360-020V
3- 925318		RÖRKLAMMER	PIPE CLAMP	ROHRKLAMMER	C- 736360-020V
3- 925321		RÖRKLAMMER	PIPE CLAMP	ROHRKLAMMER	C- 736360-020V
C- 925328-0101	16391 92-12-09	DISKRÖR	CLEANING PIPE	REINIGUNGSROHR	C- 924725-010V
					C- 925173-010V
3- 925330		NIPPEL	NIPPLE	NIPPEL	C- 794004-010V
3- 925331		NIPPEL	NIPPLE	NIPPEL	C- 794004-010V
1- 925362		DISKRÖR	CLEANING PIPE	REINIGUNGSROHR	C- 924809-010V
3- 925363		DISKRÖR	CLEANING PIPE	REINIGUNGSROHR	C- 924809-010V
C- 925492-0101	16391 92-12-09	EL-MATERIAL	ELECTRIC MATERIALS	EL-MATERIAL	C- 924810-010V
4- 925663		SKYLT	FUSE PANEL LABEL	SCHILD	RK- 41768-010V
4- 925815		HYLSA	SLEEVE	HUELSE	C- 924662-010V
4- 925816		HYLSA	SLEEVE	HUELSE	C- 924662-010V
4- 925838		SKYLT	FUSE PANEL LABEL	SCHILD	RK- 41770-010V
4- 926011		FÖRMINSKNING	REDUCTION	VERMINDERUNG	C- 795750-010V
3- 926076		FLÄNS	FLANGE	FLANSCH	C- 924662-010V
1- 926099		HÅLLARE	MOTOR HOLDER	HALTER	C- 924662-010V
4- 926100		KÅPA	COVER	DECKEL	C- 924662-010V
4- 926101		PACKNING	GASKET	DICHTUNG	C- 924662-010V
2- 926199		VENTIL	LATERAL BODY VALVE	VENTIL	C- 924305-010V
1- 978000		FALLRÄNNA TBA/9 V0284	DROP CHUTE TBA/9 V0284	FALLRINNE	C- 978260-020V
2- 978003		TÄCKPLÅT	COVERING PLATE	DECKBLECH	C- 271513-060V
2- 978004		TÄCKPLÅT	COVERING PLATE	DECKBLECH	C- 271513-060V
2- 978005		TÄCKPLÅT	COVERING PLATE	DECKBLECH	C- 271513-060V
3- 978006		RÖRFÄSTE	PIPE HOLDER	ROHRBEFESTIGUNG	C- 271866-060V
3- 978007		RÖRFÄSTE	PIPE HOLDER	ROHRBEFESTIGUNG	C- 271866-060V
3- 978008		RÖRFÄSTE	PIPE HOLDER	ROHRBEFESTIGUNG	C- 271866-060V
4- 978010		MÄRKSKYLT	SIGN BOARD	SCHILD	C- 978239-020V
					C- 978240-020V
					C- 978241-020V
1- 978020		SCHEMA VATTEN	WATER DIAGRAM	SCHEMA WASSER	B- 648109-100V
1- 978021		SCHEMA VATTEN	WATER DIAGRAM	SCHEMA WASSER	B- 648109-100V
4- 978023		KLAMMER	CRAMP	KLAMMER	C- 978239-020V
					C- 978240-020V
					C- 978241-020V
4- 978024		PLATTA	PLATE	PLATTE	C- 978239-020V
					C- 978240-020V
					C- 978241-020V
4- 978025		DISTANS	SPACER	DISTANZ	C- 978239-020V
					C- 978240-020V
					C- 978241-020V
G1- 978031		VOLYMKLAFF 284 ML	VOLUMEFLAP 284 ML	VOLUMENKLAPPE	CR- 256209-030V
G1- 978031		VOLYMKLAFF 284 ML	VOLUMEFLAP 284 ML	VOLUMENKLAPPE	CR- 256210-030V
					C- 978259-010V
4- 978037		FÄSTE	BRACKET	BEFESTIGUNGSHALTER	C- 978367-010V
3- 978044		HUV	HOOD	HAUBE	C- 978367-010V
C- 978048-0101	15018 90-05-31	SPÄNNELEMENT	CLAMPING ELEMENT	SPANNELEMENT	C- 272765-070V
4- 978049		MUTTER	NUT	MUTTER	C- 978048-010V
4- 978050-0001		SKRUV	SCREW	SCHRAUBE	C- 978048-010V
4- 978050-0002		SKRUV	SCREW	SCHRAUBE	C- 978048-010V
4- 978051		EXCENTER	ECCENTRIC	EXZENTER	C- 978048-010V
4- 978052		BRICKA	WASHER	SCHEIBE	C- 978048-010V
1- 978053		TRANSPORTPLÅT	TRANSPORT PLATE	BLECH	C- 77094-010V
C- 978158-010V	14198 90-03-06	PLATTFORM BAK	PLATFORM REAR	PLATTFORM	B- 648102-100V
C- 978162-010V	15587 90-11-27	PAPPERSSKYDD	PAPER GUARD	PAPIERSCHUTZ	B- 648107-100V
1- 978163		LUCKA	OPENING	DECKEL	C- 978162-010V
2- 978164		HÅLLARE	HOLDER	HALTER	C- 978162-010V
2- 978165		BEN	LEG	BEIN	C- 978162-010V
2- 978166		STÖD	SUPPORT	STUETZE	C- 978162-010V
3- 978167		STAG	STRUT	VERSTREBUNG	C- 978162-010V
4- 978168		RÄNNA	CHUTE	RINNE	C- 978162-010V
4- 978169		RÄNNA	CHUTE	RINNE	C- 978162-010V
4- 978170		GLIDPLÅT	SLIDE SHEET	GLEITBLECH	C- 456103-010V
					C- 978192-020V
4- 978171		STÖDKLOTS	SUPPORT BLOCK	ST~TZKLOTZ	C- 456103-010V
					C- 978192-020V
3- 978176		FÄSTE	BRACKET	BEFESTIGUNGSHALTER	C- 571918-010V
C- 978179-0101	15202 90-10-12	PAPPERSSKYDD (BAKRE)	PAPER GUARD (REAR)	PAPIERSCHUTZ	B- 648107-100V
3- 978181		HÄNGARE	VERTICAL HOLDER	HÄNGER	C- 978179-010V
3- 978182		KROK	HOOK	HAKEN	C- 978179-010V
4- 978183		VINKELFÄSTE	ANGLE BRACKET	WINKELBEFESTIGUNG	C- 978179-010V
4- 978184		ANSLAG	STOPPER	ANSCHLAG	C- 256206-020V
					C- 256207-020V
4- 978185		SHIMS	SHIM	SHIMS	C- 256206-020V
					C- 256207-020V
3- 978190		BRICKA	WASHER	SCHEIBE	C- 272765-070V
3- 978191		GENOMFÖRING	LEAD-IN	DURCHF~HRUNG	C- 272765-070V
C- 978192-0201	19540 93-04-05	KONVERTERINGSSATS SV	CONVERTING KIT FF	UMWANDLUNGSATZ	C- 978270-020V
C- 978192-0202	19540 93-04-05	KONVERTERINGSSATS SV	CONVERTING KIT FF	UMWANDLUNGSATZ	C- 567704-020V
3- 978193		FÄSTPLATTA	FASTENING PLATE	BEFESTIGUNGSPLATTE	C- 441850-040V
3- 978194		MODIFIERAD SKÄRMPLÅT	MODIFIED SHIELDPLATE	ABSCHIRMBLECH	C- 978192-020V
4- 978195		FÄSTPLÅT	MOUNTING SHEET	BEFESTIGUNGSBLECH	C- 978192-020V
					C- 570079-020V

PART NO	LAST ECN	BENÄMNING	TITLE	BENENNUNG	GROUP NO
					C- 567681-020V
					C- 978192-020V
4- 978207		DISTANSRÖR	SPACER PIPE	DISTANZROHR	C- 572750-010V
4- 978209		MUTTER	NUT	MUTTER	C- 572750-010V
2- 978210		SKYDDSPLÅT	PROTECTION PLATE	SCHUTZBLECH	C- 572750-010V
RK- 978212-0101	16849 91-09-23	VÄRMEVÄXLARE	HEAT EXCHANGER	WÄRMEWECHSLER	C- 978239-020V
					C- 978240-020V
					C- 978241-020V
1- 978213		RÖRSPIRAL HUS	COIL HOUSING	ROHR	RK- 978212-010V
P1- 978214		KYLRÖR	COOLING PIPE	KUEHLROHR	RK- 978238-010V
4- 978215		STOPPLÅT	STOP PLATE	STOPPBLECH	RK- 520069-010V
2- 978216		SKYDD	PROTECTION	SCHUTZ	RK- 978234-010V
2- 978217		MUNSTYCKSFÄSTE	NOZZLE BRACKET	D~SENBEFESTIGUNG	RK- 978212-010V
2- 978220		LUFT/N2 RÖR	AIR/N2 PIPING	ROHR	C- 978239-020V
					C- 978240-020V
					C- 978241-020V
3- 978221		LUFT/N2 RÖR	AIR/N2 PIPE	ROHR	C- 978239-020V
					C- 978240-020V
3- 978221		LUFT/N2 RÖR	AIR/N2 PIPE	ROHR	C- 978241-020V
3- 978222		LUFT/N2	AIR/N2	ROHR	C- 978239-020V
					C- 978240-020V
					C- 978241-020V
3- 978223		LUFT/N2	AIR/N2	ROHR	C- 978239-020V
					C- 978240-020V
					C- 978241-020V
3- 978224		LUFT/N2	AIR/N2	ROHR	C- 978239-020V
					C- 978240-020V
					C- 978241-020V
3- 978225		LUFT/N2	AIR/N2	ROHR	C- 978239-020V
					C- 978240-020V
					C- 978241-020V
3- 978226		LUFTRÖR	AIR PIPE	LUFTROHR	C- 978239-020V
					C- 978240-020V
					C- 978241-020V
3- 978227		LUFTRÖR	AIR PIPE	LUFTROHR	C- 978239-020V
					C- 978240-020V
					C- 978241-020V
3- 978228		LUFTRÖR	AIR PIPE	LUFTROHR	C- 978239-020V
					C- 978240-020V
					C- 978241-020V
1- 978229		FÄSTE	BRACKET	BEFESTIGUNGSHALTER	C- 978239-020V
					C- 978240-020V
					C- 978241-020V
2- 978230		HÅLLARE	HOLDER	HALTER	C- 978239-020V
					C- 978240-020V
					C- 978241-020V
3- 978231		KLACK	LUG	NOCKE	C- 978239-020V
					C- 978240-020V
					C- 978241-020V
2- 978232		GÅNGJÄRN	HINGE	SCHARNIER	C- 978239-020V
					C- 978240-020V
					C- 978241-020V
3- 978233		STÖD	SUPPORT	STUETZE	C- 978239-020V
					C- 978240-020V
					C- 978241-020V
RK- 978234-0101	17733 92-06-02	MANÖVERSKÅP	CONTROL CABINET	MANÖVERSCHRANK	C- 978239-020V
					C- 978240-020V
					C- 978241-020V
3- 978235		VENTILPLATTA	VALVE PLATE	VENTILPLATTE	RK- 978234-010V
4- 978236		LUFTRÖR	AIR PIPE	LUFTROHR	C- 978239-020V
					C- 978240-020V
					C- 978241-020V
4- 978237		LUFTRÖR	AIR PIPE	LUFTROHR	RK- 978234-010V
RK- 978238-0101	17733 92-06-02	ÖVERGÅNGSRÖR	TRANSITION PIPING ASSY.	~BERGANGSROHR Z-ZEICHNUN	C- 978239-020V
					C- 978240-020V
					C- 978241-020V
C- 978239-020V	19540 93-04-05	HEAD SPACE VIA INJICERIN	HEAD SPACE BY INJECTION	HEAD SPACE DURCH INJ.	C- 77091-040V
C- 978240-020V	19540 93-04-05	HEAD SPACE VIA INJICERIN	HEAD SPACE BY INJECTION	HEAD SPACE DURCH INJ.	C- 77091-040V
C- 978241-020V	19540 93-04-05	HEAD SPACE VIA INJICERIN	HEAD SPACE BY INJECTION	HEAD SPACE DURCH INJ.	C- 77091-040V
P1- 978247		ÖVERGÅNGSKONSOL	TRANSITION BRACKET	~BERGANGSKONSOLE	RK- 978238-010V
1- 978255-0001		INSTALLATIONSRITNING	INSTALLATION DRAWING	INSTALLATIONSZEICHNUNG	B- 648109-100V
1- 978255-0002		INSTALLATIONSRITNING	INSTALLATION DRAWING	INSTALLATIONSZEICHNUNG	B- 648109-100V
1- 978256-0001		INSTALLATIONSRITNING	INSTALLATION DRAWING	INSTALLATIONSZEICHNUNG	B- 648109-100V
1- 978256-0002		INSTALLATIONSRITNING	INSTALLATION DRAWING	INSTALLATIONSZEICHNUNG	B- 648109-100V
1- 978257-0001		INSTALLATIONSRITNING	INSTALLATION DRAWING	INSTALLATIONSZEICHNUNG	B- 648109-100V
1- 978257-0002		INSTALLATIONSRITNING	INSTALLATION DRAWING	INSTALLATIONSZEICHNUNG	B- 648109-100V
C- 978258-0201	19540 93-04-05	KONV.SATS DRIVN. 250/284	CONVERTING KIT	UMWANDLUNGSATZ	C- 978270-020V
C- 978258-0202	19540 93-04-05	KONV.SATS DRIVN 250/200	CONVERTING KIT	UMWANDLUNGSATZ	C- 567704-020V
					C- 567705-020V
C- 978259-0101	16864 91-11-29	CONV.SATS BACKSYS.250/28	CONV.KIT JAW SYST.	UMWANDLUNGSATZ	C- 978270-020V
C- 978259-0102	16864 91-11-29	KONV.SATS BACKSYS.250/20	CONV.KIT JAW SYST.	UMWANDLUNGSATZ	C- 567704-020V
					C- 567705-020V
C- 978260-0201	19540 93-04-05	KONV.SATS STATIV 250/284	CONVERTING KIT FRAME	UMWANDLUNGSATZ	C- 978270-020V
C- 978260-0202	19540 93-04-05	KONV.SATS STATIV 250/200	CONVERTING KIT FRAME	UMWANDLUNGSATZ	C- 567704-020V
					C- 567705-020V
4- 978261		PINNE	PEG	STIFT	C- 978258-020V
					C- 978442-020V
					C- 978258-020V
4- 978262		STYRPINNE	GUIDE PIN	FUEHRUNGSBOLZEN	C- 256202-050V
3- 978263		BLADFJÄDER	LEAF SPRING	BLATTFEDER	C- 456180-010V
					C- 978260-020V
3- 978266		TÄCKPLÅT	COVERING PLATE	DECKBLECH	C- 751860-020V

PART NO	LAST ECN	BENÄMNING	TITLE	BENENNUNG	GROUP NO
C- 978270-0201	19540 93-04-05	KONVERTERINGSSATS 250/28	CONVERTING KIT	UMWANDLUNGSATZ	C- 77091-040V
3- 978272		FÄSTE	BRACKET	BEFESTIGUNGSHALTER	C- 256197-050V
					C- 491814-020V
					C- 491815-020V
4- 978273		SKALA YTTRE	DIAL	MASSTAB	C- 256197-050V
					C- 491814-020V
					C- 491815-020V
4- 978274		SKALA INRE	DIAL	MASSTAB	C- 256197-050V
					C- 491814-020V
					C- 491815-020V
3- 978275		LAGERFÄSTE	BEARING HOLDER	LAGERHALTER	C- 256197-050V
					C- 491814-020V
					C- 491815-020V
C- 978280-0101	15041 90-12-05	SKÅP VOLYMOMBYGGNAD	CABINET VOLUME REBUILDIN	SCHRANK	C- 567704-020V
					C- 567705-020V
					C- 567707-020V
					C- 978270-020V
1- 978281		LÅDRAM	BOX FRAME	KASTENRAHMEN	C- 978280-010V
1- 978282		KURVFÄSTE	CURVE BRACKET	KURVENFESTE	C- 978280-010V
1- 978283		DÖRR	DOOR	TUER	C- 978280-010V
2- 978284		KONSOL	CANTILEVER	KONSOLE	C- 978280-010V
2- 978285		HÅLLARE	HOLDER	HALTER	C- 978280-010V
3- 978286		BOTTENPLÅT	BOTTOM PANEL	BODENBLECH	C- 978280-010V
3- 978287		GAVELPLÅT	GABLE PLATE	STIRNWANDBLECH	C- 978280-010V
3- 978288		TOPPKÅPA	TOP COVER	TOPPHAUBE	C- 978280-010V
3- 978289		BAKRE PLÅT	REAR PLATE	HINTERE PLATTE	C- 978280-010V
4- 978290		FÄSTE	BRACKET	BEFESTIGUNGSHALTER	C- 978280-010V
4- 978291		HÅLLARE	HOLDER	HALTER	C- 978280-010V
4- 978292		AXEL	SHAFT	WELLE	C- 978280-010V
4- 978293		VINKELFÄSTE	ANGLE BRACKET	WINKELBEFESTIGUNG	C- 978280-010V
4- 978294		GLIDLIST	SLIDING STRIP	GLEITLEISTE	C- 978280-010V
4- 978340		DISTANS	SPACER	DISTANZ	C- 256202-050V
3- 978342		VINKELSTÅNG	ANGLE BAR	WINKELSTAHL	C- 978367-010V
3- 978343		VINKELSTÅNG	ANGLE BAR	WINKELSTAHL	C- 978367-010V
2- 978345		KÅPA	COVER	DECKEL	C- 978179-010V
2- 978346		RAM	FRAME	RAHMEN	C- 978179-010V
3- 978350		SKYDD	PROTECTION	SCHUTZ	RK- 520069-010V
3- 978351		SKYDD	PROTECTION	SCHUTZ	RK- 520069-010V
1- 978352		BERÖRINGSSKYDD	TOUCH GUARD	BERUEHRUNGSSCHUTZ	C- 978239-020V
					C- 978240-020V
					C- 978241-020V
4- 978355		KABELRÄNNA	CABLE TRENCH	KABELRINNE	C- 271569-050V
G1- 978366		VOLYMKLAFF 250	VOLUME FLAP 250	VOLUMENKLAPPE	CR- 256209-030V
					CR- 256210-030V
C- 978367-0101	16176 91-03-25	HUV	HOOD	HAUBE	C- 978162-010V
4- 978370		RÖR	PIPE	ROHR	C- 751373-010V
4- 978371		RÖR	PIPE	ROHR	C- 751373-010V
2- 978376		DISKRÖR	CLEANING PIPE	REINIGUNGSROHR	C- 978239-020V
					C- 978240-020V
					C- 978241-020V
3- 978380		BLINDPROPP	BLIND PLUG	BLINDPFROPFEN	RK- 978212-010V
3- 978381		BRICKA	WASHER	SCHEIBE	RK- 978212-010V
4- 978384		LAGERTAPP	PIVOT PIN	LAGERZAPFEN	C- 272021-060V
4- 978394		NIPPELRÖR	NIPPLE TUBE	NIPPELROHR	C- 978239-020V
					C- 978240-020V
					C- 978241-020V
4- 978400		DISTANS	SPACER	DISTANZ	RK- 978212-010V
1- 978404		FALLRÄNNA TB/9 V0180	DROP CHUTE TB/9 V0180	FALLRINNE	C- 456180-010V
1- 978405		FALLRÄNNA TB/9 V0200	DROP CHUTE TB/9 V0200	FALLRINNE	C- 456180-010V
1- 978406		FALLRÄNNA TB/9 V0236	DROP CHUTE TB/9 V0236	FALLRINNE	C- 456180-010V
1- 978407		FALLRÄNNA TB/9 V0250	DROP CHUTE TB/9 V0250	FALLRINNE	C- 456180-010V
1- 978408		FALLRÄNNA TBA/9 V0180	DROP CHUTE TBA/9 V0180	FALLRINNE	C- 456180-010V
1- 978409		FALLRÄNNA TBA/9 V0200	DROP CHUTE TBA/9 V0200	FALLRINNE	C- 456180-010V
1- 978410		FALLRÄNNA TBA/9 V0236	DROP CHUTE TBA/9 V0236	FALLRINNE	C- 456180-010V
1- 978411		FALLRÄNNA TBA/9 V0250	DROP CHUTE TBA/9 V0250	FALLRINNE	C- 978444-020V
					C- 456180-010V
1- 978412		FALLRÄNNA TBA/9 V0284	DROP CHUTE TBA/9 V0284	FALLRINNE	C- 456180-010V
1- 978413		RÄNNA	CHUTE	RINNE	C- 456100-030V
3- 978414		SCHEMA	DIAGRAM	SCHEMA	RK- 978234-010V
3- 978416-0001		SPRAYMUNSTYCKE	SPRAY NOZZLE	DUESE	RK- 978238-010V
3- 978416-0002		SPRAYMUNSTYCKE	SPRAY NOZZLE	DUESE	RK- 978238-010V
3- 978416-0003		SPRAYMUNSTYCKE	SPRAY NOZZLE	DUESE	RK- 978238-010V
2- 978417		TEXTPLATTA	TEXT PLATE	PLATTE	RK- 978234-010V
4- 978420		PACKNING	GASKET	DICHTUNG	C- 456976-050V
					RK- 978212-010V
2- 978421		INSTÄLLNINGSMALL	SETTING TEMPLATE	EINSTELLEHRE	C- 75466-030V
4- 978440		KLAMMER	CRAMP	KLAMMER	RK- 978238-010V
C- 978442-0201	19540 93-04-05	KONV.SATS DRIVN. 200/250	CONVERTING KIT DRIVE	UMWANDLUNGSATZ	C- 567707-020V
C- 978443-0101	16864 91-11-29	CONV.SATS BACKSYS.200/25	CONV.KIT JAW SYST.	UMWANDLUNGSATZ	C- 567707-020V
C- 978444-0201	19540 93-04-05	KONV.SATS STATIV 200/250	CONVERTING KIT FRAME	UMWANDLUNGSATZ	C- 567707-020V
4- 978454		MOTHÅLL	DOLLY	GEGENHALTER	CR- 256204-050V
					CR- 256205-050V
4- 978455		ÄNDSTYCKE	END PIECE	ENDST-CK	CR- 256204-050V
					CR- 256205-050V
3- 978461		SKYDDSPLÅT	PROTECTION PLATE	SCHUTZBLECH	C- 272025-030V
3- 978462		SKYDDSPLÅT	PROTECTION PLATE	SCHUTZBLECH	C- 272024-040V
3- 978517		FÄSTPLATTA	FASTENING PLATE	BEFESTIGUNGSPLATTE	CR- 256547-040V
3- 978518		SIDORÖR	SIDE PIPE	SEITENROHR	CR- 256547-040V
4- 978520		MUTTER	NUT	MUTTER	CR- 256547-040V
4- 978521		MUTTER	NUT	MUTTER	CR- 256547-040V
4- 978527		PACKNING	GASKET	DICHTUNG	CR- 256547-040V
RK- 978528-0101	17733 92-06-02	UPPSTARTSATS	START-UP KIT	STARTSATZ	C- 978239-020V

PART NO	LAST ECN	BENÄMNING	TITLE	BENENNUNG	GROUP NO
					C- 978240-020V
					C- 978241-020V
4- 978531		FÄSTE	BRACKET	BEFESTIGUNGSHALTER	C- 272021-060V
4- 978532		FÄSTE	BRACKET	BEFESTIGUNGSHALTER	C- 272021-060V
2- 978538		DISKRÖR	CLEANING PIPE	REINIGUNGSROHR	C- 295262-060V
3- 978539		KABELRÖR	CABLE CONDUIT	KABELROHR	C- 469374-040V
2- 978540		KABELRÖR	CABLE CONDUIT	KABELROHR	C- 469374-040V
2- 978541		KABELRÖR	CABLE CONDUIT	KABELROHR	C- 469374-040V
2- 978542		RAM	FRAME	RAHMEN	C- 491570-020V
2- 978543		RAM	FRAME	RAHMEN	C- 491579-020V
3- 978546		RÖR	PIPE	ROHR	C- 456976-050V
2- 978547		BERÖRINGSSKYDD	TOUCH GUARD	BERUEHRUNGSSCHUTZ	C- 256014-060V
4- 978550		TÄTNINGSBRICKA	SEALING WASHER	DICHTUNGSSCHEIBE	C- 295310-070V
3- 978551		MANOMETERRÖR	PRESSURE GAUGE TUBE	MANOMETERROHR	C- 266215-010V
2- 978561		AXEL	SHAFT	WELLE	C- 751393-010V
4- 978562		LÅSPINNE	LOCKING FINGER	VERSCHLUSSTIFT	C- 255921-040V
					C- 924808-010V
1- 978563		RÖR 90	PIPE 90	ROHR	C- 295045-070V
3- 978564		RÖR	PIPE	ROHR	C- 295045-070V
4- 978565		RÖR	PIPE	ROHR	C- 295045-070V
3- 978566		KEDJEHJUL	SPROCKET	KETTENRAD	C- 295310-070V
4- 978568		BRICKA	WASHER	SCHEIBE	C- 295310-070V
3- 978569		AXEL	SHAFT	WELLE	C- 256014-060V
3- 978570		AXEL	SHAFT	WELLE	C- 295310-070V
1- 978572		SKÄRMPLÅT	SHIELD PLATE	ABSCHIRMBLECH	C- 272765-070V
4- 978573		BUSSNING	BUSHING	BUCHSE	C- 256410-060V
1- 978574		BAD	BATH	BAD	C- 256014-060V
1- 978575		RÖR	PIPE	ROHR	C- 456555-040V
2- 978576		FRONTPLÅT	FRONT PLATE	FRONTBLECH	C- 456100-030V
1- 978577		KABELGENOMFÖRINGSPLÅT	CABLE LEAD-IN	BLECH	C- 295883-050V
3- 978578		RÖR	PIPE	ROHR	C- 491083-030V
3- 978579		RÖR	PIPE	ROHR	C- 491083-030V
4- 978580		RÖR	PIPE	ROHR	C- 491083-030V
4- 978581		RÖR	PIPE	ROHR	C- 491083-030V
4- 978582		RÖR	PIPE	ROHR	C- 491083-030V
2- 978583		RÖR	PIPE	ROHR	C- 978739-010V
2- 978584		RÖR	PIPE	ROHR	C- 978739-010V
3- 978585-0001		RÖR	PIPE	ROHR	C- 978739-010V
3- 978585-0002		RÖR	PIPE	ROHR	C- 978739-010V
3- 978585-0003		RÖR	PIPE	ROHR	C- 978739-010V
3- 978586		RÖR	PIPE	ROHR	C- 978739-010V
2- 978587		RÖR	PIPE	ROHR	C- 978739-010V
2- 978588		RÖR	PIPE	ROHR	C- 978739-010V
2- 978589		RÖR	PIPE	ROHR	C- 978739-010V
2- 978590		RÖR	PIPE	ROHR	C- 978739-010V
2- 978591		RÖR	PIPE	ROHR	C- 978739-010V
2- 978592		RÖR	PIPE	ROHR	C- 978739-010V
2- 978593		KOPPLINGSBLOCK	JUNCTION BLOCK	KUPPLUNGSBLOCK	C- 978739-010V
4- 978594		RÖR	PIPE	ROHR	C- 491083-030V
2- 978595		KOPPLINGSLÅDA	CONNECTION BOX	KUPPLUNGSKASTEN	C- 456435-040V
4- 978596		KONSOL	CANTILEVER	KONSOLE	C- 491083-030V
2- 978597		RÖR	PIPE	ROHR	C- 491083-030V
1- 978598		RÖR	PIPE	ROHR	C- 491083-030V
2- 978599		RÖR	PIPE	ROHR	C- 491083-030V
1- 978600		LÅDA	BOX	KASTEN	C- 295470-050V
1- 978601		LUFTDIAGRAM	AIR-DIAGRAM	DIAGRAMM	B- 648109-100V
1- 978602		LUFTDIAGRAM	AIR-DIAGRAM	DIAGRAMM	B- 648109-100V
4- 978603		SKYLT	SIGN	SCHILD	C- 978740-010V
C- 978604-0101	17888 93-01-27	KOPPLINGSLÅDA	CONNECTION BOX	KUPPLUNGSKASTEN	C- 272404-070V
3- 978605		FÄSTE	BRACKET	BEFESTIGUNGSHALTER	C- 271513-060V
					C- 751885-030V
2- 978606		FÄSTE	BRACKET	BEFESTIGUNGSHALTER	C- 272404-070V
2- 978607		SIDOPLÅT, VÄNSTER	SIDE PLATE, LEFT	SEITENBLECH	C- 271114-050V
2- 978608		TÄCKPLÅT	COVERING PLATE	DECKBLECH	C- 751885-030V
3- 978713		KNIV	KNIFE	MESSER	C- 978763-010V
1- 978714		MEDBRINGARE VÄNSTER	CARRIER LEFT	MITNEHMER	CR- 256205-050V
1- 978715		MEDBRINGARE HÖGER	CARRIER RIGHT	MITNEHMER	CR- 256204-050V
1- 978716		KAMSKIVA(IH)	CAM (IH)	KURVE	C- 751689-010V
3- 978717		HYLSA	SLEEVE	HUELSE	C- 978720-010V
3- 978718		ÄNDHYLSA	END SLEEVE	ENDH~LSE	C- 978720-010V
3- 978719		PINNE	PEG	STIFT	C- 978720-010V
C- 978720-0101	19186 93-01-26	FINGER	FINGER	FINGER	C- 295310-070V
G2- 978734		KONSOL	CANTILEVER	KONSOLE	C- 272560-060V
G3- 978735		FÄSTPLATTA	FASTENING PLATE	BEFESTIGUNGSPLATTE	C- 491976-020V
G3- 978736		FÄSTE	BRACKET	BEFESTIGUNGSHALTER	C- 256055-060V
1- 978737		ASEPTIKDIAGRAM	ASEPTIC DIAGRAM	DIAGRAMM	B- 648109-100V
C- 978738-010V	20112 93-07-01	VENTILPANEL	VALVE PANEL	PANEL	B- 648106-100V
C- 978739-010V	20112 93-07-01	VATTENPANEL	WATER PANEL	PANEL	C- 978738-010V
C- 978740-010V	20112 93-07-01	LUFTPANEL	AIR PANEL	PANEL	C- 978738-010V
1- 978741		SMÖRJSCHEMA	LUBRICATION CHART	SCHMIERSCHEMA	B- 648109-100V
1- 978742		PLÅT	SHEET	BLECH	C- 978740-010V
1- 978743		PLÅT	SHEET	BLECH	C- 978740-010V
4- 978744		HÅLLARE	HOLDER	HALTER	C- 978740-010V
2- 978747		INDUKTOR 180-284ML	INDUCTOR 180-284ML	INDUKTOR	CR- 256214-040V
2- 978749		INDUKTOR 200SLIM	INDUCTOR 200SLIM	INDUKTOR	CR- 256214-040V
2- 978751		INDUKTOR 125ML	INDUCTOR 125ML	INDUKTOR	CR- 256214-040V
3- 978753		AXEL	SHAFT	WELLE	C- 295310-070V
1- 978754		LUFTDIAGRAM	AIR-DIAGRAM	DIAGRAMM	B- 648109-100V
1- 978755		LUFTDIAGRAM	AIR-DIAGRAM	DIAGRAMM	B- 648109-100V
4- 978756		TAPP	PIN	ZAPFEN	C- 256223-040V
4- 978757		STÖDRULLE 180-284ML	ROLLER 180-284ML	ST~TZROLLE	C- 256223-040V
4- 978758		STÖDRULLE 125ML	ROLLER 125ML	ST~TZROLLE	C- 256223-040V

PART NO	LAST ECN	BENÄMNING	TITLE	BENENNUNG	GROUP NO
4- 978759		STÖDRULLE TB200SL	ROLLER TB200SL	ST~TZROLLE	C- 256223-040\
4- 978760		STÖDRULLE TBA200SL	ROLLER TBA200SL	ST~TZROLLE	C- 256223-040\
1- 978761		PANELÖVERSIKT	PANEL SURVEY	PANEL~BERSICHT	B- 648109-100\
1- 978762		PANELÖVERSIKT	PANEL SURVEY	PANEL~BERSICHT	B- 648109-100\
C- 978763-0101	19270 93-05-31	KLIPPSTYCKE	CUTTING PIECE	SCHNEIDEINHEIT	CR- 256208-040\
C- 978763-0102	19270 93-05-31	KLIPPSTYCKE	CUTTING PIECE	SCHNEIDEINHEIT	CR- 256208-040\
C- 978763-0103	19270 93-05-31	KLIPPSTYCKE	CUTTING PIECE	SCHNEIDEINHEIT	CR- 256208-040\
C- 978763-0104	19270 93-05-31	KLIPPSTYCKE	CUTTING PIECE	SCHNEIDEINHEIT	CR- 256208-040\
3- 978764		KNIVHÅLLARE	KNIFE HOLDER	MESSERHALTER	C- 978763-010\
3- 978765		KNIVHÅLLARE	KNIFE HOLDER	MESSERHALTER	C- 978763-010\
3- 978766		KNIVHÅLLARE	KNIFE HOLDER	MESSERHALTER	C- 978763-010\
2- 978767		HÅLLARE	HOLDER	HALTER	C- 271513-060\
2- 978780		BLÅSMUNSTYCKE, BOTTEN	AIR NOZZLE, BOTTOM	BLASMUNDSTUECK	CR- 256547-040\
2- 978781		BLÅSMUNSTYCKE, BOTTEN	AIR NOZZLE, BOTTOM	BLASMUNDSTUECK	CR- 256547-040\
1- 978787		RÖR	PIPE	ROHR	C- 272560-060\
2- 978788		RÖR	PIPE	ROHR	C- 272560-060\
1- 978789		RÖR	PIPE	ROHR	C- 271866-060\
G1- 978790		FÄSTE	BRACKET	BEFESTIGUNGSHALTER	C- 441486-040\
G1- 978791		HÅLLARE	HOLDER	HALTER	C- 441307-030\
G2- 978792		PLATTA	PLATE	PLATTE	C- 441304-040\
2- 978797		INDUKTOR 250SL	INDUCTOR 250SL	INDUKTOR	CR- 256214-040\
3- 978799		HÅLLARE	HOLDER	HALTER	C- 271866-060\
2- 978816		RETURRÖR	RETURN PIPE	RUECKLAUFROHR	C- 978239-020\
					C- 978240-020\
					C- 978241-020\
2- 978817		FYLLRÖR H2O2	FILL PIPE H2O2	FUELLROHR	C- 978239-020\
					C- 978240-020\
					C- 978241-020\
2- 978818		RETURRÖR	RETURN PIPE	RUECKLAUFROHR	C- 978239-020\
					C- 978240-020\
					C- 978241-020\
2- 978819		FYLLRÖR H2O2	FILL PIPE H2O2	FUELLROHR	C- 978239-020\
					C- 978240-020\
					C- 978241-020\
1- 978825		BEN	LEG	BEIN	C- 751928-020\
1- 978826		PLATTFORM	PLATFORM	PLATTFORM	C- 751928-020\
3- 978827		RÄCKE	RAILING	HANDLEISTE	C- 751928-020\
1- 978836-0001		MONTERINGS BESKRIVNING	MONTING DESCRIPTION	MONTIERUNGSINSTRUKTION	C- 751928-020\
2- 978881		BLÅSMUNSTYCKE, VÄNSTER	AIR NOZZLE, LEFT	BLASMUNDSTUECK	CR- 256547-040\
2- 978882		BLÅSMUNSTYCKE, VÄNSTER	AIR NOZZLE, LEFT	BLASMUNDSTUECK	CR- 256547-040\
2- 978883		BLÅSMUNSTYCKE, VÄNSTER	AIR NOZZLE, LEFT	BLASMUNDSTUECK	CR- 256547-040\
2- 978884		BLÅSMUNSTYCKE, HÖGER	AIR NOZZLE, RIGHT	BLASMUNDSTUECK	CR- 256547-040\
2- 978885		BLÅSMUNSTYCKE, HÖGER	AIR NOZZLE, RIGHT	BLASMUNDSTUECK	CR- 256547-040\
2- 978886		BLÅSMUNSTYCKE, HÖGER	AIR NOZZLE, RIGHT	BLASMUNDSTUECK	CR- 256547-040\
2- 978887		BLÅSMUNSTYCKE, BOTTEN	AIR NOZZLE, BOTTOM	BLASMUNDSTUECK	CR- 256547-040\
2- 978888		BLÅSMUNSTYCKE, BOTTEN	AIR NOZZLE, BOTTOM	BLASMUNDSTUECK	CR- 256547-040\
2- 978889		BLÅSMUNSTYCKE, BOTTEN	AIR NOZZLE, BOTTOM	BLASMUNDSTUECK	CR- 256547-040\
2- 978890		BLÅSMUNSTYCKE, BOTTEN	AIR NOZZLE, BOTTOM	BLASMUNDSTUECK	CR- 256547-040\
2- 978891		BLÅSMUNSTYCKE, BOTTEN	AIR NOZZLE, BOTTOM	BLASMUNDSTUECK	CR- 256547-040\