MM

Maintenance Manual

TBA/9 Wedge

595156-0200

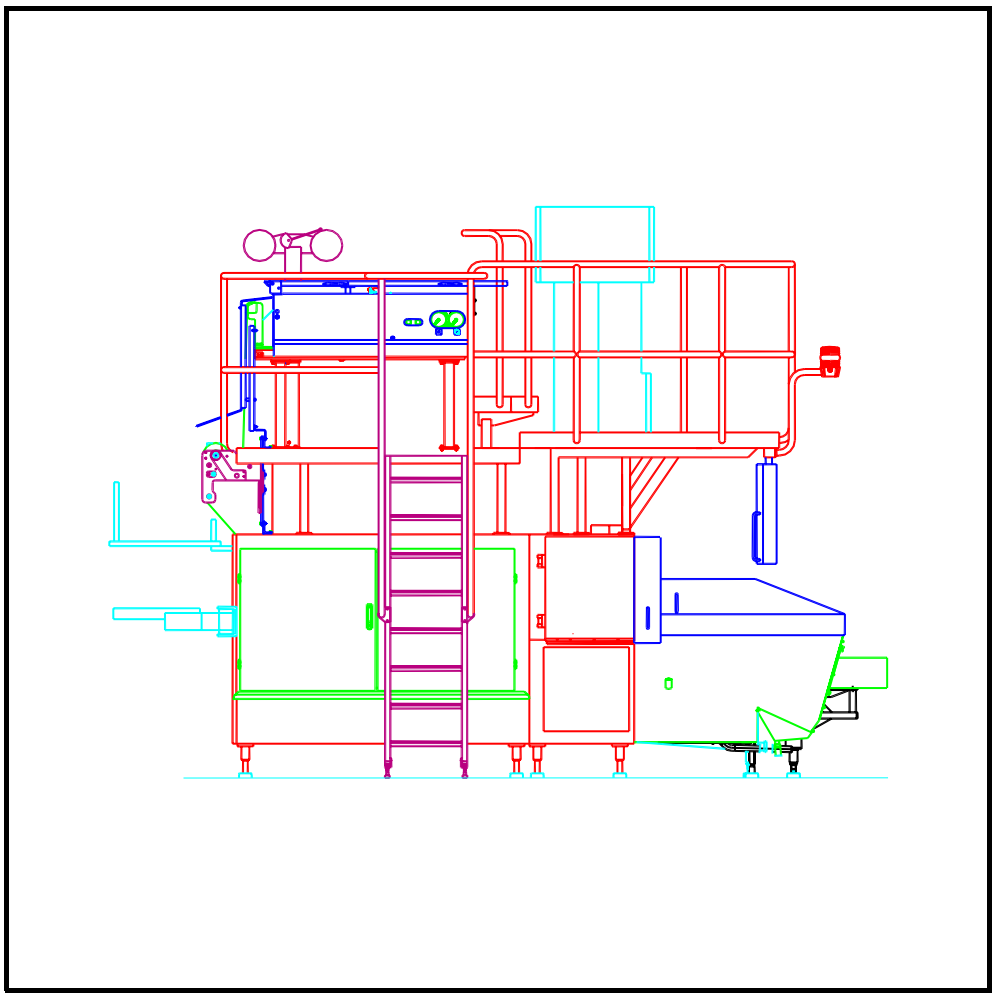

2.28025502_fro.fm

Tetra Pak

Doc No. MM-80255-0102

This document is valid for:

Series No/ Machine No Sign.

TBA/9 Wedge 595156-0200

This manual is to be used with
MS-80234-01 if the machine is based on a TBA/9 100V up to 130V
MM-80234-02 if the machine is based on a TBA/9 100V up to 130V

Equipment included:

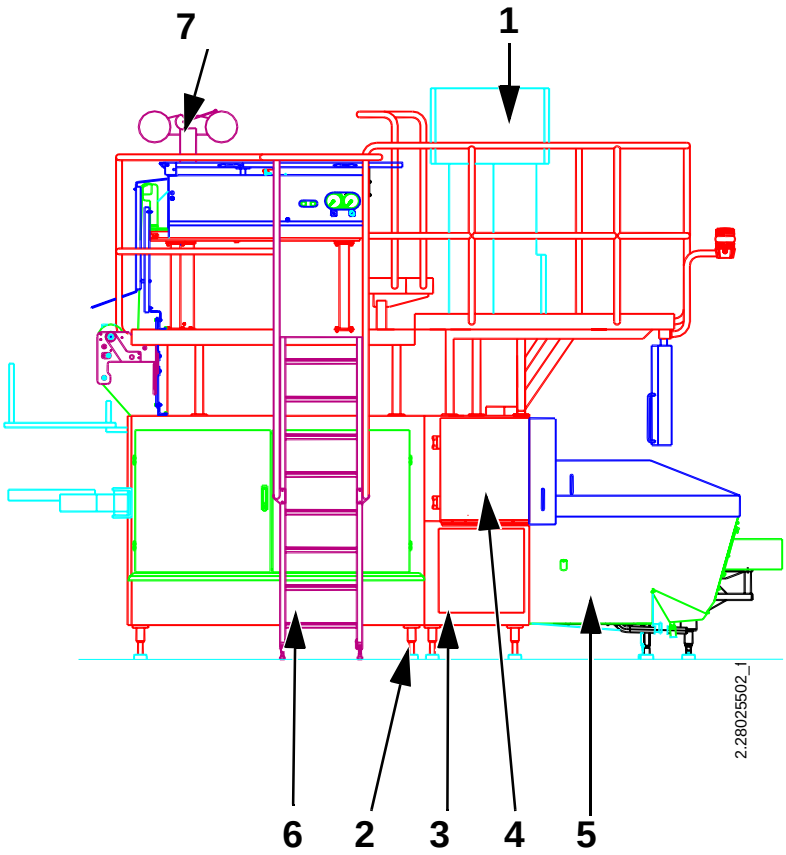

Chapters

1 Superstructure
2 Machine body
3 Drive unit
4 Jaw system
5 Final folder
6 Service unit
7 Strip applicator
8 -
9 Electrical equipment
10 Technical data

Draft

Issue 2000-03

Doc No. MM-80255-0102

Tetra Pak

Tetra Brik Packaging Systems

Introduction

Machine introduction 2
Machine identification 3
Document information 4
How to use this manual 5
Abbreviations used in this manual 7
Machine orientation 8

Safety precautions

Hazard information 10
Service technician 10
Emergency stop 11
Doors, hatches, and safety covers 12
High voltage 13
Electrical cabinet 13
TPIH generator 14
Sterilisation liquid 15
Nitrogen gas 20
Ink 22
Chemical products 23
Hearing protection 23

2.28025502TOC.fm

1 Superstructure

1 - 0 Superstructure - description 26

1.4 Tube forming 28

1.4.1 Tube supports and forming rings 28

1.4.1-1 Tube supports and forming rings - check 28
1.4.1-2 Tube supports and forming rings - set 30

1.4.2 LS overlap 33

1.4.2-1 LS overlap - set 33

1.4.3 Upper tube support 35

1.4.3-1 Upper tube support - overhaul 35

1.4.4 Movable forming ring 36

1.4.4-1 Movable forming ring - overhaul. 36
1.4.5 Divided forming ring 37
1.4.5-1 Divided forming ring - overhaul 37
1.4.6 Lower forming ring 39
1.4.6-1 Lower forming ring - overhaul 39
1.4.6-2 Lower forming ring - set counter roller 41
1.4.7 Tube alignment. 42
1.4.7-1 Tube alignment - check on packages 42
1.5 Photocell unit 44
1.5-1 Photocell unit - check. 44
1.5-2 Photocell unit - set 45

2 Machine body

2 - 0 Machine body - description 52
2.1 Safety function 53
2.1 - 1 Emergency stop - checking 53

3 Drive unit

3 - 0 Drive unit - description 56
3.1 Worm gear 57
3.1-1 Worm gear - set brake gap 57
3.1-2 Worm gear - change brake 58
3.1-3 Worm gear - change clutch bearing 59
3.1-4 Worm gear - check bearings. 65
3.1-5 Worm gear - change bearings. 66
3.1-6 Worm gear - change V-belt 68
3.1-7 Worm gear - change timing belt. 72
3.1- 8 Worm gear - check belt tension 73
3.1-9 Worm gear - change oil 74
3.1-10 Worm gear - change 75
3.1-11 Worm gear - set alignment template 83
3.1-12 Worm gear - set 84

2.28025502TOC.fm

3.1-13 Worm gear - check oil level 86
3.1-14 Worm gear - check clutch and brake gap 87

3.2 Arm 88

3.2-1 Arm - check timing belt rollers 88

3.4 Hold-down device 91

3.4-1 Hold-down device - check timing belts 91
3.4-2 Hold-down device - change timing belts 92

3.4.1 Rocker arm 95

3.4.1-1 Rocker arm - check bearing play 95

3.8 Curve pack 98

3.8-1 Curve pack - change. 98
3.8-2 Curve pack - set degree scale. 115
3.8-3 Curve pack - set pointer 117
3.8-4 Curve pack - syncronise. 118

4 Jaw system

4 - 0 Jaw system - description 124

4.0 Jaw system 125

4.0 - 1 Turning position - set 126
4.0 - 2 Movement - check 128
4.0 - 3 Movement - set 130
4.0 - 4 Stroke - check 132
4.0 - 5 Stroke-set 133
4.0 - 6 Volume cam section - set 135
4.0 - 7 Jaws alignment - set. 138
4.0 - 8 Symmetry - set 140
4.0 - 9 Mechanism - set 142
4.0 - 10 Volume flap - alignment. 144
4.0 - 11 Tube support rollers - set 145
4.0 - 12 Jaw over jaw - check 148
4.0 - 13 Jaw over jaw - set. 149
4.0 - 14 Design correction mechanism - set 152
4.0 - 15 Catch pivot spring - set 155

2.28025502TOC.fm

4.0 - 16 Cutting pistons - bleed 156
4.0 - 17 Catches - bleeding 157
4.0 - 18 Lifter cams and rollers - set 158
4.0 - 19 Clearance - check 159
4.0 - 20 Catches - check 160

4.1 Cutting jaws 161

4.1 - 1 Cutting jaw - change 161
4.1 - 2 Parallelity folding flap - set 162
4.1 - 3 Cutting pistons - overhaul 163

4.5 Volume curve piece 166

4.5 - 1 Volume cam - check 166
4.5 - 2 Volume cam - remove 167

5 Final folder

5-1 Final folder - description 170

5.1 Station chain 171

5.1-1 Station chain - change 171
5.1-2 Station chain - turn shafts 177

5.4 Indexing unit 178

5.4-1 Indexing unit - check cut out torque 178

5.5 Pressure device 179

5.5-1 Pressure device - overhaul hydraulics 179
5.5-2 Pressure device - bleed. 181
5.5-3 Pressure device - set. 183

5.7 Element 187

5.7-1 Element - set air nozzles 187

5.8 Frame 188

5.8-1 Frame - change pivot frame assembly 188
5.8-2 Frame - overhaul pivot frame assembly. 191

5.9 Pull-down device 197

5.9-1 Pull-down device - overhaul hydraulics 197

2.28025502TOC.fm

5.9-2 Pull-down device - bleed 199
5.9-3 Pull-down device - set rails 201
5.9-4 Pull-down device - set blocking piece 202

5.12 Discharge unit 206

5.12-1 Discharge unit - check 207
5.12-2 Discharge unit - set 207

5.12.1 Finger 208

5.12.1-1 Finger - setting 208

5.12.2 Guide Rail 210

5.12.2-1 Guide Rail - check / adjust 210

5.13 Cleaning system 211

5.13-1 Rotors and nozzles - check 211
5.13-2 Rotors- overhaul 211

5.14 Central lubrication 212

5.14-1 Central lubrication - check oil distribution 212

5.15 Turning device 213

5.15-1 Basic - setting 213
5.15-2 During production - checking 214
5.15-3 Cylinder - check 214
5.15-4 During production - check 214

5.16 Main machine to final folder 215

5.16-1 Synchronization - set 215

7 Strip applicator

7- 0 Strip applicator- description 218

7.1 SA, Strip guide 219

7.1-1 SA, Strip guide - check 219

7.2 Strip applicator 221

7.2-1 Strip applicator 221

7.3 Crease unit 222

7.3-1 Rotation monitor - check 222

2.28025502TOC.fm

7.3-2 Rotation monitor - set 222
7.3-3 Crease wheel - set 223

9 Electrical equipment

10 General

10.1 Technical data 228

10.2 Lubricants 230

10.4 PLC- and hydraulic function 233

Introduction

WARNING! **Risk of personal injury!**
To ensure maximum safety for the technicians, always read the **“Safety precautions”** section before doing any work on the machine or making any adjustments.

2.2Intro.fm

Machine introduction

Intended use of this Tetra Pak equipment

The intended use of this equipment is to pack pumpable food products.

Manufacturer

This Tetra Pak equipment was manufactured by:

Tetra Brik Packaging Systems AB
Ruben Rausings gata
Lund
Sweden

Service

For service, contact the nearest Tetra Pak service station.

Machine identification

Each machine is individually identified by a machine plate of the type shown below.

This plate gives the data needed when contacting Tetra Pak concerning the specific machine:

- machine name (1)
- volume (2)
- drawing specifications (3)
- machine serial number (4)
- manufacturer (5)
- year of manufacture (7).

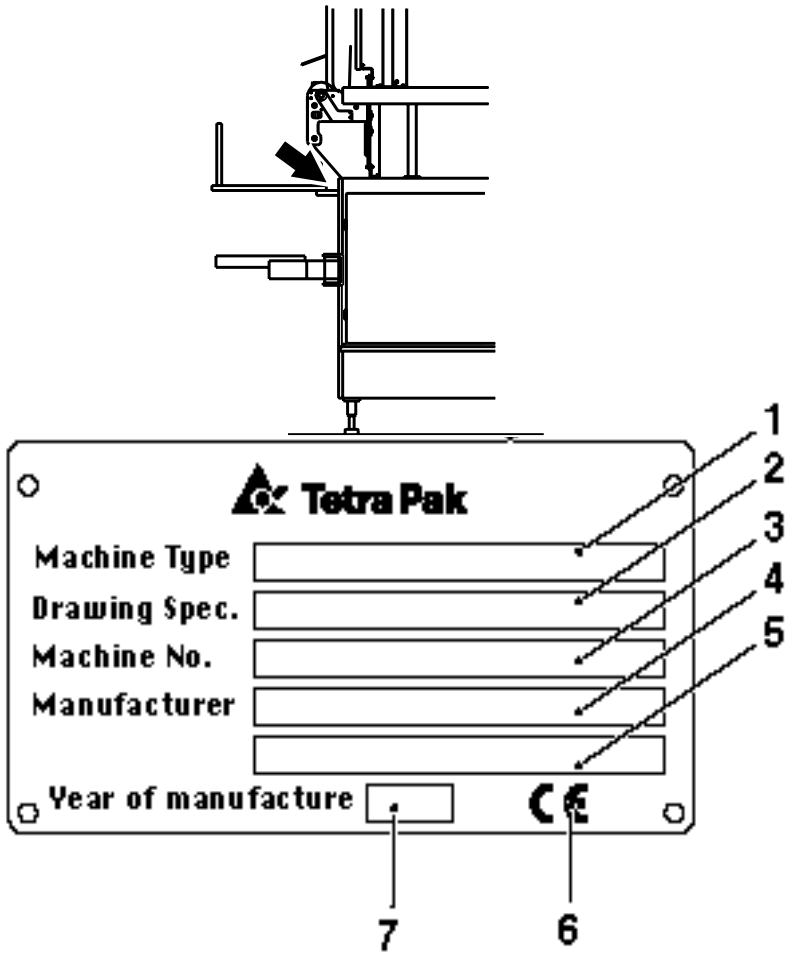

The plate also carries the **CE mark** (6). This means that **this machine complies with basic health and safety regulations of the European Economic Area (EEA)**.

The machine plate is fixed to the left of the rear panel of the electrical cabinet

2.2intro.fm

Document information

About this Maintenance Manual (MM)

The Maintenance Manual contains:

- All **scheduled maintenance** procedures listed in the checklists.
- Information for **unscheduled maintenance** such as:
  - additional maintenance procedures
  - functional descriptions
  - system descriptions

The same **structure**, **codes** and **denominations** used in this MM, are used in the Spare Part Catalogue (SPC) and in the checklists.

Document producer

This document has been produced by:

Tetra Brik Packaging Systems AB
Ruben Rausings gata
Lund
Sweden

Design modifications

The directives in this document are in accordance with the design and construction of the machine at the time it was released by the manufacturer.

2.2Intro.fm

Corresponding documents

The technical documentation for this machine includes also the following type of documents:

- Electrical Manual (EM)
- Installation Manual (IM)
- Operation Manual (OM)
- Spare Parts Catalogue (SPC)

It is important that you keep these manuals for the life of the machine, and pass the manuals on to any subsequent holder or user of the machine.

Additional copies

Additional copies can be ordered from nearest Tetra Pak service station.

When ordering technical publications, always quote the **document number** printed on the front cover of the document concerned.

Number of pages

This document contains a total of 236 pages.

Copyright © 2000
Tetra Brik Packaging Systems

All rights reserved. No part of this document may be reproduced or copied in any form or by any means without the written permission of Tetra Brik Packaging Systems.

How to use this manual

Page layout

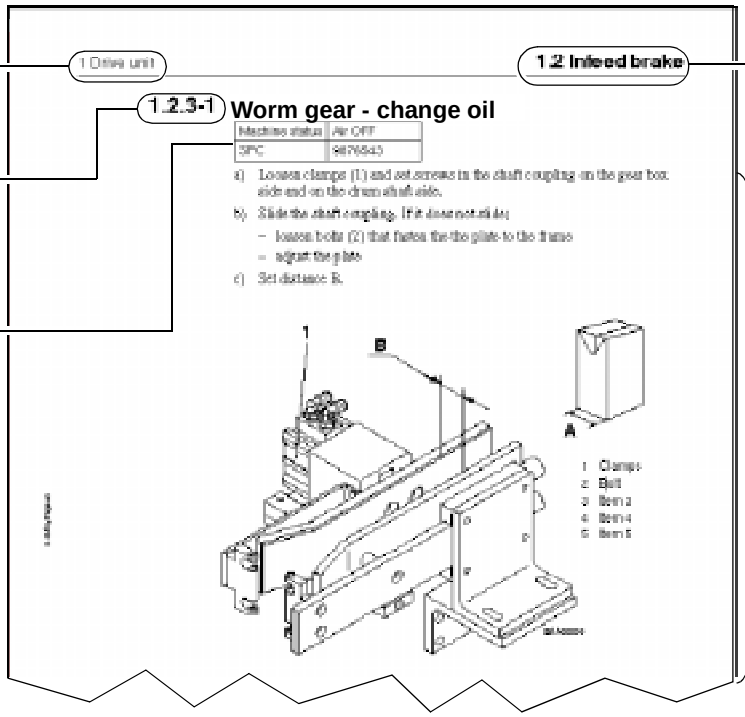

MM procedure codes

The maintenance procedures are indicated as shown by the example below:

1.2.3-1 Worm gear - change oil

- **MM chapter** or Main machine group
- **MM section** or Machine group
- **MM sub section** or Machine subgroup
- Consecutive procedure number
- **Sub section name**
- **Clarification** of activity

Type of activity

The following standard activities are used:

- **Adjust**
- **Assemble**
- **Bleed**
- **Calibrate**
- **Change**
- **Charge**
- **Check**
- **Clean**
- **Count**
- **Delime**
- **Dismantle**
- **Empty**
- **Fill**
- **Lubricate**
- **Measure**
- **Overhaul**
- **Record**
- **Remove**
- **Set**
- **Synchronise**
- **Tighten**
- **Turn**

and

- **Description**
- **Diagram**

(Cont'd)

(Cont'd)

Additional information

The following additional information is included in each MM procedure as applicable.

1.2.3-1 Worm gear - change oil

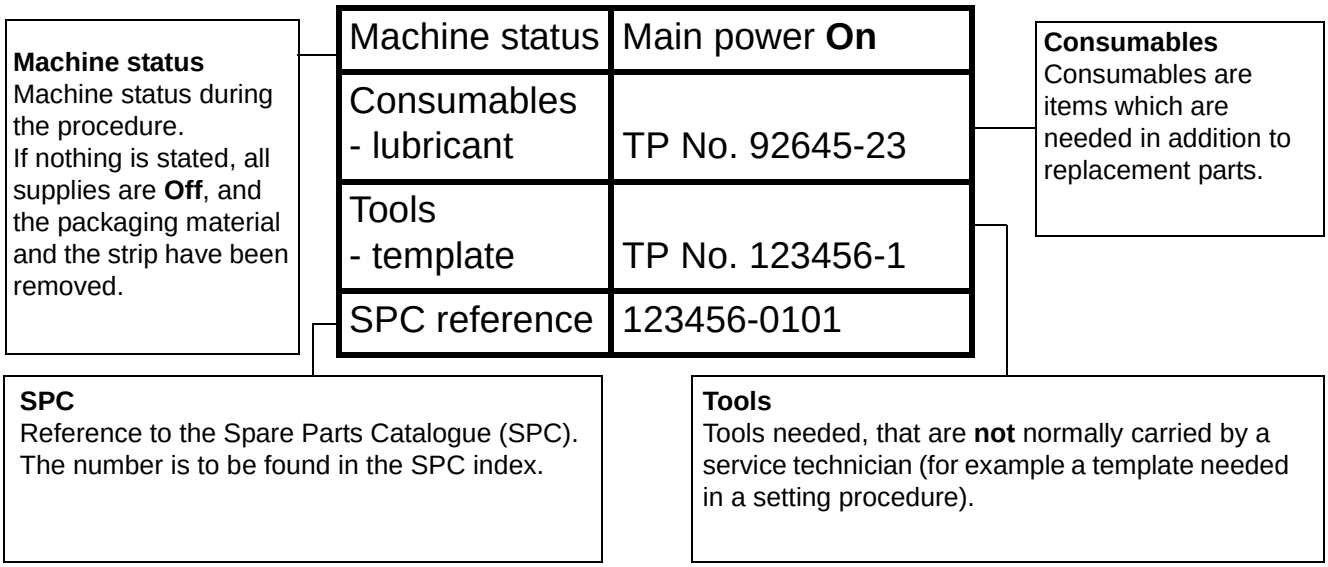

2.2Intro.fm

Abbreviations used in this manual

AP	Aseptic Product
B	Baseline (package shape)
CIP	Cleaning In Place
EM	Electrical Manual
HF	High Frequency
IM	Installation Manual
LED	Light Emitting Diode
LH	Left Hand
LS	Logitudinal Seal
MM	Maintenance Manual
OM	Operating Manual
PLC	Programmable Logic Controller
RH	Right Hand
S	Slimline (package shape)
SA	Strip Applicator
SPC	Spare Parts Catalogue
SS	Short Stop
TMCC	Tetra Pak Multi-purpose Compact Controller
TP	Tetra Pak
TPIH	Tetra Pak Induction Heating
TPMS	Tetra Pak Maintenance System
TS	Transversal Seal

2.2Intro.fm

Machine orientation

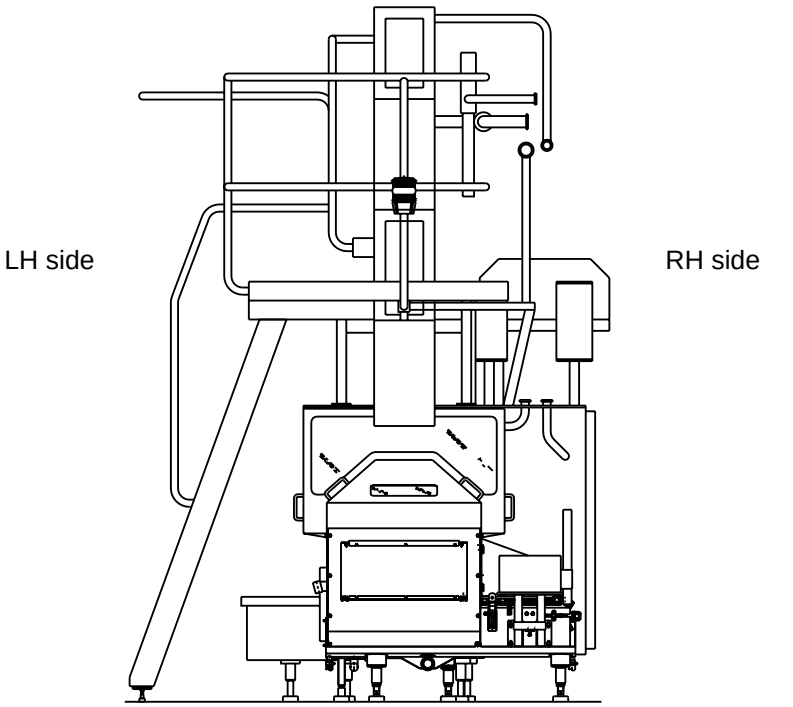

Front view of the machine

Note! In the beginning each section, there is an overview of the main group described. For more detailed information, see also the SPC.

2.2Intro.fm

Safety precautions

2.2SafetyA.fm

Hazard information

Hazard information in this document has the following significance:

DANGER!	Failure to observe information marked with this symbol, puts **your life in danger!**
WARNING!	Failure to observe information marked with this symbol, can result in **personal injury** or **destruction of equipment!**
Caution!	Failure to observe this information marked with “Caution”, can result in **damage to equipment!**

Service technician

WARNING! **Risk of personal injury!**
If safety precautions are not followed, there is risk of personal injury.

Only trained and qualified service technicians are allowed to work on the machine.

The Maintenance Manual (MM) describes the authorized way to service the machine, and it may only be serviced in accordance with these instructions. Tetra Pak will take no responsibility for injury or damage, if the machine is serviced in any other way.

During maintenance or service work, the service technician is responsible for:

- the machine and the working area around the machine,
- the personnel in the vicinity of the machine,
- assuring that the machine safety devices are fully operational before finishing the maintenance or service work.

2.2SafetyA.fm

Emergency stop

In case of danger to people or risk of damage to the machine, one of the emergency stop buttons must immediately be pushed.

In order to stop the machine immediately in an emergency situation, you must know the exact location of the emergency stop buttons.

Emergency stop must **only** be used in case of danger to people or machine. To stop production in the normal way, see the **Stop**-section in the OM.

Note! Emergency stops do not cut the Mains power.

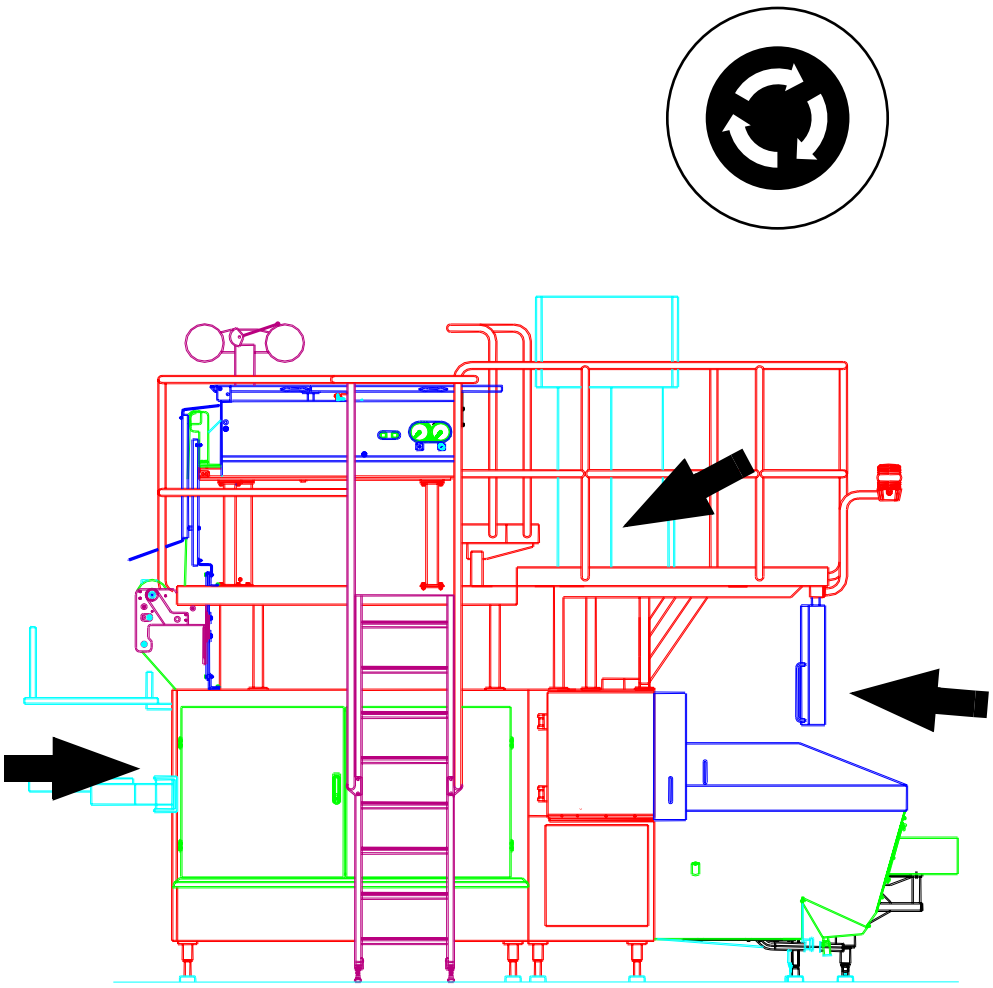

Emergency stop buttons
LH side of machine

2.2SafetyA.fm

Doors, hatches, and safety covers

WARNING! **Risk of serious injuries!**
Moving parts and hot surfaces. Never operate the machine if any safety switch is non-operational or any safety cover is not fitted.

The doors and covers shown in the picture, and the packaging material magazine, are provided with safety switches. These switches form part of the safety system of the machine and **must under no circumstances be bridged or by-passed, or otherwise made non-operational.**

Do not open doors or remove covers during operation. Never stop the machine by opening a door with a safety switch. The machine may perform a reciprocating movement during the first few seconds after a stop; also some machine parts may still be hot.

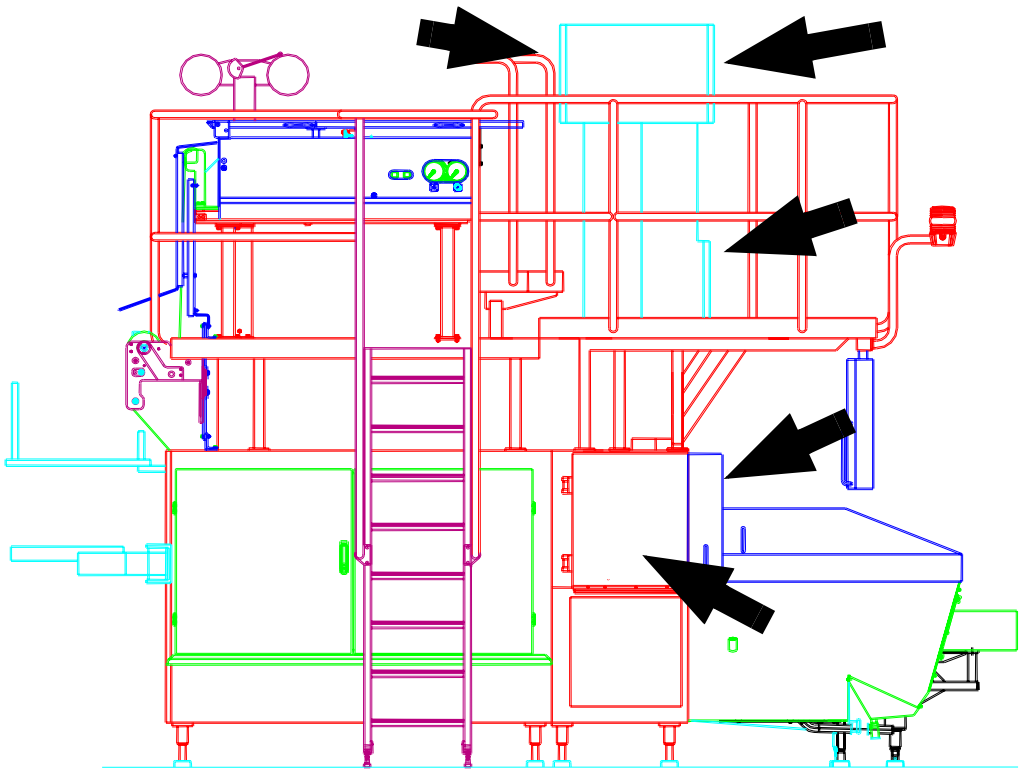

2.2SafetyA.fm

Note! The doors of the SA also have safety switches, but they may still be opened while the machine is running.

When they must be opened while the machine is running, close them as soon as the required actions have been carried out. Never leave a cover open while the machine is running.

After maintenance, make sure that all safety covers are fitted to the machine before it is operated.

High voltage

DANGER!

Risk of electroshock!
High voltage. Can cause electroshock or serious injury. In case of accident, immediately call for medical attention.

Work with parts marked with this symbol must be performed only by trainedand qualified persons.

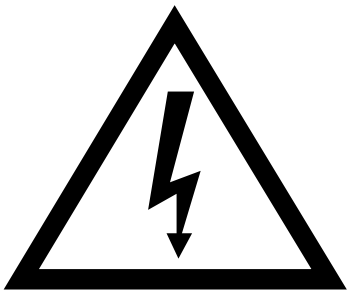

Electrical cabinet

DANGER!

Risk of electroshock!
The voltage is 400V inside the electrical cabinet. Can cause electroshock or serious injury. In case of accident, immediately call for medical attention.

Work inside the electrical cabinet must be performed by trained and qualified persons only.

Caution! Always make sure that those electrical cabinet doors, locked with screws, are closed before you enter the superstructure.

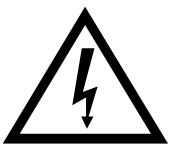

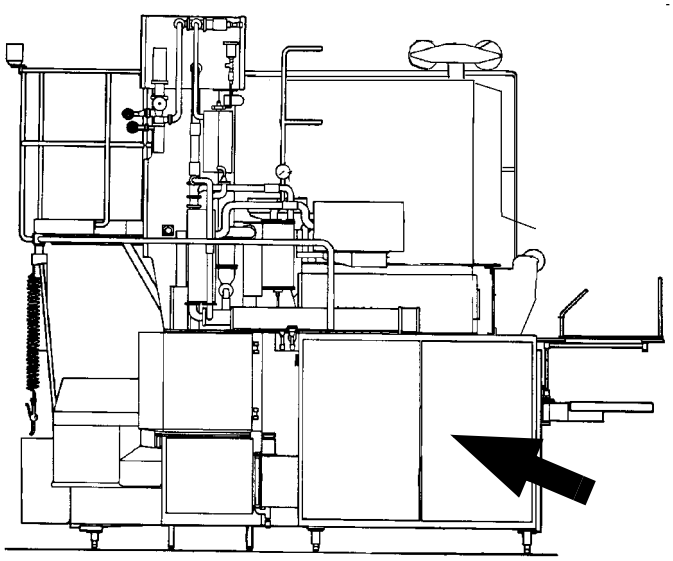

2.2SafetyA.fm

TPIH generator

DANGER!

Risk of electroshock!
The voltage is 400V inside the generator section. Can cause electroshock or serious injury. In case of accident, immediately call for medical attention.

Work inside the generator section must be performed by trained and qualified persons only.

It is **not allowed** to open the generator.

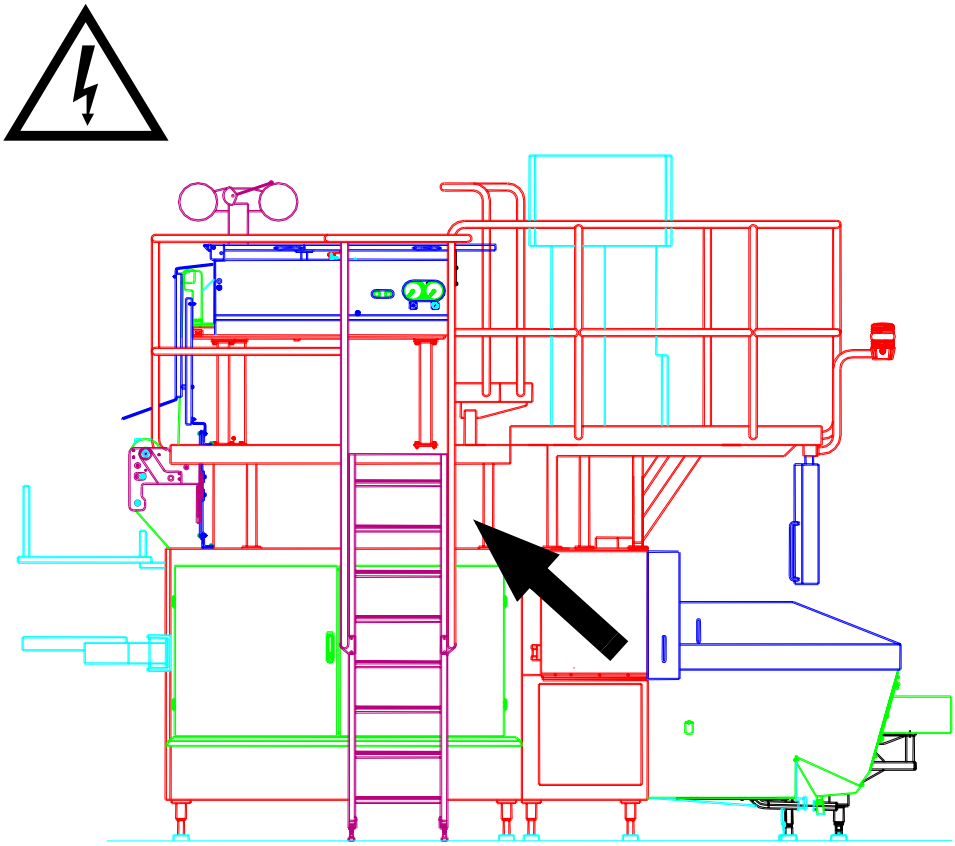

2.2SafetyA.fm

Sterilisation liquid

WARNING! **Risk of corrosion injuries!**
In both liquid and gas form, hydrogen peroxide may cause irritation or damage if in contact with skin, mucous membranes, eyes, or clothes.

WARNING! **Risk of fire!**
Causes burns. Contact with combustible materials may cause fire.

The sterilisation liquid used for sterilising the packaging material consists of 35% hydrogen peroxide (H_2O_2).

Hydrogen peroxide can

Carefully follow the instructions on the can label (see picture).

Hydrogen peroxide:

- 35% w/w Aqueous Solution UN No 2014
- Corrosive. Oxidizing.
- Causes burns. Contact with combustible materials may cause fire
- Keep in a cool place away from sources of heat.
- Avoid contamination
- Wear suitable protective clothing, gloves, and eye/face protection
- After contact with skin, wash immediately with plenty of water and seek medical advice
- In case of spillage or fire, drench with water.

Reference:

TP document No M 1751.80.

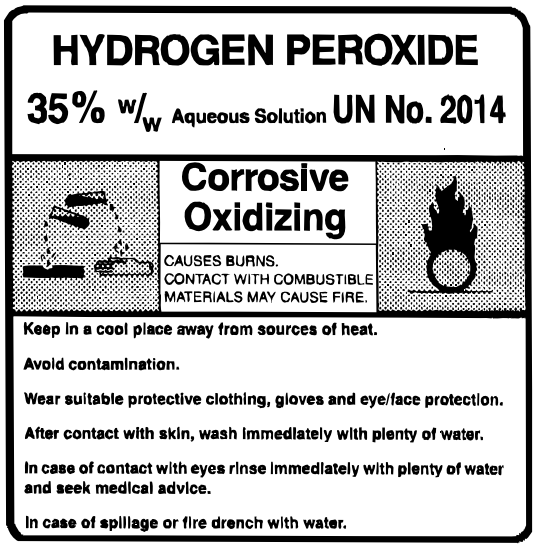

Example of can label

(Cont'd)

2.2SafetyA.fm

(Cont'd)

Storage of hydrogen peroxide

WARNING! **Risk of explosion!**
Risk of explosion or decomposition of hydrogen peroxide may arise if pouring it back in the original container with fresh peroxide left.

The hydrogen peroxide has been stabilised but may nevertheless decompose into oxygen and water, if exposed to heat, pollution, or strong sunlight.

For this reason, the room or area used for storage must be:

- cool, clean, and well ventilated
- shielded from direct sunlight
- kept free from combustible materials

Avoid contamination of hydrogen peroxide. It may react to, or **form explosive products** with many organic substances (for instance acetone, cellulose, and ethanol).

Hydrogen peroxide must be stored only in the **original container** as delivered by the supplier.

Do not pour surplus hydrogen peroxide back into the original container. **Risk of explosion!**

The container must be kept upright and must only be closed with the original ventilation cap (arrow in picture), which allows oxygen to escape. If not, there may be an explosion if decomposition of the peroxide occurs violently.

Always make sure that the container is properly closed.

Pumps or other facilities, used for hydrogen peroxide, must be used for this purpose only.

2.2SafetyA.fm

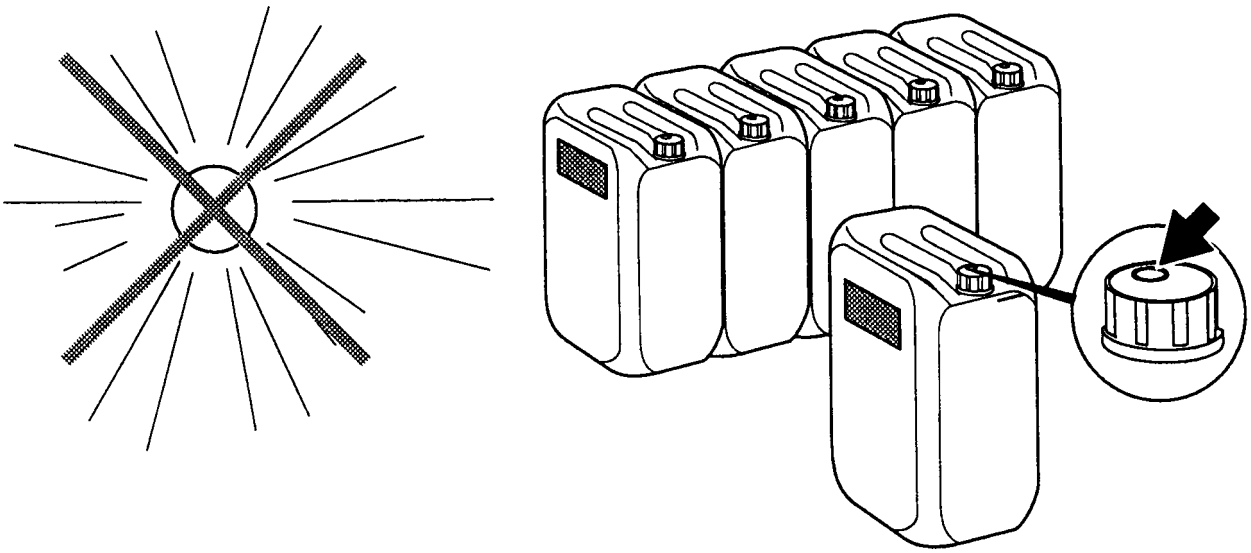

(Cont'd)

(Cont'd)

Disposal of hydrogen peroxide

The hydrogen peroxide should be sent for destruction. In some markets it is allowed to dilute it with water to a concentration below 1% and pour it into the drain. Hydrogen peroxide with a concentration below 1% is considered harmless.

Never put used hydrogen peroxide back into storage.

Spillage of sterilisation liquid

WARNING! **Risk of fire!**
Never wipe with combustible material, such as rags or paper, as these may self-ignite.

WARNING! **Risk of short-circuit!**
Do not allow hydrogen peroxide to get in contact with live electrical parts.

If peroxide is spilt on the floor or a table, dilute it with large amounts of water and flush it into the drain.

In case of fire, cool the peroxide containers by hosing with large quantities of water.

Make sure that areas or rooms used for handling or storing hydrogen peroxide are well ventilated.

2.2SafetyA.fm

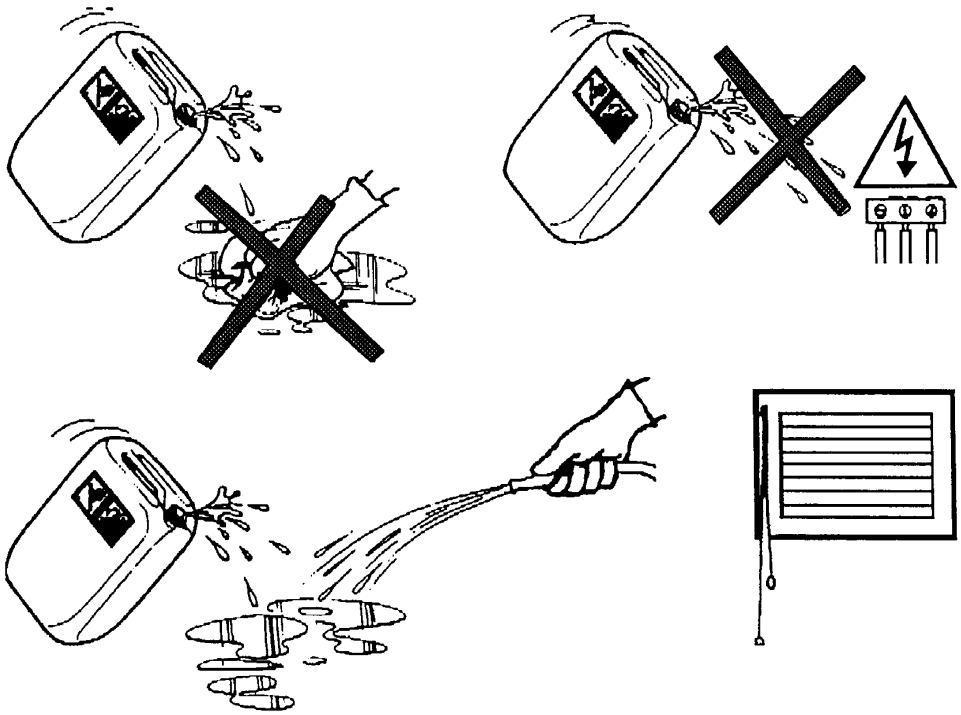

(Cont'd)

(Cont'd)

Personal protective equipment – hydrogen peroxide

Whenever there is risk of contact with the sterilization liquid, always wear:

- safety glasses, TP No.779130-102
- protective gloves, TP No. 90303-4, of neoprene
- shoes made of PVC or PE plastic, or rubber
- apron, TP No 90303-5

In case of accident involving hydrogen peroxide, always make sure that:

- the showers work
- that an eyewash device, movable, TP No. 90303-6, or wall-mounted is available at or near each machine site
- there are additional washing facilities

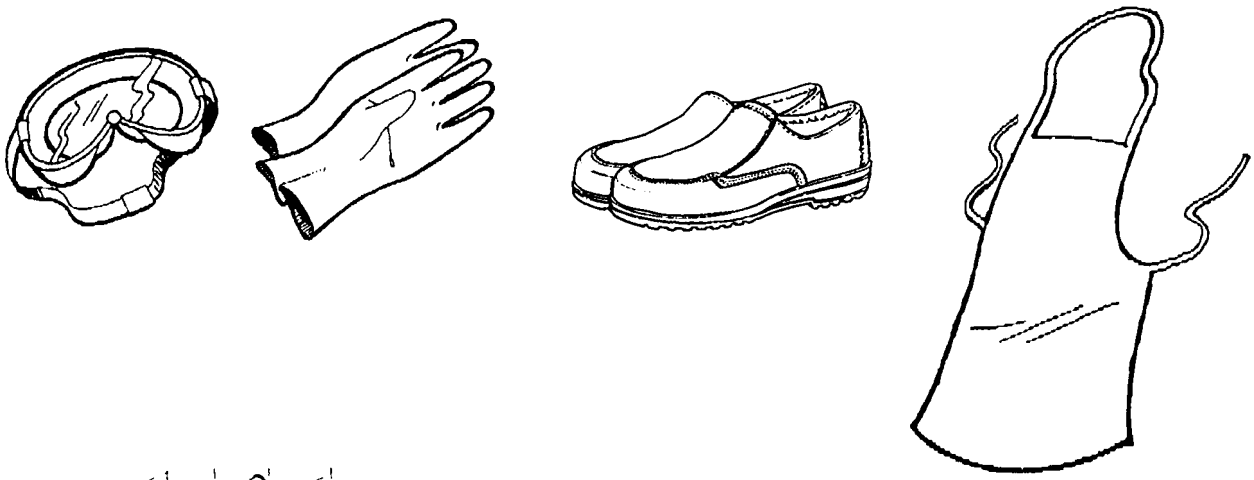



2.2SafetyA.fm

(Cont'd)

(Cont'd)

Emergency procedures – hydrogen peroxide

In case of accident involving hydrogen peroxide the basic rule is to rinse as soon as possible with as much water as possible.

If you happen to swallow hydrogen peroxide:

- drink large amounts of lukewarm water (in order to dilute the peroxide)
- seek medical attention immediately

If you get splashes or vapour from hydrogen peroxide in your eyes:

- wash the eyes thoroughly with lukewarm water for 15 minutes (keep eyelids widely apart)
- seek medical attention immediately



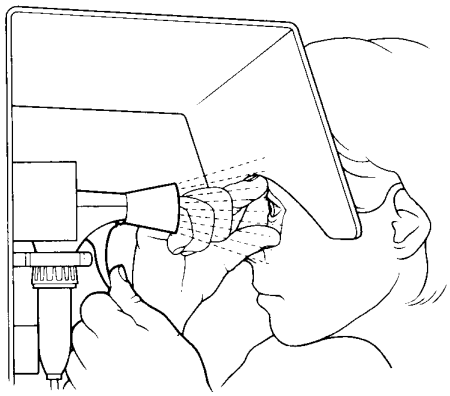

If hydrogen peroxide gets in contact with skin or clothes:

- immediately rinse with plenty of water
- if skin burns appear, seek medical advice immediately
- thoroughly wash the clothes before they are worn again

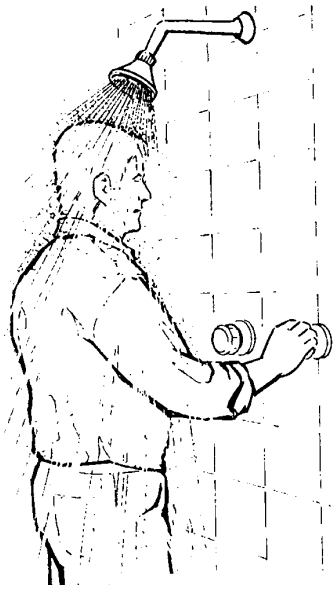

(Cont'd)

(Cont'd)

If you experience irritation or pain due to having inhaled peroxide vapor:

- leave the affected area and get some fresh air
- if the symptoms get worse; seek medical advice

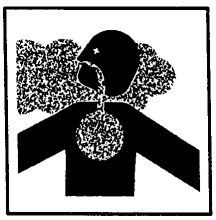

Nitrogen gas

WARNING! **Risk of personal injury!**
May be harmful to inhale. Can cause shortness of breath, dizziness, a pricking feeling in the tongue.

Handling of nitrogen gas

Make sure that the areas used for handling or storing the nitrogen gas are well ventilated.

Carefully follow the instructions on the bottle label (see picture).

2.2SafetyA.fm

NITROGEN N48
Nitrogen gas
THE GAS MAY CAUSE COLD DAMAGE DURING EXPANSION
Store and transport with valves closed and with the protection nut and safety cap fastened securely.
Protect against warming. Remove to a safe place during fire.
To be connected to connections marked only for this gas.
Open the valve slowly.
Return with overpressure.

Disposal of nitrogen gas

The gas bottles should be returned with valves closed, and with protection nut and safety cap fastened securely.

Return the gas bottles with overpressure.

(Cont'd)

(Cont'd)

Personal protective equipment – nitrogen gas

- Use protective gloves and shoes, and safety goggles.
- For emergency situations, be prepared with respiratory equipment.



Emergency procedures – nitrogen gas

- Leave the affected area and get some fresh air. If the symptoms get worse, seek medical advice.
- In case of unconsciousness, get stricken person out in fresh air, and if necessary, assist with artificial respiration. Seek medical advice immediately.
- Rescue party are to wear fresh-air mask.

Ink

WARNING! **Inflammable and harmful!**
Carefully follow the warnings on the bottle label (see picture).

Warning text on ink bottle

The following warning is written on the ink bottle:

INFLAMMABLE
Avoid direct contact with the product
Use gloves and goggles
Care for good ventilation
Propylene glycol mono methyl ether >30%
Ethanol 1-5%
SHAKE BEFORE USE

Use gloves as the ink can irritate the skin.

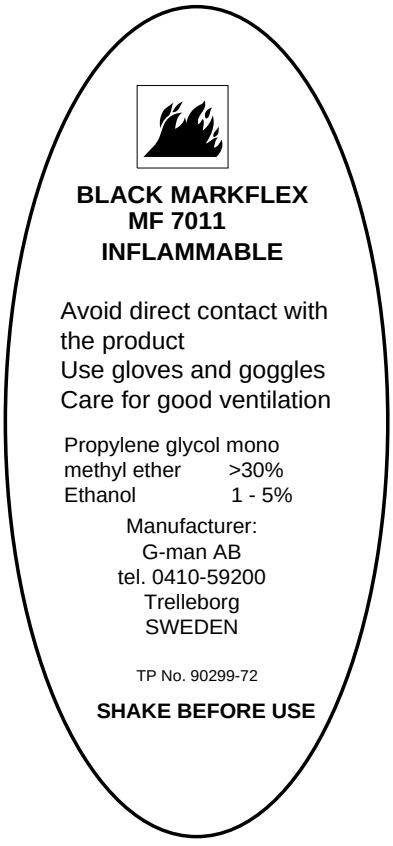

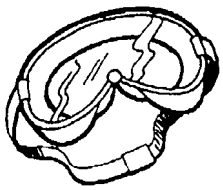

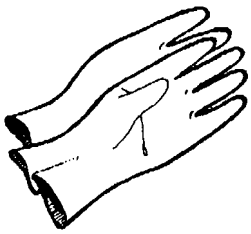

Emergency procedures – ink

In case of contact with eyes, rinse immediately with plenty of water and seek medical attention.

2.2SafetyA.fm

Chemical products

WARNING! **Risk of personal injury!**
Can be flammable or hasardous to health. Read the warnings!

When handling hydraulic oil, lubricants, and cleaning solutions, carefully follow the warnings on the container labels.

Always use safety equipment according to the instructions on the container labels. Always use gloves when handling chemical products.

For final handling of solutions, follow the instructions from the supplier.

Hearing protection

WARNING! **Risk of impaired hearing!**
Use hearing protection to minimise the risk of impaired hearing.

Always wear hearing protection while the machine is running.

Note! Always keep the ear protectors clean.

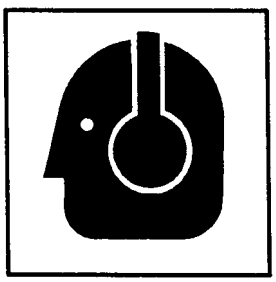

2.2SafetyA.fm

This page intentionally left blank

1 Superstructure

2.2B2550A00.fm

1 - 0 Superstructure - description

SPC	595165-0200

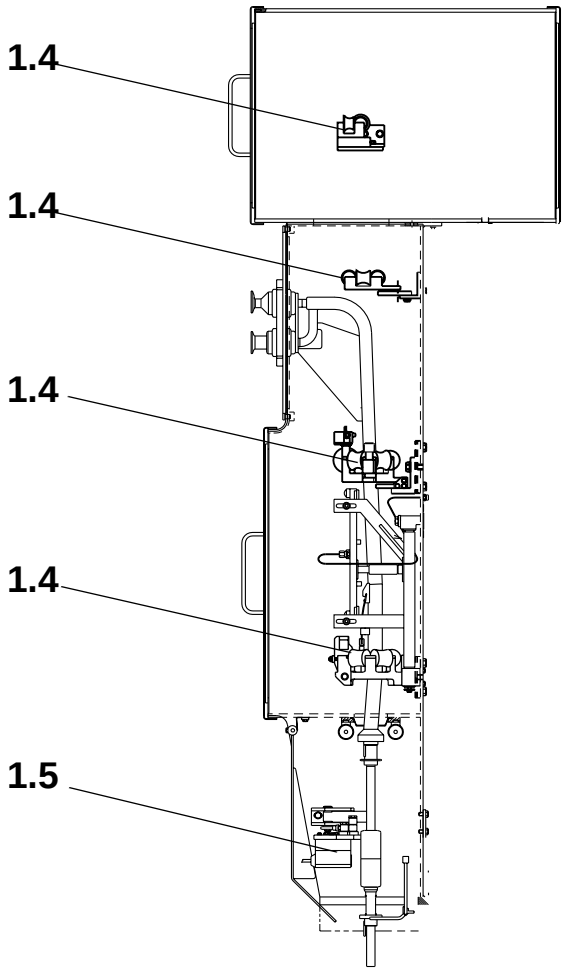

2.2B2550A00.fm

1.4 Tube forming
1.5 Photocell unit

2.2B2550A00.fm

1.4 Tube forming

SPC reference	441304-0400 441307-0300 441486-0400 456309-0500

1.4.1 Tube supports and forming rings

1.4.1-1 Tube supports and forming rings - check

Machine status	**Production**
SPC reference	441304-0400 441307-0300 441486-0400 456309-0500

a) Step down to **Zero** position.

b) Check that all rollers are undamaged and clean.

c) While the machine is **warm**, check that the play A between the rollers (1) does not exceed 0.3 mm. Change worn bushings (3) and axles/shafts (4) as required, see *1.4.3-1 Upper tube support - overhaul*, *1.4.4-1 Movable forming ring - overhaul*, *1.4.5-1 Divided forming ring - overhaul* and *1.4.6-1 Lower forming ring - overhaul*.

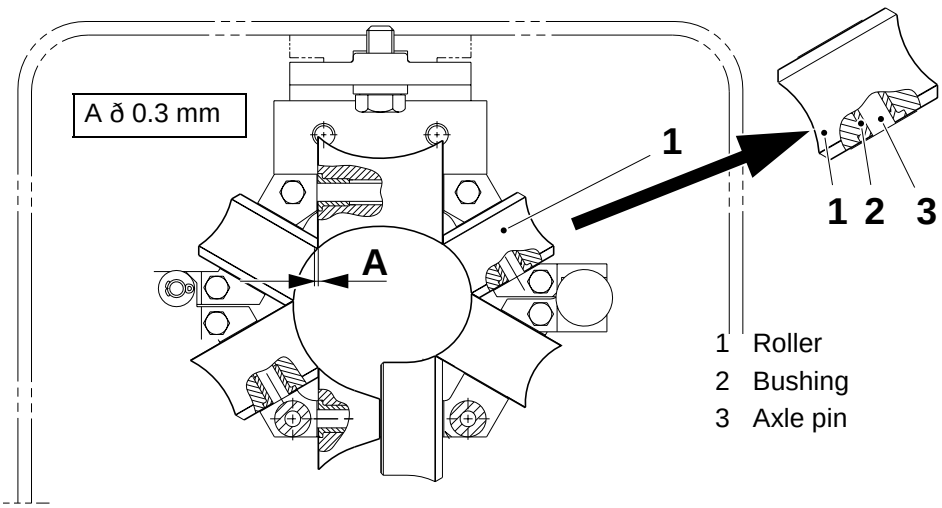

2.2B2550A04.fm

Fig. shows the Divided forming ring

(Cont'd)

(Cont'd)

Note! The play between the rollers is to be the same all the way around and the passage between the rollers should be smooth. Adjust by means of shimming washers (2).

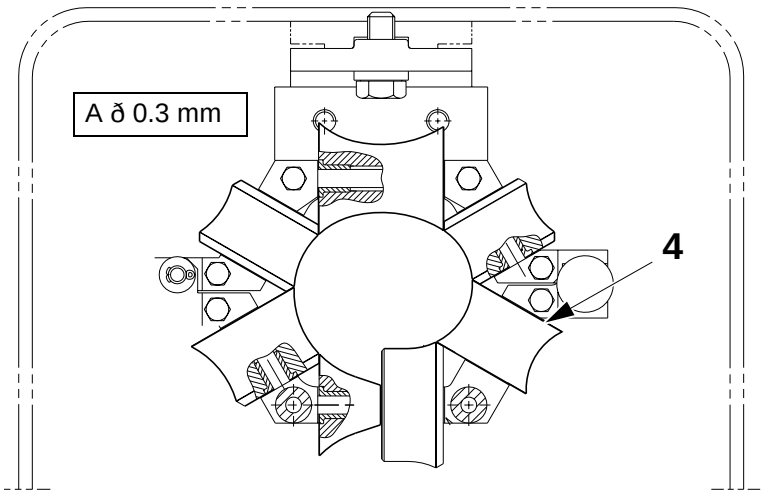

4 Shimming washer

Fig. shows the Divided forming ring

d) While the machine is still **warm**, make sure that all rollers rotate freely. Adjust the play as required.

2.2B2550A04.fm

1.4.1-2 Tube supports and forming rings - set

a) Set the position of the forming rings, see table below.

Package	A ±1.0 (mm)	B ±1.0 (mm)	C ±1.0 (mm)
200	541	977	1283

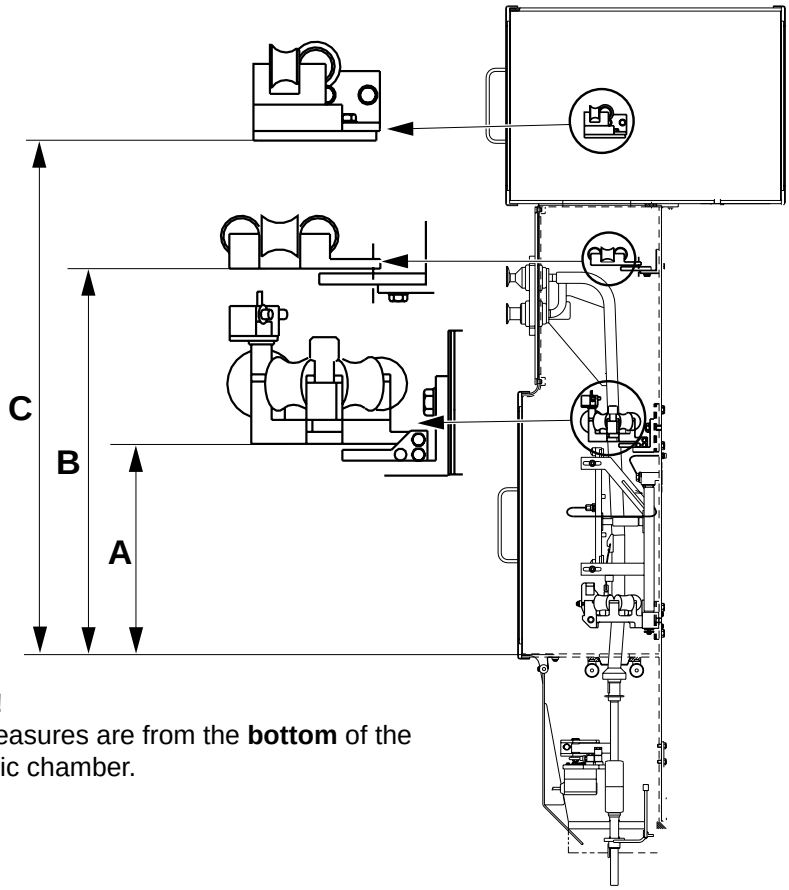

Note!
All measures are from the **bottom** of the aseptic chamber.

2.2B2550A04.fm

(Cont'd)

(Cont'd)

b) Turn the counter roller (2) to operation position and apply a ruler (1), slide callipers, or a similar tool.

c) Set the height of the lower forming ring, distance D, see table.

1 Slide callipers
2 Counter roller
3 Lower forming ring
4 Pressure roller

Package	D ±0.5 (mm)
200	1

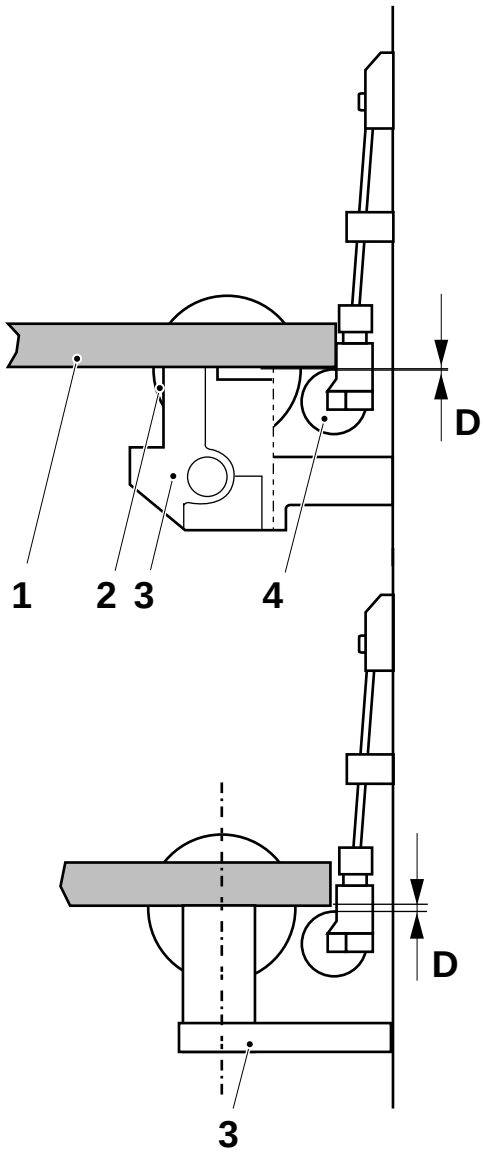

Alternative design

(Cont'd)

2.2B2550A04.fm

(Cont'd)

Support roller, lower forming ring

a) Make sure that the packaging material is threaded and well straightened.

b) Set distance E between the support roller and the edge of the packaging material tube.

c) During operation, check that the support roller (5) does not guide the packaging material tube or affects the overlap.

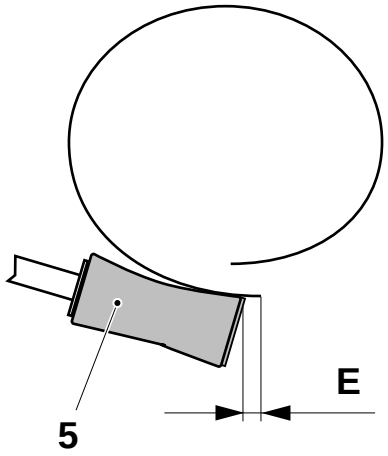

2.2B2550A04.fm

1.4.2 LS overlap

1.4.2-1 LS overlap - set

Machine status	**Production**
SPC reference	456309-0500

Pick out two packages and measure the LS overlap A.

Set the LS overlap, see table, by changing rollers in the lower forming ring.

Package	Overlap A (mm)
200	3.5 - 4.5

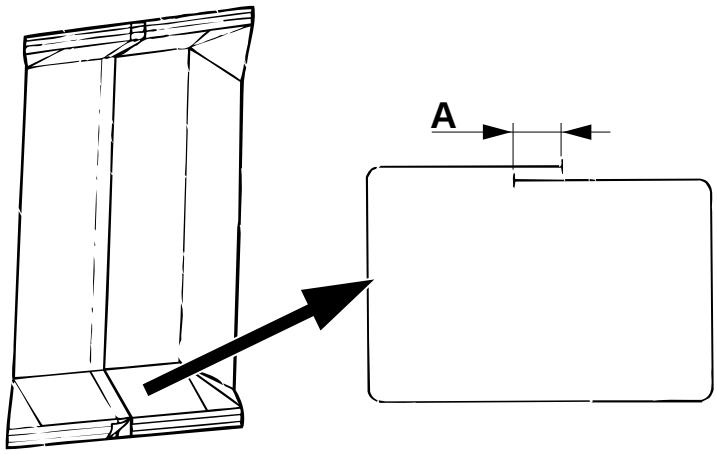

2.2B2550A04.fm

Note! The values listed in the table below apply to the **nominal** packaging material width. If the packaging material width varies, the overlap has to be increased or decreased correspondingly.

Package	Width (mm)	Overlap (mm)	Regular roller, TP No.	Minus trim. roller, TP No.	Plus trim. roller, TP No.
200	174	4	752138	752465	752464

Caution! Trimming rollers must always be fitted **symmetrically** relative the pressure roller (4). Plus and minus trimming rollers must **never** be fitted at the same time in the forming ring.

- Change max. three regular rollers in the lower forming ring with minus trimming rollers to **increase** the LS overlap A.
- Change max. three regular rollers with plus trimming rollers to **decrease** the LS overlap A.

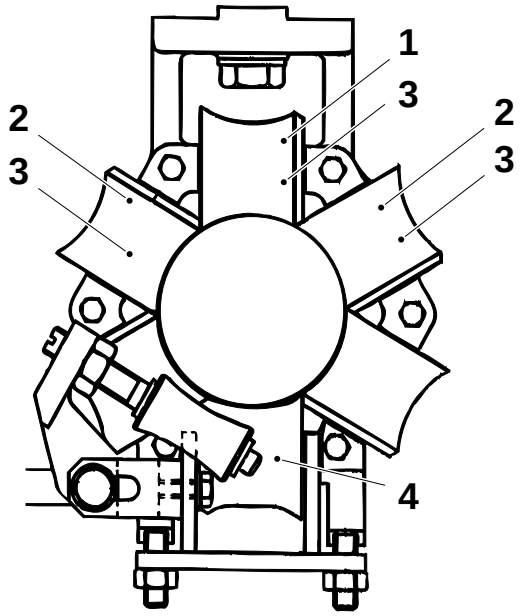

1 Where to put one trimming roller
2 Where to put two trimming rollers
3 Where to put three trimming rollers
4 Pressure roller

Check that the rollers rotate freely, see also *1.4.1-1 Tube supports and forming rings - check*.

2.2B2550A04.fm

1.4.3 Upper tube support

1.4.3-1 Upper tube support - overhaul

SPC reference	441307-0300

Note! Note the position of the lock plates and the washers before removal.

a) Unscrew the screws (1) and remove the lock plates (2).

b) Remove the forming roller (3) and the washers. Change the flange bushings and the axle.

c) Unscrew the screws (4) and remove the lock plates (5).

d) Remove the rollers (6) and the washers. Change the flange bushings and the axles.

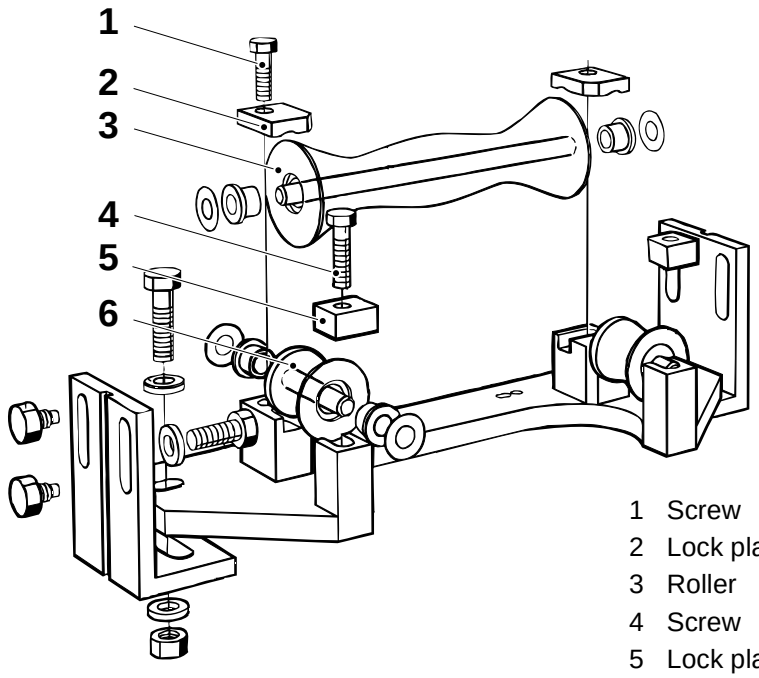

1 Screw
2 Lock plate
3 Roller
4 Screw
5 Lock plate
6 Roller

Fig. shows variant for 200

2.2B2550A04.fm

Note! In case the rollers are damaged or worn, change them before assembly.

e) Assemble in the reverse order.

f) Check that the play between the rollers does not exceed 0.3 mm and that the passage between the rollers is smooth.

g) When the machine is **warm**, make sure that the rollers rotate freely. Adjust the play as required.

1.4.4 Movable forming ring

1.4.4-1 Movable forming ring - overhaul

SPC reference	441304-0400

Note! Note the position of the lock plates and the washers before removal.

a) Unscrew the screws (1) and remove the lock plates. Remove the roller (2).

b) Change the flange bushings and the axle.

c) Unscrew the screws (3) and remove the lock plates. Remove the rollers (4) and the rollers (5).

d) Change the flange bushings and the axles in the rollers.

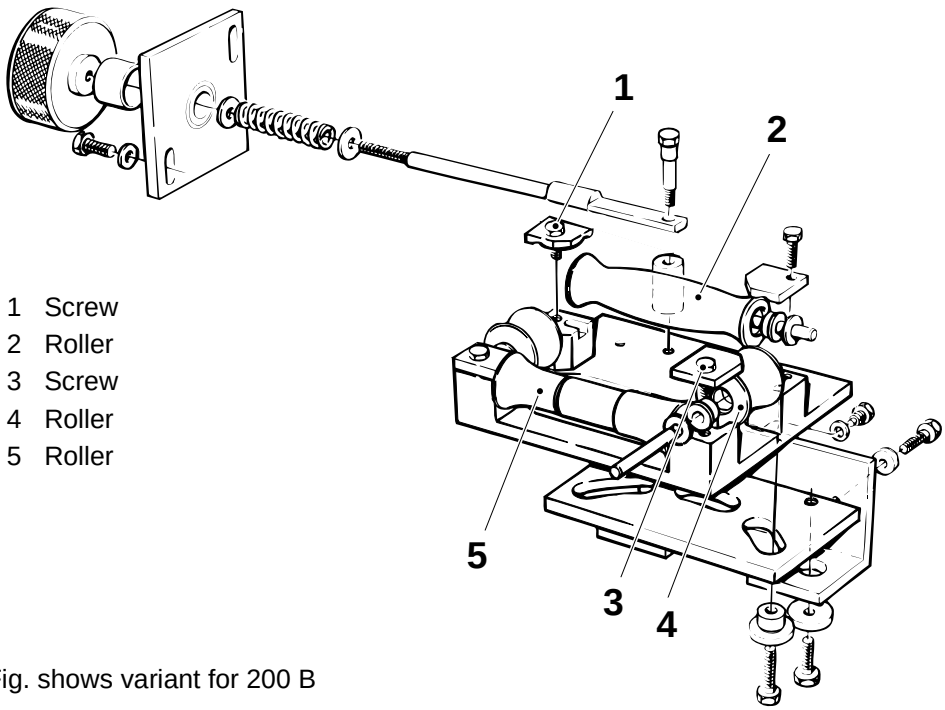

1 Screw
2 Roller
3 Screw
4 Roller
5 Roller

Fig. shows variant for 200 B

2.2B2550A04.fm

Note! In case the rollers are damaged or worn, change them before assembly.

e) Assemble in the reverse order.

f) Check that the play between the rollers does not exceed 0.3 mm and that the passage between the rollers is smooth.

g) When the machine is **warm**, make sure that the rollers rotate freely. Adjust the play as required.

1.4.5 Divided forming ring

1.4.5-1 Divided forming ring - overhaul

SPC reference	441386-040V

Note! Note the position of the lock plates and the washers before removal.

a) Unscrew the screws (1) and remove the lock plates.

b) Remove the roller (2) and the washers. Change the bushings and the axle.

c) Unscrew the screws (3) and remove the lock plates.

d) Remove the rollers (4) and the washers. Change the bushings and the axles.

e) Unscrew the screws (5) and (6) and remove the lock plates.

f) Remove the two rollers (7), the roller (8) and the washers. Change the flange bushings and the axles.

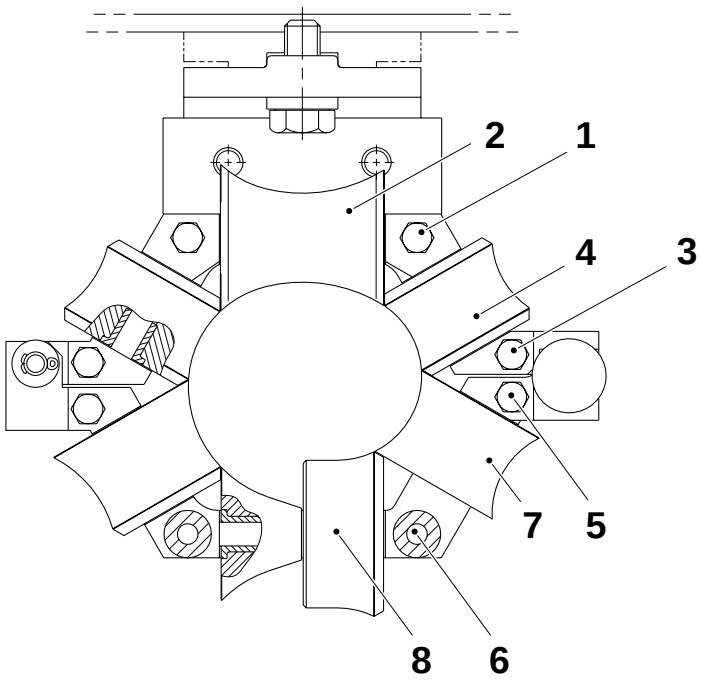

1 Screw
2 Roller
3 Screw
4 Roller
5 Screw
6 Screw
7 Roller
8 Roller

(Cont'd)

2.2B2550A04.fm

(Cont'd)

Note! In case the rollers are damaged or worn, change them before assembly.

g) Assemble in the reverse order.

h) Check that the play between the rollers does not exceed 0.3 mm and that the passage between the rollers is smooth.

i) When the machine is **warm**, make sure that the rollers rotate freely. Adjust the play as required.

2.2B2550A04.fm

1.4.6 Lower forming ring

1.4.6-1 Lower forming ring - overhaul

SPC reference	456309-0500

Note! Note the position of the lock plates and the washers before removal.

a) Tap out the pin (1). Loosen the screw (2) and pull out the axle (3). Change the bushings (4).

b) Remove the counter roller (5). Change the axle as required.

c) Remove the split pin (6) and change the roller (7).

d) Unscrew the screws (8) and remove the lock plates.

e) Remove the two rollers (9). Change the bushings and the axles.

f) Unscrew the screws (10) and remove the lock plates.

g) Remove the two rollers (11). Change the bushings and the shafts.

h) Unscrew the screws (12) and remove the lock plates.

i) Remove the two rollers (13). Change the bushings and the shafts.

2.2B2550A04.fm

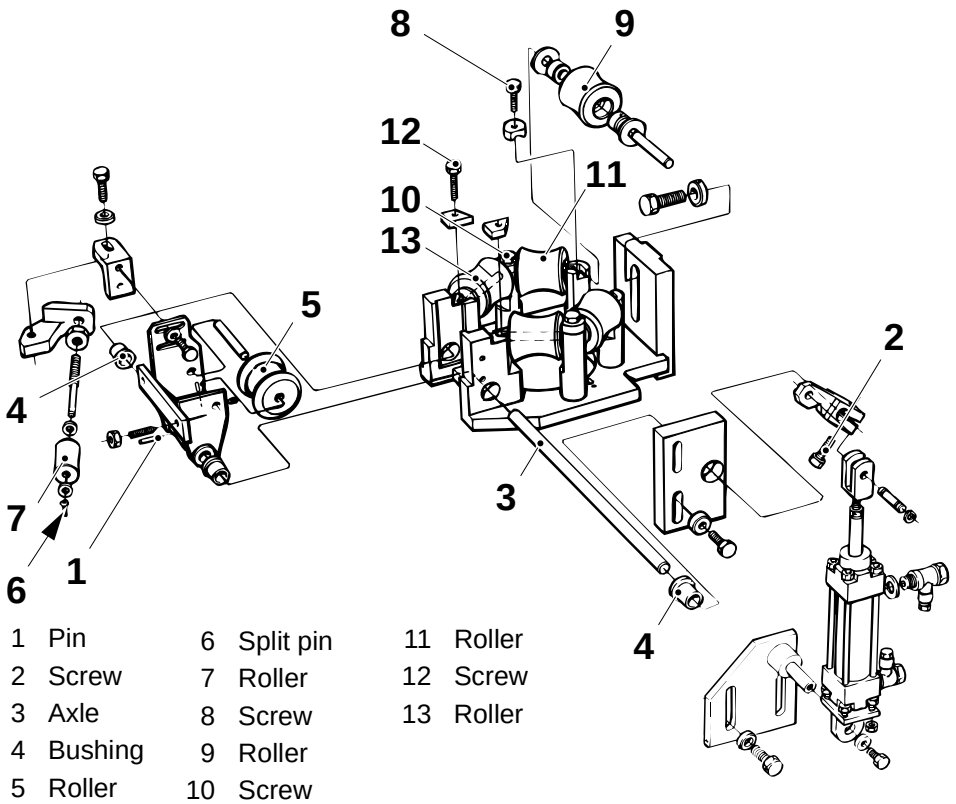

1	Pin	6	Split pin	11	Roller
2	Screw	7	Roller	12	Screw
3	Axle	8	Screw	13	Roller
4	Bushing	9	Roller		
5	Roller	10	Screw		

(Cont'd)

(Cont'd)

Note! In case the rollers are damaged or worn, change them before assembly.

j) Assemble in the reverse order.

k) Check that the play between the rollers does not exceed 0.3 mm and that the passage between the rollers is smooth.

l) When the machine is **warm**, make sure that the rollers rotate freely. Adjust the play as required.

Note! The cylinder shall be fully out and the roller (5) in its upper position when tightening the screw (2). Make sure that the clamp fitting (13) moves clear of the bracket.

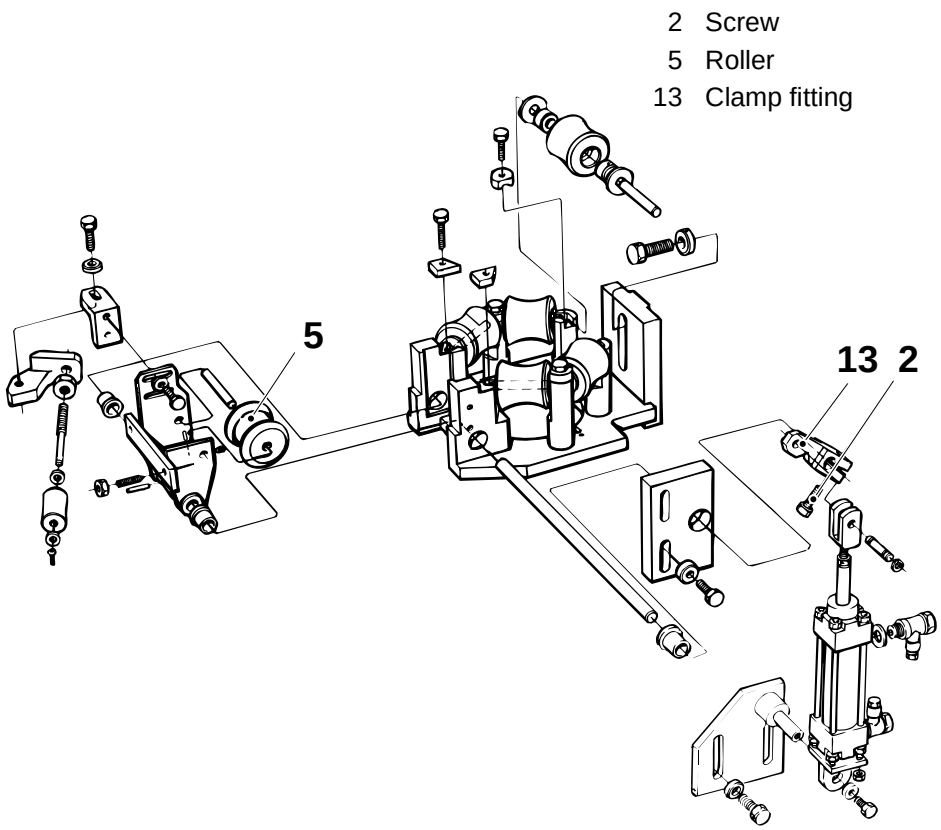

1.4.6-2 Lower forming ring - set counter roller

SPC reference	456309-0500

a) Move up the counter roller so that it touches the pressure roller.

b) Make sure that the counter roller bracket is in vertical position.

c) If required, set by means of the stop screws.

Note! Make sure that the passage between the rollers is smooth.

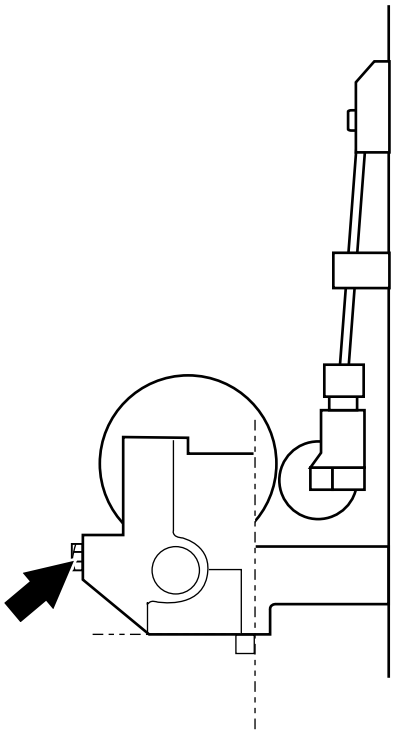

2.2B2550A04.fm

1.4.7 Tube alignment

1.4.7-1 Tube alignment - check on packages

Machine status	**Production**

a) Pick out two packages and check that the crease lines on the packages are opposite one another or displaced symmetrically.

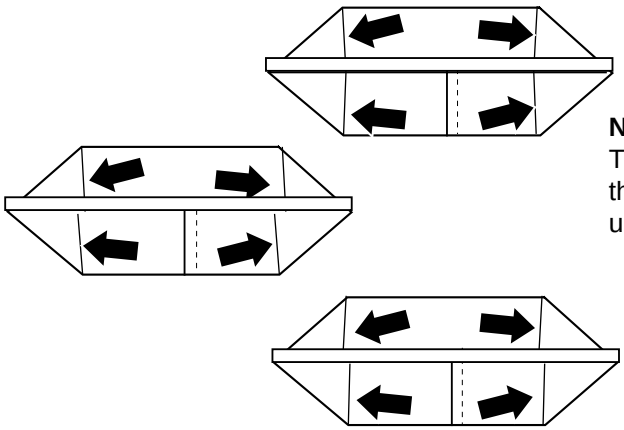

Note!
The pictures show the top of the package with the flaps unfolded.

b) If required, set the tube alignment as follows.

Position the web, SA machines

a) Make a **Short stop**. Remove the web cover.

b) Turn the knob (2) on the SA. The marks on the pointer (1) indicate how much the packaging material web is adjusted.
Turning the knob counter-clockwise 90°moves the web as illustrated.

c) Pick out new packages and check the crease position.

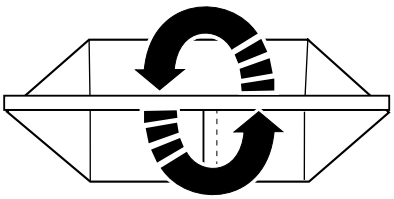

Note!
The picture shows the top of the package with the flaps unfolded.

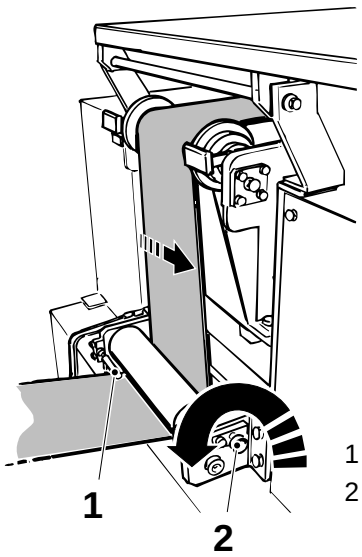

1 Pointer
2 Knob

2.2B2550A04.fm

(Cont'd)

(Cont'd)

Turn the tube

a) Turn the knob on the superstructure.
b) Turning the knob clockwise, moves the tube as illustrated.
c) Pick out new packages and check the crease position.

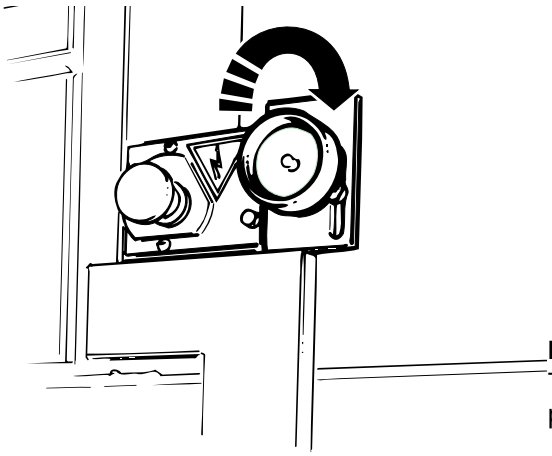

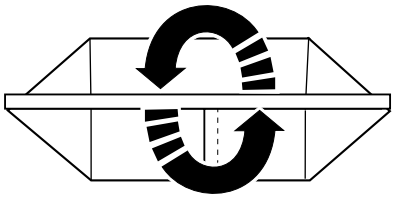

Note!
The picture shows the top of the package with the flaps unfolded.

2.2B2550A04.fm

1.5 Photocell unit

SPC reference	491976-020V

1.5-1 Photocell unit - check

Consumables - soapy water	
SPC reference	491976-020V

Check the following details for wear and/or damage:

- the shaft (1)
- the bushings (2)

Change as required.

With air on, check with soapy water, that there is no air leakage in the connections (3). Change the seal ring (4) and/or the O-ring (5) as required.

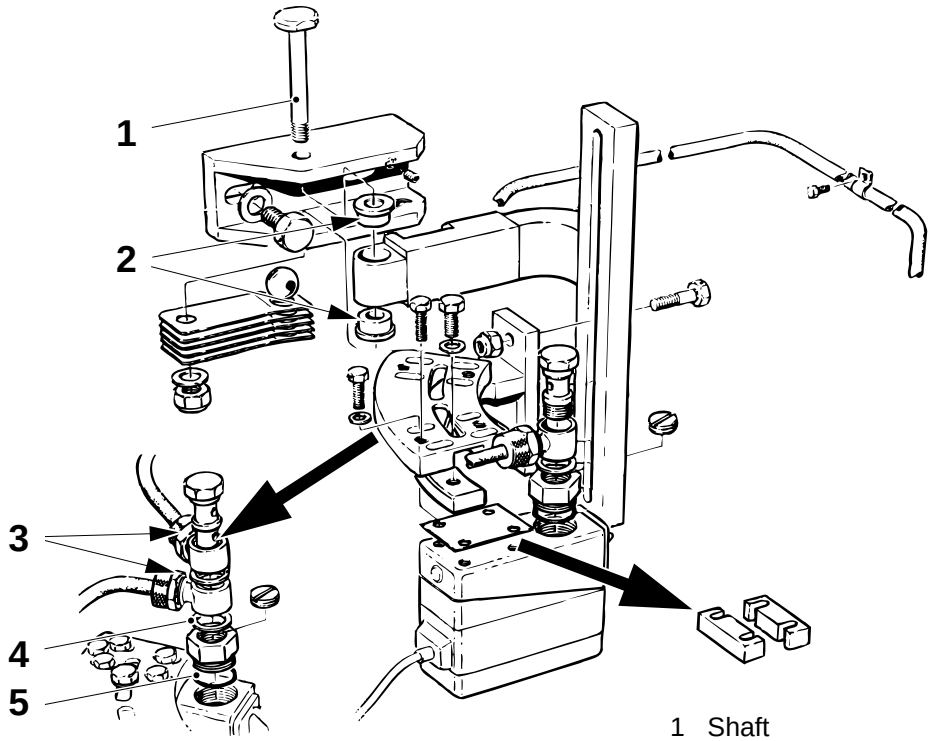

2.2B2550A05.fm

1 Shaft
2 Bushing
3 Connection
4 Seal ring
5 O-ring

1.5-2 Photocell unit - set

Machine status	Air **On** Power **On**
SPC reference	491976-020V

Vertical position

a) Set the bracket (1) in production position.

b) Set the limit screw (2) so that it bears against the bracket (1) and eliminates any play.

c) Crank the machine to 0°.

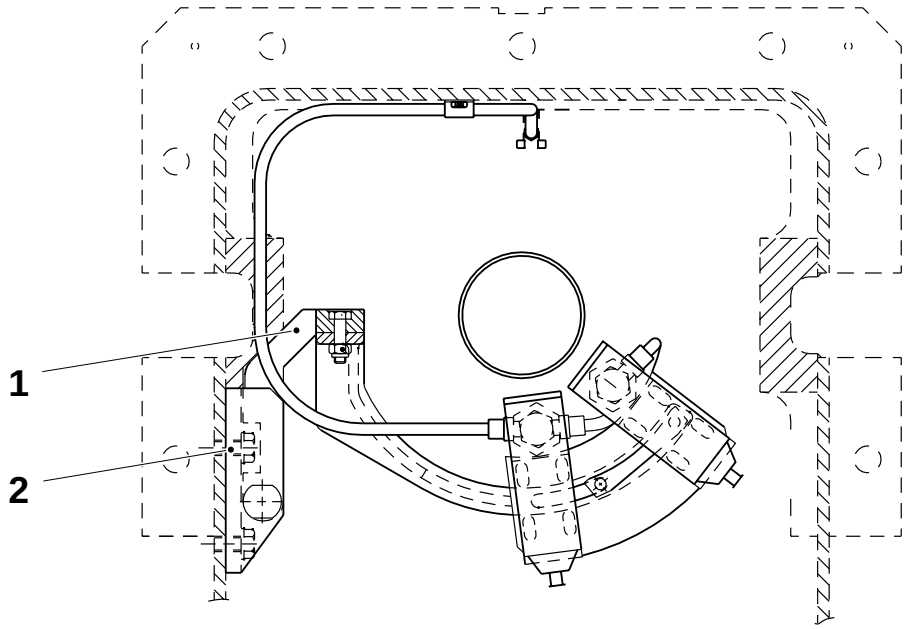

2.2B2550A05.fm

1 Bracket
2 Limit screw

(Cont'd)

(Cont'd)

d) Loosen the screws (3) and set distance A between the carrier and the photocell focal point, see table.

Package	Gap A (mm)
200	480

Note! Push the bracket (1) against the wall when tightening the screws after adjustments, in order to ensure that the play always work in the same direction.

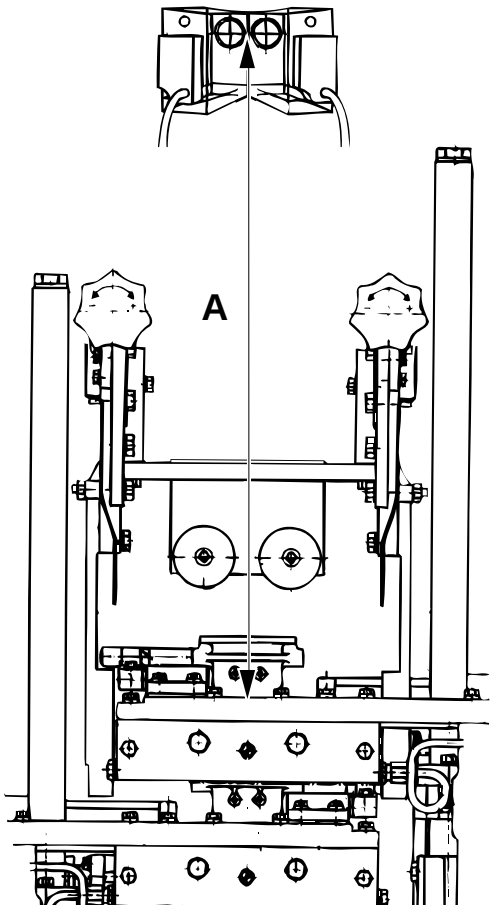

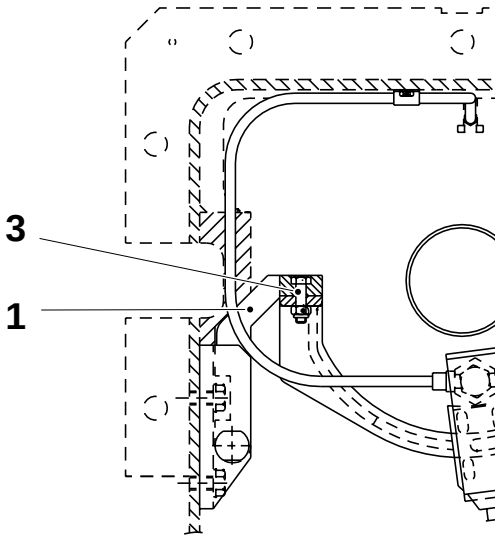

1 Bracket
3 Screw

(Cont'd)

(Cont'd)

Sensitivity

Each photocell is equipped with two separate light sources.

Select light source with the selector (4).

Always use the LH side light source first. When this does not work anymore, change over to the RH light source.

Note! Whenever there has been a change of light source, the photocell sensitivity has to be reset.

a) Insert packaging material all the way down to the jaws. Inch until a sealed tube is obtained.

b) Loosen the screws (6) and set distance B between the photocell (7) and the sealed tube (8).

c) Set the photocells so that the light spots are centered on the photocell trigger marks on the packaging material tube. Adjust by means of the screws (5).

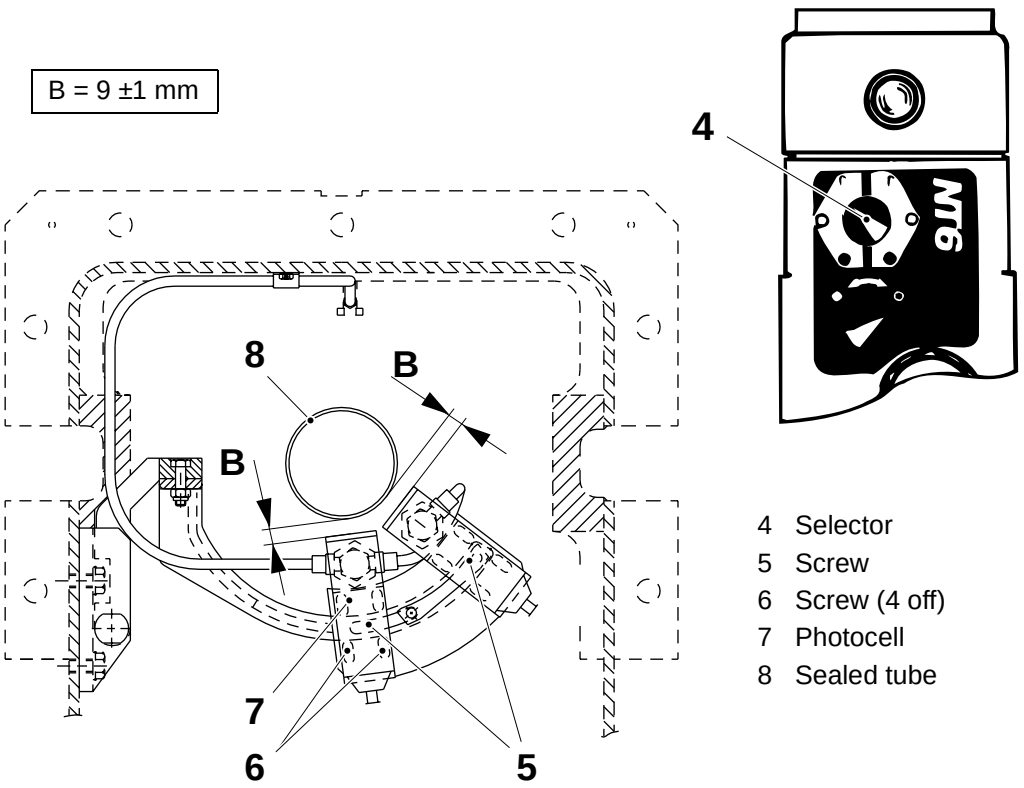

4 Selector
5 Screw
6 Screw (4 off)
7 Photocell
8 Sealed tube

2.2B2550A05.fm

(Cont'd)

(Cont'd)

d) Remove the cover over the adjustment knobs. Set the light source selector (4) to position O.

e) Crank forward until a section of white packaging material is in front of the photocell.

f) Turn the selector switch to position J.

g) Attach a piece of black tape along the edge of a sheet of white paper and stick this paper around the packaging material tube. Move up the black tape in front of the photocells.

h) Check whether the LED (9) on the photocell is on or off. If it is off, turn the setting knob counter-clockwise until the LED lights up.

i) Thereafter, follow one of the two following alternatives.

- **Alternative 1**
  Only packaging material with white background for the photocell mark is being used, turn the setting knob (10) clockwise until the LED just goes out.
- **Alternative 2**
  When packaging material with both white and unbleached background for the photocell mark is being used, turn the setting knob (10) clockwise until the LED just goes out and then turn it back (counter-clockwise) one turn.

j) Turn the light source selector (4) to position •.

k) Fit the photocell covers.

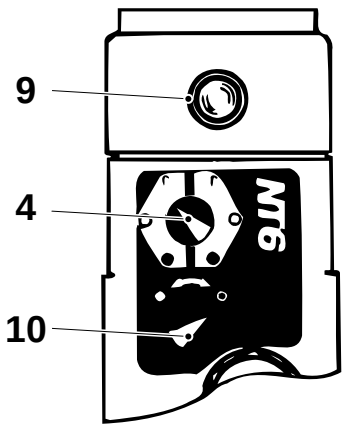

4 Selector
9 LED
10 Setting knob

2.2B2550A05.fm

(Cont'd)

(Cont'd)

Levelling

a) Put black tape very accurately along the edge of a sheet of white paper. Attach the paper around the packaging material tube so that the black tape matches exactly.

b) Move the paper slowly upwards/downwards so that the photocell light spots pass across the horizontal borderline between white and black.

c) Stop dead when the LED on the **inner photocell** (11) lights up.

d) Both photocells are to light up simultaneously.

e) If required, loosen the screws (13) on the **outer photocell** (12) and adjust the position vertically by means of the screws (14).

f) Check distance B between the photocell and the packaging material tube.

g) Tighten the screws (14).

h) Repeat the setting procedure until the LEDs of both photocells light up exactly simultaneously.

Note! All settings are to be carried out on the outer photocell only.

B = 9 ±1 mm

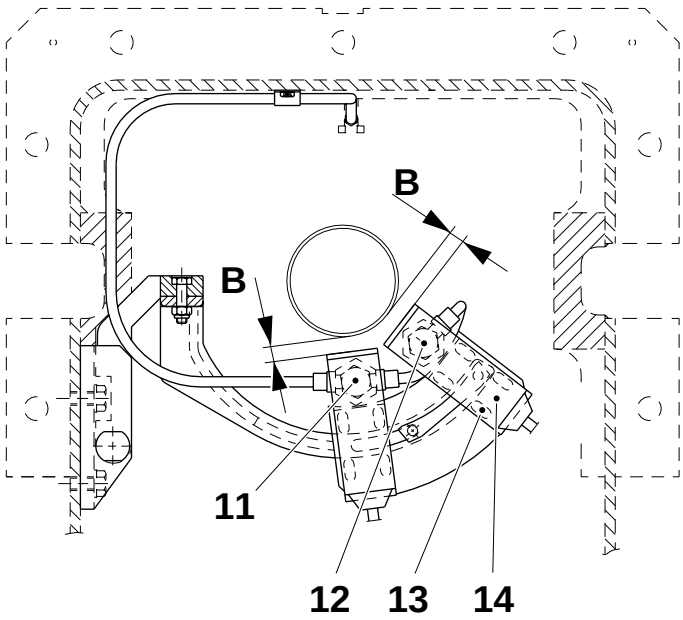

11 Inner photocell
12 Outer photocell
13 Screw
14 Screw

2.2B2550A05.fm

(Cont'd)

(Cont'd)

Final setting

Machine status	**Production**

a) Set the potentiometer in position 0.

b) Check the crease positions on the packages.

c) If required, stop the machine and finally set the position of the creases by loosening the screws (3) and raising or lowering the photocells.

d) Push the bracket (1) against the wall when tightening the screws after adjustment.

e) Check the levelling, see previous page.

f) When the mechanical setting has been completed, final adjustment can be made by means of the potentiometer. To shift the crease downwards on the package, turn the potentiometer counter-clockwise.

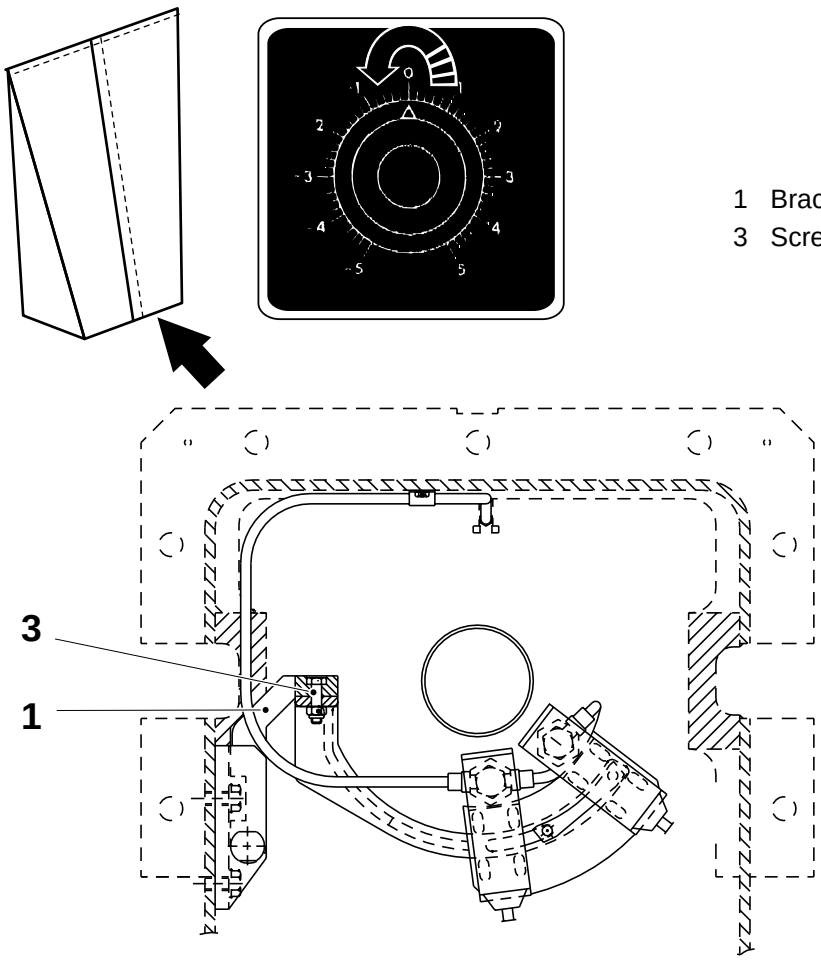

1 Bracket
3 Screw

2.2B2550A05.fm

2 Machine body

2.2B2550B00A.fm

2 - 0 Machine body - description

SPC reference	

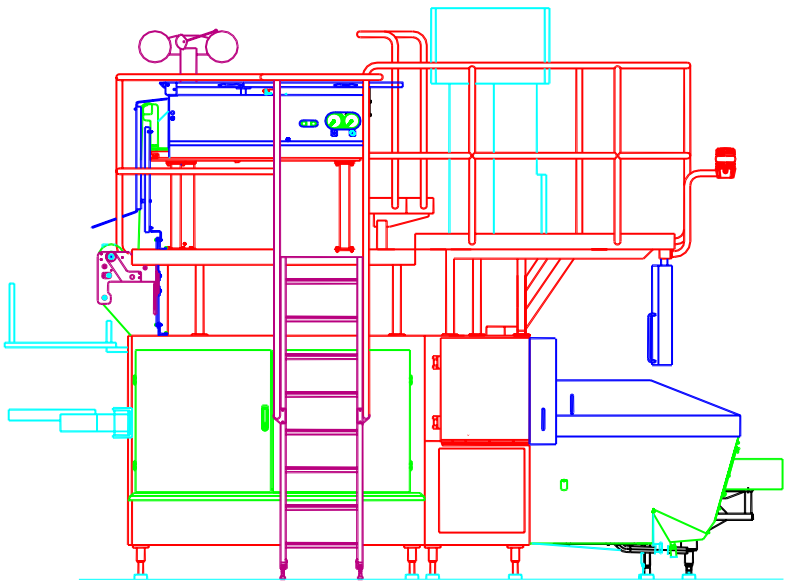

2.2B2550B00A.fm

2.1 Safety function

2.1 Safety function

2.1 - 1 Emergency stop - checking

It must not be possible to inch the machine when:

- The front cover is open.
- Any of the side doors is open.
- The crank mechanism is in engaged position.
- Any of the emergency stop buttons is pushed

2.2B2550B01.FM

This page intentionally left blank

3 Drive unit

2.2B2550c00.fm

3 - 0 Drive unit - description

SPC reference	595161

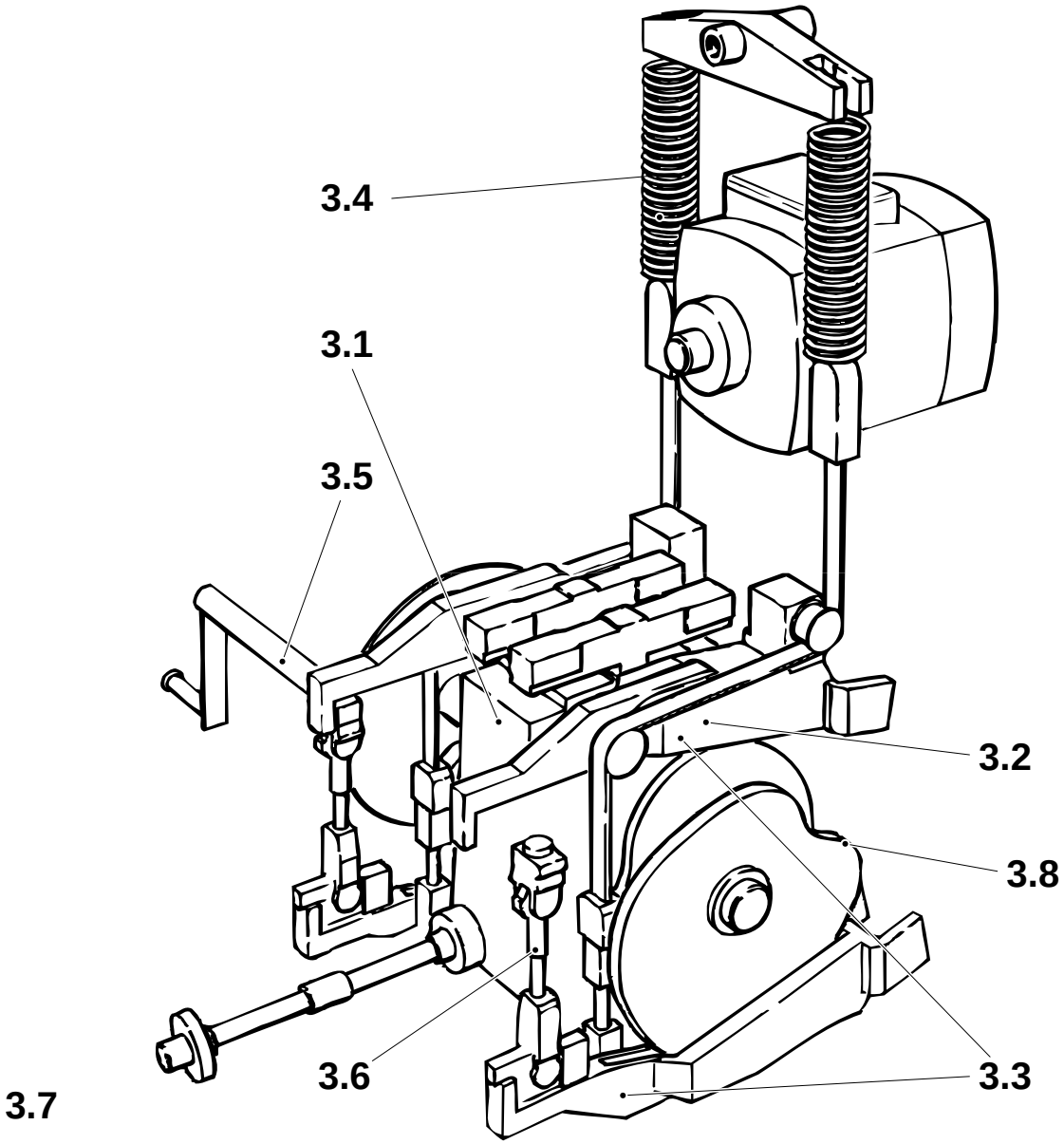

2.2B2550c00.fm

3.1 Worm gear
3.2 Arm
3.4 Hold-down device
3.8 Curve pack

3.1 Worm gear

SPC reference	256173

3.1-1 Worm gear - set brake gap

Machine status	**Preheating I**
Consumables - locking fluid	 TP No. 90157-16
SPC reference	256173

a) Unscrew the screw (1), put on some locking fluid and fit it again.

b) Set distance A by means of the screw (1). Make sure that the distance is within the tolerances all the way around. If this is not possible to obtain, change the brake, see *3.1-2 Worm gear - change brake*.

c) Engage the brake by activating the crank switch a couple of times. Make sure that distance A stays the same.

d) Step up the machine to step **Preheating I**.

e) Inch the machine in high speed, push the **Emergency stop** button and check that the machine stops immediately.

2.2B02550C01.fm

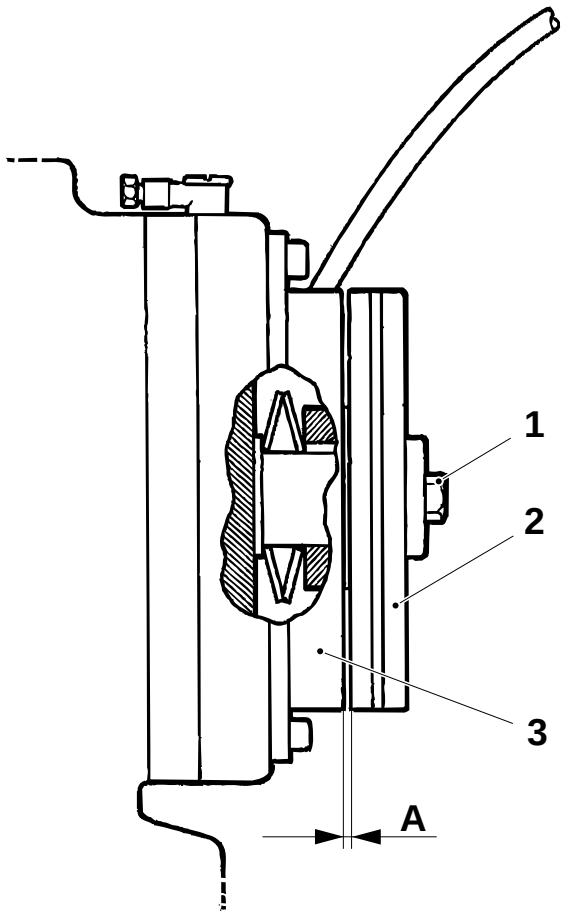

1 Screw
2 Disc
3 Brake housing

A = 0.3 - 0.5 mm

3.1-2 Worm gear - change brake

Tools - puller	 TP No. 76175
SPC reference	256173

a) Mark and disconnect the cable (1) between the brake and the connection box (2).

b) Unscrew the screw (3) and pull off the brake by means of the puller.

c) Assemble in the reverse order and set the brake gap, see *3.1-1 Worm gear - set brake gap*.

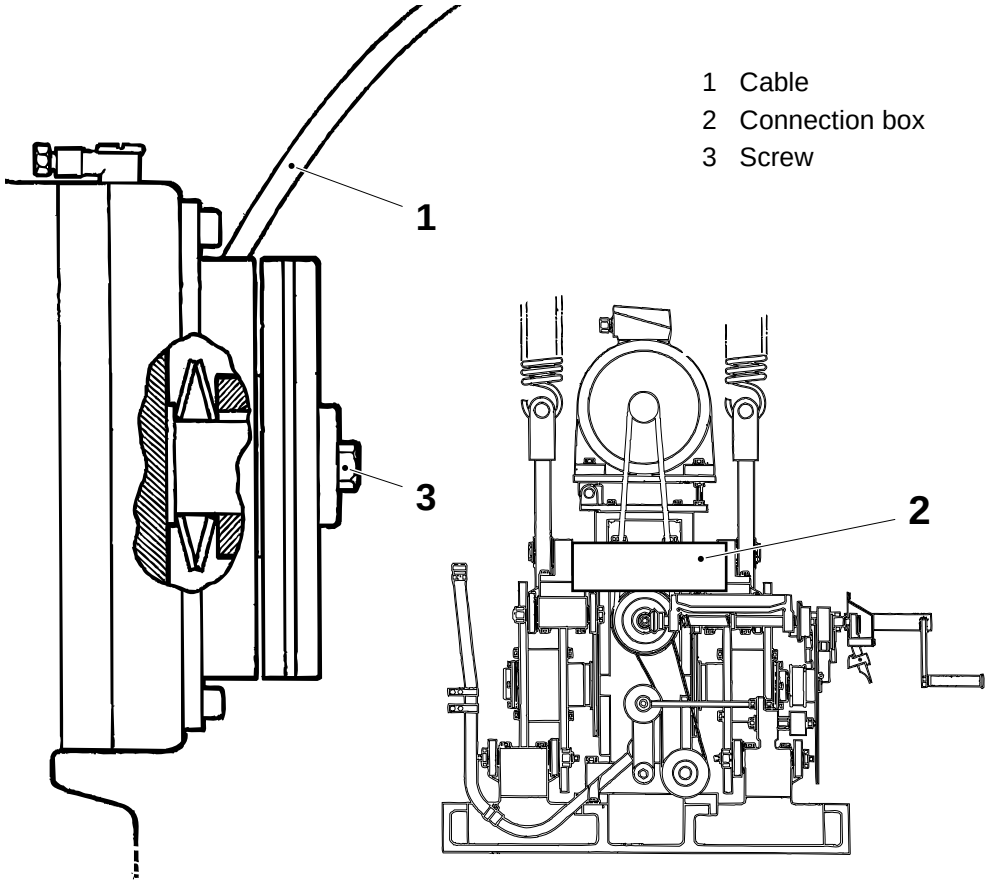

1 Cable
2 Connection box
3 Screw

2.2B02550C01.fm

3.1-3 Worm gear - change clutch bearing

Consumables - locking fluid	 TP No. 90157-16
Tools - puller - puller	 TP No. 979537 TP No. 76175
SPC reference	256173

On the LH side of the machine, remove the door (1) and the covers (2) and (3).

On the RH side, remove the cover (4) and the door (5).

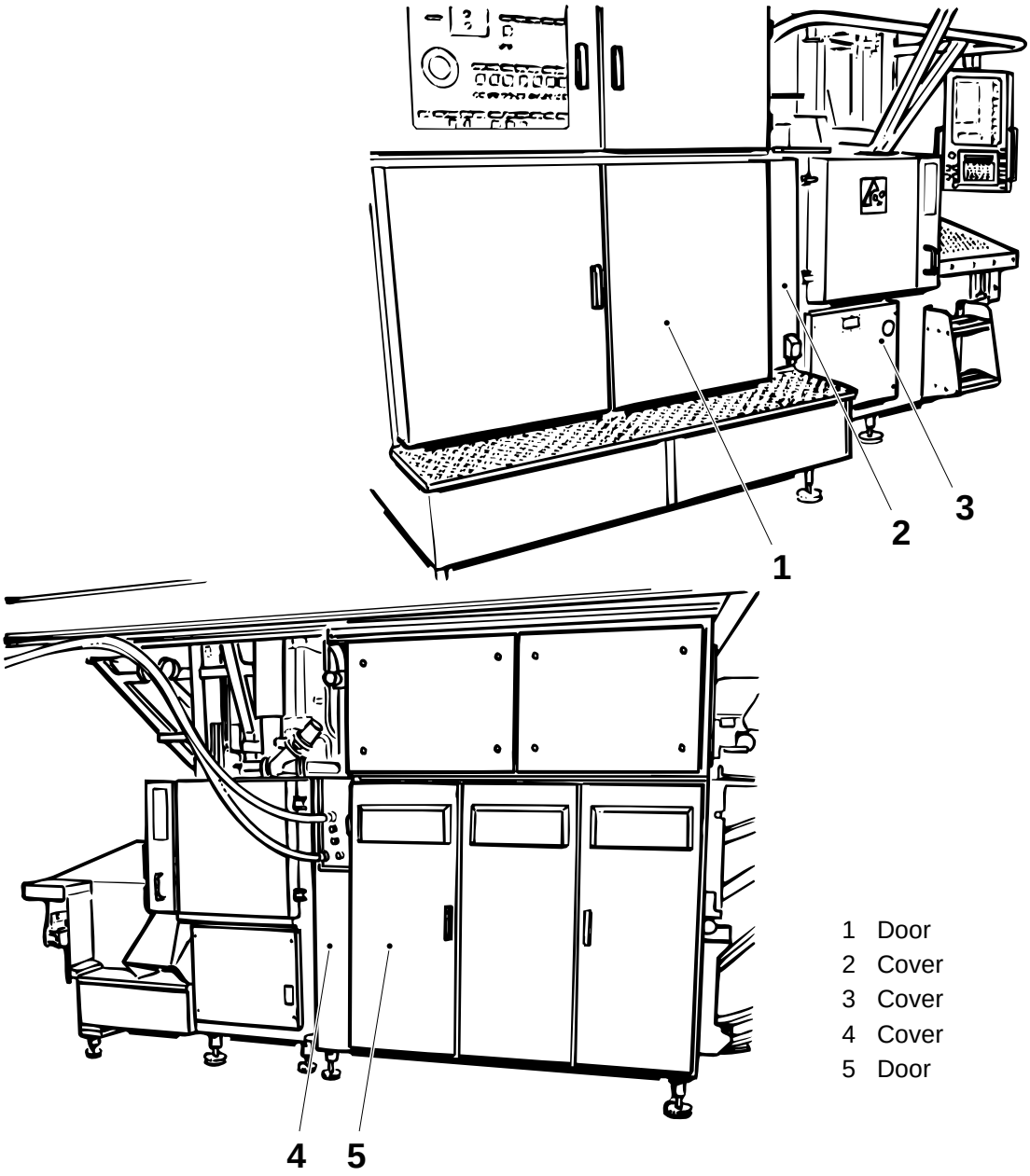

1 Door
2 Cover
3 Cover
4 Cover
5 Door

2.2B02550C01.fm

(Cont'd)

(Cont'd)

Removal

a) Slacken the crank chain by means of the chain tensioner (6).

b) Mark the position of the crank mechanism (7).

Caution! Be careful **not to damage or change** the setting of the pointer.

c) Remove the degree scale.

d) Unscrew the screws (8) and move the crank mechanism aside.

e) Measure and record distance A between the clutch and the disc.

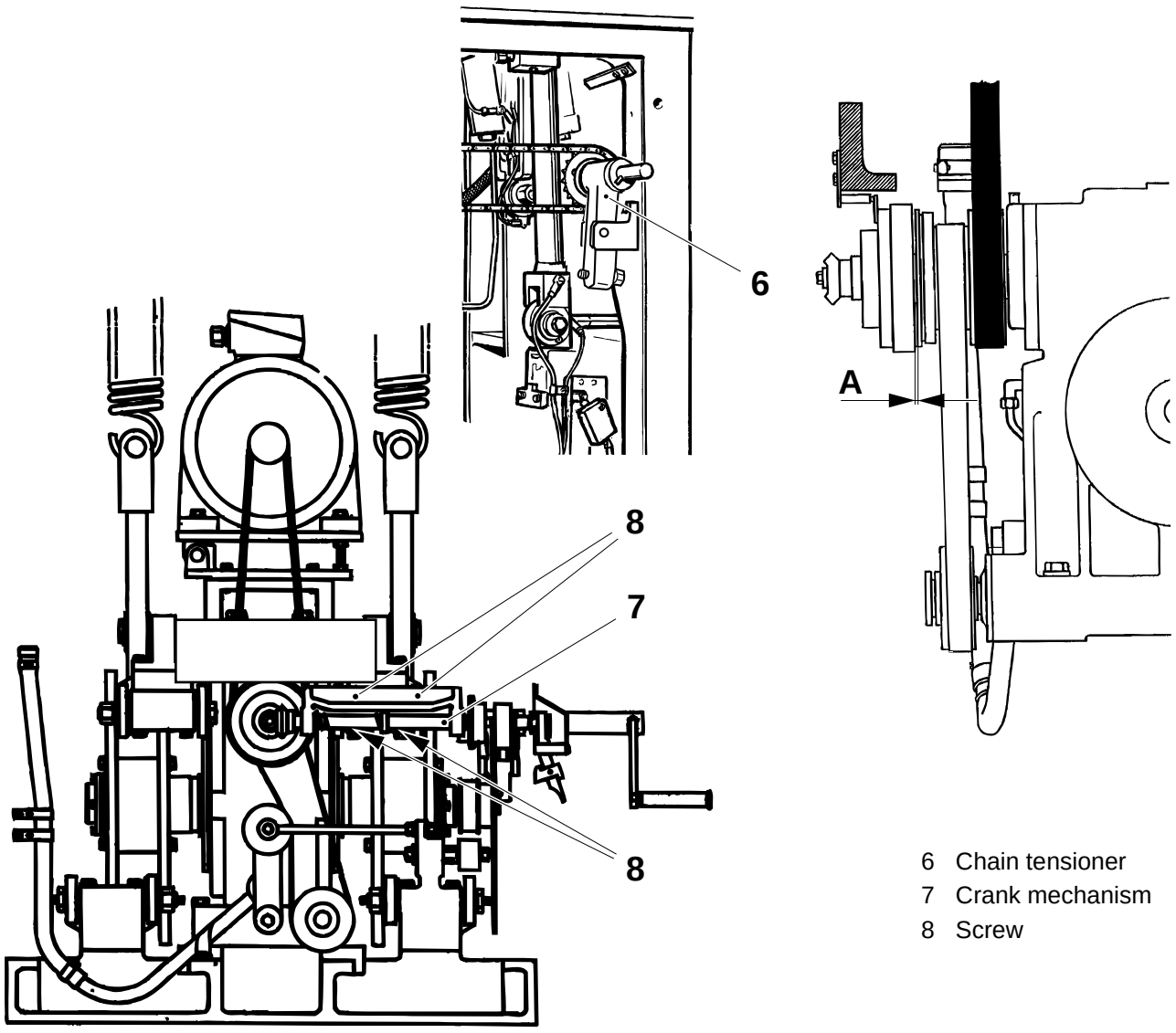

2.2B02550C01.fm

6 Chain tensioner
7 Crank mechanism
8 Screw

(Cont'd)

(Cont'd)

f) Remove the cover (9) and disconnect the cable (10) for the clutch.

g) Remove the following details:
- the carrier (11)
- the screw (12)
- the washer (13)
- the gear wheel (14) by means of the puller
- the key (15)
- the washer (16) and the ring

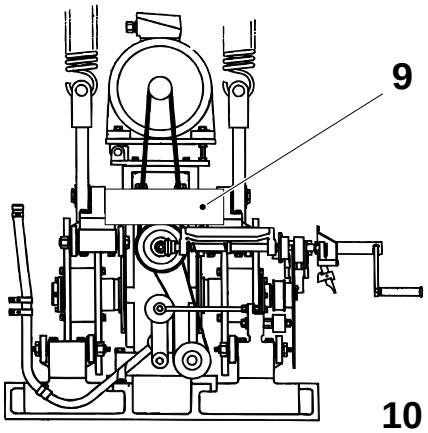

9 Cover
10 Cable
11 Carrier
12 Screw
13 Washer
14 Gear wheel
15 Key
16 Washer

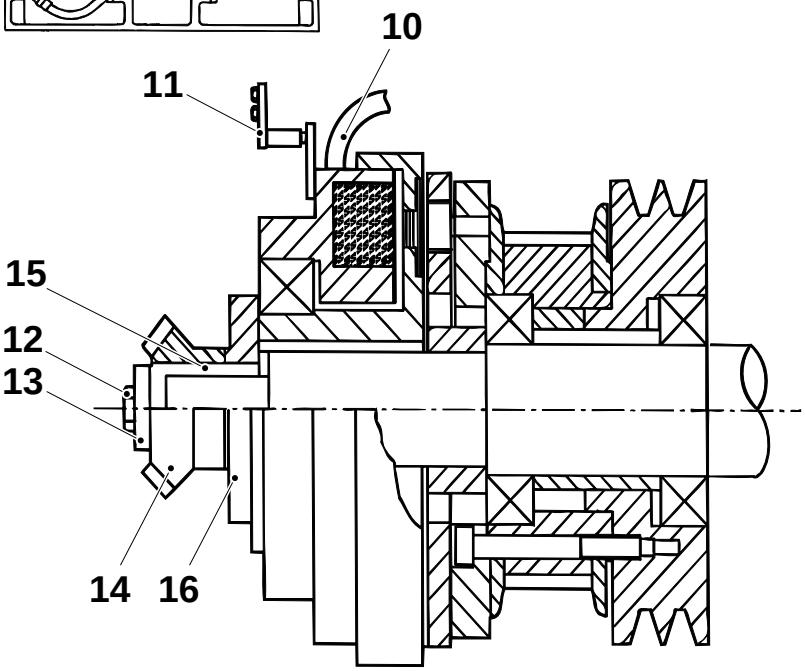

2.2B02550C01.fm

(Cont'd)

(Cont'd)

Note! Do not lose the shims.

h) Fit the puller TP No 979537 at points B and pull off the magnetic clutch.

i) Push back the edges (17) from the punch marks. Fit the other puller.

j) From the back, press out the inner ring (18) and the bearing (20).

k) Push back the edges (19) from the punch marks.

l) Press out and change the bearing (20).

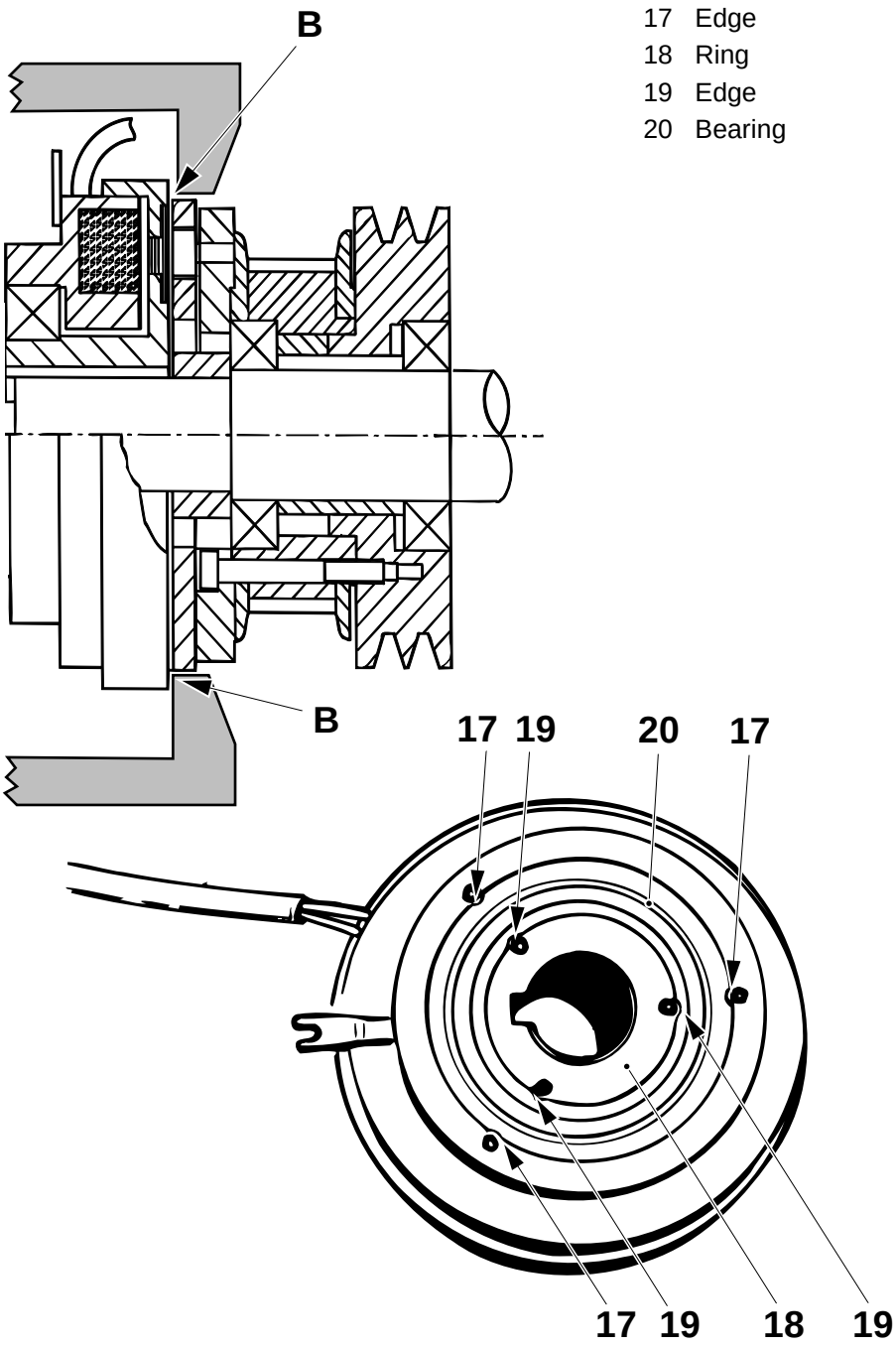

2.2B02550C01.fm

(Cont'd)

(Cont'd)

Assembly

a) Fit the bearing (20) in the inner ring (18). Make the punch marks to get the edges (19)

b) Fit the inner ring and the bearing and make the punch marks to get the edges (17).

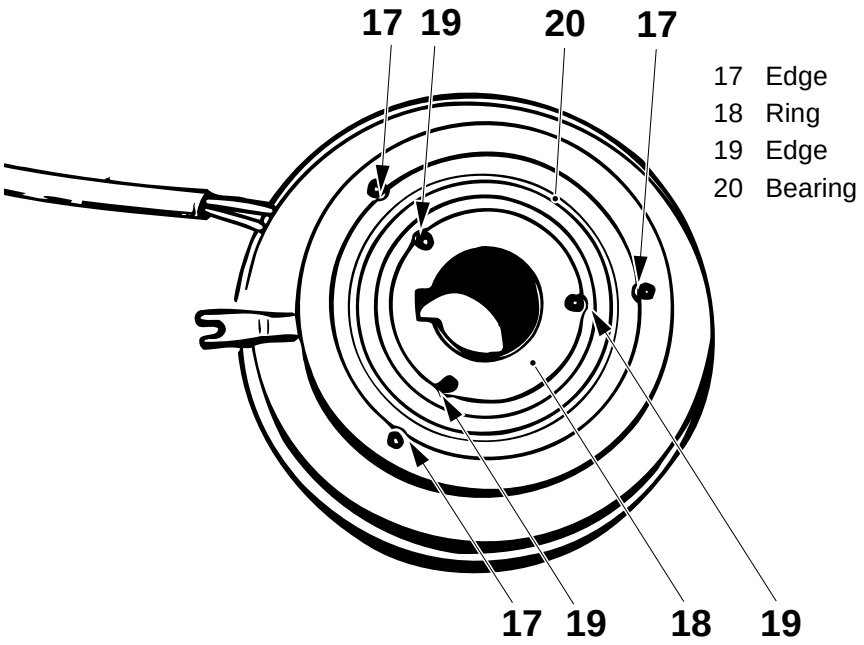

2.2B02550C01.fm

Note! If the measured distance A was not within the limits, adjust with shims (21) **before** fitting the magnetic clutch.

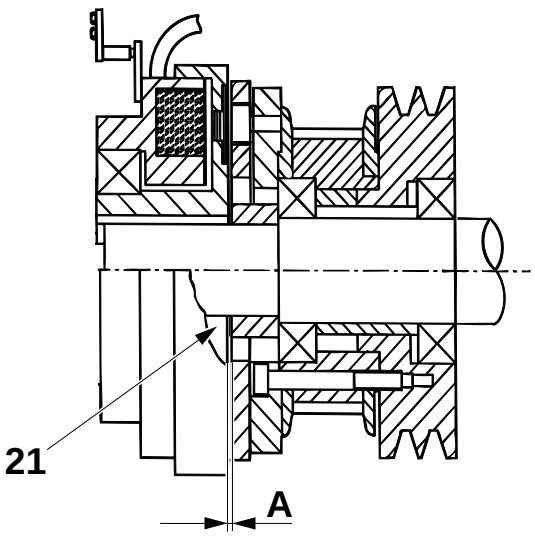

A = 0.20 - 0.45 mm

21 Shim

(Cont'd)

(Cont'd)

c) Fit the washer (16), the key (15), the gear wheel (14) and the washer (13).

d) Put some locking fluid on the screw (12) and fit it.

e) Verify distance A.

f) Assemble the remaining details in the reverse order and connect the cable in the connection box.

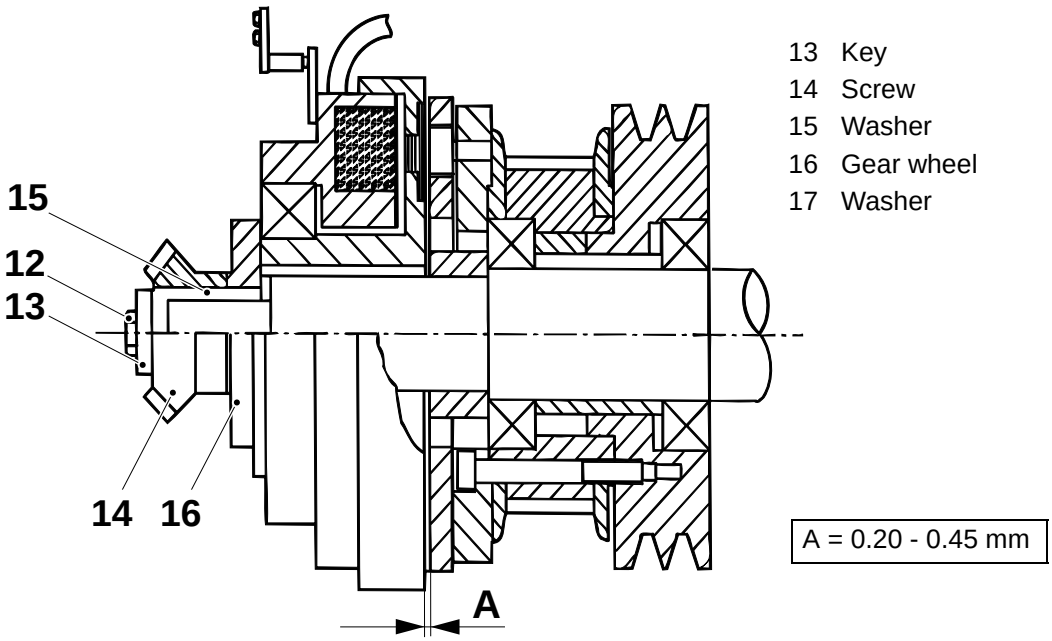

2.2B02550C01.fm

3.1-4 Worm gear - check bearings

SPC reference	256173

Manually turn the belt pulley (2) and check that it rotates easily and without any abnormal noise.

Change the bearings (1) as required, see *3.1-5 Worm gear - change bearings*.

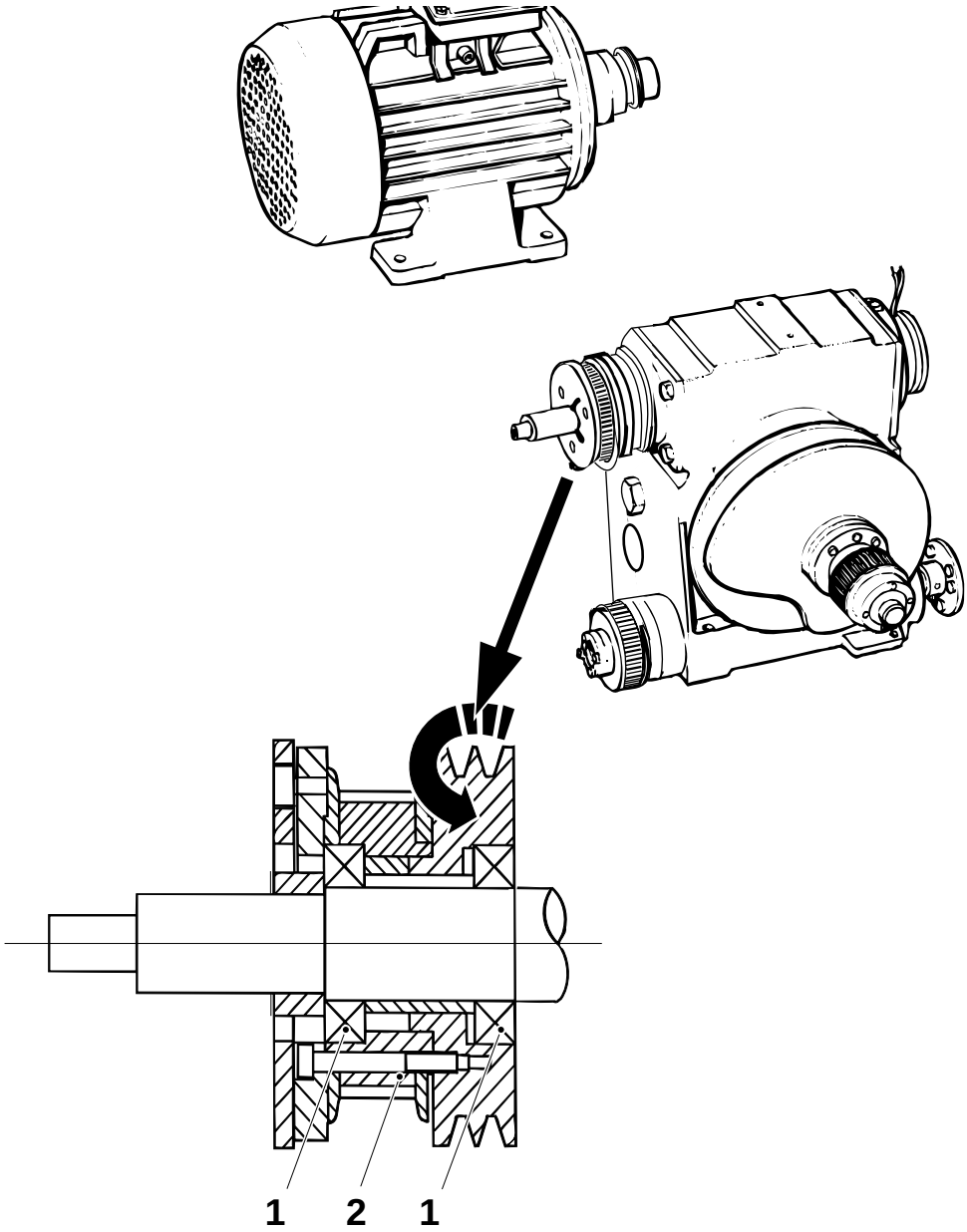

1 Bearing
2 Belt pulley

2.2B02550C01.fm

3.1-5 Worm gear - change bearings

Consumable - locking fluid	 TP No. 90157-16
Tools - puller - torque wrench - spring balance	 TP No. 979537 min 18 Nm TP No. 74767-102
SPC reference	256173

a) Remove the magnetic clutch, see *3.1-3 Worm gear - change clutch bearing*. Slacken the belts and lift them off the pulleys (6) and (7).

b) Unscrew the screws (2) and remove the disc (1).

c) Unscrew the screws (3) and remove the fixing ring (4).

d) Remove the pulleys (6) and (7) with the aid of the puller.

e) Take the pulleys apart and change the bearings (5).

f) Fit the V-belt pulley (7) and the toothed pulley (6).

g) Fit the fixing ring (4) and torque the screws (3) to 10 ±1 Nm.

h) Fit the spacer (8) and the disc (1), and torque the screws (2) to 16 ±2 Nm.

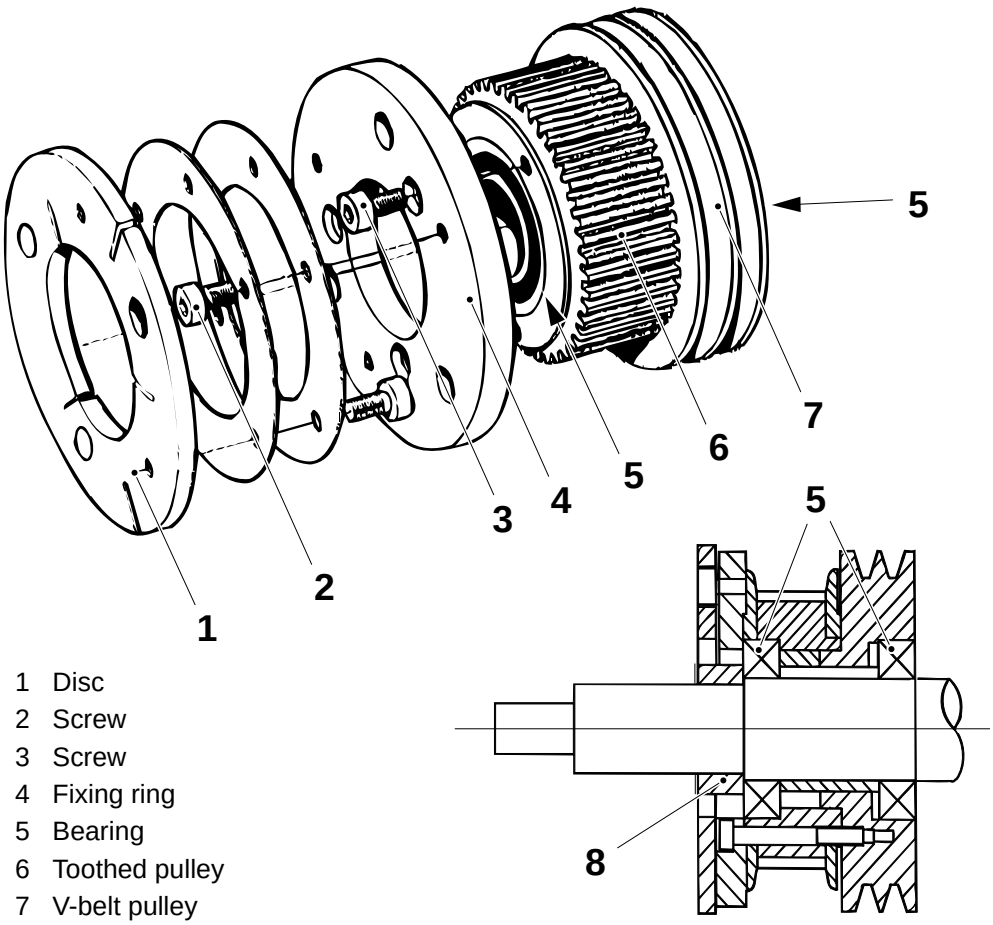

2.2B02550C01.fm

1 Disc
2 Screw
3 Screw
4 Fixing ring
5 Bearing
6 Toothed pulley
7 V-belt pulley
8 Spacer

(Cont'd)

(Cont'd)

i) Place the belts on the pulleys.

j) Fit the magnetic clutch and connect its cable in the connection box, see *3.1-3 Worm gear - change clutch bearing*.

k) Apply the spring balance at right angles to the belts and in the middle of the span.

l) Set the V-belt tension, see table, by means of the adjustment screw (9).

m) Set the timing belt tension, see table, by means of the belt tensioner (10).

n) Fit the doors and the covers.

Belt	**Load force (N)**	**Deflection (mm)**
Timing belt	14 - 16	4 - 6
V-belt	24 - 26	9 - 11

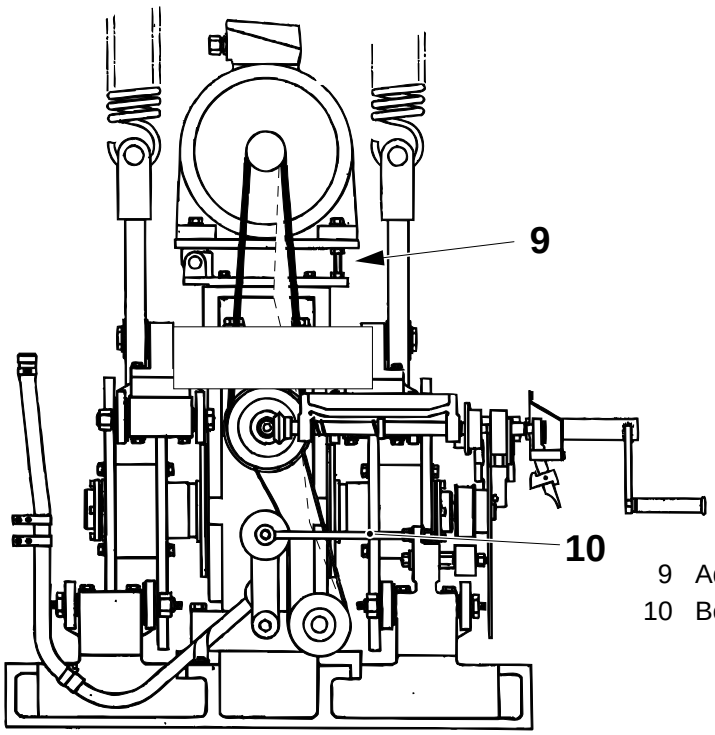

9 Adjustment screw
10 Belt tensioner

2.2B02550C01.fm

3.1-6 Worm gear - change V-belt

Tools - spring balance	TP No. 74767-102
SPC reference	256173

On the LH side of the machine, remove the door (1) and the covers (2) and (3).

On the RH side, remove the cover (4) and the door (5).

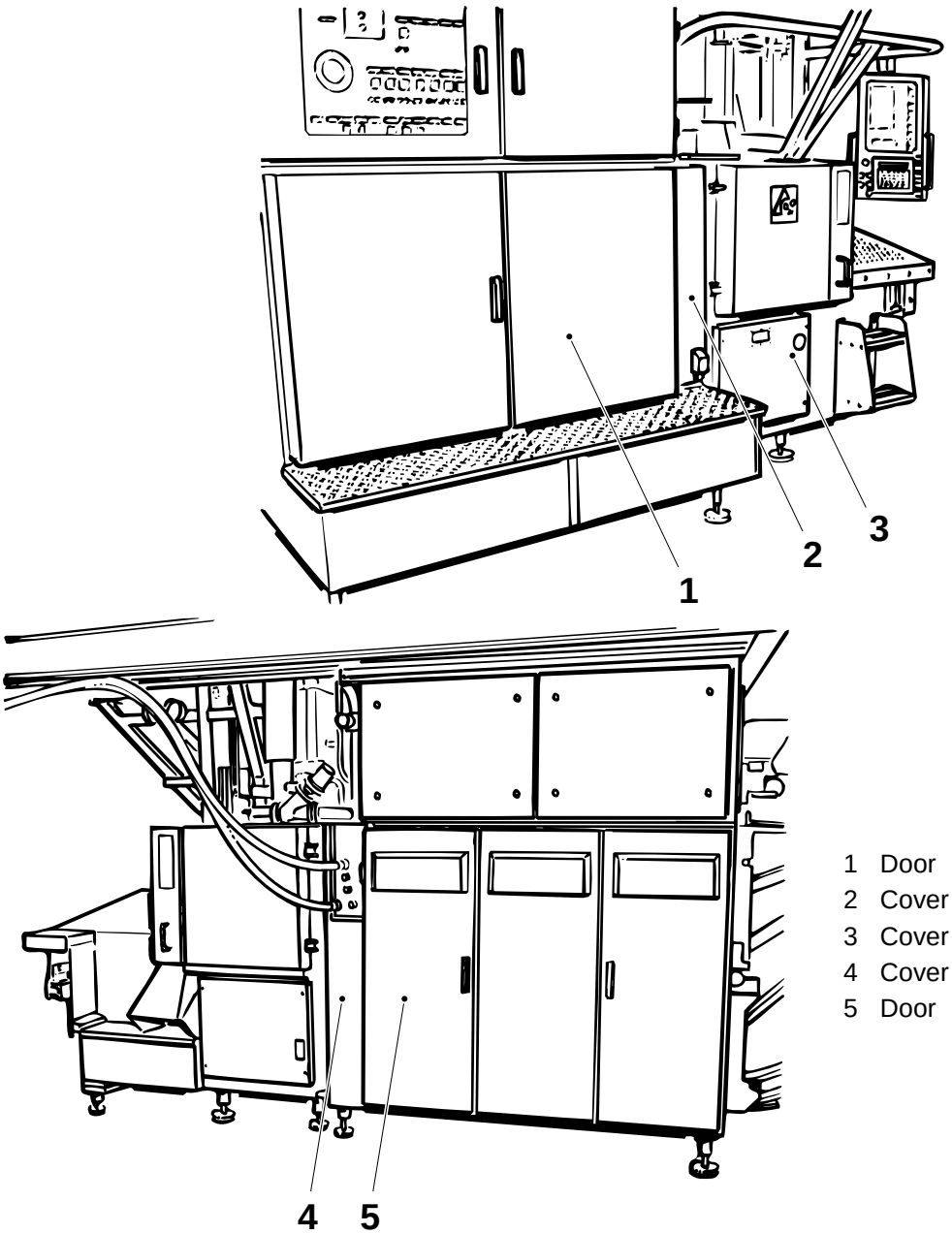

2.2B02550C01.fm

1 Door
2 Cover
3 Cover
4 Cover
5 Door

(Cont'd)

(Cont'd)

Removal

a) Slacken the crank chain by means of the chain tensioner (6).

b) Mark the position of the crank mechanism (7).

Caution! Be careful **not to damage or change** the setting of the pointer.

c) Remove the degree scale.

d) Unscrew the screws (8) and move the crank mechanism aside.

e) Loosen the belt tension by means of the belt tensioner (9) and the adjustment screw (10).

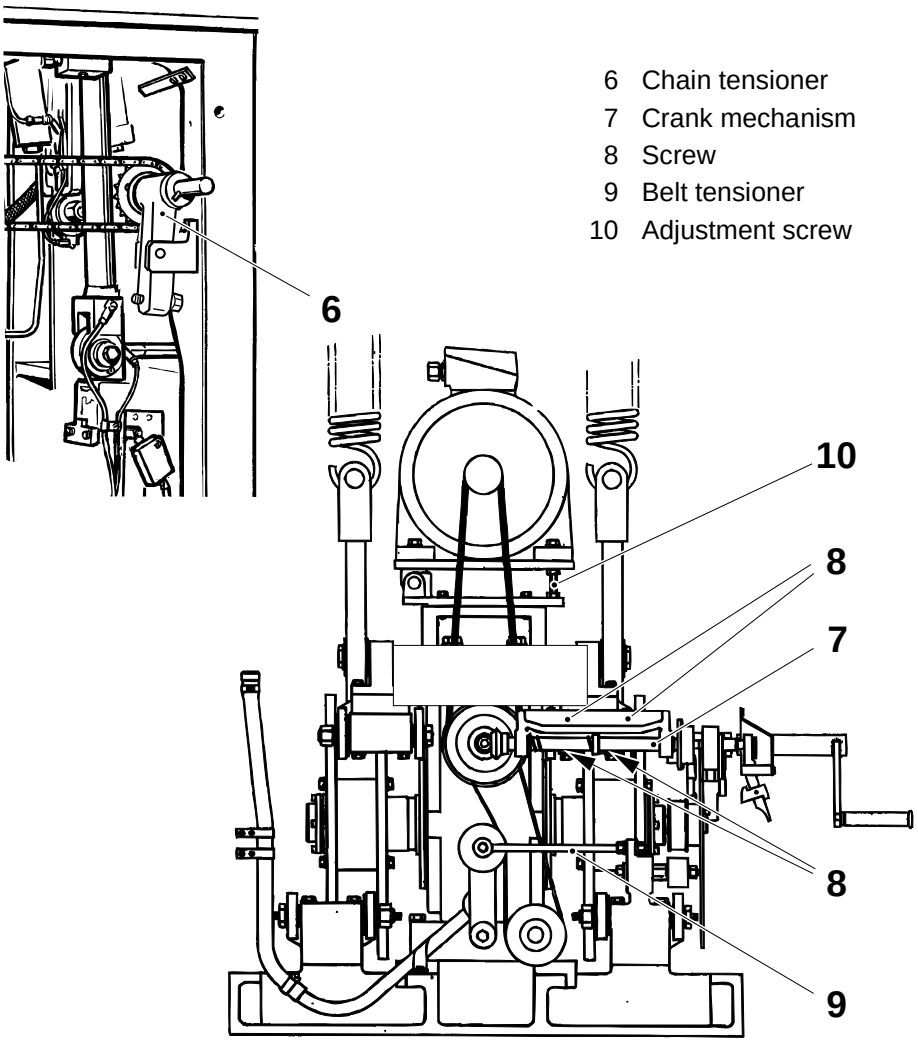

6 Chain tensioner
7 Crank mechanism
8 Screw
9 Belt tensioner
10 Adjustment screw

2.2B02550C01.fm

(Cont'd)

(Cont'd)

f) Remove the cover (11) and disconnect the cable for the clutch.
g) Remove the carrier (12).
h) Remove the timing belt (13).
i) Change the V-belt (14).
j) Assemble in the reverse order.

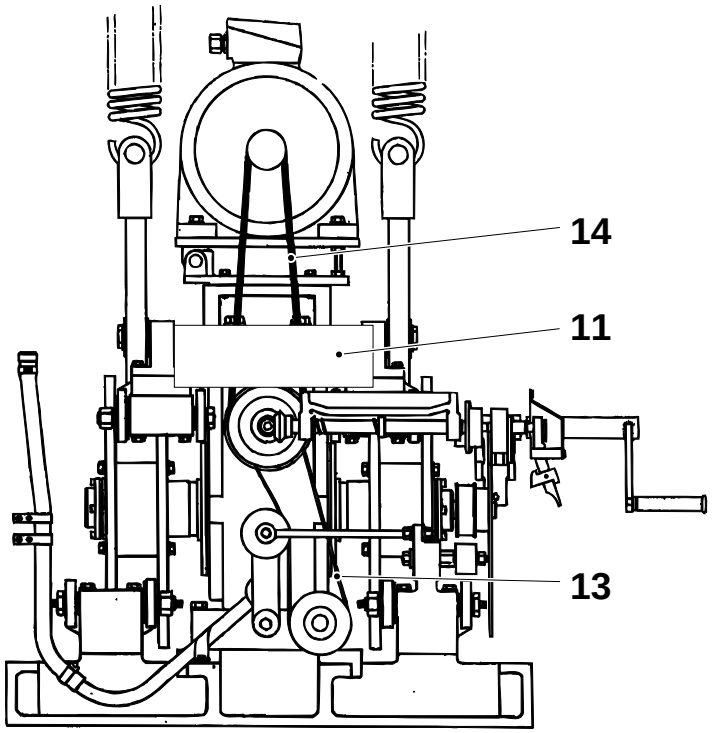

11 Connection box cover
12 Carrier
13 Timing belt
14 V-belt

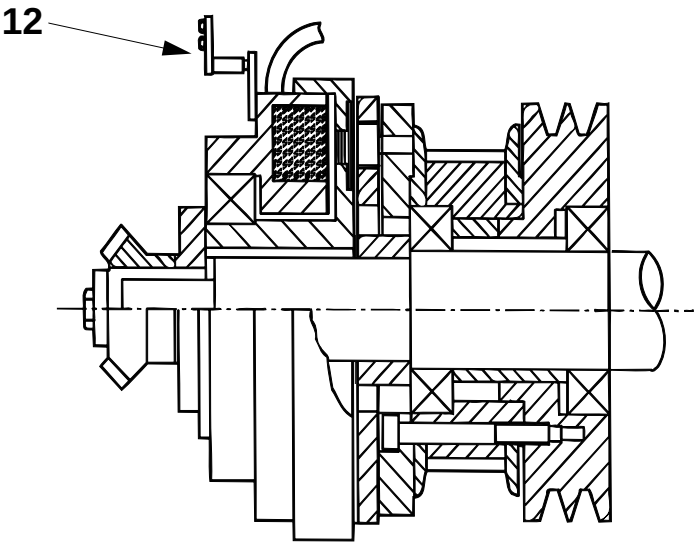

2.2B02550C01.fm

(Cont'd)

(Cont'd)

k) Apply a spring balance at right angles to the V-belt (14) and in the middle of the span of the belt and measure the tension.
Set the tension by means of the adjustment screw (10).

l) Apply the spring balance the same way to the timing belt (13). Set the tension by means of the belt tensioner (9).

m) Fit the doors and the covers.

Belt	**Load force (N)**	**Deflection (mm)**
Timing belt	14 - 16	4 - 6
V-belt	24 - 26	9 - 11

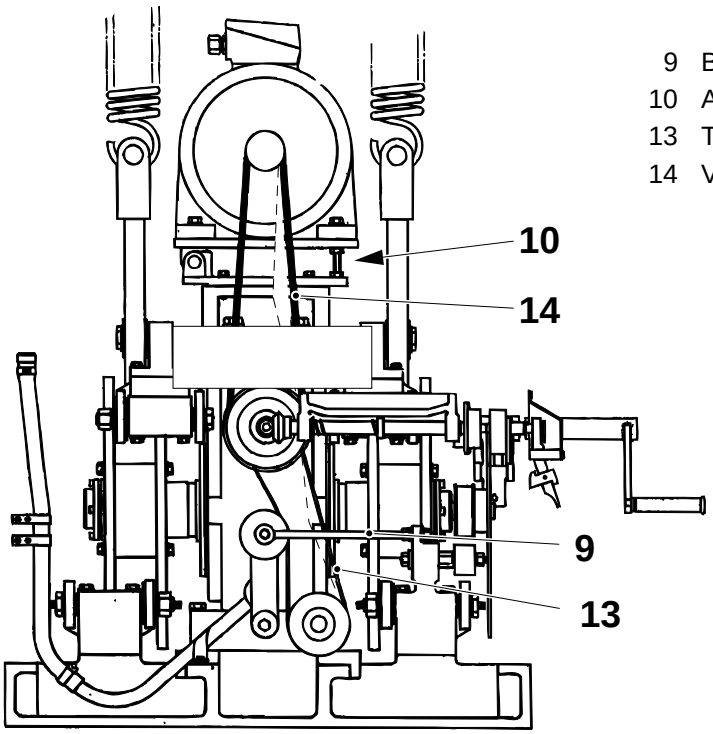

9 Belt tensioner
10 Adjustment screw
13 Timing belt
14 V-belt

2.2B02550C01.fm

3.1-7 Worm gear - change timing belt

Tools - spring balance	TP No. 74767-102
SPC reference	256173

Slacken the belt tension on the belt tensioner (1) and change the timing belt (2).

Reassemble and tension the timing belt. Check the belt tension, see *3.1- 8 Worm gear - check belt tension*.

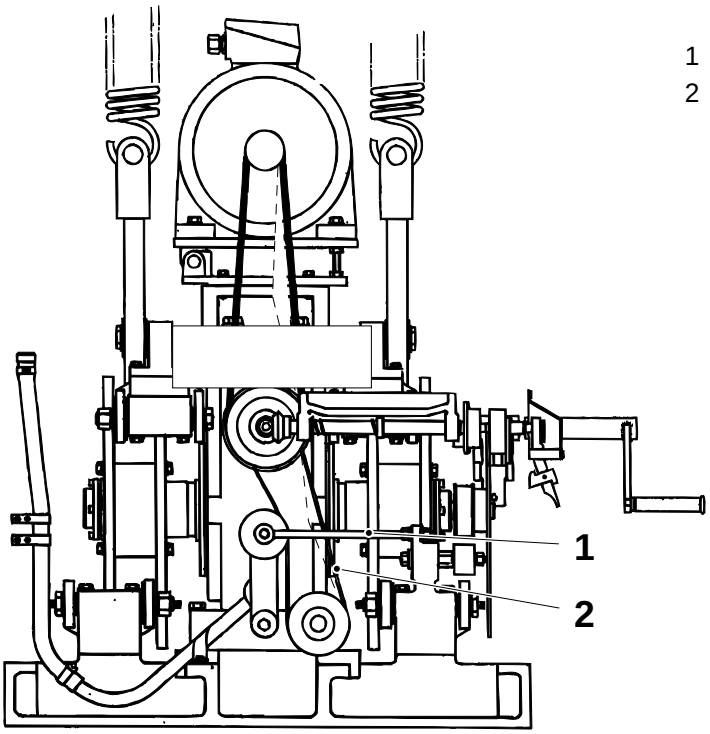

1 Belt tensioner
2 Timing belt

2.2B02550C01.fm

3.1- 8 Worm gear - check belt tension

Tools - spring balance	TP No. 74767-102
SPC reference	256173

Check the V-belt (2) and the timing belt (4) tension with the aid of the spring balance. The spring balance is to be applied at right angles to the belts and in the middle of the span of the belt.

Adjust the V-belt tension by means of the adjustment screw (1).

Adjust the timing belt tension by means of the belt tensioner (3).

Belt	Load force (N)	Deflection (mm)
Timing belt	14 - 16	4 - 6
V-belt	24 - 26	9 - 11

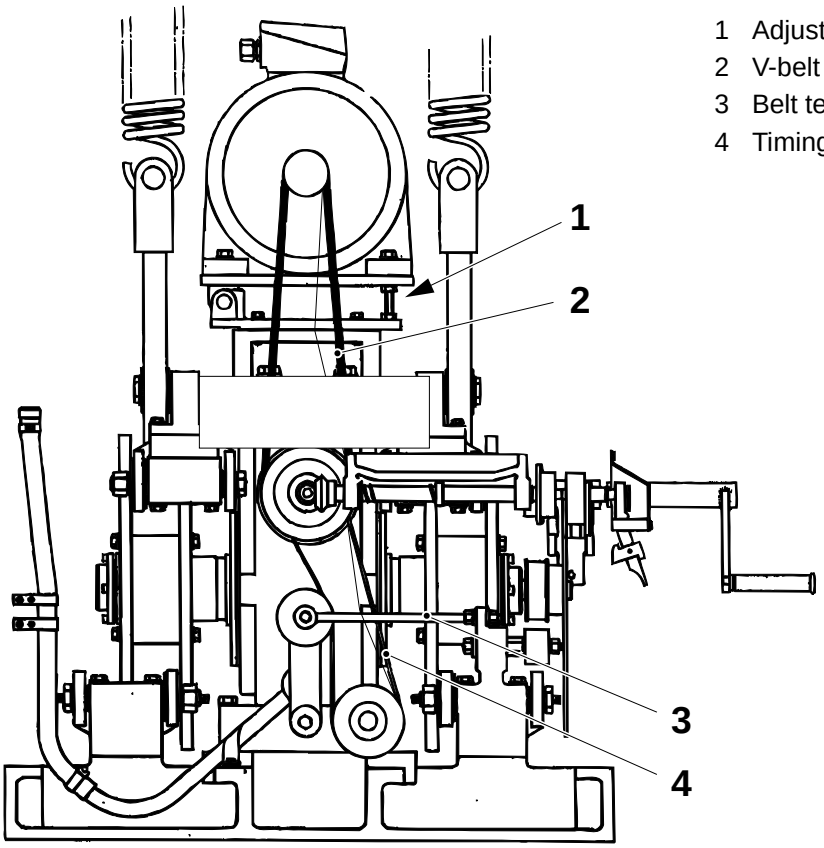

1 Adjustment screw
2 V-belt
3 Belt tensioner
4 Timing belt

2.2B02550C01.fm

3.1-9 Worm gear - change oil

Consumable - oil	code H
SPC reference	256173

Note! Always fill oil into the worm gear when it is **cold**.

WARNING!

Chemical products!
Lubricant. Follow the *Safety precautions*.

a) Undo the plug (1).
b) Remove the hose (2) from the clips (4) and drain the oil.
c) Fill up with oil, code H, see *10.2 Lubricants*.
d) Fit the plug (1).

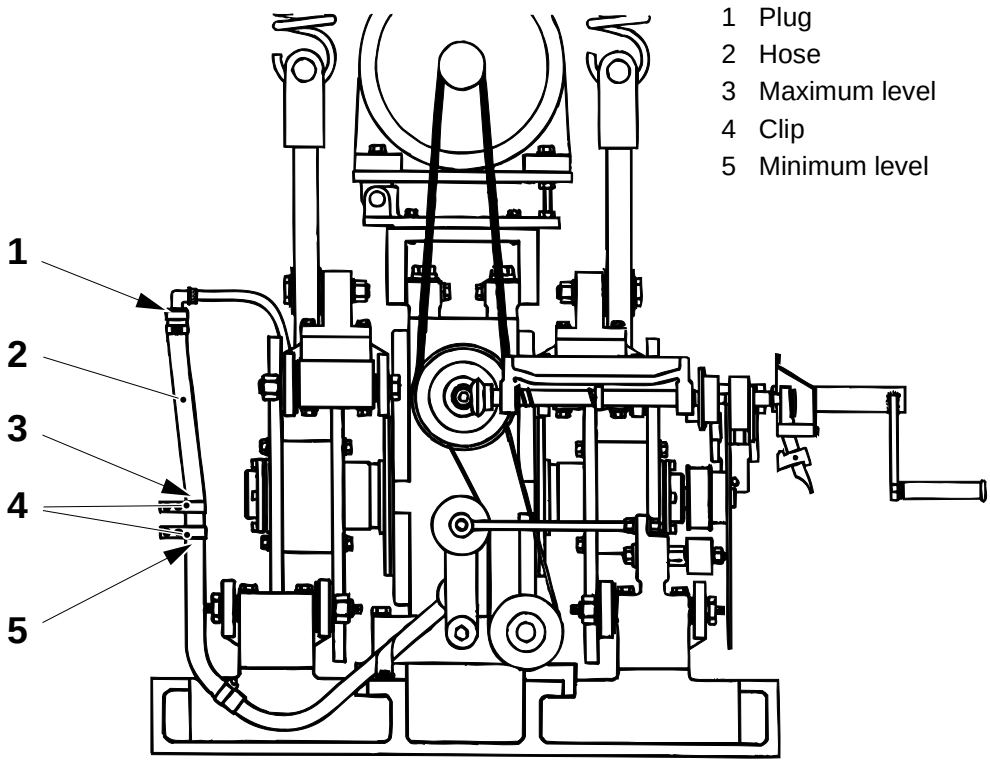

1 Plug
2 Hose
3 Maximum level
4 Clip
5 Minimum level

2.2B02550C01.fm

3.1-10 Worm gear - change

Consumable - oil	 code H
Tools - puller - puller - torque wrench - wooden blocks	 TP No 76175 TP No 979537 min 85 Nm
SPC reference	256173

Removal

a) On the LH side of the machine, remove the door and the covers indicated (arrows).

b) On the RH side, remove the covers and the door indicated.

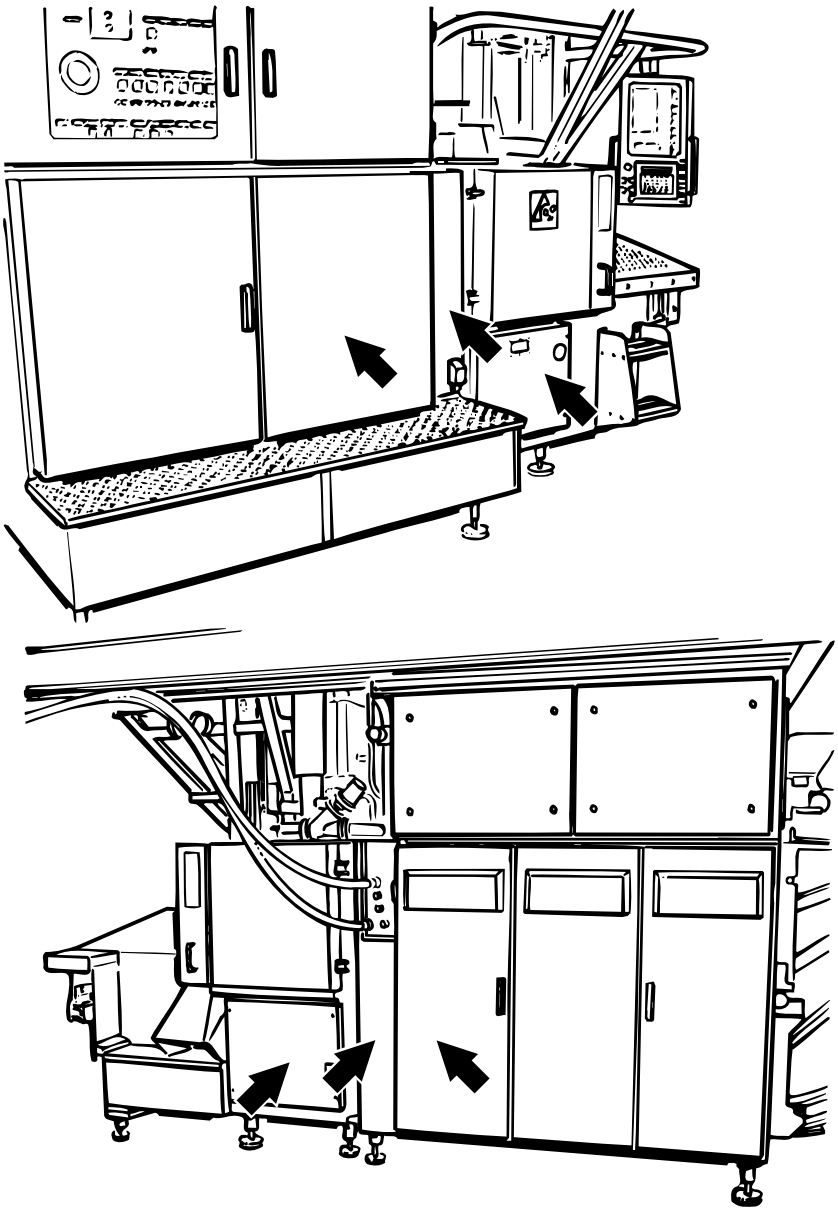

2.2B02550C01.fm

(Cont'd)

(Cont'd)

WARNING!

Chemical products!
Lubricant. Follow the *Safety precautions*.

c) Drain the oil from the worm gear.

d) Remove the drop chute, see *2.3-1 Drop chute - remove*.

e) Remove the lugs (1) holding the top of the worm gear against the frame.

f) Mark and disconnect the cable between the brake and the terminal box above the gear and the cable between the coupling and the box underneath the drive motor.

g) Remove the LH and RH curve packs, see *3.8-1 Curve pack - change,* and the alignment templates, if any.

h) Remove the oil filler hose (2) from the frame and tie up the hose to the gear.

i) Remove the belt tensioner (3) and lift off the timing belt from the pulley. Disconnect the two oil pipes on the gear.

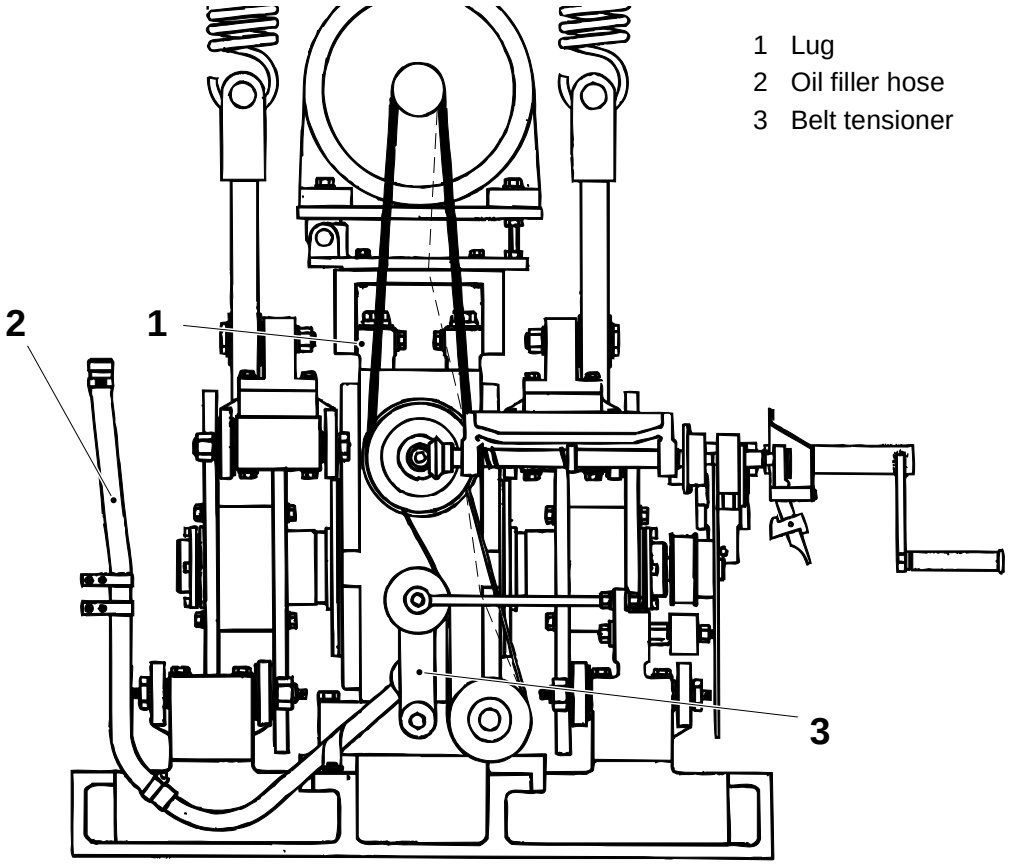

2.2B02550C01.fm

(Cont'd)

(Cont'd)

j) Remove the micro switch cables from the clamps (4) on the LH slewing bracket.

k) Disconnect the oil pipes (5) and (6), unscrew the screws (7) and lift out the slewing bracket.

l) Disconnect the oil pipes (8) on the LH arm. Lift the timing belt out of the way.

m) Remove the crank mechanism.

n) Unscrew the four screws (9) and the screws (10). Lift out the arm.

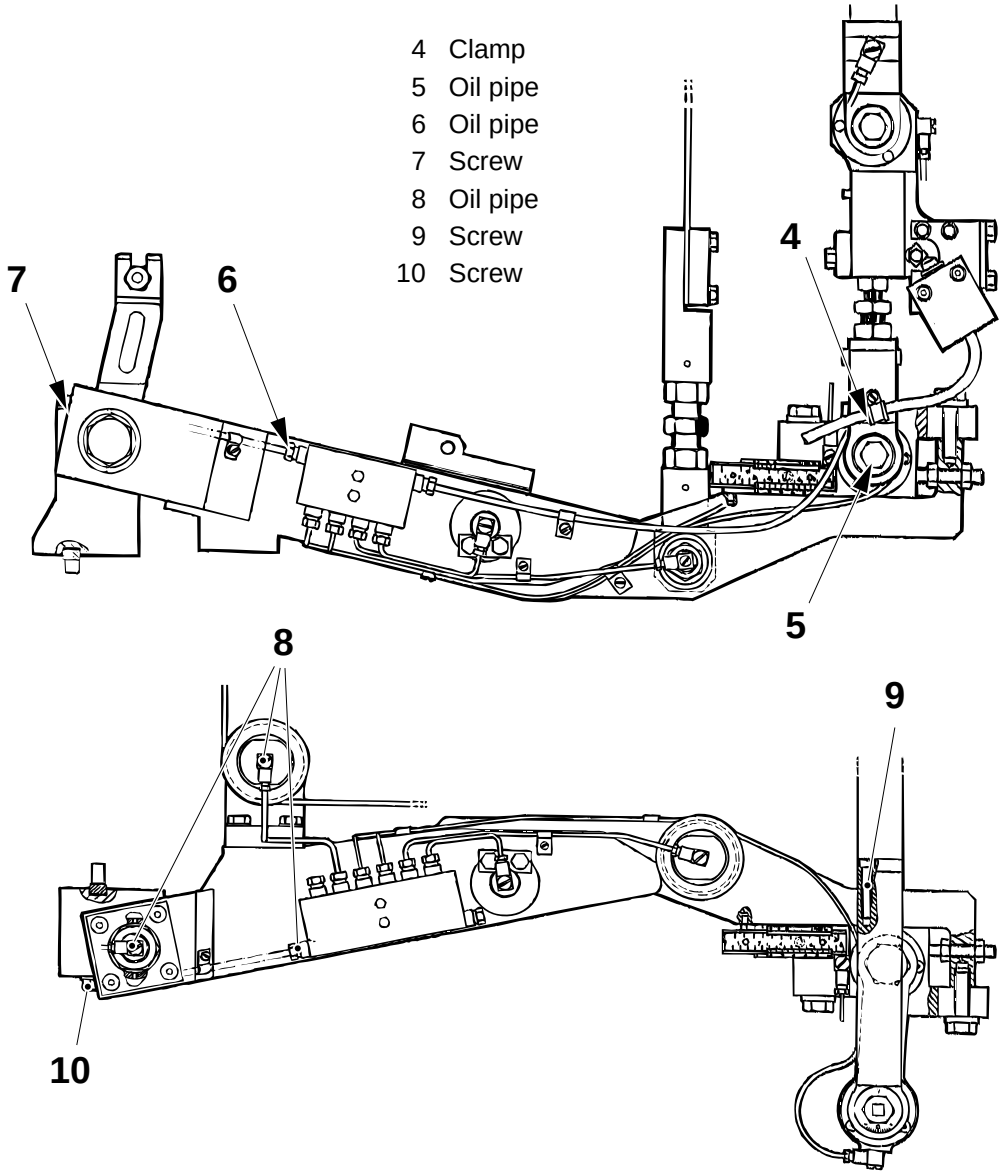

2.2B02550C01.fm

(Cont'd)

(Cont'd)

o) Remove the slewing bracket and the arm on the RH side. Follow the procedure in *j)* - *n)*.

p) Remove the carrier (11). Slacken the V-belt (12) and remove it.

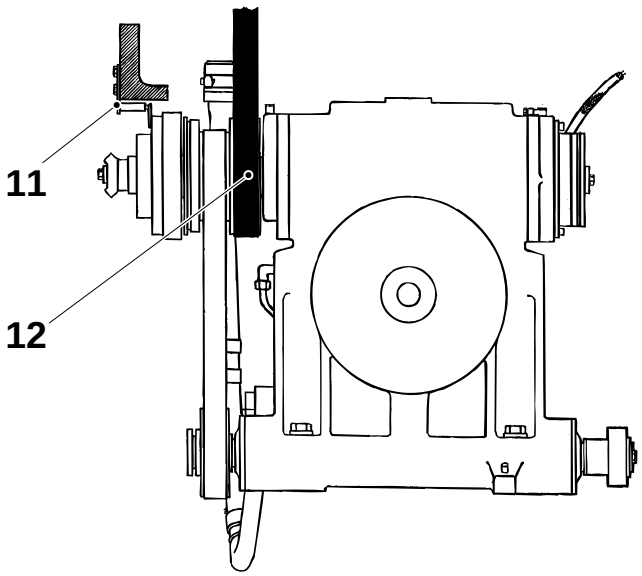

11 Carrier
12 V- belt

q) Remove the clamp connection (13).

r) Loosen the screw (14) and remove the shaft (15) and the coupling (16).

s) Place wooden blocks on the bottom of the frame, on the side where the worm gear shall be removed (to prevent the worm gear from getting stuck).

2.2B02550C01.fm

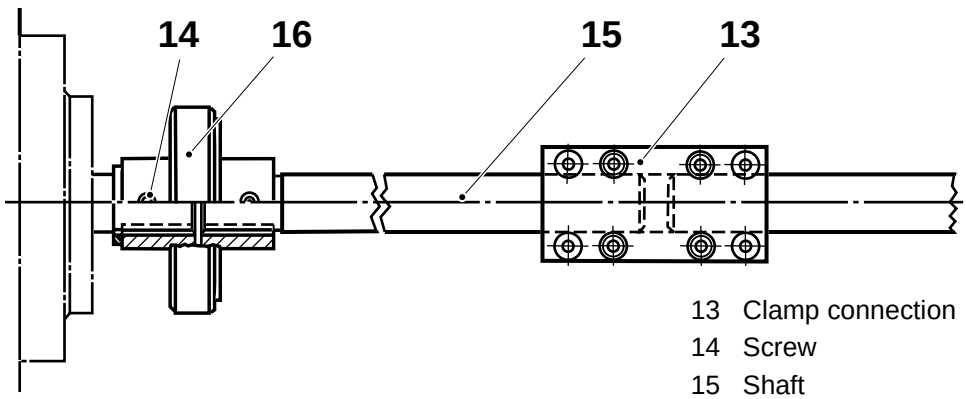

13 Clamp connection
14 Screw
15 Shaft
16 Coupling

(Cont'd)

(Cont'd)

t) Unscrew the screws (17), remove the pins (18) and lift out the worm gear to the right.

u) Remove the brake.

v) Loosen the screws to the bushing (19), half a turn at a time **in sequence** around the flange, and remove the pulley.

w) Remove the magnetic clutch from the worm gear.

x) Change the worm gear.

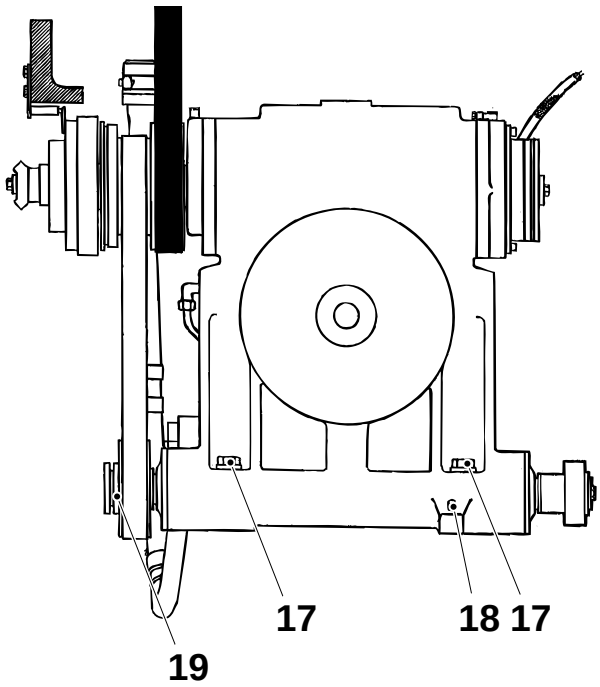

17 Screw
18 Pin
19 Bushing

2.2B02550C01.fm

Assembly

Note! Before assembly, fit the brake on the worm gear and set it, see *3.1-1 Worm gear - set brake gap*. Also make sure that the flat wedge fits properly in the magnetic clutch before fitting the worm gear in the machine.

a) Place the gear in the machine. Place the four screws in the holes.

b) Set the worm gear, see *3.1-12 Worm gear - set*.

(Cont'd)

(Cont'd)

c) Fit the two lugs. Torque the four screws (20) to 45 ±3 Nm. Torque the two screws (21) to 80 ±3 Nm.

d) Fit the V-belt (12) between the drive motor and the worm gear.

e) Place the timing belt over the pulley and attach the bow of the clutch to the carrier (11) on the frame.

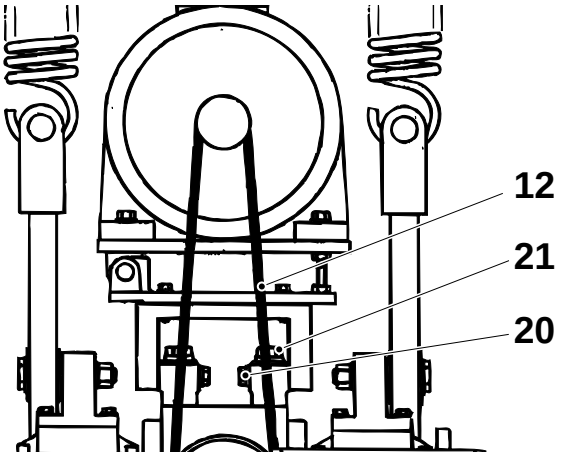

11 Carrier
12 V-belt
20 Screw
21 Screw

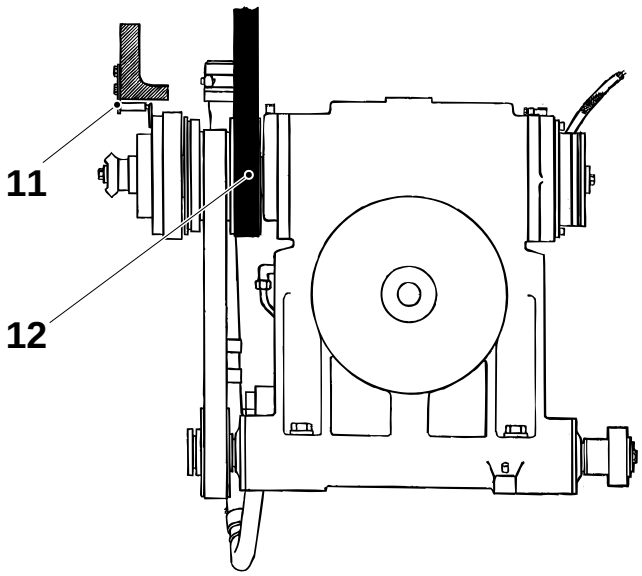

2.2B02550C01.fm

f) Tension the V-belt, see *3.1- 8 Worm gear - check belt tension*.

g) Refit the crank mechanism bracket and set it, see *3.5-3 Crank - fit*.

(Cont'd)

(Cont'd)

h) Fit the final folder couplings and the worm gear oil pipes.

i) Reconnect the cables from the worm gear brake and from the clutch to the connection box. Fit the oil filler hose (2).

j) Fit the pulley and the bushing (19), and torque the screws **in sequence** around the flange, half a a turn at a time, to 8 ±0.5 Nm.

Note! Make sure that there is the same distance all around the clamp fitting.

k) Fit the belt (22).

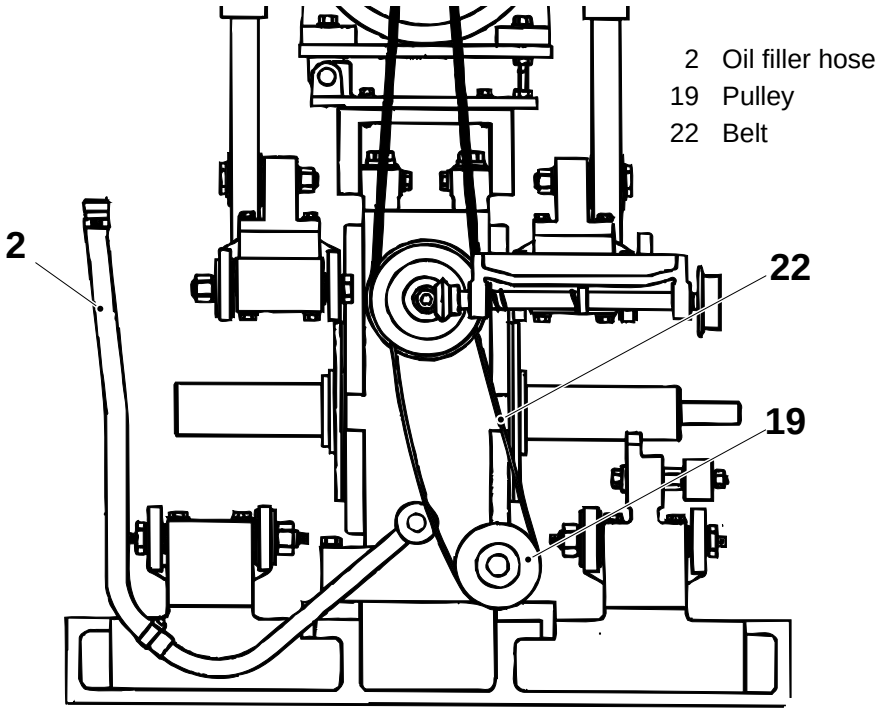

l) Fit and set the alignment templates, if any, on the worm gear, see *3.1-11 Worm gear - set alignment template*.

(Cont'd)

2.2B02550C01.fm

(Cont'd)

m) Fit the LH and RH slewing brackets (24) and the arms (25). Attach the timing belts.

n) Make sure that the arms are fitted so that the forked link (26) and the link head (27) are **in line** vertically above each other.

o) Fit all oil connections to the slewing brackets and the arms.

p) Fit the micro switch cables to the slewing brackets.

q) Fit and set the curve packs (23), see *3.8-1 Curve pack - change*.

r) Fit the belt tensioner (3) and tension the timing belt, see *3.1- 8 Worm gear - check belt tension*.

s) Fit and set the drop chute, see *2.3-2 Drop chute - set*.

WARNING!

Chemical products!
Lubricant. Follow the *Safety precautions*.

t) Top up the worm gear with oil, code H, see *10.1 Technical data*.

u) Refit the covers and the doors.

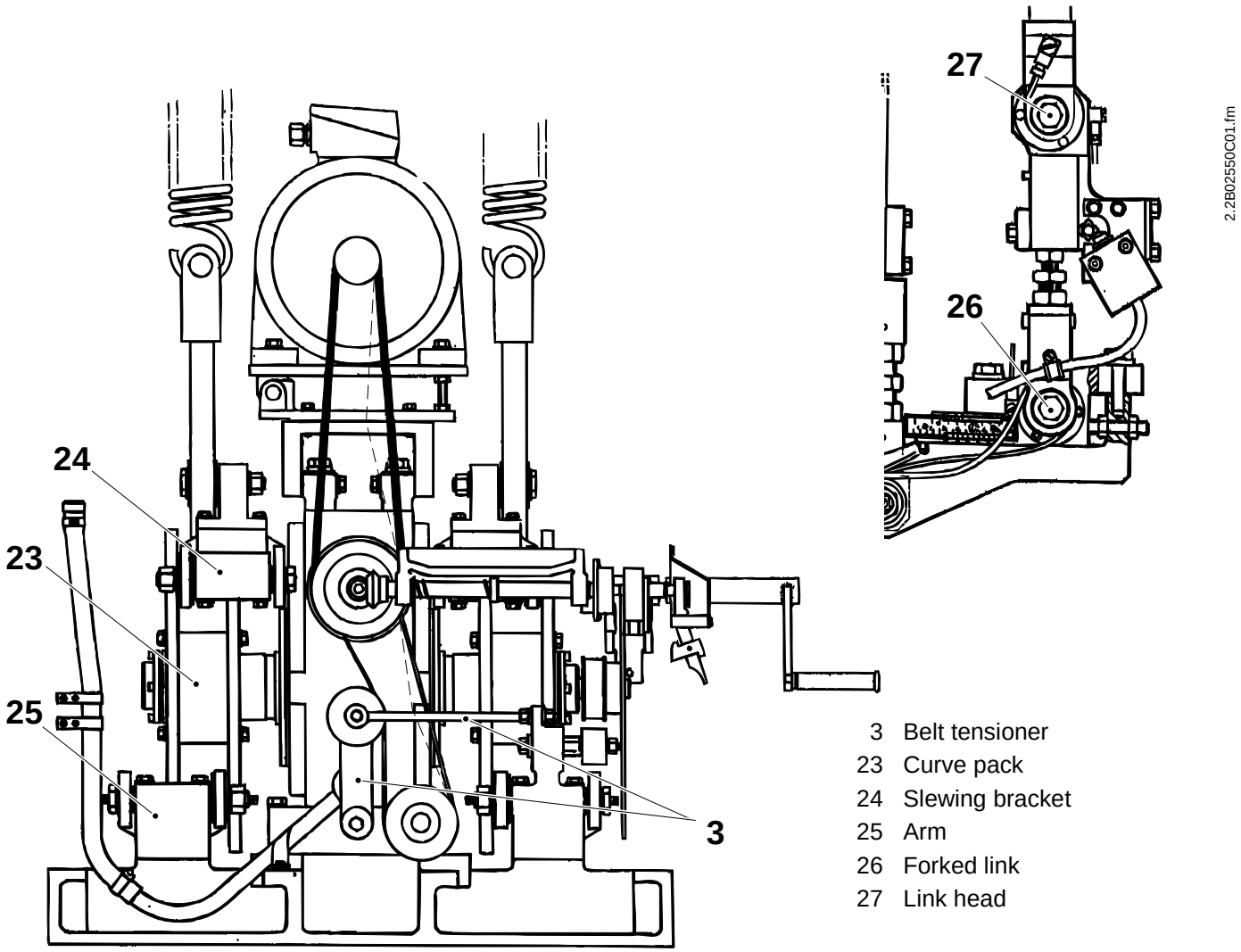

3 Belt tensioner
23 Curve pack
24 Slewing bracket
25 Arm
26 Forked link
27 Link head

3.1-11 Worm gear - set alignment template

Tools - spirit level	 TP No. 90243-165
SPC reference	256173

Level the templates relative one another **within 3 scale divisions** on the spirit level.

Note! Before assembly, thoroughly clean the templates and the shafts.

a) Place the template (2) on the RH gear shaft.

b) Apply the spirit level (1) on the template and set the template horizontal.

c) Tighten the screws (4).

d) Put the other template on the LH gear shaft. Apply the spirit level.

e) Make sure that the template is horisontal and tighten the screws.

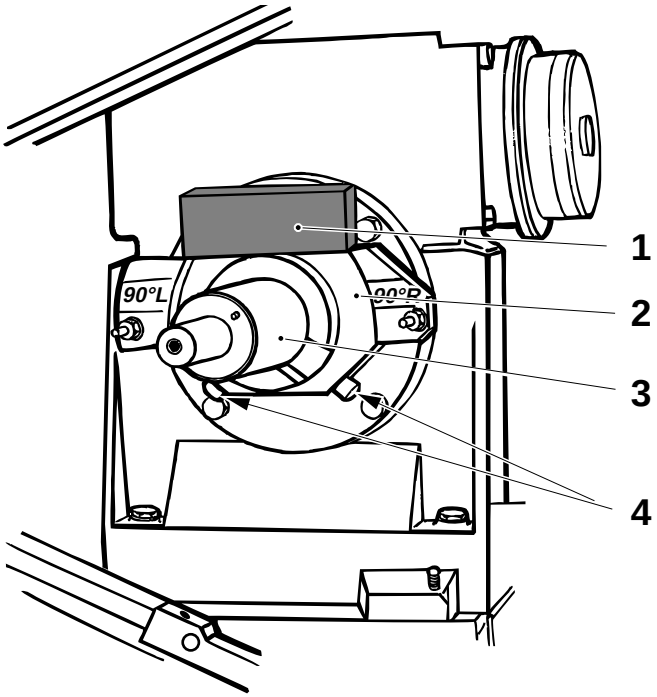

1 Spirit level
2 Alignment template
3 Shaft
4 Screw

2.2B02550C01.fm

3.1-12 Worm gear - set

Tools - template - spacer rod - template - torque wrench	 TP No. 75453 TP No. 75454 TP No. 978421 min 85 Nm
SPC reference	256173

Note! The worm gear is pinned, but if setting has to be redone, proceed as follows.

a) On the RH and the LH side, fit the setting templates (1), together with the spacer rod (2), at the mounting points (3) of the slewing bracket and the arms.

b) Move the gear towards the templates so that the shafts of the gear bears against the spacer rods.

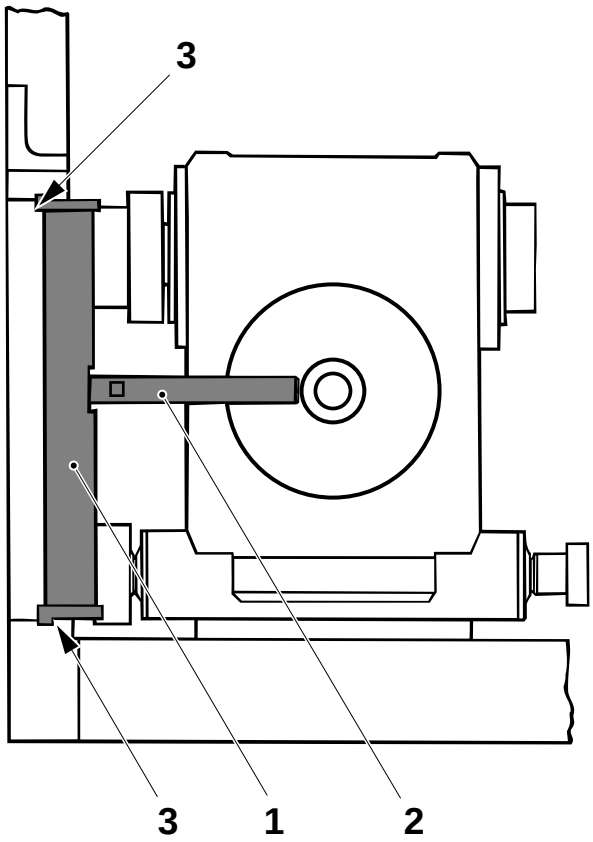

1 Template
2 Spacer rod
3 Mounting point

2.2B02550C01.fm

(Cont'd)

(Cont'd)

c) **Alt 1** - If the guides are removed:
Fit the template (4) in the holes for the LH side guides and move the worm gear sideways towards the template so that the brake (5) bears against the template.

Alt. 2 - If the guides are fitted:
Put a set square (6) against the guides (7), and set distance B.

d) Fit the worm gear screws and torque them to 80 ±3 Nm.

e) Make sure that there is distance A between the spacer rods and the shafts (8) on both sides.

f) Pin the gear.

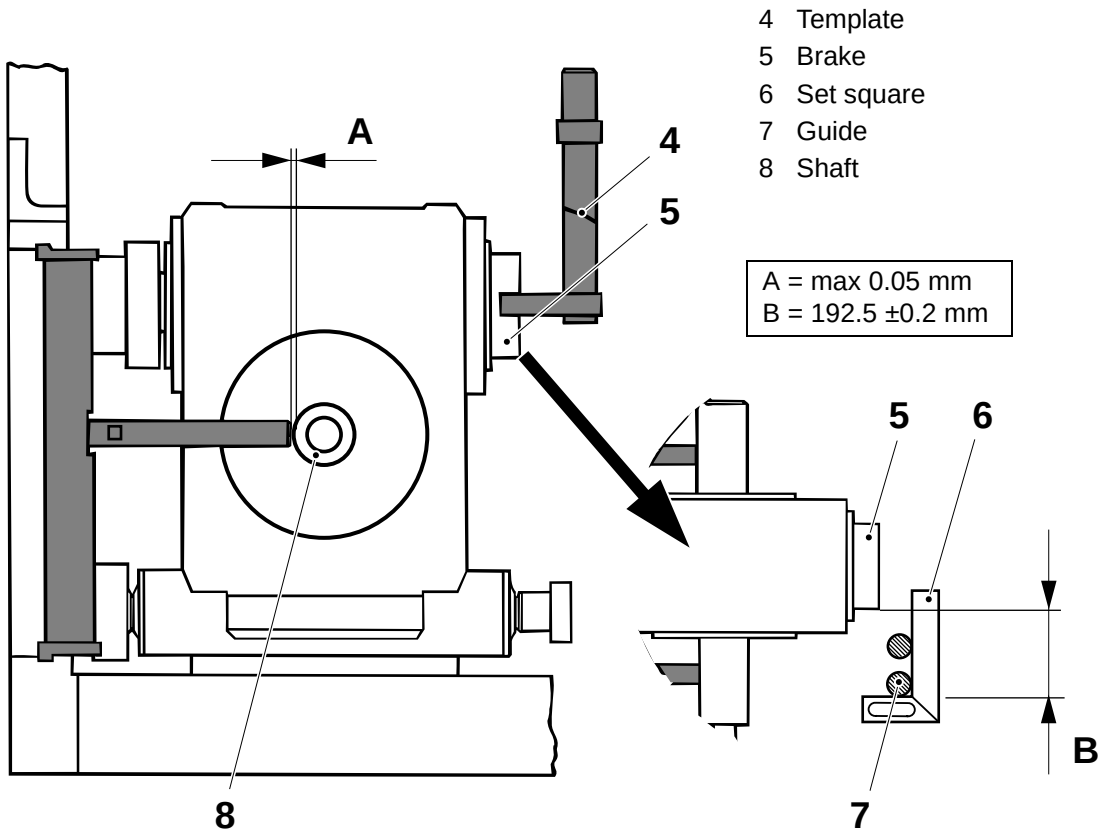

2.2B02550C01.fm

3.1-13 Worm gear - check oil level

Consumable - oil	code H
SPC reference	256173

a) Check the oil level in the worm gear.

Note! Always top up oil into the worm gear when it is **cold**.



WARNING!

Chemical products!
Lubricant. Follow the *Safety precautions*.

b) If required, remove the plug (1) and top up with oil, code H, see *10.2 Lubricants*.

c) Fit the plug.

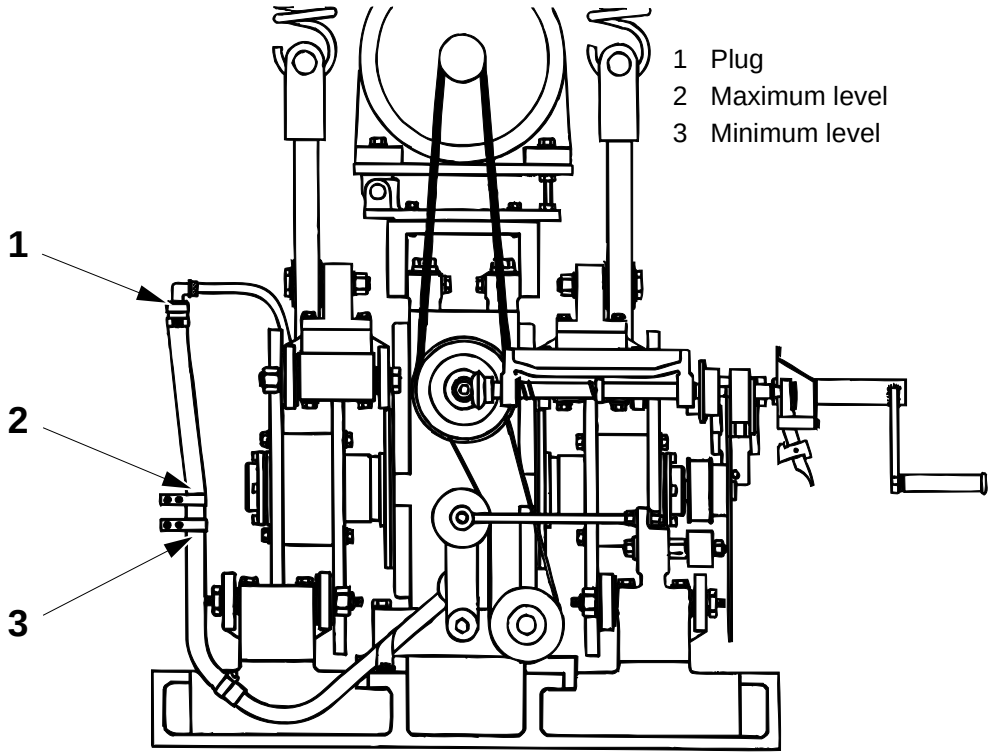

2.2B02550C01.fm

3.1-14 Worm gear - check clutch and brake gap

SPC reference	256173

a) Measure distance A between the clutch (1) and the disc (2).

b) If required, set the clutch gap. Follow the procedure in *3.1-3 Worm gear - change clutch bearing*.

c) Step up to **Preheating I**.

d) Measure distance B between the brake housing (3) and the disc (4). Make sure that the distance is within the tolerances all the way around.

e) If required, set the brake gap, see *3.1-1 Worm gear - set brake gap*.

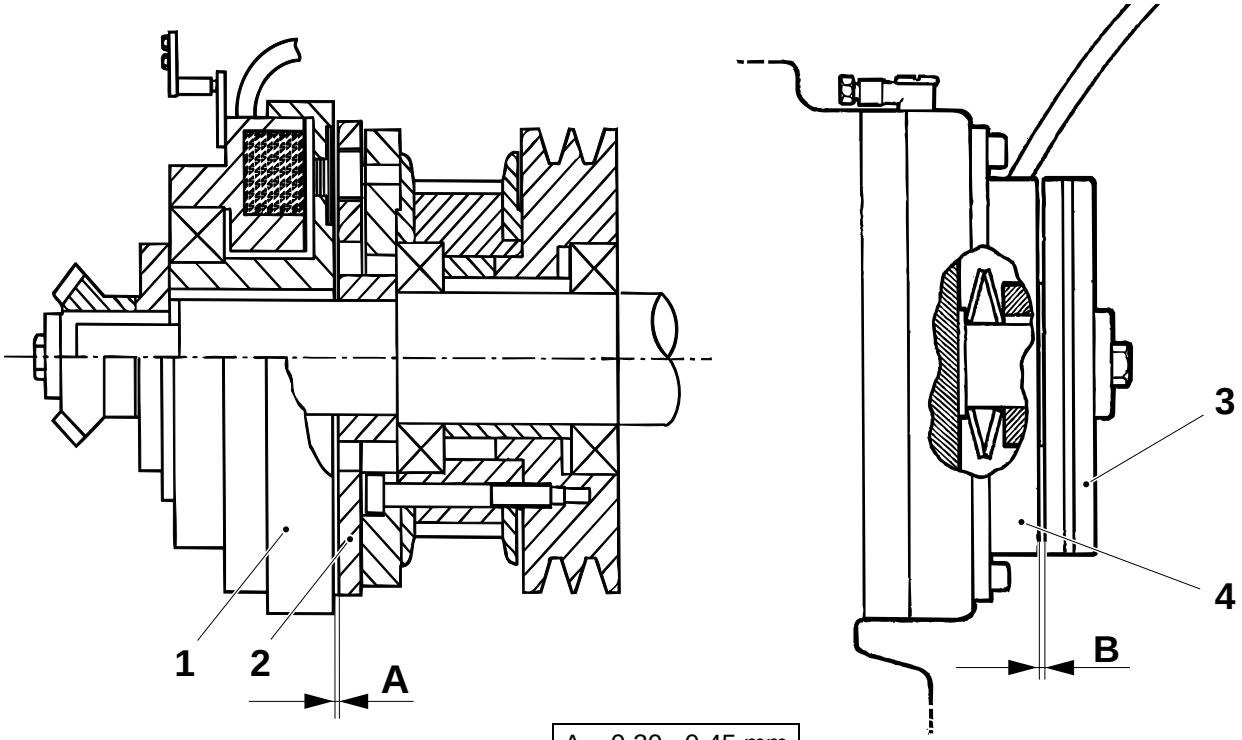

A = 0.20 - 0.45 mm
B = 0.3 - 0.5 mm

1 Clutch
2 Disc
3 Brake housing
4 Disc

2.2B02550C01.fm

3.2 Arm

SPC reference	256197

3.2-1 Arm - check timing belt rollers

SPC reference	256197

a) Check that the timing belt rollers (1) and (2) rotate freely and that there is no play in the bearings.

b) Check that the edges (3) of the rollers are straight and not damaged. Damaged edges may damage the timing belt.

c) Change the rollers and/or bearings as required.

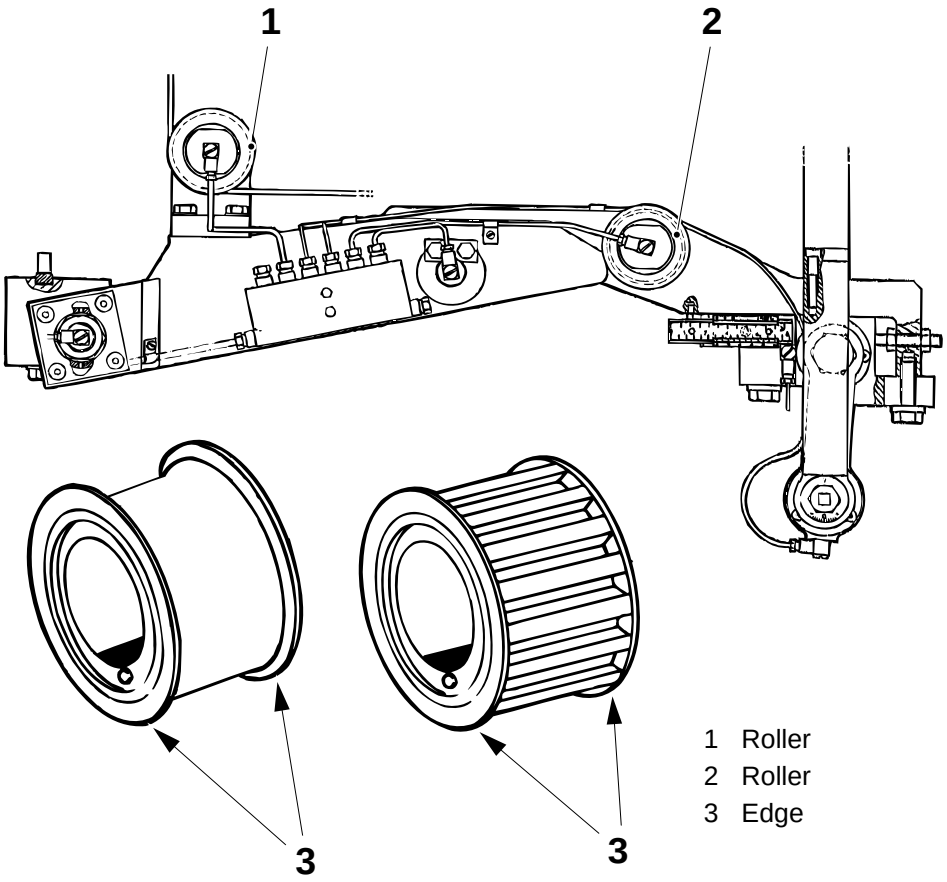

2.2B0255C02.fm

1 Roller
2 Roller
3 Edge

(Cont'd)

(Cont'd)

Change

a) Unscrew the banjo connections (4).

b) Remove the axle pins.

c) Remove the washers (5) and change the bearings (6) and/or the rollers.

d) Assemble in the reverse order.

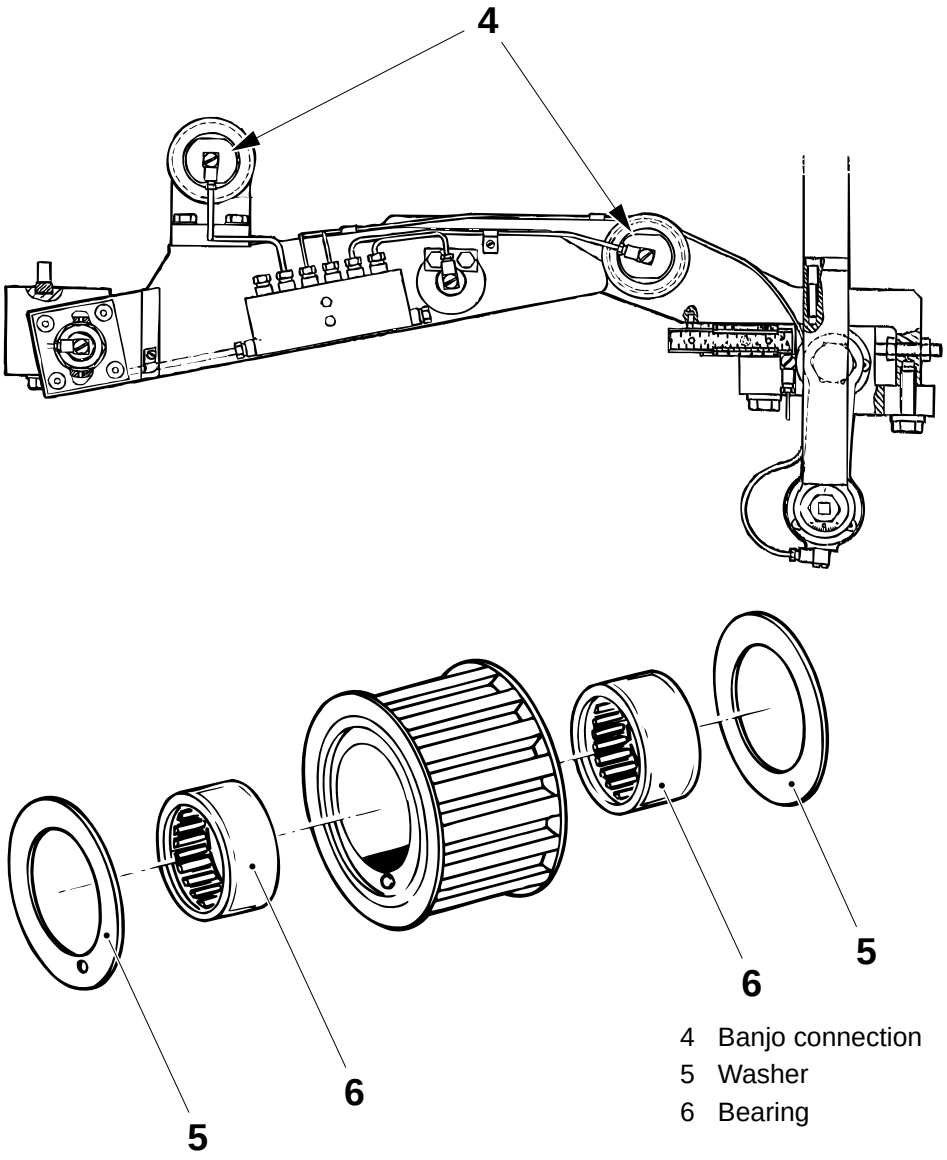

4 Banjo connection
5 Washer
6 Bearing

2.2B0255C02.fm

2.2B0255C02.fm

3.4 Hold-down device

SPC reference	572760-0100

3.4-1 Hold-down device - check timing belts

SPC reference	572760-0100

Check the inside and outside of the timing belts (1) for wear and/or damage, especially at the stress points (arrows).

Crank to get all parts of the timing belt accessible.

If required, change the timing belts, see *3.4-2 Hold-down device - change timing belts*.

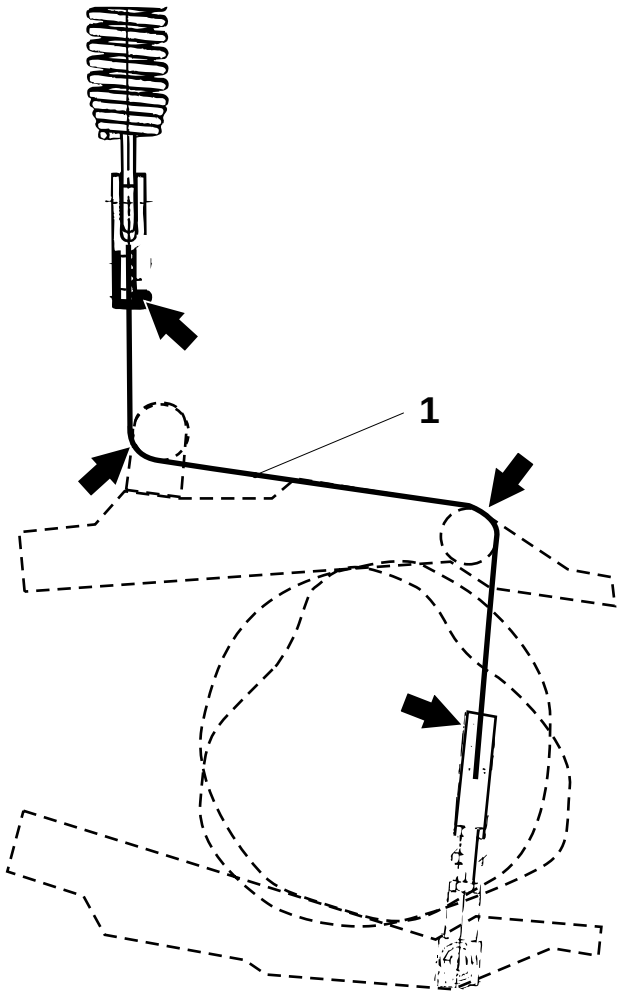

1 Timing belt

2.2B0255C04.fm

3.4-2 Hold-down device - change timing belts

Tools - torque wrench	 min 32 Nm
SPC reference	572760-0100

a) Crank to 145°.

b) Remove the cover (1).

c) Loosen half a turn the nut (3).

d) Unscrew the nuts (2).

Caution! Risk of damage to the equipment! The nut (3) **must not** be completely unscrewed and removed from the threaded pin (4).

e) Loosen the nut (3) to release the spring force of the hold-down device.

Caution! Take care **not to alter** the setting of the pointer (5) when removing the degree scale.

f) Remove the degree scale.

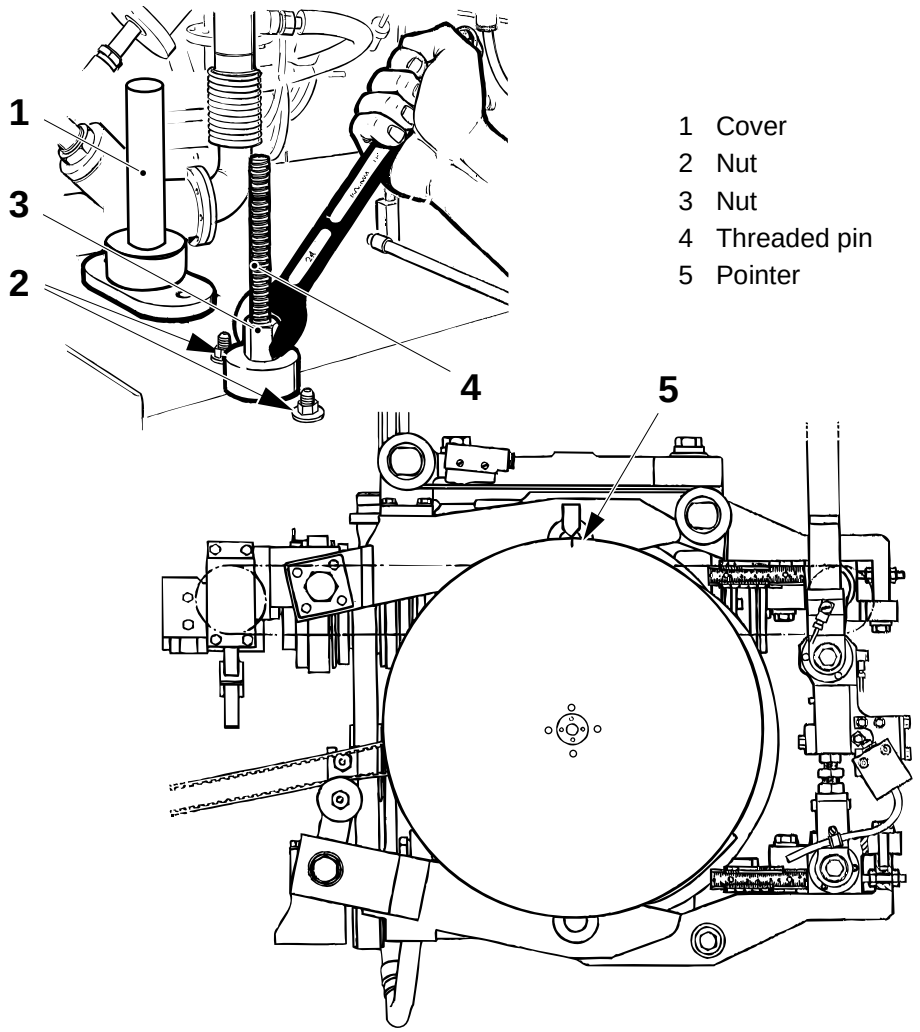

1 Cover
2 Nut
3 Nut
4 Threaded pin
5 Pointer

2.2B0255C04.fm

(Cont'd)

(Cont'd)

g) Unscrew the banjo connections (7).

h) Lift the timing belt off the timing belt rollers (8). Remove the upper bracket (6) from the spring.

i) Remove the brackets (6) and (9) from the belt.

j) Fit the brackets to the new belt, see table below.

k) Fit the belts and the banjo connections.

Package	Belt, TP No.	Length A (mm)
200 S	566404-2	710

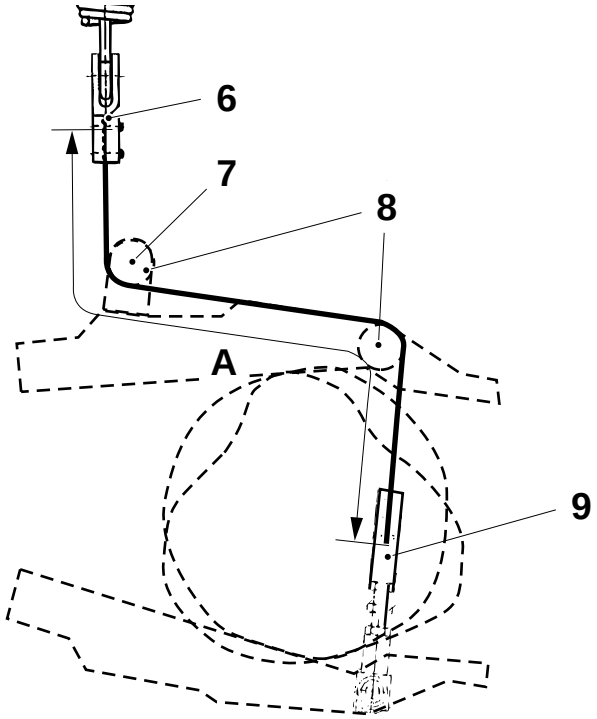

6 Bracket
7 Banjo connection
8 Roller
9 Bracket

(Cont'd)

2.2B0255C04.fm

(Cont'd)

l) Tighten the nut (3) of the hold-down device on the threaded pin (4).

m) Fit and tighten the nuts (2). Torque the nuts to 30 ±2 Nm.

n) Fit the cover (1).

o) Make sure that distance B is correct on the LH and RH rigging screws, see table.

p) Reassemble the degree scale.

Package	B ±1 (mm)
200 S	45

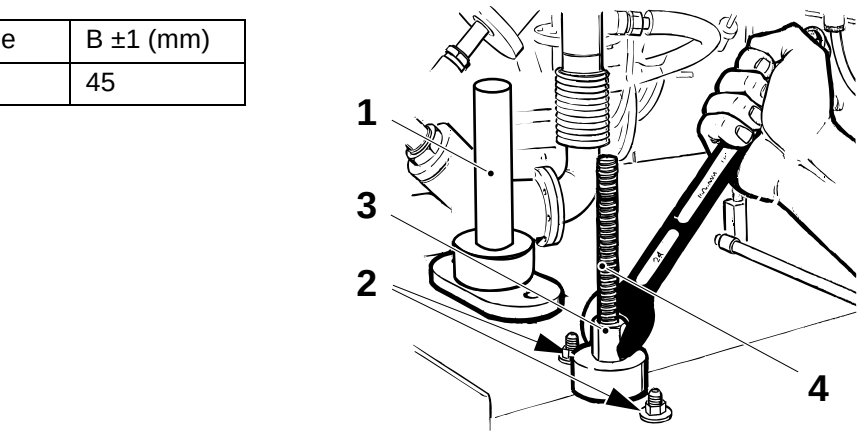

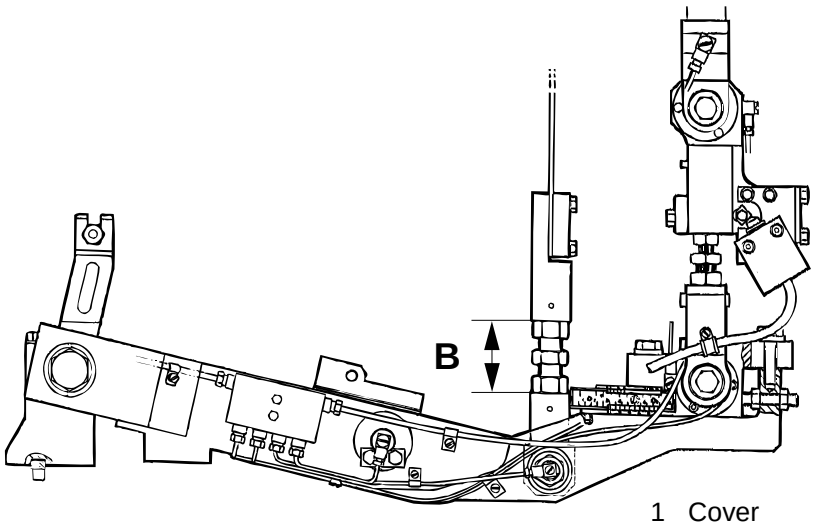

2.2B0255C04.fm

1 Cover
2 Nut
3 Nut
4 Threaded pin

3.4.1 Rocker arm

3.4.1-1 Rocker arm - check bearing play

SPC reference	572750-0100

a) Crank to 145°.

b) Remove the cover (1).

c) Loosen half a turn the nut (3).

d) Unscrew the nuts (2).

Caution! Risk of damage to the equipment! The nut (3) **must not** be completely unscrewed and removed from the threaded pin (4).

e) Loosen the nut (3) to release the spring force of the hold-down device.

f) Unhook the springs (5) from the spring bracket (6).

g) Check for play in the ball bearings (7) by moving the arm sideways.

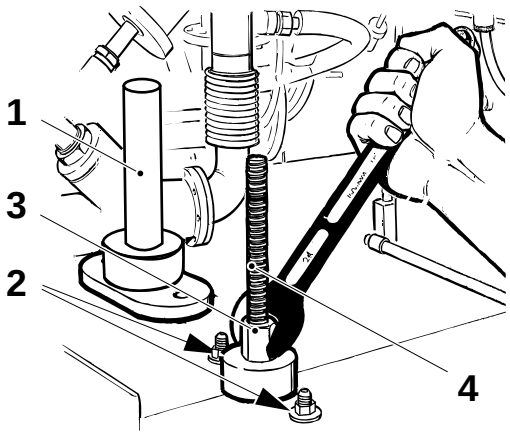

1 Cover
2 Nut
3 Nut
4 Threaded pin
5 Spring
6 Spring bracket
7 Ball bearing

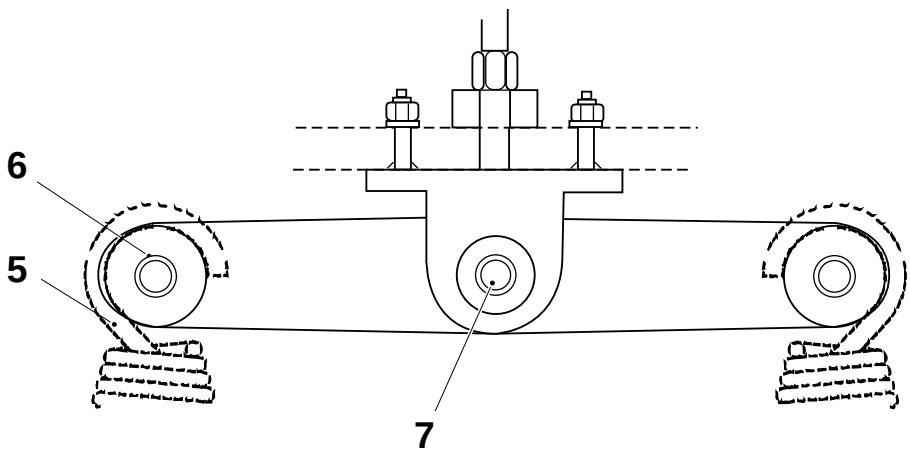

(Cont'd)

2.2B0255C04.fm

(Cont'd)

h) Check for play in the ball bearings (8). Change as required.

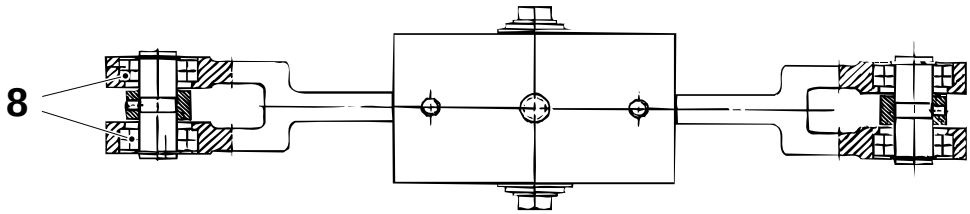

8 Ball bearing

Change bearings

a) Unscrew the nut (3) and remove the rocker arm.
b) Unscrew the screws (9) and remove the shaft (10).
c) Remove the rocker arm from the bracket.
d) Change the ball bearings (7).

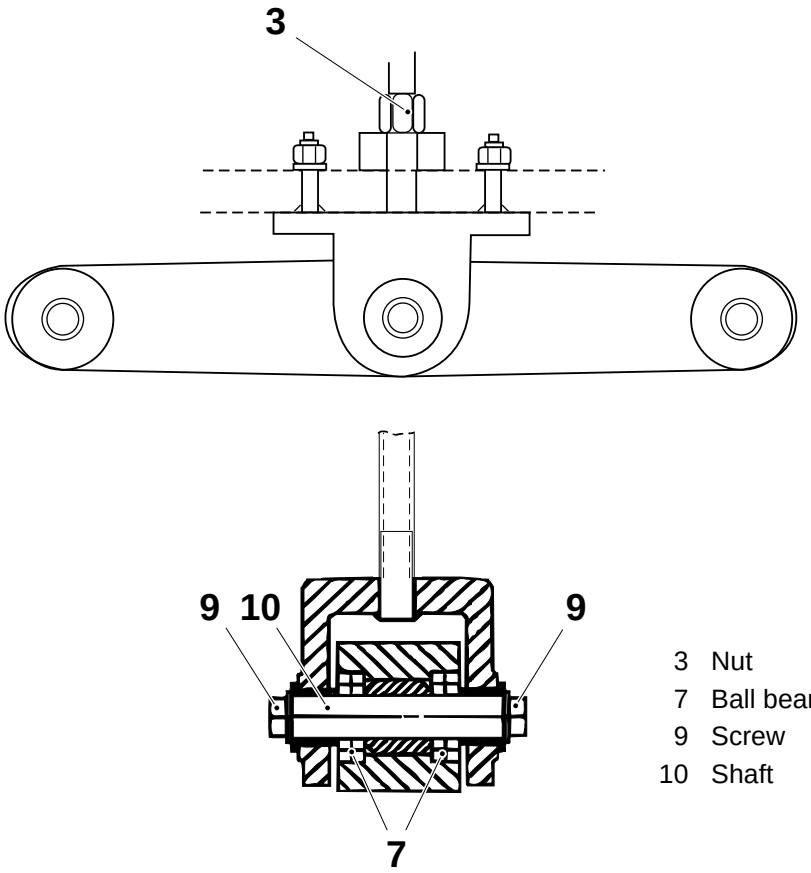

3 Nut
7 Ball bearing
9 Screw
10 Shaft

2.2B0255C04.fm

(Cont'd)

(Cont'd)

e) Remove the circlips (11) and loosen the stop screw (12).

f) Remove the shafts (13).

g) Remove the spring bracket (14)

h) Change the ball bearings (8).

i) Assemble in the reverse order. Torque the nuts (2) to 30 ±2 Nm.

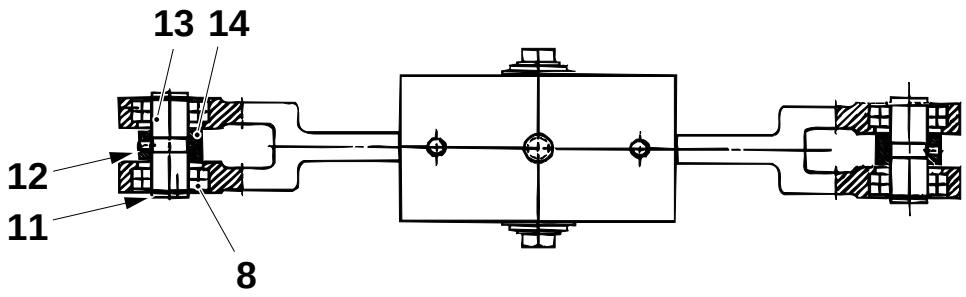

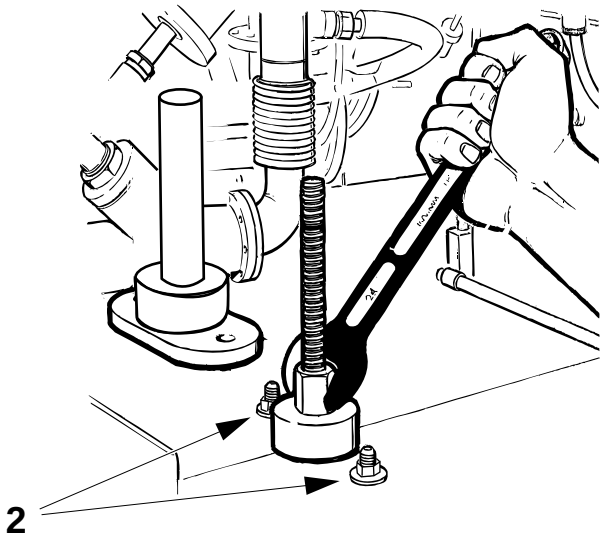

2 Nut
8 Ball bearing
11 Circlip
12 Stop screw
13 Shaft
14 Spring bracket

2.2B0255C04.fm

3.8 Curve pack

SPC reference	256202

3.8-1 Curve pack - change

Consumables - oil	 code D
Tools - guide pin - spirit level - spring balance - template - torque wrench - wooden blocks	 TP No. 75451 TP No. 90243-163 TP No. 74767-102 TP No. 76338 min 32 Nm
SPC reference	256202

Removal

a) Crank to 0°, compare with the impulse transmitter display.

b) Slacken the crank chain (1) and remove it from the chain tensioner sprocket (2).

c) Place wooden blocks (3) underneath both yokes.

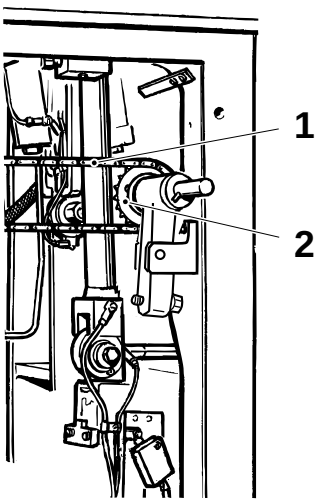

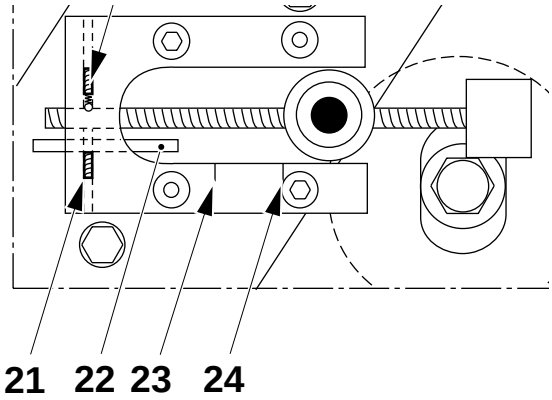

2.2B0255C08.fm

1 Crank chain
2 Chain tensioner sprocket
3 Wooden block

(Cont'd)

(Cont'd)

d) Remove the pointer (4).

e) Unscrew the screws (6) and remove the degree scale (5).

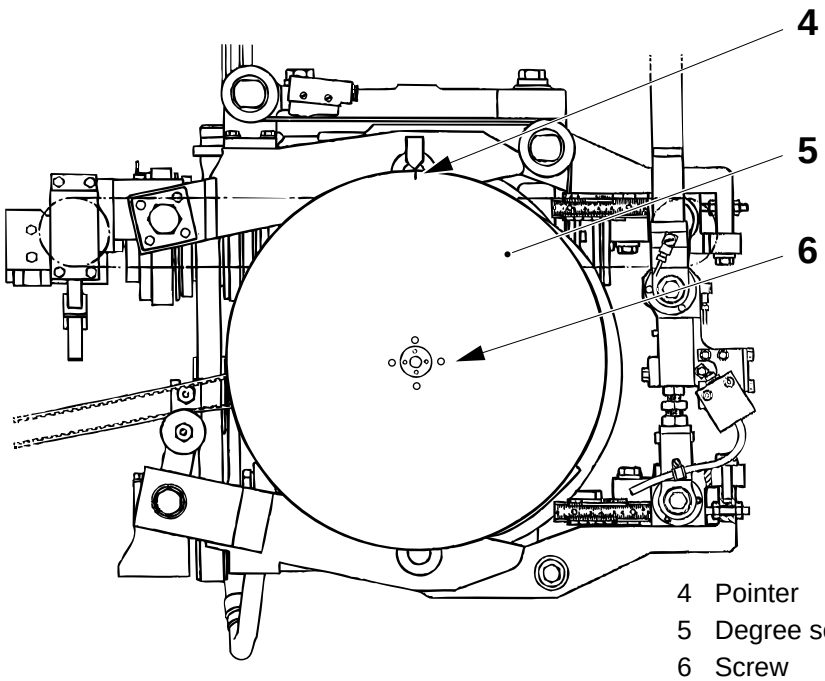

4 Pointer
5 Degree scale
6 Screw

(Cont'd)

2.2B0255C08.fm

(Cont'd)

f) Slacken the belt tensioner (7) and remove the belt.

Caution! Risk of damage to the equipment. The screws (8) **must not** be unscrewed.

g) Loosen the clamping element by screwing out the screws (8) **in sequence** around the flange, half a turn at a time. If the clamping element sticks to the timing belt pulley (9) and the spacer, long screws may be used as puller tools.

h) Remove the belt pulley.

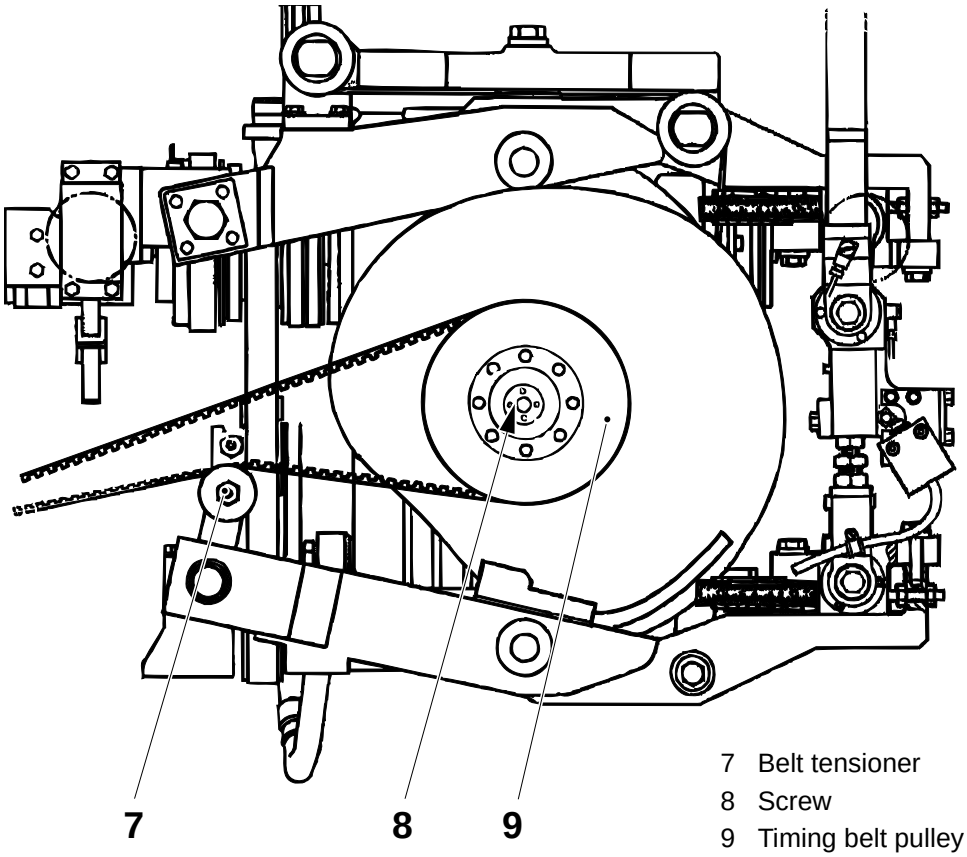

7 Belt tensioner
8 Screw
9 Timing belt pulley

2.2B0255C08.fm

(Cont'd)

(Cont'd)

i) Remove the cover (10) and unscrew the nuts (12).

Caution! Risk of damage to the equipment! The nut (13) **must not** be completely unscrewed and removed.

j) Screw out the nut (13) until the top of it is in level with the top of the screw (11).

k) Unhook the timing belts (14) from the hold down device.

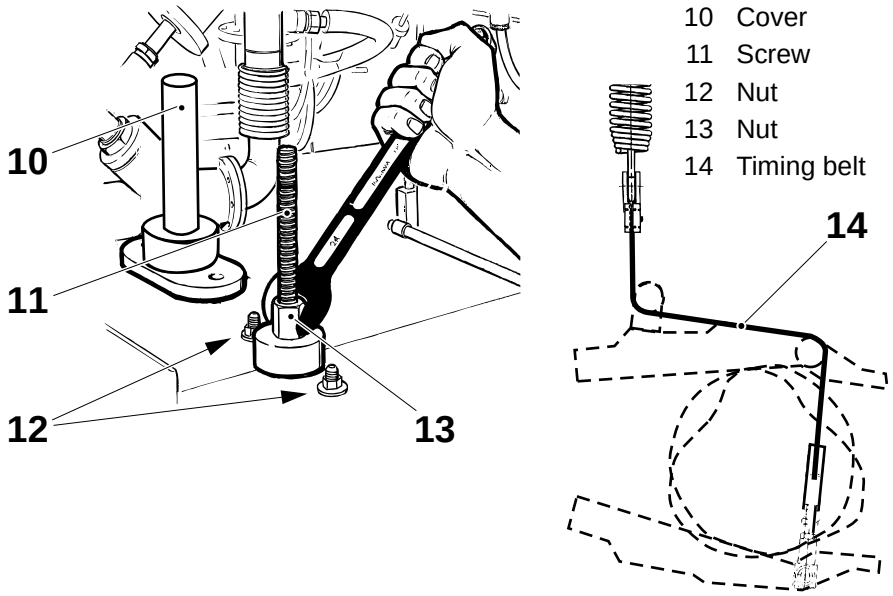

10 Cover
11 Screw
12 Nut
13 Nut
14 Timing belt

2.2B0255C08.fm

l) Loosen the cable clamps (16) and remove the cables from them.

m) Unscrew the screws (15) and split the disconnection links.

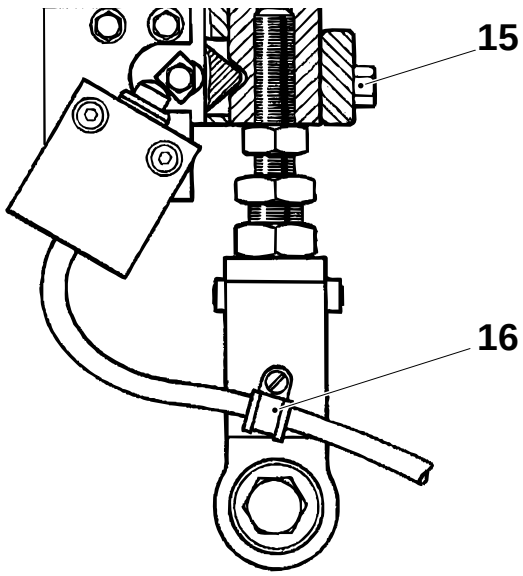

15 Clamp
16 Screw

(Cont'd)

(Cont'd)

n) Lower the slewing brackets towards the base plate and raise the arms towards the top plate.

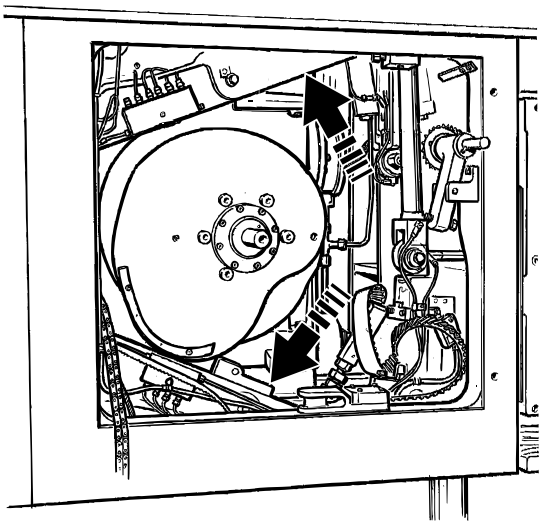

o) Loosen the clamping element (18) by screwing out the screws (19) a couple of turns.

p) Fit two of the screws (19) in the puller holes (17) and tighten **crosswise**, in small steps, until the outer sleeve comes off the inner one.

q) Lift out the curve pack and remove the clamping element.

r) Repeat items *o)* - *q)* for the other curve pack.

2.2B0255C08.fm

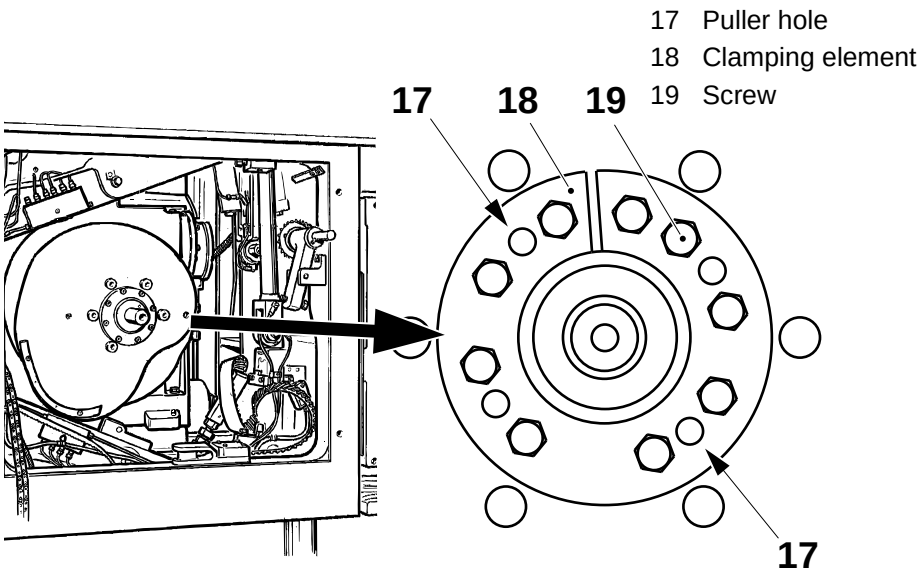

(Cont'd)

(Cont'd)

Assembly - machines equipped with alignment template

Assembly - machines not equipped with alignment template, see page *109*.

Note! The curve packs are marked with arrows. On the LH curve pack, the arrow points **clockwise**, and on the RH curve pack **counter-clockwise**.

a) Clean the worm gear shaft (1), the centre hole of the curve pack and the clamping element (4).

WARNING!

Chemical products!
Lubricant. Follow the *Safety precautions*.

b) Apply a small amount of oil to the clamping element (4). Use oil code D, see *10.2 Lubricants*.

c) Put the clamping element on the curve pack and fit the curve pack on the worm gear shaft. Make sure the marks on the curve pack (90°L and 90°R) coincide with the marks on the alignment template (2).

d) Fit back the screws (5) from the puller holes (3).

e) Torque the screws crosswise, first to 14 ±1 Nm and then finally to 28 ±1 Nm.

2.2B0255C08.fm

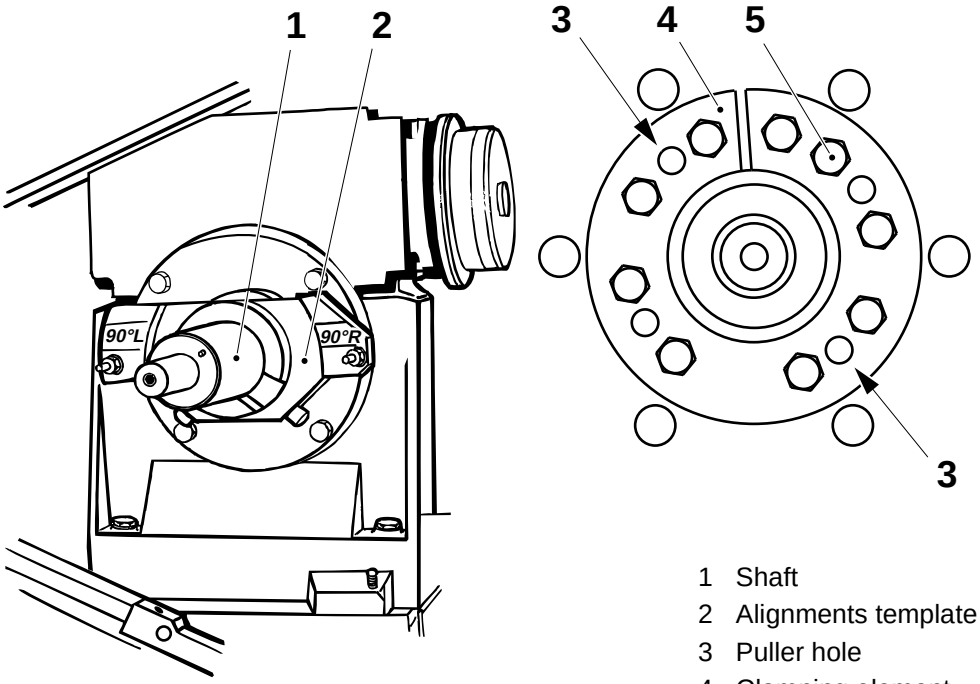

1 Shaft
2 Alignments template
3 Puller hole
4 Clamping element
5 Screw

(Cont'd)

(Cont'd)

f) Assemble the disconnection link and tighten the screw (6). Fit back the cable in the clamp (7) and remove the wooden blocks.

g) Hook the timing belt holder (8) to the spring of the counter device. At the same time, put the timing belt (9) over the belt pulleys (10).

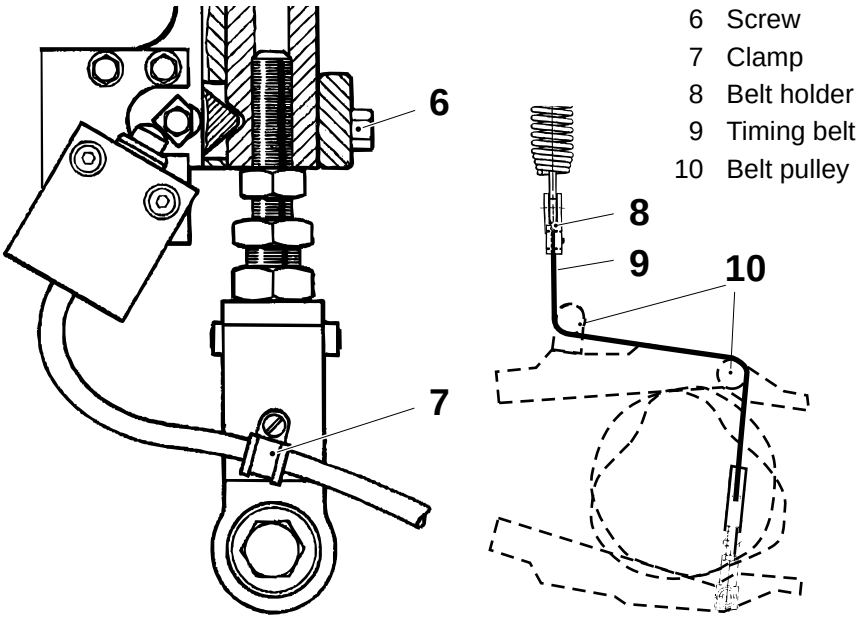

6 Screw
7 Clamp
8 Belt holder
9 Timing belt
10 Belt pulley

h) Repeat items *a)* - *g)* for the other curve pack.

i) Tighten the nut (13) of the hold down device.

j) Fit and torque the nuts (12) to 30 ±2 Nm.

k) Fit the cover (11).

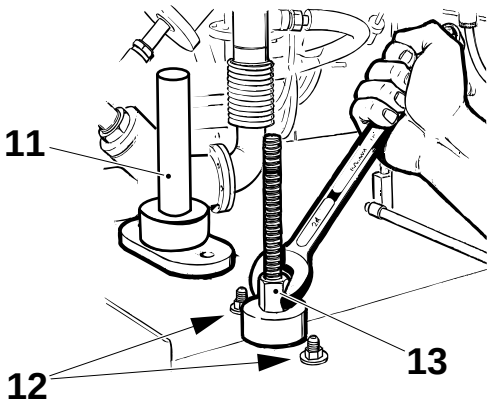

11 Cover
12 Nut
13 Nut

(Cont'd)

2.2B0255C08.fm

(Cont'd)

l) Make sure that distance A is correct on the LH and RH rigging screws, see table below.

Package	A ±1 (mm)
200 S	45

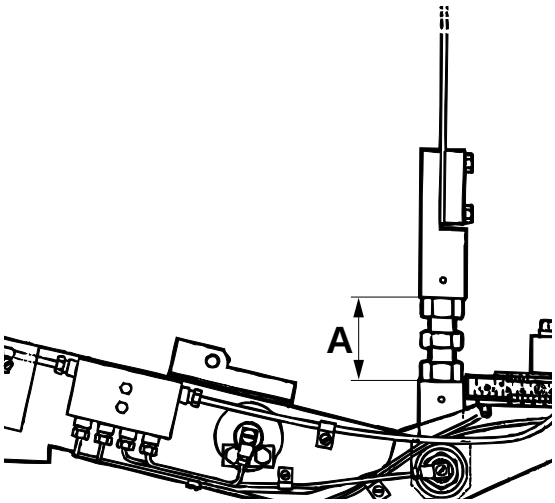

m) Fit the timing belt pulley (14) and the timing belt. Make sure that the pin on the back of the pulley is positioned correctly.

Note! Make sure that the position of the impulse transmitter cam disc is not altered.

2.2B0255C08.fm

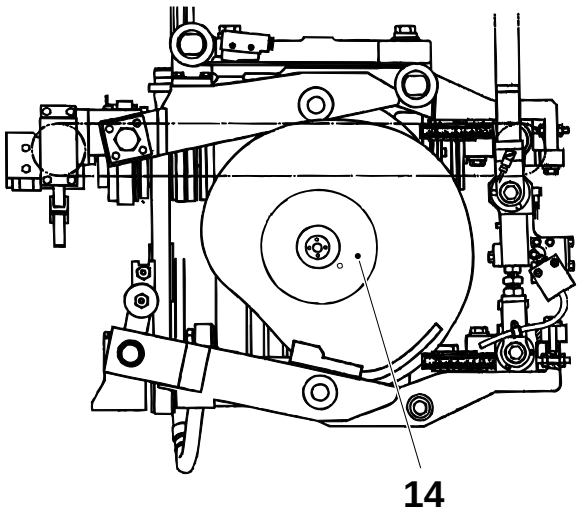

14 Belt pulley

(Cont'd)

(Cont'd)

n) Lubricate the screws (15).

WARNING!

Risk of serious damage!
Never adjust the tightening torque afterwards by screwing out the screws. The result may be that the screws shake loose.

Caution! Make sure to keep **distance A** when tightening the screws.

o) Torque the screws (15) **in sequence** around the flange, half a turn at a time, until 8.0 ±0.5 Nm is reached.

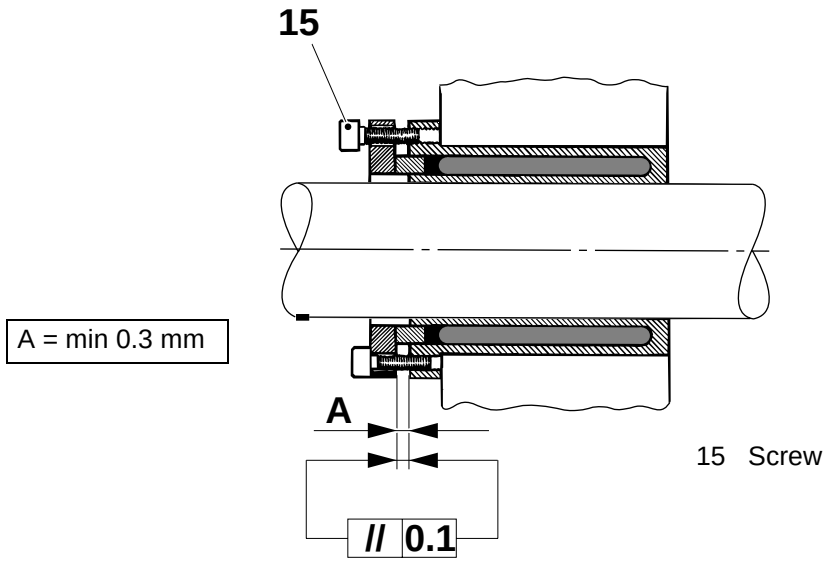

2.2B0255C08.fm

(Cont'd)

(Cont'd)

p) Tension the timing belt (17) by means of the belt tensioner (18).

q) Make sure that the display (arrow) still shows 0°. If required, slacken the belt and skip teeth.

r) Fit the degree scale pointer.

s) By means of the spring balance, set the timing belt (17) tension to 8 ±1 mm deflection with 15 ±1 N load force.

t) Fit and tension the crank chain (16).

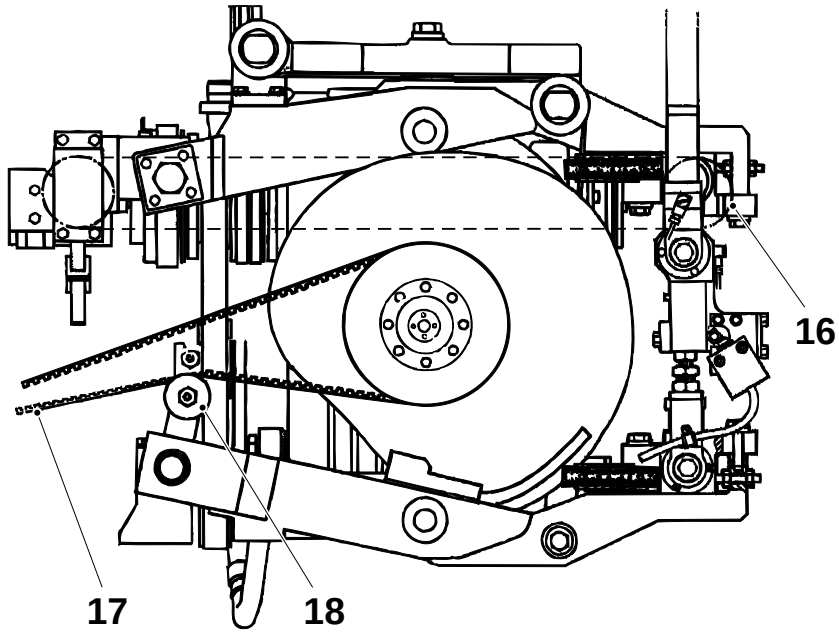

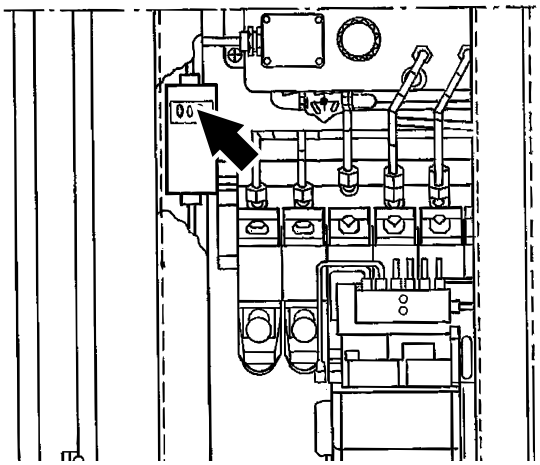

16 Crank chain
17 Timing belt
18 Belt tensioner

(Cont'd)

2.2B0255C08.fm

(Cont'd)

u) Fit the degree scale (19). Make sure that the two pins on the belt pulley have entered the holes on the degree scale.

v) The degree scale and the display are to show 0°. If required, set the degree scale, see *3.8-2 Curve pack - set degree scale* and the pointer, see *3.8-3 Curve pack - set pointer*.

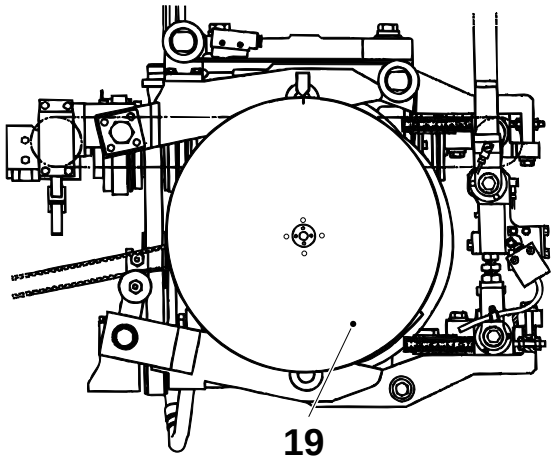

19 Degree scale

w) Check the following:
- *4.7-6 Stroke - check*.
- *4.7-3 Jaw gap - check*.
- *4.7-16 Jaw over jaw - check*.

(Cont'd)

2.2B0255C08.fm

(Cont'd)

Assembly - machines not equipped with alignment template

Assembly - machines equipped with alignment template, see page *103*.

Note! The curve packs are marked with arrows (5). On the LH curve pack (1), the arrow points clockwise, and on the RH curve pack counter-clockwise.

a) Clean the worm gear shafts, the centre holes of the curve packs and the clamping elements.

b) Apply a small amount of oil to the clamping elements. Use oil code D, see *10.2 Lubricants*.

c) Put a clamping element on the LH curve pack and fit the curve pack on the worm gear shaft.

d) Fit back the screws (8) from the puller holes (7).

e) Insert the two guide pins (6) into the holes marked 90°L and 90°R.

f) Fit the template (3) to the guide pins and place the spirit level (2) on the top.

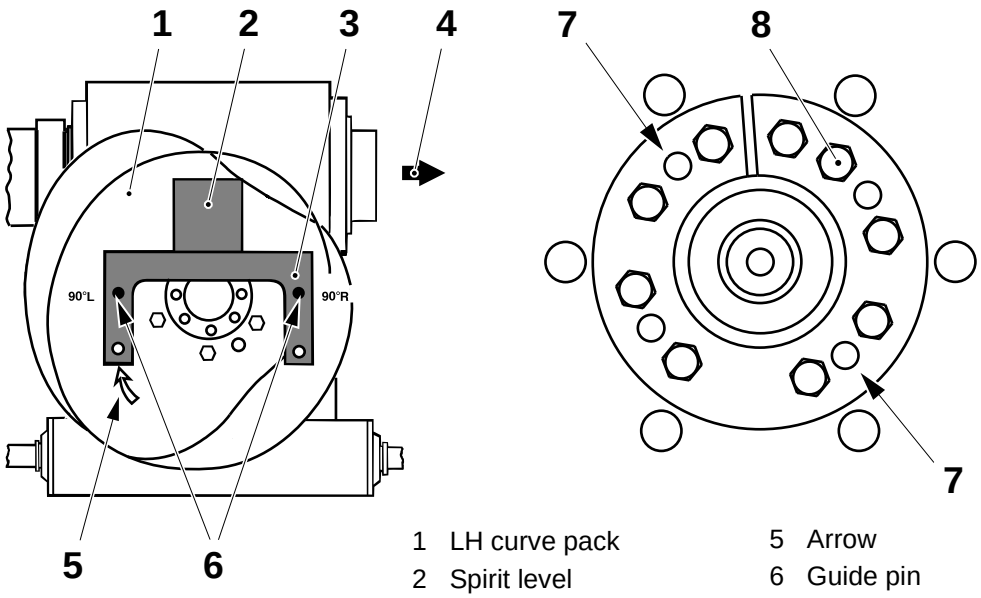

1 LH curve pack
2 Spirit level
3 Template
4 Direction of final folder
5 Arrow
6 Guide pin
7 Puller hole
8 Screw

2.2B0255C08.fm

(Cont'd)

(Cont'd)

g) Tighten the screws (8) **crosswise** by hand and turn the curve pack so that it is horizontal. Make sure the curve pack bears against the spacer (9).

h) Torque the screws **crosswise**, first to 14 ±1 Nm and then finally to 28 ±1 Nm.

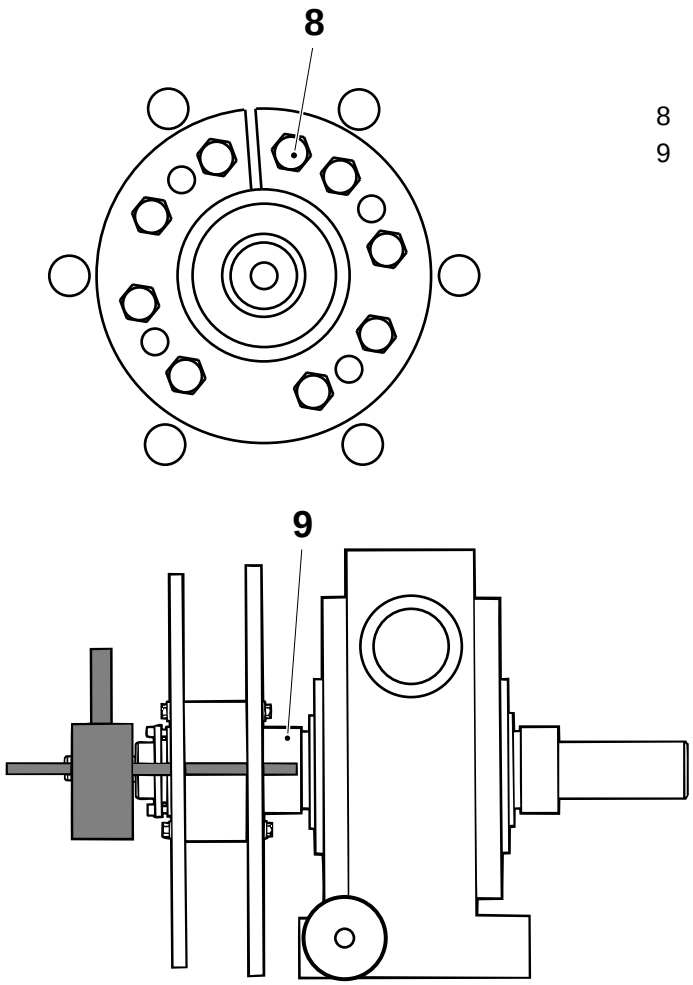

8 Screw
9 Spacer

2.2B0255C08.fm

(Cont'd)

(Cont'd)

i) Put the clamping element on the RH curve pack (11) and fit the curve pack on the worm gear shaft. Make sure that the arrow (12) on the curve pack points counter-clockwise.

j) Turn the curve pack until it is displaced by 180° in relation to the LH curve pack.

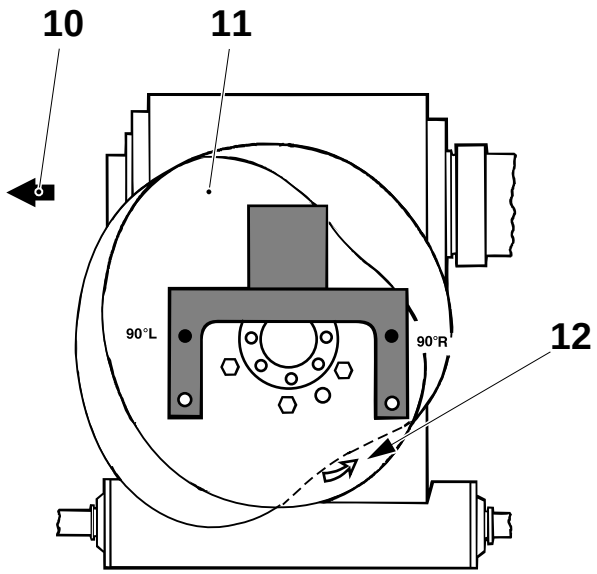

10 Direction of final folder
11 RH curve pack
12 Arrow

2.2B0255C08.fm

(Cont'd)

(Cont'd)

k) Fit back the screws (14) from the puller holes (13).

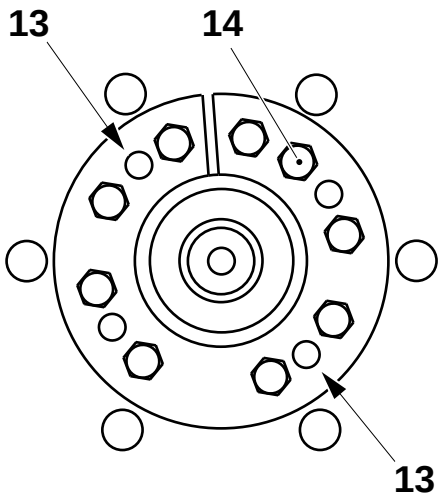

13 Puller hole
14 Screw

(Cont'd)

2.2B0255C08.fm

(Cont'd)

l) Tighten the screws (14) to the clamping element **crosswise** by hand and turn the curve pack so that it is horizontal. Make sure that the curve pack bears against the spacer (15).

m) Fit the setting templates to the RH curve pack.

n) Level the curve packs relative one another **within 3 scale divisions** on the spirit level.

o) Torque the screws (14) **crosswise**, first to 14 ±1 Nm and then finally to 28 ±1 Nm.

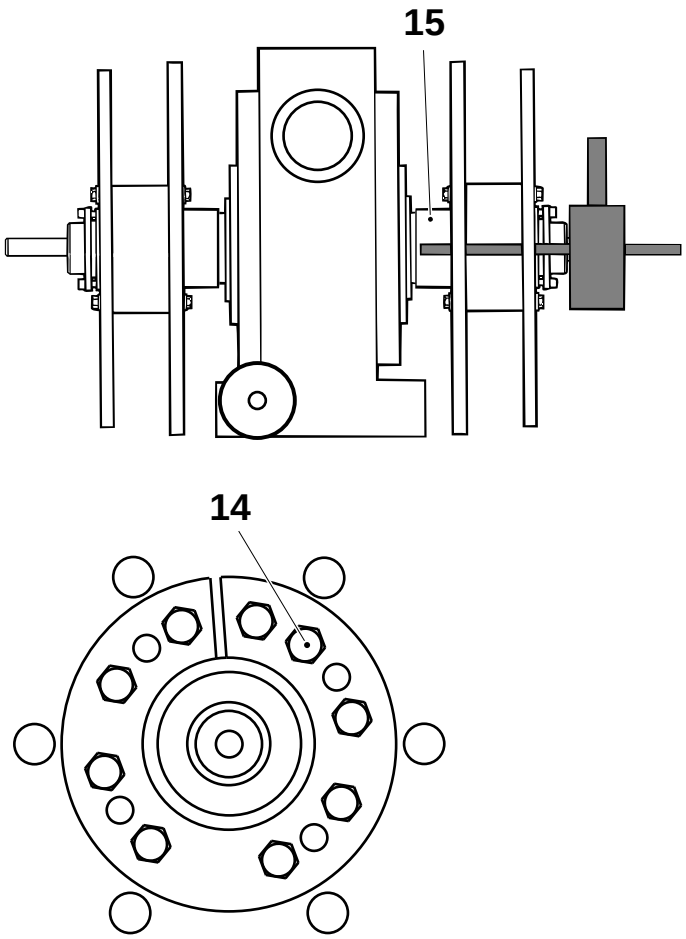

2.2B0255C08.fm

(Cont'd)

(Cont'd)

p) Make sure that the LH curve pack is still horizontal. Remove the setting templates.

q) Assemble the disconnection link and tighten the screw (16). Fit back the cable in the clamp (17) and remove the wooden blocks.

r) Hook the timing belt holder (18) to the spring of the counter device. At the same time, put the timing belt (19) over the belt pulleys (20).

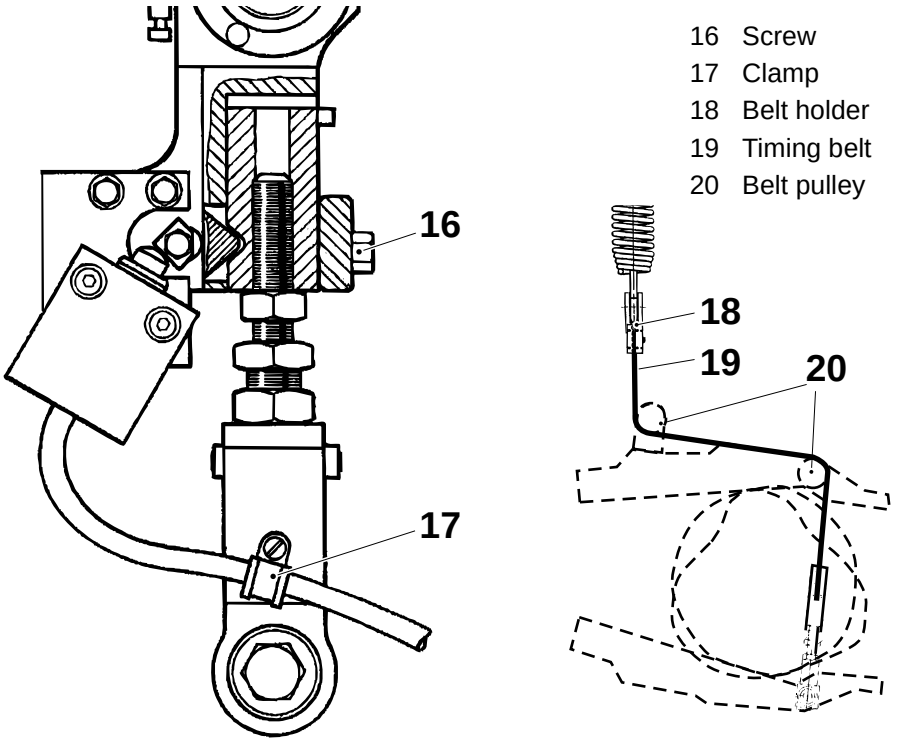

16 Screw
17 Clamp
18 Belt holder
19 Timing belt
20 Belt pulley

2.2B0255C08.fm

s) Proceed according to *Assembly - machines equipped with alignment template* items *i)* - *w)*.

3.8-2 Curve pack - set degree scale

Tools - guide pin - torque wrench	 TP No. 75451 min 8 Nm
SPC reference	256202

a) Crank the machine until the RH yoke is in its upper turning position.

b) Fit the degree scale (4) on the timing belt pulley (2). Make sure that the two pins on the belt pulley have entered the holes on the degree scale.

Caution! The screws **must not** be unscrewed.

c) Loosen the clamping element by screwing out the screws (3) **in sequence** around the flange, half a turn at a time. If the clamping element sticks to the pulley (2), long screws may be used as puller tools.

d) Turn the degree scale so that the 230° - 240° divisions face upwards.

e) Set the degree scale so that the hole at the 270° divisions is in front of the hole marked 90°R on the arm cam behind.

f) Insert the guide pins through the holes (1) at the 90° and 270° divisions and through the arm cam and yoke cam.

2.2B0255C08.fm

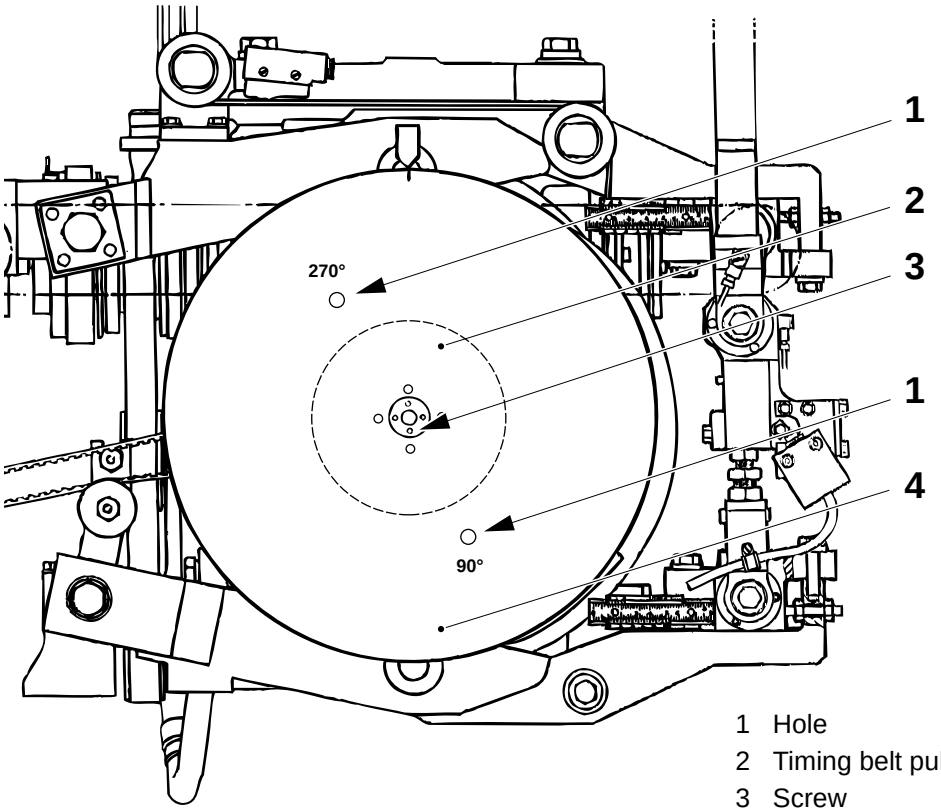

1 Hole
2 Timing belt pulley
3 Screw
4 Degree scale

(Cont'd)

(Cont'd)

g) Lubricate the screws (3).

WARNING!

Risk of serious damage!
Never adjust the tightening torque afterwards by screwing out the screws. The result may be that the screws shake loose.

Caution! Leave **distance A** when tighten the screws.

h) Torque the screws (3) in sequence around the flange, half a turn at a time, until 8.0 ±0.5 Nm is reached.

i) Pull out the guide pins.

j) Set the pointer, see *3.8-3 Curve pack - set pointer*.

k) Set the zero position on the impulse transmitter, see *6.6-3 Impulse transmitter - set zero position.*

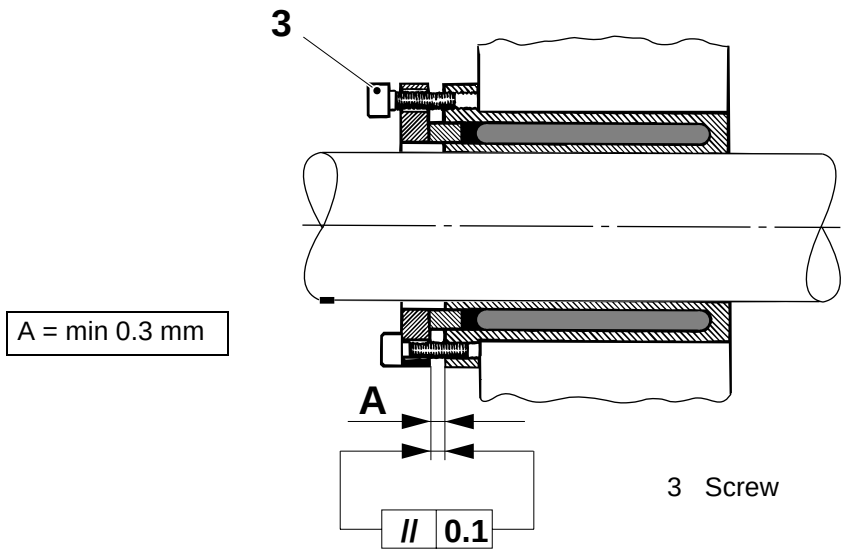

2.2B0255C08.fm

3.8-3 Curve pack - set pointer

Tools - spirit level - guide pin - template	 TP No. 90243-163 TP No. 75451 TP No. 76338
SPC reference	256202

a) Crank to 0°.

b) Fit the guide pins (4), the template (3) and the spirit level (2) on the cam pack.

c) Crank until the spirit level is horizontal.

d) Set the pointer (1) opposite 0° on the degree scale.

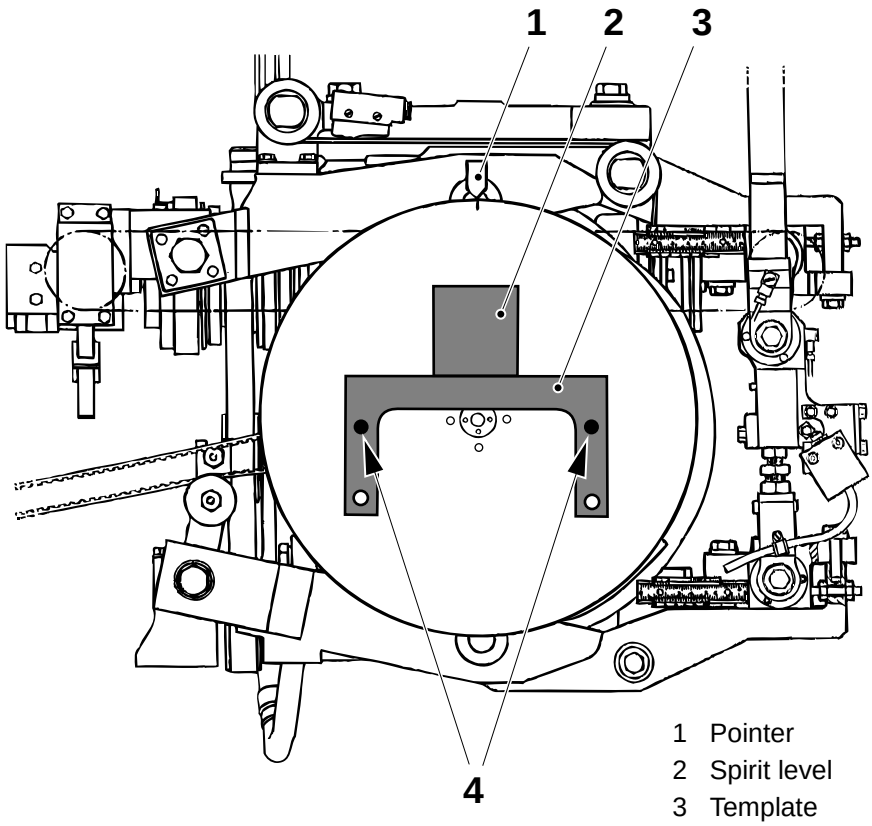

1 Pointer
2 Spirit level
3 Template
4 Guide pin

2.2B0255C08.fm

3.8-4 Curve pack - syncronise

Tools - template - guide pin	 TP No. 76338 TP No. 75451
SPC reference	256202

LH side curve pack

a) Place the arm cam (1) and the yoke cam (5) so that the text by the holes (2) reads right side up and so that the arrow (4) points **clockwise**.

Note! The cams are marked on both sides, since they are used for both RH and LH cam packs.

b) Fit the cams together and tighten the screws (3) lightly.

Note! Make sure that the hole marked 90°L on the upper cam is positioned above the hole marked 90°L on the lower cam.

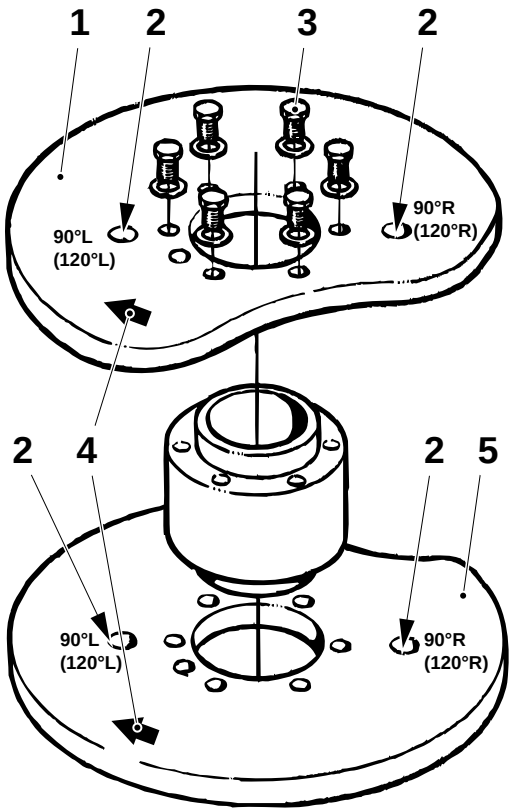

1 Arm cam
2 Hole
3 Screw
4 Arrow
5 Yoke cam

2.2B0255C08.fm

(Cont'd)

(Cont'd)

c) Place the template (7) between the cams. Insert the guide pin (6) through the cams and the template.

d) Torque the screws (3) to 50 ±2 Nm. Fit the pin (8).

e) Remove the template and the guide pins.

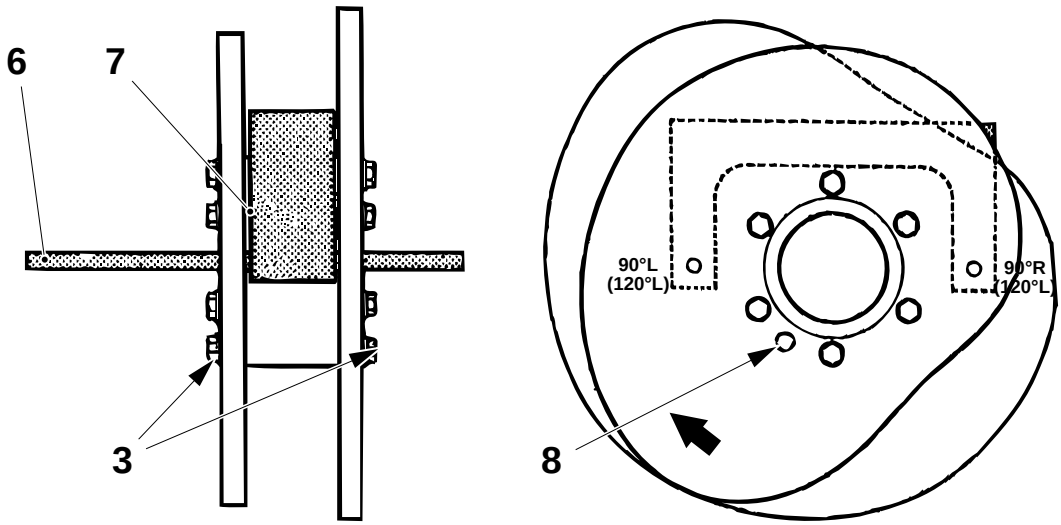

3 Screw
6 Guide pin
7 Template
8 Pin

2.2B0255C08.fm

(Cont'd)

(Cont'd)

RH side curve pack

a) Place the arm cam (9) and the yoke cam (13) so that the text by the holes (10) reads right side up and so that the arrow (12) points **counter-clockwise**.

Note! The cams are marked on both sides, since they are used for both RH and LH cam packs.

b) Fit the cams together and tighten the screws (11) lightly.

Note! Make sure that the hole marked 90°L on the upper cam is positioned above the hole marked 90°L on the lower cam.

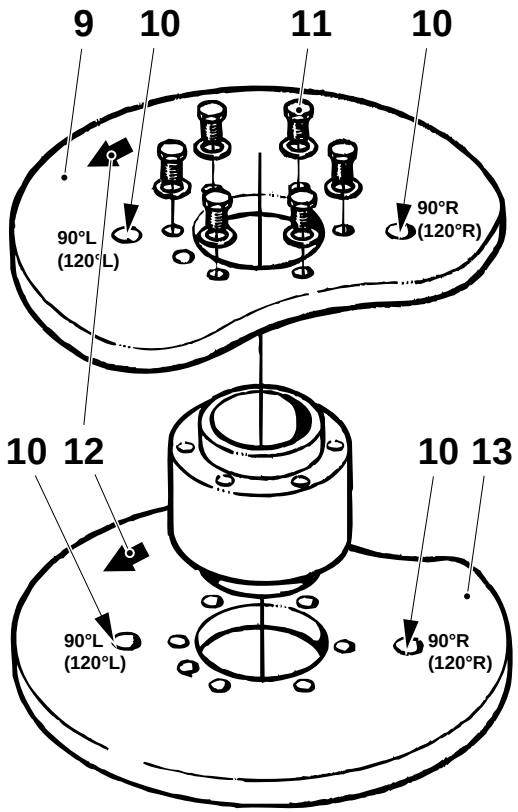

9 Arm cam
10 Hole
11 Screw
12 Arrow
13 Yoke cam

2.2B0255C08.fm

(Cont'd)

(Cont'd)

c) Place the template (7) between the cams. Insert the guide pin (6) through the cams and the template.

d) Torque the screws (11) to 50 ±2 Nm. Fit the pin (14).

e) Remove the template and the guide pins.

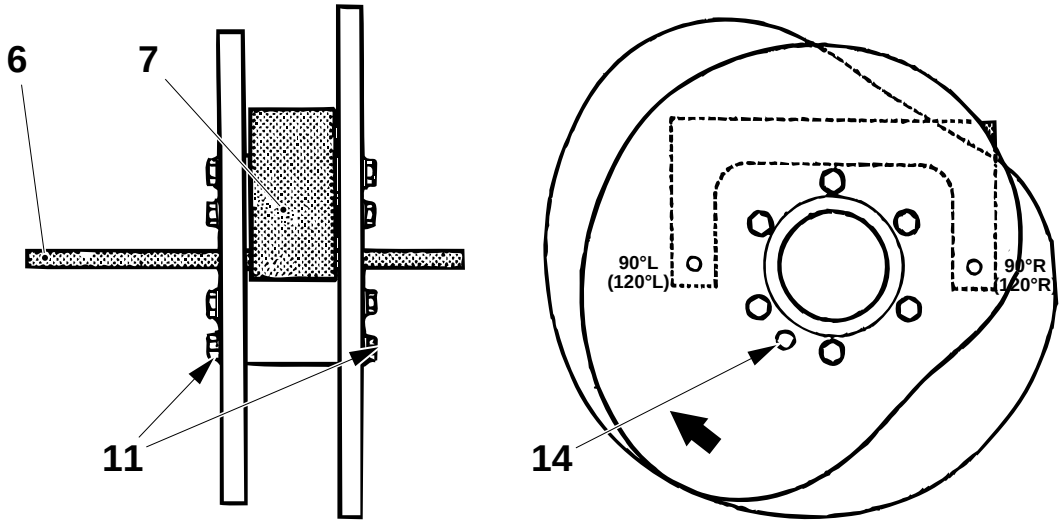

6 Guide pin
7 Template
11 Screw
14 Pin

2.2B0255C08.fm

This page intentionally left blank

2.2B0255C08.fm

4 Jaw system

2.2B2550d00.fm

4 - 0 Jaw system - description

SPC reference	595163-0100

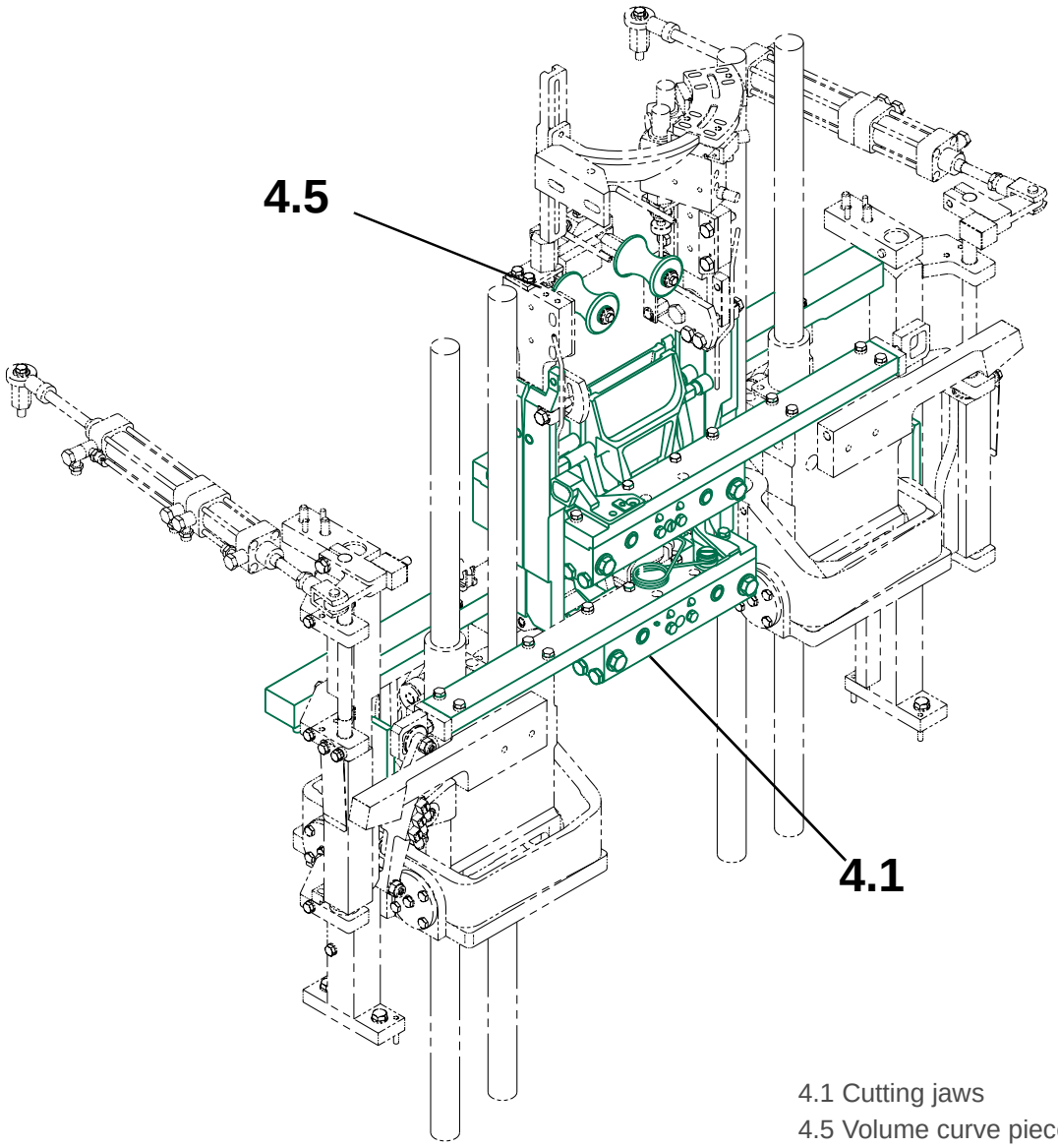

4.1 Cutting jaws
4.5 Volume curve piece

2.2B2550d00.fm

4.0 Jaw system

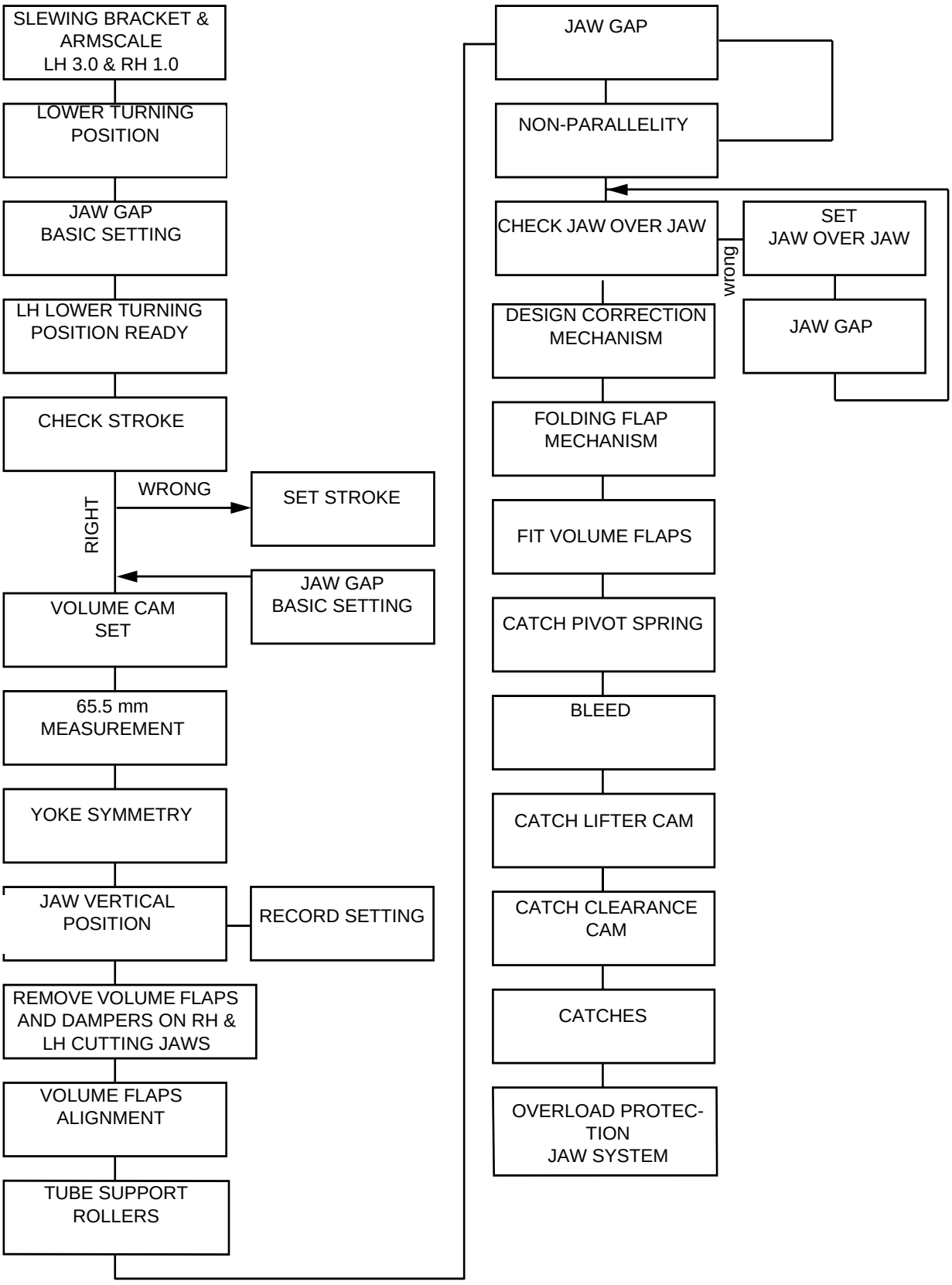

2.2B2550d00.fm

4.0 - 1 Turning position - set

Tools - template	see table below

a) Set the scales of the LH sleawing bracket and the arm at 3.0.

b) Set the scales of the RH sleawing bracket and the arm at 1.0.

c) Crank the machine until the LH yoke (4) is in its lower turning position, see table below.

d) Loosen the two screws (1) and the six screws (2).

e) Place the template (5), see table below, on the plate (3). Let the yoke rest against the template.

Volume ml	Turning position		Template TP No.	A ±0.2 mm
	LH yoke	RH yoke		
200	336°	156°	591670	34.2

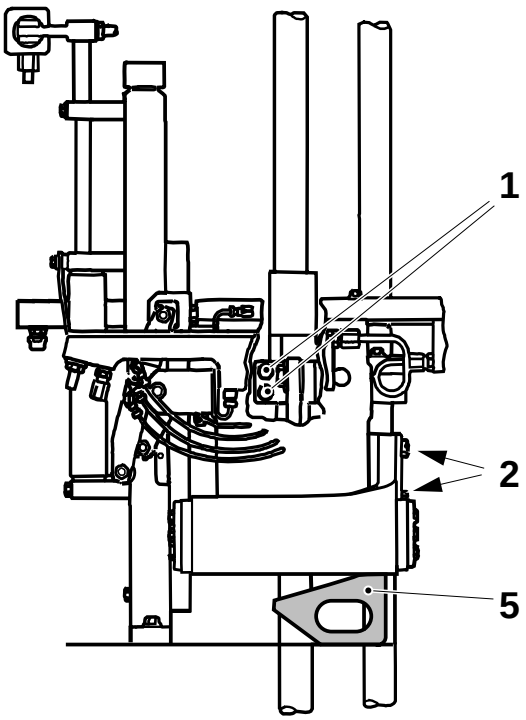

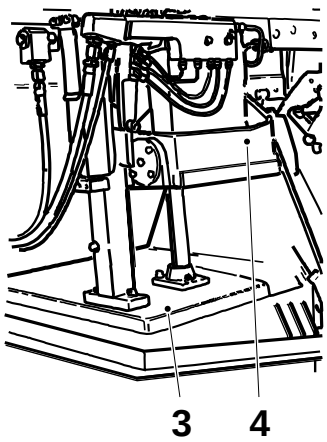

1 Screw
2 Screw
3 Plate
4 Yoke
5 Template

2.2B2550d00.fm

(Cont'd)

(Cont'd)

f) Set surface (10) on the bracket (8) parallel to surface (11) on the yoke lifter arm (9).

g) Tighten the six screws (2) and remove the template.

Caution! During the setting procedure, the jaw system must be forcibly guided by hand while the machine is being cranked.

h) Tighten the screws (1).

Cam and support rollers

Set distance B, between the support roller and the cam (7), by means of the eccentric screw (6). Set the distance B on both sides.

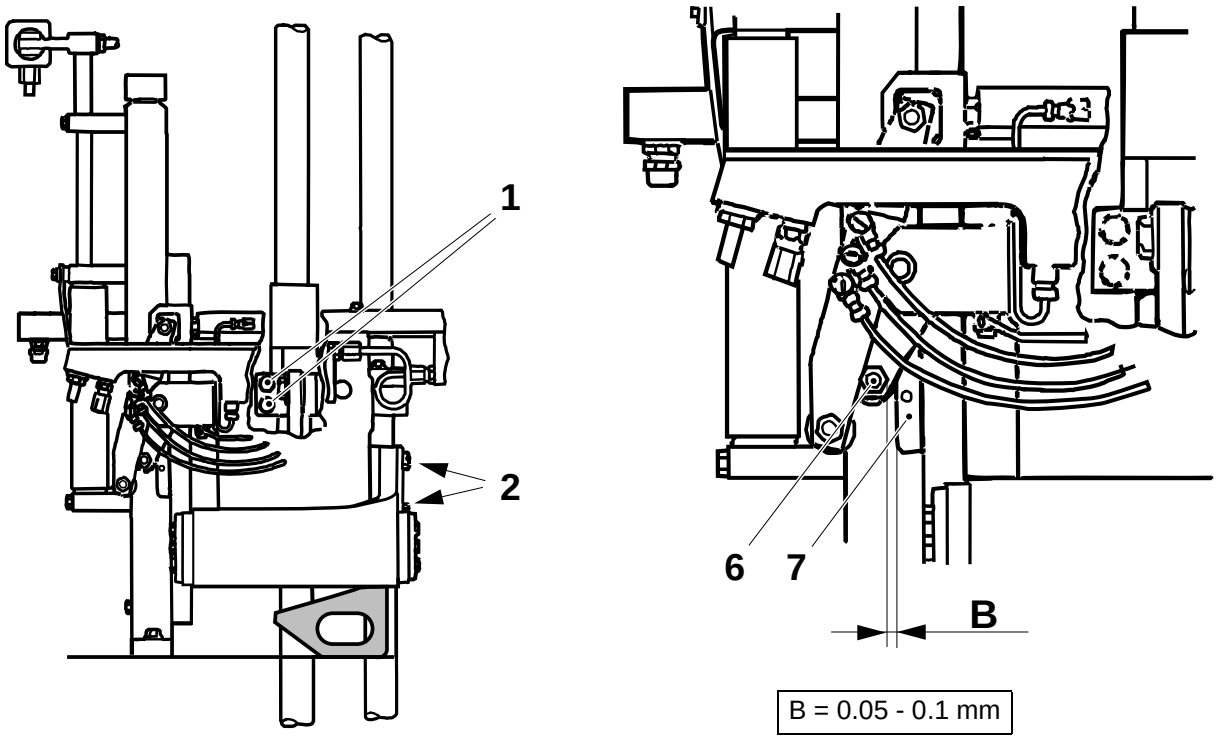

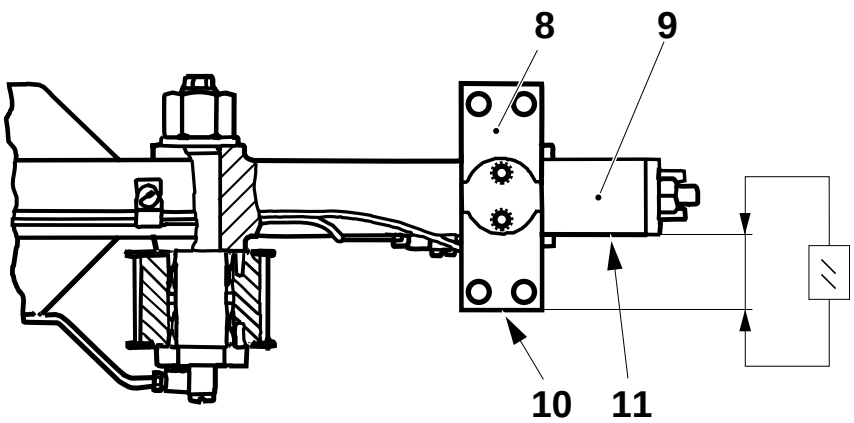

1 Screw
2 Screw
6 Eccentric screw
7 Cam
8 Bracket
9 Yoke lifter arm
10 Surface
11 Surface

2.2B2550d00.fm

4.0 - 2 Movement - check

Tools - spring	 TP No. 76304-101

Jaw gap

a) Place the tool (2) between the carriers (1).

b) Crank to 80° (LH side)/260° (RH side).

c) With a feeler gauge, measure from above jaw distance (A) between the pressure and cutting jaws, see table.

d) If the measured jaw gaps are out of tolerance, set the jaw gap, see 4.0 - 3 Movement - set.

Volume (ml)	A ±0.1 (mm)
200	1.5

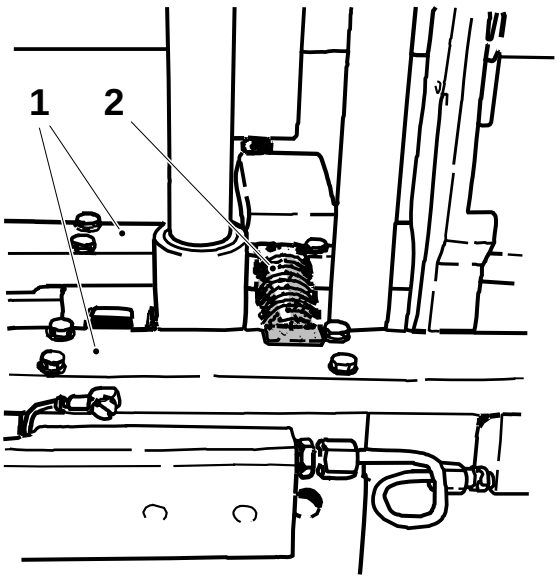

1 Carrier
2 Spring

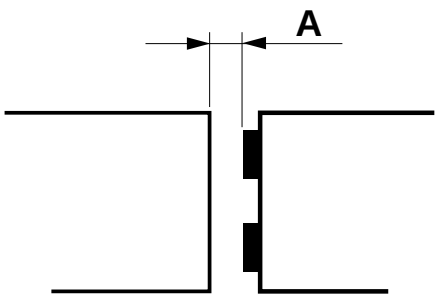

2.2B2550d00.fm

(Cont'd)

(Cont'd)

Non-parallelity in movement

The spring (2) must still be placed between the carriers (1).

a) Crank to 190° (LH side)/10° (RH side). Measure the jaw gap A from above and record the value.

b) Crank to 280° (LH side)/100° (RH side). Measure the jaw gap (A) from underneath and record the value.

c) If any of the jaw gap distances is wider than 1.8 mm, shift the adjustment device (3) on the link arm approx. 1 mm forwards. If the jaw gap is smaller than 0.4 mm at any point, shift the adjustment device backwards approx. 1 mm.

d) After setting according to the above, repeat items a) - d) under jaw gap.

2.2B2550d00.fm

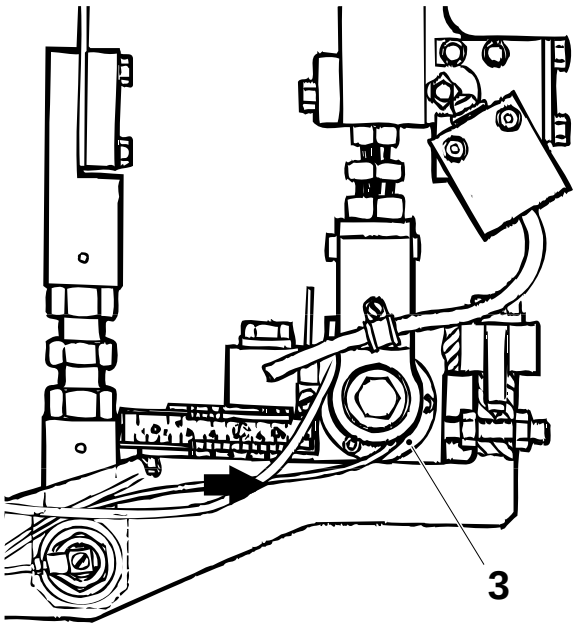

3 Adjustment

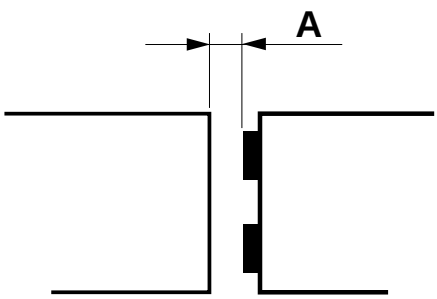

4.0 - 3 Movement - set

Tools - spring	TP No. 76304-101

a) Place the tool (2) between the carriers (1).

b) Crank to 80° (LH side)/260° (RH side).

Basic setting

a) Loosen the oil pipe clamps and the lock nuts (3). Set the distances B and C, see table, by means of the screw (4).

Volume (mm)	B ±0.1 (mm)	C ±0.1 (mm)
200	39	15

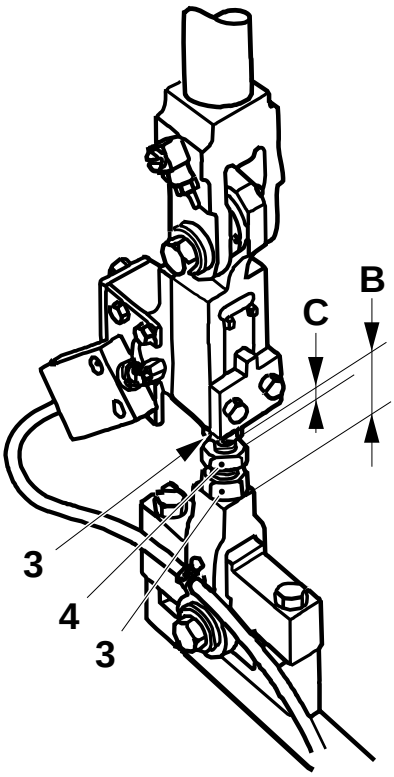

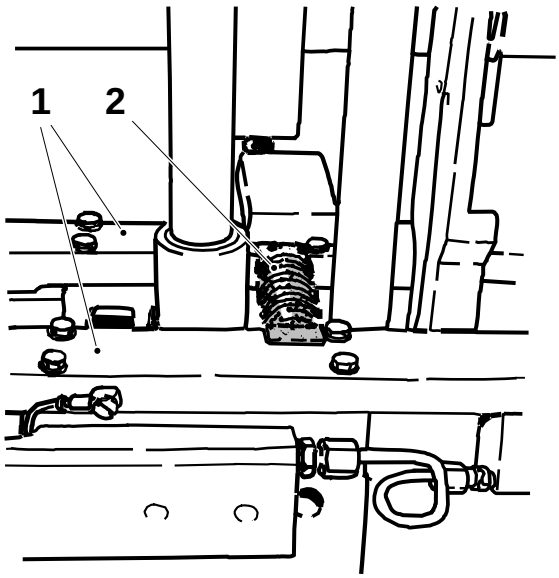

2.2B2550d00.fm

1 Carrier
2 Spring
3 Lock nut
4 Screw

(Cont'd)

(Cont'd)

b) Measure the jaw gap A between the pressure and the cutting jaws. If it exceeds 2 mm or is less than 0.05 mm, loosen the screws (5) and adjust the jaws until a jaw gap of 0.5-1.0 mm is obtained. Retighten the screws (5).

Final setting

a) Set the jaw gap A, see table below, by means of the screw (4). Increasing the distance B, increases the jaw gap A.

b) Tighten the lock nuts and check the jaw gap.

c) Also check the non-parallelity in movement of the jaw gap, see 4.0 - 2 Movement - check.

Volume (ml)	A ±0.1 (mm)	B ±0.1 (mm)
200	1.5	39

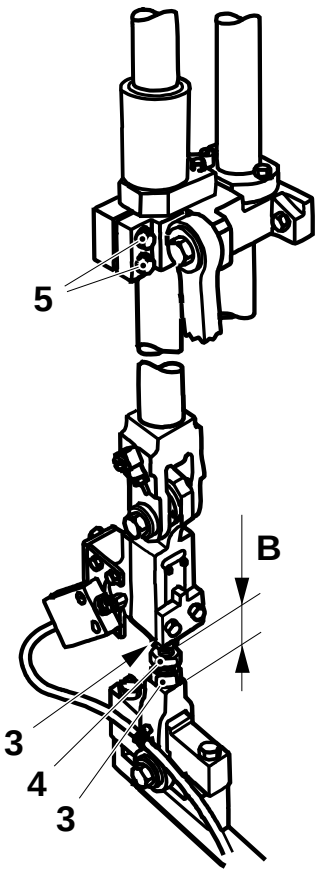

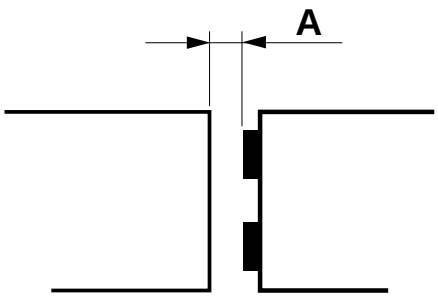

3 Locking nut
4 Screw

2.2B2550d00.fm

4.0 - 4 Stroke - check

Tools - measuring clamp - internal micrometer	TP No. 76416-101

a) Crank to 55° and fit the point measuring clamp (1), on the LH yoke.

b) Crank until the yoke (2) reaches its lower turning position, see table below.

c) Measure the stroke A with a internal micrometer and record the result.

d) Remove the point measuring clamp (1).

e) Crank to 235° and fit the point measuring clamp to the RH yoke guide.

f) Repeat items b) - d).

g) If the difference between the measured stroke A on the two sides exceeds 0.2 mm, see 4.0 - 5 Stroke-set.

Volume (ml)	Turning position	
	LH yoke	RH yoke
200	336°	156°

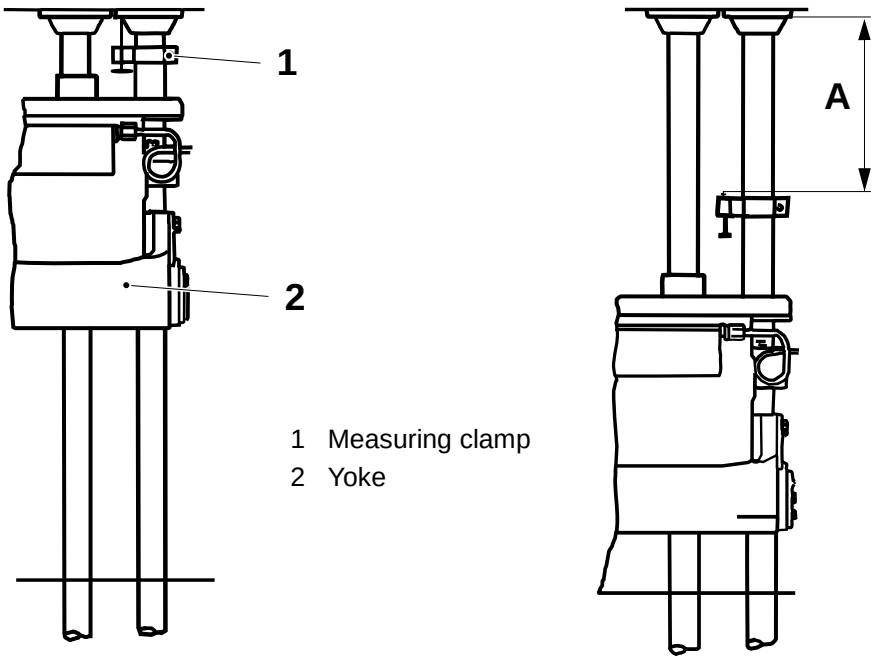

1 Measuring clamp
2 Yoke

2.2B2550d00.fm

4.0 - 5 Stroke-set

a) Loosen the screws (4) on the yoke lifter arm (2). Alter the stroke by means of the adjustment nuts (4). To increase the stroke, shift the scale towards the final folder. Tighten the screws (3).

b) Adjust the slewing bracket (5), so that the scale (6) shows the same setting as the arm vernier scale (1).

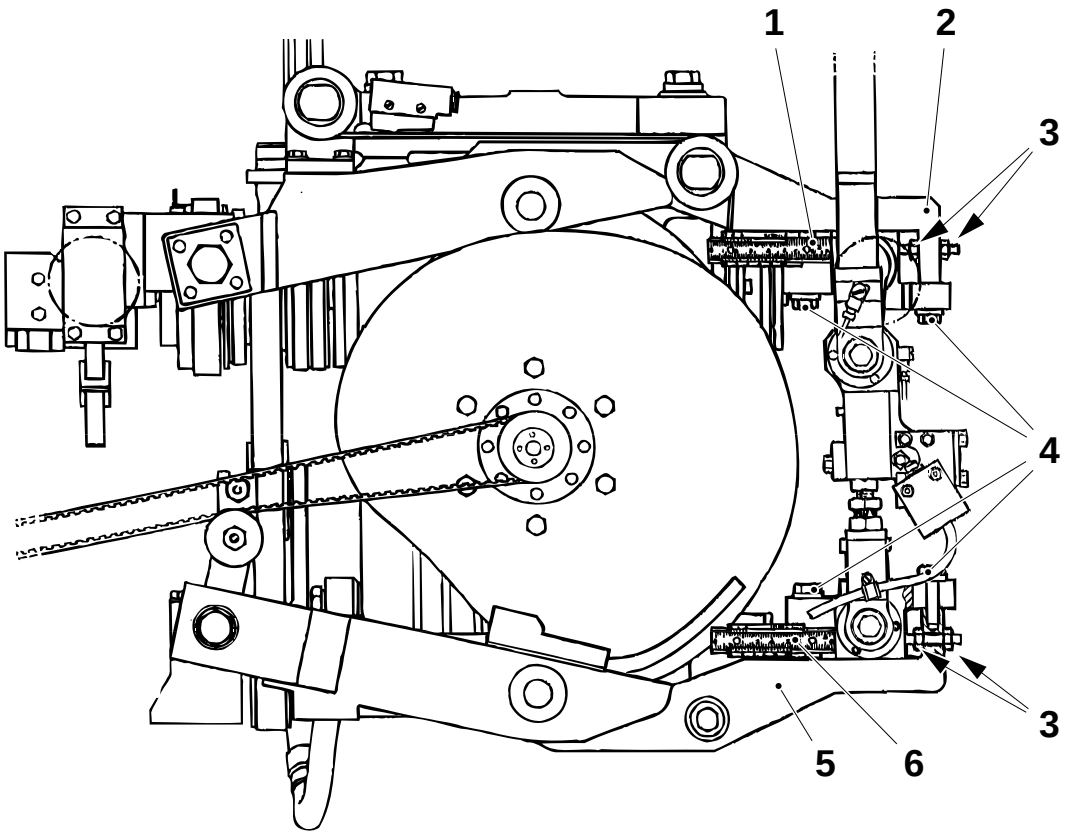

1 Vernier scale
2 Arm
3 Adjustment nut
4 Screw
5 Slewing bracket
6 Vernier scale

(Cont'd)

2.2B2550d00.fm

(Cont'd)

c) Crank to 90° and check that the distance between the volume flap and the cutting jaw is the distance B. Crank to 180° and check the distance B again.

d) Set the jaw gap, see 4.0 - 3 Movement - set.

Basic setting

Volume (ml)	Stroke length A (mm)
200	247.9

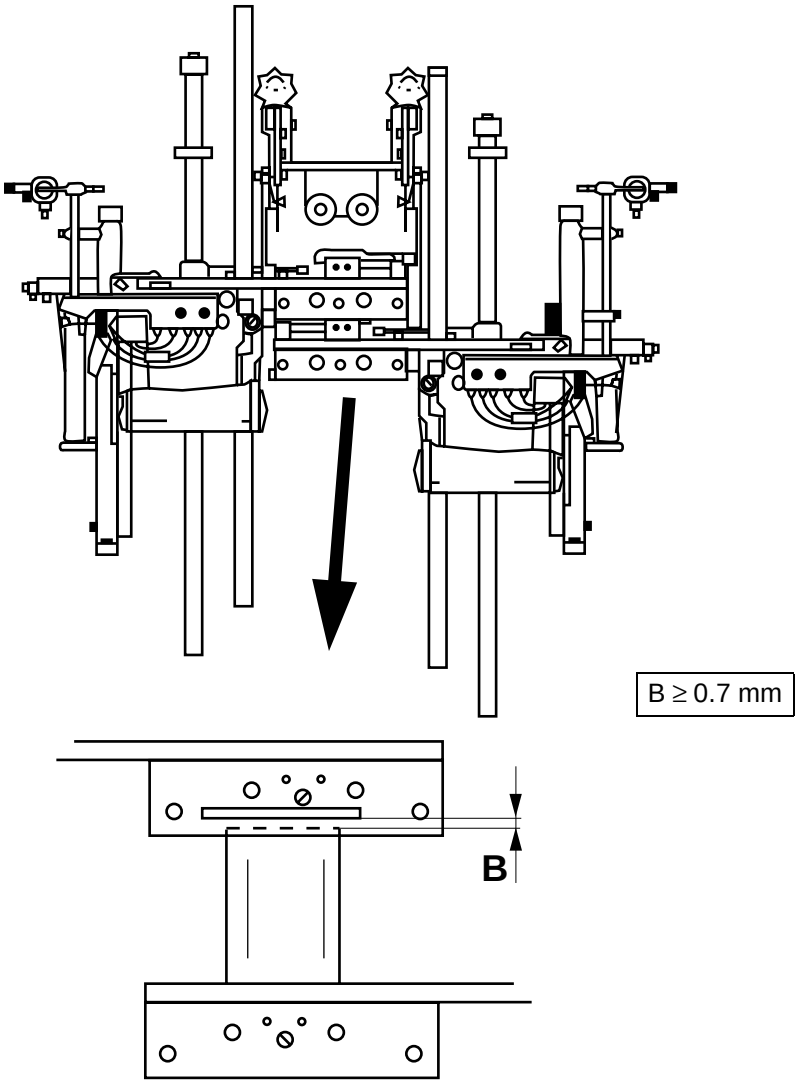

2.2B2550d00.fm

4.0 - 6 Volume cam section - set

Tools - template	 TP No. 75469-201

a) Crank to 180°.

b) Turn the knob (3) fully in and then out one and a half turn (in order to make sure that there is a gap between the volume cams when the knob is turned fully in).

c) Undo the screws (4) and fit the template (2) on the LH volume cam section. If required, undo the screws (5).

d) Set the outer volume cam (1) parallel to the template. Tighten the screws (4) and remove the template.

e) Unscrew the four screws (6) and remove the volume cam section from the machine.

f) Undo the screws (5) and set the inner volume cam (7) parallel (±0.2 mm) with the outer volume cam. Tighten the screws.

g) Fit the volume cam section.

h) Fit the template and check that the volume cams are parallel.

i) Remove the template.

2.2B2550d00.fm

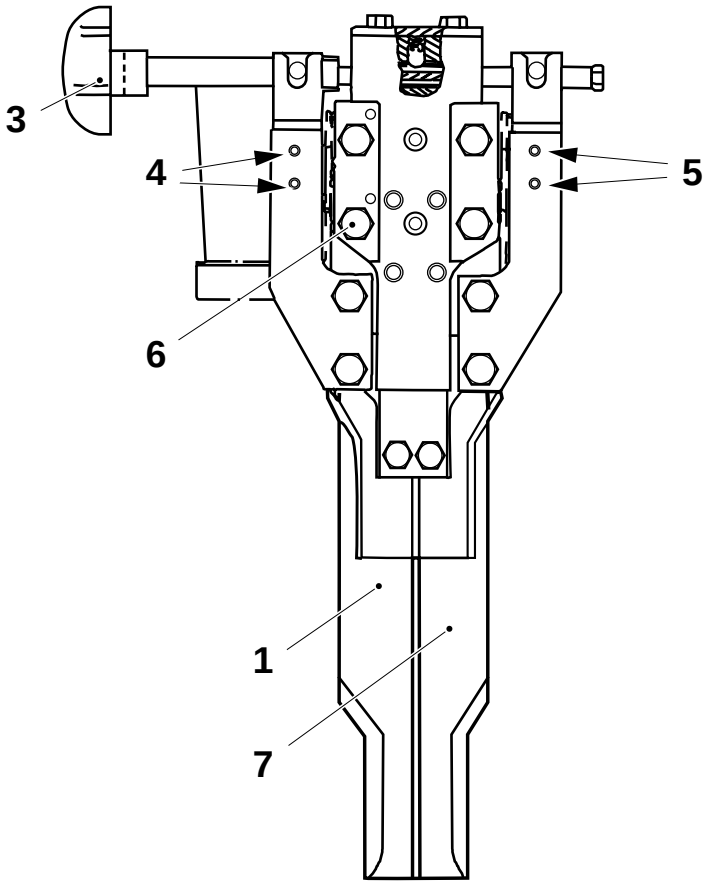

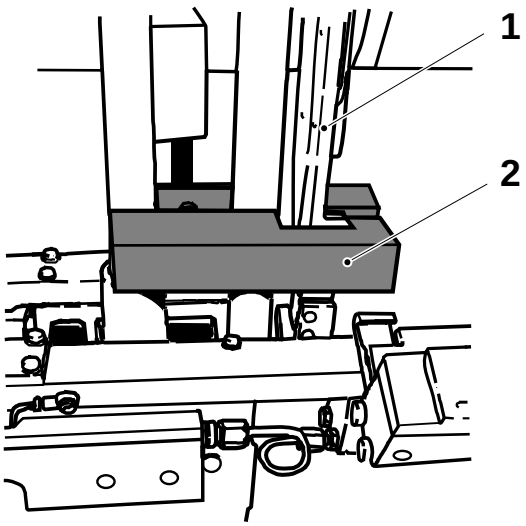

1 Outer volume cam
2 Template
3 Knob
4 Screw
5 Screw
6 Screw
7 Inner volume cam

(Cont'd)

(Cont'd)

j) Unscrew the screw (9) and shift the lug (8). Fit the screw (9) in the hole (10).

k) Crank to 0°.

l) Fit the template on the RH volume cam section and set according to above. Basically set the distance B by means of the volume adjustment knob (3).

m) Undo the screws (6) and set the distance A, between the inner volume cam (7) and the plate (11), see table below.

Volume (m)l	A ±1 (mm)	B (mm)
200	357.5	34.0

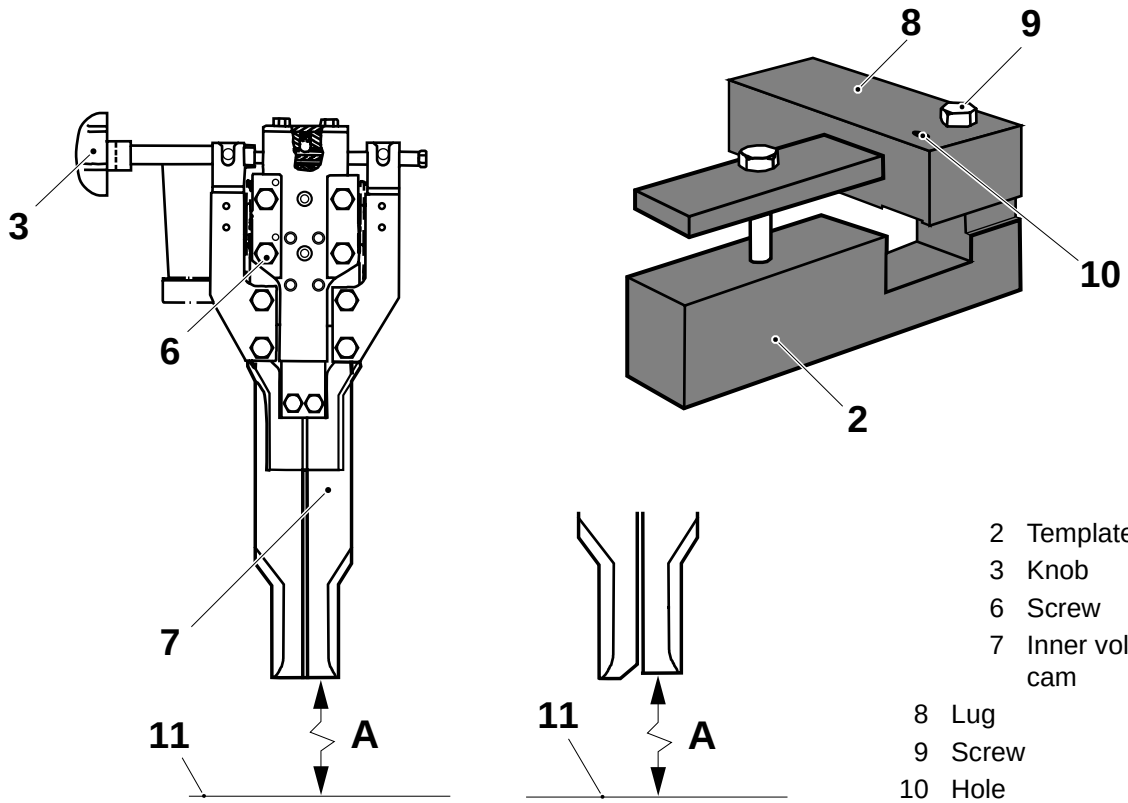

2.2B2550d00.fm

2 Template
3 Knob
6 Screw
7 Inner volume cam
8 Lug
9 Screw
10 Hole

Alternative design

(Cont'd)

(Cont'd)

Package weight setting

a) Basic set the package weight by means of the volume shims (12), see table below.

b) The number of volume shims used should be approximately the same on both the cutting jaw side and the pressure jaw side.

c) To adjust, unscrew the screws (14) and remove the volume bulge (13).

d) Final set according to the OM.

Volume (ml)	Shim TP No.
200	591560

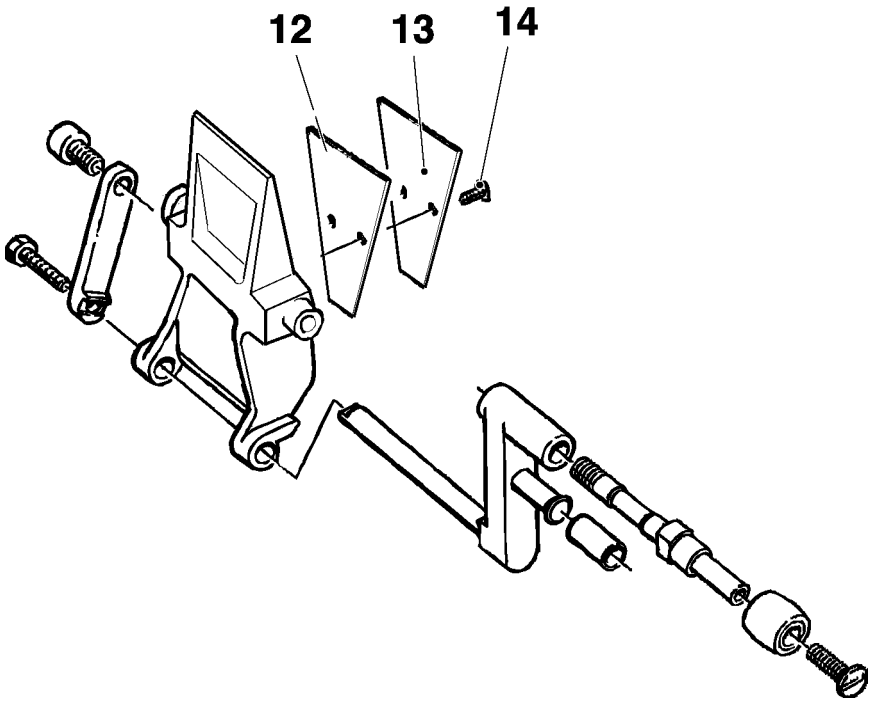

12 Volume shim
13 Volume bulge
14 Screw

2.2B2550d00.fm

4.0 - 7 Jaws alignment - set

Tools	
- spring	TP No. 76304-101
- template	TP No. 76301-101

LH Yoke

a) Remove the busbar (1) and the banjo connections. Unscrew the two bleeding screws on the carrier.

b) Crank to 175°.

c) Place the spring (9) between the carriers.

d) Place the template (8) on the carrier (5) on the pressure jaw side.

e) Set the distance A by loosening the screws (3) and shifting the bracket (4) up or down. If no template is available, set distance B.

f) Tighten the screws (3).

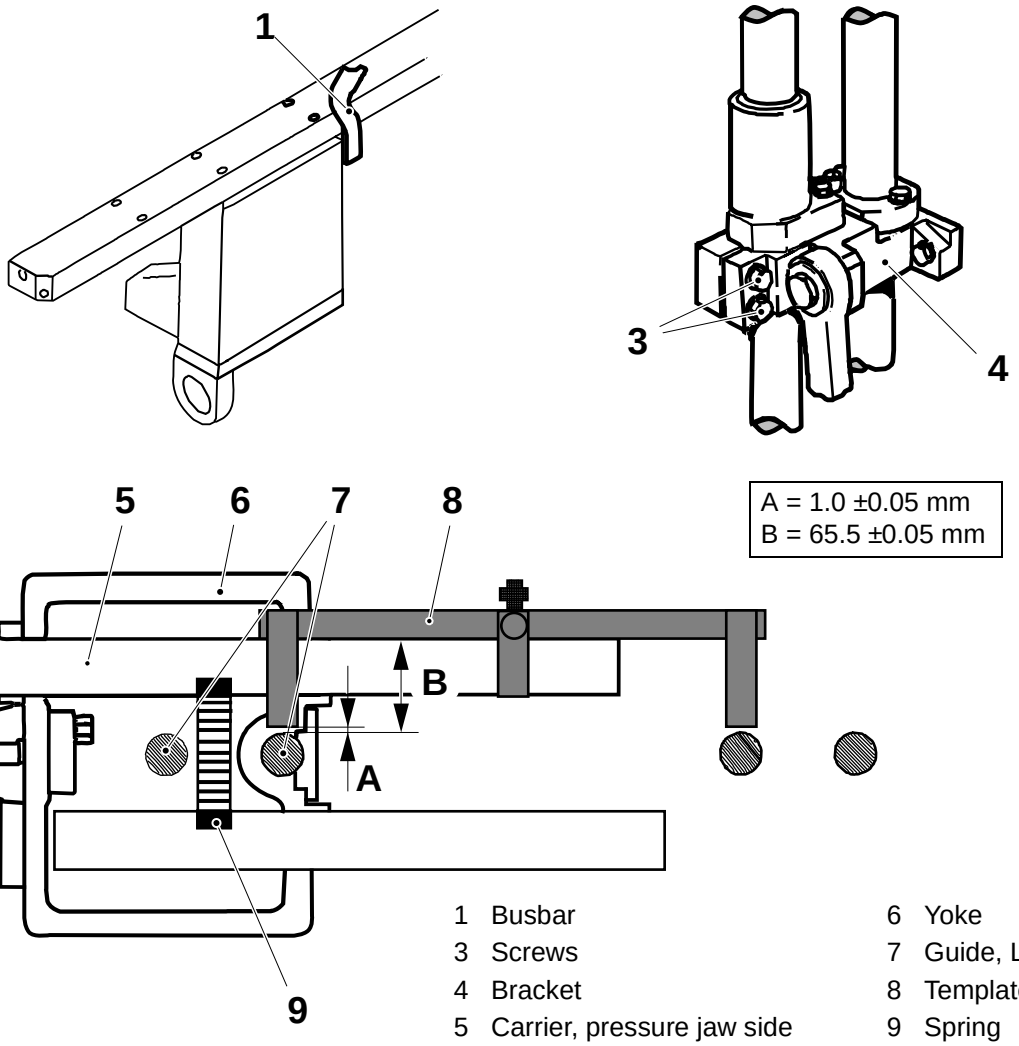

1 Busbar
3 Screws
4 Bracket
5 Carrier, pressure jaw side
6 Yoke
7 Guide, LH jaw
8 Template
9 Spring

2.2B2550d00.fm

(Cont'd)

(Cont'd)

g) Place the template (8) on to the carrier (10) on the cutting jaw side.

h) Set the distance C by means of shimming (11). Remove the screws (12) and the bracket (13) and put in shims. (Altering the shim thickness by 0.1 mm, changes the distance C approx. 0.15 mm).

i) If no template is available, set the distance D between the carrier (8) and the LH jaw pair guide (7).

j) Fit the coaxial cable, the cover, the rail, the banjo connections, and the two bleeding screws.

RH Yoke

a) Remove the coaxial cable, the cover, the rail and the banjo connections. Undo the two bleeding screws on the carrier.

b) Crank to 355°.

c) Repeat items c) - i) from the LH yoke.

2.2B2550d00.fm

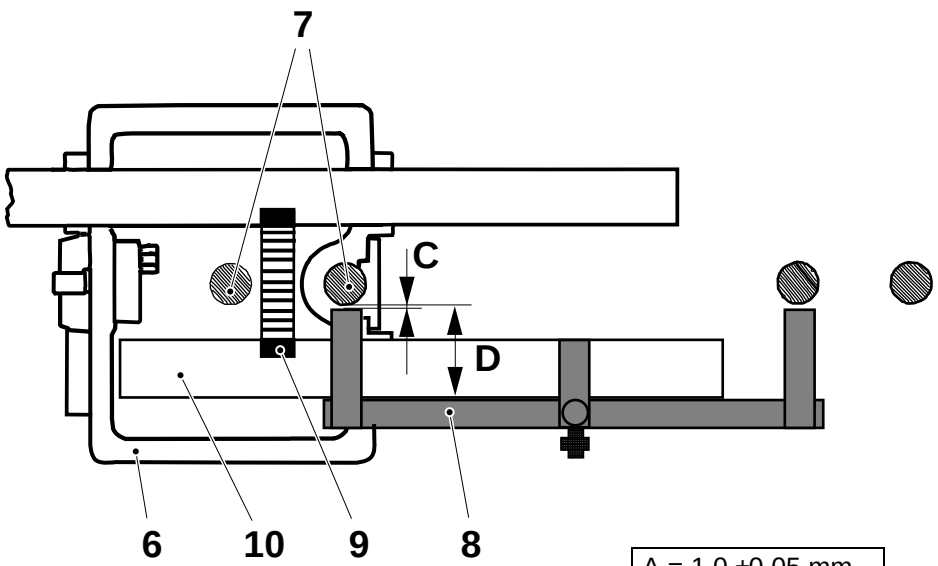

A = 1.0 ±0.05 mm
B = 65.5 ±0.05 mm

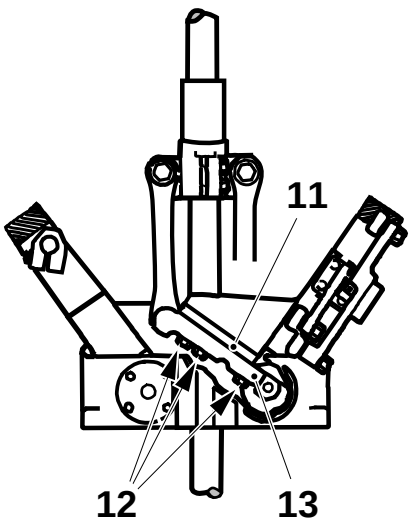

6 Yoke
7 Guide, LH jaw pair
8 Template
9 Spring
10 Carrier, cutting jaw side
11 Shim

4.0 - 8 Symmetry - set

Tools	
- spring	TP No. 76304-101
- template	TP No. 76301-101

LH Yoke

a) Crank to 175°.

b) Place the spring (2) between the carriers.

c) Fit the template (3) to the carrier (1) on the cutting side.

d) Measure the distance A between the template and the guide: record the result.

e) Remove the busbar (5) and the banjo connections on the carrier (4) on the pressure jaw side. Unscrew the two bleeding screws.

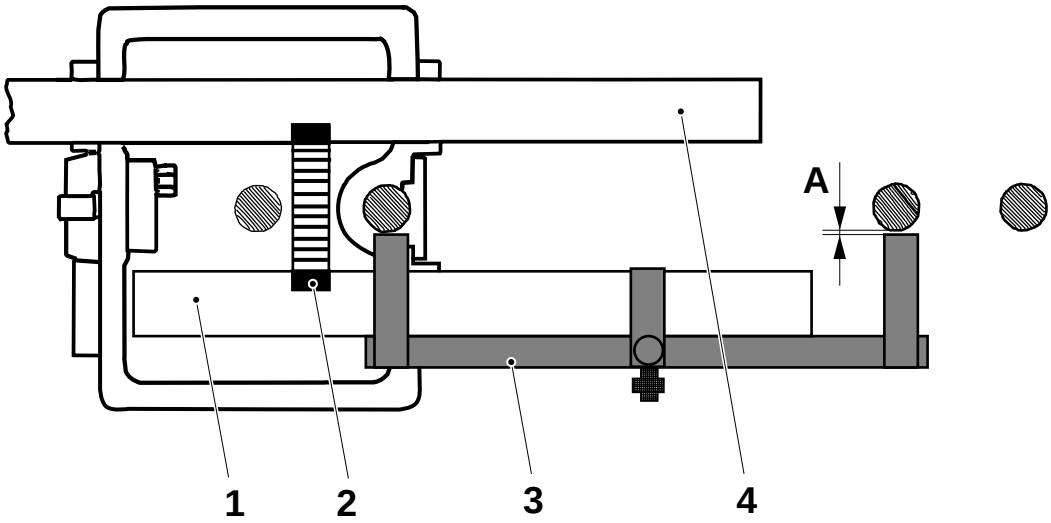

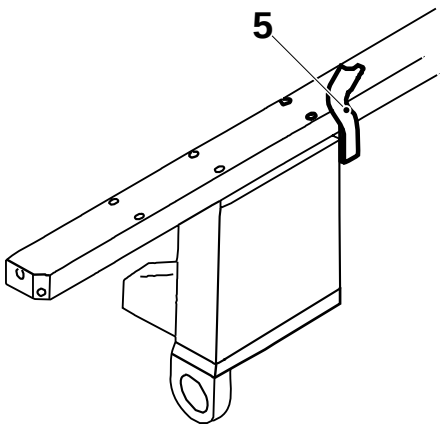

1 Carrier, cutting jaw side
2 Spring
3 Template
4 Carrier, pressure jaw side
5 Busbar

2.2B2550d00.fm

(Cont'd)

(Cont'd)

f) Shift the template (3) to the carrier (4) on the pressure jaw side.

g) Measure the distance B; record the result. The distances A and B are to be the same within 0.1 mm. If not, adjust by loosening the upper and lower screws (8), and altering the thickness of the shimming (7). (Altering the shimming by 0.1 mm, changes the symmetry distances A and B by approx. 0.15 mm).

h) Retighten the screws (8) and check the distances A and B.

i) Fit the coaxial cable, the plate, the busbar, the banjo connections, and the two bleeding screws.

RH Yoke

a) Crank to 355°.

b) Place the spring (2) between the carriers.

c) Fit the template (3) to the carrier (1) on the cutting jaw side.

d) Repeat d) - g) from the LH yoke.

e) Fit the the busbar, the banjo connections, and the two bleeding screws.

f) Set the clearance C between the support roller and cam (10) by the eccentric screw (9).

2.2B2550d00.fm

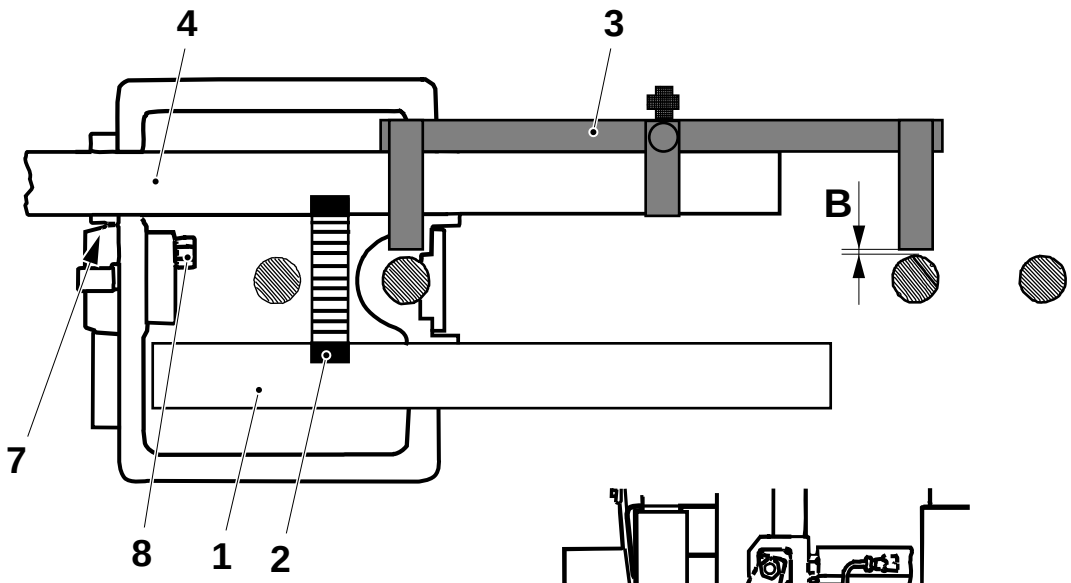

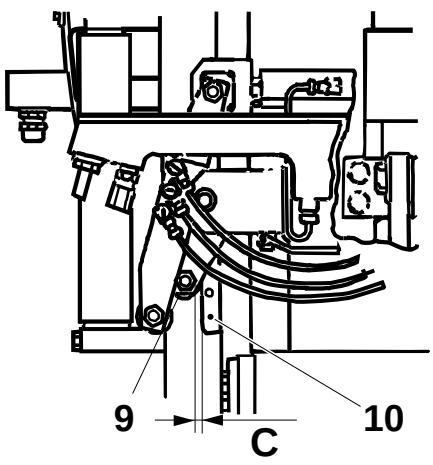

C = 0.05 - 0.1 mm

1 Carrier, cutting jaw side
2 Spring
3 Template
4 Carrier, pressure jaw side
7 Shim
8 Screw
9 Eccentric screw
10 Cam

4.0 - 9 Mechanism - set

a) Set the distance B; it should be possible to twist the ear (2) slightly sideways. Adjust by shifting the bracket (4).

b) Remove the volume flaps on the cutting jaw side.

c) Crank to 0° (RH side)/180° (LH side).

d) Place a feeler gauge, thickness 0.7 mm, under the folding flaps.

e) Move the design correction cylinder into non-corrective position, i.e. full paper feed.

f) Loosen the lock nut (1) and turn the operating rod (3) to obtain the distance A.

g) Check the distance A along the whole folding flap (cutting side and inductor side) and at the top and bottom parts of the folding flap cam.

h) If the distance A differs on the cutting side and the inductor side, adjust by means of shims underneath the carrier on the cutting side.

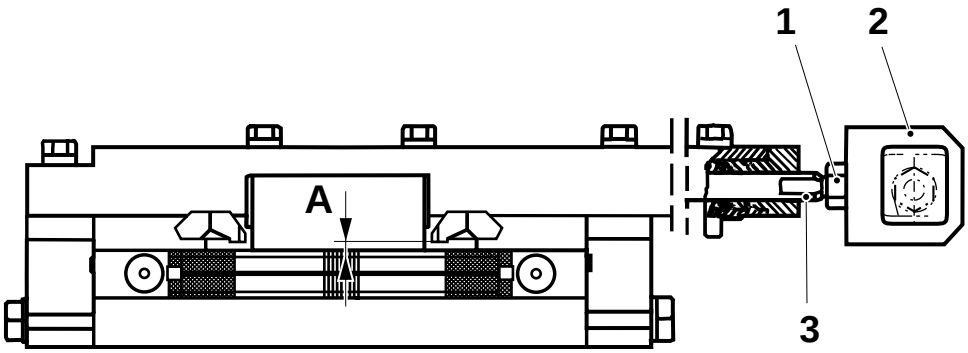

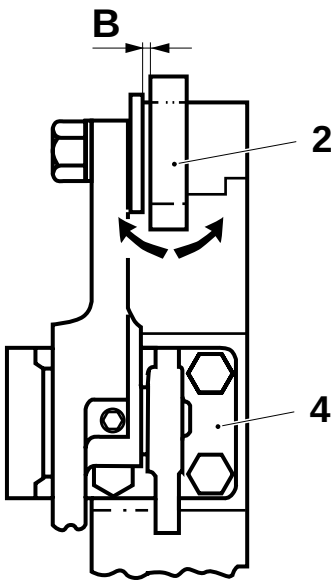

A = 0.7 ±0.05 mm
B = 0.1 - 0.5 mm

1 Lock nut
2 Ear
3 Operating rod
4 Bracket

2.2B2550d00.fm

(Cont'd)

(Cont'd)

If actions according to item h) on the previous page have been carried out, proceed as follows:

i) Crank to 30° (RH side)/ 210° (LH side).

j) Stick two pieces of adhesive tape (6) to each inductor.

k) Crank to 79° (RH side)/ 259° (LH side).

l) Tap the head of the knife screw (5) lightly so that the knife cuts through the tape.

m) Crank the jaws open. Remove the upper right and lower left pieces of tape.

n) Check the vertical position. The knife must **not** hit edge of the groove.

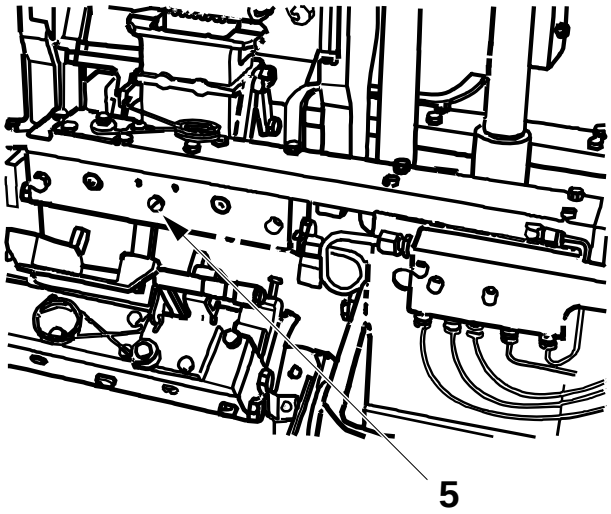

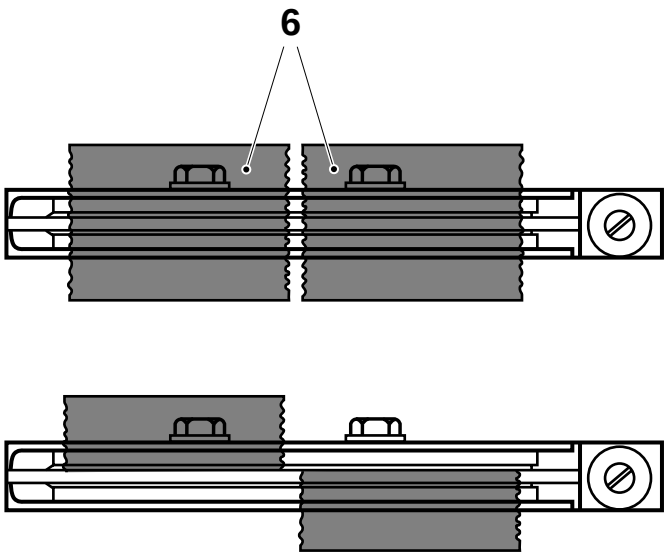

5 Screw
6 Adhesive tape

2.2B2550d00.fm

4.0 - 10 Volume flap - alignment

Tools	
- template	TP No. see table below
- fixture	TP No. 76291-101
- fixture	TP No. 76298

a) Remove the outer volume flap and knife holder.

b) Remove the bracket of the tube support rollers (applies to 125 (ml)).

c) Crank to 5° (0° for 200 and 15°), RH volume flap.

d) Fit the setting fixtures (2) and (3).

e) Loosen the screws (4). Apply the template (1), see table below, to the fixture (3).

f) Shift the carrier sideways and centre the folding flaps relative to the template.

g) Tighten the screws.

h) Remove the setting fixtures and the template.

i) Crank to 185° and repeat the setting procedure with the LH volume flap.

j) Fit the volume flap and knife holder.

k) Set the folding flaps, see 4.0 - 9 Mechanism - set.

Volume (ml)	Template TP No.
200	594987

2.2B2550d00.fm

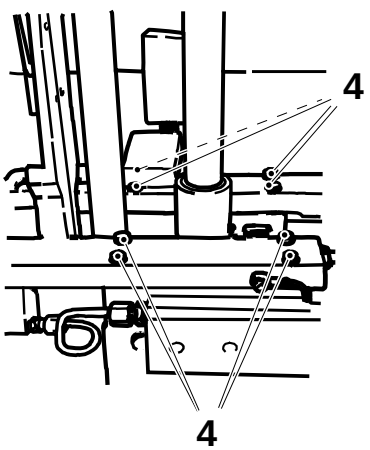

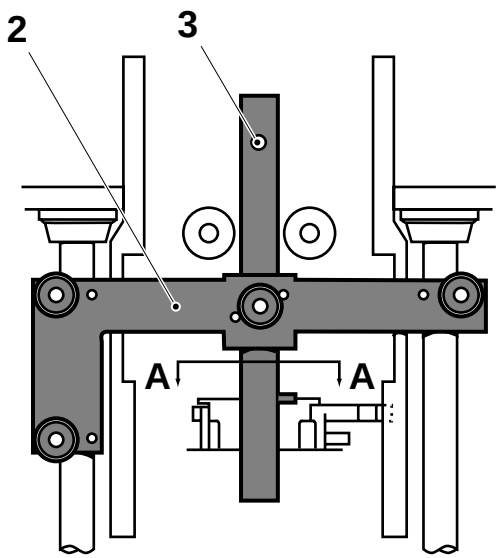

2 Fixture TP No. 7629
3 Fixture TP No. 7629
4 Screw

4.0 - 11 Tube support rollers - set

Tools	
- template	see table below
- fixture	TP No. 76291-101
- fixture	TP No. 76298

Alignment and vertical position - basic setting

a) Loosen the screws (1) and set distance A, see table below.

b) Crank to 5° or 185°.

c) Fit the setting fixtures (2) and (3).

Volume (ml)	A ±1 (mm)
200	60

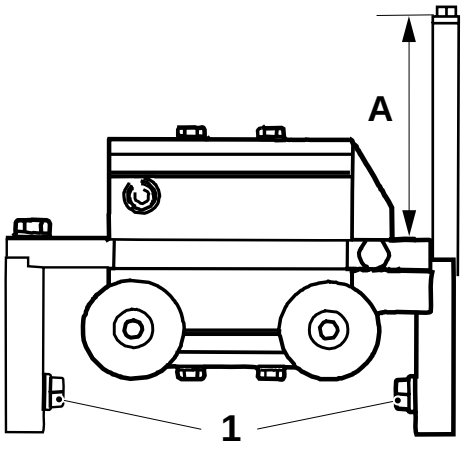

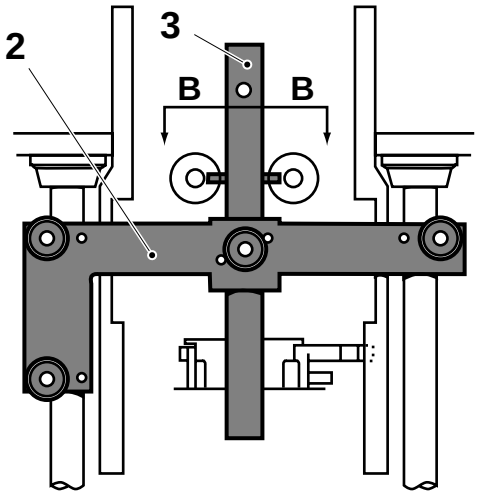

1 Screw
2 Fixture TP No. 76291-101
3 Fixture TP No. 76298

2.2B2550d00.fm

(Cont'd)

(Cont'd)

d) Undo the locking screw (4). Apply the template (6), see table below, to the fixture (2).

e) Turn the adjustment screw (7) until the LH tube support roller (5) bears against the template. Tighten the screw (4).

Volume, (ml)	Template TP No.
200	75944

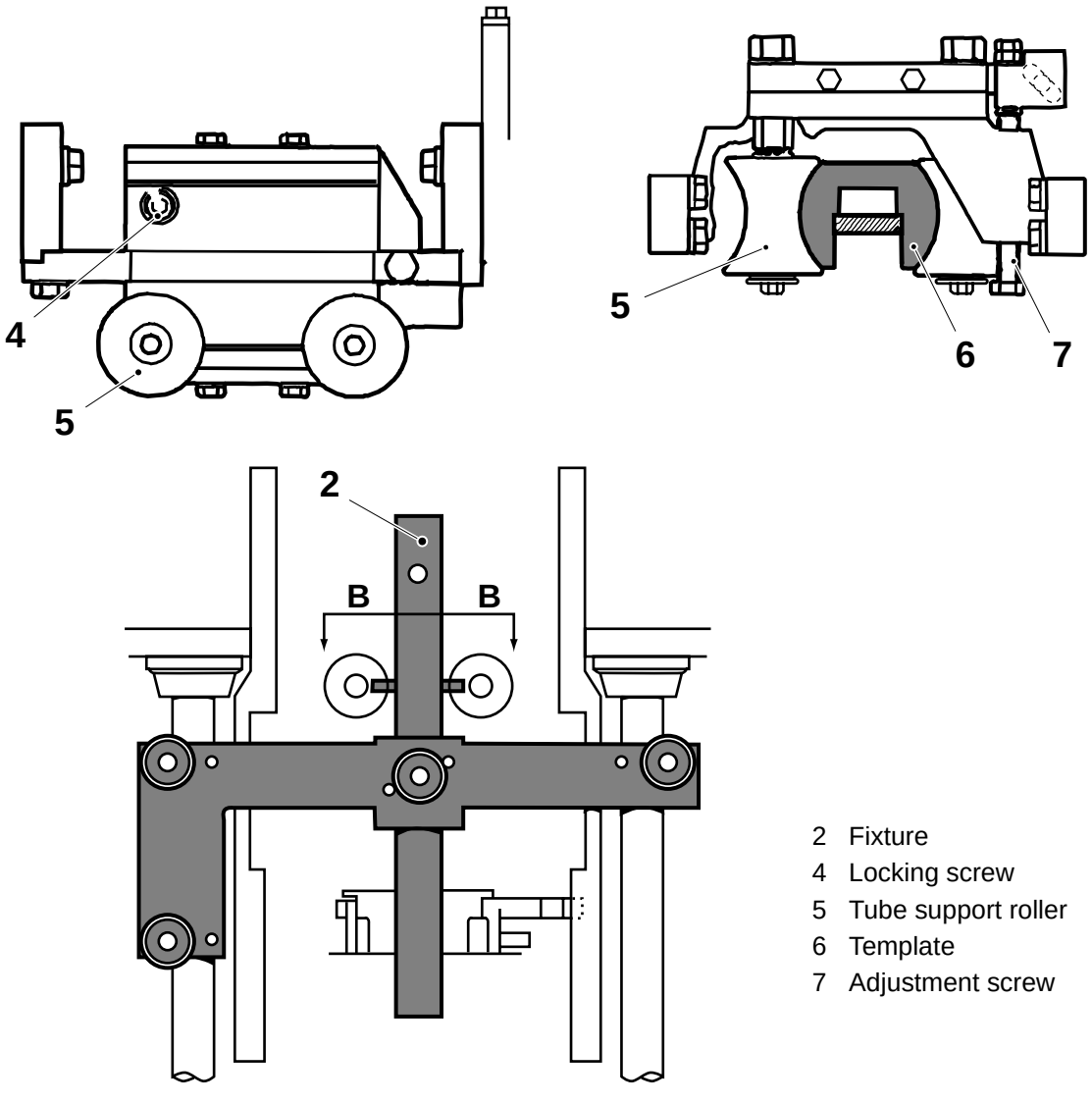

2.2B2550d00.fm

2 Fixture
4 Locking screw
5 Tube support roller
6 Template
7 Adjustment screw

(Cont'd)

(Cont'd)

f) Set the roller (5) so that it bears evenly against the template by means of the shims (9), distance C. After setting, check that the roller rotates freely.

g) Loosen the nut (8) and slide the RH tube support roller (10) against the template. Tighten the nut (8) and repeat the setting according to item f) on the RH roller.

Final setting of centring and vertical position

a) In step **Production**, push out the drop chute. Pick two consecutive semi-finished packages and check that the short sides are indentically shaped.

b) The picture below shows a section through a semi-finished package, seen from above. Shift the support rollers in the direction of the arrow.

c) To adjust, push **Short stop** and loosen the screw (4). Adjust by means of the adjustment screw (7). Turning the screw (7) clockwise moves the tube support roller to the right.

2.2B2550d00.fm

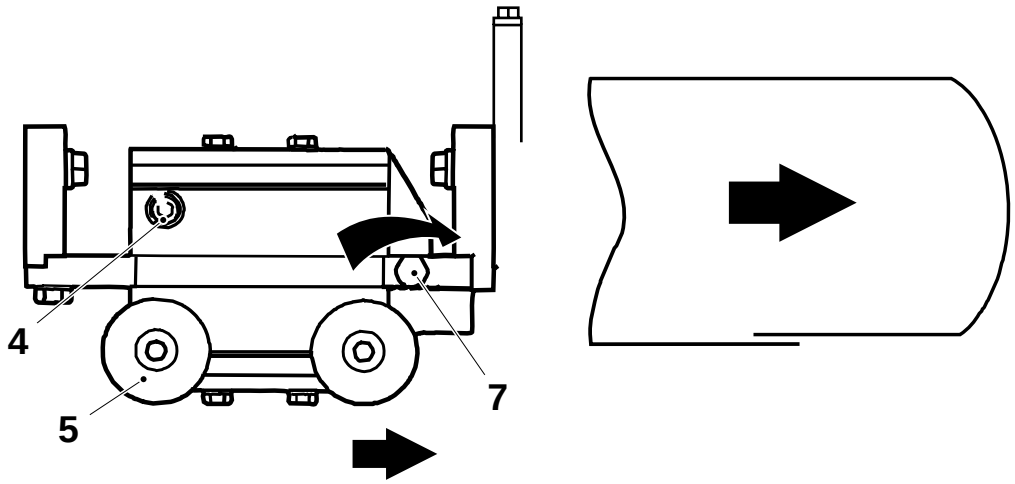

C = 0.2 - 0.3 mm

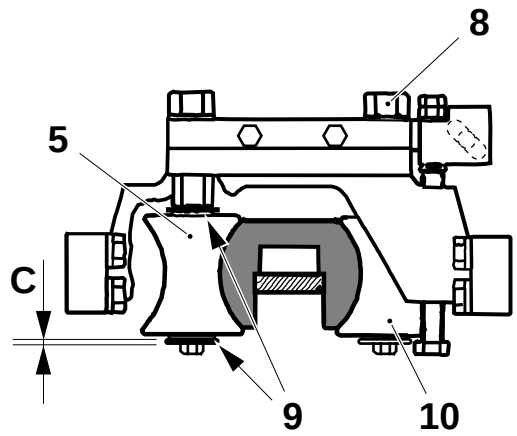

4 Locking screw
5 Tube support roller, LH
7 Adjustment screw
8 Nut
9 Shim TP No. 2033-14
10 Tube support roller, RH

4.0 - 12 Jaw over jaw - check

Tools - internal micrometer	

a) Remove the volume flaps on both cutting jaws and guide roller for inner volume flap.

b) Crank to 90°.

c) Measure and record the distance A between the inductors (1) with the aid of an internal micrometer.

d) Crank to 270° and measure the distance A.

Note! Measure the distance at the same place on the inductor both times.

e) The difference between the two distances must not exceed 0.1 mm. Adjust as required, see 4.0 - 13 Jaw over jaw - set.

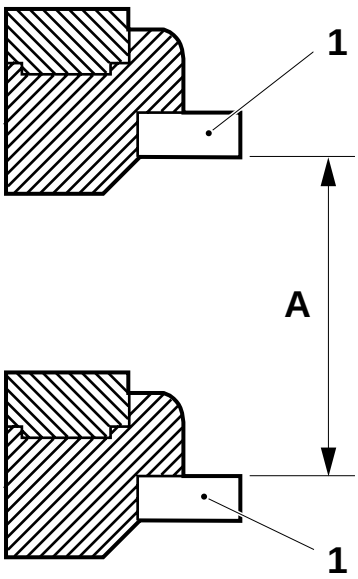

1 Inductors

2.2B2550d00.fm

4.0 - 13 Jaw over jaw - set

Tools - template	 TP No. see table below

Coarse setting

If the difference between the two distances A **exceeds** 1.0 mm, set as follows.

To reduce distance

a) Place the template (3) and a feeler gauge with a thickness equal to the adjustment, underneath the RH yoke.

Volume (ml)	Template TP No.
200	591670

Note! Adjust only half the difference.

b) Crank so that the yoke rests against the template and feeler gauge.

c) Loosen the two screws (1) and the six screws (2).

d) Remove the feeler gauge and lower the yoke against the template.

e) Tighten the screws (2).

2.2B2550d00.fm

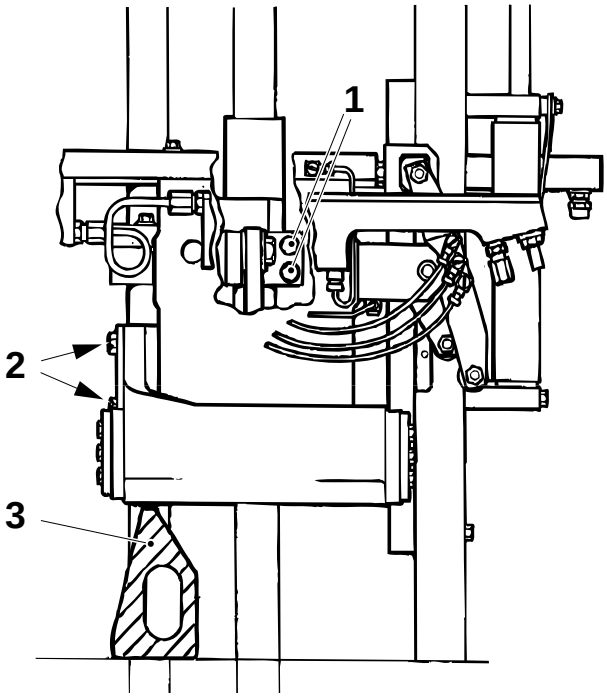

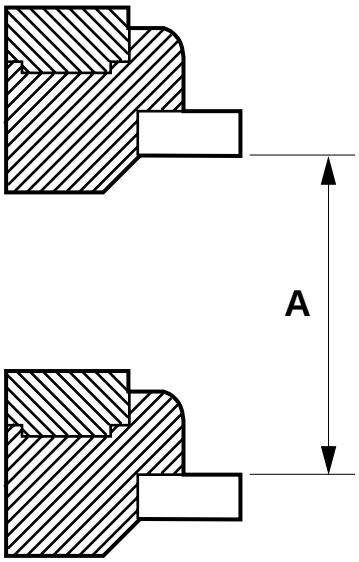

1 Screw
2 Screw
3 Template

(Cont'd)

(Cont'd)

f) Set the jaw gap, see 4.0 - 3 Movement - set.

Caution! The jaw system must be forcibly guided by hand when the machine is being cranked.

Measure the distance A, see 4.0 - 12 Jaw over jaw - check.

To increase distance

a) Place the template (3) underneath the RH yoke.

b) Crank so that the yoke rests against the template.

c) Loosen the two screws (1) and the six screws (2).

d) Lift the yoke and place a feeler gauge, with thickness equal to the adjustment, between the template and the yoke.

Note! Adjust only half the difference.

e) Tighten the screws (2).

f) Set the jaw gap, see 4.0 - 3 Movement - set.

Caution! The jaw system must be forcibly guided by hand when the machine is being cranked.

g) Measure the distance A, see 4.0 - 12 Jaw over jaw - check.

2.2B2550d00.fm

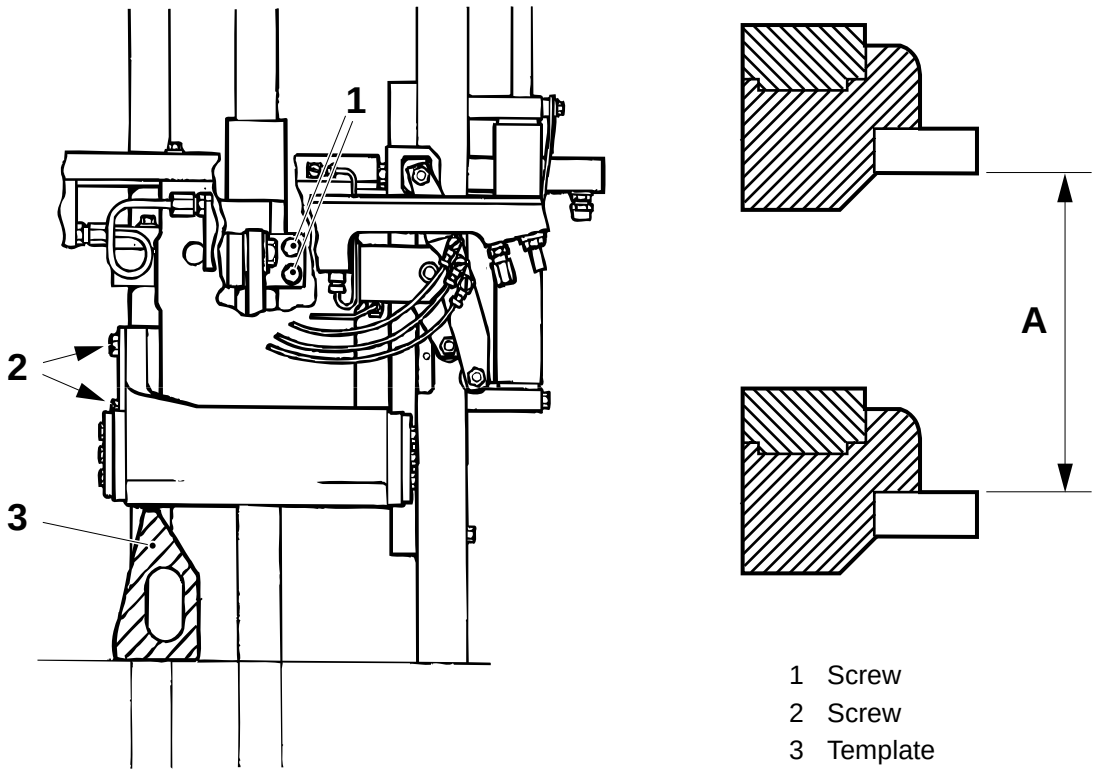

1 Screw
2 Screw
3 Template

(Cont'd)

(Cont'd)

Fine setting

If the difference between the distances A is **less than** 1.0 mm, set as follows:

a) Always adjust on the **RH** yoke lifter arm.

b) Undo the lock nut (5) on the RH yoke lifter arm and shift the eccentric axle pin (4); one scale division = 0.1 mm.

Note! Adjust only half difference.

c) Check the jaw gap, see 4.0 - 2 Movement - check. If required, repeat the setting of the distance A and the jaw gap until both are within their tolerances.

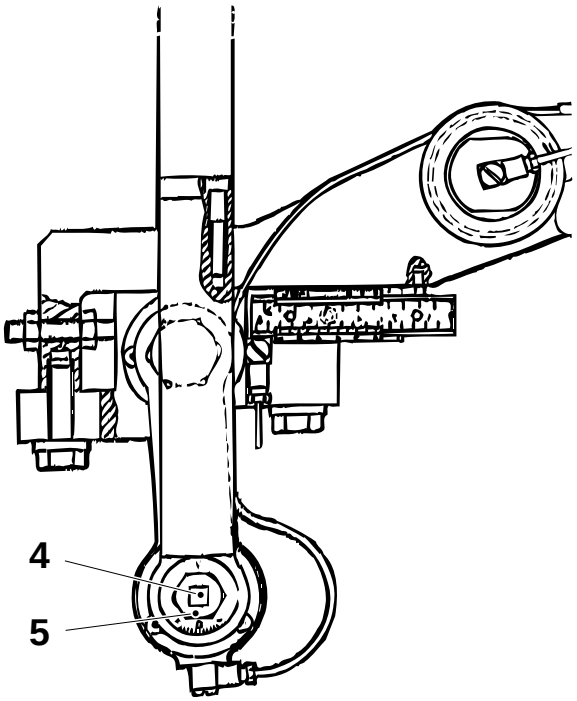

4 Axle pin
5 Lock nut

2.2B2550d00.fm

4.0 - 14 Design correction mechanism - set

Tools	
- template	TP No. 75945

a) Crank to approx. 10° (LH side)/ 190° (RH side).

b) Set the distances A and B.

Set with template

a) Place the template (3) with the chamfered corner (6) facing forwards. Loosen the screw (1) and turn the eccentric shaft (2) until the cam (5) bears against the gauge with its contact surface (4). Tighten the screw (1).

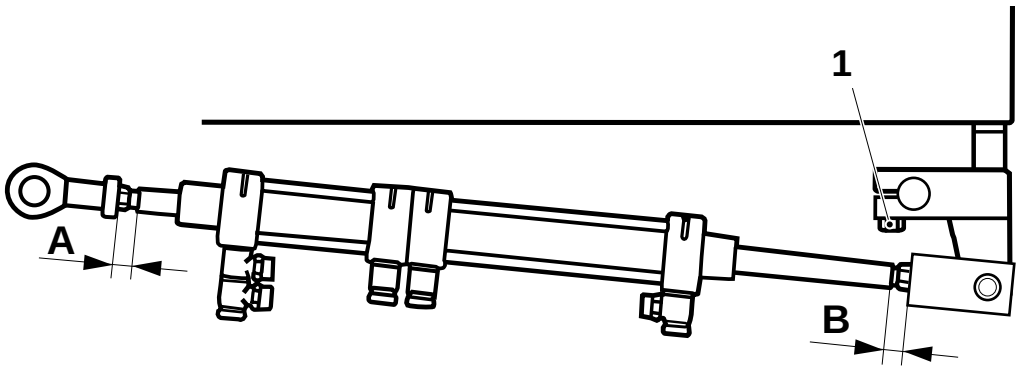

A = 10 ±0.5 mm
B = 8 ±0.5 mm

2.2B2550d00.fm

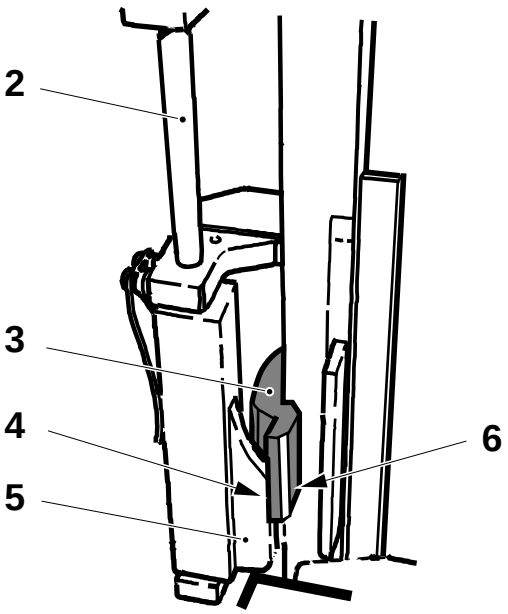

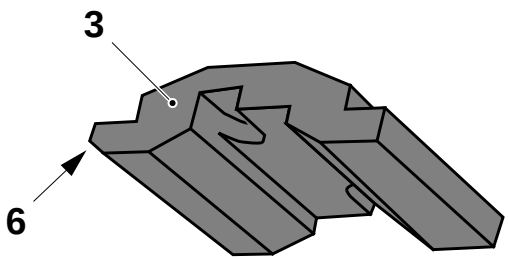

1 Screw
2 Eccentric shaft
3 Template
4 Contact surface
5 Cam
6 Chamfered corner

(Cont'd)

(Cont'd)

b) Pull out the piston rod (11) and keep it pulled out. At the same time, move the cylinder combination (9) and (10) back to end position, so that the bracket (12) pivots.

c) Turn the template (3) 180° (the camfered corner facing backwards). Check that the cam (5) bears against surface (4). If required, adjust the distance A.

d) Set the distance C between the blocking piece (8) and the cam. If required, move the blocking piece.

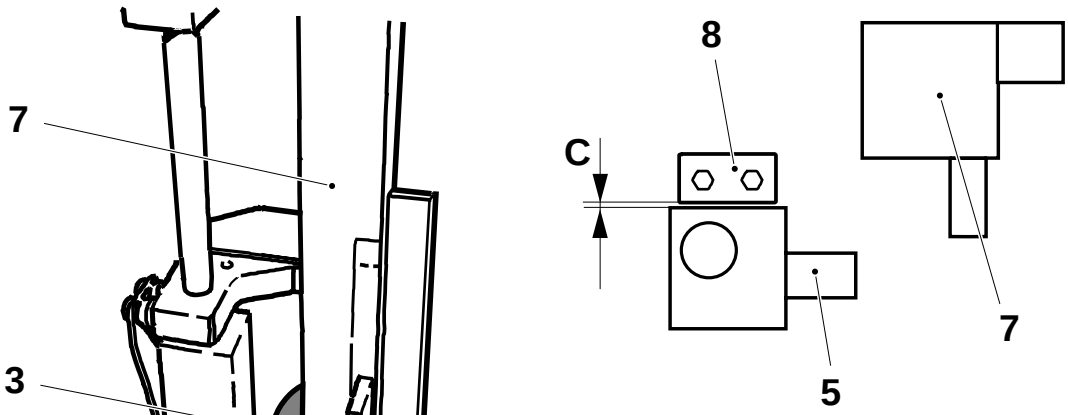

2.2B2550d00.fm

3 Template
4 Contact surface
5 Cam
7 Column
8 Blocking piece
9 Cylinder
10 Cylinder
11 Cylinder piston
12 Bracket

A = 10 ±0.5 mm
C = 0.1 ±0.05 mm

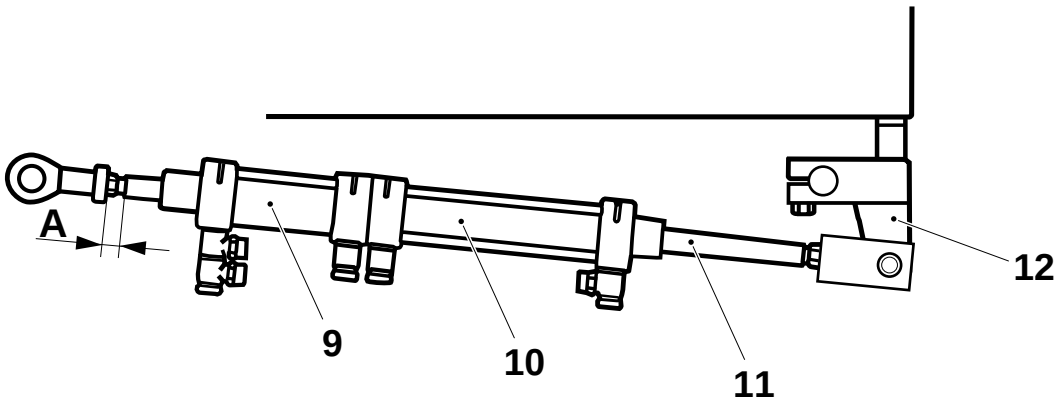

(Cont'd)

(Cont'd)

If no template is available

a) Move the cylinder combination (9) and (10), with the piston rods in, back to end position and turn the bracket (12).

b) Set the distance D mm between the cam (5) and the column (7).

c) Set the distance C between the blocking piece (8) and the cam by moving the blocking piece.

d) Pull out the piston rod (11) and keep it pulled out. At the same time, move the cylinder combination (9) and (10), so that the arm pivots.

e) Set the stroke E of the cylinder (9). If required adjust the distance A.

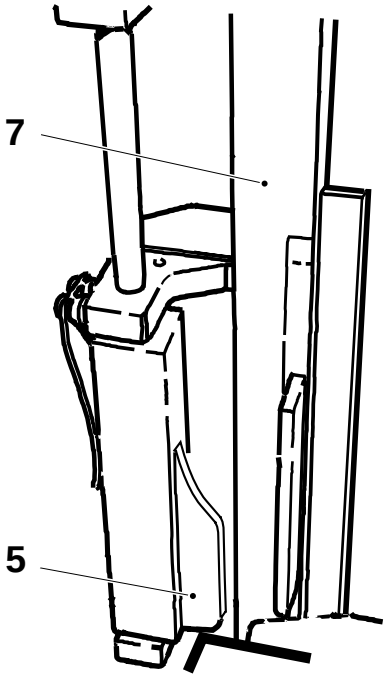

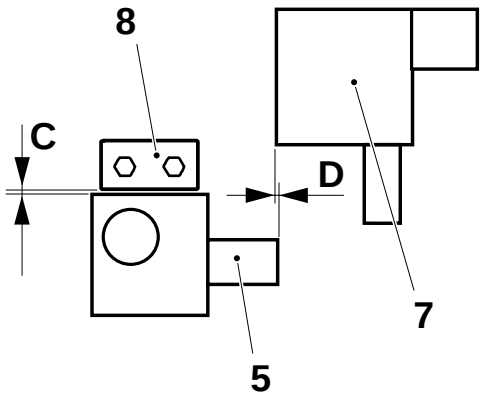

A = 10 ±0.5 mm
C = 0.1 ±0.05 mm
D = 0.5 ±0.05 mm
E = 15 ±0.5 mm

5 Cam
7 Column
8 Blocking piece
9 Cylinder
10 Cylinder
11 Piston rod
12 Arm

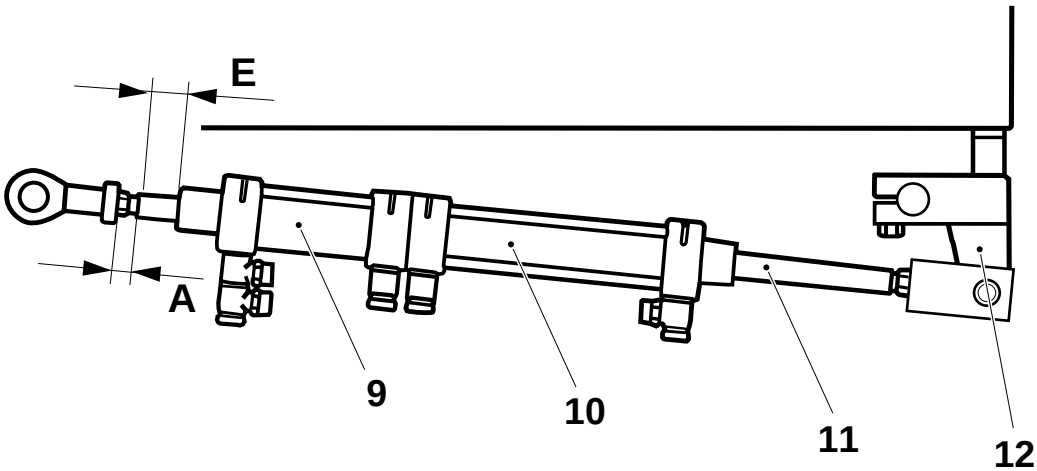

2.2B2550d00.fm

4.0 - 15 Catch pivot spring - set

Consumables - grease	 code F

a) Lubricate the bushing (2) with grease type F, see 10.2 Lubricants.

b) Crank until the catches are engaged.

c) Set the distance A, between the corner of the lug (3) and the top side of the carrier (1), by loosen the screw (4) and turn the lug (3).

d) Make sure that the lug (3) moves freely before tight the screw (4).

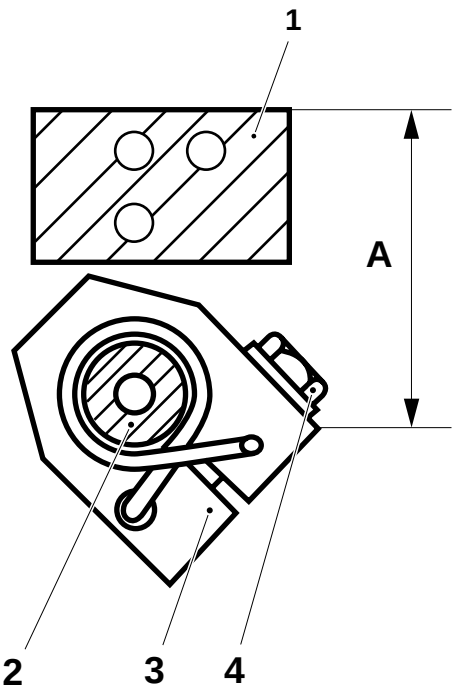

A = 59 ±2 mm

1 Carrier
2 Bushing
3 Lug
4 Screw

2.2B2550d00.fm

4.0 - 16 Cutting pistons - bleed

Machine status	Power **On** Water **On** Service switch **On**

a) Crank to 75°.

b) Reduce the hydraulic pressure (cutting pressure) to approximately 4 MPa. Undo the lock nut (2) and set with the screw (1). Read the pressure on the pressure gauge (3).

c) Loosen the screws (4) carefully and bleed the cutting mechanism.

WARNING! **Risk of personal injuries!**
Watch out for splashing.

d) Tighten the screws.

Caution! Do not overtighten.

e) Crank to 255° and bleed the cutting mechanism on the LH side.

f) Set correct hydraulic pressure, see 10.1 Technical data, with the screw (1).

g) Check that there is no oil leakage.

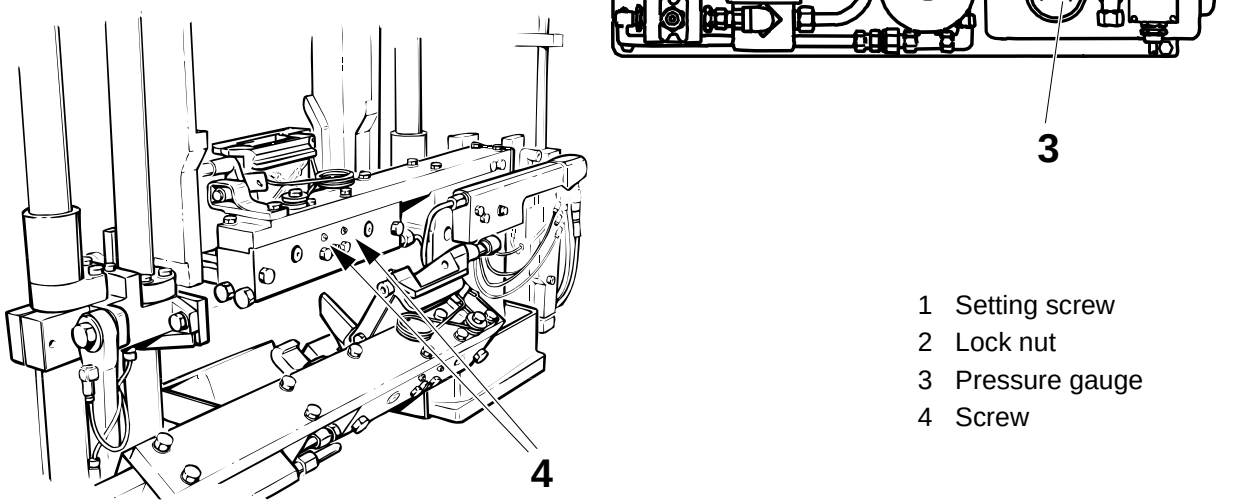

2.2B2550d00.fm

1 Setting screw
2 Lock nut
3 Pressure gauge
4 Screw

4.0 - 17 Catches - bleeding

Machine status	Power **On** Water **On** Service switch **On**

a) Crank to 0° .

b) Reduce the hydraulic pressure (jaw pressure) to approx. 4 MPa. Loosen the lock nut (1) and set with the adjustment wheel (2). Read the pressure on the pressure gauge (3).

WARNING! **Risk of personal injuries!**
Watch out for splashing.

Loosen the screw (4) carefully (two on each carrier), and bleed the catches.

c) Retighten the screws.

Caution! Do not overtighten.

d) Crank to 180° and bleed the catches of the LH side.

e) Set the correct hydraulic pressure, see 10.1 Technical data.

2.2B2550d00.fm

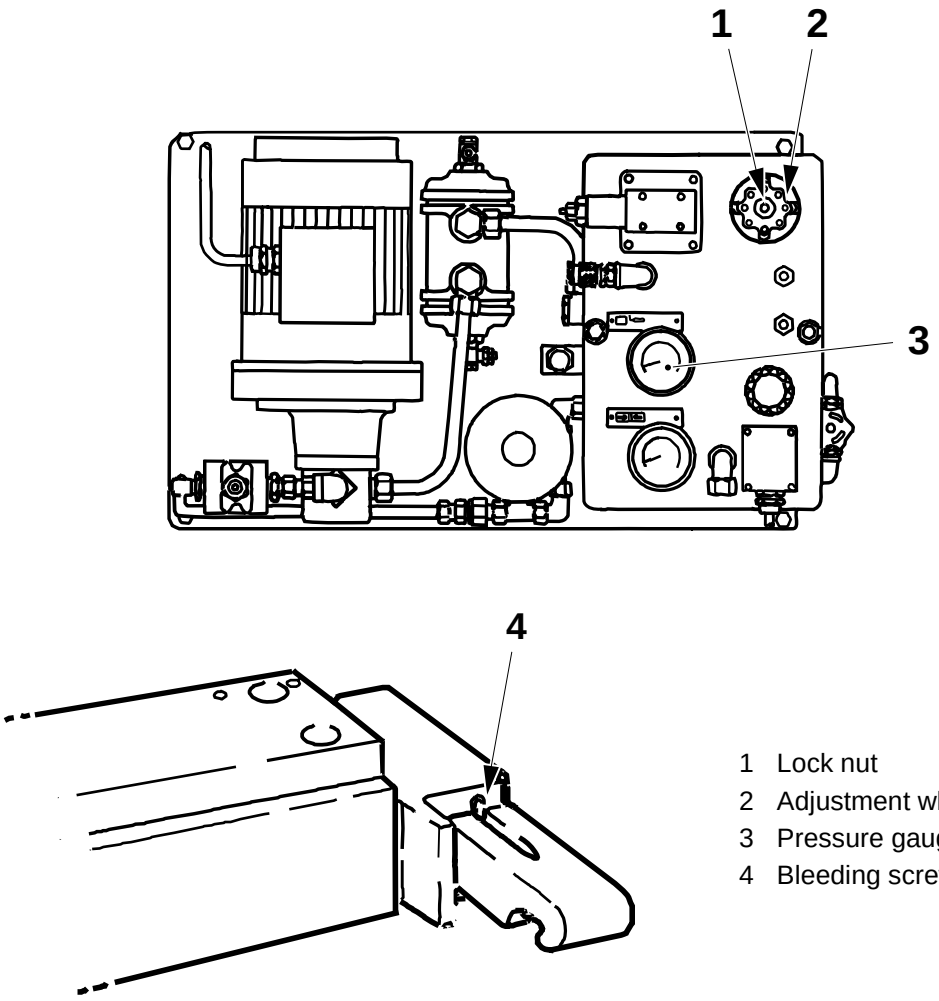

1 Lock nut
2 Adjustment wheel
3 Pressure gauge
4 Bleeding screw

4.0 - 18 Lifter cams and rollers - set

Machine status	Power **On** Water **On** Service switch **On**

a) Put a piece of double packaging material between the jaws.

b) Crank to 180° (LH side)/ 0° (RH side).

c) Unscrew the screws (3) and (7).

d) Set the distance A between the cam (1) and the cam roller (2) by shimming (5) between the bracket (6) and the yoke (4).

e) Fit the cam and yoke edge-to-edge in order to always obtain the same initial position. At assemble, tighten the screws (7) first.

f) Crank the machine and lift the catch manually in the direction of the arrow (8). Check that an overtravel B can be obtained between the cam and the cam roller at the highest point of the cam.

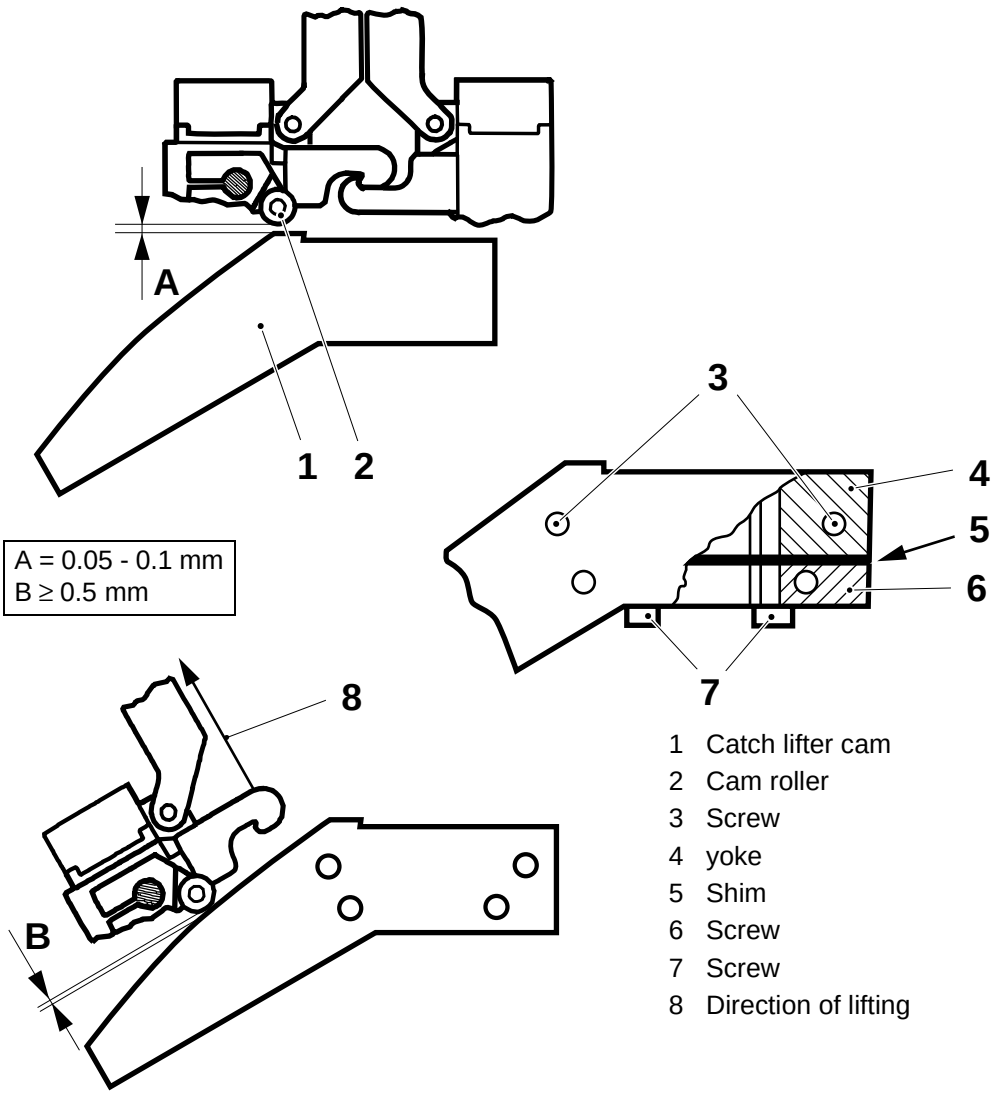

2.2B2550d00.fm

4.0 - 19 Clearance - check

Machine status	Power **On** Water **On** Service switch **On**

a) Crank the machine and check the distance A between the catches on the disengagement movement.

b) If the distance A is too small, see 4.0 - 18 Lifter cams and rollers - set and the catch pivot spring and 4.0 - 15 Catch pivot spring - set.

c) Crank to C°, see table below, and check distance B.

d) Crank to D° and check distance B for the other jaw pair.

Volume (ml)	C°	D°
200	5	185

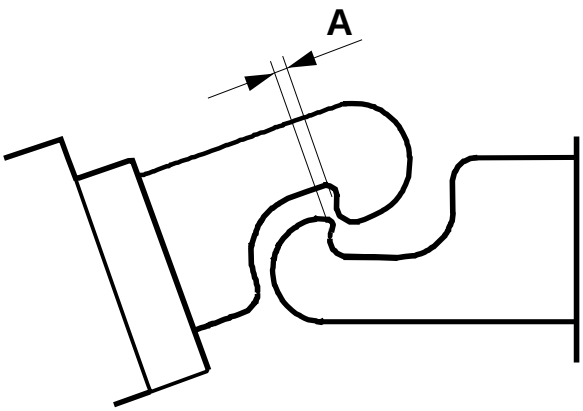

2.2B2550d00.fm

A ≥ 0.7 mm
B ≥ 4 mm

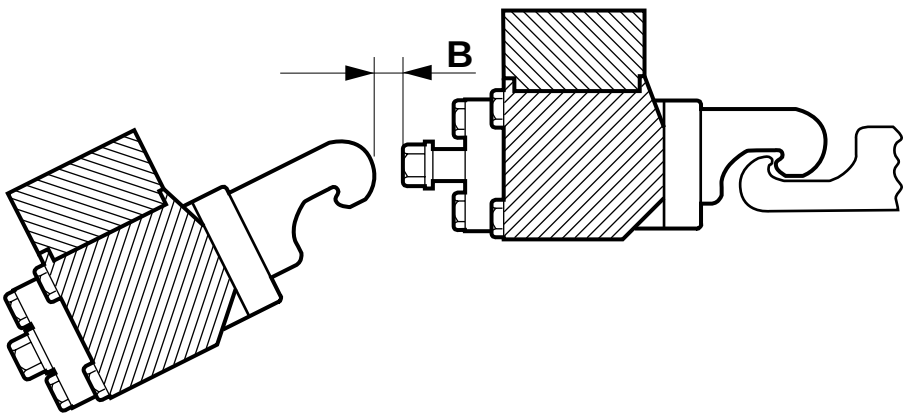

4.0 - 20 Catches - check

Machine status	Power **On** Water **On** Service switch **On**

a) Check that the engagements of the catches are not worn.

b) Put a piece of a double packaging material (0.7-0.8 mm) with the same width as the transversal sealing between the jaws. Cut the packaging material so that the folding flaps pass by.

c) Crank to 180° (LH side)/ 360° (RH side), and check the distance A.

d) If the distance A is less than 0.3 mm, check and, if required, change/ overhaul the pressure jaws, the pressure rubbers and the catches.

e) Check that the catches do not leak any hydraulic oil. If required overhaul.

A ≥ 0.3 mm

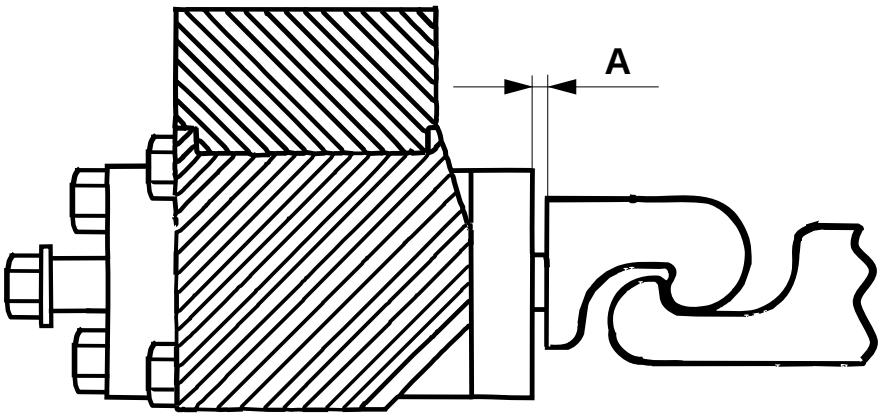

2.2B2550d00.fm

4.1 Cutting jaws

4.1 - 1 Cutting jaw - change

Machine status	Main power OFF
SPC reference	595159-0101 595160-0101

a) Crank the machine until one of the jaw pairs are in fully open.

b) Unscrew the banjo connection (1).

c) Unscrew the hydraulic pipe (2) at the bearing housing.

d) Unscrew the four screws (3).

e) Change the cutting jaw (4).

f) Assemble in the reverse order.

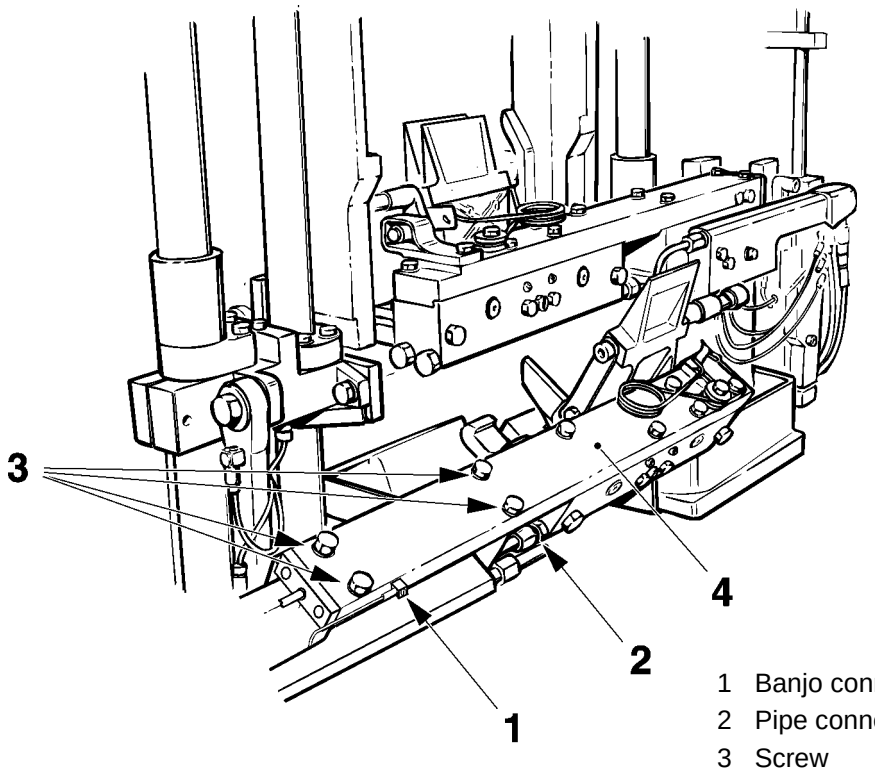

1 Banjo connection
2 Pipe connection
3 Screw
4 Cutting jaw

2.2B2550d01.fm

4.1 - 2 Parallelity folding flap - set

a) Undo the four screws (3), the pipe connection (2) and the banjo connection (4). Remove the cutting jaw.

b) Undo the four screws (1) and remove the bearing housing from the carrier.

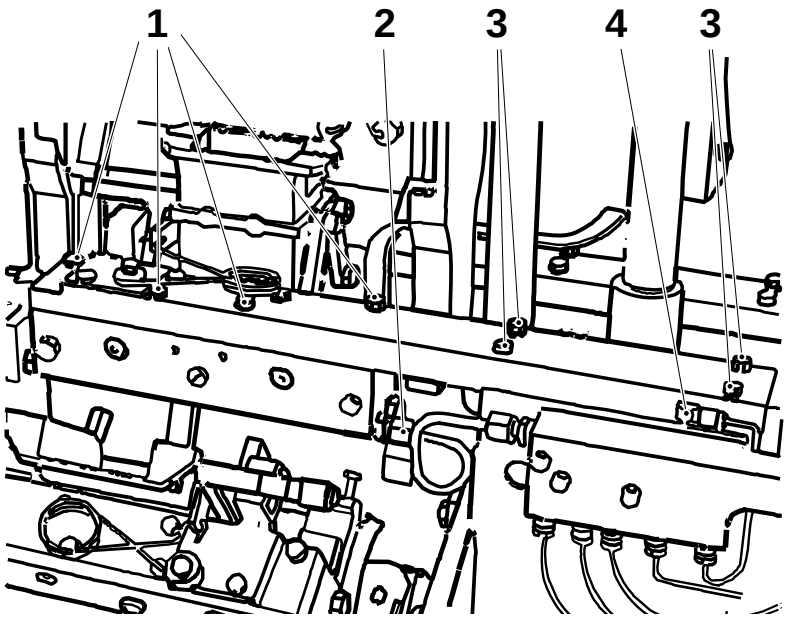

1 Screw
2 Pipe connection
3 Screw
4 Banjo connection

c) Loosen the screws (6) and (8).

d) Set the folding flaps parallel by means of altering the shims (7) in the carrier ruler (5). (Altering the shim thickness 0.05 mm changes the distance A 0.07 mm.)

e) Tighten the screws (6) and (8). Fit the bearing housing on the carrier. Place a feeler gauge (0.7 mm) under one folding flap and move the carrier ruler into non-corrective position.

f) Check that the other folding flap has the same distance within ± 0.05 mm. If not repeat items b) - e).

2.2B2550d01.fm

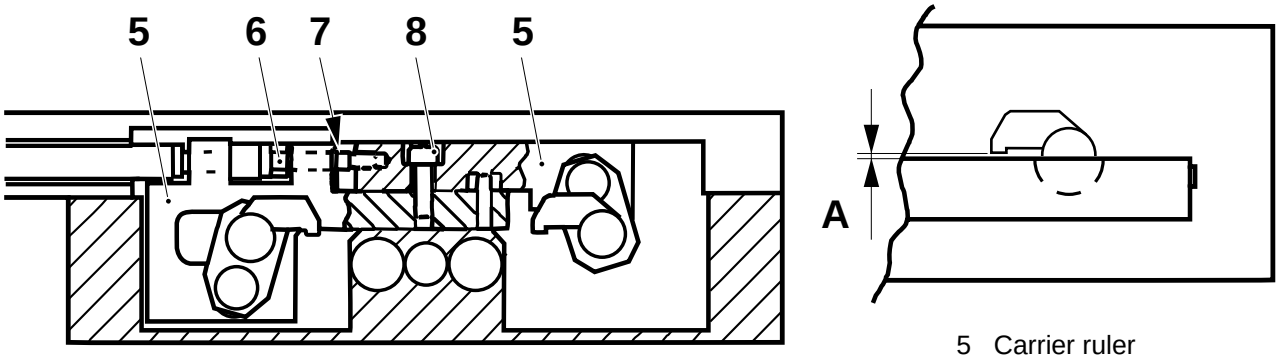

5 Carrier ruler
6 Screw
7 Shim
8 Screw

(Cont'd)

(Cont'd)

g) Fit the cutting jaw.
h) Fill the bearing housing with oil.
i) Bleed the cutting mechanism, see 4.0 - 16 Cutting pistons - bleed.
j) Set the volume flap alignment, see 4.0 - 10 Volume flap - alignment.
k) Set the folding flap mechanism, see 4.0 - 9 Mechanism - set.

4.1 - 3 Cutting pistons - overhaul

Tools - assembly cone - assembly tool - calibration tool	 TP No. 76131 TP No. 76132 TP No.78801
SPC reference	752115

a) Unscrew the two screws (2) and remove the outer cutting jaw (3).
b) Unscrew the two screws (1) and remove the inner cutting jaw (4).
c) Unscrew the nut (5) and pull the pipe aside.
d) Blow very gently with compressed air into the pipe (6).

2.2B2550d01.fm

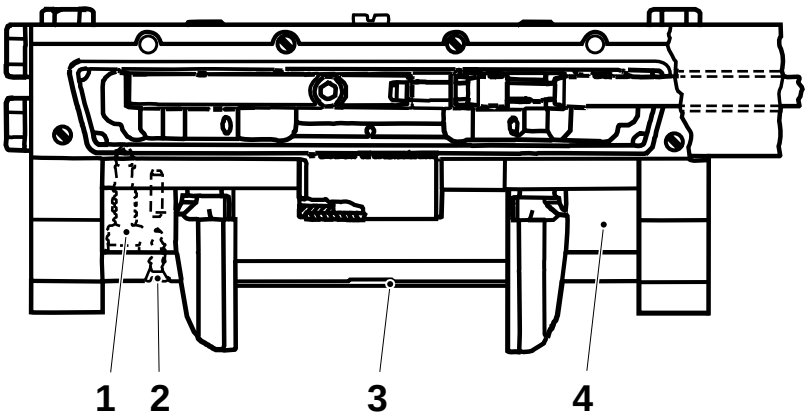

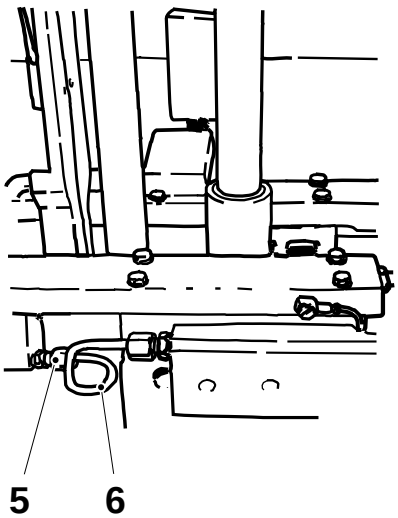

1 Screw
2 Screw
3 Outer cutting jaw
4 Inner cutting jaw
5 Nut
6 Pipe

(Cont'd)

(Cont'd)

e) Pull out the pistons (10) and remove the seals. Check the pistons for wear and/or damage. Change as required.

f) Check the bushings (9) for wear and/or damages. Change as required. Unscrew the screw (7) to remove the bushing.

Note! Change the O-ring (8) when changing the bushing (9).

g) Slide the assembly cone (11) on to the piston (10).

h) Slide the O-ring (12) over the cone.

i) Move the O-ring into the grove in the piston with the aid of the assembly tool (13).

j) Slide the seal ring (14) on to the cone. Move the seal ring onto the groove with the aid of the assembly tool.

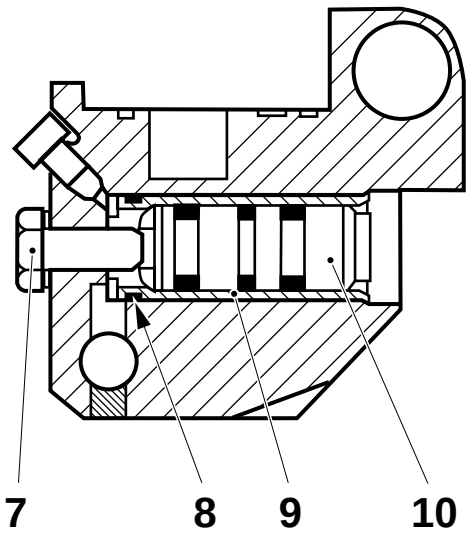

7 Screw
8 O-ring
9 Bushing
10 Piston
11 Assembly cone
12 O-ring
13 Assembly tool
14 Seal ring

2.2B2550d01.fm

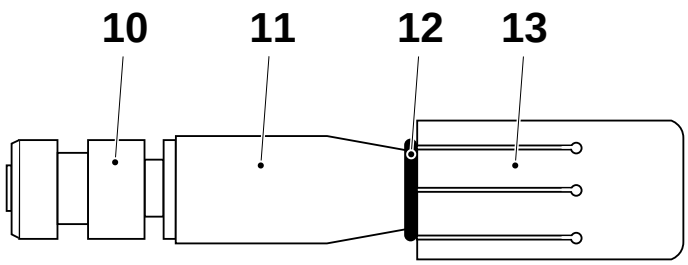

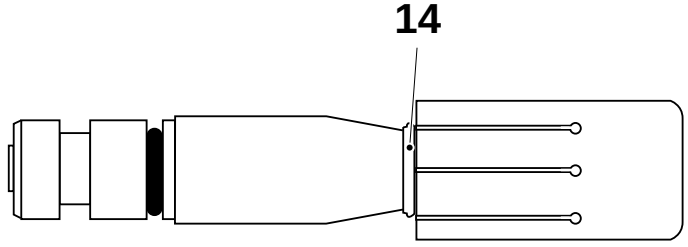

(Cont'd)

(Cont'd)

k) Calibrate the seal ring by forcing the piston through the calibration tool (15).

l) Fit the support rings (17) in their grooves. Shaping the rings will be easier if they are heated in boiling water.

m) Insert the calibration tool (15) into the bearing housing (16). Put the piston (10) through the calibration tool and into the bearing housing.

n) Connect the pipe. Fit the inner and outer cutting jaw.

o) Bleed the cutting mechanism, see 4.0 - 16 Cutting pistons - bleed.

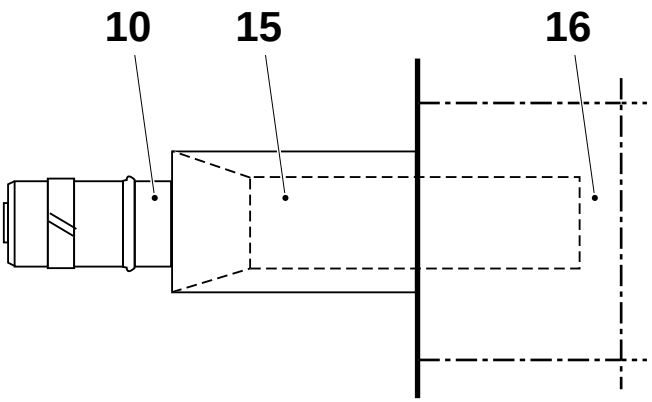

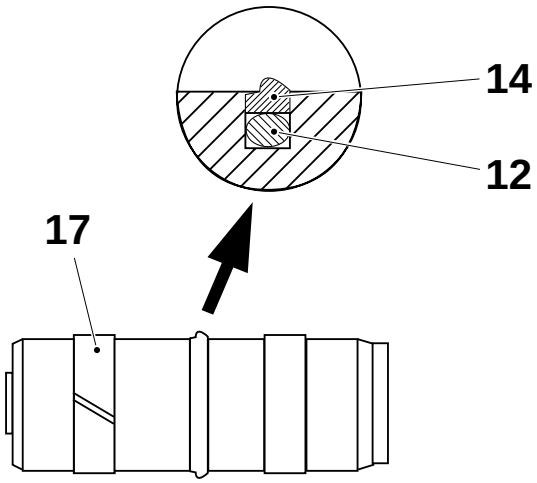

10 Piston
12 O-ring
14 Seal ring
15 Calibration tool
16 Bearing housing
17 Support ring

2.2B2550d01.fm

4.5 Volume curve piece

4.5 - 1 Volume cam - check

Machine status	Main power OFF

Check the following details for wear and/or damage:

- the nuts (1)
- the spring (2) and the ball (3)
- the spindle (4)
- the pins (5)
- the volume cams; especially the section that determines the volume (6). Change if the wear is more than distance A.
- Check that the volume cams are parallel, distance B.

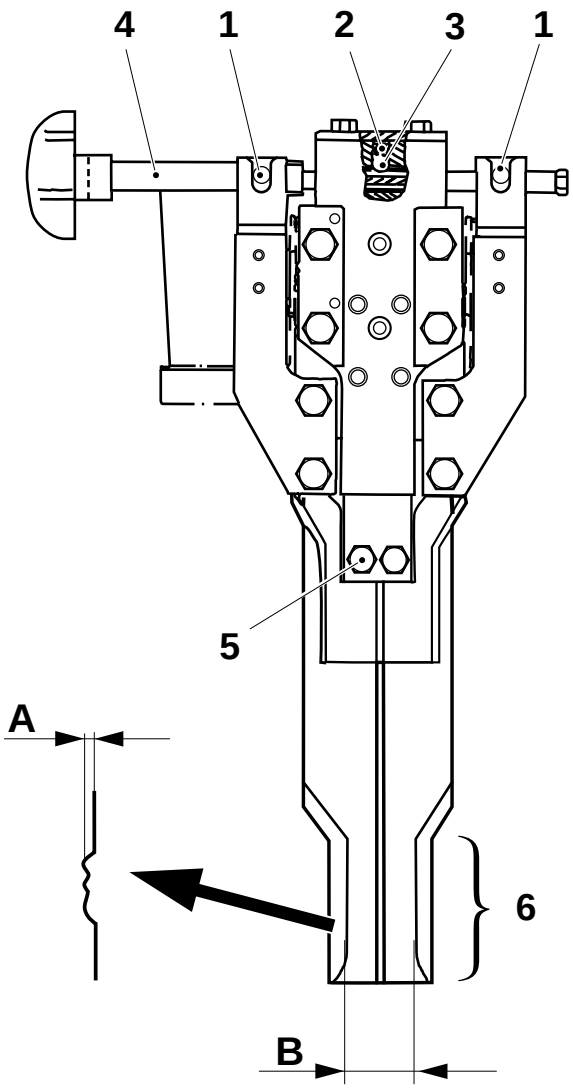

2.2B2550d05.fm

A ð 0.5 mm
B // ±0.2 mm

1 Nuts
2 Spring
3 Ball
4 Spindle
5 Pins
6 Section of cam that determines volume

4.5 - 2 Volume cam - remove

Machine status	Main power OFF
SPC reference	594941 594942

a) Unscrew the four screws (1) and remove the volume cam section.

b) Undo the dowels (2).

c) Unscrew the screws (3) and remove the volume cam (4).

d) Unscrew the screws (5). Remove the spring and the ball.

e) Unscrew the spindle by means of the knob (6). Remove the nuts (7) and the spindle.

f) Assemble in the reverse order.

Set the volume cam, see 4.0 - 6 Volume cam section - set.

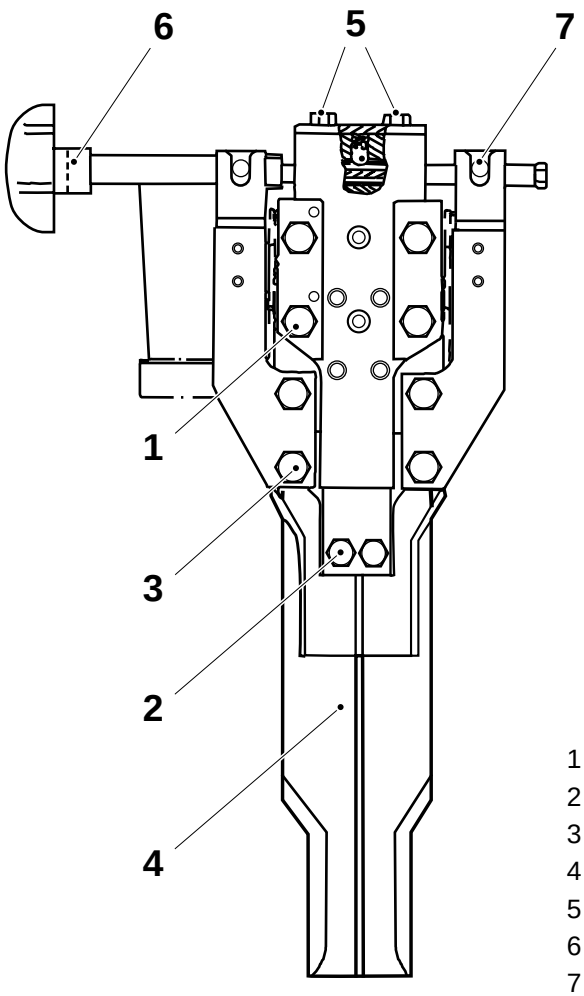

1 Screw
2 Dowel
3 Screw
4 Volume cam
5 Screw
6 Knob
7 Nut

2.2B2550d05.fm

This page intentionally left blank

5 Final folder

2.2B2550e00.fm

5-1 Final folder - description

SPC	648112

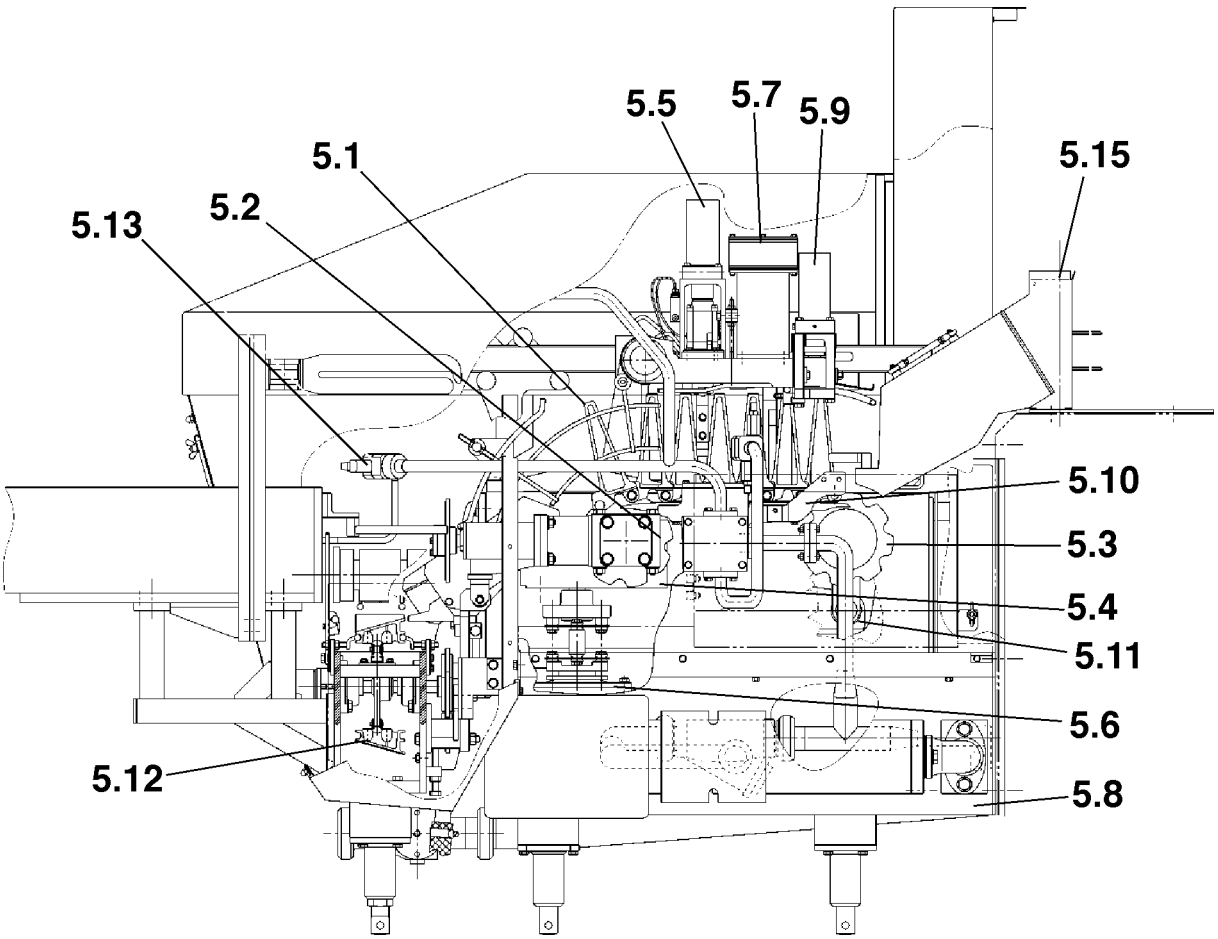

2.2B2550e00.fm

5.1 Station chain
5.2 Drive wheel
5.3 Tension sprocket
5.4 Indexing unit
5.5 Pressure device
5.6 Worm gear
5.7 Element
5.8 Frame
5.9 Pull-down device
5.10 Guide
5.11 Cantilever
5.12 Discharge unit
5.13 Cleaning system
5.14 Central lubrication
5.15 Turning device

5.1 Station chain

SPC reference	591634

5.1-1 Station chain - change

Tools - angle gauge or - template - torque wrench	 TP No. 76128 min 30 Nm

Station chain - remove

a) Remove the lid of the drive wheel. Loosen the screws (3) in sequence around the flange, half a turn at a time. If required, long screws may be used as pullers.

b) Move the chain around until an axle with a threaded hole in the axle end is opposite the bracket (4).

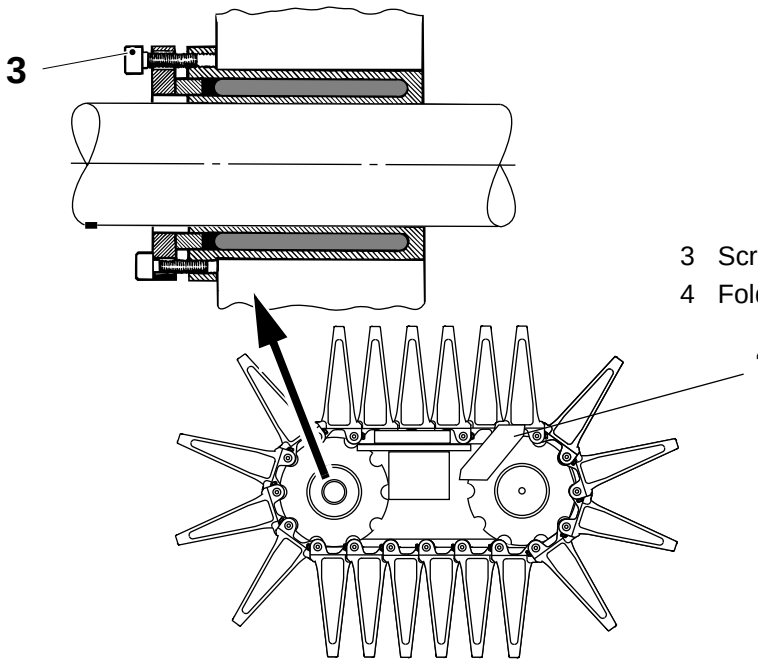

3 Screw
4 Folding bar

2.2B2550e01.fm

c) Turn the eccentric (5) to release the tension of the station chain.

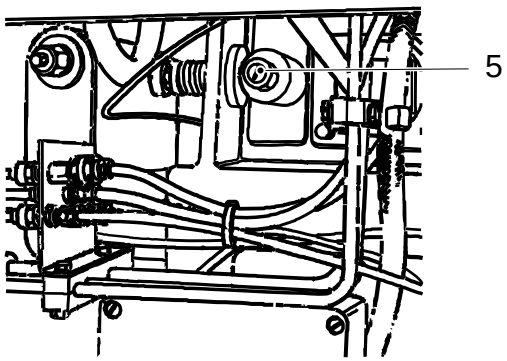

5 Eccentric

d) Unscrew the grub screw (7) and fit a long screw in the axle end (8). Pull out the axle and remove the sliders and the bushings.

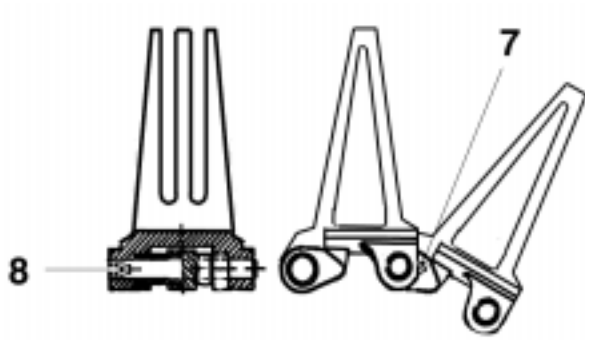

7 Grub screw
8 Axle end

e) Pull out the rear end of the chain through the opening left free by the folding bars.

f) Pull out the station chain.

Station chain - assemble

a) Crank until the axle end (1) stops indexing.

b) Inset the new station chain in the direction indicated by the arrow.

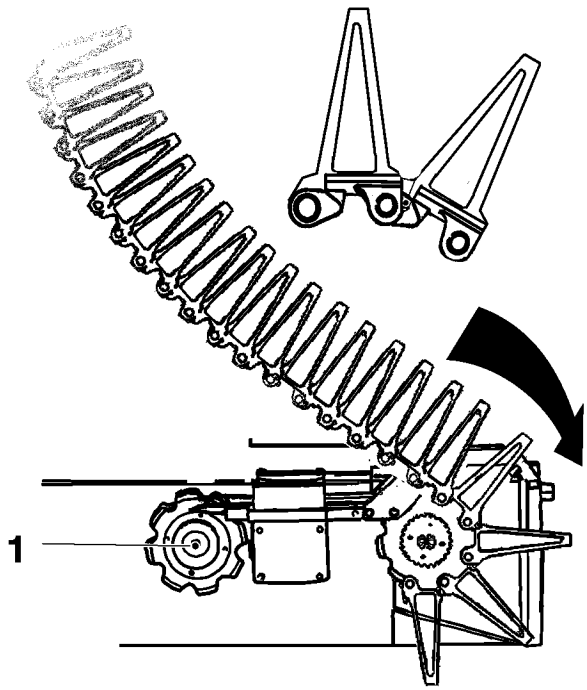

1 Axle end

2.2B2550e01.fm

c) Move the chain around until the chain ends meet.

(Cont'd)

(Cont'd)

d) Fit the bushings (4), the sliders (3) and the axle pin (5). Fit the grub screw (2).

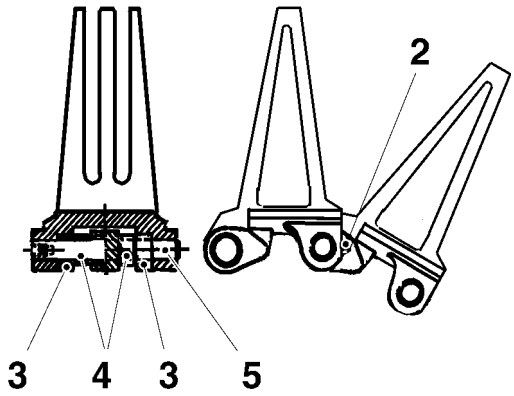

2 Grub screw
3 Slider
4 Bushing
5 Axle pin

e) Turn the eccentric (6) to apply tension on the station chain.

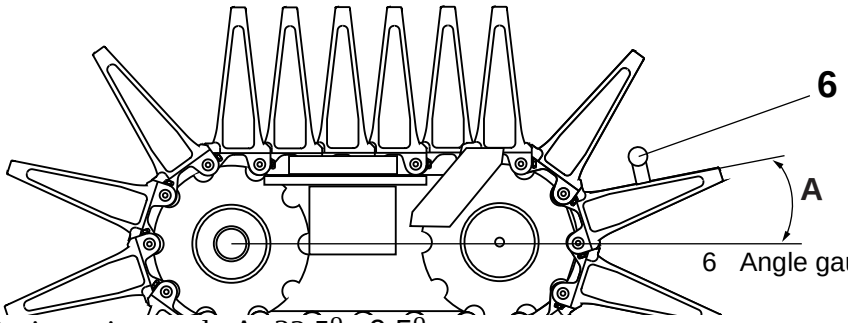

6 Angle gauge

f) Basic setting angle A=32,5° ±0.5°

(Cont'd)

2.2B2550e01.fm

(Cont'd)

g) Set distance B between the side of the slide rail and the side of the drive sprocket (9).

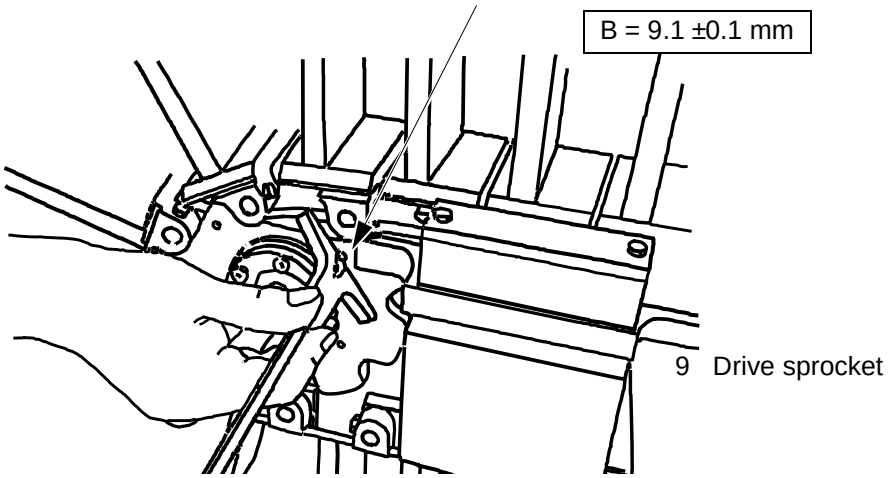

WARNING! **Risk of major damage to the machine!**
Never adjust the tightening torque afterwards by screw out the screws. The result may be that the screws shake loose.

h) Tighten the screws (10) in sequence around the flange, **half a turn at a time**. Torque the screws to 13.0 ±1 Nm.

Caution! Do not tighten the pressure ring (11) and sleeve (12) against one another, distance C.

2.2B2550e01.fm

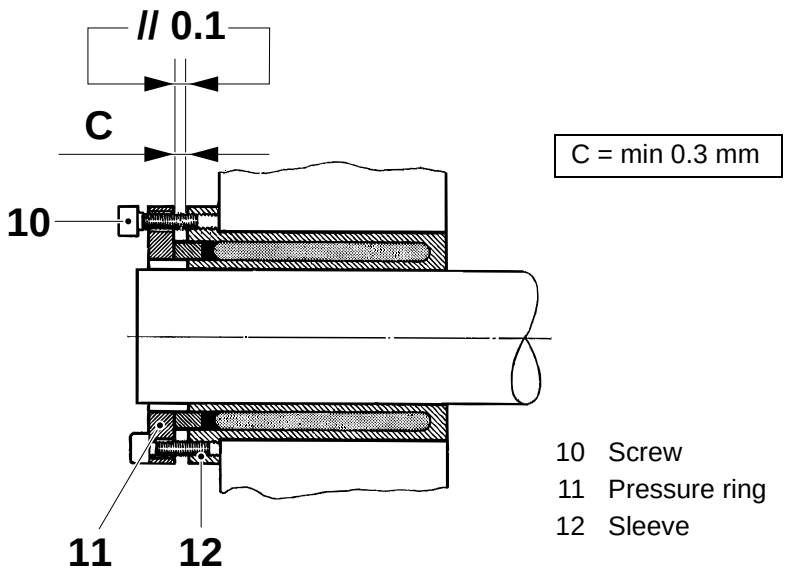

(Cont'd)

(Cont'd)

i) Make sure that angle A and distance B are still correct.

j) Check that the drive sprocket is centred by turning the station chain slide lugs on both sides of the sprocket to make sure they move clear.
If correct, fit the lid on the drive wheel.

k) Set distance D between the station (13) and the sensor.

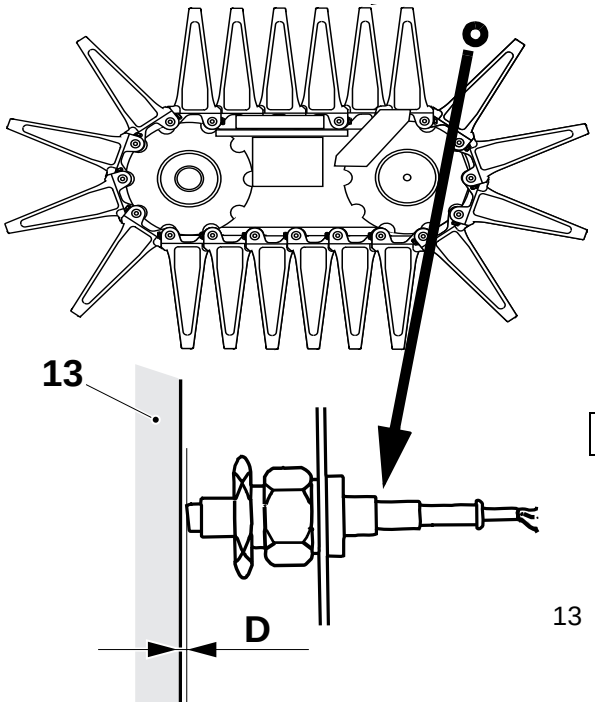

13 Station

2.2B2550e01.fm

(Cont'd)

(Cont'd)

l) Check distance E between the station chain and the plate (14).

m) If required remove the plates and adjust by means of the shims (15). Fit the plates (with the bevelling direction inwards and downwards) and set the gaps F between the plates (14) and the stations (13).

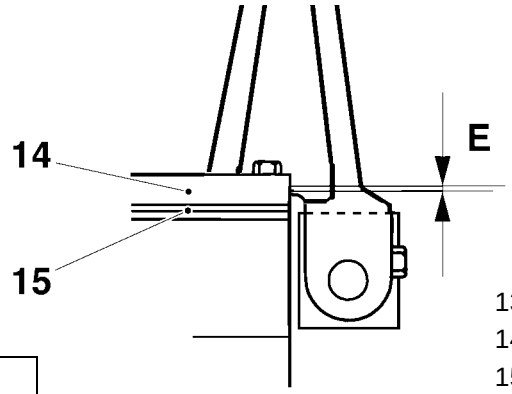

13 Station
14 Plate
15 Shim

E = 0.05 - 0.1 mm
F = 0.3 - 0.5 mm

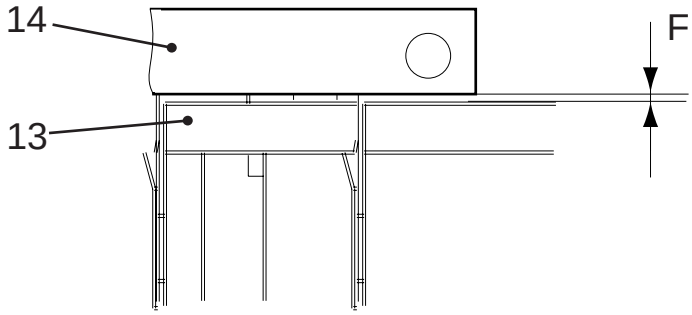

2.2B2550e01.fm

n) Set the oil brushes so that they touch the sliders (7) lightly, distance G below the sliders. To set, loosen the lock nut and adjust on the nut (19).

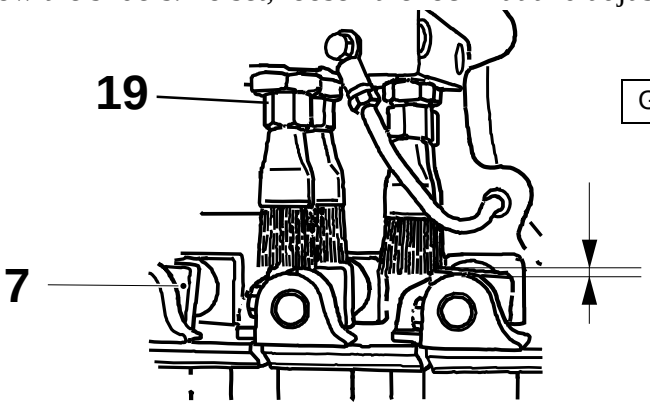

G = 2 - 3 mm

7 Slider
19 Nut

5.1-2 Station chain - turn shafts

SPC	491228

a) Turn the eccentric (2) to release the tension of the station chain.

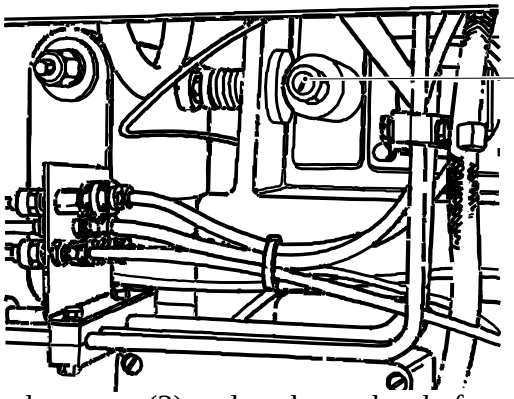

2 Eccentric

b) Unscrew the screw (3) and push out the shaft end (4).

c) Turn the shaft 180°, push it back in position and fit the screw.

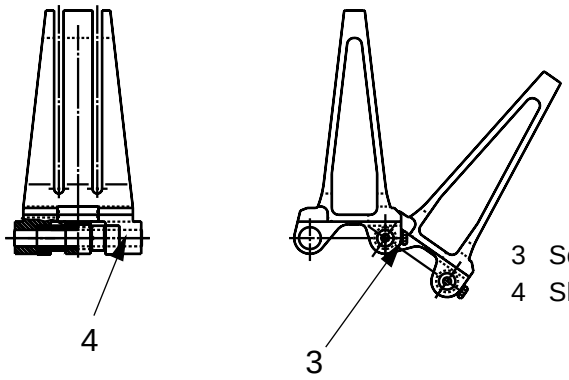

3 Screw
4 Shaft end

d) Repeat item b) and c) for the other shafts.

e) Turn the eccentric to apply tension on the station chain.

f) Check and if required set the oil brushes so that they touch the sliders (6) lightly, distance A below the sliders. To set, loosen the lock nut and adjust on the nut (5).

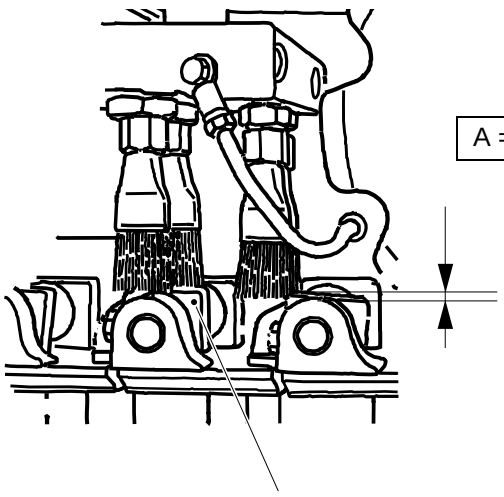

5 Nut
6 Sliders

2.2B2550e01.fm

5.4 Indexing unit

SPC reference	256410-0700

5.4-1 Indexing unit - check cut out torque

Tools - torque wrench	 min 90 Nm
SPC reference	256410-0700

Drive wheel axle

a) Remove the lid and fit a 18 mm socket on the nut. Turn the axle clockwise with the aid of a torque wrench (2). The coupling should cut out at 85 ±5 Nm.

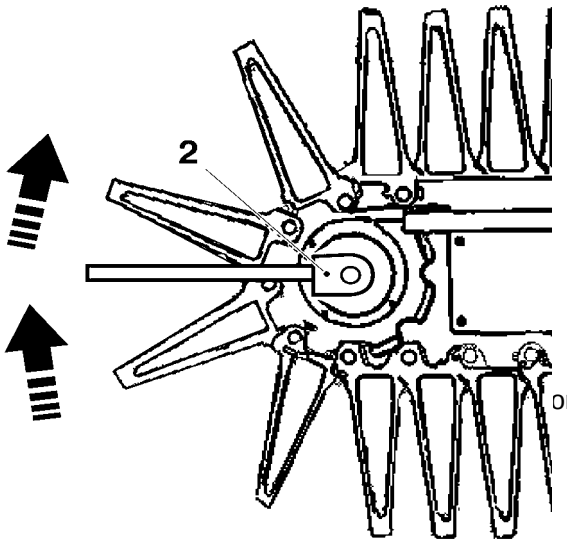

2.2B2550E04.FM

b) Reset the coupling (turn the axle clockwise).

c) Check the cutout torque at each coupling step (8 step/rev). Record the results.

d) If incorrect torques, change the indexing unit.

e) Remove the wrench and fit the lid.

5.5 Pressure device

SPC reference	591643-0100

5.5-1 Pressure device - overhaul hydraulics

Tools	TP No. 90243-146

a) Remove the cover (1).

b) Measure and record the distance A.

c) Unscrew the hydraulic connection (2) and the nut (3).

d) Remove the;
   - sleeve (4)
   - spring (5)
   - buffer ring (6)

e) Unscrew the screws (7) and lift up the cylinder (8).

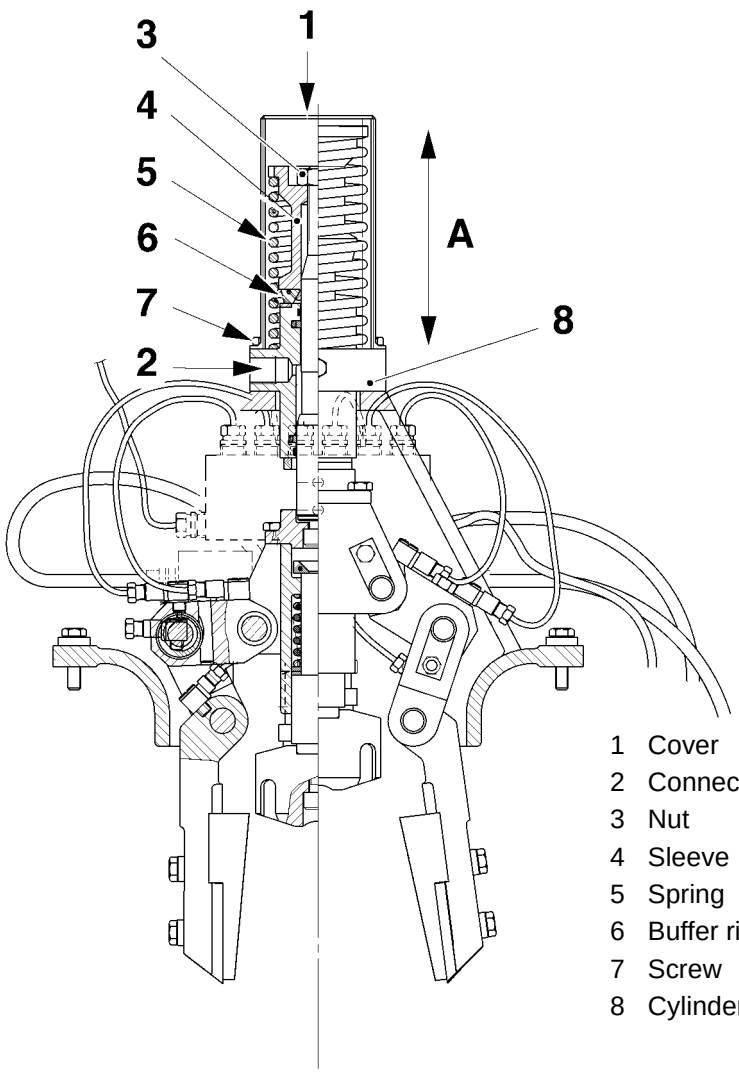

2.2B2550e05.fm

(Cont'd)

(Cont'd)

f) Change the seal rings (9) and the guide rings (10) with the aid of the tool. Fit the seal rings according to figure. Shaping the rings will be easier if they are heated in boiling water.

g) Check the piston (11) for wear and/or damages. Change as required.

h) To change the piston; unscrew the screws (12), remove the bracket (13), unscrew the screw (14) and change the piston.

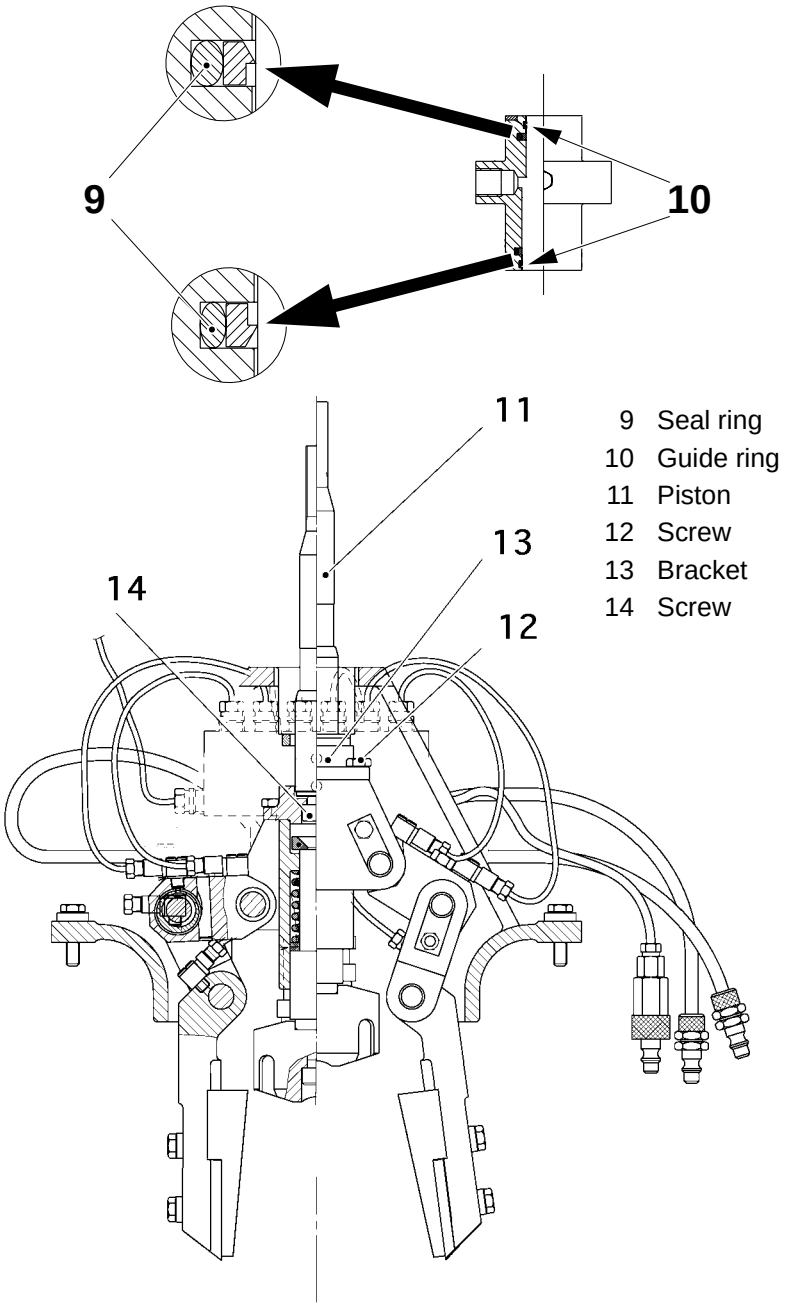

i) Assemble in the reversed order.

j) Set the distance A recorded above.

k) Bleed the pressure device, see 5.5-2 Pressure device - bleed.

5.5-2 Pressure device - bleed

Machine status	Water **On** Power **On** Service switch **On**
Tool - locking clamp	 TP No. 76167

a) Crank until the station chain stops indexing.

b) Reduce the hydraulic pressure (jaw pressure) to approx 4 MPa by means of the overflow valve (1). Read the pressure on the pressure gauge (2).

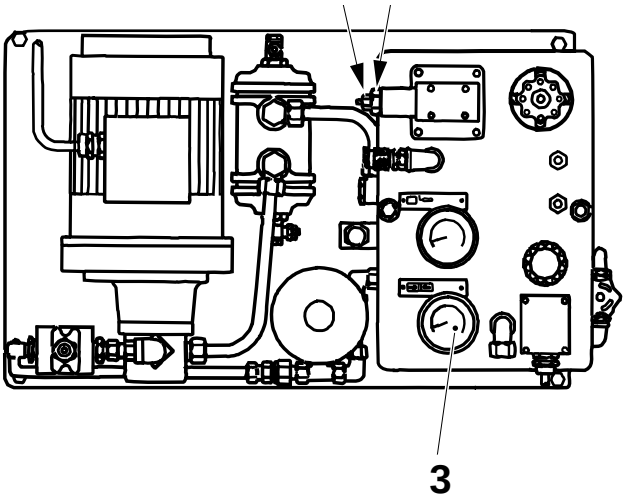

1 Valve
2 Pressure gauge

2.2B2550e05.fm

c) Actuate hydraulic valve Y42 (3) for the pressure device with the aid of the locking clamp.

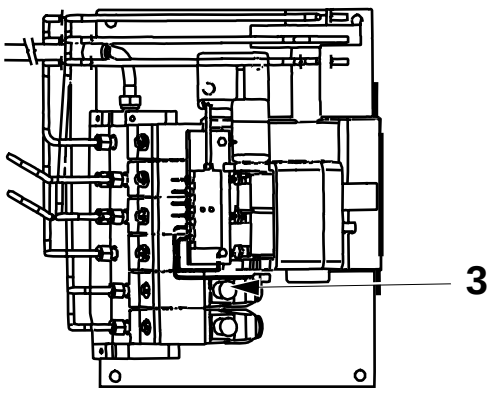

3 Valve Y42

(Cont'd)

(Cont'd)

Caution! Risk of personal injuries! Watch out for oil splashing.

d) Loosen the screw (4) and bleed the pressure device.

e) Tighten the screw.

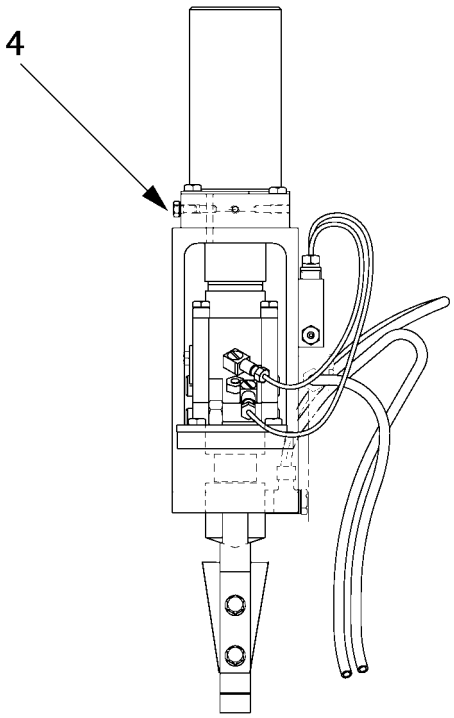

4 Screw

2.2B2550e05.fm

f) Set the correct hydraulic pressure, see 10.2 Lubricants.

g) Set the service switch to position **off**. Turn off cooling water and switch off power.

h) Remove the locking clamp.

5.5-3 Pressure device - set

Vertical position

Set distance A. To set, remove the cover (1), loosen the nut (2) and turn the threaded sleeve (3).

Fine setting may be done after examining the packages. Make sure that distance A stay within tolerances.

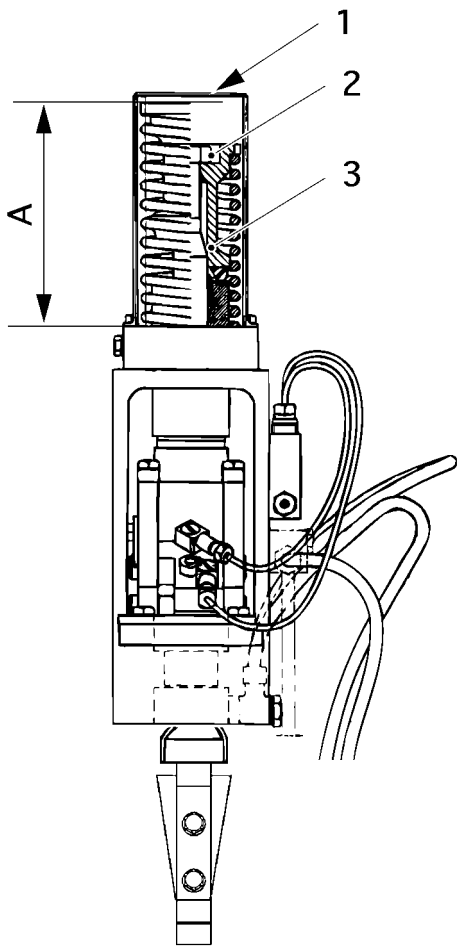

A = 101 ±1 mm

1 Cover
2 Nut
3 Threaded sleeve

2.2B2550e05.fm

(Cont'd)

(Cont'd)

Parallelity

Machine status	Power **On** Water **On** Service switch **On**
Tool - locking clamp	 TP No. 76167

a) Crank until the station chain stops indexing.

b) Loosen the nuts (2) and set the side lugs (4) in their outer position (tap on the locking pin (1) to set the eccentric axle pin (3) free).

c) Actuate hydraulic valve Y42 (6) for the pressure device with the aid of the locking clamp.

d) Set the side lugs parallel to the station (5) by means of the locking pin (1). Tighten the nuts (2).

e) Set the cooling pipes as close to the side lugs (4) as possible without touching them. Make sure that all cooling pipes go clear.

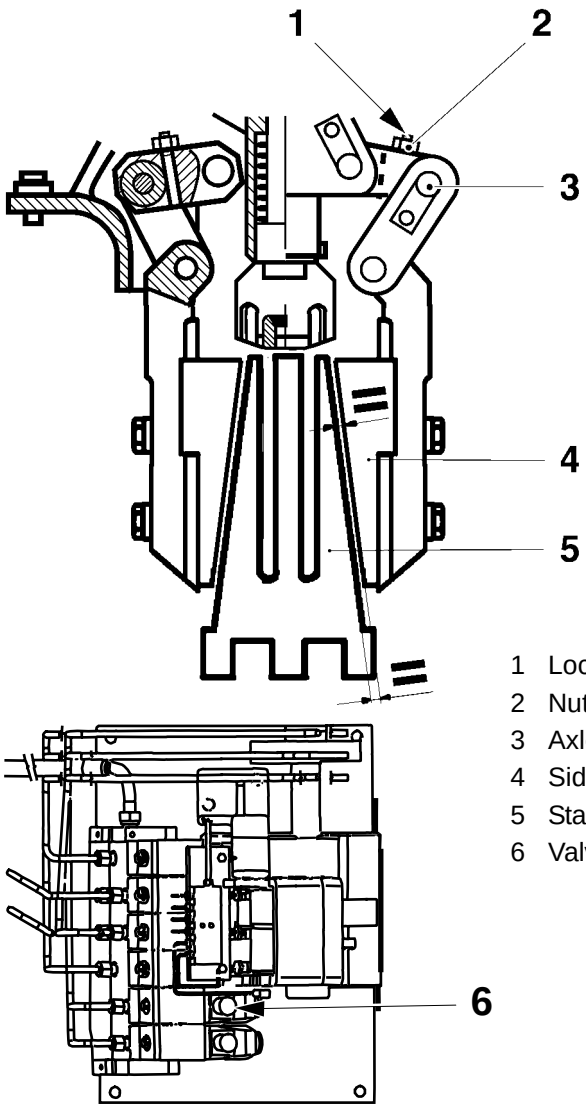

1 Locking pin
2 Nut
3 Axle pin
4 Side lug
5 Station
6 Valve Y42

2.2B2550e05.fm

(Cont'd)

(Cont'd)

f) Loosen the screws (7). Set the side lugs (4) positioned symmetrically ±0.2 mm between the stations by shifting the pressure unit lengthwise.

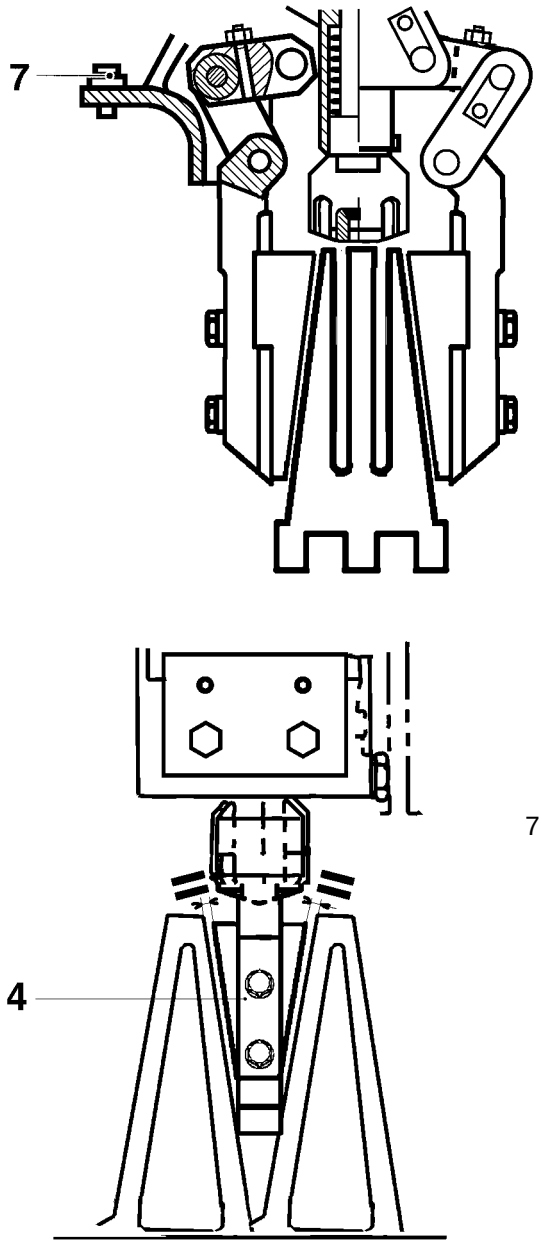

4 Side lugs
7 Screw

2.2B2550e05.fm

(Cont'd)

(Cont'd)

g) Set the side lugs positioned symmetrically ±0.2 mm between the stations with the aid of the allen screws (9).

h) Tighten the screws.

i) Set the service switch to position **off**. Turn off cooling water and switch off power.

j) Remove the locking clamp.

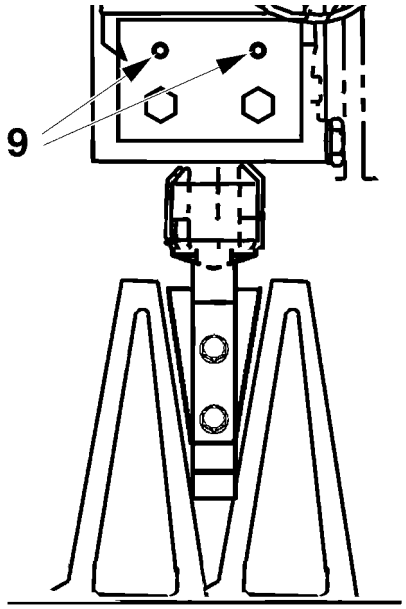

9

2.2B2550e05.fm

5.7 Element

SPC	594932-0100

5.7-1 Element - set air nozzles

Tools - template	 see table below

Crank until the station chain stops indexing.

Put templates A, see table, on the stations. The arrows on the templates are to be in the running direction of the station chain.

Volume (ml)	**Template A, TP No**.
200 S	

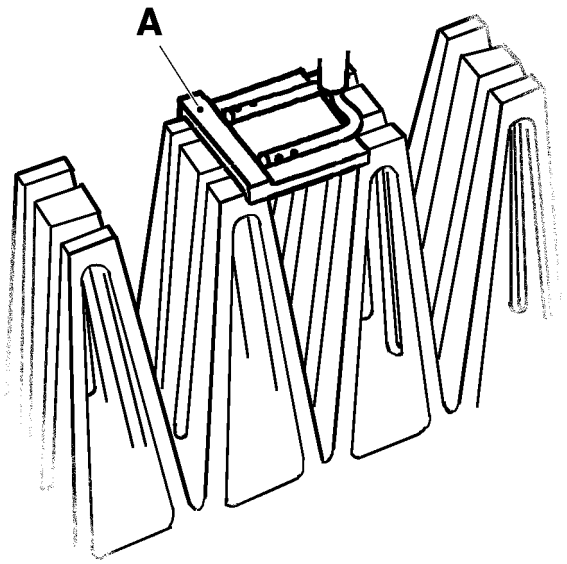

A

2.2B2550E07.FM

Loosen the screws (1) and shift the element (7) to set the air nozzle (3).

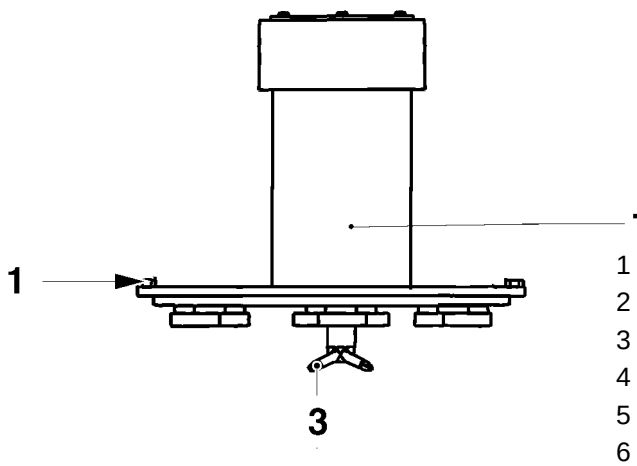

1 Screw
2 Screw
3 Air nozzle
4 Air nozzle
5 Element
6 Gasket
7 Element

5.8 Frame

SPC reference	1360652-0100

5.8-1 Frame - change pivot frame assembly

Frame - remove pivot frame assembly

a) Undo the nuts (2) and remove the cable lead-in.

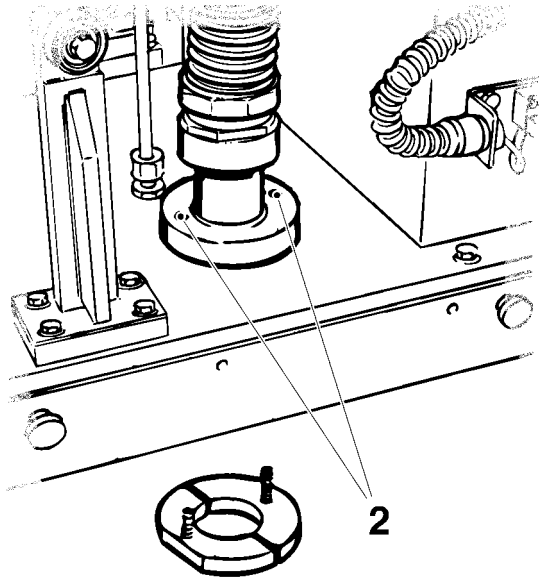

1 Connection
2 2 Nut

2.2B2550e08.fm

b) Raise the pivot frame.

c) Unscrew the screws and remove the lid (6) and the shims (7).

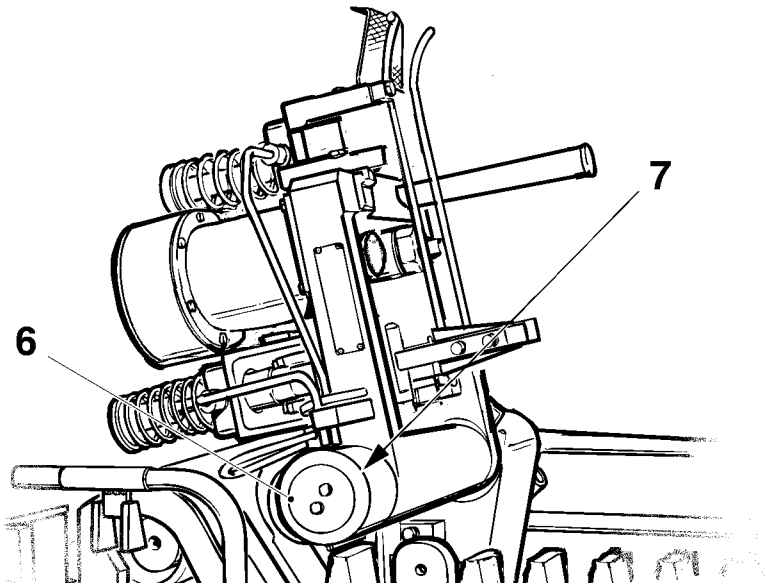

3 Lid
4 Shim

d) Remove the pivot frame assembly.

(Cont'd)

(Cont'd)

Frame - fit pivot frame assembly

a) Fit the pivot frame assembly (2) on the shaft.

b) Put shims (3) on the shaft and fit the lid (1). Make sure that the lid fits correctly and that there is no play in the frame. Add or remove shims (3) if required.

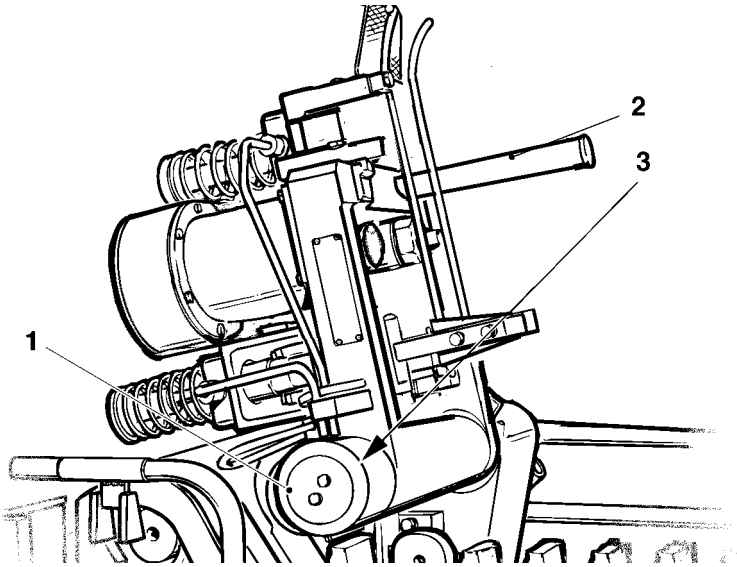

1 Lid
2 Pivot frame
3 Shim

Caution! Make sure that the rails goes free from the station chain.

c) Lower the pivot frame carefully.

d) Check the alignment of the rails over the stations. The distances A must be the same within 0.2 mm on both sides of the station.

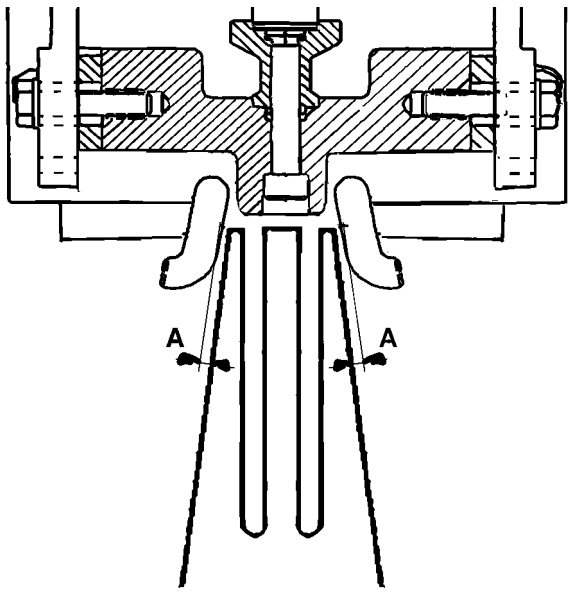

(Cont'd)

2.2B2550e08.fm

(Cont'd)

e) If required, remove the pivot frame assembly, see above and add or remove shims (3) or (4) required to align. If shims have to be added at one side, these are to be taken from the other side and vice versa.

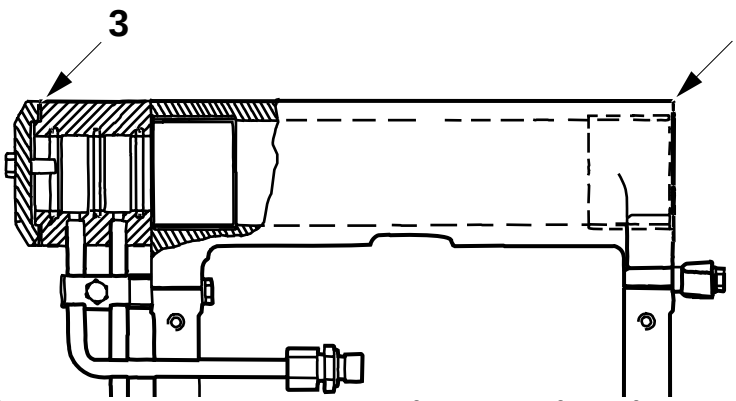

3 Shim
4 Shim

f) Fit the cable lead-in with its flange (5) (fitted from underneath).

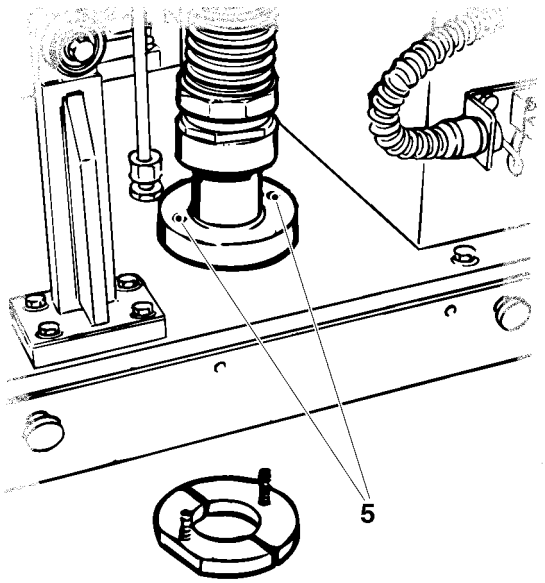

5 Flange

2.2B2550e08.fm

g) Bleed the pressure device, see 5.5-2 Pressure device - bleed.

h) Bleed the pull-down device, see 5.9-2 Pull-down device - bleed.

i) Set the Pull-down device, see 5.9-4 Pull-down device - set blocking piece.

j) Set the Pressure device, see 5.5-3 Pressure device - set.

k) Set the air nozzles, see 5.7-1 Element - set air nozzles.

5.8-2 Frame - overhaul pivot frame assembly

a) Remove the lid and the flange seal.

b) Mark and undo the electrical connections (1).

c) Unscrew the screws (2) and remove the FS element.

d) Remove the element units (3).

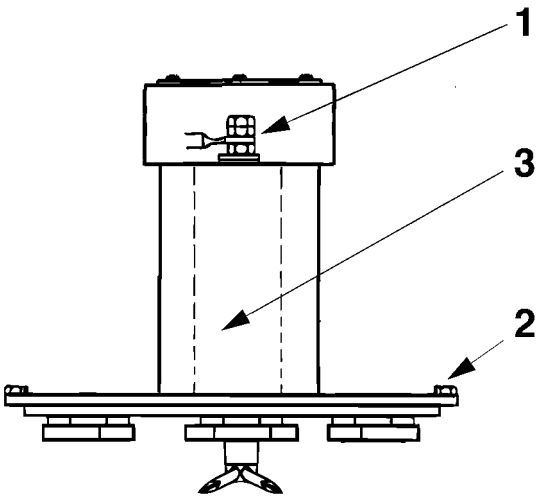

1 Electrical connection
2 Screw
3 Element unit

e) Unscrew the screws (4) and remove the air nozzles (10) and the insulating pipe (11).

2.2B2550e08.fm

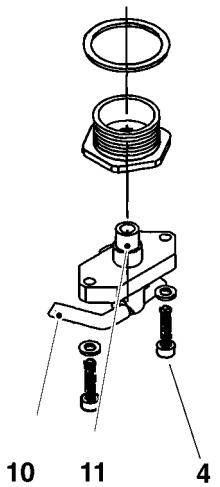

4 Screw
5 Air nozzle
6 Insulating pipe
7 Throttle washer
8 Side pipe
9 Insulating pipe
10 Air nozzle
11 Insulating pipe

(Cont'd)

(Cont'd)

f) Unscrew the nuts and take the element units apart.

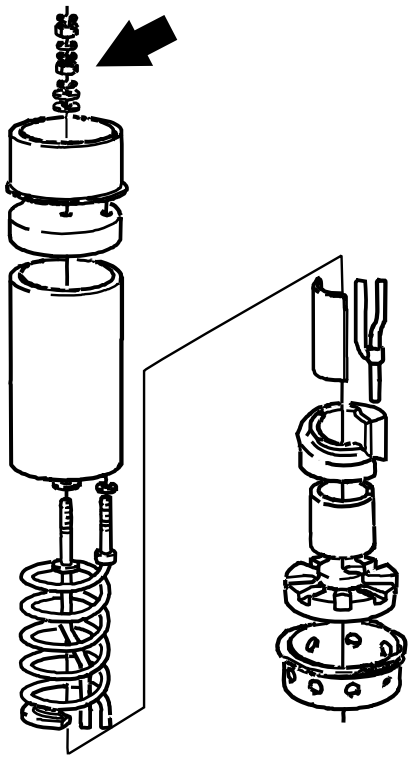

2.2B2550e08.fm

g) Change the insulating (11).

h) Check that;
   - the air holes in the nozzles (10) are open
   - the electrical connections are intact

   Clean or change as required.

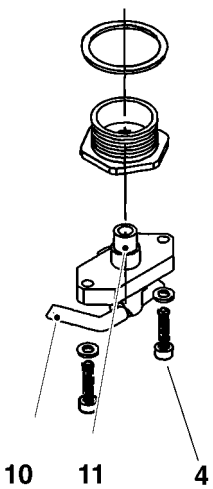

4 Nozzle
5 Insulating pipe
6 Throttle washer
7 Insulating pipe
8 Nozzle
9 Insulating pipe

(Cont'd)

(Cont'd)

i) Unscrew the screws (12) and remove the spacer piece (13).

j) Change the flange seals (14) and the stop plate (15).

k) Unscrew the screws (16) and separate the cover.

l) Change the O-ring and the cable glands (17).

m) Change the hose (18).

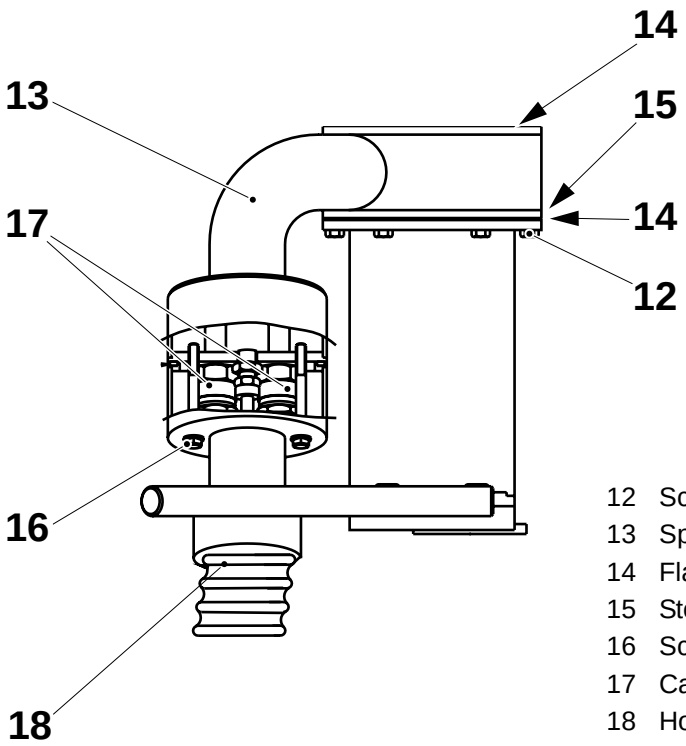

12 Screw
13 Spacer pipe
14 Flange seal
15 Stop plate
16 Screw
17 Cable gland
18 Hose

2.2B2550e08.fm

n) Assemble in the reverse order. Secure the element units so that they can not fall out if the element is turned upside down. Make sure that the throttle washers are placed correctly and that the electrical connections are fitted according to the marks.

o) Change the three seal rings (19). Check and if required change the bearing (20).

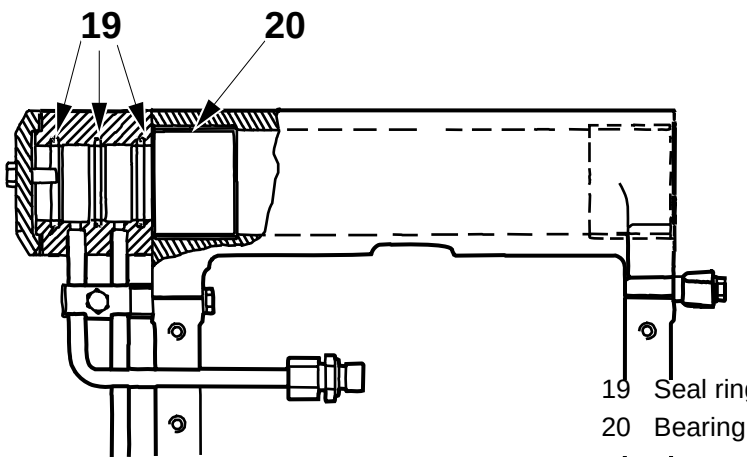

19 Seal ring
20 Bearing

(Cont'd)

(Cont'd)

p) Overhaul the hydraulics in the Pressure device, see 5.5-1 Pressure device - overhaul hydraulics. At the same time change;
   - the buffer rings (21) and (22)
   - the compression spring (23)
   - the washer (24)
   - the screw (25)
   - the screw (26)
   - the screw (27)

   Change the washers (28) if required.

q) Change the screw and the ball (29), the oil hoses (30), the banjo connection washers (31) and the spring (32).

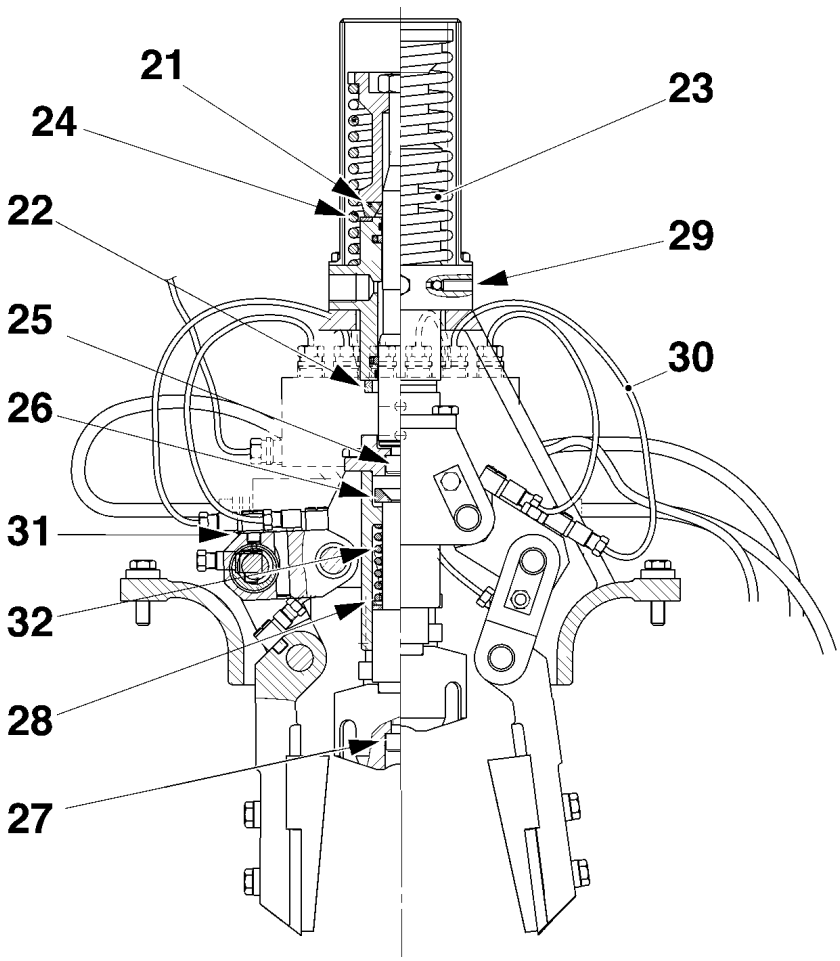

2.2B2550e08.fm

21	Buffer ring	27	Screw
22	Buffer ring	28	Washer
23	Spring	29	Ball
24	Washer	30	Oil hose
25	Screw	31	Washer
26	Screw	32	Spring

(Cont'd)

(Cont'd)

r) Check the following details for wear and/or damages;
- the banjo connections (33)
- the shafts (34)
- the shafts (35)
- the bushings (36)
- the blocks (37)

Change as required.

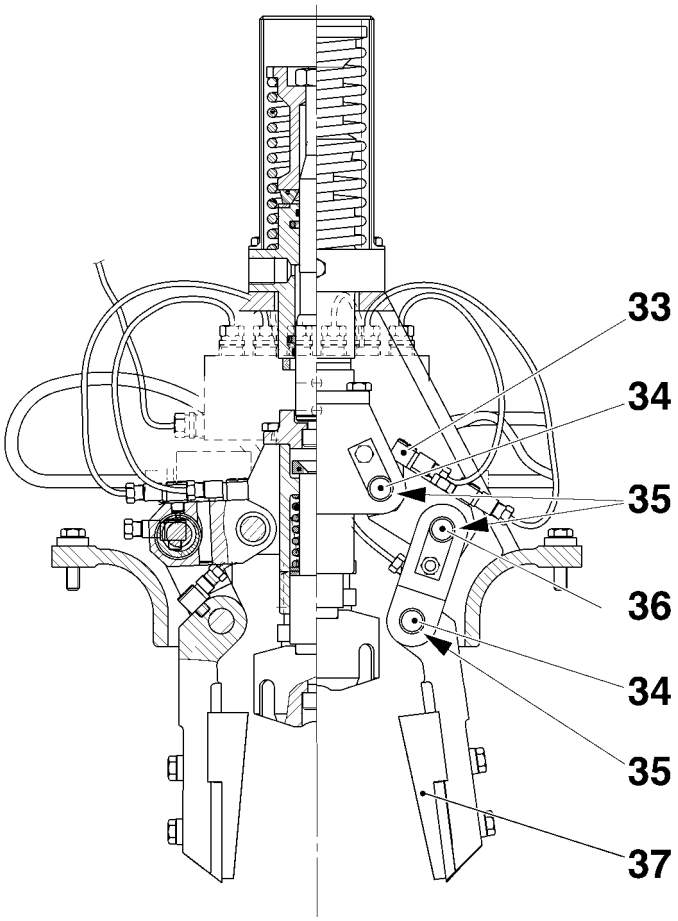

2.2B2550e08.fm

33 Banjo connection
34 Shaft
35 Shaft
36 Bushing
37 Block

(Cont'd)

(Cont'd)

s) Overhaul the hydraulics in the Pull-down device, see 5.9-1 Pull-down device - overhaul hydraulics. At the same time change;
   – the buffer rings (38) and (39)
   – the compression spring (40)
   – the washer (41)

t) Change the screw and the ball (42).

u) Change the guide lug (43) and guide pin (44) if required.

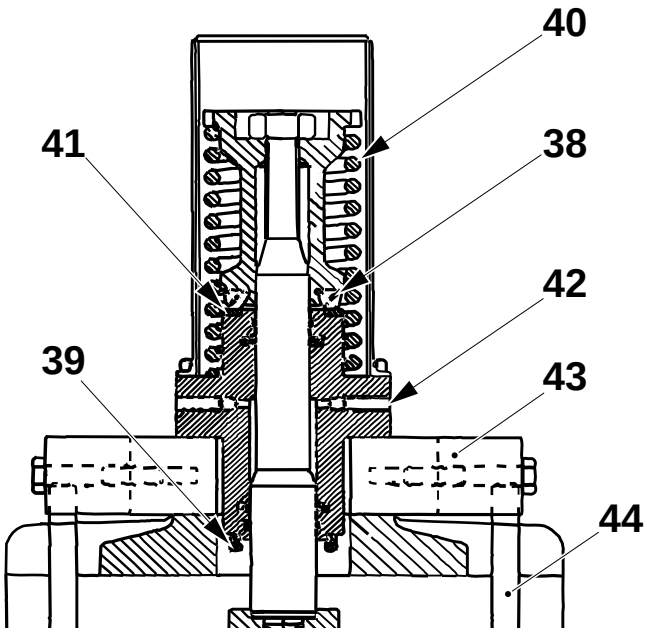

38 Buffer ring
39 Buffer ring
40 Spring
41 Washer
42 Ball
43 Guide lug
44 Guide pin

2.2B2550e08.fm

v) Set the air nozzles, see 5.7-1 Element - set air nozzles.

w) Set the rails, see 5.9-3 Pull-down device - set rails.

x) Set the blocking piece, see 5.9-4 Pull-down device - set blocking piece.

y) Set the pull-down arms.

5.9 Pull-down device

SPC reference	591677-0100

5.9-1 Pull-down device - overhaul hydraulics

Tool	TP No. 90243-146

a) Remove the cover.

b) Measure and record the distance A.

c) Unscrew the hydraulic connection and the nut (1).

d) Remove the;
   - sleeve (2)
   - spring (3)
   - buffer ring (4)

e) Unscrew the screws (5) and lift up the cylinder (6).

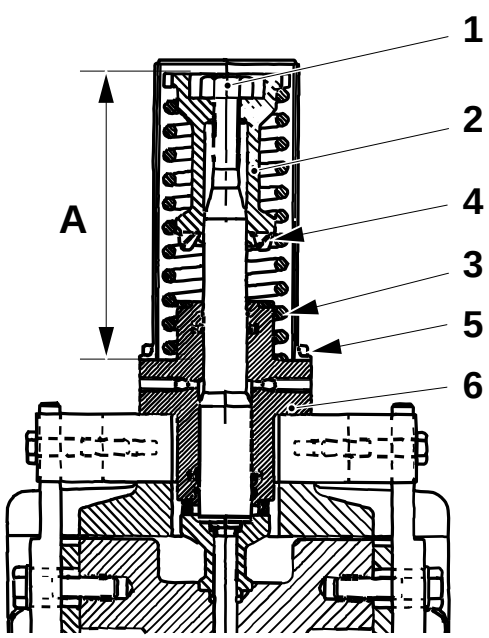

1 Nut
2 Sleeve
3 Spring
4 Buffer ring
5 Screw
6 Cylinder

(Cont'd)

2.2B2550e09.fm

(Cont'd)

f) Change the seal rings (7) and the guide rings (8) with the aid of the tool. Fit the seal rings according to figure. Shaping the rings will be easier if they are heated in boiling water.

g) Check the piston (9) for wear and/or damages. Change as required.

h) Unscrew the screw (10) to remove the piston. Make sure that the piston is correctly positioned in the slot on the spacer sleeve (11).

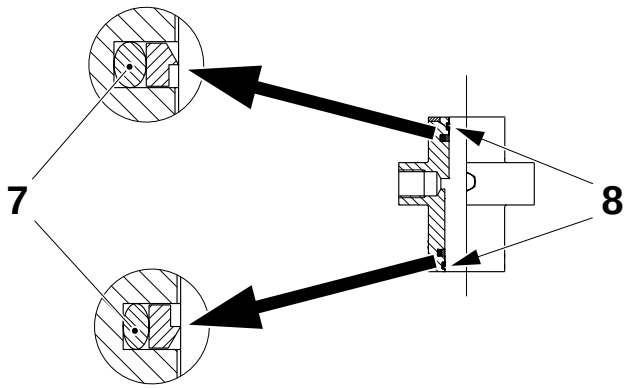

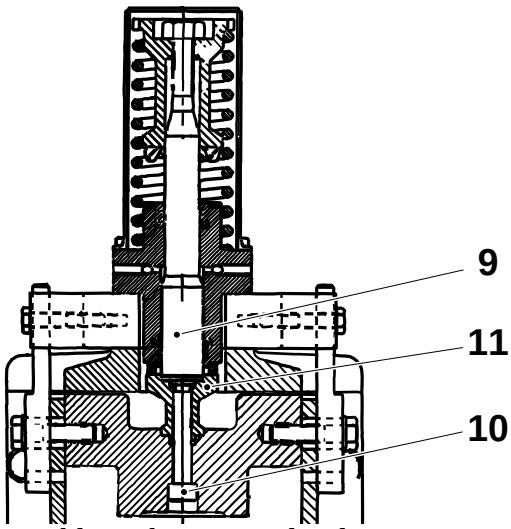

7 Seal ring
8 Guide ring
9 Piston
10 Screw
11 Spacer sleeve

2.2B2550e09.fm

i) Assemble in the reversed order.

j) Set the distance A recorded above.

k) Bleed the pull-down device, see 5.9-2 Pull-down device - bleed.

5.9-2 Pull-down device - bleed

Machine status	Power **On** Water **On** Service switch **On**
Tools - locking clamp	 TP No. 76167

a) Crank until the station chain stops indexing.

b) Reduce the hydraulic pressure (jaw pressure) to approx 4 MPa by means of the overflow valve (1). Read the pressure on the pressure gauge (2).

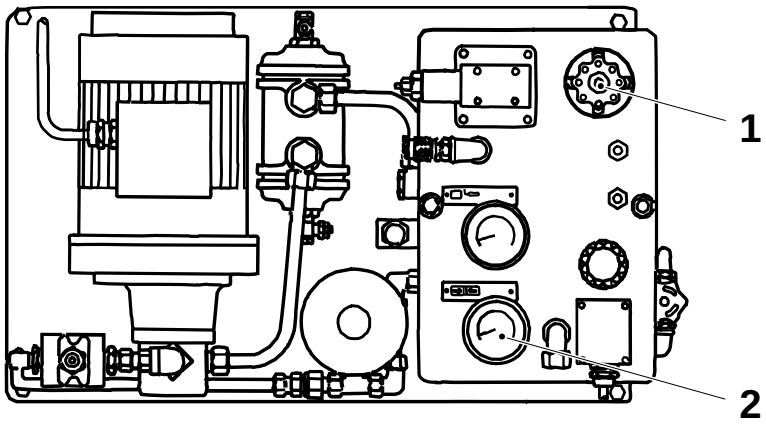

1 Valve
2 Pressure gauge

2.2B2550e09.fm

c) Actuate hydraulic valve Y41 (3) for the pull-down device with the aid of the locking clamp.

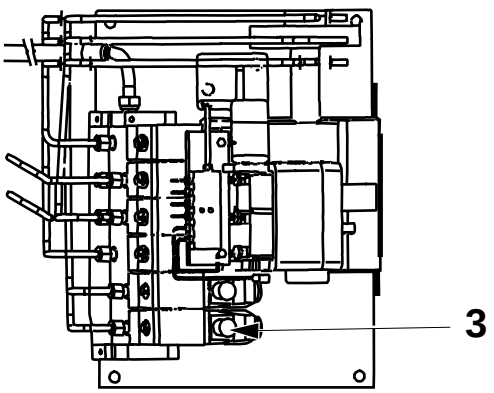

3 Valve Y41

(Cont'd)

(Cont'd)

Caution! Risk of personal injuries! Watch out for oil splashing.

d) Loosen the screw (4) and bleed the pull-down device.

e) Tighten the screw.

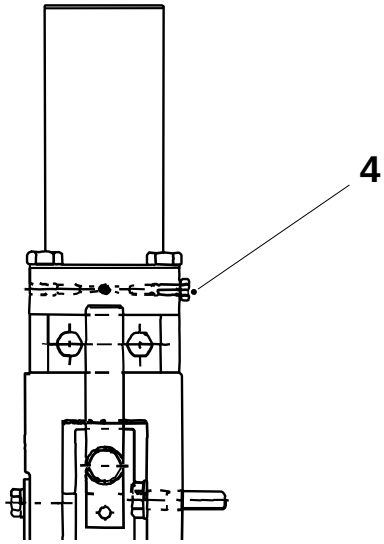

4 Screw

f) Set the correct hydraulic pressure, see 10.2 Lubricants.

g) Set the service switch to position **off**. Turn off cooling water and switch off power.

h) Remove the locking clamp.

2.2B2550e09.fm

5.9-3 Pull-down device - set rails

Tools - template	 see table below

a) Raise the pivot frame, remove the pull-down arms and loosen the screws (3).

b) Position the template (4), see table, against the blocking piece (1).

Volume, ml	Template TP No.
200 S	

c) Set the rails (2) so that they lightly touch the template. Move the template forward and backward on the blocking piece and check that the rails are parallel with the blocking piece. Tighten the screws (3).

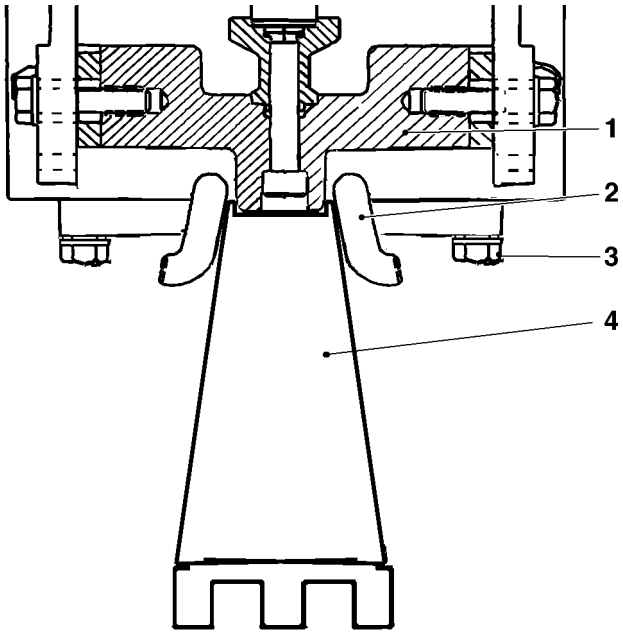

1 Blocking piece
2 Rail
3 Screw
4 Template

d) Remove the template and lower the pivot frame.

2.2B2550e09.fm

5.9-4 Pull-down device - set blocking piece

Machine status	Water **On** Power **On**
Tools - locking clamp - template	 see table below

a) Crank until the station chain stops indexing.

b) Raise the pivot frame.

c) Switch on the service switch.

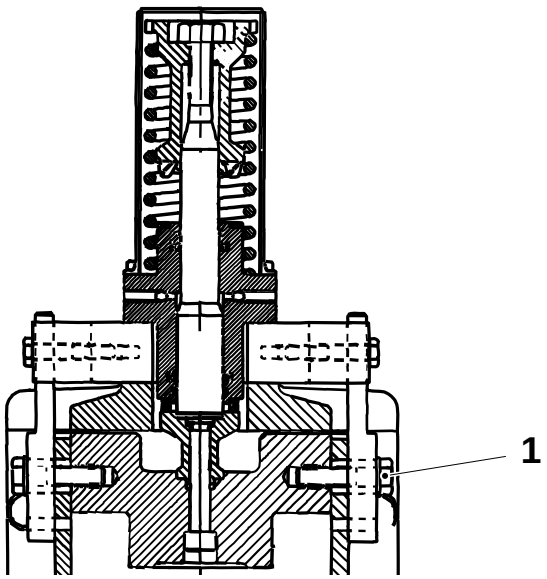

1 Screw

2.2B2550e09.fm

(Cont'd)

(Cont'd)

d) Actuate hydraulic valve Y41 (2) for the pull-down device with the aid of the locking clamp.

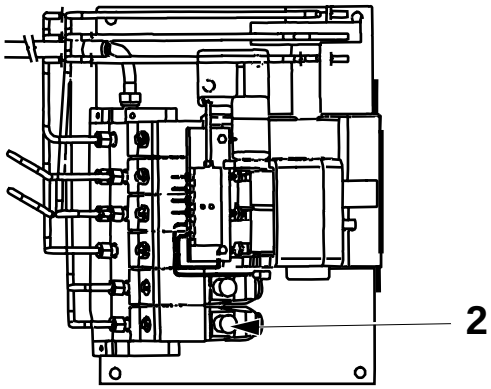

2 Valve Y41

e) Place template (3), see table, in the station chain centered underneath the blocking piece.

Volume, ml	Template TP No.
200 S	

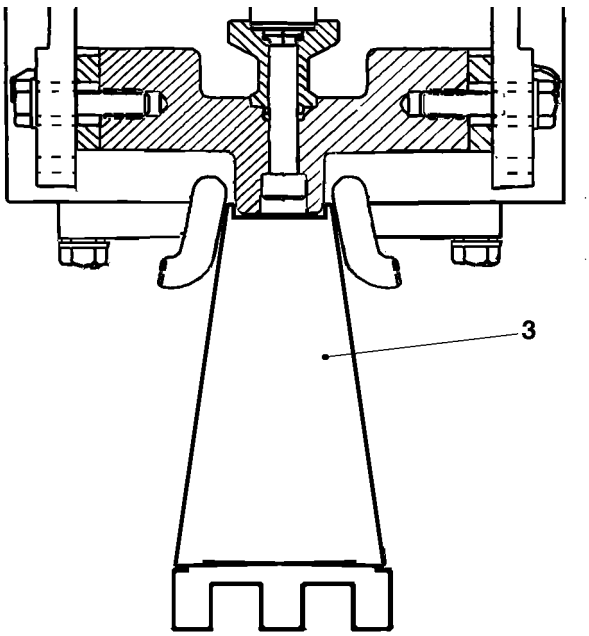

3 Template

(Cont'd)

2.2B2550e09.fm

(Cont'd)

f) Carefully tilt back the pivot frame.

g) Loosen the nut and turn the sleeve (4) until there is a play, 0.05 mm, under the stop lug (5).

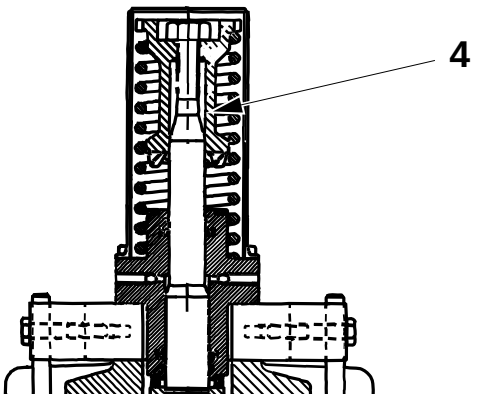

4 Sleeve
5 Stop lug

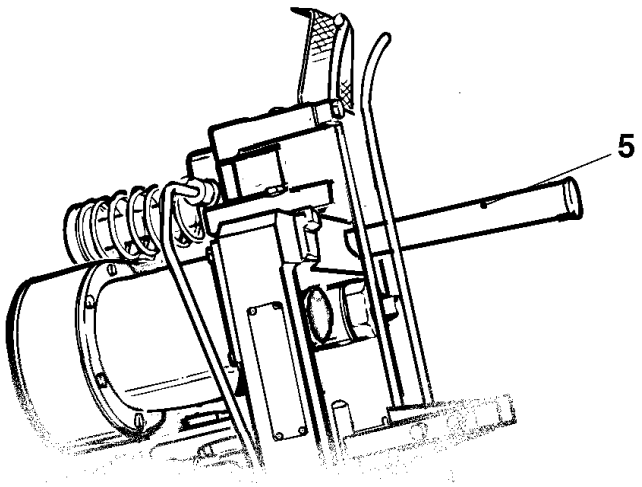

2.2B2550e09.fm

h) Tighten the nut and remove the template.

2.2B2550e09.fm

5.12 Discharge unit

SPC reference	594991-0100

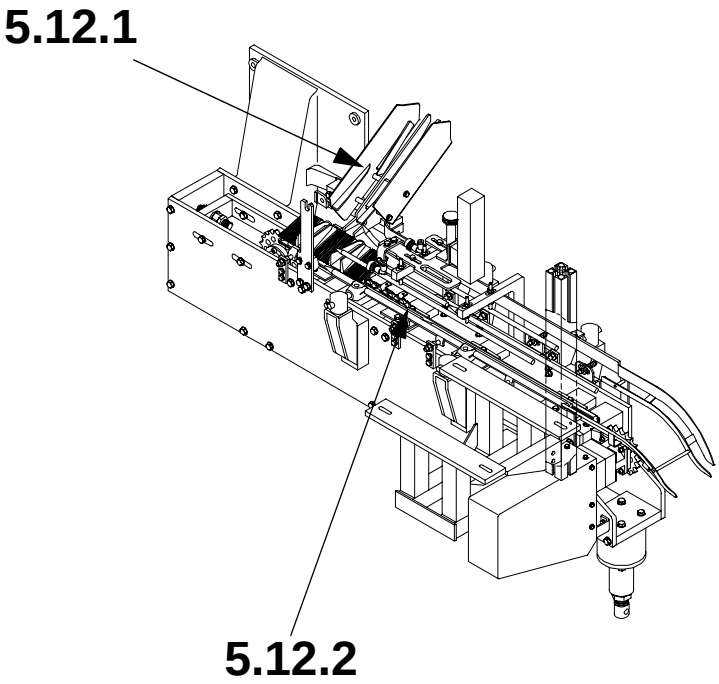

5.12.1 Finger
5.12.2 Guide Rail

2.2B2550E12A.FM

5.12-1 Discharge unit - check

Machine status	On

Checking in production

a) Check that function of the guides (1).

b) Check that the packagings falling down in the guides in the conveyor (5).

5.12-2 Discharge unit - set

Machine status	Off

a) Set the distance between station chain and guide (1) to 5 mm.

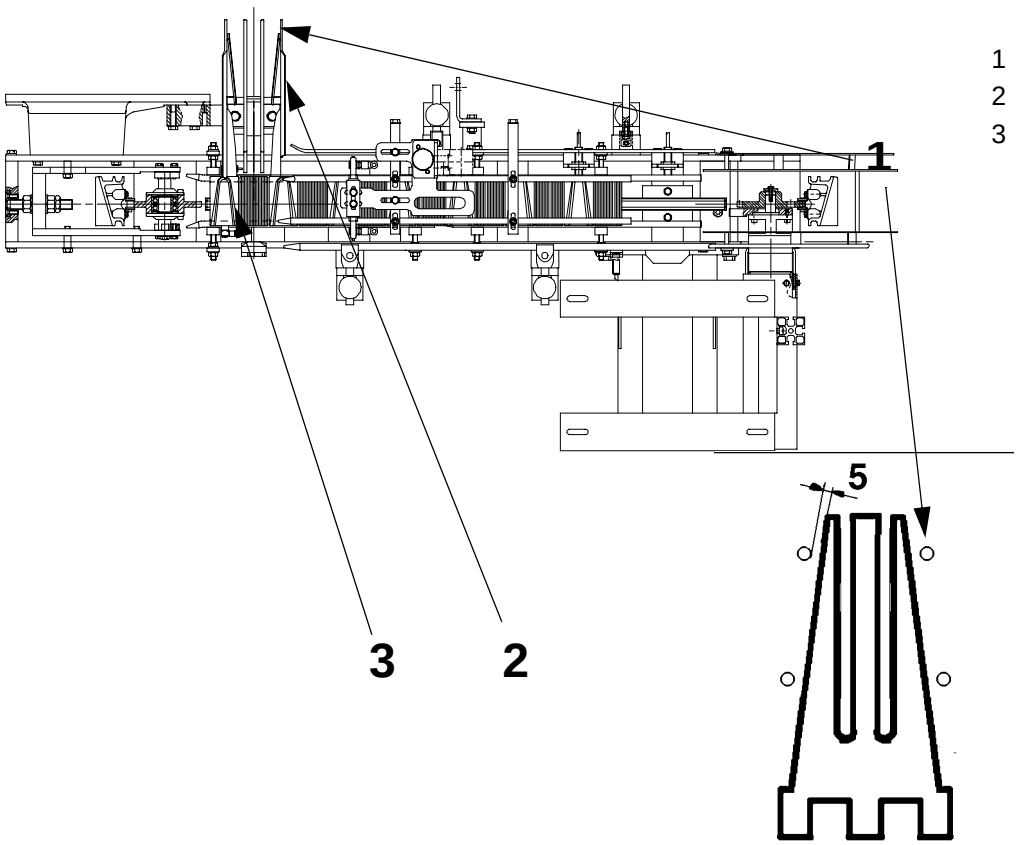

1 Guide
2 Guide
3 Conveyor

2.2B2550E12A.FM

5.12.1 Finger

5.12.1-1 Finger - setting

Machine status	Off
SPC	591582-0100

a) Set the guide (2) in the centre of the slots in station chain (6). Check that the guide does not touch the station chain.

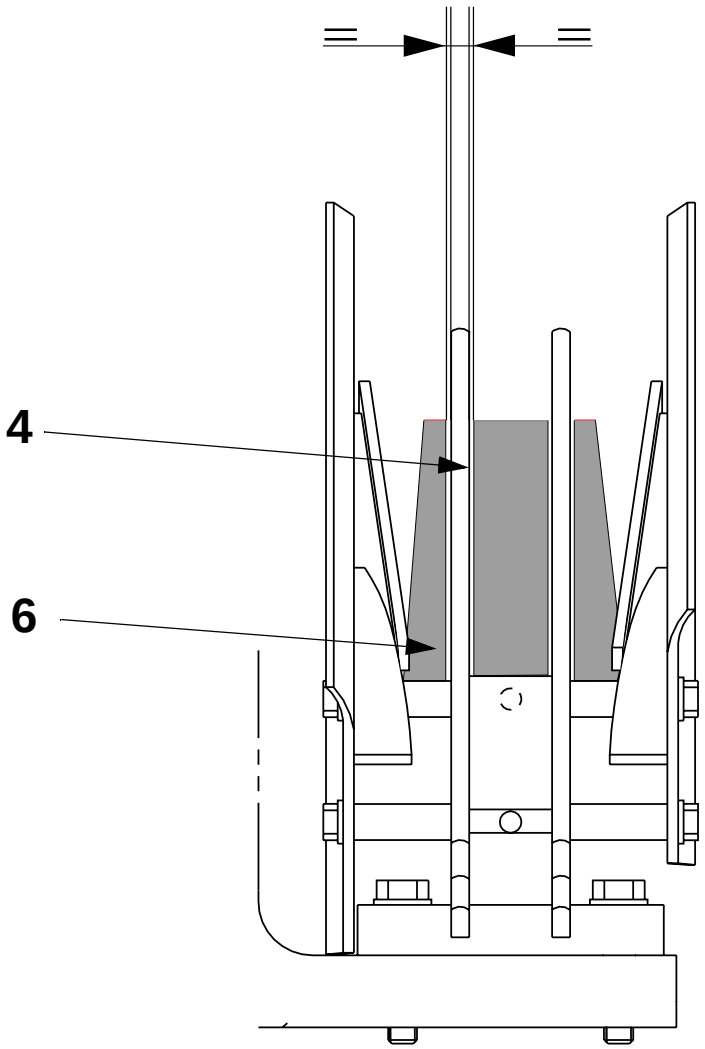

2.2B2550E12A.FM

2 Guide
6 Station chain

b) Adjust the guide (2) with shims (7), A mm above conveyor.

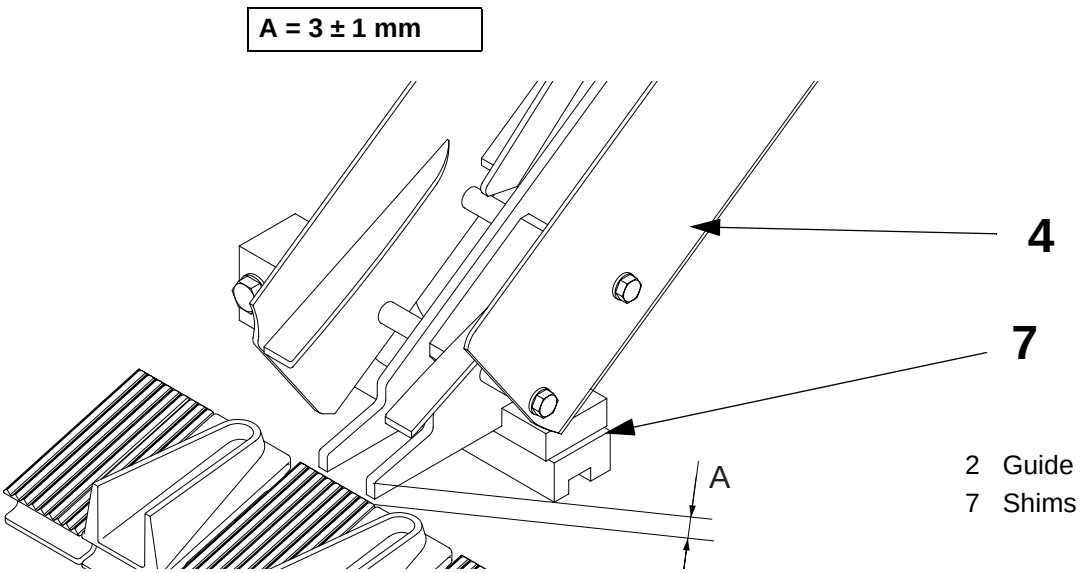

2.2B2550E12A.FM

5.12.2 Guide Rail

SPC	591496-0100

5.12.2-1 Guide Rail - check / adjust

a) Set the gap (3) between the guide and the bottom of the track.
b) Adjust with screw (1)
c) Check that the guides do not press the chain up or down.
d) Adjust with adjusting screws (2)

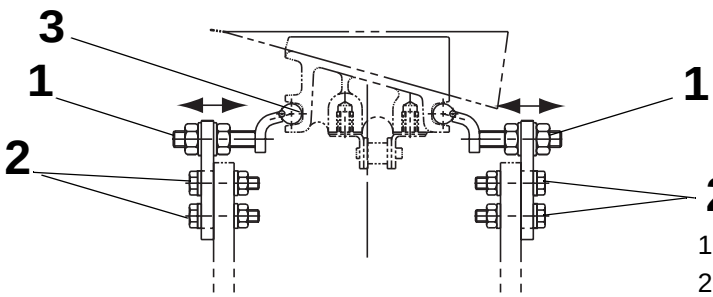

1 Adjusting screw 1
2 Adjusting screw 2
3 Gap

.

2.2B2550E12A.FM

5.13 Cleaning system

SPC reference	591572-0100

5.13-1 Rotors and nozzles - check

Check that the three cleaning rotors rotate freely.
Overhaul as required, see 5.13-2 Rotors- overhaul.

Check that all nozzles for the external cleaning are clean.
If required, remove the nozzles and clean or delime them.

If the nozzles has been removed, set the nozzles.

5.13-2 Rotors- overhaul

a) Unscrew the screws (1) and remove the cover (2) and the O-ring (3).

b) Carefully remove the seal (4).

c) Unscrew the pivot pin (5) with the aid of an allen key.

d) Remove the washer (6) and the circlip (7).

e) Remove the pivot pin from the bearing housing (8) and remove the ball bearings (9).

f) Replace worn and/or damaged details.

g) Assemble in the reversed order. Make sure that the pivot pin flange is in level with the bottom of the bearing housing.

h) Check that the cleaning rotors rotate freely.

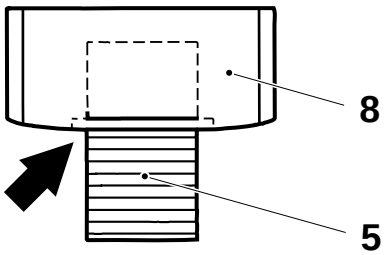

1 Screw
2 Cover
3 O-ring
4 Seal
5 Pivot pin
6 Washer
7 Circlip
8 Bearing housing
9 Ball bearing

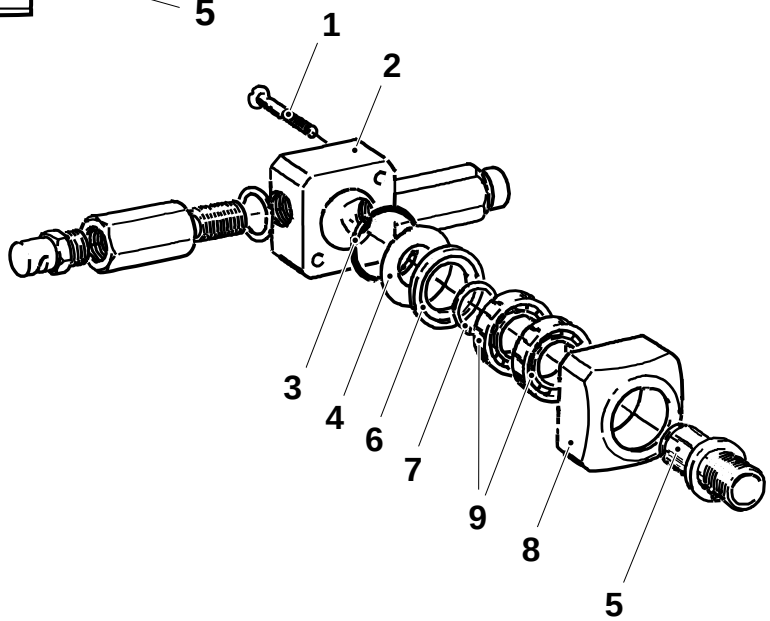

2.2B2550e13.fm

5.14 Central lubrication

5.14-1 Central lubrication - check oil distribution

Machine status	Power **On** Air **On** Water **On**

Push the **Manual lubrication** button and check that lubrication oil is distributed to all lubrication points.

2.2B2550E14.FM

5.15 Turning device

SPC	591514-0100

5.15-1 Basic - setting

a) Set the bottom plate of drop chute (1) 12 mm above one station (2) in indexed station chain in final folder Align the side plates of drop chute to the guides of station chain.

b) Adjust the rigging screw (3) so the sides of the drop shut are aligned to the guides of station chain.

Finger set

a) Loosen the screw (4).

b) Set the fingers to 55° as basic, on the protractor

c) Tighten the screw.

2.2B2550E15.FM

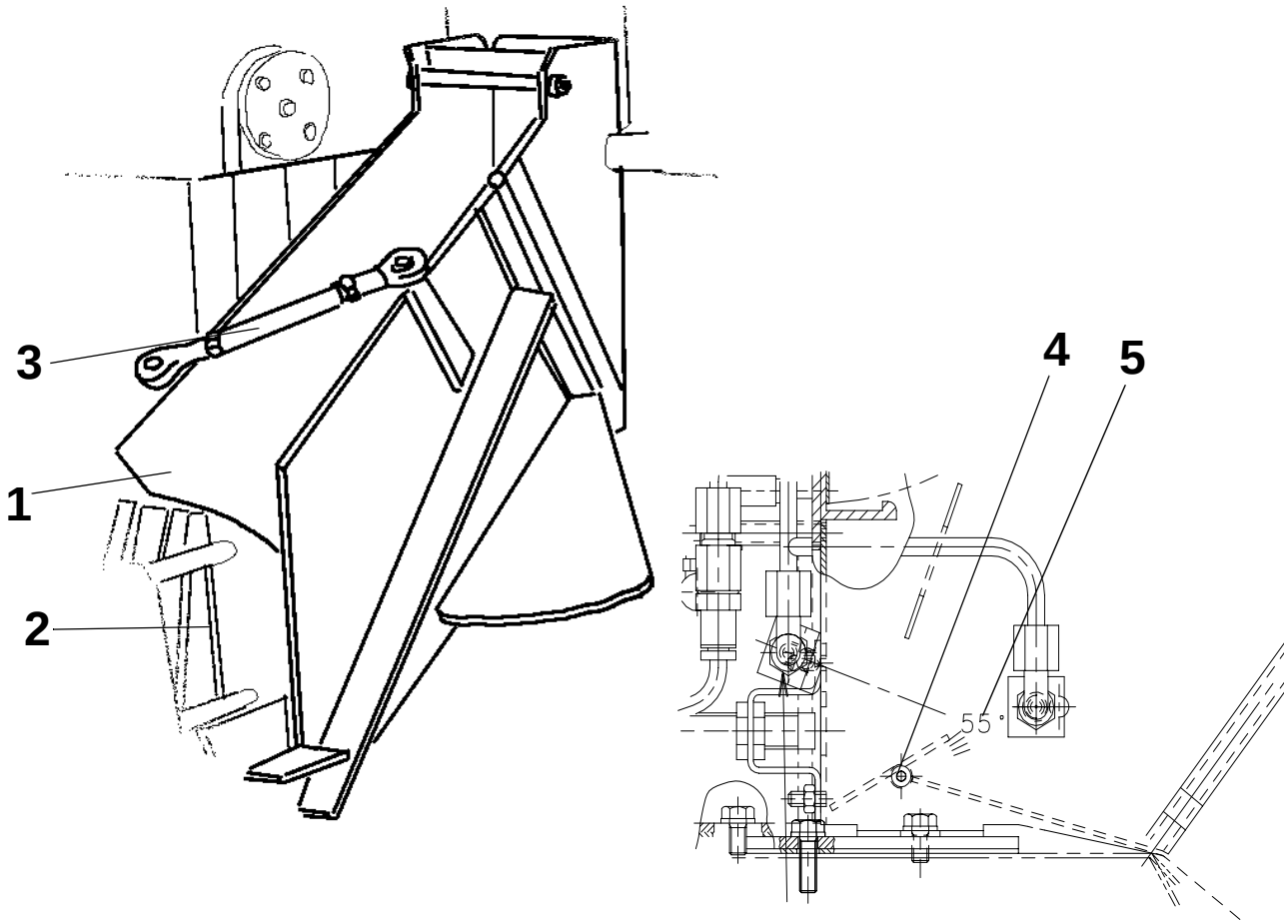

1 Drop chute
2 Station chain
3 3 Rigging screw
4 Screw
5 Protractor

5.15-2 During production - checking

a) Check the function of the cylinder (4).

6 Cylinder

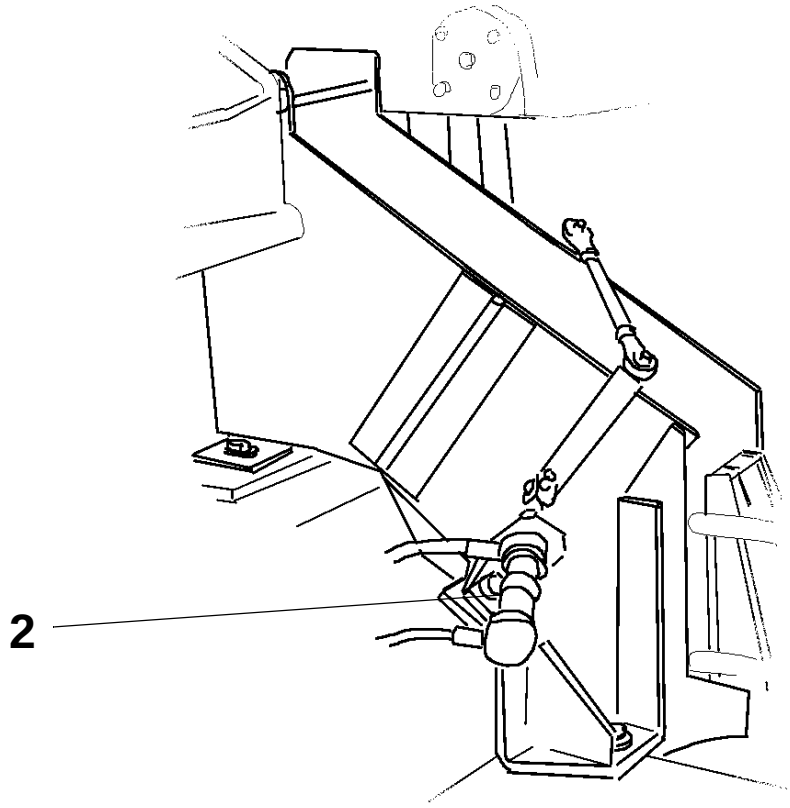

2.2B2550E15.FM

5.15-3 Cylinder - check

SPC	90450-0438

a) Check that the cylinder (1) does not jam.

1 Cylinder

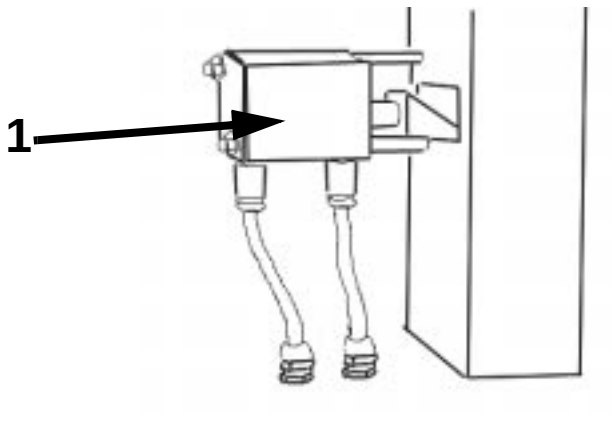

5.15-4 During production - check

a) Check that the packagings will turn properly.

5.16 Main machine to final folder

5.16-1 Synchronization - set

Machine status	OFF

a) Crank the main machine until the final folder just begins to index.
b) Switch off the main power.
c) Crank the main machine to $2^8/202^8$
d) Switch on the main power.
e) Crank the main machine to 0^8
f) Set the angle encoder (1) of the final folder.

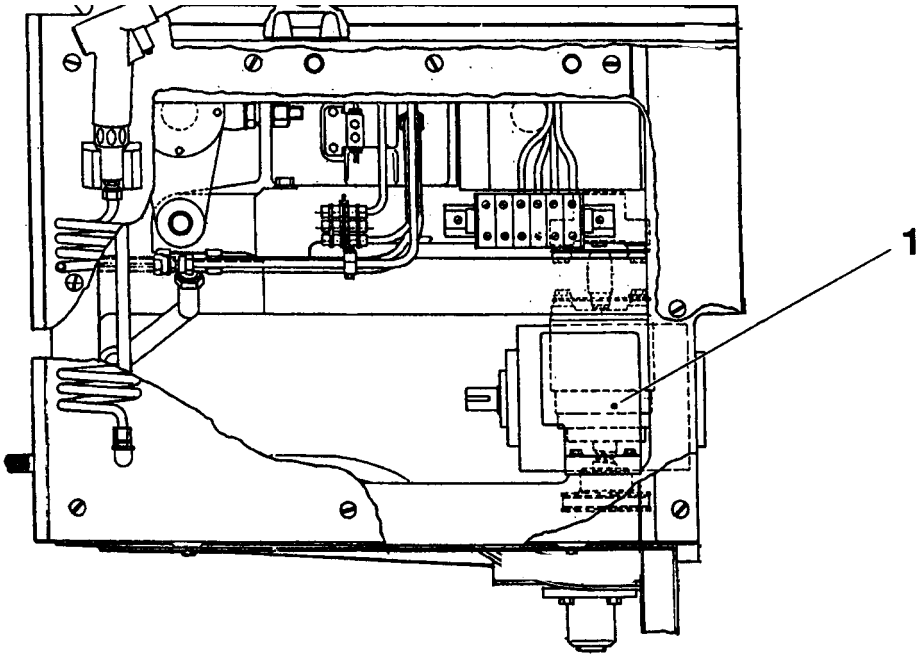

1 Angle encoder

2.2B2550e16.fm

This page intentionally left blank

7 Strip applicator

2.2b2550g00.fm

7- 0 Strip applicator- description

SPC	595162-0100

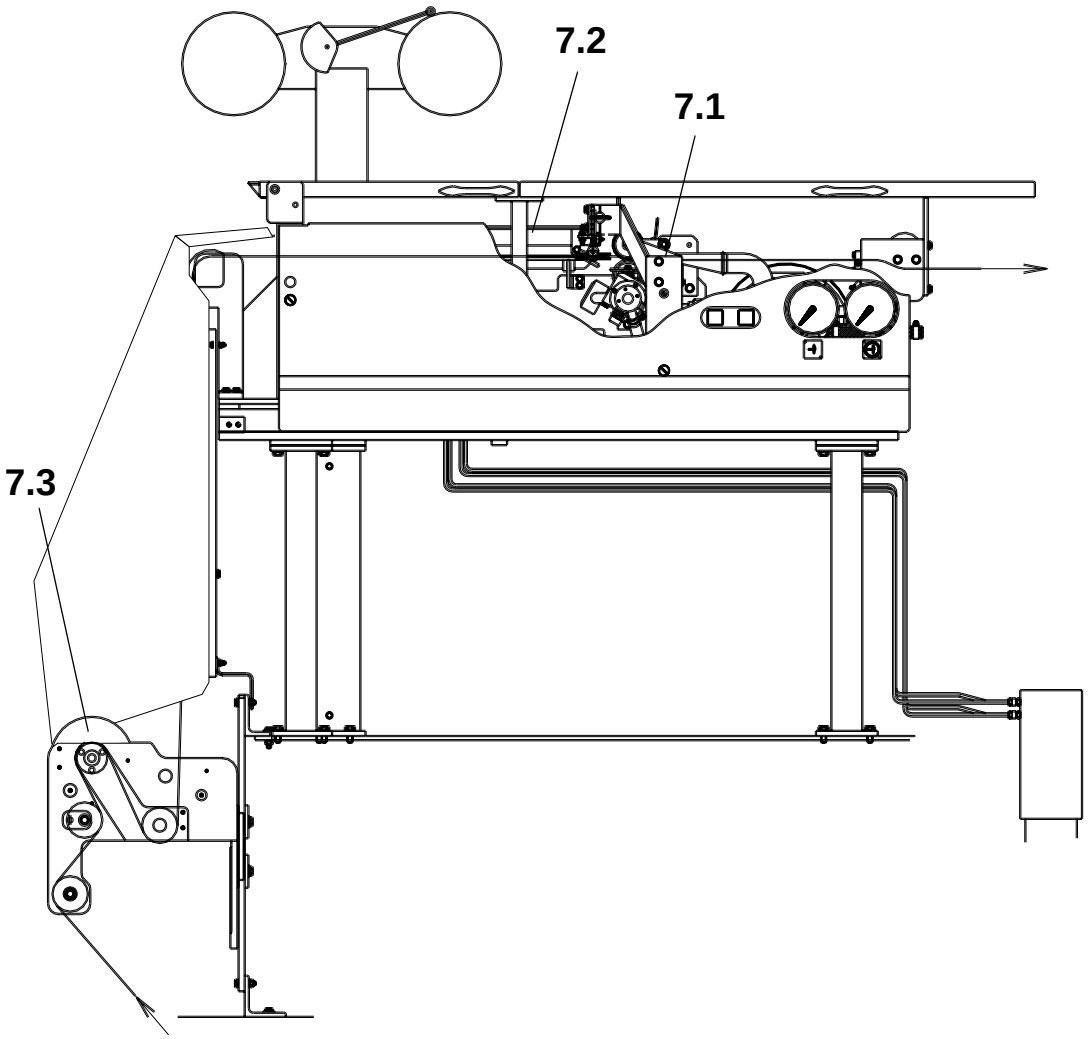

2.2b2550g00.fm

7.1 SA, Strip guide
7.2 Strip applicator
7.3 Crease unit

7.1 SA, Strip guide

Machine status	Off
SPC	595167-0100

7.1-1 SA, Strip guide - check

a) Check that:

- The guide wheel (6) is parallel with the material web and that the same height as the web.

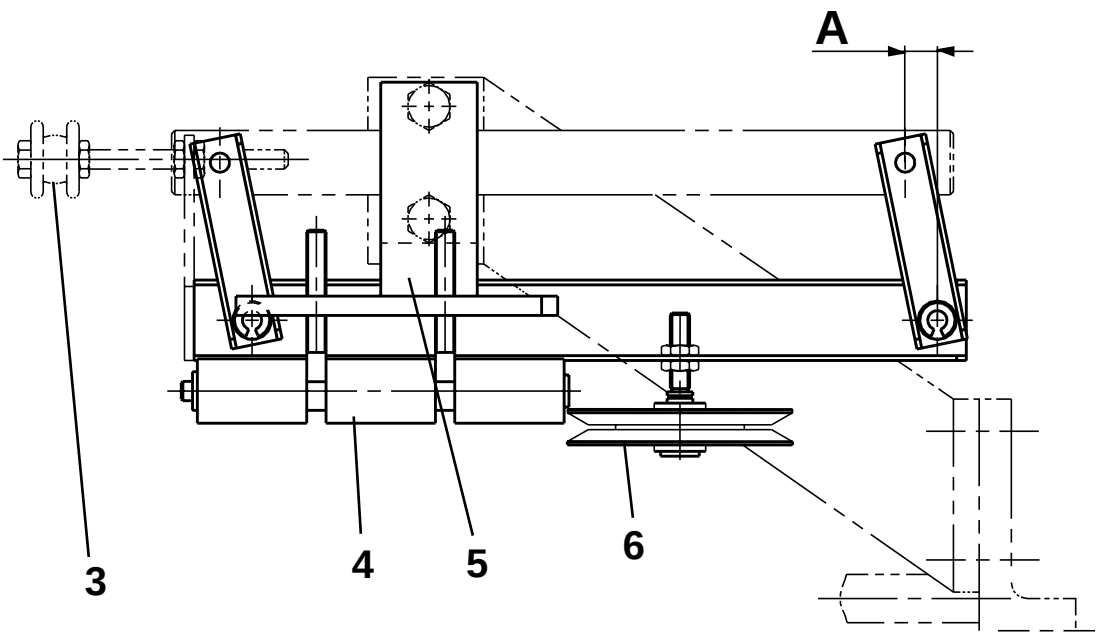

2.2B2550G01.fm

1 Material web
2 LS strip
3 Guide roller
4 Roller
5 Clamp
6 Guide wheel

A = 10 ± 1 mm

- The strip guides moves freely sideways.
- Distance A is 10 ± 1 mm; if required, adjust by means of the clamp fitting (5).
- The rollers (4) slightly touches the packaging material web.
- All rollers (3) rotates easily.
- No bearings are binding.

(Cont'd)

(Cont'd)

- The LS strip (2) is positioned symmetrically over the edge of the packaging material web (1); adjust by means of the guide roller (3).

1 Material web
2 LS strip
3 Guide roller
4 Rollert
5 Clamp
6 Guide wheel

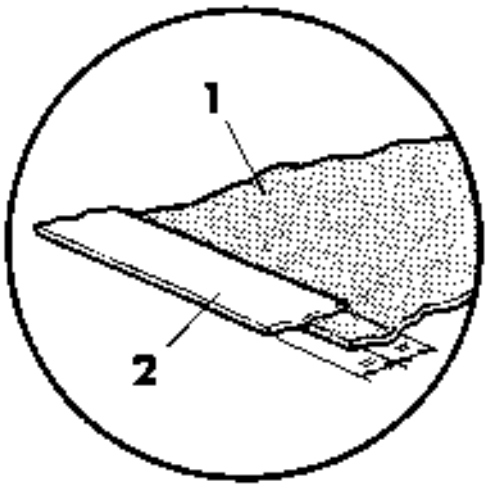

2.2B2550G01.fm

7.2 Strip applicator

SPC	595166-0100

7.2-1 Strip applicator

Machine status	
SPC	595166-0100

a) Check paper guides (1) are placed as shown in picture.

b) Paper web is to be pressed down from the element.

1 Guide
2 Paper web
3 Element

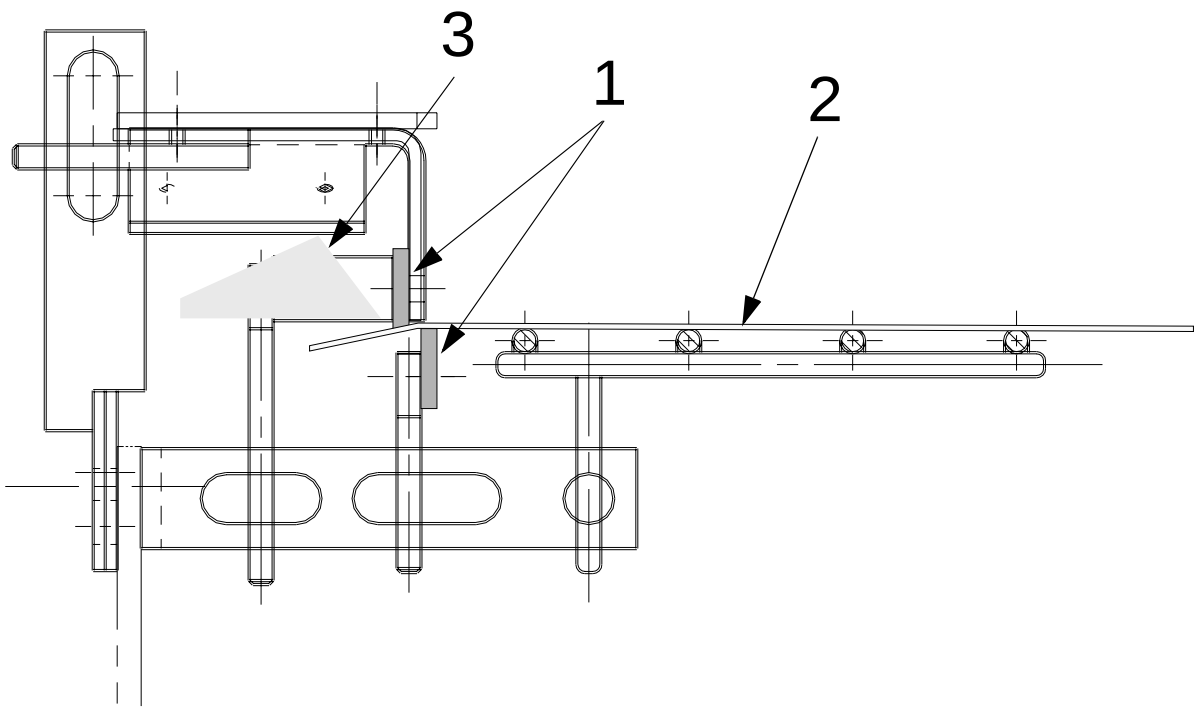

2.2B2550g02.fm

7.3 Crease unit

Machine status	
SPC	594947-0100

7.3-1 Rotation monitor - check

Check the monitor (1) function

7.3-2 Rotation monitor - set

Set distance A between the proximity switch and the cam (2).

A = 0.5 - 1.0 mm

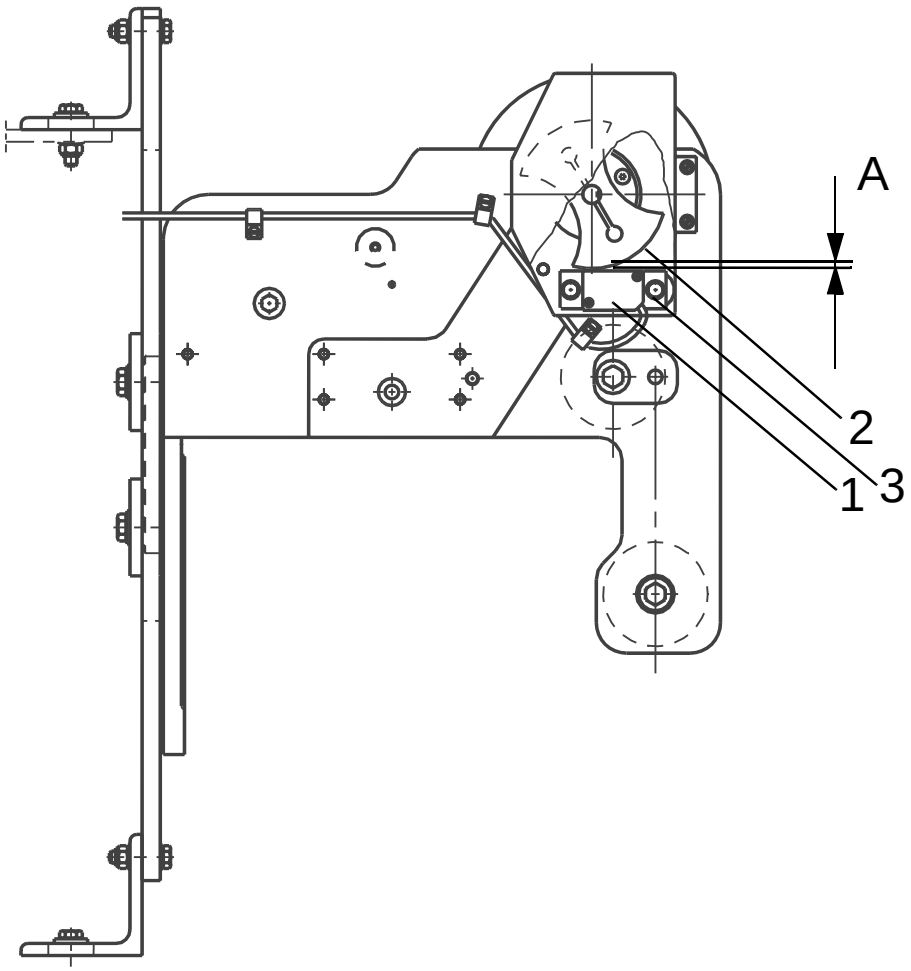

2.2B2550g03.fm

1 Proximity switch
2 Cam
3 Screw

7.3-3 Crease wheel - set

Note! Distance D may vary depending on the packaging material quality. Final adjustment may have to be carried out. Perform the adjustment on a plane surface.

a) Set distance D, see table. Adjust by putting shims (10) under the crease bars (11). Make sure that the crease bars are parallel within 0.2 mm.

b) Step up the machine to step **Production** and perform a **Short stop**.

c) Crank to **X°**, see table.

Package	D ±0.2 (mm)	X°
200 S TWA	143	265

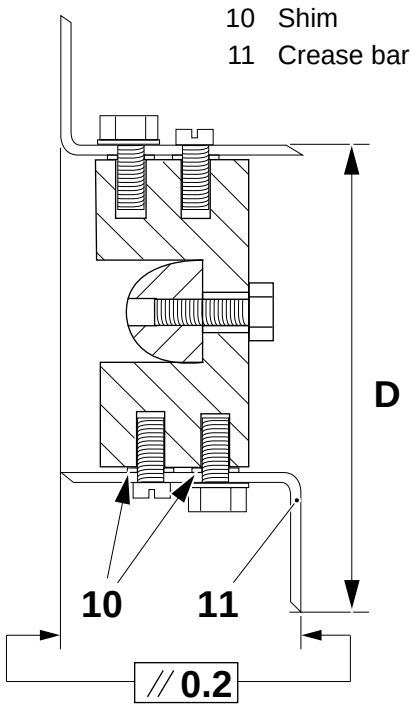

2.2B2550g03.fm

(Cont'd)

(Cont'd)

Note! Make sure that the crease wheel is correctly positioned in the creases throughout the setting procedure and that the material web is well tensioned through the machine.

d) Unscrew the screws (12), apply a spirit level (14), and shift the bracket until the crease wheel (13) is horizontal. Tighten the screws.

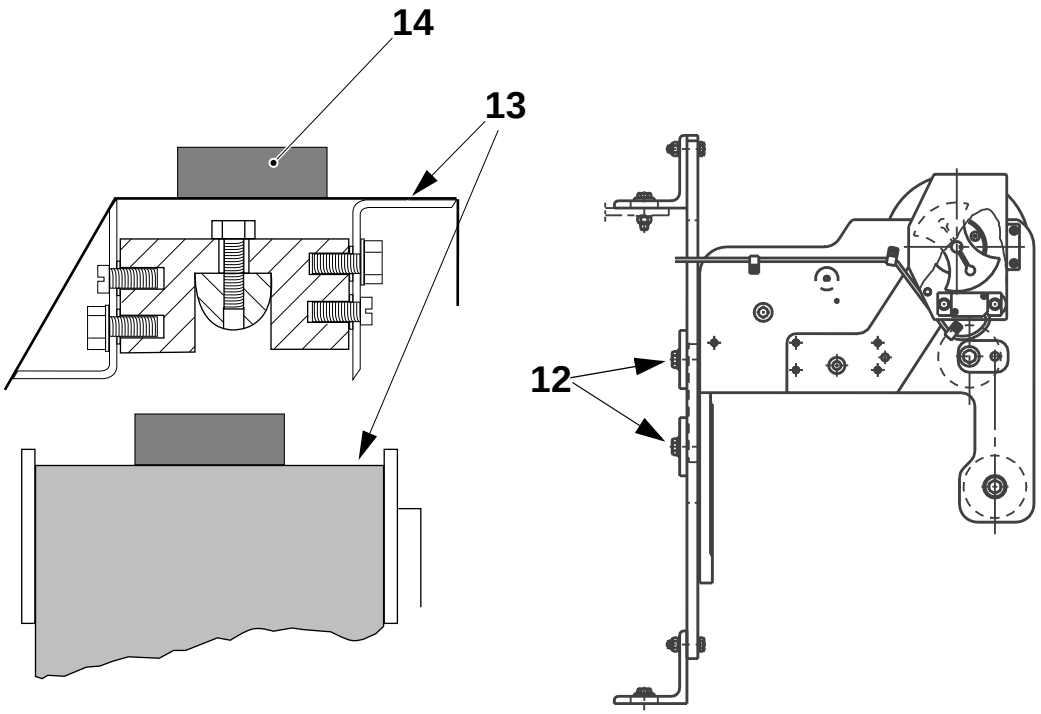

2.2B2550g03.fm

12 Screw
13 Crease wheel
14 Spirit level

e) Step up the machine to **Production**.

9 Electrical equipment

2.2B2550H00.fm

This page intentionally left blank

10 General

2.2B2550I00.fm

10.1 Technical data

Pressures	Unit	Value
Input air	MPa	0.60 - 0.70
Input cooling water	MPa	0.30 - 0.45
Input hot water	MPa	0.30 - 0.45
Input steam	kPa	170 ±30
Product pressure (depending on product and local conditions)	kPa (bar)	50 - 350 (0.5 - 3.5)
Product pressure, permitted variation during **Production**	kPa (bar)	±100 (1)
Sterile air	kPa	30 - 40
Calender rollers	MPa	0.30
LS	kPa	2.2
LS short stop	kPa	2.0
Air to photocells	kPa	10
Jaw pressure	MPa	10.0 - 11.0
Cutting pressure	MPa	8.0 - 9.0
Air to spray container	kPa	300
Design correction	kPa	200 - 300
Flap sealing	kPa	150 - 200
Paper guide plate	MPa	0.10 - 0.15
SA sealing (basic setting)	kPa	2.7
SA sealing, short stop	kPa	2.0

2.2B2550I01.fm

Pressure switches	Unit	Value
Sterile air	kPa	15
Input air	MPa	0.4

Temperatures	Unit	Value
Hot water	°C	50 - 75
Sterilisation bath, water	°C	80
Air superheater	°C	360
LS sealed tube, (basic setting)	°C	305
LS sealing, (basic setting)	°C	255
Air knife	°C	125
Pre-sterilisation	°C	270
Input steam	°C	125 - 140
SA-SEALING (BASIC SETTING)	°C	290

2.2B2550I01.fm

10.2 Lubricants

The table below lists only a selection of lubricants with their respective designations.
Comparable lubricants from other suppliers may be selected with the aid of the lubricant specifications (document No in the table).

Lubricant specifications may be ordered from Technical Standardization, Tetra Pak P & S Services AB, Ruben Rausings gata, S-221 86 LUND, Sweden.

Lubricant code	Document No	Material No (internal TP designation for material type)	Part No (used when ordering from Tetra Pak)	Example	
				Supplier	Product designation (9303)
A Motor oil	M 1251.122	51122-85	90 296-28	BP Esso Statoil Mobil Shell Caltex/ Texaco Optimol	Vanellus FE 10W-30 Essolube XD-3 10W-30 PowerWay D2 10W-30 Delwac 1400 Super 10W-30 Myrina TX 10W-30 Ursa LA 10W-30 Non Plus Ultra 10W-40
B High-pressure oil	M 1254.322	54322-220	90 296-73 90 296-78	BP Esso Statoil Mobil Shell Caltex/ Texaco Imperial Kluber Optimol	Energol GR-XP 220 Spartan EP 220 LoadWay EP 220 Mobilgear 630 Omala oil 220 Meropa Lubricant 220 Tribol ET 280-220 Lamora 220 Optigear 5150 VG 220
		54322-150 For use in production plant with start temperature below 5°C.	90 296-72	BP Esso Statoil Mobil Shell Caltex/ Texaco Imperial Kluber Optimol	Energol GR-XP 150 Spartan EP 150 LoadWay EP 150 Mobilgear 629 Omala oil 150 Meropa Lubricant 150 Tribol ET 280-150 Lamora 150 Optigear 5120 VG 150

2.2B2550I02.fm

Lubricant code	Document No	Material No (internal TP designation for material type)	Part No (used when ordering from Tetra Pak)	Example	
				Supplier	Product designation (9303)
C Hydraulic oil	M 1252.122	52122-32	90 296-53	BP Esso Statoil Mobil Shell	Bartran HV 32 Univis N 32 HydraWay HV 32 DTE Oil 13 Tellus T 32
D Mist lubrication oil	M 1251-822	51822-37	90 296-80	BP Esso Statoil Mobil Shell Caltex/ Texaco	Autran GM-MP ATF Dextron TransWay DX II ATF 220 ATF Dextron II Texamatic fluid (DEXTRON II)
E Comp-ounded cylinder oil	M 1254.922	54922-460	90 296-77 90 296-2	BP Esso Statoil Mobil Shell Caltex/ Texaco	Energol AC-C460 Cylesso TK 460 CylWay FZ 460 600W Super Cylinder Oil Valvata Oil J460 Vanguard Cylinder Oil
F Lithium grease, EP type	M 1255.115	55115-20	90 296-68	BP Esso Statoil Mobil Shell Kluber Optimol	Energrease LS EP 2 Esso MP Grease/ Beacon EP 2 UniWay EP 2 N Mobillux EP 2 Grease 1344 LiEP 2 Centoplex 2 EP Longtime PD 2
H High-pressure oil	M 1254.322	54322-320	90 296-75	BP Esso Statoil Mobil Shell Caltex/ Texaco Imperial Kluber Optimol	Energol GR-XP 320 Spartan EP 320 LoadWay EP 320 Mobilgear 632 Omala oil 320 Meropa Lubricant 320 Tribol ET 280-320 Lamora 320 Optigear 5180 VG 320

2.2B2550I02.fm

Lubricant code	Document No	Material No (internal TP designation for material type)	Part No (used when ordering from Tetra Pak)	Example	
				Supplier	Product designation (9303)
H High-pressure oil	M 1254.322	54322-220 For use in production plant with start temperature below 5°C.	90 296-73 90 296-78	BP Esso Statoil Mobil Shell Caltex/ Texaco Imperial Kluber Optimol	Energol GR-XP 220 Spartan EP 220 LoadWay EP 220 Mobilgear 630 Omala oil 220 Meropa Lubricant 220 Tribol ET 280-220 Lamora 220 Optigear 5150 VG 220
K Circulation oil	M 1254.942	54942-100	90 296-15	BP Esso Statoil Mobil Shell Caltex/ Texaco Imperial Kluber	Energol CS 100 Turbesso 100 TurbWay 100 DTE OIl Heavy Tellu OIl 100 Regal Oil R & O 100 Tribol 775 Crucolan 100
L Silicon grease	M 1255.322	55322-30	90 296-9	Dow Kluber	Dow Corning 7 Compound Unisilikon L 250L
M Lithium grease, EP type	M 1255.112	55112-10	90 296-70	BP Esso Statoil Mobil Kluber Optimol	Energrease LS EP 1 Beacon EP 1 UniWay EP 1 Mobillux EP 1 Centoplex 1 EP Longtime PD 1
O Lithium complex grease	M 1255.122	55122-30	90 269-61	BP Esso Statoil Imperial	Energrease LS 3 Unirex N3 UniWay HT-63 Molub-Alloy ET 860-220
P Synthetic compresso roil	M 1254.632	54632-68	90 296-54	BP Esso Statoil Mobil Shell Caltex/ Texaco	Energol RC-R68 Compressor oil 68 CompWay 68 Rarus 427 Corena Oil H68 Compressor oil VDL 68

2.2B2550I02.fm

10.4 PLC- and hydraulic function

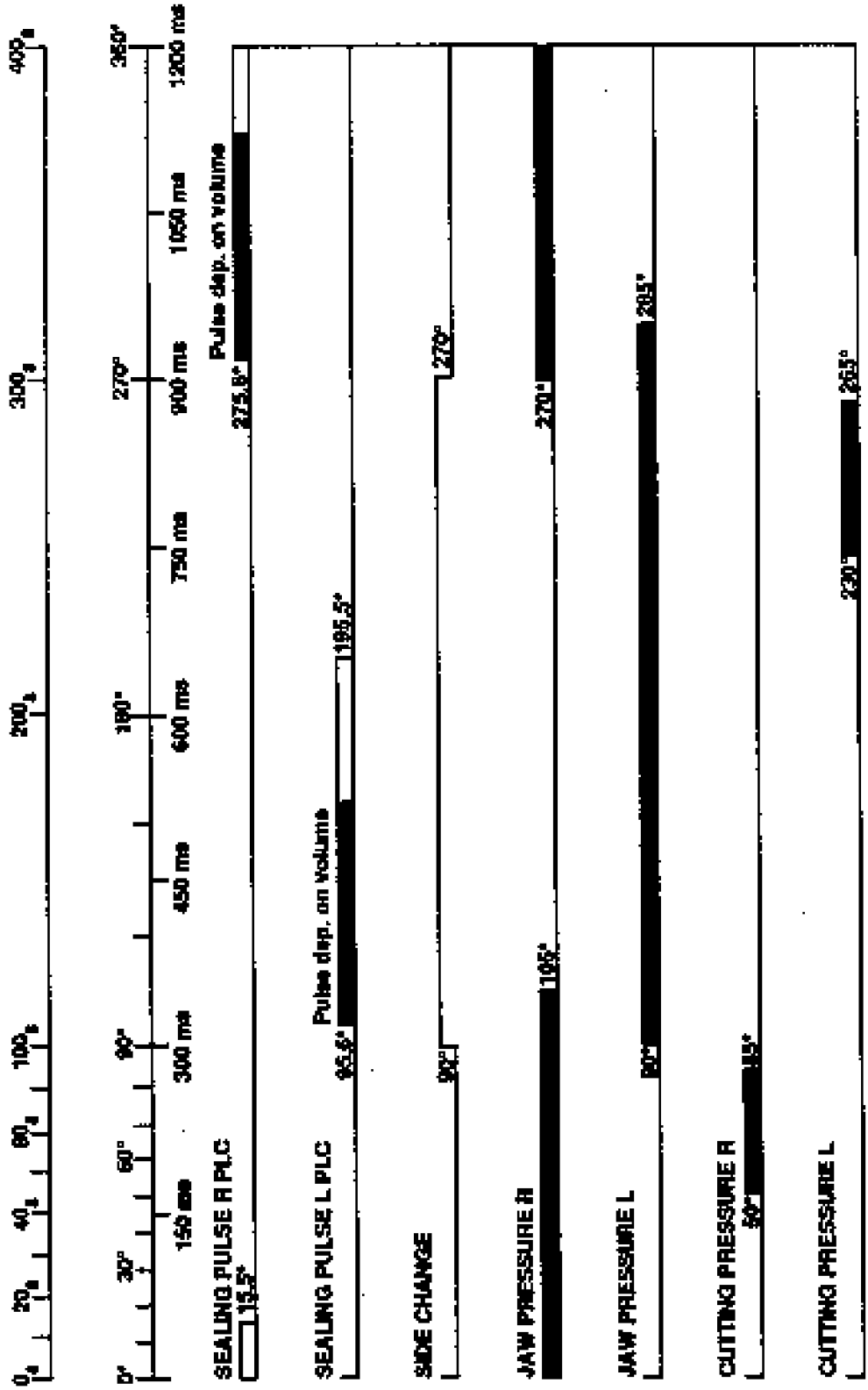

2.2B2550I03.fm

This page intentionally left blank

Tetra Pak