OM
Operation Manual

TBA/9 Wedge

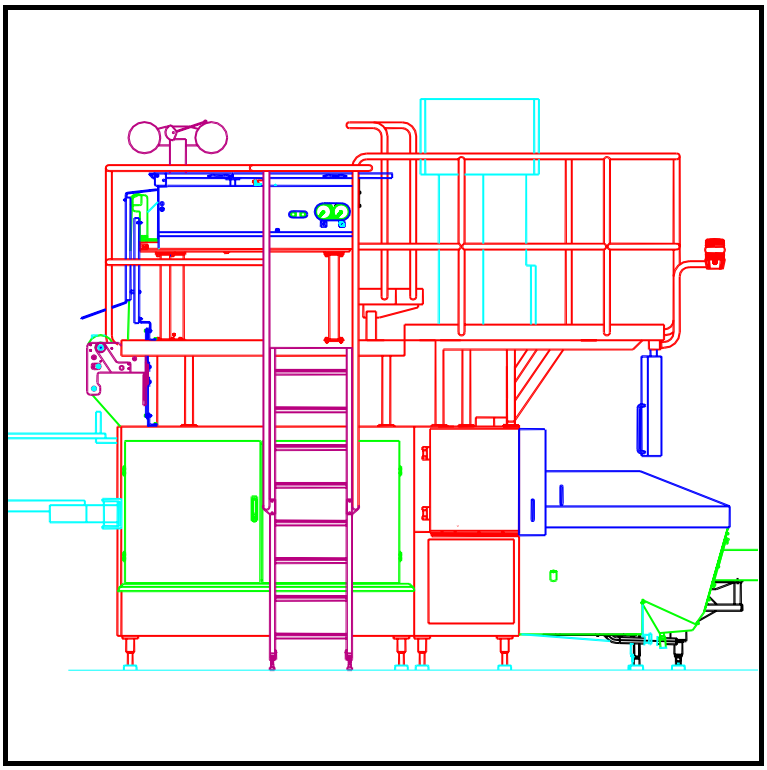

Tetra Pak

Doc No OM-80254-0102

This page intentionally left blank

This document is valid for:

Series No/ Machine No Sign.

OM
Operation Manual

Tetra Brik Aseptic
TWA-6000 200 Slim
RK-595156-0200

Table of contents

Introduction 5
Safety precautions 7
General description 23
Preparations 35
Start 53
Production checks 55
Package checks. 59
Splicing of LS strip 73
Splicing of packaging material 77
Stop 83
After production care 91
Weekly care 103
Sterilization liquid 117
Lubrication 121
Technical data 125

Doc No OM-80254-0102

Issue 2000-03

Tetra Pak
Tetra Brik PS AB

This page intentionally left blank

Introduction

This section contains basic information about the described Tetra Pak equipment and this document.

WARNING!
To ensure maximum safety for the operator, always read the **"Safety precautions"** before doing any work on the machine or making any adjustments.

Equipment

Purpose usage

The purpose usage of this Tetra Pak equipment.This machine is intended for packaging liquid food.

Service

In case of problems when operating the machine, contact the nearest Tetra Pak service station.

Manufacturer

This Tetra Pak equipment is produced by:

Tetra Brik Packaging Systems AB
Ruben Rausings gata
S- 221 86 Lund
Sweden

Machine identification

The machine plate on the left is an example of the type of machine plate attached to the electrical cabinet. The plate carries data needed when contacting Tetra Pak concerning this particular machine.

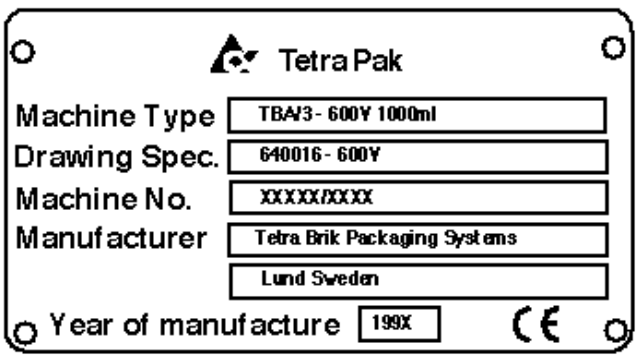

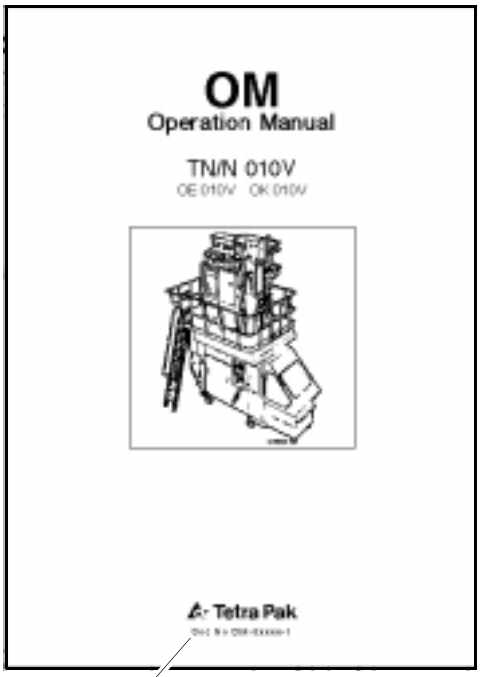

Example of manual

Document number

Document

About the Operation Manual (OM)

The purpose of the Operation Manual is to provide information on how to **operate** the machine. For instructions on maintenance, see the Maintenance Manual (MM).

It is important that you:

- keep the manual for the life of the equipment,
- pass the manual on to any subsequent holder or user of the equipment.

Design modifications

The directives in this document are in accordance with the design and construction of the machine at the time it was delivered from the Tetra Pak machine production facility.

Document producer

The document has been produced by:

Tetra Brik Packaging Systems AB
Technical Publications
Ruben Rausings gata
S-221 86 Lund
Sweden

Further copies

Additional copies can be ordered from nearest Tetra Pak service station. When ordering technical publications, always quote the **document number** printed on the front cover of the document concerned.

Number of pages

This document contains totally 128 pages.

Copyright © 2000
Tetra Brik Packaging Systems AB

All rights reserved. No parts of this document may be reproduced or copied in any form or by any means without written permission from Tetra Brik Packaging Systems AB/Inc.

Safety precautions

To ensure maximum safety, always read this section carefully before doing any work on the equipment or making any adjustments.

Hazard information

Hazard information in this document has the following significance:

DANGER!

Failure to observe information marked with this symbol **puts your life in danger**.

WARNING!

Failure to observe information marked with this symbol can result in **personal injury and/or serious damage to or destruction of equipment**.

CAUTION!

Failure to observe information marked with this symbol can result in **damage to equipment**.



Call for medical attention immediately.

Personnel

Only skilled or instructed persons are allowed to work on the equipment.

The manufacturer declines all responsibility for injury or damage if the instructions in this manual are not followed.

Personnel are responsible for:

- the equipment and the work area around the equipment
- all personnel in the vicinity of the equipment
- making sure that all safety devices are fully operational

All personnel must regard all electrical equipment as live. Before carrying out maintenance or repair work, switch the equipment off at the mains power and padlock the switch.

Electricians should be certified according to local regulations and have experience of similar types of installations, proven skills in reading and working from drawings and cable lists, and knowledge of local safety regulations regarding power and automation. Work with the electrical equipment must be performed only by skilled or instructed technicians. According to EN 60204.3,55 a skilled person is:

An individual with technical knowledge or sufficient experience to enable that individual to avoid hazards which electricity can create.

General safety precautions

Hygiene

It is important to keep hands and/or gloves clean.

Disinfect hands and/or gloves before touching the packaging material, the strip(s) or any other equipment part that may come into contact with the product.

To avoid production faults, it is important that the packaging material and the strip(s) never touch the floor, the platform or the area around the equipment.

Hearing protection

WARNING!
Risk of impaired hearing!
Wear hearing protection while the equipment is running.

Platforms and ladders

WARNING!
Risk of slipping!
Keep all surfaces free and clean.

Clean the platforms, the ladder and the area around the machine.

High voltage

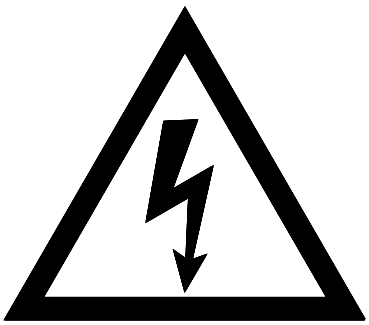

WARNING!
Risk of electrocution!
Make sure that the mains power is disconnected before starting any work on electrical equipments marked with this symbol. In case of accident, call for medical attention immediately.

Work with parts marked with this symbol must be performed by skilled or instructed persons only.

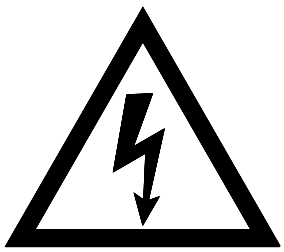

Electrical cabinet

DANGER!

Risk of electrocution!
Make sure that the mains power is disconnected before starting any work on electrical cables or connections. In case of accident, call for medical attention immediately.

High voltage in the electrical cabinet (up to 400 V). Work inside the electrical cabinet must be performed by skilled or instructed persons only.

Electrical cabinet doors locked with screws may be opened only by skilled or instructed persons.

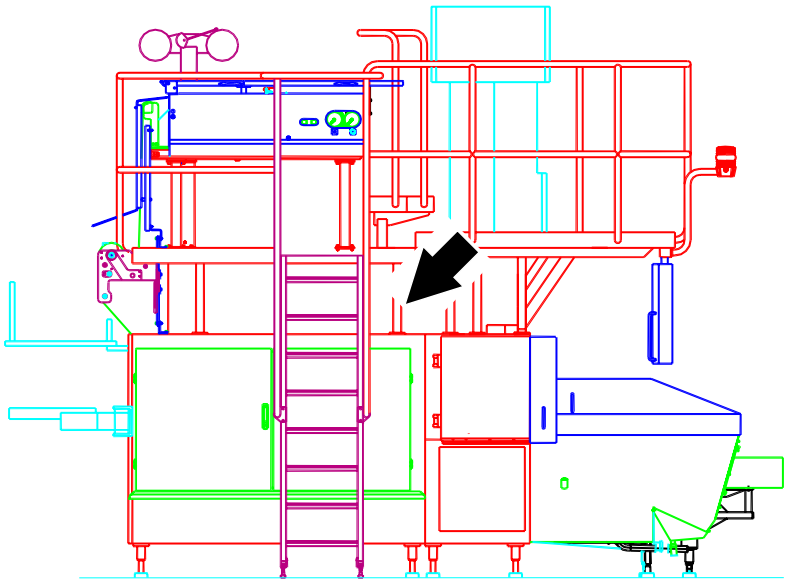

Machine safety devices

Emergency stop buttons

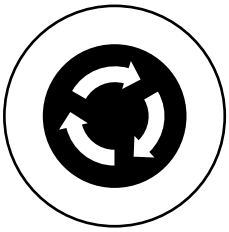

Learn the position of the **Emergency stop** buttons in order to stop the equipment immediately in case of danger to people or damage to the equipment.

The **Emergency stop** buttons do not switch off the power at the mains power switch.

Pushing the **Emergency stop** buttons will reset the equipment program to **Zero** position and deactivate all air cylinders.

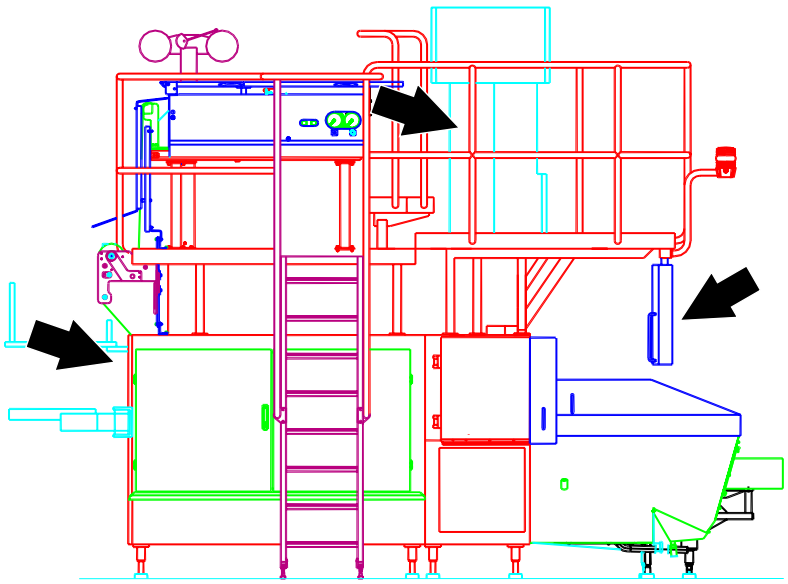

Doors, covers and guards

WARNING!

Risk of crushing and burns!

Moving parts and hot surfaces. Make sure that all doors, covers and guards are in place and functioning before operating the equipment. The equipment may perform a reciprocating movement during the first few seconds after a stop. Some equipment parts may also be hot. In case of accident, call for medical attention.

Certain doors are fitted with safety switches. These switches are part of the safety system of the equipment and must **never** be bridged, by-passed or otherwise made non-operational**.**

- Never open doors or remove covers or guards while the equipment is operating.
- Never stop the equipment by opening a door with a safety switch.

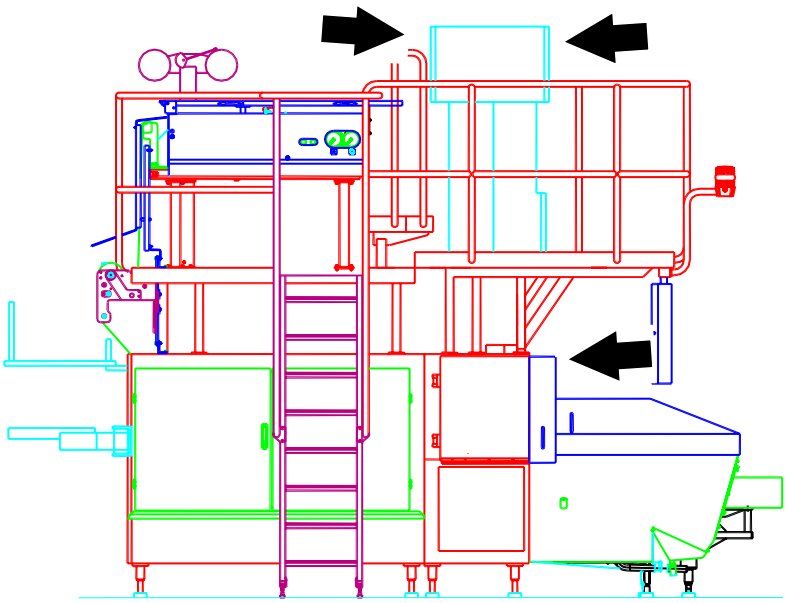

Hydrogen peroxide

WARNING!

Risk of corrosion and intoxication!
Wear personal protective equipment, see below. Hydrogen peroxide in liquid and gas form can cause irritation and injury if it comes into contact with the skin, mucous membranes, the eyes or clothes. In case of accident, follow the emergency procedures, see below.

The liquid used for sterilising the packaging material consists of 35% hydrogen peroxide (H_2O_2).

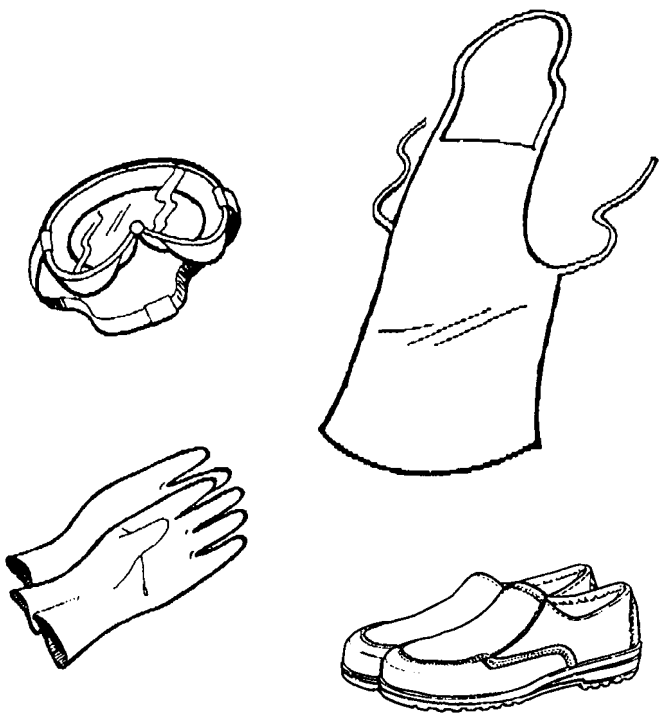

Personal protective equipment - hydrogen peroxide

Wear:

- **safety goggles**, TP No. 779130-102
- **apron**, TP No. 90303-5
- **shoes** made of PVC, PE plastic or rubber
- **protective gloves** made of neoprene, TP No. 90303-4

Before starting work with hydrogen peroxide, make sure that:

- the showers work
- a portable, TP No. 90303-6, or wall-mounted eyewash device is available at or near each machine site
- there are additional washing facilities



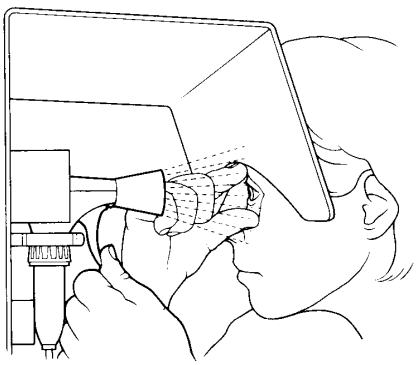

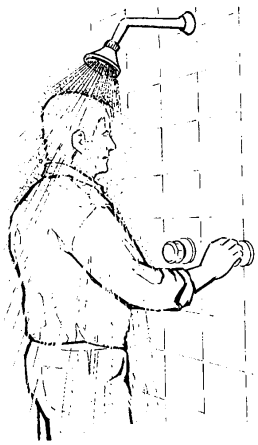

Emergency procedures - hydrogen peroxide

If you accidentally swallow hydrogen peroxide, drink large amounts of lukewarm water.

If you get splashes or vapour from hydrogen peroxide in your eyes, wash your eyes thoroughly with lukewarm water for 15 minutes (keeping eyelids wide apart).

If hydrogen peroxide comes into contact with skin or clothes:

- rinse immediately with plenty of water
- if skin burns appear, call for medical attention immediately
- thoroughly wash clothes before wearing them again

If you experience irritation or pain due to having inhaled hydrogen peroxide vapour:

- leave the affected area and get some fresh air
- if the symptoms get worse, call for medical attention

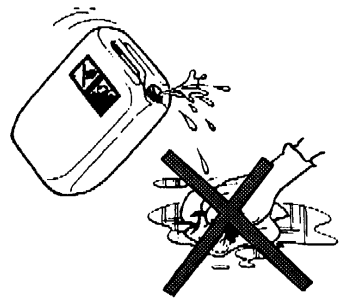

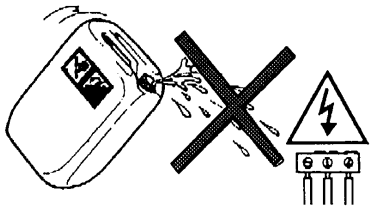

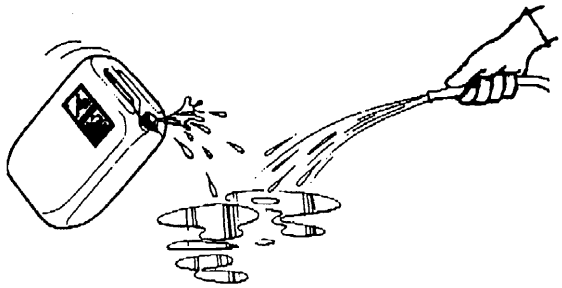

Spillage of hydrogen peroxide

WARNING!

Risk of fire!

Never wipe with combustible materials, such as rags or paper, as these may self-ignite. In case of fire, cool the hydrogen peroxide with plenty of water.

WARNING!

Risk of short-circuit!

Do not allow hydrogen peroxide to come into contact with live electrical parts.

If hydrogen peroxide is spilt on the floor or on tables, dilute it with plenty of water and flush it into the drain.

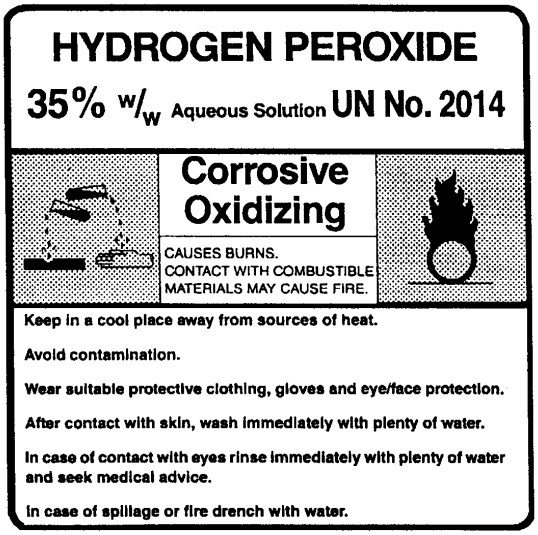

Hydrogen peroxide can

Carefully follow the instructions on the can label.

HYDROGEN PEROXIDE

- 35% w/w Aqueous Solution UN No. 2014
- Corrosive. Oxidizing
- Causes burns. Contact with combustible materials may cause fire
- Keep in a cool place away from sources of heat
- Avoid contamination
- Wear suitable protective clothing, gloves, and eye/face protection
- After contact with skin, wash immediately with plenty of water and call for medical attention
- In case of contact with eyes, rinse immediately with plenty of water and call for medical attention
- In case of spillage or fire, drench with water

Reference: TP document No. M 1751.80.

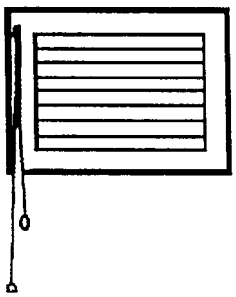

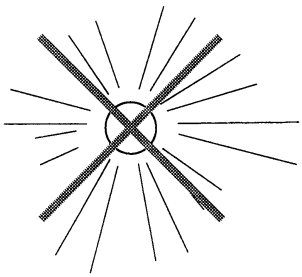

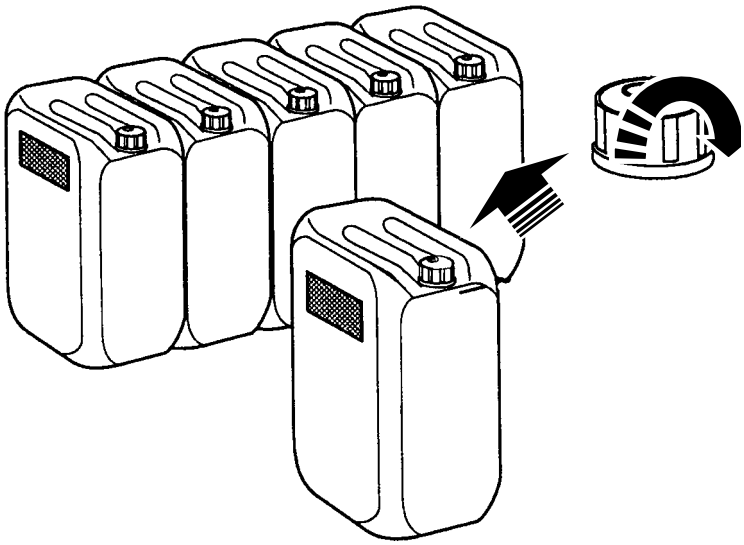

Storage of hydrogen peroxide

WARNING!

Risk of explosion!

Avoid contamination of hydrogen peroxide with organic substances (for example acetone, cellulose, and ethanol), it may react and form explosive substances. In case of accident, call for medical attention immediately.

Make sure that the area or room used for storage is:

- cool, clean and well ventilated
- shielded from direct sunlight
- free from combustible materials

Hydrogen peroxide must be stored only in its original container as delivered by the supplier.

Keep the container upright and closed with a proper ventilation cap (arrow in figure), which allows oxygen to escape.

Pumps and other equipment used for hydrogen peroxide must be used for this purpose only.

Disposal of hydrogen peroxide

Hydrogen peroxide should be sent for destruction by waste disposal specialists.

WARNING!
Risk of explosion!
Do not pour surplus hydrogen peroxide back into its original container. Hydrogen peroxide may decompose. In case of accident, call for medical attention immediately.

In some countries it is permitted to dilute hydrogen peroxide with water to a concentration below 1% and to dispose of it in the normal waste water drain. Hydrogen peroxide with a concentration below 1% is considered harmless.

Never put used hydrogen peroxide back into storage.

Nitrogen gas

WARNING!
Risk of intoxication and corrosion!
Wear personal protective equipment, see below. Can cause irritation in contact with the skin and shortness of breath, dizziness and a prickling feeling in the tongue if inhaled. In case of accident, follow the emergency procedures, see below.

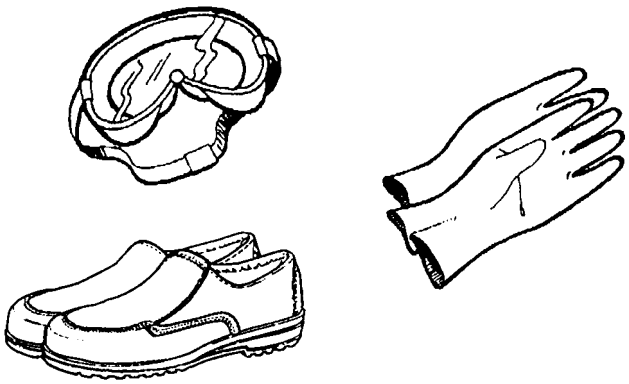

Personal protective equipment - nitrogen gas

Wear:

- **safety goggles** TP No. 779130-102
- **protective shoes**
- **protective gloves**

Before starting work with nitrogen gas, make sure that respiratory equipment is at hand for emergency situations

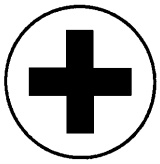



Emergency procedures - nitrogen gas

- Leave the affected area and get some fresh air. If the symptoms get worse, call for medical attention
- In case of unconsciousness, move the affected person out into the fresh air and if necessary give artificial respiration
- The rescue party must wear respiratory equipment

Nitrogen gas container

Carefully follow the instructions on the container label.

NITROGEN N48:
THE GAS MAY CAUSE COLD DAMAGE DURING EXPANSION

- Store and transport with valves closed and with the protection nut and safety cap fastened securely
- Protect against warming. Remove to a safe place during fire
- To be connected to connections marked only for this gas
- Open the valve slowly. Return with overpressure

Disposal of nitrogen gas

When returning the gas containers, make sure that:

- the valves are closed
- the protection nuts and safety caps are securely fastened

Do not release all the air pressure from the empty containers.

Storage of nitrogen gas

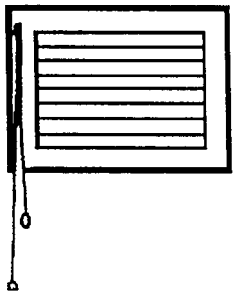

Make sure that the areas used for handling and storing the nitrogen gas are well ventilated.

Ink

WARNING!

Risk of intoxication and burns!

Wear personal protective equipment, see below. Ink is flammable and can be harmful if it comes into contact with the eyes or skin. In case of accident, follow the emergency procedures, see below

Personal protective equipment - ink

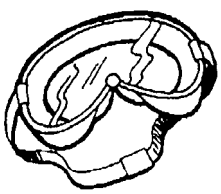

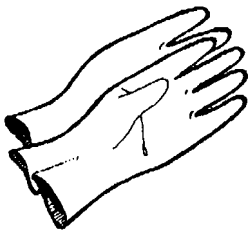

Wear

- **safety goggles** TP No. 779130-102
- **protective gloves** made of neoprene, TP No. 90303-4

Before starting work with ink, make sure that a portable, TP No. 90303-6, or wall-mounted eyewash device is available at or near each machine site.



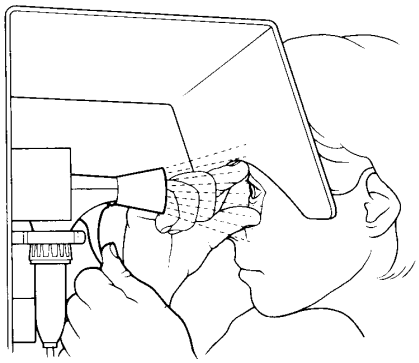

Emergency procedures - ink

If you get ink in your eyes, wash your eyes thoroughly with lukewarm water for 15 minutes (keeping eyelids wide apart).

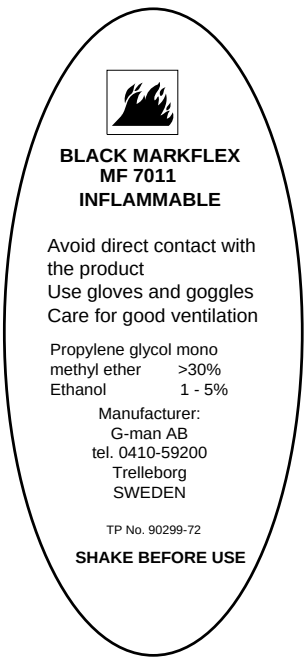

Ink container

Carefully follow the instructions on the container label (see figure below):

INFLAMMABLE

- Avoid direct contact with the product
- Use gloves and goggles
- Care for good ventilation
- Propylene glycol mono methylether >30%
- Ethanol 1-5%
- SHAKE BEFORE USE

Other chemical products

WARNING!
Risk of intoxication and fire!
Wear recommended safety equipment when handling chemical products. Certain chemical products are toxic and/or flammable. In case of accident, call for medical attention.

Carefully follow the instructions on the containers labels when handling chemical products such as:

- hydraulic fluid
- lubricants
- acids (for example nitric acid)
- caustic soda
- alkalis
- disinfectants
- detergents
- other chemical products

Follow the supplier’s instructions for disposal of the chemical products.

General description

Items in this section:

- **Abbreviations**
- **Machine function**
- **Package terms**
- **Left hand side of machine**
- **Right hand side of machine**
- **Program steps**
- **Signs and Symbols**

Abbreviations

CIP — Cleaning In Place (of product lines)

FFU—Final Folding Unit

LS — Longitudinal Sealing

SA — Strip Applicator

SCU—Separate Cleaning Unit

TS— Transversal Sealing

Machine function

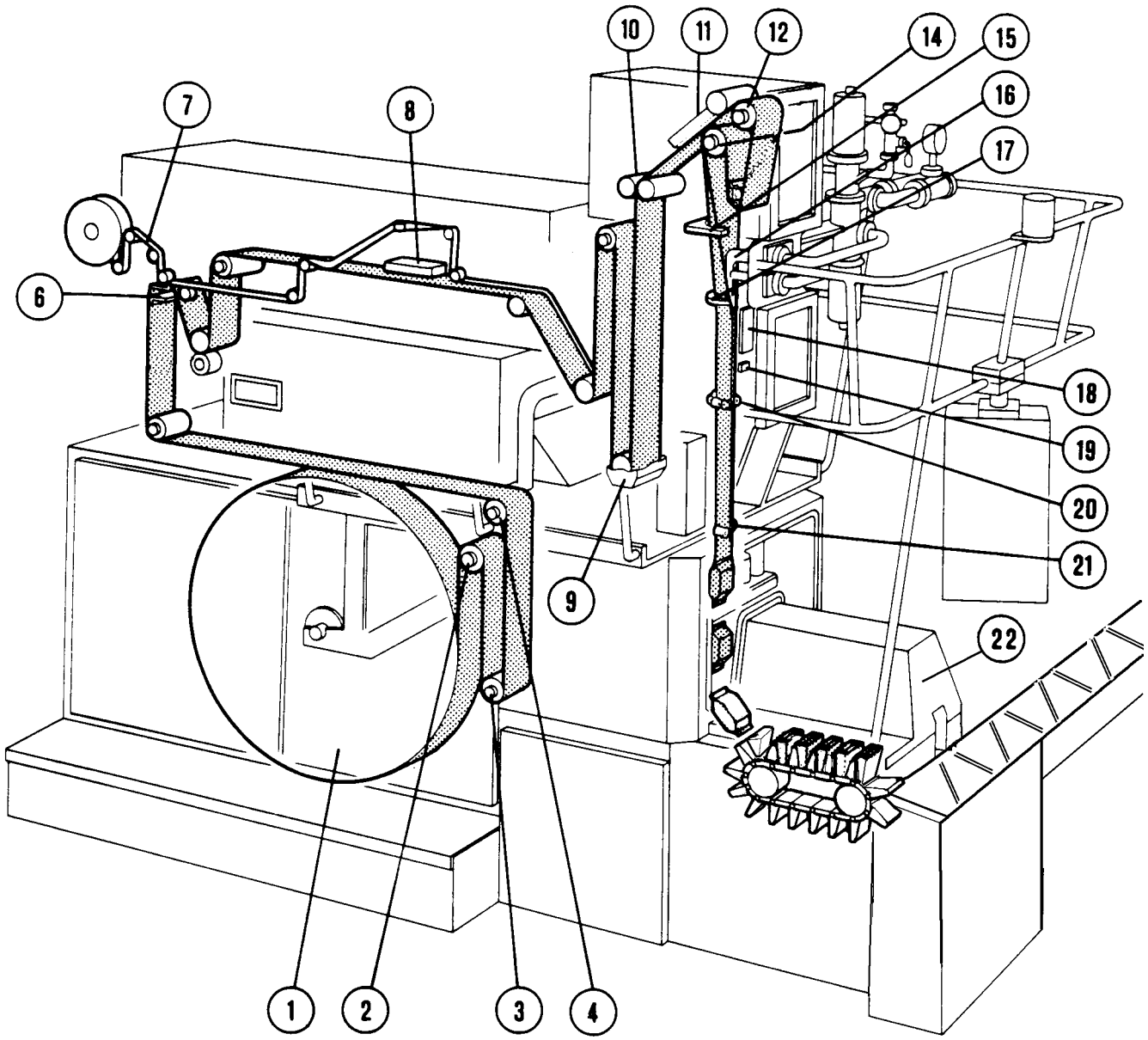

1
1

12 Bending roller
14 Bending roller (driven)
15 Upper tube support
16 Filling pipe
17 Lower tube support
18 LS (longitudinal sealing) nozzle
19 SS (short stop) nozzle
20 Forming ring
21 Tube support roller
22 Final folder

Package terms

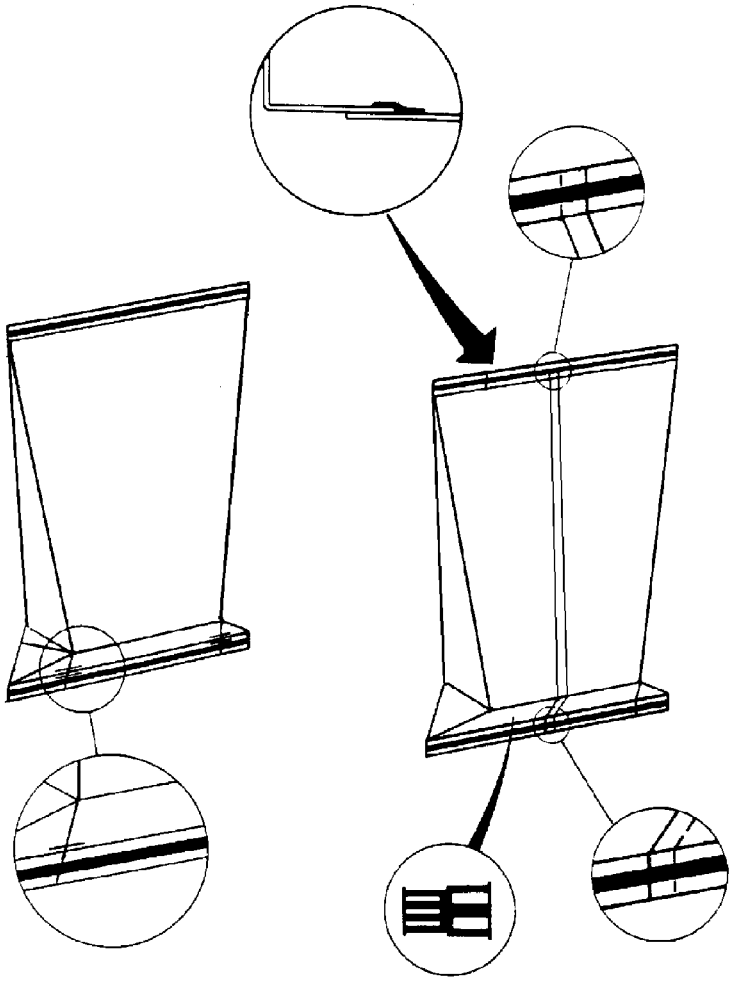

1 Bottom left fin corner
2 Bottom flap creases
3 Bottom front left corner
4 Bottom crease
5 Front side of package/panel 3
6 Left side of package/panel 2
7 Top front left corner
8 top flap creases
9 Top left fin corner
10 Spout crease
11 LS overlap
12 Air gap
13 Top right fin corner
14 Top fin crease
15 Longitudinal crease
16 Top front right corner
17 Top crease
18 Double creases
19 Bottom front right corner
20 Bottom fin crease
21 Bottom right fin corner
22 Bottom rear right corner
23 Rear side of package/panel 5
24 Right side of package/panel 4
25 Top rear right corner
26 Top inner cross
27 Top outer cross
28 Top cutting line
29 Top transversal seal
30 Perforation
31 Top rear left corner
32 Rear side of package/panel 1
33 Longitudinal seal (LS)
34 Bottom rear left corner
35 Bottom inner cross
36 Bottom transversal seal
37 Bottom cutting line
38 Bottom outer cross
39 Register code (Bar code)
40 Longitudinal Seal (LS) strip

Left hand side of machine

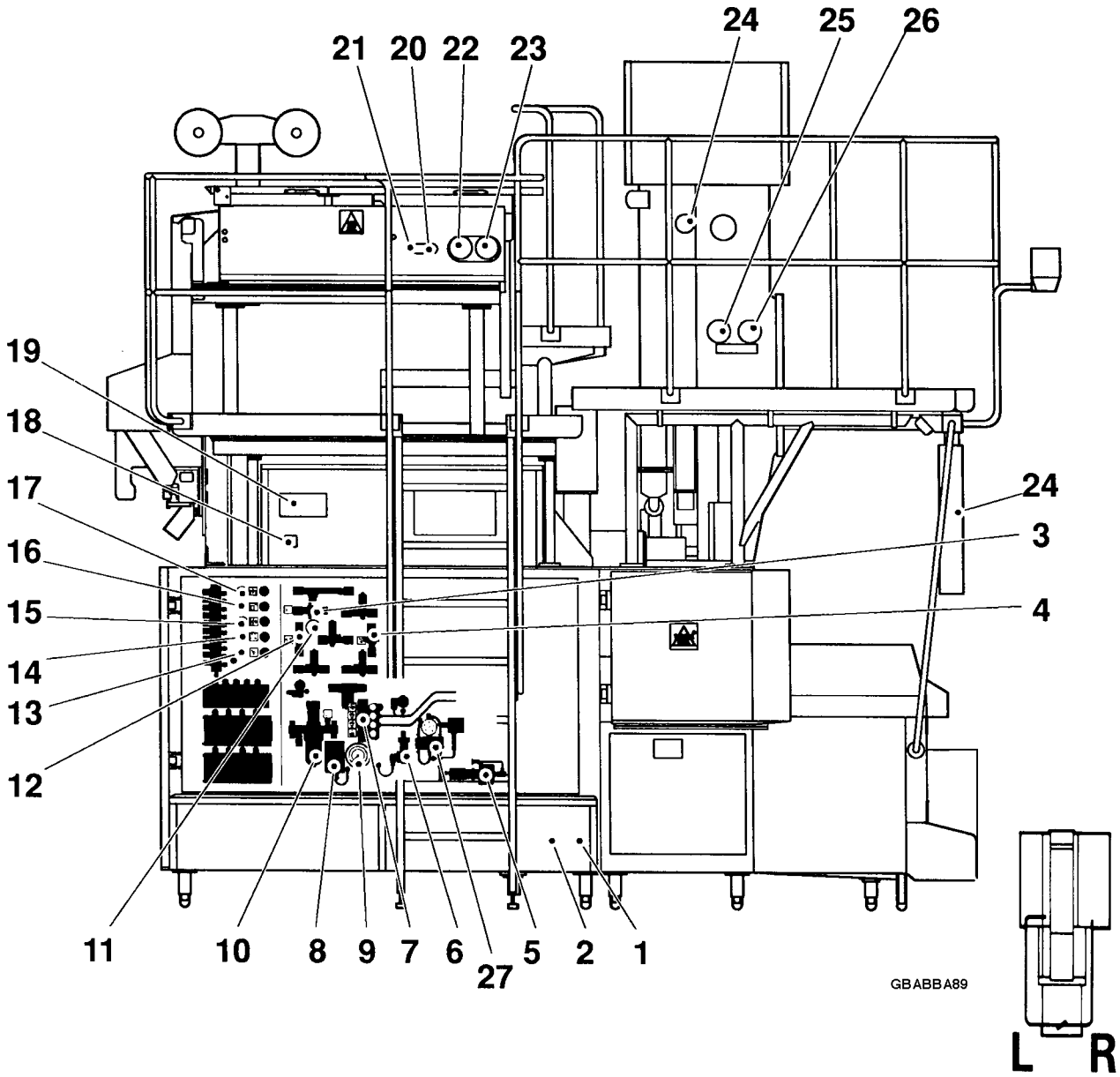

1 Jaw pressure
2 Cutting pressure
3 Cooling water INLET
4 Cooling water for transversal seal (TS), folding rail and oil cooler
5 Central lubrication pump
6 Pressure switch
7 Push buttons for cooling water flow meters
RH jaws
LH Jaw
Final folder
8 Machine lighting. Manual lubrications push button
9 Input air pressure
10 Input air
11 Input cooling water pressure
12 Hot water inlet
13 Paper guide roller
14 Flap sealing
15 Design correction
16 Air to spray container
17 Squee-gee roller
18 Alarm rest / induction heating
19 Alarm reset, induction heating TS
20 Short stop (SS)
21 Discarding package with strip splice
22 Strip applicator (SA)
23 Strip applicator (SA), short stop (SS)
24 Emergency stop
25 Longitudinal seal (LS)
26 Longitudinal seal (LS), short stop (SS)
27 Input air pressure, photocell

Right hand side of machine

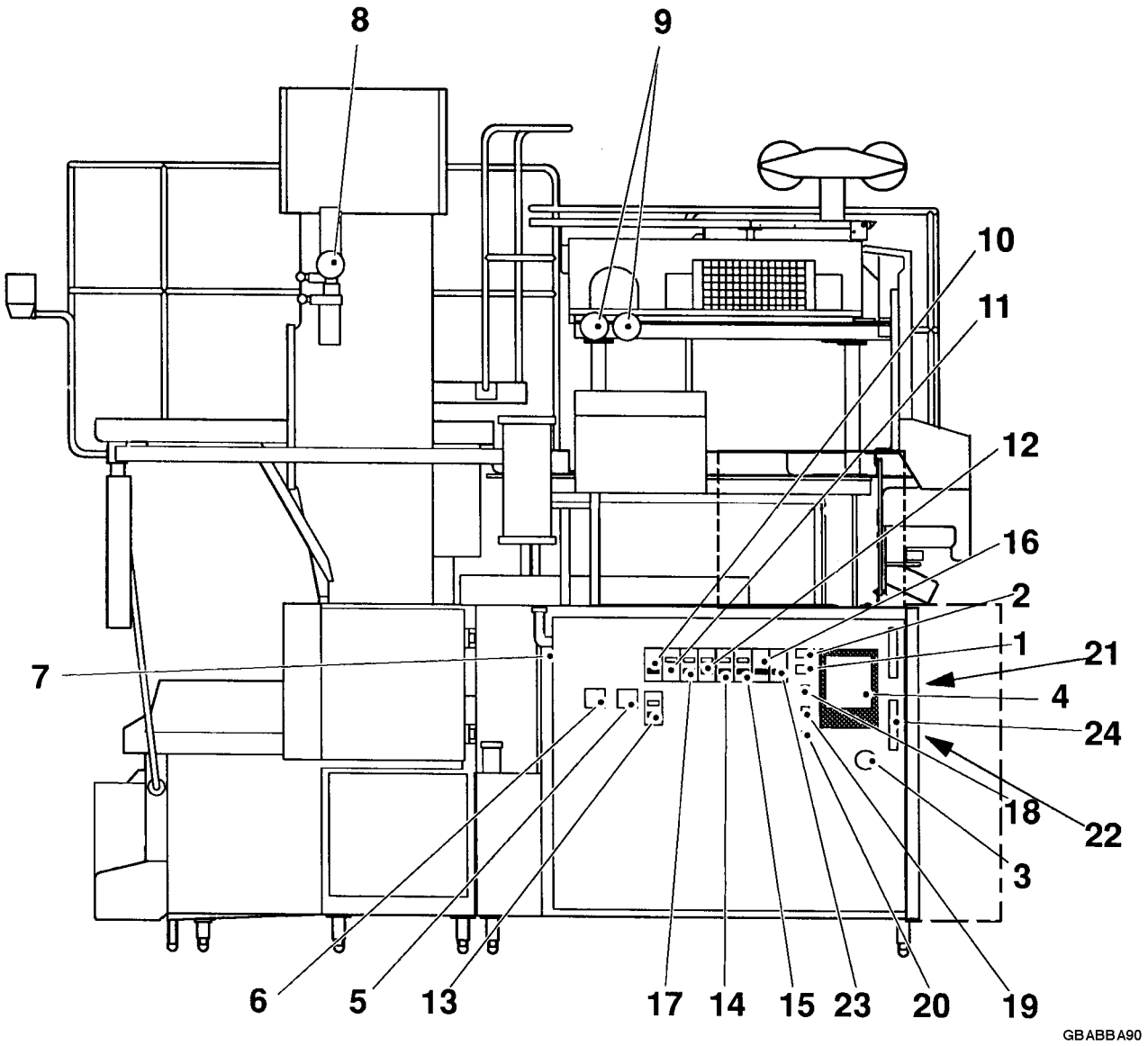

1 Package counter
2 Selector, fill entrance 0 = earlier 1 = later
3 Hour meter
4 Production recorder
5
6 Timer, transversal seal (TS)
7 Main switch
8 Product pressure
9 Sterile air pressure
10 Temp. monitor, pre-sterilization valve
11 Temp. controller, sterile bath (water)
12 Temp. controller, air super heater
13 Temp. controller, strip applicator (SA)
14 Temp. controller, longitudinal seal (LS)
15 Temp. controller, air knife
16 Temp. controller, steam
17 Temp. controller, LS, sealed tube
18 Key switch for cleaning steam barrier space
19 Key switch, service (security off)
20
21 Emergency stop
22 Short stop (SS)
23 Temp. monitor, sterilization bath (peroxide)
24 Code circuit board

Program steps

Fixed light indicates actual current programme step.
Flashing light indicates that the machine is ready for next program step.

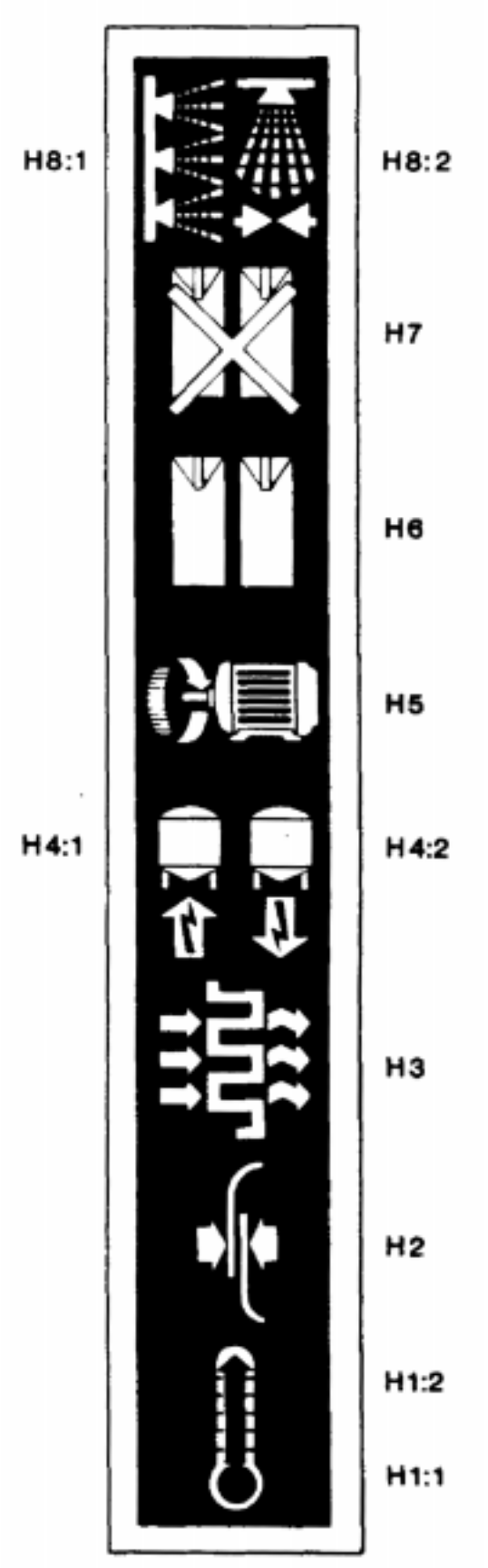

H8:2 Cleaning-in-place (CIP) of product line and valve

H8:1 External cleaning

H7 Production finished

H6 Production

H5 Motor start (machine running without filling)

H4:2 Signal from sterilizer

H4:1 Signal to sterilizer

H3 Sterilization

H1:2 Tube sealing

H1:1 Preheating, strip applicator (SA)

Signs and Symbols

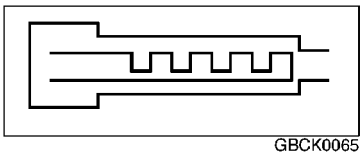 GBCK0065	Temperature air super heater	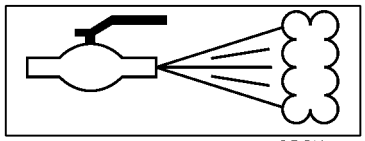 GBCK0064	Steam Barrier
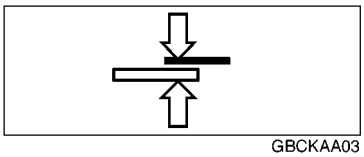 GBCKAA03	Temperature SA (Strip Applicator)	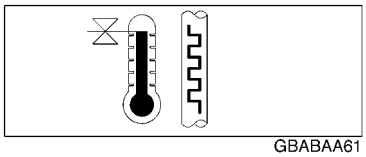 GBABAA61	Temperature tube heater
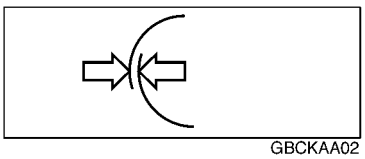 GBCKAA02	Temperature LS (Longitudinal Strip)	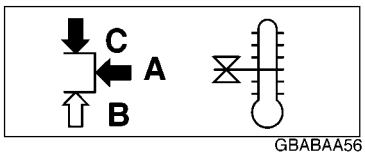 GBABAA56	Sterile air Temperature
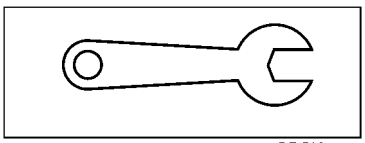 GBCK0071	Service switch (only used by service technician)	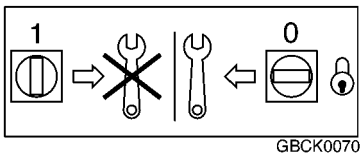 GBCK0070	Main switch 1 **ON** (live) 0 **Off** (dead)
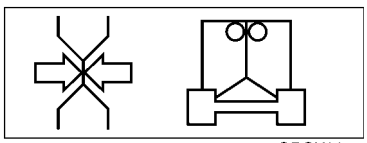 GBCK0045	TS left hand jaw (Transversal Seal)	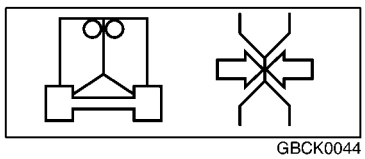 GBCK0044	TS right hand jaw (Transversal Seal)
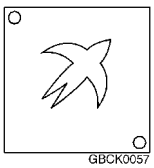 GBCK0057	Air pressure main air	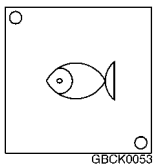 GBCK0053	Water main
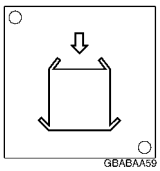 GBABAA59	Bottom flap sealing	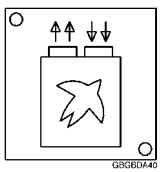 GBGBDA40	Design correction photocell, airblast

Control panel

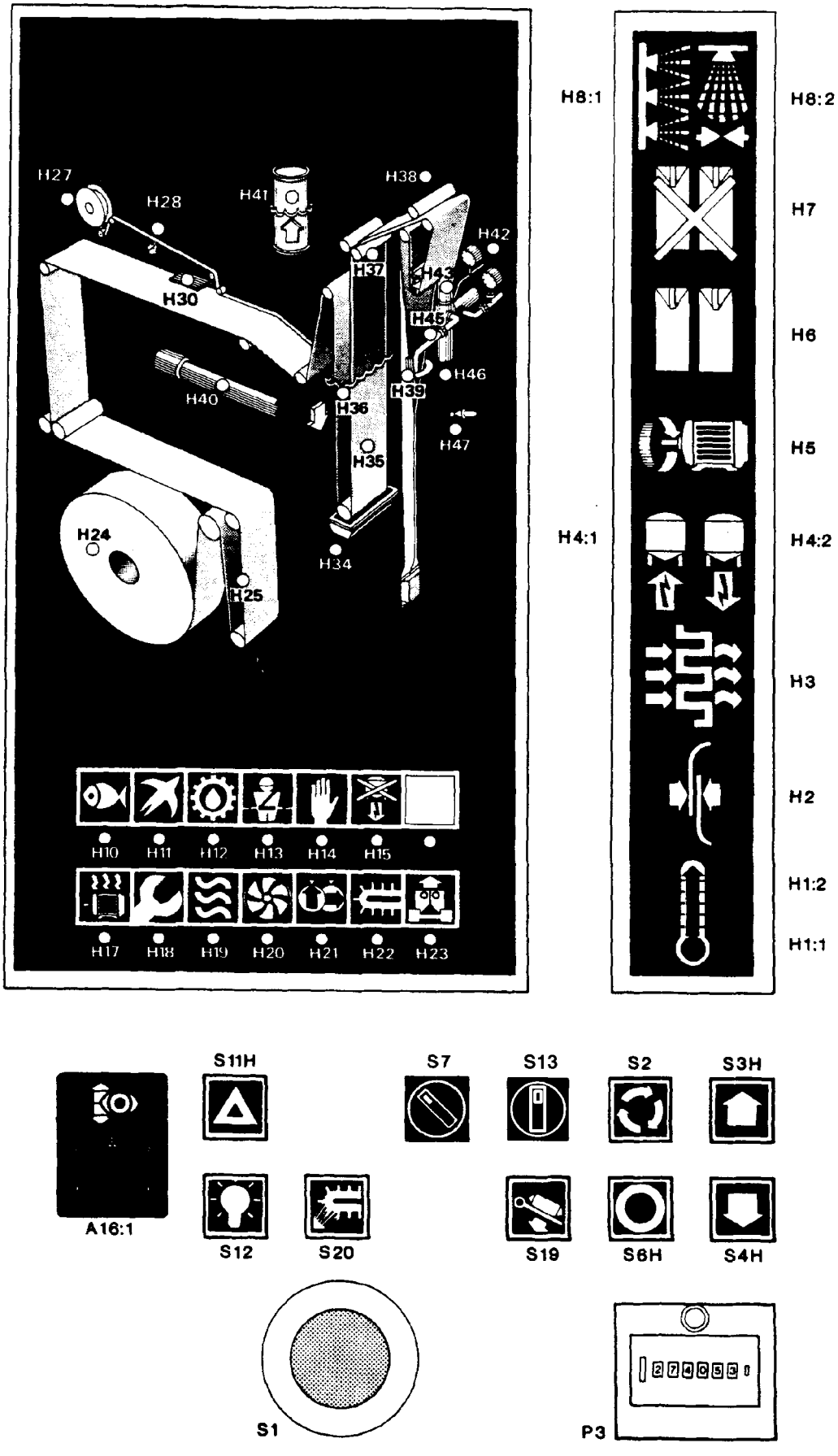

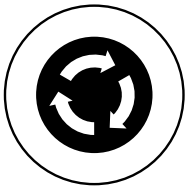
GBGBDA02P

S1

EMERGENCY STOP


GBGBDA03P

S3H

STEP UP BUTTON.
The flashing light indicate that the machine is ready for next step. Keep depressed until the light goes out.


GBGBDA07P

S2

INCHING
Is to be pressed when flashing.


GBCK0029

S19

DROP CHUTE.
As long as the button is depressed, the packages will be ejected into the drop chute instead of entering the final folder.


GBCK0022

S20

FLUSHING F.F.U.
Manual flushing of the final folder when depressed. Flushing is performed automatically during start.


GBABAA47

S11H

ALARM RESET
to be pressed when flashing.

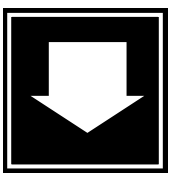
GBGBDA04P

S4H

STEP DOWN BUTTON.
This button is used to step down the machine.

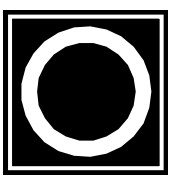
GBGBDA08P

S6H

MOTOR STOP.
The machine stops and empties the final folder automatically.

Control panel

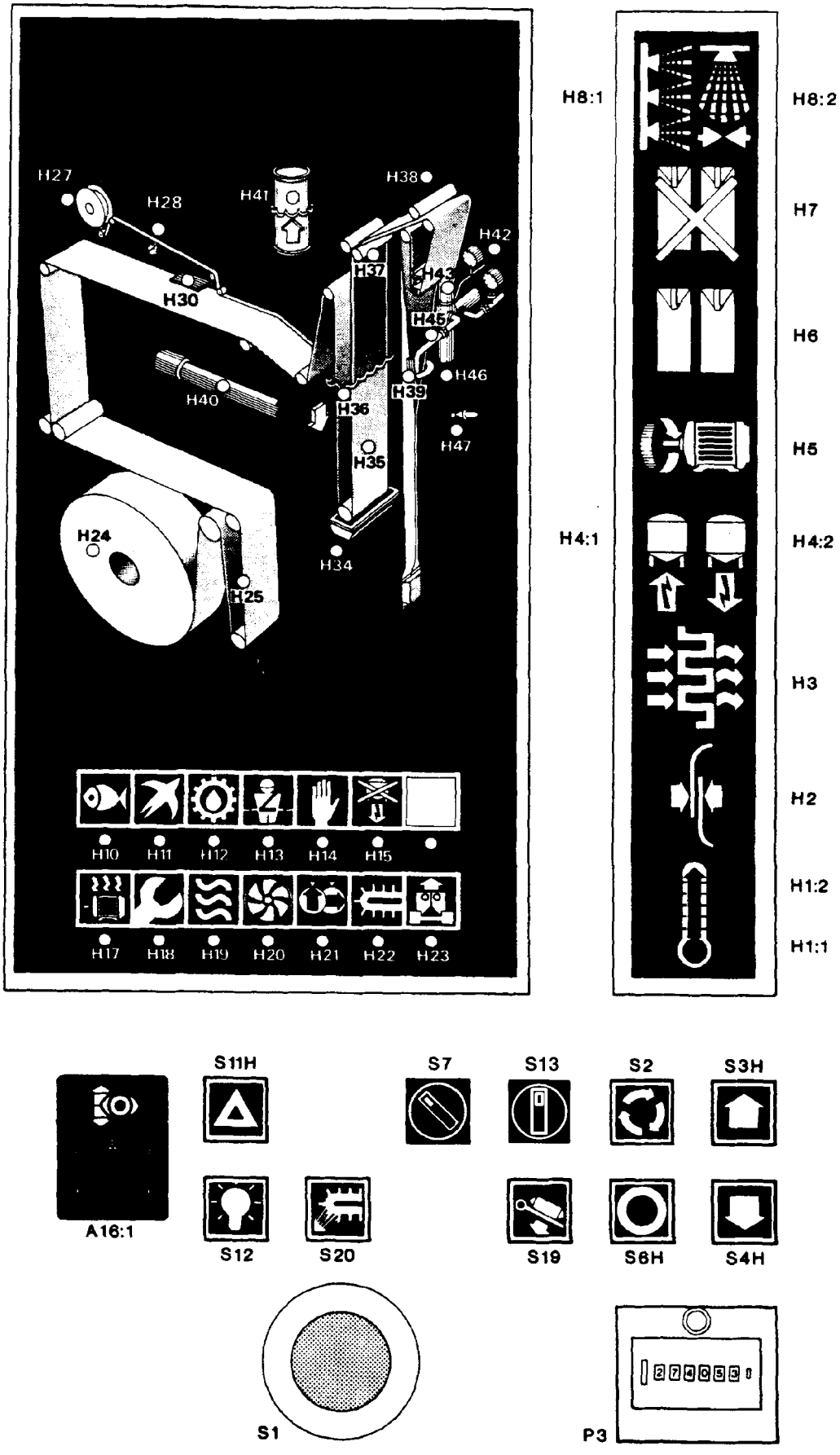


GBGBDA14P

S12

LAMP TEST.
Button to check that all lamps on the monitor panel and push buttons light up.


GBABAA62

S7

MULTI SELETOR SWITCH


GBABAA63

S13

JOG SLOW SPEED
JOG PRODUCTION SPEED

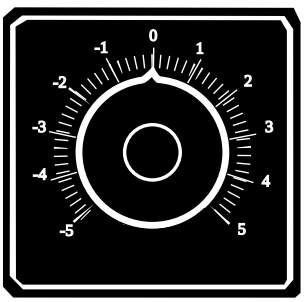

GBABBA47

A16:1

DESIGN CORRECTION POTENTIOMETER
The design adjust potentiometer is used to fine adjust the design position in relation to the jaw system. Turn the knob clockwise to move the creases downwards on the packages.

This page intentionally left blank

Preparations

Items in this section

- **Preparation before start**
- **Sterilization**

As a protective measure it is important to execute all steps in the correct order as listed in the instructions.
Otherwise different machine systems not required can be remain activated

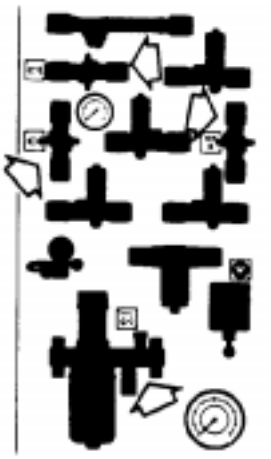

Preparation before start

1

TRHEADING OF THE PACKAGING MATERIAL WEB UP TO THE ASEPTIC CHAMBER

Before threading both air and cooling water must be turned off

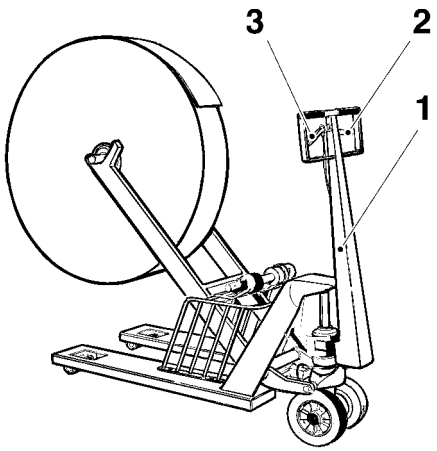

2

The reel is moved with a trolley.

Lift the reel by pumping the handle (1).

Low the reel by pressing the lever (2).

the lever (3) is used for break.



3

It is important that you disinfect your hands every time you are about to touch the packaging material or the strip or any vital machine part that comes in contact with the product.

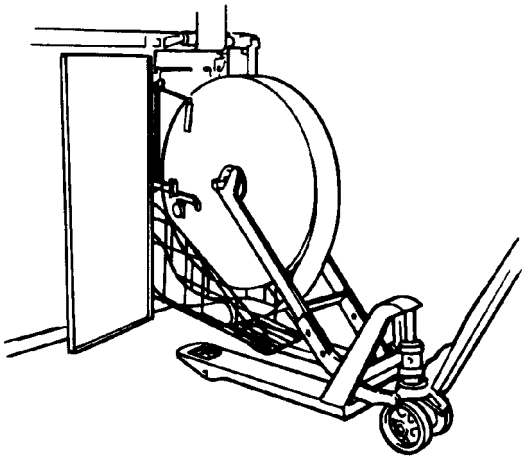

4

Pull out the cassette slowly.

Release the catch and pull out the cassette to the next stop. Put the trolley in position in front of the cassette.

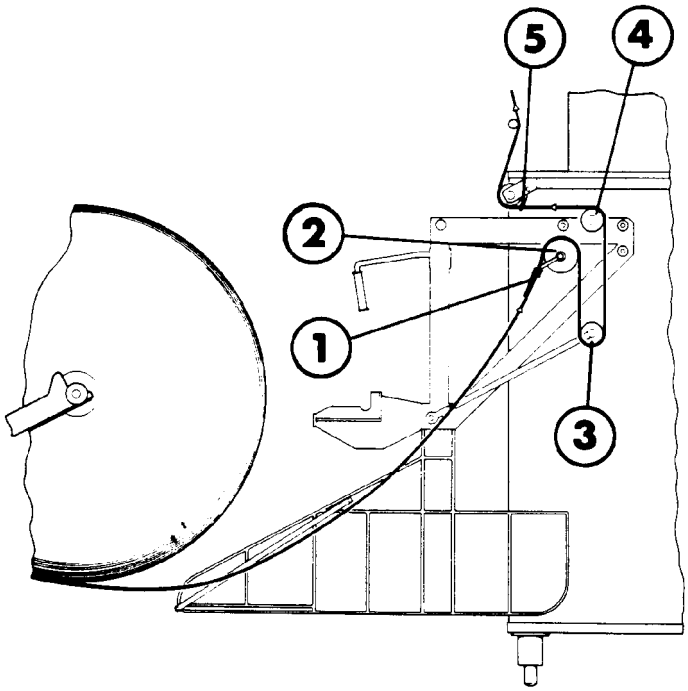

5

Round off the end of the material web with a pair of scissors.

- Thread the material web through the paper guide (1).
- Pull it round the power feed roller (2)
- under the dancer roller (3)
- over the bending roller (4)
- through the loop (5) and out of the cassette.

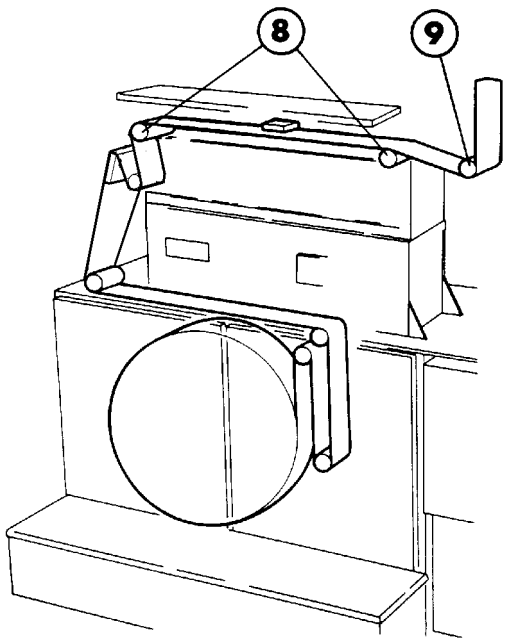

6

- Thread the material web over the bending rollers of the strip applicator (8).
- pull the material web through the strip applicator and thread it round the bending roller (9).

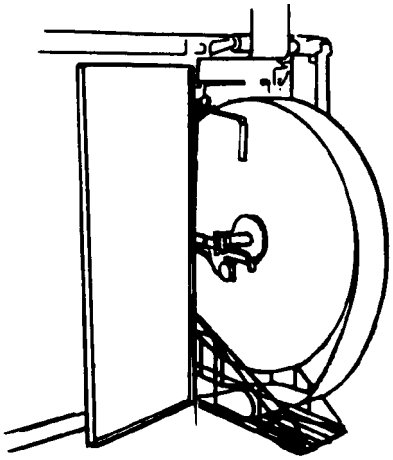

7

Push the cassette to the catch position.

Transfer the reel from the trolley over to the cassette and push the cassette slowly into the machine.

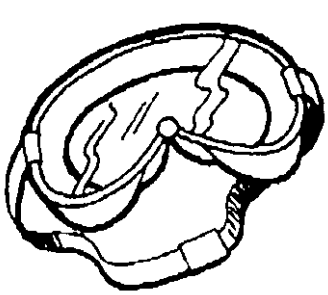

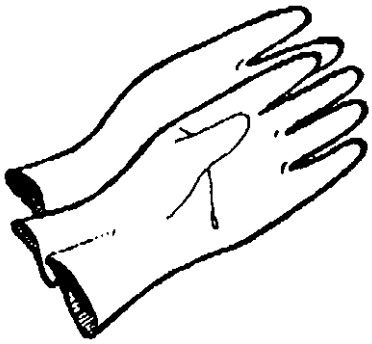

8

WARNING!

Risk of personal injury! Follow the Safety precautions.

Wear rubber gloves and safety goggles when working with sterilization liquid and packaging material that has passed through the bath, and when handling disinfected machine parts which come in contact with H_2O_2.

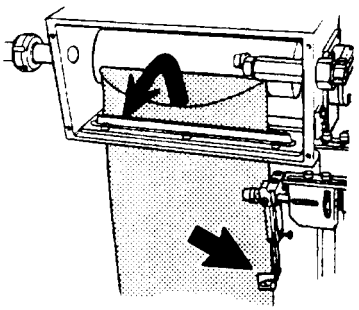

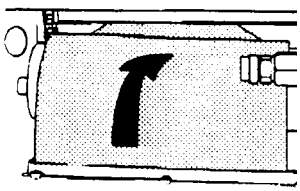

9

Remove the cover plate and open the splice detector.

Fold the material web and put it under the spiked carrier between the chains of the peroxide bath.

Also make sure that the edge of the material web is in the paper guide.

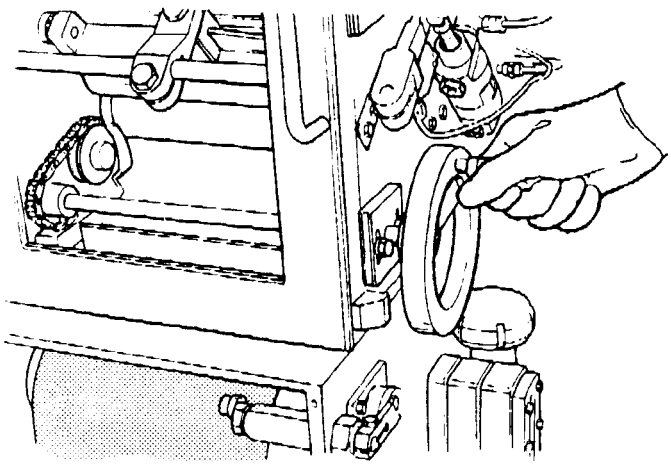

10

Crank the material web through the sterilization bath. When the end of the web comes out, remove it from the carrier and crank the carrier back to its starting position immediately.

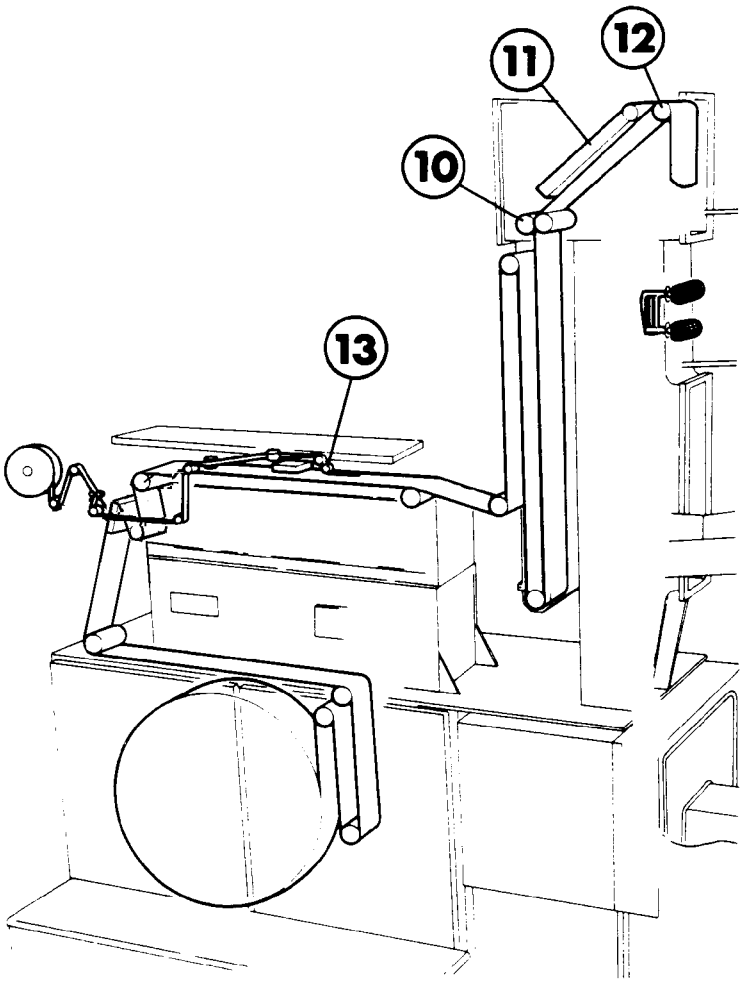

11

Thread the material web through the squeegee rollers (10).

- through the air knife (11)
- and up over the bending roller (12)

Fit the cover plate of the superstructure and close the splice detector.

Thread the LS-strip to the pressure roller (13).

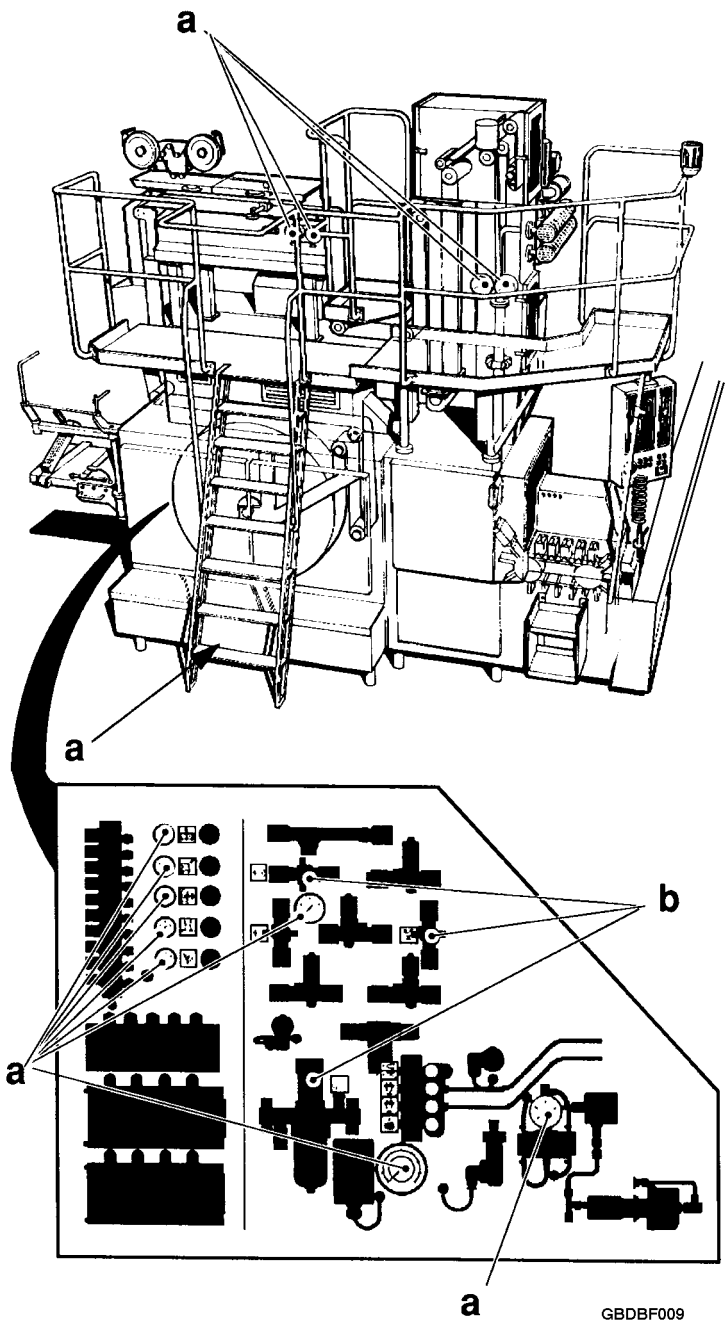

12a

Check that all pressure gauges (a) indicate zero. (see also item 12c on next page)

12b

Turn on the supply of compressed air and cooling water (b).

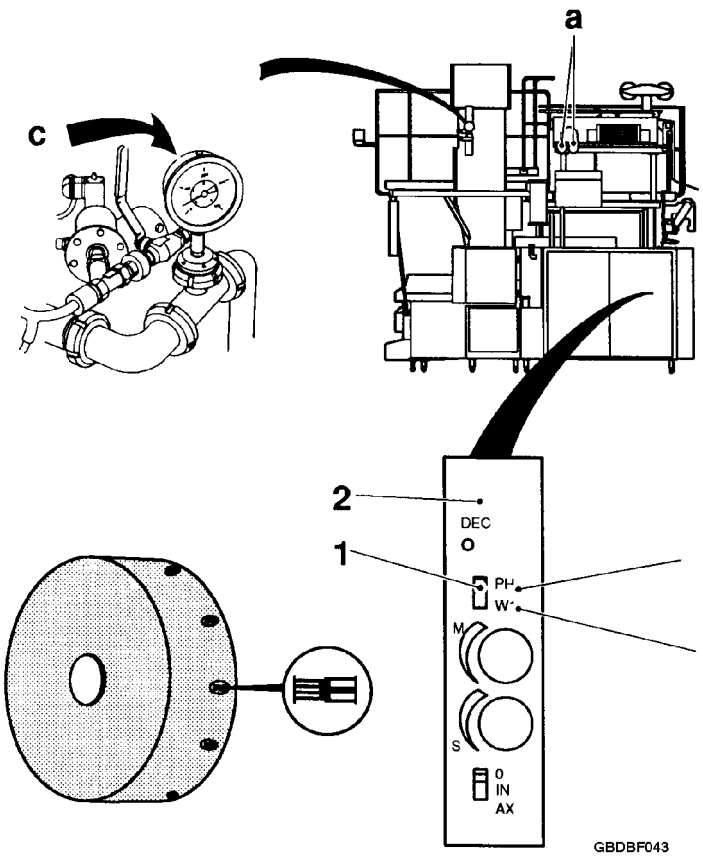

12c

Open for steam.

12d

Make sure that the selector (1) on the code circuit board (2) is positioned to the correct design reading system.

PH = packaging material **with** register code

WI = packaging material **without** register code

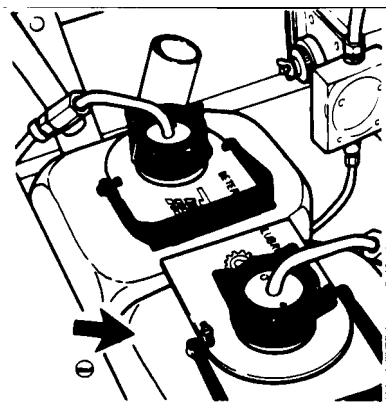

13

Risk of personal injury! Lubricant. Follow the Safety precautions.

Check that there is sufficient with oil in the tank. At least 1 litre left.

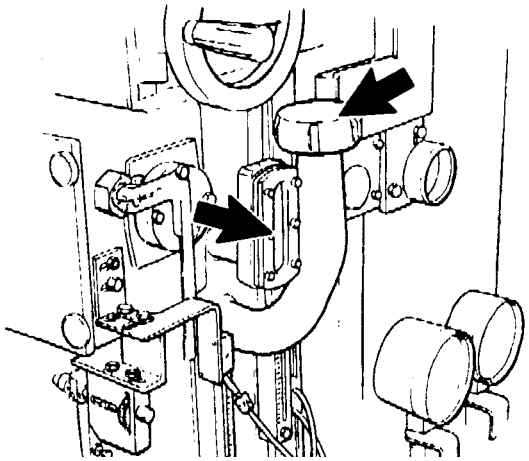

14

Check the level in the water tank. If the level is low, top up with distilled water.

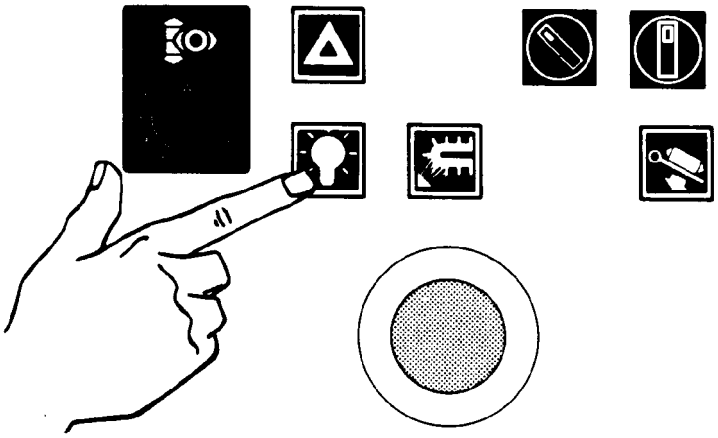

15

LAMP TEST. All signal lamps designated “H” and signal lamp A16:1 according to section General description, are to light up.

Any faulty bulb must be replaced.

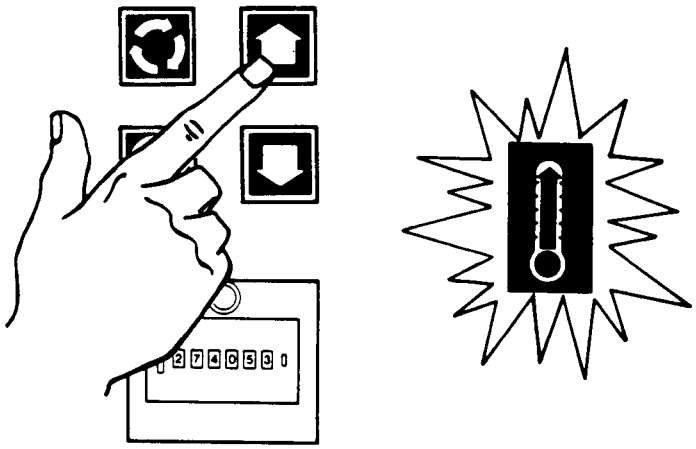

16

set the package counter to zero.
Push PROGRAMME UP.

THe Lower Half Of The Symbol Lights Up With A Fixed Light.

Pre-heating of the strip applicator (SA) element starts and goes on for 5 - 10 minutes.

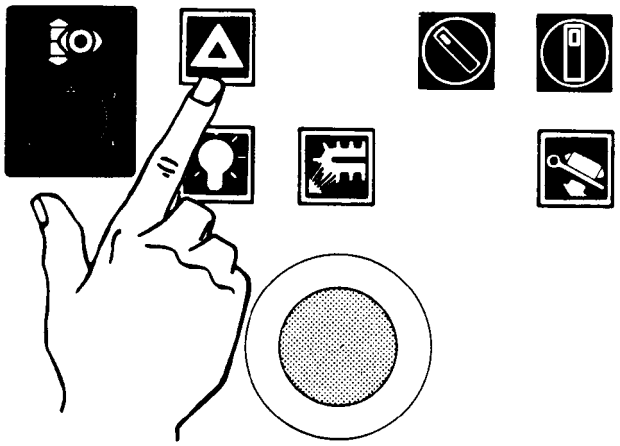

17

Push ALARM RESET.

The signal lamp (H30) for the strip applicator (SA) element gets fixed light.

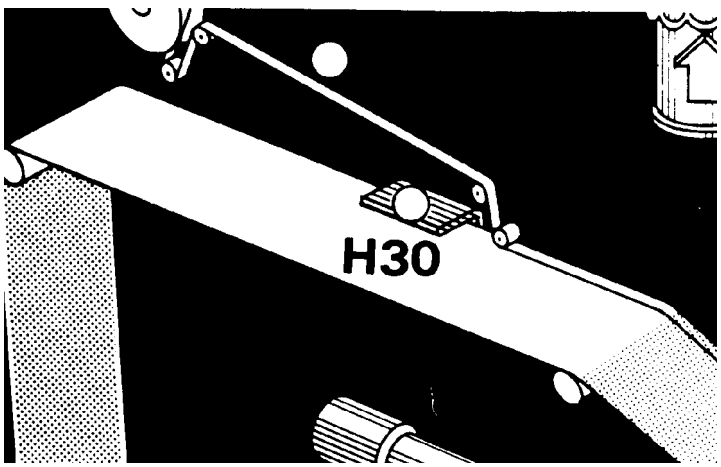

18

When the heating element of the strip applicator (SA) has reached working temperature, the signal lamp (H30) on supervision panel will go out.

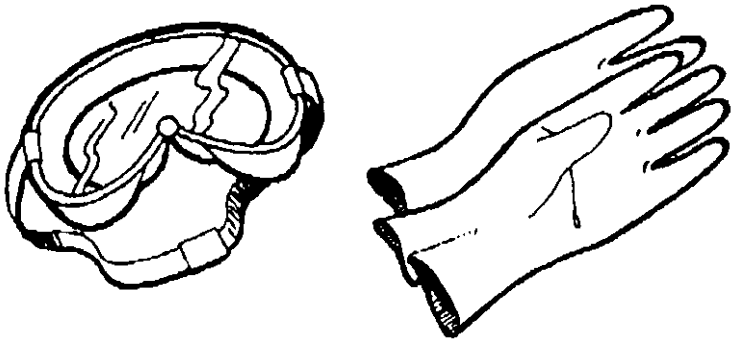

19

WARNING!

Risk of personal injury! Follow the Safety precautions.

Wear rubber gloves and safety goggles when working with sterilization liquid and packaging material that has passed through the bath, and when handling disinfected machine parts which come in contact with H_2O_2.

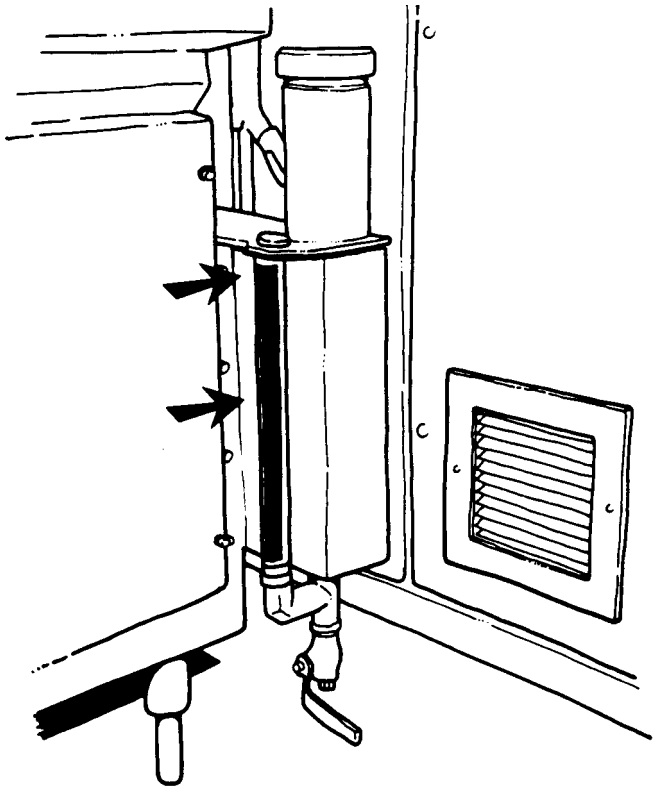

20

WARNING!

Risk of personal injury! Follow the Safety precautions.

Check the level of the peroxide tank. If necessary refill according to following instruction:

- When filling the tank with **cold** peroxide before PROGRAMME UP is pushed the first time, the maximum level point is 2 cm below the green area in the top of the level glass.
- When refilling during production the maximum level point is the top of the green area in the middle of the level glass.

Note!

Never fill above this maximum level point.

Check the hydrogen peroxide concentration, according to section.Sterilization liquid This check is to be done at least every 8 hour.

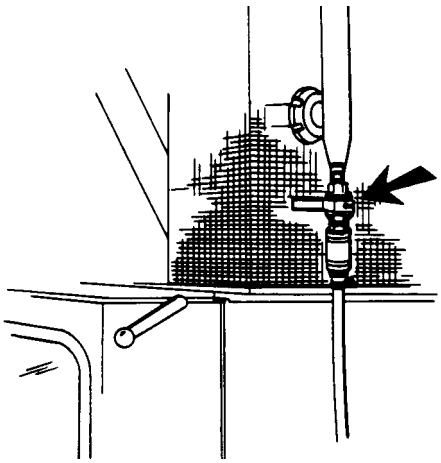

21

Drain the cleaning pipe by opening the valve.

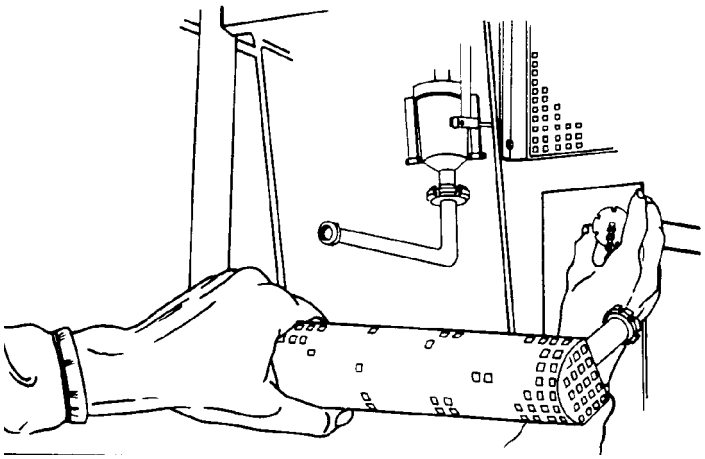

22

Remove the product pipe and put on the cap.

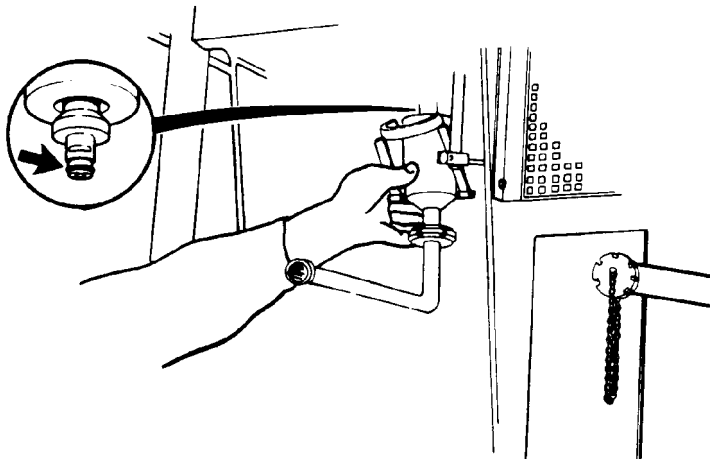

23

Remove the cleaning cup. Check that the O-ring of the filling pipe is intact.

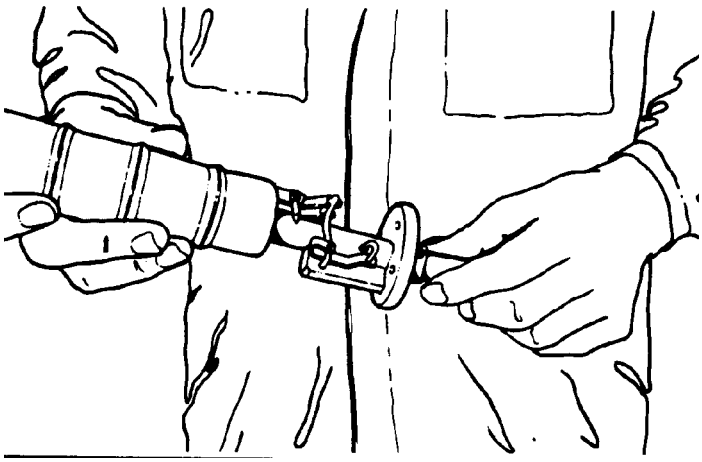

24

Check that the mechanism of the lower filling pipe moves freely and that the butterfly valve is closed when the float is in its top position.

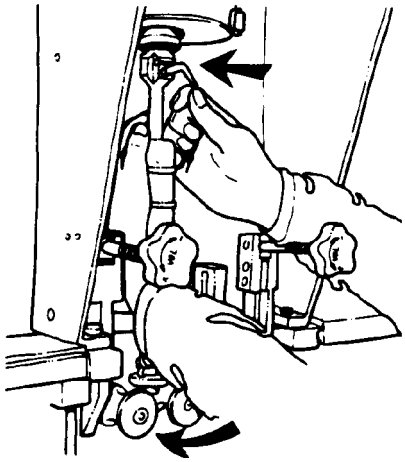

25

Fit the lower filling pipe without rinsing it.
Do not forgot the locking pin.

Check that the tube support rollers rotate freely.

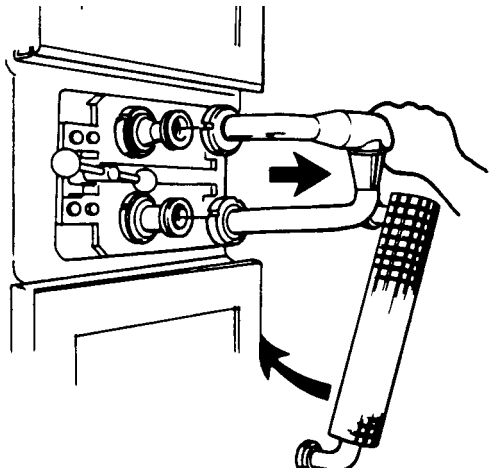

26

Remove the cleaning pipe.
Check the gaskets.

Fit the sterile air pipe.

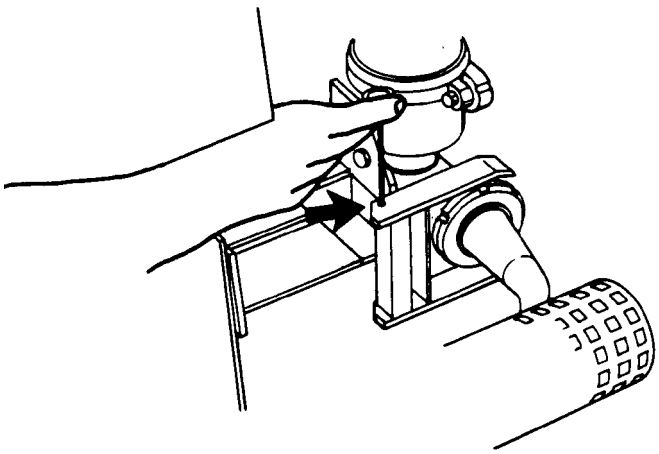

27

Fit the product pipe.
Engage the swivel arm and lock it with the pin.

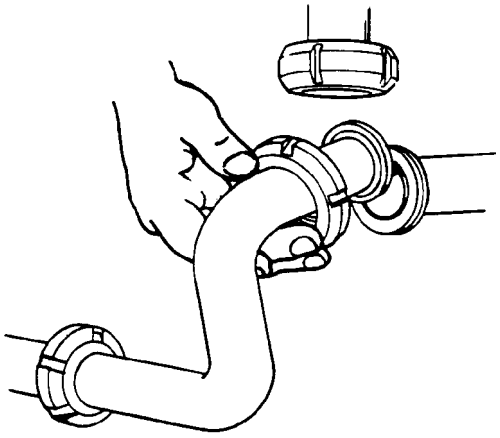

28

Remove the incoming cleaning pipe.

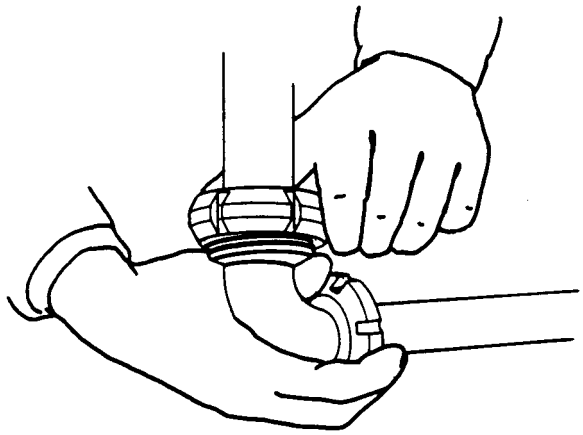

29

Connect the elbow pipe to the sterile air pipe.

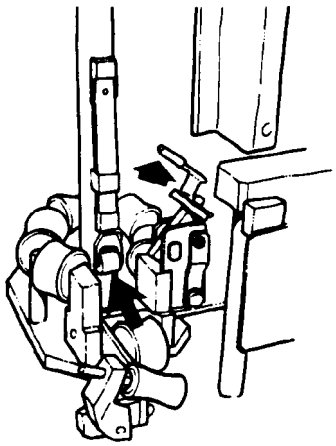

30

Raise the guide pin.

Check that the LS pressure roller is clean and without defects.

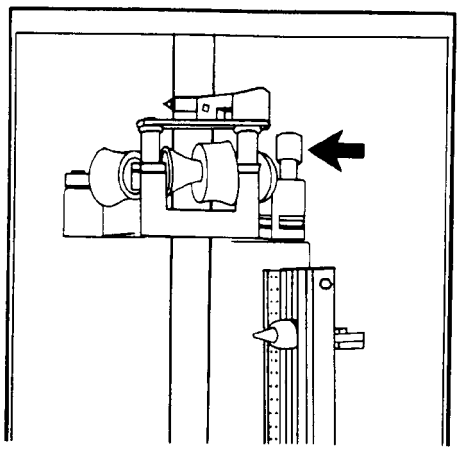

31

Open the split forming ring.

Round off the end of the material web with a pair of scissors.

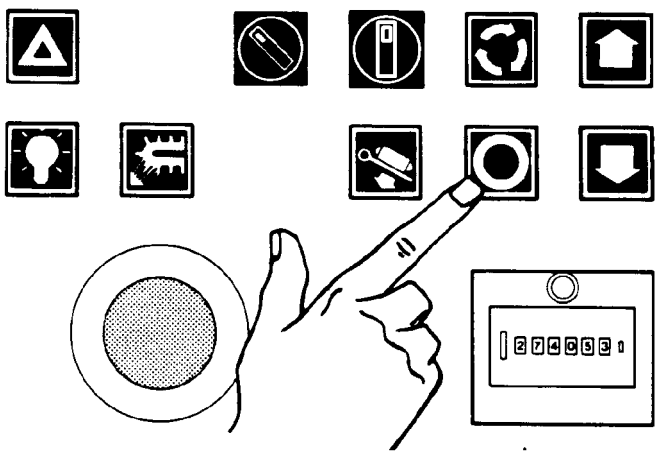

32

Close the safety doors and check that the symbol for safety monitor is not activated. Press the SHORT STOP button. The driven bending roller will then start, making it easier to pull down the packaging material. If the material has not been pulled down within 2 min., restart is done with SHORT STOP button.

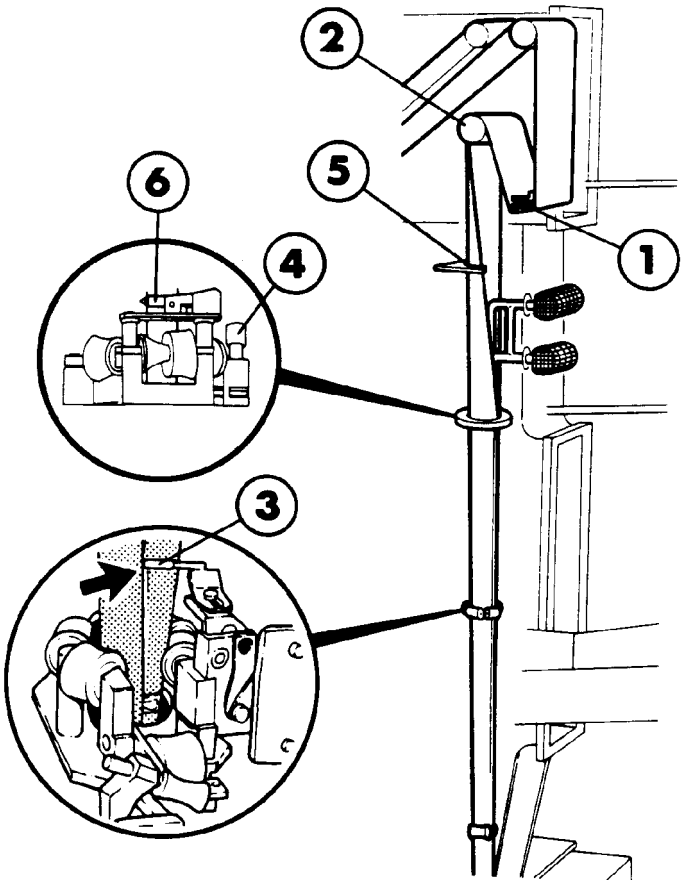

33

Pull the material web through the aseptic chamber.
Swing out the bending roller (1) to make it easier to thread the material web over the bending roller (2), through the forming rings and down towards the jaws.
Pull the material web down to the jaws.
Lower the guide pin (3). The material web must pass on either side of the guide pin.
Close the split forming ring (4).
Check that the material web is correctly positioned in the paper guide (5).
Check that the guide roller of the split forming ring (6) is lowered and that the material web passes on the correctly side of the roller.

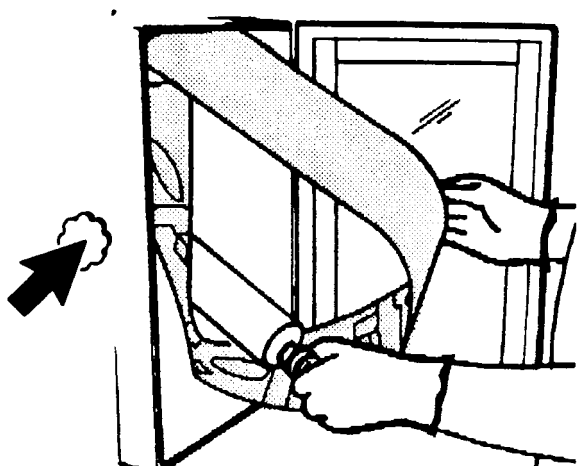

34

Position the material web around the bending roller and swing it in.

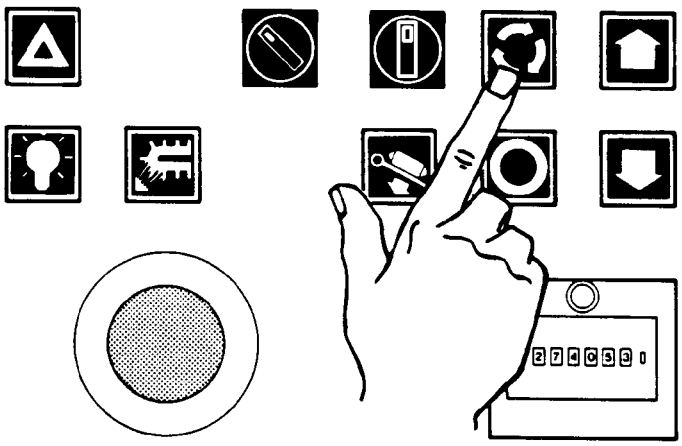

35

Select SLOW INCHING and inch the machine until the jaws grip the material web and pull it down.

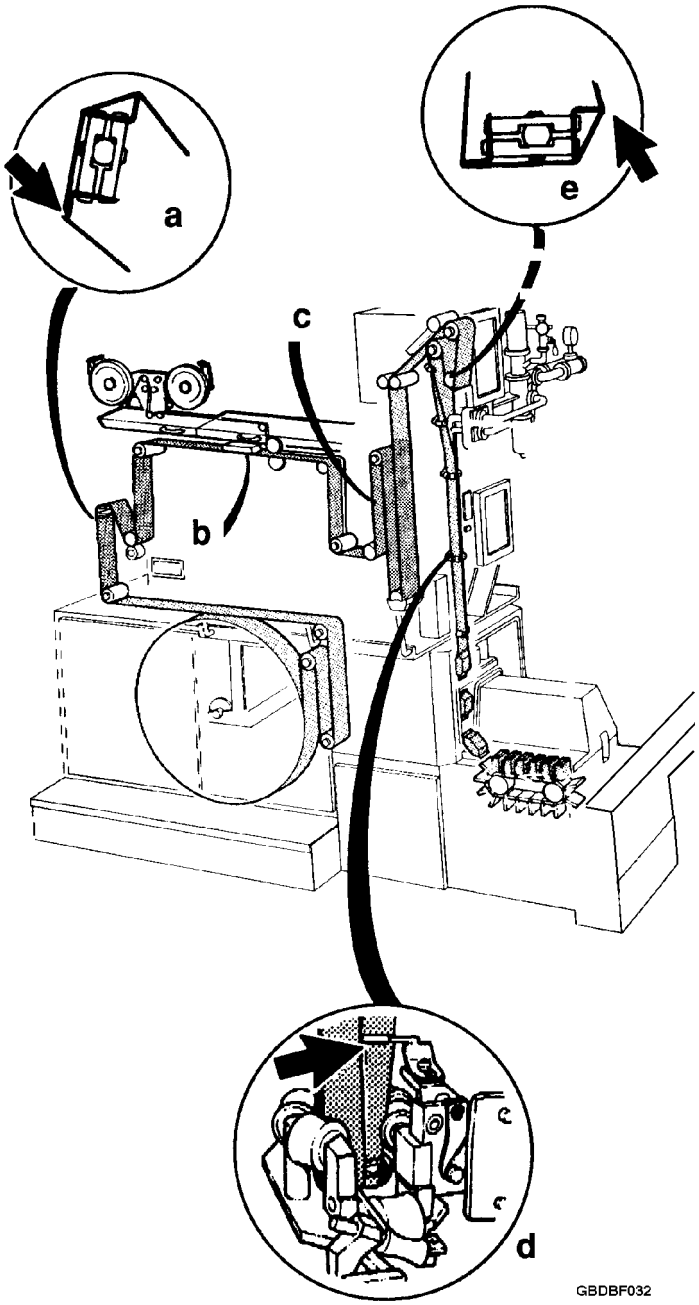

36

Check that the packaging material runs correctly at all the marked points.

a) The top creases are to match the short edge of the crease wheel.

b) The material web is to be correctly positioned at the strip guide and the paper guide.

c) The material web is to be correctly positioned at the paper guide and the splice detector.

d) The left hand edge of the web must overlap the right hand edge.

e) The top creases are to match the short plates of the design correction crease wheel. When adjusting turn the design correction crease wheel so that the edge of the short plates coincide with the top creases of the material web.

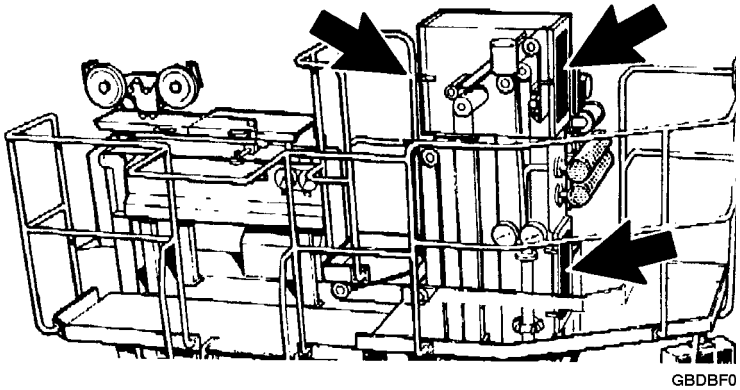

37

Close the doors of the aseptic chamber.

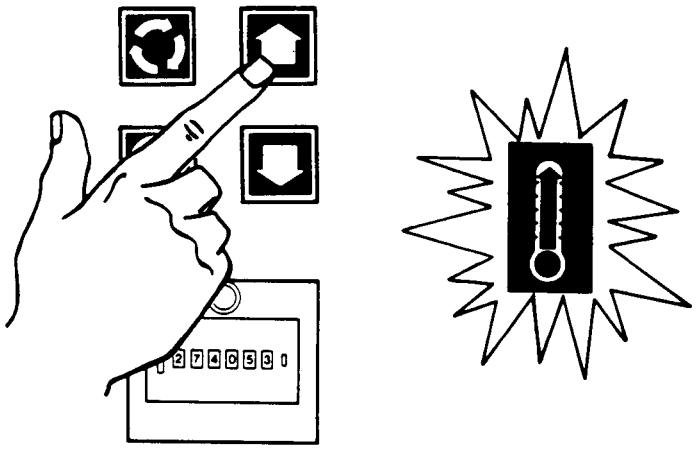

38

Push PROGRAMME UP.
Keep the button depressed until the symbol lights up with fixed light.

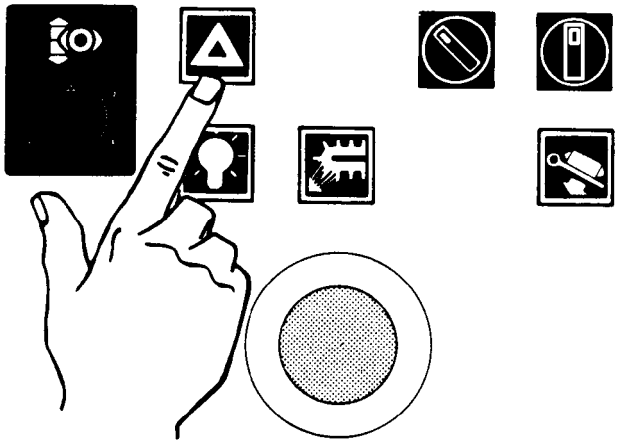

39

Push ALARM RESET.

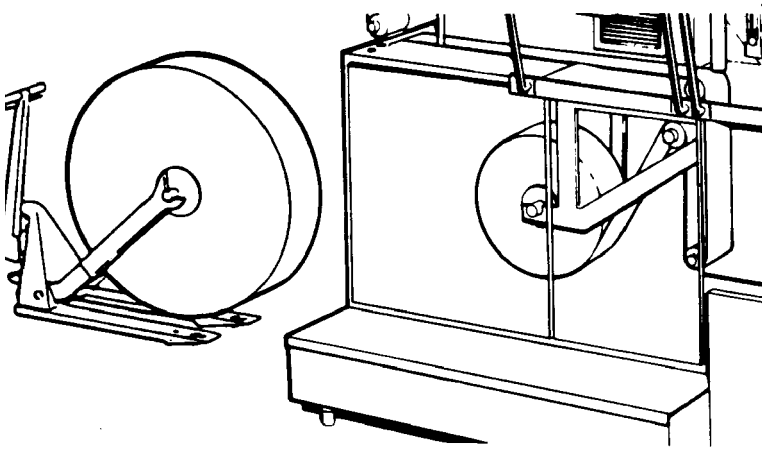

40

Check that there is packaging material for at least 10 more minutes of production, so that you don’t have to change reel during start-up.

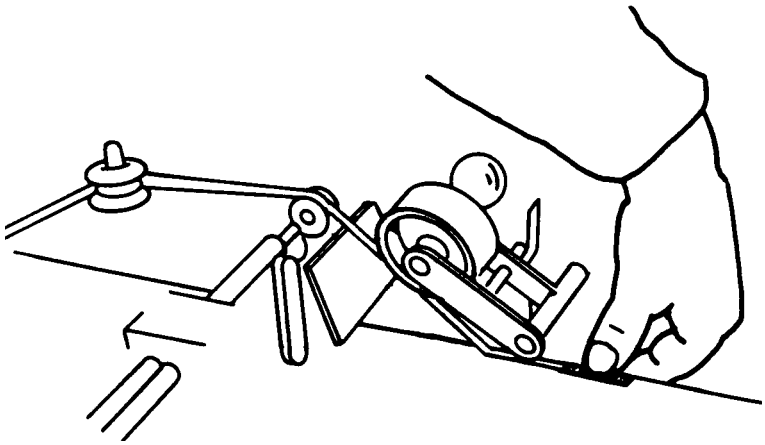

41

Attach the LS strip to the edge of the packaging material with a piece of adhesive tape.

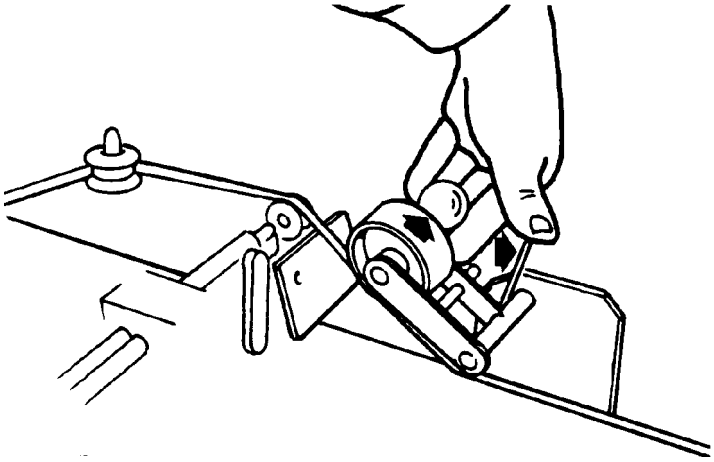

42

Engage the spring-loaded pressure roller by lifting the roller and loosen its lock.

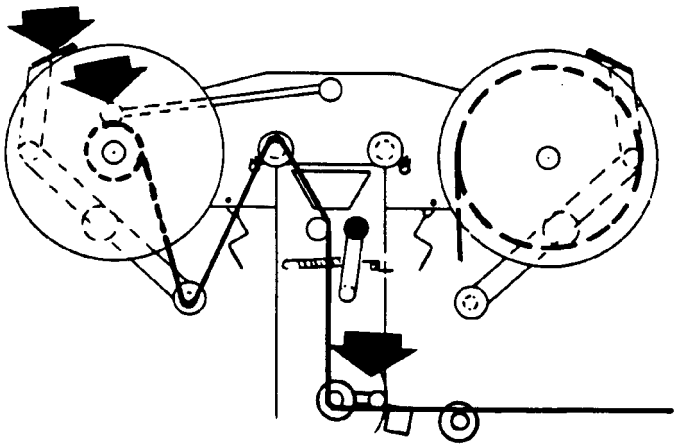

43

Check that the brake and supply monitor are in production position, and that the strip sits correctly in the strip break monitor.

During production a new strip reel always will be fitted on the opposite reel bracket.

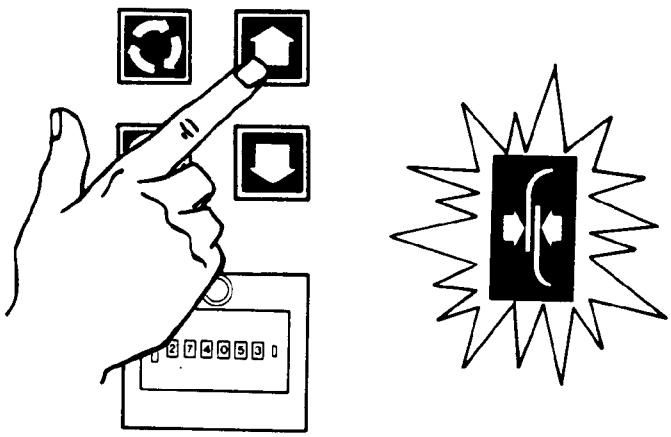

44

When the TUBE SEALING symbol and the PROGRAMME UP button start to flash, push the button.

The machine now inches forward without stopping until the material tube is sealed with the LS strip.

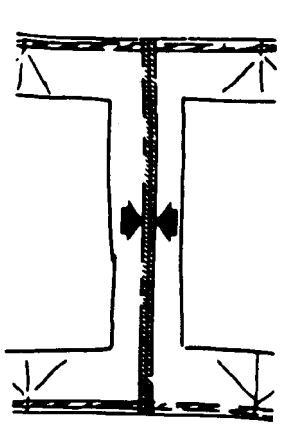

45

Pick out the last package inched out of the machine.

Check that the LS strip is in the right place and properly sealed.

46

Note!

When the material tube is sealed (TUBE SEALING lights up with fixed lights), the tube has cooled for 10 minutes and the air super heater has reached working temperature, the STERILIZATION symbol for next step starts to flash

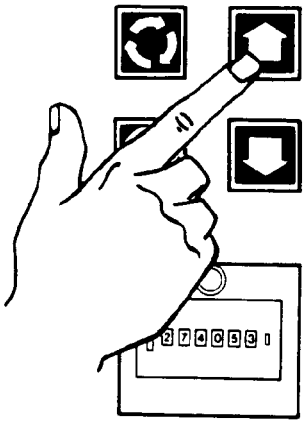

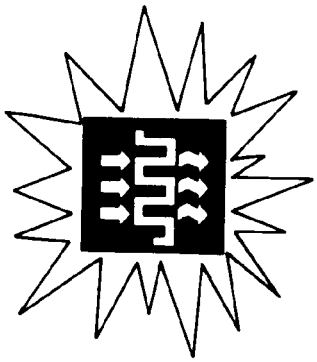

Sterilization

1

When the STERILIZATION symbol begins to flash push PROGRAMME UP.

Sterilization will commence, and the symbol lights up with fixed light.

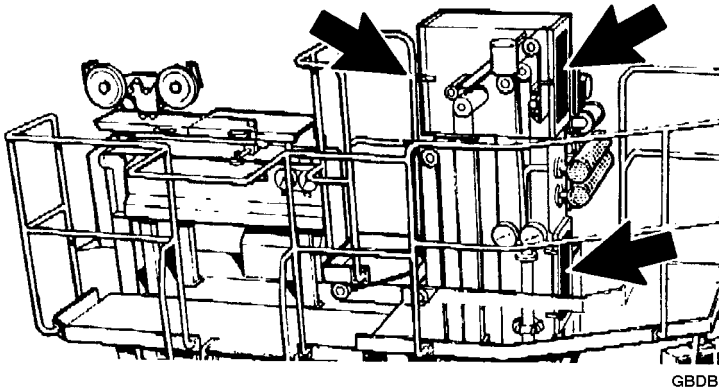

2

Moisture should form on the doors of the aseptic chamber. This is sterilization liquid being sprayed into the chamber.

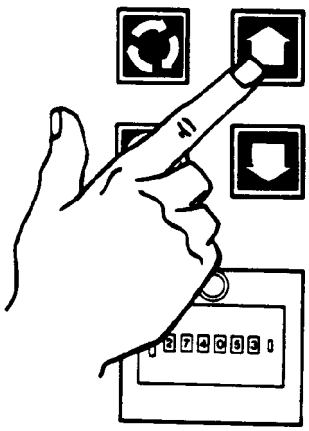

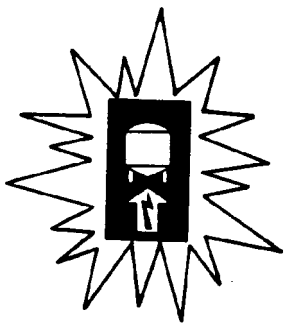

3

The sterilization time is 25 minutes. If any alarm for “LS-nozzle incorrect temp.”, acknowledge this alarm.
After sterilization the SIGNAL TO STERILIZER symbol and the PROGRAMME UP button begin to flash. Push the PROGRAMME UP button. The symbol SIGNAL TO STERILIZER lights up with fixed light.

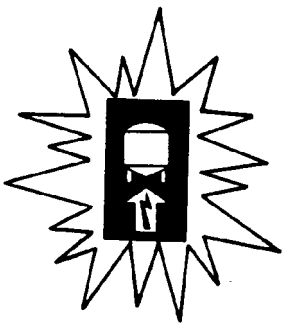

4

Wait for fixed light in the SIGNAL FROM STERILIZER symbol before you continue the programme.

This page intentionally left blank

Start

This section describe how to start the machine after “After pruduction care” Preparation described in section “Preparation” must have been carried out, as well as sterilisation, see section “Sterilization”

start afterstop, see section “Stop”.

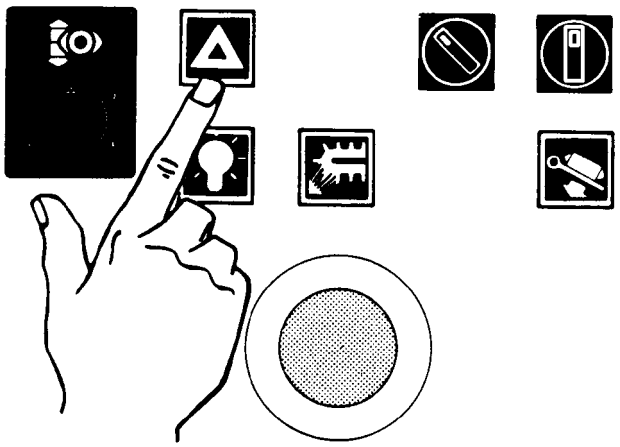

1

Before starting the machine, check that all the signal lamps on the supervision panel go out when ALARM RESET is pushed.

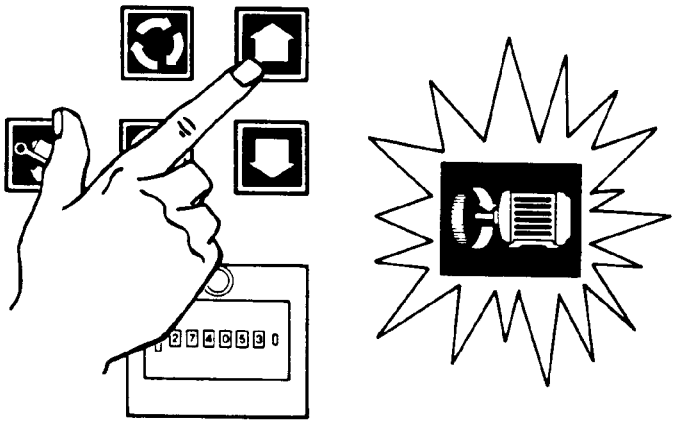

2

When the MOTOR START symbol and PROGRAMME UP button begin to flash, it is time to start the machine.

Push PROGRAMME UP and keep the button depressed until the drive motor starts.

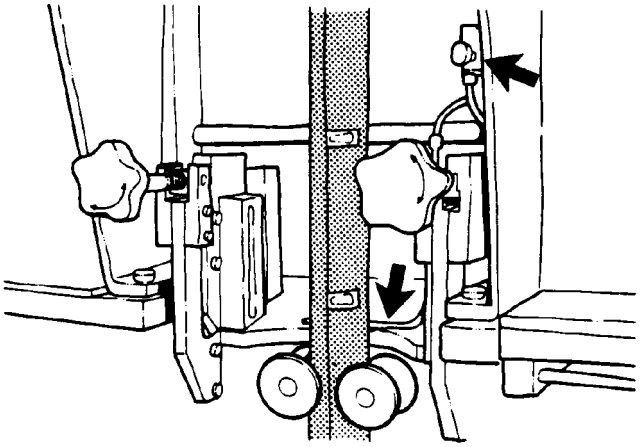

3

Check that the tube flushing is operating. If necessary adjust with the knob.

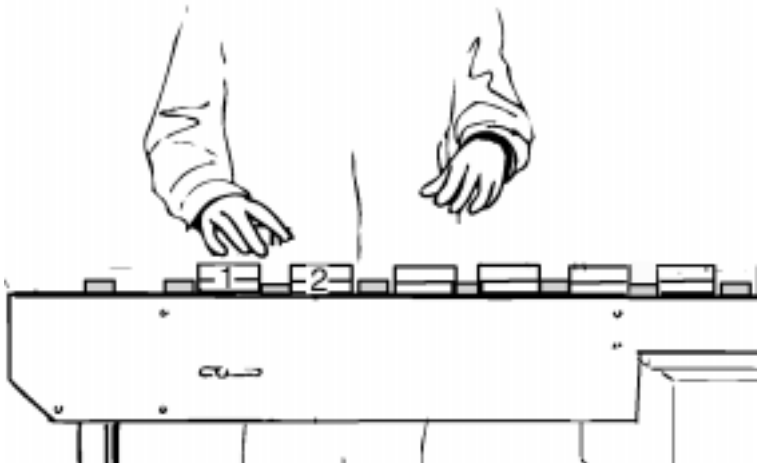

4

Pick out the first five package discharged from the final folder and number them.
On three of these packages, carry out a destructive test, see section Package checks.
The fourth and fifth packages are put aside for the laboratory.

Production checks

These checks are to be made continually when the machine is in step Production.

The operator must stay close to the machine during Production.

When there is a fault or a fault cannot be eliminated, call technician.

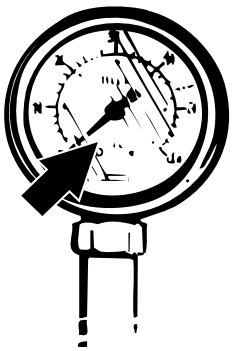

1

Check that all pressure gauges indicate the correct settings.

See section **Technical data.**

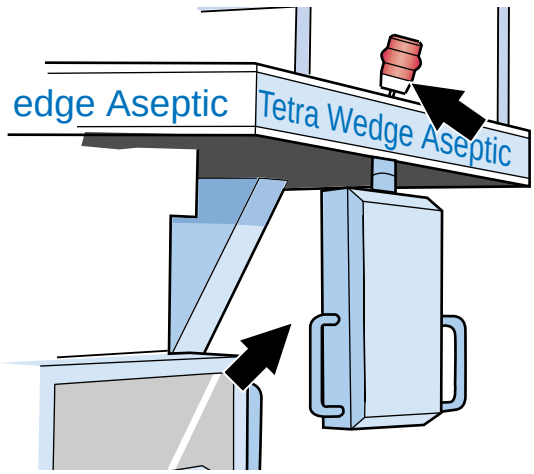

2

Check that the warning beacon is not flashing.

If it starts flashing, look at the monitor panel and take action indicated by the signal lamp.

See section **Alarm/Trouble shooting**.

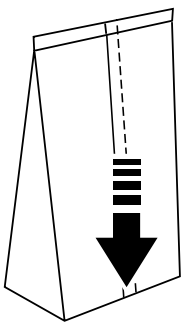

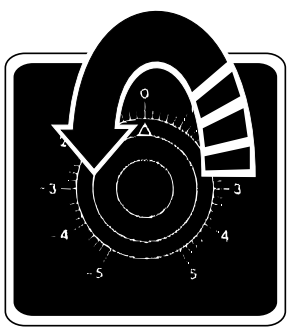

3

Check that the creases are correctly positioned on the package.

Turn the knob counter-clockwise to move the creases downwards on the package.

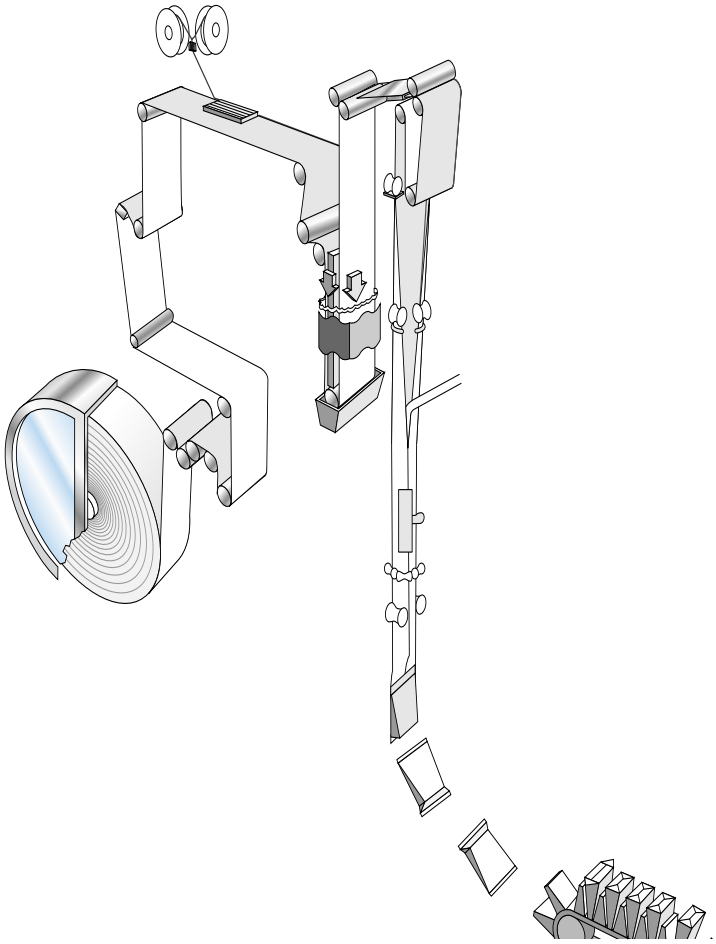

4

Check that the packaging material web and the LS strip runs correctly through the machine. Adjust as required.

If required, adjust the threading, see section **Preparation**.

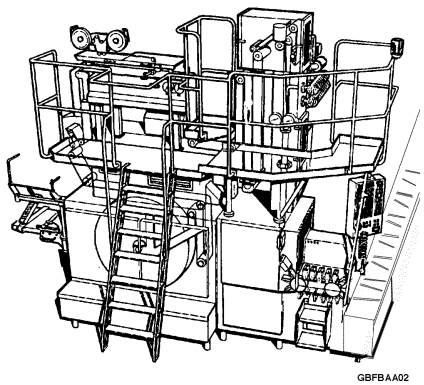

5

Check that all doors are closed and that all safety covers are fitted.

The doors of the electrical cabinet must be closed to ensure sufficient cooling.

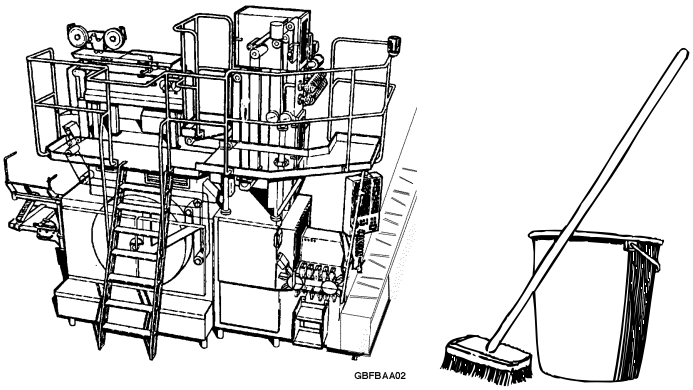

6

Make sure that the machine and the area around it is clean.

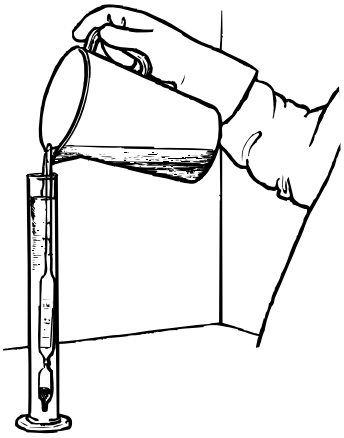

7

WARNING!
Risk of personal injury!
Peroxide! Follow the Safety precautions.

Check the hydrogen peroxide concentration, see section **Sterilization liquid**.

This check has to be carried out at least every eight hours of operation.

8

This page intentionally left blank

Package checks

Use these checking methods as minimum requirement to establish that the machine is producing good sealed packages.

If there is the slightest hint of fault, pick out more packages for further checking.
Whenever a fault cannot be eliminated, call a technician.

Packages should also be picked out for laboratory tests.

This section is divided into:

- **Non-destructive checks**
- **Destructive checks**
- **Evaluation of TS**
- **Evaluation of LS**

When the machine runs in production:

package 1 *is formed in the LH jaw pair*

package 2 *is formed in the RH jaw pair./*

This is not valid for the first packages after start.

Checking intervals

For the destructive checks, select the first two (consecutive) packages.
For the non-destructive checks, select two more packages.

Mark each package to know by which jaw pair it was made.

Also check the packages at intervals according to internal quality procedures.

Tools needed

A pair of scissors

Phase / Check	Start	Packaging material splice	LS strip splice	IS strip splice	Tab strip splice
Non destructive checks	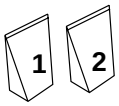	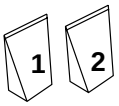			
1 Flaps	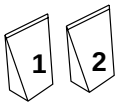	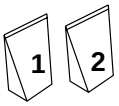			
2 Crease lines	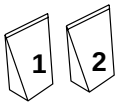	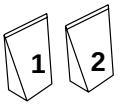			
3 Overlap					
4 Cut open	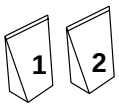	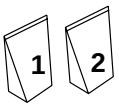	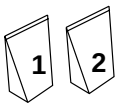	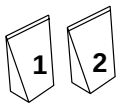	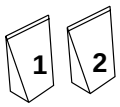
5 TS	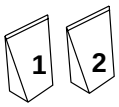	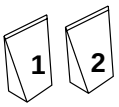			
6 LS position	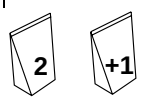 *	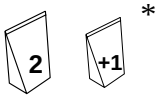 *	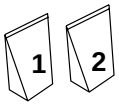		

Non-destructive checks

Pick out and check the first two consecutive packages after:

- every start
- splicing of packaging material

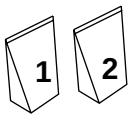

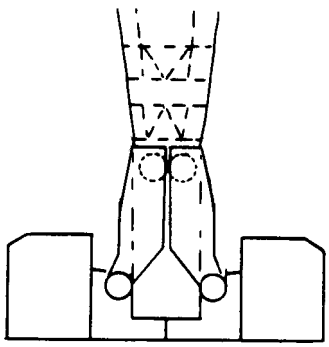

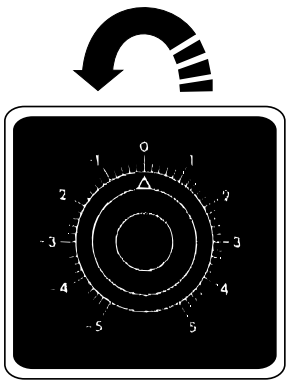

1

Check that the bottom creases are correctly positioned.

Setting of printed design

If required, adjust with the knob.
Turn the knob (arrow) anti-clockwise to move the creases downwards on the package.

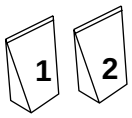

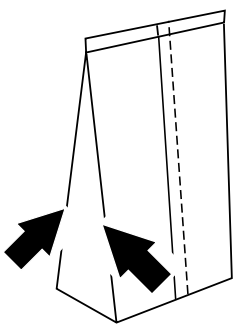

2

Check the shape of the packages.

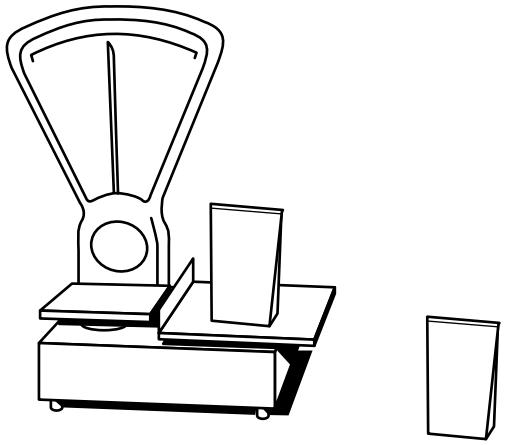

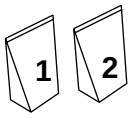

3a

Weigh the packages, and record their weights and weight deviations.

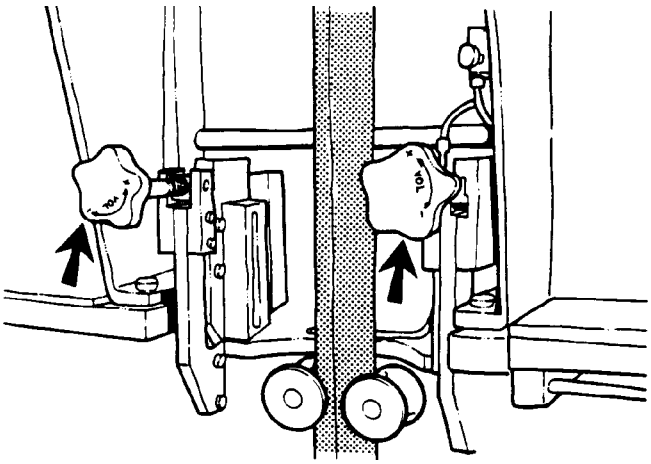

3b

If required set the weight with the two knobs.

Turning the knob towards PLUS increases the package weight, and towards MINUS reduces weight.

After setting, pick out new packages and check.

Destructive checks

Pick out and check packages according to *Checking intervals*.

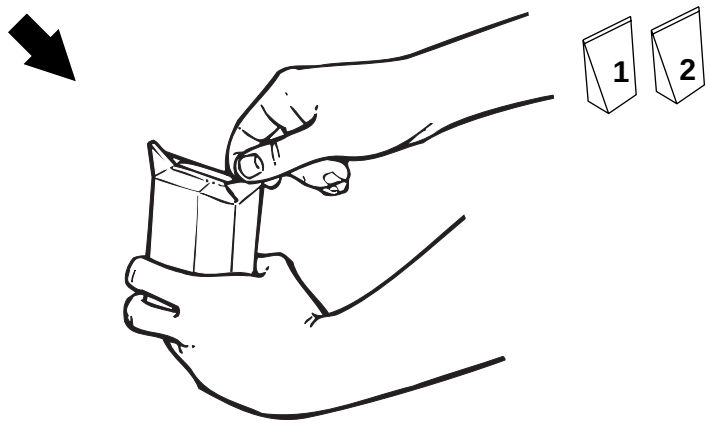

1

Flaps

Check that the flaps are properly sealed.

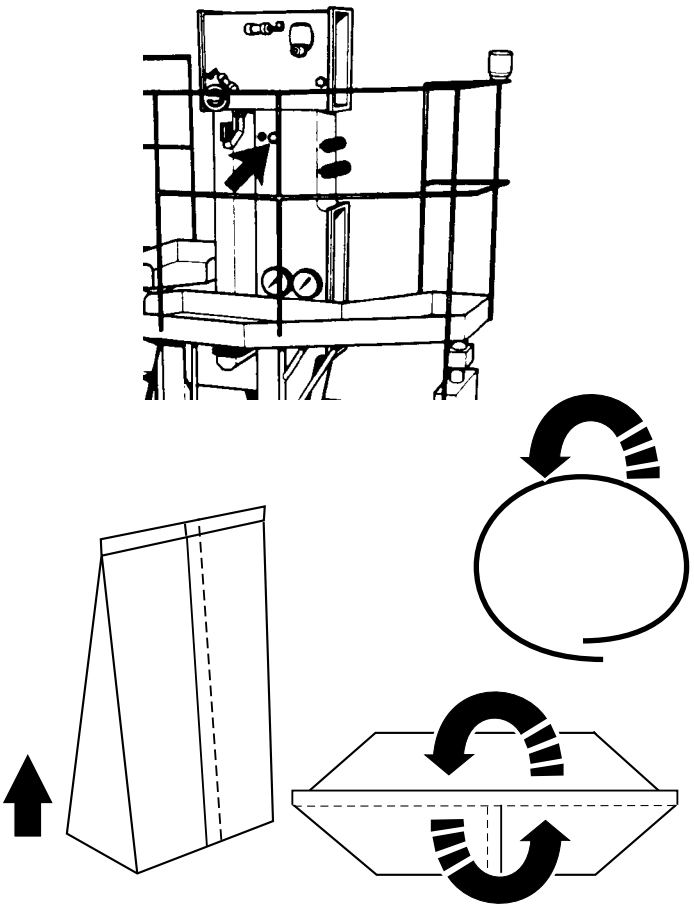

2

If required, adjust the crease position as follows:

Turn the tube guide in either direction. This is done by means of the knob on the superstructure.

After adjustment, pick out new packages and check.

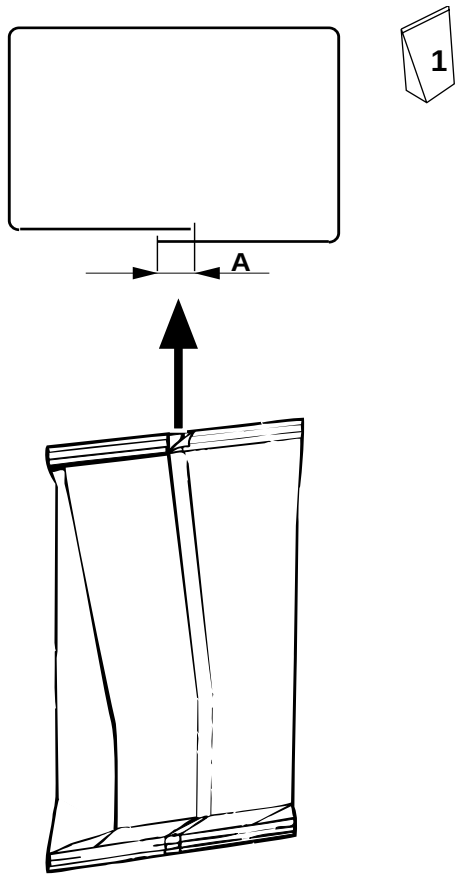

3

Overlap

Check the width of the overlap, distance A.

Package	A (mm)
200s	4

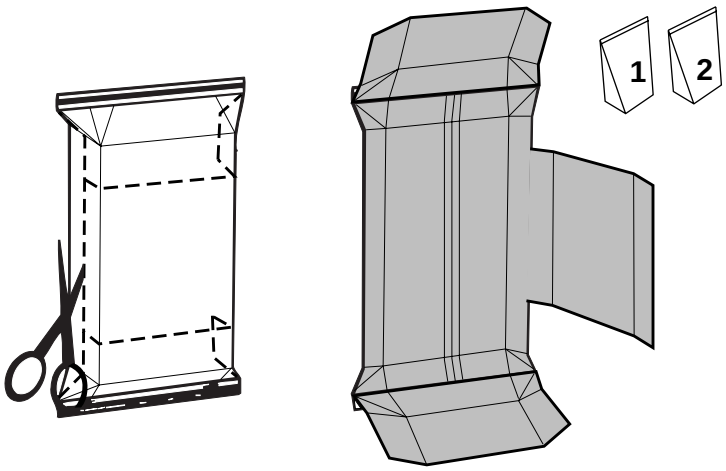

4

Cut open

Cut open the packages as illustrated.

Rinse and dry the packages.

Check the outside and inside surfaces of the packages for scratches or other possible defects.

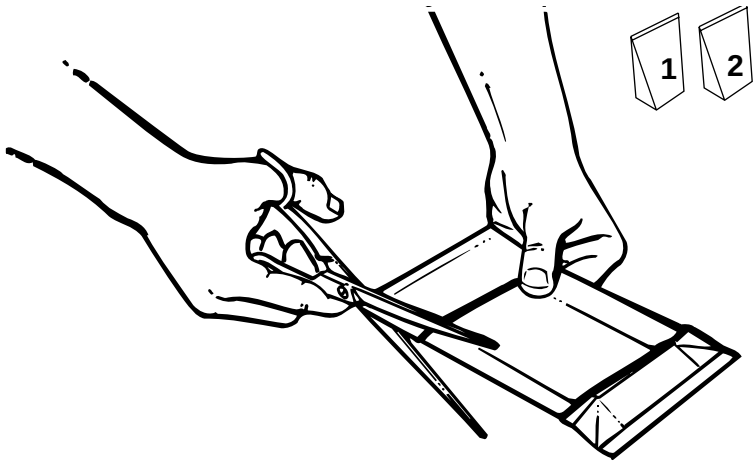

5a

TS

Cut off about 1 mm at right angles to the TS on each side of the package.

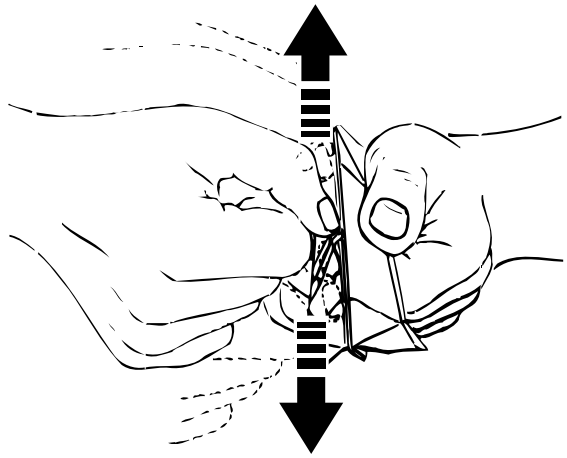

5b

Bend the TS and check that there are no lumps or ridges in the sealing area.

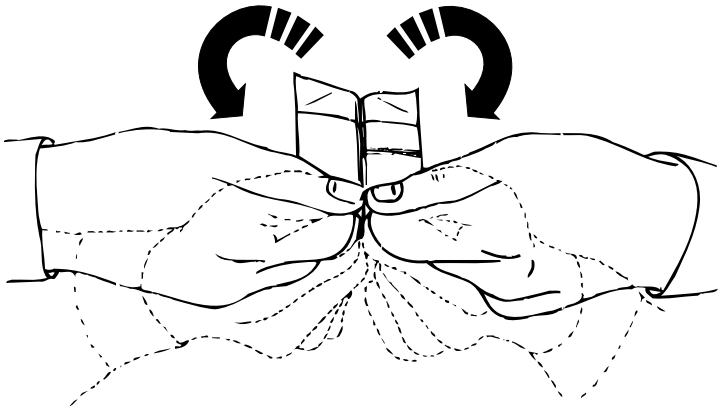

5c

Carefully, with a rolling movement, pull apart a bit of the TS from one end.

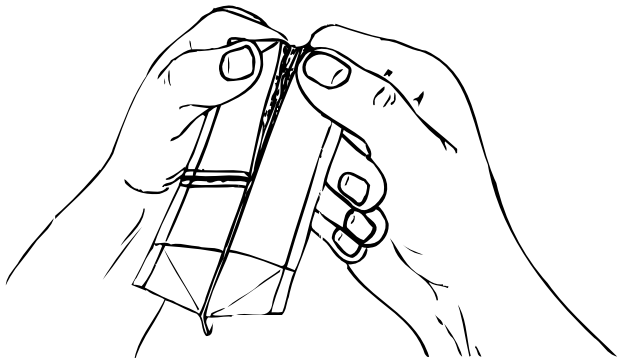

5d

Pull approximately one third of the sealing length.

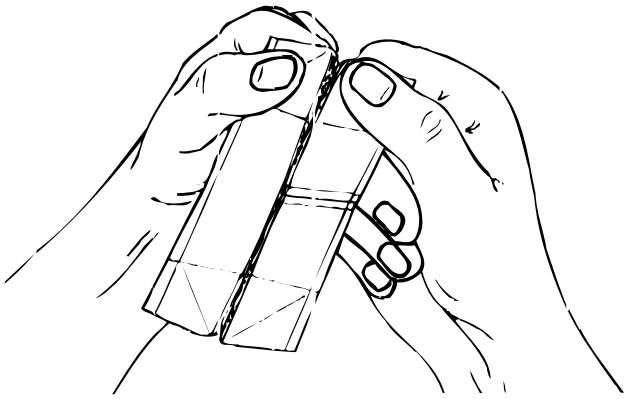

5e

Pull apart the seal from the other end.

Pull approximately one third of the sealing length.

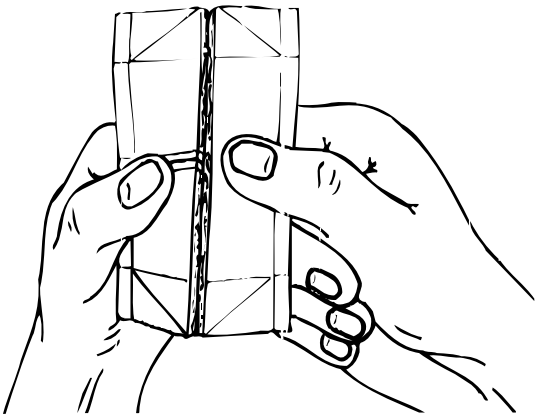

5f

Pull the point where TS and LS meet, that is the top cross and the bottom cross.

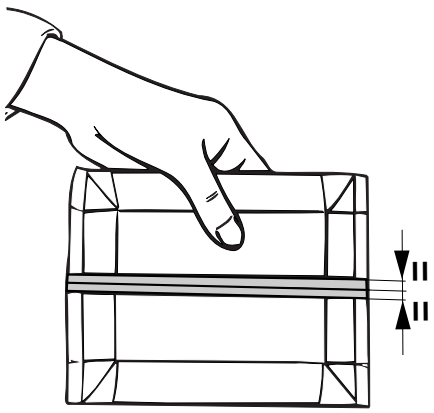

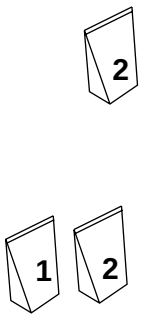

6a

LS position

Check that the LS strip is symmetrically positioned on one package.

After LS strip splice only, check two packages.

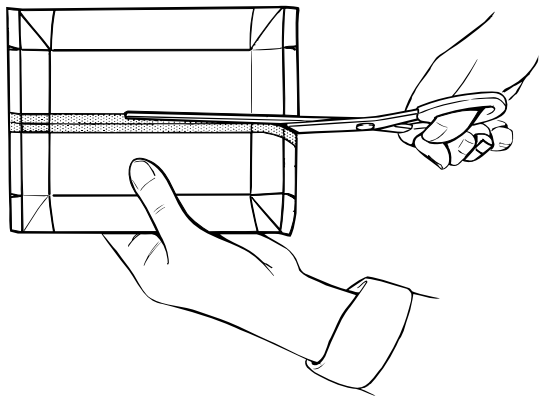

6b

Check that there are no blisters in the Al-foil.

Cut through the middle of the LS strip, along the inner edge of the packaging material.

Pull off the overlapping packaging material layer along the outside of the package.

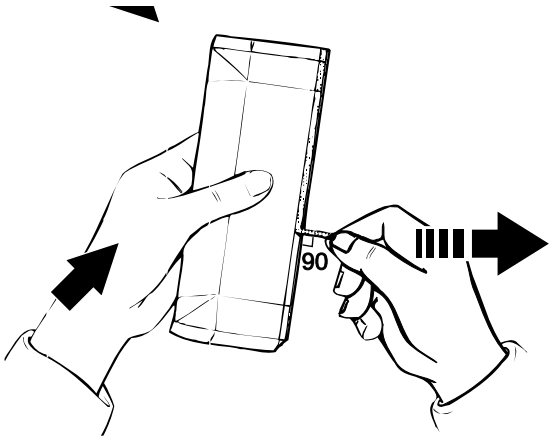

6c

Check the strip sealing by slowly pulling approx. 20 mm of the strip outwards (at an angle of 90°). Pull extremely slowly over the creases. Take hold again and pull another 20 mm. Continue along the whole edge.

Pull on both sides.

If any of the layers come off, cut the strip and start pulling again.

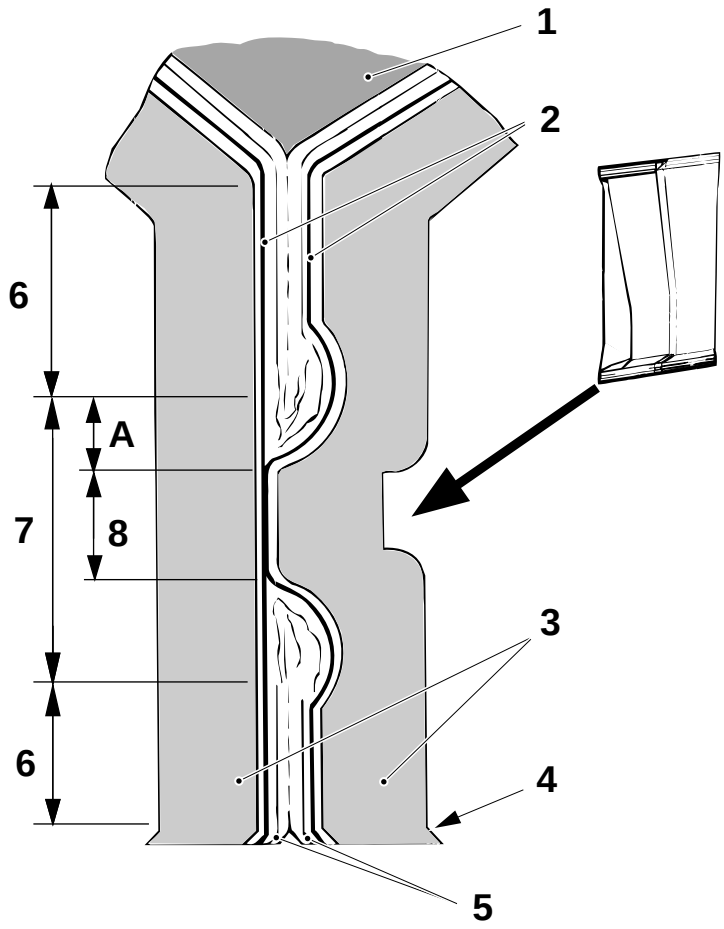

Evaluation of TS

It is only the seal against the product side (area A) that is of importance.

1 Filling product
2 Al-foil
3 Paper board
4 Cutting line
5 Plastic film, double layers
6 Blocked area
7 Sealed area
8 Ridge

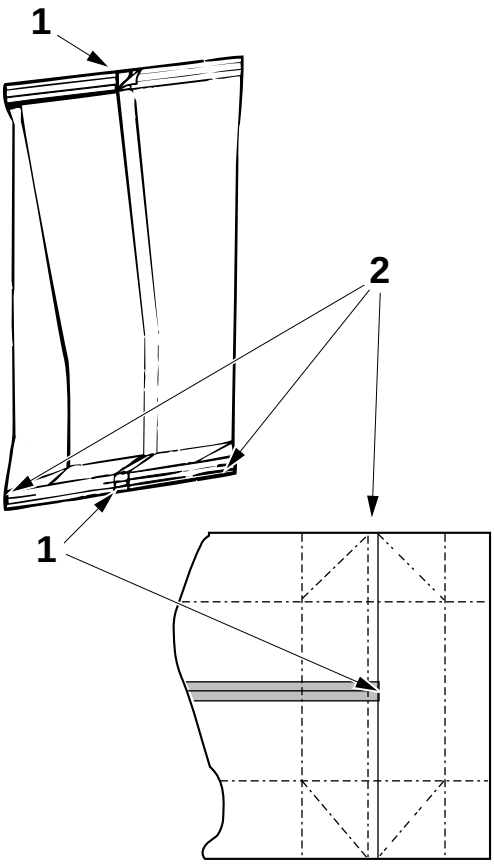

Critical points of the TS are:

- the crosses (1), that is where the TS and the LS meet
- the corners (2)

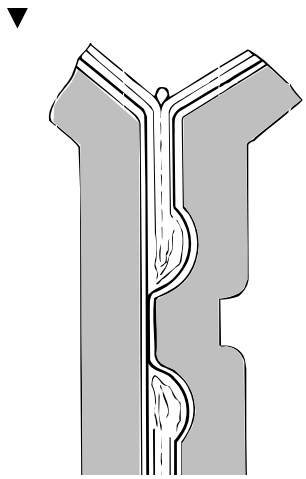

1

Check that there are no ridges or lumps in the seal.

If there are, the sealing is defective.

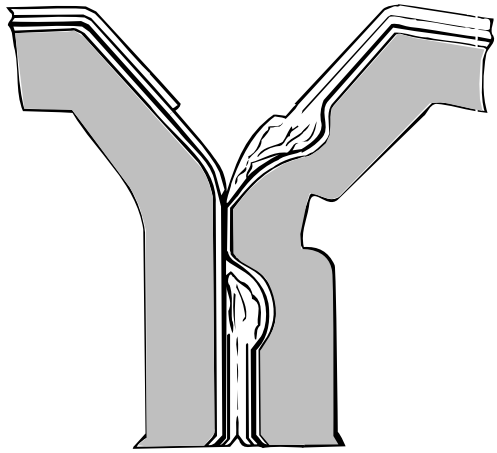

2a

Pull the seal apart:

The sealing is acceptable if

- the seal remains intact but a delamination between the two inner coatings takes place

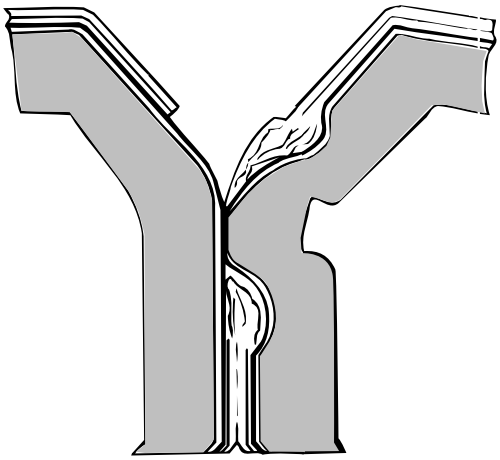

- the seal remains intact when the joint is pulled apart, but the Al-foil comes off on one of the sides presenting a shiny metal surface

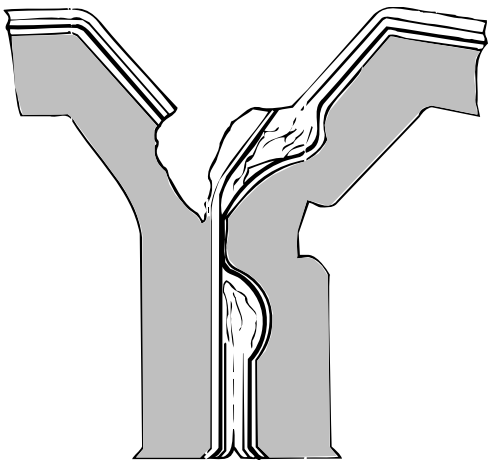

- the seal remains intact but a rupture takes place in the paper board layer

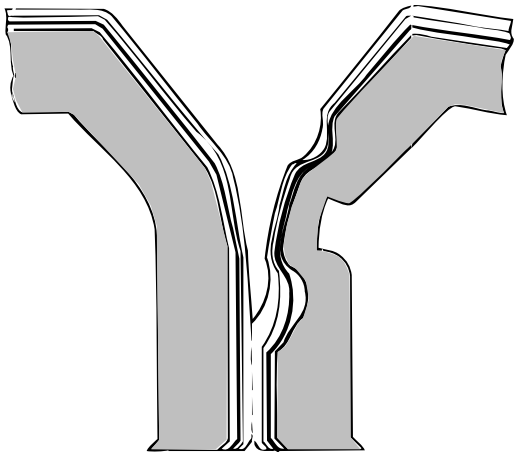

2b

The sealing is defective if

the seal is so weak that the two plastic layers separate without rupturing.

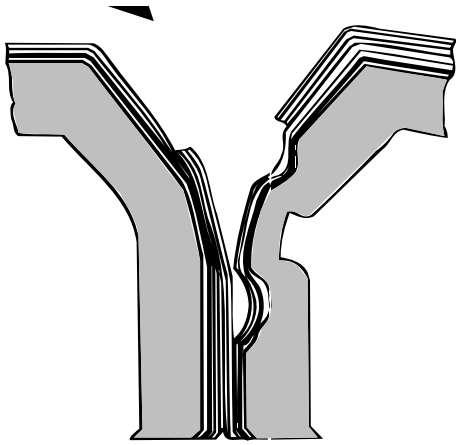

3a

Cross

What has been said about the evaluation of the TS also applies to the evaluation of the cross, that is the point where the LS and the TS meet.

The strip (arrow) can be regarded as additional coating layers on the Al-foil.

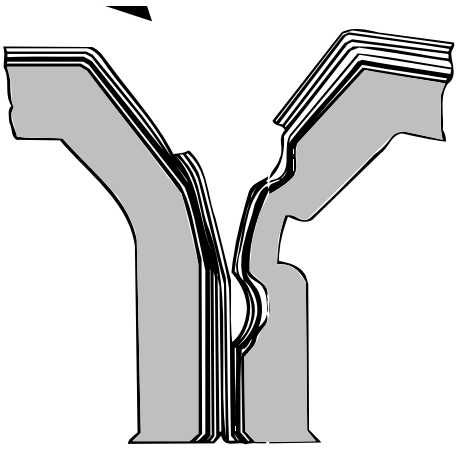

3b

The sealing is acceptable if

a rupture occurs in any of the layers

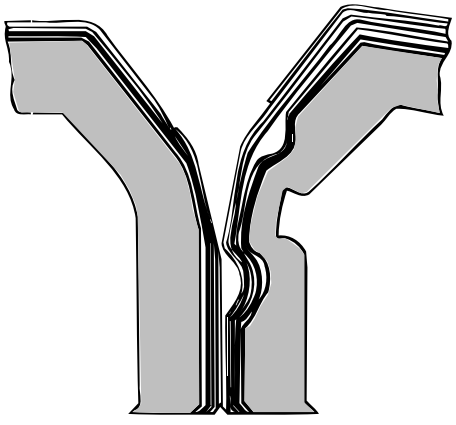

3c

The sealing is defective if

there is **no** rupture.

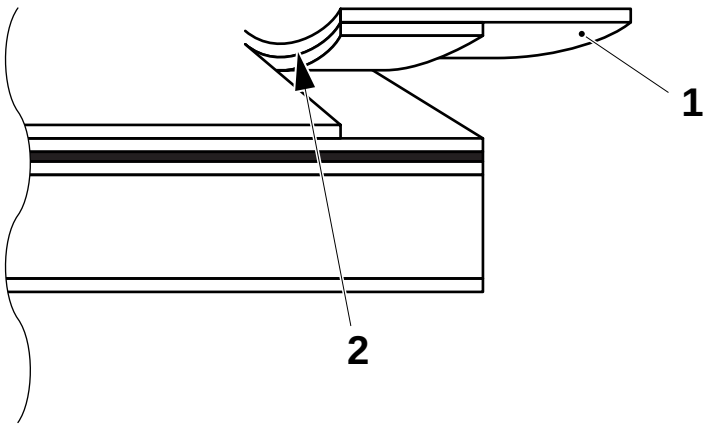

Evaluation of LS 1a

Pull the strip off.

The sealing is acceptable if

- one of the two inner coatings comes off with the strip (1), leaving a ruptured edge (2) along the seal

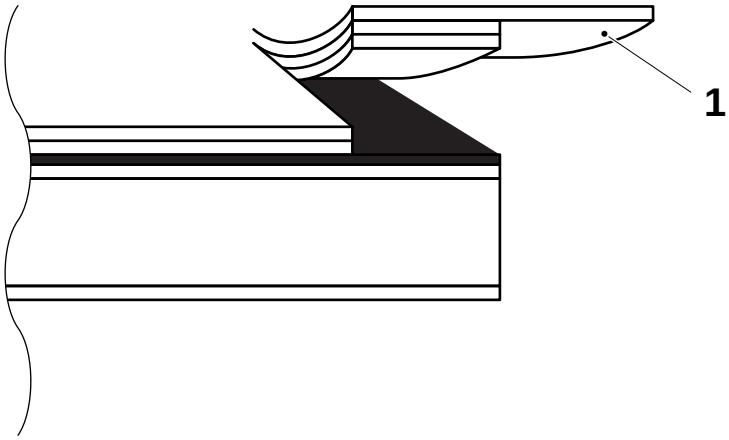

- both inner coatings come off with the strip (1), leaving the Al-foil laid bare

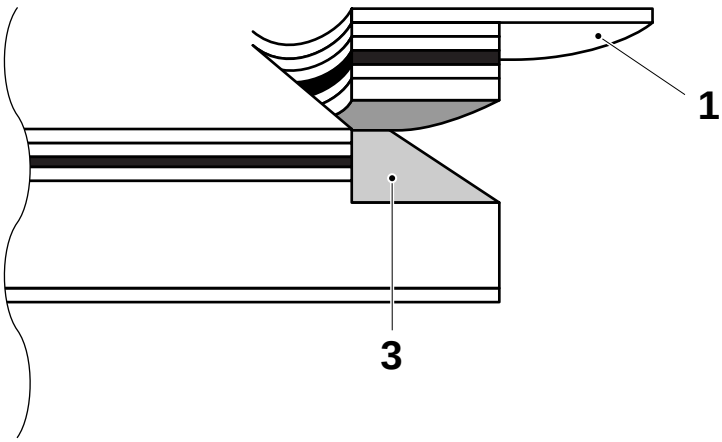

- all the inner layers including the Al-foil come off with the strip (1), although possibly leaving paper board fibres (3)

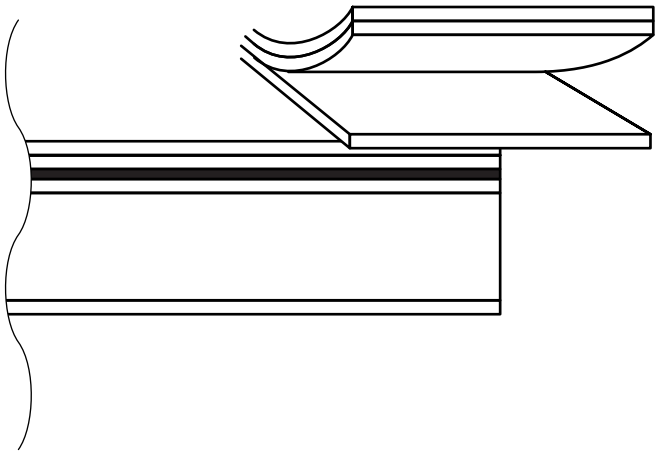

- the strip separates (delaminates), when it is pulled off

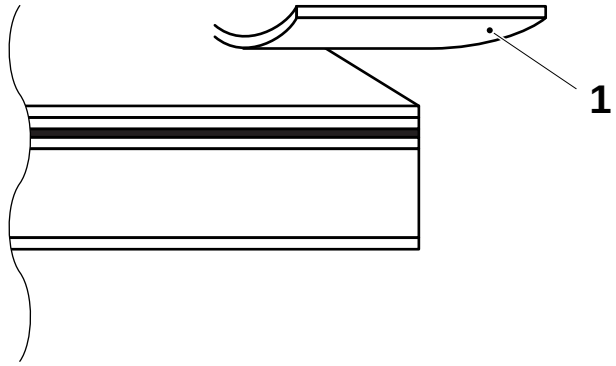

1b

The sealing is defective if

the strip (1) comes off leaving the inner coatings of the package unaffected.

This page intentionally left blank

Splicing of LS strip

To avoid unnecessary production stops, always make sure to have both strip reels prepared and the strip threaded.



1

When the LS STRIP alarm is triggered - push ALARM RESET.

Disinfect your hands.

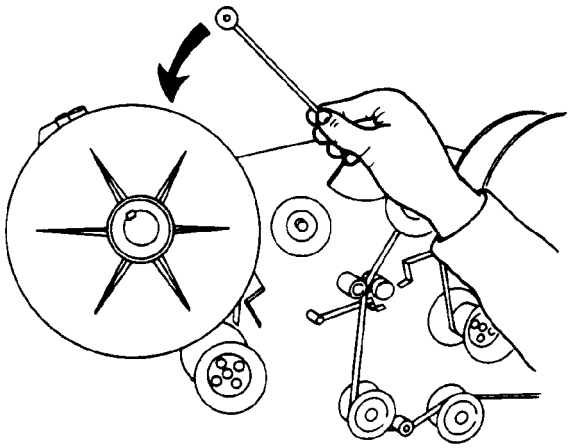

2

Shift over the supply monitor to the new strip reel.

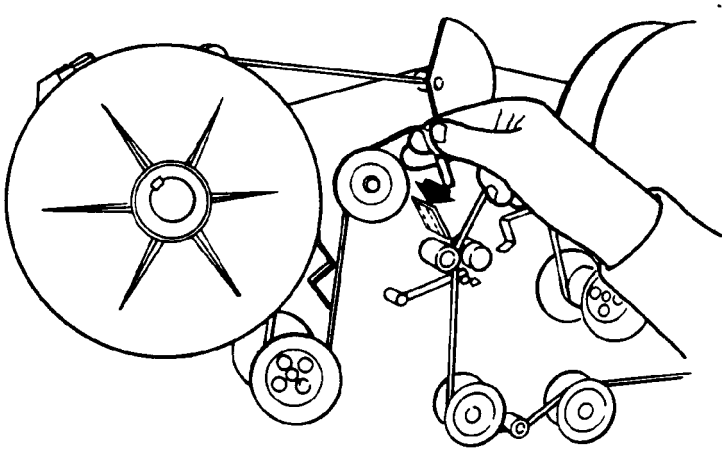

3

Pull the LS strip from the new reel and thread it around the bending rollers and on to the splicing device. Attach a piece of adhesive tape to the end of the strip. The tape must not be wider than the strip. Put the taped end of the strip into the groove. The sticky side of the tape is to face the old strip.

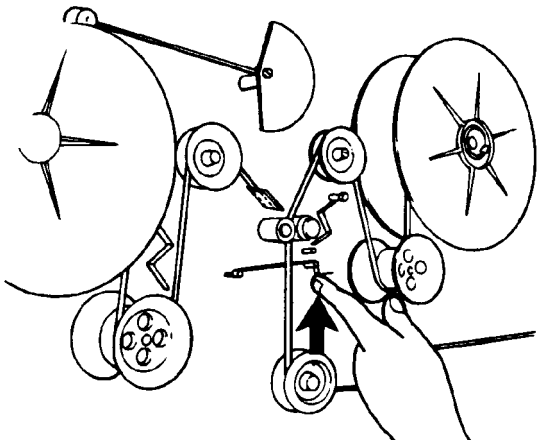

4

engage the splice pressure roller.

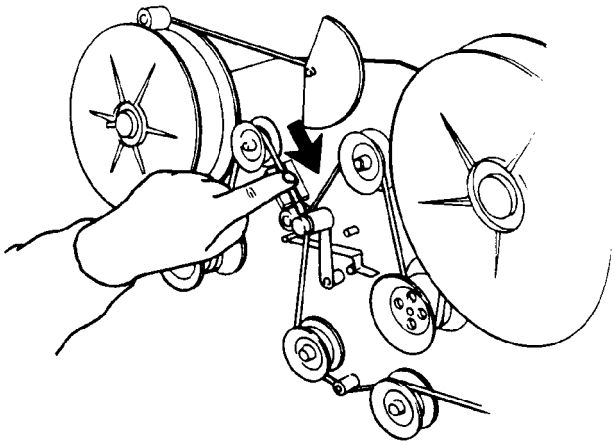

5

Push down the strip between the rollers until the tape sticks on to the old strip.

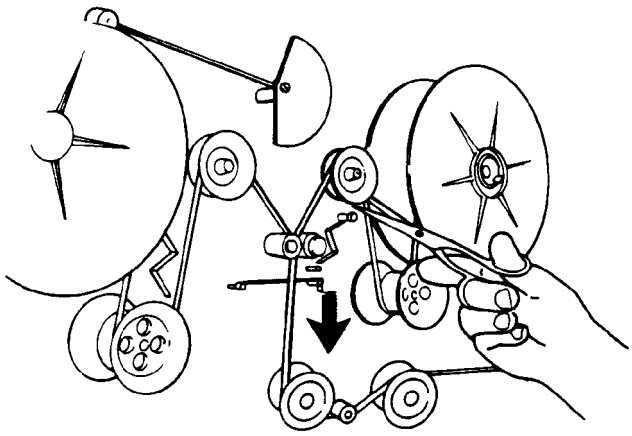

6

As soon as the tape catches, cut off old strip.

Disengage the splice pressure roller.

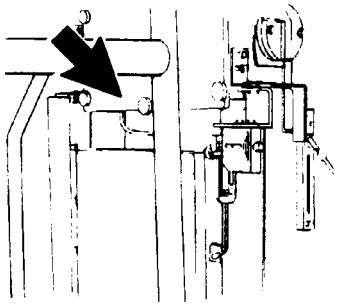

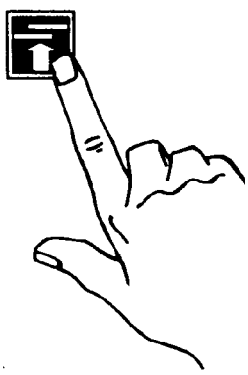

7

When the splice passes into the suction chamber of the sterilization bath- press the button on the strip applicator.

The package carrying the strip splice will then be discharged from the final folder.

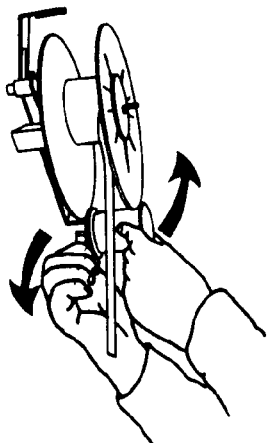

8

Disengage and block the brake. Remove the old strip reel and fit a new one. Engage the brake.

9

Pick out the first three package discharged from the final folder after the splice, and carry out a destructive test, see section Package checks.

This page intentionally left blank

Splicing of packaging material

CAUTION!
The packaging material must never touch the floor.

Always disinfect your hands/gloves before touching the packaging material

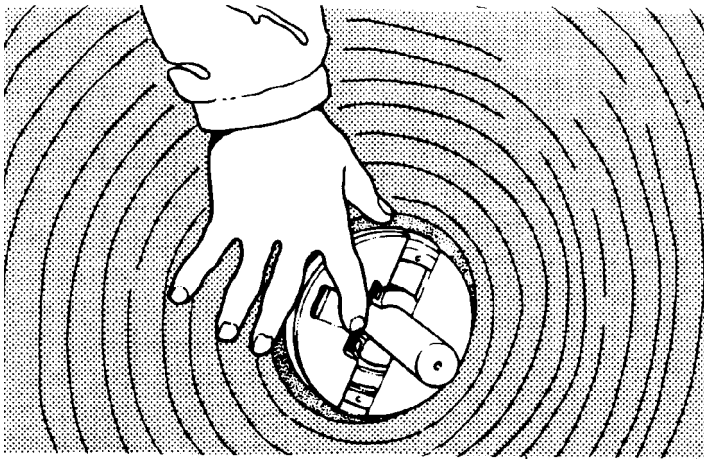

1

Insert the reel holder in the same direction as the text is read on the reel.

Release the catch of the reel holder.

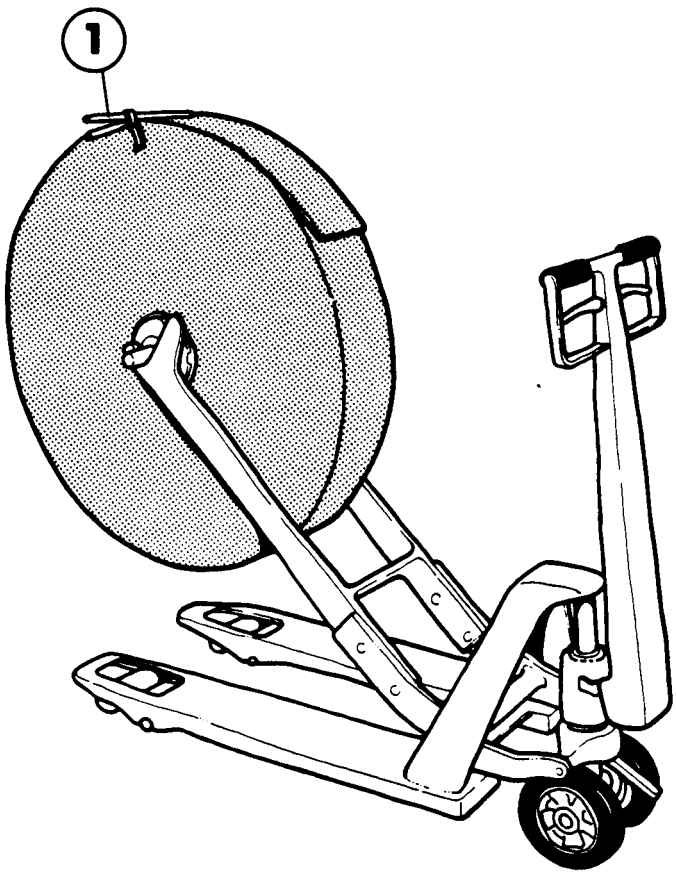

2

Lift up the reel by means of the trolley.

Fit the clip (1) on the reel.

Remove and keep the P-order tag.

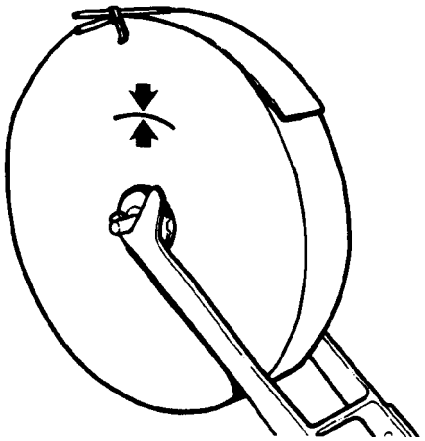

3

Sometimes there are arrow marks on the side of the reels. These arrow indicate where there are factory splices. The splice monitor discharged packages, carrying a factory splice, into the drop chute.

Always carry out destructive checks after a factory splice.

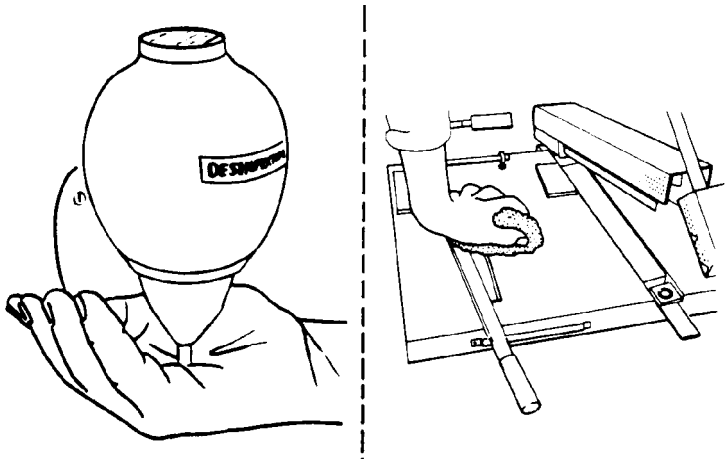

4

disinfect your hands and the splicing table before you start working with the packaging material.

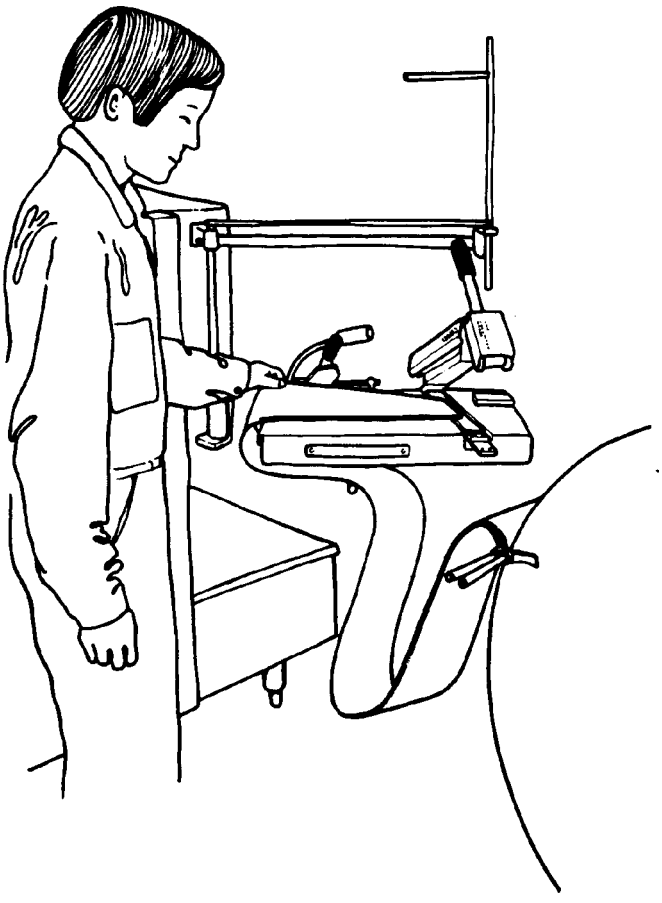

5

Pull the material web underneath and up on the splicing table.

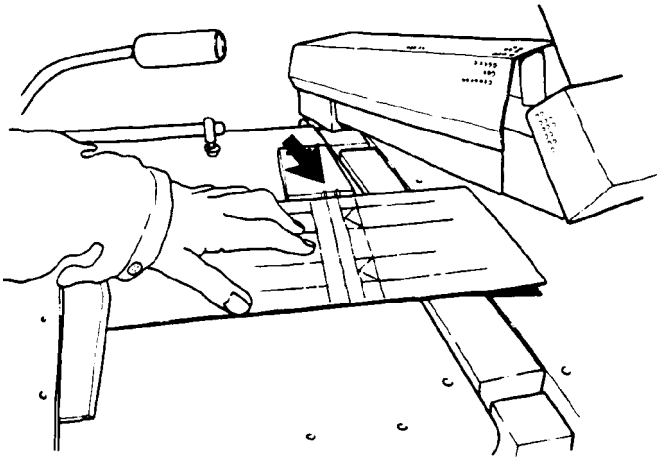

6

Place the new packaging material on the splicing table so that the fin creases line up with the location marks on the table.

Depress the knife and tear off the web.

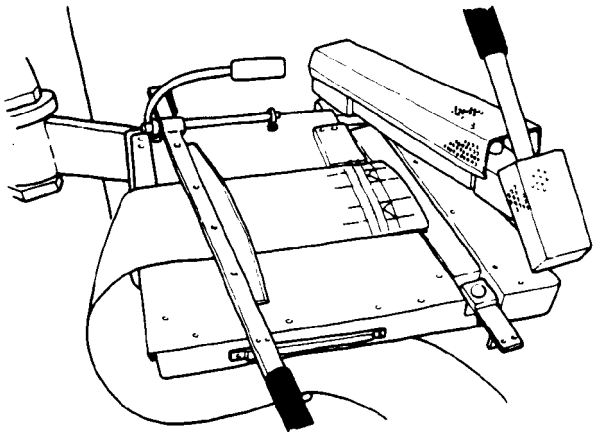

7

Slide the cut-off material web forward so that the next pair of fin creases line up with the marks.

Lock the web by depressing the knife.

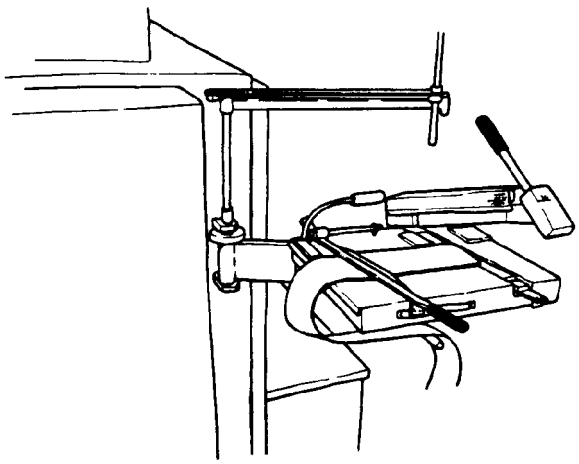

8

Swing the splicing table out of the way.

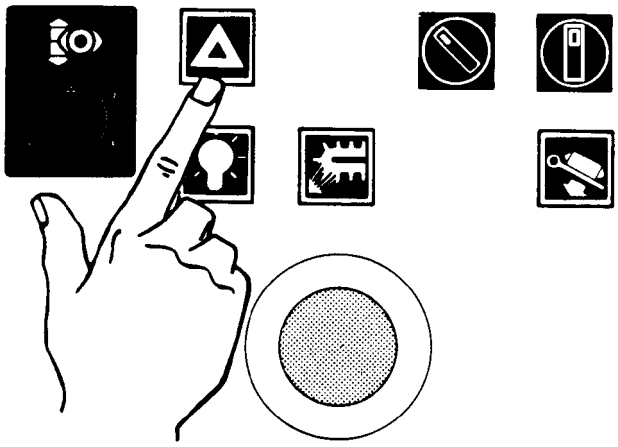

9

When the PAPER SUPPLY alarm is triggered - push ALARM RESET.

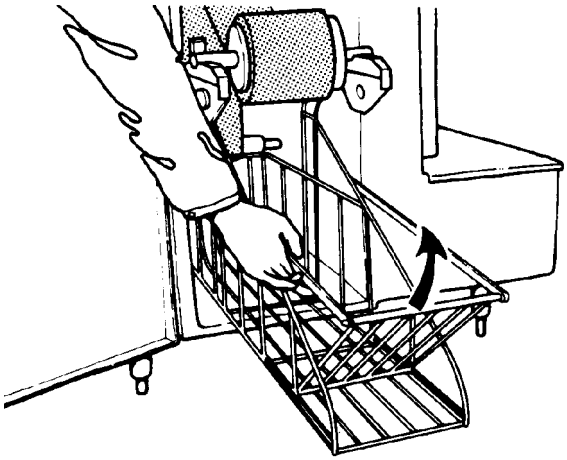

10

Pull out the cassette slowly and lift up the rear part of the basket.

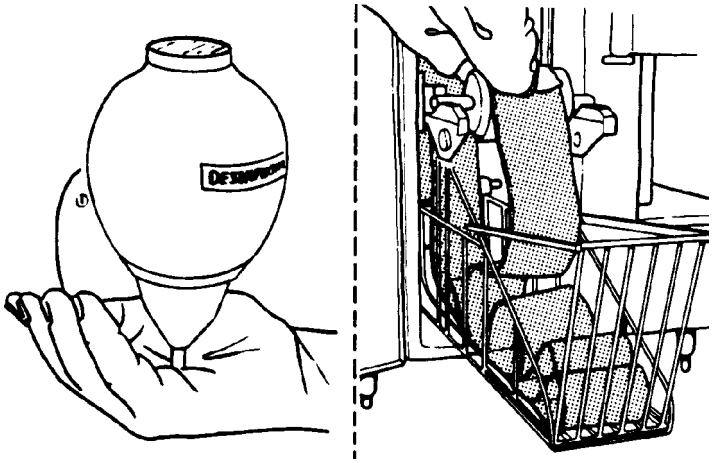

11

Disinfect your hands.

Unreel the remaining packaging material from the old reel.

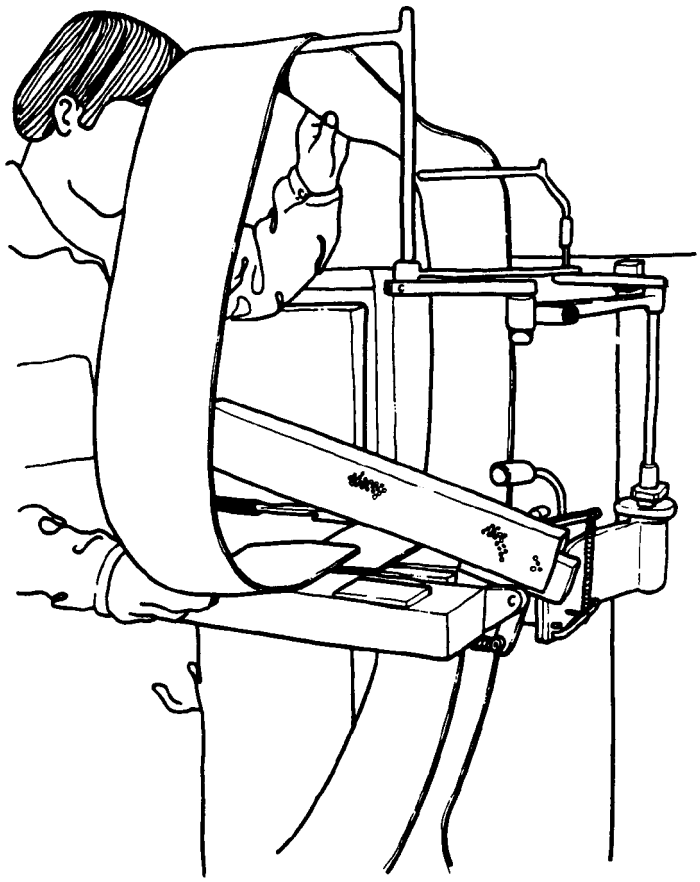

12

Pull the material web from the old reel up over the support rods and down on the splicing table.

Place it on top of the new packaging material.

The fin creases are to line up with the location marks on the splicing table.

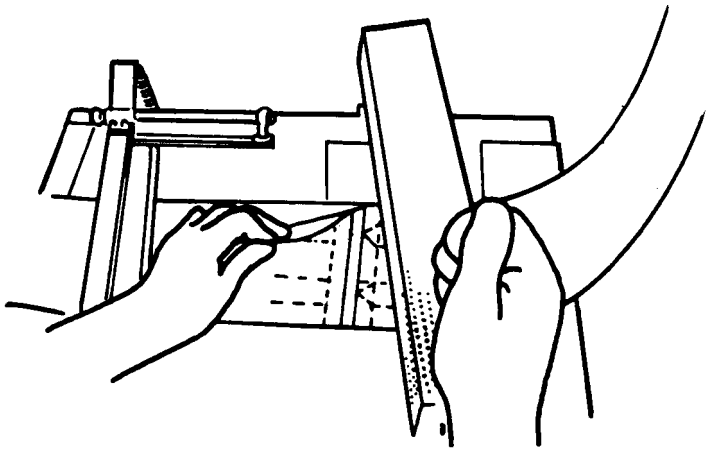

13

Depress and lock the sealing arm. Tear off the end of the packing material.

Release the sealing arm after 15 - 20 seconds.

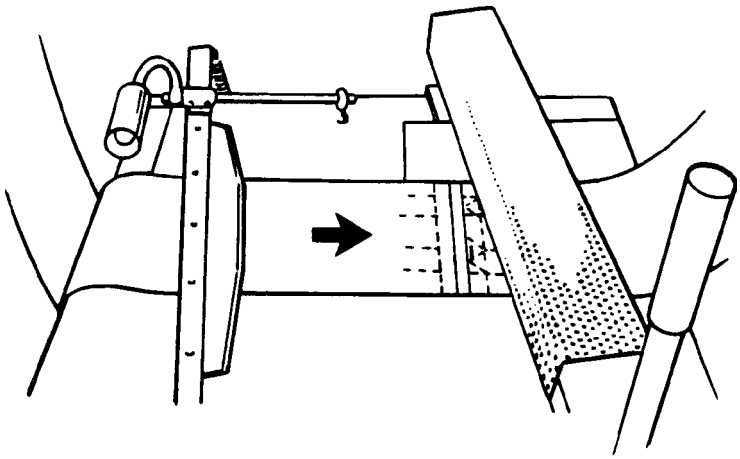

14

The splice can be made smoother by shifting the web some 15 mm in the direction away from the machine and depressing the sealing arm once more for about 5 seconds.



15

Remove the empty reel holder.

Swing the splicing table out of the way and put down the packaging material in the basket.

Note!
The packaging material must not touch the floor.

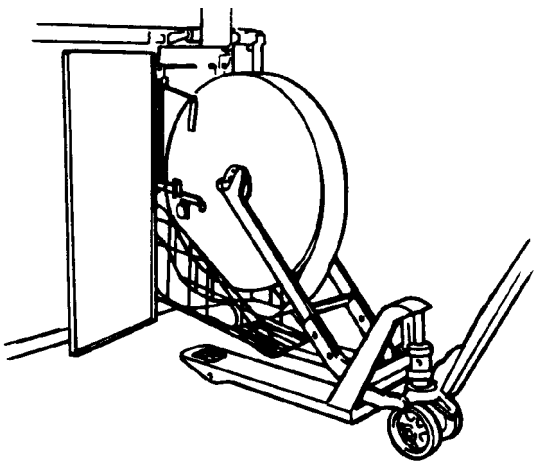

16

Transfer the reel from the trolley over to the cassette and then slowly push the cassette into the machine.

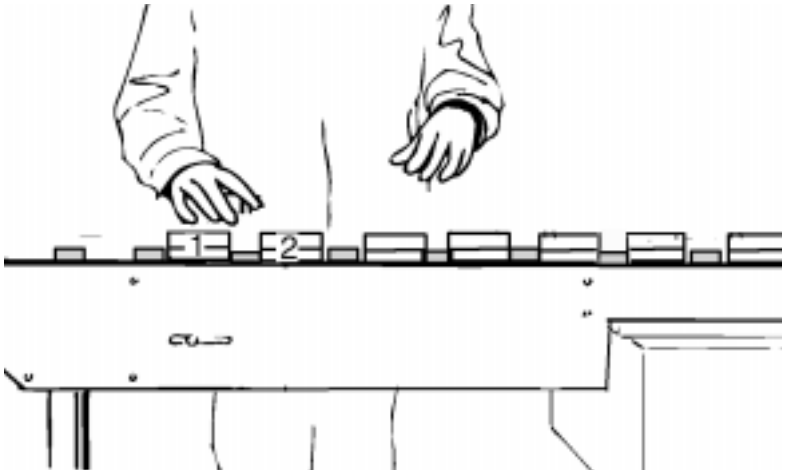

17

Pick out the first three package discharged from the final folder after the splice, and carry out a destructive test, see section Package checks.

Stop

Items in this section

- **Emergency stop**
- **Short stop**
- **Stoppage time between 15 and 60 minutes.**
- **Production finished**

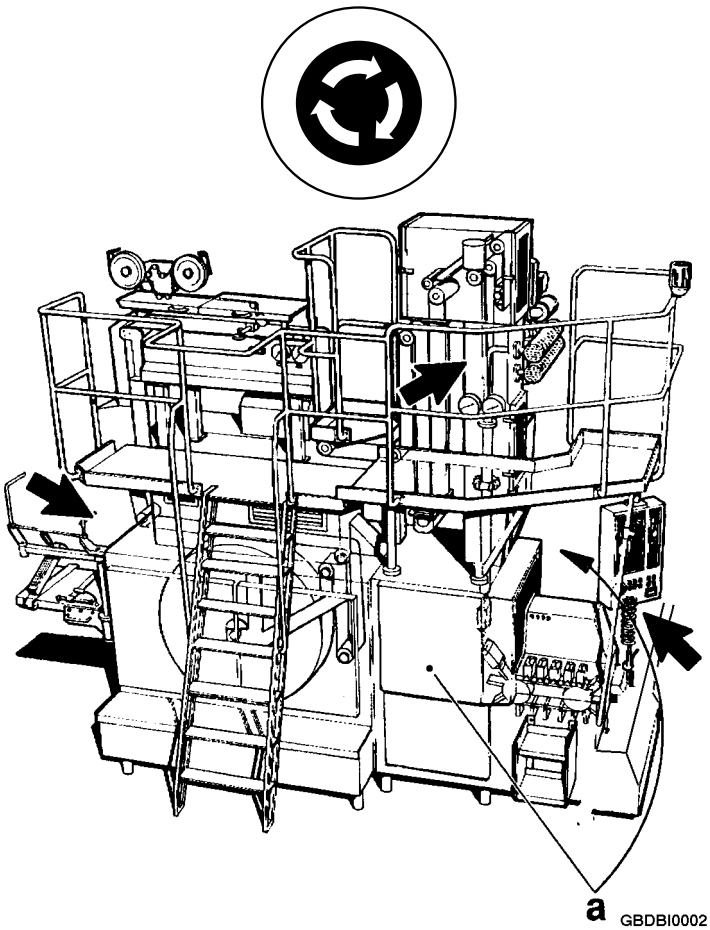

Emergency stop

1

WARNING!
Risk of personal injury!
Follow the Safety precautions.

Note!
Pushing **Emergency stop** will reset the machine program to **Zero** position and **deactivate all air cylinders**.

Push one of the three **Emergency stop** buttons.

Eliminate the cause of the stop and pull out the **Emergency stop** button

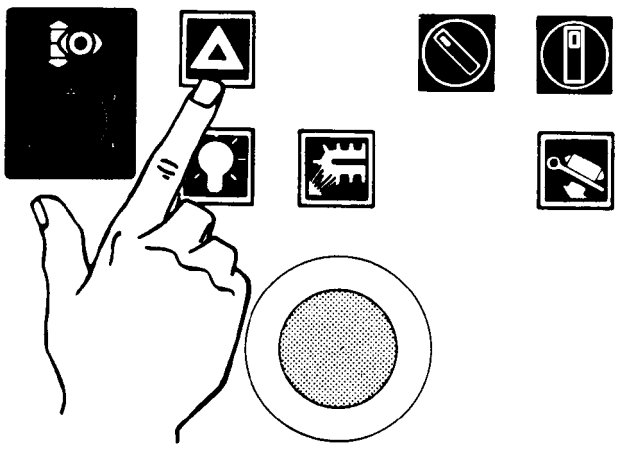

2

Push **Alarm reset**
Remove all the packages from the final folder.

After an emergency stop, the machine is restarted according to section Start

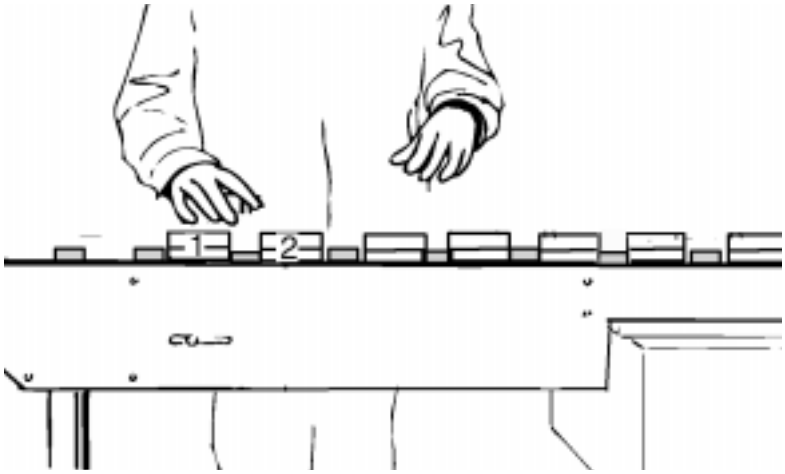

3

Pick out the first three packages discharged from the final folder and carry out a destructive test, see section Package checks.

Short stop

1

Stoppage time up to 15 minutes.

There are three short stop buttons.

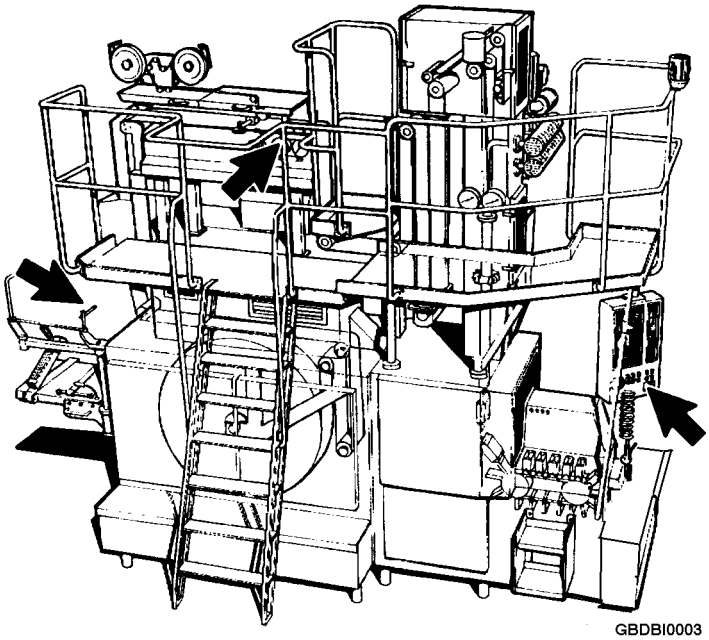

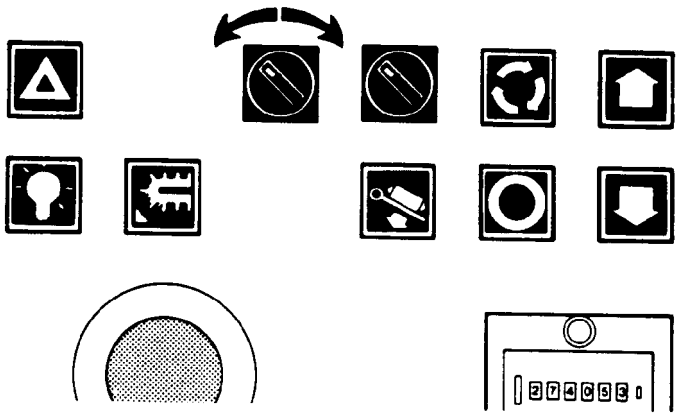

2

In **Short stop**, you can select whether the left hand or right hand pair of jaws is to stop in open position by turning the selector switch either to the left or to the right.

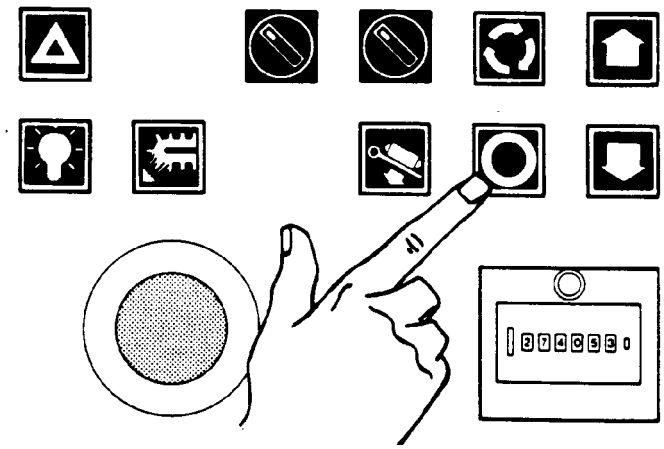

3

Push the short stop button and keep it depressed until the button lights up.
The machine then stops with filled tube, with synchronized printed design and with the selected pair of jaws in open position.

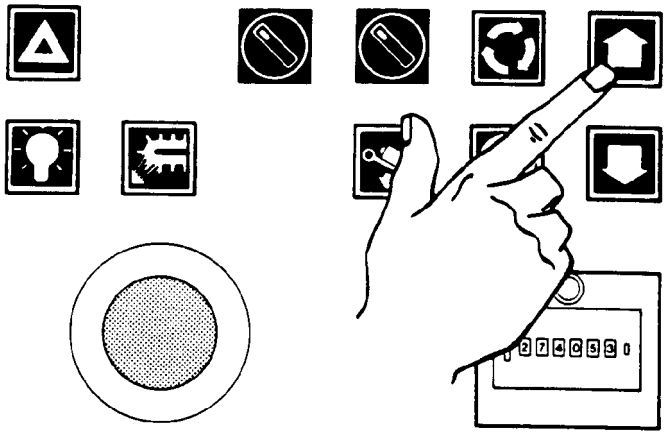

4

Restart by pushing Programme up. Keep the button depresses until the drive motor starts.

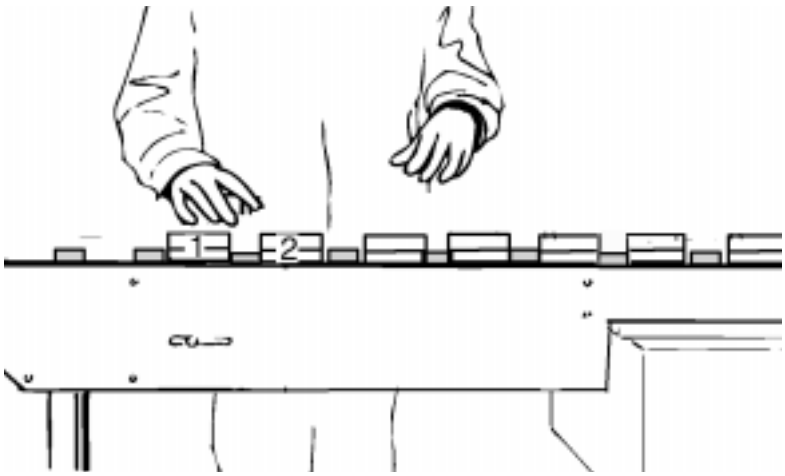

5

Pick out the first three packages discharged from the final folder and carry out a destructive test, see section Package checks.

Note!

If the **Short stop** stoppage time will be exceed, the programme resets down to *Sterilization*. Push the **Programme up** button. The symbol **Signal to sterilizer** lights up with fixed light. the tube which is filled with product, must be inched out of the machine before restart.

Stoppage time between 15 and 60 minutes.

1

In case a stoppage will last between 15 and 60 minutes, for instance for changing product, you stop the machine by pushing Programme down twice.
You can stop only the filling by pushing **Programme down** *once*

2

Restart according to section Start

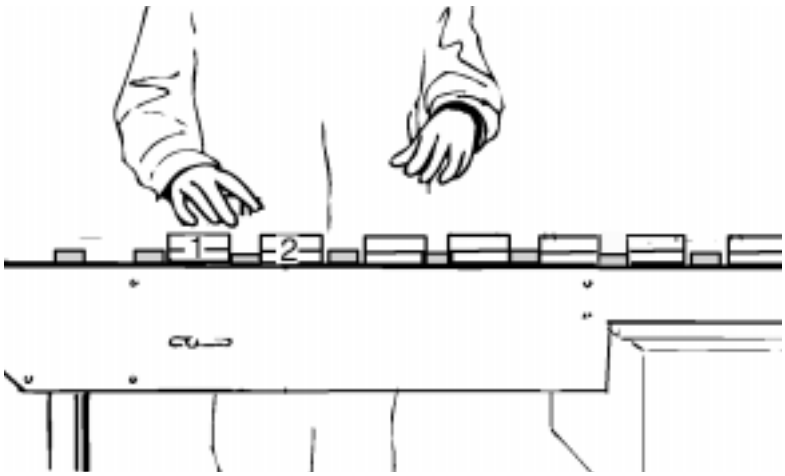

3

Pick out the first three packages discharged from the final folder and carry out a destructive test, see section Package checks.

If the machine cannot be brought back into production within 60 minutes, push **Programme down** twice until the program steps to position “0”. Push **Programme up** twice and you get a fixed light in the symbol **Preheating**. Thereafter, push **Programme up** quickly six times. The programme then steps to **Cleaning**.

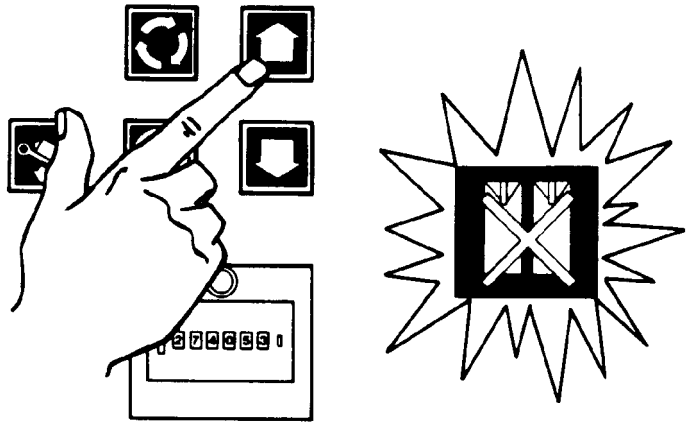

Production finished

1

When production is finished, push **Programme up**.

If you wish to restart the machine during the first minute, push **Programme down**. The symbol **Signal to sterilizer** then flashes and the machine can be restarted according to section Start

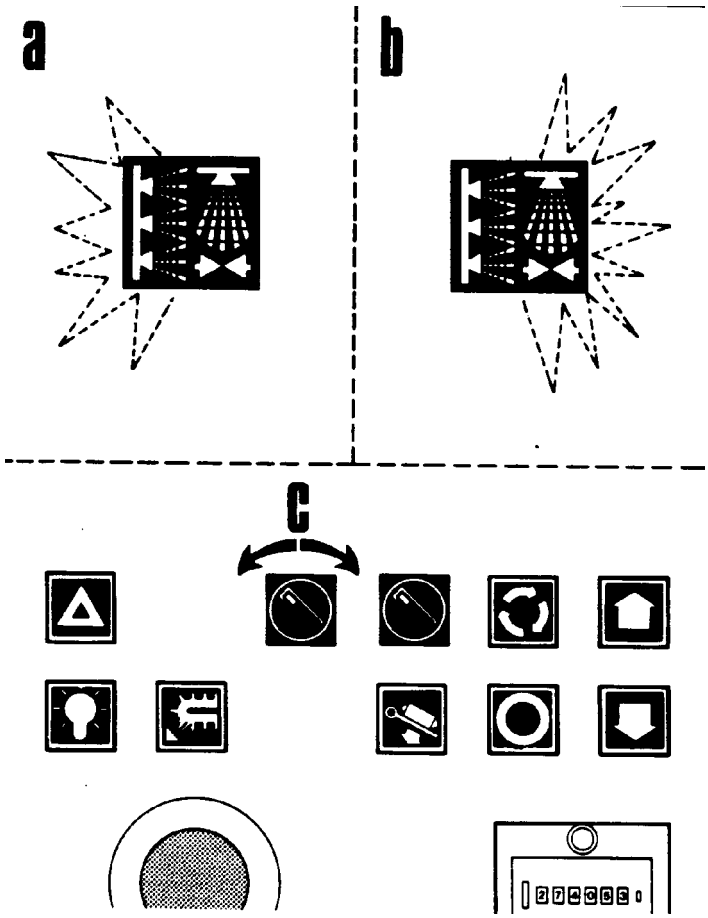

2

after one minute, one of the cleaning symbols starts to flash:

a) With the selector switch (c) in LH position, the symbol for **External cleaning** programme starts to flash.

b) With the selector switch (c) in RH position and the cleaning pipe and cleaning cup mounted, the symbol for **Cleaning-in- place** programme starts to flash.

c) In section After production care it is explained in what order you shall chose cleaning programme.

Note!

Before a new start, the machine must be cleaned and sterilized. Not until then it can be restarted in the usual way.

Note!

REMEBER! If the tube burst the machine must be cleaned and sterilized, irrespective of the duration of the stoppage.

Stop

Stop

After production care

Items in this section

- **Intermediate cleaning of product valve and filling pipe.**
- **Final cleaning of product valve and filling pipe**
- **External cleaning**

Carry out “After production care” after every production run - daily or at least every 24 operating hours.

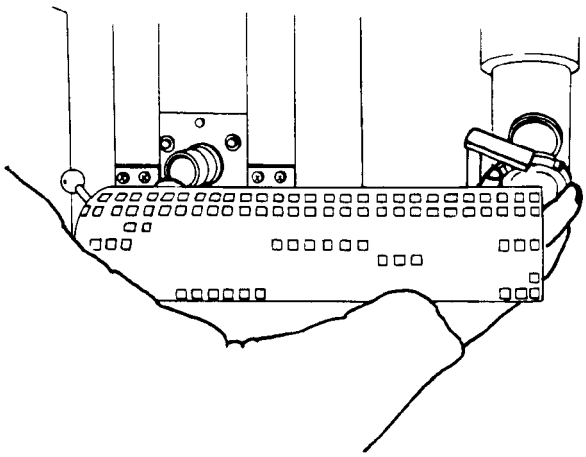

3

Disconnect the product pipe.

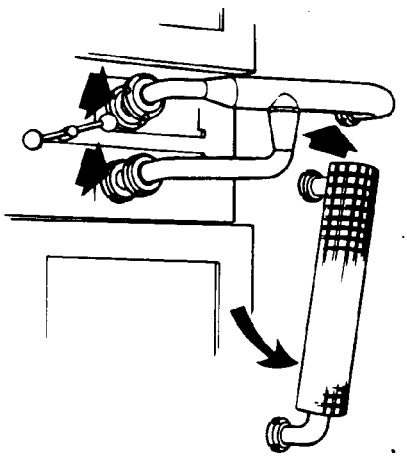

4

Disconnect the sterile air pipe.

Check that the gaskets are intact.

Connect the cleaning pipe. Swing the swivel arm back and insert the pin.

Note!
Make sure that gaskets are fitted in the correct positions!

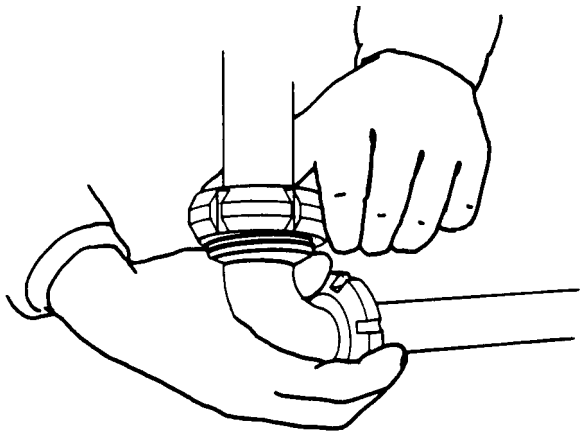

5

disconnect the elbow pipe.

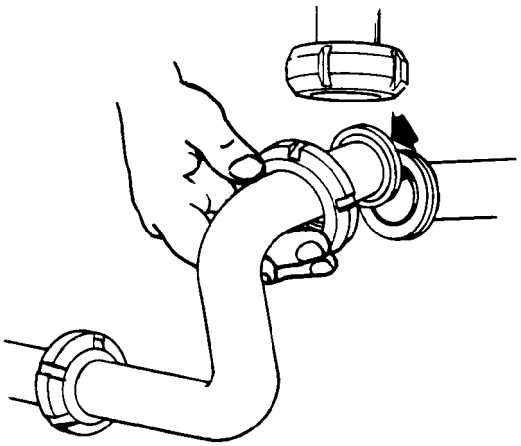

6

check that the gaskets are intact.

Connect the incoming cleaning pipe.

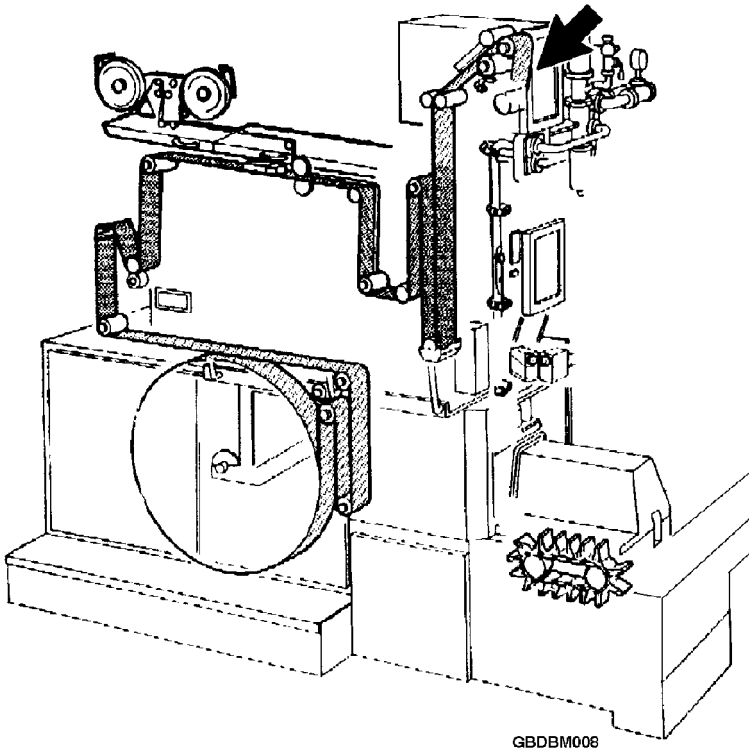

7

Cut off the packaging material between the upper bending roller and the design correction crease wheel.

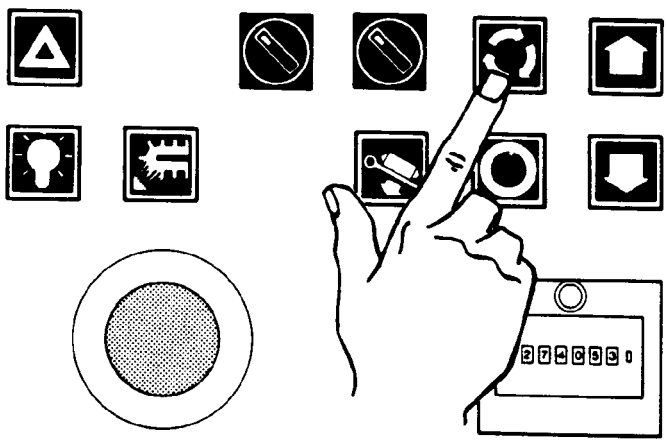

8

Select **Slow speed inching** and inch the machine until all material has been fed out of the jaw system.

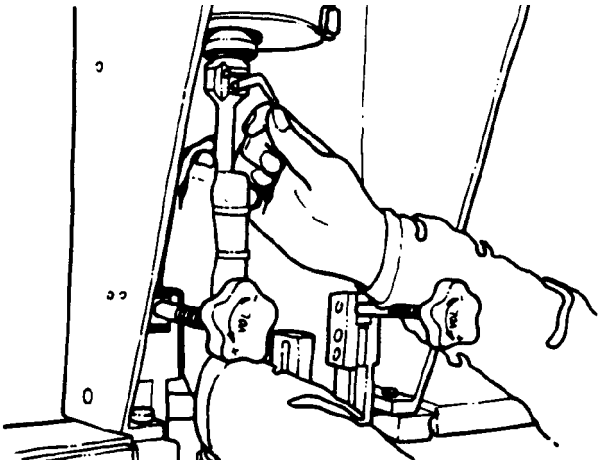

9

Rinse with water and remove the lower filling pipe from the machine.

Put it in a trough with detergent.

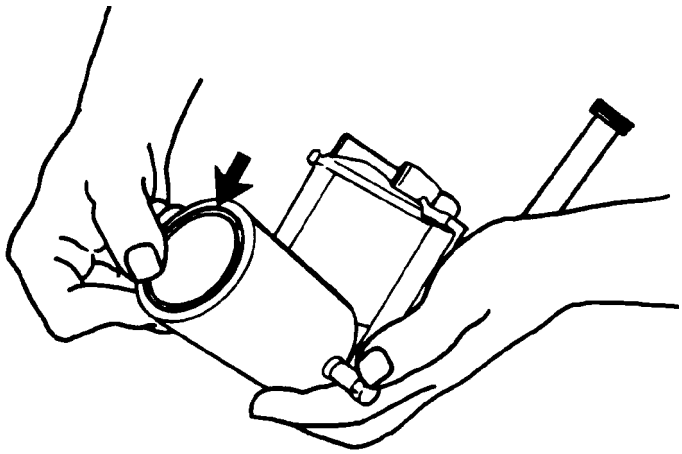

10

Check that the O-ring of the cleaning cup is intact.

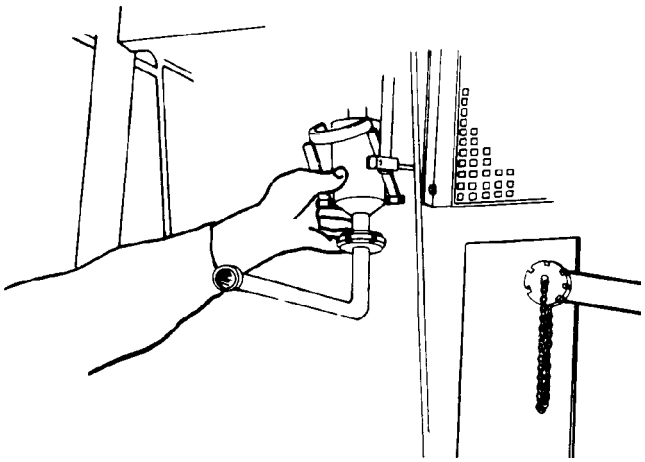

11

Put the flow distributor into the cleaning cup.

Connect the cleaning cup.

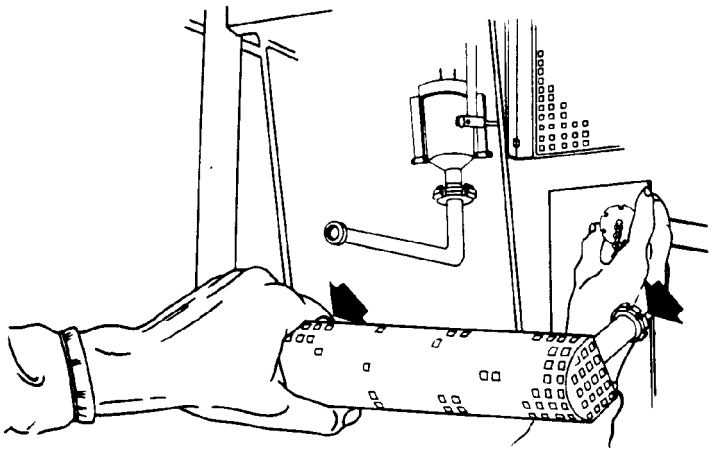

12

Check that the gaskets are intact.

Connect the product pipe.

Don’t forget to tighten all connections properly.

13

the machine is now ready for cleaning-in place.

Select either Intermediate cleaning or Final cleaning. See 20a or 20b

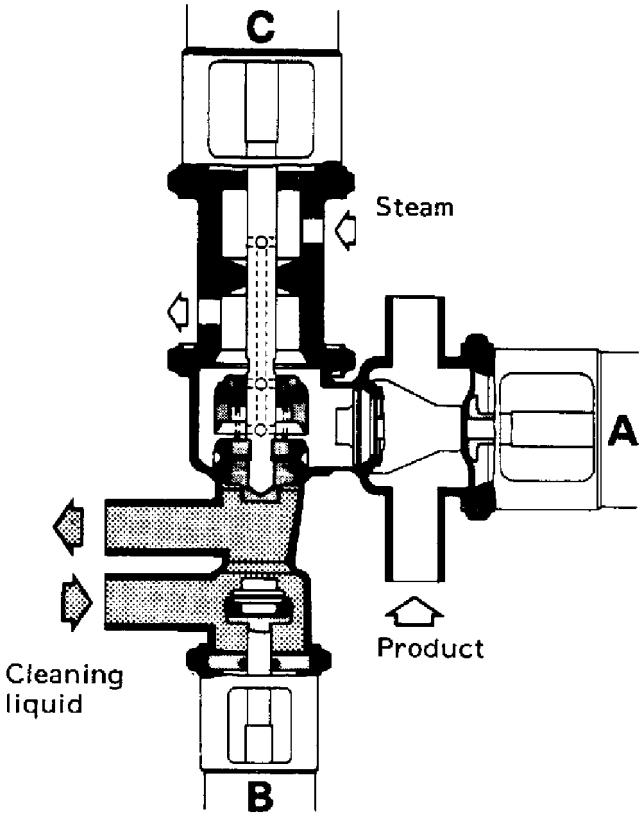

Intermediate cleaning of product valve and filling pipe.
14

a) Cleaning in this position must not be used whenever sterile product remains in the product line. here you have a steam barrier between cleaning solution and product.

The valve takes this position when the programme is in step **CIP** see items 16

This cleaning is to be done immediately after stop, except when final cleaning according to point b below can be done within one hour.

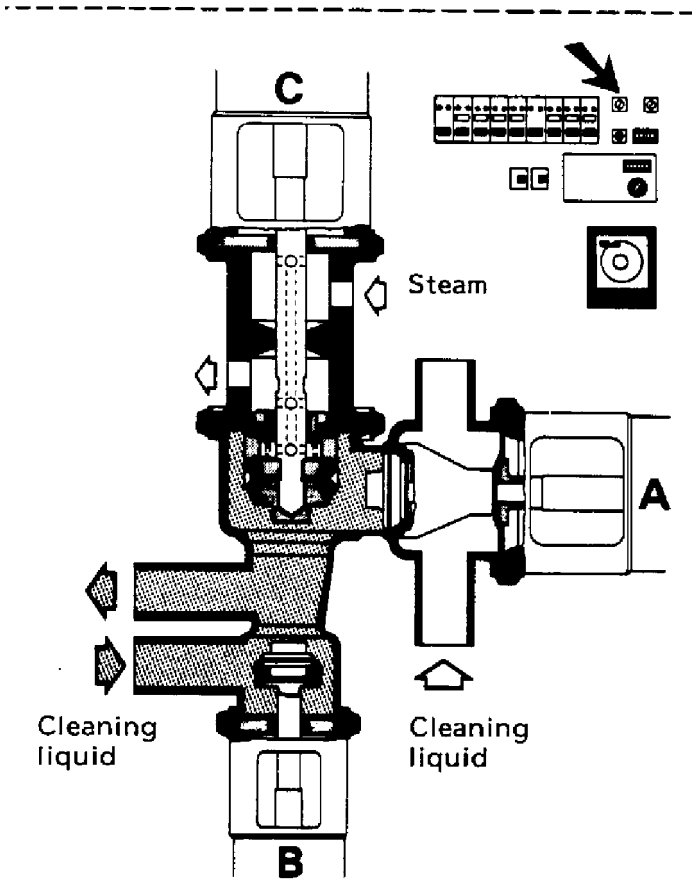

Final cleaning of product valve and filling pipe

b) In order to clean all parts in contact with product in the valve, cleaning must also be done with the key switch in position for cleaning the steam barrier space. The valve takes this position when the programme is in step **CIP** and the key switch is according to item16.

Note!
Cleaning in this position must be done every day or as soon as production is finished.

Note!
Remember **never** to clean with the key switch in position for cleaning the steam barrier space when product still remains in the product line

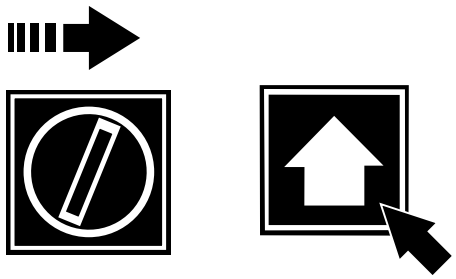

15

Turn the sector switch to the right hand position and then push **Programme up.**

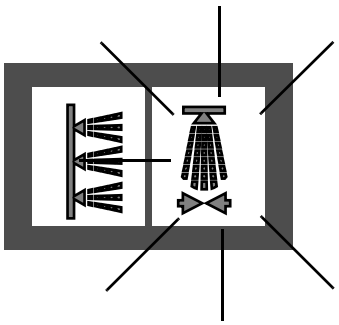

16

While **CIP** is in progress, start with the external cleaning and carry out the manual cleaning of the machine

The jaw system and the final folder are cleaned with hot water mixed with detergent.

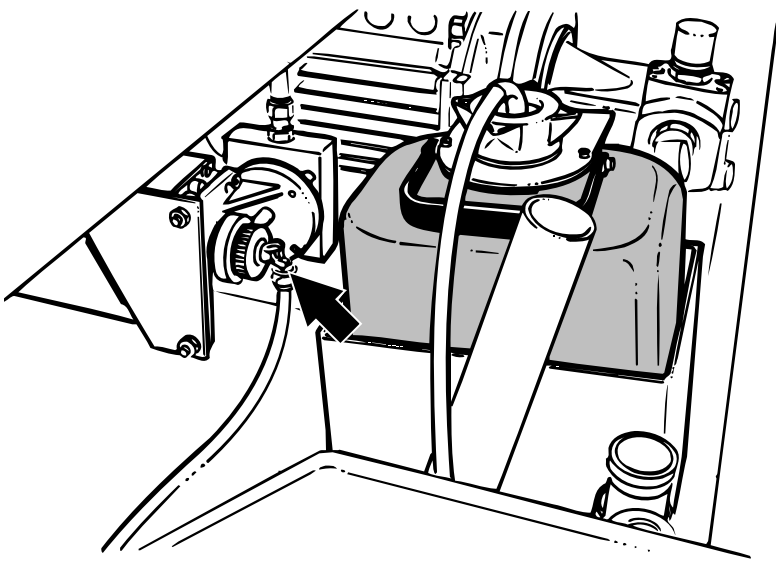

17

WARNING!

Risk of personal injury! Chemical product. Follow the Safety precautions.

Make sure there is sufficient detergent in the tank.

Mark the level, so that you can keep tabs on how much detergent has been used up after completion of the cleaning.

Between 0.7 - 0.8 litre should be used up each time

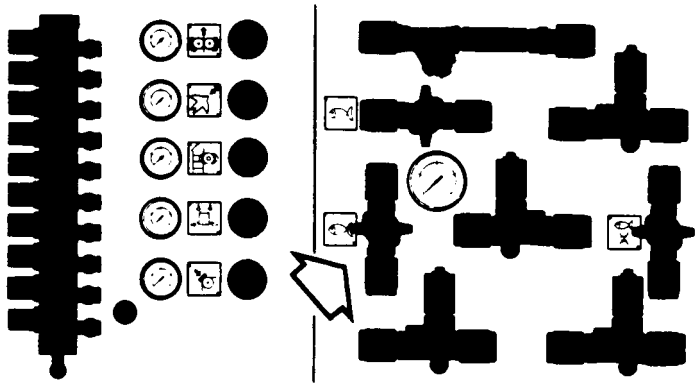

18

Open the hot water valve for cleaning.

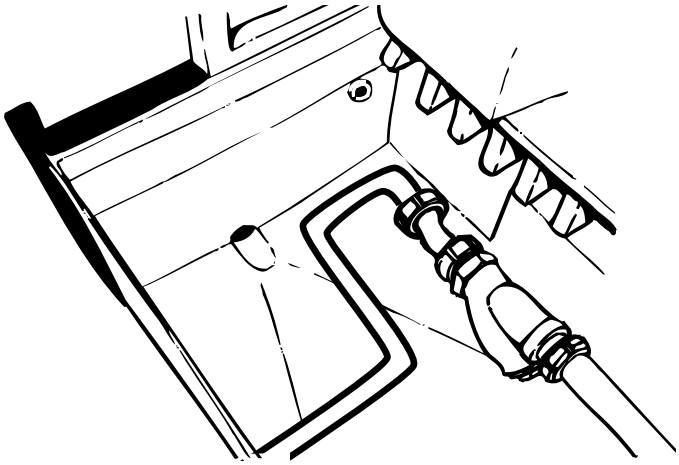

19

Remove remnants of packaging material from the tray.

Make sure the strainer is clean.

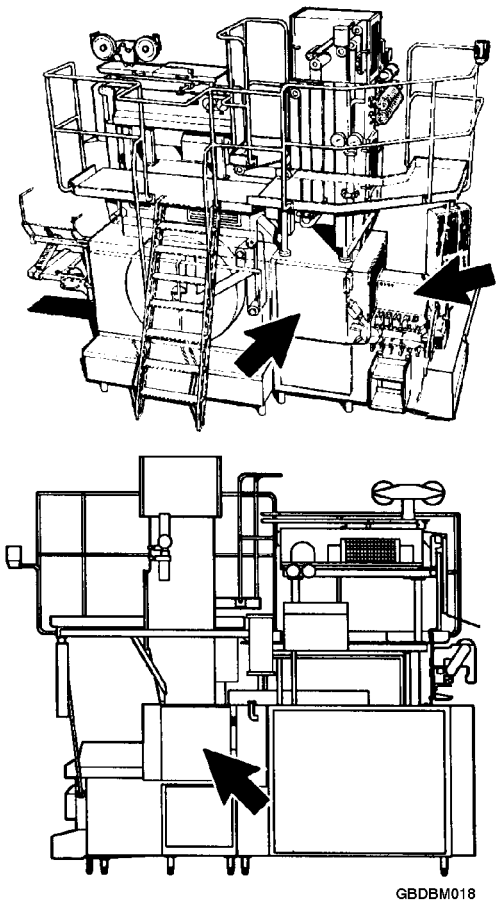

20

Close all safety doors.

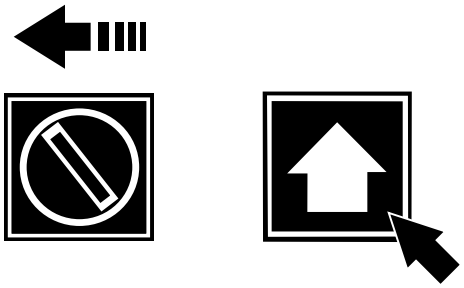

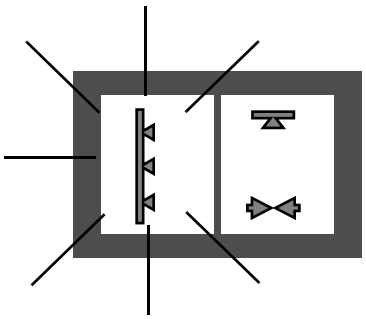

External cleaning

21

Turn the sector switch to the left hand position and then push **Programme up.**

The **External cleaning** symbol gets fixed light.

The two cleaning programs do not interfere with one another.

Note!
To stop external cleaning, turn the selector switch to the LH position and push **Program down.**

Restart cleaning by pushing **Programme up.**

Emergency stop and **Short stop** interrupt external cleaning.

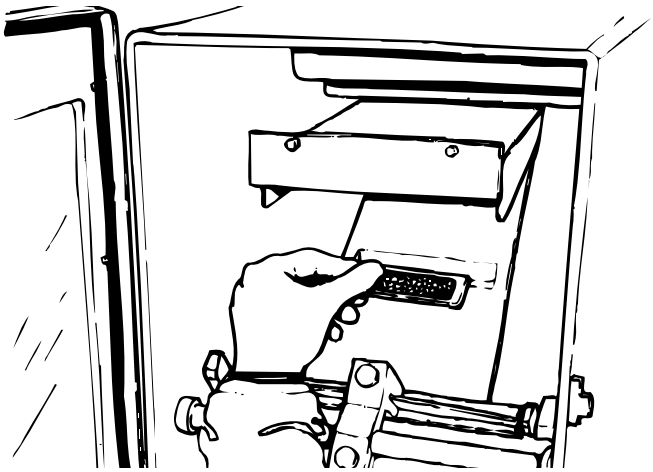

22

WARNING!
Risk of personal injury! Hydrogen peroxide. Follow the Safety precautions.

Remove the air knife cover.

Remove and clean the filter with compressed air.

Refit the filter and fit the cover.

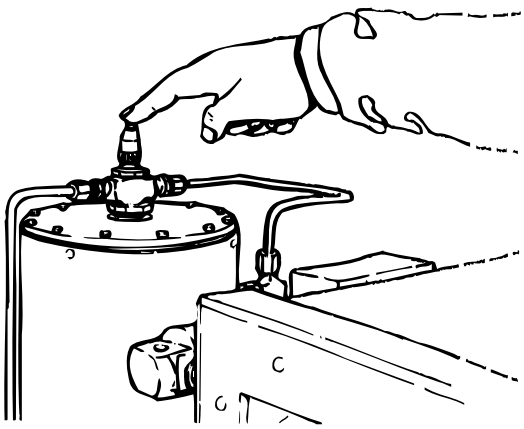

23

Push the button of the hydrogen peroxide evaporator a couple of times to clean the spray nozzle.

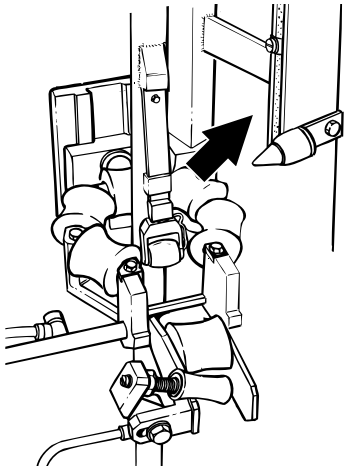

24

Clean the LS nozzle and the SA nozzle.

Check if there are any burnt deposits on the nozzle. Make sure that all air holes are open.

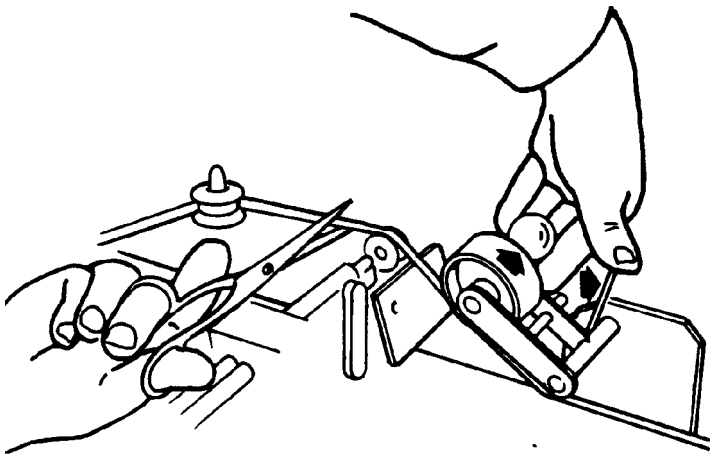

25

Cut the LS strip and disengage the pressure roller of the strip applicator.

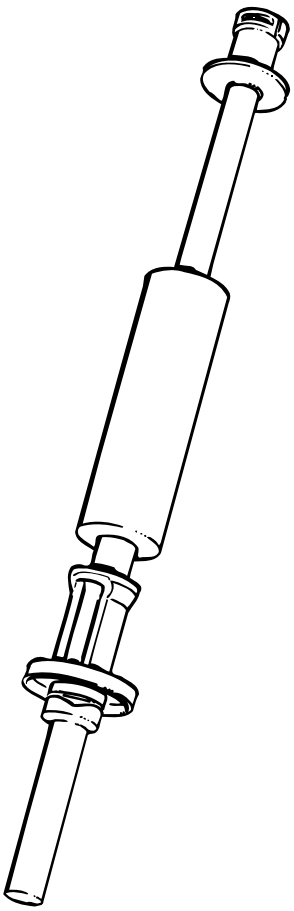

26

WARNING!
Risk of personal injury! Chemical product. Follow the Safety precautions.

CAUTION!
Chlorine or iodine based disinfectants and/ or detergents must not be used for disinfection of the lower filling pipe.

Dismantle the lower filling pipe and clean its parts with water and detergent.

Shake the float and check that there is no liquid in it. Replace as required.

Reassemble the lower filling pipe and rinse it.

The lower filling pipe must remain in the container with disinfectant until the next production run.

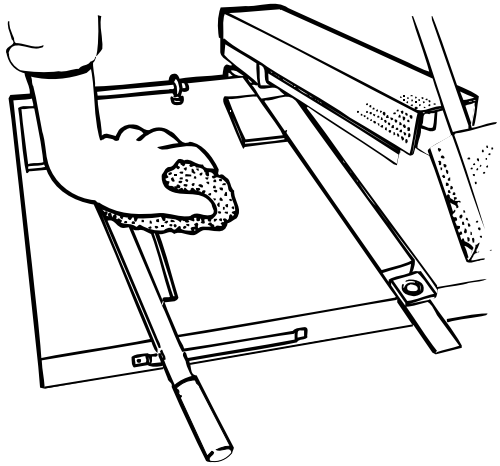

27

Risk of personal injury! Hot surface. The sealing arm may be hot.

Clean the splicing table with a wet sponge.

Disinfect the table.

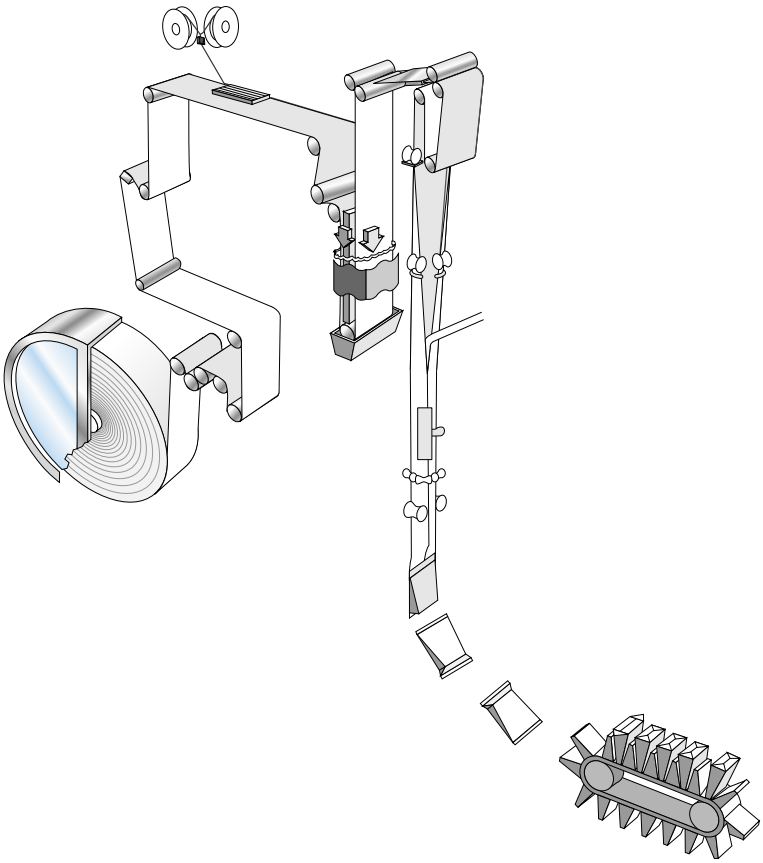

28

WARNING!
Risk of personal injury! Hydrogen peroxided. Follow the Safety precautions.

Make sure that all moving parts are clean and that they move freely.

Check on:

- the pressure and counter rollers of the SA.
- the SA bending rollers
- the splice monitor wheel.
- the squee-gee rollers.
- the rollers of the forming ring.
- the pressure roller and counter roller of the upper filling.

Make sure that all roller surfaces are clean and undamaged, and that the rollers rotate freely.

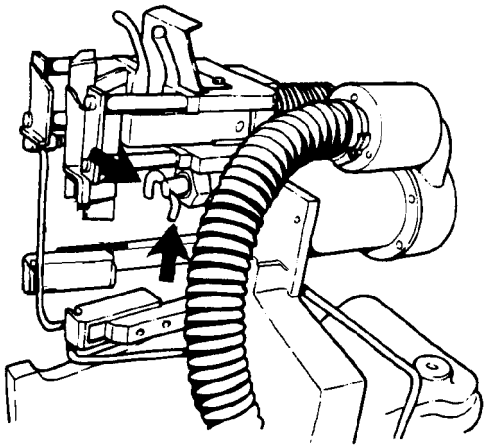

29

After finished external cleaning:

- open the final folder cover. Tilt the pivot frame forward and clean the hot air nozzles
- remove any burnt deposits with a brass wire brush and a knife
- make sure that the air holes are open

Tilt back the pivot frame.

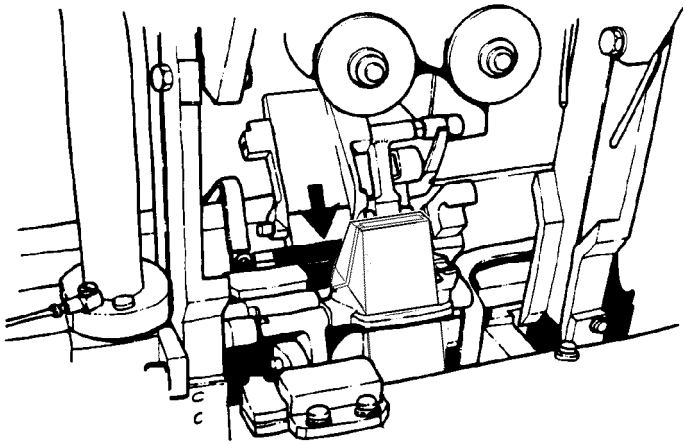

30

Crank the machine so that the inductors of the two jaw pairs become accessible.

Clean the inductors with a brass wire brush.

Rinse with water and blow the inductors and knives clean.

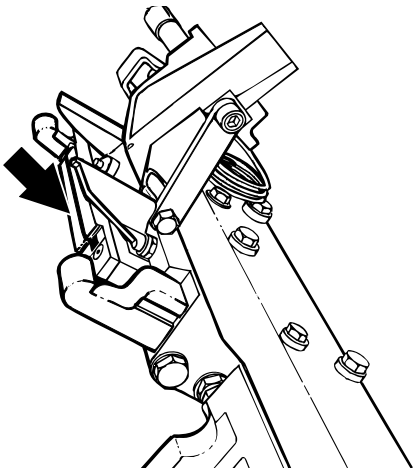

31

Check that the pressure rubbers are not deformed or worn. They must protrude **at least** 1 mm outside their holders.

Unscrew the screws and change any defective pressure rubber.

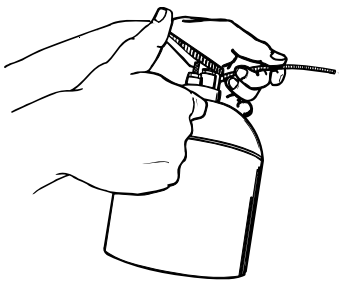

32

Check the oil levels in the machine, see section **Technical data**.

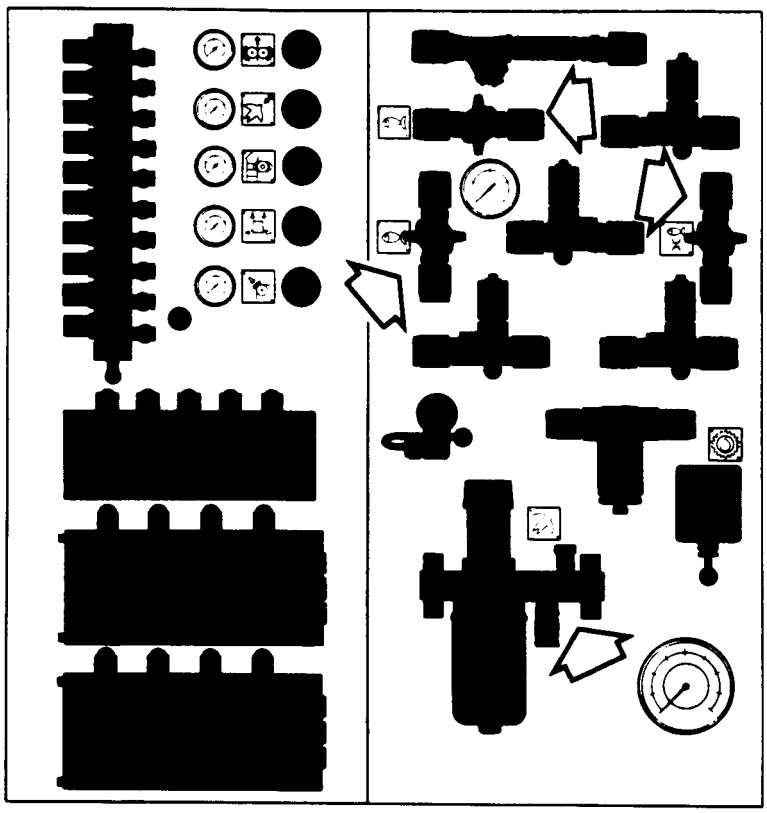

33

When CIP and external cleaning have been finished, close for cooling water and hot water.

34

After production care has now been completed.

When resuming Production, start from section **Preparation**, sub-section **Preparation after "After production care"**.

Weekly care

Carry out “After production care” after every production run.

at least once a week, also carry out the more comprehensive “Weekly care”

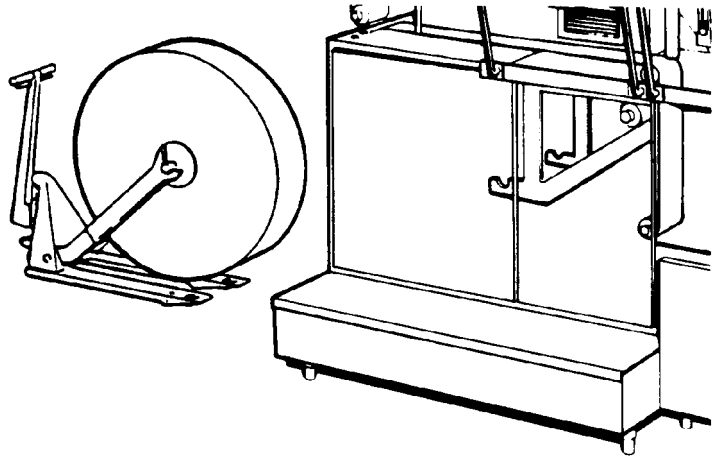

1

Open for air and cooling water.

Remove the reels of packaging material and LS strip from the machine. Pull the remaining packaging material out of the machine.

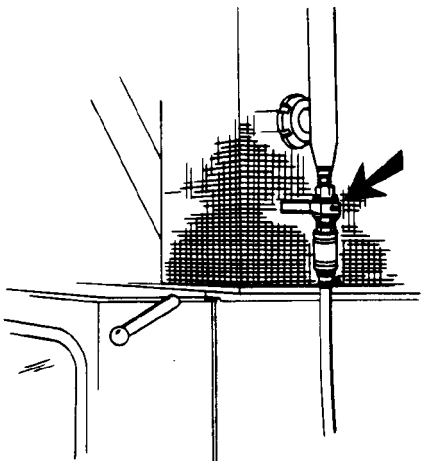

2

Open the valve and drain the

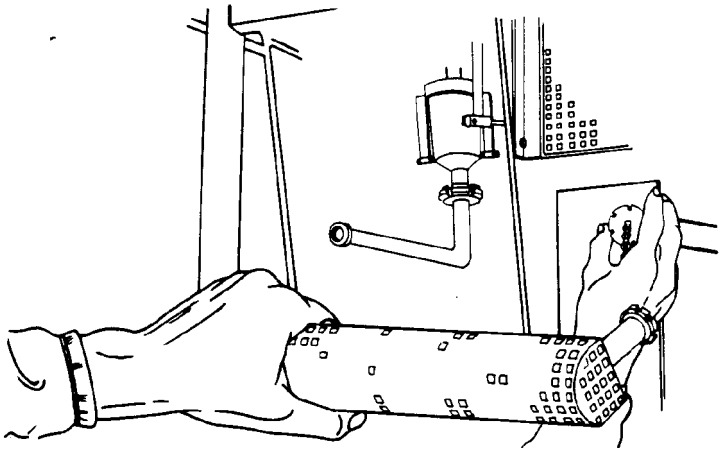

3

Remove the product pipe and put on the cap.

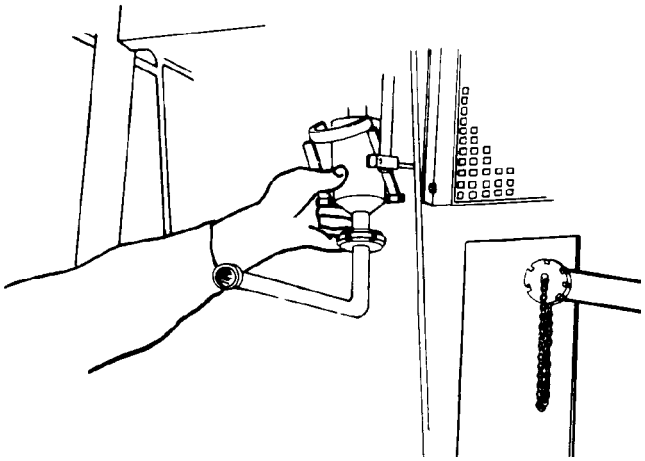

4

Remove the cleaning cup.
Check the O-ring.

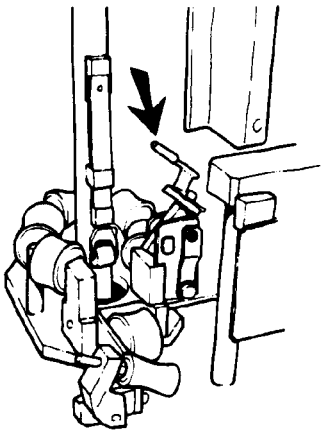

5

Raise the guide pin.

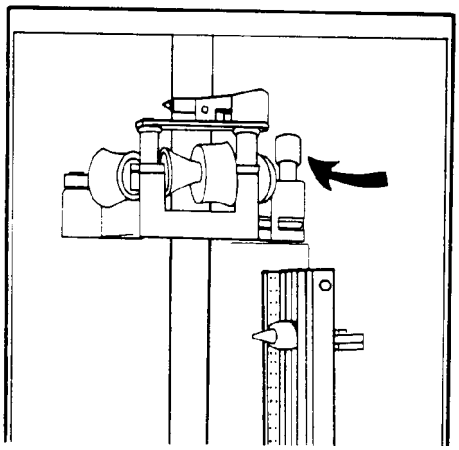

6

Open the split forming ring.

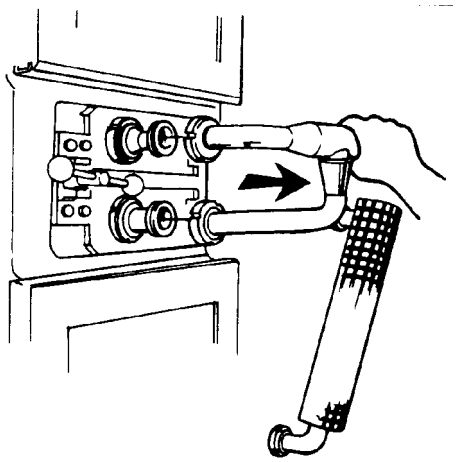

7

Remove the cleaning pipe.

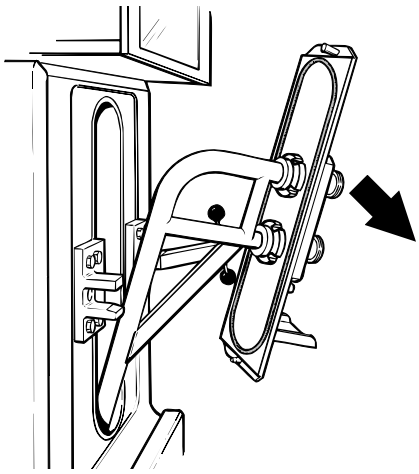

8a

Loosen the mounting bracket of the upper filling pipe and remove the pipe.

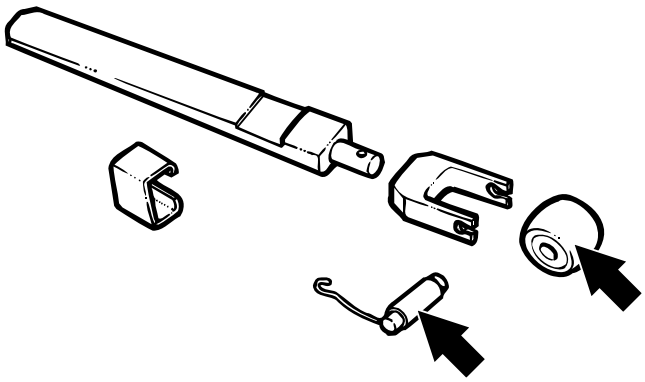

8b

Remove the LS strip pressure roller. If the roller and its shaft are defective, they must be replaced.

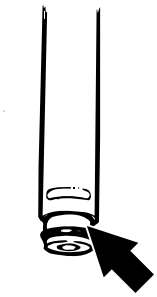

8c

Remove the O-ring from the filling pipe. Change the O-ring, if it is defective.

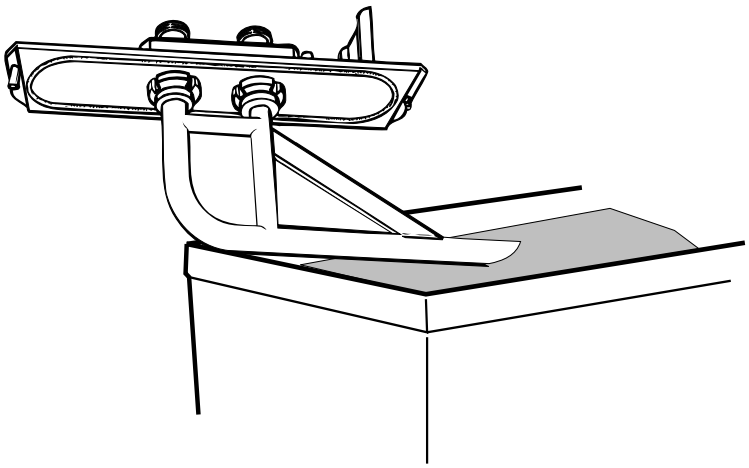

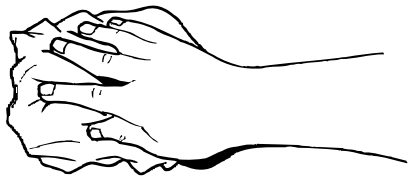

8d

WARNING!
Risk of personal injury! Detergent. Follow the Safety precautions.

CAUTION!
Chlorine or iodine based disinfectants and/ or detergents must not be used for disinfection of the lower filling pipe.

Carefully clean the filling pipe and the pressure roller with cleaning solution.
Fit the pressure roller.

Fit the roller and the O-ring to the pipe.

Rinse the pipe with clean water and lay it aside.

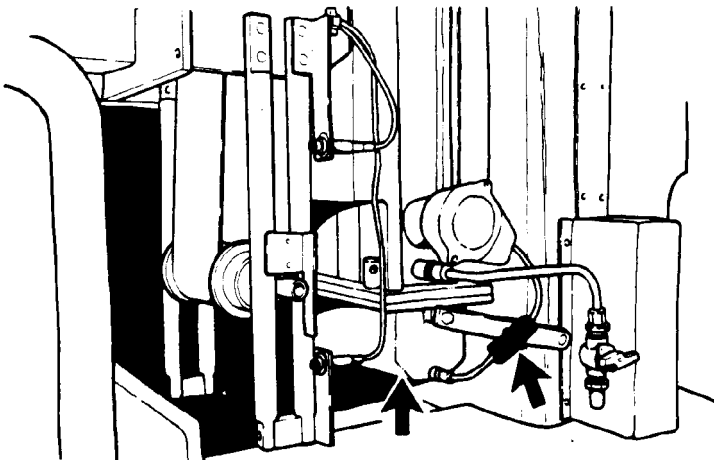

9

WARNING!
Risk of personal injury! Hydrogen peroxide. Follow the Safety precautions.

Remove the connector of the temperature sensor for the peroxide bath.

Loosen the lid of the peroxide bath.

Clean the lid and the bending roller.

Check the O-ring of the lid.
Install.

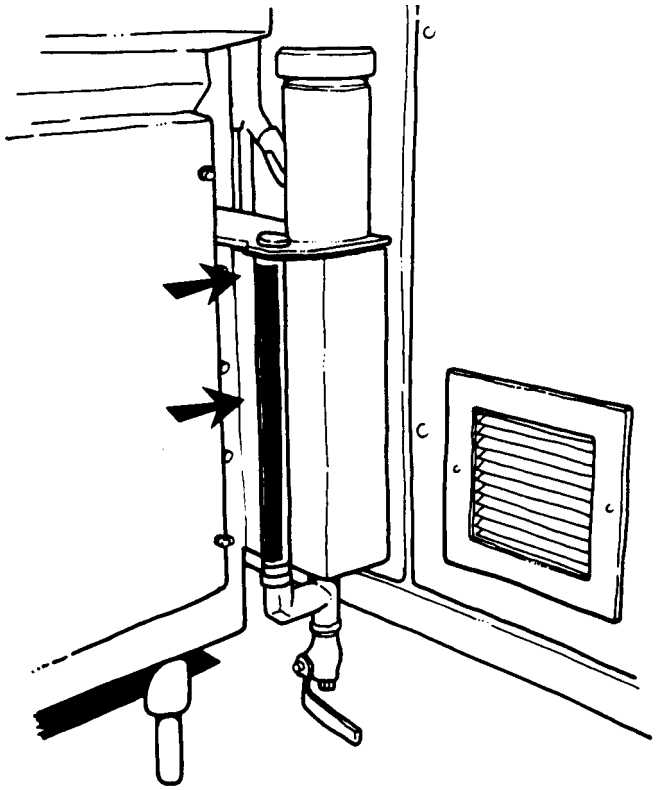

10

WARNING!
Risk of personal injury! Hydrogen peroxide. Follow the Safety precautions.

Change the sterilization liquid with regular intervals. Always change as soon as the peroxide concentration goes below 30%. When filling the peroxide container, see section Preparations.

Dilute with water when draining the old liquid.

The container is to be refilled with sterilization liquid according to section Sterilization liquid

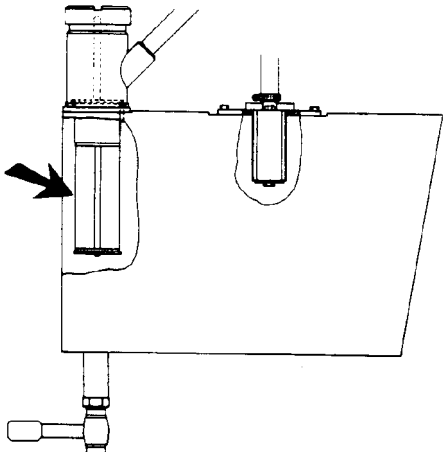

11

WARNING!
Risk of personal injury! Hydrogen peroxide. Follow the Safety precautions.

Remove the filter of the peroxide container.

Clean the filter.

Install

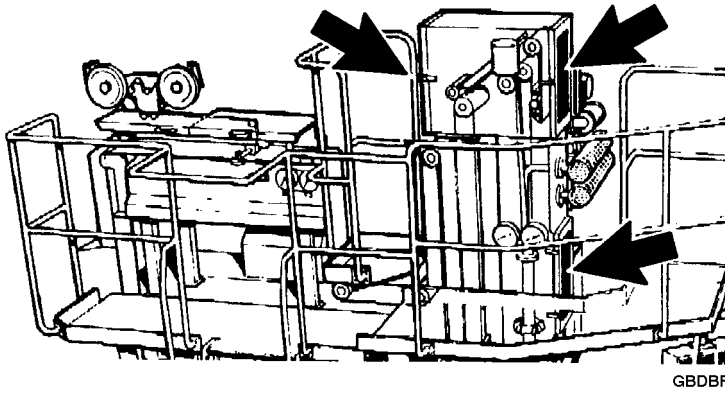

12

WARNING!
Risk of personal injury! Hydrogen peroxide. Follow the Safety precautions.

CAUTION!
Chlorine or iodine based disinfectants and/ or detergents must not be used for disinfection of the lower filling pipe.

Wash the inside of the aseptic chamber with detergent. rinse with clean water.

CAUTION!
Risk of production fault!
Avoid getting detergent and water into the opening of the hydrogen peroxide bath.

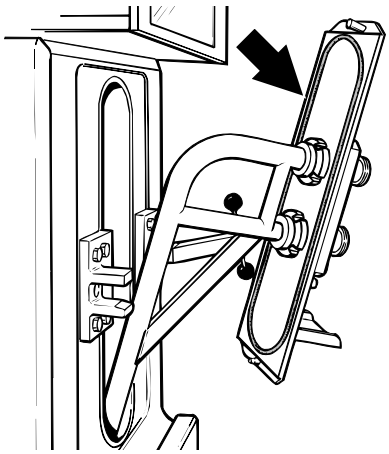

13

Check the O-ring of the upper filler tube. Fit the upper filler tube in the machine.

CAUTION!
Be careful not to damage the rollers of the LS nozzle, or to change their setting.

Make sure that the O-ring of the upper filler tube stays in the correct position.

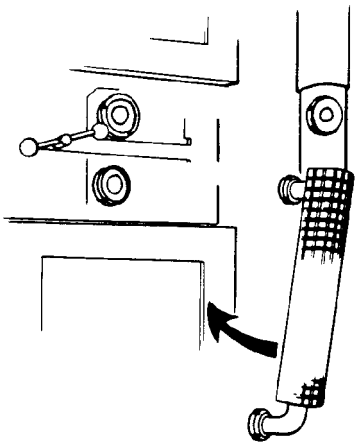

14

Connect the sterile air pipe.

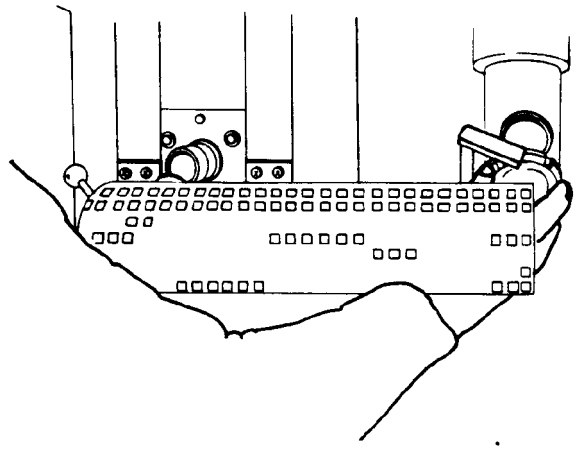

15

Connect the product pipe.

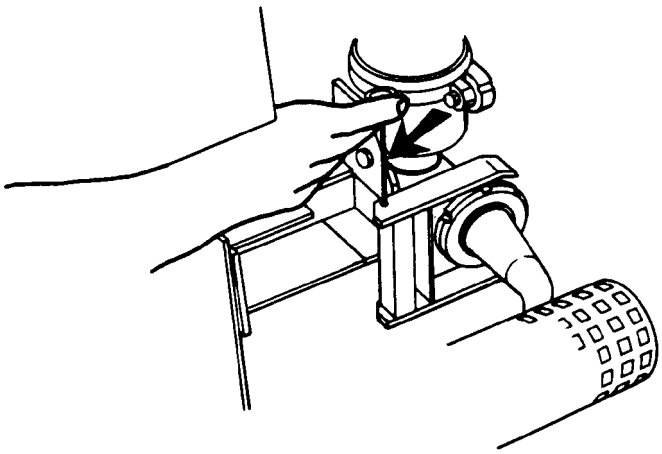

16

Swing the swivel arm back and insert the pin.

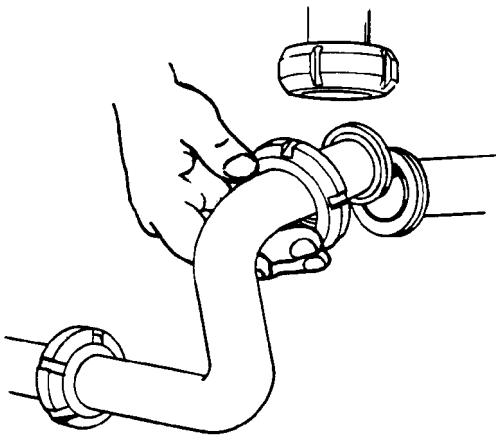

17

Remove the incoming cleaning pipe.

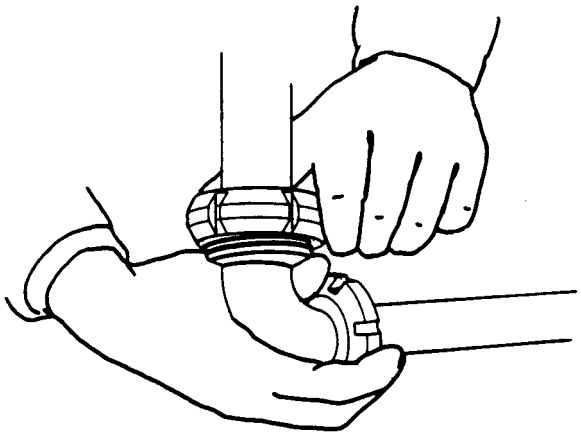

18

Connect the elbow pipe.

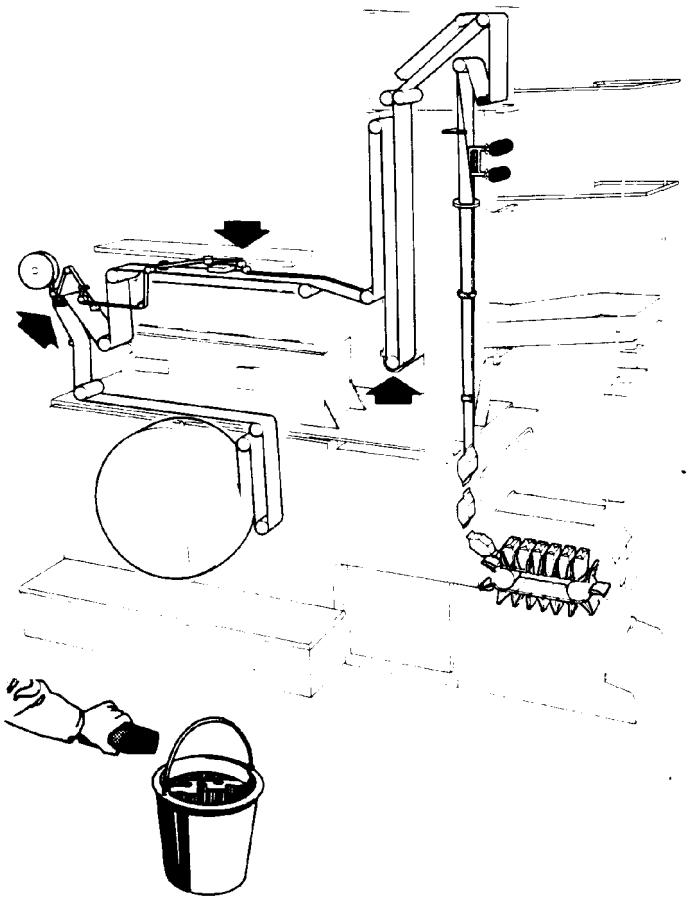

19

Make sure that the doors of the electrical cabinet are properly closed.

Clean with a damp cloth:

- The strip applicator
- The bending roller of the hydrogen peroxide bath

If you have use detergent, wipe off with another cloth and clean water.

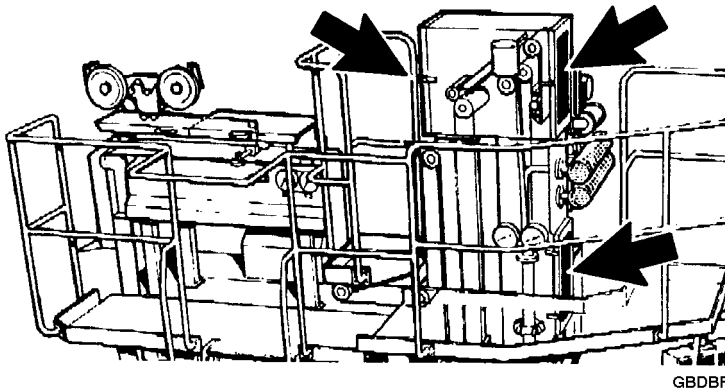

20

Close the doors of the aseptic chamber.

Clean with sponge and detergent the superstructure, the platform, and the top of the electrical cabinet.

Rinse with clean water.

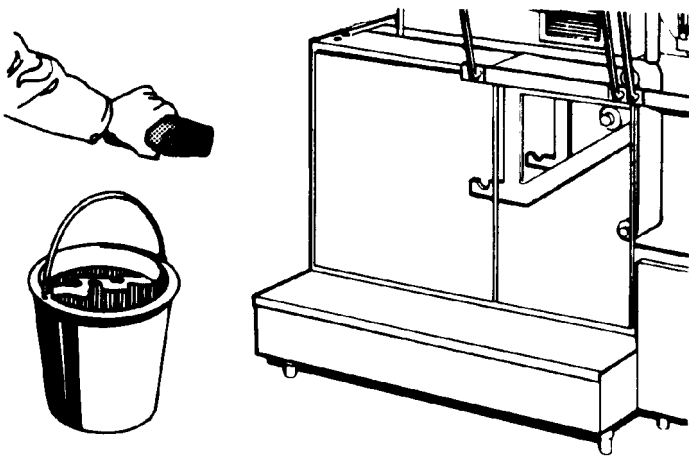

21

Pull out and lift off the cassette.

Wash the inside of the cassette and the brake unit.

Rinse with clean water and wipe off.

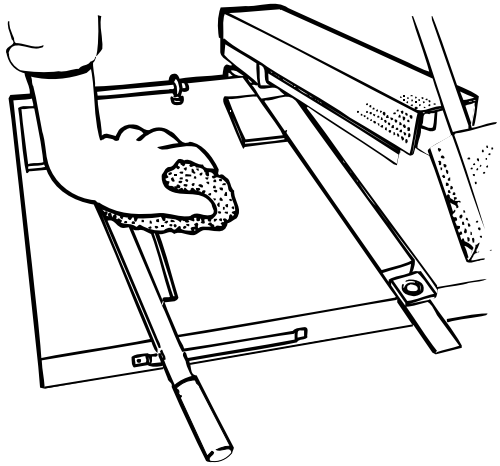

22

Clean the splicing table.

Rinse with clean water and wipe off.

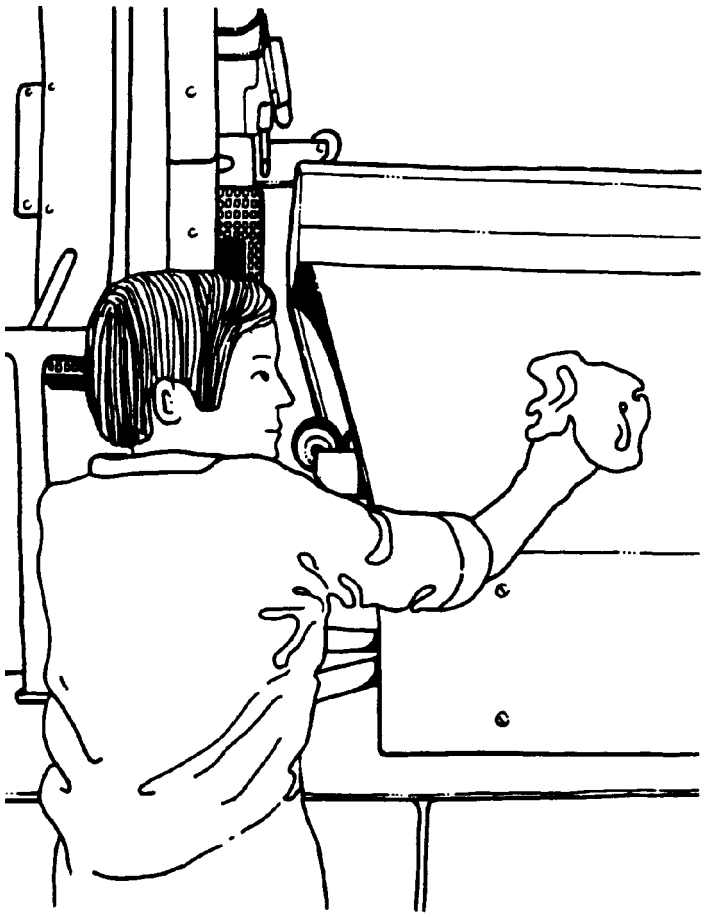

23

WARNING!
Risk of personal injury! Deliming agent. Follow the Safety precautions.

Clean the stainless steel plating, preferably with a deliming agent, or with 1% Phosphoric acid.

Rinse afterwards with clean water and wipe.

When the stainless steel has dried, rub it with paraffin oil.

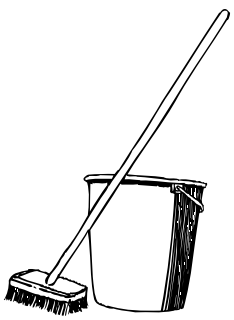

24

Make sure that the area under and around the machine is clean and tidy.

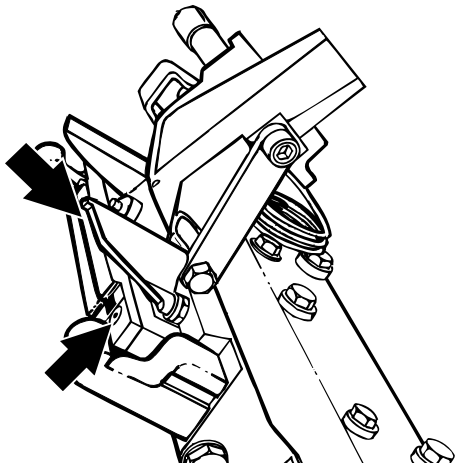

25a

WARNING!
Risk of personal injury! Lubricant. Follow the Safety precautions.

Crank the machine until one jaw pair is open. Open the final folder cover.

Unscrew the two screws and pull off the pressure rubbers.

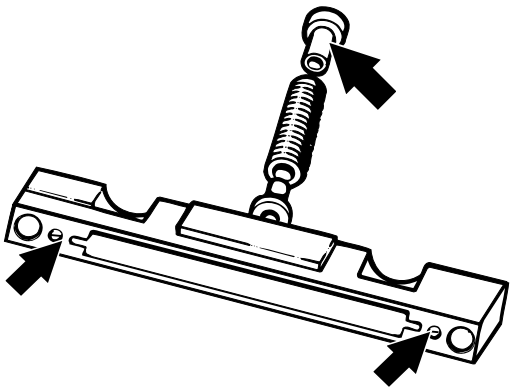

25b

WARNING!
Risk of personal injury! The knife is sharp.

Undo the two screws and pull out the knife holder.

Undo the screw holding the knife and dismantle the knife holder

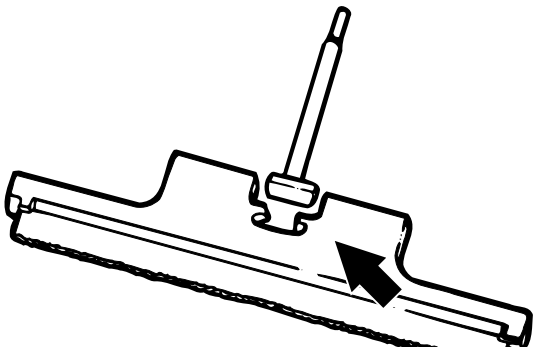

25c

Scrape both sides of the knife edge with a screw driver.

Wipe and grease the knife.



25d

Blow the spring and cutting jaw clean with compressed air.

Grease the spring.

Reassemble.

26

Cutting jaw oil change

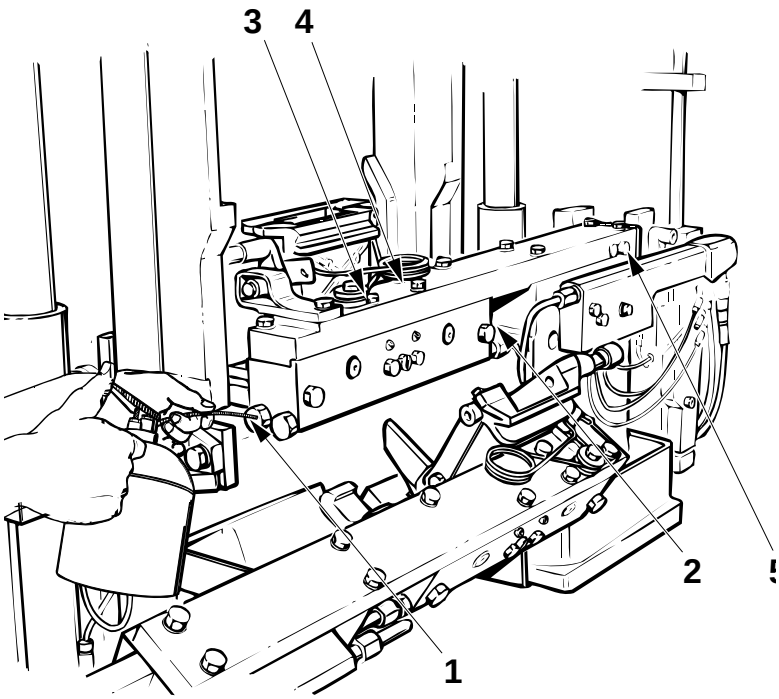

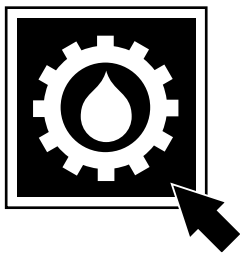

WARNING!
Risk of personal injury! Lubricant. Follow the Safety precautions.

Crank the machine until one jaw pair is in open position.

a) Drain the oil from the bearing housing by unscrewing the plugs in the drain holes (1) and (2) and the bleed holes (3) and (4).

b) Undo the pipe connection (5). Push Lubrication on and check that oil is discharged through the connection. If not, call a technician. Reconnect the oil pipe connection.

c) Blow clear with compressed air through the bleed holes (3) and (4).

d) Fill the bearing housing with oil, code H, see section **Technical data**.

e) Top up with oil through the drain hole (1).

f) When oil is flowing out through the bleed hole (3), put a finger over the hole, remove the oil can and fit the plug in the drain hole (1).

g) **Repeat the same procedure** and top up through the drain hole (2).

h) When oil is flowing out through the bleed hole (4), put a finger over the hole, remove the oil can and fit the plug in the drain hole (2).

i) Fit the bleed hole plugs.

Note!
Crank the machine and **repeat the procedure** for the other cutting jaw.

1 Drain hole
2 Drain hole
3 Bleed hole
4 Bleed hole
5 Pipe connection

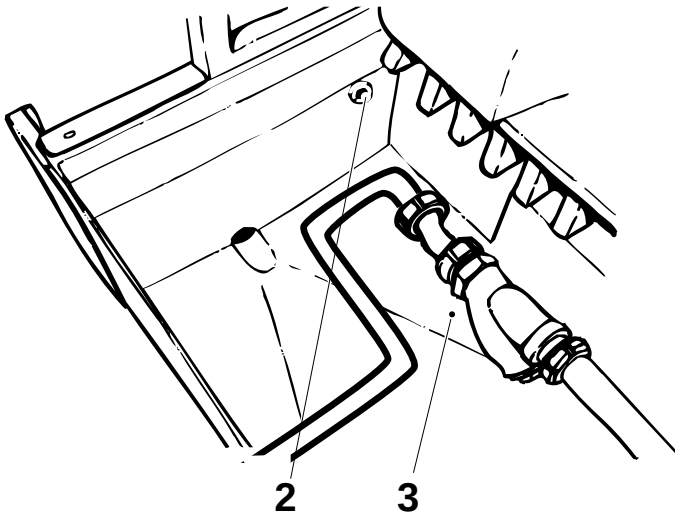

27

Disassemble and clean the filter (3) in the cleaning line.

Reassemble the filter.

Clean the level sensor (2) and remove any remnants of packaging material from the tray.

Make sure that the strainer (1) is clean

1 Level sensor
2 Filter

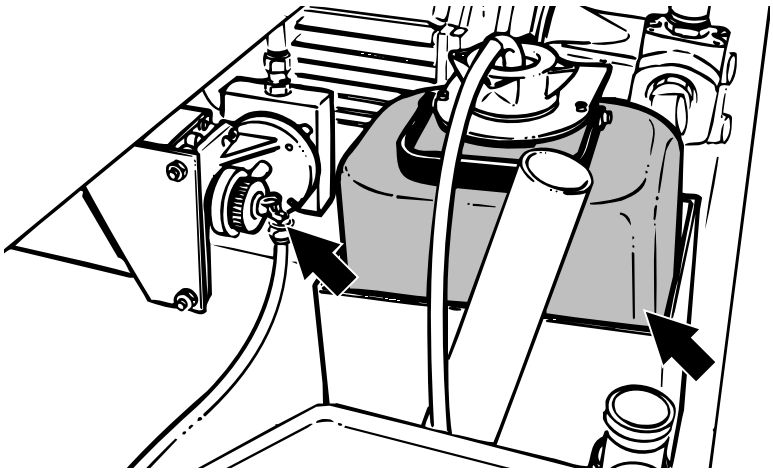

28

WARNING!
Risk of personal injury! Chemical product. Follow the Safety precautions.

Top up with detergent.

If consumption during the past week has been too high or too low, adjust it like this:

Turn counter-clockwise to increase detergent feed, or turn clockwise to reduce detergent feed. Make only very small adjustments.

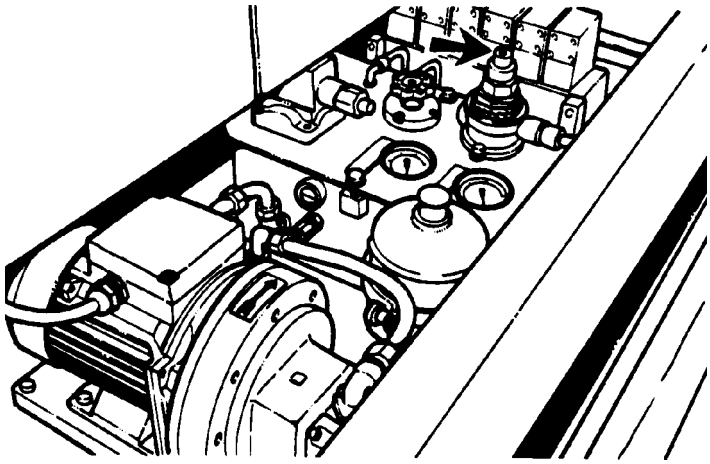

29

Check that the red button indicating clogged filter in hydraulic system has not been pushed up.

If so, replace the filter.

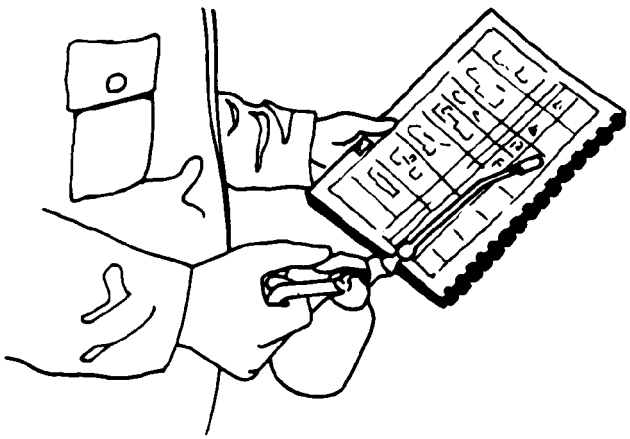

30

Check all the other oil levels in the machine according to section Lubrication

This page intentionally left blank

Sterilization liquid

This section contains information on how to proceed when handling the hydrogen peroxide used as sterilisation liquid

- **Concentration**

WARNING!
Risk of personal injury! Hydrogen peroxide. Follow the Safety precautions.

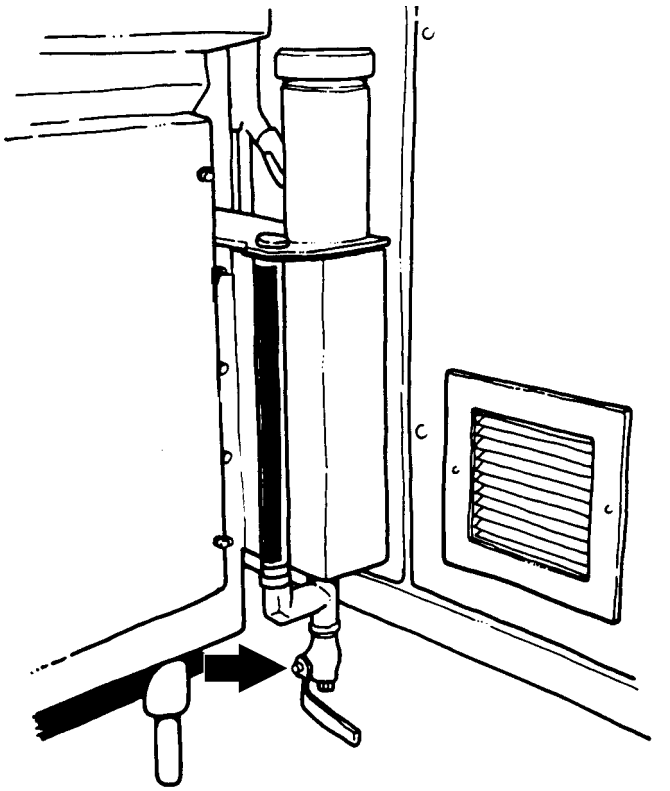

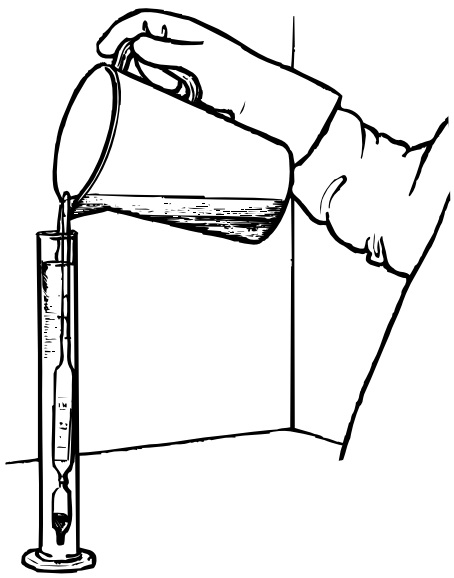

Concentration 1

The following equipment is required:

- aerometer with termometer
- graduated cylinder of plastic with an inside diameter of 35 - 50 mm

CAUTION!
The equipment must be thoroughly cleaned.

Open the valve (arrow) and draw approx 250 ml of hydrogen peroxide from the machine into a clean vessel.

Pour a small amount of hydrogen peroxide into the graduated cylinder. Lower the areometer into the cylinder making sure that there is enough to float the areometer.

If there are air bubbles on the areometer, stir gently until the bubbles disappear.

Read the density at the liquid level on the areometer and at the same time read the temperature.

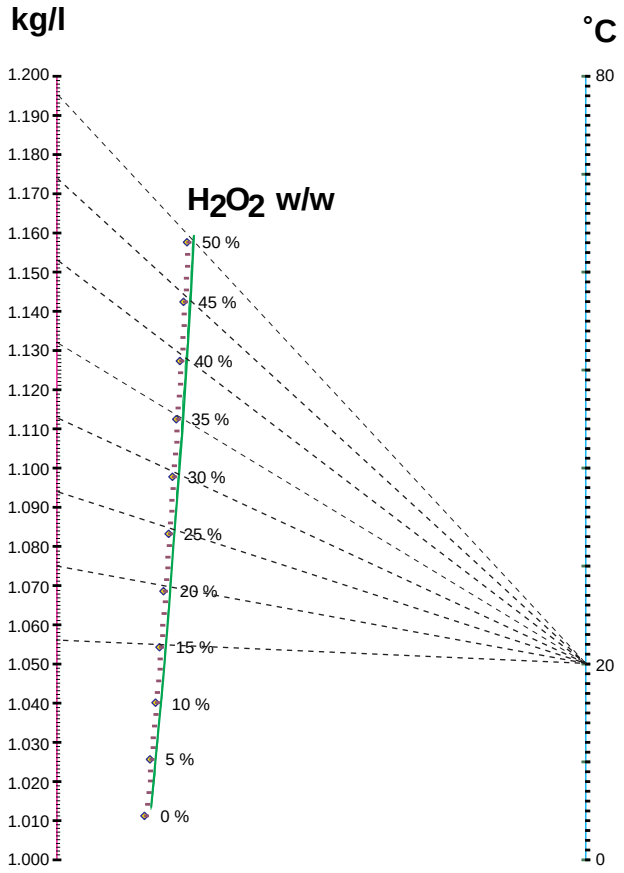

2

Evaluate the hydrogen peroxide concentration (in terms of percent by weight) from the nomogram.

With a ruler, join the density value of the sample with the temperature value to get the hydrogen peroxide concentration.

Note!

Note!

Photocopying and/or resizing the nomogram may distort its accuracy. This could lead to incorrect evaluation of the hydrogen peroxide concentration.

To check the accuracy of the nomogram, refer to the following table reporting the concentration and density values calculated at 20 °C:

°C	kg/l	% w/w
20	1.056	15
20	1.075	20
20	1.094	25
20	1.113	30
20	1.132	35
20	1.153	40
20	1.174	45
20	1.195	50

If the concentration is **below 30% or above 50%**, change the hydrogen peroxide. See *Hydrogen peroxide change* in this section.

Note!

If the hydrogen peroxide concentration is **between 30% and 35%**, repeat the check every 30 min.

If the concentration decreases, stop the machine and call a technician.

Hydrogen peroxide concentration (by weight)

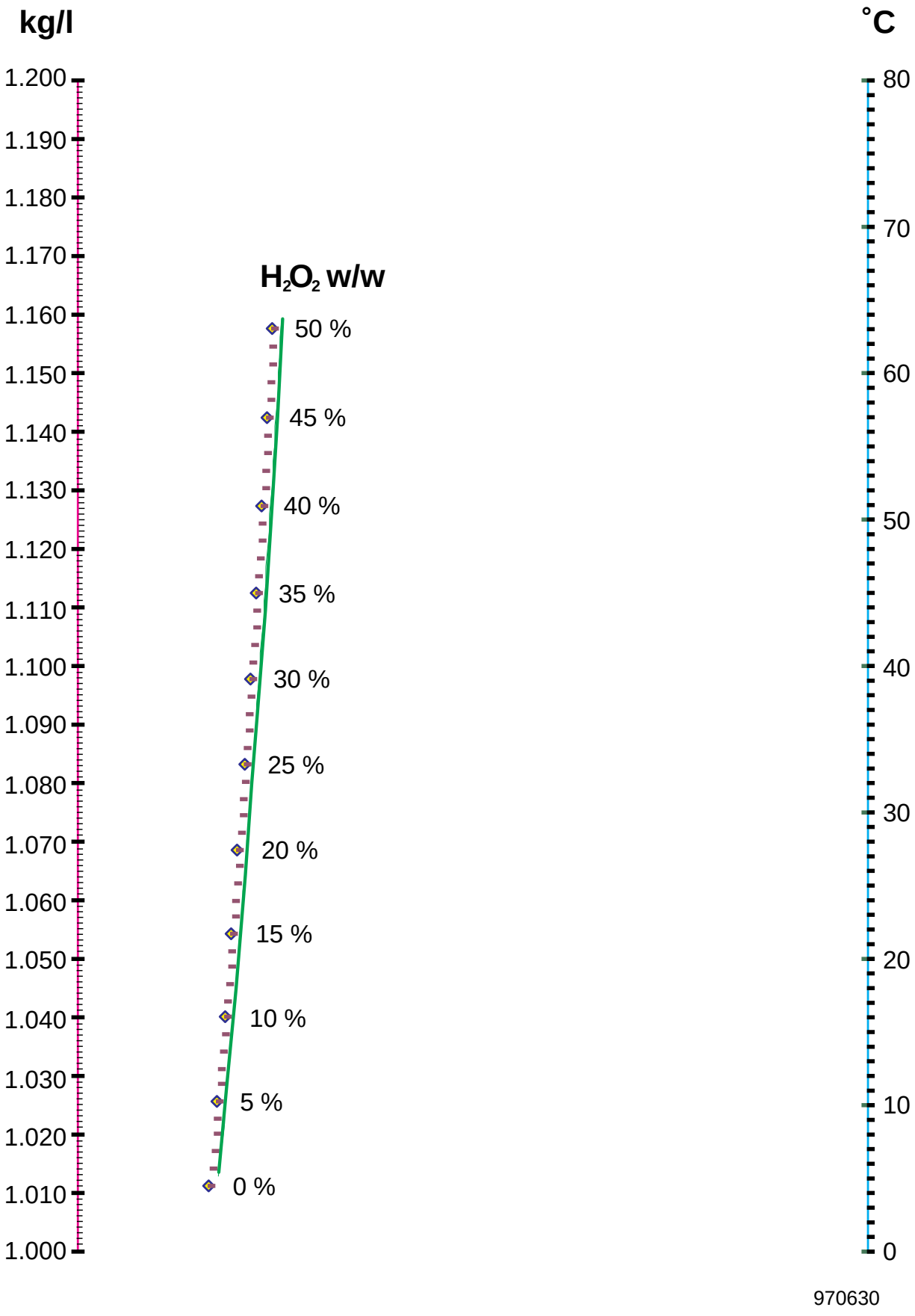

This page intentionally left blank

Lubrication

Description Action	Daily	Weekly	Lubricant, see chart	
CENTRAL LUBRI-CATION SYSTEM AND PUMP 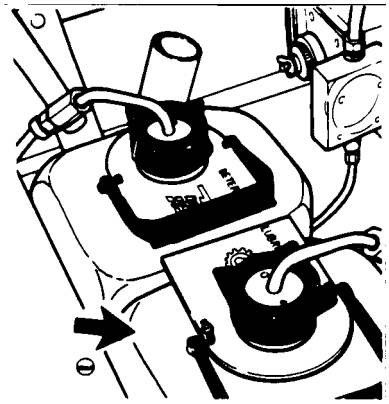			H	Check oil level, top up if required.
HYDRAULIC SYSTEM 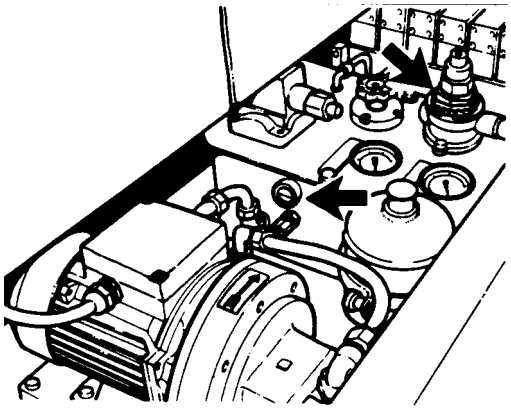			C	Check oil level, top up if required.
WORM GEAR IN FINAL FOLDER 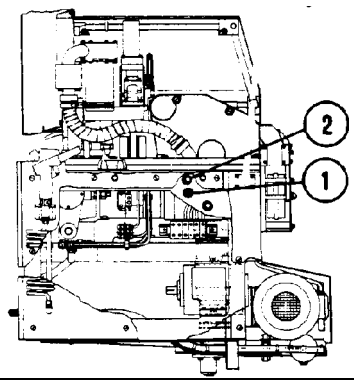			H	Remove the side cover Check oil level (!), top up if required (2). (1) Level glass (2) Filling plug
INDEXING UNIT IN FINAL FOLDER 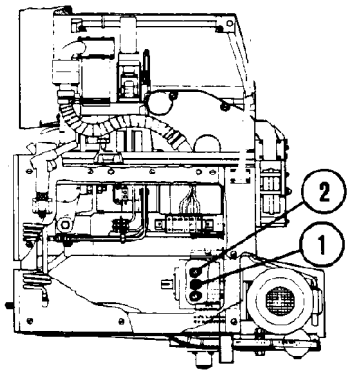			H	Remove the side cover Check oil level (!), top up if required (2). (1) Level glass (2) Filling plug

Lubrication

Description Action	Daily	Weekly	Lubricant, see chart	
KNIFE HOLDER AND SPRING IN CUTTING JAWS 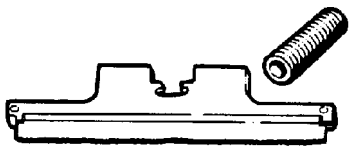			F	Grease
WORM GEAR ASEA (blue) 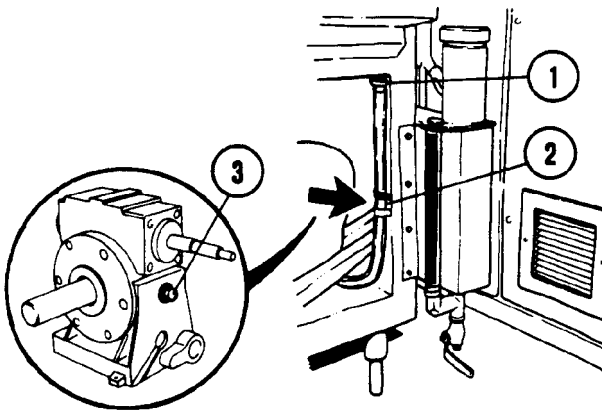			H	Check oil level, top up if necessary. **Note!** When checking the oil level the plugs (1) and (3) must be removed. Oil filling (cold gear): - Removeplugs (1) and (3) - Top up with oil to mark (2) on pipe - Fit plugs (1) and (3)
WORM GEAR HIGHFIELD (yellow) 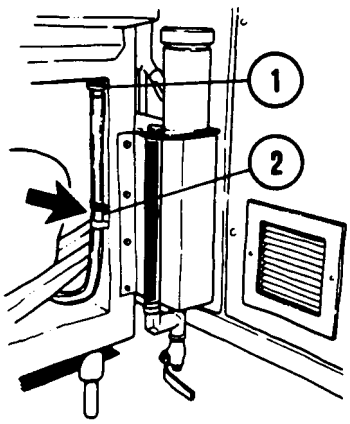				Check oil level, top up if necessary. Oil filling (cold gear): - Removeplug (1) - Top up with oil to mark (2) on pipe - Fit plug (1)

The table below lists only a selection of lubricants with their respective designations. Comparable lubricants from other suppliers may be selected with the aid of the lubricant specifications (document No in the table).

Lubricant specifications may be ordered from Technical Standardization, AB Tetra Pak, Ruben Rausings gata S-221 86 Lund Sweden

Lubricant Code	Document No	Material No (internal TP designation for material type)	Part No (used when ordering from Tetra Pak)	Example	
				Supplier	Product designation
A Motor Oil	M 1251.122	51122-85	90 296-28	BP ESSO Statoil Mobil Shell	Energol HD 20W-30 Essolube XD-3 PowerWay D4/ DieselWay D2 HD 20W-30 Shell X-100 20W-30
E Compounded cylinder oil	M 1254.922	54922-460	90 296-77 90 296-2	BP ESSO Statoil Mobil Shell	Energol AC-C460 Cylesso TK 460 CylWay FZ 460 600W super Cylinder Oil Valvata Oil J460
F Lithium, grease EP type	M 1255.115	55115-20	90 296-68	BP ESSO Statoil Mobil Shell	Energrease LS EP 2 Grease XRB 2EP Esso MP Grease/ Beacon EP 2 UniWay EP 2N Mobillux EP 2 Calithia EP Grease T 2 Grease 1344 LiEP 2
H Highpressure oil	M 1254.322	54322-320	90 296-75	BP ESSO Statoil Mobil Shell	Energol GR-XP 320 Spartan EP 320 LoadWay EP 320 Mobilgear 632 Omala oil 320
		54322-220 For use in production plant with start temperature below 5^{oC}	90 296-73 90 296-78	BP ESSO Statoil Mobil Shell	Energol GR-XP 220 Spartan EP 220 LoadWay EP 220 Mobilgear 630 Omala oil 220
K Circulation oil	M 1254.942	54942-100	90 296-15	BP ESSO Statoil Mobil Shell	Energol CS 100 Teresso 100 TubeWay 100 DTE Oil Heavy Tellus OIl 100
Q FTPE Lubricating grease	M 1255.622	55622-20	90 296-91	Sikema	Fluolub 175

This page intentionally left blank

Technical data

The machine is set according to this data sheet at the factory. It can varies depending on the environment were the machine is installed.

Function	Unit	Value
INCOMING MEDIA		
Input air	MPa	0.5
Input cooling water	MPa	0.30 – 0.45
Hot water, temperature	°C	min 70
Input steam, pressure	MPa	0.24 - 0.28
Product pressure (depending on local conditions)	MPa	0.05 - 0.20
Product pressure (allowed variation)	MPa	± 0.01
Power, voltage	V	380
Power, frequency	Hz	50/60
PRESSURE SETTING		
SA sealing	kPa	2.7
SA sealing, short stop	kPa	2.0
LS sealing	kPa	2.2
LS sealing 125ml	kPa	1.6 - 1.7
LS sealing, short stop	kPa	2.0
Cutting jaw	MPa	8.0 - 9.0
Jaw pressure	MPa	8.6 - 9.6
Design correction	MPa	0.20 - 0.30
Flap sealing	MPa	0.15 - 0.25
Squee-gee roller 125ml	MPa	0.23
Squee-gee roller 180-250m	MPa	0.3
Paper guide plate	MPa	0.10 - 0.15
Air to spray container	MPa	0.30

Function	Unit	Value
TEMPERATURE SETTING		
Input steam temperature	°C	125 - 130
SA sealing	°C	290
LS sealing, temperature	°C	255
PEROXIDE CONSUMPTION		
NOISE		
Emission sound pressure level, L_{PA}		
Sound emission	dB(A)	
Individual deviation[a]	dB(A)	

a. The value includes the uncertainty of measurement with respect to the accuracy of the measurement method and to the production variation.

This page intentionally left blank