SPC
Spare Parts Catalogue

TBA/9 Wedge

595156-0200

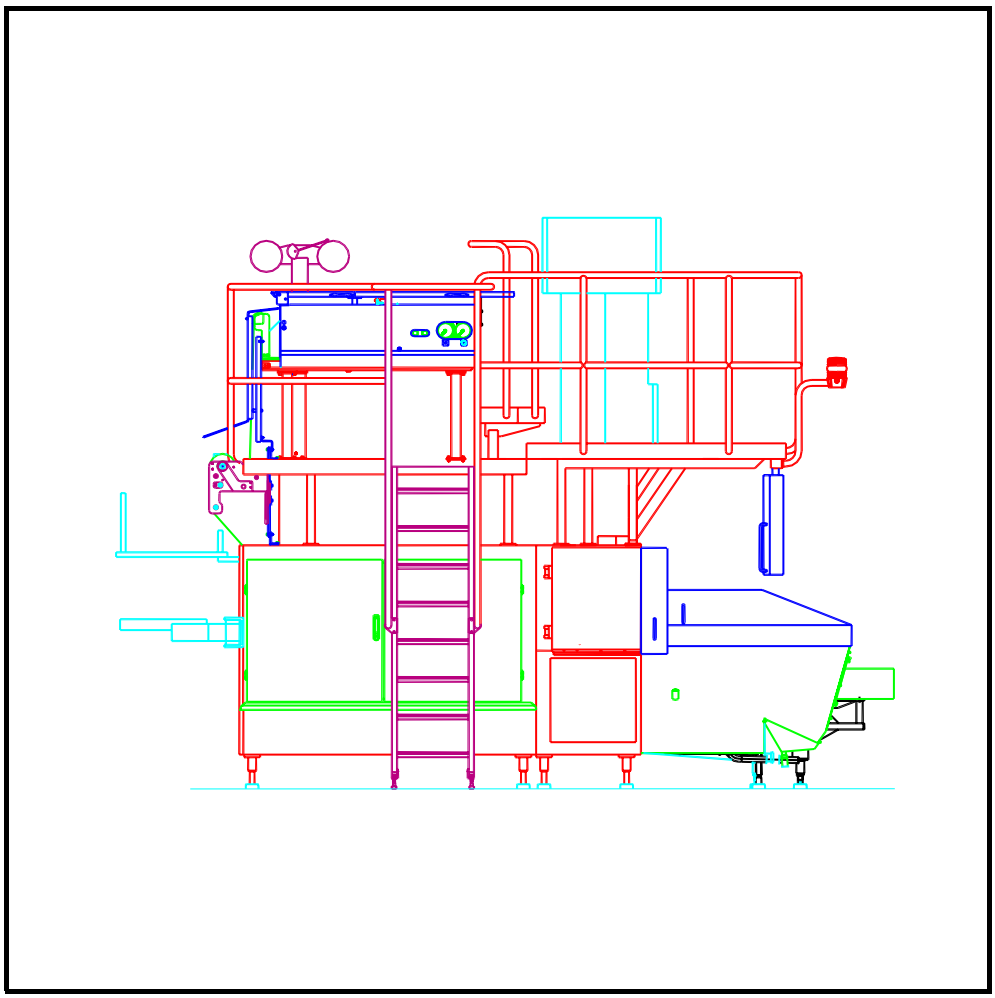

Tetra Pak

Doc No: SPC-80270-0102

For the correct machine data, check your machine specification, supplied with the machine!

This document is valid for:

Series No/ Machine No Sign.

SPC
Spare Parts Catalogue

TBA/9 Wedge
595156-0200

Equipment Included:

To check your actual machine data and eventual installed extra equipments, check the machine specification, supplied with the machine
delivery!

Order/add necessary documents.

Table of Content:

Introduction **4**

Superstructure
595165-0100 ..... **13**

Machine Body .....

Drive Unit
595161-0100 ..... **53**

Jaw System
595163-0100 ..... **73**

Final Folder
648112-0200 ..... **97**

Strip Applicator
595162-0100 ..... **185**

Regular Accessories
595170-0100 ..... **197**

Service Unit
594946-0100 ..... **203**

Tetra Wedge El-kit **209**

Part number index **235**

Doc No: SPC-80270-0102

Issue 2000-03

Tetra Pak

Tetra Brik Packaging Systems AB

General information

Manufacturer

This machine is produced by:
Tetra Brik Packaging Systems AB
Ruben Rausings gata
221 86 Lund /Sweden

Document producer

This document has been produced by:
Tetra Brik Packaging Systems AB
Technical Publications
Ruben Rausings gata
221 86 Lund /Sweden

Number of pages

This document contains totally **256 pages,** including the first **14** introduction pages.

Copyright © 2000 Tetra Brik Packaging Systems AB

All rights reserved. No parts of this document may be reproduced or copied in any forms or by any means, without written permission from Tetra Brik Packaging Systems AB.

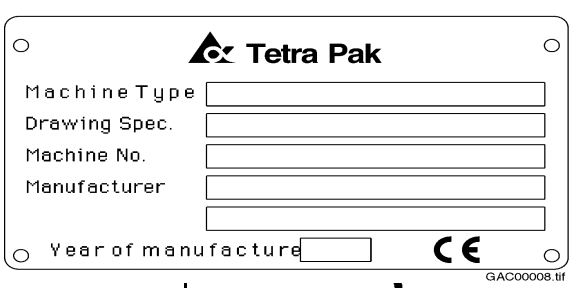

Figure 1

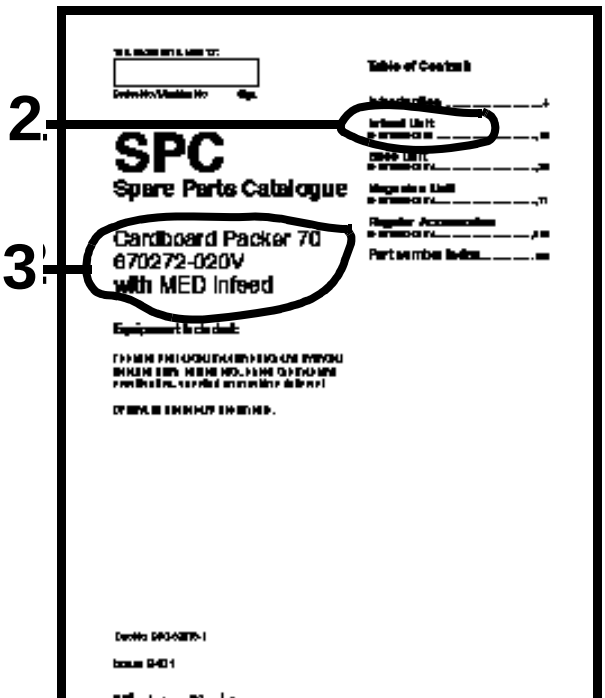

Figure 2

Figure 3

A-678544-0401 (V)

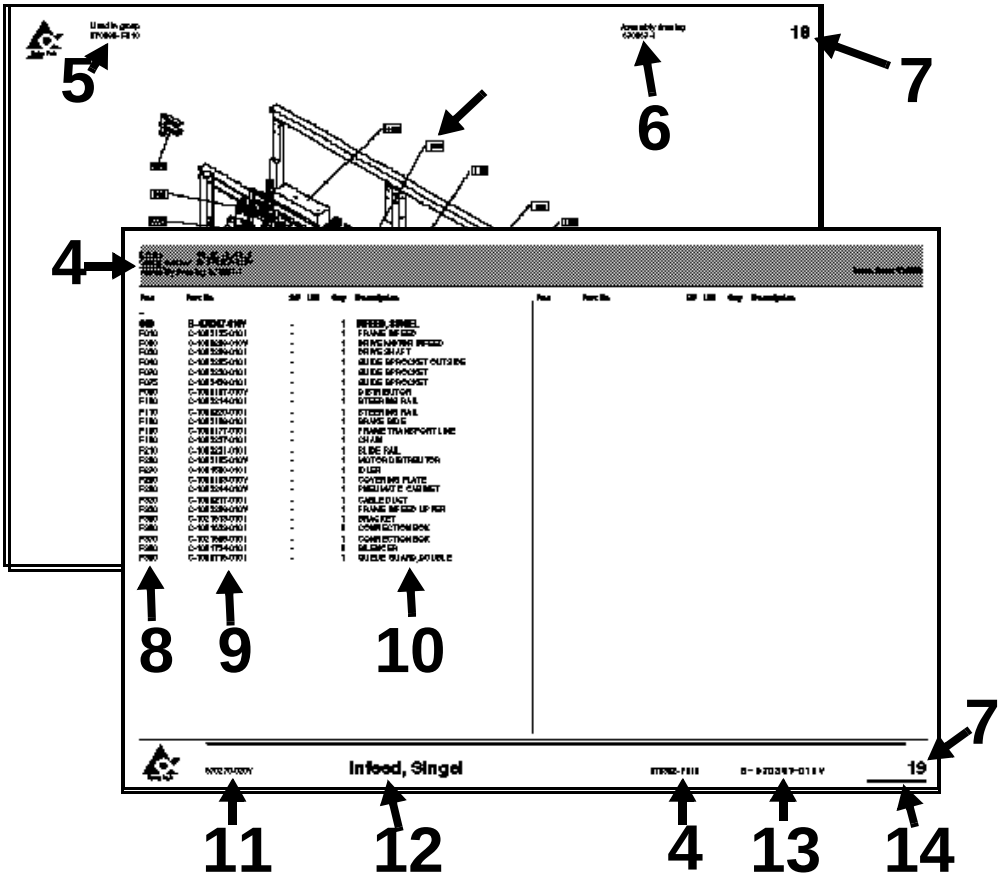

Figure 4

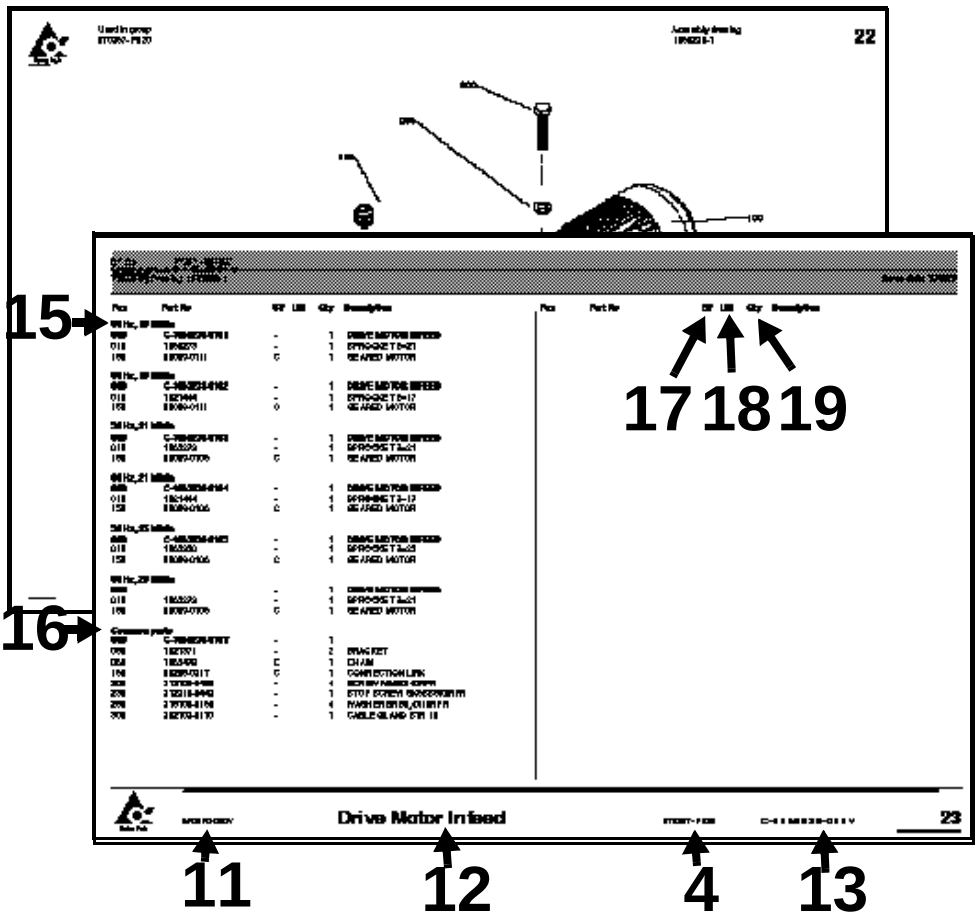

Figure 5

General information

Service

When ordering spare parts for your machine, contact the nearest Tetra Pak service station.

Machine identification

This machine plate is an example of the type of machine plate, attached to the machine frame. The plate carries data needed when contacting Tetra Pak concerning this particular machine.
The location of the different machine plates is shown on the page “Location of machine number plates”, **see page 2**

Purpose of the Spare Parts Catalogue.

The purpose of the Spare Parts Catalogue (SPC) is to provide the technicians and contact personnel with information on how to find and order spare parts for maintenance and service of the machine.
For instructions of how to replace parts and adjust machine setup, see the Maintenance Manual (MM).

Delivered documentation

The technical documentation delivered with this machine is stated in the Machine Specification.
Note! If any of these documents is missing, it must be reported in the document **Start Up Machine Quality Report.** For more information, see chapter 8 Preparation for Commissioning in the Installation Manual.
It is important that you keep these documents for the life of the equipment, and pass the documents on to any subsequent holder or user of the equipment.

Design modification

The content of this document is in accordance with the design and construction of the machine at the time it was delivered from the Tetra Pak machine production facility.

Copyright © 2000 Tetra Brik Packaging Systems AB

All rights reserved. No parts of this document may be reproduced or copied in any forms or by any means, without written permission from Tetra Brik Packaging Systems AB.

Further copies

Additional copies can be ordered from the nearest Tetra Pak service station. When ordering technical publications, always quote the document number printed on the front cover of the document concerned.

Tetra Pak Part numbering system

The third and forth digits in the subnumber, specify one unique group which can be ordered. If the forth digit is replaced by a “V”, the number combination only points to a bill-of-material document.
The first and second digits in the sub-number, specify the development step (model) of the machine or group. **(see fig. 3)**
Main number of machine /group /article, depending on level.
Prefix, giving information about level, eg.
A = Machine
B = Main section (*****)
C = Groups and subgroups
***)** Customized distribution machines are registered as B-level as well.

How to find the correct Spare Part Number

A. Check that the data on your machine sign, and /or machine specification, corresponds with the catalogue. **(see fig.1)**

1) Main groups of the machine

B. The second catalogue sheet contains a table of content for the main groups, included in the catalogue. The information regarding machine and main group status MUST correspond with your machine specification.
Locate and choose the main groups page number (1), in which you want to search for spare parts.
(see fig. 2)

2) Main group
3) Machine type

C. Search in the main group illustration, the item number, which may hold your wanted spare part. Go to the text page below and find the page number for the actual group. **(see fig. 4)**

4) Internal information, such as latest Engineering Change, bill-of-material included in the catalogue page.
5) Used-In reference to next higher level in the machine structure
6) Assembly drawing number
7) Continuous page numbering through the document
8) Pos number corresponding to illustration
9) Group or article number.
10) Group or article description. The letter “B” in front of some article numbers indicates that this article contains other parts, shown in an additional page at the end the section. Letter “A” indicatates a subgroup number with an own page directly after the actual page.
11) Machine type including development staus
12) Group description
13) Group number (bill-of-material) including development status
14) Document number

D. Continue to the found page number, and search in the illustration for your spare part. Go to the text row for the found item number, and read the part number. Take eventual variant headings in consideration; if you are unsure, read your machine specification. **(see fig. 5)**

15) Variant heading, eg volume, left /right etc.
16) Heading for common parts
17) SP = Code for articles, which are included into various spare part kits.

A = Stop function, no rep/available/bypassed	I = 1000 operating hours
B = Stop function, rep/available/bypassed	J = 2000 operating hours
C = Don’t stop function, can be bypassed	K = 3000 operating hours
D = Seldom break, long time production	L = 4000 operating hours
E = 100 operating hours	M = 5000 operating hours
F = 250 operating hours	N = 6000 operating hours
G = 500 operating hours	O = 7000 operating hours
H = 750 operating hours	P = 8000 operating hours

18) UN = Short code for measure units, eg mm, kg etc.
19) Qty = Number of items needed in the complete assembly.

SPC

Spare Parts Catalogue

This page is intentionally left blank

Pos	Part No	SP	UN	Qty	Description	Page No
TBA/9-100V 0200B or TBA/9-100V 0250B or TBA/9-110V 0200B or TBA/9-110V 0250B						
020	A 558892-0100	-		1	TETRA WEDGE EL-KIT	209
030	A 559521-0100	-		1	EL. RK SERVOKIT	211
040	A 649480-0100	-		1	ELECTRIC EQUIPMENT	219
050	A1360746-0100	-		1	TWA/9 VOLUME DETAILS	221
TBA/9-100V 0200S or TBA/9-110V 0200S						
020	A 558892-0100	-		1	TETRA WEDGE EL-KIT	209
030	A 559521-0100	-		1	EL. RK SERVOKIT	211
040	A 649480-0100	-		1	ELECTRIC EQUIPMENT	219
TBA/9-120V 0200S						
020	A 558892-0100	-		1	TETRA WEDGE EL-KIT	209
030	A 559521-0100	-		1	EL. RK SERVOKIT	211
040	A 649480-0100	-		1	ELECTRIC EQUIPMENT	219
TBA/9-130V 0200S						
030	A 559476-0100	-		1	EL. RK TETRA WEDGE	215
TBA/9-120V 0200B or TBA/9-120V 0250B						
020	A 558861-0100	-		1	TETRA WEDGE EL-KIT	207
030	A 559466-0100	-		1	EL. RK SERVOKIT	213
040	A 649480-0100	-		1	ELECTRIC EQUIPMENT	219
050	A1360746-0100	-		1	TWA/9 VOLUME DETAILS	221
TBA/9-130V 0200B or TBA/9-130V 0250B						
030	A 559476-0100	-		1	EL. RK TETRA WEDGE	215
050	A1360746-0100	-		1	TWA/9 VOLUME DETAILS	221
TBA/9-140V 0200B or TBA/9-140V 0250B						
030	A 559491-0100	-		1	EL. RK TETRA WEDGE	217
050	A1360746-0100	-		1	TWA/9 VOLUME DETAILS	221
TBA/9-140V 0200S						
030	A 559491-0100	-		1	EL. RK TETRA WEDGE	217
Common parts						
010	A 595168-0200	-		1	TBA/9 WEDGE MECH.KIT	9
060	A1360747-0100	-		1	TWA/9 WEARING OUT DETAILS	221
000	1360750-0000	-		1	DOCUMENT FOLDER	

Pos	Part No	SP	UN	Qty	Description	Page No

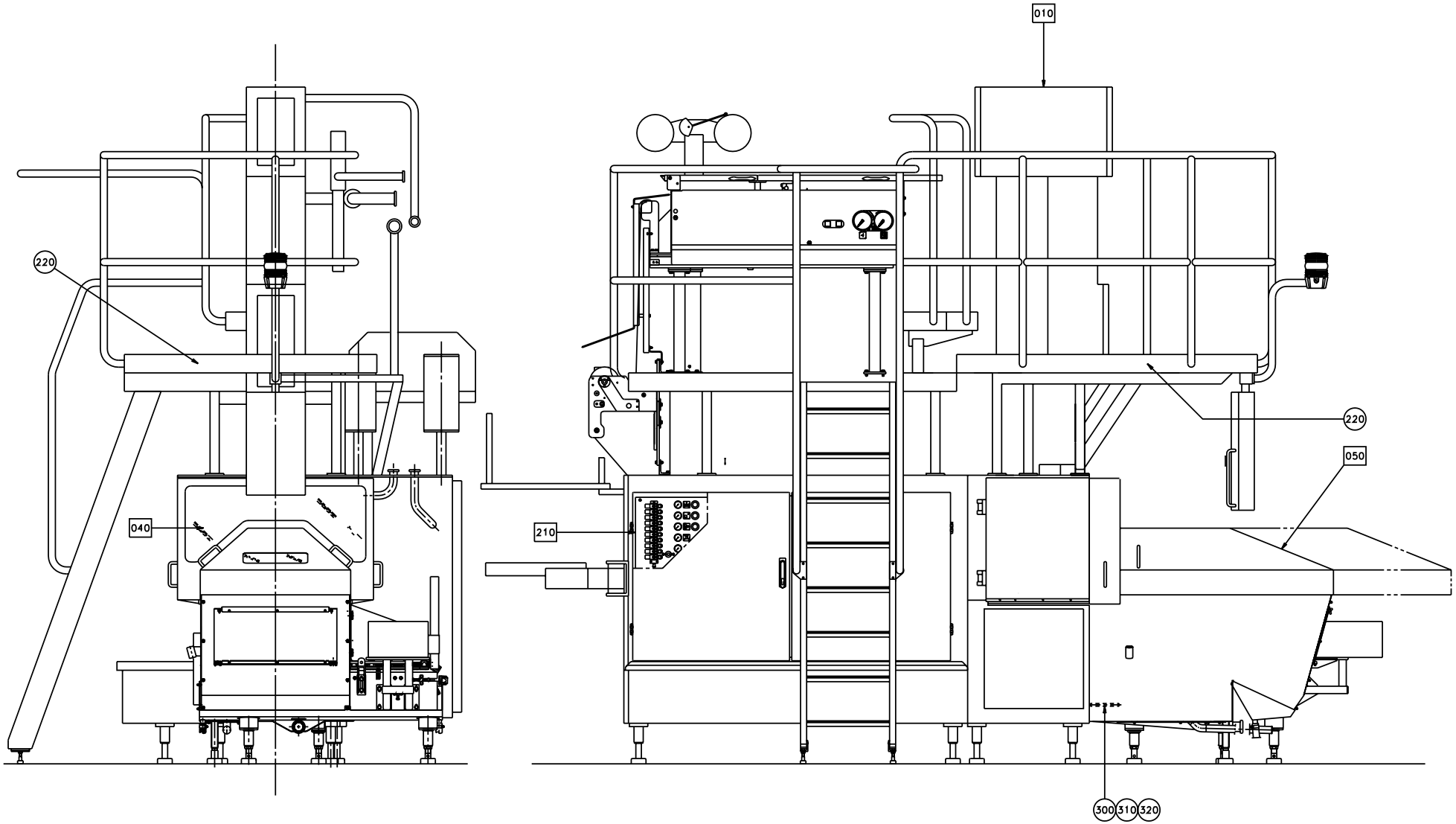

59516801.eps
595168-1
ECN 70960

Pos	Part No	SP	UN	Qty	Description	Page No
TBA/9-100V or TBA/9-110V or TBA/9-120V						
210	A 595164-0100	-		1	VALVE PANEL FRONT	165
TBA/9-130V						
210	A1360721-0100	-		1	VALVE PANEL FRONT	37
TBA/9-140V						
210	A1360722-0100	-		1	VALVE PANEL FRONT	39
Common parts						
010	A 595165-0100	-		1	SUPERSTRUCTURE	13
030	A 595161-0100	-		1	DRIVE UNIT	53
040	A 595163-0100	-		1	JAW SYSTEM	73
050	A 648112-0200	-		1	FINAL FOLDER	97
070	A 595162-0100	-		1	STRIP APPLICATOR	185
090	A 595170-0100	-		1	REGULAR ACCESSORIES	197
100	A 594954-0100	-		1	CONVEYOR FRAME	201
200	A 594946-0100	-		1	BENDING ROLLER	203
220	A 458383-0100	-		2	PAPER REEL HOLDER	41
230	272886-0000	-		1	RULER	
240	272888-0000	-		1	RULER	
250	469085-0000	-		1	RULER	
260	591441-0000	-		2	MACHINE PLATE	
290	1360742-0000	-		1	PLATE	
300	B 594958-0000	-		1	PIPE WATER	
305	1360668-0000	-		1	HOLDER	
310	B1360667-0000	-		1	PIPE WATER	
320	342736-0109	-		1	ELBOW CONNECTION W-12	
325	342711-0115	-		1	ACCESSORIES,PLUG PL-15 AND 16	

Pos	Part No	SP	UN	Qty	Description	Page No

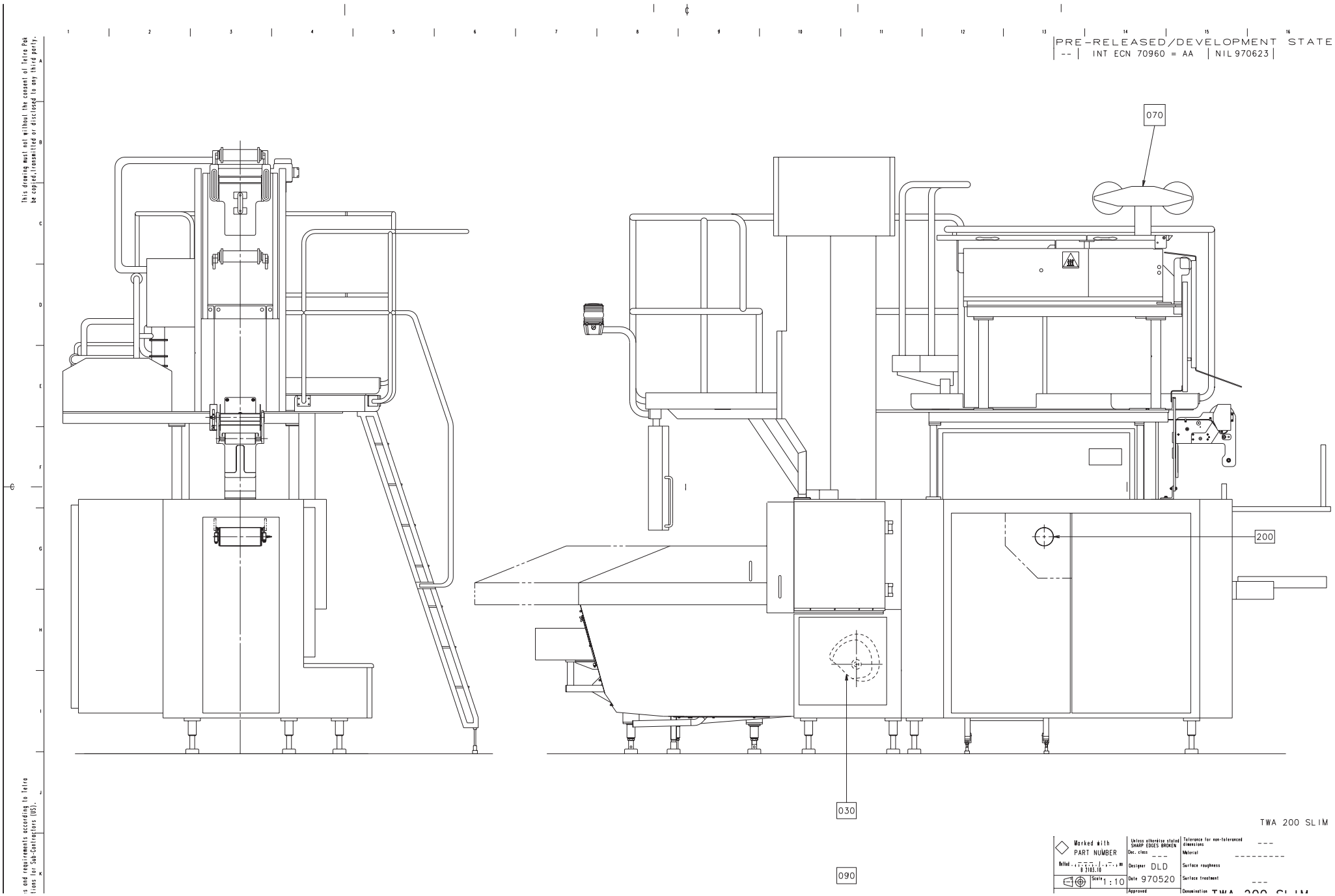
PRE-RELEASED/DEVELOPMENT STATE
-- INT ECN 70960 = AA NIL 970623
070
200
030
090
TWA 200 SLIM
Marked with PART NUMBER
Scale 1:10
Designer DLD
Date 970520
Approved
Material
Surface roughness
Surface treatment
Denomination TWA 200 SLIM

Pos	Part No	SP	UN	Qty	Description	Page No
TBA/9-100V or TBA/9-110V or TBA/9-120V						
210	A 595164-0100	-		1	VALVE PANEL FRONT	165
TBA/9-130V						
210	A1360721-0100	-		1	VALVE PANEL FRONT	37
TBA/9-140V						
210	A1360722-0100	-		1	VALVE PANEL FRONT	39
Common parts						
010	A 595165-0100	-		1	SUPERSTRUCTURE	13
030	A 595161-0100	-		1	DRIVE UNIT	53
040	A 595163-0100	-		1	JAW SYSTEM	73
050	A 648112-0200	-		1	FINAL FOLDER	97
070	A 595162-0100	-		1	STRIP APPLICATOR	185
090	A 595170-0100	-		1	REGULAR ACCESSORIES	197
100	A 594954-0100	-		1	CONVEYOR FRAME	201
200	A 594946-0100	-		1	BENDING ROLLER	203
220	A 458383-0100	-		2	PAPER REEL HOLDER	41
230	272886-0000	-		1	RULER	
240	272888-0000	-		1	RULER	
250	469085-0000	-		1	RULER	
260	591441-0000	-		2	MACHINE PLATE	
290	1360742-0000	-		1	PLATE	
300	B 594958-0000	-		1	PIPE WATER	
305	1360668-0000	-		1	HOLDER	
310	B1360667-0000	-		1	PIPE WATER	
320	342736-0109	-		1	ELBOW CONNECTION W-12	
325	342711-0115	-		1	ACCESSORIES,PLUG PL-15 AND 16	

Pos	Part No	SP	UN	Qty	Description	Page No

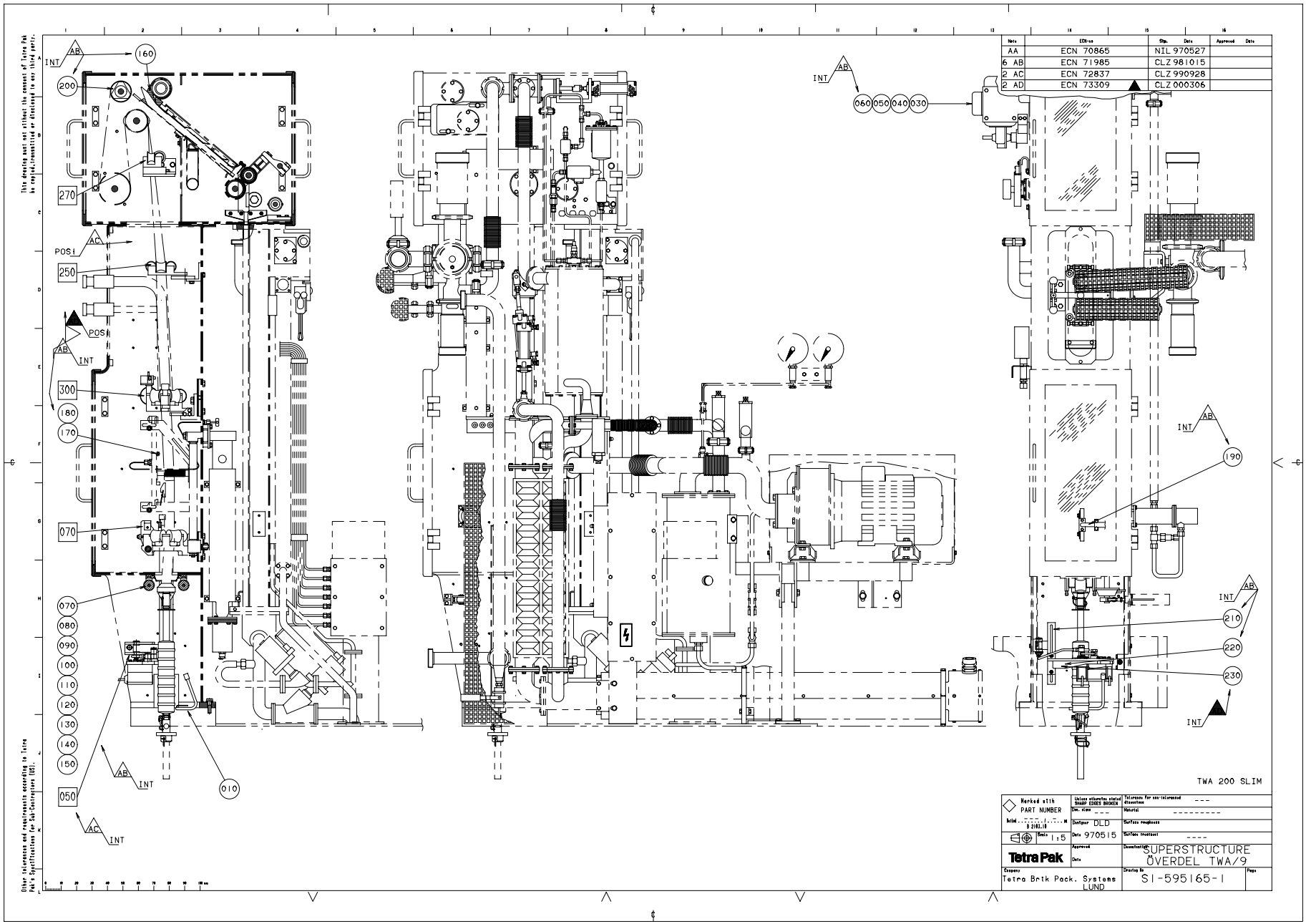
INT
AB
160
200
270
POS I
AC
250
POS
300
180
170
070
080
090
100
110
120
130
140
150
050
010
060
040
030
190
210
220
230
TWA 200 SLIM
SUPERSTRUCTURE
ÖVERDEL TWA/9
SI-595165-1
Tetra Pak
Tetra Brik Pack. Systems
LUND

Pos	Part No	SP	UN	Qty	Description	Page No
TBA/9-100V TBA/9-110V						
F050	A 491976-0200	-		1	PHOTOCELL UNIT	15
TBA/9-120V TBA/9-130V TBA/9-140V						
210	751456-0000	-		1	HOLDER	
220	751476-0000	-		1	CANTILEVER	
230	752554-0000			4	SPACER	
Common parts						
F070	A 456309-0500	-		1	LOWER FORMING RING	21
F250	A 441304-0400	-		1	MOVABLE FORMING RING	25
F270	A 441307-0300	-		1	UPPER TUBE SUPPORT	27
F300	A 441486-0400	-		1	DIVIDED FORMING RING	33
010	571103-0000	D		1	NOZZLE	
030	209331-0005	D		1	GEAR WHEEL	
040	594963-0000	K		1	GEAR WHEEL	
050	90348-0007	K		1	FREE WHEEL COUPLING	
060	456527-0000	K		1	BENDING ROLLER	
070	490901-0000	J		1	SEAL	
080	571537-0000	-		1	RING	
090	571539-0000	-		1	RING	
100	490903-0000	J		2	SHAFT	
110	751230-0000	G		4	PLAIN BEARING	
120	456996-0000	K		2	ROLLER	
130	490902-0000	R		4	AXLE SUPPORT	
140	571540-0000	R		2	PIN	
150	315204-0309	J		1	O-RINGS 89,5X3	
160	271820-0002	-		1	STEERING RAIL	
170	256899-0000	J		1	SHAFT	
180	469461-0000	I		1	ROLL	
190	571532-0000	D		1	BRACKET	
200	752858-0000	-		1	POINTER	

Pos	Part No	SP	UN	Qty	Description	Page No

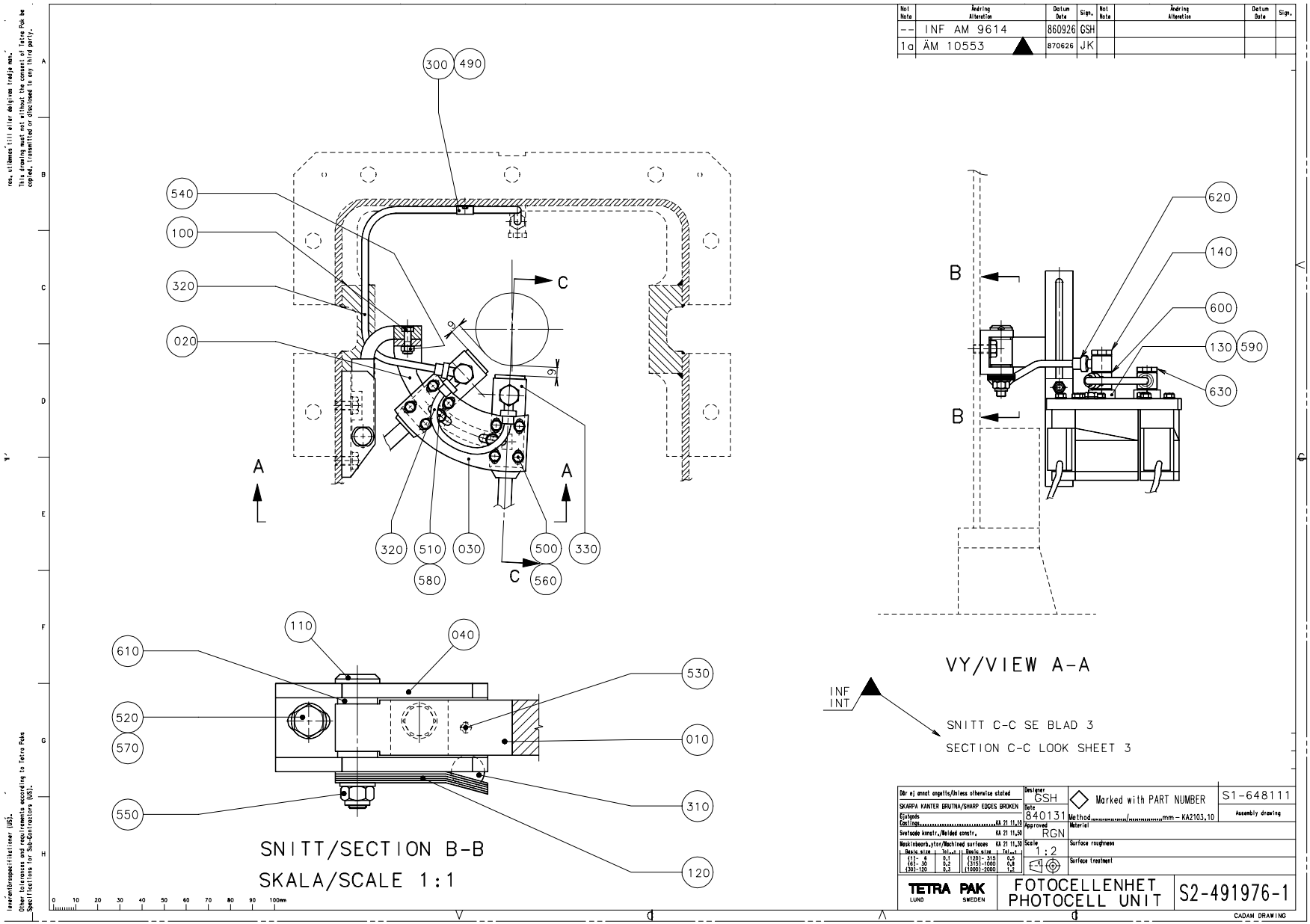
Not Note
Ändring Alteration
Datum Date
Sign.
-- INF AM 9614 860926 GSH
1a ÄM 10553 870626 JK
300
490
540
100
320
020
C
A
320
510
030
500
330
580
560
620
140
600
130
590
630
B
110
040
610
530
520
570
010
550
310
120
SNITT/SECTION B-B
SKALA/SCALE 1:1
VY/VIEW A-A
INF
INT
SNITT C-C SE BLAD 3
SECTION C-C LOOK SHEET 3
Dör ej annat angetts/Unless otherwise stated
SKARPA KANTER BRUTNA/SHARP EDGES BROKEN
Gjutgods Castings KA 21 11,10
Svetsade konstr./Welded constr. KA 21 11,50
Maskinbearb.ytor/Machined surfaces KA 21 11,30
Designer GSH
Date 840131
Approved RGN
Scale 1:2
Marked with PART NUMBER
Method mm - KA2103,10
Material
Surface roughness
Surface treatment
S1-648111
Assembly drawing
TETRA PAK
LUND SWEDEN
FOTOCELLENHET
PHOTOCELL UNIT
S2-491976-1
CADAM DRAWING

Pos	Part No	SP	UN	Qty	Description	Page No
0125S 0200S						
010	490873-0000	-		1	HOLDER	
020	491542-0000	-		1	CANTILEVER	
030	491880-0000	-		1	FASTENING PLATE	
040	490876-0000	-		1	BRACKET	
0180B 0200B 0250B						
010	490873-0000	-		1	HOLDER	
020	490874-0000	-		1	CANTILEVER	
030	490875-0000	-		1	FASTENING PLATE	
040	490876-0000	-		1	BRACKET	
0236B						
010	491844-0000	-		1	HOLDER	
020	491873-0000	-		1	CANTILEVER	
030	490875-0000	-		1	FASTENING PLATE	
040	491845-0000	-		1	BRACKET	
Common parts						
100	450628-0000	-		2	STEERING REPBY 0312105-0370	
110	457367-0000	-		1	SHAFT	
120	457368-0000	-		5	SPRING	
130	458054-0000	-		2	BUSHING REPBY 0548337-0000	
140	522187-0000	-		1	HOLLOW SCREW	
150	536374-0000	-		2	WASHER	
300	90074-0001	-		1	CLIPS, Cable clips di=10 mm	
310	90090-0016	-		1	STEEL BALL SKF RB-15 RS	
320	90166-0124	-	MM	750	TUBE 6 mm PA 11/12,Transp.	
330	90232-0055	K		2	Ph.cell NT6-14920S17	
490	312105-0287	-		1	SCREW M6S ISO 4017 M4x8 A280	
500	312105-0329	-		10	SCREW M6S ISO 4017 M5x16 A280	
510	312105-0366	-		2	SCREW M6S ISO 4017 M6x12 A280	
520	312105-0449	-		2	SCREW M6S ISO 4017 M8x16 A280	
530	312318-0323	-		1	SET SCREW CUP POINT ISO 4029 M5X8 RFR	
540	312812-0316	-		2	NUT,HEXAGON,LOCK,WITH NYLON IN-	
SERT,M6						
550	312812-0318	-		1	LOCK-NUT,HEXAGON,WITH NYLON,M8	
560	315105-0146	-		8	WASHER,PLAIN ROUND 5,3x10 Stainless	
570	315115-0165	-		2	WASHER TBRB 8,4x16 Stainless	
580	315115-0153	-		2	WASHER TBRB 6,4x12 Stainless	
590	315204-0116	K		2	O-RINGS 18,1X1,6	
600	315233-0110	K		3	PLAIN ROUND,NYLON R1/4"	
610	321101-0143	-		2	FLANGE BUS 8F7X8	
620	342980-0114	-		3	BANJO-CONNECTION,RING 6/4-G1/4"	
630	342980-0304	-		1	BANJO-HOLLOW BOLT COUPL,EXT.THR.01-	
G1/4"						

Pos	Part No	SP	UN	Qty	Description	Page No

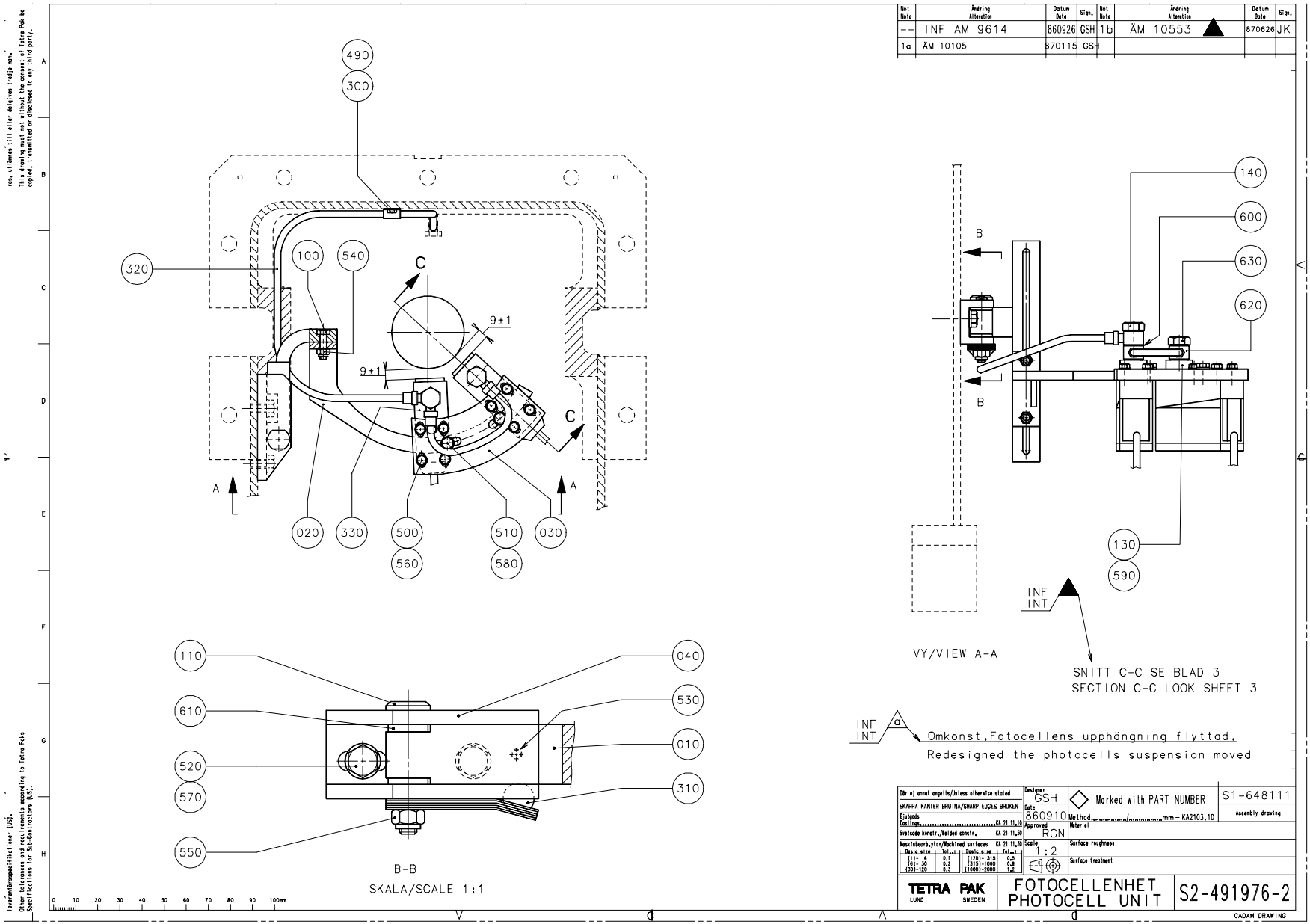
Not Note | Ändring Alteration | Datum Date | Sign. | Not Note | Ändring Alteration | Datum Date | Sign.
-- INF AM 9614 860926 GSH 1b ÄM 10553 870626 JK
1a ÄM 10105 870115 GSH
490
300
320
100
540
C
9±1
9±1
C
A
A
020
330
500
560
510
580
030
140
600
630
620
B
B
130
590
INF
INT
VY/VIEW A-A
SNITT C-C SE BLAD 3
SECTION C-C LOOK SHEET 3
110
610
520
570
550
040
530
010
310
B-B
SKALA/SCALE 1:1
INF
INT
a
Omkonst,Fotocellens upphängning flyttad.
Redesigned the photocells suspension moved
Dör ej annat angetts/Unless otherwise stated
SKARPA KANTER BRUTNA/SHARP EDGES BROKEN
Gjutgods
Castings KA 21 11,10
Svetsade konstr./Welded constr. KA 21 11,50
Maskinbearb.ytor/Machined surfaces KA 21 11,30
Designer GSH
Date 860910
Approved RGN
Scale 1:2
Marked with PART NUMBER
Method mm - KA2103,10
Material
Surface roughness
Surface treatment
S1-648111
Assembly drawing
TETRA PAK
LUND SWEDEN
FOTOCELLENHET
PHOTOCELL UNIT
S2-491976-2
CADAM DRAWING

Pos	Part No	SP	UN	Qty	Description	Page No
0125S 0200S						
010	490873-0000	-		1	HOLDER	
020	491542-0000	-		1	CANTILEVER	
030	491880-0000	-		1	FASTENING PLATE	
040	490876-0000	-		1	BRACKET	
0180B 0200B 0250B						
010	490873-0000	-		1	HOLDER	
020	490874-0000	-		1	CANTILEVER	
030	490875-0000	-		1	FASTENING PLATE	
040	490876-0000	-		1	BRACKET	
0236B						
010	491844-0000	-		1	HOLDER	
020	491873-0000	-		1	CANTILEVER	
030	490875-0000	-		1	FASTENING PLATE	
040	491845-0000	-		1	BRACKET	
Common parts						
100	450628-0000	-		2	STEERING REPBY 0312105-0370	
110	457367-0000	-		1	SHAFT	
120	457368-0000	-		5	SPRING	
130	458054-0000	-		2	BUSHING REPBY 0548337-0000	
140	522187-0000	-		1	HOLLOW SCREW	
150	536374-0000	-		2	WASHER	
300	90074-0001	-		1	CLIPS, Cable clips di=10 mm	
310	90090-0016	-		1	STEEL BALL SKF RB-15 RS	
320	90166-0124	-	MM	750	TUBE 6 mm PA 11/12,Transp.	
330	90232-0055	K		2	Ph.cell NT6-14920S17	
490	312105-0287	-		1	SCREW M6S ISO 4017 M4x8 A280	
500	312105-0329	-		10	SCREW M6S ISO 4017 M5x16 A280	
510	312105-0366	-		2	SCREW M6S ISO 4017 M6x12 A280	
520	312105-0449	-		2	SCREW M6S ISO 4017 M8x16 A280	
530	312318-0323	-		1	SET SCREW CUP POINT ISO 4029 M5X8 RFR	
540	312812-0316	-		2	NUT,HEXAGON,LOCK,WITH NYLON IN-	
SERT,M6						
550	312812-0318	-		1	LOCK-NUT,HEXAGON,WITH NYLON,M8	
560	315105-0146	-		8	WASHER,PLAIN ROUND 5,3x10 Stainless	
570	315115-0165	-		2	WASHER TBRB 8,4x16 Stainless	
580	315115-0153	-		2	WASHER TBRB 6,4x12 Stainless	
590	315204-0116	K		2	O-RINGS 18,1X1,6	
600	315233-0110	K		3	PLAIN ROUND,NYLON R1/4"	
610	321101-0143	-		2	FLANGE BUS 8F7X8	
620	342980-0114	-		3	BANJO-CONNECTION,RING 6/4-G1/4"	
630	342980-0304	-		1	BANJO-HOLLOW BOLT COUPL,EXT.THR.01-	
G1/4"						

Pos	Part No	SP	UN	Qty	Description	Page No

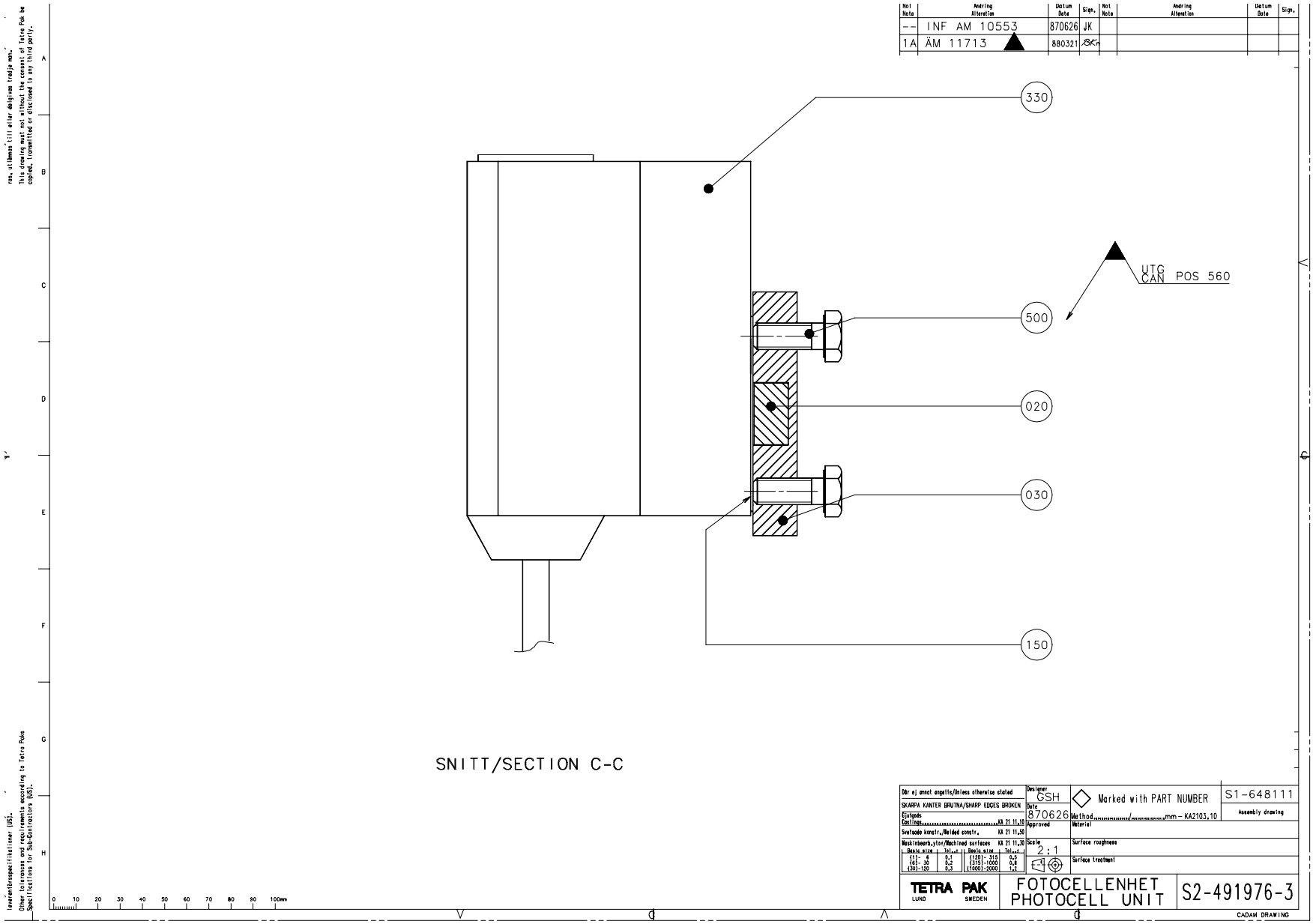
330
500
020
030
150
UTG
CAN POS 560
SNITT/SECTION C-C
TETRA PAK
LUND
SWEDEN
FOTOCELLENHET
PHOTOCELL UNIT
S2-491976-3
S1-648111
Assembly drawing
CSH
870626
Marked with PART NUMBER
2:1
CADAM DRAWING

Pos	Part No	SP	UN	Qty	Description	Page No
0125S 0200S						
010	490873-0000	-		1	HOLDER	
020	491542-0000	-		1	CANTILEVER	
030	491880-0000	-		1	FASTENING PLATE	
040	490876-0000	-		1	BRACKET	
0180B 0200B 0250B						
010	490873-0000	-		1	HOLDER	
020	490874-0000	-		1	CANTILEVER	
030	490875-0000	-		1	FASTENING PLATE	
040	490876-0000	-		1	BRACKET	
0236B						
010	491844-0000	-		1	HOLDER	
020	491873-0000	-		1	CANTILEVER	
030	490875-0000	-		1	FASTENING PLATE	
040	491845-0000	-		1	BRACKET	
Common parts						
100	450628-0000	-		2	STEERING REPBY 0312105-0370	
110	457367-0000	-		1	SHAFT	
120	457368-0000	-		5	SPRING	
130	458054-0000	-		2	BUSHING REPBY 0548337-0000	
140	522187-0000	-		1	HOLLOW SCREW	
150	536374-0000	-		2	WASHER	
300	90074-0001	-		1	CLIPS, Cable clips di=10 mm	
310	90090-0016	-		1	STEEL BALL SKF RB-15 RS	
320	90166-0124	-	MM	750	TUBE 6 mm PA 11/12,Transp.	
330	90232-0055	K		2	Ph.cell NT6-14920S17	
490	312105-0287	-		1	SCREW M6S ISO 4017 M4x8 A280	
500	312105-0329	-		10	SCREW M6S ISO 4017 M5x16 A280	
510	312105-0366	-		2	SCREW M6S ISO 4017 M6x12 A280	
520	312105-0449	-		2	SCREW M6S ISO 4017 M8x16 A280	
530	312318-0323	-		1	SET SCREW CUP POINT ISO 4029 M5X8 RFR	
540	312812-0316	-		2	NUT,HEXAGON,LOCK,WITH NYLON IN-	
SERT,M6						
550	312812-0318	-		1	LOCK-NUT,HEXAGON,WITH NYLON,M8	
560	315105-0146	-		8	WASHER,PLAIN ROUND 5,3x10 Stainless	
570	315115-0165	-		2	WASHER TBRB 8,4x16 Stainless	
580	315115-0153	-		2	WASHER TBRB 6,4x12 Stainless	
590	315204-0116	K		2	O-RINGS 18,1X1,6	
600	315233-0110	K		3	PLAIN ROUND,NYLON R1/4"	
610	321101-0143	-		2	FLANGE BUS 8F7X8	
620	342980-0114	-		3	BANJO-CONNECTION,RING 6/4-G1/4"	
630	342980-0304	-		1	BANJO-HOLLOW BOLT COUPL,EXT.THR.01-	
G1/4"						

Pos	Part No	SP	UN	Qty	Description	Page No

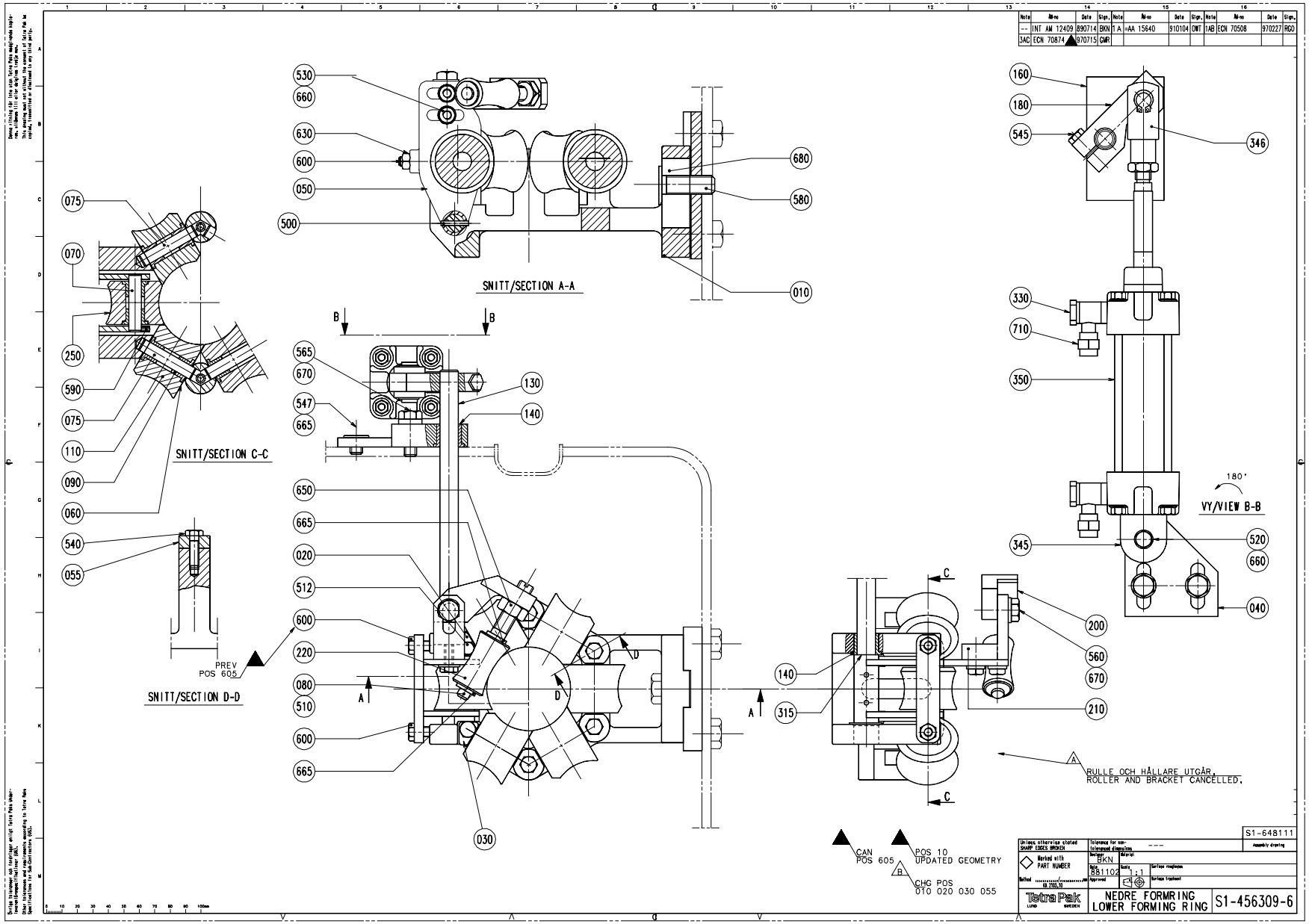
SNITT/SECTION A-A
SNITT/SECTION C-C
SNITT/SECTION D-D
VY/VIEW B-B
PREV POS 605
RULLE OCH HÅLLARE UTGÅR.
ROLLER AND BRACKET CANCELLED.
CAN POS 605
POS 10 UPDATED GEOMETRY
CHG POS 010 020 030 055
NEDRE FORMRING
LOWER FORMING RING
S1-456309-6
S1-648111

Pos	Part No	SP	UN	Qty	Description	Page No
TBA 0100B						
010	456837-0000	-		1	HOLDER	
050	257041-0000	-		1	FORK	
070	752186-0003	K		4	SHAFT	
075	752186-0012	K		2	SHAFT	
110	752153-0000	F		5	FORMING ROLLER	
140	255970-0000	K		3	BUSHING	
160	571544-0000	-		1	BEARING PLATE	
250	B 752155-0000	F		1	COUNTER ROLLER	
512	312105-0331	-		2	SCREW M6S ISO 4017 M5X20 A280	
540	312105-0370	-		4	SCREW M6S ISO 4017 M6x20 A280	
600	312318-0368	-		2	SET SCREW CUP POINT ISO 4029 M6x16	
RFR						
630	312605-0316	-		2	NUT,HEXAGON A280 M6M6	
TBA 0125S or TWA 0125S						
010	456837-0000	-		1	HOLDER	
050	257041-0000	-		1	FORK	
070	752186-0003	K		4	SHAFT	
075	752186-0012	K		2	SHAFT	
110	752153-0000	F		5	FORMING ROLLER	
140	255970-0000	K		3	BUSHING	
160	571544-0000	-		1	BEARING PLATE	
250	B 752155-0000	F		1	COUNTER ROLLER	
512	312105-0331	-		2	SCREW M6S ISO 4017 M5X20 A280	
540	312105-0370	-		4	SCREW M6S ISO 4017 M6x20 A280	
600	312318-0368	-		2	SET SCREW CUP POINT ISO 4029 M6x16	
RFR						
630	312605-0316	-		2	NUT,HEXAGON A280 M6M6	
TBA 0160S or TBA 0200S or TPA 0250SQ or TWA 0200S						
010	456837-0000	-		1	HOLDER	
050	257041-0000	-		1	FORK	
070	752186-0003	K		4	SHAFT	
075	752186-0012	K		2	SHAFT	
110	752138-0000	F		5	FORMING ROLLER	
140	255970-0000	K		3	BUSHING	
160	571544-0000	-		1	BEARING PLATE	
250	B 752140-0000	F		1	COUNTER ROLLER	
512	312105-0331	-		2	SCREW M6S ISO 4017 M5X20 A280	
540	312105-0370	-		4	SCREW M6S ISO 4017 M6x20 A280	
600	312318-0368	-		2	SET SCREW CUP POINT ISO 4029 M6x16	
RFR						
630	312605-0316	-		2	NUT,HEXAGON A280 M6M6	
TBA 0200M or TBA 0250S						
010	574337-0000	-		1	BRACKET	
050	574341-0000	-		1	FORK	
070	752186-0003	K		1	SHAFT	
075	752186-0004	K		5	SHAFT	
110	574346-0000	D		5	ROLL	
140	255970-0000	K		3	BUSHING	
160	571544-0000	-		1	BEARING PLATE	
250	574347-0000	G		1	COUNTER ROLLER	
512	312105-0331	-		2	SCREW M6S ISO 4017 M5X20 A280	
540	312105-0370	-		4	SCREW M6S ISO 4017 M6x20 A280	
600	312318-0368	-		2	SET SCREW CUP POINT ISO 4029 M6x16	
RFR						
630	312605-0316	-		2	NUT,HEXAGON A280 M6M6	
TBA 0180B or TBA 0200B or TBA 0236B or TBA 0250B or TBA 0284B or TBA 0300S or TBA 0330S						
010	490518-0000	-		1	HOLDER	
050	257040-0000	-		1	FORK	
070	752186-0005	K		6	SHAFT	
110	751502-0000	D		5	ROLLER	
140	255970-0000	K		1	BUSHING	
160	571543-0000	-		1	BEARING PLATE	
250	B 751503-0000	G		1	COUNTER ROLLER	
285	752047-0000	K		2	BUSHING	
512	312105-0331	-		6	SCREW M6S ISO 4017 M5X20 A280	
610	312318-0451	-		2	SET SCREW CUP POINT ISO 4029 M8X20	
RFR						
640	312605-0318	-		2	NUT,HEXAGON,M8 RFR	
TPA 0330SQ						
010	490518-0000	-		1	HOLDER	
050	257040-0000	-		1	FORK	
070	752186-0005	K		6	SHAFT	
110	929279-0000	D		5	ROLLER	
140	255970-0000	K		1	BUSHING	
160	571543-0000	-		1	BEARING PLATE	
250	929280-0000	G		1	COUNTER ROLLER	
285	752047-0000	K		2	BUSHING	
512	312105-0331	-		6	SCREW M6S ISO 4017 M5X20 A280	
610	312318-0451	-		2	SET SCREW CUP POINT ISO 4029 M8X20	
RFR						
640	312605-0318	-		2	NUT,HEXAGON,M8 RFR	

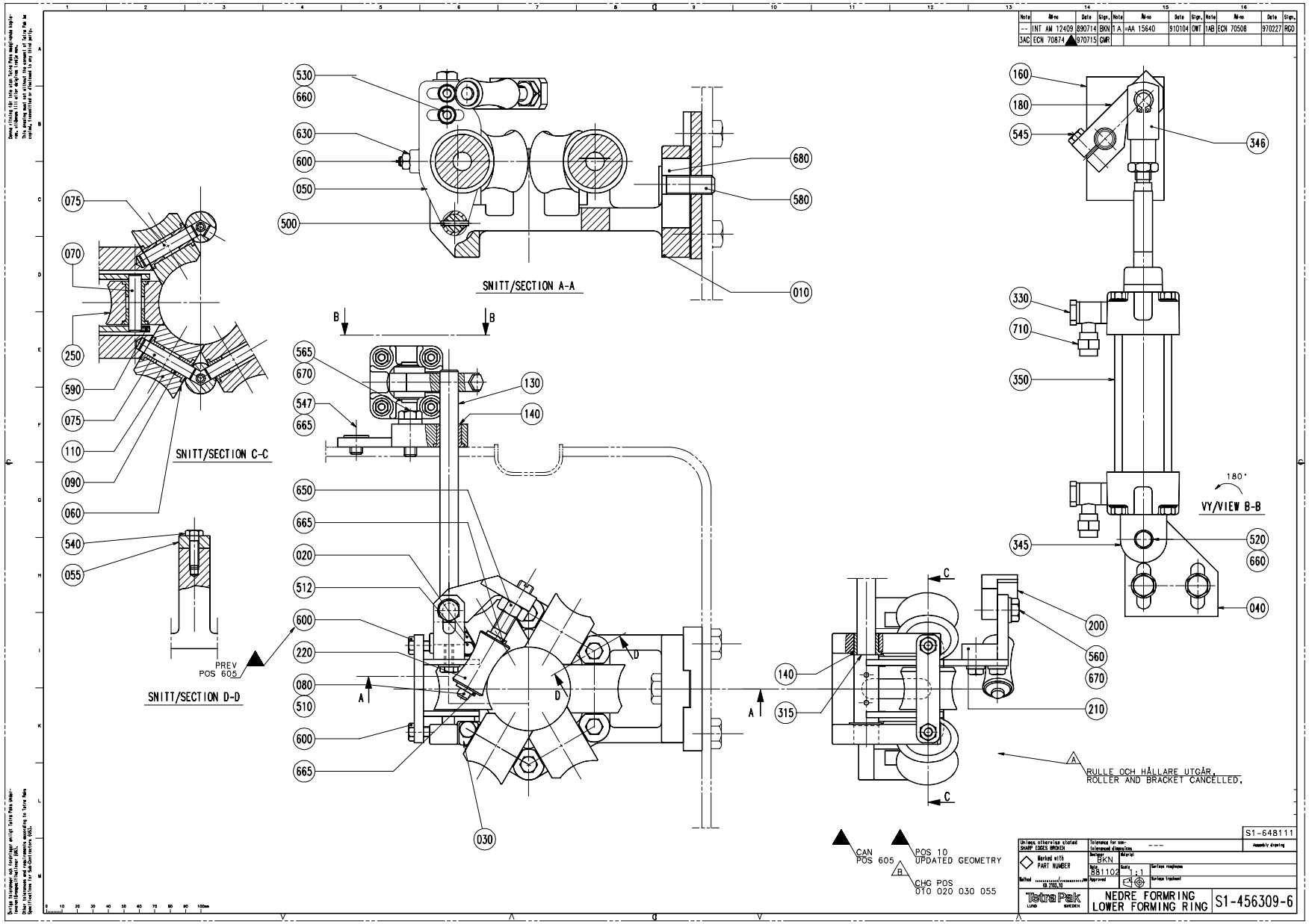
SNITT/SECTION A-A
SNITT/SECTION C-C
SNITT/SECTION D-D
VY/VIEW B-B
180°
PREV POS 605
RULLE OCH HÅLLARE UTGÅR.
ROLLER AND BRACKET CANCELLED.
CAN POS 605
POS 10 UPDATED GEOMETRY
CHG POS 010 020 030 055
NEDRE FORMRING
LOWER FORMING RING
S1-456309-6
S1-648111

Pos	Part No	SP	UN	Qty	Description	Page No
Common parts						
020	1279095-0000	-		1	LOCKING PLATE	
030	1279096-0000	-		1	LOCKING PLATE	
040	491022-0000	-		1	CYLINDER BRACKET	
055	1279092-0000	-		4	LOCKING PLATE	
060	2033-0011	F		12	WASHER	
080	239440-0000	J		1	SHAFT	
090	90240-0172	F		12	Flange Bushing, 8x12x10 NFB	
130	255969-0000	K		1	SHAFT	
180	441483-0000	-		1	CYLINDER BRACKET	
200	257042-0000	-		1	BRACKET	
210	257043-0000	-		1	ANGLE BRACKET	
220	257044-0000	I		1	ROLL	
315	752038-0000	D		4	SHIM	
330	90235-0274	D		2	"Throttle check valve, G1/8"", Manual"	
345	90239-0453	D		1	BRACKET	
346	90239-0516	M		1	ROD END,CLEVIS WITH AXLE,M10X1,25	
350	B 90239-0779	M		1	CYLINDER	
500	311103-0238	-		2	PIN,STRAIGHT 3x20	
510	311411-0140	-		1	SPLIT PIN SP1,6X16RFR	
520	312105-0364	-		1	SCREW M6S 6x10 A280	
530	312105-0368	-		2	SCREW M6S ISO 4017 M6x16 A280	
545	312105-0372	-		1	SCREW M6S ISO 4017 M6x25 A280	
547	312105-0447	-		2	SCREW M6S ISO 4017 M8x12 A280	
560	312105-0451	-		1	SCREW M6S ISO 4017 8x20 A280	
565	312105-0453	-		2	SCREW M6S ISO 4017 M8x25 A280	
580	312105-0536	-		1	SCREW M6S ISO 4017 M12X30 A280	
590	312318-0285	-		1	STOP SCREW ISO 4029 M4x6 A4	
650	312605-0320	-		1	NUT,HEXAGON,M10 A280	
660	315105-0153	-		3	WASHER,PLAIN ROUND 6,4x12 Stainless	
665	315105-0165	-		4	WASHER,PLAIN ROUND 8,4x16 Stainless	
670	315115-0165	-		3	WASHER TBRB 8,4x16 Stainless	
680	315115-0178	-		1	WASHER TBRB 13x24 Stainless	
710	342797-0121	-		2	BANJO CONNECTION,RINGPIECE 6-1/8"	

Pos	Part No	SP	UN	Qty	Description	Page No

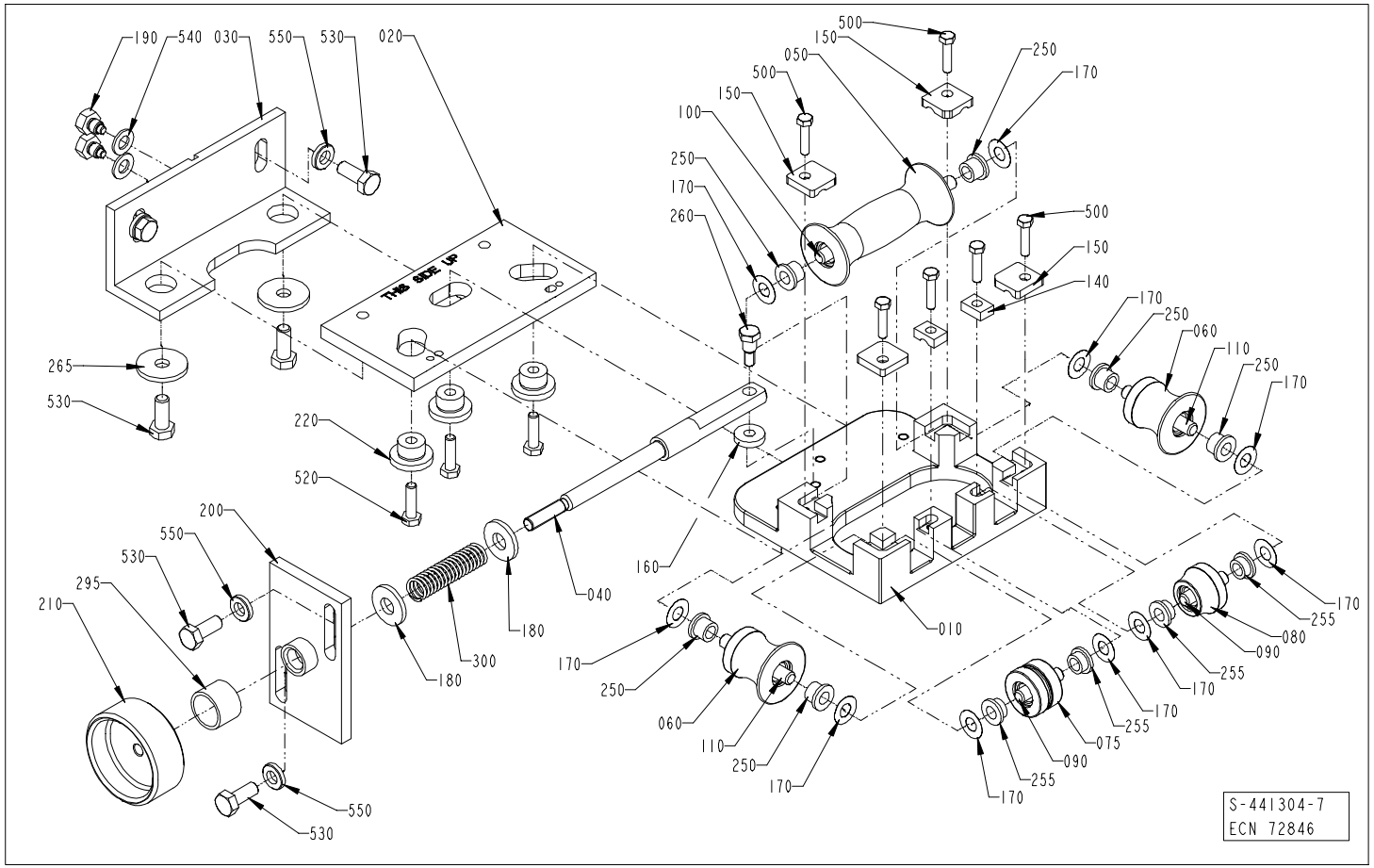
190
540
030
550
530
020
500
150
050
500
150
100
250
170
260
250
170
500
150
140
170
250
060
110
250
170
265
530
220
520
200
550
530
295
210
180
300
180
040
160
010
170
250
060
110
250
170
090
080
255
170
255
170
255
075
090
255
170
550
530
S-441304-7
ECN 72846

Pos	Part No	SP	UN	Qty	Description	Page No
TBA 0100B or TBA 0125S or TWA 0125S						
010	B 456905-0000	-		1	FASTENING PLATE	
030	571536-0000	-		1	CANTILEVER	
050	752141-0000	-		1	FORMING ROLLER	
060	752142-0000	-		2	FORMING ROLLER	
075	1296912-0000	D		1	ROLL	
080	752143-0000	D		1	FORMING ROLLER	
090	752186-0002	-		2	SHAFT	
100	752186-0008	-		1	SHAFT	
110	752186-0006	-		2	SHAFT	
140	456907-0000	-		2	LOCK PLATE	
250	90240-0172	F		6	Flange Bushing, 8x12x10 NFB	
255	752156-0000	F		4	FLANGE BUSHING	
500	312105-0332	-		6	SCREW M6S5X22RFR	
TBA 0160S or TBA 0200S or TPA 0250SQ or TWA 0200S						
010	B 456905-0000	-		1	FASTENING PLATE	
030	571535-0000	-		1	CANTILEVER	
050	752126-0000	-		1	FORMING ROLLER	
060	752127-0000	-		2	FORMING ROLLER	
075	1296914-0000	D		1	ROLL	
080	752128-0000	D		1	FORMING ROLLER	
090	752186-0002	-		2	SHAFT	
100	752186-0008	-		1	SHAFT	
110	752186-0006	-		2	SHAFT	
140	456907-0000	-		2	LOCK PLATE	
250	90240-0172	F		6	Flange Bushing, 8x12x10 NFB	
255	752156-0000	F		4	FLANGE BUSHING	
500	312105-0332	-		6	SCREW M6S5X22RFR	
TBA 0200M or TBA 0250S						
010	B 574404-0000	-		1	BRACKET	
030	571535-0000	-		1	CANTILEVER	
050	574479-0000	D		1	ROLL	
060	574480-0000	D		2	ROLL	
075	1296915-0000	D		1	ROLL	
080	574481-0000	D		1	ROLL	
090	752186-0002	-		2	SHAFT	
100	752186-0008	-		1	SHAFT	
110	752186-0006	-		2	SHAFT	
140	1279087-0000	-		2	LOCKING PLATE	
250	90240-0172	F		6	Flange Bushing, 8x12x10 NFB	
255	752156-0000	F		4	FLANGE BUSHING	
500	312105-0332	-		6	SCREW M6S5X22RFR	
TBA 0180B or TBA 0200B or TBA 0236B or TBA 0250B or TBA 0284B or TBA 0300S or TBA 0330S or TPA						
0330SQ						
010	978792-0000	-		1	PLATE	
030	571535-0000	-		1	CANTILEVER	
050	751491-0000	D		1	ROLL	
060	751492-0000	D		2	ROLL	
075	1296913-0000	D		1	ROLL	
080	751494-0000	D		1	ROLL	
090	752186-0005	K		2	SHAFT	
100	752186-0009	K		1	SHAFT	
110	752187-0000	K		1	SHAFT	
250	90240-0172	F		10	Flange Bushing, 8x12x10 NFB	
500	312105-0368	-		4	SCREW M6S ISO 4017 M6x16 A280	
Common parts						
020	751333-0000	-		1	SETTING PLATE	
040	256309-0000	K		1	SHAFT	
150	1279091-0000	-		4	LOCKING PLATE	
160	256312-0000	D		1	WASHER	
170	2033-0011	F		10	WASHER	
180	26490-0000	-		2	WASHER	
190	256280-0000	-		2	DOWEL	
200	571534-0000	-		1	PLATE	
210	257090-0000	D		1	SHIFTER HANDLE	
220	751334-0000	D		3	SPACER	
260	456042-0000	D		1	SCREW	
265	28037-0000	D		2	WASHER	
295	491153-0000	D		1	COMPRESSION GLAND	
300	90335-0008	D		1	SPRING	
520	312105-0371	-		3	SCREW M6S6X22RFR	
530	312105-0451	-		6	SCREW M6S ISO 4017 8x20 A280	
540	315105-0165	-		2	WASHER,PLAIN ROUND 8,4x16 Stainless	
550	315115-0165	-		4	WASHER TBRB 8,4x16 Stainless	

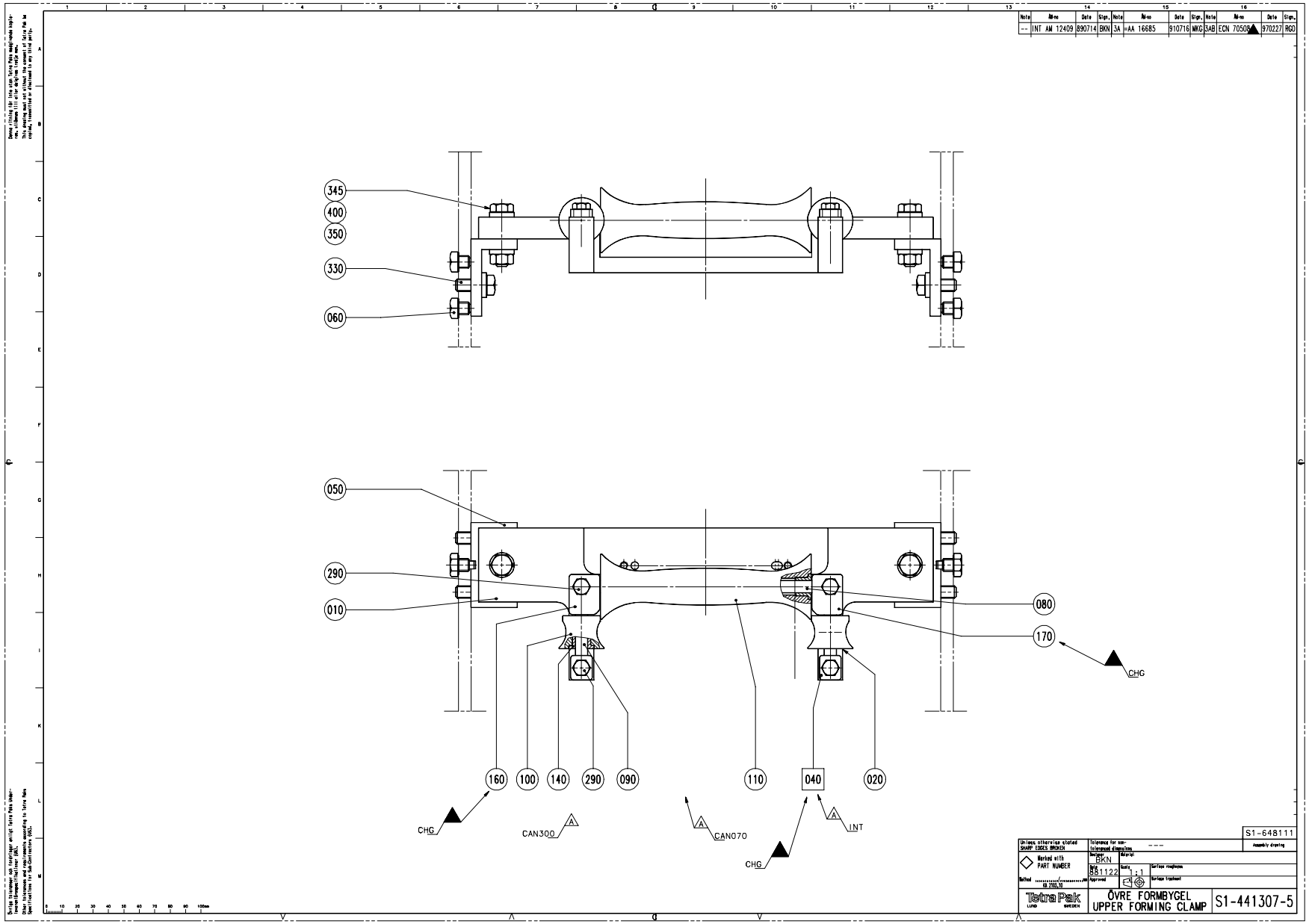
Note | Ä-no | Date | Sign. | Note | Ä-no | Date | Sign. | Note | Ä-no | Date | Sign.
-- | INT AM 12409 | 890714 | BKN | 3A | =AA 16685 | 910716 | MKG | 3AB | ECN 70508 | 970227 | RGO
345
400
350
330
060
050
290
010
080
170
CHG
160
100
140
290
090
110
040
020
CHG
CAN300
CAN070
CHG
INT
S1-648111
Unless otherwise stated SHARP EDGES BROKEN
Marked with PART NUMBER
Tolerance for non-tolerenced dimensions
Assembly drawing
Designer BKN
Date 881122
Scale 1:1
Surface roughness
Surface treatment
Approved
Method
Tetra Pak LUND SWEDEN
ÖVRE FORMBYGEL
UPPER FORMING CLAMP
S1-441307-5

Pos	Part No	SP	UN	Qty	Description	Page No
TBA 0100B or TBA 0125S or TWA 0125S						
010	469078-0000	-		1	HOLDER	
050	256279-0000	-		2	ANGLE	
080	752186-0010	-		1	SHAFT	
090	752186-0001	-		2	SHAFT	
100	752145-0000	-		2	FORMING ROLLER	
110	752144-0000	-		1	FORMING ROLLER	
160	1279089-0000	-		1	LOCKING PLATE	
170	1279088-0000	-		1	LOCKING PLATE	
290	312105-0368	-		2	SCREW M6S ISO 4017 M6x16 A280	
345	312105-0457	-		2	SCREW ISO 4017 M8x35 A280	
TBA 0160S or TBA 0200S or TPA 0250SQ or TWA 0200S						
010	B 469041-0000	-		1	HOLDER	
050	469047-0000	-		2	ANGLE	
080	752186-0010	-		1	SHAFT	
090	752186-0004	K		2	SHAFT	
100	752130-0000	-		2	FORMING ROLLER	
110	752129-0000	-		1	FORMING ROLLER	
160	1279089-0000	-		1	LOCKING PLATE	
170	1279088-0000	-		1	LOCKING PLATE	
300	312105-0368	-		2	SCREW M6S ISO 4017 M6x16 A280	
340	312105-0455	-		2	SCREW M6S ISO 4017 M8x30 A280	
TBA 0200M or TBA 0250S						
010	B 574416-0000	-		1	BRACKET	
050	469047-0000	-		2	ANGLE	
080	752186-0010	-		1	SHAFT	
090	752186-0012	K		2	SHAFT	
100	574418-0000	D		2	ROLL	
110	574417-0000	D		1	ROLL	
160	1279089-0000	-		1	LOCKING PLATE	
170	1279088-0000	-		1	LOCKING PLATE	
300	312105-0368	-		2	SCREW M6S ISO 4017 M6x16 A280	
340	312105-0455	-		2	SCREW M6S ISO 4017 M8x30 A280	
TBA 0180B						
010	978791-0000	-		1	HOLDER	
050	751267-0000	-		2	CANTILEVER	
080	752186-0011	K		1	SHAFT	
090	752186-0004	K		2	SHAFT	
160	751287-0000	-		1	PLATE	
170	751288-0000	-		1	PLATE	
300	312105-0368	-		2	SCREW M6S ISO 4017 M6x16 A280	
340	312105-0455	-		2	SCREW M6S ISO 4017 M8x30 A280	

Pos	Part No	SP	UN	Qty	Description	Page No
TBA 0200B or TBA 0236B or TBA 0250B or TBA 0284B or TBA 0300S or TBA 0330S						
010	978791-0000	-		1	HOLDER	
050	751267-0000	-		2	CANTILEVER	
080	752186-0011	K		1	SHAFT	
090	752186-0004	K		2	SHAFT	
100	751284-0000	D		2	ROLL	
110	751283-0000	D		1	ROLL	
160	751287-0000	-		1	PLATE	
170	751288-0000	-		1	PLATE	
300	312105-0368	-		2	SCREW M6S ISO 4017 M6x16 A280	
340	312105-0455	-		2	SCREW M6S ISO 4017 M8x30 A280	
TPA 0330SQ						
010	978791-0000	-		1	HOLDER	
050	751267-0000	-		2	CANTILEVER	
080	752186-0011	K		1	SHAFT	
090	752186-0004	K		2	SHAFT	
100	929441-0000	D		2	ROLL	
110	929442-0000	D		1	ROLL	
160	751287-0000	-		1	PLATE	
170	751288-0000	-		1	PLATE	
300	312105-0368	-		2	SCREW M6S ISO 4017 M6x16 A280	
340	312105-0455	-		2	SCREW M6S ISO 4017 M8x30 A280	
Common parts						
F040	A 565462-0100	-		1	LOCK PLATE	31
020	2033-0011	F		6	WASHER	
060	256280-0000	-		4	DOWEL	
140	90240-0172	F		6	Flange Bushing, 8x12x10 NFB	
330	312105-0451	-		4	SCREW M6S ISO 4017 8x20 A280	
350	312605-0318	-		2	NUT,HEXAGON,M8 RFR	
400	315115-0165	-		8	WASHER TBRB 8,4x16 Stainless	

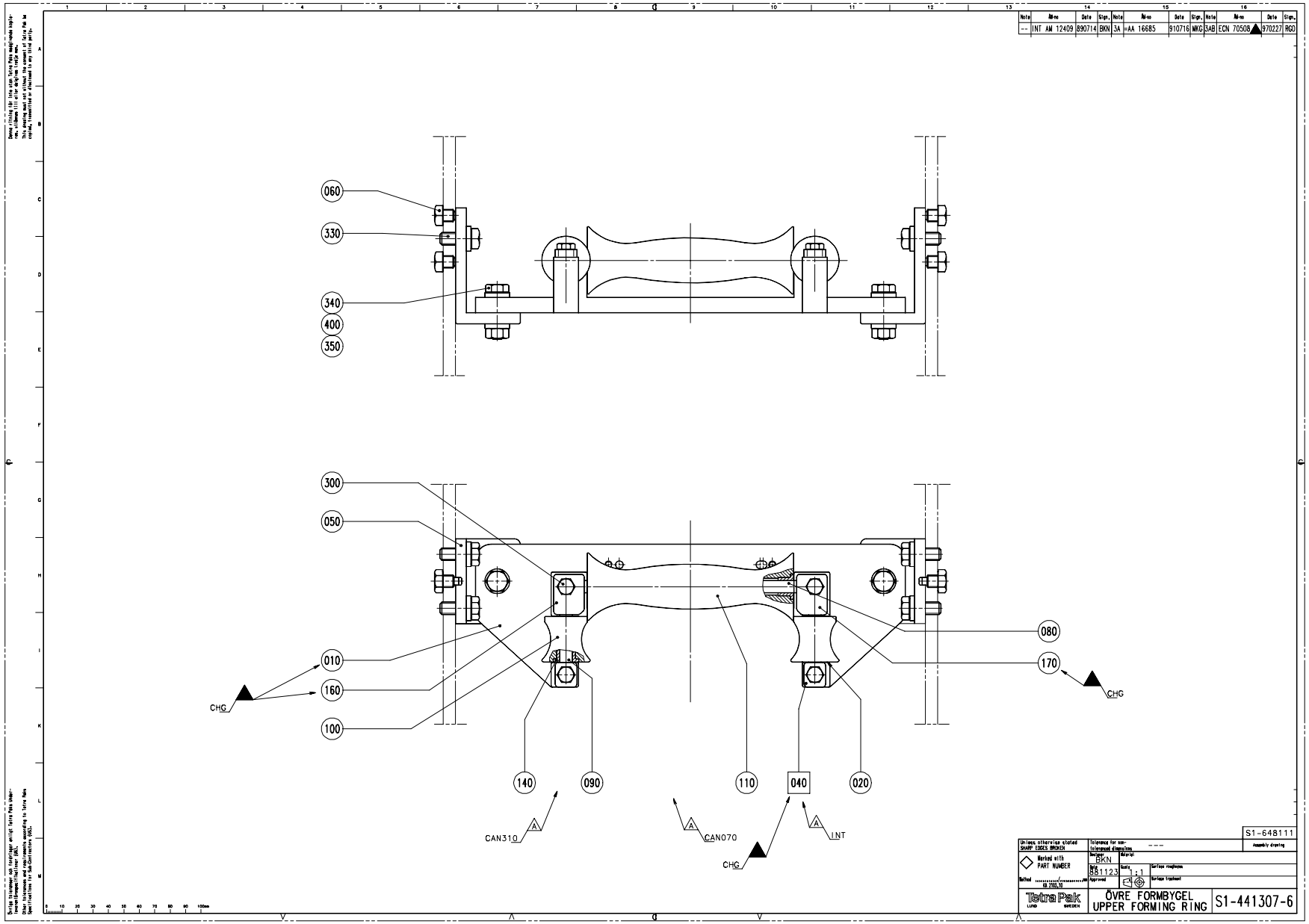
060
330
340
400
350
300
050
010
160
100
080
170
CHG
CHG
140
090
110
040
020
CAN310
CAN070
INT
CHG
S1-648111
ÖVRE FORMBYGEL
UPPER FORMING RING
S1-441307-6

Pos	Part No	SP	UN	Qty	Description	Page No
TBA 0100B or TBA 0125S or TWA 0125S						
010	469078-0000	-		1	HOLDER	
050	256279-0000	-		2	ANGLE	
080	752186-0010	-		1	SHAFT	
090	752186-0001	-		2	SHAFT	
100	752145-0000	-		2	FORMING ROLLER	
110	752144-0000	-		1	FORMING ROLLER	
160	1279089-0000	-		1	LOCKING PLATE	
170	1279088-0000	-		1	LOCKING PLATE	
290	312105-0368	-		2	SCREW M6S ISO 4017 M6x16 A280	
345	312105-0457	-		2	SCREW ISO 4017 M8x35 A280	
TBA 0160S or TBA 0200S or TPA 0250SQ or TWA 0200S						
010	B 469041-0000	-		1	HOLDER	
050	469047-0000	-		2	ANGLE	
080	752186-0010	-		1	SHAFT	
090	752186-0004	K		2	SHAFT	
100	752130-0000	-		2	FORMING ROLLER	
110	752129-0000	-		1	FORMING ROLLER	
160	1279089-0000	-		1	LOCKING PLATE	
170	1279088-0000	-		1	LOCKING PLATE	
300	312105-0368	-		2	SCREW M6S ISO 4017 M6x16 A280	
340	312105-0455	-		2	SCREW M6S ISO 4017 M8x30 A280	
TBA 0200M or TBA 0250S						
010	B 574416-0000	-		1	BRACKET	
050	469047-0000	-		2	ANGLE	
080	752186-0010	-		1	SHAFT	
090	752186-0012	K		2	SHAFT	
100	574418-0000	D		2	ROLL	
110	574417-0000	D		1	ROLL	
160	1279089-0000	-		1	LOCKING PLATE	
170	1279088-0000	-		1	LOCKING PLATE	
300	312105-0368	-		2	SCREW M6S ISO 4017 M6x16 A280	
340	312105-0455	-		2	SCREW M6S ISO 4017 M8x30 A280	
TBA 0180B						
010	978791-0000	-		1	HOLDER	
050	751267-0000	-		2	CANTILEVER	
080	752186-0011	K		1	SHAFT	
090	752186-0004	K		2	SHAFT	
160	751287-0000	-		1	PLATE	
170	751288-0000	-		1	PLATE	
300	312105-0368	-		2	SCREW M6S ISO 4017 M6x16 A280	
340	312105-0455	-		2	SCREW M6S ISO 4017 M8x30 A280	

Pos	Part No	SP	UN	Qty	Description	Page No
TBA 0200B or TBA 0236B or TBA 0250B or TBA 0284B or TBA 0300S or TBA 0330S						
010	978791-0000	-		1	HOLDER	
050	751267-0000	-		2	CANTILEVER	
080	752186-0011	K		1	SHAFT	
090	752186-0004	K		2	SHAFT	
100	751284-0000	D		2	ROLL	
110	751283-0000	D		1	ROLL	
160	751287-0000	-		1	PLATE	
170	751288-0000	-		1	PLATE	
300	312105-0368	-		2	SCREW M6S ISO 4017 M6x16 A280	
340	312105-0455	-		2	SCREW M6S ISO 4017 M8x30 A280	
TPA 0330SQ						
010	978791-0000	-		1	HOLDER	
050	751267-0000	-		2	CANTILEVER	
080	752186-0011	K		1	SHAFT	
090	752186-0004	K		2	SHAFT	
100	929441-0000	D		2	ROLL	
110	929442-0000	D		1	ROLL	
160	751287-0000	-		1	PLATE	
170	751288-0000	-		1	PLATE	
300	312105-0368	-		2	SCREW M6S ISO 4017 M6x16 A280	
340	312105-0455	-		2	SCREW M6S ISO 4017 M8x30 A280	
Common parts						
F040	A 565462-0100	-		1	LOCK PLATE	31
020	2033-0011	F		6	WASHER	
060	256280-0000	-		4	DOWEL	
140	90240-0172	F		6	Flange Bushing, 8x12x10 NFB	
330	312105-0451	-		4	SCREW M6S ISO 4017 8x20 A280	
350	312605-0318	-		2	NUT,HEXAGON,M8 RFR	
400	315115-0165	-		8	WASHER TBRB 8,4x16 Stainless	

This page is intentionally left blank

Pos	Part No	SP	UN	Qty	Description	Page No
TBA 0100B or TBA 0125S or TWA 0125S						
020	312105-0368	-		2	SCREW M6S ISO 4017 M6x16 A280	
TBA 0160S or TBA 0180B or TBA 0200B or TBA 0200M or TBA 0200S or TBA 0236B or TBA 0250B or TBA 0250S or TBA 0284B or TBA 0300S or TBA 0330S or TPA 0250SQ or TPA 0330SQ or TWA 0200S						
020	312105-0370	-		2	SCREW M6S ISO 4017 M6x20 A280	
Common parts						
010	1279087-0000	-		2	LOCKING PLATE	

Pos	Part No	SP	UN	Qty	Description	Page No

DIVIDED FORMING RING

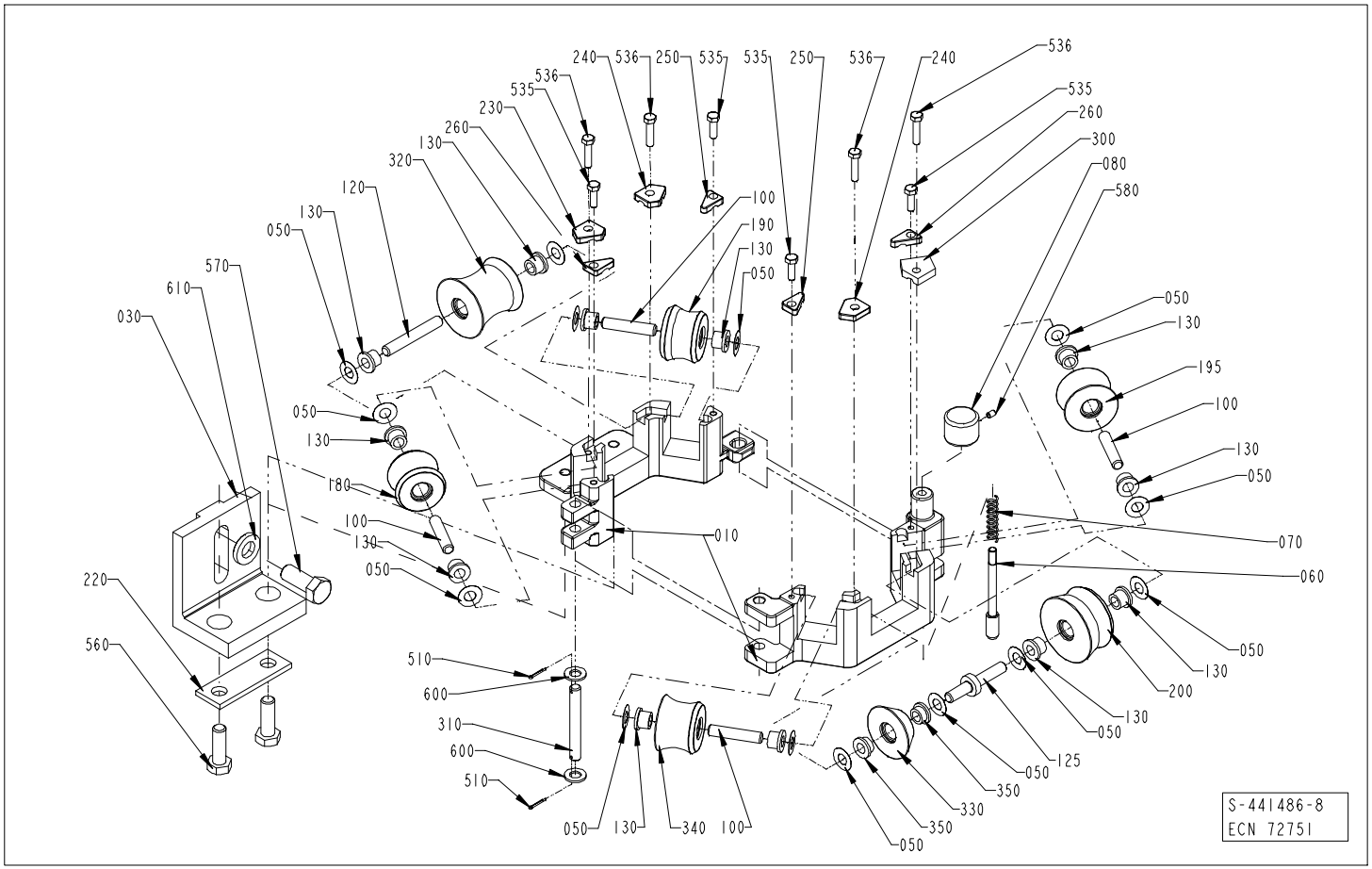

Pos	Part No	SP	UN	Qty	Description	Page No
TBA 0100B or TBA 0125S or TWA 0125S						
010	469745-0000	-		1	BRACKET	
050	2033-0011	F		14	WASHER	
100	752186-0003	K		4	SHAFT	
120	752186-0006	-		1	SHAFT	
125	752185-0000	K		1	SHAFT	
130	90240-0172	F		12	Flange Bushing, 8x12x10 NFB	
180	752147-0000	K		1	FORMING ROLLER	
190	752148-0000	K		1	FORMING ROLLER	
195	752150-0000	K		1	FORMING ROLLER	
200	752151-0000	K		1	FORMING ROLLER	
300	456872-0000	-		1	LOCK PLATE	
320	752146-0000	K		1	FORMING ROLLER	
330	752152-0000	K		1	FORMING ROLLER	
340	752149-0000	K		1	FORMING ROLLER	
350	752156-0000	F		2	FLANGE BUSHING	
535	312105-0329	-		4	SCREW M6S ISO 4017 M5x16 A280	
536	312105-0332	-		4	SCREW M6S5X22RFR	
600	315105-0165	-		2	WASHER,PLAIN ROUND 8,4x16 Stainless	
TBA 0160S or TBA 0200S or TPA 0250SQ or TWA 0200S						
010	469745-0000	-		1	BRACKET	
050	2033-0011	F		14	WASHER	
100	752186-0003	K		4	SHAFT	
120	752186-0006	-		1	SHAFT	
125	752185-0000	K		1	SHAFT	
130	90240-0172	F		12	Flange Bushing, 8x12x10 NFB	
180	752132-0000	K		1	FORMING ROLLER	
190	752133-0000	K		1	FORMING ROLLER	
195	752135-0000	K		1	FORMING ROLLER	
200	752136-0000	K		1	FORMING ROLLER	
300	456872-0000	-		1	LOCK PLATE	
320	752131-0000	K		1	FORMING ROLLER	
330	752137-0000	K		1	FORMING ROLLER	
340	752134-0000	K		1	FORMING ROLLER	
350	752156-0000	F		2	FLANGE BUSHING	
535	312105-0329	-		4	SCREW M6S ISO 4017 M5x16 A280	
536	312105-0332	-		4	SCREW M6S5X22RFR	
600	315105-0165	-		2	WASHER,PLAIN ROUND 8,4x16 Stainless	
TBA 0200M or TBA 0250S						
010	574396-0000	-		1	BRACKET	
050	2033-0011	F		14	WASHER	
090	257175-0000	D		4	WASHER	
100	752186-0004	K		4	SHAFT	
120	752186-0006	-		1	SHAFT	
125	574395-0000	K		1	SHAFT	
130	90240-0172	F		12	Flange Bushing, 8x12x10 NFB	
140	574456-0000	-		1	BRACKET	
150	451117-0000	F		1	ROLL	
160	451148-0000	-		1	BRACKET	
170	451149-0000	J		1	SHAFT	
180	574397-0000	D		1	ROLL	
190	574399-0000	D		1	ROLL	
195	574400-0000	D		1	ROLL	
200	574401-0000	D		1	ROLL	
210	456181-0000	-		2	SPACER	
300	574393-0000	-		1	LOCK PLATE	
320	574398-0000	D		1	ROLL	
330	574402-0000	D		1	ROLL	
340	574403-0000	D		1	ROLL	
350	752156-0000	F		2	FLANGE BUSHING	
500	311103-0312	-		1	PINS,STRAIGHT 5X25	
520	311411-0165	-		1	SPLIT PIN SP2,5X16RFR	
530	312105-0325	-		1	SCREW M6S 5x10 A2 80	
535	312105-0329	-		4	SCREW M6S ISO 4017 M5x16 A280	
536	312105-0332	-		2	SCREW M6S5X22RFR	
550	312105-0381	-		2	SCREW M6S ISO 4014 M6x55 A280	
590	315105-0136	-		1	WASHER,PLAIN ROUND 4,3x8 Stainless	
600	315105-0165	-		3	WASHER,PLAIN ROUND 8,4x16 Stainless	

DIVIDED FORMING RING

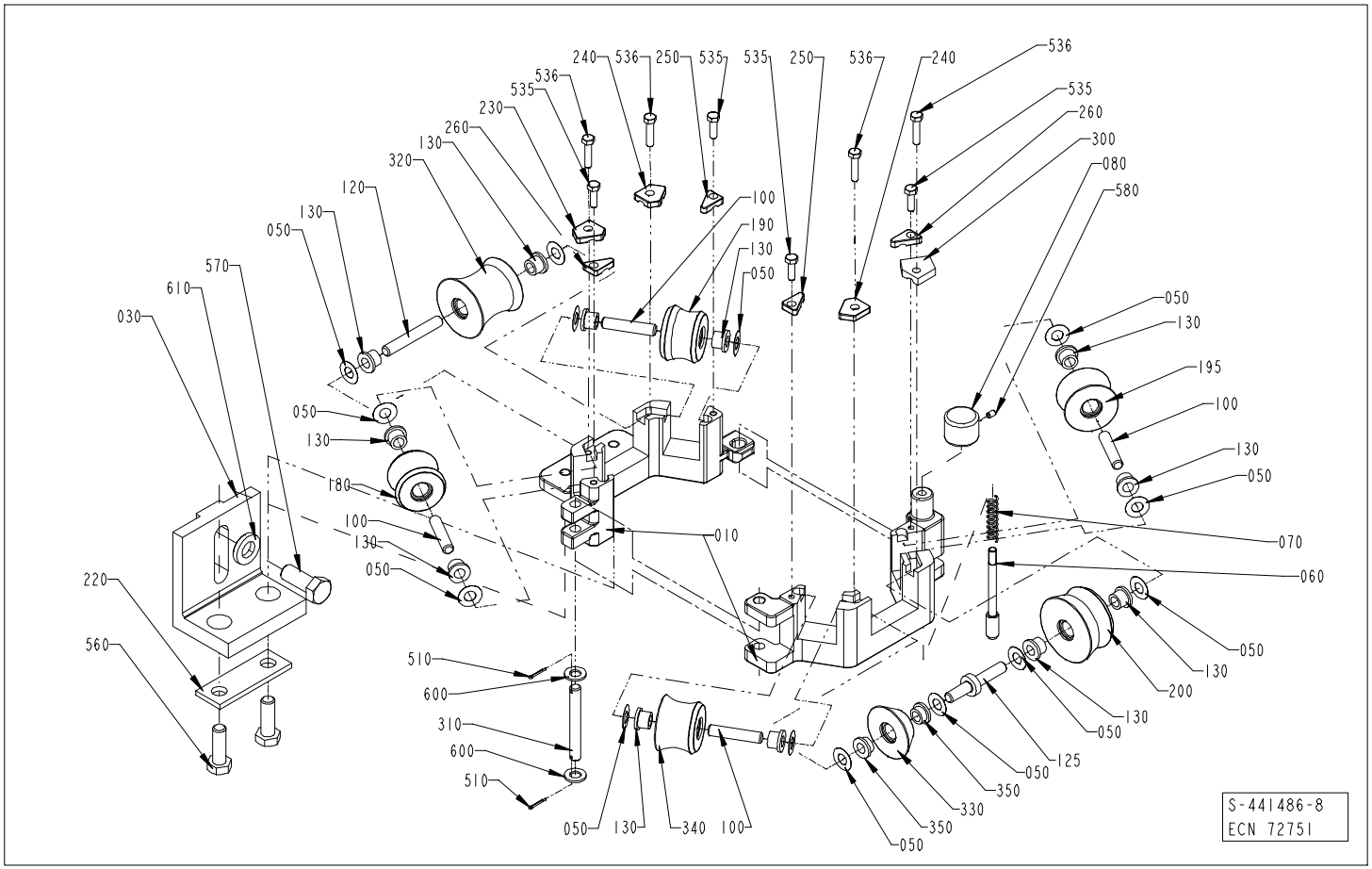

Pos	Part No	SP	UN	Qty	Description	Page No
TBA 0180B or TBA 0200B or TBA 0236B or TBA 0250B or TBA 0284B or TBA 0300S or TBA 0330S or TPA 0330SQ						
010	978790-0000	-		1	BRACKET	
040	2033-0008	F		2	WASHER	
050	2033-0011	F		12	WASHER	
090	257175-0000	D		4	WASHER	
100	752186-0004	K		2	SHAFT	
110	752186-0005	K		2	SHAFT	
120	752186-0007	K		2	SHAFT	
130	90240-0172	F		14	Flange Bushing, 8x12x10 NFB	
140	441918-0000	-		1	BRACKET	
150	451117-0000	F		1	ROLL	
160	451148-0000	-		1	BRACKET	
170	451149-0000	J		1	SHAFT	
180	751499-0000	D		1	ROLL	
190	751497-0000	D		1	ROLL	
195	751496-0000	D		1	ROLL	
200	751495-0000	D		1	ROLL	
210	456181-0000	-		2	SPACER	
300	456199-0000	-		1	LOCK PLATE	
320	751498-0000	D		1	ROLL	
330	751501-0000	D		1	ROLL	
340	751500-0000	D		1	ROLL	
500	311103-0312	-		1	PINS,STRAIGHT 5X25	
520	311411-0165	-		1	SPLIT PIN SP2,5X16RFR	
530	312105-0325	-		1	SCREW M6S 5x10 A2 80	
540	312105-0368	-		4	SCREW M6S ISO 4017 M6x16 A280	
545	312105-0370	-		2	SCREW M6S ISO 4017 M6x20 A280	
550	312105-0381	-		2	SCREW M6S ISO 4014 M6x55 A280	
590	315105-0136	-		1	WASHER,PLAIN ROUND 4,3x8 Stainless	
600	315105-0165	-		3	WASHER,PLAIN ROUND 8,4x16 Stainless	
Common parts						
030	456230-0000	-		1	ANGLE BRACKET	
060	35918-0000	D		1	SHAFT	
070	35919-0000	D		1	COMPRESSION SPRING	
080	36325-0000	-		1	KNOB	
220	456182-0000	-		1	PLATE	
230	1279086-0000	-		1	LOCKING PLATE	
240	1279090-0000	-		2	LOCKING PLATE	
250	1279093-0000	-		2	LOCKING PLATE	
260	1279094-0000	-		2	LOCKING PLATE	
310	751318-0000	D		1	SHAFT	
510	311411-0150	-		2	SPLIT PIN SP2X12RFR	
560	312105-0495	-		2	SCREW M6S ISO 4017 M10X30 A280	
570	312105-0536	-		1	SCREW M6S ISO 4017 M12X30 A280	
580	312318-0285	-		1	STOP SCREW ISO 4029 M4x6 A4	
610	315115-0178	-		1	WASHER TBRB 13x24 Stainless	

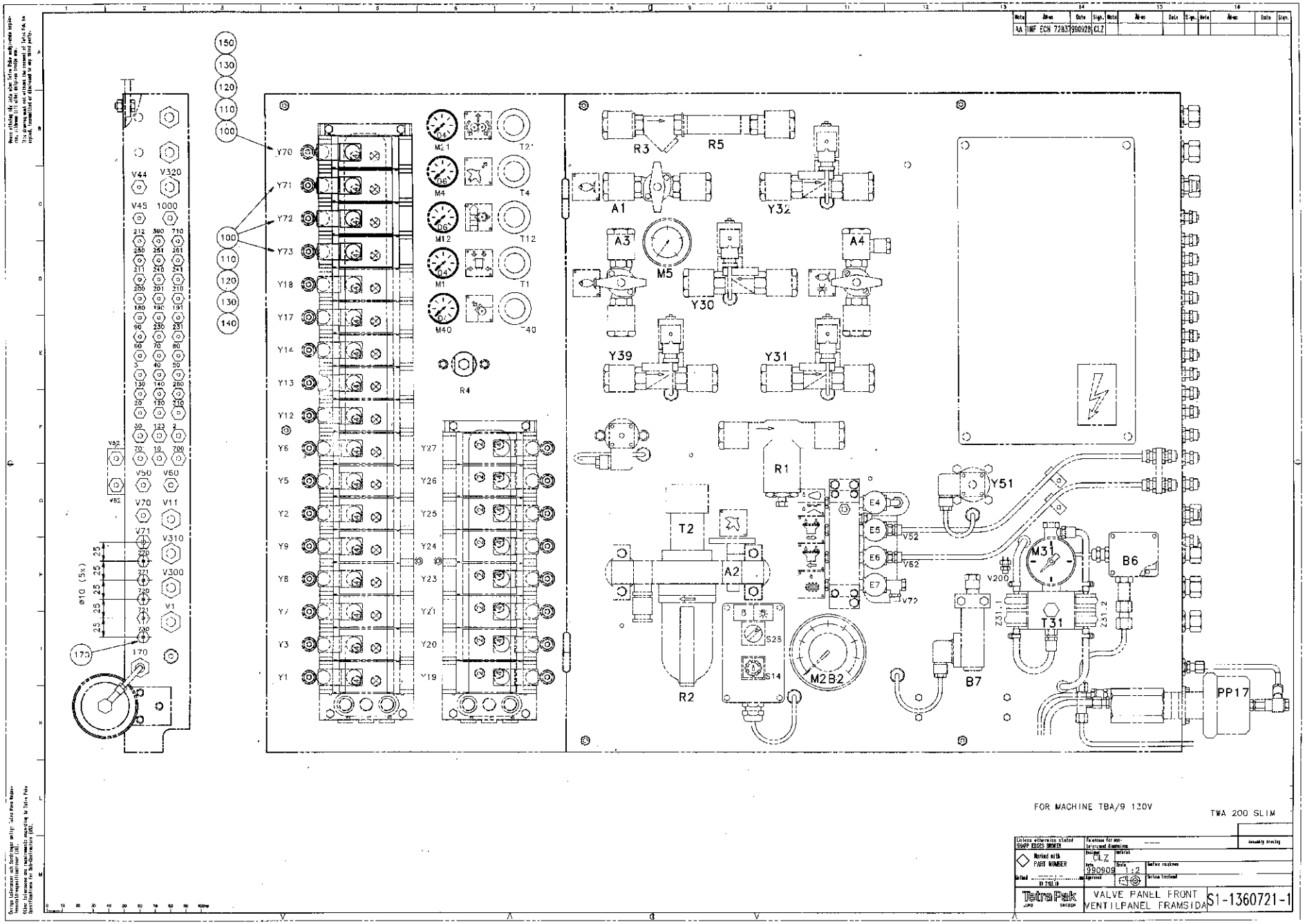
FOR MACHINE TBA/9 130V
TWA 200 SLIM
VALVE PANEL FRONT
VENTILPANEL FRAMSIDA
S1-1360721-1
Tetra Pak
R3
R5
A1
Y32
A3
M5
A4
Y30
Y39
Y31
R1
Y51
T2
A2
E4
E5
E6
E7
V52
V62
V72
M31
B6
V200
T31
Z31.1
Z31.2
S28
S14
M2B2
B7
R2
PP17
R4
M21
T21
M4
T4
M12
T12
M1
T1
M40
T40
Y70
Y71
Y72
Y73
Y18
Y17
Y14
Y13
Y12
Y6
Y5
Y2
Y9
Y8
Y7
Y3
Y1
Y27
Y26
Y25
Y24
Y23
Y21
Y20
Y19
V44
V320
V45
1000
V50
V60
V70
V11
V71
V310
V300
V1
170
ø10 (5x)
150
130
120
110
100
140

Pos	Part No	SP	UN	Qty	Description	Page No
Common parts						
100	B 90042-0108	-		4	SOLENOID VALVE Mecman 581-111-100	
110	90042-0345	-		4	COIL 24V DC	
120	90042-0392	-		4	CONTACT 2 Pole+Earth	
130	342980-0304	-		8	BANJO-HOLLOW BOLT COUPL,EXT.THR.01-G1/4"	
140	342980-0114	-		6	BANJO-CONNECTION,RING 6/4-G1/4"	
150	342980-0122	-		2	BANJO-CONNECTION,RING 8/6-G1/4"	
170	342960-0121	-		5	BULKHEAD COUPLING 8/6-6/4	

Pos	Part No	SP	UN	Qty	Description	Page No

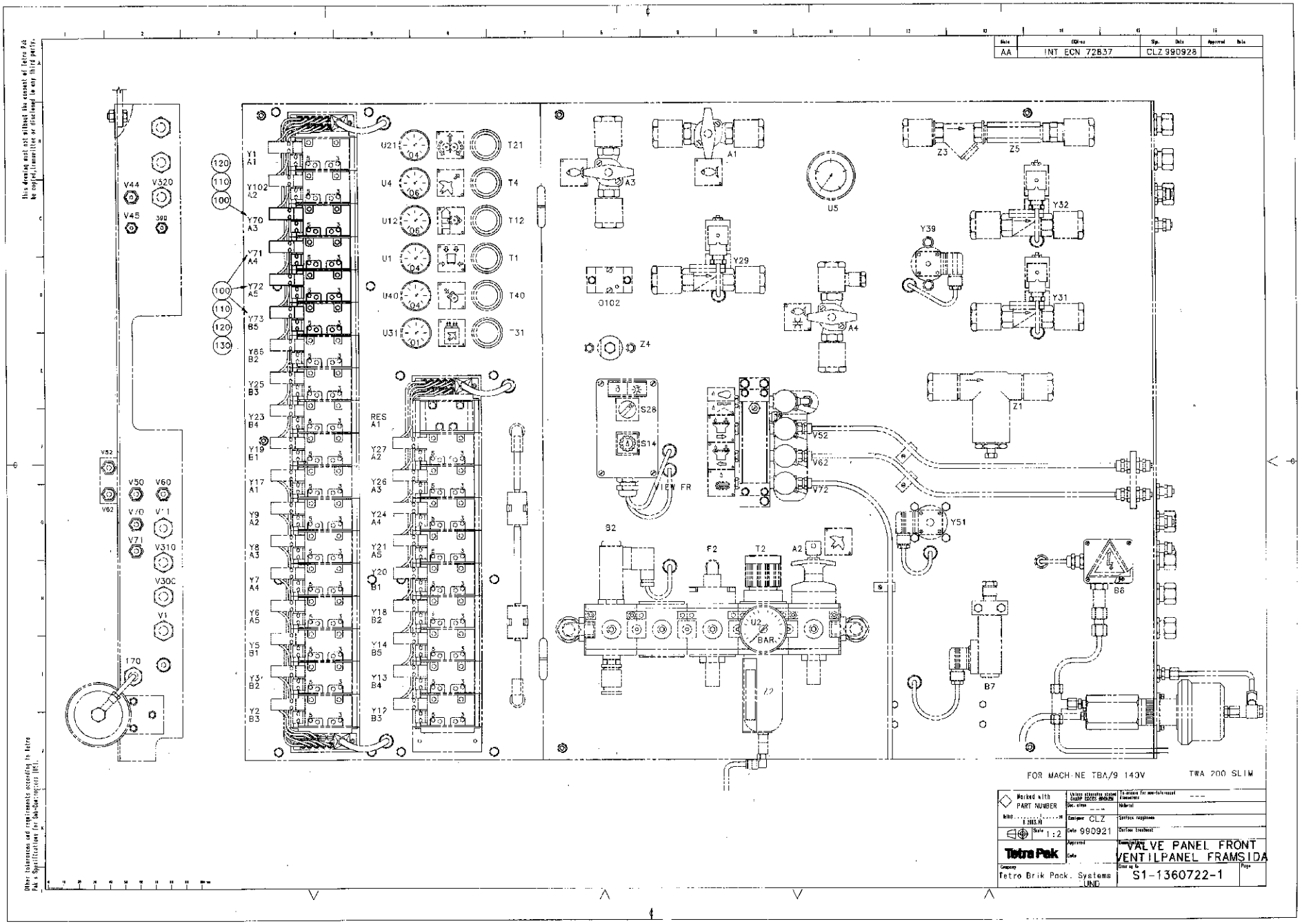
AA
INT ECN 72837
CLZ 990928
FOR MACHINE TBA/9 140V
TWA 200 SLIM
Tetra Pak
VALVE PANEL FRONT
VENTILPANEL FRAMSIDA
Tetra Brik Pack. Systems
S1-1360722-1
CLZ
990921
1:2

Pos	Part No	SP	UN	Qty	Description	Page No
Common parts						
100	90042-0215	-		4	Pneumatic valve ISO 1, 5/2 Unistable	
110	90042-0525	-		4	EL.COIL MECMAN 04938 276 18	
120	90055-0118	-		6	Elbow with tailpiece	
130	342716-0203	-		4	REDUCER 6-8	

Pos	Part No	SP	UN	Qty	Description	Page No

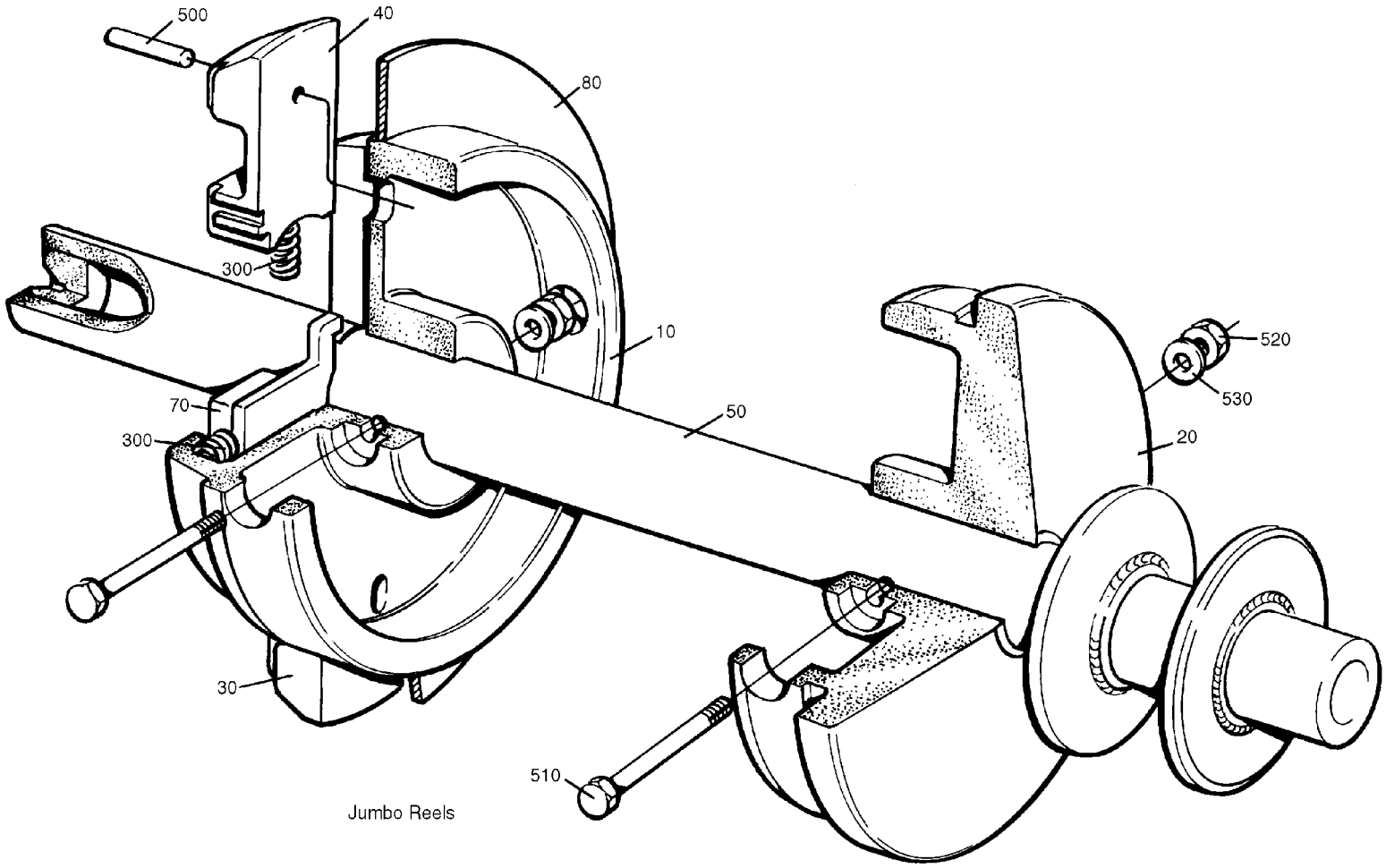

Jumbo Reels

58383-0001
58383-01.tif

Pos	Part No	SP	UN	Qty	Description	Page No
0125S						
020	272815-0002	K		1	SLEEVE	
050	272816-0002	K		1	SHAFT	
0180B 0200B 0236B 0250B						
020	272815-0001	K		1	SLEEVE	
050	272816-0001	K		1	SHAFT	
0200S						
020	272815-0003	K		1	SLEEVE	
050	272816-0003	K		1	SHAFT	
Common parts						
010	272814-0000	K		1	SLEEVE	
030	272811-0000	K		1	PLUNGER RIGHT REPBY 0575002-0000	
040	272812-0000	K		1	PLUNGER LEFT REPBY 0575002-0000	
070	272728-0000	K		1	BARRIER	
300	90335-0025	K		3	SPRING BARNES 22010	
500	311103-0274	K		2	PIN,STRAIGHT 4x25	
510	312101-0381	-		2	SCREW M6S 6x55 FZB	
520	312812-0316	-		2	NUT,HEXAGON,LOCK,WITH NYLON IN-	
SERT,M6						
530	315101-0153	-		2	WASHER BRB 6,4x12 FZB	
594958-0000						
	342708-0107	-		1	ACCESSORIES,REINFORCING RING VSH	
12X1						
1360667-0000						
	90418-0053	-		6	ELBOW 90,INTERNAL CONNECTION 15	
1360667-0000						
	342708-0109	-		2	ACCESSORIES,REINFORCING RING VSH	
15X1						

Pos	Part No	SP	UN	Qty	Description	Page No

This page is intentionally left blank

Pos	Part No	SP	UN	Qty	Description	Page No
Common parts						
0001	351179-0110	-	M	7	CABLE AWM BLACK 25MM2	
0002	351179-0110	-	M	7	CABLE AWM BLACK 25MM2	
0003	351179-0110	-	M	7	CABLE AWM BLACK 25MM2	
0004	351179-0110	-	M	7	CABLE AWM BLACK 25MM2	
0005	351123-0165	-	M	10	CABLE FKK,4x2,5	
0009	351150-0407	-	M	10	CABLE OLFLEX 12x0,75 MM2	
0012	351150-0405	-	M	10	CABLE,OLFLEX 5x0,75 MM2	
0021	351150-0406	-	M	5	CABLE OLFLEX 7x0,75 MM2	
0370	351150-0403	-	M	2	CABLE OLFLEX 3x0,75 MM2	
0371	351150-0403	-	M	2	CABLE OLFLEX 3x0,75 MM2	
0372	351150-0403	-	M	2	CABLE OLFLEX 3x0,75 MM2	
1000	351172-0102	-	M	20	CABLE AWM D.BLUE 0,75mm2	
0102	43756-0000	-	M	x		
0103	43756-0000	-	M	x		
0106	43756-0000	-	M	x		
0138	43756-0000	-	M	x		
0139	43756-0000	-	M	x		
0150	43756-0000	-	M	x		
0191	43756-0000	-	M	x		
0199	43756-0000	-	M	x		
0201	47200-0000	-	M	x		
0202	47200-0000	-	M	x		
0205	47200-0000	-	M	x		
0217	47200-0000	-	M	x		
0219	47200-0000	-	M	x		
0316	51495-0000	-	M	x		
0405	60733-0000	-	M	x		
0417	60733-0000	-	M	x		
0418	60733-0000	-	M	x		
0425	60733-0000	-	M	x		
0501	66400-0000	-	M	x		
0601	52807-0000	-	M	x		

Pos	Part No	SP	UN	Qty	Description	Page No

This page is intentionally left blank

Pos	Part No	SP	UN	Qty	Description	Page No
Common parts						
0020	A 558862-0100	-		1	ELECTRIC MATERIALS	43

Pos	Part No	SP	UN	Qty	Description	Page No

This page is intentionally left blank

Pos	Part No	SP	UN	Qty	Description	Page No
Common parts						
0003	351179-0110	-	M	7	CABLE AWM BLACK 25MM2	
0004	351179-0110	-	M	7	CABLE AWM BLACK 25MM2	
0005	351123-0165	-	M	10	CABLE FKK,4x2,5	
0009	351150-0407	-	M	10	CABLE OLFLEX 12x0,75 MM2	
0012	351150-0405	-	M	10	CABLE,OLFLEX 5x0,75 MM2	
0021	351150-0406	-	M	5	CABLE OLFLEX 7x0,75 MM2	
0370	351150-0403	-	M	2	CABLE OLFLEX 3x0,75 MM2	
0371	351150-0403	-	M	2	CABLE OLFLEX 3x0,75 MM2	
0372	351150-0403	-	M	2	CABLE OLFLEX 3x0,75 MM2	
1000	351172-0102	-	M	20	CABLE AWM D.BLUE 0,75mm2	
1010	352101-0105	-		2	GLANDS,Lead-in,IP44 PR22,5; PG16	
0102	43426-0000	-		x		
0103	43426-0000	-		x		
0106	43426-0000	-		x		
0125	43426-0000	-		x		
0135	43426-0000	-		x		
0136	43426-0000	-		x		
0139	43426-0000	-		x		
0147	43426-0000	-		x		
0175	43426-0000	-		x		
0199	43426-0000	-		x		
0201	47080-0000	-		x		
0202	47080-0000	-		x		
0205	47080-0000	-		x		
0217	47080-0000	-		x		
0219	47080-0000	-		x		
0302	51134-0000	-		x		
0306	51134-0000	-		x		
0401	60564-0000	-		x		
0413	60564-0000	-		x		
0414	60564-0000	-		x		
0421	60564-0000	-		x		
0501	66401-0000	-		x		
0502	66401-0000	-		x		
0601	52817-0000	-		x		

Pos	Part No	SP	UN	Qty	Description	Page No

This page is intentionally left blank

Pos	Part No	SP	UN	Qty	Description	Page No
Common parts						
0020	A 558893-0100	-		x	ELECTRIC MATERIALS	47
0010	A 559521-0100	-		x		
0020	A 559522-0100	-		x		51
0030	A 559523-0100	-		x		57
0040	A1365934-0100	-		x		
0103	B 43426-0000	-		x		
0109	B 43426-0000	-		x		
0113	B 43426-0000	-		x		
0123	B 43426-0000	-		x		
0125	B 43426-0000	-		x		
0136	B 43426-0000	-		x		
0139	B 43426-0000	-		x		
0140	B 43426-0000	-		x		
0148	B 43426-0000	-		x		
0150	B 43426-0000	-		x		
0151	B 43426-0000	-		x		
0160	B 43426-0000	-		x		
0161	B 43426-0000	-		x		
0163	B 43426-0000	-		x		
0165	B 43426-0000	-		x		
0175	B 43426-0000	-		x		
0177	B 43426-0000	-		x		
0199	B 43426-0000	-		x		
0201	B 47080-0000	-		x		
0202	B 47080-0000	-		x		
0228	B 47080-0000	-		x		
0238	B 47080-0000	-		x		
0301	B 51133-0000	-		x		
0357	B 51134-0000	-		x		
0421	B 60564-0000	-		x		
0424	B 60564-0000	-		x		
0428	B 60564-0000	-		x		
1020	B 62105-0000	-		x		
1030	B 53069-0000	-		x		

Pos	Part No	SP	UN	Qty	Description	Page No

This page is intentionally left blank

Pos	Part No	SP	UN	Qty	Description	Page No
Common parts						
	B 53069-0000	-		x		

Pos	Part No	SP	UN	Qty	Description	Page No

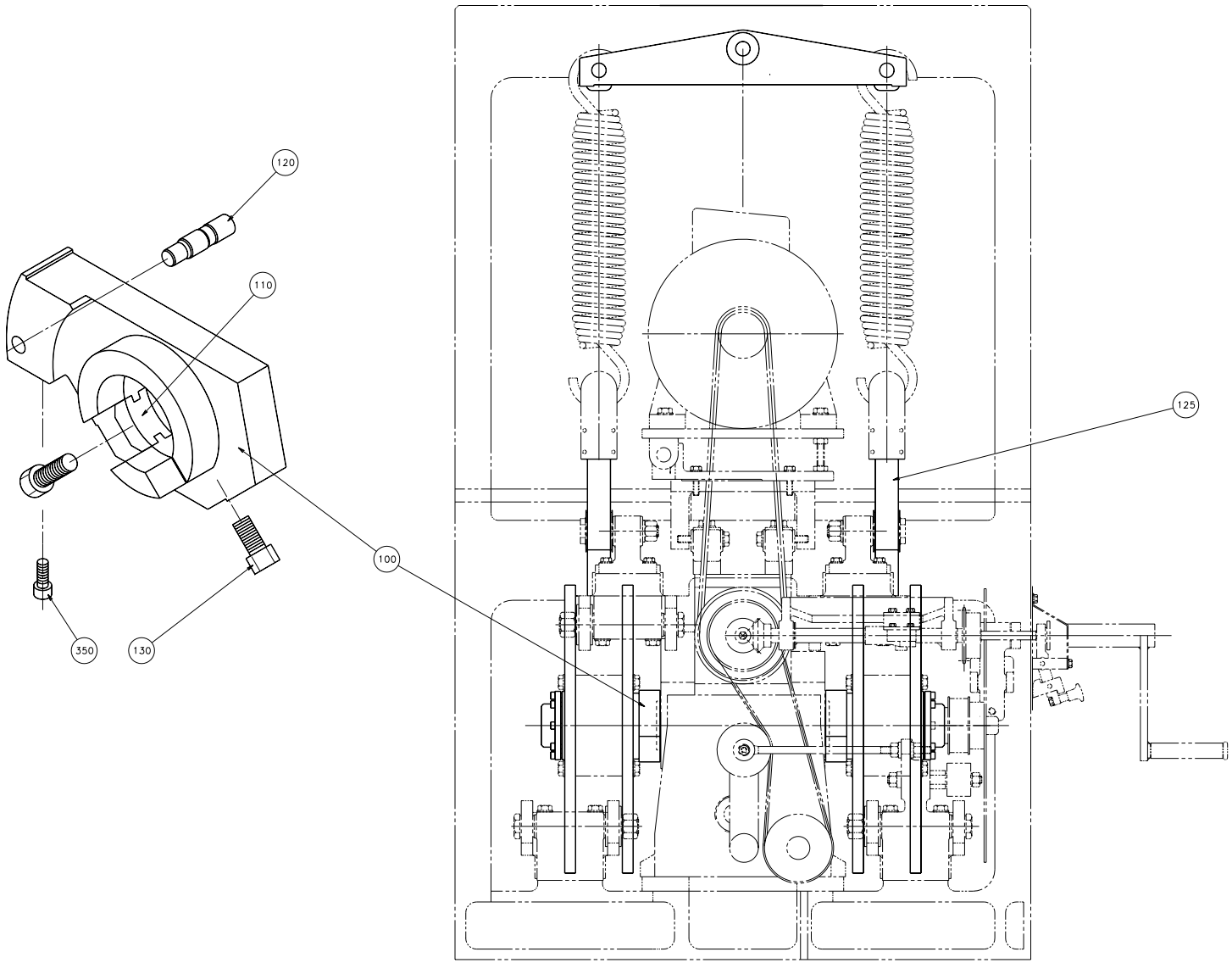

59516101.EPS
595161-1
ECN 70725

Pos	Part No	SP	UN	Qty	Description	Page No
Common parts						
010	591440-0000	K		1	SHAFT	
100	978609-0000	K		2	ALIGNMENT TEMPLATE	
110	752774-0000	K		4	PLUNGER	
120	978262-0000	K		2	GUIDE PIN	
125	566404-0002	K		2	TIMING BELT	
130	312105-0492	-		4	SCREW M6S10X22RFR	
140	90208-0091	K		2	CLAMPING ELEMENT WITH SLEEVE 60X77	
150	90208-0052	K		1	CLAMPING ELEMENT	
180	591486-0000	D		2	CURVE	
190	591485-0000	D		2	CURVE	
210	591483-0000	K		1	CURVE SEGMENT	
220	591484-0000	K		1	CURVE SEGMENT	
230	311103-0272	-		4	PIN,STRAIGHT M6 4x20	
240	594975-0000	-		2	LINK	
250	594981-0000	-		2	BEARING HOLDER	
340	312105-0493	-		2	SCREW M6S ISO 4017 M10X25 A280	
350	312115-0366	-		2	SCREW MC6S ISO 4762 M6X12 A280	
380	315105-0173	-		2	WASHER,PLAIN ROUND 10,5x22 STAINLESS	

Pos	Part No	SP	UN	Qty	Description	Page No

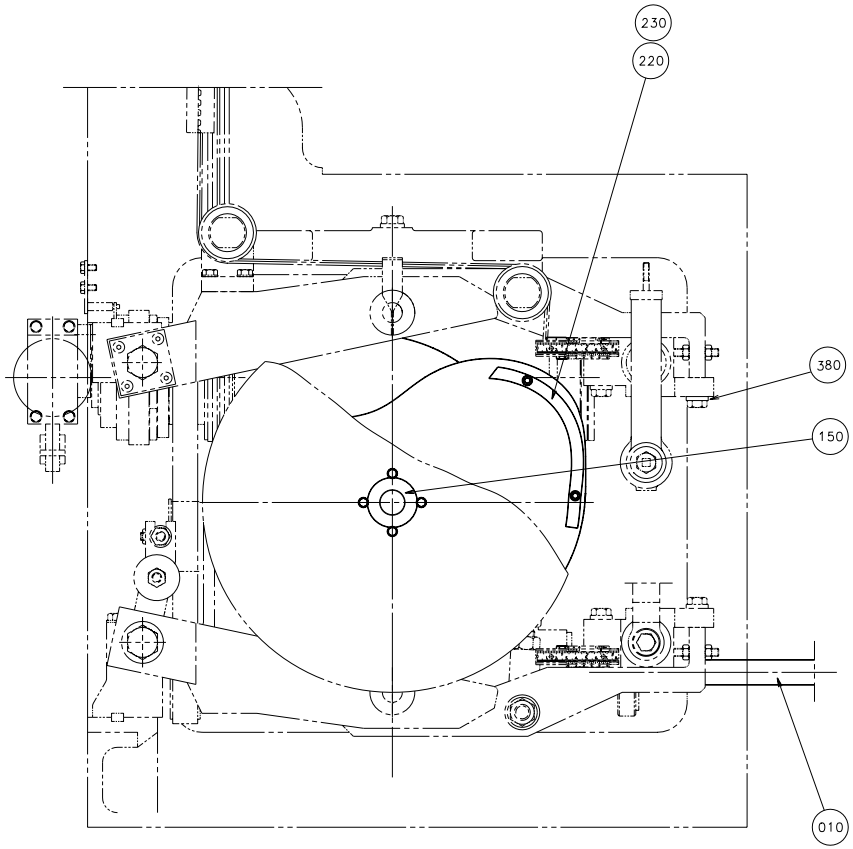

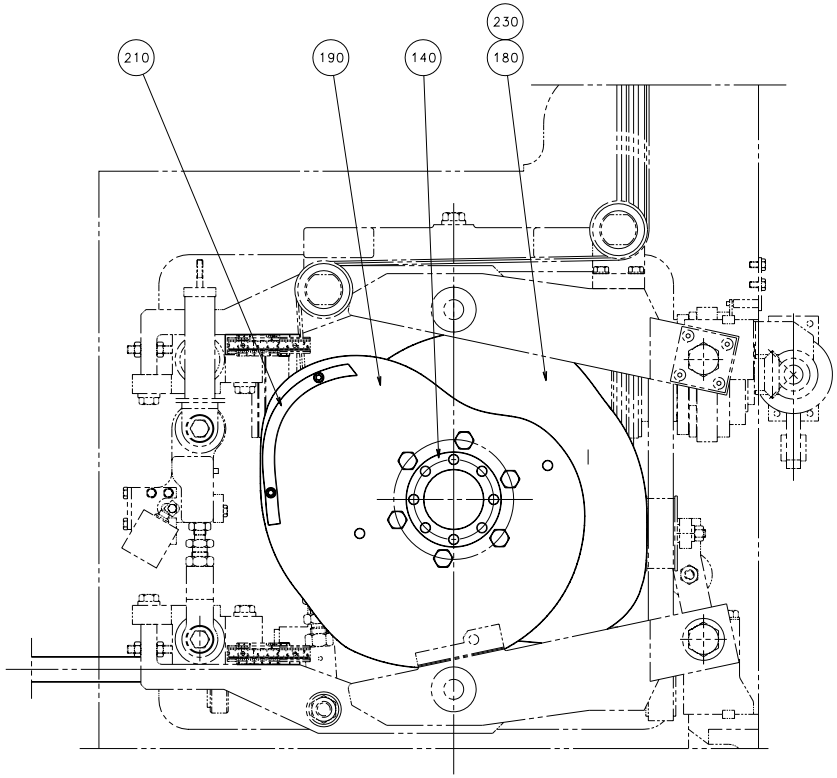

59516102.EPS
595161-1
ECN 70994

Pos	Part No	SP	UN	Qty	Description	Page No
Common parts						
010	591440-0000	K		1	SHAFT	
100	978609-0000	K		2	ALIGNMENT TEMPLATE	
110	752774-0000	K		4	PLUNGER	
120	978262-0000	K		2	GUIDE PIN	
125	566404-0002	K		2	TIMING BELT	
130	312105-0492	-		4	SCREW M6S10X22RFR	
140	90208-0091	K		2	CLAMPING ELEMENT WITH SLEEVE 60X77	
150	90208-0052	K		1	CLAMPING ELEMENT	
180	591486-0000	D		2	CURVE	
190	591485-0000	D		2	CURVE	
210	591483-0000	K		1	CURVE SEGMENT	
220	591484-0000	K		1	CURVE SEGMENT	
230	311103-0272	-		4	PIN,STRAIGHT M6 4x20	
240	594975-0000	-		2	LINK	
250	594981-0000	-		2	BEARING HOLDER	
340	312105-0493	-		2	SCREW M6S ISO 4017 M10X25 A280	
350	312115-0366	-		2	SCREW MC6S ISO 4762 M6X12 A280	
380	315105-0173	-		2	WASHER,PLAIN ROUND 10,5x22 STAINLESS	

Pos	Part No	SP	UN	Qty	Description	Page No

This page is intentionally left blank

Pos	Part No	SP	UN	Qty	Description	Page No
Common parts						
025	90023-0051	-		1	OUTPUT MODULE A&B	
025:1	90023-0318	-		1	ARM	
1010	351179-0107	-	M	17	CABLE AWM BLACK 6mm2	
1020	351175-0107	-	M	2	CABLE AWM GN/YE 6mm2	
1030	351176-0102	-	M	3	CABLE AWM RED 0,75mm2	
1040	351173-0102	-	M	3	CABLE AWM LIGHTBLUE 0,75mm2	
1050	351172-0102	-	M	50	CABLE AWM D.BLUE 0,75mm2	
1060	351180-0102	-	M	12	CABLE AWM ORANGE 0,75mm2	
1070	352103-0101	-		2	CABLE GLAND ST 9;PR15,2/PG9	
1080	352103-0111	-		2	CABLE GLAND ST 16	
1090	90089-0002	-		2	SLEEVE PR22,5/15,2;PG 16/9	
1100	90015-0023	-		1	GLANDS,Lead-in,IP67	
1110	352101-0108	-		1	GLANDS,Lead-in,IP44 PR47; PG36	
1120	90099-0103	-		1	NUT PR 47 (PG36)	
1160	353103-0140	-		3	CABLE SHOE	
1170	353024-0206	-		1	EARTH TERMINAL WPE 6	
124	90023-0048	-		1	INPUT MODULE A&B	
P.S013	90111-0139	-		1	ROTARY SWITCH	
P.S11H	90064-0322	-		1	CONTACT BLOCK	
W283	351150-0167	-	M	2	CABLE OLFLEX 4x6 MM2	
W284	351150-0412	-	M	2	CABLE OLFLEX 3x1,5mm2	
W285	351150-0425	-	M	2	CABLE OILFLEX 25x0,75mm2	
W286	351150-0403	-	M	2	CABLE OLFLEX 3x0,75 MM2	
	351150-0403	-	M	2		
0010	A 559466-0100	-		x	.....	213
0020	A 559467-0100	-		x		
0030	A 559494-0100	-		x	.....	59
0040	A1364244-0100	-		x		
0102	B 43756-0000	-		x		
0103	B 43756-0000	-		x		
0107	B 43756-0000	-		x		
0111	B 43756-0000	-		x		
0115	B 43756-0000	-		x		
0126	B 43756-0000	-		x		
0139	B 43756-0000	-		x		
0142	B 43756-0000	-		x		
0143	B 43756-0000	-		x		
0151	B 43756-0000	-		x		
0168	B 43756-0000	-		x		
0169	B 43756-0000	-		x		
0189	B 43756-0000	-		x		
0190	B 43756-0000	-		x		
0191	B 43756-0000	-		x		
0199	B 43756-0000	-		x		
0201	B 47200-0000	-		x		
0202	B 47200-0000	-		x		
0217	B 47200-0000	-		x		
0231	B 47200-0000	-		x		
0238	B 47200-0000	-		x		
0305	B 51495-0000	-		x		
0318	B 51495-0000	-		x		
0405	B 60733-0000	-		x		
0426	B 60733-0000	-		x		
0428	B 60733-0000	-		x		
0432	B 60733-0000	-		x		
1020	B 62070-0000	-		x		
1030	B 53033-0000	-		x		

This page is intentionally left blank

Pos	Part No	SP	UN	Qty	Description	Page No
Common parts						
025	90023-0051	-		1	OUTPUT MODULE A&B	
025:1	90023-0318	-		1	ARM	
1010	351179-0107	-	M	17	CABLE AWM BLACK 6mm2	
1020	351175-0107	-	M	2	CABLE AWM GN/YE 6mm2	
1030	351176-0102	-	M	3	CABLE AWM RED 0,75mm2	
1040	351173-0102	-	M	3	CABLE AWM LIGHTBLUE 0,75mm2	
1050	351172-0102	-	M	50	CABLE AWM D.BLUE 0,75mm2	
1060	351180-0102	-	M	12	CABLE AWM ORANGE 0,75mm2	
1070	352103-0101	-		2	CABLE GLAND ST 9;PR15,2/PG9	
1080	352103-0111	-		2	CABLE GLAND ST 16	
1090	90089-0002	-		2	SLEEVE PR22,5/15,2;PG 16/9	
1100	353103-0140	-		3	CABLE SHOE	
1110	353024-0206	-		1	EARTH TERMINAL WPE 6	
1120	90015-0023	-		1	GLANDS,Lead-in,IP67	
1130	352101-0108	-		1	GLANDS,Lead-in,IP44 PR47; PG36	
1140	90099-0103	-		1	NUT PR 47 (PG36)	
124	90023-0048	-		1	INPUT MODULE A&B	
P.S013	90111-0139	-		1	ROTARY SWITCH	
P.S11H	90064-0322	-		1	CONTACT BLOCK	
W283	351150-0167	-	M	2	CABLE OLFLEX 4x6 MM2	
W284	351150-0412	-	M	2	CABLE OLFLEX 3x1,5mm2	
W285	351150-0425	-	M	2	CABLE OILFLEX 25x0,75mm2	
W286	351150-0403	-	M	2	CABLE OLFLEX 3x0,75 MM2	
0010	A 559476-0100	-		x	.....	215
0020	A 559477-0100	-		x	.....	61
0030	A 559478-0100	-		x	.....	63
0040	A1364251-0100	-		x		
0102	B 43851-0000	-		x		
0107	B 43851-0000	-		x		
0113	B 43851-0000	-		x		
0129	B 43851-0000	-		x		
0137	B 43851-0000	-		x		
0139	B 43851-0000	-		x		
0141	B 43851-0000	-		x		
0150	B 43851-0000	-		x		
0153	B 43851-0000	-		x		
0154	B 43851-0000	-		x		
0159	B 43851-0000	-		x		
0170	B 43851-0000	-		x		
0176	B 43851-0000	-		x		
0185	B 43851-0000	-		x		
0186	B 43851-0000	-		x		
0187	B 43851-0000	-		x		
0189	B 43851-0000	-		x		
0190	B 43851-0000	-		x		
0191	B 43851-0000	-		x		
0199	B 43851-0000	-		x		
0201	B 47332-0000	-		x		
0202	B 47332-0000	-		x		
0206	B 47332-0000	-		x		
0214	B 47332-0000	-		x		
0219	B 47332-0000	-		x		
0235	B 47332-0000	-		x		
0305	B 51891-0000	-		x		
0306	B 51891-0000	-		x		
0311	B 51891-0000	-		x		
0405	B 60888-0000	-		x		
0412	B 60888-0000	-		x		
0414	B 60888-0000	-		x		
0422	B 60888-0000	-		x		
0442	B 60888-0000	-		x		
0447	B 60888-0000	-		x		
1020	B 62078-0000	-		x		
1030	B 53038-0000	-		x		

This page is intentionally left blank

Pos	Part No	SP	UN	Qty	Description	Page No
Common parts						
	B 53038-0000	-		x		

Pos	Part No	SP	UN	Qty	Description	Page No

This page is intentionally left blank

Pos	Part No	SP	UN	Qty	Description	Page No
Common parts						
A310:2	A1370415-0100	-		1	TETRA WEDGE OUTFEED CONVEYOR TBA/9	
1010	351172-0102	-	M	75	CABLE AWM D.BLUE 0,75mm2	
1020	351175-0105	-	M	6	CABLE AWM GN/YE 2,5mm2	
1030	351179-0105	-	M	30	CABLE AWM BLACK 2,5mm2	
1040	353245-0004	-		1	GLAND,EMC,EXTENDED WITH INSERT PR	
22,5						
1050	90135-0037	-	MM	100	GROUNDING RAIL 10x3 CU	
1060	90135-0039	-		1	SHIELD CLIP KLBU 4-13.5	
1190	353021-0216	-		5	BY PASS TERMINAL WDU 2,5 Blue	
A310	90045-0395	-		1	SERVO AMPLIFIER 5A RMS	
A310:1	90045-0376	-		1	PLINTH 19N117J	
A321	90119-0084	-		1	EXPANSION RELAY JSR1T-500ms	
F310	90007-0146	-		1	FUSE 3P 6A K	
K310	90075-0127	-		1	CONTACTOR 4KW COIL 24VDC	
K310:1	90075-0313	-		1	AUXILIARY CONTACT K&M 22 DILM.2NO;2NC	
K311	90075-0127	-		1	CONTACTOR 4KW COIL 24VDC	
K311:1	90075-0313	-		1	AUXILIARY CONTACT K&M 22 DILM.2NO;2NC	
K326	90119-0056	-		1	PLUG-IN RELAY 24VDC	
K326:1	90129-0006	-		1	BASE 11 POLE	
M.X070	90042-0535	-		1	Terminal module 19 cords	
M.Y070	90042-0538	-		1	Pilot valve, L=350 mm	
M.Y071	90042-0538	-		1	Pilot valve, L=350 mm	
M.Y072	90042-0538	-		1	Pilot valve, L=350 mm	
P.S013	90111-0139	-		1	ROTARY SWITCH	
Q310	90095-0076	-		1	OVERLOAD PROT. PKZM 6,3A	
Q310:1	90259-0317	-		1	AUX.CONTACT K&M NHI 11-PKZ0	
W003	351179-0110	-	M	7	CABLE AWM BLACK 25MM2	
W004	351179-0110	-	M	7	CABLE AWM BLACK 25MM2	
W005	351123-0165	-	M	10	CABLE FKK,4x2,5	
W009	351150-0407	-	M	10	CABLE OLFLEX 12x0,75 MM2	
W012	351150-0405	-	M	10	CABLE,OLFLEX 5x0,75 MM2	
W021	351150-0403	-	M	5	CABLE OLFLEX 3x0,75 MM2	
W740	1255692-0110	-		1	RESOLVER CABLE L=11000 mm	
W741	90220-0116	-	M	11	CABLE 4x1,0+2(2x0,5)mm2	
Z310	90024-0037	-		1	Varistor filter, 150 V RMS/200 VDC, 13 J	
	90024-0037	-		1		
0010	A 559491-0100	-		x	 217	
0020	A 559492-0100	-		x		
0030	A 559493-0100	-		x		
0040	A1370290-0100	-		x		
0102	B 44093-0000	-		x		
0107	B 44093-0000	-		x		
0113	B 44093-0000	-		x		
0137	B 44093-0000	-		x		
0139	B 44093-0000	-		x		
0145	B 44093-0000	-		x		
0146	B 44093-0000	-		x		
0157	B 44093-0000	-		x		
0158	B 44093-0000	-		x		
0166	B 44093-0000	-		x		
0167	B 44093-0000	-		x		
0170	B 44093-0000	-		x		
0171	B 44093-0000	-		x		
0172	B 44093-0000	-		x		
0181	B 44093-0000	-		x		
0182	B 44093-0000	-		x		
0183	B 44093-0000	-		x		
0189	B 44093-0000	-		x		
0190	B 44093-0000	-		x		
0191	B 44093-0000	-		x		
0199	B 44093-0000	-		x		
0201	B 47615-0000	-		x		
0202	B 47615-0000	-		x		
0206	B 47615-0000	-		x		
0214	B 47615-0000	-		x		
0219	B 47615-0000	-		x		
0235	B 47615-0000	-		x		
0308	B 52471-0000	-		x		
0310	B 52471-0000	-		x		
0312	B 52471-0000	-		x		
0405	B 61232-0000	-		x		
0413	B 61232-0000	-		x		
0414	B 61232-0000	-		x		
0423	B 61232-0000	-		x		
0450	B 61232-0000	-		x		
0451	B 61232-0000	-		x		
1020	B 62080-0000	-		x		
1030	B 53050-0000	-		x		

This page is intentionally left blank

Pos	Part No	SP	UN	Qty	Description	Page No
Common parts						
	B 53050-0000	-		x		

Pos	Part No	SP	UN	Qty	Description	Page No

This page is intentionally left blank

Pos	Part No	SP	UN	Qty	Description	Page No
Common parts						
A310:2	A1370415-0100	-		1	TETRA WEDGE OUTFEED CONVEYOR TBA/9	
1010	90135-0039	-		1	SHIELD CLIP KLBU 4-13.5	
1020	90135-0037	-	MM	100	GROUNDING RAIL 10x3 CU	
1030	353245-0004	-		1	GLAND,EMC,EXTENDED WITH INSERT PR	
22,5						
1040	351172-0102	-	M	70	CABLE AWM D.BLUE 0,75mm2	
1050	351175-0105	-	M	6	CABLE AWM GN/YE 2,5mm2	
1060	351179-0105	-	M	30	CABLE AWM BLACK 2,5mm2	
1090	353021-0216	-		9	BY PASS TERMINAL WDU 2,5 Blue	
A310	90045-0395	-		1	SERVO AMPLIFIER 5A RMS	
A310:1	90045-0376	-		1	PLINTH 19N117J	
A321	90119-0084	-		1	EXPANSION RELAY JSR1T-500ms	
F310	90007-0146	-		1	FUSE 3P 6A K	
K310	90075-0127	-		1	CONTACTOR 4KW COIL 24VDC	
K310:1	90075-0313	-		1	AUXILIARY CONTACT K&M 22 DILM.2NO;2NC	
K311	90075-0127	-		1	CONTACTOR 4KW COIL 24VDC	
K311:1	90075-0313	-		1	AUXILIARY CONTACT K&M 22 DILM.2NO;2NC	
K326	90119-0056	-		1	PLUG-IN RELAY 24VDC	
K326:1	90129-0006	-		1	BASE 11 POLE	
M.X070	90042-0535	-		1	Terminal module 19 cords	
M.Y070	90042-0538	-		1	Pilot valve, L=350 mm	
M.Y071	90042-0538	-		1	Pilot valve, L=350 mm	
M.Y072	90042-0538	-		1	Pilot valve, L=350 mm	
P.S013	90111-0139	-		1	ROTARY SWITCH	
Q310	90095-0076	-		1	OVERLOAD PROT. PKZM 6,3A	
Q310:1	90259-0317	-		1	AUX.CONTACT K&M NHI 11-PKZ0	
W003	351179-0110	-	M	7	CABLE AWM BLACK 25MM2	
W004	351179-0110	-	M	7	CABLE AWM BLACK 25MM2	
W005	351123-0165	-	M	10	CABLE FKK,4x2,5	
W012	351150-0405	-	M	10	CABLE,OLFLEX 5x0,75 MM2	
W021	351150-0403	-	M	5	CABLE OLFLEX 3x0,75 MM2	
W740	1255692-0110	-		1	RESOLVER CABLE L=11000 mm	
W741	90220-0116	-	M	11	CABLE 4x1,0+2(2x0,5)mm2	
Z310	90024-0037	-		1	Varistor filter, 150 V RMS/200 VDC, 13 J	
	90024-0037	-		1		

Pos	Part No	SP	UN	Qty	Description	Page No

This page is intentionally left blank

Pos	Part No	SP	UN	Qty	Description	Page No
Common parts						
A310:2	A1370415-0100	-		1	TETRA WEDGE OUTFEED CONVEYOR TBA/9	
1000	90135-0039	-		1	SHIELD CLIP KLBU 4-13.5	
1010	90135-0037	-	MM	100	GROUNDING RAIL 10x3 CU	
1020	353042-0004	-	MM	245	RAIL TS 35/7,5	
1030	353042-0004	-	MM	445	RAIL TS 35/7,5	
1040	351172-0102	-	M	75	CABLE AWM D.BLUE 0,75mm2	
1050	351179-0107	-	M	5	CABLE AWM BLACK 6mm2	
1060	351179-0105	-	M	12	CABLE AWM BLACK 2,5mm2	
1070	351179-0104	-	M	2	CABLE AWM BLACK 1,5mm2	
1080	351173-0104	-	M	2	CABLE AWM L.BLUE 1,5mm2	
1090	351180-0102	-	M	13	CABLE AWM ORANGE 0,75mm2	
1100	351175-0105	-	M	1	CABLE AWM GN/YE 2,5mm2	
1110	351175-0104	-	M	2	CABLE AWM GN/YE 1,5mm2	
1120	353032-0004	-		1	END PLATE WAP 2,5-10 Beige	
1130	353021-0212	-		3	FEED THROUGH TERMINAL WDU 2,5 Beige	
1140	353024-0205	-		1	EARTH TERMINAL WPE 4	
1150	312105-0455	-		5	SCREW M6S ISO 4017 M8x30 A280	
1160	312812-0318	-		5	LOCK-NUT,HEXAGON,WITH NYLON,M8	
1170	315105-0165	-		10	WASHER,PLAIN ROUND 8,4x16 Stainless	
1180	312105-0372	-		4	SCREW M6S ISO 4017 M6x25 A280	
1190	312812-0316	-		4	NUT,HEXAGON,LOCK,WITH NYLON IN-	
SERT,M6						
1200	315105-0153	-		8	WASHER,PLAIN ROUND 6,4x12 Stainless	
5000	1360714-0000	-		1	CLAMP IRON	
5010	1360715-0000	-		1	CLAMP IRON	
5020	1366635-0000	-		1	CLAMP IRON	
A300	90031-0050	-		1	PLC Baseplate, 5-Slot	
A302	90031-0058	-		1	PLC, Digital Input Module 16 pt/24 VDC	
A303	90031-0059	-		1	PLC, Digital Output Module 16 pt/24 VDC	
A310	90045-0395	-		1	SERVO AMPLIFIER 5A RMS	
A310:1	90045-0376	-		1	PLINTH 19N117J	
A320	90119-0072	-		1	SAFETY RELAY JSBR4	
A321	90119-0084	-		1	EXPANSION RELAY JSR1T-500ms	
D301	90031-0056	-		1	CPU351, Serial communication	
F310	90007-0146	-		1	FUSE 3P 6A K	
G300	90031-0068	-		1	PLC, Powersupply 120/230 VAC/50 W	
K310	90075-0127	-		1	CONTACTOR 4KW COIL 24VDC	
K310:1	90075-0313	-		1	AUXILIARY CONTACT K&M 22 DILM.2NO;2NC	
K311	90075-0127	-		1	CONTACTOR 4KW COIL 24VDC	
K311:1	90075-0313	-		1	AUXILIARY CONTACT K&M 22 DILM.2NO;2NC	
K325	90119-0052	-		1	PLUG-IN RELAY 48VDC	
K325:1	90129-0006	-		1	BASE 11 POLE	
K326	90119-0056	-		1	PLUG-IN RELAY 24VDC	
K326:1	90129-0006	-		1	BASE 11 POLE	
K350	90119-0043	-		1	OPTO RELAY 22DC 60S-3	
K351	90119-0043	-		1	OPTO RELAY 22DC 60S-3	
K352	90119-0043	-		1	OPTO RELAY 22DC 60S-3	
K353	90119-0043	-		1	OPTO RELAY 22DC 60S-3	
K354	90119-0043	-		1	OPTO RELAY 22DC 60S-3	
K355	90119-0043	-		1	OPTO RELAY 22DC 60S-3	
K356	90119-0043	-		1	OPTO RELAY 22DC 60S-3	
K357	90119-0043	-		1	OPTO RELAY 22DC 60S-3	
Q310	90095-0076	-		1	OVERLOAD PROT. PKZM 6,3A	
Q310:1	90259-0317	-		1	AUX.CONTACT K&M NHI 11-PKZ0	
R350	68444-0101	-		1	SHUNT RESISTOR FOR SSR	
R351	68444-0101	-		1	SHUNT RESISTOR FOR SSR	
R352	68444-0101	-		1	SHUNT RESISTOR FOR SSR	
R353	68444-0101	-		1	SHUNT RESISTOR FOR SSR	
R354	68444-0101	-		1	SHUNT RESISTOR FOR SSR	
R355	68444-0101	-		1	SHUNT RESISTOR FOR SSR	
R356	68444-0101	-		1	SHUNT RESISTOR FOR SSR	
R357	68444-0101	-		1	SHUNT RESISTOR FOR SSR	
Z310	90024-0037	-		1	Varistor filter, 150 V RMS/200 VDC, 13 J	

This page is intentionally left blank

Pos	Part No	SP	UN	Qty	Description	Page No
Common parts						
M.M370:1	353245-0004	-		1	GLAND,EMC,EXTENDED WITH INSERT PR	
22,5						
W280	90220-0116	-	M	11	CABLE 4x1,0+2(2x0,5)mm2	
W281	1255692-0110	-		1	RESOLVER CABLE L=11000 mm	
W287	351150-0404	-	M	10	CABLE OLFLEX 4x0,75 MM2	
0010	649480-0100	-	M	x		
0020	1370272-0100	-	M	x		
0030	1370273-0100	-	M	x		
0040	1370274-0100	-	M	x		
0050	1370275-0100	-	M	x		
0060	1364243-0100	-	M	x		
0102	44990-0000	-	M	x		
0105	44990-0000	-	M	x		
0106	44990-0000	-	M	x		
0107	44990-0000	-	M	x		
0108	44990-0000	-	M	x		
0109	44990-0000	-	M	x		
0111	44990-0000	-	M	x		
0112	44990-0000	-	M	x		
0114	44990-0000	-	M	x		
0115	44990-0000	-	M	x		
0116	44990-0000	-	M	x		
0117	44990-0000	-	M	x		
0189	44990-0000	-	M	x		
0190	44990-0000	-	M	x		
0191	44990-0000	-	M	x		
0199	44990-0000	-	M	x		
0201	48679-0000	-	M	x		
0202	48679-0000	-	M	x		
0203	48679-0000	-	M	x		
0204	48679-0000	-	M	x		
0205	48679-0000	-	M	x		
0206	48679-0000	-	M	x		
0305	53032-0000	-	M	x		
0306	53032-0000	-	M	x		
0307	53032-0000	-	M	x		
0405	62069-0000	-	M	x		

Pos	Part No	SP	UN	Qty	Description	Page No

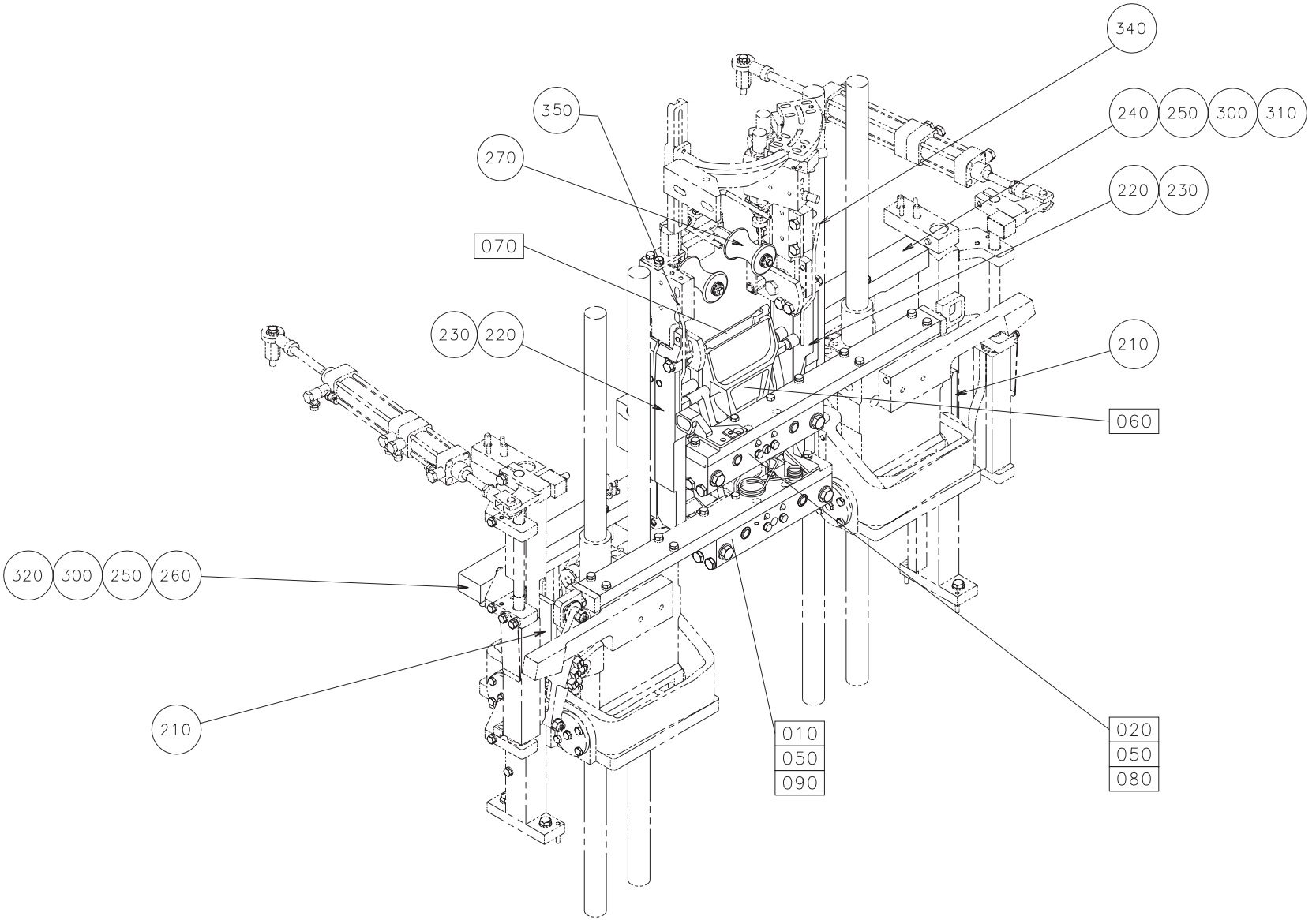
340
350
240 250 300 310
270
220 230
070
230 220
210
060
320 300 250 260
210
010
050
090
020
050
080

Pos	Part No	SP	UN	Qty	Description	Page No
Common parts						
F010	A 595159-0100	-		1	CUTTING JAW RIGHT	75
F020	A 595160-0100	-		1	CUTTING JAW LEFT	79
F050	A 256208-0400	-		2	KNIFE HOLDER	83
F060	A 591425-0100	-		2	VOLUME FLAP	85
F070	A 591426-0100	-		2	VOLUME FLAP	87
F080	A 591423-0100	-		2	SHOCK ABSORBER	89
F090	A 591424-0100	-		2	SHOCK ABSORBER	91
210	1360634-0000	K		2	COUNTER CAM	
220	1360586-0000	K		2	VOLUME CAM LEFT	
230	1360587-0000	K		2	VOLUME CAM RIGHT	
240	578628-0000	D		2	BEARING HOUSING	
250	978746-0000	K		4	CATCH	
270	978760-0000	K		2	ROLLER TBA200SL	
280	90240-0180	-		4	Flange Bushing, 10x14x15 NFB	
300	978749-0000	I		2	INDUCTOR 200SLIM	
310	594948-0000	K		1	CARRIER RIGHT	
320	594949-0000	K		1	CARRIER LEFT	
340	594969-0000	K		2	PIPE RIGHT	
350	594970-0000	K		2	PIPE LEFT	
360	1360585-0000	-		2	BRACKET	
370	1360633-0000	M		2	FOLDING FLAP CAM 200S	
380	295748-0003	-		1	BACK PIECE	

Pos	Part No	SP	UN	Qty	Description	Page No

CUTTING JAW RIGHT

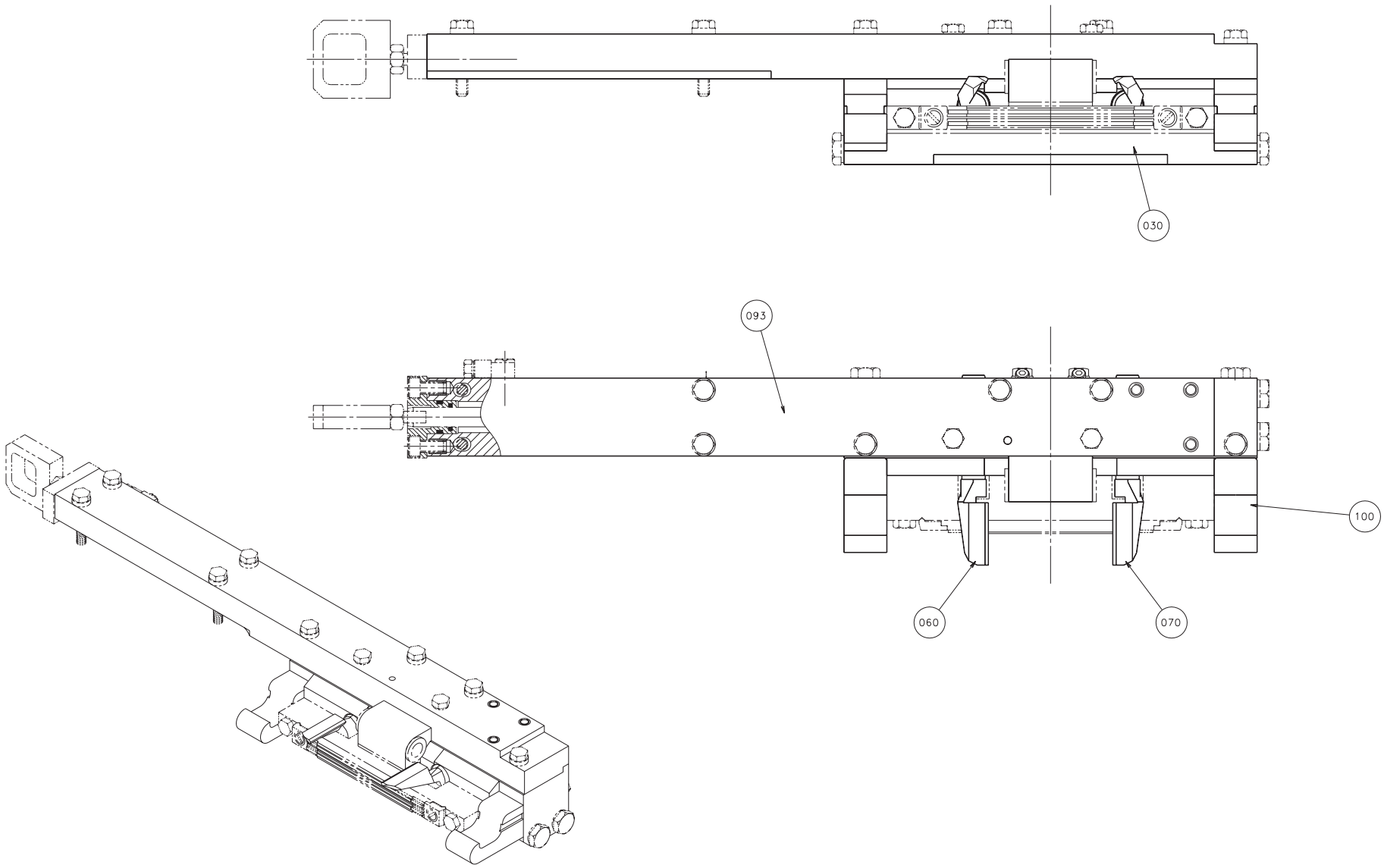

Pos	Part No	SP	UN	Qty	Description	Page No
Common parts						
030	1282424-0000	K		1	BEARING HOUSING	
040	752009-0000	K		1	RULERPART R	
045	752010-0000	K		1	RULERPART R	
060	591445-0000	K		1	FOLDING FLAP RIGHT	
070	591446-0000	K		1	FOLDING FLAP LEFT	
093	594939-0000	K		1	CARRIER RIGHT	
100	978745-0000	K		2	CATCH	
105	1360602-0000	-		1	CUTTING RAIL	
210	752115-0000	K		2	PLUNGER	
240	751579-0000	K		1	ADJUSTING SCREW	
250	751580-0000	K		1	SHIM	
260	752288-0000	K		2	SLEEVE	
270	752476-0000	K		2	SCREW	
340	90153-0015	-	KG	x	ADHESIVE Loctite IS 496/CYANOLIT 303	
520	312105-0367	-		2	SCREW M6S 6x14 A2 80	
533	312115-0329	-		1	SCREW MC6S ISO 4762 M5x16 A280	
586	315202-0110	K		2	O-RING 12,1x1,6	
589	315211-0103	F		2	GASKETS,BOLT HEAD M6	

Pos	Part No	SP	UN	Qty	Description	Page No

CUTTING JAW RIGHT

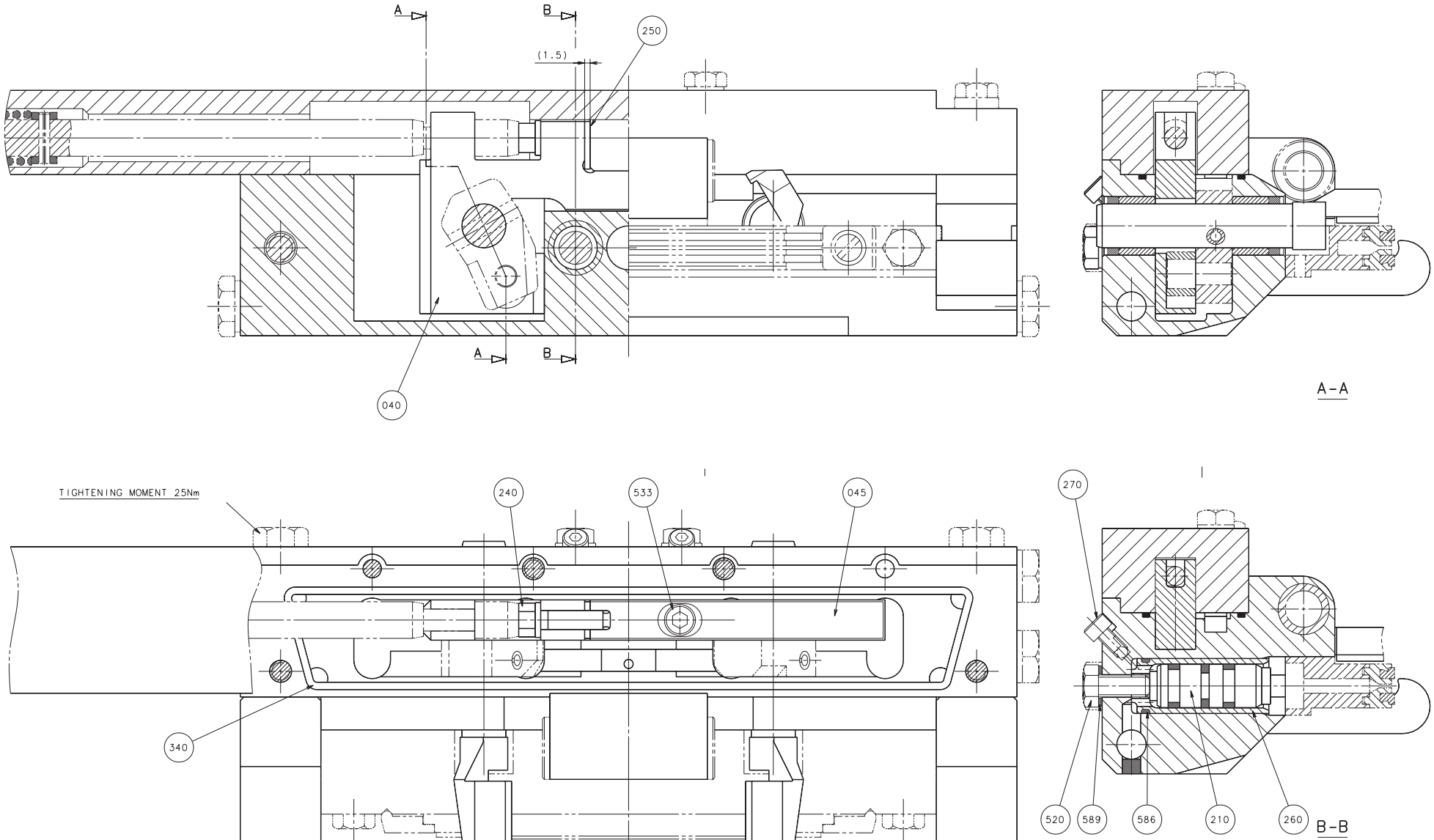

59515902.EPS
595159-02
ecn 70838

Pos	Part No	SP	UN	Qty	Description	Page No
Common parts						
030	1282424-0000	K		1	BEARING HOUSING	
040	752009-0000	K		1	RULERPART R	
045	752010-0000	K		1	RULERPART R	
060	591445-0000	K		1	FOLDING FLAP RIGHT	
070	591446-0000	K		1	FOLDING FLAP LEFT	
093	594939-0000	K		1	CARRIER RIGHT	
100	978745-0000	K		2	CATCH	
105	1360602-0000	-		1	CUTTING RAIL	
210	752115-0000	K		2	PLUNGER	
240	751579-0000	K		1	ADJUSTING SCREW	
250	751580-0000	K		1	SHIM	
260	752288-0000	K		2	SLEEVE	
270	752476-0000	K		2	SCREW	
340	90153-0015	-	KG	x	ADHESIVE Loctite IS 496/CYANOLIT 303	
520	312105-0367	-		2	SCREW M6S 6x14 A2 80	
533	312115-0329	-		1	SCREW MC6S ISO 4762 M5x16 A280	
586	315202-0110	K		2	O-RING 12,1x1,6	
589	315211-0103	F		2	GASKETS,BOLT HEAD M6	

Pos	Part No	SP	UN	Qty	Description	Page No

CUTTING JAW LEFT

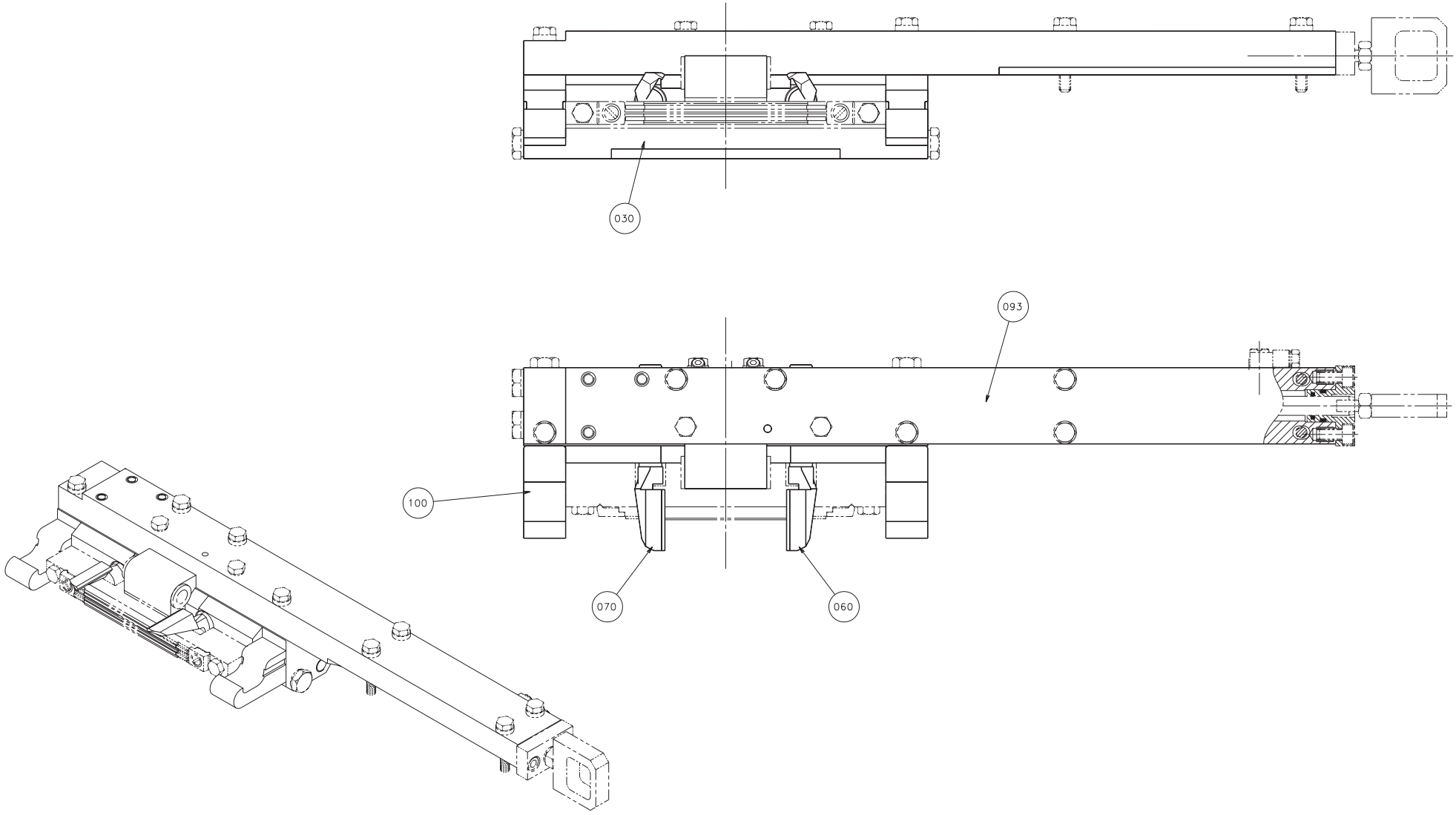

59516001.EPS
595160-1
ECN 70838

Pos	Part No	SP	UN	Qty	Description	Page No
Common parts						
030	1282424-0000	K		1	BEARING HOUSING	
040	752011-0000	K		1	RULERPART L	
045	752012-0000	K		1	RULERPART L	
060	591445-0000	K		1	FOLDING FLAP RIGHT	
070	591446-0000	K		1	FOLDING FLAP LEFT	
093	594940-0000	K		1	CARRIER LEFT	
100	978745-0000	K		2	CATCH	
105	1360602-0000	-		1	CUTTING RAIL	
210	752115-0000	K		2	PLUNGER	
240	751579-0000	K		1	ADJUSTING SCREW	
250	751580-0000	K		1	SHIM	
260	752288-0000	K		2	SLEEVE	
270	752476-0000	K		2	SCREW	
340	90153-0015	-	KG	x	ADHESIVE Loctite IS 496/CYANOLIT 303	
520	312105-0367	-		2	SCREW M6S 6x14 A2 80	
533	312115-0329	-		1	SCREW MC6S ISO 4762 M5x16 A280	
586	315202-0110	K		2	O-RING 12,1x1,6	
589	315211-0103	F		2	GASKETS,BOLT HEAD M6	

Pos	Part No	SP	UN	Qty	Description	Page No

CUTTING JAW LEFT

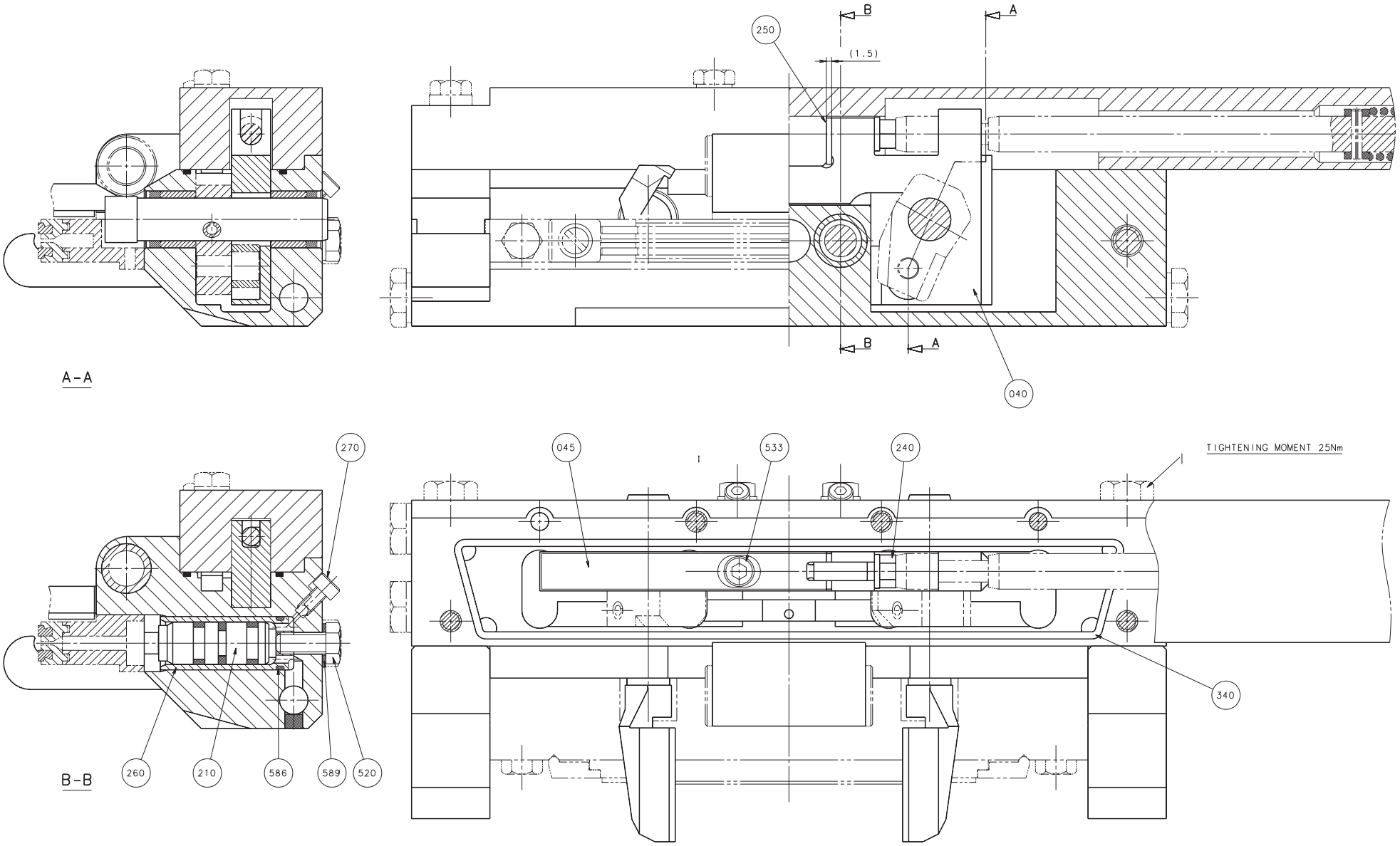

59516002.eps
595160-2
ECN 70838

Pos	Part No	SP	UN	Qty	Description	Page No
Common parts						
030	1282424-0000	K		1	BEARING HOUSING	
040	752011-0000	K		1	RULERPART L	
045	752012-0000	K		1	RULERPART L	
060	591445-0000	K		1	FOLDING FLAP RIGHT	
070	591446-0000	K		1	FOLDING FLAP LEFT	
093	594940-0000	K		1	CARRIER LEFT	
100	978745-0000	K		2	CATCH	
105	1360602-0000	-		1	CUTTING RAIL	
210	752115-0000	K		2	PLUNGER	
240	751579-0000	K		1	ADJUSTING SCREW	
250	751580-0000	K		1	SHIM	
260	752288-0000	K		2	SLEEVE	
270	752476-0000	K		2	SCREW	
340	90153-0015	-	KG	x	ADHESIVE Loctite IS 496/CYANOLIT 303	
520	312105-0367	-		2	SCREW M6S 6x14 A2 80	
533	312115-0329	-		1	SCREW MC6S ISO 4762 M5x16 A280	
586	315202-0110	K		2	O-RING 12,1x1,6	
589	315211-0103	F		2	GASKETS,BOLT HEAD M6	

Pos	Part No	SP	UN	Qty	Description	Page No

KNIFE HOLDER

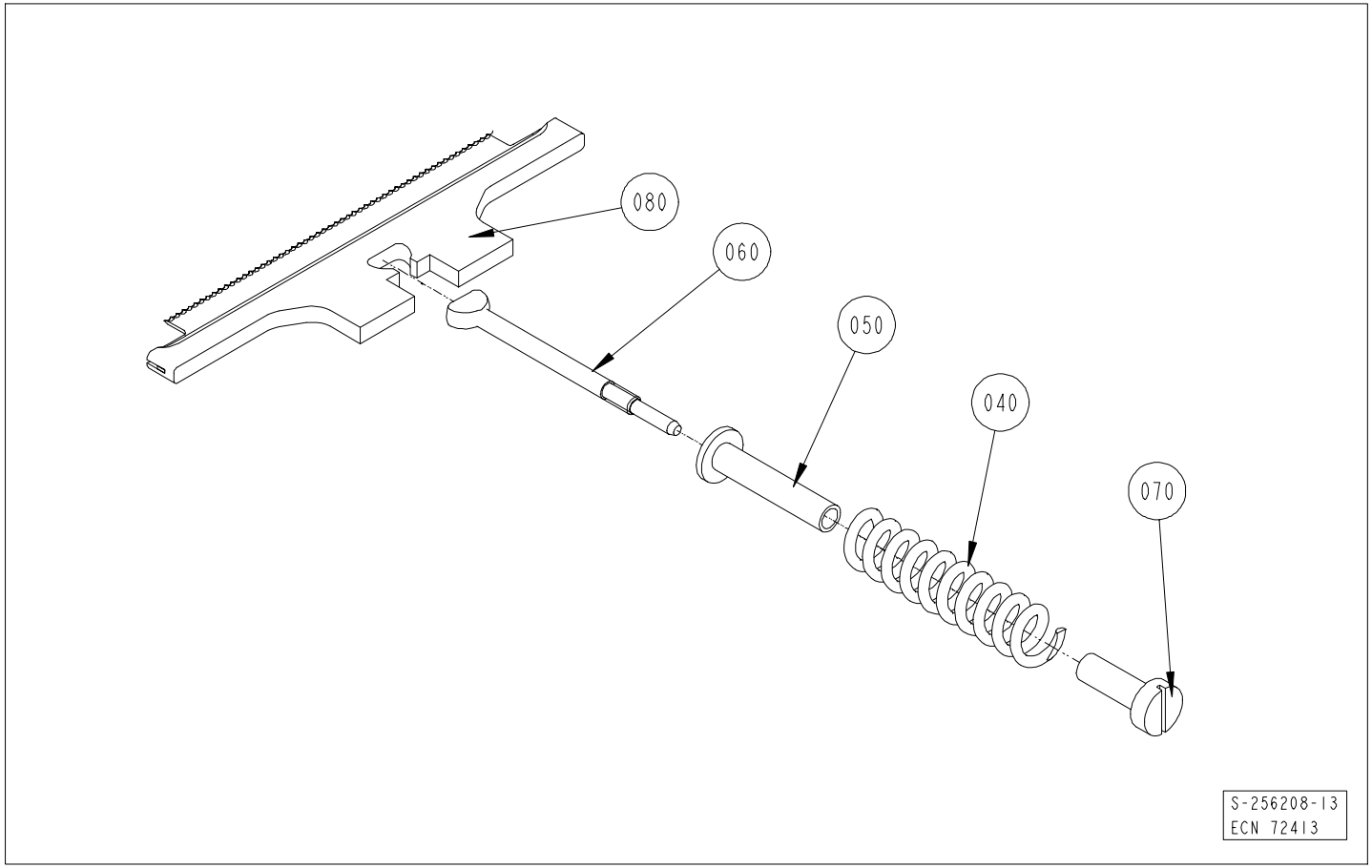

Pos	Part No	SP	UN	Qty	Description	Page No
TBA 0100B IH or TBA 0125S IH or TWA 0125S IH						
080	1282645-0000	I		1	KNIFE	
TBA 0160S IH or TBA 0200M IH or TBA 0200S IH or TBA 0250S IH or TWA 0200S IH						
080	1282647-0000	I		1	KNIFE	
TB 0180B TPC or TB 0200B TPC or TBA 0180B IH or TBA 0200B IH or TBA 0236B IH or TBA 0250B IH or TBA 0284B IH or TBA 0300S IH or TBA 0330S IH or TPA 0250SQ IH or TPA 0330SQ IH						
080	1282646-0000	I		1	KNIFE	
TB 0200S TPC						
080	A 978763-0100	-		1	CUTTING UNIT	233
Common parts						
040	441726-0000	I		1	COMPRESSION SPRING	
050	272753-0000	I		1	STEERING	
060	456009-0000	I		1	LINK	
070	272755-0000	I		1	NUT	

Pos	Part No	SP	UN	Qty	Description	Page No

VOLUME FLAP

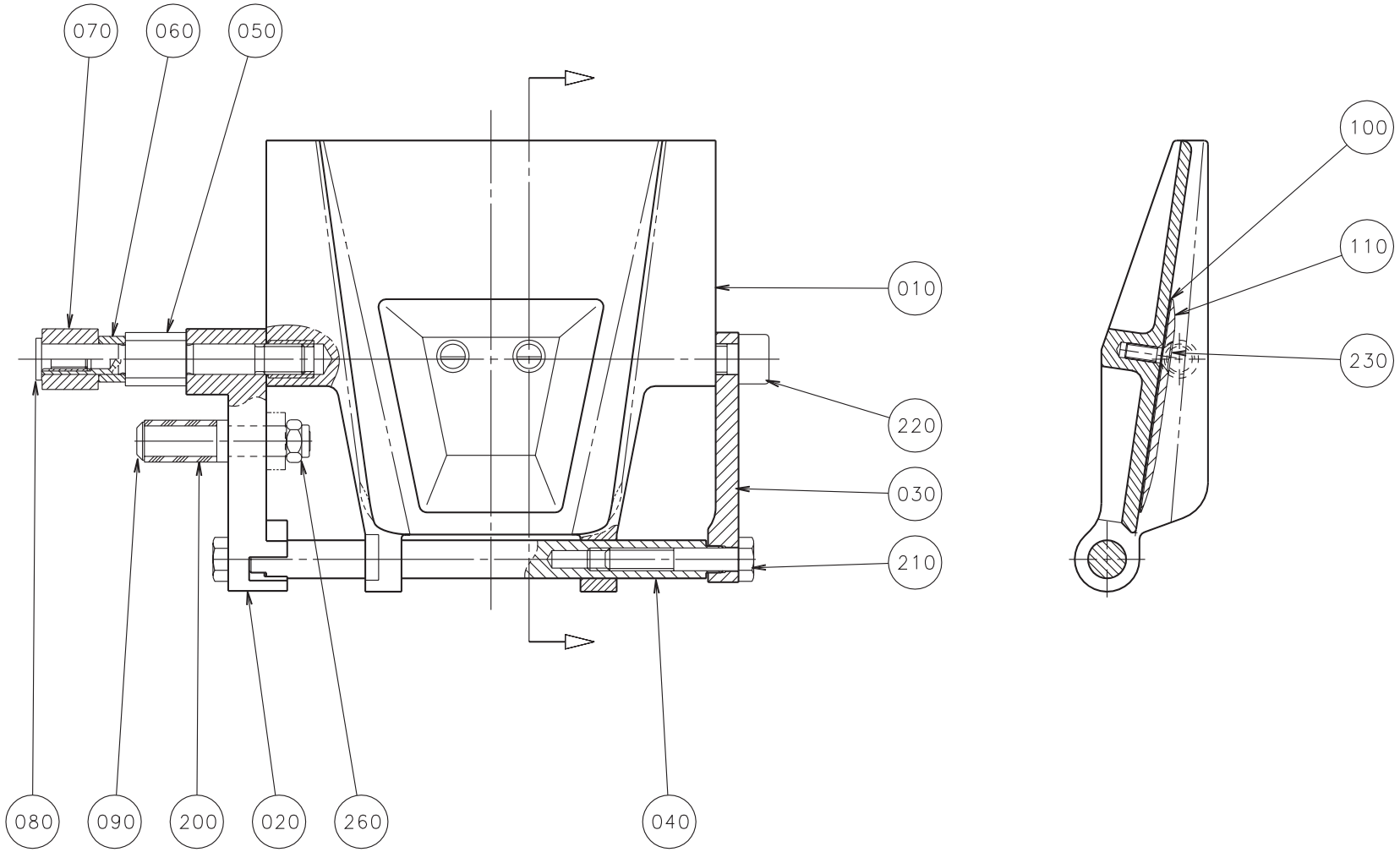

59142501.EPS
591425-1
ECN 70838

Pos	Part No	SP	UN	Qty	Description	Page No
Common parts						
010	591439-0000	K		1	VOLUME FLAP	
020	591435-0000	K		1	CARRIER	
030	272985-0001	K		1	ARM	
040	591436-0000	K		1	SHAFT	
050	591438-0000	K		1	SHAFT	
060	752615-0000	K		1	SPACER	
070	256860-0000	K		1	ROLL	
080	256859-0000	K		1	SCREW	
090	591437-0000	K		1	DOWEL	
100	591560-0000	K		3	VOLUME SHIM	
110	591559-0000	K		1	VOLUME BULGE	
200	90166-0159	F	M	x	RUBBER HOSE	
210	312105-0376	-		2	SCREW M6S ISO 4017 M6x35 A280	
220	312115-0449	-		1	SCREW MC6S ISO 4762 M8X16 A280	
230	312145-0291	F		2	SLOTTED HEAD SCREW MFS 4x12 A4	
260	312812-0316	-		1	NUT,HEXAGON,LOCK,WITH NYLON IN-	
SERT,M6						

Pos	Part No	SP	UN	Qty	Description	Page No

VOLUME FLAP

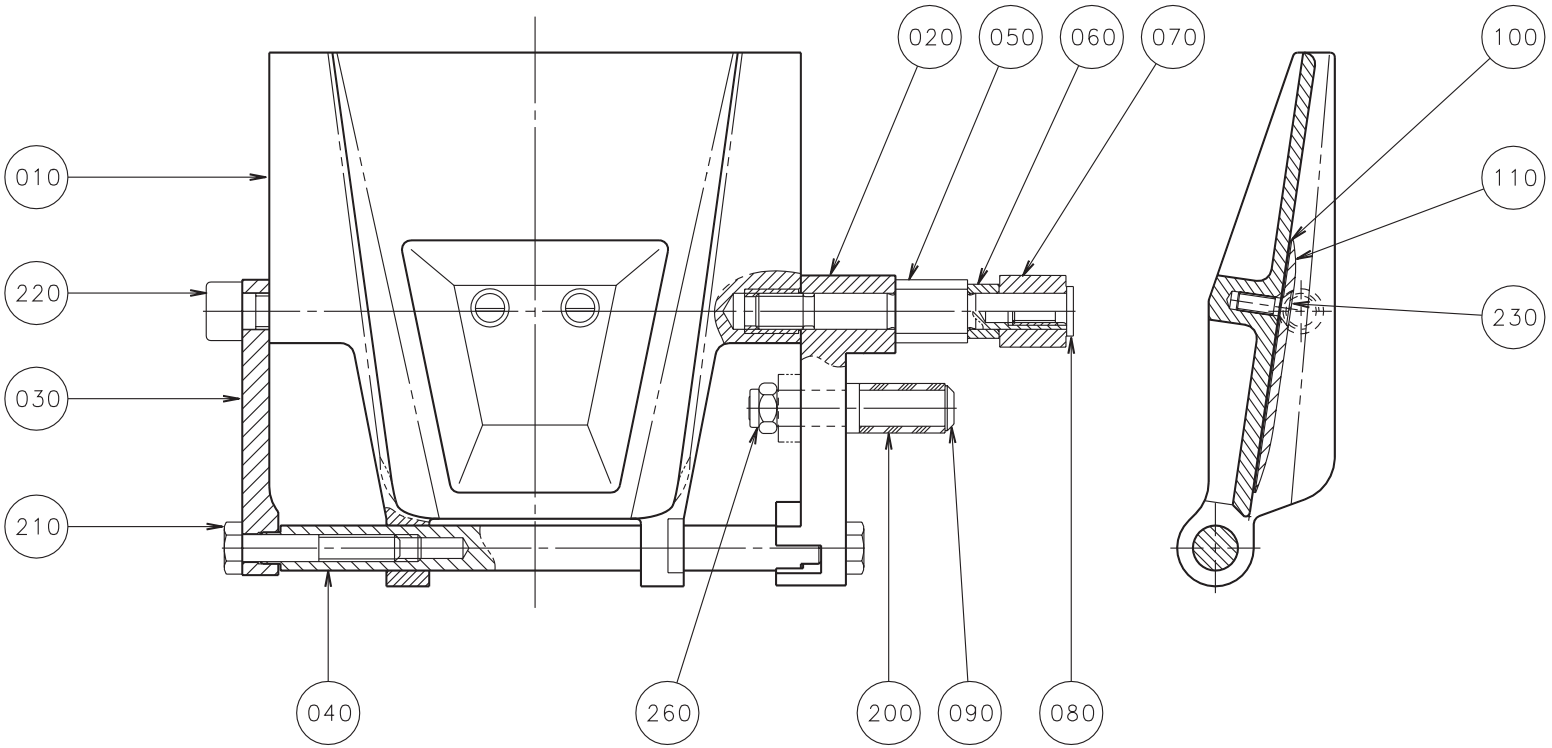

Pos	Part No	SP	UN	Qty	Description	Page No
Common parts						
010	591439-0000	K		1	VOLUME FLAP	
020	591435-0000	K		1	CARRIER	
030	272985-0001	K		1	ARM	
040	591436-0000	K		1	SHAFT	
050	591438-0000	K		1	SHAFT	
060	752615-0000	K		1	SPACER	
070	256860-0000	K		1	ROLL	
080	256859-0000	K		1	SCREW	
090	591437-0000	K		1	DOWEL	
100	591560-0000	K		3	VOLUME SHIM	
110	591559-0000	K		1	VOLUME BULGE	
200	90166-0159	F	M	x	RUBBER HOSE	
210	312105-0376	-		2	SCREW M6S ISO 4017 M6x35 A280	
220	312115-0449	-		1	SCREW MC6S ISO 4762 M8X16 A280	
230	312145-0291	F		2	SLOTTED HEAD SCREW MFS 4x12 A4	
260	312812-0316	-		1	NUT,HEXAGON,LOCK,WITH NYLON IN-	
SERT,M6						

Pos	Part No	SP	UN	Qty	Description	Page No

SHOCK ABSORBER

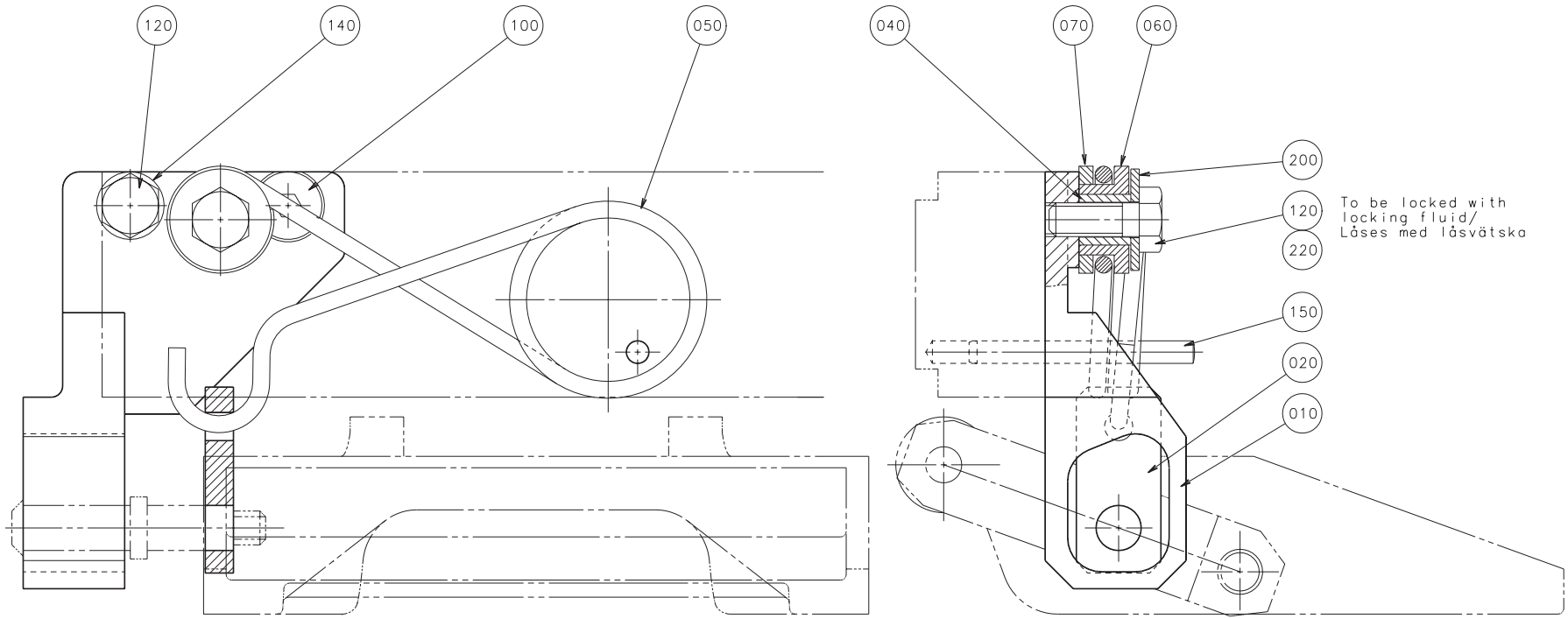

59142301.EPS
591423-1
ECN 70994

Pos	Part No	SP	UN	Qty	Description	Page No
Common parts						
010	591427-0000	K		1	STOPPER	
020	752425-0000	K		1	LINK	
040	591432-0000	K		1	SPACER	
050	591429-0000	K		1	SPRING	
060	591433-0000	K		1	SLEEVE	
070	591434-0000	K		1	WASHER	
100	312155-0366	-		1	SCREW MF6S DIN 7991 M6x12 A280	
120	312105-0368	-		2	SCREW M6S ISO 4017 M6x16 A280	
140	315105-0153	-		1	WASHER,PLAIN ROUND 6,4x12 Stainless	
150	311103-0280	-		1	PIN,STRAIGHT 4x40	
200	90005-0060	-		1	WASHER,Plain round 6,4x18;H=1,5 M6	
220	90157-0016	-	ML	x	LOCKING FLUID LOCTITE 242 50 ML	

Pos	Part No	SP	UN	Qty	Description	Page No

SHOCK ABSORBER

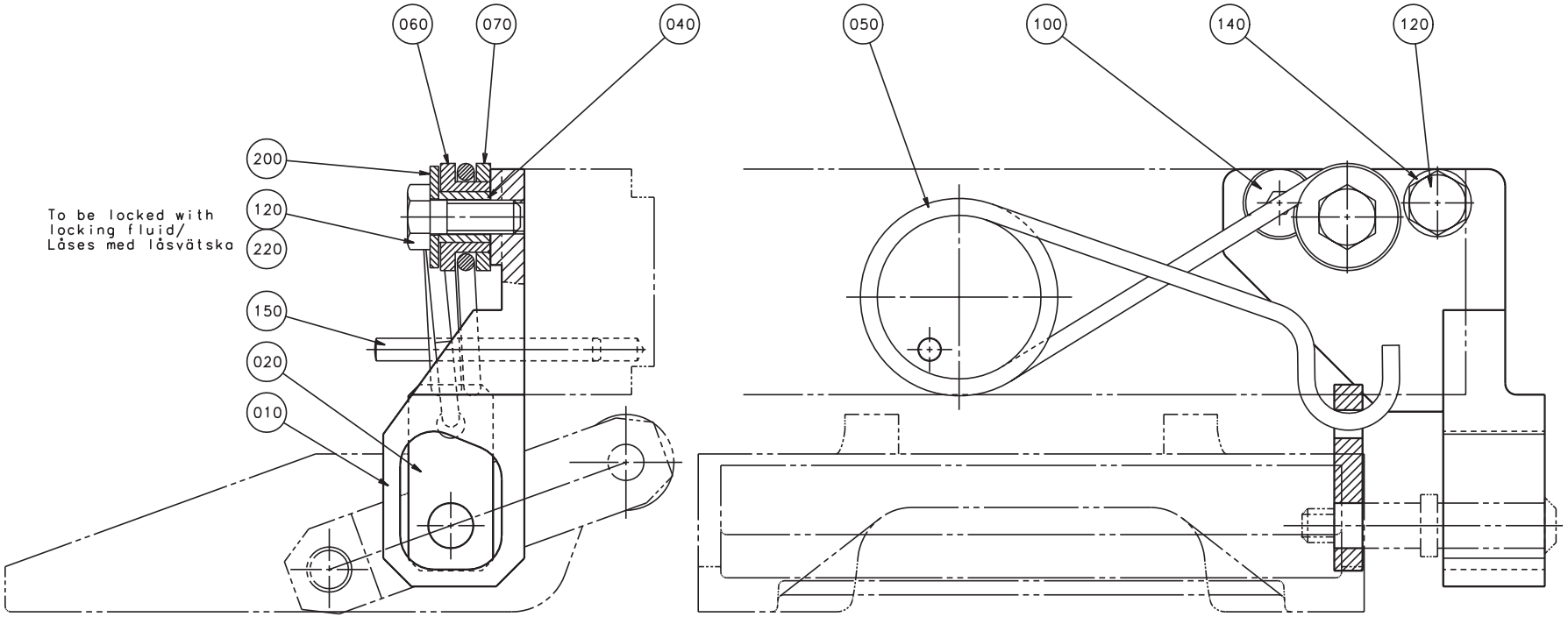

Pos	Part No	SP	UN	Qty	Description	Page No
Common parts						
010	591428-0000	K		1	STOPPER	
020	752425-0000	K		1	LINK	
040	591432-0000	K		1	SPACER	
050	591430-0000	K		1	SPRING	
060	591433-0000	K		1	SLEEVE	
070	591434-0000	K		1	WASHER	
100	312155-0366	-		1	SCREW MF6S DIN 7991 M6x12 A280	
120	312105-0368	-		2	SCREW M6S ISO 4017 M6x16 A280	
140	315105-0153	-		1	WASHER,PLAIN ROUND 6,4x12 Stainless	
150	311103-0280	-		1	PIN,STRAIGHT 4x40	
200	90005-0060	-		1	WASHER,Plain round 6,4x18;H=1,5 M6	
220	90157-0016	-	ML	x	LOCKING FLUID LOCTITE 242 50 ML	
0010	48679-0000	-	M	x		

Pos	Part No	SP	UN	Qty	Description	Page No

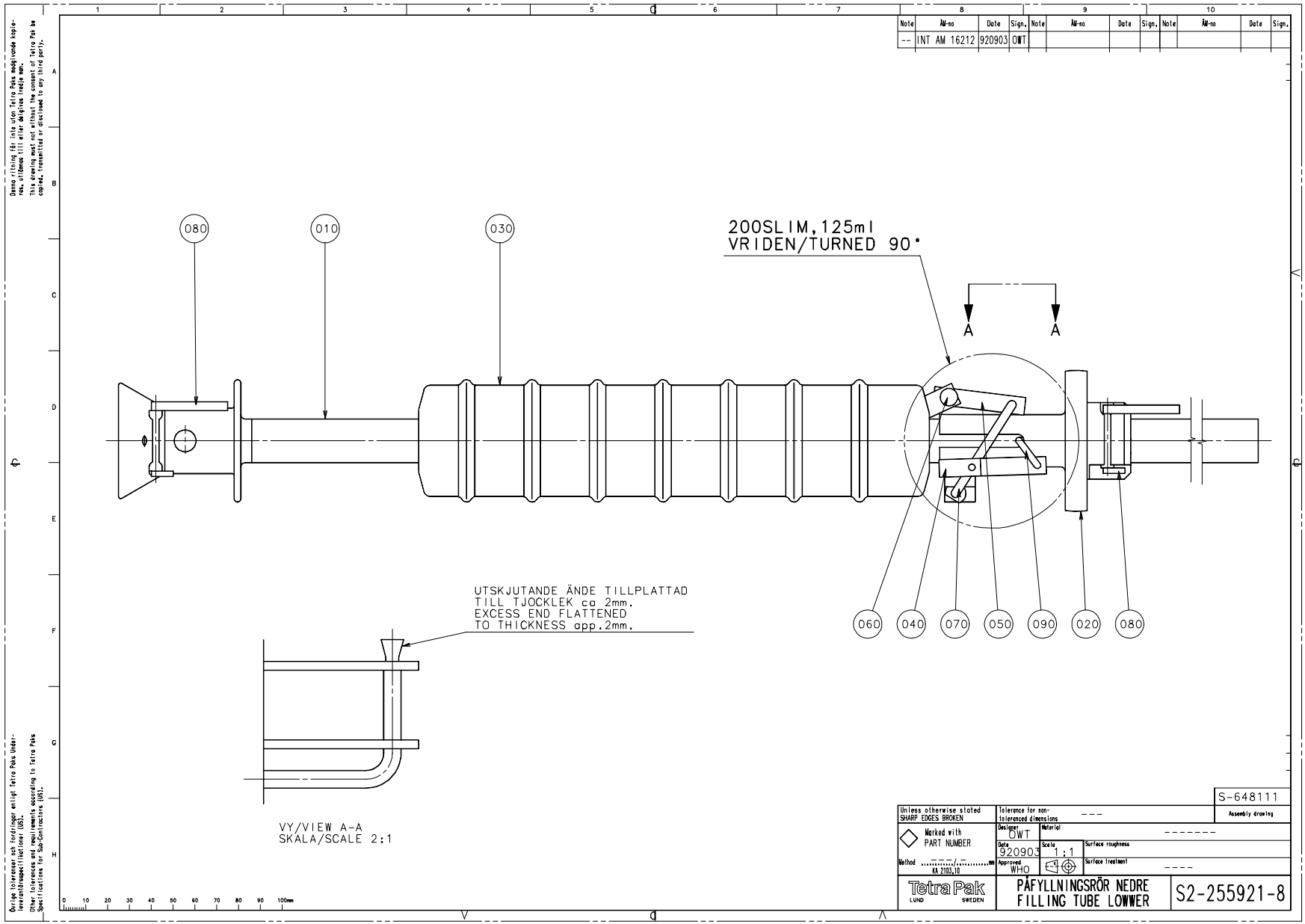
080
010
030
200SLIM,125ml
VRIDEN/TURNED 90°
A
A
060
040
070
050
090
020
080
UTSKJUTANDE ÄNDE TILLPLATTAD
TILL TJOCKLEK ca 2mm.
EXCESS END FLATTENED
TO THICKNESS app.2mm.
VY/VIEW A-A
SKALA/SCALE 2:1
Note AM-no Date Sign.
-- INT AM 16212 920903 OWT
S-648111
Assembly drawing
Unless otherwise stated SHARP EDGES BROKEN
Tolerance for non-toleranced dimensions ---
Marked with PART NUMBER
Designer OWT
Material --------
Date 920903
Scale 1:1
Surface roughness
Method ...../...../..... mm KA 2103.10
Approved WHO
Surface treatment ----
Tetra Pak LUND SWEDEN
PÅFYLLNINGSRÖR NEDRE
FILLING TUBE LOWNER
S2-255921-8

Pos	Part No	SP	UN	Qty	Description	Page No
0125S						
010	490869-0000	K		1	FILLING TUBE LOWER	
020	490850-0000	K		1	PRESSURE FLANGE	
030	272056-0000	K		1	FLOAT	
040	271348-0000	K		1	LINK	
050	491458-0000	K		1	LINK	
060	271351-0000	F		1	SHEAR PIN	
070	271347-0000	K		1	ARM	
080	978562-0000	F		2	LOCKING FINGER	
090	271350-0000	F		1	THROTTLE	
0160S						
010	491270-0000	K		1	FILLING TUBE LOWER	
020	577231-0000	K		1	PRESSURE FLANGE	
030	491142-0000	K		1	FLOAT	
040	271348-0000	K		1	LINK	
050	271349-0000	K		1	LINK	
060	271351-0000	F		1	SHEAR PIN	
070	271347-0000	K		1	ARM	
080	978562-0000	F		2	LOCKING FINGER	
090	491141-0000	K		1	THROTTLE	
0180B or 0200B						
010	469972-0001	K		1	FILLING TUBE LOWER	
020	469973-0000	K		1	PRESSURE FLANGE	
030	550487-0000	K		1	FLOAT	
040	36816-0000	K		1	LINK	
050	36817-0000	K		1	CLAMPING ELEMENT	
060	36821-0002	F		1	SHEAR PIN	
070	37296-0000	K		1	ARM	
080	38535-0002	F		2	LOCKING FINGER	
090	295987-0000	F		1	THROTTLE	
0200S						
010	491270-0000	K		1	FILLING TUBE LOWER	
020	491271-0000	K		1	PRESSURE FLANGE	
030	491142-0000	K		1	FLOAT	
040	271348-0000	K		1	LINK	
050	271349-0000	K		1	LINK	
060	271351-0000	F		1	SHEAR PIN	
070	271347-0000	K		1	ARM	
080	978562-0000	F		2	LOCKING FINGER	
090	491141-0000	K		1	THROTTLE	
0236B or 0250B or 0284B						
010	469972-0002	K		1	FILLING TUBE LOWER	
020	469973-0000	K		1	PRESSURE FLANGE	
030	550487-0000	K		1	FLOAT	
040	36816-0000	K		1	LINK	
050	36817-0000	K		1	CLAMPING ELEMENT	
060	36821-0002	F		1	SHEAR PIN	
070	37296-0000	K		1	ARM	
080	38535-0002	F		2	LOCKING FINGER	
090	295987-0000	F		1	THROTTLE	
0250S						
010	574412-0000	K		1	FILLING TUBE 250S	
020	574413-0000	K		1	PRESSURE FLANGE 250S	
030	574414-0000	K		1	FLOATER 250S	
040	36816-0000	K		1	LINK	
050	574475-0000	K		1	LINK	
060	36821-0002	F		1	SHEAR PIN	
070	37296-0000	K		1	ARM	
070	574472-0000	K		1	ARM	
080	38535-0002	F		2	LOCKING FINGER	
090	228943-0000	K		1	THROTTLE	

FILLER TUBE

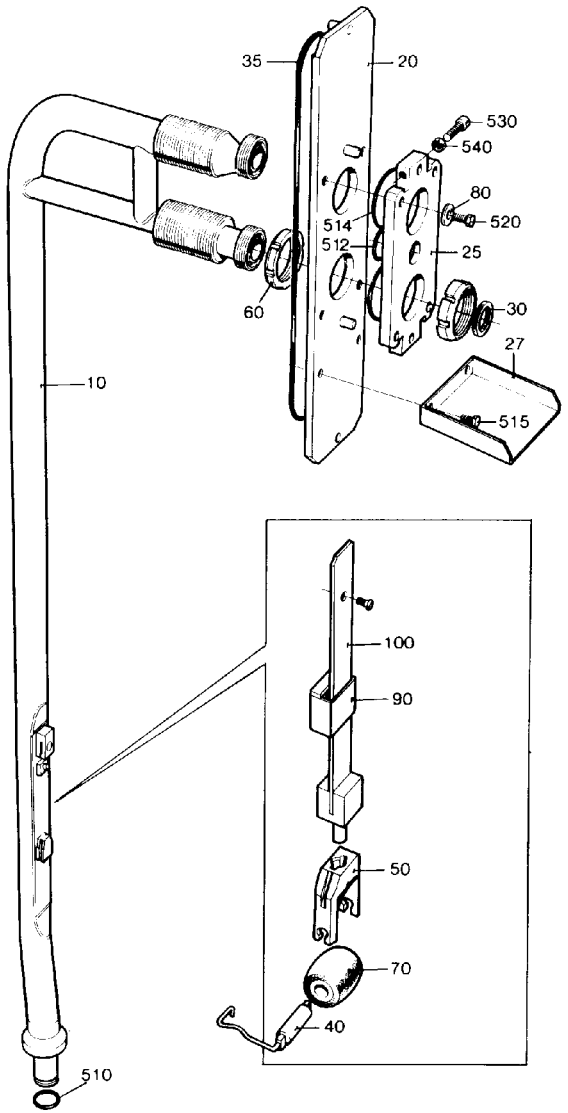

46909104.TIF
469091-4/5
AM 16685

Pos	Part No	SP	UN	Qty	Description	Page No
0125S						
010	565461-0000	K		1	FILLING TUBE UPPER	
040	255977-0000	-		1	SHAFT	
050	255978-0000	F		1	FORK	
070	272479-0000	F		1	PRESSURE ROLLER	
090	491441-0000	F		1	HOOD	
100	751604-0000	F		1	SPRING	
0160S or 0200S						
010	565461-0000	K		1	FILLING TUBE UPPER	
040	255977-0000	-		1	SHAFT	
050	255978-0000	F		1	FORK	
070	272479-0000	F		1	PRESSURE ROLLER	
090	295377-0001	F		1	HOOD	
100	751604-0000	F		1	SPRING	
0180B or 0200B or 0236B or 0250B or 0284B						
010	752694-0000	K		1	FILLING TUBE UPPER	
040	295376-0000	F		1	SHAFT	
050	568583-0000	F		1	FORK	
070	257330-0000	F		1	PRESSURE ROLLER	
090	295377-0002	F		1	HOOD	
100	544894-0000	F		1	SPRING	
0250S						
010	574384-0000	K		1	FILLING TUBE 250S	
040	255977-0000	-		1	SHAFT	
050	255978-0000	F		1	FORK	
070	272479-0000	F		1	PRESSURE ROLLER	
090	295377-0001	F		1	HOOD	
100	751604-0000	F		1	SPRING	
Common parts						
020	491414-0000	K		1	PLATE	
025	491415-0000	-		1	FASTENING PLATE	
027	295984-0000	-		1	DRIP GUARD	
030	12242-0001	F		2	GASKET	
035	491418-0001	F		1	O-RING	
060	255981-0000	-		4	NUT	
080	315125-0153	-		4	WASHERS,PLAIN ROUND,CHAMFERED 6,4X22X4	
510	315204-0214	F		1	O-RING 17,3x2,4 VITON	
512	315204-0217	F		1	O-RINGS 24,2X3	
514	315204-0301	F		2	O-RINGS 49,5X3	
515	312105-0364	-		2	SCREW M6S 6x10 A280	
520	312105-0372	-		4	SCREW M6S ISO 4017 M6x25 A280	
530	312115-0455	-		4	SCREW MC6S ISO 4762 M8X30 A280	
540	312605-0318	-		4	NUT,HEXAGON,M8 RFR	

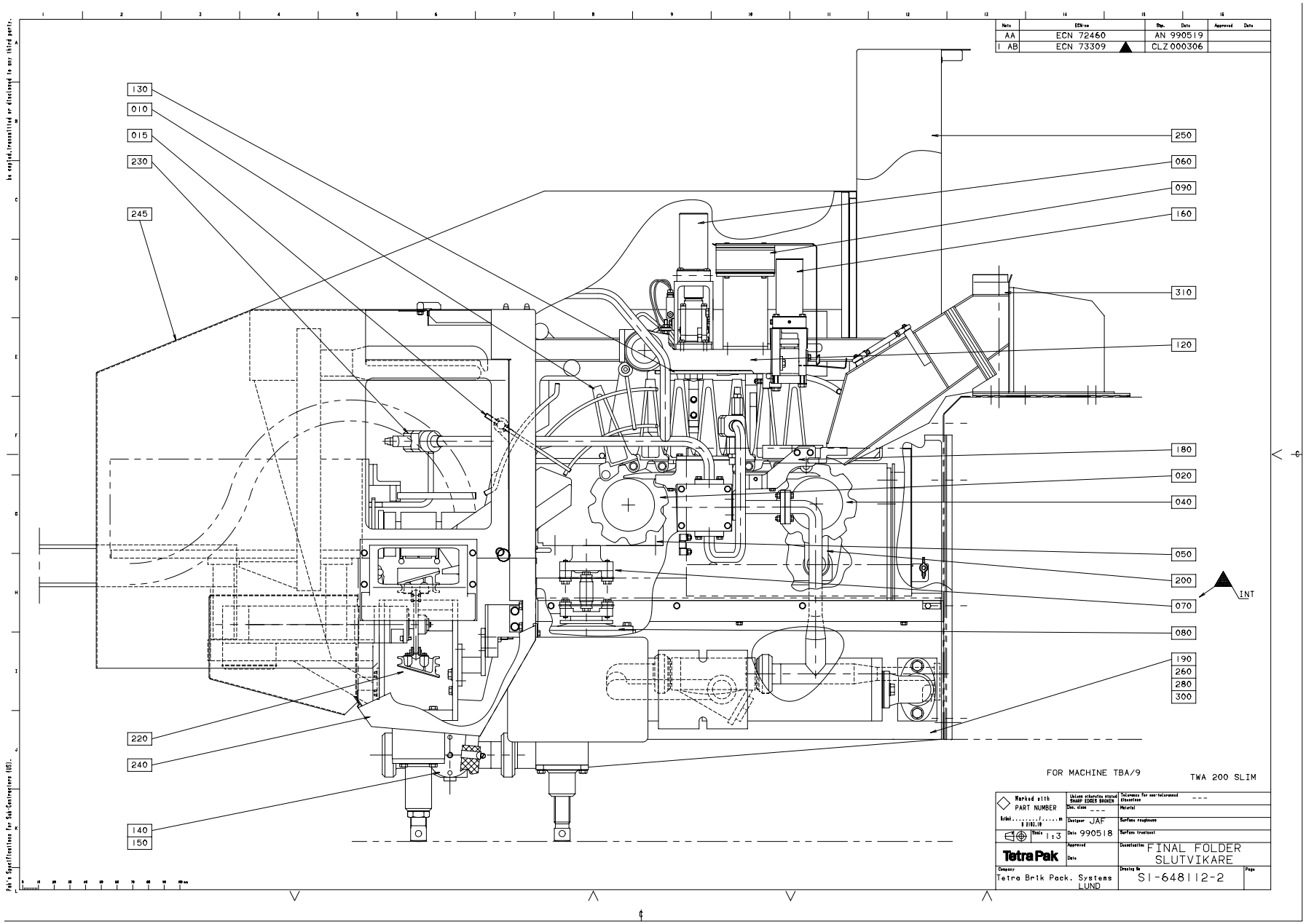
130
010
015
230
245
250
060
090
160
310
120
180
020
040
050
200
070
080
190
260
280
300
220
240
140
150
INT
FOR MACHINE TBA/9
TWA 200 SLIM
FINAL FOLDER
SLUTVIKARE
SI-648112-2
Tetra Brik Pack. Systems
LUND

Pos	Part No	SP	UN	Qty	Description	Page No
Common parts						
F010	A 591634-0100	-		1	STATION CHAIN	99
F015	A 591635-0100	-		1	GUIDE RAIL	149
F020	A 491850-0100	-		1	DRIVE WHEEL	169
F040	A1360718-0100	-		1	TENSION SPROCKET	171
F050	A 256410-0700	-		1	INDEXING UNIT	173
F060	A 591643-0100	-		1	PRESSURE DEVICE	175
F070	A 256437-0200	-		1	DISC COUPLING	
F080	A 256438-0200	-		1	WORM GEAR	177
F090	A 594932-0100	-		1	FLAP SEALING UNIT	179
F120	A1360652-0100	-		1	PIVOTING FRAME	183
F130	A 591678-0100	-		1	FOLDING BAR	101
F140	A 591676-0100	-		1	TUBE ASSEMBLY	103
F150	A 591679-0100	-		1	BOTTOM VALVE	105
F160	A 591677-0100	-		1	PULL DOWN DEVICE	107
F180	A 591680-0100	-		1	GUIDE	109
F190	A 591681-0100	-		1	MACHINE BODY	111
F200	A 591682-0100	-		1	CANTILEVER	113
F220	A 594991-0100	-		1	DISCHARGE UNIT	121
F230	A 591672-0100	-		1	CLEANING SYSTEM	141
F240	A 595171-0100	-		1	COVERING PANEL	147
F245	A1360654-0100	-		1	COVERING PANEL	151
F250	A 591621-0100	-		1	PROTECTIVE COVER	155
F260	A 271116-0300	-		1	ANGULAR TRANSMITTER	159
F280	A 271387-0300	-		1	SPRAY GUN	161
F300	A 591683-0100	-		1	CABLE ASSEMBLY	163
F310	A 591514-0100	-		1	TURNING DEVICE	167

Pos	Part No	SP	UN	Qty	Description	Page No

STATION CHAIN

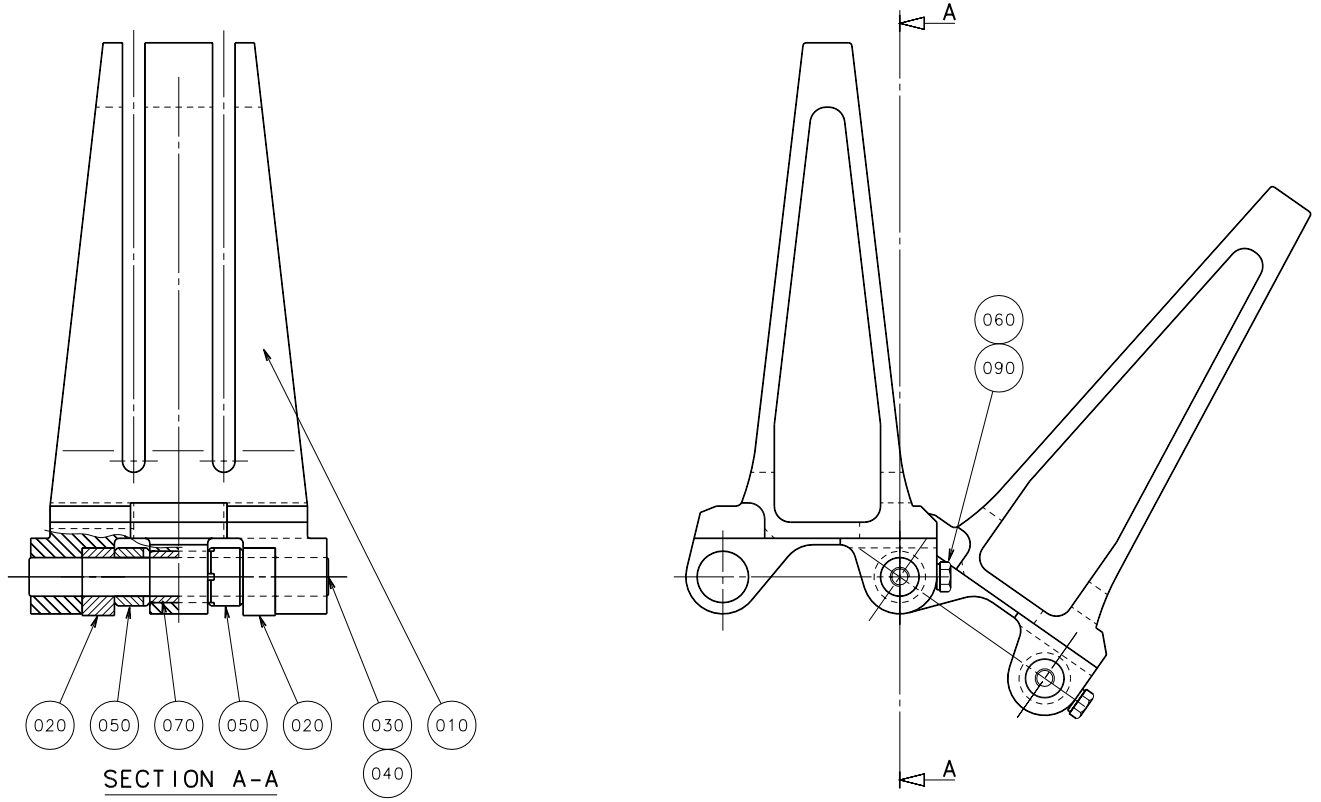

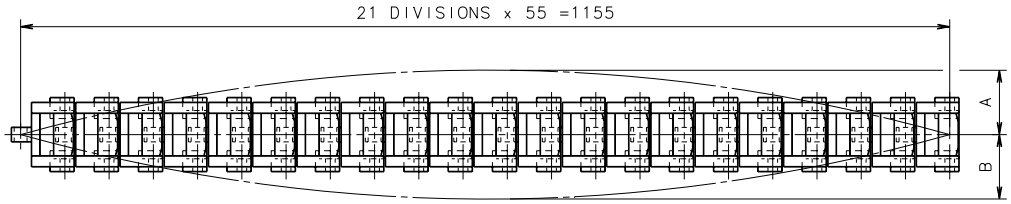

The difference between A and B has to be less than 3mm.
The torsional tolerance has to be the same.

Pos	Part No	SP	UN	Qty	Description	Page No
Common parts						
010	591417-0000	K		21	CARTON STATION	
020	491227-0000	K		42	SLIDER	
030	491228-0001	K		18	SHAFT	
040	491228-0002	K		3	SHAFT	
050	491229-0000	K		42	BUSHING	
060	491230-0000	K		21	GRUB SCREW	
070	491231-0000	K		21	BUSHING	
080	315233-0101	K		21	PLAIN ROUND,NYLON M5	

Pos	Part No	SP	UN	Qty	Description	Page No

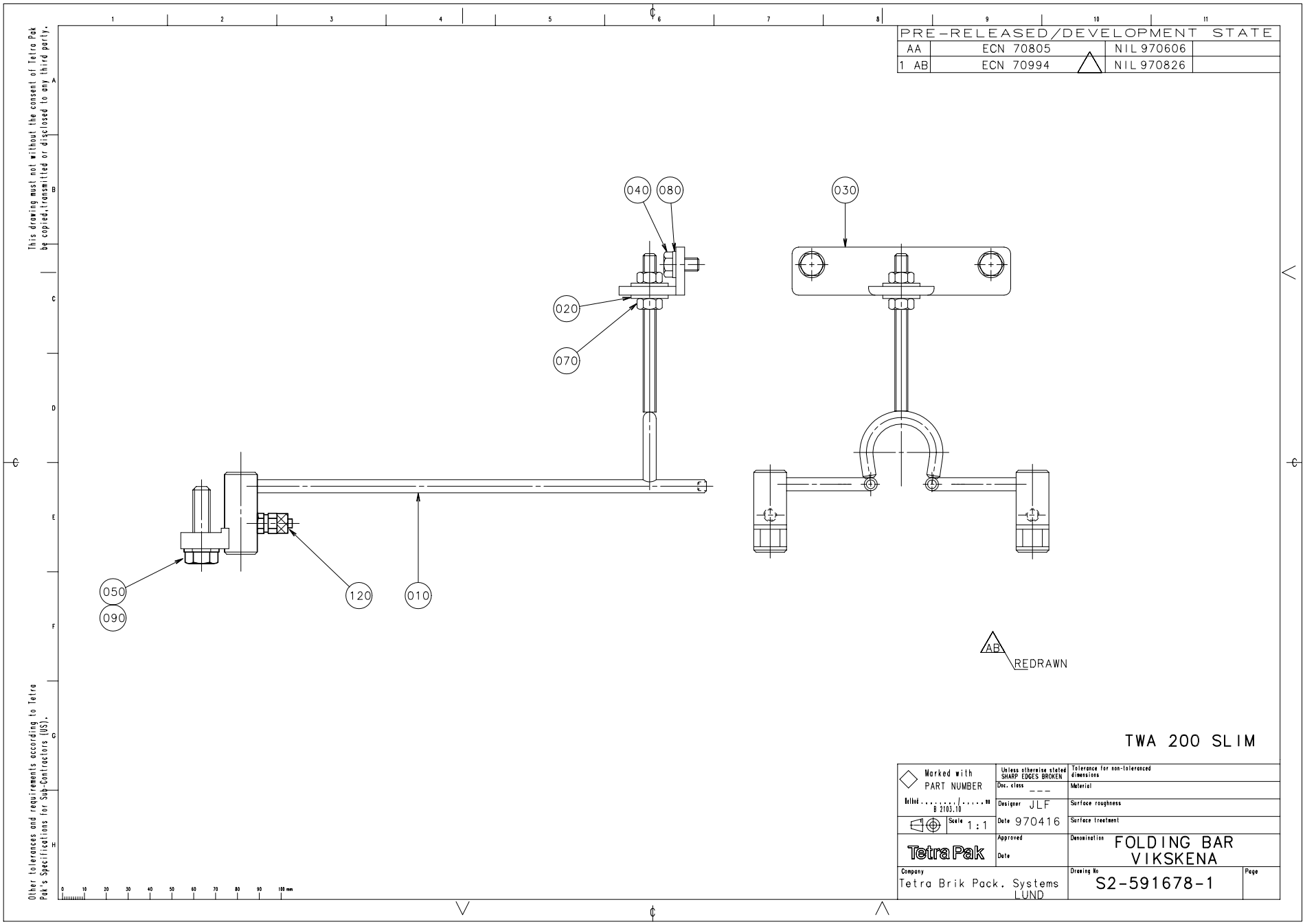
PRE-RELEASED/DEVELOPMENT STATE
AA ECN 70805 NIL 970606
1 AB ECN 70994 NIL 970826
040
080
030
020
070
050
090
120
010
AB
REDRAWN
TWA 200 SLIM
Marked with PART NUMBER
Unless otherwise stated SHARP EDGES BROKEN
Tolerance for non-toleranced dimensions
Dim. class ---
Material
Designer JLF
Surface roughness
Date 970416
Scale 1:1
Surface treatment
Approved
Date
Denomination FOLDING BAR VIKSKENA
Company Tetra Brik Pack. Systems LUND
Drawing No S2-591678-1
Page
This drawing must not without the consent of Tetra Pak be copied, transmitted or disclosed to any third party.
Other tolerances and requirements according to Tetra Pak's Specifications for Sub-Contractors (US).

Pos	Part No	SP	UN	Qty	Description	Page No
Common parts						
010	591666-0000	K		1	FOLDING BAR	
020	6278-0000	-		2	WASHER	
030	594978-0000	-		1	MOUNTING PLATE	
040	312105-0366	-		2	SCREW M6S ISO 4017 M6x12 A280	
050	312105-0459	-		2	SCREW ISO 4017 M8x40 A280	
070	312605-0316	-		2	NUT,HEXAGON A280 M6M6	
080	315105-0153	-		2	WASHER,PLAIN ROUND 6,4x12 Stainless	
090	315105-0165	-		2	WASHER,PLAIN ROUND 8,4x16 Stainless	
120	342921-0112	K		2	STRAIGHT COUPLING,EXT.THREADED 6/4-6M	

Pos	Part No	SP	UN	Qty	Description	Page No

TUBE ASSEMBLY

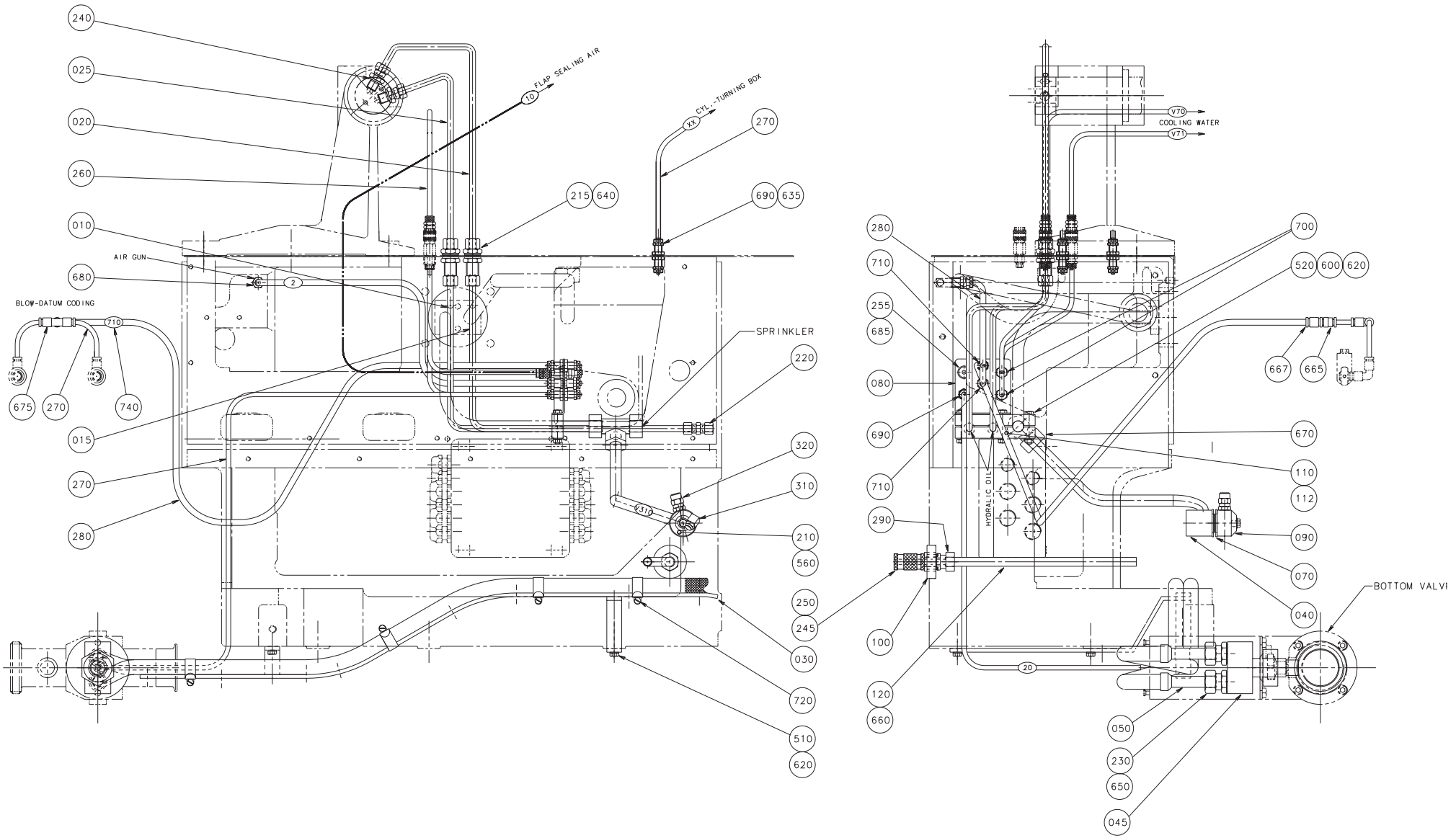

59167601.EPS
591676-1
ECN 70805

Pos	Part No	SP	UN	Qty	Description	Page No
Common parts						
010	591579-0000	-		1	PIPE	
015	591578-0000	K		1	PIPE	
020	591577-0000	K		1	PIPE	
025	591576-0000	K		1	PIPE	
030	441499-0000	-		1	HOLDER	
040	591630-0000	-		1	DISTRIBUTOR	
045	B 490618-0000	-		1	BRANCH	
050	441500-0000	-		2	HOSE	
070	256907-0000	-		2	WASHER	
080	591689-0000	D		1	PLATE	
090	272191-0000	K		1	DISTRIBUTOR	
100	272741-0000	K		1	SEAL	
110	456854-0001	-		1	CRAMP	
112	456854-0002	-		1	CRAMP	
120	491807-0000	-		1	PIPE	
210	90005-0007	K		1	WASHER,Bolt head 8,7x14;H=1 M8	
215	90030-0067	-		2	BULKHEAD CONNECTOR SV 8-L/SY	
220	90030-0091	-		2	PIPE CONNECTION G-8	
230	90030-0151	-		2	Straight Conn.15-R1/2",ext.thread	
240	90030-0185	-		2	STRAIGHT CONNECTION GA-8-G1/4"	
245	90157-0034	-		x	SEALING COMPOUND LOCTITE 572 50 ML	
250	90163-0028	-		1	SLEEVE CHROMIUM PLATED BRASS	
255	90163-0062	K		1	SLEEVE 1/8"	
260	90166-0117	F	MM	1640	HOSE 4/6 PVC Blue	
270	90166-0132	F	MM	4000	TUBE 6/4 PA,Transp.	
280	90166-0133	-	MM	1520	TUBE 8/6 PA,Transp.	
290	90224-0186	-		1	NIPPLE	
310	90424-0009	K		1	NOZZLE	
320	90424-0016	K		1	NOZZLE	
510	312105-0372	-		4	SCREW M6S ISO 4017 M6x25 A280	
520	312105-0378	-		3	SCREW ISO 4017 M6x40 A280	
560	312105-0463	-		1	SCREW M6S ISO 4014 M8x60 A280	
600	312605-0316	-		3	NUT,HEXAGON A280 M6M6	
620	315105-0153	-		7	WASHER,PLAIN ROUND 6,4x12 Stainless	
635	315233-0109	-		3	PLAIN ROUND,NYLON R1/8"	
640	315233-0111	-		2	PLAIN ROUND,NYLON R3/8"	
650	315233-0113	-		2	PLAIN ROUND,NYLON R1/2"	
660	342708-0107	-		2	ACCESSORIES,REINFORCING RING VSH 12X1	
665	342716-0203	-		1	REDUCER 6-8	
667	342728-0103	-		1	PIPE COUPLING 8 mm	
670	342746-0114	-		1	T-PIPE CONNECTION T-15	
675	342748-0102	-		1	T-CONNECTION 6 mm	
680	342930-0122	-		1	ELBOW 90 COUPL.,EXT.THREAD 8/6-R1/4"	
685	342921-0121	K		1	STRAIGHT COUPLING,EXT.THREADED 8/6-G1/8"	
690	342960-0112	-		5	BULKHEAD COUPLING 6/4	
700	342960-0121	-		2	BULKHEAD COUPLING 8/6-6/4	
710	342960-0122	-		2	BULKHEAD COUPLING 8/6	
720	342991-0106	-		7	HOSE CLIP,WORM DRIVE TYPE (30)-36	
740	359000-0400	-		2	MARKING CO2/4"0"	
740	359000-0401	-		1	MARKING COLLAR 2/4 "1" Yellow	
740	359000-0403	-		1	MARKING COLLAR PA2/4 "3" Yellow	
740	359000-0407	-		2	MARKING COLLAR PA2/4 "7" Yellow	

BOTTOM VALVE

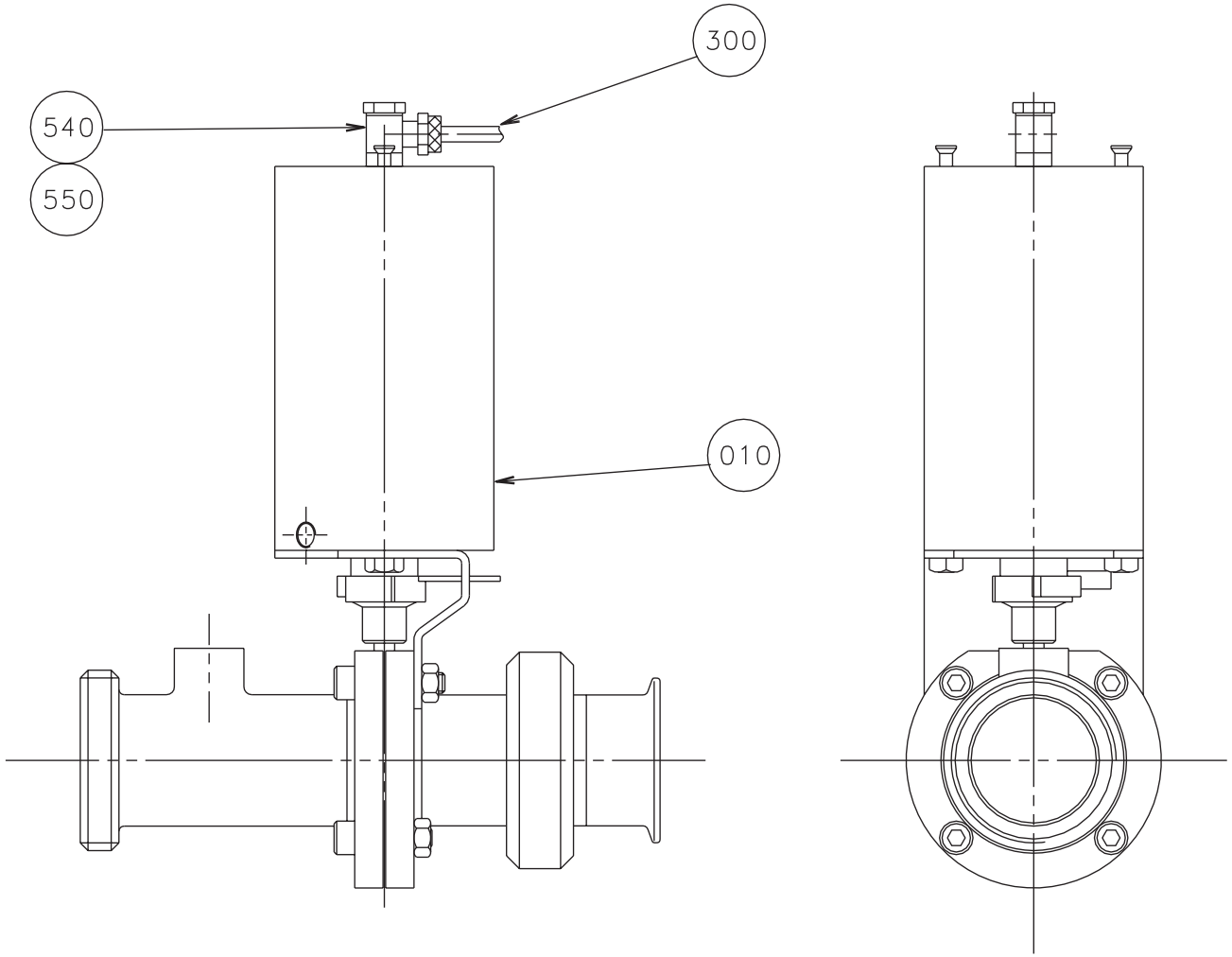

59167901.EPS
591679-1
ECN 70805

Pos	Part No	SP	UN	Qty	Description	Page No
Common parts						
010	272751-0000	D		1	BOTTOM VALVE	
300	90166-0089	-	MM	1100	HOSE 4/6.2 PE BLUE	
540	342980-0113	-		1	BANJO-CONNECTION,RING 6/4-G1/8"	
550	342980-0303	-		1	BANJO-HOLLOW BOLT COUPL,EXT.THR.01-G1/8"	

Pos	Part No	SP	UN	Qty	Description	Page No

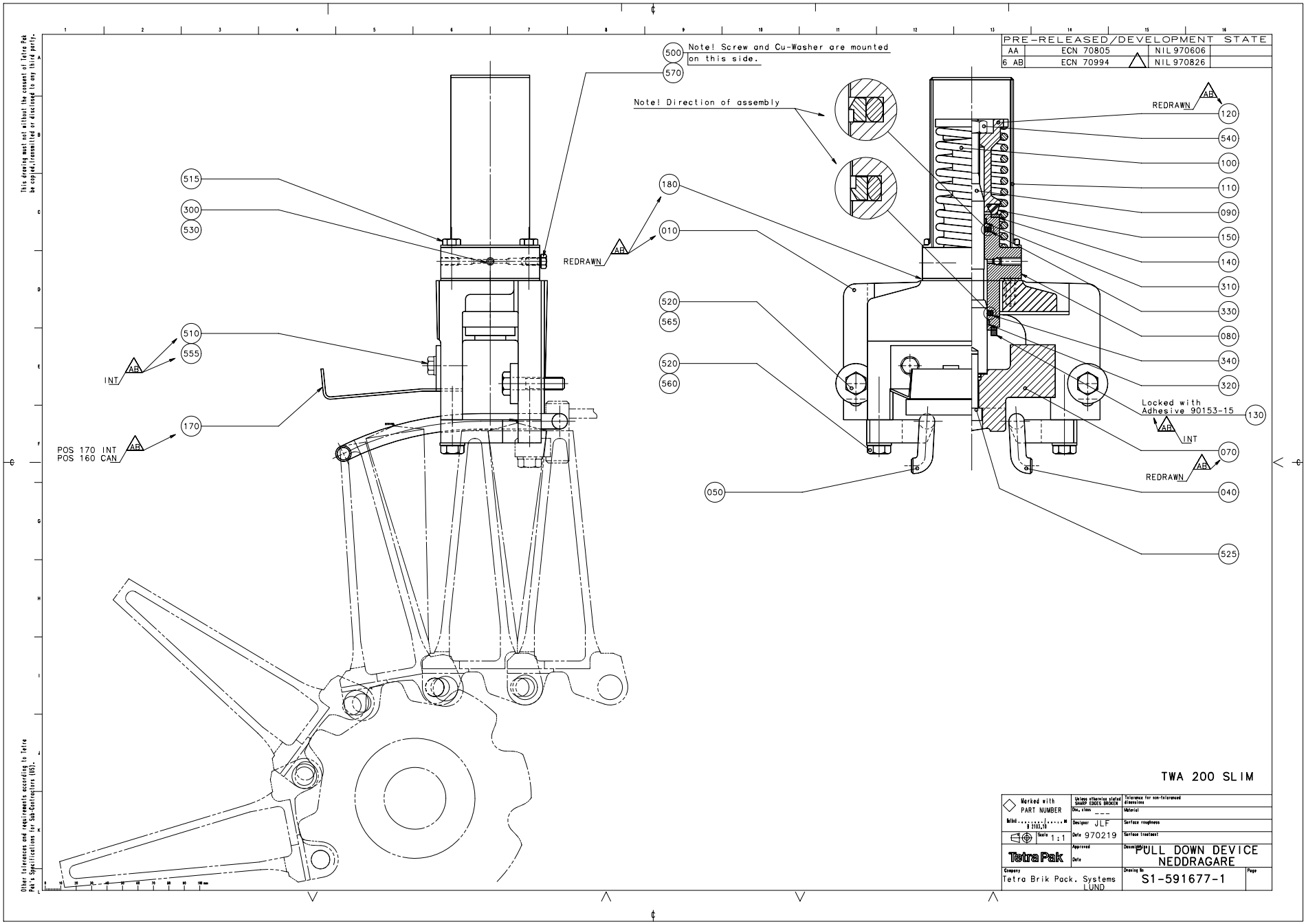
PRE-RELEASED/DEVELOPMENT STATE
AA ECN 70805 NIL 970606
6 AB ECN 70994 NIL 970826
Note! Screw and Cu-Washer are mounted on this side.
Note! Direction of assembly
REDRAWN
Locked with Adhesive 90153-15
INT
POS 170 INT
POS 160 CAN
500
570
515
300
530
180
010
520
565
520
560
510
555
170
050
120
540
100
110
090
150
140
310
330
080
340
320
130
070
040
525
TWA 200 SLIM
Marked with PART NUMBER
Unless otherwise stated SHARP EDGES BROKEN
Tolerance for non-toleranced dimensions
Material
Surface roughness
Surface treatment
Designer JLF
Date 970219
Approved
Date
Scale 1:1
Tetra Pak
PULL DOWN DEVICE
NEDDRAGARE
Company
Tetra Brik Pack. Systems
LUND
Drawing No
S1-591677-1
Page
This drawing must not without the consent of Tetra Pak be copied, transmitted or disclosed to any third party.
Other tolerances and requirements according to Tetra Pak's Specifications for Sub-Contractors (SS).

Pos	Part No	SP	UN	Qty	Description	Page No
Common parts						
010	591525-0000	D		1	BRACKET	
040	591443-0000	D		1	RAIL LEFT	
050	591444-0000	D		1	RAIL RIGHT	
070	1360748-0000	D		1	BLOCKING PIECE	
080	490980-0000	-		1	CYLINDER	
090	752083-0000	-		1	PISTON	
100	271731-0000	-		1	COMPRESSION SPRING	
110	751163-0000	-		1	COVER	
120	441894-0000	-		1	SLEEVE	
130	295072-0000	-		1	BUFFER RING	
140	441896-0000	-		1	WASHER	
150	441895-0000	-		1	BUFFER RING	
170	594977-0000	K		1	SPLASH PLATE	
180	591652-0000	K		1	SHIM	
300	90090-0013	F		1	STEEL BALL SKF RB-4/111	
310	90091-0162	F		1	GUIDE RING	
320	90091-0163	F		1	GUIDE RING	
330	90091-0160	F		1	"SEAL RING,TYPE ""GLYD-RING"" 16X23,5X3,	
340	90091-0165	F		1	"SEAL RING,TYPE ""GLYD-RING"" 20X27,5X3,	
500	312105-0325	-		1	SCREW M6S 5x10 A2 80	
510	312105-0366	-		2	SCREW M6S ISO 4017 M6x12 A280	
515	312105-0374	-		4	SCREW M6S ISO 4017 M6x30 A280	
520	312105-0455	-		4	SCREW M6S ISO 4017 M8x30 A280	
525	312115-0457	-		1	SCREW MC6S ISO 4762 M8x35 A280	
530	312311-0327	-		1	SET SCREW FULL DOGPOINT ISO 4028	
M5X12						
540	312605-0320	-		1	NUT,HEXAGON,M10 A280	
555	315105-0153	-		2	WASHER,PLAIN ROUND 6,4x12 Stainless	
560	315105-0165	-		3	WASHER,PLAIN ROUND 8,4x16 Stainless	
565	315125-0165	-		2	WASHERS,PLAIN ROUND,CHAMFERED	
8,4X26X5						
570	315234-0101	-		1	PLAIN ROUND,COPPER M5	

Pos	Part No	SP	UN	Qty	Description	Page No

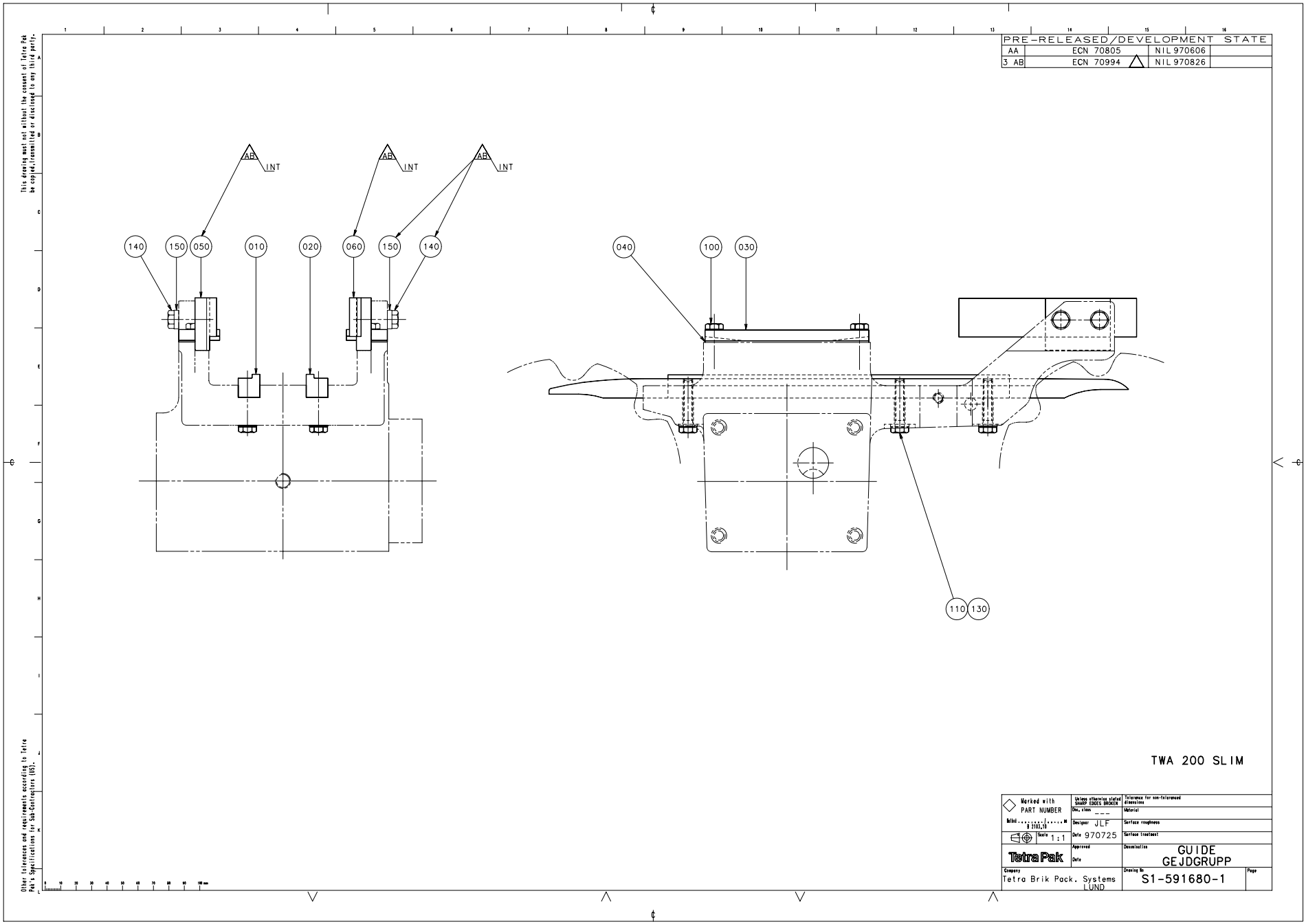
PRE-RELEASED/DEVELOPMENT STATE
AA ECN 70805 NIL 970606
3 AB ECN 70994 NIL 970826
AB INT
140
150
050
010
020
060
150
140
040
100
030
110
130
TWA 200 SLIM
Marked with PART NUMBER
Unless otherwise stated SHARP EDGES BROKEN
Tolerance for non-toleranced dimensions
Material
Surface roughness
Surface treatment
Designer JLF
Date 970725
Scale 1:1
Approved
Date
Denomination
GUIDE
GEJDGRUPP
Company
Tetra Brik Pack. Systems LUND
Drawing No
S1-591680-1
Page

Pos	Part No	SP	UN	Qty	Description	Page No
Common parts						
010	751109-0000	K		1	RAIL RIGHT	
020	751110-0000	K		1	RAIL LEFT	
030	491265-0000	K		2	PLATE	
040	491266-0000	K		4	SHIM	
050	594973-0000	-		1	STEERING RAIL L	
060	594974-0000	-		1	STEERING RAIL R	
100	312105-0370	-		8	SCREW M6S ISO 4017 M6x20 A280	
110	312105-0374	-		6	SCREW M6S ISO 4017 M6x30 A280	
130	315105-0153	-		10	WASHER,PLAIN ROUND 6,4x12 Stainless	
150	315115-0153	-		4	WASHER TBRB 6,4x12 Stainless	

Pos	Part No	SP	UN	Qty	Description	Page No

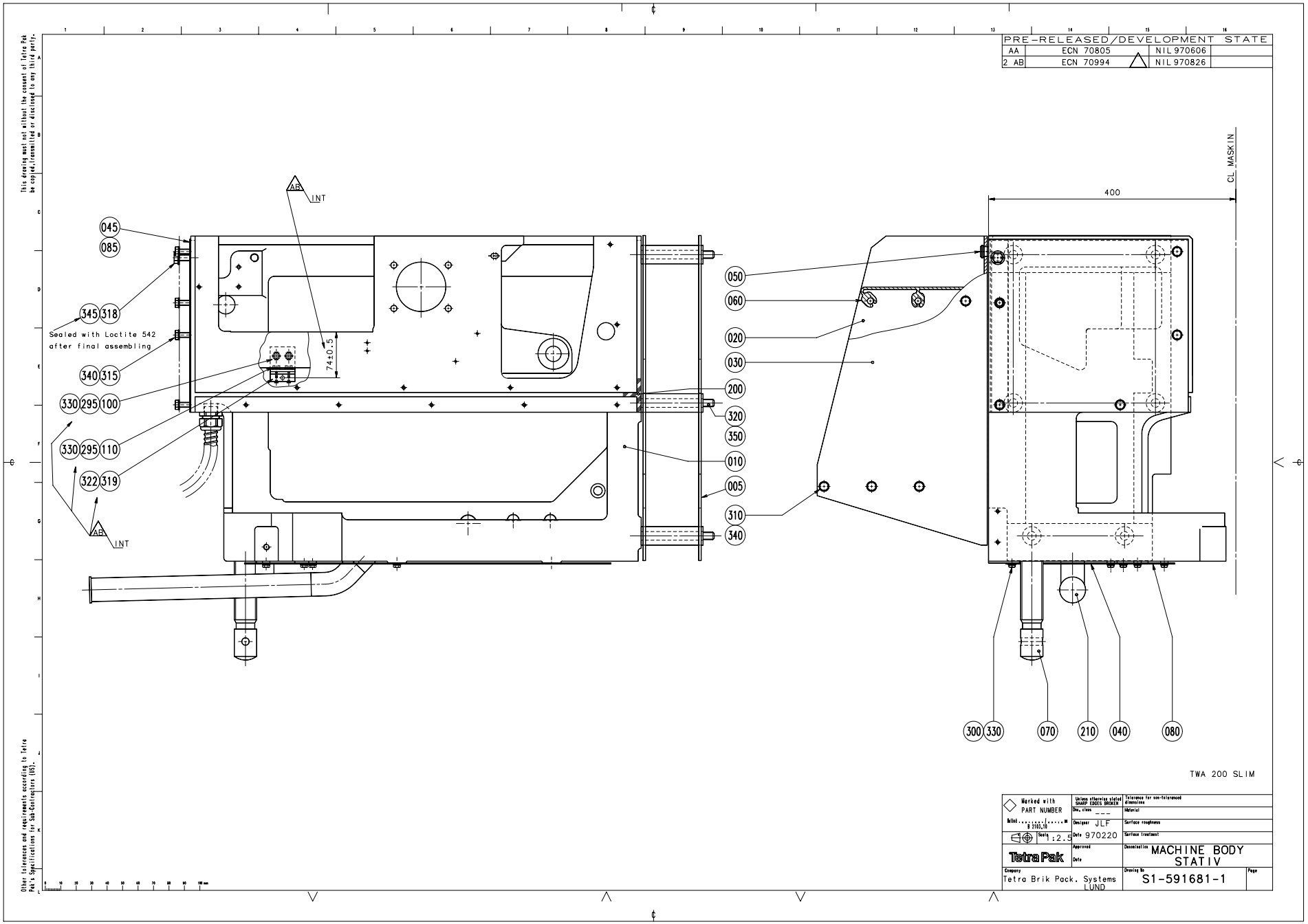
PRE-RELEASED/DEVELOPMENT STATE
AA ECN 70805 NIL 970606
2 AB ECN 70994 NIL 970826
This drawing must not without the consent of Tetra Pak be copied, transmitted or disclosed to any third party.
Other tolerances and requirements according to Tetra Pak's Specifications for Sub-Contractors (SS).
AB
INT
045
085
345
318
Sealed with Loctite 542
after final assembling
340
315
330
295
100
330
295
110
322
319
74±0.5
050
060
020
030
200
320
350
010
005
310
340
400
CL MASK IN
300
330
070
210
040
080
TWA 200 SLIM
Marked with PART NUMBER
Unless otherwise stated SHARP EDGES BROKEN
Tolerance for non-toleranced dimensions
Dec. class ---
Material
Designer JLF
Surface roughness
Date 970220
Surface treatment
Scale :2.5
Approved
Date
Tetra Pak
Denomination MACHINE BODY STATIV
Company Tetra Brik Pack. Systems LUND
Drawing No S1-591681-1
Page

Pos	Part No	SP	UN	Qty	Description	Page No
Common parts						
005	591455-0000	-		1	SPACER FRAME	
010	591568-0000	-		1	MACHINE BODY	
020	272659-0000	-		1	SIDE PIECE	
030	272660-0000	-		1	SIDE PIECE	
040	752213-0000	-		1	BOTTOM PANEL	
045	591587-0000	-		1	PLATE	
050	271591-0000	-		2	BUTTON	
060	272661-0000	-		2	STAIR	
070	272673-0000	-		1	LEG	
080	272743-0000	-		1	LID	
085	591569-0000	-		1	SHIM	
200	90143-0028	K	MM	2700	STRIP	
210	90261-0025	-		2	PLUG,BLIND PLASTIC FOR M38x1,5/M39x9	
300	312105-0367	-		7	SCREW M6S 6x14 A2 80	
310	312105-0451	-		12	SCREW M6S ISO 4017 8x20 A280	
315	312105-0455	-		5	SCREW M6S ISO 4017 M8x30 A280	
318	312105-0495	-		1	SCREW M6S ISO 4017 M10X30 A280	
320	90287-0328	-		6	SCREW, M6S ISO4014, M12x160 A280	
330	315105-0153	-		7	WASHER,PLAIN ROUND 6,4x12 Stainless	
340	315105-0165	-		17	WASHER,PLAIN ROUND 8,4x16 Stainless	
345	315105-0173	-		1	WASHER,PLAIN ROUND 10,5x22 STAINLESS	
350	315105-0178	-		6	WASHER,PLAIN ROUND 13x24	

Pos	Part No	SP	UN	Qty	Description	Page No

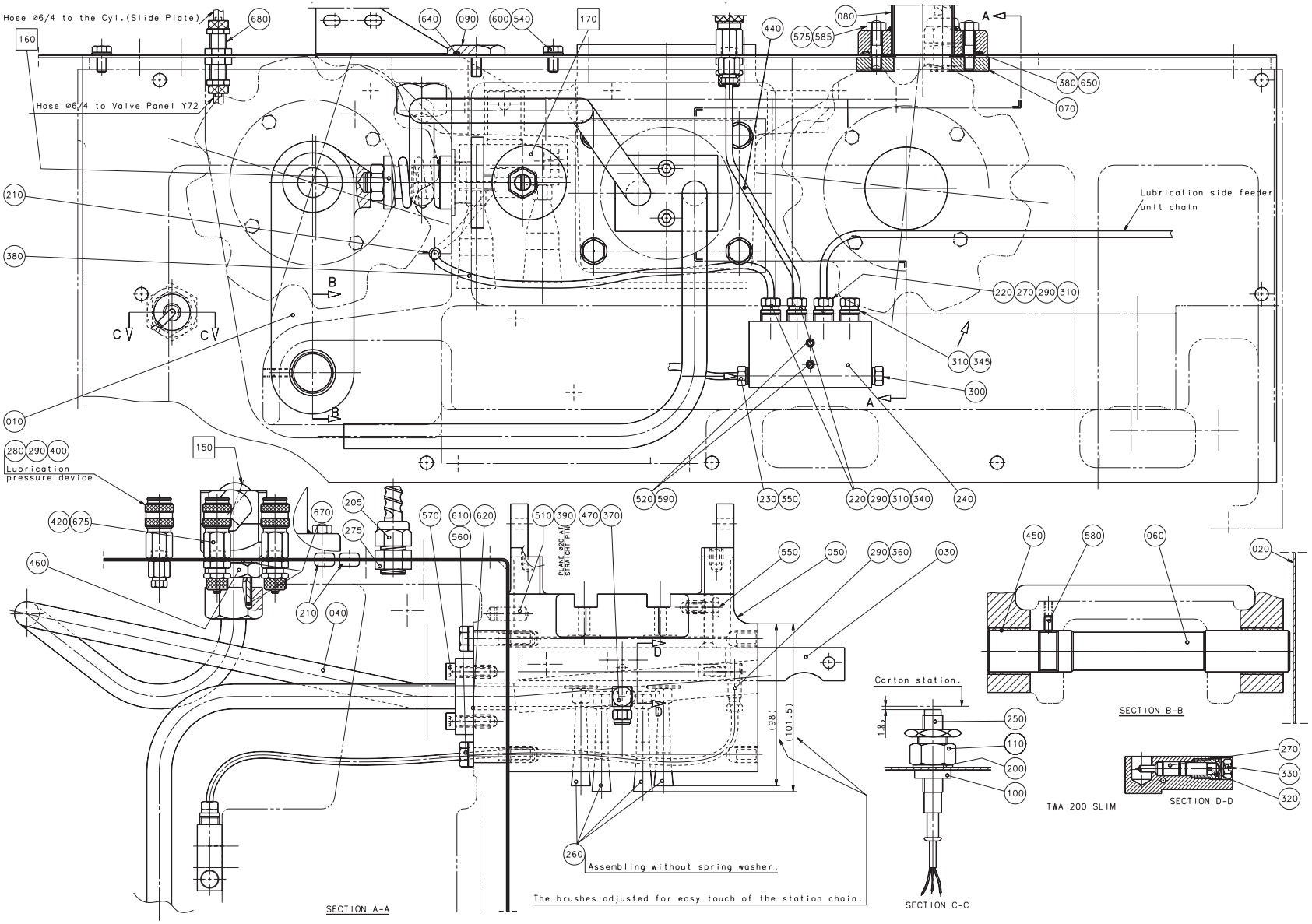
Hose ø6/4 to the Cyl.(Slide Plate)
Hose ø6/4 to Valve Panel Y72
Lubrication side feeder unit chain
Lubrication pressure device
PLANE ø20 A/ STRAIGHT PIN
Carton station.
SECTION A-A
SECTION B-B
SECTION C-C
SECTION D-D
TWA 200 SLIM
Assembling without spring washer.
The brushes adjusted for easy touch of the station chain.

Pos	Part No	SP	UN	Qty	Description	Page No
Common parts						
F150	A 441798-0100	-		1	ROTOR	115
F160	A 272652-0300	-		1	CHAIN TENSIONER	117
F170	A 978048-0100	-		1	CLAMPING ELEMENT	119
010	441600-0000	D		1	LINK ARM	
020	1360632-0000	-		1	SHIELD PLATE	
030	751070-0000	D		1	DISTRIBUTOR BLOCK	
040	979458-0000	D		1	PIPE CONNECTION	
050	752485-0000	D		1	SUPPORTING ARM	
060	256276-0000	D		1	SHAFT	
070	978190-0000	D		1	WASHER	
080	979459-0000	D		1	LEAD-IN	
090	272997-0000	D		1	STOPPER	
100	490932-0000	D		1	SLEEVE	
110	490933-0000	D		1	NUT	
200	90005-0048	D		1	WASHER M18x1,5 COPPER	
205	90012-0077	-		1	GLAND FITTING	
210	90015-0028	K		1	LEAD-IN BUSHING	
220	90028-0021	K		3	CONE DIN3862 Di=4mm	
230	90028-0025	K		1	CONE DT4.138811.2D	
240	90032-0039	-		1	DISTR.BLOCK DT4.310794.1	
250	90044-0124	K		1	Prox.sw. 922AB2XM-A9P-050-LZ-876	
260	90092-0048	K		4	OIL BRUSH	
270	90092-0054	K		5	METERING VALVE 50mm3	
275	90099-0104	-		1	NUT PR 15,2 (PG9)	
280	90134-0004	K		1	PIPE CONNECTION R1/8	
290	90134-0031	K		3	SLEEVE E 4/2	
300	90087-0019	K		1	PLUG M10x1 Stainless	
310	90134-0040	K		4	BUSHING DT4.018914.1	
320	90134-0042	K		4	SPACER DT4.170711.2	
330	90134-0045	K		4	PLUG	
340	90134-0051	K		2	SPACER COLLAR	
345	90134-0052	K		1	PLUG DT4.076817.2D	
350	90134-0055	K		1	BUSHING 6 DIN 3871 Stainless	
360	90134-0068	K		1	BANJO CONNECTION	
365	90143-0028	-	MM	700	STRIP	
370	90144-0004	-		x	TREBOFLON-TAPE W=13mm	
380	90153-0020	-	L	x	ADHESIVE BOSTIK 1782 125ml	
390	90157-0022	-		x	SEALING COMPOUND	
400	90163-0046	K		1	SLEEVE LP-004-0-WR 0510-21-1 Brass	
420	90163-0062	K		2	SLEEVE 1/8"	
440	90166-0109	K	MM	2000	TUBE 4 mm PA,Transp.	
450	90240-0055	K		2	Bushing, 25x28x25	
455	90261-0018	-		1	PLUG,BLIND PLASTIC F-183	
460	90330-0078	D		1	BUSHING,INT./EXT.R-THREAD R3/4"-Rp3/8"	
470	90424-0009	K		1	NOZZLE	
510	311103-0401	D		1	PINS,STRAIGHT 8X20	
520	312105-0297	K		2	SCREW M6S ISO 4014 M4X25 A280	
530	312105-0364	K		2	SCREW M6S 6x10 A280	
540	312105-0366	K		15	SCREW M6S ISO 4017 M6x12 A280	
550	312105-0368	K		1	SCREW M6S ISO 4017 M6x16 A280	
560	312105-0459	K		4	SCREW ISO 4017 M8x40 A280	
570	312115-0372	K		2	SCREW MC6S ISO 4762 M6x25 A280	
575	312303-0374	K		2	STUD SCREWMPS 6X25 RFR	
580	312318-0325	K		1	STOP SCREW SK6SS5X10RFR	
585	312605-0316	K		2	NUT,HEXAGON A280 M6M6	
590	315105-0136	K		2	WASHER,PLAIN ROUND 4,3x8 Stainless	
600	315105-0153	K		17	WASHER,PLAIN ROUND 6,4x12 Stainless	
610	315111-0165	K		4	WASHER TBRB8,4X16FZB	
615	315115-0165	K		1	WASHER TBRB 8,4x16 Stainless	
620	315202-0118	K		2	O-RING 22,1x1,6	
640	315202-0215	K		1	O-RING 19,2x3	
650	315202-0304	K		1	O-RINGS 64,5X3	
660	315233-0109	K		3	PLAIN ROUND,NYLON R1/8"	
670	315233-0111	K		2	PLAIN ROUND,NYLON R3/8"	
675	342921-0113	K		2	STRAIGHT COUPLING,EXT.THREADED 6/4-G1/8"	
680	342960-0112	K		3	BULKHEAD COUPLING 6/4	

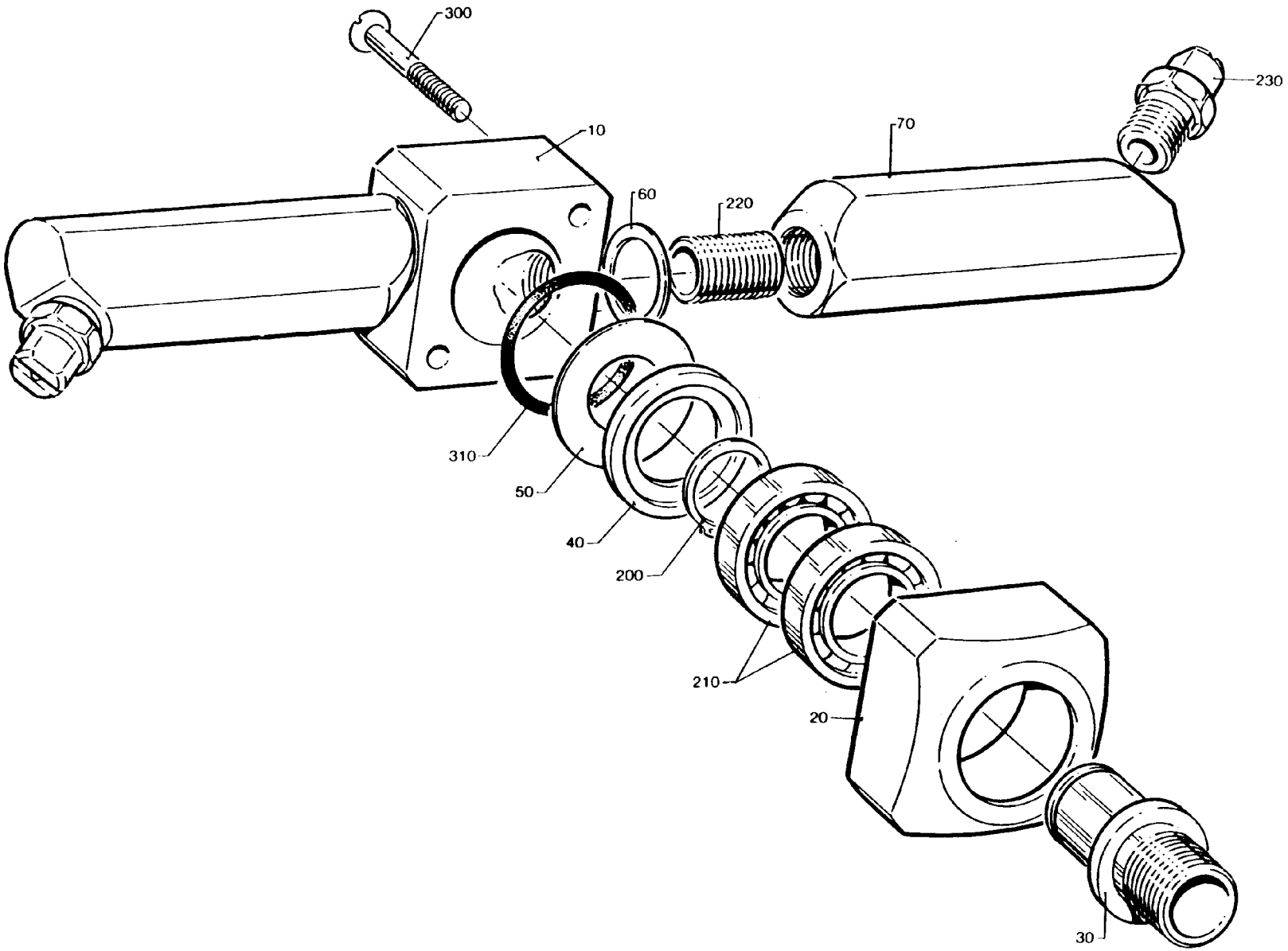

44179801.tif
441798-1
ECN

Pos	Part No	SP	UN	Qty	Description	Page No
Common parts						
010	441792-0000	D		1	HEAD	
020	441793-0000	D		1	BEARING HOUSING	
030	441794-0000	D		1	PIVOT PIN	
040	441795-0000	D		1	WASHER	
050	441796-0000	F		1	SEAL	
060	441797-0000	R		2	SHIM	
070	441799-0000	R		2	ATTACHMENT	
200	90141-0017	-		1	RETAINING RINGS FOR SHAFT 17	
210	90214-0092	I		2	BALL BEARING,STAINLESS 17X30X7	
220	90330-0101	R		2	NIPPLES,EXT.G-THREAD G1/4"	
230	90424-0035	R		2	NOZZLE	
300	312155-0299	-		2	SCREW MF6S DIN 7991 M4x30 A480	
310	315202-0217	I		1	O-RING 24,2x3	

Pos	Part No	SP	UN	Qty	Description	Page No

CHAIN TENSIONER

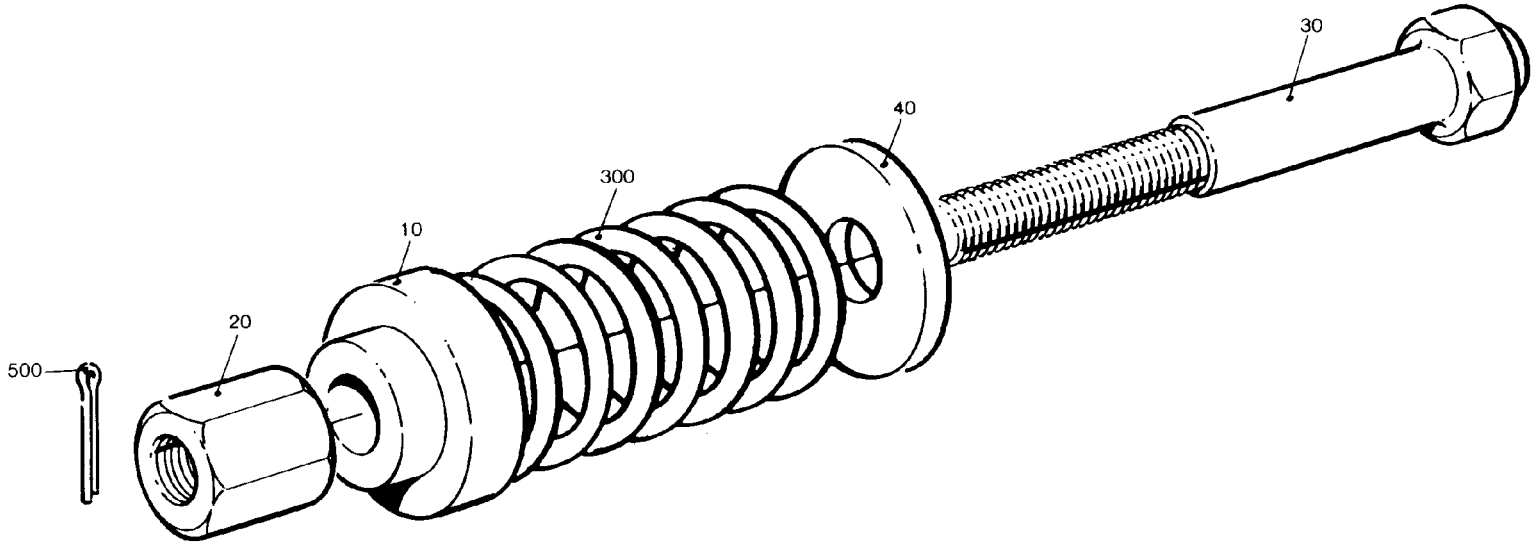

27265203.tif
272652-3
ECN

Pos	Part No	SP	UN	Qty	Description	Page No
Common parts						
010	491731-0000	-		1	WASHER	
020	256190-0000	-		1	NUT	
030	441328-0000	-		1	GUIDE PIN	
040	491732-0000	-		1	WASHER	
300	90335-0096	D		1	SPRING	
500	311411-0152	-		1	SPLIT PIN SP2X16RFR	

Pos	Part No	SP	UN	Qty	Description	Page No

CLAMPING ELEMENT

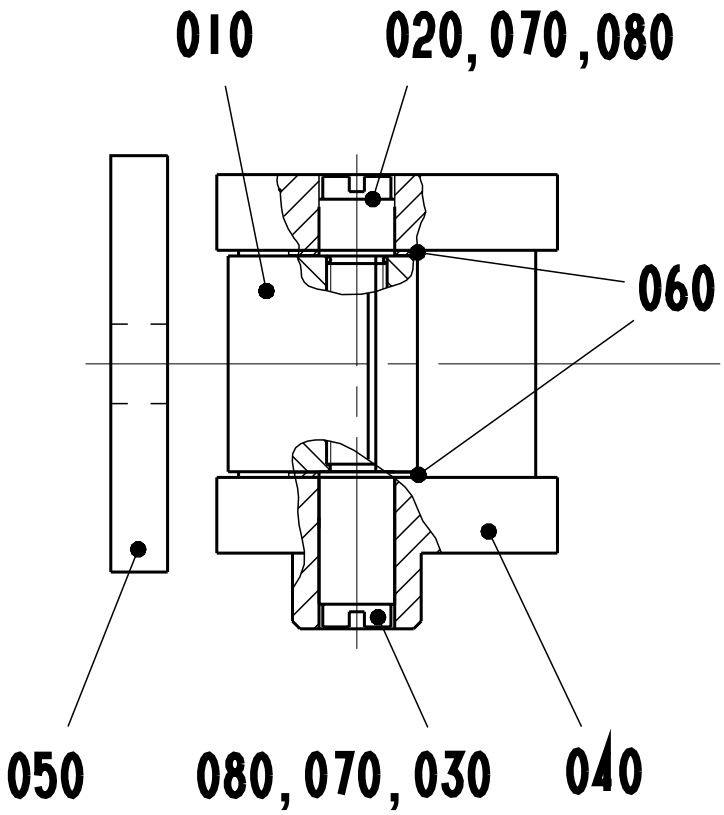

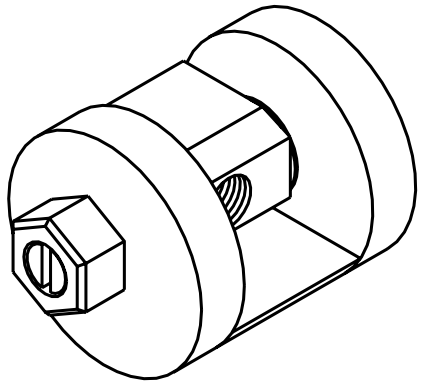

Pos	Part No	SP	UN	Qty	Description	Page No
Common parts						
010	978049-0000	D		1	NUT	
020	978050-0001	D		1	SCREW	
030	978050-0002	D		1	SCREW	
040	978051-0000	D		1	ECCENTRIC	
050	978052-0000	D		1	WASHER	
060	2033-0009	D		2	WASHER	
070	90157-0016	-		x	LOCKING FLUID LOCTITE 242 50 ML	
080	90296-0012	-	KG	x	LUBRICANT	

Pos	Part No	SP	UN	Qty	Description	Page No

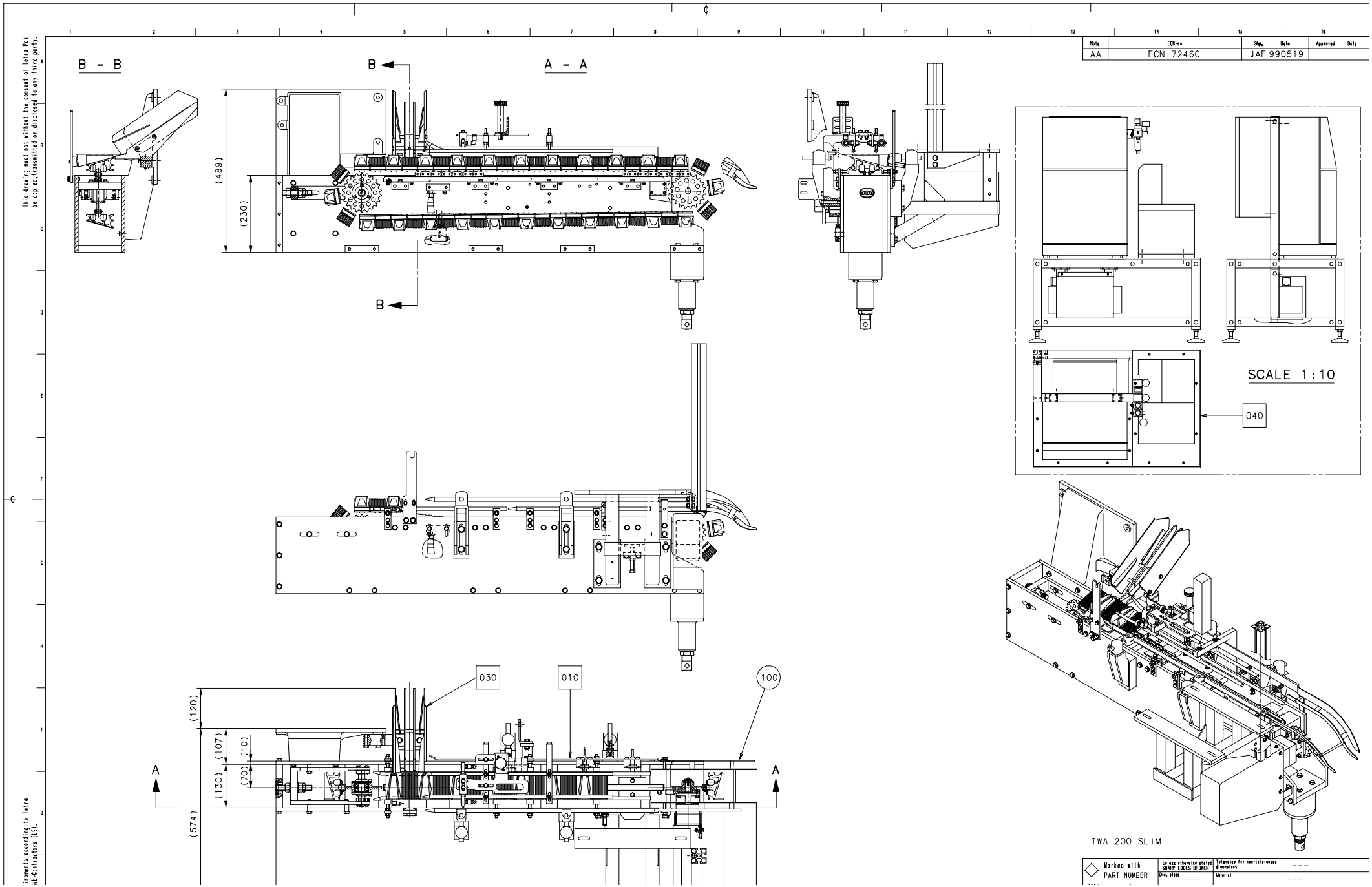

This drawing must not without the consent of Tetra Pak be copied, transmitted or disclosed to any third party.

Note	ECN-no	Sign. Date	Approved Date
AA	ECN 72460	JAF 990519	

Worked with PART NUMBER

Unless otherwise stated SHARP EDGES BROKEN

Tolerance for non-toleranced dimensions ---

Dec. class ---

Material ---

Pos	Part No	SP	UN	Qty	Description	Page No
Common parts						
010	A 594992-0100	-		1	CONVEYING EQUIPMENT	123
030	A 591582-0100	-		1	FINGER	135
040	A 591633-0100	-		1	SERVICE TABLE	137
100	1360666-0000	-		1	GUIDE	

Pos	Part No	SP	UN	Qty	Description	Page No

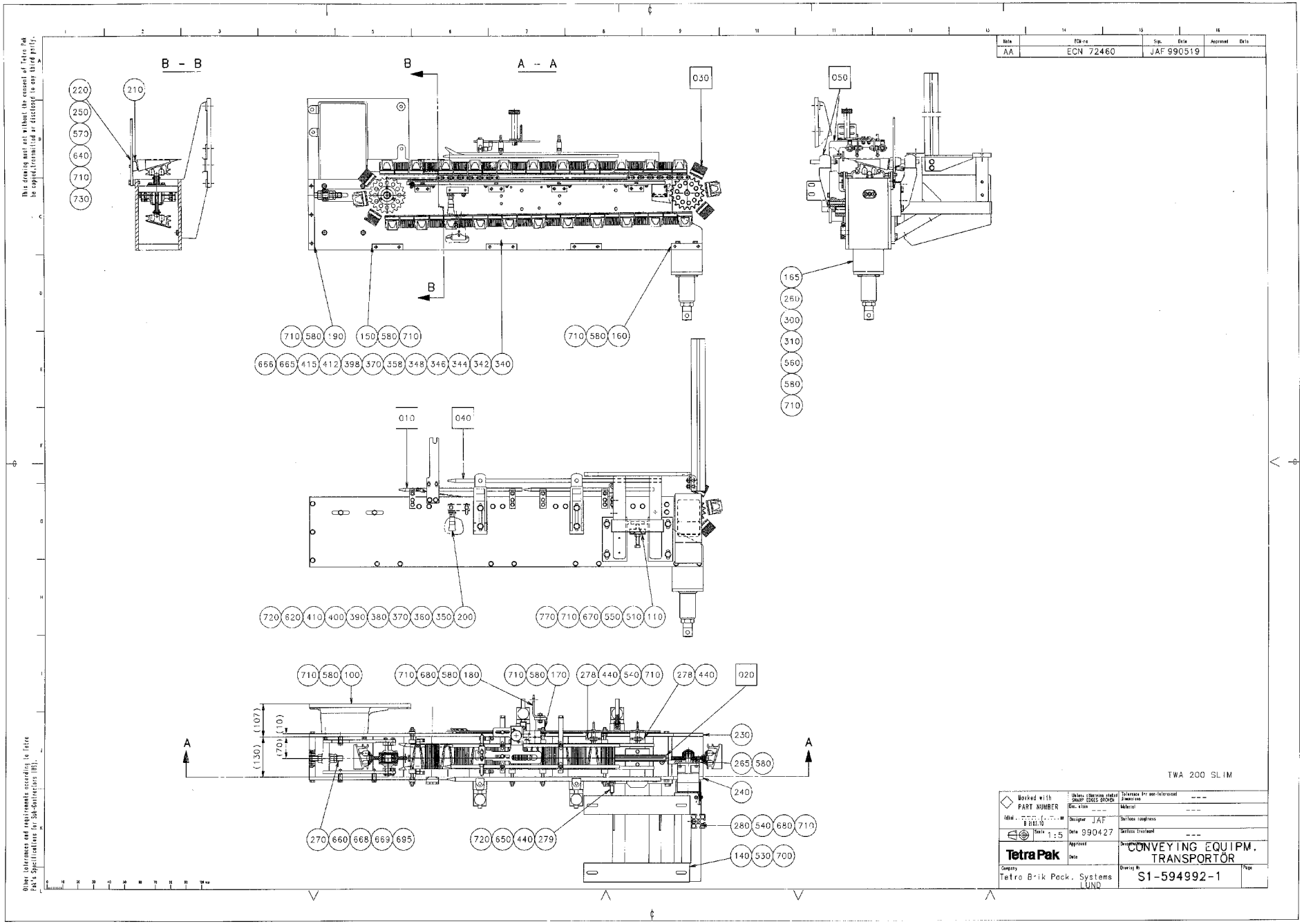
B – B
A – A
220
210
250
570
640
710
730
030
050
165
260
300
310
560
580
710
710 580 190
150 580 710
710 580 160
666 665 415 412 398 370 358 348 346 344 342 340
010
040
720 620 410 400 390 380 370 360 350 200
770 710 670 550 510 110
710 580 100
710 680 580 180
710 580 170
278 440 540 710
278 440
020
230
265 580
240
280 540 680 710
140 530 700
270 660 668 669 685
720 650 440 279
(107)
(10)
(70)
(130)
ECN-no
AA
ECN 72460
Sign. Date
JAF 990519
Approved Date
This drawing may not without the consent of Tetra Pak be copied, transmitted or disclosed to any third party.
Other tolerances and requirements according to Tetra Pak's Specifications for Sub-Deliveries 005.
TWA 200 SLIM
Worked with PART NUMBER
Designer JAF
Date 990427
Scale 1:5
Tetra Pak
CONVEYING EQUIPM. TRANSPORTÖR
Company
Tetra Brik Pack. Systems LUND
S1-594992-1

Pos	Part No	SP	UN	Qty	Description	Page No
Common parts						
010	A 598034-0100	-		1	GUIDE RAIL	125
020	A 591505-0100	-		1	CHAIN GUIDE	127
030	A 598014-0100	-		1	CHAIN FEED CONVEYOR	129
040	A 591574-0100	-		1	SLIDE RAIL	131
050	A 598029-0100	-		1	GUIDE	133
100	B 591466-0000	-		1	CANTILEVER	
110	591477-0000	-		1	LUG	
140	591515-0000	-		1	CANTILEVER	
150	B 591516-0000	-		3	SPACER PLATE	
160	B 591623-0000	-		1	SPACER PLATE	
165	591624-0000	-		1	SPACER PIPE	
170	591628-0000	-		1	STRUT	
180	591629-0000	-		1	HOLDER	
190	B 597960-0000	-		1	GABLE PART	
200	591522-0000	-		1	PLATE	
210	B 591527-0000	D		1	BLOCKING PIECE	
220	591638-0000	-		1	HOLDER	
230	B 598004-0000	-		1	GABLE PLATE RIGHT	
240	B 598005-0000	-		1	GABLE PLATE LEFT	
250	591558-0000	-		2	SPACER DISC	
260	591625-0000	-		1	NUT	
265	B1349669-0000	-		1	BRACKET	
270	597958-0000	-		1	SCREW	
278	594997-0000	-		2	HOLDER	
279	598030-0000	-		1	HOLDER	
280	591626-0000	-		1	PROFILE	
300	469095-0000	-		1	HOLDER	
310	469096-0000	-		1	LEG	
340	90028-0020	-		2	CONE DT13700S-300 Di=2,5mm	
342	90028-0021	-		2	CONE DIN3862 Di=4mm	
344	90032-0038	-		1	BLOCK 2ways DT4.310792.1D	
346	90134-0038	-		2	BUSHING 4 DIN 3871 Stainless	
348	90134-0039	-		2	BUSHING DT4.018912.1 Stainless	
350	90092-0048	K		1	OIL BRUSH	
358	90092-0052	K		2	METERING VALVE 10mm3	
360	90092-0054	K		1	METERING VALVE 50mm3	
370	90134-0031	K		3	SLEEVE E 4/2	
380	90134-0042	-		1	SPACER DT4.170711.2	
390	90134-0045	K		1	PLUG	
398	90134-0058	K		2	BANJO CONNECTION DT4.310.437.1	
400	90134-0068	K		1	BANJO CONNECTION	
410	90166-0109	K	M	2	TUBE 4 mm PA,Transp.	
412	90166-0143	K	M	1	TUBE 2,5 mm PA,Transp.	
415	90165-0003	-		1	PIPE-CLIPS,FOR SINGLE PIPE,ONE SIDE 4	
440	90044-0124	F		3	Prox.sw. 922AB2XM-A9P-050-LZ-876	
510	90287-0330	-		1	SCREW, M6S DIN933, M10x70 A480	
530	312105-0493	-		4	SCREW M6S ISO 4017 M10X25 A280	
540	312105-0451	-		4	SCREW M6S ISO 4017 8x20 A280	
550	312105-0459	-		2	SCREW ISO 4017 M8x40 A280	
560	312105-0457	-		4	SCREW ISO 4017 M8x35 A280	
570	312105-0455	-		2	SCREW M6S ISO 4017 M8x30 A280	
580	312105-0453	-		44	SCREW M6S ISO 4017 M8x25 A280	
620	312105-0370	-		2	SCREW M6S ISO 4017 M6x20 A280	
640	312105-0329	-		2	SCREW M6S ISO 4017 M5x16 A280	
650	312105-0368	-		4	SCREW M6S ISO 4017 M6x16 A280	
660	312155-0370	-		2	SCREW MF6S DIN 7991 M6X20 A280	
665	312105-0291	-		1	SCREW M6S ISO 4017 M4X12 A280	
666	312155-0297	-		2	SCREW MF6S DIN 7991 M4x25 A480	
668	312605-0324	-		2	NUT,HEXAGON,M16 A280	
669	90099-0131	-		1	NUTS,HEXAGON, M16x2, ISO4035	
670	312605-0320	-		1	NUT,HEXAGON,M10 A280	
680	312605-0318	-		4	NUT,HEXAGON,M8 RFR	
695	315105-0186	-		2	WASHER,PLAIN ROUND 17x30	
700	315105-0173	-		4	WASHER,PLAIN ROUND 10,5x22 STAINLESS	
710	315105-0165	-		50	WASHER,PLAIN ROUND 8,4x16 Stainless	
720	315105-0153	-		4	WASHER,PLAIN ROUND 6,4x12 Stainless	
730	315105-0146	-		2	WASHER,PLAIN ROUND 5,3x10 Stainless	
770	311112-0262	-		2	PINS,SLOTTED TUBULAR SPRING PIN 4X32	

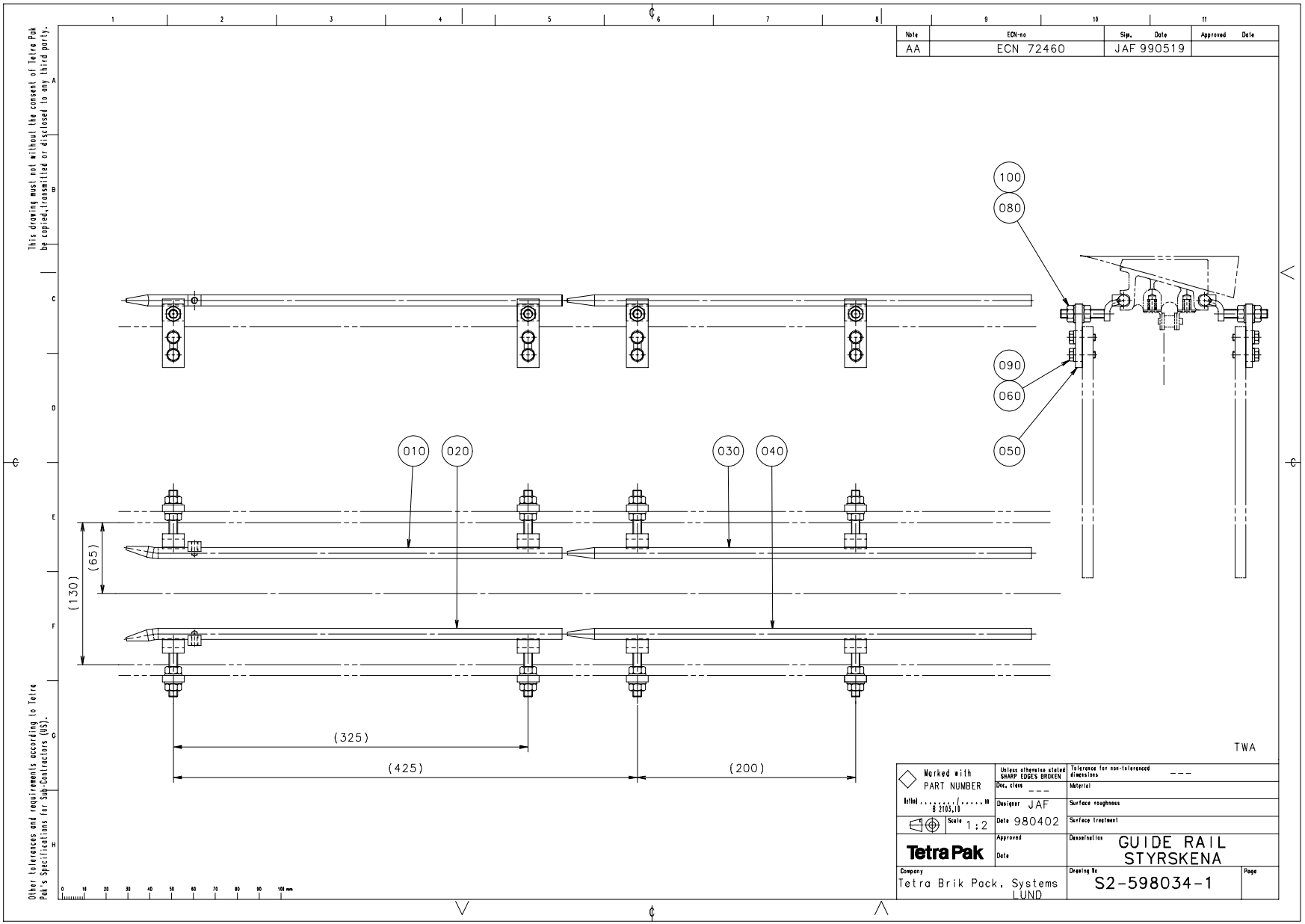
100
080
090
060
050
010
020
030
040
(65)
(130)
(325)
(425)
(200)
TWA
This drawing must not without the consent of Tetra Pak be copied, transmitted or disclosed to any third party.
Other tolerances and requirements according to Tetra Pak's Specifications for Sup-Contractors (US).
Note
ECN-no
Sign. Date
Approved Date
AA
ECN 72460
JAF 990519
Marked with PART NUMBER
Unless otherwise stated SHARP EDGES BROKEN
Tolerance for non-toleranced dimensions ---
Dep. class ---
Designer JAF
Material
Surface roughness
Scale 1:2
Date 980402
Surface treatment
Tetra Pak
Approved
Date
Designation GUIDE RAIL STYRSKENA
Company Tetra Brik Pack, Systems LUND
Drawing No S2-598034-1
Page

Pos	Part No	SP	UN	Qty	Description	Page No
Common parts						
010	594924-0000	D		1	GUIDE RIGHT	
020	594925-0000	D		1	GUIDE LEFT	
030	594926-0000	D		1	GUIDE RIGHT	
040	594927-0000	D		1	GUIDE LEFT	
050	594928-0000	-		8	BRACKET	
060	312105-0370	-		16	SCREW M6S ISO 4017 M6x20 A280	
080	312605-0318	-		16	NUT,HEXAGON,M8 RFR	
090	315105-0153	-		16	WASHER,PLAIN ROUND 6,4x12 Stainless	
100	315105-0165	-		16	WASHER,PLAIN ROUND 8,4x16 Stainless	

Pos	Part No	SP	UN	Qty	Description	Page No

CHAIN GUIDE

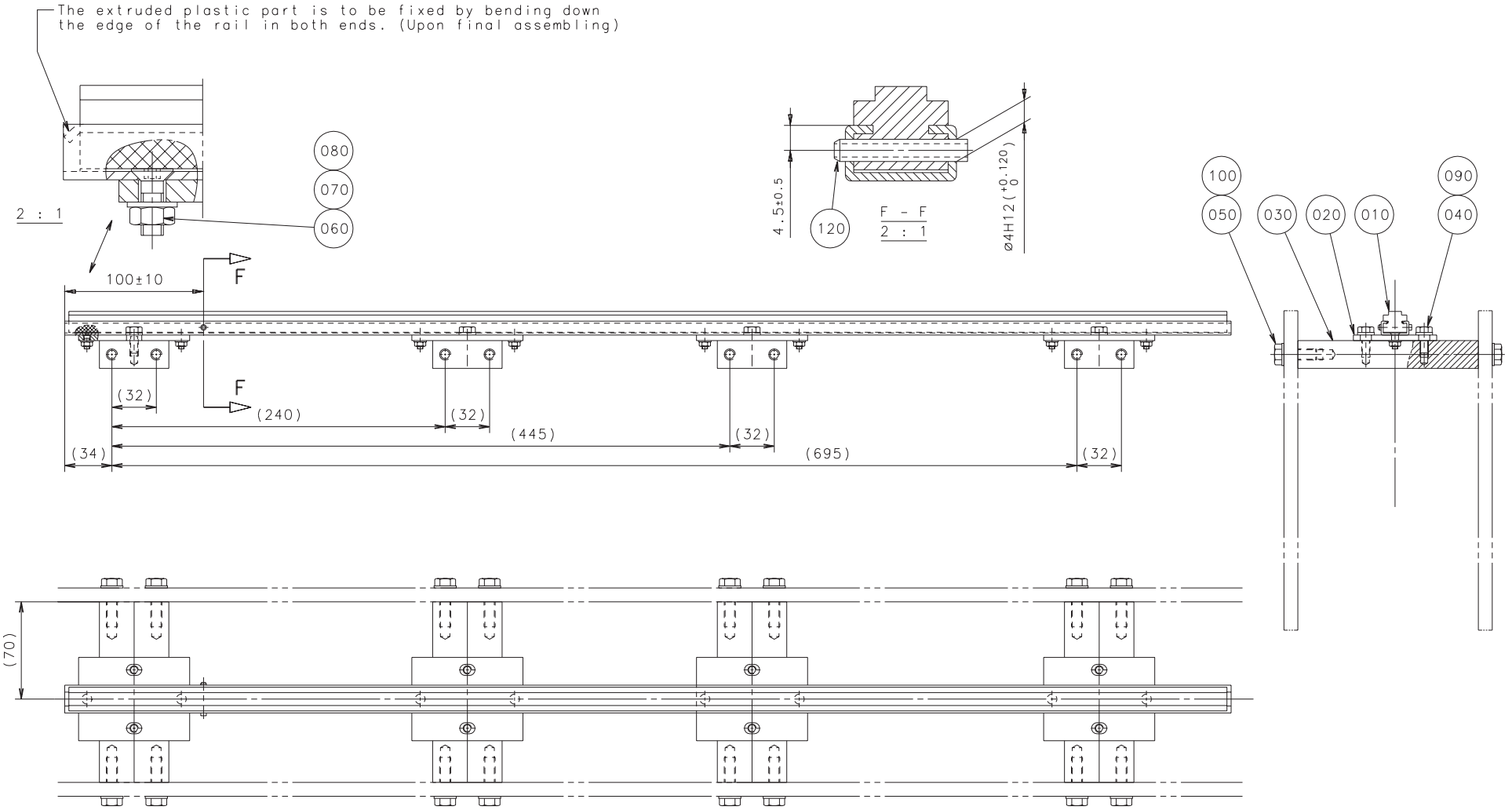

59150501.EPS
591505-1
ECN 70802

Pos	Part No	SP	UN	Qty	Description	Page No
Common parts						
010	591506-0000	K		1	SLIDING STRIP	
020	591507-0000	-		4	FASTENING PLATE	
030	591508-0000	-		4	SPACER PART	
040	312105-0368	-		8	SCREW M6S ISO 4017 M6x16 A280	
050	312105-0453	-		16	SCREW M6S ISO 4017 M8x25 A280	
060	312155-0291	-		8	SCREW MF6S DIN 7991 M4x12 A480	
070	312605-0312	-		8	NUT,HEXAGON,M4 RFR	
080	315105-0136	-		8	WASHER,PLAIN ROUND 4,3x8 Stainless	
090	315105-0153	-		8	WASHER,PLAIN ROUND 6,4x12 Stainless	
100	315105-0165	-		16	WASHER,PLAIN ROUND 8,4x16 Stainless	
120	311112-0258	-		1	PINS,SLOTTED TUBULAR SPRING PIN 4X24	

Pos	Part No	SP	UN	Qty	Description	Page No

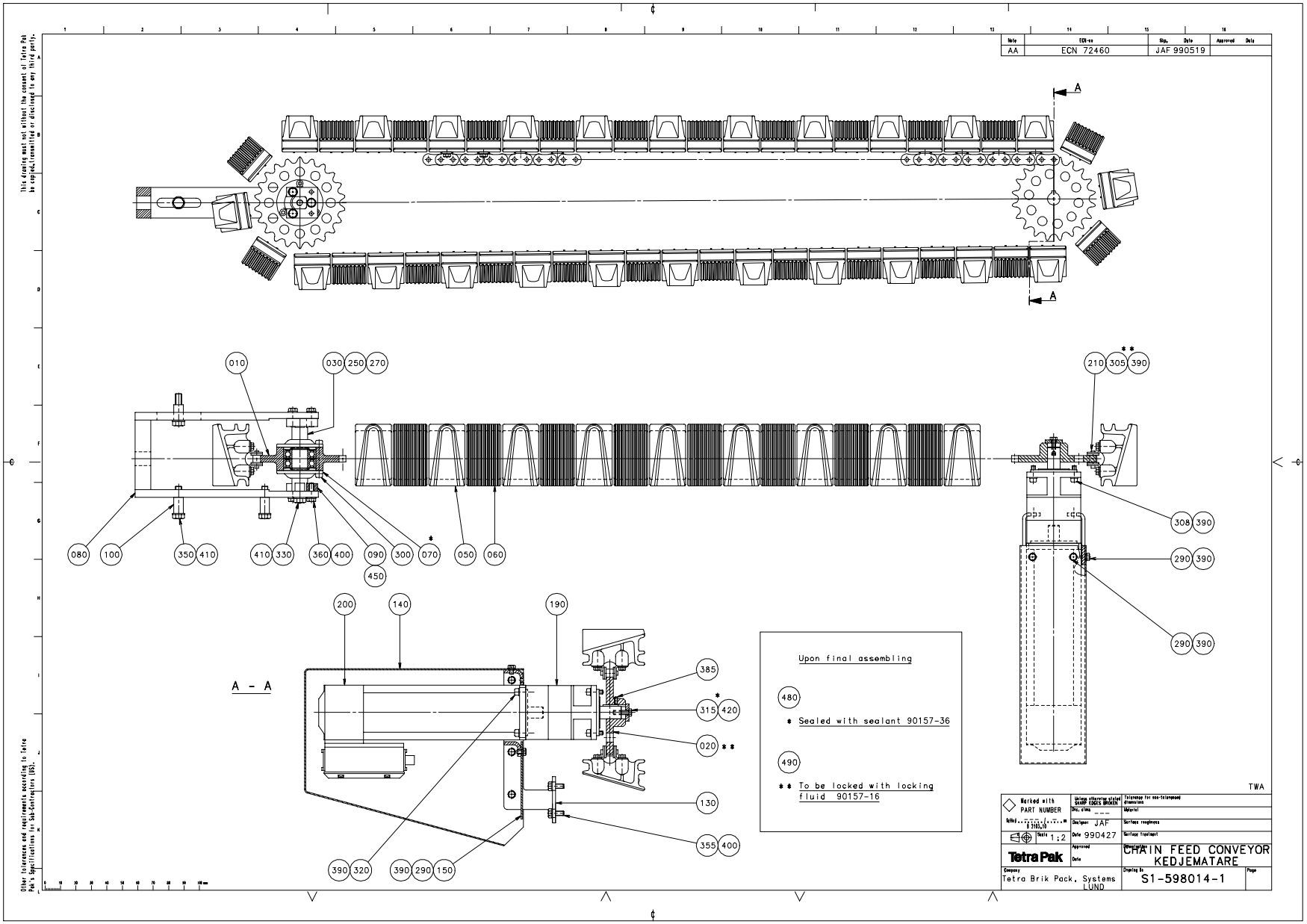
Note
ECR-no
Sign. Date
Approved Date
AA
ECN 72460
JAF 990519
A
A
010
030 250 270
210 305 390
080 100 350 410 410 330 360 400 090 300 070 050 060
450
308 390
290 390
290 390
200 140 190
A - A
385
315 420
020 **
130
355 400
390 320 390 290 150
Upon final assembling
480
* Sealed with sealant 90157-36
490
** To be locked with locking fluid 90157-16
TWA
Marked with PART NUMBER
Unless otherwise stated SHARP EDGES BROKEN
Tolerance for non-toleranced dimensions
Designer JAF
Date 990427
Material
Surface roughness
Surface treatment
Scale 1:2
Approved
Date
CHAIN FEED CONVEYOR
KEDJEMATARE
Company
Tetra Brik Pack, Systems
LUND
Drawing No
S1-598014-1
Page
This drawing must not without the consent of Tetra Pak be copied, transmitted or disclosed to any third party.
Other tolerances and requirements according to Tetra Pak's Specifications for Sub-Contractors (SS).

Pos	Part No	SP	UN	Qty	Description	Page No
Common parts						
010	597953-0000	K		1	SPROCKET	
020	1478845-0000	K		1	SPROCKET	
030	597957-0000	D		1	SHAFT	
050	591478-0000	K		24	SIDE STEERING	
060	591479-0000	K		24	BOTTOM GUIDE	
070	591470-0000	K		2	SEAL COVER	
080	597955-0000	D		1	YOKE	
090	597956-0000	D		2	CRADDLE	
100	597959-0000	D		3	SLEEVE	
130	1360677-0000	D		1	FRAME	
140	1360678-0000	D		1	HOOD	
150	1360679-0000	-		1	COVERING PLATE	
190	90056-0166	D		1	GEAR	
200	90045-0164	D		1	SERVOMOTOR ELMO EP075112-44T3B	
210	90288-0085	K		1	ROLLER CHAIN,SINGLE 5/8"-144	
250	90214-0095	K		2	BEARINGS,BALL BEARING,STAINLESS	
270	315751-0116	K		2	RETAINING RINGS FOR SHAFT 20	
290	312105-0323	-		7	SCREW M6S ISO 4017 M5X8 A280	
300	312115-0327	-		6	SCREW MC6S ISO 4762 M5X12 A280	
305	312105-0325	-		96	SCREW M6S 5x10 A2 80	
308	312115-0329	-		4	SCREW MC6S ISO 4762 M5x16 A280	
315	312105-0331	-		1	SCREW M6S ISO 4017 M5X20 A280	
320	312115-0331	-		4	SCREW MC6S ISO 4762 M5X20 A280	
330	312105-0451	-		1	SCREW M6S ISO 4017 8x20 A280	
350	312105-0457	-		3	SCREW ISO 4017 M8x35 A280	
355	312105-0368	-		3	SCREW M6S ISO 4017 M6x16 A280	
360	312105-0370	-		6	SCREW M6S ISO 4017 M6x20 A280	
385	312318-0289	-		1	SET SCREW CUP POINT ISO 4029 M4X10 RFR	
390	315105-0146	-		111	WASHER,PLAIN ROUND 5,3x10 Stainless	
400	315105-0153	-		9	WASHER,PLAIN ROUND 6,4x12 Stainless	
410	315105-0165	-		4	WASHER,PLAIN ROUND 8,4x16 Stainless	
420	315125-0153	-		1	WASHERS,PLAIN ROUND,CHAMFERED 6,4X22X4	
450	311103-0308	-		4	PINS,STRAIGHT 5X16	
480	90157-0036	-		1	FLANGE SEALING COMPOUND 574	
490	90157-0016	-	ML	x	LOCKING FLUID LOCTITE 242 50 ML	

Pos	Part No	SP	UN	Qty	Description	Page No

SLIDE RAIL

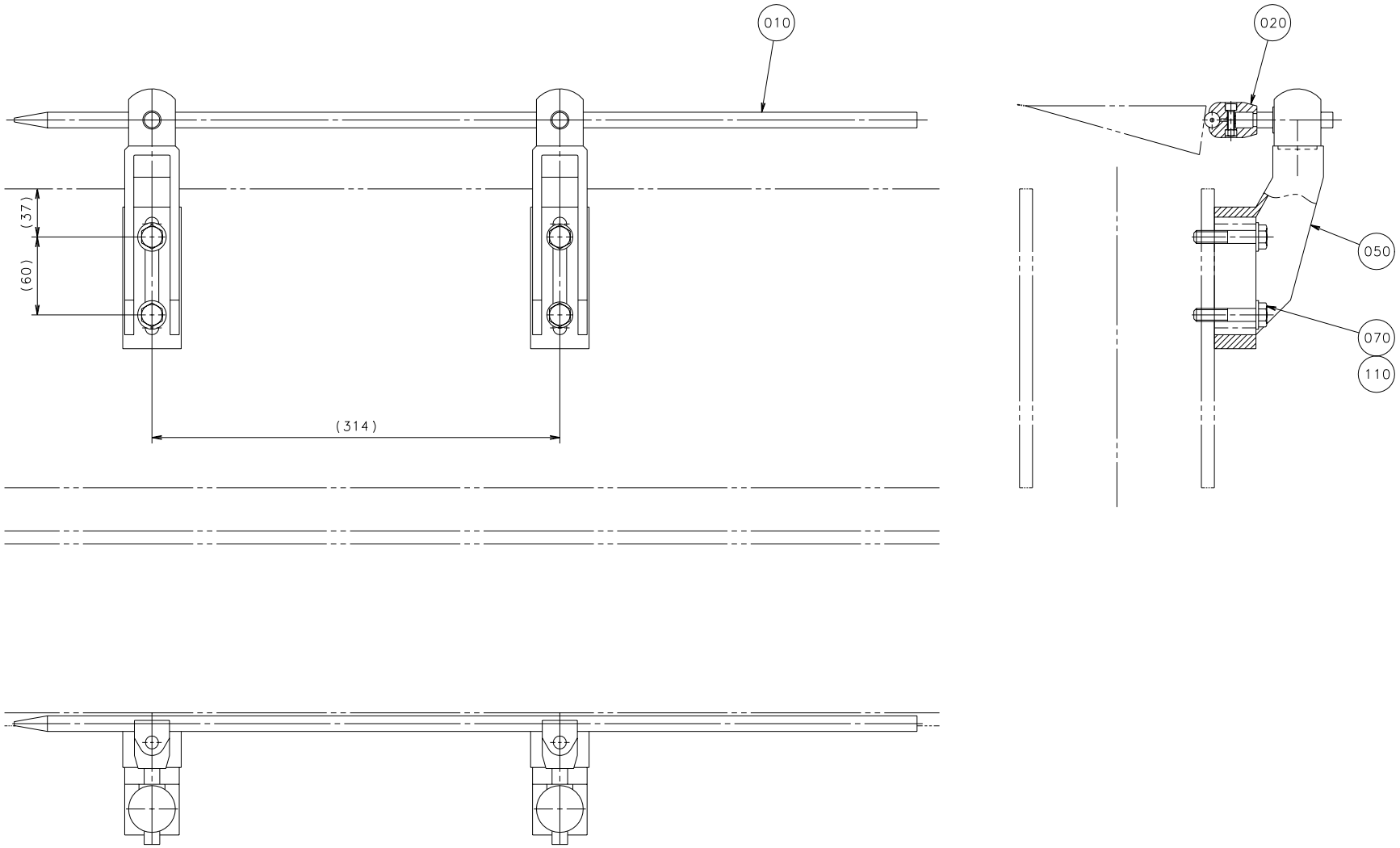

59157401.EPS
591574-1
ECN 70802

Pos	Part No	SP	UN	Qty	Description	Page No
Common parts						
010	591549-0000	D		1	GUIDE ROD	
020	591580-0000	-		2	PIN	
050	90236-0044	D		2	Guide Holder	
070	312105-0501	-		4	SCREW 4017 M10X50A280	
110	315105-0173	-		4	WASHER,PLAIN ROUND 10,5x22 STAINLESS	

Pos	Part No	SP	UN	Qty	Description	Page No

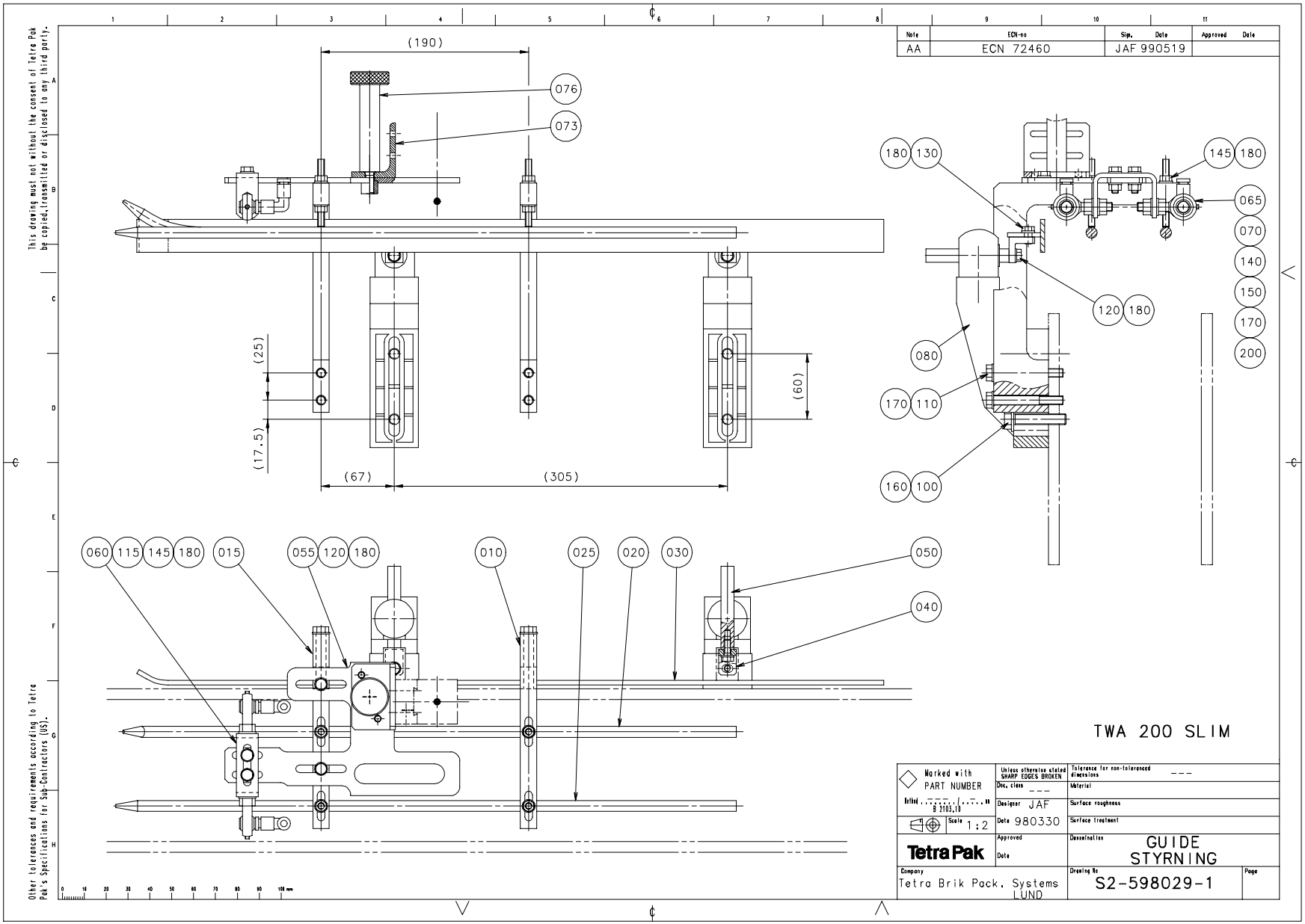
(190)
076
073
(25)
(17.5)
(67)
(305)
(60)
180 130
145 180
065
070
140
150
170
200
120 180
080
170 110
160 100
060 115 145 180
015
055 120 180
010
025
020
030
050
040
TWA 200 SLIM
This drawing must not without the consent of Tetra Pak be copied,transmitted or disclosed to any third party.
Other tolerances and requirements according to Tetra Pak's Specifications for Sup.Contractors (US).
Note
ECN-no
Sign. Date
Approved Date
AA
ECN 72460
JAF 990519
Marked with PART NUMBER
Unless otherwise stated SHARP EDGES BROKEN
Tolerance for non-toleranced dimensions ---
Dec. class ---
Material
Designer JAF
Surface roughness
Scale 1:2
Date 980330
Surface treatment
Approved
Date
Designation
GUIDE STYRNING
Company
Tetra Brik Pack, Systems LUND
Drawing No
S2-598029-1
Page

Pos	Part No	SP	UN	Qty	Description	Page No
Common parts						
010	591589-0000	D		1	ANGLE BRACKET	
015	591613-0000	D		1	ANGLE BRACKET	
020	591590-0000	D		1	GUIDE ROD	
025	591530-0000	D		1	GUIDE ROD	
030	598035-0000	D		1	STEERING RAIL	
040	591592-0000	-		2	BRACKET	
050	591593-0000	-		2	PIN	
055	598026-0000	D		1	HOLDER	
060	591615-0000	-		1	BOW CLAMP	
065	591617-0000	-		2	LINK HEAD	
070	591605-0000	K		2	DOWEL	
073	598027-0000	D		1	ANGLE BRACKET	
076	598028-0000	D		1	TIGHTENING SCREW	
080	90236-0044	D		2	Guide Holder	
100	312105-0501	-		4	SCREW 4017 M10X50A280	
110	312105-0464	-		4	SCREW M6S ISO 4014 M8x65 A280	
115	312105-0370	-		2	SCREW M6S ISO 4017 M6x20 A280	
120	312105-0368	-		4	SCREW M6S ISO 4017 M6x16 A280	
130	312105-0366	-		2	SCREW M6S ISO 4017 M6x12 A280	
140	312605-0318	-		4	NUT,HEXAGON,M8 RFR	
145	312605-0316	-		10	NUT,HEXAGON A280 M6M6	
150	312318-0285	-		2	STOP SCREW ISO 4029 M4x6 A4	
160	315105-0173	-		4	WASHER,PLAIN ROUND 10,5x22 STAINLESS	
170	315105-0165	-		8	WASHER,PLAIN ROUND 8,4x16 Stainless	
180	315105-0153	-		18	WASHER,PLAIN ROUND 6,4x12 Stainless	
200	90055-0113	-		2	Elbow pipe joint 6x6 mm	

Pos	Part No	SP	UN	Qty	Description	Page No

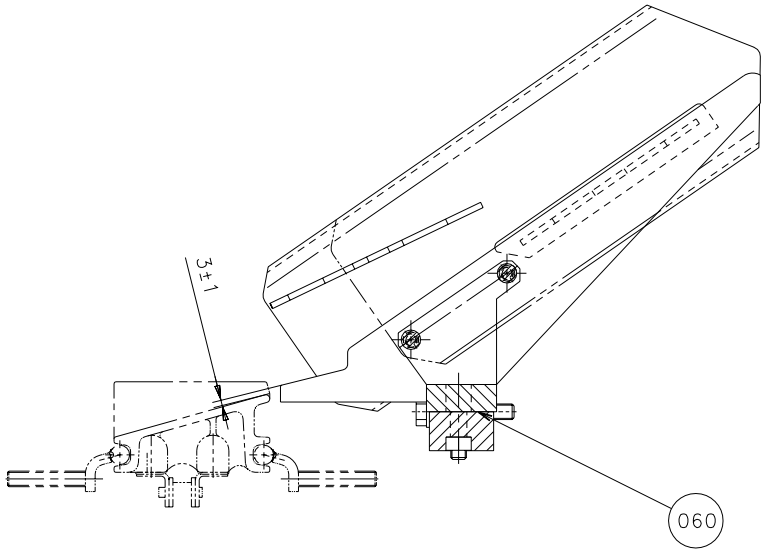
3±1
060

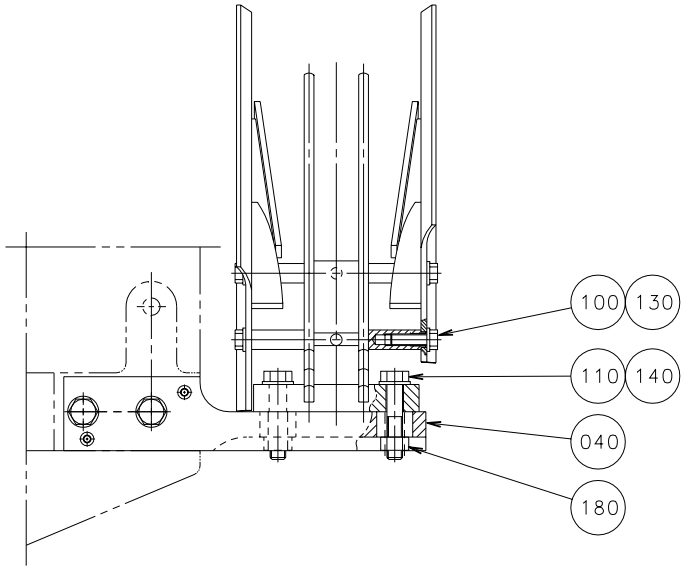
100
130
110
140
040
180

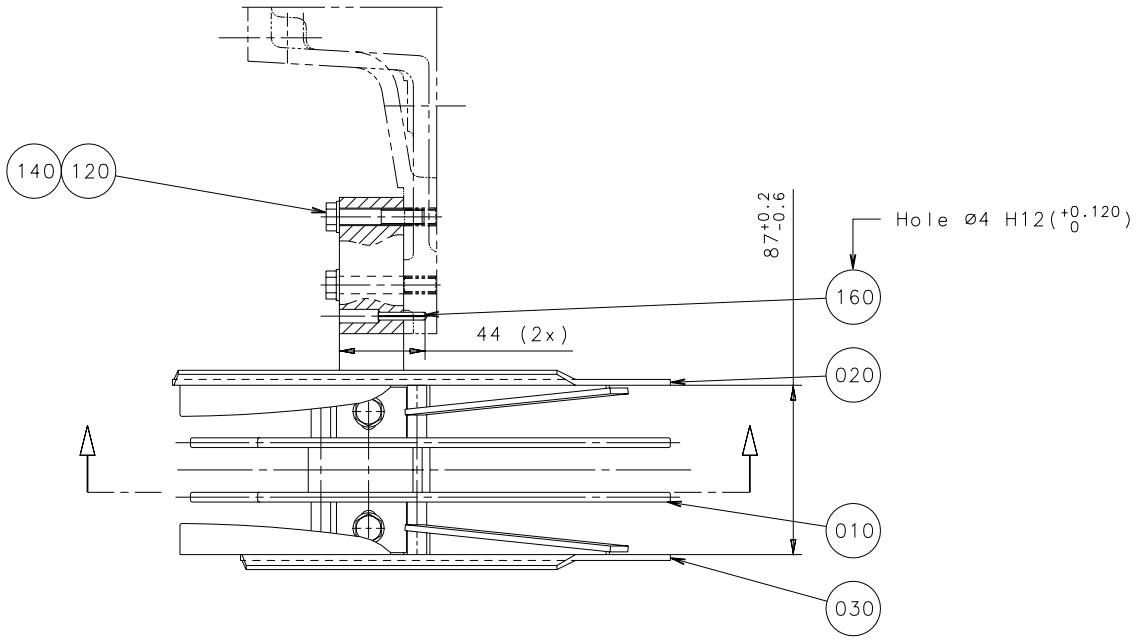
140
120
87+0.2 -0.6
Hole Ø4 H12(+0.120 0)
160
44 (2x)
020
010
030

Pos	Part No	SP	UN	Qty	Description	Page No
Common parts						
010	591583-0000	D		1	FINGER	
020	591584-0000	D		1	SIDE PLATE LEFT	
030	591585-0000	D		1	SIDE PLATE RIGHT	
040	591586-0000	-		1	HOLDER	
060	594933-0000	-		3	SHIM	
100	312105-0370	-		4	SCREW M6S ISO 4017 M6x20 A280	
110	312105-0459	-		2	SCREW ISO 4017 M8x40 A280	
120	312105-0460	-		2	SCREW ISO 4017 M8x45 A280	
130	315105-0153	-		4	WASHER,PLAIN ROUND 6,4x12 Stainless	
140	315105-0165	-		4	WASHER,PLAIN ROUND 8,4x16 Stainless	
160	311112-0258	-		2	PINS,SLOTTED TUBULAR SPRING PIN 4X24	
180	312605-0318	-		2	NUT,HEXAGON,M8 RFR	

Pos	Part No	SP	UN	Qty	Description	Page No

SERVICE TABLE

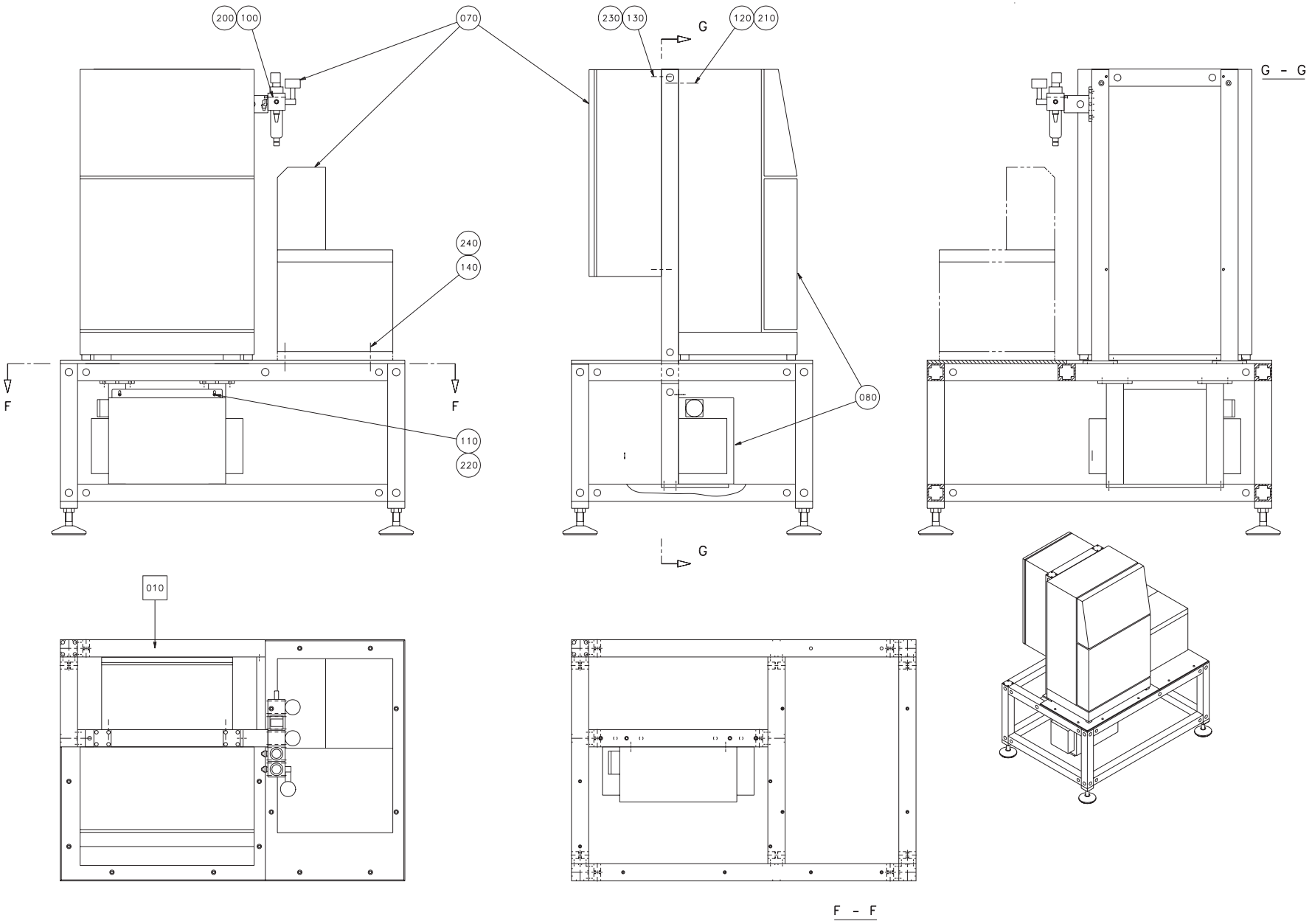

59163301.EPS
591633-1
ECN 70802

Pos	Part No	SP	UN	Qty	Description	Page No
Common parts						
F010	A 594929-0100	-		1	TABLE	139
100	312111-0307	-		2	SCREW	
110	312105-0327	-		2	SCREW M6S ISO 4017 M5X12 A280	
120	312105-0329	-		2	SCREW M6S ISO 4017 M5x16 A280	
130	312115-0370	-		4	SCREW MC6S ISO 4762 M6x20 A280	
140	312105-0449	-		4	SCREW M6S ISO 4017 M8x16 A280	
200	315105-0136	-		2	WASHER,PLAIN ROUND 4,3x8 Stainless	
210	315105-0146	-		2	WASHER,PLAIN ROUND 5,3x10 Stainless	
220	315105-0146	-		2	WASHER,PLAIN ROUND 5,3x10 Stainless	
220	315125-0146	-		2	WASHER	
230	315105-0153	-		4	WASHER,PLAIN ROUND 6,4x12 Stainless	

Pos	Part No	SP	UN	Qty	Description	Page No

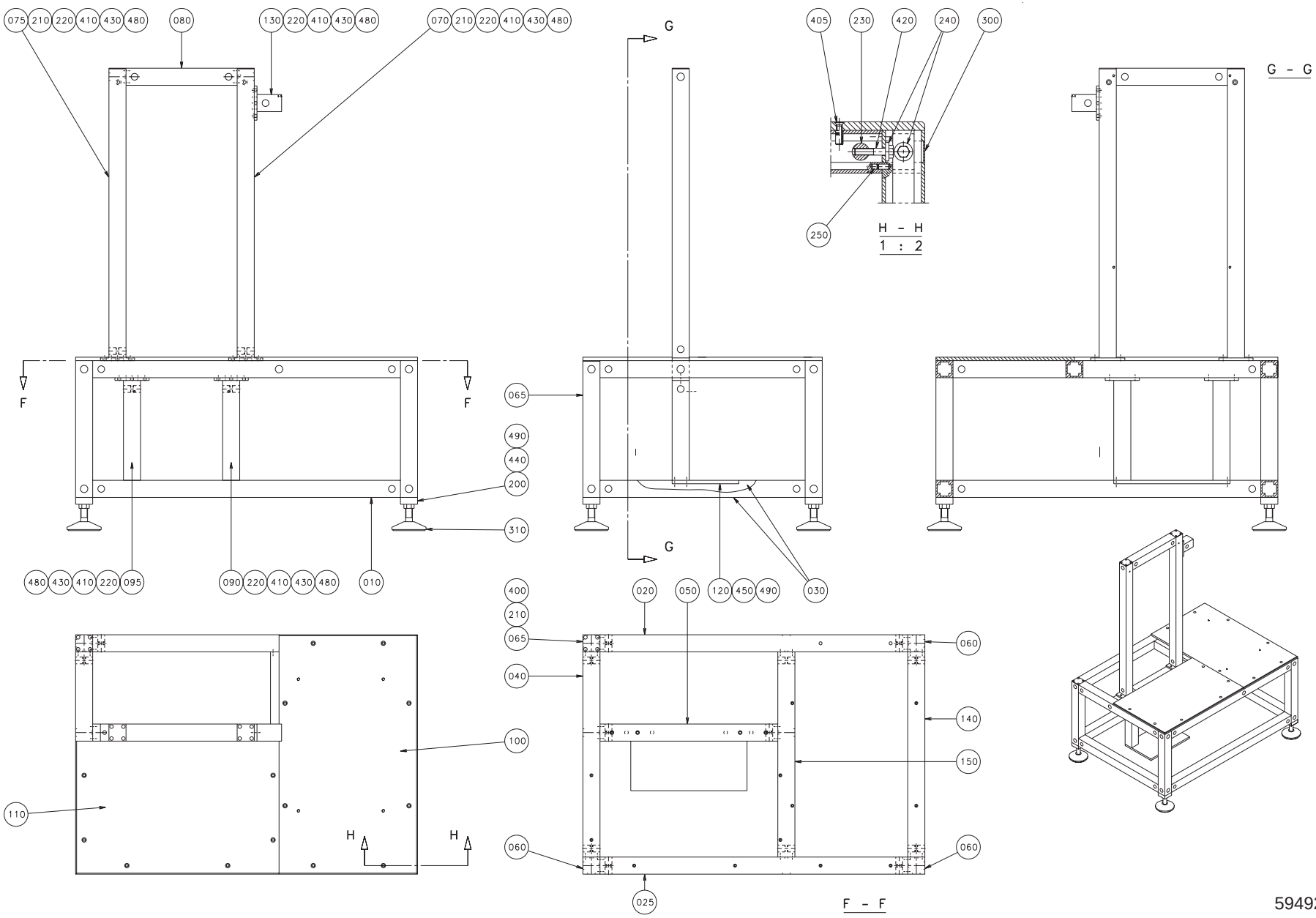

59492901.EPS
594929-1
ECN 70802

Pos	Part No	SP	UN	Qty	Description	Page No
Common parts						
010	594905-0000	-		2	PROFILE	
020	594906-0000	-		1	PROFILE	
025	594907-0000	-		1	PROFILE	
030	594908-0000	-		2	PROFILE	
040	594909-0000	-		1	PROFILE	
050	594910-0000	-		1	PROFILE	
060	594911-0000	-		3	PROFILE	
065	594912-0000	-		1	PROFILE	
070	594913-0000	-		1	PROFILE	
075	594914-0000	-		1	PROFILE	
080	594915-0000	-		1	PROFILE	
090	594916-0000	-		1	PROFILE	
095	594917-0000	-		1	PROFILE	
100	594918-0000	-		1	PLATE	
110	594919-0000	-		1	PLATE	
120	594920-0000	-		1	PLATE	
130	594921-0000	-		1	PROFILE	
140	594922-0000	-		1	PROFILE	
150	594923-0000	-		1	PROFILE	
200	556601-0000	-		4	BRACKET	
210	556604-0000	-		3	COVER PLATE	
220	556624-0000	-		5	FRAME BRACKET	
230	486268-0000	-		27	NUT	
240	548599-0000	-		22	WASHER	
250	1065410-0000	-		108	SLOTTED PIN	
300	90261-0060	-		20	END PLUG IKPK 25x1,5 Grey	
310	90347-0142	-		4	FOOT	
400	312155-0323	-		12	SCREW MF6S DIN 7991 M5X8 A280	
405	312155-0372	-		14	SCREW MF6S DIN 7991 M6X25 A280	
410	312155-0459	-		5	SCREW MF6S8X40RFR	
420	312105-0459	-		22	SCREW ISO 4017 M8x40 A280	
430	312105-0453	-		10	SCREW M6S ISO 4017 M8x25 A280	
440	312105-0376	-		16	SCREW M6S ISO 4017 M6x35 A280	
450	312105-0371	-		4	SCREW M6S6X22RFR	
480	315105-0165	-		10	WASHER,PLAIN ROUND 8,4x16 Stainless	
490	315105-0153	-		20	WASHER,PLAIN ROUND 6,4x12 Stainless	

Pos	Part No	SP	UN	Qty	Description	Page No

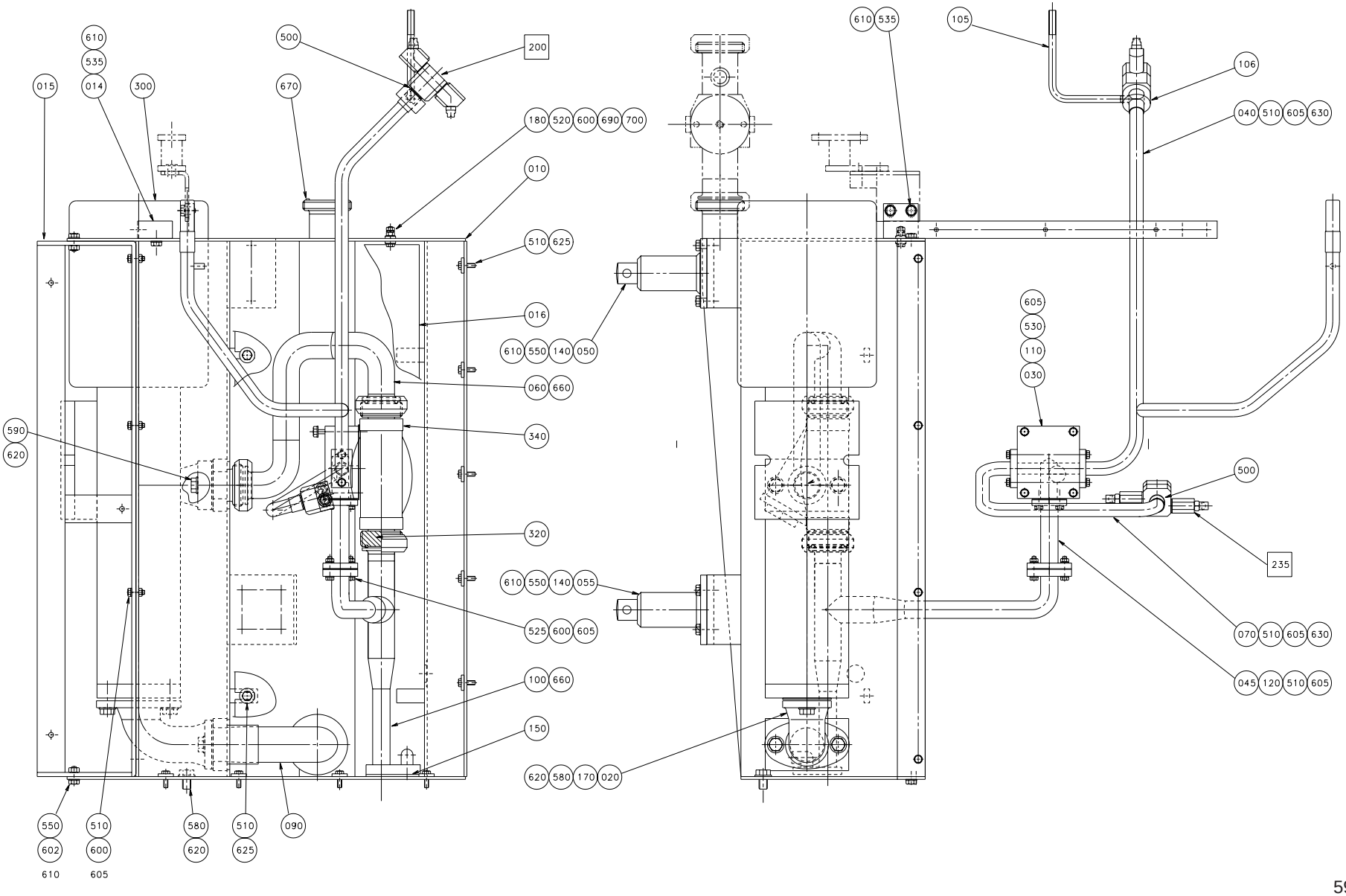

59167201.EPS
591672-1
ECN 70805

Pos	Part No	SP	UN	Qty	Description	Page No
50HZ						
300	B 90321-0015	D		1	PUMP 502 CFX 7ETV 302 50Hz IP55	
60HZ						
300	B 90321-0034	D		1	PUMP 502 CFX 5ETV 362 60Hz IP55	
Common parts						
F200	A 591674-0100	-		1	ROTOR	143
F235	A 441811-0100	-		1	ROTOR	145
010	591487-0000	-		1	CLEANING BOX	
014	594990-0000	-		1	PILLAR	
015	591493-0000	-		1	FRAME	
016	591494-0000	-		1	SEPARATION INSERT	
020	751162-0000	-		1	INLET PIPE	
025	1360672-0000	-		1	COVERING PLATE	
030	591642-0000	-		1	CONNECTION BLOCK	
040	591636-0000	-		1	JUNCTION PIPE	
045	591489-0000	-		1	EXTENSION PIPE	
050	1360687-0000	-		1	HOLDER	
060	591627-0000	-		1	PIPE	
070	591641-0000	-		1	PIPE	
090	591575-0000	-		1	PIPE	
100	456293-0000	-		1	PIPE	
105	591639-0000	-		1	ANGLE BAR	
106	591640-0000	-		1	PIPE HOLDER	
110	456395-0000	K		1	GASKET	
120	456396-0000	K		2	GASKET	
140	256641-0000	-		1	LEG	
150	295417-0000	K		1	GASKET	
170	751017-0000	K		3	GASKET	
180	295434-0000	-		2	BUSHING	
310	90143-0028	-	MM	100	STRIP	
320	90217-0041	-		2	NIPPLE	
330	90287-0062	-		4	SCREW M6	
340	B 90415-0022	-		1	FILTER	
500	315237-0111	K		2	PLAIN ROUND,ALUMINIUM R3/8"	
510	312105-0370	-		20	SCREW M6S ISO 4017 M6x20 A280	
520	312105-0372	-		1	SCREW M6S ISO 4017 M6x25 A280	
525	312105-0374	-		2	SCREW M6S ISO 4017 M6x30 A280	
530	312105-0384	-		4	SCREW M6S ISO 4014 M6x70 A280	
535	312105-0449	-		4	SCREW M6S ISO 4017 M8x16 A280	
550	312105-0451	-		4	SCREW M6S ISO 4017 8x20 A280	
580	312105-0532	-		5	SCREW M6S ISO 4017 M12X20 A280	
590	312105-0538	-		2	SCREW M6S ISO 4017 M12X35 A280	
600	312605-0316	-		7	NUT,HEXAGON A280 M6M6	
602	312605-0318	-		2	NUT,HEXAGON,M8 RFR	
605	315105-0153	-		15	WASHER,PLAIN ROUND 6,4x12 Stainless	
610	315105-0165	-		4	WASHER,PLAIN ROUND 8,4x16 Stainless	
620	315105-0178	-		7	WASHER,PLAIN ROUND 13x24	
625	315121-0153	-		11	WASHER TBRSB 6,4x22 FZB	
630	315202-0215	-		2	O-RING 19,2x3	
660	315250-0103	-		3	GASKET 48/38	
670	315250-0104	-		1	GASKET 61/51	
690	353101-0123	K		1	CABLE SHOE 0,5-1,5mm2 Red	
700	353101-0126	K		1	CABLE SHOE	

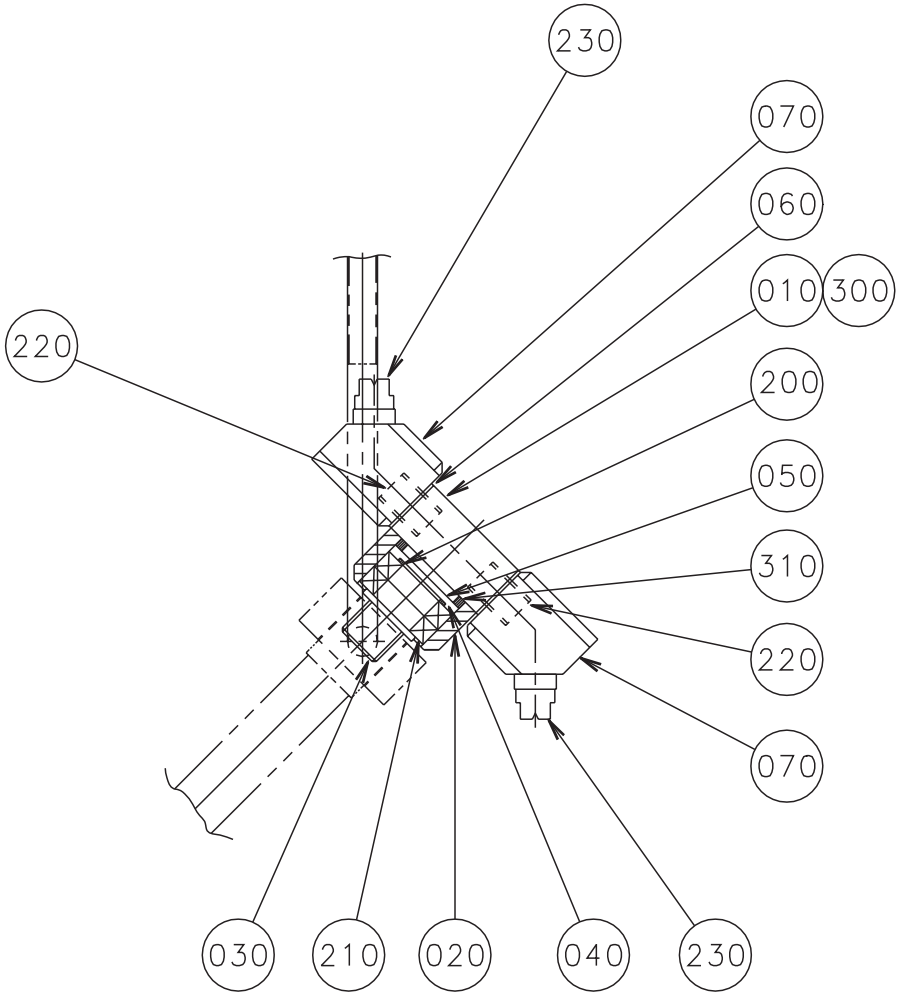
230
070
060
010
300
220
200
050
310
220
070
030
210
020
040
230

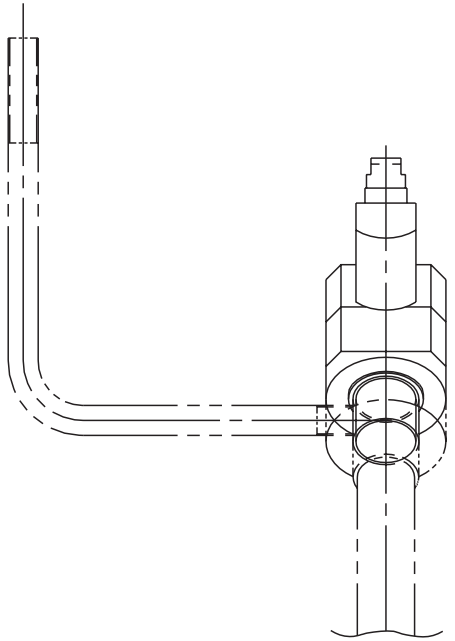

Pos	Part No	SP	UN	Qty	Description	Page No
Common parts						
010	441792-0000	D		1	HEAD	
020	441793-0000	D		1	BEARING HOUSING	
030	441794-0000	D		1	PIVOT PIN	
040	441795-0000	D		1	WASHER	
050	441796-0000	F		1	SEAL	
060	441797-0000	K		2	SHIM	
070	591637-0000	K		2	ATTACHMENT	
200	90141-0017	K		1	RETAINING RINGS FOR SHAFT 17	
210	90214-0092	K		2	BALL BEARING,STAINLESS 17X30X7	
220	90330-0101	K		2	NIPPLES,EXT.G-THREAD G1/4"	
230	90424-0035	K		2	NOZZLE	
300	312155-0299	-		2	SCREW MF6S DIN 7991 M4x30 A480	
310	315202-0217	K		1	O-RING 24,2x3	

Pos	Part No	SP	UN	Qty	Description	Page No

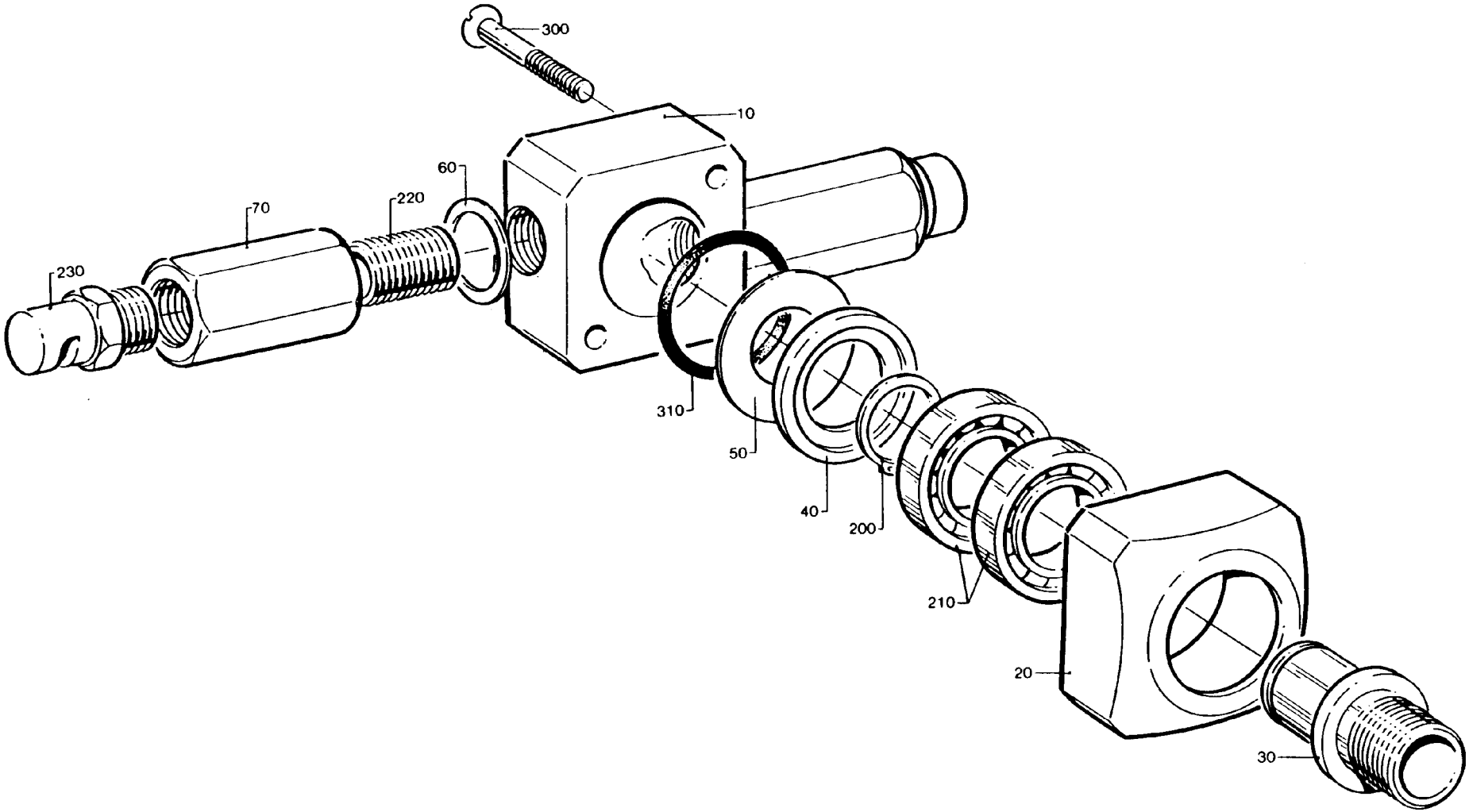

44181101.tif
441811-1
ECN

Pos	Part No	SP	UN	Qty	Description	Page No
Common parts						
010	441792-0000	D		1	HEAD	
020	441793-0000	D		1	BEARING HOUSING	
030	441794-0000	D		1	PIVOT PIN	
040	441795-0000	D		1	WASHER	
050	441796-0000	F		1	SEAL	
060	441797-0000	R		2	SHIM	
070	441800-0000	R		2	STRAIGHT FITTING	
200	90141-0017	-		1	RETAINING RINGS FOR SHAFT 17	
210	90214-0092	I		2	BALL BEARING,STAINLESS 17X30X7	
220	90330-0101	R		2	NIPPLES,EXT.G-THREAD G1/4"	
230	90424-0025	R		2	NOZZLE	
300	312155-0299	-		2	SCREW MF6S DIN 7991 M4x30 A480	
310	315202-0217	I		1	O-RING 24,2x3	

Pos	Part No	SP	UN	Qty	Description	Page No

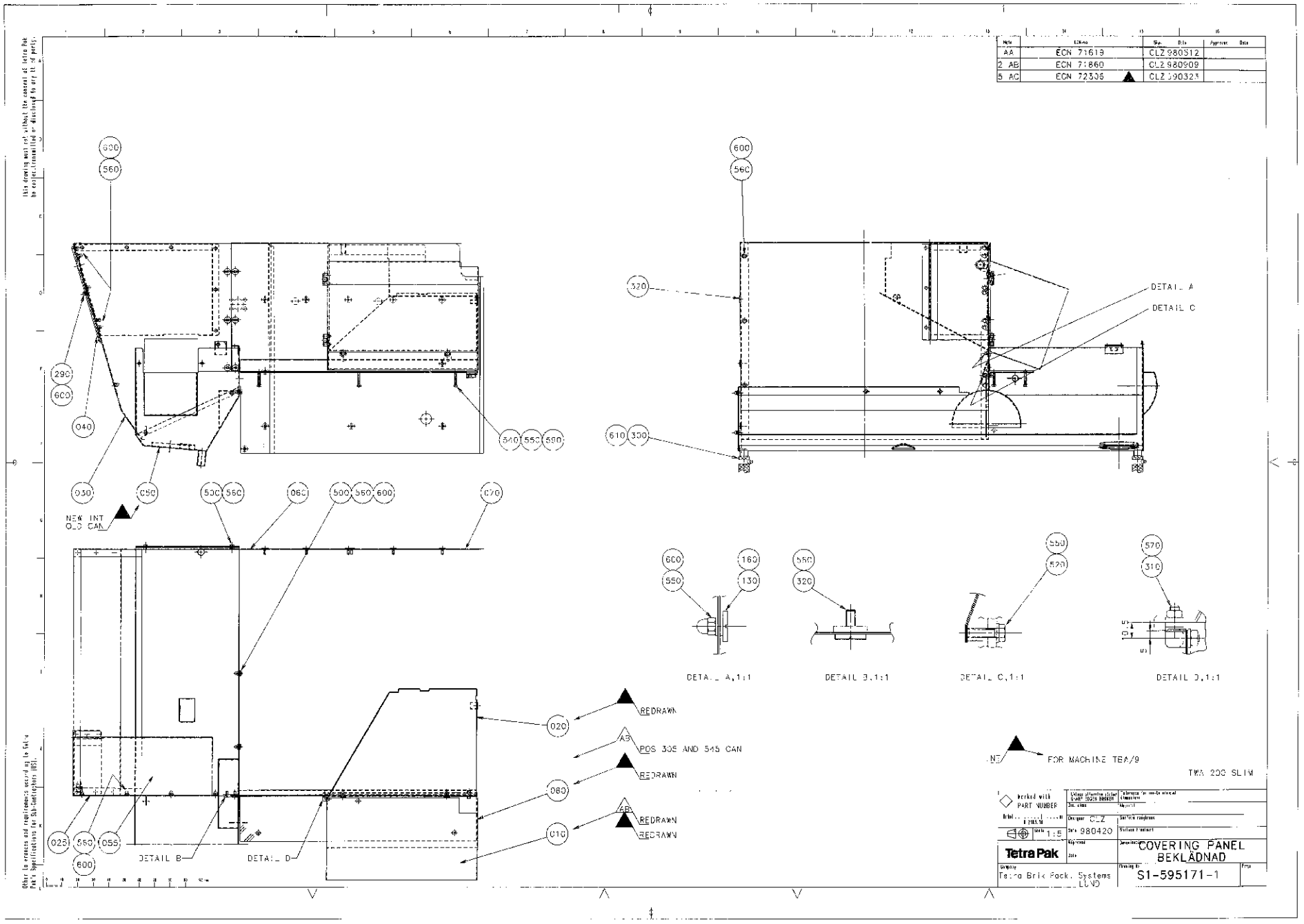
DETAIL A
DETAIL C
DETAIL B
DETAIL D
DETAIL A,1:1
DETAIL B,1:1
DETAIL C,1:1
DETAIL D,1:1
NEW INT OLD CAN
REDRAWN
POS 305 AND 545 CAN
FOR MACHINE TBA/9
TWA 200 SLIM
COVERING PANEL
BEKLÄDNAD
S1-595171-1
Tetra Brik Pack. Systems LUND

Pos	Part No	SP	UN	Qty	Description	Page No
Common parts						
010	594950-0000	D		1	WASTE CHUTE	
020	594951-0000	D		1	SIDE PLATE	
025	594943-0000	D		1	SIDE PLATE	
030	594989-0000	D		1	FRONT PLATE	
040	594965-0000	D		1	COVER	
050	1360610-0000	D		1	DRIP PLATE	
055	594934-0000	D		1	COVER PLATE	
060	591700-0000	D		1	SIDE PLATE	
070	591619-0000	D		1	SIDE PLATE	
080	591622-0000	D		1	CHECKER PLATE	
100	752093-0000	-		1	HOLDER	
130	271586-0001	-		2	WASHER	
160	979707-0000	-		2	SCREW	
290	90005-0060	-		1	WASHER,Plain round 6,4x18;H=1,5 M6	
300	90166-0049	-	M	2	HOSE PVC 25/33-34	
310	90248-0022	-		2	HINGE	
320	90287-0062	-		14	SCREW M6	
500	312105-0366	-		4	SCREW M6S ISO 4017 M6x12 A280	
520	312105-0370	-		4	SCREW M6S ISO 4017 M6x20 A280	
540	312105-0380	-		3	SCREW M6S ISO 4014 M6x50 A280	
550	315105-0153	-		11	WASHER,PLAIN ROUND 6,4x12 Stainless	
560	315105-0165	-		25	WASHER,PLAIN ROUND 8,4x16 Stainless	
570	315115-0153	-		2	WASHER TBRB 6,4x12 Stainless	
580	315125-0153	-		6	WASHERS,PLAIN ROUND,CHAMFERED 6,4X22X4	
590	312605-0316	-		3	NUT,HEXAGON A280 M6M6	
600	312705-0316	-		24	NUT,DOMED CAP,HEXAGON,M6	
610	342991-0106	-		2	HOSE CLIP,WORM DRIVE TYPE (30)-36	

Pos	Part No	SP	UN	Qty	Description	Page No

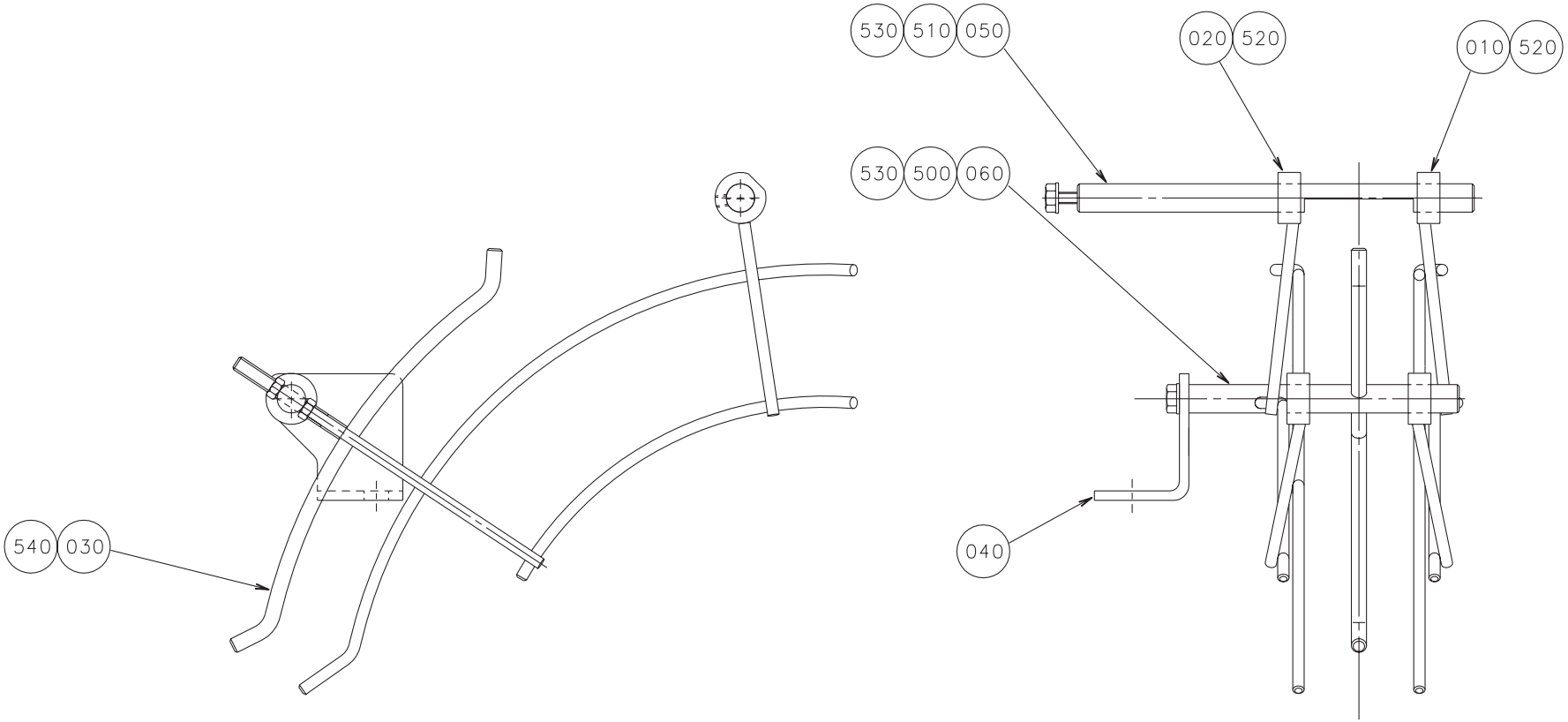

59163501.EPS
591635-1
ECN 70805

Pos	Part No	SP	UN	Qty	Description	Page No
Common parts						
010	591650-0000	-		1	GUIDE RAIL RUGHT	
020	591651-0000	-		1	GUIDE RAIL LEFT	
030	594937-0000	-		1	GUIDE	
040	591648-0000	-		1	ANGLE BRACKET	
050	591542-0000	-		1	SHAFT	
060	591649-0000	-		1	SHAFT	
500	312105-0368	-		1	SCREW M6S ISO 4017 M6x16 A280	
510	312105-0370	-		1	SCREW M6S ISO 4017 M6x20 A280	
520	312318-0362	-		4	SET SCREW CUP POINT ISO 4029 M6x8 RFR	
530	315105-0153	-		2	WASHER,PLAIN ROUND 6,4x12 Stainless	
540	312605-0318	-		2	NUT,HEXAGON,M8 RFR	

Pos	Part No	SP	UN	Qty	Description	Page No

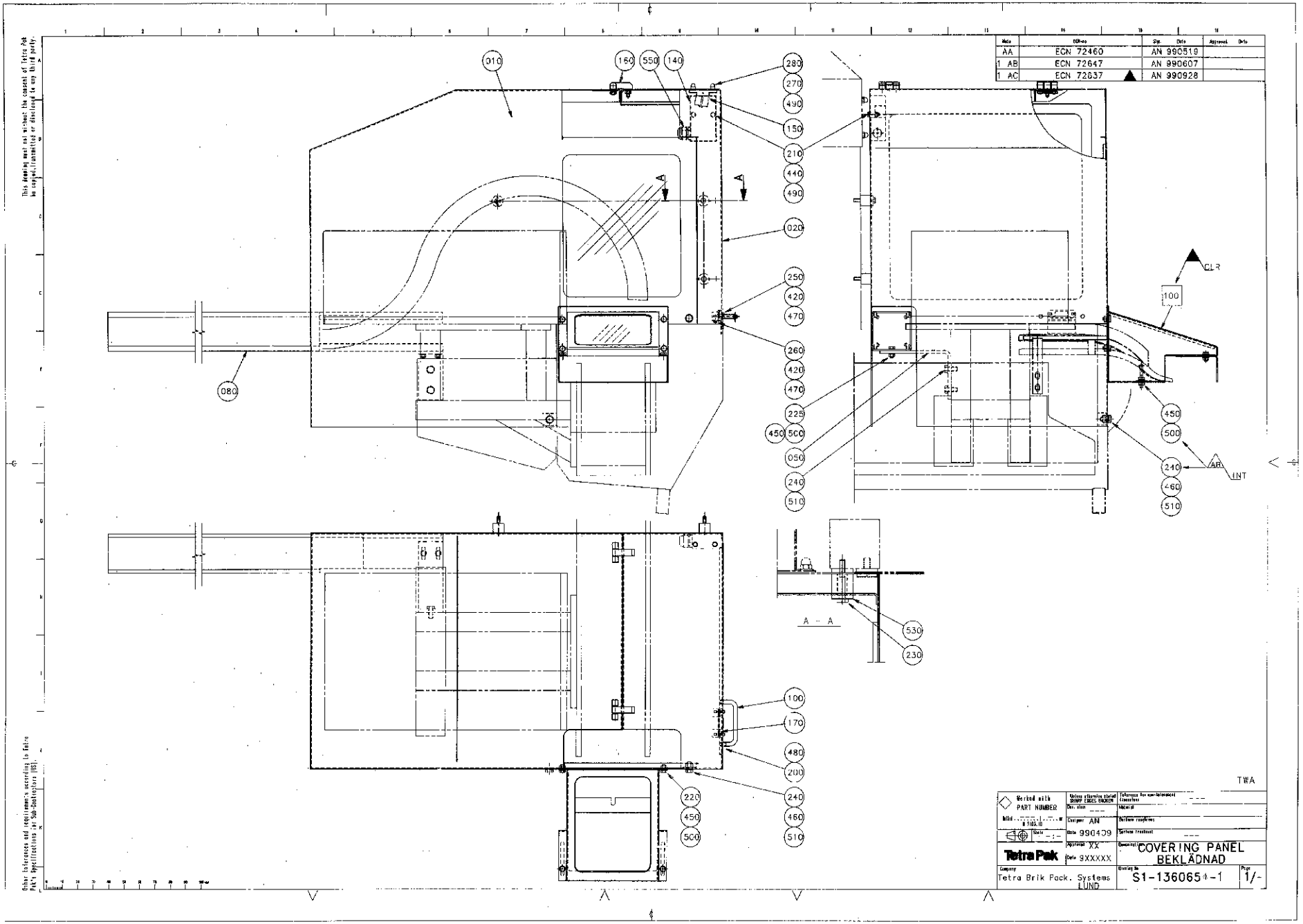
Mark | ECN-no | Sign | Date | Approved | Date
AA | ECN 72460 | AN 990519
1 AB | ECN 72647 | AN 990607
1 AC | ECN 72837 | AN 990928
010
160
550
140
280
270
490
150
210
440
490
020
250
420
470
260
420
470
225
450
500
050
240
510
080
100
CLR
450
500
240
460
510
AR
INT
A – A
530
230
100
170
480
200
240
460
510
220
450
500
TWA
Marked with PART NUMBER
Unless otherwise stated SHARP EDGES BROKEN
Designer AN
Date 990409
Approved XX
Date XXXXXX
Tetra Pak
COVERING PANEL
BEKLÄDNAD
Company
Tetra Brik Pack. Systems
LUND
Drawing No
S1-136065 -1
Page
1/-

Pos	Part No	SP	UN	Qty	Description	Page No
Common parts						
F100	A1360745-0100	-		1	COVER	153
010	B1360611-0000	-		1	COVER	
020	B1360612-0000	-		1	COVER	
050	1360619-0000	-		1	BRACKET	
080	1360630-0000	-		1	CABLE DUCT	
100	1089374-0000	-		1	HANDLE	
140	90044-0139	-		1	Key saf.sw. AZ16-02 ZVR K-2254	
150	90044-0311	-		1	Key A2 15/16 B2	
160	90248-0036	-		2	HINGE	
170	90339-0004	-		1	MAGNETIC LOCK	
200	312105-0289	-		2	SCREW M6S4X10 A2 80	
210	312105-0331	-		2	SCREW M6S ISO 4017 M5X20 A280	
220	312105-0366	-		4	SCREW M6S ISO 4017 M6x12 A280	
225	312105-0370	-		2	SCREW M6S ISO 4017 M6x20 A280	
230	312105-0378	-		3	SCREW ISO 4017 M6x40 A280	
240	312105-0449	-		4	SCREW M6S ISO 4017 M8x16 A280	
250	312115-0224	-		2	SCREW S 3X10 A4 80	
260	312115-0226	-		2	SCREW MC6S ISO 4762 M3X12 A280	
270	312155-0327	-		2	SCREW MF6S DIN 7991 M5x12 A280	
280	312705-0314	-		2	NUT,DOMED CAP,HEXAGON,M5	
420	312605-0310	-		4	NUT,HEXAGON M6M 3 A2 80	
440	312605-0314	-		2	NUT,HEXAGON,M6M5 Stainless	
450	312605-0316	-		8	NUT,HEXAGON A280 M6M6	
460	312605-0318	-		2	NUT,HEXAGON,M8 RFR	
470	315105-0124	-		8	WASHER,PLAIN ROUND 3,2x6	
480	315105-0136	-		2	WASHER,PLAIN ROUND 4,3x8 Stainless	
490	315105-0146	-		6	WASHER,PLAIN ROUND 5,3x10 Stainless	
500	315105-0153	-		10	WASHER,PLAIN ROUND 6,4x12 Stainless	
510	315105-0165	-		4	WASHER,PLAIN ROUND 8,4x16 Stainless	
530	315125-0153	-		3	WASHERS,PLAIN ROUND,CHAMFERED 6,4X22X4	
550	352103-0106	-		1	CABLE GLAND ST 11	

Pos	Part No	SP	UN	Qty	Description	Page No

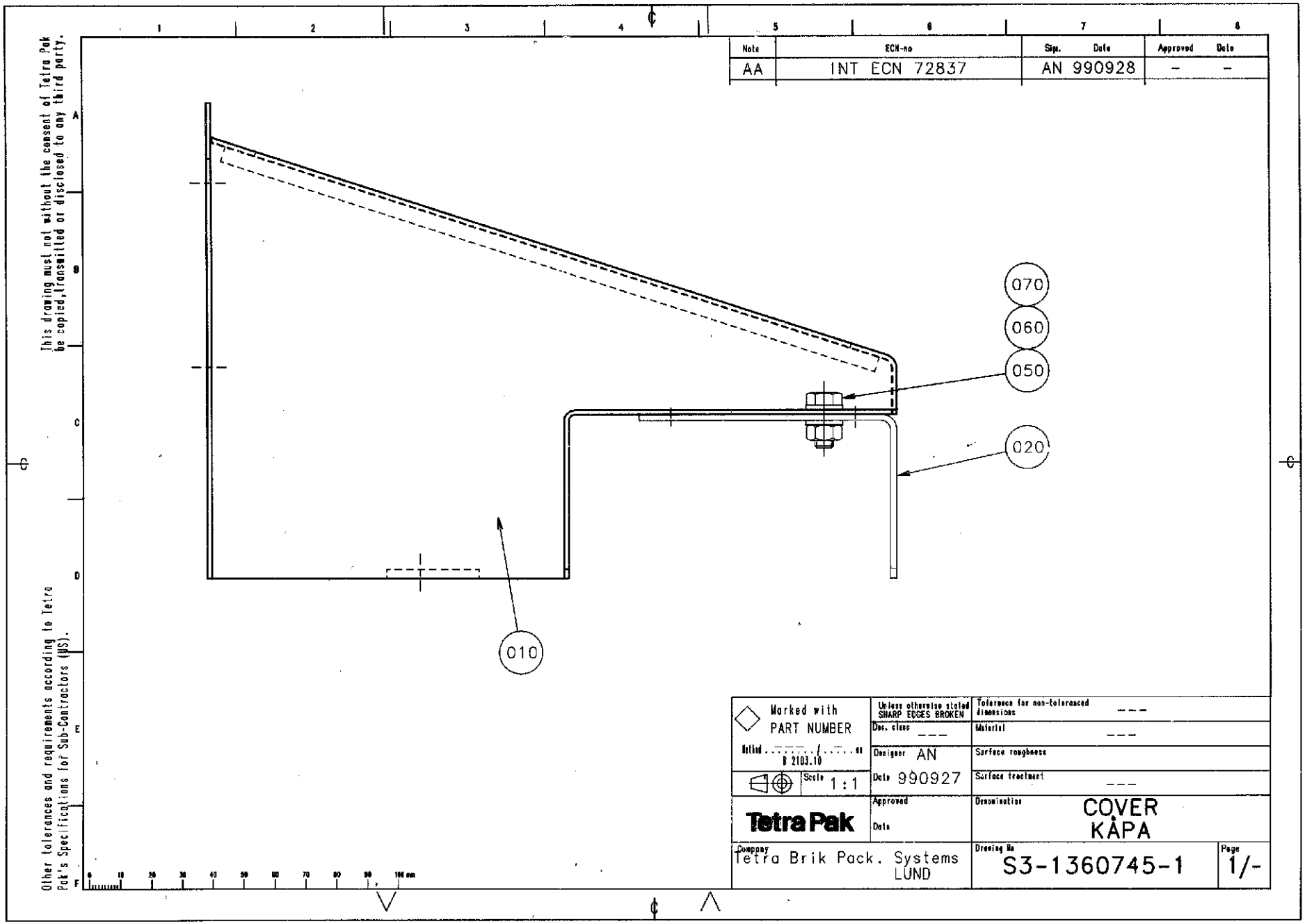
This drawing must not without the consent of Tetra Pak be copied, transmitted or disclosed to any third party.
Other tolerances and requirements according to Tetra Pak's Specifications for Sub-Contractors (HS).
Note
ECN-no
Sign. Date
Approved Date
AA
INT ECN 72837
AN 990928
– –
070
060
050
020
010
Marked with PART NUMBER
Method ISO 2203.10
Scale 1:1
Unless otherwise stated SHARP EDGES BROKEN
Doc. class ---
Designer AN
Date 990927
Approved
Date
Tolerance for non-toleranced dimensions ---
Material ---
Surface roughness
Surface treatment ---
Denomination
COVER
KÅPA
Company
Tetra Brik Pack. Systems
LUND
Drawing No
S3-1360745-1
Page
1/-

Pos	Part No	SP	UN	Qty	Description	Page No
Common parts						
010	B1360709-0000	-		1	COVER	
020	1360710-0000	-		1	PLATE	
050	312105-0367	-		2	SCREW M6S 6x14 A2 80	
060	312605-0316	-		2	NUT,HEXAGON A280 M6M6	
070	315105-0153	-		4	WASHER,PLAIN ROUND 6,4x12 Stainless	

Pos	Part No	SP	UN	Qty	Description	Page No

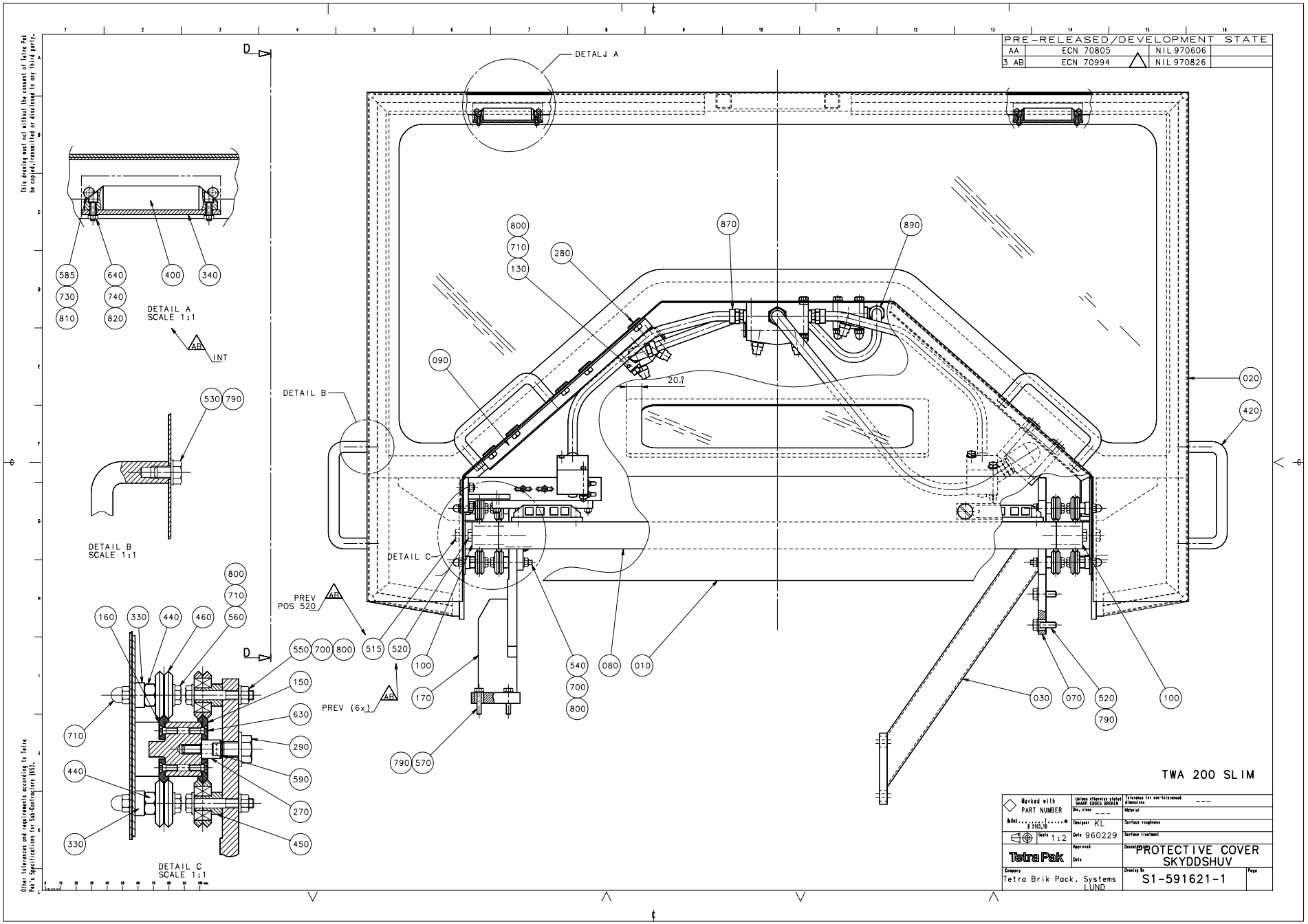
PRE-RELEASED/DEVELOPMENT STATE
AA ECN 70805 NIL 970606
3 AB ECN 70994 NIL 970826
DETALJ A
DETAIL A
SCALE 1:1
DETAIL B
SCALE 1:1
DETAIL C
SCALE 1:1
DETAIL B
DETAIL C
PREV POS 520
PREV (6x)
INT
20.9
TWA 200 SLIM
PROTECTIVE COVER
SKYDDSHUV
Tetra Brik Pack. Systems
LUND
S1-591621-1

Pos	Part No	SP	UN	Qty	Description	Page No
Common parts						
010	1116150-0000	D		1	COVER	
020	1116148-0000	D		1	COVER	
030	1116280-0000	D		1	BRACKET	
040	594962-0000	-		1	RUBBER STRIP	
060	1349670-0000	D		1	SWITCH BRACKET	
070	1116277-0000	D		1	BRACKET	
080	1116283-0000	D		1	BEAM	
090	979720-0000	D		1	EDGE PLATE	
100	1116284-0000	D		2	GUIDE HOLDER	
120	979487-0000	-		1	MOUNTING PLATE	
125	979490-0000	-		1	DISTRIBUTOR BLOCK	
130	979491-0000	-		1	BLOCK	
135	979493-0000	-		1	BLOCK	
140	979494-0000	-		2	BLOCK	
150	1116275-0000	D		4	GUIDE	
160	1116276-0000	D		4	GUIDE	
170	1116278-0000	D		1	BRACKET	
180	1116279-0000	D		1	BRACKET	
190	1478844-0000	D		1	SWITCH BRACKET	
200	1116151-0000	K		1	GLASS	
210	1116152-0000	K		1	GLASS	
220	295423-0000	-		1	SEAL	
230	469068-0000	-		1	SLEEVE	
240	979489-0000	-		1	PLATE	
260	1116270-0000	K		2	LOCK COMPONENT	
270	979515-0000	-		3	LOCK COMPONENT	
280	979707-0000	-		10	SCREW	
290	979514-0000	-		1	STOP SCREW	
300	1116271-0000	D		2	BRACKET	
320	1116273-0000	D		2	SPACER	
330	1116274-0000	D		10	SPACER	
340	594985-0000	-		2	BRACKET	
390	90044-0182	-		1	Key saf.sw. AZM 415-22ZPAK 24 VDC	
400	90237-0071	-		4	MAGNETLOCK	
410	90143-0049	-	M	5	RUBBERSTRIP 11X21MM	
420	90017-0016	-		4	HANDLE,STAINLESS	
440	90363-0301	-		10	BUSHING	
450	90363-0302	-		10	BUSHING	
460	90363-0049	-		20	ROLL	
470	90287-0062	-		10	SCREW M6	
480	90157-0041	-		x	SEALING COMPOUND	
490	90166-0153	-	M	3	TUBE 12 mm PA Black	
492	90166-0234	-	M	1	HOSE	
495	90424-0070	-		9	SPREADER NOZZLE	
510	312105-0460	-		4	SCREW ISO 4017 M8x45 A280	
515	312105-0370	-		4	SCREW M6S ISO 4017 M6x20 A280	
520	312105-0453	-		2	SCREW M6S ISO 4017 M8x25 A280	
530	312105-0447	-		8	SCREW M6S ISO 4017 M8x12 A280	
535	312105-0379	-		6	SCREW M6S ISO 4014 M6x45 A280	
540	312105-0380	-		1	SCREW M6S ISO 4014 M6x50 A280	
550	312105-0378	-		12	SCREW ISO 4017 M6x40 A280	
560	312105-0376	-		10	SCREW M6S ISO 4017 M6x35 A280	
570	312105-0374	-		16	SCREW M6S ISO 4017 M6x30 A280	
580	312105-0368	-		4	SCREW M6S ISO 4017 M6x16 A280	
585	312115-0291	-		4	SCREW MC6S ISO 4762 M4x12 A280	
590	312155-0372	-		3	SCREW MF6S DIN 7991 M6X25 A280	
600	312155-0370	-		1	SCREW MF6S DIN 7991 M6X20 A280	
610	312115-0374	-		2	SCREW MC6S ISO 4762 M6x30 A280	
620	312115-0378	-		4	SCREW MC6S ISO 4762 M6X40 A280	
630	312155-0291	-		56	SCREW MF6S DIN 7991 M4x12 A480	
640	312125-0226	-		4	SLOTTED CHEESE HEAD ISO 1207 M3X12 RFR	
650	312125-0222	-		8	SLOTTED CHEESE HEAD ISO 1207 M3x8 RFR	
660	312132-0287	-		4	SLOTTED PAN HEAD ISO 1580 M4X8 MSGFN	
700	312605-0316	-		18	NUT,HEXAGON A280 M6M6	
710	312705-0316	-		22	NUT,DOMED CAP,HEXAGON,M6	
730	312605-0312	-		4	NUT,HEXAGON,M4 RFR	
740	312605-0310	-		4	NUT,HEXAGON M6M 3 A2 80	
790	315105-0165	-		8	WASHER,PLAIN ROUND 8,4x16 Stainless	
800	315105-0153	-		54	WASHER,PLAIN ROUND 6,4x12 Stainless	
810	315105-0136	-		4	WASHER,PLAIN ROUND 4,3x8 Stainless	
820	315105-0124	-		4	WASHER,PLAIN ROUND 3,2x6	
860	342713-0210	-		3	PLUG,EXT.THREAD,HEXAGON SOCKET 1/4"Brass	
870	342920-0141	-		4	STRAIGHT COUPL.,EXT.THREADED 12/10-R3/8"	
880	342920-0151	-		1	STRAIGHT COUPL.,EXT.THREAD.15/12,5-R1/2"	
890	342930-0141	-		2	ELBOW 90 COUPL.,EXT.THREAD 12/10XR3/8"	
895	342930-0151	-		1	ELBOW 90 COUPL.,EXT.THREAD 5/12,5-R1/2"	
900	342940-0141	-		1	T-COUPLING,EXT.THREAD 12/10-R3/8"	

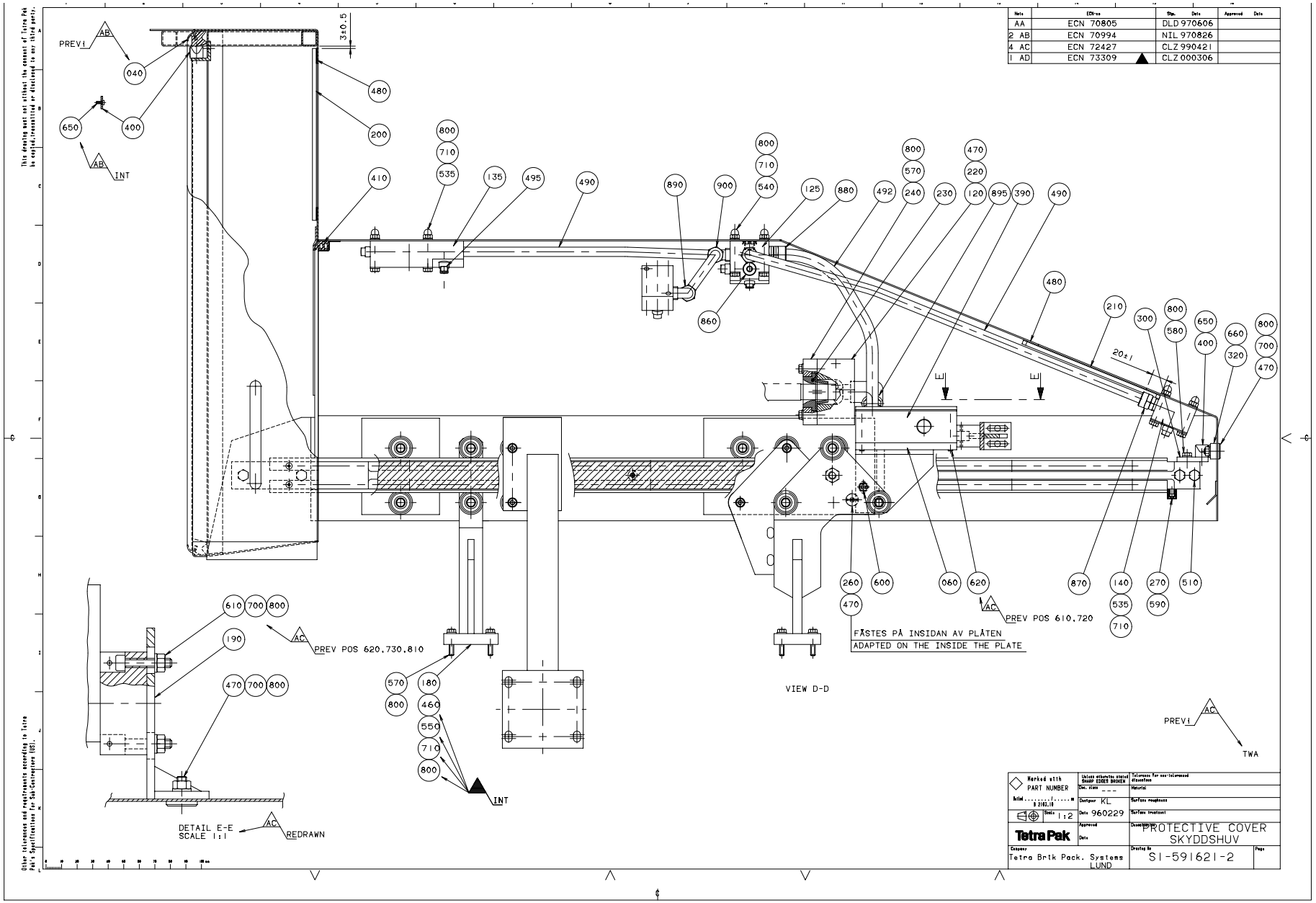
PREV! AB
AB INT
AC PREV POS 620,730,810
AC PREV POS 610,720
FÄSTES PÅ INSIDAN AV PLÅTEN
ADAPTED ON THE INSIDE THE PLATE
VIEW D-D
DETAIL E-E
SCALE 1:1
AC REDRAWN
INT
PREV! AC
TWA
PROTECTIVE COVER
SKYDDSHUV
Tetra Pak
Tetra Brik Pack. Systems LUND
S1-591621-2

Pos	Part No	SP	UN	Qty	Description	Page No
Common parts						
010	1116150-0000	D		1	COVER	
020	1116148-0000	D		1	COVER	
030	1116280-0000	D		1	BRACKET	
040	594962-0000	-		1	RUBBER STRIP	
060	1349670-0000	D		1	SWITCH BRACKET	
070	1116277-0000	D		1	BRACKET	
080	1116283-0000	D		1	BEAM	
090	979720-0000	D		1	EDGE PLATE	
100	1116284-0000	D		2	GUIDE HOLDER	
120	979487-0000	-		1	MOUNTING PLATE	
125	979490-0000	-		1	DISTRIBUTOR BLOCK	
130	979491-0000	-		1	BLOCK	
135	979493-0000	-		1	BLOCK	
140	979494-0000	-		2	BLOCK	
150	1116275-0000	D		4	GUIDE	
160	1116276-0000	D		4	GUIDE	
170	1116278-0000	D		1	BRACKET	
180	1116279-0000	D		1	BRACKET	
190	1478844-0000	D		1	SWITCH BRACKET	
200	1116151-0000	K		1	GLASS	
210	1116152-0000	K		1	GLASS	
220	295423-0000	-		1	SEAL	
230	469068-0000	-		1	SLEEVE	
240	979489-0000	-		1	PLATE	
260	1116270-0000	K		2	LOCK COMPONENT	
270	979515-0000	-		3	LOCK COMPONENT	
280	979707-0000	-		10	SCREW	
290	979514-0000	-		1	STOP SCREW	
300	1116271-0000	D		2	BRACKET	
320	1116273-0000	D		2	SPACER	
330	1116274-0000	D		10	SPACER	
340	594985-0000	-		2	BRACKET	
390	90044-0182	-		1	Key saf.sw. AZM 415-22ZPAK 24 VDC	
400	90237-0071	-		4	MAGNETLOCK	
410	90143-0049	-	M	5	RUBBERSTRIP 11X21MM	
420	90017-0016	-		4	HANDLE,STAINLESS	
440	90363-0301	-		10	BUSHING	
450	90363-0302	-		10	BUSHING	
460	90363-0049	-		20	ROLL	
470	90287-0062	-		10	SCREW M6	
480	90157-0041	-		x	SEALING COMPOUND	
490	90166-0153	-	M	3	TUBE 12 mm PA Black	
492	90166-0234	-	M	1	HOSE	
495	90424-0070	-		9	SPREADER NOZZLE	
510	312105-0460	-		4	SCREW ISO 4017 M8x45 A280	
515	312105-0370	-		4	SCREW M6S ISO 4017 M6x20 A280	
520	312105-0453	-		2	SCREW M6S ISO 4017 M8x25 A280	
530	312105-0447	-		8	SCREW M6S ISO 4017 M8x12 A280	
535	312105-0379	-		6	SCREW M6S ISO 4014 M6x45 A280	
540	312105-0380	-		3	SCREW M6S ISO 4014 M6x50 A280	
550	312105-0378	-		10	SCREW ISO 4017 M6x40 A280	
560	312105-0376	-		10	SCREW M6S ISO 4017 M6x35 A280	
570	312105-0374	-		16	SCREW M6S ISO 4017 M6x30 A280	
580	312105-0368	-		4	SCREW M6S ISO 4017 M6x16 A280	
585	312115-0291	-		4	SCREW MC6S ISO 4762 M4x12 A280	
590	312155-0372	-		3	SCREW MF6S DIN 7991 M6X25 A280	
600	312155-0370	-		1	SCREW MF6S DIN 7991 M6X20 A280	
610	312115-0374	-		2	SCREW MC6S ISO 4762 M6x30 A280	
620	312115-0378	-		4	SCREW MC6S ISO 4762 M6X40 A280	
630	312155-0291	-		56	SCREW MF6S DIN 7991 M4x12 A480	
640	312125-0226	-		4	SLOTTED CHEESE HEAD ISO 1207 M3X12 RFR	
650	312125-0222	-		8	SLOTTED CHEESE HEAD ISO 1207 M3x8 RFR	
660	312132-0287	-		4	SLOTTED PAN HEAD ISO 1580 M4X8 MSGFN	
700	312605-0316	-		18	NUT,HEXAGON A280 M6M6	
710	312705-0316	-		20	NUT,DOMED CAP,HEXAGON,M6	
730	312605-0312	-		4	NUT,HEXAGON,M4 RFR	
740	312605-0310	-		4	NUT,HEXAGON M6M 3 A2 80	
790	315105-0165	-		8	WASHER,PLAIN ROUND 8,4x16 Stainless	
800	315105-0153	-		54	WASHER,PLAIN ROUND 6,4x12 Stainless	
810	315105-0136	-		4	WASHER,PLAIN ROUND 4,3x8 Stainless	
820	315105-0124	-		4	WASHER,PLAIN ROUND 3,2x6	
860	342713-0210	-		3	PLUG,EXT.THREAD,HEXAGON SOCKET 1/4"Brass	
870	342920-0141	-		4	STRAIGHT COUPL.,EXT.THREADED 12/10-R3/8"	
880	342920-0151	-		1	STRAIGHT COUPL.,EXT.THREAD.15/12,5-R1/2"	
890	342930-0141	-		2	ELBOW 90 COUPL.,EXT.THREAD 12/10XR3/8"	
895	342930-0151	-		1	ELBOW 90 COUPL.,EXT.THREAD 5/12,5-R1/2"	
900	342940-0141	-		1	T-COUPLING,EXT.THREAD 12/10-R3/8"	

ANGULAR TRANSMITTER

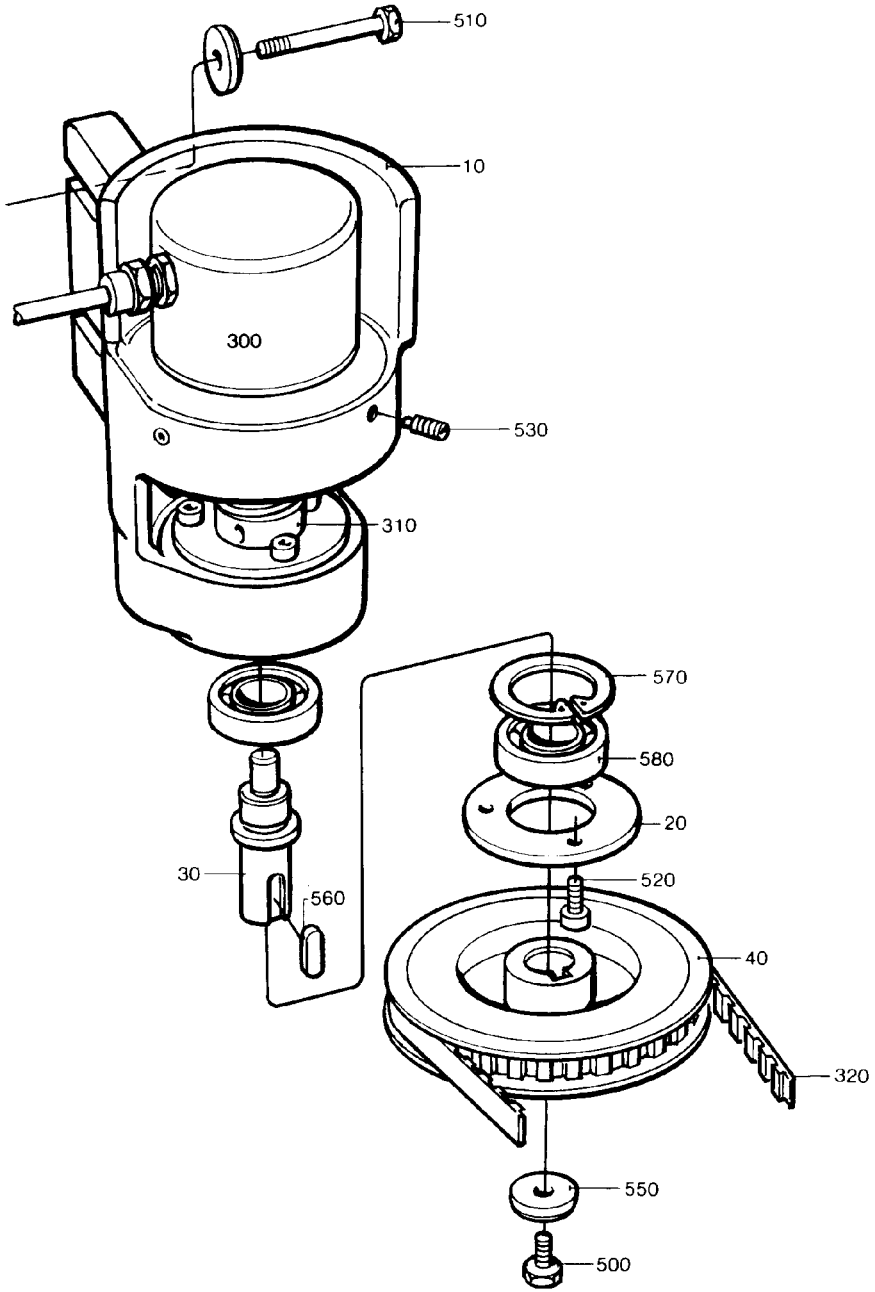

27111603.tif
271116-3
ECN

Pos	Part No	SP	UN	Qty	Description	Page No
Common parts						
010	441597-0000	-		1	BEARING CONSOLE	
020	257133-0000	-		2	LID	
030	272647-0000	-		1	SHAFT	
040	272648-0000	K		1	TIMING BELT PULLEY	
300	90061-0018	K		1	ANGLE ENCODER 8BIT GRAY"REPBY 90061-27"	
310	90355-0031	K		1	Bellow Coupling 10/10	
320	90417-0050	K		1	TIMING BELT T 5X500X12	
500	312101-0366	-		1	SCREW M6S 6x12-8,8 FZB	
510	312105-0376	-		2	SCREW M6S ISO 4017 M6x35 A280	
520	312111-0325	-		6	SCREW MC6S5X10FZB	
530	491630-0000	-		2	SCREW	
550	315121-0153	-		3	WASHER TBRSB 6,4x22 FZB	
560	315701-0199	-		1	KEYS,PARALLEL WITH ROUND ENDS 5X5X16	
570	315752-0123	-		1	CIRCLIP SGH32	
580	321308-0202	K		2	BALL BEARING 15x32x9	

Pos	Part No	SP	UN	Qty	Description	Page No

SPRAY GUN

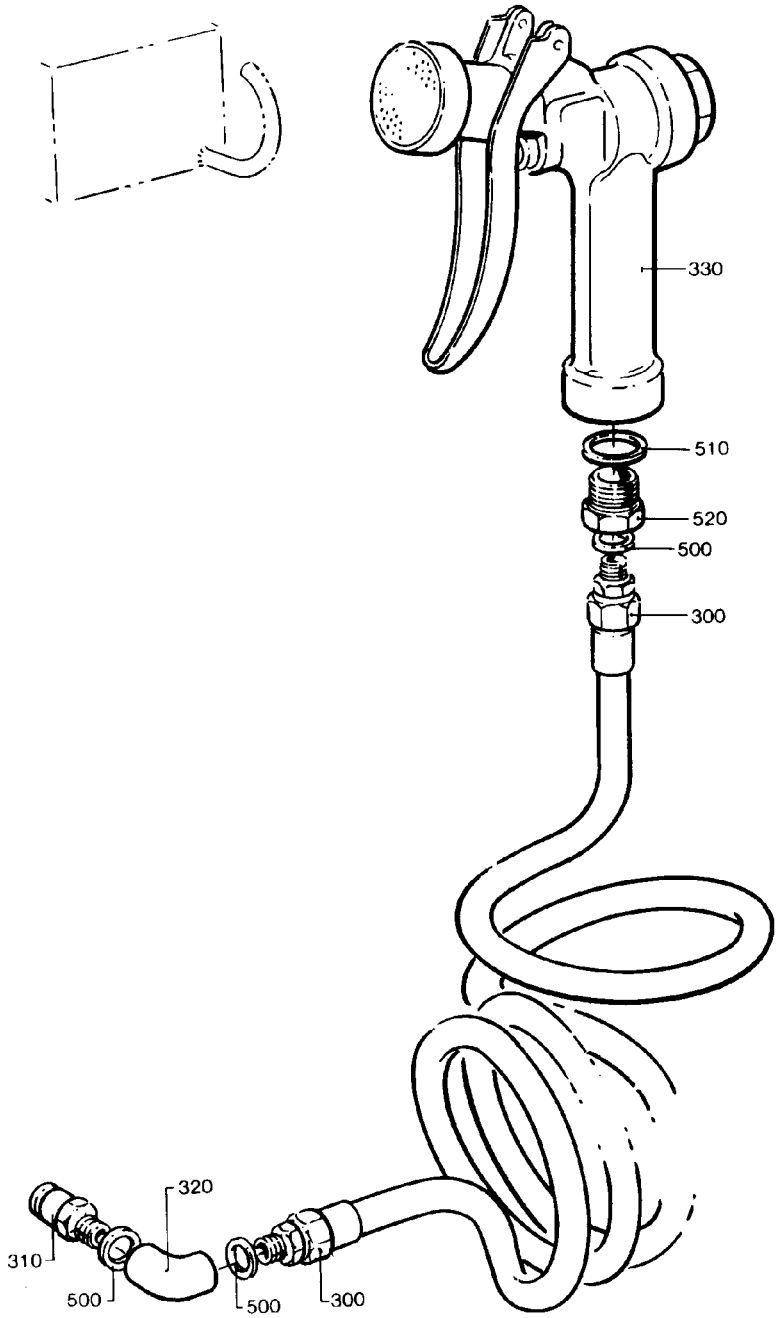

27138702.tif
271387-2
ECN

Pos	Part No	SP	UN	Qty	Description	Page No
Common parts						
300	90152-0017	-		1	HOSE	
310	90163-0014	-		1	NIPPLE STAINLESS STEEL	
320	90330-0081	-		1	ELBOW 90,INTERNAL THREAD Rp1/4"	
330	90426-0003	-		1	HAND SHOWER	
500	315233-0110	-		3	PLAIN ROUND,NYLON R1/4"	
510	315233-0113	-		1	PLAIN ROUND,NYLON R1/2"	
520	342701-0205	-		1	BUSHING,INT./EXT.G-THREAD G1/2"-G1/4"	

Pos	Part No	SP	UN	Qty	Description	Page No

CABLE ASSEMBLY

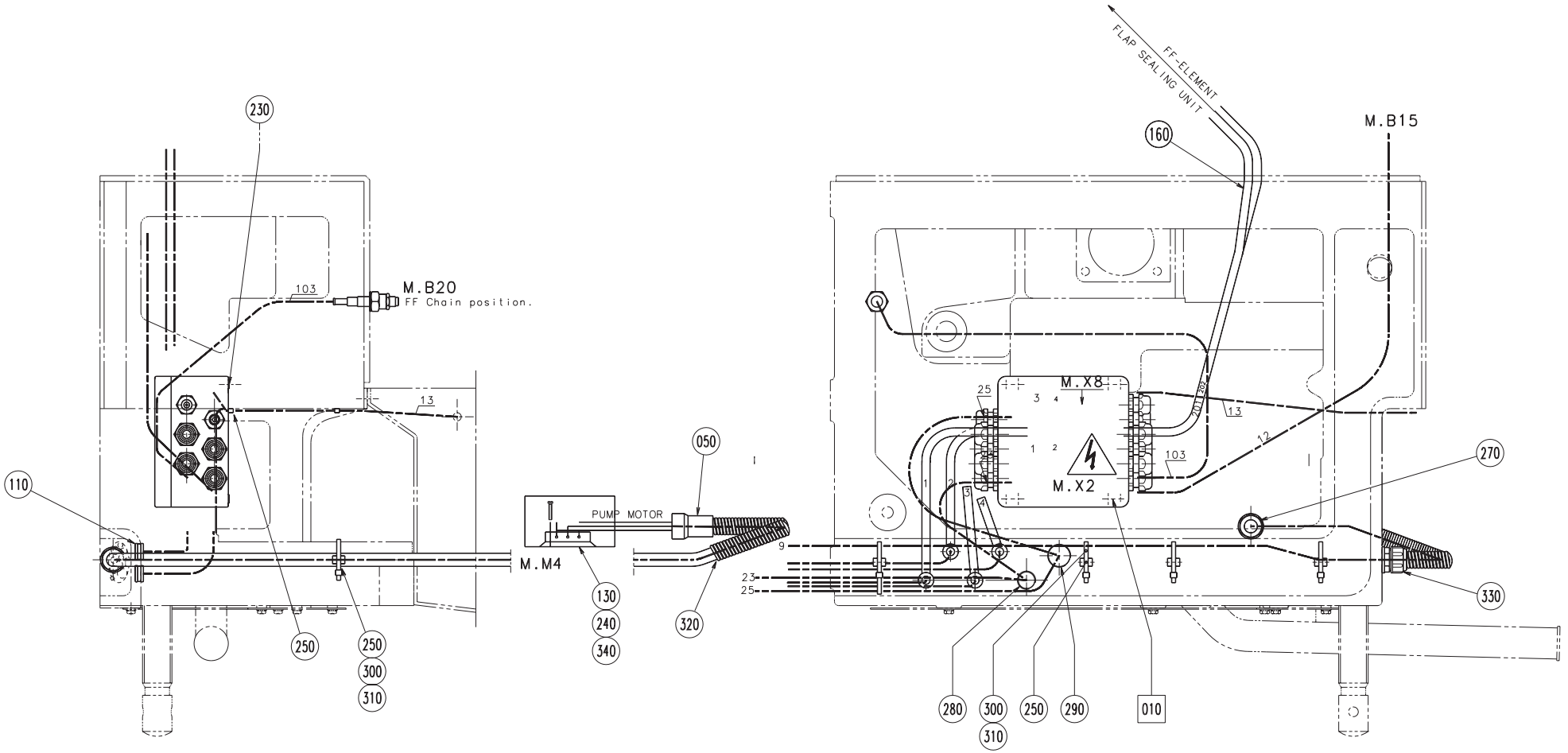

59168301.EPS
591683-1
ECN 70805

Pos	Part No	SP	UN	Qty	Description	Page No
Common parts						
F010	A 591664-0100	-		1	CONNECTION BOX	165
050	456249-0000	K		1	PROTECTIVE COVER	
110	90015-0023	-		4	GLANDS,Lead-in,IP67	
130	90077-0102	-		2	TERMINAL BK4 KRG 4-POLE	
160	90166-0098	-	MM	1000	SHRINKABLE HOSE PVC 25mm	
230	312115-0374	-		2	SCREW MC6S ISO 4762 M6x30 A280	
240	312125-0230	-		4	SLOTTED CHEESE HEAD ISO 1207 M3X20	
RFR						
250	312125-0287	-		7	SLOTTED CHEESE HEAD ISO 1207 M4X8	
RFR						
270	352103-0108	-		1	CABLE GLAND ST 13	
280	352103-0111	K		1	CABLE GLAND ST 16	
290	352103-0116	K		1	CABLE GLAND ST 21	
300	352113-0102	-		5	CLIP-STRIP,Black 188x4,8mm	
310	352113-0202	-		5	ANCHOR TM2S8-M REPL.BY 352113-205	
320	90152-0051	-	MM	700	GLANDS,HOSE 25x18	
330	90012-0072	-		1	GLAND FITTING **	
340	353001-0102	-		6	END SLEEVE 0,75mm2	

Pos	Part No	SP	UN	Qty	Description	Page No

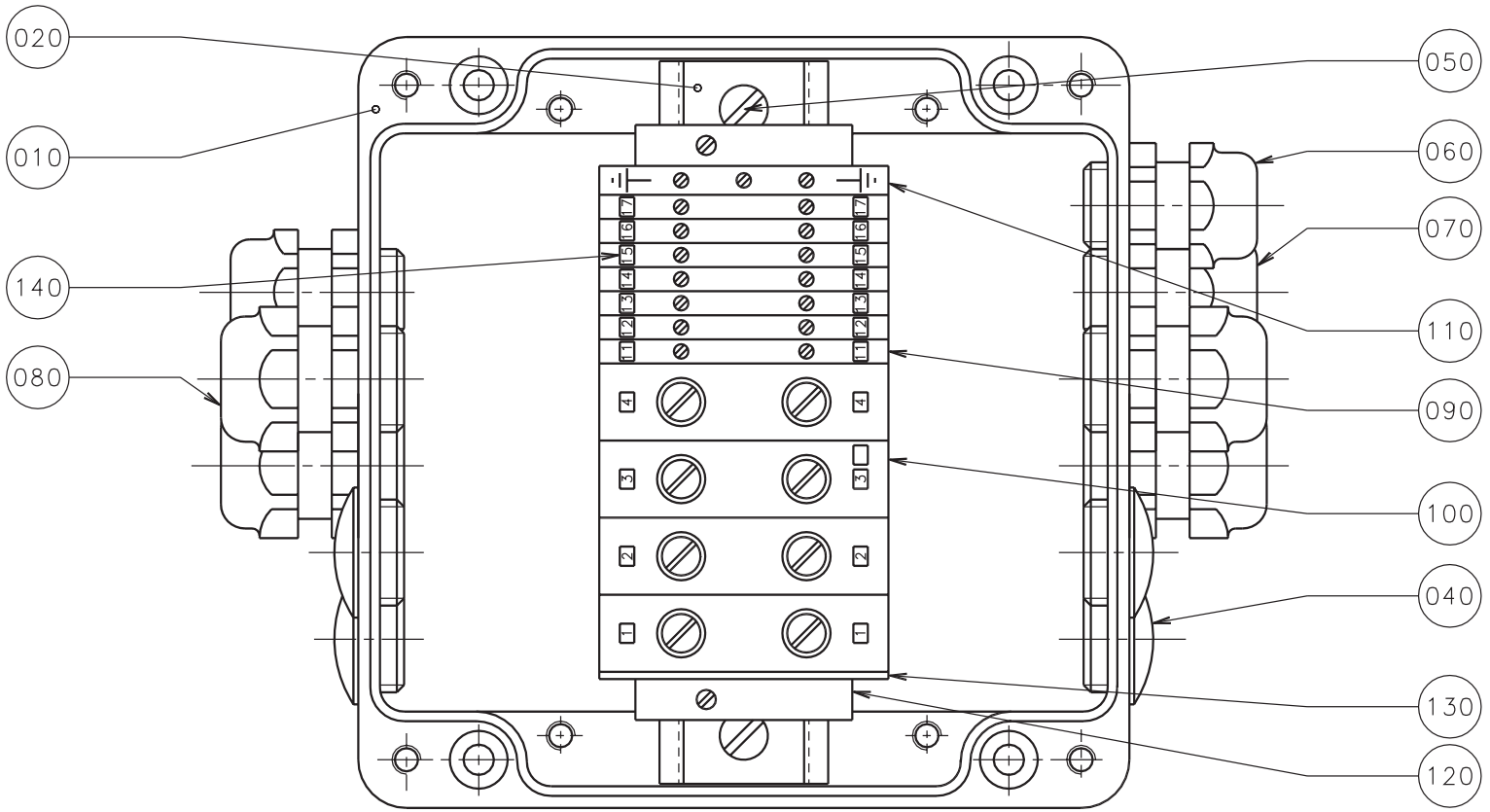

RITAD UTAN LOCK

DRAWN WITHOUT LID

Pos	Part No	SP	UN	Qty	Description	Page No
Common parts						
010	751129-0000	-		1	CONNECTION BOX	
020	751125-0001	-		1	RAIL	
040	90002-0004	-		4	BLANK-OFF PLUG 22,5	
050	312125-0364	-		2	SCREW,SLOTTED HEAD MCS 6x10 RFR	
060	352103-0105	-		1	CABLE GLAND STR 11;PR 18,6;PG11	
070	352103-0106	-		2	CABLE GLAND ST 11	
080	352103-0111	-		4	CABLE GLAND ST 16	
090	353021-0216	-		7	BY PASS TERMINAL WDU 2,5 Blue	
100	353021-0219	-		4	BY PASS TERMINAL WDU 35	
110	353024-0204	-		1	EARTH TERMINAL WPE 2,5	
120	353031-0201	-		2	END BRACKET EW35	
130	353033-0105	-		1	PARTITION WTW 2,5-10	
140	359011-0807	-		2	MARKING PLATES 5-FW 1-50	

Pos	Part No	SP	UN	Qty	Description	Page No

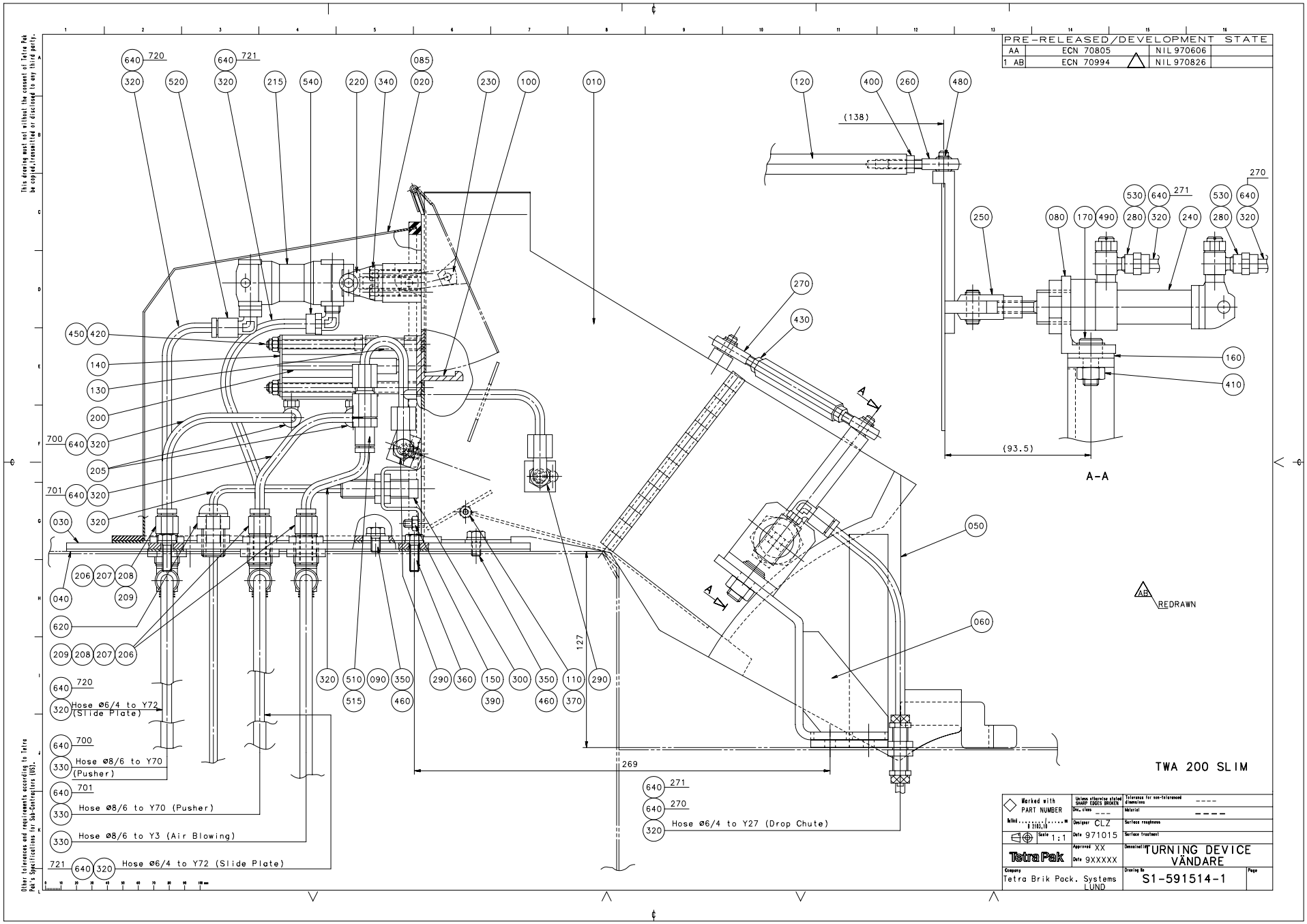
PRE-RELEASED/DEVELOPMENT STATE
AA ECN 70805 NIL 970606
1 AB ECN 70994 NIL 970826
A-A
(93.5)
(138)
REDRAWN
TWA 200 SLIM
Hose Ø6/4 to Y72 (Slide Plate)
Hose Ø8/6 to Y70 (Pusher)
Hose Ø8/6 to Y70 (Pusher)
Hose Ø8/6 to Y3 (Air Blowing)
Hose Ø6/4 to Y72 (Slide Plate)
Hose Ø6/4 to Y27 (Drop Chute)
Marked with PART NUMBER
Designer CLZ
Date 971015
Approved XX
Date 9XXXXX
Scale 1:1
Tetra Pak
TURNING DEVICE VÄNDARE
Company Tetra Brik Pack. Systems LUND
S1-591514-1

Pos	Part No	SP	UN	Qty	Description	Page No
Common parts						
010	591418-0000	D		1	TURNING DEVICE	
020	594996-0000	-		1	PROTECTIVE COVER	
030	591453-0000	-		1	COVERING PLATE	
040	591454-0000	K		1	GASKET	
050	594994-0000	-		1	SIDE PLATE	
060	1360607-0000	-		1	BRACKET	
080	591509-0000	-		1	BRACKET	
085	594995-0000	K		1	GASKET	
087	594998-0000	-		1	STRUT RIGHT	
088	594999-0000	-		1	STRUT LEFT	
100	591419-0000	D		1	PUSHER	
110	1360696-0000	K		1	GUIDE PLATE	
120	591422-0000	-		1	RIGGING SCREW	
130	591451-0000	-		2	SPACER	
140	591452-0000	-		1	MOUNTING PLATE	
150	591457-0000	-		1	BRACKET	
160	591510-0000	D		1	WASHER	
170	591512-0000	D		1	SHAFT	
200	90450-0438	K		1	Double acting, Compact, cyl 25-25	
205	90055-0207	-		2	ELBOW PIPE JOINT,Ext.thread,D=6 mm M5	
206	90055-0209	-		5	Bulkhead lead-in	
207	90055-0210	-		2	ELBOW PIPE JOINT,Ext.thread,D=6 mm G1/8	
208	90055-0211	-		3	ELBOW PIPE JOINT,Ext.thread,D=8 mm G1/8	
209	90055-0212	-		4	STRAIGHT COUPLING, D=6 mm - G1/8"	
215	B 90239-0084	K		1	CYLINDER	
220	90239-0130	D		1	BRACKET	
230	90239-0088	D		1	BRACKET	
240	90239-0847	K		1	Double acting, Mini-ISO, Cyl. 20-50	
250	90239-0532	-		1	ROD END,CLEVIS WITH AXLE,M8	
260	90115-0009	-		1	ROD ENDS,RE-LUBRICATEABLE 6-M6X1RH	
270	90115-0010	-		1	ROD ENDS,RE-LUBRICATEABLE	
280	90235-0282	-		2	"Throttle check valve, G1/8"", Manual"	
290	90030-0137	-		2	ELBOW CONNECTION WA 6-R1/8"	
300	90044-0124	K		1	Prox.sw. 922AB2XM-A9P-050-LZ-876	
320	90166-0081	-	M	11	TUBE 6/4 PA Blue	
330	90166-0013	-	M	7	TUBE 8/6 PA Blue	
340	312105-0329	-		4	SCREW M6S ISO 4017 M5x16 A280	
350	312105-0366	-		8	SCREW M6S ISO 4017 M6x12 A280	
355	312105-0368	-		4	SCREW M6S ISO 4017 M6x16 A280	
360	312105-0370	-		4	SCREW M6S ISO 4017 M6x20 A280	
370	312115-0291	-		2	SCREW MC6S ISO 4762 M4x12 A280	
390	312605-0314	-		2	NUT,HEXAGON,M6M5 Stainless	
400	312605-0316	-		4	NUT,HEXAGON A280 M6M6	
410	312605-0320	-		1	NUT,HEXAGON,M10 A280	
420	312812-0314	-		2	NUT,HEXAGON,LOCK,WITH NYLON,M5	
430	312902-0316	-		1	NUTS,HEXAGON,LEFT HAND THREAD,M6	
450	315105-0146	-		2	WASHER,PLAIN ROUND 5,3x10 Stainless	
460	315105-0153	-		14	WASHER,PLAIN ROUND 6,4x12 Stainless	
480	315751-0103	-		2	RETAINING RINGS FOR SHAFT 6	
490	315751-0112	-		1	RETAINING RINGS FOR SHAFT 15	
500	90015-0010	-		1	BUSHING	
510	342772-0113	-		1	ELBOW FITTING, 6 - G1/8	
520	342732-0102	-		4	ELBOW PIPE JOINT,Ext.thread,D=6 mm G1/8	
530	342797-0121	-		2	BANJO CONNECTION,RINGPIECE 6-1/8"	
620	352103-0100	-		1	CABLE GLAND STR 9;PR15,2	
640	359000-0400	-		12	MARKING CO2/4"0"	
640	359000-0401	-		8	MARKING COLLAR 2/4 "1" Yellow	
640	359000-0402	-		12	MARKING COLLAR 2/4 "2" Yellow	
640	359000-0407	-		16	MARKING COLLAR PA2/4 "7" Yellow	

DRIVE WHEEL

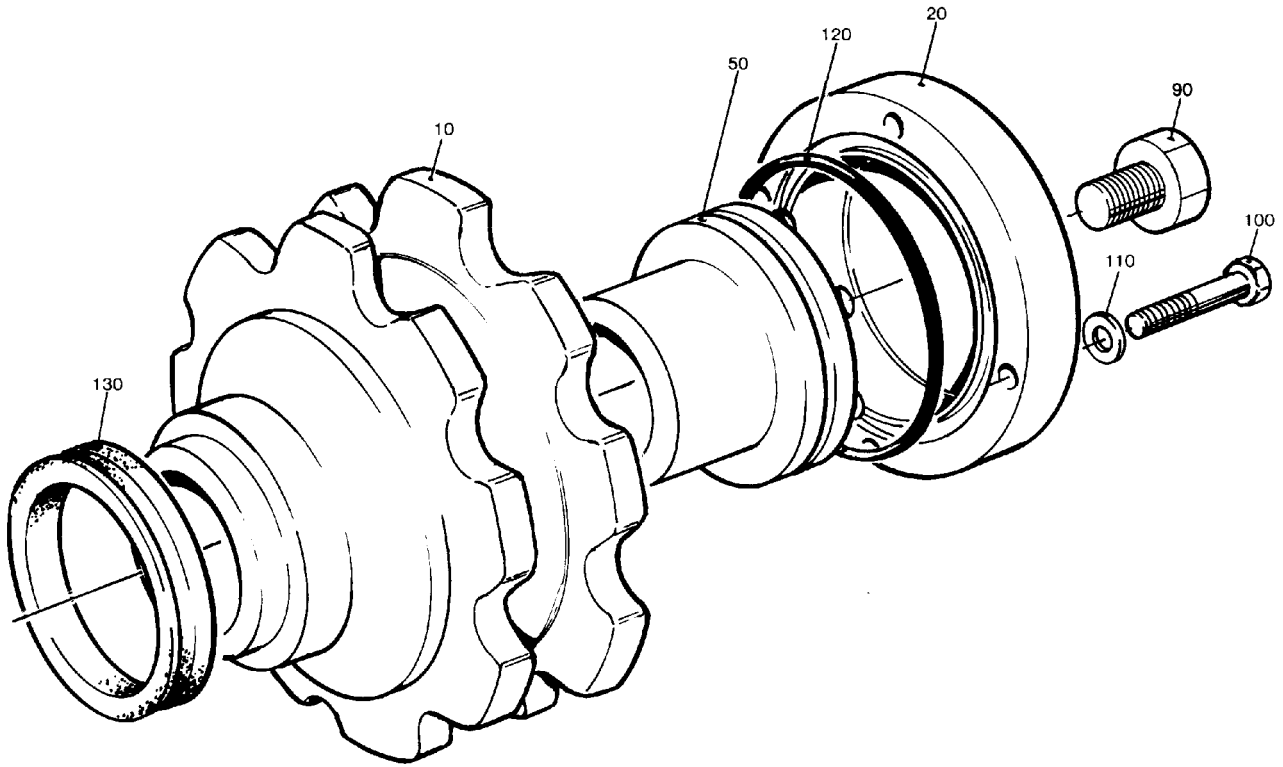

49185001.TIF
491850-1
AM 14278

Pos	Part No	SP	UN	Qty	Description	Page No
TB or TBA						
010	491258-0000	D		1	DRIVE WHEEL	
TPA						
010	1143975-0000	D		1	DRIVE WHEEL	
Common parts						
020	491851-0000	D		1	LID	
050	90208-0031	D		1	BUSHING	
090	312101-0530	D		1	SCREW M6S12X16FZB	
100	312105-0335	D		4	SCREW M6S ISO 4017 M5x30 A280	
110	315105-0146	D		4	WASHER,PLAIN ROUND 5,3x10 Stainless	
120	315202-0306	D		1	O-RINGS 74,5X3	
130	315220-0210	D		1	SEAL RING V-60S	

Pos	Part No	SP	UN	Qty	Description	Page No

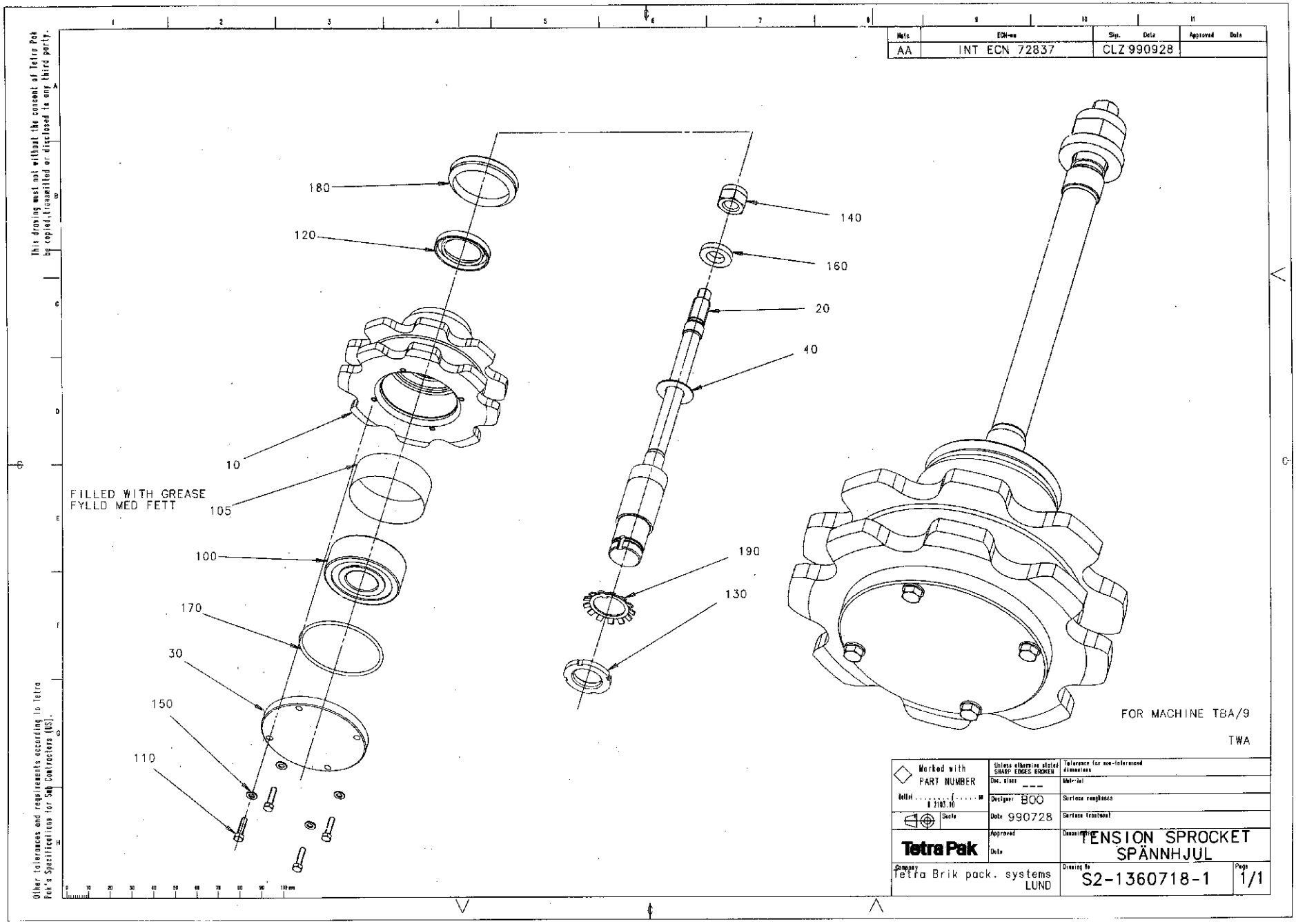
180
120
140
160
20
40
10
105
FILLED WITH GREASE
FYLLD MED FETT
100
190
130
170
30
150
110
FOR MACHINE TBA/9
TWA
Marked with PART NUMBER
Tetra Pak
Tetra Brik pack. systems LUND
TENSION SPROCKET
SPÄNNHJUL
S2-1360718-1
1/1

Pos	Part No	SP	UN	Qty	Description	Page No
Common parts						
010	B1360719-0000	D		1	TENSION SPROCKET	
020	491848-0000	D		1	SHAFT	
030	491291-0000	D		1	LID	
040	441589-0000	K		1	SHIM	
100	90214-0122	K		1	BEARINGS,BALL BEARING,SPHERI-CAL,SELF-ALI	
105	90296-0070	K		1	GREASE	
110	312105-0331	K		4	SCREW M6S ISO 4017 M5X20 A280	
120	315221-0177	K		1	SEALING RINGS,TYPE A 35X52X7	
130	312805-0106	D		1	NUT,ROUND,WITH SLOTS,M30x1,5	
140	312810-0324	K		1	LOCK NUT 16 FZB	
150	315105-0146	K		4	WASHER,PLAIN ROUND 5,3x10 Stainless	
160	315111-0186	K		1	WASHER TBRB 17x30 FZB	
170	315202-0306	K		1	O-RINGS 74,5X3	
180	315220-0210	K		1	SEAL RING V-60S	
190	315410-0106	D		1	WASHERS,LOCK 30X38	

Pos	Part No	SP	UN	Qty	Description	Page No

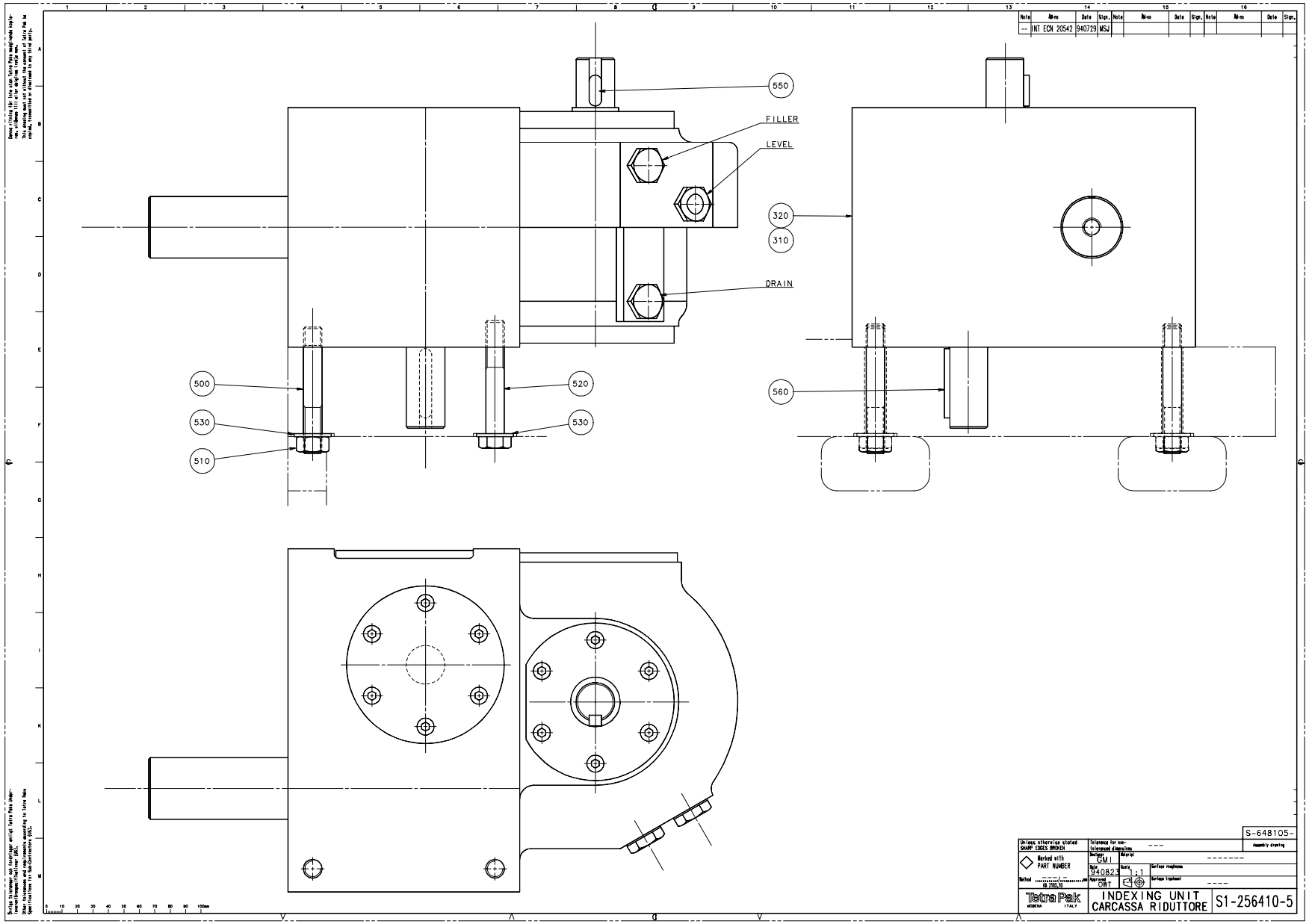
550
FILLER
LEVEL
320
310
DRAIN
500
520
530
530
510
560
INT ECN 20542 940729 MSJ
S-648105-
INDEXING UNIT
CARCASSA RIDUTTORE
S1-256410-5

Pos	Part No	SP	UN	Qty	Description	Page No
TB or TBA						
320	90416-0039	D		1	INDEXING GEAR	
TPA						
320	90416-0046	D		1	Indexing Device	
Common parts						
310	90296-0073	D	L	2	OIL	
500	312303-0548	D		2	STUD SCREWMPS 12X70 RFR	
510	312605-0322	D		2	NUT,HEXAGON,M12 RFR	
520	312105-0547	-		2	SCREW M6S12X75RFR	
530	315101-0178	-		4	WASHER BRB 13x24 FZB	
550	315701-0263	D		1	KEYS,PARALLEL WITH ROUND ENDS 8X7X20	
560	315701-0271	D		1	KEYS,PARALLEL WITH ROUND ENDS 8X7X45	

Pos	Part No	SP	UN	Qty	Description	Page No

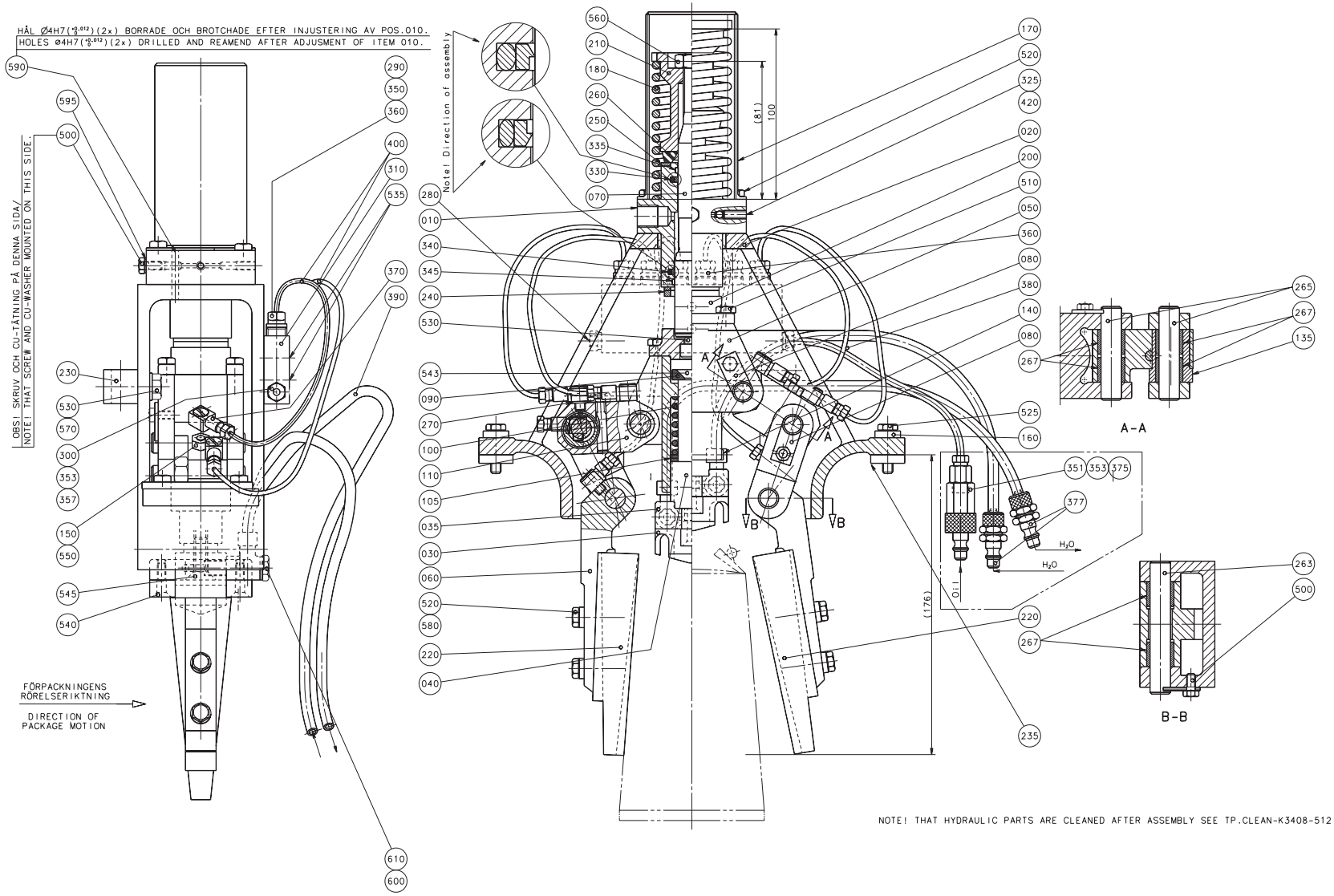
HÅL Ø4H7(+0.012 0)(2x) BORRADE OCH BROTCHADE EFTER INJUSTERING AV POS.010.
HOLES Ø4H7(+0.012 0)(2x) DRILLED AND REAMEND AFTER ADJUSMENT OF ITEM 010.
OBS! SKRUV OCH CU-TÄTNING PÅ DENNA SIDA/
NOTE! THAT SCREW AND CU-WASHER MOUNTED ON THIS SIDE.
FÖRPACKNINGENS RÖRELSERIKTNING
DIRECTION OF PACKAGE MOTION
Note! Direction of assembly
(81)
100
(176)
A-A
B-B
Oil
H_2O
H_2O
NOTE! THAT HYDRAULIC PARTS ARE CLEANED AFTER ASSEMBLY SEE TP.CLEAN-K3408-512

Pos	Part No	SP	UN	Qty	Description	Page No
Common parts						
010	490980-0000	K		1	CYLINDER	
020	272576-0000	D		1	BRACKET	
030	591667-0000	D		1	BLOCKING PIECE	
035	591657-0000	K		1	HOLDER PRESSURE BLOCK	
040	491772-0001	K		1	SPINDLE	
050	491803-0000	D		1	HOUSE	
060	751552-0000	F		2	ARM	
070	752083-0000	K		1	PISTON	
080	21047-0000	-		6	LOCK WASHER	
090	491802-0000	-		1	WASHER	
100	490942-0000	F		1	COMPRESSION SPRING	
105	260427-0000	K		2	WASHER	
110	751553-0000	K		2	ARM	
135	751557-0000	K		2	SLEEVE	
140	256461-0000	K		1	DOWEL	
150	256462-0000	K		2	SCREW	
160	256463-0000	D		2	WASHER	
170	751163-0000	D		1	COVER	
180	271731-0000	K		1	COMPRESSION SPRING	
200	491771-0000	K		1	BRACKET	
210	441894-0000	K		1	SLEEVE	
220	591529-0000	K		2	BLOCK	
240	295072-0000	K		1	BUFFER RING	
250	441896-0000	D		1	WASHER	
260	441895-0000	F		1	BUFFER RING	
263	751554-0001	F		2	SHAFT	
265	751554-0002	K		4	SHAFT	
267	751555-0000	K		12	BUSHING	
270	90005-0056	-		2	WASHER,Plain Round,nylon 6x8,5;H=1	
280	90087-0019	-		1	PLUG M10x1 Stainless	
290	90028-0020	-		6	CONE DT13700S-300 Di=2,5mm	
300	90028-0021	-		1	CONE DIN3862 Di=4mm	
310	90032-0040	-		1	BLOCK 6ways DT4.317796.1D	
325	90090-0013	F		1	STEEL BALL SKF RB-4/111	
330	90091-0160	F		1	"SEAL RING,TYPE ""GLYD-RING"" 16X23,5X3,	
335	90091-0162	-		1	GUIDE RING	
340	90091-0165	F		1	"SEAL RING,TYPE ""GLYD-RING"" 20X27,5X3,	
345	90091-0163	F		1	GUIDE RING	
350	90092-0054	-		6	METERING VALVE 50mm3	
351	90134-0004	K		1	PIPE CONNECTION R1/8	
353	90134-0031	-		2	SLEEVE E 4/2	
357	90134-0038	-		1	BUSHING 4 DIN 3871 Stainless	
360	90134-0039	-		6	BUSHING DT4.018912.1 Stainless	
370	90134-0058	-		6	BANJO CONNECTION DT4.310.437.1	
375	90163-0048	K		1	NIPPLE LP-004-2-WR 510-23-1	
377	90163-0063	K		2	NIPPLE 6/4	
380	90166-0109	-	MM	700	TUBE 4 mm PA,Transp.	
390	90166-0117	-	MM	2500	HOSE 4/6 PVC Blue	
400	90166-0143	-	MM	1500	TUBE 2,5 mm PA,Transp.	
420	90287-0119	F		1	SCREW,SET,CUP POINT,P6SS DIN 913, M5x12	
500	312105-0325	-		7	SCREW M6S 5x10 A2 80	
510	312105-0368	-		4	SCREW M6S ISO 4017 M6x16 A280	
520	312105-0374	-		8	SCREW M6S ISO 4017 M6x30 A280	
525	312105-0372	-		4	SCREW M6S ISO 4017 M6x25 A280	
530	312115-0449	-		1	SCREW MC6S ISO 4762 M8X16 A280	
535	312155-0295	-		2	SCREW MF6S DIN 7991 M4x20 A480	
540	312115-0331	-		2	SCREW MC6S ISO 4762 M5X20 A280	
543	312155-0449	-		1	SCREW MF6S DIN 7991 M8X16 A280	
545	312155-0453	-		1	SCREW MF6S DIN 7991 M8x25 A280	
550	312605-0316	-		2	NUT,HEXAGON A280 M6M6	
560	312605-0320	-		1	NUT,HEXAGON,M10 A280	
580	315115-0153	-		4	WASHER TBRB 6,4x12 Stainless	
590	311103-0276	-		2	PIN,STRAIGHT 4x30	
595	315234-0101	-		1	PLAIN ROUND,COPPER M5	
600	342980-0113	-		2	BANJO-CONNECTION,RING 6/4-G1/8"	
610	342980-0303	-		2	BANJO-HOLLOW BOLT COUPL,EXT.THR.01-G1/8"	

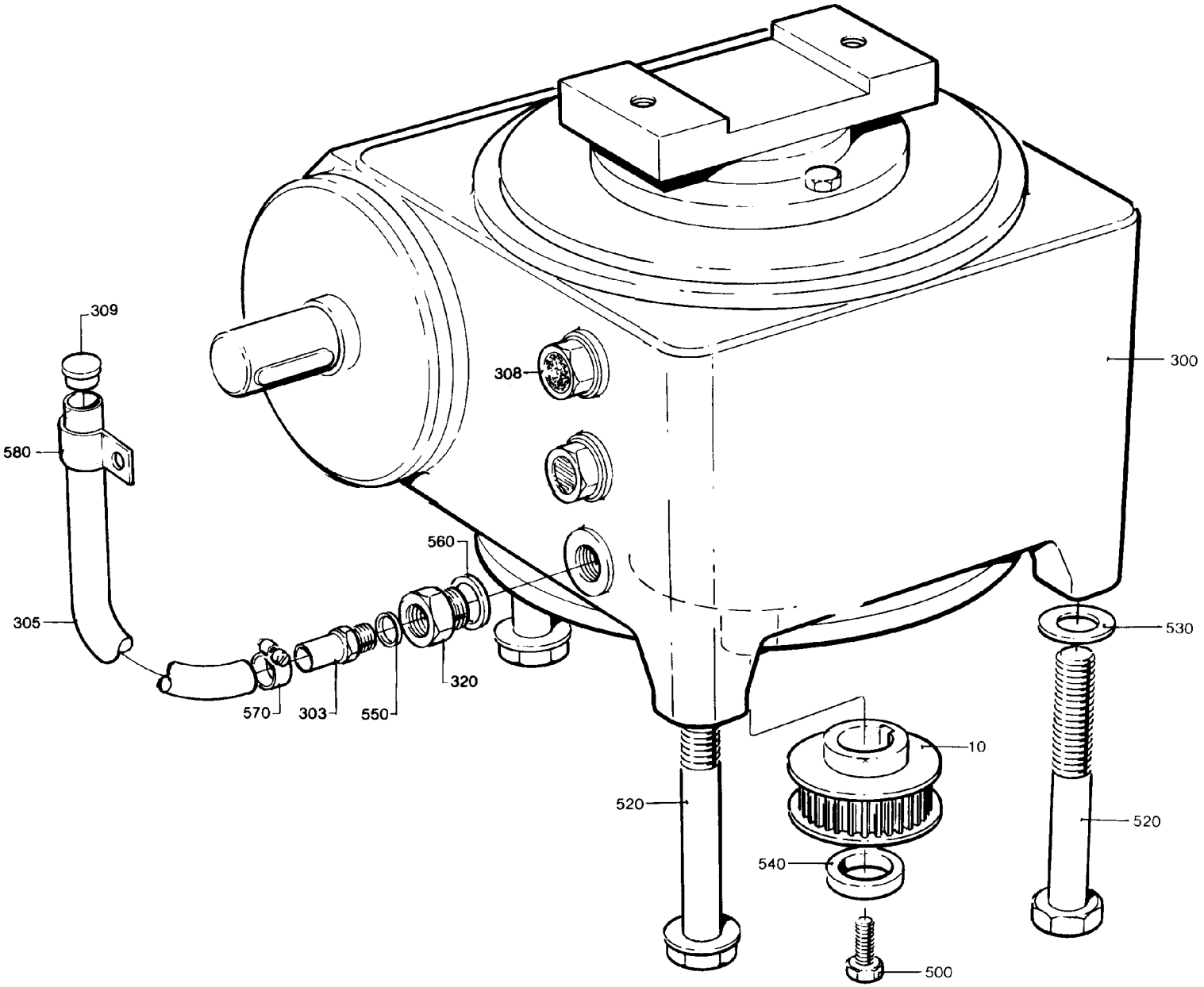

25643803.tif
256438-3
ECN

Pos	Part No	SP	UN	Qty	Description	Page No
Common parts						
010	272758-0000	K		1	TIMING BELT PULLEY	
300	90056-0071	K		1	WORM GEAR	
303	90163-0052	-		1	HOSE NIPPLE,EXT.THREAD 1/4"-12	
305	90166-0113	-	MM	500	HOSE	
308	90257-0002	-		1	FILTER PLUG MECMAN F12 8145-00-120	
309	90261-0018	-		1	PLUG,BLIND PLASTIC F-183	
310	90296-0076	-	L	2	OIL	
320	90330-0085	-		1	BUSHING,INT./EXT.R-THREAD R1/2"-Rp1/4"	
500	312101-0329	-		1	SCREW M6S 5x16 FZB	
520	312101-0552	-		3	SCREW M6S12X100FZB	
530	315101-0178	-		3	WASHER BRB 13x24 FZB	
540	315121-0153	-		1	WASHER TBRSB 6,4x22 FZB	
550	315234-0110	-		1	PLAIN ROUND,COPPER R1/4"	
560	315234-0113	-		1	PLAIN ROUND,COPPER R1/2",M20	
570	342991-0101	-		1	HOSE CLIP,WORM DRIVE TYPE (13)-16	
580	352110-0103	-		1	CRAMP TK 14-20	

Pos	Part No	SP	UN	Qty	Description	Page No

FLAP SEALING UNIT

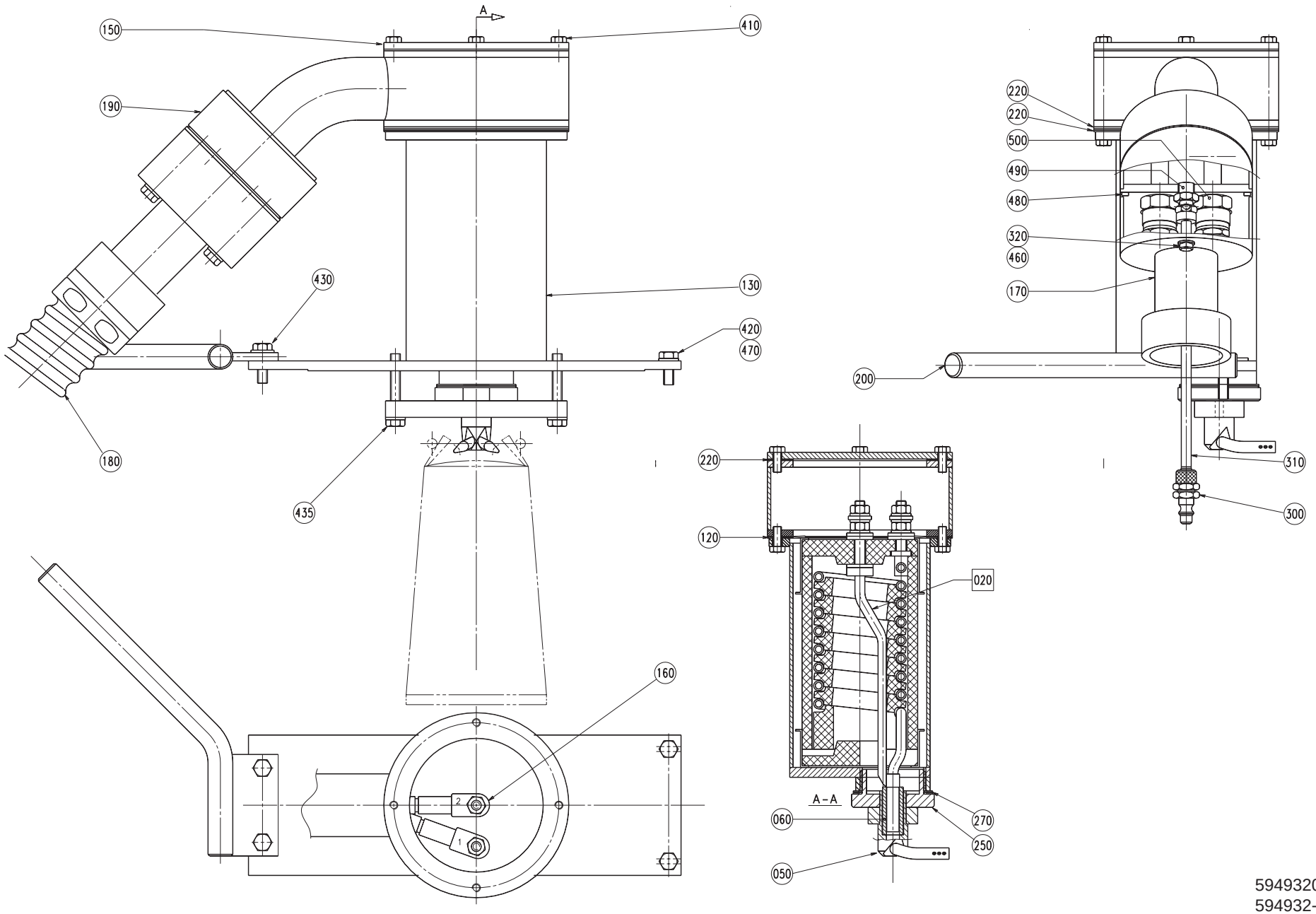

59493201.EPS
594932-1
ECN 70805

Pos	Part No	SP	UN	Qty	Description	Page No
Common parts						
F020	A 31390-0110	-		1	FF-ELEMENT BOTTOM	181
050	591661-0000	K		1	AIR NOZZLE	
060	252766-0001	F		1	INSULATING PIPE	
120	591554-0000	K		1	STOP PLATE	
130	591550-0000	K		1	HEATING CHAMBER	
150	591552-0000	K		1	LID	
160	B 271499-0000	K		2	ELECTRICAL CONNECTION	
170	295306-0000	-		1	COVER	
180	B 295307-0000	-		1	FLEXIBLE CONDUIT	
190	591551-0000	K		1	SPACER PIECE	
200	591688-0000	D		1	HANDLE	
210	1478843-0000	-		1	TUBE	
220	591553-0000	F		3	FLANGE SEAL	
250	591662-0000	D		1	NUT	
270	978527-0000	-		2	GASKET	
280	1360622-0000	-		1	COVER	
300	90163-0080	-		1	NIPPLE 5450-8/6	
305	90166-0081	-	MM	2000	TUBE 6/4 PA Blue	
310	90166-0133	-	MM	1200	TUBE 8/6 PA,Transp.	
410	312115-0327	-		4	SCREW MC6S ISO 4762 M5X12 A280	
420	312105-0368	-		2	SCREW M6S ISO 4017 M6x16 A280	
430	312105-0370	-		2	SCREW M6S ISO 4017 M6x20 A280	
435	312105-0378	-		2	SCREW ISO 4017 M6x40 A280	
440	312105-0380	-		2	SCREW M6S ISO 4014 M6x50 A280	
450	312318-0331	-		4	SET SCREW CUP POINT ISO 4029 M5X20	
RFR						
455	312105-0366	-		2	SCREW M6S ISO 4017 M6x12 A280	
460	312605-0314	-		8	NUT,HEXAGON,M6M5 Stainless	
465	315105-0146	-		12	WASHER,PLAIN ROUND 5,3x10 Stainless	
470	315105-0153	-		10	WASHER,PLAIN ROUND 6,4x12 Stainless	
480	315204-0305	-		1	O-RINGS 69,5X3	
485	342722-0197	-		1	STRAIGHT COUPLING, D=6 mm - M5	
490	342920-0122	-		1	STRAIGHT COUPLING,EXT.THREADED 8/6-	
R1/4"						
500	352100-0107	-		2	CABLE GLANR.18,6-12	

Pos	Part No	SP	UN	Qty	Description	Page No

FF-ELEMENT BOTTOM

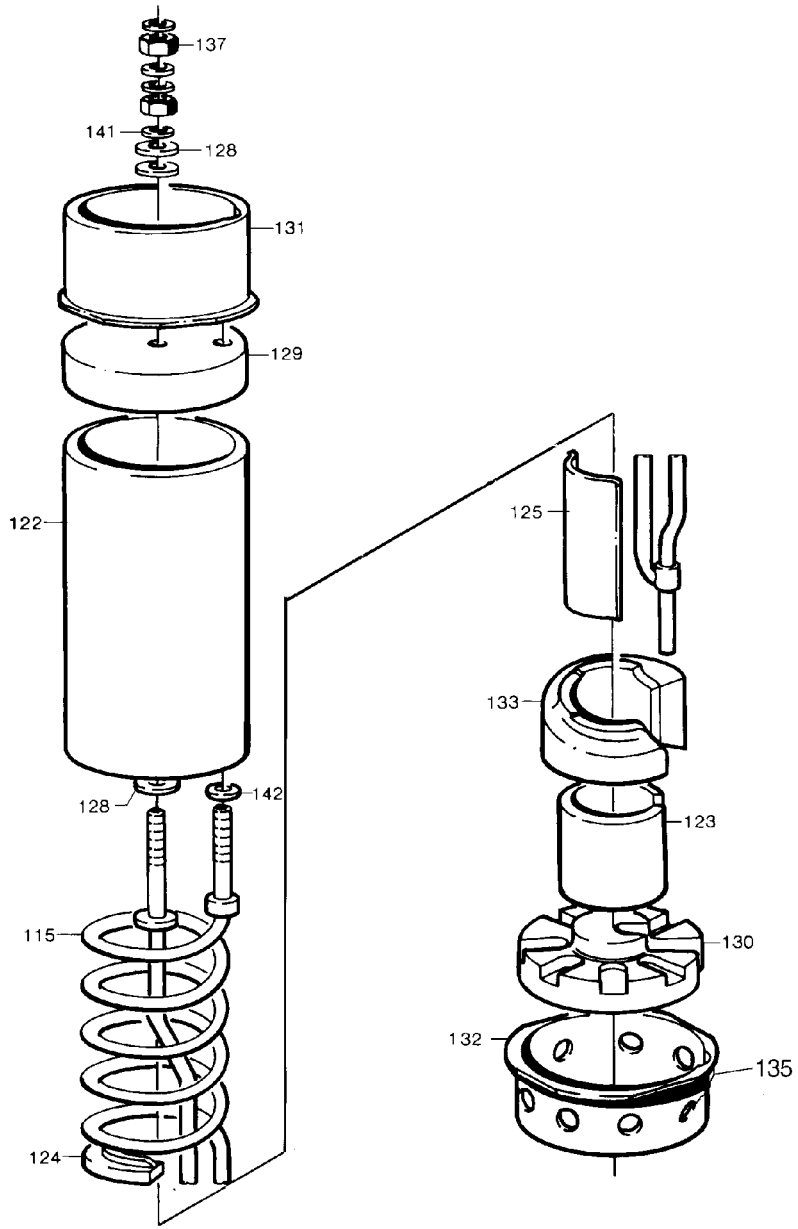

03139001.TIF
31390-1
AM 13601

Pos	Part No	SP	UN	Qty	Description	Page No
0300B 640005 or 0300B 648005 or 0300B 648035 or 0355B 648035 or 0375S 648035 or 0400B 648035 or 0500S 648035 or 0500SQ 648035 or 0568B 640005 or 0568B 648005 or 0568B 648025 or 0568B 648035 or 0568SQ 648035 or 0750B 648035 or 1000SQ 648035 or 1136B 640005 or 1136B 648005 or TBA 0200B 648105 or TBA 0236B 640005 or TBA 0236B 648005 or TBA 0236B 648035 or TBA 0236B 648105 or TBA 0250B 640005 or TBA 0250B 648005 or TBA 0250B 648035 or TBA 0250S 648105 or TBA 0284B 640005 or TBA 0284B 648005 or TBA 0284B 648035 or TBA 0284B 648105 or TWA						
115	30311-0001	K		1	FF HEATINGELEMENT Buttom Kanthal 2333-02	
0500B 640005 or 0500B 648005 or 0500B 648025 or 0500B 648035 or 0750S 648035 or 1000B 640005 or 1000B 648005 or 1000B 648025 or 1000B 648035 or 1000S 648035 or 1055B 648035 or 1136B 648035 or TBA 0100B 648105 or TBA 0125S 648105 or TBA 0180B 640005 or TBA 0180B 648005 or TBA 0180B 648105 or TBA 0189B 640005 or TBA 0189B 648005 or TBA 0189B 648105 or TBA 0200B 640005 or TBA 0200B 648005 or TBA 0200S 648105						
115	30311-0002	K		1	FF HEATINGELEMENT Buttom Kanthal 2333-02	
TBA 0250B 648105						
115	30311-0001	K		1	FF HEATINGELEMENT Buttom Kanthal 2333-02	
Common parts						
122	20705-0001	K		1	INSULATING PIPE	
124	29413-0000	K		21	LACE	
125	31653-0002	K		1	FIX PLATE 39x85x0,5mm	
128	525233-0000	K		5	GASKET 16x2x6mm	
129	20772-0000	K		1	INSULATOR BODY 70x70x15mm	
130	37536-0000	-		1	INSULATOR BODY Lower 70x70x15mm	
131	23771-0000	-		1	SPACER RING 4x78x1mm	
132	37537-0000	-		1	SPACER RING Lower 72x78x1mm	
133	37535-0000	-		1	SUPPORTING PART 56x56x31,5mm	
137	312811-0316	-		6	LOCK NUT M6RFR	
141	315105-0153	-		4	WASHER,PLAIN ROUND 6,4x12 Stainless	
142	315115-0153	-		1	WASHER TBRB 6,4x12 Stainless	

Pos	Part No	SP	UN	Qty	Description	Page No

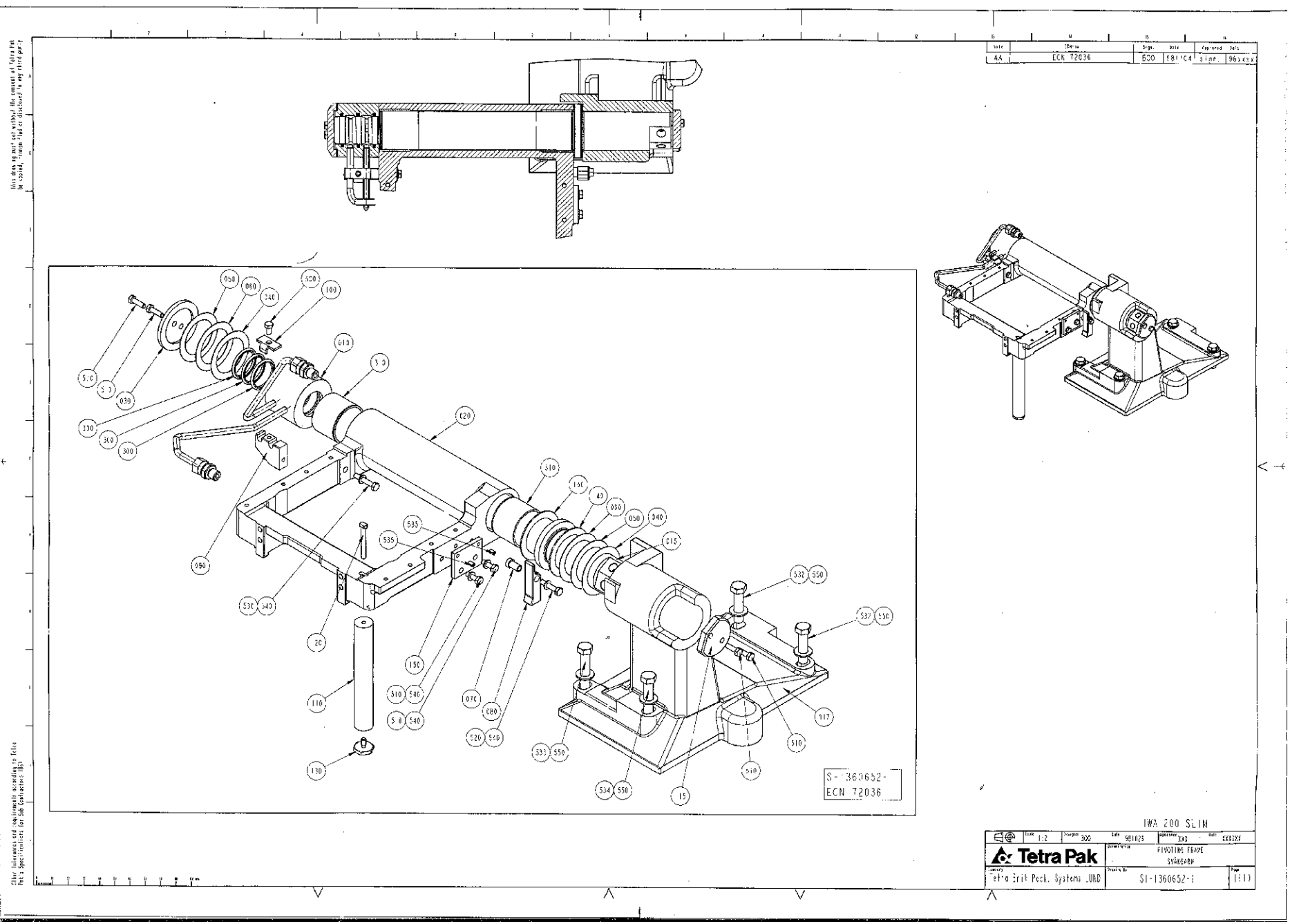
S-1360652-
ECN 72036
IWA 200 SLIM
Tetra Pak
PIVOTING FRAME
SVÄNGARM
Tetra Brik Pack. Systems .UAB
S1-1360652-1

Pos	Part No	SP	UN	Qty	Description	Page No
Common parts						
010	B 295202-0001	D		1	SWIVEL	
015	295313-0000	-		1	SHAFT	
017	1360653-0000	D		1	CANTILEVER	
020	B 295201-0000	D		1	FRAME	
030	295203-0000	D		1	LID	
040	295204-0001	K		2	SHIM	
050	295204-0002	K		2	SHIM	
060	295204-0003	K		2	SHIM	
070	295205-0000	-		1	SPACER SLEEVE	
080	295206-0000	-		1	FLAP	
090	295207-0000	-		1	HOLDER	
100	295208-0000	-		1	SECURING PLATE	
110	B 591545-0000	D		1	SUPPORT	
115	1360581-0000	-		1	LID	
120	295431-0000	-		1	SCREW	
130	295432-0000	-		1	SCREW	
140	591588-0000	-		2	SHIM	
150	469527-0000	-		1	SETTING PLATE	
300	90091-0136	K		3	"SEAL RING,TYPE ""GLYD-RING"" 36X44X3,1"	
310	90240-0094	K		2	Bushing, 50x55x40	
500	312105-0366	-		1	SCREW M6S ISO 4017 M6x12 A280	
510	312105-0370	-		6	SCREW M6S ISO 4017 M6x20 A280	
520	312105-0374	-		1	SCREW M6S ISO 4017 M6x30 A280	
530	312105-0376	-		1	SCREW M6S ISO 4017 M6x35 A280	
532	312105-0542	-		2	SCREW M6S ISO 4014 M12X50 A280	
533	312105-0544	-		1	SCREW M6S ISO 4014 M12X60 A280	
534	312105-0548	-		1	SCREW M6S ISO 4014 M12X80 A280	
535	312318-0323	-		2	SET SCREW CUP POINT ISO 4029 M5X8 RFR	
540	315105-0153	-		4	WASHER,PLAIN ROUND 6,4x12 Stainless	
550	315105-0178	-		4	WASHER,PLAIN ROUND 13x24	

Pos	Part No	SP	UN	Qty	Description	Page No

STRIP APPLICATOR

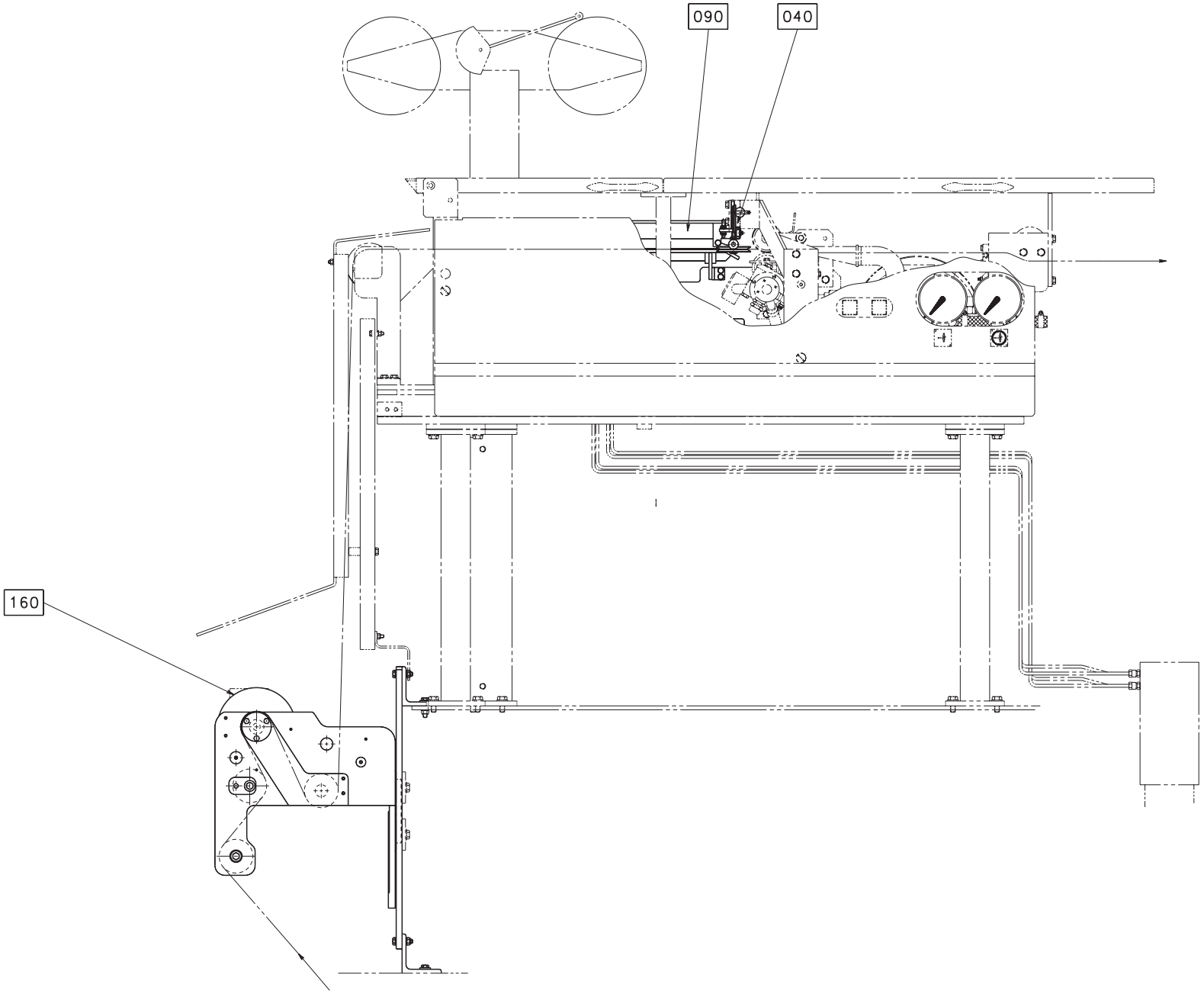

59516201.EPS
595162-1
ECN 70825

Pos	Part No	SP	UN	Qty	Description	Page No
TBA/9-100V TBA/9-110V or TBA/9-120V						
230	1360720-0000	-		1	COVER	
Common parts						
F040	A 595167-0100	-		1	STRIP GUIDE	187
F090	A 595166-0100	-		1	STRIP APPLICATOR	189
F160	A 594947-0100	-		1	CREASE UNIT	191
200	456917-0000	D		1	HEAT GUARD	
210	256986-0003	D		1	STRUT	
220	256986-0006	D		1	STRUT	

STRIP GUIDE

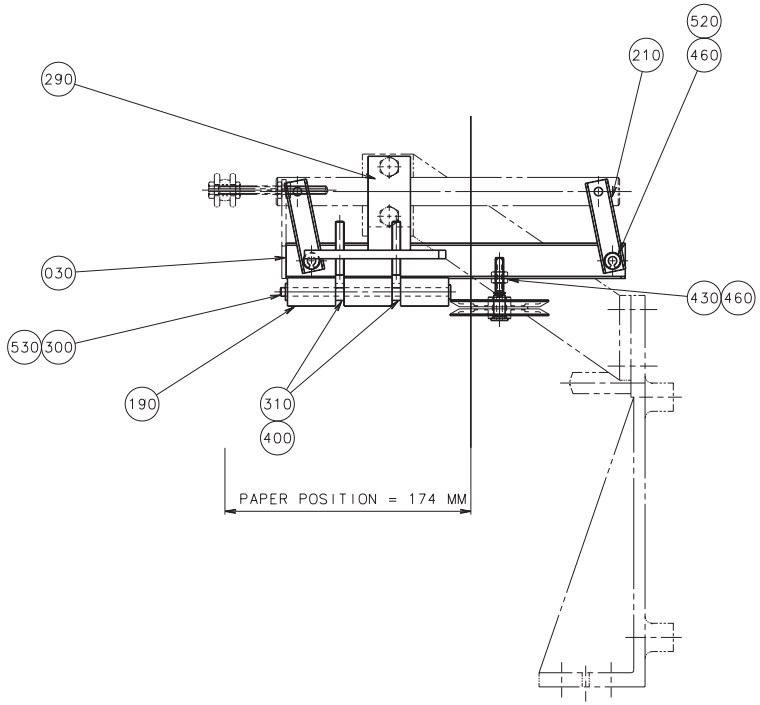
520
210
460
290
030
430
460
530
300
190
310
400
PAPER POSITION = 174 MM

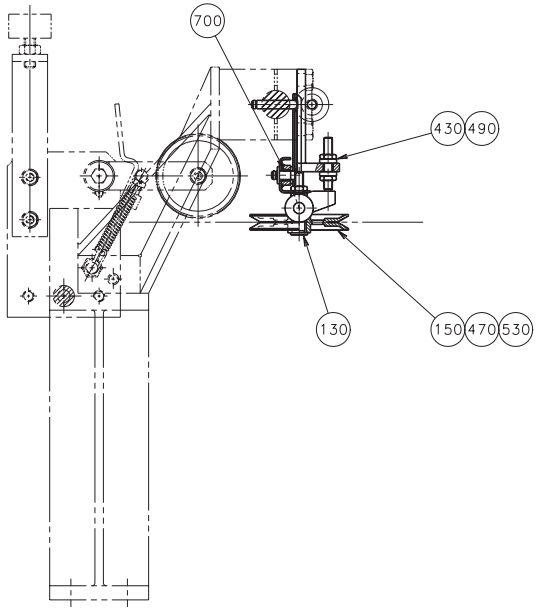
700
430
490
130
150
470
530

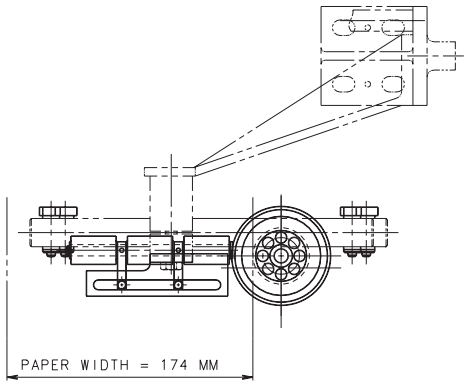
PAPER WIDTH = 174 MM

Pos	Part No	SP	UN	Qty	Description	Page No
Common parts						
030	591616-0000	D		1	LEAD ARM	
130	590328-0000	K		1	SHAFT	
150	590333-0000	D		1	GUIDE WHEEL	
190	590331-0000	K		3	ROLLER	
210	590334-0000	K		2	LINK	
290	590335-0000	-		1	BRACKET	
300	590329-0000	D		1	SHAFT	
310	590336-0000	D		2	HOLDER	
400	312318-0218	-		2	SET SCREW CUP POINT ISO 4029 M3X4 RFR	
430	312605-0316	-		6	NUT,HEXAGON A280 M6M6	
460	315105-0153	-		4	WASHER,PLAIN ROUND 6,4x12 Stainless	
470	315105-0165	-		1	WASHER,PLAIN ROUND 8,4x16 Stainless	
490	315115-0153	-		4	WASHER TBRB 6,4x12 Stainless	
520	315755-0107	F		2	RETAINING RINGS,RADIAL ASSEMBLY 5	
530	315755-0109	F		2	RETAINING RINGS,RADIAL ASSEMBLY 7	
700	321120-0101	F		2	Bushing, 6x8x6	

Pos	Part No	SP	UN	Qty	Description	Page No

STRIP APPLICATOR

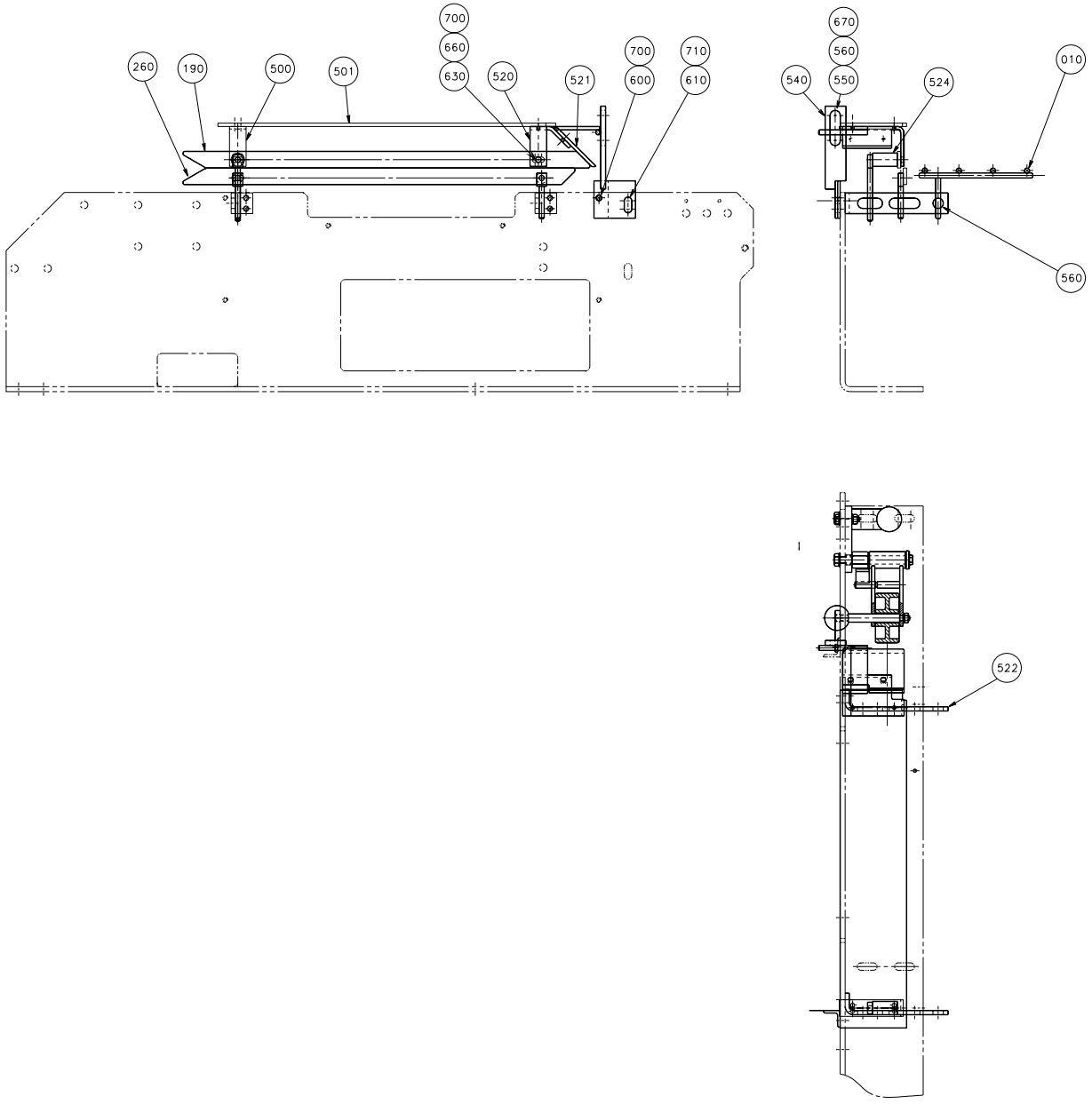

59516601.EPS
595166-1
ECN 70825

Pos	Part No	SP	UN	Qty	Description	Page No
Common parts						
010	1103765-0000	-		1	PAPER SUPPORT	
190	591556-0000	-		1	PAPER SUPPORT	
260	591555-0000	-		1	PAPER SUPPORT	
500	591610-0000	-		1	ANGLE BRACKET	
501	591609-0000	-		1	HEAT GUARD	
520	591612-0000	-		1	ANGLE BRACKET	
521	591611-0000	-		1	HEAT GUARD	
522	591606-0000	-		2	BRACKET	
524	591607-0000	-		1	SPACER	
540	590321-0000	-		1	BRACKET	
550	22559-0000	-		1	GRUB SCREW	
560	28036-0000	-		6	WASHER	
600	312105-0362	-		1	SCREW M6S ISO 4017 M6x8 A280	
610	312105-0447	-		1	SCREW M6S ISO 4017 M8x12 A280	
630	312155-0368	-		1	SCREW MF6S DIN7991 M6X16 A280	
660	312605-0316	-		1	NUT,HEXAGON A280 M6M6	
670	312605-0318	-		1	NUT,HEXAGON,M8 RFR	
700	315105-0153	-		2	WASHER,PLAIN ROUND 6,4x12 Stainless	
710	315105-0165	-		1	WASHER,PLAIN ROUND 8,4x16 Stainless	

Pos	Part No	SP	UN	Qty	Description	Page No

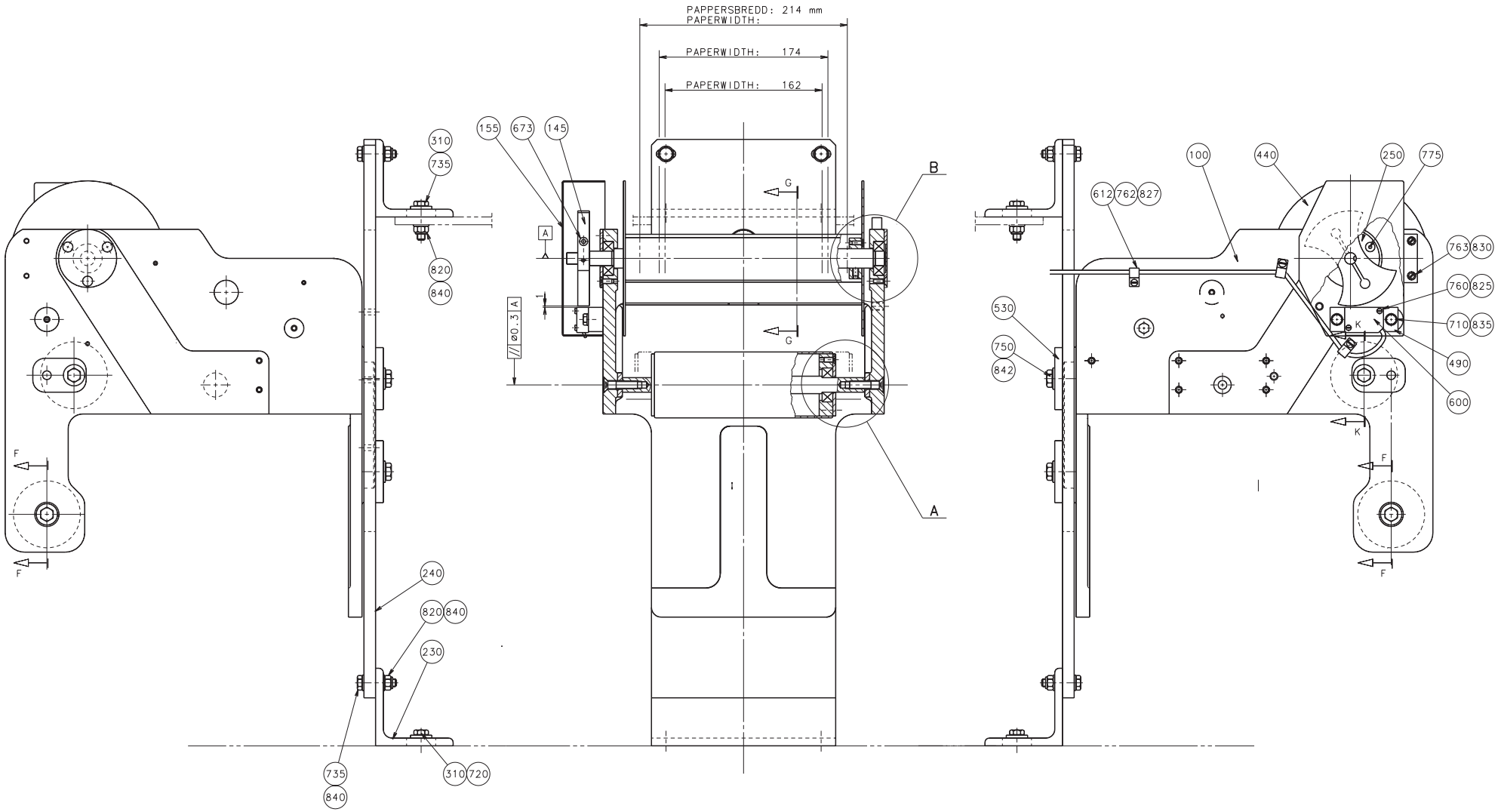

59494701.EPS
594947-1
ECN 70825

Pos	Part No	SP	UN	Qty	Description	Page No
TBA/9-100V TBA/9-110V or TBA/9-120V						
440	256406-0000	-		1	GABLE PLATE	
450	441752-0000	-		1	GABLE PLATE	
490	441753-0000	-		1	FASTENING PLATE	
500	441754-0000	-		2	SPACER	
685	312105-0332	-		2	SCREW M6S5X22RFR	
810	312605-0310	-		2	NUT,HEXAGON M6M 3 A2 80	
830	315105-0146	-		2	WASHER,PLAIN ROUND 5,3x10 Stainless	
835	315105-0153	-		12	WASHER,PLAIN ROUND 6,4x12 Stainless	
TBA/9-130V or TBA/9-140V						
145	491965-0000	-		1	CAM	
440	256406-0000	-		2	GABLE PLATE	
490	752534-0000	-		1	PLATE	
673	312115-0333	-		2	SCREW MC6S ISO 4762 M5x25 A280	
710	312105-0372	-		2	SCREW M6S ISO 4017 M6x25 A280	
835	315105-0153	-		14	WASHER,PLAIN ROUND 6,4x12 Stainless	
Common parts						
010	752542-0002	D		1	BENDING ROLLER	
020	752543-0002	D		1	SHAFT	
030	594952-0000	D		2	CREASE BAR	
050	B 594953-0000	D		2	SPACER	
100	752200-0000	-		1	CANTILEVER	
110	591566-0000	-		1	LID	
155	556422-0000	-		1	PROTECTION	
230	456331-0000	-		2	ANGLE BRACKET	
240	752539-0000	-		1	PLATE	
250	752240-0000	-		1	LID	
270	752538-0000	D		2	SHAFT	
300	591563-0000	D		1	SHAFT	
306	752537-0000	D		2	BENDING ROLLER	
310	28036-0000	-		4	WASHER	
320	2033-0011	D		6	WASHER	
330	265568-0000	K		4	DUST COVER	
410	256248-0001	D		2	LID	
460	256409-0000	-		6	WASHER	
470	257141-0000	-		2	RETAINING RING	
530	253107-0000	D		2	WASHER	
540	752544-0001	D		6	SHIM	
550	752544-0002	D		8	SHIM	
560	591567-0000	K		12	LACE	
600	90044-0104	F		1	PROX.SWITCH IFM IN 3002 48Vdc	
612	90165-0056	-		6	PIPE-CLIPS,FOR SINGLE PIPE,ONE SIDE 4mm	
615	90214-0098	F		10	BALL BEARING,STAINLESS	
620	90287-0331	-		4	Screw	
705	312105-0370	-		2	SCREW M6S ISO 4017 M6x20 A280	
720	312105-0451	-		2	SCREW M6S ISO 4017 8x20 A280	
735	312105-0457	-		7	SCREW ISO 4017 M8x35 A280	
740	312105-0459	-		5	SCREW ISO 4017 M8x40 A280	
750	312105-0493	-		2	SCREW M6S ISO 4017 M10X25 A280	
760	312125-0230	-		2	SLOTTED CHEESE HEAD ISO 1207 M3X20 RFR	
762	312125-0289	-		6	SLOTTED HEMCS4X10RFR	
763	312125-0325	-		2	SLOTTED HEMCS5X10RFR	
770	312155-0291	-		6	SCREW MF6S DIN 7991 M4x12 A480	
775	312155-0327	-		18	SCREW MF6S DIN 7991 M5x12 A280	
800	312155-0457	-		2	SCREW MF6S DIN 7991 M8X35 A280	
807	312318-0362	-		3	SET SCREW CUP POINT ISO 4029 M6x8 RFR	
820	312812-0318	-		6	LOCK-NUT,HEXAGON,WITH NYLON,M8	
825	315105-0124	-		2	WASHER,PLAIN ROUND 3,2x6	
827	315105-0136	-		6	WASHER,PLAIN ROUND 4,3x8 Stainless	
840	315105-0165	-		15	WASHER,PLAIN ROUND 8,4x16 Stainless	
842	315105-0173	-		2	WASHER,PLAIN ROUND 10,5x22 STAINLESS	

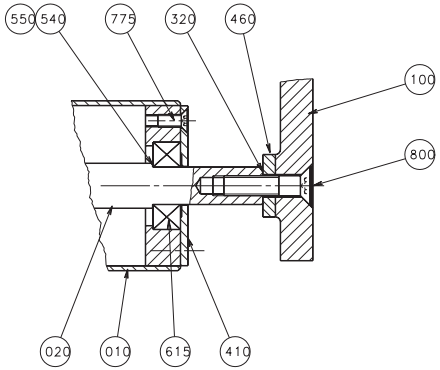

DET.A

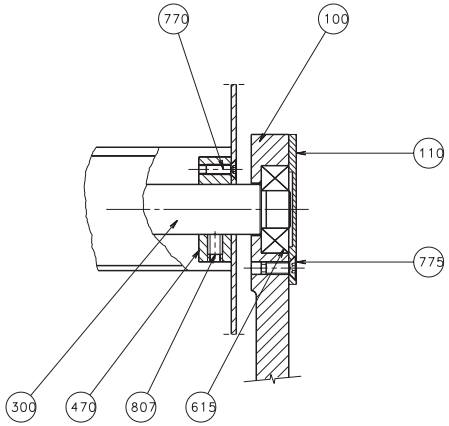

DET.B

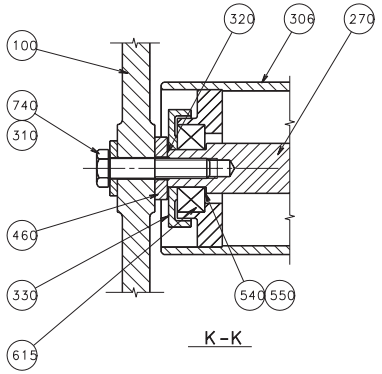

K-K

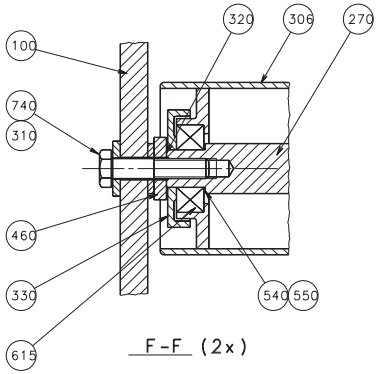

F-F (2x)

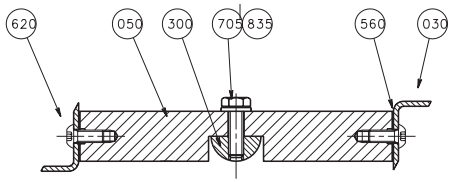

G-G

59494701.EPS
594947-1
ECN 70825

Pos	Part No	SP	UN	Qty	Description	Page No
TBA/9-100V TBA/9-110V or TBA/9-120V						
440	256406-0000	-		1	GABLE PLATE	
450	441752-0000	-		1	GABLE PLATE	
490	441753-0000	-		1	FASTENING PLATE	
500	441754-0000	-		2	SPACER	
685	312105-0332	-		2	SCREW M6S5X22RFR	
810	312605-0310	-		2	NUT,HEXAGON M6M 3 A2 80	
830	315105-0146	-		2	WASHER,PLAIN ROUND 5,3x10 Stainless	
835	315105-0153	-		12	WASHER,PLAIN ROUND 6,4x12 Stainless	
TBA/9-130V or TBA/9-140V						
145	491965-0000	-		1	CAM	
440	256406-0000	-		2	GABLE PLATE	
490	752534-0000	-		1	PLATE	
673	312115-0333	-		2	SCREW MC6S ISO 4762 M5x25 A280	
710	312105-0372	-		2	SCREW M6S ISO 4017 M6x25 A280	
835	315105-0153	-		14	WASHER,PLAIN ROUND 6,4x12 Stainless	
Common parts						
010	752542-0002	D		1	BENDING ROLLER	
020	752543-0002	D		1	SHAFT	
030	594952-0000	D		2	CREASE BAR	
050	B 594953-0000	D		2	SPACER	
100	752200-0000	-		1	CANTILEVER	
110	591566-0000	-		1	LID	
155	556422-0000	-		1	PROTECTION	
230	456331-0000	-		2	ANGLE BRACKET	
240	752539-0000	-		1	PLATE	
250	752240-0000	-		1	LID	
270	752538-0000	D		2	SHAFT	
300	591563-0000	D		1	SHAFT	
306	752537-0000	D		2	BENDING ROLLER	
310	28036-0000	-		4	WASHER	
320	2033-0011	D		6	WASHER	
330	265568-0000	K		4	DUST COVER	
410	256248-0001	D		2	LID	
460	256409-0000	-		6	WASHER	
470	257141-0000	-		2	RETAINING RING	
530	253107-0000	D		2	WASHER	
540	752544-0001	D		6	SHIM	
550	752544-0002	D		8	SHIM	
560	591567-0000	K		12	LACE	
600	90044-0104	F		1	PROX.SWITCH IFM IN 3002 48Vdc	
612	90165-0056	-		6	PIPE-CLIPS,FOR SINGLE PIPE,ONE SIDE 4mm	
615	90214-0098	F		10	BALL BEARING,STAINLESS	
620	90287-0331	-		4	Screw	
705	312105-0370	-		2	SCREW M6S ISO 4017 M6x20 A280	
720	312105-0451	-		2	SCREW M6S ISO 4017 8x20 A280	
735	312105-0457	-		7	SCREW ISO 4017 M8x35 A280	
740	312105-0459	-		5	SCREW ISO 4017 M8x40 A280	
750	312105-0493	-		2	SCREW M6S ISO 4017 M10X25 A280	
760	312125-0230	-		2	SLOTTED CHEESE HEAD ISO 1207 M3X20 RFR	
762	312125-0289	-		6	SLOTTED HEMCS4X10RFR	
763	312125-0325	-		2	SLOTTED HEMCS5X10RFR	
770	312155-0291	-		6	SCREW MF6S DIN 7991 M4x12 A480	
775	312155-0327	-		18	SCREW MF6S DIN 7991 M5x12 A280	
800	312155-0457	-		2	SCREW MF6S DIN 7991 M8X35 A280	
807	312318-0362	-		3	SET SCREW CUP POINT ISO 4029 M6x8 RFR	
820	312812-0318	-		6	LOCK-NUT,HEXAGON,WITH NYLON,M8	
825	315105-0124	-		2	WASHER,PLAIN ROUND 3,2x6	
827	315105-0136	-		6	WASHER,PLAIN ROUND 4,3x8 Stainless	
840	315105-0165	-		15	WASHER,PLAIN ROUND 8,4x16 Stainless	
842	315105-0173	-		2	WASHER,PLAIN ROUND 10,5x22 STAINLESS	

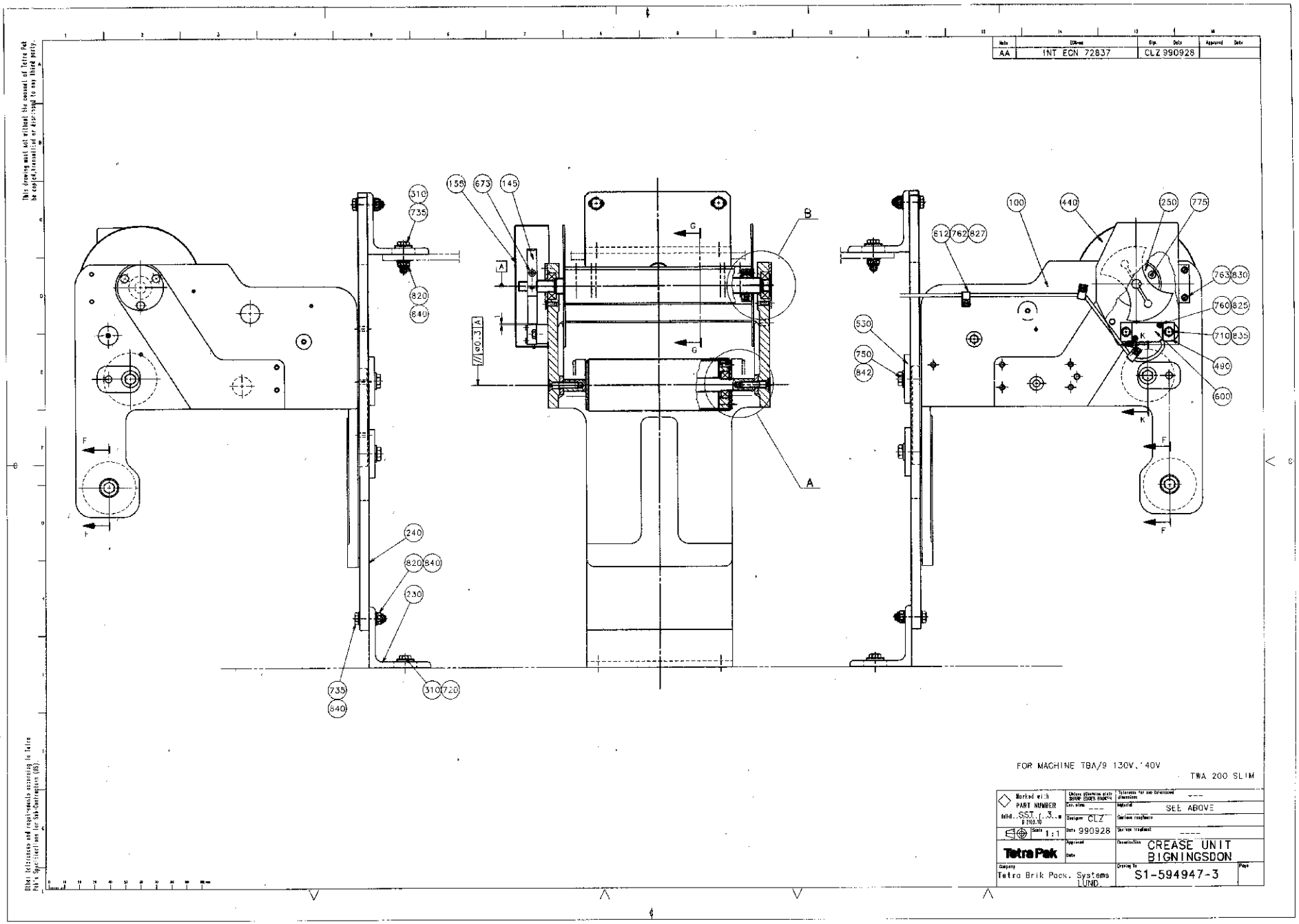
AA
INT ECN 72837
CLZ 990928
FOR MACHINE TBA/9 130V, 140V
TWA 200 SLIM
PART NUMBER
SEE ABOVE
CLZ
990928
1:1
CREASE UNIT
BIGNINGSDON
Tetra Brik Pack. Systems
LUND
S1-594947-3

Pos	Part No	SP	UN	Qty	Description	Page No
TBA/9-100V TBA/9-110V or TBA/9-120V						
440	256406-0000	-		1	GABLE PLATE	
450	441752-0000	-		1	GABLE PLATE	
490	441753-0000	-		1	FASTENING PLATE	
500	441754-0000	-		2	SPACER	
685	312105-0332	-		2	SCREW M6S5X22RFR	
810	312605-0310	-		2	NUT,HEXAGON M6M 3 A2 80	
830	315105-0146	-		2	WASHER,PLAIN ROUND 5,3x10 Stainless	
835	315105-0153	-		12	WASHER,PLAIN ROUND 6,4x12 Stainless	
TBA/9-130V or TBA/9-140V						
145	491965-0000	-		1	CAM	
440	256406-0000	-		2	GABLE PLATE	
490	752534-0000	-		1	PLATE	
673	312115-0333	-		2	SCREW MC6S ISO 4762 M5x25 A280	
710	312105-0372	-		2	SCREW M6S ISO 4017 M6x25 A280	
835	315105-0153	-		14	WASHER,PLAIN ROUND 6,4x12 Stainless	
Common parts						
010	752542-0002	D		1	BENDING ROLLER	
020	752543-0002	D		1	SHAFT	
030	594952-0000	D		2	CREASE BAR	
050	B 594953-0000	D		2	SPACER	
100	752200-0000	-		1	CANTILEVER	
110	591566-0000	-		1	LID	
155	556422-0000	-		1	PROTECTION	
230	456331-0000	-		2	ANGLE BRACKET	
240	752539-0000	-		1	PLATE	
250	752240-0000	-		1	LID	
270	752538-0000	D		2	SHAFT	
300	591563-0000	D		1	SHAFT	
306	752537-0000	D		2	BENDING ROLLER	
310	28036-0000	-		4	WASHER	
320	2033-0011	D		6	WASHER	
330	265568-0000	K		4	DUST COVER	
410	256248-0001	D		2	LID	
460	256409-0000	-		6	WASHER	
470	257141-0000	-		2	RETAINING RING	
530	253107-0000	D		2	WASHER	
540	752544-0001	D		6	SHIM	
550	752544-0002	D		8	SHIM	
560	591567-0000	K		12	LACE	
600	90044-0104	F		1	PROX.SWITCH IFM IN 3002 48Vdc	
612	90165-0056	-		6	PIPE-CLIPS,FOR SINGLE PIPE,ONE SIDE 4mm	
615	90214-0098	F		10	BALL BEARING,STAINLESS	
620	90287-0331	-		4	Screw	
705	312105-0370	-		2	SCREW M6S ISO 4017 M6x20 A280	
720	312105-0451	-		2	SCREW M6S ISO 4017 8x20 A280	
735	312105-0457	-		7	SCREW ISO 4017 M8x35 A280	
740	312105-0459	-		5	SCREW ISO 4017 M8x40 A280	
750	312105-0493	-		2	SCREW M6S ISO 4017 M10X25 A280	
760	312125-0230	-		2	SLOTTED CHEESE HEAD ISO 1207 M3X20 RFR	
762	312125-0289	-		6	SLOTTED HEMCS4X10RFR	
763	312125-0325	-		2	SLOTTED HEMCS5X10RFR	
770	312155-0291	-		6	SCREW MF6S DIN 7991 M4x12 A480	
775	312155-0327	-		18	SCREW MF6S DIN 7991 M5x12 A280	
800	312155-0457	-		2	SCREW MF6S DIN 7991 M8X35 A280	
807	312318-0362	-		3	SET SCREW CUP POINT ISO 4029 M6x8 RFR	
820	312812-0318	-		6	LOCK-NUT,HEXAGON,WITH NYLON,M8	
825	315105-0124	-		2	WASHER,PLAIN ROUND 3,2x6	
827	315105-0136	-		6	WASHER,PLAIN ROUND 4,3x8 Stainless	
840	315105-0165	-		15	WASHER,PLAIN ROUND 8,4x16 Stainless	
842	315105-0173	-		2	WASHER,PLAIN ROUND 10,5x22 STAINLESS	

This page is intentionally left blank

Pos	Part No	SP	UN	Qty	Description	Page No
TBA/9-100V TBA/9-110V or TBA/9-120V						
500	594955-0000	-		1	AIR DIAGRAM	
560	594945-0000	-		1	PANEL SURVEY	
580	594944-0000	-		1	CIRCUIT DIAG.C-LUB.	
TBA/9-130V						
500	1360736-0000	-		1	AIR DIAGRAM	
560	1360735-0000	-		1	PANEL SURVEY	
580	1360737-0000	-		1	CIRCUIT DIAG.C-LUB.	
TBA/9-140V						
500	1360740-0000	-		1	AIR DIAGRAM	
560	1360739-0000	-		1	PANEL SURVEY	
580	1360741-0000	-		1	CIRCUIT DIAG.C-LUB.	
Common parts						
F200	A 752495-0100	-		1	ATTACHMENT	199
300	591663-0000	-		1	COVER PLATE	
305	564543-0000	-		1	CLEANING PIPE	
700	591653-0000	-		1	SETTING PLATE	
710	591670-0000	-		1	SETTING PLATE	
720	594980-0000	-		1	TEMPLATE	
730	594986-0000	-		1	TEMPLATE	
740	594987-0000	-		1	TEMPLATE	
750	594988-0000	-		1	TEMPLATE	
910	90347-0079	-		2	DAMPER TFE 601	

Pos	Part No	SP	UN	Qty	Description	Page No

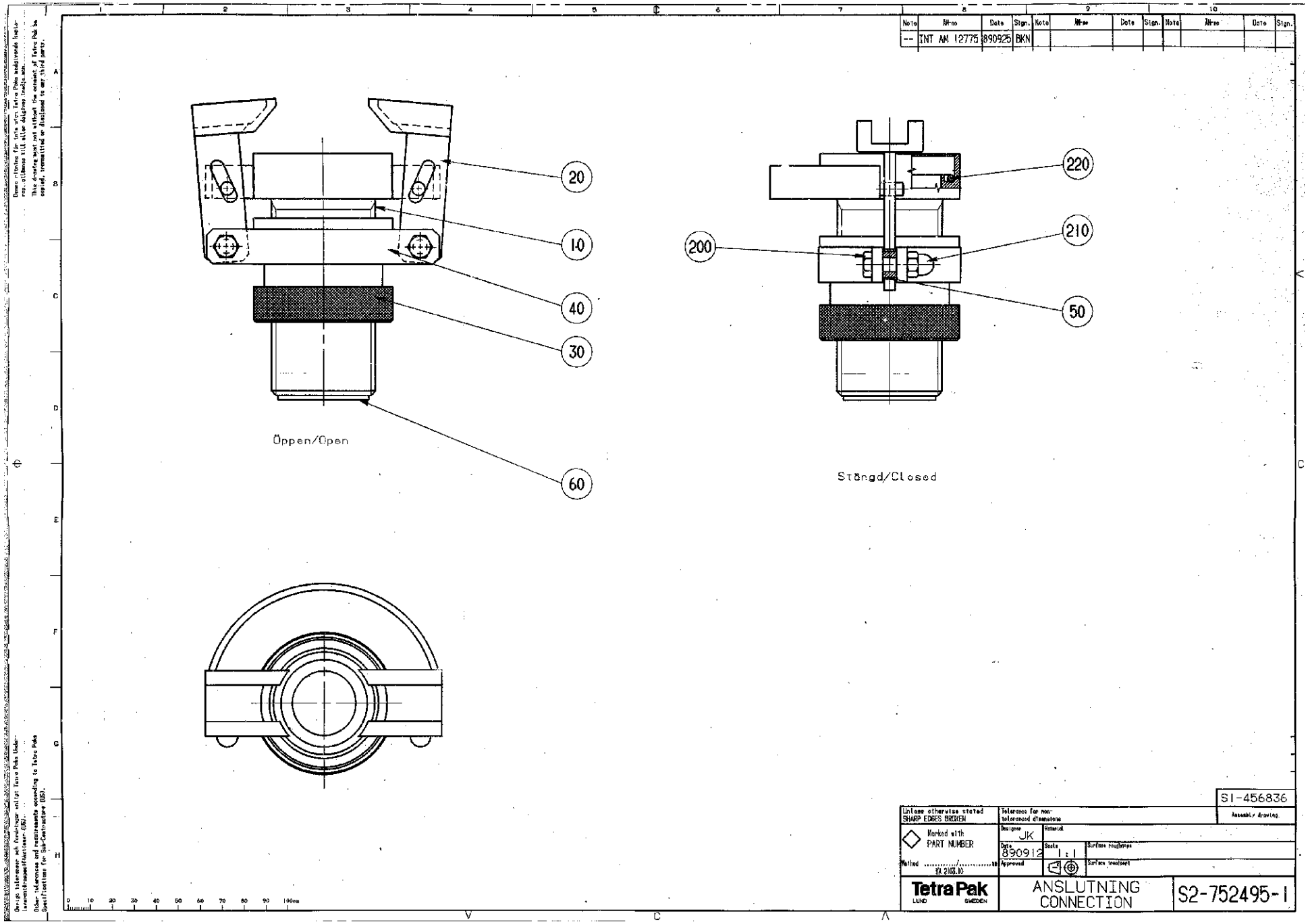
20
10
40
30
60
Öppen/Open
220
210
200
50
Stängd/Closed
S1-456836
Assembly drawing.
ANSLUTNING
CONNECTION
S2-752495-1

Pos	Part No	SP	UN	Qty	Description	Page No
0125S or 0160S or 0200S						
010	752517-0000	-		1	CLEANING PIPE	
020	752521-0000	-		2	CATCH	
220	315204-0526	F		1	O-RING 36,1X3,53VITON	
0180B or 0200B or 0236B or 0250B or 0284B						
010	752496-0000	-		1	CLEANING PIPE	
020	752498-0000	-		2	CATCH	
220	90242-0182	F		1	O-RING 50X4	
0250S						
010	574431-0000	-		1	CLEANING PIPE	
020	12242-0003	F		1	GASKET	
020	752521-0000	-		2	CATCH	
Common parts						
030	752497-0000	-		1	NUT	
040	752499-0000	-		2	RING	
050	553586-0000	-		2	SPACER	
060	12242-0002	F		1	GASKET	
200	312105-0371	-		2	SCREW M6S6X22RFR	
210	312811-0316	-		2	LOCK NUT M6RFR	

Pos	Part No	SP	UN	Qty	Description	Page No

CONVEYOR FRAME

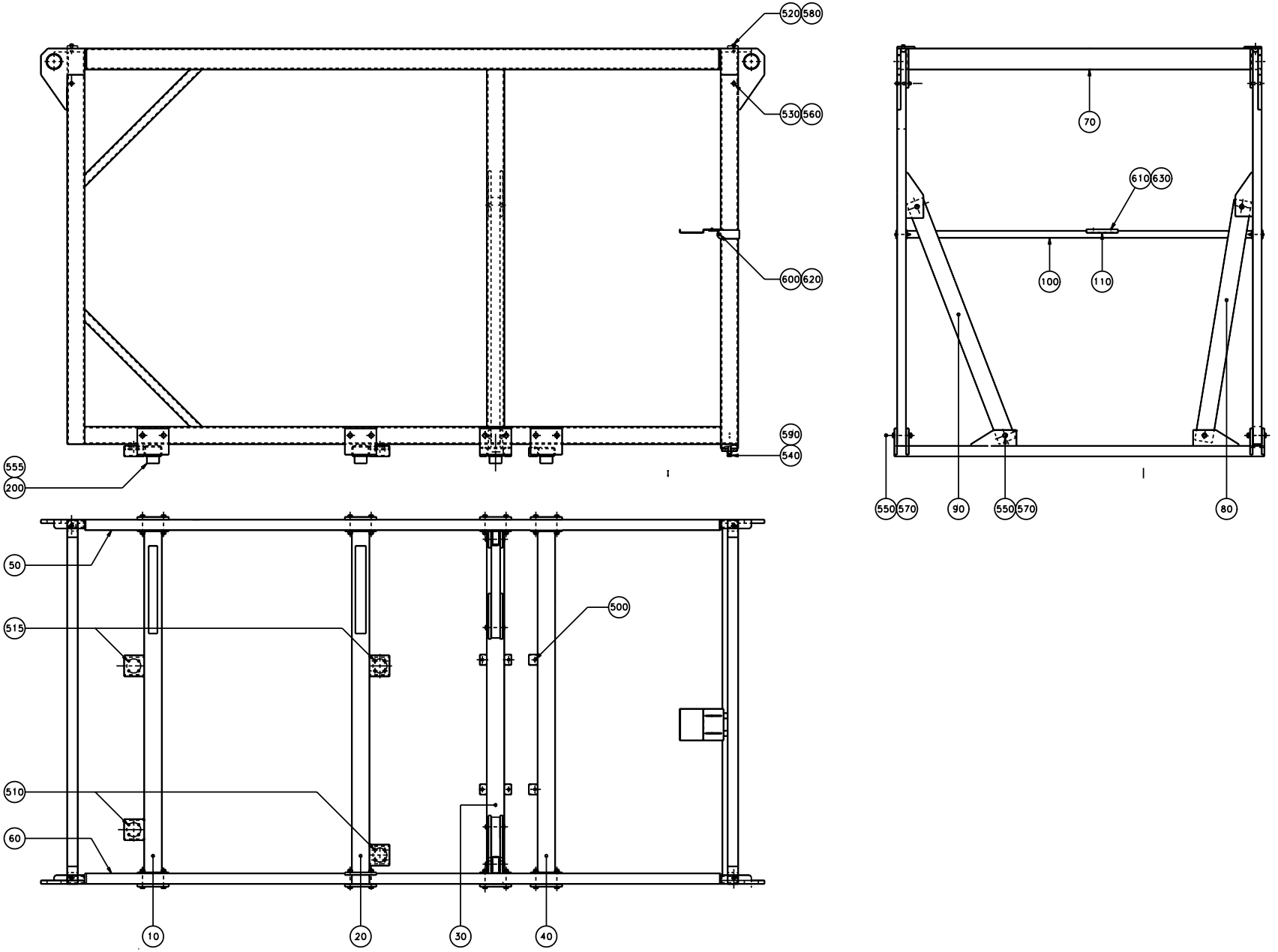

59495401.EPS
594954-1
ECN 70890

Pos	Part No	SP	UN	Qty	Description	Page No
Common parts						
010	563451-0000	-		1	BEAM 1	
020	563452-0000	-		1	BEAM 2	
030	563453-0000	-		1	BEAM 3	
040	563454-0000	-		1	BEAM 4	
050	563455-0000	-		1	GABLE RIGHT	
060	563456-0000	-		1	GABLE LEFT	
070	563457-0000	-		2	CORNER BEAM	
080	563458-0000	-		1	CROSS BAR LEFT	
090	563459-0000	-		1	CROSS BAR	
100	594960-0000	-		1	SUPPORT BEAM	
110	594961-0000	-		1	SUPPORTING SHEET	
200	565570-0000	-		12	SUPPORT	
500	312101-0493	-		6	SCREW M6S10X25FZB	
510	312101-0453	-		8	SCREW M6S 8x25 FZB	
515	312101-0457	-		8	SCREW M6S 8x35 FZB	
520	312101-0538	-		4	SCREW M6S12X35FZB	
540	312104-0634	-		2	SCREW M6S16X70H8.8FZB	
550	312101-0640	-		12	SCREW M6S16X100FZB	
555	312111-0451	-		1	SCREW MC6S8X20FZB	
560	312810-0322	-		4	LOCK NUT 12-8. FZB	
570	312810-0324	-		16	LOCK NUT 16 FZB	
580	315121-0179	-		4	WASHER BRSB13,5X36FZB	
590	312901-0324	-		2	NUT M6M16VFZB	
600	312101-0384	-		2	SCREW M6S6X70FZB	
610	312101-0368	-		2	SCREW M6S 6x16 Zink Plated	
620	312810-0318	-		2	LOCK NUT 8FZB	
630	312810-0316	-		2	LOCK NUT 6FZB	

Pos	Part No	SP	UN	Qty	Description	Page No

BENDING ROLLER

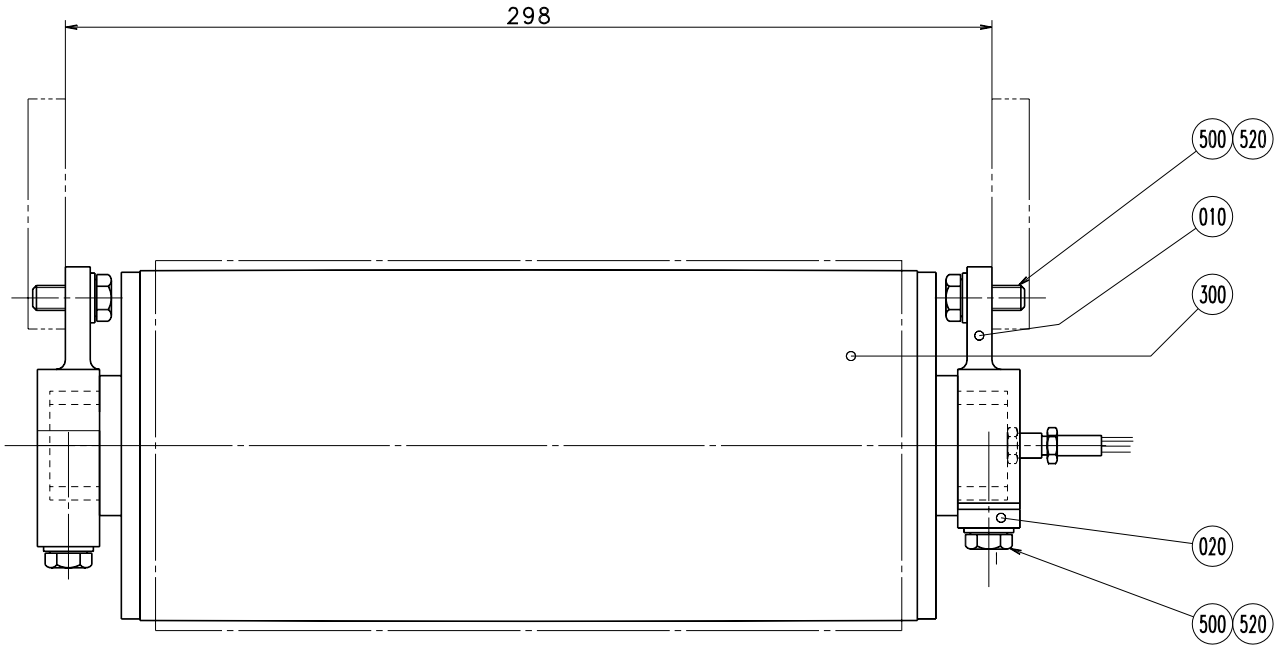

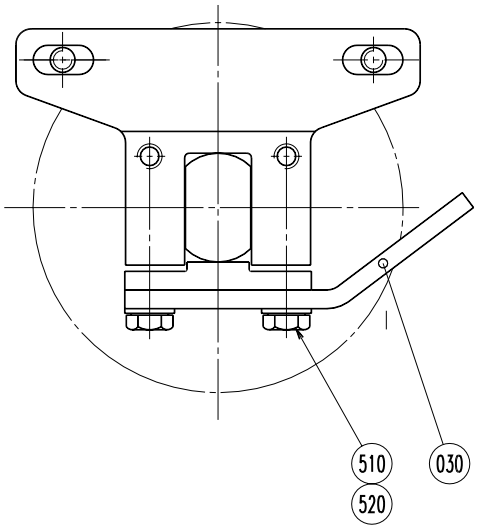

Pos	Part No	SP	UN	Qty	Description	Page No
Common parts						
010	570524-0000	K		2	BEARING	
020	570523-0000	K		2	CAP	
030	752057-0000	K		1	STOP	
300	90045-0201	K		1	Roll-Motor JOKI	
500	312105-0451	-		6	SCREW M6S ISO 4017 8x20 A280	
510	312105-0453	-		2	SCREW M6S ISO 4017 M8x25 A280	
520	315105-0165	-		8	WASHER,PLAIN ROUND 8,4x16 Stainless	

Pos	Part No	SP	UN	Qty	Description	Page No

VALVE PANEL FRONT

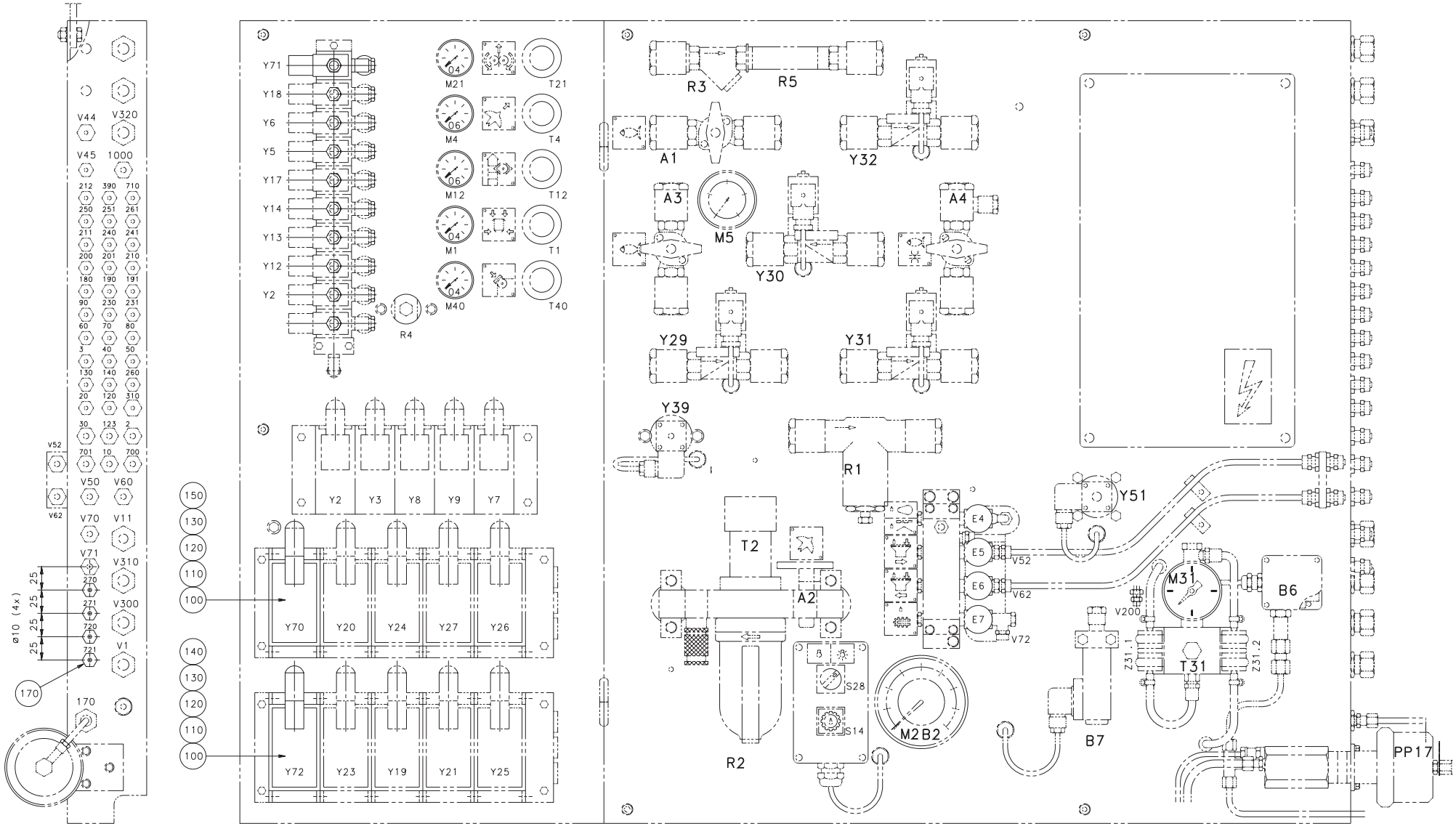

59516401.EPS
595164-1
ECN 70866

Pos	Part No	SP	UN	Qty	Description	Page No
Common parts						
100	B 90042-0074	-		2	SOLENOID VALVE Mecman 581-211-100	
110	90042-0326	-		2	COIL 48VDC Mecman	
120	90042-0366	-		2	CONTACT 2-Pole+Earth Hirschmann	
130	342980-0304	-		4	BANJO-HOLLOW BOLT COUPL,EXT.THR.01-G1/4"	
140	342980-0114	-		2	BANJO-CONNECTION,RING 6/4-G1/4"	
150	342980-0122	-		2	BANJO-CONNECTION,RING 8/6-G1/4"	
170	342960-0121	-		5	BULKHEAD COUPLING 8/6-6/4	

Pos	Part No	SP	UN	Qty	Description	Page No

This page is intentionally left blank

Pos	Part No	SP	UN	Qty	Description	Page No
Common parts						
0010	A 558862-0100	-		1	ELECTRIC MATERIALS	43
0020	A 558863-0100	-		1	ELECTRICAL DOCUMENT	45

This page is intentionally left blank

Pos	Part No	SP	UN	Qty	Description	Page No
Common parts						
0010	A 558893-0100	-		x	ELECTRIC MATERIALS	47
0020	A 558894-0100	-		x	ELECTRICAL DOCUMENT	49

Pos	Part No	SP	UN	Qty	Description	Page No

This page is intentionally left blank

Pos	Part No	SP	UN	Qty	Description	Page No
Common parts						
0010	A 559522-0100	-		1	ELECTRICAL DOCUMENT	51
0020	A 559523-0100	-		1	ELECTRICAL MATERIAL	57
	A 559523-0100	-		1		

Pos	Part No	SP	UN	Qty	Description	Page No

This page is intentionally left blank

Pos	Part No	SP	UN	Qty	Description	Page No
Common parts						
0010	A 559467-0100	-		1	ELECTRICAL DOCUMENT	
0020	A 559494-0100	-		1	ELECTRICAL MATERIAL	59

Pos	Part No	SP	UN	Qty	Description	Page No

This page is intentionally left blank

Pos	Part No	SP	UN	Qty	Description	Page No
Common parts						
0010	A 559477-0100	-		1	ELECTRICAL DOCUMENT	61
0020	A 559478-0100	-		1	ELECTRIC MATERIALS	63
	A 559478-0100	-		1		

This page is intentionally left blank

Pos	Part No	SP	UN	Qty	Description	Page No
Common parts						
0010	A 559492-0100	-		1	ELECTRICAL DOCUMENT	65
0020	A 559493-0100	-		1	ELECTRIC MATERIALS	67
	A 559493-0100	-		1		

Pos	Part No	SP	UN	Qty	Description	Page No

This page is intentionally left blank

Pos	Part No	SP	UN	Qty	Description	Page No
Common parts						
0010	A1370272-0100	-		1	EL-CABINET	69
0020	A1370273-0100	-		1	MACHINE SERVOKIT	71
0030	A1370274-0100	-		1	ELECTRICAL DOCUMENT	
0040	A1370275-0100	-		1	STANDARD EQUIPMENT	

Pos	Part No	SP	UN	Qty	Description	Page No

This page is intentionally left blank

Pos	Part No	SP	UN	Qty	Description	Page No
TBA/9-120V 0200B or TBA/9-120V 0250B						
091	**751477-0000**	**-**		**2**	**DOWEL**	
096	315204-0306	-		1	O-RING 74,5X3	
TBA/9-130V 0200B or TBA/9-130V 0250B or TBA/9-140V 0200B or TBA/9-140V 0250B						
Common parts						
010	A 255921-0400	-		1	LOWER FILLING TUBE	93
020	A 469091-0300	-		1	FILLER TUBE	95
030	751476-0000	-		1	CANTILEVER	
040	491880-0000	-		1	FASTENING PLATE	
050	564543-0000	-		1	CLEANING PIPE	
060	491209-0002	-		1	PIPE	
070	578216-0000	-		1	ARM	
080	752554-0000	-		1	SPACER	
090	978384-0000	-		1	PIVOT PIN	
092	490896-0000	-		1	CONTAINER	
093	295300-0000	-		1	FORCE SPRING	
094	315204-0224	-		1	O-RING 42,2X3 VITON	
095	469759-0000	-		1	FORCE SPRING	
100	751047-0000	-		1	LID	
110	456731-0002	-		1	PIPE	
120	751073-0002	-		1	PIPE 240	
130	751074-0002	-		1	PIPE 241	
140	751080-0002	-		1	PIPE 200	
150	751144-0002	-		1	PIPE 201	
160	752637-0003	-		1	BENDING ROLLER	
200	272887-0000	-		1	RULER	
210	752085-0000	-		1	SPRING	
220	752179-0000	-		1	BOW CLAMP	
230	752181-0000	-		1	GUIDING ARBOR	
240	752184-0000	-		1	SPRING HOLDER	
250	90166-0132	-	M	5	TUBE 6/4 PA,Transp.	
260	90166-0133	-	M	5	TUBE 8/6 PA,Transp.	
270	342980-0114	-		2	BANJO-CONNECTION,RING 6/4-G1/4"	
280	342980-0122	-		2	BANJO-CONNECTION,RING 8/6-G1/4"	
290	342980-0304	-		4	BANJO-HOLLOW BOLT COUPL,EXT.THR.01-G1/4"	
300	295985-0000	-		1	FORCE SPRING	
310	456129-0002	-		1	FORCE SPRING	

This page is intentionally left blank

Pos	Part No	SP	UN	Qty	Description	Page No
Common parts						
0010	441727-0000	-		2	CUTTING JAW	
0020	295757-0000	-		2	CUTTING RAIL	
0030	256659-0000	-		2	OPERATING ROD	
0040	272419-0000	-		4	CARRIER	
0050	491018-0000	-		4	BRACKET	
0060	22463-0000	-		4	ROLL	
0070	33408-0000	-		8	BEARING	
0080	255653-0000	-		4	FLANGE BUSHING	
0090	255742-0000	-		2	COMPRESSION SPRING	
0100	255801-0000	-		2	RETAINING RING	
0110	256607-0000	-		4	AXLE PIN	
0120	256626-0000	-		2	EAR	
0130	256706-0000	-		2	BEARING PLATE	
0140	257362-0000	-		4	LACE	
0150	752574-0000	-		8	END PIECE	
0160	752575-0000	-		8	DOLLY 200S	
0170	90090-0005	-		4	STEEL-BALL SKF RB 3/111	
0180	90091-0091	-		2	SEALING RINGS,TYPE "GLYD-RING" 10/	
14X1,7						
0190	90091-0169	-		8	GUIDE RING	
0200	90091-0216	-		4	"SEAL RINGS TYPE ""GLYD-RING"" 7,1X12X2	
0210	90134-0058	-		2	BANJO CONNECTION DT4.310.437.1	
0220	90242-0093	-	MM	1000	O-RING	
0230	90287-0128	-		4	SCREW, SET,FULL DOG POINT,T6SS M4x6 A2	
0240	90330-0066	-		6	PLUG,EXTERNAL G-THREAD G1/8"	
0250	311103-0312	-		2	PINS,STRAIGHT 5X25	
0260	311111-0207	-		2	SLOTTED TUFRP3X14	
0270	311111-0308	-		4	SLOTTED TUFRP5X20	
0280	312105-0362	-		4	SCREW M6S ISO 4017 M6x8 A280	
0290	312105-0376	-		16	SCREW M6S ISO 4017 M6x35 A280	
0300	312105-0462	-		4	SCREW M6S ISO 4014 M8x55 A280	
0310	312115-0366	-		4	SCREW MC6S ISO 4762 M6X12 A280	
0320	312115-0370	-		4	SCREW MC6S ISO 4762 M6x20 A280	
0330	312145-0291	-		4	SLOTTED HEAD SCREW MFS 4x12 A4	
0340	312605-0318	-		2	NUT,HEXAGON,M8 RFR	
0350	315115-0153	-		16	WASHER TBRB 6,4x12 Stainless	
0360	315202-0265	-		2	O-RING 12,3x2,4	
0370	315230-0157	-		8	"SEAL RING,GR-NEEDLE BEARINGS	
12X16X3"						
0400	490940-0000	-		2	CYLINDER	
0410	751743-0000	-		4	PISTON	
0420	752282-0000	-		2	CONNECTION RIGHT	
0430	752284-0000	-		2	SHAFT	
0440	255653-0000	-		4	FLANGE BUSHING	
0450	256557-0001	-		4	WASHER	
0460	256557-0002	-		2	WASHER	
0470	256557-0003	-		2	WASHER	
0480	256576-0000	-		2	ROLL	
0490	257249-0000	-		4	SCREW	
0500	257250-0000	-		4	LID	
0510	272501-0000	-		2	BRACKET RIGHT	
0520	272503-0000	-		2	CLAMPING PIECE	
0530	272506-0000	-		4	LACE	
0540	441355-0000	-		4	BLEEDING SCREW	
0550	441385-0000	-		2	HUB	
0560	441764-0000	-		2	SHAFT	
0570	456311-0000	-		2	TORSION SPRING RIGHT	
0580	490942-0000	-		4	COMPRESSION SPRING	
0590	490943-0000	-		4	COMPRESSION SPRING	
0600	751769-0000	-		4	SLEEVE	
0610	752289-0000	-		2	CLAMP RIGHT	
0620	752476-0000	-		8	SCREW	
0630	90030-0065	-		2	PIPE CONNECTION	
0640	90090-0005	-		8	STEEL-BALL SKF RB 3/111	
0650	90091-0089	-		4	SEALING RINGS,TYPE "GLYD-RING" 16/	
22X2,5						
0660	90091-0162	-		4	GUIDE RING	
0670	90091-0170	-		4	GUIDE RING	
0680	90091-0214	-		4	"SEAL RINGS TYPE ""GLYD-RING"" 16X20,9X	
0690	90091-0215	-		4	"SEAL RINGS TYPE "" GLYD-RING"" 25X32,5	
0700	90092-0052	-		2	METERING VALVE 10mm3	
0710	90092-0053	-		2	METERING VALVE 30mm3	
0720	90134-0042	-		4	SPACER DT4.170711.2	
0730	90134-0045	-		2	PLUG	
0740	90134-0047	-		2	CONNECTION	
0750	90134-0058	-		2	BANJO CONNECTION DT4.310.437.1	
0760	90166-0143	-	MM	320	TUBE 2,5 mm PA,Transp.	
0770	311103-0242	-		4	PIN,STRAIGHT 3x30	
0780	311103-0312	-		2	PINS,STRAIGHT 5X25	
0790	312105-0370	-		22	SCREW M6S ISO 4017 M6x20 A280	
0800	312105-0374	-		4	SCREW M6S ISO 4017 M6x30 A280	
0810	312105-0376	-		12	SCREW M6S ISO 4017 M6x35 A280	
0820	312105-0447	-		2	SCREW M6S ISO 4017 M8x12 A280	
0830	312105-0453	-		2	SCREW M6S ISO 4017 M8x25 A280	
0840	312105-0455	-		2	SCREW M6S ISO 4017 M8x30 A280	

This page is intentionally left blank

Pos	Part No	SP	UN	Qty	Description	Page No
0850	312115-0371	-		4	SCREW 6X22 A4 80	
0860	315105-0153	-		10	WASHER,PLAIN ROUND 6,4x12 Stainless	
0870	315105-0165	-		2	WASHER,PLAIN ROUND 8,4x16 Stainless	
0880	315115-0153	-		12	WASHER TBRB 6,4x12 Stainless	
0890	315202-0102	-		16	O-RING 4,1x1,6	
0900	315202-0106	-		2	O-RING 8,1x1,6	
0910	315202-0108	-		6	O-RING 10,1x1,6	
0920	315234-0109	-		4	PLAIN ROUND,COPPER R1/8",M10	
0930	315237-0106	-		4	GASKET	
0940	315237-0107	-		2	GASKET	
0950	321120-0132	-		2	Bushing, 18x20x20	
0960	342713-0209	-		4	PLUG,EXT.G-THREAD,HEXAGON SOCKET G1/8"	
1000	491962-0000	-		2	RAIL	
1010	32644-0000	-		4	WASHER	
1020	256882-0000	-		2	WASHER	
1030	271846-0000	-		2	INSULATION NUT	
1040	271848-0000	-		2	SCREW	
1050	491681-0000	-		2	GASKET	
1060	311103-0270	-		4	PIN,STRAIGHT M6 4x16	
1070	312115-0293	-		4	SCREW MC6S ISO 4762 M4X16 A280	
1080	312115-0331	-		4	SCREW MC6S ISO 4762 M5X20 A280	
1090	315105-0136	-		4	WASHER,PLAIN ROUND 4,3x8 Stainless	
1100	315105-0146	-		4	WASHER,PLAIN ROUND 5,3x10 Stainless	
1110	315202-0102	-		4	O-RING 4,1x1,6	

Pos	Part No	SP	UN	Qty	Description	Page No

This page is intentionally left blank

Pos	Part No	SP	UN	Qty	Description	Page No
90042-0074						
	90042-0371	F		1	WEAR & TEAR PARTS KIT	
90042-0074						
	90042-0385	-		1	SEAL KIT 04904 273 09	
90042-0108						
	90042-0451	K		1	WEAR & TEAR PARTS KIT 04904 295 06	
90239-0084						
	90239-0348	K		1	SEAL KIT	
90239-0779						
	90239-0442	K		1	SEAL KIT	
90321-0015						
	90321-0466	K		1	SPARE PART KIT	
90321-0015						
	90321-0481	K		1	GASKET	
90321-0034						
	90321-0466	K		1	SPARE PART KIT	
90321-0034						
	90321-0481	K		1	GASKET	
90415-0022						
	90415-0320	K		1	FILTER INSERT	
271499-0000						
	351121-0110	-	M	1	CABLE RHH 25	
271499-0000						
	353104-0175	-		1	CABLE SHOEYAV 25 M6	
295201-0000						
	312911-0118	-		11	THREADED I M6X1,5D	
295201-0000						
	312911-0126	-		2	THREADED I M8X1,5D	
295307-0000						
	90012-0058	-		1	GLAND	
295307-0000						
	90152-0019	-	M	1	FLEXIBLE CONDUIT PG 36	
456905-0000						
0010	1282582-0000	-		1	CAST WORKPIECE	
469041-0000						
0010	1282583-0000	-		1	CAST WORKPIECE	
490618-0000						
	90330-0106	-		1	PIPE COUPLING	
574404-0000						
0010	1282582-0000	-		1	CAST WORKPIECE	
574416-0000						
0010	1282583-0000	-		1	CAST WORKPIECE	
591466-0000						
	312911-0127	-		6	THREADED INSERTS M8X2,0D	
591516-0000						
	312911-0127	-		4	THREADED INSERTS M8X2,0D	
591527-0000						
	312911-0115	-		2	THREADED INSERTS M5X2,0D	
591545-0000						
	312911-0119	-		2	THREADED INSERTS M6X2,0D	
591623-0000						
	312911-0127	-		4	THREADED INSERTS M8X2,0D	
594953-0000						
	312911-0115	-		2	THREADED INSERTS M5X2,0D	
594958-0000						
	342708-0107	-		1	ACCESSORIES,REINFORCING RING VSH 12X1	
597960-0000						
	312911-0119	-		2	THREADED INSERTS M6X2,0D	
597960-0000						
	312911-0127	-		6	THREADED INSERTS M8X2,0D	
598004-0000						
	312911-0111	-		3	THREADED INSERTS M4X2,0D	
598004-0000						
	312911-0117	-		8	THREADED INSERTS M6X1,0D	
598004-0000						
	312911-0125	-		9	THREADED INSERTS M8X1,0D	
598004-0000						
	312911-0129	-		4	THREADED INSERTS M10X1,0D	
598005-0000						
	312911-0117	-		13	THREADED INSERTS M6X1,0D	
598005-0000						
	312911-0125	-		4	THREADED INSERTS M8X1,0D	
598005-0000						
	312911-0129	-		8	THREADED INSERTS M10X1,0D	
751503-0000						
	90166-0179	-	M	1	SHRINKABLE HOSE	

This page is intentionally left blank

Pos	Part No	SP	UN	Qty	Description	Page No
752140-0000						
	90166-0179	-	M	1	SHRINKABLE HOSE	
752155-0000						
	90166-0179	-	M	1	SHRINKABLE HOSE	
	978048-0001	-		x		

Pos	Part No	SP	UN	Qty	Description	Page No

This page is intentionally left blank

Pos	Part No	SP	UN	Qty	Description	Page No
Common parts						
010	978049-0000	D		1	NUT	
020	978050-0001	D		1	SCREW	
030	978050-0002	D		1	SCREW	
040	978051-0000	D		1	ECCENTRIC	
050	978052-0000	D		1	WASHER	
060	2033-0009	D		2	WASHER	
070	90157-0016	-		x	LOCKING FLUID LOCTITE 242 50 ML	
080	90296-0012	-	KG	x	LUBRICANT	
	978763-0001	-	KG	x		
	978763-0051	-	KG	x		

Pos	Part No	SP	UN	Qty	Description	Page No

This page is intentionally left blank

Pos	Part No	SP	UN	Qty	Description	Page No
Common parts						
010	978765-0000	N		1	KNIFE HOLDER	
020	978713-0000	I		1	KNIFE	
030	90153-0054	-	L	x	ADHESIVE	
035	90153-0055	-	L	x	ADHESIVE	
1349669-0000						
	312115-0449	-		1	SCREW MC6S ISO 4762 M8X16 A280	
1349669-0000						
	312115-0460	-		1	SCREW MC6S ISO 4762 M8X45 A280	
1360611-0000						
010	1360613-0000	-		1	GLASS	
1360611-0000						
020	90157-0041	-		1	SEALING COMPOUND	
1360612-0000						
010	1360614-0000	-		1	GLASS	
1360612-0000						
020	90157-0041	-		1	SEALING COMPOUND	
1360667-0000						
	90418-0053	-		6	ELBOW 90,INTERNAL CONNECTION 15	
1360667-0000						
	342708-0109	-		2	ACCESSORIES,REINFORCING RING VSH 15X1	
1360709-0000						
010	1360609-0000	-		1	GLASS	
1360709-0000						
020	90157-0041	-		1	SEALING COMPOUND	
1360719-0000						
	491289-0000	-		1	TENSION SPROCKET	

Pos	Part No	SP	UN	Qty	Description	Page No

SPC

Spare Parts Catalogue

Part No	Description	Page No
1065410-0000	SLOTTED PIN	139
1089374-0000	HANDLE	151
1103765-0000	PAPER SUPPORT	189
1116148-0000	COVER	155, 157
1116150-0000	COVER	155, 157
1116151-0000	GLASS	155, 157
1116152-0000	GLASS	155, 157
1116270-0000	LOCK COMPONENT	155, 157
1116271-0000	BRACKET	155, 157
1116273-0000	SPACER	155, 157
1116274-0000	SPACER	155, 157
1116275-0000	GUIDE	155, 157
1116276-0000	GUIDE	155, 157
1116277-0000	BRACKET	155, 157
1116278-0000	BRACKET	155, 157
1116279-0000	BRACKET	155, 157
1116280-0000	BRACKET	155, 157
1116283-0000	BEAM	155, 157
1116284-0000	GUIDE HOLDER	155, 157
1143975-0000	DRIVE WHEEL	169
12242-0001	GASKET	95
12242-0002	GASKET	199
12242-0003	GASKET	199
1255692-0110	RESOLVER CABLE L=11000 mm	63, 67, 71
1279086-0000	LOCKING PLATE	35
1279087-0000	LOCKING PLATE	25, 31
1279088-0000	LOCKING PLATE	27, 29
1279089-0000	LOCKING PLATE	27, 29
1279090-0000	LOCKING PLATE	35
1279091-0000	LOCKING PLATE	25
1279092-0000	LOCKING PLATE	23
1279093-0000	LOCKING PLATE	35
1279094-0000	LOCKING PLATE	35
1279095-0000	LOCKING PLATE	23
1279096-0000	LOCKING PLATE	23
1282424-0000	BEARING HOUSING	75, 77, 79, 81
1282582-0000	CAST WORKPIECE	227
1282583-0000	CAST WORKPIECE	227
1282645-0000	KNIFE	83
1282646-0000	KNIFE	83
1282647-0000	KNIFE	83
1296912-0000	ROLL	25
1296913-0000	ROLL	25
1296914-0000	ROLL	25
1296915-0000	ROLL	25
1349669-0000	BRACKET	123
1349670-0000	SWITCH BRACKET	155, 157
1360581-0000	LID	183
1360585-0000	BRACKET	73
1360586-0000	VOLUME CAM LEFT	73
1360587-0000	VOLUME CAM RIGHT	73
1360602-0000	CUTTING RAIL	75, 77, 79, 81
1360607-0000	BRACKET	167
1360609-0000	GLASS	233
1360610-0000	DRIP PLATE	147
1360611-0000	COVER	151
1360612-0000	COVER	151
1360613-0000	GLASS	233
1360614-0000	GLASS	233
1360619-0000	BRACKET	151
1360622-0000	COVER	179
1360630-0000	CABLE DUCT	151
1360632-0000	SHIELD PLATE	113
1360633-0000	FOLDING FLAP CAM 200S	73
1360634-0000	COUNTER CAM	73
1360652-0100	PIVOTING FRAME	97
1360653-0000	CANTILEVER	183
1360666-0000	GUIDE	121
1360667-0000	PIPE WATER	9, 11
1360668-0000	HOLDER	9, 11
1360672-0000	COVERING PLATE	141
1360677-0000	FRAME	129
1360678-0000	HOOD	129
1360679-0000	COVERING PLATE	129
1360687-0000	HOLDER	141
1360696-0000	GUIDE PLATE	167
1360709-0000	COVER	153
1360710-0000	PLATE	153
1360714-0000	CLAMP IRON	69
1360715-0000	CLAMP IRON	69
1360718-0100	TENSION SPROCKET	97
1360719-0000	TENSION SPROCKET	171
1360720-0000	COVER	185
1360721-0100	VALVE PANEL FRONT	9, 11
1360722-0100	VALVE PANEL FRONT	9, 11
1360735-0000	PANEL SURVEY	197

Part No	Description	Page No
1360736-0000	AIR DIAGRAM	197
1360737-0000	CIRCUIT DIAG.C-LUB.	197
1360739-0000	PANEL SURVEY	197
1360740-0000	AIR DIAGRAM	197
1360741-0000	CIRCUIT DIAG.C-LUB.	197
1360742-0000	PLATE	9, 11
1360745-0100	COVER	151
1360746-0100	TWA/9 VOLUME DETAILS	7
1360747-0100	TWA/9 WEARING OUT DETAILS	7
1364243-0100		71
1364244-0100		57
1364251-0100		59
1365934-0100		49
1366635-0000	CLAMP IRON	69
1370272-0100		71
1370272-0100	EL-CABINET	219
1370273-0100		71
1370273-0100	MACHINE SERVOKIT	219
1370274-0100		71
1370274-0100	ELECTRICAL DOCUMENT	219
1370275-0100		71
1370275-0100	STANDARD EQUIPMENT	219
1370290-0100		63
1370415-0100	TETRA WEDGE OUTFEED CONVEYOR TBA/9	63, 67, 69
1478843-0000	TUBE	179
1478844-0000	SWITCH BRACKET	155, 157
1478845-0000	SPROCKET	129
2033-0008	WASHER	35
2033-0009	WASHER	119, 231
2033-0011	WASHER	23, 25, 27, 29, 33, 35, 191, 193, 195
20705-0001	INSULATING PIPE	181
20772-0000	INSULATOR BODY 70x70x15mm	181
209331-0005	GEAR WHEEL	13
21047-0000	LOCK WASHER	175
22463-0000	ROLL	223
22559-0000	GRUB SCREW	189
228943-0000	THROTTLE	93
23771-0000	SPACER RING 4x78x1mm	181
239440-0000	SHAFT	23
252766-0001	INSULATING PIPE	179
253107-0000	WASHER	191, 193, 195
255653-0000	FLANGE BUSHING	223
255742-0000	COMPRESSION SPRING	223
255801-0000	RETAINING RING	223
255921-0400	LOWER FILLING TUBE	221
255969-0000	SHAFT	23
255970-0000	BUSHING	21
255977-0000	SHAFT	95
255978-0000	FORK	95
255981-0000	NUT	95
256190-0000	NUT	117
256208-0400	KNIFE HOLDER	73
256248-0001	LID	191, 193, 195
256276-0000	SHAFT	113
256279-0000	ANGLE	27, 29
256280-0000	DOWEL	25, 27, 29
256309-0000	SHAFT	25
256312-0000	WASHER	25
256406-0000	GABLE PLATE	191, 193, 195
256409-0000	WASHER	191, 193, 195
256410-0700	INDEXING UNIT	97
256438-0200	WORM GEAR	97
256461-0000	DOWEL	175
256462-0000	SCREW	175
256463-0000	WASHER	175
256557-0001	WASHER	223
256557-0002	WASHER	223
256557-0003	WASHER	223
256576-0000	ROLL	223
256607-0000	AXLE PIN	223
256626-0000	EAR	223
256641-0000	LEG	141
256659-0000	OPERATING ROD	223
256706-0000	BEARING PLATE	223
256859-0000	SCREW	85, 87
256860-0000	ROLL	85, 87
256882-0000	WASHER	225
256899-0000	SHAFT	13
256907-0000	WASHER	103
256986-0003	STRUT	185
256986-0006	STRUT	185
257040-0000	FORK	21
257041-0000	FORK	21
257042-0000	BRACKET	23
257043-0000	ANGLE BRACKET	23
257044-0000	ROLL	23

Part No	Description	Page No
257090-0000	SHIFTER HANDLE	25
257133-0000	LID	159
257141-0000	RETAINING RING	191, 193, 195
257175-0000	WASHER	33, 35
257249-0000	SCREW	223
257250-0000	LID	223
257330-0000	PRESSURE ROLLER	95
257362-0000	LACE	223
260427-0000	WASHER	175
26490-0000	WASHER	25
265568-0000	DUST COVER	191, 193, 195
271116-0300	ANGULAR TRANSMITTER	97
271347-0000	ARM	93
271348-0000	LINK	93
271349-0000	LINK	93
271350-0000	THROTTLE	93
271351-0000	SHEAR PIN	93
271387-0300	SPRAY GUN	97
271499-0000	ELECTRICAL CONNECTION	179
271586-0001	WASHER	147
271591-0000	BUTTON	111
271731-0000	COMPRESSION SPRING	107, 175
271820-0002	STEERING RAIL	13
271846-0000	INSULATION NUT	225
271848-0000	SCREW	225
272056-0000	FLOAT	93
272191-0000	DISTRIBUTOR	103
272419-0000	CARRIER	223
272479-0000	PRESSURE ROLLER	95
272501-0000	BRACKET RIGHT	223
272503-0000	CLAMPING PIECE	223
272506-0000	LACE	223
272576-0000	BRACKET	175
272647-0000	SHAFT	159
272648-0000	TIMING BELT PULLEY	159
272652-0300	CHAIN TENSIONER	113
272659-0000	SIDE PIECE	111
272660-0000	SIDE PIECE	111
272661-0000	STAIR	111
272673-0000	LEG	111
272728-0000	BARRIER	41
272741-0000	SEAL	103
272743-0000	LID	111
272751-0000	BOTTOM VALVE	105
272753-0000	STEERING	83
272755-0000	NUT	83
272758-0000	TIMING BELT PULLEY	177
272811-0000	PLUNGER RIGHT REPBY 0575002-0000	41
272812-0000	PLUNGER LEFT REPBY 0575002-0000	41
272814-0000	SLEEVE	41
272815-0001	SLEEVE	41
272815-0002	SLEEVE	41
272815-0003	SLEEVE	41
272816-0001	SHAFT	41
272816-0002	SHAFT	41
272816-0003	SHAFT	41
272886-0000	RULER	9, 11
272887-0000	RULER	221
272888-0000	RULER	9, 11
272985-0001	ARM	85, 87
272997-0000	STOPPER	113
28036-0000	WASHER	189, 191, 193, 195
28037-0000	WASHER	25
29413-0000	LACE	181
295072-0000	BUFFER RING	107, 175
295201-0000	FRAME	183
295202-0001	SWIVEL	183
295203-0000	LID	183
295204-0001	SHIM	183
295204-0002	SHIM	183
295204-0003	SHIM	183
295205-0000	SPACER SLEEVE	183
295206-0000	FLAP	183
295207-0000	HOLDER	183
295208-0000	SECURING PLATE	183
295306-0000	COVER	179
295307-0000	FLEXIBLE CONDUIT	179
295313-0000	SHAFT	183
295376-0000	SHAFT	95
295377-0001	HOOD	95
295377-0002	HOOD	95
295417-0000	GASKET	141
295423-0000	SEAL	155, 157
295431-0000	SCREW	183
295432-0000	SCREW	183
295434-0000	BUSHING	141

Part No	Description	Page No
295748-0003	BACK PIECE	73
295757-0000	CUTTING RAIL	223
295984-0000	DRIP GUARD	95
295985-0000	FORCE SPRING	221
295987-0000	THROTTLE	93
2NC		63, 67, 69
30311-0001	FF HEATINGELEMENT Buttom Kanthal 2333-02	181
30311-0002	FF HEATINGELEMENT Buttom Kanthal 2333-02	181
311103-0238	PIN,STRAIGHT 3x20	23
311103-0242	PIN,STRAIGHT 3x30	223
311103-0270	PIN,STRAIGHT M6 4x16	225
311103-0272	PIN,STRAIGHT M6 4x20	53, 55
311103-0274	PIN,STRAIGHT 4x25	41
311103-0276	PIN,STRAIGHT 4x30	175
311103-0280	PIN,STRAIGHT 4x40	89, 91
311103-0308	PINS,STRAIGHT 5X16	129
311103-0312	PINS,STRAIGHT 5X25	33, 35, 223
311103-0401	PINS,STRAIGHT 8X20	113
311111-0207	SLOTTED TUFRP3X14	223
311111-0308	SLOTTED TUFRP5X20	223
311112-0258	PINS,SLOTTED TUBULAR SPRING PIN 4X24	127, 135
311112-0262	PINS,SLOTTED TUBULAR SPRING PIN 4X32	123
311411-0140	SPLIT PIN SP1,6X16RFR	23
311411-0150	SPLIT PIN SP2X12RFR	35
311411-0152	SPLIT PIN SP2X16RFR	117
311411-0165	SPLIT PIN SP2,5X16RFR	33, 35
312101-0329	SCREW M6S 5x16 FZB	177
312101-0366	SCREW M6S 6x12-8,8 FZB	159
312101-0368	SCREW M6S 6x16 Zink Plated	201
312101-0381	SCREW M6S 6x55 FZB	41
312101-0384	SCREW M6S6X70FZB	201
312101-0453	SCREW M6S 8x25 FZB	201
312101-0457	SCREW M6S 8x35 FZB	201
312101-0493	SCREW M6S10X25FZB	201
312101-0530	SCREW M6S12X16FZB	169
312101-0538	SCREW M6S12X35FZB	201
312101-0552	SCREW M6S12X100FZB	177
312101-0640	SCREW M6S16X100FZB	201
312104-0634	SCREW M6S16X70H8.8FZB	201
312105-0287	SCREW M6S ISO 4017 M4x8 A280	15, 17, 19
312105-0289	SCREW M6S4X10 A2 80	151
312105-0291	SCREW M6S ISO 4017 M4X12 A280	123
312105-0297	SCREW M6S ISO 4014 M4X25 A280	113
312105-0323	SCREW M6S ISO 4017 M5X8 A280	129
312105-0325	SCREW M6S 5x10 A2 80	33, 35, 107, 129, 175
312105-0327	SCREW M6S ISO 4017 M5X12 A280	137
312105-0329	SCREW M6S ISO 4017 M5x16 A280	15, 17, 19, 33, 123, 137, 167
312105-0331	SCREW M6S ISO 4017 M5X20 A280	21, 129, 151, 171
312105-0332	SCREW M6S5X22RFR	25, 33, 191, 193, 195
312105-0335	SCREW M6S ISO 4017 M5x30 A280	169
312105-0362	SCREW M6S ISO 4017 M6x8 A280	189, 223
312105-0364	SCREW M6S 6x10 A280	23, 95, 113
312105-0366	SCREW M6S ISO 4017 M6x12 A280	15, 17, 19, 101, 107, 113, 133, 147, 151, 167, 179, 183
312105-0367	SCREW M6S 6x14 A2 80	75, 77, 79, 81, 111, 153
312105-0368	SCREW M6S ISO 4017 M6x16 A280	23, 25, 27, 29, 31, 35, 89, 91, 113, 123, 127, 129, 133, 149, 155, 157, 167, 175, 179
312105-0370	SCREW M6S ISO 4017 M6x20 A280	21, 31, 35, 109, 123, 125, 129, 133, 135, 141, 147, 149, 151, 155, 157, 167, 179, 183, 191, 193, 195, 223
312105-0371	SCREW M6S6X22RFR	25, 139, 199
312105-0372	SCREW M6S ISO 4017 M6x25 A280	23, 69, 95, 103, 141, 175, 191, 193, 195
312105-0374	SCREW M6S ISO 4017 M6x30 A280	107, 109, 141, 155, 157, 175, 183, 223
312105-0376	SCREW M6S ISO 4017 M6x35 A280	85, 87, 139, 155, 157, 159, 183, 223
312105-0378	SCREW ISO 4017 M6x40 A280	103, 151, 155, 157, 179
312105-0379	SCREW M6S ISO 4014 M6x45 A280	155, 157
312105-0380	SCREW M6S ISO 4014 M6x50 A280	147, 155, 157, 179
312105-0381	SCREW M6S ISO 4014 M6x55 A280	33, 35
312105-0384	SCREW M6S ISO 4014 M6x70 A280	141
312105-0447	SCREW M6S ISO 4017 M8x12 A280	23, 155, 157, 189, 223
312105-0449	SCREW M6S ISO 4017 M8x16 A280	15, 17, 19, 137, 141, 151
312105-0451	SCREW M6S ISO 4017 8x20 A280	23, 25, 27, 29, 111, 123, 129, 141, 191, 193, 195, 203
312105-0453	SCREW M6S ISO 4017 M8x25 A280	23, 123, 127, 139, 155, 157, 203, 223
312105-0455	SCREW M6S ISO 4017 M8x30 A280	27, 29, 69, 107, 111, 123, 223
312105-0457	SCREW ISO 4017 M8x35 A280	27, 29, 123, 129, 191, 193, 195
312105-0459	SCREW ISO 4017 M8x40 A280	101, 113, 123, 135, 139, 191, 193, 195
312105-0460	SCREW ISO 4017 M8x45 A280	135, 155, 157
312105-0462	SCREW M6S ISO 4014 M8x55 A280	223
312105-0463	SCREW M6S ISO 4014 M8x60 A280	103
312105-0464	SCREW M6S ISO 4014 M8x65 A280	133
312105-0492	SCREW M6S10X22RFR	53, 55
312105-0493	SCREW M6S ISO 4017 M10X25 A280	53, 55, 123, 191, 193, 195
312105-0495	SCREW M6S ISO 4017 M10X30 A280	35, 111
312105-0501	SCREW 4017 M10X50A280	131, 133
312105-0532	SCREW M6S ISO 4017 M12X20 A280	141
312105-0536	SCREW M6S ISO 4017 M12X30 A280	23, 35

Part No	Description	Page No
312105-0538	SCREW M6S ISO 4017 M12X35 A280	141
312105-0542	SCREW M6S ISO 4014 M12X50 A280	183
312105-0544	SCREW M6S ISO 4014 M12X60 A280	183
312105-0547	SCREW M6S12X75RFR	173
312105-0548	SCREW M6S ISO 4014 M12X80 A280	183
312111-0307	SCREW	137
312111-0325	SCREW MC6S5X10FZB	159
312111-0451	SCREW MC6S8X20FZB	201
312115-0224	SCREW S 3X10 A4 80	151
312115-0226	SCREW MC6S ISO 4762 M3X12 A280	151
312115-0291	SCREW MC6S ISO 4762 M4x12 A280	155, 157, 167
312115-0293	SCREW MC6S ISO 4762 M4X16 A280	225
312115-0327	SCREW MC6S ISO 4762 M5X12 A280	129, 179
312115-0329	SCREW MC6S ISO 4762 M5x16 A280	75, 77, 79, 81, 129
312115-0331	SCREW MC6S ISO 4762 M5X20 A280	129, 175, 225
312115-0333	SCREW MC6S ISO 4762 M5x25 A280	191, 193, 195
312115-0366	SCREW MC6S ISO 4762 M6X12 A280	53, 55, 223
312115-0370	SCREW MC6S ISO 4762 M6x20 A280	137, 223
312115-0371	SCREW 6X22 A4 80	225
312115-0372	SCREW MC6S ISO 4762 M6x25 A280	113
312115-0374	SCREW MC6S ISO 4762 M6x30 A280	155, 157, 163
312115-0378	SCREW MC6S ISO 4762 M6X40 A280	155, 157
312115-0449	SCREW MC6S ISO 4762 M8X16 A280	85, 87, 175, 233
312115-0455	SCREW MC6S ISO 4762 M8X30 A280	95
312115-0457	SCREW MC6S ISO 4762 M8x35 A280	107
312115-0460	SCREW MC6S ISO 4762 M8X45 A280	233
312125-0222	SLOTTED CHEESE HEAD ISO 1207 M3x8 RFR	155, 157
312125-0226	SLOTTED CHEESE HEAD ISO 1207 M3X12 RFR	155, 157
312125-0230	SLOTTED CHEESE HEAD ISO 1207 M3X20 RFR	163, 191, 193, 195
312125-0287	SLOTTED CHEESE HEAD ISO 1207 M4X8 RFR	163
312125-0289	SLOTTED HEMCS4X10RFR	191, 193, 195
312125-0325	SLOTTED HEMCS5X10RFR	191, 193, 195
312125-0364	SCREW,SLOTTED HEAD MCS 6x10 RFR	165
312132-0287	SLOTTED PAN HEAD ISO 1580 M4X8 MSGFN	155, 157
312145-0291	SLOTTED HEAD SCREW MFS 4x12 A4	85, 87, 223
312155-0291	SCREW MF6S DIN 7991 M4x12 A480	127, 155, 157, 191, 193, 195
312155-0295	SCREW MF6S DIN 7991 M4x20 A480	175
312155-0297	SCREW MF6S DIN 7991 M4x25 A480	123
312155-0299	SCREW MF6S DIN 7991 M4x30 A480	115, 143, 145
312155-0323	SCREW MF6S DIN 7991 M5X8 A280	139
312155-0327	SCREW MF6S DIN 7991 M5x12 A280	151, 191, 193, 195
312155-0366	SCREW MF6S DIN 7991 M6x12 A280	89, 91
312155-0368	SCREW MF6S DIN7991 M6X16 A280	189
312155-0370	SCREW MF6S DIN 7991 M6X20 A280	123, 155, 157
312155-0372	SCREW MF6S DIN 7991 M6X25 A280	139, 155, 157
312155-0449	SCREW MF6S DIN 7991 M8X16 A280	175
312155-0453	SCREW MF6S DIN 7991 M8x25 A280	175
312155-0457	SCREW MF6S DIN 7991 M8X35 A280	191, 193, 195
312155-0459	SCREW MF6S8X40RFR	139
312303-0374	STUD SCREWMPS 6X25 RFR	113
312303-0548	STUD SCREWMPS 12X70 RFR	173
312311-0327	SET SCREW FULL DOGPOINT ISO 4028 M5X12	107
312318-0218	SET SCREW CUP POINT ISO 4029 M3X4 RFR	187
312318-0285	STOP SCREW ISO 4029 M4x6 A4	23, 35, 133
312318-0289	SET SCREW CUP POINT ISO 4029 M4X10 RFR	129
312318-0323	SET SCREW CUP POINT ISO 4029 M5X8 RFR	15, 17, 19, 183
312318-0325	STOP SCREW SK6SS5X10RFR	113
312318-0331	SET SCREW CUP POINT ISO 4029 M5X20 RFR	179
312318-0362	SET SCREW CUP POINT ISO 4029 M6x8 RFR	149, 191, 193, 195
312318-0368	SET SCREW CUP POINT ISO 4029 M6x16 RFR	21
312318-0451	SET SCREW CUP POINT ISO 4029 M8X20 RFR	21
312605-0310	NUT,HEXAGON M6M 3 A2 80	151, 155, 157, 191, 193, 195
312605-0312	NUT,HEXAGON,M4 RFR	127, 155, 157
312605-0314	NUT,HEXAGON,M6M5 Stainless	151, 167, 179
312605-0316	NUT,HEXAGON A280 M6M6	21, 101, 103, 113, 133, 141, 147, 151, 153, 155, 157, 167, 175, 187, 189
312605-0318	NUT,HEXAGON,M8 RFR	21, 27, 29, 95, 123, 125, 133, 135, 141, 149, 151, 189, 223
312605-0320	NUT,HEXAGON,M10 A280	23, 107, 123, 167, 175
312605-0322	NUT,HEXAGON,M12 RFR	173
312605-0324	NUT,HEXAGON,M16 A280	123
312705-0314	NUT,DOMED CAP,HEXAGON,M5	151
312705-0316	NUT,DOMED CAP,HEXAGON,M6	147, 155, 157
312805-0106	NUT,ROUND,WITH SLOTS,M30x1,5	171
312810-0316	LOCK NUT 6FZB	201
312810-0318	LOCK NUT 8FZB	201
312810-0322	LOCK NUT 12-8. FZB	201
312810-0324	LOCK NUT 16 FZB	171, 201
312811-0316	LOCK NUT M6RFR	181, 199
312812-0314	NUT,HEXAGON,LOCK,WITH NYLON,M5	167
312812-0316	NUT,HEXAGON,LOCK,WITH NYLON INSERT,M6	15, 17, 19, 41, 69, 85, 87
312812-0318	LOCK-NUT,HEXAGON,WITH NYLON,M8	15, 17, 19, 69, 191, 193, 195
312901-0324	NUT M6M16VFZB	201
312902-0316	NUTS,HEXAGON,LEFT HAND THREAD,M6	167
312911-0111	THREADED INSERTS M4X2,0D	227
312911-0115	THREADED INSERTS M5X2,0D	227

Part No	Description	Page No
312911-0117	THREADED INSERTS M6X1,0D	227
312911-0118	THREADED I M6X1,5D	227
312911-0119	THREADED INSERTS M6X2,0D	227
312911-0125	THREADED INSERTS M8X1,0D	227
312911-0126	THREADED I M8X1,5D	227
312911-0127	THREADED INSERTS M8X2,0D	227
312911-0129	THREADED INSERTS M10X1,0D	227
31390-0110	FF-ELEMENT BOTTOM	179
315101-0153	WASHER BRB 6,4x12 FZB	41
315101-0178	WASHER BRB 13x24 FZB	173, 177
315105-0124	WASHER,PLAIN ROUND 3,2x6	151, 155, 157, 191, 193, 195
315105-0136	WASHER,PLAIN ROUND 4,3x8 Stainless	33, 35, 113, 127, 137, 151, 155, 157, 191, 193, 195, 225
315105-0146	WASHER,PLAIN ROUND 5,3x10 Stainless	15, 17, 19, 123, 129, 137, 151, 167, 169, 171, 179, 191, 193, 195, 225
315105-0153	WASHER,PLAIN ROUND 6,4x12 Stainless	23, 69, 89, 91, 101, 103, 107, 109, 111, 113, 123, 125, 127, 129, 133, 135, 137, 139, 141, 147, 149, 151, 153, 155, 157, 167, 179, 181, 183, 187, 189, 191, 193, 195, 225
315105-0165	WASHER,PLAIN ROUND 8,4x16 Stainless	23, 25, 33, 35, 69, 101, 107, 111, 123, 125, 127, 129, 133, 135, 139, 141, 147, 151, 155, 157, 187, 189, 191, 193, 195, 203, 225
315105-0173	WASHER,PLAIN ROUND 10,5x22 STAINLESS	53, 55, 111, 123, 131, 133, 191, 193, 195
315105-0178	WASHER,PLAIN ROUND 13x24	111, 141, 183
315105-0186	WASHER,PLAIN ROUND 17x30	123
315111-0165	WASHER TBRB8,4X16FZB	113
315111-0186	WASHER TBRB 17x30 FZB	171
315115-0153	WASHER TBRB 6,4x12 Stainless	15, 17, 19, 109, 147, 175, 181, 187, 223, 225
315115-0165	WASHER TBRB 8,4x16 Stainless	15, 17, 19, 23, 25, 27, 29, 113
315115-0178	WASHER TBRB 13x24 Stainless	23, 35
315121-0153	WASHER TBRSB 6,4x22 FZB	141, 159, 177
315121-0179	WASHER BRSB13,5X36FZB	201
315125-0146	WASHER	137
315125-0153	WASHERS,PLAIN ROUND,CHAMFERED 6,4X22X4	95, 129, 147, 151
315125-0165	WASHERS,PLAIN ROUND,CHAMFERED 8,4X26X5	107
315202-0102	O-RING 4,1x1,6	225
315202-0106	O-RING 8,1x1,6	225
315202-0108	O-RING 10,1x1,6	225
315202-0110	O-RING 12,1x1,6	75, 77, 79, 81
315202-0118	O-RING 22,1x1,6	113
315202-0215	O-RING 19,2x3	113, 141
315202-0217	O-RING 24,2x3	115, 143, 145
315202-0265	O-RING 12,3x2,4	223
315202-0304	O-RINGS 64,5X3	113
315202-0306	O-RINGS 74,5X3	169, 171
315204-0116	O-RINGS 18,1X1,6	15, 17, 19
315204-0214	O-RING 17,3x2,4 VITON	95
315204-0217	O-RINGS 24,2X3	95
315204-0301	O-RINGS 49,5X3	95
315204-0305	O-RINGS 69,5X3	179
315204-0309	O-RINGS 89,5X3	13
315204-0526	O-RING 36,1X3,53VITON	199
315211-0103	GASKETS,BOLT HEAD M6	75, 77, 79, 81
315220-0210	SEAL RING V-60S	169, 171
315221-0177	SEALING RINGS,TYPE A 35X52X7	171
315230-0157	"SEAL RING,GR-NEEDLE BEARINGS 12X16X3"	223
315233-0101	PLAIN ROUND,NYLON M5	99
315233-0109	PLAIN ROUND,NYLON R1/8"	103, 113
315233-0110	PLAIN ROUND,NYLON R1/4"	15, 17, 19, 161
315233-0111	PLAIN ROUND,NYLON R3/8"	103, 113
315233-0113	PLAIN ROUND,NYLON R1/2"	103, 161
315234-0101	PLAIN ROUND,COPPER M5	107, 175
315234-0109	PLAIN ROUND,COPPER R1/8",M10	225
315234-0110	PLAIN ROUND,COPPER R1/4"	177
315234-0113	PLAIN ROUND,COPPER R1/2",M20	177
315237-0106	GASKET	225
315237-0107	GASKET	225
315237-0111	PLAIN ROUND,ALUMINIUM R3/8"	141
315250-0103	GASKET 48/38	141
315250-0104	GASKET 61/51	141
315410-0106	WASHERS,LOCK 30X38	171
315701-0199	KEYS,PARALLEL WITH ROUND ENDS 5X5X16	159
315701-0263	KEYS,PARALLEL WITH ROUND ENDS 8X7X20	173
315701-0271	KEYS,PARALLEL WITH ROUND ENDS 8X7X45	173
315751-0103	RETAINING RINGS FOR SHAFT 6	167
315751-0112	RETAINING RINGS FOR SHAFT 15	167
315751-0116	RETAINING RINGS FOR SHAFT 20	129
315752-0123	CIRCLIP SGH32	159
315755-0107	RETAINING RINGS,RADIAL ASSEMBLY 5	187
315755-0109	RETAINING RINGS,RADIAL ASSEMBLY 7	187
31653-0002	FIX PLATE 39x85x0,5mm	181
321101-0143	FLANGE BUS 8F7X8	15, 17, 19
321120-0101	Bushing, 6x8x6	187
321120-0132	Bushing, 18x20x20	225
321308-0202	BALL BEARING 15x32x9	159
32644-0000	WASHER	225

Part No	Description	Page No
33408-0000	BEARING	223
342701-0205	BUSHING,INT./EXT.G-THREAD G1/2"-G1/4"	161
342708-0107	ACCESSORIES,REINFORCING RING VSH 12X1	41, 103, 227
342708-0109	ACCESSORIES,REINFORCING RING VSH 15X1	41, 233
342711-0115	ACCESSORIES,PLUG PL-15 AND 16	9, 11
342713-0209	PLUG,EXT.G-THREAD,HEXAGON SOCKET G1/8"	225
342713-0210	PLUG,EXT.THREAD,HEXAGON SOCKET 1/4"Brass	155, 157
342716-0203	REDUCER 6-8	39, 103
342722-0197	STRAIGHT COUPLING, D=6 mm - M5	179
342728-0103	PIPE COUPLING 8 mm	103
342732-0102	ELBOW PIPE JOINT,Ext.thread,D=6 mm G1/8	167
342736-0109	ELBOW CONNECTION W-12	9, 11
342746-0114	T-PIPE CONNECTION T-15	103
342748-0102	T-CONNECTION 6 mm	103
342772-0113	ELBOW FITTING, 6 - G1/8	167
342797-0121	BANJO CONNECTION,RINGPIECE 6-1/8"	23, 167
342920-0122	STRAIGHT COUPLING,EXT.THREADED 8/6-R1/4"	179
342920-0141	STRAIGHT COUPL.,EXT.THREADED 12/10-R3/8"	155, 157
342920-0151	STRAIGHT COUPL.,EXT.THREAD.15/12,5-R1/2"	155, 157
342921-0112	STRAIGHT COUPLING,EXT.THREADED 6/4-6M	101
342921-0113	STRAIGHT COUPLING,EXT.THREADED 6/4-G1/8"	113
342921-0121	STRAIGHT COUPLING,EXT.THREADED 8/6-G1/8"	103
342930-0122	ELBOW 90 COUPL.,EXT.THREAD 8/6-R1/4"	103
342930-0141	ELBOW 90 COUPL.,EXT.THREAD 12/10XR3/8"	155, 157
342930-0151	ELBOW 90 COUPL.,EXT.THREAD 5/12,5-R1/2"	155, 157
342940-0141	T-COUPLING,EXT.THREAD 12/10-R3/8"	155, 157
342960-0112	BULKHEAD COUPLING 6/4	103, 113
342960-0121	BULKHEAD COUPLING 8/6-6/4	37, 103, 205
342960-0122	BULKHEAD COUPLING 8/6	103
342980-0113	BANJO-CONNECTION,RING 6/4-G1/8"	105, 175
342980-0114	BANJO-CONNECTION,RING 6/4-G1/4"	15, 17, 19, 37, 205, 221
342980-0122	BANJO-CONNECTION,RING 8/6-G1/4"	37, 205, 221
342980-0303	BANJO-HOLLOW BOLT COUPL,EXT.THR.01-G1/8"	105, 175
342980-0304	BANJO-HOLLOW BOLT COUPL,EXT.THR.01-G1/4"	15, 17, 19, 37, 205, 221
342991-0101	HOSE CLIP,WORM DRIVE TYPE (13)-16	177
342991-0106	HOSE CLIP,WORM DRIVE TYPE (30)-36	103, 147
351121-0110	CABLE RHH 25	227
351123-0165	CABLE FKK,4x2,5	43, 47, 63, 67
351150-0167	CABLE OLFLEX 4x6 MM2	57, 59
351150-0403		57
351150-0403	CABLE OLFLEX 3x0,75 MM2	43, 47, 57, 59, 63, 67
351150-0404	CABLE OLFLEX 4x0,75 MM2	71
351150-0405	CABLE,OLFLEX 5x0,75 MM2	43, 47, 63, 67
351150-0406	CABLE OLFLEX 7x0,75 MM2	43, 47
351150-0407	CABLE OLFLEX 12x0,75 MM2	43, 47, 63
351150-0412	CABLE OLFLEX 3x1,5mm2	57, 59
351150-0425	CABLE OILFLEX 25x0,75mm2	57, 59
351172-0102	CABLE AWM D.BLUE 0,75mm2	43, 47, 57, 59, 63, 67, 69
351173-0102	CABLE AWM LIGHTBLUE 0,75mm2	57, 59
351173-0104	CABLE AWM L.BLUE 1,5mm2	69
351175-0104	CABLE AWM GN/YE 1,5mm2	69
351175-0105	CABLE AWM GN/YE 2,5mm2	63, 67, 69
351175-0107	CABLE AWM GN/YE 6mm2	57, 59
351176-0102	CABLE AWM RED 0,75mm2	57, 59
351179-0104	CABLE AWM BLACK 1,5mm2	69
351179-0105	CABLE AWM BLACK 2,5mm2	63, 67, 69
351179-0107	CABLE AWM BLACK 6mm2	57, 59, 69
351179-0110	CABLE AWM BLACK 25MM2	43, 47, 63, 67
351180-0102	CABLE AWM ORANGE 0,75mm2	57, 59, 69
352100-0107	CABLE GLANR.18,6-12	179
352101-0105	GLANDS,Lead-in,IP44 PR22,5	47
352101-0108	GLANDS,Lead-in,IP44 PR47	57, 59
352103-0100	CABLE GLAND STR 9	167
352103-0101	CABLE GLAND ST 9	57, 59
352103-0105	CABLE GLAND STR 11	165
352103-0106	CABLE GLAND ST 11	151, 165
352103-0108	CABLE GLAND ST 13	163
352103-0111	CABLE GLAND ST 16	57, 59, 163, 165
352103-0116	CABLE GLAND ST 21	163
352110-0103	CRAMP TK 14-20	177
352113-0102	CLIP-STRIP,Black 188x4,8mm	163
352113-0202	ANCHOR TM2S8-M REPL.BY 352113-205	163
353001-0102	END SLEEVE 0,75mm2	163
353021-0212	FEED THROUGH TERMINAL WDU 2,5 Beige	69
353021-0216	BY PASS TERMINAL WDU 2,5 Blue	63, 67, 165
353021-0219	BY PASS TERMINAL WDU 35	165
353024-0204	EARTH TERMINAL WPE 2,5	165
353024-0205	EARTH TERMINAL WPE 4	69
353024-0206	EARTH TERMINAL WPE 6	57, 59
353031-0201	END BRACKET EW35	165
353032-0004	END PLATE WAP 2,5-10 Beige	69
353033-0105	PARTITION WTW 2,5-10	165
353042-0004	RAIL TS 35/7,5	69
353101-0123	CABLE SHOE 0,5-1,5mm2 Red	141
353101-0126	CABLE SHOE	141
353103-0140	CABLE SHOE	57, 59

Part No	Description	Page No
353104-0175	CABLE SHOEYAV 25 M6	227
353245-0004	GLAND,EMC,EXTENDED WITH INSERT PR 22,5	63, 67, 71
359000-0400	MARKING CO2/4"0"	103, 167
359000-0401	MARKING COLLAR 2/4 "1" Yellow	103, 167
359000-0402	MARKING COLLAR 2/4 "2" Yellow	167
359000-0403	MARKING COLLAR PA2/4 "3" Yellow	103
359000-0407	MARKING COLLAR PA2/4 "7" Yellow	103, 167
359011-0807	MARKING PLATES 5-FW 1-50	165
35918-0000	SHAFT	35
35919-0000	COMPRESSION SPRING	35
36325-0000	KNOB	35
36816-0000	LINK	93
36817-0000	CLAMPING ELEMENT	93
36821-0002	SHEAR PIN	93
37296-0000	ARM	93
37535-0000	SUPPORTING PART 56x56x31,5mm	181
37536-0000	INSULATOR BODY Lower 70x70x15mm	181
37537-0000	SPACER RING Lower 72x78x1mm	181
38535-0002	LOCKING FINGER	93
43426-0000		47, 49
43756-0000		43, 57
43851-0000		59
44093-0000		63
441304-0400	MOVABLE FORMING RING	13
441307-0300	UPPER TUBE SUPPORT	13
441328-0000	GUIDE PIN	117
441355-0000	BLEEDING SCREW	223
441385-0000	HUB	223
441483-0000	CYLINDER BRACKET	23
441486-0400	DIVIDED FORMING RING	13
441499-0000	HOLDER	103
441500-0000	HOSE	103
441589-0000	SHIM	171
441597-0000	BEARING CONSOLE	159
441600-0000	LINK ARM	113
441726-0000	COMPRESSION SPRING	83
441727-0000	CUTTING JAW	223
441752-0000	GABLE PLATE	191, 193, 195
441753-0000	FASTENING PLATE	191, 193, 195
441754-0000	SPACER	191, 193, 195
441764-0000	SHAFT	223
441792-0000	HEAD	115, 143, 145
441793-0000	BEARING HOUSING	115, 143, 145
441794-0000	PIVOT PIN	115, 143, 145
441795-0000	WASHER	115, 143, 145
441796-0000	SEAL	115, 143, 145
441797-0000	SHIM	115, 143, 145
441798-0100	ROTOR	113
441799-0000	ATTACHMENT	115
441800-0000	STRAIGHT FITTING	145
441811-0100	ROTOR	141
441894-0000	SLEEVE	175
441895-0000	BUFFER RING	107, 175
441896-0000	WASHER	107, 175
441918-0000	BRACKET	35
44990-0000		71
450628-0000	STEERING REPBY 0312105-0370	15, 17, 19
451117-0000	ROLL	33, 35
451148-0000	BRACKET	33, 35
451149-0000	SHAFT	33, 35
456009-0000	LINK	83
456042-0000	SCREW	25
456129-0002	FORCE SPRING	221
456181-0000	SPACER	33, 35
456182-0000	PLATE	35
456199-0000	LOCK PLATE	35
456230-0000	ANGLE BRACKET	35
456249-0000	PROTECTIVE COVER	163
456293-0000	PIPE	141
456309-0500	LOWER FORMING RING	13
456311-0000	TORSION SPRING RIGHT	223
456331-0000	ANGLE BRACKET	191, 193, 195
456395-0000	GASKET	141
456396-0000	GASKET	141
456527-0000	BENDING ROLLER	13
456731-0002	PIPE	221
456837-0000	HOLDER	21
456854-0001	CRAMP	103
456854-0002	CRAMP	103
456872-0000	LOCK PLATE	33
456905-0000	FASTENING PLATE	25
456907-0000	LOCK PLATE	25
456917-0000	HEAT GUARD	185
456996-0000	ROLLER	13
457367-0000	SHAFT	15, 17, 19
457368-0000	SPRING	15, 17, 19

Part No	Description	Page No
458054-0000	BUSHING REPBY 0548337-0000	15, 17, 19
458383-0100	PAPER REEL HOLDER	9, 11
469041-0000	HOLDER	27, 29
469047-0000	ANGLE	27, 29
469068-0000	SLEEVE	155, 157
469078-0000	HOLDER	27, 29
469085-0000	RULER	9, 11
469091-0300	FILLER TUBE	221
469095-0000	HOLDER	123
469096-0000	LEG	123
469461-0000	ROLL	13
469527-0000	SETTING PLATE	183
469745-0000	BRACKET	33
469972-0001	FILLING TUBE LOWER	93
469972-0002	FILLING TUBE LOWER	93
469973-0000	PRESSURE FLANGE	93
47080-0000		47, 49
47200-0000		43, 57
47332-0000		59
47615-0000		63
486268-0000	NUT	139
48679-0000		71, 91
490518-0000	HOLDER	21
490618-0000	BRANCH	103
490850-0000	PRESSURE FLANGE	93
490869-0000	FILLING TUBE LOWER	93
490873-0000	HOLDER	13, 15, 17, 19
490874-0000	CANTILEVER	15, 17, 19
490875-0000	FASTENING PLATE	15, 17, 19
490876-0000	BRACKET	15, 17, 19
490901-0000	SEAL	13
490902-0000	AXLE SUPPORT	13
490903-0000	SHAFT	13
490932-0000	SLEEVE	113
490933-0000	NUT	113
490940-0000	CYLINDER	223
490942-0000	COMPRESSION SPRING	175, 223
490943-0000	COMPRESSION SPRING	223
490980-0000	CYLINDER	107, 175
491018-0000	BRACKET	223
491022-0000	CYLINDER BRACKET	23
491141-0000	THROTTLE	93
491142-0000	FLOAT	93

Part No	Description	Page No
491153-0000	COMPRESSION GLAND	25
491209-0002	PIPE	221
491227-0000	SLIDER	99
491228-0001	SHAFT	99
491228-0002	SHAFT	99
491229-0000	BUSHING	99
491230-0000	GRUB SCREW	99
491231-0000	BUSHING	99
491258-0000	DRIVE WHEEL	169
491265-0000	PLATE	109
491266-0000	SHIM	109
491270-0000	FILLING TUBE LOWER	93
491271-0000	PRESSURE FLANGE	93
491289-0000	TENSION SPROCKET	233
491291-0000	LID	171
491414-0000	PLATE	95
491415-0000	FASTENING PLATE	95
491418-0001	O-RING	95
491441-0000	HOOD	95
491458-0000	LINK	93
491542-0000	CANTILEVER	13, 15, 17, 19
491630-0000	SCREW	159
491681-0000	GASKET	225
491731-0000	WASHER	117
491732-0000	WASHER	117
491771-0000	BRACKET	175
491772-0001	SPINDLE	175
491802-0000	WASHER	175
491803-0000	HOUSE	175
491807-0000	PIPE	103
491844-0000	HOLDER	15, 17, 19
491845-0000	BRACKET	15, 17, 19
491848-0000	SHAFT	171
491850-0100	DRIVE WHEEL	97
491851-0000	LID	169
491873-0000	CANTILEVER	15, 17, 19
491880-0000	FASTENING PLATE	15, 17, 19, 221
491962-0000	RAIL	225
491965-0000	CAM	191, 193, 195
491976-0100	PHOTOCELL UNIT	13
51133-0000		49
51134-0000		47, 49
51495-0000		43, 57

Part No	Description	Page No
51891-0000		59
522187-0000	HOLLOW SCREW	15, 17, 19
52471-0000		63
525233-0000	GASKET 16x2x6mm	181
52807-0000		43
52817-0000		47
53032-0000		71
53033-0000		57
53038-0000		59, 61
53050-0000		63, 65
53069-0000		49, 51
536374-0000	WASHER	15, 17, 19
544894-0000	SPRING	95
548599-0000	WASHER	139
550487-0000	FLOAT	93
553586-0000	SPACER	199
556422-0000	PROTECTION	191, 193, 195
556601-0000	BRACKET	139
556604-0000	COVER PLATE	139
556624-0000	FRAME BRACKET	139
558861-0100	TETRA WEDGE EL-KIT	7
558862-0100	ELECTRIC MATERIALS	45, 207
558863-0100	ELECTRICAL DOCUMENT	207
558892-0100	TETRA WEDGE EL-KIT	7
558893-0100	ELECTRIC MATERIALS	49, 209
558894-0100	ELECTRICAL DOCUMENT	209
559466-0100		57
559466-0100	EL. RK SERVOKIT	7
559467-0100		57
559467-0100	ELECTRICAL DOCUMENT	213
559476-0100		59
559476-0100	EL. RK TETRA WEDGE	7
559477-0100		59
559477-0100	ELECTRICAL DOCUMENT	215
559478-0100		59, 215
559478-0100	ELECTRIC MATERIALS	215
559491-0100		63
559491-0100	EL. RK TETRA WEDGE	7
559492-0100		63
559492-0100	ELECTRICAL DOCUMENT	217
559493-0100		63, 217
559493-0100	ELECTRIC MATERIALS	217
559494-0100		57
559494-0100	ELECTRICAL MATERIAL	213
559521-0100	EL. RK SERVOKIT	7
559522-0100		49
559522-0100	ELECTRICAL DOCUMENT	211
559523-0100		49, 211
559523-0100	ELECTRICAL MATERIAL	211
563451-0000	BEAM 1	201
563452-0000	BEAM 2	201
563453-0000	BEAM 3	201
563454-0000	BEAM 4	201
563455-0000	GABLE RIGHT	201
563456-0000	GABLE LEFT	201
563457-0000	CORNER BEAM	201
563458-0000	CROSS BAR LEFT	201
563459-0000	CROSS BAR	201
564543-0000	CLEANING PIPE	197, 221
565461-0000	FILLING TUBE UPPER	95
565462-0100	LOCK PLATE	27, 29
565570-0000	SUPPORT	201
566404-0002	TIMING BELT	53, 55
568583-0000	FORK	95
570523-0000	CAP	203
570524-0000	BEARING	203
571103-0000	NOZZLE	13
571532-0000	BRACKET	13
571534-0000	PLATE	25
571535-0000	CANTILEVER	25
571536-0000	CANTILEVER	25
571537-0000	RING	13
571539-0000	RING	13
571540-0000	PIN	13
571543-0000	BEARING PLATE	21
571544-0000	BEARING PLATE	21
574337-0000	BRACKET	21
574341-0000	FORK	21
574346-0000	ROLL	21
574347-0000	COUNTER ROLLER	21
574384-0000	FILLING TUBE 250S	95
574393-0000	LOCK PLATE	33
574395-0000	SHAFT	33
574396-0000	BRACKET	33
574397-0000	ROLL	33
574398-0000	ROLL	33

Part No	Description	Page No
574399-0000	ROLL	33
574400-0000	ROLL	33
574401-0000	ROLL	33
574402-0000	ROLL	33
574403-0000	ROLL	33
574404-0000	BRACKET	25
574412-0000	FILLING TUBE 250S	93
574413-0000	PRESSURE FLANGE 250S	93
574414-0000	FLOATER 250S	93
574416-0000	BRACKET	27, 29
574417-0000	ROLL	27, 29
574418-0000	ROLL	27, 29
574431-0000	CLEANING PIPE	199
574456-0000	BRACKET	33
574472-0000	ARM	93
574475-0000	LINK	93
574479-0000	ROLL	25
574480-0000	ROLL	25
574481-0000	ROLL	25
577231-0000	PRESSURE FLANGE	93
578216-0000	ARM	221
578628-0000	BEARING HOUSING	73
590321-0000	BRACKET	189
590328-0000	SHAFT	187
590329-0000	SHAFT	187
590331-0000	ROLLER	187
590333-0000	GUIDE WHEEL	187
590334-0000	LINK	187
590335-0000	BRACKET	187
590336-0000	HOLDER	187
591417-0000	CARTON STATION	99
591418-0000	TURNING DEVICE	167
591419-0000	PUSHER	167
591422-0000	RIGGING SCREW	167
591423-0100	SHOCK ABSORBER	73
591424-0100	SHOCK ABSORBER	73
591425-0100	VOLUME FLAP	73
591426-0100	VOLUME FLAP	73
591427-0000	STOPPER	89
591428-0000	STOPPER	91
591429-0000	SPRING	89
591430-0000	SPRING	91
591432-0000	SPACER	89, 91

Part No	Description	Page No
591433-0000	SLEEVE	89, 91
591434-0000	WASHER	89, 91
591435-0000	CARRIER	85, 87
591436-0000	SHAFT	85, 87
591437-0000	DOWEL	85, 87
591438-0000	SHAFT	85, 87
591439-0000	VOLUME FLAP	85, 87
591440-0000	SHAFT	53, 55
591441-0000	MACHINE PLATE	9, 11
591443-0000	RAIL LEFT	107
591444-0000	RAIL RIGHT	107
591445-0000	FOLDING FLAP RIGHT	75, 77, 79, 81
591446-0000	FOLDING FLAP LEFT	75, 77, 79, 81
591451-0000	SPACER	167
591452-0000	MOUNTING PLATE	167
591453-0000	COVERING PLATE	167
591454-0000	GASKET	167
591455-0000	SPACER FRAME	111
591457-0000	BRACKET	167
591466-0000	CANTILEVER	123
591470-0000	SEAL COVER	129
591477-0000	LUG	123
591478-0000	SIDE STEERING	129
591479-0000	BOTTOM GUIDE	129
591483-0000	CURVE SEGMENT	53, 55
591484-0000	CURVE SEGMENT	53, 55
591485-0000	CURVE	53, 55
591486-0000	CURVE	53, 55
591487-0000	CLEANING BOX	141
591489-0000	EXTENSION PIPE	141
591493-0000	FRAME	141
591494-0000	SEPARATION INSERT	141
591505-0100	CHAIN GUIDE	123
591506-0000	SLIDING STRIP	127
591507-0000	FASTENING PLATE	127
591508-0000	SPACER PART	127
591509-0000	BRACKET	167
591510-0000	WASHER	167
591512-0000	SHAFT	167
591514-0100	TURNING DEVICE	97
591515-0000	CANTILEVER	123
591516-0000	SPACER PLATE	123
591522-0000	PLATE	123

Part No	Description	Page No
591525-0000	BRACKET	107
591527-0000	BLOCKING PIECE	123
591529-0000	BLOCK	175
591530-0000	GUIDE ROD	133
591542-0000	SHAFT	149
591545-0000	SUPPORT	183
591549-0000	GUIDE ROD	131
591550-0000	HEATING CHAMBER	179
591551-0000	SPACER PIECE	179
591552-0000	LID	179
591553-0000	FLANGE SEAL	179
591554-0000	STOP PLATE	179
591555-0000	PAPER SUPPORT	189
591556-0000	PAPER SUPPORT	189
591558-0000	SPACER DISC	123
591559-0000	VOLUME BULGE	85, 87
591560-0000	VOLUME SHIM	85, 87
591563-0000	SHAFT	191, 193, 195
591566-0000	LID	191, 193, 195
591567-0000	LACE	191, 193, 195
591568-0000	MACHINE BODY	111
591569-0000	SHIM	111
591574-0100	SLIDE RAIL	123
591575-0000	PIPE	141
591576-0000	PIPE	103
591577-0000	PIPE	103
591578-0000	PIPE	103
591579-0000	PIPE	103
591580-0000	PIN	131
591582-0100	FINGER	121
591583-0000	FINGER	135
591584-0000	SIDE PLATE LEFT	135
591585-0000	SIDE PLATE RIGHT	135
591586-0000	HOLDER	135
591587-0000	PLATE	111
591588-0000	SHIM	183
591589-0000	ANGLE BRACKET	133
591590-0000	GUIDE ROD	133
591592-0000	BRACKET	133
591593-0000	PIN	133
591605-0000	DOWEL	133
591606-0000	BRACKET	189
591607-0000	SPACER	189
591609-0000	HEAT GUARD	189
591610-0000	ANGLE BRACKET	189
591611-0000	HEAT GUARD	189
591612-0000	ANGLE BRACKET	189
591613-0000	ANGLE BRACKET	133
591615-0000	BOW CLAMP	133
591616-0000	LEAD ARM	187
591617-0000	LINK HEAD	133
591619-0000	SIDE PLATE	147
591621-0100	PROTECTIVE COVER	97
591622-0000	CHECKER PLATE	147
591623-0000	SPACER PLATE	123
591624-0000	SPACER PIPE	123
591625-0000	NUT	123
591626-0000	PROFILE	123
591627-0000	PIPE	141
591628-0000	STRUT	123
591629-0000	HOLDER	123
591630-0000	DISTRIBUTOR	103
591633-0100	SERVICE TABLE	121
591634-0100	STATION CHAIN	97
591635-0100	GUIDE RAIL	97
591636-0000	JUNCTION PIPE	141
591637-0000	ATTACHMENT	143
591638-0000	HOLDER	123
591639-0000	ANGLE BAR	141
591640-0000	PIPE HOLDER	141
591641-0000	PIPE	141
591642-0000	CONNECTION BLOCK	141
591643-0100	PRESSURE DEVICE	97
591648-0000	ANGLE BRACKET	149
591649-0000	SHAFT	149
591650-0000	GUIDE RAIL RUGHT	149
591651-0000	GUIDE RAIL LEFT	149
591652-0000	SHIM	107
591653-0000	SETTING PLATE	197
591657-0000	HOLDER PRESSURE BLOCK	175
591661-0000	AIR NOZZLE	179
591662-0000	NUT	179
591663-0000	COVER PLATE	197
591664-0100	CONNECTION BOX	163
591666-0000	FOLDING BAR	101
591667-0000	BLOCKING PIECE	175

Part No	Description	Page No
591670-0000	SETTING PLATE	197
591672-0100	CLEANING SYSTEM	97
591674-0100	ROTOR	141
591676-0100	TUBE ASSEMBLY	97
591677-0100	PULL DOWN DEVICE	97
591678-0100	FOLDING BAR	97
591679-0100	BOTTOM VALVE	97
591680-0100	GUIDE	97
591681-0100	MACHINE BODY	97
591682-0100	CANTILEVER	97
591683-0100	CABLE ASSEMBLY	97
591688-0000	HANDLE	179
591689-0000	PLATE	103
591700-0000	SIDE PLATE	147
594905-0000	PROFILE	139
594906-0000	PROFILE	139
594907-0000	PROFILE	139
594908-0000	PROFILE	139
594909-0000	PROFILE	139
594910-0000	PROFILE	139
594911-0000	PROFILE	139
594912-0000	PROFILE	139
594913-0000	PROFILE	139
594914-0000	PROFILE	139
594915-0000	PROFILE	139
594916-0000	PROFILE	139
594917-0000	PROFILE	139
594918-0000	PLATE	139
594919-0000	PLATE	139
594920-0000	PLATE	139
594921-0000	PROFILE	139
594922-0000	PROFILE	139
594923-0000	PROFILE	139
594924-0000	GUIDE RIGHT	125
594925-0000	GUIDE LEFT	125
594926-0000	GUIDE RIGHT	125
594927-0000	GUIDE LEFT	125
594928-0000	BRACKET	125
594929-0100	TABLE	137
594932-0100	FLAP SEALING UNIT	97
594933-0000	SHIM	135
594934-0000	COVER PLATE	147
594937-0000	GUIDE	149
594939-0000	CARRIER RIGHT	75, 77
594940-0000	CARRIER LEFT	79, 81
594943-0000	SIDE PLATE	147
594944-0000	CIRCUIT DIAG.C-LUB.	197
594945-0000	PANEL SURVEY	197
594946-0100	BENDING ROLLER	9, 11
594947-0100	CREASE UNIT	185
594948-0000	CARRIER RIGHT	73
594949-0000	CARRIER LEFT	73
594950-0000	WASTE CHUTE	147
594951-0000	SIDE PLATE	147
594952-0000	CREASE BAR	191, 193, 195
594953-0000	SPACER	191, 193, 195
594954-0100	CONVEYOR FRAME	9, 11
594955-0000	AIR DIAGRAM	197
594956-0000	DOCUMENT FOLDER	7
594958-0000	PIPE WATER	9, 11
594960-0000	SUPPORT BEAM	201
594961-0000	SUPPORTING SHEET	201
594962-0000	RUBBER STRIP	155, 157
594963-0000	GEAR WHEEL	13
594965-0000	COVER	147
594969-0000	PIPE RIGHT	73
594970-0000	PIPE LEFT	73
594973-0000	STEERING RAIL L	109
594974-0000	STEERING RAIL R	109
594975-0000	LINK	53, 55
594977-0000	SPLASH PLATE	107
594978-0000	MOUNTING PLATE	101
594980-0000	TEMPLATE	197
594981-0000	BEARING HOLDER	53, 55
594984-0000	SLEEVE	107
594985-0000	BRACKET	155, 157
594986-0000	TEMPLATE	197
594987-0000	TEMPLATE	197
594988-0000	TEMPLATE	197
594989-0000	FRONT PLATE	147
594990-0000	PILLAR	141
594991-0100	DISCHARGE UNIT	97
594992-0100	CONVEYING EQUIPMENT	121
594994-0000	SIDE PLATE	167
594995-0000	GASKET	167
594996-0000	PROTECTIVE COVER	167

Part No	Description	Page No
594997-0000	HOLDER	123
594998-0000	STRUT RIGHT	167
594999-0000	STRUT LEFT	167
595159-0100	CUTTING JAW RIGHT	73
595160-0100	CUTTING JAW LEFT	73
595161-0100	DRIVE UNIT	9, 11
595162-0100	STRIP APPLICATOR	9, 11
595163-0100	JAW SYSTEM	9, 11
595164-0100	VALVE PANEL FRONT	9, 11
595165-0100	SUPERSTRUCTURE	9, 11
595166-0100	STRIP APPLICATOR	185
595167-0100	STRIP GUIDE	185
595168-0200	TBA/9 WEDGE MECH.KIT	7
595170-0100	REGULAR ACCESSORIES	9, 11
595171-0100	COVERING PANEL	97
597953-0000	SPROCKET	129
597955-0000	YOKE	129
597956-0000	CRADDLE	129
597957-0000	SHAFT	129
597958-0000	SCREW	123
597959-0000	SLEEVE	129
597960-0000	GABLE PART	123
598004-0000	GABLE PLATE RIGHT	123
598005-0000	GABLE PLATE LEFT	123
598014-0100	CHAIN FEED CONVEYOR	123
598026-0000	HOLDER	133
598027-0000	ANGLE BRACKET	133
598028-0000	TIGHTENING SCREW	133
598029-0100	GUIDE	123
598030-0000	HOLDER	123
598034-0100	GUIDE RAIL	123
598035-0000	STEERING RAIL	133
60564-0000		47, 49
60733-0000		43, 57
60888-0000		59
61232-0000		63
62069-0000		71
62070-0000		57
62078-0000		59
62080-0000		63
62105-0000		49
6278-0000	WASHER	101
648112-0200	FINAL FOLDER	9, 11
649480-0100		71
649480-0100	ELECTRIC EQUIPMENT	7
66400-0000		43
66401-0000		47
68444-0101	SHUNT RESISTOR FOR SSR	69
751017-0000	GASKET	141
751070-0000	DISTRIBUTOR BLOCK	113
751073-0002	PIPE 240	221
751074-0002	PIPE 241	221
751080-0002	PIPE 200	221
751109-0000	RAIL RIGHT	109
751110-0000	RAIL LEFT	109
751125-0001	RAIL	165
751129-0000	CONNECTION BOX	165
751144-0002	PIPE 201	221
751162-0000	INLET PIPE	141
751163-0000	COVER	107, 175
751230-0000	PLAIN BEARING	13
751267-0000	CANTILEVER	27, 29
751283-0000	ROLL	27, 29
751284-0000	ROLL	27, 29
751287-0000	PLATE	27, 29
751288-0000	PLATE	27, 29
751318-0000	SHAFT	35
751333-0000	SETTING PLATE	25
751334-0000	SPACER	25
751476-0000	CANTILEVER	221
751491-0000	ROLL	25
751492-0000	ROLL	25
751494-0000	ROLL	25
751495-0000	ROLL	35
751496-0000	ROLL	35
751497-0000	ROLL	35
751498-0000	ROLL	35
751499-0000	ROLL	35
751500-0000	ROLL	35
751501-0000	ROLL	35
751502-0000	ROLLER	21
751503-0000	COUNTER ROLLER	21
751552-0000	ARM	175
751553-0000	ARM	175
751554-0001	SHAFT	175
751554-0002	SHAFT	175

Part No	Description	Page No
751555-0000	BUSHING	175
751557-0000	SLEEVE	175
751579-0000	ADJUSTING SCREW	75, 77, 79, 81
751580-0000	SHIM	75, 77, 79, 81
751604-0000	SPRING	95
751743-0000	PISTON	223
751769-0000	SLEEVE	223
752009-0000	RULERPART R	75, 77
752010-0000	RULERPART R	75, 77
752011-0000	RULERPART L	79, 81
752012-0000	RULERPART L	79, 81
752038-0000	SHIM	23
752047-0000	BUSHING	21
752057-0000	STOP	203
752083-0000	PISTON	107, 175
752085-0000	SPRING	221
752093-0000	HOLDER	147
752115-0000	PLUNGER	75, 77, 79, 81
752126-0000	FORMING ROLLER	25
752127-0000	FORMING ROLLER	25
752128-0000	FORMING ROLLER	25
752129-0000	FORMING ROLLER	27, 29
752130-0000	FORMING ROLLER	27, 29
752131-0000	FORMING ROLLER	33
752132-0000	FORMING ROLLER	33
752133-0000	FORMING ROLLER	33
752134-0000	FORMING ROLLER	33
752135-0000	FORMING ROLLER	33
752136-0000	FORMING ROLLER	33
752137-0000	FORMING ROLLER	33
752138-0000	FORMING ROLLER	21
752140-0000	COUNTER ROLLER	21
752141-0000	FORMING ROLLER	25
752142-0000	FORMING ROLLER	25
752143-0000	FORMING ROLLER	25
752144-0000	FORMING ROLLER	27, 29
752145-0000	FORMING ROLLER	27, 29
752146-0000	FORMING ROLLER	33
752147-0000	FORMING ROLLER	33
752148-0000	FORMING ROLLER	33
752149-0000	FORMING ROLLER	33
752150-0000	FORMING ROLLER	33
752151-0000	FORMING ROLLER	33
752152-0000	FORMING ROLLER	33
752153-0000	FORMING ROLLER	21
752155-0000	COUNTER ROLLER	21
752156-0000	FLANGE BUSHING	25, 33
752179-0000	BOW CLAMP	221
752181-0000	GUIDING ARBOR	221
752184-0000	SPRING HOLDER	221
752185-0000	SHAFT	33
752186-0001	SHAFT	27, 29
752186-0002	SHAFT	25
752186-0003	SHAFT	21, 33
752186-0004	SHAFT	21, 27, 29, 33, 35
752186-0005	SHAFT	21, 25, 35
752186-0006	SHAFT	25, 33
752186-0007	SHAFT	35
752186-0008	SHAFT	25
752186-0009	SHAFT	25
752186-0010	SHAFT	27, 29
752186-0011	SHAFT	27, 29
752186-0012	SHAFT	21, 27, 29
752187-0000	SHAFT	25
752200-0000	CANTILEVER	191, 193, 195
752213-0000	BOTTOM PANEL	111
752240-0000	LID	191, 193, 195
752282-0000	CONNECTION RIGHT	223
752284-0000	SHAFT	223
752288-0000	SLEEVE	75, 77, 79, 81
752289-0000	CLAMP RIGHT	223
752425-0000	LINK	89, 91
752476-0000	SCREW	75, 77, 79, 81, 223
752485-0000	SUPPORTING ARM	113
752495-0100	ATTACHMENT	197
752496-0000	CLEANING PIPE	199
752497-0000	NUT	199
752498-0000	CATCH	199
752499-0000	RING	199
752517-0000	CLEANING PIPE	199
752521-0000	CATCH	199
752534-0000	PLATE	191, 193, 195
752537-0000	BENDING ROLLER	191, 193, 195
752538-0000	SHAFT	191, 193, 195
752539-0000	PLATE	191, 193, 195
752542-0002	BENDING ROLLER	191, 193, 195

Part No	Description	Page No
752543-0002	SHAFT	191, 193, 195
752544-0001	SHIM	191, 193, 195
752544-0002	SHIM	191, 193, 195
752554-0000	SPACER	221
752574-0000	END PIECE	223
752575-0000	DOLLY 200S	223
752615-0000	SPACER	85, 87
752637-0003	BENDING ROLLER	221
752694-0000	FILLING TUBE UPPER	95
752774-0000	PLUNGER	53, 55
752858-0000	POINTER	13
90002-0004	BLANK-OFF PLUG 22,5	165
90005-0007	WASHER,Bolt head 8,7x14	103
90005-0048	WASHER M18x1,5 COPPER	113
90005-0056	WASHER,Plain Round,nylon 6x8,5	175
90005-0060	WASHER,Plain round 6,4x18	89, 91, 147
90007-0146	FUSE 3P 6A K	63, 67, 69
90012-0058	GLAND	227
90012-0072	GLAND FITTING **	163
90012-0077	GLAND FITTING	113
90015-0010	BUSHING	167
90015-0023	GLANDS,Lead-in,IP67	57, 59, 163
90015-0028	LEAD-IN BUSHING	113
90017-0016	HANDLE,STAINLESS	155, 157
90023-0048	INPUT MODULE A&B	57, 59
90023-0051	OUTPUT MODULE A&B	57, 59
90023-0318	ARM	57, 59
90024-0037		63, 67
90024-0037	Varistor filter, 150 V RMS/200 VDC, 13 J	63, 67, 69
90028-0020	CONE DT13700S-300 Di=2,5mm	123, 175
90028-0021	CONE DIN3862 Di=4mm	113, 123, 175
90028-0025	CONE DT4.138811.2D	113
90030-0065	PIPE CONNECTION	223
90030-0067	BULKHEAD CONNECTOR SV 8-L/SY	103
90030-0091	PIPE CONNECTION G-8	103
90030-0137	ELBOW CONNECTION WA 6-R1/8"	167
90030-0151	Straight Conn.15-R1/2",ext.thread	103
90030-0185	STRAIGHT CONNECTION GA-8-G1/4"	103
90031-0050	PLC Baseplate, 5-Slot	69
90031-0056	CPU351, Serial communication	69
90031-0058	PLC, Digital Input Module 16 pt/24 VDC	69
90031-0059	PLC, Digital Output Module 16 pt/24 VDC	69
90031-0068	PLC, Powersupply 120/230 VAC/50 W	69
90032-0038	BLOCK 2ways DT4.310792.1D	123
90032-0039	DISTR.BLOCK DT4.310794.1	113
90032-0040	BLOCK 6ways DT4.317796.1D	175
90042-0074	SOLENOID VALVE Mecman 581-211-100	205
90042-0108	SOLENOID VALVE Mecman 581-111-100	37
90042-0215	Pneumatic valve ISO 1, 5/2 Unistable	39
90042-0326	COIL 48VDC Mecman	205
90042-0345	COIL 24V DC	37
90042-0366	CONTACT 2-Pole+Earth Hirschmann	205
90042-0371	WEAR & TEAR PARTS KIT	227
90042-0385	SEAL KIT 04904 273 09	227
90042-0392	CONTACT 2 Pole+Earth	37
90042-0451	WEAR & TEAR PARTS KIT 04904 295 06	227
90042-0525	EL.COIL MECMAN 04938 276 18	39
90042-0535	Terminal module 19 cords	63, 67
90042-0538	Pilot valve, L=350 mm	63, 67
90044-0104	PROX.SWITCH IFM IN 3002 48Vdc	191, 193, 195
90044-0124	Prox.sw. 922AB2XM-A9P-050-LZ-876	113, 123, 167
90044-0139	Key saf.sw. AZ16-02 ZVR K-2254	151
90044-0182	Key saf.sw. AZM 415-22ZPAK 24 VDC	155, 157
90044-0311	Key A2 15/16 B2	151
90045-0164	SERVOMOTOR ELMO EP075112-44T3B	129
90045-0201	Roll-Motor JOKI	203
90045-0376	PLINTH 19N117J	63, 67, 69
90045-0395	SERVO AMPLIFIER 5A RMS	63, 67, 69
90055-0113	Elbow pipe joint 6x6 mm	133
90055-0118	Elbow with tailpiece	39
90055-0207	ELBOW PIPE JOINT,Ext.thread,D=6 mm M5	167
90055-0209	Bulkhead lead-in	167
90055-0210	ELBOW PIPE JOINT,Ext.thread,D=6 mm G1/8	167
90055-0211	ELBOW PIPE JOINT,Ext.thread,D=8 mm G1/8	167
90055-0212	STRAIGHT COUPLING, D=6 mm - G1/8"	167
90056-0071	WORM GEAR	177
90056-0166	GEAR	129
90061-0018	ANGLE ENCODER 8BIT GRAY"REPBY 90061-27"	159
90064-0322	CONTACT BLOCK	57, 59
90074-0001	CLIPS, Cable clips di=10 mm	15, 17, 19
90075-0127	CONTACTOR 4KW COIL 24VDC	63, 67, 69
90075-0313	AUXILIARY CONTACT K&M 22 DILM.2NO	63, 67, 69
90077-0102	TERMINAL BK4 KRG 4-POLE	163
90087-0019	PLUG M10x1 Stainless	113, 175
90089-0002	SLEEVE PR22,5/15,2	57, 59
90090-0005	STEEL-BALL SKF RB 3/111	223

Part No	Description	Page No
90090-0013	STEEL BALL SKF RB-4/111	107, 175
90090-0016	STEEL BALL SKF RB-15 RS	15, 17, 19
90091-0089	SEALING RINGS,TYPE "GLYD-RING" 16/22X2,5	223
90091-0091	SEALING RINGS,TYPE "GLYD-RING" 10/14X1,7	223
90091-0136	"SEAL RING,TYPE ""GLYD-RING"" 36X44X3,1"	183
90091-0160	"SEAL RING,TYPE ""GLYD-RING"" 16X23,5X3,	107, 175
90091-0162	GUIDE RING	107, 175, 223
90091-0163	GUIDE RING	107, 175
90091-0165	"SEAL RING,TYPE ""GLYD-RING"" 20X27,5X3,	107, 175
90091-0169	GUIDE RING	223
90091-0170	GUIDE RING	223
90091-0214	"SEAL RINGS TYPE ""GLYD-RING"" 16X20,9X	223
90091-0215	"SEAL RINGS TYPE "" GLYD-RING"" 25X32,5	223
90091-0216	"SEAL RINGS TYPE ""GLYD-RING"" 7,1X12X2	223
90092-0048	OIL BRUSH	113, 123
90092-0052	METERING VALVE 10mm3	123, 223
90092-0053	METERING VALVE 30mm3	223
90092-0054	METERING VALVE 50mm3	113, 123, 175
90095-0076	OVERLOAD PROT. PKZM 6,3A	63, 67, 69
90099-0103	NUT PR 47 (PG36)	57, 59
90099-0104	NUT PR 15,2 (PG9)	113
90099-0131	NUTS,HEXAGON, M16x2, ISO4035	123
90111-0139	ROTARY SWITCH	57, 59, 63, 67
90115-0009	ROD ENDS,RE-LUBRICATEABLE 6-M6X1RH	167
90115-0010	ROD ENDS,RE-LUBRICATEABLE	167
90119-0043	OPTO RELAY 22DC 60S-3	69
90119-0052	PLUG-IN RELAY 48VDC	69
90119-0056	PLUG-IN RELAY 24VDC	63, 67, 69
90119-0072	SAFETY RELAY JSBR4	69
90119-0084	EXPANSION RELAY JSR1T-500ms	63, 67, 69
90129-0006	BASE 11 POLE	63, 67, 69
90134-0004	PIPE CONNECTION R1/8	113, 175
90134-0031	SLEEVE E 4/2	113, 123, 175
90134-0038	BUSHING 4 DIN 3871 Stainless	123, 175
90134-0039	BUSHING DT4.018912.1 Stainless	123, 175
90134-0040	BUSHING DT4.018914.1	113
90134-0042	SPACER DT4.170711.2	113, 123, 223
90134-0045	PLUG	113, 123, 223
90134-0047	CONNECTION	223
90134-0051	SPACER COLLAR	113
90134-0052	PLUG DT4.076817.2D	113
90134-0055	BUSHING 6 DIN 3871 Stainless	113
90134-0058	BANJO CONNECTION DT4.310.437.1	123, 175, 223
90134-0068	BANJO CONNECTION	113, 123
90135-0037	GROUNDING RAIL 10x3 CU	63, 67, 69
90135-0039	SHIELD CLIP KLBU 4-13.5	63, 67, 69
90141-0017	RETAINING RINGS FOR SHAFT 17	115, 143, 145
90143-0028	STRIP	111, 113, 141
90143-0049	RUBBERSTRIP 11X21MM	155, 157
90144-0004	TREBOFLON-TAPE W=13mm	113
90152-0017	HOSE	161
90152-0019	FLEXIBLE CONDUIT PG 36	227
90152-0051	GLANDS,HOSE 25x18	163
90153-0015	ADHESIVE Loctite IS 496/CYANOLIT 303	75, 77, 79, 81
90153-0020	ADHESIVE BOSTIK 1782 125ml	113
90153-0054	ADHESIVE	233
90153-0055	ADHESIVE	233
90157-0016	LOCKING FLUID LOCTITE 242 50 ML	89, 91, 119, 129, 231
90157-0022	SEALING COMPOUND	113
90157-0034	SEALING COMPOUND LOCTITE 572 50 ML	103
90157-0036	FLANGE SEALING COMPOUND 574	129
90157-0041	SEALING COMPOUND	155, 157, 233
90163-0014	NIPPLE STAINLESS STEEL	161
90163-0028	SLEEVE CHROMIUM PLATED BRASS	103
90163-0046	SLEEVE LP-004-0-WR 0510-21-1 Brass	113
90163-0048	NIPPLE LP-004-2-WR 510-23-1	175
90163-0052	HOSE NIPPLE,EXT.THREAD 1/4"-12	177
90163-0062	SLEEVE 1/8"	103, 113
90163-0063	NIPPLE 6/4	175
90163-0080	NIPPLE 5450-8/6	179
90165-0003	PIPE-CLIPS,FOR SINGLE PIPE,ONE SIDE 4	123
90165-0056	PIPE-CLIPS,FOR SINGLE PIPE,ONE SIDE 4mm	191, 193, 195
90166-0013	TUBE 8/6 PA Blue	167
90166-0049	HOSE PVC 25/33-34	147
90166-0081	TUBE 6/4 PA Blue	167, 179
90166-0089	HOSE 4/6.2 PE BLUE	105
90166-0098	SHRINKABLE HOSE PVC 25mm	163
90166-0109	TUBE 4 mm PA,Transp.	113, 123, 175
90166-0113	HOSE	177
90166-0117	HOSE 4/6 PVC Blue	103, 175
90166-0124	TUBE 6 mm PA 11/12,Transp.	15, 17, 19
90166-0132	TUBE 6/4 PA,Transp.	103, 221
90166-0133	TUBE 8/6 PA,Transp.	103, 179, 221
90166-0143	TUBE 2,5 mm PA,Transp.	123, 175, 223
90166-0153	TUBE 12 mm PA Black	155, 157
90166-0159	RUBBER HOSE	85, 87

Part No	Description	Page No
90166-0179	SHRINKABLE HOSE	227, 229
90166-0234	HOSE	155, 157
90208-0031	BUSHING	169
90208-0052	CLAMPING ELEMENT	53, 55
90208-0091	CLAMPING ELEMENT WITH SLEEVE 60X77	53, 55
90214-0092	BALL BEARING,STAINLESS 17X30X7	115, 143, 145
90214-0095	BEARINGS,BALL BEARING,STAINLESS	129
90214-0098	BALL BEARING,STAINLESS	191, 193, 195
90214-0122	BEARINGS,BALL BEARING,SPHERICAL,SELF-ALI	171
90217-0041	NIPPLE	141
90220-0116	CABLE 4x1,0+2(2x0,5)mm2	63, 67, 71
90224-0186	NIPPLE	103
90232-0055	Ph.cell NT6-14920S17	15, 17, 19
90235-0274	"Throttle check valve, G1/8"", Manual"	23
90235-0282	"Throttle check valve, G1/8"", Manual"	167
90236-0044	Guide Holder	131, 133
90237-0071	MAGNETLOCK	155, 157
90239-0084	CYLINDER	167
90239-0088	BRACKET	167
90239-0130	BRACKET	167
90239-0348	SEAL KIT	227
90239-0442	SEAL KIT	227
90239-0453	BRACKET	23
90239-0516	ROD END,CLEVIS WITH AXLE,M10X1,25	23
90239-0532	ROD END,CLEVIS WITH AXLE,M8	167
90239-0779	CYLINDER	23
90239-0847	Double acting, Mini-ISO, Cyl. 20-50	167
90240-0055	Bushing, 25x28x25	113
90240-0094	Bushing, 50x55x40	183
90240-0172	Flange Bushing, 8x12x10 NFB	23, 25, 27, 29, 33, 35
90240-0180	Flange Bushing, 10x14x15 NFB	73
90242-0093	O-RING	223
90242-0182	O-RING 50X4	199
90248-0022	HINGE	147
90248-0036	HINGE	151
90257-0002	FILTER PLUG MECMAN F12 8145-00-120	177
90259-0317	AUX.CONTACT K&M NHI 11-PKZ0	63, 67, 69
90261-0018	PLUG,BLIND PLASTIC F-183	113, 177
90261-0025	PLUG,BLIND PLASTIC FOR M38x1,5/M39x9	111
90261-0060	END PLUG IKPK 25x1,5 Grey	139
90287-0062	SCREW M6	141, 147, 155, 157
90287-0119	SCREW,SET,CUP POINT,P6SS DIN 913, M5x12	175
90287-0128	SCREW, SET,FULL DOG POINT,T6SS M4x6 A2	223
90287-0328	SCREW, M6S ISO4014, M12x160 A280	111
90287-0330	SCREW, M6S DIN933, M10x70 A480	123
90287-0331	Screw	191, 193, 195
90288-0085	ROLLER CHAIN,SINGLE 5/8"-144	129
90296-0012	LUBRICANT	119, 231
90296-0070	GREASE	171
90296-0073	OIL	173
90296-0076	OIL	177
90321-0015	PUMP 502 CFX 7ETV 302 50Hz IP55	141
90321-0034	PUMP 502 CFX 5ETV 362 60Hz IP55	141
90321-0466	SPARE PART KIT	227
90321-0481	GASKET	227
90330-0066	PLUG,EXTERNAL G-THREAD G1/8"	223
90330-0078	BUSHING,INT./EXT.R-THREAD R3/4"-Rp3/8"	113
90330-0081	ELBOW 90,INTERNAL THREAD Rp1/4"	161
90330-0085	BUSHING,INT./EXT.R-THREAD R1/2"-Rp1/4"	177
90330-0101	NIPPLES,EXT.G-THREAD G1/4"	115, 143, 145
90330-0106	PIPE COUPLING	227
90335-0008	SPRING	25
90335-0025	SPRING BARNES 22010	41
90335-0096	SPRING	117
90339-0004	MAGNETIC LOCK	151
90347-0079	DAMPER TFE 601	197
90347-0142	FOOT	139
90348-0007	FREE WHEEL COUPLING	13
90355-0031	Bellow Coupling 10/10	159
90363-0049	ROLL	155, 157
90363-0301	BUSHING	155, 157
90363-0302	BUSHING	155, 157
90415-0022	FILTER	141
90415-0320	FILTER INSERT	227
90416-0039	INDEXING GEAR	173
90416-0046	Indexing Device	173
90417-0050	TIMING BELT T 5X500X12	159
90418-0053	ELBOW 90,INTERNAL CONNECTION 15	41, 233
90424-0009	NOZZLE	103, 113
90424-0016	NOZZLE	103
90424-0025	NOZZLE	145
90424-0035	NOZZLE	115, 143
90424-0070	SPREADER NOZZLE	155, 157
90426-0003	HAND SHOWER	161
90450-0438	Double acting, Compact, cyl 25-25	167
929279-0000	ROLLER	21

Part No	Description	Page No
929280-0000	COUNTER ROLLER	21
929441-0000	ROLL	27, 29
929442-0000	ROLL	27, 29
978048-0001		229
978048-0100	CLAMPING ELEMENT	113
978049-0000	NUT	119, 231
978050-0001	SCREW	119, 231
978050-0002	SCREW	119, 231
978051-0000	ECCENTRIC	119, 231
978052-0000	WASHER	119, 231
978190-0000	WASHER	113
978262-0000	GUIDE PIN	53, 55
978384-0000	PIVOT PIN	221
978527-0000	GASKET	179
978562-0000	LOCKING FINGER	93
978609-0000	ALIGNMENT TEMPLATE	53, 55
978713-0000	KNIFE	233
978745-0000	CATCH	75, 77, 79, 81
978746-0000	CATCH	73
978749-0000	INDUCTOR 200SLIM	73
978760-0000	ROLLER TBA200SL	73
978763-0001		231
978763-0051		231
978763-0100	CUTTING UNIT	83
978765-0000	KNIFE HOLDER	233
978790-0000	BRACKET	35
978791-0000	HOLDER	27, 29
978792-0000	PLATE	25
979458-0000	PIPE CONNECTION	113
979459-0000	LEAD-IN	113
979487-0000	MOUNTING PLATE	155, 157
979489-0000	PLATE	155, 157
979490-0000	DISTRIBUTOR BLOCK	155, 157
979491-0000	BLOCK	155, 157
979493-0000	BLOCK	155, 157
979494-0000	BLOCK	155, 157
979514-0000	STOP SCREW	155, 157
979515-0000	LOCK COMPONENT	155, 157
979707-0000	SCREW	147, 155, 157
979720-0000	EDGE PLATE	155, 157

H

H=1		175
H=1 M8		103
H=1,5 M6		89, 91, 147

P

PG 16/9		57, 59
PG11		165
PG16		47
PG36		57, 59
PR 18,6		165
PR15,2		167
PR15,2/PG9		57, 59

SPC binder labels. 40 mm Full width *Note! This page is generated **automaticall** using the **variable definitions** made in the **front page** file!!*

TBA/9 Wedge
595156-0200

Issue: 2000-03 Doc No: SPC-80270-0102

TBA/9 Wedge
595156-0200

Issue: 2000-03 Doc No: SPC-80270-0102

TBA/9 Wedge
595156-0200

Issue: 2000-03 Doc No: SPC-80270-0102

TBA/9 Wedge
595156-0200

Issue: 2000-03 Doc No: SPC-80270-0102

TBA/9 Wedge
595156-0200

Issue: 2000-03 Doc No: SPC-80270-0102

TBA/9 Wedge
595156-0200

Issue: 2000-03 Doc No: SPC-80270-0102

TBA/9 Wedge
595156-0200

Issue: 2000-03 Doc No: SPC-80270-0102

TBA/9 Wedge
595156-0200

Issue: 2000-03 Doc No: SPC-80270-0102

TBA/9 Wedge
595156-0200

Issue: 2000-03 Doc No: SPC-80270-0102

TBA/9 Wedge
595156-0200

Issue: 2000-03 Doc No: SPC-80270-0102

TBA/9 Wedge
595156-0200

Issue: 2000-03 Doc No: SPC-80270-0102

SPC binder labels. 30 mm Half width *Note! This page is generated **automaticall***
*using the **variable definitions** made in the **front page** file!!*

TBA/9 Wedge
595156-0200

Issue: 2000-03 Doc No: SPC-80270-0102

TBA/9 Wedge
595156-0200

Issue: 2000-03 Doc No: SPC-80270-0102

TBA/9 Wedge
595156-0200

Issue: 2000-03 Doc No: SPC-80270-0102

TBA/9 Wedge
595156-0200

Issue: 2000-03 Doc No: SPC-80270-0102

TBA/9 Wedge
595156-0200

Issue: 2000-03 Doc No: SPC-80270-0102

TBA/9 Wedge
595156-0200

Issue: 2000-03 Doc No: SPC-80270-0102

TBA/9 Wedge
595156-0200

Issue: 2000-03 Doc No: SPC-80270-0102

TBA/9 Wedge
595156-0200

Issue: 2000-03 Doc No: SPC-80270-0102

TBA/9 Wedge
595156-0200

Issue: 2000-03 Doc No: SPC-80270-0102

TBA/9 Wedge
595156-0200

Issue: 2000-03 Doc No: SPC-80270-0102

TBA/9 Wedge
595156-0200

Issue: 2000-03 Doc No: SPC-80270-0102

TBA/9 Wedge
595156-0200

Issue: 2000-03 Doc No: SPC-80270-0102

TBA/9 Wedge
595156-0200

Issue: 2000-03 Doc No: SPC-80270-0102

TBA/9 Wedge
595156-0200

Issue: 2000-03 Doc No: SPC-80270-0102

This page intentionally left blank