MM binder labels. Half width

Headspace by Injection for TBA/9 130V→140V

Doc No MM-80169–3

Headspace by Injection for TBA/9 130V→140V

Doc No MM-80169–3

Headspace by Injection for TBA/9 130V→140V

Doc No MM-80169–3

Headspace by Injection for TBA/9 130V→140V

Doc No MM-80169–3

Headspace by Injection for TBA/9 130V→140V

Doc No MM-80169–3

Headspace by Injection for TBA/9 130V→140V

Doc No MM-80169–3

Headspace by Injection for TBA/9 130V→140V

Doc No MM-80169–3

Headspace by Injection for TBA/9 130V→140V

Doc No MM-80169–3

Headspace by Injection for TBA/9 130V→140V

Doc No MM-80169–3

Headspace by Injection for TBA/9 130V→140V

Doc No MM-80169–3

Headspace by Injection for TBA/9 130V→140V

Doc No MM-80169–3

Headspace by Injection for TBA/9 130V→140V

Doc No MM-80169–3

Headspace by Injection for TBA/9 130V→140V

Doc No MM-80169–3

Headspace by Injection for TBA/9 130V→140V

Doc No MM-80169–3

MM
Maintenance Manual

Headspace by Injection

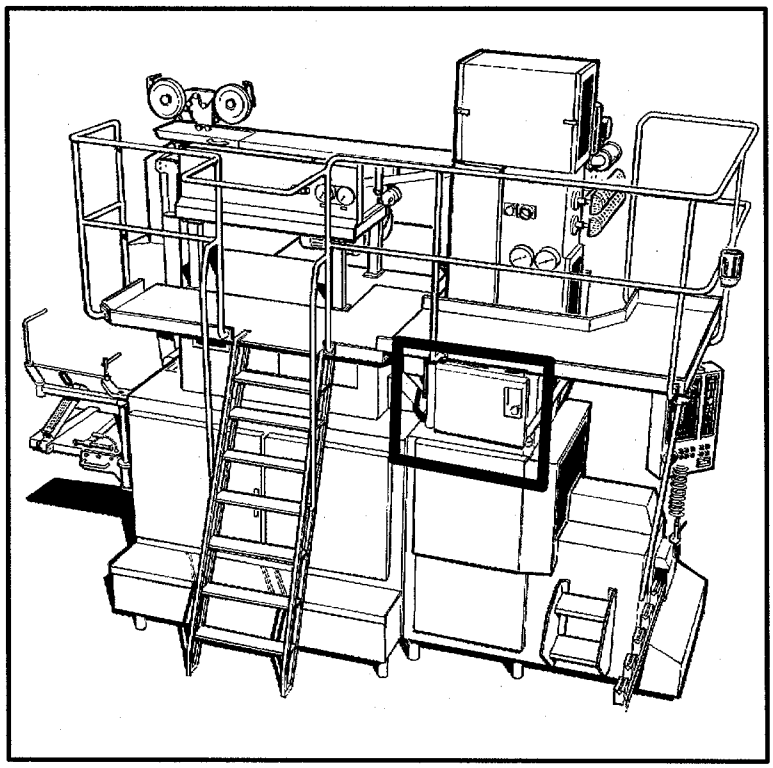

Tetra Pak

Doc No MM-80169–3

This document is valid for:

Series No/ Machine No Sign

MM
Maintenance Manual

Headspace by Injection
978239–010V→020V
978240–010V→020V
978241–010V→020V

Optional equipment/optional kit for:

Tetra Brik Aseptic TBA/9
648152 130V→140V

Doc No MM-80169–3

Issue 9401

Tetra Pak

Tetra Brik Packaging Systems AB

	000
Valves	100
Filter	200
Proximity Switches	300
	400
	500
	600
	700
	800
Settings	900
Electrical Equipment	1000

Description	Page
Valve diagram – checking	105–11
Valve diagram	105–71
Injection stop valve – checking	110–11
Stroke limiter, A-valve – setting	115–51

Checking

Check the tightness of all pipe connections by means of soapy water.

Nitrogen

Test all pipe connections within the area inside the **dashed** line.

Peroxide/air mixture for sprayning

Test all pipe connections within the area inside the **dashed-dotted** line.

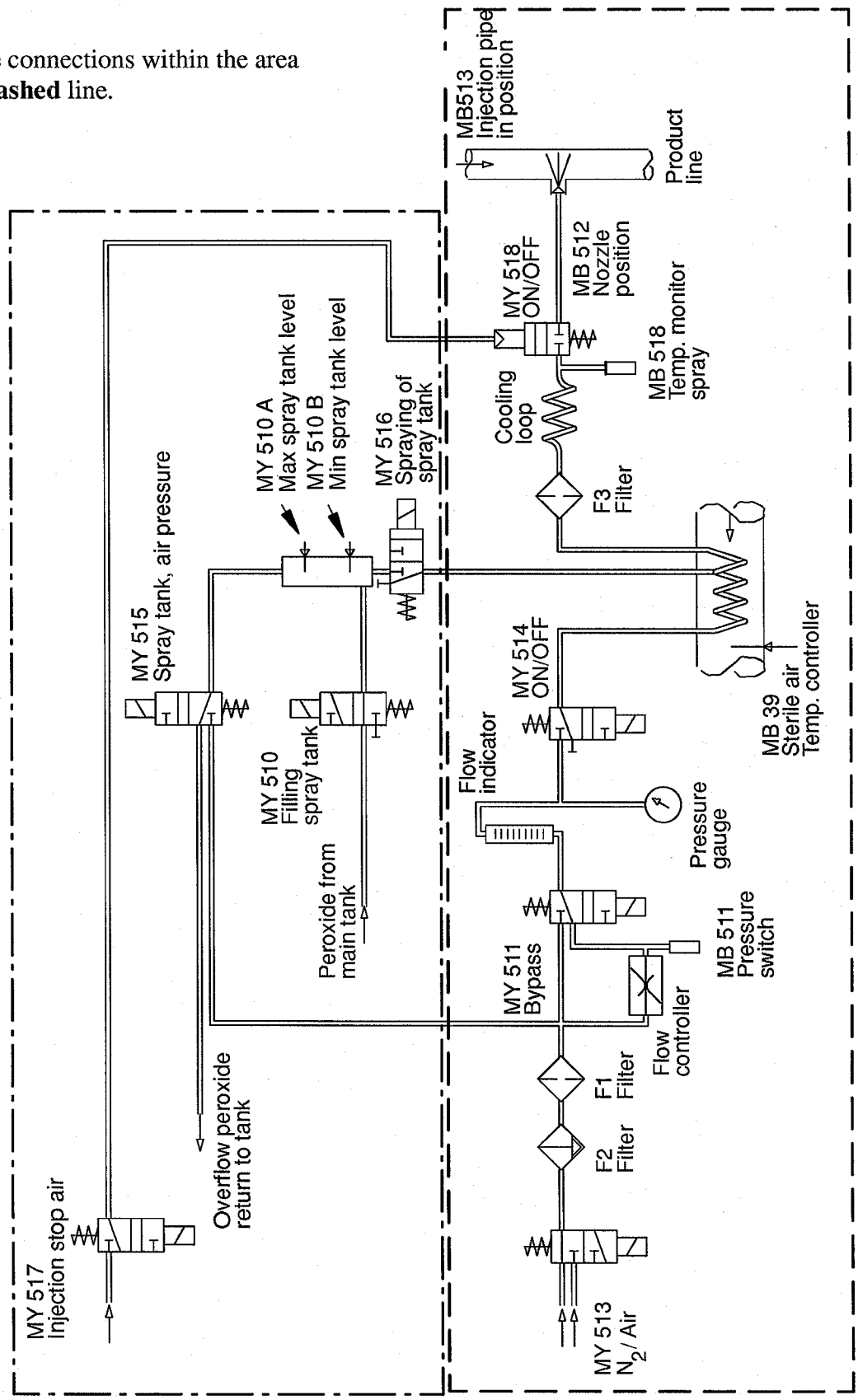

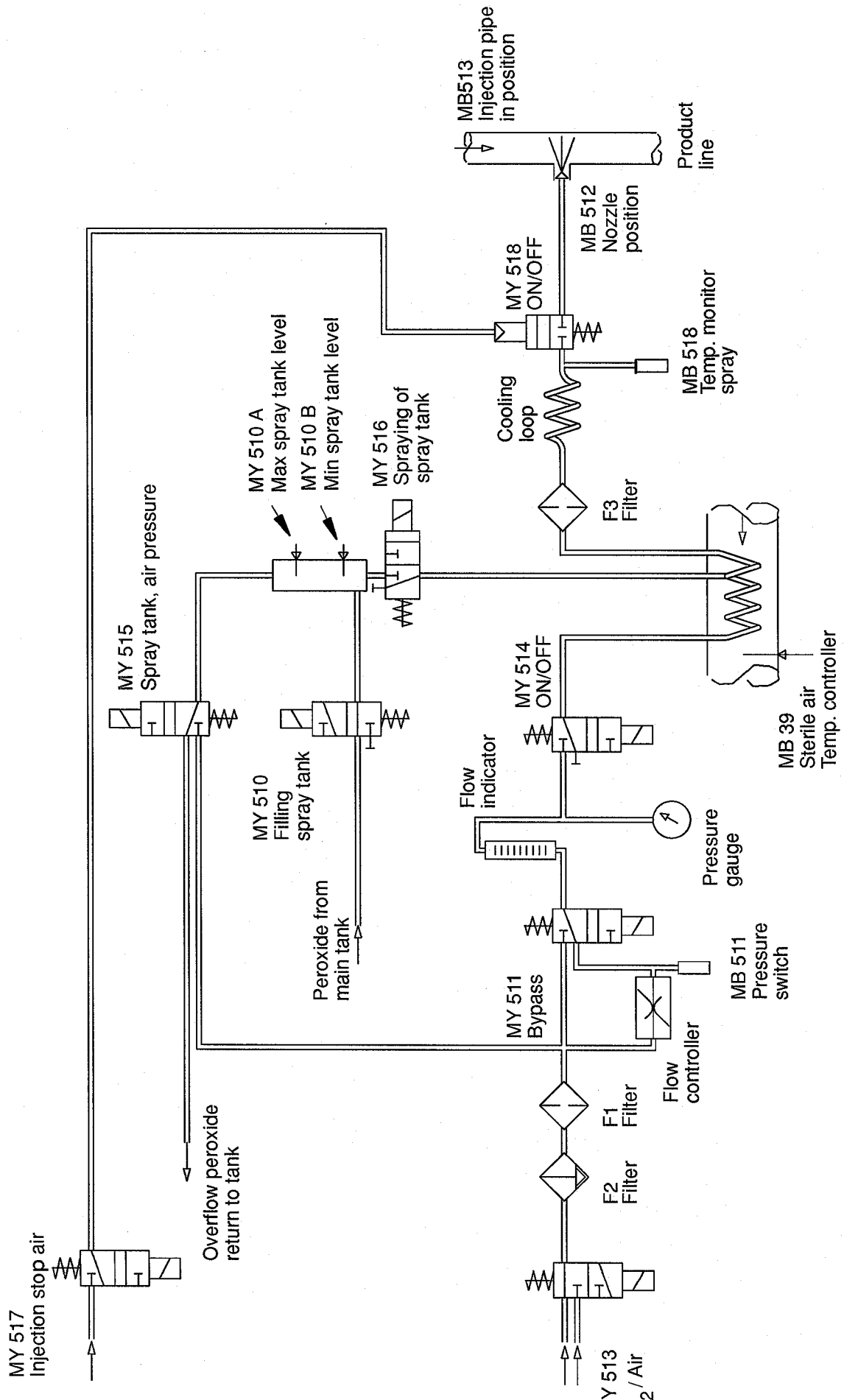
MB513
Injection pipe
in position
Product
line
MB 512
Nozzle
position
MY 518
ON/OFF
MB 518
Temp. monitor
spray
Cooling
loop
F3
Filter
MY 510 A
Max spray tank level
MY 510 B
Min spray tank level
MY 516
Spraying of
spray tank
MY 515
Spray tank, air pressure
MY 514
ON/OFF
MB 39
Sterile air
Temp. controller
Flow
indicator
MY 510
Filling
spray tank
Peroxide from
main tank
Pressure
gauge
MB 511
Pressure
switch
MY 511
Bypass
Flow
controller
F1
Filter
F2
Filter
Overflow peroxide
return to tank
MY 517
Injection stop air
MY 513
N_2 / Air

Checking

Check the gasket and the membrane in the valve (1).

Replace gasket and membrane as required.

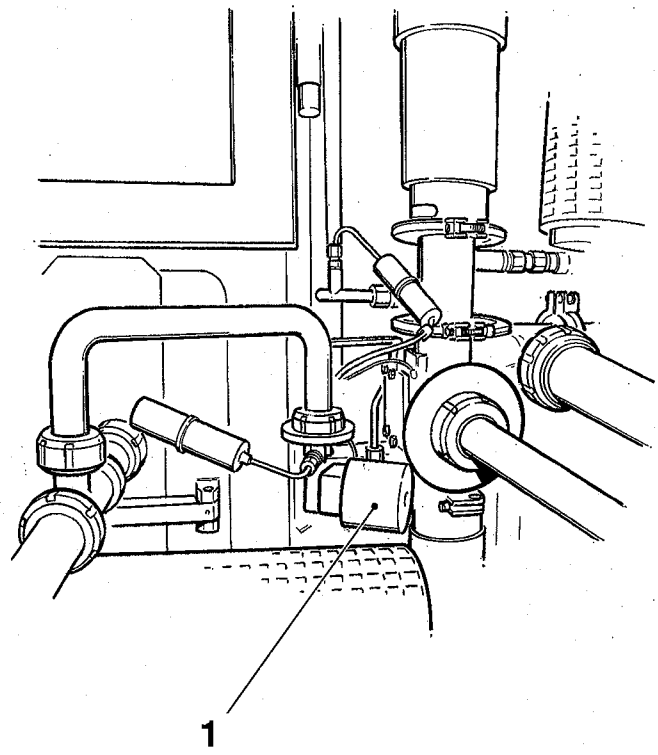

1 Injection stop valve

Setting

Basically set distance A between the screw head (1) and the arm (2) by adjusting on the screw.

Distance A may, depending on the product type, need further adjustment.

Set the proximity switch (3). The LED on the switch should get fixed light when the arm (2) for the stroke limiter is in non-activated position.

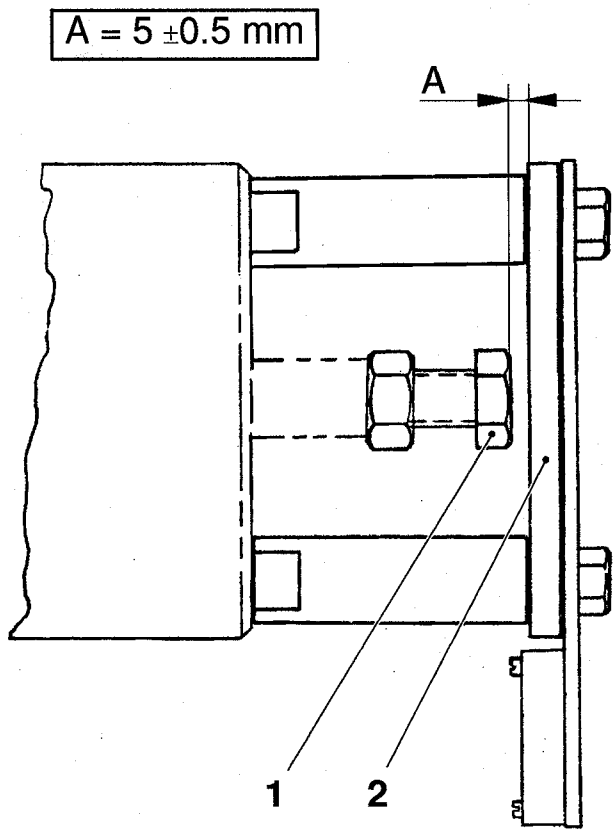

1 Screw head
2 Arm for stroke limiter
3 Proximity switch

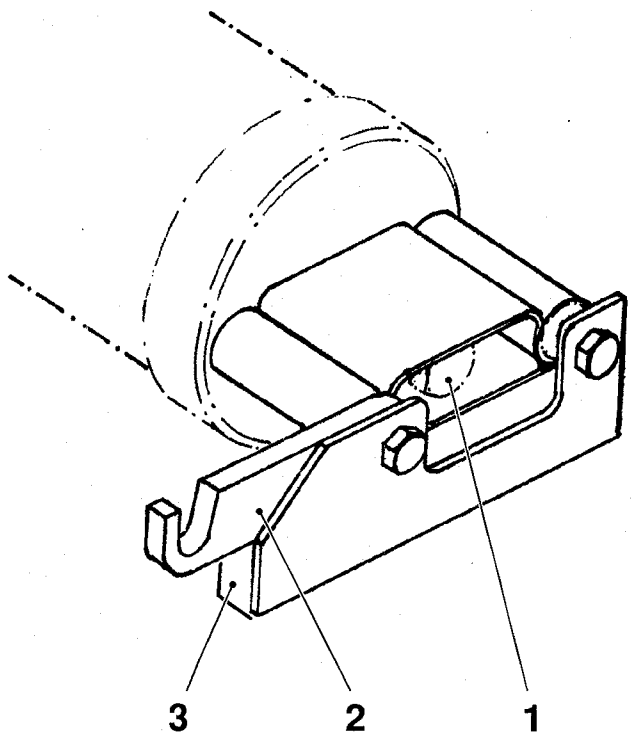

Description	Page
Filter – replacement	205–31

Replacement

Air filter

Unscrew the cover (1) on the filter housing and replace the filter insert.

Sterile air filter

Remove the cover (2) on the filter housing and replace the filter insert.

Oil separator for nitrogen and air

Remove the upper and lower filter housing sections (3) and replace the filter inserts.

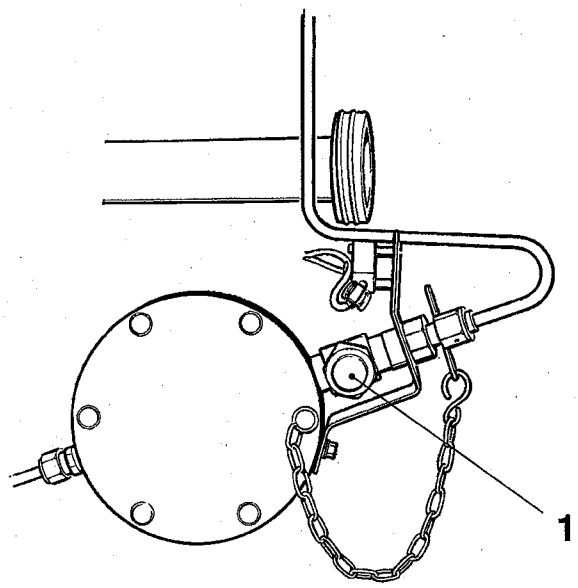

1 Filter housing cover
2 Filter housing cover
3 Upper and lower filter housing section

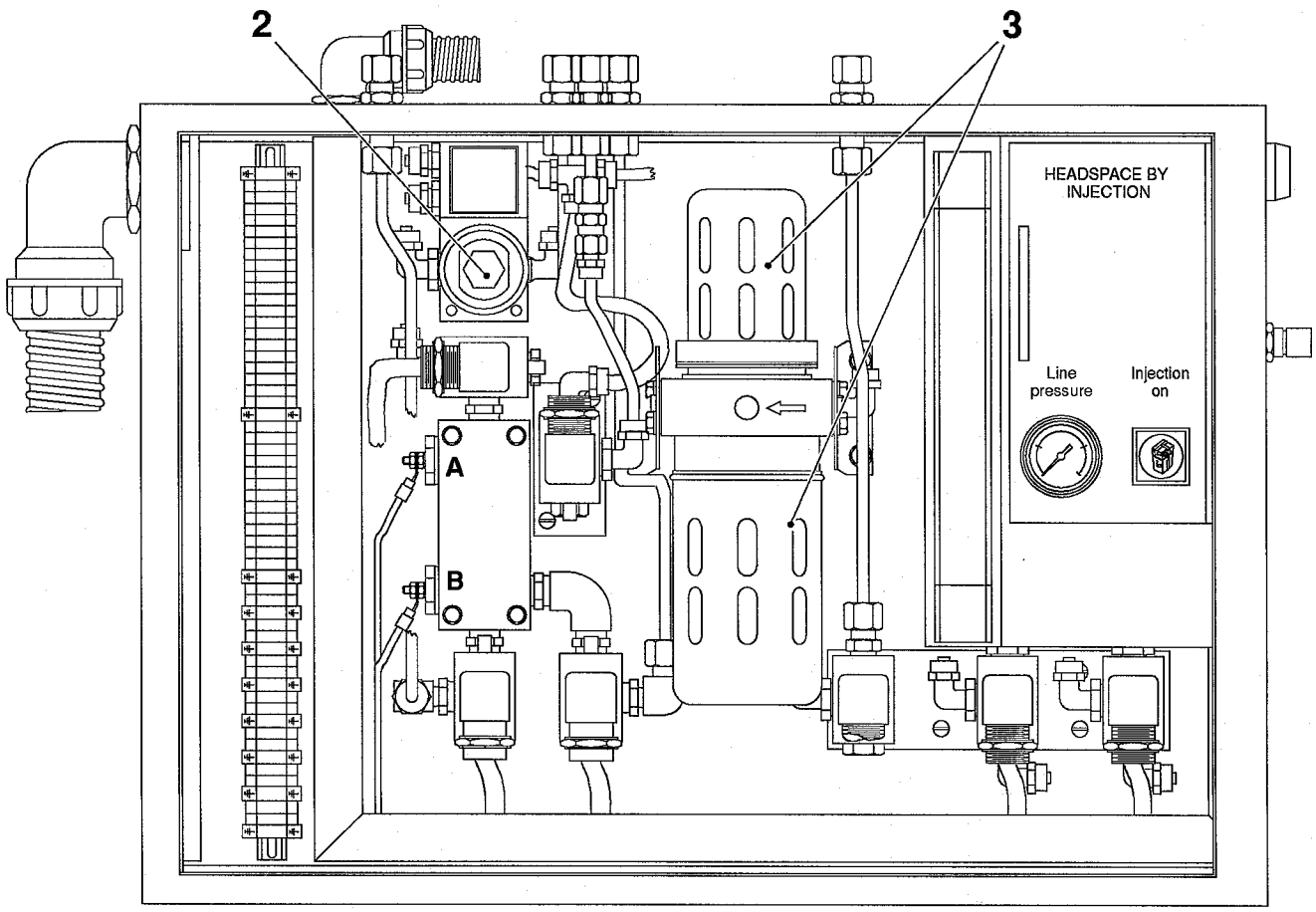

Description	Page
Proximity switches – setting	305–51

Setting

Gas injection pipe

Set the gap between the flange (1) of the gas injection pipe and the proximity switch to approximately 0.5 mm.

Check the function of the proximity switches.

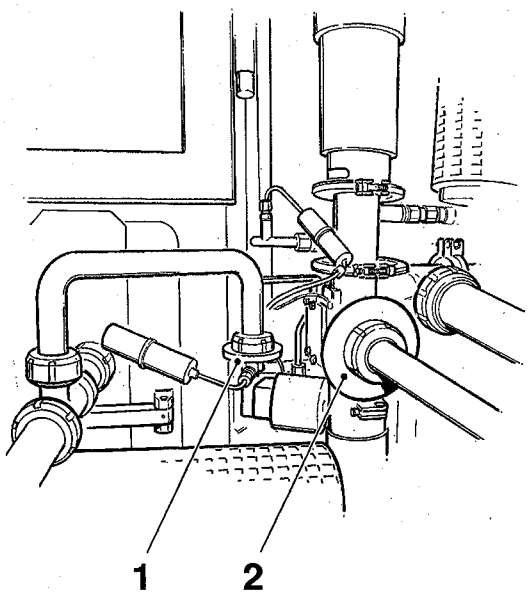

Product pipe

Set the gap between the flange (2) of the product pipe and the proximity switch to approximately 0.5 mm.

Check the function of the proximity switch.

Sterile air pipe

Set the gap between the sterile air pipe and the proximity switch (3) to approximately 0.5 mm.

Set the gap between the flange of the plug and the proximity switch (4) to approximately 0.5 mm.

Check the function of the proximity switch.

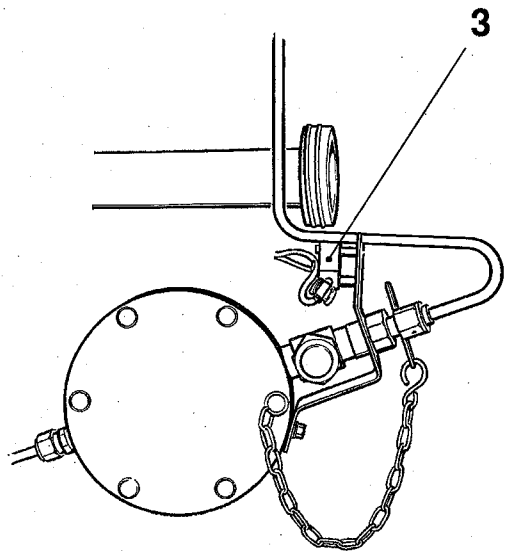

1 Gas injection pipe flange
2 Product pipe flange
3 Proximity switch
4 Proximity switch

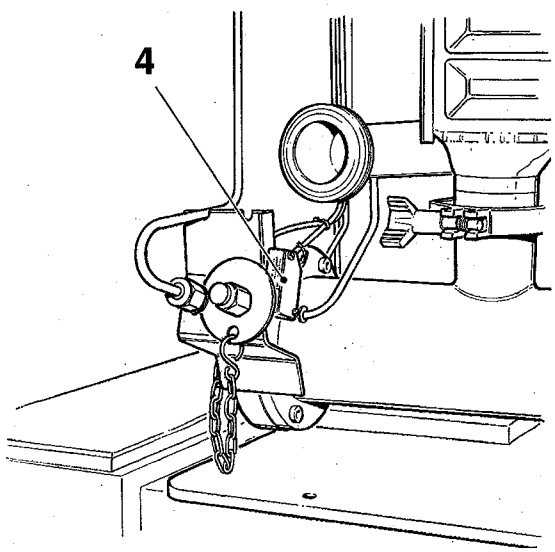

Description	Page
Settings	905–51

Recommended pressures

Product pressure (depending on product and local variations)	kPa (bar)	80 – 200 (0.8 – 2.0)
Nitrogen pressure (basic setting)	MPa	0.5
Headspace, pressure during production	MPa	0.25 – 0.35

Temperatures

Headspace, spraying	°C	60

Flow

Injection gas flow meter, during production	l/min	4.0 – 8.0

Description

Page

Temperature regulator – setting 1005–51

Setting

Set the parameters on the temperature regulator Spraying HI (A518), see table below.

Setting procedure, see MS TBA/9 140V.

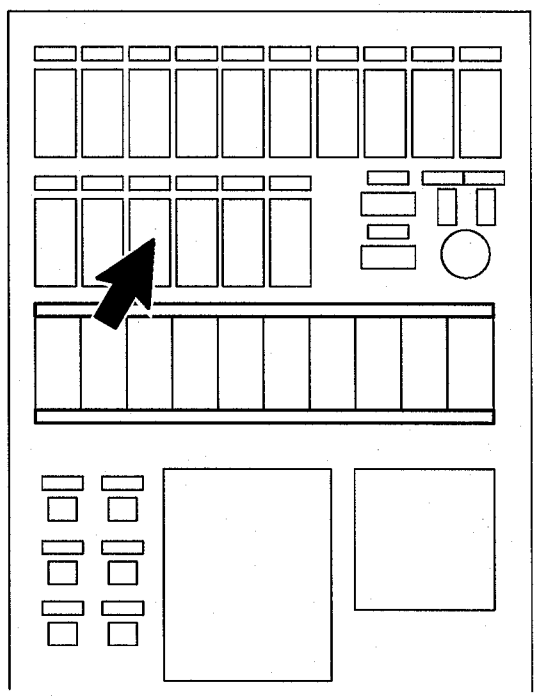

Parameters:
W = temperature, °C
SP = setpoint, °C
LCL = lower OK limit, °C
LCH = upper OK limit, °C
HCA = current limit, A
SPL = lower setpoint limit, °C
SPH = upper setpoint limit, °C
Loc = blocking at operation

Parameter	Settings
W	60
SP2	0
LCL1	1
LCH1	100
LCL2	–
LCH2	–
HCA	–
Loc	1
SPL	0
SPH	100

Tetra Pak