SPC
Spare Parts Catalogue

TBA/9 6000

648152-6000

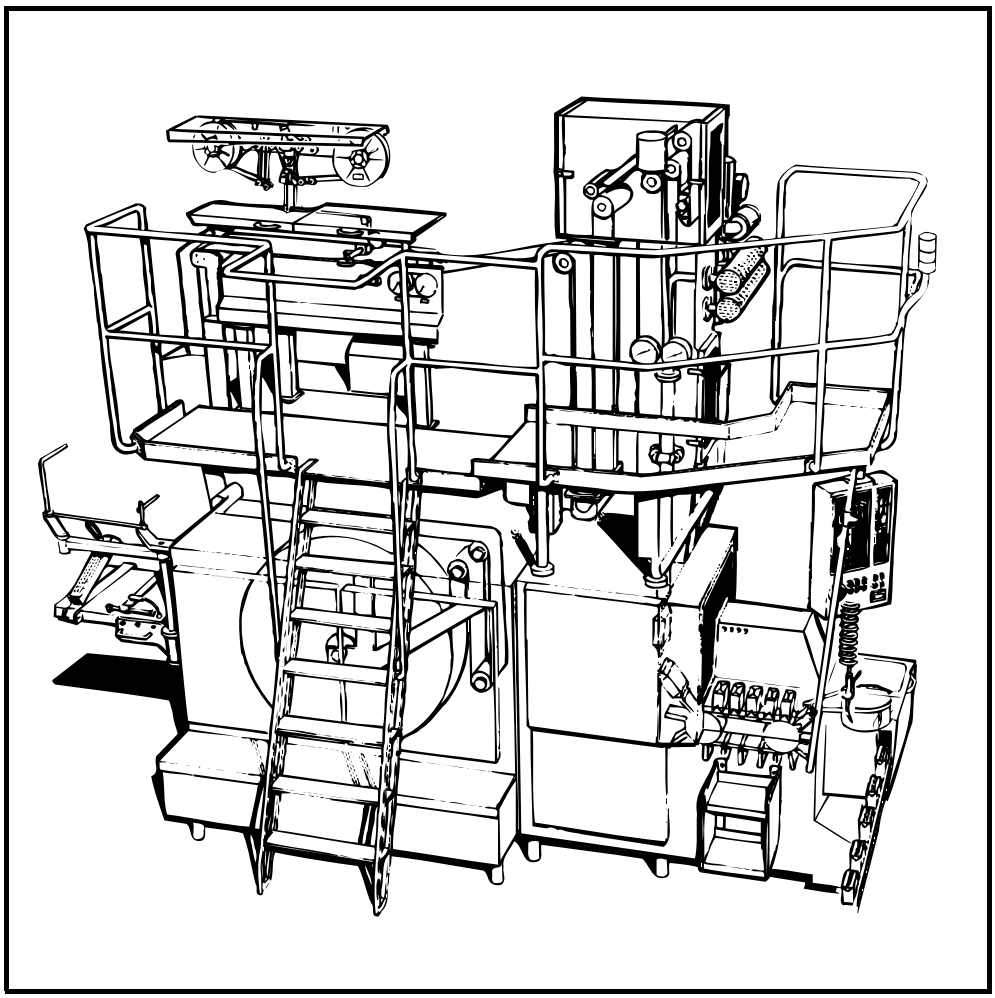

Tetra Pak

Doc No: SPC-80322-0101

Main Groups of the Machine

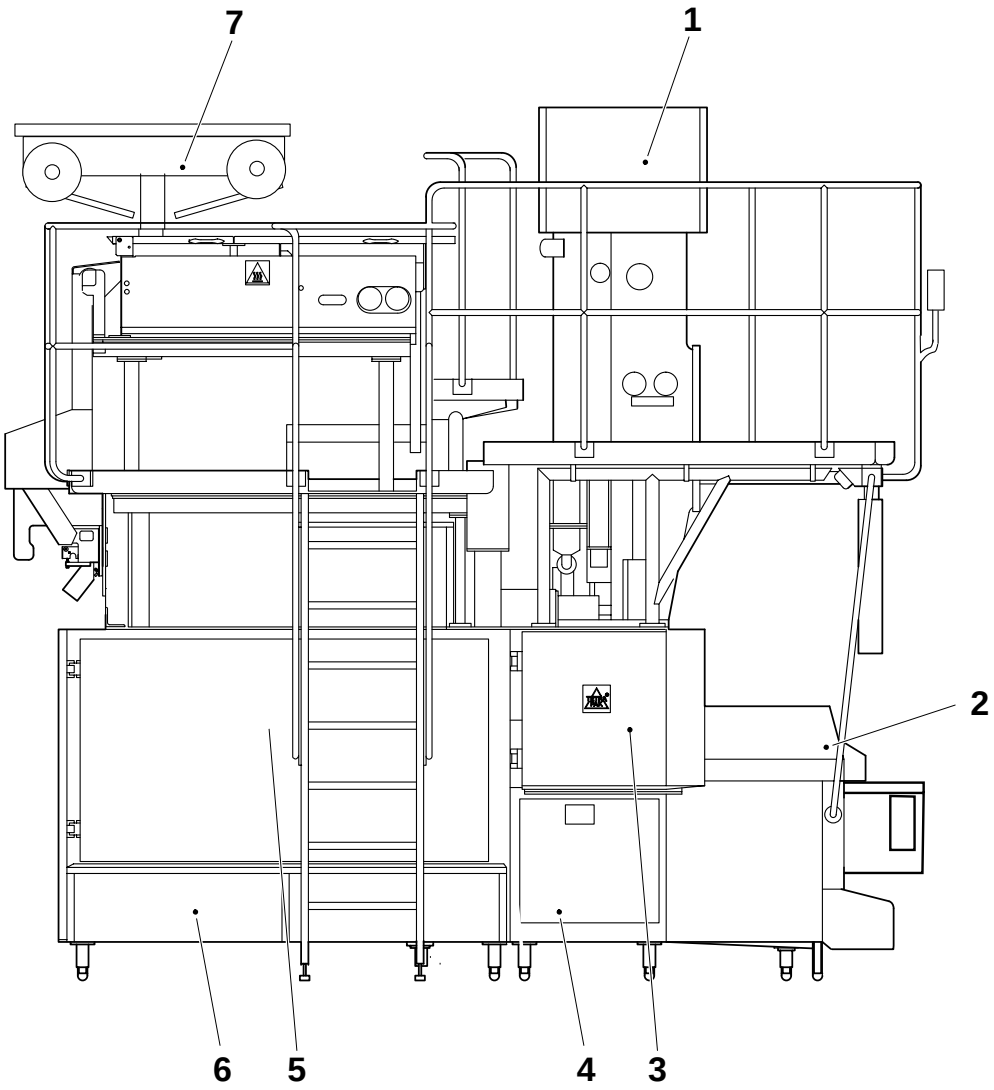

1 - Superstructure
2 - Final Folder
4 - Jaw System
5 - Machine Body
6 - Service Unit
7 - Strip Applicator

For the correct machine data, check your machine specification, supplied with the machine!

This document is valid for:

Series No/ Machine No Sign.

SPC
Spare Parts Catalogue

Tetra Brik Aseptic
TBA/9
648152-6000

Table of Content:

Introduction **5**

Superstructure
B- 648143-0100 ..... , **9**

Machine Body
B- 648144-0100 ..... , **207**

Drive
B- 648145-0100 ..... , **267**

Jaw System
B- 648146-0100 ..... , **305**

Final Folder
B- 648147-0100 ..... , **391**

Service Unit
B- 648148-0100 ..... , **493**

Strip Applicator
B- 648153-0100 ..... , **637**

Regular Accessories
B- 648154-0100 ..... , **705**

Electrical Equipment
B- 648155-0100 ..... , **723**

Part number index
..... , **769**

Doc No: SPC-80322-0101

Issue 2001-04

Tetra Pak

Tetra Brik Packaging Systems AB

General information

Manufacturer

This document has been produced by:
Tetra Brik Packaging Systems AB
Technical Publications
Ruben Rausings gata
221 86 LUND
Sweden

Number of pages

This document contains totally **832 pages,** including the first **8** introduction pages.

Copyright © 2001 Tetra Brik Packaging Systems AB

All rights reserved. No parts of this document may be reproduced or copied in any forms or by any means, without written permission from Tetra Brik Packaging Systems AB.

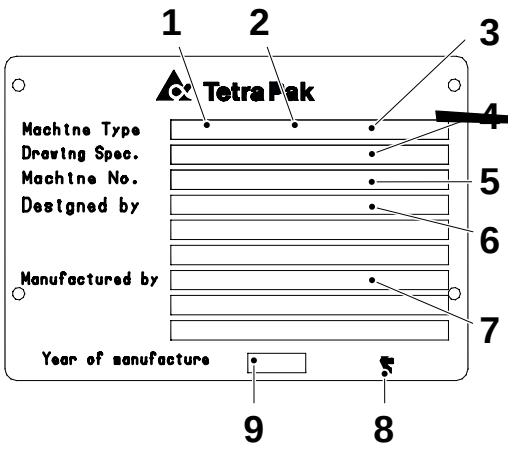

1 Machine type
2 Volume
3 Source (original development step)
4 Drawing specifications
5 Machine serial number
6 Designed by
7 Manufactured by
8 CE mark
9 Year of manufactur

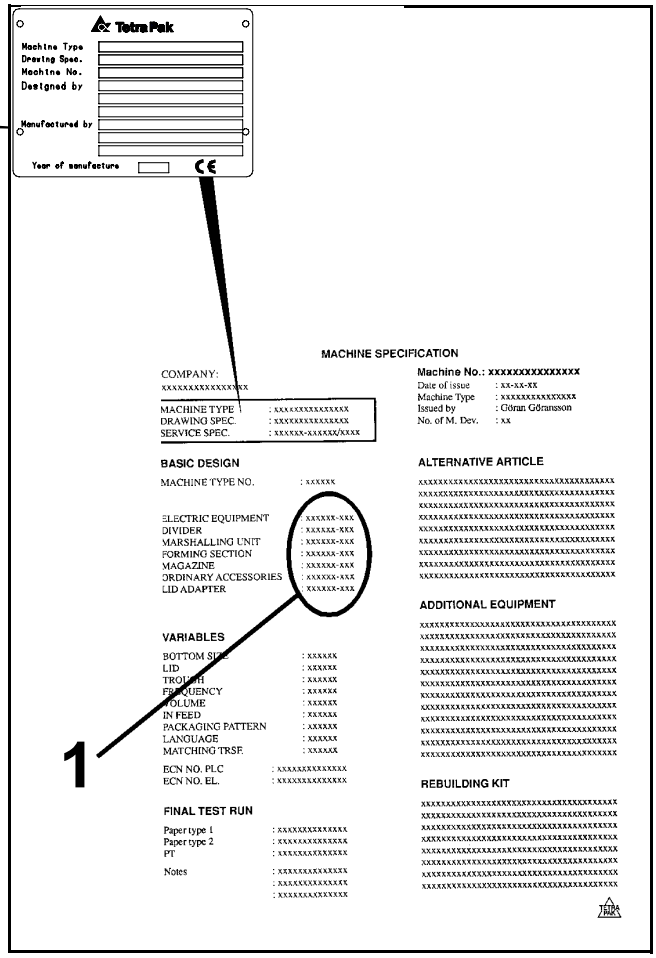

Figure 1

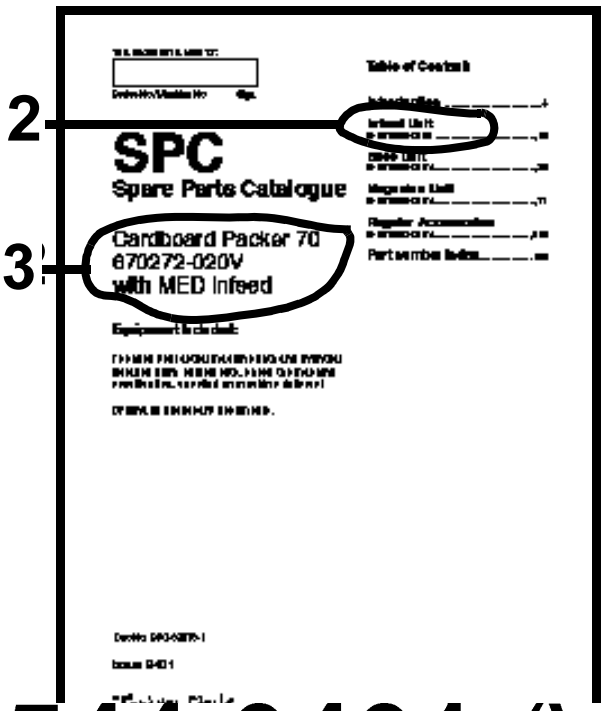

Figure 2

Figure 3

A-678544-0401 (V)

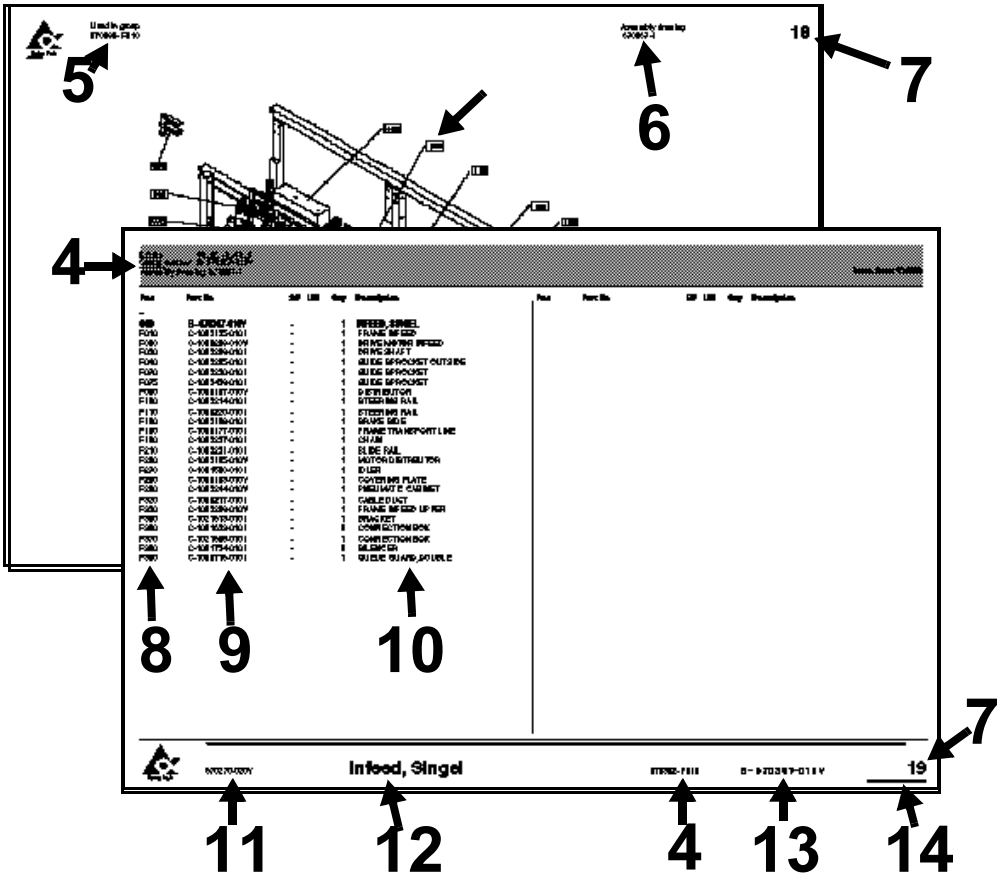

Figure 4

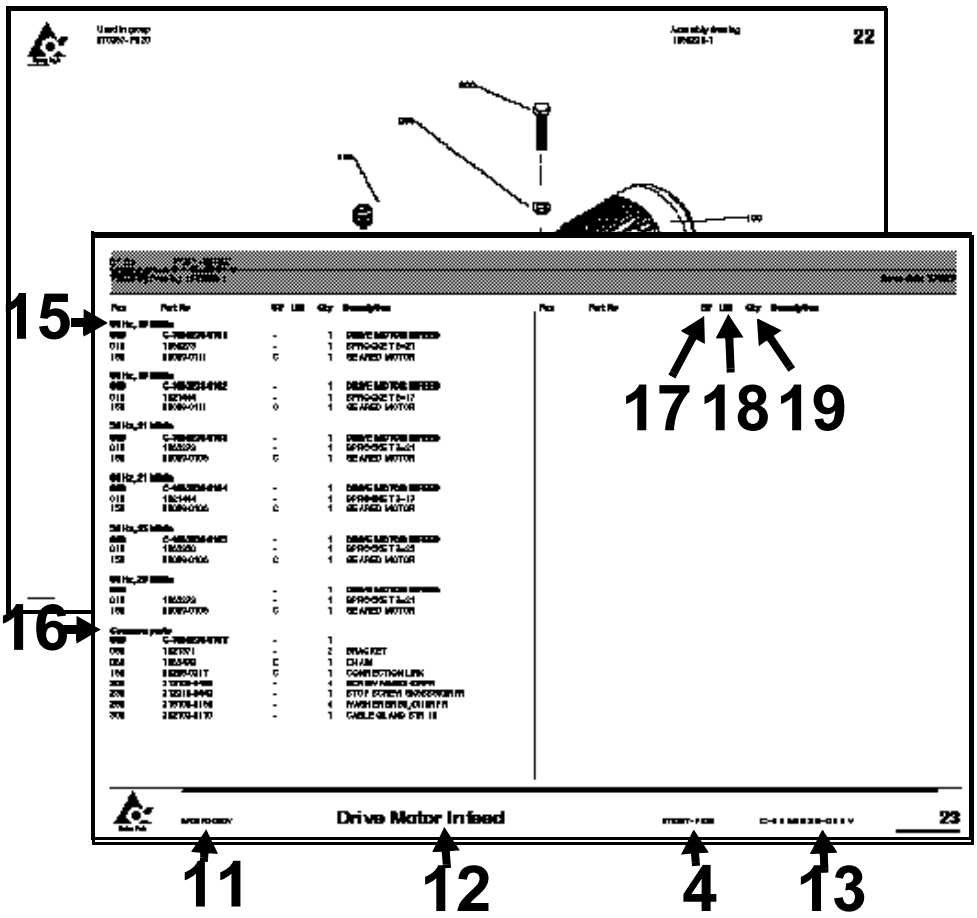

Figure 5

General information

Service

When ordering spare parts for your machine, contact the nearest Tetra Pak service station.

Machine identification

This machine plate is an example of the type of machine plate, attached to the machine frame. The plate carries data needed when contacting Tetra Pak concerning this particular machine.
The location of the different machine plates is shown on the page “Location of machine number plates”, **see page 2**

Purpose of the Spare Parts Catalogue.

The purpose of the Spare Parts Catalogue (SPC) is to provide the technicians and contact personnel with information on how to find and order spare parts for maintenance and service of the machine.
For instructions of how to replace parts and adjust machine setup, see the Maintenance Manual (MM).

Delivered documentation

The technical documentation delivered with this machine is stated in the Machine Specification.
Note! If any of these documents is missing, it must be reported in the document **Start Up Machine Quality Report.** For more information, see chapter 8 Preparation for Commissioning in the Installation Manual.
It is important that you keep these documents for the life of the equipment, and pass the documents on to any subsequent holder or user of the equipment.

Design modification

The content of this document is in accordance with the design and construction of the machine at the time it was delivered from the Tetra Pak machine production facility.

Copyright © 1999 Tetra Brik Packaging Systems AB

All rights reserved. No parts of this document may be reproduced or copied in any forms or by any means, without written permission from Tetra Brik Packaging Systems AB.

Further copies

Additional copies can be ordered from the nearest Tetra Pak service station. When ordering technical publications, always quote the document number printed on the front cover of the document concerned.

Tetra Pak Part numbering system

The third and forth digits in the subnumber, specify one unique group which can be ordered. If the forth digit is replaced by a “V”, the number combination only points to a bill-of-material document.
The first and second digits in the sub-number, specify the development step (model) of the machine or group. **(see fig. 3)**
Main number of machine /group /article, depending on level.
Prefix, giving information about level, eg.
A = Machine
B = Main section (*)
C = Groups and subgroups
***)** Customized distribution machines are registered as B-level as well.

How to find the correct Spare Part Number

A. Check that the data on your machine sign, and /or machine specification, corresponds with the catalogue. **(see fig.1)**

1) Main groups of the machine

B. The second catalogue sheet contains a table of content for the main groups, included in the catalogue. The information regarding machine and main group status MUST correspond with your machine specification.
Locate and choose the main groups page number (1), in which you want to search for spare parts.
(see fig. 2)

2) Main group
3) Machine type

C. Search in the main group illustration, the item number, which may hold your wanted spare part. Go to the text page below and find the page number for the actual group. **(see fig. 4)**

4) Internal information, such as latest Engineering Change, bill-of-material included in the catalogue page.
5) Used-In reference to next higher level in the machine structure
6) Assembly drawing number
7) Continuous page numbering through the document
8) Pos number corresponding to illustration
9) Group or article number.
10) Group or article description. The letter “B” in front of some article numbers indicates that this article contains other parts, shown in an additional page at the end the section. Letter “A” indicatates a subgroup number with an own page directly after the actual page.
11) Machine type including development staus
12) Group description
13) Group number (bill-of-material) including development status
14) Document number

D. Continue to the found page number, and search in the illustration for your spare part. Go to the text row for the found item number, and read the part number. Take eventual variant headings in consideration; if you are unsure, read your machine specification. **(see fig. 5)**

15) Variant heading, eg volume, left /right etc.
16) Heading for common parts
17) SP = Code for articles, which are included into various spare part kits.

A = Stop function, no rep/available/bypassed
B = Stop function, rep/available/bypassed
C = Don’t stop function, can bypassed
D = Seldom break, long time production
E = 100 operating hours
F = 250 operating hours
G = 500 operating hours
H = 750 operating hours
I = 1000 operating hours
J = 2000 operating hours
K = 3000 operating hours
L = 4000 operating hours
M = 5000 operating hours
N = 6000 operating hour
O = 7000 operating hour
P = 8000 operating hour
Q = 9000 operating hour
R = 10000 operating hour
S = 11000 operating hours
T = 12000 operating hours
U = 13000 operating hours
V = 14000 operating hours
W = 15000 operating hour
X = 20000 operating hour
Y = 25000 operating hour
Z = 30000 operating hour

18) UN = Short code for measure units, eg mm, kg etc.
19) Qty = Number of items needed in the complete assembly.

SPC

Spare Parts Catalogue

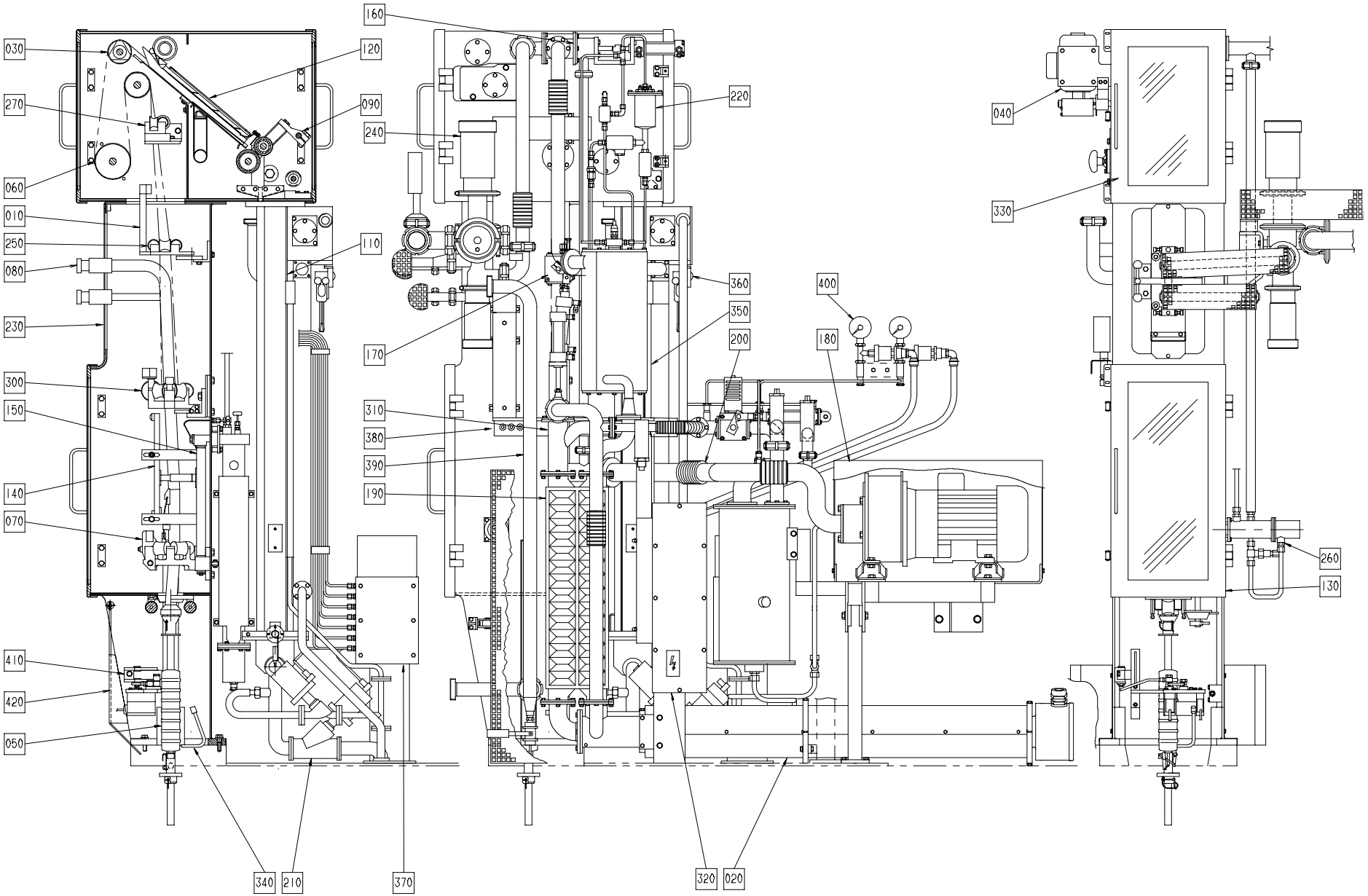

S - 648143-1
ECN 82225

Pos	Part No	SP	UN	Qty	Description	Page No
SOURCE,TBA/9-100V						
010	A 257166-0300	-		1	PAPER GUIDE	**14**
020	A 271181-0200	-		1	AIR SUPER-HEATER	**16**
030	A 272004-0200	-		1	BENDING ROLLER	**20**
040	A1529185-0100	-		1	BENDING ROLLER	**24**
050	A 255921-0300	-		1	LOWER FILLING TUBE	**28**
060	A1529140-0100	-		1	CREASE ROLLER	**32**
070	A 456309-0200	-		1	LOWER FORMING RING	**36**
080	A1529243-0100	-		1	Upper filling tube	**44**
090	A1529263-0100	-		1	CALENDER ROLLER	**48**
110	A1529171-0100	-		1	BATH	**52**
120	A1529257-0100	-		1	AIR KNIFE	**62**
130	A1529091-0100	-		1	DOOR	**66**
140	A 469501-0100	-		1	AIR NOZZLE	**70**
150	A1529173-0100	-		1	HOT AIR ELEMENT	**76**
160	A 272337-0200	-		1	VALVE	**84**
170	A1529083-0100	-		1	CHANGE-OVER VALVE	**88**
180	A 469452-0100	-		1	COMPRESSOR UNIT	**92**
190	A1529212-0100	-		1	CONDUIT	**96**
200	A1529250-0100	-		1	SUCTION PIPE	**102**
210	A 456556-0100	-		1	PEROXIDE PIPE	**106**
220	A1529198-0100	-		1	SPRAY SYSTEM	**110**
230	A1529190-0100	-		1	ASEPTIC CHAMBER	**114**
240	A1529254-0100	-		1	VALVE	**122**
260	A1529084-0100	-		1	HOT AIR ELEMENT	**144**
300	A 441486-0200	-		1	DIVIDED FORMING RING	**150**
310	A 271169-0200	-		1	VALVE	**162**
330	A1529023-0100	-		1	DOOR	**168**
330	A1529092-0100	-		1	DOOR	**170**
340	A 469781-0100	-		1	TUBE FLUSHING DEVICE	**172**
360	A 469074-0100	-		1	SPLICE DETECTOR	**176**
370	A1529238-0100	-		1	PIPE WORK-PNEUMATIC	**180**
380	A1529236-0100	-		1	CABLE TRENCH	**186**
390	A 456836-0200	-		1	CLEANING SYSTEM	**190**
410	A1529266-0100	-		1	PHOTOCELL UNIT	**196**
500	A 295778-0200	-		1	START-UP KIT	**202**
SOURCE,TBA/9-110V						
010	A 257166-0300	-		1	PAPER GUIDE	**14**
020	A 271181-0200	-		1	AIR SUPER-HEATER	**16**
030	A 272004-0200	-		1	BENDING ROLLER	**20**
040	A1529185-0100	-		1	BENDING ROLLER	**24**
050	A 255921-0400	-		1	LOWER FILLING TUBE	**30**
060	A1529140-0100	-		1	CREASE ROLLER	**32**
070	A 456309-0200	-		1	LOWER FORMING RING	**36**
080	A1529243-0100	-		1	Upper filling tube	**44**
090	A1529263-0100	-		1	CALENDER ROLLER	**48**
110	A1529171-0100	-		1	BATH	**62**
120	A1529257-0100	-		1	AIR KNIFE	**62**
130	A1529091-0100	-		1	DOOR	**66**
140	A 469501-0200	-		1	AIR NOZZLE	**72**
150	A1529174-0100	-		1	HOT AIR ELEMENT	**80**
160	A 272337-0200	-		1	VALVE	**84**
170	A1529083-0100	-		1	CHANGE-OVER VALVE	**88**
180	A 469452-0100	-		1	COMPRESSOR UNIT	**88**
190	A1529212-0100	-		1	CONDUIT	**96**
200	A1529250-0100	-		1	SUCTION PIPE	**102**
210	A 456556-0100	-		1	PEROXIDE PIPE	**106**
220	A1529198-0100	-		1	SPRAY SYSTEM	**110**
230	A1529190-0100	-		1	ASEPTIC CHAMBER	**114**
240	A1529254-0100	-		1	VALVE	**122**
260	A1529084-0100	-		1	HOT AIR ELEMENT	**144**
300	A 441486-0200	-		1	DIVIDED FORMING RING	**150**
310	A 271169-0200	-		1	VALVE	**162**
330	A1529092-0100	-		1	DOOR	**170**
330	A1529023-0100	-		1	DOOR	**168**
340	A 469781-0100	-		1	TUBE FLUSHING DEVICE	**172**
360	A 469074-0100	-		1	SPLICE DETECTOR	**176**
370	A1529239-0100	-		1	PIPE WORK-PNEUMATIC	**182**
380	A1529236-0100	-		1	CABLE TRENCH	**186**
390	A 456836-0200	-		1	CLEANING SYSTEM	**190**
410	A1529266-0100	-		1	PHOTOCELL UNIT	**196**
500	A 295778-0300	-		1	START-UP KIT	**204**
Common Parts						
250	A 441304-0200	-		1	MOVABLE FORMING RING	**138**
270	A 441307-0200	-		1	UPPER TUBE SUPPORT	**148**
320	A1529098-0100	-		1	EL.CONNECTION BOX	**166**
350	A 272407-0200	-		1	GENERATOR	**174**
400	A1529088-0100	-		1	GAUGE GROUP	**194**
420	A 751702-0100	-		1	HATCH	**200**

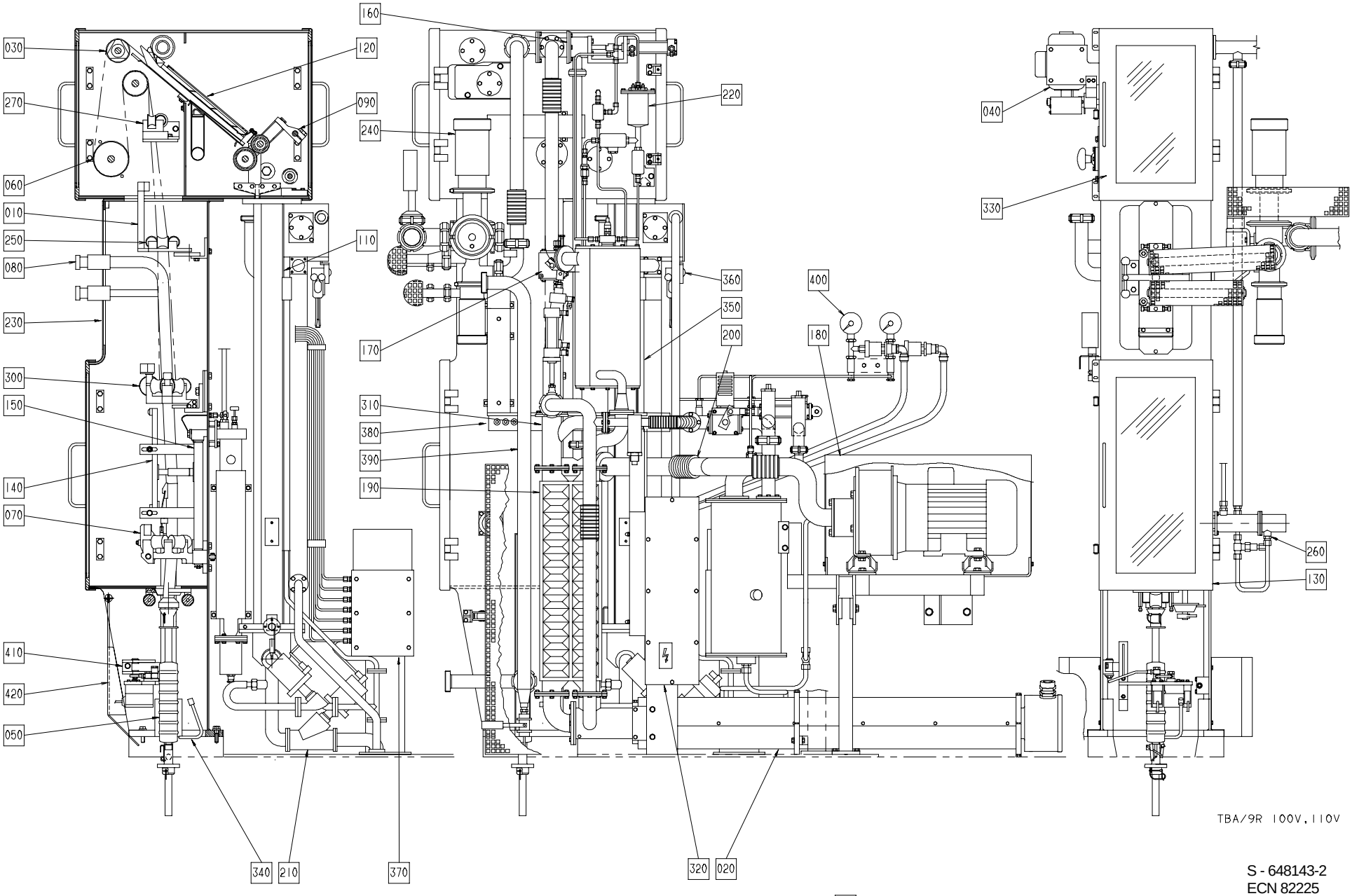

S - 648143-2
ECN 82225

500 UPPSTARTSATS/START-UP KIT

Pos	Part No	SP	UN	Qty	Description	Page No
SOURCE,TBA/9-120V						
020	A 271181-0300	-		1	AIR SUPER-HEATER	**18**
030	A 272004-0300	-		1	BENDING ROLLER	**20**
040	A1529080-0100	-		1	BENDING ROLLER	**26**
050	A 255921-0400	-		1	LOWER FILLING TUBE	**30**
060	A1529172-0100	-		1	CREASE ROLLER	**34**
070	A 456309-0300	-		1	LOWER FORMING RING	**40**
080	A 469091-0200	-		1	FILLER TUBE	**46**
090	A1529264-0100	-		1	CALENDER ROLLER	**50**
110	A1529168-0100	-		1	BATH	**58**
120	A 272025-0300	-		1	AIR KNIFE	**64**
130	A1529022-0100	-		1	DOOR	**68**
140	A 469501-0300	-		1	AIR NOZZLE	**74**
150	A1529175-0100	-		1	HOT AIR ELEMENT	**82**
160	A 272337-0300	-		1	VALVE	**86**
170	A1529178-0100	-		1	CHANGE-OVER VALVE	**88**
180	A 469452-0200	-		1	COMPRESSOR UNIT	**94**
190	A1529211-0100	-		1	CONDUIT	**98**
200	A1529251-0100	-		1	SUCTION PIPE	**104**
210	A 456556-0200	-		1	PEROXIDE PIPE	**108**
220	A1529085-0100	-		1	SPRAY SYSTEM	**112**
230	A1529120-0100	-		1	ASEPTIC CHAMBER	**118**
240	A1529255-0100	-		1	PRODUCT VALVE	**124**
260	A1529256-0100	-		1	HOT AIR ELEMENT	**146**
300	A 441486-0300	-		1	DIVIDED FORMING RING	**156**
310	A 271169-0300	-		1	VALVE	**164**
330	A1529023-0100	-		2	DOOR	**168**
340	A 469781-0200	-		1	TUBE FLUSHING DEVICE	**172**
360	A 469074-0200	-		1	SPLICE DETECTOR	**178**
370	A1529240-0100	-		1	PIPE WORK-PNEUMATIC	**184**
380	A1529237-0100	-		1	CABLE TRENCH	**188**
390	A 456836-0300	-		1	CLEANING SYSTEM	**192**
410	A1529267-0100	-		1	PHOTOCELL UNIT	**198**
500	A 295778-0300	-		1	START-UP KIT	**204**
Common Parts						
250	A 441304-0200	-		1	MOVABLE FORMING RING	**138**
270	A 441307-0200	-		1	UPPER TUBE SUPPORT	**148**
320	A1529098-0100	-		1	EL.CONNECTION BOX	**166**
350	A 272407-0200	-		1	GENERATOR	**174**
400	A1529088-0100	-		1	GAUGE GROUP	**194**
420	A 751702-0100	-		1	HATCH	**200**

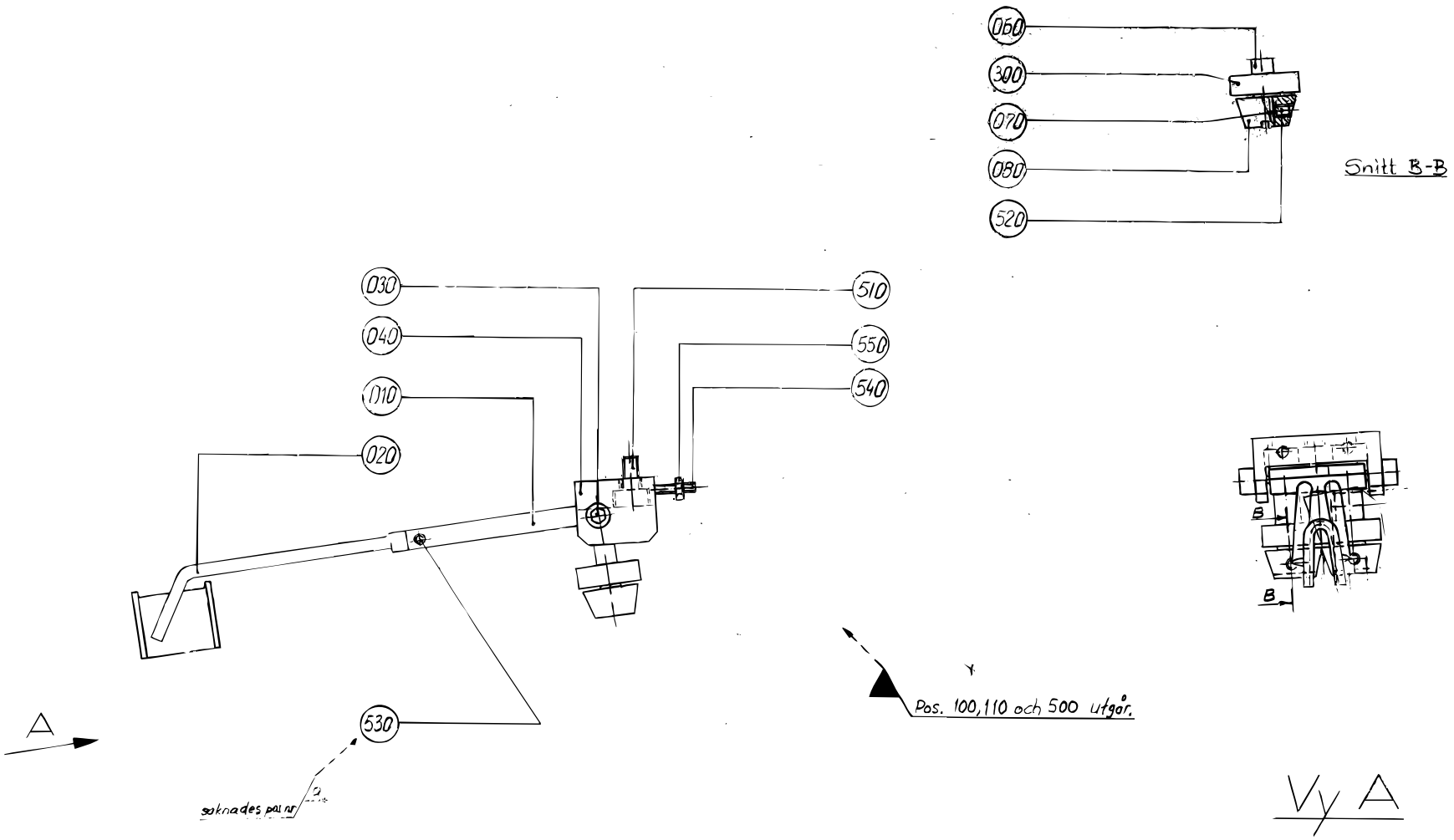
060
300
070
080
520
Snitt B-B
030
040
010
020
510
550
540
530
saknades på ritn
Pos. 100, 110 och 500 utgör.
A
B
B
Vy A

Pos	Part No	SP	UN	Qty	Description	Page No
Common Parts						
010	23582-0000	-		1	HOLDER	
020	23583-0000	C		1	GUIDE FINGER	
030	23584-0000	C		2	SCREW	
040	24351-0000	-		1	BOW CLAMP	
060	24355-0000	C		2	DOWEL	
070	24356-0000	C		4	PIECE	
080	111543-0000	C		2	GUIDE CONE	
300	90214-0035	C		2	BALL BEARING REPBY 0090214-0138	
510	312115-0366	-		1	Screw MC6S M6x12 A280	
520	312318-0283	C		4	Screw,Sock.Set Cuppoint MSK6SS M4x4 A4	
530	312318-0285	C		2	Screw,Sock.Set Cuppoint MSK6SS M4x6 A4	
540	312318-0291	C		2	Screw,Sock.Set Cuppoint MSK6SS M4x12 A4	
550	312605-0312	-		2	Nut Hex. M6M M4 A280	

Pos	Part No	SP	UN	Qty	Description	Page No

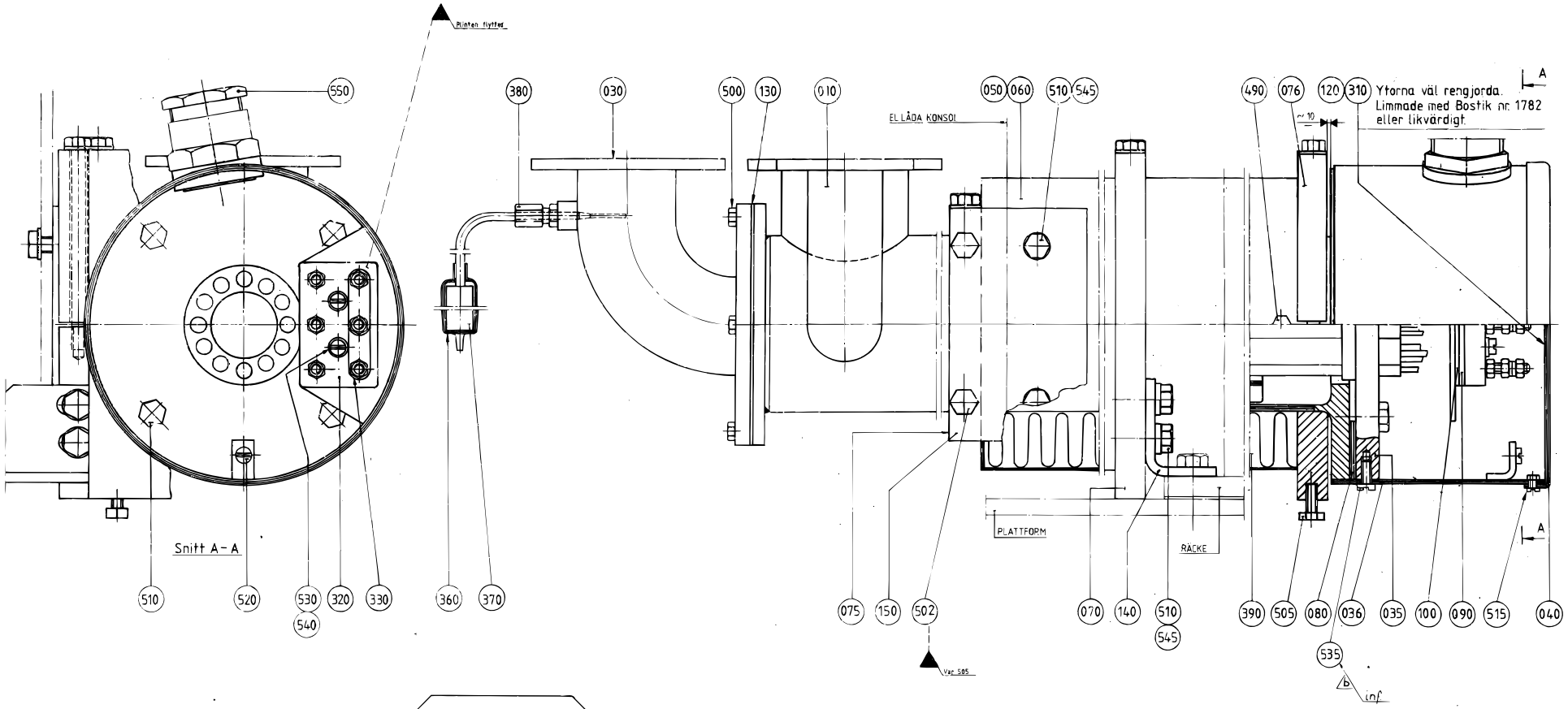

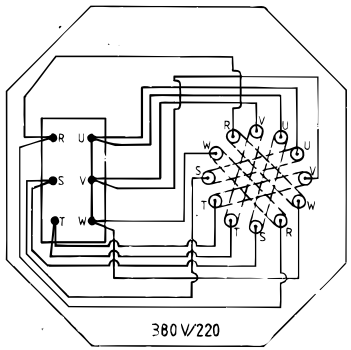

Kopplingsschema

e Omritad

Pos. 320, 330, 530 och 540 flyttade från höger sida till sida i snitt A-A.
Utg. pos. 020, 290, 300, 305 inf. pos. 036, 076, 140, 150, 545
Utg. pos. 400. inf. pos. 505.

Pos	Part No	SP	UN	Qty	Description	Page No
Common Parts						
010	272792-0000	D		1	HEATING PIPE	
030	271183-0000	-		1	PIPE	
035	B 449939-0001	C		1	HEATING ELEMENT 15KW	
036	B 451430-0000	-		1	CONNECTION HOUS.(MINOR)	
040	29876-0000	-		1	COVER	
050	271184-0000	-		1	DISCHARGE TRAY	
060	271185-0000	-		1	DISCHARGE TRAY	
070	272793-0000	-		1	SUPPORT	
075	B 272794-0000	-		1	SUPPORT	
076	B 456123-0000	-		1	SUPPORT	
080	531731-0000	C		1	GASKET	
090	751009-0000	C		1	INSULATION	
100	30298-0000	C		1	INSULATION	
120	469070-0000	-		1	WIRING DIAGRAM	
130	751016-0000	-		1	GASKET	
140	456124-0000	-		1	ANGLE BRACKET	
150	456125-0000	-		1	FASTENING PLATE	
310	90153-0020	C	ML	1	ADHESIVE BOSTIK 1782 125ml	
320	90195-0028	C		1	TERM.BLOCK 6-POLE STEATIT	
330	90195-0029	C		3	CONN. LINK NO324 FOR -28	
360	90326-0012	C		1	PROTECTIVE COVER	
370	90326-0020	C		1	PLUG,FEMALE YELLOW CR-AL	
380	90326-0051	C		1	THERMO COUPLE	
390	90411-0005	C	MM	11	INSULATOR	
490	312105-0325	-		12	Screw M6S M5x10 A280	
500	312105-0368	-		6	Screw M6S M6x16 A280	
502	312105-0374	-		2	Screw M6S M6x30 A280	
505	312105-0455	-		2	Screw M6S M8x30 A280	
510	312105-0453	-		8	Screw M6S M8x25 A280	
515	312125-0285	-		4	Screw Slot.Pan Hd. MCS 4x6 A480	
520	312125-0323	-		1	Screw Pan Head MCS M5X8 RFR	
530	312125-0331	-		2	Screw Pan Head MCS M5X20 RFR	
535	312125-0366	-		4	Screw Pan Head MCS M6X12 RFR	
540	315105-0146	-		2	Washer, Plain, BRB, 5,3/10,H=1	
545	315115-0165	-		4	Washer, Plain, TBRB 8,4/16 H=3	
550	352100-0121	-		1	CABLE GLANR. 37-23,5	

Pos	Part No	SP	UN	Qty	Description	Page No

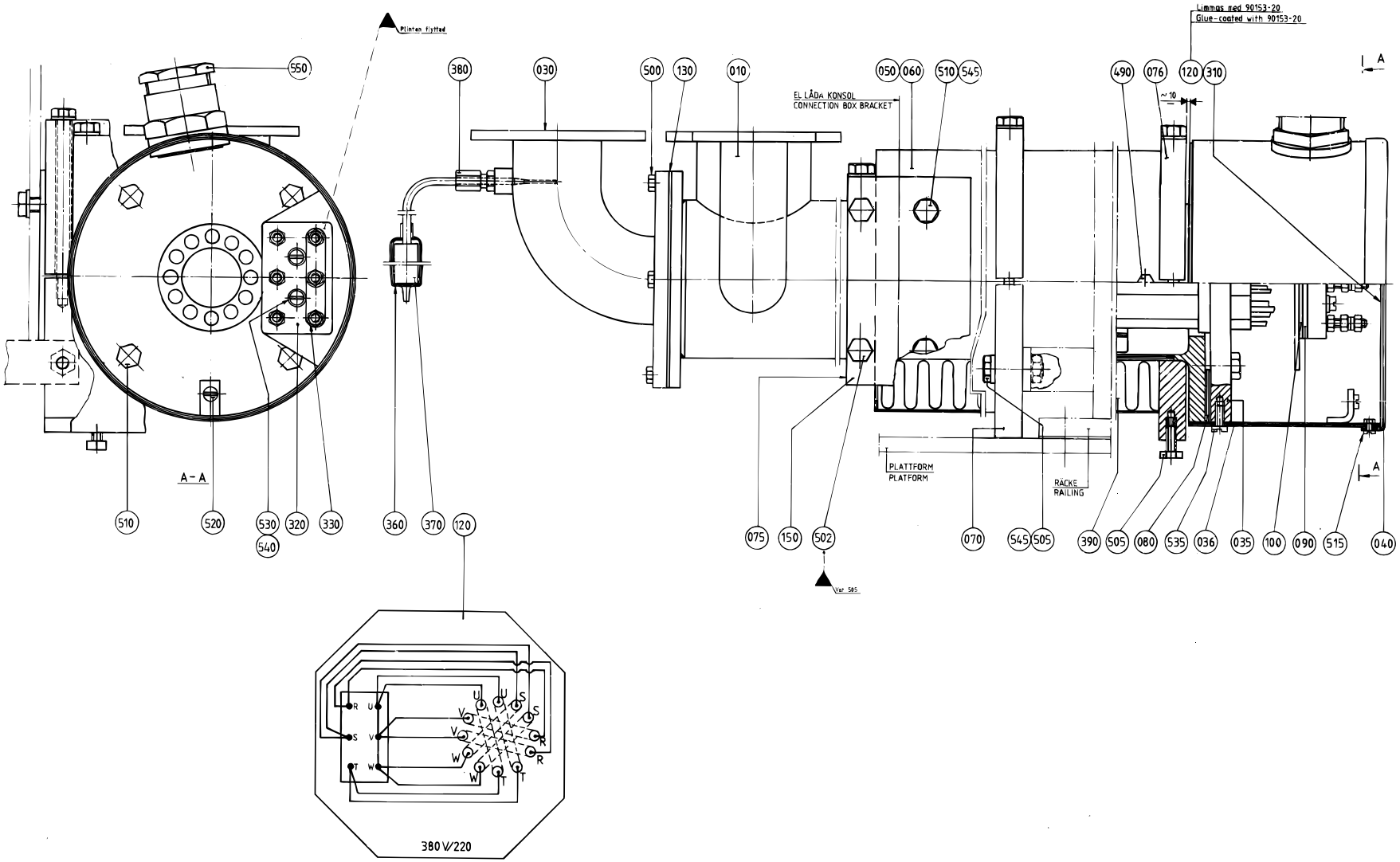

Kopplingsschema
Wiring diagram

Pos	Part No	SP	UN	Qty	Description	Page No
Common Parts						
010	272792-0000	D		1	HEATING PIPE	
030	271183-0000	-		1	PIPE	
035	B 449939-0001	C		1	HEATING ELEMENT 15KW	
036	B 451430-0000	-		1	CONNECTION HOUS.(MINOR)	
040	29876-0000	-		1	COVER	
050	271184-0000	-		1	DISCHARGE TRAY	
060	271185-0000	-		1	DISCHARGE TRAY	
070	B 491218-0000	-		1	SUPPORT	
075	B 272794-0000	-		1	SUPPORT	
076	B 456123-0000	-		1	SUPPORT	
080	531731-0000	C		1	GASKET	
090	751009-0000	C		1	INSULATION	
100	30298-0000	C		1	INSULATION	
120	491305-0000	-		1	CONN.DIAGRAM AIR SUPERH.	
130	751016-0000	-		1	GASKET	
150	456125-0000	-		1	FASTENING PLATE	
310	90153-0020	C	ML	1	ADHESIVE BOSTIK 1782 125ml	
320	90195-0028	C		1	TERM.BLOCK 6-POLE STEATIT	
330	90195-0029	C		3	CONN. LINK NO324 FOR -28	
360	90326-0012	C		1	PROTECTIVE COVER	
370	90326-0020	C		1	PLUG,FEMALE YELLOW CR-AL	
380	90326-0051	C		1	THERMO COUPLE	
390	90411-0005	C	MM	11	INSULATOR	
490	312105-0325	-		12	Screw M6S M5x10 A280	
500	312105-0368	-		6	Screw M6S M6x16 A280	
502	312105-0374	-		2	Screw M6S M6x30 A280	
505	312105-0455	-		3	Screw M6S M8x30 A280	
510	312105-0453	-		6	Screw M6S M8x25 A280	
515	312125-0285	-		4	Screw Slot.Pan Hd. MCS 4x6 A480	
520	312125-0323	-		1	Screw Pan Head MCS M5X8 RFR	
530	312125-0331	-		2	Screw Pan Head MCS M5X20 RFR	
535	312125-0366	-		4	Screw Pan Head MCS M6X12 RFR	
540	315105-0146	-		2	Washer, Plain, BRB, 5,3/10,H=1	
545	315125-0165	-		3	Washer, Plain Round,Chamf. 8,4/26, H=5	
550	352100-0121	-		1	CABLE GLANR. 37-23,5	

Pos	Part No	SP	UN	Qty	Description	Page No

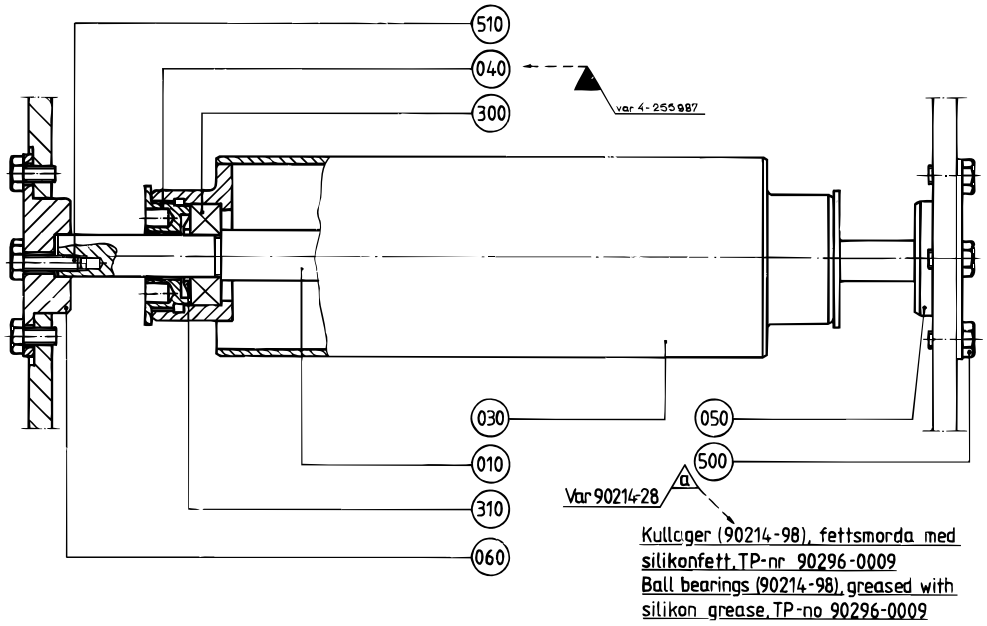
510
040
300
var 4-255987
030
050
010
500
310
060
Var 90214-28
a
Kullager (90214-98), fettsmorda med silikonfett, TP-nr 90296-0009
Ball bearings (90214-98), greased with silikon grease, TP-no 90296-0009

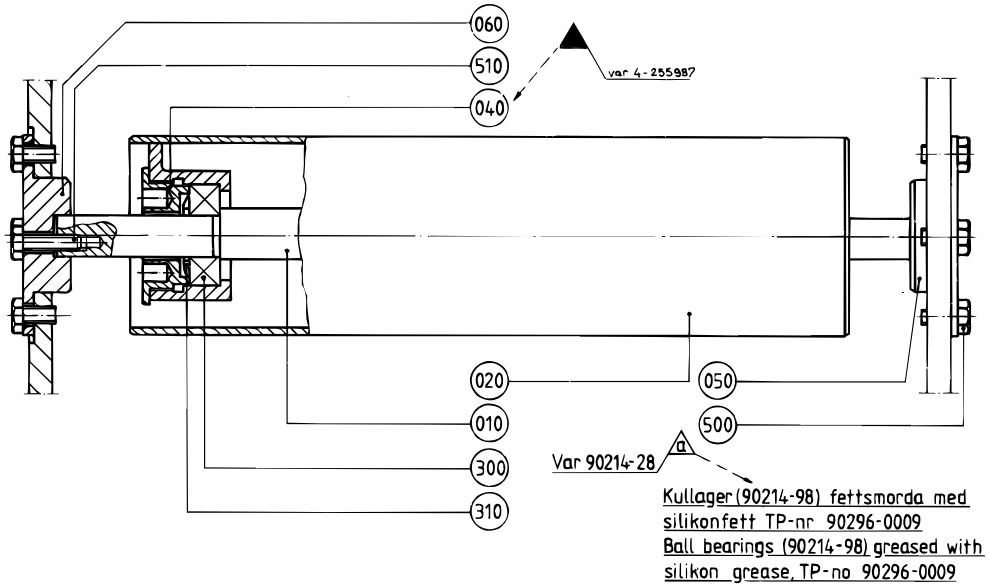
060
510
040
var 4-255987
020
050
010
500
300
310
Var 90214-28
a
Kullager (90214-98) fettsmorda med silikonfett TP-nr 90296-0009
Ball bearings (90214-98) greased with silikon grease, TP-no 90296-0009

Pos	Part No	SP	UN	Qty	Description	Page No
0125S OR 0100B						
030	271744-0000	C		1	BENDING ROLLER	
0200S OR 0180B OR 0236B OR 0200B OR 0187B OR 0250B OR 0284B						
020	272005-0000	C		1	BENDING ROLLER	
Common Parts						
010	491392-0000	C		1	SHAFT	
020	272005-0000	C		1	BENDING ROLLER	
040	247170-0000	-		2	BEARING COVER	
050	491393-0000	-		1	AXLE SUPPORT	
060	272018-0000	-		1	AXLE SUPPORT	
300	90214-0098	C		2	BALL BEARING,STAINLESS	
310	90214-0303	C		2	SEALING RING 18,6X35X2	
500	312105-0366	-		8	Screw M6S M6x12 A280	
510	312105-0370	-		1	Screw M6S M6x20 A280	

Pos	Part No	SP	UN	Qty	Description	Page No

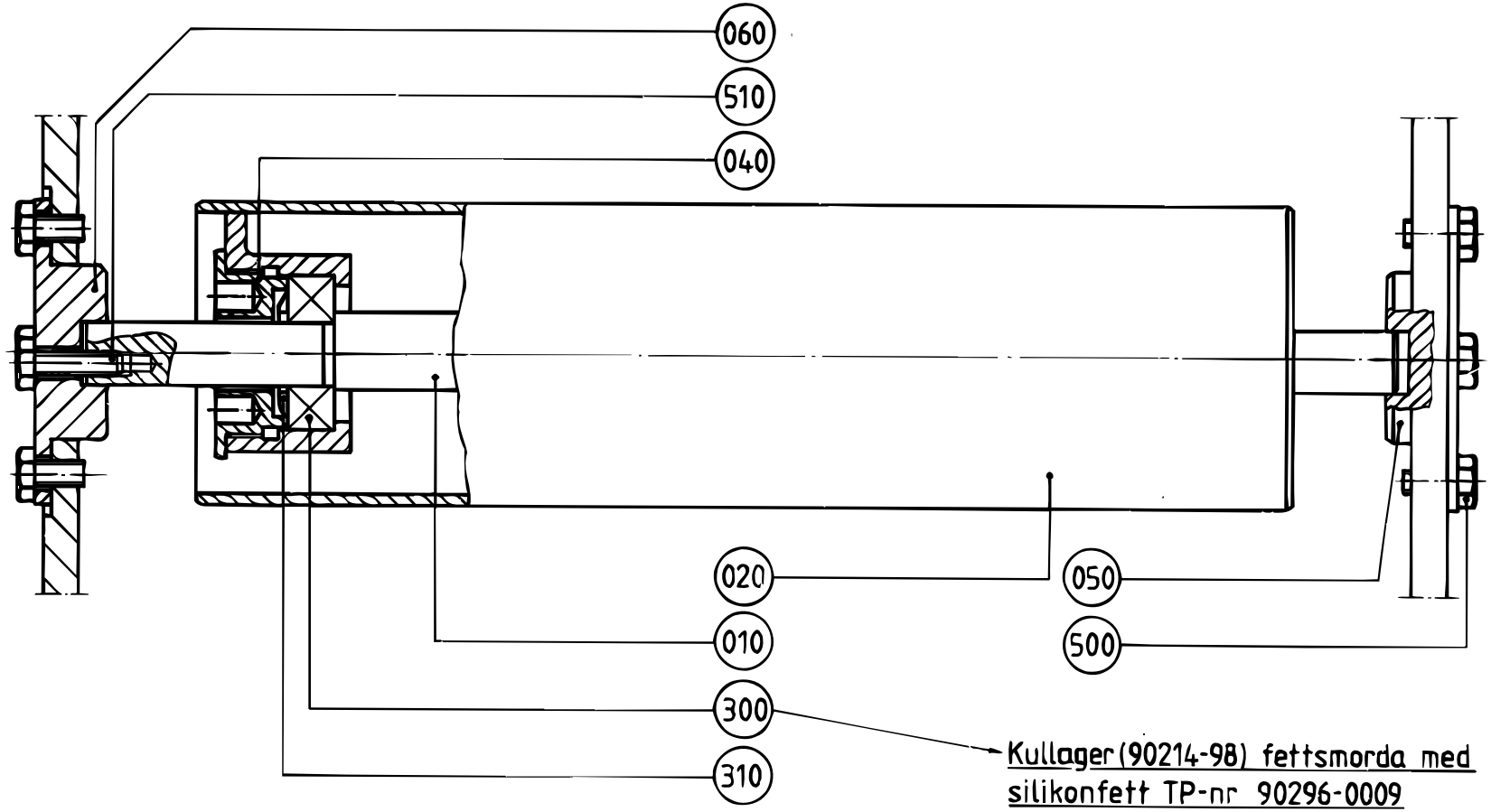

S - 272004-3
ECN 82225

Pos	Part No	SP	UN	Qty	Description	Page No
Common Parts						
010	255989-0000	C		1	SHAFT	
040	247170-0000	-		2	BEARING COVER	
050	272017-0000	-		1	AXLE SUPPORT	
060	272018-0000	-		1	AXLE SUPPORT	
300	90214-0098	C		2	BALL BEARING,STAINLESS	
310	90214-0303	C		2	SEALING RING 18,6X35X2	
500	312105-0366	-		8	Screw M6S M6x12 A280	
510	312105-0370	-		1	Screw M6S M6x20 A280	

Pos	Part No	SP	UN	Qty	Description	Page No

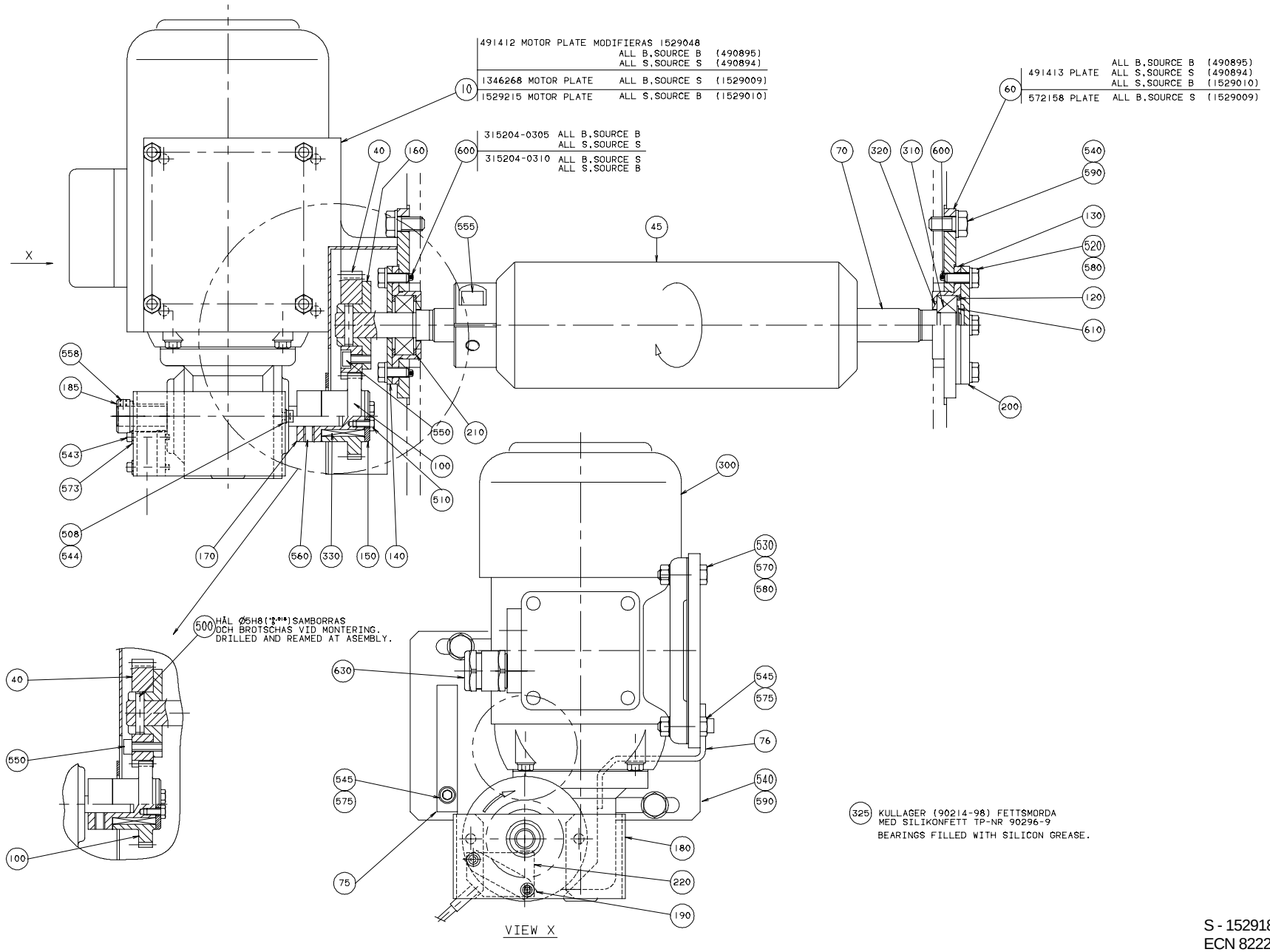

S - 1529185-1
ECN 82225

Pos	Part No	SP	UN	Qty	Description	Page No
0200B						
040	255897-0004	C		1	GEAR WHEEL	
045	441546-0000	C		1	BENDING ROLLER	
070	456515-0000	C		1	SHAFT	
100	209331-0011	C		1	GEAR WHEEL	
555	312115-0451	-		2	Screw MC6S M8x20 A280	
600	315204-0305	-		2	O-Ring 69,5x3 mm	
0200S						
040	255897-0008	C		1	GEAR WHEEL	
045	456527-0000	C		1	BENDING ROLLER	
100	209331-0009	C		1	GEAR WHEEL	
600	315204-0310	-		2	O-Ring 94,5x3 mm	
0250B						
040	255897-0007	C		1	GEAR WHEEL	
045	441546-0000	C		1	BENDING ROLLER	
070	456515-0000	C		1	SHAFT	
100	209331-0001	C		1	GEAR WHEEL	
555	312115-0451	-		2	Screw MC6S M8x20 A280	
600	315204-0305	-		2	O-Ring 69,5x3 mm	
Common Parts						
010	1529215-0000	-		1	MOTOR PLATE	
020	491413-0000	-		1	BEARING PANEL	
075	1529049-0000	-		1	COVER	
076	752568-0000	-		1	PROTECTION	
120	247172-0000	-		1	SPACER RING	
130	247173-0000	D		2	BEARING SEAT	
140	250590-0000	-		1	BEARING COVER	
150	250592-0000	-		1	WASHER	
160	255898-0000	-		1	HUB	
170	1334234-0000	-		1	HUB	
180	1529166-0000	-		1	BRACKET	
185	1529139-0000	-		1	INDICATOR	
190	795581-0000	-		1	PLATE	
200	456516-0000	-		1	BEARING COVER	
210	491333-0000	C		2	SPACER RING	
220	90044-0194	-		1	Prox.sw. IN5329/IN3002-BPKG	
300	B 90069-0281	C		1	Gears, Worm motor OKM87-60E3	
310	90214-0098	C		2	BALL BEARING,STAINLESS	
320	90214-0303	C		2	SEALING RING 18,6X35X2	
325	90296-0009	-	ML	1	SILICONE GREASE TUBE 100 Gr.	
330	90348-0007	C		1	FREE WHEEL COUPLING	
500	311103-0310	-		1	Pin, Parallell, m6, 5x20	
510	312105-0287	-		2	Screw M6S M4x8 A280	
520	312105-0367	-		8	Screw M6S M6x14 A280	
530	312105-0372	-		4	Screw M6S M6x25 A280	
540	312105-0451	-		4	Screw M6S 8x20 A280	
543	312115-0230	-		2	Screw MC6S M3x20 A280	
544	312115-0291	-		2	Screw MC6S M4x12 A280	
545	312115-0323	-		4	Screw MC6S M5x8 A280	
550	312115-0327	-		3	Screw MC6S M5x12 A280	
558	312318-0283	-		1	Screw,Sock.Set Cuppoint MSK6SS M4x4 A4	
560	312318-0364	-		1	Screw Hex.Sock.Set Cup P.MSK6SS6x10 SS	
570	312605-0316	-		4	Nut Hex. M6M M6 A280	
573	315105-0136	-		4	Washer, Plain, BRB, 4,3/8,H=0,8	
575	315105-0146	-		4	Washer, Plain, BRB, 5,3/10,H=1	
580	315105-0153	-		12	Washer, Plain, BRB, 6,4/12,H=1,5	
590	315115-0165	-		4	Washer, Plain, TBRB 8,4/16 H=3	
610	315755-0112	-		1	Locking Washer 12	
630	90012-0137	-		1	GLAND,EMC,EXTENDED WITH INSERT	

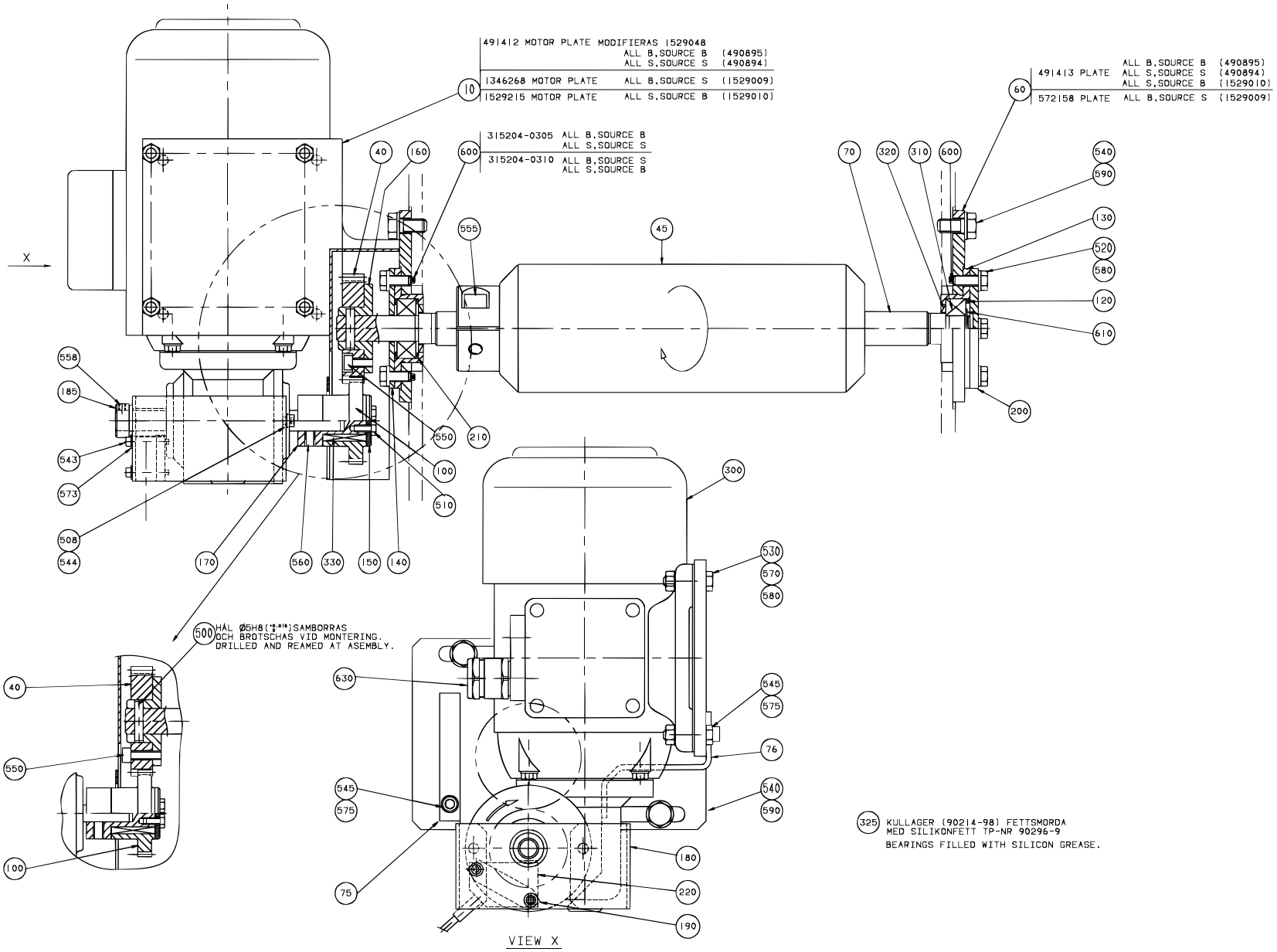

S - 1529080-1
ECN 82225

Pos	Part No	SP	UN	Qty	Description	Page No
Common Parts						
075	1529049-0000	-		1	COVER	
076	752568-0000	-		1	PROTECTION	
120	247172-0000	-		1	SPACER RING	
130	247173-0000	D		2	BEARING SEAT	
140	250590-0000	-		1	BEARING COVER	
150	250592-0000	-		1	WASHER	
160	255898-0000	-		1	HUB	
170	1334234-0000	-		1	HUB	
180	1529166-0000	-		1	BRACKET	
185	1529139-0000	-		1	INDICATOR	
190	795581-0000	-		1	PLATE	
200	456516-0000	-		1	BEARING COVER	
210	491333-0000	C		2	SPACER RING	
220	90044-0194	-		1	Prox.sw. IN5329/IN3002-BPKG	
300	B 90069-0281	C		1	Gears, Worm motor OKM87-60E3	
310	90214-0098	C		2	BALL BEARING,STAINLESS	
320	90214-0303	C		2	SEALING RING 18,6X35X2	
325	90296-0009	-	ML	1	SILICONE GREASE TUBE 100 Gr.	
330	90348-0007	C		1	FREE WHEEL COUPLING	
500	311103-0310	-		1	Pin, Parallell, m6, 5x20	
510	312105-0287	-		2	Screw M6S M4x8 A280	
520	312105-0367	-		8	Screw M6S M6x14 A280	
530	312105-0372	-		4	Screw M6S M6x25 A280	
540	312105-0451	-		4	Screw M6S 8x20 A280	
543	312115-0230	-		2	Screw MC6S M3x20 A280	
544	312115-0291	-		2	Screw MC6S M4x12 A280	
545	312115-0323	-		4	Screw MC6S M5x8 A280	
550	312115-0327	-		3	Screw MC6S M5x12 A280	
558	312318-0283	-		1	Screw,Sock.Set Cuppoint MSK6SS M4x4 A4	
560	312318-0364	-		1	Screw Hex.Sock.Set Cup P.MSK6SS6x10 SS	
570	312605-0316	-		4	Nut Hex. M6M M6 A280	
573	315105-0136	-		4	Washer, Plain, BRB, 4,3/8,H=0,8	
575	315105-0146	-		4	Washer, Plain, BRB, 5,3/10,H=1	
580	315105-0153	-		12	Washer, Plain, BRB, 6,4/12,H=1,5	
590	315115-0165	-		4	Washer, Plain, TBRB 8,4/16 H=3	
610	315755-0112	-		1	Locking Washer 12	
630	90012-0137	-		1	GLAND,EMC,EXTENDED WITH INSERT	

Pos	Part No	SP	UN	Qty	Description	Page No

LOWER FILLING TUBE

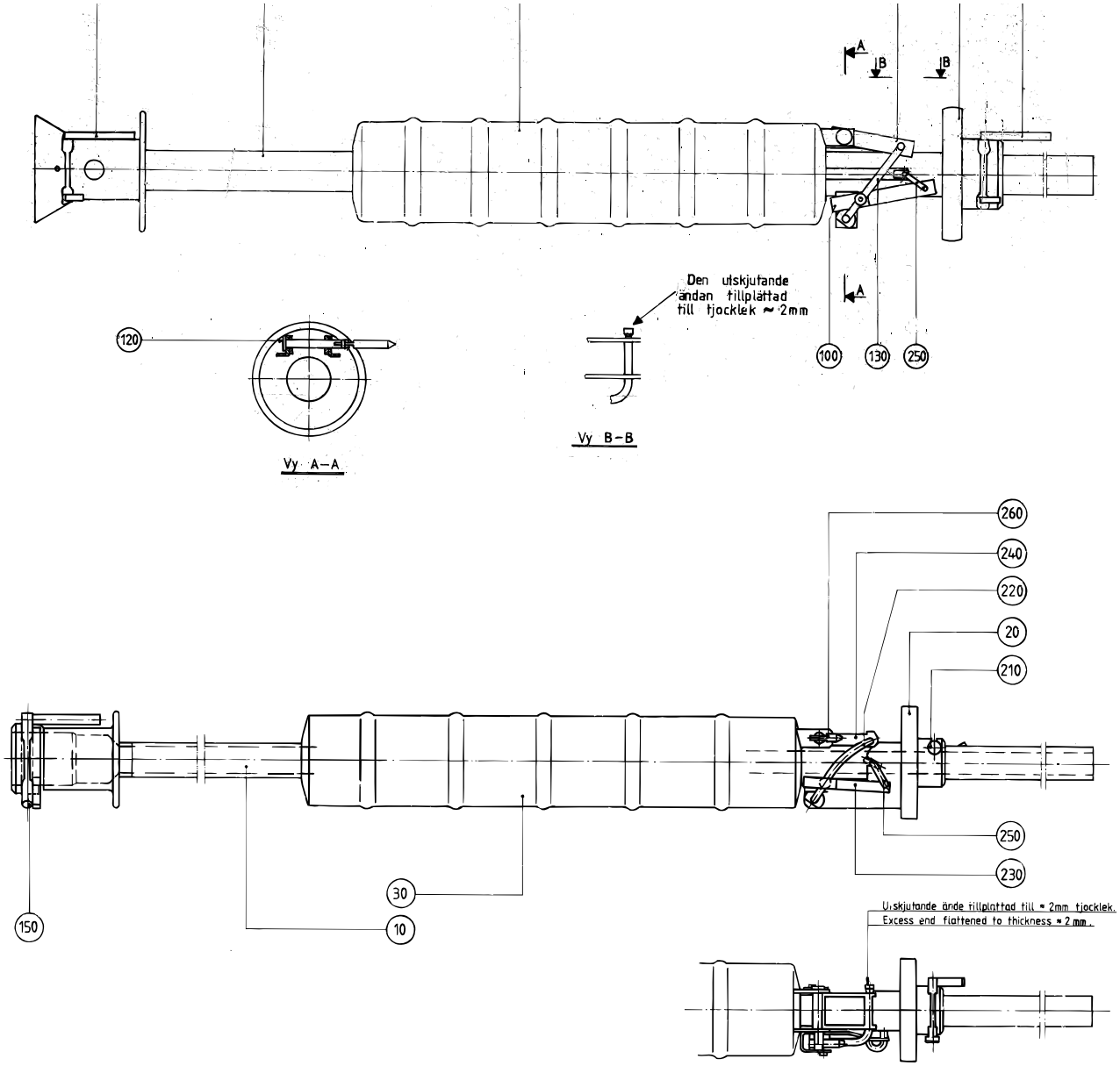

Pos	Part No	SP	UN	Qty	Description	Page No
0125S						
010	469549-0000		C	1	FILLER TUBE	
020	257097-0000		C	1	PRESSURE FLANGE	
030	272056-0000		C	1	FLOAT	
210	257101-0000		C	1	LOCK	
220	271347-0000		C	1	ARM	
230	271348-0000		C	1	LINK	
240	491458-0000		C	1	LINK	
250	271350-0000		C	1	THROTTLE	
260	271351-0000		C	1	SHEAR PIN	
0180B 0200B						
020	295252-0000		C	1	PRESSURE FLANGE	
030	259580-0000		C	1	FLOAT REPBY 0550487-0000	
100	36816-0000		C	1	LINK	
110	36817-0000		C	1	CLAMPING ELEMENT	
120	36821-0002		C	1	SHEAR PIN	
130	37296-0000		C	1	ARM	
140	38535-0001		C	1	LOCKING FINGER	
250	295987-0000		C	1	THROTTLE	
0180B OR 0200B						
010	441074-0001		C	1	FILLER TUBE	
0200S						
010	491139-0000		C	1	FILLER TUBE	
020	491140-0000		C	1	PRESSURE FLANGE	
030	491142-0000		C	1	FLOAT	
210	257101-0000		C	1	LOCK	
220	271347-0000		C	1	ARM	
230	271348-0000		C	1	LINK	
240	271349-0000		C	1	LINK	
250	491141-0000		C	1	THROTTLE	
260	271351-0000		C	1	SHEAR PIN	
0236B OR 0250B						
010	441074-0002		C	1	FILLER TUBE	
020	295252-0000		C	1	PRESSURE FLANGE	
030	259580-0000		C	1	FLOAT REPBY 0550487-0000	
100	36816-0000		C	1	LINK	
110	36817-0000		C	1	CLAMPING ELEMENT	
120	36821-0002		C	1	SHEAR PIN	
130	37296-0000		C	1	ARM	
140	38535-0001		C	1	LOCKING FINGER	
250	295987-0000		C	1	THROTTLE	
Common Parts						
150	38535-0002		C	1	LOCKING FINGER	

Pos	Part No	SP	UN	Qty	Description	Page No

LOWER FILLING TUBE

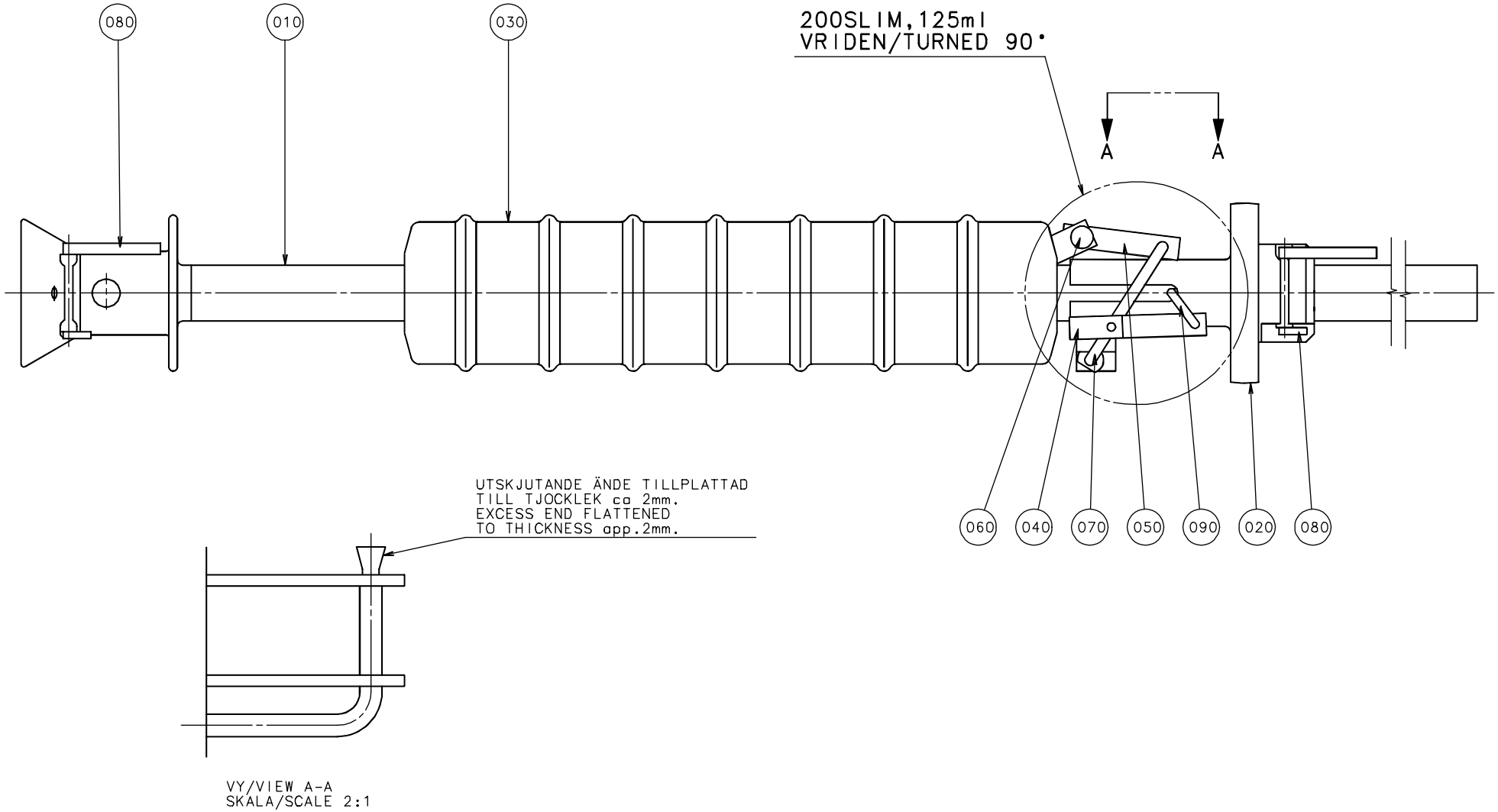

Pos	Part No	SP	UN	Qty	Description	Page No
0125S						
010	490869-0000	C		1	FILLING TUBE LOWER	
020	490850-0000	C		1	PRESSURE FLANGE	
030	272056-0000	C		1	FLOAT	
040	271348-0000	C		1	LINK	
050	491458-0000	C		1	LINK	
060	271351-0000	C		1	SHEAR PIN	
070	271347-0000	C		1	ARM	
080	978562-0000	C		2	LOCKING FINGER	
090	271350-0000	C		1	THROTTLE	
0160S						
010	491270-0000	C		1	FILLING TUBE LOWER	
020	577231-0000	C		1	PRESSURE FLANGE	
030	491142-0000	C		1	FLOAT	
040	271348-0000	C		1	LINK	
050	271349-0000	C		1	LINK	
060	271351-0000	C		1	SHEAR PIN	
070	271347-0000	C		1	ARM	
080	978562-0000	C		2	LOCKING FINGER	
090	491141-0000	C		1	THROTTLE	
0180B OR 0200B						
010	469972-0001	C		1	FILLING TUBE LOWER	
020	469973-0000	C		1	PRESSURE FLANGE	
030	550487-0000	C		1	FLOAT	
040	36816-0000	C		1	LINK	
050	36817-0000	C		1	CLAMPING ELEMENT	
060	36821-0002	C		1	SHEAR PIN	
070	37296-0000	C		1	ARM	
080	38535-0002	C		2	LOCKING FINGER	
090	295987-0000	C		1	THROTTLE	
0200S						
010	491270-0000	C		1	FILLING TUBE LOWER	
020	491271-0000	C		1	PRESSURE FLANGE	
030	491142-0000	C		1	FLOAT	
040	271348-0000	C		1	LINK	
050	271349-0000	C		1	LINK	
060	271351-0000	C		1	SHEAR PIN	
070	271347-0000	C		1	ARM	
080	978562-0000	C		2	LOCKING FINGER	
090	491141-0000	C		1	THROTTLE	
0236B OR 0250B OR 0284B						
010	469972-0002	C		1	FILLING TUBE LOWER	
020	469973-0000	C		1	PRESSURE FLANGE	
030	550487-0000	C		1	FLOAT	
040	36816-0000	C		1	LINK	
050	36817-0000	C		1	CLAMPING ELEMENT	
060	36821-0002	C		1	SHEAR PIN	
070	37296-0000	C		1	ARM	
080	38535-0002	C		2	LOCKING FINGER	
090	295987-0000	C		1	THROTTLE	
0250S						
010	574412-0000	C		1	FILLING TUBE 250S	
020	574413-0000	C		1	PRESSURE FLANGE 250S	
030	574414-0000	C		1	FLOATER 250S	
040	36816-0000	C		1	LINK	
050	574475-0000	C		1	LINK	
060	36821-0002	C		1	SHEAR PIN	
070	574472-0000	C		1	ARM	
070	37296-0000	C		1	ARM	
080	38535-0002	C		2	LOCKING FINGER	
090	228943-0000	C		1	THROTTLE	

CREASE ROLLER

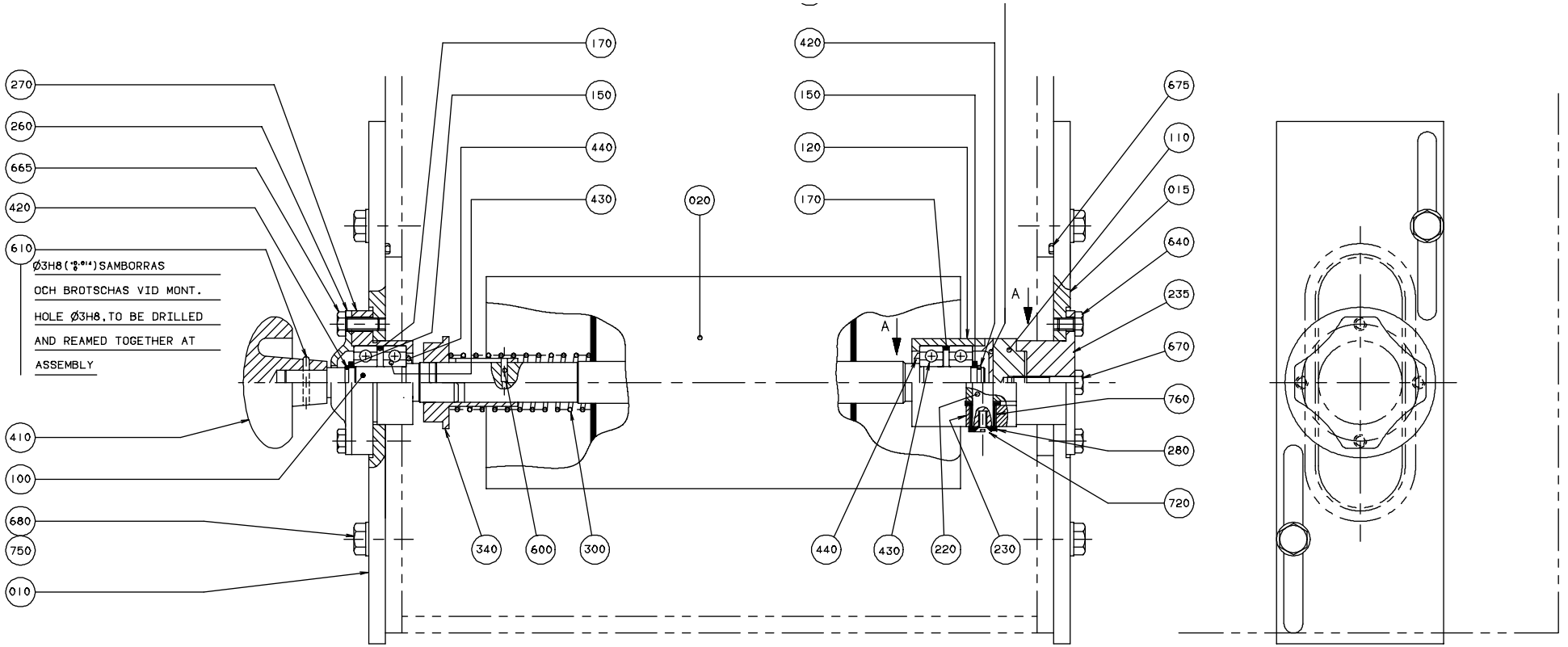

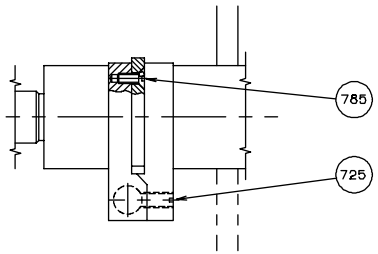

SNITT/SECTION A-A

445 KULLAGER (90214-98) FETTSMORDA
MED SILIKONFETT TP-no:90296-9
BALL BEARINGS (90214-98) GREASED WITH
SILICON-GREASE, TP-No:90296-9

TBA/9R 100V/110V

S - 1529140-1
ECN 82225

Pos	Part No	SP	UN	Qty	Description	Page No
Common Parts						
010	1529216-0000	-		1	PLATE	
015	1529217-0000	-		1	PLATE	
020	490882-0000	-		1	ROLL	
100	752744-0000	D		1	SHAFT	
110	271837-0000	D		1	BRACKET	
120	456012-0000	C		1	BEARING SEAT	
150	15529-0000	-		2	WASHER	
170	247172-0000	C		2	SPACER RING	
220	751467-0000	C		1	SHAFT	
230	271656-0000	C		2	WASHER	
235	271837-0000	D		1	BRACKET	
240	456013-0000	C		1	BEARING COVER	
260	752745-0000	D		1	BEARING COVER	
270	271841-0000	D		1	BEARING SEAT	
280	271844-0000	-		1	WASHER	
300	272001-0000	C		1	COMPRESSION SPRING	
340	295010-0000	C		1	GUIDE SLEEVE	
410	90051-0045	D		1	HANDLE	
420	90141-0011	C		2	Retain. Ring, SPEC 12,8	
430	90214-0098	C		4	BALL BEARING,STAINLESS	
440	90214-0303	C		2	SEALING RING 18,6X35X2	
445	90296-0009	-	L	1	SILICONE GREASE TUBE 100 Gr.	
600	311103-0234	C		1	Pin, Parallell, m6, 3x12	
610	311103-0238	C		1	Pin, Parallell, m6, 3x20	
640	312105-0364	-		4	Screw M6S M6x10 A280	
665	312105-0370	-		4	Screw M6S M6x20 A280	
670	312105-0374	-		2	Screw M6S M6x30 A280	
675	315204-0313	-		2	O-Ring 109,5x3 mm	
680	312105-0451	-		4	Screw M6S 8x20 A280	
720	312145-0287	-		1	Screw Counters.Slot.Hd. MFS 4x8 SS	
725	312318-0364	-		1	Screw Hex.Sock.Set Cup P.MSK6SS6x10 SS	
750	315115-0165	-		4	Washer, Plain, TBRB 8,4/16 H=3	
760	321127-0100	C		2	BEARING BUSHING WITHOUT FLANGE,10/13X10	
785	312155-0291	-		4	Screw Hex.Sock.Count.MF6S M4x12 A480	

Pos	Part No	SP	UN	Qty	Description	Page No

CREASE ROLLER

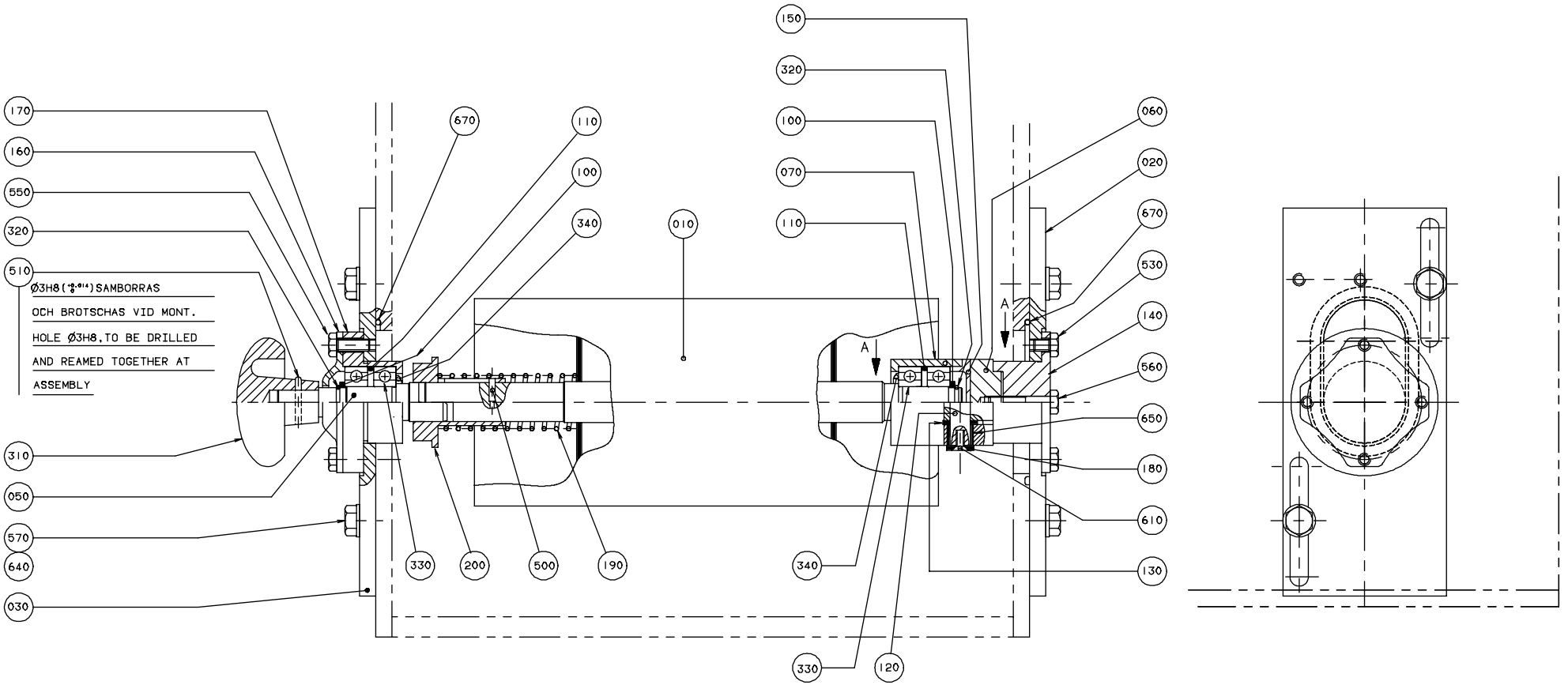

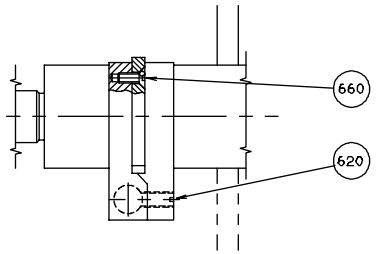

SNITT/SECTION A-A

350 KULLAGER (90214-98) FETTSMORDA
MED SILIKONFETT TP-no:90296-9
BALL BEARINGS (90214-98) GREASED WITH
SILICON-GREASE,TP-No:90296-9

TBA/9R 120V

S - 1529172-1
ECN 82225

Pos	Part No	SP	UN	Qty	Description	Page No
0200B OR 0250B						
670	315204-0303	C		2	O-Ring 59,5x3 mm	
0200S						
670	315204-0306	C		2	O-Ring 74,5x3 mm	
Common Parts						
010	490882-0000	-		1	ROLL	
020	491626-0000	-		1	BEARING PANEL	
030	491627-0000	-		1	BEARING PANEL	
050	752744-0000	D		1	SHAFT	
060	271835-0000	D		1	BRACKET	
070	456012-0000	C		1	BEARING SEAT	
100	15529-0000	-		2	WASHER	
110	247172-0000	C		2	SPACER RING	
120	751467-0000	C		1	SHAFT	
130	271656-0000	C		2	WASHER	
140	271837-0000	D		1	BRACKET	
150	456013-0000	C		1	BEARING COVER	
160	752745-0000	D		1	BEARING COVER	
170	271841-0000	D		1	BEARING SEAT	
180	271844-0000	D		1	WASHER	
190	272001-0000	C		1	COMPRESSION SPRING	
200	295010-0000	C		1	GUIDE SLEEVE	
310	90051-0045	D		1	HANDLE	
320	90141-0011	C		2	Retaining Ring for shaft, 15x1,6 mm	
330	90214-0098	C		4	BALL BEARING,STAINLESS	
340	90214-0303	C		2	SEALING RING 18,6X35X2	
350	90296-0009	-	L	1	SILICONE GREASE TUBE 100 Gr.	
500	311103-0234	C		1	Pin, Parallell, m6, 3x12	
510	311103-0238	C		1	Pin, Parallell, m6, 3x20	
530	312105-0362	-		4	Screw M6S M6x8 A280	
550	312105-0368	-		4	Screw M6S M6x16 A280	
560	312105-0374	-		2	Screw M6S M6x30 A280	
570	312105-0451	-		4	Screw M6S 8x20 A280	
610	312145-0287	-		1	Screw Counters.Slot.Hd. MFS 4x8 SS	
620	312318-0364	-		1	Screw Hex.Sock.Set Cup P.MSK6SS6x10 SS	
640	315115-0165	-		4	Washer, Plain, TBRB 8,4/16 H=3	
650	321127-0100	C		2	BEARING BUSHING WITHOUT FLANGE,10/13X10	
660	312155-0291	-		4	Screw Hex.Sock.Count.MF6S M4x12 A480	
670	315204-0309	-		2	O-Ring 89,5x3 mm	

Pos	Part No	SP	UN	Qty	Description	Page No

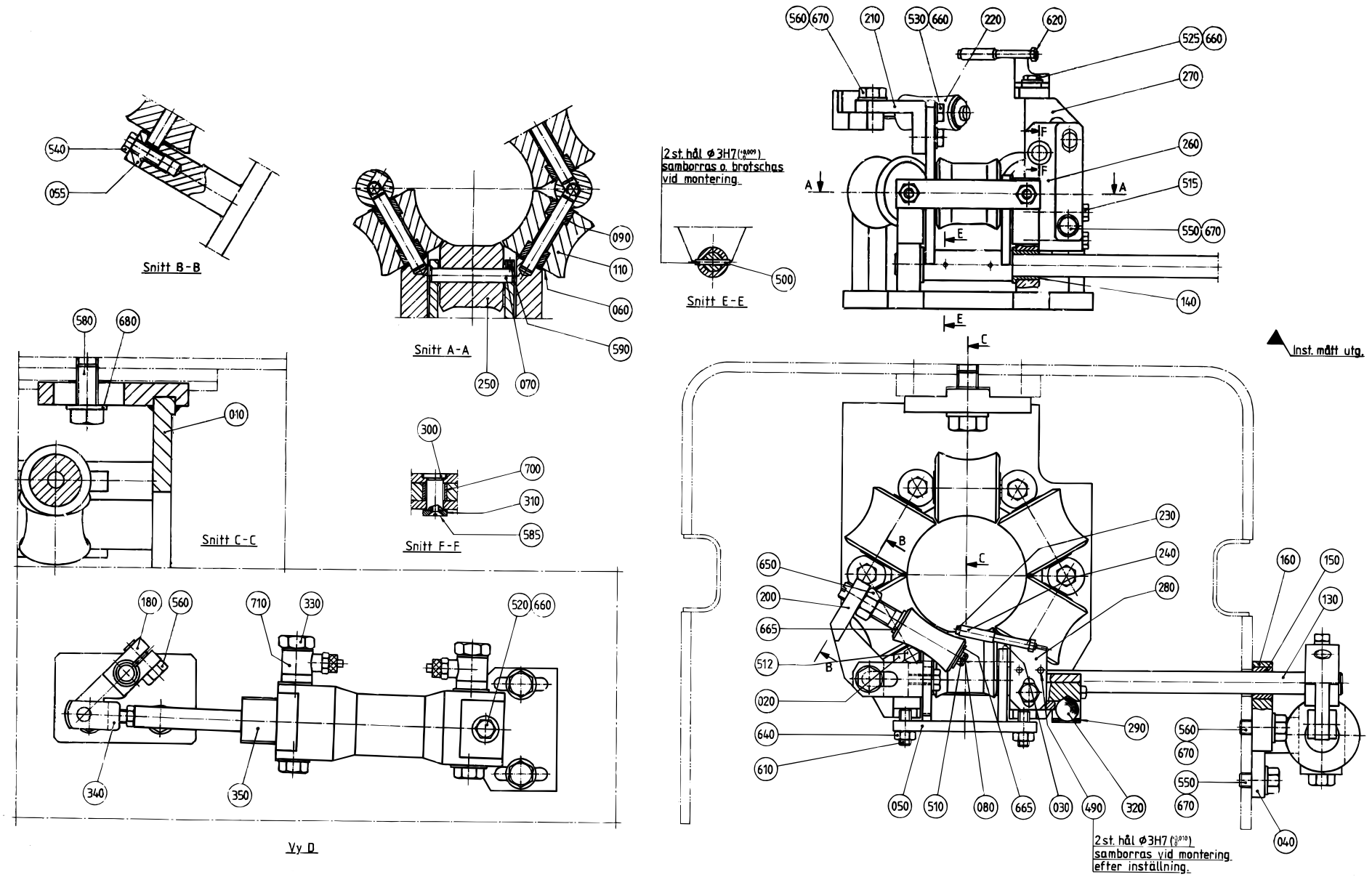
Snitt B-B
Snitt A-A
Snitt C-C
Snitt E-E
Snitt F-F
Vy D
2 st. hål ø 3H7
samborras o. brotschas
vid montering
2 st. hål ø 3H7
samborras vid montering
efter inställning.
Inst. mått utg.

Pos	Part No	SP	UN	Qty	Description	Page No
0125S						
010	456837-0000	-		1	HOLDER	
020	456840-0000	-		1	LOCK PLATE	
030	456839-0000	-		1	LOCK PLATE	
050	257041-0000	-		1	FORK	
055	456838-0000	-		4	LOCK PLATE	
070	2873-0000	C		6	SHAFT	
110	441876-0000	C		5	ROLL	
250	491376-0000	C		1	COUNTER ROLLER	
280	491587-0000	-		1	HOLDER	
600	312318-0368	-		2	Screw,Sock.Set Cuppoint MSK6SS M6x16 A4	
630	312605-0316	-		2	Nut Hex. M6M M6 A280	
0180B OR 0236B OR 0200B OR 0187B OR 0250B OR 0284B						
010	456093-0000	-		1	HOLDER	
020	456132-0000	-		1	LOCK PLATE	
030	456131-0000	-		1	LOCK PLATE	
050	257040-0000	-		1	FORK	
055	456130-0000	-		4	LOCK PLATE	
070	263655-0006	C		6	SHAFT	
110	456090-0000	C		5	ROLL	
250	38630-0003	C		1	COUNTER ROLLER	
280	271421-0000	-		1	HOLDER	
610	312318-0451	-		2	Screw,Sock.Set Cuppoint MSK6SS M8x20 A4	
640	312605-0318	-		2	Nut Hex. M6M M8 A280	
0200S						
010	456837-0000	-		1	HOLDER	
020	456840-0000	-		1	LOCK PLATE	
030	456839-0000	-		1	LOCK PLATE	
050	257041-0000	-		1	FORK	
055	456838-0000	-		4	LOCK PLATE	
070	2873-0000	C		6	SHAFT	
110	456996-0000	C		5	ROLLER	
250	491222-0000	C		1	COUNTER ROLLER	
280	491587-0000	-		1	HOLDER	
600	312318-0368	-		2	Screw,Sock.Set Cuppoint MSK6SS M6x16 A4	
630	312605-0316	-		2	Nut Hex. M6M M6 A280	
Common Parts						
040	256258-0000	-		1	CYLINDER BRACKET	
060	2033-0011	C		24	WASHER	
080	239440-0000	C		1	SHAFT	
090	441828-0000	C		10	PLAIN BEARING REPBY 0751230-0000	
130	255969-0000	C		1	SHAFT	
140	255970-0000	C		2	BUSHING	
150	255971-0000	C		1	BUSHING	
160	255972-0000	-		1	BEARING PLATE	
180	255974-0000	-		1	BRACKET	
200	257042-0000	-		1	BRACKET	
210	257043-0000	-		1	ANGLE BRACKET	
220	257044-0000	C		1	ROLL	
230	257050-0000	C		1	SHAFT	
240	268059-0000	C		1	ROLL	
260	271419-0000	-		1	FORK	
270	271420-0000	-		1	CANTILEVER	
290	271422-0000	C		2	SPRING	
300	271423-0001	C		1	SHAFT	
310	271844-0000	C		1	WASHER	
320	90090-0003	C		1	STEEL-BALL SKF RB 12,7mm RJ	
330	90235-0275	C		2	"THROTTLE CHECK VALVES,G1/4""""	
340	90239-0127	C		1	BRACKET	
350	B 90239-0166	C		1	CYLINDER	
490	311103-0233	-		2	Pin, Parallell, m6, 3x10	
500	311103-0238	-		2	Pin, Parallell, m6, 3x20	
510	311411-0140	-		1	SPLIT PIN SP1,6X16RFR	
512	312105-0331	-		2	Screw M6S M5x20 A280	
515	312105-0337	-		2	Screw M6S M5x35 A280	
520	312105-0364	-		1	Screw M6S M6x10 A280	
525	312105-0366	-		1	Screw M6S M6x12 A280	
530	312105-0368	-		2	Screw M6S M6x16 A280	
540	312105-0370	-		4	Screw M6S M6x20 A280	
550	312105-0449	-		3	Screw M6S M8x16 A280	
560	312105-0451	-		4	Screw M6S 8x20 A280	
580	312105-0536	-		1	Screw M6S M12x30 A280	
585	312145-0285	-		1	Screw Counters.Slot.Hd. MFS 4x6 SS	
590	312318-0285	-		1	Screw,Sock.Set Cuppoint MSK6SS M4x6 A4	
620	312605-0310	-		1	Nut Hex. M6M M3 A280	
650	312605-0320	-		1	Nut Hex. M6M M10 A280	
660	315105-0153	-		4	Washer, Plain, BRB, 6,4/12,H=1,5	
665	315105-0165	-		2	Washer, Plain, BRB, 8,4/16,H=1,5	
670	315115-0165	-		6	Washer, Plain, TBRB 8,4/16 H=3	
680	315115-0178	-		1	Washer, Plain, TBRB 13/24 H=4	
700	321127-0100	-		1	BEARING BUSHING WITHOUT FLANGE,10/13X10	
710	342797-0122	C		2	Conn. Banjo, Ringpiece 6-1/4	

(Cont'd)

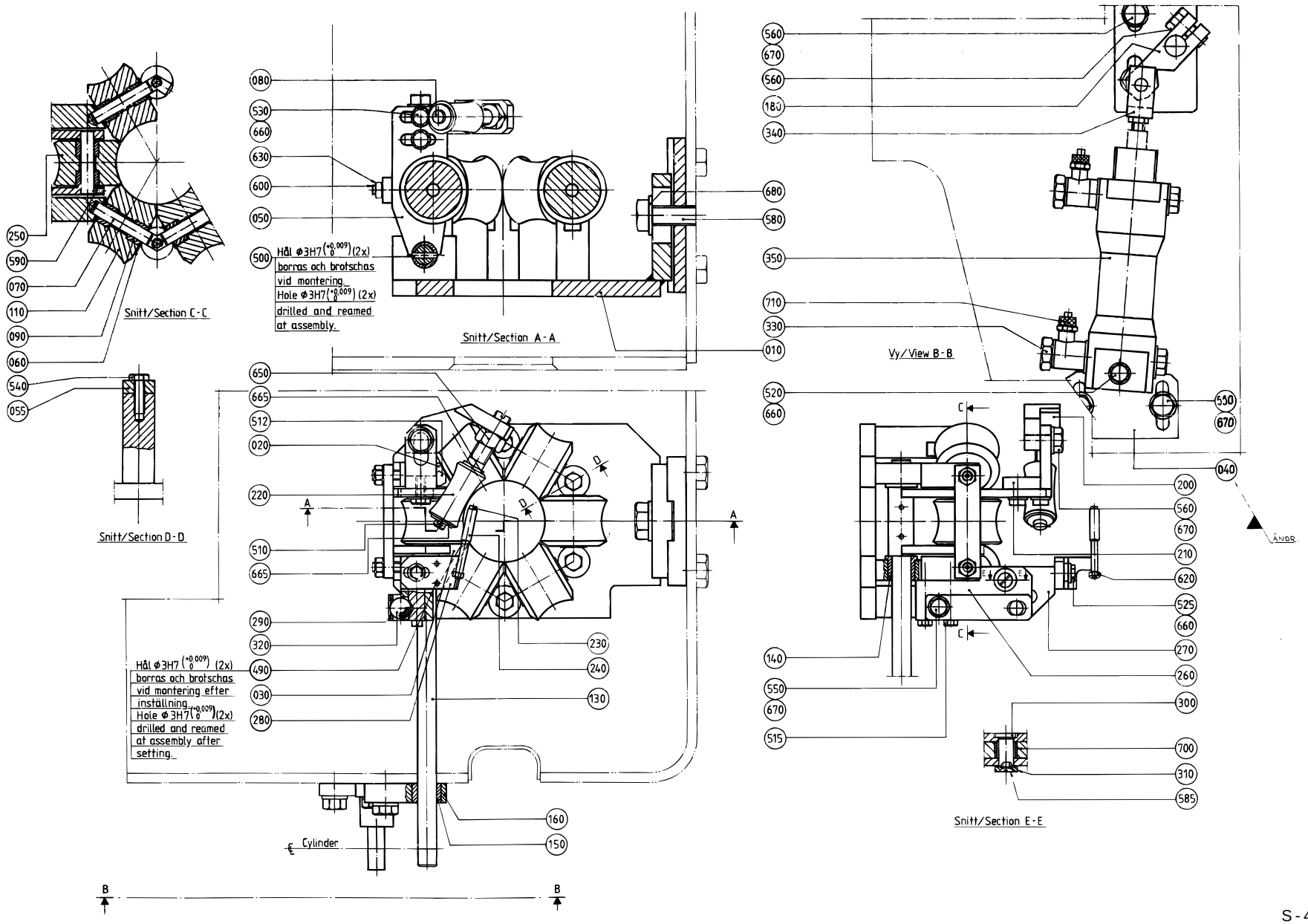
Snitt/Section C-C
Snitt/Section D-D
Snitt/Section A-A
Vy/View B-B
Snitt/Section E-E
Hål Ø3H7 (+0,009 0) (2x) borras och brotschas vid montering.
Hole Ø3H7 (+0,009 0) (2x) drilled and reamed at assembly.
Hål Ø3H7 (+0,009 0) (2x) borras och brotschas vid montering efter inställning.
Hole Ø3H7 (+0,009 0) (2x) drilled and reamed at assembly after setting.
Cylinder
ÄNDR
250
590
070
110
090
060
540
055
080
530
660
630
600
050
500
650
665
512
020
220
510
665
290
320
490
030
280
230
240
130
160
150
560
670
560
180
340
680
580
350
710
330
010
520
660
530
670
040
200
560
670
210
620
525
660
270
260
300
140
550
670
515
700
310
585

Pos	Part No	SP	UN	Qty	Description	Page No
(Cont'd)						
0125S						
010	456837-0000	-		1	HOLDER	
020	456840-0000	-		1	LOCK PLATE	
030	456839-0000	-		1	LOCK PLATE	
050	257041-0000	-		1	FORK	
055	456838-0000	-		4	LOCK PLATE	
070	2873-0000	C		6	SHAFT	
110	441876-0000	C		5	ROLL	
250	491376-0000	C		1	COUNTER ROLLER	
280	491587-0000	-		1	HOLDER	
600	312318-0368	-		2	Screw,Sock.Set Cuppoint MSK6SS M6x16 A4	
630	312605-0316	-		2	Nut Hex. M6M M6 A280	
0180B OR 0236B OR 0200B OR 0187B OR 0250B OR 0284B						
010	456093-0000	-		1	HOLDER	
020	456132-0000	-		1	LOCK PLATE	
030	456131-0000	-		1	LOCK PLATE	
050	257040-0000	-		1	FORK	
055	456130-0000	-		4	LOCK PLATE	
070	263655-0006	C		6	SHAFT	
110	456090-0000	C		5	ROLL	
250	38630-0003	C		1	COUNTER ROLLER	
280	271421-0000	-		1	HOLDER	
610	312318-0451	-		2	Screw,Sock.Set Cuppoint MSK6SS M8x20 A4	
640	312605-0318	-		2	Nut Hex. M6M M8 A280	
0200S						
010	456837-0000	-		1	HOLDER	
020	456840-0000	-		1	LOCK PLATE	
030	456839-0000	-		1	LOCK PLATE	
050	257041-0000	-		1	FORK	
055	456838-0000	-		4	LOCK PLATE	
070	2873-0000	C		6	SHAFT	
110	456996-0000	C		5	ROLLER	
250	491222-0000	C		1	COUNTER ROLLER	
280	491587-0000	-		1	HOLDER	
600	312318-0368	-		2	Screw,Sock.Set Cuppoint MSK6SS M6x16 A4	
630	312605-0316	-		2	Nut Hex. M6M M6 A280	
Common Parts						
040	256258-0000	-		1	CYLINDER BRACKET	
060	2033-0011	C		24	WASHER	
080	239440-0000	C		1	SHAFT	
090	441828-0000	C		10	PLAIN BEARING REPBY 0751230-0000	
130	255969-0000	C		1	SHAFT	
140	255970-0000	C		2	BUSHING	
150	255971-0000	C		1	BUSHING	
160	255972-0000	-		1	BEARING PLATE	
180	255974-0000	-		1	BRACKET	
200	257042-0000	-		1	BRACKET	
210	257043-0000	-		1	ANGLE BRACKET	
220	257044-0000	C		1	ROLL	
230	257050-0000	C		1	SHAFT	
240	268059-0000	C		1	ROLL	
260	271419-0000	-		1	FORK	
270	271420-0000	-		1	CANTILEVER	
290	271422-0000	C		2	SPRING	
300	271423-0001	C		1	SHAFT	
310	271844-0000	C		1	WASHER	
320	90090-0003	C		1	STEEL-BALL SKF RB 12,7mm RJ	
330	90235-0275	C		2	"THROTTLE CHECK VALVES,G1/4""""	
340	90239-0127	C		1	BRACKET	
350	B 90239-0166	C		1	CYLINDER	
490	311103-0233	-		2	Pin, Parallell, m6, 3x10	
500	311103-0238	-		2	Pin, Parallell, m6, 3x20	
510	311411-0140	-		1	SPLIT PIN SP1,6X16RFR	
512	312105-0331	-		2	Screw M6S M5x20 A280	
515	312105-0337	-		2	Screw M6S M5x35 A280	
520	312105-0364	-		1	Screw M6S M6x10 A280	
525	312105-0366	-		1	Screw M6S M6x12 A280	
530	312105-0368	-		2	Screw M6S M6x16 A280	
540	312105-0370	-		4	Screw M6S M6x20 A280	
550	312105-0449	-		3	Screw M6S M8x16 A280	
560	312105-0451	-		4	Screw M6S 8x20 A280	
580	312105-0536	-		1	Screw M6S M12x30 A280	
585	312145-0285	-		1	Screw Counters.Slot.Hd. MFS 4x6 SS	
590	312318-0285	-		1	Screw,Sock.Set Cuppoint MSK6SS M4x6 A4	
620	312605-0310	-		1	Nut Hex. M6M M3 A280	
650	312605-0320	-		1	Nut Hex. M6M M10 A280	
660	315105-0153	-		4	Washer, Plain, BRB, 6,4/12,H=1,5	
665	315105-0165	-		2	Washer, Plain, BRB, 8,4/16,H=1,5	
670	315115-0165	-		6	Washer, Plain, TBRB 8,4/16 H=3	
680	315115-0178	-		1	Washer, Plain, TBRB 13/24 H=4	
700	321127-0100	-		1	BEARING BUSHING WITHOUT FLANGE,10/13X10	
710	342797-0122	C		2	Conn. Banjo, Ringpiece 6-1/4	

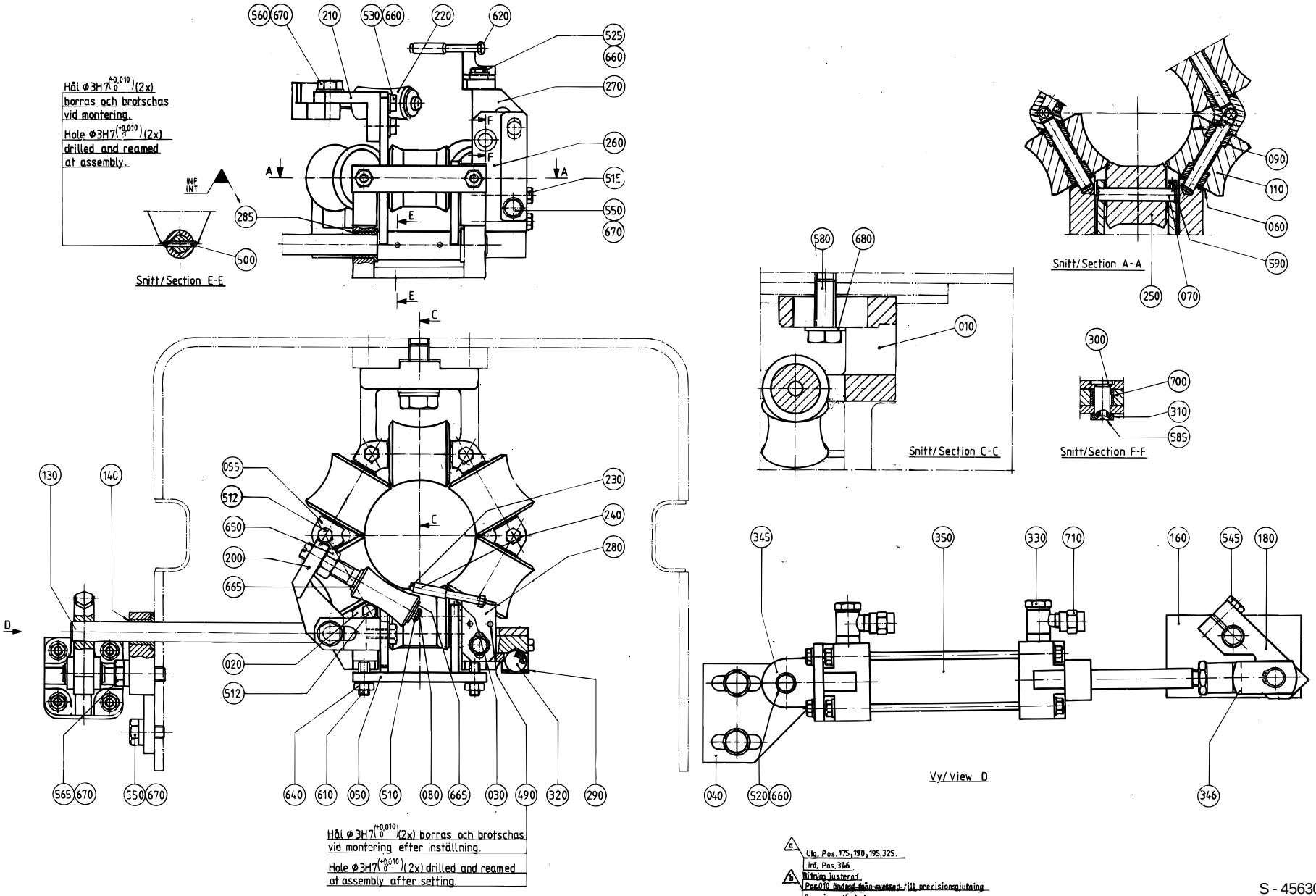

S - 456309-3
ECN 82225

Pos	Part No	SP	UN	Qty	Description	Page No
0200S						
010	456837-0000	-		1	HOLDER	
020	456840-0000	-		1	LOCK PLATE	
030	456839-0000	-		1	LOCK PLATE	
050	257041-0000	-		1	FORK	
055	456838-0000	-		4	LOCK PLATE	
070	2873-0000	C		6	SHAFT	
110	456996-0000	C		5	ROLLER	
250	491222-0000	C		1	COUNTER ROLLER	
280	491587-0000	-		1	HOLDER	
600	312318-0368	-		2	Screw,Sock.Set Cuppoint MSK6SS M6x16 A4	
630	312605-0316	-		2	Nut Hex. M6M M6 A280	
0250B						
010	490518-0000	-		1	HOLDER	
020	490539-0000	-		1	LOCK PLATE	
030	490540-0000	-		1	LOCK PLATE	
050	257040-0000	-		1	FORK	
055	490538-0000	-		4	LOCKING PLATE	
070	263655-0006	C		6	SHAFT	
110	456090-0000	C		5	ROLL	
140	255970-0000	C		1	BUSHING	
250	38630-0003	C		1	COUNTER ROLLER	
280	271421-0000	-		1	HOLDER	
285	752047-0000	C		2	BUSHING	
512-02	312105-0331	-		6	Screw M6S M5x20 A280	
610	312318-0451	-		2	Screw,Sock.Set Cuppoint MSK6SS M8x20 A4	
640	312605-0318	-		2	Nut Hex. M6M M8 A280	
Common Parts						
040	491022-0000	-		1	CYLINDER BRACKET	
060	2033-0011	C		12	WASHER	
080	239440-0000	C		1	SHAFT	
090	751230-0000	C		10	PLAIN BEARING	
130	255969-0000	C		1	SHAFT	
160	491021-0000	-		1	BEARING PLATE	
180	441483-0000	-		1	CYLINDER BRACKET	
200	257042-0000	-		1	BRACKET	
210	257043-0000	-		1	ANGLE BRACKET	
220	257044-0000	C		1	ROLL	
230	257050-0000	C		1	SHAFT	
240	268059-0000	C		1	ROLL	
260	271419-0000	-		1	FORK	
270	271420-0000	-		1	CANTILEVER	
290	271422-0000	C		2	SPRING	
300	271423-0001	C		1	SHAFT	
310	271844-0000	C		1	WASHER	
320	90090-0003	C		1	STEEL-BALL SKF RB 12,7mm RJ	
330	90235-0282	C		2	THROTTLE CHECK VALVES,G1/8	
345	90239-0453	C		1	BRACKET	
346	90239-0516	C		1	ROD END,CLEVIS WITH AXLE M10X1,25	
350	B 90239-0779	C		1	CYLINDER	
490	311103-0233	-		2	Pin, Parallell, m6, 3x10	
500	311103-0238	-		2	Pin, Parallell, m6, 3x20	
510	311411-0140	-		1	SPLIT PIN SP1,6X16RFR	
515	312105-0337	-		2	Screw M6S M5x35 A280	
520	312105-0364	-		1	Screw M6S M6x10 A280	
525	312105-0366	-		1	Screw M6S M6x12 A280	
530	312105-0368	-		2	Screw M6S M6x16 A280	
545	312105-0372	-		1	Screw M6S M6x25 A280	
550	312105-0449	-		3	Screw M6S M8x16 A280	
560	312105-0451	-		1	Screw M6S 8x20 A280	
565	312105-0453	-		2	Screw M6S M8x25 A280	
580	312105-0536	-		1	Screw M6S M12x30 A280	
585	312145-0285	-		1	Screw Counters.Slot.Hd. MFS 4x6 SS	
590	312318-0285	-		1	Screw,Sock.Set Cuppoint MSK6SS M4x6 A4	
620	312605-0310	-		1	Nut Hex. M6M M3 A280	
650	312605-0320	-		1	Nut Hex. M6M M10 A280	
660	315105-0153	-		4	Washer, Plain, BRB, 6,4/12,H=1,5	
665	315105-0165	-		2	Washer, Plain, BRB, 8,4/16,H=1,5	
670	315115-0165	-		6	Washer, Plain, TBRB 8,4/16 H=3	
680	315115-0178	-		1	Washer, Plain, TBRB 13/24 H=4	
700	321127-0100	-		1	BEARING BUSHING WITHOUT FLANGE,10/13X10	
710	342797-0121	C		2	Conn. Banjo, Ringpiece 6-1/8	

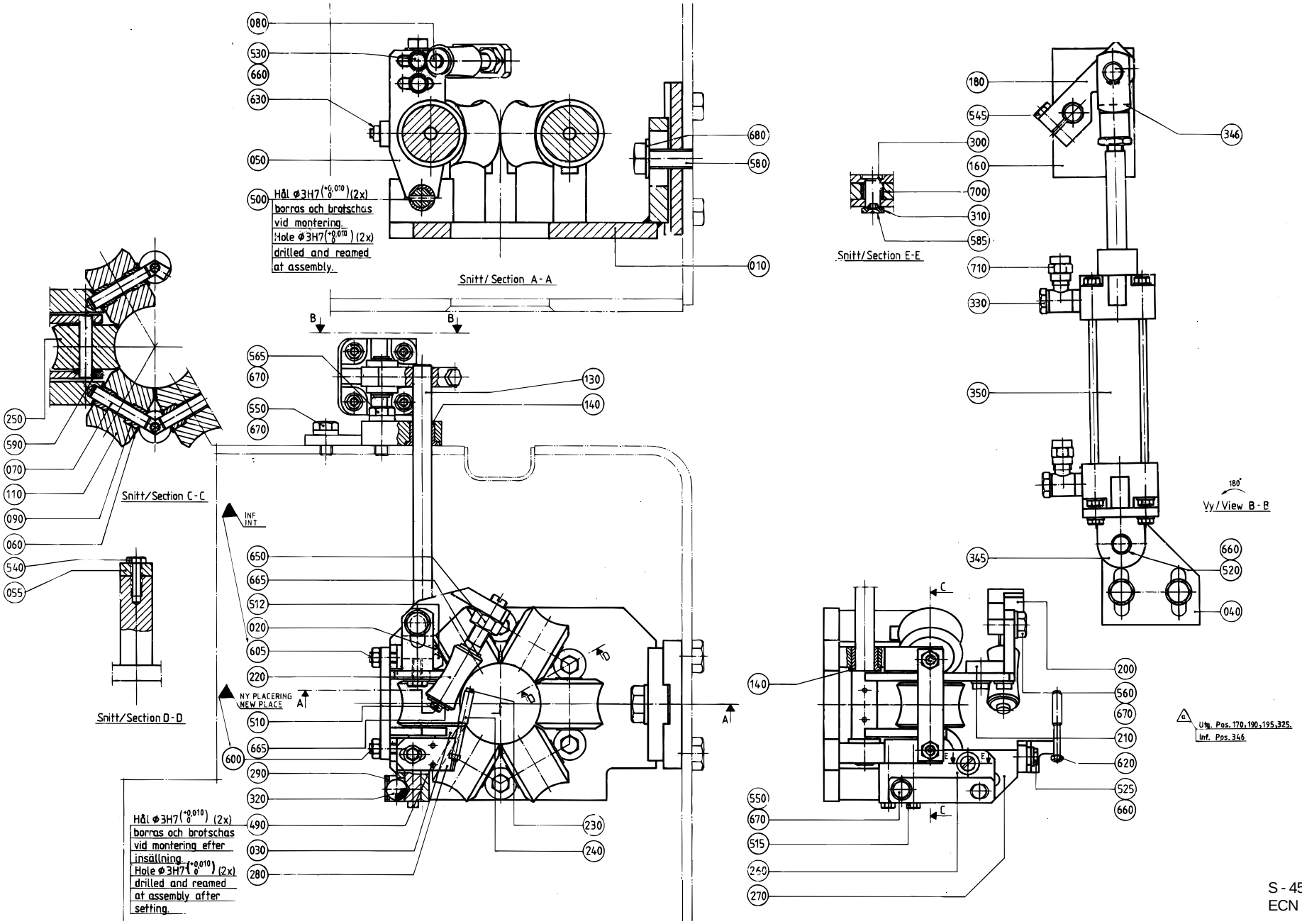
080
530
660
630
050
500
Hål ø3H7 (+0,010 0) (2x)
borras och brotschas
vid montering.
Hole ø3H7 (+0,010 0) (2x)
drilled and reamed
at assembly.
680
580
010
Snitt/Section A-A
B
B
565
670
550
670
130
140
250
590
070
110
090
060
540
055
Snitt/Section C-C
Snitt/Section D-D
INF
INT
650
665
512
020
605
220
NY PLACERING
NEW PLACE
A
510
665
600
290
320
490
030
280
230
240
Hål ø3H7 (+0,010 0) (2x)
borras och brotschas
vid montering efter
insällning.
Hole ø3H7 (+0,010 0) (2x)
drilled and reamed
at assembly after
setting.
180
545
300
160
700
310
585
710
330
350
345
346
660
520
040
Snitt/Section E-E
180°
Vy/View B-B
C
E
140
550
670
515
260
270
200
560
670
210
620
525
660
Utg. Pos. 170,190,195,325.
Inf. Pos. 346

Pos	Part No	SP	UN	Qty	Description	Page No
125S						
010	456837-0000	-		1	HOLDER	
020	456840-0000	-		1	LOCK PLATE	
030	456839-0000	-		1	LOCK PLATE	
050	257041-0000	-		1	FORK	
055	456838-0000	-		4	LOCK PLATE	
070	2873-0000	C		6	SHAFT	
110	441876-0000	C		5	ROLL	
140-02	255970-0000	C		3	BUSHING	
250	491376-0000	C		1	COUNTER ROLLER	
280	491587-0000	-		1	HOLDER	
512	312105-0331	-		2	Screw M6S M5x20 A280	
540	312105-0370	-		4	Screw M6S M6x20 A280	
600	312318-0368	-		1	Screw,Sock.Set Cuppoint MSK6SS M6x16 A4	
605	312318-0372	-		1	Screw,Sock.Set Cuppoint MSK6SS M6x25 A4	
630	312605-0316	-		2	Nut Hex. M6M M6 A280	
0200S						
010	456837-0000	-		1	HOLDER	
020	456840-0000	-		1	LOCK PLATE	
030	456839-0000	-		1	LOCK PLATE	
050	257041-0000	-		1	FORK	
055	456838-0000	-		4	LOCK PLATE	
070	2873-0000	C		6	SHAFT	
110	456996-0000	C		5	ROLLER	
140-02	255970-0000	C		3	BUSHING	
250	491222-0000	C		1	COUNTER ROLLER	
280	491587-0000	-		1	HOLDER	
512	312105-0331	-		2	Screw M6S M5x20 A280	
540	312105-0370	-		4	Screw M6S M6x20 A280	
600	312318-0368	-		1	Screw,Sock.Set Cuppoint MSK6SS M6x16 A4	
605	312318-0372	-		1	Screw,Sock.Set Cuppoint MSK6SS M6x25 A4	
630	312605-0316	-		2	Nut Hex. M6M M6 A280	
Common Parts						
040	491022-0000	-		1	CYLINDER BRACKET	
060	2033-0011	C		12	WASHER	
080	239440-0000	C		1	SHAFT	
090	751230-0000	C		10	PLAIN BEARING	
130	255969-0000	C		1	SHAFT	
160	491021-0000	-		1	BEARING PLATE	
180	441483-0000	-		1	CYLINDER BRACKET	
200	257042-0000	-		1	BRACKET	
210	257043-0000	-		1	ANGLE BRACKET	
220	257044-0000	C		1	ROLL	
230	257050-0000	C		1	SHAFT	
240	268059-0000	C		1	ROLL	
260	271419-0000	-		1	FORK	
270	271420-0000	-		1	CANTILEVER	
290	271422-0000	C		2	SPRING	
300	271423-0001	C		1	SHAFT	
310	271844-0000	C		1	WASHER	
320	90090-0003	C		1	STEEL-BALL SKF RB 12,7mm RJ	
330	90235-0282	C		2	THROTTLE CHECK VALVES,G1/8	
345	90239-0453	C		1	BRACKET	
346	90239-0516	C		1	ROD END,CLEVIS WITH AXLE M10X1,25	
350	B 90239-0779	C		1	CYLINDER	
490	311103-0233	-		2	Pin, Parallell, m6, 3x10	
500	311103-0238	-		2	Pin, Parallell, m6, 3x20	
510	311411-0140	-		1	SPLIT PIN SP1,6X16RFR	
515	312105-0337	-		2	Screw M6S M5x35 A280	
520	312105-0364	-		1	Screw M6S M6x10 A280	
525	312105-0366	-		1	Screw M6S M6x12 A280	
530	312105-0368	-		2	Screw M6S M6x16 A280	
545	312105-0372	-		1	Screw M6S M6x25 A280	
550	312105-0449	-		3	Screw M6S M8x16 A280	
560	312105-0451	-		1	Screw M6S 8x20 A280	
565	312105-0453	-		2	Screw M6S M8x25 A280	
580	312105-0536	-		1	Screw M6S M12x30 A280	
585	312145-0285	-		1	Screw Counters.Slot.Hd. MFS 4x6 SS	
590	312318-0285	-		1	Screw,Sock.Set Cuppoint MSK6SS M4x6 A4	
620	312605-0310	-		1	Nut Hex. M6M M3 A280	
650	312605-0320	-		1	Nut Hex. M6M M10 A280	
660	315105-0153	-		4	Washer, Plain, BRB, 6,4/12,H=1,5	
665	315105-0165	-		2	Washer, Plain, BRB, 8,4/16,H=1,5	
670	315115-0165	-		6	Washer, Plain, TBRB 8,4/16 H=3	
680	315115-0178	-		1	Washer, Plain, TBRB 13/24 H=4	
700	321127-0100	-		1	BEARING BUSHING WITHOUT FLANGE,10/13X10	
710	342797-0121	C		2	Conn. Banjo, Ringpiece 6-1/8	

UPPER FILLING TUBE

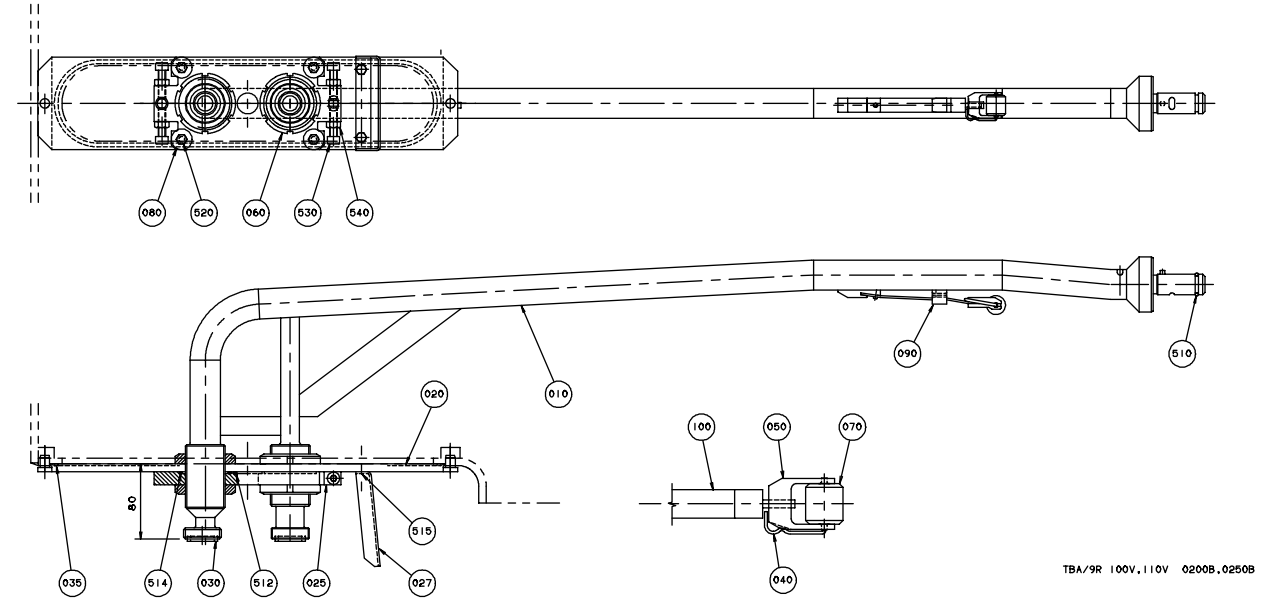

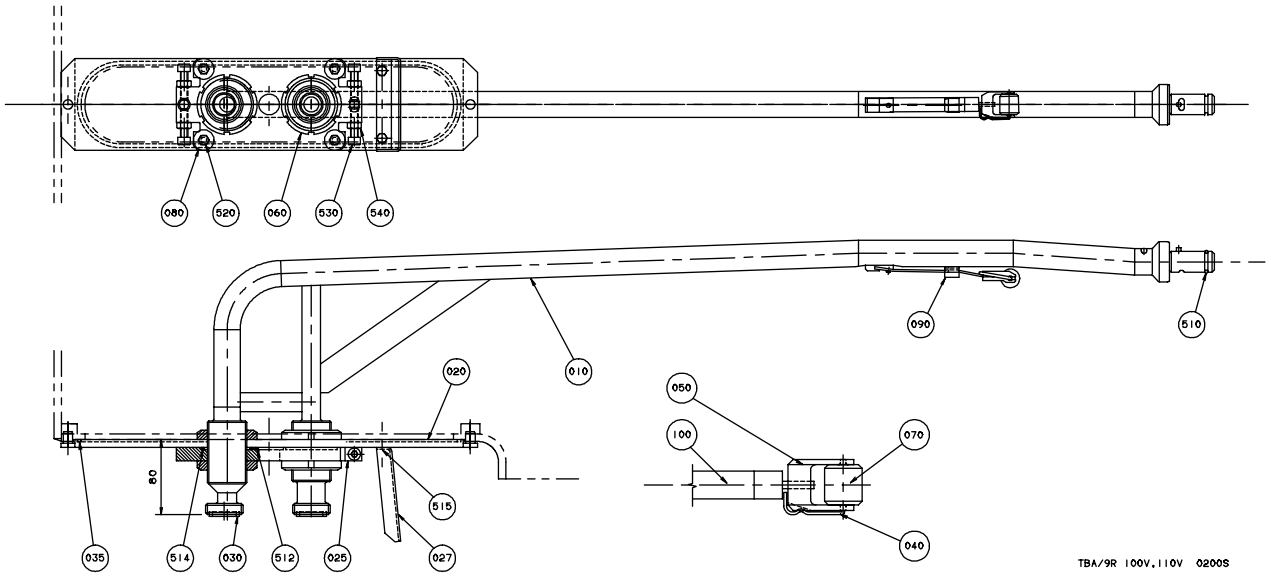

Pos	Part No	SP	UN	Qty	Description	Page No
0200B OR 0250B						
010	752694-0000	C		1	FILLING TUBE UPPER	
040	295376-0000	C		1	SHAFT	
050	295375-0000	C		1	FORK	
070	257330-0000	C		1	PRESSURE ROLLER	
090	295377-0002	C		1	HOOD	
100	544894-0000	C		1	SPRING	
0200S						
010	565461-0000	C		1	FILLING TUBE UPPER	
040	255977-0000	-		1	SHAFT	
050	255978-0000	C		1	FORK	
070	272479-0000	C		1	PRESSURE ROLLER	
090	295377-0001	C		1	HOOD	
100	751604-0000	C		1	SPRING	
Common Parts						
020	599035-0000	C		1	PLATE	
025	599037-0000	-		1	FASTENING PLATE	
027	295984-0000	-		1	DRIP GUARD	
030	12242-0001	C		2	GASKET	
035	491418-0001	-		1	O-RING	
060	255981-0000	-		4	NUT	
080	315125-0153	-		4	Washer, Plain Round,Chamf. 6,4/22, H=4	
510	315204-0214	C		1	O-Ring 17,3x2,4 mm	
512	315204-0217	-		1	O-Ring 24,2x3 mm	
514	315204-0301	-		2	O-Ring 49,5x3 mm	
515	312105-0364	-		2	Screw M6S M6x10 A280	
520	312105-0372	-		4	Screw M6S M6x25 A280	
530	312115-0455	-		4	Screw MC6S M8x30 A280	
540	312605-0318	-		4	Nut Hex. M6M M8 A280	

Pos	Part No	SP	UN	Qty	Description	Page No

FILLER TUBE

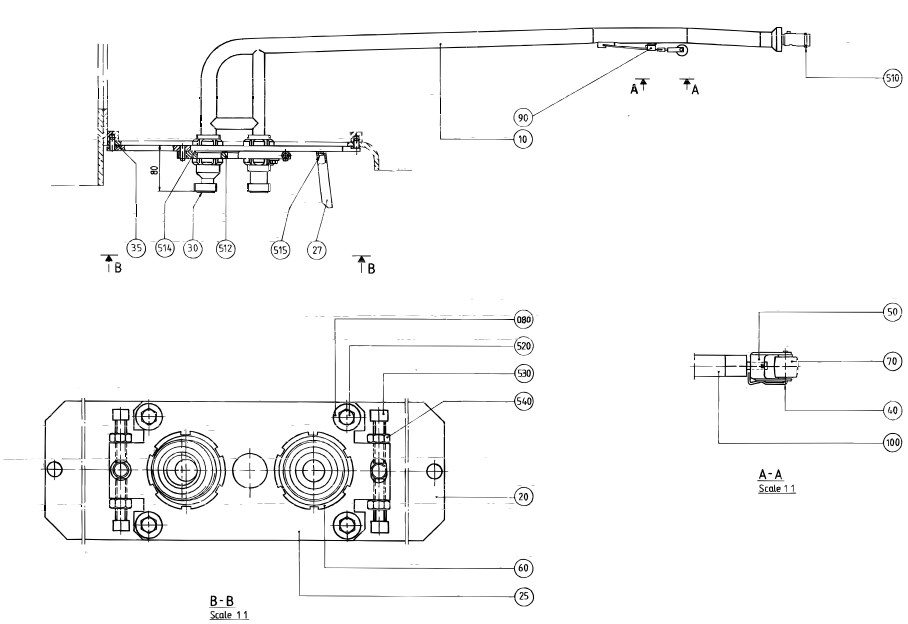
510
90
10
A
A
80
35
514
30
512
515
27
B
B
080
520
530
540
20
60
25
B - B
Scale 1:1
50
70
40
100
A - A
Scale 1:1

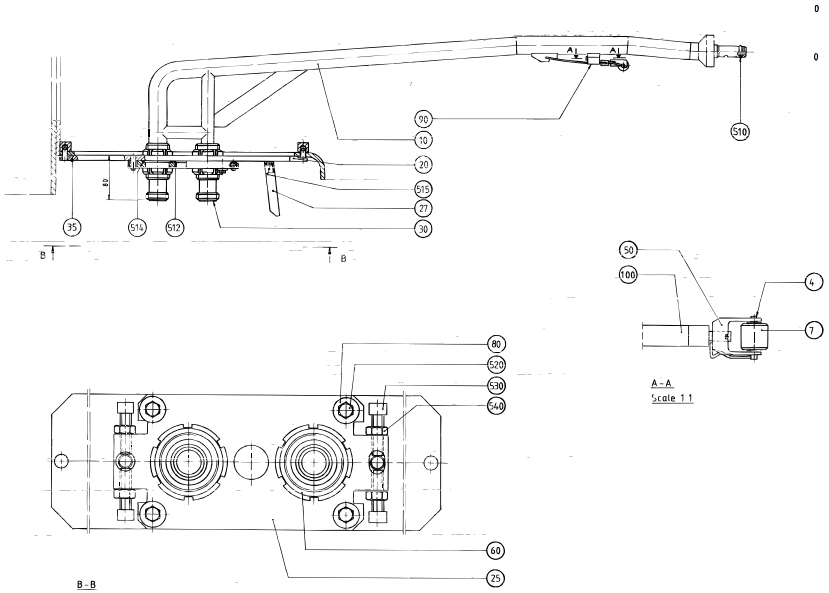
90
10
20
515
27
30
510
35
514
512
B
B
50
100
4
7
A - A
Scale 1:1
80
520
530
540
60
25
B - B

Pos	Part No	SP	UN	Qty	Description	Page No
0125S						
010	565461-0000	C		1	FILLING TUBE UPPER	
040	255977-0000	-		1	SHAFT	
050	255978-0000	C		1	FORK	
070	272479-0000	C		1	PRESSURE ROLLER	
090	491441-0000	C		1	HOOD	
100	751604-0000	C		1	SPRING	
0200S						
010	565461-0000	C		1	FILLING TUBE UPPER	
040	255977-0000	-		1	SHAFT	
050	255978-0000	C		1	FORK	
070	272479-0000	C		1	PRESSURE ROLLER	
090	295377-0001	C		1	HOOD	
100	751604-0000	C		1	SPRING	
Common Parts						
020	491414-0000	C		1	PLATE	
025	491415-0000	-		1	FASTENING PLATE	
027	295984-0000	-		1	DRIP GUARD	
030	12242-0001	C		2	GASKET	
035	491418-0001	C		1	O-RING	
060	255981-0000	-		4	NUT	
080	315125-0153	-		4	Washer, Plain Round,Chamf. 6,4/22, H=4	
510	315204-0214	C		1	O-Ring 17,3x2,4 mm	
512	315204-0217	C		1	O-Ring 24,2x3 mm	
514	315204-0301	C		2	O-Ring 49,5x3 mm	
515	312105-0364	-		2	Screw M6S M6x10 A280	
520	312105-0372	-		4	Screw M6S M6x25 A280	
530	312115-0455	-		4	Screw MC6S M8x30 A280	
540	312605-0318	-		4	Nut Hex. M6M M8 A280	

Pos	Part No	SP	UN	Qty	Description	Page No

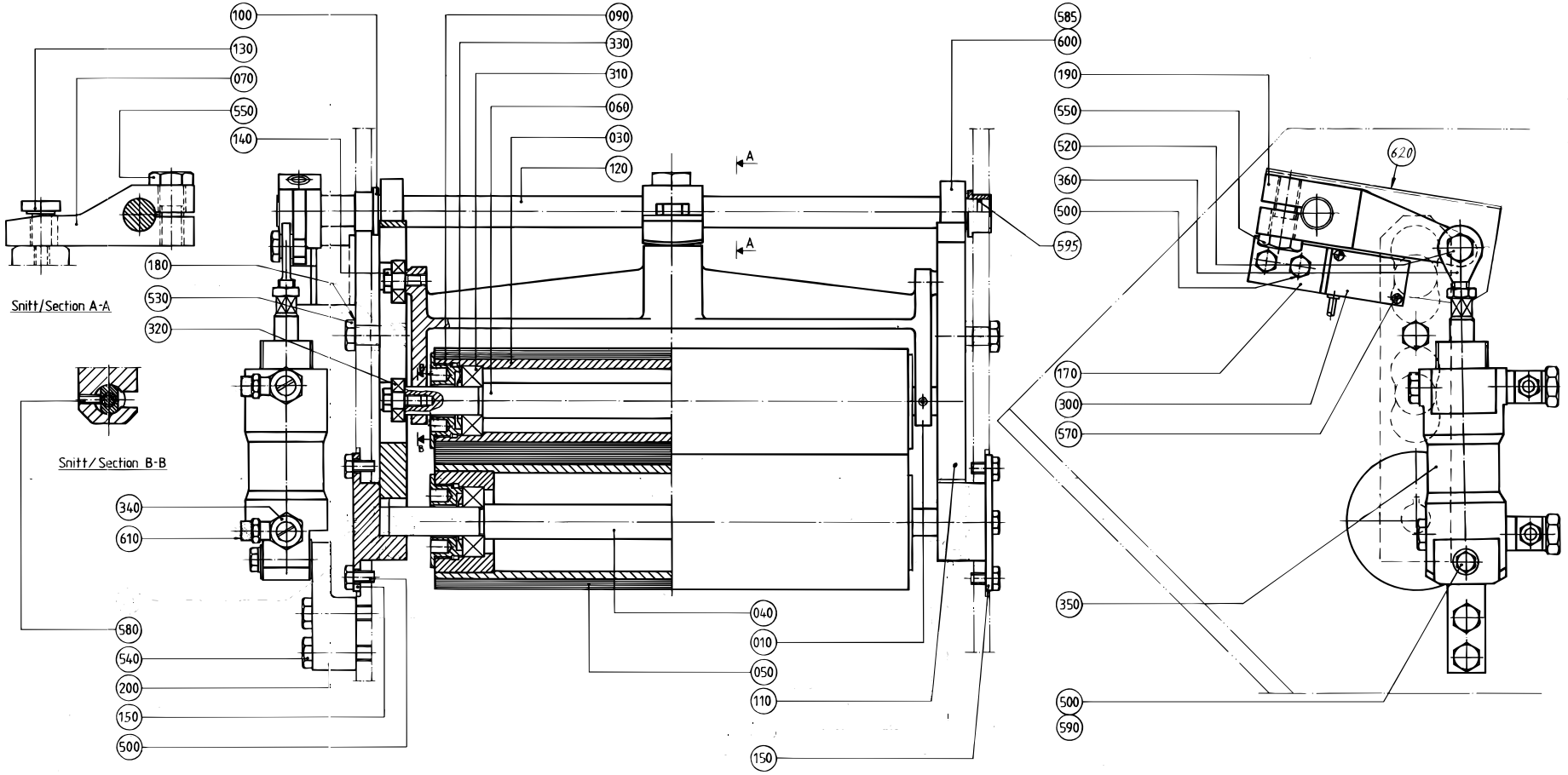

Kullager (90214-98 och 90214-40)
fettsmorda med silikonfett TP nr 90296-0009
Ball bearings (90214-98 and 90214-40)
greased with silikon grease TP no 90296-0009

Pos	Part No	SP	UN	Qty	Description	Page No
Common Parts						
010	272926-0000	-		1	FORK	
030	491396-0000	C		1	CALENDER ROLLER	
040	566695-0000	C		1	SHAFT	
050	491397-0000	C		1	CALENDER ROLLER	
060	271893-0000	C		1	SHAFT	
070	272927-0000	-		1	PRESSURE ARM	
090	247170-0000	D		4	BEARING COVER	
100	271269-0000	C		2	BUSHING	
110	566695-0000	-		2	SHAFT	
120	751132-0000	D		1	SHAFT	
130	271898-0000	D		1	SCREW	
140	271899-0000	D		4	SCREW	
150	566697-0000	-		2	AXLE SUPPORT	
170	272033-0000	-		1	BRACKET	
180	315115-0153	-		2	Washer, Plain, TBRB 6,4/12 H=3	
190	272928-0000	-		1	ARM	
200	272929-0000	-		1	BRACKET	
300	90044-0104	C		1	PROX.SWITCH IFM IN 3002	
310	90214-0098	C		4	BALL BEARING,STAINLESS	
320	90214-0040	C		4	BALL BEARING,STAINLESS 8X22X7	
330	90214-0303	C		4	SEALING RING 18,6X35X2	
340	90235-0275	-		2	"THROTTLE CHECK VALVES,G1/4"""	
350	B 90239-0189	C		1	CYLINDER	
360	90239-0320	C		1	BRACKET	
500	312105-0364	-		11	Screw M6S M6x10 A280	
520	312105-0449	-		1	Screw M6S M8x16 A280	
530	312105-0366	-		2	Screw M6S M6x12 A280	
540	312105-0455	-		2	Screw M6S M8x30 A280	
550	312105-0536	-		2	Screw M6S M12x30 A280	
570	312125-0228	-		2	Screw Pan Head MCS M3x16 A480	
580	312318-0327	-		2	Screw,Sock.Set Cuppoint MSK6SS M5x12 A4	
585	312318-0362	-		4	Screw,Sock.Set Cuppoint MSK6SS M6x8 A4	
590	315105-0153	-		1	Washer, Plain, BRB, 6,4/12,H=1,5	
595	315204-0111	-		2	O-Ring 13,1x1,6 mm	
600	315742-0112	-		2	Collar, 16/32, H=12	
610	342797-0122	-		2	Conn. Banjo, Ringpiece 6-1/4	
620	978462-0000	-		1	PROTECTION PLATE	

Pos	Part No	SP	UN	Qty	Description	Page No

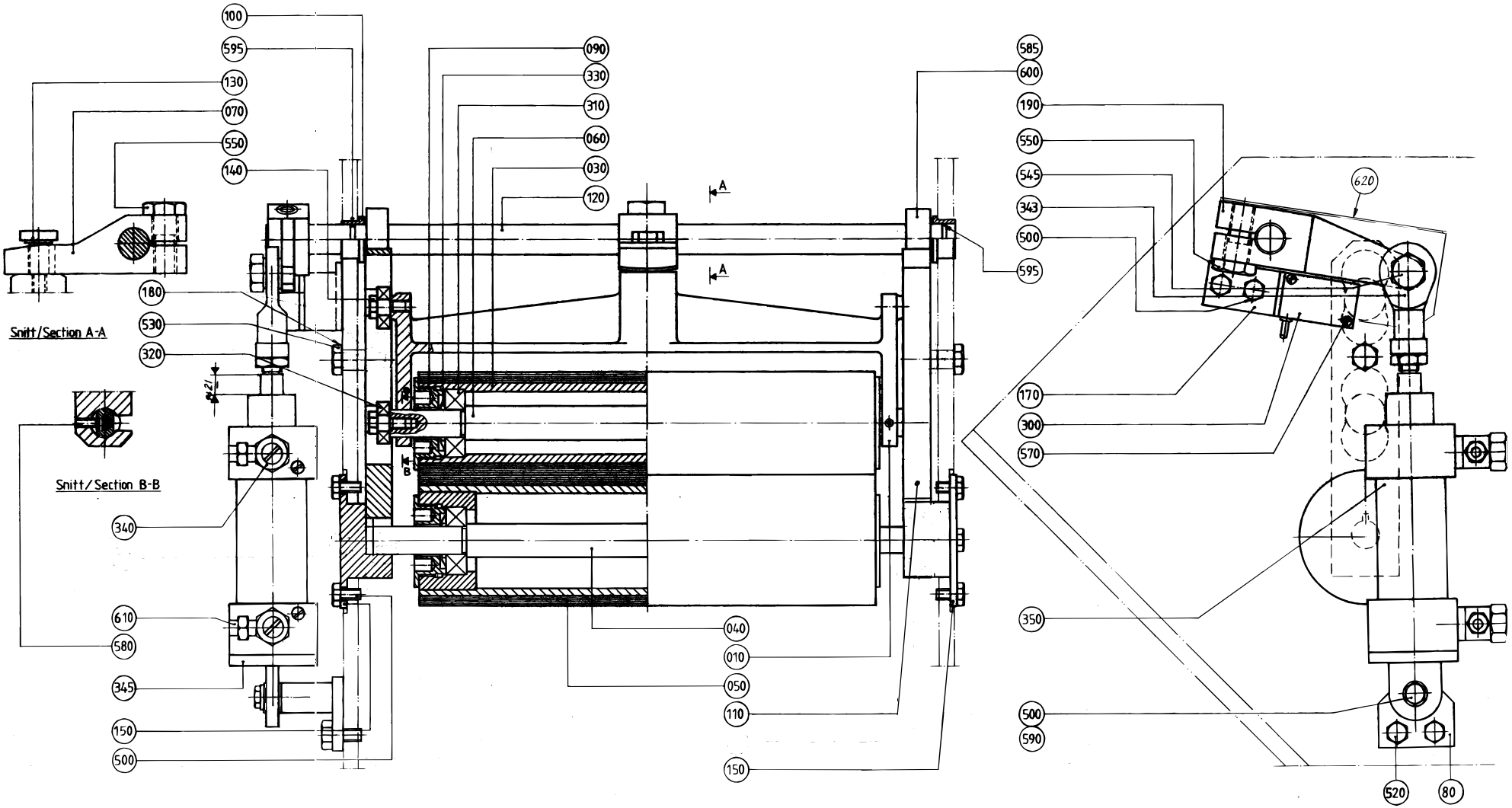
100
595
130
070
550
140
090
330
310
060
030
120
180
530
320
Snitt/Section A-A
Snitt/Section B-B
340
610
580
345
150
500
040
010
050
110
150
585
600
190
550
545
343
500
595
620
170
300
570
350
500
590
520
80
360 Kullager (90214-98 och 90214-40)
fettsmorda med silikonfett TP nr 90296-0009
Ball bearings (90214-98 and 90214-40)
greased with silikon grease TP no 90296-0009

Pos	Part No	SP	UN	Qty	Description	Page No
Common Parts						
010	272926-0000	-		1	FORK	
030	491396-0000	C		1	CALENDER ROLLER	
040	566695-0000	D		1	SHAFT	
050	491397-0000	C		1	CALENDER ROLLER	
060	271893-0000	C		1	SHAFT	
070	272927-0000	-		1	PRESSURE ARM	
080	441578-0002	-		1	CYLINDER BRACKET	
090	247170-0000	D		4	BEARING COVER	
100	271269-0000	C		2	BUSHING	
110	566696-0000	-		2	GUIDE CONSOLE	
120	751132-0000	D		1	SHAFT	
130	271898-0000	D		1	SCREW	
140	271899-0000	D		4	SCREW	
150	566697-0000	-		2	AXLE SUPPORT	
170	272033-0000	-		1	BRACKET	
180	315115-0153	-		2	Washer, Plain, TBRB 6,4/12 H=3	
190	441904-0000	-		1	ARM	
300	90044-0104	C		1	PROX.SWITCH IFM IN 3002	
310	90214-0098	C		4	BALL BEARING,STAINLESS	
320	90214-0040	C		4	BALL BEARING,STAINLESS 8X22X7	
330	90214-0303	C		4	SEALING RING 18,6X35X2	
340	90235-0282	-		2	THROTTLE CHECK VALVES,G1/8	
343	90239-0405	C		1	ROD END,BALL JOINT EYE,MINI-ISO M10X1,25	
345	90239-0453	C		1	BRACKET	
350	B 90239-0773	C		1	CYLINDER	
360	90296-0009	-	L	1	SILICONE GREASE TUBE 100 Gr.	
500	312105-0364	-		11	Screw M6S M6x10 A280	
520	312105-0447	-		2	Screw M6S M8x12 A280	
530	312105-0366	-		2	Screw M6S M6x12 A280	
545	312105-0491	-		1	Screw M6S M10x20 A280	
550	312105-0536	-		2	Screw M6S M12x30 A280	
570	312125-0228	-		2	Screw Pan Head MCS M3x16 A480	
580	312318-0327	-		2	Screw,Sock.Set Cuppoint MSK6SS M5x12 A4	
585	312318-0362	-		4	Screw,Sock.Set Cuppoint MSK6SS M6x8 A4	
590	315105-0153	-		1	Washer, Plain, BRB, 6,4/12,H=1,5	
595	315204-0111	-		2	O-Ring 13,1x1,6 mm	
600	315742-0112	-		2	Collar, 16/32, H=12	
610	342797-0121	C		2	Conn. Banjo, Ringpiece 6-1/8	
620	978462-0000	-		1	PROTECTION PLATE	

Pos	Part No	SP	UN	Qty	Description	Page No

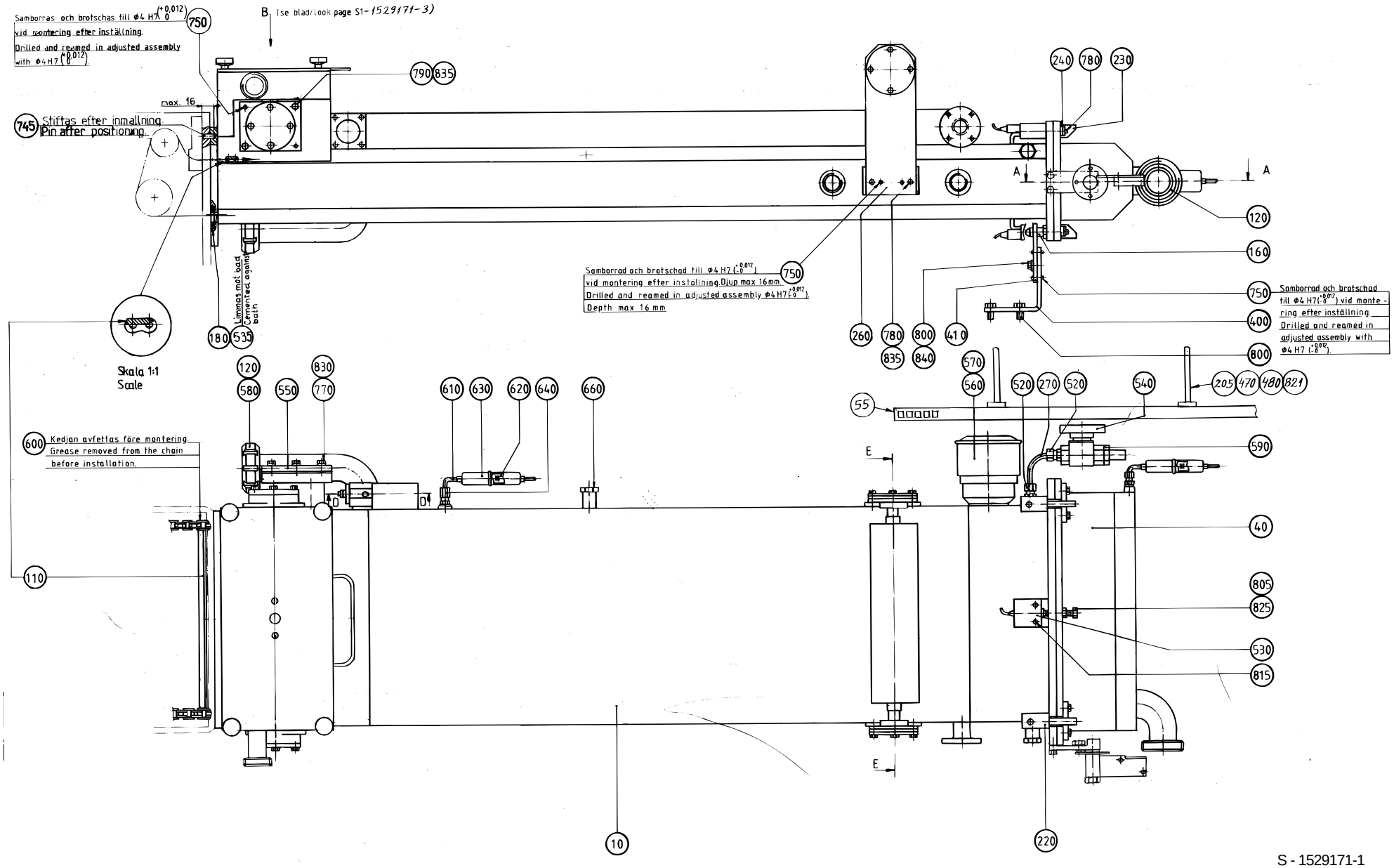

S - 1529171-1
ECN 82225

Pos	Part No	SP	UN	Qty	Description	Page No
Common Parts						
425	B 567189-0106	C		1	ELECTRODE	
010	1529079-0000	-		1	BATH	
015	469962-0000	-		1	BOX	
040	456993-0000	-		1	COVER	
045	273954-0000	C		1	SEAL	
047	491125-0000	-		1	LID	
050	256001-0000	-		2	CANTILEVER	
055	988547-0000	-		1	CABLE DUCT	
060	295111-0000	C		1	BENDING ROLLER	
070	441624-0000	C		1	BENDING ROLLER	
100	456994-0000	C		1	BENDING ROLLER	
110	456995-0000	C		1	CARRIER	
115	456784-0000	-		1	LID	
120	12242-0003	C		2	GASKET	
130	247172-0000	C		4	SPACER RING	
140	247173-0000	D		2	BEARING SEAT	
150	247239-0000	C		2	WHEEL	
160	247248-0000	-		2	PIN	
170	491363-0000	C		2	NUT	
173	491364-0000	-		2	BEARING HOLDER	
175	491365-0000	-		2	THRUST BEARING	
180	256005-0000	C		1	GASKET	
184	751761-0000	-		1	ARM	
185	751762-0000	-		1	SHAFT	
190	256006-0000	-		1	AXLE SUPPORT	
195	1529170-0000	-		1	BRACKET	
200	256007-0000	-		1	AXLE SUPPORT	
205	27815-0000	-		4	WASHER	
210	978569-0000	C		1	SHAFT	
220	256010-0000	C		4	NUT	
230	256011-0000	D		4	DOWEL	
240	256012-0000	D		4	SHAFT	
260	271036-0000	-		2	CANTILEVER	
270	271280-0000	-		1	PIPE	
340	295388-0000	C		1	GASKET	
350	441474-0000	-		2	SHIM	
360	441635-0000	D		2	BEARING SEAT	
400	456472-0000	-		2	ANGLE	
410	456474-0000	-		2	ADJUSTMENT PLATE	
420	456516-0000	D		4	BEARING COVER	
430	B 469786-0000	-		1	NIPPLE	
440	273937-0000	C		1	DIAPHRAGM	
450	469982-0000	-		1	WASHER	
470	751698-0000	-		2	HOLDER	
480	751699-0000	-		2	WASHER	
515	90044-0194	-		1	Prox.sw. IN5329/IN3002-BPKG	
520	90030-0109	C		2	Conn. Str., 12-R1/2, Ext. Thread	
530	90044-0084	C		2	Limit sw. 14 CE1-4	
533	90051-0053	-		4	HANDLES,KNOB,INTERNAL THREAD,M6 24X17	
535	90153-0016	-	ML	1	ADHESIVE TUBE 100G RHODORSIL CAF 3	
538	90157-0022	C	L	1	SEALING COMPOUND	
540	90187-0029	C		1	Ball Valve, G1/2, NPBR	
550	90199-0010	C		1	LEVEL GLASS	
560	90206-0326	-		1	CONNECTION BOX	
570	B 90206-0070	C		1	HEATING ELEMENT 6000W 380/220V	
573	90240-0146	-		2	BEARING BUSHING WITH FLANGE,15/21X20	
575	B 484190-0000	C		4	BALL BEARING	
580	90217-0035	-		1	NUT	
590	90224-0078	-		1	Pipe Socket, Art.No RAN 1612	
600	B 491130-0000	C		2	ROLLER CHAIN	
605	90287-0106	-		1	Screw Springload. Slotted Head M10x21	
610	90326-0019	C		1	THERMOELEMENT	
620	90326-0020	C		2	PLUG,FEMALE YELLOW CR-AL	
630	90326-0012	C		2	PROTECTIVE COVER	
640	90326-0306	C		1	GLAND FITTING 9041-45-KS-KR.1/8"D=4,5mm	
650	90326-0052	C		1	THERMO ELEMENT	
660	90330-0026	-		2	Plug, Ext. G-Thread, G1/4	
745	311103-0308	-		2	Pin, Parallell, m6, 5x16	
750	311103-0270	-		12	Pin, Parallell, m6, 4x16	
760	312105-0325	-		9	Screw M6S M5x10 A280	
770	312105-0332	-		6	Screw M6S M5x22 A280	
780	312105-0366	-		16	Screw M6S M6x12 A280	
790	312105-0368	-		17	Screw M6S M6x16 A280	
795	312105-0372	-		4	Screw M6S M6x25 A280	
800	312105-0449	-		1	Screw M6S M8x16 A280	
805	312109-0463	-		2	Screw M6S M8x60H A4 80	
808	312115-0366	-		6	Screw MC6S M6x12 A280	
809	312125-0230	-		2	Screw Pan Head MCS M3X20 RFR	
810	312125-0285	-		1	Screw Slot.Pan Hd. MCS 4x6 A480	
812	312125-0331	-		2	Screw Pan Head MCS M5X20 RFR	

(Cont'd)

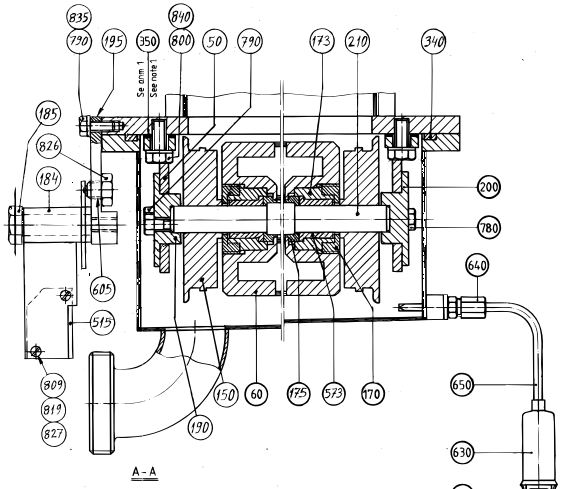

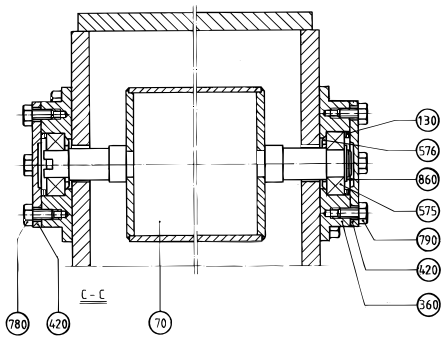

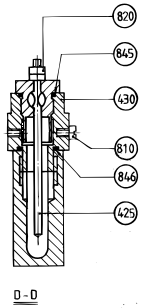

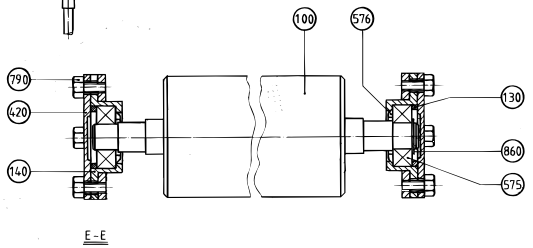

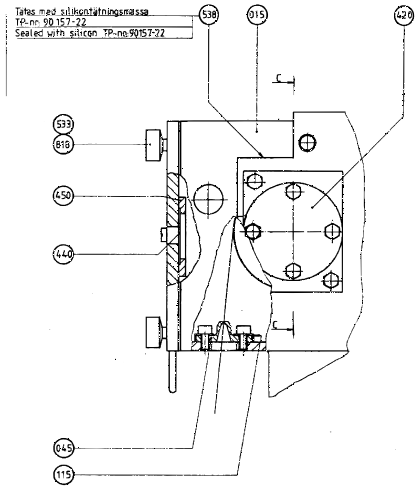

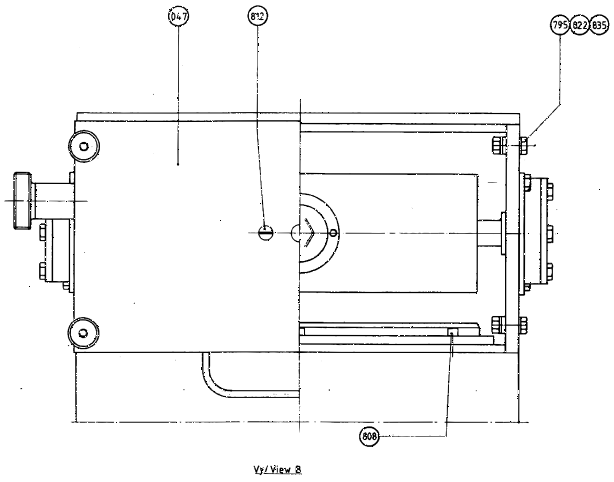

Anm/Note
1 Används vid behov.
To use when demanded.

Pos	Part No	SP	UN	Qty	Description	Page No
(Cont'd)						
815	312115-0329	-		4	Screw MC6S M5x16 A280	
818	312303-0378	-		4	Screw Stud, Metal End=1d, PS 6x30 SS	
819	312605-0310	-		2	Nut Hex. M6M M3 A280	
820	312605-0312	-		2	Nut Hex. M6M M4 A280	
821	312605-0314	-		4	Nut Hex. M6M M5 A280	
822	312605-0316	-		4	Nut Hex. M6M M6 A280	
825	312605-0318	-		2	Nut Hex. M6M M8 A280	
826	312605-0320	-		1	Nut Hex. M6M M10 A280	
827	315105-0124	-		2	Washer, Plain, BRB, 3,2/6,H=0,5	
830	315105-0146	-		6	Washer, Plain, BRB, 5,3/10,H=1	
835	315105-0153	-		19	Washer, Plain, BRB, 6,4/12,H=1,5	
840	315105-0165	-		6	Washer, Plain, BRB, 8,4/16,H=1,5	
845	315204-0213	C		1	O-Ring 15,2x2,4 mm	
846	315204-0215	C		1	O-Ring 19,2x3 mm	
860	315751-0112	C		2	Retain. Ring, 15	

Pos	Part No	SP	UN	Qty	Description	Page No

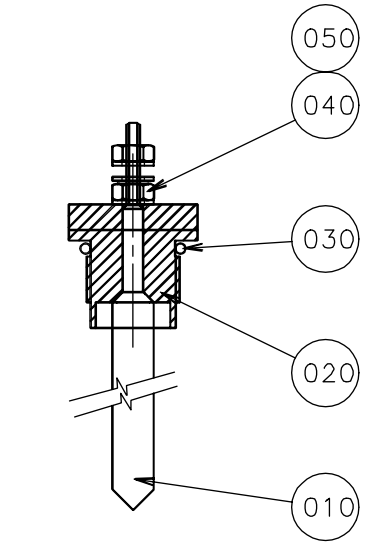
050
040
030
020
010

Pos	Part No	SP	UN	Qty	Description	Page No
Common						
010	567070-0001			1	Electrode	
010	567070-0008			1	Electrode	
020	560931-0000			1	Bracket	
030	90242-0168			1	O-ring	
040	312605-0312			2	Nut Hex. M6M M4 A280	
050	315105-0136			3	Washer, Plain, BRB, 4.3/8,H=0,8	

Pos	Part No	SP	UN	Qty	Description	Page No

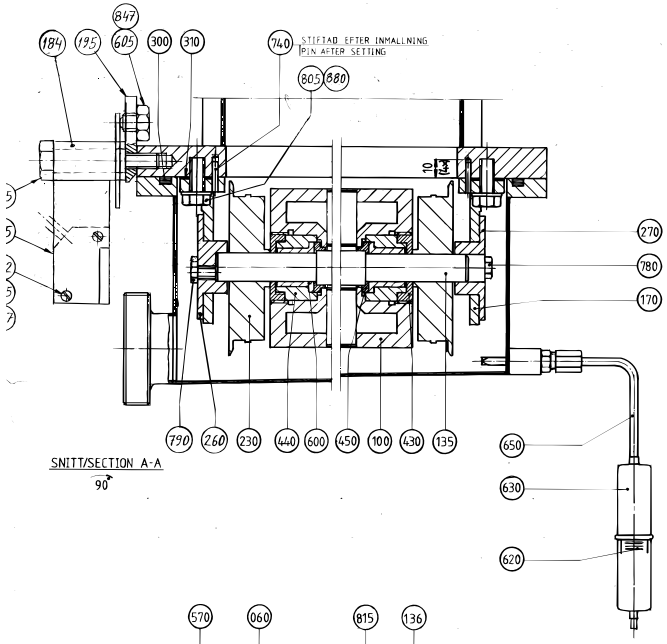
847
184
195
605
300
310
740
STIFTAD EFTER INMALLNING
PIN AFTER SETTING
805
880
270
780
170
790
260
230
440
600
450
100
430
135
650
630
620
SNITT/SECTION A-A
90

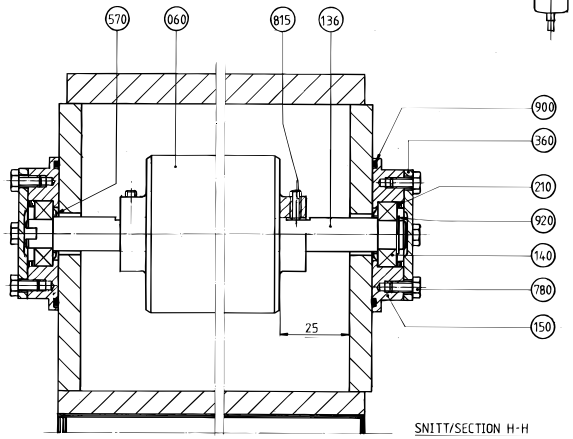
570
060
815
136
900
360
210
920
140
780
150
25
SNITT/SECTION H-H

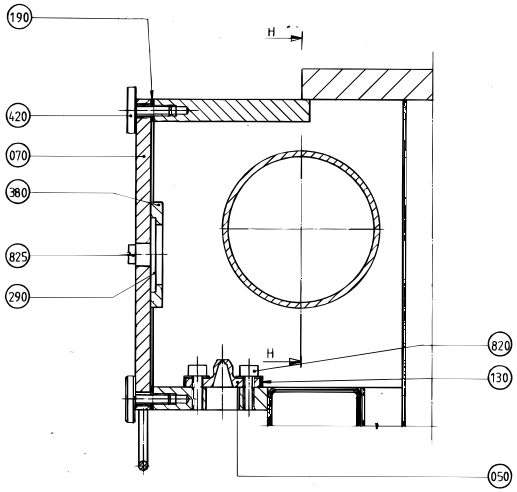
190
H
420
070
360
825
290
820
130
050
SNITT/SECTION B-B
90

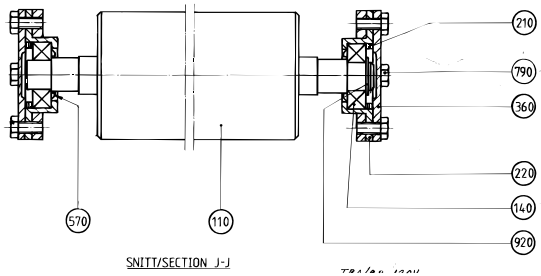
210
790
360
220
140
920
570
110
SNITT/SECTION J-J

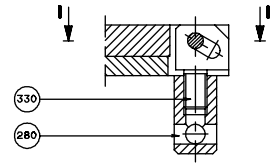
330
280
SNITT/SECTION F-F

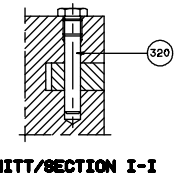
320
SNITT/SECTION I-I

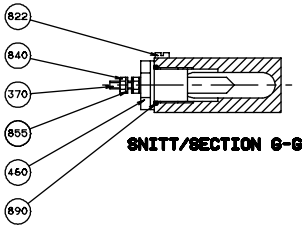
822
840
370
855
460
890
SNITT/SECTION G-G

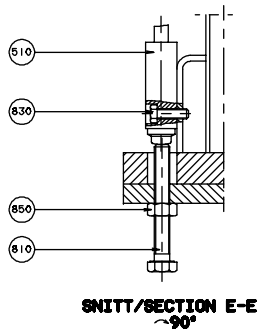
510
830
850
810
SNITT/SECTION E-E
90°

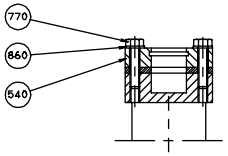
770
860
540
SNITT/SECTION C-C

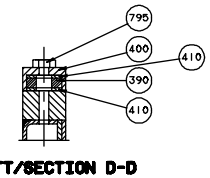
795
400
410
390
410
SNITT/SECTION D-D

Pos	Part No	SP	UN	Qty	Description	Page No
Common Parts						
010	1529078-0000	-		1	BATH	
040	491593-0000	-		1	COVER	
050	273954-0000	C		1	SEAL	
055	978547-0000	-		1	TOUCH GUARD	
060	491594-0000	-		1	BENDING ROLLER	
070	491595-0000	-		1	LID	
080	491596-0000	-		1	PIPE	
090	491597-0000	-		1	PIPE	
100	295111-0000	C		1	BENDING ROLLER	
110	456994-0000	C		1	BENDING ROLLER	
120	456995-0000	C		1	CARRIER	
130	456784-0000	-		1	LID	
135	978569-0000	D		1	SHAFT	
136	491737-0000	-		1	SHAFT	
140	B 484190-0000	C		4	BALL BEARING	
150	491598-0000	-		2	BEARING SEAT	
160	491599-0000	-		2	CANTILEVER	
170	491600-0000	-		2	CANTILEVER	
180	B 491601-0000	C		2	ROLLER CHAIN	
184	751761-0000	-		1	ARM	
185	751762-0000	-		1	SHAFT	
190	751331-0000	C		1	GASKET	
195	751763-0000	-		1	BRACKET	
200	12242-0003	C		2	GASKET	
205	27815-0000	C		4	WASHER	
210	247172-0000	C		4	SPACER RING	
220	247173-0000	D		2	BEARING SEAT	
230	247239-0000	C		2	WHEEL	
240	247248-0000	-		2	PIN	
250	256005-0000	C		1	GASKET	
260	256006-0000	-		1	AXLE SUPPORT	
270	256007-0000	-		1	AXLE SUPPORT	
280	256010-0000	C		4	NUT	
290	273937-0000	C		1	DIAPHRAGM	
300	295388-0000	C		1	GASKET	
310	441474-0000	-		2	SHIM	
320	441636-0000	-		4	SHAFT	
330	441637-0000	-		4	DOWEL	
340	456472-0000	-		2	ANGLE	
350	456474-0000	-		2	ADJUSTMENT PLATE	
360	456516-0000	D		4	BEARING COVER	
370	567070-0012	C		1	ELECTRODE	
380	469982-0000	-		1	WASHER	
390	543470-0000	C		2	LEVEL GLASS	
400	476398-0000	-		2	LID	
410	569016-0000	C		2	GASKET	
420	491126-0000	-		6	SCREW	
430	491363-0000	-		2	NUT	
440	491364-0000	-		2	BEARING HOLDER	
450	491365-0000	-		2	THRUST BEARING	
460	560931-0000	-		1	BRACKET	
470	751698-0000	-		2	HOLDER	
480	751699-0000	-		2	WASHER	
490	90030-0109	C		1	Conn. Str., 12-R1/2, Ext. Thread	
500	90030-0187	C		2	Conn. Str. GA-12-G3/8	
510	90044-0084	C		2	Limit sw. 14 CE1-4	
515	90044-0194	-		1	Prox.sw. IN5329/IN3002-BPKG	
520	90153-0016	-	ML	1	ADHESIVE TUBE 100G RHODORSIL CAF 3	
530	90187-0029	C		1	Ball Valve, G1/2, NPBR	
540	90199-0010	C		1	LEVEL GLASS	
550	90206-0326	-		1	CONNECTION BOX	
560	B 90206-0070	C		1	HEATING ELEMENT 6000W 380/220V	
570	90214-0303	C		8	SEALING RING 18,6X35X2	
580	90217-0035	-		1	NUT	
590	90224-0078	-		1	Pipe Socket, Art.No RAN 1612	
600	90240-0146	C		2	BEARING BUSHING WITH FLANGE,15/21X20	
605	90287-0106	-		1	Screw Springload. Slotted Head M10x21	
610	90326-0019	C		1	THERMOELEMENT	
620	90326-0020	C		2	PLUG,FEMALE YELLOW CR-AL	
630	90326-0012	C		2	PROTECTIVE COVER	
640	90326-0306	C		1	GLAND FITTING 9041-45-KS-KR.1/8"D=4,5mm	
650	90326-0052	C		1	THERMO ELEMENT	
740	311103-0236	-		4	Pin, Parallell, m6, 3x16	
750	311103-0270	-		12	Pin, Parallell, m6, 4x16	
760	311103-0310	-		2	Pin, Parallell, m6, 5x20	
770	312105-0332	-		6	Screw M6S M5x22 A280	
780	312105-0366	-		2	Screw M6S M6x12 A280	
790	312105-0368	-		14	Screw M6S M6x16 A280	
795	312105-0370	-		4	Screw M6S M6x20 A280	
800	312105-0449	-		1	Screw M6S M8x16 A280	
805	312105-0451	-		4	Screw M6S 8x20 A280	
810	312109-0463	-		2	Screw M6S M8x60H A4 80	
812	312125-0230	-		2	Screw Pan Head MCS M3X20 RFR	
815	312318-0368	-		2	Screw,Sock.Set Cuppoint MSK6SS M6x16 A4	
820	312115-0366	-		6	Screw MC6S M6x12 A280	

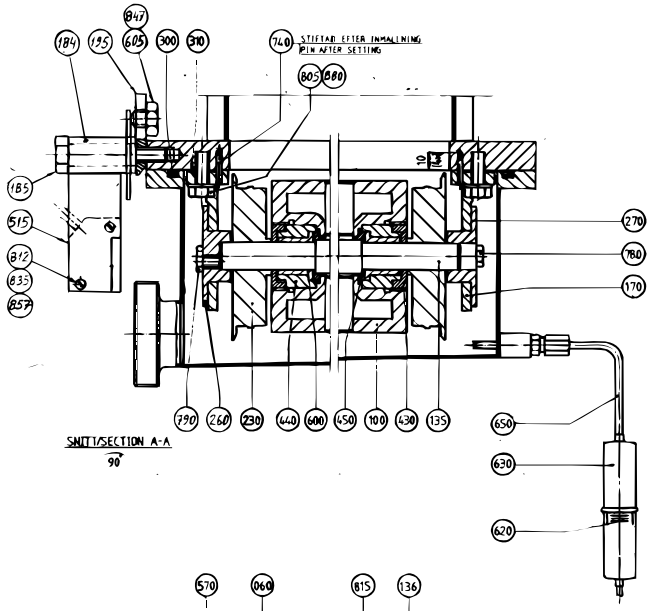
SNITT/SECTION A-A
90

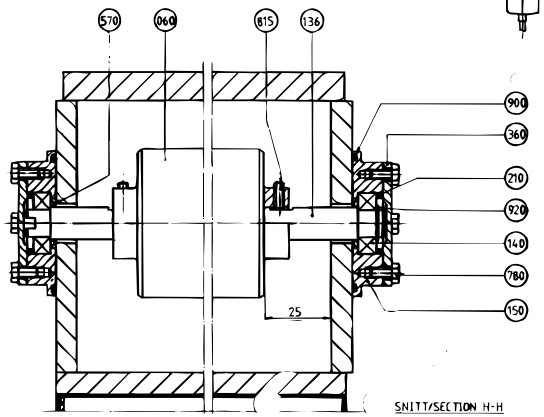
SNITT/SECTION H-H

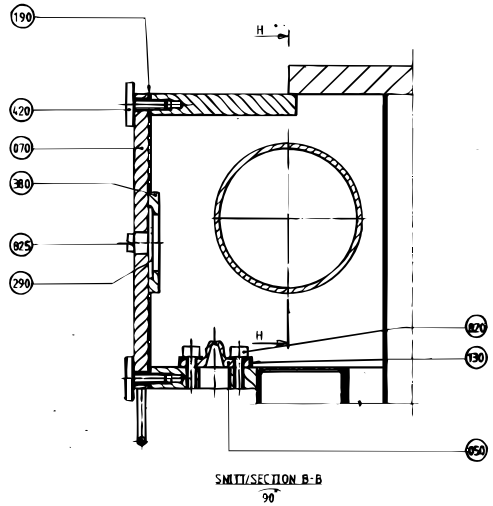
SNITT/SECTION B-B
90

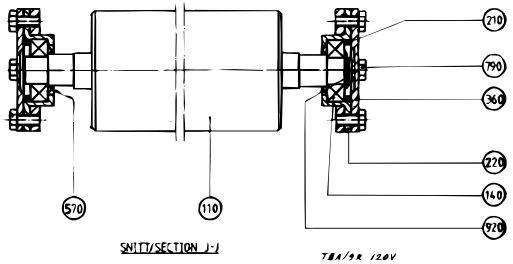
SNITT/SECTION J-J

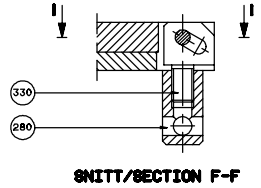
SNITT/SECTION F-F

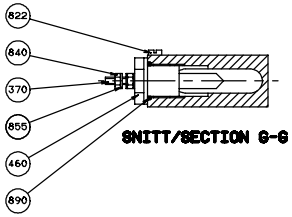
SNITT/SECTION G-G

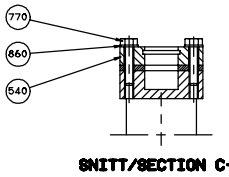
SNITT/SECTION C-C

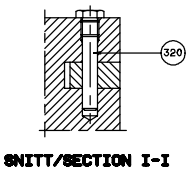
SNITT/SECTION I-I

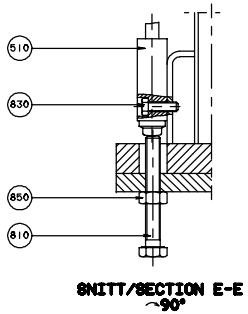
SNITT/SECTION E-E
90°

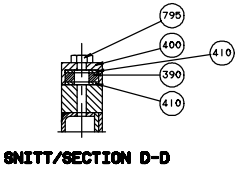
SNITT/SECTION D-D

Pos	Part No	SP	UN	Qty	Description	Page No
822	312125-0285	-		1	Screw Slot.Pan Hd. MCS 4x6 A480	
825	312125-0331	-		2	Screw Pan Head MCS M5X20 RFR	
830	312115-0329	-		4	Screw MC6S M5x16 A280	
835	312605-0310	-		2	Nut Hex. M6M M3 A280	
840	312605-0312	-		2	Nut Hex. M6M M4 A280	
845	312605-0314	-		4	Nut Hex. M6M M5 A280	
847	312605-0320	-		1	Nut Hex. M6M M10 A280	
850	312605-0318	-		2	Nut Hex. M6M M8 A280	
855	315105-0136	-		3	Washer, Plain, BRB, 4,3/8,H=0,8	
857	315105-0124	-		2	Washer, Plain, BRB, 3,2/6,H=0,5	
860	315105-0146	-		6	Washer, Plain, BRB, 5,3/10,H=1	
870	315105-0153	-		9	Washer, Plain, BRB, 6,4/12,H=1,5	
880	315105-0165	-		6	Washer, Plain, BRB, 8,4/16,H=1,5	
890	315204-0213	C		1	O-Ring 15,2x2,4 mm	
900	315204-0305	C		2	O-Ring 69,5x3 mm	
920	315751-0112	C		2	Retain. Ring, 15	

Pos	Part No	SP	UN	Qty	Description	Page No

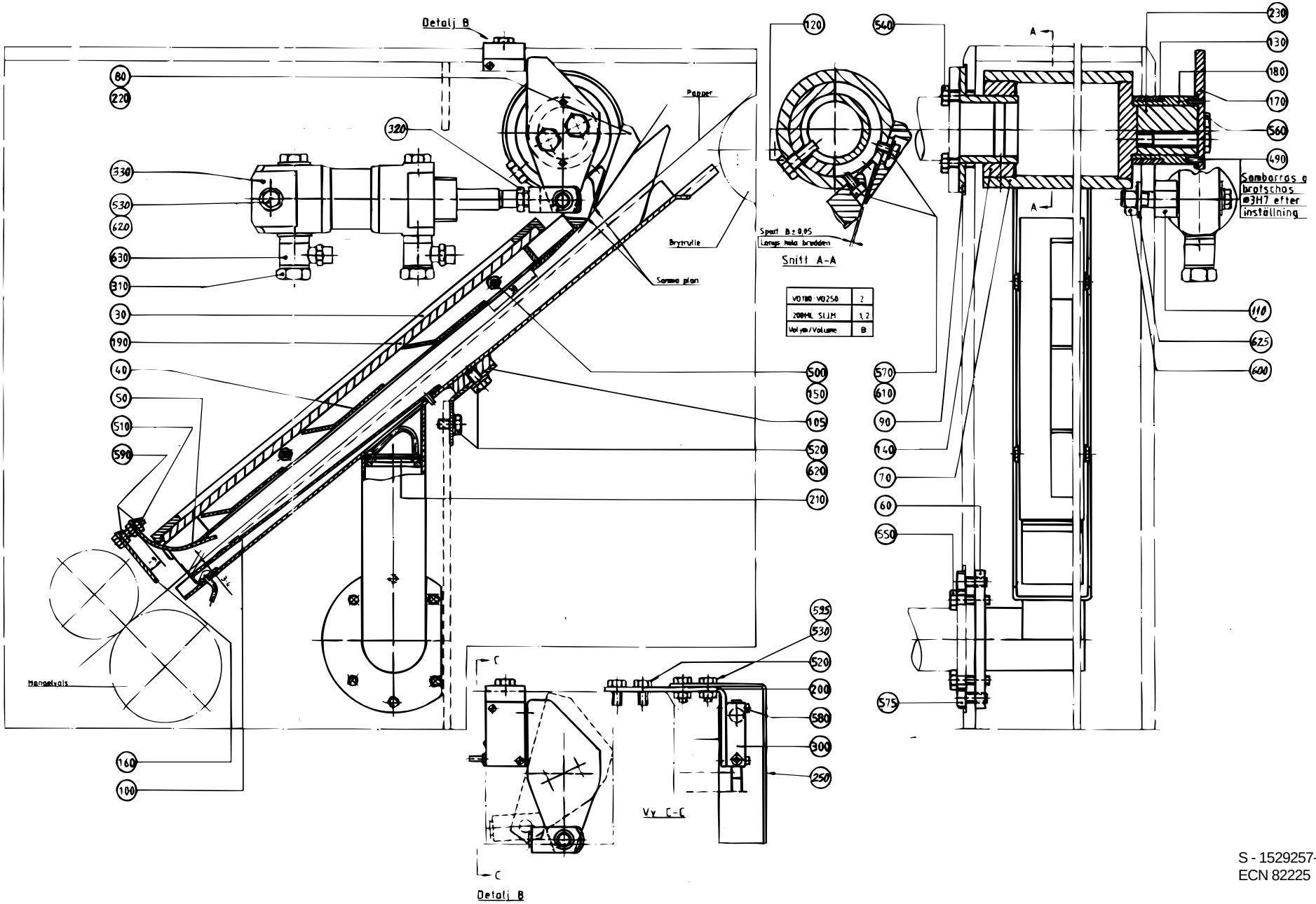

S - 1529257-1
ECN 82225

Pos	Part No	SP	UN	Qty	Description	Page No
0200B OR 0250B						
080	469991-0000	-		1	RAIL	
0200S						
080	271820-0002	-		1	STEERING RAIL	
Common Parts						
090	271858-0000	-		1	FLANGE	
105	272464-0000	-		1	ANGLE BRACKET	
110	441578-0001	D		1	CYLINDER BRACKET	
120	255995-0000	-		1	SCREW	
130	751165-0000	C		1	BUSHING	
140	256022-0000	C		1	BUSHING	
150	263311-0000	D		4	WASHER	
200	490867-0000	-		1	BRACKET	
230	441576-0000	-		1	SPACER	
240	441903-0000	D		1	ARM	
250	978461-0000	-		1	PROTECTION PLATE	
300	90044-0104	C		1	PROX.SWITCH IFM IN 3002	
310	90235-0274	C		2	"THROTTLE CHECK VALVES,G1/8"""	
320	90239-0516	C		1	ROD END,CLEVIS WITH AXLE M10X1,25	
330	B 90239-0773	C		1	CYLINDER	
340	90239-0453	D		1	BRACKET	
490	311103-0233	-		2	Pin, Parallell, m6, 3x10	
500	312105-0293	-		4	Screw M6S M4x16 A280	
510	312105-0331	-		2	Screw M6S M5x20 A280	
520	312105-0364	-		6	Screw M6S M6x10 A280	
530	312105-0366	-		3	Screw M6S M6x12 A280	
540	312105-0368	-		4	Screw M6S M6x16 A280	
550	312105-0370	-		4	Screw M6S M6x20 A280	
555	312105-0447	-		2	Screw M6S M8x12 A280	
560	312105-0464	-		2	Screw M6S M8x65 A280	
575	312115-0366	-		2	Screw MC6S M6x12 A280	
580	312125-0228	-		2	Screw Pan Head MCS M3x16 A480	
590	312605-0314	-		4	Nut Hex. M6M M5 A280	
600	312605-0316	-		2	Nut Hex. M6M M6 A280	
610	315105-0146	-		2	Washer, Plain, BRB, 5,3/10,H=1	
620	315105-0153	-		9	Washer, Plain, BRB, 6,4/12,H=1,5	
630	342797-0121	C		2	Conn. Banjo, Ringpiece 6-1/8	

Pos	Part No	SP	UN	Qty	Description	Page No

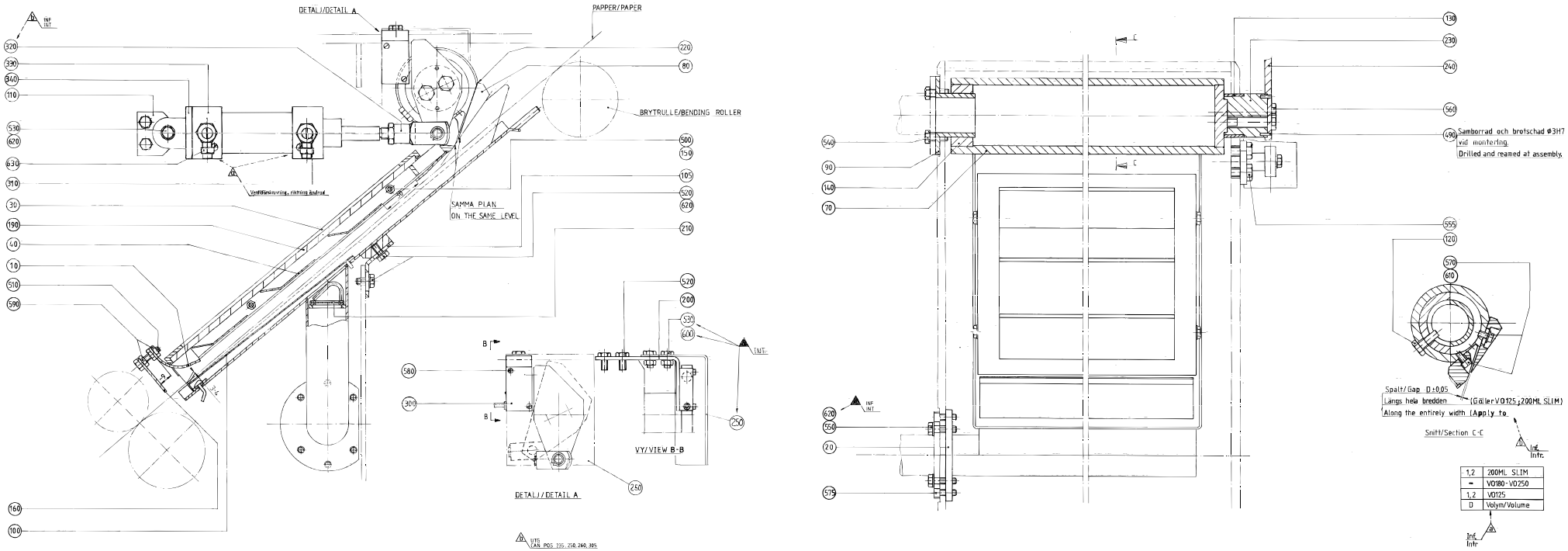

S - 272025-3, 4
ECN 82225

Pos	Part No	SP	UN	Qty	Description	Page No
TBA 0125S OR TBA 0100B OR TWA 0125S						
010	271824-0000	-		1	AIR KNIFE, MOVABLE	
020	271825-0000	-		1	FIXED AIR KNIFE	
030	271941-0001	-		1	FRAME	
040	271942-0001	-		1	AIR GUIDE	
070	272026-0001	-		1	AIR DISTRIBUTOR	
080	271820-0001	-		1	STEERING RAIL	
100	272140-0001	-		1	HEAD PLATE	
160	271827-0001	-		1	HEAD PLATE	
190	272027-0001	C		1	GLASS PANE	
210	272141-0001	C		1	FILTER	
220	272329-0001	C		2	LACE	
570	312115-0325	-		5	Screw Hex.Sock.Hd.MC6S-TT 5x10 A480	
TBA 0330S OR TBA 0300S OR TBA 0180B OR TBA 0160S OR TBA 0200B OR TBA 0250S OR TBA 0284B OR TBA 0200S OR TBA 0200M OR TBA 0250B OR TBA 0200SQ OR TBA 0236B OR TWA 0200S OR TPA TPA 0250SQ OR TPA TPA 0330SQ						
010	272022-0000	-		1	AIR KNIFE, MOVABLE	
020	272023-0000	-		1	FIXED AIR KNIFE	
030	271941-0002	-		1	FRAME	
040	271942-0002	-		1	AIR GUIDE	
070	272026-0002	-		1	AIR DISTRIBUTOR	
080	271820-0002	-		1	STEERING RAIL	
100	272140-0002	-		1	HEAD PLATE	
160	271827-0002	-		1	HEAD PLATE	
190	272027-0002	C		1	GLASS PANE	
210	272141-0002	C		1	FILTER	
220	272329-0002	C		3	LACE	
570	312115-0325	-		7	Screw Hex.Sock.Hd.MC6S-TT 5x10 A480	
Common Parts						
030	271941-0002	-		1	FRAME	
040	271942-0002	-		1	AIR GUIDE	
050	272022-0000	-		1	AIR KNIFE, MOVABLE	
060	272023-0000	-		1	FIXED AIR KNIFE	
070	272026-0002	-		1	AIR DISTRIBUTOR	
090	271858-0000	-		1	FLANGE	
100	272140-0002	-		1	HEAD PLATE	
105	272464-0000	-		1	ANGLE BRACKET	
110	255984-0001	-		1	CYLINDER BRACKET	
120	255995-0000	C		1	SCREW	
130	751165-0000	C		1	BUSHING	
140	256022-0000	C		1	BUSHING	
150	263311-0000	D		4	WASHER	
160	271827-0002	-		1	HEAD PLATE	
170	441903-0000	D		1	ARM	
180	271865-0000	D		1	SLEEVE	
190	272027-0002	C		1	GLASS PANE	
200	490867-0000	D		1	BRACKET	
210	272141-0002	C		1	FILTER	
220	272329-0002	C		2	LACE	
230	295103-0000	-		1	SPACER	
250	978461-0000	-		1	PROTECTION PLATE	
300	90044-0104	C		1	PROX.SWITCH IFM IN 3002	
310	90235-0275	C		2	"THROTTLE CHECK VALVES,G1/4""""	
320	90239-0127	C		1	BRACKET	
330	B 90239-0189	C		1	CYLINDER	
490	311103-0233	-		2	Pin, Parallell, m6, 3x10	
500	312105-0293	-		4	Screw M6S M4x16 A280	
510	312105-0331	-		2	Screw M6S M5x20 A280	
520	312105-0364	-		6	Screw M6S M6x10 A280	
530	312105-0366	-		3	Screw M6S M6x12 A280	
540	312105-0368	-		4	Screw M6S M6x16 A280	
550	312105-0370	-		4	Screw M6S M6x20 A280	
560	312105-0461	-		2	Screw M6S M8x50 A280	
570	312115-0325	-		4	Screw Hex.Sock.Hd.MC6S-TT 5x10 A480	
575	312115-0366	-		2	Screw MC6S M6x12 A280	
580	312125-0228	-		2	Screw Pan Head MCS M3x16 A480	
590	312605-0314	-		4	Nut Hex. M6M M5 A280	
595	312605-0316	-		2	Nut Hex. M6M M6 A280	
600	312605-0320	-		1	Nut Hex. M6M M10 A280	
610	315105-0146	-		2	Washer, Plain, BRB, 5,3/10,H=1	
620	315105-0153	-		5	Washer, Plain, BRB, 6,4/12,H=1,5	
625	315105-0173	-		1	Washer, Plain, BRB, 10,5/22,H=2	
630	342797-0122	-		2	Conn. Banjo, Ringpiece 6-1/4	

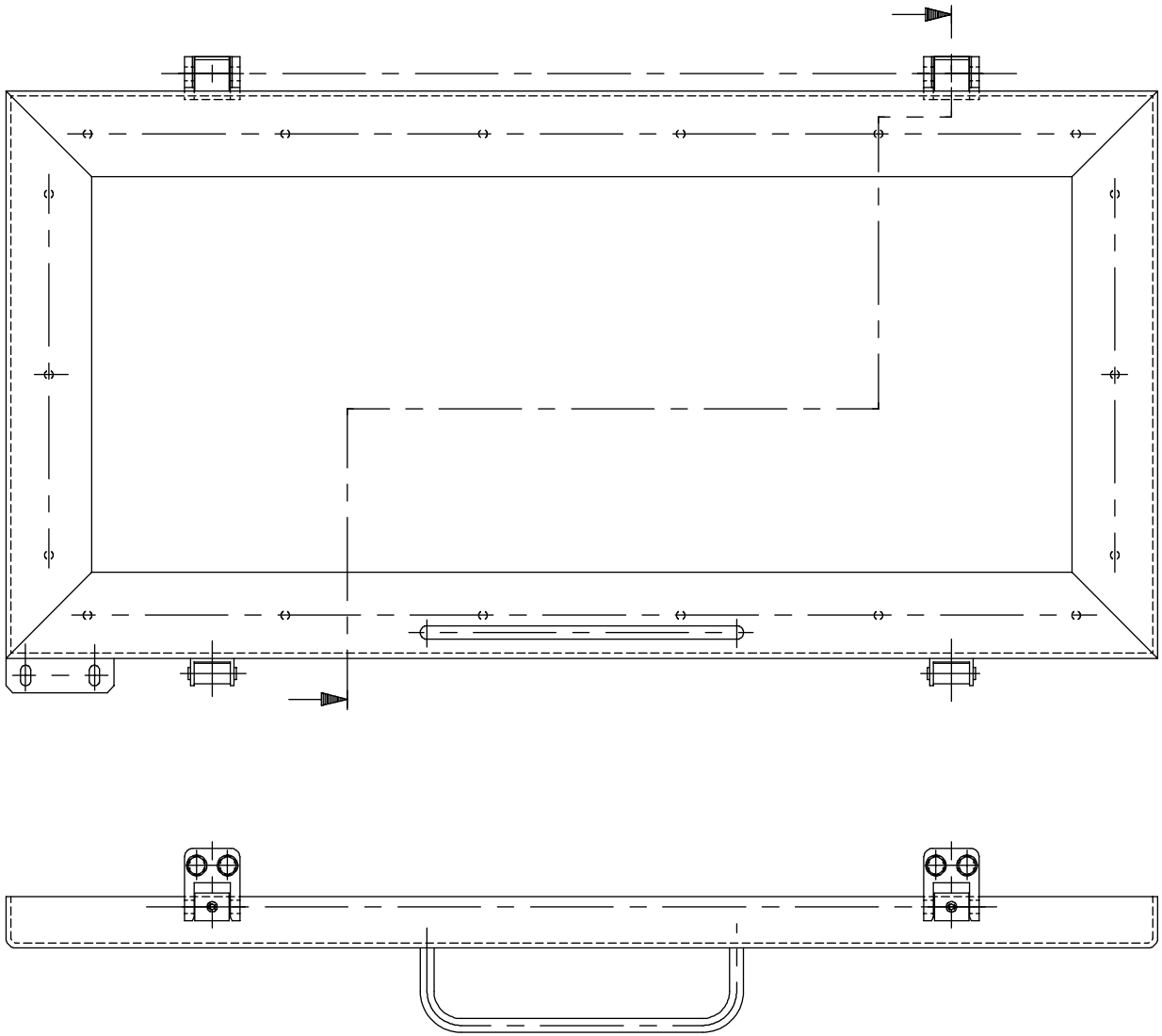

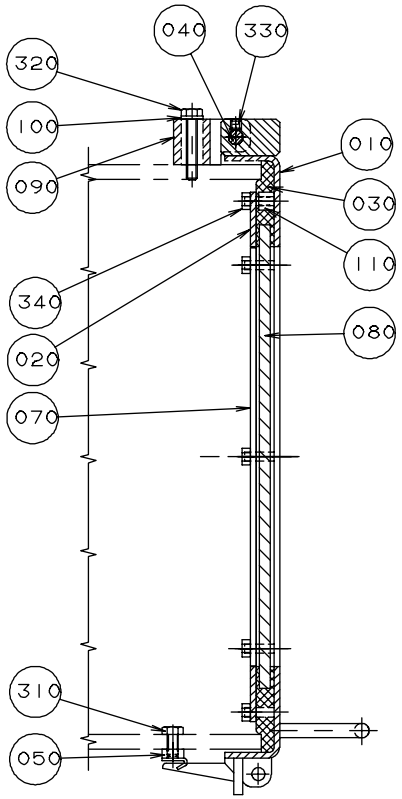
040
330
320
100
090
010
030
110
340
080
020
070
310
050

Pos	Part No	SP	UN	Qty	Description	Page No
Common Parts						
010	1529014-0000	-		1	FRAME	
020	272780-0000	-		2	COVER SLIP	
030	272785-0000	C		1	RUBBER STRIP	
040	256031-0000	C		2	SHAFT	
050	271860-0000	C		2	CLAMP BLOCK	
070	272782-0000	-		2	COVER SLIP	
080	272783-0003	C		1	GLASS PANE	
090	272786-0000	C		2	HINGE	
100	272787-0000	C		2	WASHER	
110	441718-0000	D		18	SPACER	
310	312105-0366	-		4	Screw M6S M6x12 A280	
320	312105-0376	-		4	Screw M6S M6S M6x35 A280	
330	312318-0360	-		2	Screw Hex.Sock.Set Cup P.MSK6SS6x6 SS	
340	312605-0314	-		18	Nut Hex. M6M M5 A280	

Pos	Part No	SP	UN	Qty	Description	Page No

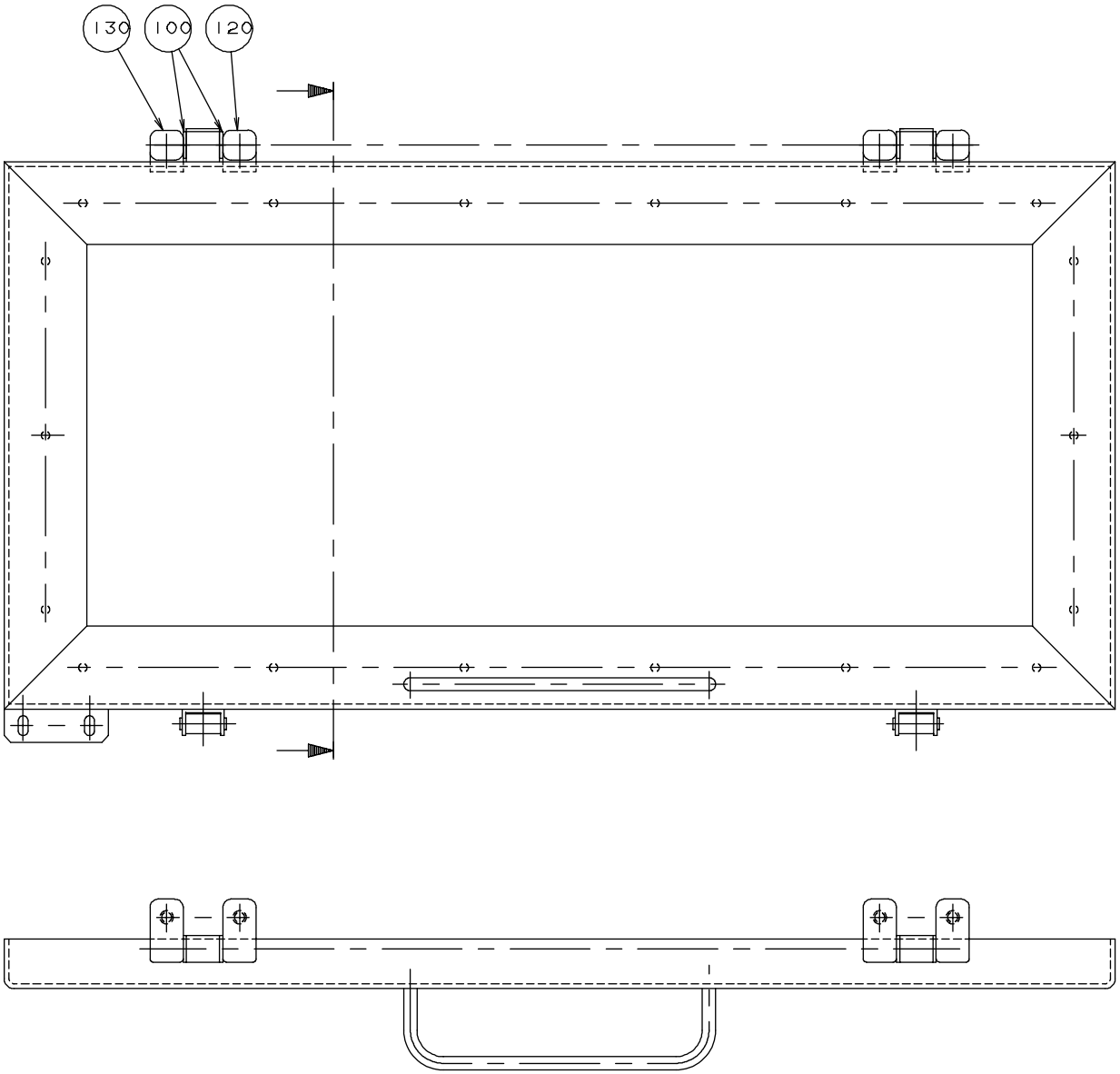
130
100
120
330
090
300
320
020
070
310
050
010
030
110
080

Pos	Part No	SP	UN	Qty	Description	Page No
Common Parts						
010	978542-0000	-		1	FRAME	
020	272780-0000	-		2	COVER SLIP	
030	272785-0000	-		1	RUBBER STRIP	
050	271860-0000	C		2	CLAMP BLOCK	
070	272782-0000	-		2	COVER SLIP	
080	272783-0003	-		1	GLASS PANE	
090	441737-0000	C		2	WASHER	
100	441739-0000	C		4	WASHER	
110	441718-0000	D		18	SPACER	
120	441740-0000	C		2	HINGE FLANGE	
130	441741-0000	C		2	HINGE FLANGE	
300	312105-0451	-		4	Screw M6S 8x20 A280	
310	312105-0366	-		4	Screw M6S M6x12 A280	
320	312605-0314	-		18	Nut Hex. M6M M5 A280	
330	311103-0413	-		2	Pin, Parallell, m6, 8x50	

Pos	Part No	SP	UN	Qty	Description	Page No

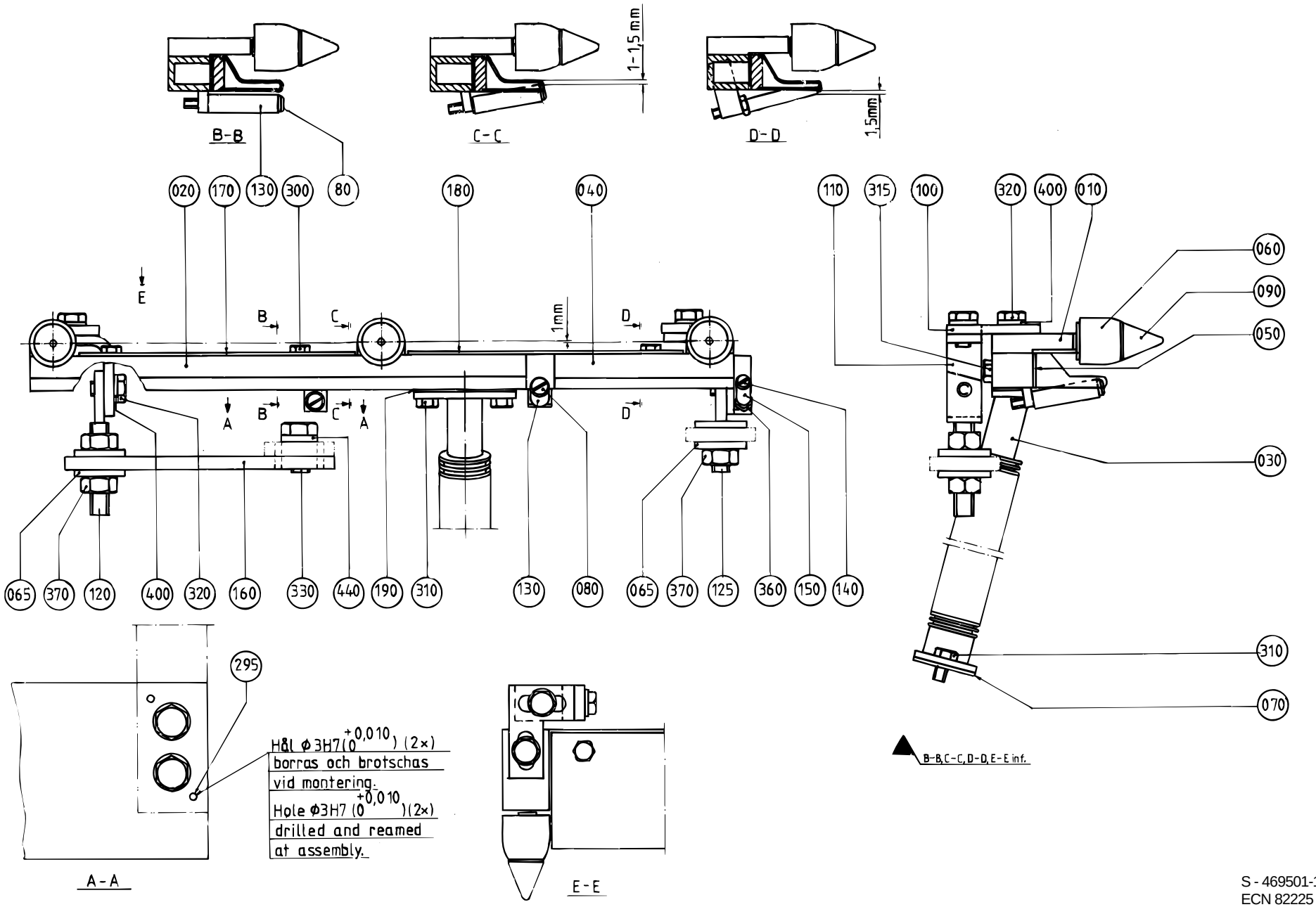
B-B
C-C
D-D
1-1,5 mm
1,5mm
020
170
130
300
80
180
040
110
315
100
320
400
010
060
090
050
030
310
070
295
065
370
120
400
320
160
330
440
190
310
130
080
065
370
125
360
150
140
1mm
E
B
C
D
A
Hål ϕ3H7 (0 +0,010) (2×)
borras och brotschas
vid montering.
Hole ϕ3H7 (0 +0,010) (2×)
drilled and reamed
at assembly.
A-A
E-E
B-B, C-C, D-D, E-E inf.

Pos	Part No	SP	UN	Qty	Description	Page No
Common Parts						
010	469416-0000	D		1	ATTACHMENT	
020	469418-0000	C		1	AIR NOZZLE	
030	469792-0000	D		1	PIPE-LINE	
040	469420-0000	D		1	AIR NOZZLE	
050	469796-0000	C		1	GASKET REPBY 0491983-0000	
060	6161-0000	C		3	ROLL	
065	28036-0000	-		4	WASHER	
070	256066-0000	C		1	GASKET REPBY 0751010-0000	
080	256899-0000	C		2	SHAFT	
090	272095-0000	C		3	SHAFT	
100	469458-0000	-		2	BRACKET	
110	469459-0000	-		2	BRACKET	
120	469460-0000	-		1	BRACKET	
125	491143-0000	-		1	BRACKET	
130	469461-0000	C		2	ROLL	
140	469463-0000	C		1	SHAFT	
150	469464-0000	C		1	ROLL	
160	491178-0000	-		1	BRACKET	
170	469466-0000	-		1	PLATE	
180	469467-0000	-		1	PLATE	
190	469791-0000	C		1	GASKET REPBY 0751024-0000	
295	311103-0234	-		2	Pin, Parallell, m6, 3x12	
300	312105-0287	-		3	Screw M6S M4x8 A280	
310	312105-0325	-		4	Screw M6S M5x10 A280	
315	312105-0333	-		5	Screw M6S M5x25 A280	
320	312105-0366	-		6	Screw M6S M6x12 A280	
330	312105-0449	-		2	Screw M6S M8x16 A280	
360	312605-0312	-		1	Nut Hex. M6M M4 A280	
370	312605-0318	-		3	Nut Hex. M6M M8 A280	
400	315105-0153	-		6	Washer, Plain, BRB, 6,4/12,H=1,5	
440	315115-0165	-		2	Washer, Plain, TBRB 8,4/16 H=3	

Pos	Part No	SP	UN	Qty	Description	Page No

AIR NOZZLE

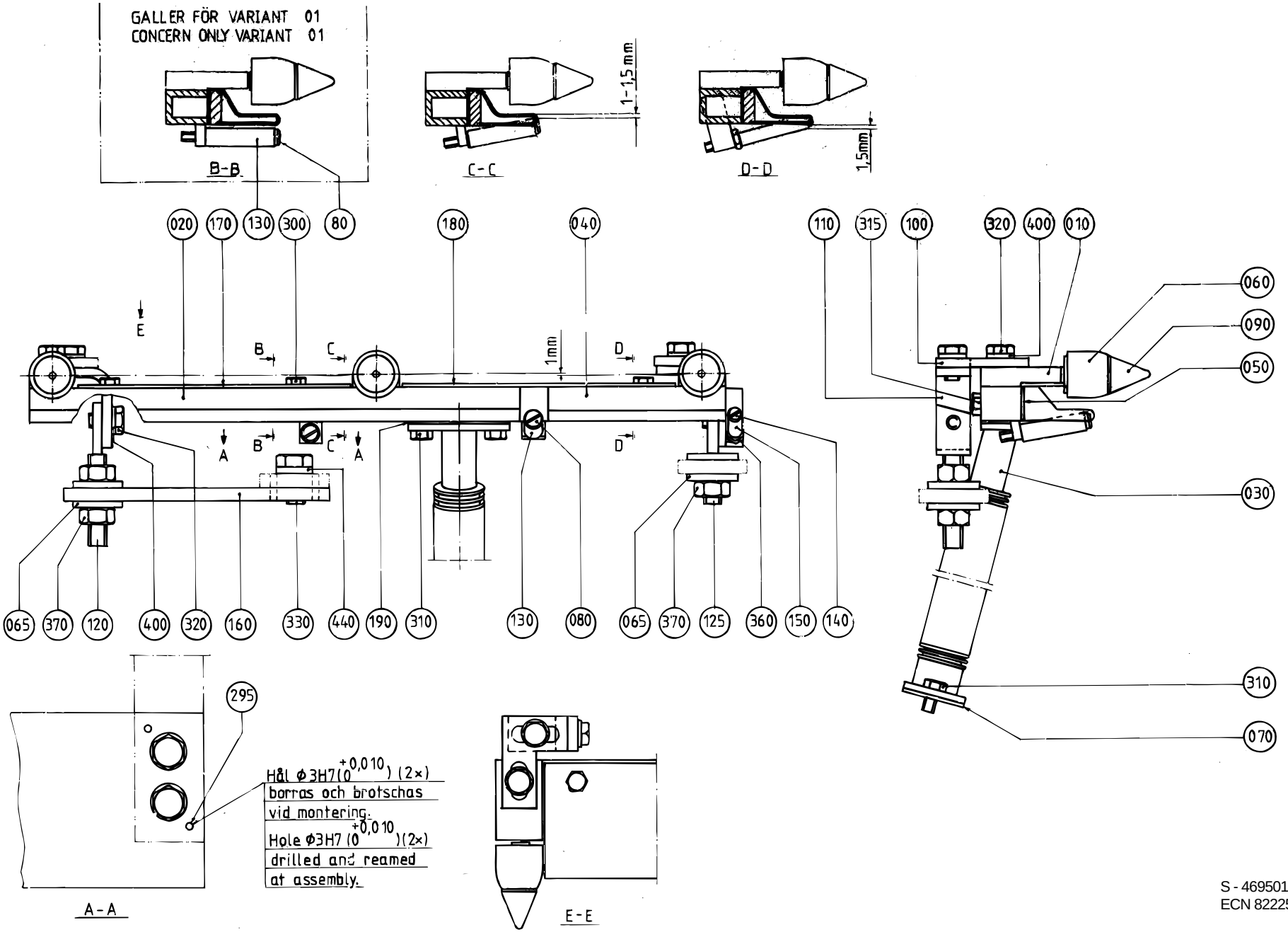

S - 469501-2
ECN 82225

Pos	Part No	SP	UN	Qty	Description	Page No
0125S OR 0200S						
080-02	256899-0000	C		2	SHAFT	
130-02	469461-0000	C		2	ROLL	
0180B OR 0236B OR 0200B OR 0250B						
080	256899-0000	C		1	SHAFT	
130	469461-0000	C		1	ROLL	
010	469416-0000	D		1	ATTACHMENT	
020	469418-0000	C		1	AIR NOZZLE	
030	469792-0000	D		1	PIPE-LINE	
040	469420-0000	D		1	AIR NOZZLE	
050	491983-0000	C		1	GASKET	
060	6161-0000	C		3	ROLL	
065	28036-0000	-		4	WASHER	
070	751010-0000	C		1	GASKET	
090	272095-0000	C		3	SHAFT	
100	469458-0000	-		2	BRACKET	
110	469459-0000	-		2	BRACKET	
120	469460-0000	-		1	BRACKET	
125	491143-0000	-		1	BRACKET	
140	469463-0000	C		1	SHAFT	
150	469464-0000	C		1	ROLL	
160	491178-0000	-		1	BRACKET	
170	469466-0000	-		1	PLATE	
180	469467-0000	-		1	PLATE	
190	751024-0000	C		1	GASKET	
295	311103-0234	-		2	Pin, Parallell, m6, 3x12	
300	312105-0287	-		3	Screw M6S M4x8 A280	
310	312105-0325	-		4	Screw M6S M5x10 A280	
315	312105-0333	-		5	Screw M6S M5x25 A280	
320	312105-0366	-		6	Screw M6S M6x12 A280	
330	312105-0449	-		2	Screw M6S M8x16 A280	
360	312605-0312	-		1	Nut Hex. M6M M4 A280	
370	312605-0318	-		3	Nut Hex. M6M M8 A280	
400	315105-0153	-		6	Washer, Plain, BRB, 6,4/12,H=1,5	
440	315115-0165	-		2	Washer, Plain, TBRB 8,4/16 H=3	

Pos	Part No	SP	UN	Qty	Description	Page No

AIR NOZZLE

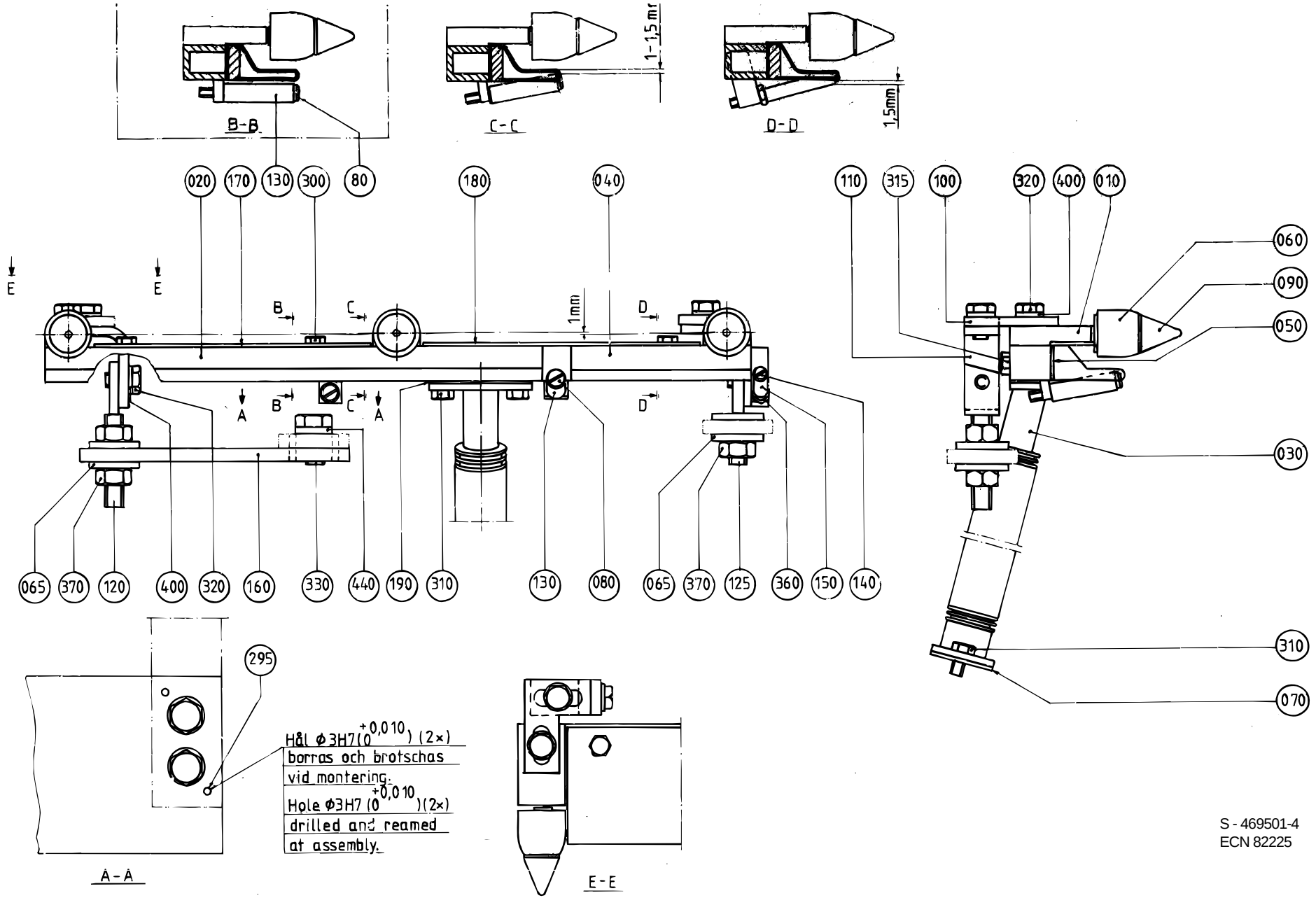

S - 469501-4
ECN 82225

Pos	Part No	SP	UN	Qty	Description	Page No
0125S OR 0200S						
080	256899-0000	C		2	SHAFT	
130	469461-0000	C		2	ROLL	
0180B OR 0236B OR 0200B OR 0250B OR 0284B						
080	256899-0000	C		1	SHAFT	
130	469461-0000	C		1	ROLL	
Common Parts						
010	752218-0000	D		1	ATTACHMENT	
020	751459-0000	C		1	AIR NOZZLE	
030	751722-0000	D		1	PIPE-LINE	
040	751282-0000	D		1	AIR NOZZLE	
050	751293-0000	C		1	GASKET	
060	6161-0000	C		3	ROLL	
065	28036-0000	-		4	WASHER	
070	751010-0000	C		1	GASKET	
090	272095-0000	C		3	SHAFT	
100	469458-0000	-		2	BRACKET	
110	469459-0000	-		2	BRACKET	
120	469460-0000	-		1	BRACKET	
125	491143-0000	-		1	BRACKET	
140	469463-0000	C		1	SHAFT	
150	469464-0000	C		1	ROLL	
170	469466-0000	-		2	PLATE	
190	751024-0000	C		1	GASKET	
300	312105-0287	-		4	Screw M6S M4x8 A280	
310	312105-0325	-		4	Screw M6S M5x10 A280	
315	312105-0333	-		5	Screw M6S M5x25 A280	
320	312105-0366	-		6	Screw M6S M6x12 A280	
360	312605-0312	-		1	Nut Hex. M6M M4 A280	
370	312605-0318	-		3	Nut Hex. M6M M8 A280	
400	315105-0153	-		6	Washer, Plain, BRB, 6,4/12,H=1,5	

Pos	Part No	SP	UN	Qty	Description	Page No

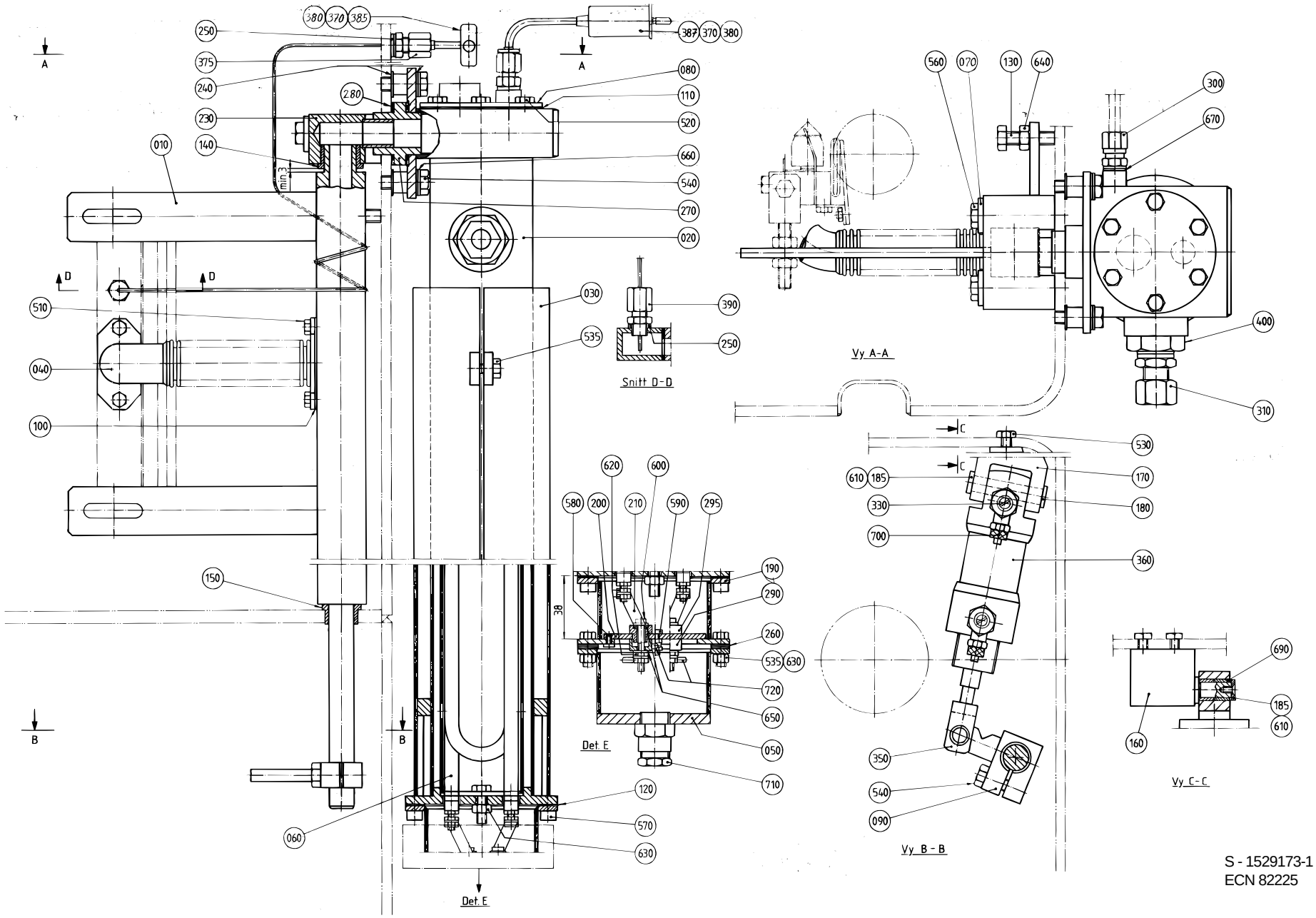

S - 1529173-1
ECN 82225

Pos	Part No	SP	UN	Qty	Description	Page No
0200B OR 0250B						
040	256058-0000	D		1	LEAD	
100	751010-0000	C		2	GASKET	
510	312105-0325	-		4	Screw M6S M5x10 A280	
Common Parts						
010	256056-0000	D		1	PIVOT ARM	
020	272284-0000	D		1	HEATING PIPE	
030	272114-0000	-		1	HEAT GUARD	
050	256059-0000	D		1	COVER	
060	267494-0000	C		1	COIL HEATER	
070	315125-0165	-		2	Washer, Plain Round,Chamf. 8,4/26, H=5	
080	751734-0000	D		1	LID	
090	256063-0000	D		1	CYLINDER BRACKET	
110	751735-0000	C		1	GASKET	
120	751013-0000	C		1	GASKET	
130	256073-0000	-		1	SCREW	
140	295909-0000	C		1	BUSHING	
150	271269-0000	C		1	BUSHING	
160	271345-0000	D		1	BRACKET	
170	271346-0000	D		1	FORK	
180	271423-0005	C		1	SHAFT	
185	271844-0000	C		2	WASHER	
190	272105-0000	D		1	CONNECTION HOUS.(MINOR)	
200	272145-0000	C		1	CONNECTION DEVICE	
210	272146-0000	C		2	BRIDGE CONNECTOR	
230	272286-0000	-		1	AXLE SUPPORT	
240	751019-0000	C		8	WASHER	
250	273429-0000	C		2	WASHER	
260	751020-0000	C		1	GASKET	
270	295936-0000	C		1	BUSHING	
280	751023-0000	C		2	GASKET	
290	90006-0008	C		2	BUSHING 657	
295	90006-0009	C		2	BUSHING 0002004	
300	90030-0184	-		1	Conn. Str. GA-6-G1/8	
310	90030-0187	-		1	Conn. Str. GA-12-G3/8	
330	90235-0275	C		2	"THROTTLE CHECK VALVES,G1/4"""	
350	90239-0012	C		1	BRACKET	
360	B 90239-0189	C		1	CYLINDER	
370	90326-0012	C		2	PROTECTIVE COVER	
375	90326-0306	C		1	GLAND FITTING 9041-45-KS-KR.1/8"D=4,5mm	
380	90326-0020	C		2	PLUG,FEMALE YELLOW CR-AL	
385	B 90326-0048	C		1	THERMOELEMENT	
387	90326-0052	-		1	THERMO ELEMENT	
390	90326-0304	C		1	LEAD IN	
400	90330-0078	C		1	Bushing, Int/Ext. Thr. R3/4-Rp3/8	
505	312105-0364	-		6	Screw M6S M6x10 A280	
520	312105-0364	-		6	Screw M6S M6x10 A280	
530	312105-0366	-		2	Screw M6S M6x12 A280	
535	312105-0368	-		1	Screw M6S M6x16 A280	
540	312105-0453	-		5	Screw M6S M8x25 A280	
560	312105-0462	-		2	Screw M6S M8x55 A280	
570	312115-0366	-		6	Screw MC6S M6x12 A280	
580	312125-0222	-		3	Screw Pan Head MCS M3x8 RFR	
590	312125-0291	-		1	Screw Pan Head MCS M4x12 RFR	
600	312125-0299	-		2	Screw Pan Head MCS M4X30 RFR	
610	312145-0287	-		2	Screw Counters.Slot.Hd. MFS 4x8 SS	
620	312605-0312	-		1	Nut Hex. M6M M4 A280	
630	312605-0316	-		7	Nut Hex. M6M M6 A280	
640	312605-0318	-		1	Nut Hex. M6M M8 A280	
650	315105-0136	-		8	Washer, Plain, BRB, 4,3/8,H=0,8	
660	315105-0165	-		4	Washer, Plain, BRB, 8,4/16,H=1,5	
670	315234-0109	-		1	Washer,Pl.Rnd.Cu.10,3/13,5 H=1,0	
690	321127-0100	-		2	BEARING BUSHING WITHOUT FLANGE,10/13X10	
700	342980-0114	-		2	BANJO-CONNECTION,RING 6/4-G1/4"	
710	352100-0106	-		1	CABLE GLANR.18,6-10,5	
720	353104-0130	C		3	CABLE SHOEYAV 025 M 4*	

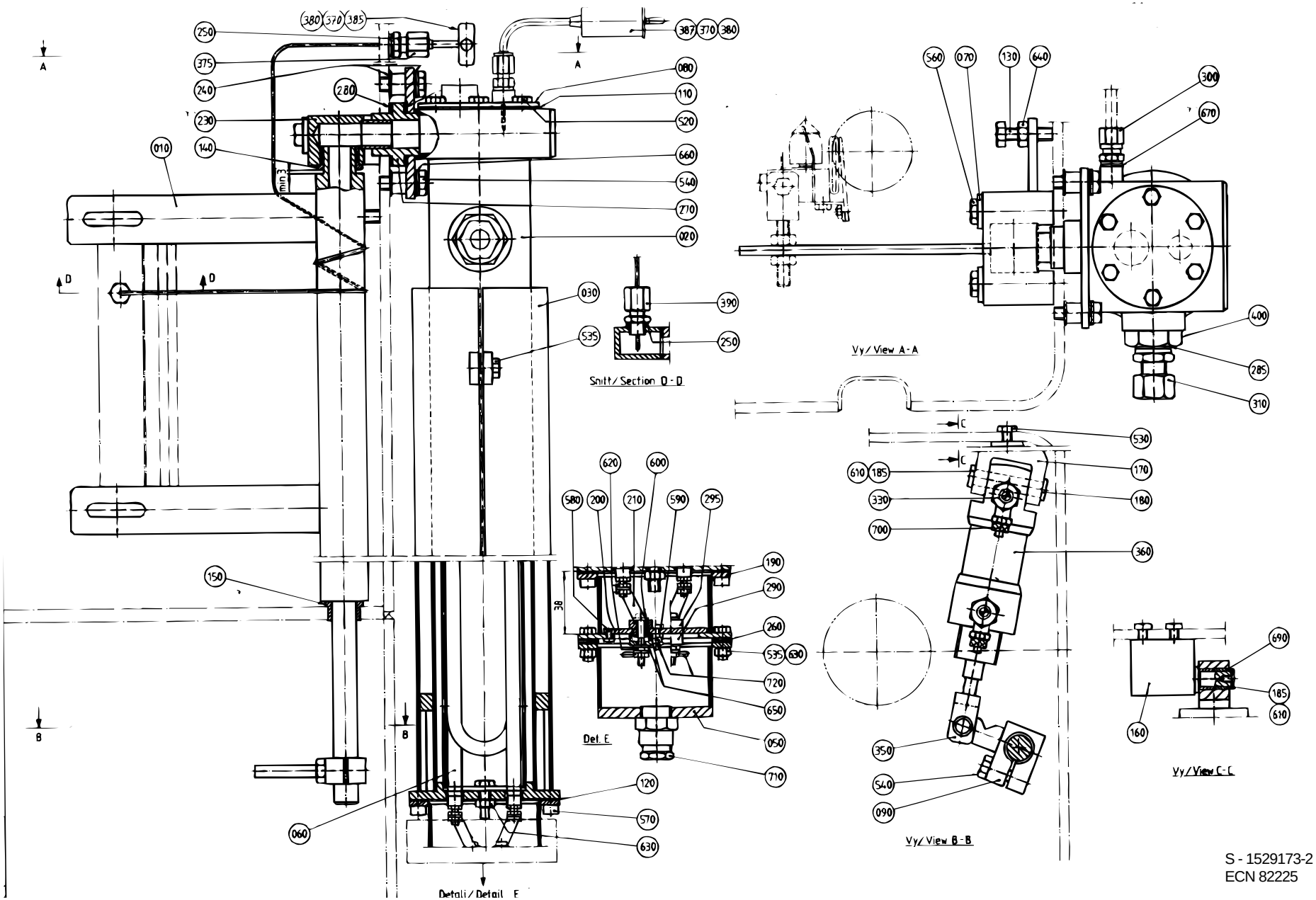

S - 1529173-2
ECN 82225

Pos	Part No	SP	UN	Qty	Description	Page No
0200B OR 0250B						
040	256058-0000	D		1	LEAD	
100	751010-0000	C		2	GASKET	
510	312105-0325	-		4	Screw M6S M5x10 A280	
Common Parts						
010	256056-0000	D		1	PIVOT ARM	
020	272284-0000	D		1	HEATING PIPE	
030	272114-0000	-		1	HEAT GUARD	
050	256059-0000	D		1	COVER	
060	267494-0000	C		1	COIL HEATER	
070	315125-0165	-		2	Washer, Plain Round,Chamf. 8,4/26, H=5	
080	751734-0000	D		1	LID	
090	256063-0000	D		1	CYLINDER BRACKET	
110	751735-0000	C		1	GASKET	
120	751013-0000	C		1	GASKET	
130	256073-0000	-		1	SCREW	
140	295909-0000	C		1	BUSHING	
150	271269-0000	C		1	BUSHING	
160	271345-0000	D		1	BRACKET	
170	271346-0000	D		1	FORK	
180	271423-0005	C		1	SHAFT	
185	271844-0000	C		2	WASHER	
190	272105-0000	D		1	CONNECTION HOUS.(MINOR)	
200	272145-0000	C		1	CONNECTION DEVICE	
210	272146-0000	C		2	BRIDGE CONNECTOR	
230	272286-0000	-		1	AXLE SUPPORT	
240	751019-0000	C		8	WASHER	
250	273429-0000	C		2	WASHER	
260	751020-0000	C		1	GASKET	
270	295936-0000	C		1	BUSHING	
280	751023-0000	C		2	GASKET	
290	90006-0008	C		2	BUSHING 657	
295	90006-0009	C		2	BUSHING 0002004	
300	90030-0184	-		1	Conn. Str. GA-6-G1/8	
310	90030-0187	-		1	Conn. Str. GA-12-G3/8	
330	90235-0275	C		2	"THROTTLE CHECK VALVES,G1/4"""	
350	90239-0012	C		1	BRACKET	
360	B 90239-0189	C		1	CYLINDER	
370	90326-0012	C		2	PROTECTIVE COVER	
375	90326-0306	C		1	GLAND FITTING 9041-45-KS-KR.1/8"D=4,5mm	
380	90326-0020	C		2	PLUG,FEMALE YELLOW CR-AL	
385	B 90326-0048	C		1	THERMOELEMENT	
387	90326-0052	-		1	THERMO ELEMENT	
390	90326-0304	C		1	LEAD IN	
400	90330-0078	C		1	Bushing, Int/Ext. Thr. R3/4-Rp3/8	
505	312105-0364	-		6	Screw M6S M6x10 A280	
520	312105-0364	-		6	Screw M6S M6x10 A280	
530	312105-0366	-		2	Screw M6S M6x12 A280	
535	312105-0368	-		1	Screw M6S M6x16 A280	
540	312105-0453	-		5	Screw M6S M8x25 A280	
560	312105-0462	-		2	Screw M6S M8x55 A280	
570	312115-0366	-		6	Screw MC6S M6x12 A280	
580	312125-0222	-		3	Screw Pan Head MCS M3x8 RFR	
590	312125-0291	-		1	Screw Pan Head MCS M4x12 RFR	
600	312125-0299	-		2	Screw Pan Head MCS M4X30 RFR	
610	312145-0287	-		2	Screw Counters.Slot.Hd. MFS 4x8 SS	
620	312605-0312	-		1	Nut Hex. M6M M4 A280	
630	312605-0316	-		7	Nut Hex. M6M M6 A280	
640	312605-0318	-		1	Nut Hex. M6M M8 A280	
650	315105-0136	-		8	Washer, Plain, BRB, 4,3/8,H=0,8	
660	315105-0165	-		4	Washer, Plain, BRB, 8,4/16,H=1,5	
670	315234-0109	-		1	Washer,Pl.Rnd.Cu.10,3/13,5 H=1,0	
690	321127-0100	-		2	BEARING BUSHING WITHOUT FLANGE,10/13X10	
700	342980-0114	-		2	BANJO-CONNECTION,RING 6/4-G1/4"	
710	352100-0106	-		1	CABLE GLANR.18,6-10,5	
720	353104-0130	C		3	CABLE SHOEYAV 025 M 4*	

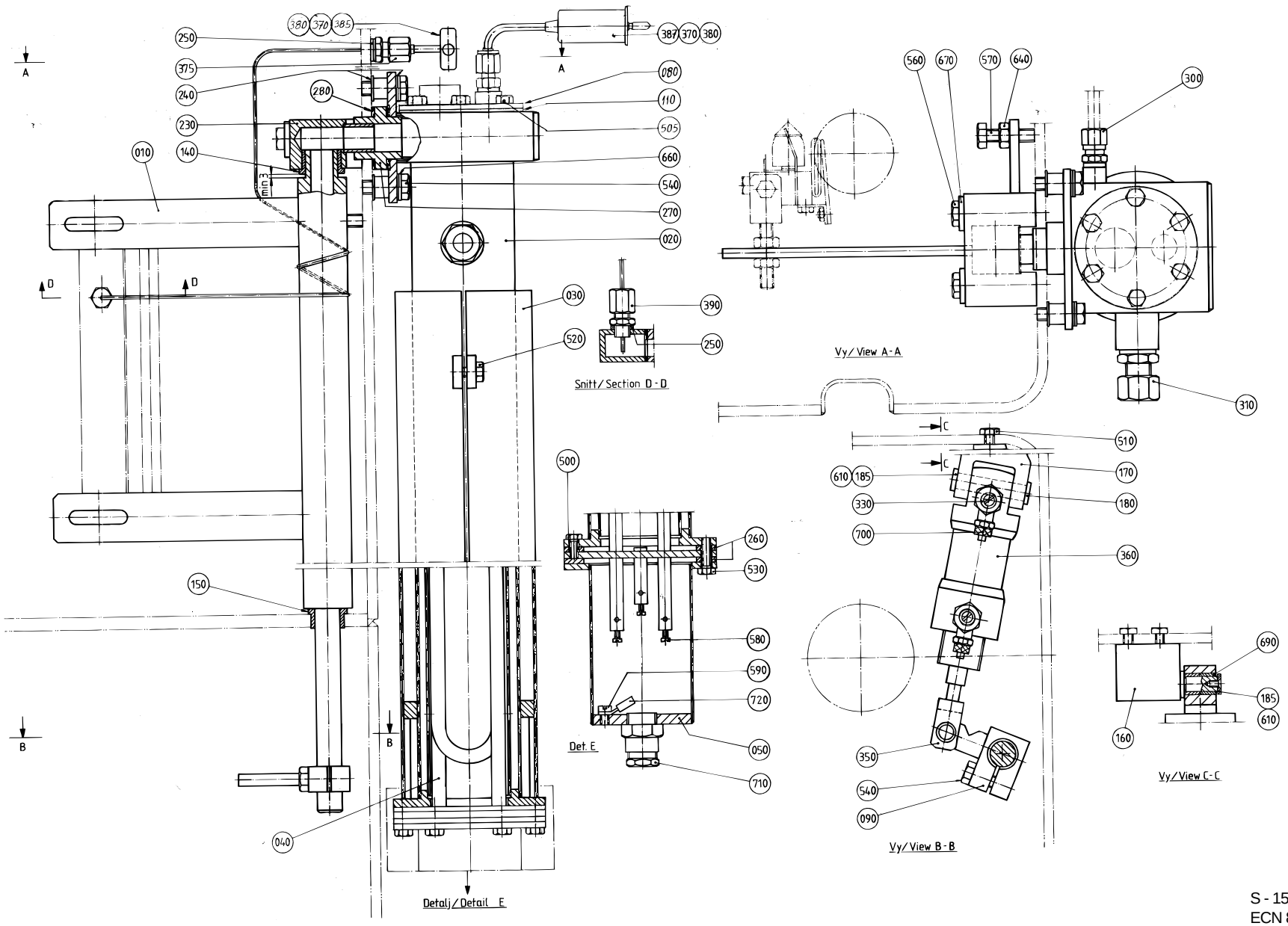
Snitt/Section D-D
Vy/View A-A
Det E
Detalj/Detail E
Vy/View B-B
Vy/View C-C

Pos	Part No	SP	UN	Qty	Description	Page No
Common Parts						
010	256056-0000	-		1	PIVOT ARM	
020	491643-0000	-		1	HEATING PIPE	
030	272114-0000	-		1	HEAT GUARD	
040	441804-0000	-		1	COIL HEATER	
050	491170-0000	-		1	COVER	
080	751734-0000	-		1	LID	
090	256063-0000	-		1	CYLINDER BRACKET	
110	751735-0000	-		1	GASKET	
140	295909-0000	-		1	BUSHING	
150	271269-0000	-		1	BUSHING	
160	271345-0000	-		1	BRACKET	
170	271346-0000	-		1	FORK	
180	271423-0005	-		1	SHAFT	
185	271844-0000	-		2	WASHER	
230	272286-0000	-		1	AXLE SUPPORT	
240	751019-0000	-		8	WASHER	
250	273429-0000	-		2	WASHER	
260	751020-0000	-		2	GASKET	
270	295936-0000	-		1	BUSHING	
280	751023-0000	-		2	GASKET	
300	90030-0184	-		1	Conn. Str. GA-6-G1/8	
310	90030-0187	-		1	Conn. Str. GA-12-G3/8	
330	90235-0275	-		2	"THROTTLE CHECK VALVES,G1/4""""	
350	90239-0127	-		1	BRACKET	
360	B 90239-0189	-		1	CYLINDER	
370	90326-0012	-		2	PROTECTIVE COVER	
375	90326-0306	-		1	GLAND FITTING 9041-45-KS-KR.1/8"D=4,5mm	
380	90326-0020	-		2	PLUG,FEMALE YELLOW CR-AL	
385	B 90326-0048	-		1	THERMOELEMENT	
387	90326-0052	-		1	THERMO ELEMENT	
390	90326-0304	-		1	LEAD IN	
500	312105-0327	-		2	Screw M6S M5x12 A280	
505	312105-0364	-		6	Screw M6S M6x10 A280	
510	312105-0366	-		2	Screw M6S M6x12 A280	
520	312105-0368	-		4	Screw M6S M6x16 A280	
530	312105-0370	-		6	Screw M6S M6x20 A280	
540	312105-0453	-		5	Screw M6S M8x25 A280	
560	312105-0462	-		2	Screw M6S M8x55 A280	
570	312109-0457	-		1	Screw M6S M8x35 A280	
580	312125-0226	-		3	Screw Pan Head MCS M3X12 RFR	
590	312125-0323	-		1	Screw Pan Head MCS M5X8 RFR	
610	312145-0287	-		2	Screw Counters.Slot.Hd. MFS 4x8 SS	
640	312605-0318	-		1	Nut Hex. M6M M8 A280	
660	315105-0165	-		4	Washer, Plain, BRB, 8,4/16,H=1,5	
670	315125-0165	-		2	Washer, Plain Round,Chamf. 8,4/26, H=5	
690	321127-0100	-		2	BEARING BUSHING WITHOUT FLANGE,10/13X10	
700	342980-0114	-		2	BANJO-CONNECTION,RING 6/4-G1/4"	
710	352100-0106	-		1	CABLE GLANR.18,6-10,5	
720	353101-0132	-		1	CABLE SHOE	

HOT AIR ELEMENT

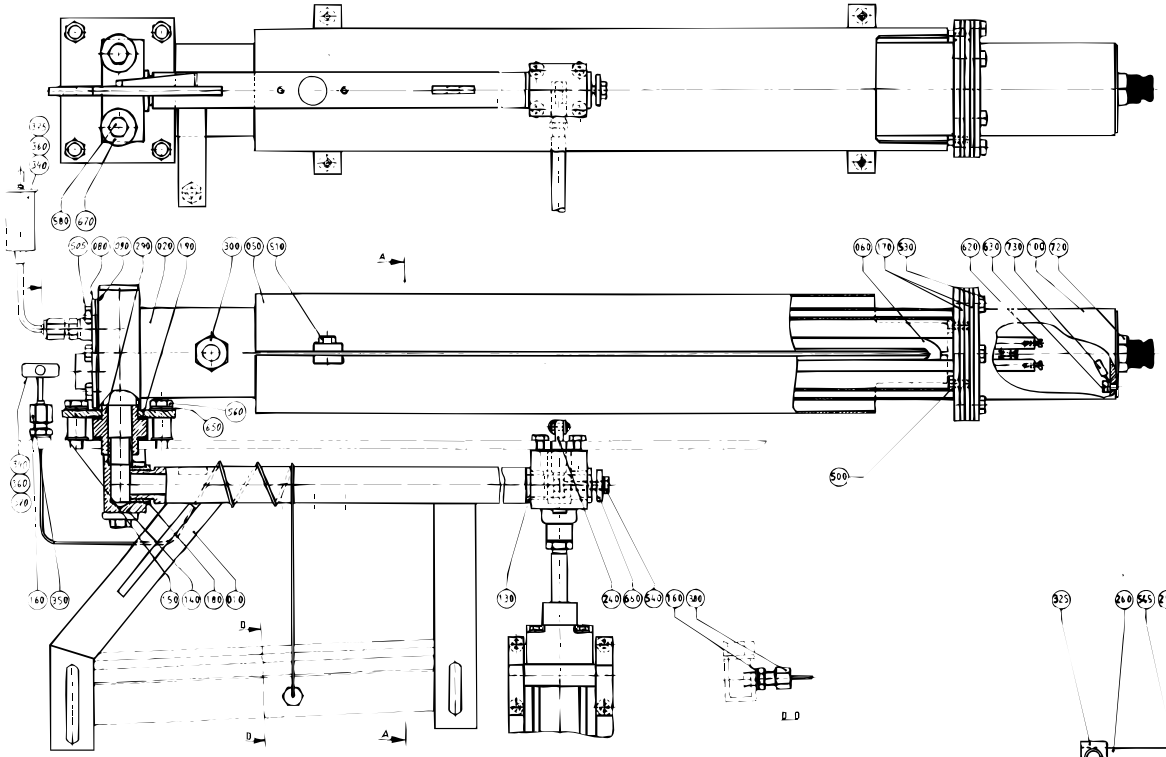

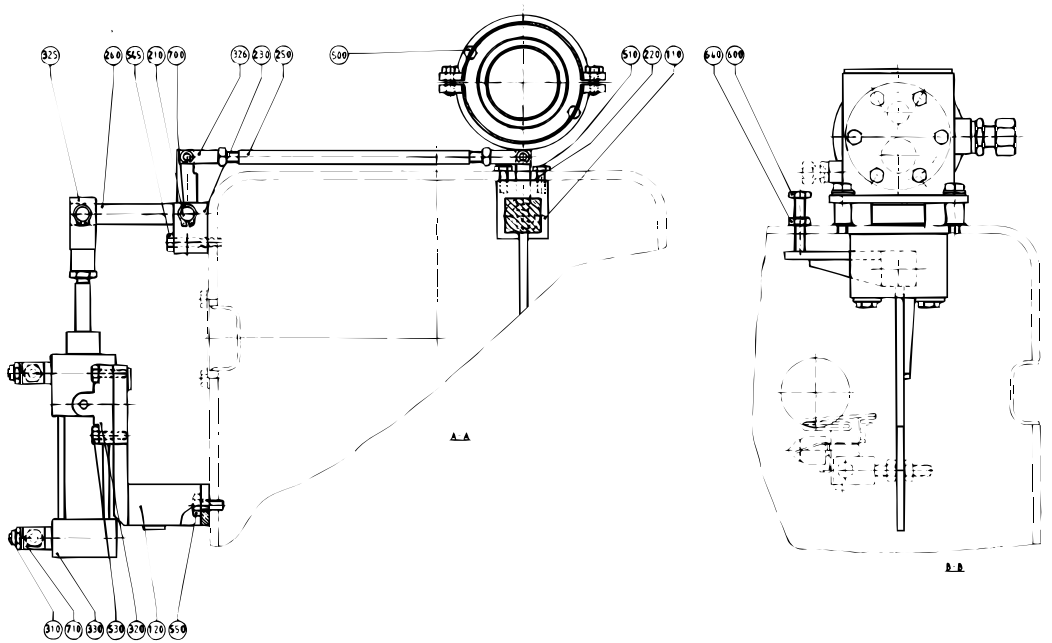

S - 1529175-1. 2
ECN 82225

Common Parts

Pos	Part No	SP	UN	Qty	Description	Page No
010	491169-0000	-		1	PIVOT ARM	
020	1529077-0000	-		1	HEATING PIPE	
050	272114-0000	-		1	HEAT GUARD	
060	441804-0000	-		1	COIL HEATER	
080	751734-0000	-		1	LID	
090	751735-0000	-		1	GASKET	
100	491170-0000	-		1	COVER	
110	491171-0000	-		1	BEARING BLOCK	
120	491176-0000	-		1	BRACKET	
130	271269-0000	-		2	BUSHING	
140	272868-0000	-		1	STOPPER DOWEL	
150	751019-0000	-		8	WASHER	
160	273429-0000	-		2	WASHER	
170	751020-0000	-		2	GASKET	
180	295909-0000	-		1	BUSHING	
190	751023-0000	-		2	GASKET	
210	491931-0000	-		1	SHAFT	
220	491172-0000	-		1	GASKET	
230	491173-0000	-		1	BRACKET	
240	491174-0000	-		1	ARM	
250	491175-0000	-		1	LINK	
260	491177-0000	-		1	ARM	
290	491487-0000	-		1	BUSHING	
300	90030-0187	-		1	Conn. Str. GA-12-G3/8	
310	90235-0282	-		2	THROTTLE CHECK VALVES,G1/8	
320	90239-0460	-		1	BRACKET	
325	90239-0516	-		1	ROD END,CLEVIS WITH AXLE M10X1,25	
326	90239-0532	-		2	ROD END,CLEVIS WITH AXLE M8	
330	B 90239-0779	-		1	CYLINDER	
340	90326-0012	-		2	PROTECTIVE COVER	
350	90326-0306	-		1	GLAND FITTING 9041-45-KS-KR.1/8"D=4,5mm	
360	90326-0020	-		2	PLUG,FEMALE YELLOW CR-AL	
370	B 90326-0048	-		1	THERMOELEMENT	
375	90326-0052	-		1	THERMO ELEMENT	
380	90326-0304	-		1	LEAD IN	
500	312105-0327	-		2	Screw M6S M5x12 A280	
505	312105-0364	-		6	Screw M6S M6x10 A280	
510	312105-0368	-		8	Screw M6S M6x16 A280	
530	312105-0370	-		1	Screw M6S M6x20 A280	
540	312105-0372	-		1	Screw M6S M6x25 A280	
545	312105-0376	-		1	Screw M6S M6S M6x35 A280	
550	312105-0449	-		2	Screw M6S M8x16 A280	
560	312105-0455	-		4	Screw M6S M8x30 A280	
580	312105-0462	-		2	Screw M6S M8x55 A280	
600	312109-0457	-		1	Screw M6S M8x35 A280	
620	312125-0226	-		3	Screw Pan Head MCS M3X12 RFR	
630	312125-0323	-		1	Screw Pan Head MCS M5X8 RFR	
640	312605-0318	-		1	Nut Hex. M6M M8 A280	
650	315105-0165	-		4	Washer, Plain, BRB, 8,4/16,H=1,5	
660	315125-0153	-		1	Washer, Plain Round,Chamf. 6,4/22, H=4	
670	315125-0165	-		2	Washer, Plain Round,Chamf. 8,4/26, H=5	
700	90141-0016	-		2	Retain. Ring, 10	
710	342797-0121	-		2	Conn. Banjo, Ringpiece 6-1/8	
720	352100-0106	-		1	CABLE GLANR.18,6-10,5	
730	353101-0132	-		1	CABLE SHOE	

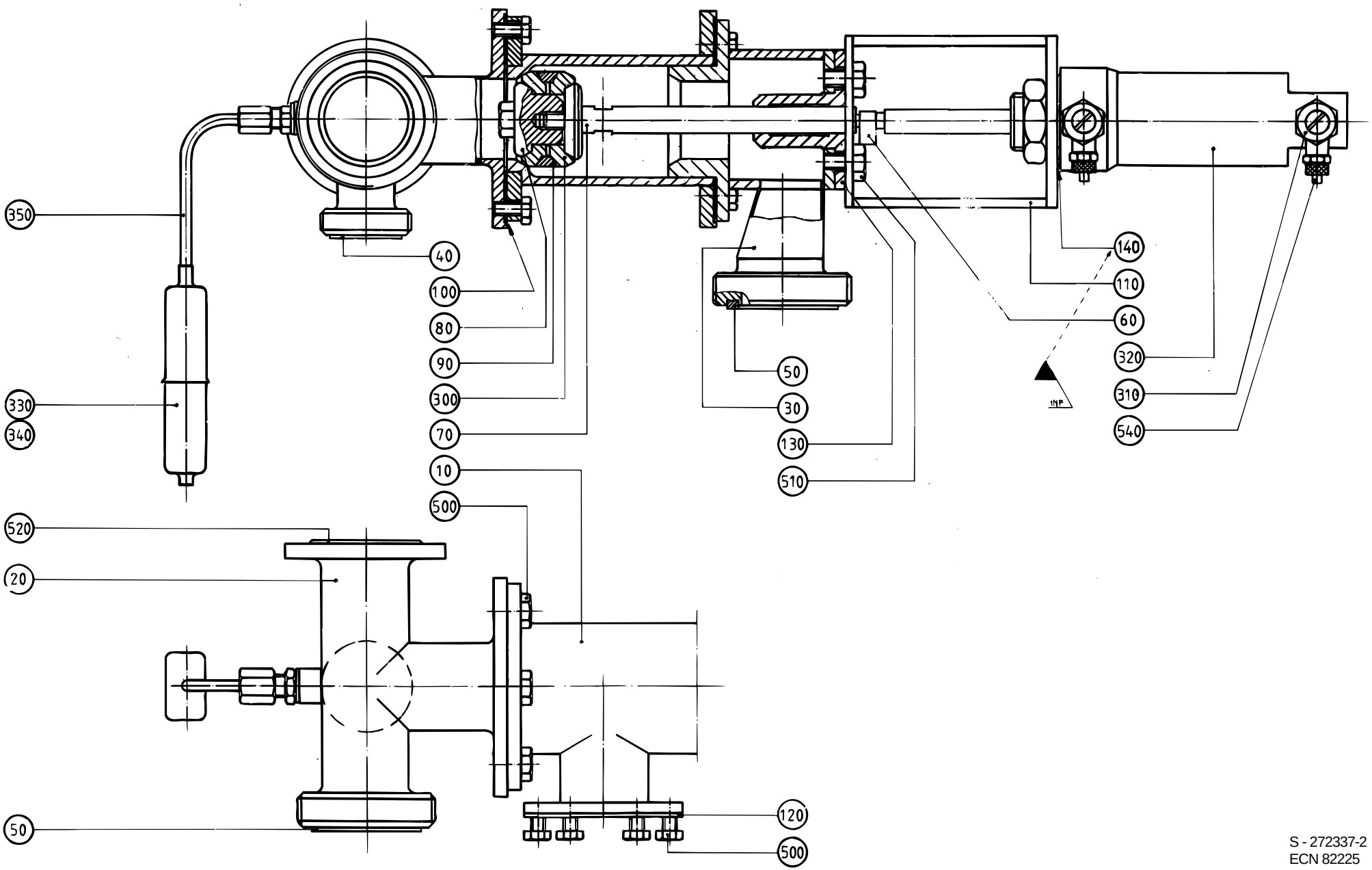
350
40
100
80
90
300
70
10
500
330
340
520
20
50
50
30
130
510
140
110
60
320
310
540
120
500

Pos	Part No	SP	UN	Qty	Description	Page No
Common Parts						
010	271167-0000	D		1	VALVE HOUSING	
020	271890-0000	-		1	BRANCH PIPE	
030	269401-0000	D		1	HOUSE	
040	90091-0180	C		1	Gasket 32x25x4,8 mm	
050	90091-0182	C		2	Gasket 48x38x4,8 mm	
060	37638-0000	C		1	PENDULUM SUSPENSION	
070	266389-0000	C		1	PISTON ROD	
080	266390-0000	C		1	NUT	
090	266391-0000	C		1	RING	
100	295160-0000	C		2	GASKET	
110	266394-0000	D		1	BRACKET	
120	531742-0000	C		1	GASKET	
130	272341-0000	C		1	SPINDLE GUIDE	
140	456886-0000	-		1	WASHER	
300	90207-0368	C		2	SEAL RING REPBY 0530588-0000	
310	90235-0275	-		2	"THROTTLE CHECK VALVES,G1/4"""	
320	B 90239-0166	C		1	CYLINDER	
330	90326-0012	C		1	PROTECTIVE COVER	
340	90326-0020	C		1	PLUG,FEMALE YELLOW CR-AL	
350	90326-0051	C		1	THERMO COUPLE	
500	312105-0366	-		18	Screw M6S M6x12 A280	
510	312105-0449	-		2	Screw M6S M8x16 A280	
520	315204-0223	-		1	O-Ring 39,2x3 mm	
540	342797-0122	-		2	Conn. Banjo, Ringpiece 6-1/4	

Pos	Part No	SP	UN	Qty	Description	Page No

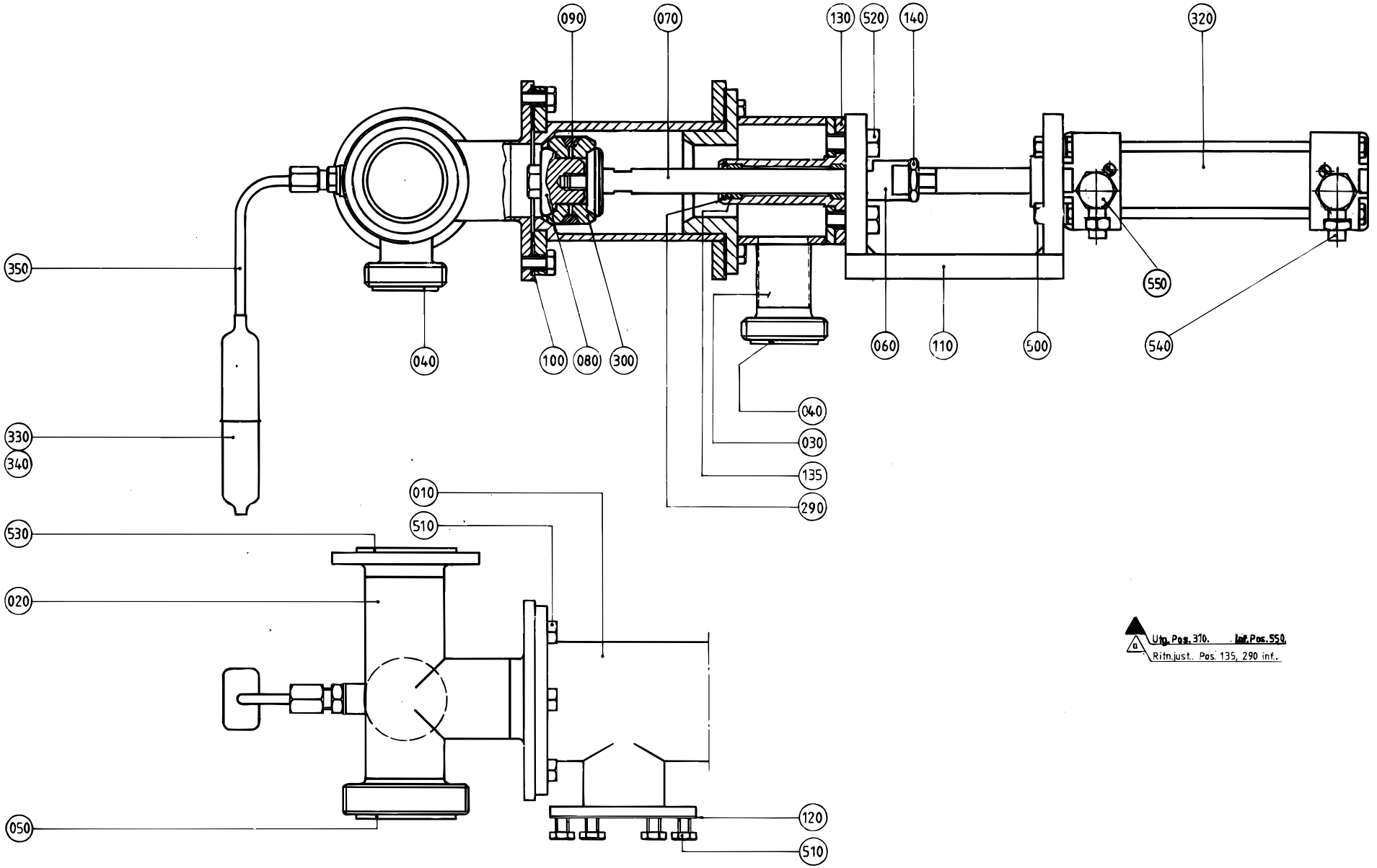
090
070
130
520
140
320
350
040
100
080
300
060
110
500
550
540
330
340
040
030
135
290
010
510
530
020
050
120
510
Utg. Pos. 310.
Inf. Pos. 550.
Ritn.just.. Pos. 135, 290 inf..

Pos	Part No	SP	UN	Qty	Description	Page No
Common Parts						
010	271167-0000	D		1	VALVE HOUSING	
020	490884-0000	-		1	BRANCH PIPE	
030	491101-0000	D		1	HOUSE	
040	90091-0180	C		2	Gasket 32x25x4,8 mm	
050	90091-0182	C		1	Gasket 48x38x4,8 mm	
060	441871-0000	C		1	PENDULUM SUSPENSION	
070	266389-0000	C		1	PISTON ROD	
080	266390-0000	C		1	NUT	
090	266391-0000	C		1	RING	
100	295160-0000	C		2	GASKET	
110	441843-0000	D		1	BRACKET	
120	531742-0000	C		1	GASKET	
130	532348-0000	C		1	SPINDLE GUIDE	
135	532349-0000	C		2	PLAIN BEARING	
140	441286-0000	D		1	NUT	
290	90141-0022	C		1	Snap Ring B 16	
300	530588-0000	C		2	SEAL RING	
320	B 90239-0779	C		1	CYLINDER	
330	90326-0012	C		1	PROTECTIVE COVER	
340	90326-0020	C		1	PLUG,FEMALE YELLOW CR-AL	
350	90326-0051	C		1	THERMO COUPLE	
500	312105-0331	-		4	Screw M6S M5x20 A280	
510	312105-0366	-		18	Screw M6S M6x12 A280	
520	312105-0451	-		2	Screw M6S 8x20 A280	
530	315204-0223	-		1	O-Ring 39,2x3 mm	
540	342797-0121	C		2	Conn. Banjo, Ringpiece 6-1/8	
550	342980-0303	-		2	BANJO-HOLLOW BOLT COUPL,EXT.THR.01-G1/8"	

Pos	Part No	SP	UN	Qty	Description	Page No

CHANGE-OVER VALVE

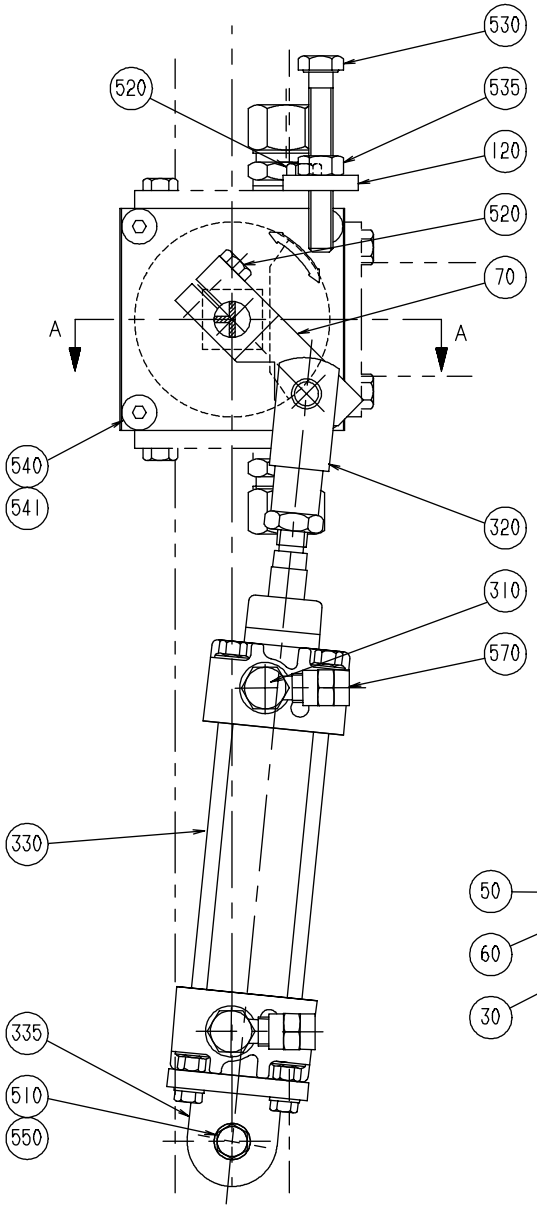

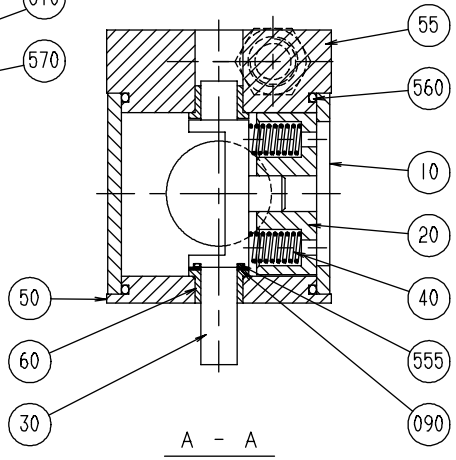

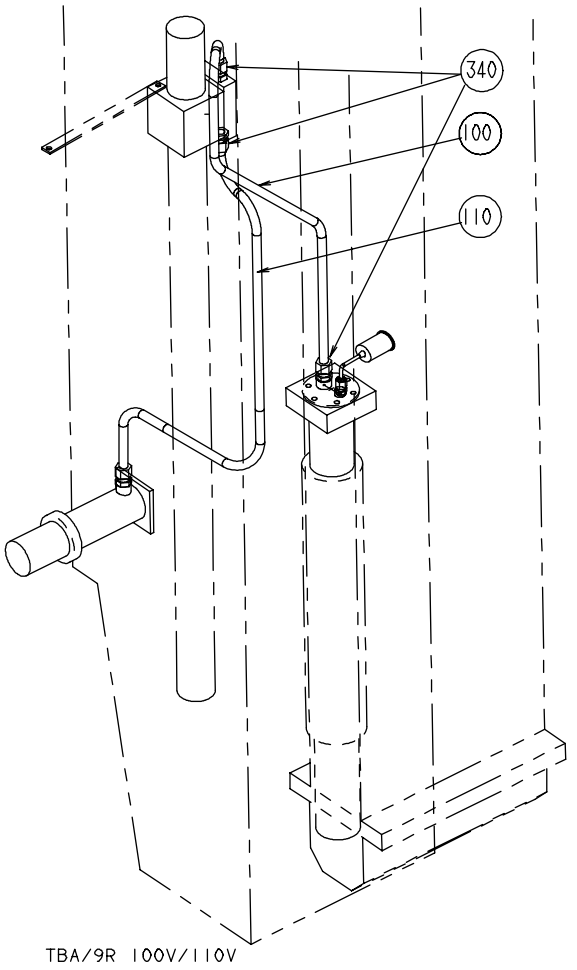

Pos	Part No	SP	UN	Qty	Description	Page No
0200B OR 0250B						
110	751737-0001	-		1	PIPE	
0200S						
110	751737-0002	-		1	PIPE	
Common Parts						
010	255870-0000	-		1	VALVE HOUSING	
020	255871-0000	-		1	PIEC	
030	751732-0000	-		1	BRACKET	
040	21521-0000	-		1	COMPRESSION SPRING	
050	255874-0000	-		1	BEARING COVER	
055	751731-0000	-		1	BEARING COVER	
060	255875-0000	-		2	BUSHING	
070	441483-0000	-	-	1	CYLINDER BRACKET	
090	266737-0000	-	-	1	WASHER	
100	751736-0000	-	-	1	PIPE	
120	751740-0000	-	-	1	STOP	
310	342980-0303	C		2	BANJO-HOLLOW BOLT COUPL,EXT.THR.01-G1/8"	
320	90239-0516	-		1	ROD ENDS,CLEVIS WITH AXLE M10X1,25	
330	90239-0779	-		1	CYLINDER	
335	90239-0453	-		1	BRACKET	
340	90030-0187	-		3	Conn. Str. GA-12-G3/8	
510	312105-0366	-		1	Screw M6S M6x12 A280	
520	312105-0370	-		1	Screw M6S M6x20 A280	
530	312109-0463	-		1	Screw M6S M8x60H A4 80	
535	312605-0318	-		1	Nut Hex. M6M M8 A280	
540	312155-0364	-		4	Screw Hex.Sock.Count.MF6S M6x10 A280	
541	312155-0374	-		4	Screw Hex.Sock.Count.MF6S M6x30 A280	
550	315105-0153	-		1	Washer, Plain, BRB, 6,4/12,H=1,5	
560	315204-0302	C		2	O-Ring 54,5x3 mm	
570	342797-0121	C		2	Conn. Banjo, Ringpiece 6-1/8	

Pos	Part No	SP	UN	Qty	Description	Page No

CHANGE-OVER VALVE

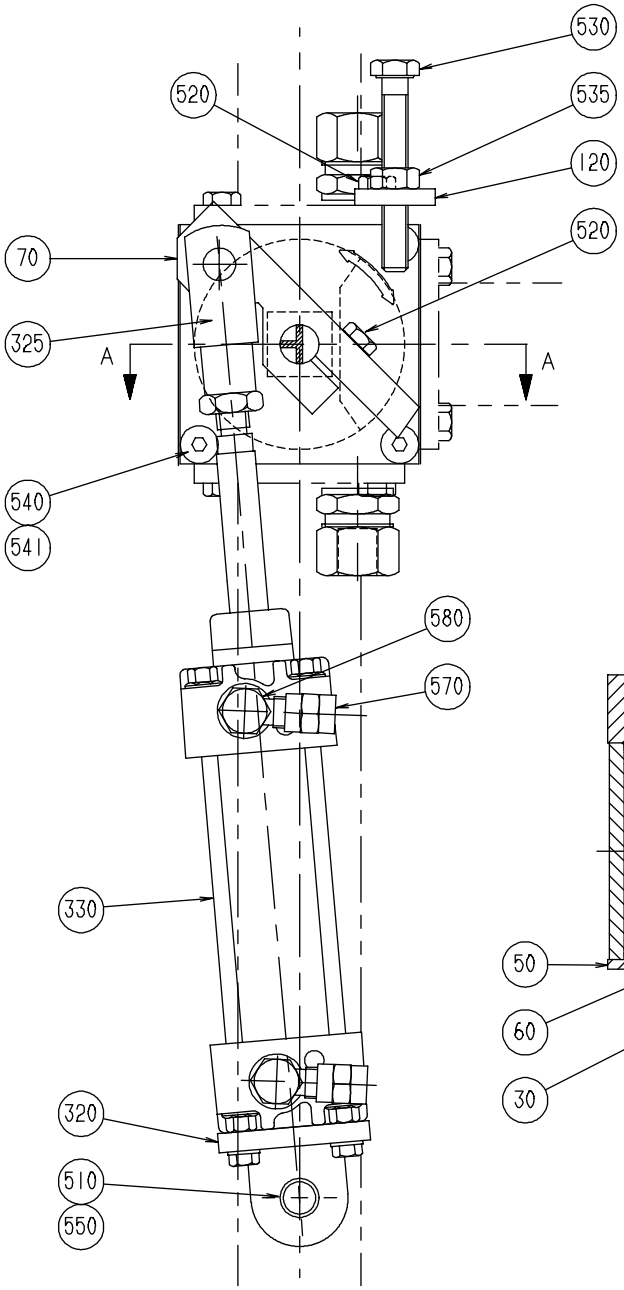

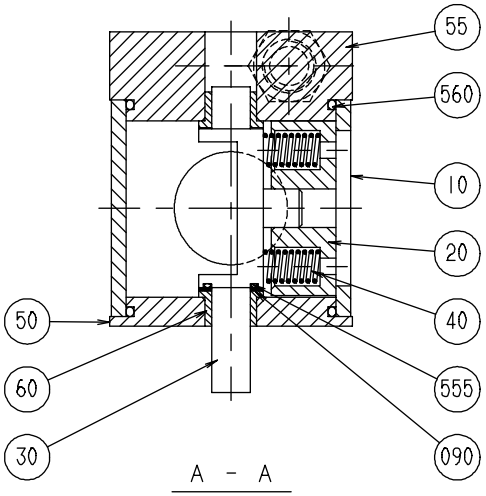

A - A

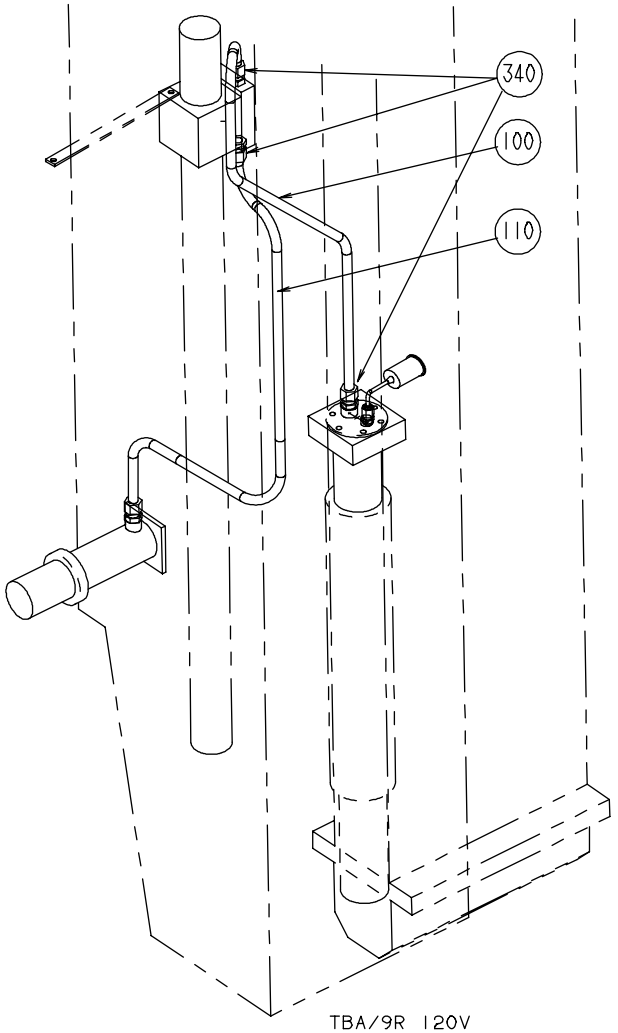

TBA/9R 120V

Pos	Part No	SP	UN	Qty	Description	Page No
0200B OR 0250B						
110	751737-0001	-		1	PIPE	
0200S						
110	751737-0002	-		1	PIPE	
Common Parts						
010	255870-0000	-		1	VALVE HOUSING	
020	255871-0000	-		1	PIEC	
030	751732-0000	-		1	BRACKET	
040	21521-0000	-		1	COMPRESSION SPRING	
050	255874-0000	-		1	BEARING COVER	
055	751731-0000	-		1	BEARING COVER	
060	255875-0000	-		2	BUSHING	
070	751760-0000	-	-	1	CYLINDER BRACKET	
090	266737-0000	-	-	1	WASHER	
100	751736-0000	-	-	1	PIPE	
120	751740-0000	-	-	1	STOP	
320	90239-0453	-		1	BRACKET	
325	90239-0516	-		1	ROD ENDS,CLEVIS WITH AXLE M10X1,25	
330	90239-0779	-		1	CYLINDER	
340	90030-0187	-		3	Conn. Str. GA-12-G3/8	
510	312105-0366	-		1	Screw M6S M6x12 A280	
520	312105-0370	-		1	Screw M6S M6x20 A280	
530	312109-0463	-		1	Screw M6S M8x60H A4 80	
535	312605-0318	-		1	Nut Hex. M6M M8 A280	
540	312155-0364	-		4	Screw Hex.Sock.Count.MF6S M6x10 A280	
541	312155-0374	-		4	Screw Hex.Sock.Count.MF6S M6x30 A280	
550	315105-0153	-		1	Washer, Plain, BRB, 6,4/12,H=1,5	
560	315204-0302	C		2	O-Ring 54,5x3 mm	
570	342797-0121	C		2	Conn. Banjo, Ringpiece 6-1/8	
580	342980-0303	C		2	BANJO-HOLLOW BOLT COUPL,EXT.THR.01-G1/8"	

Pos	Part No	SP	UN	Qty	Description	Page No

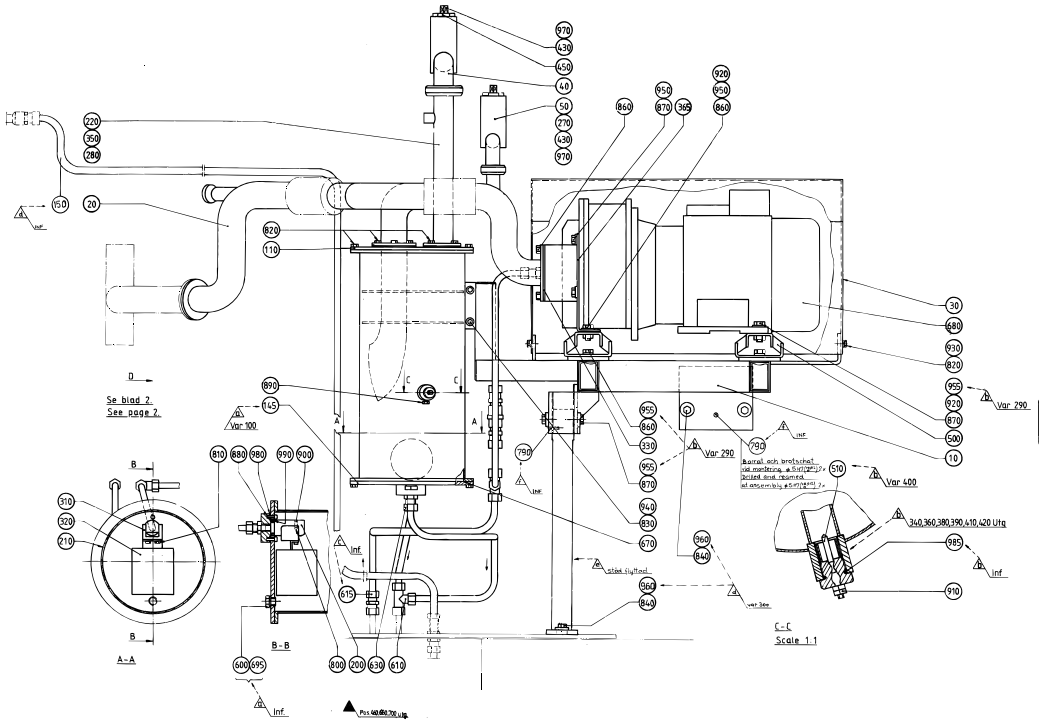
Se blad 2
See page 2
Var 100
Var 290
Var 400
340,360,380,390,410,420 Utg
inf
B-B
A-A
C-C
Scale 1:1

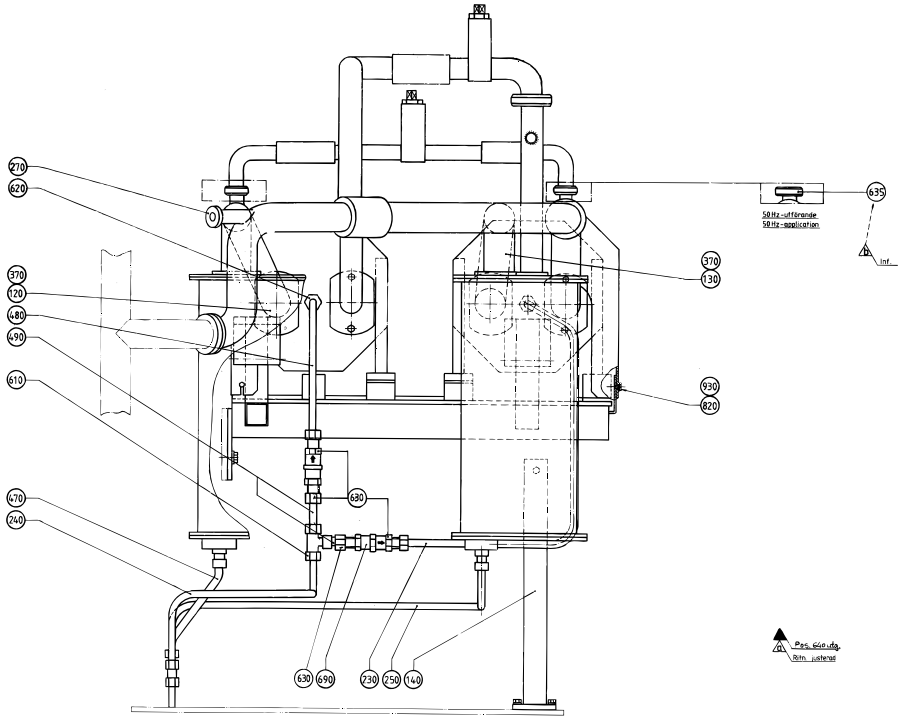
50Hz-utförande
50Hz-application
inf

Pos	Part No	SP	UN	Qty	Description	Page No
50HZ						
430	442236-0000	D		1	THROTTLE SCREW	
450	442237-0000	D		1	NUT	
635	90217-0026	-		2	NUT	
970	315202-0119	C		1	O-Ring 25,1x1,6 mm	
60HZ						
050	469152-0000	-		1	PIPE	
430-02	442236-0000	D		2	THROTTLE SCREW	
450-02	442237-0000	D		2	NUT	
970-02	315202-0119	C		2	O-Ring 25,1x1,6 mm	
Common Parts						
010	469148-0000	-		1	CANTILEVER	
020	469149-0000	-		1	PIPE	
030	469150-0000	-		1	COVER	
040	469151-0000	-		1	PIPE	
110	271640-0000	D		2	LID	
120	469153-0000	-		1	PIPE	
130	469154-0000	-		1	PIPE	
140	469155-0000	-		1	SUPPORT	
145	469511-0000	D		2	BOTTOM COVER	
150	490862-0000	-		1	PIPE	
200	269443-0000	D		2	BRACKET	
210	269461-0000	D		2	CANISTER	
220	456189-0000	-		1	PIPE	
230	469156-0000	-		1	PIPE	
240	469157-0000	-		1	PIPE	
250	469158-0000	-		1	PIPE	
270	12242-0001	C		3	GASKET	
280	12242-0003	C		1	GASKET	
310	179595-0000	D		2	CLOSING DEVICE	
320	179596-0000	D		2	FLOAT	
330	230551-0000	C		4	GASKET	
350	531742-0000	C		1	GASKET	
365	269859-0000	-		4	BRACKET	
370	271461-0000	C		2	GASKET	
470	456269-0000	-		1	PIPE	
480	456270-0000	-		1	PIPE	
490	456271-0000	-		2	PIPE	
500	B 469160-0000	C		8	VIBRATION DAMPER	
510	458962-0001	C		2	ELECTRODE REPBY 0567189-0101	
600	90005-0006	-		2	Gasket Bolt head 16,7x24x1,5 mm M16	
610	90030-0058	-		2	Conn. T-Pipe T-12	
615	90030-0106	-		1	Conn. Pipe G-12	
620	90030-0109	-		2	Conn. Str., 12-R1/2, Ext. Thread	
630	90030-0187	-		6	Conn. Str. GA-12-G3/8	
670	90242-0084	C		4	O-Ring 203,0x3 mm	
680	B 90270-0011	-		2	COMPRESSOR RA112 "REPL.BY 90270-17"	
690	90270-0347	D		2	VALVE	
695	90330-0029	-		2	Plug, Ext. G-Thread, R-236R3/8	
790	311103-0310	-		2	Pin, Parallell, m6, 5x20	
800	311103-0361	-		2	Pin, Parallell, m6, 6x40	
810	312105-0287	-		4	Screw M6S M4x8 A280	
820	312105-0366	-		58	Screw M6S M6x12 A280	
830	312105-0447	-		8	Screw M6S M8x12 A280	
840	312105-0451	-		4	Screw M6S 8x20 A280	
860	312105-0491	-		2	Screw M6S M10x20 A280	
870	312105-0495	-		14	Screw M6S M10x30 A280	
880	312115-0368	-		4	Screw MC6S M6x16 A280	
890	312125-0285	-		2	Screw Slot.Pan Hd. MCS 4x6 A480	
900	312318-0323	-		2	Screw,Sock.Set Cuppoint MSK6SS M5x8 A4	
910	312605-0312	-		4	Nut Hex. M6M M4 A280	
920	312605-0320	-		8	Nut Hex. M6M M10 A280	
930	315105-0153	-		5	Washer, Plain, BRB, 6,4/12,H=1,5	
940	315105-0165	-		8	Washer, Plain, BRB, 8,4/16,H=1,5	
950	315105-0173	-		12	Washer, Plain, BRB, 10,5/22,H=2	
955	315115-0173	-		14	Washer, Plain, TBRB 10,5/22 H=4	
960	315125-0165	-		4	Washer, Plain Round,Chamf. 8,4/26, H=5	
980	315204-0103	C		4	O-Ring 5,1x1,6 mm	
985	315204-0213	C		2	O-Ring 15,2x2,4 mm	
990	315204-0217	C		2	O-Ring 24,2x3 mm	

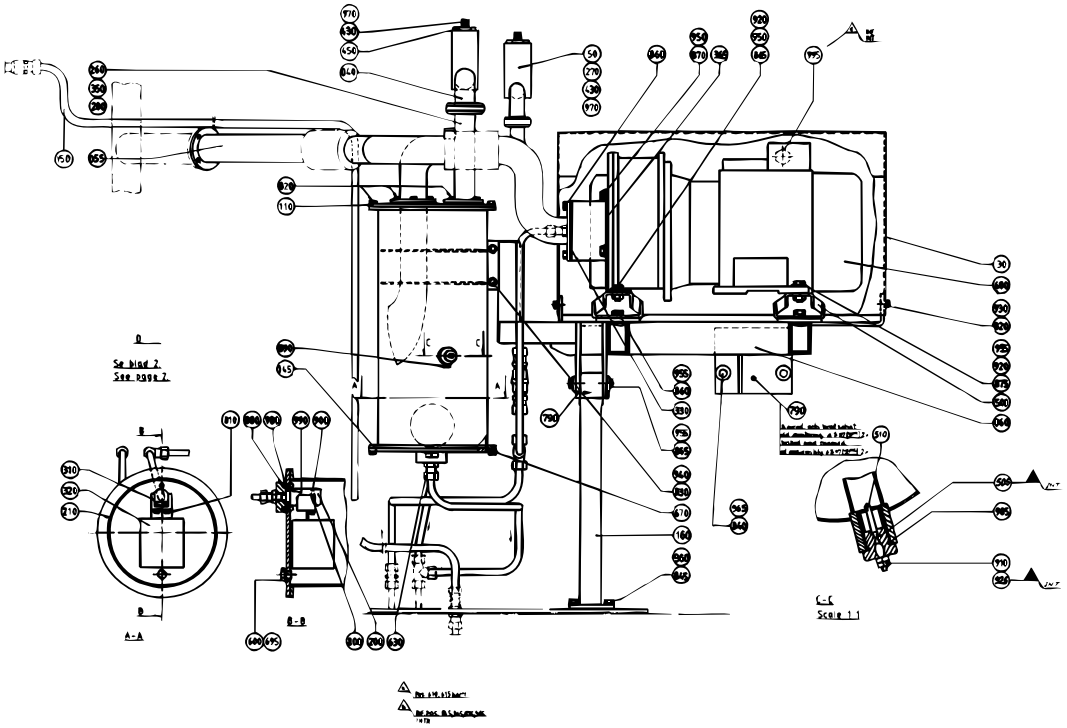

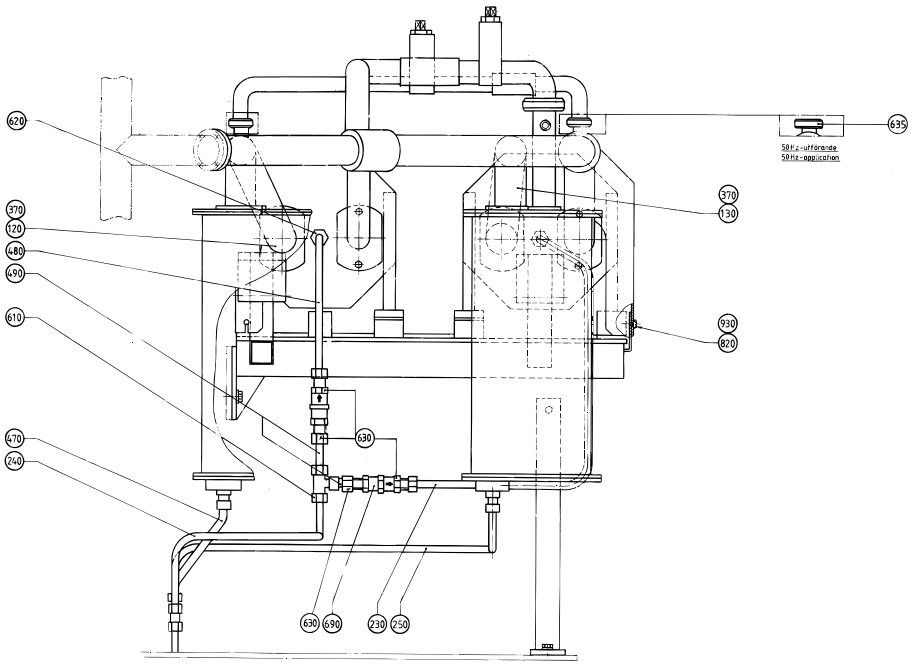

S - 469452-3, 4
ECN 82225

Pos	Part No	SP	UN	Qty	Description	Page No
50HZ						
430	490998-0000	D		1	THROTTLE SCREW	
450	442237-0000	D		1	NUT	
635	90217-0026	-		2	NUT	
970	315202-0119	C		1	O-Ring 25,1x1,6 mm	
60HZ						
050	491090-0000	-		1	PIPE	
430	490998-0000	D		2	THROTTLE SCREW	
450	442237-0000	D		2	NUT	
970	315202-0119	C		2	O-Ring 25,1x1,6 mm	
Common Parts						
030	469150-0000	-		1	COVER	
040	490997-0000	-		1	PIPE	
060	491749-0000	-		1	CANTILEVER	
110	271640-0000	D		2	LID	
120	469153-0000	-		1	PIPE	
130	469154-0000	-		1	PIPE	
145	469511-0000	D		2	BOTTOM COVER	
150	490862-0000	-		1	PIPE	
160	491750-0000	-		1	SUPPORT	
200	269443-0000	D		2	BRACKET	
210	269461-0000	D		2	CANISTER	
230	469156-0000	-		1	PIPE	
240	469157-0000	-		1	PIPE	
250	469158-0000	-		1	PIPE	
260	491095-0000	-		1	PIPE	
270	12242-0001	C		2	GASKET	
280	12242-0003	C		1	GASKET	
310	179595-0000	D		2	CLOSING DEVICE	
320	179596-0000	D		2	FLOAT	
330	230551-0000	C		4	GASKET	
350	531742-0000	C		1	GASKET	
365	269859-0000	-		4	BRACKET	
370	271461-0000	C		2	GASKET	
470	456269-0000	-		1	PIPE	
480	456270-0000	-		1	PIPE	
490	456271-0000	-		2	PIPE	
500	B 469160-0000	C		8	VIBRATION DAMPER	
505	560931-0000	-		2	BRACKET	
510	567070-0012	C		2	ELECTRODE	
600	90005-0006	-		2	Gasket Bolt head 16,7x24x1,5 mm M16	
610	90030-0058	-		1	Conn. T-Pipe T-12	
620	90030-0109	-		2	Conn. Str., 12-R1/2, Ext. Thread	
630	90030-0187	-		6	Conn. Str. GA-12-G3/8	
670	90242-0084	C		4	O-Ring 203,0x3 mm	
680	90270-0017	-		2	Compressor NASH/ELMO 112 MB/4-2083	
690	90270-0347	D		2	VALVE	
695	90330-0029	-		2	Plug, Ext. G-Thread, R-236R3/8	
790	311103-0310	-		2	Pin, Parallell, m6, 5x20	
800	311103-0361	-		2	Pin, Parallell, m6, 6x40	
810	312105-0287	-		4	Screw M6S M4x8 A280	
820	312105-0366	-		58	Screw M6S M6x12 A280	
830	312105-0447	-		8	Screw M6S M8x12 A280	
840	312105-0451	-		2	Screw M6S 8x20 A280	
845	312105-0453	-		2	Screw M6S M8x25 A280	
860	312105-0491	-		14	Screw M6S M10x20 A280	
865	312105-0493	-		6	Screw M6S M10x25 A280	
870	312105-0495	-		1	Screw M6S M10x30 A280	
875	312105-0497	-		4	Screw M6S M10x35 A280	
880	312115-0368	-		4	Screw MC6S M6x16 A280	
890	312125-0285	-		2	Screw Slot.Pan Hd. MCS 4x6 A480	
900	312318-0323	-		2	Screw,Sock.Set Cuppoint MSK6SS M5x8 A4	
910	312605-0312	-		4	Nut Hex. M6M M4 A280	
920	312605-0320	-		8	Nut Hex. M6M M10 A280	
925	315105-0136	-		6	Washer, Plain, BRB, 4,3/8,H=0,8	
930	315105-0153	-		5	Washer, Plain, BRB, 6,4/12,H=1,5	
940	315105-0165	-		8	Washer, Plain, BRB, 8,4/16,H=1,5	
950	315105-0173	-		12	Washer, Plain, BRB, 10,5/22,H=2	
955	315115-0173	-		14	Washer, Plain, TBRB 10,5/22 H=4	
960	315115-0165	-		2	Washer, Plain, TBRB 8,4/16 H=3	
965	315125-0165	-		2	Washer, Plain Round,Chamf. 8,4/26, H=5	
980	315204-0103	C		4	O-Ring 5,1x1,6 mm	
985	315204-0213	C		2	O-Ring 15,2x2,4 mm	
990	315204-0217	C		2	O-Ring 24,2x3 mm	
995	352103-0111	-		2	CABLE GLAND ST 16	

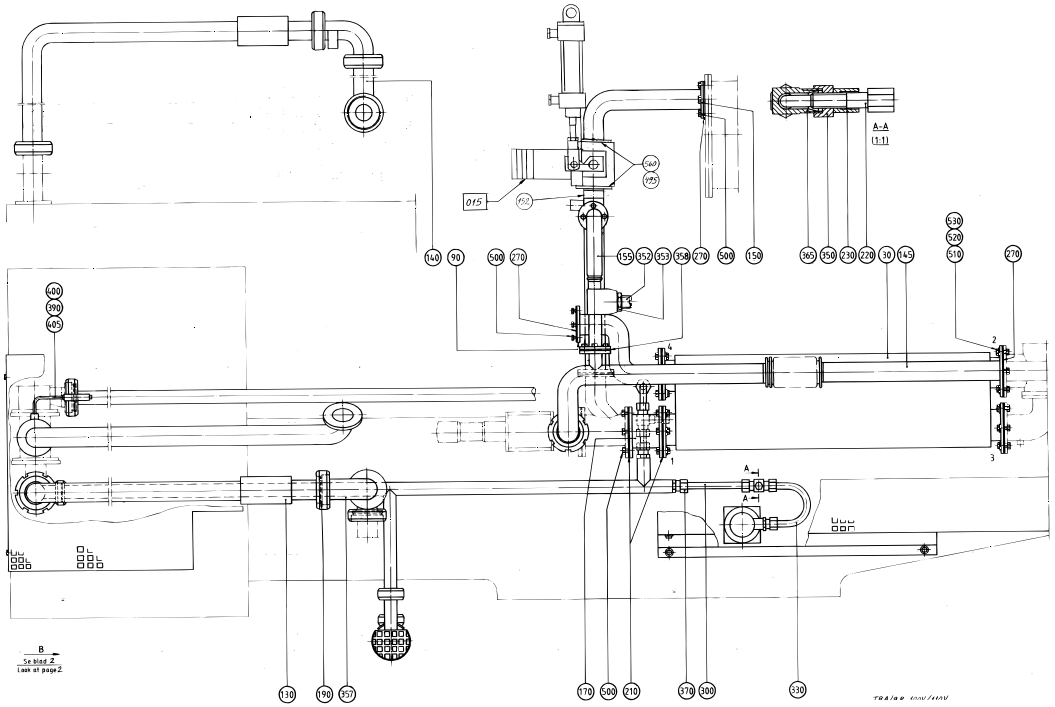

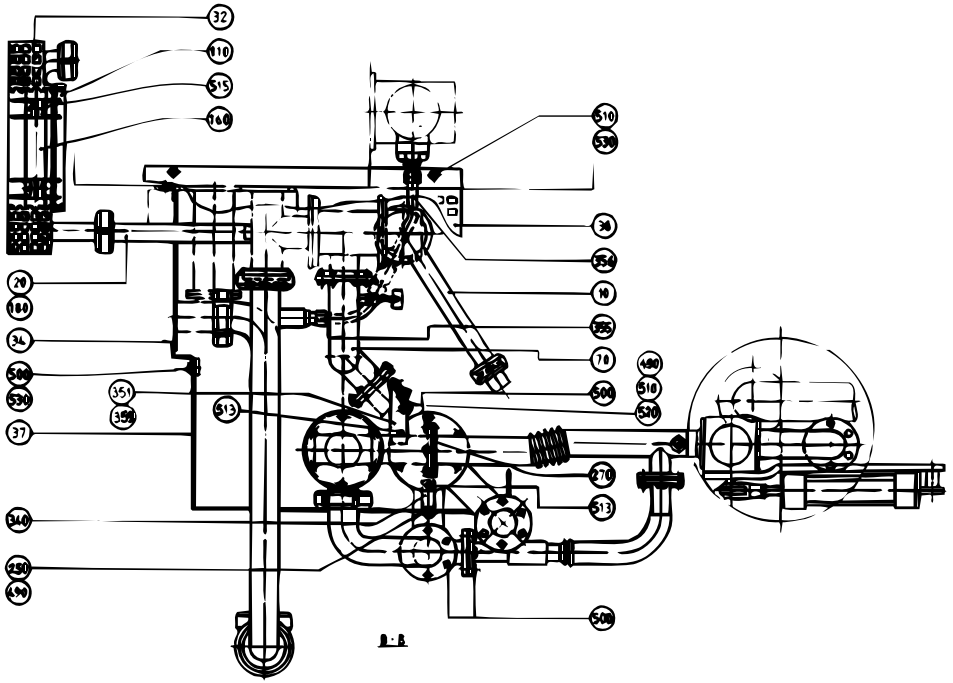

S - 1529212-1, 2
ECN 82225

Pos	Part No	SP	UN	Qty	Description	Page No
Common Parts						
F195	A 476859-0200	-		1	CHANGE-OVER VALVE	**100**
010	272308-0003	-		1	PIPE	
020	272356-0000	-		1	PIPE	
030	527705-0000	D		1	HEAT EXCHANGER	
032	B 272557-0001	-		1	TOUCH GUARD	
034	272586-0000	-		1	TOUCH GUARD	
037	456912-0000	-		1	TOUCH GUARD	
038	456913-0000	-		1	TOUCH GUARD	
070	469969-0000	-		1	PIPE	
090	272312-0000	-		1	PIPE	
110	272556-0001	-		1	TOUCH GUARD	
130	456591-0002	-		1	PIPE	
140	B 456592-0002	-		1	PIPE	
145	469385-0000	-		1	PIPE	
150	566175-0000	-		1	ELBOW PIPE	
152	566174-0000	-		1	ATTACHMENT PIPE	
155	469387-0000	-		1	PIPE	
160	256840-0002	-		1	PIPE	
170	271251-0000	-		1	DISTANCE SPACER	
180	12242-0001	C		1	GASKET	
190	12242-0003	C		1	GASKET	
210	531737-0000	C		5	GASKET	
220	209145-0000	-		2	THROTTLE SCREW	
230	209146-0000	-		2	BARRIER NUT	
250	315125-0153	-		1	Washer, Plain Round,Chamf. 6,4/22, H=4	
270	531742-0000	C		4	GASKET	
300	272349-0001	-		1	PIPE	
330	272440-0000	-		1	PIPE	
340	272808-0000	-		1	BRACKET	
350	279589-0000	-		2	NUT	
351	295549-0000	-		1	CRAMP	
352	295878-0000	C		1	THROTTLE SCREW	
353	295879-0000	C		1	NUT	
355	441444-0000	-		1	PIPE	
356	441445-0000	-		1	PIPE	
357	B 456904-0000	-		1	PIPE	
358	441721-0000	C		2	GASKET	
359	441735-0000	-		1	BRACKET	
365	90030-0058	-		2	Conn. T-Pipe T-12	
370	90030-0187	-		2	Conn. Str. GA-12-G3/8	
390	90326-0012	C		1	PROTECTIVE COVER	
400	90326-0020	C		1	PLUG,FEMALE YELLOW CR-AL	
405	90326-0051	C		1	THERMO COUPLE	

Pos	Part No	SP	UN	Qty	Description	Page No
490	312105-0364	-		3	Screw M6S M6x10 A280	
495	312105-0366	-		8	Screw M6S M6x12 A280	
500	312105-0367	-		42	Screw M6S M6x14 A280	
510	312105-0370	-		24	Screw M6S M6x20 A280	
513	312105-0372	-		2	Screw M6S M6x25 A280	
515	312115-0329	-		4	Screw MC6S M5x16 A280	
520	312605-0316	-		29	Nut Hex. M6M M6 A280	
530	315105-0153	-		3	Washer, Plain, BRB, 6,4/12,H=1,5	
560	315204-0222	-		2	O-Ring 36,2x3 mm	

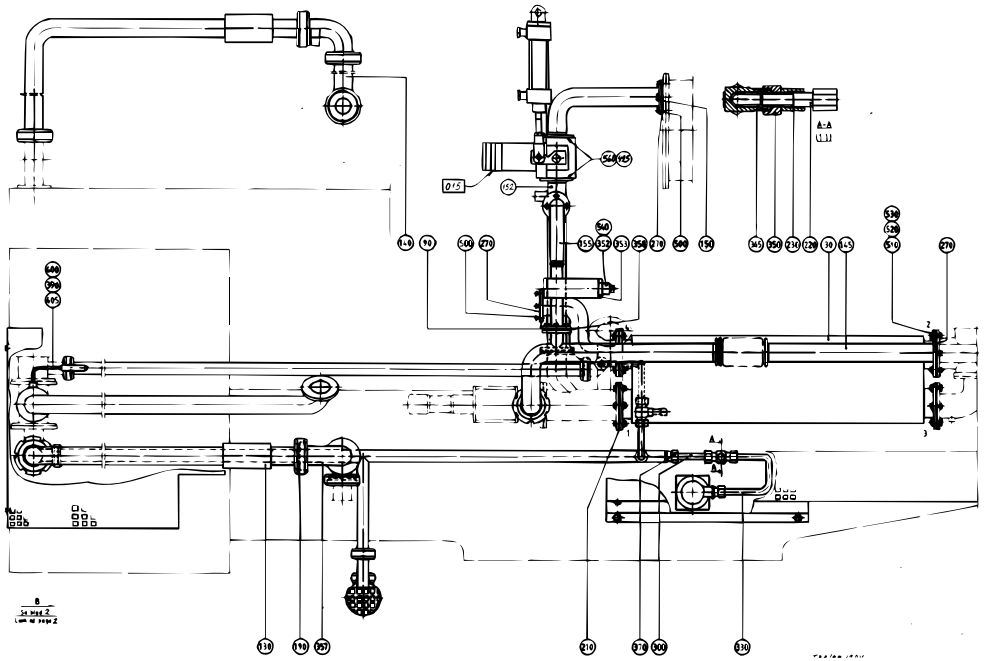

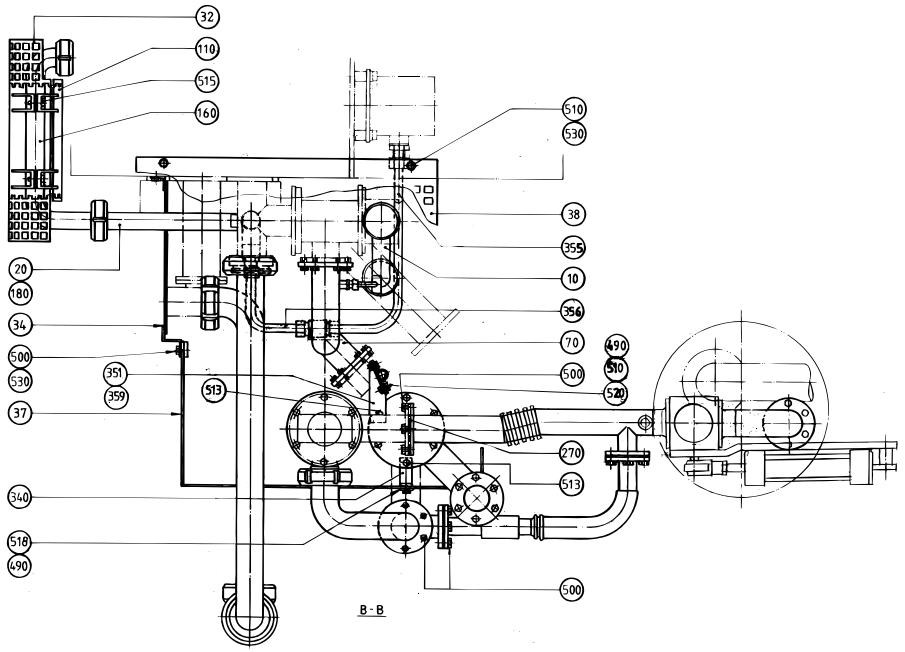

S - 1529211-1, 2
ECN 82225

Pos	Part No	SP	UN	Qty	Description	Page No
0200B OR 0250B						
330	491209-0001	-		1	PIPE	
0200S						
330	491209-0002	-		1	PIPE	
Common parts						
F195	A 476859-0200	-		1	CHANGE-OVER VALVE	**100**
010	491755-0000	-		1	PIPE	
020	491219-0000	-		1	PIPE	
030	527705-0000	D		1	HEAT EXCHANGER	
032	B 272557-0001	-		1	TOUCH GUARD	
034	491299-0000	-		1	TOUCH GUARD	
037	456912-0000	-		1	TOUCH GUARD	
038	456913-0000	-		1	TOUCH GUARD	
070	491154-0000	-		1	PIPE	
090	272312-0000	-		1	PIPE	
110	272556-0001	-		1	TOUCH GUARD	
130	456591-0003	-		1	PIPE	
140	B 456592-0002	-		1	PIPE	
145	469385-0000	-		1	PIPE	
150	566175-0000	-		1	ELBOW PIPE	
152	566174-0000	-		1	ATTACHMENT PIPE	
155	491089-0000	-		1	PIPE	
160	256840-0003	-		1	PIPE	
180	12242-0001	C		1	GASKET	
190	12242-0003	C		1	GASKET	
210	531737-0000	C		4	GASKET	
220	209145-0000	-		2	THROTTLE SCREW	
230	209146-0000	-		2	BARRIER NUT	
270	531742-0000	C		4	GASKET	
300	272349-0004	-		1	PIPE	
340	272808-0000	-		1	BRACKET	
350	279589-0000	-		2	NUT	
351	295549-0000	-		1	CRAMP	
352	490998-0000	C		1	THROTTLE SCREW	
353	442237-0000	-		1	NUT	
355	491220-0000	-		1	PIPE	
356	491221-0000	-		1	PIPE	
357	B 456904-0000	-		1	PIPE	
358	441721-0000	C		2	GASKET	
359	441735-0000	-		1	BRACKET	
365	90030-0058	-		2	Conn. T-Pipe T-12	
370	90030-0187	-		2	Conn. Str. GA-12-G3/8	
390	90326-0012	C		1	PROTECTIVE COVER	
400	90326-0020	C		1	PLUG,FEMALE YELLOW CR-AL	
405	90326-0051	C		1	THERMO COUPLE	
490	312105-0364	-		3	Screw M6S M6x10 A280	
495	312105-0366	-		8	Screw M6S M6x12 A280	
500	312105-0367	-		42	Screw M6S M6x14 A280	
510	312105-0370	-		24	Screw M6S M6x20 A280	
512	566174-0000	-		1	ATTACHMENT PIPE	
513	312105-0372	-		2	Screw M6S M6x25 A280	
515	312115-0329	-		4	Screw MC6S M5x16 A280	
518	315125-0153	-		1	Washer, Plain Round,Chamf. 6,4/22, H=4	
520	312605-0316	-		29	Nut Hex. M6M M6 A280	
530	315105-0153	-		3	Washer, Plain, BRB, 6,4/12,H=1,5	
540	315204-0119	C		1	O-Ring 25,1x1,6 mm	
560	315204-0222	-		2	O-Ring 36,2x3 mm	

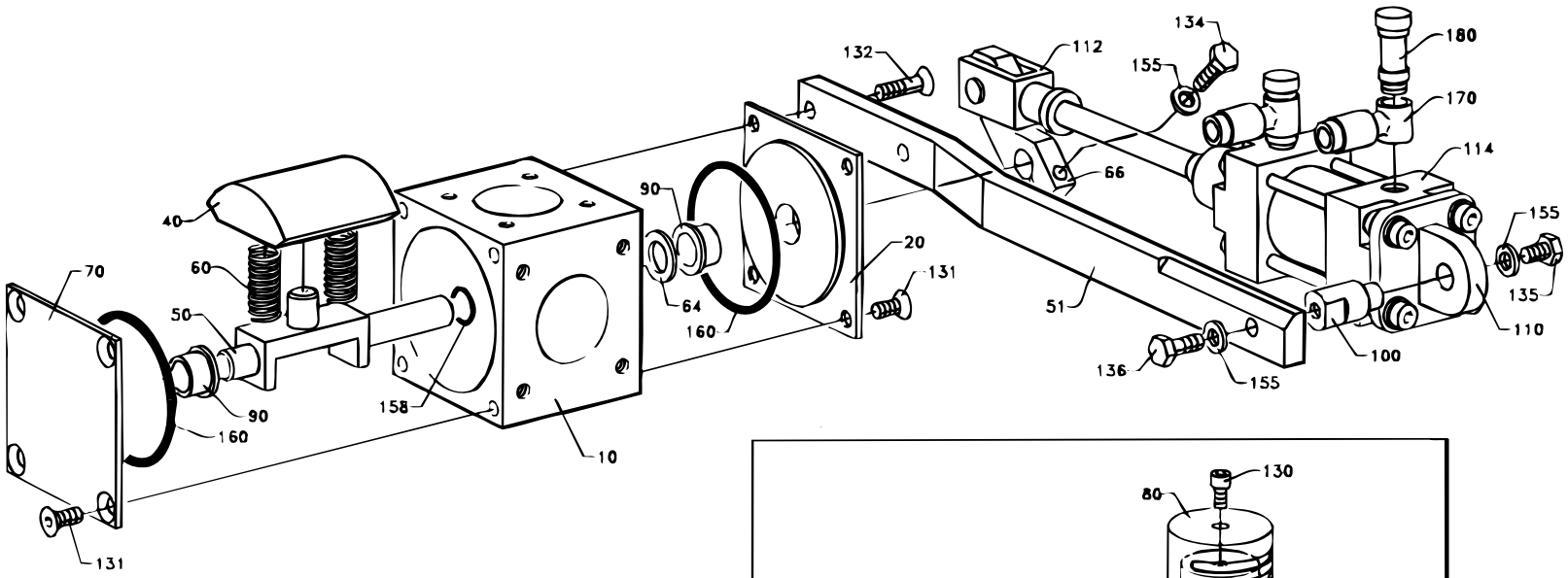
132
112
134
155
180
170
114
66
155
135
110
100
136
155
51
20
131
90
64
160
40
60
50
70
90
160
158
10
131

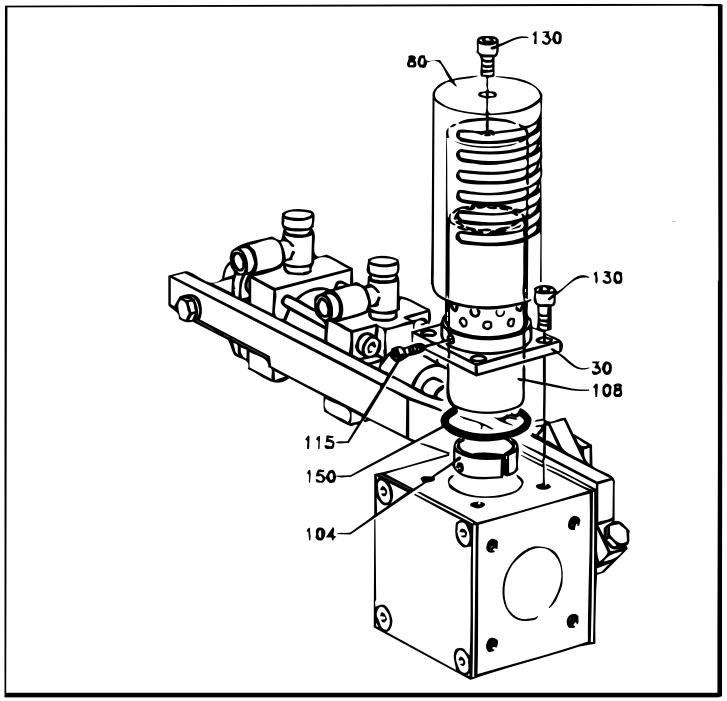
130
80
130
30
108
115
150
104
ILLUtec®
47685903.dwg
AM 17647

Pos	Part No	SP	UN	Qty	Description	Page No
Common Parts						
010	B 466474-0000	-		1	VALVE HOUSING	
020	441957-0000	-		1	BEARING COVER	
030	466477-0000	-		1	INNER PIPE	
040	466479-0000	D		1	PIECE	
050	555541-0000	D		1	BRACKET	
051	555542-0000	D		1	BRACKET	
060	21521-0000	C		2	COMPRESSION SPRING	
064	266737-0000	D		1	WASHER	
066	441483-0000	D		1	CYLINDER BRACKET	
070	255874-0000	-		1	BEARING COVER	
080	466478-0000	-		1	OUTER PIPE	
090	255875-0000	C		2	BUSHING	
100	555540-0000	D		1	SPACER	
104	466483-0000	-		1	CLAMPING PIECE	
108	466484-0000	-		1	NET	
110	90239-0453	D		1	BRACKET	
112	90239-0516	D		1	ROD END,CLEVIS WITH AXLE M10X1,25	
114	B 90239-0779	C		1	CYLINDER	
115	312115-0224	-		2	Screw Hex.Sock.Hd.MC6S-TT 3x10 A480	
130	312115-0364	-		5	Screw Hex.Sock.Hd.MC6S-TT 6x10 A480	
131	312155-0364	-		6	Screw Hex.Sock.Count.MF6S M6x10 A280	
132	312155-0370	-		2	Screw Hex.Sock.Count.MF6S M6x20 A280	
134	312105-0370	-		1	Screw M6S M6x20 A280	
135	312105-0364	-		2	Screw M6S M6x10 A280	
136	312105-0368	-		1	Screw M6S M6x16 A280	
150	315204-0222	C		1	O-Ring 36,2x3 mm	
155	315105-0153	-		3	Washer, Plain, BRB, 6,4/12,H=1,5	
158	315204-0110	C		1	O-Ring 12,1x1,6 mm	
160	315204-0302	C		2	O-Ring 54,5x3 mm	
170	342797-0121	-		2	Conn. Banjo, Ringpiece 6-1/8	
180	342980-0303	-		2	BANJO-HOLLOW BOLT COUPL,EXT.THR.01-G1/8"	

Pos	Part No	SP	UN	Qty	Description	Page No

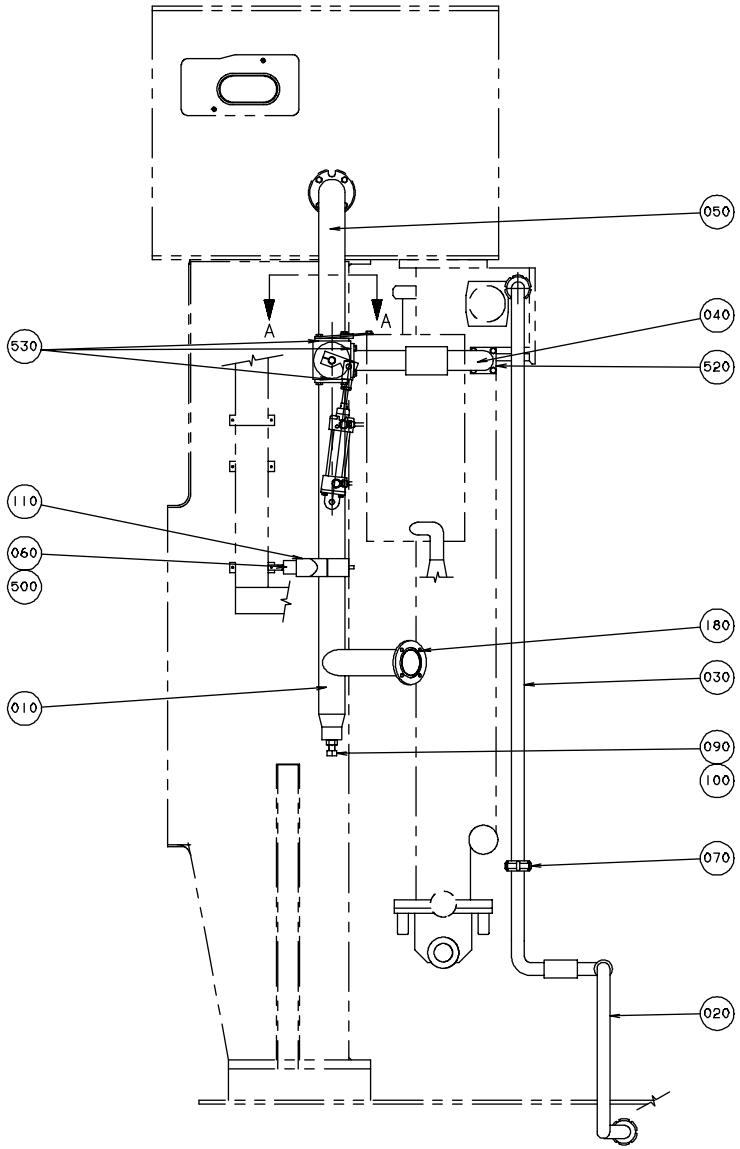

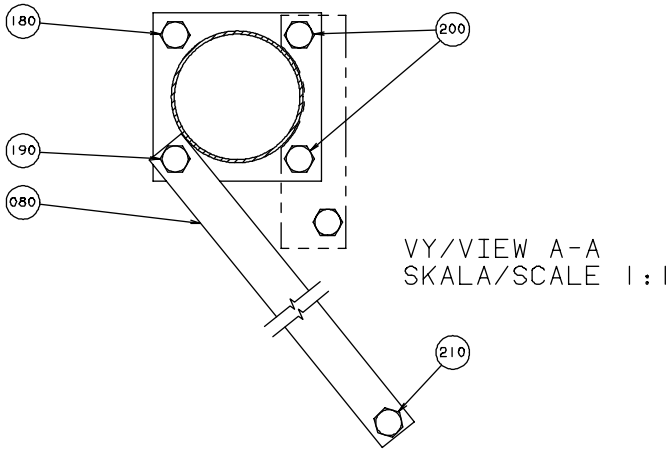

S - 1529250-1
ECN 82225

Pos	Part No	SP	UN	Qty	Description	Page No
Common Parts						
010	1529252-0000	D		1	PIPE	
020	491360-0000	D		1	PIPE	
030	469992-0000	D		1	PIPE	
040	255879-0000	D		1	PIPE	
050	255905-0000	D		1	PIPE	
060	490967-0000	-		1	BRACKET	
070	12242-0001	C		3	GASKET	
080	752175-0000	-		1	STRUT	
090	490906-0000	C		1	SCREW	
100	490907-0000	C		1	NUT	
110	1529249-0000	-		1	PIPE HOLDER	
180	312105-0366	-		22	Screw M6S M6x12 A280	
190	312105-0368	-		1	Screw M6S M6x16 A280	
200	312105-0370	-		2	Screw M6S M6x20 A280	
210	312105-0372	-		1	Screw M6S M6x25 A280	
520	315204-0223	C		1	O-Ring 39,2x3 mm	
530	315204-0301	C		5	O-Ring 49,5x3 mm	

Pos	Part No	SP	UN	Qty	Description	Page No

SUCTION PIPE

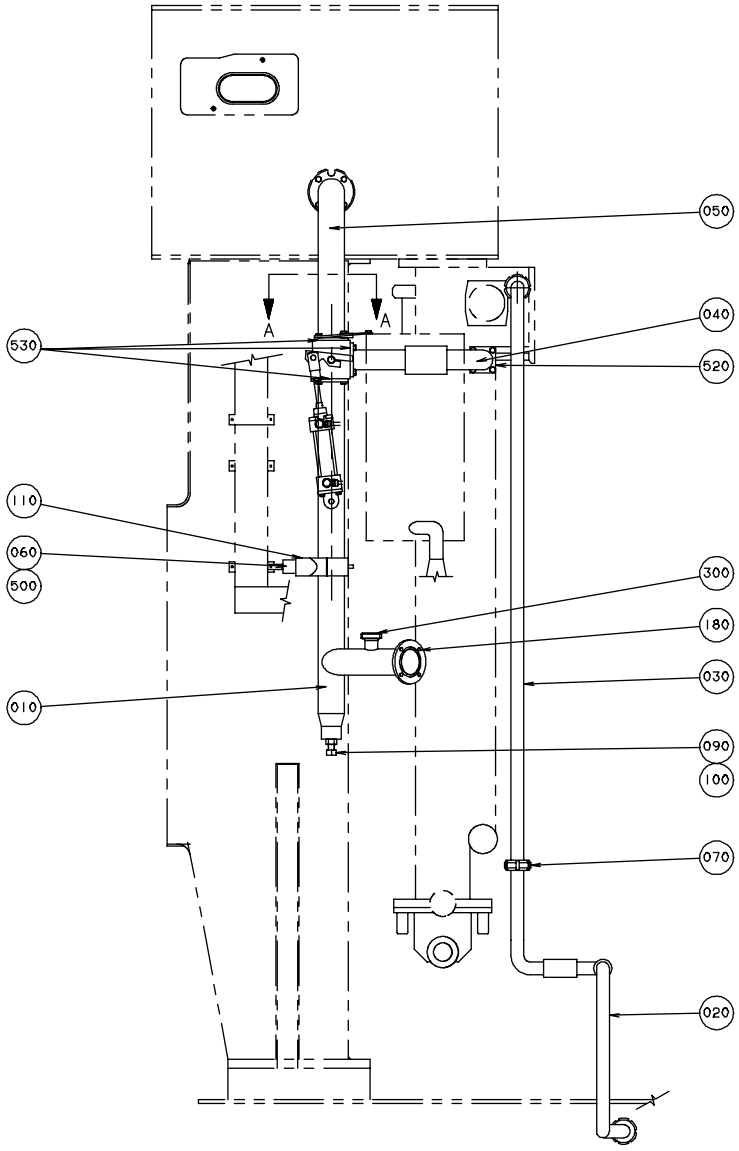

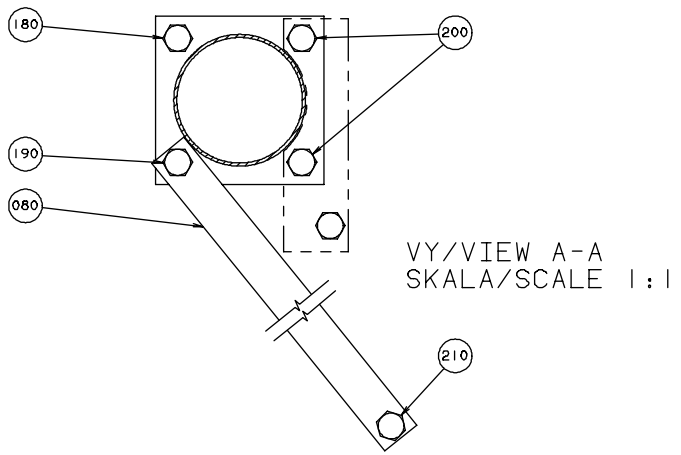

S - 1529251-1
ECN 82225

TBA/9R 120V

Pos	Part No	SP	UN	Qty	Description	Page No
Common Parts						
010	491760-0000	D		1	PIPE	
020	491360-0000	D		1	PIPE	
030	469992-0000	D		1	PIPE	
040	255879-0000	D		1	PIPE	
050	255905-0000	D		1	PIPE	
060	490967-0000	-		1	BRACKET	
070	12242-0001	C		3	GASKET	
080	752175-0000	-		1	STRUT	
090	490906-0000	C		1	SCREW	
100	490907-0000	C		1	NUT	
110	1529249-0000	-		1	PIPE HOLDER	
180	312105-0366	-		22	Screw M6S M6x12 A280	
190	312105-0368	-		1	Screw M6S M6x16 A280	
200	312105-0370	-		2	Screw M6S M6x20 A280	
210	312105-0372	-		1	Screw M6S M6x25 A280	
300	90091-0180	C		1	Gasket 32x25x4,8 mm	
520	315204-0223	C		1	O-Ring 39,2x3 mm	
530	315204-0301	C		5	O-Ring 49,5x3 mm	

Pos	Part No	SP	UN	Qty	Description	Page No

PEROXIDE PIPE

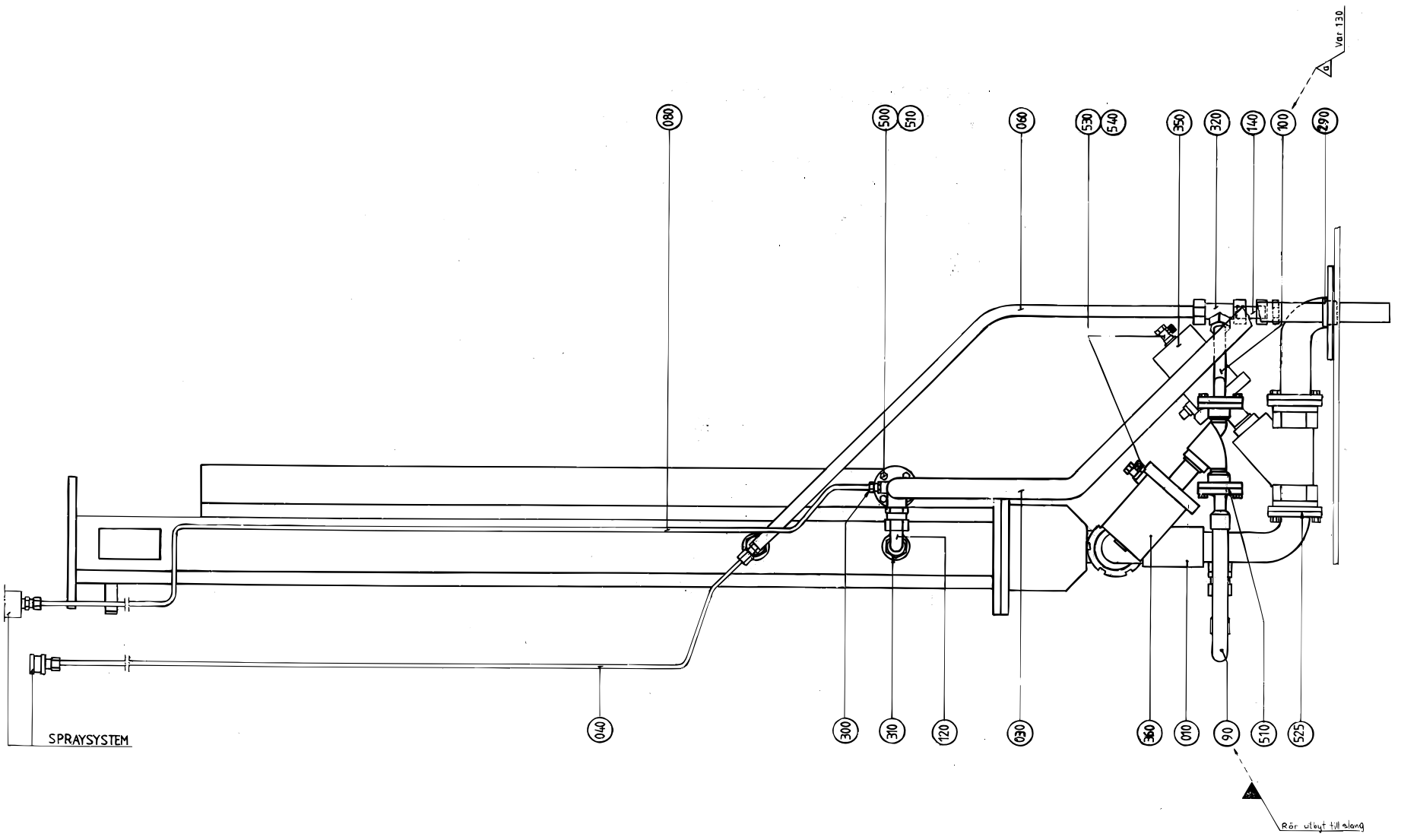

S - 456556-1
ECN 82225

Pos	Part No	SP	UN	Qty	Description	Page No
Common Parts						
010	456530-0000	-		1	PIPE	
030	295150-0003	-		1	PIPE	
040	456143-0000	-		1	PIPE	
060	295078-0001	-		1	PIPE	
080	295196-0002	-		1	PIPE	
090	490991-0000	D		1	HOSE	
100	469378-0000	-		1	PIPE	
120	295081-0000	-		1	PIPE	
140	295083-0000	-		1	PIPE	
290	90015-0024	C		1	GLANDS,Lead-in,IP67	
300	90030-0184	-		2	Conn. Str. GA-6-G1/8	
310	90030-0188	-		5	Conn. Str. GA-15-G1/2	
320	90030-0152	-		1	Conn. T-Pipe 15-L/SY	
350	B 484538-0000	C		1	VALVE	
360	B 484192-0000	C		1	VALVE	
500	312105-0366	-		2	Screw M6S M6x12 A280	
510	315204-0218	C		3	O-Ring 26,2x3 mm	
525	315204-0223	C		2	O-Ring 39,2x3 mm	
530	342797-0122	-		2	Conn. Banjo, Ringpiece 6-1/4	
540	342980-0304	-		2	BANJO-HOLLOW BOLT COUPL,EXT.THR.01-G1/4"	

Pos	Part No	SP	UN	Qty	Description	Page No

PEROXIDE PIPE

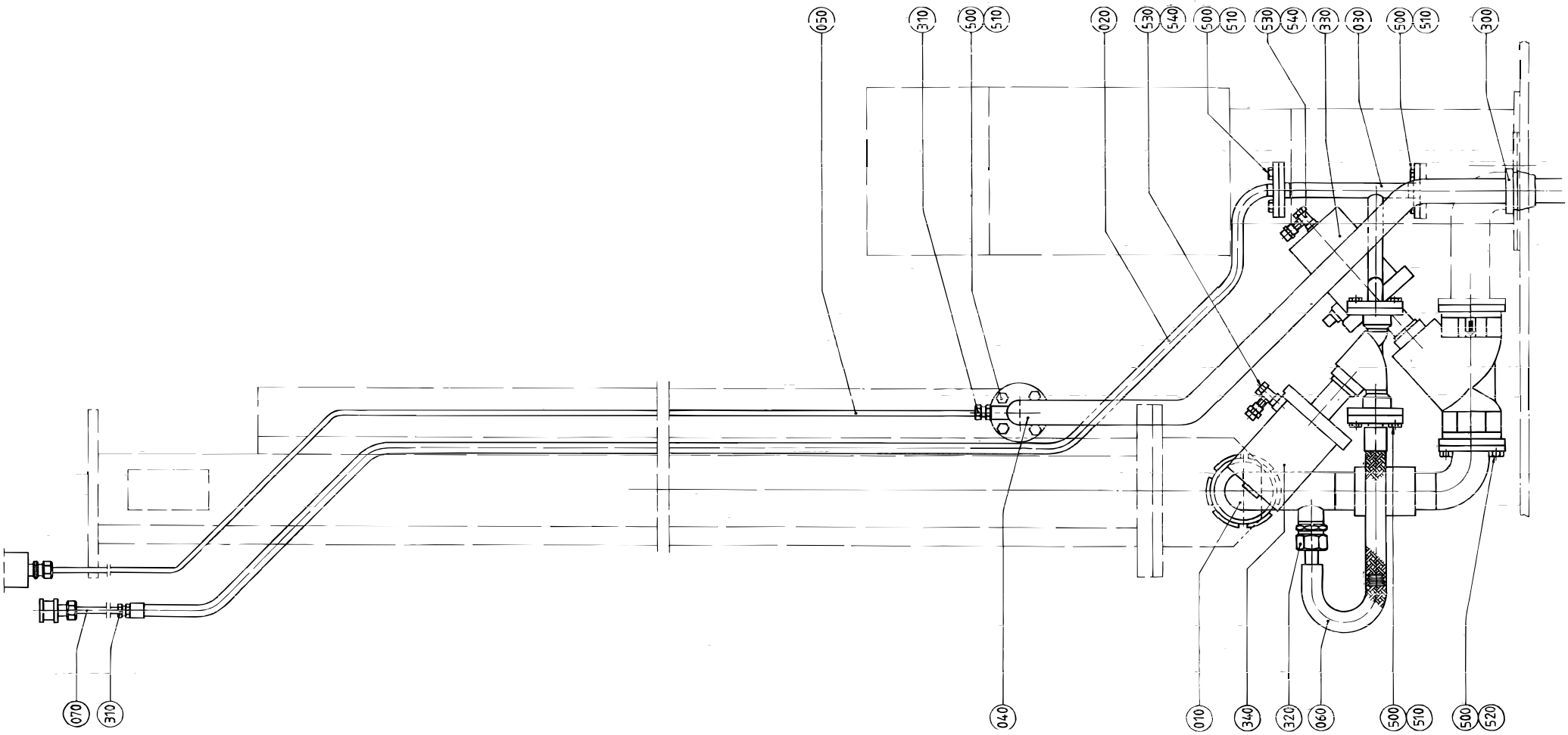

S - 456556-2
ECN 82225

Pos	Part No	SP	UN	Qty	Description	Page No
Common Parts						
010	490966-0000	-		1	PIPE	
020	491398-0000	-		1	PIPE	
030	490994-0000	-		1	PIPE	
040	490996-0000	-		1	PIPE	
050	491399-0000	-		1	PIPE	
060	490991-0000	D		1	HOSE	
070	490979-0000	-		1	PIPE	
300	90015-0024	C		1	GLANDS,Lead-in,IP67	
310	90030-0184	-		2	Conn. Str. GA-6-G1/8	
320	90030-0188	-		1	Conn. Str. GA-15-G1/2	
330	B 484538-0000	C		1	VALVE	
340	B 484192-0000	C		1	VALVE	
500	312105-0366	-		24	Screw M6S M6x12 A280	
510	315204-0218	C		5	O-Ring 26,2x3 mm	
520	315204-0223	C		2	O-Ring 39,2x3 mm	
530	342797-0122	-		2	Conn. Banjo, Ringpiece 6-1/4	
540	342980-0304	-		2	BANJO-HOLLOW BOLT COUPL,EXT.THR.01-G1/4"	

Pos	Part No	SP	UN	Qty	Description	Page No

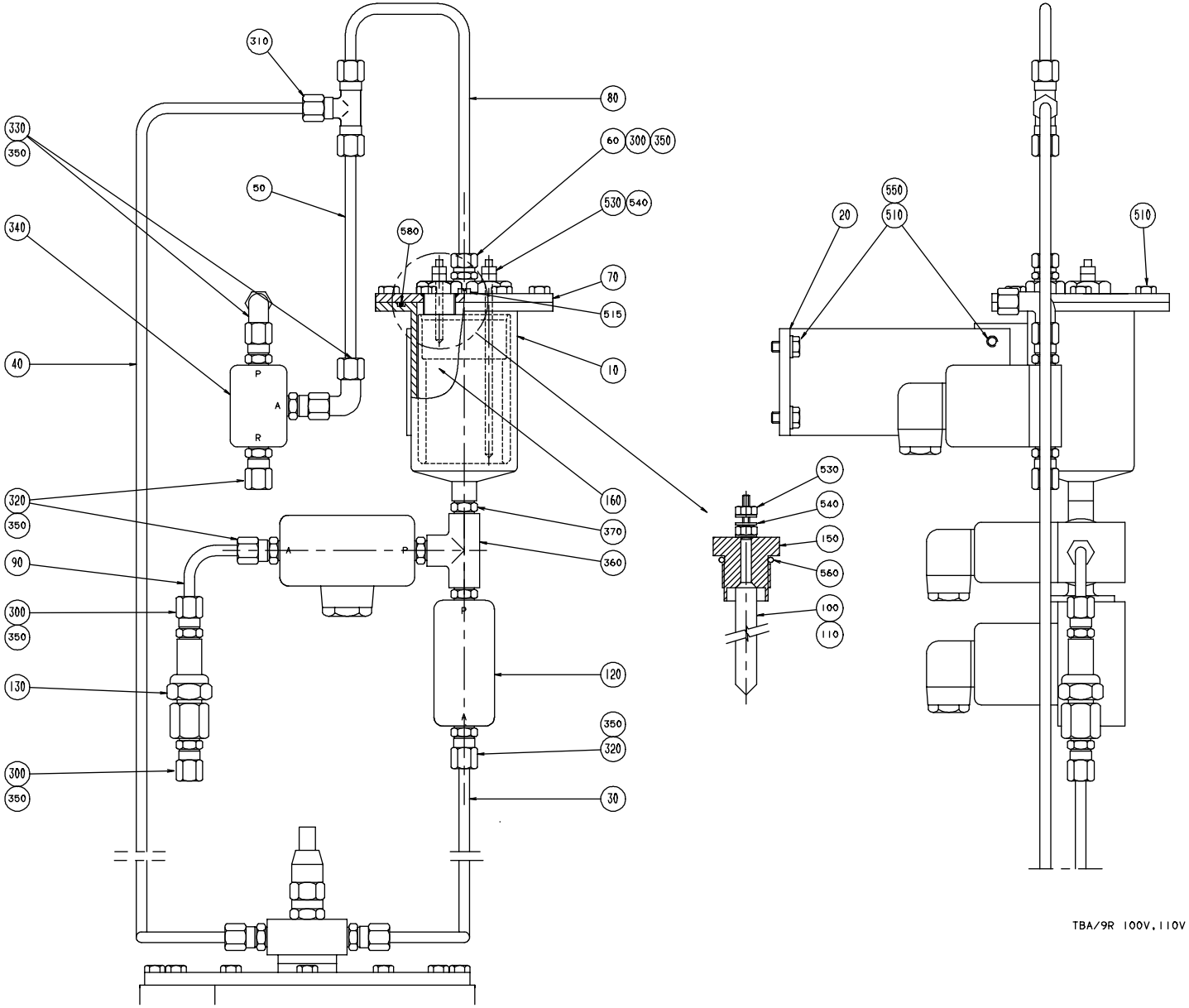
310
80
330
350
60
300
350
50
530
540
340
580
70
515
10
40
P
A
R
320
350
160
370
360
90
300
350
130
120
350
320
300
350
30
550
20
510
510
530
540
150
560
100
110
TBA/9R 100V, 110V

Pos	Part No	SP	UN	Qty	Description	Page No
Common Parts						
010	272157-0000	D		1	CONTAINER	
020	272844-0000	-		1	BRACKET	
030	456897-0000	-		1	PIPE	
040	469515-0000	-		1	PIPE	
050	752676-0000	-		1	PIPE	
060	450833-0000	C		1	FILTER	
070	450837-0000	-		1	LID	
080	752675-0000	-		1	PIPE	
090	456900-0000	-		1	PIPE	
100	567070-0011	C		1	ELECTRODE	
110	567070-0007	C		1	ELECTRODE	
120	B 544906-0000	C		2	SOLENOID VALVE	
130	B 484196-0000	C		1	FILTER	
150	560931-0000	-		2	BRACKET	
160	752501-0000	-		1	SLEEVE	
300	90030-0184	-		3	Conn. Str. GA-6-G1/8	
310	90030-0076	-		1	Conn. T-Pipe T-6	
320	90030-0202	-		3	Conn. Str., 6-G1/4, Ext. Thread	
330	90030-0203	-		2	Conn. Elbow Adj.,EXT 6-G1/4	
340	B 90042-0171	C		1	SOLENOID VALVE BUERKERT	
350	90144-0073	-	MM	1	TREBOFLON-TAPE W=13mm	
360	90330-0024	-		1	T-Pipe, Int. Thread, Rp1/4	
370	90330-0043	-		3	Nipples, Ext. Thread. R-207R1/4	
510	312105-0366	-		1	Screw M6S M6x12 A280	
515	312125-0285	-		1	Screw Slot.Pan Hd. MCS 4x6 A480	
530	312605-0312	-		4	Nut Hex. M6M M4 A280	
540	315105-0136	-		6	Washer, Plain, BRB, 4,3/8,H=0,8	
550	315105-0153	-		4	Washer, Plain, BRB, 6,4/12,H=1,5	
560	315204-0213	C		2	O-Ring 15,2x2,4 mm	
580	315204-0305	C		1	O-Ring 69,5x3 mm	

Pos	Part No	SP	UN	Qty	Description	Page No

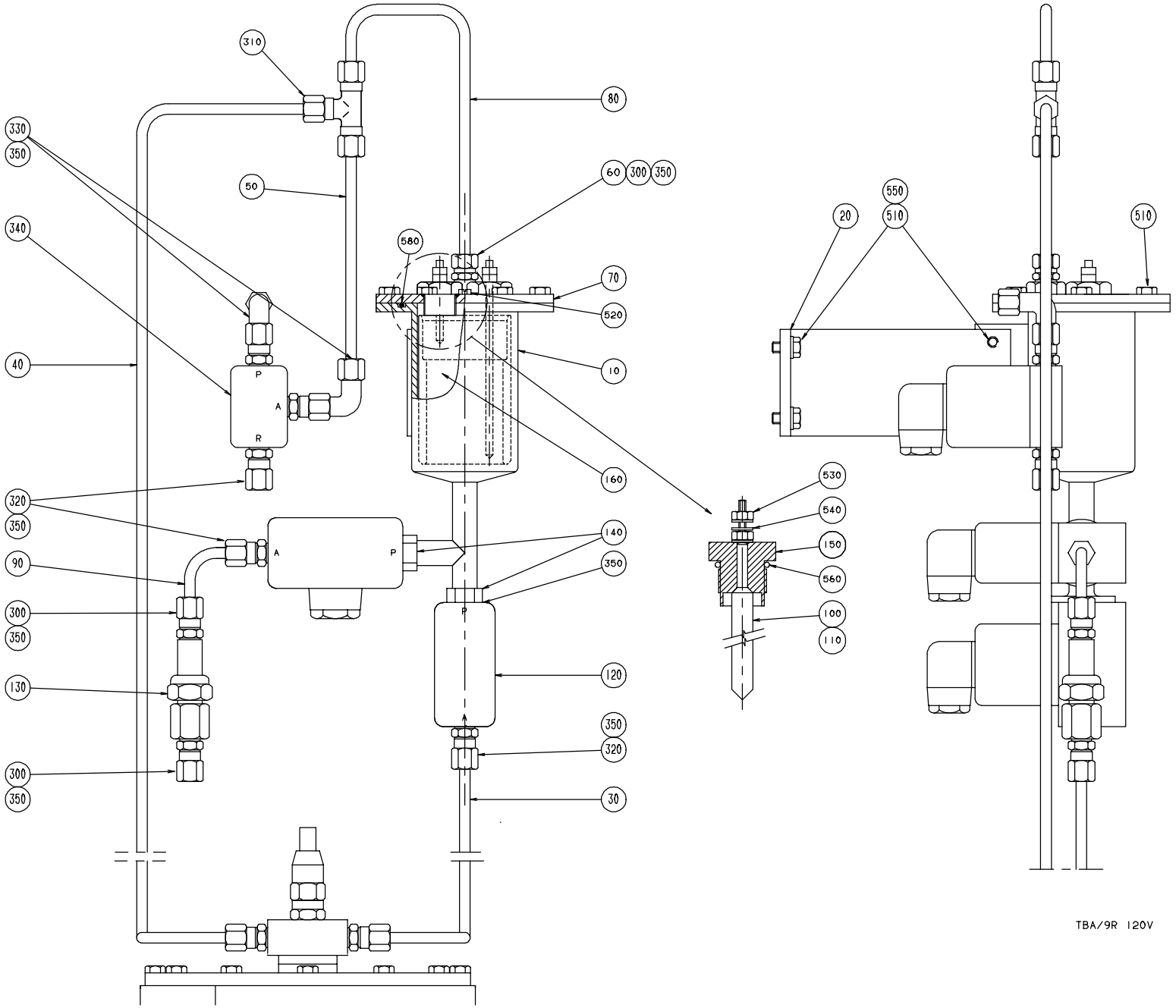

S - 1529085-1
ECN 82225

Pos	Part No	SP	UN	Qty	Description	Page No
Common Parts						
010	491191-0000	D		1	CONTAINER	
020	272844-0000	-		1	BRACKET	
030	456897-0000	-		1	PIPE	
040	469515-0000	-		1	PIPE	
050	752676-0000	-		1	PIPE	
060	450833-0000	C		1	FILTER	
070	450837-0000	-		1	LID	
080	752675-0000	-		1	PIPE	
090	456900-0000	-		1	PIPE	
100	567070-0011	C		1	ELECTRODE	
110	567070-0007	C		1	ELECTRODE	
120	B 544906-0000	C		2	SOLENOID VALVE	
130	B 484196-0000	C		1	FILTER	
140	491192-0000	C		2	NUT	
150	560931-0000	-		2	BRACKET	
160	752501-0000	-		1	SLEEVE	
300	90030-0184	-		3	Conn. Str. GA-6-G1/8	
310	90030-0076	-		1	Conn. T-Pipe T-6	
320	90030-0202	-		3	Conn. Str., 6-G1/4, Ext. Thread	
330	90030-0203	-		2	Conn. Elbow Adj.,EXT 6-G1/4	
340	B 90042-0171	C		1	SOLENOID VALVE BUERKERT	
350	90144-0073	-	MM	1	TREBOFLON-TAPE W=13mm	
510	312105-0366	-		1	Screw M6S M6x12 A280	
520	312125-0285	-		1	Screw Slot.Pan Hd. MCS 4x6 A480	
530	312605-0312	-		4	Nut Hex. M6M M4 A280	
540	315105-0136	-		6	Washer, Plain, BRB, 4,3/8,H=0,8	
550	315105-0153	-		4	Washer, Plain, BRB, 6,4/12,H=1,5	
560	315204-0213	C		2	O-Ring 15,2x2,4 mm	
580	315204-0305	C		1	O-Ring 69,5x3 mm	

Pos	Part No	SP	UN	Qty	Description	Page No

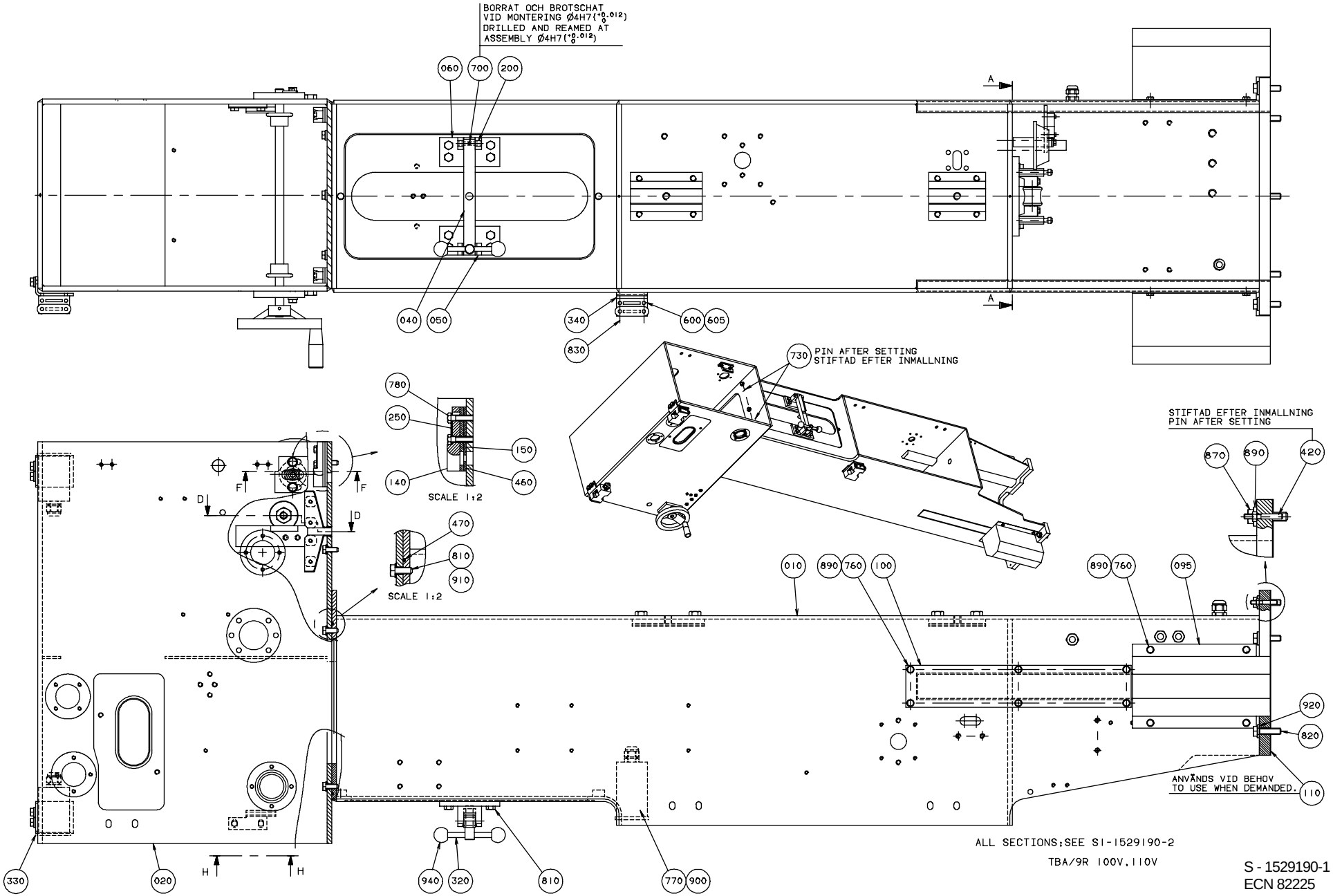

S - 1529190-1
ECN 82225

Pos	Part No	SP	UN	Qty	Description	Page No
0200B OR 0250B						
010	1529121-0000	-		1	PILLAR	
020	1529191-0000	-		1	HOUSE	
030	273953-0000	C		1	SEAL	
070	456794-0000	-		1	RING	
240	263655-0006	C		2	SHAFT	
360	456796-0000	C		2	ROLLER	
370	456797-0000	-		4	AXLE SUPPORT	
390	456801-0000	-		1	ARM	
0200S						
010	1529122-0000	-		1	PILLAR	
020	1529192-0000	-		1	HOUSE	
030	490901-0000	C		1	SEAL	
070	490899-0000	-		1	RING	
240	490903-0000	C		2	SHAFT	
350	751230-0000	C		4	PLAIN BEARING	
360	456996-0000	C		2	ROLLER	
370	490902-0000	-		4	AXLE SUPPORT	
390	490904-0000	-		1	ARM	
Common Parts						
Common Parts						
040	295426-0000	-		1	CAP	
050	295427-0000	-		1	LOCK	
060	295428-0000	-		1	HINGE	
095	490964-0000	D		2	COVER	
100	456890-0000	-		2	COVERING PLATE	
110	469092-0000	-		2	SHIM	
130	2033-0007	-		8	WASHER	
140	247349-0000	C		2	STEERING	
150	491602-0000	-		2	GASKET HOLDER	
170	247355-0000	-		1	LOCK WASHER	
180	247358-0000	D		1	SHIFTER HANDLE	
190	255986-0000	C		2	WHEEL	
200	256163-0000	C		1	SHAFT	
210	247357-0000	C		2	SPROCKET	
220	751131-0000	C		1	SHAFT	
230	256170-0000	-		2	DRIP PLATE	
250	267033-0000	-		2	WASHER	
260	271863-0000	C		2	SHAFT	
270	271864-0000	-		2	WASHER	
280	272002-0000	-		1	PROTECTIVE COVER LEFT	
290	272003-0000	-		1	PROTECTIVE COVER RIGHT	
300	279008-0000	C		2	BUSHING	
310	279010-0000	-		1	BEARING PLATE	
320	295429-0000	D		1	HANDLE	
330	978532-0000	-		2	BRACKET	
340	978531-0000	-		1	BRACKET	
400	751730-0000	D		1	LOCKING CIRCLIP	
410	456803-0000	D		1	PIVOT PIN	
420	B 469159-0000	-		2	PIN	
430	469521-0000	-		1	BEARING PLATE	
450	491314-0000	-		8	SCREW	
460	491128-0000	C		2	GASKET	
470	491418-0002	C		1	O-RING	
480	751684-0000	C		1	STOP LUG	
490	441737-0000	-		1	WASHER	
600	90044-0139	C		3	Key saf.sw. AZ16-02 ZVR K-2254	
605	90044-0310	-		3	Key 4215/16B1	
610	90044-0194	-		1	Prox.sw. IN5329/IN3002-BPKG	
700	311103-0272	-		1	Pin, Parallell, m6, 4x20	
710	311103-0276	-		3	Pin, Parallell, m6, 4x30	
720	311103-0308	-		2	Pin, Parallell, m6, 5x16	
730	311103-0310	-		2	Pin, Parallell, m6, 5x20	
750	312105-0327	-		6	Screw M6S M5x12 A280	
760	312105-0364	-		2	Screw M6S M6x10 A280	
770	312105-0368	-		6	Screw M6S M6x16 A280	
780	312105-0372	-		4	Screw M6S M6x25 A280	
790	312105-0378	-		4	Screw M6S M6x40 A280	
800	312105-0384	-		1	Screw M6S M6x70 A280	
810	312105-0451	-		24	Screw M6S 8x20 A280	
815	312105-0453	-		2	Screw M6S M8x25 A280	
820	312105-0499	-		7	Screw M6S M10x40 A280	
830	312115-0329	-		6	Screw MC6S M5x16 A280	
840	312115-0370	-		2	Screw MC6S M6x20 A280	
850	312125-0230	-		2	Screw Pan Head MCS M3X20 RFR	
860	312125-0287	-		4	Screw Pan Head MCS M4X8 RFR	
870	312605-0316	-		1	Nut Hex. M6M M6 A280	
880	315105-0124	-		2	Washer, Plain, BRB, 3,2/6,H=0,5	
890	315105-0153	-		3	Washer, Plain, BRB, 6,4/12,H=1,5	
900	315115-0153	-		6	Washer, Plain, TBRB 6,4/12 H=3	
910	315115-0165	-		16	Washer, Plain, TBRB 8,4/16 H=3	
920	315115-0173	-		7	Washer, Plain, TBRB 10,5/22 H=4	
930	315125-0153	-		2	Washer, Plain Round,Chamf. 6,4/22, H=4	
933	315204-0109	C		2	O-Ring 11,1x1,6 mm	
935	315204-0208	C		8	O-Ring 9,3x2,4 mm	
940	318800-0103	C		2	HANDLES,SPHERICAL KNOB,INT.THRE.,D.25-M6	

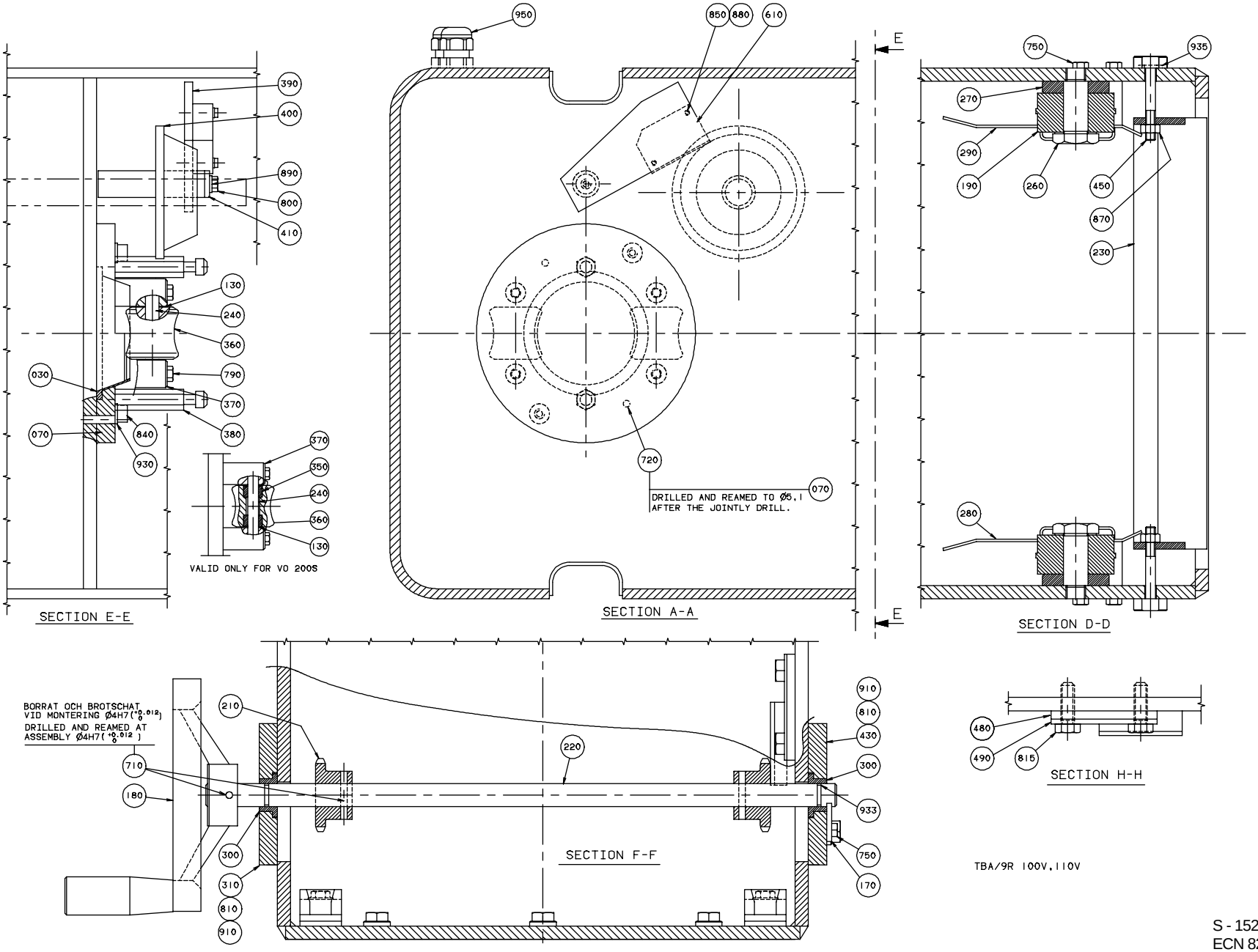
950
850
880
610
E
750
935
270
290
190
260
450
870
230
390
400
890
800
410
130
240
360
030
790
370
070
840
380
930
370
350
240
360
130
VALID ONLY FOR VO 200S
720
070
DRILLED AND REAMED TO Ø5,1
AFTER THE JOINTLY DRILL.
280
SECTION E-E
SECTION A-A
SECTION D-D
BORRAT OCH BROTSCHAT
VID MONTERING Ø4H7(+0,012 0)
DRILLED AND REAMED AT
ASSEMBLY Ø4H7(+0,012 0)
210
220
910
810
430
300
710
180
933
750
170
300
310
810
910
480
490
815
SECTION F-F
SECTION H-H
TBA/9R 100V,110V

Pos	Part No	SP	UN	Qty	Description	Page No
950	352103-0101	-		3	CABLE GLAND ST 9;PR15,2/PG9	
960	352110-0100	-		4	CRAMP TK 5-7 White Polyamid	

Pos	Part No	SP	UN	Qty	Description	Page No

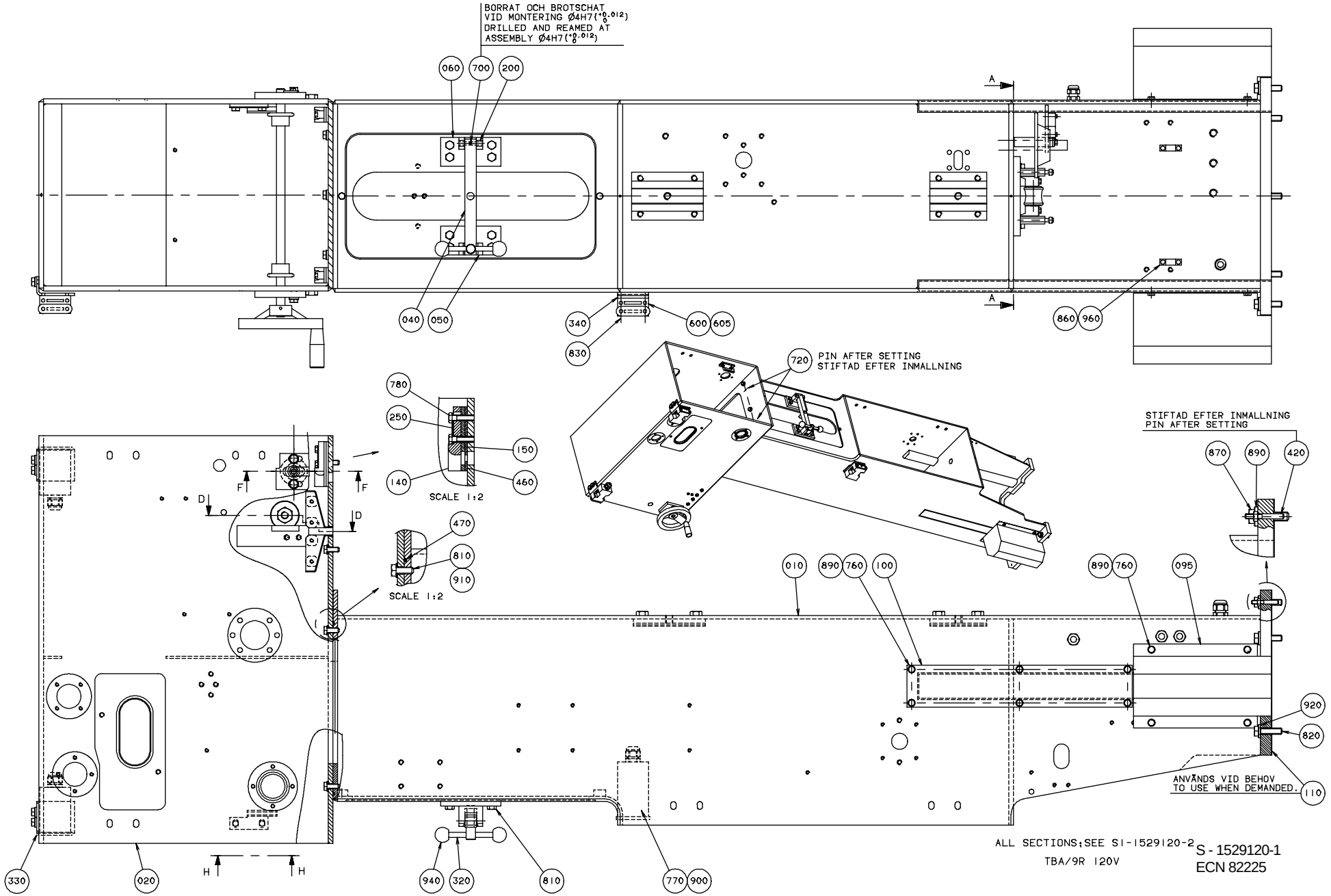
BORRAT OCH BROTSCHAT
VID MONTERING Ø4H7(+0.012 0)
DRILLED AND REAMED AT
ASSEMBLY Ø4H7(+0.012 0)
060
700
200
040
050
340
830
600
605
860
960
A
A
720
PIN AFTER SETTING
STIFTAD EFTER INMALLNING
780
250
150
140
460
SCALE 1:2
470
810
910
SCALE 1:2
STIFTAD EFTER INMALLNING
PIN AFTER SETTING
870
890
420
010
890
760
100
890
760
095
920
820
110
ANVÄNDS VID BEHOV
TO USE WHEN DEMANDED.
330
020
940
320
810
770
900
D
D
F
F
H
H
ALL SECTIONS;SEE S1-1529120-2
TBA/9R 120V
S - 1529120-1
ECN 82225

Pos	Part No	SP	UN	Qty	Description	Page No
0200B OR 0250B						
010	B 490918-0000	-		1	PILLAR	
020	490895-0000	-		1	OVER HOUSE	
020	1529009-0000	-		1	HOUSE	
030	273953-0000	C		1	SEAL	
070	456794-0000	-		1	RING	
240	263655-0006	C		2	SHAFT	
360	456796-0000	C		2	ROLLER	
370	456797-0000	-		4	AXLE SUPPORT	
380	456798-0000	-		2	DOWEL	
390	456801-0000	-		1	ARM	
0200S						
010	B 490919-0000	-		1	PILLAR	
020	490894-0000	-		1	OVER HOUSE	
020	1529010-0000	-		1	HOUSE	
030	490901-0000	C		1	SEAL	
070	490899-0000	-		1	RING	
240	490903-0000	C		2	SHAFT	
350	751230-0000	C		4	PLAIN BEARING	
360	456996-0000	C		2	ROLLER	
370	490902-0000	-		4	AXLE SUPPORT	
380	751477-0000	-		2	DOWEL	
390	490904-0000	-		1	ARM	
Common Parts						
040	295426-0000	-		1	CAP	
050	295427-0000	-		1	LOCK	
060	295428-0000	-		1	HINGE	
095	490964-0000	D		2	COVER	
100	456890-0000	-		2	COVERING PLATE	
110	469092-0000	-		2	SHIM	
130	2033-0007	-		8	WASHER	
140	247349-0000	C		2	STEERING	
150	491602-0000	-		2	GASKET HOLDER	
170	247355-0000	-		1	LOCK WASHER	
180	247358-0000	D		1	SHIFTER HANDLE	
190	255986-0000	C		2	WHEEL	
200	256163-0000	C		1	SHAFT	
210	247357-0000	C		2	SPROCKET	
220	751131-0000	C		1	SHAFT	
230	256170-0000	-		2	DRIP PLATE	
250	267033-0000	-		2	WASHER	
260	271863-0000	C		2	SHAFT	
270	271864-0000	-		2	WASHER	
280	272002-0000	-		1	PROTECTIVE COVER LEFT	
290	272003-0000	-		1	PROTECTIVE COVER RIGHT	
300	279008-0000	C		2	BUSHING	
310	279010-0000	-		1	BEARING PLATE	
320	295429-0000	D		1	HANDLE	
330	978532-0000	-		2	BRACKET	
340	978531-0000	-		1	BRACKET	
400	751730-0000	D		1	LOCKING CIRCLIP	
410	456803-0000	D		1	PIVOT PIN	
420	B 469159-0000	-		2	PIN	
430	469521-0000	-		1	BEARING PLATE	
450	491314-0000	-		8	SCREW	
460	491128-0000	C		2	GASKET	
470	491418-0002	C		1	O-RING	
480	751684-0000	C		1	STOP LUG	
490	441737-0000	-		1	WASHER	
600	90044-0139	C		3	Key saf.sw. AZ16-02 ZVR K-2254	
605	90044-0310	-		3	Key 4215/16B1	
610	90044-0194	-		1	Prox.sw. IN5329/IN3002-BPKG	
700	311103-0272	-		1	Pin, Parallell, m6, 4x20	
710	311103-0276	-		3	Pin, Parallell, m6, 4x30	
720	311103-0308	-		2	Pin, Parallell, m6, 5x16	
730	311103-0310	-		2	Pin, Parallell, m6, 5x20	
750	312105-0327	-		6	Screw M6S M5x12 A280	
760	312105-0364	-		2	Screw M6S M6x10 A280	
770	312105-0368	-		6	Screw M6S M6x16 A280	
780	312105-0372	-		4	Screw M6S M6x25 A280	
790	312105-0378	-		4	Screw M6S M6x40 A280	
800	312105-0384	-		1	Screw M6S M6x70 A280	
810	312105-0451	-		24	Screw M6S 8x20 A280	
815	312105-0453	-		2	Screw M6S M8x25 A280	
820	312105-0499	-		7	Screw M6S M10x40 A280	
830	312115-0329	-		6	Screw MC6S M5x16 A280	
840	312115-0370	-		2	Screw MC6S M6x20 A280	
850	312125-0230	-		2	Screw Pan Head MCS M3X20 RFR	
860	312125-0287	-		4	Screw Pan Head MCS M4X8 RFR	
870	312605-0316	-		1	Nut Hex. M6M M6 A280	
880	315105-0124	-		2	Washer, Plain, BRB, 3,2/6,H=0,5	
890	315105-0153	-		3	Washer, Plain, BRB, 6,4/12,H=1,5	
900	315115-0153	-		6	Washer, Plain, TBRB 6,4/12 H=3	
910	315115-0165	-		16	Washer, Plain, TBRB 8,4/16 H=3	
920	315115-0173	-		7	Washer, Plain, TBRB 10,5/22 H=4	
930	315125-0153	-		2	Washer, Plain Round,Chamf. 6,4/22, H=4	

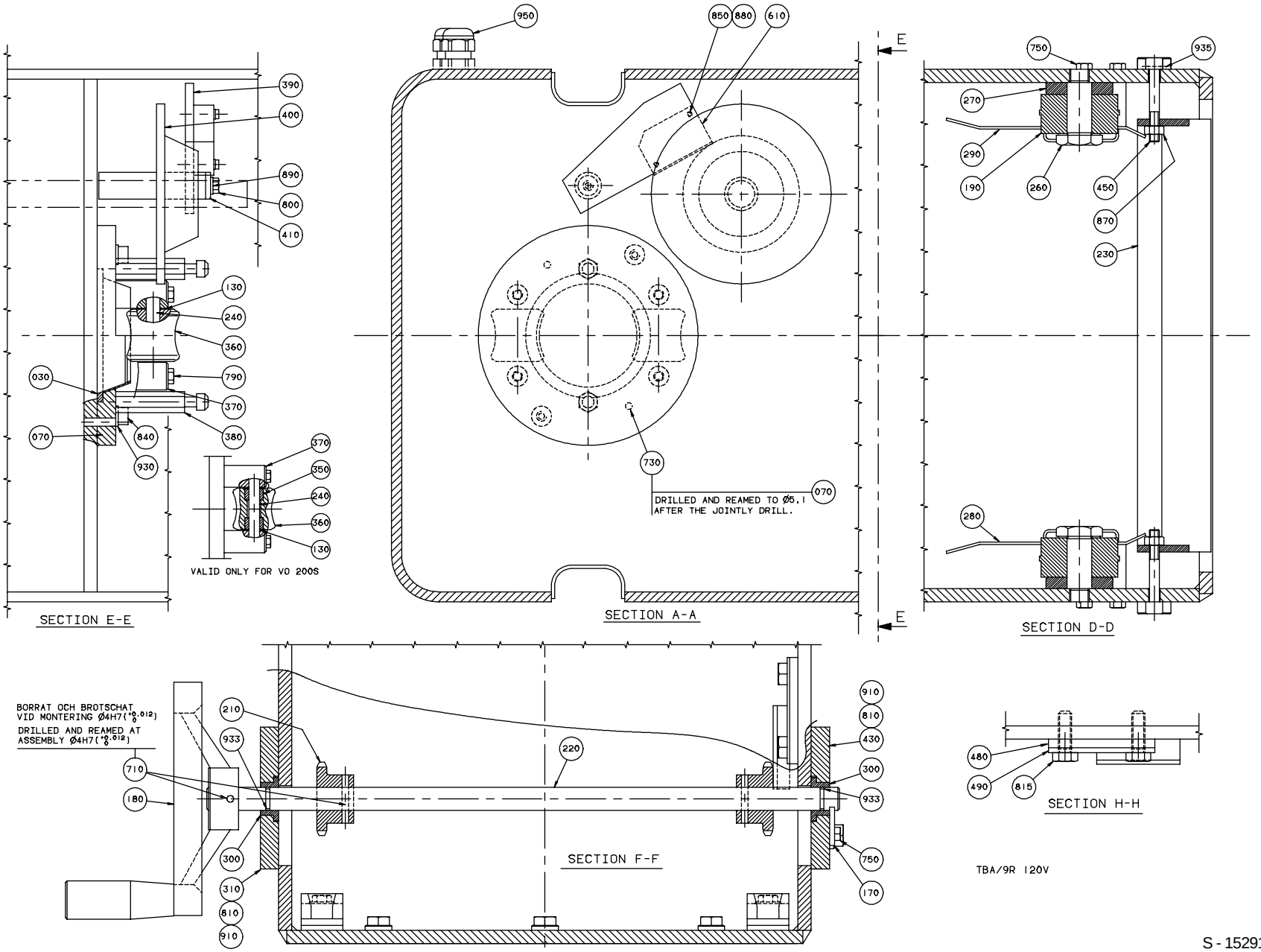
950
850
880
610
E
750
935
270
290
190
260
450
870
230
390
400
890
800
410
130
240
360
790
030
370
070
840
380
930
370
350
240
360
130
VALID ONLY FOR VO 200S
730
070
DRILLED AND REAMED TO Ø5.1
AFTER THE JOINTLY DRILL.
280
SECTION E-E
SECTION A-A
SECTION D-D
BORRAT OCH BROTSCHAT
VID MONTERING Ø4H7(+0.012 0)
DRILLED AND REAMED AT
ASSEMBLY Ø4H7(+0.012 0)
210
933
710
180
220
910
810
430
300
933
750
170
300
310
810
910
SECTION F-F
480
490
815
SECTION H-H
TBA/9R 120V

Pos	Part No	SP	UN	Qty	Description	Page No
933	315204-0109	C		2	O-Ring 11,1x1,6 mm	
935	315204-0208	C		8	O-Ring 9,3x2,4 mm	
940	318800-0103	C		2	HANDLES,SPHERICAL KNOB,INT.THRE.,D.25-M6	
950	352103-0101	-		3	CABLE GLAND ST 9;PR15,2/PG9	
960	352110-0100	-		4	CRAMP TK 5-7 White Polyamid	

Pos	Part No	SP	UN	Qty	Description	Page No

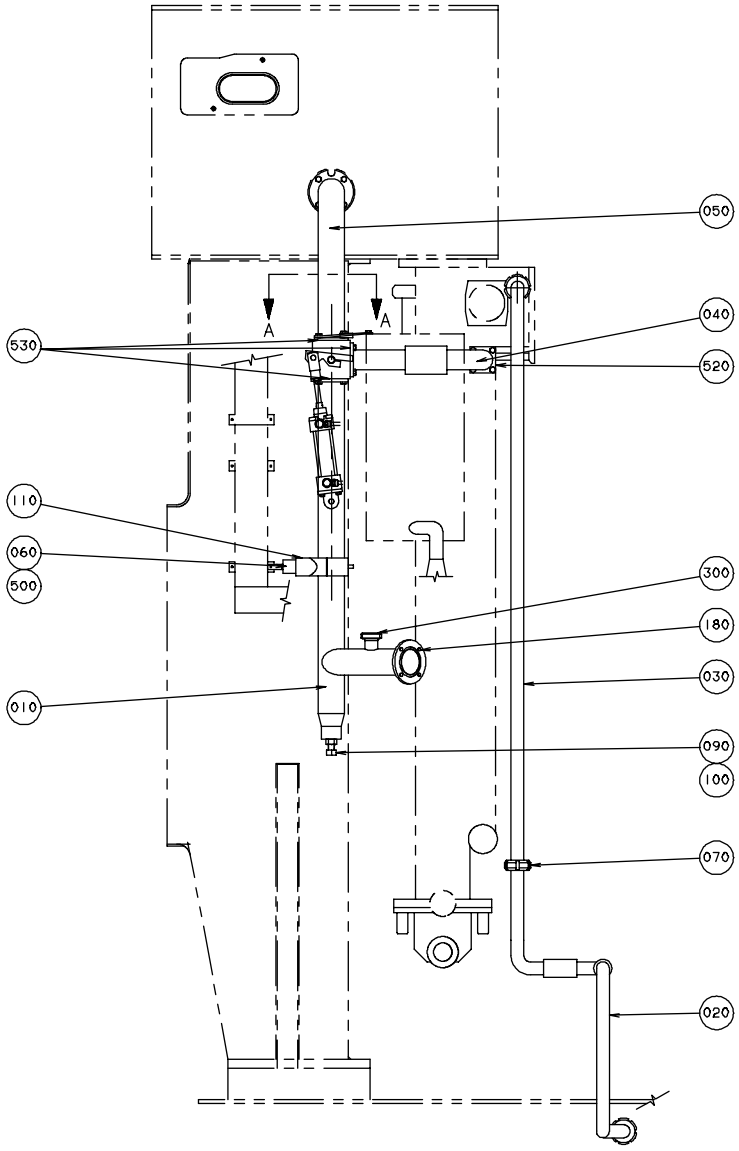

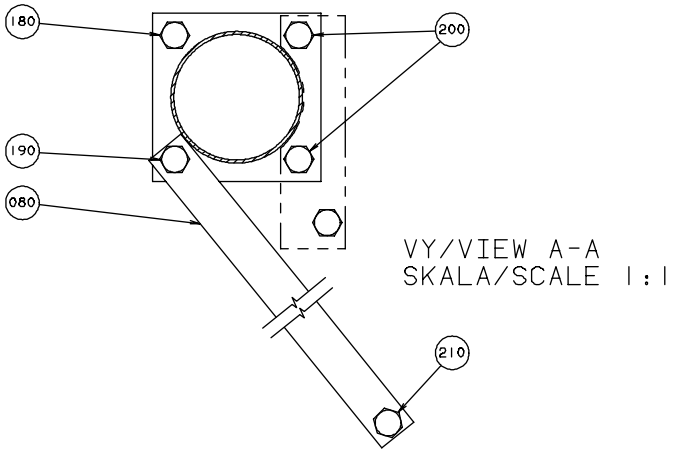

S - 1529251-1
ECN 82225

TBA/9R 120V

Pos	Part No	SP	UN	Qty	Description	Page No
Common Parts						
F245	440630-0101	-		1	VALVE	**126**
010	272555-0000	-		1	TOUCH GUARD	
020	256355-0000	-		1	CANTILEVER	
030	272352-0000	D		1	PIPE	
040	272554-0000	-		1	TOUCH GUARD	
050	237871-0000	D		1	BARRIER	
055	440978-0000	-		1	PIPE BEND	
060	12242-0003	C		3	GASKET	
070	12242-0005	C		5	GASKET	
085	28036-0000	C		4	WASHER	
090	449193-0000	D		1	PRESSURE GAUGE TUBE	
110	237873-0000	C		1	SHAFT	
120	271747-0000	C		1	COTTER	
130	271748-0000	D		1	BEARING BLOCK	
160	295250-0000	C		1	PIPE	
170	295730-0000	D		2	SPACER SHEET	
180	469503-0000	-		1	ELBOW PIPE	
220	90030-0132	-		1	ACCESSORIES,PLUG PL-6	
250	90030-0109	-		1	Conn. Str., 12-R1/2, Ext. Thread	
270	752741-0000	C		1	PIPE	
300	B 90043-0050	C		1	PRESSURE GAUGE	
310	90044-0104	C		2	PROX.SWITCH IFM IN 3002	
320	90163-0057	D		5	NIPPLE 1/8" Brass	
330	90163-0062	D		5	Quick Coupling, (F) 5053-1/8	
365	90224-0307	-		5	CONNECTION	
366	90224-0308	-		2	Conn. Banjo, Art. No. 2023-1/8-1/8	
370	90235-0259	C		1	VALVE	
375	90235-0274	-		2	"THROTTLE CHECK VALVES,G1/8""""	
380	90326-0012	C		1	PROTECTIVE COVER	
390	90326-0020	C		1	PLUG,FEMALE YELLOW CR-AL	
400	90328-0003	C		4	SILENCER	
410	90030-0187	C		2	Conn. Str. GA-12-G3/8	
420	90330-0032	C		1	Nipples, Ext. Thread. R1/8-R1/8	
425	90330-0048	-		1	Bushing, Int/Ext. Thr. R1/2-Rp3/8	
430	90330-0062	C		1	STRIGHT COUPLING R3/8" R131U	
500	311411-0181	-		1	SPLIT PIN SP3,2X20RFR	
510	312105-0333	-		2	Screw M6S M5x25 A280	
520	312105-0451	-		4	Screw M6S 8x20 A280	
530	312105-0453	-		4	Screw M6S M8x25 A280	
540	312115-0228	-		4	Screw MC6S M3x16 A280	
545	312115-0329	-		4	Screw MC6S M5x16 A280	
560	315105-0124	-		4	Washer, Plain, BRB, 3,2/6,H=0,5	
570	342803-0104	-		2	Screw Fitting, Nut, No190616	
580	342812-0104	-		2	Sleeve, No. 190707	

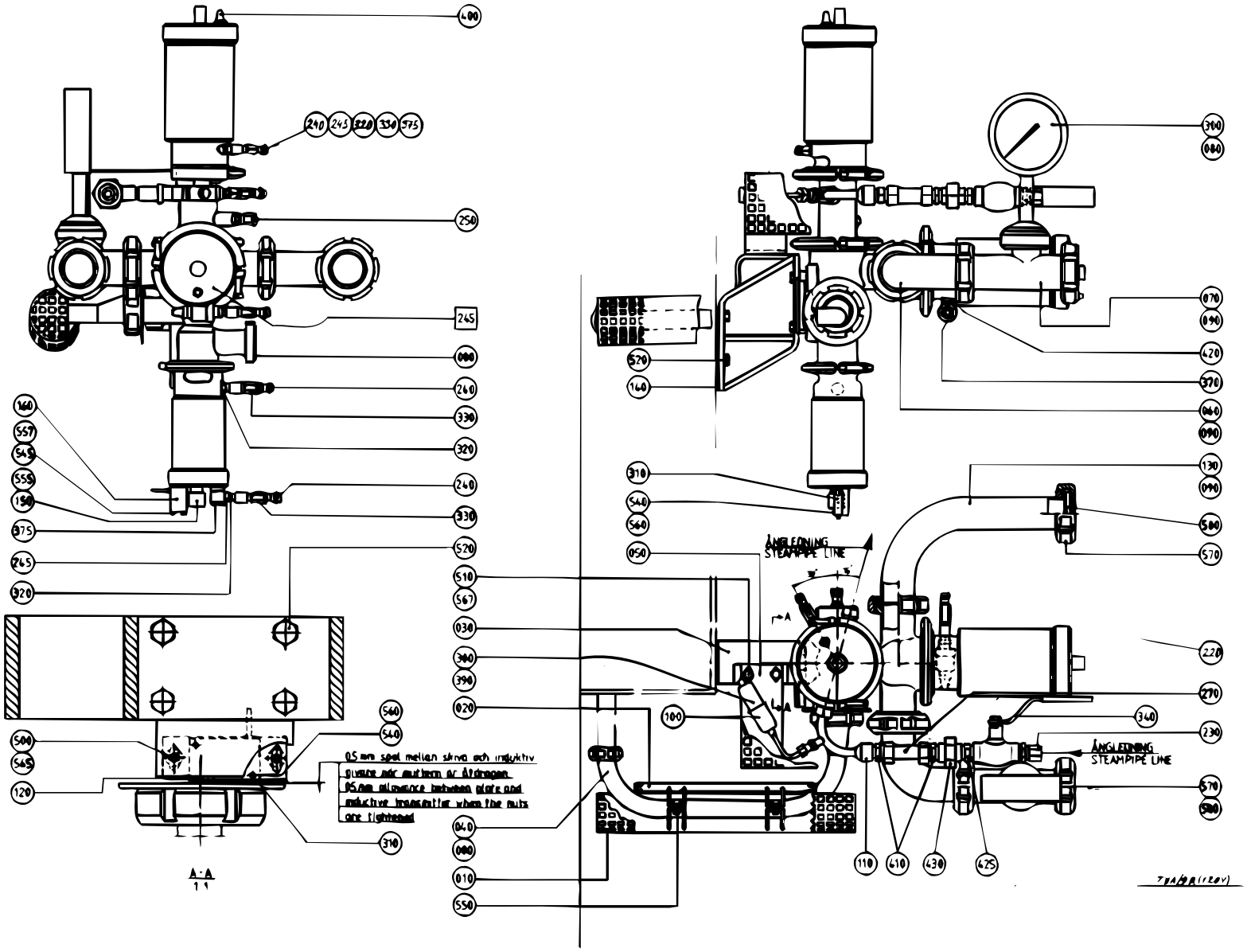

S - 1529255-1
ECN 82225

Pos	Part No	SP	UN	Qty	Description	Page No
Common Parts						
010	272555-0000	-		1	TOUCH GUARD	
020	272554-0000	-		1	TOUCH GUARD	
030	441723-0000	-		1	CANTILEVER	
040	490983-0000	-		1	PIPE	
050	490984-0000	-		1	TOUCH GUARD	
060	440978-0000	-		1	PIPE BEND	
070	449193-0000	D		1	PRESSURE GAUGE TUBE	
080	12242-0003	C		3	GASKET	
090	12242-0005	C		5	GASKET	
100	90326-0089	C		1	THERMOCOUPLE	
110	295250-0000	C		1	PIPE	
120	297195-0000	-		1	SPACER	
130	469503-0000	-		1	ELBOW PIPE	
140	490985-0000	D		2	SPACER SHEET	
150	440647-0000	-		1	SLEEVE	
160	440731-0000	-		1	PLATE	
220	90030-0132	-		1	ACCESSORIES,PLUG PL-6	
230	90030-0109	-		1	Conn. Str., 12-R1/2, Ext. Thread	
240	90224-0307	-		5	CONNECTION	
245	A 440630-0200	-		1	AP-VALVE	
245	90224-0308	D		2	Conn. Banjo, Art. No. 2023-1/8-1/8	
250	90030-0187	-		2	Conn. Str. GA-12-G3/8	
270	752741-0000	C		1	PIPE	
300	B 90043-0050	C		1	PRESSURE GAUGE	
310	90044-0104	C		2	PROX.SWITCH IFM IN 3002	
320	90163-0057	D		4	NIPPLE 1/8" Brass	
330	90163-0062	D		4	Quick Coupling, (F) 5053-1/8	
340	90187-0059	C		1	Ball Valve, for Hydr.Per. G1/2 3mm hole	
370	90235-0259	C		1	VALVE	
375	90235-0274	C		2	"THROTTLE CHECK VALVES,G1/8""""	
380	90326-0012	C		1	PROTECTIVE COVER	
390	90326-0020	C		1	PLUG,FEMALE YELLOW CR-AL	
400	90328-0003	C		3	SILENCER	
410	90030-0187	C		2	Conn. Str. GA-12-G3/8	
420	90330-0032	C		1	Nipples, Ext. Thread. R1/8-R1/8	
425	90330-0048	-		1	Bushing, Int/Ext. Thr. R1/2-Rp3/8	
430	90330-0062	C		1	STRIGHT COUPLING R3/8" R131U	
500	312105-0329	-		2	Screw M6S M5x16 A280	
510	312105-0364	-		2	Screw M6S M6x10 A280	
520	312105-0451	-		8	Screw M6S 8x20 A280	
540	312115-0228	-		8	Screw MC6S M3x16 A280	
545	312115-0305	-		2	Screw MC6S M4x50 A280	
550	312115-0329	-		4	Screw MC6S M5x16 A280	
555	312155-0532	-		1	Screw Hex.Sock.Count.MF6S 12x20 SS	
557	315105-0136	-		2	Washer, Plain, BRB, 4,3/8,H=0,8	
560	315105-0124	-		8	Washer, Plain, BRB, 3,2/6,H=0,5	
565	315105-0146	-		2	Washer, Plain, BRB, 5,3/10,H=1	
567	315115-0153	-		2	Washer, Plain, TBRB 6,4/12 H=3	
570	342803-0104	-		2	Screw Fitting, Nut, No190616	
580	342812-0104	-		2	Sleeve, No. 190707	

AP-VALVE

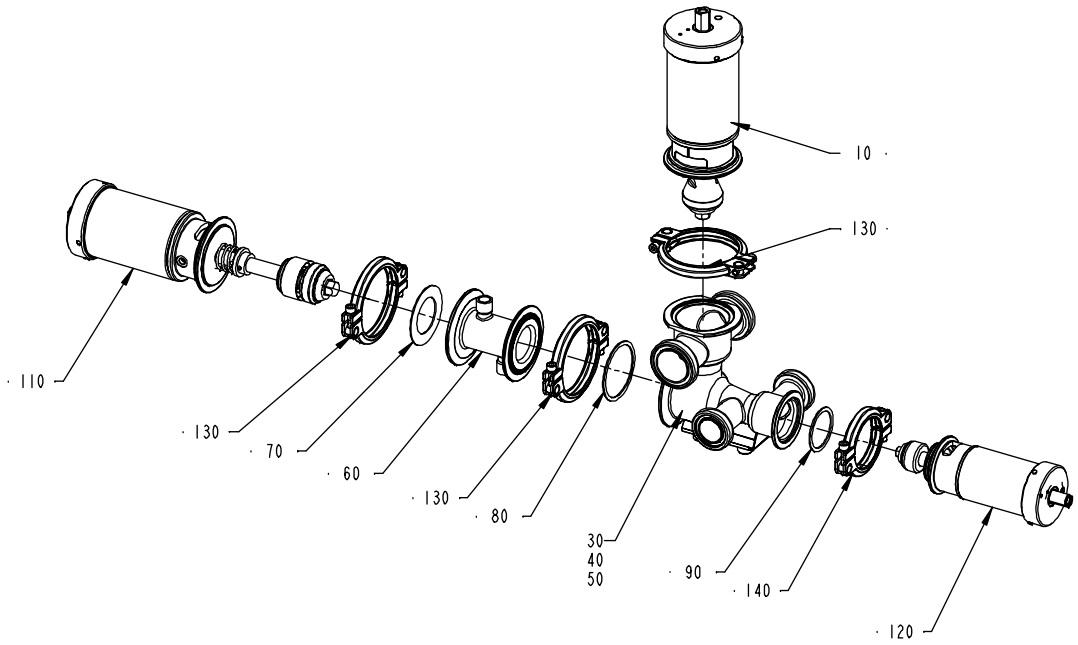

S - 440630-3
ECN 82225

Pos	Part No	SP	UN	Qty	Description	Page No
Common Parts						
010	A 539209-0100	D		1	A-CYLINDER	
060	440634-0000	D		1	HOUSE	
070	539212-0000	C		1	GASKET	
080	90207-0363	C		1	GASKET	
090	90207-0365	C		1	GASKET	
110	A 539210-0100	D		1	C-CYLINDER	
120	A 539211-0100	D		1	B-CYLINDER	
130	A 541163-0100	D		3	CLAMP RING	
140	A 541164-0100	D		1	CLAMP RING	

Pos	Part No	SP	UN	Qty	Description	Page No

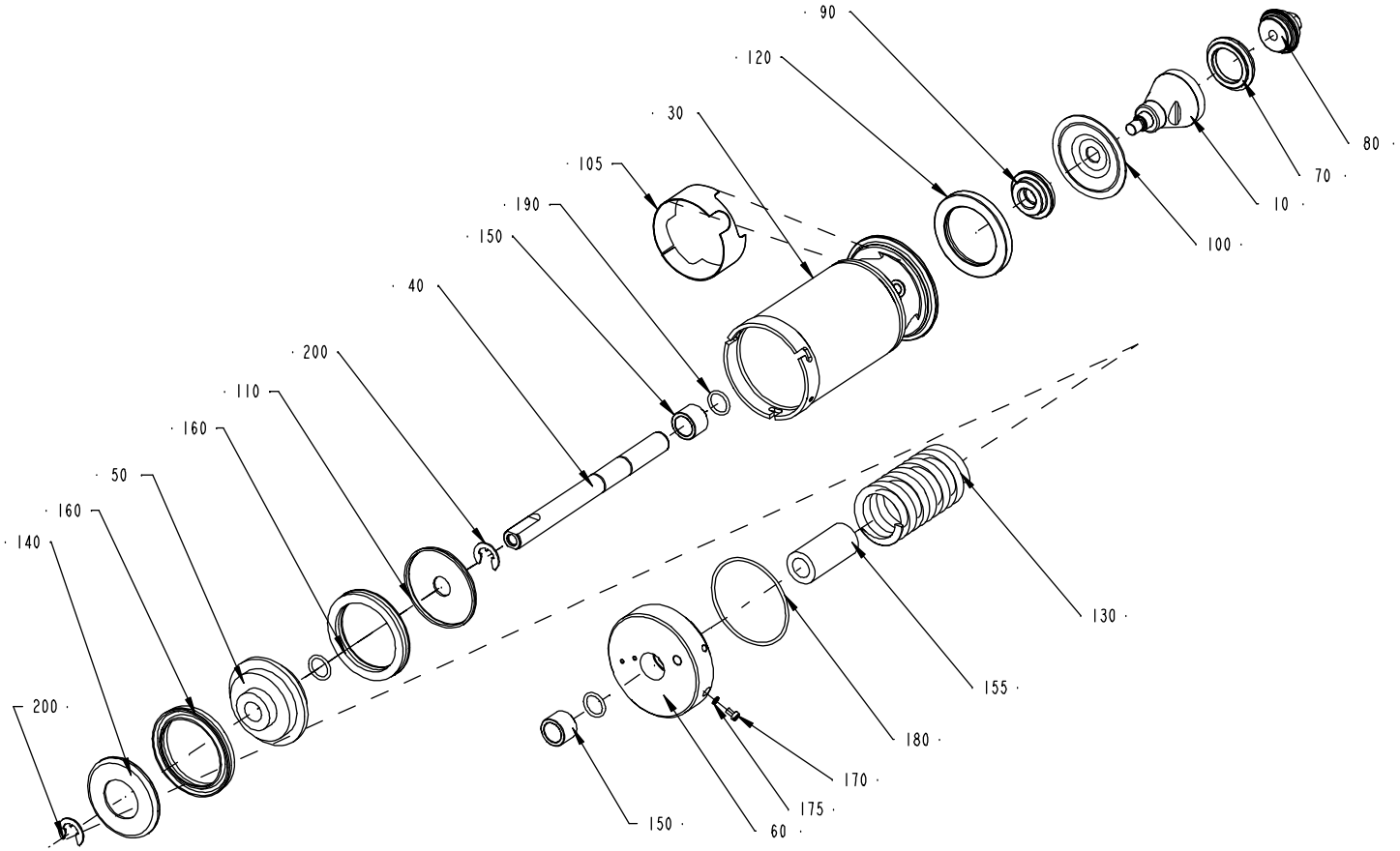
90
120
30
105
190
150
40
200
110
160
50
160
140
200
80
70
10
100
130
155
180
170
175
60
150

Pos	Part No	SP	UN	Qty	Description	Page No
2"						
010	530592-0000	D		1	SEAL RING HOLDER	
3"						
010	530595-0000	D		1	SEAL RING HOLDER	
Common Parts						
030	440632-0000	D		1	CYLINDER HOUSING	
040	440637-0000	D		1	PISTON ROD	
050	440638-0000	D		1	PISTON	
060	484998-0000	D		1	END SECTION	
070	530589-0000	C		1	SEAL RING	
080	530590-0000	C		1	VALVE CONE	
090	541166-0000	D		1	WASHER	
100	533169-0000	C		1	DIAPHRAGM	
105	476203-0000	-		1	PROTECTION	
110	440651-0000	D		1	WASHER	
120	440655-0000	D		1	RING	
130	440663-0000	C		1	COMPRESSION SPRING	
140	484975-0000	D		1	WASHER	
150	497933-0000	C		2	BUSHING	
155	541167-0000	D		1	SPACER SLEEVE	
160	90020-0028	C		2	SLEEVE	
170	312125-0323	-		1	Screw Pan Head MCS M5X8 RFR	
175	315233-0101	-		1	Washer,Pl.Rnd.Nyl.5,2/8,H=1	
180	315202-0308	C		1	O-Ring 84,5x3 mm	
190	315204-0215	C		3	O-Ring 19,2x3 mm	
200	315754-0113	-		2	LOCKING WAE 15	

Pos	Part No	SP	UN	Qty	Description	Page No

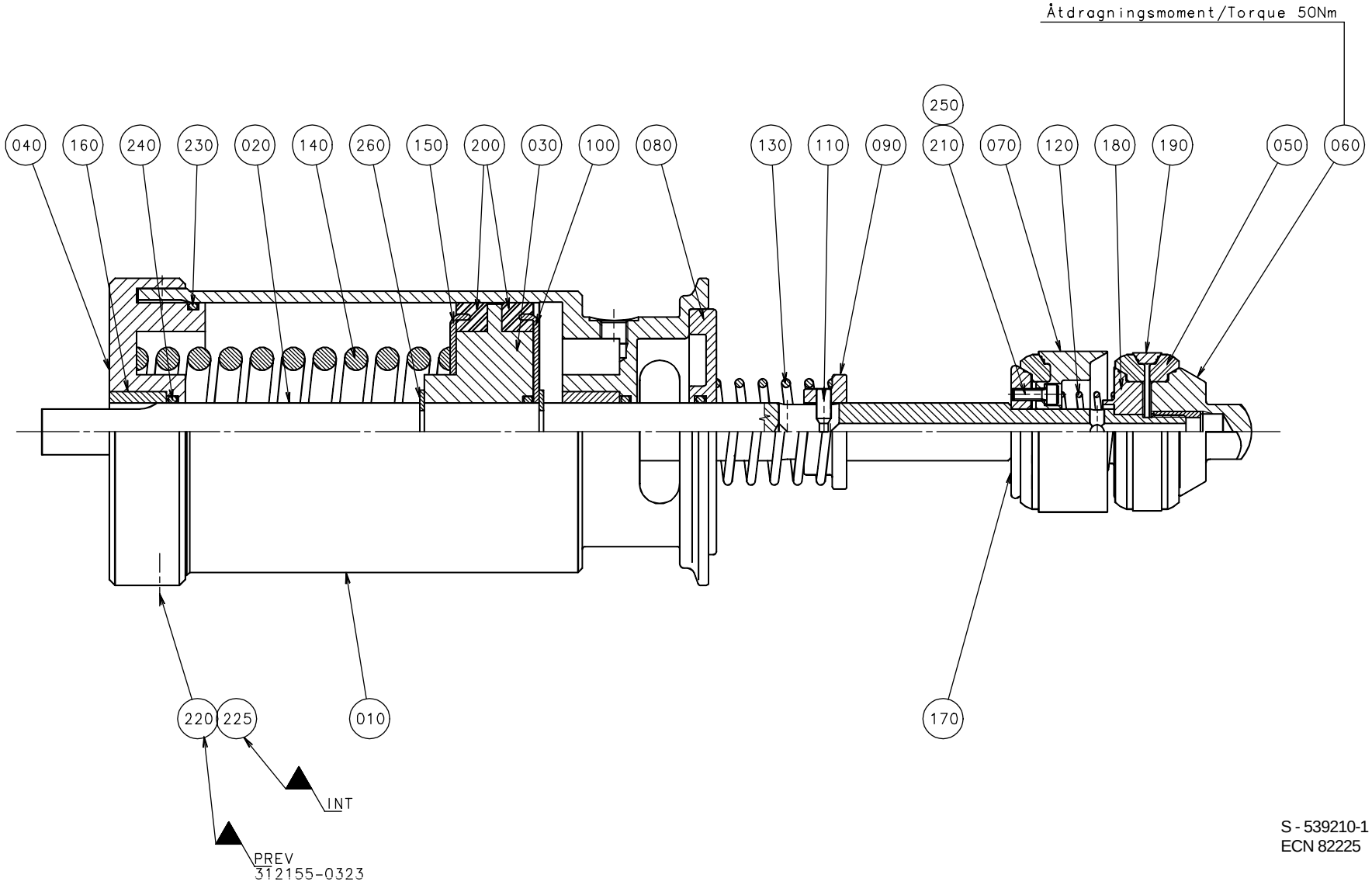

S - 539210-1
ECN 82225

Pos	Part No	SP	UN	Qty	Description	Page No
Common Parts						
010	440632-0000	D		1	CYLINDER HOUSING	
020	440635-0000	D		1	PISTON ROD	
030	440638-0000	D		1	PISTON	
040	484998-0000	D		1	END SECTION	
050	530589-0000	C		3	SEAL RING	
060	530590-0000	C		1	VALVE CONE	
070	530591-0000	D		1	HOLDER	
080	440648-0000	D		1	SEALING WASHER	
090	440650-0000	D		1	WASHER	
100	440651-0000	D		1	WASHER	
110	440659-0000	-		1	CYLINDRICAL PIN	
120	440660-0000	C		1	COMPRESSION SPRING	
130	440661-0000	C		1	COMPRESSION SPRING	
140	440663-0000	C		1	COMPRESSION SPRING	
150	484975-0000	D		1	WASHER	
160	497933-0000	C		2	BUSHING	
170	530597-0000	D		1	WASHER	
180	530598-0000	D		1	WASHER	
190	530599-0000	C		1	RING	
200	90020-0028	C		2	SLEEVE	
210	312115-0291	-		4	Screw MC6S M4x12 A280	
220	312125-0323	-		1	Screw Pan Head MCS M5X8 RFR	
225	315233-0101	-		1	Washer,Pl.Rnd.Nyl.5,2/8,H=1	
230	315202-0308	C		1	O-Ring 84,5x3 mm	
240	315204-0215	C		4	O-Ring 19,2x3 mm	
250	315402-0136	-		4	Lock Washer, FBB 4,1	
260	315754-0113	-		2	LOCKING WAE 15	

Pos	Part No	SP	UN	Qty	Description	Page No

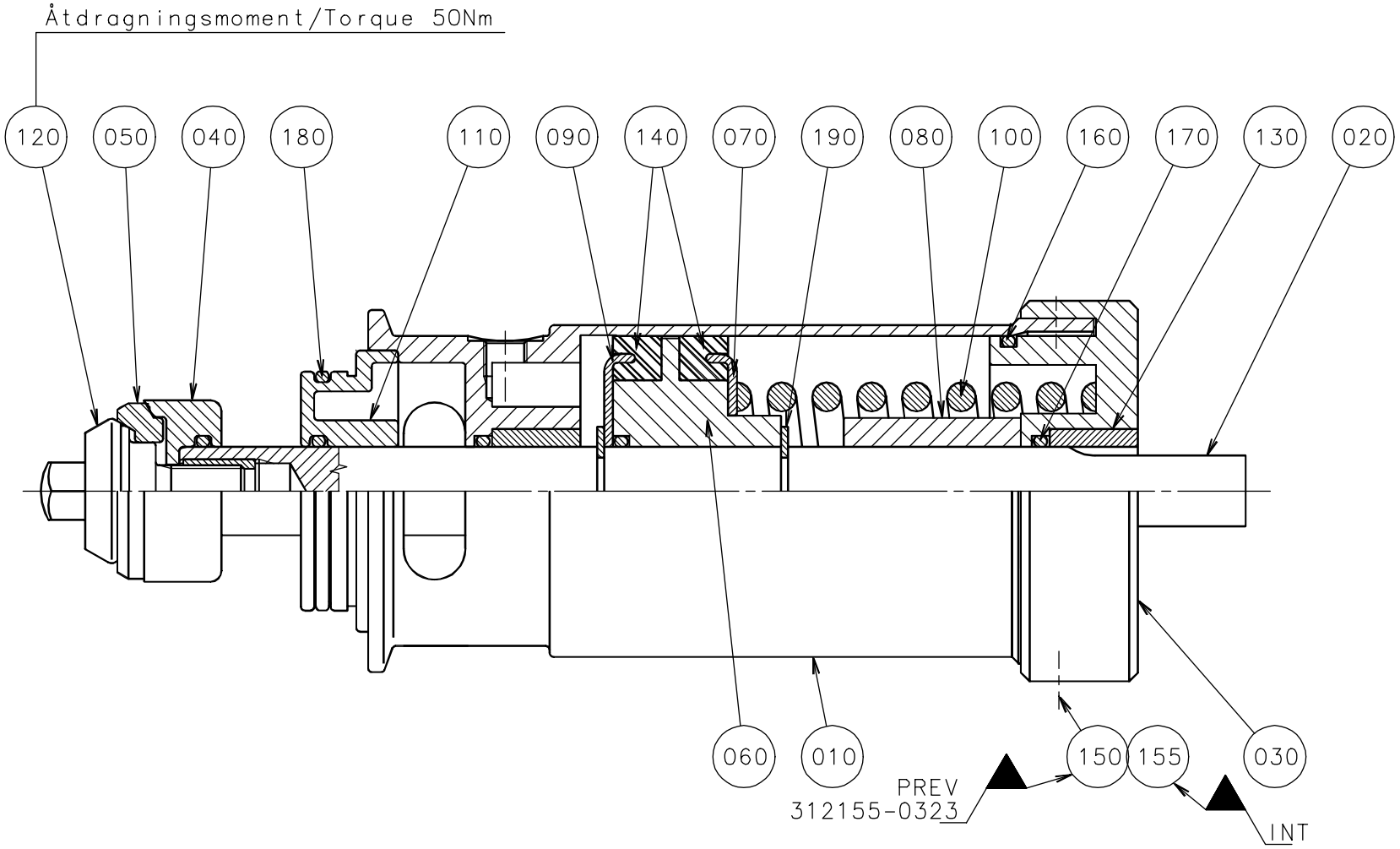

S - 539211-1
ECN 82225

Pos	Part No	SP	UN	Qty	Description	Page No
Common Parts						
010	440633-0000	D		1	CYLINDER HOUSING	
020	440636-0000	D		1	PISTON ROD	
030	440695-0000	D		1	END SECTION	
040	530587-0000	D		1	WASHER	
050	530588-0000	C		1	SEAL RING	
060	440646-0000	D		1	PISTON	
070	440652-0000	D		1	WASHER	
080	440654-0000	D		1	SPACER SLEEVE	
090	440656-0000	D		1	WASHER	
100	440662-0000	C		1	COMPRESSION SPRING	
110	440664-0000	D		1	SEALING WASHER	
120	476185-0000	C		1	VALVE CONE	
130	497933-0000	C		2	BUSHING	
140	90020-0027	C		2	SLEEVE	
150	312125-0323	-		1	Screw Pan Head MCS M5X8 RFR	
155	315233-0101	-		1	Washer,Pl.Rnd.Nyl.5,2/8,H=1	
160	315202-0304	C		1	O-Ring 64,5x3 mm	
170	315204-0215	C		5	O-Ring 19,2x3 mm	
180	315204-0301	C		1	O-Ring 49,5x3 mm	
190	315754-0113	-		2	LOCKING WAE 15	

Pos	Part No	SP	UN	Qty	Description	Page No

CLAMP RING

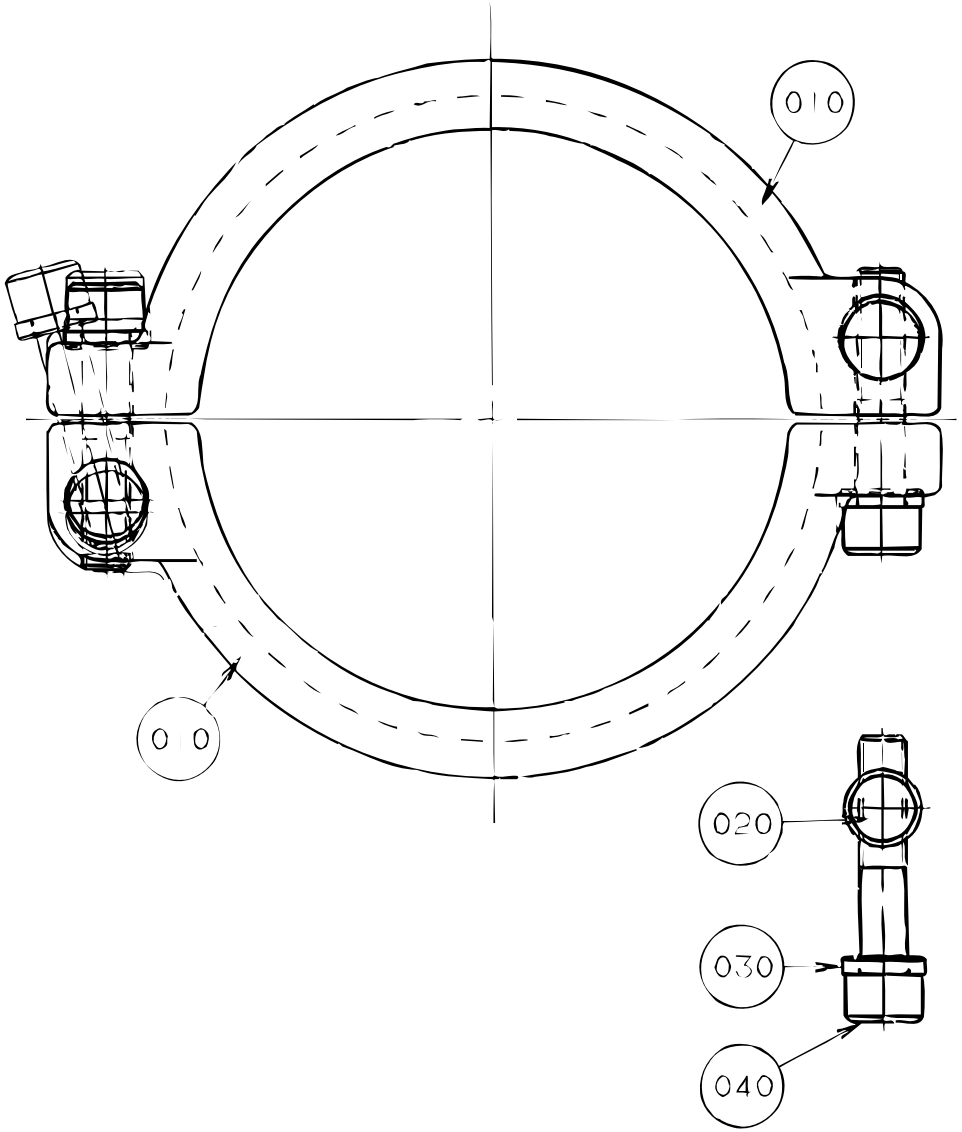

Pos	Part No	SP	UN	Qty	Description	Page No
Common Parts						
010	532117-0000	D		2	CLAMP RING	
020	497748-0000	D		2	PIN	
030	541165-0000	D		2	WASHER	
040	312115-0459	-		2	Screw MC6S M8x40 A280	

Pos	Part No	SP	UN	Qty	Description	Page No

CLAMP RING

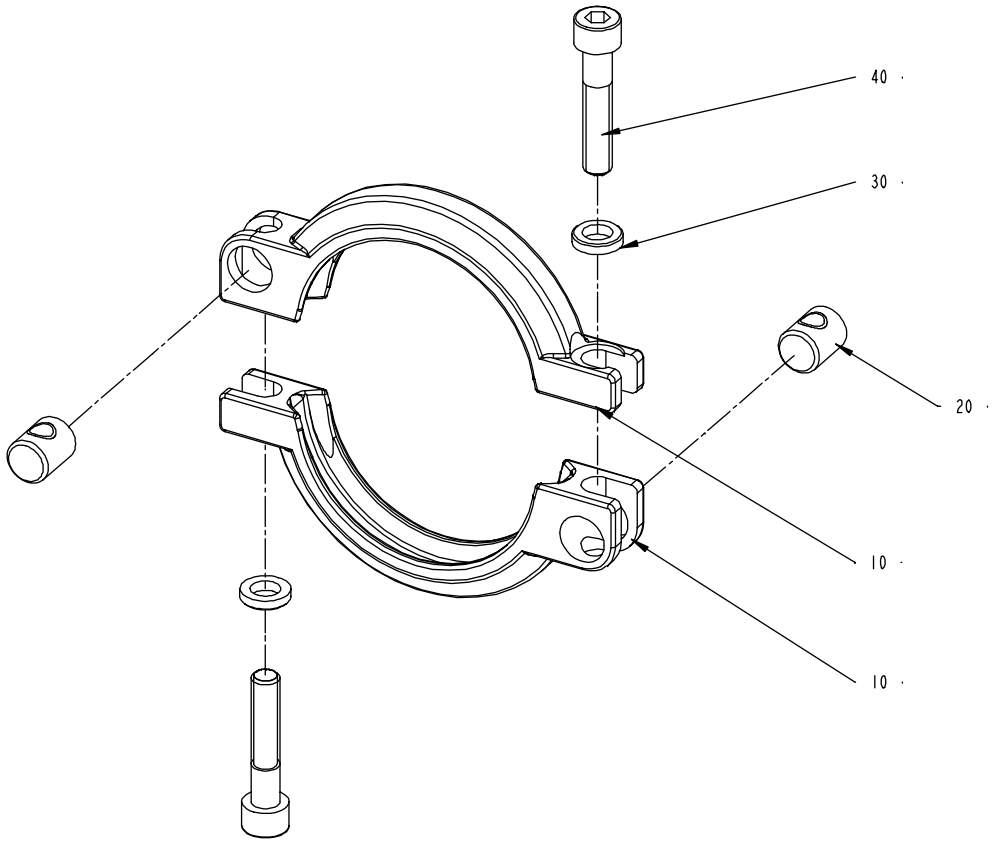

Pos	Part No	SP	UN	Qty	Description	Page No
Common Parts						
010	532118-0000	D		2	CLAMP RING	
020	497748-0000	D		2	PIN	
030	541165-0000	D		2	WASHER	
040	312115-0459	-		2	Screw MC6S M8x40 A280	

Pos	Part No	SP	UN	Qty	Description	Page No

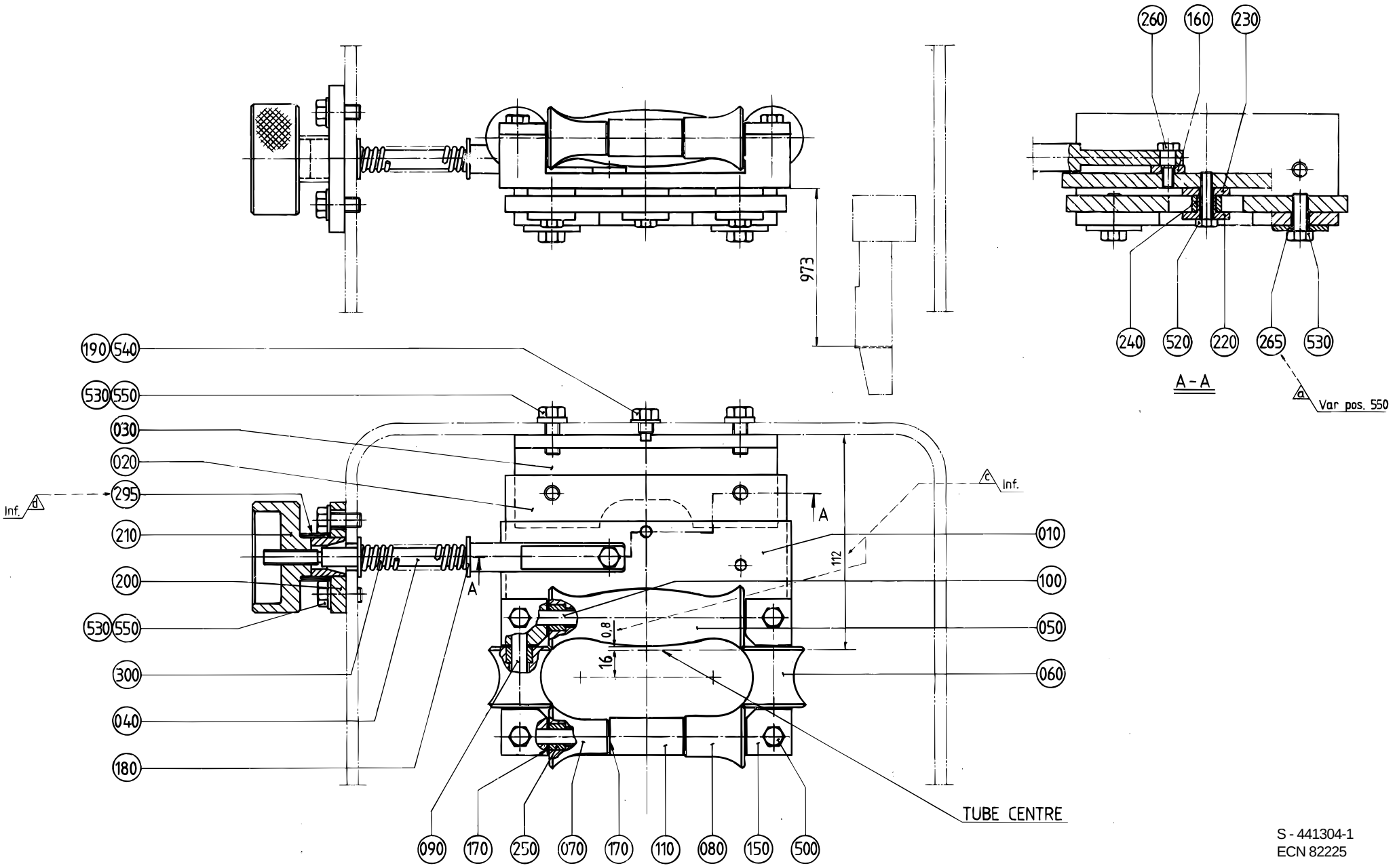

S - 441304-1
ECN 82225

Pos	Part No	SP	UN	Qty	Description	Page No
0180B OR 0236B OR 0200B OR 0187B OR 0250B OR 0284B						
010	456138-0000	-		1	PLATE	
030	456035-0000	-		1	CANTILEVER	
050	456078-0000	C		1	ROLL	
060	456079-0000	C		2	ROLL	
070	456080-0000	C		1	ROLL	
080	456081-0000	C		1	ROLL	
090	263655-0005	C		2	SHAFT	
100	456140-0000	C		1	SHAFT	
110	456141-0000	C		1	SHAFT	
150	456139-0000	-		4	LOCK PLATE	
500	312105-0368	-		4	Screw M6S M6x16 A280	
Common Parts						
020	456034-0000	-		1	SETTING PLATE	
040	256309-0000	C		1	SHAFT	
160	256312-0000	-		1	WASHER	
170	2033-0011	C		1	WASHER	
180	26490-0000	-		2	WASHER	
190	256280-0000	C		2	DOWEL	
200	257089-0000	-		1	PLATE	
210	257090-0000	-		1	SHIFTER HANDLE	
220	271717-0000	C		3	SPACER	
230	271718-0000	C		3	WASHER	
240	272797-0000	C		3	ROLL	
250	751230-0000	C		1	PLAIN BEARING	
260	456042-0000	C		1	SCREW	
265	28037-0000	-		2	WASHER	
295	491153-0000	C		1	COMPRESSION GLAND	
300	90335-0008	C		1	SPRING	
520	312105-0372	-		3	Screw M6S M6x25 A280	
530	312105-0451	-		6	Screw M6S 8x20 A280	
540	315105-0165	-		2	Washer, Plain, BRB, 8,4/16,H=1,5	
550	315115-0165	-		4	Washer, Plain, TBRB 8,4/16 H=3	

Pos	Part No	SP	UN	Qty	Description	Page No

MOVABLE FORMING RING

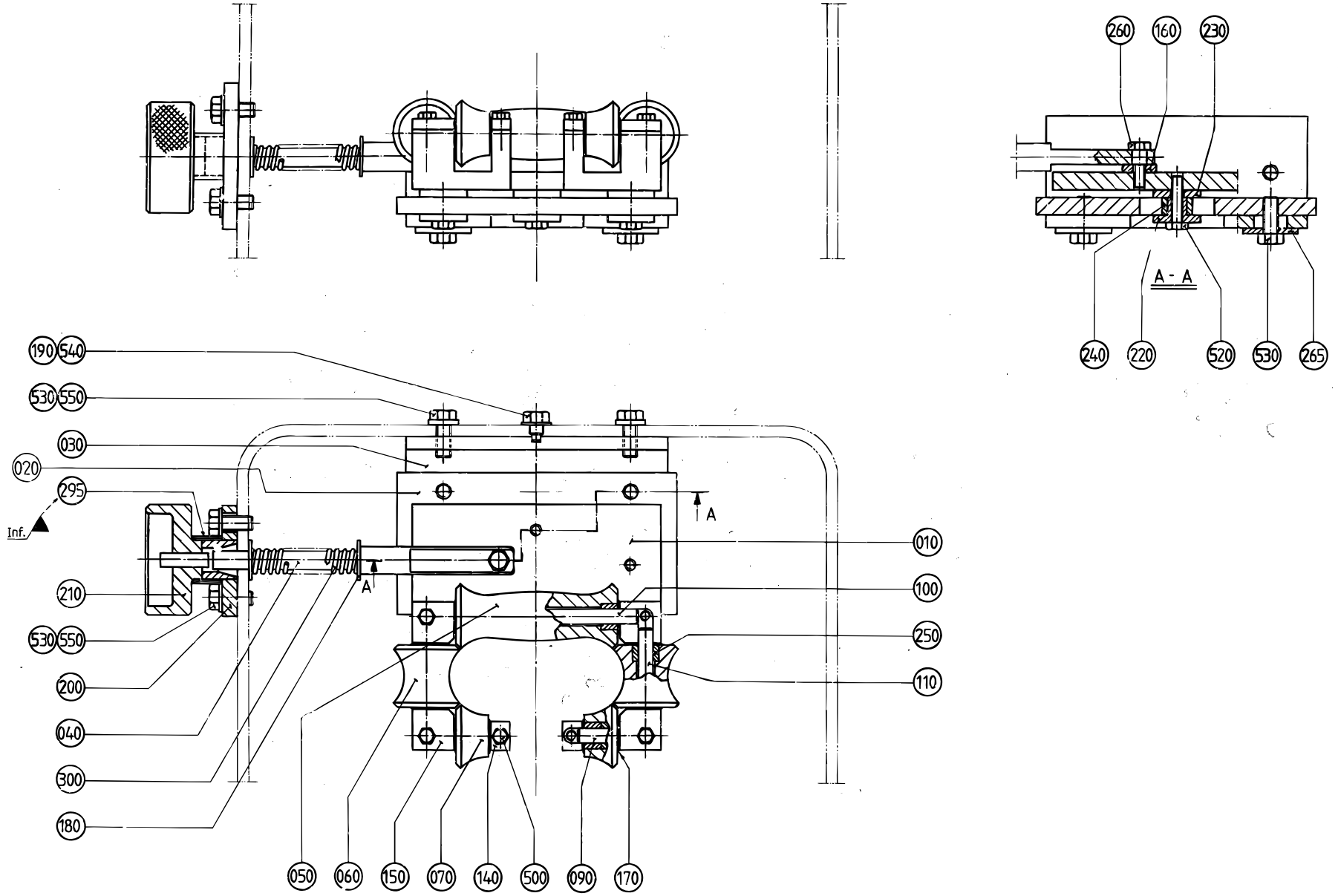

Pos	Part No	SP	UN	Qty	Description	Page No
0125S						
010	B 456905-0000	-		1	FASTENING PLATE	
030	469921-0000	-		1	CANTILEVER	
050	469088-0000	-		1	ROLL	
060	469089-0000	-		2	ROLL	
070	469090-0000	-		2	ROLL	
090	263655-0002	-		2	SHAFT	
100	263655-0019	-		1	SHAFT	
110	263655-0011	-		2	SHAFT	
140	456907-0000	-		2	LOCK PLATE	
150	456906-0000	-		4	LOCK PLATE	
500	312105-0332	-		6	Screw M6S M5x22 A280	
Common Parts						
020	456034-0000	-		1	SETTING PLATE	
040	256309-0000	C		1	SHAFT	
160	256312-0000	-		1	WASHER	
170	2033-0011	C		1	WASHER	
180	26490-0000	-		2	WASHER	
190	256280-0000	C		2	DOWEL	
200	257089-0000	-		1	PLATE	
210	257090-0000	-		1	SHIFTER HANDLE	
220	271717-0000	C		3	SPACER	
230	271718-0000	C		3	WASHER	
240	272797-0000	C		3	ROLL	
250	751230-0000	C		1	PLAIN BEARING	
260	456042-0000	C		1	SCREW	
265	28037-0000	-		2	WASHER	
295	491153-0000	C		1	COMPRESSION GLAND	
300	90335-0008	C		1	SPRING	
520	312105-0372	-		3	Screw M6S M6x25 A280	
530	312105-0451	-		6	Screw M6S 8x20 A280	
540	315105-0165	-		2	Washer, Plain, BRB, 8,4/16,H=1,5	
550	315115-0165	-		4	Washer, Plain, TBRB 8,4/16 H=3	

Pos	Part No	SP	UN	Qty	Description	Page No

MOVABLE FORMING RING

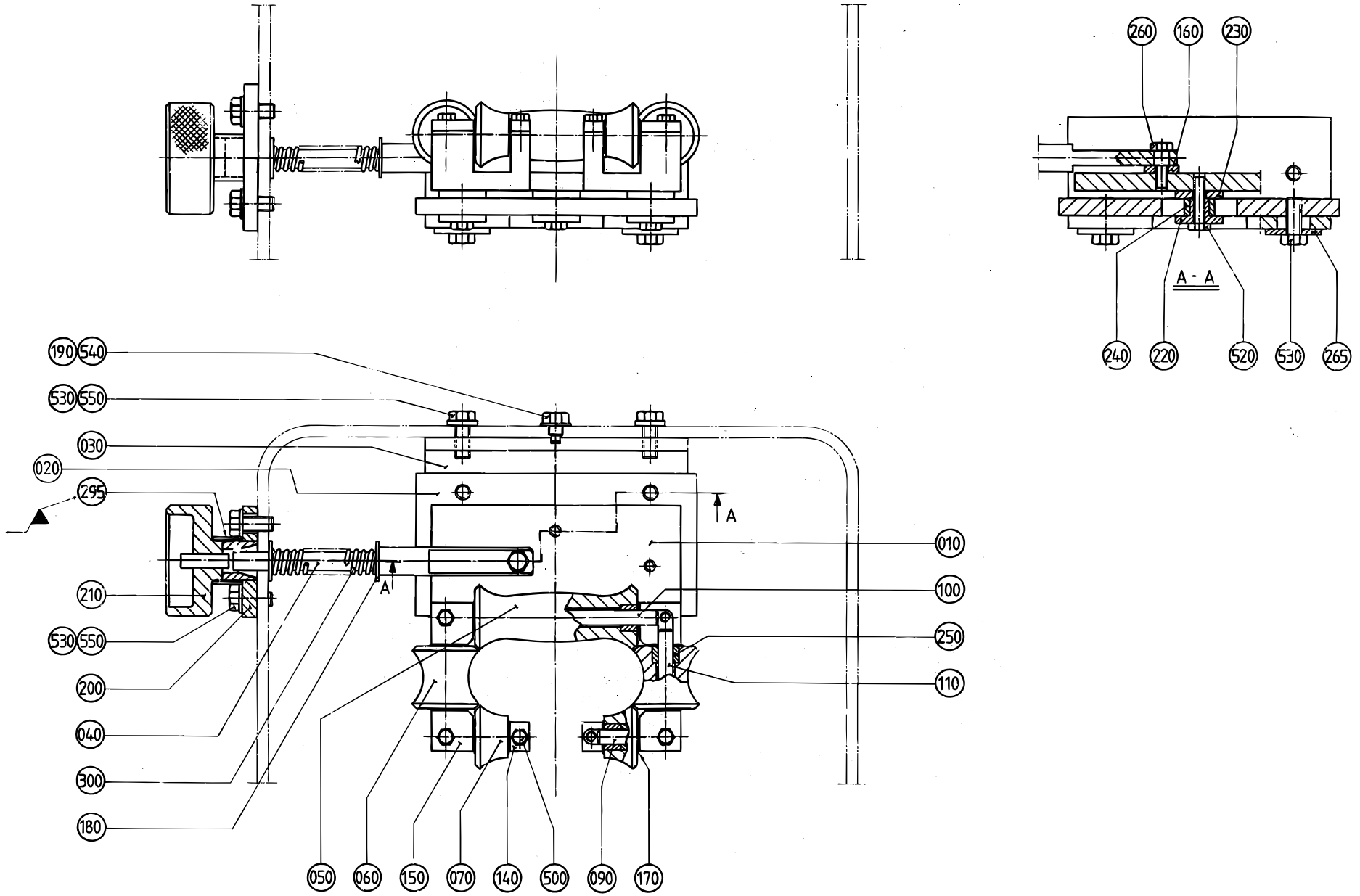

Pos	Part No	SP	UN	Qty	Description	Page No
0200S						
010	B 456905-0000	-		1	FASTENING PLATE	
030	456035-0000	-		1	CANTILEVER	
050	456908-0000	-		1	ROLL	
060	456909-0000	-		2	ROLL	
070	456910-0000	-		2	ROLL	
090	263655-0002	-		2	SHAFT	
100	263655-0019	-		1	SHAFT	
110	263655-0011	-		2	SHAFT	
140	456907-0000	-		2	LOCK PLATE	
150	456906-0000	-		4	LOCK PLATE	
500	312105-0332	-		6	Screw M6S M5x22 A280	
Common Parts						
020	456034-0000	-		1	SETTING PLATE	
040	256309-0000	C		1	SHAFT	
160	256312-0000	-		1	WASHER	
170	2033-0011	C		1	WASHER	
180	26490-0000	-		2	WASHER	
190	256280-0000	C		2	DOWEL	
200	257089-0000	-		1	PLATE	
210	257090-0000	-		1	SHIFTER HANDLE	
220	271717-0000	C		3	SPACER	
230	271718-0000	C		3	WASHER	
240	272797-0000	C		3	ROLL	
250	751230-0000	C		1	PLAIN BEARING	
260	456042-0000	C		1	SCREW	
265	28037-0000	-		2	WASHER	
295	491153-0000	C		1	COMPRESSION GLAND	
300	90335-0008	C		1	SPRING	
520	312105-0372	-		3	Screw M6S M6x25 A280	
530	312105-0451	-		6	Screw M6S 8x20 A280	
540	315105-0165	-		2	Washer, Plain, BRB, 8,4/16,H=1,5	
550	315115-0165	-		4	Washer, Plain, TBRB 8,4/16 H=3	

Pos	Part No	SP	UN	Qty	Description	Page No

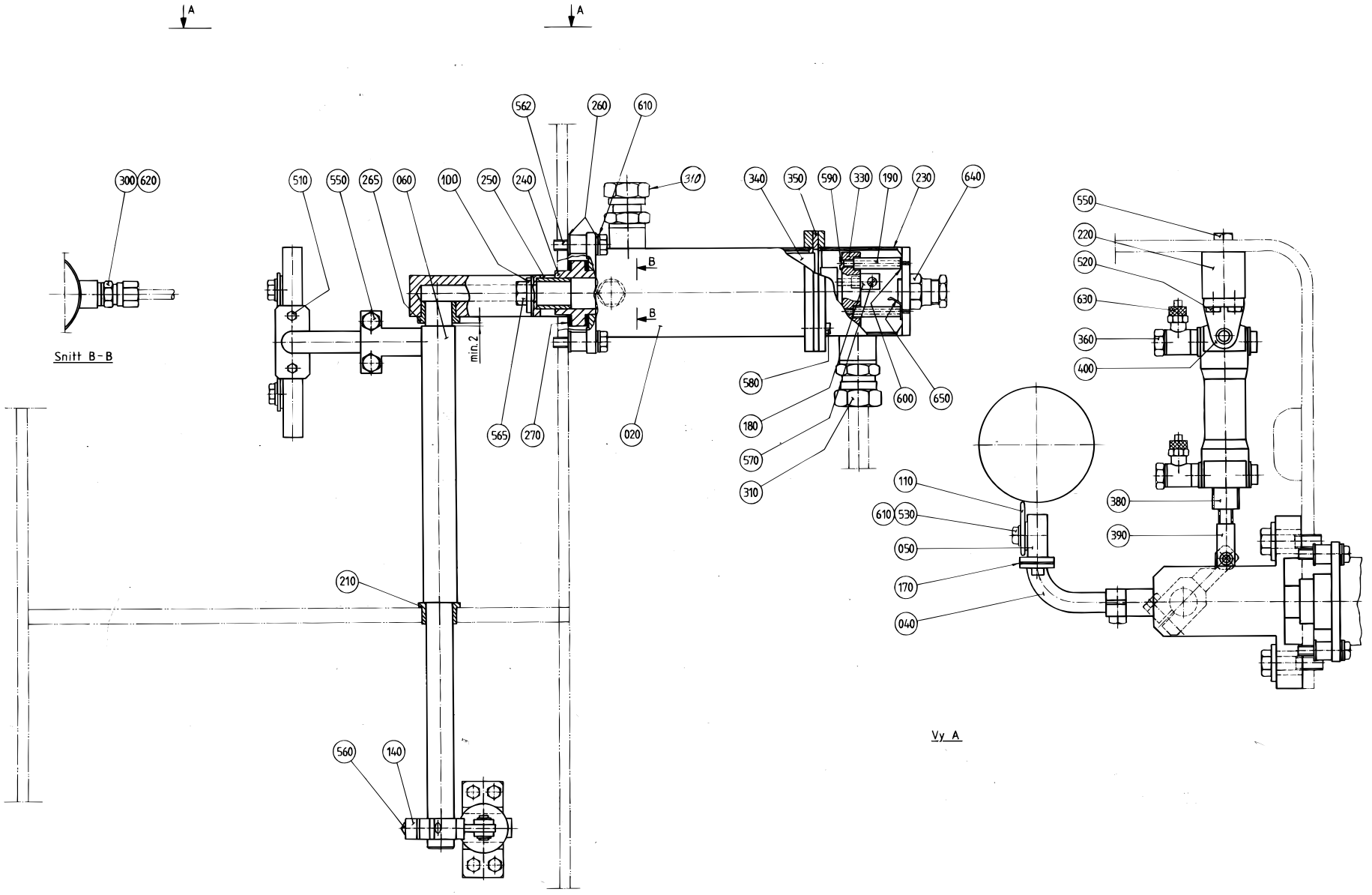

S - 1529084-1
ECN 82225

Pos	Part No	SP	UN	Qty	Description	Page No
0180B OR 0236B OR 0200B OR 0187B OR 0250B OR 0284B						
010	456153-0000	-		1	HOLDER	
050	256279-0000	-		2	ANGLE	
080	456156-0000	C		1	SHAFT	
090	263655-0003	C		2	SHAFT	
100	456077-0000	C		2	ROLL	
110	456076-0000	C		1	ROLL	
150	456154-0000	-		2	LOCK PLATE	
160	456155-0000	-		2	LOCK PLATE	
300	312105-0370	-		4	Screw M6S M6x20 A280	
340	312105-0455	-		2	Screw M6S M8x30 A280	
Common Parts						
020	751733-0000	D		1	HEATING PIPE	
040	256112-0000	D		1	BRACKET	
050	256689-0000	C		1	AIR NOZZLE	
060	272948-0002	-		1	SHAFT	
100	315125-0165	-		2	Washer, Plain Round,Chamf. 8,4/26, H=5	
110	491097-0000	C		1	HEAT GUARD	
140	256117-0000	-		1	BRACKET	
170	751015-0000	C		1	GASKET	
180	266739-0000	C		3	CABLE GLAND	
190	266740-0003	-		3	SPACER	
210	271269-0000	C		1	BUSHING	
220	271316-0000	-		1	BRACKET	
230	272083-0000	-		1	COVER	
240	295936-0000	C		1	BUSHING	
250	272287-0000	-		1	AXLE SUPPORT	
260	751018-0000	C		8	WASHER	
265	295910-0000	C		1	BUSHING	
270	751023-0000	C		2	GASKET	
300	90030-0184	-		1	Conn. Str. GA-6-G1/8	
310	90030-0187	-		2	Conn. Str. GA-12-G3/8	
330	B 90125-0020	C		1	PLATE	
340	90206-0031	C		1	HEATING ELEMENT 700+1200W,220V	
350	90206-0322	C		1	GASKET	
360	90235-0274	C		2	"THROTTLE CHECK VALVES,G1/8"""	
380	B 90239-0073	-		1	CYLINDER	
390	90239-0088	C		1	BRACKET	
400	90239-0099	C		1	BRACKET	
510	312105-0287	-		2	Screw M6S M4x8 A280	
530	312105-0364	-		4	Screw M6S M6x10 A280	
540	312105-0366	-		2	Screw M6S M6x12 A280	
550	312105-0368	-		2	Screw M6S M6x16 A280	
560	312105-0370	-		1	Screw M6S M6x20 A280	
562	312105-0372	-		4	Screw M6S M6x25 A280	
565	312105-0455	-		2	Screw M6S M8x30 A280	
570	312125-0220	-		3	Screw Slot.Pan Hd. MCS 3x6 A480	
575	312125-0285	-		1	Screw Slot.Pan Hd. MCS 4x6 A480	
580	312125-0291	-		4	Screw Pan Head MCS M4x12 RFR	
590	312145-0228	-		3	Screw Counters.Slot.Hd. MFS 3x16 SS	
610	315105-0153	-		6	Washer, Plain, BRB, 6,4/12,H=1,5	
620	315234-0109	C		1	Washer,Pl.Rnd.Cu.10,3/13,5 H=1,0	
630	342797-0121	C		2	Conn. Banjo, Ringpiece 6-1/8	
640	352103-0106	-		1	CABLE GLAND ST 11	
650	353104-0130	C		1	CABLE SHOEYAV 025 M 4*	

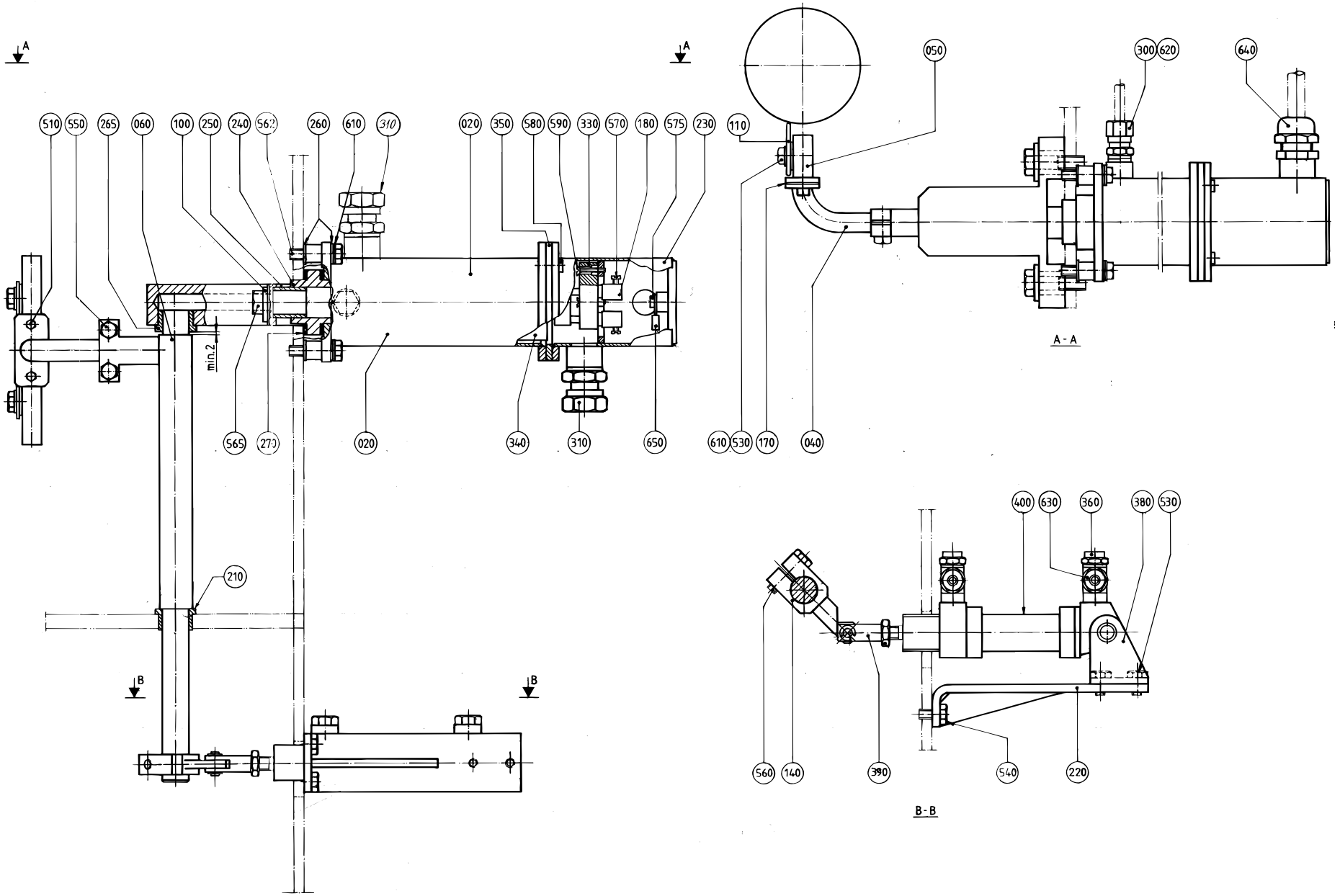
A
A
B
B
510
550
265
060
100
250
240
562
260
610
310
020
350
580
590
330
570
180
575
230
110
050
300
620
640
min.2
565
270
020
340
310
650
610
530
170
040
A - A
210
400
630
360
380
530
560
140
390
540
220
B - B

Pos	Part No	SP	UN	Qty	Description	Page No
Common Parts						
020	751733-0000	D		1	HEATING PIPE	
040	256112-0000	D		1	BRACKET	
050	256689-0000	C		1	AIR NOZZLE	
060	272948-0003	C		1	SHAFT	
100	315125-0165	-		2	Washer, Plain Round,Chamf. 8,4/26, H=5	
110	491097-0000	C		1	HEAT GUARD	
140	491545-0000	D		1	BRACKET	
170	751015-0000	C		1	GASKET	
180	266739-0000	C		3	CABLE GLAND	
210	271269-0000	C		1	BUSHING	
220	491224-0000	-		1	BRACKET	
230	491223-0000	D		1	COVER	
240	295936-0000	C		1	BUSHING	
250	272287-0000	-		1	AXLE SUPPORT	
260	751018-0000	C		8	WASHER	
265	295910-0000	C		1	BUSHING	
270	751023-0000	C		2	GASKET	
300	90030-0184	-		1	Conn. Str. GA-6-G1/8	
310	90030-0187	-		2	Conn. Str. GA-12-G3/8	
330	B 90125-0020	C		1	PLATE	
340	90206-0031	C		1	HEATING ELEMENT 700+1200W,220V	
350	90206-0322	C		1	GASKET	
360	90235-0282	C		2	THROTTLE CHECK VALVES,G1/8	
380	90239-0487	-		1	REAR,CLEVIS,MINI-ISO 20-25	
390	90239-0532	C		1	ROD END,CLEVIS WITH AXLE M8	
400	90239-0847	C		1	Double acting, Mini-ISO, CYL.20-50	
510	312105-0287	-		2	Screw M6S M4x8 A280	
530	312105-0364	-		4	Screw M6S M6x10 A280	
540	312105-0366	-		2	Screw M6S M6x12 A280	
550	312105-0368	-		2	Screw M6S M6x16 A280	
560	312105-0370	-		1	Screw M6S M6x20 A280	
562	312105-0372	-		4	Screw M6S M6x25 A280	
565	312105-0455	-		2	Screw M6S M8x30 A280	
570	312125-0220	-		3	Screw Slot.Pan Hd. MCS 3x6 A480	
575	312125-0285	-		1	Screw Slot.Pan Hd. MCS 4x6 A480	
580	312125-0291	-		4	Screw Pan Head MCS M4x12 RFR	
590	312145-0228	-		3	Screw Counters.Slot.Hd. MFS 3x16 SS	
610	315105-0153	-		6	Washer, Plain, BRB, 6,4/12,H=1,5	
620	315234-0109	C		1	Washer,Pl.Rnd.Cu.10,3/13,5 H=1,0	
630	342797-0121	C		2	Conn. Banjo, Ringpiece 6-1/8	
640	352103-0106	-		1	CABLE GLAND ST 11	
650	353104-0130	C		1	CABLE SHOEYAV 025 M 4*	

Pos	Part No	SP	UN	Qty	Description	Page No

UPPER TUBE SUPPORT

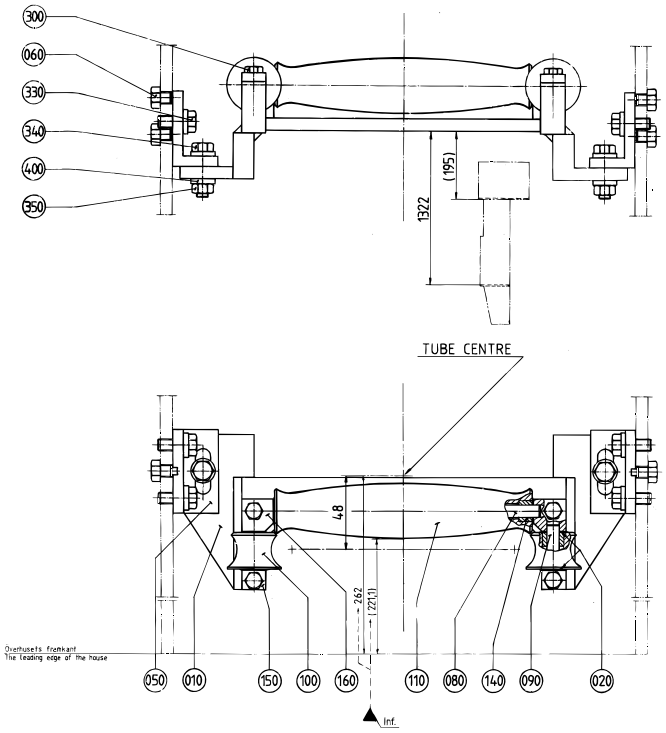

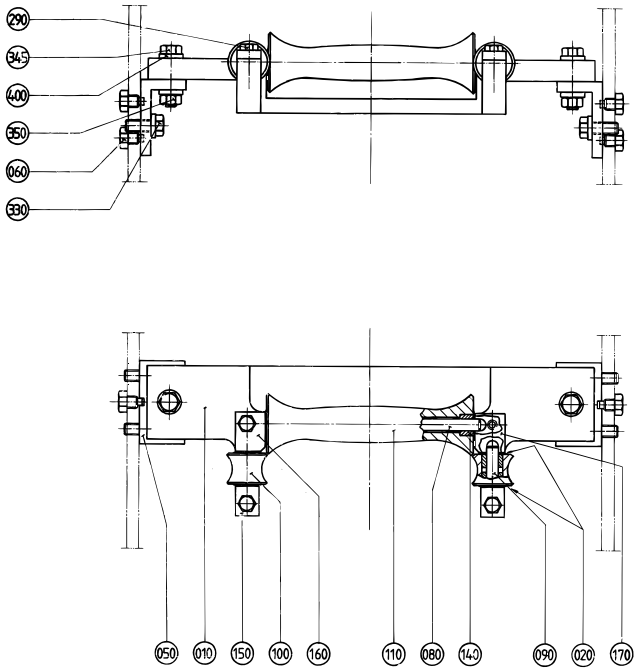

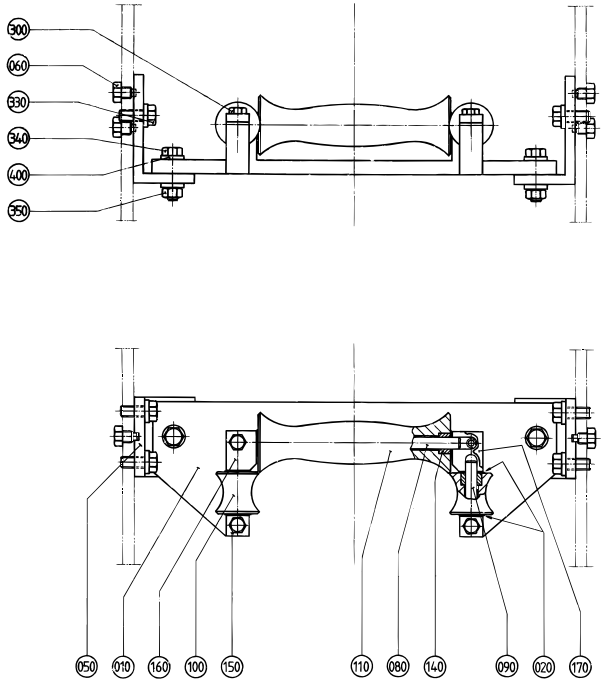

S - 441307-1, -2, -3
ECN 82225

Pos	Part No	SP	UN	Qty	Description	Page No
0125S						
010	469078-0000	-		1	HOLDER	
050	256279-0000	-		2	ANGLE	
080	263655-0016	-		1	SHAFT	
090	263655-0021	-		2	SHAFT	
100	469083-0000	-		2	ROLL	
110	469082-0000	-		1	ROLL	
150	469081-0000	-		2	LOCK PLATE	
160	469079-0000	-		1	LOCK PLATE	
170	469080-0000	-		1	LOCK PLATE	
290	312105-0368	-		4	Screw M6S M6x16 A280	
345	312105-0457	-		2	Screw M6S M8x35 A280	
0200S						
010	B 469041-0000	-		1	HOLDER	
050	469047-0000	-		2	ANGLE	
080	263655-0016	-		1	SHAFT	
090	263655-0004	-		2	SHAFT	
100	469046-0000	-		2	ROLL	
110	469045-0000	-		1	ROLL	
150	469044-0000	-		2	LOCK PLATE	
160	469042-0000	-		1	LOCK PLATE	
170	469043-0000	-		1	LOCK PLATE	
300	312105-0370	-		4	Screw M6S M6x20 A280	
340	312105-0455	-		2	Screw M6S M8x30 A280	
0180B OR 0236B OR 0200B OR 0187B OR 0250B OR 0284B						
010	456153-0000	-		1	HOLDER	
050	256279-0000	-		2	ANGLE	
080	456156-0000	C		1	SHAFT	
090	263655-0003	C		2	SHAFT	
100	456077-0000	C		2	ROLL	
110	456076-0000	C		1	ROLL	
150	456154-0000	-		2	LOCK PLATE	
160	456155-0000	-		2	LOCK PLATE	
300	312105-0370	-		4	Screw M6S M6x20 A280	
340	312105-0455	-		2	Screw M6S M8x30 A280	
Common Parts						
020	2033-0011	C		6	WASHER	
060	256280-0000	C		4	DOWEL	
140	751230-0000	C		6	PLAIN BEARING	
330	312105-0451	-		4	Screw M6S 8x20 A280	
350	312605-0318	-		2	Nut Hex. M6M M8 A280	
400	315115-0165	-		8	Washer, Plain, TBRB 8,4/16 H=3	

Pos	Part No	SP	UN	Qty	Description	Page No

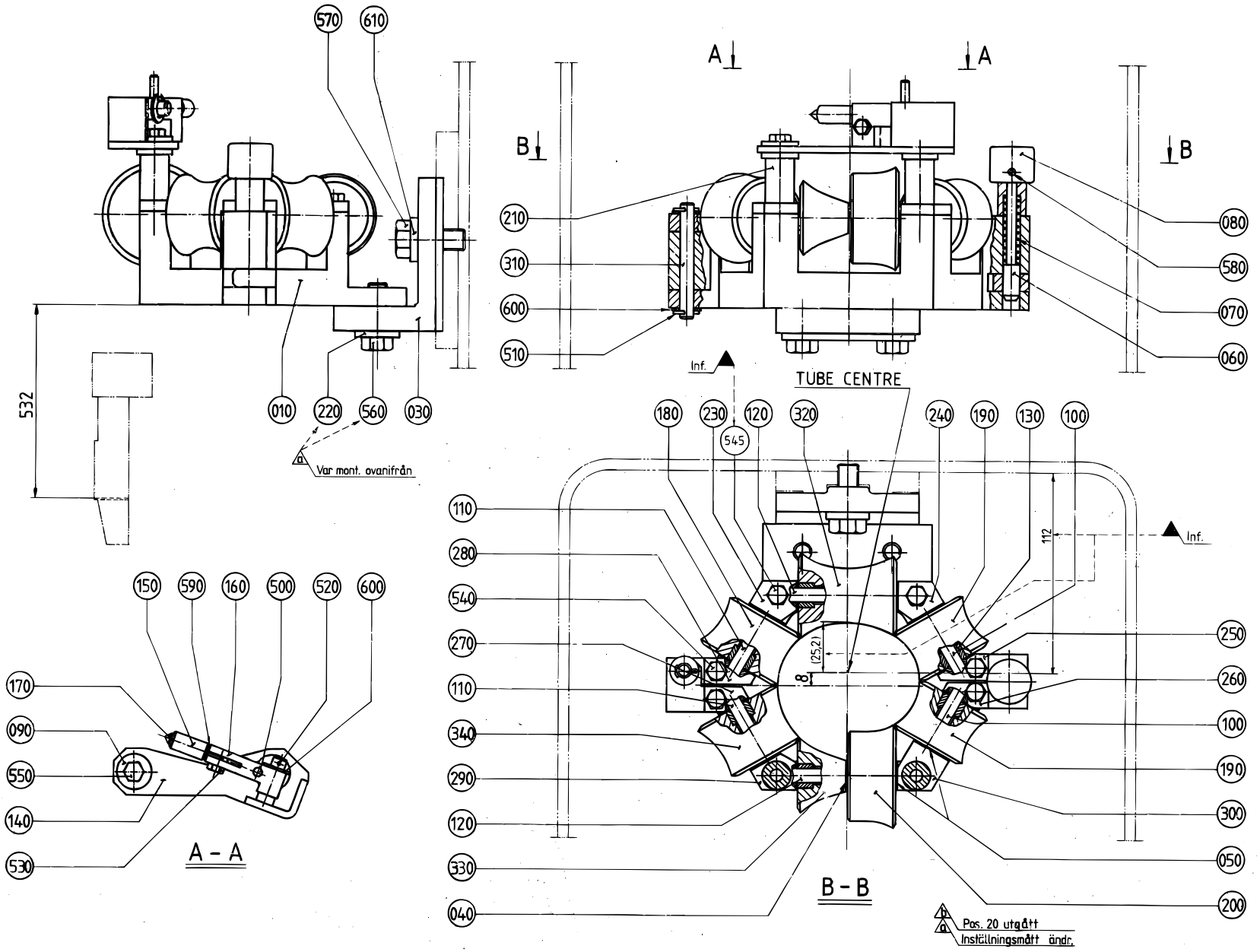
570
610
532
010
220
560
030
Var mont. ovanifrån
A
A
B
B
210
310
600
510
080
580
070
060
Inf.
TUBE CENTRE
180
230
120
320
545
240
190
130
100
110
280
540
270
110
340
290
120
330
040
112
Inf.
(25.2)
8
250
260
100
190
300
050
200
150
590
160
500
520
600
170
090
550
140
530
A - A
B - B
Pos. 20 utgått
Inställningsmått ändr.

Pos	Part No	SP	UN	Qty	Description	Page No
0180B OR 0236B OR 0200B OR 0187B OR 0250B OR 0284B						
010	469524-0000	-		1	BRACKET	
040	2033-0008	C		3	WASHER	
050	2033-0011	C		24	WASHER	
090	257175-0000	-		4	WASHER	
100	263655-0004	C		2	SHAFT	
110	263655-0006	C		2	SHAFT	
120	263655-0009	C		2	SHAFT	
130-02	751230-0000	C		14	PLAIN BEARING	
140	441918-0000	-		1	BRACKET	
150	451117-0000	C		1	ROLL	
160	451148-0000	-		1	BRACKET	
170	451149-0000	C		1	SHAFT	
180	456082-0000	C		1	ROLL	
190	456085-0000	C		2	ROLL	
200	456086-0000	C		1	ROLL	
210	456181-0000	-		2	SPACER	
230	456183-0000	-		1	LOCKING PLATE	
240	456184-0000	-		1	LOCKING PLATE	
250	456185-0000	-		1	LOCK PLATE	
260	456186-0000	-		1	LOCK PLATE	
270	456187-0000	-		1	LOCK PLATE	
280	456188-0000	-		1	LOCK PLATE	
290	456198-0000	-		1	LOCK PLATE	
300	456199-0000	-		1	LOCK PLATE	
320	456304-0000	C		1	ROLL	
330	456305-0000	C		1	ROLL	
340	456306-0000	C		1	ROLL	
500	311103-0312	-		1	Pin, Parallell, m6, 5x25	
520	311411-0165	-		1	SPLIT PIN SP2,5X16RFR	
530	312105-0325	-		1	Screw M6S M5x10 A280	
540	312105-0368	-		4	Screw M6S M6x16 A280	
545	312105-0370	-		2	Screw M6S M6x20 A280	
550	312105-0381	-		2	Screw M6S M6x55 A280	
590	315105-0136	-		1	Washer, Plain, BRB, 4,3/8,H=0,8	
600-02	315105-0165	-		3	Washer, Plain, BRB, 8,4/16,H=1,5	
Common Parts						
030	456230-0000	-		1	ANGLE BRACKET	
060	35918-0000	C		1	SHAFT	
070	35919-0000	C		1	COMPRESSION SPRING	
080	36325-0000	C		1	KNOB	
220	456182-0000	-		1	PLATE	
310	751318-0000	-		1	SHAFT	
510	311411-0150	-		2	SPLIT PIN SP2X12RFR	
560	312105-0495	-		2	Screw M6S M10x30 A280	
570	312105-0536	-		1	Screw M6S M12x30 A280	
580	312318-0285	-		1	Screw,Sock.Set Cuppoint MSK6SS M4x6 A4	
610	315115-0178	-		1	Washer, Plain, TBRB 13/24 H=4	

DIVIDED FORMING RING

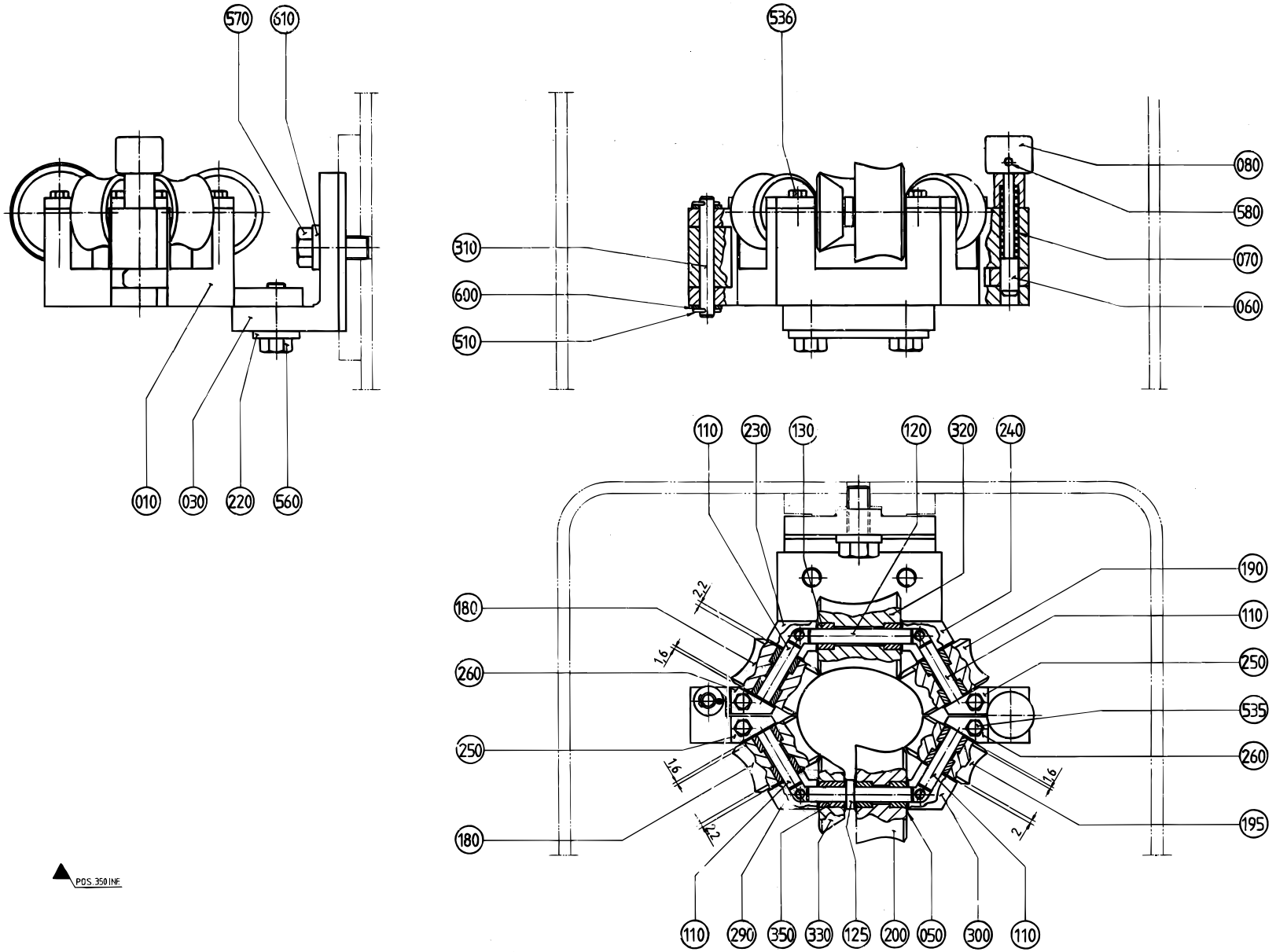

POS. 350 INF.

OBSERVERA HUR RULLARNA ÄR VÄNDA.
PLEASE NOTE HOW THE POLLERS ARE TURNED.

S - 441486-2
ECN 82225

Pos	Part No	SP	UN	Qty	Description	Page No
0125S						
010	469745-0000	-		1	BRACKET	
050-02	2033-0011	C		28	WASHER	
110	263655-0018	C		4	SHAFT	
120	263655-0007	-		1	SHAFT	
125	456881-0000	C		1	SHAFT	
130	751230-0000	C		12	PLAIN BEARING	
180	469126-0000	C		2	ROLL	
190	469125-0000	C		1	ROLL	
195	469127-0000	C		1	ROLL	
200	469128-0000	C		1	ROLL	
230	456869-0000	-		1	LOCKING PLATE	
240	456871-0000	-		1	LOCK PLATE	
250	456873-0000	-		2	LOCK PLATE	
260	456874-0000	-		2	LOCK PLATE	
290	456870-0000	-		1	LOCK PLATE	
300	456872-0000	-		1	LOCK PLATE	
320	469124-0000	C		1	ROLL	
330	469136-0000	C		1	ROLL	
350	751231-0000	C		1	PLAIN BEARING	
535	312105-0329	-		4	Screw M6S M5x16 A280	
536	312105-0332	-		4	Screw M6S M5x22 A280	
600	315105-0165	-		2	Washer, Plain, BRB, 8,4/16,H=1,5	
Common Parts						
030	456230-0000	-		1	ANGLE BRACKET	
060	35918-0000	C		1	SHAFT	
070	35919-0000	C		1	COMPRESSION SPRING	
080	36325-0000	C		1	KNOB	
220	456182-0000	-		1	PLATE	
310	751318-0000	-		1	SHAFT	
510	311411-0150	-		2	SPLIT PIN SP2X12RFR	
560	312105-0495	-		2	Screw M6S M10x30 A280	
570	312105-0536	-		1	Screw M6S M12x30 A280	
580	312318-0285	-		1	Screw,Sock.Set Cuppoint MSK6SS M4x6 A4	
610	315115-0178	-		1	Washer, Plain, TBRB 13/24 H=4	

Pos	Part No	SP	UN	Qty	Description	Page No

0

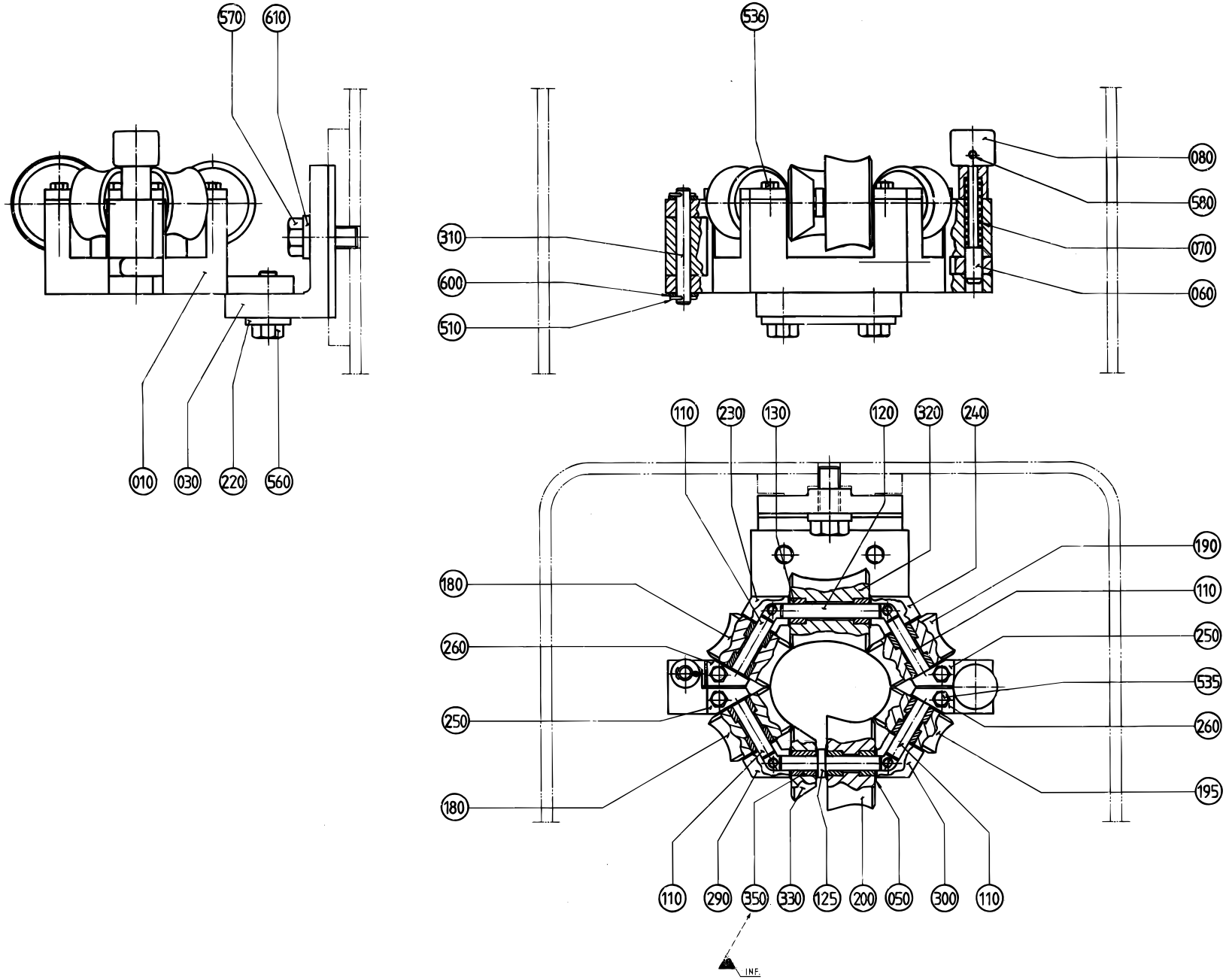

S - 441486-3
ECN 82225

Pos	Part No	SP	UN	Qty	Description	Page No
0200S						
010	469745-0000	-		1	BRACKET	
050-02	2033-0011	C		28	WASHER	
110	263655-0018	C		4	SHAFT	
120	263655-0007	-		1	SHAFT	
125	456881-0000	C		1	SHAFT	
130	751230-0000	C		12	PLAIN BEARING	
180	490549-0000	C		2	ROLL	
190	490548-0000	C		1	ROLL	
195	490550-0000	C		1	ROLL	
200	490551-0000	C		1	ROLL	
230	456869-0000	-		1	LOCKING PLATE	
240	456871-0000	-		1	LOCK PLATE	
250	456873-0000	-		2	LOCK PLATE	
260	456874-0000	-		2	LOCK PLATE	
290	456870-0000	-		1	LOCK PLATE	
300	456872-0000	-		1	LOCK PLATE	
320	490547-0000	C		1	ROLL	
330	490552-0000	C		1	ROLL	
350	751231-0000	C		1	PLAIN BEARING	
535	312105-0329	-		4	Screw M6S M5x16 A280	
536	312105-0332	-		4	Screw M6S M5x22 A280	
600	315105-0165	-		2	Washer, Plain, BRB, 8,4/16,H=1,5	
Common Parts						
030	456230-0000	-		1	ANGLE BRACKET	
060	35918-0000	C		1	SHAFT	
070	35919-0000	C		1	COMPRESSION SPRING	
080	36325-0000	C		1	KNOB	
220	456182-0000	-		1	PLATE	
310	751318-0000	-		1	SHAFT	
510	311411-0150	-		2	SPLIT PIN SP2X12RFR	
560	312105-0495	-		2	Screw M6S M10x30 A280	
570	312105-0536	-		1	Screw M6S M12x30 A280	
580	312318-0285	-		1	Screw,Sock.Set Cuppoint MSK6SS M4x6 A4	
610	315115-0178	-		1	Washer, Plain, TBRB 13/24 H=4	

Pos	Part No	SP	UN	Qty	Description	Page No

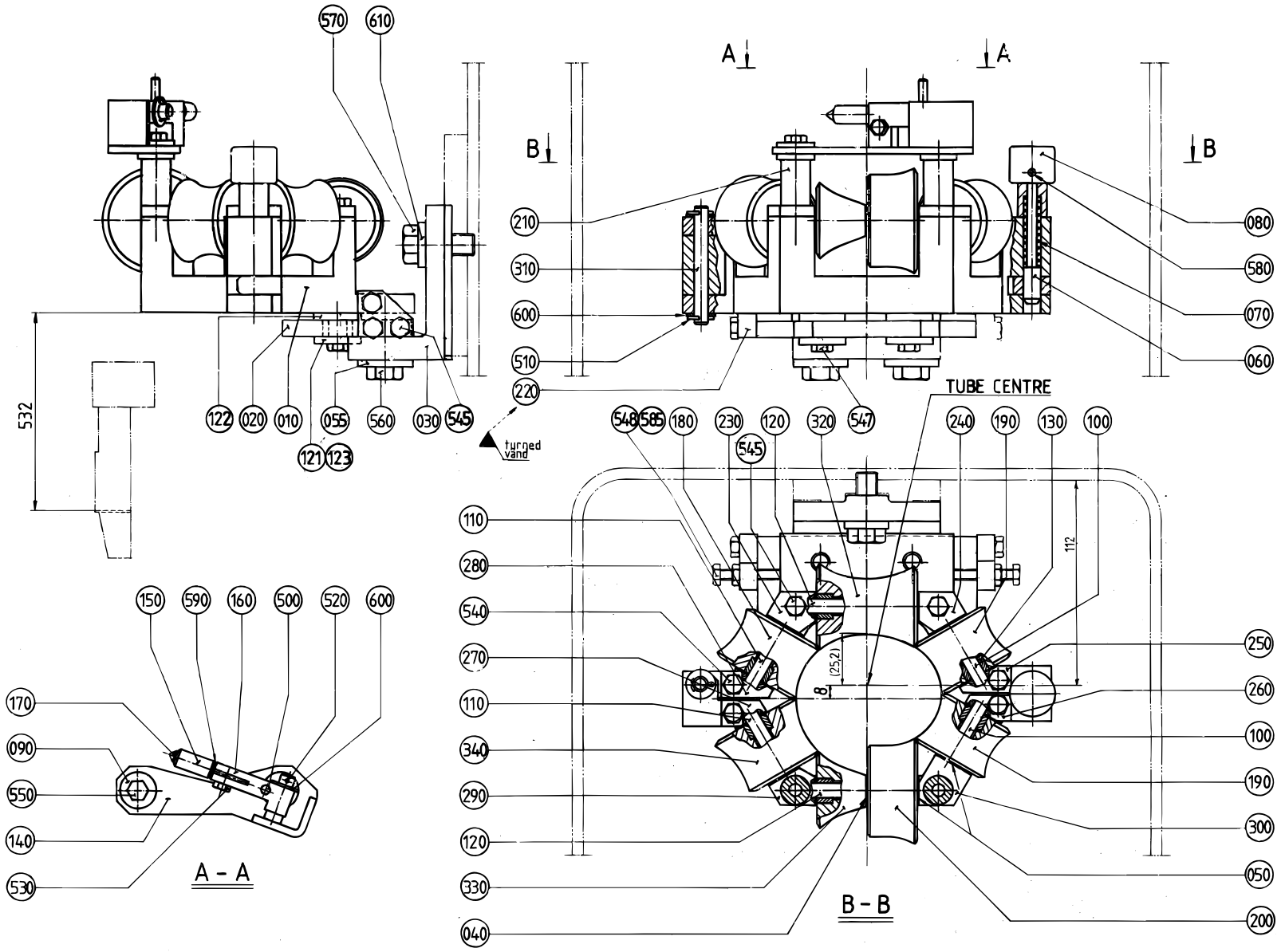
570
610
A
A
B
B
210
310
600
510
220
080
580
070
060
532
122
020
010
055
560
030
545
121
123
turned vand
TUBE CENTRE
548
585
180
230
120
320
547
240
190
130
100
545
110
280
540
270
110
340
290
120
330
040
112
(25,2)
8
250
260
100
190
300
050
200
150
590
160
500
520
600
170
090
550
140
530
A - A
B - B

Pos	Part No	SP	UN	Qty	Description	Page No
0180B OR 0236B OR 0200B OR 0187B OR 0250B OR 0284B						
010	469524-0000	-		1	BRACKET	
040	2033-0008	C		3	WASHER	
050	2033-0011	C		24	WASHER	
090	257175-0000	-		4	WASHER	
100	263655-0004	C		2	SHAFT	
110	263655-0006	C		2	SHAFT	
120	263655-0009	C		2	SHAFT	
130-02	751230-0000	C		14	PLAIN BEARING	
140	441918-0000	-		1	BRACKET	
150	451117-0000	C		1	ROLL	
160	451148-0000	-		1	BRACKET	
170	451149-0000	C		1	SHAFT	
180	456082-0000	C		1	ROLL	
190	456085-0000	C		2	ROLL	
200	456086-0000	C		1	ROLL	
210	456181-0000	-		2	SPACER	
230	456183-0000	-		1	LOCKING PLATE	
240	456184-0000	-		1	LOCKING PLATE	
250	456185-0000	-		1	LOCK PLATE	
260	456186-0000	-		1	LOCK PLATE	
270	456187-0000	-		1	LOCK PLATE	
280	456188-0000	-		1	LOCK PLATE	
290	456198-0000	-		1	LOCK PLATE	
300	456199-0000	-		1	LOCK PLATE	
320	456304-0000	C		1	ROLL	
330	456305-0000	C		1	ROLL	
340	456306-0000	C		1	ROLL	
500	311103-0312	-		1	Pin, Parallell, m6, 5x25	
520	311411-0165	-		1	SPLIT PIN SP2,5X16RFR	
530	312105-0325	-		1	Screw M6S M5x10 A280	
540	312105-0368	-		4	Screw M6S M6x16 A280	
545	312105-0370	-		2	Screw M6S M6x20 A280	
550	312105-0381	-		2	Screw M6S M6x55 A280	
590	315105-0136	-		1	Washer, Plain, BRB, 4,3/8,H=0,8	
600-02	315105-0165	-		3	Washer, Plain, BRB, 8,4/16,H=1,5	

Pos	Part No	SP	UN	Qty	Description	Page No

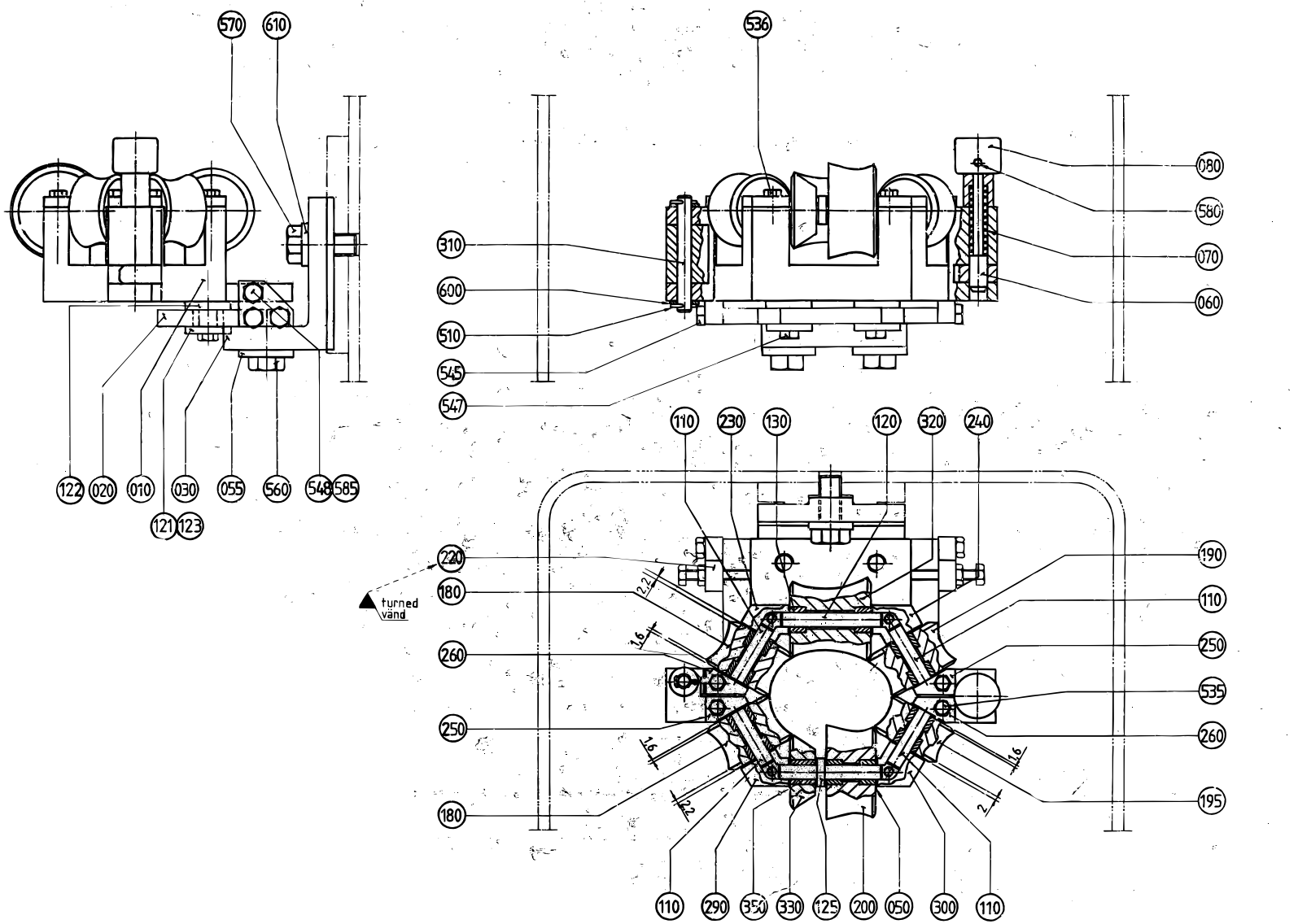

OBSERVERA HUR RULLARNA ÄR VÄNDA.
PLEASE NOTE HOW THE ROLLERS ARE TURNED.

Pos	Part No	SP	UN	Qty	Description	Page No
0125S						
010	469745-0000	-		1	BRACKET	
020	751603-0000	-		1	SETTING PLATE	
030	491907-0000	-		1	ANGLE BRACKET	
050	2033-0011	C		14	WASHER	
110	263655-0018	C		4	SHAFT	
120	263655-0007	-		1	SHAFT	
125	456881-0000	C		1	SHAFT	
130	751230-0000	C		12	PLAIN BEARING	
180	469126-0000	C		2	ROLL	
190	469125-0000	C		1	ROLL	
195	469127-0000	C		1	ROLL	
200	469128-0000	C		1	ROLL	
230	456869-0000	-		1	LOCKING PLATE	
240	456871-0000	-		1	LOCK PLATE	
250	456873-0000	-		2	LOCK PLATE	
260	456874-0000	-		2	LOCK PLATE	
290	456870-0000	-		1	LOCK PLATE	
300	456872-0000	-		1	LOCK PLATE	
320	469124-0000	C		1	ROLL	
330	469136-0000	C		1	ROLL	
350	751231-0000	C		1	PLAIN BEARING	
535	312105-0329	-		4	Screw M6S M5x16 A280	
536	312105-0332	-		4	Screw M6S M5x22 A280	
545	312105-0370	-		4	Screw M6S M6x20 A280	
600	315105-0165	-		2	Washer, Plain, BRB, 8,4/16,H=1,5	
Common Parts						
055	28037-0000	-		2	WASHER	
060	35918-0000	C		1	SHAFT	
070	35919-0000	C		1	COMPRESSION SPRING	
080	36325-0000	C		1	KNOB	
121	271717-0000	-		2	SPACER	
122	271718-0000	-		2	WASHER	
123	272797-0000	-		2	ROLL	
220	751209-0000	-		2	PLATE	
310	751318-0000	-		1	SHAFT	
510	311411-0150	-		2	SPLIT PIN SP2X12RFR	
547	312105-0374	-		2	Screw M6S M6x30 A280	
548	312105-0376	-		2	Screw M6S M6S M6x35 A280	
560	312105-0453	-		2	Screw M6S M8x25 A280	
570	312105-0536	-		1	Screw M6S M12x30 A280	
580	312318-0285	-		1	Screw,Sock.Set Cuppoint MSK6SS M4x6 A4	
585	312605-0316	-		2	Nut Hex. M6M M6 A280	
610	315115-0178	-		1	Washer, Plain, TBRB 13/24 H=4	

Pos	Part No	SP	UN	Qty	Description	Page No

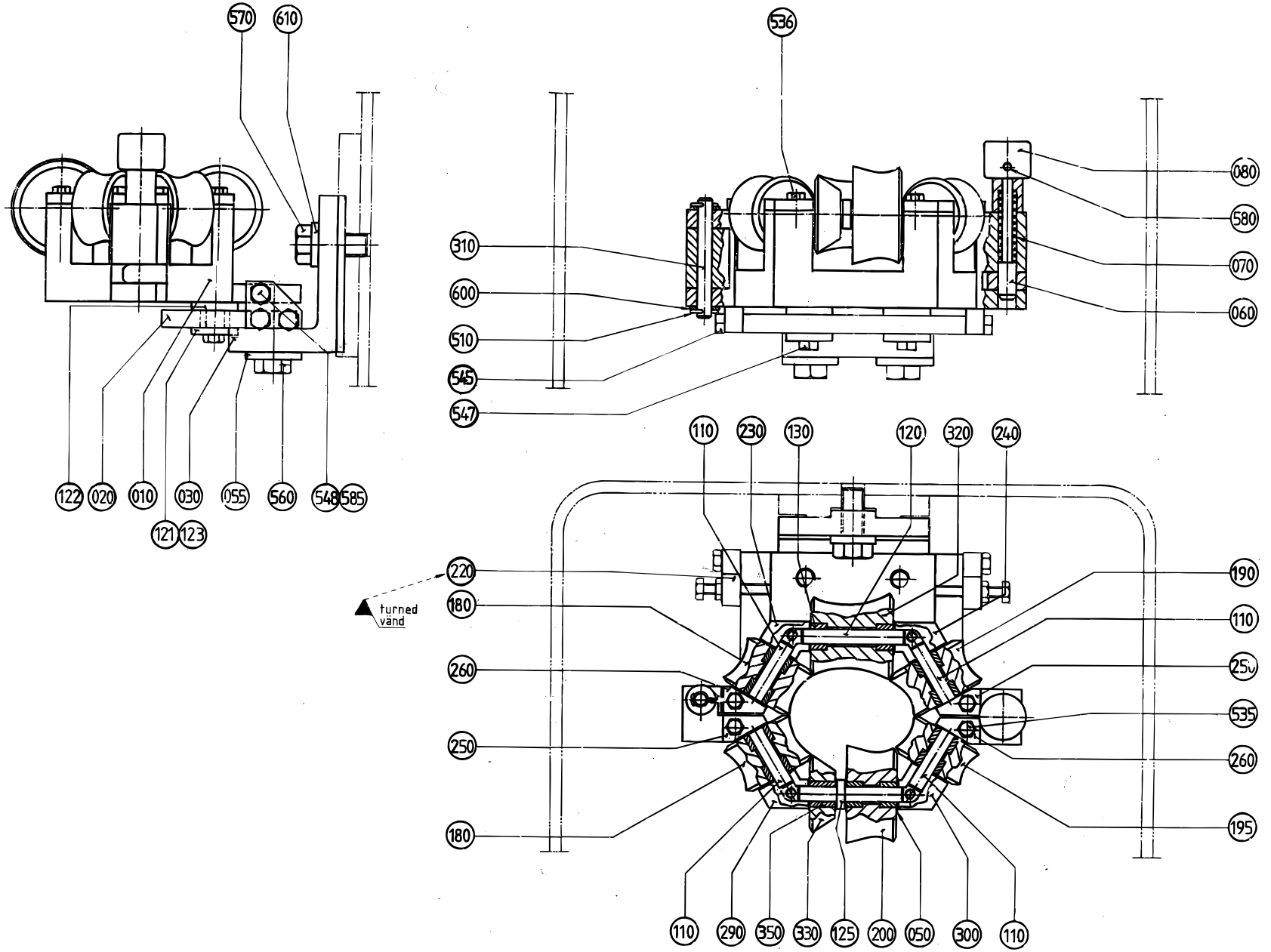
570
610
536
080
580
070
060
310
600
510
545
547
122
020
010
030
055
560
548
585
121
123
110
230
130
120
320
240
220
180
260
250
180
turned
vänd
190
110
250
535
260
195
110
290
350
330
125
200
050
300
110

Pos	Part No	SP	UN	Qty	Description	Page No
0200S						
010	469745-0000	-		1	BRACKET	
020	751603-0000	-		1	SETTING PLATE	
030	491907-0000	-		1	ANGLE BRACKET	
050	2033-0011	C		14	WASHER	
110	263655-0018	C		4	SHAFT	
120	263655-0007	-		1	SHAFT	
125	456881-0000	C		1	SHAFT	
130	751230-0000	C		12	PLAIN BEARING	
180	490549-0000	C		2	ROLL	
190	490548-0000	C		1	ROLL	
195	490550-0000	C		1	ROLL	
200	490551-0000	C		1	ROLL	
230	456869-0000	-		1	LOCKING PLATE	
240	456871-0000	-		1	LOCK PLATE	
250	456873-0000	-		2	LOCK PLATE	
260	456874-0000	-		2	LOCK PLATE	
290	456870-0000	-		1	LOCK PLATE	
300	456872-0000	-		1	LOCK PLATE	
320	490547-0000	C		1	ROLL	
330	490552-0000	C		1	ROLL	
350	751231-0000	C		1	PLAIN BEARING	
535	312105-0329	-		4	Screw M6S M5x16 A280	
536	312105-0332	-		4	Screw M6S M5x22 A280	
545	312105-0370	-		4	Screw M6S M6x20 A280	
600	315105-0165	-		2	Washer, Plain, BRB, 8,4/16,H=1,5	
Common Parts						
055	28037-0000	-		2	WASHER	
060	35918-0000	C		1	SHAFT	
070	35919-0000	C		1	COMPRESSION SPRING	
080	36325-0000	C		1	KNOB	
121	271717-0000	-		2	SPACER	
122	271718-0000	-		2	WASHER	
123	272797-0000	-		2	ROLL	
220	751209-0000	-		2	PLATE	
310	751318-0000	-		1	SHAFT	
510	311411-0150	-		2	SPLIT PIN SP2X12RFR	
547	312105-0374	-		2	Screw M6S M6x30 A280	
548	312105-0376	-		2	Screw M6S M6S M6x35 A280	
560	312105-0453	-		2	Screw M6S M8x25 A280	
570	312105-0536	-		1	Screw M6S M12x30 A280	
580	312318-0285	-		1	Screw,Sock.Set Cuppoint MSK6SS M4x6 A4	
585	312605-0316	-		2	Nut Hex. M6M M6 A280	
610	315115-0178	-		1	Washer, Plain, TBRB 13/24 H=4	

Pos	Part No	SP	UN	Qty	Description	Page No

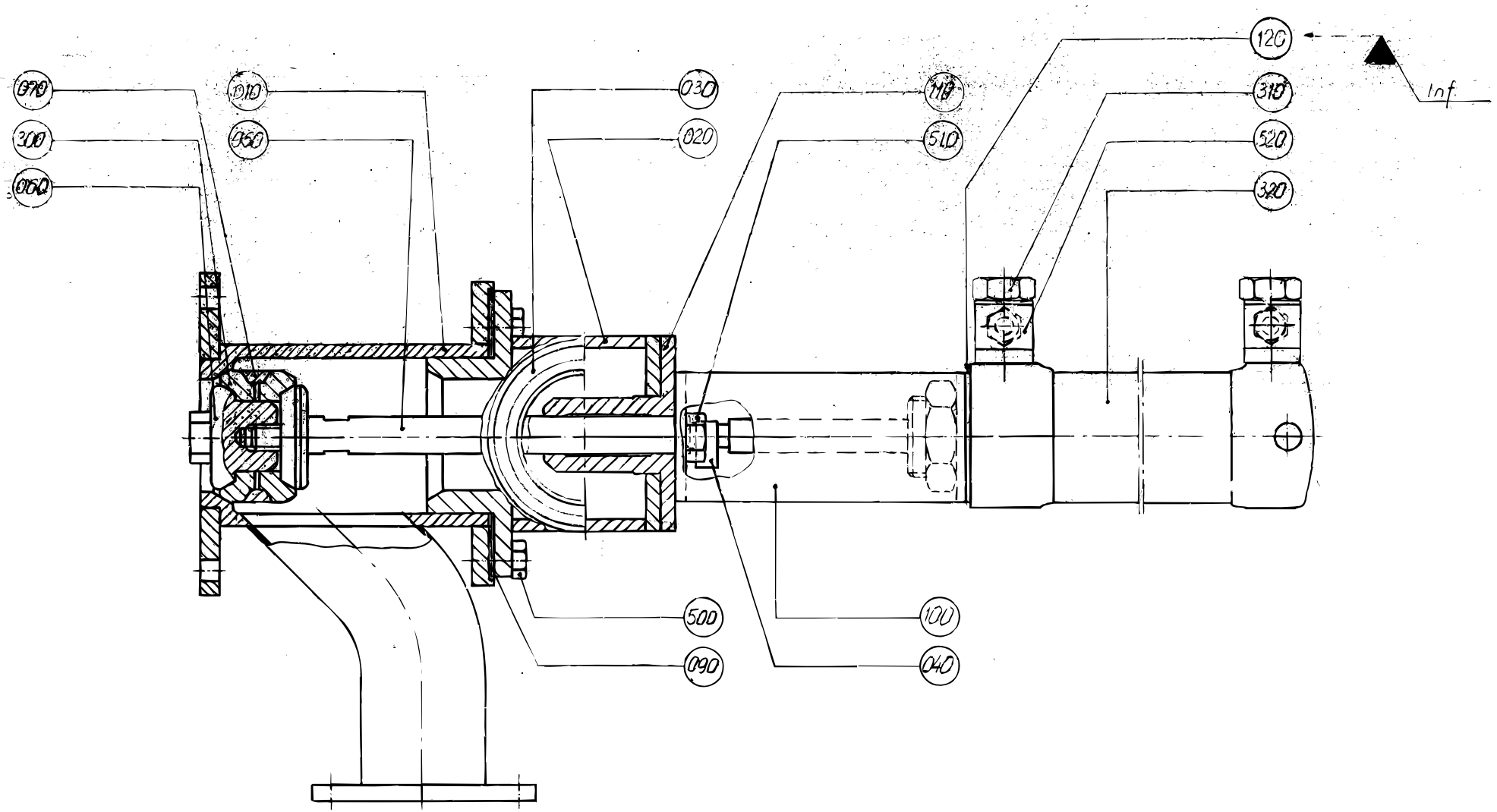

S - 271169-2
ECN 82225

Pos	Part No	SP	UN	Qty	Description	Page No
Common Parts						
010	269400-0000	D		1	VALVE HOUSING	
020	269401-0000	D		1	HOUSE	
030	90091-0182	C		1	Gasket 48x38x4,8 mm	
040	37638-0000	C		1	PENDULUM SUSPENSION	
050	266389-0000	C		1	PISTON ROD	
060	266390-0000	C		1	NUT	
070	266391-0000	C		1	RING	
090	295160-0000	C		1	GASKET	
100	266394-0000	-		1	BRACKET	
110	272341-0000	C		1	SPINDLE GUIDE	
120	456886-0000	-		1	WASHER	
300	90207-0368	C		2	SEAL RING REPBY 0530588-0000	
310	90235-0275	C		2	"THROTTLE CHECK VALVES,G1/4""""	
320	B 90239-0166	C		1	CYLINDER	
500	312105-0366	-		6	Screw M6S M6x12 A280	
510	312105-0449	-		2	Screw M6S M8x16 A280	
520	342797-0122	C		2	Conn. Banjo, Ringpiece 6-1/4	

Pos	Part No	SP	UN	Qty	Description	Page No

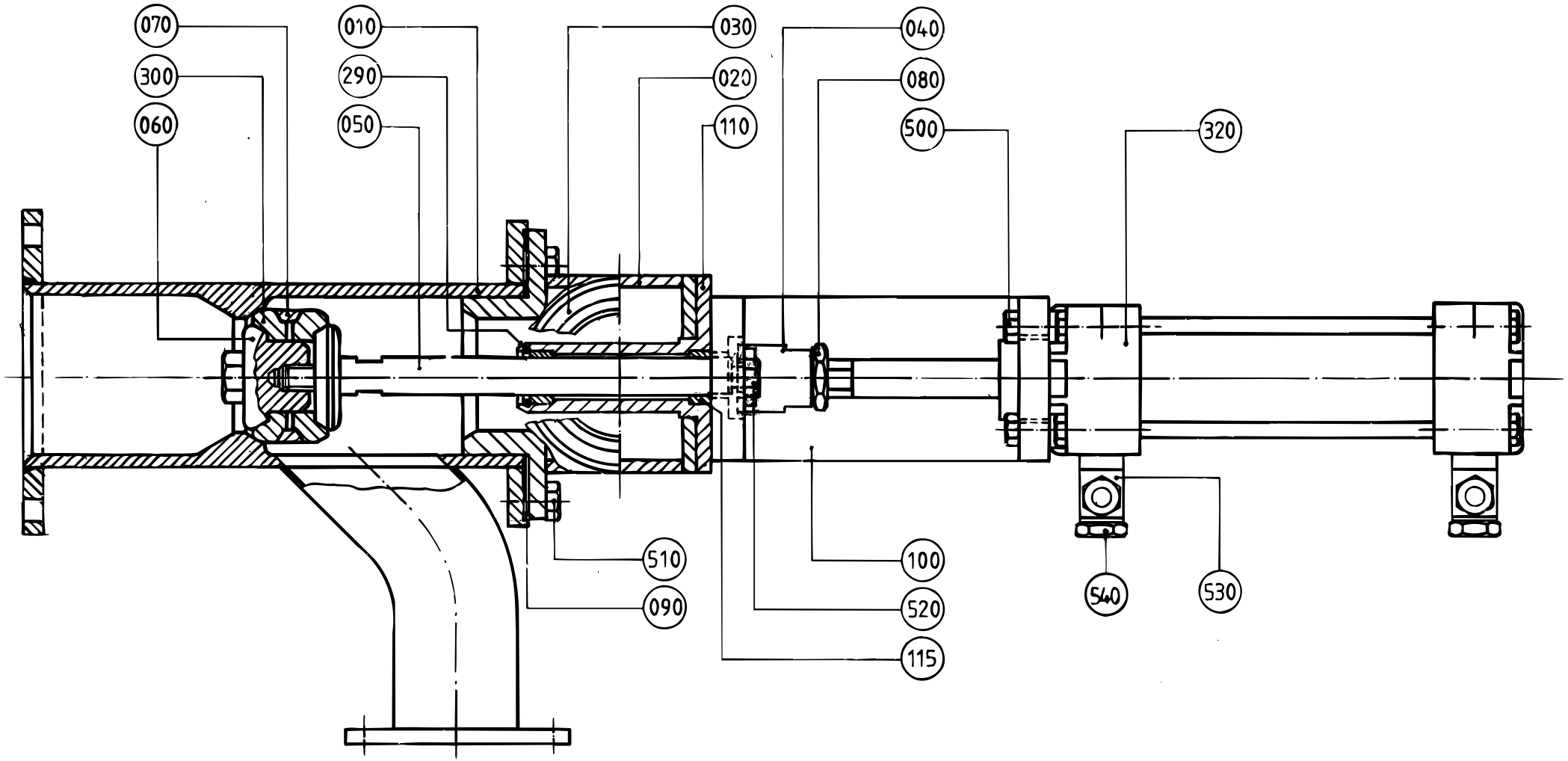
070
300
060
010
290
050
030
020
110
040
080
500
320
510
090
100
520
115
540
530

Pos	Part No	SP	UN	Qty	Description	Page No
Common Parts						
010	490976-0000	D		1	VALVE HOUSING	
020	269401-0000	D		1	HOUSE	
030	90091-0182	C		1	Gasket 48x38x4,8 mm	
040	441871-0000	C		1	PENDULUM SUSPENSION	
050	266389-0000	C		1	PISTON ROD	
060	266390-0000	C		1	NUT	
070	266391-0000	C		1	RING	
080	441286-0000	D		1	NUT	
090	295160-0000	C		1	GASKET	
100	441843-0000	D		1	BRACKET	
110	532348-0000	C		1	SPINDLE GUIDE	
115	532349-0000	C		2	PLAIN BEARING	
290	90141-0022	C		1	Snap Ring B 16	
300	530588-0000	C		2	SEAL RING	
320	B 90239-0779	C		1	CYLINDER	
500	312105-0331	-		4	Screw M6S M5x20 A280	
510	312105-0366	-		6	Screw M6S M6x12 A280	
520	312105-0451	-		2	Screw M6S 8x20 A280	
530	342797-0121	C		2	Conn. Banjo, Ringpiece 6-1/8	
540	342980-0303	-		2	BANJO-HOLLOW BOLT COUPL,EXT.THR.01-G1/8"	

Pos	Part No	SP	UN	Qty	Description	Page No

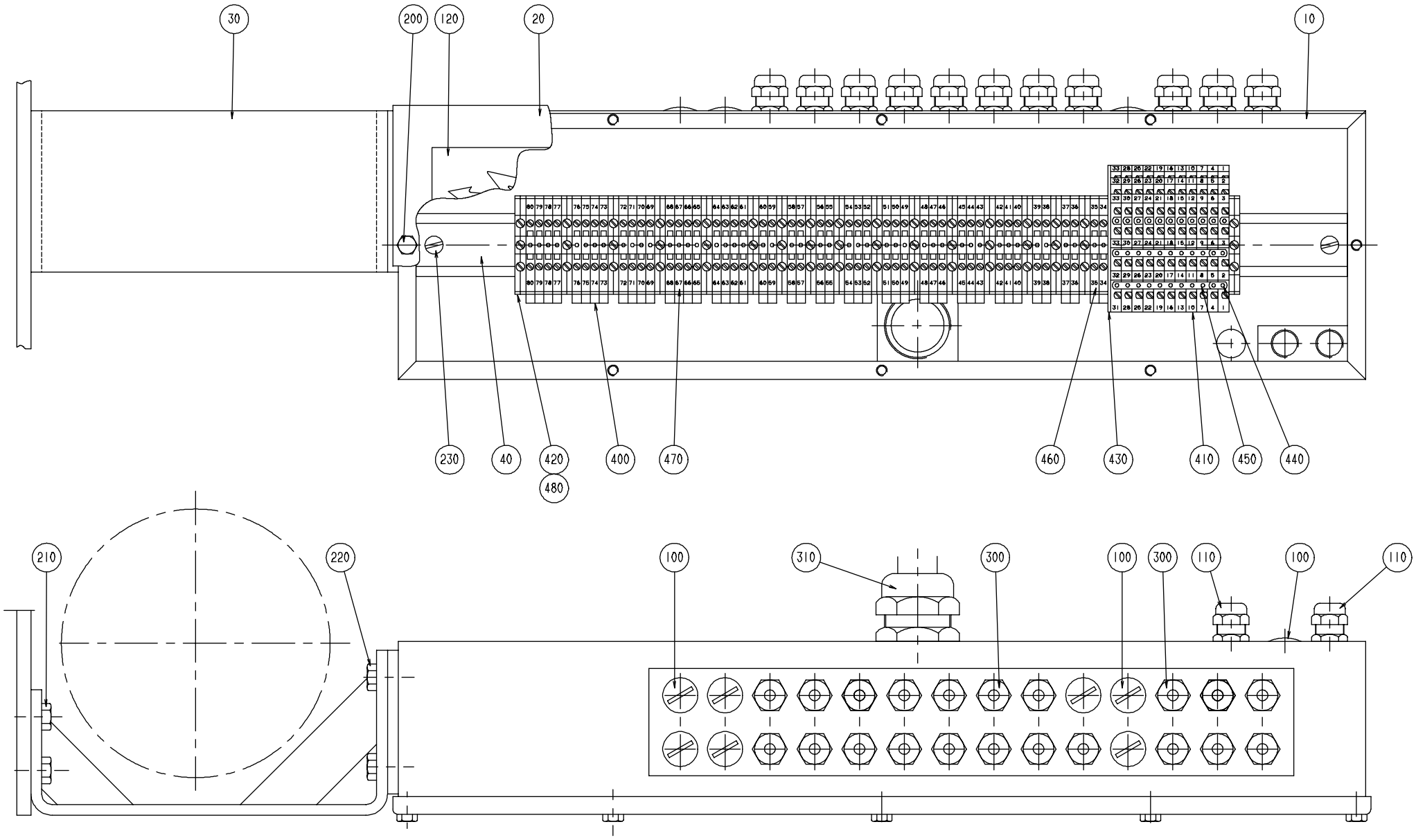

S - 1529098-1
ECN 82225

Pos	Part No	SP	UN	Qty	Description	Page No
Common Parts						
010	1529189-0000	-		1	BOX	
020	295624-0000	-		1	LID	
030	456554-0000	-		1	CANTILEVER	
040	10793-0083	-		1	MOUNTING RAIL	
100	90002-0013	-		7	BLANK-OFF PLUG 15,2	
110	90012-0063	-		2	Cable Gland PR 15,2	
120	90194-0016	-		1	SIGN "FLASH SIGN" 50X50MM	
200	312105-0366	-		8	Screw M6S M6x12 A280	
210	312105-0449	-		4	Screw M6S M8x16 A280	
220	312105-0451	-		4	Screw M6S 8x20 A280	
230	312125-0364	-		2	Screw Slot.Pan Hd. MCS 6x10 A480	
300	352103-0101	-		21	CABLE GLAND ST 9;PR15,2/PG9	
310	352103-0121	-		1	CABLE GLAND ST 29	
400	353021-0212	-		47	FEED THROUGH TERMINAL WDU 2,5 Beige	
410	353021-0302	-		11	TERMINALS,TRIPLE-LEVEL, DLD 2,5/35 PA	
420	353024-0205	-		17	EARTH TERMINAL WPE 4	
430	353032-0302	-		1	END PLATE WAP	
440	353034-0401	-		2	BRIDGE CONLECK Q2	
450	353034-0404	-		2	BRIDGE CONLECK Q10	
460	359011-0807	-		2	MARKING PLATES 5-FW 1-50	
470	359011-0808	-		2	MARKING PLATES 5-FW 51-100	
480	359011-0834	-		1	SET OF SIGNS 6-GW(EARTH)	

Pos	Part No	SP	UN	Qty	Description	Page No

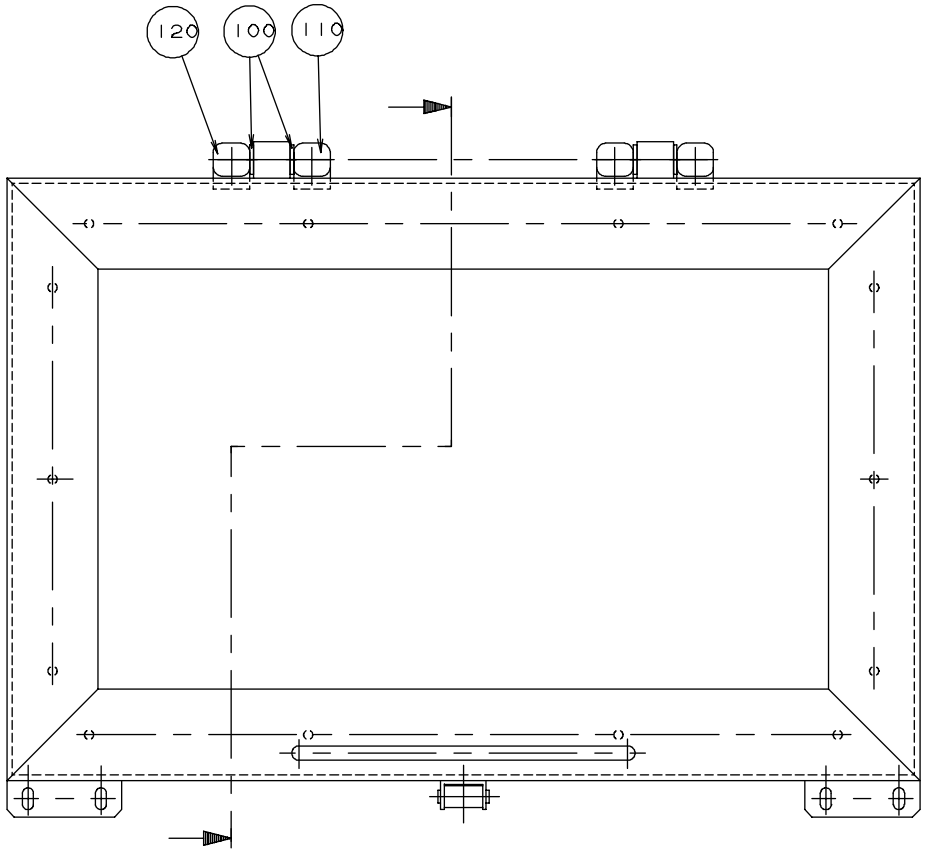

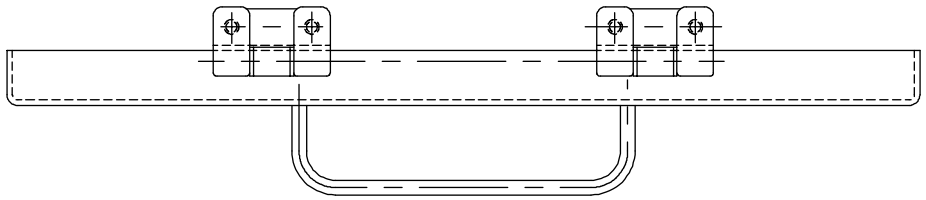

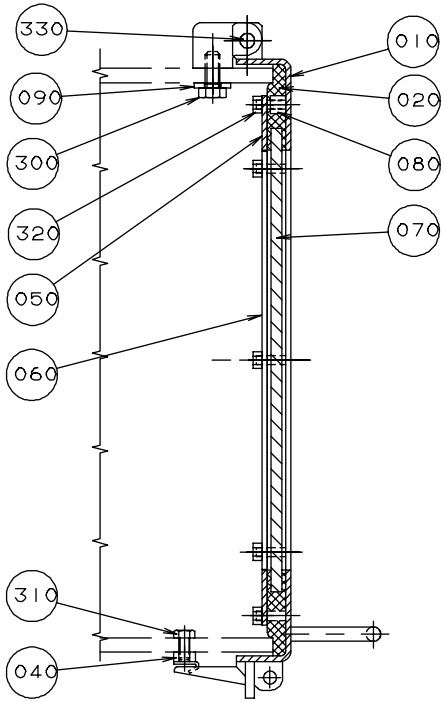

MODIFICATION FROM -100V,-110V TO -140V
MODIFIC.DRWG.1529197-1 FRAME

MODIFICATION FROM -120V,-130V TO -140V
MODIFIC.DRWG.1529015-1 FRAME

S - 1529023-1
ECN 82225

Pos	Part No	SP	UN	Qty	Description	Page No
Common Parts						
010	978543-0000	-		1	FRAME	
020	272784-0002	C		1	RUBBER STRIP	
040	271860-0000	C		1	CLAMP BLOCK	
050	272781-0002	-		2	COVER SLIP	
060	272782-0000	-		2	COVER SLIP	
070	272783-0002	C		1	GLASS PANE	
080	441718-0000	C		14	SPACER	
090	441737-0000	C		2	WASHER	
100	441739-0000	C		4	WASHER	
110	441740-0000	C		2	HINGE FLANGE	
120	441741-0000	C		2	HINGE FLANGE	
300	312105-0451	-		4	Screw M6S 8x20 A280	
310	312105-0366	-		2	Screw M6S M6x12 A280	
320	312605-0314	-		14	Nut Hex. M6M M5 A280	
330	311103-0413	-		2	Pin, Parallell, m6, 8x50	

Pos	Part No	SP	UN	Qty	Description	Page No

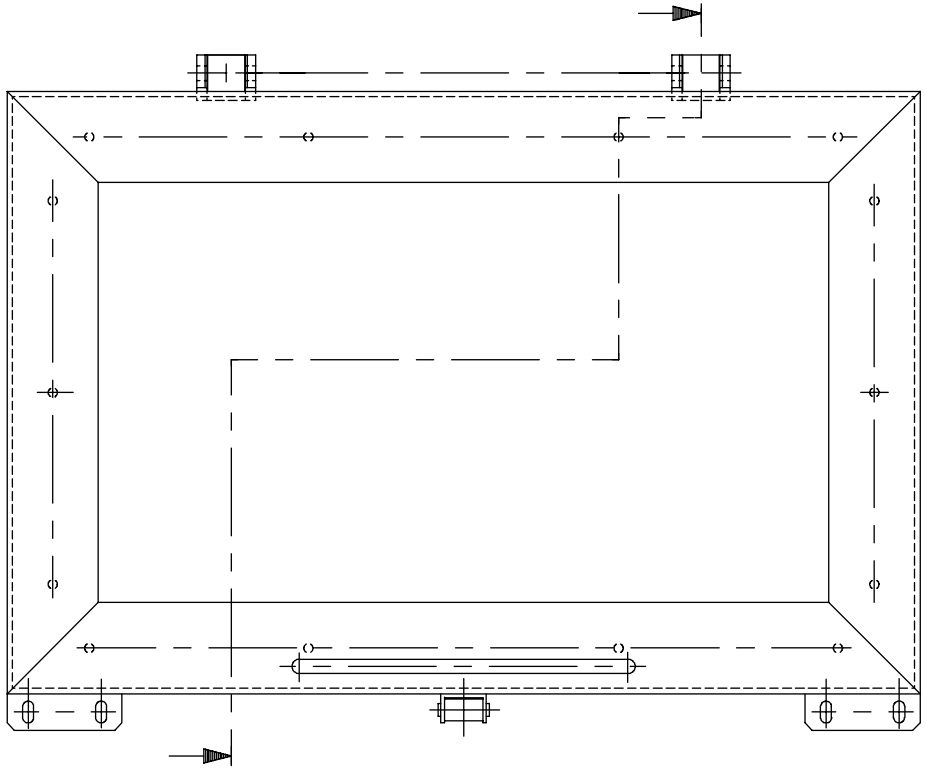

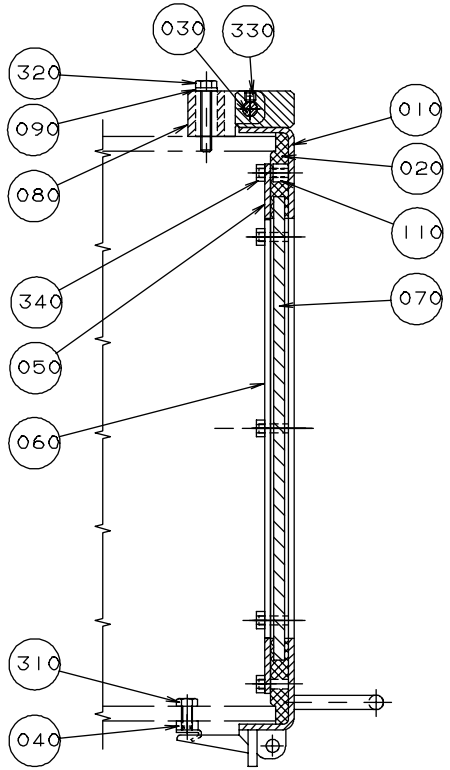

MODIFICATION FROM -100V,-110V(TO -140V)

Pos	Part No	SP	UN	Qty	Description	Page No
Common Parts						
010	1529016-0000	-		1	FRAME	
020	272784-0002	C		1	RUBBER STRIP	
030	256031-0000	C		2	SHAFT	
040	271860-0000	C		1	CLAMP BLOCK	
050	272781-0002	-		2	COVER SLIP	
060	272782-0000	-		2	COVER SLIP	
070	272783-0002	C		1	GLASS PANE	
080	272786-0000	C		2	HINGE	
090	272787-0000	C		2	WASHER	
110	441718-0000	D		14	SPACER	
310	312105-0366	-		2	Screw M6S M6x12 A280	
320	312105-0376	-		4	Screw M6S M6S M6x35 A280	
330	312318-0360	-		2	Screw Hex.Sock.Set Cup P.MSK6SS6x6 SS	
340	312605-0314	-		14	Nut Hex. M6M M5 A280	

Pos	Part No	SP	UN	Qty	Description	Page No

TUBE FLUSHING DEVICE

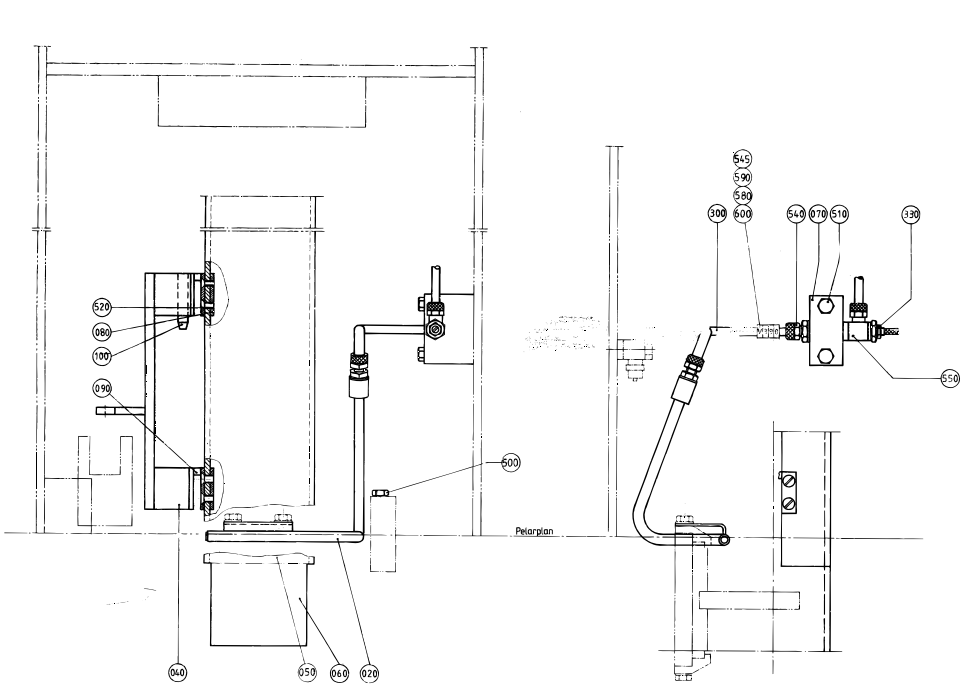

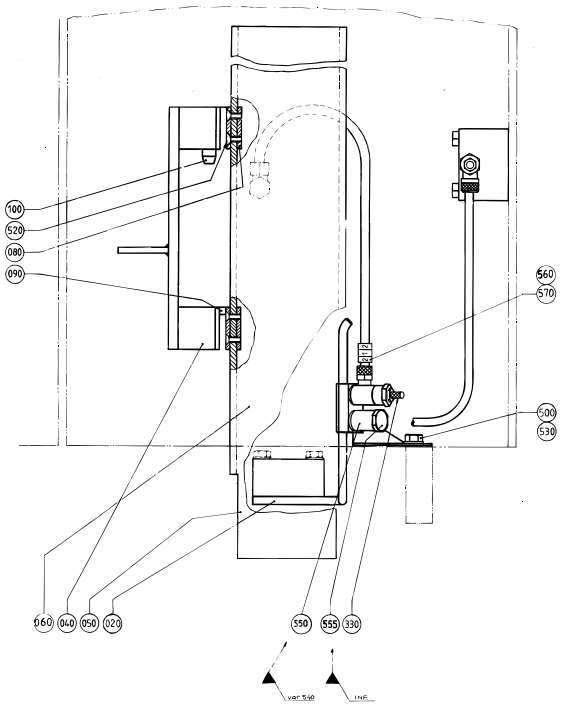

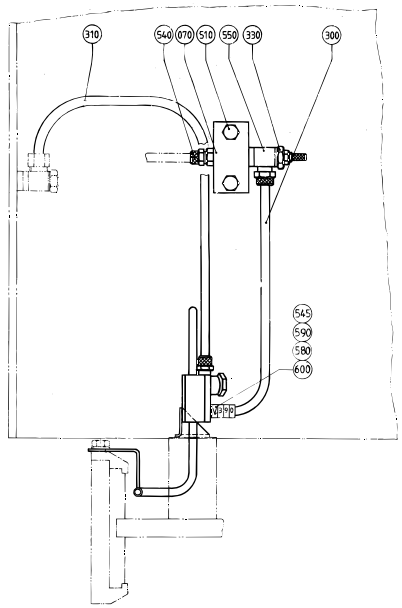

Pos	Part No	SP	UN	Qty	Description	Page No
0125S MPTAB						
020	469778-0000	D		1	FORCE SPRING	
060	469768-0000	C		1	PROTECTIVE GLASS	
310	90166-0124	-	MM	25	TUBE 6 mm PA,Transp.	
330-02	90235-0280	-		2	THROTTLE CHECK VALVES,M5	
530	315105-0153	-		1	Washer, Plain, BRB, 6,4/12,H=1,5	
540	342921-0113	-		1	STRAIGHT COUPLING,EXT.THREADED 6/4-G1/8"	
550-02	342980-0113	C		3	BANJO-CONNECTION,RING 6/4-G1/8"	
555	342980-0303	-		1	BANJO-HOLLOW BOLT COUPL,EXT.THR.01-G1/8"	
560	359000-0401	-		2	MARKING COLLAR 2/4 "1" Yellow	
570	359000-0402	-		1	MARKING COLLAR 2/4 "2" Yellow	
0180B MPTAB OR 0200B MPTAB OR 0250B MPTAB OR 0236B MPTAB						
020	469499-0000	D		1	FORCE SPRING	
050	469767-0000	C		1	PROTECTIVE GLASS	
310	90166-0124	-	MM	25	TUBE 6 mm PA,Transp.	
330-02	90235-0280	-		2	THROTTLE CHECK VALVES,M5	
530	315105-0153	-		1	Washer, Plain, BRB, 6,4/12,H=1,5	
540	342921-0113	-		1	STRAIGHT COUPLING,EXT.THREADED 6/4-G1/8"	
550-02	342980-0113	C		3	BANJO-CONNECTION,RING 6/4-G1/8"	
555	342980-0303	-		1	BANJO-HOLLOW BOLT COUPL,EXT.THR.01-G1/8"	
560	359000-0401	-		2	MARKING COLLAR 2/4 "1" Yellow	
570	359000-0402	-		1	MARKING COLLAR 2/4 "2" Yellow	
0200S MPTAB						
020	469522-0000	D		1	FORCE SPRING	
060	469768-0000	C		1	PROTECTIVE GLASS	
310	90166-0124	-	MM	25	TUBE 6 mm PA,Transp.	
330-02	90235-0280	-		2	THROTTLE CHECK VALVES,M5	
530	315105-0153	-		1	Washer, Plain, BRB, 6,4/12,H=1,5	
540	342921-0113	-		1	STRAIGHT COUPLING,EXT.THREADED 6/4-G1/8"	
550-02	342980-0113	C		3	BANJO-CONNECTION,RING 6/4-G1/8"	
555	342980-0303	-		1	BANJO-HOLLOW BOLT COUPL,EXT.THR.01-G1/8"	
560	359000-0401	-		2	MARKING COLLAR 2/4 "1" Yellow	
570	359000-0402	-		1	MARKING COLLAR 2/4 "2" Yellow	
0125S UPTAB						
020	B 469758-0000	D		1	FORCE SPRING	
060	469768-0000	C		1	PROTECTIVE GLASS	
330	90235-0280	-		1	THROTTLE CHECK VALVES,M5	
540-02	342921-0113	-		2	STRAIGHT COUPLING,EXT.THREADED 6/4-G1/8"	
550	342980-0113	C		1	BANJO-CONNECTION,RING 6/4-G1/8"	
0180B UPTAB OR 0200B UPTAB OR 0250B UPTAB OR 0236B UPTAB						
020	B 469774-0000	D		1	FORCE SPRING	
050	469767-0000	C		1	PROTECTIVE GLASS	
330	90235-0280	-		1	THROTTLE CHECK VALVES,M5	
540-02	342921-0113	-		2	STRAIGHT COUPLING,EXT.THREADED 6/4-G1/8"	
550	342980-0113	C		1	BANJO-CONNECTION,RING 6/4-G1/8"	
0200S UPTAB						
020	B 469759-0000	D		1	FORCE SPRING	
060	469768-0000	C		1	PROTECTIVE GLASS	
330	90235-0280	-		1	THROTTLE CHECK VALVES,M5	
540-02	342921-0113	-		2	STRAIGHT COUPLING,EXT.THREADED 6/4-G1/8"	
550	342980-0113	C		1	BANJO-CONNECTION,RING 6/4-G1/8"	
Common Parts						
040	295395-0000	-		1	BRACKET	
070	271509-0000	-		1	JUNCTION BLOCK	
080	295025-0000	-		2	BRACKET	
090	295397-0000	-		1	HINGE	
100	295398-0000	-		1	HINGE	
300	90166-0119	C	MM	25	HOSE PUR 4/6 Black	
500	312105-0366	-		1	Screw M6S M6x12 A280	
510	312105-0378	-		2	Screw M6S M6x40 A280	
520	312145-0289	-		4	Screw Counters.Slot.Hd. MFS 4x10 SS	
545	359000-0400	-		1	MARKING CO2/4"0"	
580	359000-0403	-		1	MARKING COLLAR PA2/4 "3" Yellow	
590	359000-0409	-		1	MARKING COLLAR PA2/4 "9" Yellow	
600	359000-0771	-		1	MARKING CO2/4"V"	

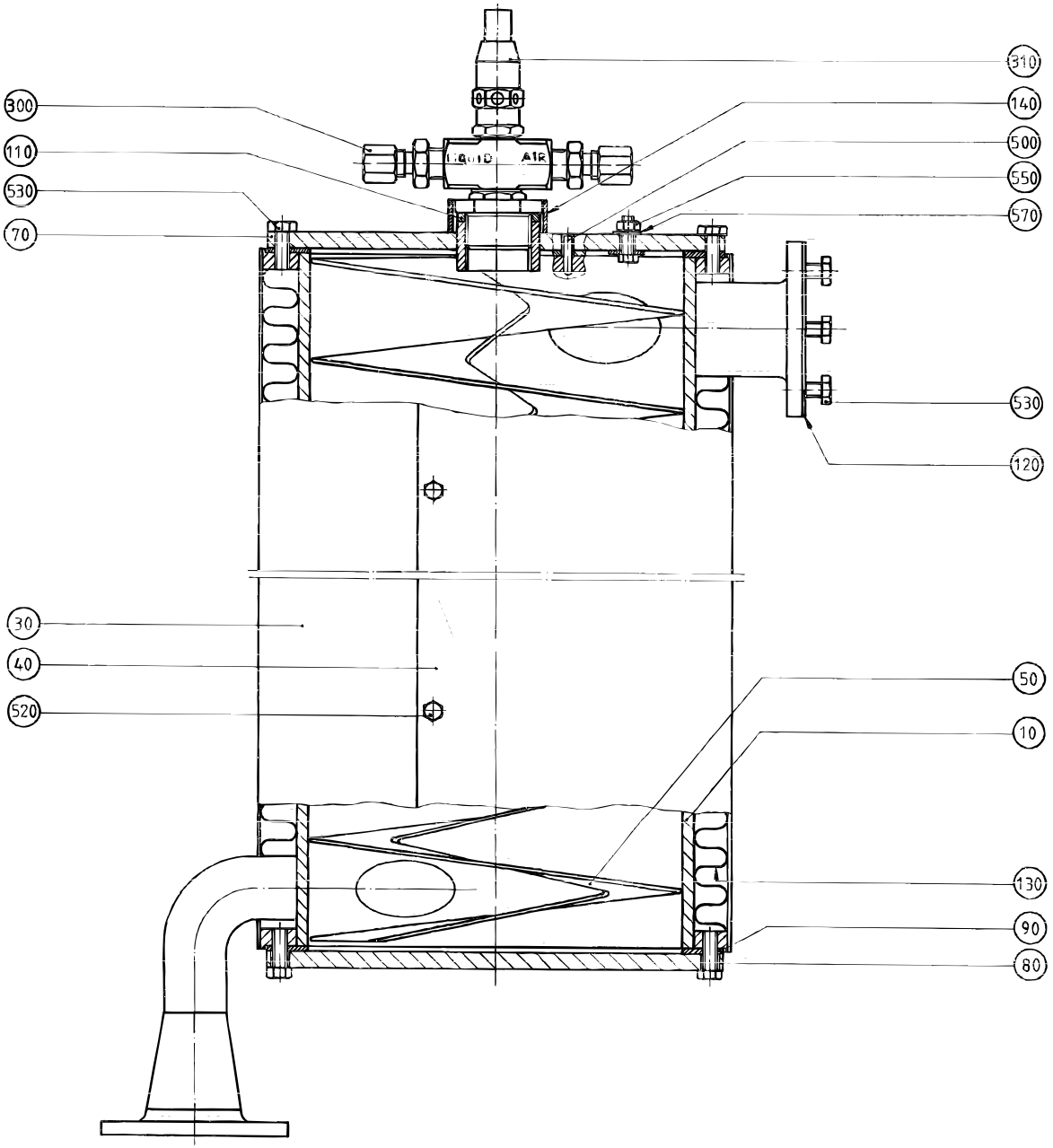

S - 272407-1
ECN 82225

Pos	Part No	SP	UN	Qty	Description	Page No
Common Parts						
010	272274-0000	D		1	CONTAINER	
030	272319-0000	-		1	DISCHARGE TRAY	
040	272320-0000	-		1	DISCHARGE TRAY	
050	272325-0000	D		1	SPIRAL	
070	272275-0000	D		1	LID	
080	272276-0000	D		1	BOTTOM	
090	272277-0000	C		2	GASKET	
110	12242-0001	C		1	GASKET	
120	531742-0000	C		1	GASKET	
130	441501-0000	C		1	INSULATION	
140	295993-0000	D		1	GASKET HOLDER	
300	90030-0062	C		2	Conn. Str. GE 6-1/4-18 NPTF	
310	B 90424-0017	C		1	NOZZLE	
500	311103-0236	-		1	Pin, Parallell, m6, 3x16	
520	312105-0325	-		14	Screw M6S M5x10 A280	
530	312105-0368	-		3	Screw M6S M6x16 A280	
550	312605-0314	-		1	Nut Hex. M6M M5 A280	
570	315105-0146	-		1	Washer, Plain, BRB, 5,3/10,H=1	

Pos	Part No	SP	UN	Qty	Description	Page No

SPLICE DETECTOR

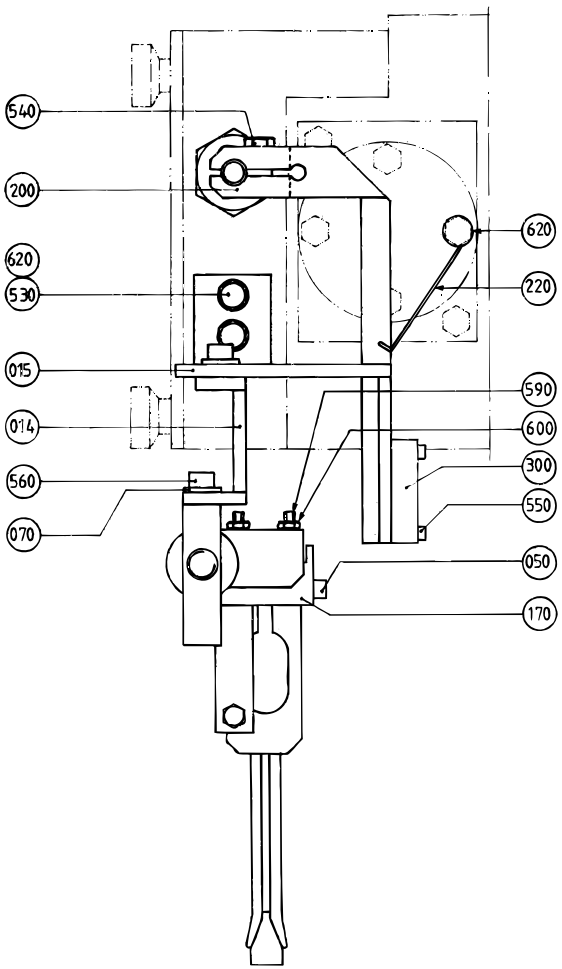

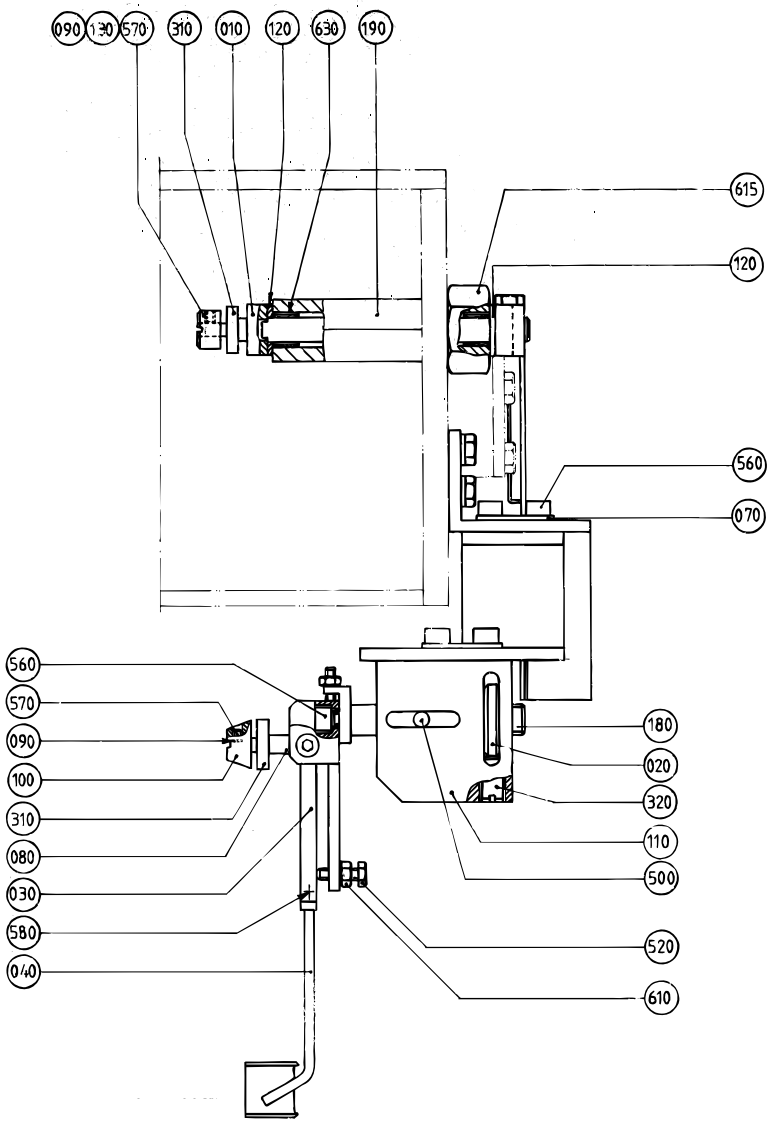

POS.210,535 UTG.. POS. 014 INF.

S - 469074-1
ECN 82225

Pos	Part No	SP	UN	Qty	Description	Page No
Common Parts						
010	469979-0000	-		1	HOLDER	
014	491127-0000	-		1	BRACKET	
015	491148-0000	-		1	BRACKET	
020	23580-0000	-		1	SHIFTER HANDLE	
030	23582-0000	-		1	HOLDER	
040	23583-0000	C		1	GUIDE FINGER	
050	23584-0000	C		2	SCREW	
070	24354-0000	-		2	WASHER	
080	24355-0000	C		2	DOWEL	
090	24356-0000	C		5	PIECE	
100	111543-0000	C		2	GUIDE CONE	
110	245210-0000	-		1	BODY	
120	271211-0000	-		2	WASHER	
130	271654-0000	-		1	RETAINING RING	
170	272467-0000	-		1	BOW CLAMP	
180	456119-0000	-		1	SHAFT	
190	469981-0000	-		1	BRACKET	
200	456121-0000	-		1	ARM	
220	491149-0000	C		1	SPRING	
300	90044-0104	C		1	PROX.SWITCH IFM IN 3002	
310	90214-0035	C		3	BALL BEARING REPBY 0090214-0138	
320	90287-0009	C		1	SPRINGLOADED SCREW M10x19	
500	311103-0350	-		1	Pin, Parallell, CP, m6, 6x14	
520	312105-0331	-		1	Screw M6S M5x20 A280	
530	312105-0368	-		2	Screw M6S M6x16 A280	
540	312105-0370	-		1	Screw M6S M6x20 A280	
550	312115-0228	-		2	Screw MC6S M3x16 A280	
560	312115-0366	-		5	Screw MC6S M6x12 A280	
570	312318-0283	-		5	Screw,Sock.Set Cuppoint MSK6SS M4x4 A4	
580	312318-0285	-		2	Screw,Sock.Set Cuppoint MSK6SS M4x6 A4	
590	312318-0291	-		2	Screw,Sock.Set Cuppoint MSK6SS M4x12 A4	
600	312605-0312	-		2	Nut Hex. M6M M4 A280	
610	312605-0314	-		1	Nut Hex. M6M M5 A280	
615	312605-0326	-		1	Nut Hex. M6M M20 A280	
620	315105-0153	-		3	Washer, Plain, BRB, 6,4/12,H=1,5	
630	321127-0100	-		2	BEARING BUSHING WITHOUT FLANGE,10/13X10	

Pos	Part No	SP	UN	Qty	Description	Page No

SPLICE DETECTOR

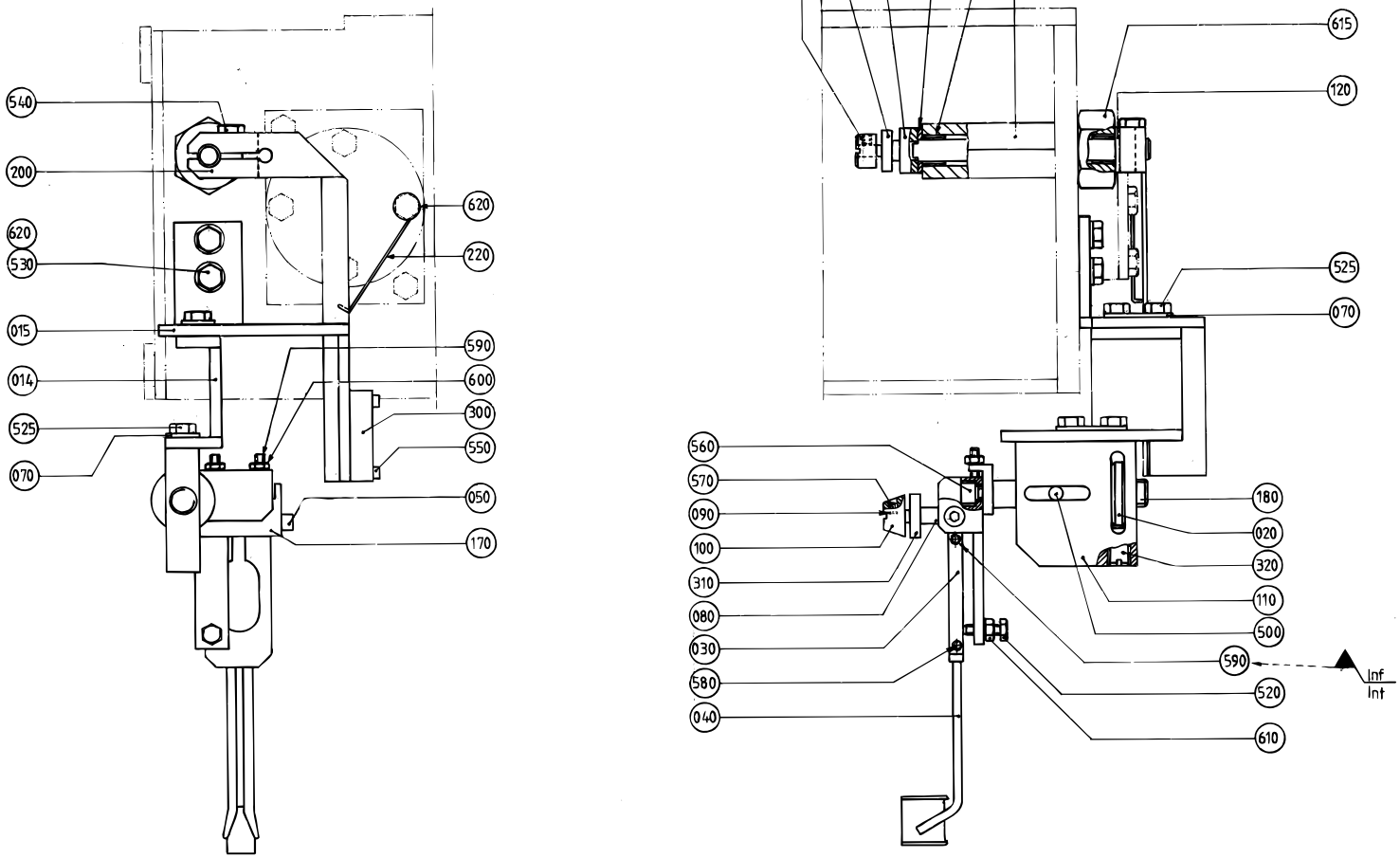

S - 469074-2
ECN 82225

Pos	Part No	SP	UN	Qty	Description	Page No
Common Parts						
010	469979-0000	-		1	HOLDER	
014	491127-0000	-		1	BRACKET	
015	491578-0000	-		1	BRACKET	
020	23580-0000	-		1	SHIFTER HANDLE	
030	23582-0000	-		1	HOLDER	
040	23583-0000	C		1	GUIDE FINGER	
050	23584-0000	C		2	SCREW	
070	24354-0000	-		2	WASHER	
080	24355-0000	C		2	DOWEL	
090	24356-0000	C		5	PIECE	
100	111543-0000	C		2	GUIDE CONE	
110	245210-0000	-		1	BODY	
120	271211-0000	-		2	WASHER	
130	271654-0000	-		1	RETAINING RING	
170	272467-0000	-		1	BOW CLAMP	
180	456119-0000	-		1	SHAFT	
190	469981-0000	-		1	BRACKET	
200	456121-0000	-		1	ARM	
220	491149-0000	C		1	SPRING	
300	90044-0104	C		1	PROX.SWITCH IFM IN 3002	
310	90214-0138	C		3	BEARINGS,BALL BEARING,STAINLESS	
320	90287-0009	C		1	SPRINGLOADED SCREW M10x19	
500	311103-0350	-		1	Pin, Parallell, CP, m6, 6x14	
520	312105-0331	-		1	Screw M6S M5x20 A280	
525	312105-0366	-		4	Screw M6S M6x12 A280	
530	312105-0368	-		2	Screw M6S M6x16 A280	
540	312105-0370	-		1	Screw M6S M6x20 A280	
550	312115-0228	-		2	Screw MC6S M3x16 A280	
560	312115-0366	-		1	Screw MC6S M6x12 A280	
570	312318-0283	-		5	Screw,Sock.Set Cuppoint MSK6SS M4x4 A4	
580	312318-0285	-		3	Screw,Sock.Set Cuppoint MSK6SS M4x6 A4	
590	312318-0291	-		3	Screw,Sock.Set Cuppoint MSK6SS M4x12 A4	
600	312605-0312	-		2	Nut Hex. M6M M4 A280	
610	312605-0314	-		1	Nut Hex. M6M M5 A280	
615	312605-0326	-		1	Nut Hex. M6M M20 A280	
620	315105-0153	-		3	Washer, Plain, BRB, 6,4/12,H=1,5	
630	321127-0100	-		2	BEARING BUSHING WITHOUT FLANGE,10/13X10	

Pos	Part No	SP	UN	Qty	Description	Page No

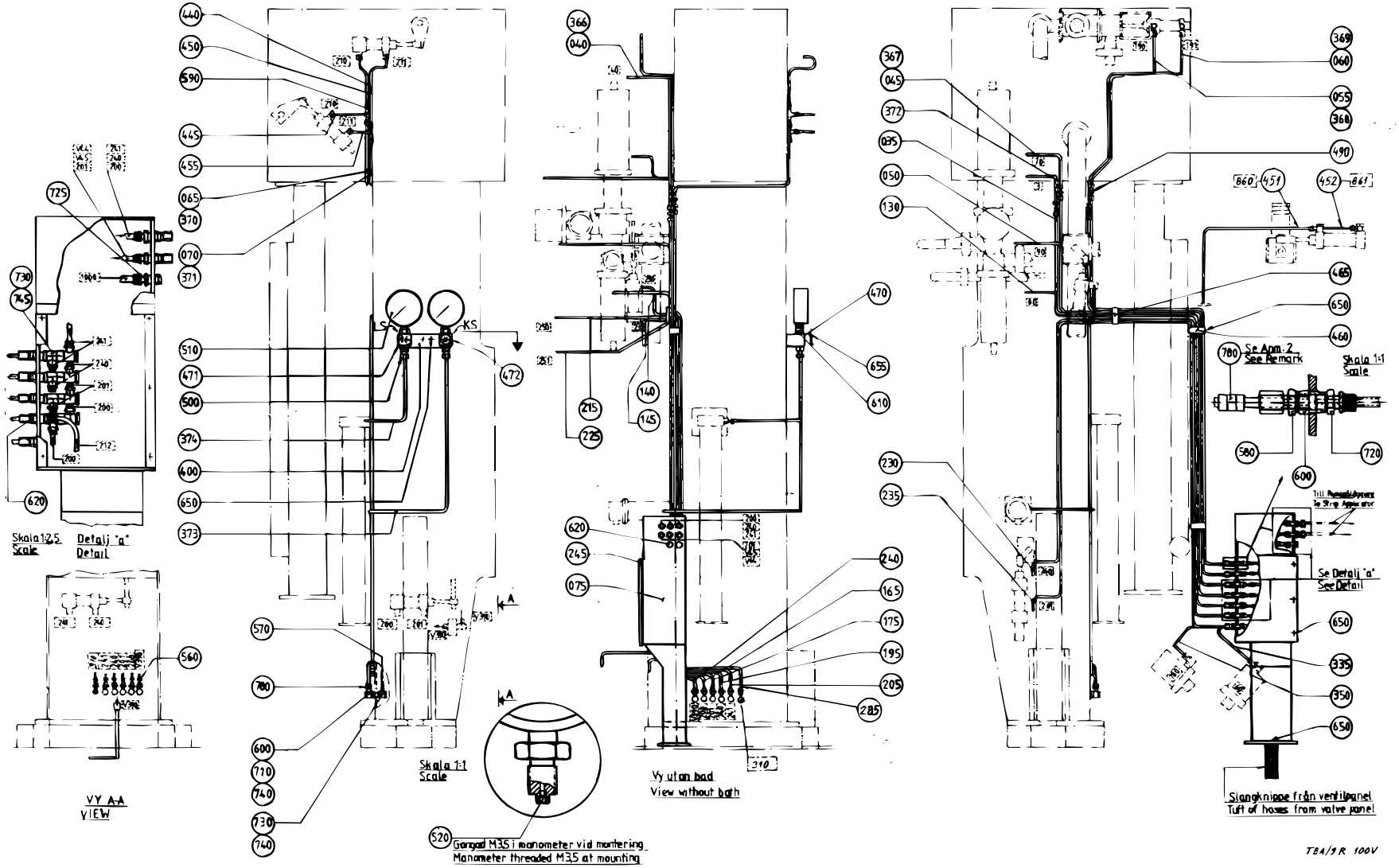

S - 1529238-1
ECN 82225

Pos	Part No	SP	UN	Qty	Description	Page No
Common Parts						
035	295557-0000	-		1	PIPE	
040	295734-0000	-		1	PIPE	
045	295735-0000	-		1	PIPE	
050	295560-0000	-		1	PIPE	
055	295736-0000	-		1	PIPE	
060	295737-0000	-		1	PIPE	
065	295738-0000	-		1	PIPE	
070	295739-0000	-		1	PIPE	
075	1529247-0000	-		1	CONNECTION BOX	
130	295568-0000	-		1	PIPE	
140	295570-0000	-		1	PIPE	
145	295571-0000	-		1	PIPE	
165	295575-0000	-		1	PIPE	
175	295577-0000	-		1	PIPE	
195	295581-0000	-		1	PIPE	
205	295583-0000	-		1	PIPE	
215	295585-0000	-		1	PIPE	
225	295587-0000	-		1	PIPE	
230	295588-0000	-		1	PIPE	
235	295589-0000	-		1	PIPE	
240	295590-0000	-		1	PIPE	
245	B 456411-0000	-		1	LID	
285	751071-0000	-		1	PIPE	
335	295591-0000	-		1	PIPE	
350	295594-0000	-		1	PIPE	
366	295740-0000	-		1	PIPE	
367	1529271-0000	-		1	PIPE	
368	295742-0000	-		1	PIPE	
369	295743-0000	-		1	PIPE	
370	295775-0000	-		1	PIPE	
371	295776-0000	-		1	PIPE	
372	441441-0000	-		1	PIPE	
373	469497-0000	-		1	PIPE	
374	469498-0000	-		1	PIPE	
400	33577-0000	-		1	CANTILEVER	
440	295600-0000	-		1	PIPE	
445	295601-0000	-		1	PIPE	
450	295602-0000	-		1	PIPE	
451	1529265-0000	-		1	PIPE	
452	1529272-0000	-		1	PIPE	
455	295603-0000	-		1	PIPE	
460	295604-0000	-		3	CRAMP	
465	295605-0000	-		3	BRACKET	
470	464173-0000	-		2	LABEL HOLDER	
471	464174-0000	-		1	SIGN	
472	464175-0000	-		1	SIGN	
490	90030-0075	C		7	PIPE CONNECTION G-6	
500	90030-0092	C		2	Straight Conn., 6-R1/4,ext. tappered	
510	90043-0034	C		2	PRESSURE GAUGE	
520	90043-0302	C		2	SCREW	
560	90166-0119	C	MM	21	HOSE PUR 4/6 Black	
570	90166-0132	C	M	1	TUBE 6 mm PA,Transp.	
580	90224-0307	-		31	CONNECTION	
600	90330-0025	C		4	Bushing, Int/Ext. Thr. R1/4-Rp1/8	
610	90330-0105	C		2	Nut, Hexagon, R3/8	
620	90330-0066	-		3	Plug, Ext. G-Thread, G1/8	
650	312105-0366	-		2	Screw M6S M6x12 A280	
655	312502-0120	-		4	Drive Screw Round Head KDS 0x5	
710	342797-0121	-		6	Conn. Banjo, Ringpiece 6-1/8	
720	342921-0113	-		28	STRAIGHT COUPLING,EXT.THREADED 6/4-G1/8"	
725	342921-0121	C		1	STRAIGHT COUPLING,EXT.THREADED 8/6-G1/8"	
730	342980-0113	-		14	BANJO-CONNECTION,RING 6/4-G1/8"	
740	342980-0303	-		12	BANJO-HOLLOW BOLT COUPL,EXT.THR.01-G1/8"	
745	342980-0313	-		4	BANJO-HOLLOW BOLT COUPL,EXT.THR.02-G1/8"	
780	359000-0406	-		6	MARKING COLLAR PA2/4 "6" Yellow	
780	359000-0405	-		4	MARKING CO2/4"5"	
780	359000-0404	-		12	MARKING COLLAR PA2/4 "4" Yellow	
780	359000-0403	-		12	MARKING COLLAR PA2/4 "3" Yellow	
780	359000-0402	-		44	MARKING COLLAR 2/4 "2" Yellow	
780	359000-0408	-		4	MARKING COLLAR PA2/4 "8" Yellow	
780	359000-0409	-		14	MARKING COLLAR PA2/4 "9" Yellow	
780	359000-0771	-		4	MARKING CO2/4"V"	
780	359000-0407	-		4	MARKING COLLAR PA2/4 "7" Yellow	
780	359000-0401	-		51	MARKING COLLAR 2/4 "1" Yellow	
780	359000-0400	-		53	MARKING CO2/4"0"	

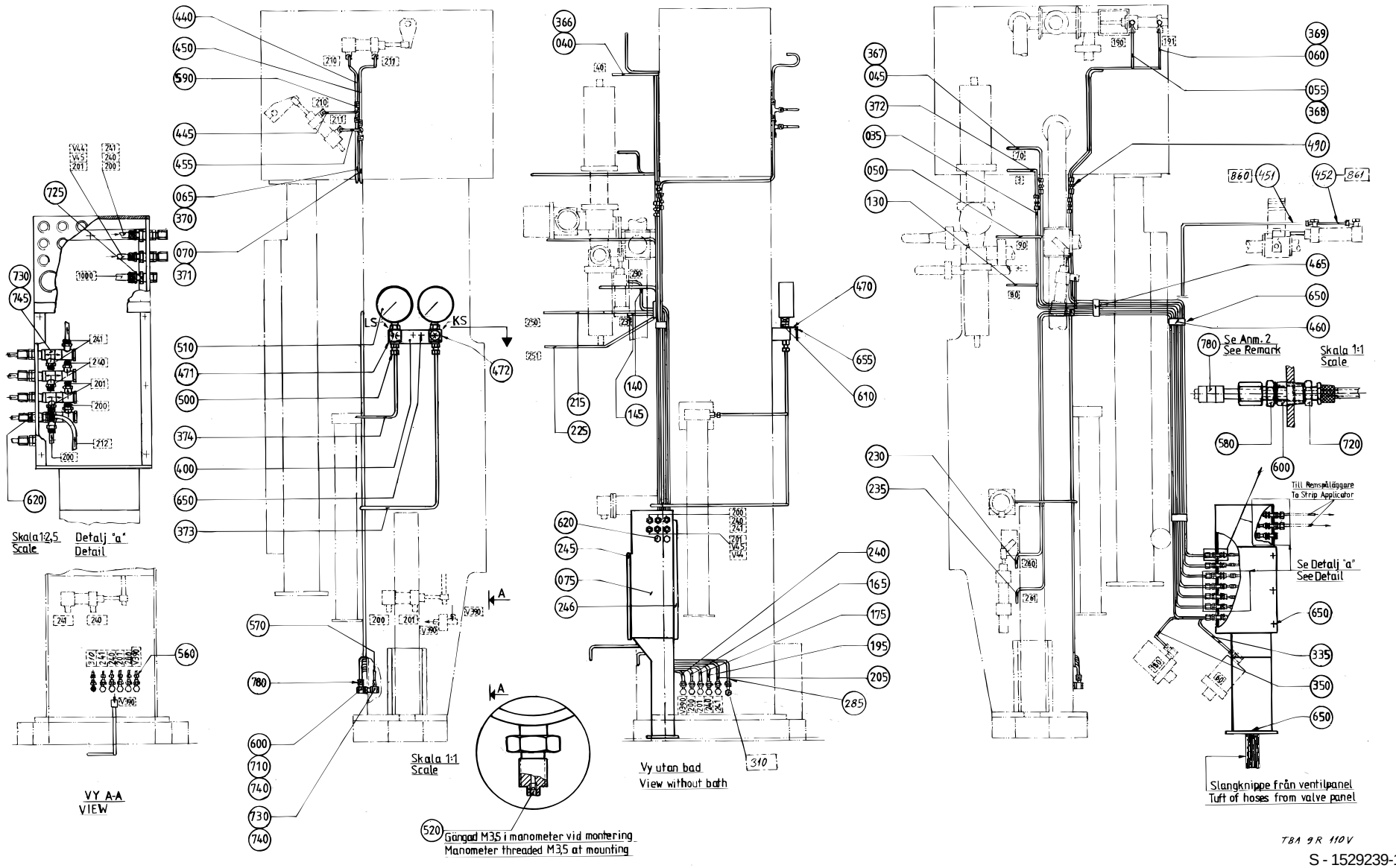

S - 1529239-1
ECN 82225

Pos	Part No	SP	UN	Qty	Description	Page No
Common Parts						
035	295557-0000	-		1	PIPE	
040	295734-0000	-		1	PIPE	
045	295735-0000	-		1	PIPE	
050	295560-0000	-		1	PIPE	
055	295736-0000	-		1	PIPE	
060	295737-0000	-		1	PIPE	
065	295738-0000	-		1	PIPE	
070	295739-0000	-		1	PIPE	
075	1529248-0000	-		1	CONNECTION BOX	
130	295568-0000	-		1	PIPE	
140	295570-0000	-		1	PIPE	
145	295571-0000	-		1	PIPE	
165	295575-0000	-		1	PIPE	
175	295577-0000	-		1	PIPE	
195	295581-0000	-		1	PIPE	
205	295583-0000	-		1	PIPE	
215	295585-0000	-		1	PIPE	
225	295587-0000	-		1	PIPE	
230	295588-0000	-		1	PIPE	
235	295589-0000	-		1	PIPE	
240	295590-0000	-		1	PIPE	
245	B 456411-0000	-		1	LID	
246	B 491423-0000	-		1	LID	
285	751071-0000	-		1	PIPE	
335	295591-0000	-		1	PIPE	
350	295594-0000	-		1	PIPE	
366	295740-0000	-		1	PIPE	
367	1529272-0000	-		1	PIPE	
368	295742-0000	-		1	PIPE	
369	295743-0000	-		1	PIPE	
370	295775-0000	-		1	PIPE	
371	295776-0000	-		1	PIPE	
372	441441-0000	-		1	PIPE	
373	469497-0000	-		1	PIPE	
374	469498-0000	-		1	PIPE	
400	33577-0000	-		1	CANTILEVER	
440	295600-0000	-		1	PIPE	
445	295601-0000	-		1	PIPE	
450	295602-0000	-		1	PIPE	
451	1529265-0000	-		1	PIPE	
452	1529271-0000	-		1	PIPE	
455	295603-0000	-		1	PIPE	
460	295604-0000	-		3	CRAMP	
465	295605-0000	-		3	BRACKET	
470	464173-0000	-		2	LABEL HOLDER	
471	464174-0000	-		1	SIGN	
472	464175-0000	-		1	SIGN	
490	90030-0075	C		7	PIPE CONNECTION G-6	
500	90030-0092	C		2	Straight Conn., 6-R1/4,ext. tappered	
510	90043-0034	C		2	PRESSURE GAUGE	
520	90043-0302	C		2	SCREW	
560	90166-0119	C	MM	21	HOSE PUR 4/6 Black	
570	90166-0132	C	M	1	TUBE 6 mm PA,Transp.	
580	90224-0307	-		31	CONNECTION	
600	90330-0025	C		37	Bushing, Int/Ext. Thr. R1/4-Rp1/8	
610	90330-0105	C		2	Nut, Hexagon, R3/8	
620	90330-0066	-		3	Plug, Ext. G-Thread, G1/8	
650	312105-0366	-		27	Screw M6S M6x12 A280	
655	312502-0120	-		4	Drive Screw Round Head KDS 0x5	
710	342797-0121	-		6	Conn. Banjo, Ringpiece 6-1/8	
720	342921-0113	-		25	STRAIGHT COUPLING,EXT.THREADED 6/4-G1/8"	
725	342921-0121	C		1	STRAIGHT COUPLING,EXT.THREADED 8/6-G1/8"	
730	342980-0113	-		14	BANJO-CONNECTION,RING 6/4-G1/8"	
740	342980-0303	-		12	BANJO-HOLLOW BOLT COUPL,EXT.THR.01-G1/8"	
745	342980-0313	-		4	BANJO-HOLLOW BOLT COUPL,EXT.THR.02-G1/8"	
780	359000-0404	-		12	MARKING COLLAR PA2/4 "4" Yellow	
780	359000-0403	-		12	MARKING COLLAR PA2/4 "3" Yellow	
780	359000-0402	-		44	MARKING COLLAR 2/4 "2" Yellow	
780	359000-0401	-		51	MARKING COLLAR 2/4 "1" Yellow	
780	359000-0400	-		53	MARKING CO2/4"0"	
780	359000-0405	-		4	MARKING CO2/4"5"	
780	359000-0771	-		4	MARKING CO2/4"V"	
780	359000-0409	-		14	MARKING COLLAR PA2/4 "9" Yellow	
780	359000-0408	-		4	MARKING COLLAR PA2/4 "8" Yellow	
780	359000-0407	-		4	MARKING COLLAR PA2/4 "7" Yellow	
780	359000-0406	-		6	MARKING COLLAR PA2/4 "6" Yellow	

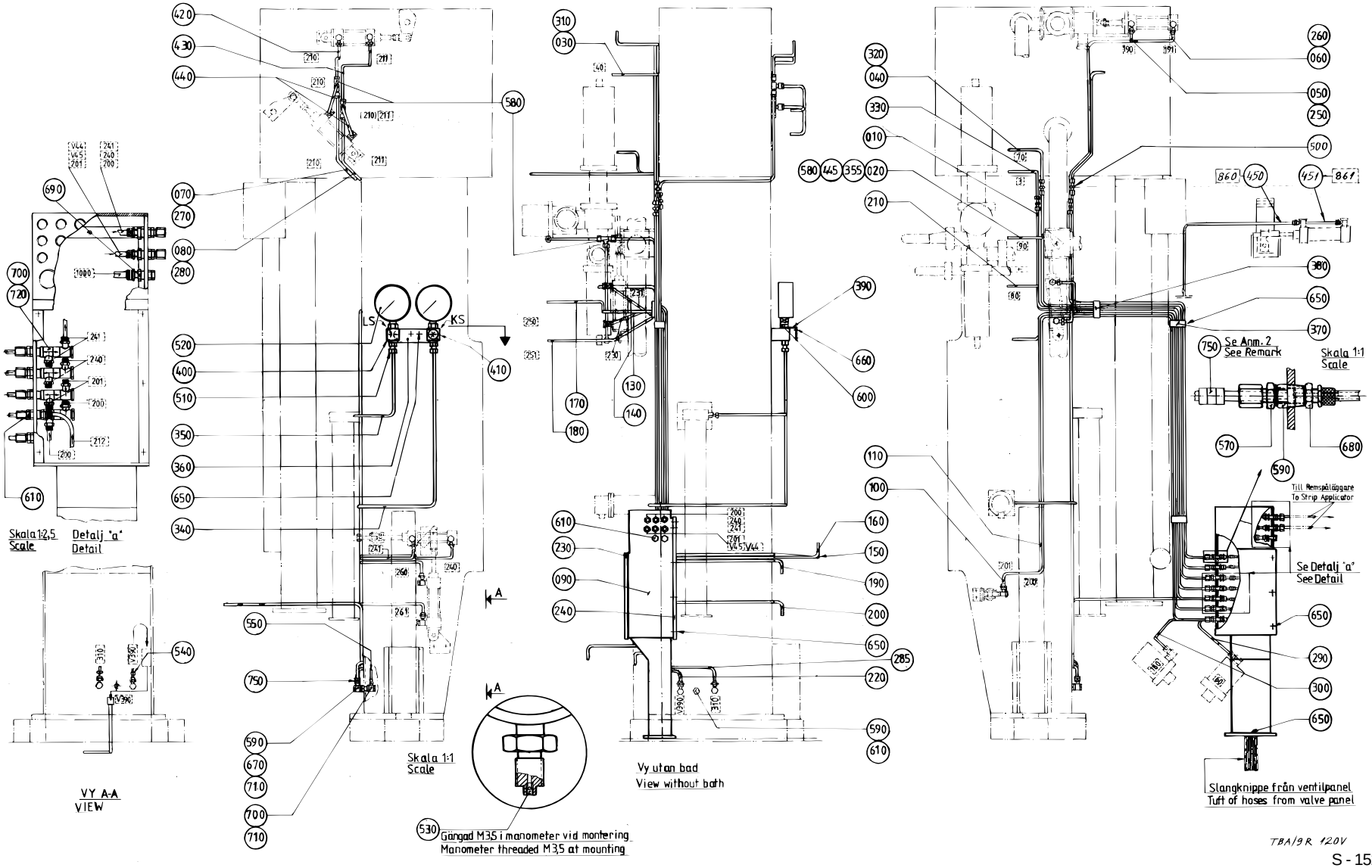

S - 1529240-1
ECN 82225

Pos	Part No	SP	UN	Qty	Description	Page No
Common Parts						
010	295557-0000	-		1	PIPE	
020	751105-0000	-		1	PIPE 90	
030	295734-0000	-		1	PIPE	
040	295735-0000	-		1	PIPE	
050	295736-0000	-		1	PIPE	
060	295737-0000	-		1	PIPE	
070	295738-0000	-		1	PIPE	
080	295739-0000	-		1	PIPE	
090	1529248-0000	-		1	CONNECTION BOX	
100	491657-0000	-		1	PIPE 200	
110	491658-0000	-		1	PIPE 201	
130	491660-0000	-		1	PIPE 230	
140	491661-0000	-		1	PIPE 231	
150	491662-0000	-		1	PIPE 240	
160	491663-0000	-		1	PIPE 241	
170	491664-0000	-		1	PIPE 250	
180	491665-0000	-		1	PIPE 251	
190	491666-0000	-		1	PIPE 260	
200	491667-0000	-		1	PIPE 261	
210	295568-0000	-		1	PIPE	
220	295590-0000	-		1	PIPE	
230	B 456411-0000	-		1	LID	
240	B 491423-0000	-		1	LID	
250	491655-0000	-		1	PIPE 190	
260	491656-0000	-		1	PIPE 191	
270	491668-0000	-		1	PIPE 210	
280	491669-0000	-		1	PIPE 211	
285	751071-0000	-		1	PIPE	
290	295591-0000	-		1	PIPE	
300	295594-0000	-		1	PIPE	
310	295740-0000	-		1	PIPE	
320	1529272-0000	-		1	PIPE	
330	441441-0000	-		1	PIPE	
340	469497-0000	-		1	PIPE	
350	469498-0000	-		1	PIPE	
355	751106-0000	-		1	PIPE 90	
360	33577-0000	-		1	CANTILEVER	
370	295604-0000	-		3	CRAMP	
380	295605-0000	-		3	BRACKET	
390	464173-0000	-		2	LABEL HOLDER	
400	464174-0000	-		1	SIGN	
410	464175-0000	-		1	SIGN	
420	491670-0000	-		1	PIPE 210	
430	491671-0000	-		1	PIPE 211	
440	491672-0000	-		2	PIPE 210 (211)	
445	751107-0000	-		1	PIPE	
450	1529265-0000	-		1	PIPE	
451	1529271-0000	-		1	PIPE	
510	90030-0092	C		2	Straight Conn., 6-R1/4,ext. tappered	
520	90043-0034	C		2	PRESSURE GAUGE	
530	90043-0302	C		2	SCREW	
540	90166-0119	C	MM	21	HOSE PUR 4/6 Black	
550	90166-0132	C	M	3	TUBE 6 mm PA,Transp.	
570	90224-0307	-		29	CONNECTION	
590	90330-0025	C		34	Bushing, Int/Ext. Thr. R1/4-Rp1/8	
600	90330-0105	C		2	Nut, Hexagon, R3/8	
610	90330-0066	-		4	Plug, Ext. G-Thread, G1/8	
650	312105-0366	-		27	Screw M6S M6x12 A280	
660	312502-0120	-		4	Drive Screw Round Head KDS 0x5	
670	342797-0121	-		2	Conn. Banjo, Ringpiece 6-1/8	
680	342921-0113	-		26	STRAIGHT COUPLING,EXT.THREADED 6/4-G1/8"	
690	342921-0121	C		1	STRAIGHT COUPLING,EXT.THREADED 8/6-G1/8"	
700	342980-0113	-		1	BANJO-CONNECTION,RING 6/4-G1/8"	
710	342980-0303	-		3	BANJO-HOLLOW BOLT COUPL,EXT.THR.01-G1/8"	
720	342980-0313	-		4	BANJO-HOLLOW BOLT COUPL,EXT.THR.02-G1/8"	
750	359000-0408	-		4	MARKING COLLAR PA2/4 "8" Yellow	
750	359000-0771	-		4	MARKING CO2/4"V"	
750	359000-0409	-		14	MARKING COLLAR PA2/4 "9" Yellow	
750	359000-0407	-		4	MARKING COLLAR PA2/4 "7" Yellow	
750	359000-0406	-		6	MARKING COLLAR PA2/4 "6" Yellow	
750	359000-0405	-		4	MARKING CO2/4"5"	
750	359000-0404	-		12	MARKING COLLAR PA2/4 "4" Yellow	
750	359000-0403	-		16	MARKING COLLAR PA2/4 "3" Yellow	
750	359000-0402	-		44	MARKING COLLAR 2/4 "2" Yellow	
750	359000-0401	-		55	MARKING COLLAR 2/4 "1" Yellow	
750	359000-0400	-		57	MARKING CO2/4"0"	

CABLE TRENCH

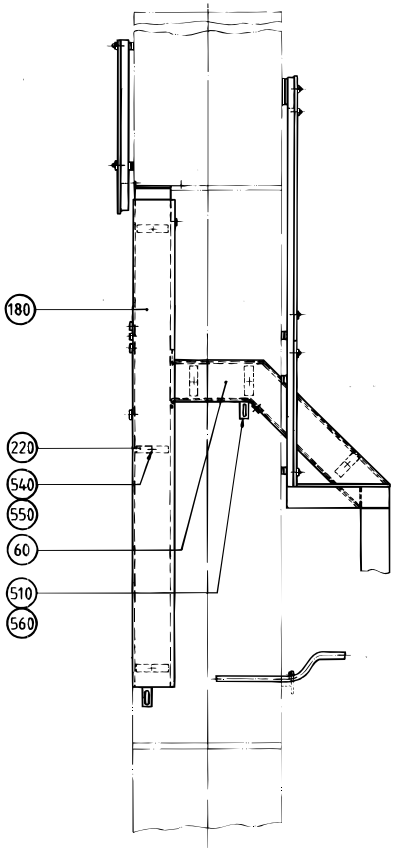

B - B

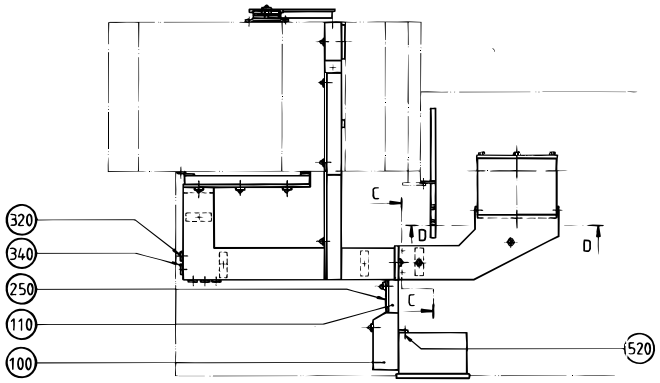

A - A

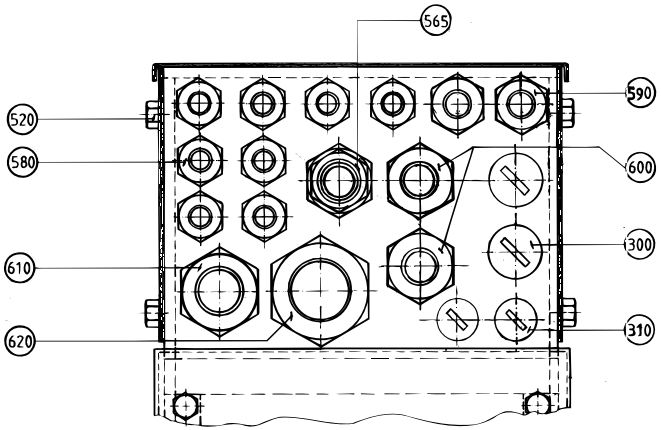

D - D
Scale 1:1

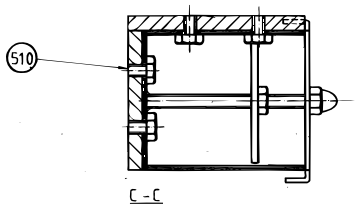

C - C
Scale 1:1

Common Parts

Pos	Part No	SP	UN	Qty	Description	Page No
010	295463-0000	-		1	CABLE TRENCH	
020	469343-0000	-		1	CABLE TRENCH	
030	469344-0000	-		1	CABLE TRENCH	
040	469345-0000	-		1	CABLE TRENCH	
050	469346-0000	-		1	CABLE TRENCH	
060	469347-0000	-		1	LID	
070	295465-0002	-		1	LID	
080	295782-0000	-		1	CABLE TRENCH	
090	295783-0000	-		1	LID	
100	469348-0000	-		1	COVER	
110	469349-0000	-		1	CABLE TRENCH	
120	469350-0000	-		1	LID	
130	469351-0000	-		1	LID	
140	1529269-0000	-		1	CABLE DUCT	
150	1529268-0000	-		1	CABLE DUCT	
160	1529233-0000	-		1	CABLE CONDUIT	
170	441312-0000	-		1	CABLE CONDUIT	
180	469352-0000	-		1	LID	
190	469353-0000	-		1	LID	
200	469354-0000	-		1	LID	
210	271508-0000	-		1	BRACKET	
220	272945-0000	-		7	LOCK	
230	295466-0000	-		15	LOCK	
240	295819-0003	-		1	LID	
250	B 469355-0000	-		1	LID	
300	90002-0009	-		2	BLANK-OFF PLUG 18.6	
310	90002-0013	-		2	BLANK-OFF PLUG 15,2	
320	90015-0020	-		21	GLANDS,Lead-in,IP67	
330	90015-0021	-		2	GLANDS,Lead-in,IP67	
340	90015-0023	-		1	GLANDS,Lead-in,IP67	
350	90015-0024	-		1	GLANDS,Lead-in,IP67	
360	90064-0052	-		1	PUSH BUTTON	
370	90066-0013	-		1	PUSH BUTTON BOX	
380	90089-0003	-		1	SLEEVE PR22,5/18,6;PG16/11	
390	90099-0011	-		1	NUT PR 37 BRASS	
500	312105-0362	-		6	Screw M6S M6x8 A280	
510	312105-0364	-		1	Screw M6S M6x10 A280	
520	312105-0366	-		21	Screw M6S M6x12 A280	
530	312125-0323	-		2	Screw Pan Head MCS M5X8 RFR	
540	312605-0316	-		23	Nut Hex. M6M M6 A280	
550	312705-0316	-		25	Nut Hex. Domed Cap MHM-6 M6 A280	
560	315105-0153	-		1	Washer, Plain, BRB, 6,4/12,H=1,5	
565	352100-0112	-		1	CABLE GLANR.22,5-15	
570	352101-0107	-		1	GLANDS,Lead-in,IP44 PR37; PG29	
580	352103-0101	-		8	CABLE GLAND ST 9;PR15,2/PG9	
590	352103-0106	-		3	CABLE GLAND ST 11	
600	352103-0111	-		2	CABLE GLAND ST 16	
610	352103-0116	-		1	CABLE GLAND ST 21	
620	352103-0121	-		1	CABLE GLAND ST 29	

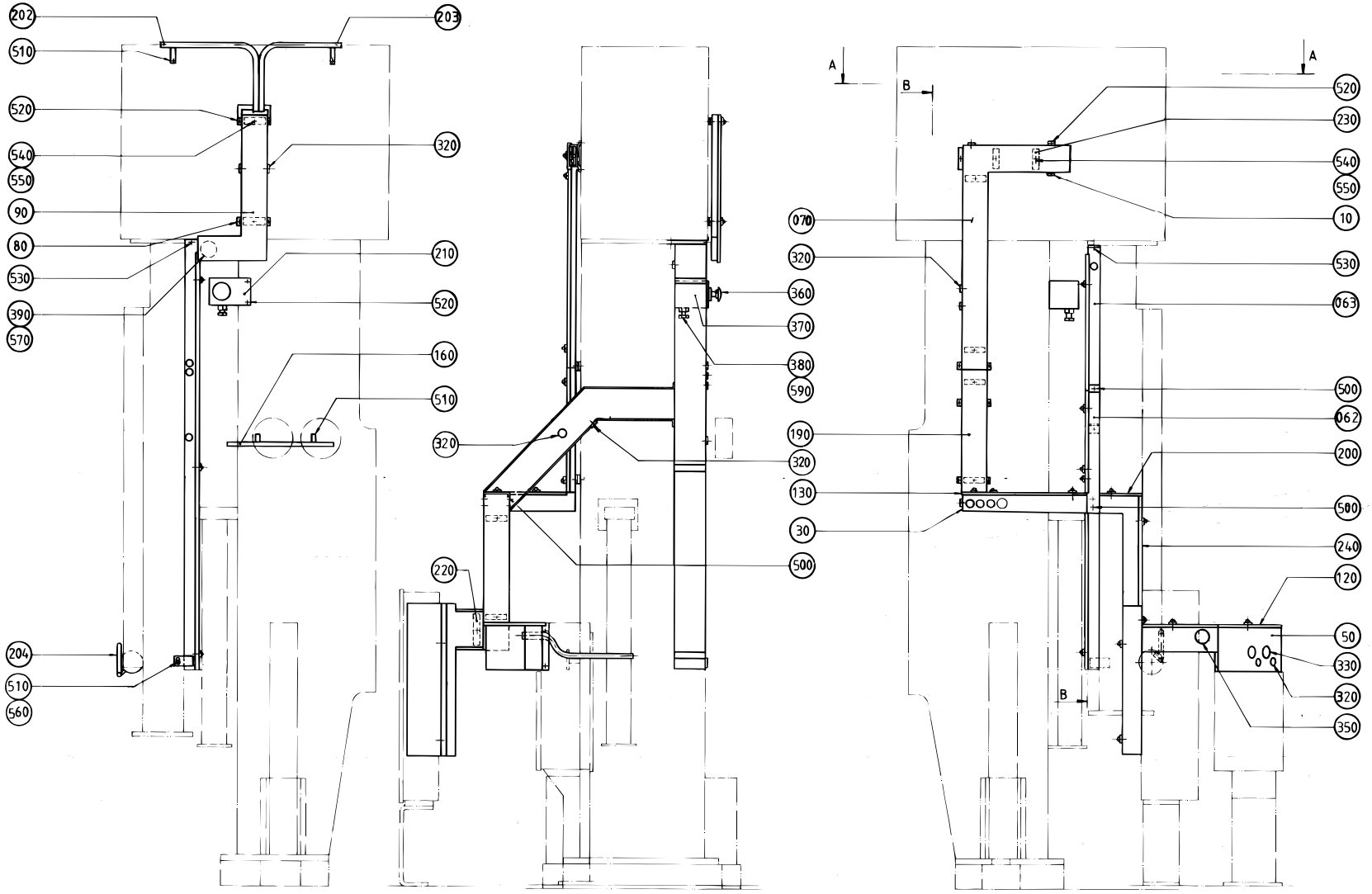

Vy utan bad.
View without bath.

S - 1529237-1
ECN 82225

Pos	Part No	SP	UN	Qty	Description	Page No
Common Parts						
010	751076-0000	-		1	CABLE TRENCH	
030	751001-0000	-		1	CABLE TRENCH	
050	469346-0000	-		1	CABLE TRENCH	
060	469347-0000	-		1	LID	
062	491836-0000	-		1	CABLE TRENCH	
063	491837-0000	-		1	CABLE TRENCH	
070	751077-0000	-		1	LID	
080	295782-0000	-		1	CABLE TRENCH	
090	295783-0000	-		1	LID	
100	469348-0000	-		1	COVER	
110	469349-0000	-		1	CABLE TRENCH	
120	469350-0000	-		1	LID	
130	469351-0000	-		1	LID	
160	1529233-0000	-		1	CABLE CONDUIT	
180	469352-0000	-		1	LID	
190	469353-0000	-		1	LID	
200	469354-0000	-		1	LID	
202	1529231-0000	-		1	CABLE CONDUIT	
203	1529232-0000	-		1	CABLE CONDUIT	
204	491838-0000	-		1	CABLE CONDUIT	
210	271508-0000	-		1	BRACKET	
220	272945-0000	-		7	LOCK	
230	295466-0000	-		15	LOCK	
240	295819-0003	-		1	LID	
250	B 469355-0000	-		1	LID	
300	90002-0009	-		2	BLANK-OFF PLUG 18.6	
310	90002-0013	-		2	BLANK-OFF PLUG 15,2	
320	90015-0020	-		21	GLANDS,Lead-in,IP67	
330	90015-0021	-		2	GLANDS,Lead-in,IP67	
340	90015-0023	-		1	GLANDS,Lead-in,IP67	
350	90015-0024	-		1	GLANDS,Lead-in,IP67	
360	90064-0052	-		1	PUSH BUTTON	
370	90066-0013	-		1	PUSH BUTTON BOX	
380	90089-0003	-		1	SLEEVE PR22,5/18,6;PG16/11	
390	90099-0011	-		1	NUT PR 37 BRASS	
500	312105-0362	-		6	Screw M6S M6x8 A280	
510	312105-0364	-		13	Screw M6S M6x10 A280	
520	312105-0366	-		25	Screw M6S M6x12 A280	
530	312125-0323	-		2	Screw Pan Head MCS M5X8 RFR	
540	312605-0316	-		23	Nut Hex. M6M M6 A280	
550	312705-0316	-		25	Nut Hex. Domed Cap MHM-6 M6 A280	
560	315105-0153	-		1	Washer, Plain, BRB, 6,4/12,H=1,5	
565	352100-0112	-		1	CABLE GLANR.22,5-15	
570	352101-0107	-		1	GLANDS,Lead-in,IP44 PR37; PG29	
580	352103-0101	-		8	CABLE GLAND ST 9;PR15,2/PG9	
590	352103-0106	-		3	CABLE GLAND ST 11	
600	352103-0111	-		2	CABLE GLAND ST 16	
610	352103-0116	-		1	CABLE GLAND ST 21	
620	352103-0121	-		1	CABLE GLAND ST 29	

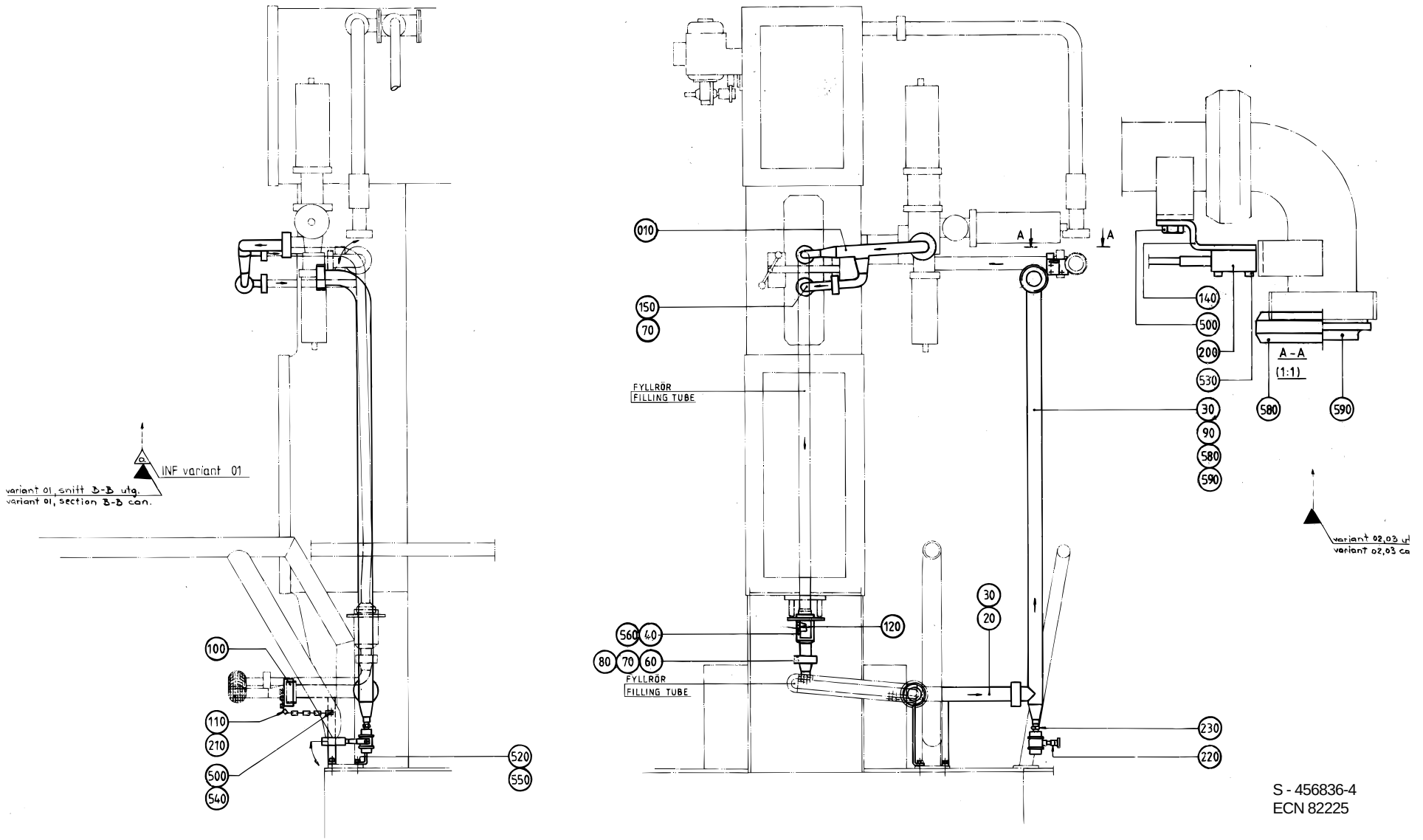

S - 456836-4
ECN 82225

Pos	Part No	SP	UN	Qty	Description	Page No
0125S						
040	490896-0000	-		1	CONTAINER	
120	295300-0000	-		1	FORCE SPRING	
160	491645-0000	-		1	PIPE	
560	315204-0224	C		1	O-Ring 42,2x3 mm	
0180B OR 0236B OR 0200B OR 0250B						
040	469987-0000	-		1	CONTAINER	
120	295301-0000	-		1	FLUSH PIPE	
560	315204-0303	C		1	O-Ring 59,5x3 mm	
0200S						
040	490896-0000	-		1	CONTAINER	
120	295300-0000	-		1	FORCE SPRING	
560	315204-0224	C		1	O-Ring 42,2x3 mm	
Common Parts						
010	751121-0000	-		1	CLEANING PIPE	
020	456858-0000	-		1	PIPE	
030	456859-0002	-		1	PIPE	
060	564543-0000	-		1	CLEANING PIPE	
070	12242-0001	C		2	GASKET	
080	12242-0002	C		1	GASKET	
090	12242-0003	C		4	GASKET	
100	209181-0000	-		1	LID	
110	209183-0000	-		1	RING	
140	456857-0000	-		1	BRACKET	
150	456902-0000	-		1	PIPE	
200	90044-0104	-		1	PROX.SWITCH IFM IN 3002	
210	90155-0008	-	MM	2	CHAIN	
220	90187-0051	-		1	Ball Valve, G3/8 PTFE	
230	90330-0028	-		1	Nipples, Ext. Thread. R-207R3/8	
500	312105-0364	-		3	Screw M6S M6x10 A280	
520	312105-0455	-		2	Screw M6S M8x30 A280	
530	312125-0228	-		2	Screw Pan Head MCS M3x16 A480	
540	315105-0153	-		1	Washer, Plain, BRB, 6,4/12,H=1,5	
550	315105-0165	-		2	Washer, Plain, BRB, 8,4/16,H=1,5	
580	342803-0103	-		2	Screw Fitting, Nut, No190615	
590	342812-0103	-		2	Sleeve, No. 190706	

Pos	Part No	SP	UN	Qty	Description	Page No

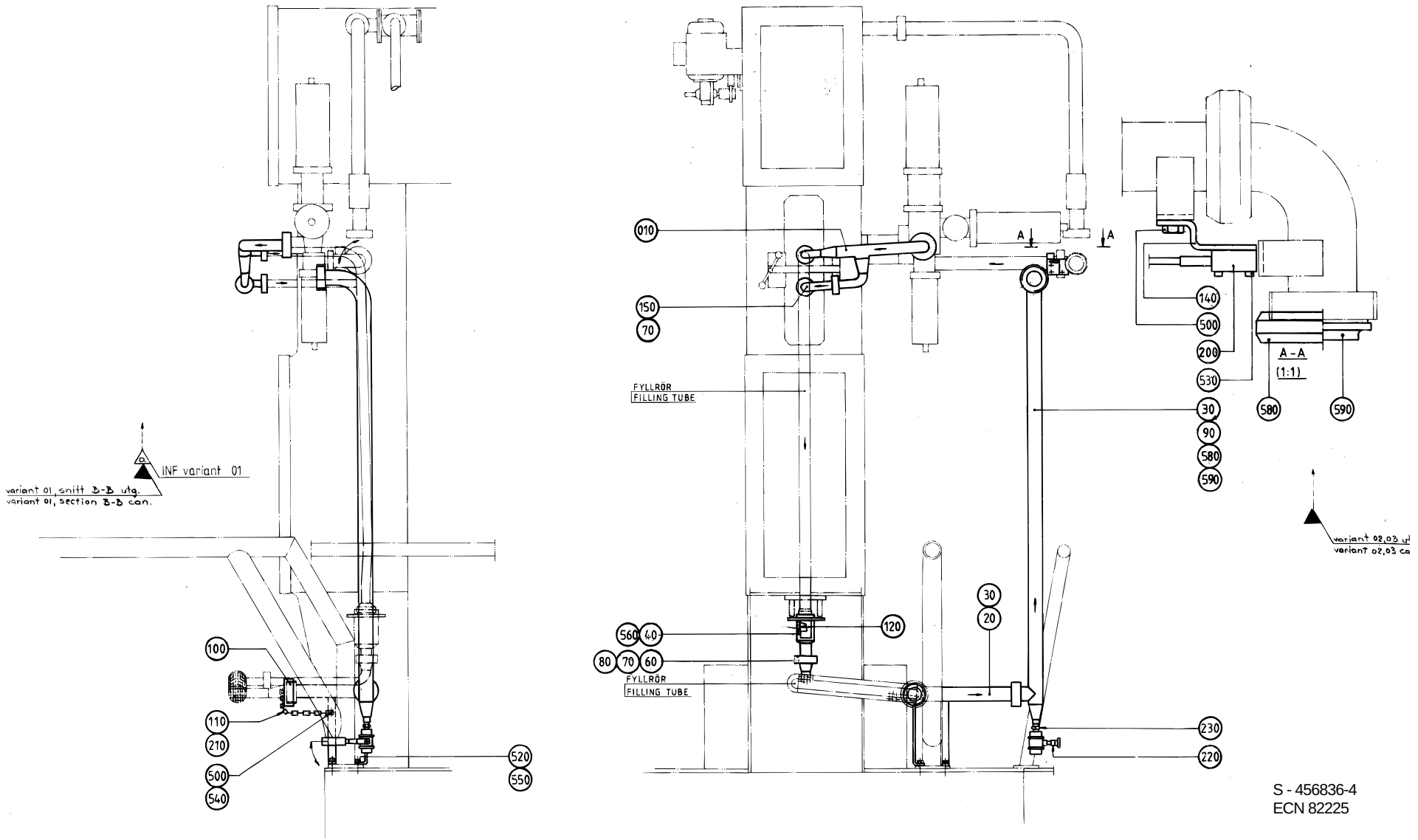

S - 456836-4
ECN 82225

Pos	Part No	SP	UN	Qty	Description	Page No
0125S OR 0200S						
040	490896-0000	-		1	CONTAINER	
120	295300-0000	-		1	FORCE SPRING	
560	315204-0224	C		1	O-Ring 42,2x3 mm	
0180B OR 0236B OR 0200B OR 0250B						
040	469987-0000	-		1	CONTAINER	
120	295301-0000	-		1	FLUSH PIPE	
560	315204-0303	C		1	O-Ring 59,5x3 mm	
Common Parts						
010	596072-0000	-		2	CONNECTION	
020	90274-0045	-		2	GUARD	
025	491020-0000	-		1	PIPE	
030	90043-0095	C		2	PRESSURE GAUGE	
040	90330-0083	-		2	Nipples, Ext. Thread. R3/8-R1/4	
050	90330-0024	-		2	T-Pipe, Int. Thread, Rp1/4	
060	90152-0033	-	MM	28	Spiral Conduit for PR 15,2(PG 9)	
065	33577-0000	-		1	CANTILEVER	
070	90012-0064	-		2	GLAND	
080	90330-0120	-		2	Nut, Hexagon, G1/4	
090	90005-0012	-		2	Washer,Pl.Rnd.Cu.13,5/17,H=1,5	
100	90012-0063	-		2	Cable Gland PR 15,2	
110	351173-0104	-	MM	56	CABLE AWM LIGTHBLUE 1,5MM2	
120	351179-0104	-	MM	56	CABLE AWM BLACK 1,5MM2	
130	90166-0111	-	MM	2	SHRINKABLE HOSE 6.4 MM(1/4")Black	
500	312105-0366	-		2	Screw M6S M6x12 A280	
520	342797-0122	-		4	Conn. Banjo, Ringpiece 6-1/4	
530	342980-0304	-		4	BANJO-HOLLOW BOLT COUPL,EXT.THR.01-G1/4"	

Pos	Part No	SP	UN	Qty	Description	Page No

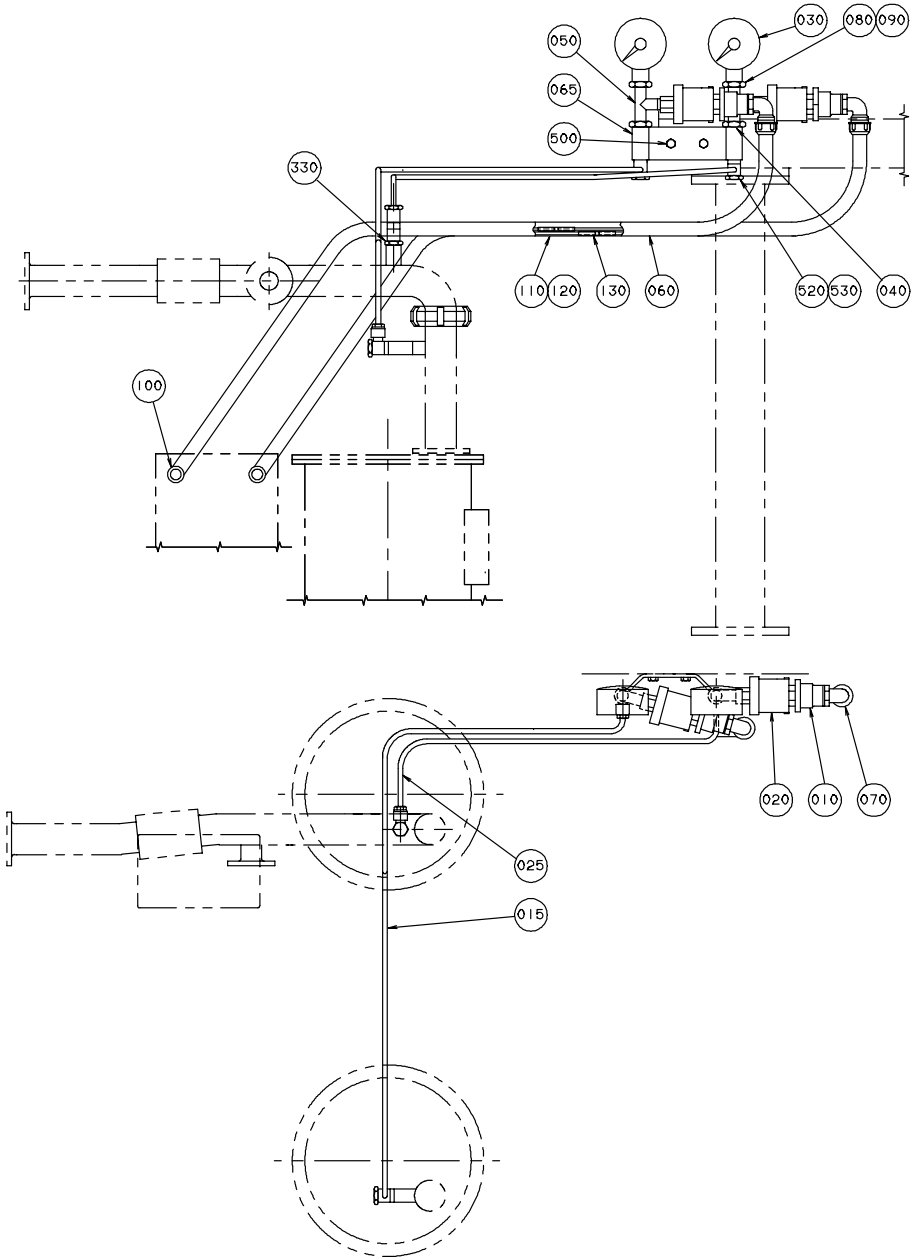
030
080
090
050
065
500
330
110
120
130
060
520
530
040
100
020
010
070
025
015

Pos	Part No	SP	UN	Qty	Description	Page No
Common Parts						
010	596072-0000	-		2	CONNECTION	
020	90274-0045	-		2	GUARD	
025	491020-0000	-		1	PIPE	
030	90043-0095	C		2	PRESSURE GAUGE	
040	90330-0083	-		2	Nipples, Ext. Thread. R3/8-R1/4	
050	90330-0024	-		2	T-Pipe, Int. Thread, Rp1/4	
060	90152-0033	-	MM	28	Spiral Conduit for PR 15,2(PG 9)	
065	33577-0000	-		1	CANTILEVER	
070	90012-0064	-		2	GLAND	
080	90330-0120	-		2	Nut, Hexagon, G1/4	
090	90005-0012	-		2	Washer,Pl.Rnd.Cu.13,5/17,H=1,5	
100	90012-0063	-		2	Cable Gland PR 15,2	
110	351173-0104	-	MM	56	CABLE AWM LIGTHBLUE 1,5MM2	
120	351179-0104	-	MM	56	CABLE AWM BLACK 1,5MM2	
130	90166-0111	-	MM	2	SHRINKABLE HOSE 6.4 MM(1/4")Black	
500	312105-0366	-		2	Screw M6S M6x12 A280	
520	342797-0122	-		4	Conn. Banjo, Ringpiece 6-1/4	
530	342980-0304	-		4	BANJO-HOLLOW BOLT COUPL,EXT.THR.01-G1/4"	

Pos	Part No	SP	UN	Qty	Description	Page No

PHOTOCELL UNIT

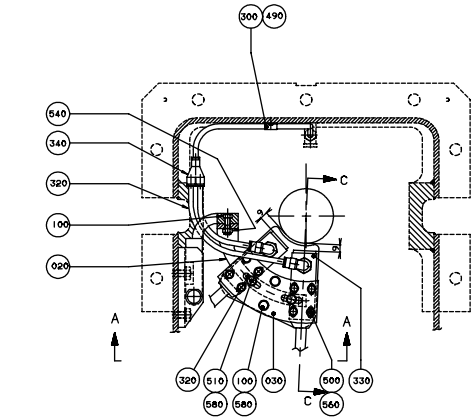

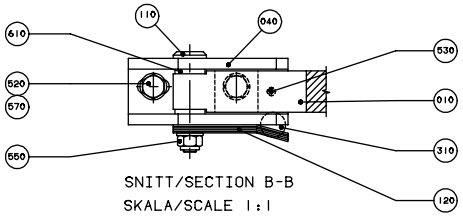

SNITT/SECTION B-B
SKALA/SCALE 1:1

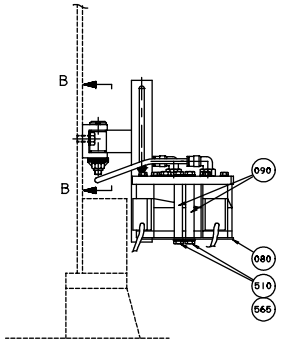

VY/VIEW A-A

SNITT C-C SE BLAD 4
SECTION C-C LOOK SHEET 4

TBA/9R 100V,110V 0200B,0250B

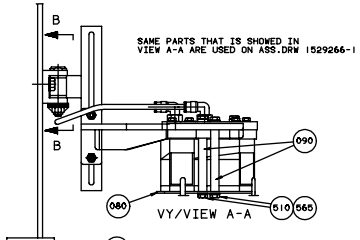

VY/VIEW A-A

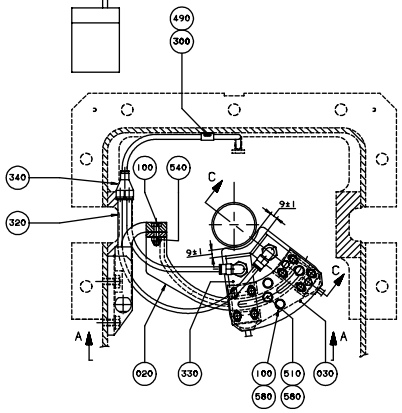

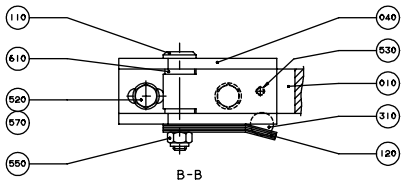

B-B
SKALA/SCALE 1:1

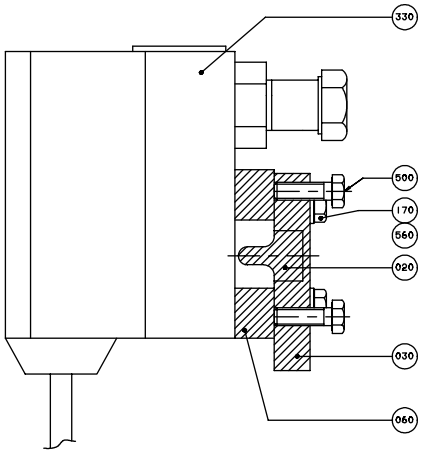

SNITT/SECTION C-C
Volume ,200ML SLIM

TBA/9R 100V,110V 0200S

Pos	Part No	SP	UN	Qty	Description	Page No
0200B OR 0250B						
020	751457-0000	D		1	CANTILEVER	
030	978735-0000	D		1	FASTENING PLATE	
080	1260486-0000	-		1	PLATE	
090	1260490-0000	-		2	NUT	
150	536374-0000	-		2	WASHER	
500	312105-0329	-		1	Screw M6S M5x16 A280	
Common Parts						
010	751456-0000	-		1	HOLDER	
040	490876-0000	-		1	BRACKET	
100	312105-0370	-		4	Screw M6S M6x20 A280	
110	457367-0000	C		1	SHAFT	
120	457368-0000	C		5	SPRING	
300	90074-0001	-		1	CLIPS, Cable clips di=10 mm	
310	90090-0016	-		1	STEEL BALL SKF RB-15 RS	
320	90166-0124	-	MM	75	TUBE 6 mm PA,Transp.	
330	90458-0601	C		2	PHOTOCELL, SICK PHOTOCELL 1	
340	90055-0100	-		1	Y-CONNECTION	
490	312105-0287	-		1	Screw M6S M4x8 A280	
510	312105-0366	-		4	Screw M6S M6x12 A280	
520	312105-0449	-		2	Screw M6S M8x16 A280	
530	312318-0325	-		1	Screw Hex.Sock.Set Cup P.MSK6SS5x10 SS	
540	312812-0316	-		2	Nut Hex. Ny-Lock M6 A480	
550	312812-0318	-		1	Nut Hex. Ny-Lock M8 A480	
560	315105-0146	-		8	Washer, Plain, BRB, 5,3/10,H=1	
565	315105-0153	-		2	Washer, Plain, BRB, 6,4/12,H=1,5	
570	315115-0165	-		3	Washer, Plain, TBRB 8,4/16 H=3	
580	315115-0153	-		4	Washer, Plain, TBRB 6,4/12 H=3	
610	321101-0143	-		2	FLANGE BUS 8F7X8	

Pos	Part No	SP	UN	Qty	Description	Page No

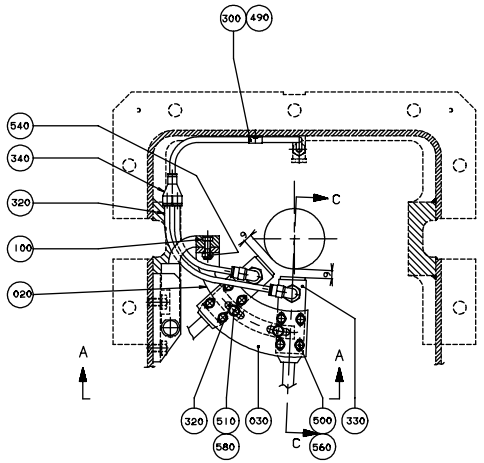

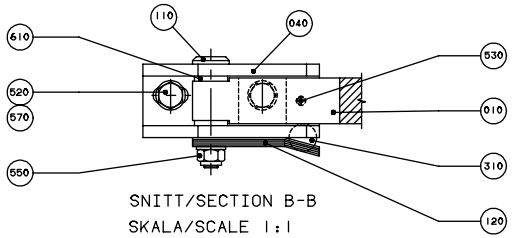

SNITT/SECTION B-B
SKALA/SCALE 1:1

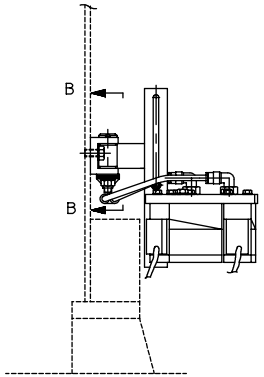

VY/VIEW A-A

SNITT C-C SE BLAD 3
SECTION C-C LOOK SHEET 3

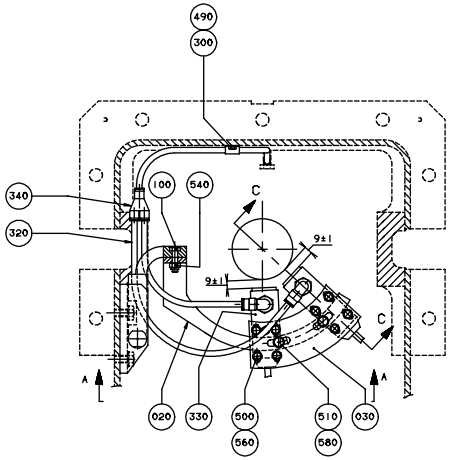

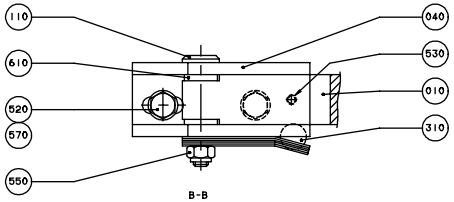

B-B
SKALA/SCALE 1:1

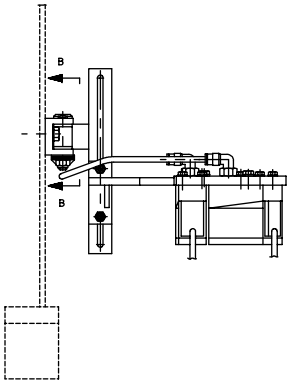

VY/VIEW A-A

SNITT C-C SE BLAD 3
SECTION C-C LOOK SHEET 3

TBA/9R 120V 0200S

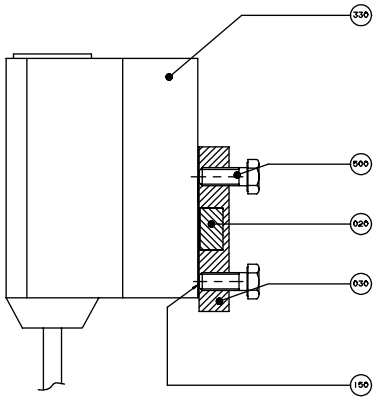

SNITT/SECTION C-C

TBA/9R 120V 0200B,0250B,0200S

Pos	Part No	SP	UN	Qty	Description	Page No
0200B OR 0250B						
020	490874-0000	-		1	CANTILEVER	
030	490875-0000	-		1	FASTENING PLATE	
0200S						
020	491542-0000	-		1	CANTILEVER	
030	491880-0000	-		1	FASTENING PLATE	
0200S						
020	751476-0000	-		1	CANTILEVER	
030	491880-0000	-		1	FASTENING PLATE	
060	752554-0000	-		4	SPACER	
080	1260487-0000	-		1	PLATE	
090	1260491-0000	-		2	NUT	
170	312109-0335	-		8	Screw M6S M5x30 A280	
500	312105-0329	-		2	Screw M6S M5x16 A280	
Common Parts						
010	490873-0000	-		1	HOLDER	
040	490876-0000	-		1	BRACKET	
100	312105-0370	-		2	Screw M6S M6x20 A280	
110	457367-0000	-		1	SHAFT	
120	457368-0000	-		5	SPRING	
150	536374-0000	-		2	WASHER	
300	90074-0001	-		1	CLIPS, Cable clips di=10 mm	
310	90090-0016	-		1	STEEL BALL SKF RB-15 RS	
320	90166-0124	-	MM	75	TUBE 6 mm PA,Transp.	
330	90458-0601	C		2	PHOTOCELL, SICK PHOTOCELL 1	
340	90055-0100	-		1	Y-CONNECTION	
490	312105-0287	-		1	Screw M6S M4x8 A280	
500	312105-0329	-		1	Screw M6S M5x16 A280	
510	312105-0366	-		2	Screw M6S M6x12 A280	
520	312105-0449	-		2	Screw M6S M8x16 A280	
530	312318-0323	-		1	Screw,Sock.Set Cuppoint MSK6SS M5x8 A4	
540	312812-0316	-		2	Nut Hex. Ny-Lock M6 A480	
550	312812-0318	-		1	Nut Hex. Ny-Lock M8 A480	
560	315105-0146	-		8	Washer, Plain, BRB, 5,3/10,H=1	
570	315115-0165	-		2	Washer, Plain, TBRB 8,4/16 H=3	
580	315115-0153	-		2	Washer, Plain, TBRB 6,4/12 H=3	
610	321101-0143	-		2	FLANGE BUS 8F7X8	

Pos	Part No	SP	UN	Qty	Description	Page No

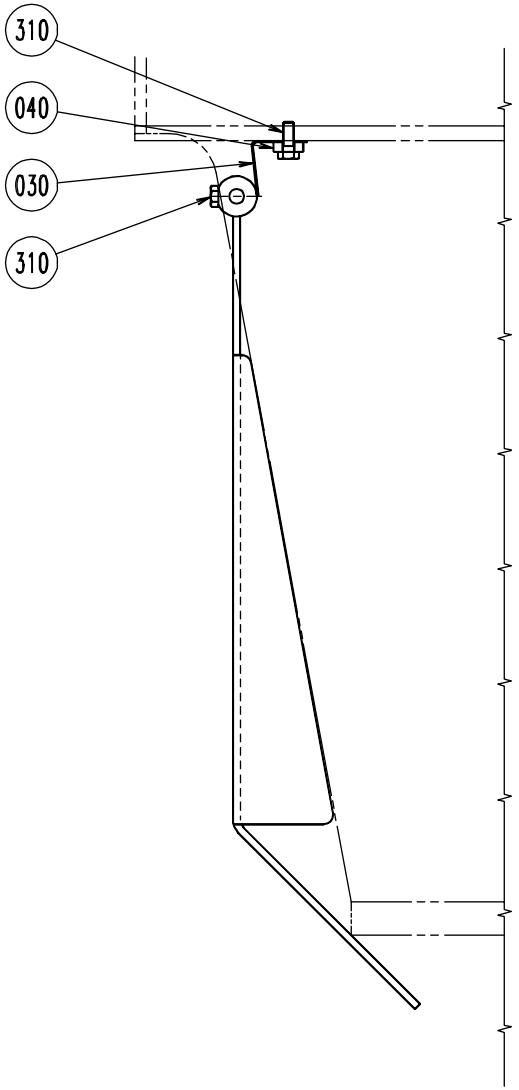
310
040
030
310

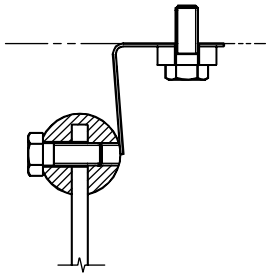
A-A
(1:1)

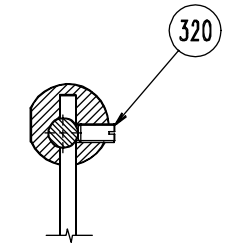
320
B-B
(1:1)

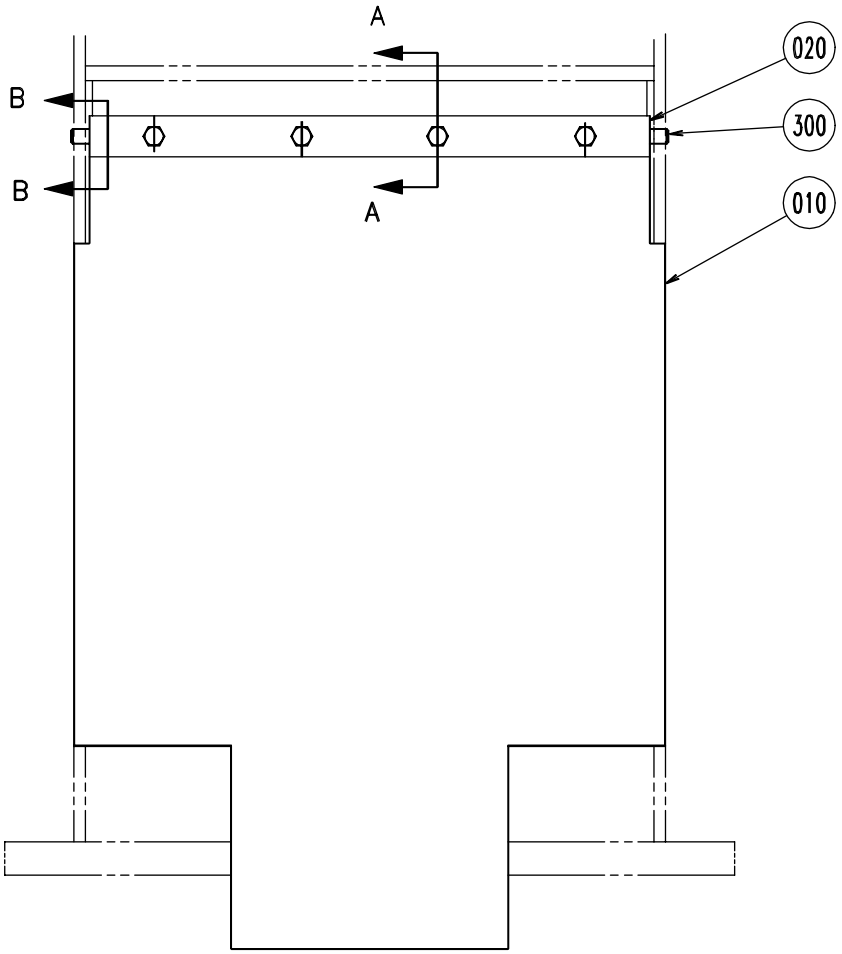
A
B
B
A
020
300
010

Pos	Part No	SP	UN	Qty	Description	Page No
Common Parts						
010	751674-0000	D		1	HATCH	
020	456809-0000	-		1	SHAFT	
030	469922-0000	-		1	SPRING	
040	469927-0000	-		1	RIM	
300	311103-0405	-		2	Pin, Parallell, m6, 8x30	
310	312105-0368	-		7	Screw M6S M6x16 A280	
320	312318-0323	-		2	Screw,Sock.Set Cuppoint MSK6SS M5x8 A4	

Pos	Part No	SP	UN	Qty	Description	Page No

This page is intentionally left blank

Pos	Part No	SP	UN	Qty	Description	Page No
0125S OR 0200S						
120	272479-0000	-		1	PRESSURE ROLLER	
0180B OR 0236B OR 0200B OR 0250B						
070	257330-0000	-		1	PRESSURE ROLLER	
Common Parts						
020	267494-0000	-		1	COIL HEATER	
050	12242-0003	-		2	GASKET	
060	230551-0000	-		2	GASKET	
080	266610-0000	-		2	GASKET REPBY 0531742-0000	
110	271461-0000	-		1	GASKET	
150	295388-0000	-		1	GASKET	
153	441721-0000	-		1	GASKET	
160	90206-0031	-		1	HEATING ELEMENT 700+1200W,220V	
180	B 90206-0070	-		1	HEATING ELEMENT 6000W 380/220V	
200	315204-0214	-		1	O-Ring 17,3x2,4 mm	
210	90242-0084	-		2	O-Ring 203,0x3 mm	
220	90415-0316	-		1	FILTER / 6051-200-SS	
230	90424-0304	-		1	GASKET	
240	315204-0218	-		1	O-Ring 26,2x3 mm	
260	315204-0223	-		2	O-Ring 39,2x3 mm	
F010	499255-0101	-		1	SEAL KIT**	
	90042-0466	C		1	DIAPHRAGM 330.95.2 VITON	
	90043-0301	-		1	DIAPHRAGM	
	90069-0359	-		1	CARBON BRUSH	
	294464-0000	C		1	BASE PLATE	
	270927-0000	C		3	SCREW	
	270926-0000	C		6	NUT	
	90206-0326	-		1	CONNECTION BOX	
	90285-0087	C		1	SEAL	
	90285-0094	C		1	SEAL KIT	
	90285-0094	C		1	SEAL KIT	
	90239-0442	C		1	SEAL KIT	
	90239-0442	C		1	SEAL KIT	
	90270-0338	C		1	SPARE PARTS KIT	
	90270-0345	C		1	SHIMS	
	90270-0346	C		1	GASKET	
	90270-0348	-		1	MOTOR ELMO RA112/MB42083	
	90326-0304	-		1	LEAD IN	
	90424-0304	C		1	GASKET	
	90424-0303	C		1	GASKET	
	90424-0302	C		1	GASKET	
	90424-0301	C		1	SLEEVE	

Pos	Part No	SP	UN	Qty	Description	Page No

This page is intentionally left blank

Pos	Part No	SP	UN	Qty	Description	Page No
0125S OR 0200S						
120	272479-0000	-		1	PRESSURE ROLLER	
0180B OR 0236B OR 0200B OR 0250B						
070	257330-0000	-		1	PRESSURE ROLLER	
Common Parts						
010	A 499255-0100	-		1	SEAL KIT	
020	441804-0000	-		1	COIL HEATER	
050	12242-0003	-		2	GASKET	
060	230551-0000	-		2	GASKET	
080	531742-0000	-		2	GASKET	
110	271461-0000	-		1	GASKET	
150	295388-0000	-		1	GASKET	
153	441721-0000	-		1	GASKET	
160	90206-0031	-		1	HEATING ELEMENT 700+1200W,220V	
180	B 90206-0070	-		1	HEATING ELEMENT 6000W 380/220V	
200	315204-0214	-		1	O-Ring 17,3x2,4 mm	
210	90242-0084	-		2	O-Ring 203,0x3 mm	
220	90415-0316	-		1	FILTER / 6051-200-SS	
230	90424-0304	-		1	GASKET	
240	315204-0218	-		1	O-Ring 26,2x3 mm	
260	315204-0223	-		2	O-Ring 39,2x3 mm	

Pos	Part No	SP	UN	Qty	Description	Page No


Tetra Pak

SPC

Spare Parts Catalogue

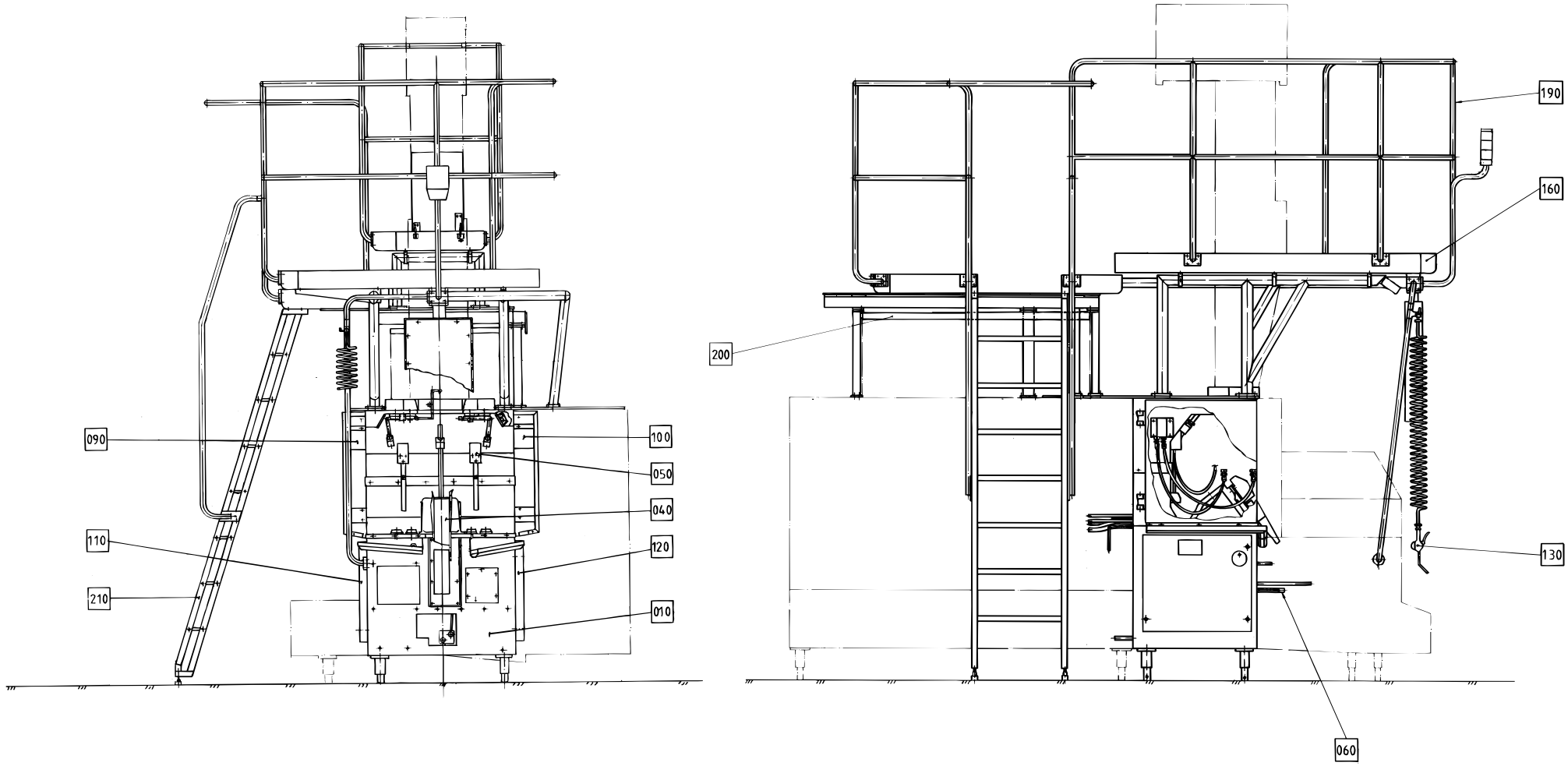
090
100
050
040
110
120
210
010
200
190
160
130
060

Pos	Part No	SP	UN	Qty	Description	Page No
Common Parts						
010	A1529128-0100	-		1	MACHINE BODY TBA/9R	**210**
040	A 456180-0100	-		1	DROP CHUTE	**216**
050	A1529188-0100	-		2	TRANSMISSION TBA/9R	**222**
060	A 271562-0600	-		1	PIPE WORK MACHINE BODY	**224**
090	A1529132-0100	-		1	DOOR TBA/9R	**238**
100	A1529133-0100	-		1	DOOR TBA/9R	**240**
110	A 256665-0200	-		1	HATCH LEFT	**242**
120	A1296815-0100	-		1	HATCH RIGHT	**244**
130	A 271414-0200	-		1	AIR JET GUN	**246**
160	A1529126-0100	-		1	PLATFORM TBA/9R	**248**
190	A1529127-0100	-		1	RAILING TBA/9R	**254**
200	A 469496-0100	-		1	COVERING PLATE	**262**
210	A 469762-0100	-		1	LADDER	**264**

Pos	Part No	SP	UN	Qty	Description	Page No

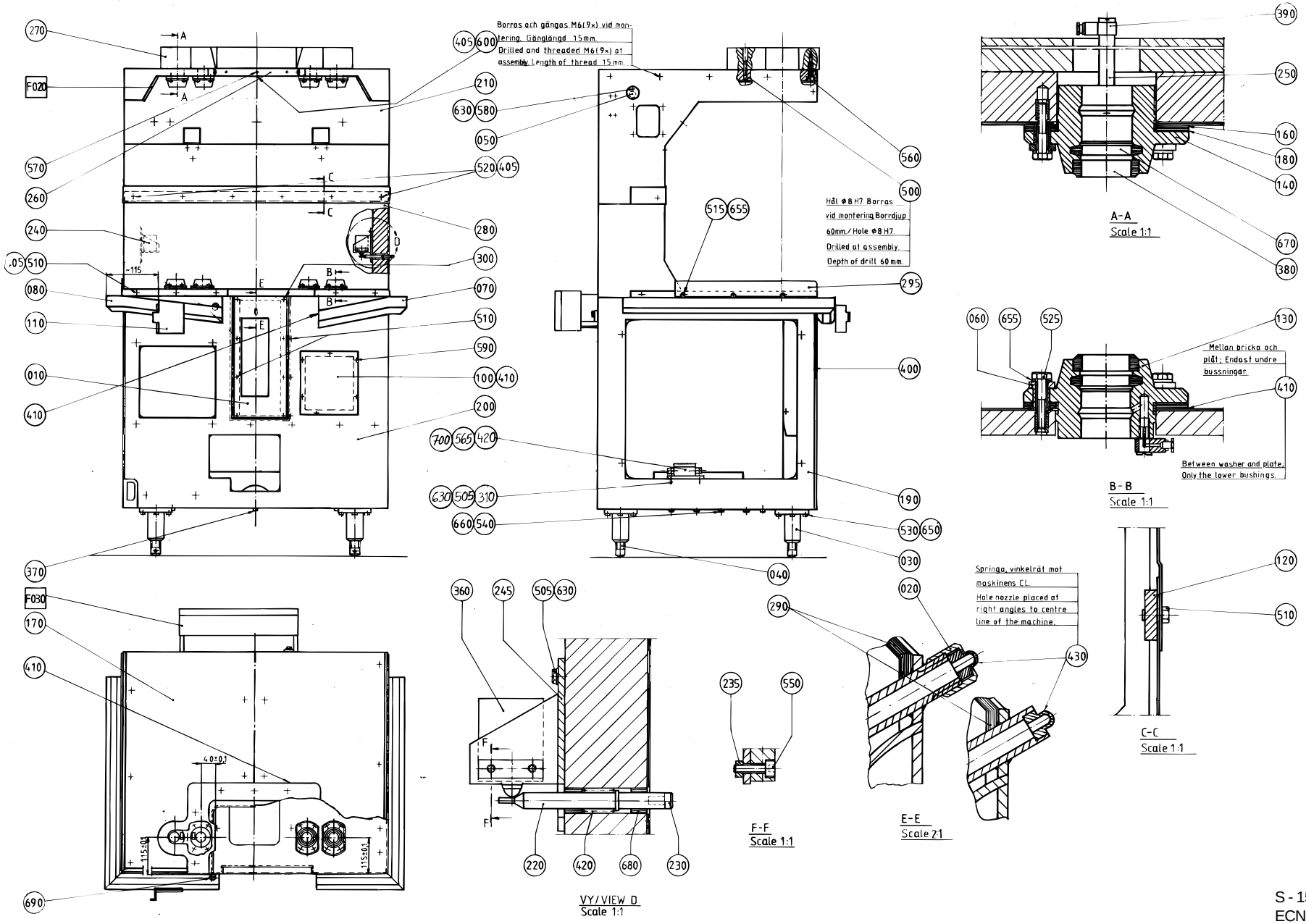
Borras och gängas M6(9x) vid montering. Gänglängd 15mm.
Drilled and threaded M6(9x) at assembly. Length of thread 15mm.
Hål Ø8 H7. Borras vid montering. Borrdjup 60mm. / Hole Ø8 H7. Drilled at assembly. Depth of drill 60mm.
A-A
Scale 1:1
Mellan bricka och plåt: Endast undre bussningar.
Between washer and plate. Only the lower bushings.
B-B
Scale 1:1
Springa, vinkelrät mot maskinens CL.
Hole nozzle placed at right angles to centre line of the machine.
C-C
Scale 1:1
F-F
Scale 1:1
E-E
Scale 2:1
VY/VIEW D
Scale 1:1

Pos	Part No	SP	UN	Qty	Description	Page No
0200B						
010	469831-0004	-		1	COVER	
020	441077-0000	-		1	NOZZLE BRACKET	
0200S						
010	469832-0001	-		1	COVER	
0250B						
010	469832-0002	-		1	COVER	
Common Parts						
F020	A 441534-0100	-		2	LIGHT FIXTURE	**212**
F030	A 456827-0100	-		1	CONNECTION BOX	**214**
030	469095-0000	D		4	HOLDER	
040	469096-0000	D		4	LEG	
050	272058-0000	-		2	LID	
060	751085-0000	-		32	BUSHING	
070	978413-0000	-		1	CHUTE	
080	272671-0000	-		1	CHUTE	
100	295302-0000	-		1	HATCH	
110	441162-0000	-		1	PROTECTION PLATE	
120	441212-0000	D		1	HOLDER	
130	441217-0000	C		4	BUSHING LOWER	
140	441218-0000	C		4	BUSHING UPPER	
160	441221-0000	-		8	WASHER	
170	1529205-0000	-		1	MACHINE BODY	
180	441593-0000	-		8	GASKET	
190	441658-0000	-		1	FRONT PLATE	
200	456573-0000	-		1	FRONT PLATE	
210	751124-0000	-		1	FRONT PLATE	
220	490891-0000	D		2	PIN	
250	469937-0000	-		4	PIPE	
260	441677-0000	-		1	FRONT PLATE	
270	441806-0000	-		1	COLLAR	
280	441809-0000	-		1	FRONT PLATE	
290	441810-0000	D		1	GASKET	
295	490986-0000	-		1	SHEET	
300	6278-0000	C		1	WASHER	
310	1529206-0000	-		2	PLATE	
370	90087-0002	-		3	PIPE PLUG	
380	90091-0106	C		8	Scraper 30x40x10 mm	
390	90137-0010	-		8	Banjo Conn. M6, d=2,5 mm	
400	90143-0010	-	MM	26	STRIP	
405	90157-0016	-	ML	1	LOCKING FLUID	
410	90157-0022	-	L	1	SEALING COMPOUND	
420	90265-0037	-		2	CONNECTION BOX ROSE	
430	90424-0027	C		1	NOZZLE	
500	311103-0415	-		3	Pin, Parallell, CP, m6, 8x55	
505	312105-0327	-		4	Screw M6S M5x12 A280	
510	312105-0366	-		27	Screw M6S M6x12 A280	
515	312105-0368	-		3	Screw M6S M6x16 A280	
520	312105-0370	-		2	Screw M6S M6x20 A280	
525	312105-0374	-		32	Screw M6S M6x30 A280	
530	312105-0451	-		16	Screw M6S 8x20 A280	
540	312105-0489	-		8	Screw M6S M10x16 A280	
560	312115-0503	-		1	Screw MC6S M10x60 A280	
565	312125-0291	-		4	Screw Pan Head MCS M4x12 RFR	
570	312125-0323	-		7	Screw Pan Head MCS M5X8 RFR	
580	312125-0329	-		2	Screw Pan Head MCS M5X16 RFR	
590	312155-0325	-		6	Screw Hex.Sock.Count.MF6S M5x10 A280	
600	312155-0366	-		9	Screw Hex.Sock.Count.MF6S M6x12 A280	
630	315105-0146	-		6	Washer, Plain, BRB, 5,3/10,H=1	
650	315105-0165	-		16	Washer, Plain, BRB, 8,4/16,H=1,5	
655	315105-0153	-		35	Washer, Plain, BRB, 6,4/12,H=1,5	
660	315233-0109	C		8	Washer,Pl.Rnd.Nyl.10,3/14,H=1	
670	315259-0102	C		8	Felt Seal 22-47 mm	
690	352103-0100	-		1	CABLE GLAND STR 9;PR15,2	
700	352103-0106	-		4	CABLE GLAND ST 11	

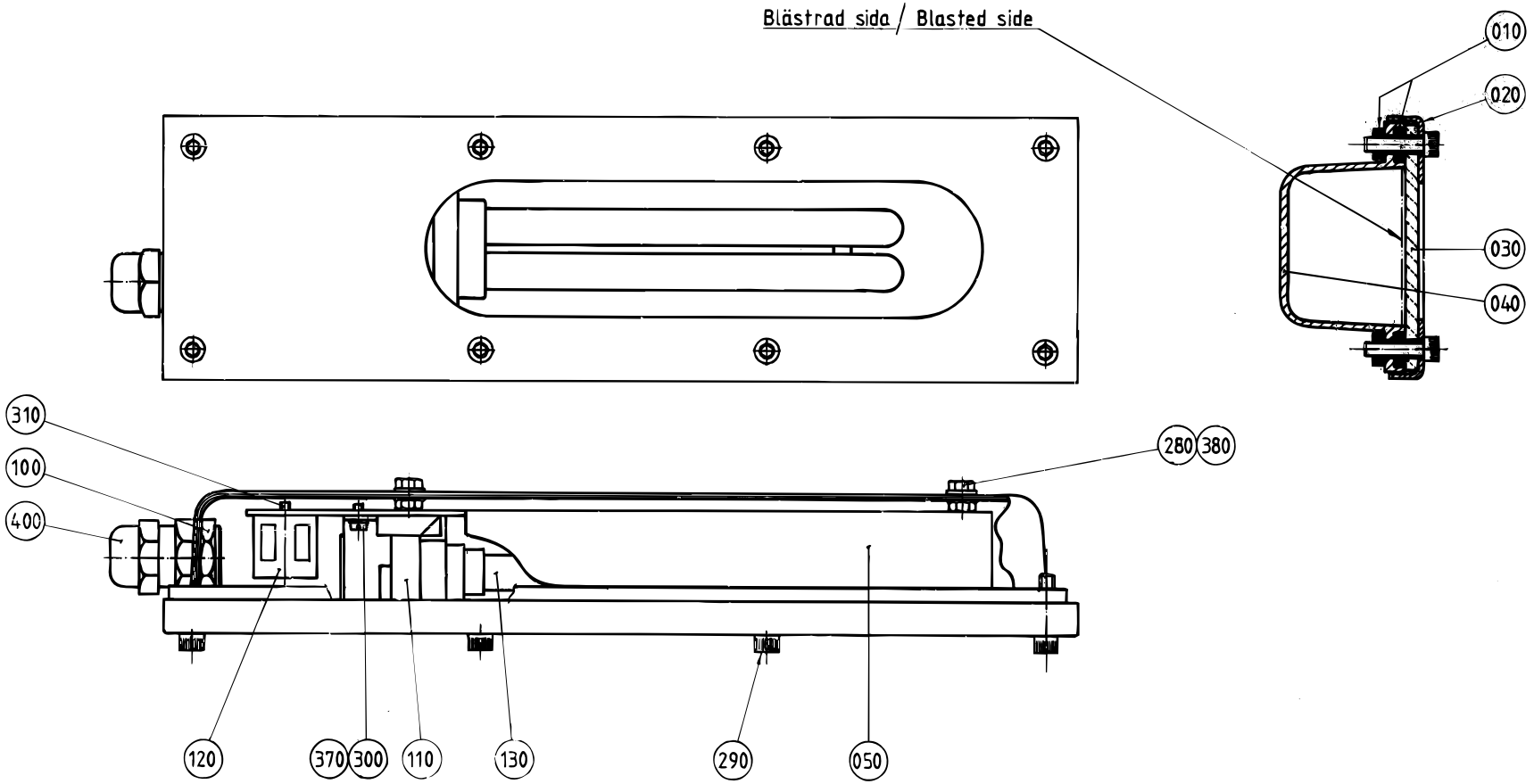
Blästrad sida / Blasted side
010
020
030
040
310
100
400
280
380
120
370
300
110
130
290
050

Pos	Part No	SP	UN	Qty	Description	Page No
Common Parts						
010	441536-0000	C		2	GASKET	
020	456263-0000	-		1	SHEET	
030	456264-0000	C		1	GLASS	
040	B 469336-0000	D		1	COVER	
050	B 469337-0000	-		1	REFLECTOR	
100	90099-0002	-		1	NUT Pr 18,6 Brass	
110	90164-0301	C		1	HOLDING FIXTURE	
120	90195-0020	-		1	TERMINAL BK2 KRG 2-POLE	
130	90297-0006	C		1	FLUORESCENT TUBE 9W	
280	312105-0325	-		2	Screw M6S M5x10 A280	
290	312115-0331	-		8	Screw MC6S M5x20 A280	
300	312125-0220	-		2	Screw Slot.Pan Hd. MCS 3x6 A480	
310	312125-0230	-		1	Screw Pan Head MCS M3X20 RFR	
370	315105-0124	-		2	Washer, Plain, BRB, 3,2/6,H=0,5	
380	315105-0146	-		2	Washer, Plain, BRB, 5,3/10,H=1	
400	352103-0106	-		1	CABLE GLAND ST 11	

Pos	Part No	SP	UN	Qty	Description	Page No

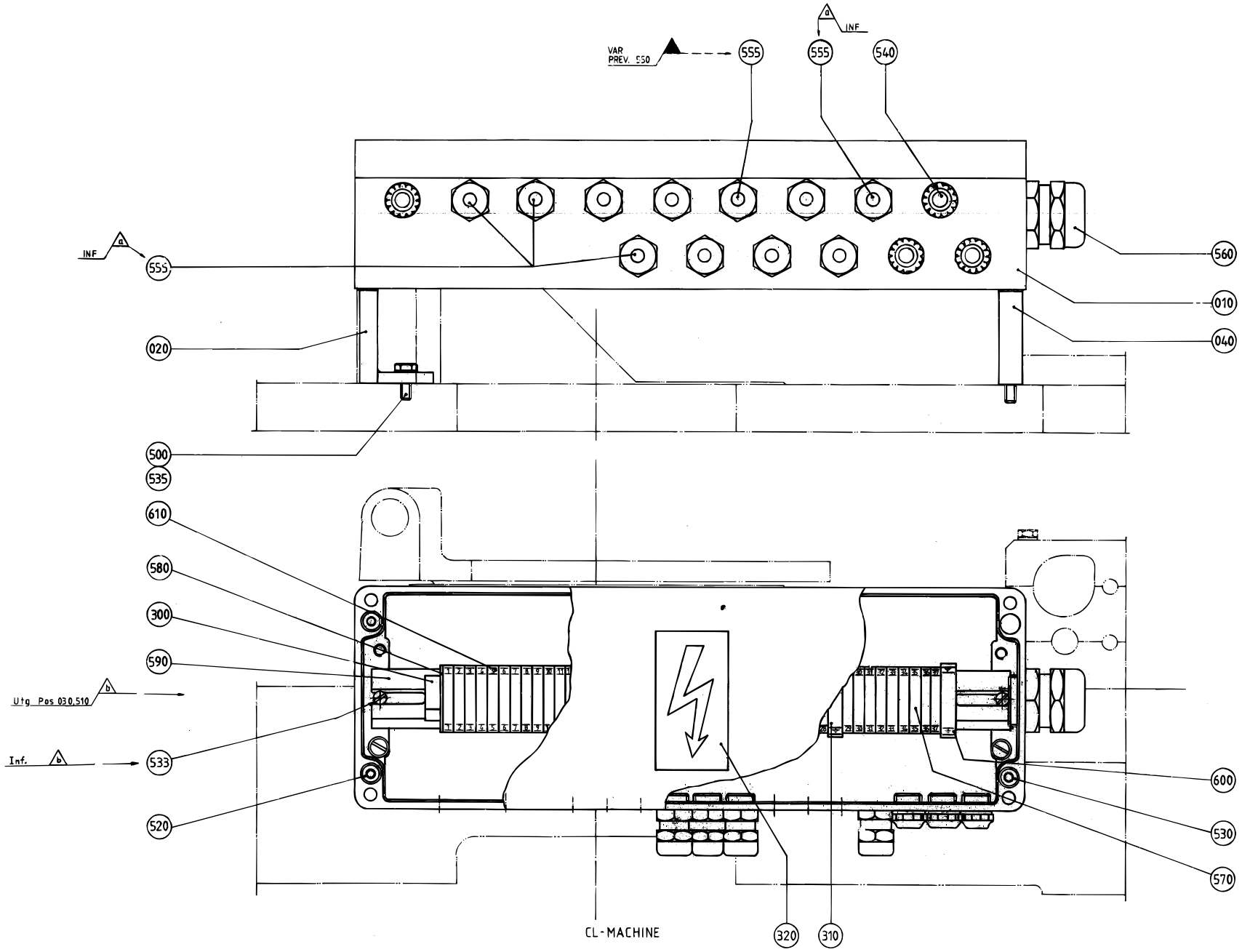
a
INF
VAR
PREV. 550
555
555
540
INF
555
560
010
040
020
500
535
610
580
300
590
Utg Pos 030,510
b
Inf.
b
533
520
600
530
570
CL-MACHINE
320
310
a
Omritad

Pos	Part No	SP	UN	Qty	Description	Page No
Common Parts						
010	456750-0000	-		1	APPLIANCE BOX	
020	456751-0000	-		1	BRACKET	
040	456753-0000	-		1	SPACER	
300	90094-0004	-		1	END SUPPORT EWK 2061.6 WM	
310	90135-0021	-		6	EARTH CLAMP	
320	90194-0016	-		1	SIGN "FLASH SIGN" 50X50MM	
500	312101-0368	-		2	Screw M6S M6x16 FZB	
520	312111-0372	-		2	Screw Hex.Sock.Hd.MC6S-TT 6x25 88 FZB	
530	312111-0385	-		1	Screw Hex.Sock.Hd.MC6S-TT 6x75 88 FZB	
533	312125-0364	-		2	Screw Slot.Pan Hd. MCS 6x10 A480	
535	315101-0153	-		2	Washer, Plain, BRB, 6,4/12 H=1,5	
540	352101-0102	-		4	GLANDS,Lead-in,IP44 PR15,2; PG9	
555	352103-0101	-		11	CABLE GLAND ST 9;PR15,2/PG9	
560	352103-0115	-		1	CABLE GLAND STR 21	
570	353021-0110	-		37	CONNECTIONLƒMMA SAK 4PA	
580	353032-0104	-		1	END PLATE AP 4 PA	
590	353042-0002	-	MM	1	RAIL TS32	
600	359011-0202	-		12	SIGN BOARD(GROUND)	
610	359011-0801	-		2	SIGN BOARD BSFW 1-50	

Pos	Part No	SP	UN	Qty	Description	Page No

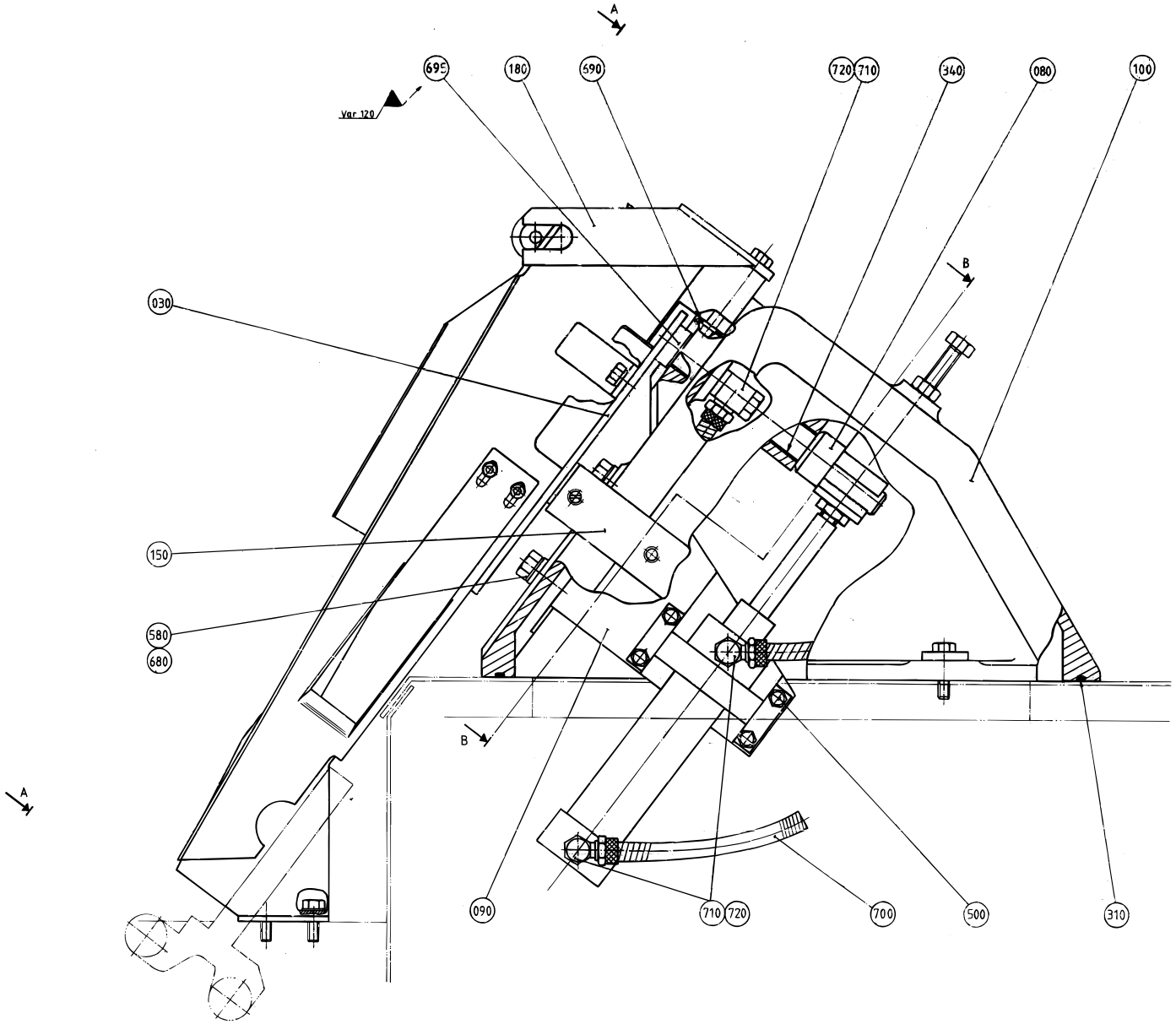
A
695
180
590
720
710
340
080
100
Var 120
B
030
150
580
680
B
A
090
710
720
700
500
310

Pos	Part No	SP	UN	Qty	Description	Page No
TBA 0330S						
010	582168-0000	D		1	DROP CHUTE	
020	582170-0000	-		1	HEAD PLATE	
030	491881-0003	D		1	PIVOT ARM	
040	979938-0000	D		1	SLIDER	
050	1348290-0000	C		1	LEAF SPRING	
060	1348291-0000	C		1	LEAF SPRING	
170	574452-0000	D		1	PROTECTION	
560	312109-0378	-		2	Screw M6S M6x40 A280	
TB 0180B						
010	978404-0000	D		1	DROP CHUTE TB/9 V0180	
020	456162-0000	-		1	HEAD PLATE	
030	491881-0001	D		1	PIVOT ARM	
040	295097-0000	D		1	SLIDER	
050	456165-0000	C		1	LEAF SPRING	
060	456167-0000	C		1	LEAF SPRING	
170	295075-0000	D		1	PROTECTION	
560	312105-0380	-		2	Screw M6S M6x50 A280	
TB 0200B						
010	978405-0000	D		1	DROP CHUTE TB/9 V0200	
020	456161-0000	-		1	HEAD PLATE	
030	491881-0001	D		1	PIVOT ARM	
040	295097-0000	D		1	SLIDER	
050	456165-0000	C		1	LEAF SPRING	
060	456167-0000	C		1	LEAF SPRING	
170	295075-0000	D		1	PROTECTION	
560	312105-0380	-		2	Screw M6S M6x50 A280	
TB 0200S						
010	456158-0000	D		1	DROP CHUTE	
020	456163-0000	-		1	HEAD PLATE	
030	491881-0001	D		1	PIVOT ARM	
040	255942-0000	D		1	SLIDER	
050	456164-0000	C		1	LEAF SPRING	
060	456166-0000	C		1	LEAF SPRING	
170	295075-0000	D		1	PROTECTION	
560	312105-0380	-		2	Screw M6S M6x50 A280	
TB 0236B						
010	978406-0000	D		1	DROP CHUTE TB/9 V0236	
020	456160-0000	-		1	HEAD PLATE	
030	491881-0001	D		1	PIVOT ARM	
040	295097-0000	D		1	SLIDER	
050	456165-0000	C		1	LEAF SPRING	
060	456167-0000	C		1	LEAF SPRING	
170	295075-0000	D		1	PROTECTION	
560	312105-0380	-		2	Screw M6S M6x50 A280	
TB 0250B						
010	978407-0000	D		1	DROP CHUTE TB/9 V0250	
020	456159-0000	-		1	HEAD PLATE	
030	491881-0001	D		1	PIVOT ARM	
040	295097-0000	D		1	SLIDER	
050	456165-0000	C		1	LEAF SPRING	
060	456167-0000	C		1	LEAF SPRING	
170	295075-0000	D		1	PROTECTION	
560	312105-0380	-		2	Screw M6S M6x50 A280	
TBA 0100B						
010	979766-0000	D		1	DROP CHUTE	
020	979777-0000	-		1	HEAD PLATE 100	
030	491881-0001	D		1	PIVOT ARM	
040	255942-0000	D		1	SLIDER	
050	979767-0000	C		1	FLAT SPRING	
060	979768-0000	C		1	FLAT SPRING	
170	295075-0000	D		1	PROTECTION	
560	312105-0380	-		2	Screw M6S M6x50 A280	
TBA 0125S						
010	456145-0000	D		1	DROP CHUTE	
020	456151-0000	-		1	HEAD PLATE	
030	491881-0002	D		1	PIVOT ARM	
040	255942-0000	D		1	SLIDER	
050	456164-0000	C		1	LEAF SPRING	
060	456166-0000	C		1	LEAF SPRING	
170	295075-0000	D		1	PROTECTION	
560	312105-0380	-		2	Screw M6S M6x50 A280	
TBA 0160S						
010	577215-0000	D		1	DROP SHUTE TBA/9 V0160	
020	577214-0000	-		1	HEAD PLATE	
030	491881-0001	D		1	PIVOT ARM	
040	469502-0000	D		1	SLIDER	
050	577227-0000	C		1	LEAF SPRING	
060	577226-0000	C		1	LEAF SPRING	
560	312105-0380	-		2	Screw M6S M6x50 A280	

(Cont'd)

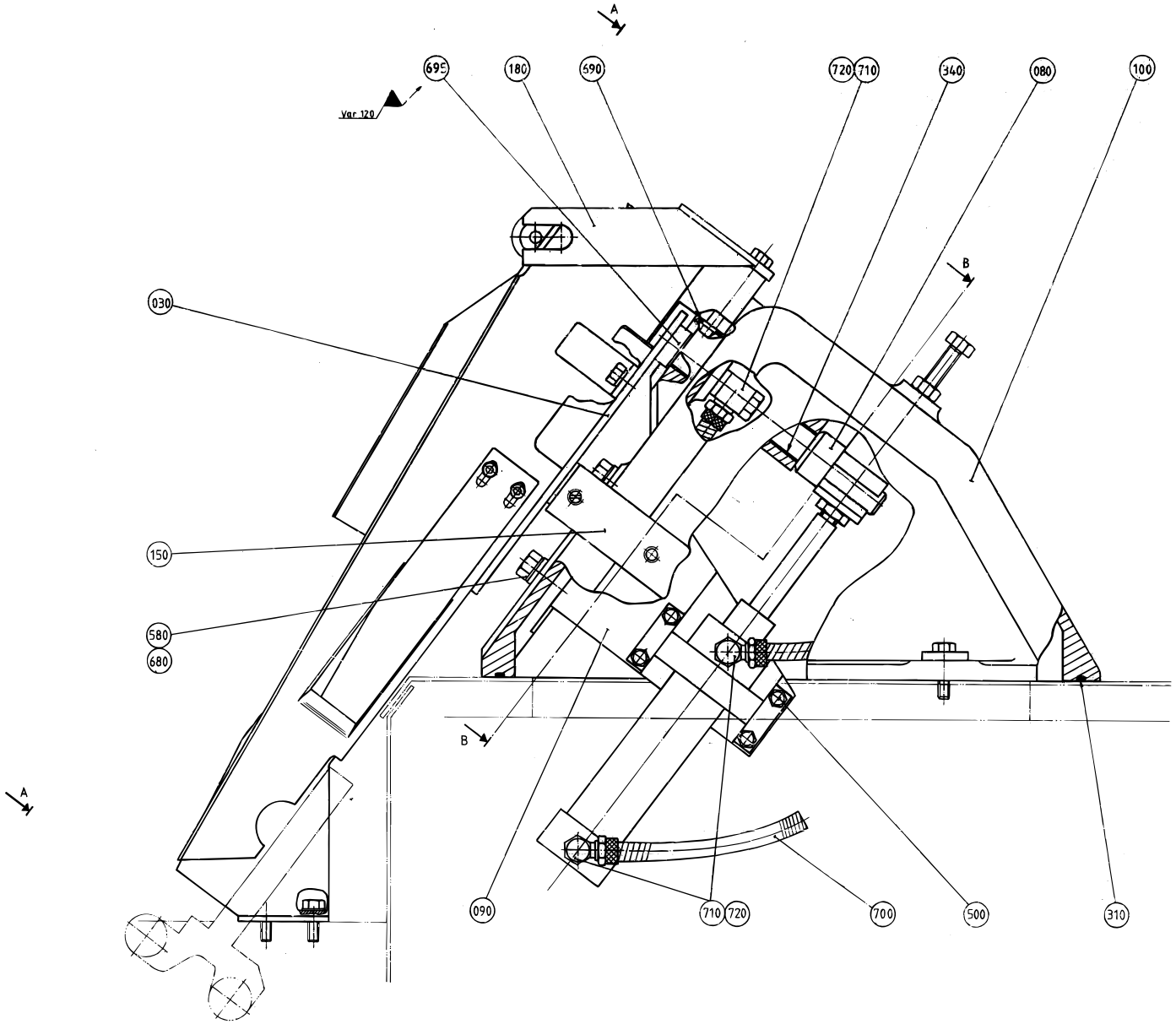
A
695
180
590
720
710
340
080
100
Var 120
B
030
150
580
680
B
A
090
710
720
700
500
310

Pos	Part No	SP	UN	Qty	Description	Page No
(Cont'd)						
TBA 0180B						
010	978408-0000	D		1	DROP CHUTE TBA/9 V0180	
020	456150-0000	-		1	HEAD PLATE	
030	491881-0001	D		1	PIVOT ARM	
040	295097-0000	D		1	SLIDER	
050	456165-0000	C		1	LEAF SPRING	
060	456167-0000	C		1	LEAF SPRING	
170	295075-0000	D		1	PROTECTION	
560	312105-0380	-		2	Screw M6S M6x50 A280	
TBA 0200B						
010	978409-0000	D		1	DROP CHUTE TBA/9 V0200	
020	456149-0000	-		1	HEAD PLATE	
030	491881-0001	D		1	PIVOT ARM	
040	295097-0000	D		1	SLIDER	
050	456165-0000	C		1	LEAF SPRING	
060	456167-0000	C		1	LEAF SPRING	
170	295075-0000	D		1	PROTECTION	
560	312105-0380	-		2	Screw M6S M6x50 A280	
TBA 0200M						
010	979862-0000	-		1	DROP CHUTE	
020	979878-0000	-		1	HEAD PLATE	
030	491881-0003	D		1	PIVOT ARM	
040	574449-0000	D		1	SLIDER	
050	979879-0000	C		1	LEAF SPRING	
060	979877-0000	C		1	FLAT SPRING	
170	574452-0000	D		1	PROTECTION	
560	312105-0380	-		2	Screw M6S M6x50 A280	
TBA 0200S						
010	456146-0000	D		1	DROP CHUTE	
020	456152-0000	-		1	HEAD PLATE	
030	491881-0001	D		1	PIVOT ARM	
040	469502-0000	D		1	SLIDER	
050	456164-0000	C		1	LEAF SPRING	
060	456166-0000	C		1	LEAF SPRING	
170	295075-0000	D		1	PROTECTION	
560	312105-0380	-		2	Screw M6S M6x50 A280	
TBA 0236B						
010	978410-0000	D		1	DROP CHUTE TBA/9 V0236	
020	456148-0000	-		1	HEAD PLATE	
030	491881-0001	D		1	PIVOT ARM	
040	295097-0000	D		1	SLIDER	
050	456165-0000	C		1	LEAF SPRING	
060	456167-0000	C		1	LEAF SPRING	
170	295075-0000	D		1	PROTECTION	
560	312105-0380	-		2	Screw M6S M6x50 A280	
TBA 0250B						
010	978411-0000	D		1	DROP CHUTE TBA/9 V0250	
020	456147-0000	-		1	HEAD PLATE	
030	491881-0001	D		1	PIVOT ARM	
040	295097-0000	D		1	SLIDER	
050	456165-0000	C		1	LEAF SPRING	
060	456167-0000	C		1	LEAF SPRING	
170	295075-0000	D		1	PROTECTION	
560	312105-0380	-		2	Screw M6S M6x50 A280	
TBA 0250S						
010	574448-0000	D		1	DROP SHUTE TBA/9 V0250SL	
020	574450-0000	-		1	HEAD PLATE	
030	491881-0003	D		1	PIVOT ARM	
040	574449-0000	D		1	SLIDER	
050	577227-0000	C		1	LEAF SPRING	
060	577226-0000	C		1	LEAF SPRING	
170	574452-0000	D		1	PROTECTION	
560	312105-0380	-		2	Screw M6S M6x50 A280	
TBA 0300S OR TBA 0284B						
010	978412-0000	D		1	DROP CHUTE TBA/9 V0284	
020	456152-0000	-		1	HEAD PLATE	
030	491881-0001	D		1	PIVOT ARM	
040	295097-0000	D		1	SLIDER	
050	978263-0000	C		1	LEAF SPRING	
060	752893-0000	C		1	LEAF SPRING	
170	295075-0000	D		1	PROTECTION	
560	312105-0380	-		2	Screw M6S M6x50 A280	

(Cont'd)

Drop Chute

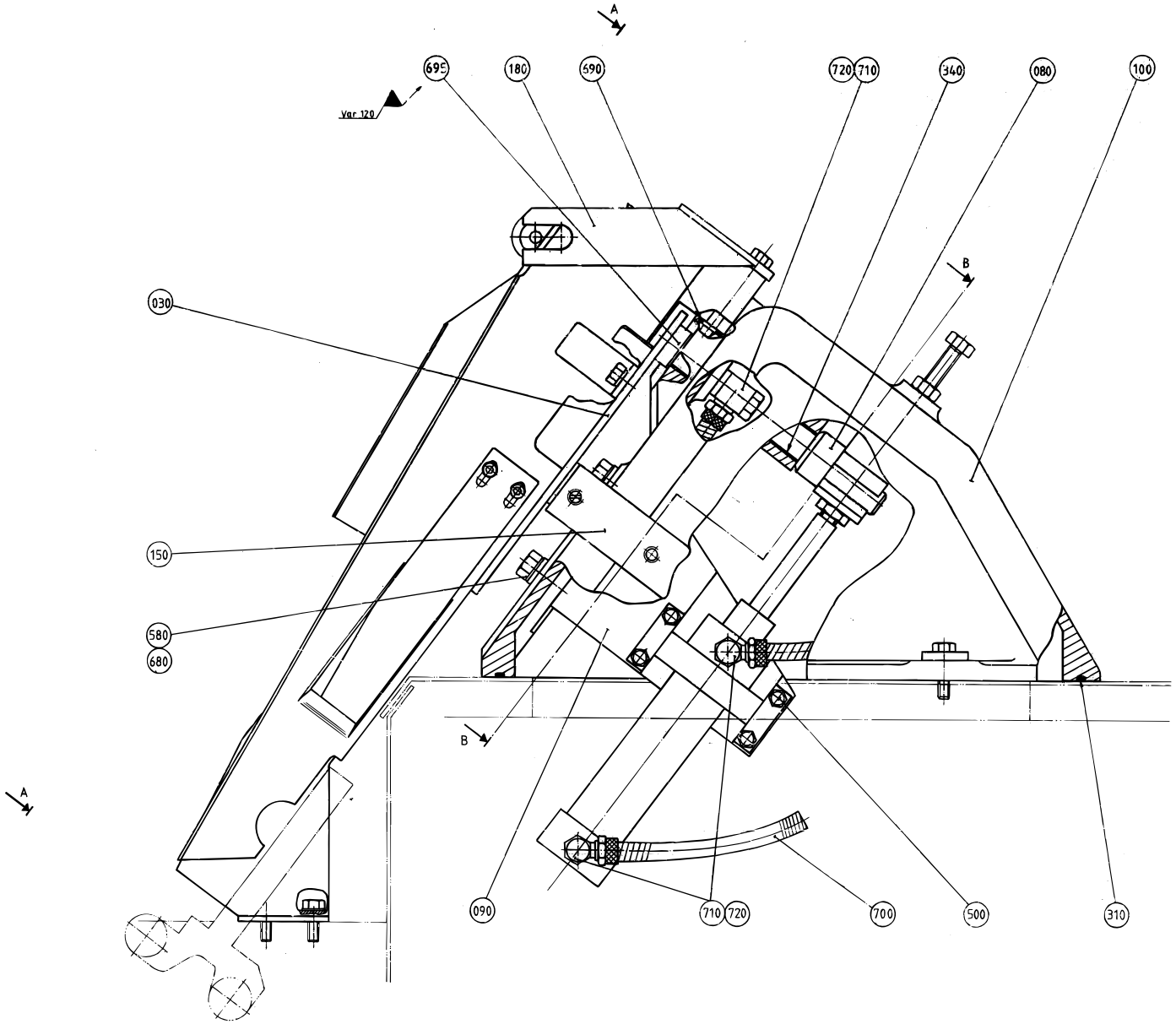
A
695
180
590
720
710
340
080
100
Var 120
B
030
150
580
680
B
A
090
710
720
700
500
310

Pos	Part No	SP	UN	Qty	Description	Page No
(Cont'd)						
Common Parts						
70	255939-0000		PC	4	WASHER	
80	255940-0000		PC	1	SPACER	
90	255943-0000		PC	1	HOLDER	
100	271163-0000		PC	1	CANTILEVER	
110	272600-0000		PC	1	ARM	
130	272602-0000		PC	1	SCREW	
140	272742-0000		PC	1	FINGER	
150	72852-0000		PC	1	HOLDER	
160	272853-0000		PC	1	SCREW	
180	295399-0000		PC	1	HOLDER	
300	90458-0256		PC	1	PROXIMITY SWITCH IIA 3010-BPKG/6M	
310	90161-0001		MM	1500	O-Ring Material 3 mm mm	
320	90239-0298		PC	1	CYLINDER REPL.BY 90450-33	
330	90239-0405		PC	1	ROD END,BALL JOINT EYE, M10X1,25	
340	90240-0073		PC	2	RICTION BEARING	
500	312101-0331		PC	4	Screw M6S M5x20 FZB	
510	312101-0499		PC	1	Screw M6S M10x40 FZB	
520	312105-0366		PC	1	Screw M6S M6x12 A280	
530	312105-0368		PC	2	Screw M6S M6x16 A280	
540	312105-0372		PC	4	Screw M6S M6x25 A280	
550	312105-0376		PC	2	Screw M6S M6S M6x35 A280	
570	312105-0451		PC	2	Screw M6S 8x20 A280	
580	312105-0455		PC	2	Screw M6S M8x30 A280	
590	312115-0285		PC	4	Screw Hex.Sock.Hd.MC6S-TTS 4x6 A480	
600	312125-0323		PC	2	Screw Pan Head MCS M5X8 RFR	
610	312155-0368		PC	1	Screw Hex.Sock.Count.MF6S M6x16 A280	
620	312601-0320		PC	1	NUT M6M 10-8 FZB	
630	312605-0318		PC	4	Nut Hex. M6M M8 A280	
640	315105-0136		PC	4	Washer, Plain, BRB, 4,3/8,H=0,8	
650	315105-0146		PC	2	Washer, Plain, BRB, 5,3/10,H=1	
660	315105-0153		PC	5	Washer, Plain, BRB, 6,4/12,H=1,5	
670	315105-0165		PC	2	Washer, Plain, BRB, 8,4/16,H=1,5	
680	315115-0165		PC	4	Washer, Plain, TBRB 8,4/16 H=3	
690	315202-0206		PC	1	O-Ring 7,3x2,4 mm	
695	315233-0111		PC	1	Washer,Pl.Rnd.Nyl.17/22,H=1	
700	342903-0121		PC	3	NUT WITH SPRING 8/6-M12X1	
710	342980-0121		PC	3	"BANJO-CONNECTION,RING 8/6-G1/8"	
720	342980-0303		PC	3	"BANJO-HOLLOW BOLT COUPL	

Pos	Part No	SP	UN	Qty	Description	Page No

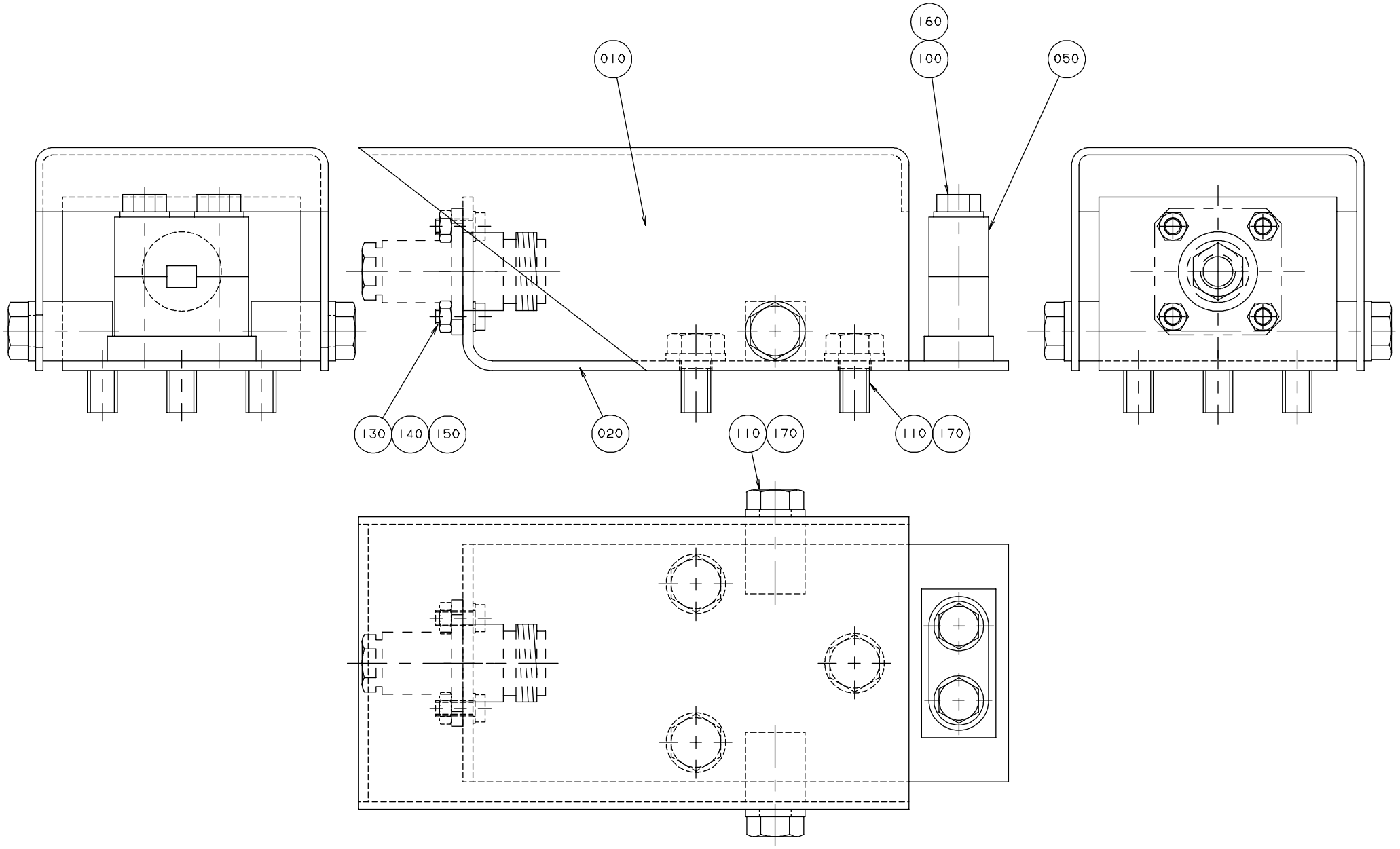
160
100
010
050
130
140
150
020
110
170
110
170

Pos	Part No	SP	UN	Qty	Description	Page No
Common Parts						
010	256975-0000	-		1	PROTECTION	
020	1529193-0000	-		1	BRACKET	
050	464368-0000	-		2	CRAMP	
100	312105-0335	-		2	Screw M6S M5x30 A280	
110	312105-0364	-		5	Screw M6S M6x10 A280	
130	312125-0222	-		4	Screw Pan Head MCS M3x8 RFR	
140	312605-0310	-		4	Nut Hex. M6M M3 A280	
150	315105-0124	-		4	Washer, Plain, BRB, 3,2/6,H=0,5	
160	315105-0146	-		2	Washer, Plain, BRB, 5,3/10,H=1	
170	315105-0153	-		5	Washer, Plain, BRB, 6,4/12,H=1,5	

Pos	Part No	SP	UN	Qty	Description	Page No

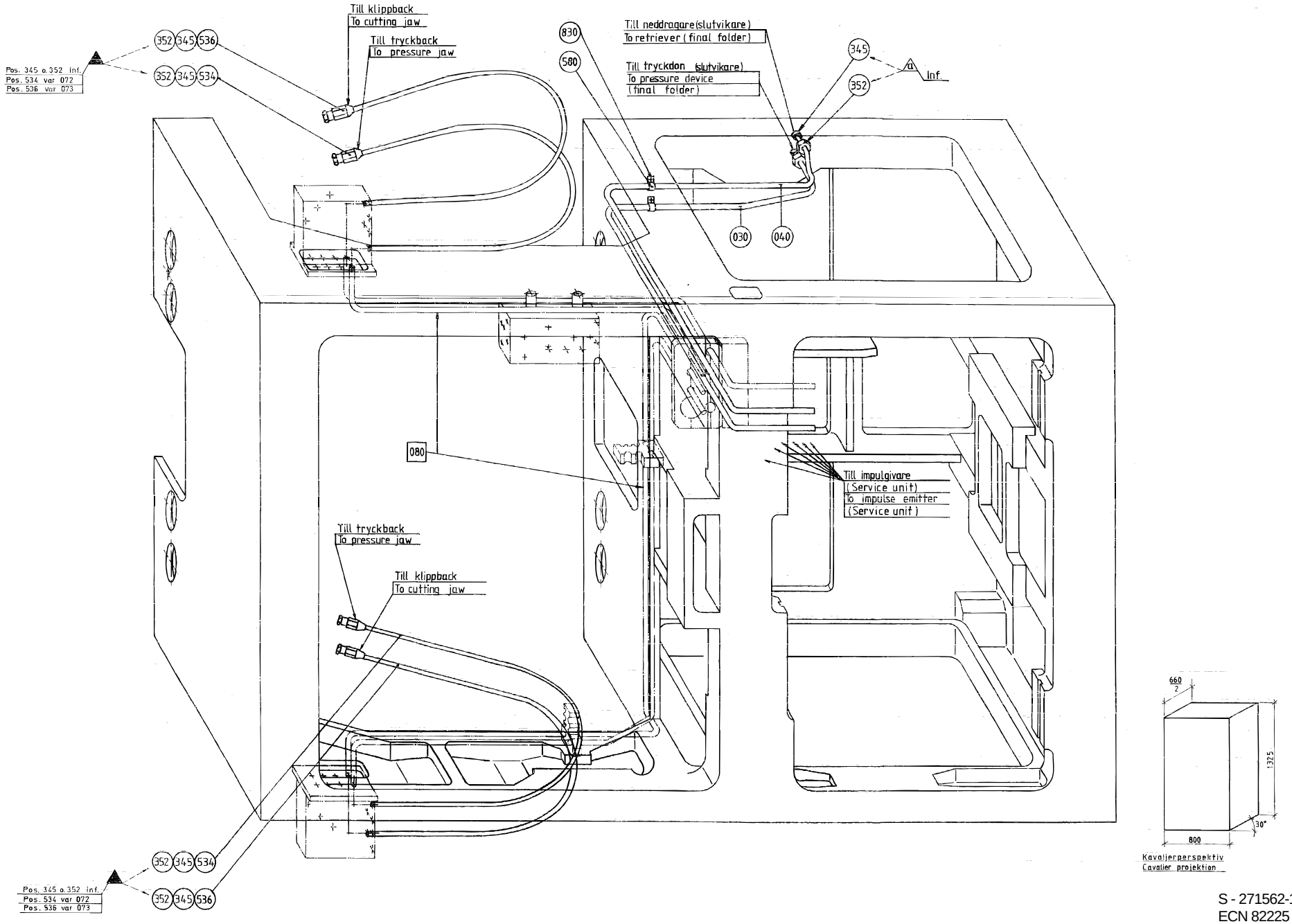

S - 271562-13
ECN 82225

Pos	Part No	SP	UN	Qty	Description	Page No
F070	271261-0500		PC	1	CLEANING SYSTEM.....	**232**
F080	491650-0100		PC	1	DISTRIBUTOR BLOCK	**234**
TB/9						
630	90166-0118	-	M	12	TUBE 8 mm PA Black	
TBA/9 OR TBA/9 R						
630	90166-0118	-	M	11	TUBE 8 mm PA Black	
Common Parts						
030	18542-0000	C		2	WASHER	
040	257190-0000	-		2	SEPARATION BLOCK	
050	272679-0000	-		1	PIPE	
060	295417-0000	-		1	GASKET	
070	295785-0000	-		1	FORCE SPRING	
080	295978-0000	-		1	PIPE	
090	491870-0000	-		1	BRANCH PIPE	
100	441665-0000	-		1	FORCE SPRING	
110	469146-0000	-		1	HOSE	
120	456128-0000	-		1	FORCE SPRING	
130	469134-0000	-		1	BRACKET	
140	469135-0000	-		1	HOLDER	
300	90030-0151	C		3	Conn. Str.,15-R1/2, Ext. Thread	
310	90330-0097	-		2	Nipples, Ext. Thread, G1/8	
320	90330-0099	-		2	Elbow, 90 Int. Thread, R-222R1/8	
330	90424-0032	C		2	NOZZLE	
340	90424-0033	C		4	NOZZLE	
350	90424-0035	C		4	NOZZLE	
450	311103-0272	-		1	Pin, Parallell, m6, 4x20	
490	312105-0327	-		4	Screw M6S M5x12 A280	
500	312105-0364	-		1	Screw M6S M6x10 A280	
510	312105-0378	-		2	Screw M6S M6x40 A280	
520	312105-0459	-		2	Screw M6S M8x40 A280	
530	312115-0364	-		1	Screw Hex.Sock.Hd.MC6S-TT 6x10 A480	
535	312605-0314	-		2	Nut Hex. M6M M5 A280	
538	315105-0146	-		6	Washer, Plain, BRB, 5,3/10,H=1	
540	315105-0153	-		4	Washer, Plain, BRB, 6,4/12,H=1,5	
550	315233-0113	C		6	Washer,Pl.Rnd.Nyl.21,4/27,H=1,2	
560	342710-0115	C		1	Reduction RBM 16/8	
570	342720-0114	C		3	Conn. Str. GA-15-G1/2	
580	342726-0109	C		1	Conn. Pipe G-12	
590	342736-0114	C		1	Conn. Elbow W-15	
600	342746-0114	C		1	Conn. T-Pipe T-15	
605	90165-0039		PC	1	CLIP	
610	90166-0108		MM	1	TUBE 6 mm PA,Transp.	
620	90166-0109		MM	1	TUBE 4 mm PA,Transp.	
640	90166-0132		M	5	TUBE 6 mm PA,Transp.	
641	90166-0133		M	10	TUBE 8 mm PA,Transp.	
650	90266-0006		MM	1	TUBE	
660	312101-0337		PC	4	Screw M6S M5x35 FZB	
790	312105-0289		PC	2	Screw M6S M4x10 A280	
800	312105-0295		PC	8	Screw M6S M4x20 A280	
810	312105-0297		PC	12	Screw M6S M4x25 A280	
820	312105-0372		PC	2	Screw M6S M6x25 A280	
830	312115-0289		PC	2	Screw Hex.Sock.Hd.MC6S-TT 4x10 A480	
840	312125-0287		PC	16	Screw Pan Head MCS M4X8 RFR	
845	312125-0323		PC	1	Screw Pan Head MCS M5X8 RFR	
850	312165-0325		PC	2	Screw Slot.Rais.Count.Hd.MKFS 5x10 SS	
854	315101-0146		PC	4	Washer, Plain, BRB, 5,3/10 H=1	
857	315105-0136		PC	8	Washer, Plain, BRB, 4,3/8,H=0,8	
860	315234-0109		PC	1	Washer,Pl.Rnd.Cu.10,3/13,5 H=1,0	
865	342727-0102		PC	1	Conn. Pipe G-6-LFZB	
867	342736-0109		PC	1	Conn. Elbow W-12	
870	342767-0100		PC	1	Conn. Bulkhead G1/8	
880	342797-0121		PC	1	Conn. Banjo, Ringpiece 6-1/8	
890	342980-0303		PC	1	"BANJO-HOLLOW BOLT COUPL,E	
900	352113-0101		PC	4	CLIP STRIP BLACK 92x2,5mm	
910	359000-0400		PC	22	"MARKING CO2/4 ""0"	
920	359000-0401		PC	20	"MARKING COLLAR 2/4 ""1"" Yellow"	
930	359000-0402		PC	14	"MARKING COLLAR 2/4 ""2"" Yellow"	
940	359000-0403		PC	8	"MARKING COLLAR PA2/4 ""3"" Yellow"	
950	359000-0404		PC	2	"MARKING COLLAR PA2/4 ""4"" Yellow"	
951	359000-0405		PC	4	"MARKING CO2/4""5"""	
952	359000-0406		PC	4	"MARKING COLLAR PA2/4 ""6"" Yellow"	
965	359000-0407		PC	8	"MARKING COLLAR PA2/4 ""7"" Yellow"	

(Cont'd)

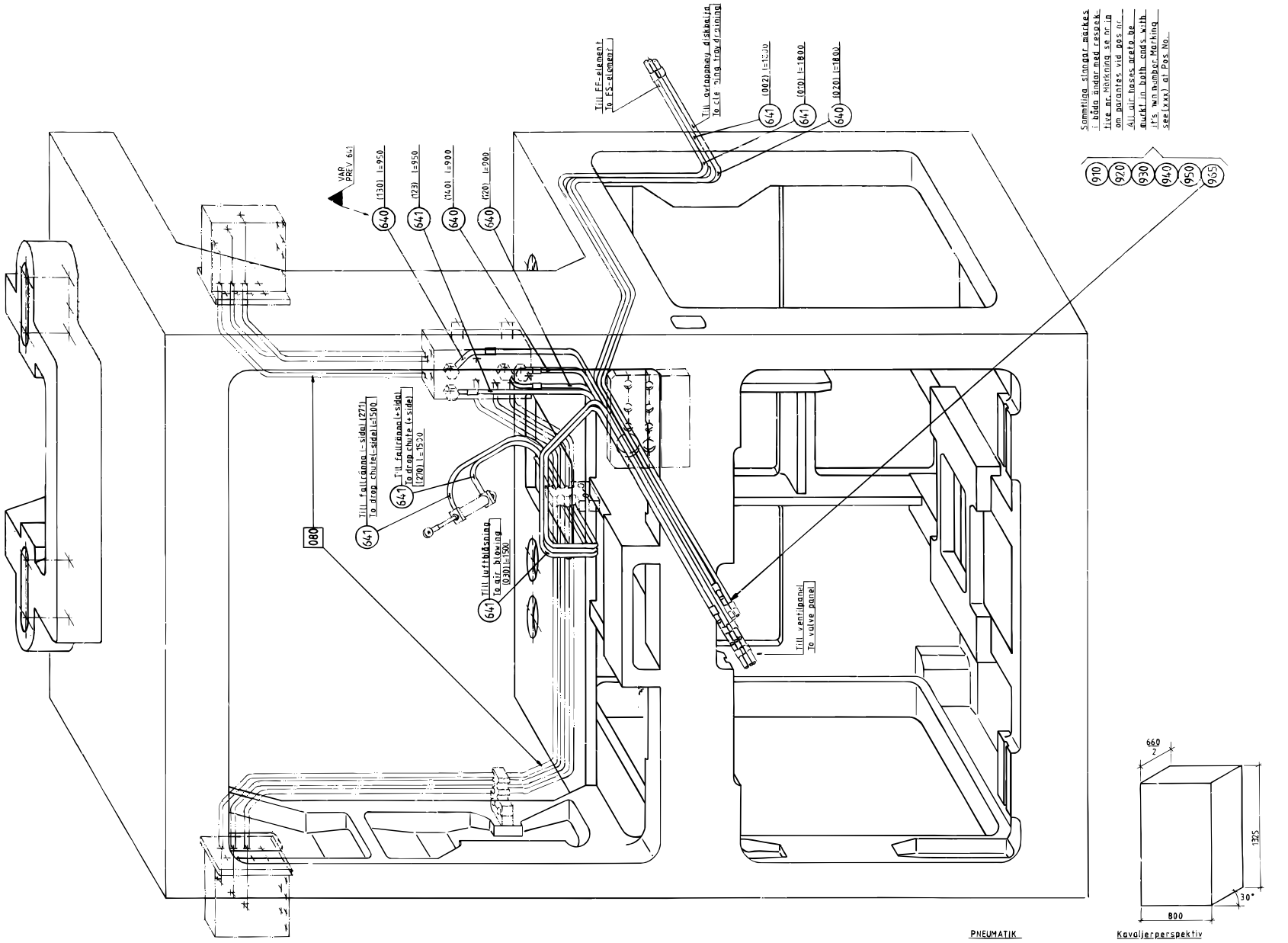

S - 271562-16
ECN 82225

Pos	Part No	SP	UN	Qty	Description	Page No
(Cont'd)						
F070	271261-0500		PC	1	CLEANING SYSTEM.....	**232**
F080	491650-0100		PC	1	DISTRIBUTOR BLOCK	**234**
TB/9						
630	90166-0118	-	M	12	TUBE 8 mm PA Black	
TBA/9 OR TBA/9 R						
630	90166-0118	-	M	11	TUBE 8 mm PA Black	
Common Parts						
030	18542-0000	C		2	WASHER	
040	257190-0000	-		2	SEPARATION BLOCK	
050	272679-0000	-		1	PIPE	
060	295417-0000	-		1	GASKET	
070	295785-0000	-		1	FORCE SPRING	
080	295978-0000	-		1	PIPE	
090	491870-0000	-		1	BRANCH PIPE	
100	441665-0000	-		1	FORCE SPRING	
110	469146-0000	-		1	HOSE	
120	456128-0000	-		1	FORCE SPRING	
130	469134-0000	-		1	BRACKET	
140	469135-0000	-		1	HOLDER	
300	90030-0151	C		3	Conn. Str.,15-R1/2, Ext. Thread	
310	90330-0097	-		2	Nipples, Ext. Thread, G1/8	
320	90330-0099	-		2	Elbow, 90 Int. Thread, R-222R1/8	
330	90424-0032	C		2	NOZZLE	
340	90424-0033	C		4	NOZZLE	
350	90424-0035	C		4	NOZZLE	
450	311103-0272	-		1	Pin, Parallell, m6, 4x20	
490	312105-0327	-		4	Screw M6S M5x12 A280	
500	312105-0364	-		1	Screw M6S M6x10 A280	
510	312105-0378	-		2	Screw M6S M6x40 A280	
520	312105-0459	-		2	Screw M6S M8x40 A280	
530	312115-0364	-		1	Screw Hex.Sock.Hd.MC6S-TT 6x10 A480	
535	312605-0314	-		2	Nut Hex. M6M M5 A280	
538	315105-0146	-		6	Washer, Plain, BRB, 5,3/10,H=1	
540	315105-0153	-		4	Washer, Plain, BRB, 6,4/12,H=1,5	
550	315233-0113	C		6	Washer,Pl.Rnd.Nyl.21,4/27,H=1,2	
560	342710-0115	C		1	Reduction RBM 16/8	
570	342720-0114	C		3	Conn. Str. GA-15-G1/2	
580	342726-0109	C		1	Conn. Pipe G-12	
590	342736-0114	C		1	Conn. Elbow W-15	
600	342746-0114	C		1	Conn. T-Pipe T-15	

Pos	Part No	SP	UN	Qty	Description	Page No
605	90165-0039		PC	1	CLIP	
610	90166-0108		MM	1	TUBE 6 mm PA,Transp.	
620	90166-0109		MM	1	TUBE 4 mm PA,Transp.	
640	90166-0132		M	5	TUBE 6 mm PA,Transp.	
641	90166-0133		M	10	TUBE 8 mm PA,Transp.	
650	90266-0006		MM	1	TUBE	
660	312101-0337		PC	4	Screw M6S M5x35 FZB	
790	312105-0289		PC	2	Screw M6S M4x10 A280	
800	312105-0295		PC	8	Screw M6S M4x20 A280	
810	312105-0297		PC	12	Screw M6S M4x25 A280	
820	312105-0372		PC	2	Screw M6S M6x25 A280	
830	312115-0289		PC	2	Screw Hex.Sock.Hd.MC6S-TT 4x10 A480	
840	312125-0287		PC	16	Screw Pan Head MCS M4X8 RFR	
845	312125-0323		PC	1	Screw Pan Head MCS M5X8 RFR	
850	312165-0325		PC	2	Screw Slot.Rais.Count.Hd.MKFS 5x10 SS	
854	315101-0146		PC	4	Washer, Plain, BRB, 5,3/10 H=1	
857	315105-0136		PC	8	Washer, Plain, BRB, 4,3/8,H=0,8	
860	315234-0109		PC	1	Washer,Pl.Rnd.Cu.10,3/13,5 H=1,0	
865	342727-0102		PC	1	Conn. Pipe G-6-LFZB	
867	342736-0109		PC	1	Conn. Elbow W-12	
870	342767-0100		PC	1	Conn. Bulkhead G1/8	
880	342797-0121		PC	1	Conn. Banjo, Ringpiece 6-1/8	
890	342980-0303		PC	1	"BANJO-HOLLOW BOLT COUPL,E	
900	352113-0101		PC	4	CLIP STRIP BLACK 92x2,5mm	
910	359000-0400		PC	22	"MARKING CO2/4 "0"	
920	359000-0401		PC	20	"MARKING COLLAR 2/4 ""1"" Yellow"	
930	359000-0402		PC	14	"MARKING COLLAR 2/4 ""2"" Yellow"	
940	359000-0403		PC	8	"MARKING COLLAR PA2/4 ""3"" Yellow"	
950	359000-0404		PC	2	"MARKING COLLAR PA2/4 ""4"" Yellow"	
951	359000-0405		PC	4	"MARKING CO2/4""5"""	
952	359000-0406		PC	4	"MARKING COLLAR PA2/4 ""6"" Yellow"	
965	359000-0407		PC	8	"MARKING COLLAR PA2/4 ""7"" Yellow"	

(Cont'd)

Pipe Work Machine Body

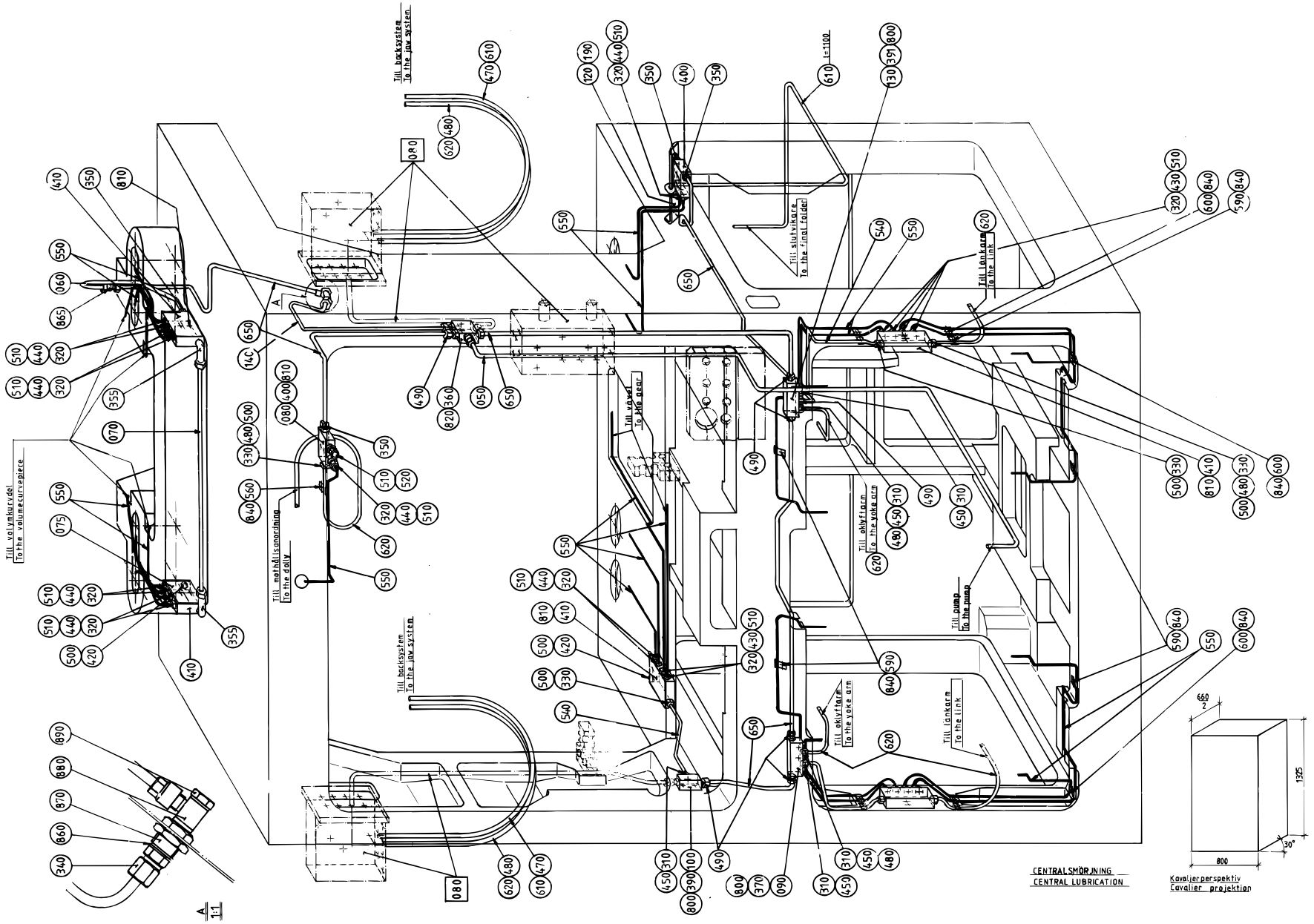

Pos	Part No	SP	UN	Qty	Description	Page No
(Cont'd)						
F070	271261-0500		PC	1	CLEANING SYSTEM.....	**232**
F080	491650-0100		PC	1	DISTRIBUTOR BLOCK	**234**
TB/9						
630	90166-0118	-	M	12	TUBE 8 mm PA Black	
TBA/9 OR TBA/9 R						
630	90166-0118	-	M	11	TUBE 8 mm PA Black	
Common Parts						
030	18542-0000	C		2	WASHER	
040	257190-0000	-		2	SEPARATION BLOCK	
050	272679-0000	-		1	PIPE	
060	295417-0000	-		1	GASKET	
070	295785-0000	-		1	FORCE SPRING	
080	295978-0000	-		1	PIPE	
090	491870-0000	-		1	BRANCH PIPE	
100	441665-0000	-		1	FORCE SPRING	
110	469146-0000	-		1	HOSE	
120	456128-0000	-		1	FORCE SPRING	
130	469134-0000	-		1	BRACKET	
140	469135-0000	-		1	HOLDER	
300	90030-0151	C		3	Conn. Str.,15-R1/2, Ext. Thread	
310	90330-0097	-		2	Nipples, Ext. Thread, G1/8	
320	90330-0099	-		2	Elbow, 90 Int. Thread, R-222R1/8	
330	90424-0032	C		2	NOZZLE	
340	90424-0033	C		4	NOZZLE	
350	90424-0035	C		4	NOZZLE	
450	311103-0272	-		1	Pin, Parallell, m6, 4x20	
490	312105-0327	-		4	Screw M6S M5x12 A280	
500	312105-0364	-		1	Screw M6S M6x10 A280	
510	312105-0378	-		2	Screw M6S M6x40 A280	
520	312105-0459	-		2	Screw M6S M8x40 A280	
530	312115-0364	-		1	Screw Hex.Sock.Hd.MC6S-TT 6x10 A480	
535	312605-0314	-		2	Nut Hex. M6M M5 A280	
538	315105-0146	-		6	Washer, Plain, BRB, 5,3/10,H=1	
540	315105-0153	-		4	Washer, Plain, BRB, 6,4/12,H=1,5	
550	315233-0113	C		6	Washer,Pl.Rnd.Nyl.21,4/27,H=1,2	
560	342710-0115	C		1	Reduction RBM 16/8	
570	342720-0114	C		3	Conn. Str. GA-15-G1/2	
580	342726-0109	C		1	Conn. Pipe G-12	
590	342736-0114	C		1	Conn. Elbow W-15	
600	342746-0114	C		1	Conn. T-Pipe T-15	

Pos	Part No	SP	UN	Qty	Description	Page No
605	90165-0039		PC	1	CLIP	
610	90166-0108		MM	1	TUBE 6 mm PA,Transp.	
620	90166-0109		MM	1	TUBE 4 mm PA,Transp.	
640	90166-0132		M	5	TUBE 6 mm PA,Transp.	
641	90166-0133		M	10	TUBE 8 mm PA,Transp.	
650	90266-0006		MM	1	TUBE	
660	312101-0337		PC	4	Screw M6S M5x35 FZB	
790	312105-0289		PC	2	Screw M6S M4x10 A280	
800	312105-0295		PC	8	Screw M6S M4x20 A280	
810	312105-0297		PC	12	Screw M6S M4x25 A280	
820	312105-0372		PC	2	Screw M6S M6x25 A280	
830	312115-0289		PC	2	Screw Hex.Sock.Hd.MC6S-TT 4x10 A480	
840	312125-0287		PC	16	Screw Pan Head MCS M4X8 RFR	
845	312125-0323		PC	1	Screw Pan Head MCS M5X8 RFR	
850	312165-0325		PC	2	Screw Slot.Rais.Count.Hd.MKFS 5x10 SS	
854	315101-0146		PC	4	Washer, Plain, BRB, 5,3/10 H=1	
857	315105-0136		PC	8	Washer, Plain, BRB, 4,3/8,H=0,8	
860	315234-0109		PC	1	Washer,Pl.Rnd.Cu.10,3/13,5 H=1,0	
865	342727-0102		PC	1	Conn. Pipe G-6-LFZB	
867	342736-0109		PC	1	Conn. Elbow W-12	
870	342767-0100		PC	1	Conn. Bulkhead G1/8	
880	342797-0121		PC	1	Conn. Banjo, Ringpiece 6-1/8	
890	342980-0303		PC	1	"BANJO-HOLLOW BOLT COUPL,E	
900	352113-0101		PC	4	CLIP STRIP BLACK 92x2,5mm	
910	359000-0400		PC	22	"MARKING CO2/4 "0"	
920	359000-0401		PC	20	"MARKING COLLAR 2/4 ""1"" Yellow"	
930	359000-0402		PC	14	"MARKING COLLAR 2/4 ""2"" Yellow"	
940	359000-0403		PC	8	"MARKING COLLAR PA2/4 ""3"" Yellow"	
950	359000-0404		PC	2	"MARKING COLLAR PA2/4 ""4"" Yellow"	
951	359000-0405		PC	4	"MARKING CO2/4""5"""	
952	359000-0406		PC	4	"MARKING COLLAR PA2/4 ""6"" Yellow"	
965	359000-0407		PC	8	"MARKING COLLAR PA2/4 ""7"" Yellow"	

(Cont'd)

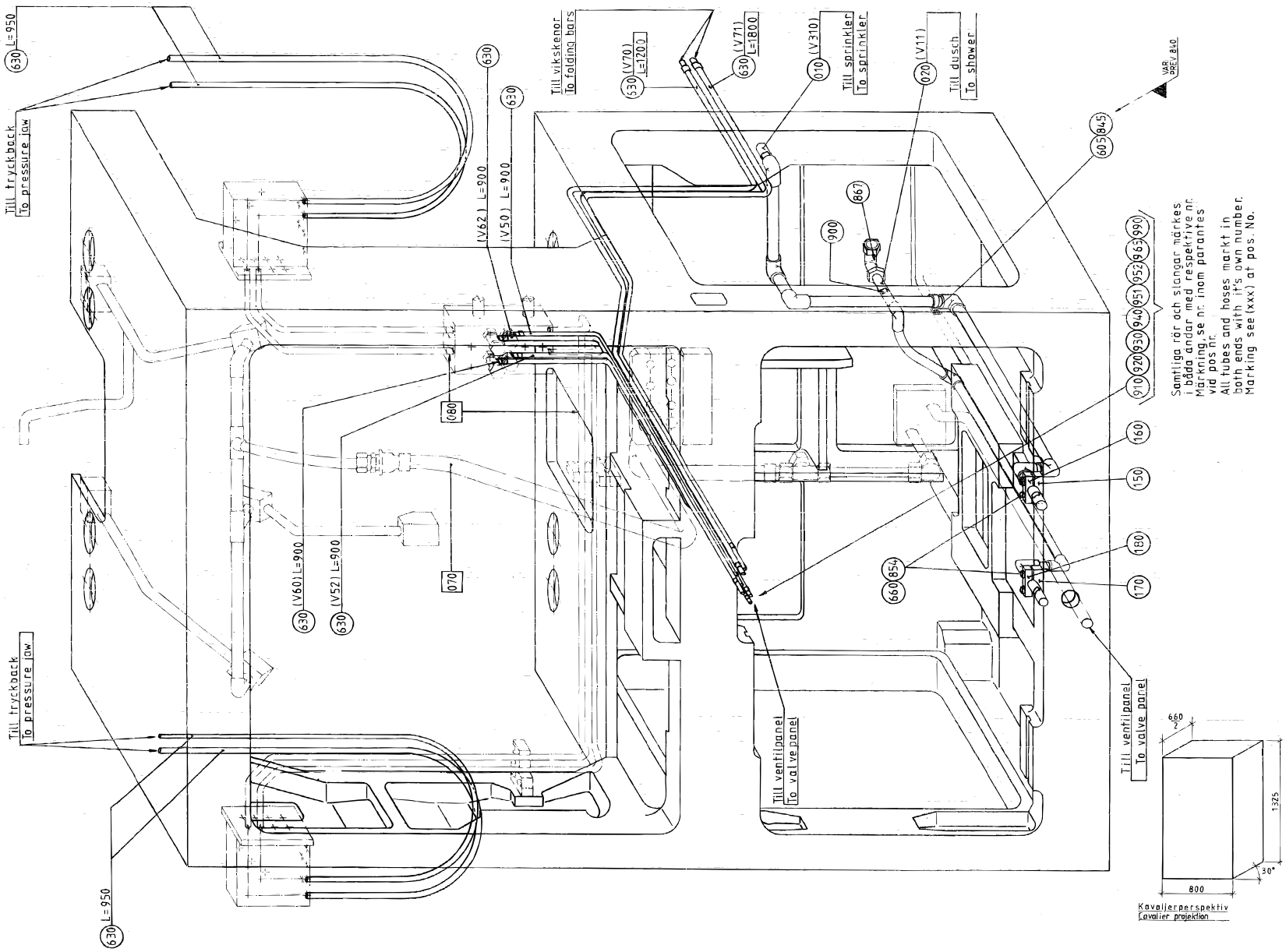

S - 271562-18
ECN 82225

Pos	Part No	SP	UN	Qty	Description	Page No
(Cont'd)						
F070	271261-0500		PC	1	CLEANING SYSTEM.....	**232**
F080	491650-0100		PC	1	DISTRIBUTOR BLOCK	**234**
TB/9						
630	90166-0118	-	M	12	TUBE 8 mm PA Black	
TBA/9 OR TBA/9 R						
630	90166-0118	-	M	11	TUBE 8 mm PA Black	
Common Parts						
030	18542-0000	C		2	WASHER	
040	257190-0000	-		2	SEPARATION BLOCK	
050	272679-0000	-		1	PIPE	
060	295417-0000	-		1	GASKET	
070	295785-0000	-		1	FORCE SPRING	
080	295978-0000	-		1	PIPE	
090	491870-0000	-		1	BRANCH PIPE	
100	441665-0000	-		1	FORCE SPRING	
110	469146-0000	-		1	HOSE	
120	456128-0000	-		1	FORCE SPRING	
130	469134-0000	-		1	BRACKET	
140	469135-0000	-		1	HOLDER	
300	90030-0151	C		3	Conn. Str.,15-R1/2, Ext. Thread	
310	90330-0097	-		2	Nipples, Ext. Thread, G1/8	
320	90330-0099	-		2	Elbow, 90 Int. Thread, R-222R1/8	
330	90424-0032	C		2	NOZZLE	
340	90424-0033	C		4	NOZZLE	
350	90424-0035	C		4	NOZZLE	
450	311103-0272	-		1	Pin, Parallell, m6, 4x20	
490	312105-0327	-		4	Screw M6S M5x12 A280	
500	312105-0364	-		1	Screw M6S M6x10 A280	
510	312105-0378	-		2	Screw M6S M6x40 A280	
520	312105-0459	-		2	Screw M6S M8x40 A280	
530	312115-0364	-		1	Screw Hex.Sock.Hd.MC6S-TT 6x10 A480	
535	312605-0314	-		2	Nut Hex. M6M M5 A280	
538	315105-0146	-		6	Washer, Plain, BRB, 5,3/10,H=1	
540	315105-0153	-		4	Washer, Plain, BRB, 6,4/12,H=1,5	
550	315233-0113	C		6	Washer,Pl.Rnd.Nyl.21,4/27,H=1,2	
560	342710-0115	C		1	Reduction RBM 16/8	
570	342720-0114	C		3	Conn. Str. GA-15-G1/2	
580	342726-0109	C		1	Conn. Pipe G-12	
590	342736-0114	C		1	Conn. Elbow W-15	
600	342746-0114	C		1	Conn. T-Pipe T-15	

Pos	Part No	SP	UN	Qty	Description	Page No
605	90165-0039		PC	1	CLIP	
610	90166-0108		MM	1	TUBE 6 mm PA,Transp.	
620	90166-0109		MM	1	TUBE 4 mm PA,Transp.	
640	90166-0132		M	5	TUBE 6 mm PA,Transp.	
641	90166-0133		M	10	TUBE 8 mm PA,Transp.	
650	90266-0006		MM	1	TUBE	
660	312101-0337		PC	4	Screw M6S M5x35 FZB	
790	312105-0289		PC	2	Screw M6S M4x10 A280	
800	312105-0295		PC	8	Screw M6S M4x20 A280	
810	312105-0297		PC	12	Screw M6S M4x25 A280	
820	312105-0372		PC	2	Screw M6S M6x25 A280	
830	312115-0289		PC	2	Screw Hex.Sock.Hd.MC6S-TT 4x10 A480	
840	312125-0287		PC	16	Screw Pan Head MCS M4X8 RFR	
845	312125-0323		PC	1	Screw Pan Head MCS M5X8 RFR	
850	312165-0325		PC	2	Screw Slot.Rais.Count.Hd.MKFS 5x10 SS	
854	315101-0146		PC	4	Washer, Plain, BRB, 5,3/10 H=1	
857	315105-0136		PC	8	Washer, Plain, BRB, 4,3/8,H=0,8	
860	315234-0109		PC	1	Washer,Pl.Rnd.Cu.10,3/13,5 H=1,0	
865	342727-0102		PC	1	Conn. Pipe G-6-LFZB	
867	342736-0109		PC	1	Conn. Elbow W-12	
870	342767-0100		PC	1	Conn. Bulkhead G1/8	
880	342797-0121		PC	1	Conn. Banjo, Ringpiece 6-1/8	
890	342980-0303		PC	1	"BANJO-HOLLOW BOLT COUPL,E	
900	352113-0101		PC	4	CLIP STRIP BLACK 92x2,5mm	
910	359000-0400		PC	22	"MARKING CO2/4 "0"	
920	359000-0401		PC	20	"MARKING COLLAR 2/4 ""1"" Yellow"	
930	359000-0402		PC	14	"MARKING COLLAR 2/4 ""2"" Yellow"	
940	359000-0403		PC	8	"MARKING COLLAR PA2/4 ""3"" Yellow"	
950	359000-0404		PC	2	"MARKING COLLAR PA2/4 ""4"" Yellow"	
951	359000-0405		PC	4	"MARKING CO2/4""5"""	
952	359000-0406		PC	4	"MARKING COLLAR PA2/4 ""6"" Yellow"	
965	359000-0407		PC	8	"MARKING COLLAR PA2/4 ""7"" Yellow"	

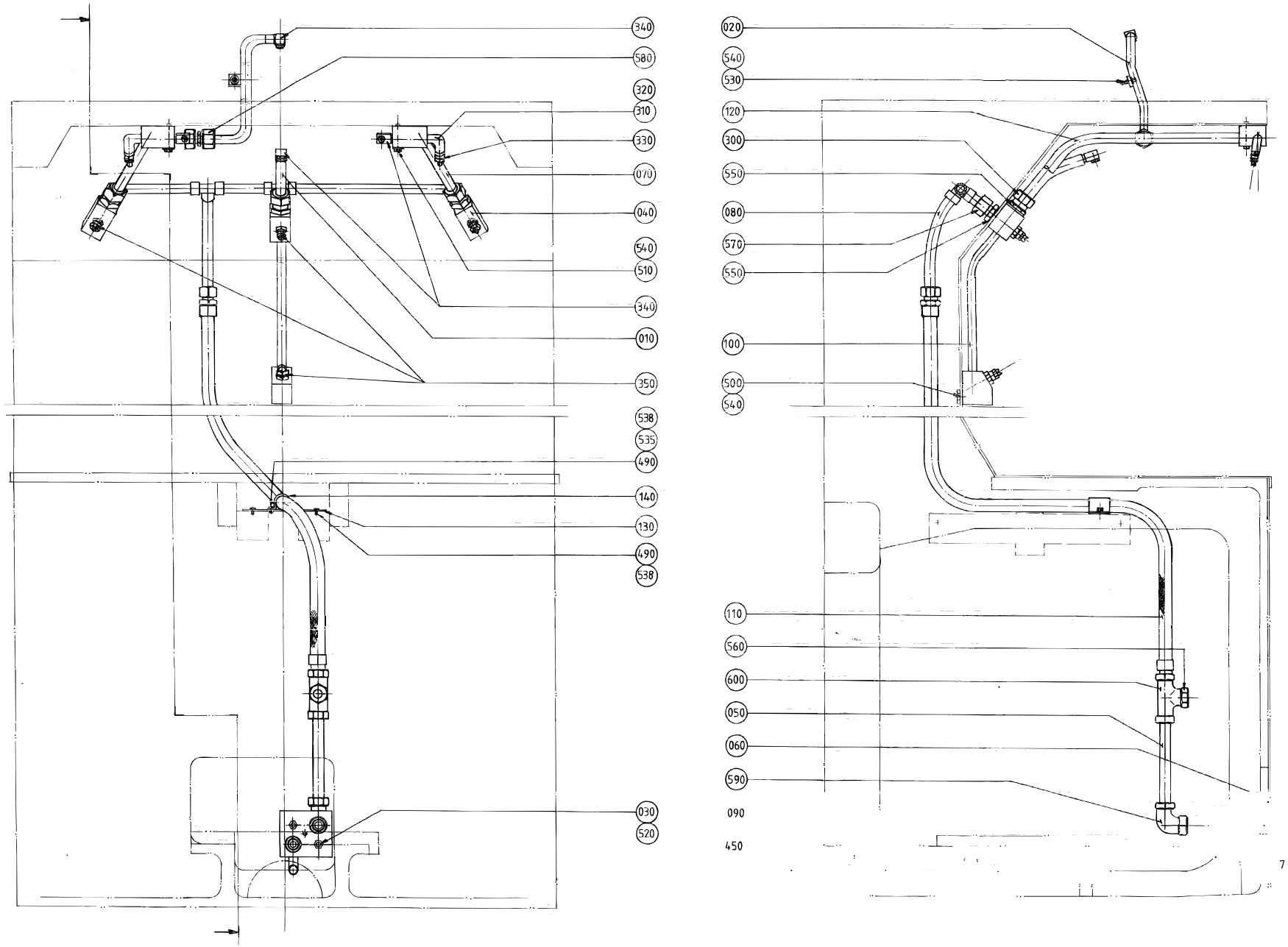
340
580
320
310
330
070
040
540
510
340
010
350
538
535
490
140
130
490
538
030
520
020
540
530
120
300
550
080
570
550
100
500
540
110
560
600
050
060
590
090
450

Pos	Part No	SP	UN	Qty	Description	Page No
TBA/9 0100B OR TBA/9 0125S						
010	271121-0000	-		1	FORCE SPRING	
020	456129-0001	-		1	FORCE SPRING	
TBA/9 0160S OR TBA/9 0250S OR TB/9 0200S OR TBA/9 0200S OR TBA/9R 0200S						
010	295985-0000	-		1	FORCE SPRING	
020	456129-0002	-		1	FORCE SPRING	
TBA/9 0187B OR TBA/9 0180B OR TBA/9 0284B OR TB/9 0284B OR TB/9 0236B OR TB/9 0250B OR TBA/9 0200B OR TBA/9 0250B OR TBA/9 0236B OR TB/9 0180B OR TB/9 0200B OR TB/9 0187B OR TBA/9R 0200B OR TBA/9R 0250B						
010	271121-0000	-		1	FORCE SPRING	
020	456129-0002	-		1	FORCE SPRING	
Common Parts						
30	18542-0000	C	PC	2	WASHER	
40	257190-0000		PC	2	SEPARATION BLOCK	
50	272679-0000		PC	1	PIPE	
60	295417-0000		PC	1	GASKET	
70	295785-0000		PC	1	FORCE SPRING	
80	295978-0000		PC	1	PIPE	
90	491870-0000		PC	1	BRANCH PIPE	
100	441665-0000		PC	1	FORCE SPRING	
110	469146-0000		PC	1	HOSE	
120	456128-0000		PC	1	FORCE SPRING	
130	469134-0000		PC	1	BRACKET	
140	469135-0000		PC	1	HOLDER	
300	90030-0151	C	PC	3	Conn. Str.,15-R1/2, Ext. Thread	
310	90330-0097		PC	2	Nipples, Ext. Thread, G1/8	
320	90330-0099		PC	2	Elbow, 90 Int. Thread, R-222R1/8	
330	90424-0032	C	PC	2	NOZZLE	
340	90424-0033	C	PC	4	NOZZLE	
350	90424-0035	C	PC	4	NOZZLE	
450	311103-0272		PC	1	Pin, Parallell, m6, 4x20	
490	312105-0327		PC	4	Screw M6S M5x12 A280	
500	312105-0364		PC	1	Screw M6S M6x10 A280	
510	312105-0378		PC	2	Screw M6S M6x40 A280	
520	312105-0459		PC	2	Screw M6S M8x40 A280	
530	312115-0364		PC	1	Screw Hex.Sock.Hd.MC6S-TT 6x10 A480	
535	312605-0314		PC	2	Nut Hex. M6M M5 A280	
538	315105-0146		PC	6	Washer, Plain, BRB, 5,3/10,H=1	
540	315105-0153		PC	4	Washer, Plain, BRB, 6,4/12,H=1,5	
550	315233-0113	C	PC	6	Washer,Pl.Rnd.Nyl.21,4/27,H=1,2	
560	342710-0115	C	PC	1	Reduction RBM 16/8	
570	342720-0114	C	PC	3	Conn. Str. GA-15-G1/2	
580	342726-0109	C	PC	1	Conn. Pipe G-12	
590	342736-0114	C	PC	1	Conn. Elbow W-15	
600	342746-0114	C	PC	1	Conn. T-Pipe T-15	

Distributor Block

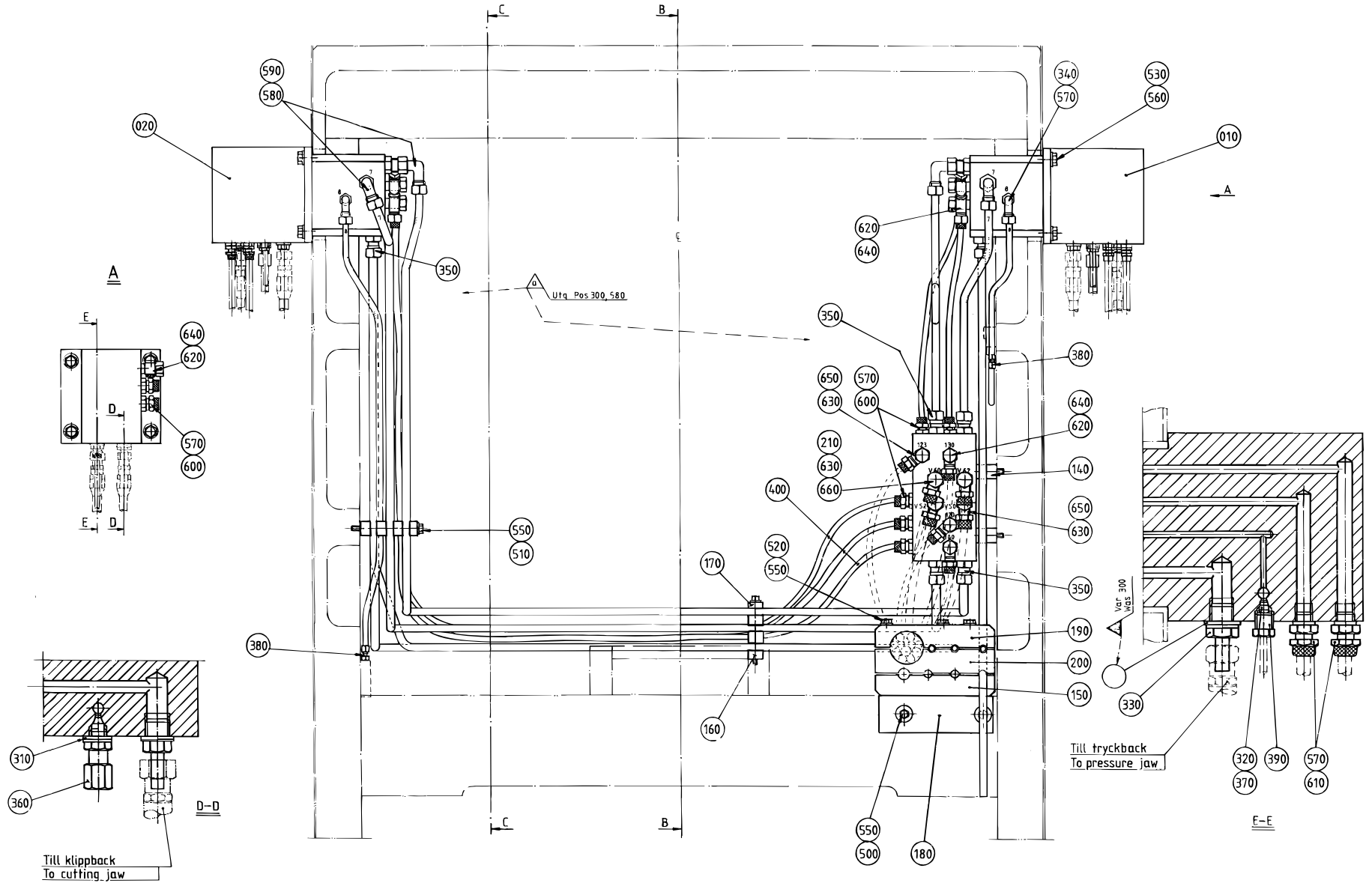

Pos	Part No	SP	UN	Qty	Description	Page No
TBA OR TWA						
370	90134-0031	C		2	Sleeve for plastic tube	
390	90134-0038	-		2	Bushing/Nut inlet/outlet 4 mm	
TPA						
370	90092-0052	C		2	Metering valve 10 mm3	
385	929420-0000	-		2	CONNECTION	
390	90134-0040	-		2	Bushing valve connection 4 mm	
Common Parts						
10	491255-0000		PC	1	DISTRIBUTOR BLOCK LEFT	
20	491254-0000		PC	1	DISTRIBUTOR BLOCK RIGHT	
30	491256-0000		PC	1	DISTRIBUTOR BLOCK LEFT	
40	491244-0000		PC	1	PIPE WATER	
50	491245-0000		PC	1	PIPE CENTRAL LUBRICATION	
60	491246-0000		PC	1	PIPE CENTRAL LUBRICATION	
70	491247-0000		PC	1	PIPE WATER	
80	491248-0000		PC	1	PIPE WATER	
90	491249-0000		PC	1	PIPE HYDRAULIC	
100	491250-0000		PC	1	PIPE HYDRAULIC	
110	491251-0000		PC	1	PIPE WATER	
120	491252-0000		PC	1	PIPE HYDRAULIC	
130	491253-0000		PC	1	PIPE HYDRAULIC	
140	271088-0000		PC	2	SPACER	
150	271323-0000		PC	1	HOLDER	
160	271343-0000		PC	2	HOLDER	
170	271344-0000		PC	2	HOLDER	
180	456561-0000		PC	1	BRACKET	
190	469000-0000		PC	1	HOLDER	
200	469001-0000		PC	1	HOLDER	
210	469071-0000	D	PC	2	SPACER	
310	90005-0045		PC	2	Washer, Plain Round 10(3/8)/14,H=2	
320	90028-0021	C	PC	2	Cone tube 4 mm	
330	90030-0065	C	PC	4	PIPE CONNECTION	
340	90030-0171	C	PC	2	Conn. Elbow Adj.,EXT 6-G1/8	
350	90030-0185	C	PC	8	Conn. Str. GA-8-G1/4	
360	90134-0019	C	PC	2	Conn. Straight, GE 6-LM FZB	
380	90134-0034	C	PC	2	NIPPLE	
400	90166-0132		M	5	TUBE 6 mm PA,Transp.	
500	312101-0372		PC	2	Screw M6S M6x25 FZB	
510	312101-0385		PC	2	Screw M6S M6x75 FZB	
520	312101-0388		PC	3	Screw M6S M6x90 FZB	
530	312105-0453		PC	8	Screw M6S M8x25 A280	
540	312111-0471		PC	2	Screw Hex.Sock.Hd.MC6S-TT 8x100 88 FZ	
550	315101-0153		PC	7	Washer, Plain, BRB, 6,4/12 H=1,5	
560	315105-0165		PC	8	Washer, Plain, BRB, 8,4/16,H=1,5	
570	315211-0105	C	PC	6	Gasket Bolt head 10,4x15,9x2,1 mm G1/8	
580	315211-0108	C	PC	4	Gasket Bolt head 13,7x20,6x13,7 mm G1/4	
590	342738-0208	C	PC	4	Conn. Elbow Adj.,EXT 8-G1/4	
600	342722-0202	C	PC	10	"PIPE COUPLING 1/8"" D=6mm"	
610	342921-0121	C	PC	4	"STRAIGHT COUPLING,EXT.THREADED	
620	342732-0102	C	PC	11	ELBOW PIPE JOINT	
630	342980-0122	C	PC	5	"BANJO-CONNECTION,RING 8/6-G1/4"""	
650	342980-0304	C	PC	3	"BANJO-HOLLOW BOLT COUPL,	
660	342980-0314	C	PC	2	"BANJO-HOLLOW BOLT COUPL,	

(Cont'd)

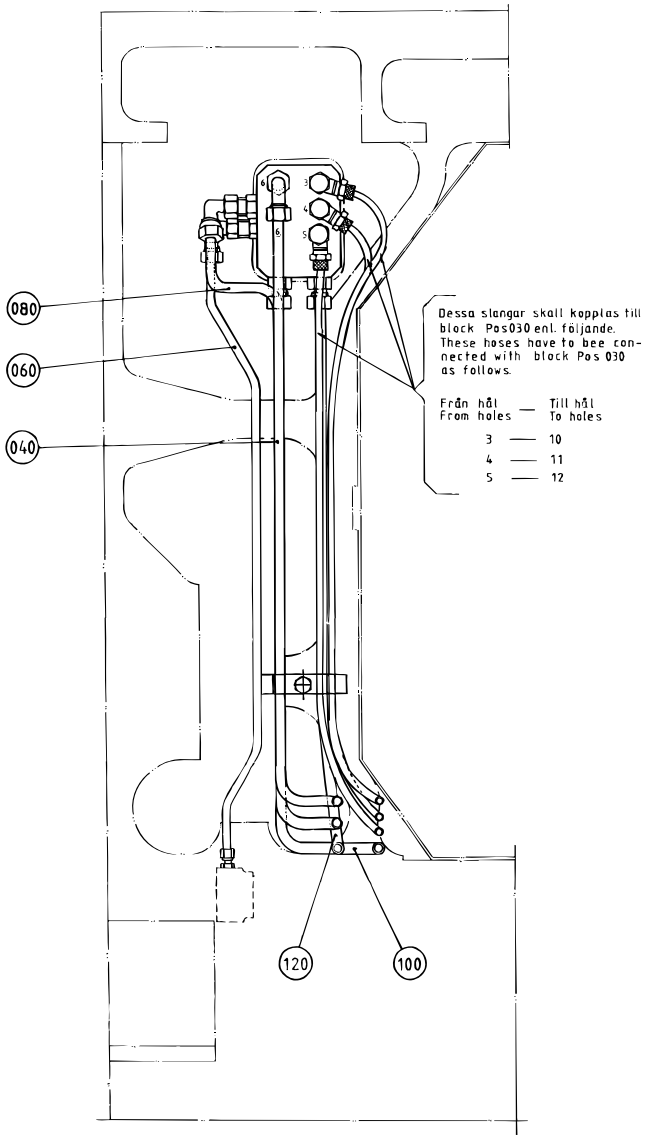

C-C

För att undvika felaktiga monteringar av rör är både rör och hål i blocken märkta med ett nummer vilka skall referera till varandra

To avoid mistakes when assembling pipes both pipes and holes in the blocks are marked with a number, which have to corresponds to eachother

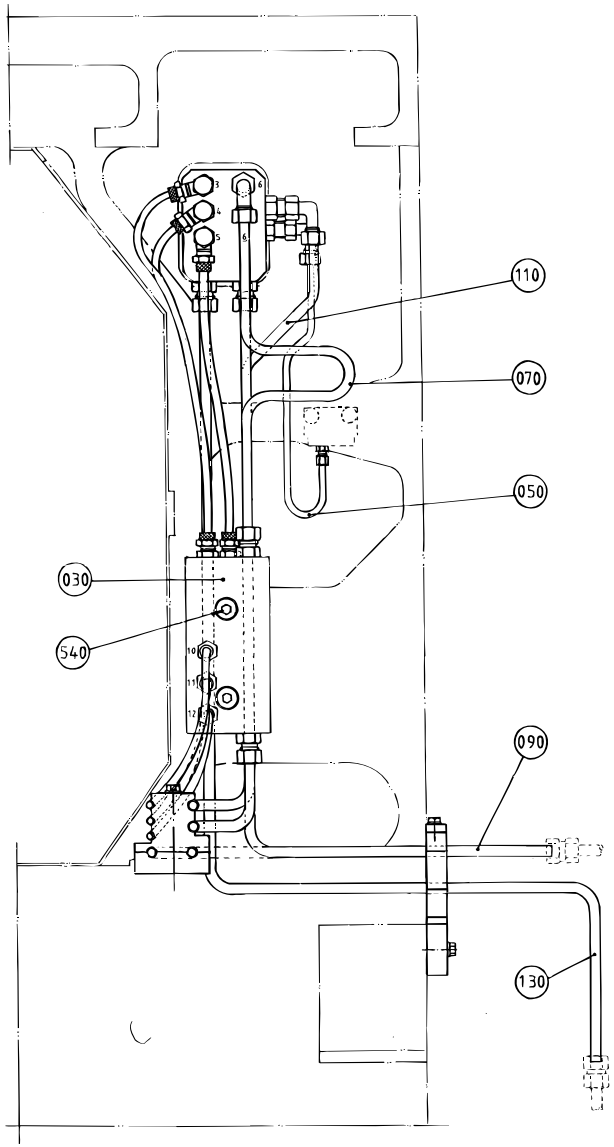

B-B

Pos	Part No	SP	UN	Qty	Description	Page No
(Cont'd)						
TBA OR TWA						
370	90134-0031	C		2	Sleeve for plastic tube	
390	90134-0038	-		2	Bushing/Nut inlet/outlet 4 mm	
TPA						
370	90092-0052	C		2	Metering valve 10 mm3	
385	929420-0000	-		2	CONNECTION	
390	90134-0040	-		2	Bushing valve connection 4 mm	
Common Parts						
10	491255-0000		PC	1	DISTRIBUTOR BLOCK LEFT	
20	491254-0000		PC	1	DISTRIBUTOR BLOCK RIGHT	
30	491256-0000		PC	1	DISTRIBUTOR BLOCK LEFT	
40	491244-0000		PC	1	PIPE WATER	
50	491245-0000		PC	1	PIPE CENTRAL LUBRICATION	
60	491246-0000		PC	1	PIPE CENTRAL LUBRICATION	
70	491247-0000		PC	1	PIPE WATER	
80	491248-0000		PC	1	PIPE WATER	
90	491249-0000		PC	1	PIPE HYDRAULIC	
100	491250-0000		PC	1	PIPE HYDRAULIC	
110	491251-0000		PC	1	PIPE WATER	
120	491252-0000		PC	1	PIPE HYDRAULIC	
130	491253-0000		PC	1	PIPE HYDRAULIC	
140	271088-0000		PC	2	SPACER	
150	271323-0000		PC	1	HOLDER	
160	271343-0000		PC	2	HOLDER	
170	271344-0000		PC	2	HOLDER	
180	456561-0000		PC	1	BRACKET	
190	469000-0000		PC	1	HOLDER	
200	469001-0000		PC	1	HOLDER	
210	469071-0000	D	PC	2	SPACER	
310	90005-0045		PC	2	Washer, Plain Round 10(3/8)/14,H=2	
320	90028-0021	C	PC	2	Cone tube 4 mm	
330	90030-0065	C	PC	4	PIPE CONNECTION	
340	90030-0171	C	PC	2	Conn. Elbow Adj.,EXT 6-G1/8	
350	90030-0185	C	PC	8	Conn. Str. GA-8-G1/4	
360	90134-0019	C	PC	2	Conn. Straight, GE 6-LM FZB	
380	90134-0034	C	PC	2	NIPPLE	
400	90166-0132		M	5	TUBE 6 mm PA,Transp.	
500	312101-0372		PC	2	Screw M6S M6x25 FZB	
510	312101-0385		PC	2	Screw M6S M6x75 FZB	
520	312101-0388		PC	3	Screw M6S M6x90 FZB	
530	312105-0453		PC	8	Screw M6S M8x25 A280	
540	312111-0471		PC	2	Screw Hex.Sock.Hd.MC6S-TT 8x100 88 FZ	
550	315101-0153		PC	7	Washer, Plain, BRB, 6,4/12 H=1,5	
560	315105-0165		PC	8	Washer, Plain, BRB, 8,4/16,H=1,5	
570	315211-0105	C	PC	6	Gasket Bolt head 10,4x15,9x2,1 mm G1/8	
580	315211-0108	C	PC	4	Gasket Bolt head 13,7x20,6x13,7 mm G1/4	
590	342738-0208	C	PC	4	Conn. Elbow Adj.,EXT 8-G1/4	
600	342722-0202	C	PC	10	"PIPE COUPLING 1/8"" D=6mm"	
610	342921-0121	C	PC	4	"STRAIGHT COUPLING,EXT.THREADED	
620	342732-0102	C	PC	11	ELBOW PIPE JOINT	
630	342980-0122	C	PC	5	"BANJO-CONNECTION,RING 8/6-G1/4"""	
650	342980-0304	C	PC	3	"BANJO-HOLLOW BOLT COUPL,	
660	342980-0314	C	PC	2	"BANJO-HOLLOW BOLT COUPL,	

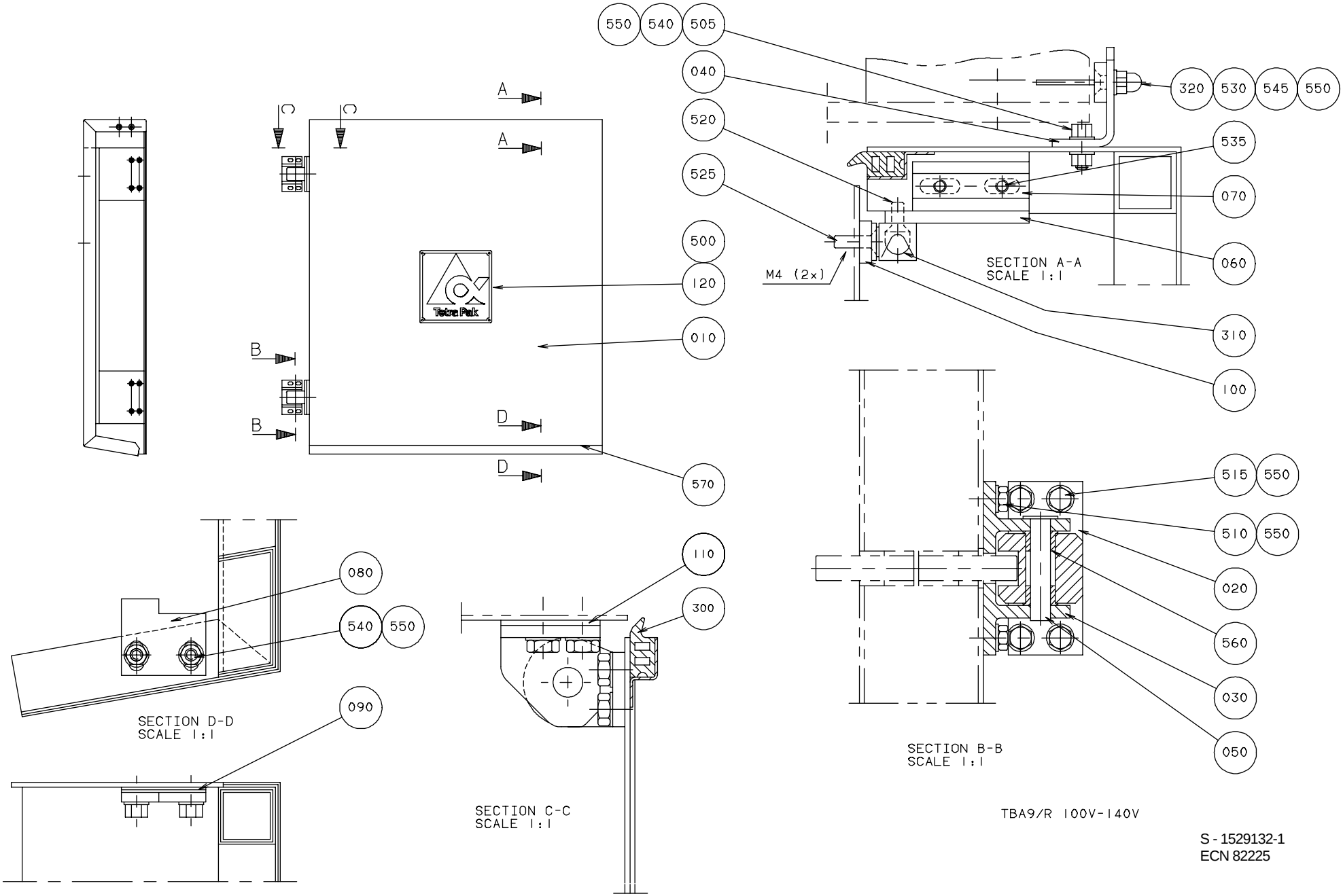

S - 1529132-1
ECN 82225

Pos	Part No	SP	UN	Qty	Description	Page No
Common Parts						
005	574658-0000	D		1	LOGOTYPE TP	
010	1529135-0000	D		1	DOOR	
020	271219-0000	D		2	HINGE	
030	271220-0000	D		2	HINGE	
040	1529137-0000	D		1	BRACKET	
050	271221-0000	D		2	PIN	
060	441668-0000	-		1	HOLDER	
070	441691-0000	-		1	PLATE	
080	491233-0000	-		1	GUIDE LUG	
090	456829-0000	-		2	SHIM	
100	469492-0000	-		1	SPACER	
110	491235-0000	-		2	WASHER	
300	90143-0049	-	M	15	RUBBERSTRIP 11X21MM	
310	90237-0071	C		1	MAGNETLOCK	
320	90044-0310	-		1	Key 4215/16B1	
500	311520-0435	-		4	Rivet, Blank 3,2x10	
505	312105-0327	-		2	Screw M6S M5x12 A280	
510	312105-0329	-		8	Screw M6S M5x16 A280	
515	312105-0331	-		8	Screw M6S M5x20 A280	
520	312145-0222	-		2	Screw Counters.Slot.Hd. MFS 3x8 SS	
525	312145-0291	-		2	Screw Counters.Slot.Hd. MFS 4x12 A4	
530	312155-0327	-		2	Screw Hex.Sock.Count.MF6S M5x12 A280	
535	312155-0329	-		2	Screw Hex.Sock.Count.MF6S M5x16 A280	
540	312605-0314	-		4	Nut Hex. M6M M5 A280	
545	312705-0314	-		2	Nut Hex. Domed Cap MHM-6 M5 A280	
550	315105-0146	-		22	Washer, Plain, BRB, 5,3/10,H=1	
560	321111-0096	C		4	BEARING BUSHING WITH FLANGE, 8/12X8	
570	90143-0060	-	M	575	EDGE STRIP 9,5x6,3mm Black PVC	

Pos	Part No	SP	UN	Qty	Description	Page No

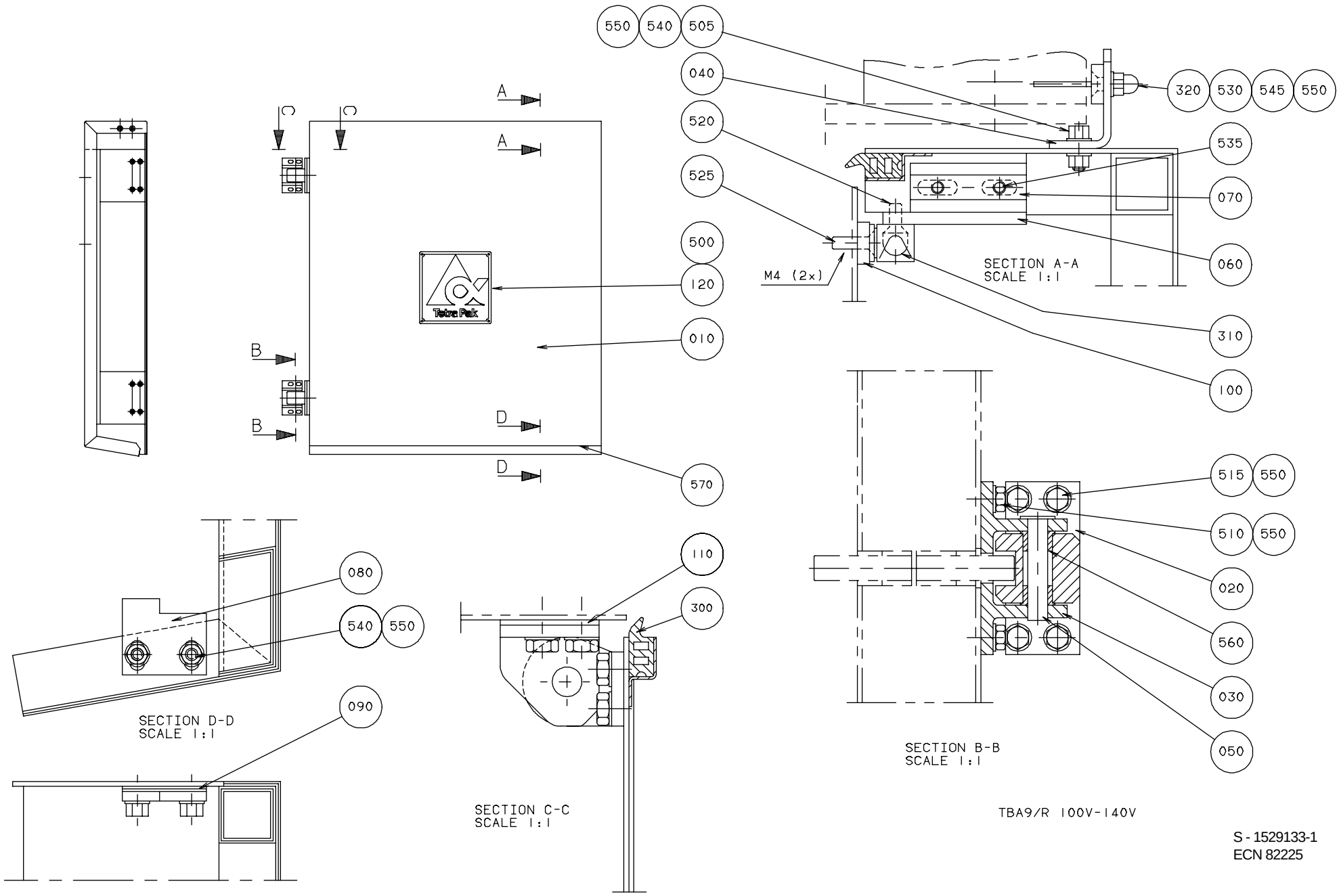

S - 1529133-1
ECN 82225

Pos	Part No	SP	UN	Qty	Description	Page No
Common Parts						
010	1529136-0000	D		1	DOOR	
020	271219-0000	D		2	HINGE	
030	271220-0000	D		2	HINGE	
033	1529138-0000	D		1	BRACKET	
035	979719-0000	-		2	SPACER	
040	271221-0000	D		2	PIN	
050	441691-0000	-		1	PLATE	
060	441692-0000	-		1	HOLDER	
070	491233-0000	-		1	GUIDE LUG	
080	456829-0000	-		2	SHIM	
090	469492-0000	-		1	SPACER	
100	491235-0000	-		2	WASHER	
300	90143-0049	-	M	16	RUBBERSTRIP 11X21MM	
310	90237-0071	C		1	MAGNETLOCK	
320	90044-0310	-		1	Key 4215/16B1	
490	312105-0327	-		2	Screw M6S M5x12 A280	
500	312105-0329	-		8	Screw M6S M5x16 A280	
505	312105-0331	-		8	Screw M6S M5x20 A280	
510	312145-0222	-		2	Screw Counters.Slot.Hd. MFS 3x8 SS	
515	312145-0291	-		2	Screw Counters.Slot.Hd. MFS 4x12 A4	
520	312155-0327	-		2	Screw Hex.Sock.Count.MF6S M5x12 A280	
525	312155-0329	-		2	Screw Hex.Sock.Count.MF6S M5x16 A280	
530	312605-0314	-		4	Nut Hex. M6M M5 A280	
535	312705-0314	-		2	Nut Hex. Domed Cap MHM-6 M5 A280	
540	315105-0146	-		22	Washer, Plain, BRB, 5,3/10,H=1	
550	321111-0096	C		4	BEARING BUSHING WITH FLANGE, 8/12X8	
560	90143-0060	-	MM	6	EDGE STRIP 9,5x6,3mm Black PVC	

Pos	Part No	SP	UN	Qty	Description	Page No

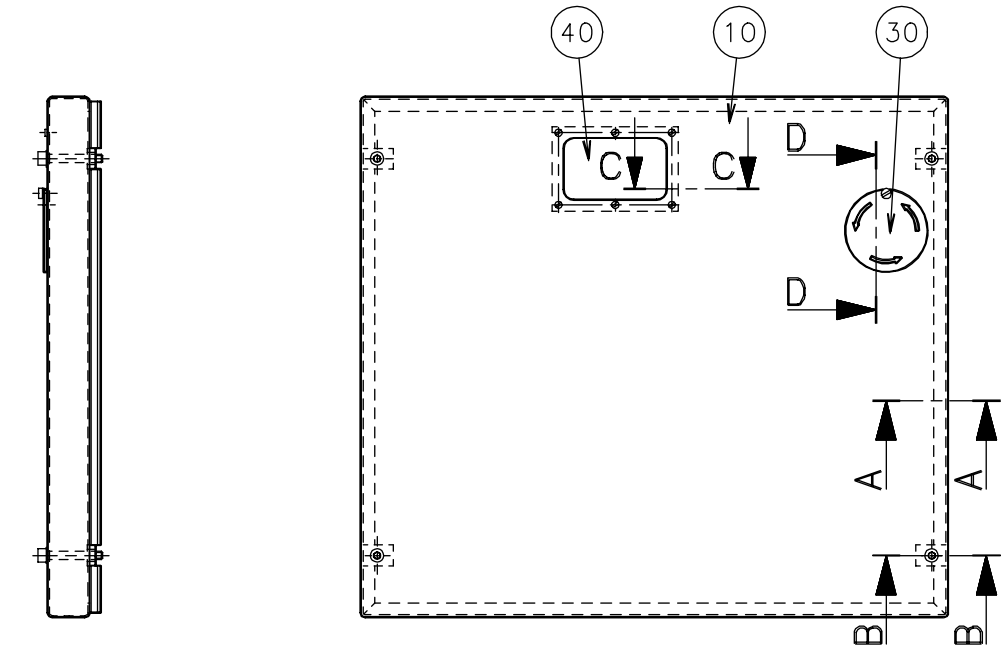

A-A
scale 1:2

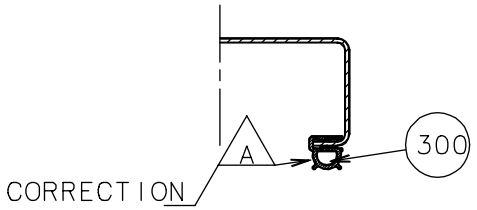

B-B
scale 1:2

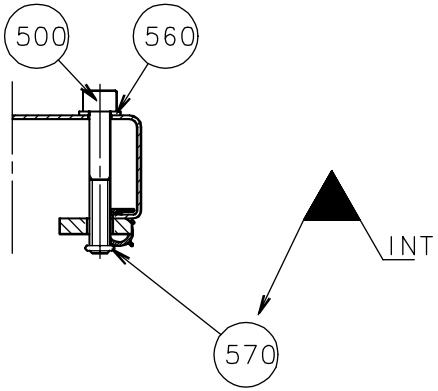

C-C
scale 1:1

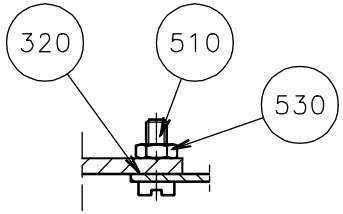

D-D
scale 1:1

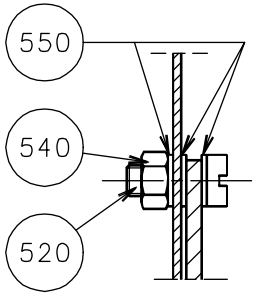

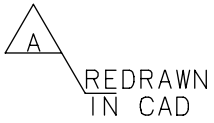

Pos	Part No	SP	UN	Qty	Description	Page No
Common Parts						
010	1279044-0000	-		1	HATCH	
030	469964-0000	-		1	LID	
040	257231-0000	D		1	WINDOW	
300	90143-0068	C	MM	22	RUBBERSTRIP EMKA 1011-06	
320	90157-0022	C	L	1	SEALING COMPOUND	
500	312115-0463	-		4	Screw MC6S M8x60 A280	
510	312125-0291	-		6	Screw Pan Head MCS M4x12 RFR	
520	312125-0329	-		1	Screw Pan Head MCS M5X16 RFR	
530	312605-0312	-		6	Nut Hex. M6M M4 A280	
540	312810-0314	-		1	Nut Hex. Ny-Lock M5 FZB	
550	315105-0146	-		3	Washer, Plain, BRB, 5,3/10,H=1	
560	315105-0165	-		4	Washer, Plain, BRB, 8,4/16,H=1,5	
570	315202-0105	-		4	O-Ring 7,1x1,6 mm	

Pos	Part No	SP	UN	Qty	Description	Page No

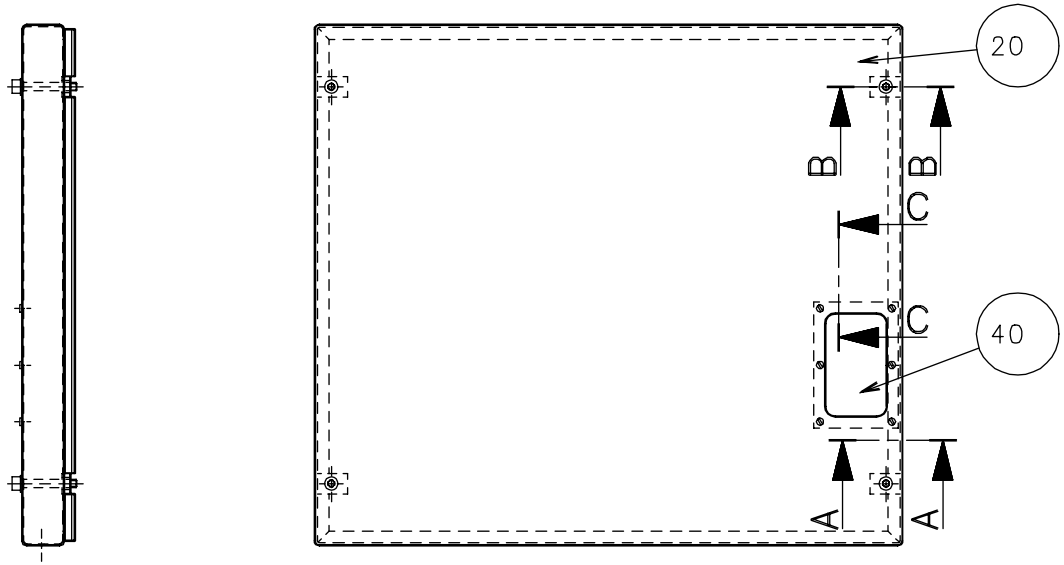
20
B
B
C
C
40
A
A

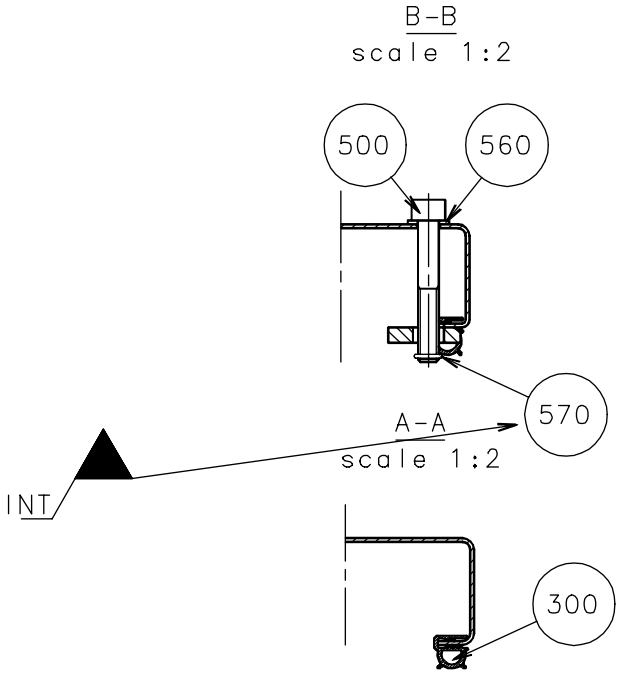
B-B
scale 1:2
500
560
570
A-A
scale 1:2
INT
300

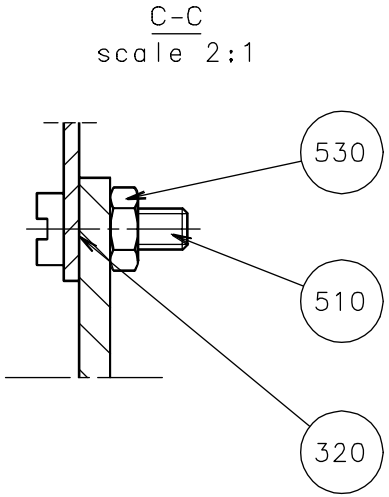
C-C
scale 2:1
530
510
320

Pos	Part No	SP	UN	Qty	Description	Page No
Common Parts						
020	1279045-0000	-		1	HATCH	
040	257231-0000	D		1	WINDOW	
300	90143-0068	C	MM	22	RUBBERSTRIP EMKA 1011-06	
320	90157-0022	C	L	1	SEALING COMPOUND	
500	312115-0463	-		4	Screw MC6S M8x60 A280	
510	312125-0291	-		6	Screw Pan Head MCS M4x12 RFR	
530	312605-0312	-		6	Nut Hex. M6M M4 A280	
560	315105-0165	-		4	Washer, Plain, BRB, 8,4/16,H=1,5	
570	315202-0105	-		4	O-Ring 7,1x1,6 mm	

Pos	Part No	SP	UN	Qty	Description	Page No

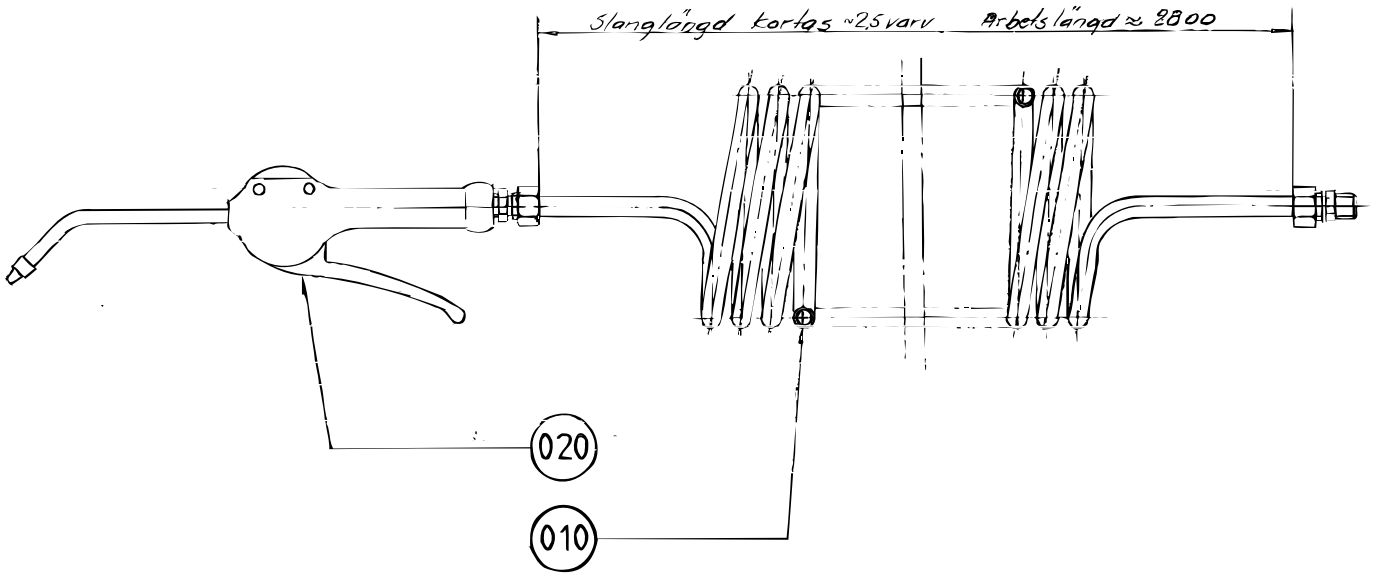
Slanglängd kortas ~25 varv
Arbetslängd ≈ 2800
020
010

Pos	Part No	SP	UN	Qty	Description	Page No
Common Parts						
010	90152-0016	C		1	HOSE	
020	90243-0061	C		1	FAN NOZZLE	

Pos	Part No	SP	UN	Qty	Description	Page No

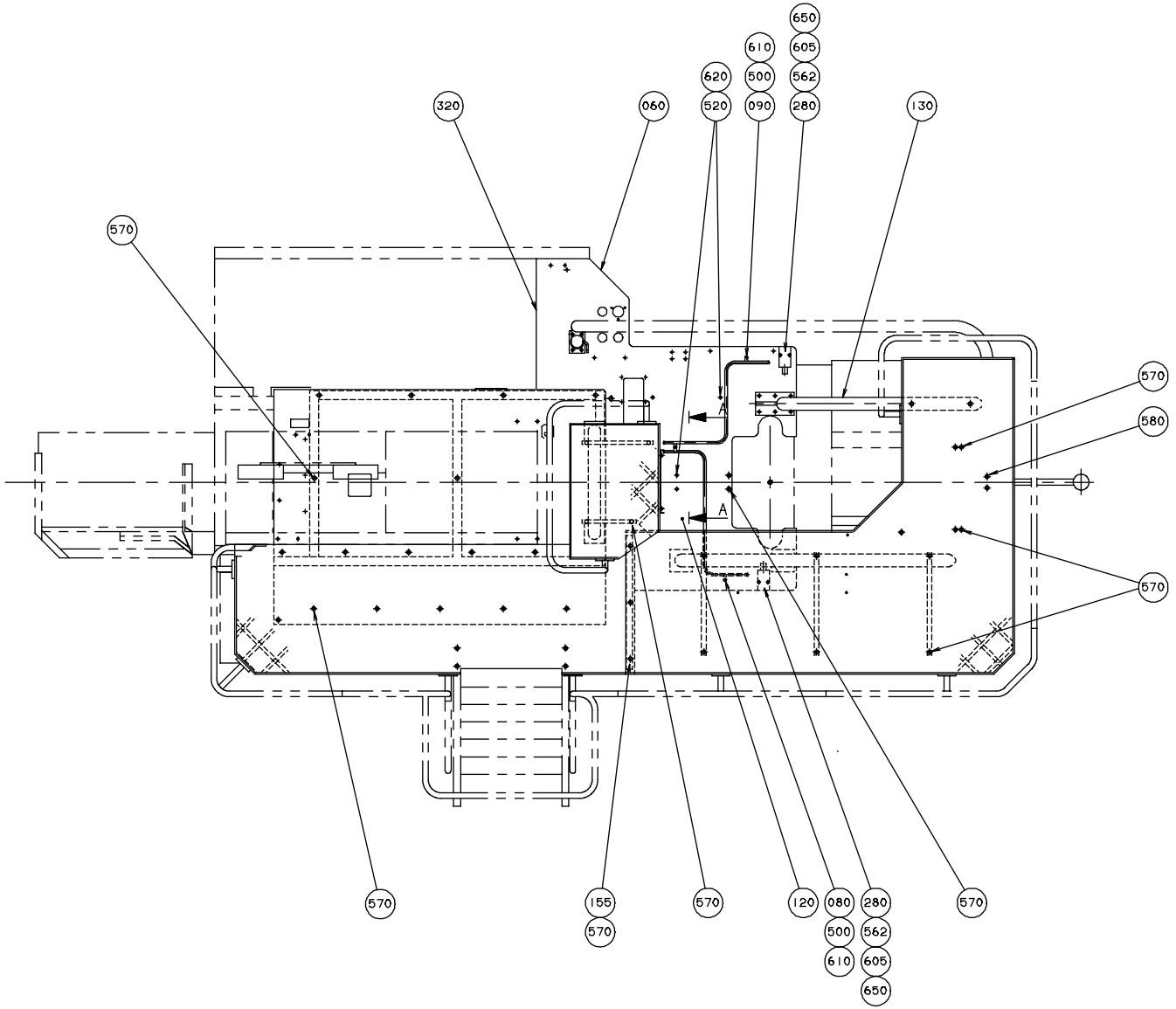

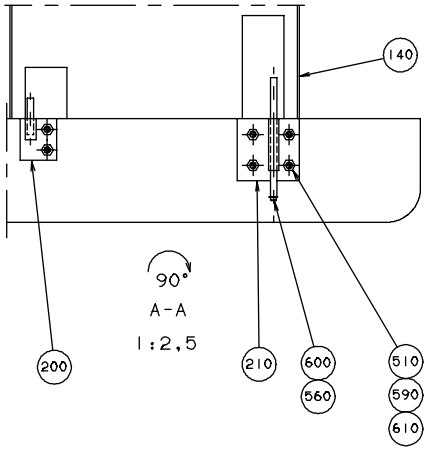

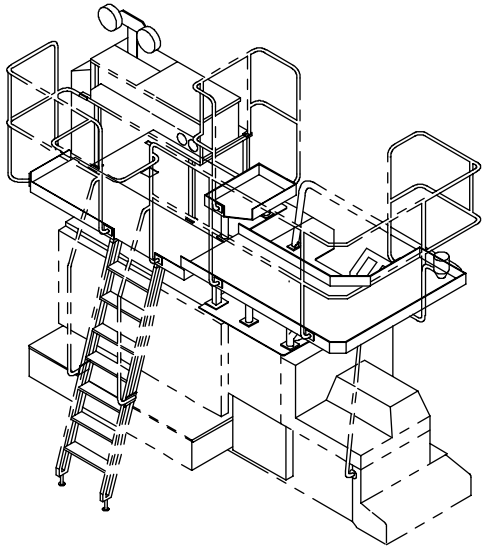

TBA/9R 100V-120V UPTAB

Pos	Part No	SP	UN	Qty	Description	Page No
SOURCE,TBA/9-100V OR SOURCE,TBA/9-110V						
060	1529183-0000	-		1	SHEET	
SOURCE,TBA/9-120V						
060	1529213-0000	-		1	SHEET	
Common Parts						
5	544536-0100	PC		1	SET OF SIGNS.....	**252**
15	469004-0000	PC		1	PLATFORM	
30	469006-0000	PC		1	FRAME	
40	469007-0000	PC		1	FRAME SECTION	
70	1529035-0000	PC		1	PLATFORM	
80	1529241-0000	PC		1	CABLE CONDUIT	
90	1529242-0000	PC		1	CABLE CONDUIT	
100	469013-0000	PC		1	CABLE DUCT	
110	469014-0000	PC		1	LID	
120	1529184-0000	PC		1	SHEET	
130	469016-0000	PC		1	FRAME SECTION	
140	469017-0000	PC		1	SHEET	
143	469010-0000	PC		1	FRAME SHEET	
150	469018-0000	PC		1	PLATFORM	
155	1529034-0000	PC		1	COVER PLATE	
160	469019-0000	PC		1	LEG	
170	469020-0000	PC		1	LEG	
180	469021-0000	PC		2	LEG	
190	469022-0000	PC		1	FRAME SECTION	
200	295881-0000	PC		1	BRACKET	
210	295882-0000	PC		1	BRACKET	
250	469445-0000	PC		3	SPACER	
260	90015-0020	PC		2	GLANDS,Lead-in,IP67	
280	90044-0139	PC		2	Key saf.sw. AZ16-02 ZVR K-2254	
300	90143-0012	MM		1900	STRIP	
310	90153-0017	G		50	ADHESIVE 160 mL	
320	90157-0022	L		1	SEALING COMPOUND	
340	90164-0015	PC		1	LIGHT FIXTURE TYPE:DWDV 206	
350	90164-0302	PC		2	BRACKET	
500	312105-0362	PC		3	Screw M6S M6x8 A280	
510	312105-0370	PC		1	Screw M6S M6x20 A280	
520	312105-0449	PC		41	Screw M6S M8x16 A280	
530	312105-0453	PC		13	Screw M6S M8x25 A280	
560	312115-0220	PC		1	Screw Hex.Sock.Hd.MC6S-TT 3x6 A480	
562	312115-0329	PC		4	Screw MC6S M5x16 A280	
570	312155-0449	PC		50	Screw Hex.Sock.Count.MF6S M8x16 A280	
580	312155-0453	PC		2	Screw Hex.Sock.Count.MF6S M8x25 A280	
585	312605-0316	PC		6	Nut Hex. M6M M6 A280	
590	312605-0318	PC		4	Nut Hex. M6M M8 A280	
595	312705-0314	PC		3	Nut Hex. Domed Cap MHM-6 M5 A280	
600	315105-0136	PC		1	Washer, Plain, BRB, 4,3/8,H=0,8	
605	315105-0146	PC		4	Washer, Plain, BRB, 5,3/10,H=1	
610	315105-0153	PC		15	Washer, Plain, BRB, 6,4/12,H=1,5	
620	315105-0165	PC		64	Washer, Plain, BRB, 8,4/16,H=1,5	
650	352103-0106	PC		2	CABLE GLAND ST 11	

(Cont'd)

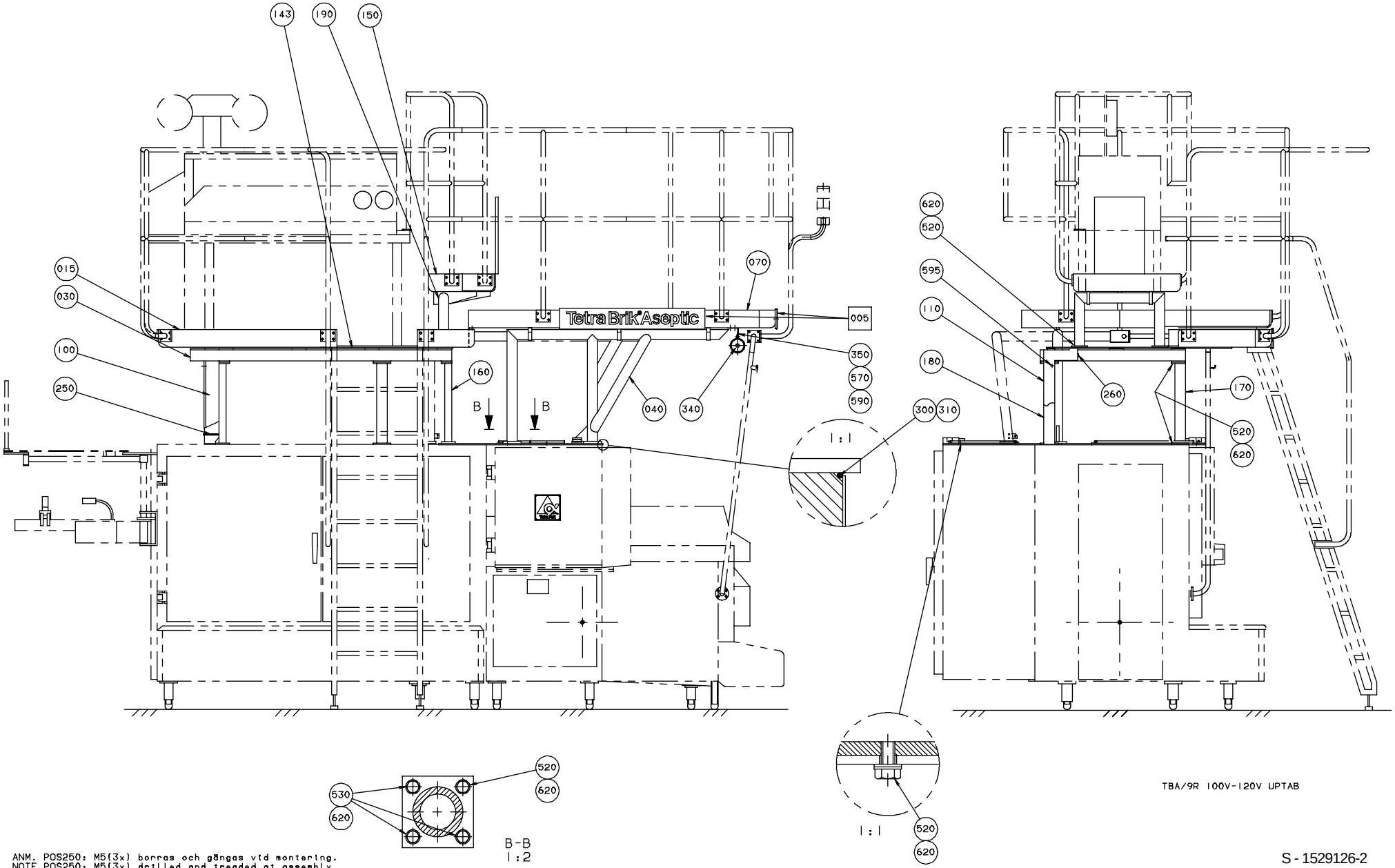

ANM. POS250: M5(3x) borras och gängas vid montering.
NOTE POS250: M5(3x) drilled and treaded at assembly.

S - 1529126-2
ECN 82225

Pos	Part No	SP	UN	Qty	Description	Page No
(Cont'd)						
SOURCE,TBA/9-100V OR SOURCE,TBA/9-110V						
060	1529183-0000	-		1	SHEET	
SOURCE,TBA/9-120V						
060	1529213-0000	-		1	SHEET	
Common Parts						
5	544536-0100	PC		1	SET OF SIGNS.....	**252**
15	469004-0000	PC		1	PLATFORM	
30	469006-0000	PC		1	FRAME	
40	469007-0000	PC		1	FRAME SECTION	
70	1529035-0000	PC		1	PLATFORM	
80	1529241-0000	PC		1	CABLE CONDUIT	
90	1529242-0000	PC		1	CABLE CONDUIT	
100	469013-0000	PC		1	CABLE DUCT	
110	469014-0000	PC		1	LID	
120	1529184-0000	PC		1	SHEET	
130	469016-0000	PC		1	FRAME SECTION	
140	469017-0000	PC		1	SHEET	
143	469010-0000	PC		1	FRAME SHEET	
150	469018-0000	PC		1	PLATFORM	
155	1529034-0000	PC		1	COVER PLATE	
160	469019-0000	PC		1	LEG	
170	469020-0000	PC		1	LEG	
180	469021-0000	PC		2	LEG	
190	469022-0000	PC		1	FRAME SECTION	
200	295881-0000	PC		1	BRACKET	
210	295882-0000	PC		1	BRACKET	
250	469445-0000	PC		3	SPACER	
260	90015-0020	PC		2	GLANDS,Lead-in,IP67	
280	90044-0139	PC		2	Key saf.sw. AZ16-02 ZVR K-2254	
300	90143-0012	MM		1900	STRIP	
310	90153-0017	G		50	ADHESIVE 160 mL	
320	90157-0022	L		1	SEALING COMPOUND	
340	90164-0015	PC		1	LIGHT FIXTURE TYPE:DWDV 206	
350	90164-0302	PC		2	BRACKET	
500	312105-0362	PC		3	Screw M6S M6x8 A280	
510	312105-0370	PC		1	Screw M6S M6x20 A280	
520	312105-0449	PC		41	Screw M6S M8x16 A280	
530	312105-0453	PC		13	Screw M6S M8x25 A280	
560	312115-0220	PC		1	Screw Hex.Sock.Hd.MC6S-TT 3x6 A480	
562	312115-0329	PC		4	Screw MC6S M5x16 A280	
570	312155-0449	PC		50	Screw Hex.Sock.Count.MF6S M8x16 A280	
580	312155-0453	PC		2	Screw Hex.Sock.Count.MF6S M8x25 A280	
585	312605-0316	PC		6	Nut Hex. M6M M6 A280	
590	312605-0318	PC		4	Nut Hex. M6M M8 A280	
595	312705-0314	PC		3	Nut Hex. Domed Cap MHM-6 M5 A280	
600	315105-0136	PC		1	Washer, Plain, BRB, 4,3/8,H=0,8	
605	315105-0146	PC		4	Washer, Plain, BRB, 5,3/10,H=1	
610	315105-0153	PC		15	Washer, Plain, BRB, 6,4/12,H=1,5	
620	315105-0165	PC		64	Washer, Plain, BRB, 8,4/16,H=1,5	
650	352103-0106	PC		2	CABLE GLAND ST 11	

This page is intentionally left blank

Pos	Part No	SP	UN	Qty	Description	Page No
TB						
010	544526-0000	-		2	MACHINE PLATE TB	
TBA						
010	544527-0000	-		2	MACHINE PLATE TBA	
Common Parts						
060	544533-0000	-		4	PLASTIC PEHD 21172-10	
100	90165-0086	-		4	CRAMP	
200	312155-0370	-		4	Screw Hex.Sock.Count.MF6S M6x20 A280	
210	312812-0316	-		4	Nut Hex. Ny-Lock M6 A480	

Pos	Part No	SP	UN	Qty	Description	Page No

Railing TBA/9R

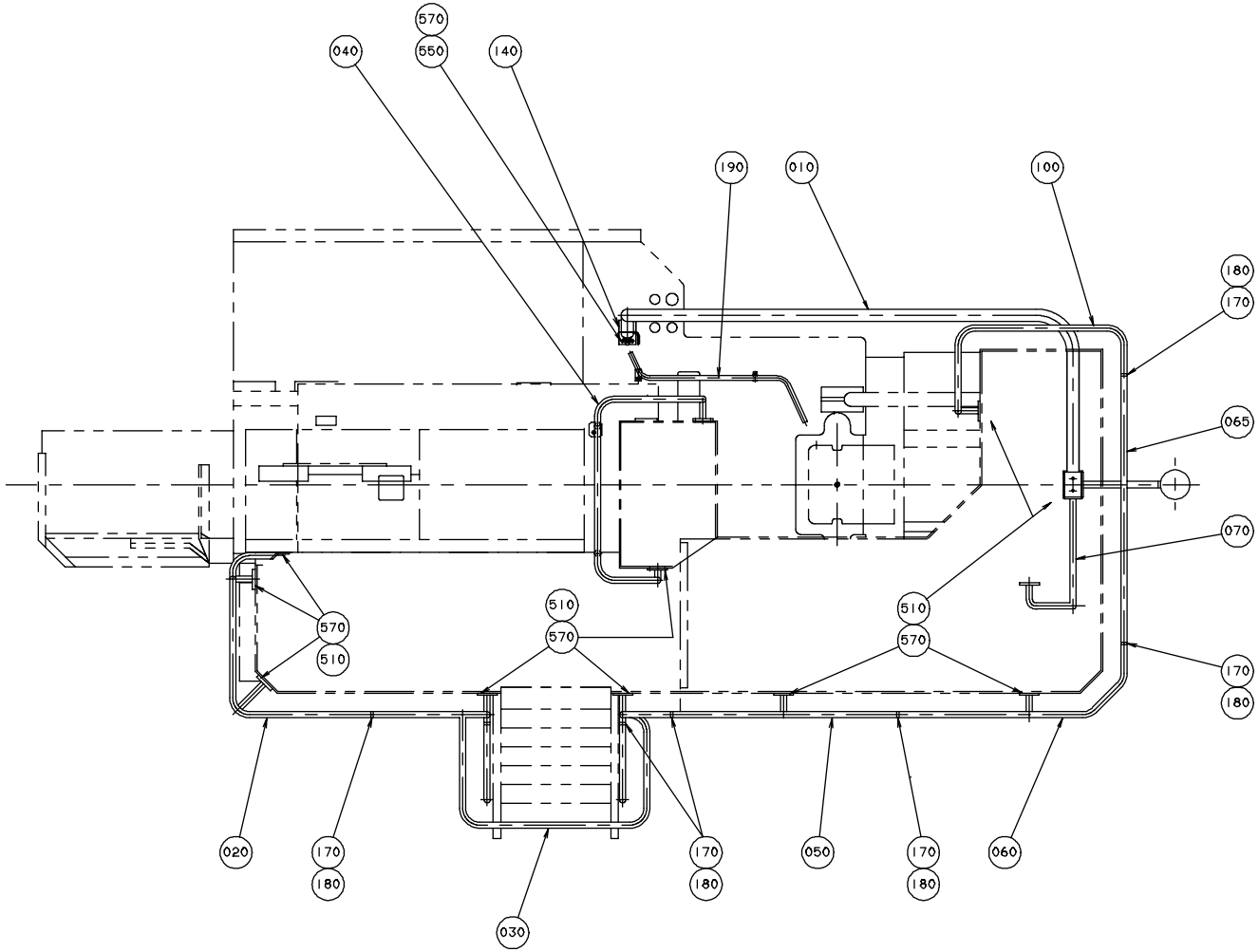

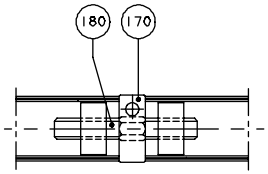

DETALJ AV RÄCKSKARV
DETAIL OF RAILING JOINT
(1:1)

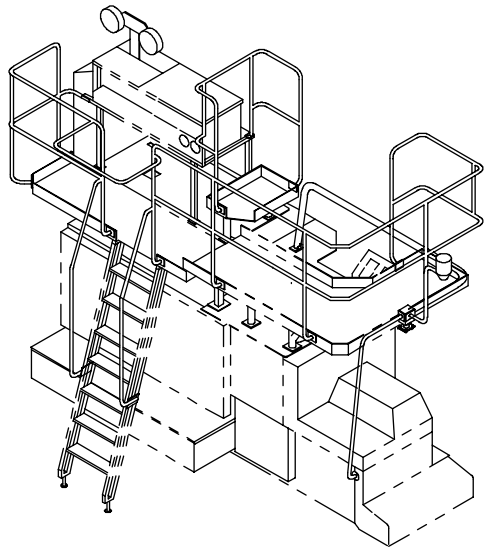

TBA9/R 100V-120V UPTAB

S - 1529127-1
ECN 82225

Pos	Part No	SP	UN	Qty	Description	Page No
SOURCE,TBA/9-100V OR SOURCE,TBA/9-110V						
010	456979-0002	-		1	CABLE CONDUIT	
020	469023-0000	-		1	RAILING	
030	1529031-0000	-		1	RAILING	
040	469025-0000	-		1	RAILING	
070	441512-0000	-		1	STRUT END	
080	441687-0000	-		1	STRUT	
090	491138-0000	-		1	STRUT	
110	469490-0000	-		1	HAND RAIL	
120	469489-0000	-		1	HAND RAIL	
500	311103-0356	-		2	PIN,STRIGHT M6 6x28 RFR	
510	312105-0449	-		44	Screw M6S M8x16 A280	
530	312115-0453	-		3	Screw MC6S M8x25 A280	
535	312115-0457	-		2	Screw MC6S M8x35 A280	
560	312605-0318	-		4	Nut Hex. M6M M8 A280	
570	315105-0165	-		6	Washer, Plain, BRB, 8,4/16,H=1,5	
SOURCE,TBA/9-120V						
010	751075-0002	-		1	CABLE CONDUIT	
020	B 469967-0000	-		1	RAILING	
030	B 469965-0000	-		1	RAILING	
040	751309-0000	-		1	RAILING	
050	B 751051-0000	-		1	RAILING	
060	B 751052-0000	-		1	RAILING	
065	1529032-0000	-		1	RAILING	
070	751056-0000	-		1	STRUT END	
080	751055-0000	-		1	STRUT	
100	B 751057-0000	-		1	RAILING	
110	B 751050-0000	-		1	HAND RAIL	
120	B 751049-0000	-		1	HAND RAIL	
400	A 751332-0100	-		1	BRACKET.....	**258**
510	312105-0449	-		49	Screw M6S M8x16 A280	
530	312115-0453	-		1	Screw MC6S M8x25 A280	
560	312605-0318	-		1	Nut Hex. M6M M8 A280	
570	315105-0165	-		58	Washer, Plain, BRB, 8,4/16,H=1,5	
Common Parts						
130	469026-0000		PC	1	INTERMEDIATE PART	
140	469028-0000		PC	1	GASKET	
150	751182-0000		PC	1	GASKET	
160	751183-0000		PC	1	GASKET	
170	751484-0000		PC	12	CLAMPING RING	
180	751485-0000		PC	12	SCREW	
190	751745-0000		PC	1	CABLE CONDUIT	
320	90224-0234	C	PC	1	BRACKET	
525	312105-0459		PC	4	Screw M6S M8x40 A280	
550	312105-0455		PC	4	Screw M6S M8x30 A280	
590	315202-0215	C	PC	1	O-Ring 19,2x3 mm	
595	352103-0100		PC	2	"CABLE GLAND STR 9;PR15,2"	
600	352103-0108		PC	1	CABLE GLAND ST 13	
700	1529033-0100		PC	1	ALARM DEVICE.....	**260**

(Cont'd)

Railing TBA/9R

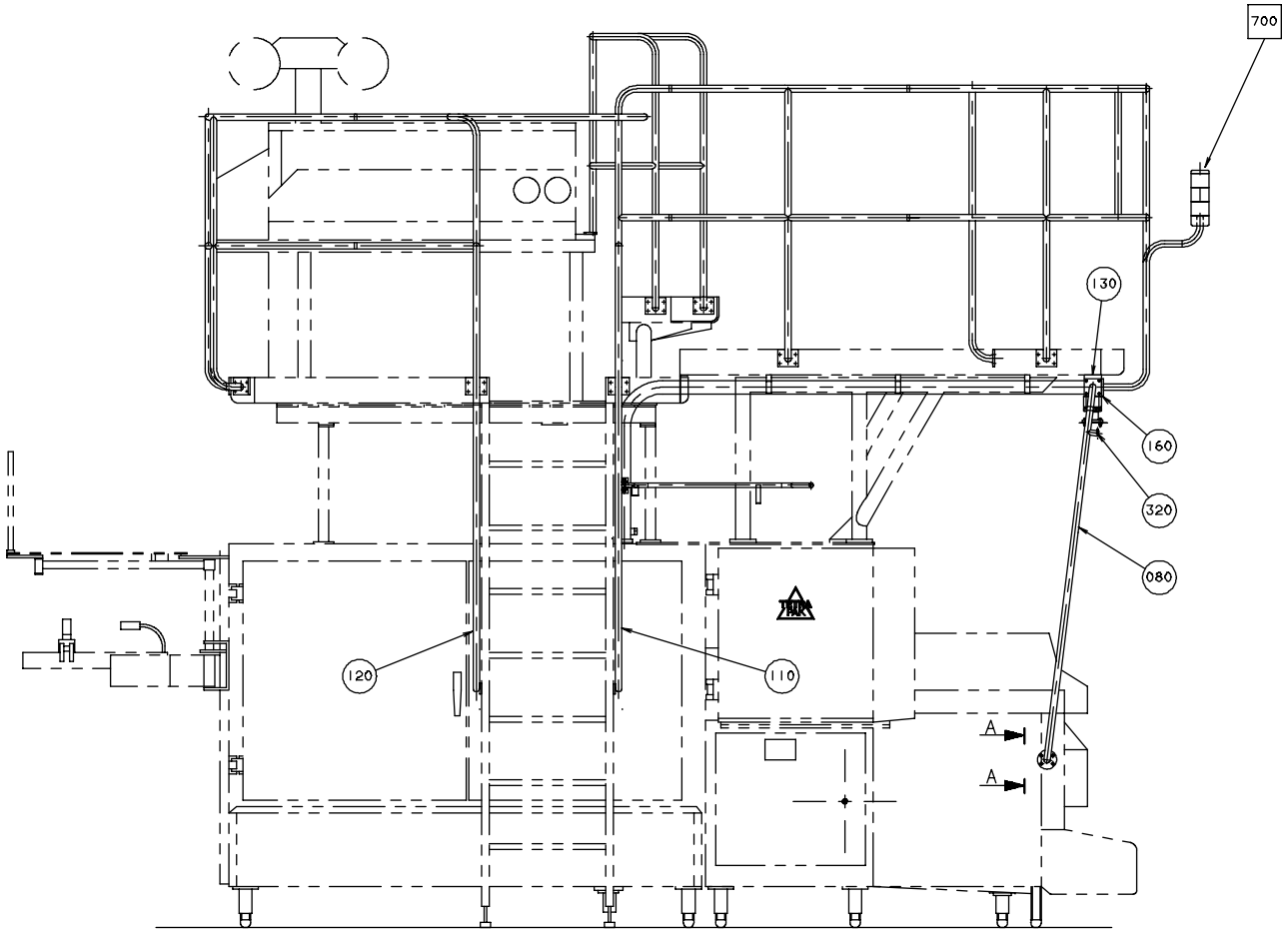

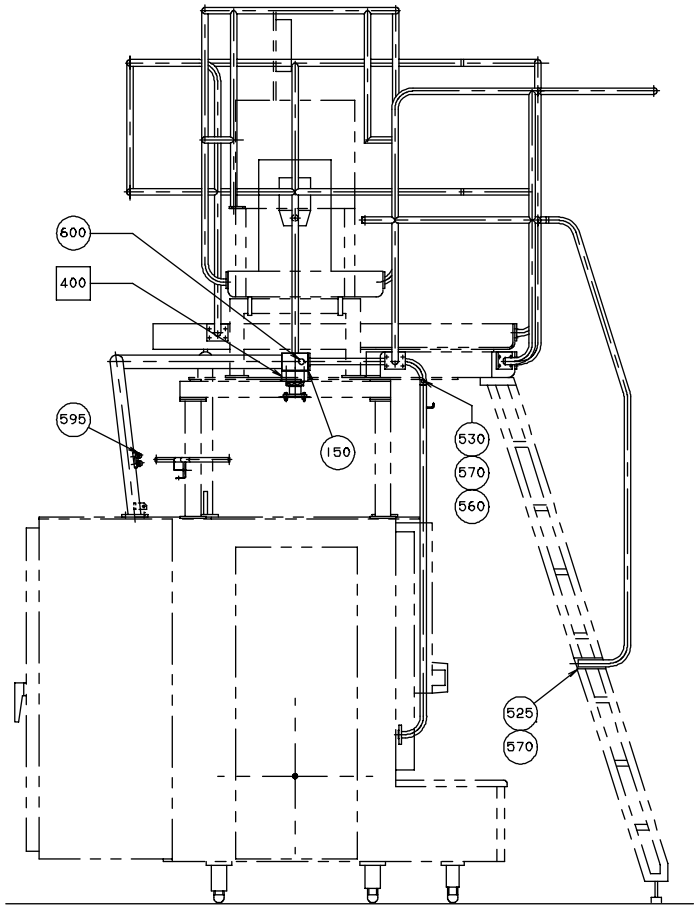

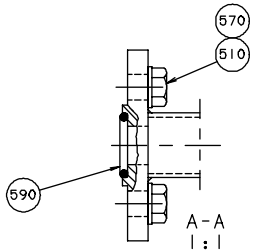

TBA/9R 100V-120V UPTAB

Pos	Part No	SP	UN	Qty	Description	Page No
(Cont'd)						
SOURCE,TBA/9-100V OR SOURCE,TBA/9-110V						
010	456979-0002	-		1	CABLE CONDUIT	
020	469023-0000	-		1	RAILING	
030	1529031-0000	-		1	RAILING	
040	469025-0000	-		1	RAILING	
070	441512-0000	-		1	STRUT END	
080	441687-0000	-		1	STRUT	
090	491138-0000	-		1	STRUT	
110	469490-0000	-		1	HAND RAIL	
120	469489-0000	-		1	HAND RAIL	
500	311103-0356	-		2	PIN,STRIGHT M6 6x28 RFR	
510	312105-0449	-		44	Screw M6S M8x16 A280	
530	312115-0453	-		3	Screw MC6S M8x25 A280	
535	312115-0457	-		2	Screw MC6S M8x35 A280	
560	312605-0318	-		4	Nut Hex. M6M M8 A280	
570	315105-0165	-		6	Washer, Plain, BRB, 8,4/16,H=1,5	
SOURCE,TBA/9-120V						
010	751075-0002	-		1	CABLE CONDUIT	
020	B 469967-0000	-		1	RAILING	
030	B 469965-0000	-		1	RAILING	
040	751309-0000	-		1	RAILING	
050	B 751051-0000	-		1	RAILING	
060	B 751052-0000	-		1	RAILING	
065	1529032-0000	-		1	RAILING	
070	751056-0000	-		1	STRUT END	
080	751055-0000	-		1	STRUT	
100	B 751057-0000	-		1	RAILING	
110	B 751050-0000	-		1	HAND RAIL	
120	B 751049-0000	-		1	HAND RAIL	
400	A 751332-0100	-		1	BRACKET.....	**258**
510	312105-0449	-		49	Screw M6S M8x16 A280	
530	312115-0453	-		1	Screw MC6S M8x25 A280	
560	312605-0318	-		1	Nut Hex. M6M M8 A280	
570	315105-0165	-		58	Washer, Plain, BRB, 8,4/16,H=1,5	
Common Parts						
130	469026-0000		PC	1	INTERMEDIATE PART	
140	469028-0000		PC	1	GASKET	
150	751182-0000		PC	1	GASKET	
160	751183-0000		PC	1	GASKET	
170	751484-0000		PC	12	CLAMPING RING	
180	751485-0000		PC	12	SCREW	
190	751745-0000		PC	1	CABLE CONDUIT	
320	90224-0234	C	PC	1	BRACKET	
525	312105-0459		PC	4	Screw M6S M8x40 A280	
550	312105-0455		PC	4	Screw M6S M8x30 A280	
590	315202-0215	C	PC	1	O-Ring 19,2x3 mm	
595	352103-0100		PC	2	"CABLE GLAND STR 9;PR15,2"	
600	352103-0108		PC	1	CABLE GLAND ST 13	
700	1529033-0100		PC	1	ALARM DEVICE.....	**260**

Bracket

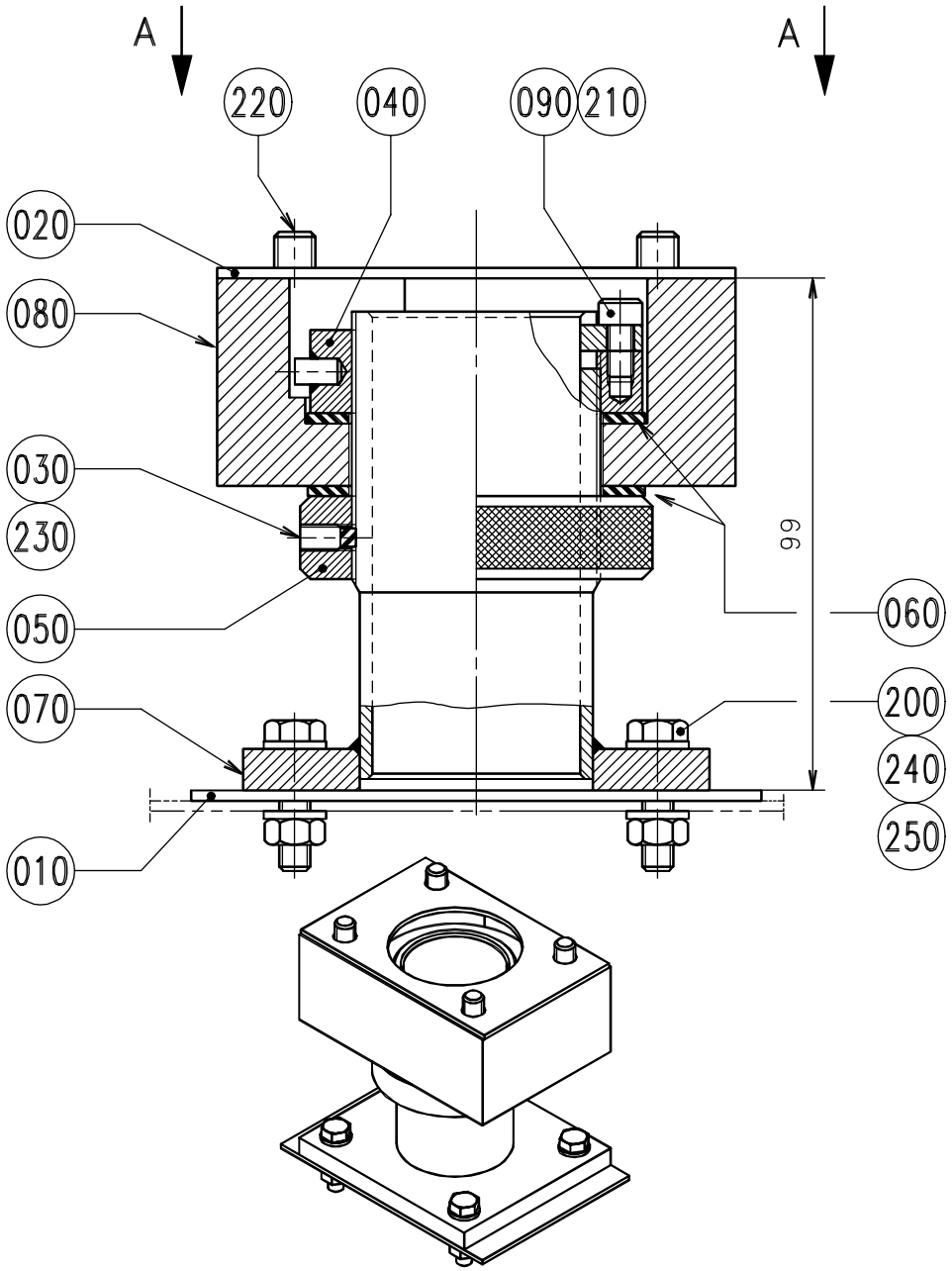

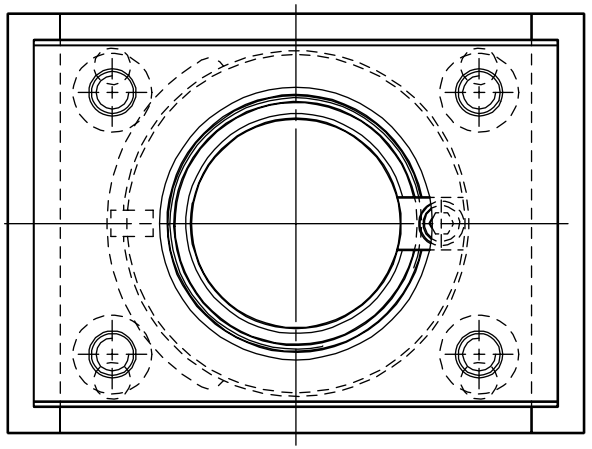

A – A

S - 751332-1
ECN 82225

Pos	Part No	SP	UN	Qty	Description	Page No
Common Parts						
010	441448-0000	D		1	GASKET	
020	490500-0000	D		1	GASKET	
030	751095-0000	D		2	PLUG	
040	751096-0000	D		1	LOCKING CIRCLIP	
050	751097-0000	D		1	BRAKE RING	
060	751098-0000	D		2	FRICTION DISC	
070	751099-0000	D		1	LEAD-IN	
080	751100-0000	D		1	BEARING HOUSING	
090	751108-0000	D		1	SECURING PLATE	
200	312105-0372	-		4	Screw M6S M6x25 A280	
210	312115-0325	-		1	Screw Hex.Sock.Hd.MC6S-TT 5x10 A480	
220	312115-0459	-		4	Screw MC6S M8x40 A280	
230	312318-0323	-		2	Screw,Sock.Set Cuppoint MSK6SS M5x8 A4	
240	312605-0316	-		4	Nut Hex. M6M M6 A280	
250	315105-0153	-		8	Washer, Plain, BRB, 6,4/12,H=1,5	

Pos	Part No	SP	UN	Qty	Description	Page No

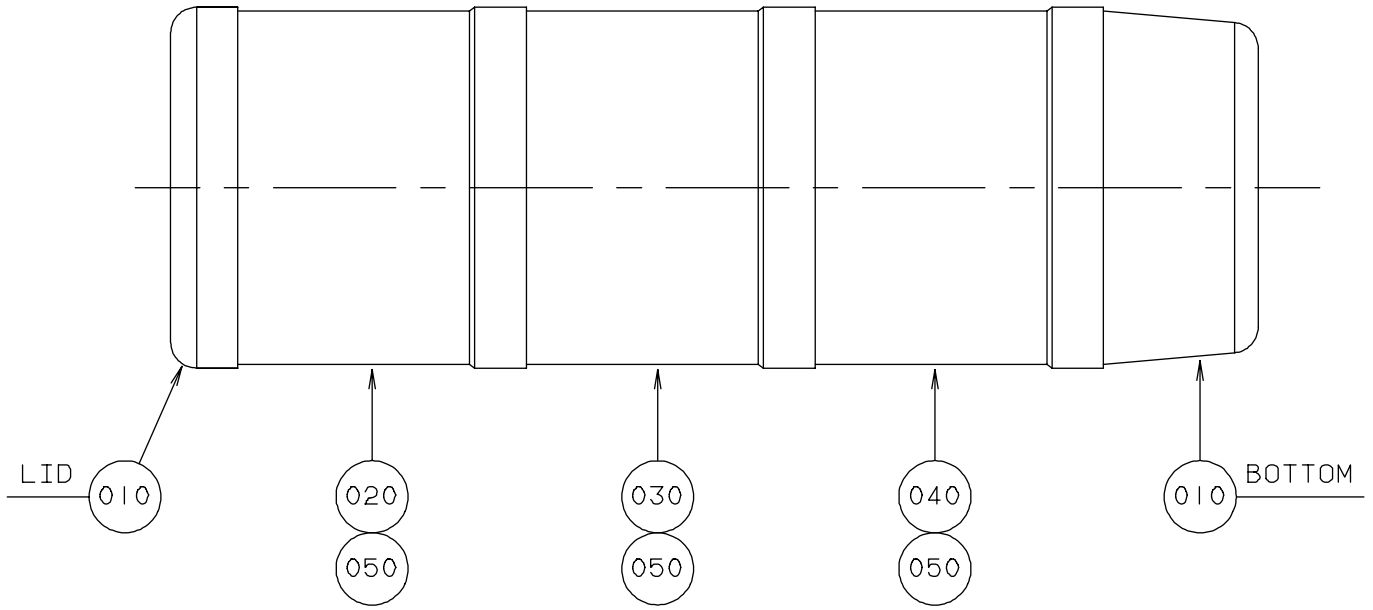

TBA/9R 100V-120V

Pos	Part No	SP	UN	Qty	Description	Page No
Common Parts						
010	90458-0292	-		1	BASE KT70-1001	
020	90458-0293	-		1	LIGHT ELEMENT KL70-401R	
030	90458-0294	-		1	LIGHT ELEMENT YELLOW KL70-401Y	
040	90458-0295	-		1	LIGHT ELEMENT BLUE KL70-401L	
050	90036-0068	-		3	BULB 6.5W 24V	

Pos	Part No	SP	UN	Qty	Description	Page No

Covering Plate

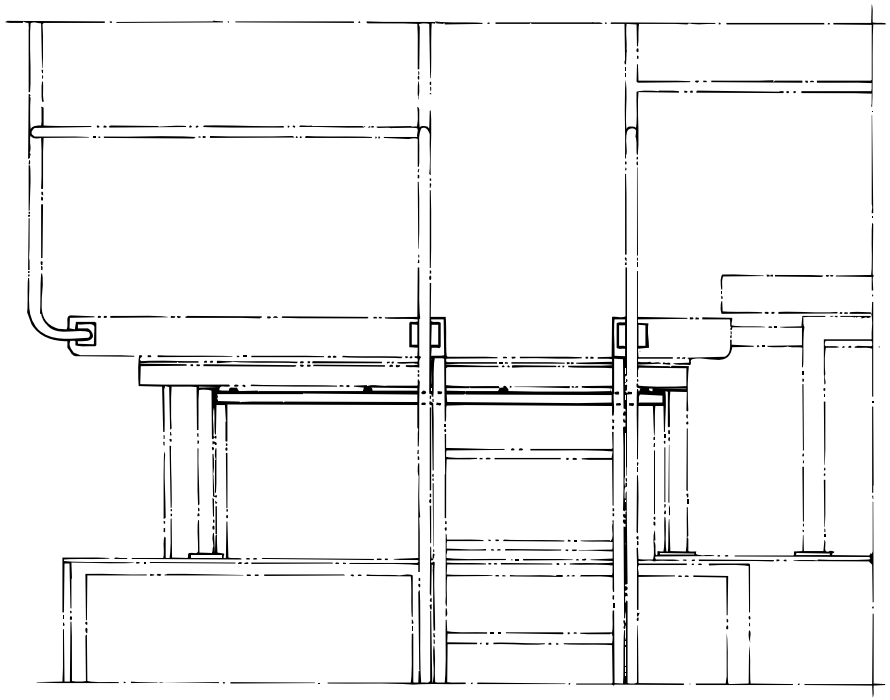

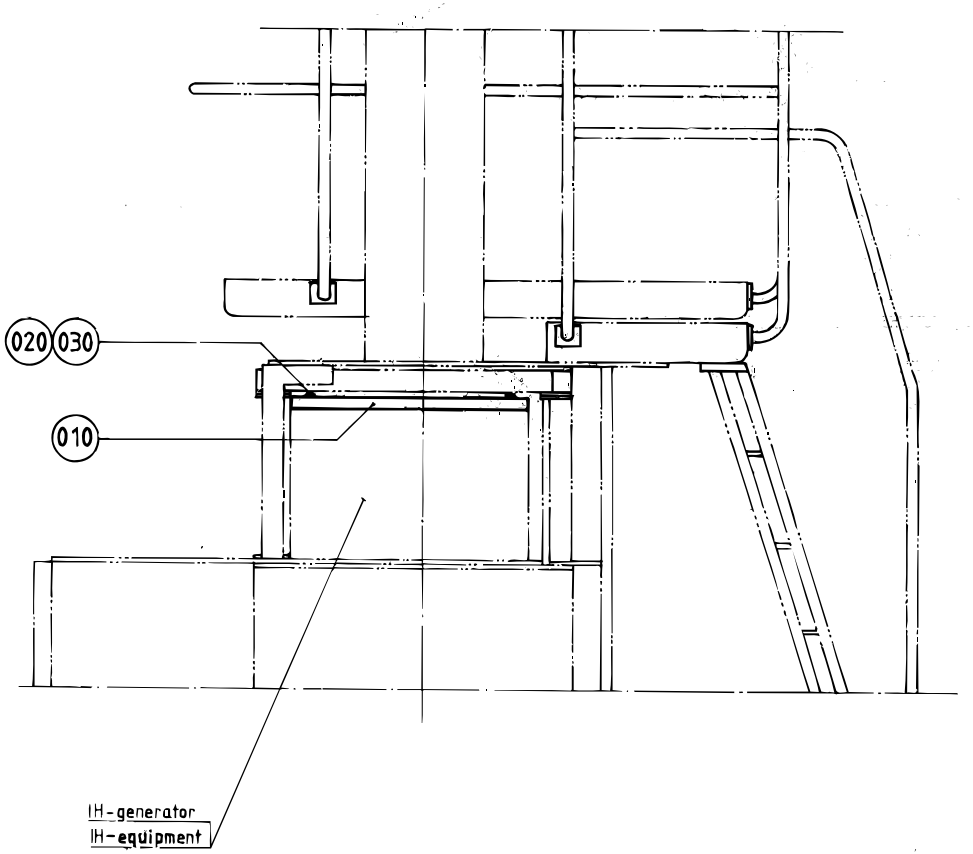

S - 469496-1
ECN 82225

Pos	Part No	SP	UN	Qty	Description	Page No
Common Parts						
010	469453-0000	-		1	COVERING PLATE	
020	312105-0459	-		8	Screw M6S M8x40 A280	
030	315105-0165	-		8	Washer, Plain, BRB, 8,4/16,H=1,5	

Pos	Part No	SP	UN	Qty	Description	Page No

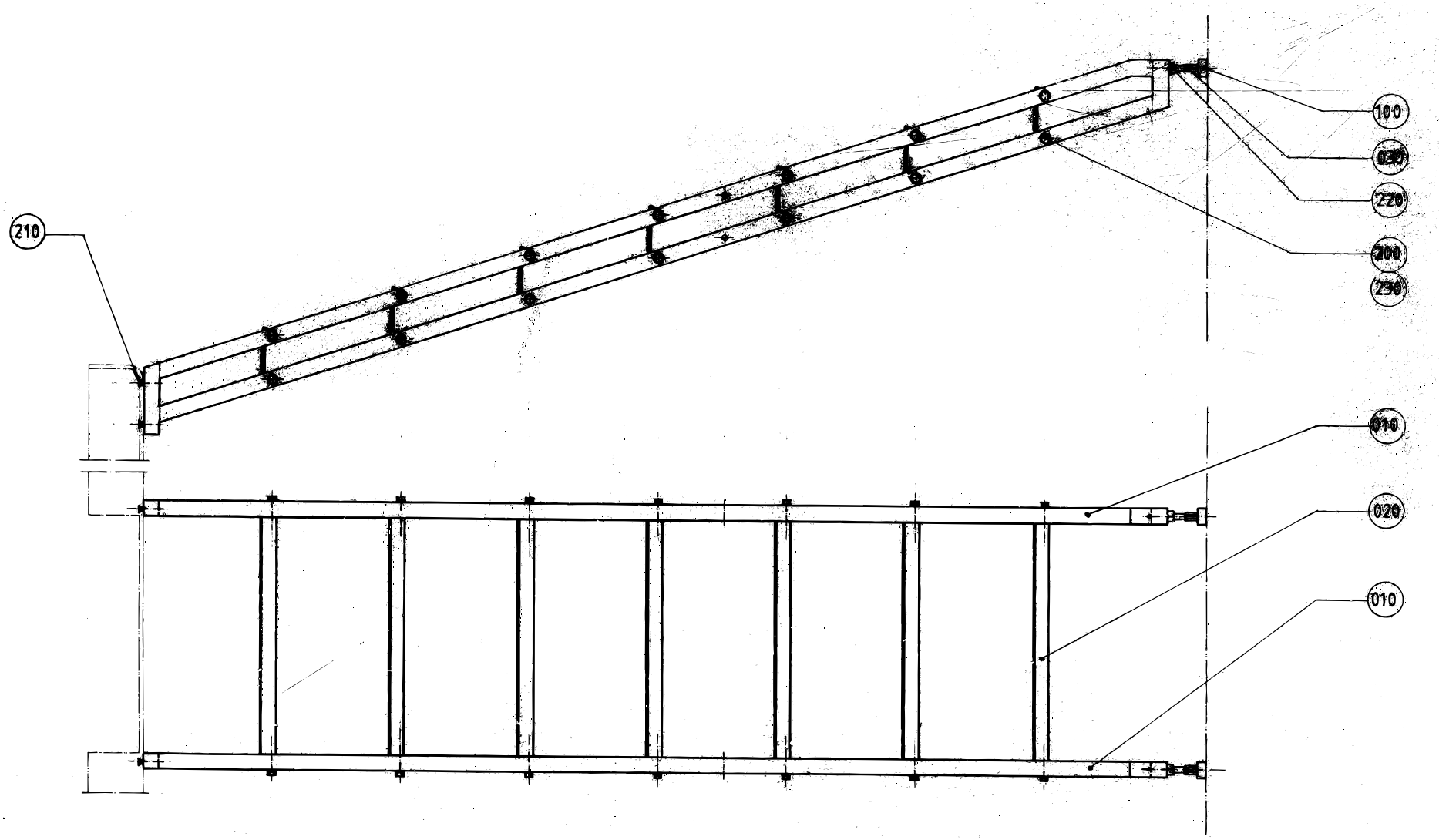

S - 469762-1
ECN 82225

Pos	Part No	SP	UN	Qty	Description	Page No
Common Parts						
010	469008-0000	-		2	SIDE PIECE	
020	441679-0000	-		7	STAIR	
030	B 441905-0000	-		2	RETARD PIN	
100	90347-0004	-		2	VIBRATION DAMPER	
200	312105-0459	-		28	Screw M6S M8x40 A280	
210	312155-0449	-		4	Screw Hex.Sock.Count.MF6S M8x16 A280	
220	312605-0322	-		2	Nut Hex. M6M M12 A280	
230	315105-0165	-		28	Washer, Plain, BRB, 8,4/16,H=1,5	

Pos	Part No	SP	UN	Qty	Description	Page No


Tetra Pak

SPC

Spare Parts Catalogue

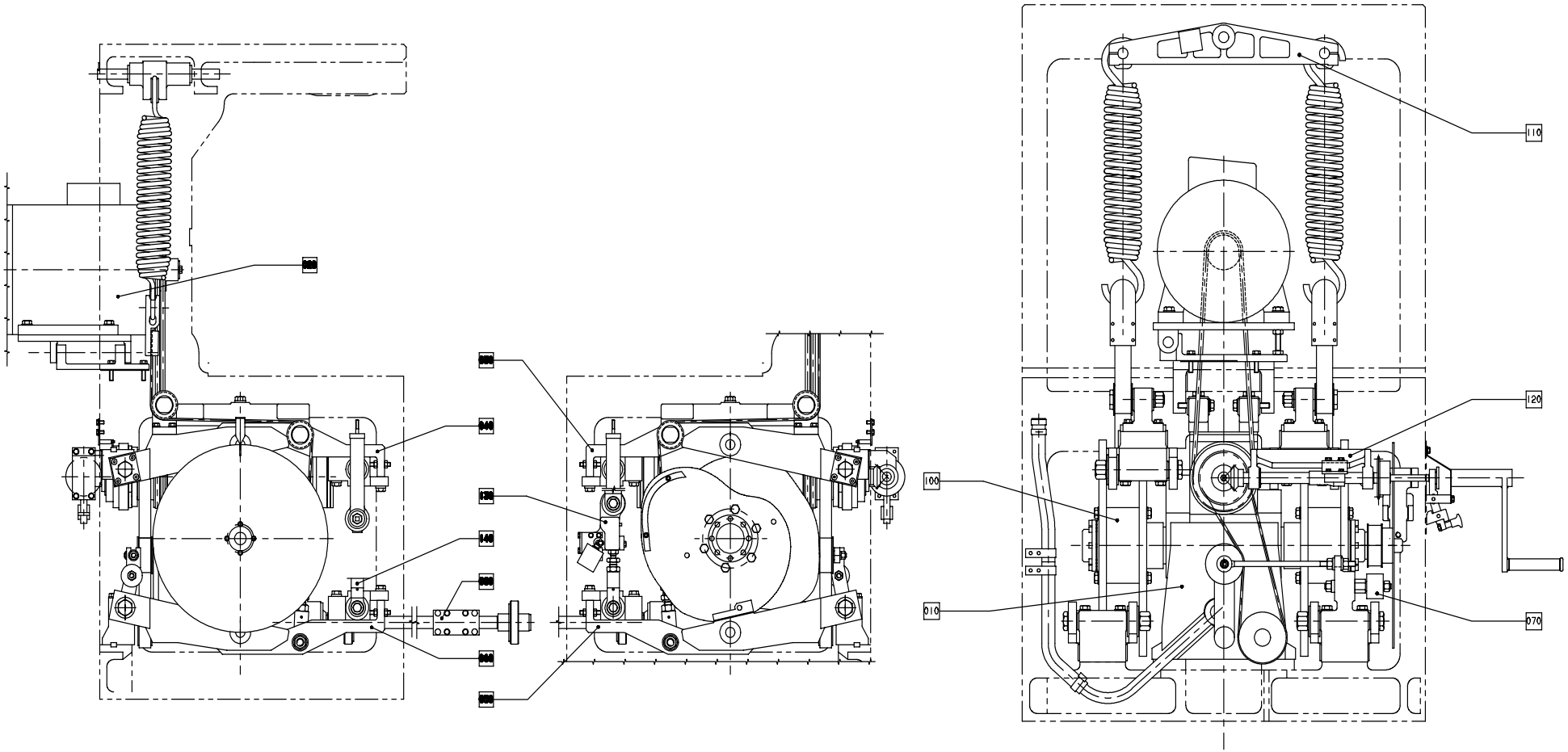

S - 648145-1,2
ECN 82225

Pos	Part No	SP	UN	Qty	Description	Page No
Common Parts						
010	A1529111-0100	-		1	WORM GEAR	**270**
020	A 271128-0300	-		1	MOTOR	**272**
030	A1529114-0100	-		1	ARM	**274**
050	A1529151-0100	-		1	Link arm, right	**282**
060	A1529152-0100	-		1	LINK ARM, LEFT	**286**
070	A 256199-0300	-		1	BELT STRETCHER	**290**
080	A 256200-0300	-		1	INTERMEDIARY SHAFT	**292**
100	A 256202-0300	-		1	CAM PACKAGE IH	**294**
110	A 256203-0300	-		1	HOLD-DOWN DEVICE	**296**
120	A 256806-0300	-		1	CRANK	**298**
130	A 491787-0200	-		1	DISCONNECTION LINK RIGHT	**300**
140	A 491788-0200	-		1	DISCONNECTION LINK LEFT	**302**

Pos	Part No	SP	UN	Qty	Description	Page No

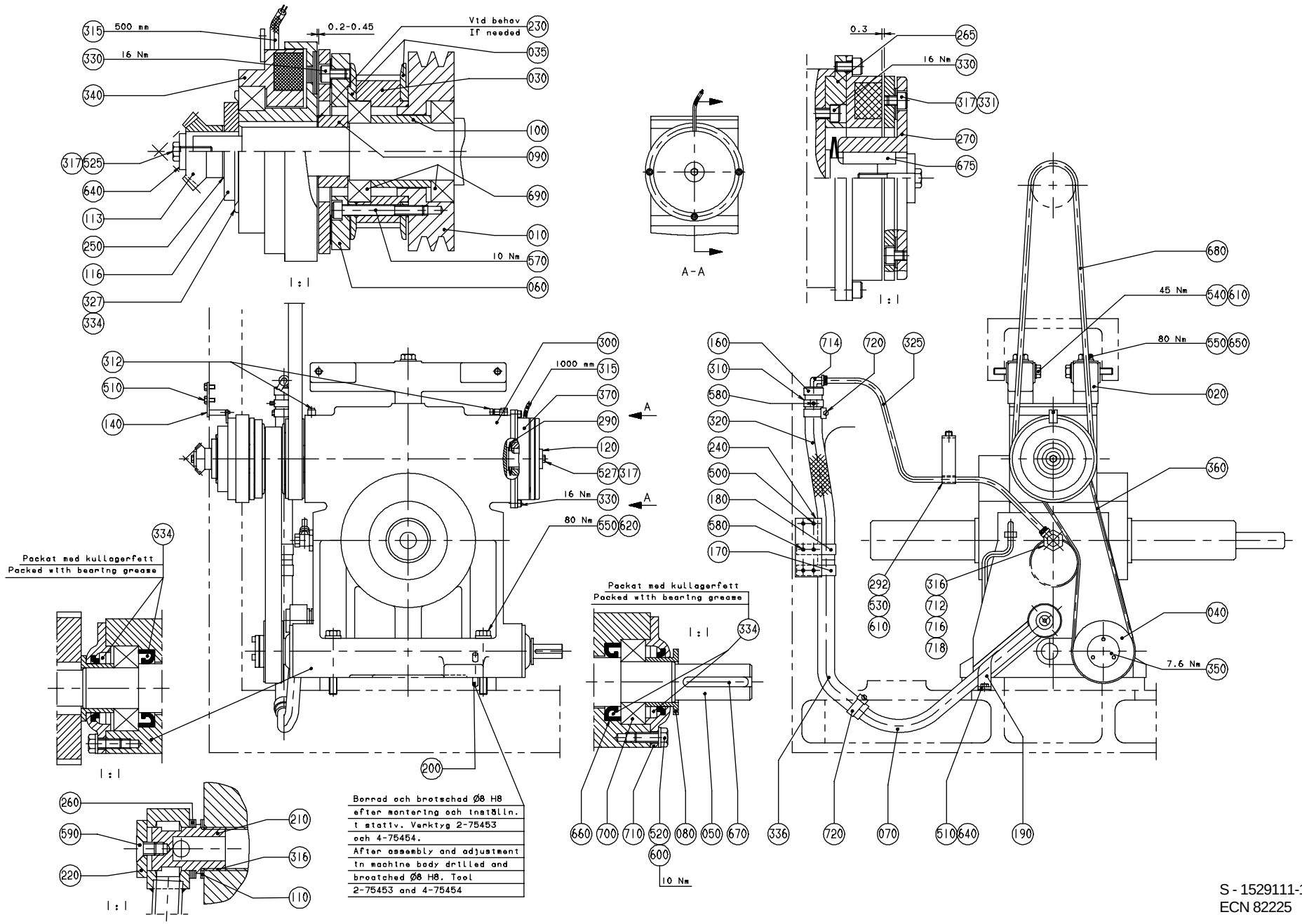
315
500 mm
330
16 Nm
340
0.2-0.45
Vid behov
If needed
230
035
030
100
090
690
010
10 Nm
570
060
317
525
640
113
250
116
327
334
1 : 1
A-A
0.3
265
16 Nm
330
317
331
270
675
1 : 1
680
45 Nm
540
610
80 Nm
550
650
020
360
040
7.6 Nm
350
312
510
140
300
1000 mm
315
370
290
120
527
317
16 Nm
330
80 Nm
550
620
A
160
310
580
320
240
500
180
580
170
714
720
325
292
530
610
316
712
716
718
Packat med kullagerfett
Packed with bearing grease
334
1 : 1
200
260
590
220
210
316
110
1 : 1
Borrad och brotschad Ø8 H8
efter montering och inställn.
i stativ. Verktyg 2-75453
och 4-75454.
After assembly and adjustment
in machine body drilled and
broatched Ø8 H8. Tool
2-75453 and 4-75454
660
700
710
520
600
10 Nm
080
050
670
336
720
070
510
640
190

Pos	Part No	SP	UN	Qty	Description	Page No
Common Parts						
010	256174-0002	D		1	PULLEY	
020	441356-0000	D		2	BRACKET	
030	751243-0000	C		1	TOOTHED PULLY	
035	751245-0000	C		2	FLANGE	
040	256176-0000	C		1	GEAR WHEEL	
050	256177-0000	C		1	SHAFT	
060	256178-0000	C		1	FIXING RING	
070	272372-0000	C		1	HOUSE	
080	256179-0000	-		2	SPACER SLEEVE	
090	256180-0000	-		1	SPACER	
100	256181-0000	-		1	SPACER PIPE	
110	257174-0000	C		1	SEALING WASHER	
113	257179-0000	-		1	GEAR WHEEL	
116	491409-0000	-		1	WASHER	
120	271689-0000	-		1	WASHER	
140	272374-0000	C		1	CARRIER	
160	272376-0000	-		1	SHUTTER	
170	272377-0001	-		1	CRAMP	
180	272377-0002	-		1	CRAMP	
190	272388-0000	-		1	CRAMP	
200	295140-0000	C		2	PIN	
210	295766-0000	C		1	SCREW	
220	295767-0000	C		1	SEALING WASHER	
230	441024-0000	C		1	LACE	
240	441360-0000	-		1	PLATE	
250	491410-0000	C		1	LACE	
260	456934-0000	C		1	SEALING WASHER	
265	469999-0000	-		1	FLANGE	
270	491274-0000	-		1	HUB	
290	90016-0010	C		2	DISC SPRINGS,50X25,4X2	
292	469867-0000	-		1	HOSE HOLDER	
300	90056-0072	C		1	WORM GEAR	
310	90074-0026	-		1	CLIPS, Cable clips di=24 mm	
312	90134-0058	-		2	Connection	
315	90142-0005	-	MM	15	HOSE	
316	90144-0073	-	MM	1	TREBOFLON-TAPE W=13mm	
317	90157-0016	-	ML	1	LOCKING FLUID	
320	90166-0060	C	MM	53	HOSE 19/26-27 Reinf.PVC	
325	90166-0133	-	MM	5	TUBE 8 mm PA,Transp.	
327	90214-0312	C		1	SEALING RING 50X74,6X2,5	
330	90287-0081	-		11	Screw MC6S M6x10 129	
331	90287-0149	-		6	Screw MC6S M6x8 109	
334	90296-0068	-	G	1	Grease Uniway LI 62 Cartridge 400 Gr.	
336	90296-0075	-	L	4	OIL 54322-320 Acc to M 1254.322	
340	90355-0160	C		1	Shaft coupling	
350	90208-0120	C		1	Cone Clamp. Element 22/32, L=25	
360	90417-0076	C		1	Timing belt T10x920x25 Polyurethane	
370	90432-0023	C		1	Brake ORTLINGHAUS	
500	312101-0329	-		2	Screw M6S M5x16 FZB	
510	312101-0366	-		3	Screw M6S M6x12 FZB	
520	312101-0368	-		6	Screw M6S M6x16 FZB	
525	312101-0370	-		1	Screw M6S M6x20 FZB	
527	312101-0376	-		1	Screw M6S M6x35 FZB	
530	312101-0488	-		1	Screw M6S M10x14 FZB	
540	312101-0504	-		8	Screw M6S M10x65 FZB	
550	312101-0550	-		6	Screw M6S M12x90 FZB	
570	312111-0380	-		3	Screw Hex.Sock.Hd.MC6S-TT 6x50 88 FZB	
580	312121-0323	-		5	Screw Slot.Pan Hd. MCS 5x8 FZB	
590	312155-0447	-		1	Screw Hex.Sock.Count.MF6S 8x12 SS	
600	315101-0153	-		6	Washer, Plain, BRB, 6,4/12 H=1,5	
610	315111-0173	-		9	Washer, Plain, TBRB 10,5/22 H=4	
620	315111-0178	-		4	Washer, Plain, TBRB 13/24 H=4	
640	315121-0153	-		2	Washer, Plain, TBRSB 6,4/22 H=4	
650	315121-0178	-		2	Washer, Plain, TBRSB 13/36 H=6	
660	315221-0169	C		2	Radial Seal 30x47x7 mm	
670	315701-0239	C		1	KEYS,PARALLEL WITH ROUND ENDS 6X6X40	
675	315701-0268	-		1	KEYS,PARALLEL WITH ROUND ENDS 8X7X32	
680	318108-0111	C		2	V-BELT SPZ 1137x9,5	
690	321308-0207	C		2	BALL BEARING 35X62X14	
700	321313-0105	C		2	BALL BEARING 25X52X15	
710	321600-0114	C		2	OIL SEAL (LL3052	
712	342701-0208	-		1	Bushing, Int/Ext. G-Thread No. 3/4-1/4	
714	342930-0122	-		1	ELBOW 90 COUPL.,EXT.THREAD 8/6-R1/4"	
716	342980-0122	-		1	BANJO-CONNECTION,RING 8/6-G1/4"	
718	342980-0304	-		1	BANJO-HOLLOW BOLT COUPL,EXT.THR.01-G1/4"	
720	342991-0104	-		2	HOSE CLIP,WORM DRIVE TYPE (23)-27	

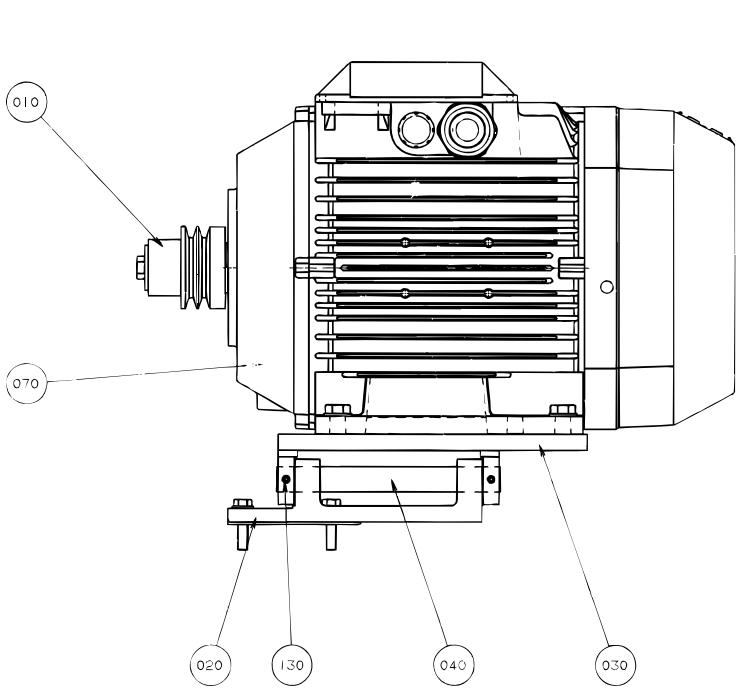
010
070
020
130
040
030

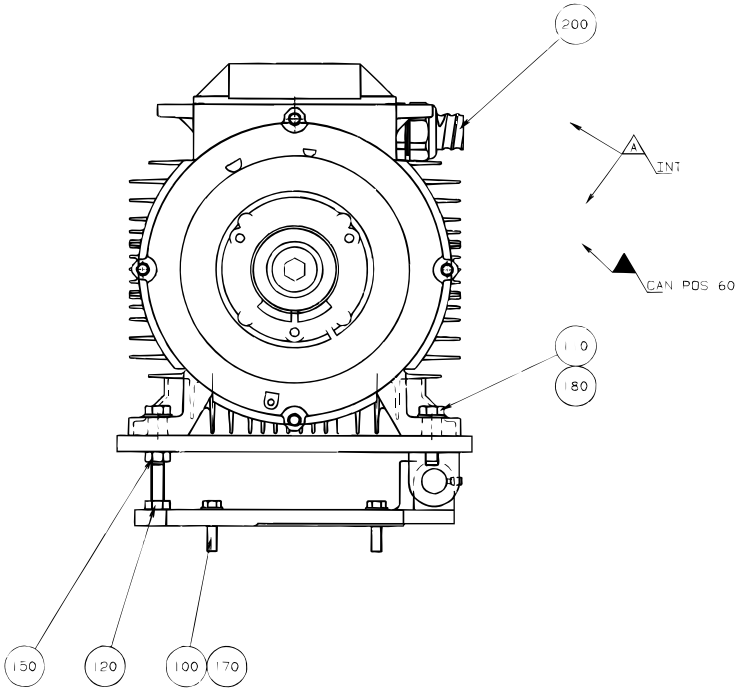
200
A
INT
CAN POS 60
190
180
150
120
100
170

Pos	Part No	SP	UN	Qty	Description	Page No
IH 50HZ UPTAB						
010	456589-0004	C		1	V-BELT PULLEY	
IH 60HZ UPTAB						
010	456589-0003	C		1	V-BELT PULLEY	
TPC 50HZ OR IH 50HZ MPTAB						
010	456589-0002	C		1	V-BELT PULLEY	
TPC 60HZ OR IH 60HZ MPTAB						
010	456589-0001	C		1	V-BELT PULLEY	
Common Parts						
020	272431-0000	D		1	BRACKET	
030	441387-0000	-		1	MOTOR CRADLE	
040	272434-0000	C		1	SHAFT	
060	90002-0012	-		1	BLANK-OFF PLUG 28,3	
070	90045-0096	-		1	MOTOR ABB REPL.BY 90045-159	
100	312101-0457	-		4	Screw M6S M8x35 FZB	
110	312101-0499	-		4	Screw M6S M10x40 FZB	
120	312104-0505	-		1	Screw M6S M10x70H FZB	
130	312311-0366	-		2	Screw, Sock.Set Dogpoint M6X12	
150	312601-0320	-		1	NUT M6M 10-8 FZB	
170	315111-0165	-		4	Washer, Plain, TBRB 8,4/16 H=3	
180	315111-0173	-		4	Washer, Plain, TBRB 10,5/22 H=4	
200	352103-0116	-		1	CABLE GLAND ST 21	

Pos	Part No	SP	UN	Qty	Description	Page No

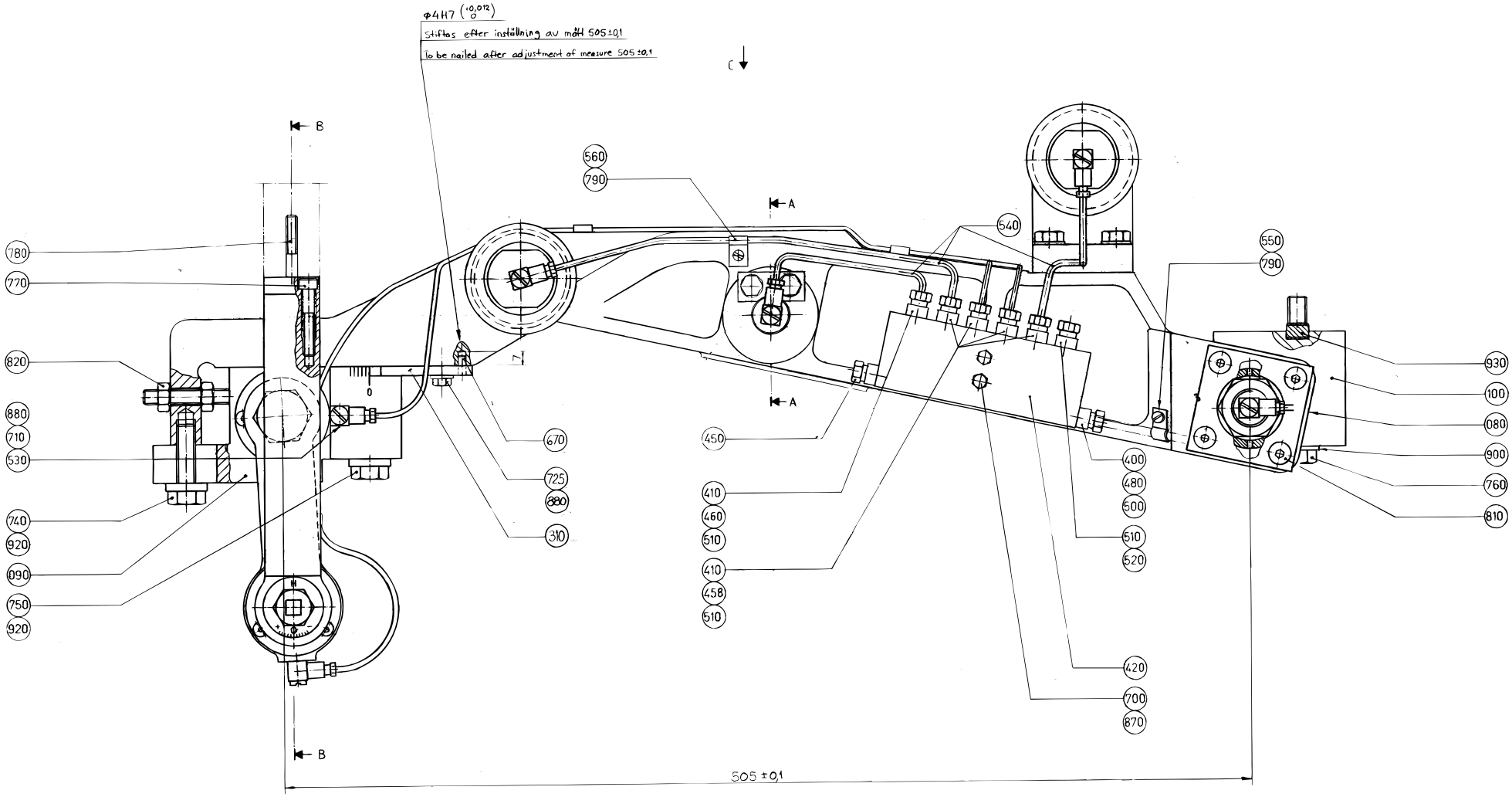
Ø4H7 (+0,012 0)
Stiftas efter inställning av mått 505±0,1
To be nailed after adjustment of measure 505±0,1
B
A
C
505±0,1
780
770
820
880
710
530
740
920
090
750
920
560
790
670
725
880
310
450
410
460
510
410
458
510
540
550
790
400
480
500
510
520
420
700
870
930
100
080
900
760
810

Pos	Part No	SP	UN	Qty	Description	Page No
Common Parts						
030	272459-0000	C		1	WASHER	
040	272460-0000	-		1	WASHER	
080	751212-0000	D		2	ARM	
085	272442-0000	D		2	CANTILEVER	
090	594981-0000	D		2	BEARING HOLDER	
100	272455-0000	-		2	BEARING BRACKET	
110	594975-0000	C		2	LINK	
120	272457-0000	C		4	BOW CLAMP	
130	295770-0000	C		2	AXLE BOLT	
140	256421-0000	C		2	PULLEY	
150	256422-0000	C		4	WASHER	
160	256426-0001	C		2	WASHER	
170	256426-0002	C		4	WASHER	
180	256427-0000	C		2	SHAFT	
190	490916-0000	C		4	AXLE PIN	
200	256472-0000	C		2	WASHER	
210	257306-0000	C		2	ROLL	
220	257308-0000	C		2	SCREW	
230	257309-0000	C		2	SHAFT	
240	257310-0000	C		2	NUT	
250	257311-0000	C		8	CAP	
280	272116-0000	C		2	CAP	
290	272458-0000	C		2	ECCENTRIC SHAFT	
300	272461-0000	C		2	WASHER	
310	978272-0000	-		2	BRACKET	
320	1484791-0000	-		2	Scale	
330	1484792-0000	-		2	Scale	
400	90028-0021	C		2	Cone tube 4 mm	
410	90028-0020	C		1	Cone tube 2,5mm	
420	90032-0040	-		2	Block 6 ways	
430	90035-0005	-		2	COVER	
440	321531-0248	-		8	NEEDLE SLEHK2016	
450	90087-0019	-		2	PLUG M10x1 Stainless	
458	90092-0052	C		8	Metering valve 10 mm3	
460	90092-0053	C		2	Metering valve 30 mm3	
480	90134-0031	-		2	Sleeve for plastic tube	
500	90134-0038	-		2	Bushing/Nut inlet/outlet 4 mm	
510	90134-0039	-		12	Bushing valve connection 2,5 mm	
520	90134-0052	-		2	Plug dosing block	
530	90134-0058	-		14	Connection	
540	90266-0019	-	MM	11	PIPE	
550	90165-0002	-		6	CLIP	
560	90165-0022	-		4	PIPE-CLIPS,FOR SINGLE PIPE,ONE SIDE 2,5	
570	90166-0143	-	MM	22	TUBE 2,5 mm PA,Transp.	
580	90240-0048	C		4	PLAIN BEARING,SELF ADJUST.SPER. 25X42X20	
590	90240-0050	C		4	PLAIN BEARING,SELF ADJUST.SPER. 20X35X24	
670	311101-0267	-		2	Pin, Parallell, CP, h6, 4x10	
680	311303-0234	C		2	SLOTTED PIRPB3X12FZB	
700	312101-0297	-		4	Screw M6S M4x25 FZB	
710	312101-0362	-		6	Screw M6S M6x8 FZB	
720	312101-0364	-		4	Screw M6S M6x10 FZB	
725	312101-0368	-		2	Screw M6S M6x16 FZB	
730	312101-0453	-		8	Screw M6S M8x25 FZB	
740	312101-0497	-		2	Screw M6S M10x35 FZB	
750	312101-0504	-		2	Screw M6S M10x65 FZB	
760	312101-0507	-		4	Screw M6S M10x80 FZB	
770	312111-0376	-		8	Screw Hex.Sock.Hd.MC6S-TT 6x35 88 FZB	
780	312111-0378	-		4	Screw Hex.Sock.Hd.MC6S-TT 6x40 88 FZB	
790	312121-0287	-		1	Screw Slot.Pan Hd. MCS 4x8 FZB	
800	312151-0287	-		24	Screw Hex.Sock.Count.MF6S 4x8 FZB	
810	312151-0364	-		16	Screw Hex.Sock.Count.MF6S 6x10 FZB	
820	312601-0318	-		4	NUT M6M8FZB	
830	312811-0322	C		4	Nut Hex.Lock Heli Coil Mid Grip M12 SS	
840	312811-0324	C		4	Nut Hex.Lock Heli Coil Mid Grip M16 SS	
850	312811-0326	C		2	Nut Hex.Lock Heli Coil Mid Grip M20 SS	
870	315101-0136	-		4	Washer, Plain, BRB, 4,3/8 H=0,8	
880	315101-0153	-		8	Washer, Plain, BRB, 6,4/12 H=1,5	
890	315101-0165	-		8	Washer, Plain, BRB, 8,4/16 H=1,5	
900	315101-0173	-		4	Washer, Plain, BRB, 10,5/22 H=2	
910	315101-0186	-		4	Washer, Plain, BRB, 17/30 H=3	
920	315111-0173	-		4	Washer, Plain, TBRB 10,5/22 H=4	
930	315701-0335	-		2	KEYS,PARALLEL WITH ROUND ENDS 12X8X56	
940	321129-0137	C		8	THRUST WASHER 22/38X1,5	
950	321576-0260	C		2	BEARINGS,BEARING ROLLER 20X47X25	

(Cont'd)

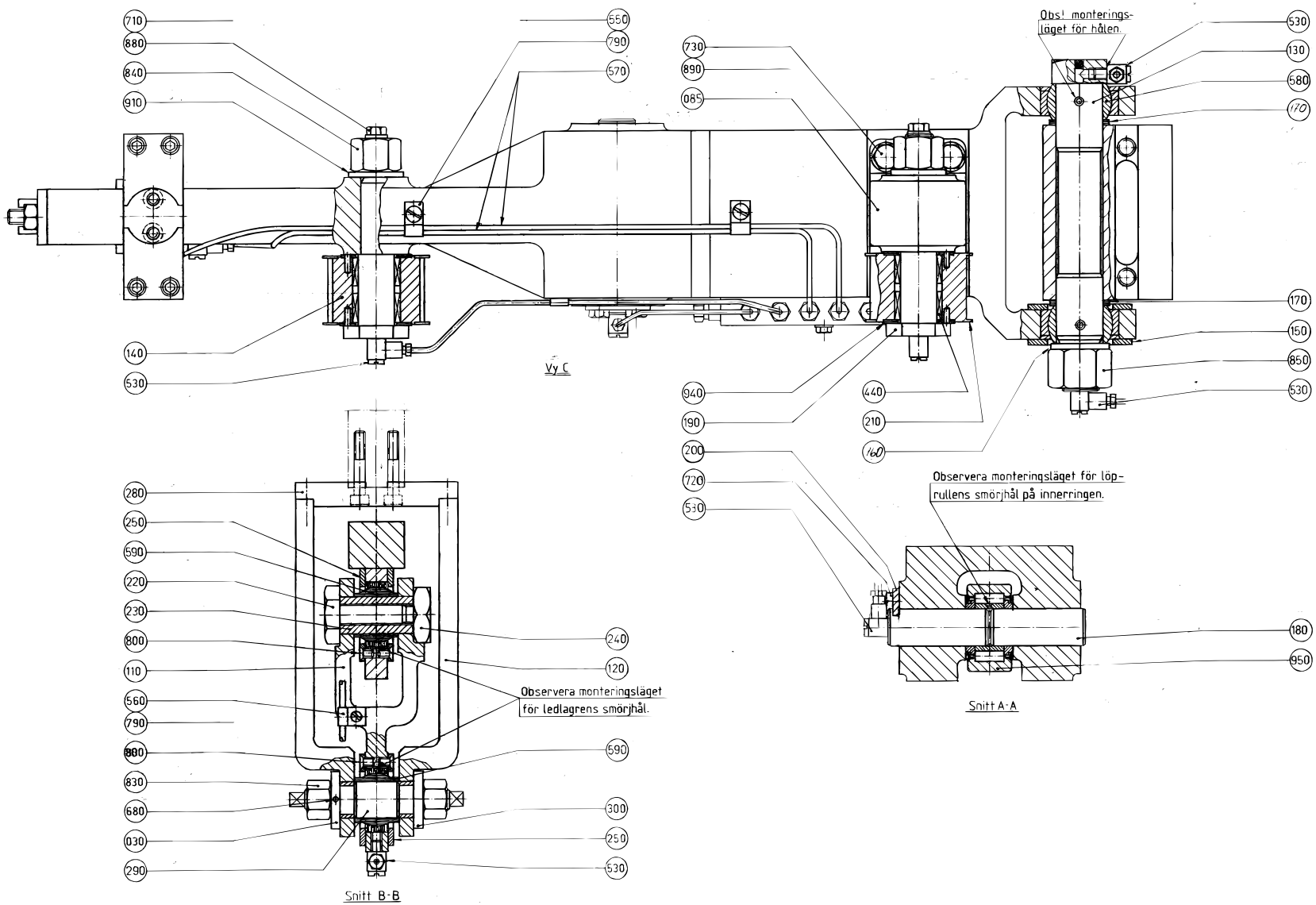
710
880
840
910
550
790
570
730
890
085
530
130
580
170
Obs! monterings-
läget för hålen.
140
530
Vy C
940
190
200
720
530
440
210
160
170
150
850
530
Observera monteringsläget för löp-
rullens smörjhål på innerringen.
180
950
Snitt A-A
280
250
590
220
230
800
110
560
790
800
830
680
030
290
240
120
Observera monteringsläget
för ledlagrens smörjhål.
590
300
250
530
Snitt B-B

(Cont'd)

Common Parts

Pos	Part No	SP	UN	Qty	Description	Page No
030	272459-0000	C		1	WASHER	
040	272460-0000	-		1	WASHER	
080	751212-0000	D		2	ARM	
085	272442-0000	D		2	CANTILEVER	
090	594981-0000	D		2	BEARING HOLDER	
100	272455-0000	-		2	BEARING BRACKET	
110	594975-0000	C		2	LINK	
120	272457-0000	C		4	BOW CLAMP	
130	295770-0000	C		2	AXLE BOLT	
140	256421-0000	C		2	PULLEY	
150	256422-0000	C		4	WASHER	
160	256426-0001	C		2	WASHER	
170	256426-0002	C		4	WASHER	
180	256427-0000	C		2	SHAFT	
190	490916-0000	C		4	AXLE PIN	
200	256472-0000	C		2	WASHER	
210	257306-0000	C		2	ROLL	
220	257308-0000	C		2	SCREW	
230	257309-0000	C		2	SHAFT	
240	257310-0000	C		2	NUT	
250	257311-0000	C		8	CAP	
280	272116-0000	C		2	CAP	
290	272458-0000	C		2	ECCENTRIC SHAFT	
300	272461-0000	C		2	WASHER	
310	978272-0000	-		2	BRACKET	
320	1484791-0000	-		2	Scale	
330	1484792-0000	-		2	Scale	
400	90028-0021	C		2	Cone tube 4 mm	
410	90028-0020	C		1	Cone tube 2,5mm	
420	90032-0040	-		2	Block 6 ways	
430	90035-0005	-		2	COVER	
440	321531-0248	-		8	NEEDLE SLEHK2016	
450	90087-0019	-		2	PLUG M10x1 Stainless	
458	90092-0052	C		8	Metering valve 10 mm3	
460	90092-0053	C		2	Metering valve 30 mm3	
480	90134-0031	-		2	Sleeve for plastic tube	
500	90134-0038	-		2	Bushing/Nut inlet/outlet 4 mm	
510	90134-0039	-		12	Bushing valve connection 2,5 mm	
520	90134-0052	-		2	Plug dosing block	
530	90134-0058	-		14	Connection	
540	90266-0019	-	MM	11	PIPE	
550	90165-0002	-		6	CLIP	
560	90165-0022	-		4	PIPE-CLIPS,FOR SINGLE PIPE,ONE SIDE 2,5	
570	90166-0143	-	MM	22	TUBE 2,5 mm PA,Transp.	
580	90240-0048	C		4	PLAIN BEARING,SELF ADJUST.SPER. 25X42X20	
590	90240-0050	C		4	PLAIN BEARING,SELF ADJUST.SPER. 20X35X24	
670	311101-0267	-		2	Pin, Parallell, CP, h6, 4x10	
680	311303-0234	C		2	SLOTTED PIRPB3X12FZB	
700	312101-0297	-		4	Screw M6S M4x25 FZB	
710	312101-0362	-		6	Screw M6S M6x8 FZB	
720	312101-0364	-		4	Screw M6S M6x10 FZB	
725	312101-0368	-		2	Screw M6S M6x16 FZB	
730	312101-0453	-		8	Screw M6S M8x25 FZB	
740	312101-0497	-		2	Screw M6S M10x35 FZB	
750	312101-0504	-		2	Screw M6S M10x65 FZB	
760	312101-0507	-		4	Screw M6S M10x80 FZB	
770	312111-0376	-		8	Screw Hex.Sock.Hd.MC6S-TT 6x35 88 FZB	
780	312111-0378	-		4	Screw Hex.Sock.Hd.MC6S-TT 6x40 88 FZB	
790	312121-0287	-		1	Screw Slot.Pan Hd. MCS 4x8 FZB	
800	312151-0287	-		24	Screw Hex.Sock.Count.MF6S 4x8 FZB	
810	312151-0364	-		16	Screw Hex.Sock.Count.MF6S 6x10 FZB	
820	312601-0318	-		4	NUT M6M8FZB	
830	312811-0322	C		4	Nut Hex.Lock Heli Coil Mid Grip M12 SS	
840	312811-0324	C		4	Nut Hex.Lock Heli Coil Mid Grip M16 SS	
850	312811-0326	C		2	Nut Hex.Lock Heli Coil Mid Grip M20 SS	
870	315101-0136	-		4	Washer, Plain, BRB, 4,3/8 H=0,8	
880	315101-0153	-		8	Washer, Plain, BRB, 6,4/12 H=1,5	
890	315101-0165	-		8	Washer, Plain, BRB, 8,4/16 H=1,5	
900	315101-0173	-		4	Washer, Plain, BRB, 10,5/22 H=2	
910	315101-0186	-		4	Washer, Plain, BRB, 17/30 H=3	
920	315111-0173	-		4	Washer, Plain, TBRB 10,5/22 H=4	
930	315701-0335	-		2	KEYS,PARALLEL WITH ROUND ENDS 12X8X56	
940	321129-0137	C		8	THRUST WASHER 22/38X1,5	
950	321576-0260	C		2	BEARINGS,BEARING ROLLER 20X47X25	

(Cont'd)

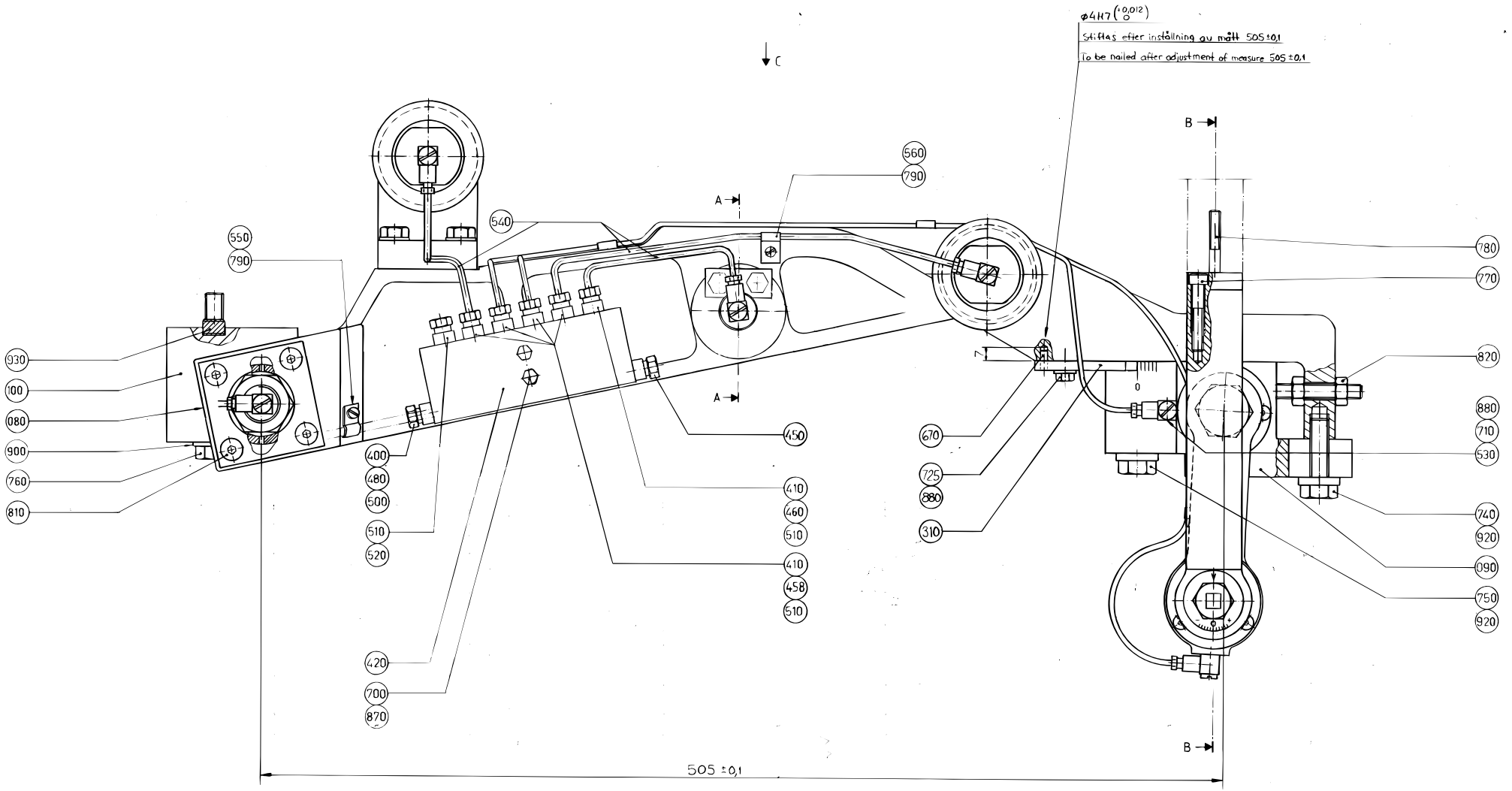
ø4H7 (+0,012 0)
Stiftas efter inställning av mått 505±0,1
To be nailed after adjustment of measure 505±0,1
C
A
A
B
B
560
790
540
550
790
930
100
080
900
760
810
400
480
500
510
520
450
410
460
510
410
458
510
420
700
870
670
725
880
310
780
770
820
880
710
530
740
920
090
750
920
505±0,1

Pos	Part No	SP	UN	Qty	Description	Page No

(Cont'd)

Common Parts

Pos	Part No	SP	UN	Qty	Description	Page No
030	272459-0000	C		1	WASHER	
040	272460-0000	-		1	WASHER	
080	751212-0000	D		2	ARM	
085	272442-0000	D		2	CANTILEVER	
090	594981-0000	D		2	BEARING HOLDER	
100	272455-0000	-		2	BEARING BRACKET	
110	594975-0000	C		2	LINK	
120	272457-0000	C		4	BOW CLAMP	
130	295770-0000	C		2	AXLE BOLT	
140	256421-0000	C		2	PULLEY	
150	256422-0000	C		4	WASHER	
160	256426-0001	C		2	WASHER	
170	256426-0002	C		4	WASHER	
180	256427-0000	C		2	SHAFT	
190	490916-0000	C		4	AXLE PIN	
200	256472-0000	C		2	WASHER	
210	257306-0000	C		2	ROLL	
220	257308-0000	C		2	SCREW	
230	257309-0000	C		2	SHAFT	
240	257310-0000	C		2	NUT	
250	257311-0000	C		8	CAP	
280	272116-0000	C		2	CAP	
290	272458-0000	C		2	ECCENTRIC SHAFT	
300	272461-0000	C		2	WASHER	
310	978272-0000	-		2	BRACKET	
320	1484791-0000	-		2	Scale	
330	1484792-0000	-		2	Scale	
400	90028-0021	C		2	Cone tube 4 mm	
410	90028-0020	C		1	Cone tube 2,5mm	
420	90032-0040	-		2	Block 6 ways	
430	90035-0005	-		2	COVER	
440	321531-0248	-		8	NEEDLE SLEHK2016	
450	90087-0019	-		2	PLUG M10x1 Stainless	
458	90092-0052	C		8	Metering valve 10 mm3	
460	90092-0053	C		2	Metering valve 30 mm3	
480	90134-0031	-		2	Sleeve for plastic tube	
500	90134-0038	-		2	Bushing/Nut inlet/outlet 4 mm	
510	90134-0039	-		12	Bushing valve connection 2,5 mm	
520	90134-0052	-		2	Plug dosing block	
530	90134-0058	-		14	Connection	
540	90266-0019	-	MM	11	PIPE	
550	90165-0002	-		6	CLIP	
560	90165-0022	-		4	PIPE-CLIPS,FOR SINGLE PIPE,ONE SIDE 2,5	
570	90166-0143	-	MM	22	TUBE 2,5 mm PA,Transp.	
580	90240-0048	C		4	PLAIN BEARING,SELF ADJUST.SPER. 25X42X20	
590	90240-0050	C		4	PLAIN BEARING,SELF ADJUST.SPER. 20X35X24	
670	311101-0267	-		2	Pin, Parallell, CP, h6, 4x10	
680	311303-0234	C		2	SLOTTED PIRPB3X12FZB	
700	312101-0297	-		4	Screw M6S M4x25 FZB	
710	312101-0362	-		6	Screw M6S M6x8 FZB	
720	312101-0364	-		4	Screw M6S M6x10 FZB	
725	312101-0368	-		2	Screw M6S M6x16 FZB	
730	312101-0453	-		8	Screw M6S M8x25 FZB	
740	312101-0497	-		2	Screw M6S M10x35 FZB	
750	312101-0504	-		2	Screw M6S M10x65 FZB	
760	312101-0507	-		4	Screw M6S M10x80 FZB	
770	312111-0376	-		8	Screw Hex.Sock.Hd.MC6S-TT 6x35 88 FZB	
780	312111-0378	-		4	Screw Hex.Sock.Hd.MC6S-TT 6x40 88 FZB	
790	312121-0287	-		1	Screw Slot.Pan Hd. MCS 4x8 FZB	
800	312151-0287	-		24	Screw Hex.Sock.Count.MF6S 4x8 FZB	
810	312151-0364	-		16	Screw Hex.Sock.Count.MF6S 6x10 FZB	
820	312601-0318	-		4	NUT M6M8FZB	
830	312811-0322	C		4	Nut Hex.Lock Heli Coil Mid Grip M12 SS	
840	312811-0324	C		4	Nut Hex.Lock Heli Coil Mid Grip M16 SS	
850	312811-0326	C		2	Nut Hex.Lock Heli Coil Mid Grip M20 SS	
870	315101-0136	-		4	Washer, Plain, BRB, 4,3/8 H=0,8	
880	315101-0153	-		8	Washer, Plain, BRB, 6,4/12 H=1,5	
890	315101-0165	-		8	Washer, Plain, BRB, 8,4/16 H=1,5	
900	315101-0173	-		4	Washer, Plain, BRB, 10,5/22 H=2	
910	315101-0186	-		4	Washer, Plain, BRB, 17/30 H=3	
920	315111-0173	-		4	Washer, Plain, TBRB 10,5/22 H=4	
930	315701-0335	-		2	KEYS,PARALLEL WITH ROUND ENDS 12X8X56	
940	321129-0137	C		8	THRUST WASHER 22/38X1,5	
950	321576-0260	C		2	BEARINGS,BEARING ROLLER 20X47X25	

(Cont'd)

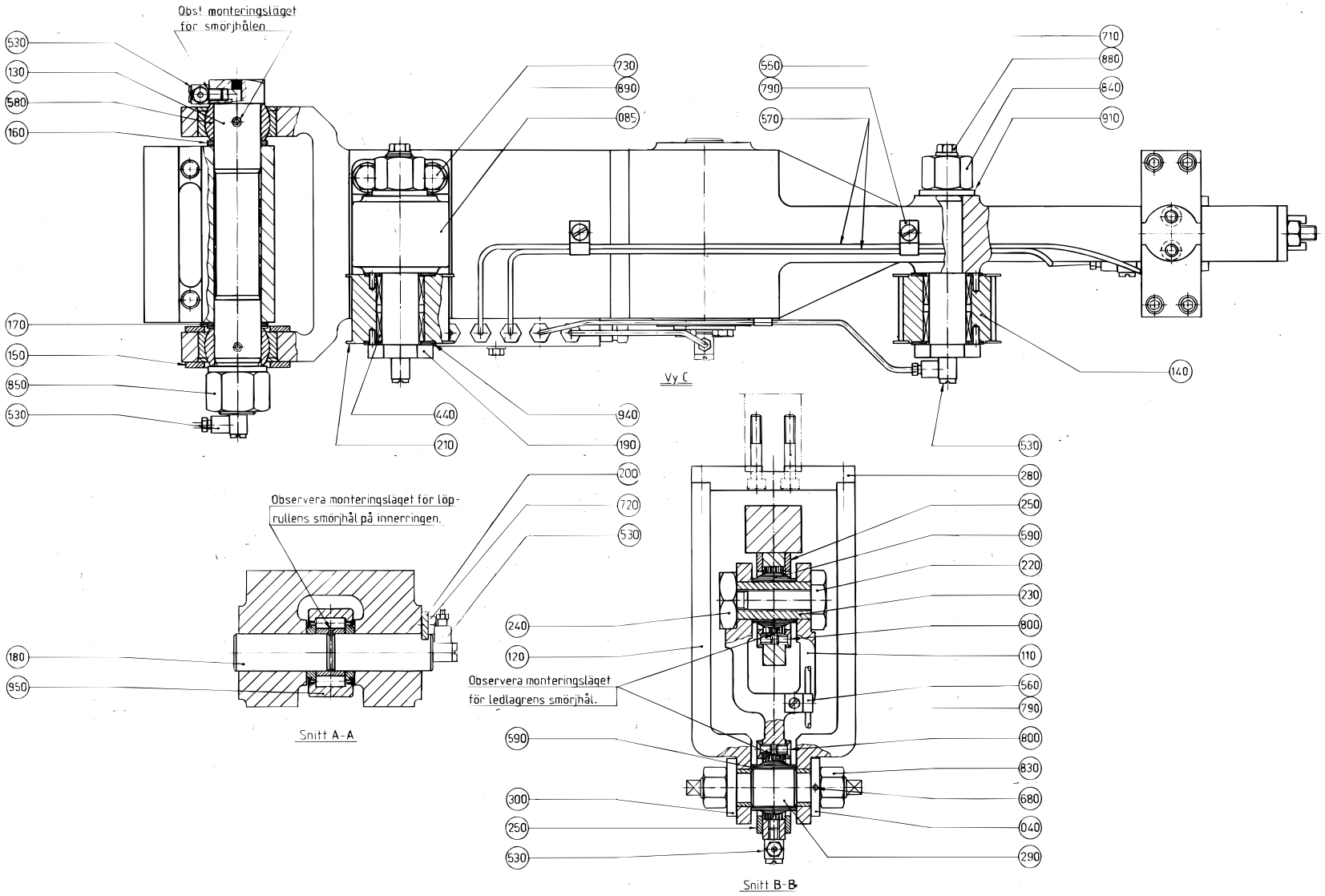
Obs! monteringsläget
för smörjhålen
530
130
580
160
730
890
085
550
790
570
710
880
640
910
170
150
850
530
440
210
940
190
200
720
530
140
Vy C
Observera monteringsläget för löp-
rullens smörjhål på innerringen.
180
950
Snitt A-A
240
120
Observera monteringsläget
för ledlagrens smörjhål.
590
300
250
530
280
250
590
220
230
800
110
560
790
800
830
680
040
290
Snitt B-B

(Cont'd)

Common Parts

Pos	Part No	SP	UN	Qty	Description	Page No
030	272459-0000	C		1	WASHER	
040	272460-0000	-		1	WASHER	
080	751212-0000	D		2	ARM	
085	272442-0000	D		2	CANTILEVER	
090	594981-0000	D		2	BEARING HOLDER	
100	272455-0000	-		2	BEARING BRACKET	
110	594975-0000	C		2	LINK	
120	272457-0000	C		4	BOW CLAMP	
130	295770-0000	C		2	AXLE BOLT	
140	256421-0000	C		2	PULLEY	
150	256422-0000	C		4	WASHER	
160	256426-0001	C		2	WASHER	
170	256426-0002	C		4	WASHER	
180	256427-0000	C		2	SHAFT	
190	490916-0000	C		4	AXLE PIN	
200	256472-0000	C		2	WASHER	
210	257306-0000	C		2	ROLL	
220	257308-0000	C		2	SCREW	
230	257309-0000	C		2	SHAFT	
240	257310-0000	C		2	NUT	
250	257311-0000	C		8	CAP	
280	272116-0000	C		2	CAP	
290	272458-0000	C		2	ECCENTRIC SHAFT	
300	272461-0000	C		2	WASHER	
310	978272-0000	-		2	BRACKET	
320	1484791-0000	-		2	Scale	
330	1484792-0000	-		2	Scale	
400	90028-0021	C		2	Cone tube 4 mm	
410	90028-0020	C		1	Cone tube 2,5mm	
420	90032-0040	-		2	Block 6 ways	
430	90035-0005	-		2	COVER	
440	321531-0248	-		8	NEEDLE SLEHK2016	
450	90087-0019	-		2	PLUG M10x1 Stainless	
458	90092-0052	C		8	Metering valve 10 mm3	
460	90092-0053	C		2	Metering valve 30 mm3	
480	90134-0031	-		2	Sleeve for plastic tube	
500	90134-0038	-		2	Bushing/Nut inlet/outlet 4 mm	
510	90134-0039	-		12	Bushing valve connection 2,5 mm	
520	90134-0052	-		2	Plug dosing block	
530	90134-0058	-		14	Connection	
540	90266-0019	-	MM	11	PIPE	
550	90165-0002	-		6	CLIP	
560	90165-0022	-		4	PIPE-CLIPS,FOR SINGLE PIPE,ONE SIDE 2,5	
570	90166-0143	-	MM	22	TUBE 2,5 mm PA,Transp.	
580	90240-0048	C		4	PLAIN BEARING,SELF ADJUST.SPER. 25X42X20	
590	90240-0050	C		4	PLAIN BEARING,SELF ADJUST.SPER. 20X35X24	
670	311101-0267	-		2	Pin, Parallell, CP, h6, 4x10	
680	311303-0234	C		2	SLOTTED PIRPB3X12FZB	
700	312101-0297	-		4	Screw M6S M4x25 FZB	
710	312101-0362	-		6	Screw M6S M6x8 FZB	
720	312101-0364	-		4	Screw M6S M6x10 FZB	
725	312101-0368	-		2	Screw M6S M6x16 FZB	
730	312101-0453	-		8	Screw M6S M8x25 FZB	
740	312101-0497	-		2	Screw M6S M10x35 FZB	
750	312101-0504	-		2	Screw M6S M10x65 FZB	
760	312101-0507	-		4	Screw M6S M10x80 FZB	
770	312111-0376	-		8	Screw Hex.Sock.Hd.MC6S-TT 6x35 88 FZB	
780	312111-0378	-		4	Screw Hex.Sock.Hd.MC6S-TT 6x40 88 FZB	
790	312121-0287	-		1	Screw Slot.Pan Hd. MCS 4x8 FZB	
800	312151-0287	-		24	Screw Hex.Sock.Count.MF6S 4x8 FZB	
810	312151-0364	-		16	Screw Hex.Sock.Count.MF6S 6x10 FZB	
820	312601-0318	-		4	NUT M6M8FZB	
830	312811-0322	C		4	Nut Hex.Lock Heli Coil Mid Grip M12 SS	
840	312811-0324	C		4	Nut Hex.Lock Heli Coil Mid Grip M16 SS	
850	312811-0326	C		2	Nut Hex.Lock Heli Coil Mid Grip M20 SS	
870	315101-0136	-		4	Washer, Plain, BRB, 4,3/8 H=0,8	
880	315101-0153	-		8	Washer, Plain, BRB, 6,4/12 H=1,5	
890	315101-0165	-		8	Washer, Plain, BRB, 8,4/16 H=1,5	
900	315101-0173	-		4	Washer, Plain, BRB, 10,5/22 H=2	
910	315101-0186	-		4	Washer, Plain, BRB, 17/30 H=3	
920	315111-0173	-		4	Washer, Plain, TBRB 10,5/22 H=4	
930	315701-0335	-		2	KEYS,PARALLEL WITH ROUND ENDS 12X8X56	
940	321129-0137	C		8	THRUST WASHER 22/38X1,5	
950	321576-0260	C		2	BEARINGS,BEARING ROLLER 20X47X25	

Link Arm, Right

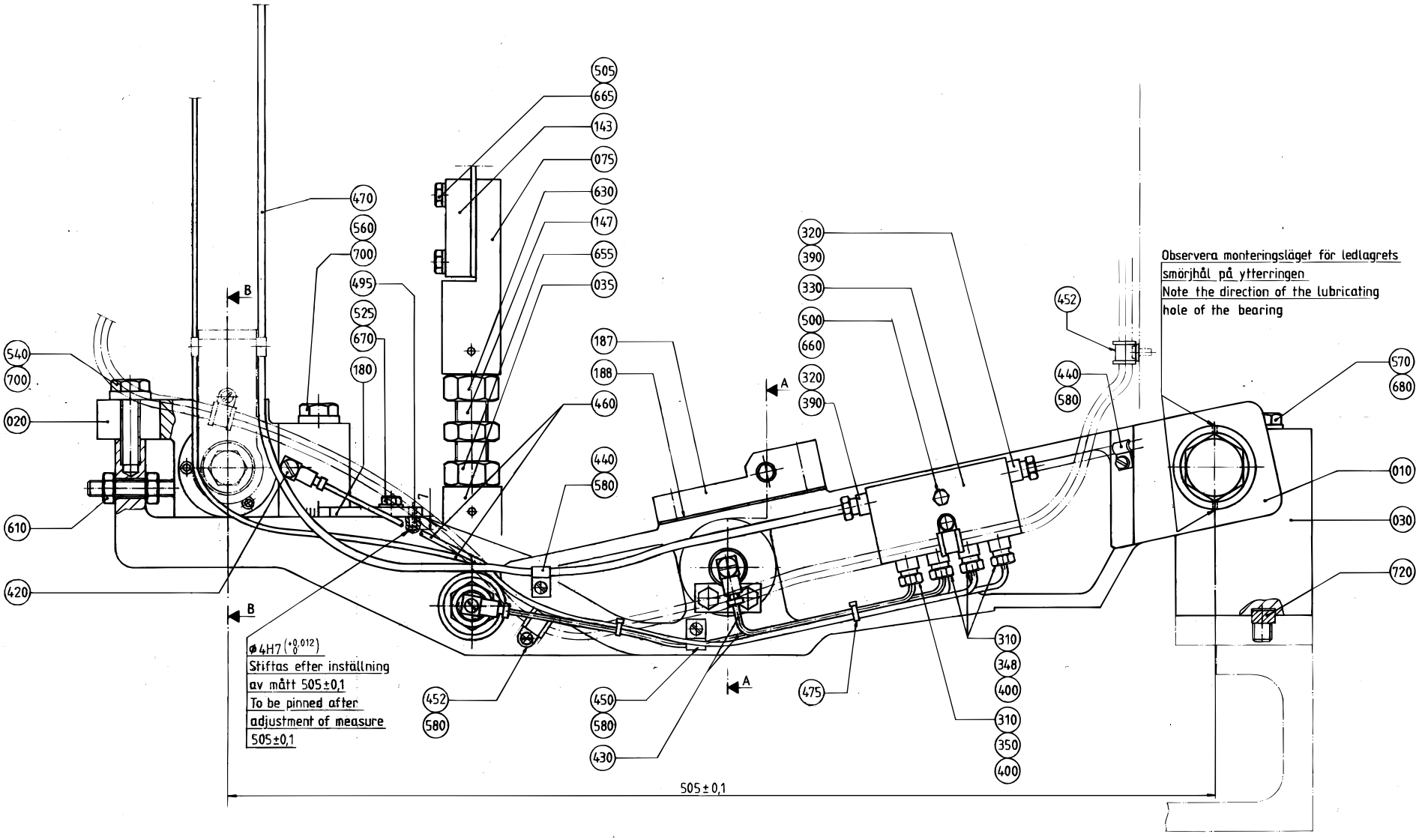

S - 1529151-1
ECN 82225

Pos	Part No	SP	UN	Qty	Description	Page No
Common Parts						
010	751212-0000	D		1	ARM	
020	256415-0000	D		1	BEARING HOLDER	
030	256418-0000	D		1	BEARING BRACKET	
035	256515-0000	C		1	END PIECE	
040	272462-0000	C		1	AXLE BOLT	
075	272607-0000	D		1	BELT HOLDER	
080	256422-0000	C		2	WASHER	
090	256426-0001	C		1	WASHER	
100	256426-0002	C		2	WASHER	
110	256427-0000	D		1	SHAFT	
120	490916-0000	C		1	AXLE PIN	
130	256472-0000	C		1	WASHER	
143	256516-0000	D		1	CAP	
147	256517-0000	D		1	SCREW	
160	257311-0000	C		2	CAP	
180	978272-0000	-		1	BRACKET	
182	491165-0000	C		1	ROLL	
183	491166-0000	C		1	SHAFT	
187	751078-0000	C		1	BRACKET RIGHT	
188	491319-0000	C		2	LACE	
190	1484791-0000	-		1	Scale	
200	1484792-0000	-		1	Scale	
310	90028-0020	C		4	Cone tube 2,5mm	
320	90028-0021	C		2	Cone tube 4 mm	
330	90032-0039	-		1	Block 4 ways	
335	321531-0248	C		2	NEEDLE SLEHK2016	
340	90083-0016	C		2	PLATE	
348	90092-0052	C		3	Metering valve 10 mm3	
350	90092-0053	C		1	Metering valve 30 mm3	
390	90134-0038	C		2	Bushing/Nut inlet/outlet 4 mm	
400	90134-0039	C		4	Bushing valve connection 2,5 mm	
420	90134-0058	-		5	Connection	
430	90266-0019	-	MM	35	PIPE	
440	90165-0002	-		2	CLIP	
450	90165-0022	-		1	PIPE-CLIPS,FOR SINGLE PIPE,ONE SIDE 2,5	
452	90165-0065	-		3	CRAMP	
460	90166-0143	-	MM	11	TUBE 2,5 mm PA,Transp.	
470	90166-0109	C	MM	7	TUBE 4 mm PA,Transp.	
475	90182-0005	-		2	CLIP STRIP 79x2,3mm REPL.BY 352113-101	
480	90240-0048	C		2	PLAIN BEARING,SELF ADJUST.SPER. 25X42X20	
490	90240-0050	C		1	PLAIN BEARING,SELF ADJUST.SPER. 20X35X24	
492	90287-0143	-		1	Screw MC6S M6x25 129	
493	90287-0144	-		1	Screw MC6S M6x35 129	
495	311101-0267	-		1	Pin, Parallell, CP, h6, 4x10	
500	312101-0297	-		2	Screw M6S M4x25 FZB	
505	312101-0333	-		4	Screw M6S M5x25 FZB	
510	312101-0362	-		2	Screw M6S M6x8 FZB	
520	312101-0364	-		2	Screw M6S M6x10 FZB	
525	312101-0368	-		1	Screw M6S M6x16 FZB	
540	312101-0497	-		1	Screw M6S M10x35 FZB	
560	312101-0504	-		1	Screw M6S M10x65 FZB	
570	312101-0515	-		2	Screw M6S M10x120 FZB	
580	312121-0287	C		4	Screw Slot.Pan Hd. MCS 4x8 FZB	
590	312151-0287	-		6	Screw Hex.Sock.Count.MF6S 4x8 FZB	
600	312151-0364	-		8	Screw Hex.Sock.Count.MF6S 6x10 FZB	
605	312311-0321	-		1	Screw, Sock.Set Dogpoint M5X6	
610	312601-0318	-		2	NUT M6M8FZB	
630	312601-0324	-		1	NUT M6M 16-8 FZB	
640	312811-0324	C		1	Nut Hex.Lock Heli Coil Mid Grip M16 SS	
650	312811-0326	C		1	Nut Hex.Lock Heli Coil Mid Grip M20 SS	
655	312901-0324	-		1	NUT M6M16VFZB	
660	315101-0136	-		2	Washer, Plain, BRB, 4,3/8 H=0,8	
665	315101-0146	-		4	Washer, Plain, BRB, 5,3/10 H=1	
670	315101-0153	-		3	Washer, Plain, BRB, 6,4/12 H=1,5	
680	315101-0173	-		2	Washer, Plain, BRB, 10,5/22 H=2	
690	315101-0186	-		1	Washer, Plain, BRB, 17/30 H=3	
700	315111-0173	-		2	Washer, Plain, TBRB 10,5/22 H=4	
720	315701-0335	-		1	KEYS,PARALLEL WITH ROUND ENDS 12X8X56	
730	321576-0260	C		1	BEARINGS,BEARING ROLLER 20X47X25	

(Cont'd)

Link Arm, Right

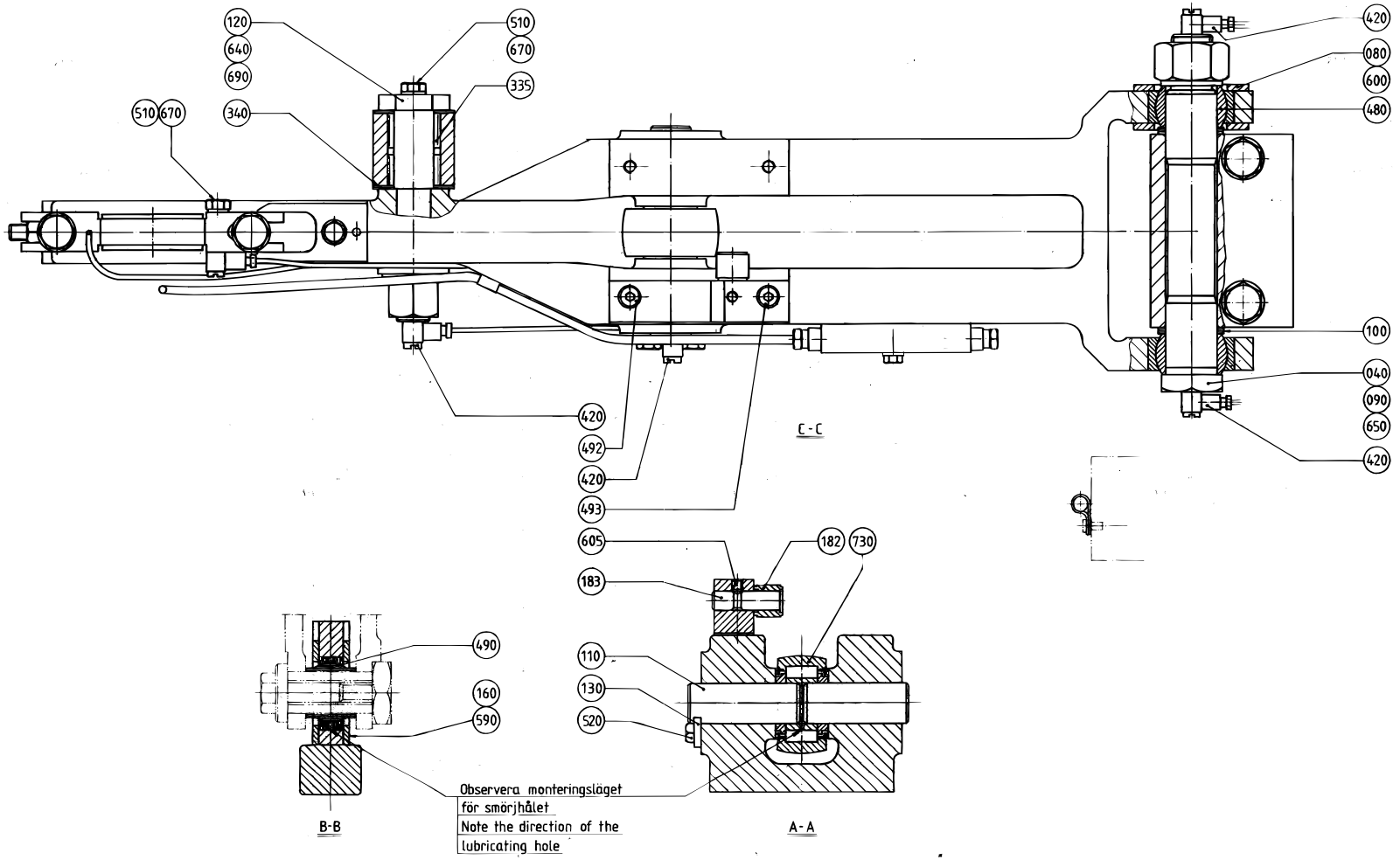

(Cont'd)

Common Parts

Pos	Part No	SP	UN	Qty	Description	Page No
010	751212-0000	D		1	ARM	
020	256415-0000	D		1	BEARING HOLDER	
030	256418-0000	D		1	BEARING BRACKET	
035	256515-0000	C		1	END PIECE	
040	272462-0000	C		1	AXLE BOLT	
075	272607-0000	D		1	BELT HOLDER	
080	256422-0000	C		2	WASHER	
090	256426-0001	C		1	WASHER	
100	256426-0002	C		2	WASHER	
110	256427-0000	D		1	SHAFT	
120	490916-0000	C		1	AXLE PIN	
130	256472-0000	C		1	WASHER	
143	256516-0000	D		1	CAP	
147	256517-0000	D		1	SCREW	
160	257311-0000	C		2	CAP	
180	978272-0000	-		1	BRACKET	
182	491165-0000	C		1	ROLL	
183	491166-0000	C		1	SHAFT	
187	751078-0000	C		1	BRACKET RIGHT	
188	491319-0000	C		2	LACE	
190	1484791-0000	-		1	Scale	
200	1484792-0000	-		1	Scale	
310	90028-0020	C		4	Cone tube 2,5mm	
320	90028-0021	C		2	Cone tube 4 mm	
330	90032-0039	-		1	Block 4 ways	
335	321531-0248	C		2	NEEDLE SLEHK2016	
340	90083-0016	C		2	PLATE	
348	90092-0052	C		3	Metering valve 10 mm3	
350	90092-0053	C		1	Metering valve 30 mm3	
390	90134-0038	C		2	Bushing/Nut inlet/outlet 4 mm	
400	90134-0039	C		4	Bushing valve connection 2,5 mm	
420	90134-0058	-		5	Connection	
430	90266-0019	-	MM	35	PIPE	
440	90165-0002	-		2	CLIP	
450	90165-0022	-		1	PIPE-CLIPS,FOR SINGLE PIPE,ONE SIDE 2,5	
452	90165-0065	-		3	CRAMP	
460	90166-0143	-	MM	11	TUBE 2,5 mm PA,Transp.	
470	90166-0109	C	MM	7	TUBE 4 mm PA,Transp.	
475	90182-0005	-		2	CLIP STRIP 79x2,3mm REPL.BY 352113-101	
480	90240-0048	C		2	PLAIN BEARING,SELF ADJUST.SPER. 25X42X20	
490	90240-0050	C		1	PLAIN BEARING,SELF ADJUST.SPER. 20X35X24	
492	90287-0143	-		1	Screw MC6S M6x25 129	
493	90287-0144	-		1	Screw MC6S M6x35 129	
495	311101-0267	-		1	Pin, Parallell, CP, h6, 4x10	
500	312101-0297	-		2	Screw M6S M4x25 FZB	
505	312101-0333	-		4	Screw M6S M5x25 FZB	
510	312101-0362	-		2	Screw M6S M6x8 FZB	
520	312101-0364	-		2	Screw M6S M6x10 FZB	
525	312101-0368	-		1	Screw M6S M6x16 FZB	
540	312101-0497	-		1	Screw M6S M10x35 FZB	
560	312101-0504	-		1	Screw M6S M10x65 FZB	
570	312101-0515	-		2	Screw M6S M10x120 FZB	
580	312121-0287	C		4	Screw Slot.Pan Hd. MCS 4x8 FZB	
590	312151-0287	-		6	Screw Hex.Sock.Count.MF6S 4x8 FZB	
600	312151-0364	-		8	Screw Hex.Sock.Count.MF6S 6x10 FZB	
605	312311-0321	-		1	Screw, Sock.Set Dogpoint M5X6	
610	312601-0318	-		2	NUT M6M8FZB	
630	312601-0324	-		1	NUT M6M 16-8 FZB	
640	312811-0324	C		1	Nut Hex.Lock Heli Coil Mid Grip M16 SS	
650	312811-0326	C		1	Nut Hex.Lock Heli Coil Mid Grip M20 SS	
655	312901-0324	-		1	NUT M6M16VFZB	
660	315101-0136	-		2	Washer, Plain, BRB, 4,3/8 H=0,8	
665	315101-0146	-		4	Washer, Plain, BRB, 5,3/10 H=1	
670	315101-0153	-		3	Washer, Plain, BRB, 6,4/12 H=1,5	
680	315101-0173	-		2	Washer, Plain, BRB, 10,5/22 H=2	
690	315101-0186	-		1	Washer, Plain, BRB, 17/30 H=3	
700	315111-0173	-		2	Washer, Plain, TBRB 10,5/22 H=4	
720	315701-0335	-		1	KEYS,PARALLEL WITH ROUND ENDS 12X8X56	
730	321576-0260	C		1	BEARINGS,BEARING ROLLER 20X47X25	

Link Arm, Left

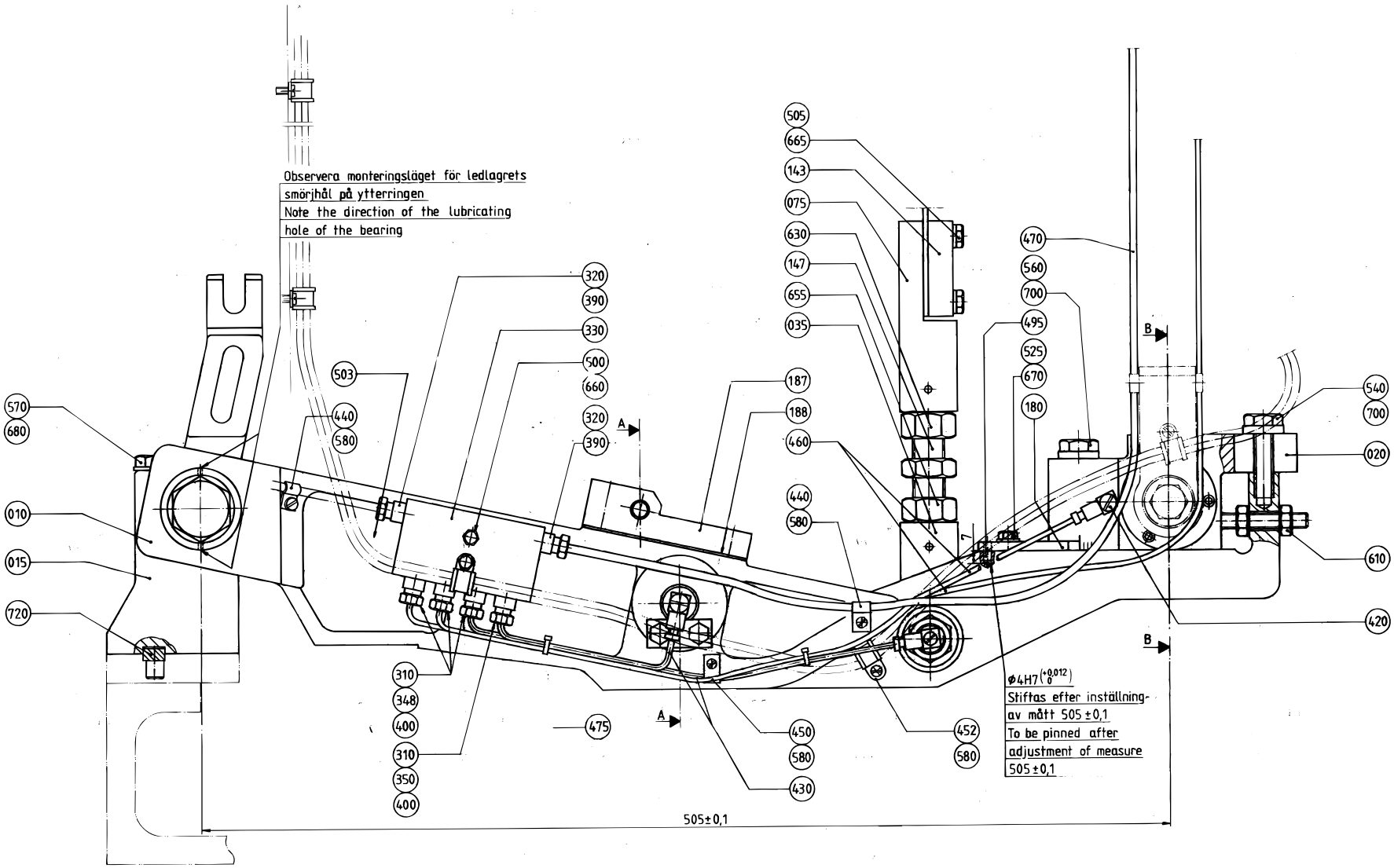

Pos	Part No	SP	UN	Qty	Description	Page No
Common Parts						
010	751212-0000	D		1	ARM	
015	751213-0000	D		1	BEARING BRACKET	
020	256415-0000	D		1	BEARING HOLDER	
035	256515-0000	C		1	END PIECE	
040	272462-0000	C		1	AXLE BOLT	
075	272607-0000	D		1	BELT HOLDER	
080	256422-0000	C		2	WASHER	
090	256426-0001	C		1	WASHER	
100	256426-0002	C		2	WASHER	
110	256427-0000	D		1	SHAFT	
120	490916-0000	C		1	AXLE PIN	
130	256472-0000	C		1	WASHER	
143	256516-0000	D		1	CAP	
147	256517-0000	D		1	SCREW	
160	257311-0000	C		2	CAP	
180	978272-0000	-		1	BRACKET	
182	491165-0000	C		1	ROLL	
183	491166-0000	C		1	SHAFT	
187	751079-0000	C		1	BRACKET LEFT	
188	491319-0000	C		2	LACE	
190	1484791-0000	-		1	Scale	
200	1484792-0000	-		1	Scale	
310	90028-0020	C		4	Cone tube 2,5mm	
320	90028-0021	C		2	Cone tube 4 mm	
330	90032-0039	-		1	Block 4 ways	
335	321531-0248	C		2	NEEDLE SLEHK2016	
340	90083-0016	C		2	PLATE	
348	90092-0052	C		3	Metering valve 10 mm3	
350	90092-0053	C		1	Metering valve 30 mm3	
390	90134-0038	C		2	Bushing/Nut inlet/outlet 4 mm	
400	90134-0039	C		4	Bushing valve connection 2,5 mm	
420	90134-0058	-		5	Connection	
430	90266-0019	-	MM	35	PIPE	
440	90165-0002	-		2	CLIP	
450	90165-0022	-		1	PIPE-CLIPS,FOR SINGLE PIPE,ONE SIDE 2,5	
452	90165-0065	-		4	CRAMP	
460	90166-0143	-	MM	11	TUBE 2,5 mm PA,Transp.	
470	90166-0109	C	MM	7	TUBE 4 mm PA,Transp.	
475	90182-0005	-		2	CLIP STRIP 79x2,3mm REPL.BY 352113-101	
480	90240-0048	C		2	PLAIN BEARING,SELF ADJUST.SPER. 25X42X20	
490	90240-0050	C		1	PLAIN BEARING,SELF ADJUST.SPER. 20X35X24	
492	90287-0143	-		1	Screw MC6S M6x25 129	
493	90287-0144	-		1	Screw MC6S M6x35 129	
495	311101-0267	-		1	Pin, Parallell, CP, h6, 4x10	
500	312101-0297	-		2	Screw M6S M4x25 FZB	
505	312101-0333	-		4	Screw M6S M5x25 FZB	
510	312101-0362	-		2	Screw M6S M6x8 FZB	
520	312101-0364	-		2	Screw M6S M6x10 FZB	
525	312101-0368	-		1	Screw M6S M6x16 FZB	
540	312101-0497	-		1	Screw M6S M10x35 FZB	
560	312101-0504	-		1	Screw M6S M10x65 FZB	
570	312101-0515	-		2	Screw M6S M10x120 FZB	
580	312121-0287	C		6	Screw Slot.Pan Hd. MCS 4x8 FZB	
590	312151-0287	-		6	Screw Hex.Sock.Count.MF6S 4x8 FZB	
600	312151-0364	-		8	Screw Hex.Sock.Count.MF6S 6x10 FZB	
605	312311-0321	-		1	Screw, Sock.Set Dogpoint M5X6	
610	312601-0318	-		2	NUT M6M8FZB	
630	312601-0324	-		1	NUT M6M 16-8 FZB	
640	312811-0324	C		1	Nut Hex.Lock Heli Coil Mid Grip M16 SS	
650	312811-0326	C		1	Nut Hex.Lock Heli Coil Mid Grip M20 SS	
655	312901-0324	-		1	NUT M6M16VFZB	
660	315101-0136	-		2	Washer, Plain, BRB, 4,3/8 H=0,8	
665	315101-0146	-		4	Washer, Plain, BRB, 5,3/10 H=1	
670	315101-0153	-		3	Washer, Plain, BRB, 6,4/12 H=1,5	
680	315101-0173	-		2	Washer, Plain, BRB, 10,5/22 H=2	
690	315101-0186	-		1	Washer, Plain, BRB, 17/30 H=3	
700	315111-0173	-		2	Washer, Plain, TBRB 10,5/22 H=4	
720	315701-0335	-		1	KEYS,PARALLEL WITH ROUND ENDS 12X8X56	
730	321576-0260	C		1	BEARINGS,BEARING ROLLER 20X47X25	

(Cont'd)

Link Arm, Left

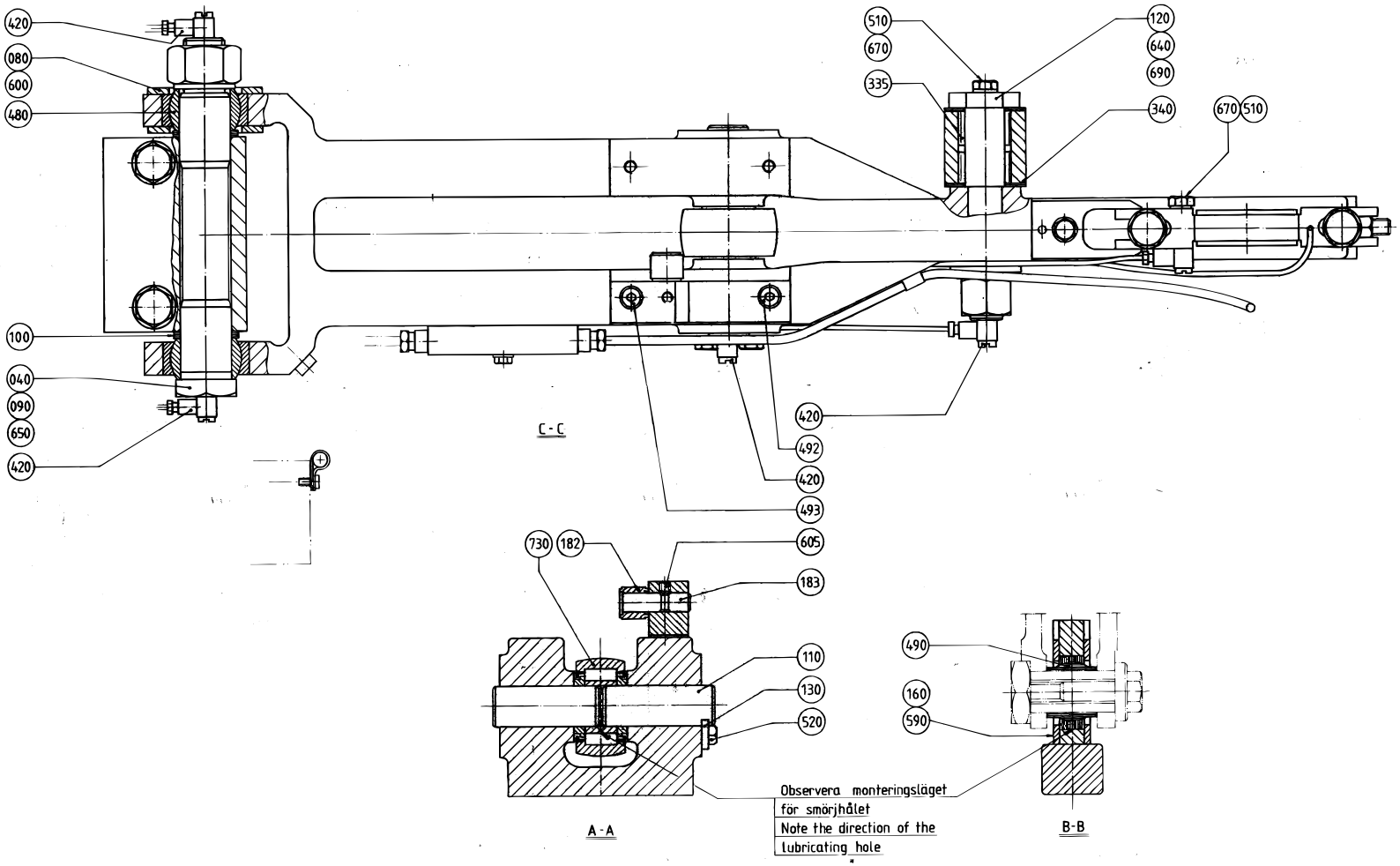

(Cont'd)

Common Parts

Pos	Part No	SP	UN	Qty	Description	Page No
010	751212-0000	D		1	ARM	
015	751213-0000	D		1	BEARING BRACKET	
020	256415-0000	D		1	BEARING HOLDER	
035	256515-0000	C		1	END PIECE	
040	272462-0000	C		1	AXLE BOLT	
075	272607-0000	D		1	BELT HOLDER	
080	256422-0000	C		2	WASHER	
090	256426-0001	C		1	WASHER	
100	256426-0002	C		2	WASHER	
110	256427-0000	D		1	SHAFT	
120	490916-0000	C		1	AXLE PIN	
130	256472-0000	C		1	WASHER	
143	256516-0000	D		1	CAP	
147	256517-0000	D		1	SCREW	
160	257311-0000	C		2	CAP	
180	978272-0000	-		1	BRACKET	
182	491165-0000	C		1	ROLL	
183	491166-0000	C		1	SHAFT	
187	751079-0000	C		1	BRACKET LEFT	
188	491319-0000	C		2	LACE	
190	1484791-0000	-		1	Scale	
200	1484792-0000	-		1	Scale	
310	90028-0020	C		4	Cone tube 2,5mm	
320	90028-0021	C		2	Cone tube 4 mm	
330	90032-0039	-		1	Block 4 ways	
335	321531-0248	C		2	NEEDLE SLEHK2016	
340	90083-0016	C		2	PLATE	
348	90092-0052	C		3	Metering valve 10 mm3	
350	90092-0053	C		1	Metering valve 30 mm3	
390	90134-0038	C		2	Bushing/Nut inlet/outlet 4 mm	
400	90134-0039	C		4	Bushing valve connection 2,5 mm	
420	90134-0058	-		5	Connection	
430	90266-0019	-	MM	35	PIPE	
440	90165-0002	-		2	CLIP	
450	90165-0022	-		1	PIPE-CLIPS,FOR SINGLE PIPE,ONE SIDE 2,5	
452	90165-0065	-		4	CRAMP	
460	90166-0143	-	MM	11	TUBE 2,5 mm PA,Transp.	
470	90166-0109	C	MM	7	TUBE 4 mm PA,Transp.	
475	90182-0005	-		2	CLIP STRIP 79x2,3mm REPL.BY 352113-101	
480	90240-0048	C		2	PLAIN BEARING,SELF ADJUST.SPER. 25X42X20	
490	90240-0050	C		1	PLAIN BEARING,SELF ADJUST.SPER. 20X35X24	
492	90287-0143	-		1	Screw MC6S M6x25 129	
493	90287-0144	-		1	Screw MC6S M6x35 129	
495	311101-0267	-		1	Pin, Parallell, CP, h6, 4x10	
500	312101-0297	-		2	Screw M6S M4x25 FZB	
505	312101-0333	-		4	Screw M6S M5x25 FZB	
510	312101-0362	-		2	Screw M6S M6x8 FZB	
520	312101-0364	-		2	Screw M6S M6x10 FZB	
525	312101-0368	-		1	Screw M6S M6x16 FZB	
540	312101-0497	-		1	Screw M6S M10x35 FZB	
560	312101-0504	-		1	Screw M6S M10x65 FZB	
570	312101-0515	-		2	Screw M6S M10x120 FZB	
580	312121-0287	C		6	Screw Slot.Pan Hd. MCS 4x8 FZB	
590	312151-0287	-		6	Screw Hex.Sock.Count.MF6S 4x8 FZB	
600	312151-0364	-		8	Screw Hex.Sock.Count.MF6S 6x10 FZB	
605	312311-0321	-		1	Screw, Sock.Set Dogpoint M5X6	
610	312601-0318	-		2	NUT M6M8FZB	
630	312601-0324	-		1	NUT M6M 16-8 FZB	
640	312811-0324	C		1	Nut Hex.Lock Heli Coil Mid Grip M16 SS	
650	312811-0326	C		1	Nut Hex.Lock Heli Coil Mid Grip M20 SS	
655	312901-0324	-		1	NUT M6M16VFZB	
660	315101-0136	-		2	Washer, Plain, BRB, 4,3/8 H=0,8	
665	315101-0146	-		4	Washer, Plain, BRB, 5,3/10 H=1	
670	315101-0153	-		3	Washer, Plain, BRB, 6,4/12 H=1,5	
680	315101-0173	-		2	Washer, Plain, BRB, 10,5/22 H=2	
690	315101-0186	-		1	Washer, Plain, BRB, 17/30 H=3	
700	315111-0173	-		2	Washer, Plain, TBRB 10,5/22 H=4	
720	315701-0335	-		1	KEYS,PARALLEL WITH ROUND ENDS 12X8X56	
730	321576-0260	C		1	BEARINGS,BEARING ROLLER 20X47X25	

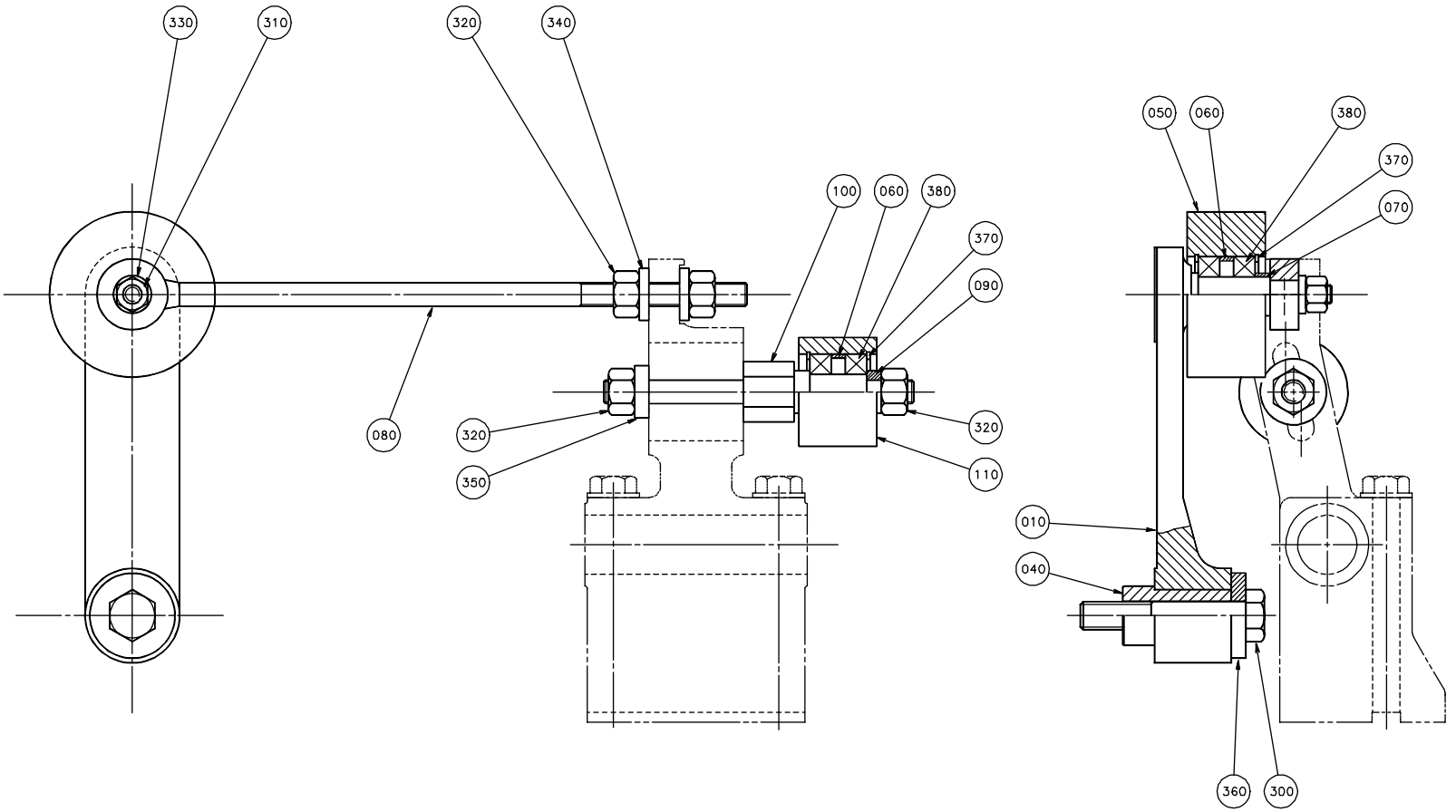
330
310
320
340
100
060
380
370
090
080
320
350
320
110
050
060
380
370
070
010
040
360
300

Pos	Part No	SP	UN	Qty	Description	Page No
Common Parts						
010	272565-0000	D		1	ARM	
040	256912-0000	C		1	DOWEL	
050	751254-0000	C		1	ROLL	
060	256914-0000	C		2	SPACER RING	
070	256915-0000	C		1	SPACER RING	
080	256916-0000	C		1	STRUT	
090	256918-0000	C		1	WASHER	
100	272566-0000	C		1	AXLE PIN	
110	272567-0000	D		1	ROLL	
300	312101-0546	-		1	Screw M6S M12x70 FZB	
310	312811-0318	C		1	Nut Hex.Lock Heli Coil Mid Grip M8 SS	
320	312811-0320	C		4	Nut Hex.Lock Heli Coil Mid Grip M10 SS	
330	315111-0165	-		1	Washer, Plain, TBRB 8,4/16 H=3	
340	315111-0173	-		2	Washer, Plain, TBRB 10,5/22 H=4	
350	315121-0173	-		1	Washer, Plain, TBRSB 10,5/28 H=6	
360	315121-0178	-		1	Washer, Plain, TBRSB 13/36 H=6	
370	315752-0123	C		4	Retain. Ring, 32	
380	321308-0202	C		4	BALL BEARING 15x32x9	

Pos	Part No	SP	UN	Qty	Description	Page No

Intermediary Shaft

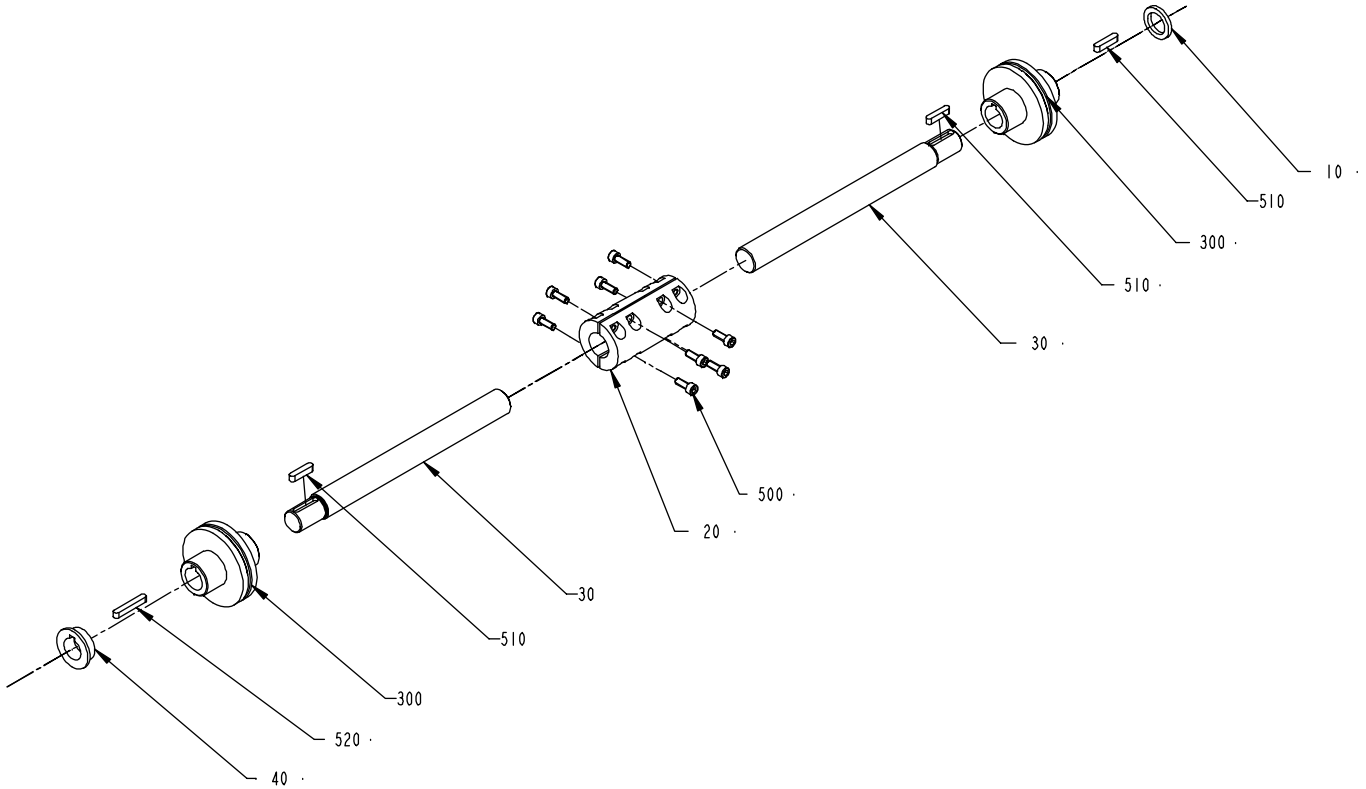

Pos	Part No	SP	UN	Qty	Description	Page No
TBA OR TPA						
030	441339-0000	D		2	SHAFT	
TWA						
030	441339-0000	-		1	SHAFT	
050	591440-0000	-		1	SHAFT	
Common Parts						
010	272857-0000	D		1	RING	
020	295983-0000	-		1	CONNECTION	
040	441720-0000	D		1	SPACER	
300	90355-0048	C		2	CONNECTION	
500	312111-0368	-		8	Screw Hex.Sock.Hd.MC6S-TT 6x16 88 FZB	
510	315701-0235	-		3	FLAT WEDGE6X6X28	
520	315701-0239	-		1	KEYS,PARALLEL WITH ROUND ENDS 6X6X40	

Pos	Part No	SP	UN	Qty	Description	Page No

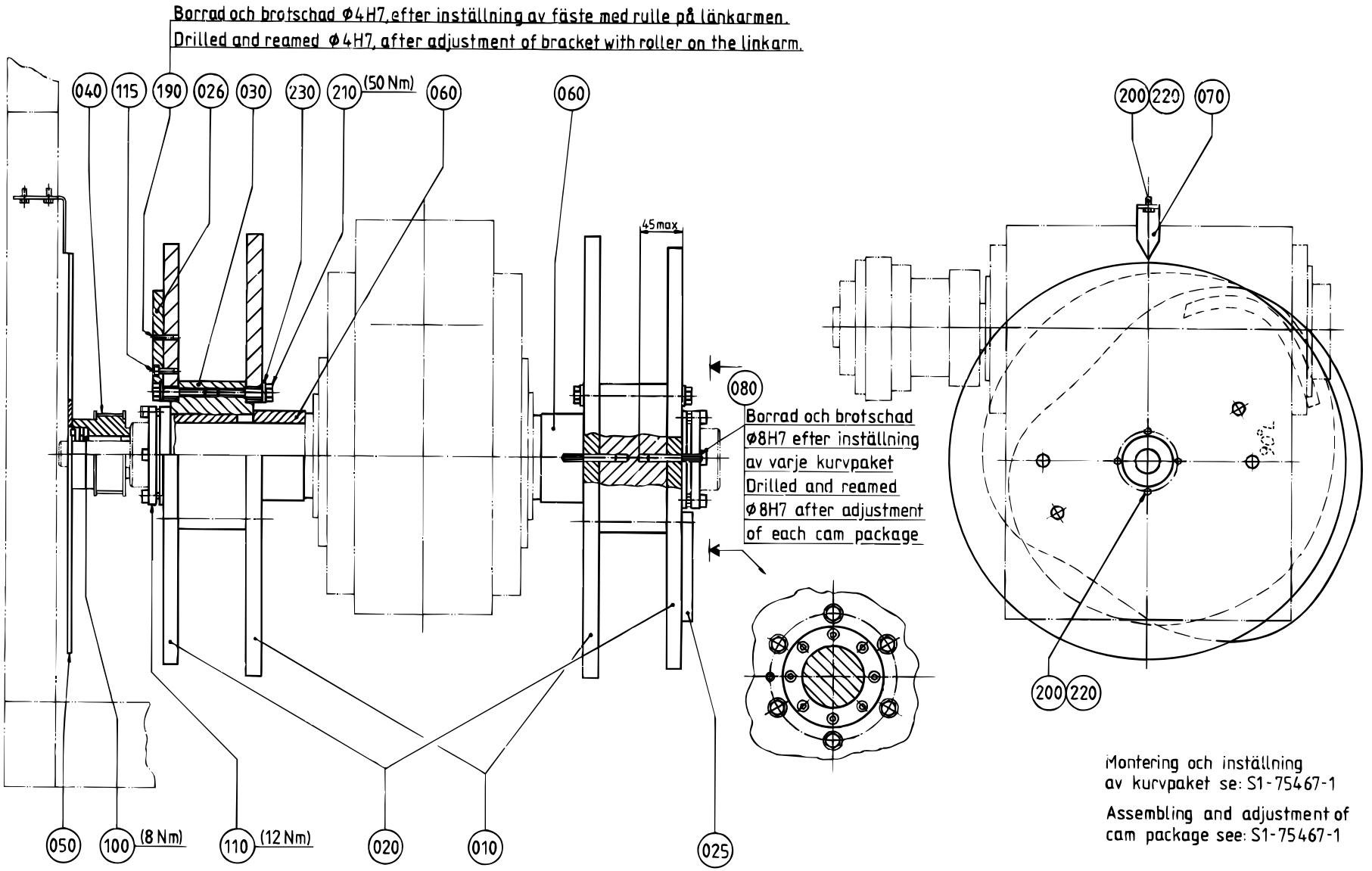
Borrad och brotschad ⌀4H7, efter inställning av fäste med rulle på länkarmen.
Drilled and reamed ⌀4H7, after adjustment of bracket with roller on the linkarm.
040
115
190
026
030
230
210
(50 Nm)
060
060
45max
080
Borrad och brotschad ⌀8H7 efter inställning av varje kurvpaket
Drilled and reamed ⌀8H7 after adjustment of each cam package
200
220
070
200
220
050
100
(8 Nm)
110
(12 Nm)
020
010
025
Montering och inställning av kurvpaket se: S1-75467-1
Assembling and adjustment of cam package see: S1-75467-1

Pos	Part No	SP	UN	Qty	Description	Page No
0125S						
010	271317-0000	D		2	CURVE	
020	271318-0000	D		2	CURVE	
025	491920-0000	C		1	CURVE SEGMENT	
026	491921-0000	C		1	CURVE SEGMENT	
210	312101-0500	-		24	Screw M6S M10x45 FZB	
230	315101-0173	-		24	Washer, Plain, BRB, 10,5/22 H=2	
0180B						
010	469369-0000	D		2	YOKECAM 180ML	
020	469370-0000	D		2	ARMCAM 180ML	
025	491918-0000	C		1	CAMSEGMENT R	
026	491919-0000	C		1	CAMSEGMENT L	
210	312101-0500	-		24	Screw M6S M10x45 FZB	
230	315101-0173	-		24	Washer, Plain, BRB, 10,5/22 H=2	
0200B						
010	456373-0000	D		2	CURVE	
020	456374-0000	D		2	CURVE	
025	491345-0000	C		1	CURVE SEGMENT	
026	491346-0000	C		1	CURVE SEGMENT	
210	312101-0500	-		24	Screw M6S M10x45 FZB	
230	315101-0173	-		24	Washer, Plain, BRB, 10,5/22 H=2	
0200S						
010	441411-0000	D		2	CURVE	
020	441412-0000	D		2	CURVE	
025	491461-0000	C		1	CURVE SEGMENT	
026	491462-0000	C		1	CURVE SEGMENT	
210	312101-0500	-		23	Screw M6S M10x45 FZB	
230	315101-0173	-		23	Washer, Plain, BRB, 10,5/22 H=2	
0236B						
010	272118-0000	D		2	YOKECAM 236ML	
020	272119-0000	D		2	ARMCAM 236ML	
025	491916-0000	C		1	CAMSEGMENT R	
026	491917-0000	C		1	CAMSEGMENT L	
210	312101-0500	-		24	Screw M6S M10x45 FZB	
230	315101-0173	-		24	Washer, Plain, BRB, 10,5/22 H=2	
0250B						
010	271759-0000	D		2	CURVE	
020	271760-0000	D		2	CURVE	
025	491459-0000	C		1	CURVE SEGMENT	
026	491460-0000	C		1	CURVE SEGMENT	
210	312101-0500	-		24	Screw M6S M10x45 FZB	
230	315101-0173	-		24	Washer, Plain, BRB, 10,5/22 H=2	

Pos	Part No	SP	UN	Qty	Description	Page No
Common Parts						
030	456744-0000	C		2	HUB	
040	272820-0000	D		1	TIMING BELT PULLEY	
050	272821-0000	D		1	PROTRACTOR	
060	256653-0000	-		2	SPACER	
070	271007-0000	D		1	POINTER	
080	295140-0000	C		4	PIN	
100	90208-0121	C		1	Clamping Element with sleeve, 25x34 mm	
110	90208-0128	C		2	Clamping Element with sleeve, 60x77 mm	
115	90287-0145	-		4	Screw MC6S M5x16 129	
190	311103-0272	-		6	Pin, Parallell, m6, 4x20	
200	312101-0325	-		6	Screw M6S M5x10 FZB	
220	315101-0146	-		6	Washer, Plain, BRB, 5,3/10 H=1	

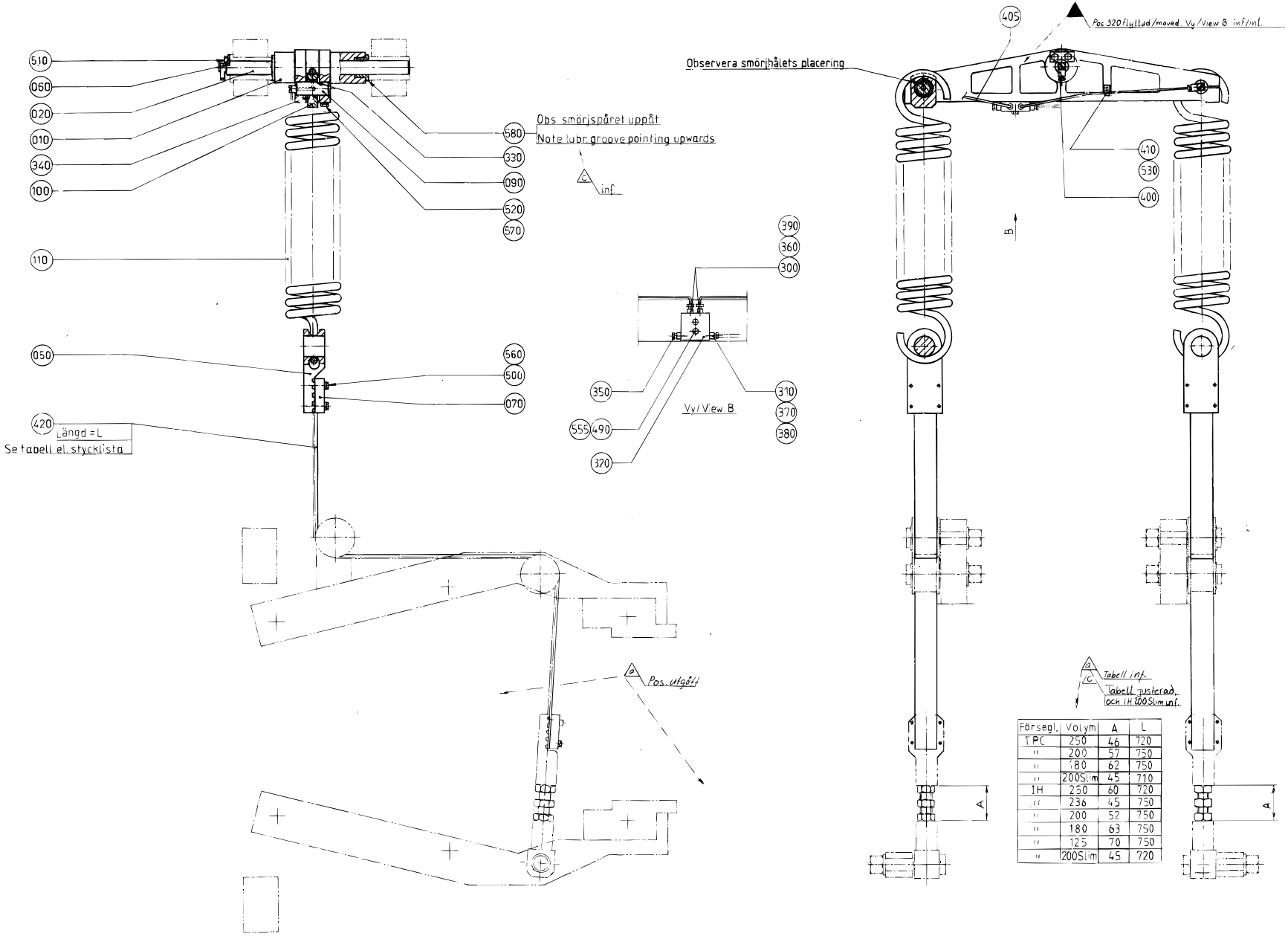

Försegl.	Volym	A	L
TPC	250	46	720
"	200	57	750
"	180	62	750
"	200Slim	45	710
1H	250	60	720
"	236	45	750
"	200	52	750
"	180	63	750
"	125	70	750
"	200Slim	45	720

Pos	Part No	SP	UN	Qty	Description	Page No
0180B IH OR 0180B TPC OR 0125S IH OR 0200B TPC OR 0200B IH OR 0236B IH						
420	B 490566-0001	C		2	TIMING BELT	
0200S IH OR 0250B TPC OR 0250B IH						
420	566404-0002	C		2	TIMING BELT	
0200S TPC						
420	B 490566-0003	C		2	TIMING BELT	
Common Parts						
010	272606-0000	-		1	CRADLE	
020	256514-0000	D		1	SHAFT	
050	272608-0000	D		2	BELT HOLDER	
060	256472-0000	-		1	WASHER	
070	256516-0000	-		2	CAP	
090	256518-0000	D		2	SHAFT	
100	256519-0000	D		2	SPRING BRACKET	
110	441353-0000	C		2	TENSION SPRING	
300	90028-0020	-		2	Cone tube 2,5mm	
310	90028-0021	-		1	Cone tube 4 mm	
320	90032-0038	-		1	Block 2 ways	
330	321531-0248	C		2	NEEDLE SLEHK2016	
340	90083-0016	C		4	PLATE	
350	90087-0019	-		1	PLUG M10x1 Stainless	
360	90092-0052	C		2	Metering valve 10 mm3	
370	90134-0031	-		1	Sleeve for plastic tube	
380	90134-0038	-		1	Bushing/Nut inlet/outlet 4 mm	
390	90134-0039	-		2	Bushing valve connection 2,5 mm	
400	90134-0058	-		3	Connection	
405	90266-0019	-	MM	5	PIPE	
410	90165-0022	-		1	PIPE-CLIPS,FOR SINGLE PIPE,ONE SIDE 2,5	
490	312101-0297	-		2	Screw M6S M4x25 FZB	
500	312101-0333	-		8	Screw M6S M5x25 FZB	
510	312101-0364	-		2	Screw M6S M6x10 FZB	
520	312101-0457	-		2	Screw M6S M8x35 FZB	
530	312121-0287	-		1	Screw Slot.Pan Hd. MCS 4x8 FZB	
555	315101-0136	-		2	Washer, Plain, BRB, 4,3/8 H=0,8	
560	315101-0146	-		8	Washer, Plain, BRB, 5,3/10 H=1	
570	315101-0165	-		2	Washer, Plain, BRB, 8,4/16 H=1,5	
580	321101-0233	C		2	FLANGE BUS 20F7x20	

Pos	Part No	SP	UN	Qty	Description	Page No

Crank

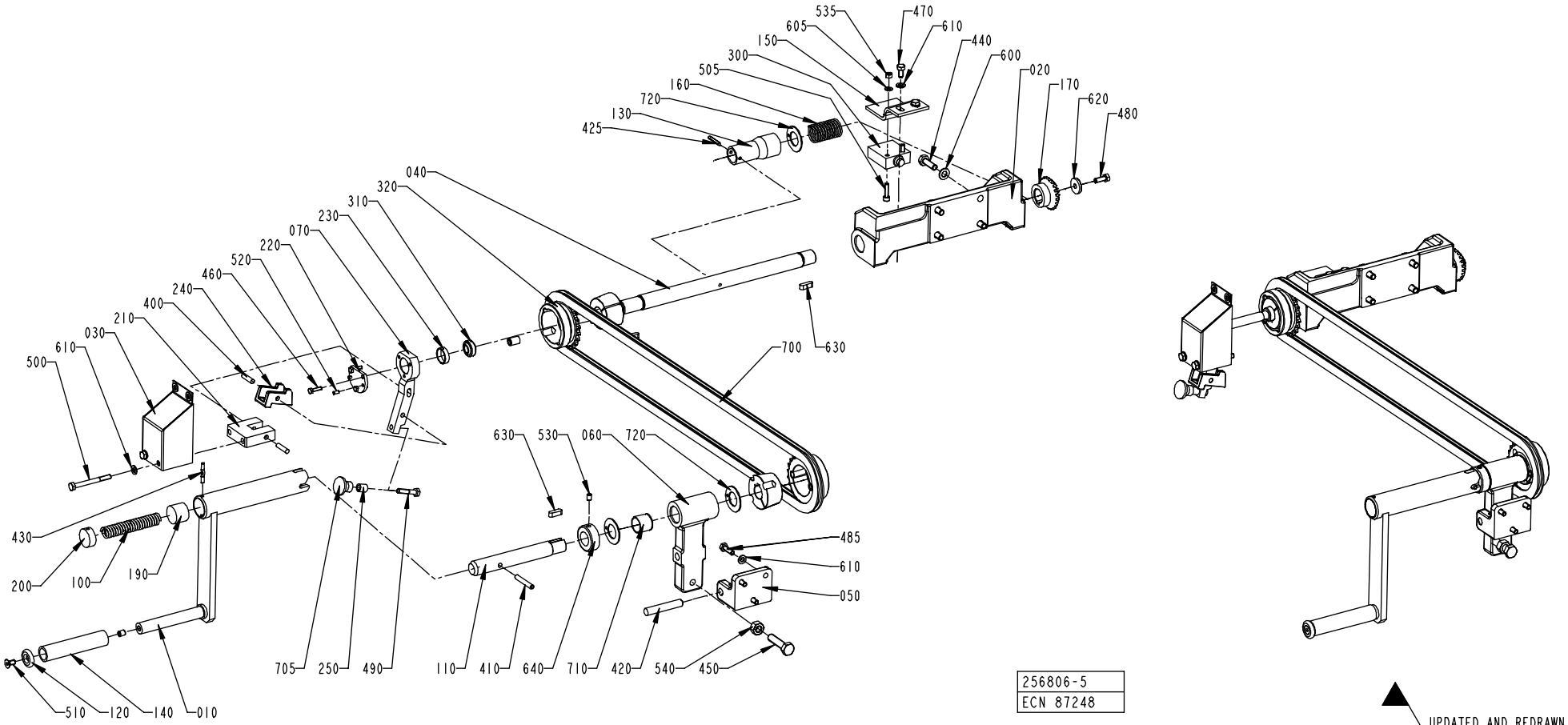
535
470
605
610
150
440
300
600
505
020
160
170
720
620
130
480
425
040
320
310
230
070
220
520
460
240
400
210
030
610
500
700
630
630
530
060
720
485
610
050
430
200
100
190
705
250
490
110
410
640
710
420
540
450
510
120
140
010
256806-5
ECN 87248
UPDATED AND REDRAWN

Pos	Part No	SP	UN	Qty	Description	Page No
Common Parts						
010	257326-0000	D		1	CRANK	
020	272664-0000	D		1	CANTILEVER	
030	272690-0000	-		1	COVER	
040	456343-0000	D		1	SHAFT	
050	272736-0000	D		1	CANTILEVER	
060	272737-0000	D		1	BRACKET	
070	272772-0000	D		1	ARM	
100	12228-0000	D		1	COMPRESSION SPRING	
110	256812-0000	D		1	SHAFT	
120	256814-0000	-		1	WASHER	
130	456344-0000	-		1	SLEEVE	
140	256816-0000	-		1	PIPE	
150	456345-0000	-		1	BRACKET	
160	256828-0000	C		1	SPRING	
170	257179-0000	C		1	GEAR WHEEL	
190	257327-0000	D		1	SLIDER	
200	257328-0000	D		1	END PIECE	
210	272691-0000	D		1	BRACKET	
220	272692-0000	D		1	LID	
230	272693-0000	D		1	RING	
240	272694-0000	-		1	BARRIER	
250	295773-0000	D		1	SPACER	
300	90044-0084	C		1	Limit sw. 14 CE1-4	
310	90240-0093	C		1	PLAIN BEARING,SELF ADJUST.SPER. 10X26X12	
320	90344-0022	C		2	SPROCKET	
400	311103-0355	-		2	Pin, Parallell, m6, 6x25	
410	311103-0361	-		1	Pin, Parallell, m6, 6x40	
420	311103-0470	-		1	Pin, Parallell, m6, 10x60	
425	311305-0274	-		1	SLOTTED PIRPC4X25FZB	
430	311307-0275	-		1	SLOTTED PIRPD4X28FZB	
440	312101-0453	-		4	Screw M6S M8x25 FZB	
450	312104-0499	-		1	Screw M6S M10x40H FZB	
460	312105-0293	-		3	Screw M6S M4x16 A280	
470	312105-0366	-		4	Screw M6S M6x12 A280	
480	312105-0368	-		1	Screw M6S M6x16 A280	
485	312105-0370	-		3	Screw M6S M6x20 A280	
490	312105-0374	-		1	Screw M6S M6x30 A280	
500	312105-0382	-		2	Screw M6S M6x60 A280	
505	312115-0331	-		2	Screw MC6S M5x20 A280	
510	312151-0366	-		1	Screw Hex.Sock.Count.MF6S 6x12 FZB	
520	312318-0287	-		2	Screw,Sock.Set Cuppoint MSK6SS M4x8 A4	
530	312318-0362	-		3	Screw,Sock.Set Cuppoint MSK6SS M6x8 A4	
535	312605-0314	-		2	Nut Hex. M6M M5 A280	
540	312605-0320	-		1	Nut Hex. M6M M10 A280	
600	315101-0165	-		4	Washer, Plain, BRB, 8,4/16 H=1,5	
605	315105-0146	-		2	Washer, Plain, BRB, 5,3/10,H=1	
610	315105-0153	-		1	Washer, Plain, BRB, 6,4/12,H=1,5	
620	315121-0153	-		1	Washer, Plain, TBRSB 6,4/22 H=4	
630	315701-0232	-		3	KEYS,PARALLEL WITH ROUND ENDS 6X6X20	
640	315742-0116	-		1	Collar, 20/36, H=13	
700	318201-0150	C		1	ROLLER CHAIN SINGLE 3/8"-150	
705	90051-0082	-		1	HANDLES,KNOB,CIRCUL,THREAD.BUSH,M625X21	
710	321120-0138	-		4	BEARING BUSHING WITHOUT FLANGE,20/23X20	
720	321129-0131	-		4	THRUST WASHER 20/36X1,5	

Disconnection Link Right

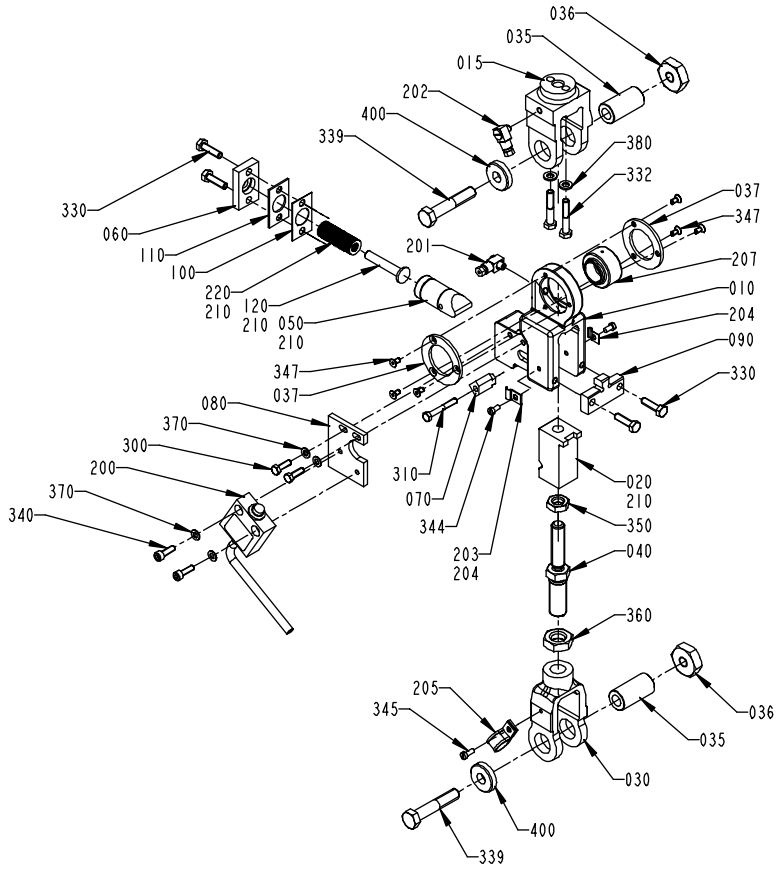

Pos	Part No	SP	UN	Qty	Description	Page No
Common Parts						
010	491194-0000	C		1	LINK HEAD	
015	272472-0000	D		1	END PIECE	
020	491195-0000	C		1	SLIDER	
030	491196-0000	D		1	FORKED LINK	
035	257309-0000	C		2	SHAFT	
036	257310-0000	C		2	NUT	
037	257311-0000	D		2	CAP	
040	751659-0000	C		1	ADJUSTING SCREW	
050	491198-0000	C		1	PISTON	
060	752677-0000	C		1	BACK PIECE	
070	491200-0000	D		1	CARRIER	
080	491456-0000	D		1	PLATE	
090	491375-0000	C		1	CROSS PIECE	
100	752674-0001	C		1	SHIM	
110	752674-0006	C		1	SHIM	
120	752685-0000	C		1	GUIDE PIN	
200	90044-0203	C		1	Limit sw. D4C-2301-B	
201	90134-0058	-		1	Connection	
202	90134-0068	-		1	Connection	
203	90165-0002	-		1	CLIP	
204	90165-0022	-		1	PIPE-CLIPS,FOR SINGLE PIPE,ONE SIDE 2,5	
205	90165-0039	-		1	CLIP	
207	90240-0050	-		1	PLAIN BEARING,SELF ADJUST.SPER. 20X35X24	
210	90296-0012	-	KG	1	LUBRICANT	
220	90016-0056	C		42	Spring Washer, Conical, 15/8,2	
300	312101-0329	-		2	Screw M6S M5x16 FZB	
310	312101-0337	-		1	Screw M6S M5x35 FZB	
330	312101-0371	-		4	Screw M6S M6x22 FZB	
332	312101-0376	-		2	Screw M6S M6x35 FZB	
339	312101-0502	-		2	Screw M6S M10x55 FZB	
340	312111-0329	-		2	Screw Hex.Sock.Hd.MC6S-TT 5x16 88 FZB	
344	312121-0287	-		2	Screw Slot.Pan Hd. MCS 4x8 FZB	
345	312121-0289	-		1	Screw Slot.Pan Hd. MCS 4x10 FZB	
347	312151-0287	-		6	Screw Hex.Sock.Count.MF6S 4x8 FZB	
350	312621-0322	-		1	NUT ML6M12FZB	
360	312621-0324	-		1	NUT ML6M16FZB	
370	315101-0146	-		4	Washer, Plain, BRB, 5,3/10 H=1	
380	315101-0153	-		2	Washer, Plain, BRB, 6,4/12 H=1,5	
400	315121-0173	-		2	Washer, Plain, TBRSB 10,5/28 H=6	

Pos	Part No	SP	UN	Qty	Description	Page No

Disconnection Link Left

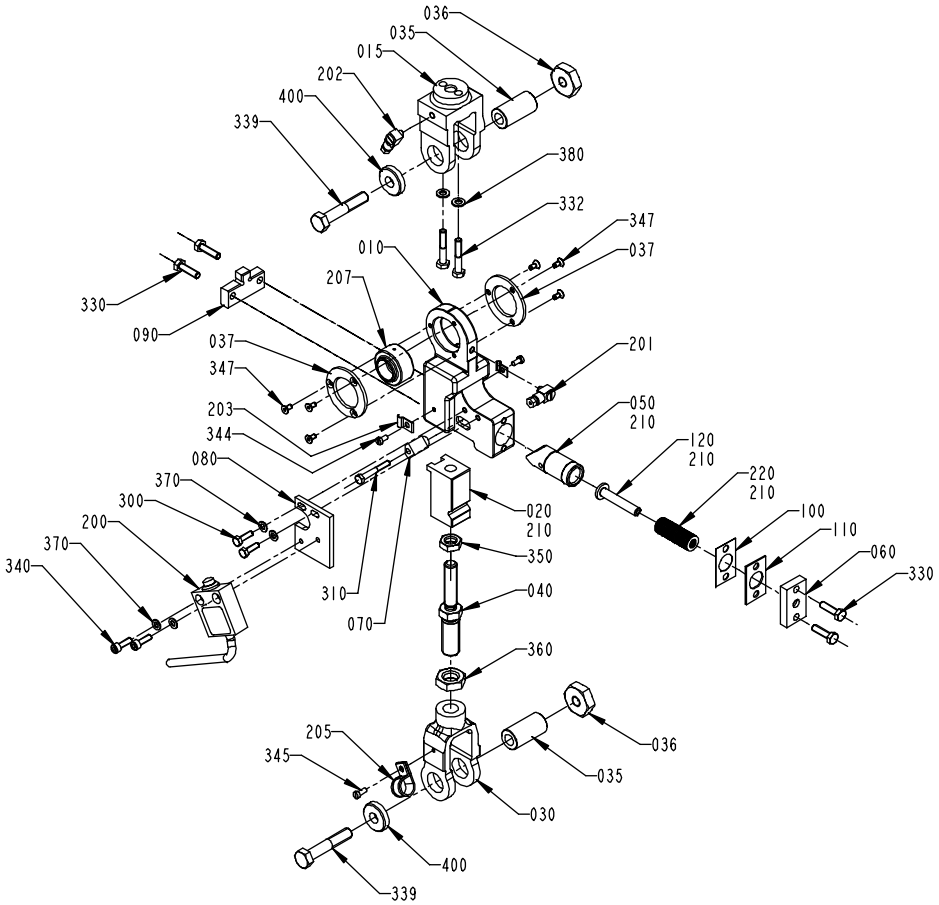

Pos	Part No	SP	UN	Qty	Description	Page No
Common Parts						
010	491194-0000	C		1	LINK HEAD	
015	272472-0000	D		1	END PIECE	
020	491195-0000	C		1	SLIDER	
030	491196-0000	D		1	FORKED LINK	
035	257309-0000	C		2	SHAFT	
036	257310-0000	C		2	NUT	
037	257311-0000	D		2	CAP	
040	751659-0000	C		1	ADJUSTING SCREW	
050	491198-0000	C		1	PISTON	
060	752677-0000	C		1	BACK PIECE	
070	491200-0000	D		1	CARRIER	
080	491456-0000	D		1	PLATE	
090	491375-0000	C		1	CROSS PIECE	
100	752674-0001	C		1	SHIM	
110	752674-0006	C		1	SHIM	
120	752685-0000	C		1	GUIDE PIN	
200	90044-0203	C		1	Limit sw. D4C-2301-B	
201	90134-0058	-		1	Connection	
202	90134-0068	-		1	Connection	
203	90165-0002	-		1	CLIP	
204	90165-0022	-		1	PIPE-CLIPS,FOR SINGLE PIPE,ONE SIDE 2,5	
205	90165-0039	-		1	CLIP	
207	90240-0050	-		1	PLAIN BEARING,SELF ADJUST.SPER. 20X35X24	
210	90296-0012	-	KG	1	LUBRICANT	
220	90016-0056	C		42	Disc Spring, Conical 15x8,2x0,8 mm	
300	312101-0329	-		2	Screw M6S M5x16 FZB	
310	312101-0337	-		1	Screw M6S M5x35 FZB	
330	312101-0371	-		4	Screw M6S M6x22 FZB	
332	312101-0376	-		2	Screw M6S M6x35 FZB	
339	312101-0502	-		2	Screw M6S M10x55 FZB	
340	312111-0329	-		2	Screw Hex.Sock.Hd.MC6S-TT 5x16 88 FZB	
344	312121-0287	-		2	Screw Slot.Pan Hd. MCS 4x8 FZB	
345	312121-0289	-		1	Screw Slot.Pan Hd. MCS 4x10 FZB	
347	312151-0287	-		6	Screw Hex.Sock.Count.MF6S 4x8 FZB	
350	312621-0322	-		1	NUT ML6M12FZB	
360	312621-0324	-		1	NUT ML6M16FZB	
370	315101-0146	-		4	Washer, Plain, BRB, 5,3/10 H=1	
380	315101-0153	-		2	Washer, Plain, BRB, 6,4/12 H=1,5	
400	315121-0173	-		2	Washer, Plain, TBRSB 10,5/28 H=6	

Pos	Part No	SP	UN	Qty	Description	Page No


Tetra Pak

SPC

Spare Parts Catalogue

JAW SYSTEM TBA/9R

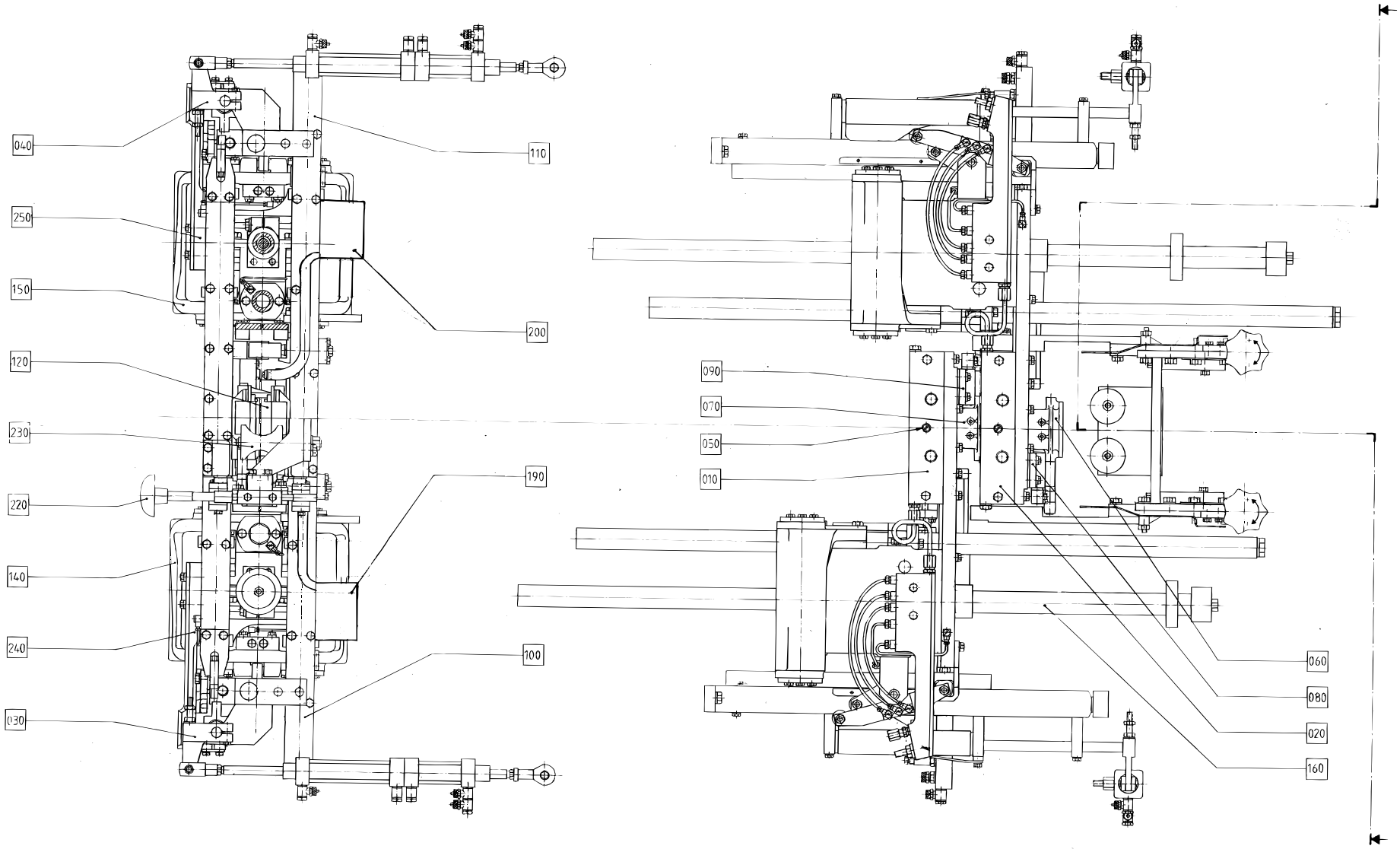

S - 648146-1
ECN 82225

Pos	Part No	SP	UN	Qty	Description	Page No
SOURCE,TBA/9-100V						
100	A1529153-0100	-		1	PRESSURE JAW RIGHT	**348**
110	A1529154-0100	-		1	PRESSURE JAW LEFT	**356**
SOURCE,TBA/9-110V OR SOURCE,TBA/9-120V						
100	A1529153-0200	-		1	PRESSURE JAW RIGHT	**354**
110	A1529154-0200	-		1	PRESSURE JAW LEFT	**362**
Common Parts						
010	A1529103-0100	-		1	CUTTING JAW RIGHT	**308**
020	A1529104-0100	-		1	CUTTING JAW LEFT	**312**
030	A256206-0200	-		1	DESIGN CORRECTION DEVICE RIGHT	**316**
040	A256207-0200	-		1	DESIGN CORRECTION DEVICE LEFT	**324**
050	A256208-0400	-		2	KNIFE HOLDER	**332**
060	A256209-0300	-		2	VOLUME FLAP VERSION 01	**336**
070	A256210-0300	-		2	VOLUME FLAP VERSION 02	**338**
080	A752671-0100	-		2	SHOCK ABSORBER	**340**
090	A752672-0100	-		2	SHOCK ABSORBER	**344**
120	A256214-0400	C		2	PRESSURE RAIL	**364**
140	A1529106-0100	-		1	YOKE RIGHT	**366**
150	A1529107-0100	-		1	YOKE LEFT	**368**
160	A 256217-0400	-		1	GUIDES	**370**
190	A1529108-0100	-		1	TRANSFER RIGHT	**372**
200	A1529109-0100	-		1	TRANSFER LEFT	**374**
220	A 256222-0200	-		1	VOLUME CURVE PIECE IH	**376**
230	A 256223-0400	-		1	SUPPORT ROLLER	**378**
240	A 257381-0300	-		1	MANIFOLD RIGHT	**384**
250	A 257382-0300	-		1	MANIFOLD LEFT	**386**
300	A 295523-0300	-		1	START-UP KIT	**388**

Pos	Part No	SP	UN	Qty	Description	Page No

CUTTING JAW RIGHT

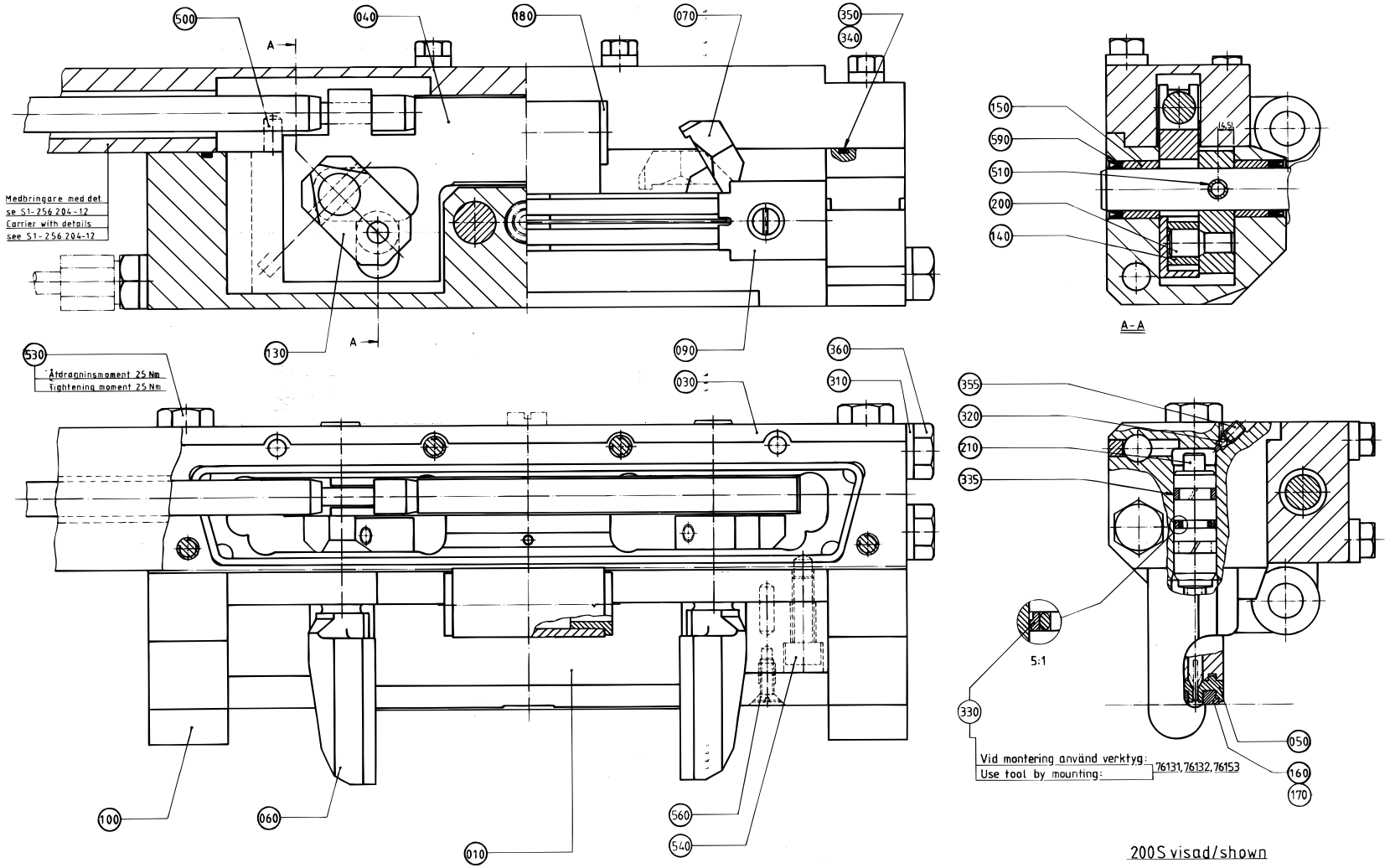

EC No: 081812 - 010201
Group number: 1529103-0100
Assembly Drawing: 1529103-1.eps

Issue: 010423

Pos	Part No	SP	UN	Qty	Description	Page No
0200B OR 0250B						
010	256769-0000	C		1	CUTTING JAW	
030	256770-0000	C		1	BEARING HOUSING	
040	751575-0000	C		1	RULERPART R	
045	751577-0000	-		1	RULERPART R	
060	272422-0000	C		1	FOLDING FLAP	
070	272423-0000	C		1	FOLDING FLAP	
0200S						
010	441727-0000	C		1	CUTTING JAW	
030	272263-0000	C		1	BEARING HOUSING	
040	752009-0000	C		1	RULERPART R	
045	752010-0000	-		1	RULERPART R	
060	272424-0000	C		1	FOLDING FLAP	
070	272425-0000	C		1	FOLDING FLAP	
170	752574-0000	C		4	END PIECE	
Common Parts						
050	1110820-0000	C		2	Cutting rail	
090	1348053-0000	C		2	Bracket	
093	256692-0000	C		1	CARRIER	
096	256659-0000	C		1	OPERATING ROD	
100	978745-0000	C		2	CATCH	
130	272419-0000	C		2	CARRIER	
140	22463-0000	C		2	ROLL	
150	33408-0000	C		4	BEARING	
160	B1110375-0003	-		2	Dolly	
180	1517641-0000	C		2	FLANGE BUSHING	
193	255742-0000	C		1	COMPRESSION SPRING	
196	255801-0000	C		1	RETAINING RING	
200	256607-0000	C		2	AXLE PIN	
204	256626-0000	C		1	EAR	
206	256706-0000	C		1	BEARING PLATE	
208	257362-0000	C		2	LACE	
210	490944-0000	C		2	PLUNGER	
230	441355-0000	-		2	BLEEDING SCREW	
240	751579-0000	-		1	ADJUSTING SCREW	
250	751580-0000	-		1	SHIM	
305	315237-0106	-		2	Washer,Pl.Rnd.Al.6/10,H=1	
310	315237-0109	C		3	Washer,Pl.Rnd.Al.10/14,H=1,5	
320	90090-0005	C		2	STEEL-BALL SKF RB 3/111	
330	90091-0216	C		2	Piston Seal, Glidoring 7,1x12x2,2 mm	
333	90091-0091	C		1	Rod Seal, Glidoring 10x14x1,7 mm	
335	90091-0169	C		4	Wear Ring 12x15x3,2 mm	
336	90134-0058	-		1	Connection	
340	90153-0015	-	KG	1	ADHESIVE Loctite IS 496/CYANOLIT 303	
350	90242-0093	C	MM	45	O-RING	
355	90287-0128	-		2	Screw, Sock.Set Dogpoint M4x6	
360	90330-0066	-		3	Plug, Ext. G-Thread, G1/8	
500	311103-0312	-		1	Pin, Parallell, m6, 5x25	
505	311111-0207	C		1	Pin, Straight Slotted Spring FRP 3x14	
510	311111-0308	C		2	Pin, Straight Slotted Spring FRP 5x20	
523	312105-0376	-		8	Screw M6S M6S M6x35 A280	
530	312105-0462	-		2	Screw M6S M8x55 A280	
535	312115-0366	-		2	Screw MC6S M6x12 A280	
540	312115-0370	-		2	Screw MC6S M6x20 A280	
560	312145-0291	-		2	Screw Counters.Slot.Hd. MFS 4x12 A4	
582	312605-0318	-		1	Nut Hex. M6M M8 A280	
585	315115-0153	-		8	Washer, Plain, TBRB 6,4/12 H=3	
587	315202-0265	C		1	O-Ring 12,3x2,4 mm	
590	315230-0157	C		4	Bearing Seal 12x16x3 mm	

(Cont'd)

CUTTING JAW RIGHT

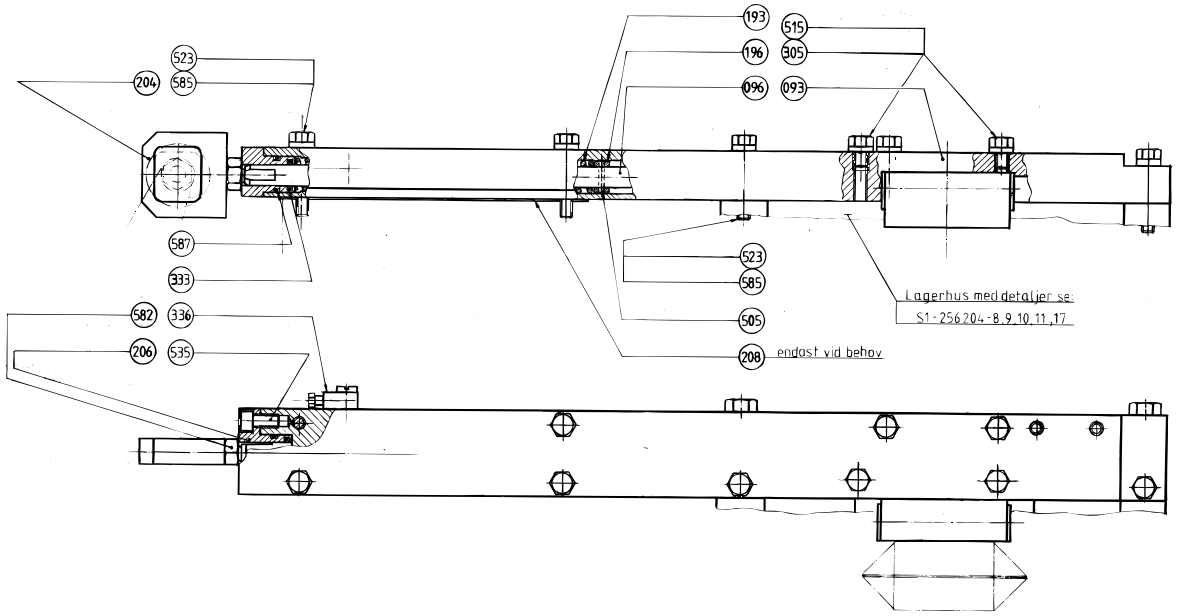

Pos	Part No	SP	UN	Qty	Description	Page No
(Cont'd)						
0200B OR 0250B						
010	256769-0000	C		1	CUTTING JAW	
030	256770-0000	C		1	BEARING HOUSING	
040	751575-0000	C		1	RULERPART R	
045	751577-0000	-		1	RULERPART R	
060	272422-0000	C		1	FOLDING FLAP	
070	272423-0000	C		1	FOLDING FLAP	
0200S						
010	441727-0000	C		1	CUTTING JAW	
030	272263-0000	C		1	BEARING HOUSING	
040	752009-0000	C		1	RULERPART R	
045	752010-0000	-		1	RULERPART R	
060	272424-0000	C		1	FOLDING FLAP	
070	272425-0000	C		1	FOLDING FLAP	
170	752574-0000	C		4	END PIECE	
Common Parts						
050	1110820-0000	C		2	Cutting rail	
090	1348053-0000	C		2	Bracket	
093	256692-0000	C		1	CARRIER	
096	256659-0000	C		1	OPERATING ROD	
100	978745-0000	C		2	CATCH	
130	272419-0000	C		2	CARRIER	
140	22463-0000	C		2	ROLL	
150	33408-0000	C		4	BEARING	
160	B1110375-0003	-		2	Dolly	
180	1517641-0000	C		2	FLANGE BUSHING	
193	255742-0000	C		1	COMPRESSION SPRING	
196	255801-0000	C		1	RETAINING RING	
200	256607-0000	C		2	AXLE PIN	
204	256626-0000	C		1	EAR	
206	256706-0000	C		1	BEARING PLATE	
208	257362-0000	C		2	LACE	
210	490944-0000	C		2	PLUNGER	
230	441355-0000	-		2	BLEEDING SCREW	
240	751579-0000	-		1	ADJUSTING SCREW	
250	751580-0000	-		1	SHIM	
305	315237-0106	-		2	Washer,Pl.Rnd.Al.6/10,H=1	
310	315237-0109	C		3	Washer,Pl.Rnd.Al.10/14,H=1,5	
320	90090-0005	C		2	STEEL-BALL SKF RB 3/111	
330	90091-0216	C		2	Piston Seal, Glidoring 7,1x12x2,2 mm	
333	90091-0091	C		1	Rod Seal, Glidoring 10x14x1,7 mm	
335	90091-0169	C		4	Wear Ring 12x15x3,2 mm	
336	90134-0058	-		1	Connection	
340	90153-0015	-	KG	1	ADHESIVE Loctite IS 496/CYANOLIT 303	
350	90242-0093	C	MM	45	O-RING	
355	90287-0128	-		2	Screw, Sock.Set Dogpoint M4x6	
360	90330-0066	-		3	Plug, Ext. G-Thread, G1/8	
500	311103-0312	-		1	Pin, Parallell, m6, 5x25	
505	311111-0207	C		1	Pin, Straight Slotted Spring FRP 3x14	
510	311111-0308	C		2	Pin, Straight Slotted Spring FRP 5x20	
523	312105-0376	-		8	Screw M6S M6S M6x35 A280	
530	312105-0462	-		2	Screw M6S M8x55 A280	
535	312115-0366	-		2	Screw MC6S M6x12 A280	
540	312115-0370	-		2	Screw MC6S M6x20 A280	
560	312145-0291	-		2	Screw Counters.Slot.Hd. MFS 4x12 A4	
582	312605-0318	-		1	Nut Hex. M6M M8 A280	
585	315115-0153	-		8	Washer, Plain, TBRB 6,4/12 H=3	
587	315202-0265	C		1	O-Ring 12,3x2,4 mm	
590	315230-0157	C		4	Bearing Seal 12x16x3 mm	

CUTTING JAW LEFT

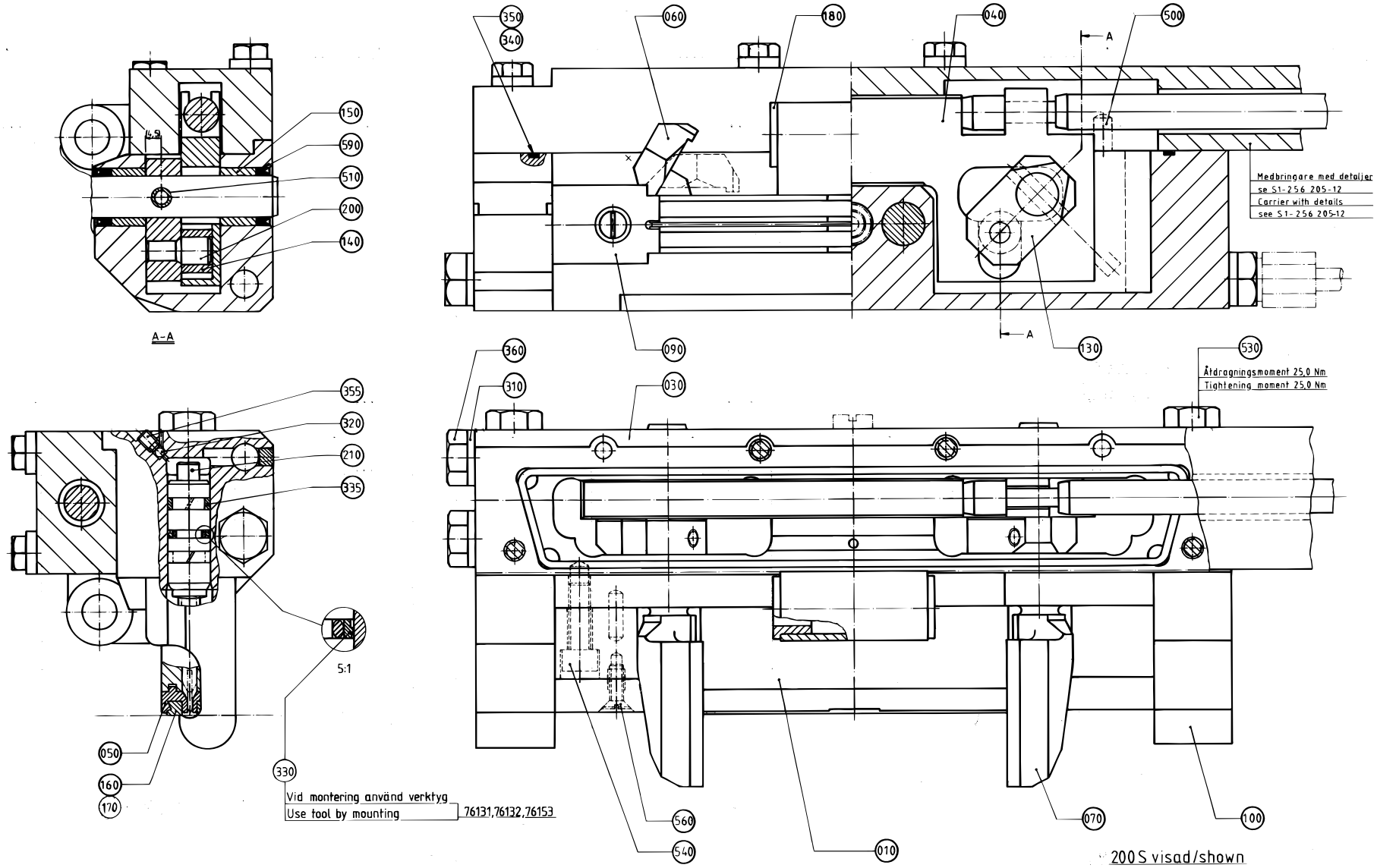

Pos	Part No	SP	UN	Qty	Description	Page No
0200B OR 0250B						
010	256769-0000		C	1	CUTTING JAW	
030	256770-0000		C	1	BEARING HOUSING	
040	751576-0000		C	1	RULERPART L	
045	751578-0000		-	1	RULERPART L	
060	272422-0000		C	1	FOLDING FLAP	
070	272423-0000		C	1	FOLDING FLAP	
0200S						
010	441727-0000		C	1	CUTTING JAW	
030	272263-0000		C	1	BEARING HOUSING	
040	752011-0000		C	1	RULERPART L	
045	752012-0000		-	1	RULERPART L	
060	272424-0000		C	1	FOLDING FLAP	
070	272425-0000		C	1	FOLDING FLAP	
170	752574-0000		C	4	END PIECE	
Common Parts						
050	1110820-0000		C	2	Cutting rail	
090	1348053-0000		C	2	Bracket	
093	256692-0000		C	1	CARRIER	
096	256659-0000		C	1	OPERATING ROD	
100	978745-0000		C	2	CATCH	
130	272419-0000		C	2	CARRIER	
140	22463-0000		C	2	ROLL	
150	33408-0000		C	4	BEARING	
160	B1110375-0003		-	2	Dolly	
180	1517641-0000		C	2	FLANGE BUSHING	
193	255742-0000		C	1	COMPRESSION SPRING	
196	255801-0000		C	1	RETAINING RING	
200	256607-0000		C	2	AXLE PIN	
204	256626-0000		C	1	EAR	
206	256706-0000		C	1	BEARING PLATE	
208	257362-0000		C	2	LACE	
210	490944-0000		C	2	PLUNGER	
230	441355-0000		-	2	BLEEDING SCREW	
240	751579-0000		-	1	ADJUSTING SCREW	
250	751580-0000		-	1	SHIM	
305	315237-0106		-	2	Washer,Pl.Rnd.Al.6/10,H=1	
310	315237-0109		C	3	Washer,Pl.Rnd.Al.10/14,H=1,5	
320	90090-0005		C	2	STEEL-BALL SKF RB 3/111	
330	90091-0216		C	2	Piston Seal, Glidoring 7,1x12x2,2 mm	
333	90091-0091		C	1	Rod Seal, Glidoring 10x14x1,7 mm	
335	90091-0169		C	4	Wear Ring 12x15x3,2 mm	
336	90134-0058		-	1	Connection	
340	90153-0015		-	KG 1	ADHESIVE Loctite IS 496/CYANOLIT 303	
350	90242-0093		C	MM 45	O-RING	
355	90287-0128		-	2	Screw, Sock.Set Dogpoint M4x6	
360	90330-0066		-	3	Plug, Ext. G-Thread, G1/8	
500	311103-0312		-	1	Pin, Parallell, m6, 5x25	
505	311111-0207		C	1	Pin, Straight Slotted Spring FRP 3x14	
510	311111-0308		C	2	Pin, Straight Slotted Spring FRP 5x20	
523	312105-0376		-	8	Screw M6S M6S M6x35 A280	
530	312105-0462		-	2	Screw M6S M8x55 A280	
535	312115-0366		-	2	Screw MC6S M6x12 A280	
540	312115-0370		-	2	Screw MC6S M6x20 A280	
560	312145-0291		-	2	Screw Counters.Slot.Hd. MFS 4x12 A4	
582	312605-0318		-	1	Nut Hex. M6M M8 A280	
585	315115-0153		-	8	Washer, Plain, TBRB 6,4/12 H=3	
587	315202-0265		C	1	O-Ring 12,3x2,4 mm	
590	315230-0157		C	4	Bearing Seal 12x16x3 mm	

(Cont'd)

CUTTING JAW LEFT

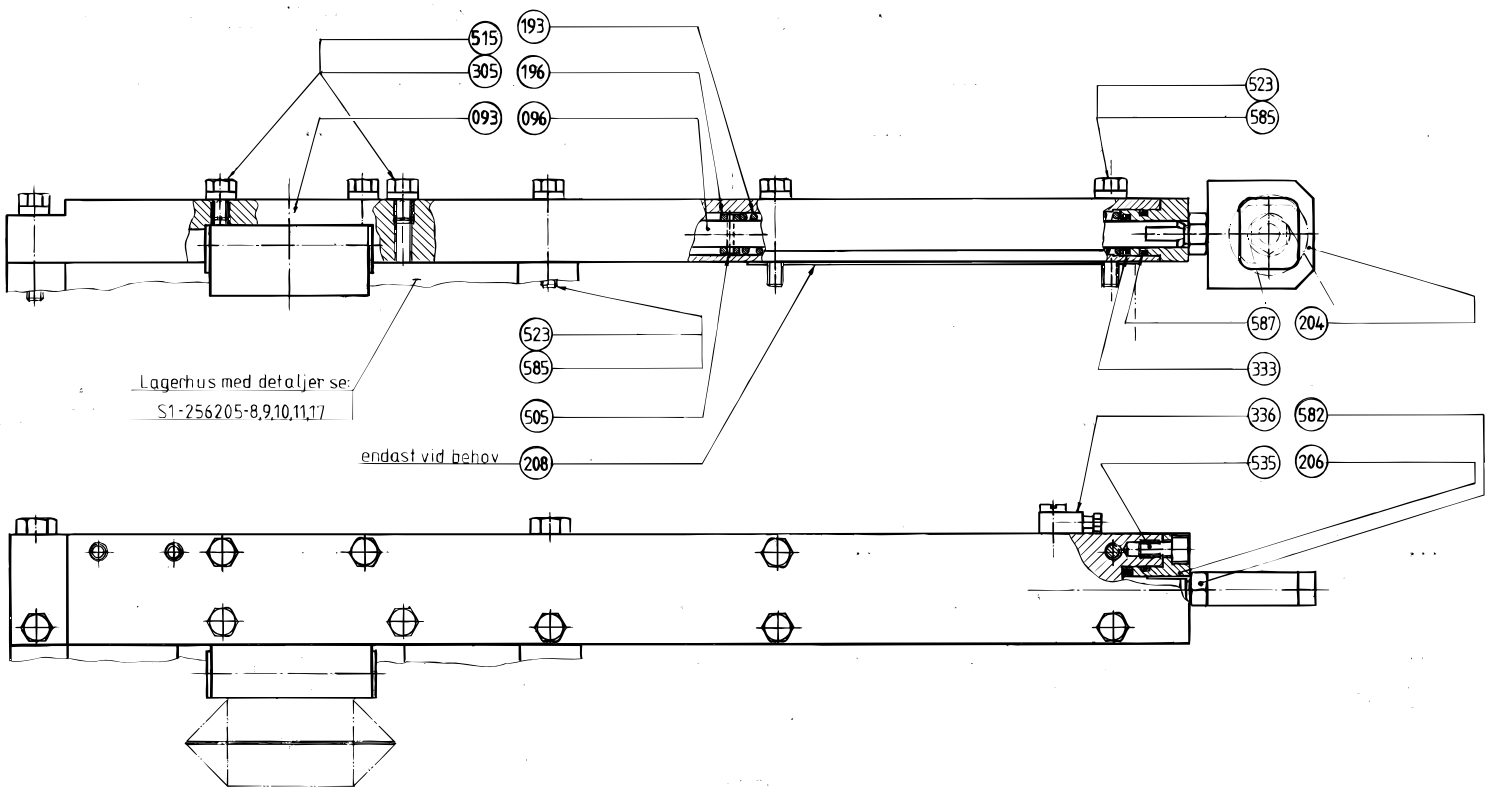

Pos	Part No	SP	UN	Qty	Description	Page No
(Cont'd)						
0200B OR 0250B						
010	256769-0000		C	1	CUTTING JAW	
030	256770-0000		C	1	BEARING HOUSING	
040	751576-0000		C	1	RULERPART L	
045	751578-0000		-	1	RULERPART L	
060	272422-0000		C	1	FOLDING FLAP	
070	272423-0000		C	1	FOLDING FLAP	
0200S						
010	441727-0000		C	1	CUTTING JAW	
030	272263-0000		C	1	BEARING HOUSING	
040	752011-0000		C	1	RULERPART L	
045	752012-0000		-	1	RULERPART L	
060	272424-0000		C	1	FOLDING FLAP	
070	272425-0000		C	1	FOLDING FLAP	
170	752574-0000		C	4	END PIECE	
Common Parts						
050	1110820-0000		C	2	Cutting rail	
090	1348053-0000		C	2	Bracket	
093	256692-0000		C	1	CARRIER	
096	256659-0000		C	1	OPERATING ROD	
100	978745-0000		C	2	CATCH	
130	272419-0000		C	2	CARRIER	
140	22463-0000		C	2	ROLL	
150	33408-0000		C	4	BEARING	
160	B1110375-0003		-	2	Dolly	
180	1517641-0000		C	2	FLANGE BUSHING	
193	255742-0000		C	1	COMPRESSION SPRING	
196	255801-0000		C	1	RETAINING RING	
200	256607-0000		C	2	AXLE PIN	
204	256626-0000		C	1	EAR	
206	256706-0000		C	1	BEARING PLATE	
208	257362-0000		C	2	LACE	
210	490944-0000		C	2	PLUNGER	
230	441355-0000		-	2	BLEEDING SCREW	
240	751579-0000		-	1	ADJUSTING SCREW	
250	751580-0000		-	1	SHIM	
305	315237-0106		-	2	Washer,Pl.Rnd.Al.6/10,H=1	
310	315237-0109		C	3	Washer,Pl.Rnd.Al.10/14,H=1,5	
320	90090-0005		C	2	STEEL-BALL SKF RB 3/111	
330	90091-0216		C	2	Piston Seal, Glidoring 7,1x12x2,2 mm	
333	90091-0091		C	1	Rod Seal, Glidoring 10x14x1,7 mm	
335	90091-0169		C	4	Wear Ring 12x15x3,2 mm	
336	90134-0058		-	1	Connection	
340	90153-0015		-	KG 1	ADHESIVE Loctite IS 496/CYANOLIT 303	
350	90242-0093		C	MM 45	O-RING	
355	90287-0128		-	2	Screw, Sock.Set Dogpoint M4x6	
360	90330-0066		-	3	Plug, Ext. G-Thread, G1/8	
500	311103-0312		-	1	Pin, Parallell, m6, 5x25	
505	311111-0207		C	1	Pin, Straight Slotted Spring FRP 3x14	
510	311111-0308		C	2	Pin, Straight Slotted Spring FRP 5x20	
523	312105-0376		-	8	Screw M6S M6S M6x35 A280	
530	312105-0462		-	2	Screw M6S M8x55 A280	
535	312115-0366		-	2	Screw MC6S M6x12 A280	
540	312115-0370		-	2	Screw MC6S M6x20 A280	
560	312145-0291		-	2	Screw Counters.Slot.Hd. MFS 4x12 A4	
582	312605-0318		-	1	Nut Hex. M6M M8 A280	
585	315115-0153		-	8	Washer, Plain, TBRB 6,4/12 H=3	
587	315202-0265		C	1	O-Ring 12,3x2,4 mm	
590	315230-0157		C	4	Bearing Seal 12x16x3 mm	

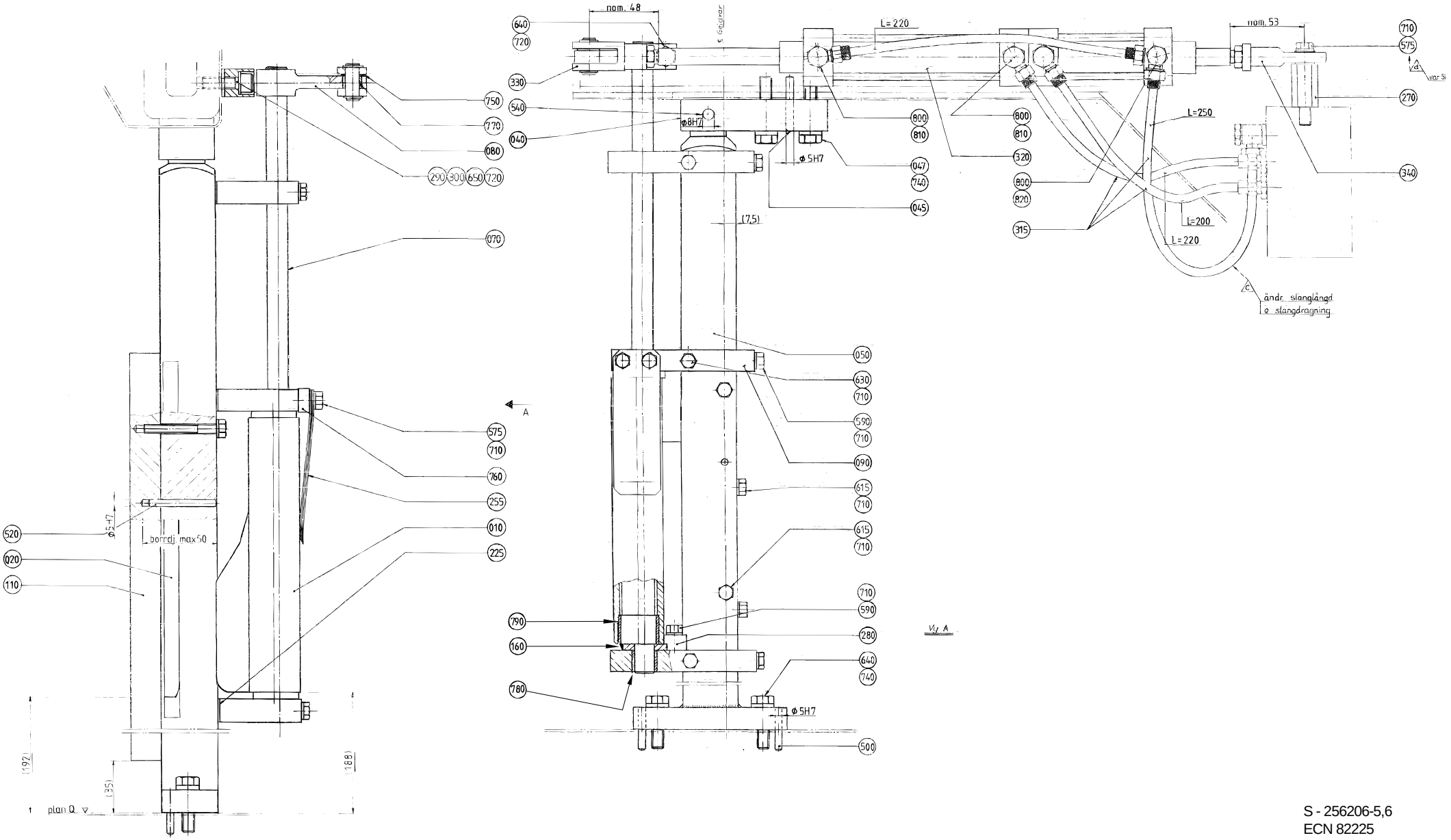
nom. 48
L=220
nom. 53
L=250
L=200
L=220
ändr. slanglängd
ø slangdragning
ø8H7
ø5H7
(7,5)
borrdj. max 50
plan Q
(192)
(35)
(188)
640
720
330
540
040
750
770
080
290
300
650
720
070
575
710
760
255
010
225
520
020
110
800
810
320
047
740
045
315
340
270
050
630
590
090
615
790
160
780
280
500

Pos	Part No	SP	UN	Qty	Description	Page No
0125S IH OR 0200B IH						
020	272640-0005	C		1	COUNTER CAM	
040	256707-0000	-		1	BRACKET	
045	311103-0316	C		2	Pin, Parallell, m6, 5x35	
047	312105-0459	-		2	Screw M6S M8x40 A280	
070	272654-0000	C		1	ECCENTRIC SHAFT	
160	256621-0000	C		2	WASHER	
0200B TPC						
010	456760-0006	C		1	FOLDING FLAP CAM	
020	272640-0004	C		1	COUNTER CAM	
040	256707-0000	-		1	BRACKET	
045	311103-0316	C		2	Pin, Parallell, m6, 5x35	
047	312105-0459	-		2	Screw M6S M8x40 A280	
070	272654-0000	C		1	ECCENTRIC SHAFT	
160	256621-0000	C		2	WASHER	
0200S IH OR 0236B TPC						
010	456760-0003	C		1	FOLDING FLAP CAM 200S	
020	272640-0009	C		1	COUNTER CAM	
040	256707-0000	-		1	BRACKET	
045	311103-0316	C		2	Pin, Parallell, m6, 5x35	
047	312105-0459	-		2	Screw M6S M8x40 A280	
070	272654-0000	C		1	ECCENTRIC SHAFT	
160	256621-0000	C		2	WASHER	
0200S TPC						
010	456760-0008	C		1	FOLDING FLAP CAM	
020	272640-0008	C		1	COUNTER CAM	
040	295774-0000	-		1	BRACKET	
045	311103-0310	C		2	Pin, Parallell, m6, 5x20	
047	312105-0453	-		2	Screw M6S M8x25 A280	
070	272654-0000	C		1	ECCENTRIC SHAFT	
160	256621-0000	C		2	WASHER	
0160S IH						
010	577225-0000	C		1	FOLDING FLAP CAM	
020	272640-0006	C		1	COUNTER CAM	
040	256707-0000	-		1	BRACKET	
045	311103-0316	C		2	Pin, Parallell, m6, 5x35	
047	312105-0459	-		2	Screw M6S M8x40 A280	
070	272654-0000	C		1	ECCENTRIC SHAFT	
160	256621-0000	C		2	WASHER	
0180B IH						
020	272640-0007	C		1	COUNTER CAM	
040	256707-0000	-		1	BRACKET	
045	311103-0316	C		2	Pin, Parallell, m6, 5x35	
047	312105-0459	-		2	Screw M6S M8x40 A280	
070	272654-0000	C		1	ECCENTRIC SHAFT	
160	256621-0000	C		2	WASHER	
0180B TPC						
010	456760-0006	C		1	FOLDING FLAP CAM	
020	272640-0006	C		1	COUNTER CAM	
040	256707-0000	-		1	BRACKET	
045	311103-0316	C		2	Pin, Parallell, m6, 5x35	
047	312105-0459	-		2	Screw M6S M8x40 A280	
070	272654-0000	C		1	ECCENTRIC SHAFT	
160	256621-0000	C		2	WASHER	
0236B IH						
010	456760-0011	C		1	FOLDING FLAP CAM 250B	
020	272640-0003	C		1	COUNTER CAM	
040	256707-0000	-		1	BRACKET	
045	311103-0316	C		2	Pin, Parallell, m6, 5x35	
047	312105-0459	-		2	Screw M6S M8x40 A280	
070	272654-0000	C		1	ECCENTRIC SHAFT	
160	256621-0000	C		2	WASHER	
0250B IH						
010	456760-0003	C		1	FOLDING FLAP CAM 200S	
020	272640-0002	C		1	COUNTER CAM	
040	256707-0000	-		1	BRACKET	
045	311103-0316	C		2	Pin, Parallell, m6, 5x35	
047	312105-0459	-		2	Screw M6S M8x40 A280	
070	272654-0000	C		1	ECCENTRIC SHAFT	
160	256621-0000	C		2	WASHER	
0250B TPC OR 0284B IH						
010	456760-0001	C		1	FOLDING FLAP CAM	
020	272640-0001	C		1	COUNTER CAM	
040	256707-0000	-		1	BRACKET	
045	311103-0316	C		2	Pin, Parallell, m6, 5x35	
047	312105-0459	-		2	Screw M6S M8x40 A280	
070	272654-0000	C		1	ECCENTRIC SHAFT	
160	256621-0000	C		2	WASHER	

(Cont'd)

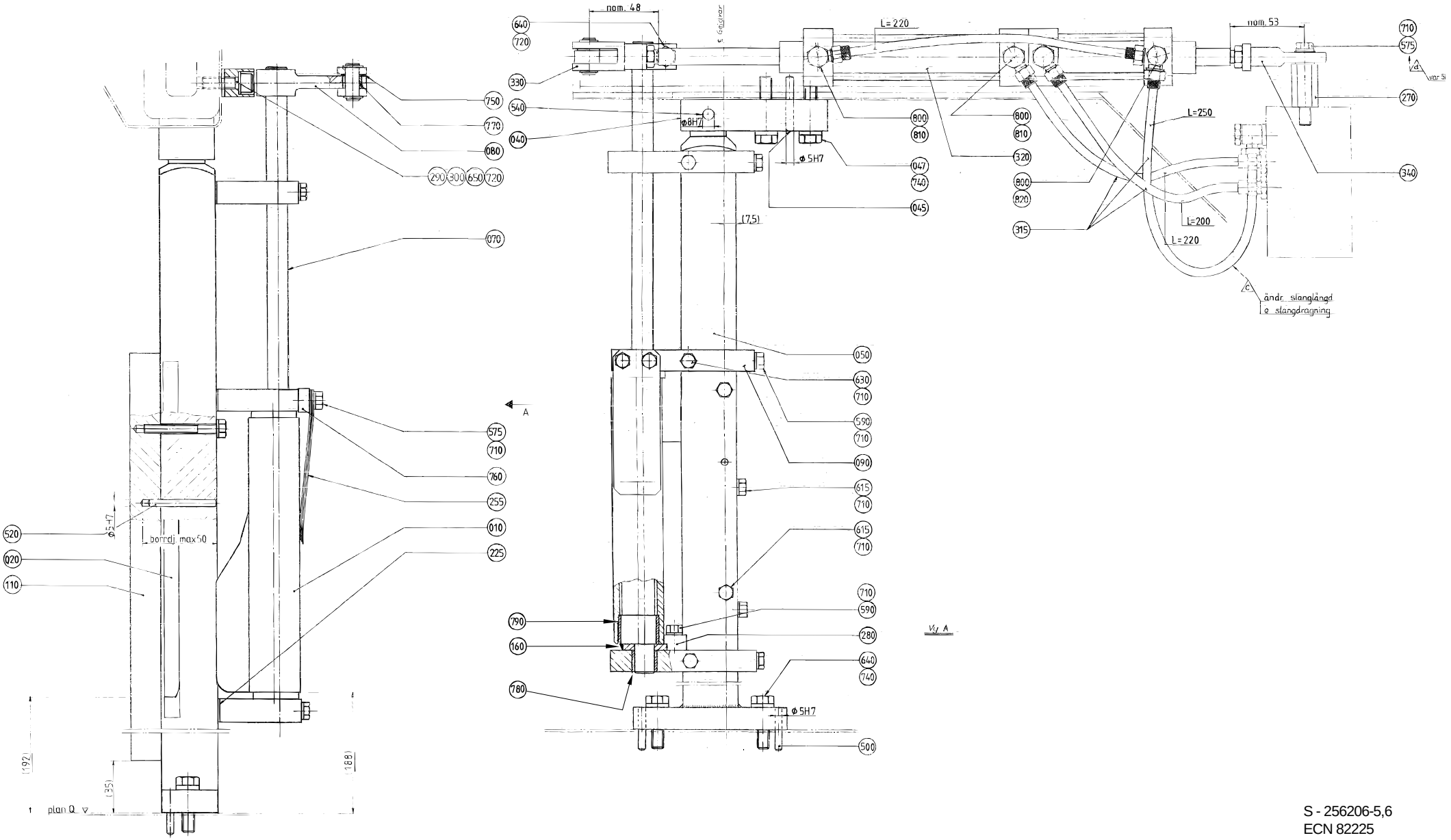
nom. 48
L=220
nom. 53
L=250
L=200
L=220
ändr. slanglängd
ø slangdragning
ø8H7
ø5H7
(7,5)
borrdj. max 50
ø5H7
(192)
(35)
(188)
plan Q
A
640
720
330
540
040
750
770
080
290
300
650
720
070
575
710
760
255
010
225
520
020
110
800
810
320
800
820
315
047
740
045
340
270
050
630
710
590
710
090
615
710
615
710
710
590
280
640
740
790
160
780
500

Pos	Part No	SP	UN	Qty	Description	Page No
(Cont'd)						
0250S IH						
010	574364-0000	C		1	FOLDING FLAP CAM	
020	272640-0009	C		1	COUNTER CAM	
040	256707-0000	-		1	BRACKET	
045	311103-0316	C		2	Pin, Parallell, m6, 5x35	
047	312105-0459	-		2	Screw M6S M8x40 A280	
070	574375-0000	C		1	ECCENTRIC SHAFT	
160	256621-0000	C		1	WASHER	
165	574374-0000	C		1	WASHER	
Common Parts						
050	272641-0000	-		1	PILLAR	
080	272429-0000	C		1	ARM	
090	272491-0000	-		3	BRACKET	
110	272645-0000	C		1	RAIL	
225	256705-0000	C		6	LACE	
255	257334-0000	C		3	LEAF SPRING	
270	271132-0000	-		1	SPACER	
280	271284-0000	-		1	BLOCKING PIECE	
290	978184-0000	-		1	STOPPER	
300	978185-0000	-		1	SHIM	
315	90166-0132	C	MM	89	TUBE 6 mm PA,Transp.	
320	90450-0096	C		1	CYLINDER	
330	90239-0357	C		1	ROD END,CLEVIS WITH AXLE M10X1,25	
340	90239-0405	C		1	ROD END,BALL JOINT EYE,MINI-ISO M10X1,25	
500	311103-0314	-		2	Pin, Parallell, m6, 5x30	
520	311103-0320	-		2	Pin, Parallell, CP, m6, 5x45	
540	311103-0409	-		1	Pin, Parallell, m6, 8x40	
575	312105-0368	-		3	Screw M6S M6x16 A280	
590	312105-0372	-		5	Screw M6S M6x25 A280	
615	312105-0379	-		5	Screw M6S M6x45 A280	
630	312105-0384	-		3	Screw M6S M6x70 A280	
640	312105-0455	-		3	Screw M6S M8x30 A280	
650	312115-0453	-		1	Screw MC6S M8x25 A280	
710	315105-0153	-		16	Washer, Plain, BRB, 6,4/12,H=1,5	
720	315105-0165	-		3	Washer, Plain, BRB, 8,4/16,H=1,5	
740	315115-0165	-		4	Washer, Plain, TBRB 8,4/16 H=3	
750	315233-0109	C		1	Washer,Pl.Rnd.Nyl.10,3/14,H=1	
760	315742-0102	-		2	Collar, 6/16, H=8	
770	321120-0098	C		1	BEARING BUSHING WITHOUT FLANG,10/12X8	
780	321120-0118	C		3	BEARING BUSHING WITHOUT FLANGE,14/16X15	
790	321120-0153	C		2	BEARING BUSHING WITHOUT FLANGE,24/27X20	
800	342980-0113	C		5	BANJO-CONNECTION,RING 6/4-G1/8"	
810	342980-0303	C		3	BANJO-HOLLOW BOLT COUPL,EXT.THR.01-G1/8"	
820	342980-0313	C		1	BANJO-HOLLOW BOLT COUPL,EXT.THR.02-G1/8"	

(Cont'd)

DESIGN CORRECTION DEVICE RIGHT

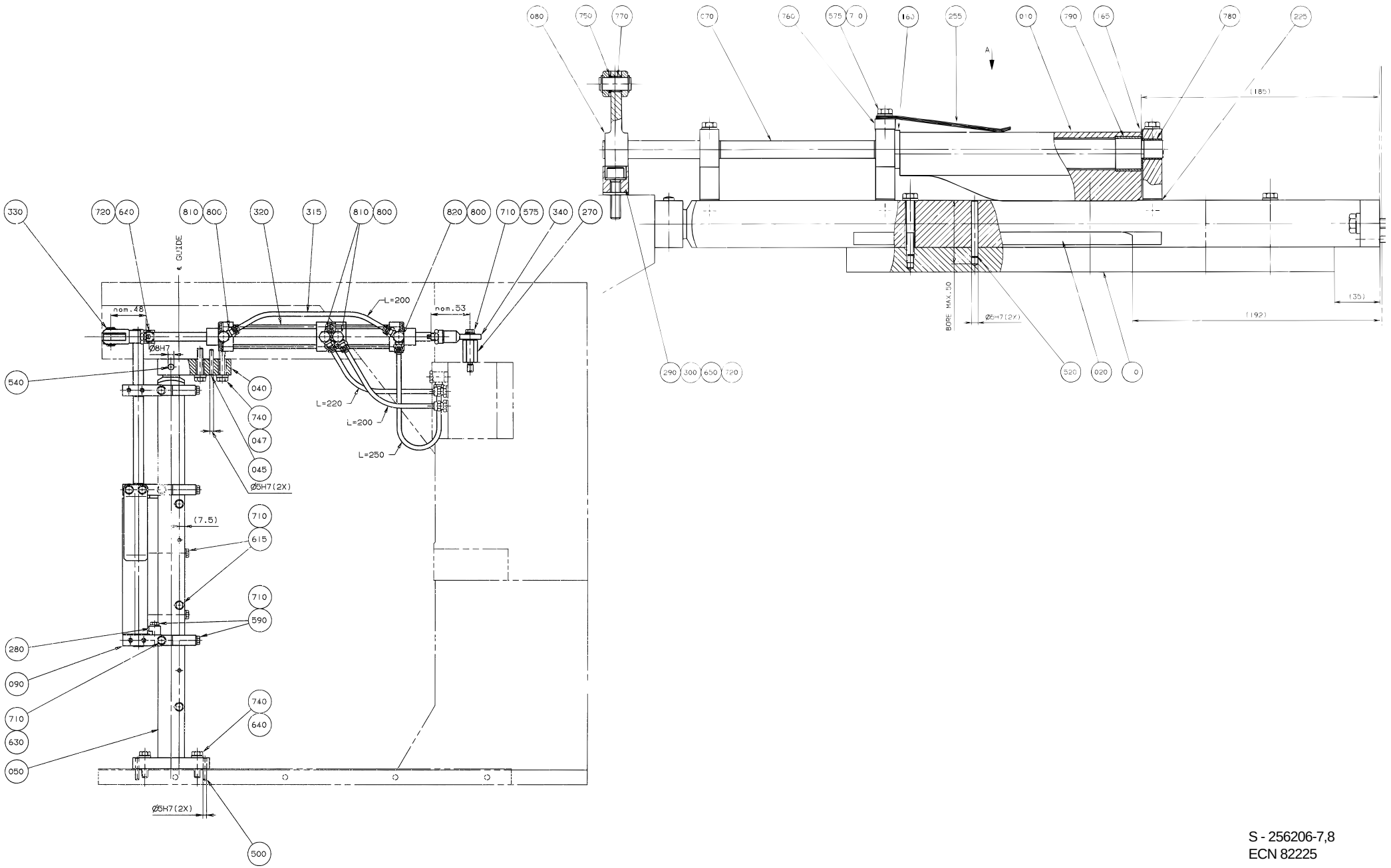

S - 256206-7,8
ECN 82225

Pos	Part No	SP	UN	Qty	Description	Page No
(Cont'd)						
0125S IH OR 0200B IH						
020	272640-0005	C		1	COUNTER CAM	
040	256707-0000	-		1	BRACKET	
045	311103-0316	C		2	Pin, Parallell, m6, 5x35	
047	312105-0459	-		2	Screw M6S M8x40 A280	
070	272654-0000	C		1	ECCENTRIC SHAFT	
160	256621-0000	C		2	WASHER	
0200B TPC						
010	456760-0006	C		1	FOLDING FLAP CAM	
020	272640-0004	C		1	COUNTER CAM	
040	256707-0000	-		1	BRACKET	
045	311103-0316	C		2	Pin, Parallell, m6, 5x35	
047	312105-0459	-		2	Screw M6S M8x40 A280	
070	272654-0000	C		1	ECCENTRIC SHAFT	
160	256621-0000	C		2	WASHER	
0200S IH OR 0236B TPC						
010	456760-0003	C		1	FOLDING FLAP CAM 200S	
020	272640-0009	C		1	COUNTER CAM	
040	256707-0000	-		1	BRACKET	
045	311103-0316	C		2	Pin, Parallell, m6, 5x35	
047	312105-0459	-		2	Screw M6S M8x40 A280	
070	272654-0000	C		1	ECCENTRIC SHAFT	
160	256621-0000	C		2	WASHER	
0200S TPC						
010	456760-0008	C		1	FOLDING FLAP CAM	
020	272640-0008	C		1	COUNTER CAM	
040	295774-0000	-		1	BRACKET	
045	311103-0310	C		2	Pin, Parallell, m6, 5x20	
047	312105-0453	-		2	Screw M6S M8x25 A280	
070	272654-0000	C		1	ECCENTRIC SHAFT	
160	256621-0000	C		2	WASHER	
0160S IH						
010	577225-0000	C		1	FOLDING FLAP CAM	
020	272640-0006	C		1	COUNTER CAM	
040	256707-0000	-		1	BRACKET	
045	311103-0316	C		2	Pin, Parallell, m6, 5x35	
047	312105-0459	-		2	Screw M6S M8x40 A280	
070	272654-0000	C		1	ECCENTRIC SHAFT	
160	256621-0000	C		2	WASHER	
0180B IH						
020	272640-0007	C		1	COUNTER CAM	
040	256707-0000	-		1	BRACKET	
045	311103-0316	C		2	Pin, Parallell, m6, 5x35	
047	312105-0459	-		2	Screw M6S M8x40 A280	
070	272654-0000	C		1	ECCENTRIC SHAFT	
160	256621-0000	C		2	WASHER	
0180B TPC						
010	456760-0006	C		1	FOLDING FLAP CAM	
020	272640-0006	C		1	COUNTER CAM	
040	256707-0000	-		1	BRACKET	
045	311103-0316	C		2	Pin, Parallell, m6, 5x35	
047	312105-0459	-		2	Screw M6S M8x40 A280	
070	272654-0000	C		1	ECCENTRIC SHAFT	
160	256621-0000	C		2	WASHER	
0236B IH						
010	456760-0011	C		1	FOLDING FLAP CAM 250B	
020	272640-0003	C		1	COUNTER CAM	
040	256707-0000	-		1	BRACKET	
045	311103-0316	C		2	Pin, Parallell, m6, 5x35	
047	312105-0459	-		2	Screw M6S M8x40 A280	
070	272654-0000	C		1	ECCENTRIC SHAFT	
160	256621-0000	C		2	WASHER	
0250B IH						
010	456760-0003	C		1	FOLDING FLAP CAM 200S	
020	272640-0002	C		1	COUNTER CAM	
040	256707-0000	-		1	BRACKET	
045	311103-0316	C		2	Pin, Parallell, m6, 5x35	
047	312105-0459	-		2	Screw M6S M8x40 A280	
070	272654-0000	C		1	ECCENTRIC SHAFT	
160	256621-0000	C		2	WASHER	
0250B TPC OR 0284B IH						
010	456760-0001	C		1	FOLDING FLAP CAM	
020	272640-0001	C		1	COUNTER CAM	
040	256707-0000	-		1	BRACKET	
045	311103-0316	C		2	Pin, Parallell, m6, 5x35	
047	312105-0459	-		2	Screw M6S M8x40 A280	
070	272654-0000	C		1	ECCENTRIC SHAFT	
160	256621-0000	C		2	WASHER	

(Cont'd)

DESIGN CORRECTION DEVICE RIGHT

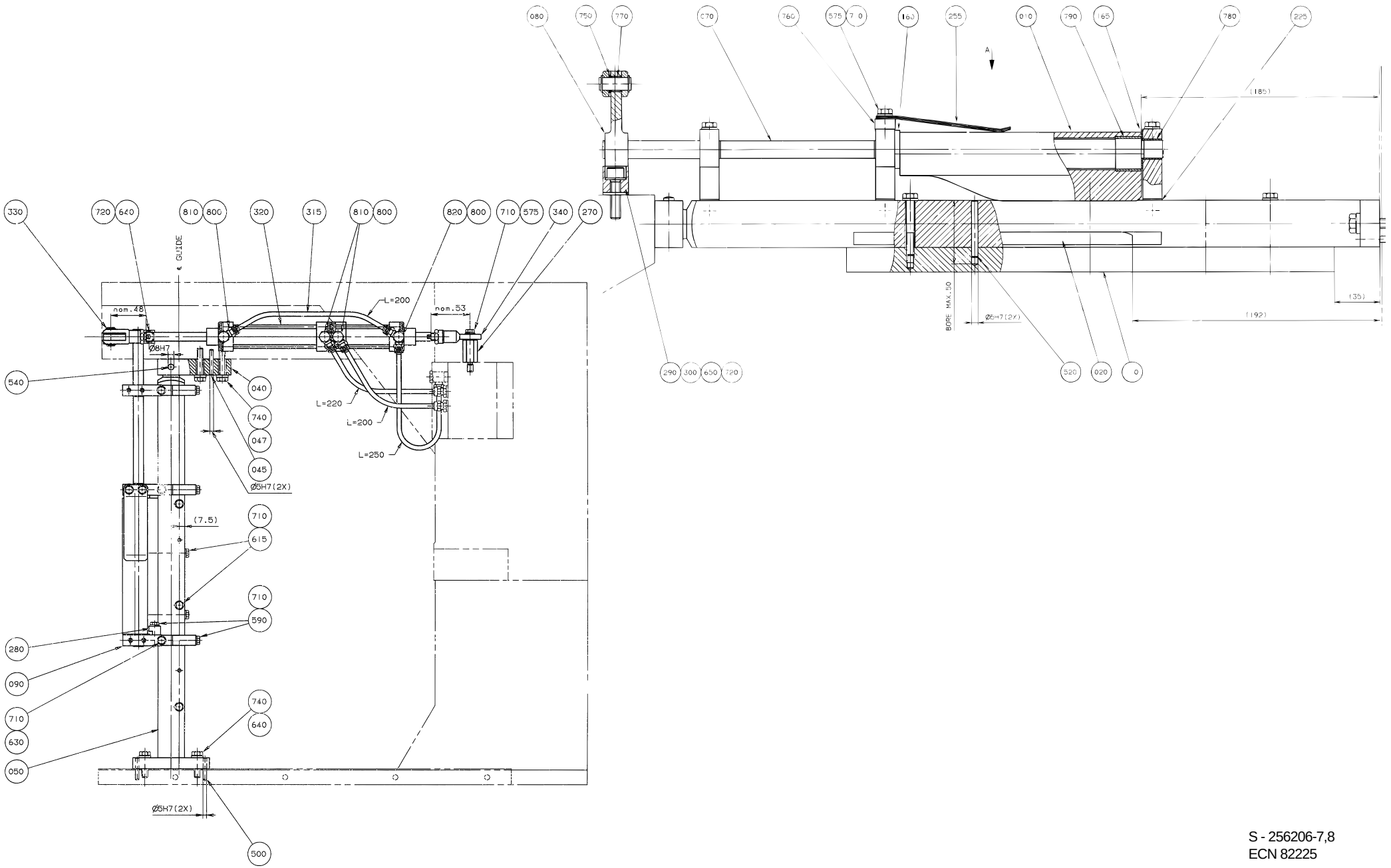

S - 256206-7,8
ECN 82225

Pos	Part No	SP	UN	Qty	Description	Page No
(Cont'd)						
0250S IH						
010	574364-0000	C		1	FOLDING FLAP CAM	
020	272640-0009	C		1	COUNTER CAM	
040	256707-0000	-		1	BRACKET	
045	311103-0316	C		2	Pin, Parallell, m6, 5x35	
047	312105-0459	-		2	Screw M6S M8x40 A280	
070	574375-0000	C		1	ECCENTRIC SHAFT	
160	256621-0000	C		1	WASHER	
165	574374-0000	C		1	WASHER	
Common Parts						
050	272641-0000	-		1	PILLAR	
080	272429-0000	C		1	ARM	
090	272491-0000	-		3	BRACKET	
110	272645-0000	C		1	RAIL	
225	256705-0000	C		6	LACE	
255	257334-0000	C		3	LEAF SPRING	
270	271132-0000	-		1	SPACER	
280	271284-0000	-		1	BLOCKING PIECE	
290	978184-0000	-		1	STOPPER	
300	978185-0000	-		1	SHIM	
315	90166-0132	C	MM	89	TUBE 6 mm PA,Transp.	
320	90450-0096	C		1	CYLINDER	
330	90239-0357	C		1	ROD END,CLEVIS WITH AXLE M10X1,25	
340	90239-0405	C		1	ROD END,BALL JOINT EYE,MINI-ISO M10X1,25	
500	311103-0314	-		2	Pin, Parallell, m6, 5x30	
520	311103-0320	-		2	Pin, Parallell, CP, m6, 5x45	
540	311103-0409	-		1	Pin, Parallell, m6, 8x40	
575	312105-0368	-		3	Screw M6S M6x16 A280	
590	312105-0372	-		5	Screw M6S M6x25 A280	
615	312105-0379	-		5	Screw M6S M6x45 A280	
630	312105-0384	-		3	Screw M6S M6x70 A280	
640	312105-0455	-		3	Screw M6S M8x30 A280	
650	312115-0453	-		1	Screw MC6S M8x25 A280	
710	315105-0153	-		16	Washer, Plain, BRB, 6,4/12,H=1,5	
720	315105-0165	-		3	Washer, Plain, BRB, 8,4/16,H=1,5	
740	315115-0165	-		4	Washer, Plain, TBRB 8,4/16 H=3	
750	315233-0109	C		1	Washer,Pl.Rnd.Nyl.10,3/14,H=1	
760	315742-0102	-		2	Collar, 6/16, H=8	
770	321120-0098	C		1	BEARING BUSHING WITHOUT FLANG,10/12X8	
780	321120-0118	C		3	BEARING BUSHING WITHOUT FLANGE,14/16X15	
790	321120-0153	C		2	BEARING BUSHING WITHOUT FLANGE,24/27X20	
800	342980-0113	C		5	BANJO-CONNECTION,RING 6/4-G1/8"	
810	342980-0303	C		3	BANJO-HOLLOW BOLT COUPL,EXT.THR.01-G1/8"	
820	342980-0313	C		1	BANJO-HOLLOW BOLT COUPL,EXT.THR.02-G1/8"	

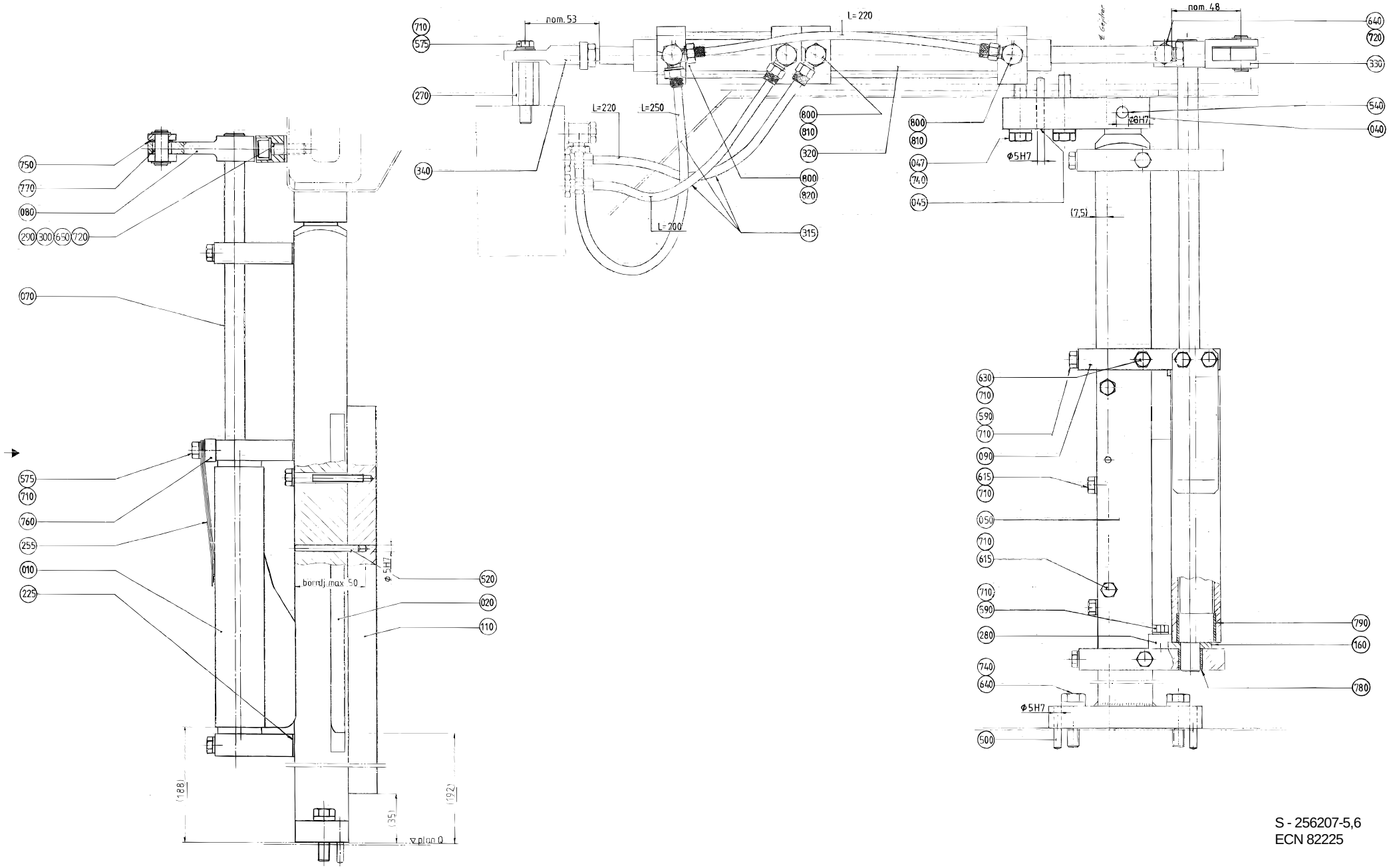

S - 256207-5,6
ECN 82225

Pos	Part No	SP	UN	Qty	Description	Page No
0125S IH OR 0200B IH						
010	456760-0010	C		1	FOLDING FLAP CAM 200B & 125S	
020	272640-0005	C		1	COUNTER CAM	
040	256707-0000	-		1	BRACKET	
045	311103-0316	C		2	Pin, Parallell, m6, 5x35	
047	312105-0459	-		2	Screw M6S M8x40 A280	
070	272654-0000	C		1	ECCENTRIC SHAFT	
160	256621-0000	C		2	WASHER	
0180B IH						
010	456760-0010	C		1	FOLDING FLAP CAM 200B & 125S	
020	272640-0007	C		1	COUNTER CAM	
040	256707-0000	-		1	BRACKET	
045	311103-0316	C		2	Pin, Parallell, m6, 5x35	
047	312105-0459	-		2	Screw M6S M8x40 A280	
070	272654-0000	C		1	ECCENTRIC SHAFT	
160	256621-0000	C		2	WASHER	
0180B TPC						
010	456760-0006	C		1	FOLDING FLAP CAM	
020	272640-0006	C		1	COUNTER CAM	
040	256707-0000	-		1	BRACKET	
045	311103-0316	C		2	Pin, Parallell, m6, 5x35	
047	312105-0459	-		2	Screw M6S M8x40 A280	
070	272654-0000	C		1	ECCENTRIC SHAFT	
160	256621-0000	C		2	WASHER	
0200B TPC						
010	456760-0006	C		1	FOLDING FLAP CAM	
020	272640-0004	C		1	COUNTER CAM	
040	256707-0000	-		1	BRACKET	
045	311103-0316	C		2	Pin, Parallell, m6, 5x35	
047	312105-0459	-		2	Screw M6S M8x40 A280	
070	272654-0000	C		1	ECCENTRIC SHAFT	
160	256621-0000	C		2	WASHER	
0200S IH OR 0236B TPC						
010	456760-0003	C		1	FOLDING FLAP CAM 200S	
020	272640-0009	C		1	COUNTER CAM	
040	256707-0000	-		1	BRACKET	
045	311103-0316	C		2	Pin, Parallell, m6, 5x35	
047	312105-0459	-		2	Screw M6S M8x40 A280	
070	272654-0000	C		1	ECCENTRIC SHAFT	
160	256621-0000	C		2	WASHER	
0236B IH						
010	456760-0011	C		1	FOLDING FLAP CAM 250B	
020	272640-0003	C		1	COUNTER CAM	
040	256707-0000	-		1	BRACKET	
045	311103-0316	C		2	Pin, Parallell, m6, 5x35	
047	312105-0459	-		2	Screw M6S M8x40 A280	
070	272654-0000	C		1	ECCENTRIC SHAFT	
160	256621-0000	C		2	WASHER	
0250B IH						
010	456760-0003	C		1	FOLDING FLAP CAM 200S	
020	272640-0002	C		1	COUNTER CAM	
040	256707-0000	-		1	BRACKET	
045	311103-0316	C		2	Pin, Parallell, m6, 5x35	
047	312105-0459	-		2	Screw M6S M8x40 A280	
070	272654-0000	C		1	ECCENTRIC SHAFT	
160	256621-0000	C		2	WASHER	
0250B TPC OR 0284B IH						
010	456760-0001	C		1	FOLDING FLAP CAM	
020	272640-0001	C		1	COUNTER CAM	
040	256707-0000	-		1	BRACKET	
045	311103-0316	C		2	Pin, Parallell, m6, 5x35	
047	312105-0459	-		2	Screw M6S M8x40 A280	
070	272654-0000	C		1	ECCENTRIC SHAFT	
160	256621-0000	C		2	WASHER	
0160S IH						
010	577225-0000	C		1	FOLDING FLAP CAM	
020	272640-0006	C		1	COUNTER CAM	
040	256707-0000	-		1	BRACKET	
045	311103-0316	C		2	Pin, Parallell, m6, 5x35	
047	312105-0459	-		2	Screw M6S M8x40 A280	
070	272654-0000	C		1	ECCENTRIC SHAFT	
160	256621-0000	C		2	WASHER	
0200S TPC						
010	456760-0008	C		1	FOLDING FLAP CAM	
020	272640-0008	C		1	COUNTER CAM	
040	295774-0000	-		1	BRACKET	
045	311103-0310	C		2	Pin, Parallell, m6, 5x20	
047	312105-0453	-		2	Screw M6S M8x25 A280	
070	272654-0000	C		1	ECCENTRIC SHAFT	
160	256621-0000	C		2	WASHER	

(Cont'd)

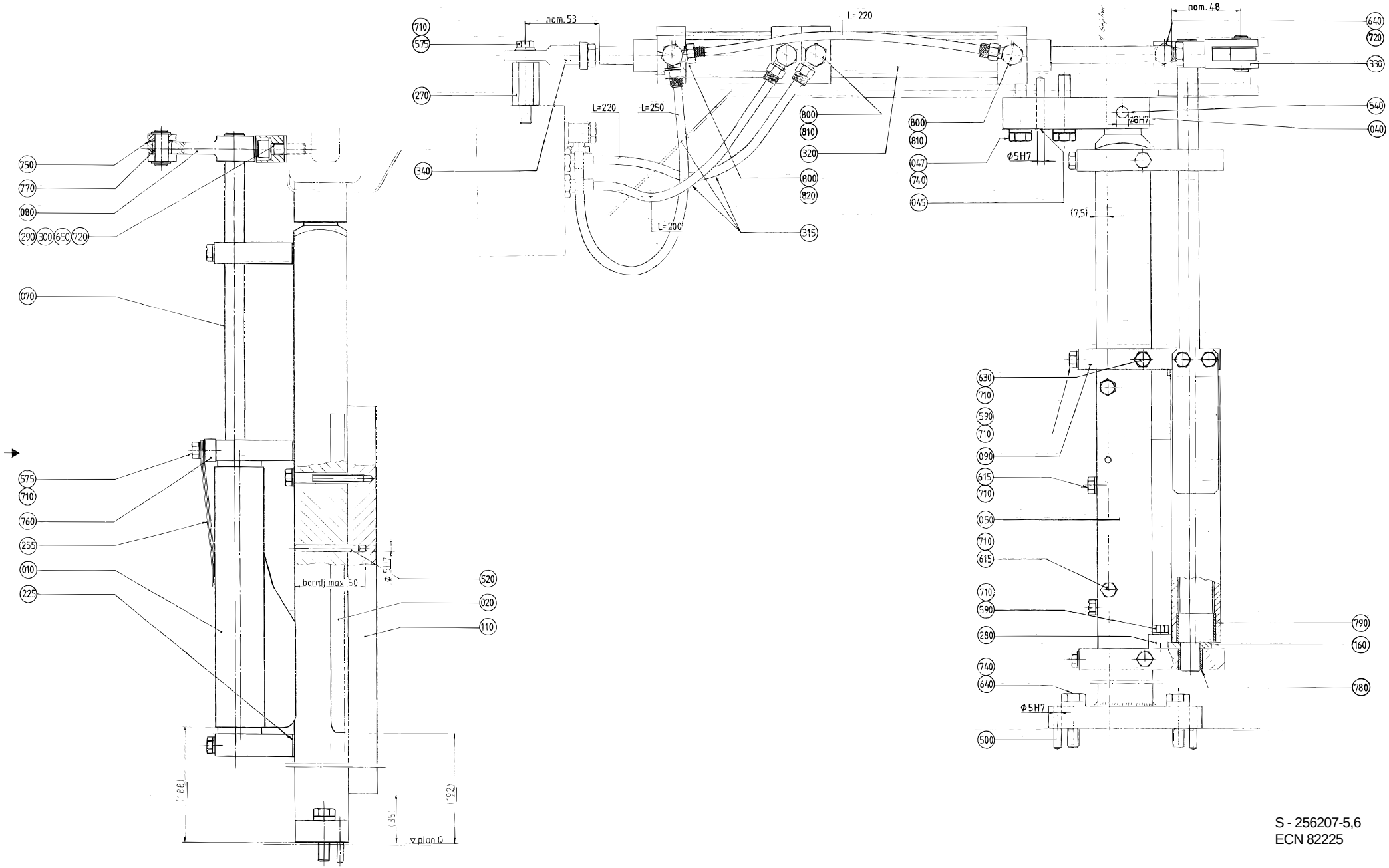

S - 256207-5,6
ECN 82225

Pos	Part No	SP	UN	Qty	Description	Page No
(Cont'd)						
0250S IH						
010	574364-0000	C		1	FOLDING FLAP CAM	
020	272640-0009	C		1	COUNTER CAM	
040	256707-0000	-		1	BRACKET	
045	311103-0316	C		2	Pin, Parallell, m6, 5x35	
047	312105-0459	-		2	Screw M6S M8x40 A280	
070	574375-0000	C		1	ECCENTRIC SHAFT	
160	256621-0000	C		1	WASHER	
165	574374-0000	C		1	WASHER	
Common Parts						
050	272642-0000	-		1	PILLAR	
080	272429-0000	C		1	ARM	
090	272491-0000	-		3	BRACKET	
110	272645-0000	C		1	RAIL	
225	256705-0000	C		6	LACE	
255	257334-0000	C		3	LEAF SPRING	
270	271132-0000	-		1	SPACER	
280	271284-0000	-		1	BLOCKING PIECE	
290	978184-0000	-		1	STOPPER	
300	978185-0000	-		1	SHIM	
315	90166-0132	C	MM	89	TUBE 6 mm PA,Transp.	
320	90450-0096	C		1	CYLINDER	
330	90239-0357	C		1	ROD END,CLEVIS WITH AXLE M10X1,25	
340	90239-0405	C		1	ROD END,BALL JOINT EYE,MINI-ISO M10X1,25	
500	311103-0314	-		2	Pin, Parallell, m6, 5x30	
520	311103-0320	-		2	Pin, Parallell, CP, m6, 5x45	
540	311103-0409	-		1	Pin, Parallell, m6, 8x40	
575	312105-0368	-		3	Screw M6S M6x16 A280	
590	312105-0372	-		5	Screw M6S M6x25 A280	
615	312105-0379	-		5	Screw M6S M6x45 A280	
630	312105-0384	-		3	Screw M6S M6x70 A280	
640	312105-0455	-		3	Screw M6S M8x30 A280	
650	312115-0453	-		1	Screw MC6S M8x25 A280	
710	315105-0153	-		16	Washer, Plain, BRB, 6,4/12,H=1,5	
720	315105-0165	-		3	Washer, Plain, BRB, 8,4/16,H=1,5	
740	315115-0165	-		4	Washer, Plain, TBRB 8,4/16 H=3	
750	315233-0109	C		1	Washer,Pl.Rnd.Nyl.10,3/14,H=1	
760	315742-0102	-		2	Collar, 6/16, H=8	
770	321120-0098	C		1	BEARING BUSHING WITHOUT FLANG,10/12X8	
780	321120-0118	C		3	BEARING BUSHING WITHOUT FLANGE,14/16X15	
790	321120-0153	C		2	BEARING BUSHING WITHOUT FLANGE,24/27X20	
800	342980-0113	C		5	BANJO-CONNECTION,RING 6/4-G1/8"	
810	342980-0303	C		3	BANJO-HOLLOW BOLT COUPL,EXT.THR.01-G1/8"	
820	342980-0313	C		1	BANJO-HOLLOW BOLT COUPL,EXT.THR.02-G1/8"	

(Cont'd)

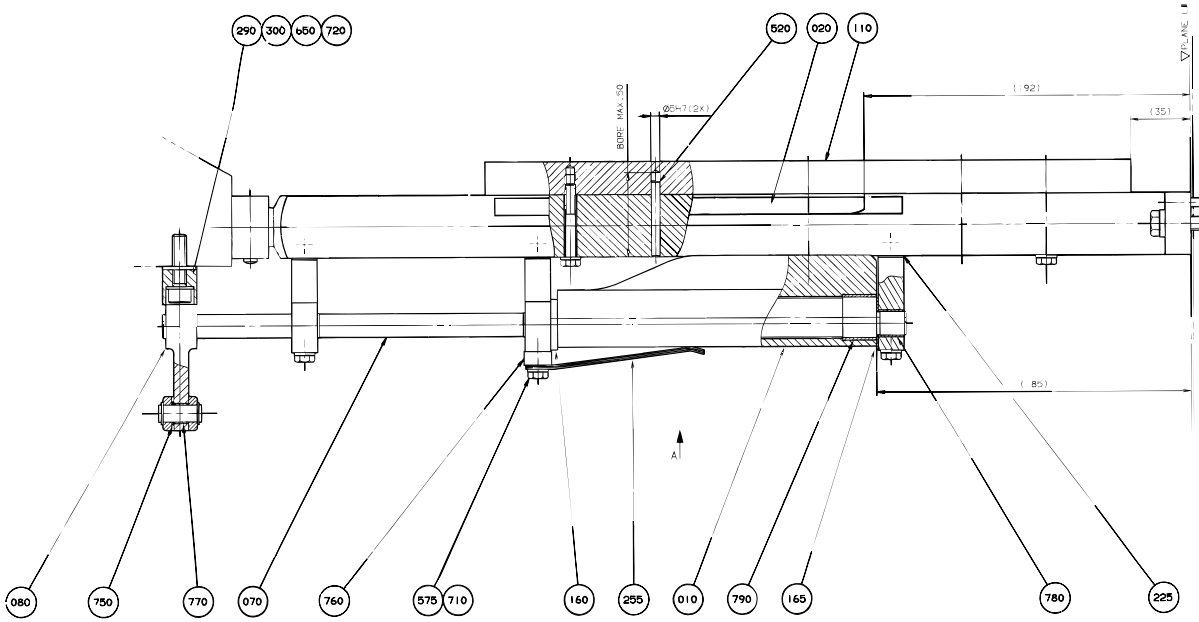

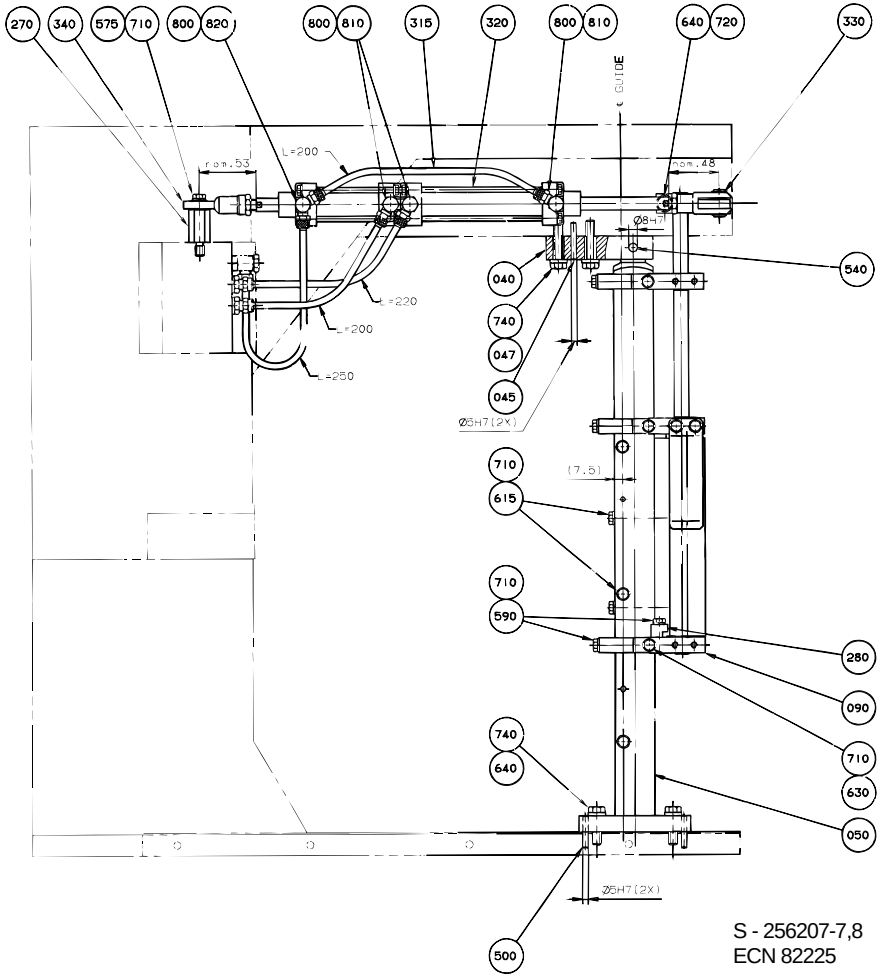

S - 256207-7,8
ECN 82225

Pos	Part No	SP	UN	Qty	Description	Page No
(Cont'd)						
125S IH OR 0200B IH						
010	456760-0010	C		1	FOLDING FLAP CAM 200B & 125S	
020	272640-0005	C		1	COUNTER CAM	
040	256707-0000	-		1	BRACKET	
045	311103-0316	C		2	Pin, Parallell, m6, 5x35	
047	312105-0459	-		2	Screw M6S M8x40 A280	
070	272654-0000	C		1	ECCENTRIC SHAFT	
160	256621-0000	C		2	WASHER	
0180B IH						
010	456760-0010	C		1	FOLDING FLAP CAM 200B & 125S	
020	272640-0007	C		1	COUNTER CAM	
040	256707-0000	-		1	BRACKET	
045	311103-0316	C		2	Pin, Parallell, m6, 5x35	
047	312105-0459	-		2	Screw M6S M8x40 A280	
070	272654-0000	C		1	ECCENTRIC SHAFT	
160	256621-0000	C		2	WASHER	
0180B TPC						
010	456760-0006	C		1	FOLDING FLAP CAM	
020	272640-0006	C		1	COUNTER CAM	
040	256707-0000	-		1	BRACKET	
045	311103-0316	C		2	Pin, Parallell, m6, 5x35	
047	312105-0459	-		2	Screw M6S M8x40 A280	
070	272654-0000	C		1	ECCENTRIC SHAFT	
160	256621-0000	C		2	WASHER	
0200B TPC						
010	456760-0006	C		1	FOLDING FLAP CAM	
020	272640-0004	C		1	COUNTER CAM	
040	256707-0000	-		1	BRACKET	
045	311103-0316	C		2	Pin, Parallell, m6, 5x35	
047	312105-0459	-		2	Screw M6S M8x40 A280	
070	272654-0000	C		1	ECCENTRIC SHAFT	
160	256621-0000	C		2	WASHER	
0200S IH OR 0236B TPC						
010	456760-0003	C		1	FOLDING FLAP CAM 200S	
020	272640-0009	C		1	COUNTER CAM	
040	256707-0000	-		1	BRACKET	
045	311103-0316	C		2	Pin, Parallell, m6, 5x35	
047	312105-0459	-		2	Screw M6S M8x40 A280	
070	272654-0000	C		1	ECCENTRIC SHAFT	
160	256621-0000	C		2	WASHER	

Pos	Part No	SP	UN	Qty	Description	Page No
0236B IH						
010	456760-0011	C		1	FOLDING FLAP CAM 250B	
020	272640-0003	C		1	COUNTER CAM	
040	256707-0000	-		1	BRACKET	
045	311103-0316	C		2	Pin, Parallell, m6, 5x35	
047	312105-0459	-		2	Screw M6S M8x40 A280	
070	272654-0000	C		1	ECCENTRIC SHAFT	
160	256621-0000	C		2	WASHER	
0250B IH						
010	456760-0003	C		1	FOLDING FLAP CAM 200S	
020	272640-0002	C		1	COUNTER CAM	
040	256707-0000	-		1	BRACKET	
045	311103-0316	C		2	Pin, Parallell, m6, 5x35	
047	312105-0459	-		2	Screw M6S M8x40 A280	
070	272654-0000	C		1	ECCENTRIC SHAFT	
160	256621-0000	C		2	WASHER	
0250B TPC OR 0284B IH						
010	456760-0001	C		1	FOLDING FLAP CAM	
020	272640-0001	C		1	COUNTER CAM	
040	256707-0000	-		1	BRACKET	
045	311103-0316	C		2	Pin, Parallell, m6, 5x35	
047	312105-0459	-		2	Screw M6S M8x40 A280	
070	272654-0000	C		1	ECCENTRIC SHAFT	
160	256621-0000	C		2	WASHER	
0160S IH						
010	577225-0000	C		1	FOLDING FLAP CAM	
020	272640-0006	C		1	COUNTER CAM	
040	256707-0000	-		1	BRACKET	
045	311103-0316	C		2	Pin, Parallell, m6, 5x35	
047	312105-0459	-		2	Screw M6S M8x40 A280	
070	272654-0000	C		1	ECCENTRIC SHAFT	
160	256621-0000	C		2	WASHER	
0200S TPC						
010	456760-0008	C		1	FOLDING FLAP CAM	
020	272640-0008	C		1	COUNTER CAM	
040	295774-0000	-		1	BRACKET	
045	311103-0310	C		2	Pin, Parallell, m6, 5x20	
047	312105-0453	-		2	Screw M6S M8x25 A280	
070	272654-0000	C		1	ECCENTRIC SHAFT	
160	256621-0000	C		2	WASHER	

(Cont'd)

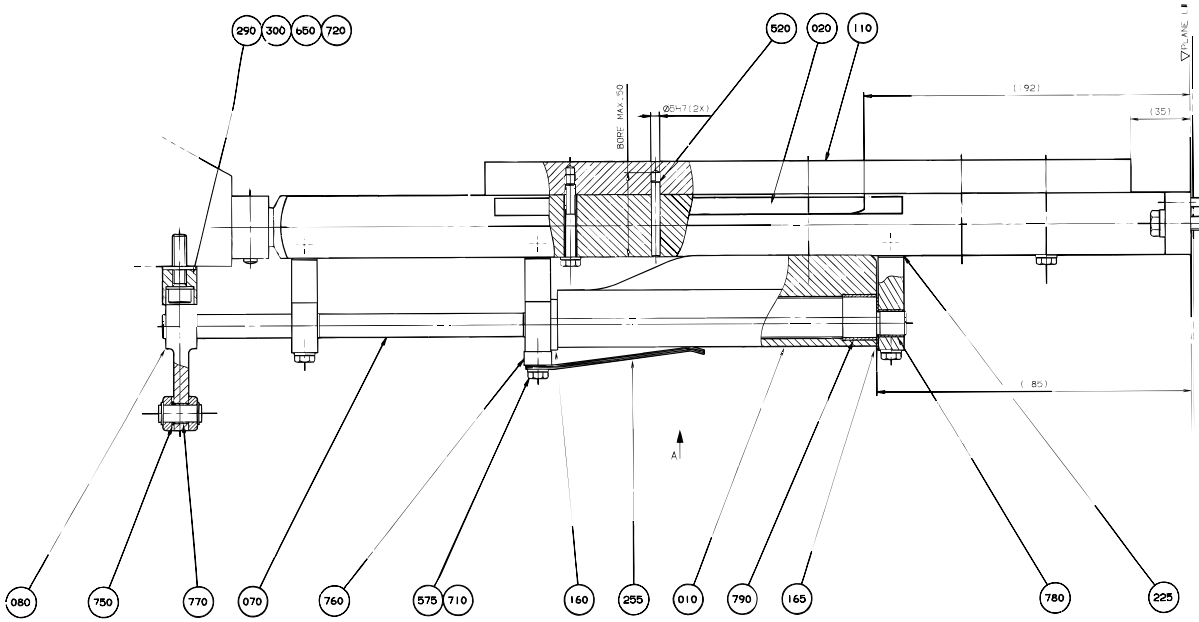

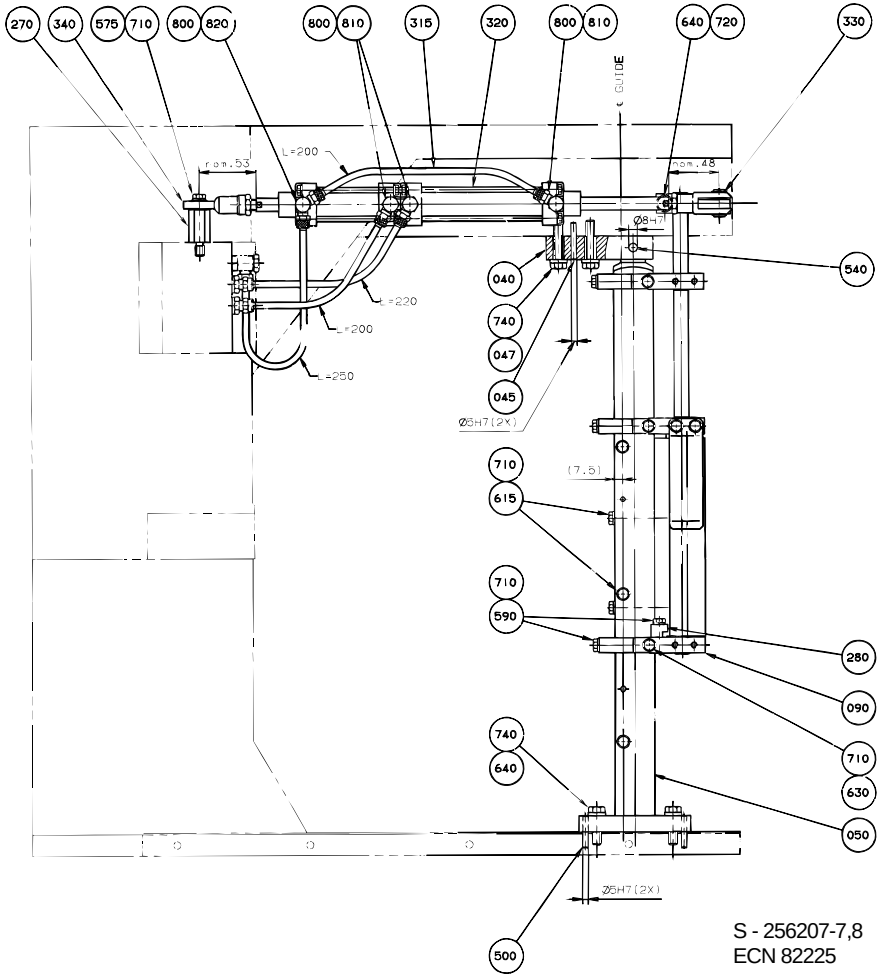

S - 256207-7,8
ECN 82225

Pos	Part No	SP	UN	Qty	Description	Page No
(Cont'd)						
0250S IH						
010	574364-0000	C		1	FOLDING FLAP CAM	
020	272640-0009	C		1	COUNTER CAM	
040	256707-0000	-		1	BRACKET	
045	311103-0316	C		2	Pin, Parallell, m6, 5x35	
047	312105-0459	-		2	Screw M6S M8x40 A280	
070	574375-0000	C		1	ECCENTRIC SHAFT	
160	256621-0000	C		1	WASHER	
165	574374-0000	C		1	WASHER	
Common Parts						
050	272642-0000	-		1	PILLAR	
080	272429-0000	C		1	ARM	
090	272491-0000	-		3	BRACKET	
110	272645-0000	C		1	RAIL	
225	256705-0000	C		6	LACE	
255	257334-0000	C		3	LEAF SPRING	
270	271132-0000	-		1	SPACER	
280	271284-0000	-		1	BLOCKING PIECE	
290	978184-0000	-		1	STOPPER	
300	978185-0000	-		1	SHIM	
315	90166-0132	C	MM	89	TUBE 6 mm PA,Transp.	
320	90450-0096	C		1	CYLINDER	
330	90239-0357	C		1	ROD END,CLEVIS WITH AXLE M10X1,25	
340	90239-0405	C		1	ROD END,BALL JOINT EYE,MINI-ISO M10X1,25	
500	311103-0314	-		2	Pin, Parallell, m6, 5x30	
520	311103-0320	-		2	Pin, Parallell, CP, m6, 5x45	
540	311103-0409	-		1	Pin, Parallell, m6, 8x40	
575	312105-0368	-		3	Screw M6S M6x16 A280	
590	312105-0372	-		5	Screw M6S M6x25 A280	
615	312105-0379	-		5	Screw M6S M6x45 A280	
630	312105-0384	-		3	Screw M6S M6x70 A280	
640	312105-0455	-		3	Screw M6S M8x30 A280	
650	312115-0453	-		1	Screw MC6S M8x25 A280	
710	315105-0153	-		16	Washer, Plain, BRB, 6,4/12,H=1,5	
720	315105-0165	-		3	Washer, Plain, BRB, 8,4/16,H=1,5	
740	315115-0165	-		4	Washer, Plain, TBRB 8,4/16 H=3	
750	315233-0109	C		1	Washer,Pl.Rnd.Nyl.10,3/14,H=1	
760	315742-0102	-		2	Collar, 6/16, H=8	
770	321120-0098	C		1	BEARING BUSHING WITHOUT FLANG,10/12X8	
780	321120-0118	C		3	BEARING BUSHING WITHOUT FLANGE,14/16X15	
790	321120-0153	C		2	BEARING BUSHING WITHOUT FLANGE,24/27X20	
800	342980-0113	C		5	BANJO-CONNECTION,RING 6/4-G1/8"	
810	342980-0303	C		3	BANJO-HOLLOW BOLT COUPL,EXT.THR.01-G1/8"	
820	342980-0313	C		1	BANJO-HOLLOW BOLT COUPL,EXT.THR.02-G1/8"	

KNIFE HOLDER

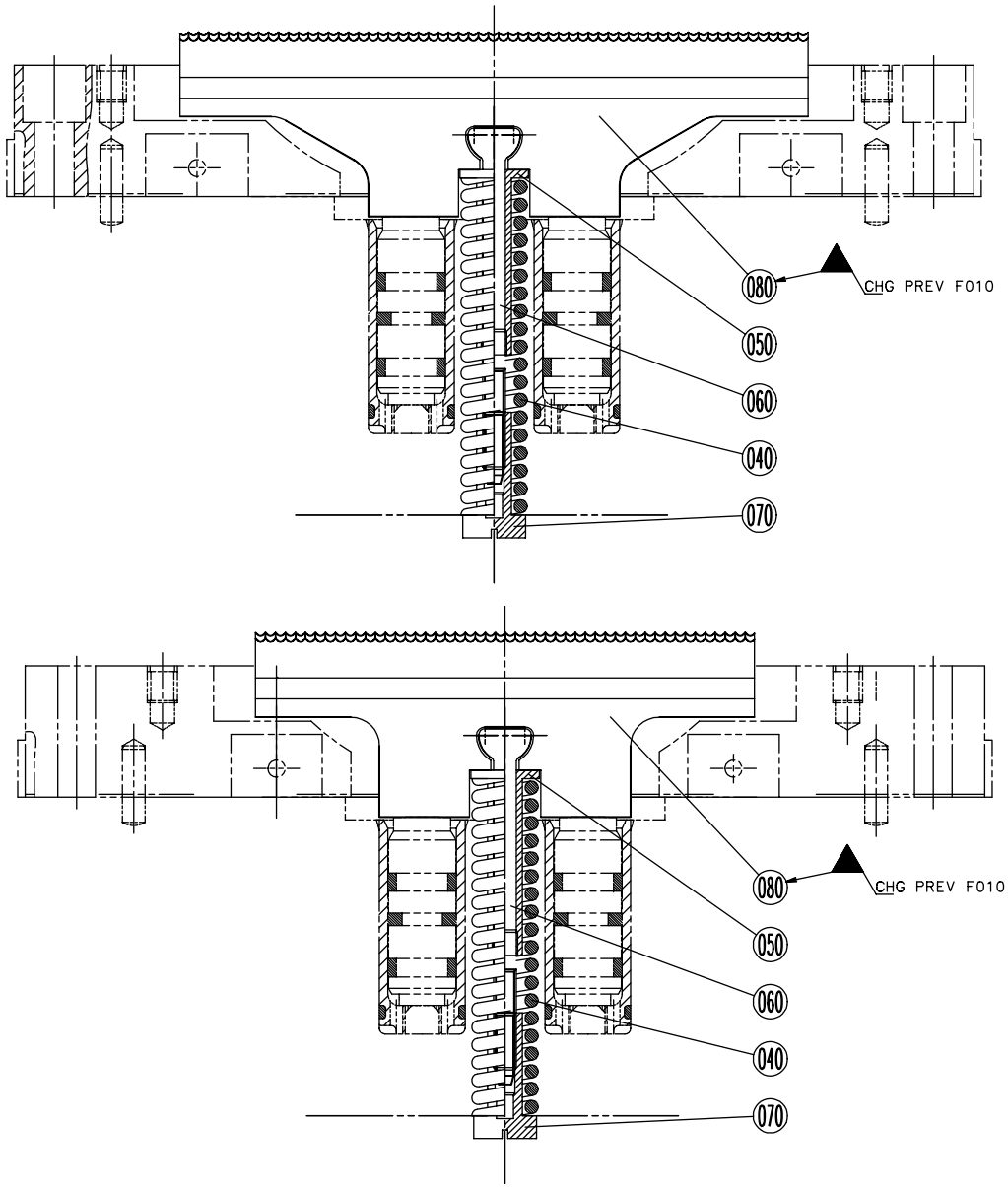

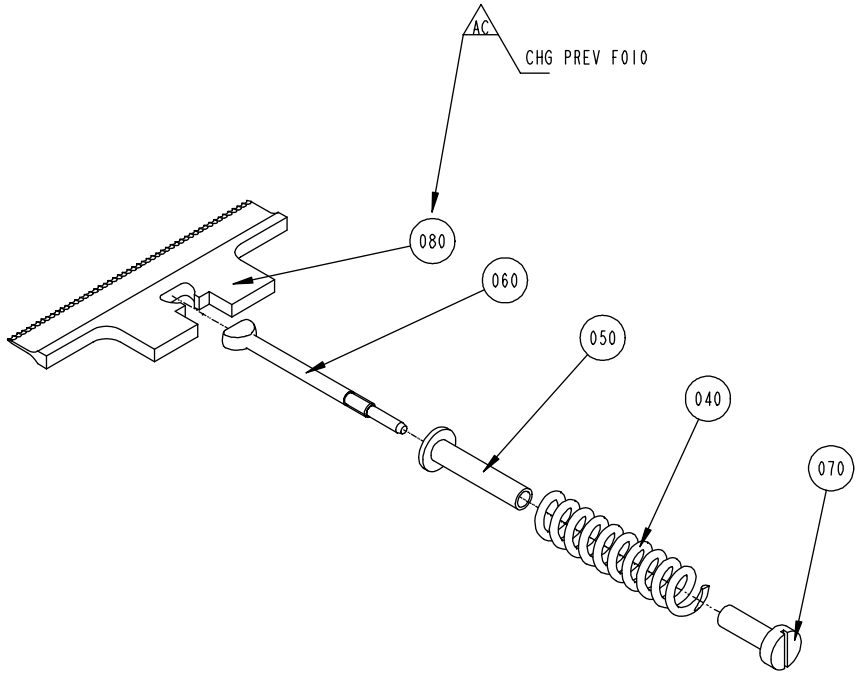

Pos	Part No	SP	UN	Qty	Description	Page No
TB 0200S TPC						
080	A 978763-0100	-		1	CUTTING UNIT	**334**
TBA 0160S IH OR TBA 0250S IH OR TBA 0200M IH OR TBA 0200S IH OR TWA 0200S IH						
080	1282647-0000	C		1	KNIFE	
Common Parts						
040	441726-0000	C		1	COMPRESSION SPRING	
050	272753-0000	C		1	STEERING	
060	456009-0000	C		1	LINK	
070	272755-0000	C		1	NUT	

Pos	Part No	SP	UN	Qty	Description	Page No

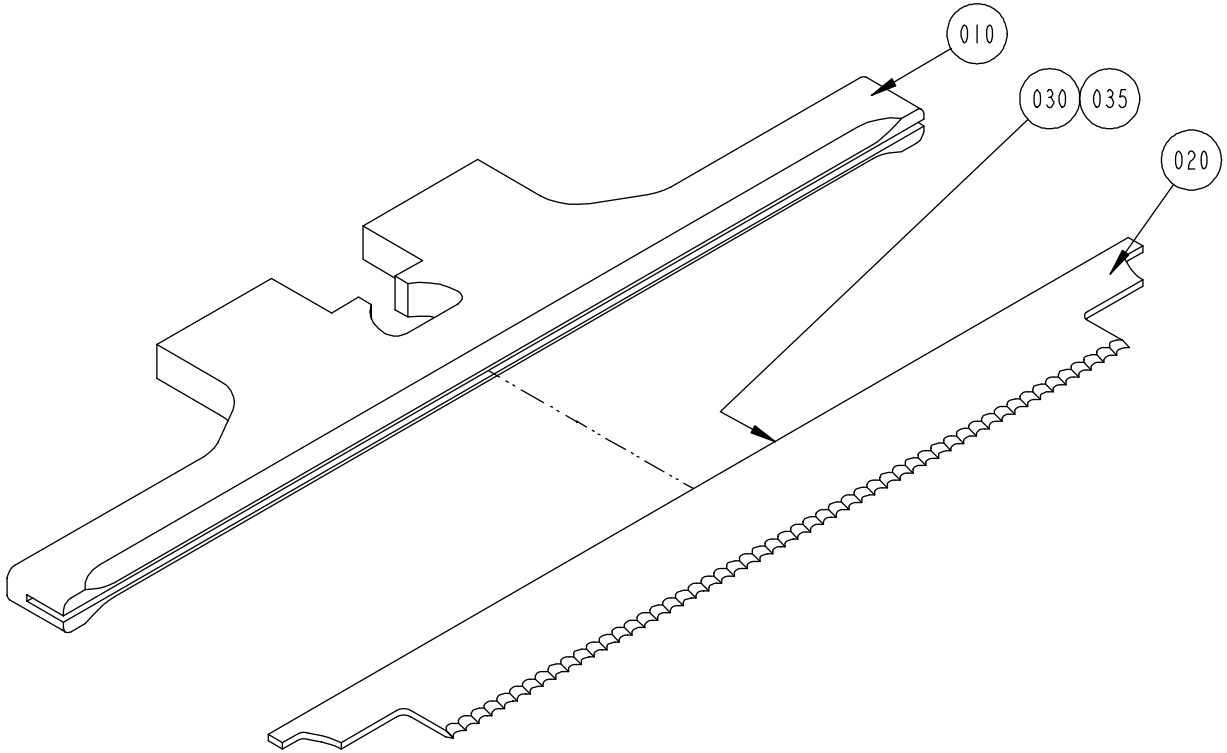
010
030
035
020

Pos	Part No	SP	UN	Qty	Description	Page No
Common Parts						
010	978765-0000	C		1	KNIFE HOLDER	
020	978713-0000	C		1	KNIFE	
030	90153-0054	-	L	1	ADHESIVE	
035	90153-0055	-	L	1	ADHESIVE	

Pos	Part No	SP	UN	Qty	Description	Page No

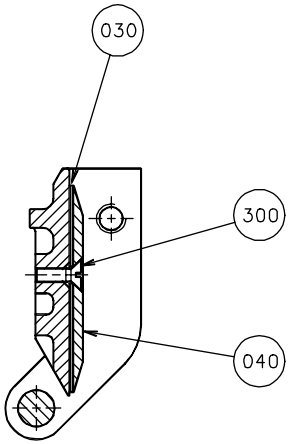

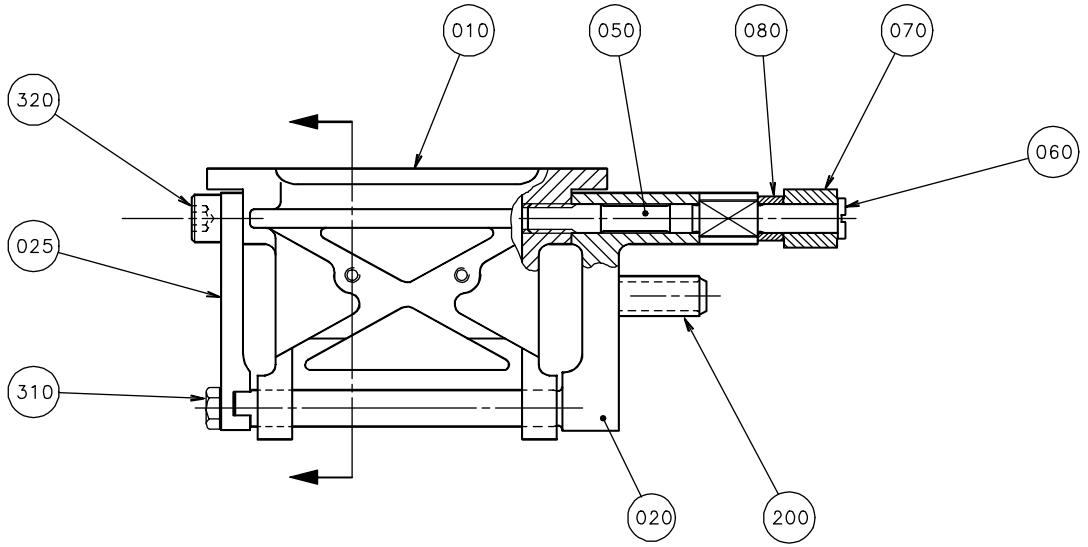

200cc VISAD/SHOWED

Pos	Part No	SP	UN	Qty	Description	Page No
0125S						
010	256849-0000	C		1	VOLUMEFLAP 125 ML	
020	752612-0001	C		1	CARRIER	
025	272985-0001	C		1	ARM	
030	272987-0000	C		3	VOLUME SHIM	
040	491868-0000	C		1	VOLUME BULGE	
0160S						
010	577211-0000	-		1	VOLUMEFLAP 160 ML	
020	752612-0001	C		1	CARRIER	
025	272985-0001	C		1	ARM	
030	577212-0000	-		3	VOLUME SHIM	
040	577213-0000	-		1	VOLUME BULGE 160 ML	
0180B						
010	752292-0000	C		1	VOLUMEFLAP 180 ML	
020	752612-0002	C		1	CARRIER	
025	272985-0002	C		1	ARM	
030	272986-0004	C		3	VOLUME SHIM	
040	272988-0004	C		1	VOLUME BULGE	
0200B						
010	752212-0000	C		1	VOLUME FLAP 200 ML	
020	752612-0001	C		1	CARRIER	
025	272985-0001	C		1	ARM	
030	272986-0003	C		3	VOLUME SHIM	
040	456005-0003	C		1	VOLUME BULGE	
0200S						
010	752999-0000	C		1	VOLUME FLAP 200S	
020	752612-0001	C		1	CARRIER	
025	272985-0001	C		1	ARM	
030	272991-0000	C		3	VOLUME SHIM	
040	272990-0000	C		1	VOLUME BULGE	
0236B						
010	272498-0000	C		1	VOLUME FLAP 236 ML	
020	752612-0001	C		1	CARRIER	
025	272985-0001	C		1	ARM	
030	272986-0002	C		3	VOLUME SHIM	
040	272988-0002	C		1	VOLUME BULGE	
0250B						
010	978366-0000	C		1	VOLUME FLAP 250 ML	
020	752612-0001	C		1	CARRIER	
025	272985-0001	C		1	ARM	
030	272986-0001	C		3	VOLUME SHIM	
040	456005-0001	C		1	VOLUME BULGE	

Pos	Part No	SP	UN	Qty	Description	Page No
0250S						
010	574365-0000	-		1	VOLUMEFLAP 250S	
020	752612-0001	C		1	CARRIER	
025	272985-0001	C		1	ARM	
030	574366-0000	-		3	VOLUME SHIM	
040	574367-0000	-		1	VOLUME BULGE	
0284B						
010	978031-0000	-		1	VOLUMEFLAP 284 ML	
020	752612-0001	C		1	CARRIER	
025	272985-0001	C		1	ARM	
030	272986-0005	-		3	VOLUME SHIM	
040	752739-0000	-		1	VOLUME BULGE	
Common Parts						
050	752598-0000	C		1	SHAFT	
060	256859-0000	C		1	SCREW	
070	256860-0000	C		2	ROLL	
080	752615-0000	-		1	SPACER	
200	90166-0159	C	MM	21	RUBBER HOSE	
300	312145-0291	C		2	Screw Counters.Slot.Hd. MFS 4x12 A4	
310	312105-0376	-		1	Screw M6S M6S M6x35 A280	
320	312115-0449	-		1	Screw MC6S M8x16 A280	

VOLUME FLAP VERSION 02

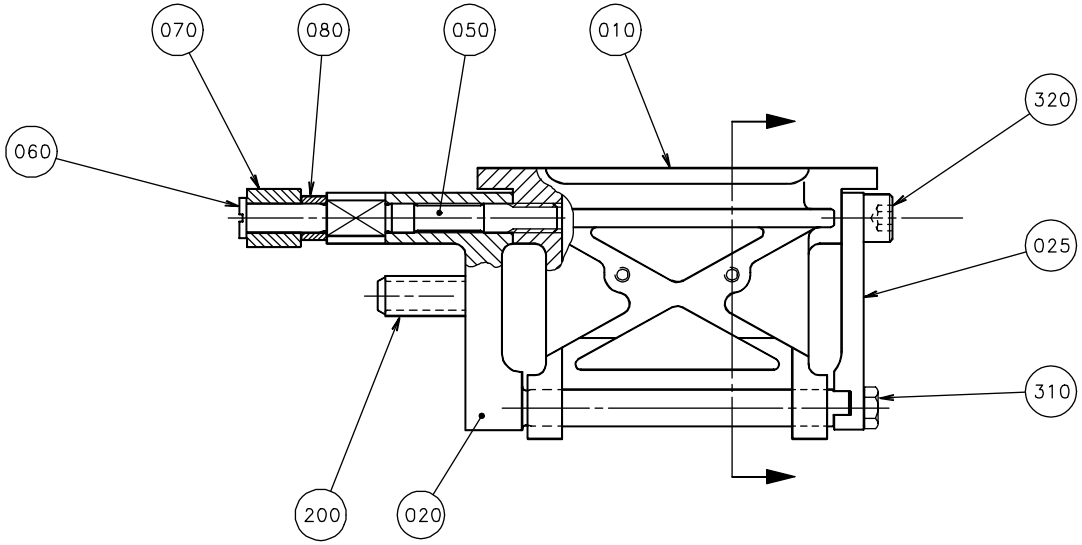

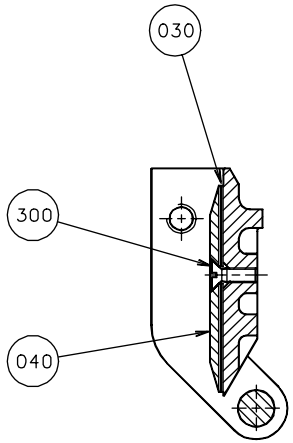

200cc VISAD/SHOWED

Pos	Part No	SP	UN	Qty	Description	Page No
0125S						
010	256849-0000	C		1	VOLUMEFLAP 125 ML	
020	752612-0001	C		1	CARRIER	
025	272985-0001	C		1	ARM	
030	272987-0000	C		3	VOLUME SHIM	
040	491868-0000	C		1	VOLUME BULGE	
0160S						
010	577211-0000	-		1	VOLUMEFLAP 160 ML	
020	752612-0001	C		1	CARRIER	
025	272985-0001	C		1	ARM	
030	577212-0000	-		3	VOLUME SHIM	
040	577213-0000	-		1	VOLUME BULGE 160 ML	
0180B						
010	752292-0000	C		1	VOLUMEFLAP 180 ML	
020	752612-0002	C		1	CARRIER	
025	272985-0002	C		1	ARM	
030	272986-0004	C		3	VOLUME SHIM	
040	272988-0004	C		1	VOLUME BULGE	
0200B						
010	752212-0000	C		1	VOLUME FLAP 200 ML	
020	752612-0001	C		1	CARRIER	
025	272985-0001	C		1	ARM	
030	272986-0003	C		3	VOLUME SHIM	
040	456005-0003	C		1	VOLUME BULGE	
0200S						
010	752999-0000	C		1	VOLUME FLAP 200S	
020	752612-0001	C		1	CARRIER	
025	272985-0001	C		1	ARM	
030	272991-0000	C		3	VOLUME SHIM	
040	272990-0000	C		1	VOLUME BULGE	
0236B						
010	272498-0000	C		1	VOLUME FLAP 236 ML	
020	752612-0001	C		1	CARRIER	
025	272985-0001	C		1	ARM	
030	272986-0002	C		3	VOLUME SHIM	
040	272988-0002	C		1	VOLUME BULGE	
0250B						
010	978366-0000	C		1	VOLUME FLAP 250 ML	
020	752612-0001	C		1	CARRIER	
025	272985-0001	C		1	ARM	
030	272986-0001	C		3	VOLUME SHIM	
040	456005-0001	C		1	VOLUME BULGE	

Pos	Part No	SP	UN	Qty	Description	Page No
0250S						
010	574365-0000	-		1	VOLUMEFLAP 250S	
020	752612-0001	C		1	CARRIER	
025	272985-0001	C		1	ARM	
030	574366-0000	-		3	VOLUME SHIM	
040	574367-0000	-		1	VOLUME BULGE	
0284B						
010	978031-0000	-		1	VOLUMEFLAP 284 ML	
020	752612-0001	C		1	CARRIER	
025	272985-0001	C		1	ARM	
030	272986-0005	-		1	VOLUME SHIM	
040	752739-0000	-		1	VOLUME BULGE	
Common Parts						
050	752598-0000	C		1	SHAFT	
060	256859-0000	C		1	SCREW	
070	256860-0000	C		2	ROLL	
080	752615-0000	-		1	SPACER	
200	90166-0159	C	MM	21	RUBBER HOSE	
300	312145-0291	C		2	Screw Counters.Slot.Hd. MFS 4x12 A4	
310	312105-0376	-		1	Screw M6S M6S M6x35 A280	
320	312115-0449	-		1	Screw MC6S M8x16 A280	

SHOCK ABSORBER

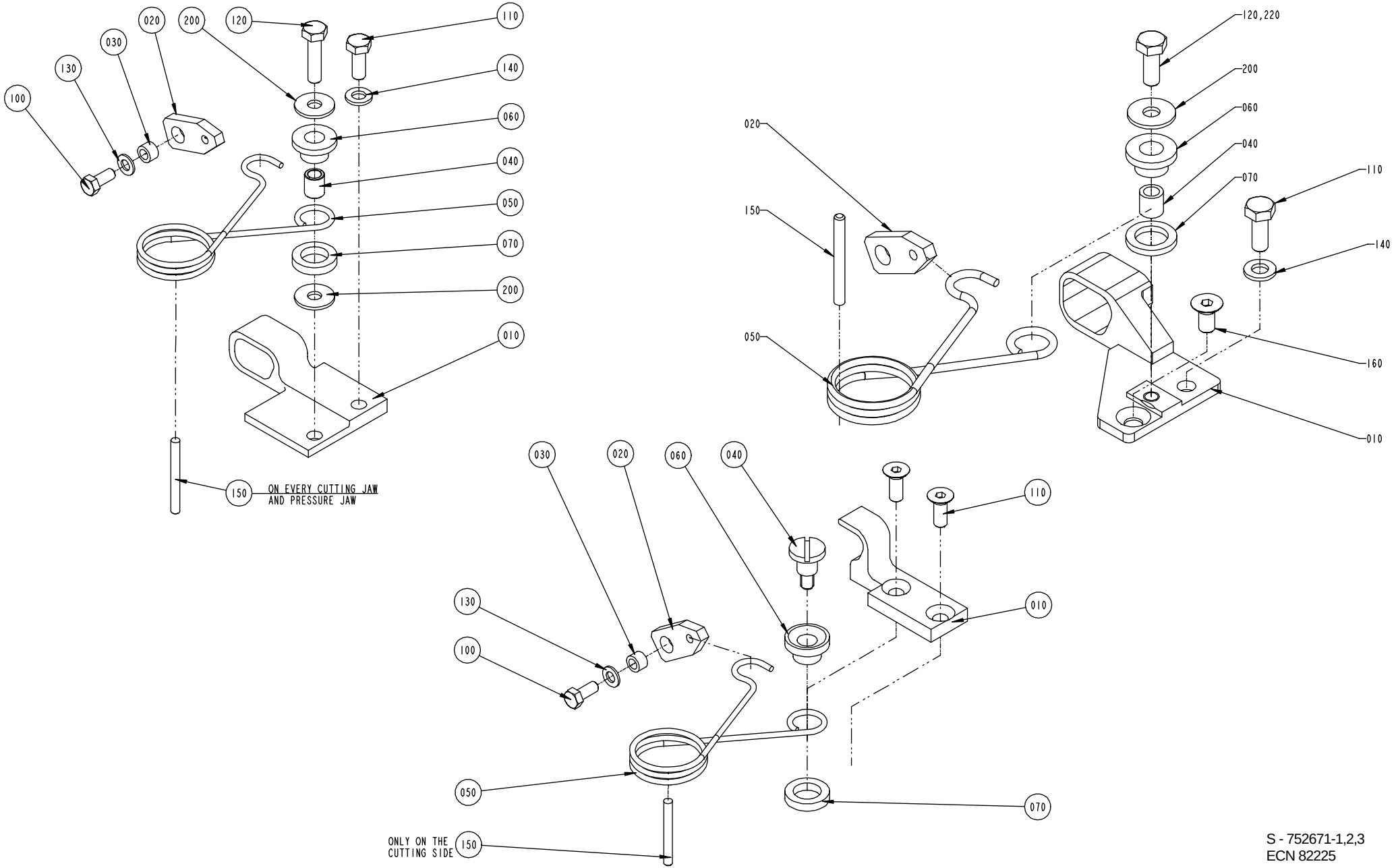

S - 752671-1,2,3
ECN 82225

Pos	Part No	SP	UN	Qty	Description	Page No
TBA 0125S						
010	752563-0000	A		1	STOP PERF 1	
030	752556-0000	B		1	SPACER	
040	752673-0000	B		1	SPACER	
060	752680-0000	B		1	SLEEVE	
100	312105-0327	-		1	Screw M6S M5x12 A280	
110	312105-0368	-		1	Screw M6S M6x16 A280	
120	312105-0372	-		1	Screw M6S M6x25 A280	
130	315105-0146	-		1	Washer, Plain, BRB, 5,3/10,H=1	
140	315105-0153	-		1	Washer, Plain, BRB, 6,4/12,H=1,5	
150	311103-0280	-		1	Pin, Parallell, m6, 4x40	
200	90005-0060	B		2	Washer, Plain, RBS 6,4/M6)/18,H=1,5	
TBA 0180B						
010	752561-0000	A		1	STOP PERF 1	
030	752556-0000	B		1	SPACER	
040	752673-0000	B		1	SPACER	
060	752680-0000	B		1	SLEEVE	
100	312105-0327	-		1	Screw M6S M5x12 A280	
110	312105-0368	-		1	Screw M6S M6x16 A280	
120	312105-0372	-		1	Screw M6S M6x25 A280	
130	315105-0146	-		1	Washer, Plain, BRB, 5,3/10,H=1	
140	315105-0153	-		1	Washer, Plain, BRB, 6,4/12,H=1,5	
150	311103-0280	-		1	Pin, Parallell, m6, 4x40	
200	90005-0060	B		2	Washer, Plain, RBS 6,4/M6)/18,H=1,5	
TBA 0200SQ						
010	1519227-0000	A		1	STOP	
030	752556-0000	B		1	SPACER	
040	752673-0000	B		1	SPACER	
060	752680-0000	B		1	SLEEVE	
100	312105-0327	-		1	Screw M6S M5x12 A280	
110	312105-0368	-		1	Screw M6S M6x16 A280	
120	312105-0372	-		1	Screw M6S M6x25 A280	
130	315105-0146	-		1	Washer, Plain, BRB, 5,3/10,H=1	
140	315105-0153	-		1	Washer, Plain, BRB, 6,4/12,H=1,5	
150	311103-0280	-		1	Pin, Parallell, m6, 4x40	
200	90005-0060	B		2	Washer, Plain, RBS 6,4/M6)/18,H=1,5	
TBA 0330S OR TBA 0300S OR TBA 0160S OR TBA 0200B OR TBA 0250S OR TBA 0284B OR TBA 0200S OR TBA 0200M OR TBA 0250B OR TBA 0236B						
010	752559-0000	A		1	STOP PERF 1	
030	752556-0000	B		1	SPACER	
040	752673-0000	B		1	SPACER	
060	752680-0000	B		1	SLEEVE	
100	312105-0327	-		1	Screw M6S M5x12 A280	
110	312105-0368	-		1	Screw M6S M6x16 A280	
120	312105-0372	-		1	Screw M6S M6x25 A280	
130	315105-0146	-		1	Washer, Plain, BRB, 5,3/10,H=1	
140	315105-0153	-		1	Washer, Plain, BRB, 6,4/12,H=1,5	
150	311103-0280	-		1	Pin, Parallell, m6, 4x40	
200	90005-0060	B		2	Washer, Plain, RBS 6,4/M6)/18,H=1,5	
TBA 0100B						
010	979758-0000	A		1	STOP PERF 1	
030	752556-0000	B		1	SPACER	
040	979760-0000	B		1	SPACER	
060	979761-0000	B		1	SLEEVE	
100	312105-0327	-		1	Screw M6S M5x12 A280	
110	312155-0368	-		2	Screw Hex.Sock.Count.MF6S M6x16 A280	
130	315105-0146	-		1	Washer, Plain, BRB, 5,3/10,H=1	
150	311103-0278	-		1	Pin, Parallell, m6, 4x35	
TWA 0125S						
010	591427-0000	-		1	STOPPER	
040	591432-0000	-		1	SPACER	
050	591429-0000	-		1	SPRING	
060	591433-0000	-		1	SLEEVE	
070	591434-0000	-		1	WASHER	
110	312155-0368	-		2	Screw Hex.Sock.Count.MF6S M6x16 A280	
140	315105-0153	-		1	Washer, Plain, BRB, 6,4/12,H=1,5	
150	311103-0280	-		1	Pin, Parallell, m6, 4x40	
160	312155-0366	-		1	Screw Hex.Sock.Count.MF6S M6x12 A280	
200	90005-0060	-		1	Washer, Plain, RBS 6,4/M6)/18,H=1,5	
220	90157-0016	-	ML	1	LOCKING FLUID	

(Cont'd)

SHOCK ABSORBER

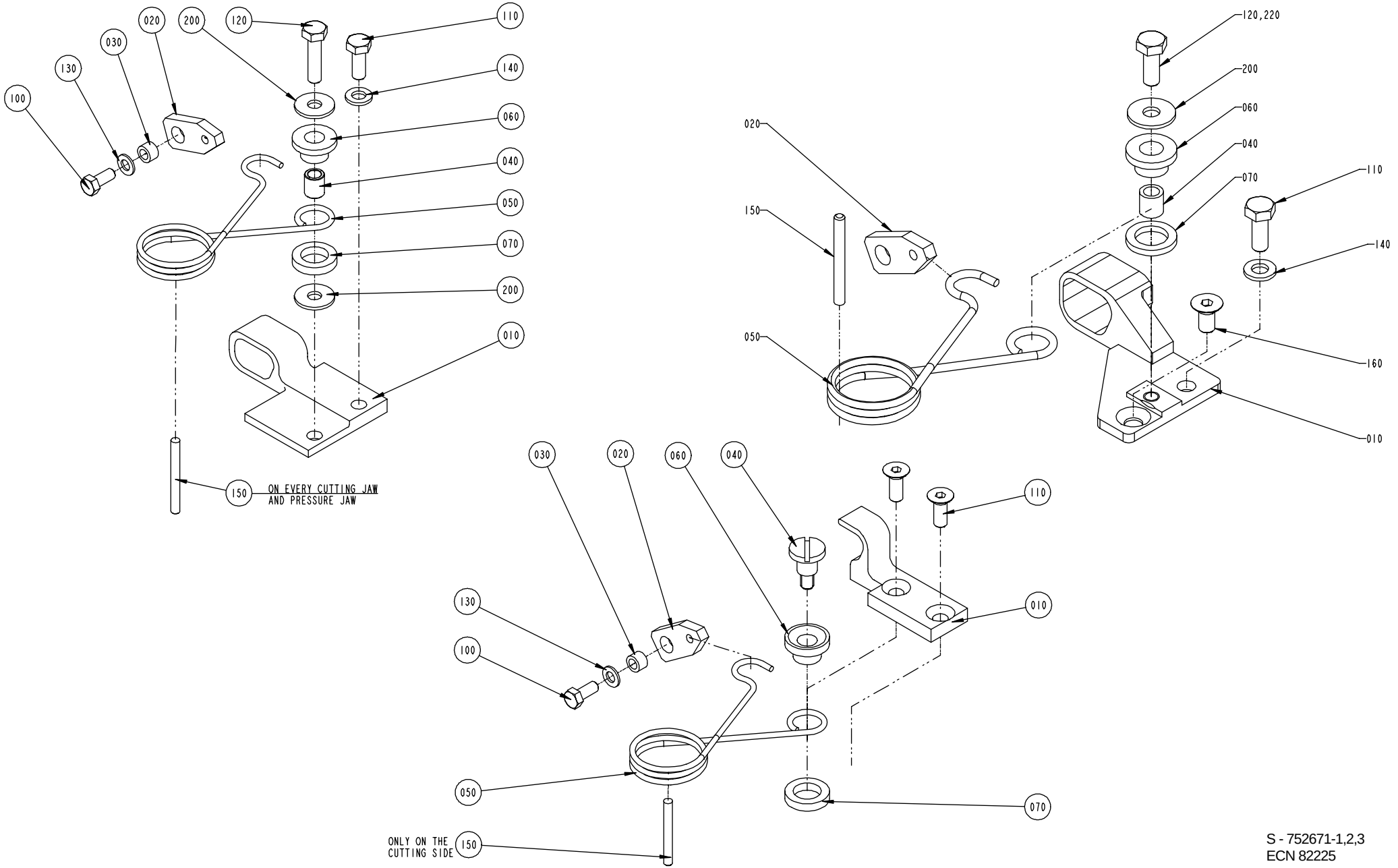

S - 752671-1,2,3
ECN 82225

Pos	Part No	SP	UN	Qty	Description	Page No
(Cont'd)						
TWA 0200S						
010	591427-0000	-		1	STOPPER	
040	591432-0000	-		1	SPACER	
050	591429-0000	-		1	SPRING	
060	591433-0000	-		1	SLEEVE	
070	591434-0000	-		1	WASHER	
110	312155-0368	-		2	Screw Hex.Sock.Count.MF6S M6x16 A280	
140	315105-0153	-		1	Washer, Plain, BRB, 6,4/12,H=1,5	
150	311103-0280	-		1	Pin, Parallell, m6, 4x40	
160	312155-0366	-		1	Screw Hex.Sock.Count.MF6S M6x12 A280	
200	90005-0060	-		1	Washer, Plain, RBS 6,4/M6)/18,H=1,5	
220	90157-0016	-	ML	1	LOCKING FLUID	
Common Parts						
010	591427-0000	-		1	STOPPER	
020	752425-0000	A		1	LINK	
050	752678-0000	A		1	SPRING PERF 1	
070	752681-0000	B		1	WASHER	

Pos	Part No	SP	UN	Qty	Description	Page No

SHOCK ABSORBER

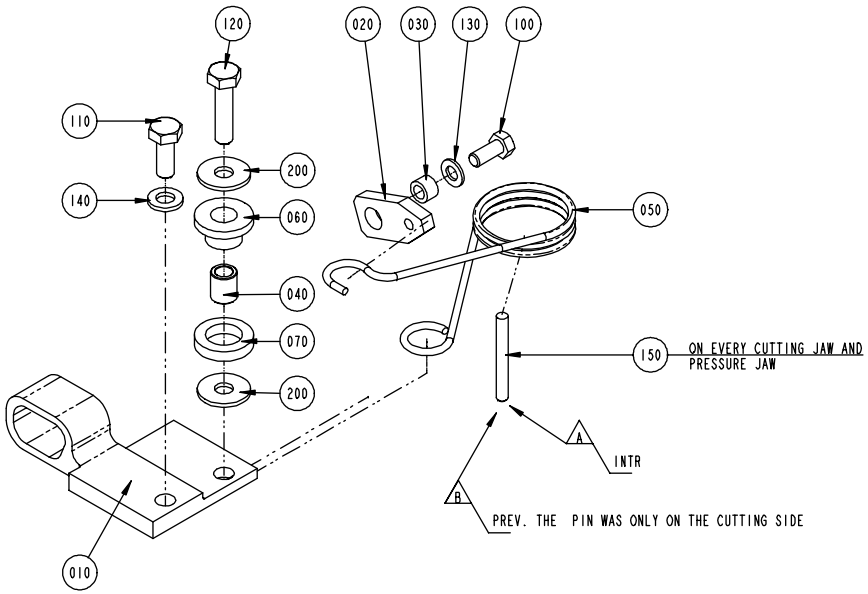

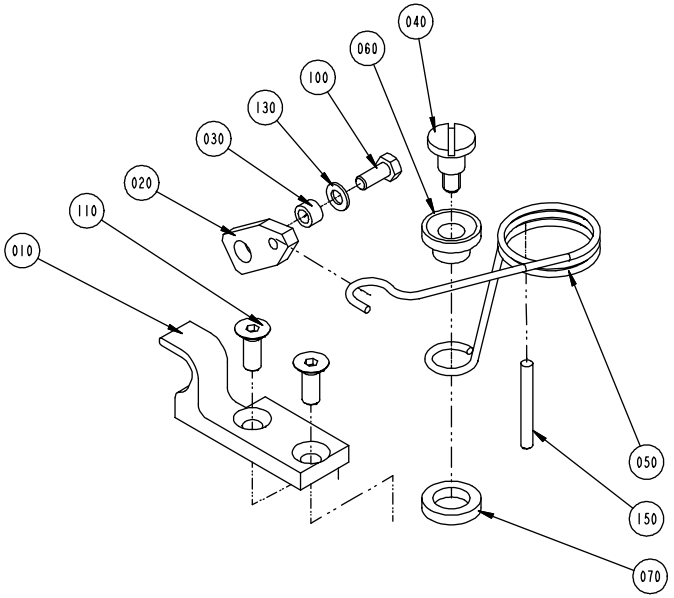

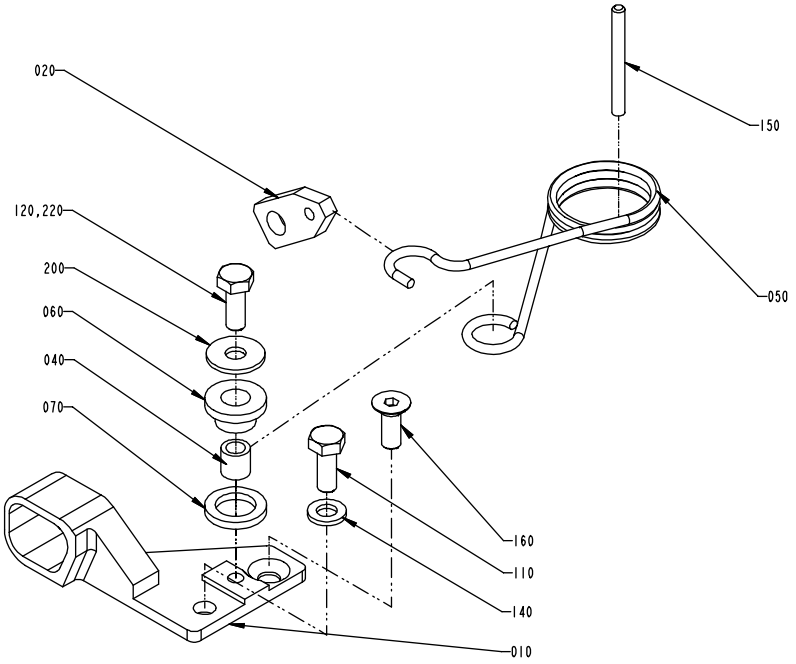

S - 752671-1,2,3
ECN 82225

Pos	Part No	SP	UN	Qty	Description	Page No
TBA 0125S						
010	752564-0000	A		1	STOP PERF 2	
030	752556-0000	B		1	SPACER	
040	752673-0000	B		1	SPACER	
060	752680-0000	B		1	SLEEVE	
100	312105-0327	-		1	Screw M6S M5x12 A280	
110	312105-0368	-		1	Screw M6S M6x16 A280	
120	312105-0372	-		1	Screw M6S M6x25 A280	
130	315105-0146	-		1	Washer, Plain, BRB, 5,3/10,H=1	
140	315105-0153	-		1	Washer, Plain, BRB, 6,4/12,H=1,5	
150	311103-0280	-		1	Pin, Parallell, m6, 4x40	
200	90005-0060	B		2	Washer, Plain, RBS 6,4/M6)/18,H=1,5	
TBA 0180B						
010	752562-0000	A		1	STOP PERF 2	
030	752556-0000	B		1	SPACER	
040	752673-0000	B		1	SPACER	
060	752680-0000	B		1	SLEEVE	
100	312105-0327	-		1	Screw M6S M5x12 A280	
110	312105-0368	-		1	Screw M6S M6x16 A280	
120	312105-0372	-		1	Screw M6S M6x25 A280	
130	315105-0146	-		1	Washer, Plain, BRB, 5,3/10,H=1	
140	315105-0153	-		1	Washer, Plain, BRB, 6,4/12,H=1,5	
150	311103-0280	-		1	Pin, Parallell, m6, 4x40	
200	90005-0060	B		2	Washer, Plain, RBS 6,4/M6)/18,H=1,5	
TBA 0200SQ						
010	1519228-0000	A		1	STOP	
030	752556-0000	B		1	SPACER	
040	752673-0000	B		1	SPACER	
060	752680-0000	B		1	SLEEVE	
100	312105-0327	-		1	Screw M6S M5x12 A280	
110	312105-0368	-		1	Screw M6S M6x16 A280	
120	312105-0372	-		1	Screw M6S M6x25 A280	
130	315105-0146	-		1	Washer, Plain, BRB, 5,3/10,H=1	
140	315105-0153	-		1	Washer, Plain, BRB, 6,4/12,H=1,5	
150	311103-0280	-		1	Pin, Parallell, m6, 4x40	
200	90005-0060	B		2	Washer, Plain, RBS 6,4/M6)/18,H=1,5	
TBA 0330S OR TBA 0300S OR TBA 0160S OR TBA 0200B OR TBA 0250S OR TBA 0284B OR TBA 0200S OR TBA 0200M OR TBA 0250B OR TBA 0236B						
010	752560-0000	A		1	STOP PERF 2	
030	752556-0000	B		1	SPACER	
040	752673-0000	B		1	SPACER	
060	752680-0000	B		1	SLEEVE	
100	312105-0327	-		1	Screw M6S M5x12 A280	
110	312105-0368	-		1	Screw M6S M6x16 A280	
120	312105-0372	-		1	Screw M6S M6x25 A280	
130	315105-0146	-		1	Washer, Plain, BRB, 5,3/10,H=1	
140	315105-0153	-		1	Washer, Plain, BRB, 6,4/12,H=1,5	
150	311103-0280	-		1	Pin, Parallell, m6, 4x40	
200	90005-0060	B		2	Washer, Plain, RBS 6,4/M6)/18,H=1,5	
TBA 0100B						
010	979759-0000	A		1	STOP PERF 2	
030	752556-0000	B		1	SPACER	
040	979760-0000	B		1	SPACER	
060	979761-0000	B		1	SLEEVE	
100	312105-0327	-		1	Screw M6S M5x12 A280	
110	312155-0368	-		2	Screw Hex.Sock.Count.MF6S M6x16 A280	
130	315105-0146	-		1	Washer, Plain, BRB, 5,3/10,H=1	
150	311103-0278	-		1	Pin, Parallell, m6, 4x35	
TWA 0125S						
010	591427-0000	-		1	STOPPER	
040	591432-0000	-		1	SPACER	
050	591429-0000	-		1	SPRING	
060	591433-0000	-		1	SLEEVE	
070	591434-0000	-		1	WASHER	
110	312155-0368	-		2	Screw Hex.Sock.Count.MF6S M6x16 A280	
140	315105-0153	-		1	Washer, Plain, BRB, 6,4/12,H=1,5	
150	311103-0280	-		1	Pin, Parallell, m6, 4x40	
160	312155-0366	-		1	Screw Hex.Sock.Count.MF6S M6x12 A280	
200	90005-0060	-		1	Washer, Plain, RBS 6,4/M6)/18,H=1,5	
220	90157-0016	-	ML	1	LOCKING FLUID	

(Cont'd)

SHOCK ABSORBER

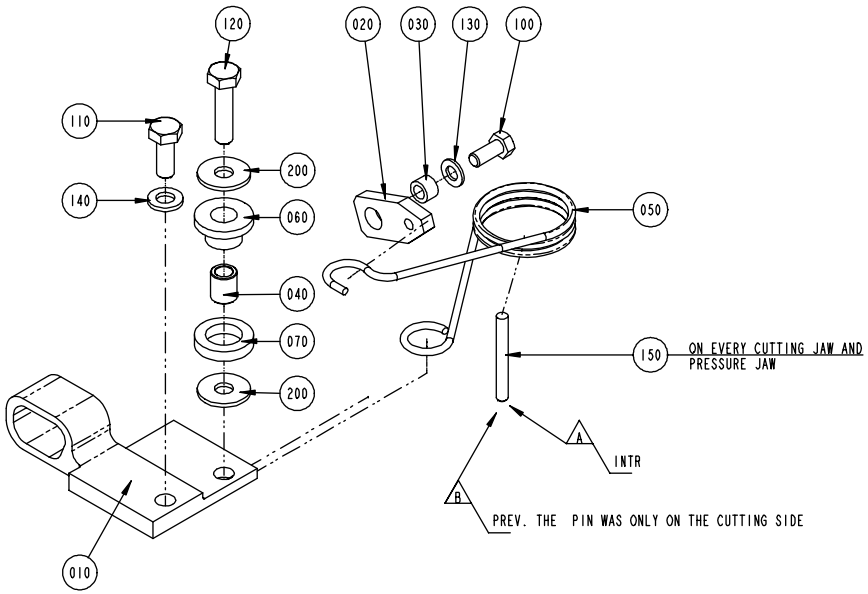

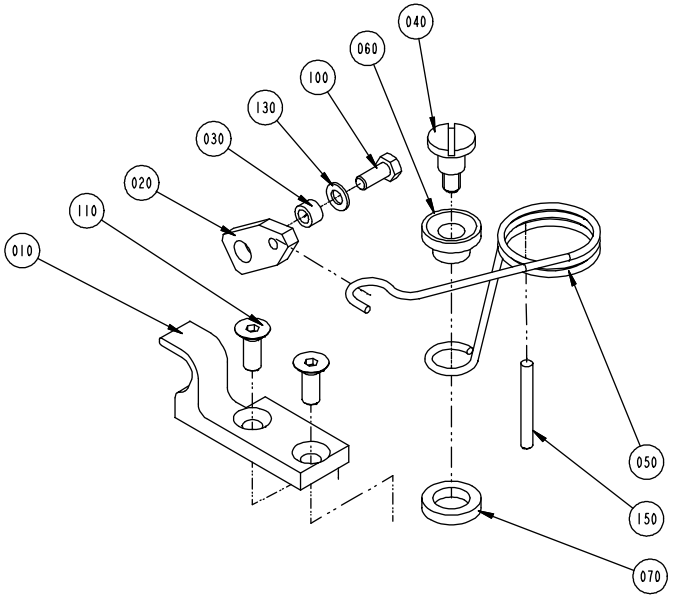

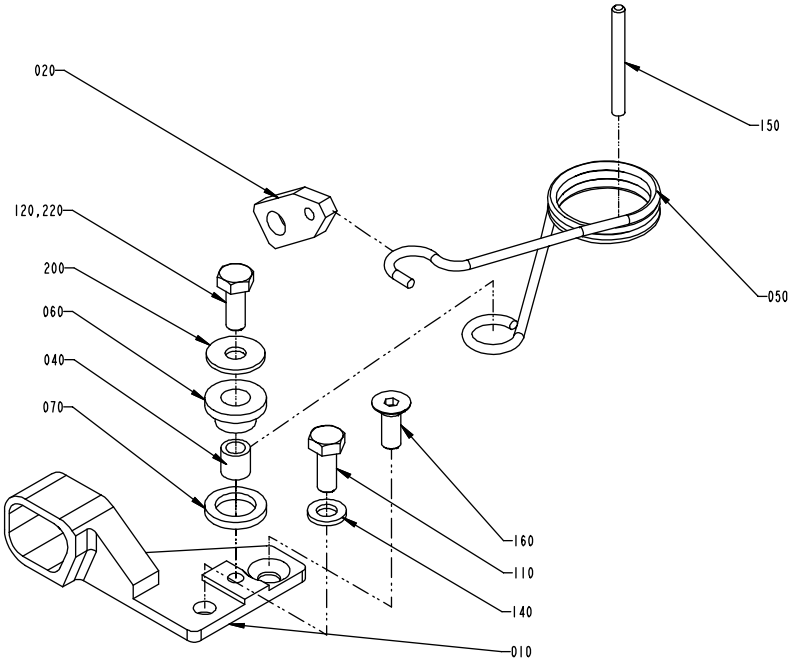

S - 752671-1,2,3
ECN 82225

Pos	Part No	SP	UN	Qty	Description	Page No
(Cont'd)						
TWA 0200S						
010	591427-0000	-		1	STOPPER	
040	591432-0000	-		1	SPACER	
050	591429-0000	-		1	SPRING	
060	591433-0000	-		1	SLEEVE	
070	591434-0000	-		1	WASHER	
110	312155-0368	-		2	Screw Hex.Sock.Count.MF6S M6x16 A280	
140	315105-0153	-		1	Washer, Plain, BRB, 6,4/12,H=1,5	
150	311103-0280	-		1	Pin, Parallell, m6, 4x40	
160	312155-0366	-		1	Screw Hex.Sock.Count.MF6S M6x12 A280	
200	90005-0060	-		1	Washer, Plain, RBS 6,4/M6)/18,H=1,5	
220	90157-0016	-	ML	1	LOCKING FLUID	
Common Parts						
010	591427-0000	-		1	STOPPER	
020	752425-0000	A		1	LINK	
050	752679-0000	A		1	SPRING PERF 2	
070	752681-0000	B		1	WASHER	

Pos	Part No	SP	UN	Qty	Description	Page No

PRESSURE JAW RIGHT

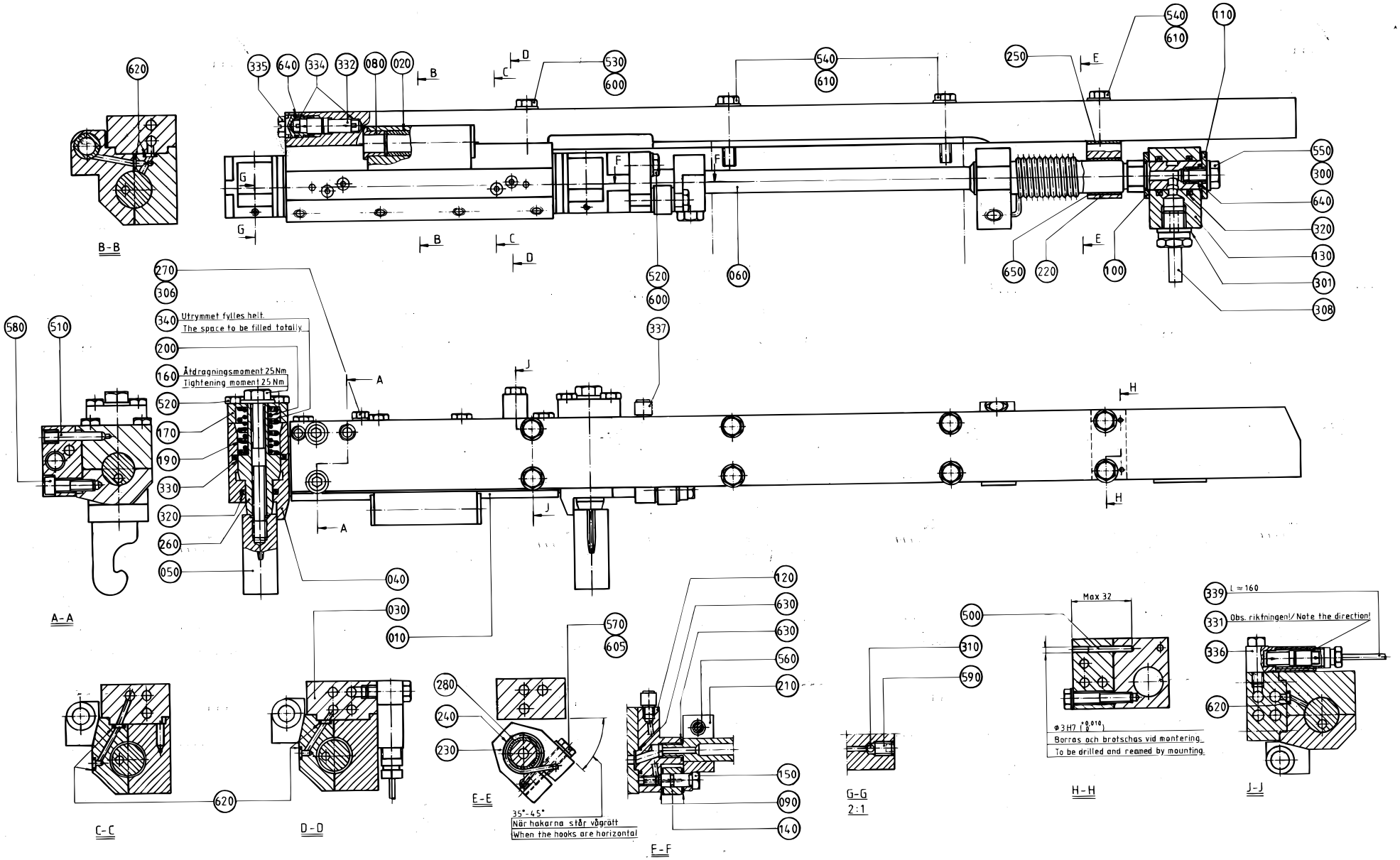

S - 1529153-1
ECN 82225

Pos	Part No	SP	UN	Qty	Description	Page No
0200B OR 0250B						
010	B 441710-0000	D		1	BEARING HOUSING	
020	255697-0002	C		1	INTERMEDIATE PIPE	
0200S						
010	B 441712-0000	D		1	BEARING HOUSING	
020	255697-0001	C		1	INTERMEDIATE PIPE	
Common Parts						
030	B 441349-0000	C		1	CARRIER RIGHT	
040	441709-0000	D		1	CYLINDER	
050	978746-0000	C		2	CATCH	
060	B 272500-0000	C		1	SHAFT	
080	1517641-0000	C		2	FLANGE BUSHING	
090	256557-0001	C		2	WASHER	
100	256557-0002	C		1	WASHER	
110	256557-0003	C		1	WASHER	
120	441762-0000	C		1	CONNECTION RIGHT	
130	441385-0000	C		1	HUB	
140	256576-0000	C		1	ROLL	
150	441764-0000	C		1	SHAFT	
160	257249-0000	C		2	SCREW	
170	257250-0000	-		2	LID	
190	490974-0000	C		2	COMPRESSION SPRING	
200	490975-0000	C		2	COMPRESSION SPRING	
210	272488-0000	-		1	CLAMP RIGHT	
220	272501-0000	C		1	BRACKET RIGHT	
230	272503-0000	-		1	CLAMPING PIECE	
240	456311-0000	C		1	TORSION SPRING RIGHT	
250	272506-0000	-		2	LACE	
260	272644-0000	C		2	PISTON	
270	441355-0000	-		1	BLEEDING SCREW	
280	456320-0000	C		1	SLEEVE	
300	90005-0007	C		1	Gasket Bolt head 8,7x14x1 mm M8	
301	315237-0110	C		1	Washer,Pl.Rnd.Al.13,5/18,H=1,5	
306	90005-0003	-		1	Gasket Bolt head 6,7x11x1 mm M6	
308	90030-0065	C		1	PIPE CONNECTION	
310	90090-0005	C		4	STEEL-BALL SKF RB 3/111	
320	90091-0089	C		4	Rod Seal, Glidoring 16x22x2,5 mm	
330	90091-0107	C		2	Rod Seal, Glidoring 25x32x2,7 mm	
331	90092-0052	-		1	Metering valve 10 mm3	
332	90092-0053	-		1	Metering valve 30 mm3	
334	90134-0042	-		2	Spacer dosing valve	
335	90134-0045	-		1	Plug M12x1	
336	90134-0047	-		1	Connection for dosing valve	
337	90134-0058	-		1	Connection	
339	90166-0143	-	MM	16	TUBE 2,5 mm PA,Transp.	
340	90296-0068	-	G	25	Grease Uniway LI 62 Cartridge 400 Gr.	
500	311103-0240	C		2	Pin, Parallell, m6, 3x25	
510	311103-0312	C		1	Pin, Parallell, m6, 5x25	
520	312105-0370	-		11	Screw M6S M6x20 A280	
530	312105-0374	-		2	Screw M6S M6x30 A280	
540	312105-0376	-		6	Screw M6S M6S M6x35 A280	
550	312105-0447	-		1	Screw M6S M8x12 A280	
560	312105-0453	-		1	Screw M6S M8x25 A280	
570	312105-0455	-		1	Screw M6S M8x30 A280	
580	312115-0371	-		2	Screw Hex.Sock.Hd.MC6S-TT 6x22 A480	
590	90287-0128	-		4	Screw, Sock.Set Dogpoint M4x6	
600	315105-0153	-		5	Washer, Plain, BRB, 6,4/12,H=1,5	
605	315105-0165	-		1	Washer, Plain, BRB, 8,4/16,H=1,5	
610	315115-0153	-		6	Washer, Plain, TBRB 6,4/12 H=3	
620	315202-0102	C		8	O-Ring 4,1x1,6 mm	
630	315202-0106	C		2	O-Ring 8,1x1,6 mm	
640	315202-0108	C		2	O-Ring 10,1x1,6 mm	
650	321120-0132	C		1	BEARING BUSHING WITHOUT FLANGE,18/20X20	

(Cont'd)

PRESSURE JAW RIGHT

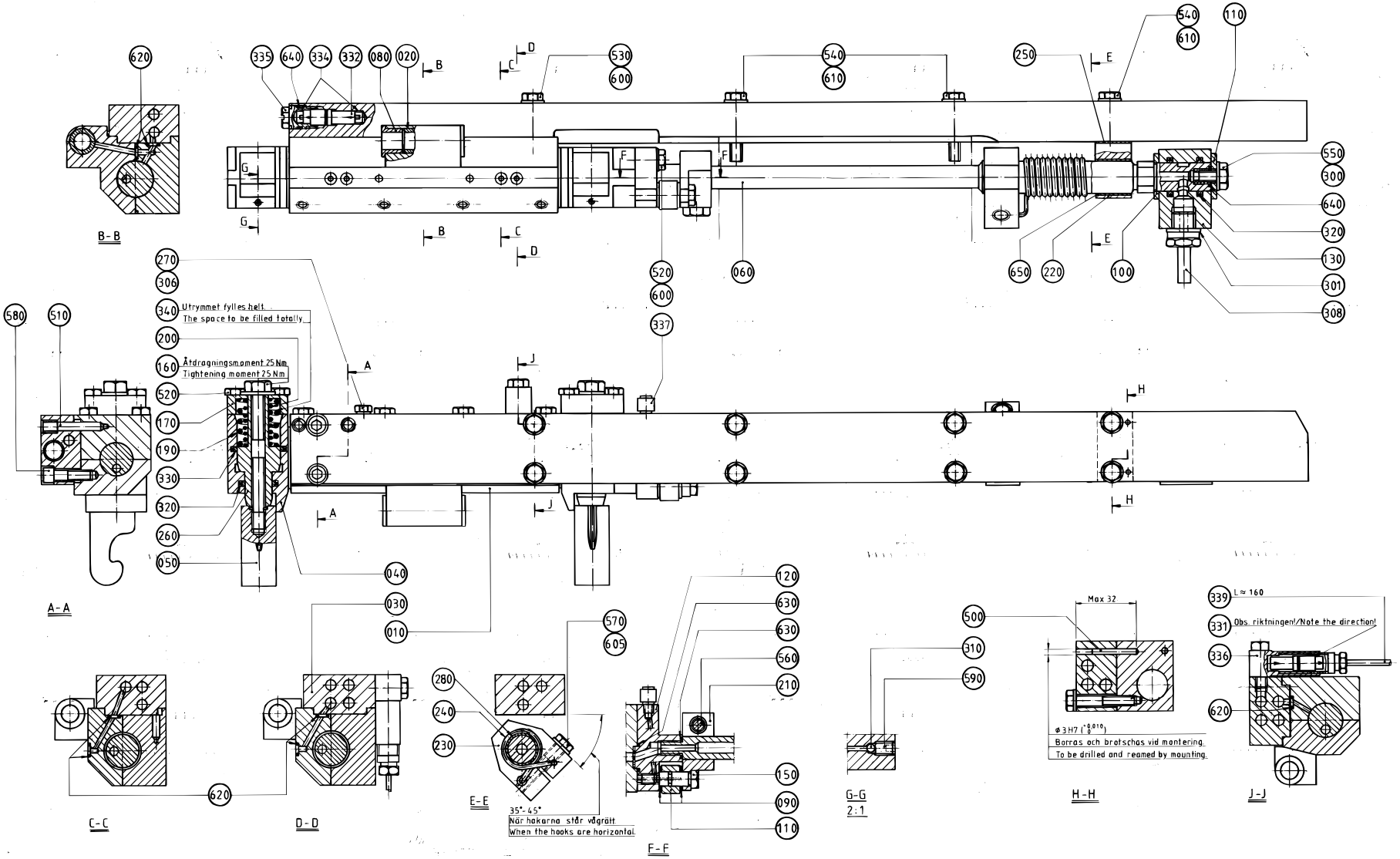

Pos	Part No	SP	UN	Qty	Description	Page No
(Cont'd)						
0200B OR 0250B						
010	B 441710-0000	D		1	BEARING HOUSING	
020	255697-0002	C		1	INTERMEDIATE PIPE	
0200S						
010	B 441712-0000	D		1	BEARING HOUSING	
020	255697-0001	C		1	INTERMEDIATE PIPE	
Common Parts						
030	B 441349-0000	C		1	CARRIER RIGHT	
040	441709-0000	D		1	CYLINDER	
050	978746-0000	C		2	CATCH	
060	B 272500-0000	C		1	SHAFT	
080	1517641-0000	C		2	FLANGE BUSHING	
090	256557-0001	C		2	WASHER	
100	256557-0002	C		1	WASHER	
110	256557-0003	C		1	WASHER	
120	441762-0000	C		1	CONNECTION RIGHT	
130	441385-0000	C		1	HUB	
140	256576-0000	C		1	ROLL	
150	441764-0000	C		1	SHAFT	
160	257249-0000	C		2	SCREW	
170	257250-0000	-		2	LID	
190	490974-0000	C		2	COMPRESSION SPRING	
200	490975-0000	C		2	COMPRESSION SPRING	
210	272488-0000	-		1	CLAMP RIGHT	
220	272501-0000	C		1	BRACKET RIGHT	
230	272503-0000	-		1	CLAMPING PIECE	
240	456311-0000	C		1	TORSION SPRING RIGHT	
250	272506-0000	-		2	LACE	
260	272644-0000	C		2	PISTON	
270	441355-0000	-		1	BLEEDING SCREW	
280	456320-0000	C		1	SLEEVE	
300	90005-0007	C		1	Gasket Bolt head 8,7x14x1 mm M8	
301	315237-0110	C		1	Washer,Pl.Rnd.Al.13,5/18,H=1,5	
306	90005-0003	-		1	Gasket Bolt head 6,7x11x1 mm M6	
308	90030-0065	C		1	PIPE CONNECTION	
310	90090-0005	C		4	STEEL-BALL SKF RB 3/111	
320	90091-0089	C		4	Rod Seal, Glidoring 16x22x2,5 mm	
330	90091-0107	C		2	Rod Seal, Glidoring 25x32x2,7 mm	
331	90092-0052	-		1	Metering valve 10 mm3	
332	90092-0053	-		1	Metering valve 30 mm3	
334	90134-0042	-		2	Spacer dosing valve	
335	90134-0045	-		1	Plug M12x1	
336	90134-0047	-		1	Connection for dosing valve	
337	90134-0058	-		1	Connection	
339	90166-0143	-	MM	16	TUBE 2,5 mm PA,Transp.	
340	90296-0068	-	G	25	Grease Uniway LI 62 Cartridge 400 Gr.	
500	311103-0240	C		2	Pin, Parallell, m6, 3x25	
510	311103-0312	C		1	Pin, Parallell, m6, 5x25	
520	312105-0370	-		11	Screw M6S M6x20 A280	
530	312105-0374	-		2	Screw M6S M6x30 A280	
540	312105-0376	-		6	Screw M6S M6S M6x35 A280	
550	312105-0447	-		1	Screw M6S M8x12 A280	
560	312105-0453	-		1	Screw M6S M8x25 A280	
570	312105-0455	-		1	Screw M6S M8x30 A280	
580	312115-0371	-		2	Screw Hex.Sock.Hd.MC6S-TT 6x22 A480	
590	90287-0128	-		4	Screw, Sock.Set Dogpoint M4x6	
600	315105-0153	-		5	Washer, Plain, BRB, 6,4/12,H=1,5	
605	315105-0165	-		1	Washer, Plain, BRB, 8,4/16,H=1,5	
610	315115-0153	-		6	Washer, Plain, TBRB 6,4/12 H=3	
620	315202-0102	C		8	O-Ring 4,1x1,6 mm	
630	315202-0106	C		2	O-Ring 8,1x1,6 mm	
640	315202-0108	C		2	O-Ring 10,1x1,6 mm	
650	321120-0132	C		1	BEARING BUSHING WITHOUT FLANGE,18/20X20	

(Cont'd)

PRESSURE JAW RIGHT

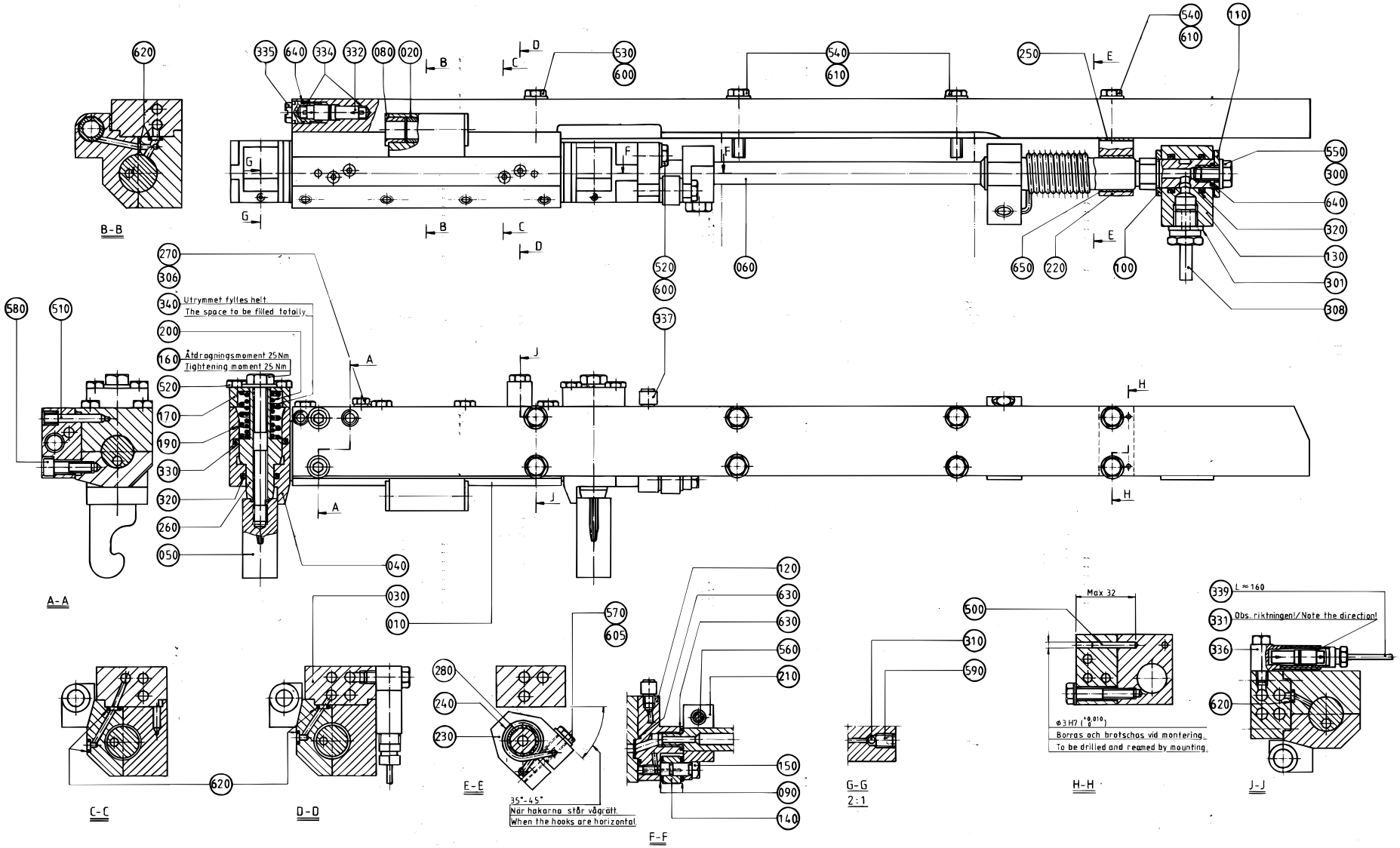

Pos	Part No	SP	UN	Qty	Description	Page No
(Cont'd)						
0200B OR 0250B						
010	B 441710-0000	D		1	BEARING HOUSING	
020	255697-0002	C		1	INTERMEDIATE PIPE	
0200S						
010	B 441712-0000	D		1	BEARING HOUSING	
020	255697-0001	C		1	INTERMEDIATE PIPE	
Common Parts						
030	B 441349-0000	C		1	CARRIER RIGHT	
040	441709-0000	D		1	CYLINDER	
050	978746-0000	C		2	CATCH	
060	B 272500-0000	C		1	SHAFT	
080	1517641-0000	C		2	FLANGE BUSHING	
090	256557-0001	C		2	WASHER	
100	256557-0002	C		1	WASHER	
110	256557-0003	C		1	WASHER	
120	441762-0000	C		1	CONNECTION RIGHT	
130	441385-0000	C		1	HUB	
140	256576-0000	C		1	ROLL	
150	441764-0000	C		1	SHAFT	
160	257249-0000	C		2	SCREW	
170	257250-0000	-		2	LID	
190	490974-0000	C		2	COMPRESSION SPRING	
200	490975-0000	C		2	COMPRESSION SPRING	
210	272488-0000	-		1	CLAMP RIGHT	
220	272501-0000	C		1	BRACKET RIGHT	
230	272503-0000	-		1	CLAMPING PIECE	
240	456311-0000	C		1	TORSION SPRING RIGHT	
250	272506-0000	-		2	LACE	
260	272644-0000	C		2	PISTON	
270	441355-0000	-		1	BLEEDING SCREW	
280	456320-0000	C		1	SLEEVE	
300	90005-0007	C		1	Gasket Bolt head 8,7x14x1 mm M8	
301	315237-0110	C		1	Washer,Pl.Rnd.Al.13,5/18,H=1,5	
306	90005-0003	-		1	Gasket Bolt head 6,7x11x1 mm M6	
308	90030-0065	C		1	PIPE CONNECTION	
310	90090-0005	C		4	STEEL-BALL SKF RB 3/111	
320	90091-0089	C		4	Rod Seal, Glidoring 16x22x2,5 mm	
330	90091-0107	C		2	Rod Seal, Glidoring 25x32x2,7 mm	
331	90092-0052	-		1	Metering valve 10 mm3	
332	90092-0053	-		1	Metering valve 30 mm3	
334	90134-0042	-		2	Spacer dosing valve	
335	90134-0045	-		1	Plug M12x1	
336	90134-0047	-		1	Connection for dosing valve	
337	90134-0058	-		1	Connection	
339	90166-0143	-	MM	16	TUBE 2,5 mm PA,Transp.	
340	90296-0068	-	G	25	Grease Uniway LI 62 Cartridge 400 Gr.	
500	311103-0240	C		2	Pin, Parallell, m6, 3x25	
510	311103-0312	C		1	Pin, Parallell, m6, 5x25	
520	312105-0370	-		11	Screw M6S M6x20 A280	
530	312105-0374	-		2	Screw M6S M6x30 A280	
540	312105-0376	-		6	Screw M6S M6S M6x35 A280	
550	312105-0447	-		1	Screw M6S M8x12 A280	
560	312105-0453	-		1	Screw M6S M8x25 A280	
570	312105-0455	-		1	Screw M6S M8x30 A280	
580	312115-0371	-		2	Screw Hex.Sock.Hd.MC6S-TT 6x22 A480	
590	90287-0128	-		4	Screw, Sock.Set Dogpoint M4x6	
600	315105-0153	-		5	Washer, Plain, BRB, 6,4/12,H=1,5	
605	315105-0165	-		1	Washer, Plain, BRB, 8,4/16,H=1,5	
610	315115-0153	-		6	Washer, Plain, TBRB 6,4/12 H=3	
620	315202-0102	C		8	O-Ring 4,1x1,6 mm	
630	315202-0106	C		2	O-Ring 8,1x1,6 mm	
640	315202-0108	C		2	O-Ring 10,1x1,6 mm	
650	321120-0132	C		1	BEARING BUSHING WITHOUT FLANGE,18/20X20	

PRESSURE JAW RIGHT

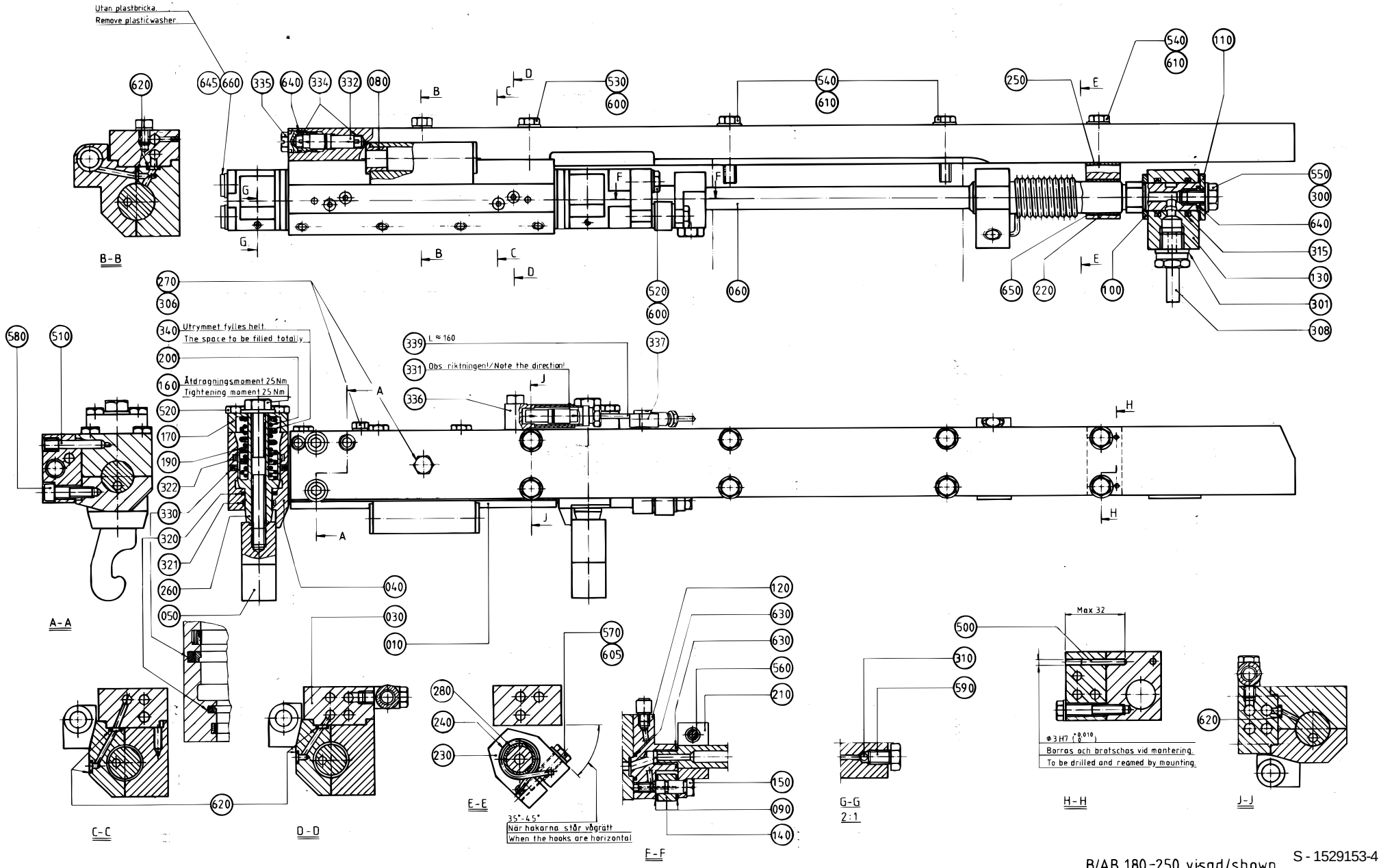

B/AB 180-250 visad/shown

S - 1529153-4
ECN 82225

Pos	Part No	SP	UN	Qty	Description	Page No
0200B OR 0250B						
010	B 441710-0000	D		1	BEARING HOUSING	
0200S						
010	B 441712-0000	D		1	BEARING HOUSING	
Common Parts						
030	491297-0000	C		1	CARRIER RIGHT	
040	490940-0000	D		1	CYLINDER	
050	978746-0000	C		2	CATCH	
060	B 272500-0000	C		1	SHAFT	
080	1517641-0000	C		2	FLANGE BUSHING	
090	256557-0001	C		2	WASHER	
100	256557-0002	C		1	WASHER	
110	256557-0003	C		1	WASHER	
120	441762-0000	C		1	CONNECTION RIGHT	
130	441385-0000	C		1	HUB	
140	256576-0000	C		1	ROLL	
150	441764-0000	C		1	SHAFT	
160	257249-0000	C		2	SCREW	
170	257250-0000	-		2	LID	
190	490942-0000	C		2	COMPRESSION SPRING	
200	490943-0000	C		2	COMPRESSION SPRING	
210	272488-0000	-		1	CLAMP RIGHT	
220	272501-0000	C		1	BRACKET RIGHT	
230	272503-0000	-		1	CLAMPING PIECE	
240	456311-0000	C		1	TORSION SPRING RIGHT	
250	272506-0000	-		2	LACE	
260	751743-0000	C		2	PISTON	
270	441355-0000	-		2	BLEEDING SCREW	
280	751769-0000	C		2	SLEEVE	
300	315237-0107	C		1	Washer,Pl.Rnd.Al.8/14,H=1	
301	315237-0110	C		1	Washer,Pl.Rnd.Al.13,5/18,H=1,5	
306	315237-0106	-		2	Washer,Pl.Rnd.Al.6/10,H=1	
308	90030-0065	C		1	PIPE CONNECTION	
310	90090-0005	C		4	STEEL-BALL SKF RB 3/111	
315	90091-0089	C		2	Rod Seal, Glidoring 16x22x2,5 mm	
320	90091-0214	C		2	Rod Seal, Glidoring 16x20,9x2,2 mm	
321	90091-0162	C		2	Wear Ring 16x19x3,2 mm	
322	90091-0170	C		2	Wear Ring 25x30x4,2 mm	
330	90091-0215	C		2	Rod Seal, Glidoring 25x32,5x3,2 mm	
331	90092-0052	-		1	Metering valve 10 mm3	
332	90092-0053	-		1	Metering valve 30 mm3	
334	90134-0042	-		2	Spacer dosing valve	
335	90134-0045	-		1	Plug M12x1	
336	90134-0047	-		1	Connection for dosing valve	
337	90134-0058	-		1	Connection	
339	90166-0143	-	MM	16	TUBE 2,5 mm PA,Transp.	
340	90296-0068	-	G	25	Grease Uniway LI 62 Cartridge 400 Gr.	
500	311103-0242	C		2	Pin, Parallell, m6, 3x30	
510	311103-0312	C		1	Pin, Parallell, m6, 5x25	
520	312105-0370	-		11	Screw M6S M6x20 A280	
530	312105-0374	-		2	Screw M6S M6x30 A280	
540	312105-0376	-		6	Screw M6S M6S M6x35 A280	
550	312105-0447	-		1	Screw M6S M8x12 A280	
560	312105-0453	-		1	Screw M6S M8x25 A280	
570	312105-0455	-		1	Screw M6S M8x30 A280	
580	312115-0371	-		2	Screw Hex.Sock.Hd.MC6S-TT 6x22 A480	
590	491555-0000	C		4	SCREW	
600	315105-0153	-		5	Washer, Plain, BRB, 6,4/12,H=1,5	
605	315105-0165	-		1	Washer, Plain, BRB, 8,4/16,H=1,5	
610	315115-0153	-		6	Washer, Plain, TBRB 6,4/12 H=3	
620	315202-0102	C		8	O-Ring 4,1x1,6 mm	
630	315202-0106	C		2	O-Ring 8,1x1,6 mm	
640	315202-0108	C		2	O-Ring 10,1x1,6 mm	
645	315234-0109	C		2	Washer,Pl.Rnd.Cu.10,3/13,5 H=1,0	
650	321120-0132	C		1	BEARING BUSHING WITHOUT FLANGE,18/20X20	
660	342713-0209	-		2	Plug, Ext Thread Hex Socket 8638-00-180	

PRESSURE JAW LEFT

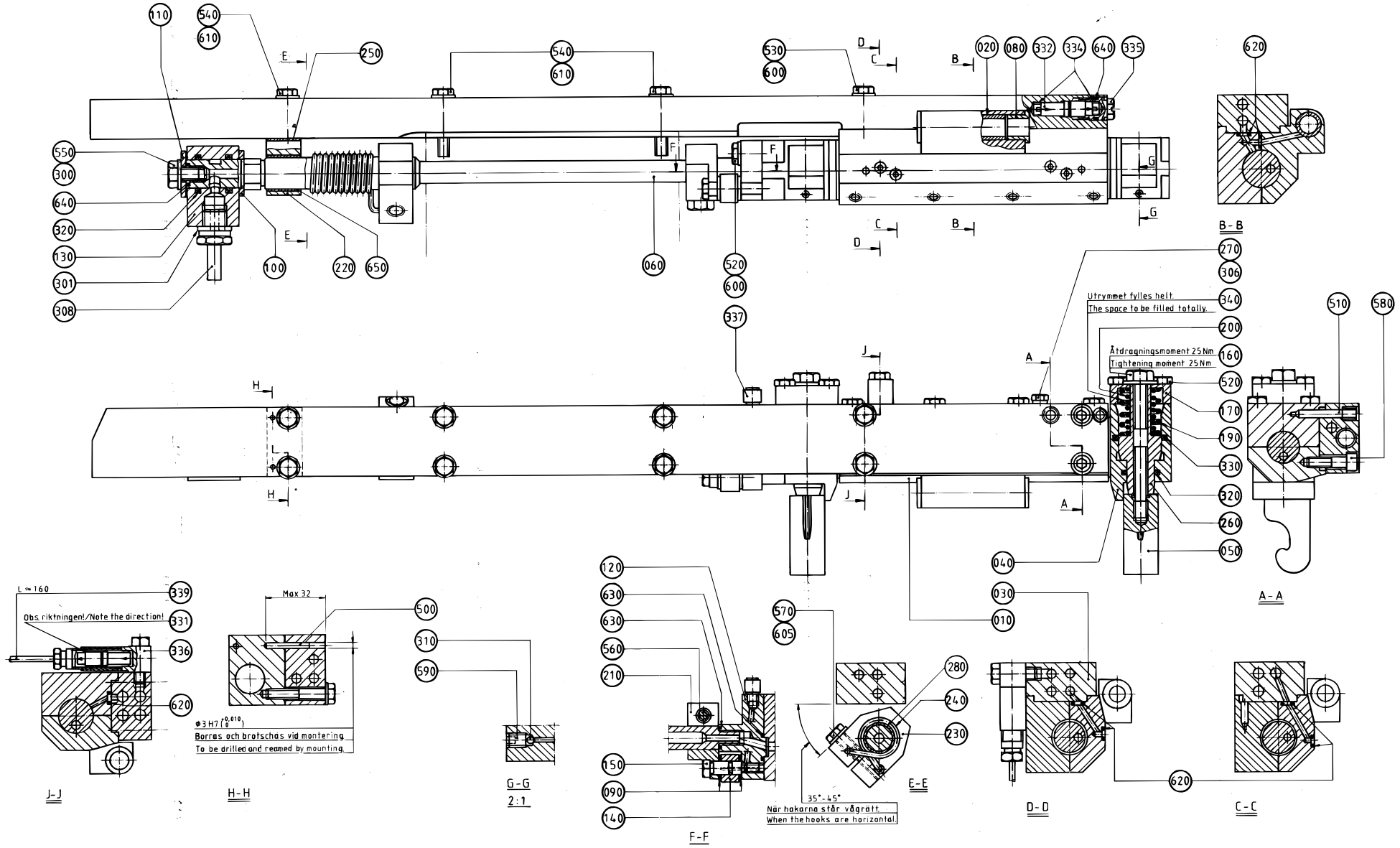

Pos	Part No	SP	UN	Qty	Description	Page No
0200B OR 0250B						
010	B 441710-0000	D		1	BEARING HOUSING	
020	255697-0002	C		1	INTERMEDIATE PIPE	
0200S						
010	B 441712-0000	D		1	BEARING HOUSING	
020	255697-0001	C		1	INTERMEDIATE PIPE	
Common Parts						
030	B 441350-0000	C		1	CARRIER LEFT	
040	441709-0000	D		1	CYLINDER	
050	978746-0000	C		2	CATCH	
060	B 272500-0000	C		1	SHAFT	
080	1517641-0000	C		2	FLANGE BUSHING	
090	256557-0001	C		2	WASHER	
100	256557-0002	C		1	WASHER	
110	256557-0003	C		1	WASHER	
120	441763-0000	C		1	CONNECTION LEFT	
130	441385-0000	C		1	HUB	
140	256576-0000	C		1	ROLL	
150	441764-0000	C		1	SHAFT	
160	257249-0000	C		2	SCREW	
170	257250-0000	-		2	LID	
190	490974-0000	C		2	COMPRESSION SPRING	
200	490975-0000	C		2	COMPRESSION SPRING	
210	272489-0000	-		1	CLAMP LEFT	
220	272502-0000	C		1	BRACKET LEFT	
230	272503-0000	-		1	CLAMPING PIECE	
240	456312-0000	C		1	TORSION SPRING LEFT	
250	272506-0000	-		2	LACE	
260	272644-0000	C		2	PISTON	
270	441355-0000	-		1	BLEEDING SCREW	
280	456320-0000	C		1	SLEEVE	
300	90005-0007	C		1	Gasket Bolt head 8,7x14x1 mm M8	
301	315237-0110	C		1	Washer,Pl.Rnd.Al.13,5/18,H=1,5	
306	90005-0003	-		1	Gasket Bolt head 6,7x11x1 mm M6	
308	90030-0065	C		1	PIPE CONNECTION	
310	90090-0005	C		4	STEEL-BALL SKF RB 3/111	
320	90091-0089	C		4	Rod Seal, Glidoring 16x22x2,5 mm	
330	90091-0107	C		2	Rod Seal, Glidoring 25x32x2,7 mm	
331	90092-0052	-		1	Metering valve 10 mm3	
332	90092-0053	-		1	Metering valve 30 mm3	
334	90134-0042	-		2	Spacer dosing valve	
335	90134-0045	-		1	Plug M12x1	
336	90134-0047	-		1	Connection for dosing valve	
337	90134-0058	-		1	Connection	
339	90166-0143	-	MM	16	TUBE 2,5 mm PA,Transp.	
340	90296-0068	-	G	25	Grease Uniway LI 62 Cartridge 400 Gr.	
500	311103-0240	C		2	Pin, Parallell, m6, 3x25	
510	311103-0312	C		1	Pin, Parallell, m6, 5x25	
520	312105-0370	-		11	Screw M6S M6x20 A280	
530	312105-0374	-		2	Screw M6S M6x30 A280	
540	312105-0376	-		6	Screw M6S M6S M6x35 A280	
550	312105-0447	-		1	Screw M6S M8x12 A280	
560	312105-0453	-		1	Screw M6S M8x25 A280	
570	312105-0455	-		1	Screw M6S M8x30 A280	
580	312115-0371	-		2	Screw Hex.Sock.Hd.MC6S-TT 6x22 A480	
590	90287-0128	-		4	Screw, Sock.Set Dogpoint M4x6	
600	315105-0153	-		5	Washer, Plain, BRB, 6,4/12,H=1,5	
605	315105-0165	-		1	Washer, Plain, BRB, 8,4/16,H=1,5	
610	315115-0153	-		6	Washer, Plain, TBRB 6,4/12 H=3	
620	315202-0102	C		8	O-Ring 4,1x1,6 mm	
630	315202-0106	C		2	O-Ring 8,1x1,6 mm	
640	315202-0108	C		2	O-Ring 10,1x1,6 mm	
650	321120-0132	C		1	BEARING BUSHING WITHOUT FLANGE,18/20X20	

(Cont'd)

PRESSURE JAW LEFT

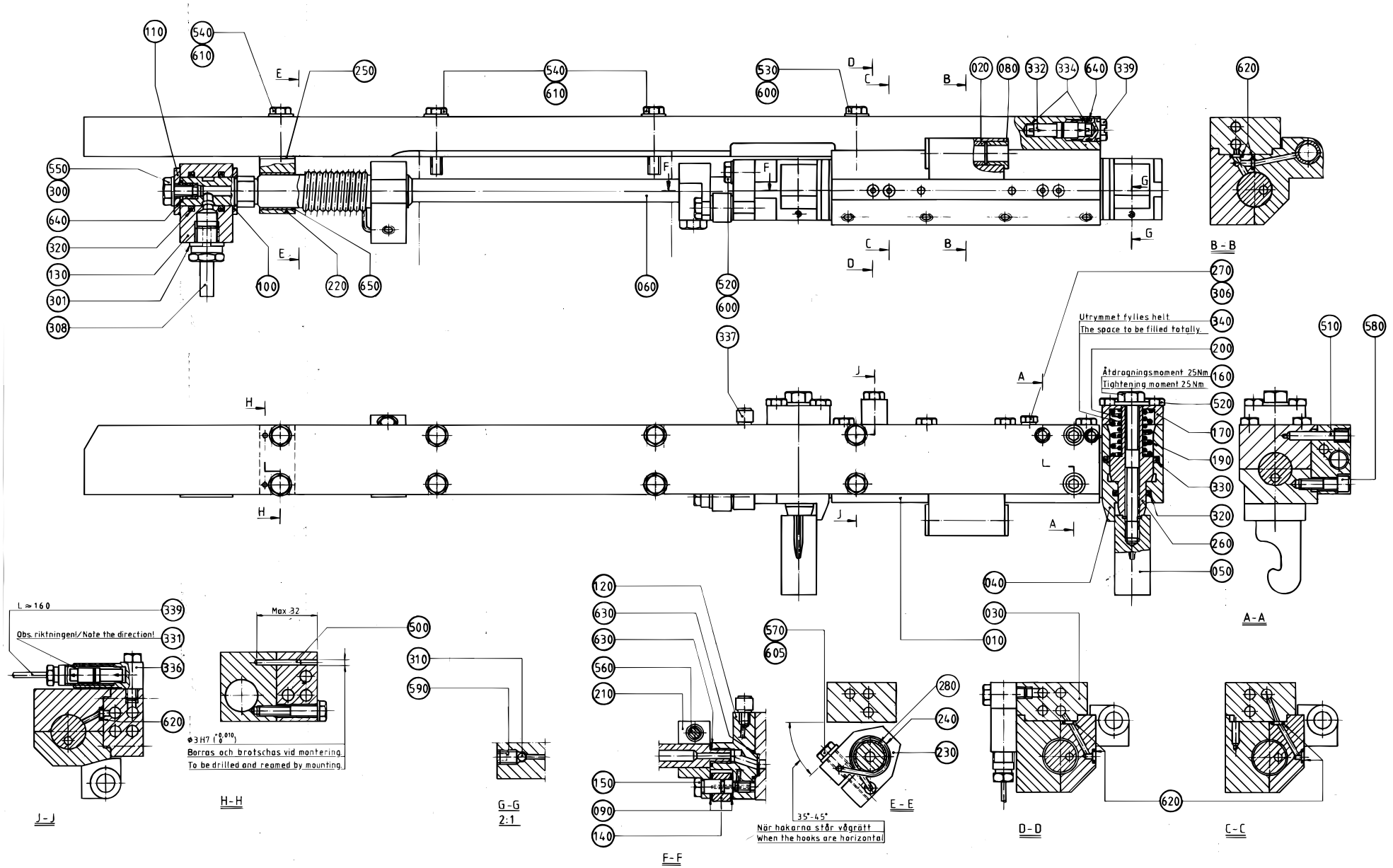

Pos	Part No	SP	UN	Qty	Description	Page No
(Cont'd)						
0200B OR 0250B						
010	B 441710-0000	D		1	BEARING HOUSING	
020	255697-0002	C		1	INTERMEDIATE PIPE	
0200S						
010	B 441712-0000	D		1	BEARING HOUSING	
020	255697-0001	C		1	INTERMEDIATE PIPE	
Common Parts						
030	B 441350-0000	C		1	CARRIER LEFT	
040	441709-0000	D		1	CYLINDER	
050	978746-0000	C		2	CATCH	
060	B 272500-0000	C		1	SHAFT	
080	1517641-0000	C		2	FLANGE BUSHING	
090	256557-0001	C		2	WASHER	
100	256557-0002	C		1	WASHER	
110	256557-0003	C		1	WASHER	
120	441763-0000	C		1	CONNECTION LEFT	
130	441385-0000	C		1	HUB	
140	256576-0000	C		1	ROLL	
150	441764-0000	C		1	SHAFT	
160	257249-0000	C		2	SCREW	
170	257250-0000	-		2	LID	
190	490974-0000	C		2	COMPRESSION SPRING	
200	490975-0000	C		2	COMPRESSION SPRING	
210	272489-0000	-		1	CLAMP LEFT	
220	272502-0000	C		1	BRACKET LEFT	
230	272503-0000	-		1	CLAMPING PIECE	
240	456312-0000	C		1	TORSION SPRING LEFT	
250	272506-0000	-		2	LACE	
260	272644-0000	C		2	PISTON	
270	441355-0000	-		1	BLEEDING SCREW	
280	456320-0000	C		1	SLEEVE	
300	90005-0007	C		1	Gasket Bolt head 8,7x14x1 mm M8	
301	315237-0110	C		1	Washer,Pl.Rnd.Al.13,5/18,H=1,5	
306	90005-0003	-		1	Gasket Bolt head 6,7x11x1 mm M6	
308	90030-0065	C		1	PIPE CONNECTION	
310	90090-0005	C		4	STEEL-BALL SKF RB 3/111	
320	90091-0089	C		4	Rod Seal, Glidoring 16x22x2,5 mm	
330	90091-0107	C		2	Rod Seal, Glidoring 25x32x2,7 mm	
331	90092-0052	-		1	Metering valve 10 mm3	
332	90092-0053	-		1	Metering valve 30 mm3	
334	90134-0042	-		2	Spacer dosing valve	
335	90134-0045	-		1	Plug M12x1	
336	90134-0047	-		1	Connection for dosing valve	
337	90134-0058	-		1	Connection	
339	90166-0143	-	MM	16	TUBE 2,5 mm PA,Transp.	
340	90296-0068	-	G	25	Grease Uniway LI 62 Cartridge 400 Gr.	
500	311103-0240	C		2	Pin, Parallell, m6, 3x25	
510	311103-0312	C		1	Pin, Parallell, m6, 5x25	
520	312105-0370	-		11	Screw M6S M6x20 A280	
530	312105-0374	-		2	Screw M6S M6x30 A280	
540	312105-0376	-		6	Screw M6S M6S M6x35 A280	
550	312105-0447	-		1	Screw M6S M8x12 A280	
560	312105-0453	-		1	Screw M6S M8x25 A280	
570	312105-0455	-		1	Screw M6S M8x30 A280	
580	312115-0371	-		2	Screw Hex.Sock.Hd.MC6S-TT 6x22 A480	
590	90287-0128	-		4	Screw, Sock.Set Dogpoint M4x6	
600	315105-0153	-		5	Washer, Plain, BRB, 6,4/12,H=1,5	
605	315105-0165	-		1	Washer, Plain, BRB, 8,4/16,H=1,5	
610	315115-0153	-		6	Washer, Plain, TBRB 6,4/12 H=3	
620	315202-0102	C		8	O-Ring 4,1x1,6 mm	
630	315202-0106	C		2	O-Ring 8,1x1,6 mm	
640	315202-0108	C		2	O-Ring 10,1x1,6 mm	
650	321120-0132	C		1	BEARING BUSHING WITHOUT FLANGE,18/20X20	

(Cont'd)

PRESSURE JAW LEFT

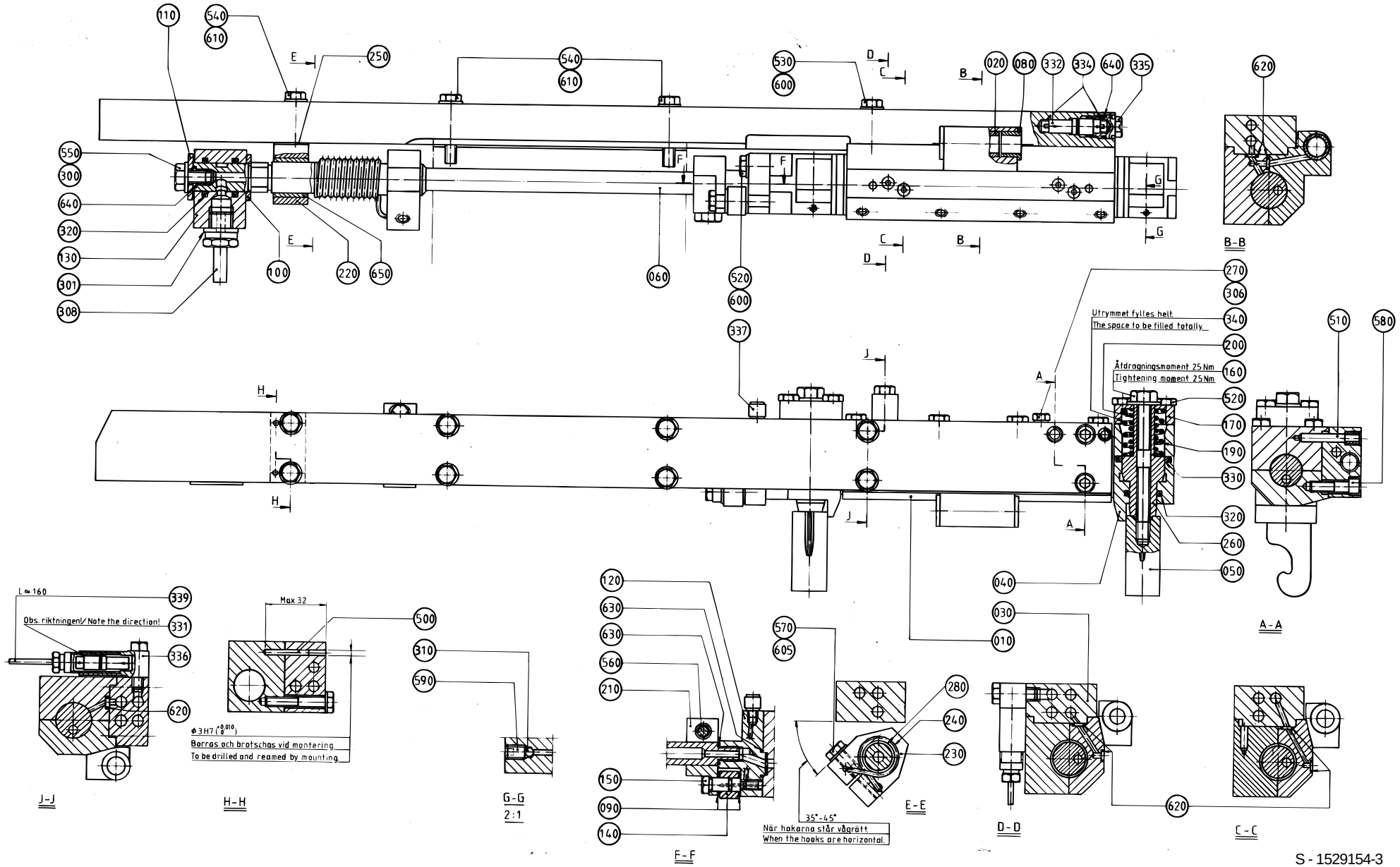

S - 1529154-3
ECN 82225

Pos	Part No	SP	UN	Qty	Description	Page No
(Cont'd)						
0200B OR 0250B						
010	B 441710-0000	D		1	BEARING HOUSING	
020	255697-0002	C		1	INTERMEDIATE PIPE	
0200S						
010	B 441712-0000	D		1	BEARING HOUSING	
020	255697-0001	C		1	INTERMEDIATE PIPE	
Common Parts						
030	B 441350-0000	C		1	CARRIER LEFT	
040	441709-0000	D		1	CYLINDER	
050	978746-0000	C		2	CATCH	
060	B 272500-0000	C		1	SHAFT	
080	1517641-0000	C		2	FLANGE BUSHING	
090	256557-0001	C		2	WASHER	
100	256557-0002	C		1	WASHER	
110	256557-0003	C		1	WASHER	
120	441763-0000	C		1	CONNECTION LEFT	
130	441385-0000	C		1	HUB	
140	256576-0000	C		1	ROLL	
150	441764-0000	C		1	SHAFT	
160	257249-0000	C		2	SCREW	
170	257250-0000	-		2	LID	
190	490974-0000	C		2	COMPRESSION SPRING	
200	490975-0000	C		2	COMPRESSION SPRING	
210	272489-0000	-		1	CLAMP LEFT	
220	272502-0000	C		1	BRACKET LEFT	
230	272503-0000	-		1	CLAMPING PIECE	
240	456312-0000	C		1	TORSION SPRING LEFT	
250	272506-0000	-		2	LACE	
260	272644-0000	C		2	PISTON	
270	441355-0000	-		1	BLEEDING SCREW	
280	456320-0000	C		1	SLEEVE	
300	90005-0007	C		1	Gasket Bolt head 8,7x14x1 mm M8	
301	315237-0110	C		1	Washer,Pl.Rnd.Al.13,5/18,H=1,5	
306	90005-0003	-		1	Gasket Bolt head 6,7x11x1 mm M6	
308	90030-0065	C		1	PIPE CONNECTION	
310	90090-0005	C		4	STEEL-BALL SKF RB 3/111	
320	90091-0089	C		4	Rod Seal, Glidoring 16x22x2,5 mm	
330	90091-0107	C		2	Rod Seal, Glidoring 25x32x2,7 mm	
331	90092-0052	-		1	Metering valve 10 mm3	
332	90092-0053	-		1	Metering valve 30 mm3	
334	90134-0042	-		2	Spacer dosing valve	
335	90134-0045	-		1	Plug M12x1	
336	90134-0047	-		1	Connection for dosing valve	
337	90134-0058	-		1	Connection	
339	90166-0143	-	MM	16	TUBE 2,5 mm PA,Transp.	
340	90296-0068	-	G	25	Grease Uniway LI 62 Cartridge 400 Gr.	
500	311103-0240	C		2	Pin, Parallell, m6, 3x25	
510	311103-0312	C		1	Pin, Parallell, m6, 5x25	
520	312105-0370	-		11	Screw M6S M6x20 A280	
530	312105-0374	-		2	Screw M6S M6x30 A280	
540	312105-0376	-		6	Screw M6S M6S M6x35 A280	
550	312105-0447	-		1	Screw M6S M8x12 A280	
560	312105-0453	-		1	Screw M6S M8x25 A280	
570	312105-0455	-		1	Screw M6S M8x30 A280	
580	312115-0371	-		2	Screw Hex.Sock.Hd.MC6S-TT 6x22 A480	
590	90287-0128	-		4	Screw, Sock.Set Dogpoint M4x6	
600	315105-0153	-		5	Washer, Plain, BRB, 6,4/12,H=1,5	
605	315105-0165	-		1	Washer, Plain, BRB, 8,4/16,H=1,5	
610	315115-0153	-		6	Washer, Plain, TBRB 6,4/12 H=3	
620	315202-0102	C		8	O-Ring 4,1x1,6 mm	
630	315202-0106	C		2	O-Ring 8,1x1,6 mm	
640	315202-0108	C		2	O-Ring 10,1x1,6 mm	
650	321120-0132	C		1	BEARING BUSHING WITHOUT FLANGE,18/20X20	

PRESSURE JAW LEFT

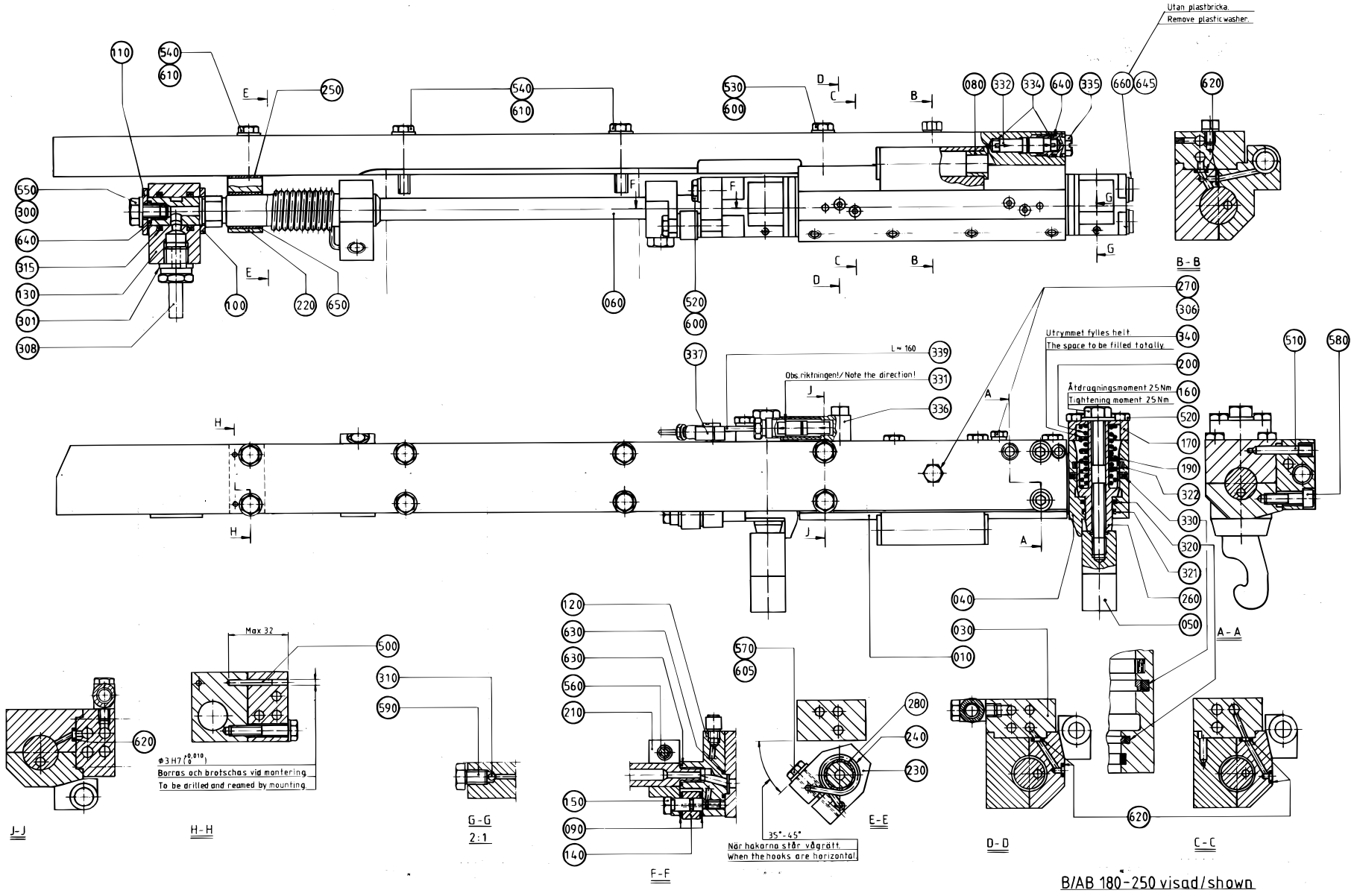

Pos	Part No	SP	UN	Qty	Description	Page No
0200B OR 0250B						
010	**B 441710-0000**		**D**	**1**	**BEARING HOUSING**	
0200S						
010	**B 441712-0000**		**D**	**1**	**BEARING HOUSING**	
Common parts						
030	491298-0000	C		1	CARRIER LEFT	
040	490940-0000	D		1	CYLINDER	
050	978746-0000	C		2	CATCH	
060	B 272500-0000	C		1	SHAFT	
080	1517641-0000	C		2	FLANGE BUSHING	
090	256557-0001	C		2	WASHER	
100	256557-0002	C		1	WASHER	
110	256557-0003	C		1	WASHER	
120	441763-0000	C		1	CONNECTION LEFT	
130	441385-0000	C		1	HUB	
140	256576-0000	C		1	ROLL	
150	441764-0000	C		1	SHAFT	
160	257249-0000	C		2	SCREW	
170	257250-0000	-		2	LID	
190	490942-0000	C		2	COMPRESSION SPRING	
200	490943-0000	C		2	COMPRESSION SPRING	
210	272489-0000	-		1	CLAMP LEFT	
220	272502-0000	C		1	BRACKET LEFT	
230	272503-0000	-		1	CLAMPING PIECE	
240	456312-0000	C		1	TORSION SPRING LEFT	
250	272506-0000	-		2	LACE	
260	751743-0000	C		2	PISTON	
270	441355-0000	-		2	BLEEDING SCREW	
280	751769-0000	C		2	SLEEVE	
300	315237-0107	C		1	Washer,Pl.Rnd.Al.8/14,H=1	
301	315237-0110	C		1	Washer,Pl.Rnd.Al.13,5/18,H=1,5	
306	315237-0106	-		2	Washer,Pl.Rnd.Al.6/10,H=1	
308	90030-0065	C		1	PIPE CONNECTION	
310	90090-0005	C		4	STEEL-BALL SKF RB 3/111	
315	90091-0089	C		2	Rod Seal, Glidoring 16x22x2,5 mm	
320	90091-0214	C		2	Rod Seal, Glidoring 16x20,9x2,2 mm	
321	90091-0162	C		2	Wear Ring 16x19x3,2 mm	
322	90091-0170	C		2	Wear Ring 25x30x4,2 mm	
330	90091-0215	C		2	Rod Seal, Glidoring 25x32,5x3,2 mm	
331	90092-0052	-		1	Metering valve 10 mm3	
332	90092-0053	-		1	Metering valve 30 mm3	
334	90134-0042	-		2	Spacer dosing valve	
335	90134-0045	-		1	Plug M12x1	
336	90134-0047	-		1	Connection for dosing valve	
337	90134-0058	-		1	Connection	
339	90166-0143	-	MM	16	TUBE 2,5 mm PA,Transp.	
340	90296-0068	-	G	25	Grease Uniway LI 62 Cartridge 400 Gr.	
500	311103-0242	C		2	Pin, Parallell, m6, 3x30	
510	311103-0312	C		1	Pin, Parallell, m6, 5x25	
520	312105-0370	-		11	Screw M6S M6x20 A280	
530	312105-0374	-		2	Screw M6S M6x30 A280	
540	312105-0376	-		6	Screw M6S M6S M6x35 A280	
550	312105-0447	-		1	Screw M6S M8x12 A280	
560	312105-0453	-		1	Screw M6S M8x25 A280	
570	312105-0455	-		1	Screw M6S M8x30 A280	
580	312115-0371	-		2	Screw Hex.Sock.Hd.MC6S-TT 6x22 A480	
590	491555-0000	C		4	SCREW	
600	315105-0153	-		5	Washer, Plain, BRB, 6,4/12,H=1,5	
605	315105-0165	-		1	Washer, Plain, BRB, 8,4/16,H=1,5	
610	315115-0153	-		6	Washer, Plain, TBRB 6,4/12 H=3	
620	315202-0102	C		8	O-Ring 4,1x1,6 mm	
630	315202-0106	C		2	O-Ring 8,1x1,6 mm	
640	315202-0108	C		2	O-Ring 10,1x1,6 mm	
645	315234-0109	C		2	Washer,Pl.Rnd.Cu.10,3/13,5 H=1,0	
650	321120-0132	C		1	BEARING BUSHING WITHOUT FLANGE,18/20X20	
660	342713-0209	-		2	Plug, Ext Thread Hex Socket 8638-00-180	

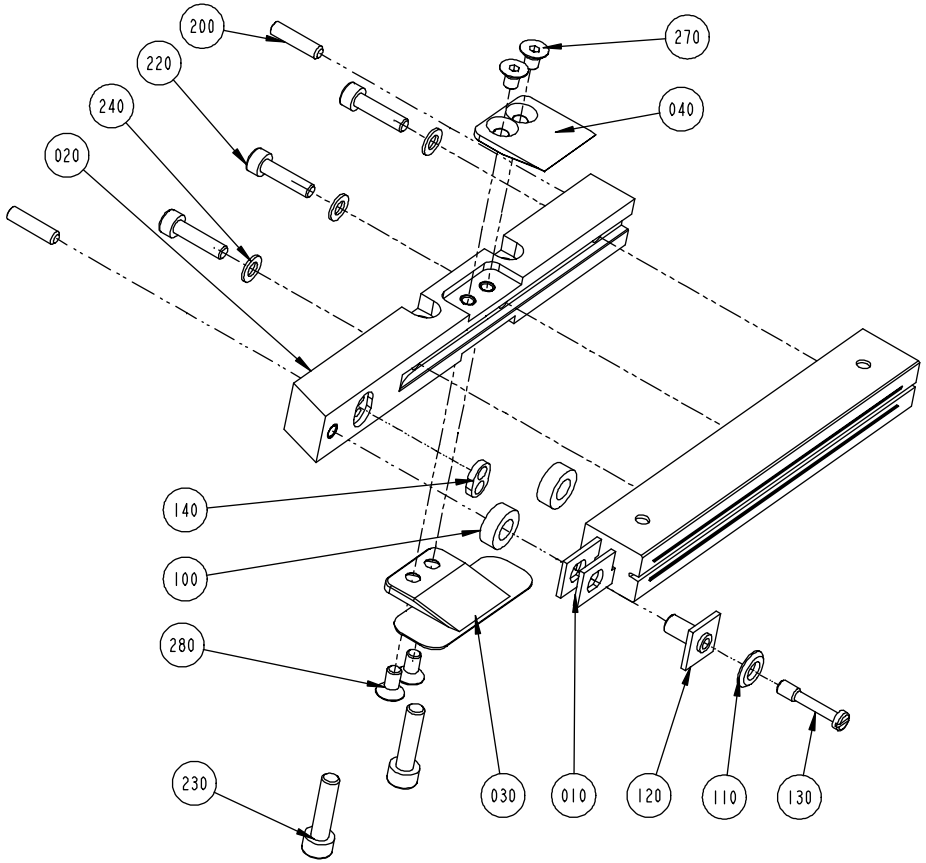
200
220
240
020
270
040
140
100
280
230
030
010
120
110
130

Pos	Part No	SP	UN	Qty	Description	Page No
TBA 0125S OR TBA 0100B OR TWA 0125S						
010	B1110530-0000	A		1	Inductor	
020	491886-0000	B		1	RAIL	
220	312115-0293	-		3	Screw MC6S M4x16 A280	
230	312105-0331	-		2	Screw M6S M5x20 A280	
240	315105-0136	B		3	Washer, Plain, BRB, 4,3/8,H=0,8	
TBA 0160S OR TBA 0200S OR TWA 0200S						
010	B1110532-0000	A		1	Inductor	
020	491962-0000	B		1	RAIL	
220	312115-0293	-		2	Screw MC6S M4x16 A280	
230	312115-0331	-		2	Screw MC6S M5x20 A280	
240	315105-0136	B		2	Washer, Plain, BRB, 4,3/8,H=0,8	
260	315202-0102	B		2	O-Ring 4,1x1,6 mm	
TBA 0250S OR TBA 0200M						
010	B1110535-0000	A		1	Inductor	
020	491962-0000	B		1	RAIL	
220	312115-0293	-		2	Screw MC6S M4x16 A280	
230	312115-0331	-		2	Screw MC6S M5x20 A280	
240	315105-0136	B		2	Washer, Plain, BRB, 4,3/8,H=0,8	
260	315202-0102	B		2	O-Ring 4,1x1,6 mm	
TBA 0330S OR TBA 0300S OR TBA 0180B OR TBA 0200B OR TBA 0284B OR TBA 0250B OR TBA 0236B						
010	B1110534-0000	A		1	Inductor	
020	491954-0000	B		1	RAIL	
220	312115-0293	-		3	Screw MC6S M4x16 A280	
230	312115-0331	-		2	Screw MC6S M5x20 A280	
240	315105-0136	B		3	Washer, Plain, BRB, 4,3/8,H=0,8	
260	315202-0102	B		2	O-Ring 4,1x1,6 mm	
TBA 0200SQ						
010	1520078-0000	A		1	INDUCTOR	
020	1519229-0000	B		1	RAIL	
030	1539120-0000	B		1	VOLUME BULGE	
040	1539593-0000	B		1	COVER	
220	312115-0293	-		3	Screw MC6S M4x16 A280	
230	312115-0331	-		2	Screw MC6S M5x20 A280	
240	315105-0136	B		2	Washer, Plain, BRB, 4,3/8,H=0,8	
270	312155-0285	-		2	Screw Hex.Sock.Count.MF6S M4x6 A480	
280	312155-0287	-		2	Screw Hex.Sock.Count.MF6S M4x8 A270	
Common Parts						
100	32644-0000	B		1	WASHER	
110	256882-0000	B		1	WASHER	
120	271846-0000	B		1	INSULATION NUT	
130	271848-0000	B		1	SCREW	
140	491681-0000	B		1	GASKET	
200	311103-0270	-		2	Pin, Parallell, m6, 4x16	
250	315105-0146	-		2	Washer, Plain, BRB, 5,3/10,H=1	

YOKE RIGHT

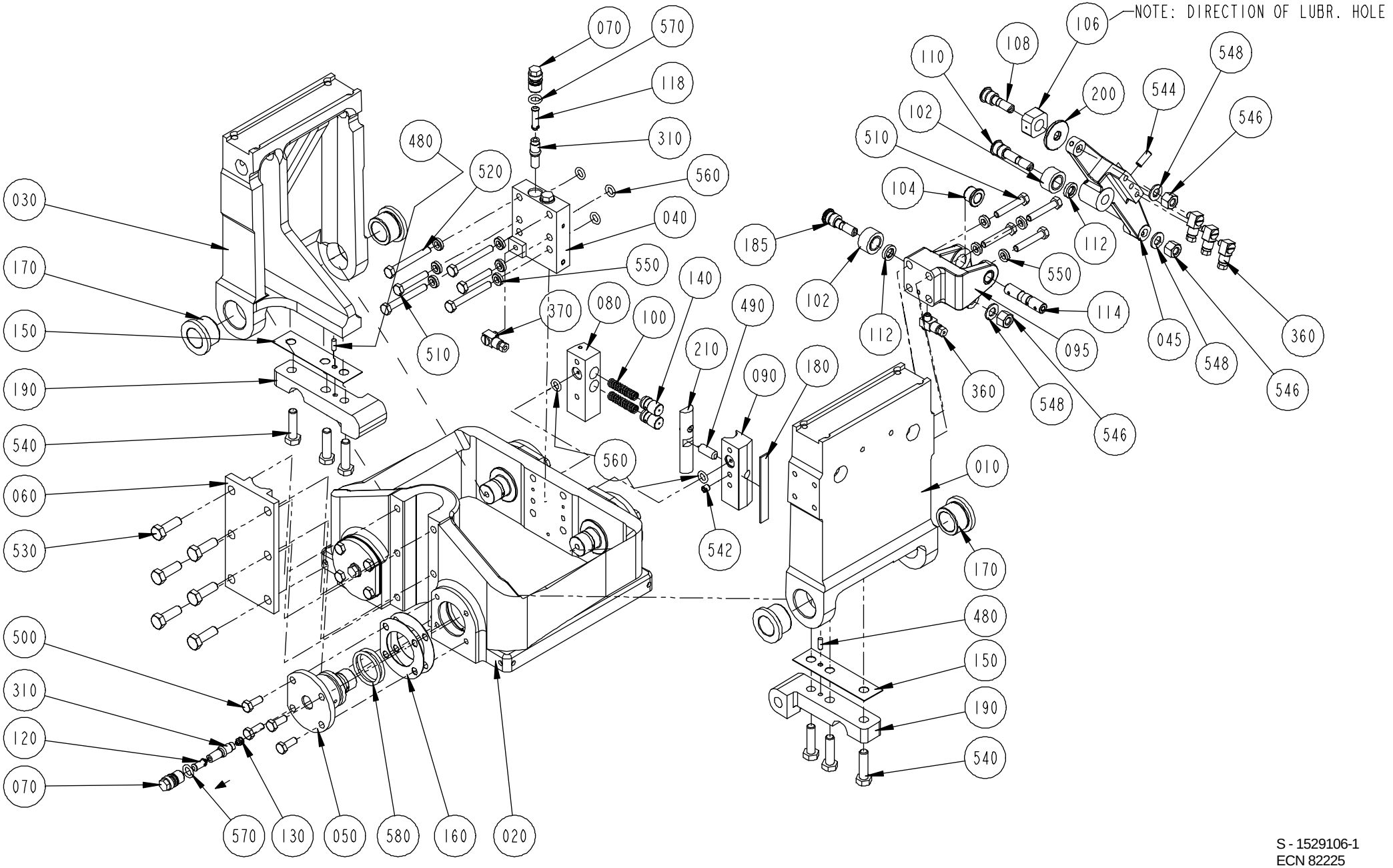
NOTE: DIRECTION OF LUBR. HOLE
030
170
150
190
540
060
530
500
310
120
070
570
130
050
580
160
020
480
520
510
070
570
118
310
560
040
550
140
370
080
100
560
542
210
490
090
180
185
102
112
104
110
108
106
200
102
510
544
548
546
112
550
114
095
045
548
546
360
360
548
546
010
170
480
150
190
540

Pos	Part No	SP	UN	Qty	Description	Page No
Common Parts						
010	255609-0000	C		1	ARM CUTTING JAW	
020	B 256834-0000	C		1	YOKE	
030	1529057-0000	C		1	ARM	
040	256953-0000	C		1	BLOCK RIGHT	
045	272492-0000	D		1	ARM RIGHT	
050	272454-0000	C		4	PIVOT PIN	
060	256082-0000	C		1	CAP	
070	256829-0000	C		6	SCREW	
080	256870-0000	C		1	BRACKET	
090	491349-0000	C		1	BEARING SEAT	
095	272496-0000	D		1	BRACKET RIGHT	
100	20239-0000	C		2	COMPRESSION SPRING	
102	22475-0000	C		2	CURVE ROLLER	
104	1517641-0000	C		2	FLANGE BUSHING	
106	256628-0000	C		1	PIECE	
108	256629-0001	C		1	AXLE PIN	
110	256629-0003	C		1	AXLE PIN	
112	256704-0000	C		2	WASHER	
114	256710-0000	C		1	SHAFT	
118	256831-0001	C		2	SPACER	
120	256831-0002	C		4	SPACER	
130	256831-0003	C		4	SPACER	
140	256889-0000	C		2	PLUNGER	
150	256890-0000	-		2	LACE	
160	256891-0000	-		6	LACE	
170	257213-0000	C		4	BUSHING	
180	257317-0000	-		1	LACE	
185	271100-0000	C		1	DOWEL	
190	272415-0000	C		2	ARM	
200	441706-0000	C		1	WASHER	
210	491350-0000	C		1	SLIDER	
310	90092-0054	C		6	Metering valve 50 mm3	
360	90134-0058	-		4	Connection	
370	90134-0068	-		1	Connection	
480	311103-0268	-		2	Pin, Parallell, m6, 4x12	
490	311103-0401	-		1	Pin, Parallell, m6, 8x20	
500	312105-0368	-		16	Screw M6S M6x16 A280	
510	312105-0376	-		6	Screw M6S M6S M6x35 A280	
520	312105-0380	-		4	Screw M6S M6x50 A280	
530	312105-0453	-		6	Screw M6S M8x25 A280	
540	312105-0455	-		6	Screw M6S M8x30 A280	
542	312318-0360	-		1	Screw Hex.Sock.Set Cup P.MSK6SS6x6 SS	
544	312318-0368	-		1	Screw,Sock.Set Cuppoint MSK6SS M6x16 A4	
546	312811-0318	-		3	Nut Hex.Lock Heli Coil Mid Grip M8 SS	
548	315105-0165	-		3	Washer, Plain, BRB, 8,4/16,H=1,5	
550	315115-0153	-		1	Washer, Plain, TBRB 6,4/12 H=3	
560	315202-0206	C		5	O-Ring 7,3x2,4 mm	
570	315202-0207	C		6	O-Ring 8,3x2,4 mm	
580	315202-0219	C		8	O-Ring 29,2x3 mm	

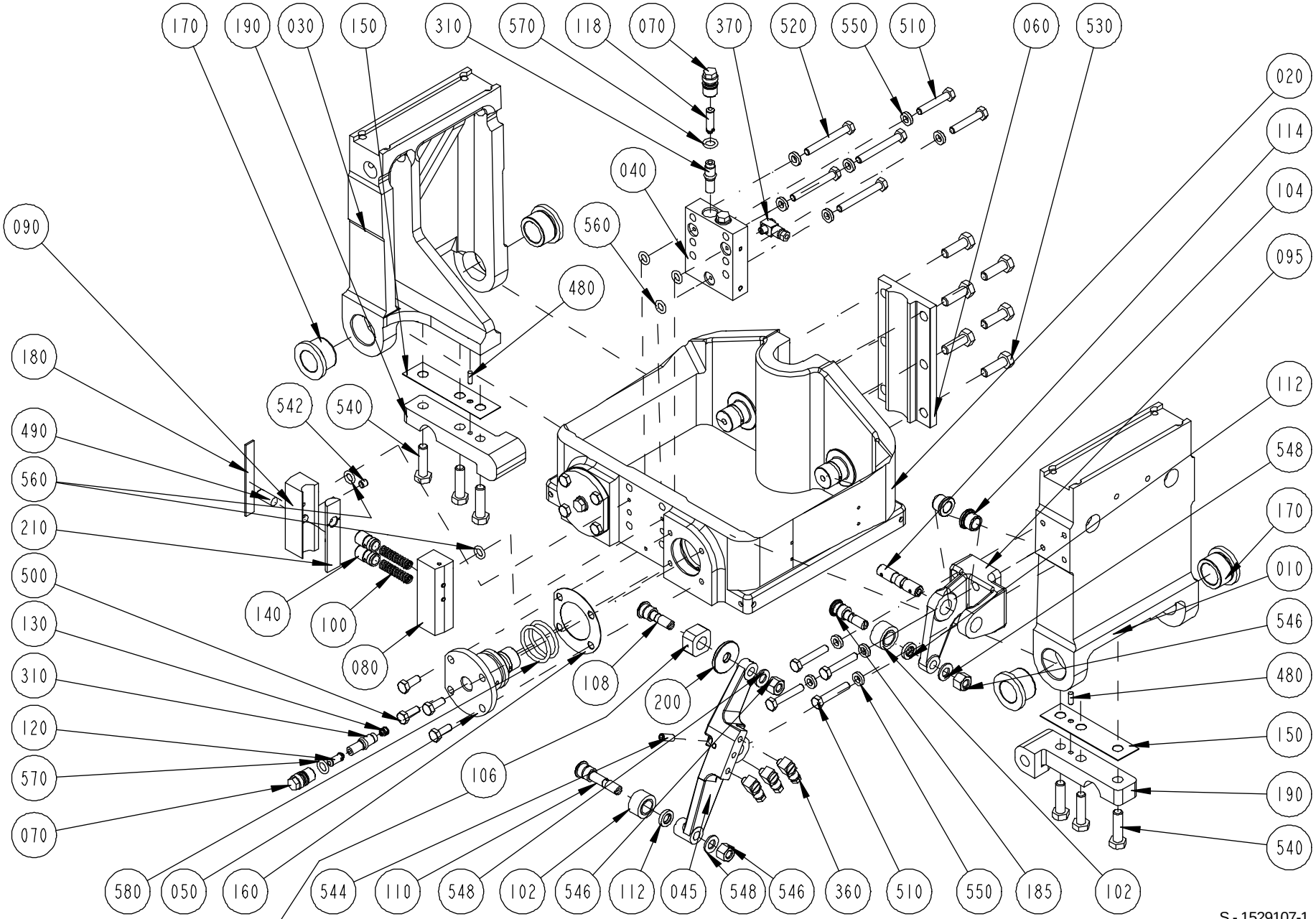

S - 1529107-1
ECN 82225

Pos	Part No	SP	UN	Qty	Description	Page No
Common Parts						
010	255609-0000	C		1	ARM CUTTING JAW	
020	B 256834-0000	C		1	YOKE	
030	1529057-0000	C		1	ARM	
040	256954-0000	C		1	BLOCK LEFT	
045	272493-0000	D		1	ARM LEFT	
050	272454-0000	C		4	PIVOT PIN	
060	256082-0000	C		1	CAP	
070	256829-0000	C		6	SCREW	
080	256870-0000	C		1	BRACKET	
090	491349-0000	C		1	BEARING SEAT	
095	272497-0000	D		1	BRACKET LEFT	
100	20239-0000	C		2	COMPRESSION SPRING	
102	22475-0000	C		2	CURVE ROLLER	
104	1517641-0000	C		2	FLANGE BUSHING	
106	256628-0000	C		1	PIECE	
108	256629-0001	C		1	AXLE PIN	
110	256629-0003	C		1	AXLE PIN	
112	256704-0000	C		2	WASHER	
114	256710-0000	C		1	SHAFT	
118	256831-0001	C		2	SPACER	
120	256831-0002	C		4	SPACER	
130	256831-0003	C		4	SPACER	
140	256889-0000	C		2	PLUNGER	
150	256890-0000	-		2	LACE	
160	256891-0000	-		6	LACE	
170	257213-0000	C		4	BUSHING	
180	257317-0000	-		1	LACE	
185	271100-0000	C		1	DOWEL	
190	272415-0000	C		2	ARM	
200	441706-0000	C		1	WASHER	
210	491350-0000	C		1	SLIDER	
310	90092-0054	C		6	Metering valve 50 mm3	
360	90134-0058	-		4	Connection	
370	90134-0068	-		1	Connection	
480	311103-0268	-		2	Pin, Parallell, m6, 4x12	
490	311103-0401	-		1	Pin, Parallell, m6, 8x20	
500	312105-0368	-		16	Screw M6S M6x16 A280	
510	312105-0376	-		6	Screw M6S M6S M6x35 A280	
520	312105-0380	-		4	Screw M6S M6x50 A280	
530	312105-0453	-		6	Screw M6S M8x25 A280	
540	312105-0455	-		6	Screw M6S M8x30 A280	
542	312318-0360	-		1	Screw Hex.Sock.Set Cup P.MSK6SS6x6 SS	
544	312318-0368	-		1	Screw,Sock.Set Cuppoint MSK6SS M6x16 A4	
546	312811-0318	-		3	Nut Hex.Lock Heli Coil Mid Grip M8 SS	
548	315105-0165	-		3	Washer, Plain, BRB, 8,4/16,H=1,5	
550	315115-0153	-		1	Washer, Plain, TBRB 6,4/12 H=3	
560	315202-0206	C		5	O-Ring 7,3x2,4 mm	
570	315202-0207	C		6	O-Ring 8,3x2,4 mm	
580	315202-0219	C		8	O-Ring 29,2x3 mm	

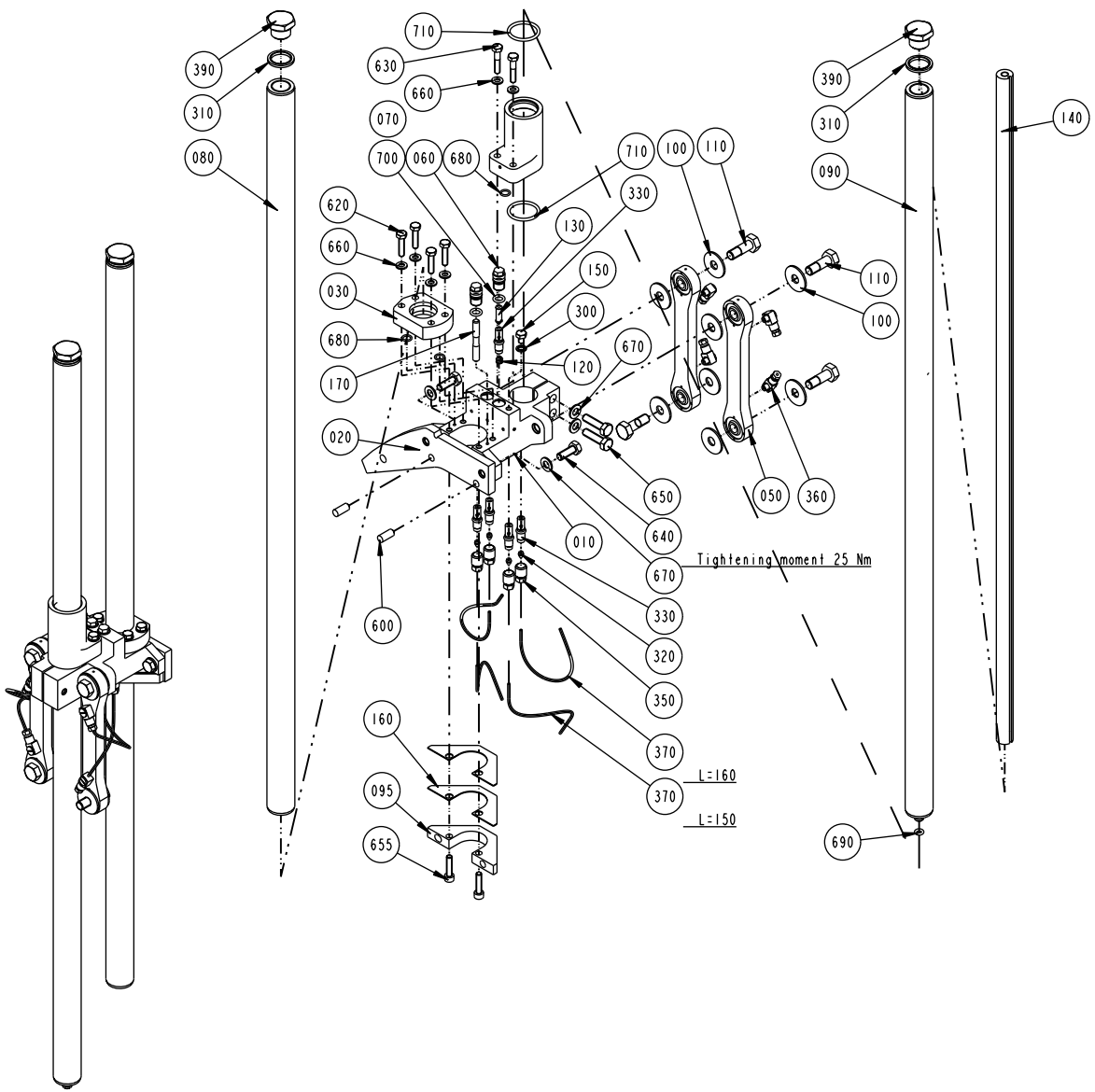

GraphicID: 256217-4.eps
Parent Drw: 256217-4
ECN 73446

Pos	Part No	SP	UN	Qty	Description	Page No
Common Parts						
010	B 272689-0000	D		2	BRACKET	
020	B 441749-0000	C		2	CURVE	
030	456002-0000	C		2	BEARING	
050	441031-0000	C		4	LINK BEARING	
060	256829-0000	C		4	SCREW	
070	272490-0000	D		2	SLEEVE	
080	441269-0000	D		2	GUIDE	
090	441268-0000	D		2	GUIDE	
095	441750-0000	C		2	YOKE	
100	256738-0000	C		16	WASHER	
110	256739-0000	C		8	SCREW	
120	256831-0003	C		2	SPACER	
130	256831-0004	C		2	SPACER	
140	272840-0000	-		2	ROD	
150	441355-0000	-		2	BLEEDING SCREW	
160	441751-0000	C		4	LACE	
170	456004-0000	-		2	SPACER	
300	90005-0003	C		2	Gasket Bolt head 6,7x11x1 mm M6	
310	90005-0014	C		4	"Gasket Bolt head 21,5x28,6x2,5 mm G1/2	
320	90028-0020	C		8	Cone tube 2,5mm	
330	90092-0052	C		1	Metering valve 10 mm3	
350	90134-0039	-		8	Bushing valve connection 2,5 mm	
360	90134-0058	-		8	Connection	
370	90166-0143	-	MM	124	TUBE 2,5 mm PA,Transp.	
390	90330-0037	-		4	Plug, Ext. G-Thread, G1/2	
600	311103-0401	-		4	Pin, Parallell, m6, 8x20	
620	312105-0372	-		6	Screw M6S M6x25 A280	
630	312105-0374	-		4	Screw M6S M6x30 A280	
640	312105-0452	-		4	Screw M6S M8x22 A280	
650	312105-0455	-		4	Screw M6S M8x30 A280	
655	312115-0372	-		4	Screw MC6S M6x25 A280	
660	315105-0153	-		1	Washer, Plain, BRB, 6,4/12,H=1,5	
670	315105-0165	-		8	Washer, Plain, BRB, 8,4/16,H=1,5	
680	315202-0106	C		6	O-Ring 8,1x1,6 mm	
690	315202-0204	C		2	O-Ring 5,3x2,4 mm	
700	315202-0207	C		4	O-Ring 8,3x2,4 mm	
710	315202-0219	C		4	O-Ring 29,2x3 mm	

Pos	Part No	SP	UN	Qty	Description	Page No

TRANSFER RIGHT

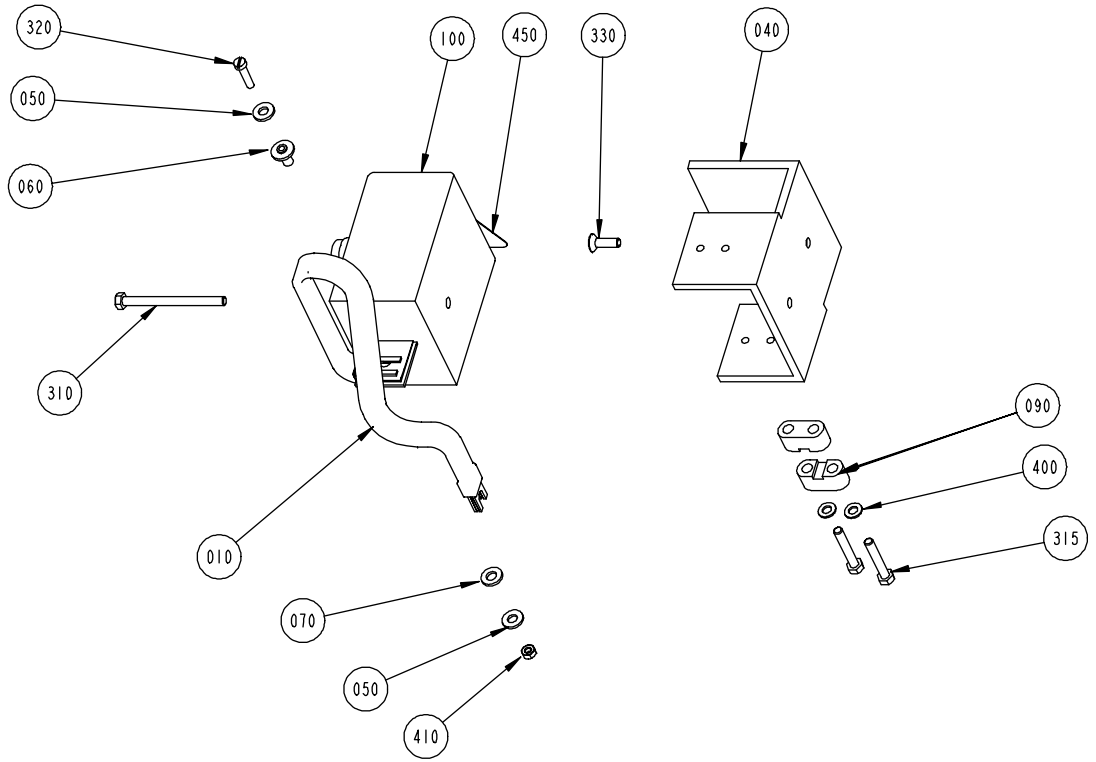

Pos	Part No	SP	UN	Qty	Description	Page No
0200B OR 0250B						
100	B 67379-0114	C		1	Impedance Transformer	
0200S						
100	B 67379-0105	C		1	Impedance Transformer	
Common Parts						
010	571872-0000	C		1	BUSBAR,LEFT	
040	579944-0000	-		1	HOLDER	
050	28509-0000	C		2	WASHER	
060	32544-0000	C		1	INSULATION NUT	
070	32079-0000	C		1	WASHER	
090	464368-0000	C		2	CRAMP	
310	312101-0343	-		1	Screw M6S M5x60 FZB	
315	312105-0335	-		2	Screw M6S M5x30 A280	
320	312122-0294	-		1	Screw Slot.Pan Hd. MCS 4x18 BR NP	
330	312155-0329	-		1	Screw Hex.Sock.Count.MF6S M5x16 A280	
400	315105-0146	-		2	Washer, Plain, BRB, 5,3/10,H=1	
410	312602-0312	-		1	Nut Hex. M6M M4 BR	
450	90194-0016	-		1	SIGN "FLASH SIGN" 50X50MM	

Pos	Part No	SP	UN	Qty	Description	Page No

TRANSFER LEFT

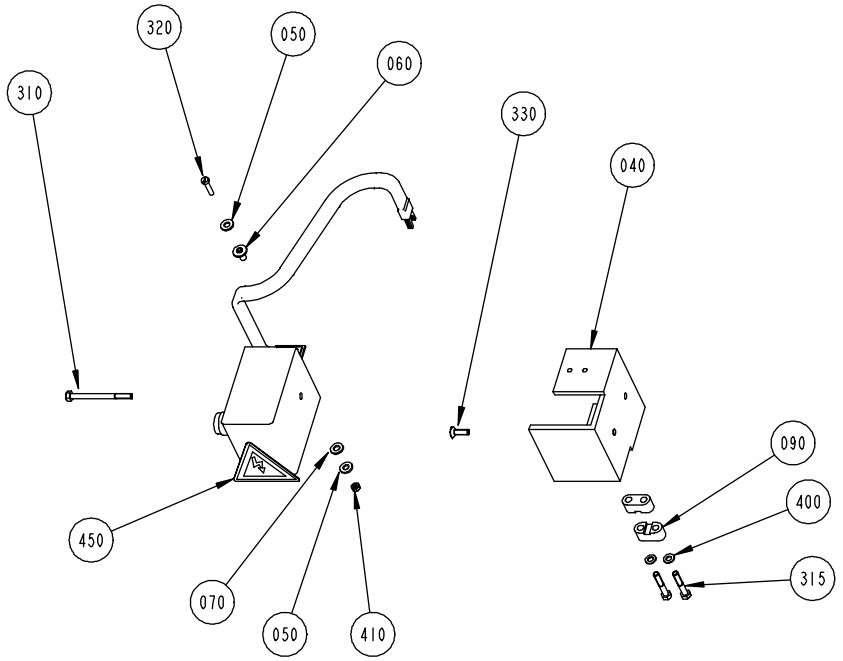

Pos	Part No	SP	UN	Qty	Description	Page No
0200B OR 0250B						
100	B 67379-0114	C		1	Impedance Transformer	
0200S						
100	B 67379-0105	C		1	Impedance Transformer	
Common Parts						
010	571872-0000	C		1	BUSBAR,LEFT	
040	579944-0000	-		1	HOLDER	
050	28509-0000	C		2	WASHER	
060	32544-0000	C		1	INSULATION NUT	
070	32079-0000	C		1	WASHER	
090	464368-0000	C		2	CRAMP	
310	312101-0343	-		1	Screw M6S M5x60 FZB	
315	312105-0335	-		2	Screw M6S M5x30 A280	
320	312122-0294	-		1	Screw Slot.Pan Hd. MCS 4x18 BR NP	
330	312155-0329	-		1	Screw Hex.Sock.Count.MF6S M5x16 A280	
400	315105-0146	-		2	Washer, Plain, BRB, 5,3/10,H=1	
410	312602-0312	-		1	Nut Hex. M6M M4 BR	
450	90194-0016	-		1	SIGN "FLASH SIGN" 50X50MM	

Pos	Part No	SP	UN	Qty	Description	Page No

VOLUME CURVE PIECE IH

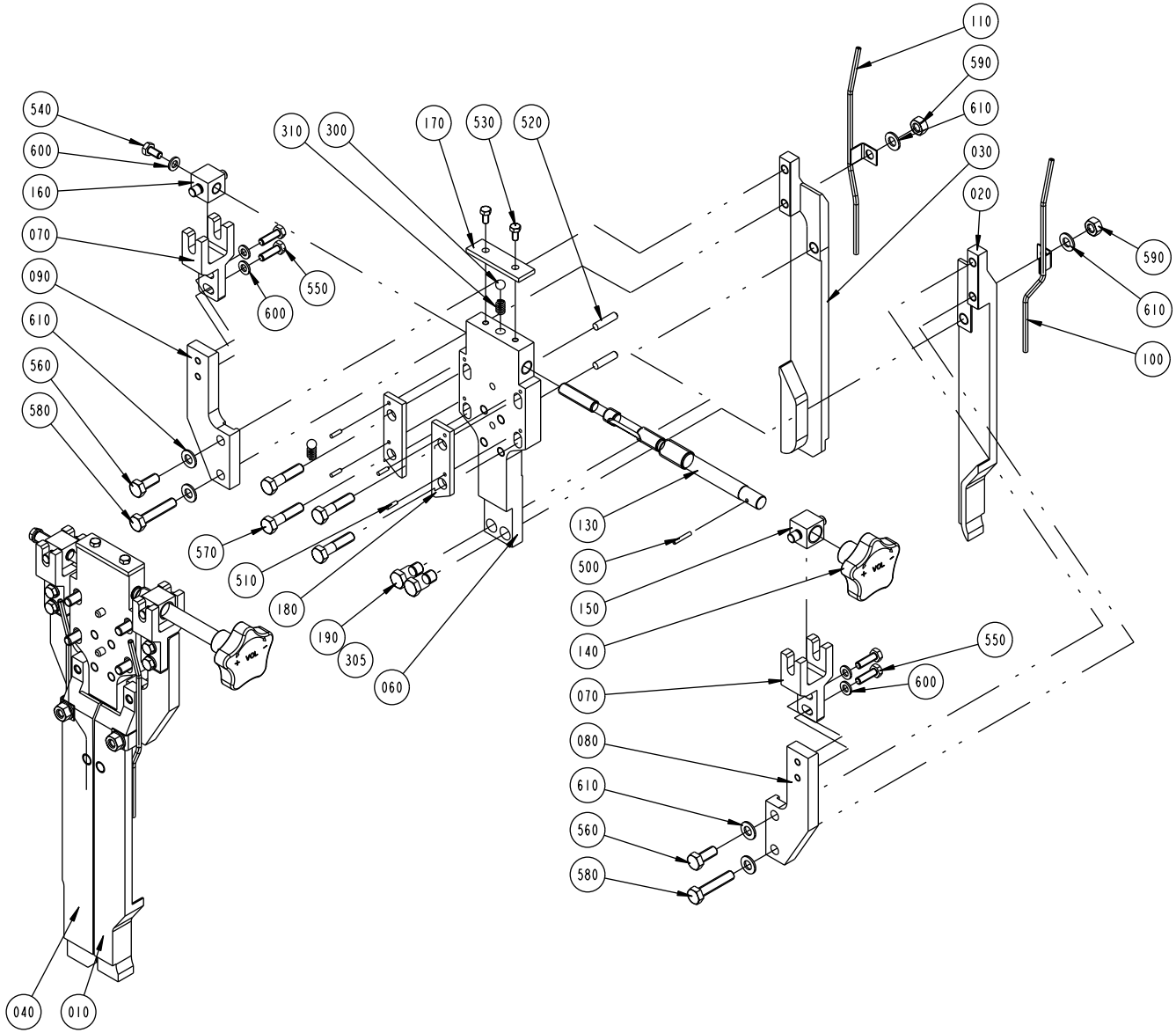

GraphicID: 256222-3.eps
Parent Drw: 256222-3
ECN 72852

Pos	Part No	SP	UN	Qty	Description	Page No
0125S						
010	272955-0000	C		1	VOLUME CAM LEFT	
020	272963-0000	C		1	VOLUME CAM RIGHT	
030	272966-0000	C		1	VOLUME CAM LEFT, WIDE	
040	272968-0000	C		1	VOLUME CAM RIGHT, WIDE	
0160S						
010	577221-0000	C		1	VOLUME CAM LEFT	
020	577222-0000	C		1	VOLUME CAM RIGHT	
030	577223-0000	C		1	VOLUME CAM LEFT, WIDE	
040	577224-0000	C		1	VOLUME CAM RIGHT, WIDE	
0180B						
010	272956-0000	C		1	VOLUME CAM LEFT	
020	272964-0000	C		1	VOLUME CAM RIGHT	
030	272965-0000	C		1	VOLUME CAM LEFT, WIDE	
040	272967-0000	C		1	VOLUME CAM RIGHT, WIDE	
0200B						
010	272955-0000	C		2	VOLUME CAM LEFT	
020	272963-0000	C		2	VOLUME CAM RIGHT	
0200S						
010	491436-0000	C		1	VOLUME CAM LEFT	
020	491434-0000	C		1	VOLUME CAM RIGHT	
030	491433-0000	C		1	VOLUME CAM LEFT, WIDE	
040	491435-0000	C		1	VOLUME CAM RIGHT, WIDE	
0236B						
010	272954-0000	C		2	VOLUME CAM LEFT	
020	272962-0000	C		2	VOLUME CAM RIGHT	
0250B						
010	272953-0000	C		2	VOLUME CAM LEFT	
020	272961-0000	C		2	VOLUME CAM RIGHT	
0250S						
010	574380-0000	C		1	VOLUME CAM LEFT	
020	574378-0000	C		1	VOLUME CAM RIGHT	
030	574379-0000	C		1	VOLUME CAM LEFT, WIDE	
040	574377-0000	C		1	VOLUME CAM RIGHT, WIDE	
0284B						
010	272949-0000	C		2	VOLUME CAM LEFT	
020	272957-0000	C		2	VOLUME CAM RIGHT	
Common Parts						
060	272969-0000	-		2	BRACKET	
070	272761-0000	C		4	FORK	
080	272970-0000	-		2	ARM LEFT	
090	272971-0000	-		2	ARM RIGHT	
100	441758-0000	C		2	PIPE RIGHT	
110	441759-0000	C		2	PIPE LEFT	
130	272978-0000	C		2	SPINDLE	
140	240797-0000	-		2	HANDLE	
150	257393-0001	C		2	NUT	
160	257393-0002	C		2	NUT	
170	257395-0000	-		2	WASHER	
180	272972-0000	-		4	RULER	
190	272973-0000	C		4	DOWEL	
300	90090-0014	C		2	STEEL BALL RB 7,9389 RJ	
305	90157-0021	-	KG	1	LOCKING FLUID	
310	90335-0011	C		2	SPRING	
500	311103-0238	-		2	Pin, Parallell, m6, 3x20	
510	311103-0234	-		8	Pin, Parallell, m6, 3x12	
520	311103-0355	-		4	Pin, Parallell, m6, 6x25	
530	312105-0325	-		4	Screw M6S M5x10 A280	
540	312105-0366	-		2	Screw M6S M6x12 A280	
550	312105-0370	-		8	Screw M6S M6x20 A280	
560	312105-0451	-		4	Screw M6S 8x20 A280	
570	312105-0457	-		8	Screw M6S M8x35 A280	
580	312109-0459	-		4	Screw M6S M8x40 A280	
590	312605-0318	-		4	Nut Hex. M6M M8 A280	
600	315105-0153	-		1	Washer, Plain, BRB, 6,4/12,H=1,5	
610	315105-0165	-		12	Washer, Plain, BRB, 8,4/16,H=1,5	

SUPPORT ROLLER

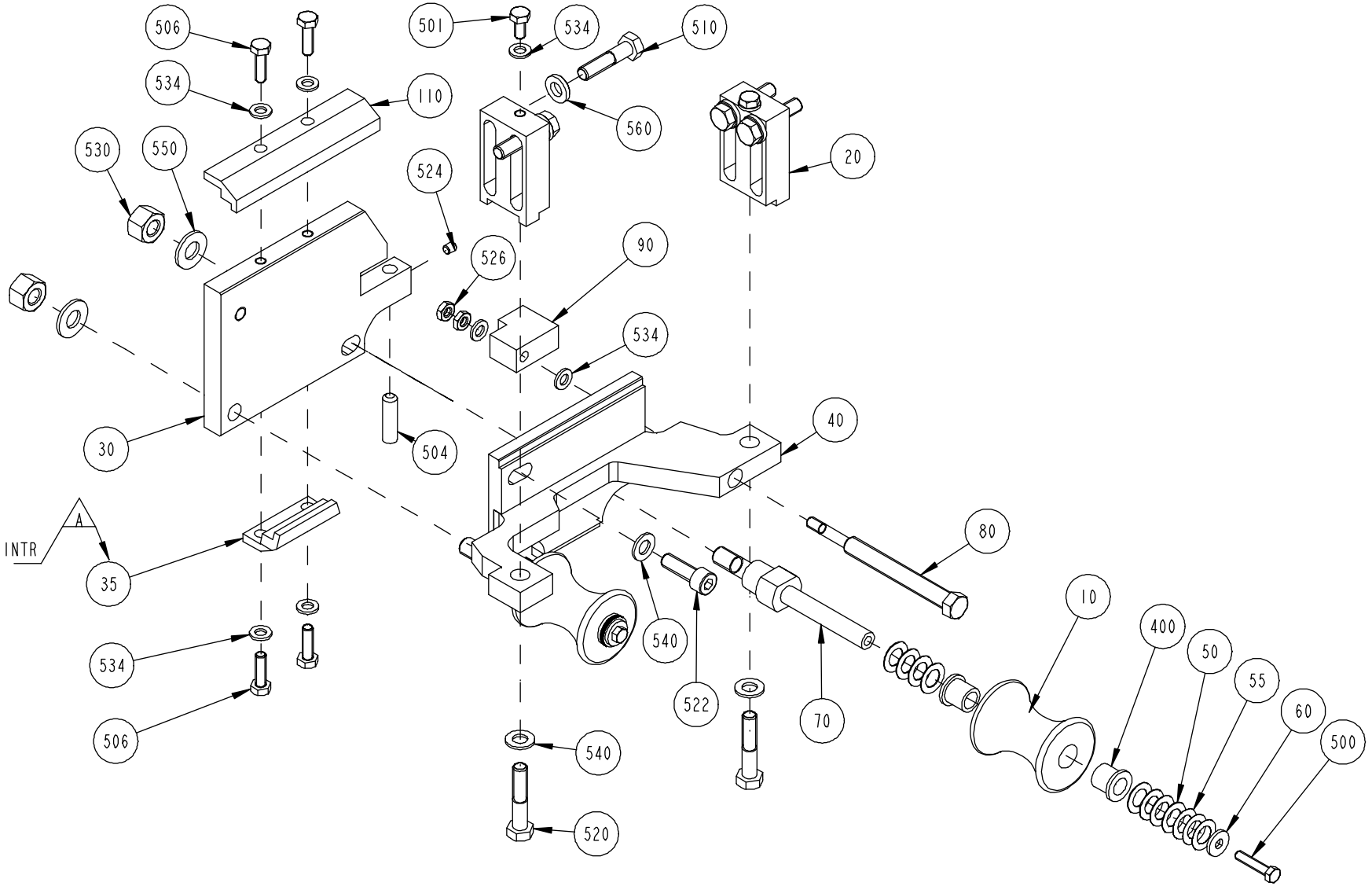

Pos	Part No	SP	UN	Qty	Description	Page No
NOPT TBA 0200SQ IH						
010	1532526-0000	B		2	ROLLER	
020	1532525-0000	-		2	BRACKET	
030	295748-0001	-		1	BACK PIECE	
NOPT TBA 0236B IH OR NOPT TBA 0200B IH OR NOPT TBA 0180B IH OR NOPT TBA 0330S IH OR NOPT TBA 0250B IH OR NOPT TBA 0284B IH OR NOPT TBA 0300S IH						
010	978757-0000	B		2	ROLLER 180-284ML	
020	272974-0001	-		2	BRACKET	
030	295748-0001	-		1	BACK PIECE	
PT19 TBA 0180B IH OR PT19 TBA 0200B IH OR PT19 TBA 0284B IH OR PT19 TBA 0330S IH OR PT19 TBA 0250B IH OR PT19 TBA 0236B IH						
010	978757-0000	B		2	ROLLER 180-284ML	
020	272974-0001	-		2	BRACKET	
030	295748-0001	-		1	BACK PIECE	
035	752651-0000	-		1	STEERING RAIL	
NOPT TBA 0100B IH OR NOPT TBA 0125S IH OR NOPT TWA 0125S IH						
010	978758-0000	B		2	ROLLER 125ML	
020	272974-0002	-		2	BRACKET	
030	295748-0002	-		1	BACK PIECE	
PT19 TBA 0125S IH OR PT19 TBA 0100B IH						
010	978758-0000	B		2	ROLLER 125ML	
020	272974-0002	-		2	BRACKET	
030	295748-0002	-		1	BACK PIECE	
035	752651-0000	-		1	STEERING RAIL	
NOPT TB 0200S TPC						
010	978759-0000	B		2	ROLLER TB200SL	
020	272974-0001	-		2	BRACKET	
030	295748-0003	-		1	BACK PIECE	
NOPT TBA 0200S IH OR NOPT TBA 0160S IH OR NOPT TWA 0200S IH						
010	978760-0000	B		2	ROLLER TBA200SL	
020	272974-0001	-		2	BRACKET	
030	295748-0003	-		1	BACK PIECE	
PT19 TB 0200S TPC						
010	978759-0000	B		2	ROLLER TB200SL	
020	272974-0001	-		2	BRACKET	
030	295748-0003	-		1	BACK PIECE	
035	752651-0000	-		1	STEERING RAIL	
PT19 TBA 0160S IH OR PT19 TBA 0200S IH						
010	978760-0000	B		2	ROLLER TBA200SL	
020	272974-0001	-		2	BRACKET	
030	295748-0003	-		1	BACK PIECE	
035	752651-0000	-		1	STEERING RAIL	

Pos	Part No	SP	UN	Qty	Description	Page No
NOPT TBA 0200M IH OR NOPT TBA 0250S IH						
010	574385-0000	B		2	ROLLER TBA250SL	
020	272974-0001	-		2	BRACKET	
030	574408-0000	-		1	BACK PIECE	
PT19 TBA 0250S IH OR PT19 TBA 0200M IH						
010	574385-0000	B		2	ROLLER TBA250SL	
020	272974-0001	-		2	BRACKET	
030	574408-0000	-		1	BACK PIECE	
035	752651-0000	-		1	STEERING RAIL	
Common Parts						
040	752649-0000	-		1	CANTILEVER	
050	2033-0009	-		16	WASHER	
055	2033-0014	-		6	WASHER	
060	27815-0000	-		2	WASHER	
070	978756-0000	B		2	PIN	
080	295744-0000	B		1	SCREW	
090	295749-0000	-		1	ADJUSTING BLOCK	
110	295750-0002	-		1	STEERING RAIL	
400	90240-0180	B		4	BEARING BUSHING WITH FLANGE,10/14x15 NFB	
500	312105-0333	-		2	Screw M6S M5x25 A280	
501	312105-0366	-		2	Screw M6S M6x12 A280	
504	311103-0405	-		1	Pin, Parallell, m6, 8x30	
506	312105-0370	-		4	Screw M6S M6x20 A280	
510	312105-0457	-		4	Screw M6S M8x35 A280	
520	312105-0459	-		2	Screw M6S M8x40 A280	
522	312115-0453	-		1	Screw MC6S M8x25 A280	
524	312318-0321	-		1	Screw Hex.Sock.Set Cup P.MSK6SS 5x6 SS	
526	312625-0316	-		2	Nut Hex. M6 SS	
530	312811-0320	-		2	Nut Hex.Lock Heli Coil Mid Grip M10 SS	
534	315105-0153	-		8	Washer, Plain, BRB, 6,4/12,H=1,5	
540	315105-0165	-		3	Washer, Plain, BRB, 8,4/16,H=1,5	
550	315105-0173	-		2	Washer, Plain, BRB, 10,5/22,H=2	
560	315115-0165	-		4	Washer, Plain, TBRB 8,4/16 H=3	

(Cont'd)

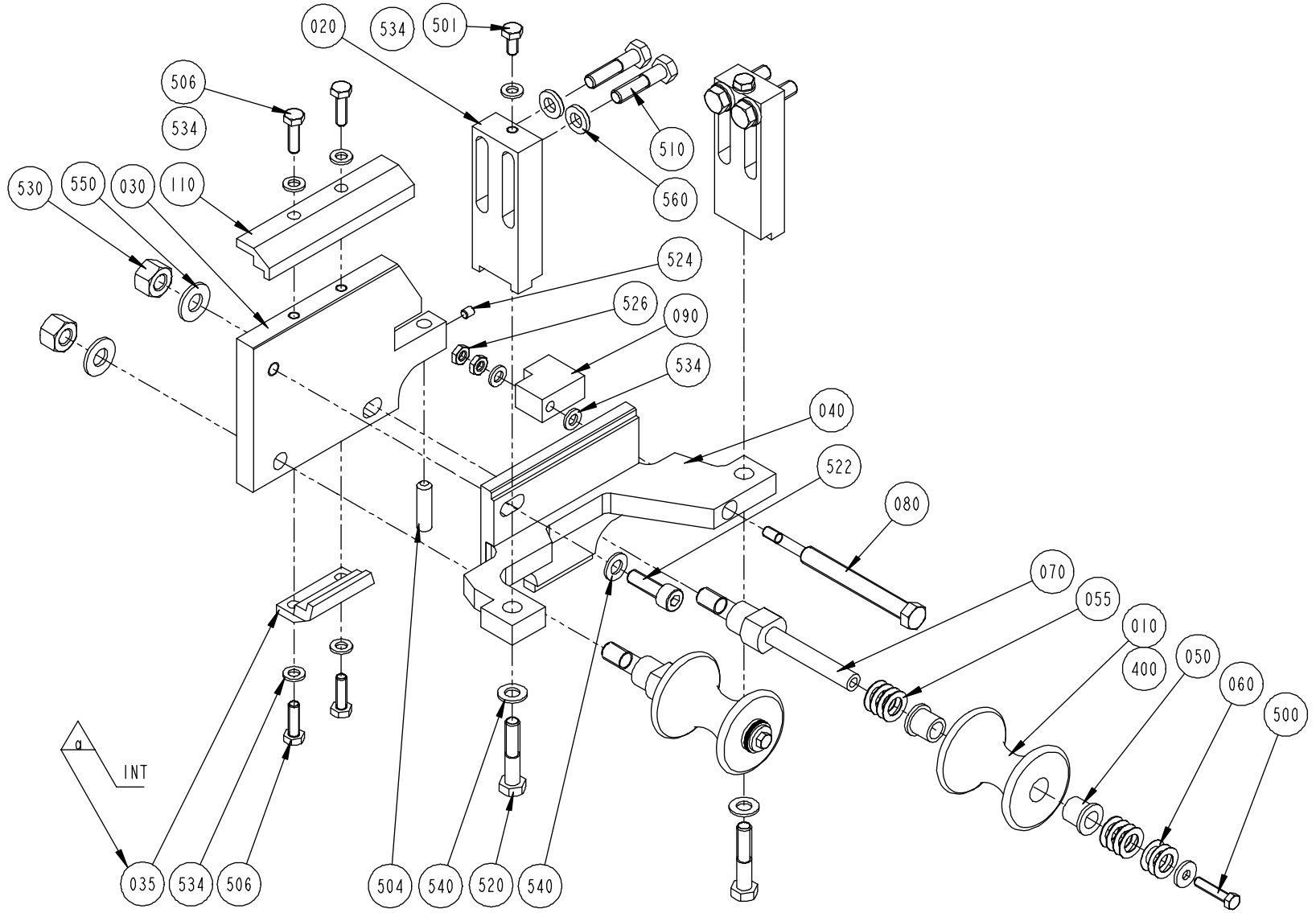

S - 256223-8
ECN 82225

Pos	Part No	SP	UN	Qty	Description	Page No
(Cont'd)						
NOPT TBA 0200SQ IH						
010	1532526-0000	B		2	ROLLER	
020	1532525-0000	-		2	BRACKET	
030	295748-0001	-		1	BACK PIECE	
NOPT TBA 0236B IH OR NOPT TBA 0200B IH OR NOPT TBA 0180B IH OR NOPT TBA 0330S IH OR NOPT TBA 0250B IH OR NOPT TBA 0284B IH OR NOPT TBA 0300S IH						
010	978757-0000	B		2	ROLLER 180-284ML	
020	272974-0001	-		2	BRACKET	
030	295748-0001	-		1	BACK PIECE	
PT19 TBA 0180B IH OR PT19 TBA 0200B IH OR PT19 TBA 0284B IH OR PT19 TBA 0330S IH OR PT19 TBA 0250B IH OR PT19 TBA 0236B IH						
010	978757-0000	B		2	ROLLER 180-284ML	
020	272974-0001	-		2	BRACKET	
030	295748-0001	-		1	BACK PIECE	
035	752651-0000	-		1	STEERING RAIL	
NOPT TBA 0100B IH OR NOPT TBA 0125S IH OR NOPT TWA 0125S IH						
010	978758-0000	B		2	ROLLER 125ML	
020	272974-0002	-		2	BRACKET	
030	295748-0002	-		1	BACK PIECE	
PT19 TBA 0125S IH OR PT19 TBA 0100B IH						
010	978758-0000	B		2	ROLLER 125ML	
020	272974-0002	-		2	BRACKET	
030	295748-0002	-		1	BACK PIECE	
035	752651-0000	-		1	STEERING RAIL	
NOPT TB 0200S TPC						
010	978759-0000	B		2	ROLLER TB200SL	
020	272974-0001	-		2	BRACKET	
030	295748-0003	-		1	BACK PIECE	
NOPT TBA 0200S IH OR NOPT TBA 0160S IH OR NOPT TWA 0200S IH						
010	978760-0000	B		2	ROLLER TBA200SL	
020	272974-0001	-		2	BRACKET	
030	295748-0003	-		1	BACK PIECE	
PT19 TB 0200S TPC						
010	978759-0000	B		2	ROLLER TB200SL	
020	272974-0001	-		2	BRACKET	
030	295748-0003	-		1	BACK PIECE	
035	752651-0000	-		1	STEERING RAIL	
PT19 TBA 0160S IH OR PT19 TBA 0200S IH						
010	978760-0000	B		2	ROLLER TBA200SL	
020	272974-0001	-		2	BRACKET	
030	295748-0003	-		1	BACK PIECE	
035	752651-0000	-		1	STEERING RAIL	
NOPT TBA 0200M IH OR NOPT TBA 0250S IH						
010	574385-0000	B		2	ROLLER TBA250SL	
020	272974-0001	-		2	BRACKET	
030	574408-0000	-		1	BACK PIECE	
PT19 TBA 0250S IH OR PT19 TBA 0200M IH						
010	574385-0000	B		2	ROLLER TBA250SL	
020	272974-0001	-		2	BRACKET	
030	574408-0000	-		1	BACK PIECE	
035	752651-0000	-		1	STEERING RAIL	
Common Parts						
040	752649-0000	-		1	CANTILEVER	
050	2033-0009	-		16	WASHER	
055	2033-0014	-		6	WASHER	
060	27815-0000	-		2	WASHER	
070	978756-0000	B		2	PIN	
080	295744-0000	B		1	SCREW	
090	295749-0000	-		1	ADJUSTING BLOCK	
110	295750-0002	-		1	STEERING RAIL	
400	90240-0180	B		4	BEARING BUSHING WITH FLANGE,10/14x15 NFB	
500	312105-0333	-		2	Screw M6S M5x25 A280	
501	312105-0366	-		2	Screw M6S M6x12 A280	
504	311103-0405	-		1	Pin, Parallell, m6, 8x30	
506	312105-0370	-		4	Screw M6S M6x20 A280	
510	312105-0457	-		4	Screw M6S M8x35 A280	
520	312105-0459	-		2	Screw M6S M8x40 A280	
522	312115-0453	-		1	Screw MC6S M8x25 A280	
524	312318-0321	-		1	Screw Hex.Sock.Set Cup P.MSK6SS 5x6 SS	
526	312625-0316	-		2	Nut Hex. M6 SS	
530	312811-0320	-		2	Nut Hex.Lock Heli Coil Mid Grip M10 SS	
534	315105-0153	-		8	Washer, Plain, BRB, 6,4/12,H=1,5	
540	315105-0165	-		3	Washer, Plain, BRB, 8,4/16,H=1,5	
550	315105-0173	-		2	Washer, Plain, BRB, 10,5/22,H=2	
560	315115-0165	-		4	Washer, Plain, TBRB 8,4/16 H=3	

(Cont'd)

SUPPORT ROLLER

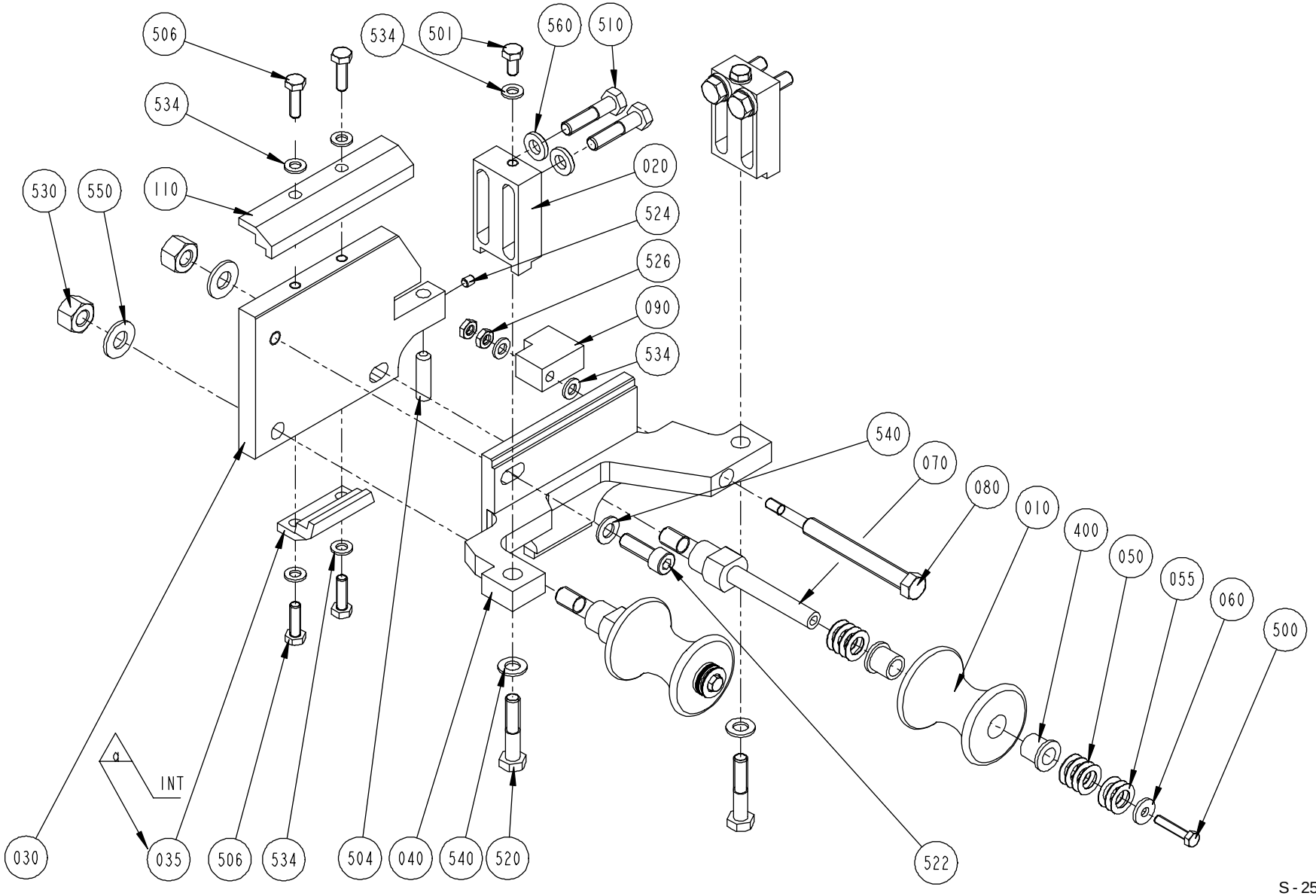

S - 256223-9
ECN 82225

Pos	Part No	SP	UN	Qty	Description	Page No
(Cont'd)						
NOPT TBA 0200SQ IH						
010	1532526-0000	B		2	ROLLER	
020	1532525-0000	-		2	BRACKET	
030	295748-0001	-		1	BACK PIECE	
NOPT TBA 0236B IH OR NOPT TBA 0200B IH OR NOPT TBA 0180B IH OR NOPT TBA 0330S IH OR NOPT TBA 0250B IH OR NOPT TBA 0284B IH OR NOPT TBA 0300S IH						
010	978757-0000	B		2	ROLLER 180-284ML	
020	272974-0001	-		2	BRACKET	
030	295748-0001	-		1	BACK PIECE	
PT19 TBA 0180B IH OR PT19 TBA 0200B IH OR PT19 TBA 0284B IH OR PT19 TBA 0330S IH OR PT19 TBA 0250B IH OR PT19 TBA 0236B IH						
010	978757-0000	B		2	ROLLER 180-284ML	
020	272974-0001	-		2	BRACKET	
030	295748-0001	-		1	BACK PIECE	
035	752651-0000	-		1	STEERING RAIL	
NOPT TBA 0100B IH OR NOPT TBA 0125S IH OR NOPT TWA 0125S IH						
010	978758-0000	B		2	ROLLER 125ML	
020	272974-0002	-		2	BRACKET	
030	295748-0002	-		1	BACK PIECE	
PT19 TBA 0125S IH OR PT19 TBA 0100B IH						
010	978758-0000	B		2	ROLLER 125ML	
020	272974-0002	-		2	BRACKET	
030	295748-0002	-		1	BACK PIECE	
035	752651-0000	-		1	STEERING RAIL	
NOPT TB 0200S TPC						
010	978759-0000	B		2	ROLLER TB200SL	
020	272974-0001	-		2	BRACKET	
030	295748-0003	-		1	BACK PIECE	
NOPT TBA 0200S IH OR NOPT TBA 0160S IH OR NOPT TWA 0200S IH						
010	978760-0000	B		2	ROLLER TBA200SL	
020	272974-0001	-		2	BRACKET	
030	295748-0003	-		1	BACK PIECE	
PT19 TB 0200S TPC						
010	978759-0000	B		2	ROLLER TB200SL	
020	272974-0001	-		2	BRACKET	
030	295748-0003	-		1	BACK PIECE	
035	752651-0000	-		1	STEERING RAIL	
PT19 TBA 0160S IH OR PT19 TBA 0200S IH						
010	978760-0000	B		2	ROLLER TBA200SL	
020	272974-0001	-		2	BRACKET	
030	295748-0003	-		1	BACK PIECE	
035	752651-0000	-		1	STEERING RAIL	
NOPT TBA 0200M IH OR NOPT TBA 0250S IH						
010	574385-0000	B		2	ROLLER TBA250SL	
020	272974-0001	-		2	BRACKET	
030	574408-0000	-		1	BACK PIECE	
PT19 TBA 0250S IH OR PT19 TBA 0200M IH						
010	574385-0000	B		2	ROLLER TBA250SL	
020	272974-0001	-		2	BRACKET	
030	574408-0000	-		1	BACK PIECE	
035	752651-0000	-		1	STEERING RAIL	
Common Parts						
040	752649-0000	-		1	CANTILEVER	
050	2033-0009	-		16	WASHER	
055	2033-0014	-		6	WASHER	
060	27815-0000	-		2	WASHER	
070	978756-0000	B		2	PIN	
080	295744-0000	B		1	SCREW	
090	295749-0000	-		1	ADJUSTING BLOCK	
110	295750-0002	-		1	STEERING RAIL	
400	90240-0180	B		4	BEARING BUSHING WITH FLANGE,10/14x15 NFB	
500	312105-0333	-		2	Screw M6S M5x25 A280	
501	312105-0366	-		2	Screw M6S M6x12 A280	
504	311103-0405	-		1	Pin, Parallell, m6, 8x30	
506	312105-0370	-		4	Screw M6S M6x20 A280	
510	312105-0457	-		4	Screw M6S M8x35 A280	
520	312105-0459	-		2	Screw M6S M8x40 A280	
522	312115-0453	-		1	Screw MC6S M8x25 A280	
524	312318-0321	-		1	Screw Hex.Sock.Set Cup P.MSK6SS 5x6 SS	
526	312625-0316	-		2	Nut Hex. M6 SS	
530	312811-0320	-		2	Nut Hex.Lock Heli Coil Mid Grip M10 SS	
534	315105-0153	-		8	Washer, Plain, BRB, 6,4/12,H=1,5	
540	315105-0165	-		3	Washer, Plain, BRB, 8,4/16,H=1,5	
550	315105-0173	-		2	Washer, Plain, BRB, 10,5/22,H=2	
560	315115-0165	-		4	Washer, Plain, TBRB 8,4/16 H=3	

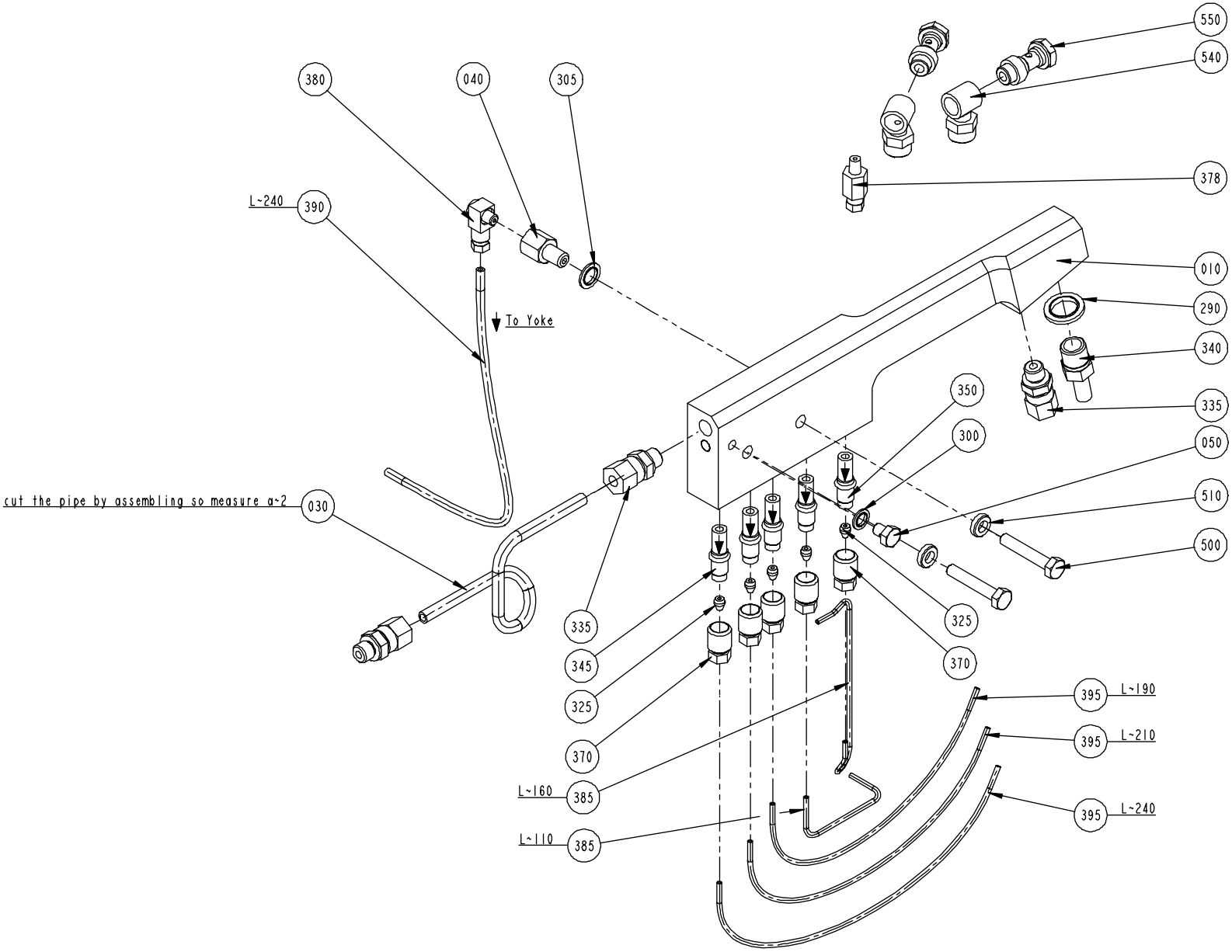
550
540
380
040
305
378
L~240
390
To Yoke
010
290
340
350
335
300
050
cut the pipe by assembling so measure a~2
030
510
500
335
325
345
370
325
395
L~190
370
395
L~210
L~160
385
395
L~240
L~110
385

Pos	Part No	SP	UN	Qty	Description	Page No
Common Parts						
010	456017-0000	D		1	HOSE HOLDER RIGHT	
030	257379-0000	D		1	HYDRAULIC PIPE RIGHT	
040	257000-0000	D		1	NIPPLE	
050	441355-0000	C		1	BLEEDING SCREW	
290	90005-0003	C		1	Gasket Bolt head 6,7x11x1 mm M6	
300	90005-0005	C		1	"Gasket Bolt head 13,7x20,6x2,1 mm G1/4	
305	90005-0007	C		1	Gasket Bolt head 8,7x14x1 mm M8	
325	90028-0020	C		5	Cone tube 2,5mm	
335	90030-0184	C		3	Conn. Str. GA-6-G1/8	
340	90030-0065	C		1	PIPE CONNECTION	
345	90092-0052	C		4	Metering valve 10 mm3	
350	90092-0053	C		1	Metering valve 30 mm3	
370	90134-0039	C		5	Bushing valve connection 2,5 mm	
378	90134-0066	-		1	Connection M6 tube 4 mm	
380	90134-0068	-		1	Connection	
385	90266-0019	-	MM	27	PIPE	
390	90166-0109	-	MM	24	TUBE 4 mm PA,Transp.	
395	90166-0143	-	MM	64	TUBE 2,5 mm PA,Transp.	
500	312105-0376	-		2	Screw M6S M6S M6x35 A280	
510	315115-0153	-		2	Washer, Plain, TBRB 6,4/12 H=3	
540	342980-0121	-		2	BANJO-CONNECTION,RING 8/6-G1/8"	
550	342980-0303	-		2	BANJO-HOLLOW BOLT COUPL,EXT.THR.01-G1/8"	

Pos	Part No	SP	UN	Qty	Description	Page No

MANIFOLD LEFT

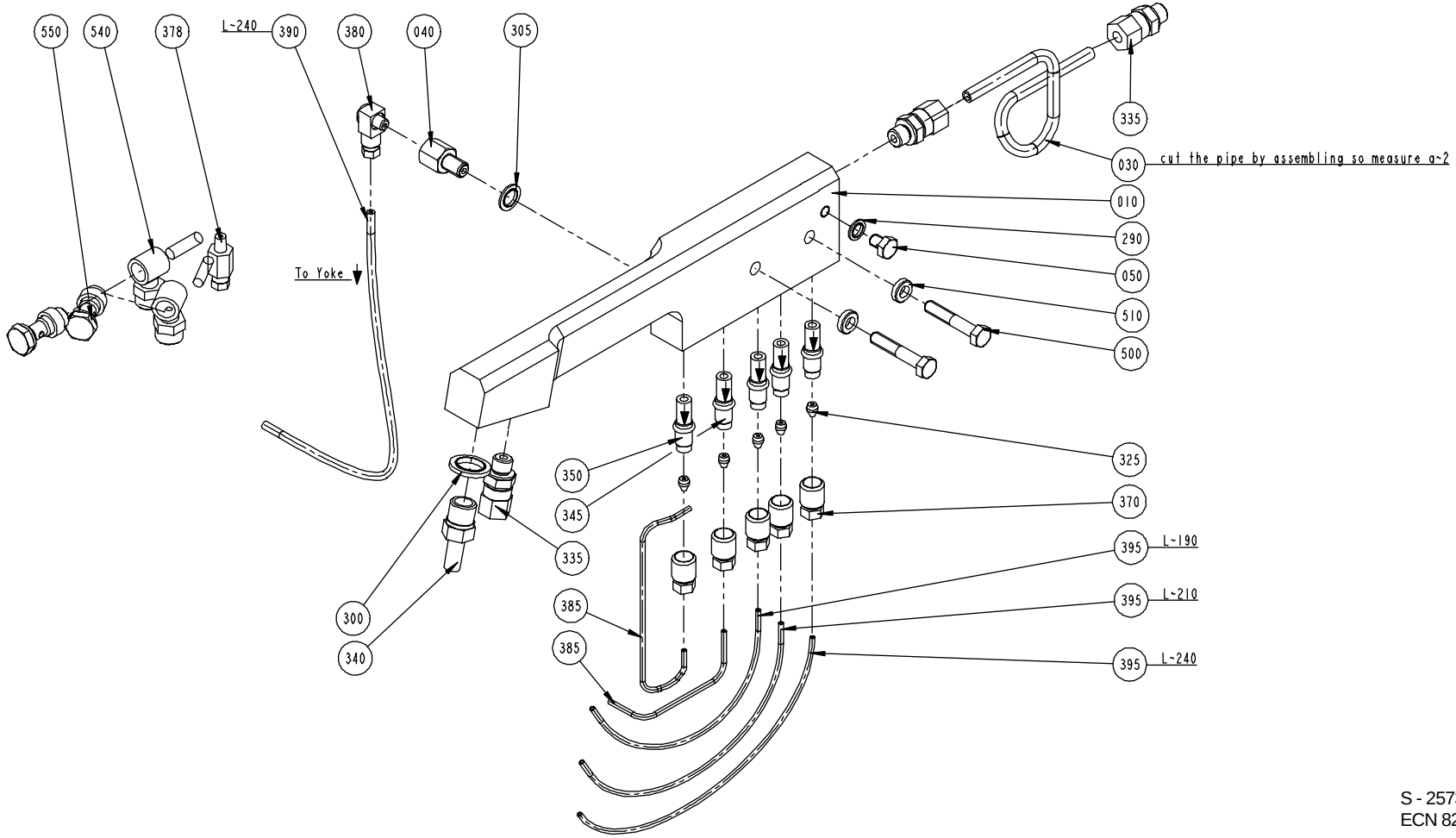

Pos	Part No	SP	UN	Qty	Description	Page No
Common Parts						
010	456018-0000		D	1	HOSE HOLDER LEFT	
030	257380-0000		D	1	HYDRAULIC PIPE LEFT	
040	257000-0000		D	1	NIPPLE	
050	441355-0000		C	1	BLEEDING SCREW	
290	90005-0003		C	1	Gasket Bolt head 6,7x11x1 mm M6	
300	90005-0005		C	1	"Gasket Bolt head 13,7x20,6x2,1 mm G1/4	
305	90005-0007		C	1	Gasket Bolt head 8,7x14x1 mm M8	
325	90028-0020		C	5	Cone tube 2,5mm	
335	90030-0184		C	3	Conn. Str. GA-6-G1/8	
340	90030-0065		C	1	PIPE CONNECTION	
345	90092-0052		C	4	Metering valve 10 mm3	
350	90092-0053		C	1	Metering valve 30 mm3	
370	90134-0039		C	5	Bushing valve connection 2,5 mm	
378	90134-0066		-	1	Connection M6 tube 4 mm	
380	90134-0068		-	1	Connection	
385	90266-0019		-	MM 27	PIPE	
390	90166-0109		-	MM 24	TUBE 4 mm PA,Transp.	
395	90166-0143		-	MM 64	TUBE 2,5 mm PA,Transp.	
500	312105-0376		-	2	Screw M6S M6S M6x35 A280	
510	315115-0153		-	2	Washer, Plain, TBRB 6,4/12 H=3	
540	342980-0121		-	2	BANJO-CONNECTION,RING 8/6-G1/8"	
550	342980-0303	-		2	BANJO-HOLLOW BOLT COUPL,EXT.THR.01-G1/8"	

Pos	Part No	SP	UN	Qty	Description	Page No

This page is intentionally left blank

Pos	Part No	SP	UN	Qty	Description	Page No
0125S IH OR 0100B IH						
020	B 569392-0000	-		2	Inductor	
040	B 295005-0000	-		4	Dolly	
070	272762-0000	-		4	KNIFE	
0180B IH OR 0200B IH OR 0250B IH OR 0236B IH OR 0284B IH						
010	B 570540-0000	-		2	Inductor	
050	B 295758-0000	-		4	Dolly	
060	271738-0000	-		4	KNIFE	
0180B TPC OR 0200B TPC OR 0200S TPC OR 0250B TPC OR 0236B TPC OR 0284B TPC						
030	B 441733-0000	-		2	TPC-Bar	
060	271738-0000	-		4	KNIFE	
0200S IH						
010	B 570540-0000	-		2	Inductor	
055	B 752575-0000	-		4	Dolly	
060	271738-0000	-		4	KNIFE	
Common Parts						
080	456011-0000	-		6	PIN	

Pos	Part No	SP	UN	Qty	Description	Page No


Tetra Pak

SPC

Spare Parts Catalogue

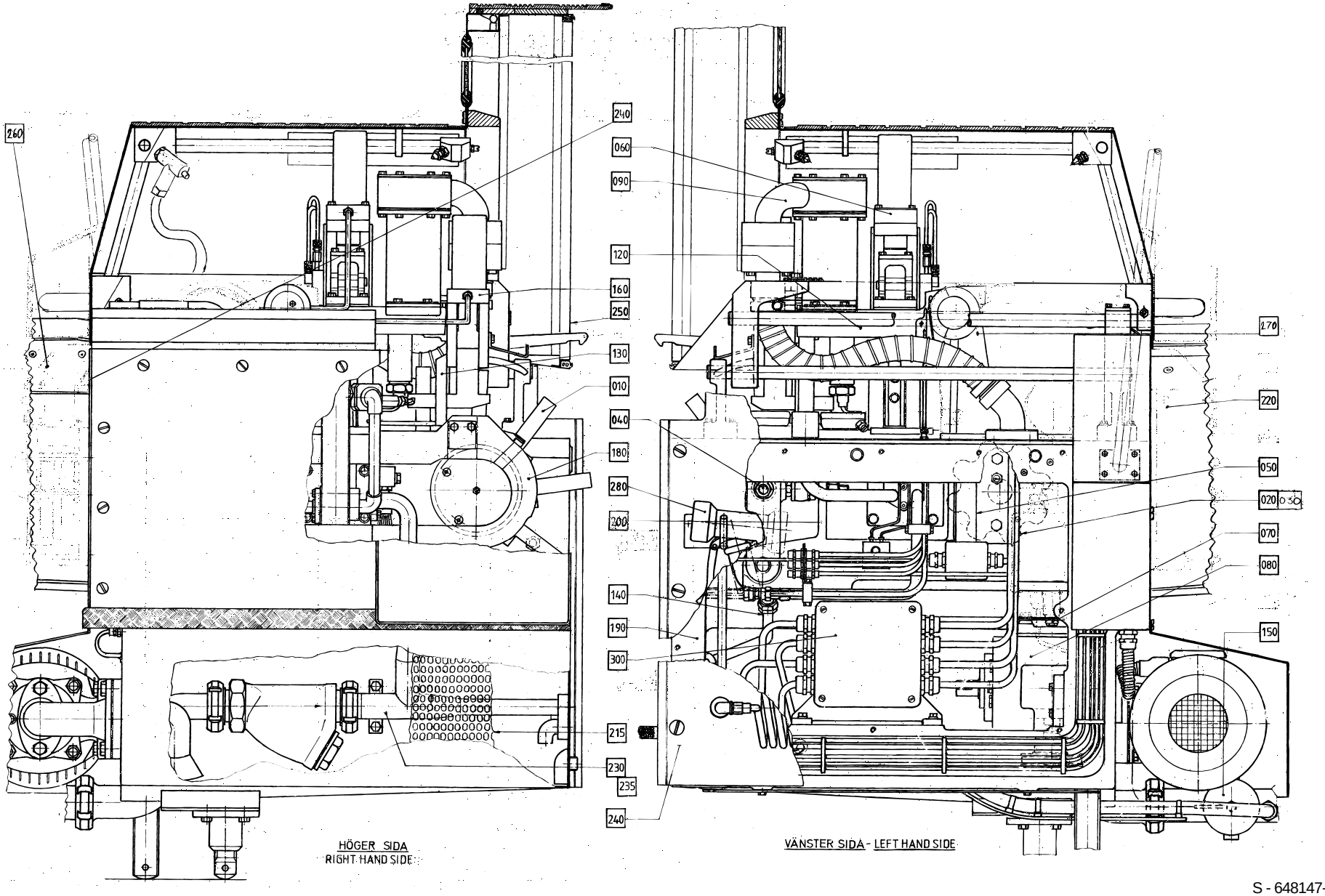

S - 648147-1
ECN 82225

Pos	Part No	SP	UN	Qty	Description	Page No
SOURCE,TBA/9-100V						
030	A 441271-0100	-		1	SAFETY SPROCK	**398**
040	A 441594-0100	-		1	TENSION SPROCKET	**402**
050	A 256410-0300	-		1	INDEXING UNIT	**406**
SOURCE,TBA/9-110V						
030	A 441271-0200	-		1	SAFETY SPROCK	**400**
040	A 441594-0100	-		1	TENSION SPROCKET	**402**
050	A 256410-0300	-		1	INDEXING UNIT	**406**
SOURCE,TBA/9-120V						
020	A 491850-0100	-		1	DRIVE WHEEL	**396**
040	A 491846-0100	-		1	TENSION SPROCKET	**404**
050	A 256410-0400	-		1	INDEXING UNIT	**408**
Common Parts						
010	A 491225-0100	C		1	STATION CHAIN	**394**
060	A 256436-0500	-		1	PRESSURE DEVICE	**410**
070	A 256437-0200	-		1	DISC COUPLING	**414**
080	A 256438-0200	-		1	WORM GEAR	**416**
090	A 256547-0300	-		1	ELEMENT	**418**
120	A 295211-0100	-		1	FRAME	**422**
130	A 295218-0100	-		1	FOLDING BAR	**424**
140	A1529134-0100	-		1	PIPE WORK	**426**
150	A 256674-0200	-		1	BOTTOM VALVE	**428**
160	A 256712-0400	-		1	PULL-DOWN DEVICE	**430**
180	A 491259-0100	-		1	GUIDE	**434**
190	A 441695-0100	-		1	MACHINE BODY	**436**
200	A1529142-0100	-		1	CANTILEVER	**438**
215	A 456567-0100	-		1	SEPARATION INSERT	**444**
220	A1529147-0100	-		1	OUTFEED TRANSFER	**446**
230	A 456588-0300	-		1	CLEANING SYSTEM	**454**
240	A1529149-0100	-		1	COVERING PANEL	**458**
250	A1529055-0100	-		1	PROTECTIVE COVER	**462**
260	A1091733-0100	-		1	PROTECTION	**472**
270	A1529148-0100	-		1	MOUNTING PLATE	**476**
280	A 271387-0300	-		1	SPRAY GUN	**486**
300	A1529141-0100	-		1	CABLE CONNECTION	**488**

Pos	Part No	SP	UN	Qty	Description	Page No

STATION CHAIN

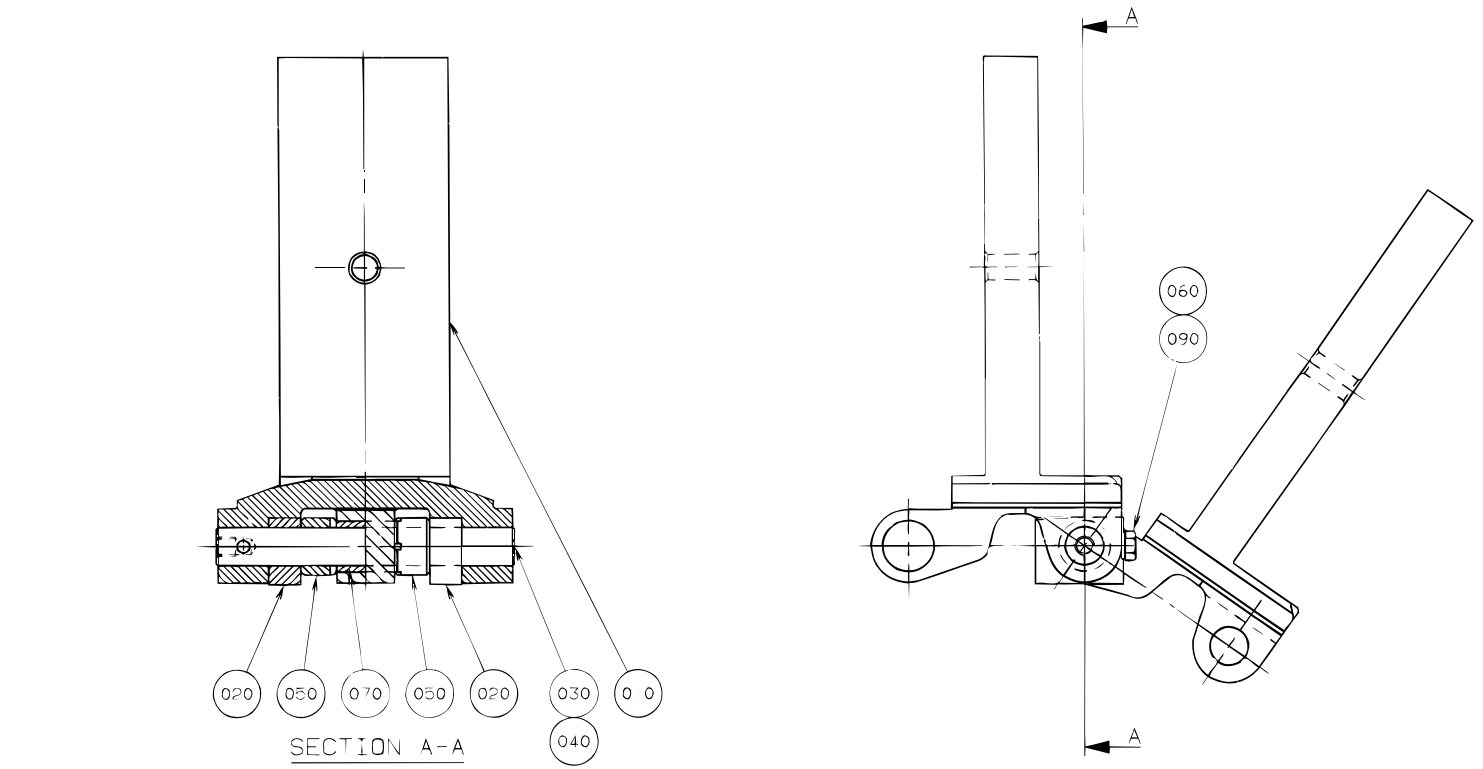

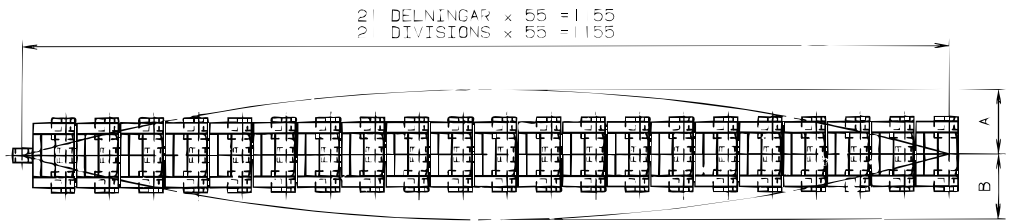

Skillnaden mellan A och B skall vara mindre än 3mm.
Vridningstoleransen skall vara densamma.

The difference between A and B has to be less than 3mm.
The torsional tolerance has to be the same.

Pos	Part No	SP	UN	Qty	Description	Page No
0100B						
010	979735-0000	C		21	CARTON STATION	
0125S						
010	751472-0000	C		21	CARTON STATION WITH BEVEL	
0160S						
010	577206-0000	C		21	CARTON STATION WITH BEVEL	
0180B						
010	752048-0006	C		21	CARTON STATION WITH BEVEL	
0187B						
010	752048-0005	C		21	CARTON STATION WITH BEVEL	
0200B						
010	752048-0004	C		21	CARTON STATION WITH BEVEL	
0200M						
010	979863-0000	C		21	CARTON STATION	
0200S						
010	1282444-0000	C		21	CARTON STATION WITH BEVEL	
0236B						
010	752048-0003	C		21	CARTON STATION WITH BEVEL	
0250B						
010	752048-0002	C		21	CARTON STATION WITH BEVEL	
0250S						
010	574344-0000	C		21	CARTON STATION WITH BEVEL	
0300B OR 0284B						
010	752048-0001	C		21	CARTON STATION WITH BEVEL	
0330S						
010	752048-0007	-		21	CARTON STATION WITH BEVEL	
Common Parts						
020	491227-0000	C		42	SLIDER	
030	491228-0001	C		18	SHAFT	
040	491228-0002	C		3	SHAFT	
050	491229-0000	C		42	BUSHING	
060	491230-0000	C		21	GRUB SCREW	
070	491231-0000	C		21	BUSHING	
090	315233-0101	C		21	Washer,Pl.Rnd.Nyl.5,2/8,H=1	

Pos	Part No	SP	UN	Qty	Description	Page No

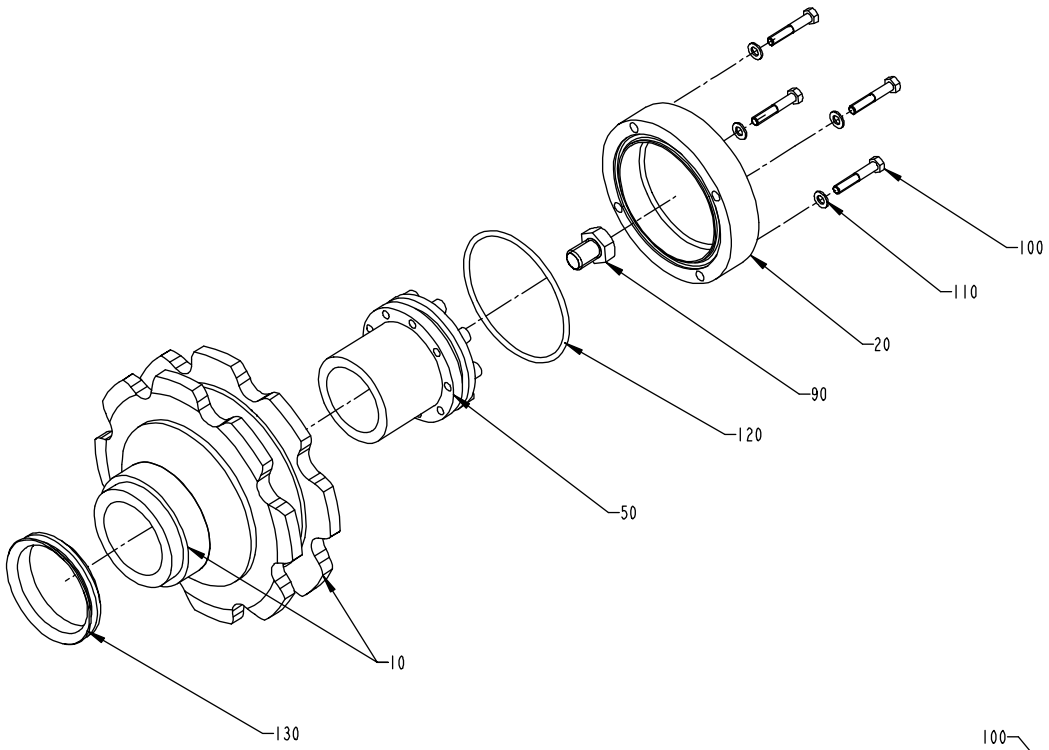

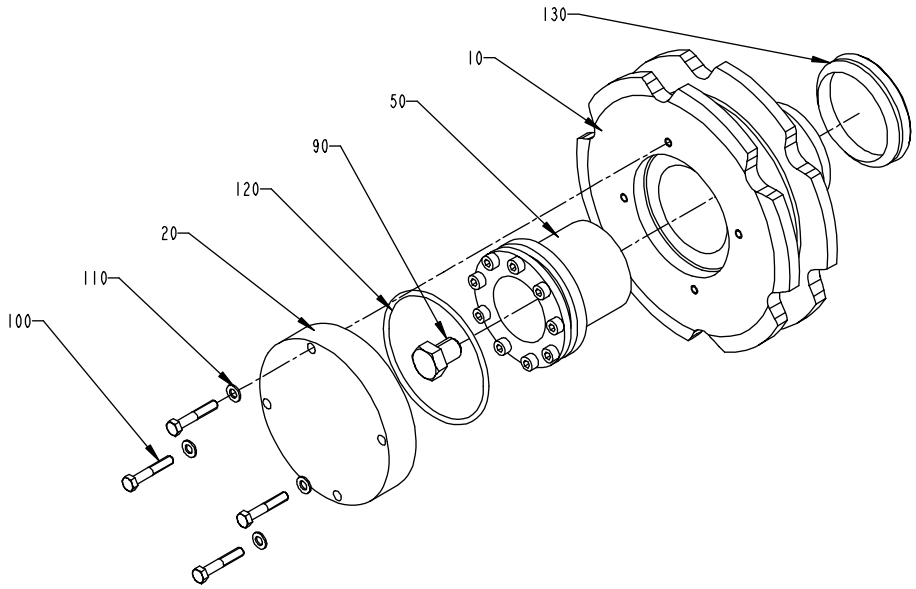

S - 491850-1,2
ECN 82225

Pos	Part No	SP	UN	Qty	Description	Page No
TBA OR TB						
010	491258-0000	D		1	DRIVE WHEEL	
TPA						
010	1143975-0000	D		1	DRIVE WHEEL	
Common Parts						
020	491851-0000	D		1	LID	
050	90208-0031	D		1	BUSHING	
090	312101-0530	D		1	Screw M6S M12x16 FZB	
100	312105-0335	D		4	Screw M6S M5x30 A280	
110	315105-0146	D		4	Washer, Plain, BRB, 5,3/10,H=1	
120	315202-0306	D		1	O-Ring 74,5x3 mm	
130	315220-0210	D		1	V-Rings 54x64x13 mm V-60S	

Pos	Part No	SP	UN	Qty	Description	Page No

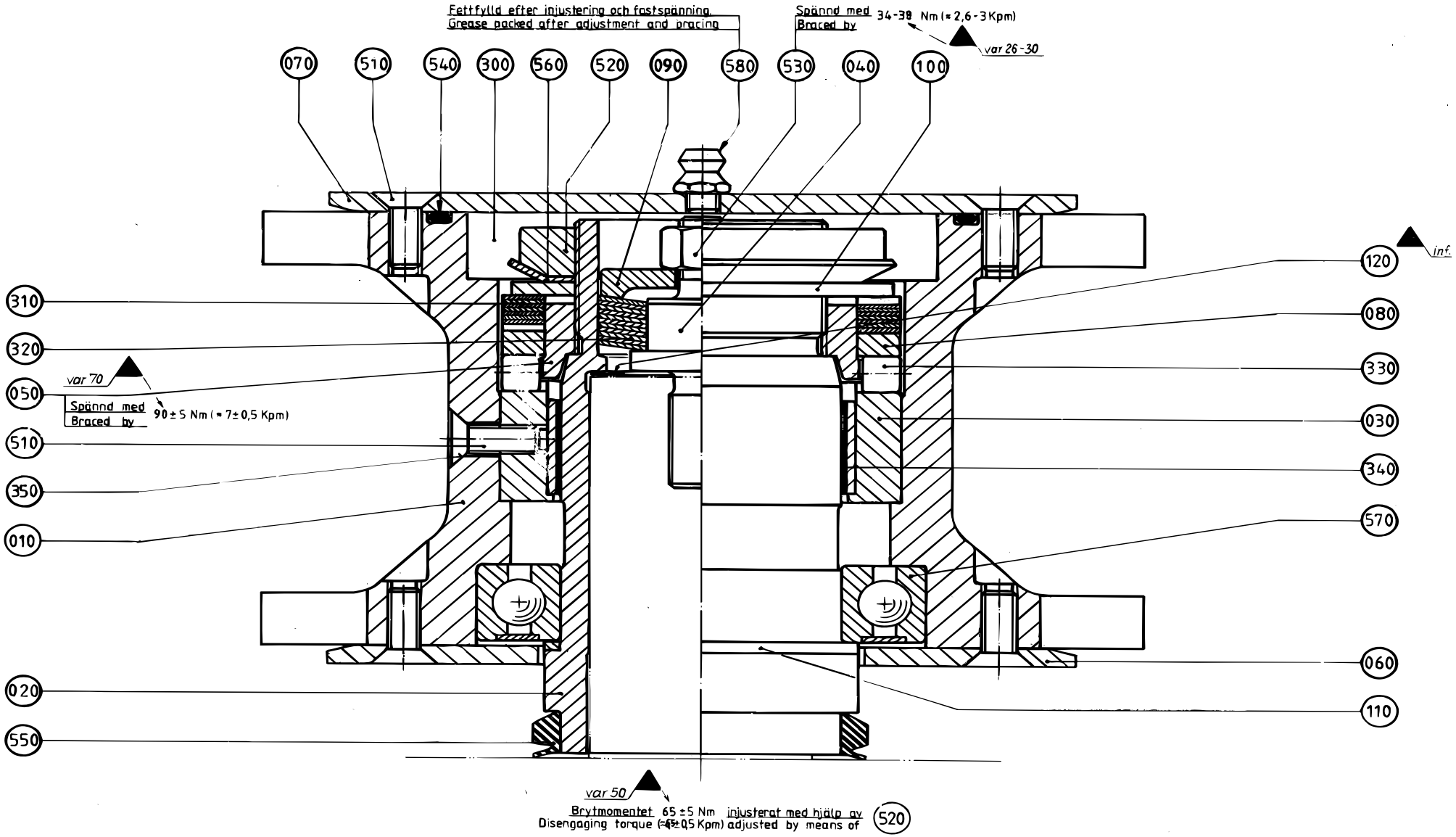

S - 441271-1
ECN 82225

Pos	Part No	SP	UN	Qty	Description	Page No
Common Parts						
010	441602-0000	C		1	SPROCKET	
020	441784-0000	D		1	BEARING SLEEVE	
030	441785-0000	C		1	CARRIER RING	
040	441786-0000	D		1	AXLE PIN	
050	441787-0000	D		1	CARRIER	
060	491311-0000	C		1	GUIDE FLANGE LEFT	
070	491310-0000	C		1	GUIDING FLANGE RIGHT	
080	441276-0000	D		1	RING	
090	441789-0000	-		1	WASHER	
100	441790-0000	-		1	WASHER	
110	441845-0000	-		1	SPACER RING	
120	469383-0000	C		1	SHIM	
300	90296-0070	-	G	4	GREASE	
310	90016-0054	C		7	Spring Washer, Wavy 71,53/55,88	
320	90016-0053	-		11	DISC SPRING	
330	90014-0011	C		4	ROLLER	
340	90240-0109	C		1	BEARING BUSHING WITHOUT FLANGE, 50X55X20	
350	90157-0016	-	ML	1	LOCKING FLUID	
510	312155-0368	-		11	Screw Hex.Sock.Count.MF6S M6x16 A280	
520	312805-0109	-		1	Nut Round with slots M45x1,5 FE	
530	312811-0318	-		1	Nut Hex.Lock Heli Coil Mid Grip M8 SS	
540	315202-0309	C		1	O-Ring 89,5x3 mm	
550	315220-0198	C		1	V-Rings 45x55x13 mm V-50S	
560	315410-0109	-		1	Lock Washer MB 9 d=45 H=1,25	
570	321308-0110	C		1	BEARINGS,BALL BEARING	
580	344502-0021	-		1	Grease nipple straight M6	

Pos	Part No	SP	UN	Qty	Description	Page No

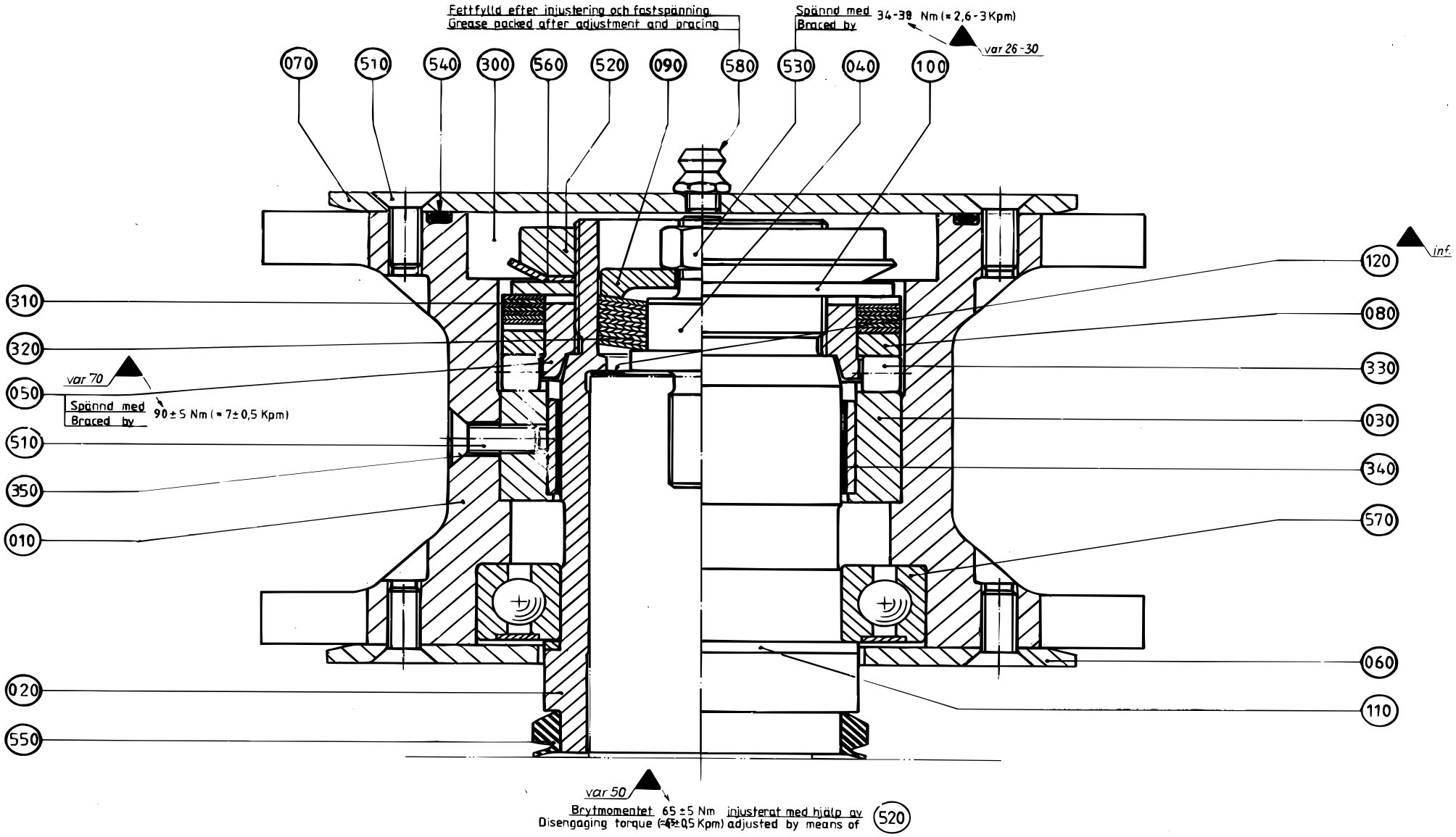
Fettfylld efter injustering och fastspänning
Grease packed after adjustment and bracing
Spännd med
Braced by
34-38 Nm (≈ 2,6-3 Kpm)
var 26-30
070
510
540
300
560
520
090
580
530
040
100
120
inf.
080
330
030
340
570
060
110
310
320
var 70
050
Spännd med
Braced by
90 ± 5 Nm (≈ 7 ± 0,5 Kpm)
510
350
010
020
550
var 50
Brytmomentet 65 ± 5 Nm injusterat med hjälp av
Disengaging torque (≈ 4,5 ± 0,5 Kpm) adjusted by means of
520

Pos	Part No	SP	UN	Qty	Description	Page No
Common Parts						
010	441602-0000	C		1	SPROCKET	
020	441784-0000	D		1	BEARING SLEEVE	
030	491727-0000	C		1	DRIVING RING	
050	491728-0000	C		1	CARRIER	
060	491311-0000	C		1	GUIDE FLANGE LEFT	
070	491310-0000	C		1	GUIDING FLANGE RIGHT	
080	491729-0000	D		1	STRESS PLATE	
100	441790-0000	-		1	WASHER	
110	441845-0000	-		1	SPACER RING	
120	491730-0000	C		1	PEEL-OFF SHIMS	
130	469504-0000	D		1	WASHER	
300	90296-0070	-	G	4	GREASE	
310	90016-0054	C		7	Spring Washer, Wavy 71,53/55,88	
330	90014-0011	C		4	ROLLER	
340	90240-0109	C		1	BEARING BUSHING WITHOUT FLANGE, 50X55X20	
350	90157-0016	-	ML	1	LOCKING FLUID	
360	312105-0541	-		1	Screw M6S M12x45 A280	
510	312155-0368	-		11	Screw Hex.Sock.Count.MF6S M6x16 A280	
520	312805-0109	-		1	Nut Round with slots M45x1,5 FE	
530	315105-0178	-		1	Washer, Plain, BRB, 13/24,H=2	
540	315202-0309	C		2	O-Ring 89,5x3 mm	
550	315220-0198	C		1	V-Rings 45x55x13 mm V-50S	
555	315220-0204	C		1	V-Rings 49x59x13 mm V-55S	
560	315410-0109	-		1	Lock Washer MB 9 d=45 H=1,25	
570	321308-0110	C		1	BEARINGS,BALL BEARING	
580	344502-0021	-		1	Grease nipple straight M6	

Pos	Part No	SP	UN	Qty	Description	Page No

TENSION SPROCKET

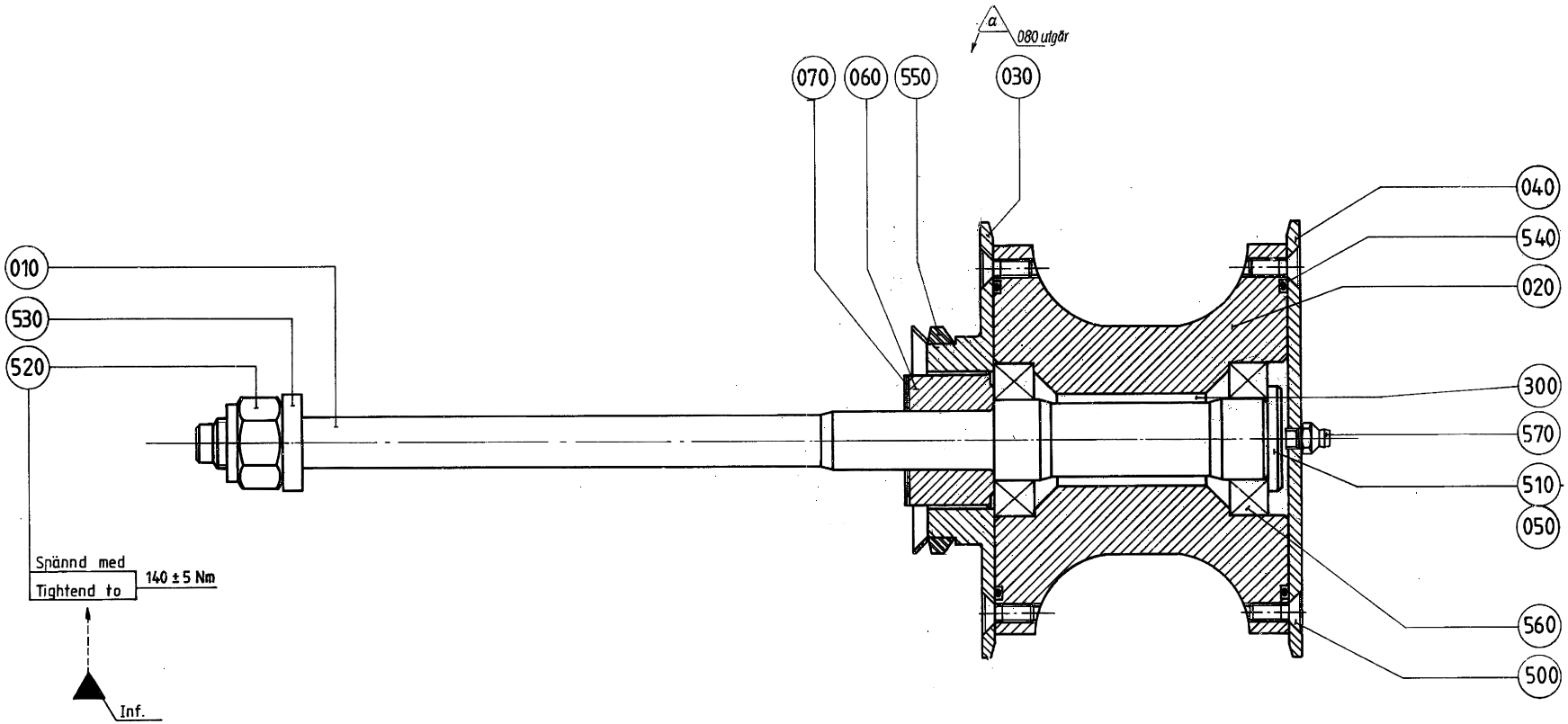

GraphicID: 441594-1.eps
Parent Drw: 441594-1
ECN 8248

Pos	Part No	SP	UN	Qty	Description	Page No
Common Parts						
010	441583-0000	D		1	SHAFT	
020	441584-0000	D		1	TENSION SPROCKET	
030	491312-0000	C		1	GUIDE FLANGE LEFT	
040	491310-0000	C		1	GUIDING FLANGE RIGHT	
050	441587-0000	D		1	WASHER	
060	441588-0000	D		1	SPACER	
070	441589-0000	C		1	SHIM	
300	90296-0070	-	G	4	GREASE	
500	312155-0368	-		8	Screw Hex.Sock.Count.MF6S M6x16 A280	
510	312151-0460	-		1	Screw Hex.Sock.Count.MF6S 8x45 FZB	
520	312810-0324	-		1	Nut Hex. Ny-Lock M16 FZB	
530	315111-0186	-		1	Washer, Plain, TBRB 17/30 H=6	
540	315202-0309	C		2	O-Ring 89,5x3 mm	
550	315220-0210	C		1	V-Rings 54x64x13 mm V-60S	
560	321306-0105	C		2	BALL BEARING 25X47X12	
570	344502-0021	-		1	Grease nipple straight M6	

Pos	Part No	SP	UN	Qty	Description	Page No

TENSION SPROCKET

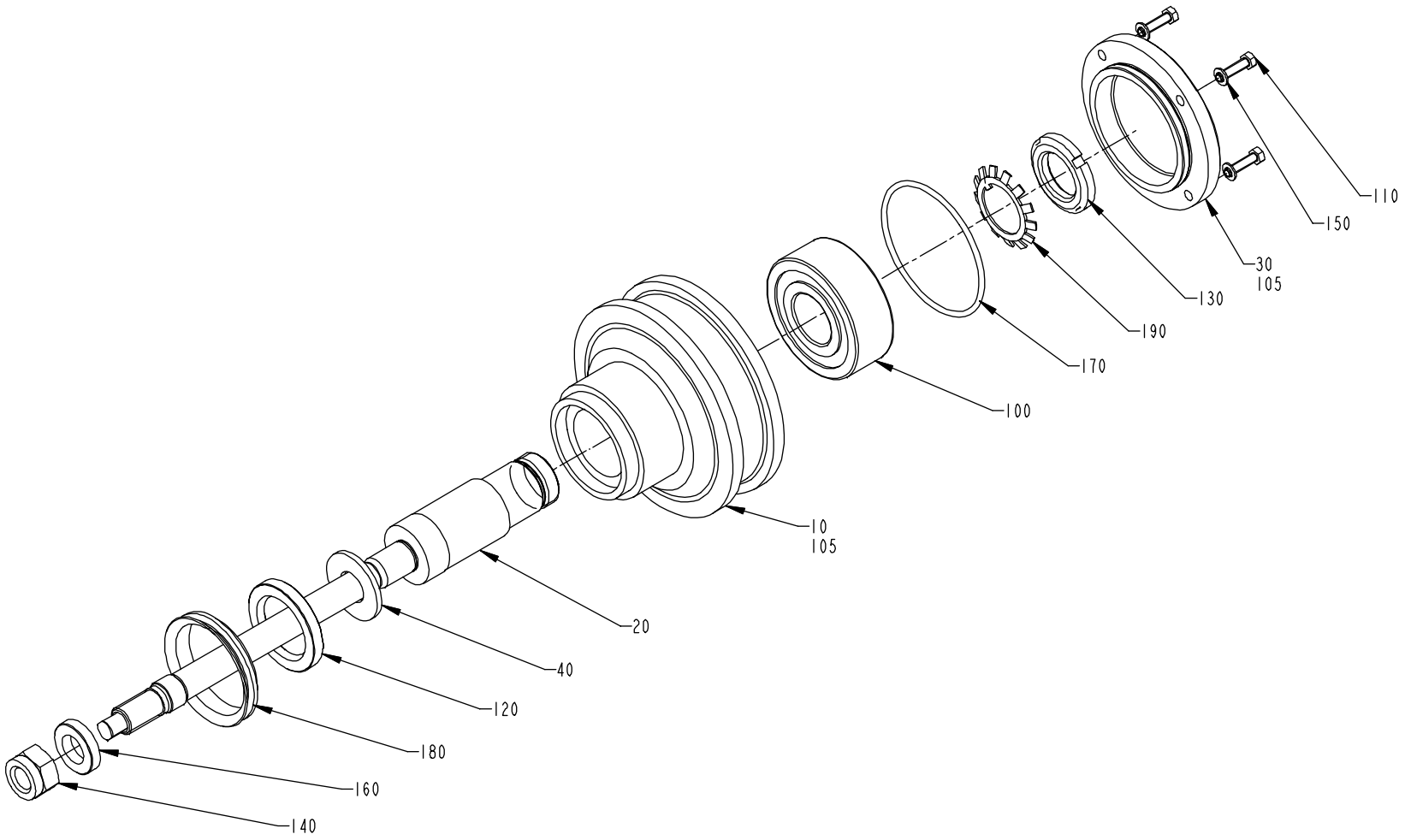

GraphicID: 491846-1.eps
Parent Drw: 491846-1
ECN 72501

Pos	Part No	SP	UN	Qty	Description	Page No
Common Parts						
010	B 491847-0000	D		1	TENSION SPROCKET	
020	491848-0000	D		1	SHAFT	
030	491291-0000	D		1	LID	
040	491849-0000	C		1	ADJUSTING SHIM	
100	90214-0122	C		1	BALL BEARING	
105	90296-0070	C	G	4	GREASE	
110	312105-0331	C		4	Screw M6S M5x20 A280	
120	315221-0177	C		1	Radial Seal 35x52x7 mm	
130	312805-0106	D		1	Nut Round with slots M30x1,5 FE	
140	312810-0324	C		1	Nut Hex. Ny-Lock M16 FZB	
150	315105-0146	C		4	Washer, Plain, BRB, 5,3/10,H=1	
160	315111-0186	C		1	Washer, Plain, TBRB 17/30 H=6	
170	315202-0306	C		1	O-Ring 74,5x3 mm	
180	315220-0210	C		1	V-Rings 54x64x13 mm V-60S	
190	315410-0106	D		1	Lock Washer MB 6 d=30 H=1,25	

Pos	Part No	SP	UN	Qty	Description	Page No

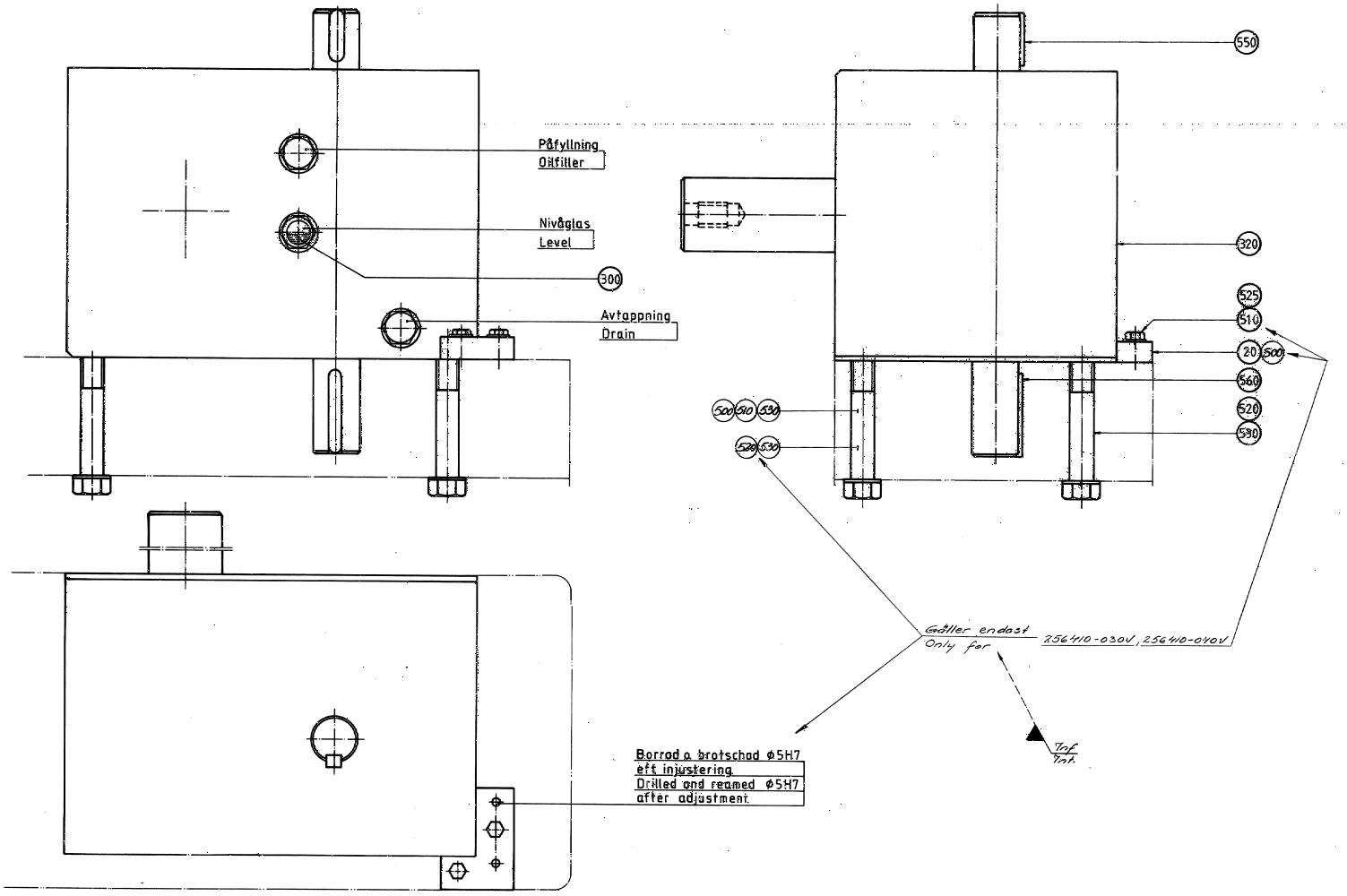

GraphicID: 256410-3_1_AA.eps
Parent Drw: 256410-3
ECN 14278

Pos	Part No	SP	UN	Qty	Description	Page No
Common Parts						
020	256412-0000	-		1	HEAD PLATE	
300	90296-0028	-	L	4	OIL (QTY OF STOCK REFLECTS LITERS)	
320	B 90416-0014	C		1	INDEXING DEVICE	
500	311103-0308	-		2	Pin, Parallell, m6, 5x16	
510	312105-0331	-		2	Screw M6S M5x20 A280	
520	312105-0547	-		4	Screw M6S M12x75 A280	
525	315105-0146	-		2	Washer, Plain, BRB, 5,3/10,H=1	
530	315111-0178	-		4	Washer, Plain, TBRB 13/24 H=4	
550	315701-0263	-		1	KEYS,PARALLEL WITH ROUND ENDS 8X7X20	
560	315701-0271	-		1	KEYS,PARALLEL WITH ROUND ENDS 8X7X45	

Pos	Part No	SP	UN	Qty	Description	Page No

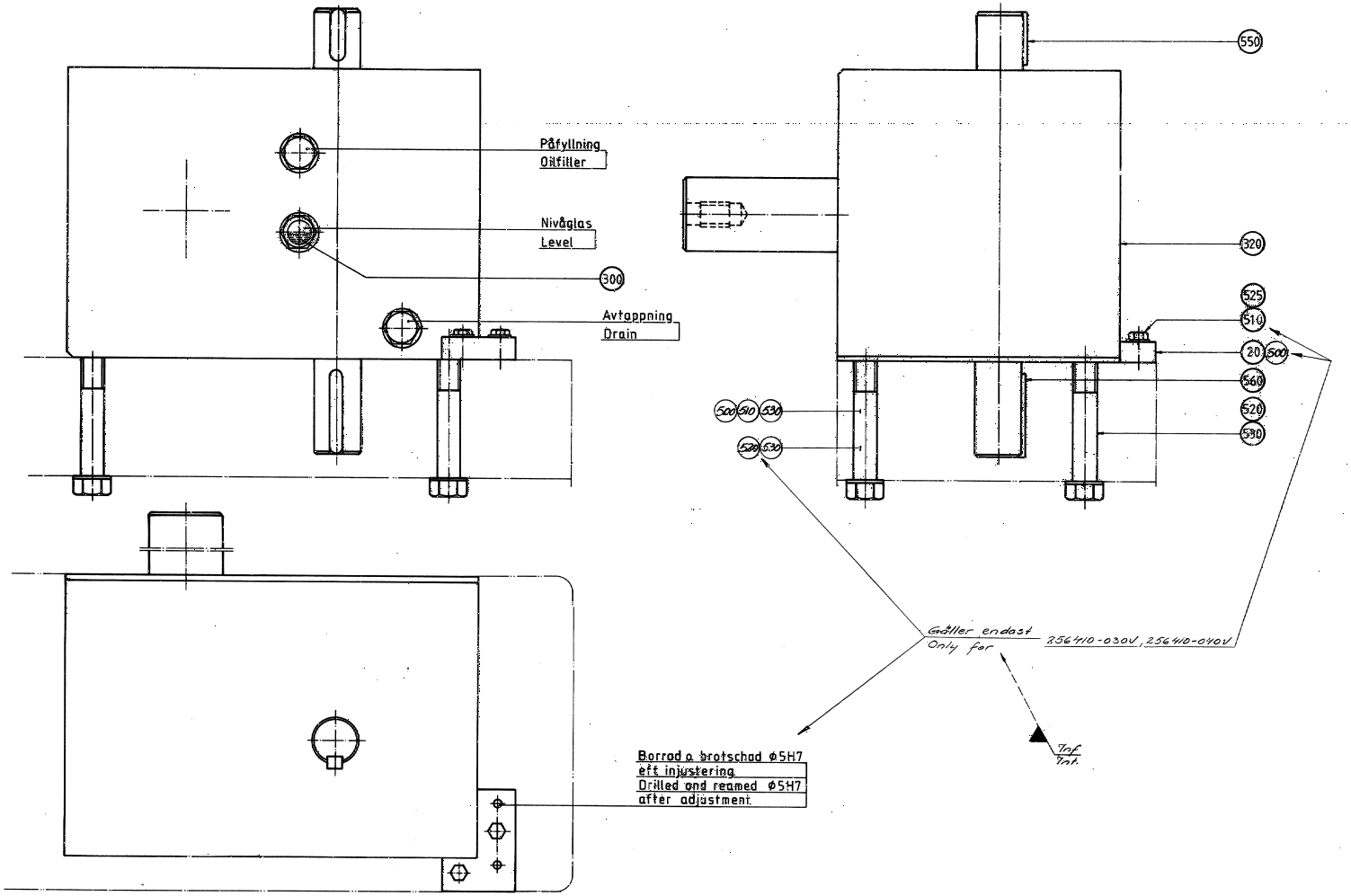

GraphicID: 256410-3_1_AA.eps
Parent Drw: 256410-3
ECN 14278

Pos	Part No	SP	UN	Qty	Description	Page No
Common Parts						
020	256412-0000	-		1	HEAD PLATE	
300	90296-0028	-	L	4	OIL (QTY OF STOCK REFLECTS LITERS)	
320	B 90416-0021	C		1	INDEXING DEVICE	
500	311103-0308	-		2	Pin, Parallell, m6, 5x16	
510	312105-0331	-		2	Screw M6S M5x20 A280	
520	312105-0547	-		4	Screw M6S M12x75 A280	
525	315105-0146	-		2	Washer, Plain, BRB, 5,3/10,H=1	
530	315111-0178	-		4	Washer, Plain, TBRB 13/24 H=4	
550	315701-0263	-		1	Parallel key with round end 8x7x20 mm	
560	315701-0271	-		1	Parallel key with round end 8x7x45 mm	

Pos	Part No	SP	UN	Qty	Description	Page No

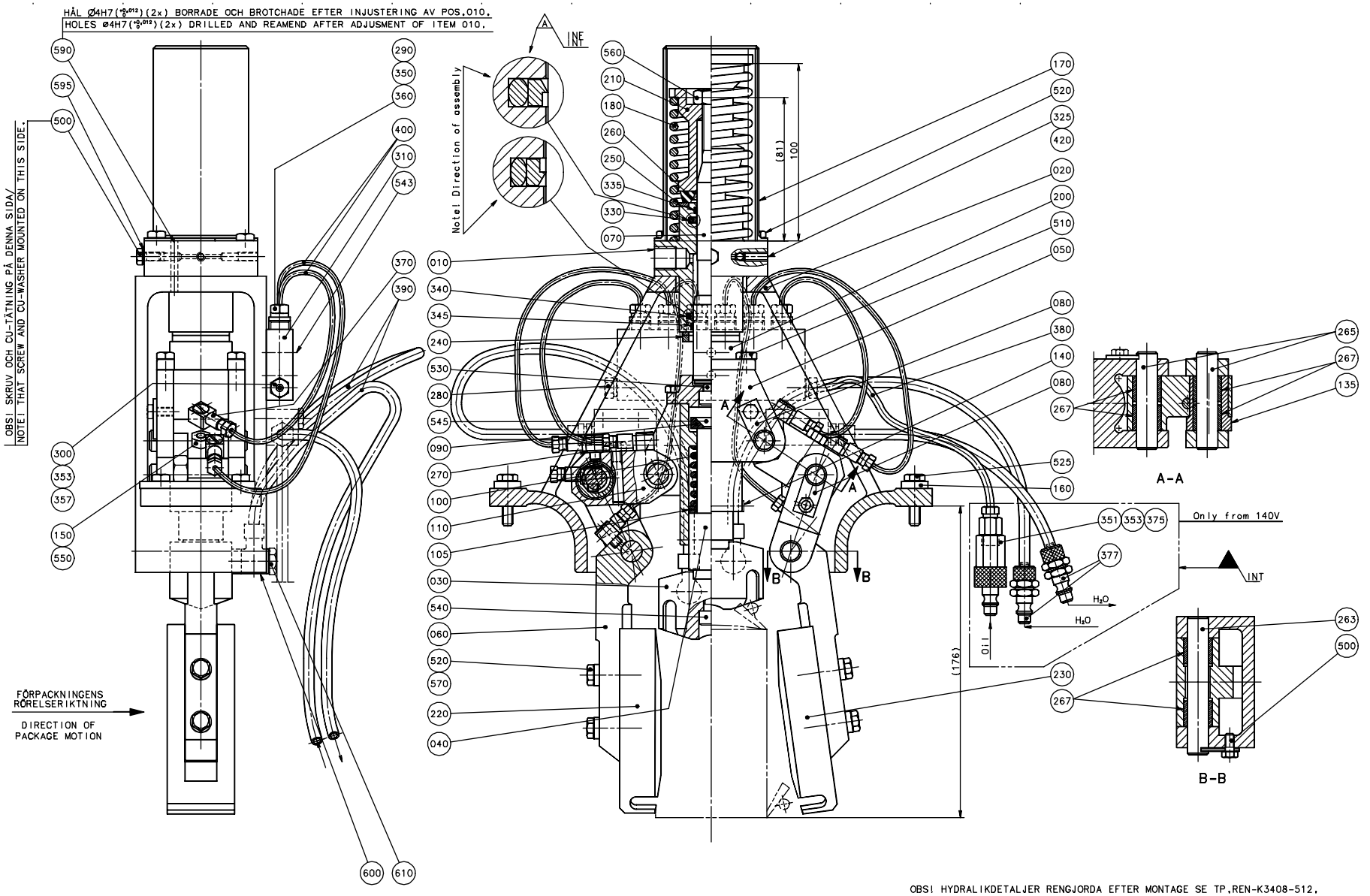

OBS! HYDRALIKDETALJER RENGJORDA EFTER MONTAGE SE TP.REN-K3408-512.
NOTE! THAT HYDRAULIC PARTS ARE CLEANED AFTER ASSEMBLY SEE TP.CLEAN-K3408-512

Pos	Part No	SP	UN	Qty	Description	Page No
0125S						
030	491799-0000	-		1	BLOCKING PIECE	
040	491772-0007	-		1	SPINDLE	
220	272935-0000	-		1	BLOCK RIGHT	
230	272936-0000	-		1	BLOCK LEFT	
520	312105-0374	-		6	Screw M6S M6x30 A280	
570	315115-0153	-		2	Washer, Plain, TBRB 6,4/12 H=3	
0180B						
030	491798-0000	-		1	BLOCKING PIECE	
040	491772-0006	-		1	SPINDLE	
220	456864-0002	-		1	BLOCK RIGHT	
230	456865-0002	-		1	BLOCK LEFT	
520	312105-0374	-		6	Screw M6S M6x30 A280	
570	315115-0153	-		2	Washer, Plain, TBRB 6,4/12 H=3	
0200B						
030	491798-0000	-		1	BLOCKING PIECE	
040	491772-0004	-		1	SPINDLE	
220	456864-0001	-		1	BLOCK RIGHT	
230	456865-0001	-		1	BLOCK LEFT	
520	312105-0374	-		6	Screw M6S M6x30 A280	
570	315115-0153	-		2	Washer, Plain, TBRB 6,4/12 H=3	
0200S						
030	491800-0000	-		1	BLOCKING PIECE	
040	491772-0001	-		1	SPINDLE	
220	469406-0000	-		1	BLOCKING PIECE	
230	469405-0000	-		1	BLOCKING PIECE	
520	312105-0374	-		8	Screw M6S M6x30 A280	
570	315115-0153	-		4	Washer, Plain, TBRB 6,4/12 H=3	
0236B						
030	491798-0000	-		1	BLOCKING PIECE	
040	491772-0003	-		1	SPINDLE	
220	271052-0003	-		1	BLOCK RIGHT	
230	271051-0003	-		1	BLOCK LEFT	
520	312105-0374	-		8	Screw M6S M6x30 A280	
570	315115-0153	-		4	Washer, Plain, TBRB 6,4/12 H=3	
0250B						
030	491798-0000	-		1	BLOCKING PIECE	
040	491772-0002	-		1	SPINDLE	
220	271052-0002	-		1	BLOCK RIGHT	
230	271051-0002	-		1	BLOCK LEFT	
520	312105-0374	-		8	Screw M6S M6x30 A280	
570	315115-0153	-		4	Washer, Plain, TBRB 6,4/12 H=3	

Pos	Part No	SP	UN	Qty	Description	Page No
0284B						
030	491798-0000	-		1	BLOCKING PIECE	
040	491772-0001	-		1	SPINDLE	
220	271052-0001	-		1	BLOCK RIGHT	
230	271051-0001	-		1	BLOCK LEFT	
520	312105-0374	-		8	Screw M6S M6x30 A280	
570	315115-0153	-		4	Washer, Plain, TBRB 6,4/12 H=3	

(Cont'd)

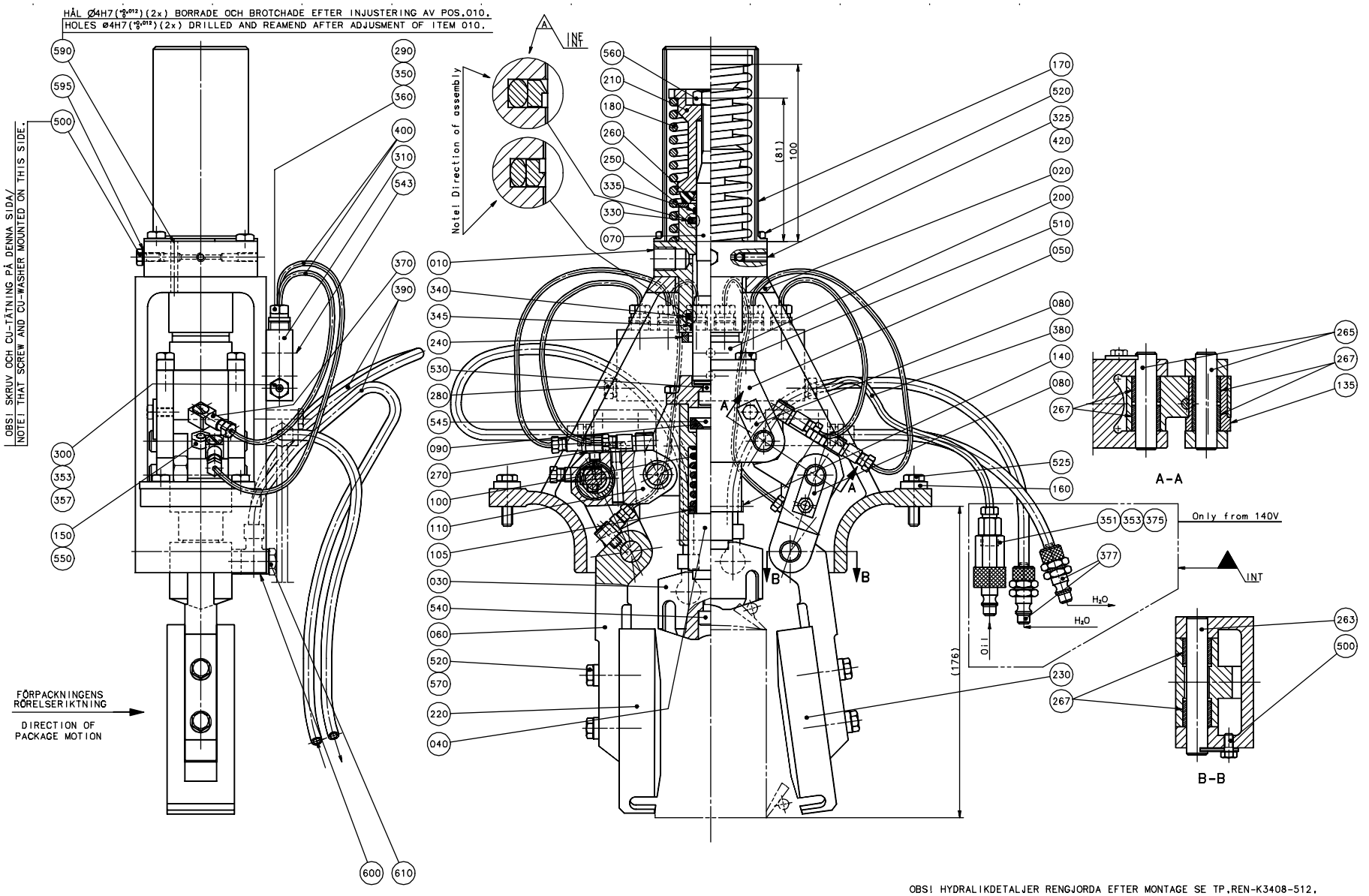

OBS! HYDRALIKDETALJER RENGJORDA EFTER MONTAGE SE TP.REN-K3408-512.
NOTE! THAT HYDRAULIC PARTS ARE CLEANED AFTER ASSEMBLY SEE TP.CLEAN-K3408-512

(Cont'd)

Common Parts

Pos	Part No	SP	UN	Qty	Description	Page No
010	490980-0000	-		1	CYLINDER	
020	272576-0000	-		1	BRACKET	
050	491803-0000	-		1	HOUSE	
060	751552-0000	-		2	ARM	
070	752083-0000	-		1	PISTON	
080	21047-0000	-		6	LOCK WASHER	
090	491802-0000	-		1	WASHER	
100	490942-0000	-		1	COMPRESSION SPRING	
105	260427-0000	-		2	WASHER	
110	751553-0000	-		2	ARM	
135	751557-0000	-		2	SLEEVE	
140	256461-0000	-		1	DOWEL	
150	256462-0000	-		2	SCREW	
160	256463-0000	-		2	WASHER	
170	751163-0000	-		1	COVER	
180	271731-0000	-		1	COMPRESSION SPRING	
200	491771-0000	-		1	BRACKET	
210	441894-0000	-		1	SLEEVE	
240	295072-0000	-		1	BUFFER RING	
250	441896-0000	-		1	WASHER	
260	441895-0000	-		1	BUFFER RING	
263	751554-0001	-		2	SHAFT	
265	751554-0002	-		4	SHAFT	
267	751555-0000	-		12	BUSHING	
270	90005-0056	-		2	Washer,Pl.Rnd.Nyl.6/8,5,H=1	
280	90087-0019	-		1	PLUG M10x1 Stainless	
290	90028-0020	-		6	Cone tube 2,5mm	
300	90028-0021	-		1	Cone tube 4 mm	
310	90032-0040	-		1	Block 6 ways	
325	90090-0013	-		1	STEEL BALL SKF RB-4/111	
330	90091-0160	-		1	Rod Seal, Stepseal 16x23,5x3,2 mm	
335	90091-0162	-		1	Wear Ring 16x19x3,2 mm	
340	90091-0165	-		1	Rod Seal, Stepseal 20x27,5x3,2 mm	
345	90091-0163	-		1	Wear Ring 20x23x3,2 mm	
350	90092-0054	-		6	Metering valve 50 mm3	
353	90134-0031	-		1	Sleeve for plastic tube	
357	90134-0038	-		1	Bushing/Nut inlet/outlet 4 mm	
360	90134-0039	-		6	Bushing valve connection 2,5 mm	
370	90134-0058	-		6	Connection	
380	90166-0109	-	MM	7	TUBE 4 mm PA,Transp.	
390	90166-0117	-	MM	25	HOSE 4/6 PVC Blue	
400	90166-0143	-	MM	15	TUBE 2,5 mm PA,Transp.	
420	90287-0119	-		1	Screw,Sock.Set Flatpoint MMP6SS M5x12 A2	
500	312105-0325	-		7	Screw M6S M5x10 A280	
510	312105-0368	-		4	Screw M6S M6x16 A280	
525	312105-0372	-		4	Screw M6S M6x25 A280	
530	312115-0449	-		1	Screw MC6S M8x16 A280	
540	312115-0455	-		1	Screw MC6S M8x30 A280	
543	312155-0295	-		2	Screw Hex.Sock.Count.MF6S M4x20 A480	
545	312155-0449	-		1	Screw Hex.Sock.Count.MF6S M8x16 A280	
550	312605-0316	-		2	Nut Hex. M6M M6 A280	
560	312605-0320	-		1	Nut Hex. M6M M10 A280	
590	311103-0276	-		2	Pin, Parallell, m6, 4x30	
595	315234-0101	-		1	Washer,Pl.Rnd.Cu.5/8 H=0,8	
600	342980-0113	-		2	BANJO-CONNECTION,RING 6/4-G1/8"	
610	342980-0303	-		2	BANJO-HOLLOW BOLT COUPL,EXT.THR.01-G1/8"	

DISC COUPLING

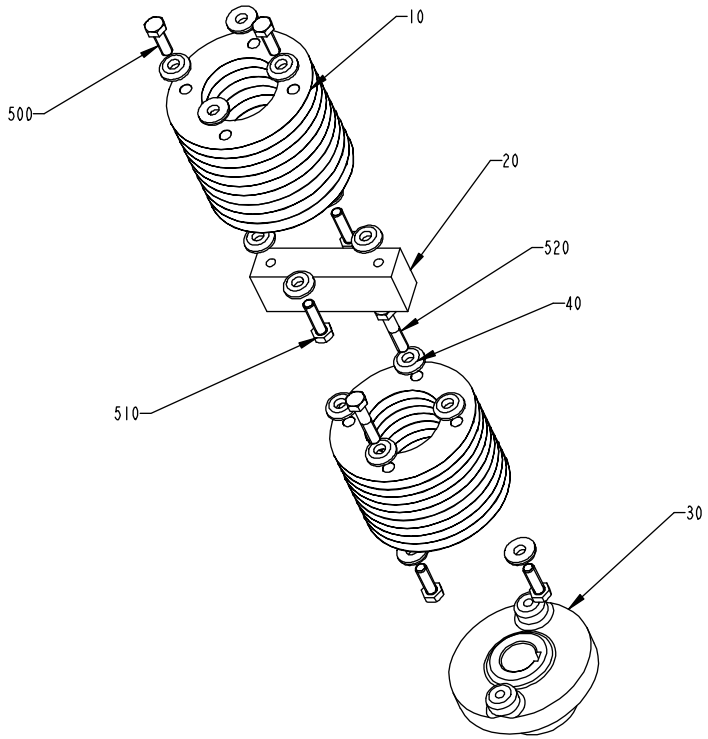

Pos	Part No	SP	UN	Qty	Description	Page No
Common Parts						
010	31559-0000	C		2	SPRING PLATE	
020	272746-0000	D		1	ROD	
030	272747-0000	D		1	CONNECTION	
040	31553-0001	-		14	WASHER	
500	312101-0453	-		4	Screw M6S M8x25 FZB	
510	312101-0455	-		2	Screw M6S M8x30 FZB	
520	312101-0459	-		2	Screw M6S M8x40 FZB	

Pos	Part No	SP	UN	Qty	Description	Page No

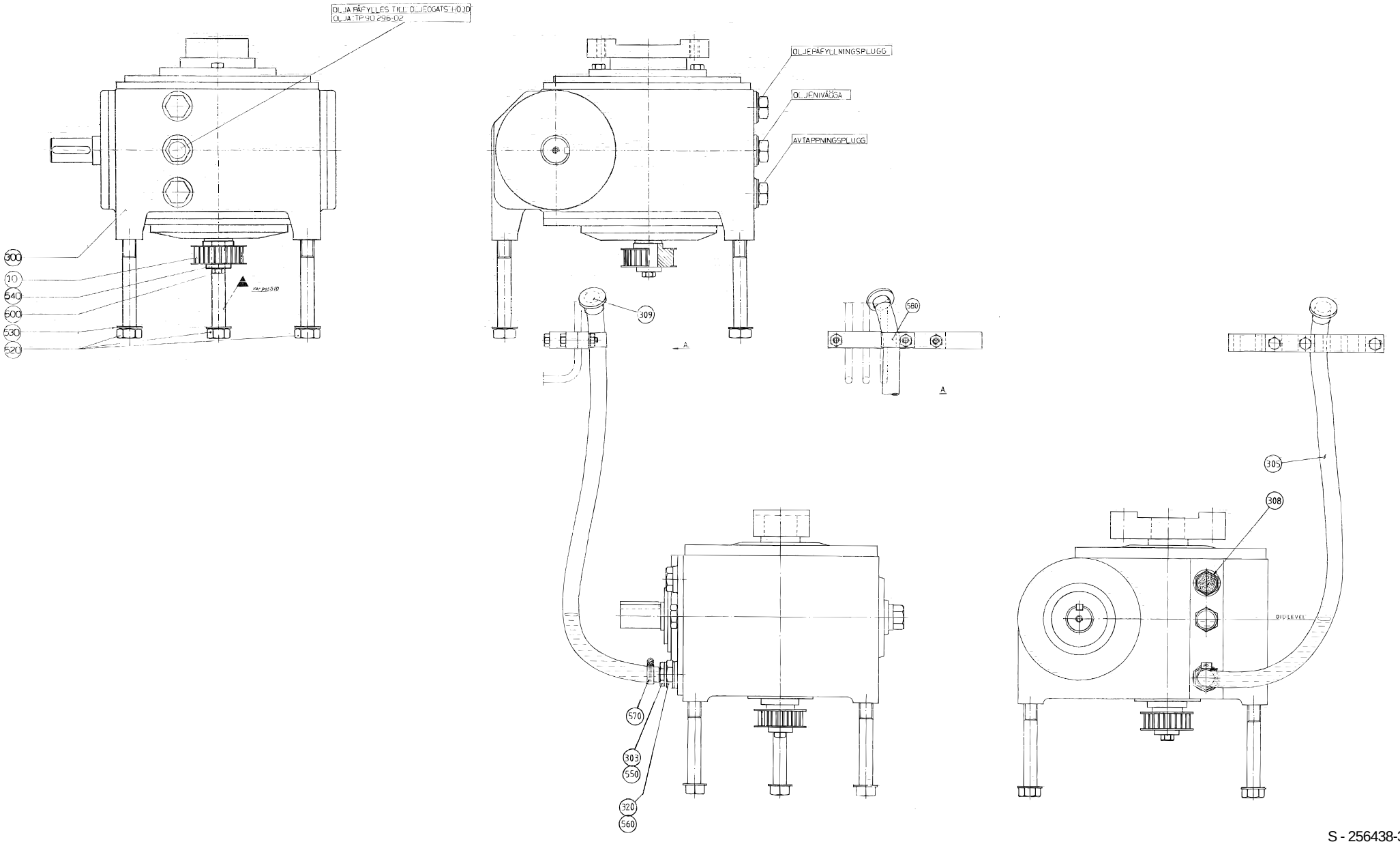
OLJA PÅFYLLES TILL OLJEGATSHÖJD
OLJA: TP 90 296-02
OLJEPÅFYLLNINGSPLUGG
OLJENIVÅGGA
AVTAPPNINGSPLUGG
300
10
540
500
530
520
309
580
A
305
308
570
303
550
320
560
OIL LEVEL

Pos	Part No	SP	UN	Qty	Description	Page No
Common Parts						
010	272758-0000	C		1	TIMING BELT PULLEY	
300	90056-0071	C		1	WORM GEAR	
303	90163-0052	-		1	HOSE NIPPLE,EXT.THREAD 1/4"-12	
305	90166-0113	-	MM	5	HOSE	
308	90257-0002	-		1	FILTER PLUG PARTNO 8145-00-120 TYP F12	
309	90261-0018	-		1	Plug, Blind, Plastic GPN300F-183	
310	90296-0076	-	L	2	OIL	
320	90330-0085	-		1	Bushing, Int/Ext. Thr. R1/2-Rp1/4	
500	312101-0329	-		1	Screw M6S M5x16 FZB	
520	312101-0552	-		3	Screw M6S M12x100 FZB	
530	315101-0178	-		3	Washer, Plain, BRB, 13/24 H=2	
540	315121-0153	-		1	Washer, Plain, TBRSB 6,4/22 H=4	
550	315234-0110	-		1	Washer,Pl.Rnd.Cu.13,5/18 H=1,5	
560	315234-0113	-		1	Washer,Pl.Rnd.Cu.21,3//26 H=1,5	
570	342991-0101	-		1	HOSE CLIP,WORM DRIVE TYPE (13)-16	
580	352110-0103	-		1	CRAMP TK 14-20	

Pos	Part No	SP	UN	Qty	Description	Page No

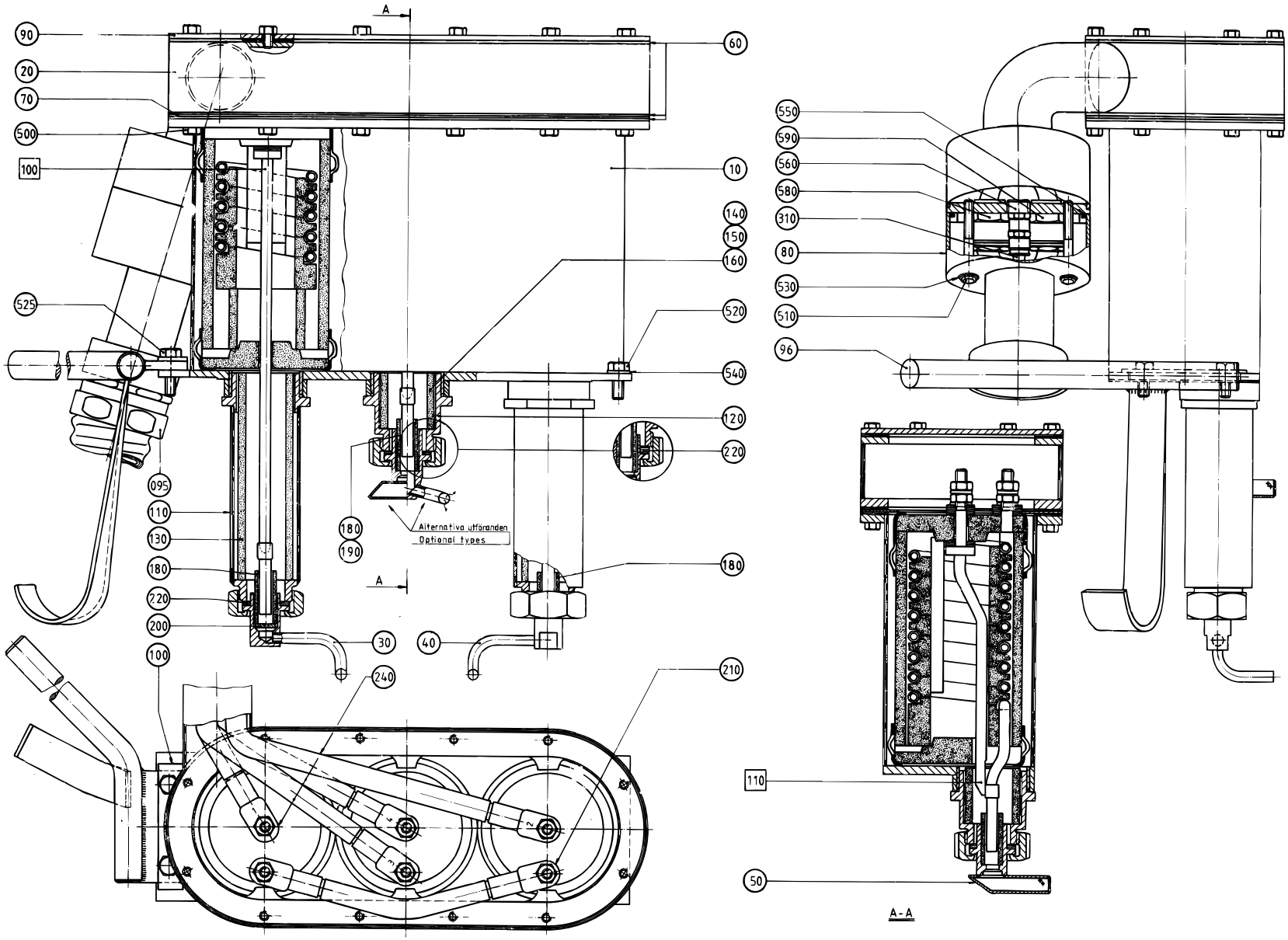
A
90
20
70
500
100
60
10
140
150
160
525
520
540
120
220
095
110
130
180
190
180
220
200
100
30
40
240
210
Alternativa utföranden
Optional types
550
590
560
580
310
80
530
510
96
110
50
A-A

Pos	Part No	SP	UN	Qty	Description	Page No
0125S						
030	B 295617-0002	C		1	AIR NOZZLE	
040	B 295618-0002	C		1	AIR NOZZLE	
050	B 295621-0000	C		1	AIR NOZZLE	
120	23763-0009	D		1	SPACER PIPE	
150	23765-0004	C		1	INSULATING PIPE	
180	252766-0001	C		3	INSULATING PIPE	
220	263673-0000	C		8	GASKET	
0180B						
030	B 295617-0001	C		1	AIR NOZZLE	
040	B 295618-0001	C		1	AIR NOZZLE	
050	B 247227-0001	C		1	AIR NOZZLE	
120	23763-0001	D		1	SPACER PIPE	
140	23765-0003	C		1	INSULATING PIPE	
180	252766-0001	C		2	INSULATING PIPE	
190	252766-0002	C		1	INSULATING PIPE	
220	263673-0000	C		6	GASKET	
0200B						
030	B 295617-0001	C		1	AIR NOZZLE	
040	B 295618-0001	C		1	AIR NOZZLE	
050	B 247227-0001	C		1	AIR NOZZLE	
120	23763-0002	D		1	SPACER PIPE	
140	23765-0003	C		1	INSULATING PIPE	
180	252766-0001	C		2	INSULATING PIPE	
190	252766-0002	C		1	INSULATING PIPE	
220	263673-0000	C		6	GASKET	
0200S						
030	B 295617-0003	C		1	AIR NOZZLE	
040	B 295618-0003	C		1	AIR NOZZLE	
050	B 295622-0000	C		1	AIR NOZZLE	
120	23763-0007	D		1	SPACER PIPE	
180	252766-0001	C		3	INSULATING PIPE	
220	263673-0000	C		8	GASKET	
0236B						
030	B 295617-0001	C		1	AIR NOZZLE	
040	B 295618-0001	C		1	AIR NOZZLE	
050	B 247227-0001	C		1	AIR NOZZLE	
120	23763-0005	D		1	SPACER PIPE	
160	23765-0005	C		1	INSULATING PIPE	
180	252766-0001	C		2	INSULATING PIPE	
190	252766-0002	C		1	INSULATING PIPE	
220	263673-0000	C		8	GASKET	

Pos	Part No	SP	UN	Qty	Description	Page No
0250B						
030	B 295617-0001	C		1	AIR NOZZLE	
040	B 295618-0001	C		1	AIR NOZZLE	
050	B 247227-0001	C		1	AIR NOZZLE	
120	23763-0006	D		1	SPACER PIPE	
160	23765-0005	C		1	INSULATING PIPE	
180	252766-0001	C		3	INSULATING PIPE	
220	263673-0000	C		6	GASKET	
0284B						
030	B 295617-0001	C		1	AIR NOZZLE	
040	B 295618-0001	C		1	AIR NOZZLE	
050	B 247227-0001	C		1	AIR NOZZLE	
120	23763-0012	-		1	SPACER PIPE	
180	252766-0001	C		3	INSULATING PIPE	
220	263673-0000	C		6	GASKET	
Common Parts						
010	256548-0000	-		1	HEATING CHAMBER	
020	B 441143-0000	-		1	SPACER PIECE	
060	531730-0000	C		3	FLANGE SEAL	
070	23769-0000	C		1	STOP PLATE	
080	295306-0000	-		1	COVER	
090	271191-0000	-		1	LID	
095	B 295307-0000	-		1	FLEXIBLE CONDUIT	
096	441693-0000	-		1	HANDLE	
100	A 31390-0100	-		2	FF-ELEMENT TOP	**420**
100	20702-0000	-		1	COVERING PLATE	
110	23762-0002	-		2	SIDE PIPE	
110	A 31390-0110	C		1	FF-ELEMENT BOTTOM	
130	23765-0002	C		2	INSULATING PIPE	
200	259807-0000	C		2	WASHER	
210	B 469977-0000	C		1	ELECTRICAL CONNECTION	
240	B 271499-0000	C		4	ELECTRICAL CONNECTION	
310	90166-0133	C	MM	12	TUBE 8 mm PA,Transp.	
500	312105-0327	-		24	Screw M6S M5x12 A280	
510	90287-0208	-		2	Screw M6S M5x70 A480	
520	312105-0368	-		2	Screw M6S M6x16 A280	
525	312105-0372	-		2	Screw M6S M6x25 A280	
530	315105-0146	-		2	Washer, Plain, BRB, 5,3/10,H=1	
540	315105-0153	-		2	Washer, Plain, BRB, 6,4/12,H=1,5	
550	315204-0305	C		1	O-Ring 69,5x3 mm	
560	342920-0122	-		1	STRAIGHT COUPLING,EXT.THREADED 8/6-R1/4"	
590	352100-0107	-		4	CABLE GLANR.18,6-12	

FF-ELEMENT TOP

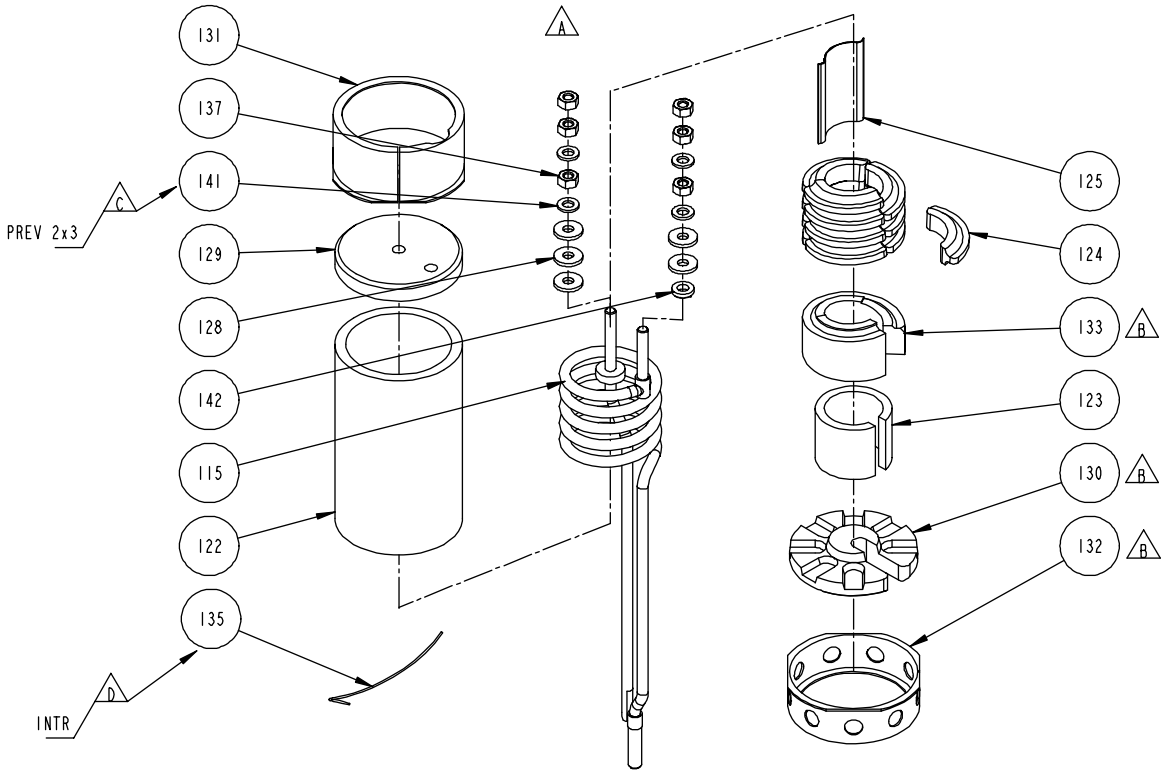

Pos	Part No	SP	UN	Qty	Description	Page No
0355B 648035 OR 0568SQ 648035 OR 0500SQ 648035 OR TBA 0180B 648035 OR TBA 0200B 648035 OR TBA 0189B 648035 OR TBA 0236B 648035						
115	30310-0003	C		1	FF HEATING ELEMENT TOP	
0375S 648035 OR 0400B 648035 OR 0300B 648035 OR 0500B 648025 OR 0500B 648035 OR 0500B 648005 OR 0500S 648035 OR 0500B 640005 OR 0750B 648035 OR 0568B 648035 OR TBA 0330S 648105 OR TBA 0300S 648105 OR 0568B 648005 OR 0568B 640005 OR TBA 0180B 640005 OR TBA 0180B 648005 OR TBA 0180B 648105 OR TBA 0160S 648105 OR TBA 0200B 640005 OR TBA 0200B 648005 OR TBA 0200B 648105 OR TBA 0189B 640005 OR TBA 0189B 648005 OR TBA 0125S 648105 OR TBA 0100B 648105 OR TBA 0250S 648105 OR TBA 0250B 640005 OR TBA 0250B 648005 OR TBA 0250B 648035 OR TBA 0284B 640005 OR TBA 0284B 648005 OR TBA 0284B 648035 OR TBA 0284B 648105 OR TBA 0200S 648105 OR TBA 0236B 648105 OR TBA 0236B 648005 OR TBA 0236B 640005 OR 0300B 648005 OR 0300B 640005 OR 0568B 648025						
115	30310-0002	C		1	FF HEATING ELEMENT TOP	
1136B 648005 OR 1136B 648035 OR 1136B 640005 OR 1000SQ 648035 OR 1055B 648035 OR 1000S 648035 OR 0750S 648035 OR 1000B 648005 OR 1000B 648025 OR 1000B 648035 OR 1000B 640005						
115	30310-0001	C		1	FF HEATING ELEMENT TOP	
TBA 0250B 648105						
115	30310-0002	C		1	FF HEATING ELEMENT TOP	
Common Parts						
122	20705-0001	C		1	INSULATING PIPE	
123	29411-0000	C		1	SPACER PIPE	
124	29413-0000	C		12	LACE	
125	31653-0001	C		1	SHEET	
128	525233-0000	C		5	GASKET 16x2x6mm	
129	20772-0000	C		1	INSULATOR BODY 70x70x15mm	
130	37536-0000	C		1	INSULATOR BODY Lower 70x70x15mm	
131	23771-0000	C		1	SPACER RING 4x78x1mm	
132	37537-0000	C		1	SPACER RING Lower 72x78x1mm	
133	37535-0000	C		1	SUPPORTING PART 56x56x31,5mm	
135	90145-0005	-	M	1	WIRE	
137	312811-0316	-		6	Nut Hex.Lock Heli Coil Mid Grip M6 SS	
141	315105-0153	-		4	Washer, Plain, BRB, 6,4/12,H=1,5	
142	315115-0153	-		1	Washer, Plain, TBRB 6,4/12 H=3	

Pos	Part No	SP	UN	Qty	Description	Page No

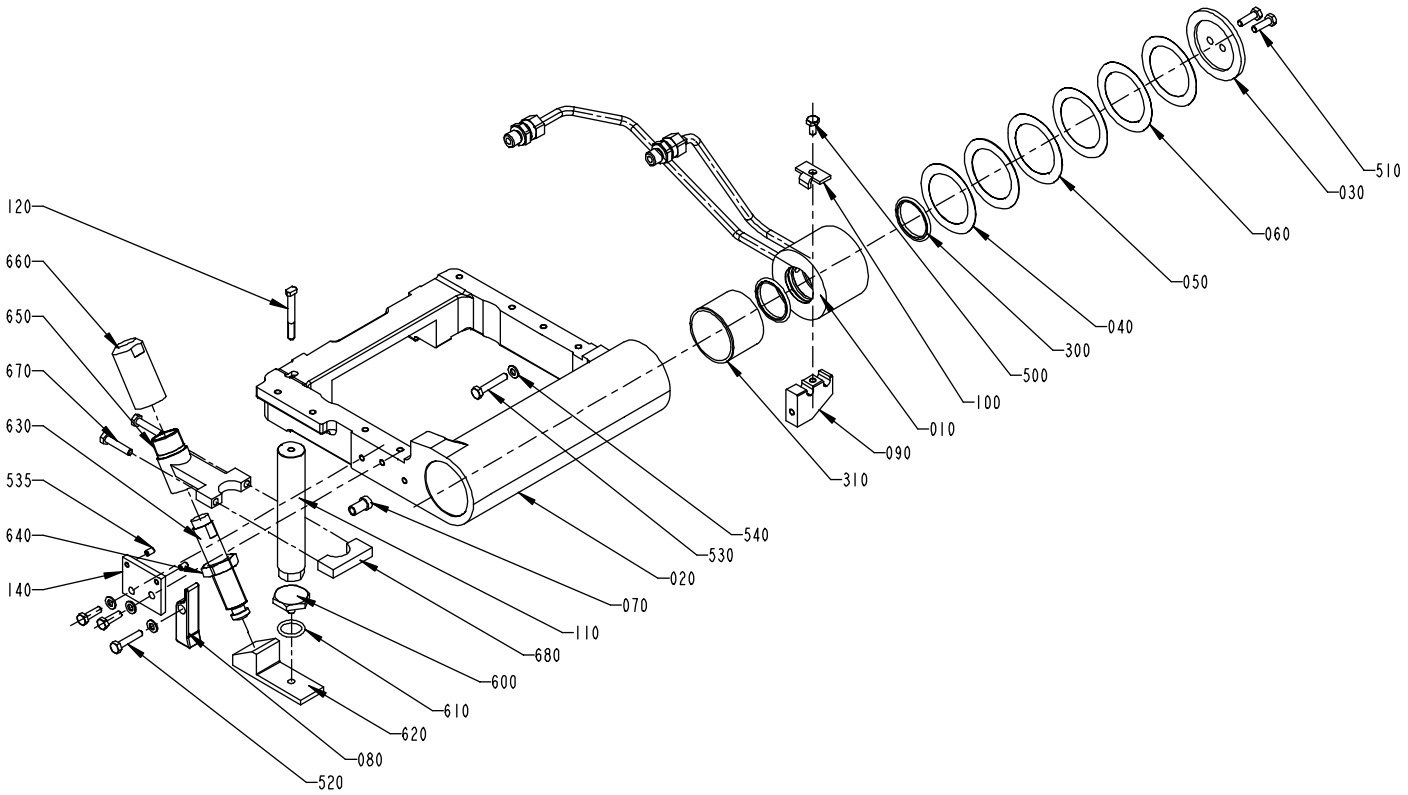
120
660
650
670
630
535
640
140
080
520
620
610
600
680
110
070
020
530
540
310
090
010
100
500
300
040
050
060
030
510

Pos	Part No	SP	UN	Qty	Description	Page No
TBA 0180B OR TBA 0160S OR TBA 0200B OR TBA 0125S OR TBA 0100B OR TBA 0236B						
010	B 295202-0002	D		1	SWIVEL	
140	469527-0000	D		1	SETTING PLATE	
TBA 0250B						
010	B 295202-0001	D		1	SWIVEL	
140	469527-0000	D		1	SETTING PLATE	
TBA 0250S						
010	B 295202-0003	D		1	SWIVEL	
140	469527-0000	D		1	SETTING PLATE	
TBA 0300S OR TBA 0284B OR TBA 0200S OR TBA 0200M						
010	B 295202-0001	D		1	SWIVEL	
140	469527-0000	D		1	SETTING PLATE	
TBA 0330S						
010	295202-0004	D		1	SWIVEL	
140	582038-0000	D		1	SETTING PLATE	
Common Parts						
020	B 295201-0000	D		1	FRAME	
030	295203-0000	D		1	LID	
040	295204-0001	C		2	SHIM	
050	295204-0002	C		2	SHIM	
060	295204-0003	C		2	SHIM	
070	295205-0000	-		1	SPACER SLEEVE	
080	295206-0000	D		1	FLAP	
090	295207-0000	D		1	HOLDER	
100	295208-0000	D		1	SECURING PLATE	
110	1512132-0000	-		1	SUPPORT	
120	295431-0000	D		1	SCREW	
300	90091-0136	C		3	Rod Seal, Glidoring 36x44x3,1 mm	
310	90240-0094	C		2	BEARING BUSHING WITHOUT FLANGE, 50X55X40	
500	312105-0366	-		1	Screw M6S M6x12 A280	
510	312105-0370	-		4	Screw M6S M6x20 A280	
520	312105-0374	-		1	Screw M6S M6x30 A280	
530	312105-0376	-		1	Screw M6S M6S M6x35 A280	
535	312318-0323	-		2	Screw,Sock.Set Cuppoint MSK6SS M5x8 A4	
540	315105-0153	-		4	Washer, Plain, BRB, 6,4/12,H=1,5	
600	272997-0000	-		1	STOPPER	
610	315202-0215	-		1	O-Ring 19,2x3 mm	
620	1512133-0000	-		1	STOP	
630	90347-0189	C		1	SHOCK ABSORBER, 370-050-400	
640	90099-0057	-		1	Nut Hex. M20x1,5	
650	1512126-0000	D		1	SUPPORT	
660	1512128-0000	-		1	PLUG	
670	312109-0374	-		2	Screw M6S M6x30 A280	
680	1512127-0000	-		1	CLAMP	

FOLDING BAR

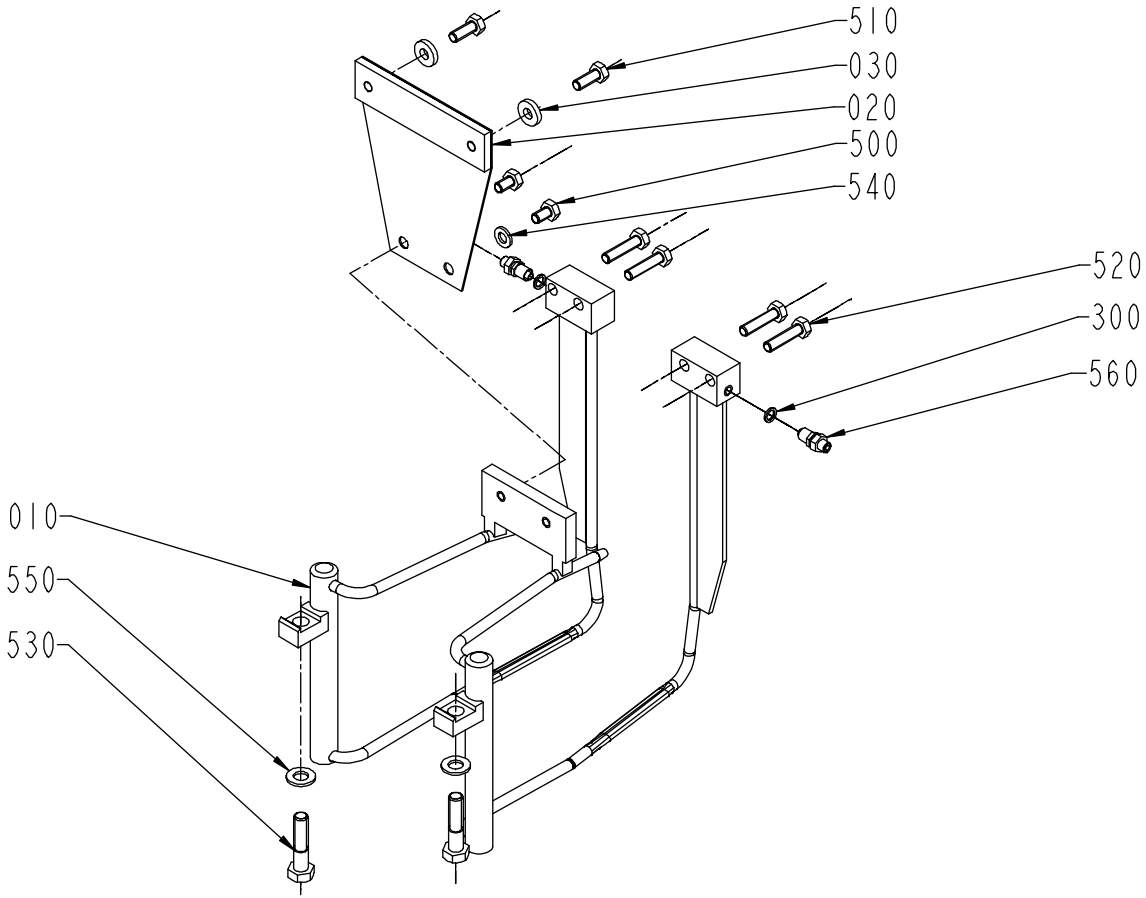

Pos	Part No	SP	UN	Qty	Description	Page No
0100B						
010	979741-0000	C		1	FOLDING BAR	
020	295871-0009	D		1	BRACKET	
0125S						
010	295863-0000	C		1	FOLDING BAR	
020	295871-0006	D		1	BRACKET	
0160S						
010	577207-0000	C		1	FOLDING BAR	
020	295871-0008	D		1	BRACKET	
0180B						
010	295862-0004	C		1	FOLDING BAR	
020	295871-0005	D		1	BRACKET	
0200B						
010	295862-0003	C		1	FOLDING BAR	
020	295871-0004	D		1	BRACKET	
0200M						
010	979866-0000	C		1	FOLDING BAR	
020	295871-0002	D		1	BRACKET	
0200S						
010	295864-0000	C		1	FOLDING BAR	
020	295871-0001	D		1	BRACKET	
0236B						
010	295862-0002	C		1	FOLDING BAR	
020	295871-0003	D		1	BRACKET	
0250B						
010	295862-0001	C		1	FOLDING BAR	
020	295871-0002	D		1	BRACKET	
0250S						
010	574465-0000	C		1	FOLDING BAR	
020	295871-0007	D		1	BRACKET	
0300S OR 0284B						
010	295862-0005	C		1	FOLDING BAR	
020	295871-0001	D		1	BRACKET	
0330S						
010	582041-0000	C		1	FOLDING BAR	
020	295871-0007	D		1	BRACKET	
Common Parts						
030	271587-0000	-		2	WASHER	
300	90005-0056	-		2	Washer,Pl.Rnd.Nyl.6/8,5,H=1	
500	312105-0364	-		2	Screw M6S M6x10 A280	
510	312105-0368	-		2	Screw M6S M6x16 A280	
520	312105-0372	-		4	Screw M6S M6x25 A280	
530	312105-0457	-		2	Screw M6S M8x35 A280	
540	315105-0153	-		2	Washer, Plain, BRB, 6,4/12,H=1,5	
550	315105-0165	-		2	Washer, Plain, BRB, 8,4/16,H=1,5	
560	342921-0112	C		2	STRAIGHT COUPLING,EXT.THREADED 6/4-6M	

This page is intentionally left blank

Pos	Part No	SP	UN	Qty	Description	Page No
SOURCE,TBA/9-100V OR SOURCE,TBA/9-110V						
050	441500-0000	-		1	HOSE	
065	B 490619-0000	-		1	HOSE	
300	90330-0081	-		1	Elbow, 90 Int. Thread, R-222R1/4	
640	315233-0110	-		3	Washer,Pl.Rnd.Nyl.13,3/17,H=1	
SOURCE,TBA/9-120V						
050	441500-0000	-		2	HOSE	
245	90157-0034	-	L	1	SEALING COMPOUND LOCTITE 572 50 ML	
Common Parts						
010	1091748-0000	-		1	TUBE	
015	1091750-0000	-		1	TUBE	
020	1091749-0000	-		1	TUBE	
025	1091751-0000	-		1	TUBE	
030	441499-0000	-		1	HOLDER	
040	456852-0000	-		1	DISTRIBUTOR	
045	B 490618-0000	-		1	BRANCH	
060	456853-0001	-		1	PIPE CLAMP	
062	456853-0002	-		1	PIPE CLAMP	
063	456853-0003	-		1	PIPE CLAMP	
070	256907-0000	-		2	WASHER	
080	271478-0000	-		1	PLATE	
090	272191-0000	-		1	DISTRIBUTOR	
100	272741-0000	C		1	SEAL	
110	456854-0001	-		1	CRAMP	
112	456854-0002	-		1	CRAMP	
120	491807-0000	-		1	PIPE	
210	90005-0007	C		1	Gasket Bolt head 8,7x14x1 mm M8	
215	90030-0067	-		2	Conn. Bulkhead SV 8-L/SY	
220	90030-0091	-		2	Conn. Pipe G-8	
230	90030-0151	-		2	Conn. Str.,15-R1/2, Ext. Thread	
240	90030-0185	-		2	Conn. Str. GA-8-G1/4	
250	90163-0028	-		1	Quick Coupling, (F) LP 006-0-WR513	
260	90166-0117	C	MM	164	HOSE 4/6 PVC Blue	
270	90166-0132	C	MM	18	TUBE 6 mm PA,Transp.	
280	90166-0133	C	MM	52	TUBE 8 mm PA,Transp.	
290	90224-0186	-		1	NIPPLE	
310	90424-0009	C		1	NOZZLE	
320	90424-0016	C		1	NOZZLE	
510	312105-0372	-		4	Screw M6S M6x25 A280	
515	312105-0374	-		1	Screw M6S M6x30 A280	
520	312105-0378	-		3	Screw M6S M6x40 A280	
530	312105-0380	-		2	Screw M6S M6x50 A280	
560	312105-0463	-		1	Screw M6S M8x60 A280	
600	312605-0316	-		6	Nut Hex. M6M M6 A280	
620	315105-0153	-		12	Washer, Plain, BRB, 6,4/12,H=1,5	
650	315233-0113	-		2	Washer,Pl.Rnd.Nyl.21,4/27,H=1,2	
660	342708-0107	-		2	ACCESSORIES,REINFORCING RING VSH 12X1	
670	342746-0114	-		1	Conn. T-Pipe T-15	
680	342920-0122	-		1	STRAIGHT COUPLING,EXT.THREADED 8/6-R1/4"	
690	342960-0112	-		1	BULKHEAD COUPLING 6/4	
700	342960-0121	-		2	BULKHEAD COUPLING 8/6-6/4	
710	342960-0122	-		2	BULKHEAD COUPLING 8/6	
720	342991-0106	-		7	HOSE CLIP,WORM DRIVE TYPE (30)-36	

BOTTOM VALVE

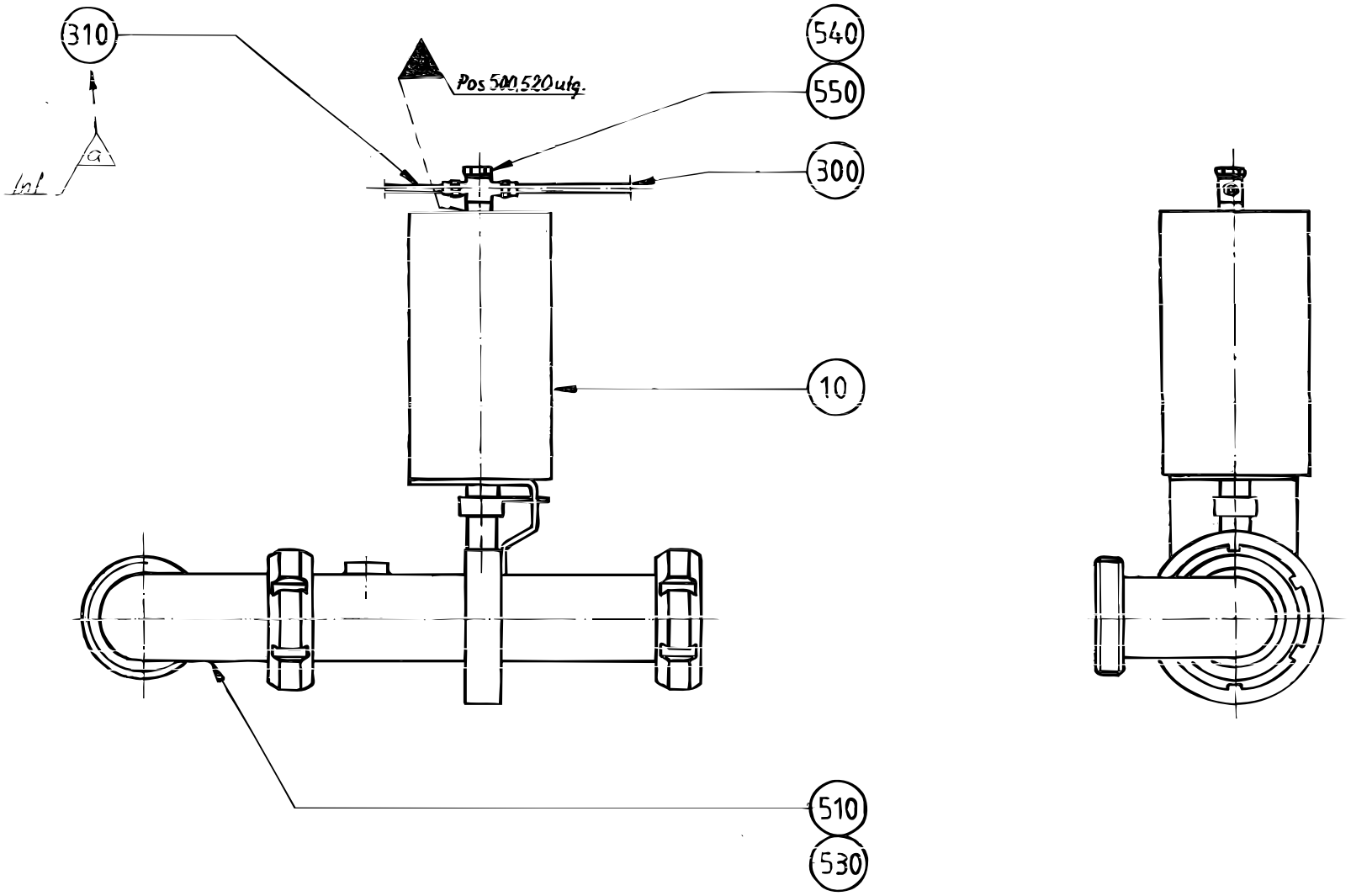

Pos	Part No	SP	UN	Qty	Description	Page No
Common Parts						
010	272751-0000	D		1	BOTTOM VALVE	
300	90166-0089	-	MM	11	HOSE 4/6.2 PE BLUE	
310	90166-0089	-	MM	42	HOSE 4/6.2 PE BLUE	
510	315250-0104	-		1	Gasket 61x51x5,5 mm	
530	342807-0104	-		1	Elbow, 90, No1190763	
540	342980-0213	-		1	BANJO-CONNECTION,T-RING 6/4-G1/8"	
550	342980-0303	-		1	BANJO-HOLLOW BOLT COUPL,EXT.THR.01-G1/8"	

Pos	Part No	SP	UN	Qty	Description	Page No

PULL-DOWN DEVICE

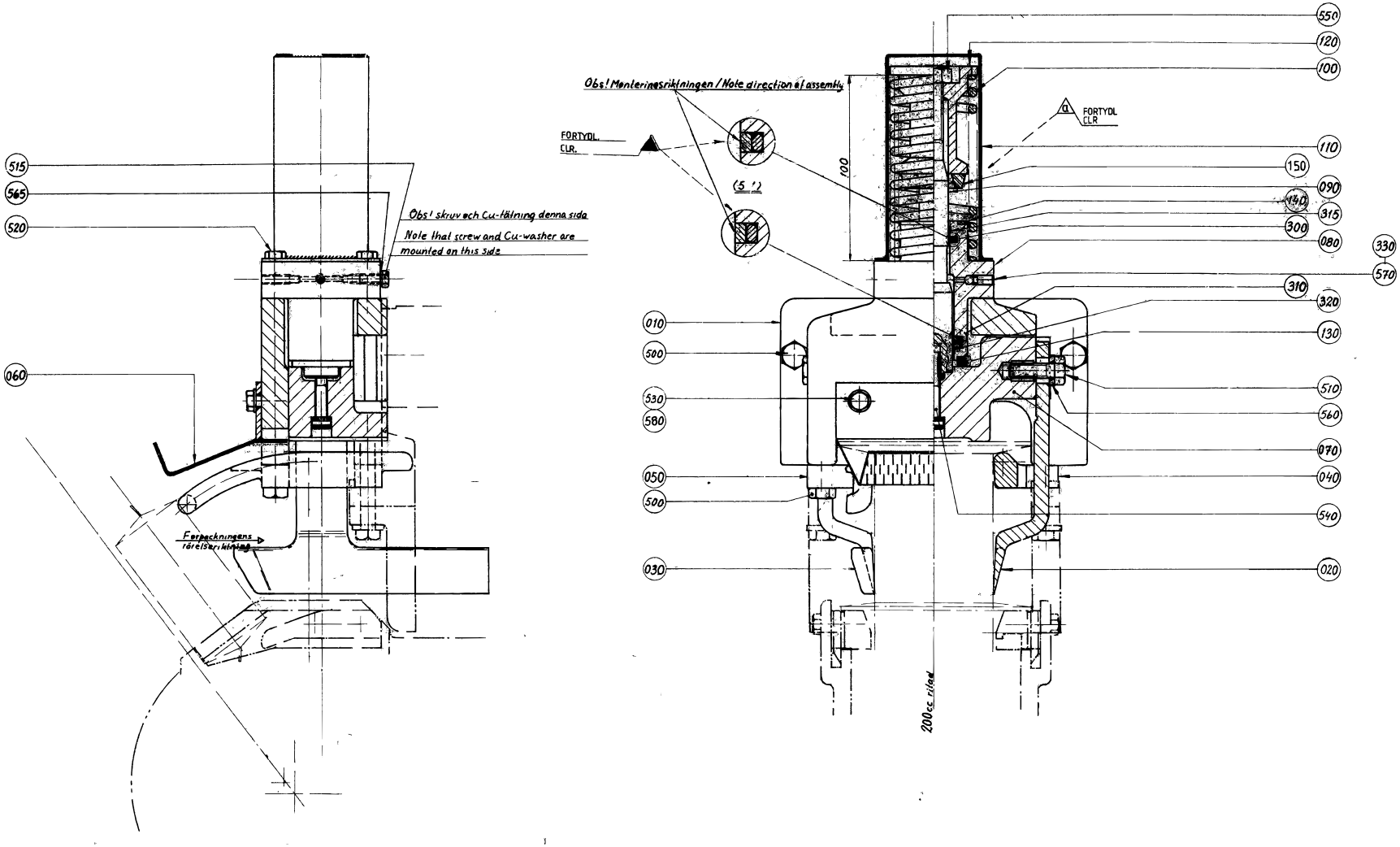

GraphicID: 256712-7.eps
Parent Drw: 256712-7
ECN 13111

Pos	Part No	SP	UN	Qty	Description	Page No
0180B						
010	295843-0004	C		1	BRACKET	
020	272905-0004	C		1	ARM	
030	272906-0004	C		1	ARM	
040	295057-0003	D		1	RAIL	
050	295058-0003	D		1	RAIL	
060	272045-0004	C		1	SLIDE SHEET	
070	491804-0000	C		1	BLOCKING PIECE	
0200B						
010	295843-0003	C		1	BRACKET	
020	272905-0003	C		1	ARM	
030	272906-0003	C		1	ARM	
040	295057-0002	D		1	RAIL	
050	295058-0002	D		1	RAIL	
060	272045-0003	C		1	SLIDE SHEET	
070	491804-0000	C		1	BLOCKING PIECE	
0236B						
010	295843-0002	C		1	BRACKET	
020	272905-0002	C		1	ARM	
030	272906-0002	C		1	ARM	
040	295057-0001	D		1	RAIL	
050	295058-0001	D		1	RAIL	
060	272045-0002	C		1	SLIDE SHEET	
070	491804-0000	C		1	BLOCKING PIECE	
0250B						
010	295843-0001	C		1	BRACKET	
020	272905-0001	C		1	ARM	
030	272906-0001	C		1	ARM	
040	295057-0001	D		1	RAIL	
050	295058-0001	D		1	RAIL	
060	272045-0002	C		1	SLIDE SHEET	
070	491804-0000	C		1	BLOCKING PIECE	
0284B						
010	295843-0006	C		1	BRACKET	
020	272905-0006	C		1	ARM	
030	272906-0006	C		1	ARM	
040	295057-0001	D		1	RAIL	
050	295058-0001	D		1	RAIL	
060	272045-0001	C		1	SLIDE SHEET	
070	491804-0000	C		1	BLOCKING PIECE	
0125S						
010	295843-0005	C		1	BRACKET	
020	272905-0005	C		1	ARM	
030	272906-0005	C		1	ARM	
040	295059-0000	D		1	RAIL LEFT	
050	295060-0000	D		1	RAIL	
060	271939-0001	C		1	SLIDE SHEET	
070	491805-0000	C		1	BLOCKING PIECE	
0200S						
010	295843-0006	C		1	BRACKET	
020	272905-0006	C		1	ARM	
030	272906-0006	C		1	ARM	
040	295061-0000	D		1	RAIL	
050	295062-0000	D		1	RAIL	
060	272045-0001	C		1	SLIDE SHEET	
070	491806-0000	C		1	BLOCKING PIECE	
Common Parts						
080	490980-0000	C		1	CYLINDER	
090	752083-0000	C		1	PISTON	
100	271731-0000	C		1	COMPRESSION SPRING	
110	751163-0000	D		1	COVER	
120	441894-0000	C		1	SLEEVE	
130	295072-0000	C		1	BUFFER RING	
140	441896-0000	D		1	WASHER	
150	441895-0000	C		1	BUFFER RING	
300	90091-0160	C		1	Rod Seal, Stepseal 16x23,5x3,2 mm	
310	90091-0165	C		1	Rod Seal, Stepseal 20x27,5x3,2 mm	
315	90091-0162	C		1	Wear Ring 16x19x3,2 mm	
320	90091-0163	C		1	Wear Ring 20x23x3,2 mm	
330	90090-0013	C		1	STEEL BALL SKF RB-4/111	
500	312105-0455	-		4	Screw M6S M8x30 A280	
510	312105-0453	-		2	Screw M6S M8x25 A280	
515	312105-0325	-		1	Screw M6S M5x10 A280	
520	312105-0374	-		4	Screw M6S M6x30 A280	
530	312105-0368	-		2	Screw M6S M6x16 A280	
540	312115-0455	-		1	Screw MC6S M8x30 A280	
550	312605-0320	-		1	Nut Hex. M6M M10 A280	
560	315115-0165	-		2	Washer, Plain, TBRB 8,4/16 H=3	
565	315234-0101	-		1	Washer,Pl.Rnd.Cu.5/8 H=0,8	
570	312311-0327	-		1	Screw, Sock.Set Dogpoint M5X12	
580	315105-0153	-		2	Washer, Plain, BRB, 6,4/12,H=1,5	

(Cont'd)

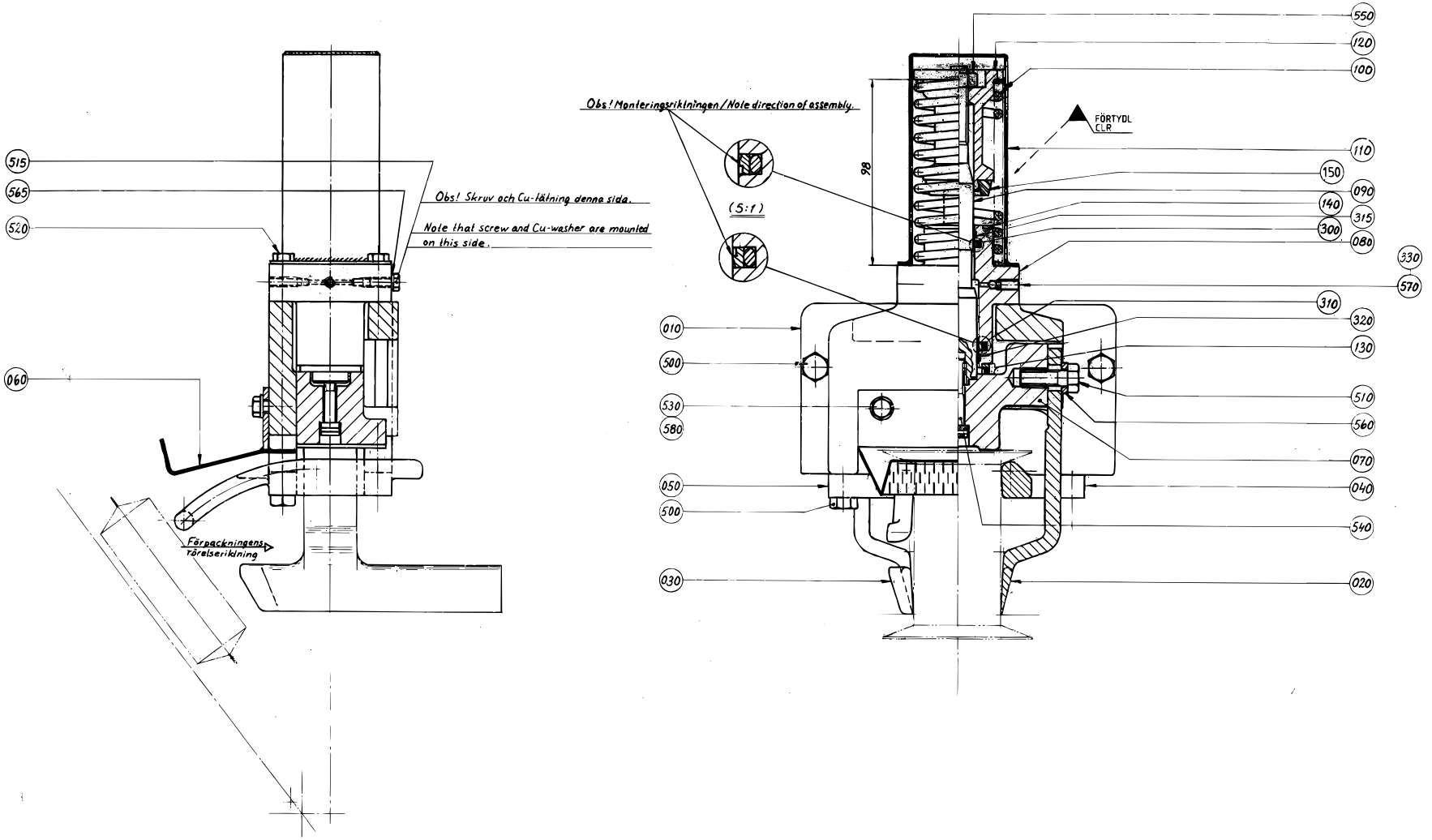
515
565
520
060
Obs! Skruv och Cu-tätning denne sida.
Note that screw and Cu-washer are mounted on this side.
Förpackningens rörelseriktning
Obs! Monteringsriktningen/Note direction of assembly.
(5:1)
98
FÖRTYDL
CLR
550
120
100
110
150
090
140
315
300
080
330
570
310
320
130
510
560
070
040
540
020
010
500
530
580
050
500
030

(Cont'd)

Pos	Part No	SP	UN	Qty	Description	Page No
0180B						
010	295843-0004	C		1	BRACKET	
020	272905-0004	C		1	ARM	
030	272906-0004	C		1	ARM	
040	295057-0003	D		1	RAIL	
050	295058-0003	D		1	RAIL	
060	272045-0004	C		1	SLIDE SHEET	
070	491804-0000	C		1	BLOCKING PIECE	
0200B						
010	295843-0003	C		1	BRACKET	
020	272905-0003	C		1	ARM	
030	272906-0003	C		1	ARM	
040	295057-0002	D		1	RAIL	
050	295058-0002	D		1	RAIL	
060	272045-0003	C		1	SLIDE SHEET	
070	491804-0000	C		1	BLOCKING PIECE	
0236B						
010	295843-0002	C		1	BRACKET	
020	272905-0002	C		1	ARM	
030	272906-0002	C		1	ARM	
040	295057-0001	D		1	RAIL	
050	295058-0001	D		1	RAIL	
060	272045-0002	C		1	SLIDE SHEET	
070	491804-0000	C		1	BLOCKING PIECE	
0250B						
010	295843-0001	C		1	BRACKET	
020	272905-0001	C		1	ARM	
030	272906-0001	C		1	ARM	
040	295057-0001	D		1	RAIL	
050	295058-0001	D		1	RAIL	
060	272045-0002	C		1	SLIDE SHEET	
070	491804-0000	C		1	BLOCKING PIECE	
0284B						
010	295843-0006	C		1	BRACKET	
020	272905-0006	C		1	ARM	
030	272906-0006	C		1	ARM	
040	295057-0001	D		1	RAIL	
050	295058-0001	D		1	RAIL	
060	272045-0001	C		1	SLIDE SHEET	
070	491804-0000	C		1	BLOCKING PIECE	

Pos	Part No	SP	UN	Qty	Description	Page No
0125S						
010	295843-0005	C		1	BRACKET	
020	272905-0005	C		1	ARM	
030	272906-0005	C		1	ARM	
040	295059-0000	D		1	RAIL LEFT	
050	295060-0000	D		1	RAIL	
060	271939-0001	C		1	SLIDE SHEET	
070	491805-0000	C		1	BLOCKING PIECE	
0200S						
010	295843-0006	C		1	BRACKET	
020	272905-0006	C		1	ARM	
030	272906-0006	C		1	ARM	
040	295061-0000	D		1	RAIL	
050	295062-0000	D		1	RAIL	
060	272045-0001	C		1	SLIDE SHEET	
070	491806-0000	C		1	BLOCKING PIECE	
Common Parts						
080	490980-0000	C		1	CYLINDER	
090	752083-0000	C		1	PISTON	
100	271731-0000	C		1	COMPRESSION SPRING	
110	751163-0000	D		1	COVER	
120	441894-0000	C		1	SLEEVE	
130	295072-0000	C		1	BUFFER RING	
140	441896-0000	D		1	WASHER	
150	441895-0000	C		1	BUFFER RING	
300	90091-0160	C		1	Rod Seal, Stepseal 16x23,5x3,2 mm	
310	90091-0165	C		1	Rod Seal, Stepseal 20x27,5x3,2 mm	
315	90091-0162	C		1	Wear Ring 16x19x3,2 mm	
320	90091-0163	C		1	Wear Ring 20x23x3,2 mm	
330	90090-0013	C		1	STEEL BALL SKF RB-4/111	
500	312105-0455	-		4	Screw M6S M8x30 A280	
510	312105-0453	-		2	Screw M6S M8x25 A280	
515	312105-0325	-		1	Screw M6S M5x10 A280	
520	312105-0374	-		4	Screw M6S M6x30 A280	
530	312105-0368	-		2	Screw M6S M6x16 A280	
540	312115-0455	-		1	Screw MC6S M8x30 A280	
550	312605-0320	-		1	Nut Hex. M6M M10 A280	
560	315115-0165	-		2	Washer, Plain, TBRB 8,4/16 H=3	
565	315234-0101	-		1	Washer,Pl.Rnd.Cu.5/8 H=0,8	
570	312311-0327	-		1	Screw, Sock.Set Dogpoint M5X12	
580	315105-0153	-		2	Washer, Plain, BRB, 6,4/12,H=1,5	

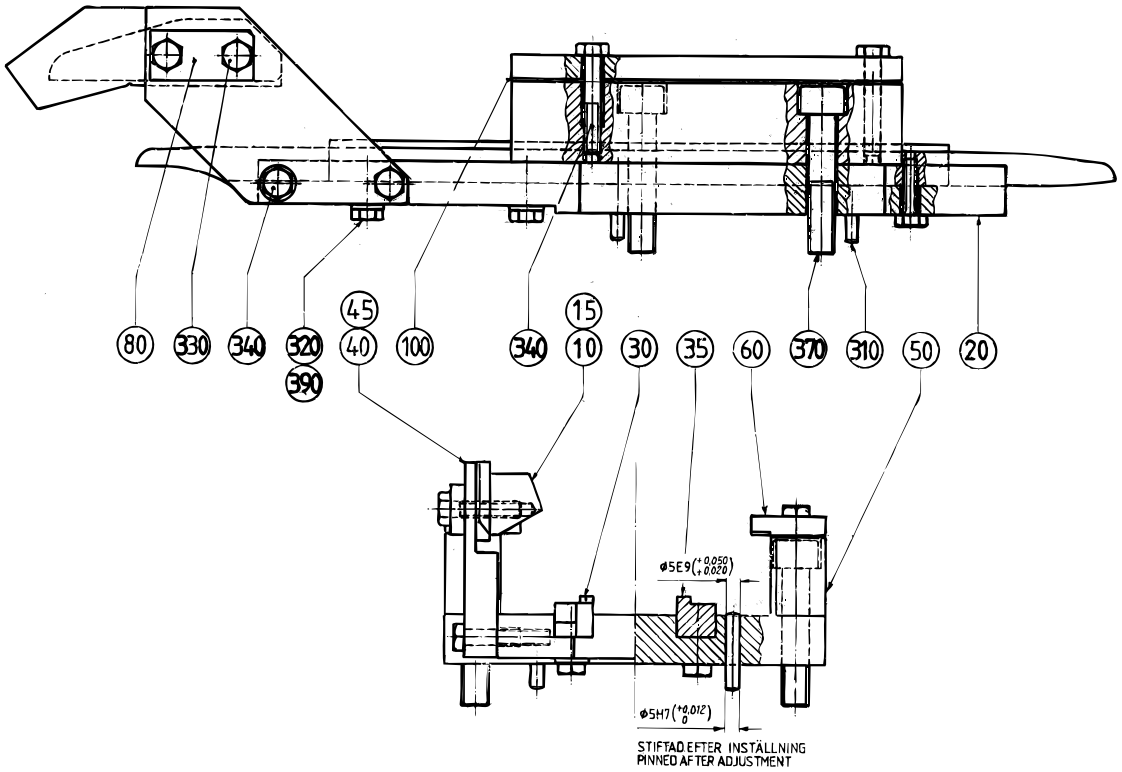
80
330
340
320
390
45
40
100
340
15
10
30
35
60
370
310
50
20
ø5E9(+0,050 +0,020)
ø5H7(+0,012 0)
STIFTAD EFTER INSTÄLLNING
PINNED AFTER ADJUSTMENT

Pos	Part No	SP	UN	Qty	Description	Page No
0125S OR 0100B						
010	751697-0000	C		1	FOLDING BAR RIGHT	
015	751696-0000	C		1	FOLDING BAR LEFT	
0180B OR 0236B OR 0200B OR 0187B OR 0250B OR 0284B						
010	751707-0000	C		1	FOLDING BAR RIGHT	
015	751708-0000	C		1	FOLDING BAR LEFT	
0200S						
010	751709-0000	C		1	FOLDING BAR RIGHT	
015	751710-0000	C		1	FOLDING BAR LEFT	
Common Parts						
020	491260-0000	D		1	RAIL BRACKET	
030	751109-0000	C		1	RAIL RIGHT	
035	751110-0000	C		1	RAIL LEFT	
040	751119-0000	D		1	BRACKET RIGHT	
045	751120-0000	D		1	BRACKET LEFT	
050	491264-0000	D		2	SPACER BLOCK	
060	491265-0000	C		2	PLATE	
080	295729-0000	D		2	WASHER	
100	491266-0000	C		4	SHIM	
310	311103-0312	C		2	Pin, Parallell, m6, 5x25	
320	312105-0370	C		6	Screw M6S M6x20 A280	
330	312105-0372	C		4	Screw M6S M6x25 A280	
340	312105-0374	C		8	Screw M6S M6x30 A280	
370	312115-0501	C		4	Screw MC6S M10x50 A280	
390	315105-0153	C		4	Washer, Plain, BRB, 6,4/12,H=1,5	

Pos	Part No	SP	UN	Qty	Description	Page No

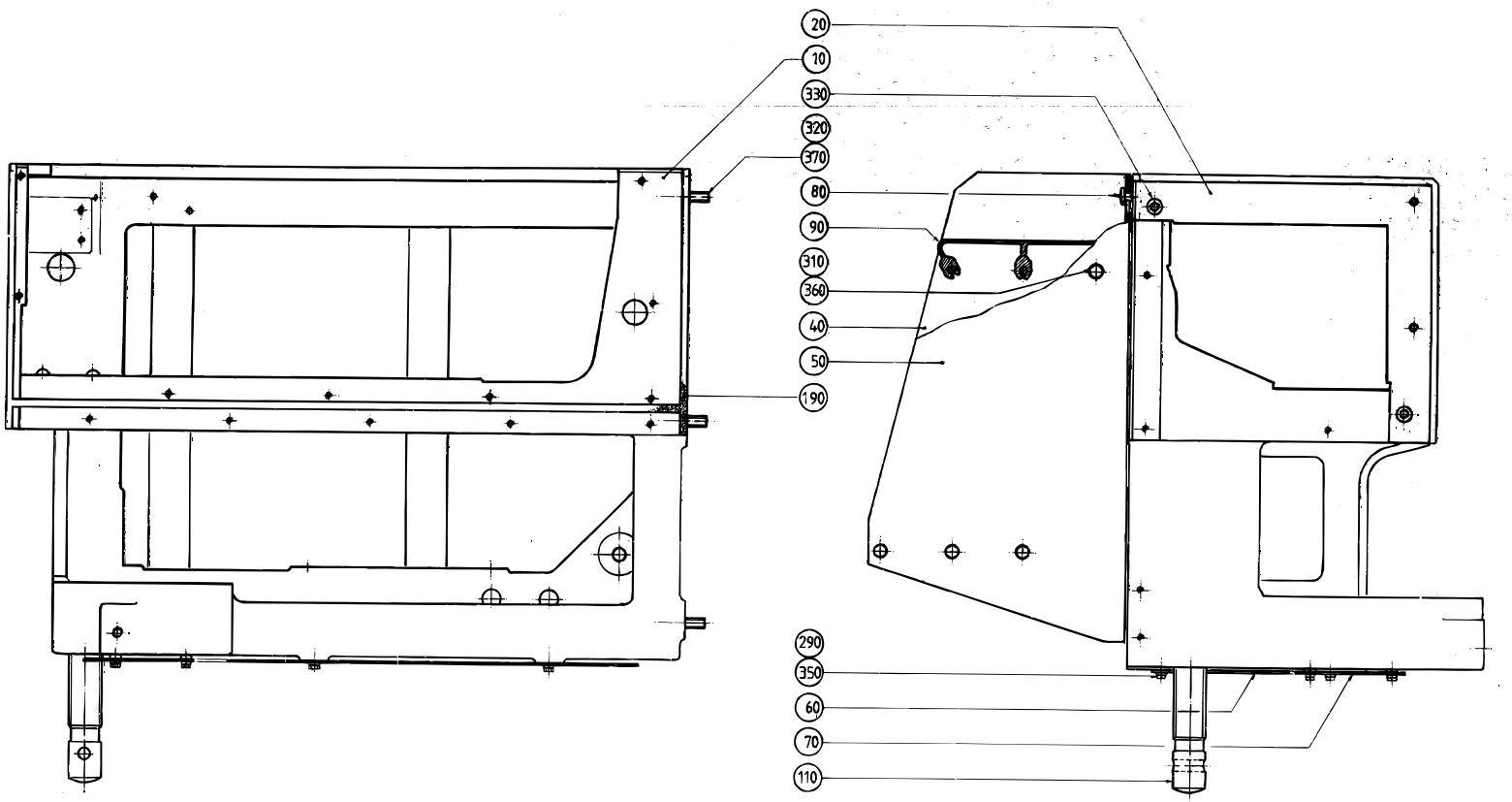
20
10
330
320
370
80
90
310
360
40
50
190
290
350
60
70
110

Pos	Part No	SP	UN	Qty	Description	Page No
Common Parts						
010	441595-0000	-		1	MACHINE BODY	
020	441596-0000	-		1	CANTILEVER	
040	272659-0000	-		1	SIDE PIECE	
050	272660-0000	-		1	SIDE PIECE	
060	272745-0000	-		1	HATCH	
070	272743-0000	-		1	LID	
080	271591-0000	-		2	BUTTON	
090	272661-0000	-		2	STAIR	
110	272673-0000	-		1	LEG	
190	90143-0056	C	MM	27	STRIP	
290	312105-0370	-		5	Screw M6S M6x20 A280	
310	312105-0451	-		12	Screw M6S 8x20 A280	
320	312105-0544	-		6	Screw M6S M12x60 A280	
330	312115-0491	-		2	Screw MC6S M10x20 A280	
350	315105-0153	-		8	Washer, Plain, BRB, 6,4/12,H=1,5	
360	315105-0165	-		12	Washer, Plain, BRB, 8,4/16,H=1,5	
370	315105-0178	-		6	Washer, Plain, BRB, 13/24,H=2	

Pos	Part No	SP	UN	Qty	Description	Page No

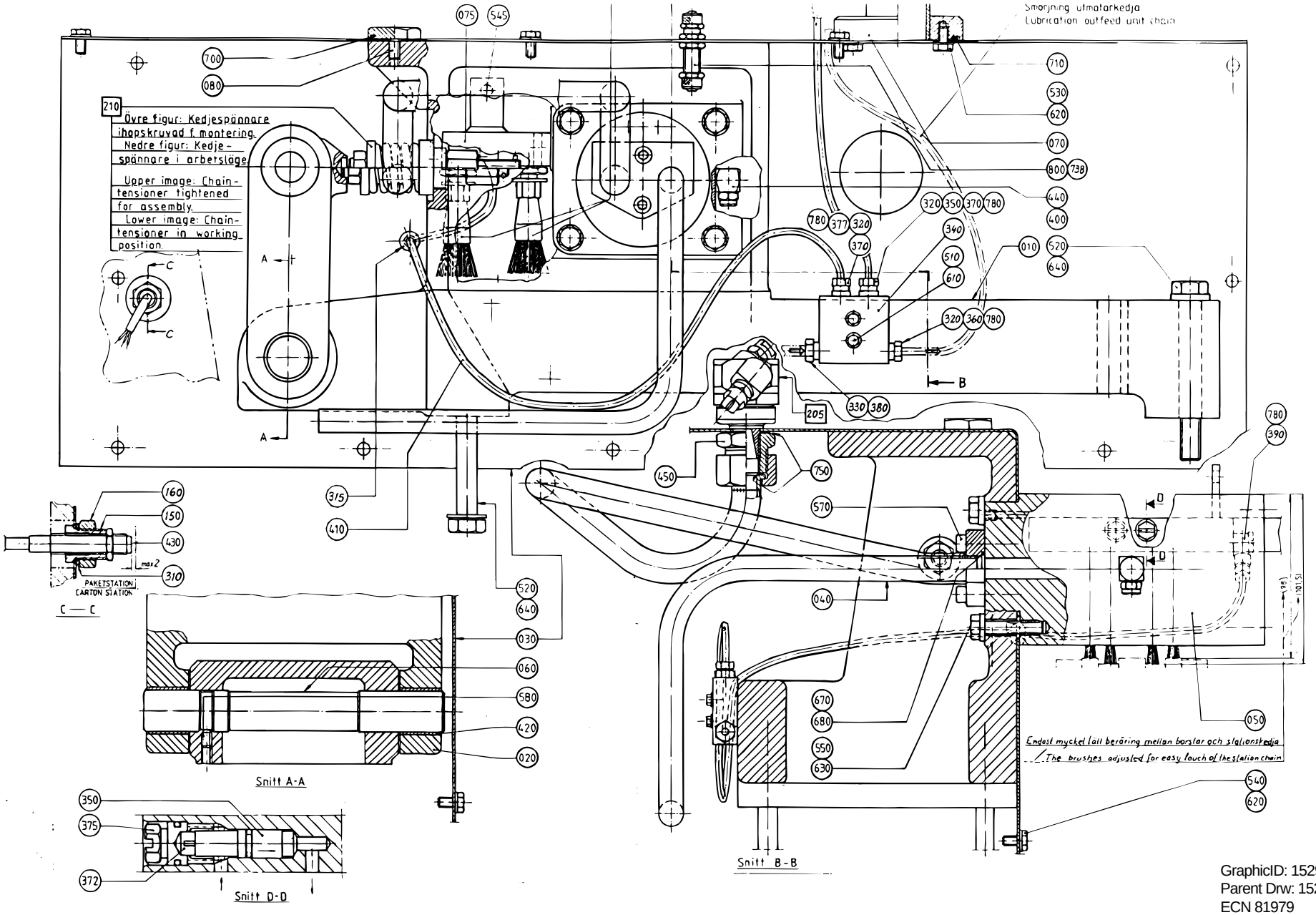

GraphicID: 1529142-1.eps
Parent Drw: 1529142-1
ECN 81979

Pos	Part No	SP	UN	Qty	Description	Page No
Common Parts						
010	441599-0000	D		1	BED	
020	441600-0000	D		1	LINK ARM	
030	1529143-0000	-		1	SHIELD PLATE	
040	751082-0000	D		1	PIPE CONNECTION	
050	B 441598-0000	D		1	SUPPORTING ARM	
060	256276-0000	D		1	SHAFT	
070	469143-0000	-		1	LEAD-IN	
075	751070-0000	D		1	DISTRIBUTOR BLOCK	
080	272997-0000	-		1	STOPPER	
150	490932-0000	-		1	SLEEVE	
160	490933-0000	-		1	NUT	
205	A 441798-0100	-		1	ROTOR	**440**
210	A 272652-0300	-		1	CHAIN TENSIONER	**442**
310	90005-0048	-		1	Washer,Pl.Rnd.Cu.18,2/23,9 H=1,5	
315	90015-0028	-		1	LEAD-IN BUSHING	
320	90028-0021	C		3	Cone tube 4 mm	
330	90028-0025	C		1	Cone tube 6 mm	
340	90032-0038	-		1	Block 2 ways	
345	90092-0048	C		4	Oil Brush, Flat, 5/16-24 UNF	
350	90092-0054	C		5	Metering valve 50 mm3	
360	90134-0038	C		1	Bushing/Nut inlet/outlet 4 mm	
370	90134-0040	C		2	Bushing valve connection 4 mm	
372	90134-0042	C		4	Spacer dosing valve	
375	90134-0045	C		4	Plug M12x1	
377	90134-0051	C		1	Spacing collar dosing block	
380	90134-0055	C		1	Bushing/Nut inlet/outlet 6 mm	
390	90134-0068	C		1	Connection	
400	90144-0073	-	M	1	TREBOFLON-TAPE W=13mm	
410	90166-0109	-	MM	16	TUBE 4 mm PA,Transp.	
420	90240-0055	C		2	BEARING BUSHING WITHOUT FLANGE, 25X28X25	
430	90044-0124	C		1	Prox.sw. 922AB2XM-A9P-050-LZ-876	
440	90424-0009	-		1	NOZZLE	
450	90330-0078	-		1	Bushing, Int/Ext. Thr. R3/4-Rp3/8	
510	312101-0297	-		2	Screw M6S M4x25 FZB	
520	312101-0552	-		4	Screw M6S M12x100 FZB	
530	312105-0364	-		2	Screw M6S M6x10 A280	
540	312105-0366	-		15	Screw M6S M6x12 A280	
545	312105-0370	-		1	Screw M6S M6x20 A280	
550	312105-0459	-		4	Screw M6S M8x40 A280	
570	312115-0372	-		2	Screw MC6S M6x25 A280	
580	312318-0325	-		1	Screw Hex.Sock.Set Cup P.MSK6SS5x10 SS	
610	315101-0136	-		2	Washer, Plain, BRB, 4,3/8 H=0,8	
620	315105-0153	-		17	Washer, Plain, BRB, 6,4/12,H=1,5	
630	315111-0165	-		4	Washer, Plain, TBRB 8,4/16 H=3	
640	315111-0178	-		4	Washer, Plain, TBRB 13/24 H=4	
670	315202-0115	C		1	O-Ring 17,1x1,6 mm	
680	315202-0117	C		1	O-Ring 19,1x1,6 mm	
700	315202-0215	C		1	O-Ring 19,2x3 mm	
710	315202-0304	C		1	O-Ring 64,5x3 mm	
738	315233-0109	C		2	Washer,Pl.Rnd.Nyl.10,3/14,H=1	
750	315233-0111	C		2	Washer,Pl.Rnd.Nyl.17/22,H=1	
780	90134-0031	C		6	Sleeve for plastic tube	
800	342960-0112	-		2	BULKHEAD COUPLING 6/4	

POS 60: Is to be peeled of to thickness,which gives item 70 the denoted inclination after tightening.(1 foilthickness correspond to 13.5°)

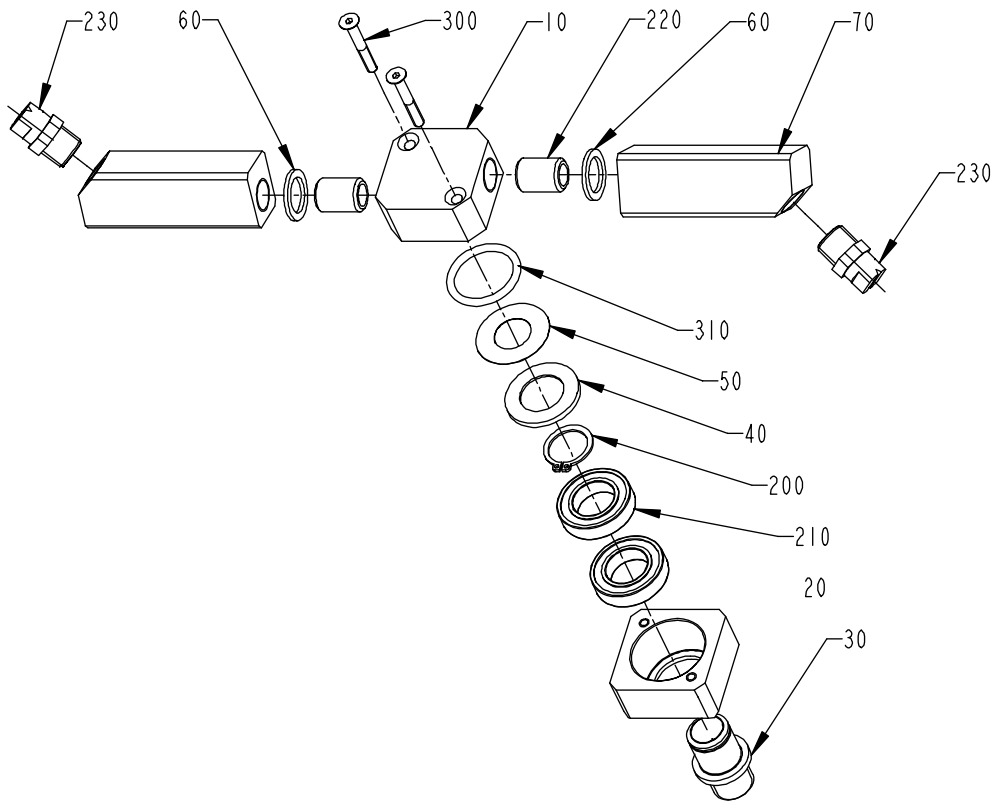

Pos	Part No	SP	UN	Qty	Description	Page No
Common Parts						
010	441792-0000	D		1	HEAD	
020	441793-0000	D		1	BEARING HOUSING	
030	441794-0000	D		1	PIVOT PIN	
040	441795-0000	D		1	WASHER	
050	441796-0000	C		1	SEAL	
060	441797-0000	C		2	SHIM	
070	441799-0000	C		2	ATTACHMENT	
200	90141-0017	-		1	Retain. Ring, 17	
210	90214-0092	C		2	BALL BEARING,STAINLESS 17X30X7	
220	90330-0101	C		2	Nipples, Ext. Thread, G1/4	
230	90424-0035	C		2	NOZZLE	
300	312155-0299	-		2	Screw Hex.Sock.Count.MF6S M4x30 A480	
310	315202-0217	C		1	O-Ring 24,2x3 mm	

Pos	Part No	SP	UN	Qty	Description	Page No

CHAIN TENSIONER

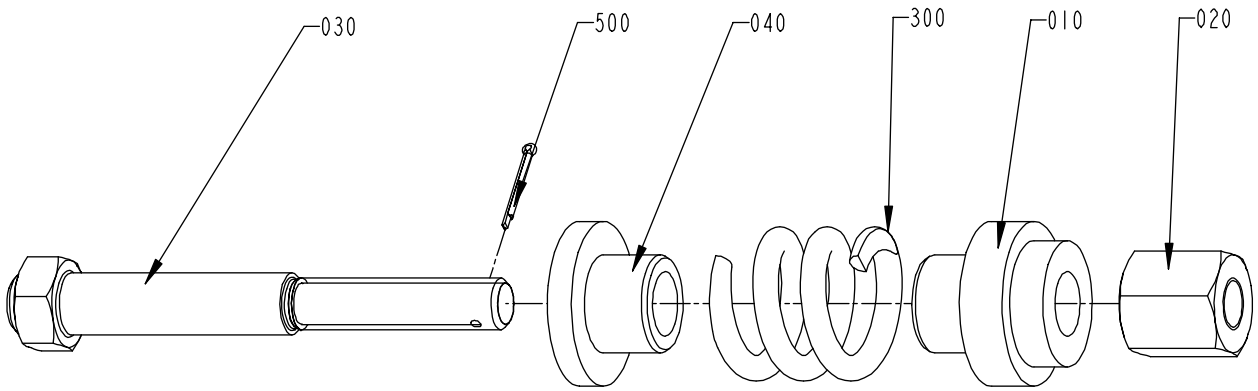

Pos	Part No	SP	UN	Qty	Description	Page No
Common Parts						
010	491731-0000	-		1	WASHER	
020	256190-0000	-		1	NUT	
030	441328-0000	-		1	GUIDE PIN	
040	491732-0000	-		1	WASHER	
300	90335-0096	D		1	SPRING	
500	311411-0152	-		1	SPLIT PIN SP2X16RFR	

Pos	Part No	SP	UN	Qty	Description	Page No

SEPARATION INSERT

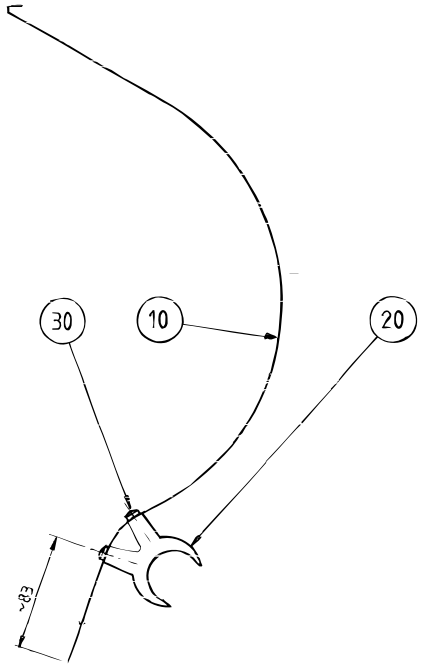

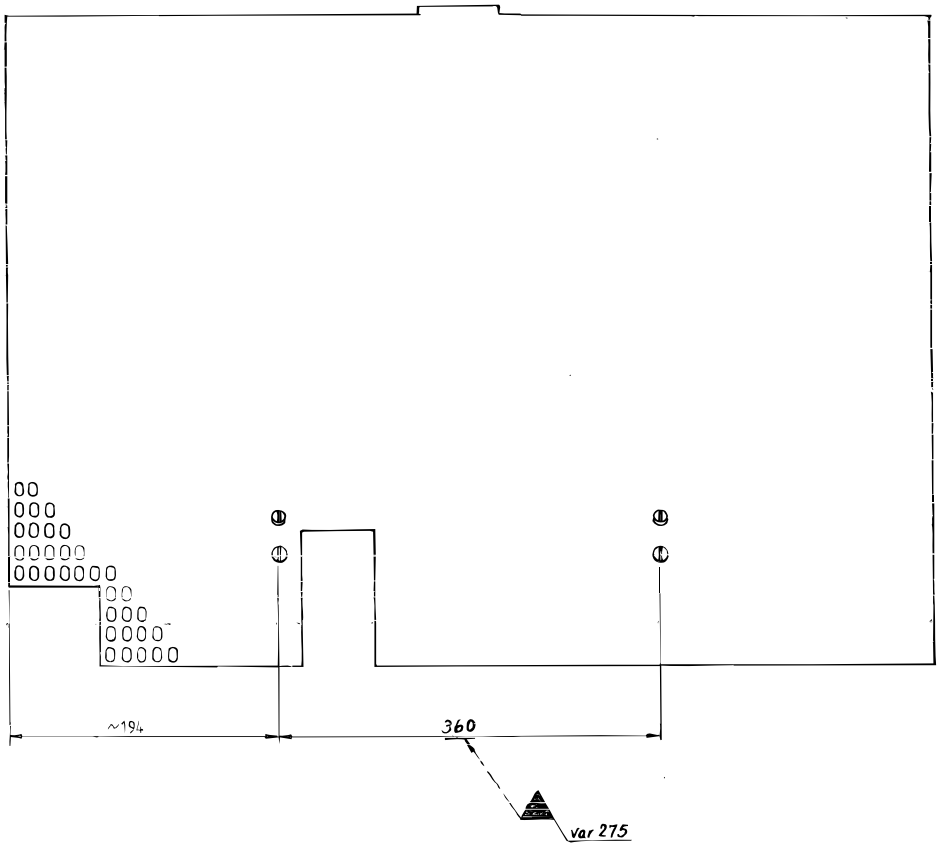

Pos	Part No	SP	UN	Qty	Description	Page No
Common Parts						
010	456568-0000	-		1	SHEET	
020	456569-0000	-		2	BRACKET	
030	90287-0134	-		4	Screw Pozie, RXS B10x13 A4	

Pos	Part No	SP	UN	Qty	Description	Page No

OUTFEED TRANSFER

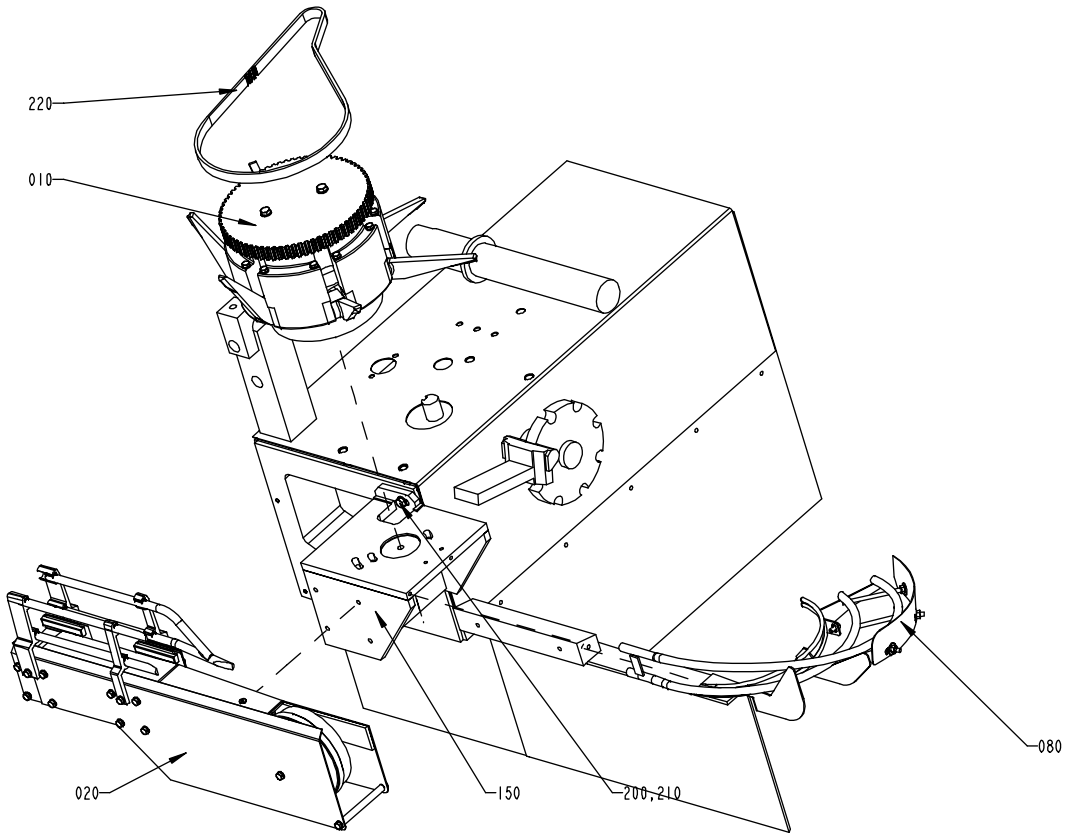

Pos	Part No	SP	UN	Qty	Description	Page No
Common Parts						
010	A1091670-0100	-		1	OUTFEED TRANSFER	**448**
020	A1091679-0100	-		1	CONVEYOR	**450**
060	A1529063-0100	-		1	TURNING DEVICE	**452**
150	1091672-0000	-		1	BRACKET	
200	312105-0455	-		2	Screw M6S M8x30 A280	
210	315105-0165	-		2	Washer, Plain, BRB, 8,4/16,H=1,5	
220	318172-0156	-		1	Timing belt T10x1010x16 Polyurethane	

Pos	Part No	SP	UN	Qty	Description	Page No

OUTFEED TRANSFER

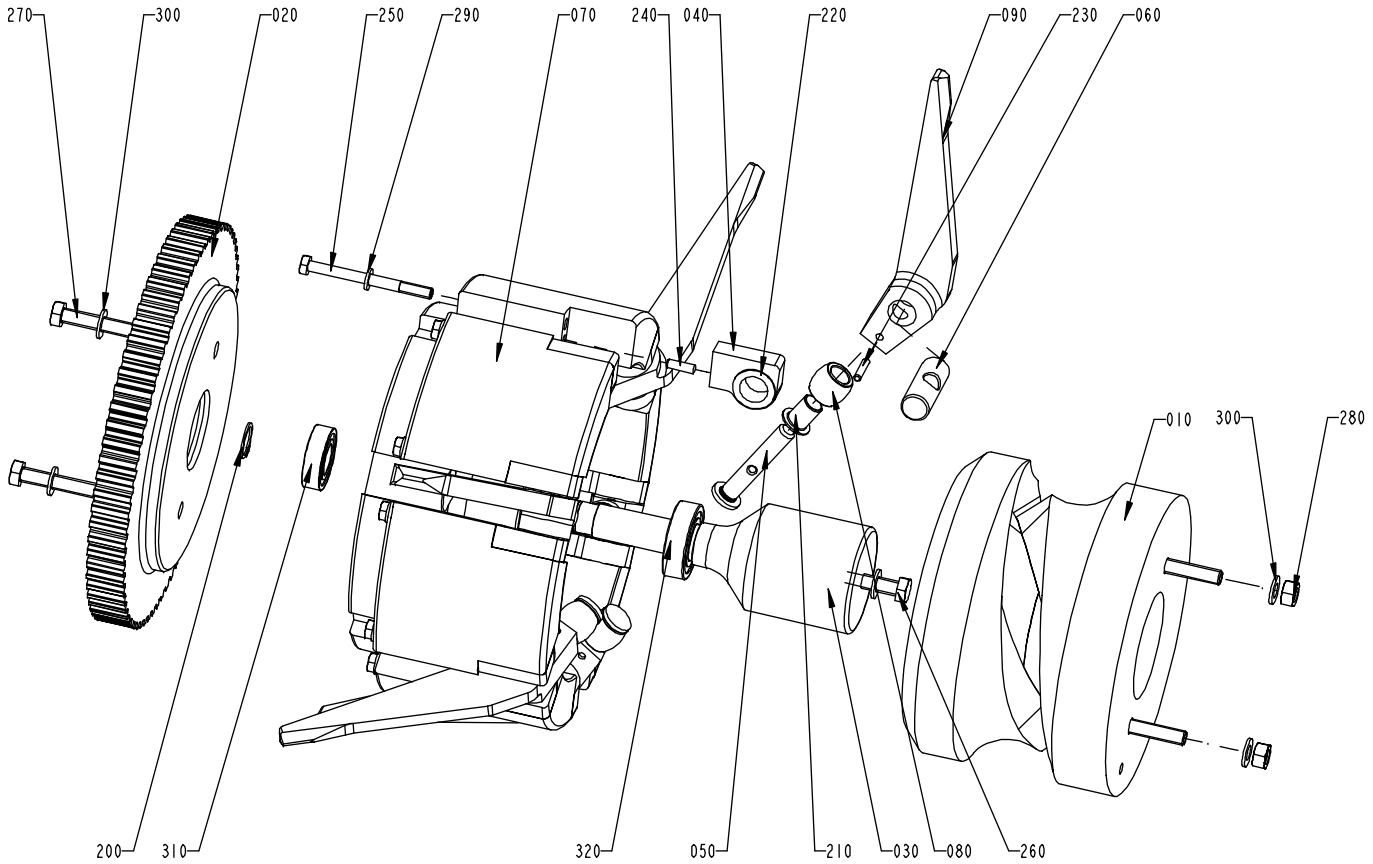

Pos	Part No	SP	UN	Qty	Description	Page No
Common Parts						
010	1091671-0000	-		1	CAM	
020	1091674-0000	-		1	Toothed pulley	
030	1091677-0000	-		1	SHAFT	
040	1260065-0000	-		12	BRACKET	
050	1260068-0000	-		6	SHAFT	
060	1260070-0000	-		6	SHAFT	
070	1367330-0000	-		1	DRUM	
080	1367331-0000	-		6	ROLLER	
090	1091760-0000	-		6	Carrier	
200	90141-0017	-		1	Retain. Ring, 17	
210	90240-0331	-		6	BUSHING	
220	90240-0332	-		12	BUSHING	
230	311103-0272	-		6	Pin, Parallell, m6, 4x20	
240	311103-0308	-		12	Pin, Parallell, m6, 5x16	
250	312105-0384	-		12	Screw M6S M6x70 A280	
260	312105-0455	-		1	Screw M6S M8x30 A280	
270	312109-0460	-		2	Screw M6S M8x45 A280	
280	312605-0318	-		2	Nut Hex. M6M M8 A280	
290	315105-0153	-		12	Washer, Plain, BRB, 6,4/12,H=1,5	
300	315105-0165	-		5	Washer, Plain, BRB, 8,4/16,H=1,5	
310	90458-0533	-		1	BALL BEARING, 17X35X10	
320	90214-0225	-		1	BEARINGS,BALL BEARING,STAINLESS	

Pos	Part No	SP	UN	Qty	Description	Page No

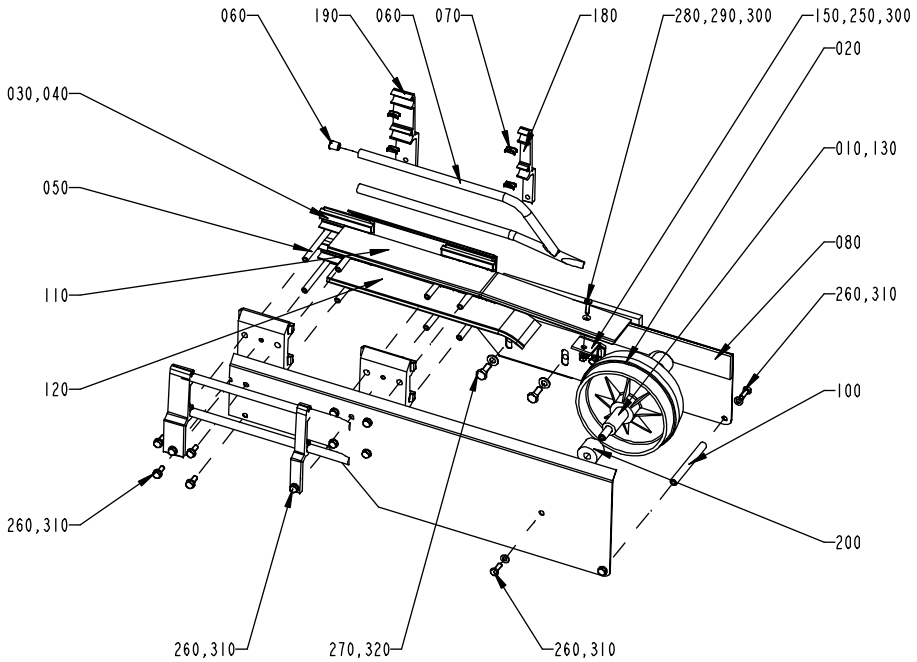
060
190
060
070
180
280,290,300
150,250,300
020
030,040
010,130
050
080
110
260,310
120
100
260,310
200
260,310
270,320
260,310

Pos	Part No	SP	UN	Qty	Description	Page No
Common Parts						
010	229207-0000	-		1	BEARING SLEEVE	
020	245039-0000	-		1	GUIDE WHEEL	
030	457696-0001	-		4	JOINT PIECE	
040	466074-0002	-		8	SLIDER	
050	476220-0000	-		8	SPACER	
060	484701-0000	-		1	SHUTTER	
070	1020290-0201	-		1	LOCKING BLOCK	
080	1091681-0000	-		1	PLATE	
090	1091682-0000	-		1	PLATE	
100	1091683-0000	-		1	SPACER	
110	1091684-0000	-		1	RAIL	
120	1091685-0000	-		1	RAIL	
130	1091686-0000	-		1	SPACER	
140	1091688-0000	-		2	RAIL	
150	1091719-0000	-		1	BRACKET	
170	1091746-0000	-		1	RAIL	
180	1138080-0001	-		2	RAIL HOLDER, B50 width 15 mm	
190	1138080-0002	-		2	RAIL HOLDER, B50 width 30 mm	
200	1144943-0000	-		2	SPACER	
250	312105-0323	-		2	Screw M6S M5x8 A280	
260	312105-0368	-		24	Screw M6S M6x16 A280	
270	312105-0451	-		4	Screw M6S 8x20 A280	
280	312155-0331	-		1	Screw Hex.Sock.Count.MF6S M5x20 A280	
290	312605-0314	-		1	Nut Hex. M6M M5 A280	
300	315105-0146	-		3	Washer, Plain, BRB, 5,3/10,H=1	
310	315105-0153	-		24	Washer, Plain, BRB, 6,4/12,H=1,5	
320	315105-0165	-		4	Washer, Plain, BRB, 8,4/16,H=1,5	

Pos	Part No	SP	UN	Qty	Description	Page No

TURNING DEVICE

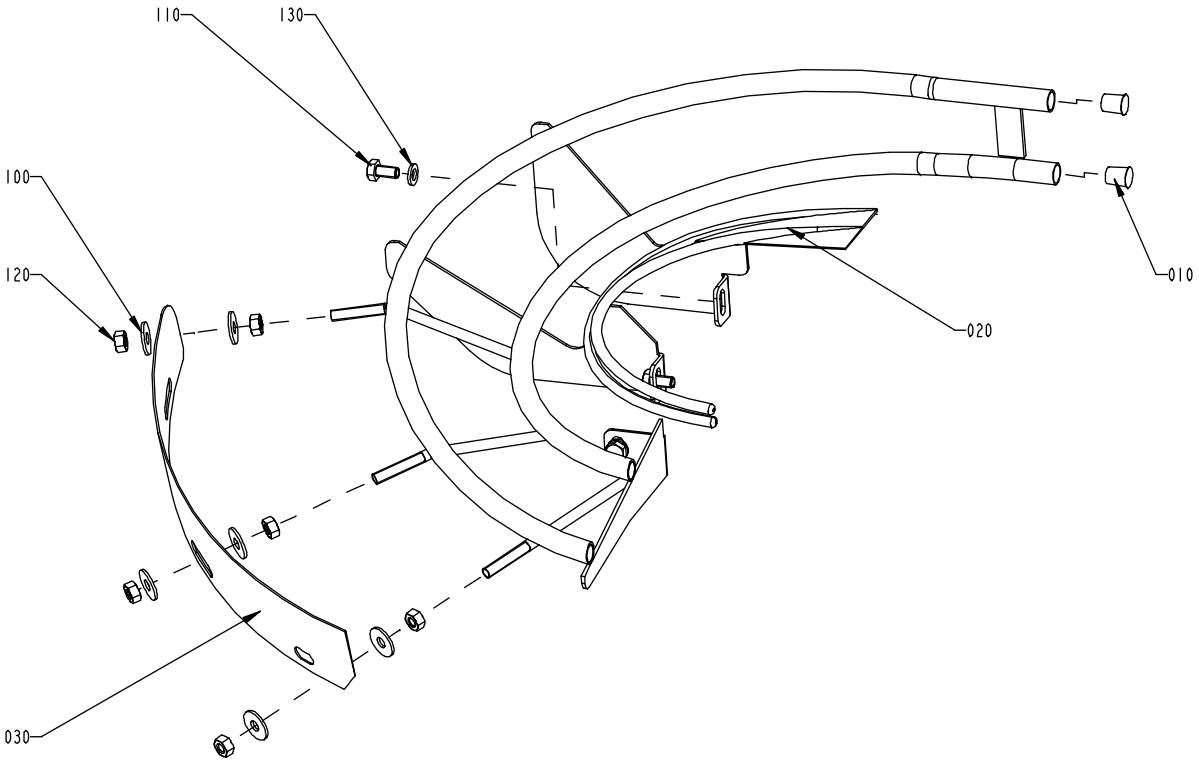

Pos	Part No	SP	UN	Qty	Description	Page No
0200S						
020	1091673-0000	-		1	GUIDE RAIL	
030	1091687-0000	-		1	GUIDE PLATE	
0250B						
020	1091759-0000	-		1	GUIDE RAIL	
030	1091766-0000	-		1	GUIDE PLATE	
Common Parts						
010	484701-0000	-		2	SHUTTER	
100	90005-0060	-		6	Washer, Plain, RBS 6,4/M6)/18,H=1,5	
110	312105-0366	-		3	Screw M6S M6x12 A280	
120	312605-0316	-		6	Nut Hex. M6M M6 A280	
130	315105-0153	-		3	Washer, Plain, BRB, 6,4/12,H=1,5	

Pos	Part No	SP	UN	Qty	Description	Page No

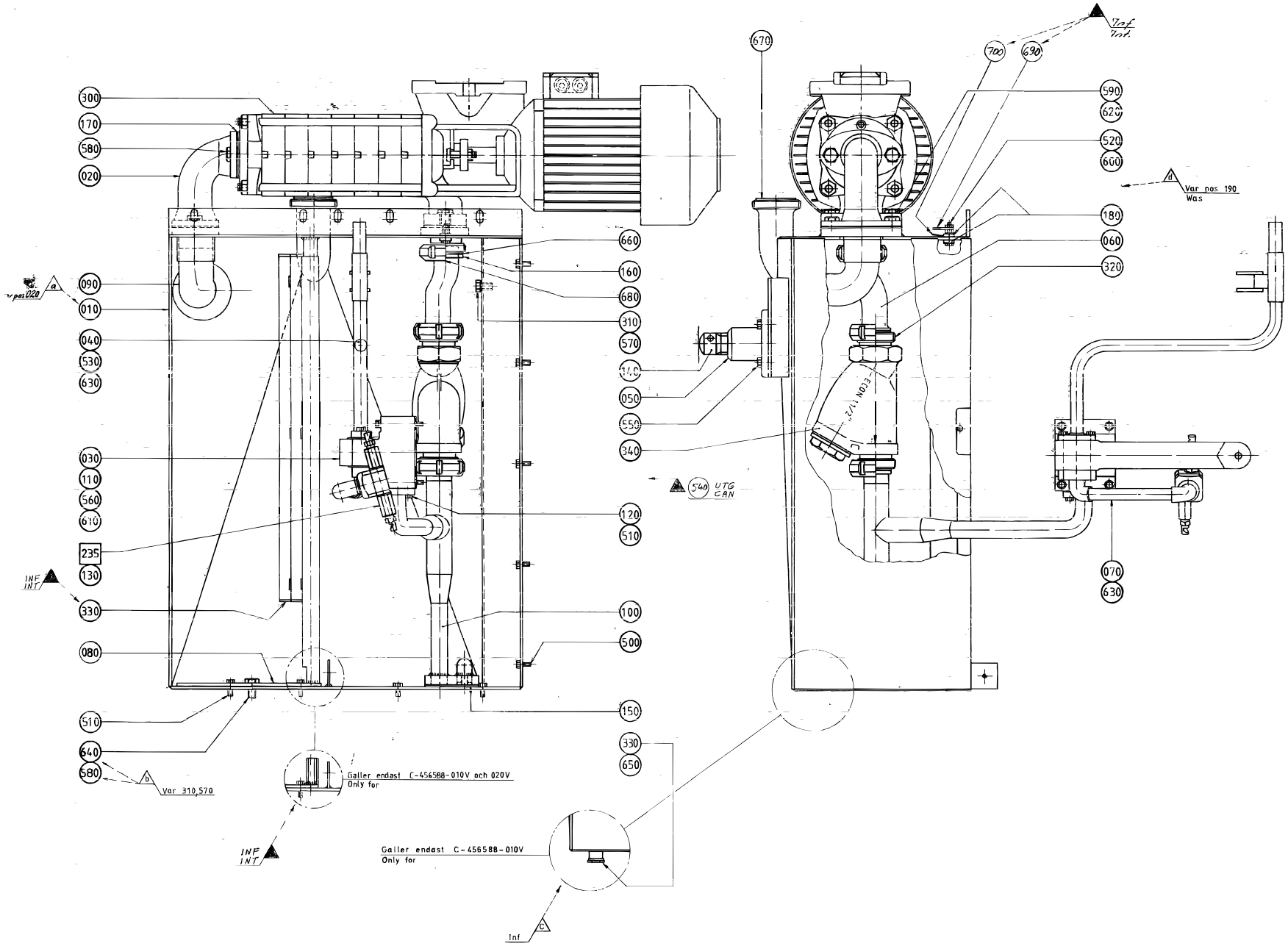
300
170
580
020
090
010
040
530
630
030
110
560
610
235
130
330
080
510
640
580
660
160
680
310
570
050
550
340
120
510
100
500
150
330
650
670
700
690
590
620
520
600
180
060
320
070
630
Var pos 190
Was
540 UTG CAN
Var 310,570
Gäller endast C-456588-010V och 020V
Only for
Gäller endast C-456588-010V
Only for
INF
INT
Inf

Pos	Part No	SP	UN	Qty	Description	Page No
50HZ						
300	B 90321-0015	D		1	PUMP 502 CFX 7ETV 302 50Hz IP55	
60HZ						
300	B 90321-0034	D		1	PUMP 502 CFX 5ETV 362 60Hz IP55	
Common Parts						
F235	A 441811-0100	-		1	ROTOR	**456**
010	491808-0000	-		1	CLEANING EQUIPMENT	
020	751162-0000	-		1	INLET PIPE	
030	441603-0000	-		1	BRACKET	
040	441839-0000	D		1	JUNCTION PIPE	
050	256640-0000	-		1	HOLDER	
060	271433-0000	-		1	PIPE	
070	B 456393-0000	-		1	PIPE	
080	525386-0000	D		1	PROTECTIVE GRATING	
090	295412-0000	-		1	PIPE	
100	456293-0000	-		1	PIPE	
110	456395-0000	C		1	GASKET	
120	456396-0000	C		1	GASKET	
130	456394-0000	C		1	SEALING WASHER	
140	256641-0000	-		1	LEG	
150	295417-0000	C		1	GASKET	
160	271435-0000	-		1	WASHER	
170	751017-0000	C		3	GASKET	
180	295434-0000	-		2	BUSHING	
310	90005-0067	-		1	Gasket Bolt head 10x17x1,5 mm M10	
320	90217-0041	-		2	Nipple, No. 190506	
330	90261-0033	C		4	Plug, Blind, Plastic GPN300F182	
340	B 90415-0022	-		1	""""FILTER / R1 1/2""""""" TYP. 1012 """"	
500	312105-0368	-		7	Screw M6S M6x16 A280	
510	312105-0370	-		4	Screw M6S M6x20 A280	
520	312105-0372	-		1	Screw M6S M6x25 A280	
530	312105-0384	-		2	Screw M6S M6x70 A280	
550	312105-0451	-		4	Screw M6S 8x20 A280	
560	312105-0464	-		4	Screw M6S M8x65 A280	
570	312105-0491	-		1	Screw M6S M10x20 A280	
580	312105-0532	-		5	Screw M6S M12x20 A280	
590	312105-0538	-		2	Screw M6S M12x35 A280	
600	312605-0316	-		2	Nut Hex. M6M M6 A280	
610	315105-0165	-		4	Washer, Plain, BRB, 8,4/16,H=1,5	
620	315105-0178	-		2	Washer, Plain, BRB, 13/24,H=2	
630	315202-0215	-		2	O-Ring 19,2x3 mm	
640	315211-0107	-		1	Gasket Bolt head 12,7x18x1,5 mm M12	
660	315250-0103	-		3	Gasket 48x38x5,5 mm	
670	315250-0104	-		1	Gasket 61x51x5,5 mm	
680	342803-0103	-		2	Screw Fitting, Nut, No190615	
690	353101-0123	C		1	CABLE SHOE 0,5-1,5mm2 Red	
700	353101-0126	C		1	CABLE SHOE	

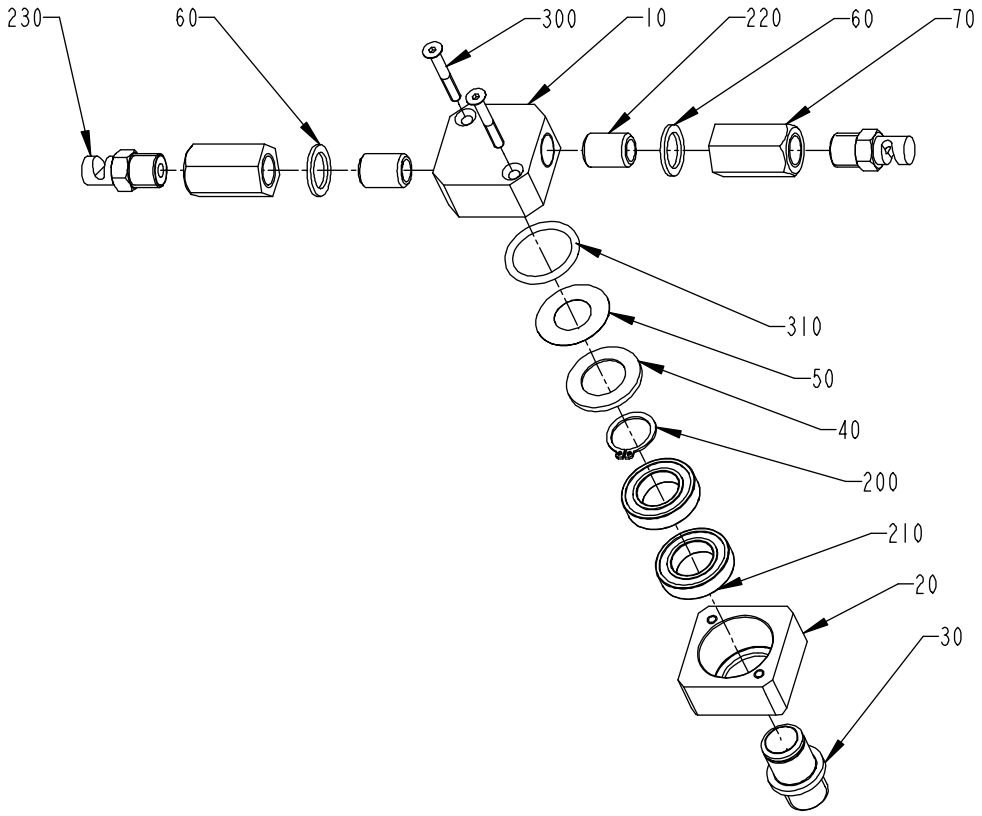
230
60
300
10
220
60
70
310
50
40
200
210
20
30

Pos	Part No	SP	UN	Qty	Description	Page No
Common Parts						
010	441792-0000	D		1	HEAD	
020	441793-0000	D		1	BEARING HOUSING	
030	441794-0000	D		1	PIVOT PIN	
040	441795-0000	D		1	WASHER	
050	441796-0000	C		1	SEAL	
060	441797-0000	C		2	SHIM	
070	441800-0000	C		2	STRAIGHT FITTING	
200	90141-0017	-		1	Retain. Ring, 17	
210	90214-0092	C		2	BALL BEARING,STAINLESS 17X30X7	
220	90330-0101	C		2	Nipples, Ext. Thread, G1/4	
230	90424-0025	C		2	NOZZLE	
300	312155-0299	-		2	Screw Hex.Sock.Count.MF6S M4x30 A480	
310	315202-0217	C		1	O-Ring 24,2x3 mm	

Pos	Part No	SP	UN	Qty	Description	Page No

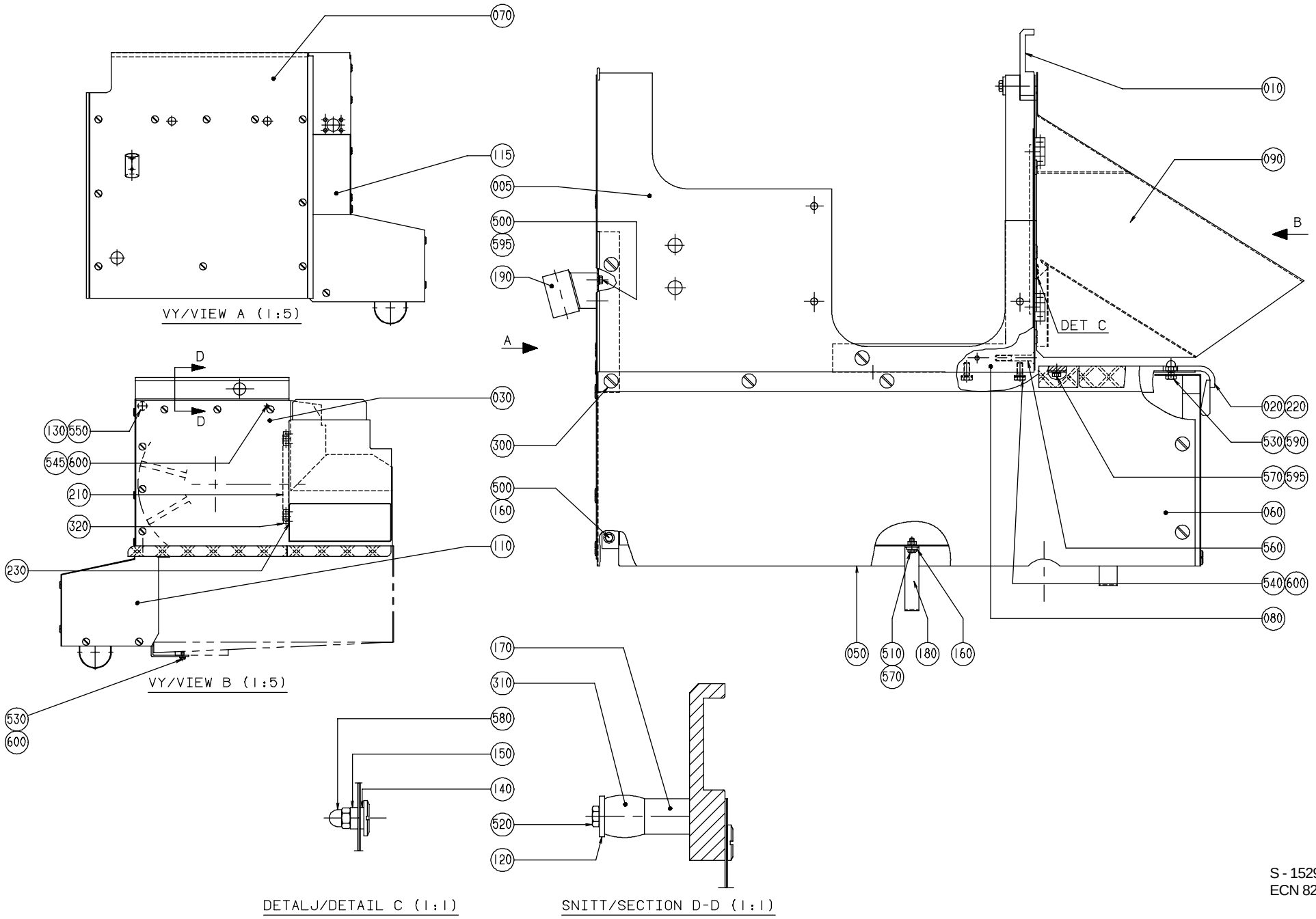
070
115
005
500
595
190
010
090
B
A
DET C
030
300
500
160
110
020
220
530
590
570
595
060
560
540
600
080
050
510
570
180
160
130
550
545
600
210
320
230
D
D
VY/VIEW A (1:5)
VY/VIEW B (1:5)
530
600
170
310
580
150
140
520
120
DETALJ/DETAIL C (1:1)
SNITT/SECTION D-D (1:1)

Pos	Part No	SP	UN	Qty	Description	Page No
Common Parts						
005	A1091774-0100	-		1	COVER PLATE	**460**
010	295332-0000	-		1	RAIL	
020	525392-0000	-		1	CHECKER PLATE	
030	295334-0000	-		1	SIDE PLATE	
050	295336-0000	-		1	BOTTOM PANEL	
060	456285-0000	-		1	COVER	
070	978607-0000	-		1	SIDE PLATE, LEFT	
080	B 456289-0000	-		1	BLOCKING PIECE	
090	525387-0000	D		1	WASTE CHUTE	
110	295340-0000	-		1	GABLE PLATE	
115	456290-0000	-		1	GUSSET PLATE	
120	38087-0000	-		1	WASHER	
130	271585-0000	-		1	WASHER	
140	271586-0001	-		2	WASHER	
150	271586-0002	-		2	WASHER	
160	271587-0000	-		6	WASHER	
170	295341-0000	-		1	SPACER	
180	295342-0000	-		1	CRAMP	
190	752093-0000	-		1	HOLDER	
210	525388-0000	-		1	FASTENING IRON	
220	525393-0000	-		1	CHECKER PLATE	
230	566015-0000	-		2	WASHER	
300	90287-0062	-		34	SCREW M6	
310	90347-0035	C		1	DAMPER	
320	90248-0022	-		2	HINGE	
500	312105-0366	-		4	Screw M6S M6x12 A280	
510	312105-0368	-		2	Screw M6S M6x16 A280	
520	312105-0382	-		1	Screw M6S M6x60 A280	
530	312105-0449	-		2	Screw M6S M8x16 A280	
540	312105-0451	-		3	Screw M6S 8x20 A280	
545	312105-0457	-		1	Screw M6S M8x35 A280	
550	312105-0459	-		1	Screw M6S M8x40 A280	
555	312155-0368	-		1	Screw Hex.Sock.Count.MF6S M6x16 A280	
560	312155-0461	-		1	Screw Hex.Sock.Count.MF6S M8x50 A280	
570	312605-0316	-		3	Nut Hex. M6M M6 A280	
580	312705-0316	-		2	Nut Hex. Domed Cap MHM-6 M6 A280	
590	312705-0318	-		1	Nut Hex. Domed Cap MHM-6 M8 A280	
595	315105-0153	-		3	Washer, Plain, BRB, 6,4/12,H=1,5	
600	315105-0165	-		5	Washer, Plain, BRB, 8,4/16,H=1,5	

Pos	Part No	SP	UN	Qty	Description	Page No

COVER PLATE

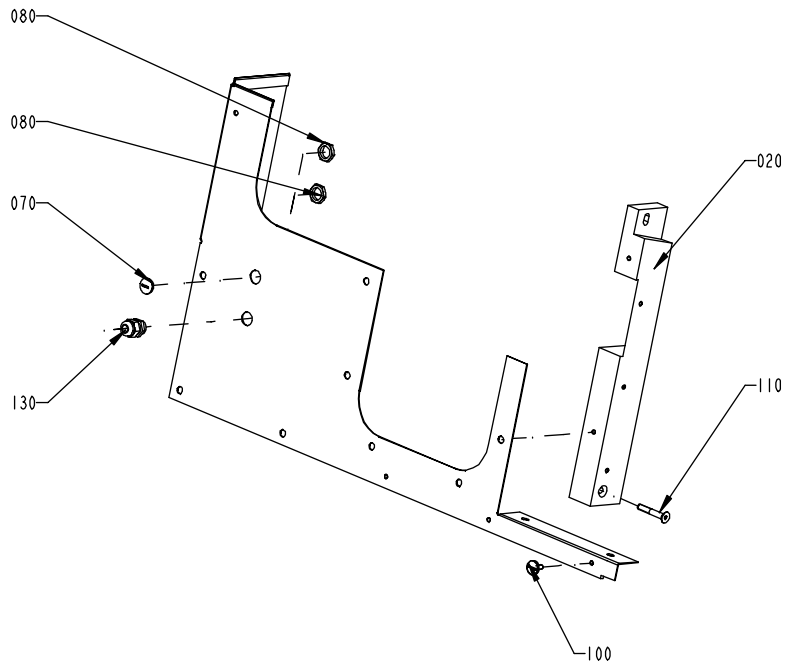

Pos	Part No	SP	UN	Qty	Description	Page No
Common Parts						
010	1091736-0000	-		1	COLUMN	
020	1091738-0000	-		1	FRONT PLATE	
070	90002-0009	-		1	BLANK-OFF PLUG 18.6	
090	90099-0117	-		2	NUT PR 18,6 (PG11)	
100	90287-0062	-		1	SCREW M6	
110	312155-0461	-		1	Screw Hex.Sock.Count.MF6S M8x50 A280	
130	352103-0106	-		2	CABLE GLAND ST 11	

Pos	Part No	SP	UN	Qty	Description	Page No

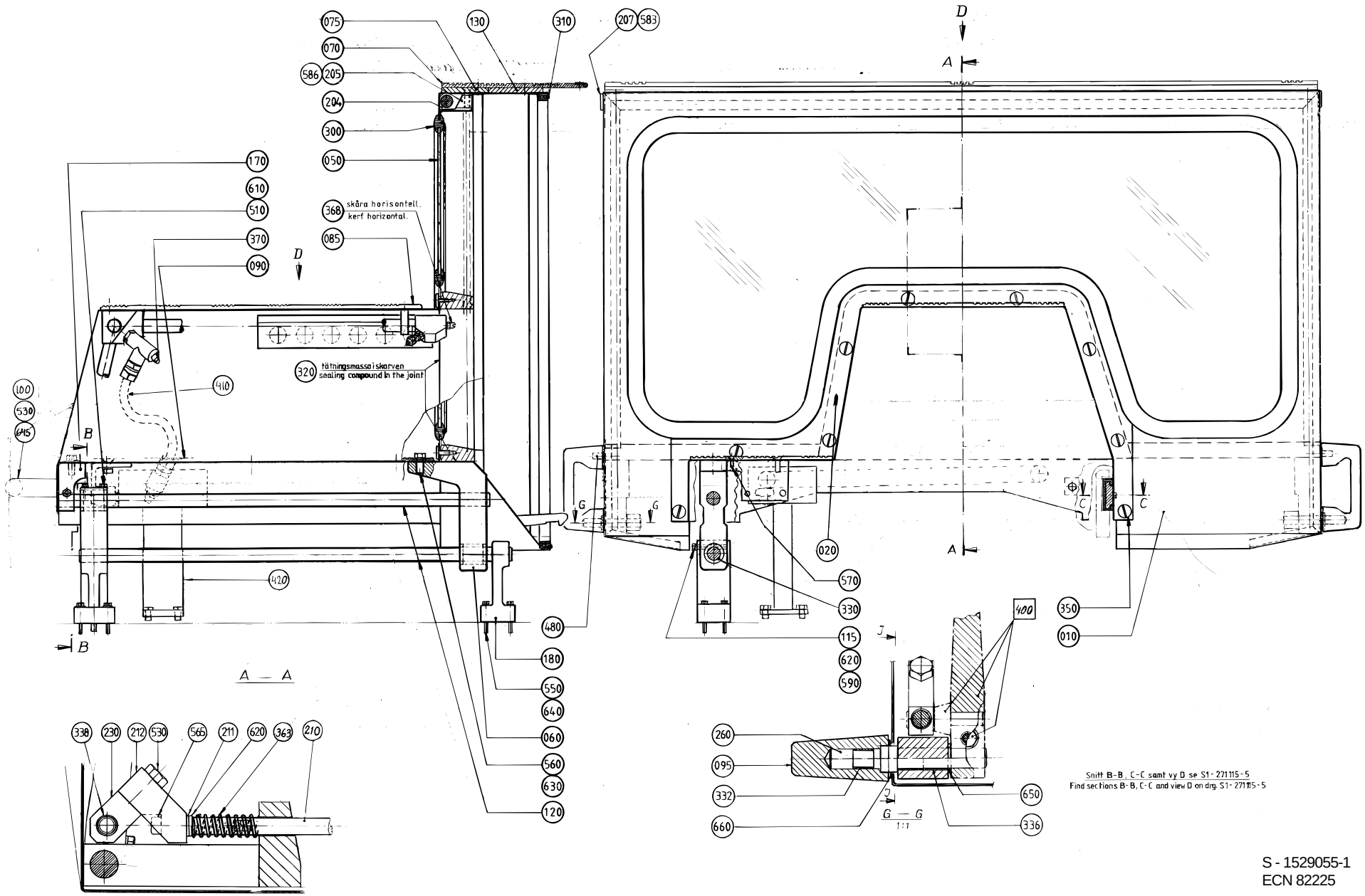

S - 1529055-1
ECN 82225

Pos	Part No	SP	UN	Qty	Description	Page No
Common Parts						
010	469050-0000	-		1	FRONT GUARD	
020	1529145-0000	-		1	HOOD	
030	441829-0000	-		1	PIPE	
040	295347-0000	D		1	BEARING BRACKET	
050	295348-0000	C		1	GLASS	
060	295349-0000	D		1	BEARING BRACKET	
070	469053-0000	-		1	CHECKER PLATE	
075	469054-0000	-		1	PLATE	
085	469056-0000	-		1	CHECKER PLATE	
090	1529144-0000	-		1	CHECKER PLATE	
095	469058-0000	D		2	HANDLE	
100	1091778-0000	-		1	HANDLE	
115	271608-0000	C		2	CLAMP SCREW	
120	441359-0000	C		2	GUIDE	
130	469061-0000	-		1	PLATE	
140	271708-0000	-		1	SLIDE RAIL	
150	1529146-0000	-		1	Washer	
170	295355-0000	-		1	BEARING BRACKET	
180	295356-0000	-		1	HOUSING	
190	295357-0000	C		1	ROD	
200	295358-0000	D		1	RULER	
203	469811-0000	-		1	SHAFT	
204	469812-0000	C		2	BEARING	
205	469813-0000	D		2	CLAMPING PART	
206	469814-0000	D		2	LINK ARM	
207	469815-0000	-		2	END PIECE	
208	469816-0000	D		2	CAP	
209	469817-0000	C		2	PIN	
210	469818-0000	D		2	ROD	
211	469819-0000	C		2	PEEL-OFF SHIM	
212	469820-0000	-		2	BRACKET	
220	295423-0000	C		1	SEAL	
230	469063-0000	-		2	HEAD	
260	469066-0000	-		2	SHAFT	
275	469068-0000	C		1	SLEEVE	
280	469069-0000	-		1	PLATE	
290	469968-0000	-		1	EDGE STRIP	
298	90143-0016	-	MM	3	STRIP	
300	90143-0039	-	MM	34	STRIP	
310	90143-0049	-	MM	26	RUBBERSTRIP 11X21MM	
320	90157-0022	-	L	2	SEALING COMPOUND	
330	90189-0019	C		2	BALL BUSHING 20X30X30	
332	90208-0047	-		2	COLLAR	
336	90240-0052	-		4	BEARING BUSHING WITHOUT FLANGE, 12x14x15	
338	90240-0076	C		2	RICTION BEARING	
340	90240-0083	C		2	BEARING BUSHING WITHOUT FLANGE, 8X10X10	
348	312155-0289	-		5	Screw Hex.Sock.Count.MF6S M4x10 A480	
350	90287-0062	-		9	SCREW M6	
363	90335-0055	D		2	SPRING	
368	90424-0035	-		2	NOZZLE	
370	90424-0036	-		6	NOZZLE	
400	A 490912-0100	-		2	CATCH **466**	
410	A1091715-0100	-		1	PIPE **468**	
420	A1091771-0100	-		1	SAFETY GUARD **470**	
480	311103-0407	-		2	Pin, Parallell, m6, 8x35	
500	312105-0327	-		7	Screw M6S M5x12 A280	
510	312105-0329	-		2	Screw M6S M5x16 A280	
515	312105-0332	-		2	Screw M6S M5x22 A280	
520	312105-0362	-		1	Screw M6S M6x8 A280	
525	312105-0451	-		2	Screw M6S 8x20 A280	
530	312105-0455	-		2	Screw M6S M8x30 A280	
550	312105-0378	-		12	Screw M6S M6x40 A280	
560	312105-0492	-		2	Screw M6S M10x22 A280	
565	312115-0374	-		2	Screw MC6S M6x30 A280	
570	312155-0368	-		1	Screw Hex.Sock.Count.MF6S M6x16 A280	
580	312155-0372	-		8	Screw Hex.Sock.Count.MF6S M6x25 A280	
583	312155-0378	-		2	Screw Hex.Sock.Count.MF6S M6x40 A280	
586	312155-0455	-		2	Screw Hex.Sock.Count.MF6S M8x30 A280	
590	312605-0316	-		5	Nut Hex. M6M M6 A280	
600	312812-0316	-		1	Nut Hex. Ny-Lock M6 A480	
610	315105-0146	-		13	Washer, Plain, BRB, 5,3/10,H=1	
620	315105-0153	-		18	Washer, Plain, BRB, 6,4/12,H=1,5	
630	315105-0173	-		2	Washer, Plain, BRB, 10,5/22,H=2	
640	315115-0153	-		4	Washer, Plain, TBRB 6,4/12 H=3	
645	315125-0165	-		2	Washer, Plain Round,Chamf. 8,4/26, H=5	
650	315233-0110	-		2	Washer,Pl.Rnd.Nyl.13,3/17,H=1	
660	315233-0111	-		2	Washer,Pl.Rnd.Nyl.17/22,H=1	

(Cont'd)

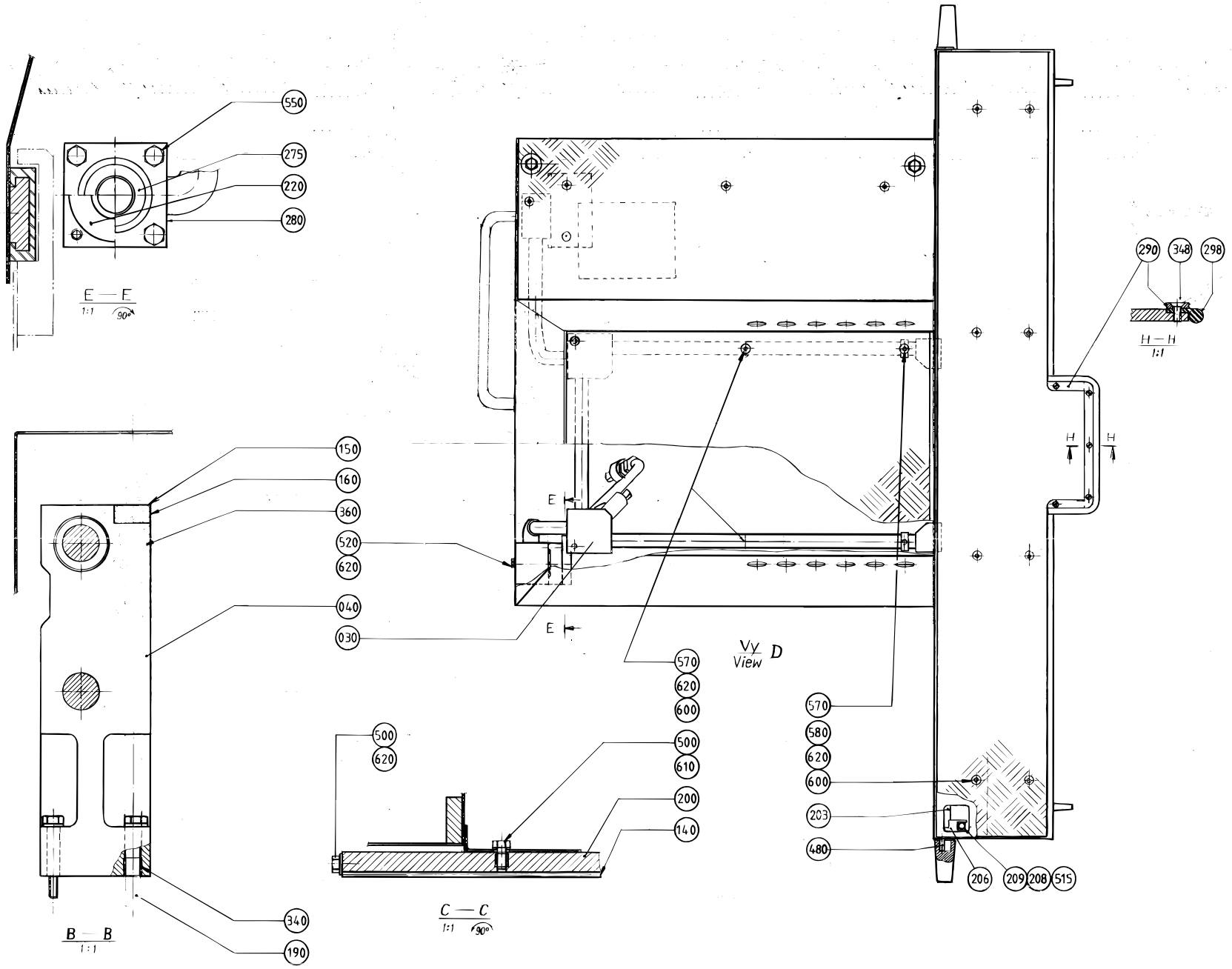

S - 1529055-2
ECN 82225

Pos	Part No	SP	UN	Qty	Description	Page No
(Cont'd)						
Common Parts						
010	469050-0000	-		1	FRONT GUARD	
020	1529145-0000	-		1	HOOD	
030	441829-0000	-		1	PIPE	
040	295347-0000	D		1	BEARING BRACKET	
050	295348-0000	C		1	GLASS	
060	295349-0000	D		1	BEARING BRACKET	
070	469053-0000	-		1	CHECKER PLATE	
075	469054-0000	-		1	PLATE	
085	469056-0000	-		1	CHECKER PLATE	
090	1529144-0000	-		1	CHECKER PLATE	
095	469058-0000	D		2	HANDLE	
100	1091778-0000	-		1	HANDLE	
115	271608-0000	C		2	CLAMP SCREW	
120	441359-0000	C		2	GUIDE	
130	469061-0000	-		1	PLATE	
140	271708-0000	-		1	SLIDE RAIL	
150	1529146-0000	-		1	Washer	
170	295355-0000	-		1	BEARING BRACKET	
180	295356-0000	-		1	HOUSING	
190	295357-0000	C		1	ROD	
200	295358-0000	D		1	RULER	
203	469811-0000	-		1	SHAFT	
204	469812-0000	C		2	BEARING	
205	469813-0000	D		2	CLAMPING PART	
206	469814-0000	D		2	LINK ARM	
207	469815-0000	-		2	END PIECE	
208	469816-0000	D		2	CAP	
209	469817-0000	C		2	PIN	
210	469818-0000	D		2	ROD	
211	469819-0000	C		2	PEEL-OFF SHIM	
212	469820-0000	-		2	BRACKET	
220	295423-0000	C		1	SEAL	
230	469063-0000	-		2	HEAD	
260	469066-0000	-		2	SHAFT	
275	469068-0000	C		1	SLEEVE	
280	469069-0000	-		1	PLATE	
290	469968-0000	-		1	EDGE STRIP	
298	90143-0016	-	MM	3	STRIP	
300	90143-0039	-	MM	34	STRIP	
310	90143-0049	-	MM	26	RUBBERSTRIP 11X21MM	
320	90157-0022	-	L	2	SEALING COMPOUND	
330	90189-0019	C		2	BALL BUSHING 20X30X30	
332	90208-0047	-		2	COLLAR	
336	90240-0052	-		4	BEARING BUSHING WITHOUT FLANGE, 12x14x15	
338	90240-0076	C		2	RICTION BEARING	
340	90240-0083	C		2	BEARING BUSHING WITHOUT FLANGE, 8X10X10	
348	312155-0289	-		5	Screw Hex.Sock.Count.MF6S M4x10 A480	
350	90287-0062	-		9	SCREW M6	
363	90335-0055	D		2	SPRING	
368	90424-0035	-		2	NOZZLE	
370	90424-0036	-		6	NOZZLE	
400	A 490912-0100	-		2	CATCH	**466**
410	A1091715-0100	-		1	PIPE	**468**
420	A1091771-0100	-		1	SAFETY GUARD	**470**
480	311103-0407	-		2	Pin, Parallell, m6, 8x35	
500	312105-0327	-		7	Screw M6S M5x12 A280	
510	312105-0329	-		2	Screw M6S M5x16 A280	
515	312105-0332	-		2	Screw M6S M5x22 A280	
520	312105-0362	-		1	Screw M6S M6x8 A280	
525	312105-0451	-		2	Screw M6S 8x20 A280	
530	312105-0455	-		2	Screw M6S M8x30 A280	
550	312105-0378	-		12	Screw M6S M6x40 A280	
560	312105-0492	-		2	Screw M6S M10x22 A280	
565	312115-0374	-		2	Screw MC6S M6x30 A280	
570	312155-0368	-		1	Screw Hex.Sock.Count.MF6S M6x16 A280	
580	312155-0372	-		8	Screw Hex.Sock.Count.MF6S M6x25 A280	
583	312155-0378	-		2	Screw Hex.Sock.Count.MF6S M6x40 A280	
586	312155-0455	-		2	Screw Hex.Sock.Count.MF6S M8x30 A280	
590	312605-0316	-		5	Nut Hex. M6M M6 A280	
600	312812-0316	-		1	Nut Hex. Ny-Lock M6 A480	
610	315105-0146	-		13	Washer, Plain, BRB, 5,3/10,H=1	
620	315105-0153	-		18	Washer, Plain, BRB, 6,4/12,H=1,5	
630	315105-0173	-		2	Washer, Plain, BRB, 10,5/22,H=2	
640	315115-0153	-		4	Washer, Plain, TBRB 6,4/12 H=3	
645	315125-0165	-		2	Washer, Plain Round,Chamf. 8,4/26, H=5	
650	315233-0110	-		2	Washer,Pl.Rnd.Nyl.13,3/17,H=1	
660	315233-0111	-		2	Washer,Pl.Rnd.Nyl.17/22,H=1	

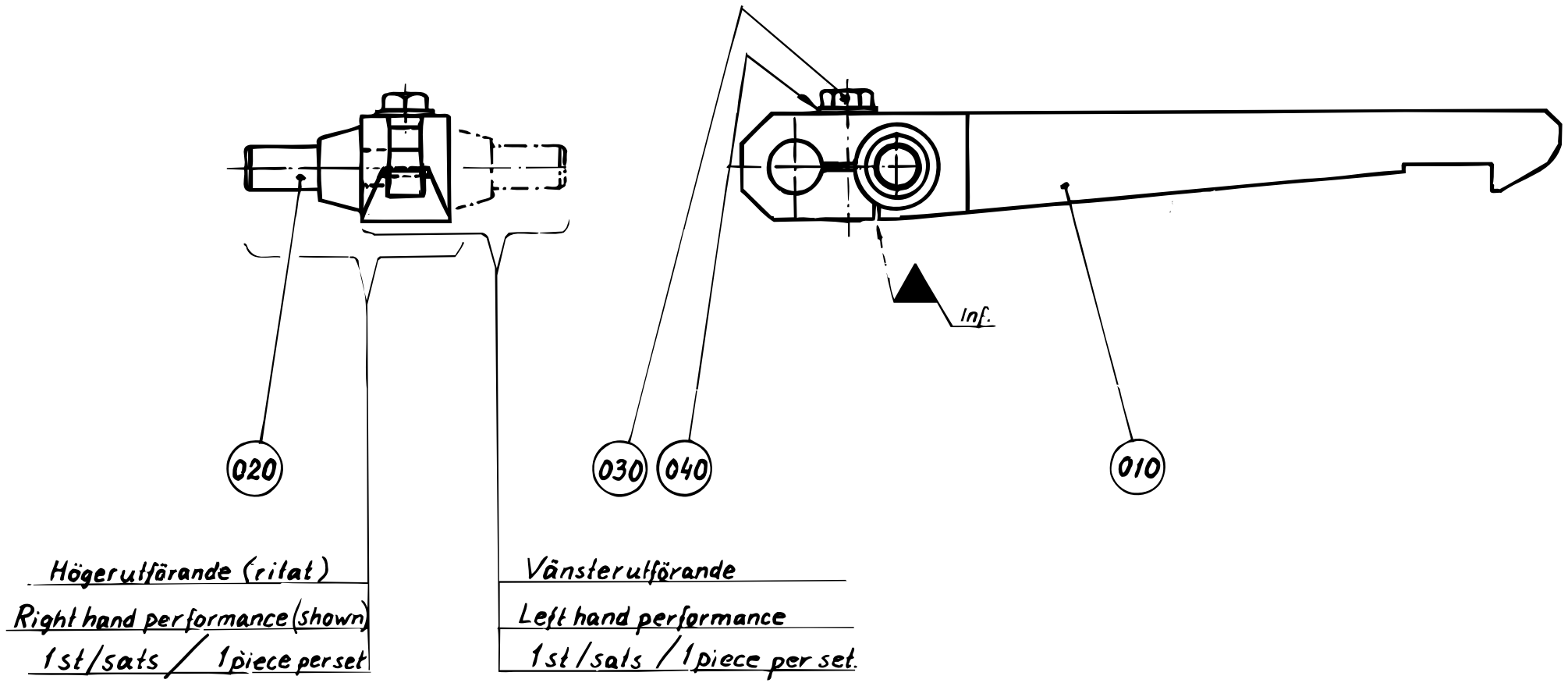
Inf.
020
030
040
010
Högerutförande (ritat)
Right hand performance (shown)
1st/sats / 1piece per set
Vänsterutförande
Left hand performance
1st/sats / 1piece per set.

Pos	Part No	SP	UN	Qty	Description	Page No
Common Parts						
010	469821-0000	D		1	CATCH	
020	469822-0000	D		1	AXLE PIN	
030	312105-0372	-		1	Screw M6S M6x25 A280	
040	315105-0153	-		1	Washer, Plain, BRB, 6,4/12,H=1,5	

Pos	Part No	SP	UN	Qty	Description	Page No

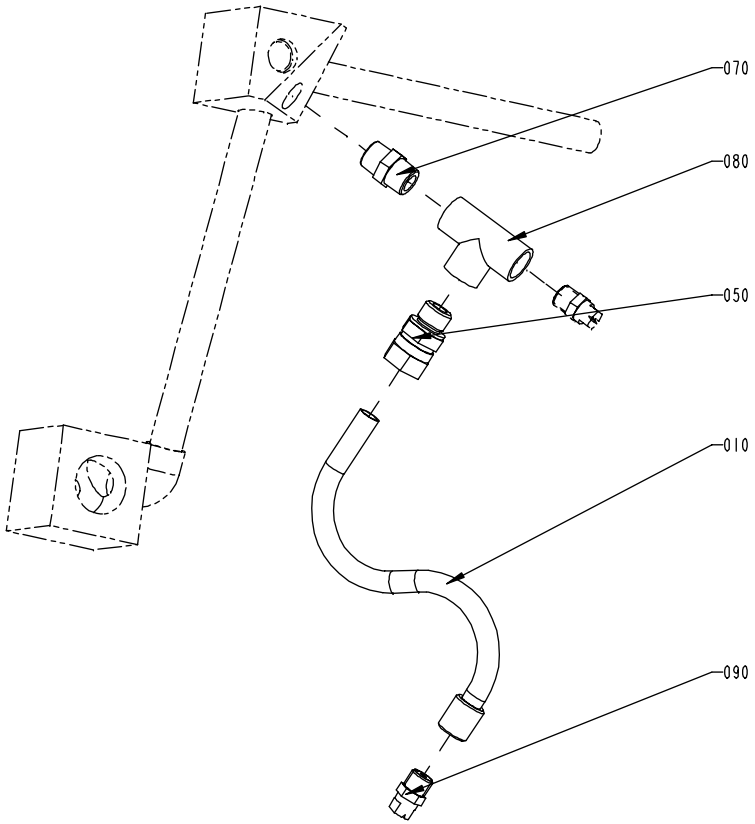
070
080
050
010
090

Pos	Part No	SP	UN	Qty	Description	Page No
Common Parts						
010	1091716-0000	-		1	PIPE	
050	90030-0187	-		1	Conn. Str. GA-12-G3/8	
070	90330-0028	-		1	Nipples, Ext. Thread. R-207R3/8	
080	90330-0067	-		1	T-Pipe, Int. Thread, R-221R3/8	
090	90424-0035	-		1	NOZZLE	

Pos	Part No	SP	UN	Qty	Description	Page No

SAFETY GUARD

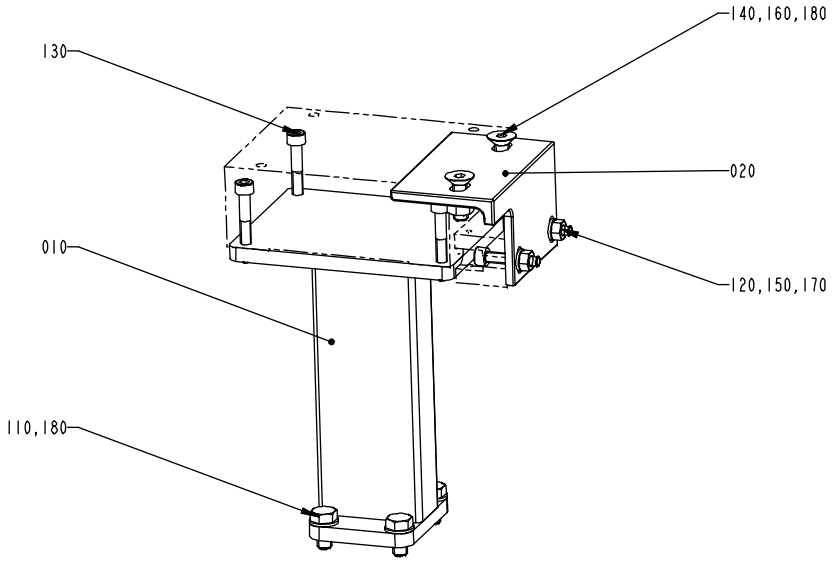

Pos	Part No	SP	UN	Qty	Description	Page No
Common Parts						
010	1091772-0000	-		1	BRACKET	
020	1091773-0000	-		1	BRACKET	
110	312105-0449	-		2	Screw M6S M8x16 A280	
120	312115-0374	-		2	Screw MC6S M6x30 A280	
130	312115-0378	-		4	Screw MC6S M6x40 A280	
140	312155-0453	-		2	Screw Hex.Sock.Count.MF6S M8x25 A280	
150	312605-0316	-		2	Nut Hex. M6M M6 A280	
160	312605-0318	-		2	Nut Hex. M6M M8 A280	
170	315105-0153	-		2	Washer, Plain, BRB, 6,4/12,H=1,5	
180	315105-0165	-		6	Washer, Plain, BRB, 8,4/16,H=1,5	

Pos	Part No	SP	UN	Qty	Description	Page No

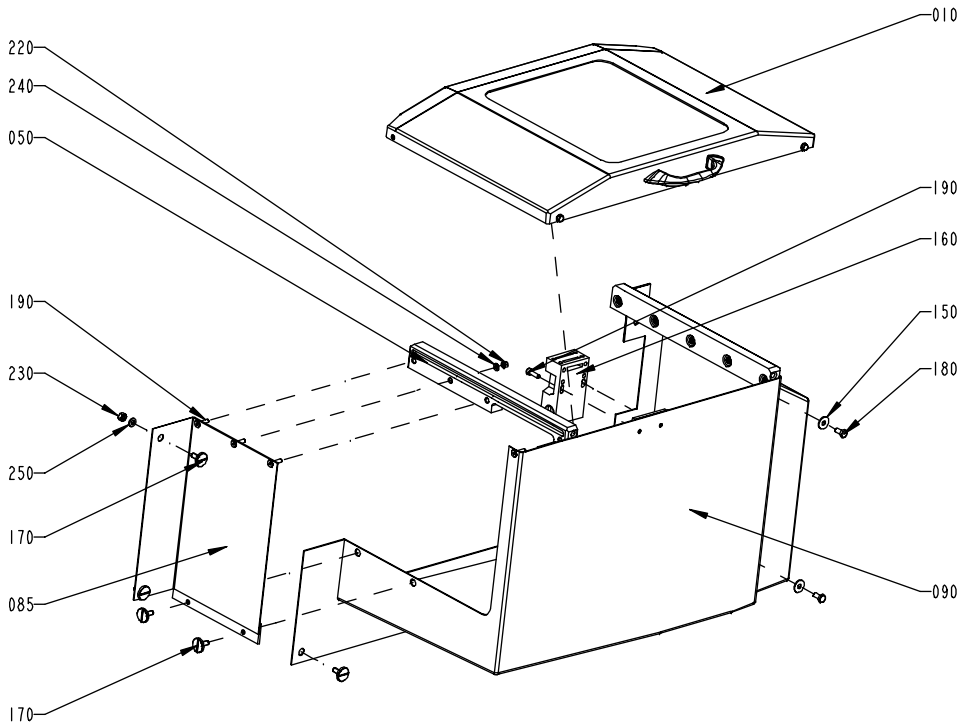
010
220
240
050
190
160
190
150
230
180
250
170
085
090
170

Pos	Part No	SP	UN	Qty	Description	Page No
Common Parts						
010	A1091734-0100	-		1	DOOR	**474**
050	1091735-0000	-		1	GUIDE RAIL	
085	1091740-0000	-		1	COVER	
090	1091743-0000	-		1	PROTECTIVE COVER	
100	1091763-0000	-		1	GUIDE RAIL	
150	90005-0060	-		2	Washer, Plain, RBS 6,4/M6)/18,H=1,5	
160	90044-0139	-		1	Key saf.sw. AZ16-02 ZVR K-2254	
170	90287-0062	-		1	SCREW M6	
180	312105-0366	-		2	Screw M6S M6x12 A280	
190	312115-0329	-		2	Screw MC6S M5x16 A280	
200	312155-0331	-		9	Screw Hex.Sock.Count.MF6S M5x20 A280	
220	312605-0314	-		9	Nut Hex. M6M M5 A280	
230	312605-0316	-		1	Nut Hex. M6M M6 A280	
240	315105-0146	-		9	Washer, Plain, BRB, 5,3/10,H=1	
250	315105-0153	-		1	Washer, Plain, BRB, 6,4/12,H=1,5	

Pos	Part No	SP	UN	Qty	Description	Page No

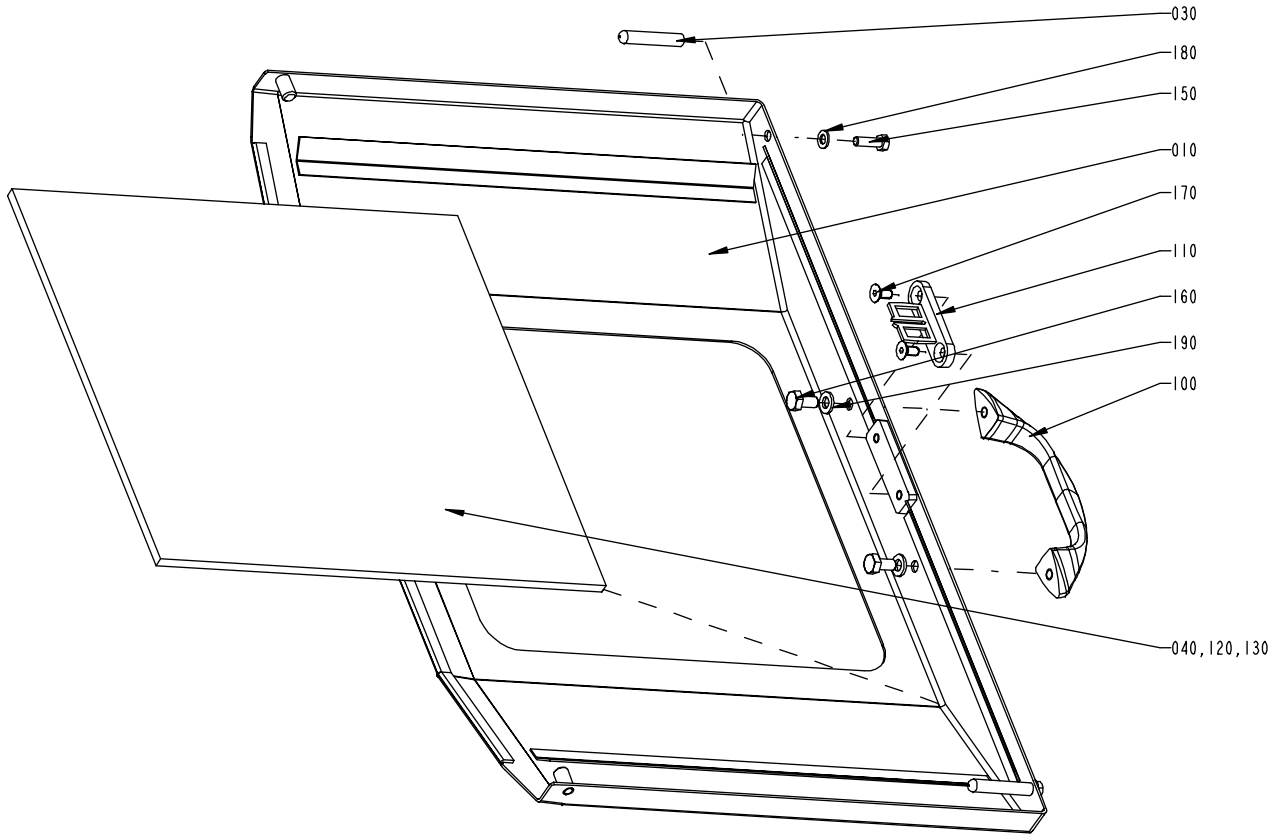
030
180
150
010
170
110
160
190
100
040, 120, 130

Pos	Part No	SP	UN	Qty	Description	Page No
Common Parts						
010	1091739-0000	-		1	LID	
030	1091741-0000	-		2	PIN	
040	1091742-0000	-		1	GLASS PANE	
100	7309-0000	-		1	HANDLE	
110	90044-0310	-		1	Key 4215/16B1	
120	90153-0049	-	KG	1	ADHESIVE	
130	90157-0041	-	L	1	SEALING COMPOUND	
150	312105-0329	-		2	Screw M6S M5x16 A280	
160	312105-0366	-		2	Screw M6S M6x12 A280	
170	312155-0325	-		2	Screw Hex.Sock.Count.MF6S M5x10 A280	
180	315105-0146	-		2	Washer, Plain, BRB, 5,3/10,H=1	
190	315105-0153	-		2	Washer, Plain, BRB, 6,4/12,H=1,5	

Pos	Part No	SP	UN	Qty	Description	Page No

MOUNTING PLATE

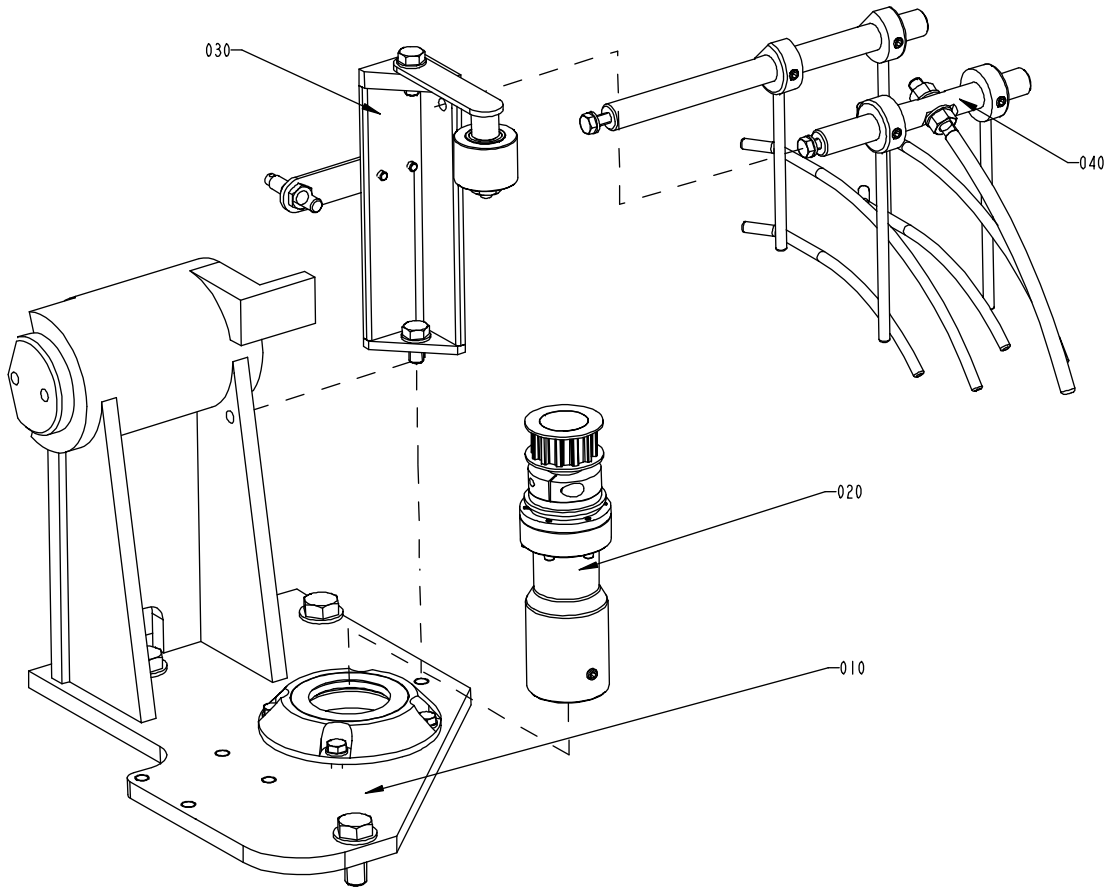

Pos	Part No	SP	UN	Qty	Description	Page No
Common Parts						
010	A1091717-0100	-		1	CANTILEVER	**478**
020	A1091720-0100	-		1	DRIVE SHAFT	**480**
030	A1529164-0100	-		1	BELT STRETCHER	**482**
040	A1529167-0100	-		1	GUIDE	**484**

Pos	Part No	SP	UN	Qty	Description	Page No

CANTILEVER

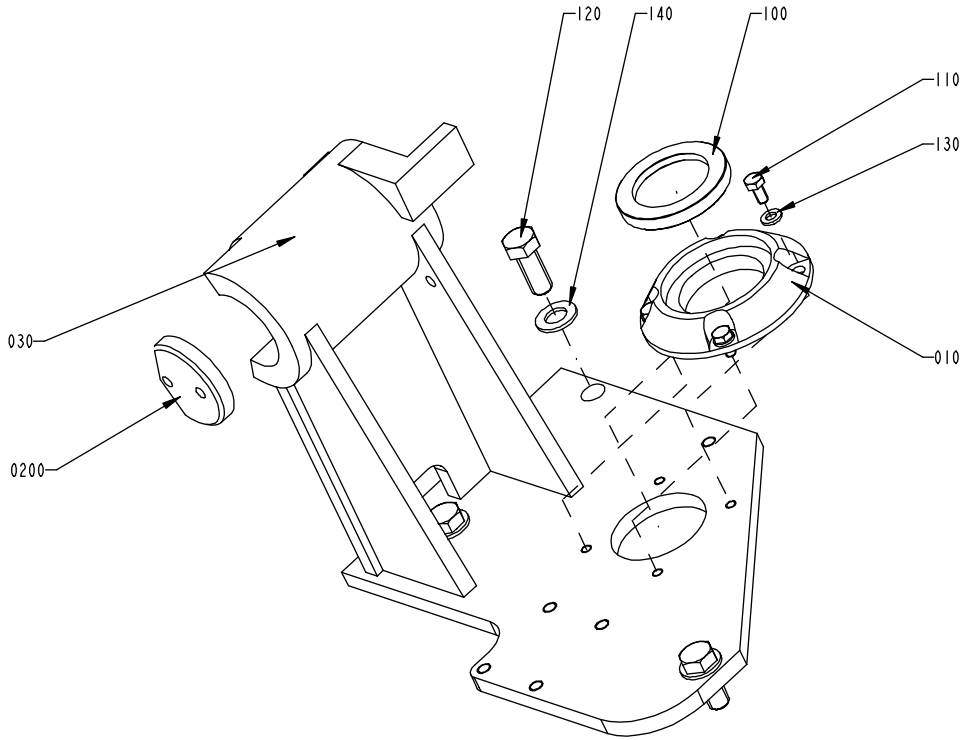

Pos	Part No	SP	UN	Qty	Description	Page No
Common Parts						
010	1091689-0000	-		1	HOUSE	
020	1360581-0000	-		1	LID	
030	1367329-0000	-		1	CANTILEVER	
100	90091-0304	-		1	Radial Seal 45x65x8 mm Dust Lip	
110	312105-0366	-		4	Screw M6S M6x12 A280	
120	312105-0536	-		3	Screw M6S M12x30 A280	
130	315105-0153	-		4	Washer, Plain, BRB, 6,4/12,H=1,5	
140	315105-0178	-		3	Washer, Plain, BRB, 13/24,H=2	

Pos	Part No	SP	UN	Qty	Description	Page No

DRIVE SHAFT

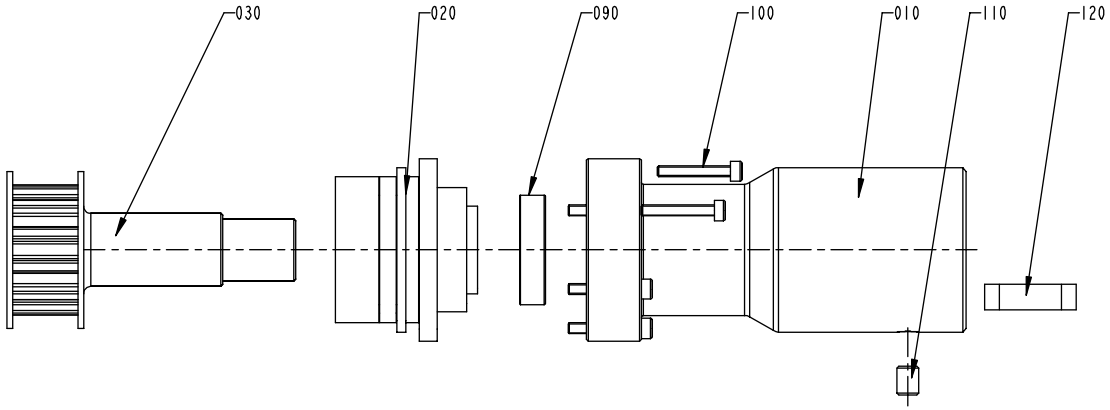

Pos	Part No	SP	UN	Qty	Description	Page No
Common Parts						
010	1091678-0000	-		1	SHAFT	
020	90458-0589	-		1	SAFETY COUPLING SK1-10-W-20H7-3Nm-1-6Nm	
030	1091675-0000	-		1	Toothed pulley	
090	90214-0120	-		1	BEARINGS,BALL BEARING,STAINLESS	
100	312115-0230	-		6	Screw MC6S M3x20 A280	
110	312318-0362	-		1	Screw,Sock.Set Cuppoint MSK6SS M6x8 A4	
120	315705-0265	-		1	KEYS,PARALLEL WITH ROUND ENDS 8X7X25	

Pos	Part No	SP	UN	Qty	Description	Page No

BELT STRETCHER

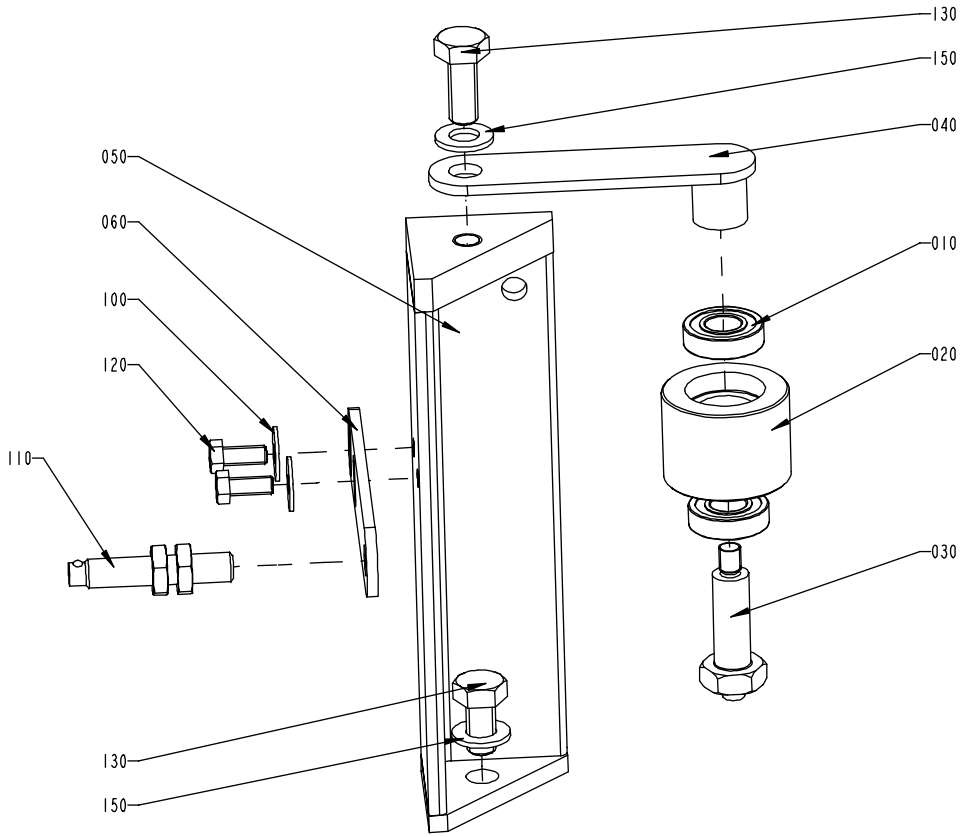

Pos	Part No	SP	UN	Qty	Description	Page No
Common Parts						
010	90214-0167	-		2	BALL BEARING,STAINLESS 10X22X6	
020	577747-0000	-		1	ROLL	
030	577748-0000	-		1	FITTING BOLT	
040	1091725-0000	-		1	BRACKET	
050	1091732-0000	-		1	BRACKET	
060	1091747-0000	-		1	BRACKET	
100	90005-0114	-		2	Washer, Plain Round 5,3(M5)/15, H=1	
110	90044-0145	-		1	Prox.sw. 922 AAIY-A9P-050-LZ876	
120	312105-0327	-		2	Screw M6S M5x12 A280	
130	312105-0449	-		2	Screw M6S M8x16 A280	
150	315105-0165	-		2	Washer, Plain, BRB, 8,4/16,H=1,5	

Pos	Part No	SP	UN	Qty	Description	Page No

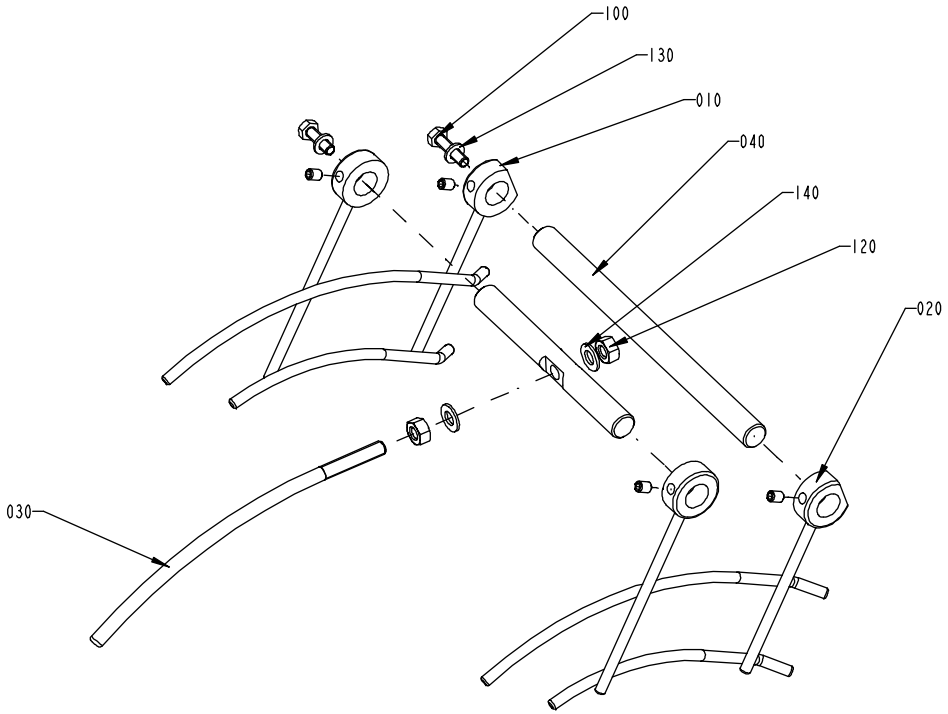
100
130
010
040
140
120
020
030

Pos	Part No	SP	UN	Qty	Description	Page No
Common Parts						
010	1091727-0000	-		1	GUIDE	
020	1091728-0000	-		1	GUIDE	
030	1091729-0000	-		1	GUIDE	
040	1091730-0000	-		1	SHAFT	
050	1091731-0000	-		1	SHAFT	
090	312105-0370	-		1	Screw M6S M6x20 A280	
100	312105-0372	-		1	Screw M6S M6x25 A280	
110	312318-0362	-		4	Screw,Sock.Set Cuppoint MSK6SS M6x8 A4	
120	312605-0318	-		2	Nut Hex. M6M M8 A280	
130	315105-0153	-		2	Washer, Plain, BRB, 6,4/12,H=1,5	
140	315105-0165	-		2	Washer, Plain, BRB, 8,4/16,H=1,5	

Pos	Part No	SP	UN	Qty	Description	Page No

SPRAY GUN

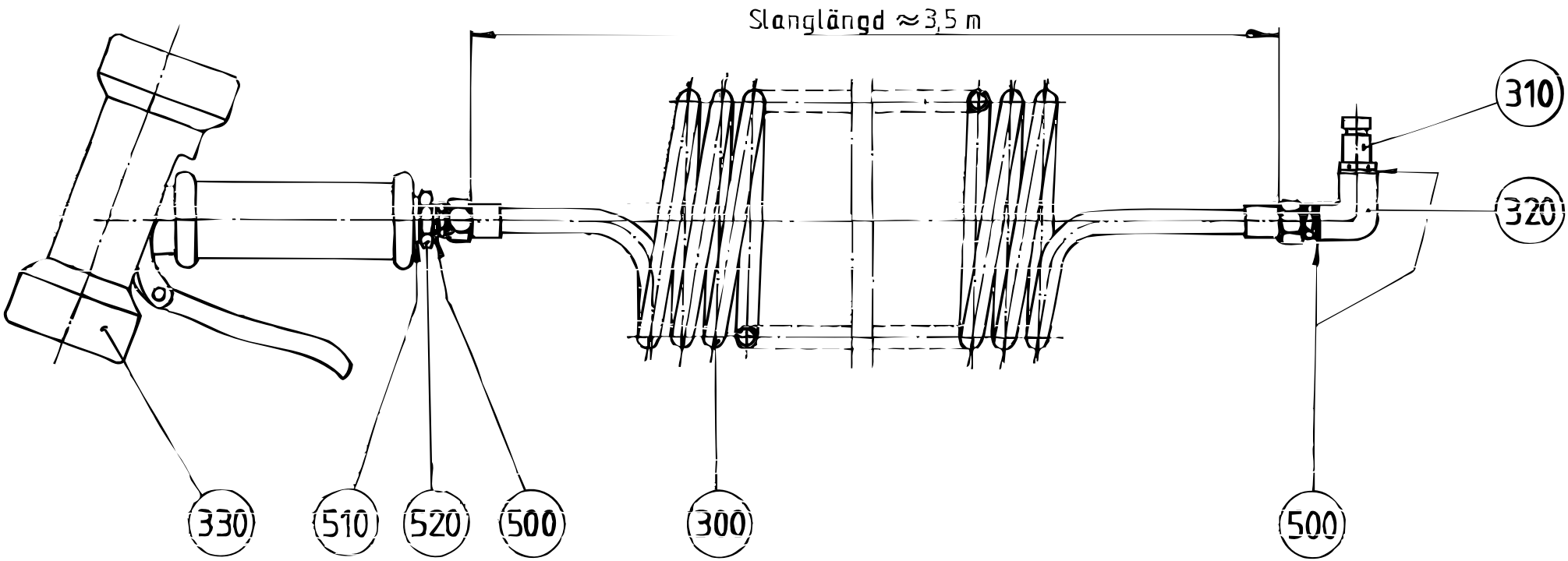

Pos	Part No	SP	UN	Qty	Description	Page No
Common Parts						
300	90152-0017	-		1	HOSE	
310	90163-0014	-		1	Quick Coupling, (M) LP-006-1-WR013	
320	90330-0081	-		1	Elbow, 90 Int. Thread, R-222R1/4	
330	90426-0003	-		1	HAND SHOWER	
500	315233-0110	-		3	Washer,Pl.Rnd.Nyl.13,3/17,H=1	
510	315233-0113	-		1	Washer,Pl.Rnd.Nyl.21,4/27,H=1,2	
520	342701-0205	-		1	BUSHING,INT./EXT.G-THREAD G1/2"-G1/4"	

Pos	Part No	SP	UN	Qty	Description	Page No

CABLE CONNECTION

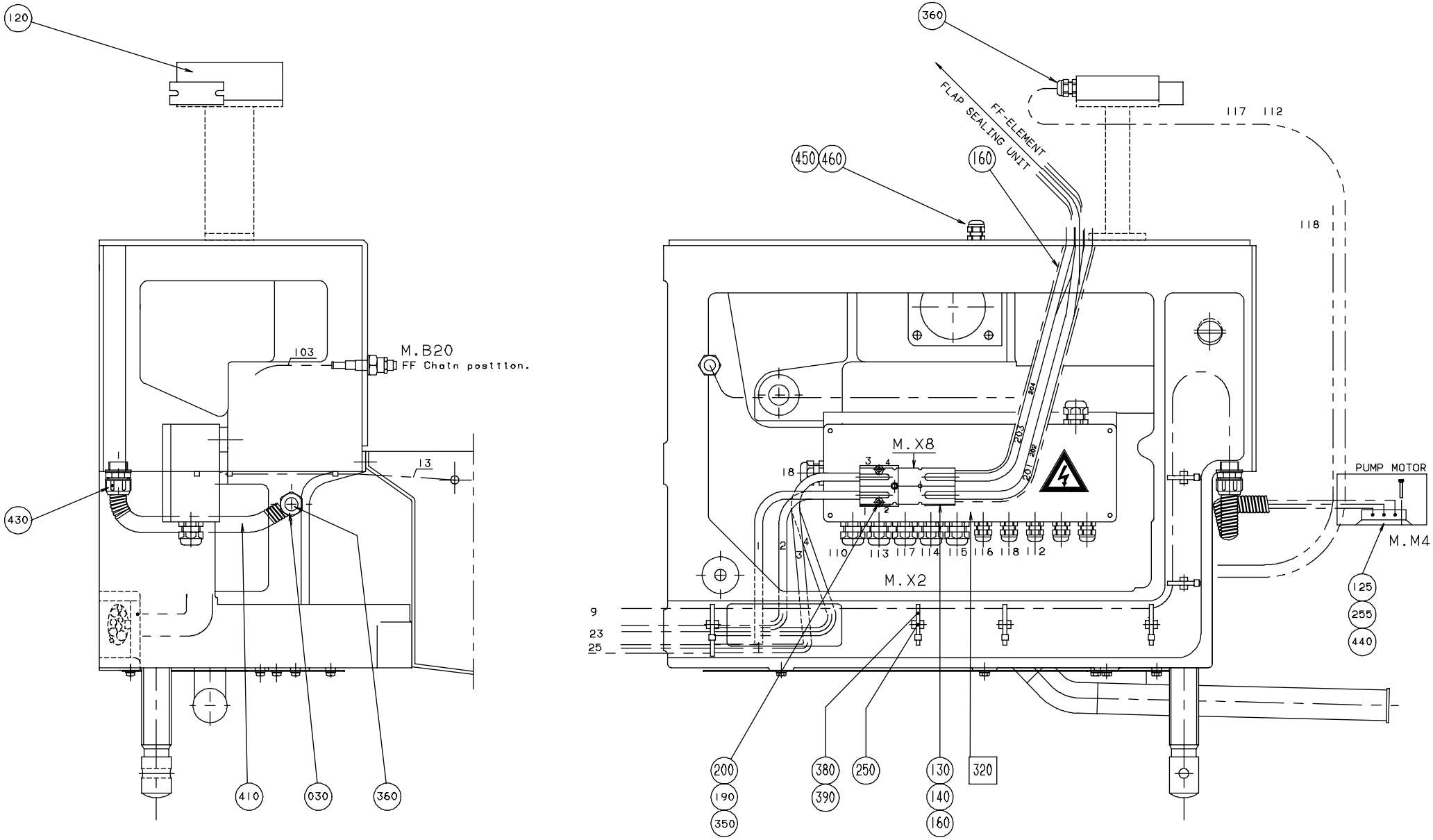

S - 1529141-1
ECN 82225

Pos	Part No	SP	UN	Qty	Description	Page No
Common Parts						
030	456249-0000	C		1	PROTECTIVE COVER	
120	90044-0182	-		1	Key saf.sw. AZM 415-22ZPAK 24 VDC	
125	90077-0102	-		2	TERMINAL BK4 KRG 4-POLE	
130	90110-0114	-		8	CONTACT HOUSING BLACK	
140	90110-0116	-		8	CONTACT PIN AWG 2-8	
160	90166-0023	-	MM	11	SHRINKABLE HOSE 38mm	
190	978193-0000	-		1	FASTENING PLATE	
200	312105-0366	-		2	Screw M6S M6x12 A280	
240	312115-0374	-		2	Screw MC6S M6x30 A280	
250	312125-0287	-		1	Screw Pan Head MCS M4X8 RFR	
255	312125-0230	-		4	Screw Pan Head MCS M3X20 RFR	
320	A1529095-0100	-		1	CONNECTION BOX	**490**
350	315101-0136	-		1	Washer, Plain, BRB, 4,3/8 H=0,8	
360	352103-0108	-		3	CABLE GLAND ST 13	
380	352113-0102	-		8	CLIP-STRIP,Black 188x4,8mm	
390	352113-0205	-		8	ANCHOR TM2S8-C100	
410	352135-0106	-	MM	35	Spiral Conduit Di=16 mm	
430	352136-0129	-		1	GLAND FITTING PR22,5/PG16 Di=16mm	
440	353001-0102	-		6	END SLEEVE 0,75mm2	
450	352103-0095	-		1	CABLE GLAND STR 7	
460	90099-0116	-		1	NUT PR 12,5 (PG7)	

Pos	Part No	SP	UN	Qty	Description	Page No

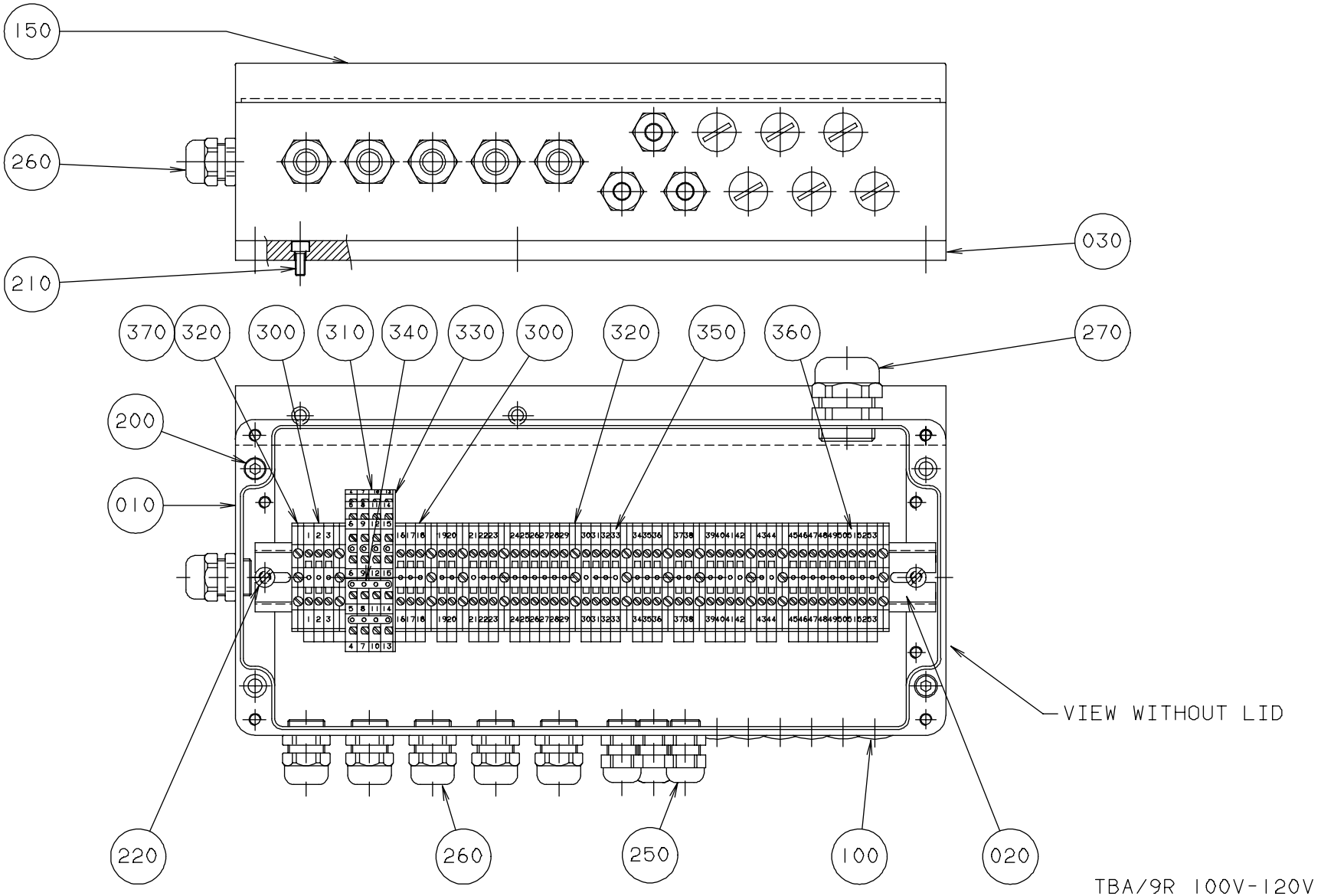
150
260
210
030
370
320
300
310
340
330
300
320
350
360
270
200
010
VIEW WITHOUT LID
220
260
250
100
020
TBA/9R 100V-120V

Pos	Part No	SP	UN	Qty	Description	Page No
Common Parts						
010	1529096-0000	D		1	CONNECTION BOX	
020	571929-0000	D		1	RAIL	
030	1529097-0000	D		1	SPACER	
100	90002-0013	-		6	BLANK-OFF PLUG 15,2	
150	90194-0016	C		1	SIGN "FLASH SIGN" 50X50MM	
200	312111-0372	C		2	Screw Hex.Sock.Hd.MC6S-TT 6x25 88 FZB	
210	312115-0327	C		2	Screw MC6S M5x12 A280	
220	312125-0364	C		2	Screw Slot.Pan Hd. MCS 6x10 A480	
250	352103-0101	C		3	CABLE GLAND ST 9;PR15,2/PG9	
260	352103-0106	C		6	CABLE GLAND ST 11	
270	352103-0121	C		1	CABLE GLAND ST 29	
300	353021-0212	C		41	FEED THROUGH TERMINAL WDU 2,5 Beige	
310	353021-0302	C		4	TERMINALS,TRIPLE-LEVEL, DLD 2,5/35 PA	
320	353024-0205	C		12	EARTH TERMINAL WPE 4	
330	353032-0302	-		1	END PLATE WAP	
340	353034-0403	-		2	BRIDGE CONLECK Q4	
350	359011-0807	C		2	MARKING PLATES 5-FW 1-50	
360	359011-0808	C		2	MARKING PLATES 5-FW 51-100	
370	359011-0834	-		1	SET OF SIGNS 6-GW(EARTH)	

Pos	Part No	SP	UN	Qty	Description	Page No


Tetra Pak

SPC

Spare Parts Catalogue

SERVICE UNIT TBA/9R

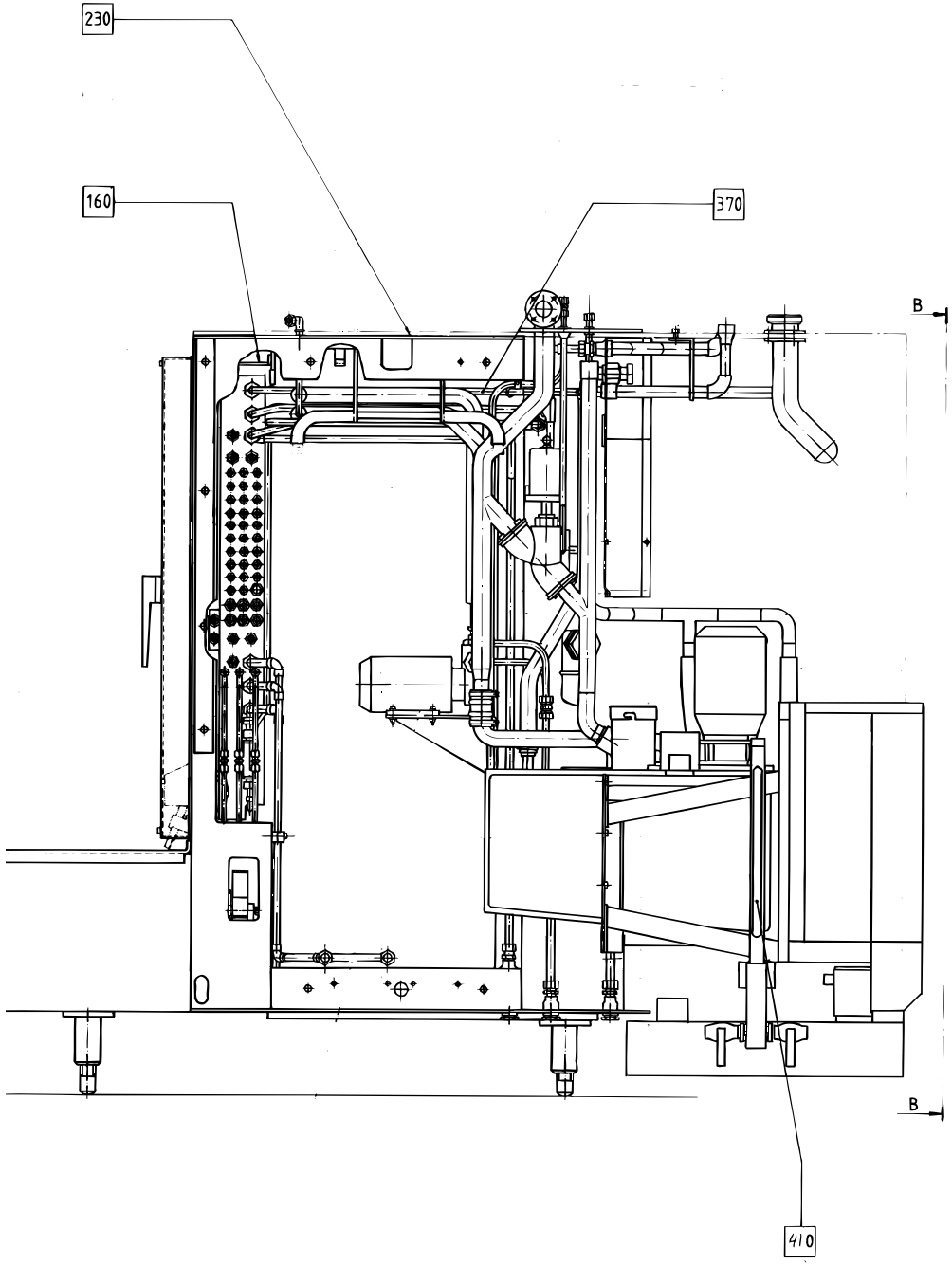

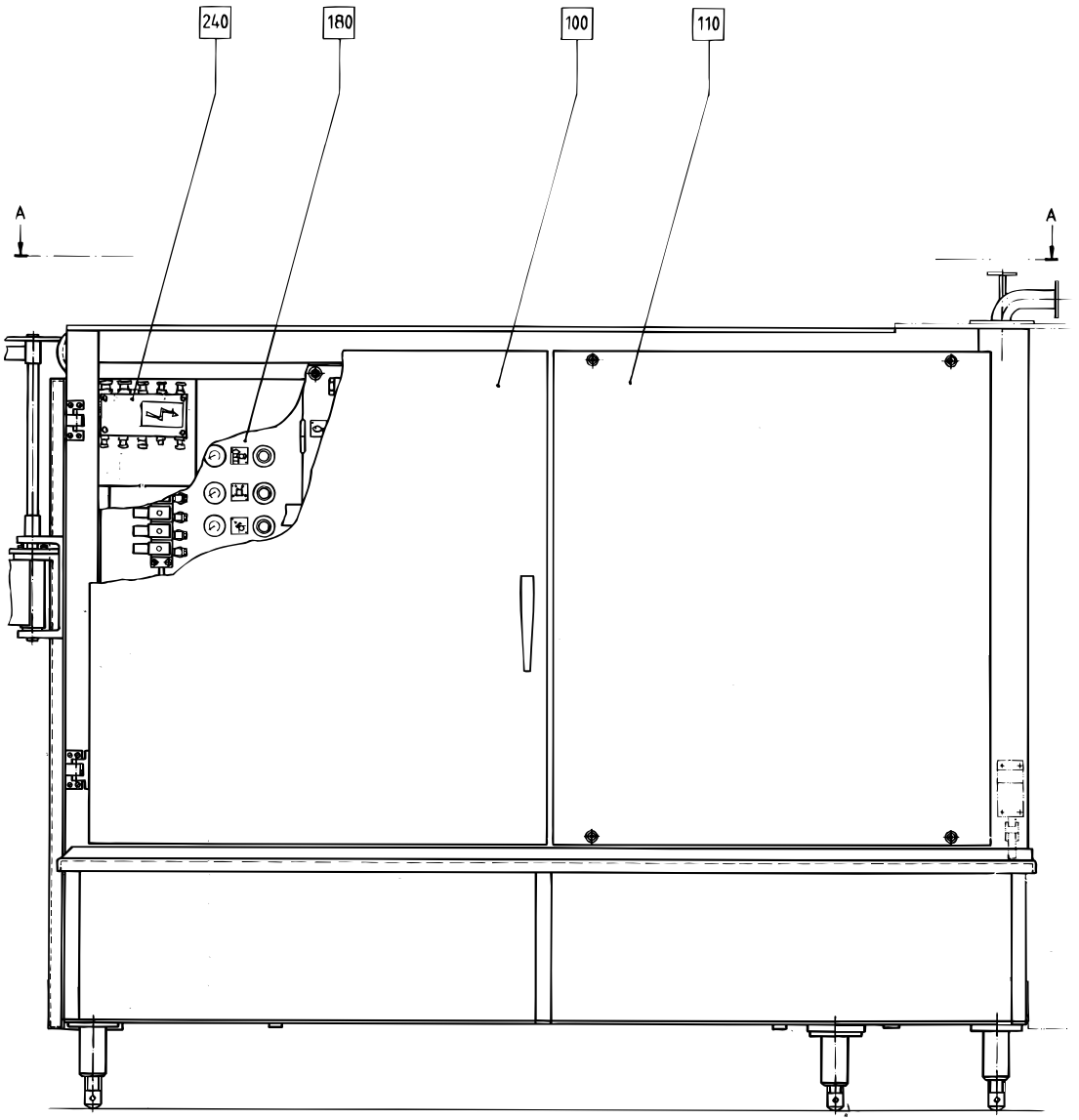

Pos	Part No	SP	UN	Qty	Description	Page No
SOURCE,TBA/9-100V						
130	A1529209-0100	-		1	COVERING PLATE	**534**
160	A1529221-0100	-		1	CABLE TRACK	**552**
170	A 271452-0200	-		1	Detergent pump	**556**
230	A1529207-0100	-		1	MACHINE BODY	**582**
290	A 456546-0100	-		1	IMPULSE TRANSMITTER	**590**
350	A 271453-0200	-		1	OIL TANK	**600**
360	A 271507-0200	-		1	HYDRAULIC SYSTEM	**606**
SOURCE,TBA/9-110V						
130	A1529209-0100	-		1	COVERING PLATE	**534**
160	A1529221-0100	-		1	CABLE TRACK	**552**
170	A 271452-0200	-		1	Detergent pump	**556**
230	A1529207-0100	-		1	MACHINE BODY	**582**
290	A 456546-0100	-		1	IMPULSE TRANSMITTER	**590**
350	A 271453-0300	-		1	OIL TANK	**602**
360	A 271507-0200	-		1	HYDRAULIC SYSTEM	
SOURCE,TBA/9-120V						
130	A1529223-0100	-		1	COVERING PLATE	**536**
160	A1529222-0100	-		1	CABLE TRACK	**554**
170	A 490761-0100	-		1	DETERGENT PUMP	**558**
230	A1529230-0100	-		1	MACHINE BODY	**584**
290	A 456546-0200	-		1	IMPULSE TRANSMITTER	**594**
350	A 491890-0100	-		1	OIL TANK	**605**
360	A 491894-0100	-		1	HYDRAULIC SYSTEM	**608**

Pos	Part No	SP	UN	Qty	Description	Page No
Common Parts						
010	A 272359-0200	-		1	BENDING ROLLER	**498**
020	A1529225-0100	-		1	CARRIAGE	**500**
090	A 257146-0200	-		1	LID	**526**
100	A 256873-0200	-		1	DOOR	**528**
110	A 256875-0200	-		1	HATCH	**530**
120	A 469535-0100	-		1	DOOR	**532**
140	A 271699-0300	-		1	SPLICING APPARATUS	**538**
150	A 271992-0200	-		1	PAPER HOLDER	**550**
180	A1529116-0100	-		1	VALVE PANEL	**560**
240	A1529066-0100	-		1	CONNECTION BOX	**586**
280	A 451348-0100	-		1	CONNECTION BOX	**588**
320	A 271468-0200	-		1	GUIDE	**596**
330	A 271469-0200	-		1	GUIDE	**599**
370	A1529150-0100	-		1	PIPE WORK	**610**
400	A1529047-0100	-		1	PROTECTION	**616**
410	A1529158-0100	-		1	HYDROGEN PEROXIDE	**618**
600	A 469384-0100	-		1	START-UP KIT	**634**

(Cont'd)

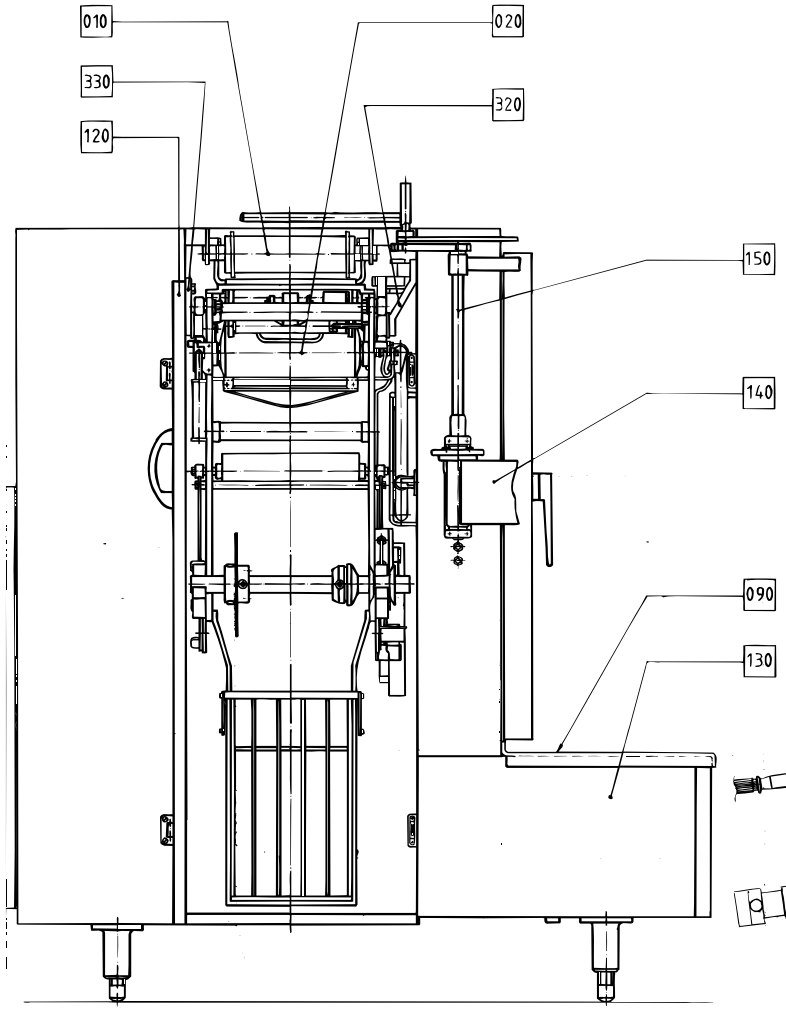

VY B-B MED ÖPPEN KASSETTDÖRR.
VIEW B-B WITH OPEN DOOR.

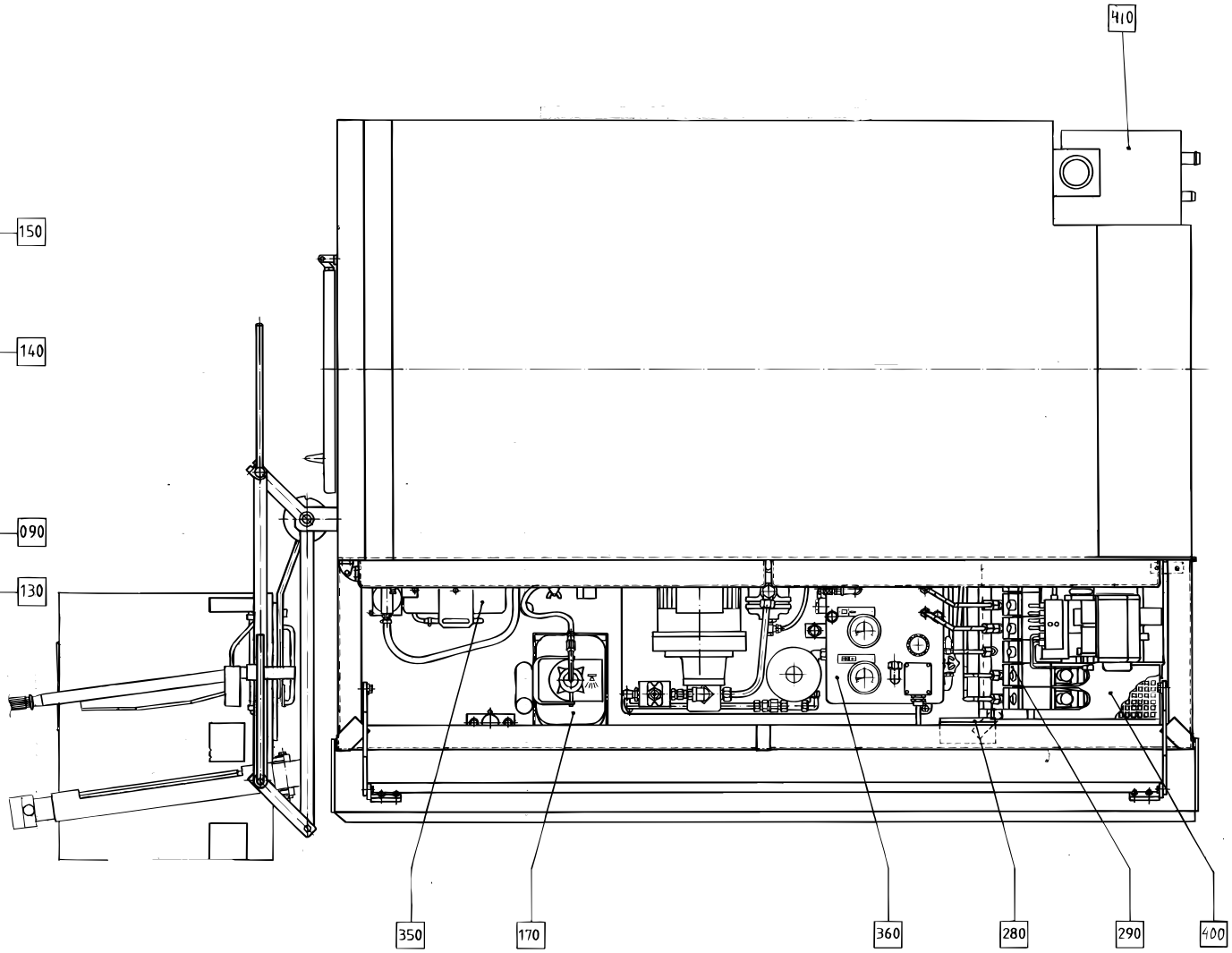

VY A-A MED ÖPPET LOCK.
VIEW A-A WITH OPEN LID.

Pos	Part No	SP	UN	Qty	Description	Page No
(Cont'd)						
SOURCE,TBA/9-100V						
130	A1529209-0100	-		1	COVERING PLATE	**534**
160	A1529221-0100	-		1	CABLE TRACK	**552**
170	A 271452-0200	-		1	Detergent pump	**556**
230	A1529207-0100	-		1	MACHINE BODY	**582**
290	A 456546-0100	-		1	IMPULSE TRANSMITTER	**590**
350	A 271453-0200	-		1	OIL TANK	**600**
360	A 271507-0200	-		1	HYDRAULIC SYSTEM	**606**
SOURCE,TBA/9-110V						
130	A1529209-0100	-		1	COVERING PLATE	**534**
160	A1529221-0100	-		1	CABLE TRACK	**552**
170	A 271452-0200	-		1	Detergent pump	**556**
230	A1529207-0100	-		1	MACHINE BODY	**582**
290	A 456546-0100	-		1	IMPULSE TRANSMITTER	**590**
350	A 271453-0300	-		1	OIL TANK	**602**
360	A 271507-0200	-		1	HYDRAULIC SYSTEM	
SOURCE,TBA/9-120V						
130	A1529223-0100	-		1	COVERING PLATE	**536**
160	A1529222-0100	-		1	CABLE TRACK	**554**
170	A 490761-0100	-		1	DETERGENT PUMP	**558**
230	A1529230-0100	-		1	MACHINE BODY	**584**
290	A 456546-0200	-		1	IMPULSE TRANSMITTER	**594**
350	A 491890-0100	-		1	OIL TANK	**605**
360	A 491894-0100	-		1	HYDRAULIC SYSTEM	**608**

Pos	Part No	SP	UN	Qty	Description	Page No
Common Parts						
010	A 272359-0200	-		1	BENDING ROLLER	**498**
020	A1529225-0100	-		1	CARRIAGE	**500**
090	A 257146-0200	-		1	LID	**526**
100	A 256873-0200	-		1	DOOR	**528**
110	A 256875-0200	-		1	HATCH	**530**
120	A 469535-0100	-		1	DOOR	**532**
140	A 271699-0300	-		1	SPLICING APPARATUS	**538**
150	A 271992-0200	-		1	PAPER HOLDER	**550**
180	A1529116-0100	-		1	VALVE PANEL	**560**
240	A1529066-0100	-		1	CONNECTION BOX	**586**
280	A 451348-0100	-		1	CONNECTION BOX	**588**
320	A 271468-0200	-		1	GUIDE	**596**
330	A 271469-0200	-		1	GUIDE	**599**
370	A1529150-0100	-		1	PIPE WORK	**610**
400	A1529047-0100	-		1	PROTECTION	**616**
410	A1529158-0100	-		1	HYDROGEN PEROXIDE	**618**
600	A 469384-0100	-		1	START-UP KIT	**634**

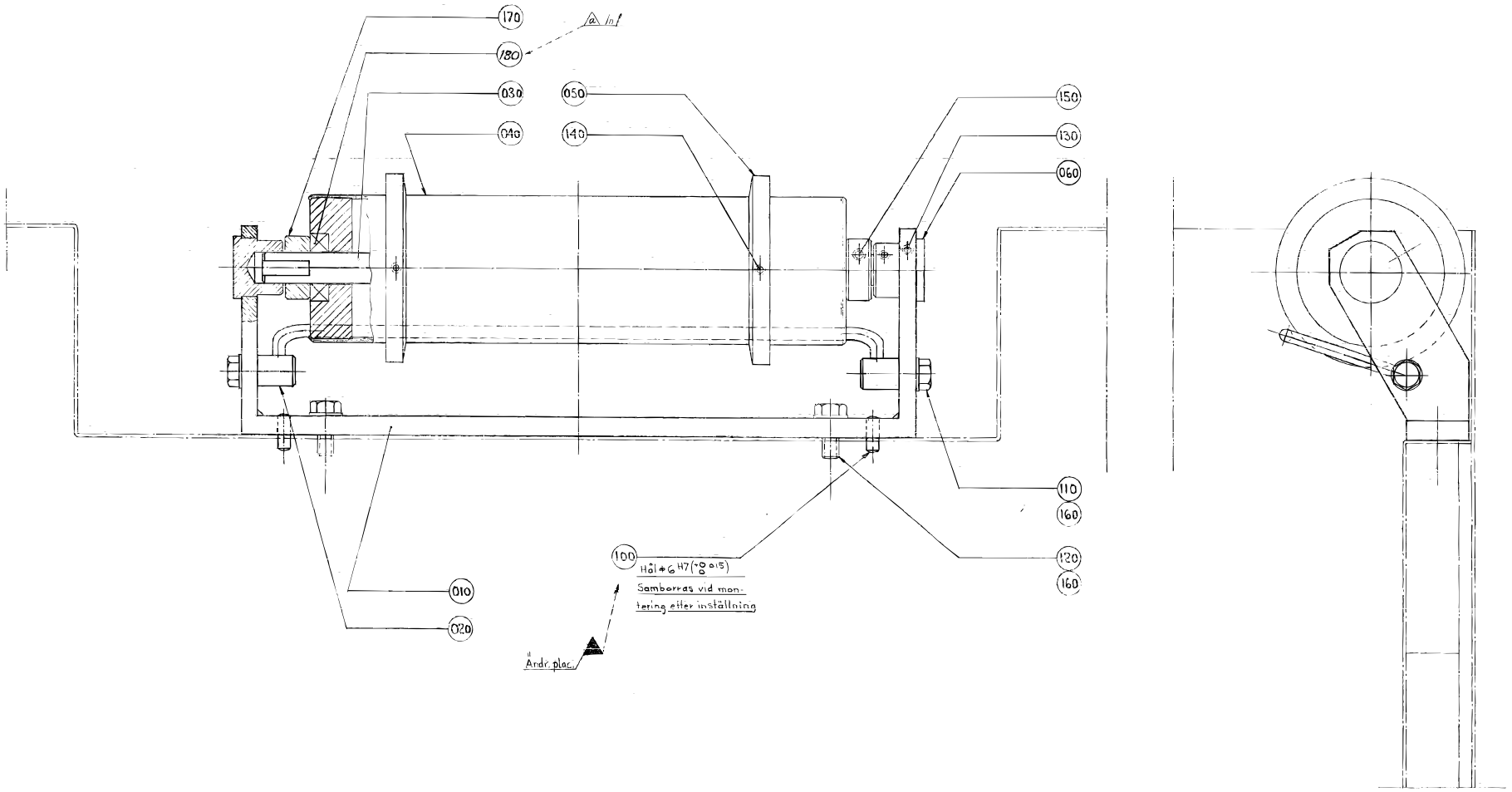
170
180
030
040
050
140
150
130
060
110
160
120
160
100
Hål ø6 H7 (+0,015 0)
Samborras vid montering eller inställning
010
020
Andr. plac.

Pos	Part No	SP	UN	Qty	Description	Page No
Common Parts						
010	272360-0000	-		1	CANTILEVER	
020	272361-0000	D		1	BOW CLAMP	
030	271753-0000	C		1	SHAFT	
040	456544-0000	C		1	BENDING ROLLER	
050	456545-0000	-		2	FLANGE	
060	272362-0000	C		2	BEARING	
100	311103-0351	-		2	Pin, Parallell, m6, 6x16	
110	312105-0449	-		2	Screw M6S M8x16 A280	
120	312105-0451	-		2	Screw M6S 8x20 A280	
130	312318-0321	-		4	Screw Hex.Sock.Set Cup P.MSK6SS 5x6 SS	
140	312318-0323	-		4	Screw,Sock.Set Cuppoint MSK6SS M5x8 A4	
150	312318-0360	-		2	Screw Hex.Sock.Set Cup P.MSK6SS6x6 SS	
160	315105-0165	-		4	Washer, Plain, BRB, 8,4/16,H=1,5	
170	315742-0111	-		2	Collar, 15/30, H=12	
180	321308-0202	C		2	BALL BEARING 15x32x9	

Pos	Part No	SP	UN	Qty	Description	Page No

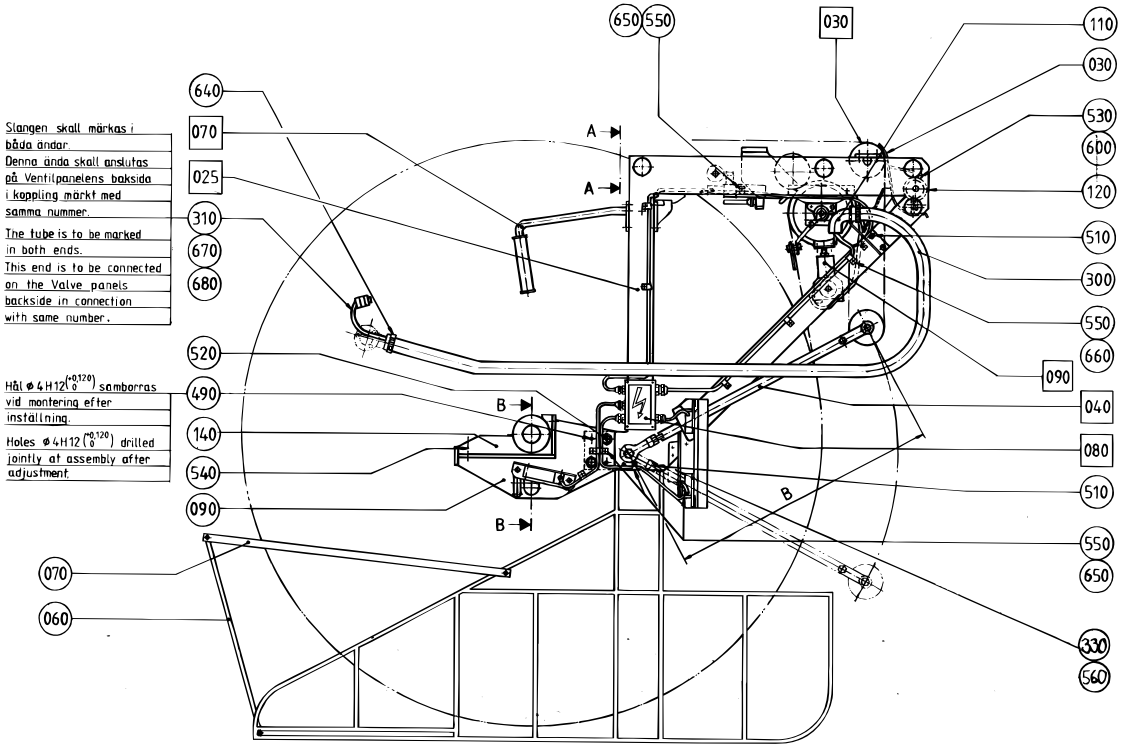

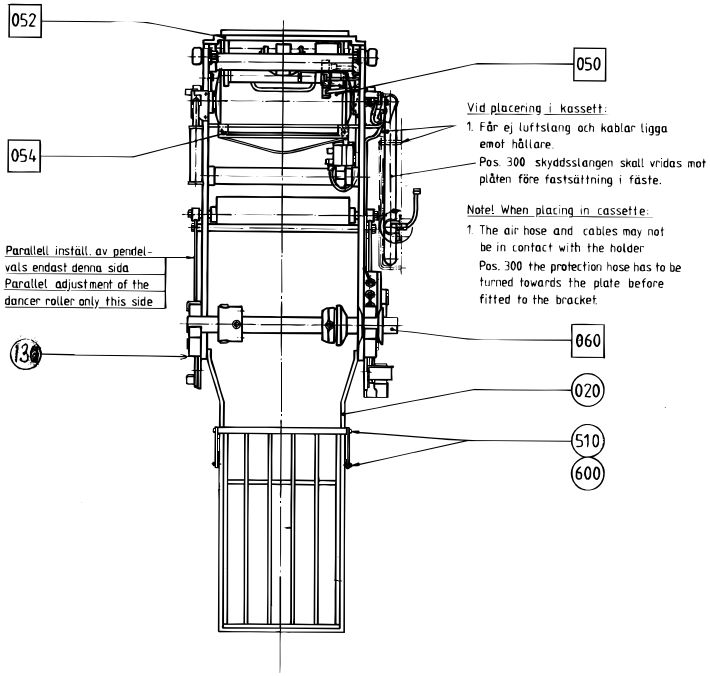

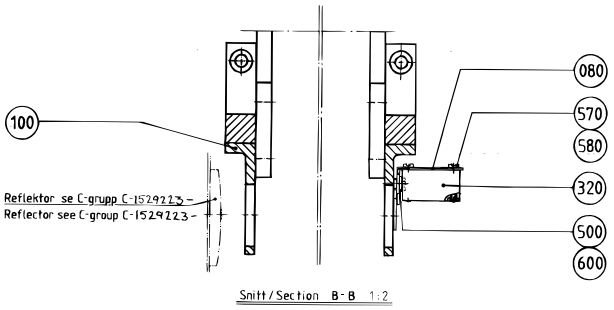

Snitt / Section B-B 1:2

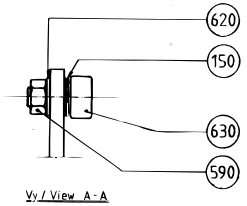

Vy / View A-A
1:2

INSTÄLLNING AV KASSETTVAGN

Ställ in mått B=534±1mm på armarna 040 Montera därefter Kassettvagnen komplett. Kontrollera att Brytrullen 030 ligger i våg och är vinkelrätt mot utsidan på Rullar 630 Ställ Driven brytrulle 050 i våg och parallellt ± 0,2mm med Brytrullen 030 Placera en rak axel ø 32mm i Lagringarna 140 och ställ axeln i våg och parallellt ±0,2mm med Brytrullen 030 Ställ Pendelvalsen 040 parallellt ±1mm med axeln i Lagringarna 140

SETTING OF CARRIAGE

On arms 040 Set measure B=534±1mm. Make a complete assembling on the Carriage. Check that Bending roller 030 is in balance and at right angle to outside Rollers 630 Set Driven bending roller 050 in balance and in parallel ±0,2mm with Bending roller 030 Put a straight axle ø 32mm in Bearings 140 and set the axle in balance and in parallel ±0,2mm with Bending roller 030 Set Dancer roller 040 in parallel ±1mm with the axle in Bearings 140

S - 1529225-1
ECN 82225

Pos	Part No	SP	UN	Qty	Description	Page No
Common Parts						
020	271546-0000	D		1	BASKET	
025	A1529226-0100	-		1	CARRIAGE	**502**
030	A 272473-0100	-		1	BENDING ROLLER	**504**
030	B 441907-0000	-		1	RULING GUIDE	
040	A 272084-0200	-		1	STRETCHER	**506**
050	A 271017-0200	-		1	BENDING ROLLER	**508**
052	A 271934-0300	-		1	PAPER GUIDE PLATE	**510**
054	A 272231-0300	-		1	PAPER GUIDE	**512**
060	A 458384-0100	-		2	PAPER REEL HOLDER	**518**
060	271547-0000	D		1	DOOR	
060	A 458383-0100	-		2	PAPER REEL HOLDER	**516**
070	A 271454-0200	-		1	CATCH HANDLE	**520**
070	271548-0000	D		2	LINK	
080	271558-0000	D		1	BRACKET	
080	A 295839-0200	-		1	CONNECTION BOX	**522**
090	A 751478-0200	-		1	BRAKE	**524**
090	490779-0000	D		1	BRACKET LEFT	
100	490780-0000	D		1	BRACKET RIGHT	
110	272697-0000	D		1	BRACKET	
120	441908-0000	-		2	BOW CLAMP	
130	1529041-0000	-		1	PROTECTION	
140	272564-0000	-		2	BEARING	
150	456072-0000	C		24	WASHER	
300	90166-0060	C	MM	135	HOSE 19/26-27 Reinf.PVC	
310	90166-0132	-	M	3	TUBE 6 mm PA,Transp.	
320	90232-0039	-		1	PHOTOCELL	
330	1529039-0000	-		1	PROTECTION	
490	311112-0255	-		4	Pin, Straight Slotted Spring FRP 4x18	
500	312105-0364	-		2	Screw M6S M6x10 A280	
510	312105-0368	-		1	Screw M6S M6x16 A280	
520	312105-0491	-		4	Screw M6S M10x20 A280	
530	312115-0368	-		4	Screw MC6S M6x16 A280	
540	312115-0449	-		4	Screw MC6S M8x16 A280	
550	312125-0285	-		14	Screw Slot.Pan Hd. MCS 4x6 A480	
560	312155-0327	-		2	Screw Hex.Sock.Count.MF6S M5x12 A280	
570	312125-0297	-		2	Screw Pan Head MCS M4X25 RFR	
580	312605-0312	-		2	Nut Hex. M6M M4 A280	
590	312631-0324	-		8	Nut Hex. M16x1,5 FE FZB	
600	315105-0153	-		1	Washer, Plain, BRB, 6,4/12,H=1,5	
620	315105-0186	-		8	Washer, Plain, BRB, 17/30,H=3	
630	321582-0212	C		8	BEARINGS,CAM ROLLER NUKR35A	
640	342991-0105	-		2	HOSE CLIP,WORM DRIVE TYPE (27)-30	
650	352110-0100	-		12	CRAMP TK 5-7 White Polyamid	
660	352110-0101	-		3	CRAMP TK 7-10	
670	359000-0400	-		4	MARKING CO2/4"0"	
680	359000-0404	-		2	MARKING COLLAR PA2/4 "4" Yellow	

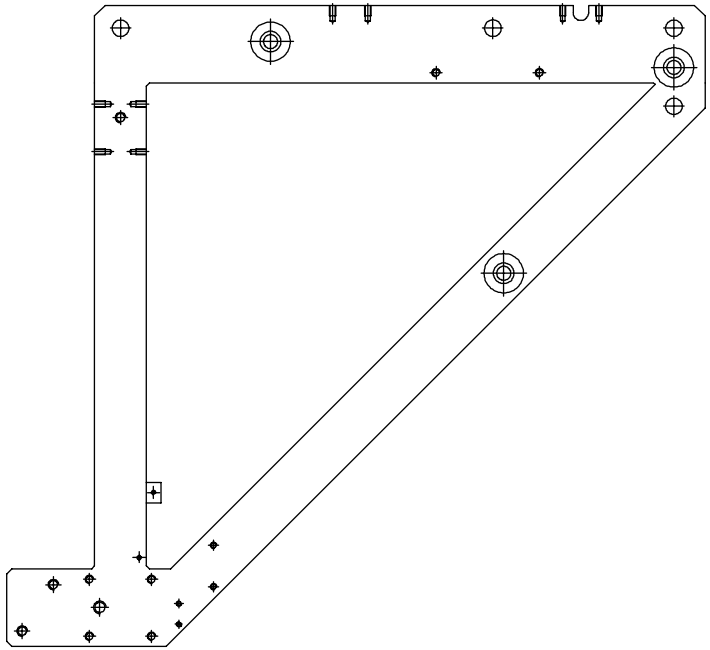

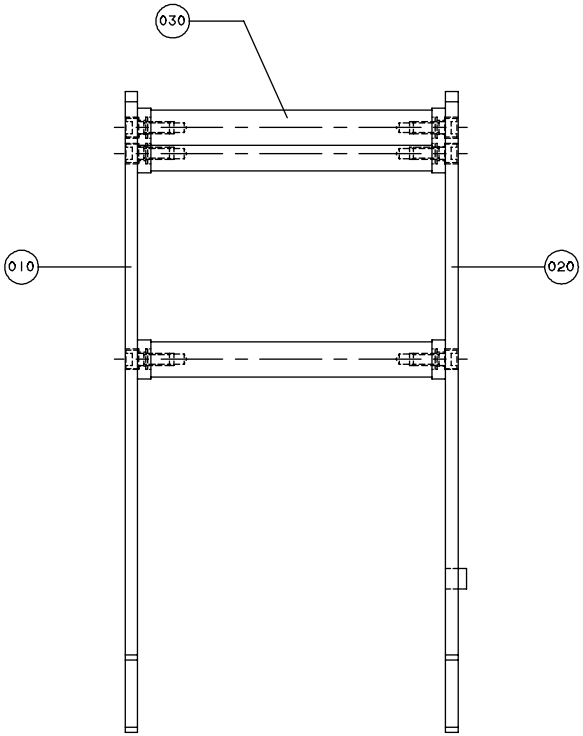

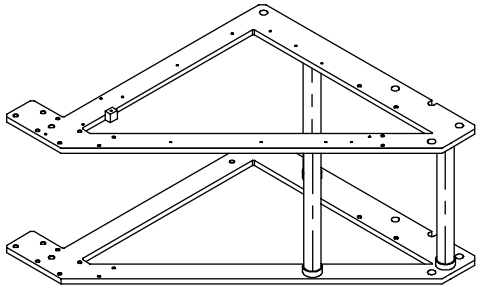

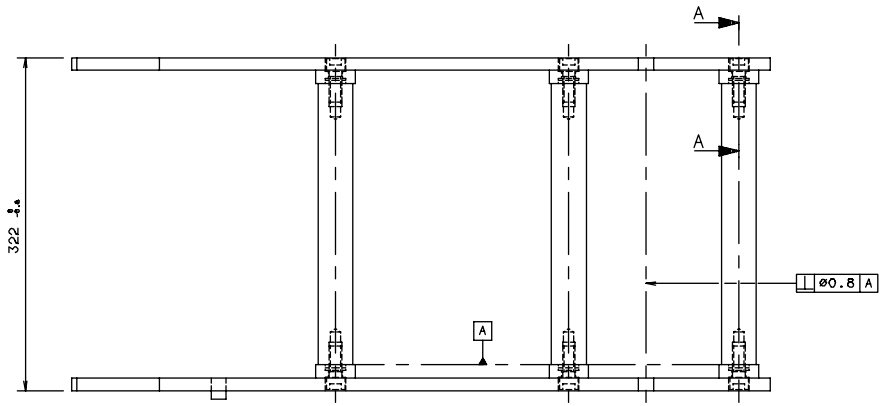

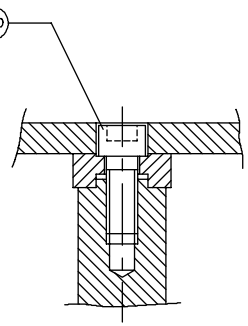

A-A
SCALE 1:1

S - 1529225-1
ECN 82225

Pos	Part No	SP	UN	Qty	Description	Page No
Common Parts						
010	1529046-0000	-		1	SIDE PIECE	
020	272790-0000	-		1	SIDE PIECE	
030	272791-0000	D		3	SPACER ROD	
300	312115-0536	-		6	Screw MC6S M12x30 A280	

Pos	Part No	SP	UN	Qty	Description	Page No

BENDING ROLLER

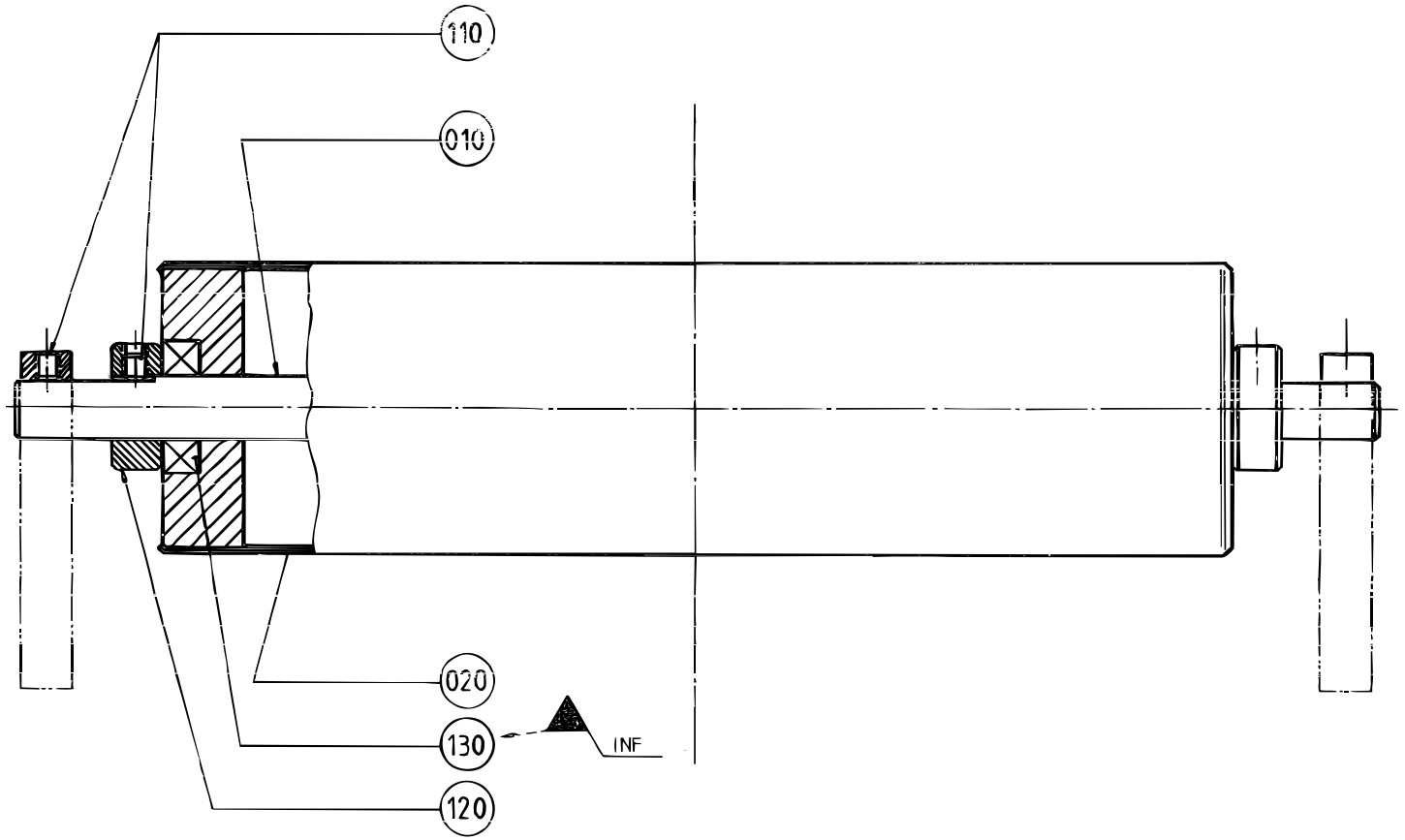

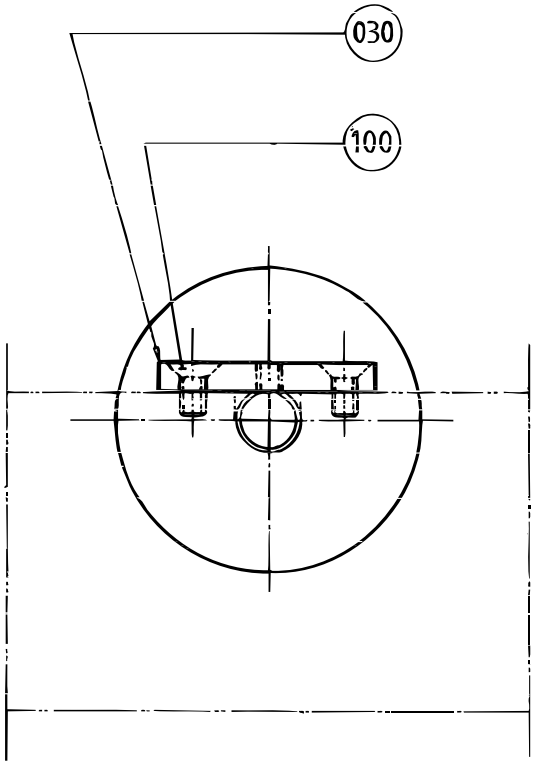

S - 272473-1
ECN 82225

Pos	Part No	SP	UN	Qty	Description	Page No
Common Parts						
010	272474-0000	C		1	SHAFT	
020	456544-0000	C		1	BENDING ROLLER	
030	272475-0000	-		2	CAP	
100	312155-0366	-		4	Screw Hex.Sock.Count.MF6S M6x12 A280	
110	312318-0360	-		4	Screw Hex.Sock.Set Cup P.MSK6SS6x6 SS	
120	315742-0111	-		2	Collar, 15/30, H=12	
130	321308-0202	C		2	BALL BEARING 15x32x9	

Pos	Part No	SP	UN	Qty	Description	Page No

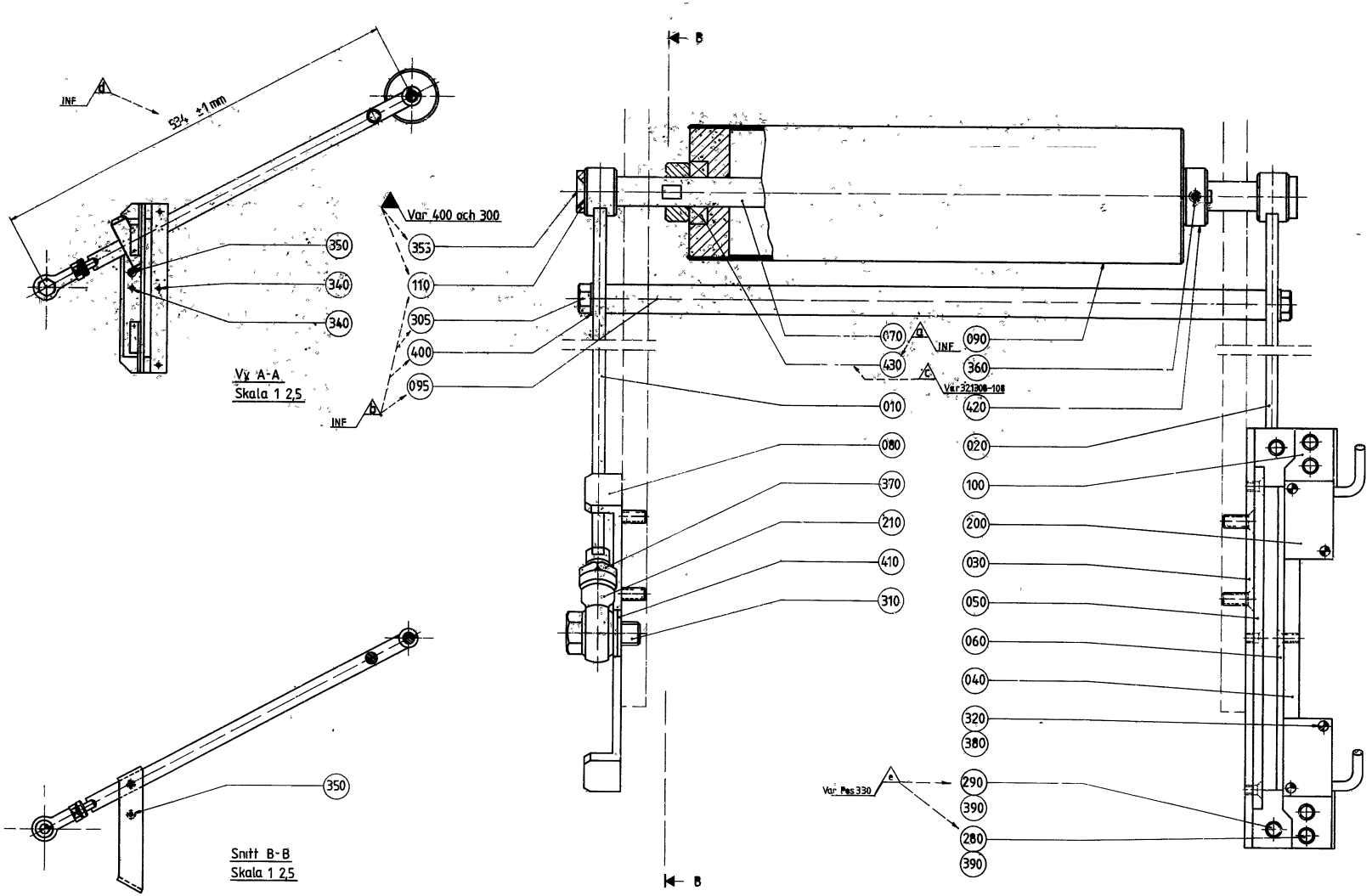

GraphicID: 1272084-2.eps
Parent Drw: 272084-2
ECN 7766

Pos	Part No	SP	UN	Qty	Description	Page No
Common Parts						
010	272085-0000	D		1	PENDULUM ARM	
020	469518-0000	D		1	PENDULUM ARM	
030	272087-0000	-		1	HOLDER	
040	272088-0000	-		1	GUIDE	
050	272089-0000	C		1	SLIDE RAIL	
060	272090-0000	C		1	SLIDE RAIL	
070	272476-0000	C		1	SHAFT	
080	272477-0000	D		1	HOLDER	
090	456544-0000	C		1	BENDING ROLLER	
095	295110-0000	-		1	SPACER	
100	272091-0000	-		2	BRACKET	
110	230918-0000	-		2	WASHER	
200	90044-0087	C		2	PROXIMITY SWITCH REPL.BY 90044-104	
210	90115-0006	C		2	ROD ENDS,RE-LUBRICATEABLE	
280	312105-0287	-		4	Screw M6S M4x8 A280	
290	312105-0291	-		2	Screw M6S M4x12 A280	
305	312105-0452	-		2	Screw M6S M8x22 A280	
310	312105-0536	-		2	Screw M6S M12x30 A280	
320	312125-0228	-		4	Screw Pan Head MCS M3x16 A480	
340	312145-0287	-		6	Screw Counters.Slot.Hd. MFS 4x8 SS	
350	312155-0368	-		4	Screw Hex.Sock.Count.MF6S M6x16 A280	
355	312155-0449	-		2	Screw Hex.Sock.Count.MF6S M8x16 A280	
360	312318-0360	-		2	Screw Hex.Sock.Set Cup P.MSK6SS6x6 SS	
370	312605-0322	-		2	Nut Hex. M6M M12 A280	
380	315105-0124	-		4	Washer, Plain, BRB, 3,2/6,H=0,5	
390	315105-0136	-		6	Washer, Plain, BRB, 4,3/8,H=0,8	
400	315105-0165	-		2	Washer, Plain, BRB, 8,4/16,H=1,5	
410	315105-0178	-		4	Washer, Plain, BRB, 13/24,H=2	
420	315742-0111	-		2	Collar, 15/30, H=12	
430	321308-0202	C		2	BALL BEARING 15x32x9	

Pos	Part No	SP	UN	Qty	Description	Page No

BENDING ROLLER

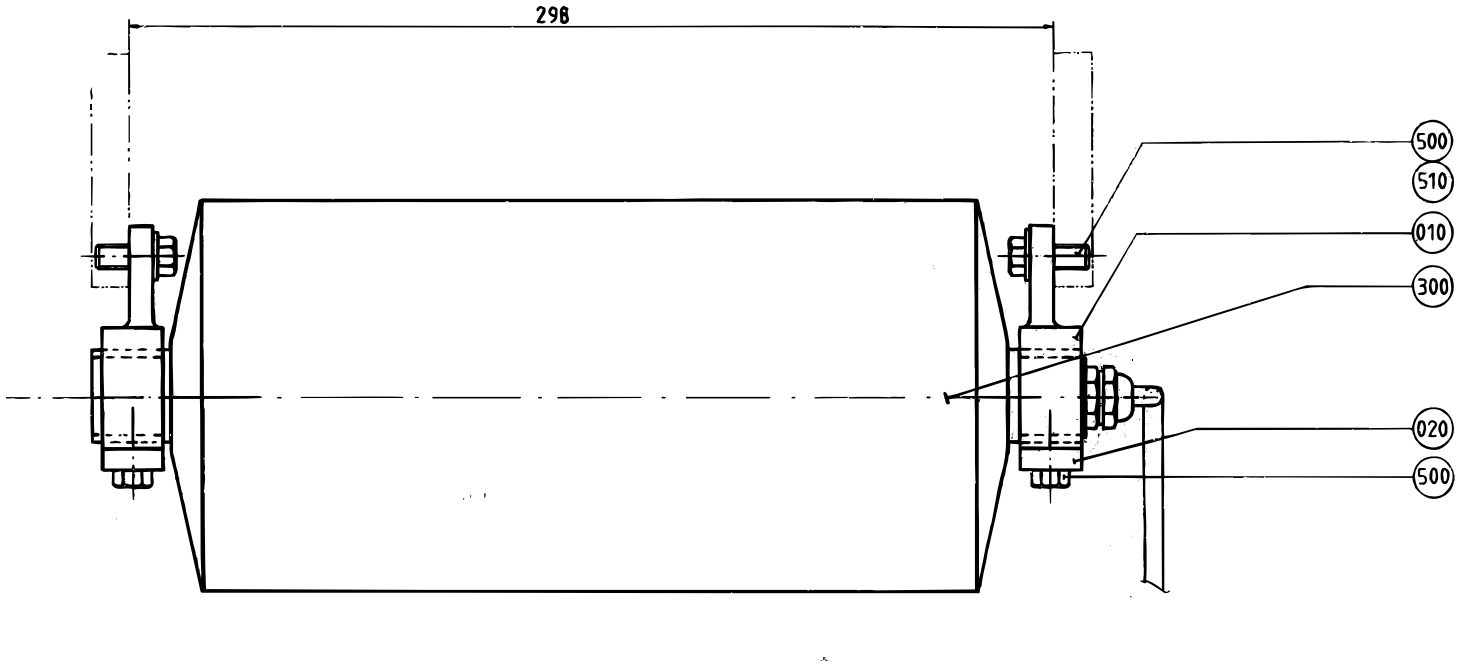

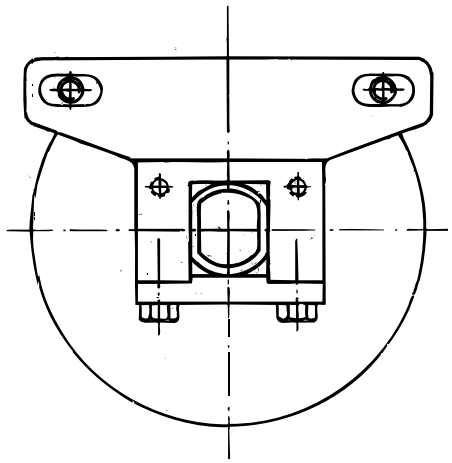

Pos	Part No	SP	UN	Qty	Description	Page No
Common Parts						
010	272584-0000	C		2	BEARING	
020	257224-0000	C		2	CAP	
300	90045-0102	C		1	Roll motor Mini-250	
500	312105-0451	-		8	Screw M6S 8x20 A280	
510	315105-0165	-		4	Washer, Plain, BRB, 8,4/16,H=1,5	

Pos	Part No	SP	UN	Qty	Description	Page No

PAPER GUIDE PLATE

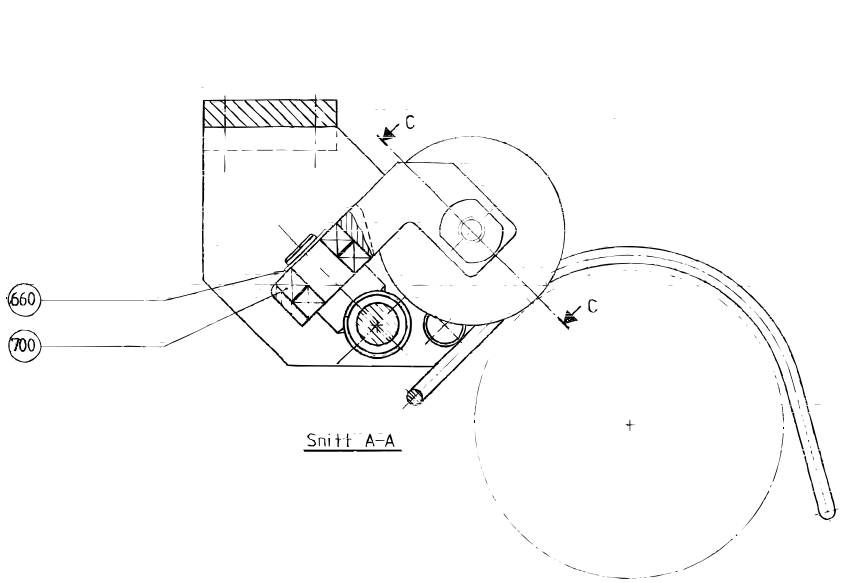

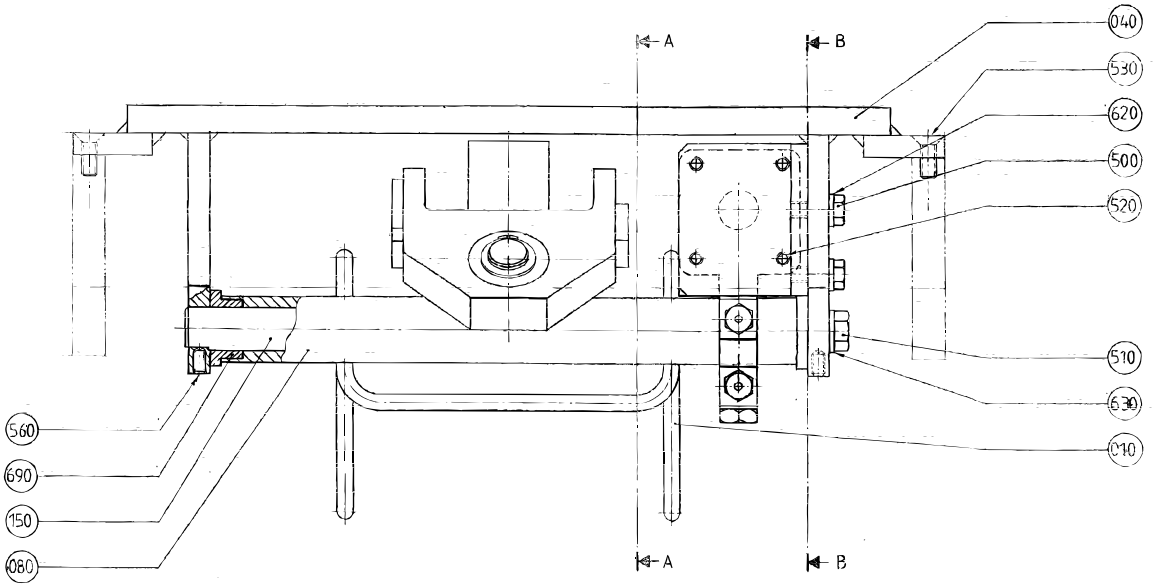

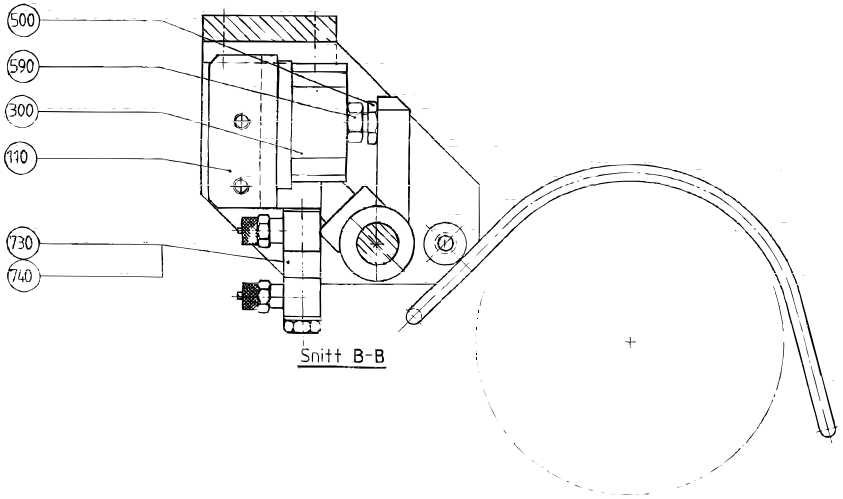

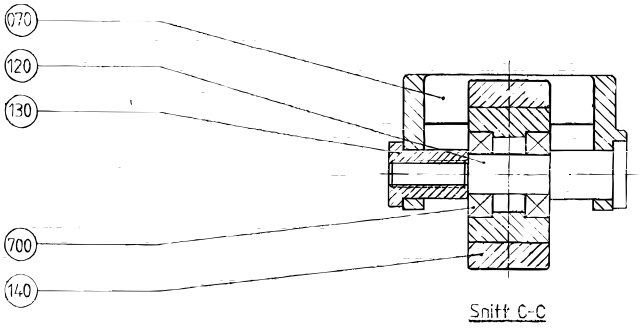

Pos	Part No	SP	UN	Qty	Description	Page No
Common Parts						
010	295716-0000	D		1	BOW CLAMP	
040	295717-0000	D		1	CANTILEVER	
070	263150-0000	D		1	BRACKET	
080	271911-0000	D		1	SHAFT	
110	295873-0000	D		1	BRACKET	
120	263152-0000	C		1	SHAFT	
130	263153-0000	C		1	NUT	
140	266710-0000	C		1	WHEEL	
150	271912-0000	C		1	SHAFT	
300	90239-0750	D		1	CYLINDER	
500	312105-0368	-		3	Screw M6S M6x16 A280	
510	312105-0451	-		2	Screw M6S 8x20 A280	
520	312115-0327	-		4	Screw MC6S M5x12 A280	
530	312155-0368	-		4	Screw Hex.Sock.Count.MF6S M6x16 A280	
560	312318-0323	-		2	Screw,Sock.Set Cuppoint MSK6SS M5x8 A4	
590	312605-0316	-		1	Nut Hex. M6M M6 A280	
620	315105-0153	-		2	Washer, Plain, BRB, 6,4/12,H=1,5	
630	315105-0165	-		2	Washer, Plain, BRB, 8,4/16,H=1,5	
660	315750-0112	C		1	Retain. Ring, 15	
690	321101-0202	C		2	FLANGE BUS 16F7X12	
700	321308-0202	C		4	BALL BEARING 15x32x9	
730	342980-0113	-		2	BANJO-CONNECTION,RING 6/4-G1/8"	
740	342980-0313	-		1	BANJO-HOLLOW BOLT COUPL,EXT.THR.02-G1/8"	

Pos	Part No	SP	UN	Qty	Description	Page No

PAPER GUIDE

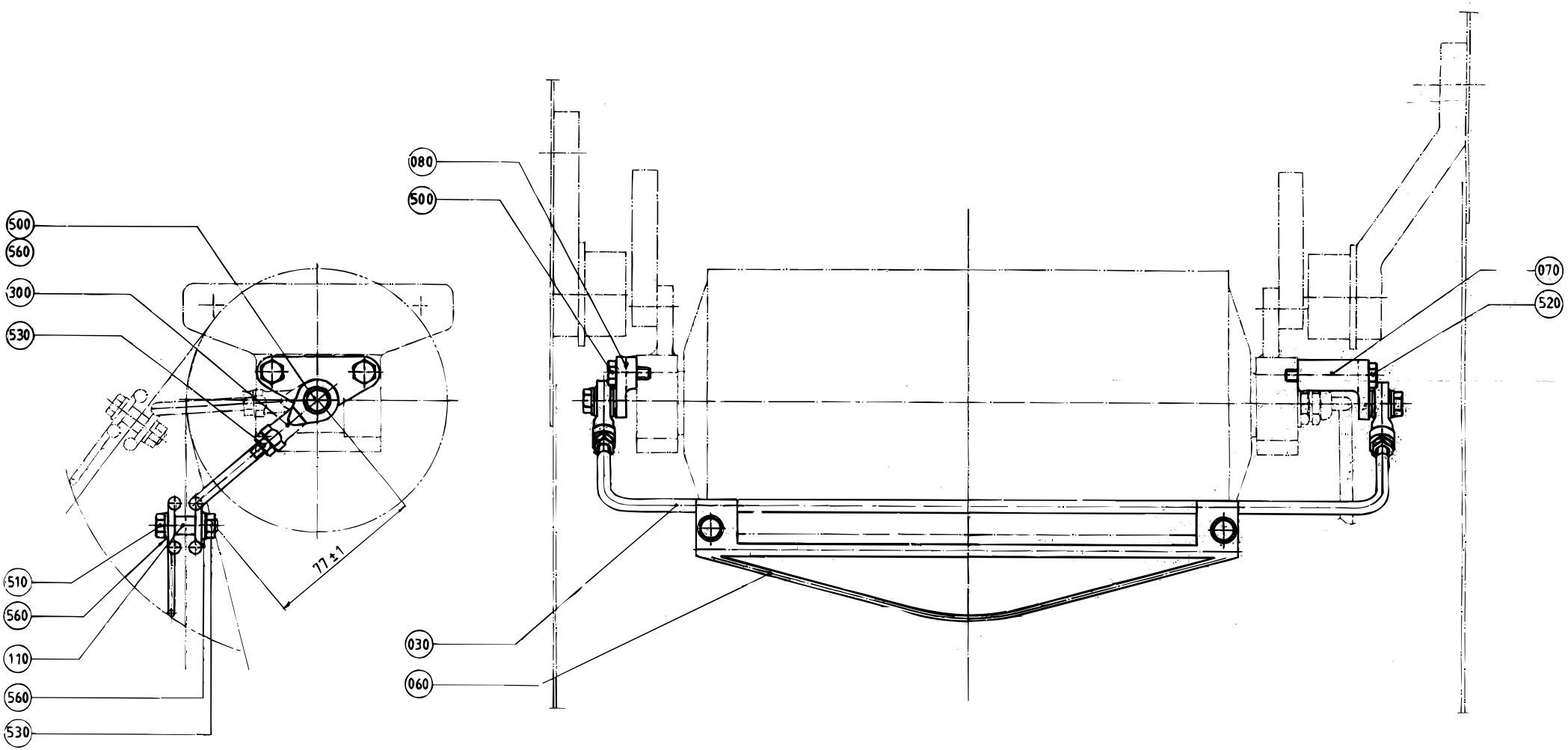

S - 272231-2
ECN 82225

Pos	Part No	SP	UN	Qty	Description	Page No
Common Parts						
030	490759-0000	-		1	BOW CLAMP	
060	490760-0000	-		1	GUIDING ARBOR	
070	295015-0000	-		1	BRACKET	
080	295016-0000	-		1	BRACKET	
110	272236-0000	C		2	SPACER SLEEVE	
300	90115-0068	C		2	ROD ENDS,MAINTENANCE FREE,6-M6X1RH	
500	312105-0368	-		4	Screw M6S M6x16 A280	
510	312105-0372	-		2	Screw M6S M6x25 A280	
520	312105-0378	-		2	Screw M6S M6x40 A280	
530	312605-0316	-		4	Nut Hex. M6M M6 A280	
560	315105-0153	-		8	Washer, Plain, BRB, 6,4/12,H=1,5	

Pos	Part No	SP	UN	Qty	Description	Page No

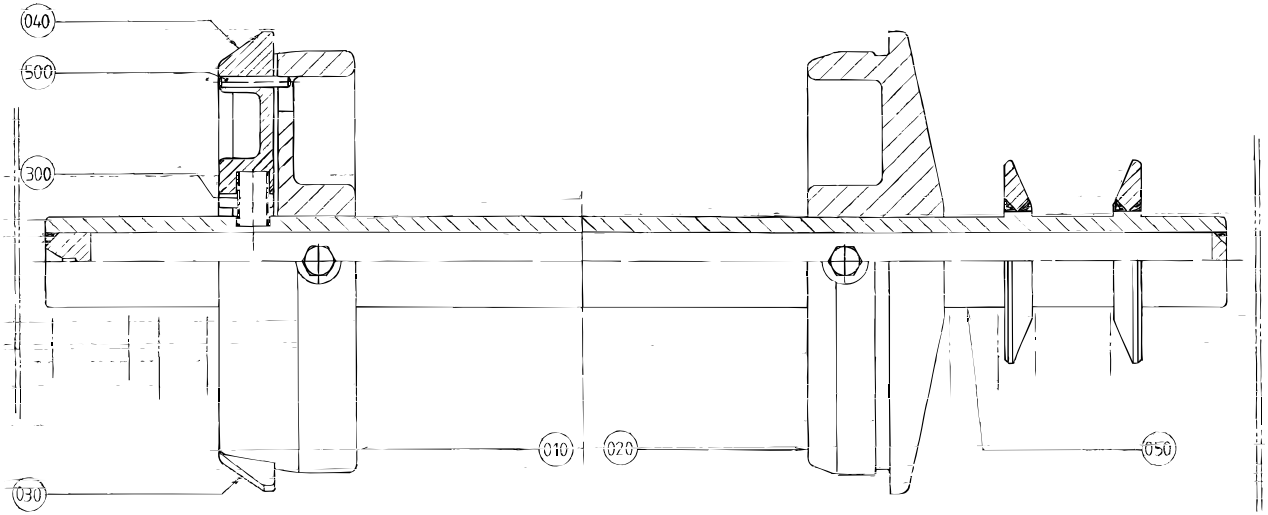

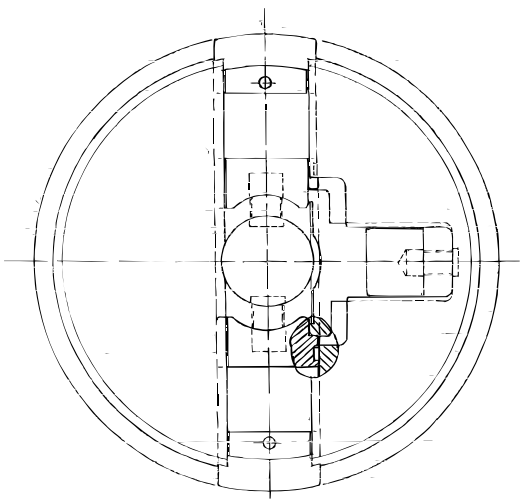

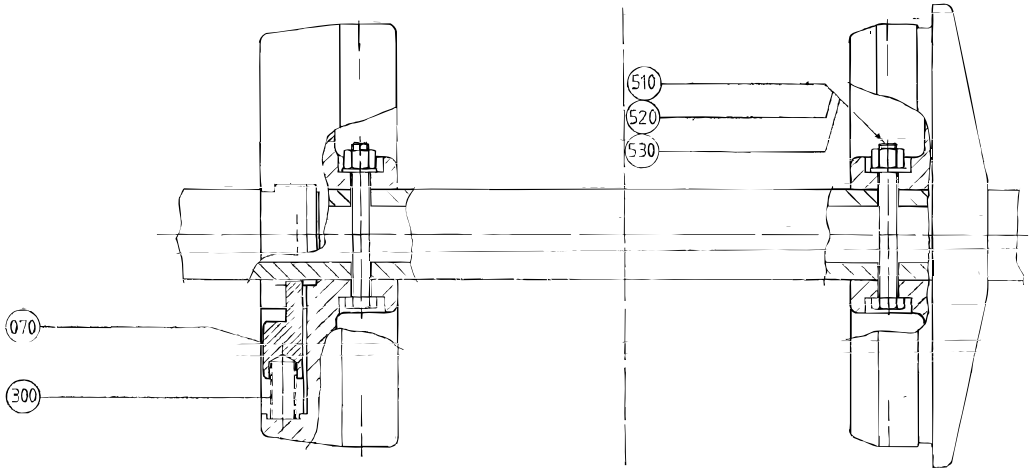

S - 458383-1
ECN 82225

Pos	Part No	SP	UN	Qty	Description	Page No
Common Parts						
010	272814-0000	C		1	SLEEVE	
030	575002-0000	C		1	PLUNGER	
040	575002-0000	C		1	PLUNGER	
070	272728-0000	C		1	BARRIER	
300	90335-0025	C		3	SPRING BARNES 22010	
500	311103-0274	C		2	Pin, Parallell, m6, 4x25	
510	312101-0381	-		2	Screw M6S M6x55 FZB	
520	312812-0316	-		2	Nut Hex. Ny-Lock M6 A480	
530	315101-0153	-		2	Washer, Plain, BRB, 6,4/12 H=1,5	

Pos	Part No	SP	UN	Qty	Description	Page No

PAPER REEL HOLDER

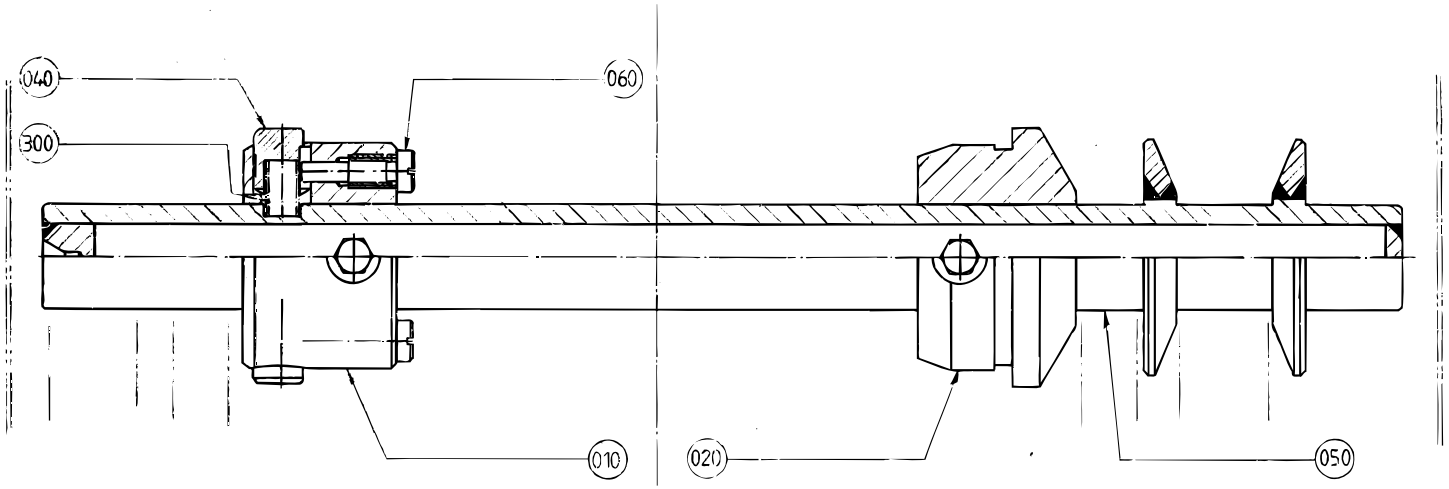

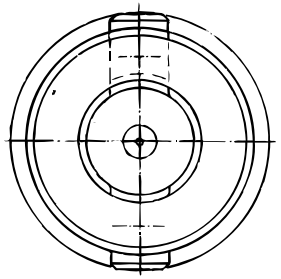

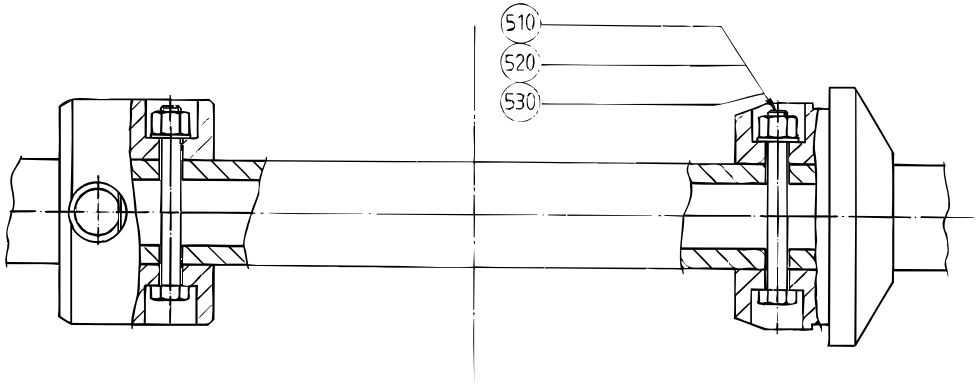

Pos	Part No	SP	UN	Qty	Description	Page No
0125S						
020	272815-0002	C		1	SLEEVE	
050	272816-0002	C		1	SHAFT	
0180B OR 0236B OR 0200B OR 0250B						
020	272815-0001	C		1	SLEEVE	
050	272816-0001	C		1	SHAFT	
0200S						
020	272815-0003	C		1	SLEEVE	
050	272816-0003	C		1	SHAFT	
Common Parts						
010	272814-0000	C		1	SLEEVE	
030	575002-0000	C		1	PLUNGER	
040	575002-0000	C		1	PLUNGER	
070	272728-0000	C		1	BARRIER	
300	90335-0025	C		3	SPRING BARNES 22010	
500	311103-0274	C		2	Pin, Parallell, m6, 4x25	
510	312101-0381	-		2	Screw M6S M6x55 FZB	
520	312812-0316	-		2	Nut Hex. Ny-Lock M6 A480	
530	315101-0153	-		2	Washer, Plain, BRB, 6,4/12 H=1,5	

Pos	Part No	SP	UN	Qty	Description	Page No

PAPER REEL HOLDER

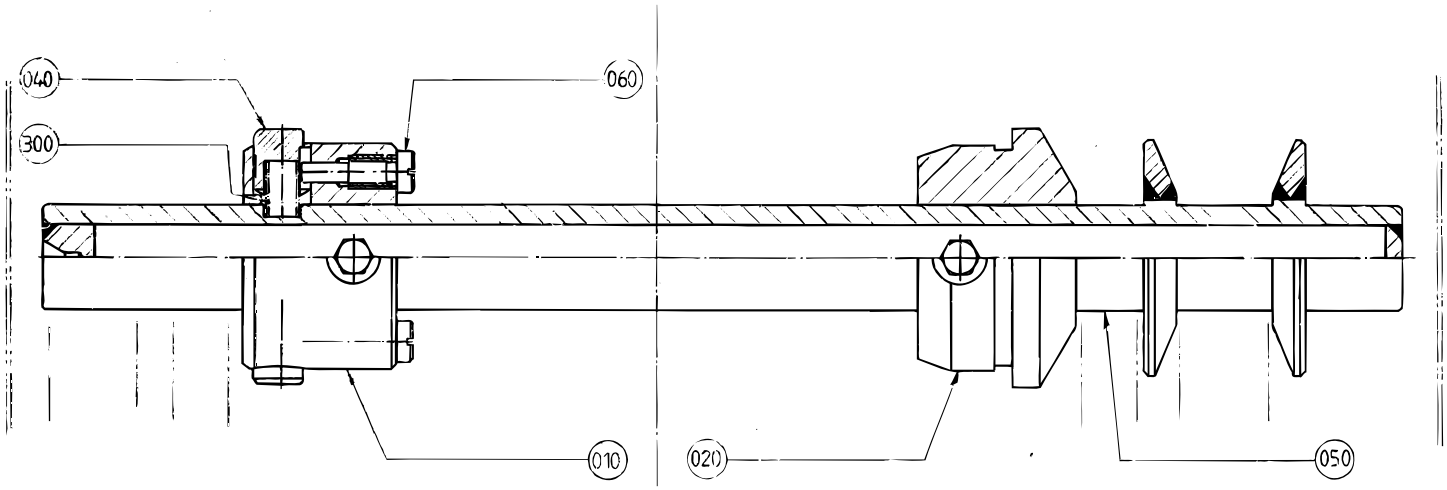

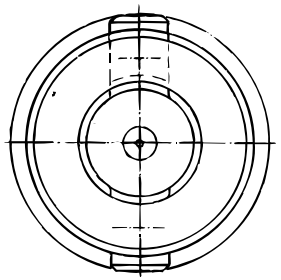

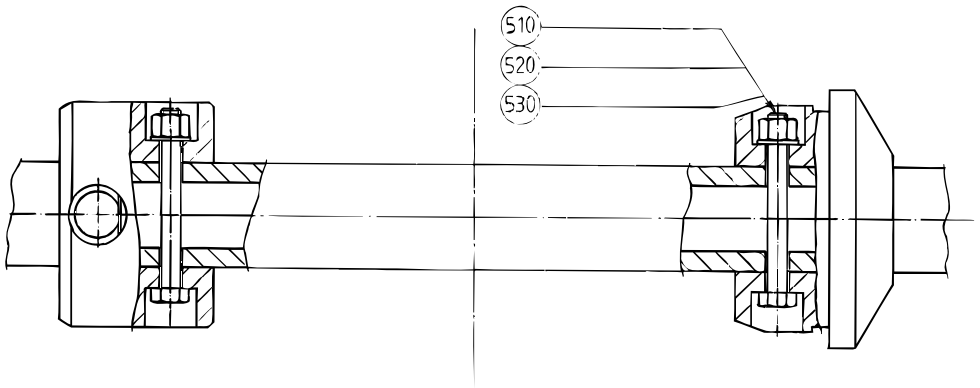

Pos	Part No	SP	UN	Qty	Description	Page No
0125S						
020	272810-0002	C		1	SLEEVE	
050	272816-0002	C		1	SHAFT	
0180B OR 0236B OR 0200B OR 0250B OR 0284B						
020	272810-0001	C		1	SLEEVE	
050	272816-0001	C		1	SHAFT	
0200S OR 0160S						
020	272810-0003	C		1	SLEEVE	
050	272816-0003	C		1	SHAFT	
0250S						
020	574435-0000	C		1	SLEEVE	
050	272816-0004	C		1	SHAFT	
Common Parts						
010	271239-0000	C		1	SLEEVE	
040	272813-0000	C		2	PLUNGER	
060	271241-0000	C		2	SCREW	
300	90335-0025	C		2	SPRING BARNES 22010	
510	312101-0381	-		2	Screw M6S M6x55 FZB	
520	312812-0316	-		2	Nut Hex. Ny-Lock M6 A480	
530	315101-0153	-		2	Washer, Plain, BRB, 6,4/12 H=1,5	

Pos	Part No	SP	UN	Qty	Description	Page No

CATCH HANDLE

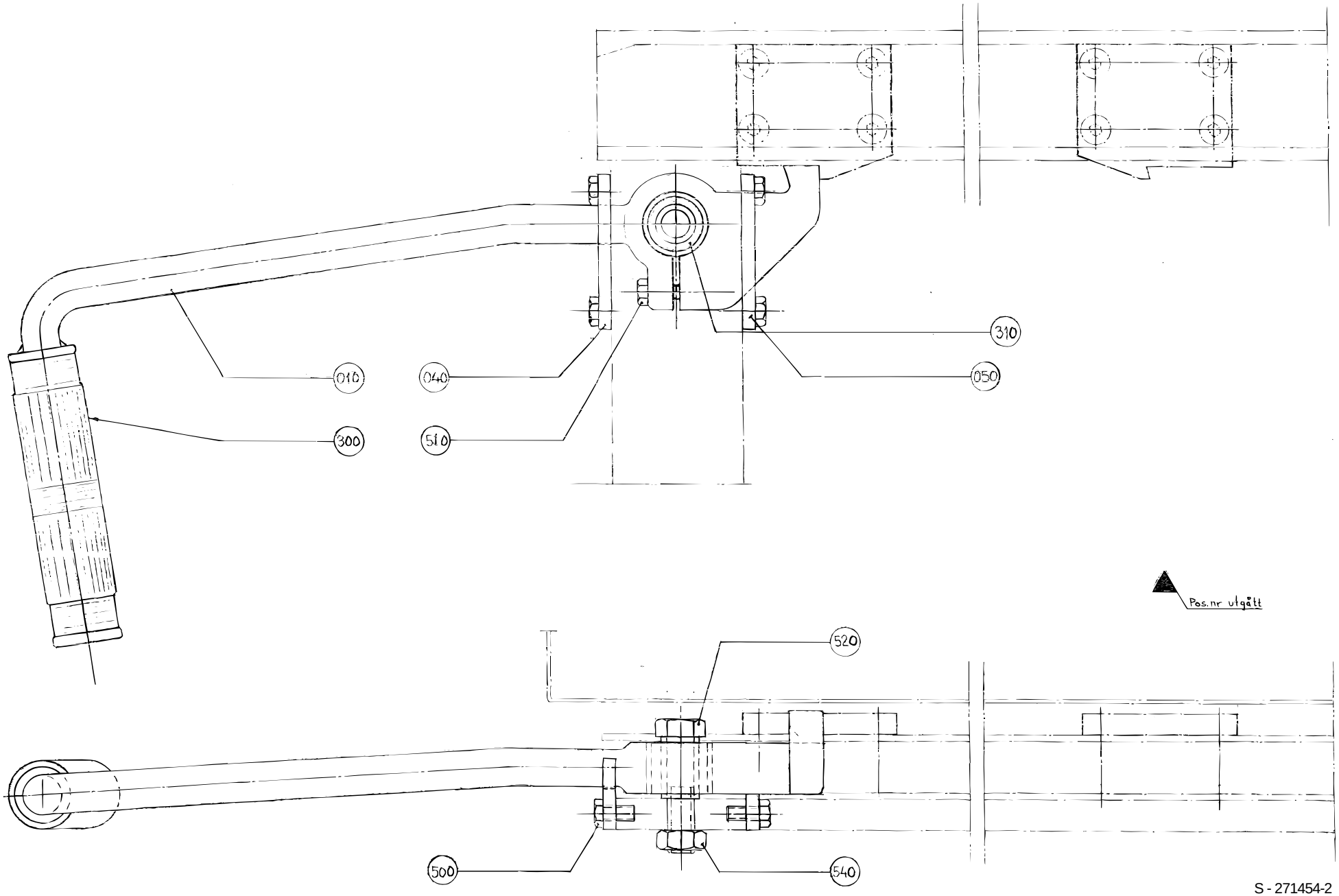

Pos	Part No	SP	UN	Qty	Description	Page No
Common Parts						
010	272569-0000	-		1	CATCH HANDLE	
040	272603-0000	-		1	STOP LUG	
050	272604-0000	-		1	GUIDE LUG	
300	90017-0001	-		1	BIKE-HANDLE,RUBBER	
310	90347-0012	C		1	DAMPER	
500	312105-0366	-		4	Screw M6S M6x12 A280	
510	312105-0370	-		1	Screw M6S M6x20 A280	
520	312105-0500	-		1	Screw M6S M10x45 A280	
540	312605-0320	-		1	Nut Hex. M6M M10 A280	

Pos	Part No	SP	UN	Qty	Description	Page No

CONNECTION BOX

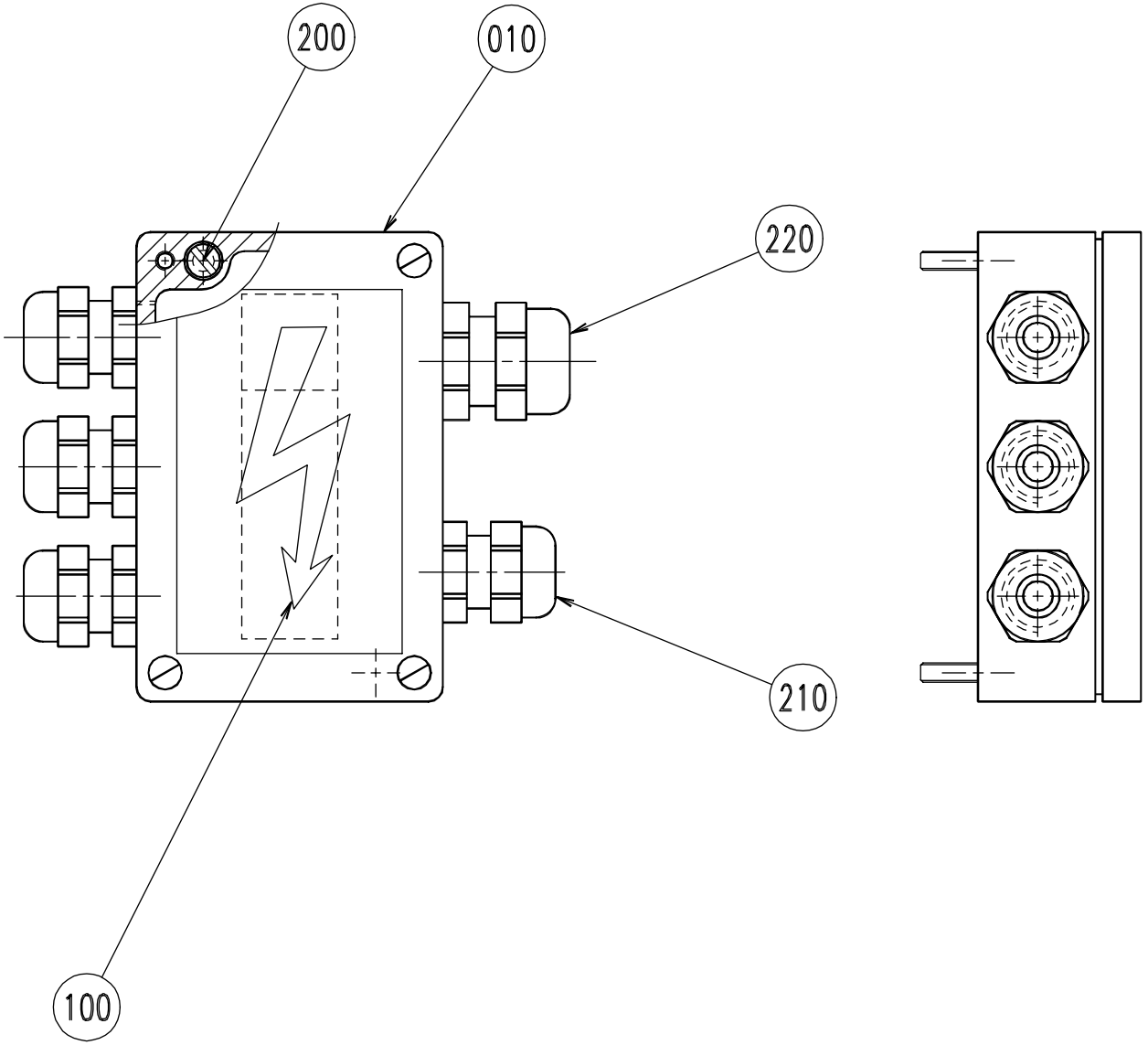

Pos	Part No	SP	UN	Qty	Description	Page No
Common Parts						
010	751321-0000	-		1	CONNECTION BOX	
100	90194-0040	-		1	FLASH SIGN 37X74MM REPL.BY 90194-0016	
200	312125-0295	-		2	Screw Pan Head MCS M4X20 RFR	
210	352103-0101	-		4	CABLE GLAND ST 9;PR15,2/PG9	
220	352103-0106	-		1	CABLE GLAND ST 11	

Pos	Part No	SP	UN	Qty	Description	Page No

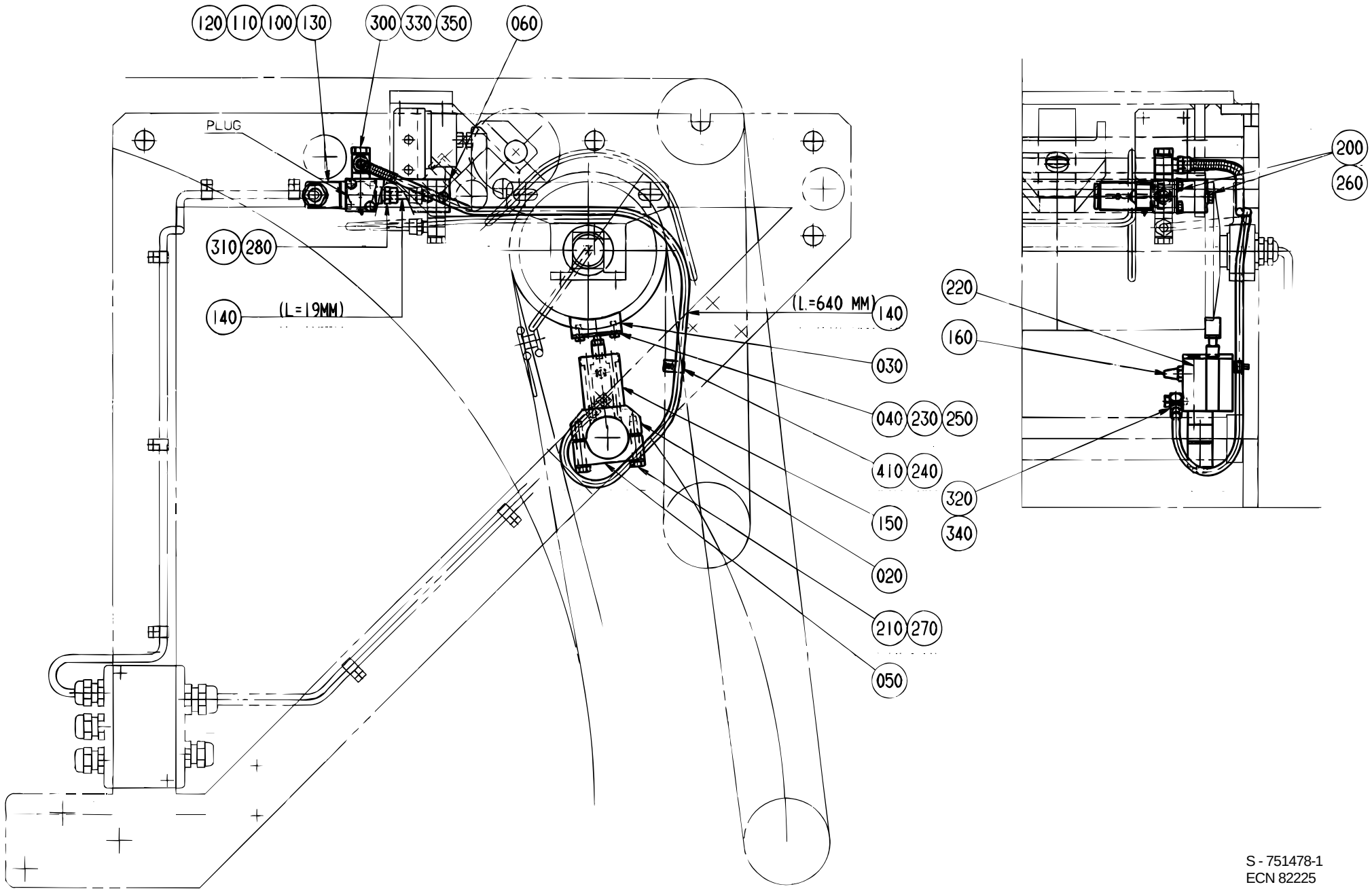

S - 751478-1
ECN 82225

Pos	Part No	SP	UN	Qty	Description	Page No
Common Parts						
020	751322-0000	-		1	BRACKET	
030	751323-0000	-		1	BRAKE BLOCK	
040	751324-0000	-		1	HOLDER	
050	751325-0000	-		1	BRACKET	
060	751326-0000	-		1	BRACKET	
100	90042-0109	-		1	SOLENOID VALVE 553-121-000	
110	90042-0345	-		1	COIL 24V DC	
120	90042-0366	-		1	CONTACT 2-Pole+Earth Hirschmann	
130	90042-0438	-		1	CONNECTION RAMP 553-400-001	
140	90166-0132	-	M	1	TUBE 6 mm PA,Transp.	
150	90239-0983	-		1	CYLINDER	
160	90328-0020	-		1	SILENCER	
200	312105-0325	-		4	Screw M6S M5x10 A280	
210	312105-0374	-		2	Screw M6S M6x30 A280	
220	312111-0340	-		2	Screw Hex.Sock.Hd.MC6S-TT 5x45 88 FZB	
230	312122-0287	-		2	Screw Pan Head MCS M4X8 NL. PL.	
240	312125-0285	-		1	Screw Slot.Pan Hd. MCS 4x6 A480	
250	312605-0314	-		1	Nut Hex. M6M M5 A280	
260	315105-0146	-		4	Washer, Plain, BRB, 5,3/10,H=1	
270	315105-0153	-		2	Washer, Plain, BRB, 6,4/12,H=1,5	
280	315233-0109	-		1	Washer,Pl.Rnd.Nyl.10,3/14,H=1	
300	342903-0111	-		1	NUT WITH SPRING 6/4-M10X1	
310	342921-0113	-		1	STRAIGHT COUPLING,EXT.THREADED 6/4-G1/8"	
320	342980-0111	-		1	BANJO-CONNECTION,RING 6/4-M5	
330	342980-0113	-		1	BANJO-CONNECTION,RING 6/4-G1/8"	
340	B 342980-0301	-		1	BANJO-HOLLOW BOLT COUPL.,EXT.THREA.01-M5	
350	342980-0303	-		1	BANJO-HOLLOW BOLT COUPL,EXT.THR.01-G1/8"	
410	352110-0100	-		1	CRAMP TK 5-7 White Polyamid	

Pos	Part No	SP	UN	Qty	Description	Page No

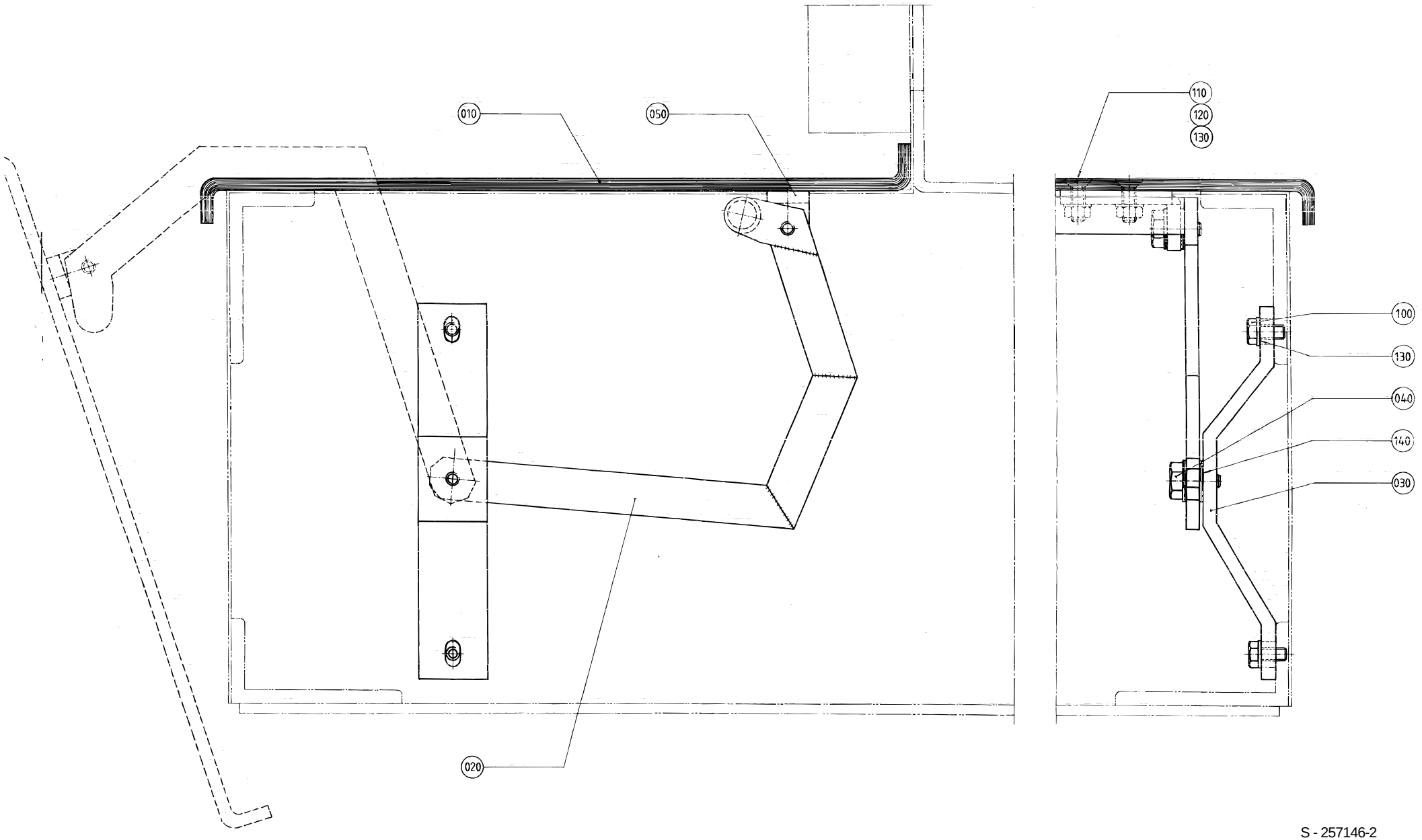

S - 257146-2
ECN 82225

Pos	Part No	SP	UN	Qty	Description	Page No
Common Parts						
010	295156-0000	-		1	LID	
020	295157-0000	-		1	ARM	
030	256148-0000	-		2	HOLDER	
040	256150-0000	-		4	SCREW	
050	272552-0000	-		2	BRACKET	
100	312105-0449	-		4	Screw M6S M8x16 A280	
110	312145-0453	-		4	Screw Counters.Slot.Hd. MFS 8x25 SS	
120	312605-0318	-		4	Nut Hex. M6M M8 A280	
130	315105-0165	-		8	Washer, Plain, BRB, 8,4/16,H=1,5	
140	90005-0126	-		8	Washer, Plain Round 13(M12)/24, H=2	

Pos	Part No	SP	UN	Qty	Description	Page No

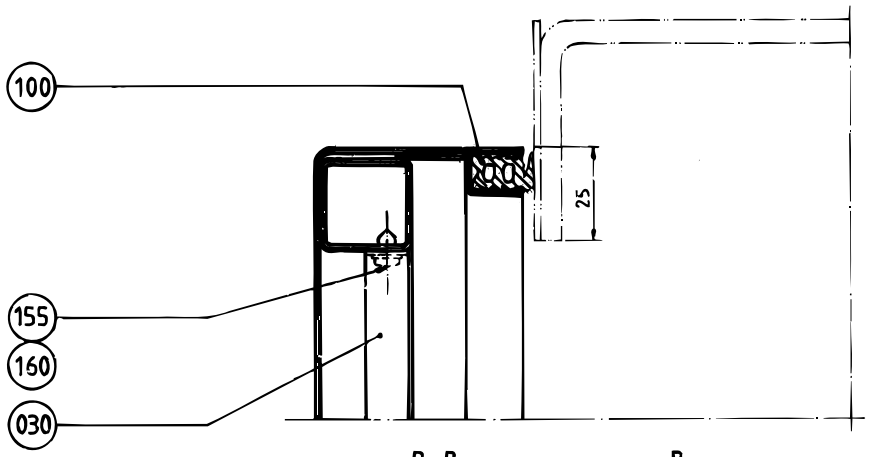
100
155
160
030
25
B - B

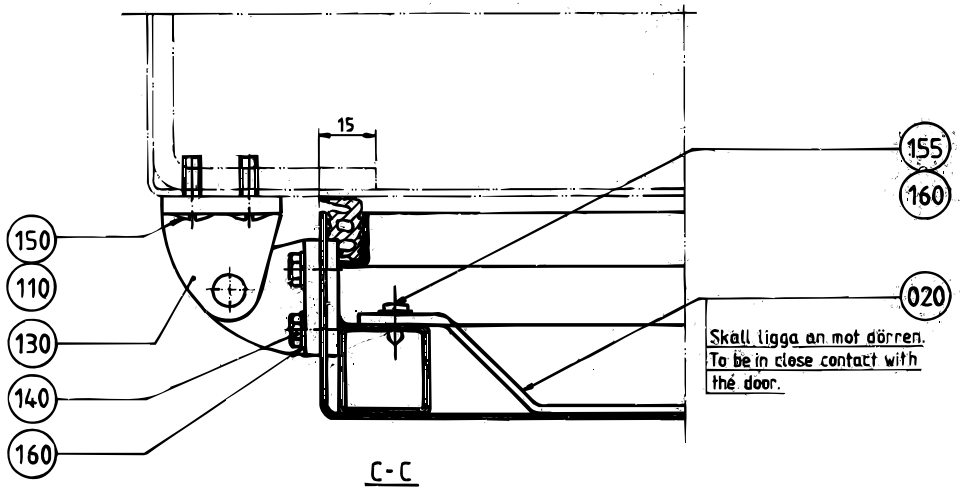
15
155
160
150
110
130
140
160
020
Skall ligga an mot dörren.
To be in close contact with
the door.
C - C

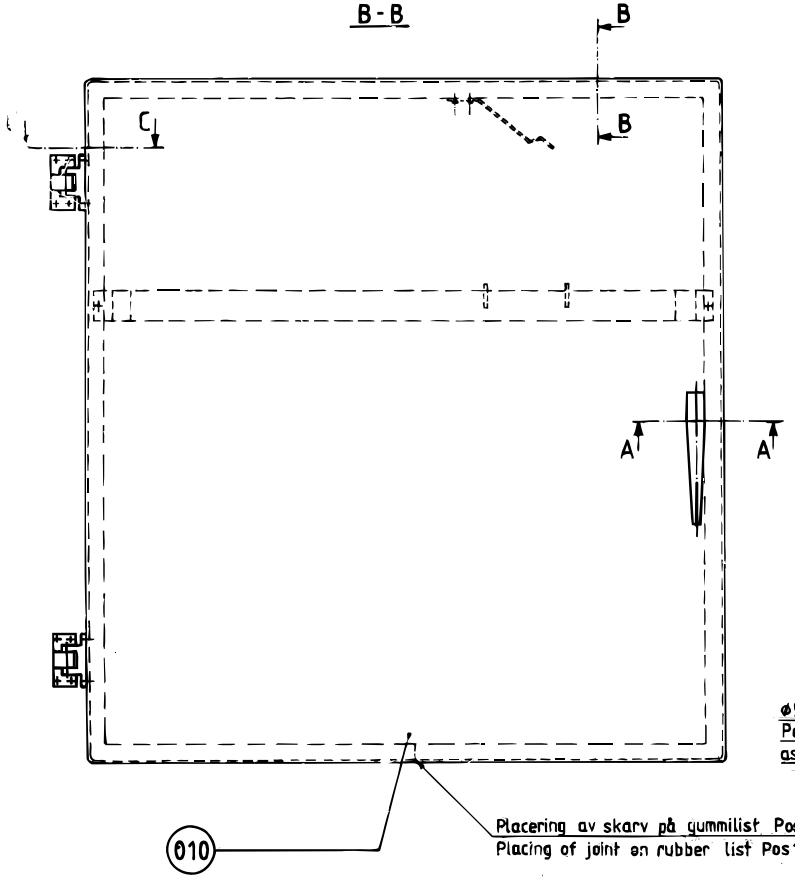
B
C
B
A
A
010
Placering av skarv på gummilist Pos 100
Placing of joint on rubber list Pos 100

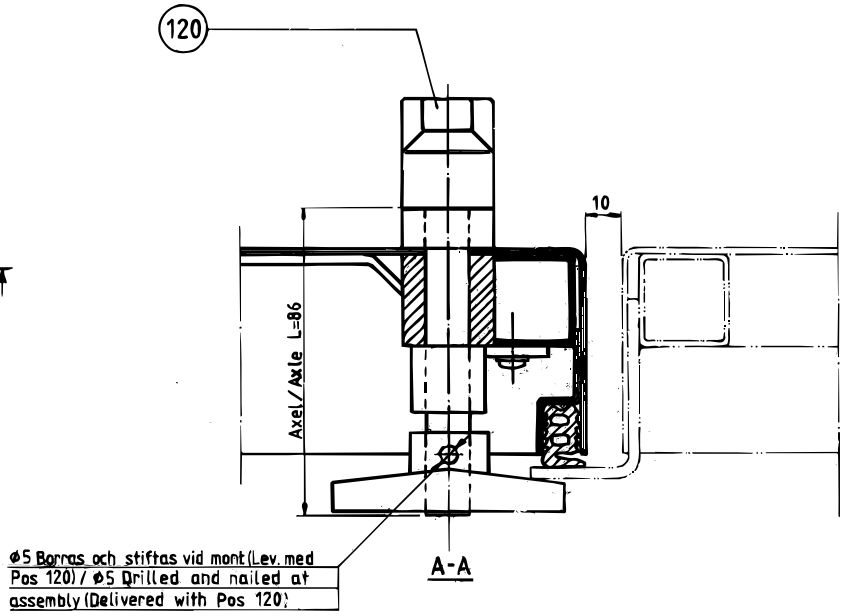
120
10
Axel / Axle L=86
ø5 Borras och stiftas vid mont (Lev. med
Pos 120) / ø5 Drilled and nailed at
assembly (Delivered with Pos 120)
A-A

Pos	Part No	SP	UN	Qty	Description	Page No
Common Parts						
010	295158-0000	-		1	DOOR	
020	295246-0000	-		1	HOLDER	
030	295247-0000	-		1	LEAF SPRING	
100	90143-0049	-	MM	37	RUBBERSTRIP 11X21MM	
110	90157-0016	-	ML	1	LOCKING FLUID	
120	B 90237-0044	-		1	DOOR HANDLE Lˆgstrup	
130	90248-0013	-		2	HINGE 3562E STUV	
140	312105-0325	-		8	Screw M6S M5x10 A280	
150	312165-0329	-		8	Screw Slot.Rais.Count.Hd.MKFS 5x16 SS	
155	312503-0410	-		4	Screw Cross Reces.Rnd.Hd.Tapp. B10x13	
160	315105-0146	-		12	Washer, Plain, BRB, 5,3/10,H=1	

Pos	Part No	SP	UN	Qty	Description	Page No

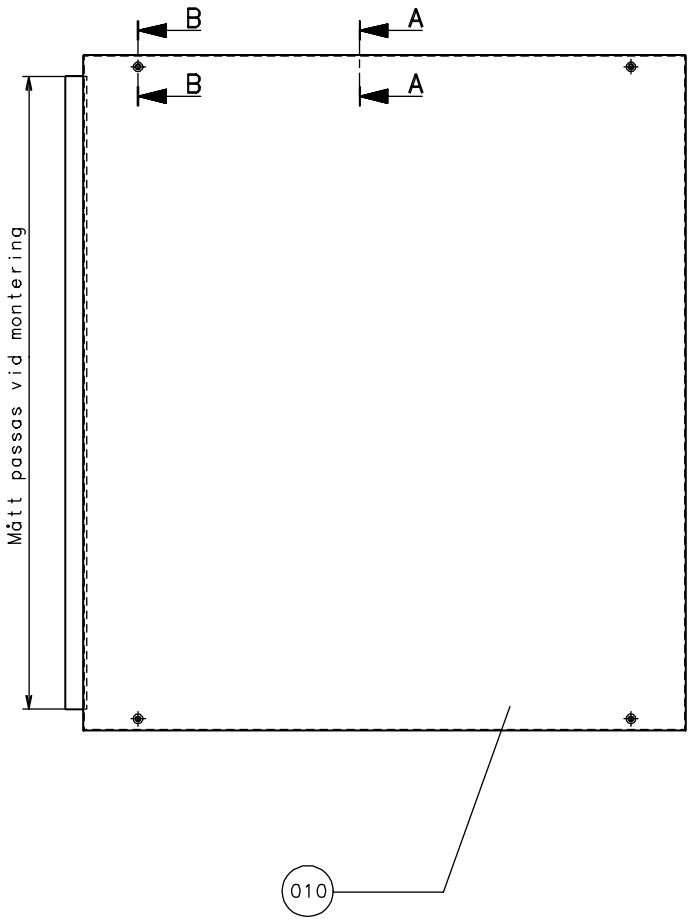

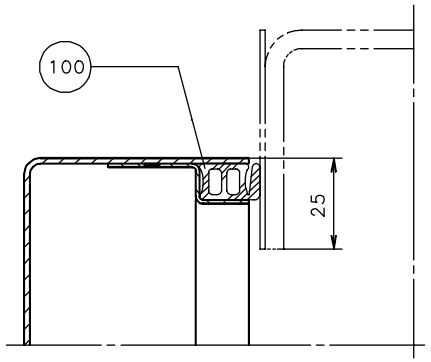

A-A
SCALE 1:1

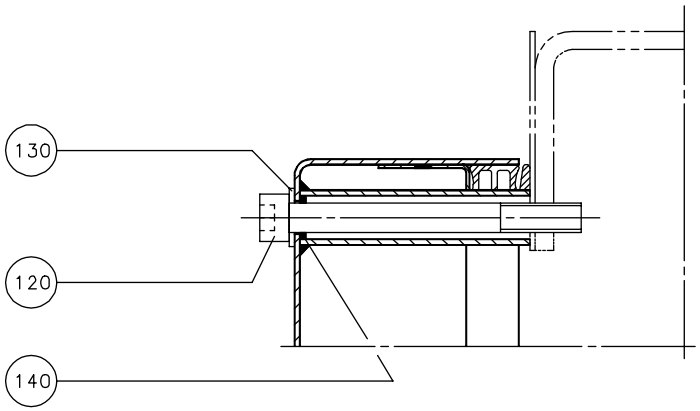

B-B
SCALE 1:1

Pos	Part No	SP	UN	Qty	Description	Page No
Common Parts						
010	572345-0000	-		1	HATCH	
100	90143-0049	-	MM	23	RUBBERSTRIP 11X21MM	
120	312115-0467	-		4	Screw MC6S M8x80 A280	
130	315105-0165	-		4	Washer, Plain, BRB, 8,4/16,H=1,5	
140	315202-0104	-		4	O-Ring 6,1x1,6 mm	

Pos	Part No	SP	UN	Qty	Description	Page No

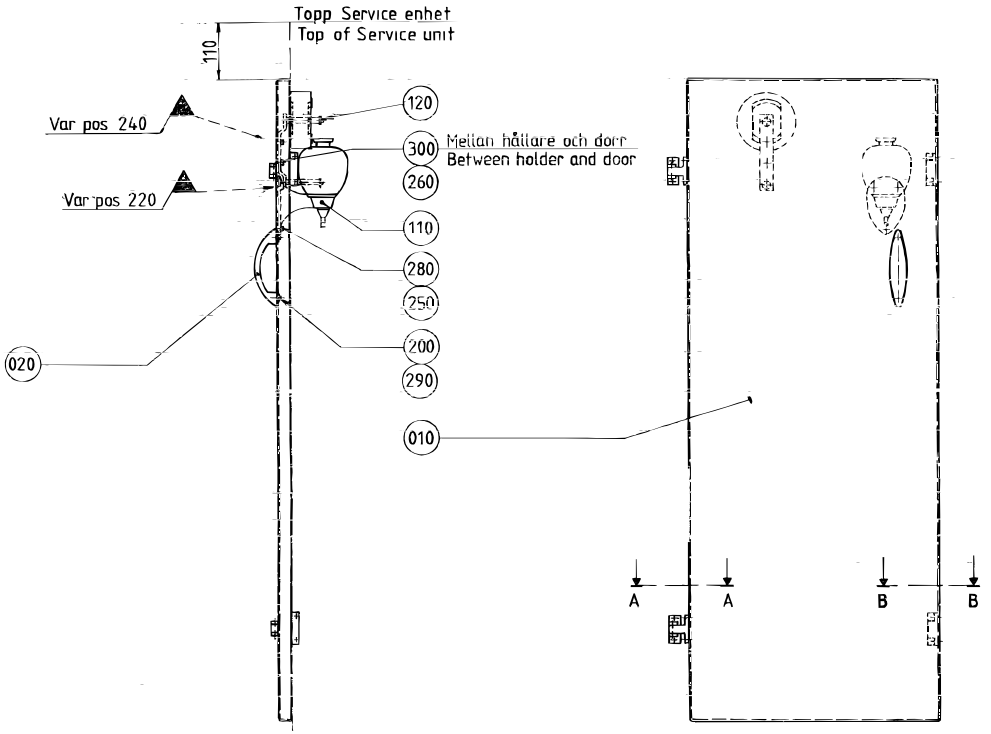

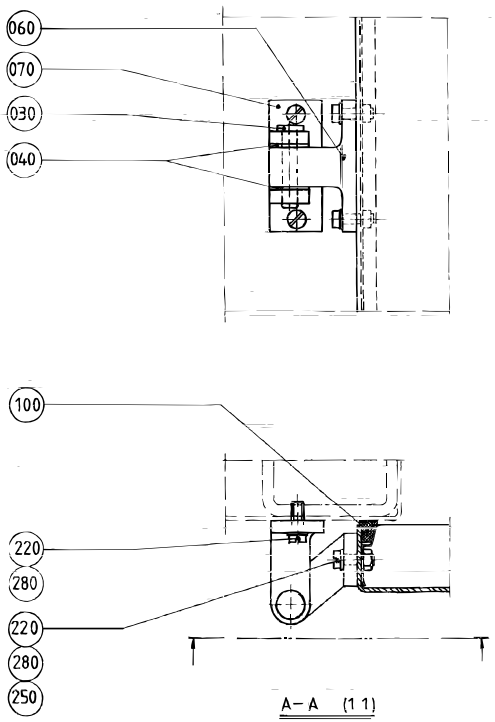

A – A (1 1)

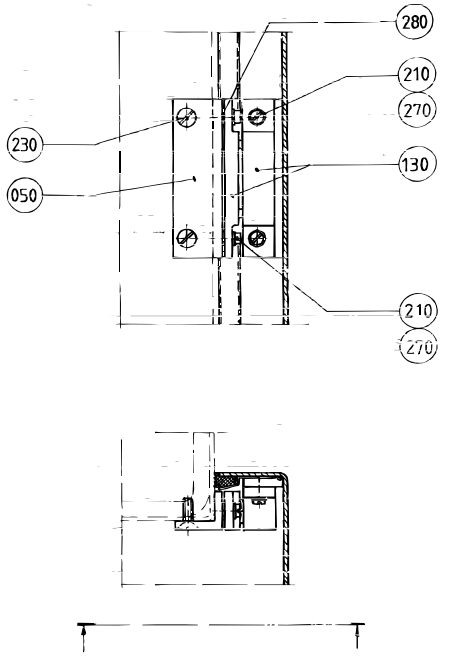

B – B (1 1)

S - 469535-1
ECN 82225

Pos	Part No	SP	UN	Qty	Description	Page No
Common Parts						
010	469526-0000	-		1	DOOR	
020	7309-0000	-		1	HANDLE	
030	257397-0000	-		2	PIN	
040	271011-0000	-		4	WASHER	
050	272453-0000	-		2	SPACER	
060	272510-0000	-		2	HINGE	
070	272511-0000	-		2	HINGE	
100	90143-0047	-	MM	35	RUBBER STRIP	
105	90157-0016	-		1	LOCKING FLUID	
110	90243-0133	-		1	CONTAINER	
120	90256-0001	C		1	TAPE HOLDER	
130	90339-0004	-		2	MAGNETIC LOCK	
200	312105-0364	-		2	Screw M6S M6x10 A280	
210	312125-0222	-		8	Screw Pan Head MCS M3x8 RFR	
220	312125-0291	-		8	Screw Pan Head MCS M4x12 RFR	
230	312145-0291	-		4	Screw Counters.Slot.Hd. MFS 4x12 A4	
250	312605-0312	-		7	Nut Hex. M6M M4 A280	
260	312605-0314	-		2	Nut Hex. M6M M5 A280	
270	315105-0124	-		8	Washer, Plain, BRB, 3,2/6,H=0,5	
280	315105-0136	-		15	Washer, Plain, BRB, 4,3/8,H=0,8	
290	315105-0153	-		2	Washer, Plain, BRB, 6,4/12,H=1,5	
300	315115-0153	-		2	Washer, Plain, TBRB 6,4/12 H=3	

Pos	Part No	SP	UN	Qty	Description	Page No

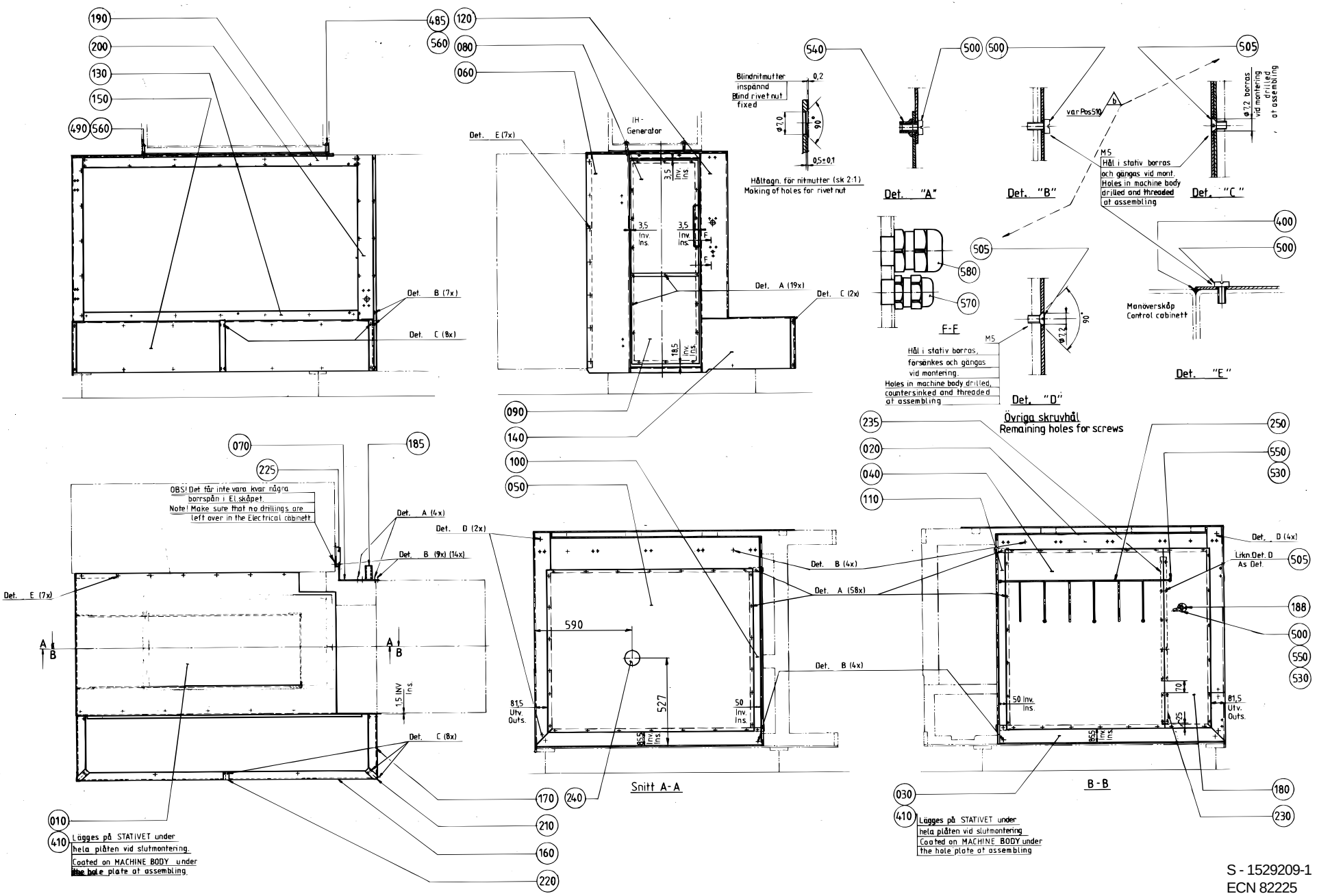

S - 1529209-1
ECN 82225

Pos	Part No	SP	UN	Qty	Description	Page No
Common Parts						
010	1529151-0000	-		1	COVERING PLATE	
020	469033-0000	-		1	COVERING PLATE	
030	295639-0000	-		1	BOTTOM PANEL	
040	441067-0000	-		1	SIDE COVER LEFT	
050	469516-0000	-		1	SIDE PLATE RIGHT	
060	469034-0000	-		1	GUSSET PLATE	
070	469036-0000	-		1	COVERING PLATE	
080	295645-0000	-		1	COVER, UPPER	
090	295646-0000	-		1	COVER, LOWER	
100	295647-0000	-		1	CORNER STRIP	
110	295648-0000	-		1	CORNER STRIP	
120	469035-0000	-		1	GUSSET PLATE	
130	295650-0000	-		1	COVERING PLATE	
140	295651-0000	-		1	COVERING PLATE	
150	295652-0000	-		1	COVERING PLATE	
160	295653-0000	-		1	COVERING PLATE	
170	295654-0000	-		1	COVERING PLATE	
180	441068-0000	-		1	SIDE PLATE	
185	441421-0000	-		1	PROTECTIVE CASING	
188	272698-0000	-		1	BRACKET	
190	469038-0000	-		1	COVERING PLATE	
200	469039-0000	-		1	COVERING PLATE	
210	295658-0000	-		2	COVER SLIP	
220	295659-0000	-		1	COVER SLIP	
225	491186-0000	-		1	COVER SLIP	
230	441069-0001	-		1	BRACKET	
235	441069-0002	-		1	BRACKET	
240	491286-0000	-		1	REFLECTOR	
250	272696-0000	-		1	HOLDER	
400	90157-0022	-	L	1	SEALING COMPOUND	
410	90298-0012	-		1	INHIBITOR	
485	312105-0463	-		2	Screw M6S M8x60 A280	
490	312105-0464	-		2	Screw M6S M8x65 A280	
500	312125-0325	-		122	Screw Slot.Pan Hd. MCS 5x10 A480	
505	312145-0323	-		89	Screw Counters.Slot.Hd. MFS 5x8 SS	
530	312605-0314	-		8	Nut Hex. M6M M5 A280	
540	312923-0122	-		81	Nut Blind Rivet PO M5x12,6 SS	
550	315105-0146	-		8	Washer, Plain, BRB, 5,3/10,H=1	
560	315105-0165	-		4	Washer, Plain, BRB, 8,4/16,H=1,5	
570	352103-0101	-		1	CABLE GLAND ST 9;PR15,2/PG9	
580	352103-0106	-		1	CABLE GLAND ST 11	

Pos	Part No	SP	UN	Qty	Description	Page No

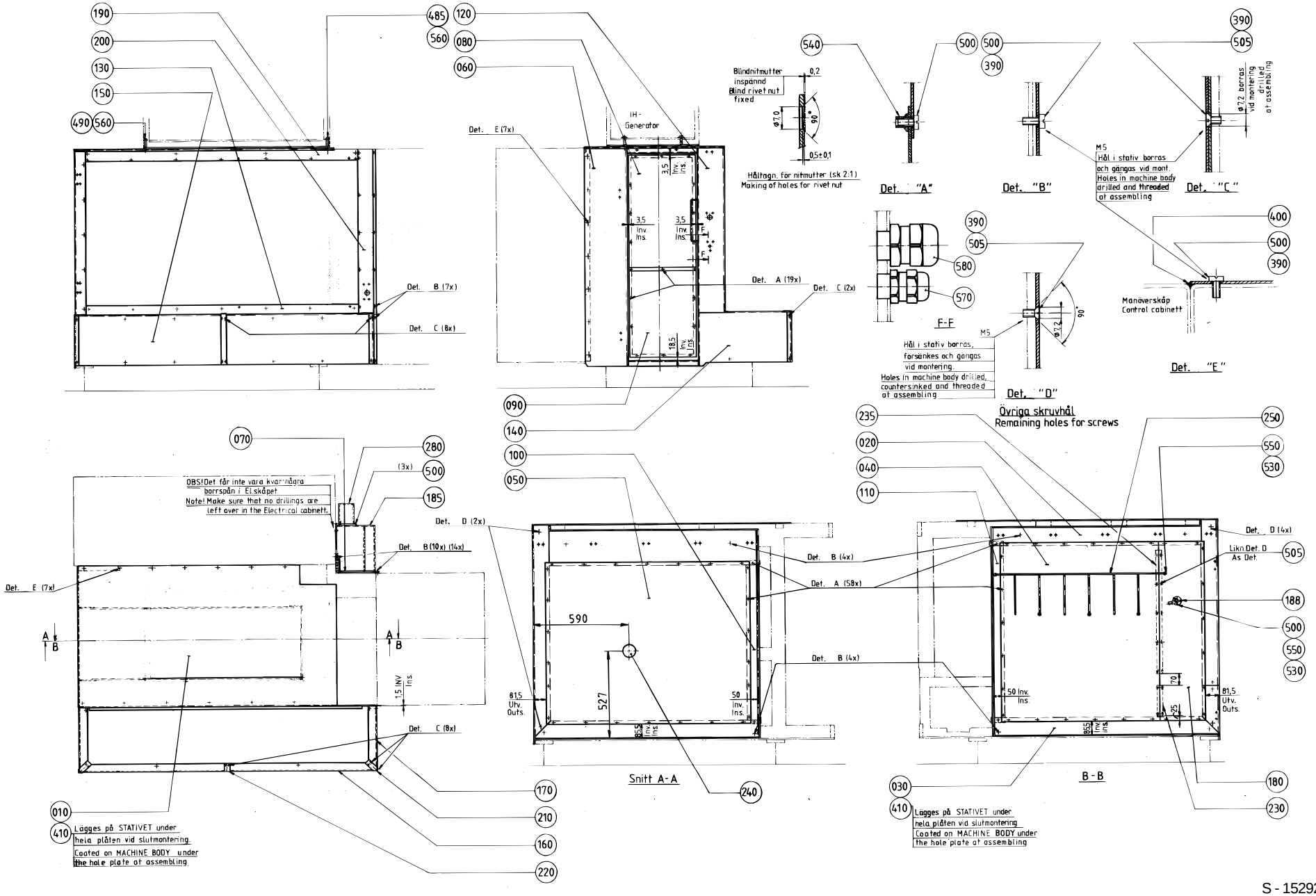
190
200
130
150
490
560
485
560
120
080
060
IH-
Generator
Det. E (7x)
Det. B (7x)
Det. C (8x)
Det. A (19x)
Det. C (2x)
090
140
100
050
Blindnitmutter
inspännd
Blind rivet nut
fixed
Håltagn. för nitmuttrar (sk 2:1)
Making of holes for rivet nut
540
500
500
390
Det. "A"
Det. "B"
390
505
M5
Hål i stativ borras
och gängas vid mont.
Holes in machine body
drilled and threaded
at assembling
Det. "C"
Ø7,2 borras
vid montering
drilled
at assembling
390
505
580
570
F-F
M5
Hål i stativ borras,
försänkes och gängas
vid montering.
Holes in machine body drilled,
countersinked and threaded
at assembling
Det. "D"
400
500
390
Manöverskåp
Control cabinett
Det. "E"
Övriga skruvhål
Remaining holes for screws
235
020
040
110
250
550
530
070
280
(3x)
500
185
OBS! Det får inte vara kvarnågra
borrspån i Elskåpet
Note! Make sure that no drillings are
left over in the Electrical cabinett.
Det. D (2x)
Det. B (10x) (14x)
Det. E (7x)
Det. B (4x)
Det. A (58x)
Det. B (4x)
590
527
81,5
Utv.
Outs.
50
Inv.
Ins.
Snitt A-A
240
Det. D (4x)
Likn. Det. D
As Det.
505
188
500
550
530
50 Inv.
Ins.
70
25
81,5
Utv.
Outs.
B-B
030
410
Lägges på STATIVET under
hela plåten vid slutmontering.
Coated on MACHINE BODY under
the hole plate at assembling
180
230
010
410
Lägges på STATIVET under
hela plåten vid slutmontering.
Coated on MACHINE BODY under
the hole plate at assembling
170
210
160
220

Pos	Part No	SP	UN	Qty	Description	Page No
Common Parts						
010	1529151-0000	-		1	COVERING PLATE	
020	469033-0000	-		1	COVERING PLATE	
030	295639-0000	-		1	BOTTOM PANEL	
040	441067-0000	-		1	SIDE COVER LEFT	
050	469516-0000	-		1	SIDE PLATE RIGHT	
060	469034-0000	-		1	GUSSET PLATE	
070	491470-0000	-		1	COVERING PLATE	
080	295645-0000	-		1	COVER, UPPER	
090	295646-0000	-		1	COVER, LOWER	
100	295647-0000	-		1	CORNER STRIP	
110	295648-0000	-		1	CORNER STRIP	
120	469035-0000	-		1	GUSSET PLATE	
130	295650-0000	-		1	COVERING PLATE	
140	295651-0000	-		1	COVERING PLATE	
150	295652-0000	-		1	COVERING PLATE	
160	295653-0000	-		1	COVERING PLATE	
170	295654-0000	-		1	COVERING PLATE	
180	441068-0000	-		1	SIDE PLATE	
185	491287-0000	-		1	PROTECTIVE CASING	
188	272698-0000	-		1	BRACKET	
190	469038-0000	-		1	COVERING PLATE	
200	469039-0000	-		1	COVERING PLATE	
210	295658-0000	-		2	COVER SLIP	
220	295659-0000	-		1	COVER SLIP	
230	441069-0001	-		1	BRACKET	
235	441069-0002	-		1	BRACKET	
240	491286-0000	-		1	REFLECTOR	
250	272696-0000	-		1	HOLDER	
280	491488-0000	-		1	PROTECTIVE CASING	
390	90157-0016	-	ML	1	LOCKING FLUID	
400	90157-0022	-	L	1	SEALING COMPOUND	
410	90298-0012	-		1	INHIBITOR	
485	312105-0463	-		2	Screw M6S M8x60 A280	
490	312105-0464	-		2	Screw M6S M8x65 A280	
500	312125-0325	-		123	Screw Slot.Pan Hd. MCS 5x10 A480	
505	312145-0323	-		89	Screw Counters.Slot.Hd. MFS 5x8 SS	
530	312605-0314	-		8	Nut Hex. M6M M5 A280	
540	312923-0122	-		77	Nut Blind Rivet PO M5x12,6 SS	
550	315105-0146	-		8	Washer, Plain, BRB, 5,3/10,H=1	
560	315105-0165	-		4	Washer, Plain, BRB, 8,4/16,H=1,5	
570	352103-0101	-		1	CABLE GLAND ST 9;PR15,2/PG9	
580	352103-0106	-		1	CABLE GLAND ST 11	

Pos	Part No	SP	UN	Qty	Description	Page No

SPLICING APPARATUS

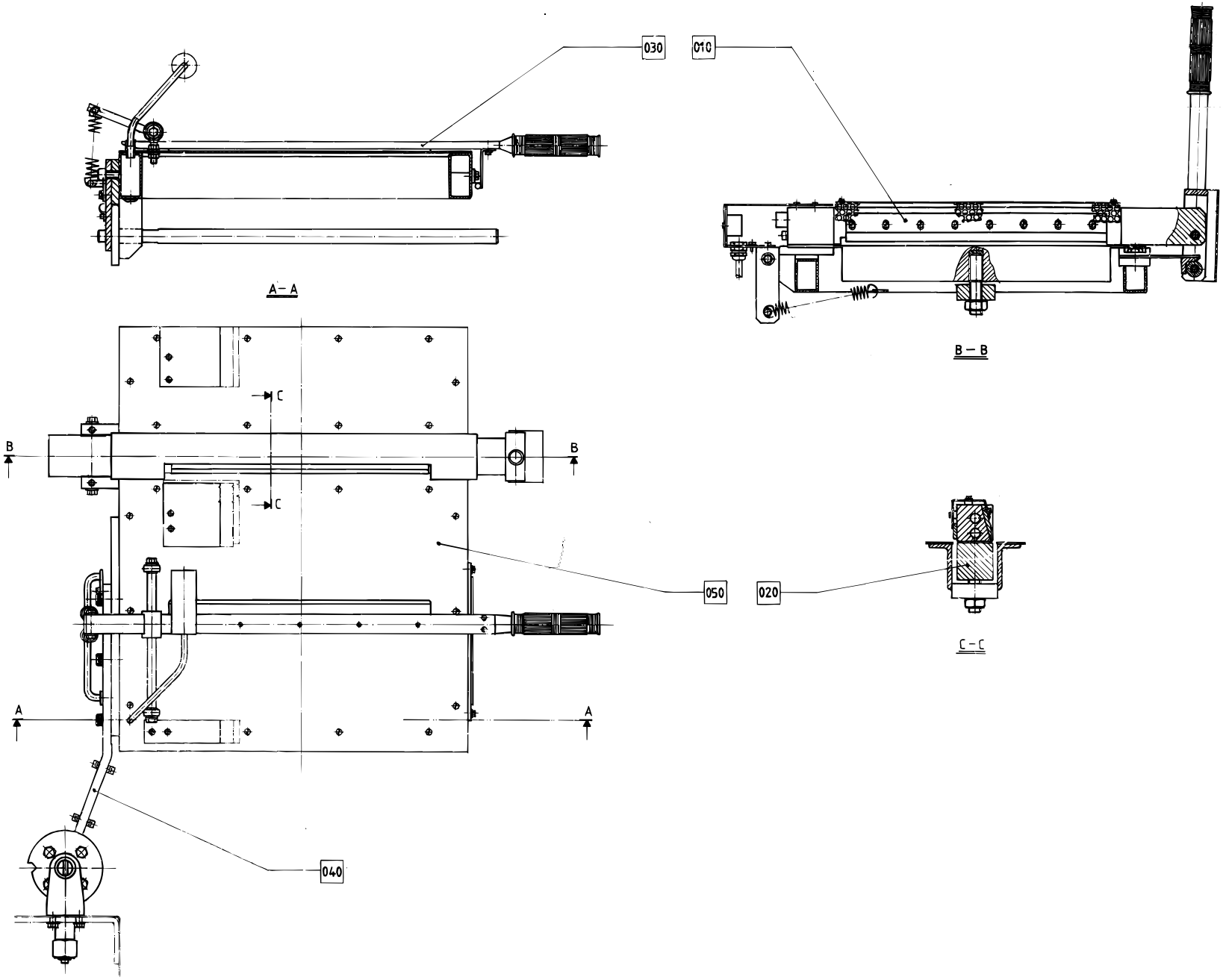

Pos	Part No	SP	UN	Qty	Description	Page No
Common Parts						
010	A 37877-0300	-		1	HEATING BLOCK	**540**
020	A 37894-0100	-		1	COUNTER RAIL	**542**
030	A 450101-0100	-		1	TEARING DEVICE	**544**
040	A 271626-0300	-		1	SUSPENSION ARM	**546**
050	A 271641-0300	-		1	TABLE	**548**

Pos	Part No	SP	UN	Qty	Description	Page No

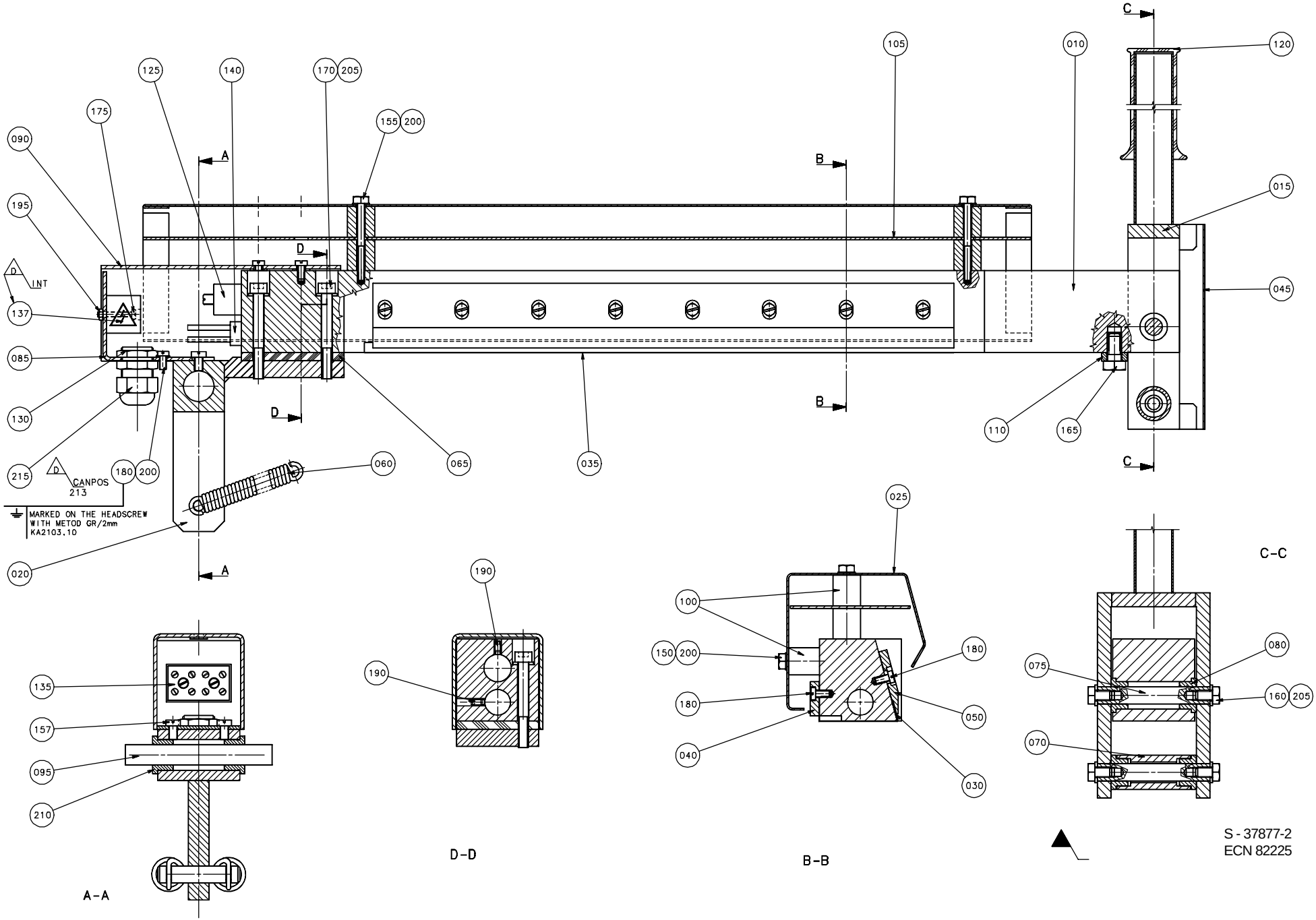

S - 37877-2
ECN 82225

Pos	Part No	SP	UN	Qty	Description	Page No
Common Parts						
010	255301-0000	D		1	HEATING RAIL	
015	37879-0000	-		1	LOCKING ARM	
020	37880-0000	-		1	HINGE	
025	243132-0000	D		1	PROTECTION PLATE	
030	31017-0000	C		1	KNIFE	
035	31723-0000	C		1	TEFLON STRIP	
040	31724-0000	-		1	LOCK BAR	
045	37882-0000	D		1	PROTECTION PLATE	
050	37883-0000	-		1	LOCK BAR	
055	37884-0000	D		1	SHAFT	
060	37885-0000	C		2	TENSION SPRING	
065	37886-0000	D		1	INSULATING DISK	
070	37888-0000	D		1	ROLL	
075	37889-0000	D		2	SHAFT	
080	37890-0000	D		4	FLANGE ROLLER	
085	37892-0000	D		1	CONNECTION BOX	
090	37893-0000	-		1	LID	
095	208173-0000	D		1	SHAFT	
100	229775-0000	D		6	SPACER	
105	243133-0000	D		1	SHIELD PLATE	
110	245221-0000	-		1	STOP	
120	90017-0001	D		1	BIKE-HANDLE,RUBBER	
125	90059-0001	C		1	THERMOSTAT	
130	90099-0002	-		1	NUT Pr 18,6 Brass	
135	90077-0102	-		1	TERMINAL BK4 KRG 4-POLE	
137	90194-0016	-		1	SIGN "FLASH SIGN" 50X50MM	
140	90206-0053	C		1	HEATING ELEMENT 230V 1200W	
150	312105-0297	-		2	Screw M6S M4x25 A280	
155	312105-0304	-		2	Screw M6S M4x45 A280	
157	312105-0323	-		2	Screw M6S M5x8 A280	
160	312105-0364	-		4	Screw M6S M6x10 A280	
165	312105-0449	-		2	Screw M6S M8x16 A280	
170	312115-0380	-		4	Screw MC6S M6x50 A280	
175	312125-0230	-		2	Screw Pan Head MCS M3X20 RFR	
180	312125-0287	-		19	Screw Pan Head MCS M4X8 RFR	
190	312318-0287	-		2	Screw,Sock.Set Cuppoint MSK6SS M4x8 A4	
195	312605-0310	-		2	Nut Hex. M6M M3 A280	
200	315105-0136	-		5	Washer, Plain, BRB, 4,3/8,H=0,8	
205	315105-0153	-		8	Washer, Plain, BRB, 6,4/12,H=1,5	
210	321101-0173	-		2	FLANGE BUS 12F7x12	
215	352103-0106	-		1	CABLE GLAND ST 11	

Pos	Part No	SP	UN	Qty	Description	Page No

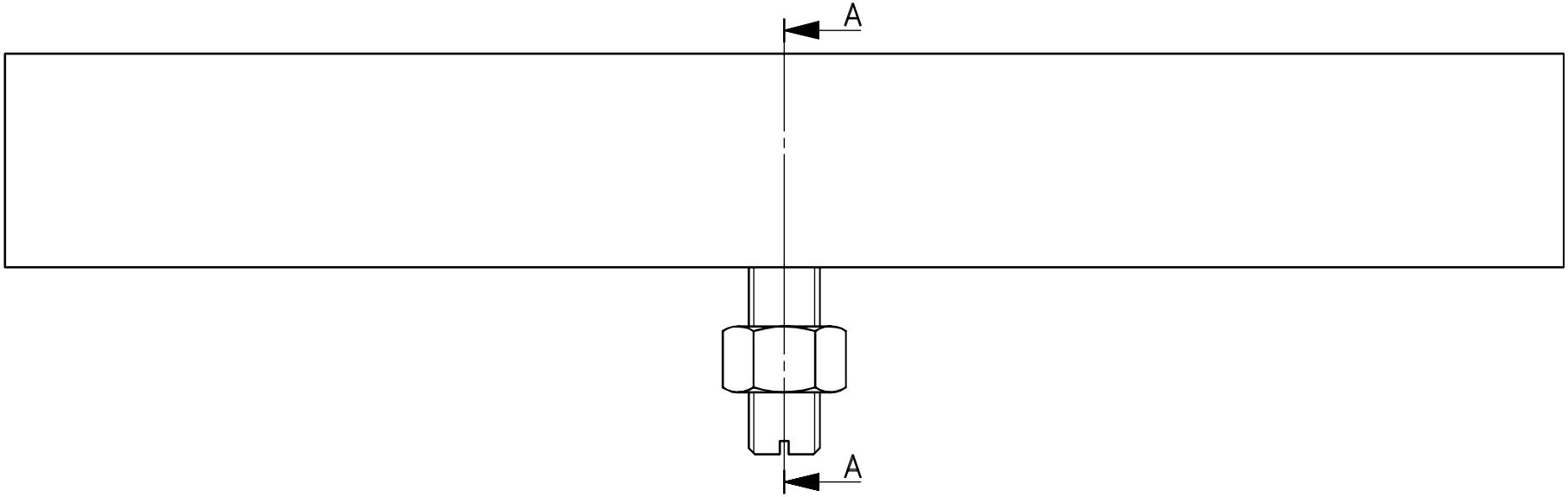

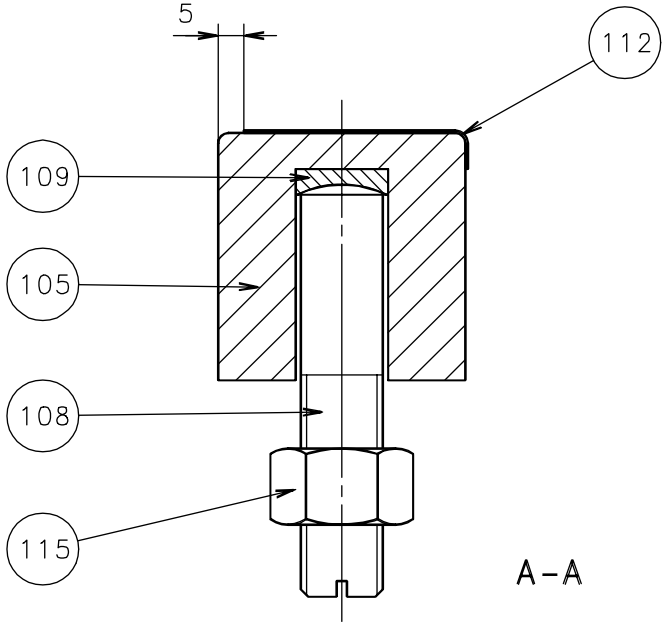

A–A

WHEN APPLYING THE TEFLON TAPE NOTE FOLLOWING POINTS:
1)THE COUNTER BLOCK'S SURFACE MUST BE DEGREASED
2)THE COUNTER BLOCK MUST BE HEATED TO ~80°C BEFORE APPLYING THE TEFLON TAPE
3)NO AIR BUBBLES BETWEEN THE TAPE AND COUNTER BLOCK

QUANDO SI APPLICA IL NASTRO DI TEFLON SEGUIRE LE NOTE:
1)LA SUPERFICIE DEL CONTROSTAMPO DEVE ESSERE SGRASSATA
2)IL CONTROSTAMPO DEVE ESSERE RISCALDATO A~80°PRIMA DI APPLICARE IL NASTRO DI TEFLON
3)NON DEVONO ESSERCI BOLLE D'ARIA TRA IL NASTRO DI TEFLON E IL CONTROSTAMPO

REDRAWN

S - 37894-1
ECN 82225

Pos	Part No	SP	UN	Qty	Description	Page No
Common Parts						
105	37895-0000	-		1	RAIL	
108	37896-0000	-		1	DOWEL	
109	37897-0000	-		1	WASHER	
112	90144-0030	C	MM	36	TAPE	
115	312605-0324	-		1	Nut Hex. M6M M16 A280	

Pos	Part No	SP	UN	Qty	Description	Page No

TEARING DEVICE

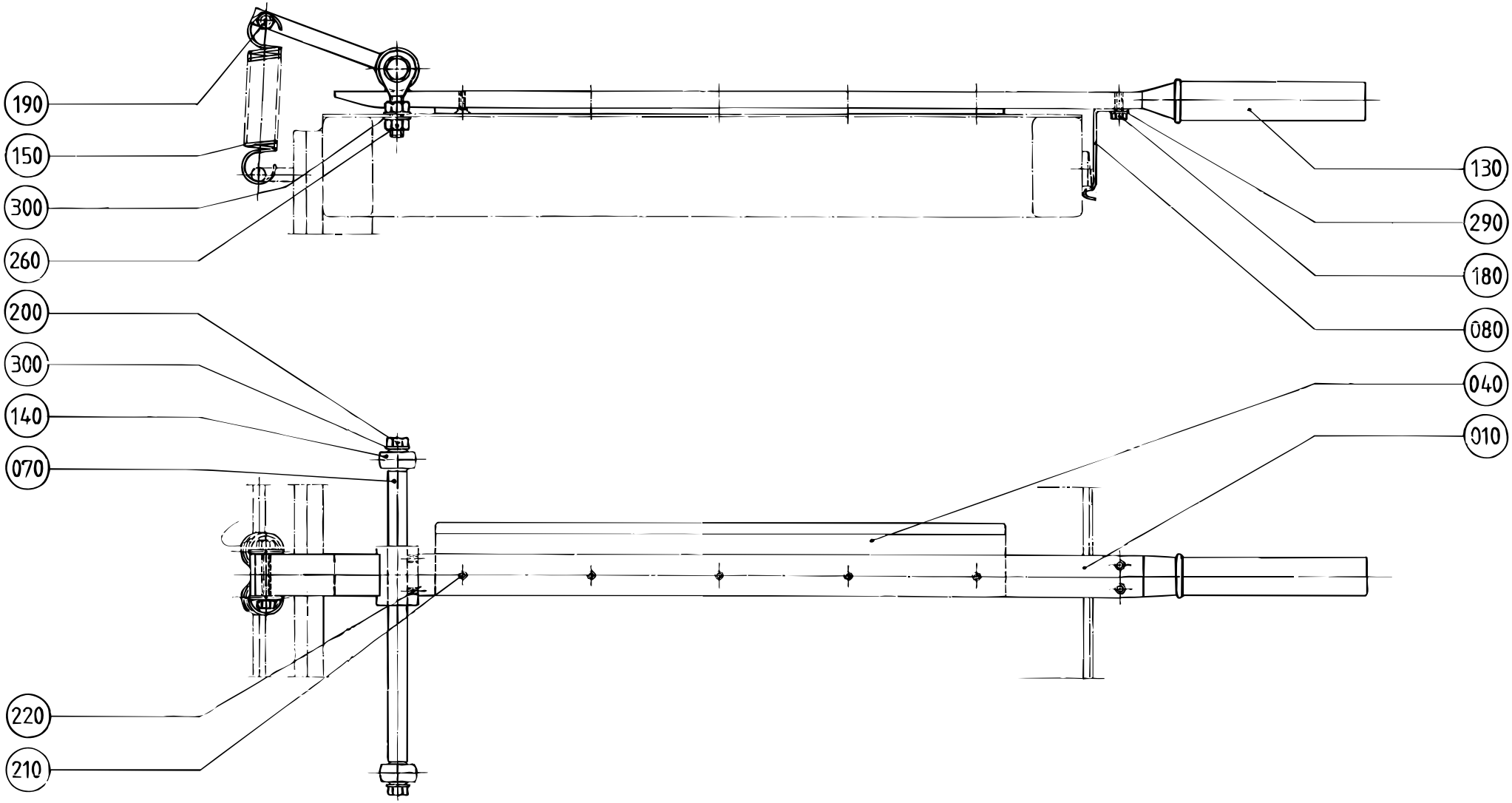

S - 450101-1
ECN 82225

Pos	Part No	SP	UN	Qty	Description	Page No
Common Parts						
010	450102-0000	-		1	PRESSURE ARM	
040	450103-0000	-		1	KNIFE	
070	37901-0000	-		1	SHAFT	
080	206913-0000	-		1	LOCKING LOOP	
130	90017-0001	-		1	BIKE-HANDLE,RUBBER	
140	90115-0054	-		2	ROD ENDS,RE-LUBRICATEABLE 8-M8X1,25RH	
150	90335-0004	C		2	SPRING	
180	312105-0327	-		2	Screw M6S M5x12 A280	
190	312105-0329	-		2	Screw M6S M5x16 A280	
200	312105-0455	-		2	Screw M6S M8x30 A280	
210	312145-0291	-		5	Screw Counters.Slot.Hd. MFS 4x12 A4	
220	312318-0321	-		2	Screw Hex.Sock.Set Cup P.MSK6SS 5x6 SS	
260	312605-0318	-		4	Nut Hex. M6M M8 A280	
290	315105-0146	-		2	Washer, Plain, BRB, 5,3/10,H=1	
300	315105-0165	-		6	Washer, Plain, BRB, 8,4/16,H=1,5	

SUSPENSION ARM

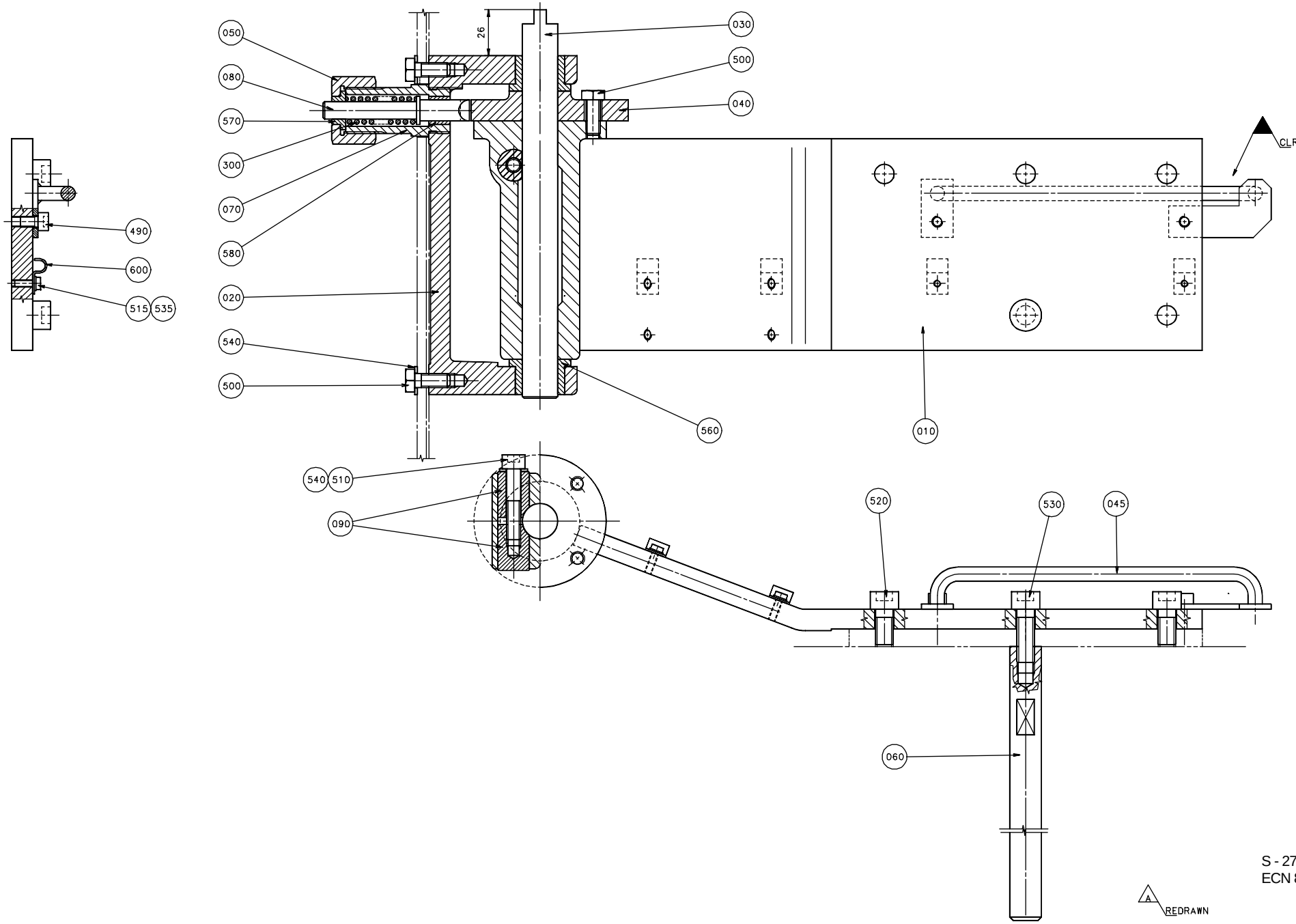

S - 271626-3
ECN 82225

A REDRAWN

Pos	Part No	SP	UN	Qty	Description	Page No
Common Parts						
010	469076-0000	-		1	ARM	
020	272864-0000	-		1	BRACKET	
030	272865-0000	-		1	SHAFT	
040	272866-0000	-		1	LOCKING FLANGE	
045	979782-0000	-		1	BOW CLAMP	
050	271632-0000	-		1	HOOD	
060	272862-0000	-		1	HOLDER	
070	272867-0000	D		1	SPRING HOUSING	
080	272868-0000	D		1	STOPPER DOWEL	
090	272869-0002	-		1	FLAP	
090	272869-0001	-		1	FLAP	
300	37927-0000	D		1	COMPRESSION SPRING	
490	312105-0364	-		2	Screw M6S M6x10 A280	
500	312105-0451	-		8	Screw M6S 8x20 A280	
510	312105-0459	-		1	Screw M6S M8x40 A280	
515	312125-0291	-		4	Screw Pan Head MCS M4x12 RFR	
520	312115-0491	-		4	Screw MC6S M10x20 A280	
530	312115-0495	-		1	Screw MC6S M10x30 A280	
535	315105-0136	-		4	Washer, Plain, BRB, 4,3/8,H=0,8	
540	315105-0165	-		5	Washer, Plain, BRB, 8,4/16,H=1,5	
560	321101-0233	-		2	FLANGE BUS 20F7x20	
570	321111-0134	-		1	BEARING BUSHING WITH FLANGE, 10/16X8	
580	321116-0151	-		1	BEARING BUSHING WITHOUT FLANGE,12X16X12	
600	352110-0102	-		4	CRAMP TK 10-14	

Pos	Part No	SP	UN	Qty	Description	Page No

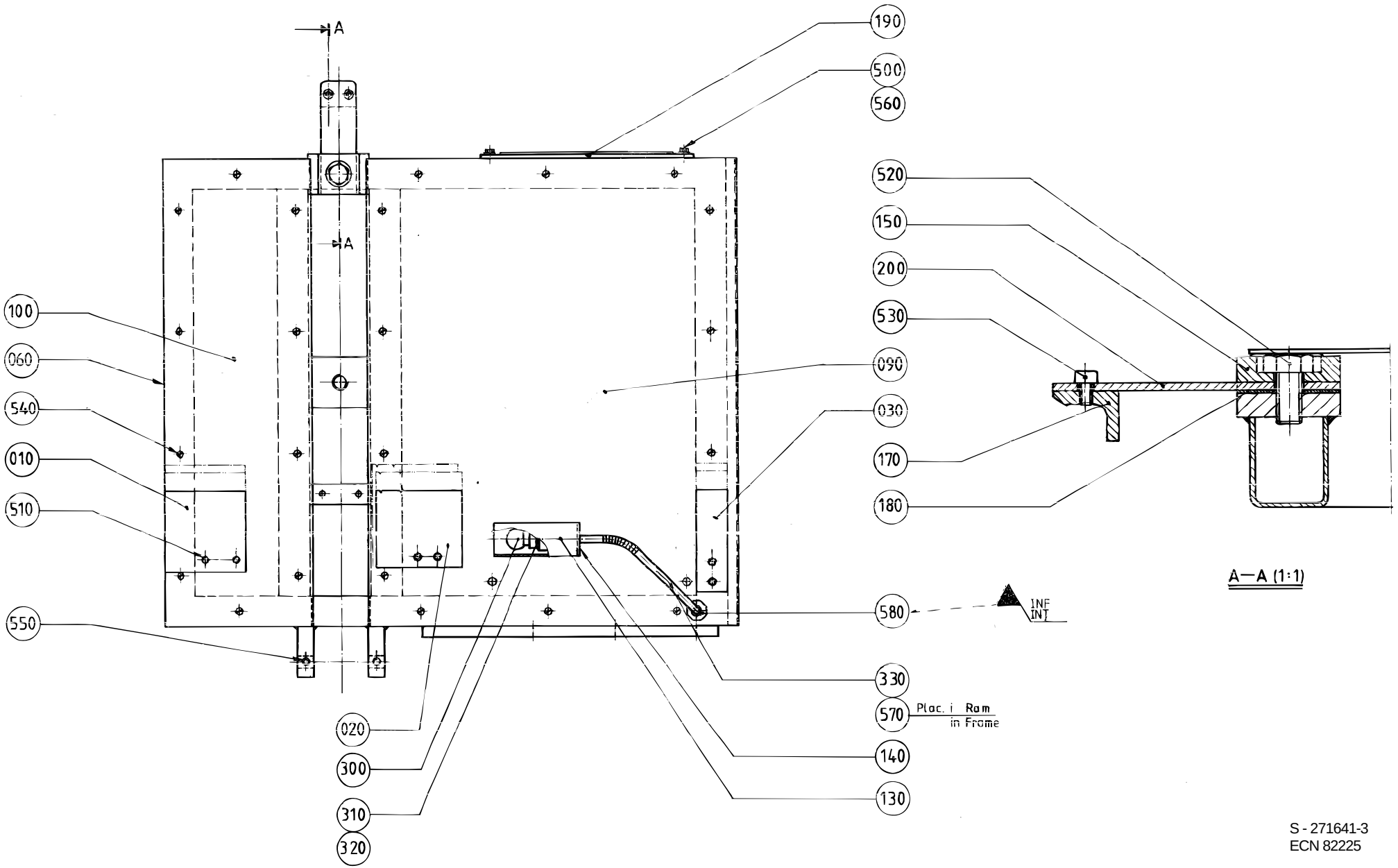

S - 271641-3
ECN 82225

Pos	Part No	SP	UN	Qty	Description	Page No
0125S						
010	271642-0000	-		1	RULER	
020	469084-0000	-		1	RULER	
030	271644-0000	-		1	RULER	
0180B OR 0236B OR 0200B OR 0250B OR 0284B						
010	37913-0000	-		1	RULER	
020	450278-0000	-		1	RULER	
030	37917-0000	-		1	RULER	
0200S OR 0160S						
010	272886-0000	-		1	RULER	
020	469085-0000	-		1	RULER	
030	272888-0000	-		1	RULER	
0250S						
010	574484-0000	-		1	RULER	
020	574485-0000	-		1	RULER	
030	574486-0000	-		1	RULER	
Common Parts						
060	458379-0000	-		1	FRAME	
090	450098-0000	-		1	SHEET	
100	450099-0000	-		1	SHEET	
130	37774-0000	-		1	PROTECTIVE COVER	
140	37775-0000	-		1	LAMP HOLDER	
150	37908-0000	-		1	PLATE	
170	37910-0000	-		1	LOCK	
180	37911-0000	C		1	LACE	
190	37912-0000	-		1	LOCK PLATE	
200	450100-0000	C		1	SPRING	
300	90036-0009	C		1	LIGHT BULB BA15D 24V	
310	90037-0001	-		1	LAMPHOLDER	
320	90086-0001	-		1	NIPPLE	
330	90152-0001	-		1	HOSE L=280mm THREAD M10x1	
500	312105-0325	-		2	Screw M6S M5x10 A280	
510	312105-0362	-		6	Screw M6S M6x8 A280	
520	312105-0491	-		1	Screw M6S M10x20 A280	
530	312115-0323	-		2	Screw MC6S M5x8 A280	
540	312145-0220	-		23	Screw Counters.Slot.Hd. MFS 3x6 SS	
550	312318-0362	-		2	Screw,Sock.Set Cuppoint MSK6SS M6x8 A4	
560	315105-0146	-		2	Washer, Plain, BRB, 5,3/10,H=1	
570	352101-0102	-		1	GLANDS,Lead-in,IP44 PR15,2; PG9	
580	352103-0105	-		1	CABLE GLAND STR 11;PR 18,6;PG11	

Pos	Part No	SP	UN	Qty	Description	Page No

PAPER HOLDER

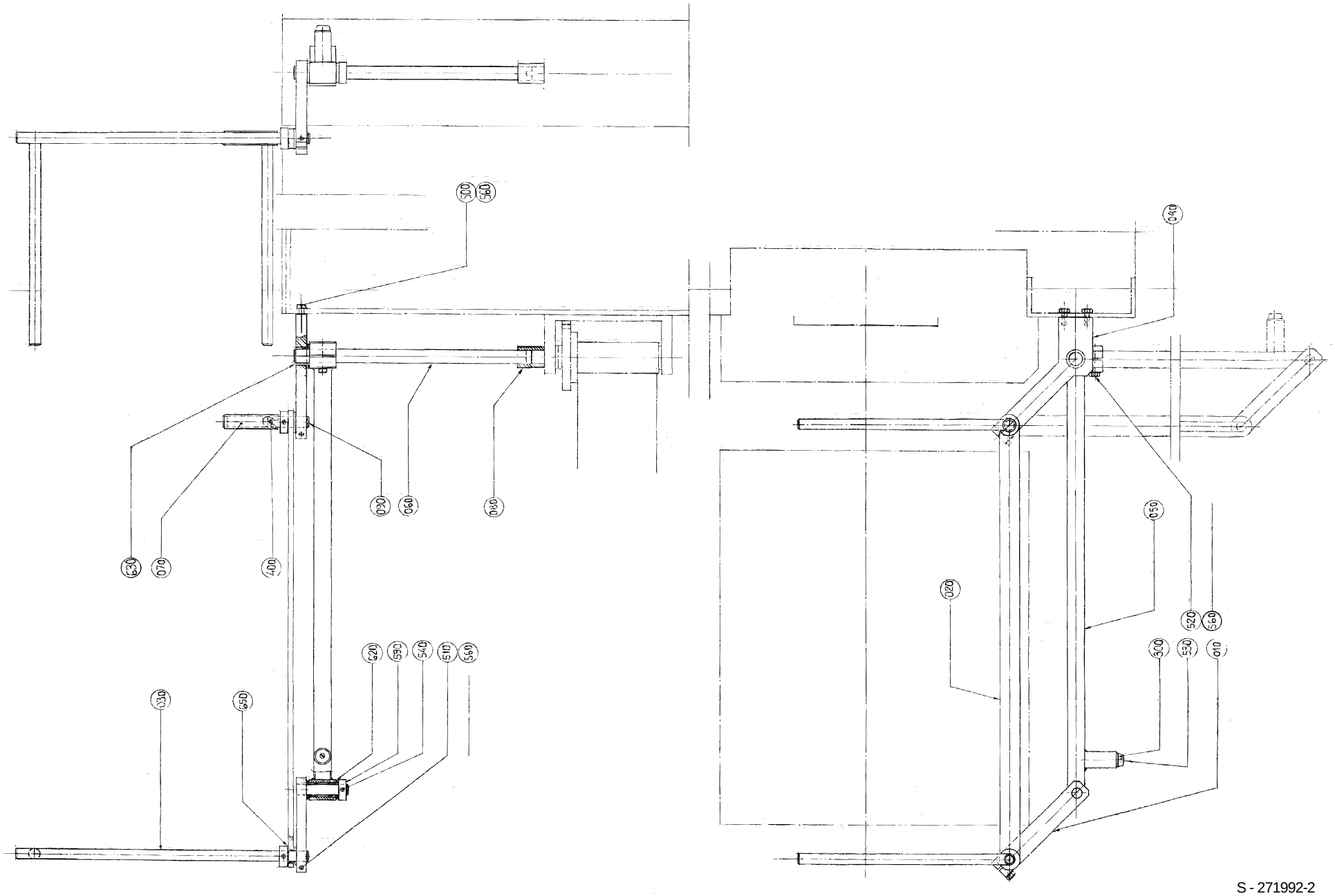

S - 271992-2
ECN 82225

Pos	Part No	SP	UN	Qty	Description	Page No
Common Parts						
010	271380-0000	-		1	LINK	
020	271381-0000	-		1	STRUT	
030	271428-0000	-		1	HOLDER	
040	271993-0000	-		1	BEARING	
050	295408-0000	-		1	ARM	
060	295409-0000	-		1	SHAFT	
070	469141-0000	-		1	HOLDER	
080	271995-0000	-		1	SLEEVE	
090	295661-0000	-		1	SHAFT	
300	90347-0005	C		1	VIBRATION DAMPER	
400	311103-0267	C		1	Pin, Parallell, m6, 4x10	
500	312105-0451	-		2	Screw M6S 8x20 A280	
510	312105-0455	-		2	Screw M6S M8x30 A280	
520	312105-0459	-		1	Screw M6S M8x40 A280	
530	312125-0291	-		1	Screw Pan Head MCS M4x12 RFR	
540	312318-0362	-		3	Screw,Sock.Set Cuppoint MSK6SS M6x8 A4	
560	315105-0165	-		5	Washer, Plain, BRB, 8,4/16,H=1,5	
590	315742-0112	-		3	Collar, 16/32, H=12	
620	321101-0202	C		4	FLANGE BUS 16F7X12	
630	321101-0233	C		1	FLANGE BUS 20F7x20	
650	321129-0117	C		2	THRUST WASHER 16/30X1,5	

Pos	Part No	SP	UN	Qty	Description	Page No

CABLE TRACK

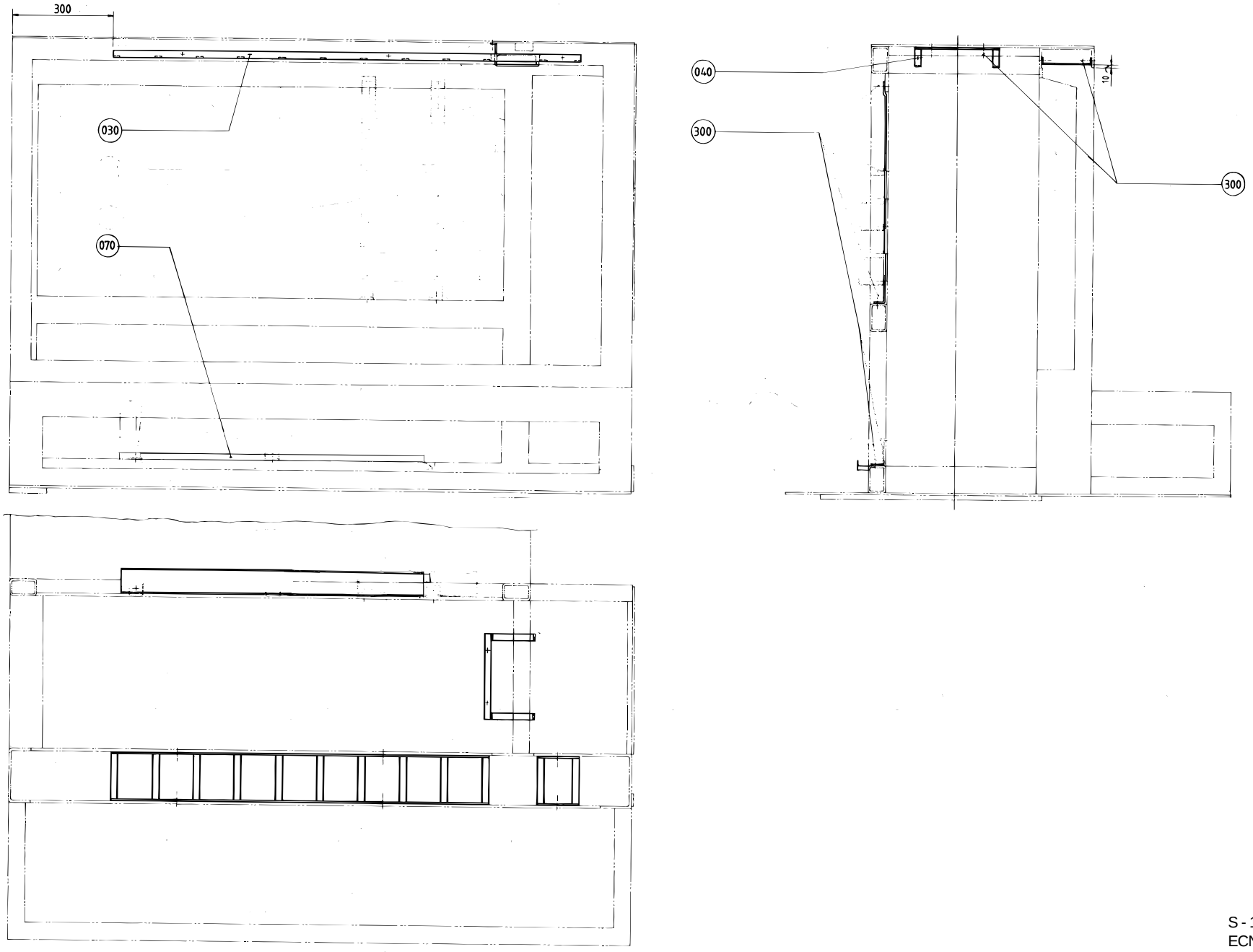

Pos	Part No	SP	UN	Qty	Description	Page No
Common Parts						
030	272559-0000	-		1	CABLE TRACK	
040	295296-0000	-		1	CABLE TRACK	
070	1529220-0000	-		1	CABLE TRENCH	
300	312101-0364	-		2	Screw M6S M6x10 FZB	

Pos	Part No	SP	UN	Qty	Description	Page No

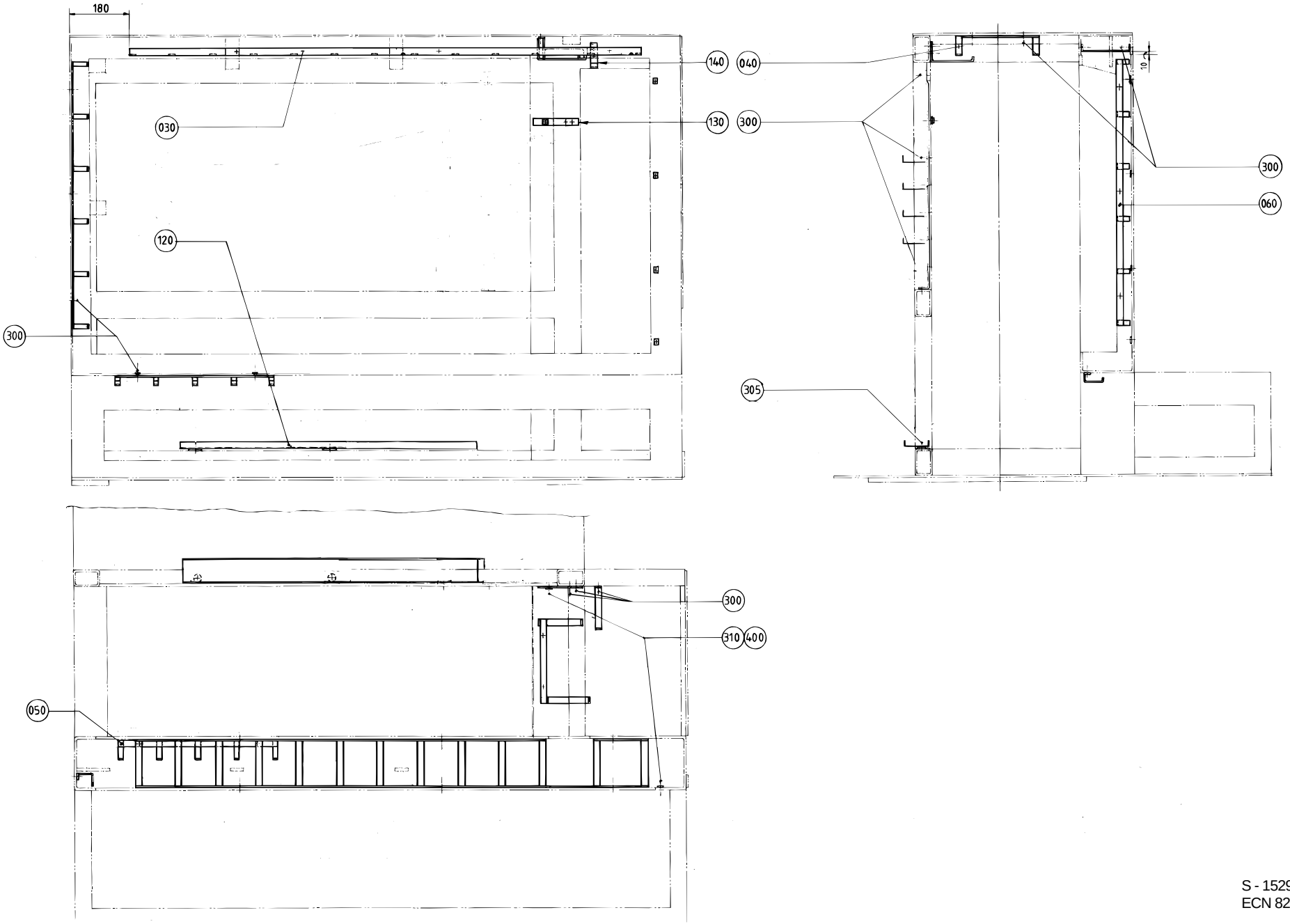
180
140
040
030
130
300
120
300
305
300
060
300
310
400
050
10

Pos	Part No	SP	UN	Qty	Description	Page No
Common Parts						
030	272559-0000	-		1	CABLE TRACK	
040	295296-0000	-		1	CABLE TRACK	
050	491945-0000	-		1	CABLE TRACK	
060	491946-0000	-		1	CABLE TRACK	
120	1529220-0000	-		1	CABLE TRENCH	
130	751059-0000	-		1	BRACKET	
140	751060-0000	-		1	BRACKET	
300	312101-0364	-		2	Screw M6S M6x10 FZB	
305	312101-0368	-		2	Screw M6S M6x16 FZB	
310	312121-0285	-		5	Screw Slot.Pan Hd. MCS 4x6 FZB	
400	352113-0205	-		5	ANCHOR TM2S8-C100	

Pos	Part No	SP	UN	Qty	Description	Page No

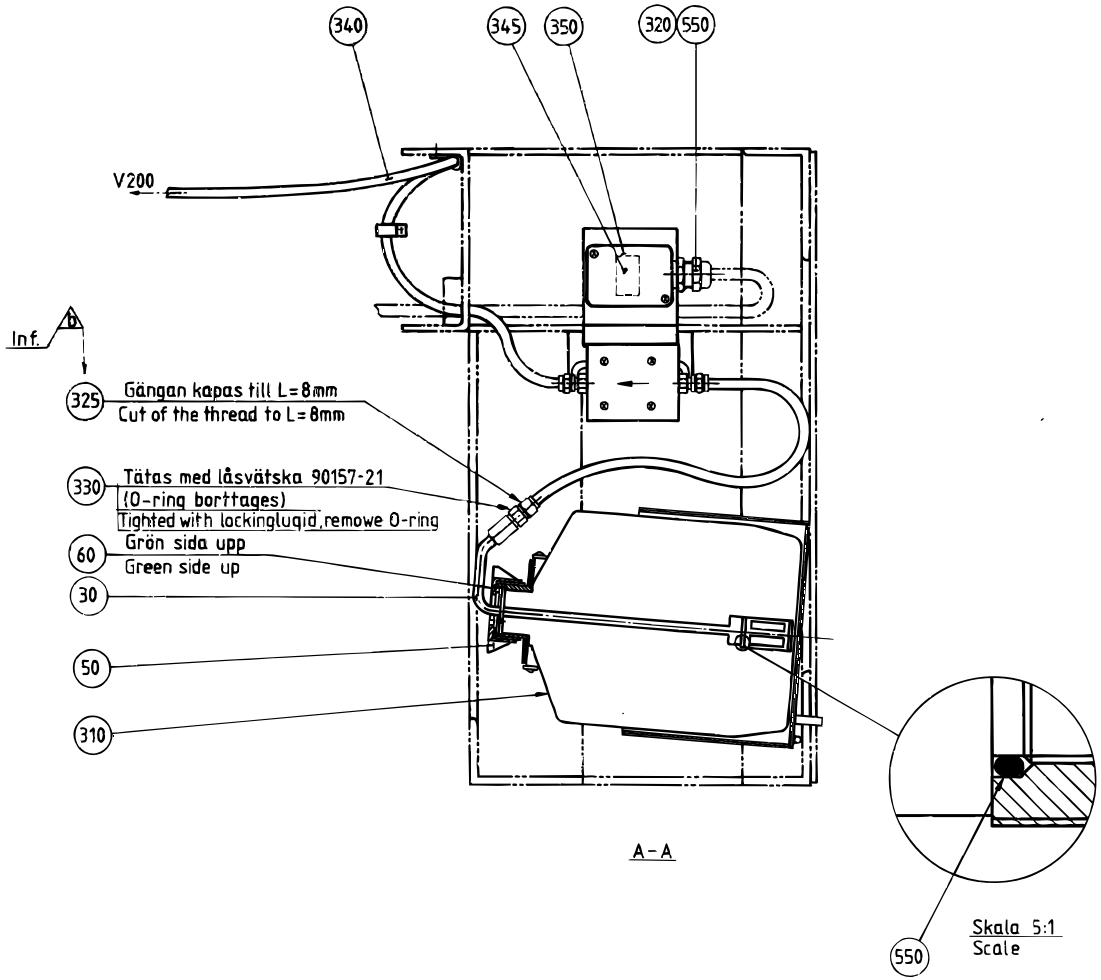

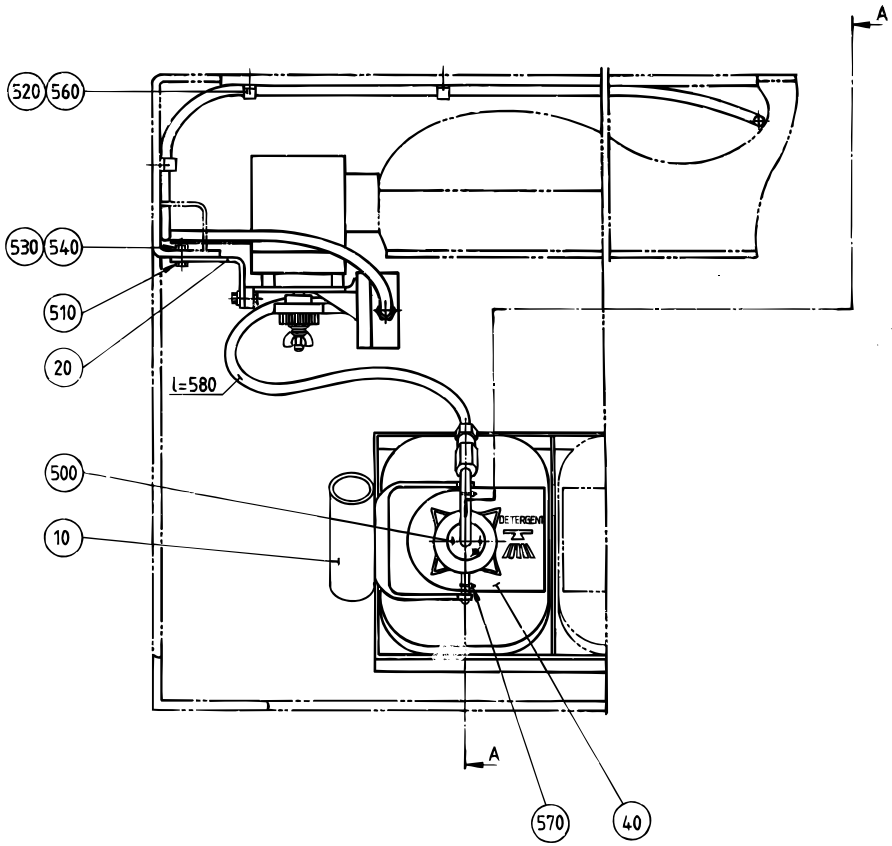

S - 271452-2
ECN 82225

Pos	Part No	SP	UN	Qty	Description	Page No
Common Parts						
010	271229-0000	-		1	BOX	
020	271451-0000	-		1	BRACKET	
030	295384-0000	-		1	SUCTION PIPE	
040	295387-0000	-		1	SIGN BOARD	
050	35962-0000	-		1	LID	
060	295390-0000	-		1	SIGN	
310	90050-0011	-		1	BOTTLE	
320	90099-0003	-		1	NUT	
325	90224-0094	-		1	NIPPLE	
330	90157-0021	-	G	1	LOCKING FLUID	
340	90166-0008	-	MM	2	HOSE 7/10 PVC TRANSP.	
345	90195-0020	-		1	TERMINAL BK2 KRG 2-POLE	
350	B 90321-0017	-		1	PUMP C660P 220V 50Hz;50W	
500	311520-0329	-		1	Rivet, Blank 2,4x8	
510	312101-0370	-		4	Screw M6S M6x20 FZB	
520	312125-0285	-		4	Screw Slot.Pan Hd. MCS 4x6 A480	
530	312601-0316	-		4	NUT M6M 6-8 FZB	
540	315101-0153	-		4	Washer, Plain, BRB, 6,4/12 H=1,5	
550	315202-0109	-		1	O-Ring 11,1x1,6 mm	
555	352103-0110	-		1	CABLE GLAND STR 16	
560	352110-0102	-		4	CRAMP TK 10-14	
570	352113-0101	-		2	CLIP STRIP BLACK 92x2,5mm	

Pos	Part No	SP	UN	Qty	Description	Page No

DETERGENT PUMP

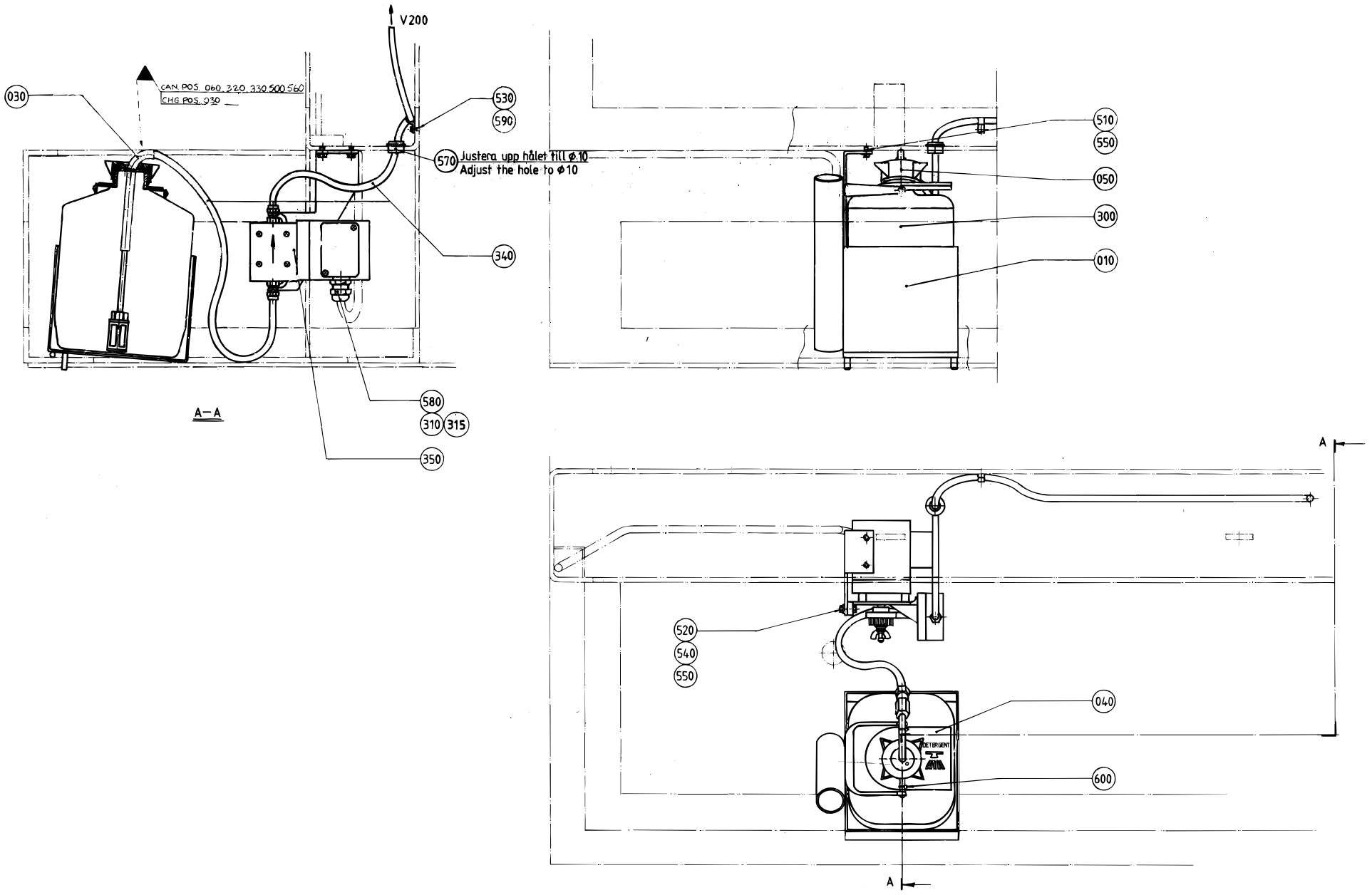

S - 490761-1
ECN 82225

Pos	Part No	SP	UN	Qty	Description	Page No
Common Parts						
010	490768-0000	-		1	BOX	
020	490769-0000	-		1	BRACKET	
030	979217-0000	-		1	PIPE	
040	295387-0000	-		1	SIGN BOARD	
050	35962-0000	C		1	LID	
300	90050-0011	C		1	BOTTLE	
310	90099-0003	-		1	NUT	
315	90195-0020	-		1	TERMINAL BK2 KRG 2-POLE	
340	90166-0008	-	MM	2	HOSE 7/10 PVC TRANSP.	
350	B 90321-0037	D		1	PUMP C-6125P EP 220V;50Hz	
510	312105-0366	-		2	Screw M6S M6x12 A280	
520	312105-0370	-		2	Screw M6S M6x20 A280	
530	312125-0285	-		1	Screw Slot.Pan Hd. MCS 4x6 A480	
540	312605-0316	-		2	Nut Hex. M6M M6 A280	
550	315105-0153	-		4	Washer, Plain, BRB, 6,4/12,H=1,5	
570	352101-0105	-		1	GLANDS,Lead-in,IP44 PR22,5; PG16	
580	352103-0110	-		1	CABLE GLAND STR 16	
590	352110-0102	-		1	CRAMP TK 10-14	
600	352113-0101	-		2	CLIP STRIP BLACK 92x2,5mm	

Pos	Part No	SP	UN	Qty	Description	Page No

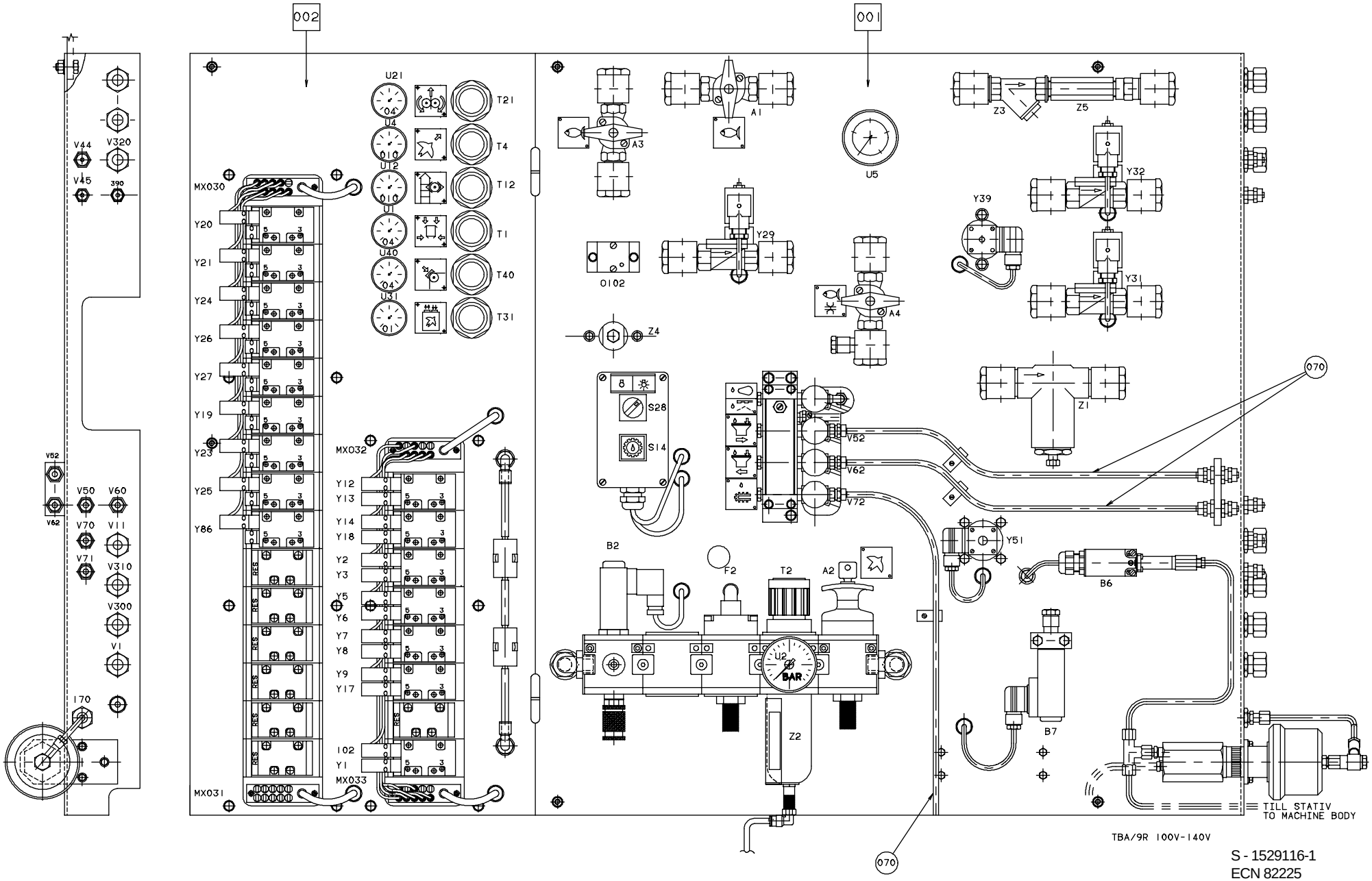

S - 1529116-1
ECN 82225

Pos	Part No	SP	UN	Qty	Description	Page No
Common Parts						
001	A1529117-0100	-		1	VALVE PANEL	**564**
002	A1529100-0100	-		1	Air panel	**578**
050	90166-0013	-	M	4	TUBE 8 mm PA Blue	
060	90166-0068	-	M	2	TUBE 12 mm PA Blue	
065	90166-0081	-	M	1	TUBE 6 mm PA Blue	
070	90166-0118	-	M	4	TUBE 8 mm PA Black	
080	90166-0119	-	M	2	HOSE PUR 4/6 Black	
100	90230-0028	-		1	NON-RETURN VALVE H 151 R 3/8"	
210	342921-0115	-		1	STRAIGHT COUPLING,EXT.THREADED 6/4-G3/8"	
215	342735-0103	-		1	ELBOW PIPE JOINT	
220	342735-0109	-		2	ELBOW PIPE JOINT	
230	342940-0115	-		1	T-COUPLING,EXT.THREAD 6/4-R3/8"	
240	342748-0102	-		1	T-CONNECTION	
260	352113-0101	-		2	CLIP STRIP BLACK 92x2,5mm	
270	352113-0102	-		2	CLIP-STRIP,Black 188x4,8mm	
280	352113-0104	-		2	CLIP-STRIP,Black 300x4,8mm	
290	359000-0406	-		5	MARKING COLLAR PA2/4 "6" Yellow	
290	359000-0407	-		5	MARKING COLLAR PA2/4 "7" Yellow	
290	359000-0409	-		4	MARKING COLLAR PA2/4 "9" Yellow	
290	359000-0771	-		28	MARKING CO2/4"V"	
290	359000-0401	-		16	MARKING COLLAR 2/4 "1" Yellow	
290	359000-0402	-		22	MARKING COLLAR 2/4 "2" Yellow	
290	359000-0403	-		7	MARKING COLLAR PA2/4 "3" Yellow	
290	359000-0405	-		9	MARKING CO2/4"5"	
290-02	359000-0400	-		32	MARKING CO2/4"0"	
290-03	359000-0404	-		1	MARKING COLLAR PA2/4 "4" Yellow	

(Cont'd)

Pos	Part No	SP	UN	Qty	Description	Page No

VALVE PANEL

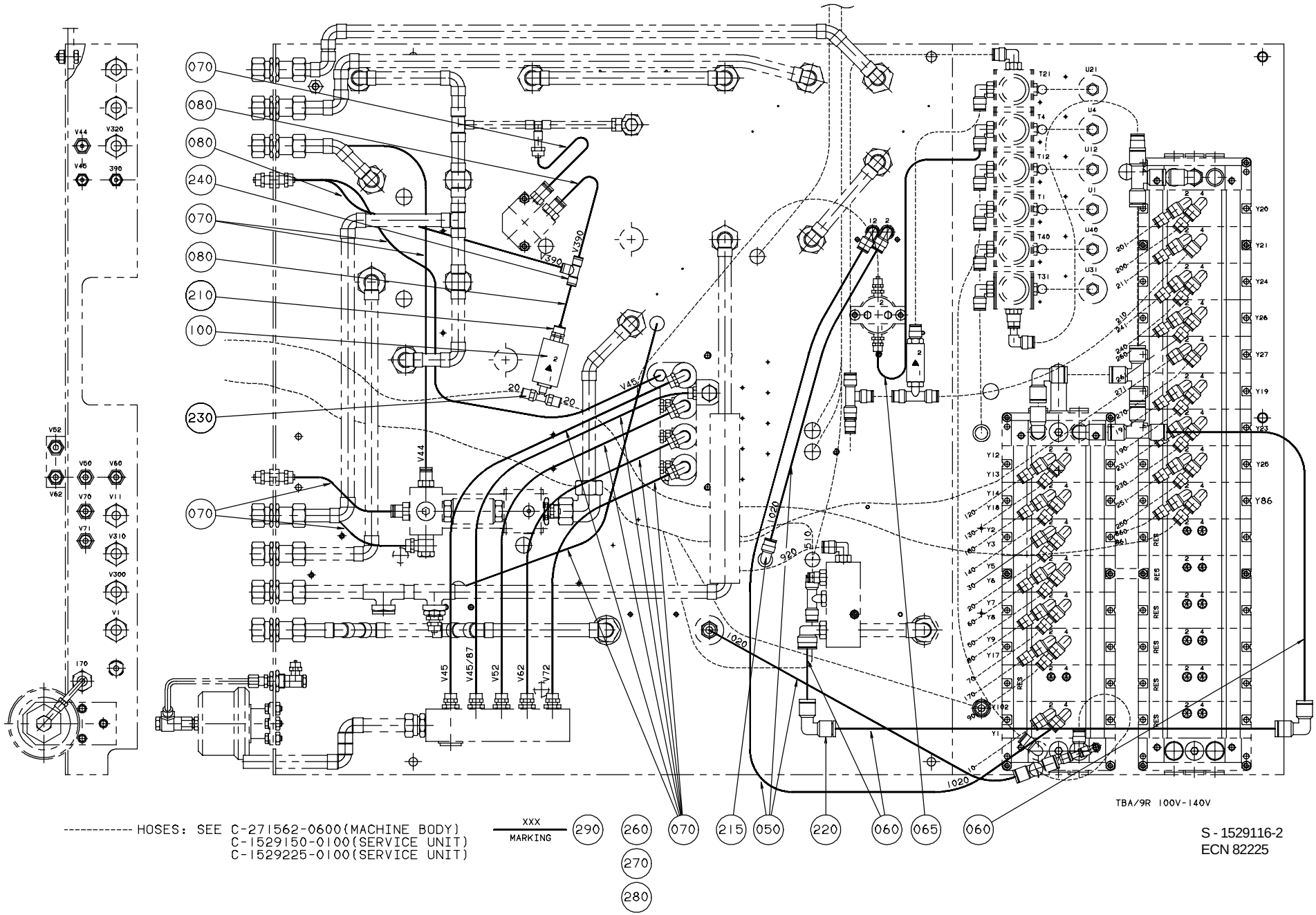

S - 1529116-2
ECN 82225

Pos	Part No	SP	UN	Qty	Description	Page No

(Cont'd)

Common Parts

001	A1529117-0100	-		1	VALVE PANEL	**564**
002	A1529100-0100	-		1	Air panel	**578**
050	90166-0013	-	M	4	TUBE 8 mm PA Blue	
060	90166-0068	-	M	2	TUBE 12 mm PA Blue	
065	90166-0081	-	M	1	TUBE 6 mm PA Blue	
070	90166-0118	-	M	4	TUBE 8 mm PA Black	
080	90166-0119	-	M	2	HOSE PUR 4/6 Black	
100	90230-0028	-		1	NON-RETURN VALVE H 151 R 3/8"	
210	342921-0115	-		1	STRAIGHT COUPLING,EXT.THREADED 6/4-G3/8"	
215	342735-0103	-		1	ELBOW PIPE JOINT	
220	342735-0109	-		2	ELBOW PIPE JOINT	
230	342940-0115	-		1	T-COUPLING,EXT.THREAD 6/4-R3/8"	
240	342748-0102	-		1	T-CONNECTION	
260	352113-0101	-		2	CLIP STRIP BLACK 92x2,5mm	
270	352113-0102	-		2	CLIP-STRIP,Black 188x4,8mm	
280	352113-0104	-		2	CLIP-STRIP,Black 300x4,8mm	
290	359000-0406	-		5	MARKING COLLAR PA2/4 "6" Yellow	
290	359000-0407	-		5	MARKING COLLAR PA2/4 "7" Yellow	
290	359000-0409	-		4	MARKING COLLAR PA2/4 "9" Yellow	
290	359000-0771	-		28	MARKING CO2/4"V"	
290	359000-0401	-		16	MARKING COLLAR 2/4 "1" Yellow	
290	359000-0402	-		22	MARKING COLLAR 2/4 "2" Yellow	
290	359000-0403	-		7	MARKING COLLAR PA2/4 "3" Yellow	
290	359000-0405	-		9	MARKING CO2/4"5"	
290-02	359000-0400	-		32	MARKING CO2/4"0"	
290-03	359000-0404	-		1	MARKING COLLAR PA2/4 "4" Yellow	

(Cont'd)

Pos	Part No	SP	UN	Qty	Description	Page No

VALVE PANEL

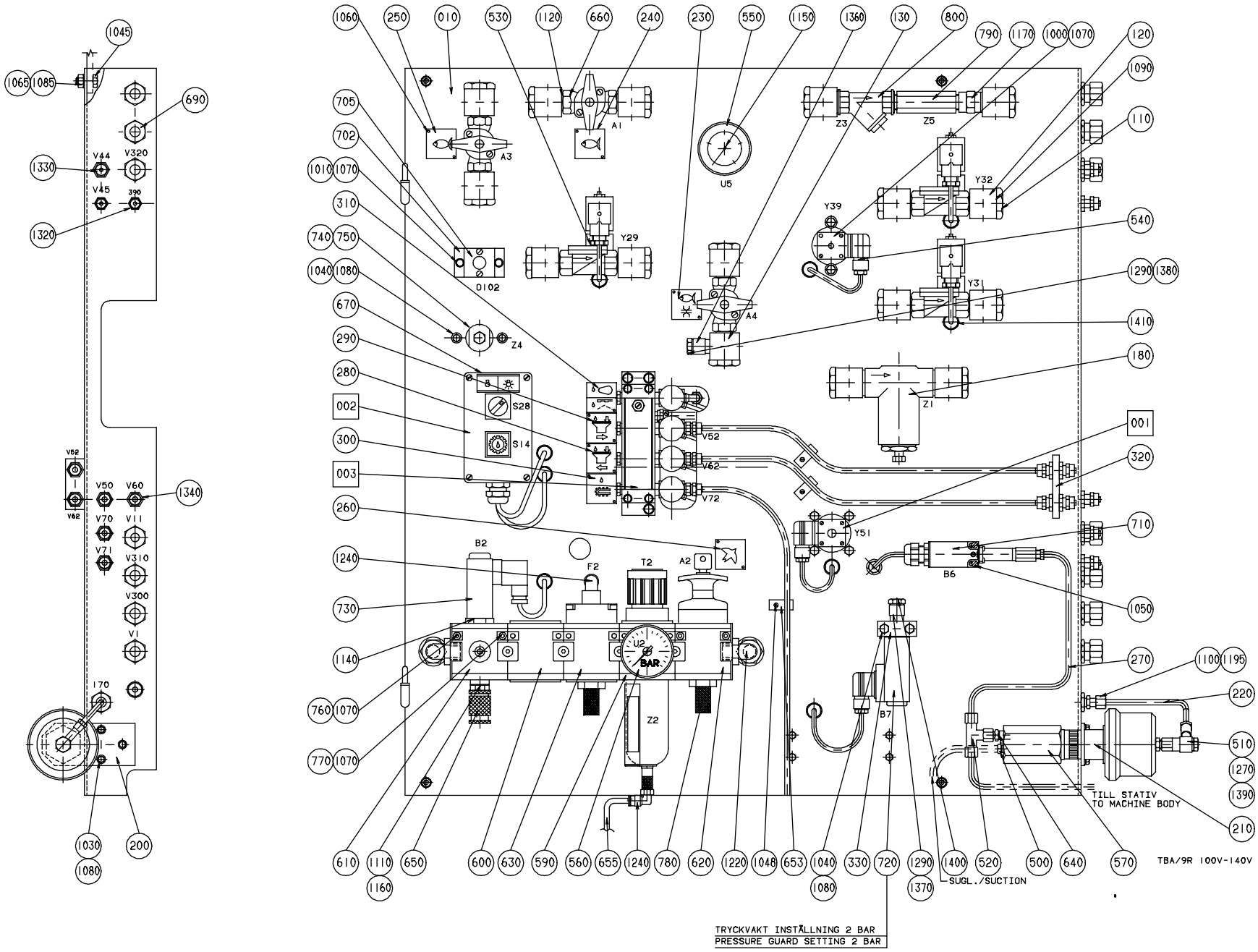
TILL STATIV
TO MACHINE BODY
TBA/9R 100V-140V
SUGL./SUCTION
TRYCKVAKT INSTÄLLNING 2 BAR
PRESSURE GUARD SETTING 2 BAR

Pos	Part No	SP	UN	Qty	Description	Page No
Common Parts						
001	A1529204-0100	-		1	AIR INJECTOR	**568**
002	A 456882-0100	-		1	PUSH BUTTON BOX	**572**
003	A 469118-0200	-		1	FLOW METER	**574**
004	A 469121-0200	-		1	JUNCTION BLOCK	**576**
010	1529118-0000	-		1	SHEET	
020	B 978583-0000	-		1	PIPE	
030	B 978584-0000	-		1	PIPE	
040	B 978587-0000	-		1	PIPE	
050	B 978588-0000	-		1	PIPE	
060	B 978589-0000	-		1	PIPE	
070	B 978590-0000	-		1	PIPE	
090	B 978592-0000	-		1	PIPE	
100	978593-0000	-		1	JUNCTION BLOCK	
110	271950-0000	-		16	HOLLOW SCREW	
115	295496-0000	-		1	BLOCKING PIECE	
117	456137-0000	-		1	HOSE	
120	469328-0000	-		15	BANJO CONNECTION	
130	491951-0000	-		1	BANJO CONNECTION	
140	B 978585-0001	-		1	PIPE	
160	B 978585-0003	-		1	PIPE	
170	B 978586-0000	-		1	PIPE	
180	B 271823-0000	-		1	FILTER	
190	271949-0000	-		16	NUT	
200	272129-0000	-		1	BRACKET	
210	272130-0000	-		1	SPACER	
220	272340-0000	-		1	PIPE	
230	273454-0000	-		1	SIGN	
240	273455-0000	-		1	LABEL (COLD WATER)	
250	273456-0000	-		1	SIGN	
260	273458-0000	-		1	LABEL (AIR)	
270	979133-0000	-		1	PIPE	
280	445533-0000	-		1	SIGN	
290	445534-0000	-		1	SIGN	
300	445535-0000	-		1	SIGN	
310	469330-0000	-		1	SIGN	
320	469331-0000	-		1	HOLDER	
330	469332-0000	-		1	ATTACHMENT	
340	491649-0000	-		1	BRACKET	
500	90005-0045	-		1	Washer, Plain Round 10(3/8)/14,H=2	
505	90005-0061	-		16	Washer,Pl.Rnd.Fibre 14/24,H=1,5	
510	90030-0116	-		1	Nipples, Reducing, Ext. Thr. No. 2520	
520	90030-0127	-		1	Conn. T-Pipe Adj. ,EVT,INT.T-6	
530	B 90042-0172	-		3	SOLENOID VALVE 4023/1005/1032 24VDC	
540	90042-0173	-		1	SOLENOID VALVE BURKERT	
550	90043-0006	-		1	PRESSURE GAUGE	
560	90043-0036	-		1	PRESSURE GAUGE	
570	B 90048-0041	-		1	Oil pump no container	
575	90062-0016	-		1	Lock Washer,Serrat.ext.gear,8,4/15 H=0,8	
590	B 90113-0072	-		1	PRESSURE REGULATOR	
600	90113-0374	-		1	SLOW STARTING VALVE	
610	90113-0375	-		1	PRESSURE DISTRIBUTION	
620	90113-0377	-		1	SHUT-OFF VALVE	
630	90113-0378	-		1	SHUT-OFF VALVE	
640	90134-0019	-		1	Conn. Straight, GE 6-LM FZB	
645	90153-0035	-	L	1	ADHESIVE	
650	90163-0016	-		1	Quick Coupling, (F) LP 006-0-WR013	
653	90165-0044	-		3	CLIP	
654	90166-0013	-	MM	1	TUBE 8 mm PA Blue	
655	90166-0081	-	M	2	TUBE 6 mm PA Blue	
660	90187-0029	-		3	Ball Valve, G1/2, NPBR	
670	90194-0016	-		2	SIGN "FLASH SIGN" 50X50MM	
680	342722-0203	-		1	STRAIGHT COUPLING	
690	90224-0296	-		7	Conn. Bulkhead, Art.No. 116 1500	
700	90224-0297	-		1	Reducer, Art. No 166 1215	
702	90235-0450	-		1	PLATE	
705	90235-0766	-		1	VALVE	
710	90274-0084	-		1	PRESSURE SWITCH	
720	90274-0056	-		1	PRESSURE SWITCH	
730	90274-0074	-		1	PRESSURE SWITCH	
740	90277-0323	-		1	FILTER HOUSING / 95S6-1/4 NPT / 122B-40K	
750	90277-0324	-		1	FILTER CARTRIDGE / 050-11-A	
760	90287-0212	-		3	Screw MC6S M5x85 129	
770	90287-0215	-		1	Screw MC6S M5x130 129	
780	90328-0001	-		1	SILENCER	
790	90415-0018	-		1	FILTER FOR LIME SEPARATING / D MOD.AD	
800	90415-0019	-		1	FILTER / ART.NO. HH-M15-Rg	
1000	312101-0327	-		2	Screw M6S M5x12 FZB	
1010	312101-0329	-		4	Screw M6S M5x16 FZB	
1020	312101-0367	-		2	Screw M6S M6x14 FZB	
1030	312101-0368	-		3	Screw M6S M6x16 FZB	
1040	312101-0380	-		4	Screw M6S M6x50 FZB	
1045	312101-0451	-		4	Screw M6S M8x20 FZB	

(Cont'd)

VALVE PANEL

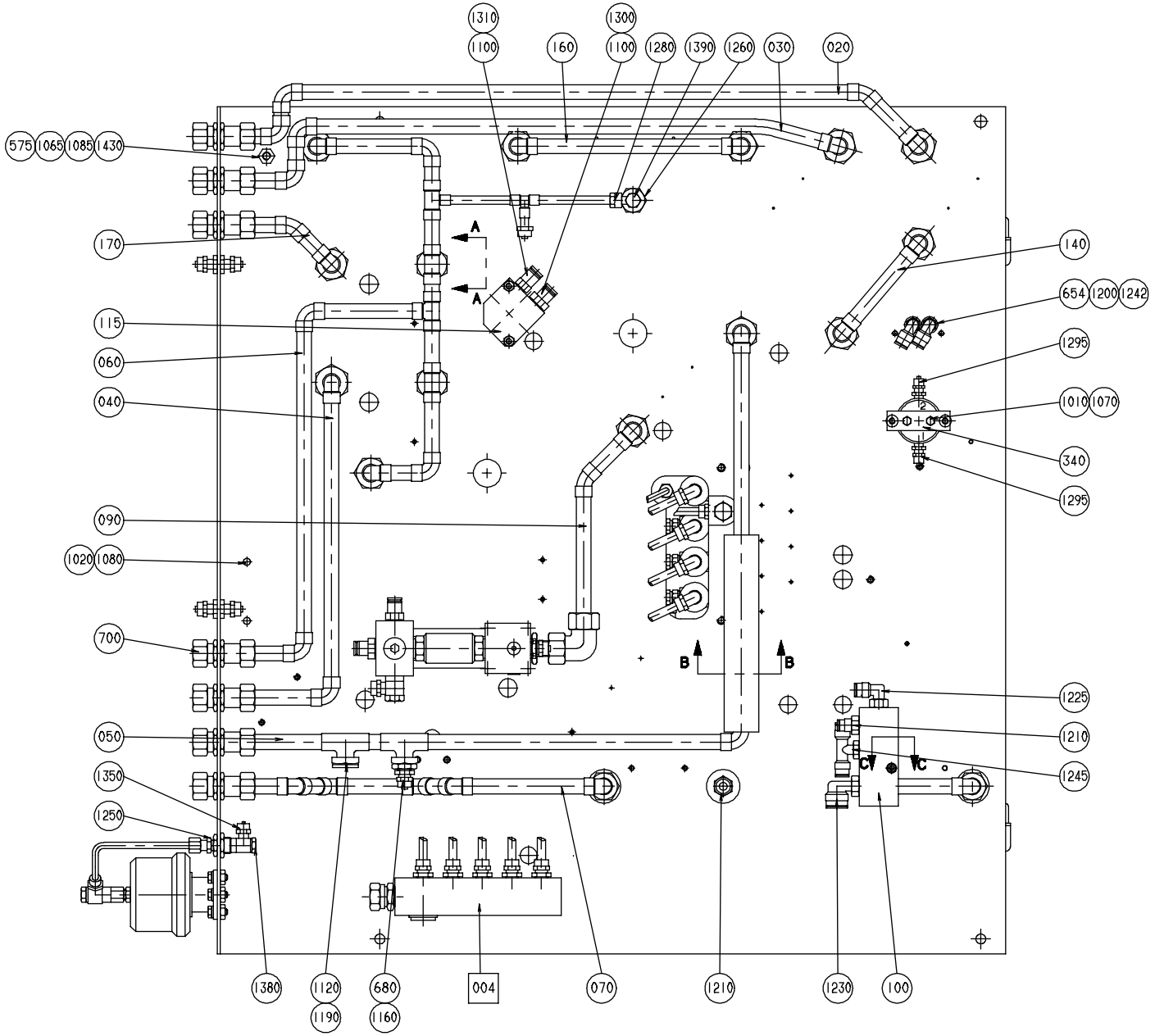

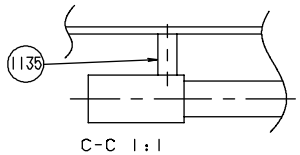

C-C 1:1

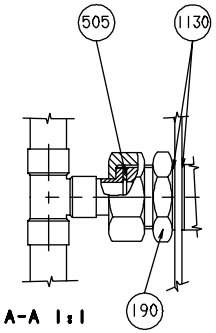

A-A 1:1

Muttern 190 låses med Loc-tite 542.
Muttern åtdragen för hand och därefter lossad ungefär 30°.

The nut 190 is fixed by Loc-tite 542.
The nut shall be tightened by hand and after tightening the nut is turned back 30°.

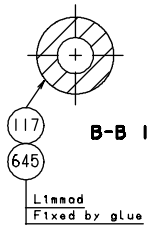

B-B 1:1

TBA/9R 100V-140V

(Cont'd)

Pos	Part No	SP	UN	Qty	Description	Page No
1048	312121-0287	-		3	Screw Slot.Pan Hd. MCS 4x8 FZB	
1050	312121-0291	-		2	Screw Slot.Pan Hd. MCS 4x12 FZB	
1060	312502-0120	-		16	Drive Screw Round Head KDS 0x5	
1065	312601-0318	-		5	NUT M6M8FZB	
1070	315101-0146	-		1	Washer, Plain, BRB, 5,3/10 H=1	
1080	315101-0153	-		9	Washer, Plain, BRB, 6,4/12 H=1,5	
1085	315101-0165	-		5	Washer, Plain, BRB, 8,4/16 H=1,5	
1090	315202-0710	-		16	O-Ring 25,12x1,78 mm	
1100	315233-0109	-		3	Washer,Pl.Rnd.Nyl.10,3/14,H=1	
1110	315233-0110	-		1	Washer,Pl.Rnd.Nyl.13,3/17,H=1	
1120	315233-0113	-		17	Washer,Pl.Rnd.Nyl.21,4/27,H=1,2	
1130	315233-0115	-		32	Washer,Pl.Rnd.Nyl.26,6/34,H=1,2	
1135	341001-0148	-	MM	17	COPPER TUBE	
1140	342700-0205	-		1	NIPPLES,HEXAGON,EXT.G-THREAD G1/2"-G1/4"	
1150	342701-0201	-		1	BUSHING,INT./EXT.G-THREAD G1/4"-G1/8"	
1160	342701-0205	-		2	BUSHING,INT./EXT.G-THREAD G1/2"-G1/4"	
1170	342707-0113	-		1	Sleeve, Int. Thread, No. 2543-1/2	
1190	342713-0213	-		1	Plug, Ext Thread Hex Socket 8638-00-120	
1195	342720-0102	-		1	Conn. Str. GA-6-G1/8	
1200	342722-0204	-		2	PIPE COUPLING	
1210	342722-0205	-		2	STRAIGHT COUPLING D=8-R1/4"	
1220	342730-0114	-		2	Conn. Elbow WA-15-1/2	
1225	342732-0103	-		1	ELBOW PIPE JOINT	
1230	342732-0110	-		1	ELBOW PIPE JOINT	
1240	342732-0801	-		2	ELBOW PIPE JOINT	
1242	342735-0103	-		2	ELBOW PIPE JOINT	
1245	342742-0104	-		1	T-COUPLING,ADJUST,F.PLASTIC TUBE 8-G1/4"	
1250	342767-0100	-		1	Conn. Bulkhead G1/8	
1260	342767-0104	-		1	Conn. Bulkhead G1/4	
1265	342767-0114	-		1	Conn. Bulkhead G1/2	
1270	342797-0122	-		1	Conn. Banjo, Ringpiece 6-1/4	
1280	342797-0132	-		1	Conn. Banjo, Ringpiece 8-1/4	
1290	342903-0121	-		2	NUT WITH SPRING 8/6-M12X1	
1295	342920-0114	-		2	STRAIGHT COUPLING,EXT.THREADED 6/4-R1/4"	
1300	342722-0202	-		1	PIPE COUPLING 1/8" D=6mm	
1310	342722-0204	-		1	PIPE COUPLING	
1320	342960-0112	-		2	BULKHEAD COUPLING 6/4	
1330	342960-0121	-		1	BULKHEAD COUPLING 8/6-6/4	
1340	342960-0122	-		6	BULKHEAD COUPLING 8/6	
1350	342980-0113	-		1	BANJO-CONNECTION,RING 6/4-G1/8"	
1360	342980-0121	-		1	BANJO-CONNECTION,RING 8/6-G1/8"	
1370	342980-0122	-		1	BANJO-CONNECTION,RING 8/6-G1/4"	
1380	342980-0303	-		2	BANJO-HOLLOW BOLT COUPL,EXT.THR.01-G1/8"	
1390	342980-0304	-		2	BANJO-HOLLOW BOLT COUPL,EXT.THR.01-G1/4"	
1400	342980-0314	-		1	BANJO-HOLLOW BOLT COUPL,EXT.THR.02-G1/4"	
1410	352101-0103	-		1	GLANDS,Lead-in,IP44 PR18,6	
1430	353104-0144	-		1	CABLE SHOEYAV 06 M 8*	

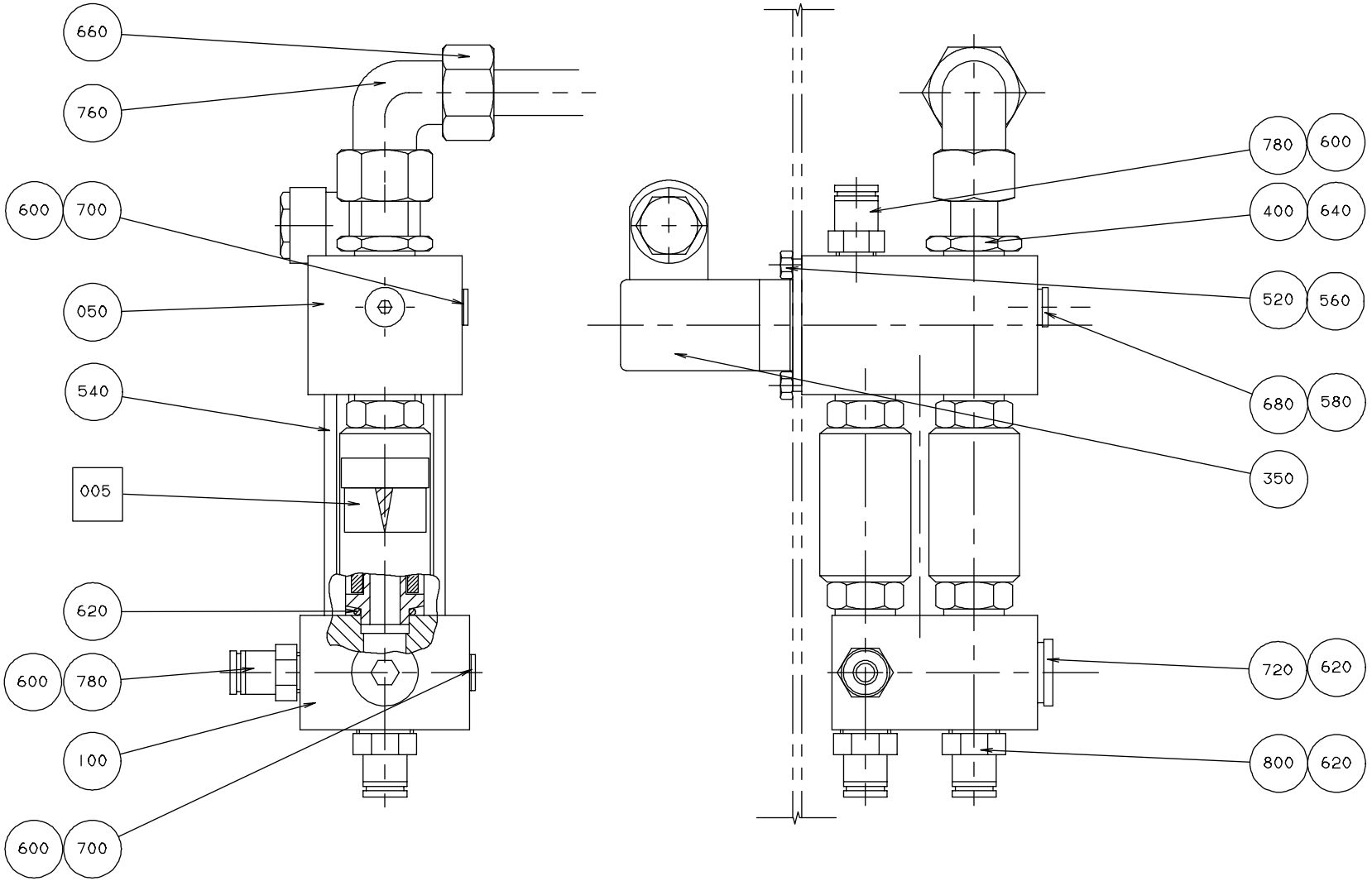

S - 1529204-1
ECN 82225

Pos	Part No	SP	UN	Qty	Description	Page No
Common Parts						
005	A 491536-0100	-		2	NON-RETURN VALVE	**570**
050	456756-0000	-		1	BLOCK	
100	456755-0000	-		1	BLOCK	
350	90042-0173	C		1	SOLENOID VALVE BURKERT	
400	90224-0078	-		1	Pipe Socket, Art.No RAN 1612	
520	312101-0327	-		4	Screw M6S M5x12 FZB	
540	312111-0471	-		2	Screw Hex.Sock.Hd.MC6S-TT 8x100 88 FZ	
560	315101-0146	-		4	Washer, Plain, BRB, 5,3/10 H=1	
580	315233-0109	-		1	Washer,Pl.Rnd.Nyl.10,3/14,H=1	
600	315233-0110	-		4	Washer,Pl.Rnd.Nyl.13,3/17,H=1	
620	315233-0111	-		7	Washer,Pl.Rnd.Nyl.17/22,H=1	
640	315233-0113	-		1	Washer,Pl.Rnd.Nyl.21,4/27,H=1,2	
660	342704-0114	-		1	ACCESSORIES,FERRULE 15-MSG	
680	342713-0209	-		1	Plug, Ext Thread Hex Socket 8638-00-180	
700	342713-0210	-		2	Plug, Ext Thread Hex Socket 8638-00-140	
720	342713-0211	-		1	Plug, Ext Thread Hex Socket 8638-00-380	
760	342736-0115	-		1	Conn. Elbow W-16	
780	342722-0205	-		2	STRAIGHT COUPLING D=8-R1/4"	
800	342722-0206	-		2	STRAIGHT COUPLING D=8-R3/8"	

Pos	Part No	SP	UN	Qty	Description	Page No

NON-RETURN VALVE

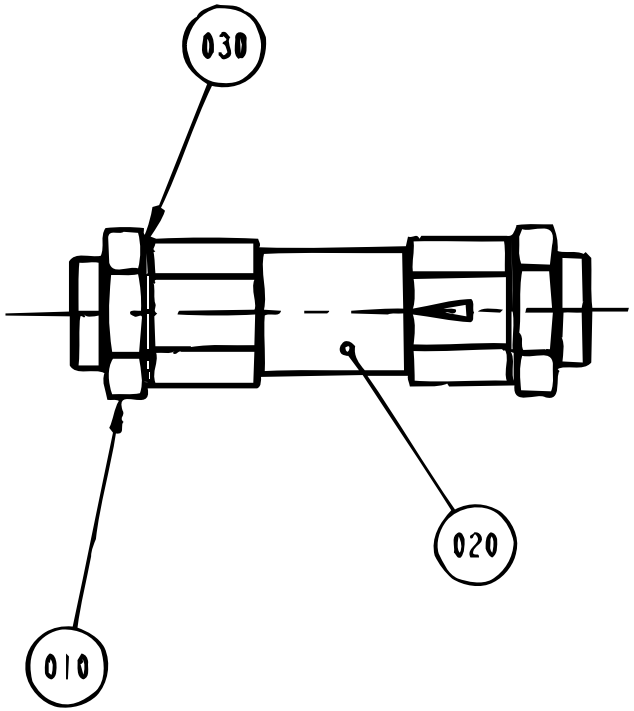

S - 491536-1
ECN 82225

Pos	Part No	SP	UN	Qty	Description	Page No
Common Parts						
010	751086-0000	D		2	NIPPLE	
020	90230-0028	C		1	NON-RETURN VALVE H 151 R 3/8"	
030	315233-0111	-		2	Washer,Pl.Rnd.Nyl.17/22,H=1	

Pos	Part No	SP	UN	Qty	Description	Page No

PUSH BUTTON BOX

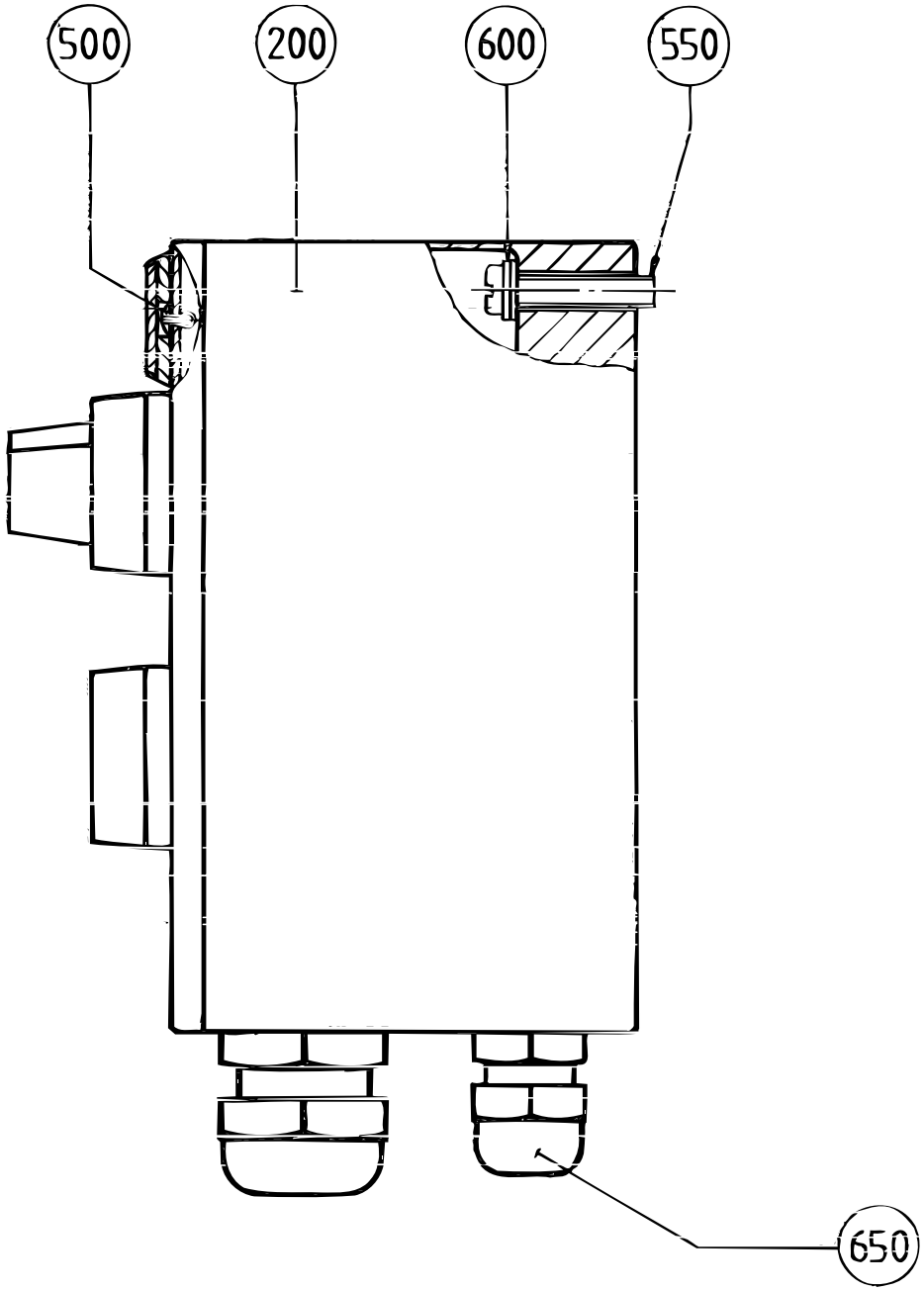

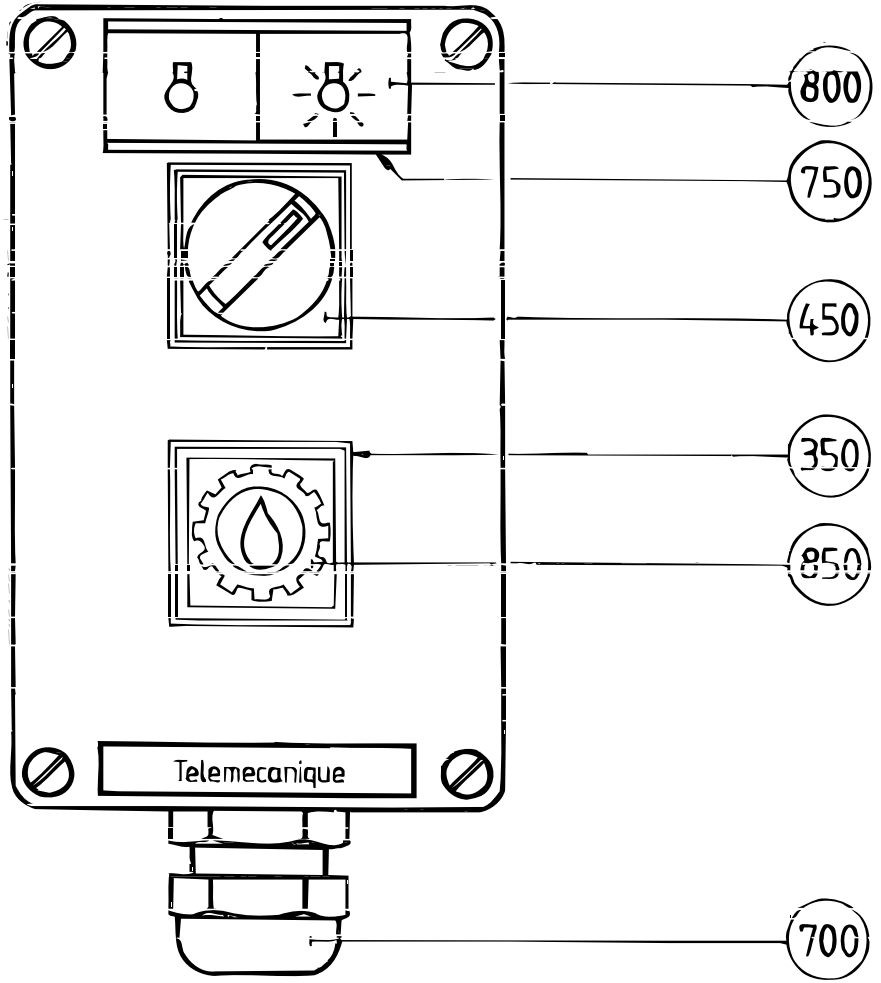

S - 456882-1
ECN 82225

Pos	Part No	SP	UN	Qty	Description	Page No
Common Parts						
200	B 456883-0000	-		1	PUSH BUTTON BOX	
350	90064-0084	C		1	PUSH BUTTON YELLOW	
450	90111-0120	C		1	SWITCH 2 POS. EA OLTEN	
500	311520-0329	-		2	Rivet, Blank 2,4x8	
550	312121-0333	-		2	Screw Slot.Pan Hd. MCS 5x25 FZB	
600	315101-0146	-		2	Washer, Plain, BRB, 5,3/10 H=1	
650	352103-0101	-		1	CABLE GLAND ST 9;PR15,2/PG9	
700	352103-0110	-		1	CABLE GLAND STR 16	
750	359240-0100	-		1	SIGN HOLDER	
800	359241-0140	-		1	SIGN "LIGHTING MACHINE"	
850	359301-0125	-		1	SIGN "LUBRICATION"	

Pos	Part No	SP	UN	Qty	Description	Page No

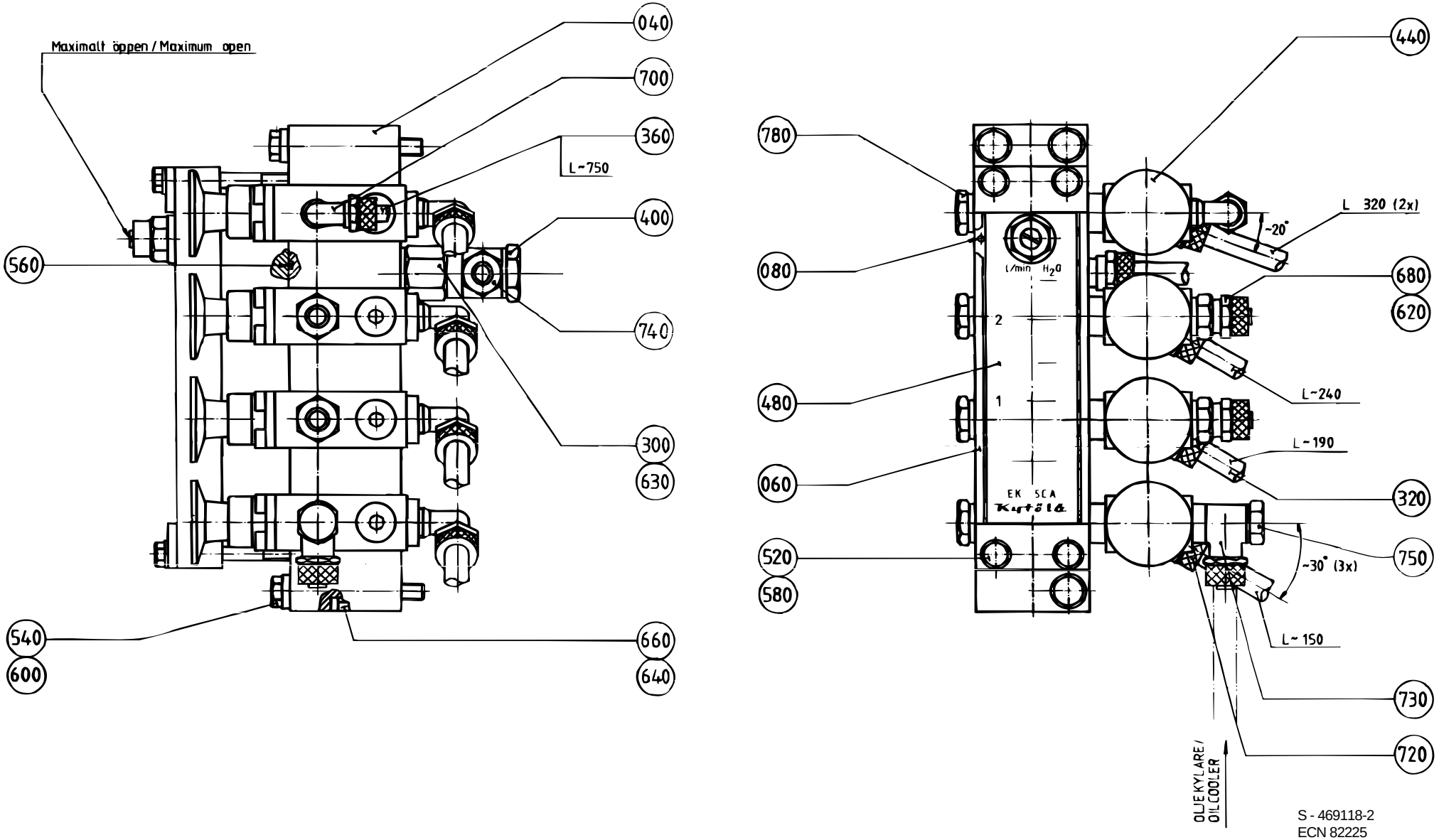
Maximalt öppen / Maximum open
040
700
360
L~750
400
560
740
300
630
540
600
660
640
440
780
L 320 (2x)
~20°
080
680
620
l/min H2O
2
480
1
L~240
L~190
060
320
EK SCA
Kytölä
520
750
580
~30° (3x)
L~150
730
720
OLJEKYLARE /
OIL COOLER
S - 469118-2
ECN 82225

Pos	Part No	SP	UN	Qty	Description	Page No
Common Parts						
040	469119-0000	-		1	BLOCK	
060	469120-0000	-		1	HOLDER	
080	456011-0000	C		6	PIN	
300	90030-0166	-		1	NIPPLE,REDUCING G1/4"-G1/4"	
320	90166-0118	-	MM	125	TUBE 8 mm PA Black	
360	90166-0119	-	MM	75	HOSE PUR 4/6 Black	
400	90230-0018	C		1	NON RETURN VALVE VCR-844-1/4"-04	
440	B 90235-0064	C		4	VALVE	
480	90243-0134	C		1	FLOW METER	
520	312105-0341	-		4	Screw M6S M5x50 A280	
540	312105-0380	-		4	Screw M6S M6x50 A280	
560	315202-0116	-		2	O-Ring 18,1x1,6 mm	
580	315105-0146	-		4	Washer, Plain, BRB, 5,3/10,H=1	
600	315115-0153	-		3	Washer, Plain, TBRB 6,4/12 H=3	
620	315233-0109	C		2	Washer,Pl.Rnd.Nyl.10,3/14,H=1	
630	315233-0110	C		1	Washer,Pl.Rnd.Nyl.13,3/17,H=1	
640	315233-0111	C		1	Washer,Pl.Rnd.Nyl.17/22,H=1	
660	342713-0211	-		1	Plug, Ext Thread Hex Socket 8638-00-380	
680	342921-0121	C		2	STRAIGHT COUPLING,EXT.THREADED 8/6-G1/8"	
700	342930-0113	C		1	ELBOW 90 COUPL.,EXT.THREAD 6/4-R1/8"	
720	342930-0121	-		4	ELBOW 90 COUPL.,EXT.THREAD 8/6-R1/8"	
730	342980-0121	-		1	BANJO-CONNECTION,RING 8/6-G1/8"	
740	342980-0122	-		1	BANJO-CONNECTION,RING 8/6-G1/4"	
750	342980-0303	C		1	BANJO-HOLLOW BOLT COUPL,EXT.THR.01-G1/8"	
780	342980-0313	C		8	BANJO-HOLLOW BOLT COUPL,EXT.THR.02-G1/8"	

Pos	Part No	SP	UN	Qty	Description	Page No

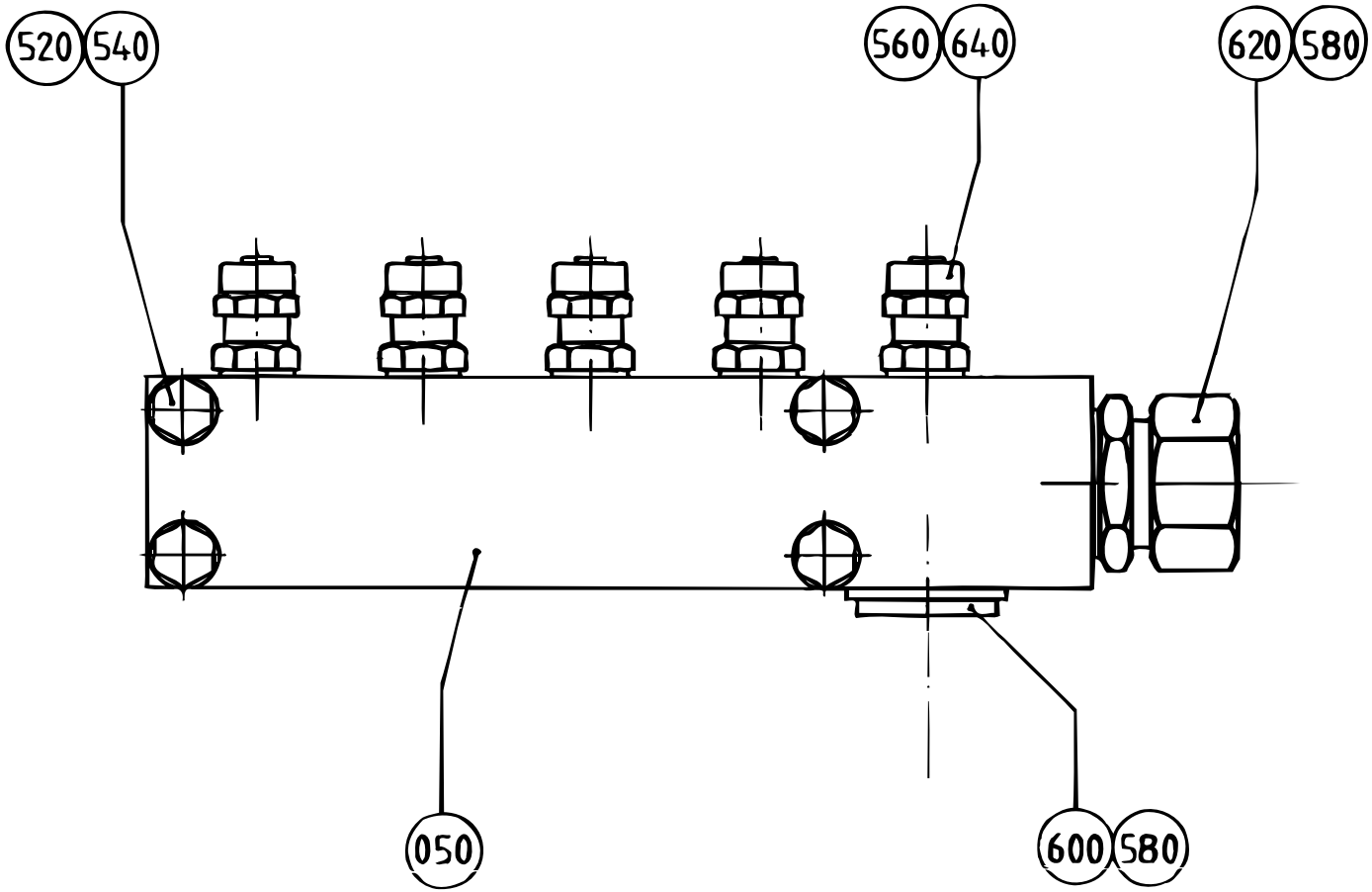
520
540
560
640
620
580
050
600
580

Pos	Part No	SP	UN	Qty	Description	Page No
Common Parts						
050	469122-0000	-		1	BLOCK	
520	312105-0368	-		4	Screw M6S M6x16 A280	
540	315105-0153	-		4	Washer, Plain, BRB, 6,4/12,H=1,5	
560	315233-0109	C		5	Washer,Pl.Rnd.Nyl.10,3/14,H=1	
580	315233-0113	C		1	Washer,Pl.Rnd.Nyl.21,4/27,H=1,2	
600	342713-0213	-		1	Plug, Ext Thread Hex Socket 8638-00-120	
620	342720-0114	-		1	Conn. Str. GA-15-G1/2	
640	342921-0121	-		5	STRAIGHT COUPLING,EXT.THREADED 8/6-G1/8"	

Pos	Part No	SP	UN	Qty	Description	Page No

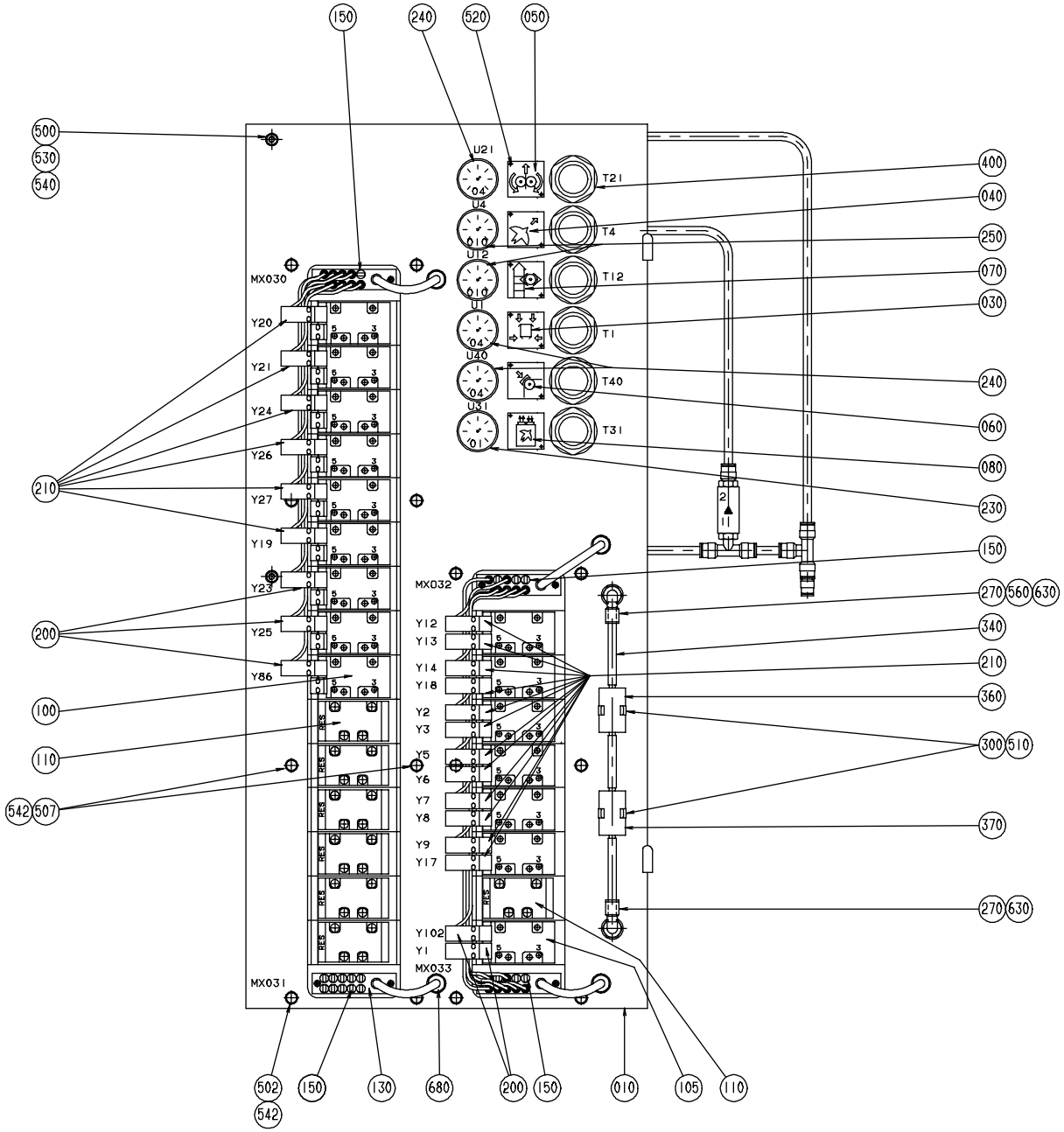
150
240
520
050
500
530
540
U21
T21
U4
T4
U12
T12
U1
T1
U40
T40
U31
T31
400
040
250
070
030
240
060
080
230
150
MX030
Y20
Y21
Y24
Y26
Y27
Y19
Y23
Y25
Y86
210
200
100
110
542
507
MX032
Y12
Y13
Y14
Y18
Y2
Y3
Y5
Y6
Y7
Y8
Y9
Y17
Y102
Y1
MX033
MX031
270
560
630
340
210
360
300
510
370
270
630
502
542
150
130
680
200
150
010
105
110

Pos	Part No	SP	UN	Qty	Description	Page No
Common Parts						
010	1529101-0000	-		1	SHEET	
030	273449-0000	-		1	SIGN	
040	273450-0000	-		1	SIGN	
050	273452-0000	-		1	SIGN	
060	295424-0000	-		1	SIGN	
070	295425-0000	-		1	SIGN	
080	978603-0000	-		1	SIGN	
090	979219-0000	-		14	SPACER PIPE	
100	90042-0215	-		9	Valve body 5/2 unistable	
105	90042-0271	-		7	Valve body 2X3/2	
110	90042-0519	-		7	Blank plate ISO size 1	
130	90042-0521	-		4	EL.CONNECTION MECMAN 04938 278 04	
140	90042-0522	-		4	PORTED END PIECE ISO SIZE 1	
150	90042-0526	-		16	PROTECTIVE SLEEVE MECMAN	
160	90042-0528	-		1	Blanking kit seals ISO size 1	
180	90042-0532	-		23	BASE PLATE ISO SIZE 1	
200	90042-0538	-		5	Pilot valve L=500mm	
210	90042-0539	-		18	Pilot valve L=350mm	
230	90043-0021	-		1	PRESSURE GAUGE Wiegand 0-1 BAR 1/8"	
240	90043-0064	-		3	PRESSURE GAUGE	
250	90043-0065	-		2	PRESSURE GAUGE	
260	90055-0217	-		1	ELBOW PIPE JOINT	
270	90055-0118	-		37	ELBOW PIPE JOINT -8mm	
275	90087-0036	-		1	PLUG	
280	90113-0090	-		1	DIFFERENTIAL PRESSURE	
283	90113-0455	-		5	QUICKCLAMP	
285	90113-0469	-		3	MANIFOLD REGULATOR 4 bar	
290	90113-0470	-		2	MANIFOLD REGULATOR 10 bar	
300	90165-0019	-		2	CLIP	
310	90166-0013	-	M	3	TUBE 8 mm PA Blue	
320	90166-0068	-	M	1	TUBE 12 mm PA Blue	
330	90166-0081	-	M	1	TUBE 6 mm PA Blue	
340	90166-0194	-	M	1	TUBE 8 mm PUR Blue	
350	90235-0151	-		1	NON-RETURN VALVE	
360	90277-0045	-		1	FILTER / 9900-05-BK	
370	90277-0046	-		1	FILTER / 9933-05-101	
380	90328-0017	-		1	SILENCER, d=6 mm	
390	90328-0024	-		3	SILENCER G3/8	
400	90457-0078	-		6	PANEL NUT	
500	312101-0451	-		2	Screw M6S M8x20 FZB	
502	312105-0376	-		14	Screw M6S M6S M6x35 A280	
507	312105-0382	-		2	Screw M6S M6x60 A280	
510	312125-0220	-		2	Screw Slot.Pan Hd. MCS 3x6 A480	
520	312502-0120	-		12	Drive Screw Round Head KDS 0x5	
530	312601-0318	-		2	NUT M6M8FZB	
535	312605-0316	-		14	Nut Hex. M6M M6 A280	
540	315101-0165	-		2	Washer, Plain, BRB, 8,4/16 H=1,5	
542	315105-0153	-		28	Washer, Plain, BRB, 6,4/12,H=1,5	
550	342713-0211	-		13	Plug, Ext Thread Hex Socket 8638-00-380	
554	342715-0102	-		2	Blind plug 6 mm	
555	342715-0103	-		14	Blind plug 8 mm	
560	342716-0203	-		28	REDUCER 6-8	
565	342716-0209	-		1	REDUCER 8-12	
569	342722-0204	-		1	PIPE COUPLING	
570	342722-0205	-		1	STRAIGHT COUPLING D=8-R1/4"	
575	342732-0102	-		6	ELBOW PIPE JOINT	
580	342732-0103	-		2	ELBOW PIPE JOINT	
590	342732-0104	-		5	ELBOW PIPE JOINT	
600	342732-0105	-		2	ELBOW PIPE D8-R3/8"	
610	342732-0110	-		3	ELBOW PIPE JOINT	
620	342735-0102	-		1	ELBOW PIPE JOINT	
630	342735-0103	-		2	ELBOW PIPE JOINT	
635	342735-0109	-		1	ELBOW PIPE JOINT	
640	342742-0104	-		1	T-COUPLING,ADJUST,F.PLASTIC TUBE 8-G1/4"	
650	342748-0103	-		1	T-CONNECTION	
655	342748-0104	-		1	T-CONNECTION	
660	342748-0109	-		3	T-CONNECTION	
670	342770-0105	-		6	HOSE COUPLING	
675	342772-0121	-		1	ELBOW FITTING	
680	352101-0103	-		4	GLANDS,Lead-in,IP44 PR18,6	
690	359000-0403	-		2	MARKING COLLAR PA2/4 "3" Yellow	
690	359000-0402	-		5	MARKING COLLAR 2/4 "2" Yellow	
690	359000-0401	-		8	MARKING COLLAR 2/4 "1" Yellow	
690	359000-0400	-		4	MARKING CO2/4"0"	

(Cont'd)

AIR PANEL

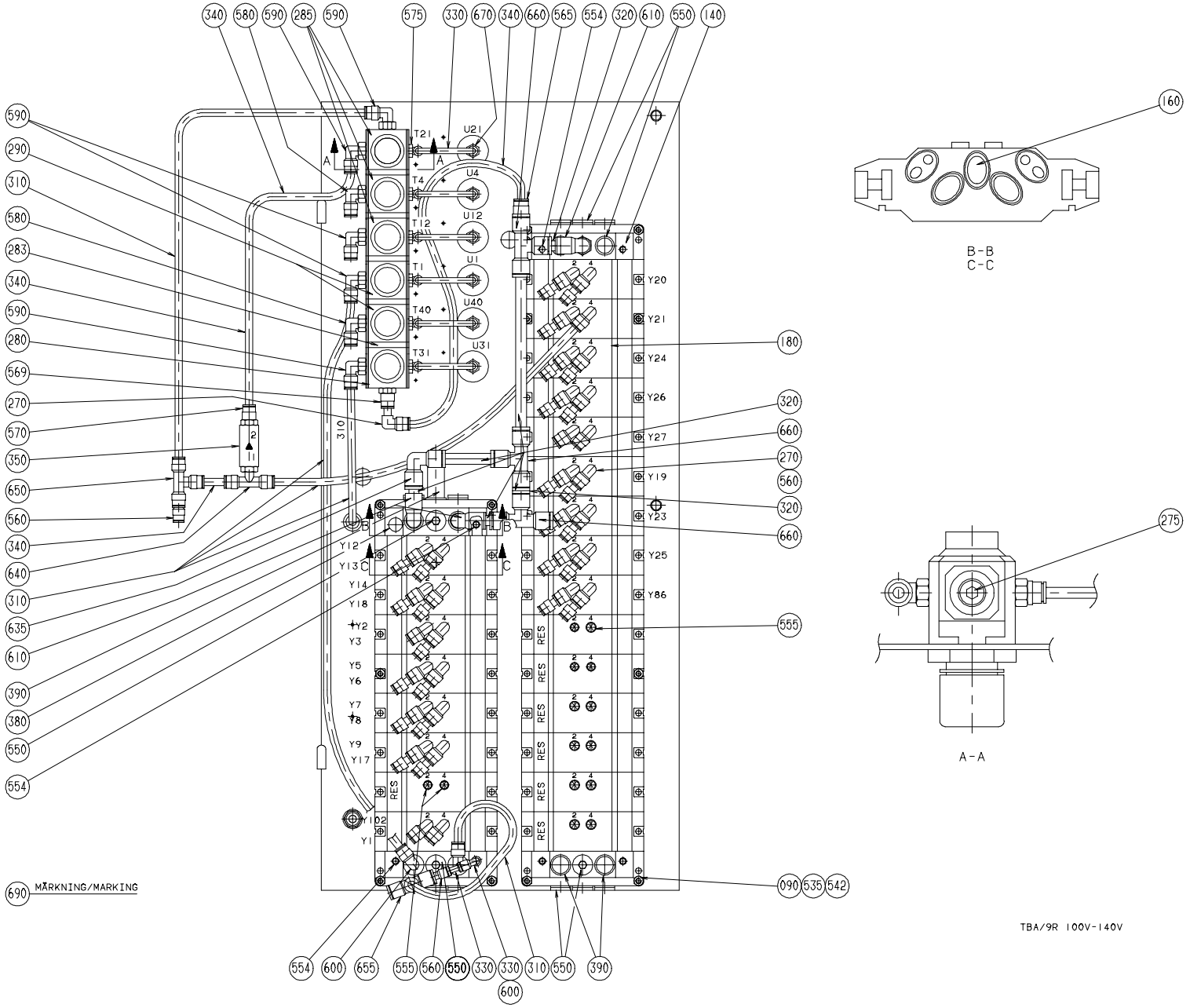
340 580 590 285 590 575 330 670 340 660 565 554 320 610 550 140
590 290 310 580 283 340 590 280 569 270 570 350 650 560 340 640 310 635 610 390 380 550 554
180 320 660 270 560 320 660 555 090 535 542
554 600 655 555 560 550 330 330 310 550 390 600
690 MÄRKNING/MARKING
T21 U21 T4 U4 T12 U12 T1 U1 T40 U40 T31 U31
Y20 Y21 Y24 Y26 Y27 Y19 Y23 Y25 Y86
Y12 Y13 Y14 Y18 Y2 Y3 Y5 Y6 Y7 Y8 Y9 Y17 Y102 Y1
RES
160
B-B
C-C
275
A-A
TBA/9R 100V-140V

(Cont'd)

Common Parts

Pos	Part No	SP	UN	Qty	Description	Page No
010	1529101-0000	-		1	SHEET	
030	273449-0000	-		1	SIGN	
040	273450-0000	-		1	SIGN	
050	273452-0000	-		1	SIGN	
060	295424-0000	-		1	SIGN	
070	295425-0000	-		1	SIGN	
080	978603-0000	-		1	SIGN	
090	979219-0000	-		14	SPACER PIPE	
100	90042-0215	-		9	Valve body 5/2 unistable	
105	90042-0271	-		7	Valve body 2X3/2	
110	90042-0519	-		7	Blank plate ISO size 1	
130	90042-0521	-		4	EL.CONNECTION MECMAN 04938 278 04	
140	90042-0522	-		4	PORTED END PIECE ISO SIZE 1	
150	90042-0526	-		16	PROTECTIVE SLEEVE MECMAN	
160	90042-0528	-		1	Blanking kit seals ISO size 1	
180	90042-0532	-		23	BASE PLATE ISO SIZE 1	
200	90042-0538	-		5	Pilot valve L=500mm	
210	90042-0539	-		18	Pilot valve L=350mm	
230	90043-0021	-		1	PRESSURE GAUGE Wiegand 0-1 BAR 1/8"	
240	90043-0064	-		3	PRESSURE GAUGE	
250	90043-0065	-		2	PRESSURE GAUGE	
260	90055-0217	-		1	ELBOW PIPE JOINT	
270	90055-0118	-		37	ELBOW PIPE JOINT -8mm	
275	90087-0036	-		1	PLUG	
280	90113-0090	-		1	DIFFERENTIAL PRESSURE	
283	90113-0455	-		5	QUICKCLAMP	
285	90113-0469	-		3	MANIFOLD REGULATOR 4 bar	
290	90113-0470	-		2	MANIFOLD REGULATOR 10 bar	
300	90165-0019	-		2	CLIP	
310	90166-0013	-	M	3	TUBE 8 mm PA Blue	
320	90166-0068	-	M	1	TUBE 12 mm PA Blue	
330	90166-0081	-	M	1	TUBE 6 mm PA Blue	
340	90166-0194	-	M	1	TUBE 8 mm PUR Blue	
350	90235-0151	-		1	NON-RETURN VALVE	
360	90277-0045	-		1	FILTER / 9900-05-BK	
370	90277-0046	-		1	FILTER / 9933-05-101	
380	90328-0017	-		1	SILENCER, d=6 mm	
390	90328-0024	-		3	SILENCER G3/8	
400	90457-0078	-		6	PANEL NUT	
500	312101-0451	-		2	Screw M6S M8x20 FZB	
502	312105-0376	-		14	Screw M6S M6S M6x35 A280	
507	312105-0382	-		2	Screw M6S M6x60 A280	
510	312125-0220	-		2	Screw Slot.Pan Hd. MCS 3x6 A480	
520	312502-0120	-		12	Drive Screw Round Head KDS 0x5	
530	312601-0318	-		2	NUT M6M8FZB	
535	312605-0316	-		14	Nut Hex. M6M M6 A280	
540	315101-0165	-		2	Washer, Plain, BRB, 8,4/16 H=1,5	
542	315105-0153	-		28	Washer, Plain, BRB, 6,4/12,H=1,5	
550	342713-0211	-		13	Plug, Ext Thread Hex Socket 8638-00-380	
554	342715-0102	-		2	Blind plug 6 mm	
555	342715-0103	-		14	Blind plug 8 mm	
560	342716-0203	-		28	REDUCER 6-8	
565	342716-0209	-		1	REDUCER 8-12	
569	342722-0204	-		1	PIPE COUPLING	
570	342722-0205	-		1	STRAIGHT COUPLING D=8-R1/4"	
575	342732-0102	-		6	ELBOW PIPE JOINT	
580	342732-0103	-		2	ELBOW PIPE JOINT	
590	342732-0104	-		5	ELBOW PIPE JOINT	
600	342732-0105	-		2	ELBOW PIPE D8-R3/8"	
610	342732-0110	-		3	ELBOW PIPE JOINT	
620	342735-0102	-		1	ELBOW PIPE JOINT	
630	342735-0103	-		2	ELBOW PIPE JOINT	
635	342735-0109	-		1	ELBOW PIPE JOINT	
640	342742-0104	-		1	T-COUPLING,ADJUST,F.PLASTIC TUBE 8-G1/4"	
650	342748-0103	-		1	T-CONNECTION	
655	342748-0104	-		1	T-CONNECTION	
660	342748-0109	-		3	T-CONNECTION	
670	342770-0105	-		6	HOSE COUPLING	
675	342772-0121	-		1	ELBOW FITTING	
680	352101-0103	-		4	GLANDS,Lead-in,IP44 PR18,6	
690	359000-0403	-		2	MARKING COLLAR PA2/4 "3" Yellow	
690	359000-0402	-		5	MARKING COLLAR 2/4 "2" Yellow	
690	359000-0401	-		8	MARKING COLLAR 2/4 "1" Yellow	
690	359000-0400	-		4	MARKING CO2/4"0"	

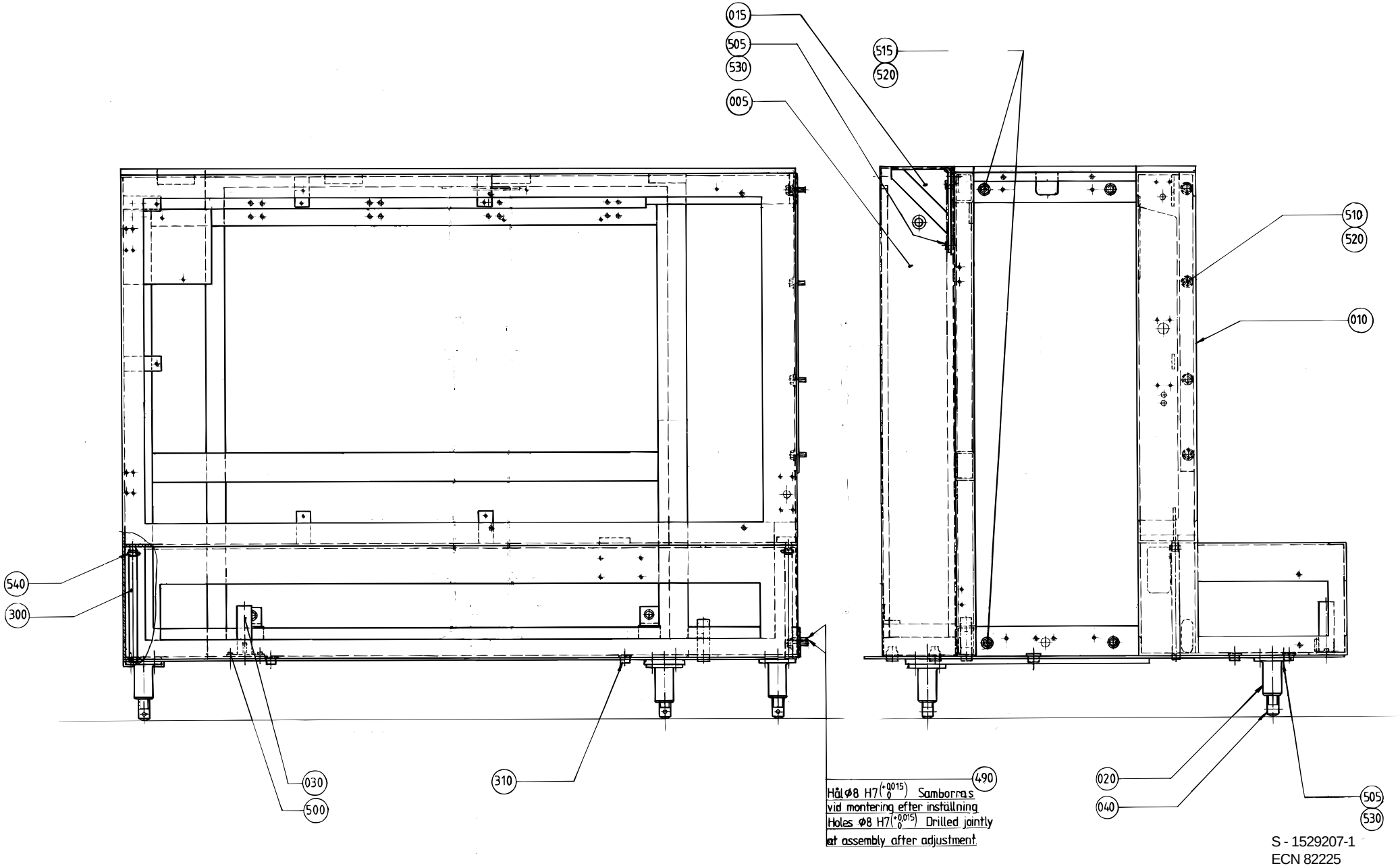

S - 1529207-1
ECN 82225

Pos	Part No	SP	UN	Qty	Description	Page No
Common Parts						
005	1529050-0000	-		1	SPACER PIECE	
010	1529210-0000	-		1	MACHINE BODY	
020	469095-0000	-		4	HOLDER	
030	295259-0000	-		1	HOLDER	
040	469096-0000	-		4	LEG	
300	90166-0087	-	MM	63	HOSE 15/23 Reinf.PVC Transp.	
310	90261-0008	-		3	Plug, Blind, Plastic GPN300F26	
490	311103-0407	-		4	Pin, Parallell, m6, 8x35	
500	312105-0368	-		2	Screw M6S M6x16 A280	
505	312105-0453	-		16	Screw M6S M8x25 A280	
510	312105-0536	-		4	Screw M6S M12x30 A280	
515	312105-0540	-		4	Screw M6S M12x40 A280	
520	315105-0178	-		8	Washer, Plain, BRB, 13/24,H=2	
530	315115-0165	-		16	Washer, Plain, TBRB 8,4/16 H=3	
540	342991-0104	-		2	HOSE CLIP,WORM DRIVE TYPE (23)-27	

Pos	Part No	SP	UN	Qty	Description	Page No

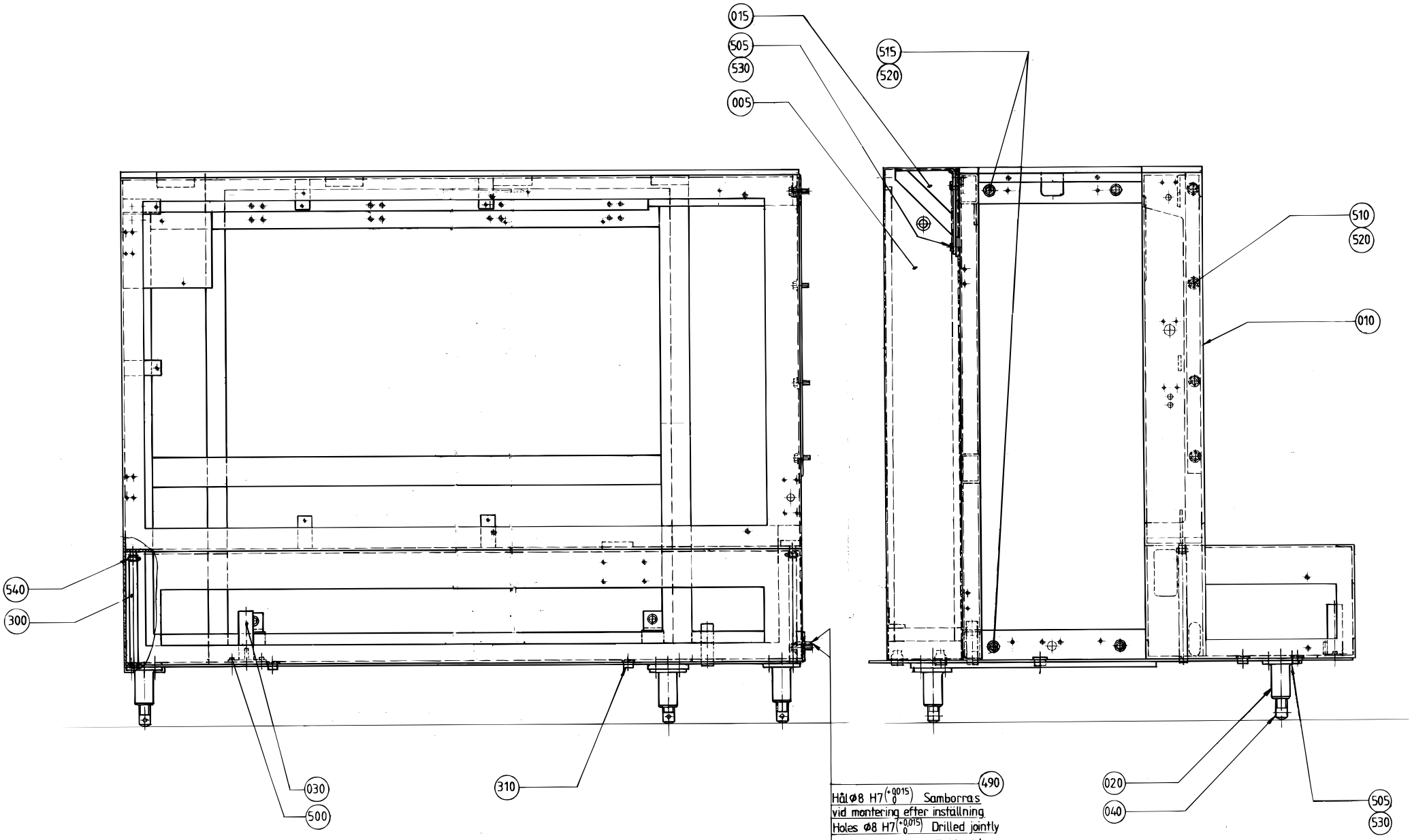

S - 1529230-1
ECN 82225

Pos	Part No	SP	UN	Qty	Description	Page No
Common Parts						
005	1529050-0000	-		1	SPACER PIECE	
010	1529210-0000	-		1	MACHINE BODY	
020	469095-0000	-		4	HOLDER	
030	295259-0000	-		1	HOLDER	
040	469096-0000	-		4	LEG	
300	90166-0087	-	MM	63	HOSE 15/23 Reinf.PVC Transp.	
310	90261-0008	-		3	Plug, Blind, Plastic GPN300F26	
490	311103-0407	-		4	Pin, Parallell, m6, 8x35	
500	312105-0368	-		2	Screw M6S M6x16 A280	
505	312105-0453	-		16	Screw M6S M8x25 A280	
510	312105-0536	-		4	Screw M6S M12x30 A280	
515	312105-0540	-		4	Screw M6S M12x40 A280	
520	315105-0178	-		8	Washer, Plain, BRB, 13/24,H=2	
530	315115-0165	-		16	Washer, Plain, TBRB 8,4/16 H=3	
540	342991-0104	-		2	HOSE CLIP,WORM DRIVE TYPE (23)-27	

Pos	Part No	SP	UN	Qty	Description	Page No

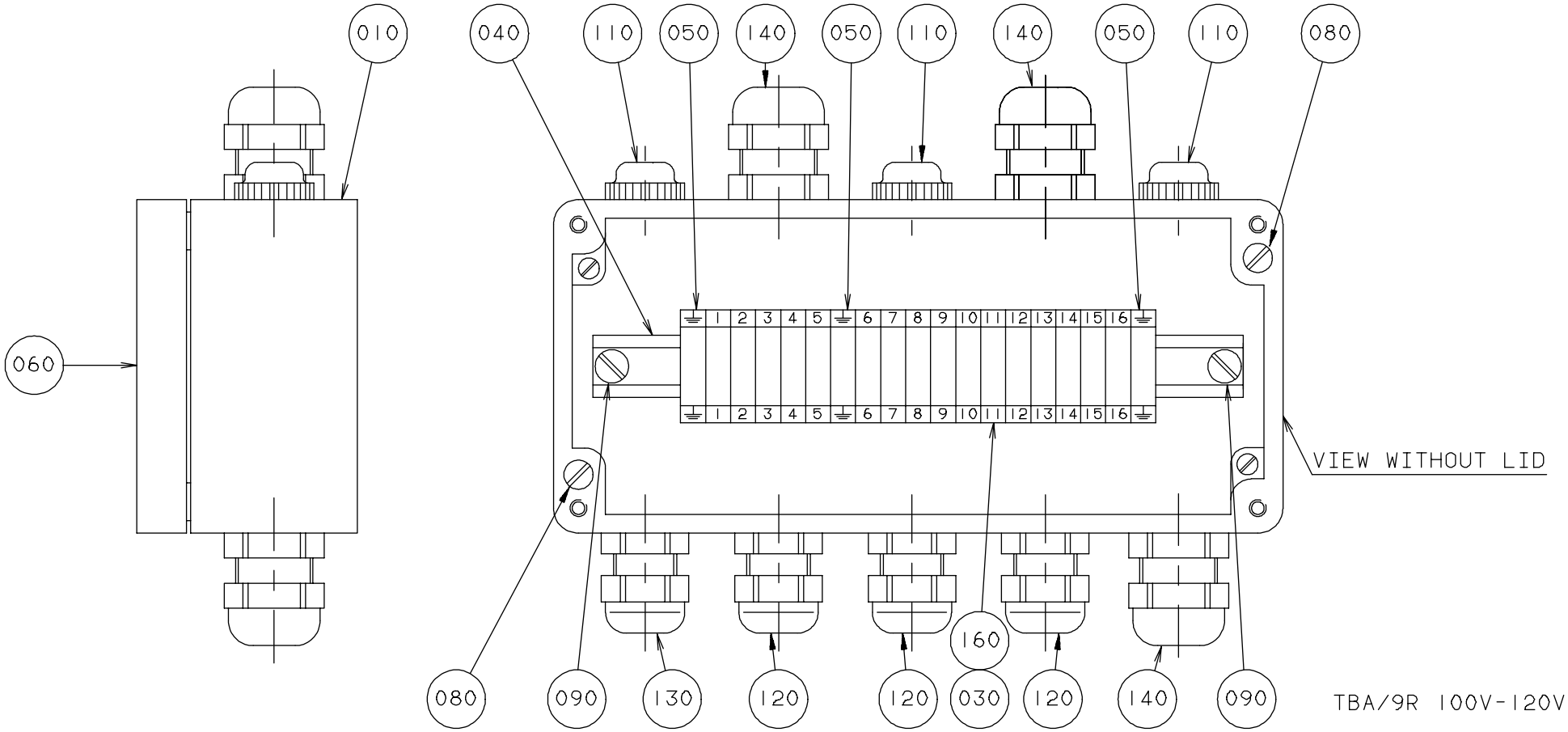
010
040
110
050
140
050
110
140
050
110
080
060
1 2 3 4 5 6 7 8 9 10 11 12 13 14 15 16
1 2 3 4 5 6 7 8 9 10 11 12 13 14 15 16
VIEW WITHOUT LID
080
090
130
120
120
160
030
120
140
090
TBA/9R 100V-120V

Pos	Part No	SP	UN	Qty	Description	Page No
Common Parts						
010	1529068-0000	-		1	CONNECTION BOX	
030	90077-0079	-		16	FEED THROUGH TERMINAL AKZ 4PA for TS15	
040	90077-0328	-	MM	156	RAIL TS15/5	
050	90135-0026	-		3	EARTH TERMINAL AKE 4PA	
060	90194-0016	-		1	SIGN "FLASH SIGN" 50X50MM	
080	312125-0293	-		2	Screw Pan Head MCS M4X16 RFR	
090	312132-0284	-		2	Screw Slot. Pan Head MSCS M4X5	
110	352101-0102	-		3	GLANDS,Lead-in,IP44 PR15,2; PG9	
120	352103-0100	-		3	CABLE GLAND STR 9;PR15,2	
130	352103-0101	-		1	CABLE GLAND ST 9;PR15,2/PG9	
140	352103-0106	-		3	CABLE GLAND ST 11	
160	359011-0807	-		2	MARKING PLATES 5-FW 1-50	

Pos	Part No	SP	UN	Qty	Description	Page No

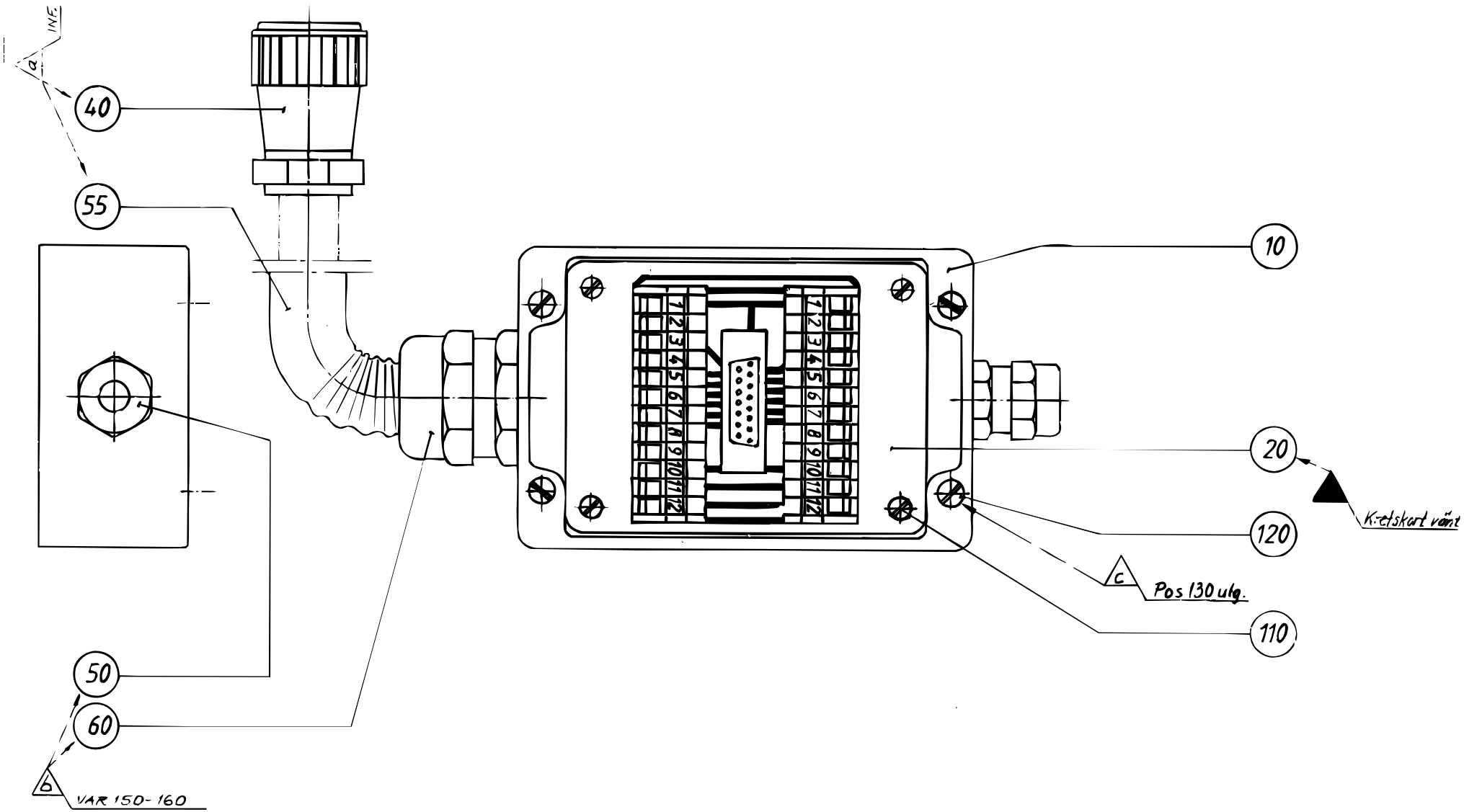
40
55
50
60
10
20
120
110
a
INE
b
VAR 150-160
c
Pos 130 utg.
Kretskort vänt

Pos	Part No	SP	UN	Qty	Description	Page No
TB/8 OR TBA/8						
040	90110-0078	-		1	CONTACT	
050	352103-0106	-		1	CABLE GLAND ST 11	
055	352135-0106	-	MM	14	Spiral Conduit Di=16 mm	
060	352136-0127	-		1	GLAND FITTING PR 18,6	
TBA/9 OR TB/9 OR TBA/9 R						
050	352103-0106	-		2	CABLE GLAND ST 11	
Common Parts						
010	464297-0000	-		1	CONNECTION BOX	
020	451423-0000	-		1	CIRCUIT BOARD	
110	312125-0220	-		4	Screw Slot.Pan Hd. MCS 3x6 A480	
120	312125-0291	-		4	Screw Pan Head MCS M4x12 RFR	

Pos	Part No	SP	UN	Qty	Description	Page No

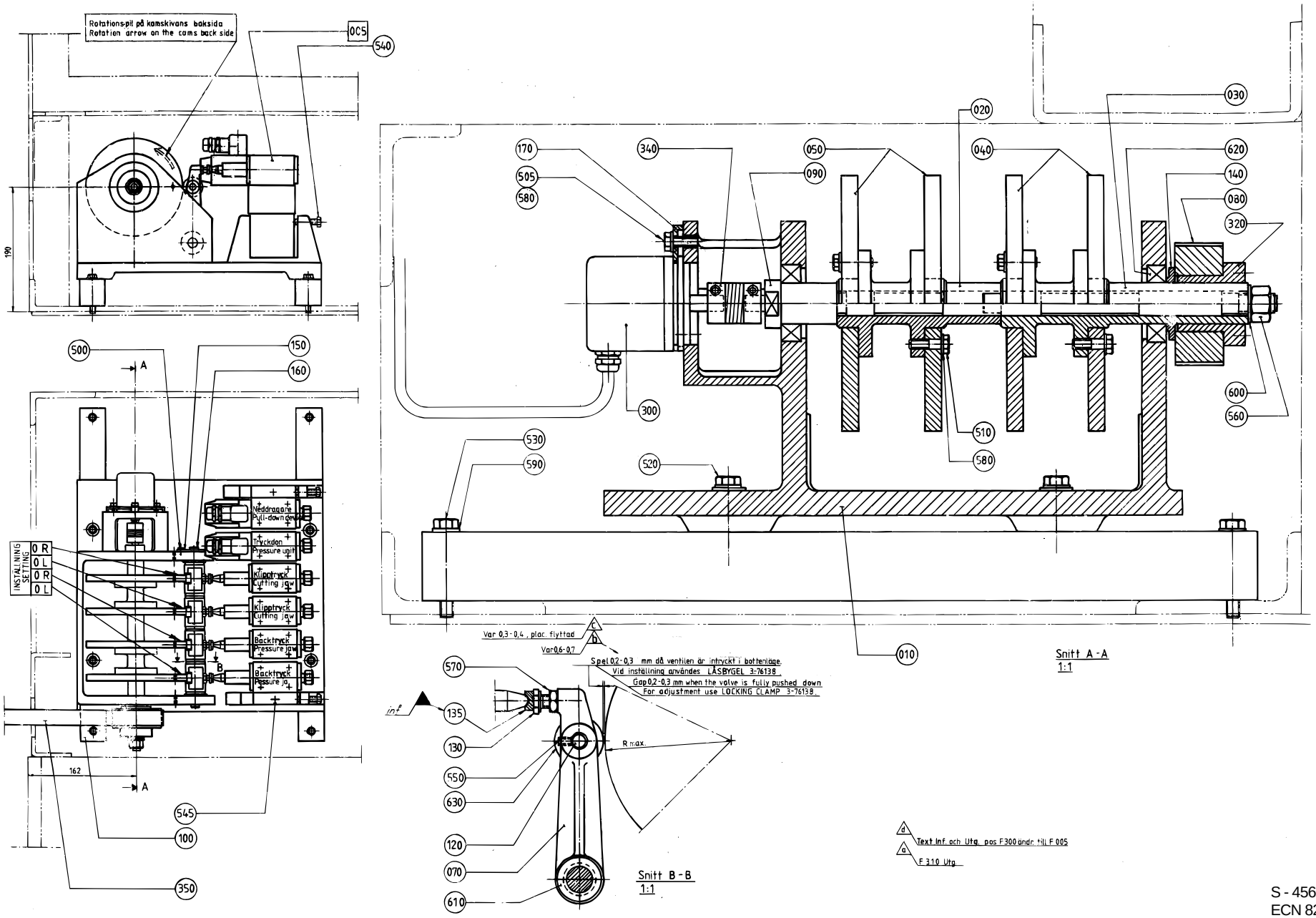

S - 456546-1
ECN 82225

Pos	Part No	SP	UN	Qty	Description	Page No
IH						
040	295927-0000	-		2	CAM DISC	
TPC						
040	295928-0000	-		2	CAM DISC	
Common Parts						
F005	A 271168-0200	-		1	BLOCK	**592**
010	456528-0000	-		1	BEARING BRACKET	
020	272573-0000	-		1	HUB	
030	272574-0000	-		1	HUB	
050	295929-0000	-		2	CAM DISC	
070	246501-0000	-		4	ARM	
080	255862-0000	-		1	TIMING BELT PULLEY	
090	256983-0000	-		1	SHAFT	
100	272575-0000	-		2	BEAM	
120	246502-0000	-		4	SHAFT	
130	490778-0000	-		4	SCREW	
135	751329-0000	-		4	WASHER	
140	255783-0000	-		1	SPACER RING	
150	256987-0000	-		1	SECURING PLATE	
160	257024-0000	-		1	SHAFT	
170	456529-0000	-		3	CLAMP HOLDER	
300	90061-0027	-		1	Angle encoder 670900035	
320	90208-0038	-		1	BUSHING "REPBY 90208-121"	
340	90355-0031	-		1	FLEXIBLE COUPLING	
350	90417-0088	-		1	Timing belt T5x1215x25	
500	312101-0327	-		2	Screw M6S M5x12 FZB	
505	312101-0368	-		3	Screw M6S M6x16 FZB	
510	312101-0370	-		12	Screw M6S M6x20 FZB	
520	312101-0459	-		4	Screw M6S M8x40 FZB	
530	312101-0462	-		4	Screw M6S M8x55 FZB	
540	312104-0457	-		2	Screw M6S M8x35H FZB	
545	312111-0465	-		2	Screw Hex.Sock.Hd.MC6S-TT 8x70 88 FZB	
550	312316-0323	-		4	Screw Hex.Sock.Set Cup P.MSK6SS5x8FZB	
560	312601-0322	-		1	NUT M6M 12-8 FZB	
570	312621-0318	-		4	ROD END,NUT M8	
580	315101-0153	-		15	Washer, Plain, BRB, 6,4/12 H=1,5	
590	315101-0165	-		8	Washer, Plain, BRB, 8,4/16 H=1,5	
600	315101-0178	-		1	Washer, Plain, BRB, 13/24 H=2	
610	321123-0107	-		8	BEARING BUSHING WITH FLANGE, 16/20X16	
620	321308-0205	-		2	BALL BEARING 25X47X12	
630	321570-0182	-		4	BEARINGS,BEARING ROLLER NA2200-2RS	

Pos	Part No	SP	UN	Qty	Description	Page No

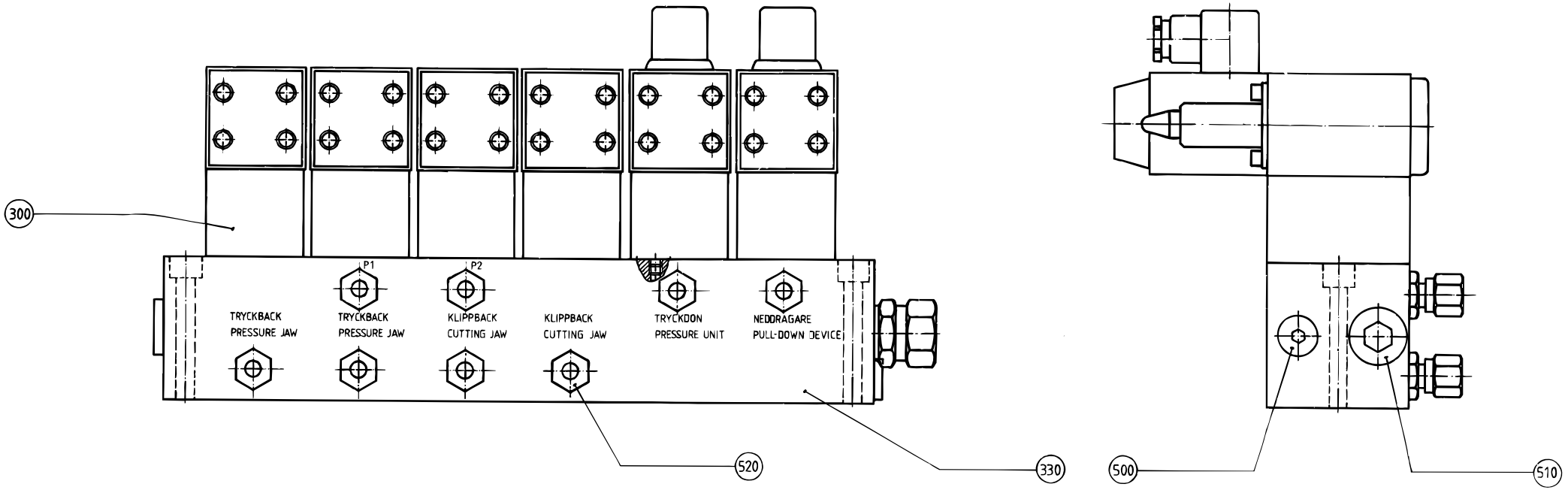

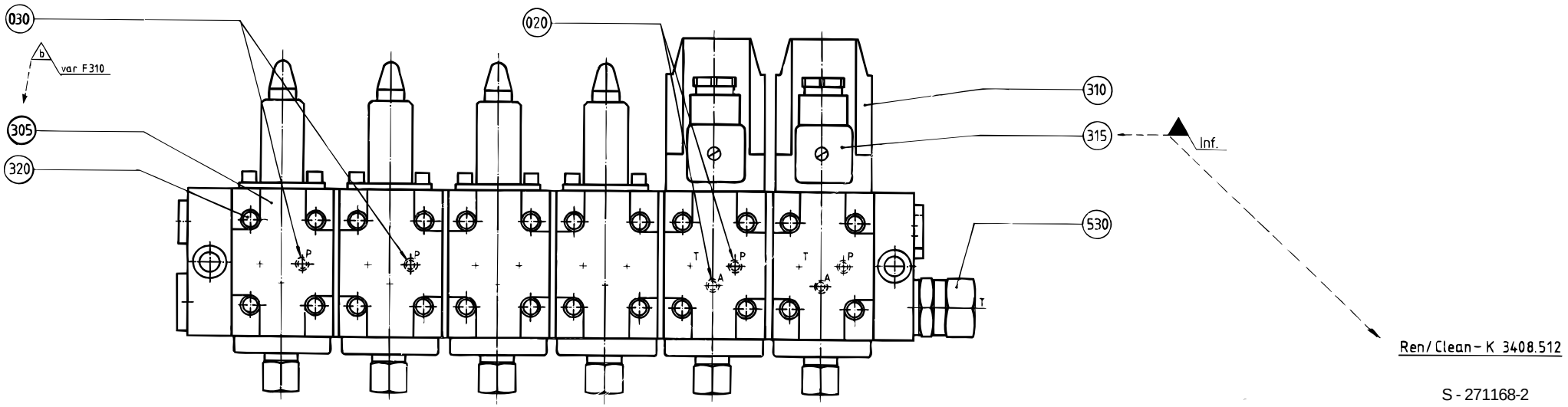

S - 271168-2
ECN 82225

Pos	Part No	SP	UN	Qty	Description	Page No
Common Parts						
020	295391-0002	C		4	THROTTLE SCREW	
030	295391-0003	C		2	THROTTLE SCREW	
300	B 90201-0010	C		6	VALVE	
305	B 90201-0016	C		4	VALVE	
310	B 90201-0017	C		2	VALVE	
315	90110-0095	C		2	CONTACT 3 POLE+EARTH	
320	90201-0303	-		6	SPARE PARTS KIT	
330	90201-0306	-		1	BLOCK	
500	342713-0310	-		3	Plug, Ext. Thread Hex. Socket. BPS14	
510	342713-0313	-		1	Plug, Ext. Thread Hex. Socket. BPS12	
520	342752-0103	-		8	Conn. Str. GA-8-G1/4	
530	342752-0114	-		1	Conn. Str. GA-15-G1/2	

Pos	Part No	SP	UN	Qty	Description	Page No

IMPULSE TRANSMITTER

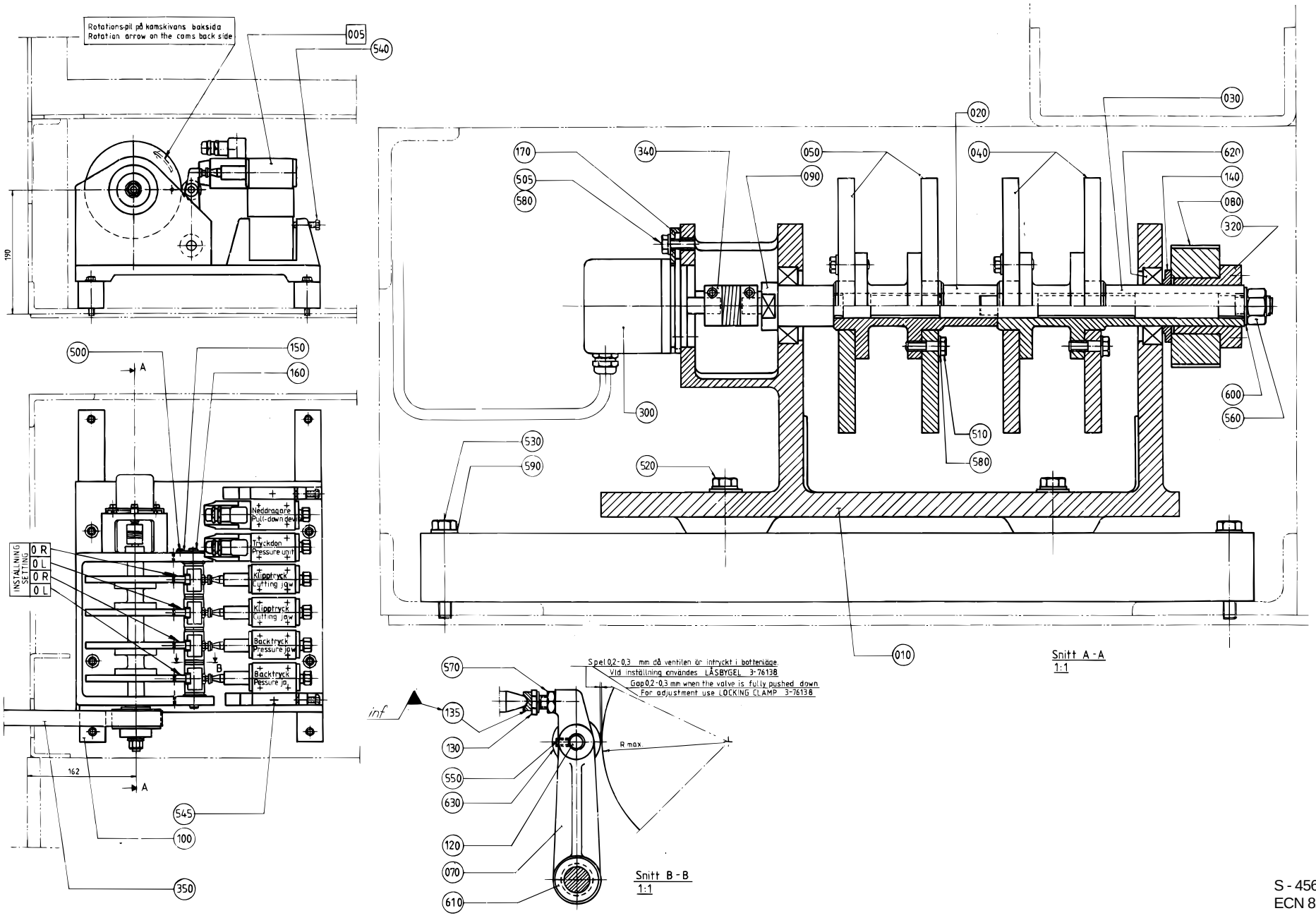

Pos	Part No	SP	UN	Qty	Description	Page No
IH						
040	295927-0000	D		2	CAM DISC	
TPC						
040	295928-0000	D		2	CAM DISC	
Common Parts						
005	A 271168-0200	-		1	BLOCK	
010	456528-0000	D		1	BEARING BRACKET	
020	272573-0000	D		1	HUB	
030	272574-0000	D		1	HUB	
050	295929-0000	D		2	CAM DISC	
070	751573-0000	C		4	ARM	
080	255862-0000	C		1	TIMING BELT PULLEY	
090	256983-0000	C		1	SHAFT	
100	272575-0000	-		2	BEAM	
120	246502-0000	C		4	SHAFT	
130	490778-0000	C		4	SCREW	
135	751329-0000	D		4	WASHER	
140	255783-0000	C		1	SPACER RING	
150	256987-0000	C		1	SECURING PLATE	
160	257024-0000	C		1	SHAFT	
170	456529-0000	C		3	CLAMP HOLDER	
300	90061-0018	D		1	ANGLE ENCODER 8BIT GRAY	
320	90208-0121	C		1	Clamping Element with sleeve, 25x34 mm	
340	90355-0031	C		1	FLEXIBLE COUPLING	
350	90417-0088	C		1	Timing belt T5x1215x25	
500	312101-0327	-		2	Screw M6S M5x12 FZB	
505	312101-0368	-		3	Screw M6S M6x16 FZB	
510	312101-0370	-		12	Screw M6S M6x20 FZB	
520	312101-0459	-		4	Screw M6S M8x40 FZB	
530	312101-0462	-		4	Screw M6S M8x55 FZB	
540	312104-0457	-		2	Screw M6S M8x35H FZB	
545	312111-0465	-		2	Screw Hex.Sock.Hd.MC6S-TT 8x70 88 FZB	
550	312316-0323	-		4	Screw Hex.Sock.Set Cup P.MSK6SS5x8FZB	
560	312601-0322	-		1	NUT M6M 12-8 FZB	
570	312621-0318	-		4	ROD END,NUT M8	
580	315101-0153	-		15	Washer, Plain, BRB, 6,4/12 H=1,5	
590	315101-0165	-		8	Washer, Plain, BRB, 8,4/16 H=1,5	
600	315101-0178	-		1	Washer, Plain, BRB, 13/24 H=2	
610	321123-0107	C		8	BEARING BUSHING WITH FLANGE, 16/20X16	
620	321308-0205	C		2	BALL BEARING 25X47X12	
630	321574-0151	C		4	BEARINGS,BEARING ROLLER NATR10	

Pos	Part No	SP	UN	Qty	Description	Page No

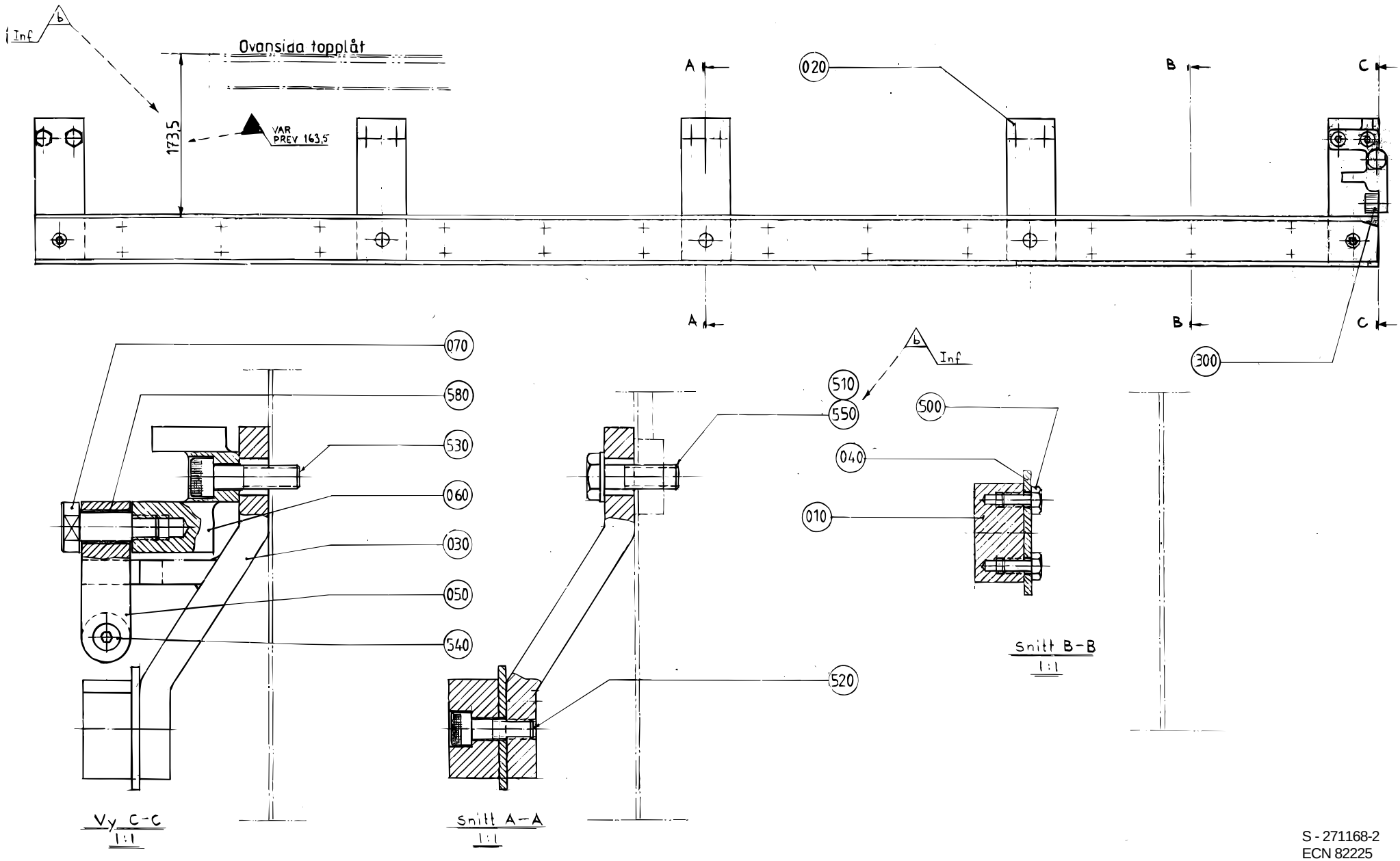
Inf
b
Ovansida topplåt
173,5
VAR
PREV 163,5
A
B
C
020
300
070
580
530
060
030
050
540
510
550
500
040
010
520
Vy C-C
1:1
Snitt A-A
1:1
Snitt B-B
1:1

Pos	Part No	SP	UN	Qty	Description	Page No
Common Parts						
010	272620-0000	C		1	GUIDE	
020	271472-0000	-		4	BRACKET	
030	271959-0000	-		1	BRACKET	
040	272621-0000	C		1	STEERING RAIL	
050	272630-0000	C		1	BARRIER	
060	272631-0000	C		1	BRACKET	
070	271961-0000	C		1	SCREW	
300	90347-0011	C		1	VIBRATION DAMPER MEGI 781056	
500	312105-0366	-		24	Screw M6S M6x12 A280	
510	312105-0495	-		8	Screw M6S M10x30 A280	
520	312115-0453	-		5	Screw MC6S M8x25 A280	
530	312115-0497	-		2	Screw MC6S M10x35 A280	
540	312155-0366	-		1	Screw Hex.Sock.Count.MF6S M6x12 A280	
550	315105-0173	-		8	Washer, Plain, BRB, 10,5/22,H=2	
580	321120-0112	C		1	BEARING BUSHING WITHOUT FLANGE,12/14X20	

Pos	Part No	SP	UN	Qty	Description	Page No

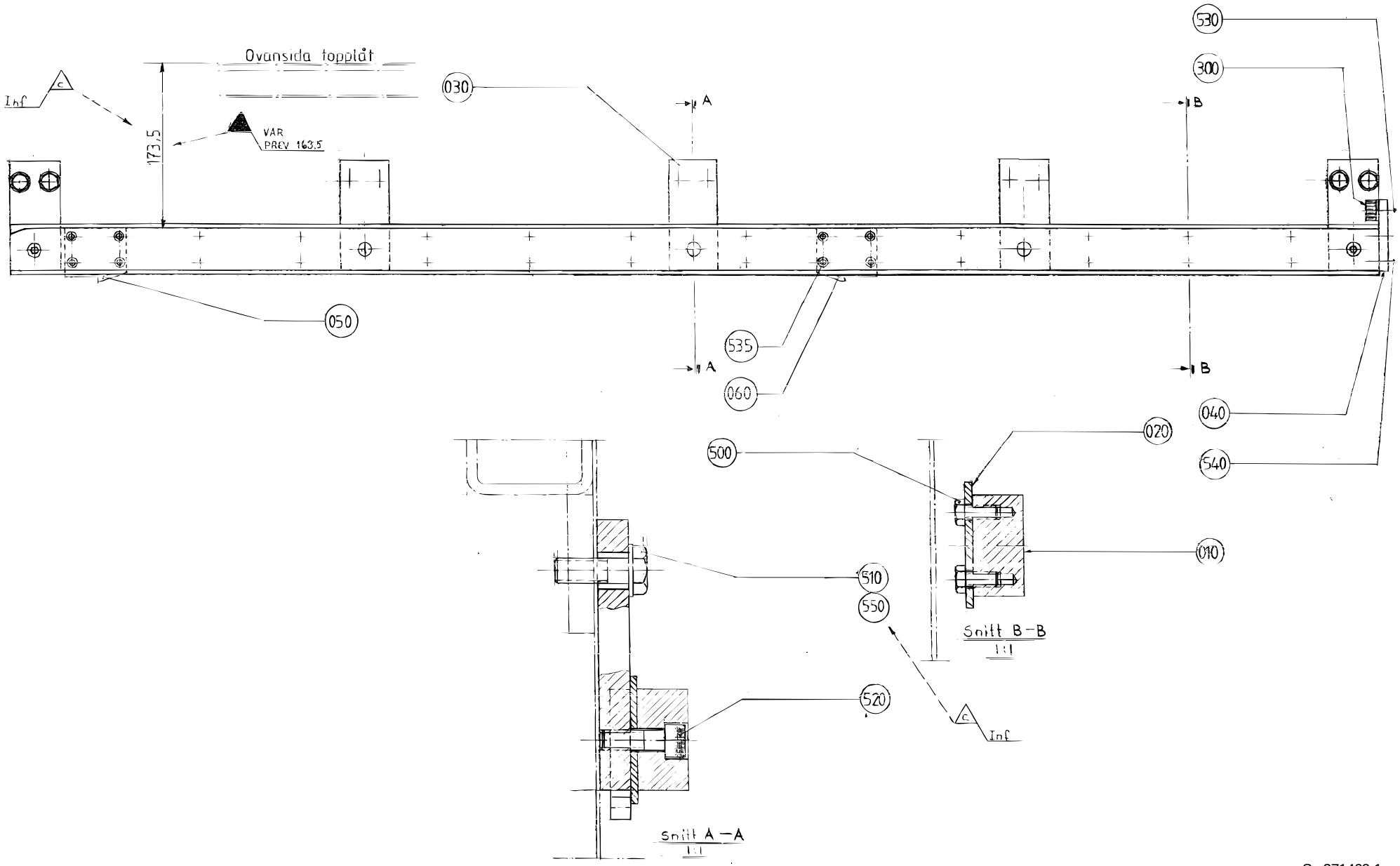

S - 271469-1
ECN 82225

Pos	Part No	SP	UN	Qty	Description	Page No
Common Parts						
010	272596-0000	C		1	GUIDE	
020	272597-0000	-		1	STEERING RAIL	
030	257151-0000	-		5	BRACKET	
040	257271-0000	C		1	STOP	
050	271456-0000	C		1	CATCH LEVER	
060	271457-0000	C		1	CATCH LEVER	
300	90347-0011	C		1	VIBRATION DAMPER MEGI 781056	
500	312105-0366	-		2	Screw M6S M6x12 A280	
510	312105-0493	-		1	Screw M6S M10x25 A280	
520	312115-0453	-		5	Screw MC6S M8x25 A280	
530	312155-0366	-		1	Screw Hex.Sock.Count.MF6S M6x12 A280	
535	312155-0374	-		8	Screw Hex.Sock.Count.MF6S M6x30 A280	
540	312155-0449	-		2	Screw Hex.Sock.Count.MF6S M8x16 A280	
550	315105-0173	-		1	Washer, Plain, BRB, 10,5/22,H=2	

Pos	Part No	SP	UN	Qty	Description	Page No

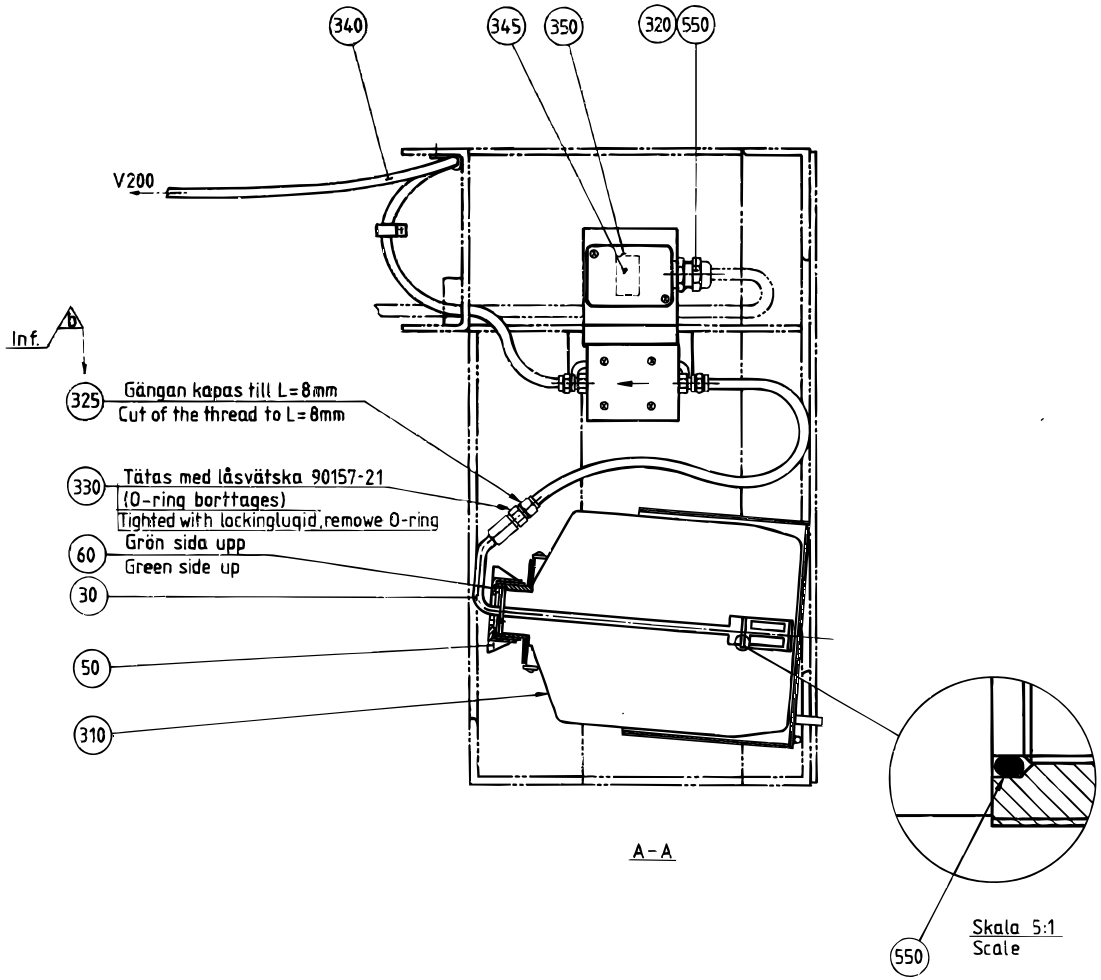

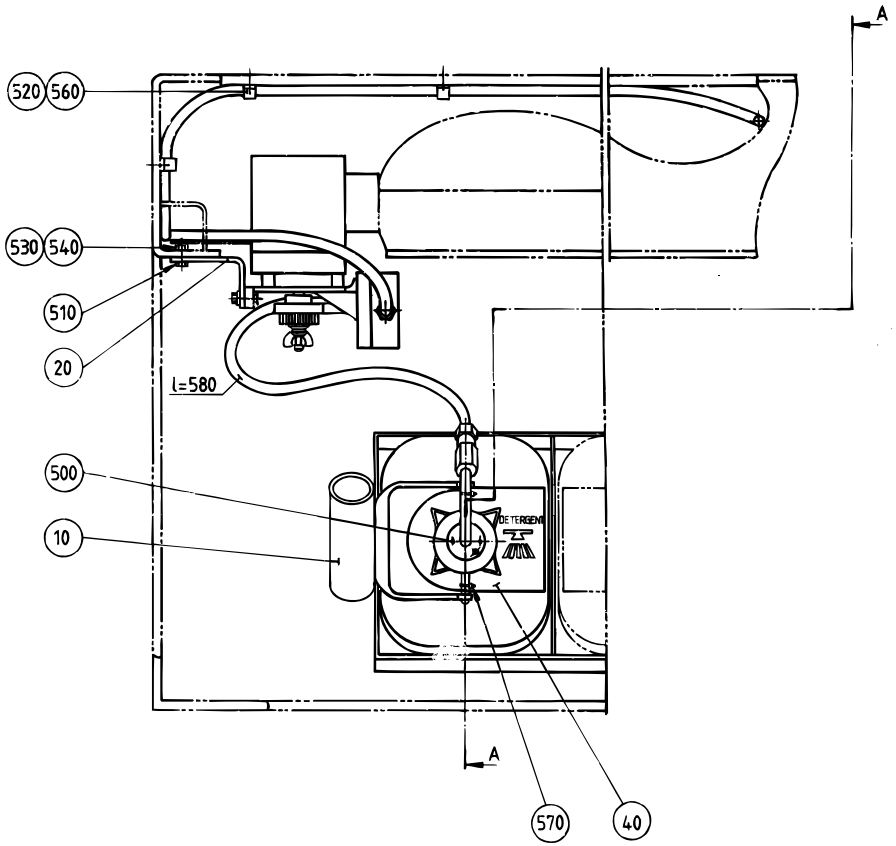

S - 271452-2
ECN 82225

Pos	Part No	SP	UN	Qty	Description	Page No
Common Parts						
005	456378-0000	-		1	HOSE	
010	295384-0000	-		1	SUCTION PIPE	
030	295386-0000	-		1	SIGN BOARD	
040	35962-0000	-		1	LID	
045	456272-0000	-		1	PLATE	
050	295389-0000	-		1	SIGN	
200	90015-0021	-		1	GLANDS,Lead-in,IP67	
220	90030-0185	-		1	Conn. Str. GA-8-G1/4	
240	90165-0044	-		4	CLIP	
250	90166-0109	-	MM	22	TUBE 4 mm PA,Transp.	
300	90050-0011	-		1	BOTTLE	
320	90415-0052	-		1	FILTER ART NO 12565 C-340-6E FOTVENTI EP	
500	311520-0329	-		1	Rivet, Blank 2,4x8	
501	312105-0366	-		2	Screw M6S M6x12 A280	
502	312125-0287	-		4	Screw Pan Head MCS M4X8 RFR	
508	315105-0153	-		2	Washer, Plain, BRB, 6,4/12,H=1,5	
510	315202-0109	-		1	O-Ring 11,1x1,6 mm	
520	342706-0114	-		1	ACCESSORIES,INSERT SLEEVE 4	
530	342706-0148	-		2	ACCESSORIES,INSERT SLEEVE 8	
580	352113-0101	-		8	CLIP STRIP BLACK 92x2,5mm	

Pos	Part No	SP	UN	Qty	Description	Page No

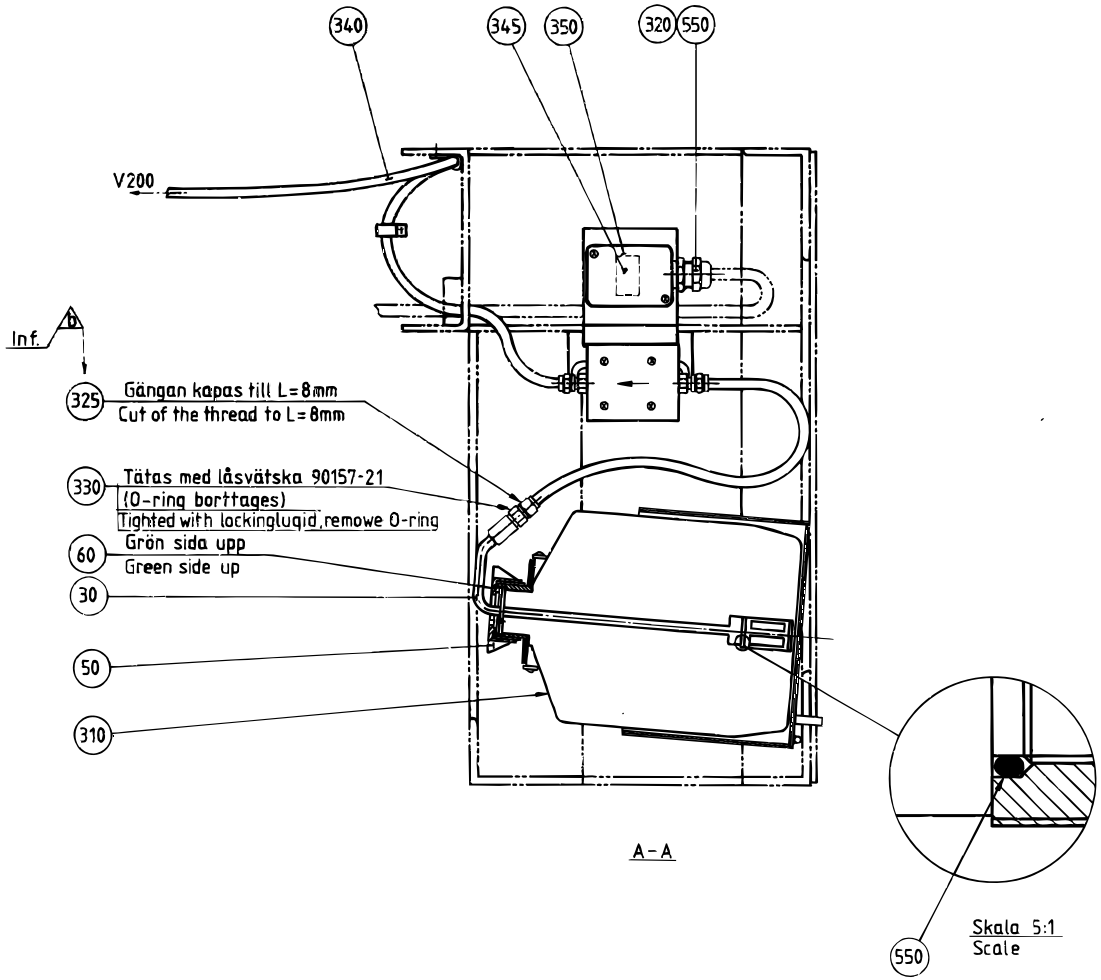

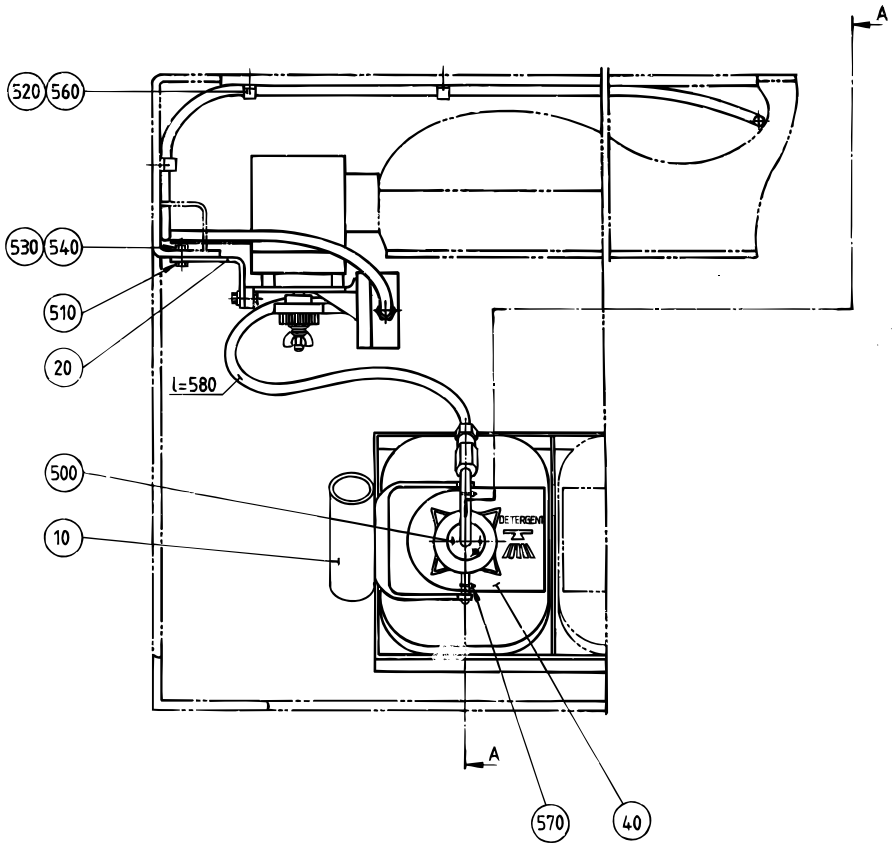

S - 271452-2
ECN 82225

Pos	Part No	SP	UN	Qty	Description	Page No
Common Parts						
005	456378-0000	-		1	HOSE	
010	295384-0000	-		1	SUCTION PIPE	
030	295386-0000	-		1	SIGN BOARD	
040	35962-0000	-		1	LID	
045	456272-0000	-		1	PLATE	
050	295389-0000	-		1	SIGN	
060	491981-0000	-		1	NIPPLE	
200	90015-0021	-		1	GLANDS,Lead-in,IP67	
220	90030-0185	-		1	Conn. Str. GA-8-G1/4	
240	90165-0044	-		4	CLIP	
250	90166-0109	-	MM	22	TUBE 4 mm PA,Transp.	
300	90050-0011	-		1	BOTTLE	
330	90415-0034	-		1	SUCTION FILTER / B4850	
500	311520-0329	-		1	Rivet, Blank 2,4x8	
501	312105-0366	-		2	Screw M6S M6x12 A280	
502	312125-0287	-		4	Screw Pan Head MCS M4X8 RFR	
508	315105-0153	-		2	Washer, Plain, BRB, 6,4/12,H=1,5	
515	315233-0110	-		1	Washer,Pl.Rnd.Nyl.13,3/17,H=1	
520	342706-0114	-		1	ACCESSORIES,INSERT SLEEVE 4	
530	342706-0148	-		2	ACCESSORIES,INSERT SLEEVE 8	
580	352113-0101	-		8	CLIP STRIP BLACK 92x2,5mm	

Pos	Part No	SP	UN	Qty	Description	Page No

OIL TANK

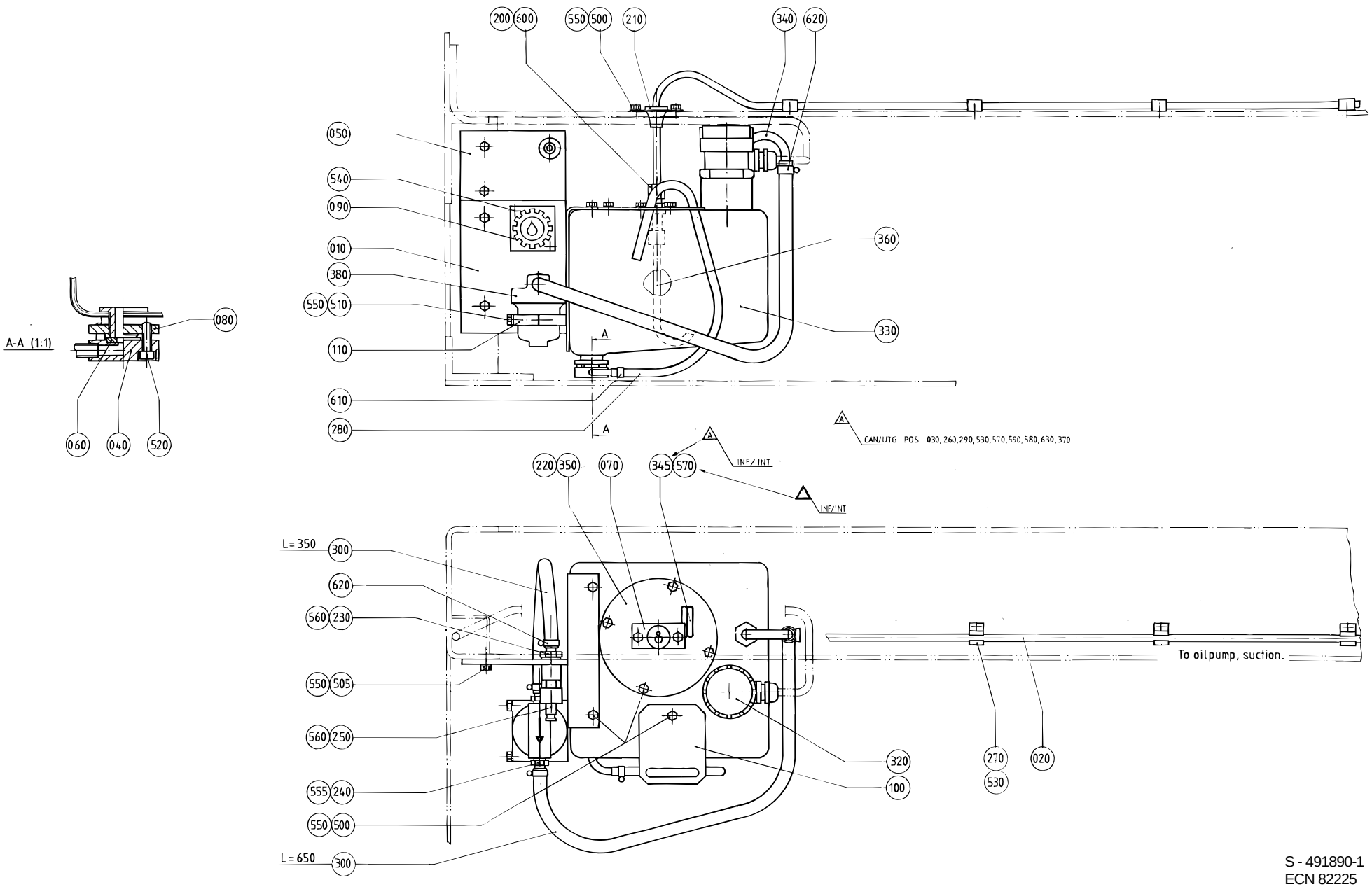

S - 491890-1
ECN 82225

Pos	Part No	SP	UN	Qty	Description	Page No
Common Parts						
010	491889-0000	-		1	HOLDER	
020	491892-0000	-		1	HOSE	
040	469410-0000	-		1	HOSE ATTACHMENT	
050	490777-0000	-		1	BRACKET	
060	279515-0000	-		1	WASHER	
070	456272-0000	-		1	PLATE	
080	469409-0000	-		1	PLATE	
090	469523-0000	-		1	SIGN	
100	469761-0000	-		1	HOLDER	
110	491891-0000	-		1	BOW CLAMP	
200	90005-0044	-		2	Washer,Pl.Rnd.Cu.15/19,H=1,5	
210	90015-0021	-		1	GLANDS,Lead-in,IP67	
220	90048-0440	C		1	GASKET	
230	90163-0050	-		1	Quick Coupling, (M) 5089 / 9	
240	90163-0052	-		2	HOSE NIPPLE,EXT.THREAD 1/4"-12	
250	90163-0066	-		1	NIPPLE 3/8"	
270	90165-0044	-		4	CLIP	
280	90166-0008	-	MM	4	HOSE 7/10 PVC TRANSP.	
300	90166-0113	-	MM	11	HOSE	
320	90274-0029	C		1	LEVEL SWITCH HEMOMATIK	
330	90304-0013	-		1	CONTAINER	
340	90304-0301	-		1	PIPE	
345	90304-0302	-		1	PIPE FITTING	
350	90304-0303	-		1	COVER	
360	90304-0305	-		1	PIPE	
380	B 90415-0033	-		1	OIL FILTER REFILLING UC-HP-1229-25	
500	312105-0366	-		9	Screw M6S M6x12 A280	
505	312105-0368	-		4	Screw M6S M6x16 A280	
510	312105-0378	-		2	Screw M6S M6x40 A280	
520	312115-0329	-		4	Screw MC6S M5x16 A280	
530	312125-0287	-		4	Screw Pan Head MCS M4X8 RFR	
540	312502-0221	-		2	Drive Screw Round Head KDS 4x6	
550	315105-0153	-		15	Washer, Plain, BRB, 6,4/12,H=1,5	
555	315233-0110	C		2	Washer,Pl.Rnd.Nyl.13,3/17,H=1	
560	315233-0111	C		2	Washer,Pl.Rnd.Nyl.17/22,H=1	
570	342701-0201	-		1	BUSHING,INT./EXT.G-THREAD G1/4"-G1/8"	
600	342762-0103	-		1	Conn. Bulkhead SV 8-LFZB	
610	342991-0100	-		1	HOSE CLIP,WORM DRIVE TYPE 10-13	
620	342991-0101	-		4	HOSE CLIP,WORM DRIVE TYPE (13)-16	

Pos	Part No	SP	UN	Qty	Description	Page No

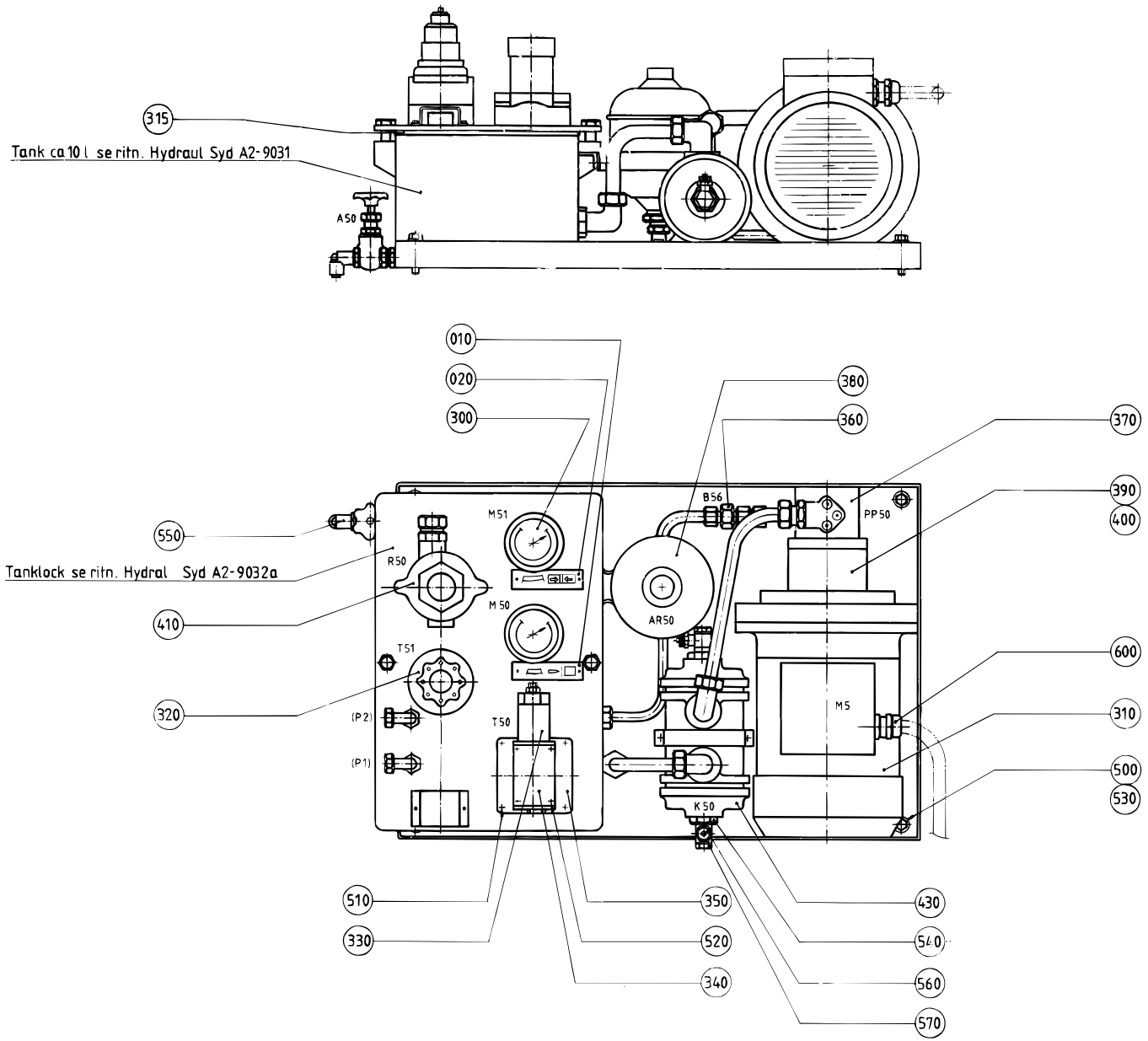
315
Tank ca 10 l se ritn. Hydraul Syd A2-9031
A50
010
020
300
380
360
370
390
400
550
Tanklock se ritn. Hydral Syd A2-9032a
410
320
510
330
350
520
340
430
540
560
570
600
310
500
530
M51
M50
T51
T50
R50
B56
PP50
AR50
M5
K50
(P2)
(P1)

Pos	Part No	SP	UN	Qty	Description	Page No
Common Parts						
010	247385-0000	-		1	SIGN	
020	247386-0000	-		1	SIGN	
300	90043-0062	-		2	MANOMETER	
310	90045-0079	-		1	Motor 3GAA 092001-HSA MT80A	
315	90091-0159	-		1	Gasket 330x308x9 mm	
320	90113-0044	-		1	PRESSURE REGULATOR	
330	90201-0014	-		1	VALVE	
340	90201-0307	-		1	PLATE	
350	90201-0308	-		1	PLATE	
360	90230-0017	-		1	NON RETURN VALVE RHD 10-L	
370	90321-0018	-		1	GEAR PUMP MLPS/T124D	
380	90321-0381	-		1	ACCUMULATOR	
390	90321-0384	-		1	DISTANCE PIECE	
400	90321-0385	-		1	COUPLING	
410	B 90415-0014	-		1	FILTER PI 1844/2020 852939 MIC10+935.832	
430	B 90422-0008	-		1	COOLER	
500	312101-0459	-		4	Screw M6S M8x40 FZB	
510	312111-0333	-		4	Screw Hex.Sock.Hd.MC6S-TT 5x25 88 FZB	
520	312111-0343	-		4	Screw Hex.Sock.Hd.MC6S-TT 5x60 88 FZB	
530	315101-0165	-		4	Washer, Plain, BRB, 8,4/16 H=1,5	
540	342701-0208	-		2	Bushing, Int/Ext. G-Thread No. 3/4-1/4	
550	342732-0104	-		1	ELBOW PIPE JOINT	
560	342980-0122	-		2	BANJO-CONNECTION,RING 8/6-G1/4"	
570	342980-0304	-		2	BANJO-HOLLOW BOLT COUPL,EXT.THR.01-G1/4"	
600	352103-0110	-		1	CABLE GLAND STR 16	

Pos	Part No	SP	UN	Qty	Description	Page No

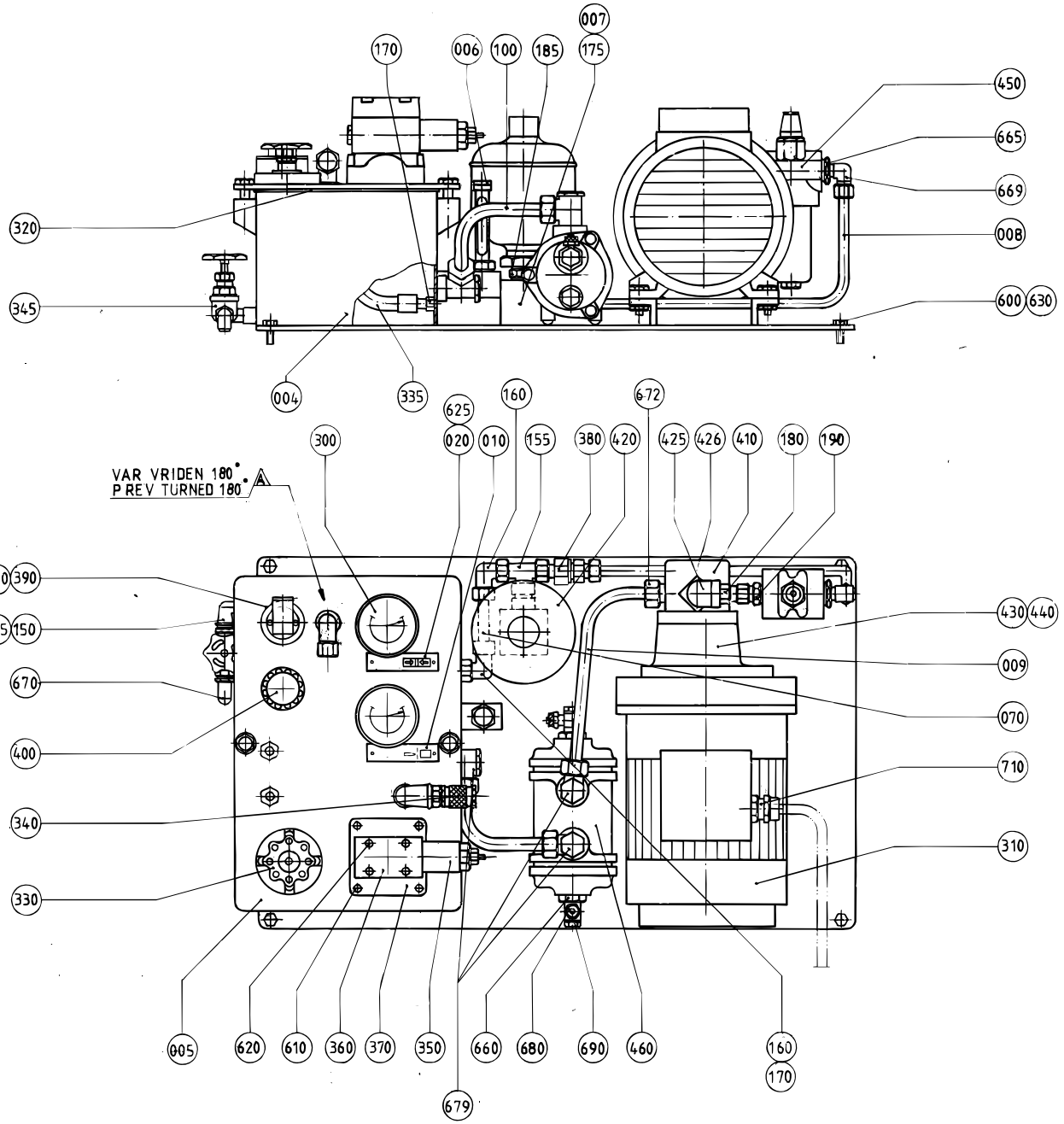

Lev./Supplier:

Hydraul Syd AB
YSTAD
SWEDEN

Pos. can.
640, 700, 720

Pos. int
004, 005, 006, 007, 008, 009, 070, 100, 150, 155, 160, 170, 175, 180, 185, 190, 345, 425, 426, 625, 655, 665, 669, 672, 679

Pos	Part No	SP	UN	Qty	Description	Page No
Common Parts						
004	978478-0000	-		1	TANK	
005	978479-0000	-		1	LID	
006	978480-0000	-		1	LEVEL TUBE	
007	978481-0000	-		1	BLOCK	
008	568932-0000	-		1	PIPE	
009	568933-0000	-		1	PIPE	
010	247385-0000	-		1	SIGN	
020	247386-0000	-		1	SIGN	
030	568921-0000	-		1	PIPE	
040	568922-0000	-		1	PIPE	
050	568923-0000	-		1	PIPE	
060	568924-0000	-		1	PIPE	
070	568926-0000	-		1	PIPE	
080	568927-0000	-		1	PIPE	
090	568928-0000	-		1	PIPE	
100	568929-0000	-		1	PIPE	
110	568930-0000	-		1	PIPE	
120	568931-0000	-		1	PIPE	
150	90030-0112	-		1	NIPPLE	
155	90030-0120	-		3	Conn. L-Pipe Adj. ,EVL,INT.T-10	
160	90030-0121	-		2	Conn. Elbow Adj.,INT 10	
165	90030-0140	-		2	Conn. Elbow Adj.,INT 8	
170	90030-0157	-		5	Conn. Str. 10-R3/8, Ext. Thread	
175	90030-0178	-		1	Conn. Str., 10-R1/4, Ext. Thread	
180	90030-0339	-		1	Conn. Str., 12-G3/8, Ext. Thread	
185	90030-0340	-		1	Nipples, Ext. Thread, Hexagon, RA-G1/2A3	
190	90030-0341	-		1	Conn. Str., 12-G1/2, Ext. Thread	
300	90043-0062	C		2	MANOMETER	
310	90045-0079	C		1	Motor 3GAA 092001-HSA MT80A	
315	90087-0023	-		1	Plug, Ext. Thread Hex. Socket VSTI 3/8-E	
320	90091-0159	C		1	Gasket 330x308x9 mm	
330	90113-0044	C		1	PRESSURE REGULATOR	
335	90148-0036	C		1	HOSE	
340	90163-0076	-		1	Quick Coupling, (F) LP-006-0-WR021	
345	90187-0120	-		1	Flap Valve, G1/4, L=38	
350	90201-0014	C		1	VALVE	
360	90201-0307	-		1	PLATE	
370	90201-0308	-		1	PLATE	
380	90230-0017	C		1	NON RETURN VALVE RHD 10-L	
390	90274-0053	C		1	LEVEL PROBE	
400	90277-0041	C		1	FILTER / UC-SAB-3101 UCC	
410	90321-0018	C		1	GEAR PUMP MLPS/T124D	
420	90321-0381	C		1	ACCUMULATOR	
425	90321-0382	-		1	FLANGE	
426	90321-0383	-		1	FLANGE	
430	90321-0384	-		1	DISTANCE PIECE	
440	90321-0385	C		1	COUPLING	
450	B 90415-0029	C		1	FILTER / MDF BN 30 G 10 B1-BYP	
460	B 90422-0008	C		1	COOLER	
600	312101-0451	-		4	Screw M6S M8x20 FZB	
610	312111-0333	-		4	Screw Hex.Sock.Hd.MC6S-TT 5x25 88 FZB	
620	312111-0343	-		4	Screw Hex.Sock.Hd.MC6S-TT 5x60 88 FZB	
625	312502-0171	-		4	Drive Screw Round Head KDS 2x6	
630	315101-0165	-		4	Washer, Plain, BRB, 8,4/16 H=1,5	
650	315202-0225	C		1	O-Ring 44,2x3 mm	
655	342221-0110	-		1	Elbow, 90, Int/Ext. Thread, Size. 8	
658	342221-0113	-		1	Elbow, 90, Int/Ext. Thread, Size. 15	
660	342701-0208	C		2	Bushing, Int/Ext. G-Thread No. 3/4-1/4	
665	342712-0205	-		1	Bushing, Int/Ext. G-Thread No. 1/2X1/4	
667	342714-0201	-		2	Reduction KOR 8/6-LFZB	
668	342714-0203	-		2	Reduction KOR 10/8-LFZB	
669	342731-0108	-		3	Conn. Elbow WE 10-LRFZB	
670	342732-0104	-		1	ELBOW PIPE JOINT	
671	342744-0102	-		2	Conn. Elbow Adj.,INT 6	
672	342752-0114	-		1	Conn. Str. GA-15-G1/2	
674	342761-0103	-		2	Conn. L-Pipe Adj. ,EVL,INT.T-8	
675	342762-0103	-		2	Conn. Bulkhead SV 8-LFZB	
676	342764-0114	-		1	Conn. Elbow Bulkhead LWSV15-LFZB	
678	342790-0102	-		2	Conn. Press. Gauge MAV6-LRFZB	
679	342792-0114	-		3	Conn. Banjo,WH 15-G1/2	
680	342980-0122	C		2	BANJO-CONNECTION,RING 8/6-G1/4"	
690	342980-0304	C		2	BANJO-HOLLOW BOLT COUPL,EXT.THR.01-G1/4"	
710	352103-0111	-		1	CABLE GLAND ST 16	

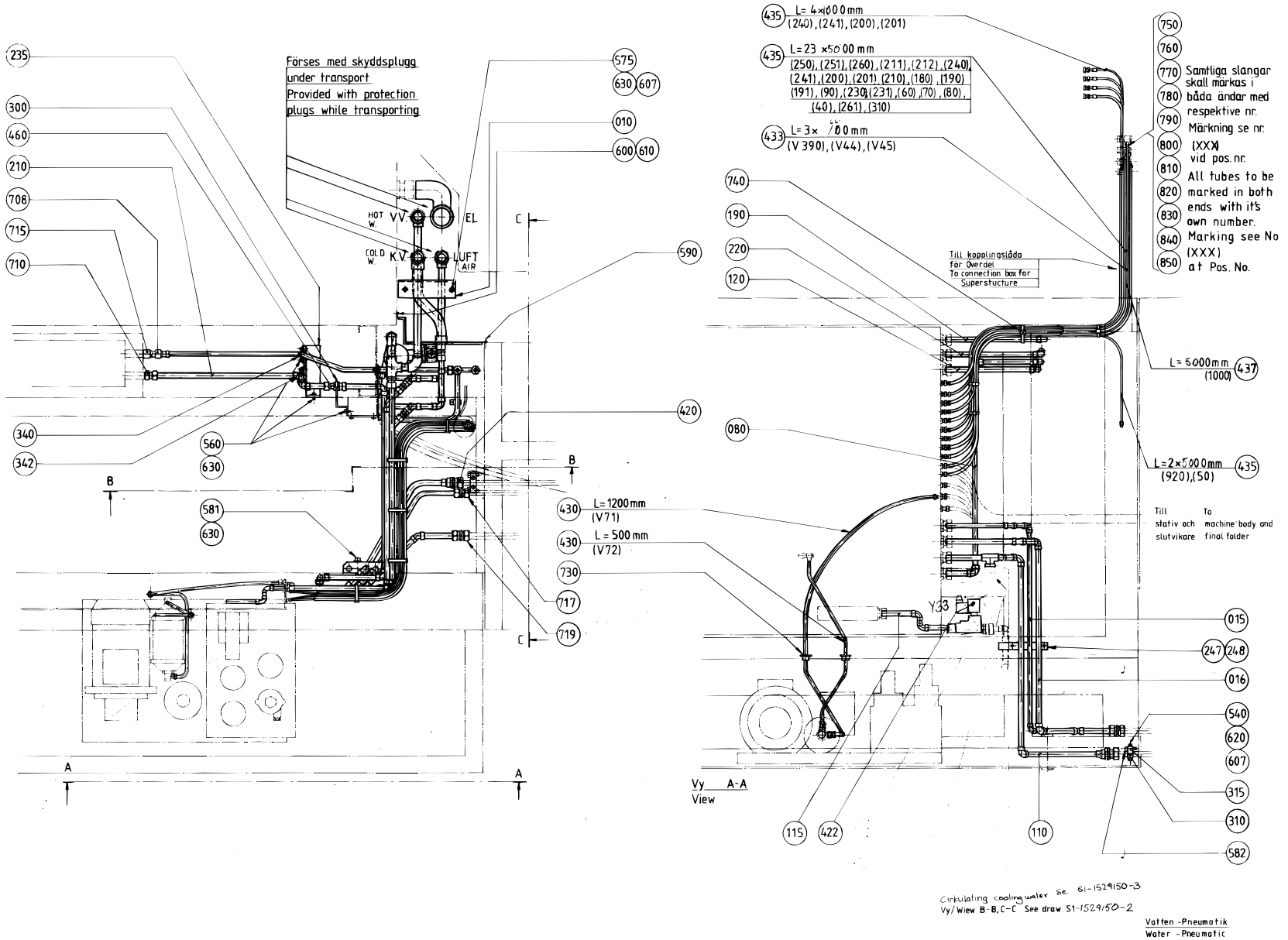
Förses med skyddsplugg under transport
Provided with protection plugs while transporting
HOT W
VV
EL
COLD W
KV
LUFT AIR
L= 1200 mm (V71)
L = 500 mm (V72)
L= 4x1000 mm (240),(241),(200),(201)
L= 23 x5000 mm (250),(251),(260),(211),(212),(240),(241),(200),(201),(210),(180),(190),(191),(90),(230),(231),(60),(70),(80),(40),(261),(310)
L= 3x 7700 mm (V390),(V44),(V45)
Till kopplingslåda för Överdel
To connection box for Superstucture
Samtliga slangar skall märkas i båda ändar med respektive nr.
Märkning se nr.
(XXX) vid pos.nr.
All tubes to be marked in both ends with it's own number.
Marking see No (XXX) at Pos. No.
L= 5000 mm (1000)
L=2x5000 mm (920),(50)
Till stativ och slutvikare
To machine body and final folder
Y33
Vy A-A
View
Circulating cooling water se 61-1529150-3
Vy/View B-B, C-C See draw. S1-1529150-2
Vatten -Pneumatik
Water -Pneumatic

Pos	Part No	SP	UN	Qty	Description	Page No
Common Parts						
000	491768-0000	-		1	DOCUMENT FOLDER	
005	491576-0000	-		1	WATER DIAGRAM TBA/9	
010	456597-0000	-		1	ATTACHMENT PIPE	
015	491187-0000	-		1	PIPE	
016	491866-0000	-		1	PIPE	
020	271867-0000	-		1	PIPE	
030	271868-0000	-		1	PIPE	
040	271869-0000	-		1	PIPE	
050	271870-0000	-		1	PIPE	
060	271871-0000	-		1	PIPE	
070	271872-0000	-		1	PIPE	
080	B 295529-0000	-		1	PIPE	
090	B 295530-0000	-		1	PIPE	
100	B 295531-0000	-		1	PIPE	
110	491183-0000	-		1	PIPE	
115	1529227-0000	-		1	PIPE	
120	B 295533-0000	-		1	PIPE	
130	456599-0000	-		1	PIPE	
132	B 490506-0000	-		1	HOSE	
134	491185-0000	-		1	HOSE	
136	490508-0000	-		1	PROTECTION	
145	491455-0000	-		1	PIPE	
147	B 456598-0000	-		1	CABLE CONDUIT	
148	490608-0000	-		1	SIGN	
149	491190-0000	-		1	PIPE	
150	491864-0000	-		2	PIPE	
160	491865-0000	-		1	HOSE	
170	1529228-0000	-		1	PIPE	
180	456824-0000	-		1	PIPE	
190	B 295536-0000	-		1	PIPE	
200	B 456978-0000	-		1	PIPE	
210	1529229-0000	-		1	PIPE	
220	B 295539-0000	-		1	PIPE	
230	B 456758-0000	-		1	ATTACHMENT	
235	456825-0000	-		1	BRACKET	
247	491241-0000	-		1	HOLDER	
248	491242-0000	-		1	HOLDER	
250	315125-0153	C		2	Washer, Plain Round,Chamf. 6,4/22, H=4	
260	271320-0000	-		1	HOLDER	
270	271321-0000	-		1	HOLDER	
280	271322-0000	-		1	HOLDER	
284	273455-0000	-		1	LABEL (COLD WATER)	
286	273456-0000	-		1	SIGN	
288	273458-0000	-		1	LABEL (AIR)	
290	295540-0000	-		1	FASTENING PLATE	
300	295541-0000	-		1	BRACKET	
310	441295-0000	-		1	HOLDER	
315	441296-0000	-		1	HOLDER	
320	90165-0009	-		3	PIPE-CLIPS,FOR SINGLE PIPE,ONE SIDE 12	
340	295549-0000	-		1	CRAMP	
342	456826-0000	-		1	PIPE CLAMP	
350	441449-0001	-		1	PIPE	
365	491453-0000	-		1	HOLDER	
368	B 469550-0000	-		2	SLEEVE	
370	271762-0000	-		1	NUT	
371	490509-0000	-		2	SPACER	
372	490510-0000	-		1	SECURING PLATE	
373	490512-0000	-		1	HOLDER	
374	490513-0000	-		1	HOLDER	
375	490514-0000	-		1	HOLDER	

(Cont'd)

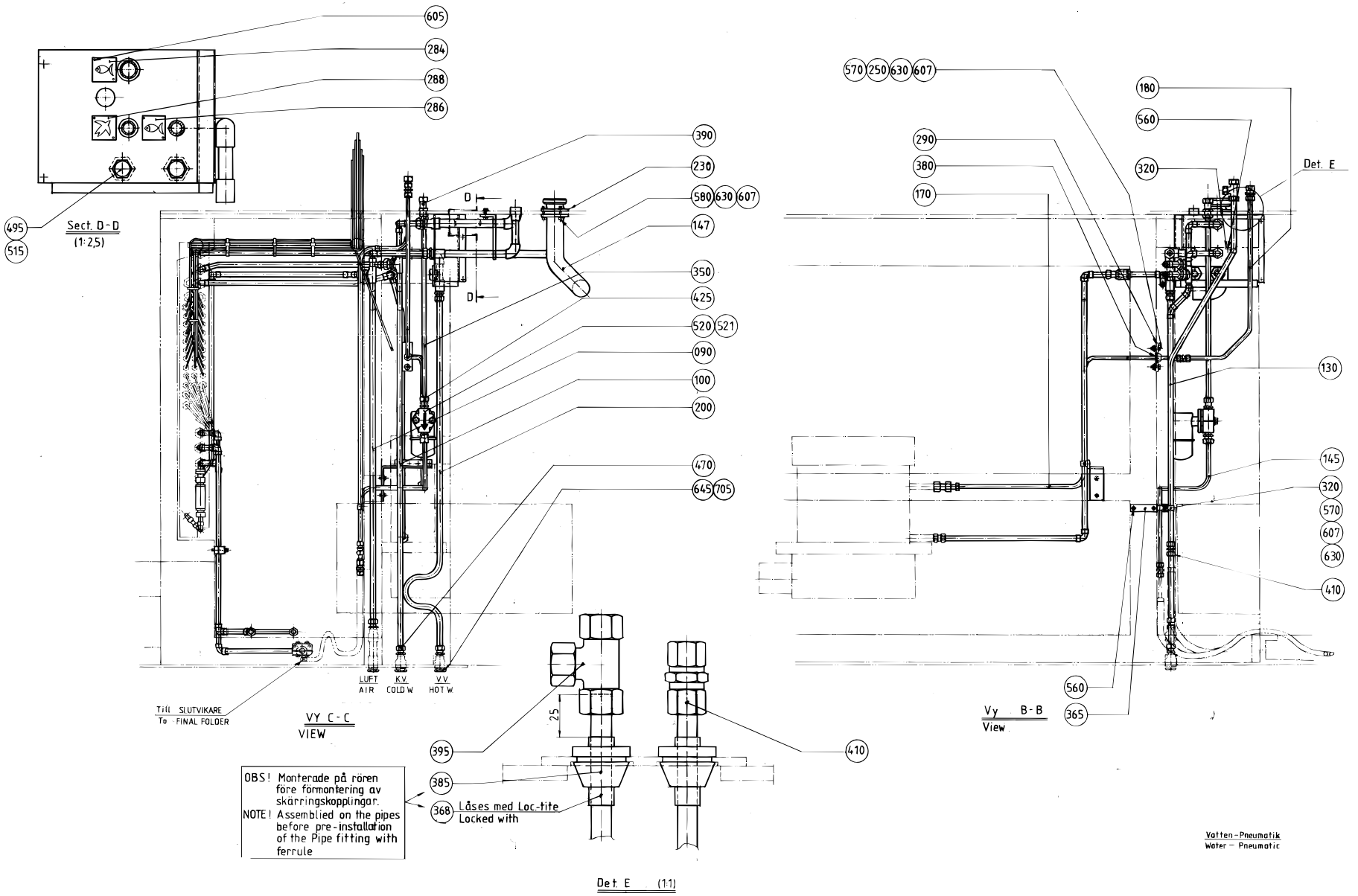

S - 1529150-2
ECN 82225

Pos	Part No	SP	UN	Qty	Description	Page No
(Cont'd)						
376	490609-0000	-		1	SEALING WASHER	
380	90015-0021	-		1	GLANDS,Lead-in,IP67	
385	90015-0022	-		2	GLANDS,Lead-in,IP67	
390	90030-0030	-		1	Conn. Bulkhead SV 12-L/SY	
395	90030-0058	-		1	Conn. T-Pipe T-12	
400	90030-0091	-		6	Conn. Pipe G-8	
410	90030-0106	-		4	Conn. Pipe G-12	
420	90030-0188	-		1	Conn. Str. GA-15-G1/2	
422	B 90042-0184	C		1	SOLENOID VALVE ASCO 48VDC	
425	90330-0061	-		2	Conn. Straight. R 1/2x12mm R-1322	
430	90166-0118	-	MM	17	TUBE 8 mm PA Black	
433	90166-0119	-	M	8	HOSE PUR 4/6 Black	
435	90166-0081	-	M	113	TUBE 6 mm PA Blue	
437	90166-0013	-	M	5	TUBE 8 mm PA Blue	
460	90224-0296	-		1	Conn. Bulkhead, Art.No. 116 1500	
470	90224-0305	-		9	PIPE CONNECTION	
495	90330-0037	-		2	Plug, Ext. G-Thread, G1/2	
515	90330-0093	-		2	Nut, Hexagon, G1/2	
520	90360-0005	C		1	STEAM TRAP / TYPE 2010	
521	90360-0006	C		1	ATTACHMENT FOR STEAM TRAP 2010	
526	90005-0061	-		2	Washer,Pl.Rnd.Fibre 14/24,H=1,5	
528	90030-0159	-		2	Conn. Bulkhead SV 15-L/SY	
530	90030-0188	-		1	Conn. Str. GA-15-G1/2	
532	90074-0005	-		2	CLIPS, Cable clips di=18 mm	
540	312101-0378	-		2	Screw M6S M6x40 FZB	
550	312101-0388	-		2	Screw M6S M6x90 FZB	
552	312105-0287	-		2	Screw M6S M4x8 A280	
554	312105-0366	-		1	Screw M6S M6x12 A280	
556	312105-0379	-		2	Screw M6S M6x45 A280	
558	312502-0120	-		2	Drive Screw Round Head KDS 0x5	
560	312105-0364	-		13	Screw M6S M6x10 A280	
570	312105-0368	-		3	Screw M6S M6x16 A280	
575	312105-0371	-		2	Screw M6S M6x22 A280	
580	312105-0374	-		3	Screw M6S M6x30 A280	
581	312105-0378	-		2	Screw M6S M6x40 A280	
582	312105-0453	-		2	Screw M6S M8x25 A280	
590	312125-0325	-		2	Screw Slot.Pan Hd. MCS 5x10 A480	
600	312125-0329	-		2	Screw Pan Head MCS M5X16 RFR	
605	312502-0120	-		6	Drive Screw Round Head KDS 0x5	
607	312605-0316	-		11	Nut Hex. M6M M6 A280	
610	312605-0314	-		2	Nut Hex. M6M M5 A280	
612	315105-0136	-		2	Washer, Plain, BRB, 4,3/8,H=0,8	
613	315105-0153	-		3	Washer, Plain, BRB, 6,4/12,H=1,5	
614	315233-0113	-		3	Washer,Pl.Rnd.Nyl.21,4/27,H=1,2	
615	342708-0109	-		1	ACCESSORIES,REINFORCING RING VSH 15X1	
616	342713-0213	-		1	Plug, Ext Thread Hex Socket 8638-00-120	
617	342720-0114	-		2	Conn. Str. GA-15-G1/2	
618	342738-0221	-		1	Conn. Elbow Adj.,EXT 15-G1/2	
620	315101-0153	-		6	Washer, Plain, BRB, 6,4/12 H=1,5	
630	315105-0153	-		29	Washer, Plain, BRB, 6,4/12,H=1,5	
645	90005-0016	C		3	"Gasket Bolt head 27/35x2,5 mm G3/4"""	

(Cont'd)

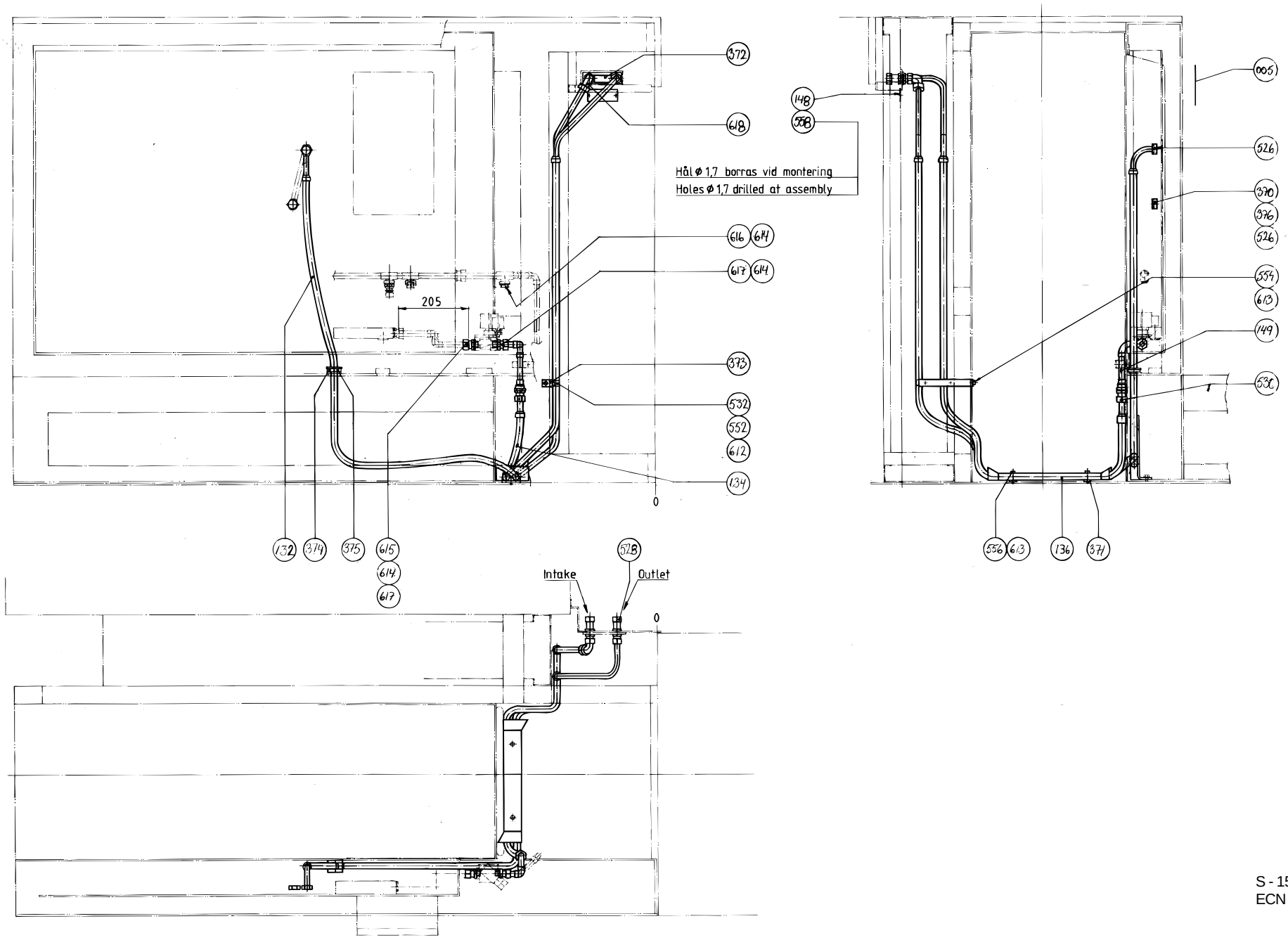
372
618
Hål ø 1,7 borras vid montering
Holes ø 1,7 drilled at assembly
616
611
617
614
205
373
532
552
612
134
0
132
374
375
615
614
617
528
Intake
Outlet
0
148
558
005
526
370
376
526
554
613
149
538
556
613
136
37

Pos	Part No	SP	UN	Qty	Description	Page No
(Cont'd)						
705	342713-0215	-		3	Plug, Ext Thread Hex Socket 8638-00-340	
708	342714-0110	-		1	Reduction KOR 15/12-L/SY	
710	342723-0114	-		1	Conn. Str. Pipe GI-15-G1/2	
715	342725-0114	-		1	Conn. Str. Pipe GI-15-G1/2	
717	342726-0109	-		1	Conn. Pipe G-12	
719	342726-0114	-		1	Conn. Pipe G-15	
730	352101-0105	-		2	GLANDS,Lead-in,IP44 PR22,5; PG16	
740	352113-0102	-		12	CLIP-STRIP,Black 188x4,8mm	
750	359000-0400	-		5	MARKING CO2/4"0"	
760	359000-0401	-		36	MARKING COLLAR 2/4 "1" Yellow	
770	359000-0402	-		38	MARKING COLLAR 2/4 "2" Yellow	
780	359000-0403	-		1	MARKING COLLAR PA2/4 "3" Yellow	
790	359000-0404	-		16	MARKING COLLAR PA2/4 "4" Yellow	
800	359000-0405	-		8	MARKING CO2/4"5"	
810	359000-0406	-		6	MARKING COLLAR PA2/4 "6" Yellow	
820	359000-0407	-		6	MARKING COLLAR PA2/4 "7" Yellow	
830	359000-0408	-		4	MARKING COLLAR PA2/4 "8" Yellow	
840	359000-0409	-		8	MARKING COLLAR PA2/4 "9" Yellow	
850	359000-0771	-		1	MARKING CO2/4"V"	

Pos	Part No	SP	UN	Qty	Description	Page No

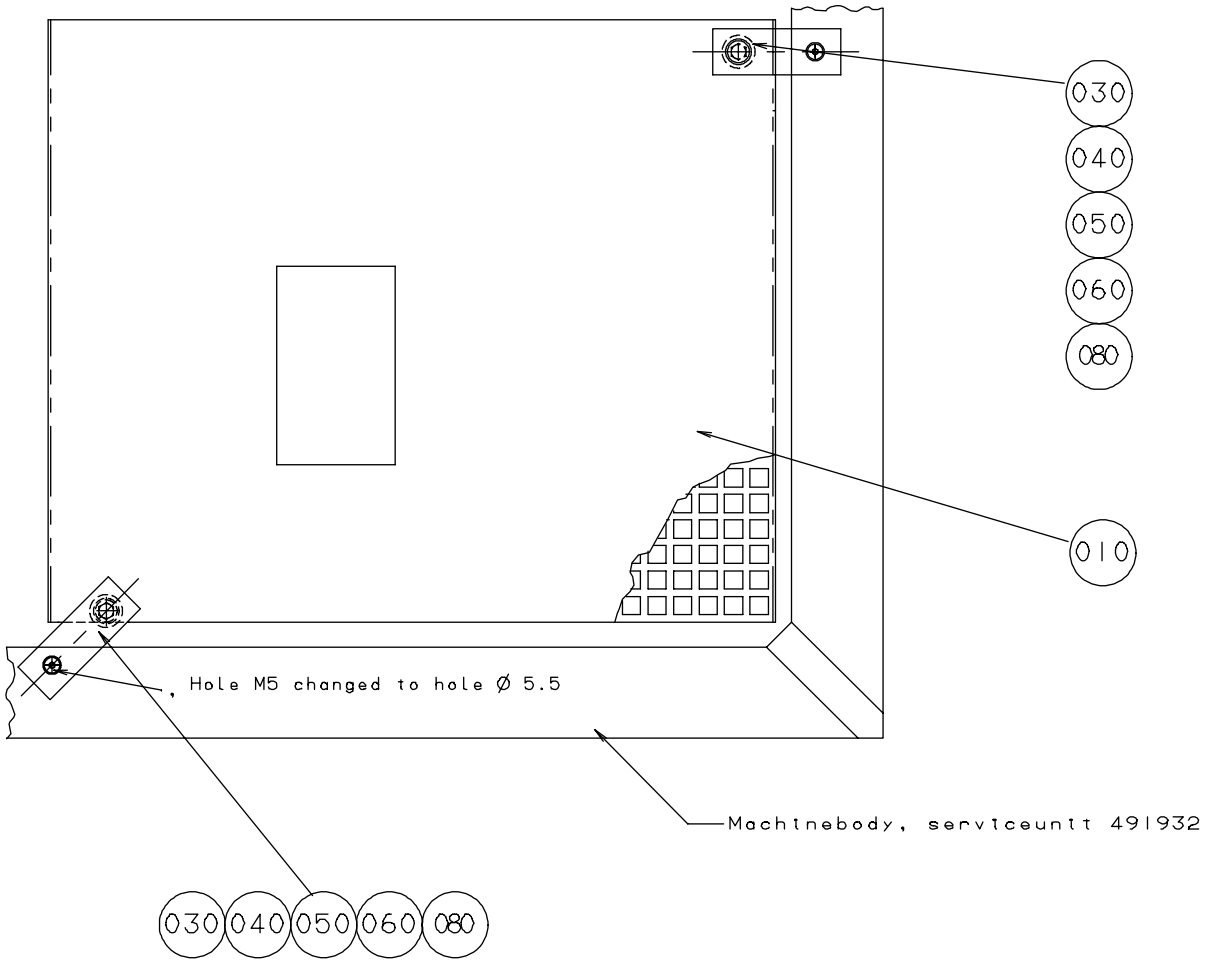

S - 1529047-1
ECN 82225

Pos	Part No	SP	UN	Qty	Description	Page No
Common Parts						
010	1529044-0000	-		1	PROTECTION	
030	315105-0153	-		1	Washer, Plain, BRB, 6,4/12,H=1,5	
040	312155-0331	-		2	Screw Hex.Sock.Count.MF6S M5x20 A280	
050	90005-0060	-		2	Washer, Plain, RBS 6,4/M6)/18,H=1,5	
060	312105-0333	-		2	Screw M6S M5x25 A280	
080	1529043-0000	-		2	BRACKET	

Pos	Part No	SP	UN	Qty	Description	Page No

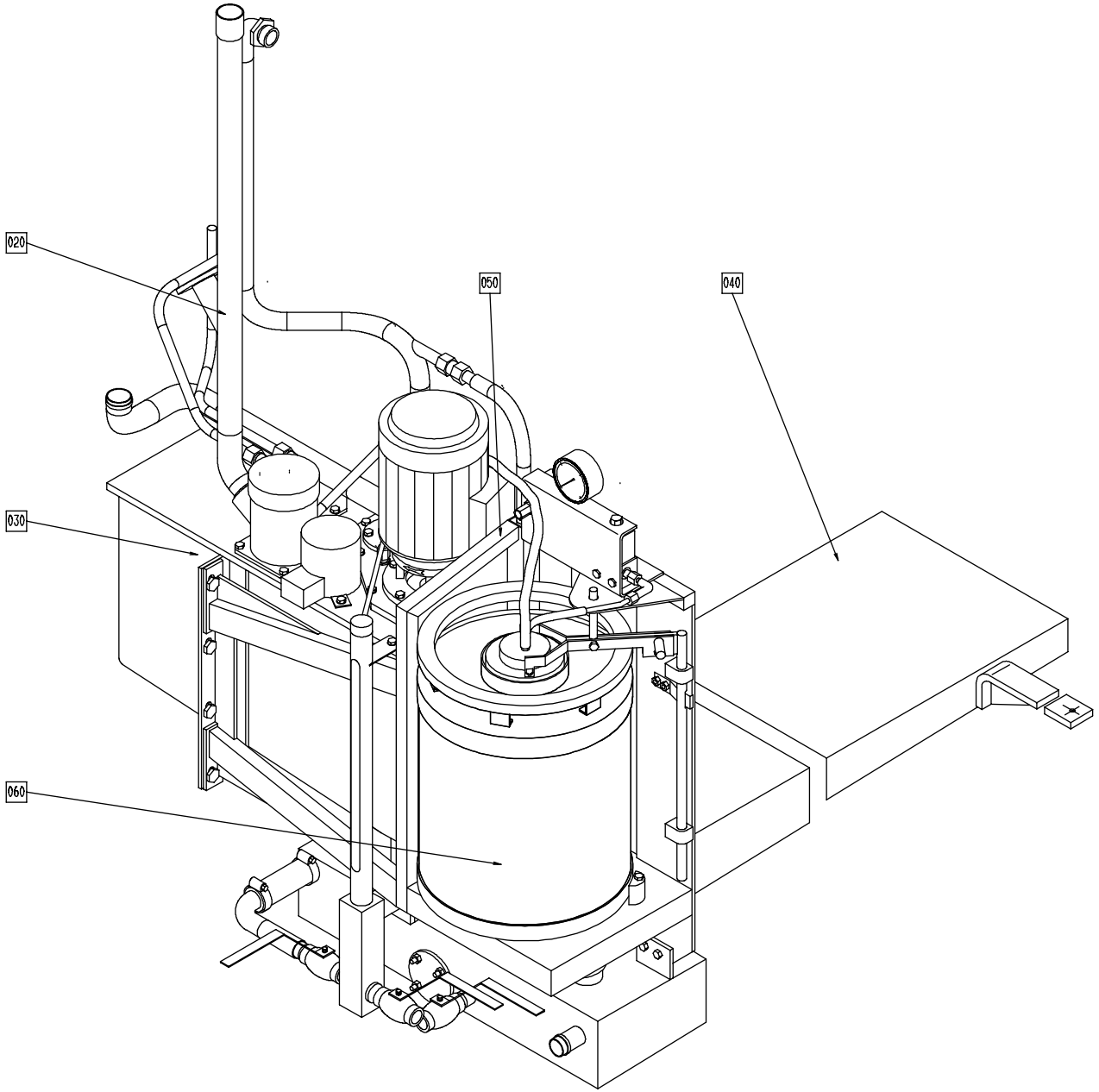
020
050
040
030
060

Pos	Part No	SP	UN	Qty	Description	Page No
Common Parts						
F020	A1529180-0100	-		1	PIPE WORK	**620**
F030	A 751373-0100	-		1	PEROXIDE TANK	**624**
F040	A1529274-0100	-		1	PEROXIDE TANK	**630**
F050	A 751406-0100	-		1	CONNECTION HOUSING	**632**
F060	B 527898-0101	-		2	CONTAINER H2O2	

Pos	Part No	SP	UN	Qty	Description	Page No

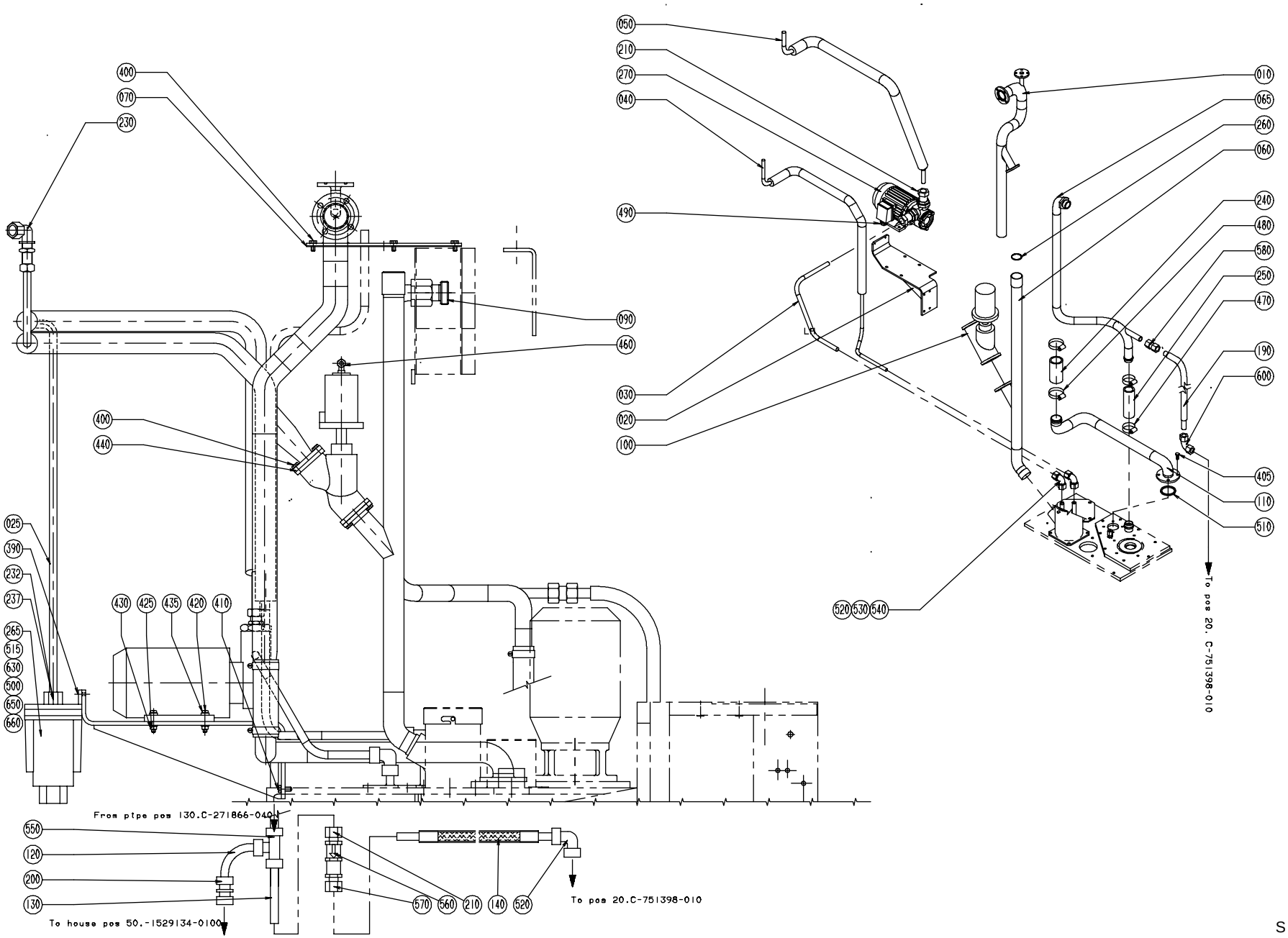
050
210
270
040
490
090
460
030
020
100
400
070
230
400
440
025
390
232
237
265
515
630
500
650
660
430
425
435
420
410
010
065
260
060
240
480
580
250
470
190
600
405
110
510
520
530
540
To pos 20. C-751398-010
From pipe pos 130.C-271866-040
550
120
200
130
To house pos 50.-1529134-0100
570
560
210
140
520
To pos 20.C-751398-010

Pos	Part No	SP	UN	Qty	Description	Page No
Common Parts						
010	491181-0000	-		1	PIPE	
020	552837-0000	-		1	CANTILEVER	
025	552838-0000	-		1	PIPE	
030	751366-0000	-		1	PIPE	
040	752613-0000	-		1	PIPE	
050	751066-0000	-		1	PIPE	
060	751362-0000	-		1	RETURN PIPE	
065	752566-0000	-		1	PIPE	
070	272818-0000	C		1	GASKET	
090	469994-0000	-		1	ATTACHMENT	
100	B 499501-0000	C		1	VALVE	
110	751364-0000	-		1	PUMP PIPE	
120	752660-0000	-		1	PIPE	
130	752659-0000	-		1	PIPE	
140	752661-0000	-		1	HOSE	
190	752864-0000	-		1	HOSE	
200	90030-0106	-		1	Conn. Pipe G-12	
210	90030-0187	-		4	Conn. Str. GA-12-G3/8	
230	90030-0221	-		3	Conn. Elbow Bulkhead WSV 12	
232	90030-0253	-		1	Conn. Str. 12-1/4 NPT, Ext. Tappered	
237	90089-0018	-		1	TRANSITIONAL NIPPLE 3/4NPT-PG16 Brass	
240	90166-0156	C	MM	2	HOSE	
250	90166-0151	C	MM	5	HOSE	
260	90242-0065	C		1	O-Ring 24,2x3 mm	
265	90274-0065	-		1	PRESSURE SWITCH	
270	A1529160-0100	C		1	PUMP	**622**
390	312105-0327	-		2	Screw M6S M5x12 A280	
400	312105-0366	-		14	Screw M6S M6x12 A280	
405	312101-0368	-		4	Screw M6S M6x16 FZB	
410	312105-0368	-		4	Screw M6S M6x16 A280	
420	312105-0374	-		4	Screw M6S M6x30 A280	
425	312605-0316	-		4	Nut Hex. M6M M6 A280	
430	315105-0153	-		4	Washer, Plain, BRB, 6,4/12,H=1,5	
435	315115-0153	-		4	Washer, Plain, TBRB 6,4/12 H=3	
440	315204-0223	C		2	O-Ring 39,2x3 mm	
460	342930-0114	-		1	ELBOW 90 COUPL.,EXT.THREAD 6/4-R1/4"	
470	342991-0106	-		2	HOSE CLIP,WORM DRIVE TYPE (30)-36	
480	342991-0107	-		2	HOSE CLIP 32-44MMRFR	
490	352103-0110	-		1	CABLE GLAND STR 16	
500	352113-0102	-		2	CLIP-STRIP,Black 188x4,8mm	
510	315204-0224	-		1	O-Ring 42,2x3 mm	
515	352136-0129	-		1	GLAND FITTING PR22,5/PG16 Di=16mm	
520	90030-0096	-		3	Conn. Elbow W-12	
530	90030-0110	-		2	ACCESSORIES,FERRULE 12	
540	342703-0215	-		4	Nut, Pipes & Connectors,NUT M-12 SS	
550	90030-0058	-		1	Conn. T-Pipe T-12	
560	90270-0347	-		1	VALVE	
570	90030-0181	-		1	Conn. Str. GE 12-3/8-18 NPTF	
580	342727-0214	-		1	Conn. Pipe G-15-L/SY	
600	342737-0221	-		1	Conn. Elbow W-15 LRFR	
630	352113-0205	-		2	ANCHOR TM2S8-C100	
650	312125-0291	-		2	Screw Pan Head MCS M4x12 RFR	
660	312605-0312	-		2	Nut Hex. M6M M4 A280	

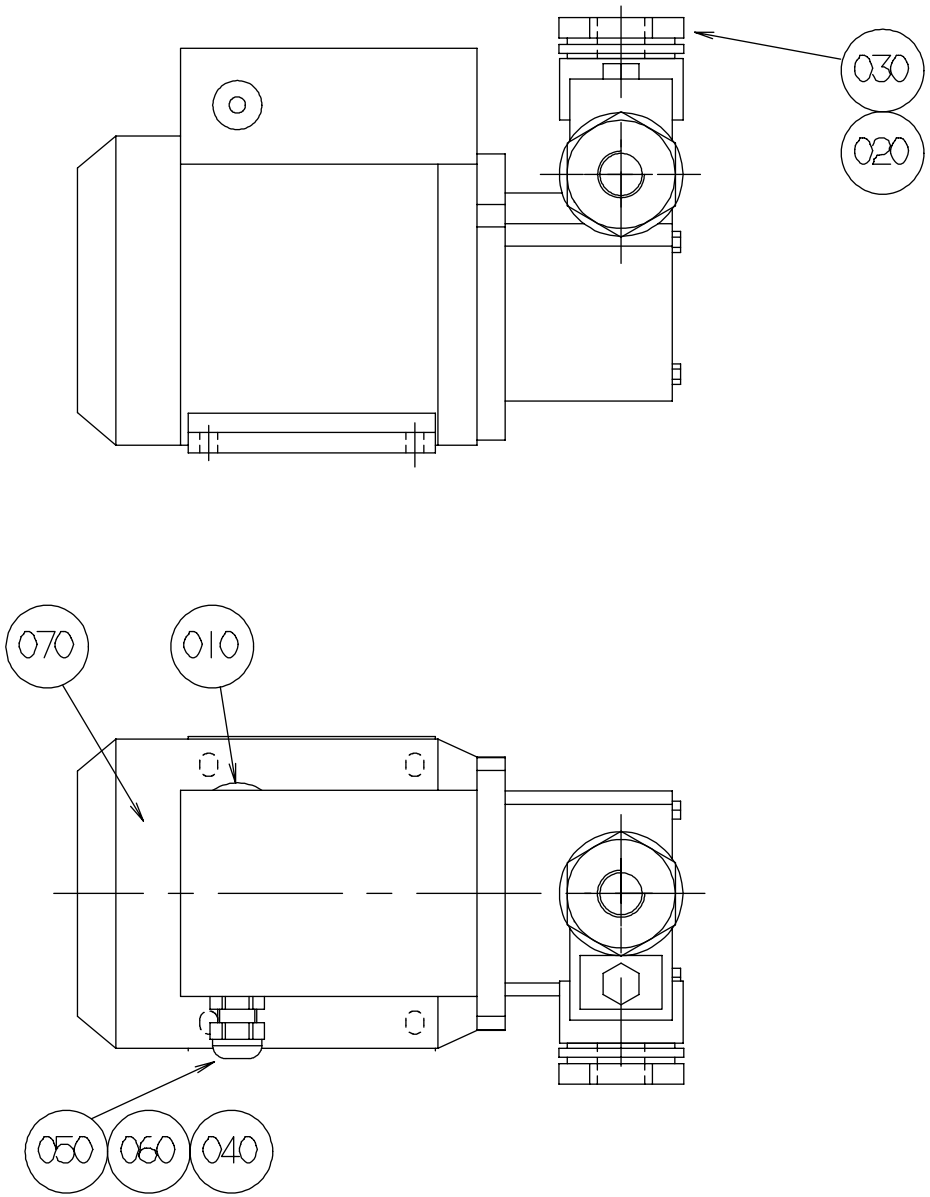

S - 1529160-1
ECN 82225

Pos	Part No	SP	UN	Qty	Description	Page No
Common Parts						
010	90002-0013	-		1	BLANK-OFF PLUG 15,2	
020	90005-0020	-		2	"Gasket Bolt head 33,9x42,9x3,4 mm G1""	
030	90030-0209	-		2	REDUCER	
040	352103-0111	-		1	CABLE GLAND ST 16	
050	90099-0001	-		1	NUT PR 15,2 BRASS	
060	90099-0003	-		1	NUT	
070	B 90321-0108	-		1	PUMP CALPEDA 7001002003Z NT61	

Pos	Part No	SP	UN	Qty	Description	Page No

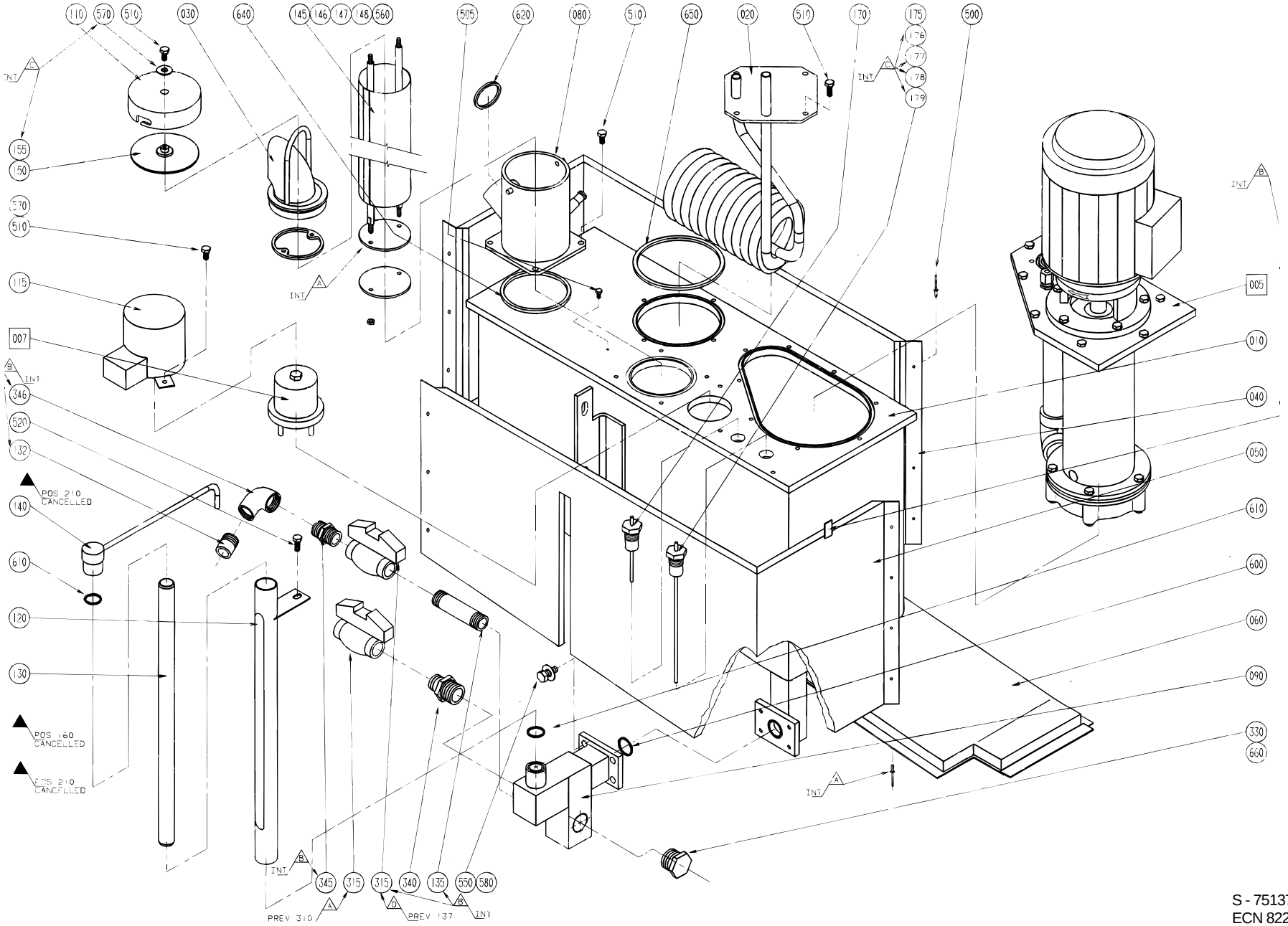

S - 751373-2
ECN 82225

Pos	Part No	SP	UN	Qty	Description	Page No
TBA/9 OR TBA/9 R						
010	751374-0000	-		1	PEROXIDE TANK	
060	751378-0000	-		1	INSULATING PLATE	
090	751381-0000	-		1	ATTACHMENT	
140	751221-0000	-		1	PIPE	
TBA/9C						
010	553126-0000	-		1	PEROXIDE TANK	
060	553652-0000	-		1	INSULATING PLATE	
090	553120-0000	-		1	ATTACHMENT	
132	978370-0000	-		1	PIPE	
135	978371-0000	-		1	PIPE	
140	553127-0000	-		1	PIPE	
330	90330-0046	-		1	Plug, Ext. G-Thread, R-236G3/4	
660	315233-0115	-		1	Washer,Pl.Rnd.Nyl.26,6/34,H=1,2	
Common Parts						
005	A 751393-0100	-		1	PEROXIDE PUMP	**626**
007	A 493652-0100	-		1	LID	**628**
020	751375-0000	-		1	PIPE COIL	
030	752614-0000	-		1	HOLDER	
040	751376-0000	-		1	INSULATING PLATE	
050	751377-0000	-		1	INSULATING PLATE	
080	751380-0000	-		1	FILLER TUBE	
110	751220-0000	-		1	FILLER CAP	
115	751357-0000	-		1	PROTECTION	
120	751382-0000	-		1	PROTECTION PIPE	
130	751383-0000	-		1	LEVEL TUBE	
145	257202-0000	D		1	STRAINER	
146	491203-0000	-		2	STRUT	
147	491304-0000	-		2	WASHER	
148	491303-0000	-		1	WASHER	
150	563286-0000	-		1	GASKET	
155	563287-0000	-		1	WASHER	
170	567070-0016	D		1	ELECTRODE	
175	567070-0017	D		1	ELECTRODE	
176	560931-0000	-		2	BRACKET	
177	90242-0168	-		2	O-RING	
178	312605-0312	-		4	Nut Hex. M6M M4 A280	
179	315105-0136	-		6	Washer, Plain, BRB, 4,3/8,H=0,8	
300	90144-0004	-	MM	1	TREBOFLON-TAPE W=13mm	
315	B 484536-0000	-		2	VALVE	
340	90330-0080	-		2	Nipples, Ext. Thread. R3/4-R1/2	
345	90330-0021	-		1	Nipples, Ext. Thread. R-207R1/2	
346	90330-0020	-		1	Elbow, 90 Int. Thread, R-2221/2	

Pos	Part No	SP	UN	Qty	Description	Page No
500	311521-0142	-		9	Blank Rivet 3,2x6	
505	312105-0287	-		1	Screw M6S M4x8 A280	
510	312105-0366	-		12	Screw M6S M6x12 A280	
520	312105-0368	-		1	Screw M6S M6x16 A280	
550	312105-0451	-		6	Screw M6S 8x20 A280	
560	312605-0314	-		2	Nut Hex. M6M M5 A280	
570	315105-0153	-		14	Washer, Plain, BRB, 6,4/12,H=1,5	
580	315115-0165	-		6	Washer, Plain, TBRB 8,4/16 H=3	
600	90242-0171	C		1	O-RING	
610	315204-0117	C		2	O-Ring 19,1x1,6 mm	
620	90242-0186	C		1	O-RING	
640	90242-0188	C		1	O-RING REPBY 0315204-0307	
650	90242-0189	C		1	O-RING	

PEROXIDE PUMP

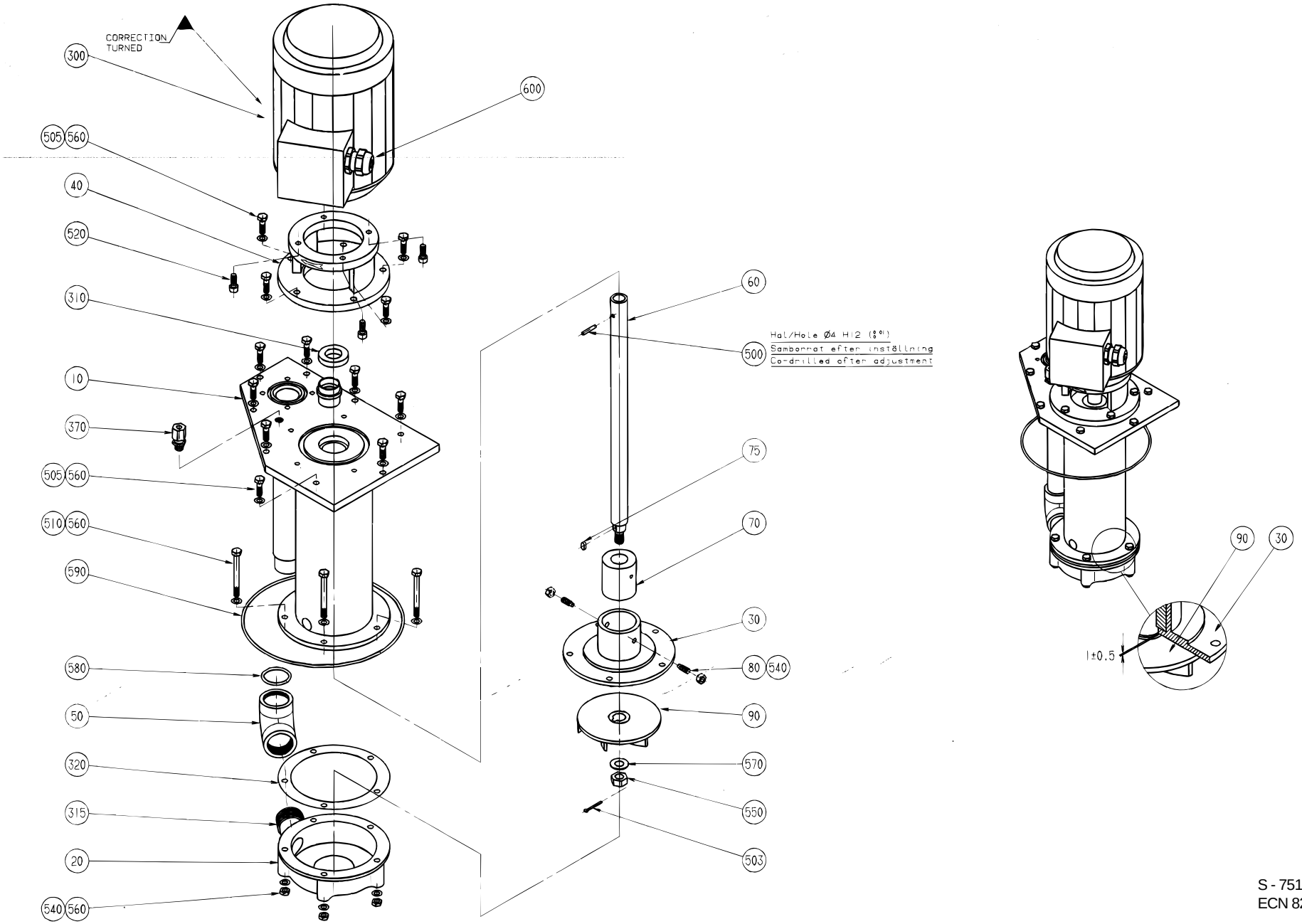

S - 751393-1
ECN 82225

Pos	Part No	SP	UN	Qty	Description	Page No
Common Parts						
010	751394-0000	-		1	EXTENSION PIPE	
020	292449-0000	-		1	PUMP HOUSING	
030	292456-0000	-		1	BEARING COVER	
040	751395-0000	-		1	FLANGE	
050	751316-0000	-		1	ELBOW PIPE	
060	978561-0000	C		1	SHAFT	
070	491770-0000	C		1	BUSHING	
075	315705-0196	C		1	Parallel key with round end 5x5x10 mm	
080	90287-0159	-		2	Screw, Sock.Set Dogpoint M6x16	
090	491929-0000	-		1	IMPELLER WHEEL	
300	90045-0087	C		1	Motor 3GAA 071002-CSA M2AA 71B	
310	90091-0137	C		1	Radial Seal Type Varilip 20x35x7 mm	
315	90144-0004	-	MM	1	TREBOFLON-TAPE W=13mm	
320	90321-0411	C		1	GASKET	
370	90030-0184	-		1	Conn. Str. GA-6-G1/8	
500	311112-0256	-		1	Pin, Straight Slotted Spring FRP 4x20	
503	311411-0169	C		1	SPLIT PIN SP2,5X25RFR	
505	312105-0370	-		13	Screw M6S M6x20 A280	
510	312105-0382	-		5	Screw M6S M6x60 A280	
520	312115-0368	-		4	Screw MC6S M6x16 A280	
540	312811-0316	-		7	Nut Hex.Lock Heli Coil Mid Grip M6 SS	
550	312605-0320	-		1	Nut Hex. M6M M10 A280	
560	315105-0153	-		23	Washer, Plain, BRB, 6,4/12,H=1,5	
570	315105-0173	-		1	Washer, Plain, BRB, 10,5/22,H=2	
580	90242-0173	C		1	O-RING	
590	90242-0153	C		1	O-RING	
600	352103-0110	-		1	CABLE GLAND STR 16	

Pos	Part No	SP	UN	Qty	Description	Page No

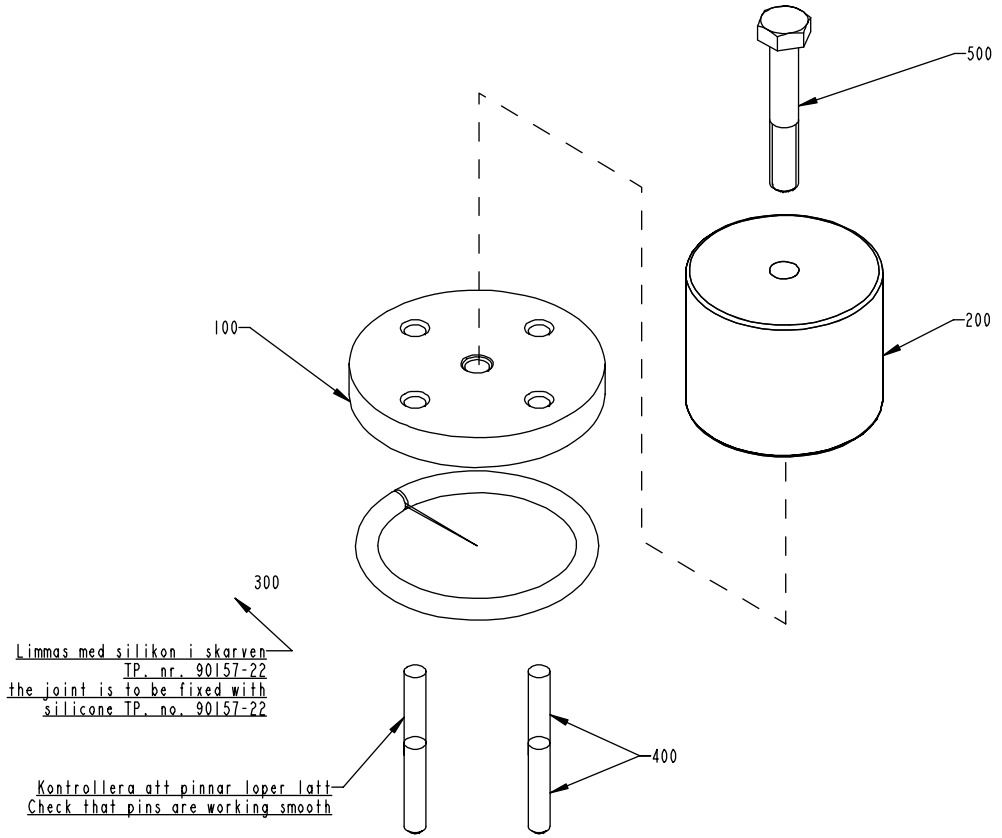

S - 493652-2
ECN 82225

Pos	Part No	SP	UN	Qty	Description	Page No
Common Parts						
100	273964-0000	-		1	LID	
200	273965-0001	-		1	WEIGHT	
300	90143-0020	-	MM	19	STRIP	
400	311103-0357	-		4	Pin, Parallell, m6, 6x30	
500	312105-0461	-		1	Screw M6S M8x50 A280	

Pos	Part No	SP	UN	Qty	Description	Page No

PEROXIDE TANK

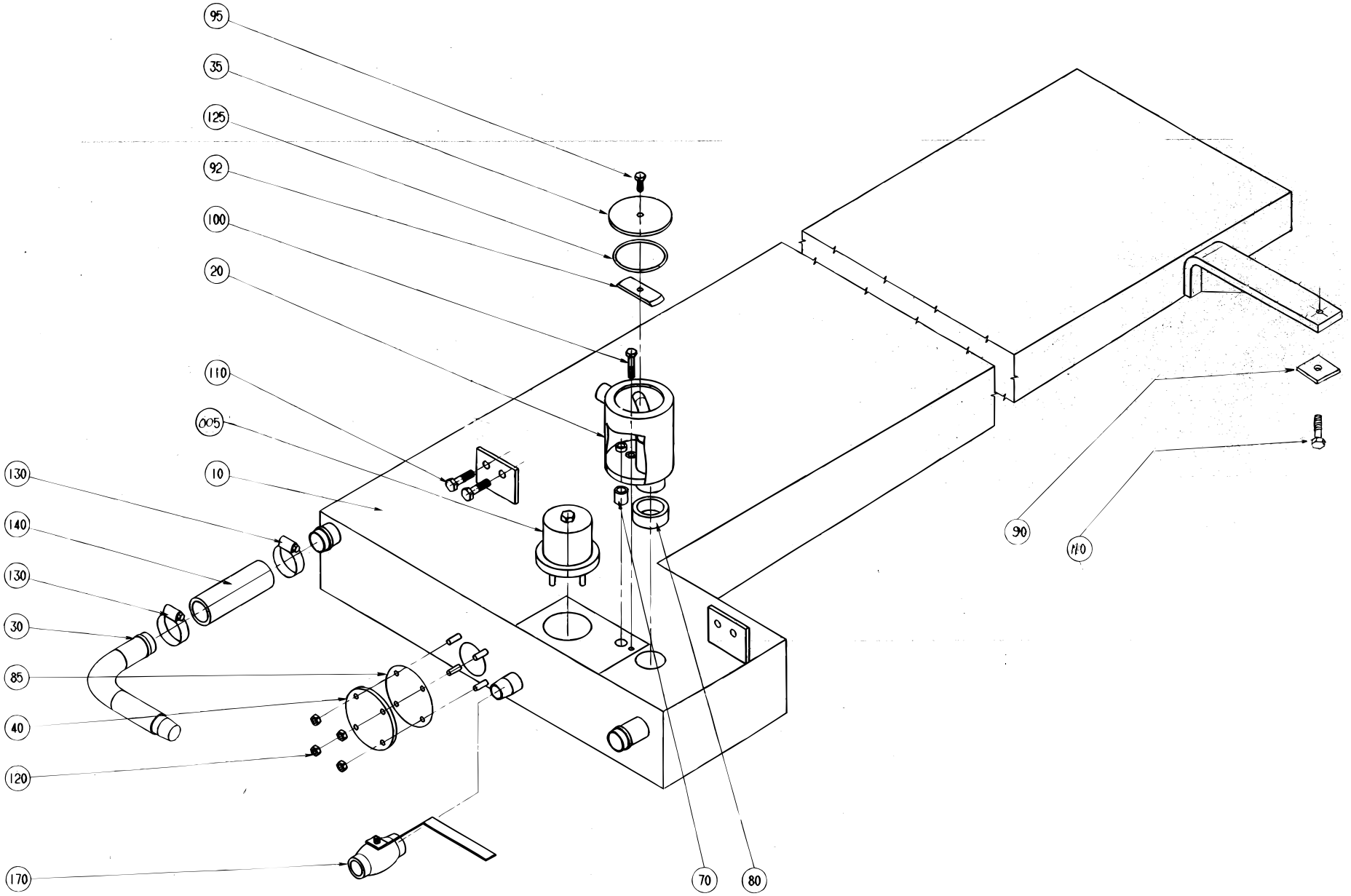

S - 1529274-1
ECN 82225

Pos	Part No	SP	UN	Qty	Description	Page No
Common Parts						
005	A 493652-0100	-		1	LID	
010	1529273-0000	-		1	TANK	
020	752810-0000	-		1	METERING DEVICE	
030	751400-0000	-		1	ATTACHMENT PIPE	
035	751223-0000	-		1	LID	
040	532205-0000	-		1	LID	
070	527906-0000	D		1	GASKET	
080	527905-0000	D		1	GASKET	
085	532206-0000	C		1	GASKET	
090	751402-0000	-		1	WASHER	
092	751403-0000	-		1	BRACKET	
095	312105-0368	-		1	Screw M6S M6x16 A280	
100	312105-0374	-		2	Screw M6S M6x30 A280	
110	312105-0451	-		3	Screw M6S 8x20 A280	
120	312605-0316	-		4	Nut Hex. M6M M6 A280	
125	315204-0302	-		1	O-Ring 54,5x3 mm	
130	342991-0106	-		2	HOSE CLIP,WORM DRIVE TYPE (30)-36	
140	90166-0049	-	MM	1	HOSE PVC 25/33-34	
170	90187-0059	-		1	Ball Valve, for Hydr.Per. G1/2 3mm hole	

Pos	Part No	SP	UN	Qty	Description	Page No

CONNECTION HOUSING

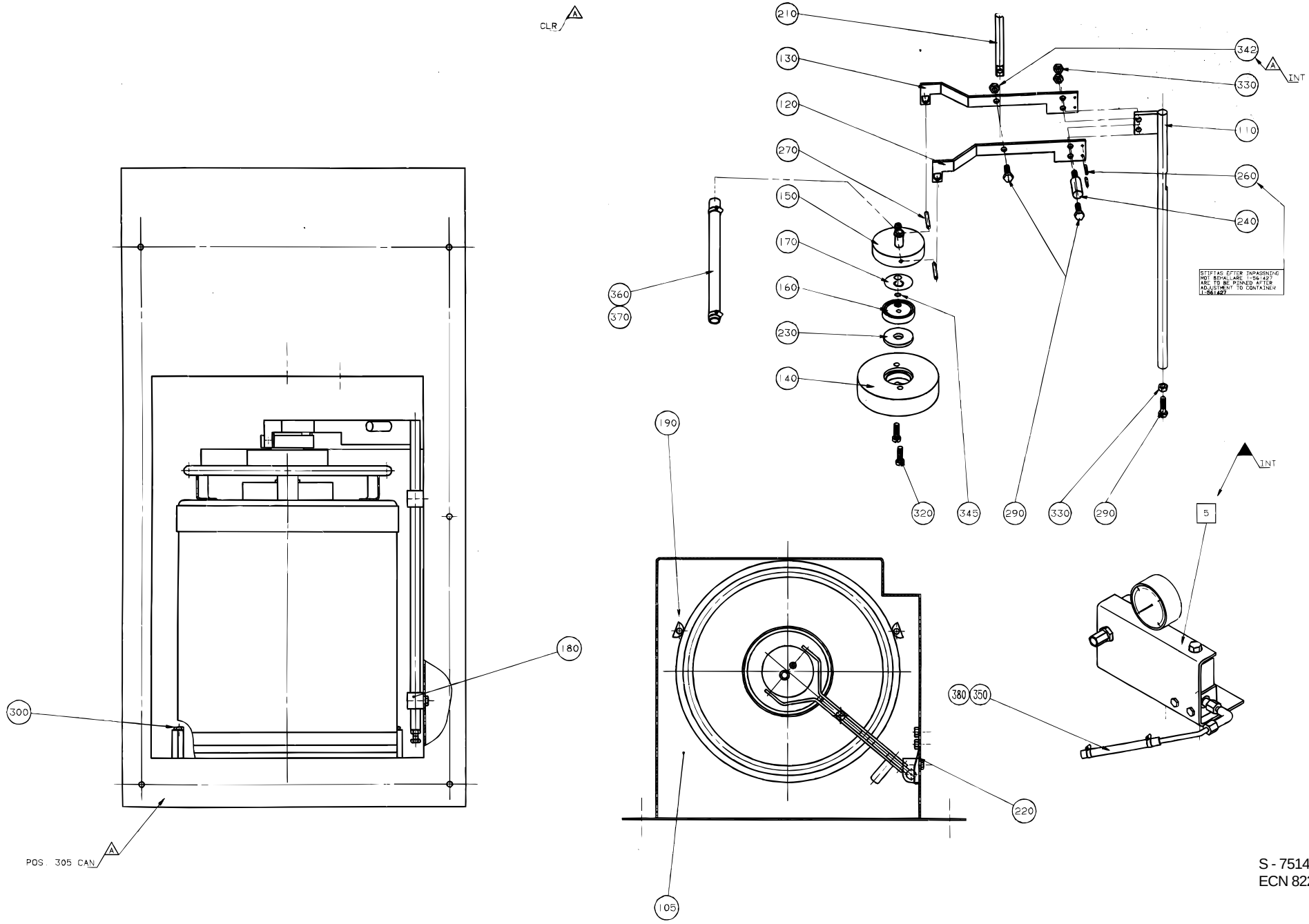

S - 751406-2
ECN 82225

Pos	Part No	SP	UN	Qty	Description	Page No
TBA/9 OR TBA/9 R						
100	751407-0000	-		1	FRAME	
135	751222-0000	-		1	SPACER	
280	312105-0366	-		1	Screw M6S M6x12 A280	
310	312105-0453	-		2	Screw M6S M8x25 A280	
315	312105-0459	-		2	Screw M6S M8x40 A280	
328	312155-0364	-		4	Screw Hex.Sock.Count.MF6S M6x10 A280	
340	315115-0165	-		4	Washer, Plain, TBRB 8,4/16 H=3	
350	90166-0101	-	MM	3	Hose 6/10 Silicone Rubber	
TBA/9C						
105	555440-0000	-		1	CANTILEVER	
350-02	90166-0101	-	MM	9	Hose 6/10 Silicone Rubber	
Common Parts						
005	751410-0100	-		1	VALVE PANEL	
110	527120-0000	-		1	STEERING	
120	527121-0001	-		1	BOW CLAMP	
130	527121-0002	-		1	BOW CLAMP	
140	273982-0000	-		1	WEIGHT	
150	527122-0000	-		1	ATTACHMENT	
160	530551-0000	-		1	WASHER	
170	527912-0000	C		1	NON-RETURN VALVE	
180	527124-0000	-		2	BEARING	
190	527125-0000	-		2	STEERING	
210	527128-0000	-		1	GUIDE PIN	
220	527126-0000	D		1	LEAF SPRING	
230	273981-0000	C		1	GASKET	
240	527127-0000	-		1	DOWEL	
260	311103-0234	-		2	Pin, Parallell, m6, 3x12	
270	311103-0273	-		2	PIN,STRAIGHT M6 4x22 RFR	
290	312105-0370	-		3	Screw M6S M6x20 A280	
300	312105-0378	-		2	Screw M6S M6x40 A280	
320	312125-0370	-		2	Screw Pan Head MCS M6X20 RFR	
330	312605-0316	-		7	Nut Hex. M6M M6 A280	
342	312811-0316	-		1	Nut Hex.Lock Heli Coil Mid Grip M6 SS	
345	90242-0163	-		1	O-RING	
360	90166-0138	-	MM	8	HOSE	
370	90132-0023	-		2	HOSE CLIP S 15/9	
380	90132-0021	-		2	HOSE CLIP 6-10mm	

Pos	Part No	SP	UN	Qty	Description	Page No

This page is intentionally left blank

Pos	Part No	SP	UN	Qty	Description	Page No
Common Parts						
010	90296-0053	-	L	1	OIL	
020	90296-0075	-	ML	25	OIL 54322-320 Acc to M 1254.322	
030	90298-0019	-		1	DETERGENT	
040	90144-0003	-		1	TAPE	

Pos	Part No	SP	UN	Qty	Description	Page No


Tetra Pak

SPC

Spare Parts Catalogue

STRIP APPLICATOR TBA/9R

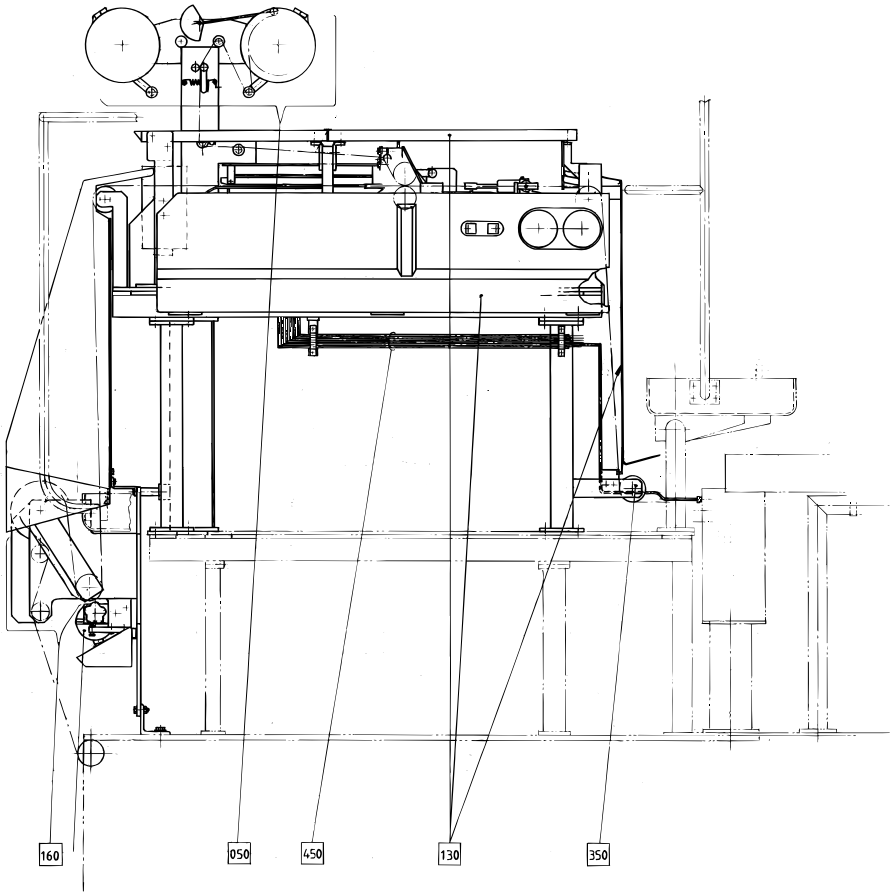

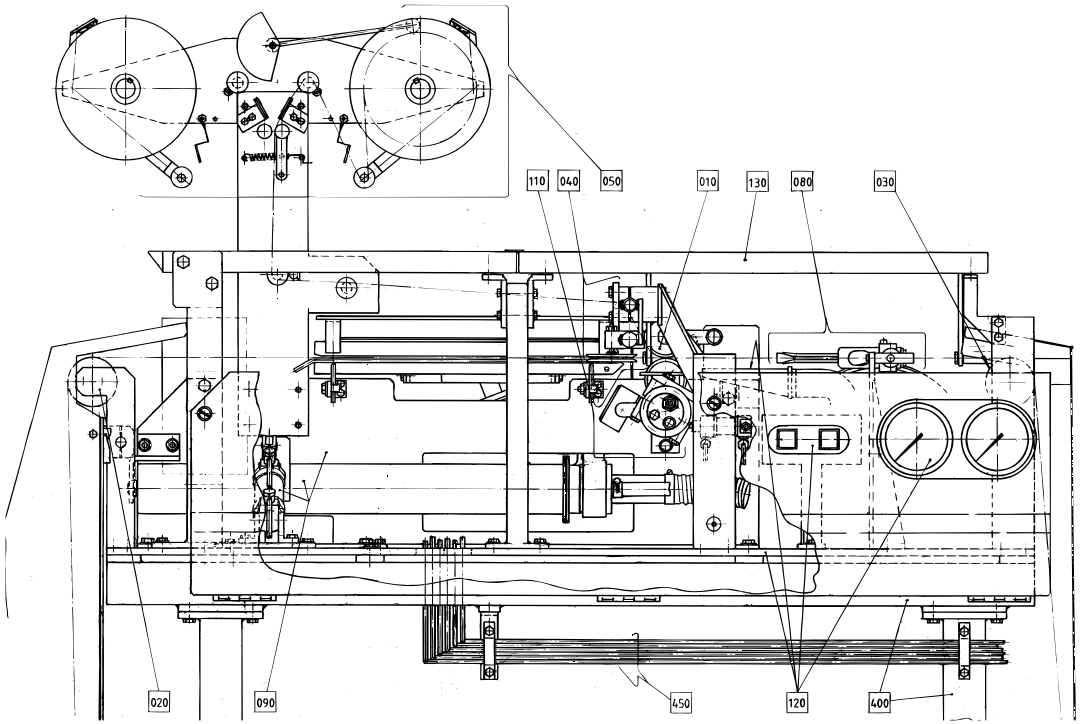

Pos	Part No	SP	UN	Qty	Description	Page No
SOURCE,TBA/9-100V OR SOURCE,TBA/9-110V						
450	A1529131-0100	-		1	PIPE WORK	**698**
SOURCE,TBA/9-120V						
450	A1529187-0100	-		1	PIPE WORK	**700**
ST-ER						
160	A1529130-0100	-		1	DATING UNIT	**684**
ST-R						
160	A1529129-0100	-		1	DATING UNIT	**676**
Common Parts						
010	A 246388-0200	-		1	PRESSURE ROLLER	**640**
020	A 256966-0200	-		1	BENDING ROLLER BRACKET	**642**
030	A 256967-0200	-		1	BENDING ROLLER	**644**
040	A 456032-0100	-		1	STRIP GUIDE	**646**
050	A1529020-0100	-		1	STRIP MAGAZINE	**648**
080	A 267315-0100	-		1	PAPER GUIDE	**662**
090	A 295891-0300	-		1	STRIP APPLICATOR	**664**
110	A 272343-0400	-		1	PRESSURE ROLLER	**668**
120	A1529186-0100	-		1	MOUNTING PLATE	**670**
130	A1529025-0100	-		1	PAPER GUARD	**672**
350	A 456919-0100	-		1	BENDING ROLLER	**694**
400	A1529099-0100	-		1	MACHINE BODY	**696**
500	A 295668-0300	-		1	START-UP KIT	**702**

Pos	Part No	SP	UN	Qty	Description	Page No

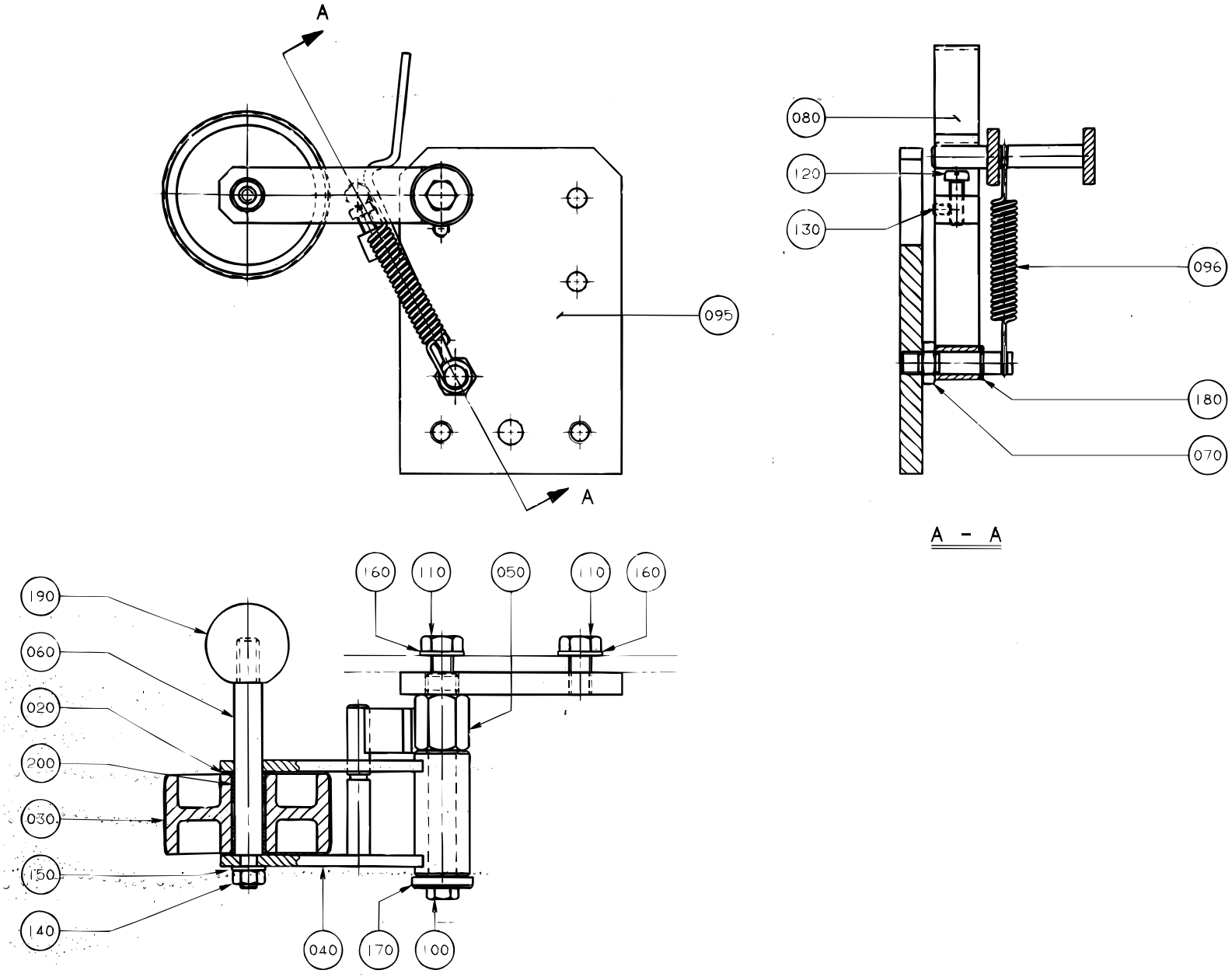
A
095
A
080
120
130
096
180
070
A - A
160
110
050
110
160
190
060
020
200
030
150
140
040
170
100

Pos	Part No	SP	UN	Qty	Description	Page No
0180B ST-R OR 0180B ST-ER OR 0200B ST-ER OR 0200B ST-R OR 0189B ST-R OR 0189B ST-ER OR 0250B ST-ER OR 0250B ST-R OR 0236B ST-ER OR 0236B ST-R OR 0284B ST-ER OR 0284B ST-R						
010	752637-0001	D		1	BENDING ROLLER	
0125B ST-R OR 0100B ST-R						
010	752637-0002	D		1	BENDING ROLLER	
0200S ST-R						
010	752637-0003	D		1	BENDING ROLLER	
Common Parts						
020	2033-0009	-		2	WASHER	
030	21903-0000	-		1	ROLL	
040	251493-0000	-		1	FORK	
050	251494-0000	-		1	SHAFT	
060	251495-0000	-		1	SHAFT	
070	251496-0000	-		1	SHAFT	
080	251498-0000	-		1	BARRIER	
095	266752-0000	-		1	MOUNTING SHEET	
096	279074-0000	-		1	TENSION SPRING	
100	312105-0368	-		1	Screw M6S M6x16 A280	
110	312105-0449	-		2	Screw M6S M8x16 A280	
120	312125-0329	-		1	Screw Pan Head MCS M5X16 RFR	
130	312318-0285	-		1	Screw,Sock.Set Cuppoint MSK6SS M4x6 A4	
140	312605-0316	-		1	Nut Hex. M6M M6 A280	
150	315105-0153	-		1	Washer, Plain, BRB, 6,4/12,H=1,5	
160	315105-0165	-		2	Washer, Plain, BRB, 8,4/16,H=1,5	
170	315121-0153	-		1	Washer, Plain, TBRSB 6,4/22 H=4	
180	315750-0105	-		1	Retain. Ring, 8	
190	318800-0104	-		1	HANDLE,SPHERICAL KNOB,INT.THRE.,D.30-M8	
200	321120-0104	-		2	BEARING BUSHING WITHOUT FLANGE,10/12x10	

Pos	Part No	SP	UN	Qty	Description	Page No

BENDING ROLLER BRACKET

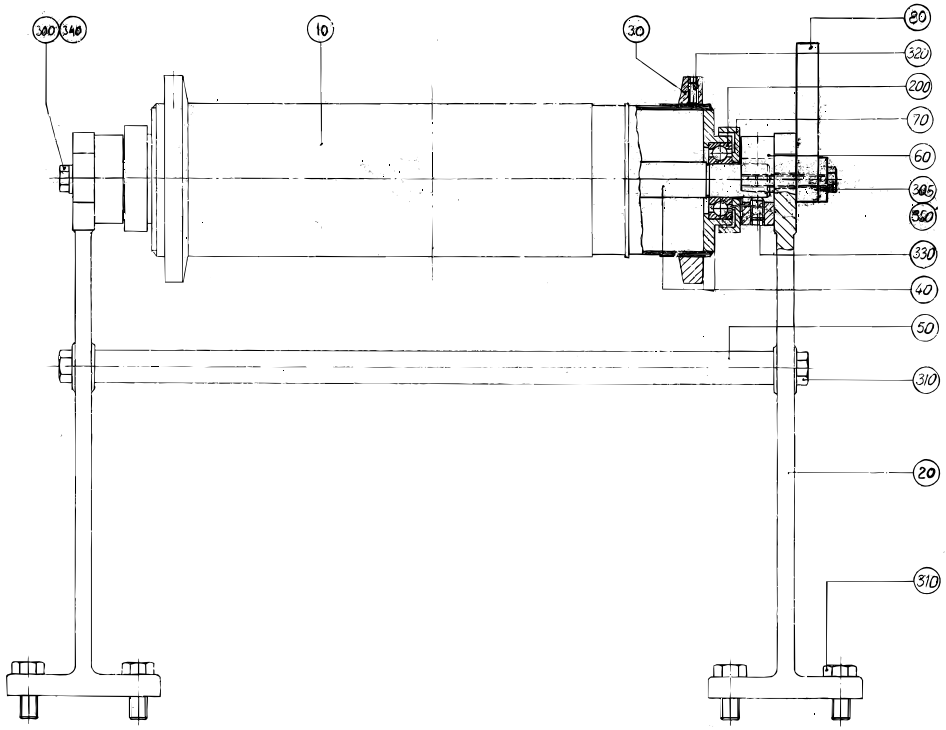

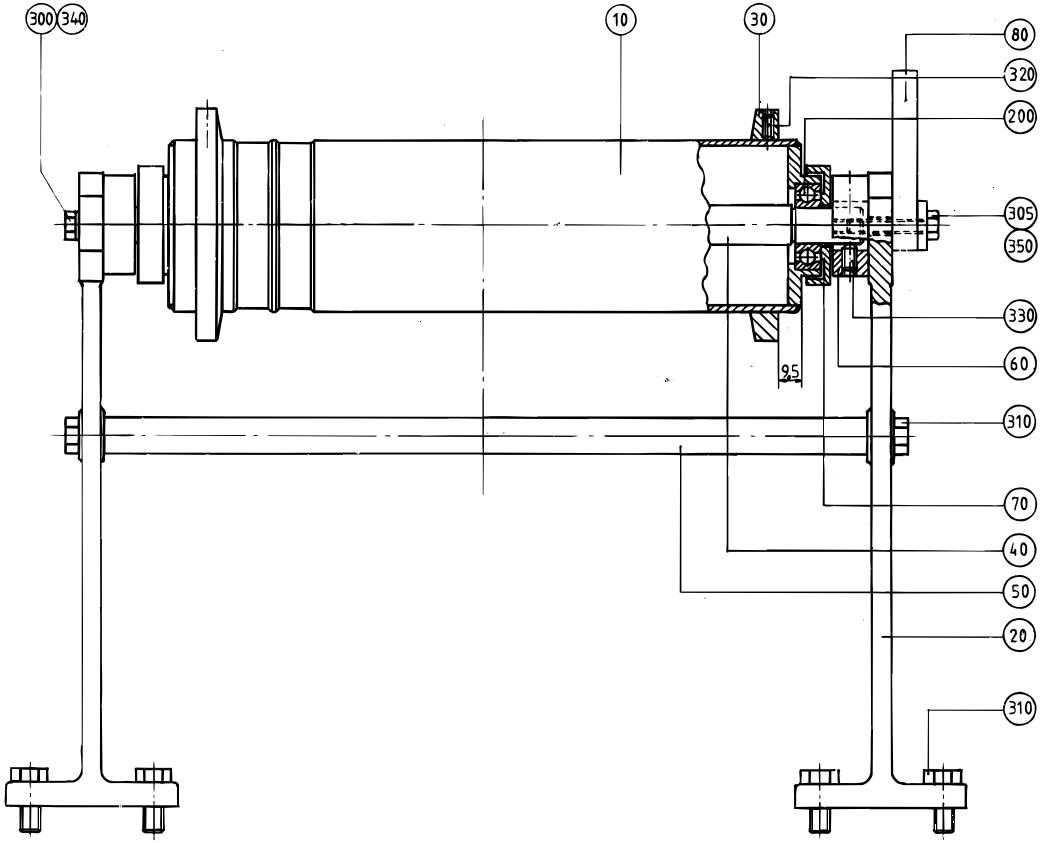

S - 256966-1, 2, 3, 4
ECN 82225

Pos	Part No	SP	UN	Qty	Description	Page No
0125B ST-ER OR 0100B ST-ER						
010	752637-0002	D		1	BENDING ROLLER	
0200S ST-ER						
010	752637-0003	D		1	BENDING ROLLER	
Common Parts						
020	546116-0000	-		2	CANTILEVER	
030	250588-0000	D		2	FLANGE	
040	256985-0000	C		1	SHAFT	
050	256986-0001	-		1	STRUT	
060	265567-0000	D		2	BEARING UNIT	
070	265568-0000	-		2	DUST COVER	
080	751048-0000	-		1	SUPPORT	
200	90214-0098	C		2	BALL BEARING,STAINLESS	
300	312105-0370	-		2	Screw M6S M6x20 A280	
305	312105-0376	-		2	Screw M6S M6S M6x35 A280	
310	312105-0451	-		1	Screw M6S 8x20 A280	
320	312318-0325	C		4	Screw Hex.Sock.Set Cup P.MSK6SS5x10 SS	
330	312318-0364	C		4	Screw Hex.Sock.Set Cup P.MSK6SS6x10 SS	
340	315105-0153	-		2	Washer, Plain, BRB, 6,4/12,H=1,5	
350	315125-0153	-		2	Washer, Plain Round,Chamf. 6,4/22, H=4	

Pos	Part No	SP	UN	Qty	Description	Page No

BENDING ROLLER

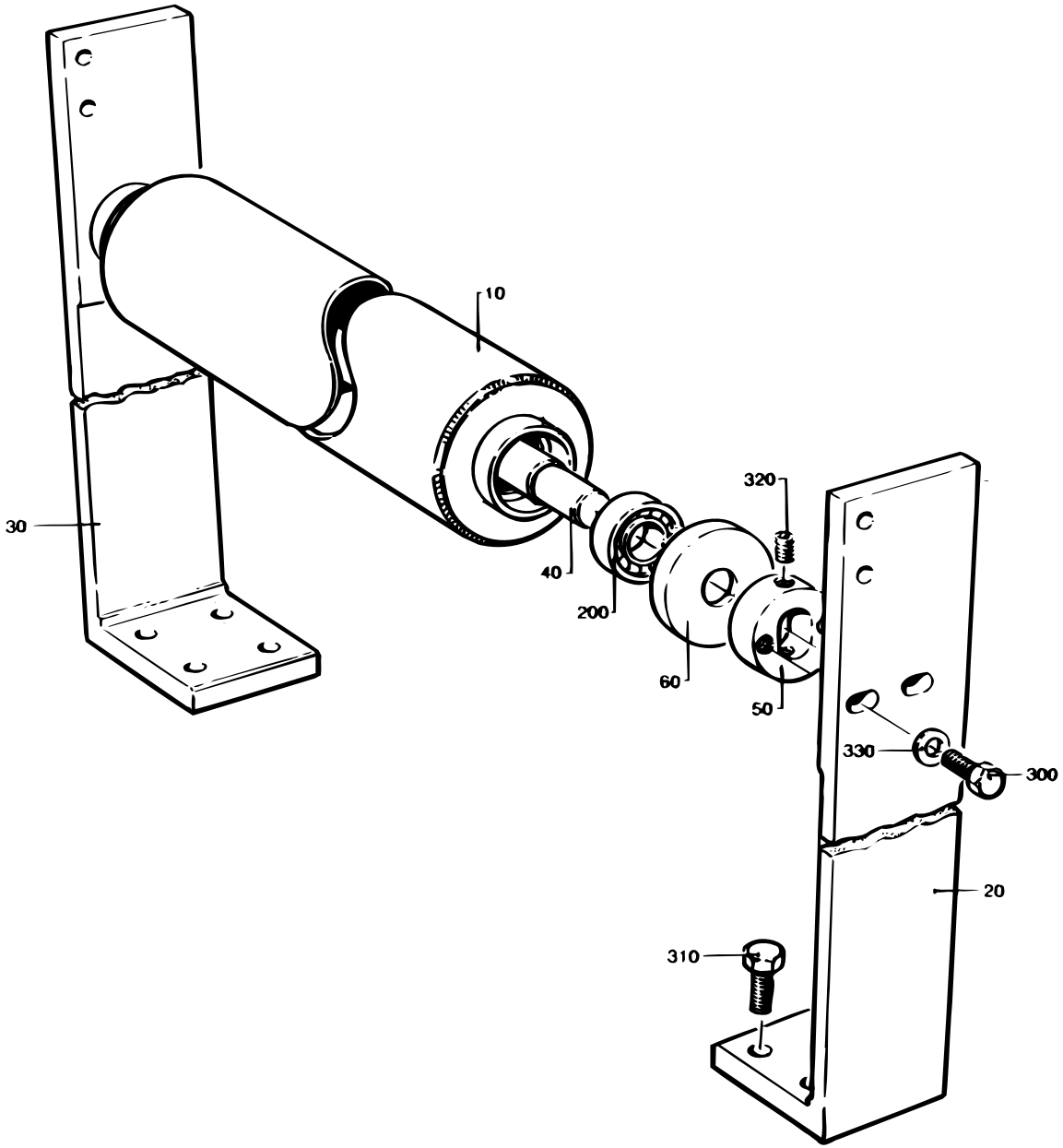

S - 256967-1
ECN 82225

Pos	Part No	SP	UN	Qty	Description	Page No
Common Parts						
010	256984-0000	D		1	BENDING ROLLER	
020	256992-0000	-		1	CANTILEVER	
030	256993-0000	-		1	CANTILEVER	
040	256985-0000	C		1	SHAFT	
050	265567-0000	D		2	BEARING UNIT	
060	265568-0000	-		2	DUST COVER	
200	90214-0098	C		2	BALL BEARING,STAINLESS	
300	312105-0370	-		4	Screw M6S M6x20 A280	
310	312105-0451	-		8	Screw M6S 8x20 A280	
320	312318-0364	C		4	Screw Hex.Sock.Set Cup P.MSK6SS6x10 SS	
330	315105-0153	-		4	Washer, Plain, BRB, 6,4/12,H=1,5	

Pos	Part No	SP	UN	Qty	Description	Page No

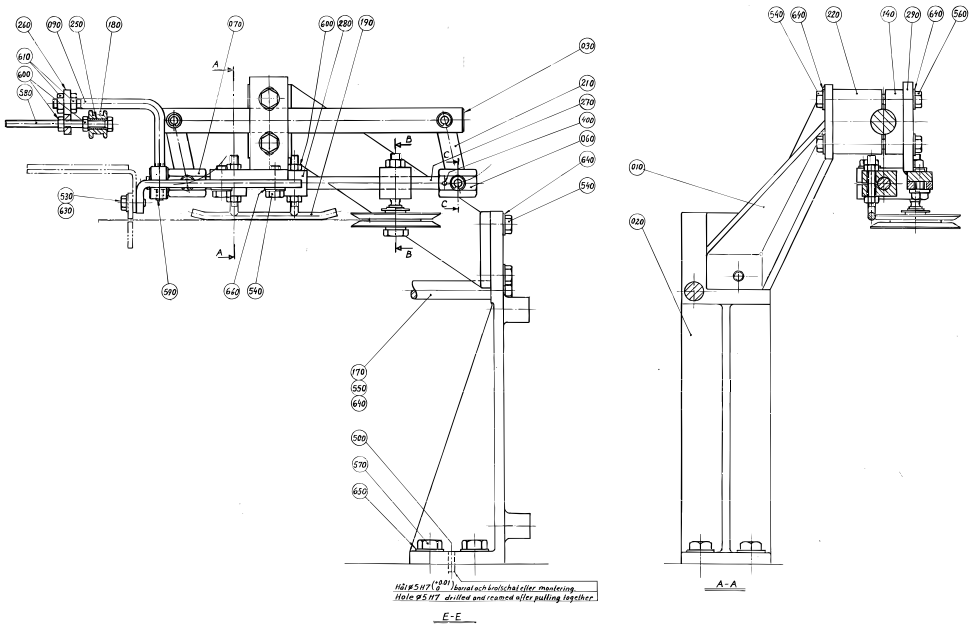
260
270
250
180
070
600
280
190
610
600
580
030
210
270
400
060
640
540
530
630
590
640
540
170
550
640
500
570
650
Hål ø 5 H7 (+0,01 0) borrat och kalibrerat efter montering.
Hole ø 5 H7 drilled and reamed after pulling together
E-E

540
690
220
140
290
690
560
010
020
A-A

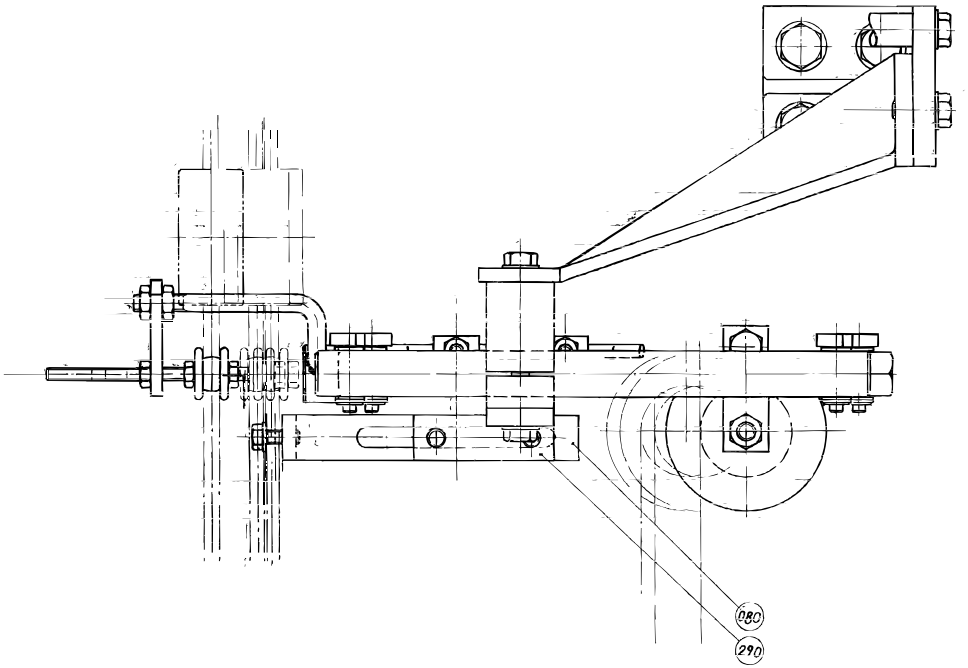
080
290

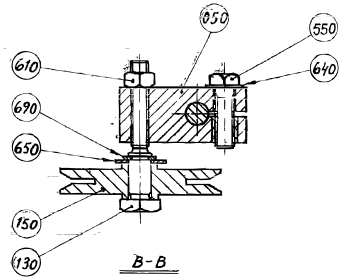
050
550
610
640
690
650
150
130
B-B

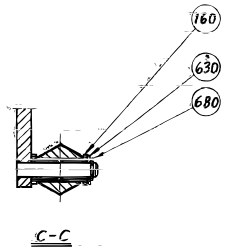
160
630
680
C-C

Pos	Part No	SP	UN	Qty	Description	Page No
0125S						
170	256986-0004	-		1	STRUT	
190	491654-0000	-		1	SUPPORT	
0180B OR 0236B OR 0200B OR 0250B OR 0284B						
170	256986-0002	-		1	STRUT	
190	266049-0000	-		1	SUPPORT	
0200S OR 0160S						
170	256986-0003	-		1	STRUT	
190	266049-0000	-		1	SUPPORT	
0250S						
170	256986-0008	-		1	STRUT	
190	266049-0000	-		1	SUPPORT	
Common Parts						
010	243218-0000	-		1	CANTILEVER	
020	272173-0000	-		1	CANTILEVER	
030	243151-0000	D		1	SHAFT	
050	456027-0000	D		1	CLAMP HOLDER	
060	456028-0000	D		1	JOINT	
070	456029-0000	D		1	JOINT	
080	456030-0000	-		1	FASTENING BRACKET	
090	456031-0000	-		1	BRACKET	
130	31418-0000	C		1	SHAFT	
140	31423-0000	-		1	MOUNTING LUG	
150	31425-0000	C		1	GUIDE WHEEL	
160	255064-0000	C		8	BUSHING	
180	257923-0000	C		1	GUIDE WHEEL	
210	272177-0000	C		2	LINK	
220	266761-0000	-		1	MOUNTING LUG	
250	456022-0000	C		1	SLEEVE	
260	456023-0000	-		1	JOINT	
270	456024-0000	D		1	GUIDE SHAFT	
280	456025-0000	D		2	CLAMP HOLDER	
290	456026-0000	-		1	BRACKET	
400	90258-0031	C		2	Pin, Straight Slotted Spring FRP 3x20	
500	311305-0308	-		2	SLOTTED PIRPC5X16FZB	
530	312105-0368	-		1	Screw M6S M6x16 A280	
540	312105-0451	-		6	Screw M6S 8x20 A280	
550	312105-0453	-		3	Screw M6S M8x25 A280	
560	312105-0459	-		2	Screw M6S M8x40 A280	
570	312105-0491	-		4	Screw M6S M10x20 A280	
580	312109-0386	-		1	Screw M6S M6x80 A280	
590	312318-0362	-		2	Screw,Sock.Set Cuppoint MSK6SS M6x8 A4	
600	312605-0316	-		7	Nut Hex. M6M M6 A280	
610	312605-0318	-		3	Nut Hex. M6M M8 A280	
620	315105-0146	-		2	Washer, Plain, BRB, 5,3/10,H=1	
630	315105-0153	-		2	Washer, Plain, BRB, 6,4/12,H=1,5	
640	315105-0165	-		9	Washer, Plain, BRB, 8,4/16,H=1,5	
650	315105-0173	-		5	Washer, Plain, BRB, 10,5/22,H=2	
660	315115-0165	-		2	Washer, Plain, TBRB 8,4/16 H=3	
680	315754-0107	C		4	LOCKING WAE 5	
690	315754-0110	C		1	LOCKING WAE 9	

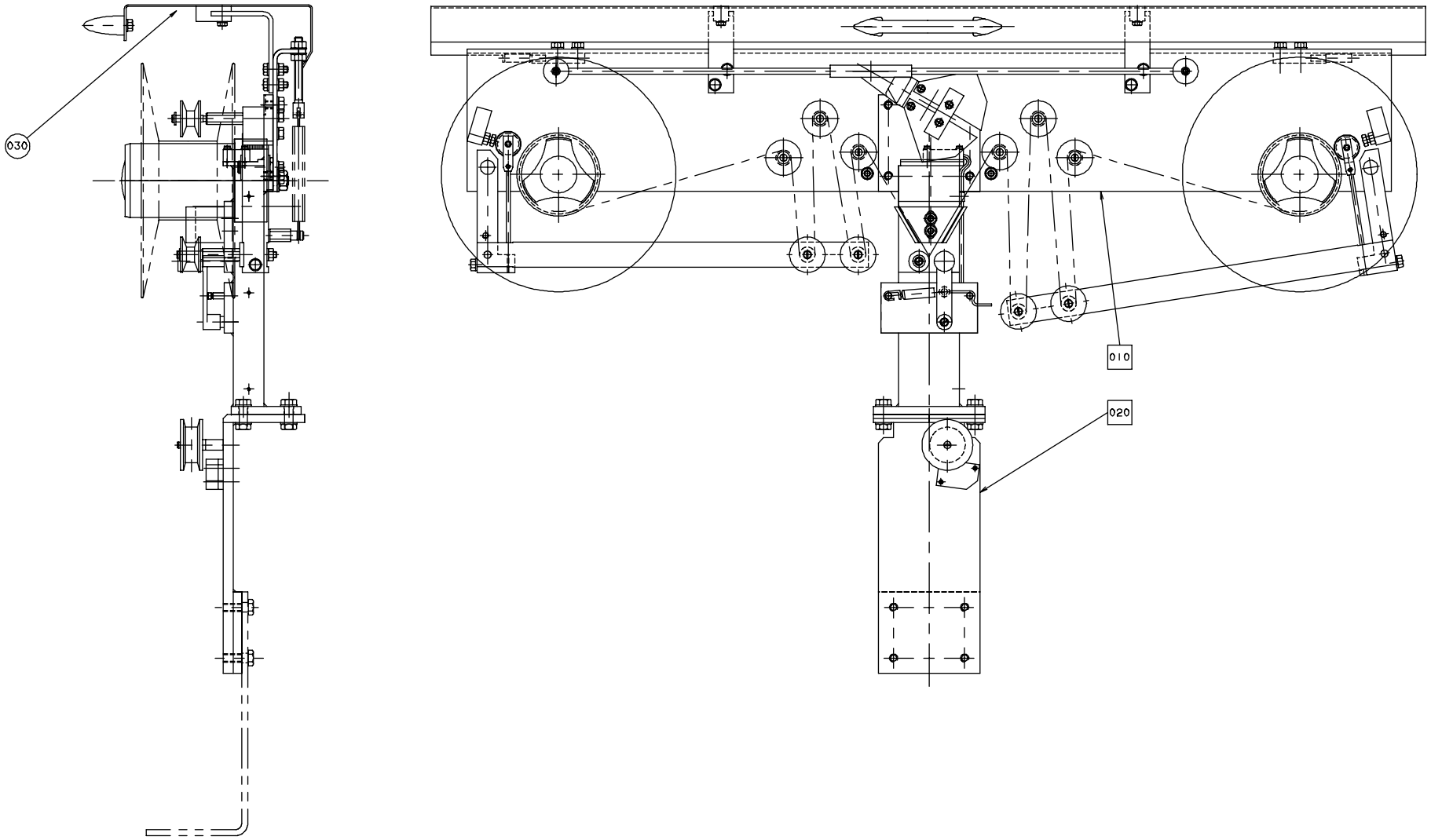

S - 1529020-1
ECN 82225

Pos	Part No	SP	UN	Qty	Description	Page No
Common Parts						
010	A 543823-0100	-		1	STRIP MAGAZINE	**650**
020	A1529021-0100	-		1	PILLAR	**660**
030	1529270-0000	-		1	SIGN	

Pos	Part No	SP	UN	Qty	Description	Page No

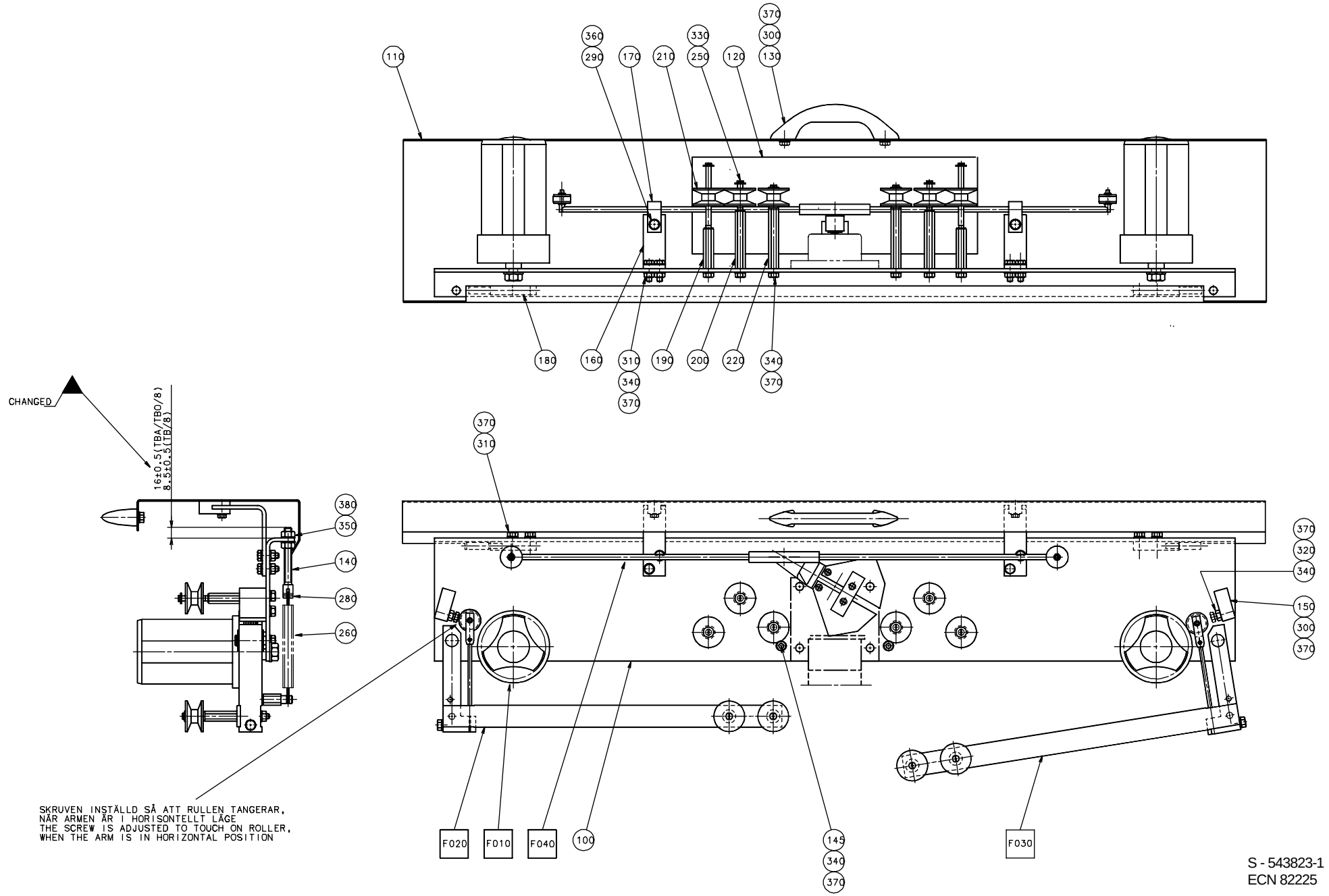

S - 543823-1
ECN 82225

Pos	Part No	SP	UN	Qty	Description	Page No
Common Parts						
F010	A 537329-0100	-		2	HUB JUMBO	**652**
F020	A 543822-0100	-		1	BRAKE ARM	**654**
F030	A 594620-0100	-		1	BRAKE ARM	**656**
F040	A 543821-0100	-		1	LEVEL PROBE	**658**
100	540869-0000	-		1	SHEET	
110	543818-0000	-		1	PROTECTION PLATE	
120	545113-0000	-		1	SIGN STRIP MAGAZINE	
130	7309-0000	-		1	HANDLE	
140	541068-0000	D		2	SPRING HOLDER	
145	541172-0000	-		2	SET SCREW	
150	541173-0000	-		2	STOP	
160	543125-0000	-		2	ANGLE	
170	543126-0000	-		2	STOP LUG	
180	543819-0000	-		2	HINGE	
190	544725-0000	C		2	AXLE PIN	
200	544727-0000	C		2	AXLE PIN	
210	B 544730-0000	C		6	ROLL	
220	536916-0000	C		2	AXLE PIN	
250	90005-0082	-		6	Washer, Plain Round 4,3(M4)/12,H=1	
260	90335-0015	C		2	SPRING 42360 Barnes	
280	311112-0205	-		2	Pin, Straight Slotted Spring FRP 3x10	
290	312105-0327	-		2	Screw M6S M5x12 A280	
300	312105-0366	-		6	Screw M6S M6x12 A280	
310	312105-0368	-		8	Screw M6S M6x16 A280	
320	312109-0374	-		2	Screw M6S M6x30 A280	
330	312125-0287	-		6	Screw Pan Head MCS M4X8 RFR	
340	312605-0316	-		14	Nut Hex. M6M M6 A280	
350	312605-0318	-		4	Nut Hex. M6M M8 A280	
360	315105-0146	-		2	Washer, Plain, BRB, 5,3/10,H=1	
370	315105-0153	-		24	Washer, Plain, BRB, 6,4/12,H=1,5	
380	315105-0165	-		4	Washer, Plain, BRB, 8,4/16,H=1,5	

Pos	Part No	SP	UN	Qty	Description	Page No

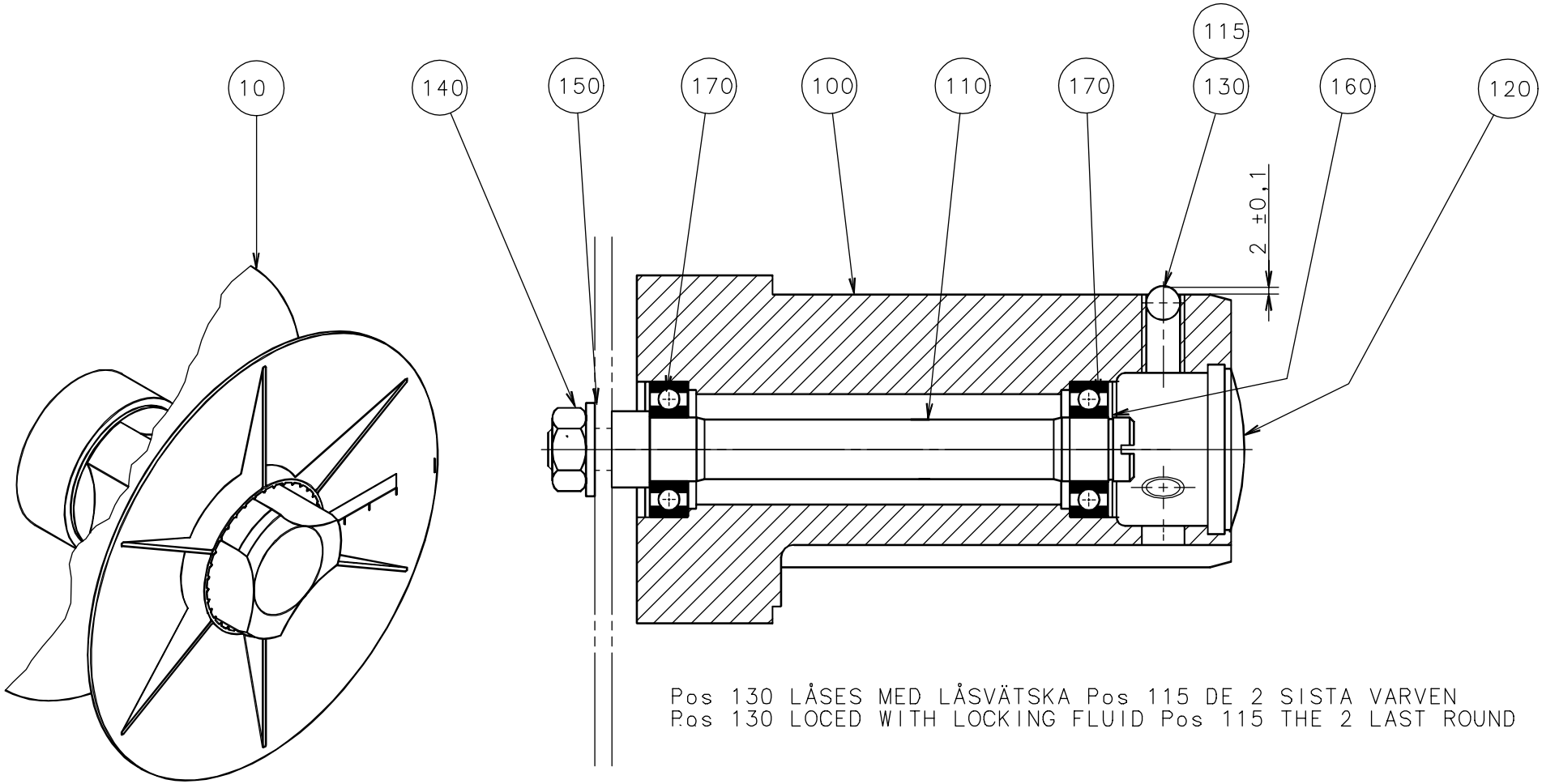

Pos 130 LÅSES MED LÅSVÄTSKA Pos 115 DE 2 SISTA VARVEN
Pos 130 LOCED WITH LOCKING FLUID Pos 115 THE 2 LAST ROUND

Pos	Part No	SP	UN	Qty	Description	Page No
Common Parts						
010	541751-0000	-		1	CONICAL BOBBIN	
100	536913-0000	D		1	HUB	
110	537327-0000	D		1	SHAFT	
115	90157-0016	-		1	LOCKING FLUID	
120	90261-0049	-		1	Plug, Blind, Plastic, No. SR1750	
130	90287-0106	-		3	Screw Springload. Slotted Head M10x21	
140	312605-0320	-		1	Nut Hex. M6M M10 A280	
150	315105-0173	-		1	Washer, Plain, BRB, 10,5/22,H=2	
160	315751-0112	-		1	Retain. Ring, 15	
170	321308-0202	C		2	BALL BEARING 15x32x9	

Pos	Part No	SP	UN	Qty	Description	Page No

BRAKE ARM

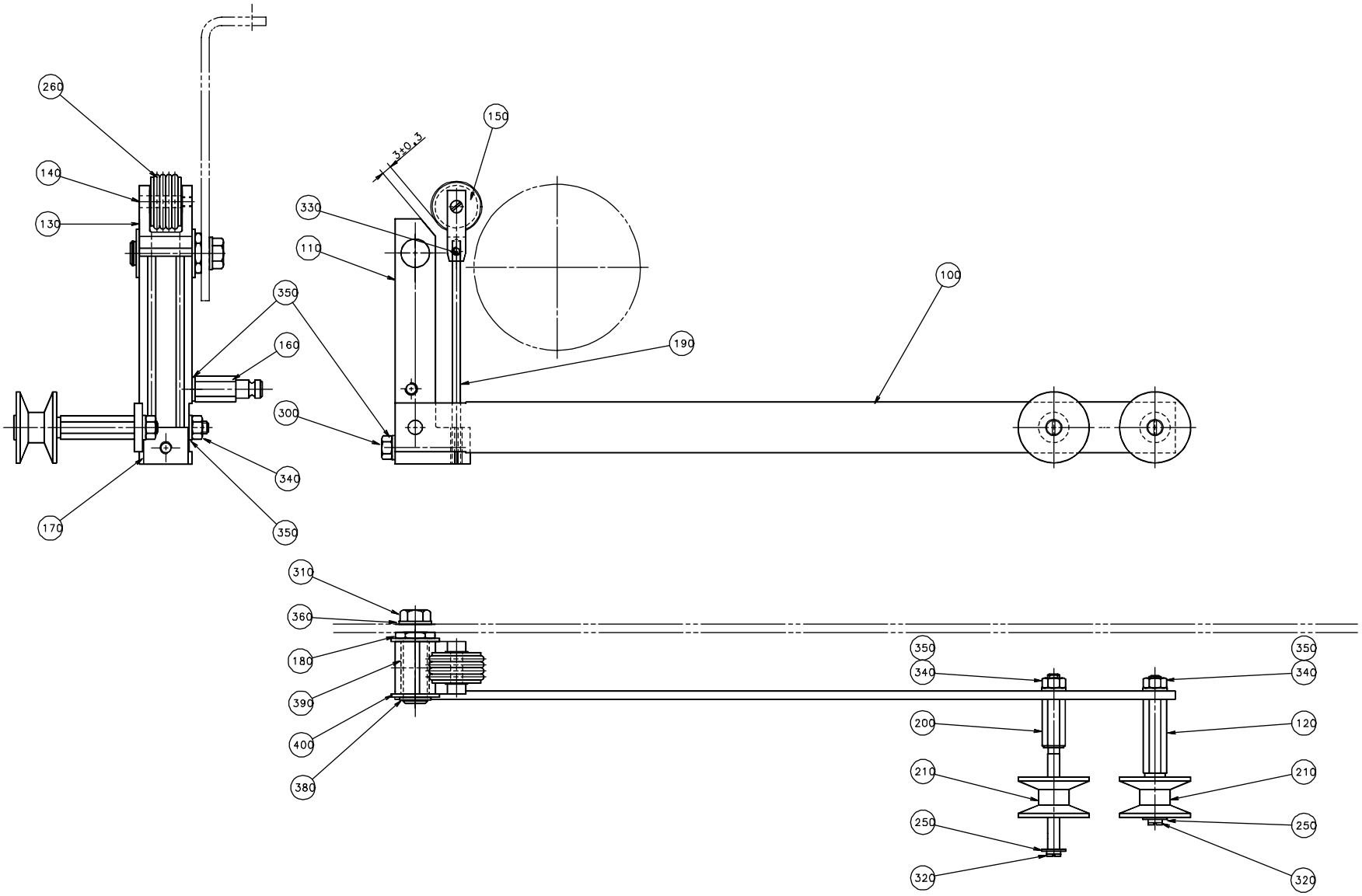

S - 543822-1
ECN 82225

Pos	Part No	SP	UN	Qty	Description	Page No
Common Parts						
100	540870-0000	D		1	ARM	
110	541057-0000	D		1	ARM	
120	536917-0000	C		1	AXLE PIN	
130	541064-0000	D		1	FORK	
140	541065-0000	D		1	SHAFT	
150	541066-0000	C		1	ROLL	
160	541067-0000	D		1	SPRING BRACKET	
170	541069-0000	D		1	SPRING BRACKET	
180	541070-0000	D		1	SHAFT	
190	543820-0000	C		2	SPRING	
200	544726-0000	C		1	AXLE PIN	
210	B 544730-0000	C		2	ROLL	
250	90005-0082	-		2	Washer, Plain Round 4,3(M4)/12,H=1	
260	90242-0148	C		4	O-Ring 19,2x3 mm	
300	312105-0378	-		1	Screw M6S M6x40 A280	
310	312105-0449	-		1	Screw M6S M8x16 A280	
320	312125-0287	-		2	Screw Pan Head MCS M4X8 RFR	
330	312318-0283	-		2	Screw,Sock.Set Cuppoint MSK6SS M4x4 A4	
340	312605-0316	-		3	Nut Hex. M6M M6 A280	
350	315105-0153	-		5	Washer, Plain, BRB, 6,4/12,H=1,5	
360	315105-0165	-		1	Washer, Plain, BRB, 8,4/16,H=1,5	
380	315751-0109	-		1	Retain. Ring, 12	
390	321120-0113	C		1	BEARING BUSHING WITHOUT FLANGE,12/14X25	
400	321129-0104	-		1	THRUST WASHER 12/24X1,5	

Pos	Part No	SP	UN	Qty	Description	Page No

BRAKE ARM

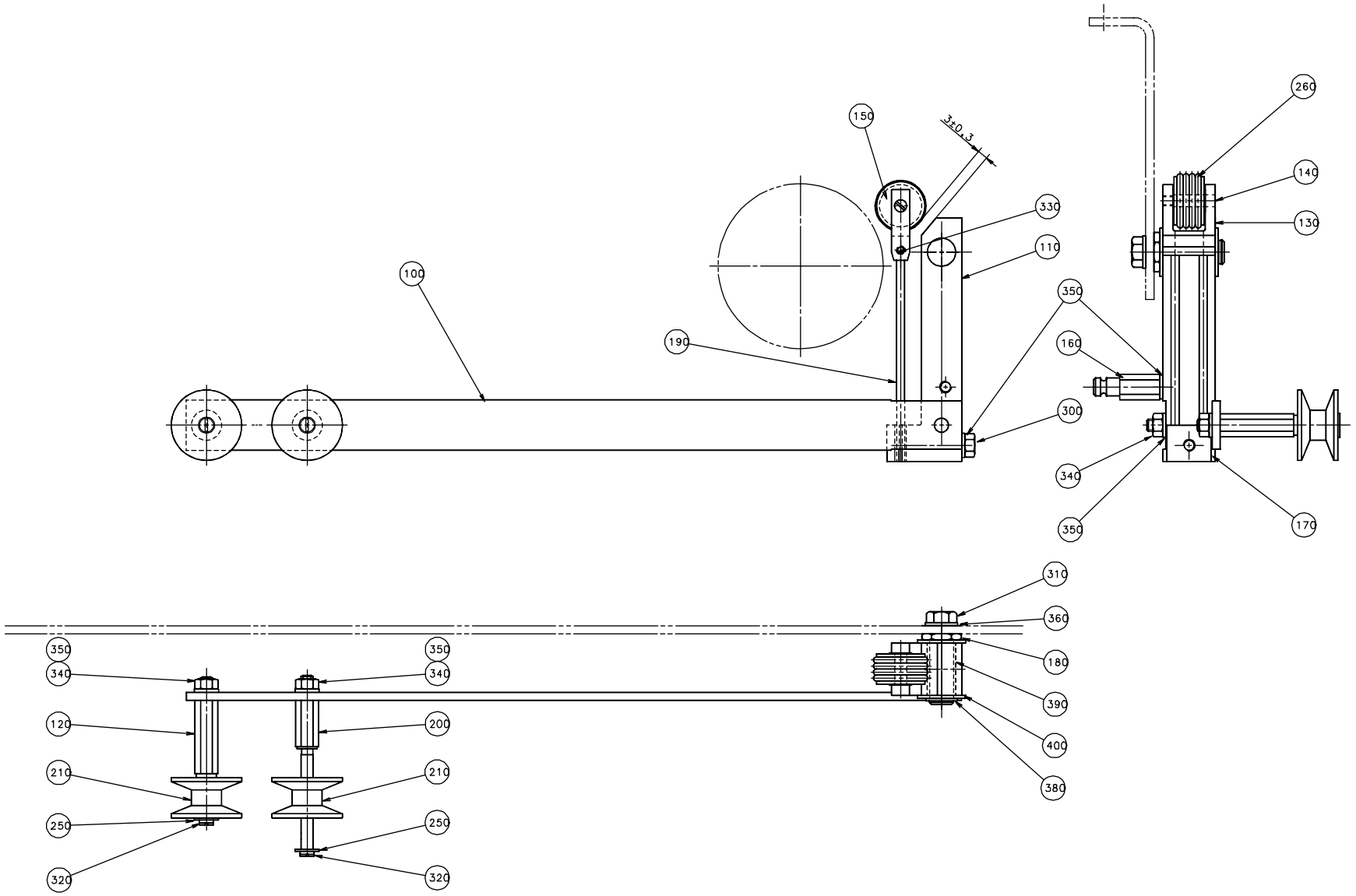
150
3±0.3
260
140
130
330
110
100
190
350
160
300
340
350
170
310
360
180
390
400
380
350
340
120
210
250
320
350
340
200
210
250
320

Pos	Part No	SP	UN	Qty	Description	Page No
Common Parts						
100	540870-0000	D		1	ARM	
110	541057-0000	D		1	ARM	
120	536917-0000	C		1	AXLE PIN	
130	541064-0000	D		1	FORK	
140	541065-0000	D		1	SHAFT	
150	541066-0000	C		1	ROLL	
160	541067-0000	D		1	SPRING BRACKET	
170	541069-0000	D		1	SPRING BRACKET	
180	541070-0000	D		1	SHAFT	
190	543820-0000	C		2	SPRING	
200	544726-0000	C		1	AXLE PIN	
210	B 544730-0000	C		2	ROLL	
250	90005-0082	-		2	Washer, Plain Round 4,3(M4)/12,H=1	
260	90242-0148	C		4	O-Ring 19,2x3 mm	
300	312105-0378	-		1	Screw M6S M6x40 A280	
310	312105-0449	-		1	Screw M6S M8x16 A280	
320	312125-0287	-		2	Screw Pan Head MCS M4X8 RFR	
330	312318-0283	-		2	Screw,Sock.Set Cuppoint MSK6SS M4x4 A4	
340	312605-0316	-		3	Nut Hex. M6M M6 A280	
350	315105-0153	-		5	Washer, Plain, BRB, 6,4/12,H=1,5	
360	315105-0165	-		1	Washer, Plain, BRB, 8,4/16,H=1,5	
380	315751-0109	-		1	Retain. Ring, 12	
390	321120-0113	C		1	BEARING BUSHING WITHOUT FLANGE,12/14X25	
400	321129-0104	-		1	THRUST WASHER 12/24X1,5	

Pos	Part No	SP	UN	Qty	Description	Page No

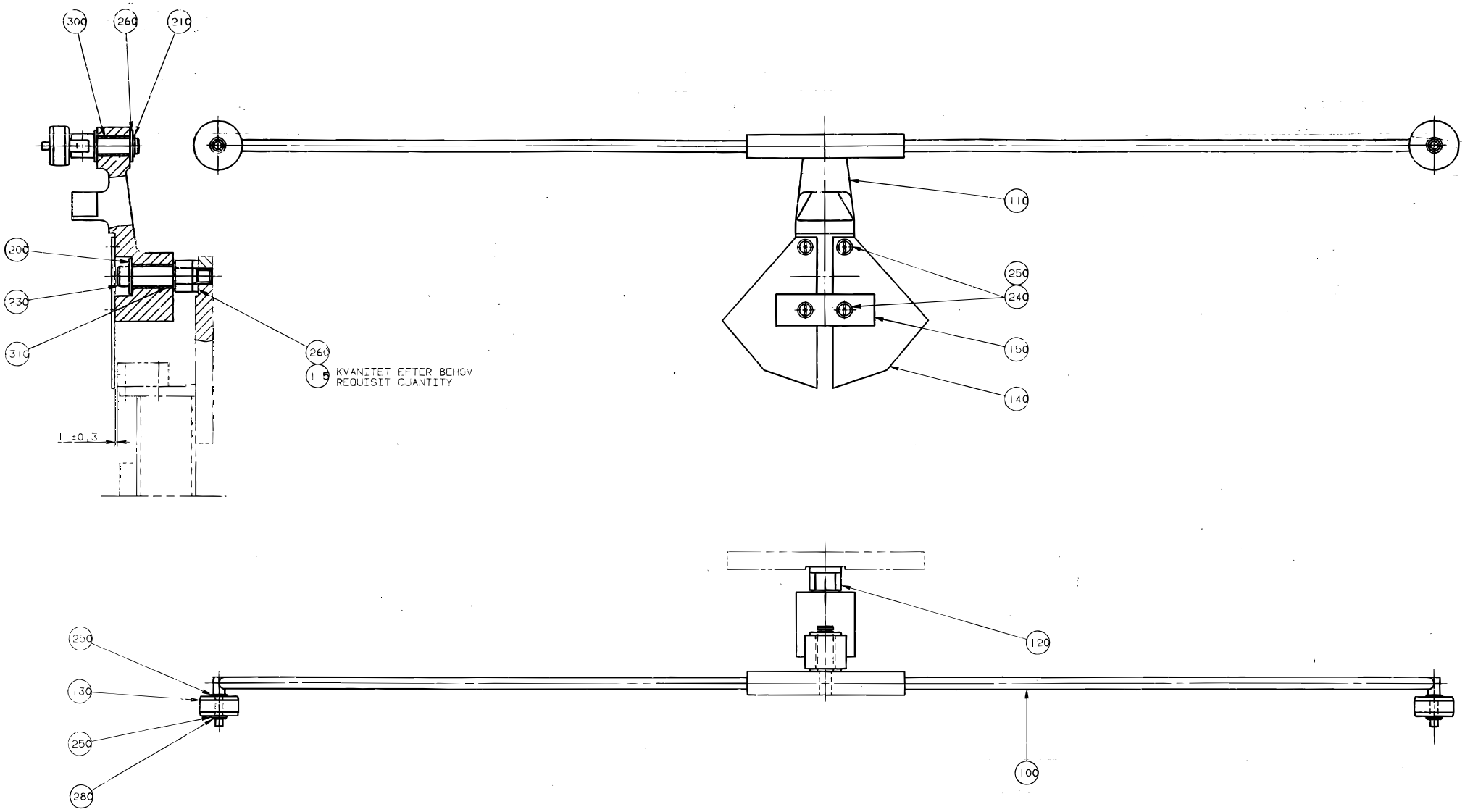

S - 543821-1
ECN 82225

Pos	Part No	SP	UN	Qty	Description	Page No
Common Parts						
100	542781-0000	D		1	ARM	
110	542784-0000	D		1	LINK ARM	
115	2033-0008	D		3	WASHER	
120	542782-0000	D		1	AXLE PIN	
130	542785-0000	C		2	ROLL	
140	542786-0000	D		2	FLAG	
150	543575-0000	-		1	LOCK SHEET	
200	90005-0060	-		1	Washer, Plain, RBS 6,4/M6)/18,H=1,5	
210	90141-0015	-		1	Retain. Ring, 8	
230	312115-0366	-		1	Screw MC6S M6x12 A280	
240	312125-0287	-		4	Screw Pan Head MCS M4X8 RFR	
250	315105-0136	-		8	Washer, Plain, BRB, 4,3/8,H=0,8	
260	315105-0165	-		3	Washer, Plain, BRB, 8,4/16,H=1,5	
280	315755-0105	-		2	Locking Washer 3,2	
300	321120-0103	C		2	BEARING BUSHING WITHOUT FLANGE,8/10X8	
310	321120-0104	C		2	BEARING BUSHING WITHOUT FLANGE,10/12x10	

Pos	Part No	SP	UN	Qty	Description	Page No

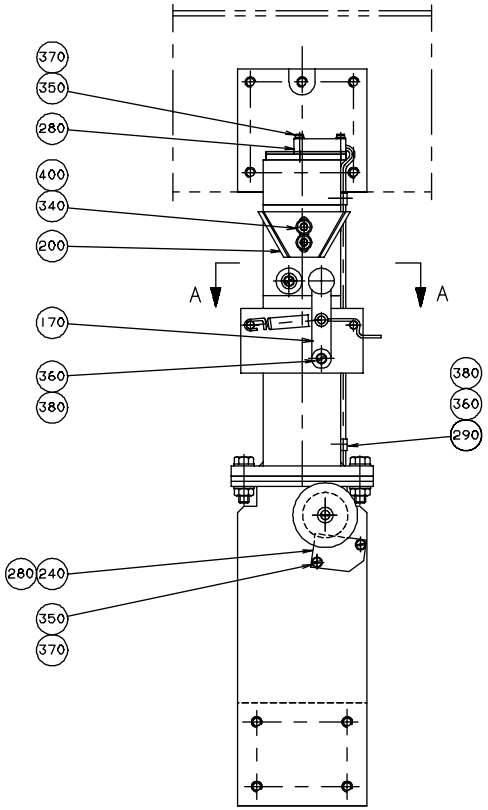
370
350
280
400
340
200
A
A
170
360
380
380
360
290
280
240
350
370

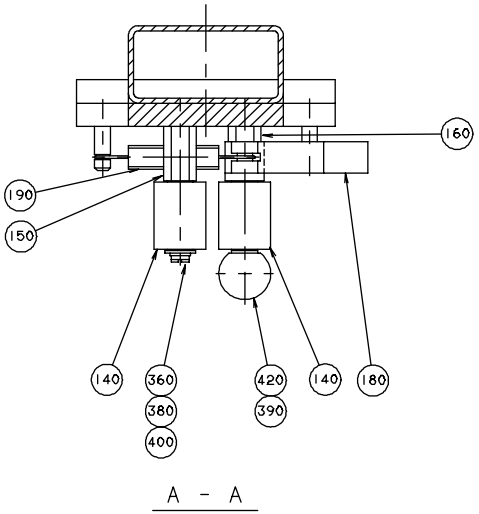
160
190
150
140
360
380
400
420
390
140
180
A - A

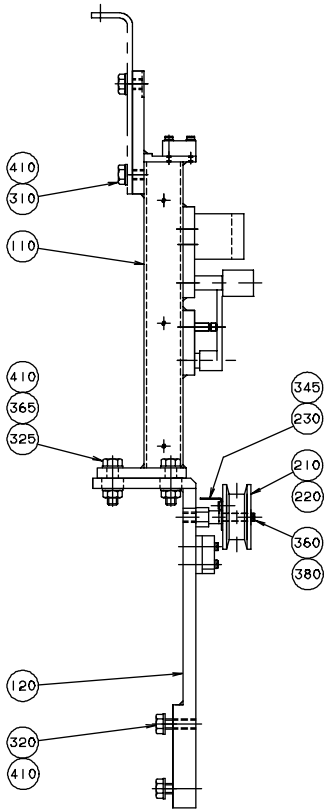
410
310
110
410
365
325
345
230
210
220
360
380
120
320
410

Pos	Part No	SP	UN	Qty	Description	Page No
Common Parts						
110	544974-0000	D		1	PILLAR	
120	1529018-0000	D		1	PILLAR	
140	232979-0000	C		2	PRESSURE ROLLER	
150	269053-0001	C		1	SHAFT	
160	269053-0003	C		1	SHAFT	
170	269054-0000	D		1	ARM	
180	269056-0000	D		1	CATCH	
190	269057-0000	C		1	TENSION SPRING	
200	279480-0000	D		1	STEERING RAIL	
210	491762-0000	D		1	SHAFT	
220	751504-0000	D		2	ROLL	
230	751505-0000	D		1	TINPLATE	
240	1529245-0000	-		1	SPACER	
280	90044-0194	C		2	Prox.sw. IN5329/IN3002-BPKG	
290	90165-0060	-		3	PIPE-CLIPS,FOR SINGLE PIPE,ONE SIDE 5	
310	312105-0449	-		4	Screw M6S M8x16 A280	
320	312105-0452	-		4	Screw M6S M8x22 A280	
330	312105-0455	-		4	Screw M6S M8x30 A280	
340	312115-0366	-		2	Screw MC6S M6x12 A280	
345	312125-0222	-		1	Screw Pan Head MCS M3x8 RFR	
350	312125-0230	-		4	Screw Pan Head MCS M3X20 RFR	
360	312125-0285	-		6	Screw Slot.Pan Hd. MCS 4x6 A480	
370	315105-0124	-		4	Washer, Plain, BRB, 3,2/6,H=0,5	
380	315105-0136	-		6	Washer, Plain, BRB, 4,3/8,H=0,8	
390	315105-0146	-		1	Washer, Plain, BRB, 5,3/10,H=1	
400	315105-0153	-		3	Washer, Plain, BRB, 6,4/12,H=1,5	
410	315105-0165	-		12	Washer, Plain, BRB, 8,4/16,H=1,5	
420	318800-0102	-		1	HANDLES,SPHERICAL KNOB,INT.THRE.,D.20-M5	
440	321120-0101	C		2	BEARING BUSHING WITHOUT FLANGE,6/8X6	

Pos	Part No	SP	UN	Qty	Description	Page No

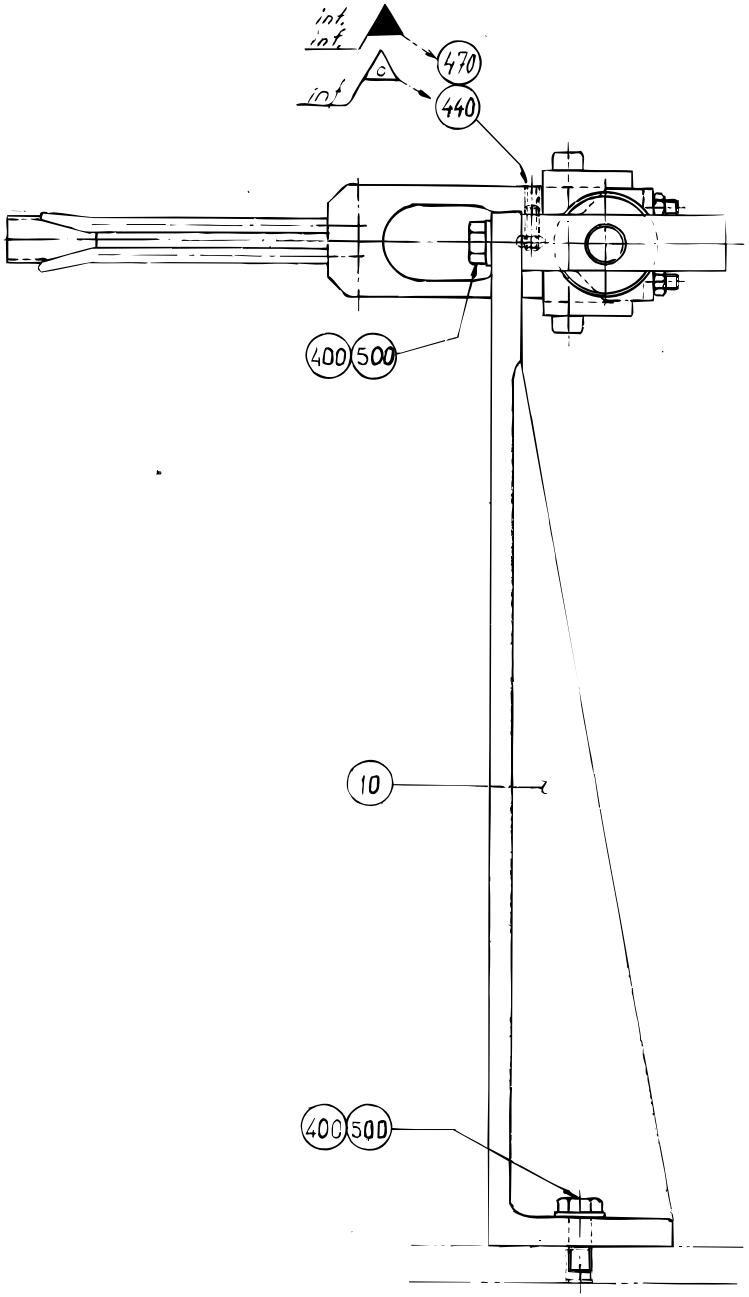

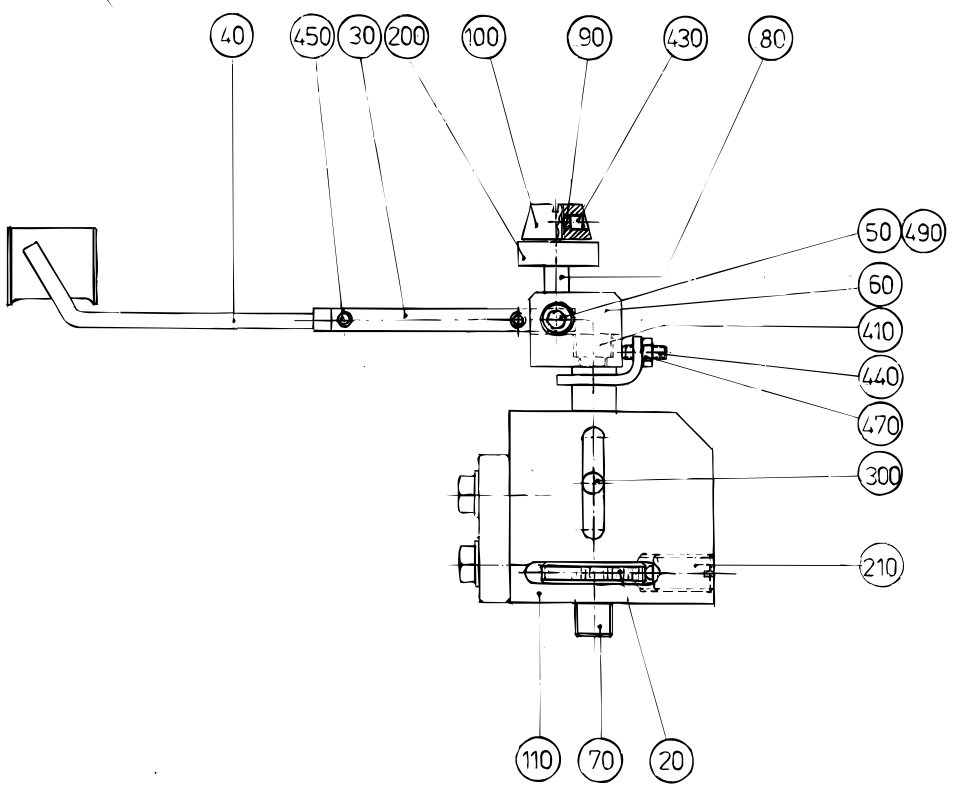

Vy A–A

S - 267315-1
ECN 82225

Pos	Part No	SP	UN	Qty	Description	Page No
Common Parts						
010	267316-0000	-		1	CANTILEVER	
020	23580-0000	-		1	SHIFTER HANDLE	
030	23582-0000	D		1	HOLDER	
040	23583-0000	C		1	GUIDE FINGER	
050	23584-0000	-		2	SCREW	
060	24351-0000	-		1	BOW CLAMP	
070	24352-0000	-		1	SHAFT	
080	24355-0000	-		2	DOWEL	
090	24356-0000	-		4	PIECE	
100	111543-0000	C		2	GUIDE CONE	
110	245210-0000	-		1	BODY	
200	90214-0138	C		2	BEARINGS,BALL BEARING,STAINLESS	
210	90287-0009	-		1	SPRINGLOADED SCREW M10x19	
300	311103-0350	-		1	Pin, Parallell, CP, m6, 6x14	
400	312105-0368	-		4	Screw M6S M6x16 A280	
410	312115-0366	-		1	Screw MC6S M6x12 A280	
430	312316-0283	C		4	Screw Hex.Sock.Set Cup P.MSK6SS4x4FZB	
440	312316-0291	C		3	Screw Hex.Sock.Set Cup P.MSK6SS4x12FZB	
450	312318-0285	C		2	Screw,Sock.Set Cuppoint MSK6SS M4x6 A4	
470	312605-0312	-		3	Nut Hex. M6M M4 A280	
490	315105-0146	-		2	Washer, Plain, BRB, 5,3/10,H=1	
500	315105-0153	-		4	Washer, Plain, BRB, 6,4/12,H=1,5	

Pos	Part No	SP	UN	Qty	Description	Page No

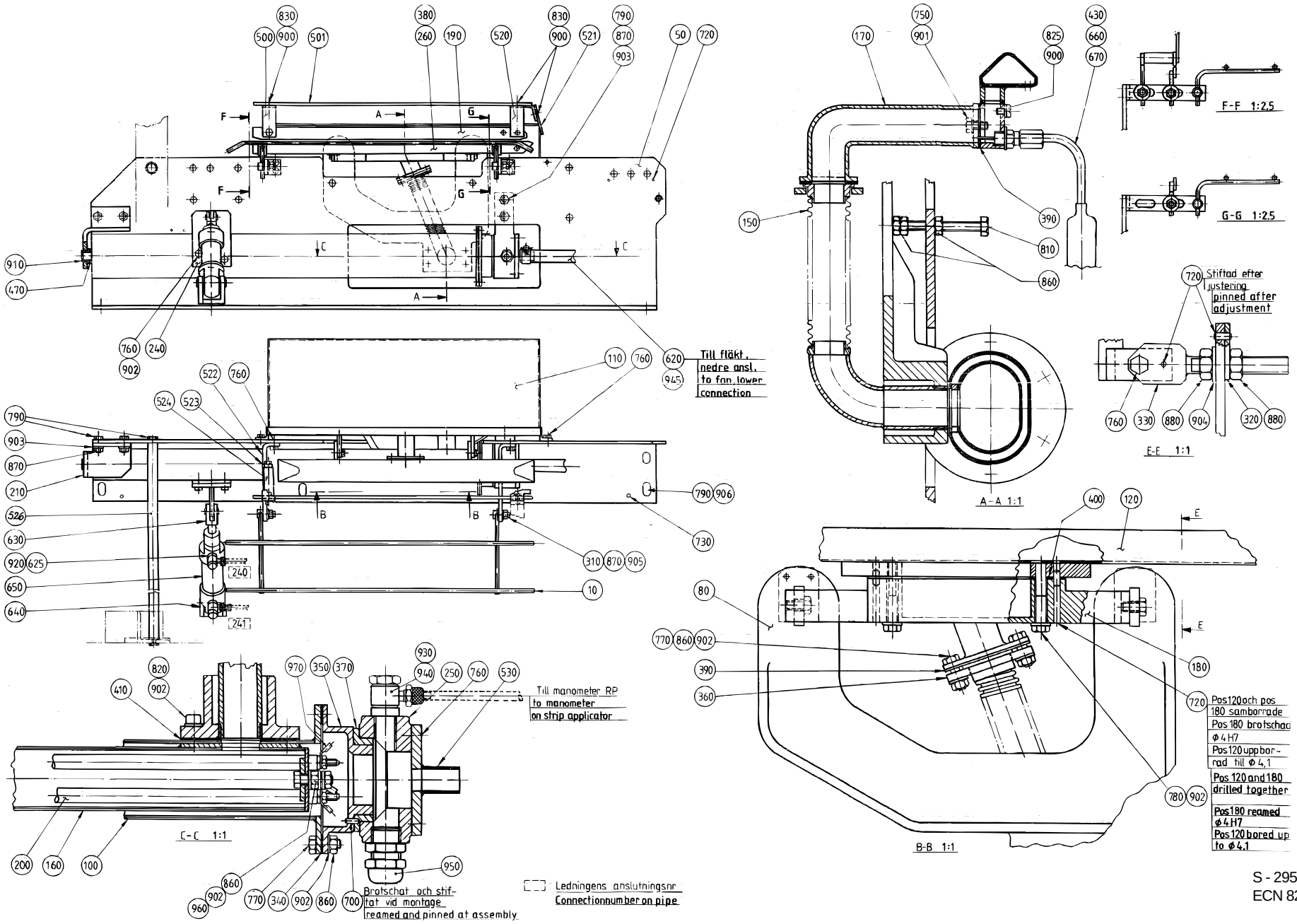

S - 295891-4
ECN 82225

Pos	Part No	SP	UN	Qty	Description	Page No
0125S						
010	456918-0000	C		1	PAPER SUPPORT	
526	256986-0007	-		1	STRUT	
0180B OR 0236B OR 0200B OR 0187B OR 0250B OR 0284B						
010	36316-0000	C		1	PAPER SUPPORT	
526	256986-0005	-		1	STRUT	
0200S OR 0160S						
010	456918-0000	C		1	PAPER SUPPORT	
526	256986-0006	-		1	STRUT	
0250S						
010	456918-0000	C		1	PAPER SUPPORT	
526	256986-0009	-		1	STRUT	
Common Parts						
050	751093-0000	-		1	MOUNTING SHEET	
080	32668-0000	-		1	ARM	
100	36749-0000	-		1	MANTLE	
110	267306-0000	-		1	TOUCH GUARD	
120	283361-0000	C		1	AIR NOZZLE	
150	32451-0000	D		1	AIR DUCT	
160	32453-0000	-		1	MANTLE	
170	32474-0000	-		1	ATTACHMENT	
180	245189-0001	-		1	ATTACHMENT	
190	246342-0000	-		1	PAPER SUPPORT	
200	251279-0000	C		1	COIL HEATER	
210	251490-0000	D		1	FASTENING BRACKET	
240	751087-0000	D		1	BRACKET	
250	283172-0000	-		1	BEARING HOUSING	
260	441348-0000	-		1	PAPER SUPPORT	
310	22559-0000	C		5	GRUB SCREW	
320	32213-0000	-		2	WASHER	
330	32215-0000	D		2	HOLDER	
340	531733-0000	C		1	GASKET	
350	32217-0000	-		1	BOTTOM SECTION	
360	32219-0000	-		1	WASHER	
370	32223-0000	C		1	BEARING	
380	32400-0000	-		2	HOLDER	
390	531734-0000	C		2	GASKET	
400	531735-0000	C		1	GASKET	
410	531736-0000	C		1	GASKET	
430	90326-0089	C		1	THERMOCOUPLE	
470	230107-0000	C		1	WASHER	
500	246343-0000	-		1	FASTENING BRACKET	
501	246344-0000	-		1	HEAT GUARD	
520	251501-0000	-		1	FASTENING BRACKET	
521	251502-0000	-		1	HEAT GUARD	
522	592586-0000	-		2	HOLDER	
523	251504-0000	-		1	HOLDER	
524	251505-0000	-		1	SPACER	
530	279672-0000	-		1	ATTACHMENT	
620	90166-0087	-	MM	3	HOSE 15/23 Reinf.PVC Transp.	
625	90235-0274	C		2	"THROTTLE CHECK VALVES,G1/8""""	
630	90239-0516	C		1	ROD END,CLEVIS WITH AXLE M10X1,25	
640	90239-0488	C		1	REAR,CLEVIS,MINI-ISO 32	
650	90239-0858	C		1	Double acting, Mini-ISO, CYL.32-50	
660	90326-0012	C		1	PROTECTIVE COVER	
670	90326-0020	C		1	PLUG,FEMALE YELLOW CR-AL	
700	311103-0232	-		1	Pin, Parallell, m6, 3x8	
720	311103-0267	-		1	Pin, Parallell, m6, 4x10	
730	311305-0308	-		2	SLOTTED PIRPC5X16FZB	
750	312105-0325	-		2	Screw M6S M5x10 A280	
760	312105-0366	-		16	Screw M6S M6x12 A280	
770	312105-0368	-		12	Screw M6S M6x16 A280	
780	312105-0378	-		2	Screw M6S M6x40 A280	
790	312105-0451	-		12	Screw M6S 8x20 A280	
810	312109-0381	-		2	Screw M6S M6x55H A480	
820	312115-0368	-		4	Screw MC6S M6x16 A280	
825	312125-0285	-		1	Screw Slot.Pan Hd. MCS 4x6 A480	
830	312125-0287	-		6	Screw Pan Head MCS M4X8 RFR	
860	312605-0316	-		14	Nut Hex. M6M M6 A280	
870	312605-0318	-		9	Nut Hex. M6M M8 A280	
880	312605-0320	-		4	Nut Hex. M6M M10 A280	
900	315105-0136	-		7	Washer, Plain, BRB, 4,3/8,H=0,8	
901	315105-0146	-		2	Washer, Plain, BRB, 5,3/10,H=1	
902	315105-0153	-		21	Washer, Plain, BRB, 6,4/12,H=1,5	
903	315105-0165	-		4	Washer, Plain, BRB, 8,4/16,H=1,5	
904	315105-0173	-		2	Washer, Plain, BRB, 10,5/22,H=2	
905	315115-0165	-		5	Washer, Plain, TBRB 8,4/16 H=3	
906	315125-0165	-		6	Washer, Plain Round,Chamf. 8,4/26, H=5	
910	321101-0173	C		1	FLANGE BUS 12F7x12	

(Cont'd)

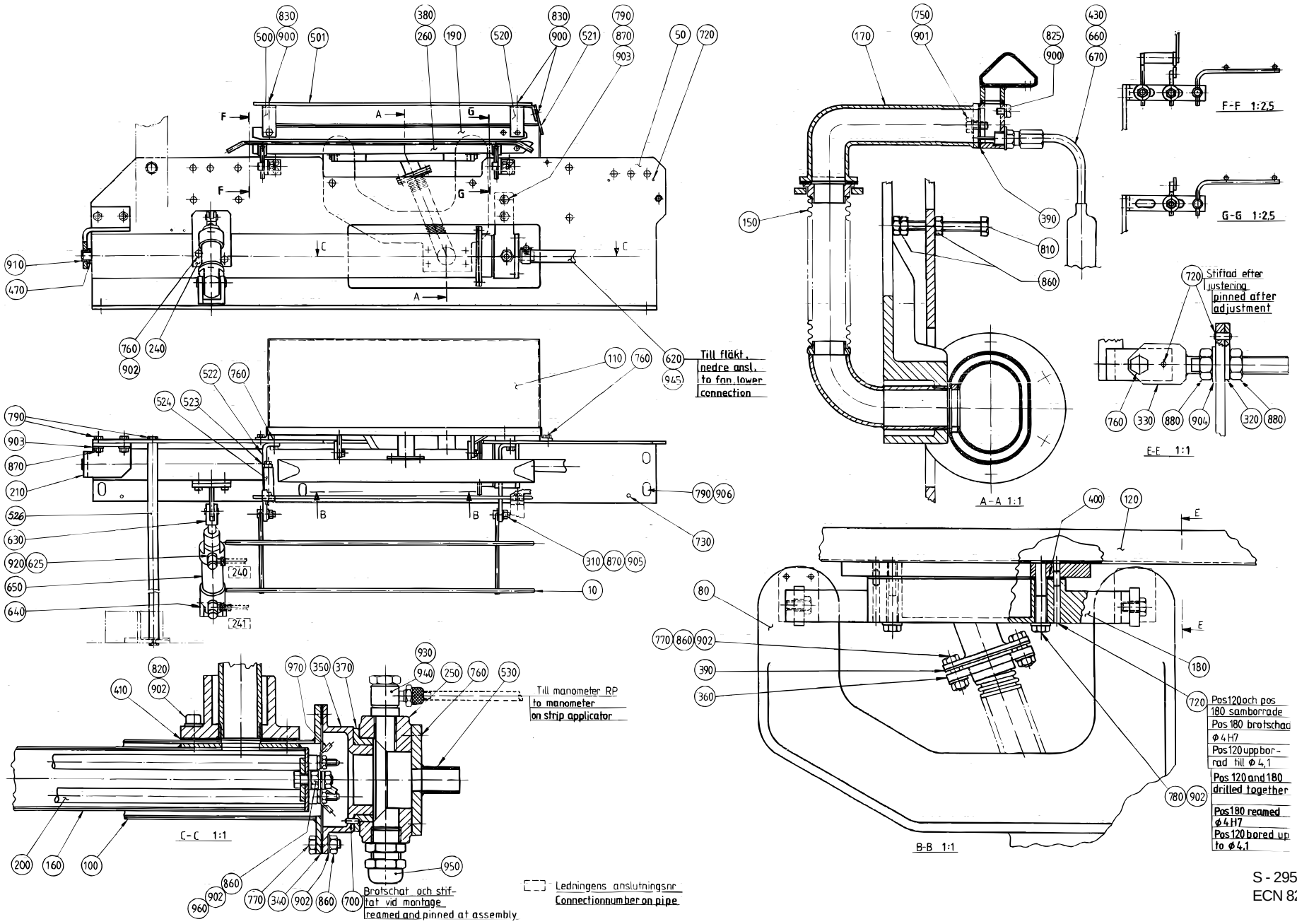

S - 295891-4
ECN 82225

Pos	Part No	SP	UN	Qty	Description	Page No
(Cont'd)						
920	342797-0121	-		2	Conn. Banjo, Ringpiece 6-1/8	
930	342797-0122	-		1	Conn. Banjo, Ringpiece 6-1/4	
940	342980-0304	-		1	BANJO-HOLLOW BOLT COUPL,EXT.THR.01-G1/4"	
945	342991-0103	-		2	HOSE CLIP,WORM DRIVE TYPE (19)-23	
950	352103-0106	-		1	CABLE GLAND ST 11	
960	353101-0134	-		1	CABLE SHOE	
970	353104-0130	-		2	CABLE SHOEYAV 025 M 4*	

Pos	Part No	SP	UN	Qty	Description	Page No

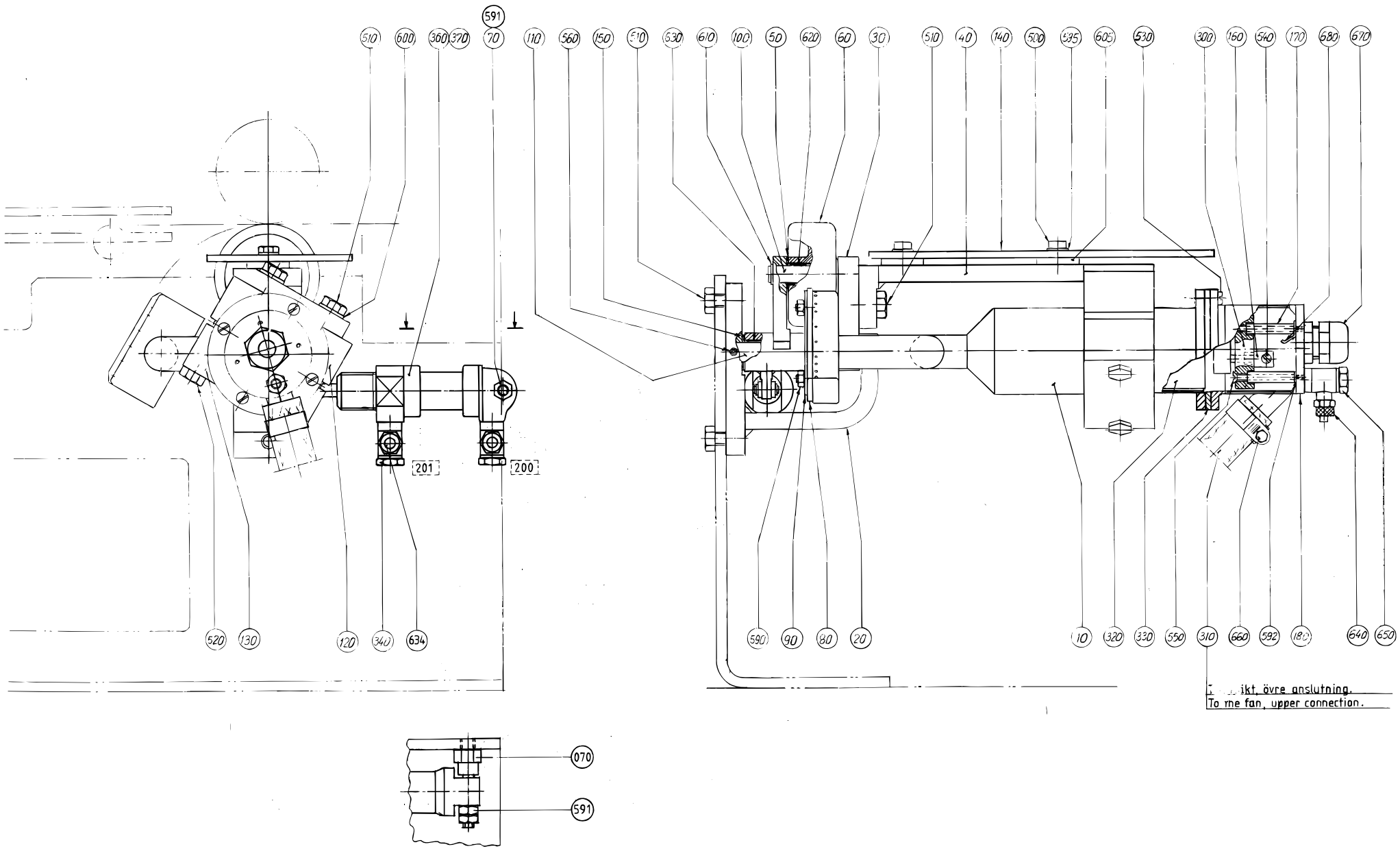
591
510
600
360
370
70
110
560
150
510
530
610
100
50
620
60
30
510
40
140
500
535
605
530
300
160
540
170
680
670
201
200
520
130
120
340
634
590
90
80
20
10
320
330
550
310
660
592
180
640
650
070
591
ikt, övre anslutning.
To the fan, upper connection.

Pos	Part No	SP	UN	Qty	Description	Page No
0125S OR 0100B OR 0200S						
140	456917-0000	-		1	HEAT GUARD	
0180B OR 0236B OR 0200B OR 0187B OR 0250B OR 0284B						
140	441354-0000	-		1	HEAT GUARD	
Common Parts						
010	266727-0000	D		1	AIR NOZZLE	
020	266728-0000	-		1	CANTILEVER	
030	456914-0000	-		1	ROCKER ARM	
040	266730-0000	-		1	HOLDER	
050	2033-0009	C		2	WASHER	
060	21903-0000	C		1	ROLL	
070	751143-0000	D		1	CYLINDER BRACKET	
080	255416-0000	C		1	PLATE	
090	255417-0000	C		1	WASHER	
100	266731-0000	D		1	SHAFT	
110	266732-0000	D		1	SHAFT	
120	266733-0000	-		1	MOUNTING BLOCK	
130	266734-0000	-		1	CAP	
150	266737-0000	C		2	WASHER	
160	266739-0000	-		3	CABLE GLAND	
170	266740-0003	-		3	SPACER	
180	456915-0000	-		1	COVER	
300	B 90125-0020	C		1	PLATE	
310	90166-0087	C	MM	3	HOSE 15/23 Reinf.PVC Transp.	
320	90206-0031	C		1	HEATING ELEMENT 700+1200W,220V	
330	90206-0322	C		1	GASKET	
340	90235-0274	-		2	''THROTTLE CHECK VALVES,G1/8"""	
360	90239-0846	C		1	Double acting, Mini-ISO, CYL.20-25	
370	90239-0088	C		1	BRACKET	
500	312105-0370	-		2	Screw M6S M6x20 A280	
510	312105-0451	-		6	Screw M6S 8x20 A280	
520	312105-0459	-		2	Screw M6S M8x40 A280	
530	312125-0291	-		4	Screw Pan Head MCS M4x12 RFR	
540	312125-0220	-		3	Screw Slot.Pan Hd. MCS 3x6 A480	
550	312145-0238	-		3	Screw Counters.Slot.Hd. MFS 3x40 SS	
560	312318-0291	C		1	Screw,Sock.Set Cuppoint MSK6SS M4x12 A4	
590	312605-0314	-		2	Nut Hex. M6M M5 A280	
591	312605-0318	-		2	Nut Hex. M6M M8 A280	
592	315105-0124	-		2	Washer, Plain, BRB, 3,2/6,H=0,5	
595	315105-0153	-		2	Washer, Plain, BRB, 6,4/12,H=1,5	
600	315105-0165	-		2	Washer, Plain, BRB, 8,4/16,H=1,5	
605	315121-0153	-		2	Washer, Plain, TBRSB 6,4/22 H=4	
610	315750-0107	C		2	Retaining Ring for shaft, 10x1 mm	
620	321120-0104	C		2	BEARING BUSHING WITHOUT FLANGE,10/12x10	
630	321120-0110	C		2	BEARING BUSHING WITHOUT FLANGE, 12X14X12	
634	342797-0121	-		2	Conn. Banjo, Ringpiece 6-1/8	
640	342980-0113	C		1	BANJO-CONNECTION,RING 6/4-G1/8"	
650	342980-0303	C		1	BANJO-HOLLOW BOLT COUPL,EXT.THR.01-G1/8"	
660	342991-0103	-		2	HOSE CLIP,WORM DRIVE TYPE (19)-23	
670	352103-0106	-		1	CABLE GLAND ST 11	
680	353104-0130	C		1	CABLE SHOEYAV 025 M 4*	

MOUNTING PLATE

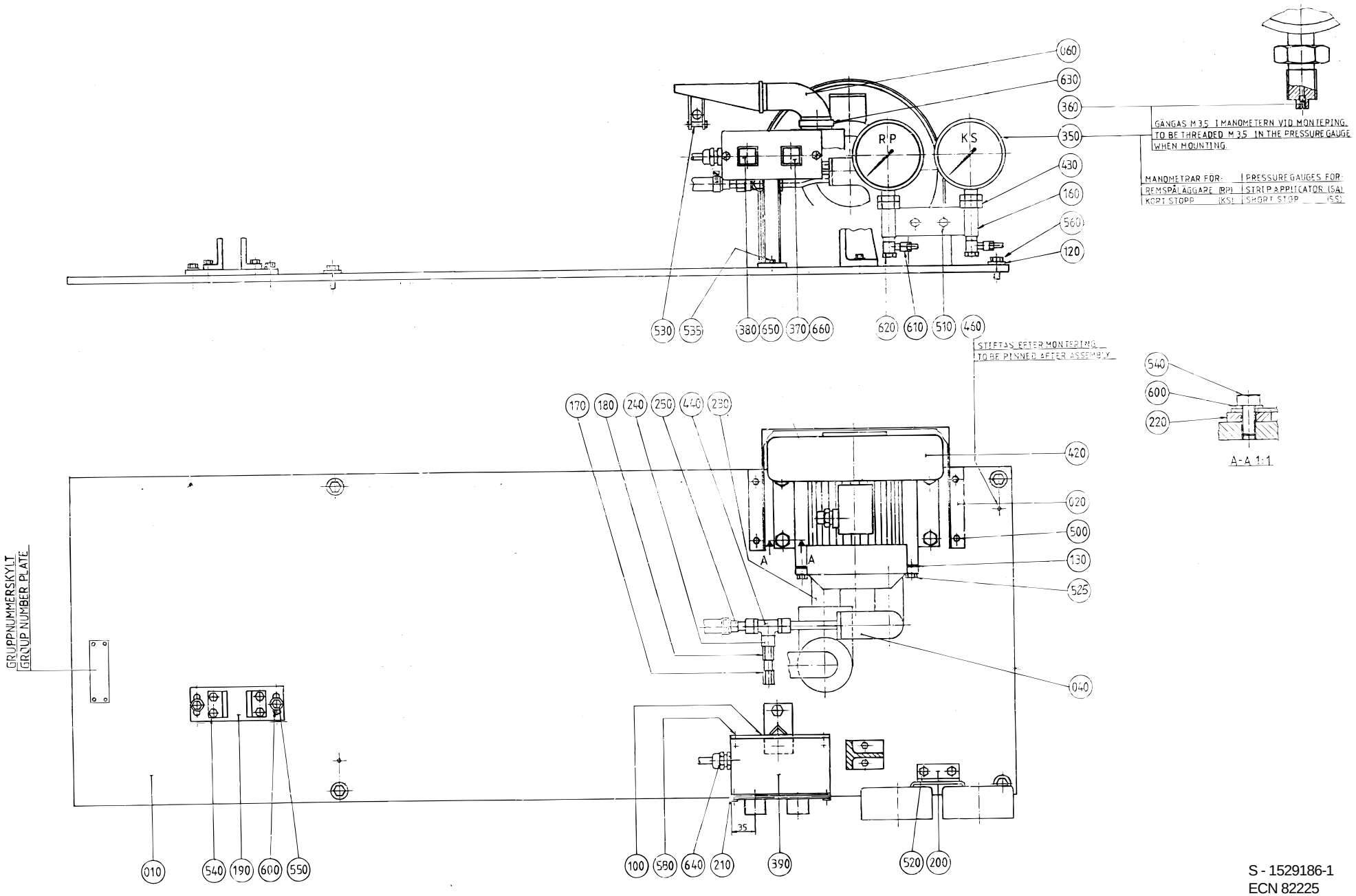

S - 1529186-1
ECN 82225

Pos	Part No	SP	UN	Qty	Description	Page No
SOURCE,TBA/9-100V OR SOURCE,TBA/9-110V						
010	1529064-0000	-		1	PLATE	
040	272186-0000	-		1	ATTACHMENT	
190	267311-0000	-		1	FASTENING PLATE	
460	311305-0308	-		2	SLOTTED PIRPC5X16FZB	
520	312105-0366	-		2	Screw M6S M6x12 A280	
540	312105-0449	-		8	Screw M6S M8x16 A280	
SOURCE,TBA/9-120V						
010	1529214-0000	-		1	PLATE	
040	751465-0000	-		1	ATTACHMENT	
190	751083-0000	-		1	FASTENING PLATE	
520	312105-0366	-		4	Screw M6S M6x12 A280	
540	312105-0449	-		4	Screw M6S M8x16 A280	
Common Parts						
020	272184-0000	-		1	COVER	
060	272622-0000	-		1	DRINKING STRAW	
100	456973-0000	-		1	BRACKET	
120	28036-0000	-		4	WASHER	
130	531732-0000	C		2	GASKET	
160	33577-0000	-		1	CANTILEVER	
170	209145-0000	-		2	THROTTLE SCREW	
180	209146-0000	-		2	BARRIER NUT	
200	272188-0000	-		1	BRACKET	
210	272189-0000	-		1	LID	
220	272190-0000	-		2	LACE	
230	272632-0000	C		1	SILENCER	
240	279589-0000	-		2	NUT	
250	279590-0000	-		2	REDUCTION	
350	90043-0034	C		2	PRESSURE GAUGE	
360	90043-0302	-		2	SCREW	
370	90064-0085	-		1	PUSH BUTTON RED	
380	90064-0084	-		1	PUSH BUTTON YELLOW	
390	90066-0020	-		1	PUSCH BUTTON BOX	
420	90264-0078	D		1	FAN	
430	90330-0038	-		2	Nut, Hexagon, G3/8	
440	90030-0058	-		2	Conn. T-Pipe T-12	
500	312105-0325	-		4	Screw M6S M5x10 A280	
510	312105-0364	-		2	Screw M6S M6x10 A280	
525	312105-0370	-		4	Screw M6S M6x20 A280	
530	312105-0372	-		1	Screw M6S M6x25 A280	
535	312105-0448	-		2	Screw M6S M8x14 A480	
550	312105-0451	-		2	Screw M6S 8x20 A280	
560	312105-0453	-		4	Screw M6S M8x25 A280	
580	312125-0325	-		4	Screw Slot.Pan Hd. MCS 5x10 A480	
600	315105-0165	-		6	Washer, Plain, BRB, 8,4/16,H=1,5	
610	342797-0122	C		2	Conn. Banjo, Ringpiece 6-1/4	
620	342980-0304	C		2	BANJO-HOLLOW BOLT COUPL,EXT.THR.01-G1/4"	
630	342991-0108	-		1	HOSE CLIP 38-50MMRFR	
640	352103-0110	-		1	CABLE GLAND STR 16	
650	359301-0100	-		1	SIGN "SPLICING"	
660	359301-0110	-		1	SIGN "SHORT STOP"	

PAPER GUARD

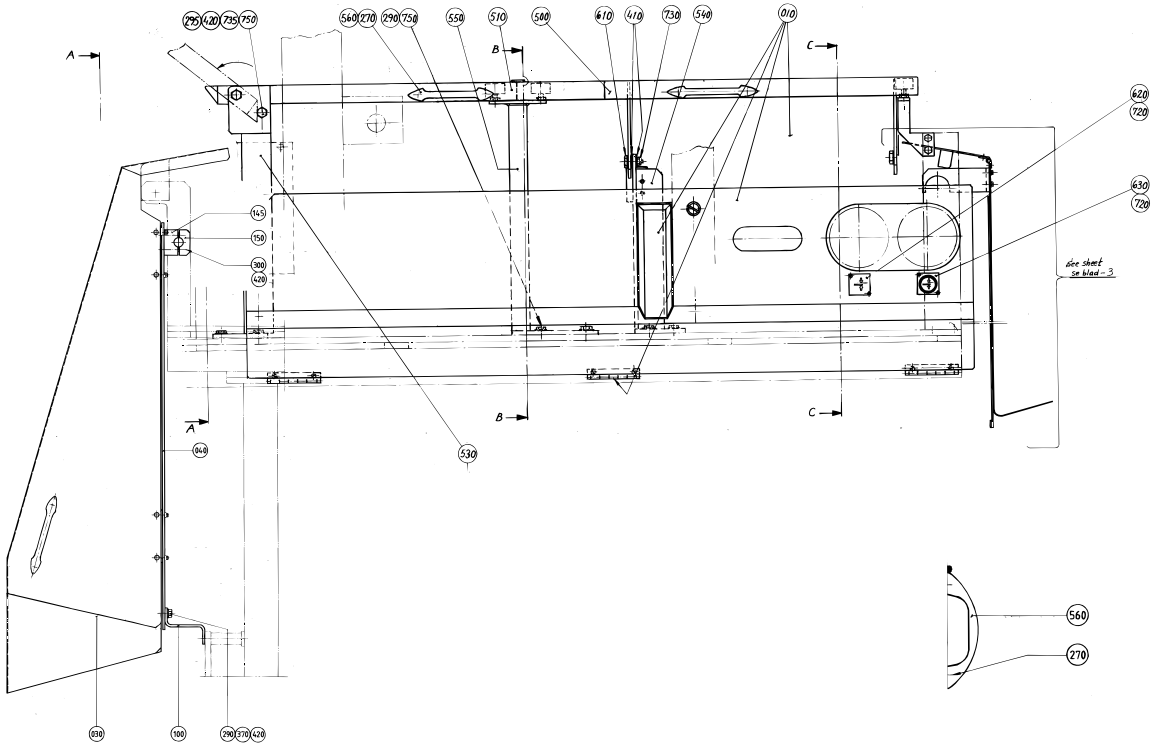

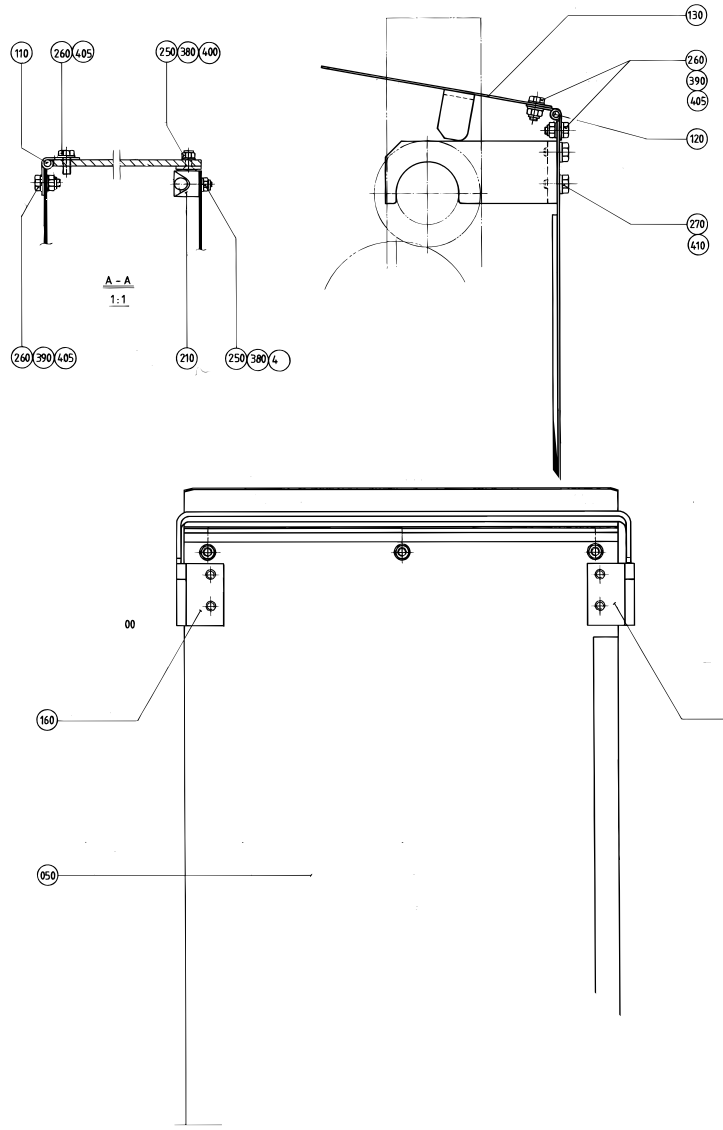

S - 1529025-1, 2, 3
ECN 82225

Common Parts

Pos	Part No	SP	UN	Qty	Description	Page No
005	A1529065-0100	-		1	CONNECTION BOX	
010	1529028-0000	-		1	PROTECTION PLATE	
030	1529280-0000	-		1	COVER	
040	490949-0000	-		1	SHEET	
050	490955-0000	-		1	BACK PLATE	
090	1529246-0000	-		1	FASTENING PLATE	
100	491552-0000	-		1	MOUNTING SHEET	
110	490950-0000	-		1	HINGE	
120	490956-0000	-		1	HINGE	
130	490957-0000	-		1	LID	
145	456964-0000	-		2	CLAMP HOLDER	
150	456965-0000	-		2	CLAMP HALF	
160	490958-0000	-		1	BRACKET	
170	490965-0000	-		1	BRACKET	
210	90237-0071	-		2	MAGNETLOCK	
220	90287-0062	-		2	SCREW M6	
250	312155-0291	-		8	Screw Hex.Sock.Count.MF6S M4x12 A480	
260	312105-0327	-		16	Screw M6S M5x12 A280	
270	312105-0366	-		12	Screw M6S M6x12 A280	
280	312105-0368	-		6	Screw M6S M6x16 A280	
290	312105-0451	-		1	Screw M6S 8x20 A280	
295	312105-0453	-		3	Screw M6S M8x25 A280	
300	312105-0459	-		4	Screw M6S M8x40 A280	
320	312125-0323	-		6	Screw Pan Head MCS M5X8 RFR	
370	312605-0318	-		5	Nut Hex. M6M M8 A280	
380	312812-0312	-		8	Nut Hex. Ny-Lock M4 A480	
390	312812-0314	-		11	Nut Hex. Ny-Lock M5 A480	
400	315105-0136	-		8	Washer, Plain, BRB, 4,3/8,H=0,8	
405	315105-0146	-		27	Washer, Plain, BRB, 5,3/10,H=1	
410	315105-0153	-		1	Washer, Plain, BRB, 6,4/12,H=1,5	
420	315105-0165	-		12	Washer, Plain, BRB, 8,4/16,H=1,5	
500	1529026-0000	-		1	LID	
510	1529027-0000	-		1	LID	
520	1529244-0000	-		1	LEG	
530	469842-0000	-		1	LEG	
540	469843-0000	-		1	LEG	
550	1529029-0000	-		1	SUPPORT	
560	7309-0000	-		3	HANDLE	
570	252972-0000	-		1	SHOULDER SCREW	
580	272636-0000	-		1	BRACKET	
590	441027-0000	-		1	BRACKET	
610	456967-0000	-		1	SHOULDER SCREW	
620	464176-0000	-		1	SIGN	
630	464177-0000	-		1	SIGN	
650	469846-0000	-		1	STOP LUG	
660	469847-0000	-		1	SHAFT	
700	90347-0004	-		3	VIBRATION DAMPER D=30 Th=M8 H=17 H2=21mm	
710	312318-0362	-		1	Screw,Sock.Set Cuppoint MSK6SS M6x8 A4	
720	312502-0120	-		4	Drive Screw Round Head KDS 0x5	
730	312812-0316	-		1	Nut Hex. Ny-Lock M6 A480	
735	312812-0318	-		1	Nut Hex. Ny-Lock M8 A480	
740	315105-0186	-		1	Washer, Plain, BRB, 17/30,H=3	
750	315115-0165	-		9	Washer, Plain, TBRB 8,4/16 H=3	
760	315742-0112	-		1	Collar, 16/32, H=12	

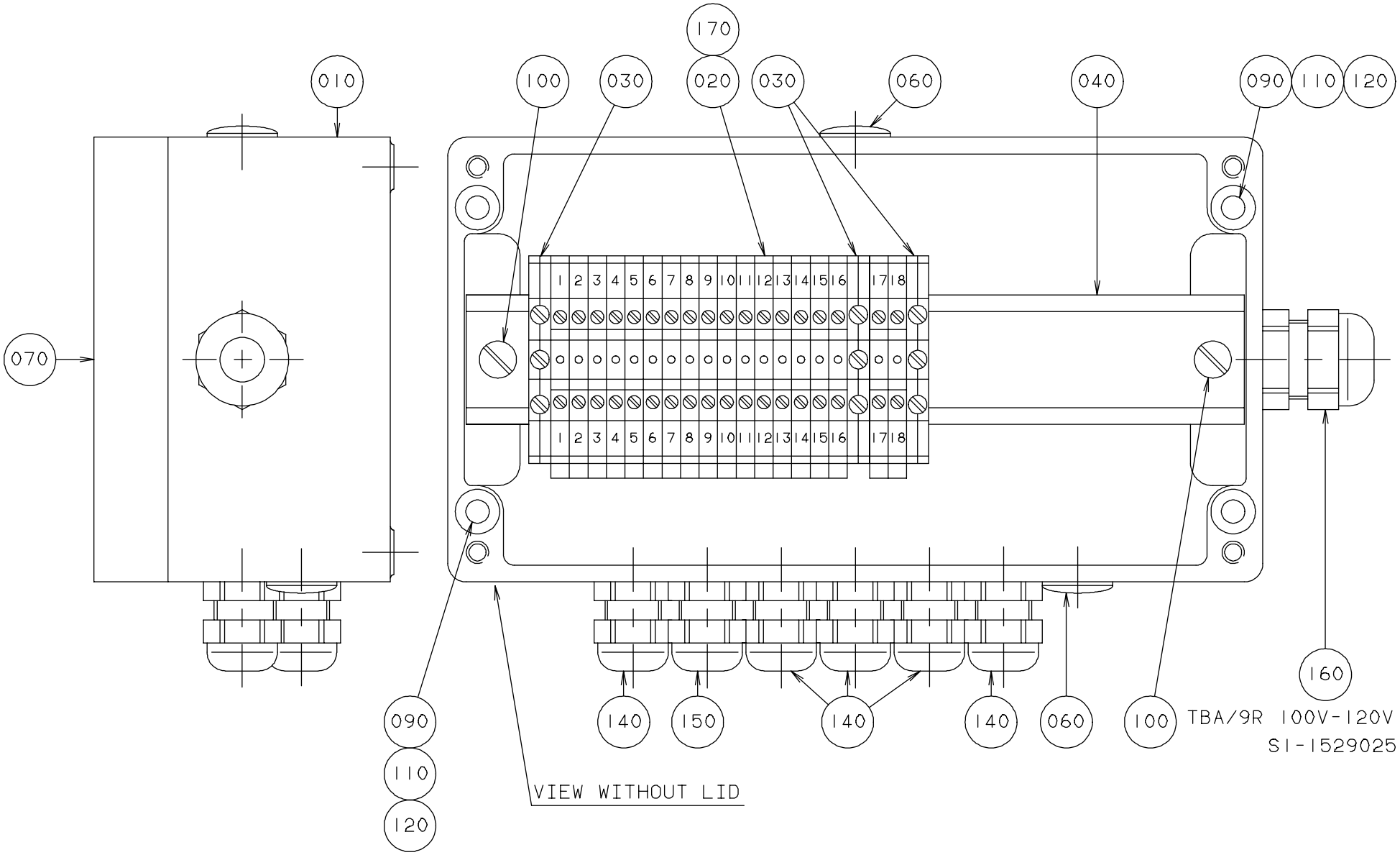
170
010
100
030
020
030
060
040
090
110
120
070
1 2 3 4 5 6 7 8 9 10 11 12 13 14 15 16 17 18
1 2 3 4 5 6 7 8 9 10 11 12 13 14 15 16 17 18
090
110
120
VIEW WITHOUT LID
140
150
140
140
060
100
160
TBA/9R 100V-120V
SI-1529025

Pos	Part No	SP	UN	Qty	Description	Page No
Common Parts						
010	1529087-0000	-		1	CONNECTION BOX	
020	353021-0212	-		18	FEED THROUGH TERMINAL WDU 2,5 Beige	
030	353024-0205	-		3	EARTH TERMINAL WPE 4	
040	353042-0004	-	MM	21	RAIL TS 35/7,5	
060	90002-0013	-		2	BLANK-OFF PLUG 15,2	
070	90194-0016	-		1	SIGN "FLASH SIGN" 50X50MM	
090	312125-0374	-		2	Screw Pan Head MCS M6X30 RFR	
100	312132-0323	-		2	Screw Slot. Pan Head MSCS M5X8	
110	312605-0316	-		2	Nut Hex. M6M M6 A280	
120	315105-0153	-		4	Washer, Plain, BRB, 6,4/12,H=1,5	
140	352103-0100	-		5	CABLE GLAND STR 9;PR15,2	
150	352103-0101	-		1	CABLE GLAND ST 9;PR15,2/PG9	
160	352103-0111	-		1	CABLE GLAND ST 16	
170	359011-0807	-		2	MARKING PLATES 5-FW 1-50	

Pos	Part No	SP	UN	Qty	Description	Page No

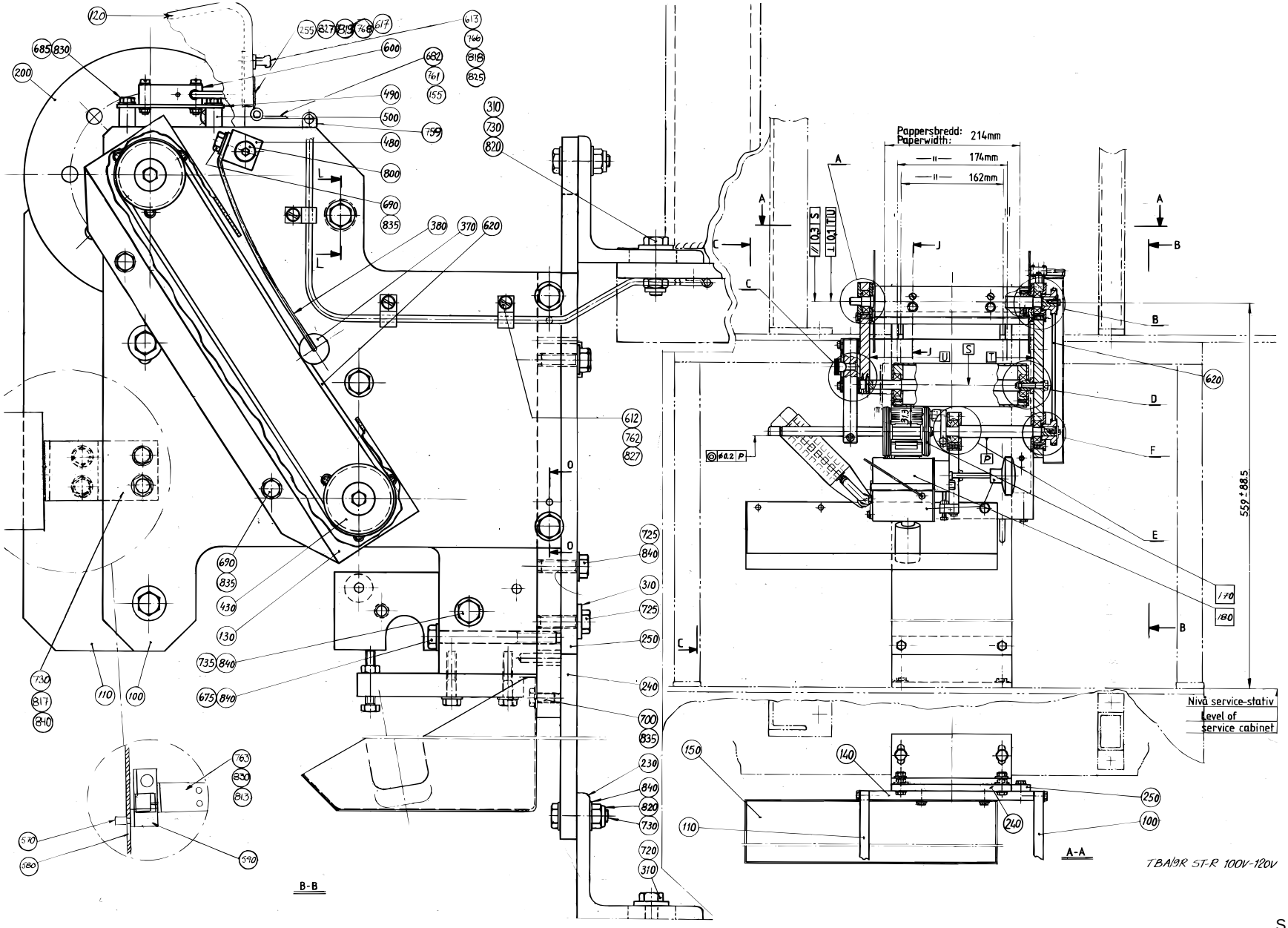

S - 1529129-1
ECN 82225

Pos	Part No	SP	UN	Qty	Description	Page No
0200B						
010	256391-0001	D		1	BENDING ROLLER	
020	256392-0001	D		1	SHAFT	
030	456767-0000	D		2	CREASE BAR	
040	441556-0004	D		2	SPACER	
050	256399-0001	D		1	SHAFT	
060	256400-0000	D		1	SHAFT	
070	90166-0059	C	MM	28	HOSE PVC 12/16mm TRANSP.	
075	90166-0059	C	MM	28	HOSE PVC 12/16mm TRANSP.	
0200S						
010	456328-0000	D		1	BENDING ROLLER	
020	256392-0003	D		1	SHAFT	
030	441554-0000	D		2	CREASE BAR	
040	441556-0009	D		2	SPACER	
050	456811-0000	D		1	SHAFT	
060	456334-0000	D		1	SHAFT	
070-02	90166-0059	C	MM	41	HOSE PVC 12/16mm TRANSP.	
075-02	90166-0059	C	MM	41	HOSE PVC 12/16mm TRANSP.	
0250B						
010	256391-0001	D		1	BENDING ROLLER	
020	256392-0001	D		1	SHAFT	
030	456767-0000	D		2	CREASE BAR	
040	441556-0002	D		2	SPACER	
050	256399-0001	D		1	SHAFT	
060	256400-0000	D		1	SHAFT	
070	90166-0059	C	MM	28	HOSE PVC 12/16mm TRANSP.	
075	90166-0059	C	MM	28	HOSE PVC 12/16mm TRANSP.	
Common Parts						
100	1529060-0000	-		1	END SECTION	
110	1529059-0000	-		1	END SECTION	
120	1529176-0000	-		1	COVER	
130	441572-0000	-		1	COVER	
140	491722-0000	-		1	PLATE	
150	491723-0000	-		1	SPLASH PLATE	
155	572252-0000	-		1	BRACKET	
160	752512-0000	D		1	BEARING CONSOLE	
165	1529061-0000	-		1	BRACKET	
170	A 293685-0200	-		2	PRINTING WHEEL SS	
180	A 434774-0300	-		1	INK UNIT	
200	441752-0000	-		1	GABLE PLATE	
230	456331-0000	-		2	ANGLE BRACKET	
240	491724-0000	-		1	PLATE	
250	456333-0000	-		1	RAIL	
255	572253-0000	-		1	SHEET	
260	752250-0000	-		1	BEARING COVER	
270	752251-0000	-		1	BEARING COVER	
280	752252-0000	-		2	BEARING COVER	
300	B 456813-0000	D		1	SHAFT	
310	28036-0000	-		15	WASHER	
320	B 32919-0000	D		1	BEARING BLOCK	
330	32923-0000	C		7	SPRING	
340	32925-0000	D		1	CARRIER	
350	544392-0000	D		1	ROLL	
360	32927-0000	D		1	SHAFT	
370	33182-0000	C		1	ROLL	
380	33183-0000	C		1	SPRING	
390	106758-0000	-		2	WASHER	
400	228652-0000	D		1	STOPPER DOWEL	
410	256248-0001	D		2	LID	
420	256398-0000	D		4	LID	
430	256403-0000	D		2	TOOTHED WHEEL	
440	256406-0000	-		1	GABLE PLATE	
450	256408-0001	-		1	SPACER	
460	256409-0000	-		5	WASHER	
470	257141-0000	-		2	RETAINING RING	
480	271441-0000	-		1	BRACKET	
490	441753-0000	-		1	FASTENING PLATE	
500	441754-0000	-		2	SPACER	
510	456335-0000	-		1	BRACKET	
520	456337-0000	-		1	CANTILEVER	
530	456776-0000	D		2	MANTLE	
540	456777-0000	D		4	SLEEVE	
550	456778-0000	D		2	SHAFT	
560	456817-0001	C		8	SHIM	
570	572254-0000	-		1	HANDLE	
580	572255-0000	-		2	SPACER	
590	90044-0139	-		1	Key saf.sw. AZ16-02 ZVR K-2254	
600	90044-0194	C		1	Prox.sw. IN5329/IN3002-BPKG	
605	90090-0001	C		1	STEEL-BALL SKF RB-15,081/111	
610	90141-0020	D		4	Retain. Ring, 42	
612	90165-0024	-		6	PIPE-CLIPS,FOR SINGLE PIPE,ONE SIDE 5	
613	90184-0001	-		1	Snap-In Ball Lock, 49x9 mm	

(Cont'd)

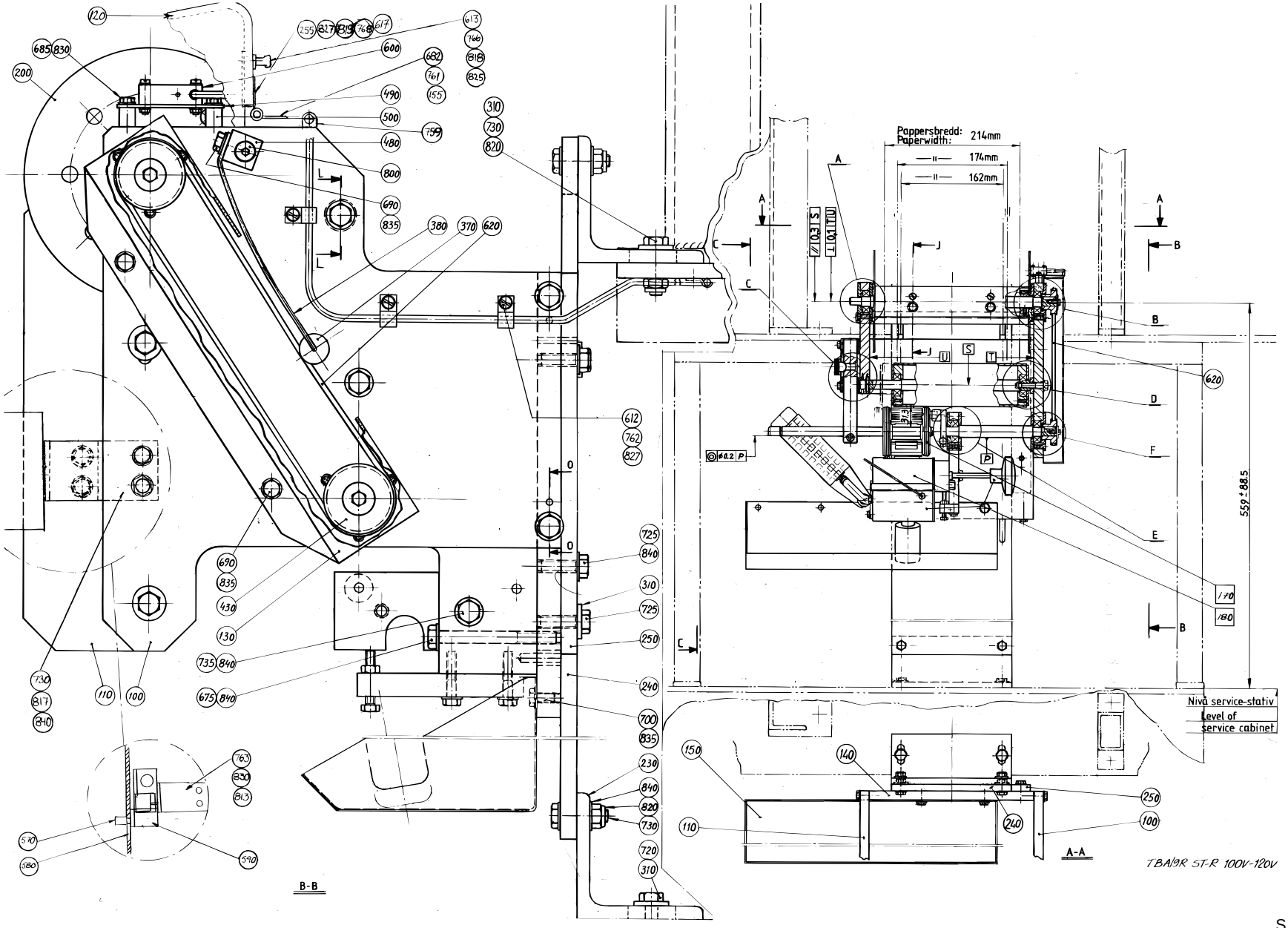

S - 1529129-1
ECN 82225

Pos	Part No	SP	UN	Qty	Description	Page No
(Cont'd)						
615	90214-0098	C		1	BALL BEARING,STAINLESS	
617	90248-0026	-		2	HINGE	
620	90417-0081	C		1	Timing belt T5x610x6	
650	311103-0240	-		1	Pin, Parallell, m6, 3x25	
655	311103-0312	-		6	Pin, Parallell, m6, 5x25	
660	311103-0314	-		1	Pin, Parallell, m6, 5x30	
665	311103-0318	-		2	Pin, Parallell, m6, 5x40	
670	311103-0357	-		1	Pin, Parallell, m6, 6x30	
675	312101-0466	-		1	Screw M6S M8x75 FZB	
680	312105-0327	-		2	Screw M6S M5x12 A280	
682	312105-0329	-		2	Screw M6S M5x16 A280	
685	312105-0332	-		2	Screw M6S M5x22 A280	
690	312105-0364	-		3	Screw M6S M6x10 A280	
700	312105-0366	-		8	Screw M6S M6x12 A280	
705	312105-0368	-		2	Screw M6S M6x16 A280	
710	312105-0374	-		2	Screw M6S M6x30 A280	
715	312105-0378	-		2	Screw M6S M6x40 A280	
720	312105-0451	-		4	Screw M6S 8x20 A280	
725	312105-0453	-		5	Screw M6S M8x25 A280	
730	312105-0455	-		16	Screw M6S M8x30 A280	
735	312105-0457	-		2	Screw M6S M8x35 A280	
740	312105-0459	-		5	Screw M6S M8x40 A280	
750	312109-0376	-		1	Screw M6S M6x35 A280	
755	312115-0370	-		1	Screw MC6S M6x20 A280	
757	312115-0372	-		1	Screw MC6S M6x25 A280	
759	312125-0224	-		2	Screw Slot.Pan Hd. MCS 3x10 A480	
760	312125-0230	-		2	Screw Pan Head MCS M3X20 RFR	
762	312125-0289	-		6	Screw Slot.Pan Hd. MCS 4x10 A480	
763	312125-0329	-		2	Screw Pan Head MCS M5X16 RFR	
765	312125-0366	-		4	Screw Pan Head MCS M6X12 RFR	
766	312145-0228	-		2	Screw Counters.Slot.Hd. MFS 3x16 SS	
767	312145-0285	-		6	Screw Counters.Slot.Hd. MFS 4x6 SS	
768	312145-0293	-		6	Screw Counters.Slot.Hd. MFS 4x16 SS	
770	312155-0291	-		6	Screw Hex.Sock.Count.MF6S M4x12 A480	
775	312155-0327	-		6	Screw Hex.Sock.Count.MF6S M5x12 A280	
777	312155-0323	-		24	Screw Hex.Sock.Count.MF6S M5x8 A280	
800	312155-0376	-		1	Screw Hex.Sock.Count.MF6S M6x35 A280	
805	312318-0362	-		3	Screw,Sock.Set Cuppoint MSK6SS M6x8 A4	
810	312605-0310	-		2	Nut Hex. M6M M3 A280	
813	312605-0314	-		2	Nut Hex. M6M M5 A280	
815	312605-0316	-		1	Nut Hex. M6M M6 A280	
817	312605-0318	-		4	Nut Hex. M6M M8 A280	
818	312812-0310	-		2	Nut Hex. Ny-Lock M3 A480	
819	312812-0312	-		6	Nut Hex. Ny-Lock M4 A480	
820	312812-0318	-		6	Nut Hex. Ny-Lock M8 A480	
825	315105-0124	-		6	Washer, Plain, BRB, 3,2/6,H=0,5	
827	315105-0136	-		12	Washer, Plain, BRB, 4,3/8,H=0,8	
830	315105-0146	-		6	Washer, Plain, BRB, 5,3/10,H=1	
835	315105-0153	-		15	Washer, Plain, BRB, 6,4/12,H=1,5	
840	315105-0165	-		24	Washer, Plain, BRB, 8,4/16,H=1,5	
845	315701-0170	-		2	Parallel key with round end 4x4x20 mm	
850	321120-0147	-		2	BEARING BUSHING WITHOUT FLANGE 22/25X25	

PRINTING WHEEL SS

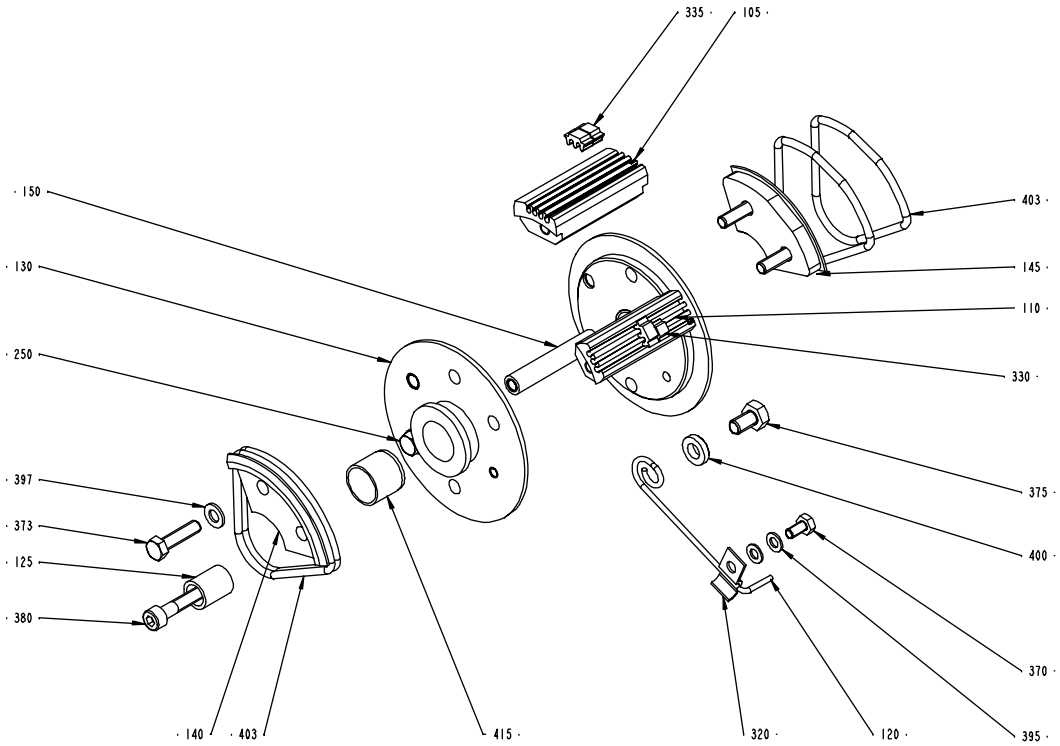

Pos	Part No	SP	UN	Qty	Description	Page No
Common Parts						
120	32691-0000	C		1	LOCKING SPRING	
125	33011-0000	C		1	SLEEVE	
320	90165-0010	-		1	CLIP	
330	90413-0033	C		1	CODE INSERT SET 0-9	
330	90413-0043	C		1	CODE INSERT SET	
335	90413-0047	C		1	CODE INSERT SET	
335	90413-0044	C		1	CODE INSERT SET	
370	312101-0287	-		1	Screw M6S M4x8 FZB	
375	312101-0364	-		1	Screw M6S M6x10 FZB	
380	312111-0335	-		1	Screw Hex.Sock.Hd.MC6S-TT 5x30 88 FZB	
395	315101-0136	-		1	Washer, Plain, BRB, 4,3/8 H=0,8	
400	315111-0153	-		1	Washer, Plain, TBRB 6,4/12 H=3	
415	321120-0122	C		2	BEARING BUSHING WITHOUT FLANGE,15/17X15	

Pos	Part No	SP	UN	Qty	Description	Page No

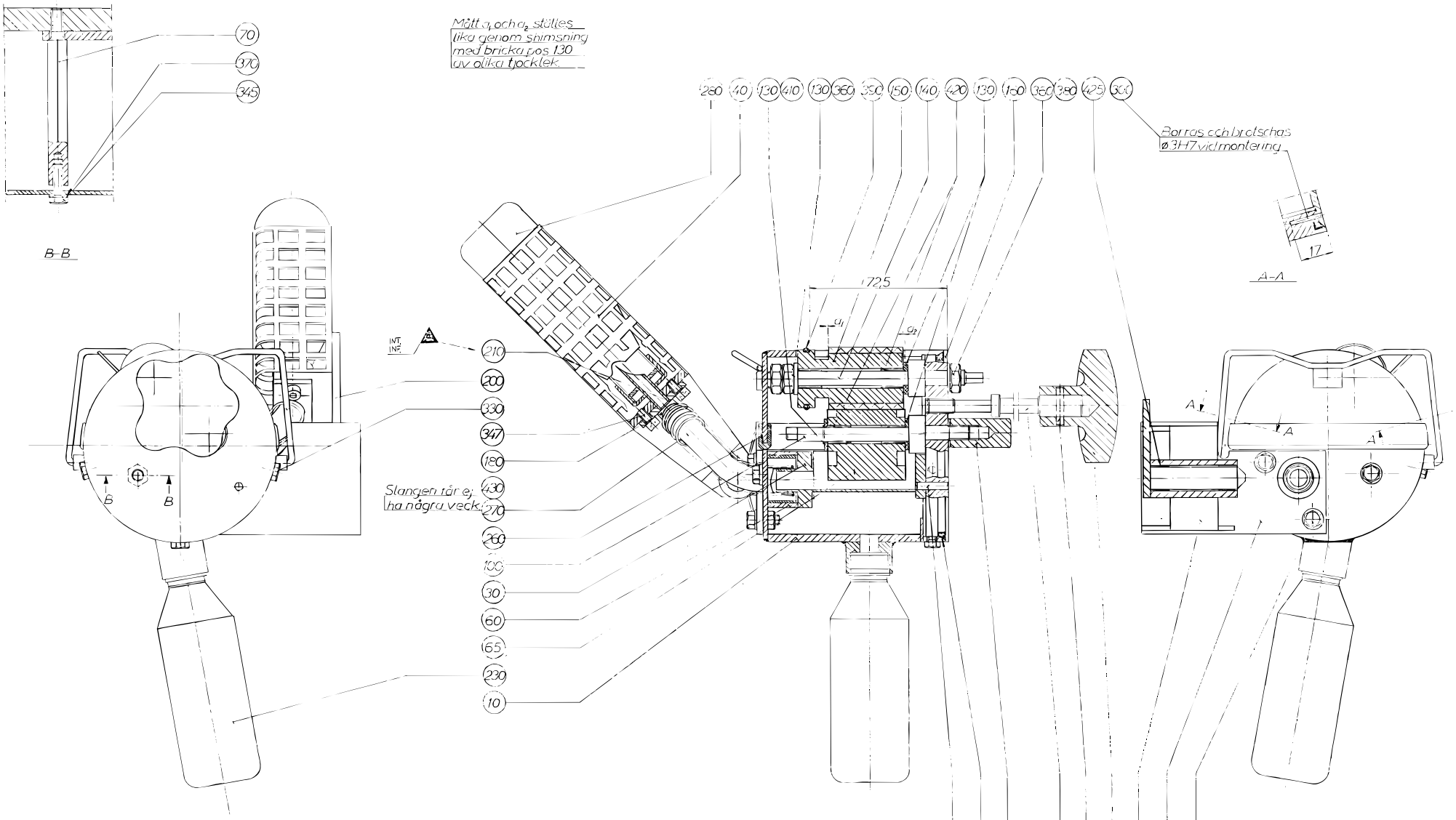
Mått a1 och a2 ställes lika genom shimsning med bricka pos 130 av olika tjocklek.
Borras och brotschas ø3H7 vid montering
17
A-A
B-B
72,5
a1
a2
INT. INF.
Slangen får ej ha några veck.
Listpos 260 limmas med ett mjukt två komp. lim som är bestmot den etanol och glykoleter tex gun mi- lösn. 6-5522 och primer 1-8427 från Trelleborg AB
70
370
345
210
200
330
347
180
430
270
260
100
30
60
65
230
10
280
40
130
410
130
360
350
150
140
420
130
160
360
380
425
300
320
400
120
380
110
310
250
80
190
340
350
370

Pos	Part No	SP	UN	Qty	Description	Page No
TB/8 OR TB/9						
230	90050-0008	C		1	BOTTLE	
TBA/3 OR TBA/19 OR TBA/9 OR TBA/9 R						
230	90050-0012	C		1	BOTTLE	
Common Parts						
010	297989-0000	-		1	COVER	
030	297210-0000	-		1	INK WELL	
040	476356-0000	D		1	HOLDER FOR INK BOTTLE	
060	445542-0000	C		1	MANTEL RUBBER	
065	450355-0000	C		1	INK ROLLER	
070	33010-0000	-		1	SCREW	
080	35547-0000	C		1	SPRING	
100	292044-0000	C		1	SHAFT	
110	293667-0000	C		1	DOWEL	
120	436927-0000	D		1	NUT	
130	293669-0004	C		2	WASHER	
130	293669-0003	C		2	WASHER	
130	293669-0002	C		2	WASHER	
130	293669-0001	C		4	WASHER	
140	293670-0000	C		1	SHAFT	
150	B 543135-0000	C		1	INK TRANSFER ROLLER	
160	297213-0000	C		1	END SECTION	
180	476355-0000	C		1	CANNULAR TUBE	
190	456772-0000	D		1	PIVOT BRACKET	
200	434747-0000	C		1	BOW CLAMP	
210	537308-0000	-		1	SPRING	
250	90051-0077	C		1	HANDLE	
260	90143-0029	C	MM	295	STRIP	
270	90166-0138	C	MM	1	HOSE	
280	90299-0072	C		1	INK	
300	311103-0236	-		2	Pin, Parallell, m6, 3x16	
310	311103-0238	-		1	Pin, Parallell, m6, 3x20	
320	311103-0270	-		1	Pin, Parallell, m6, 4x16	
330	312105-0291	-		3	Screw M6S M4x12 A280	
340	312105-0327	-		2	Screw M6S M5x12 A280	
345	312105-0329	-		1	Screw M6S M5x16 A280	
347	312115-0287	-		2	Screw MC6S M4x8 A280	
350	312605-0314	-		2	Nut Hex. M6M M5 A280	
360	312605-0318	-		3	Nut Hex. M6M M8 A280	
370	315105-0146	-		3	Washer, Plain, BRB, 5,3/10,H=1	
380	315105-0165	-		2	Washer, Plain, BRB, 8,4/16,H=1,5	
390	315202-0218	C		1	O-Ring 26,2x3 mm	
400	315202-0309	C		1	O-Ring 89,5x3 mm	
410	315750-0105	C		1	Retaining Ring for shaft, 8x0,8 mm	
420	321120-0100	C		4	BEARING BUSHING WITHOUT FLANGE,8/10x12	
425	321120-0109	C		2	BEARING BUSHING WITHOUT FLANGE,12/14X10	
430	352113-0101	C		1	CLIP STRIP BLACK 92x2,5mm	

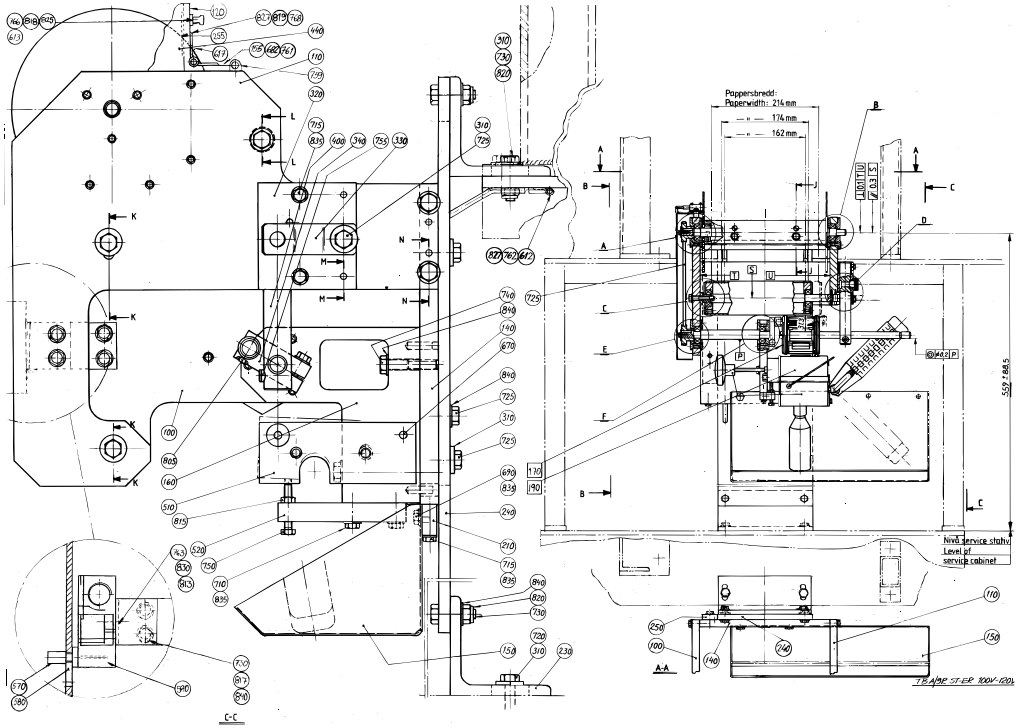

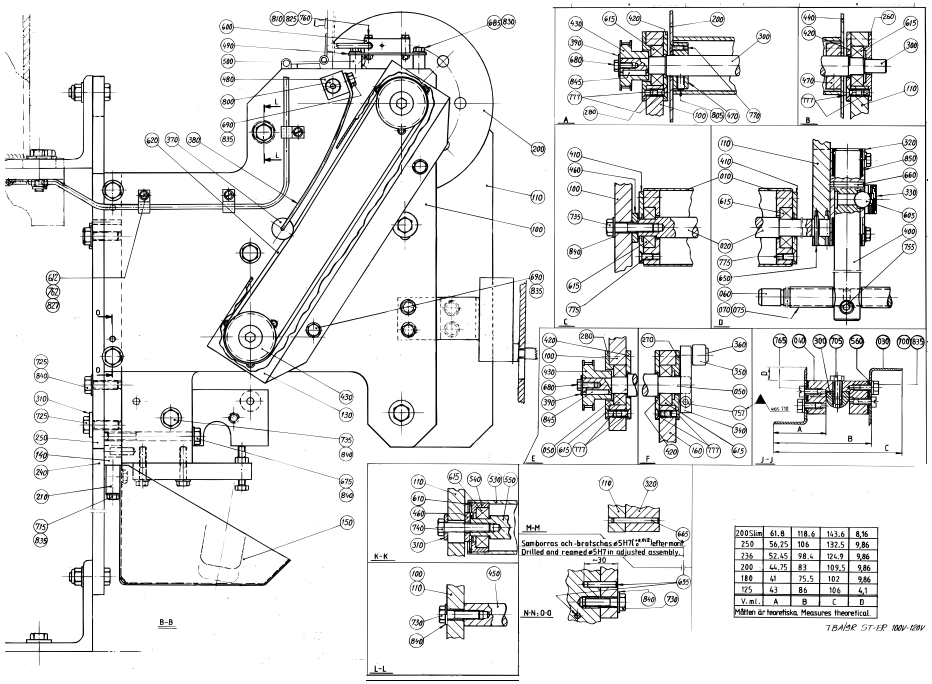

200 Slim	61.8	118.6	143.6	8.16
250	56.25	106	132.5	9.86
236	52.45	98.4	124.9	9.86
200	44.75	83	109.5	9.86
180	41	75.5	102	9.86
125	43	86	106	4.1
V.mtl	A	B	C	D

Måtten är teoretiska. Measures theoretical

Pos	Part No	SP	UN	Qty	Description	Page No
0200B						
010	256391-0001	D		1	BENDING ROLLER	
020	256392-0001	D		1	SHAFT	
030	456767-0000	D		2	CREASE BAR	
040	441556-0004	D		2	SPACER	
050	256399-0001	D		1	SHAFT	
060	256400-0000	D		1	SHAFT	
070	90166-0059	C	MM	28	HOSE PVC 12/16mm TRANSP.	
075	90166-0059	C	MM	28	HOSE PVC 12/16mm TRANSP.	
0200S						
010	456328-0000	D		1	BENDING ROLLER	
020	256392-0003	D		1	SHAFT	
030	441554-0000	D		2	CREASE BAR	
040	441556-0009	D		2	SPACER	
050	456811-0000	D		1	SHAFT	
060	456334-0000	D		1	SHAFT	
070-02	90166-0059	C	MM	41	HOSE PVC 12/16mm TRANSP.	
075-02	90166-0059	C	MM	41	HOSE PVC 12/16mm TRANSP.	
0250B						
010	256391-0001	D		1	BENDING ROLLER	
020	256392-0001	D		1	SHAFT	
030	456767-0000	D		2	CREASE BAR	
040	441556-0002	D		2	SPACER	
050	256399-0001	D		1	SHAFT	
060	256400-0000	D		1	SHAFT	
070	90166-0059	C	MM	28	HOSE PVC 12/16mm TRANSP.	
075	90166-0059	C	MM	28	HOSE PVC 12/16mm TRANSP.	
Common Parts						
100	1529060-0000	-		1	END SECTION	
110	1529059-0000	-		1	END SECTION	
120	1529036-0000	-		1	COVER	
130	441572-0000	-		1	COVER	
140	491722-0000	-		1	PLATE	
150	491723-0000	-		1	SPLASH PLATE	
155	572252-0000	-		1	BRACKET	
160	752512-0000	D		1	BEARING CONSOLE	
165	1529061-0000	-		1	BRACKET	
170	A 293684-0200	-		2	PRINTING WHEEL NSS	
180	A 434074-0300	-		1	INK UNIT	
200	441752-0000	-		1	GABLE PLATE	
230	456331-0000	-		2	ANGLE BRACKET	
240	491724-0000	-		1	PLATE	
250	456333-0000	-		1	RAIL	
255	572253-0000	-		1	SHEET	
260	752250-0000	-		1	BEARING COVER	
270	752251-0000	-		1	BEARING COVER	
280	752252-0000	-		2	BEARING COVER	
300	B 456813-0000	D		1	SHAFT	
310	28036-0000	-		15	WASHER	
320	B 32919-0000	D		1	BEARING BLOCK	
330	32923-0000	C		7	SPRING	
340	32925-0000	D		1	CARRIER	
350	544392-0000	D		1	ROLL	
360	32927-0000	D		1	SHAFT	
370	33182-0000	C		1	ROLL	
380	33183-0000	C		1	SPRING	
390	106758-0000	-		2	WASHER	
400	228652-0000	D		1	STOPPER DOWEL	
410	256248-0001	D		2	LID	
420	256398-0000	D		4	LID	
430	256403-0000	D		2	TOOTHED WHEEL	
440	256406-0000	-		1	GABLE PLATE	
450	256408-0001	-		1	SPACER	
460	256409-0000	-		5	WASHER	
470	257141-0000	-		2	RETAINING RING	
480	271441-0000	-		1	BRACKET	
490	441753-0000	-		1	FASTENING PLATE	
500	441754-0000	-		2	SPACER	
510	456336-0000	-		1	BRACKET	
520	456337-0000	-		1	CANTILEVER	
530	456776-0000	D		2	MANTLE	
540	456777-0000	D		4	SLEEVE	
550	456778-0000	D		2	SHAFT	
560	456817-0001	C		8	SHIM	
570	572254-0000	-		1	HANDLE	
580	572255-0000	-		2	SPACER	
590	90044-0139	-		1	Key saf.sw. AZ16-02 ZVR K-2254	
600	90044-0194	C		1	Prox.sw. IN5329/IN3002-BPKG	
605	90090-0001	C		1	STEEL-BALL SKF RB-15,081/111	
610	90141-0020	D		4	Retain. Ring, 42	
612	90165-0024	-		6	PIPE-CLIPS,FOR SINGLE PIPE,ONE SIDE 5	
613	90184-0001	-		1	Snap-In Ball Lock, 49x9 mm	
615	90214-0098	C		1	BALL BEARING,STAINLESS	

(Cont'd)

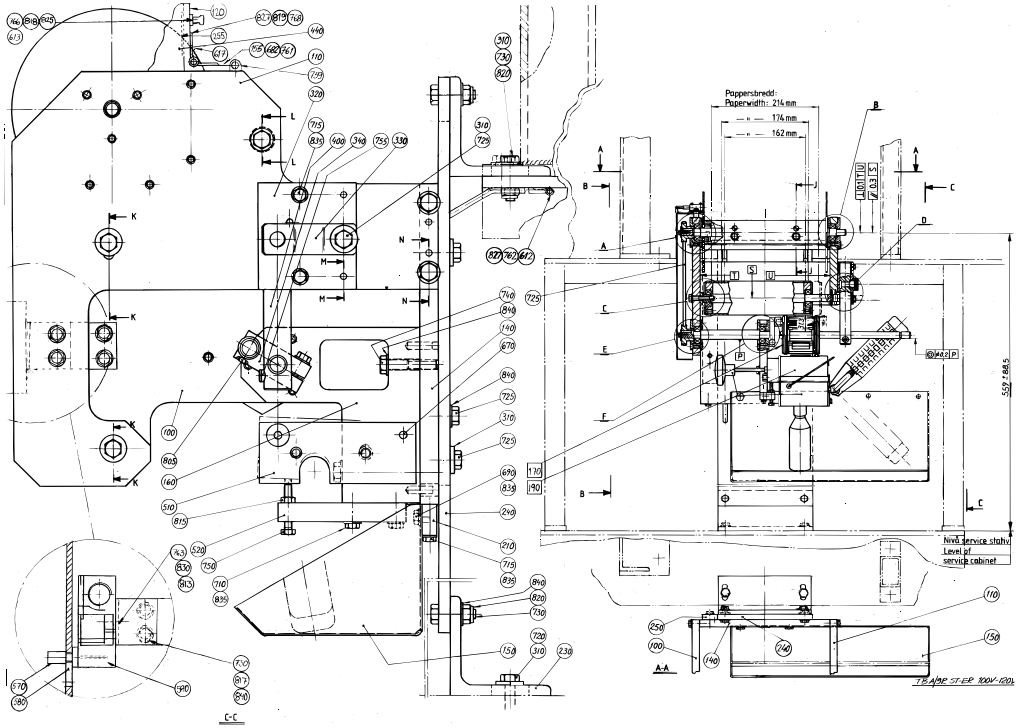

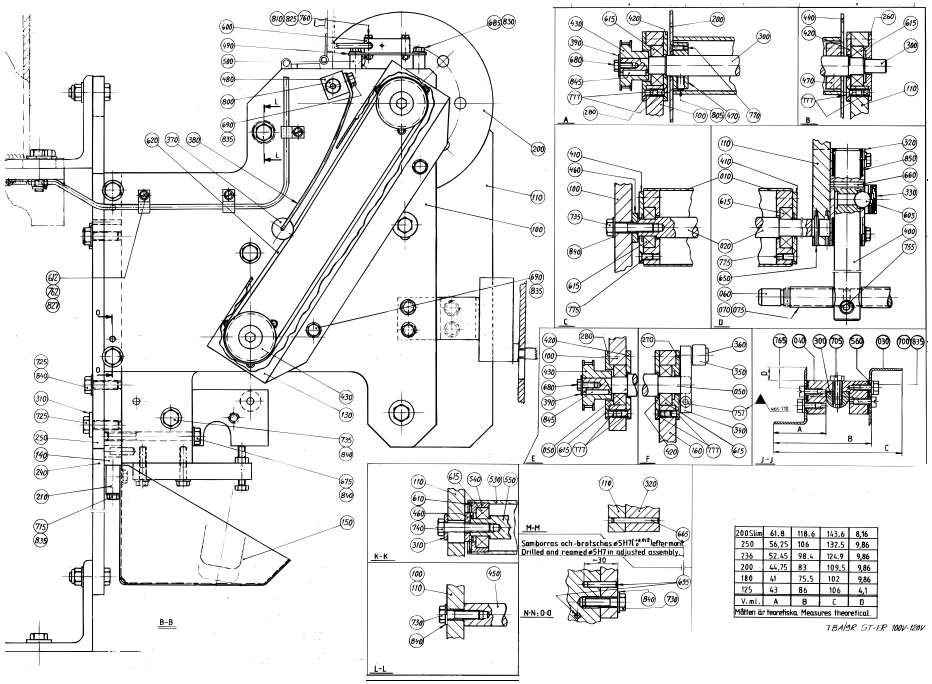

200 Slim	61.8	118.6	143.6	8.16
250	56.25	106	132.5	9.86
236	52.45	98.4	124.9	9.86
200	44.75	83	109.5	9.86
180	41	75.5	102	9.86
125	43	86	106	4.1
V.mtl.	A	B	C	D

Måtten är teoretiska. Measures theoretical

Pos	Part No	SP	UN	Qty	Description	Page No
(Cont'd)						
617	90248-0026	-		2	HINGE	
620	90417-0081	C		1	Timing belt T5x610x6	
650	311103-0240	-		1	Pin, Parallell, m6, 3x25	
655	311103-0312	-		6	Pin, Parallell, m6, 5x25	
660	311103-0314	-		1	Pin, Parallell, m6, 5x30	
665	311103-0318	-		2	Pin, Parallell, m6, 5x40	
670	311103-0357	-		1	Pin, Parallell, m6, 6x30	
675	312101-0466	-		1	Screw M6S M8x75 FZB	
680	312105-0327	-		2	Screw M6S M5x12 A280	
682	312105-0329	-		2	Screw M6S M5x16 A280	
685	312105-0332	-		2	Screw M6S M5x22 A280	
690	312105-0364	-		3	Screw M6S M6x10 A280	
700	312105-0366	-		8	Screw M6S M6x12 A280	
705	312105-0368	-		2	Screw M6S M6x16 A280	
710	312105-0374	-		2	Screw M6S M6x30 A280	
715	312105-0378	-		2	Screw M6S M6x40 A280	
720	312105-0451	-		4	Screw M6S 8x20 A280	
725	312105-0453	-		5	Screw M6S M8x25 A280	
730	312105-0455	-		16	Screw M6S M8x30 A280	
735	312105-0457	-		2	Screw M6S M8x35 A280	
740	312105-0459	-		5	Screw M6S M8x40 A280	
750	312109-0376	-		1	Screw M6S M6x35 A280	
755	312115-0370	-		1	Screw MC6S M6x20 A280	
757	312115-0372	-		1	Screw MC6S M6x25 A280	
759	312125-0224	-		2	Screw Slot.Pan Hd. MCS 3x10 A480	
760	312125-0230	-		2	Screw Pan Head MCS M3X20 RFR	
762	312125-0289	-		6	Screw Slot.Pan Hd. MCS 4x10 A480	
763	312125-0329	-		2	Screw Pan Head MCS M5X16 RFR	
765	312125-0366	-		4	Screw Pan Head MCS M6X12 RFR	
766	312145-0228	-		2	Screw Counters.Slot.Hd. MFS 3x16 SS	
767	312145-0285	-		6	Screw Counters.Slot.Hd. MFS 4x6 SS	
768	312145-0293	-		6	Screw Counters.Slot.Hd. MFS 4x16 SS	
770	312155-0291	-		6	Screw Hex.Sock.Count.MF6S M4x12 A480	
775	312155-0327	-		6	Screw Hex.Sock.Count.MF6S M5x12 A280	
777	312155-0323	-		24	Screw Hex.Sock.Count.MF6S M5x8 A280	
800	312155-0376	-		1	Screw Hex.Sock.Count.MF6S M6x35 A280	
805	312318-0362	-		3	Screw,Sock.Set Cuppoint MSK6SS M6x8 A4	
810	312605-0310	-		2	Nut Hex. M6M M3 A280	
813	312605-0314	-		2	Nut Hex. M6M M5 A280	
815	312605-0316	-		1	Nut Hex. M6M M6 A280	
817	312605-0318	-		4	Nut Hex. M6M M8 A280	
818	312812-0310	-		2	Nut Hex. Ny-Lock M3 A480	
819	312812-0312	-		6	Nut Hex. Ny-Lock M4 A480	
820	312812-0318	-		6	Nut Hex. Ny-Lock M8 A480	
825	315105-0124	-		4	Washer, Plain, BRB, 3,2/6,H=0,5	
827	315105-0136	-		6	Washer, Plain, BRB, 4,3/8,H=0,8	
830	315105-0146	-		2	Washer, Plain, BRB, 5,3/10,H=1	
835	315105-0153	-		15	Washer, Plain, BRB, 6,4/12,H=1,5	
840	315105-0165	-		16	Washer, Plain, BRB, 8,4/16,H=1,5	
845	315701-0170	-		2	Parallel key with round end 4x4x20 mm	
850	321120-0147	-		2	BEARING BUSHING WITHOUT FLANGE 22/25X25	

PRINTING WHEEL NSS

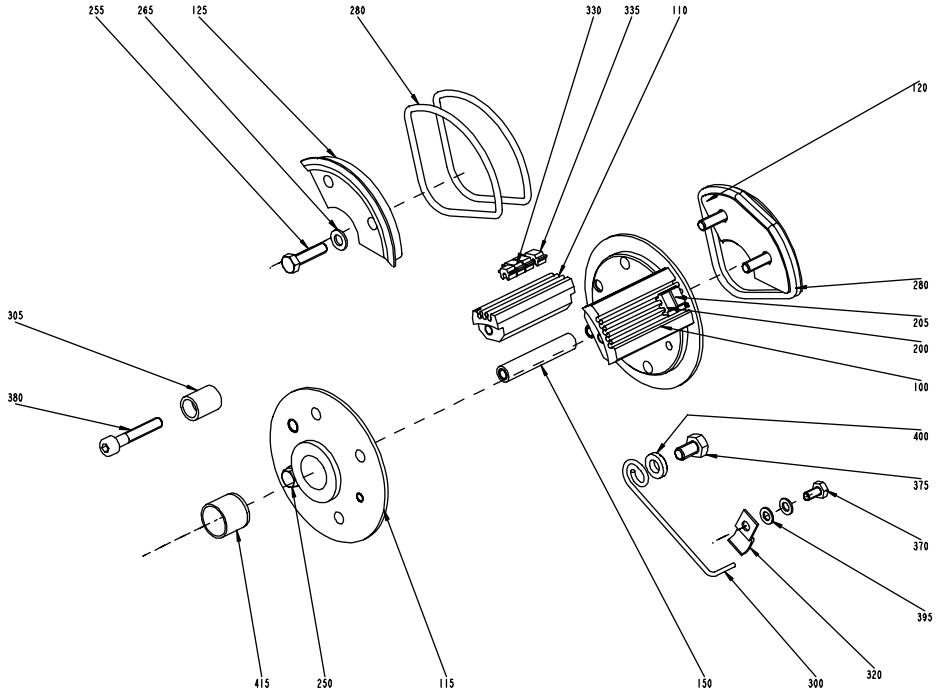

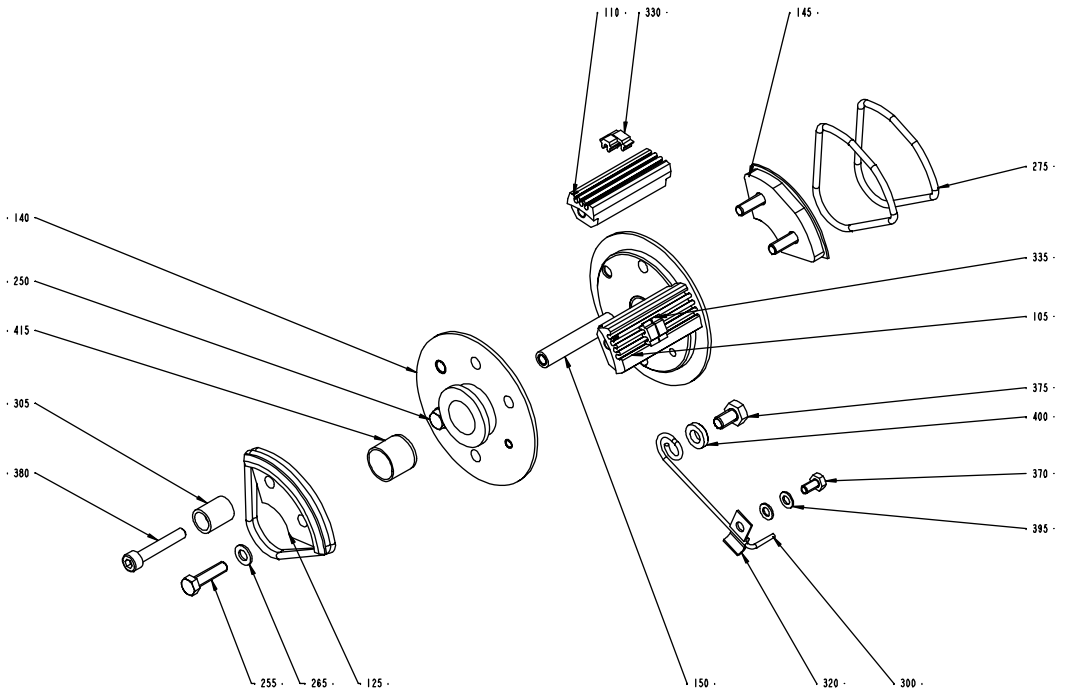

S - 293684-3, 4
ECN 82225

Pos	Part No	SP	UN	Qty	Description	Page No
TBA 0500B OR TB 0568B OR TB 0500B						
100	293395-0003	C		2	TYPE HOLDER	
110	293395-0001	C		2	TYPE HOLDER	
115	434787-0000	C		1	END SECTION	
120	292410-0000	C		1	END SECTION	
155	293676-0000	C		1	CARRIER	
200	90413-0048	C		1	CODE INSERT SET	
205	90413-0049	C		1	CODE INSERT SET	
255	312101-0331	-		7	Screw M6S M5x20 FZB	
265	315101-0146	-		7	Washer, Plain, BRB, 5,3/10 H=1	
285	315202-0304	C		2	O-Ring 64,5x3 mm	
410	315202-0305	C		2	O-Ring 69,5x3 mm	
TBA 0750B OR TBA 0500SQ OR TB 1136B OR TBA 1000S OR TB 1500B OR TBA 1055B OR TBA 1000SQ OR TBA 1000B LOFIN OR TPA 1000S OR TBA 1500S OR TBO 1000B LOFIN OR TBO 1000SQ OR TB 0568SQ OR TB 0500SQ OR TB 1000SQ OR TB 1000S OR TB 1000B LOFIN						
100	293395-0003	C		1	TYPE HOLDER	
110	293395-0001	C		1	TYPE HOLDER	
115	292409-0000	C		2	END SECTION	
120	442072-0000	C		1	CARRIER	
125	292411-0000	C		1	CARRIER	
150	293671-0000	C		1	SPACER	
200	90413-0048	C		1	CODE INSERT SET	
205	90413-0049	C		1	CODE INSERT SET	
250	312101-0329	-		2	Screw M6S M5x16 FZB	
255	312101-0331	-		3	Screw M6S M5x20 FZB	
265	315101-0146	-		5	Washer, Plain, BRB, 5,3/10 H=1	
280	315202-0301	C		4	O-Ring 49,5x3 mm	
TBA 1000B HIFIN OR TB 1000B HIFIN						
100	293395-0003	C		1	TYPE HOLDER	
110	293395-0001	C		1	TYPE HOLDER	
115	293690-0000	C		2	END SECTION	
120	442431-0000	C		1	CARRIER	
125	293688-0000	C		1	CARRIER	
150	293671-0000	C		1	SPACER	
200	90413-0048	C		1	CODE INSERT SET	
205	90413-0049	C		1	CODE INSERT SET	
250	312101-0329	-		2	Screw M6S M5x16 FZB	
255	312101-0331	-		3	Screw M6S M5x20 FZB	
265	315101-0146	-		5	Washer, Plain, BRB, 5,3/10 H=1	
280	315202-0301	C		4	O-Ring 49,5x3 mm	
TBA 0284B OR TB 0250B						
105	293395-0002	C		2	TYPE HOLDER	
110	293395-0001	C		2	TYPE HOLDER	
130	292412-0000	D		1	END SECTION	
135	292413-0000	D		1	END SECTION	
145	293659-0000	D		1	CARRIER	
255	312101-0331	-		7	Screw M6S M5x20 FZB	
265	315101-0146	-		7	Washer, Plain, BRB, 5,3/10 H=1	
285	315202-0304	C		2	O-Ring 64,5x3 mm	
410	315202-0305	C		2	O-Ring 69,5x3 mm	
TBA 0330S OR TBA 0300S OR TBA 0180B OR TBA 0160S OR TBA 0200B OR TBA 0189B OR TBA 0125S OR TBA 0100B OR TBA 0250S OR TBA 0200S OR TBA 0200M OR TBA 0250B OR TBA 0236B OR TPA TPA 0250SQ OR TPA TPA 0330SQ OR TB 0180B OR TB 0200B OR TB 0200M OR TB 0300B OR TB 0200S OR TB 0236B OR TB 0250S						
105	293395-0002	C		2	TYPE HOLDER	
110	293395-0001	C		2	TYPE HOLDER	
130	292412-0000	D		1	END SECTION	
135	292413-0000	D		1	END SECTION	
145	293659-0000	D		1	CARRIER	
255	312101-0331	-		7	Screw M6S M5x20 FZB	
265	315101-0146	-		7	Washer, Plain, BRB, 5,3/10 H=1	
285	315202-0304	C		2	O-Ring 64,5x3 mm	
410	315202-0305	C		2	O-Ring 69,5x3 mm	
TBA 0500S OR TBA 0355B OR TBA 0400B OR TBA 0375S OR TBA 0750S OR TB 0500S						
105	293395-0002	C		1	TYPE HOLDER	
110	293395-0001	C		1	TYPE HOLDER	
125	479237-0000	C		1	CARRIER	
140	479236-0000	C		2	END SECTION	
145	479238-0000	C		1	CARRIER	
150	293671-0000	C		1	SPACER	
250	312101-0329	-		2	Screw M6S M5x16 FZB	
255	312101-0331	-		3	Screw M6S M5x20 FZB	
265	315101-0146	-		5	Washer, Plain, BRB, 5,3/10 H=1	
275	315202-0224	C		4	O-Ring 42,2x3 mm	
Common Parts						
300	32691-0000	C		1	LOCKING SPRING	
305	33011-0000	C		1	SLEEVE	
320	1511572-0000	-		1	CLIP	
330	90413-0033	C		1	CODE INSERT SET 0-9	
330	90413-0043	C		1	CODE INSERT SET	
335	90413-0047	C		1	CODE INSERT SET	
335	90413-0044	C		1	CODE INSERT SET	
370	312101-0287	-		1	Screw M6S M4x8 FZB	
375	312101-0364	-		1	Screw M6S M6x10 FZB	
380	312111-0335	-		1	Screw Hex.Sock.Hd.MC6S-TT 5x30 88 FZB	

PRINTING WHEEL NSS

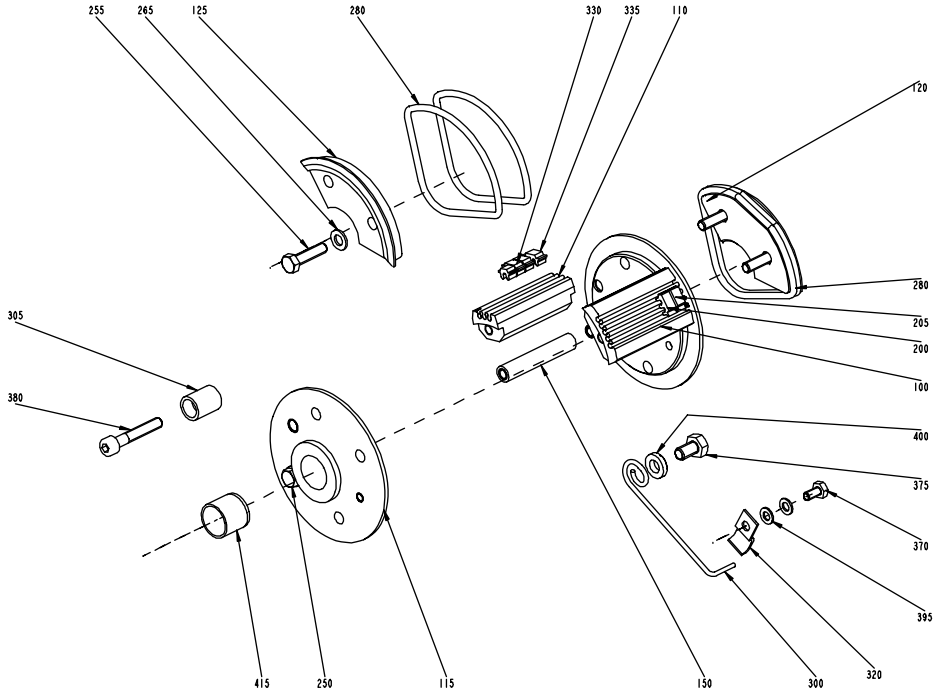

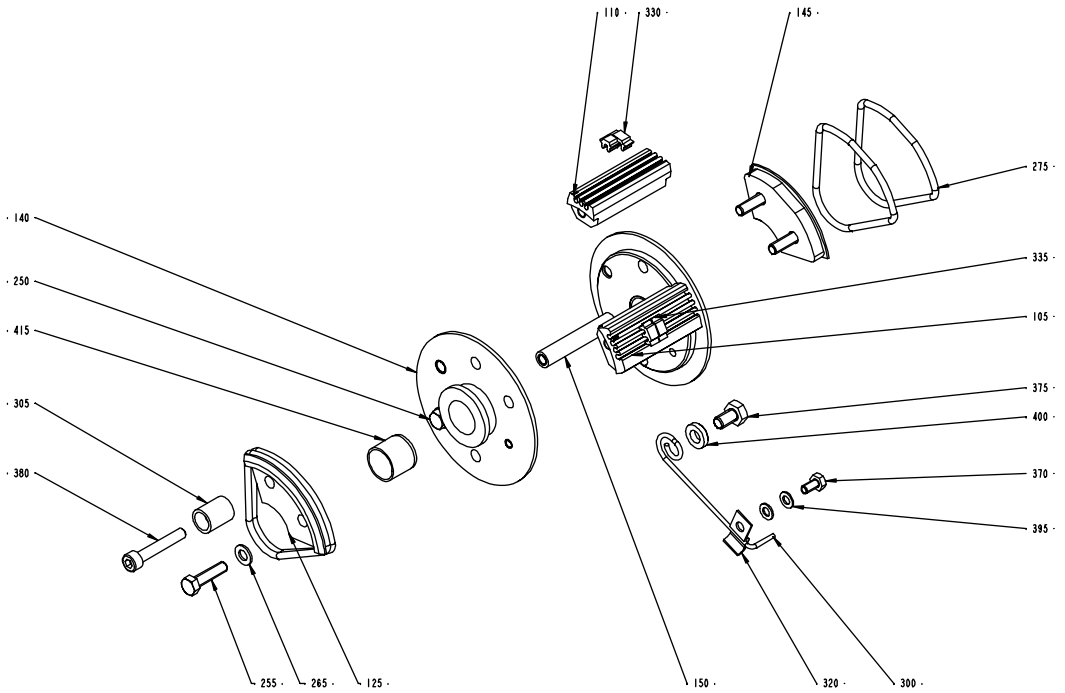

S - 293684-3, 4
ECN 82225

Pos	Part No	SP	UN	Qty	Description	Page No
395	315101-0136	-		2	Washer, Plain, BRB, 4,3/8 H=0,8	
400	315111-0153	-		1	Washer, Plain, TBRB 6,4/12 H=3	
415	321120-0122	C		2	BEARING BUSHING WITHOUT FLANGE,15/17X15	

Pos	Part No	SP	UN	Qty	Description	Page No

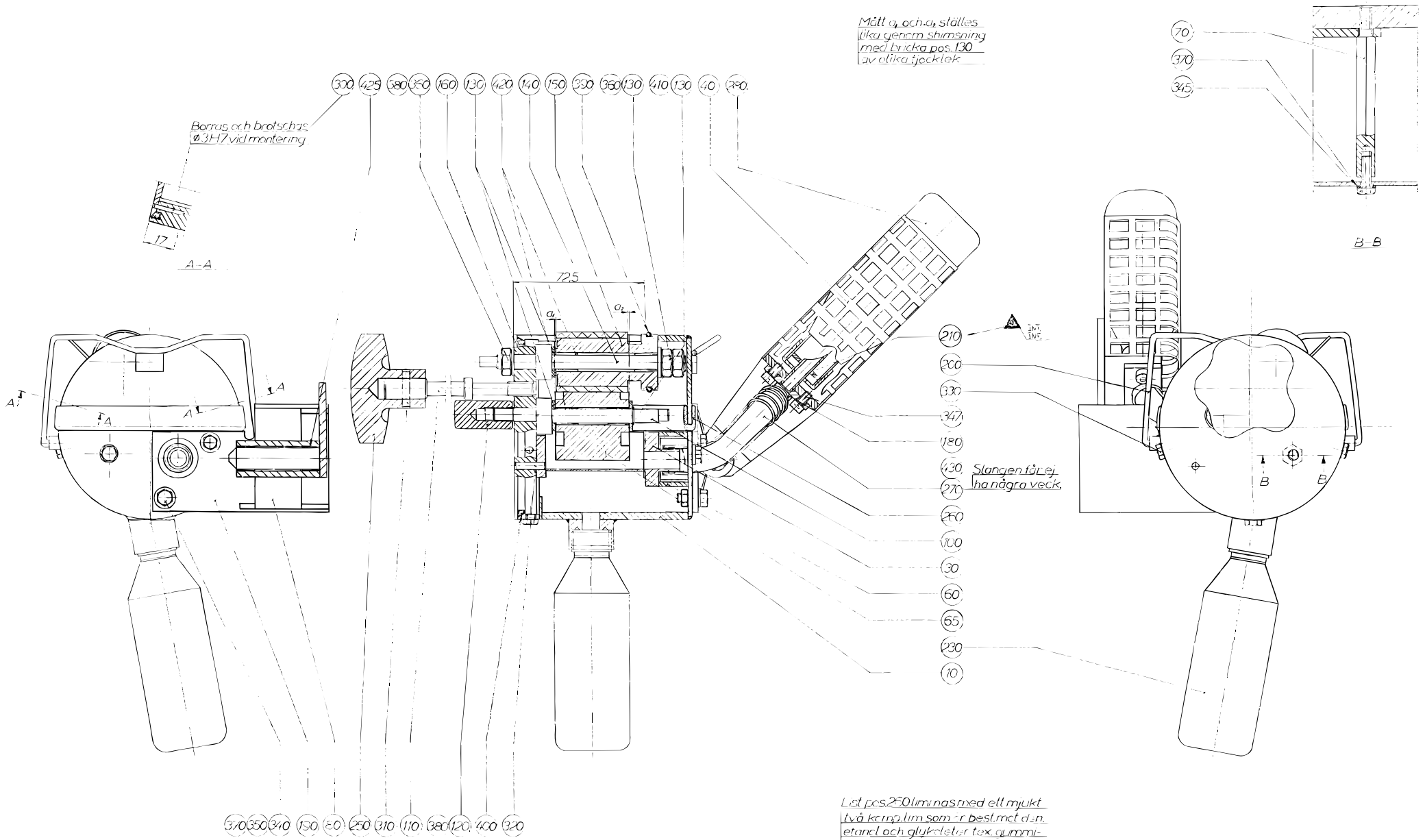
Mått a1 och a2 ställes
lika genom shimsning
med brickor pos. 130
av olika tjocklek
Borras och brotschas
Ø3H7 vid montering
17
A - A
B - B
125
a1
a2
300 425 380 350 160 130 420 140 150 330 360 130 410 130 40 280
70
370
345
210
200
330
347
180
430
270
220
100
30
60
65
230
10
Slangen får ej
ha några veck.
370 350 340 190 80 250 310 110 380 120 400 320
Lät pos. 230 limmas med ett mjukt
två komplim som är best. mot d:n,
etanol och glykoleter tex. gummi-
lösn 6-5522 och grimer 1-427 från
Trelleborg AB

Pos	Part No	SP	UN	Qty	Description	Page No
TB/8 OR TB/9						
230	90050-0008	C		1	BOTTLE	
TBA/3 OR TBA/19 OR TBA/9 OR TBA/3FINO OR TBA/9 R						
230	90050-0012	C		1	BOTTLE	
Common Parts						
010	297988-0000	-		1	COVER	
030	297211-0000	-		1	INK WELL	
040	476356-0000	D		1	HOLDER FOR INK BOTTLE	
060	445542-0000	C		1	MANTEL RUBBER	
065	450355-0000	C		1	INK ROLLER	
070	33010-0000	-		1	SCREW	
080	35547-0000	C		1	SPRING	
100	292044-0000	C		1	SHAFT	
110	293667-0000	C		1	DOWEL	
120	436927-0000	D		1	NUT	
130	293669-0004	C		2	WASHER	
130	293669-0003	C		2	WASHER	
130	293669-0002	C		2	WASHER	
130	293669-0001	C		4	WASHER	
140	293670-0000	C		1	SHAFT	
150	B 543135-0000	C		1	INK TRANSFER ROLLER	
160	293697-0000	C		1	END SECTION	
180	476354-0000	C		1	CANNULAR TUBE	
190	456773-0000	D		1	PIVOT BRACKET	
200	434747-0000	C		1	BOW CLAMP	
210	537308-0000	-		1	SPRING	
250	90051-0077	C		1	HANDLE	
260	90143-0029	C	MM	295	STRIP	
270	90166-0138	C	MM	1	HOSE	
280	90299-0072	C		1	INK	
300	311103-0236	-		2	Pin, Parallell, m6, 3x16	
310	311103-0238	-		1	Pin, Parallell, m6, 3x20	
320	311103-0270	-		1	Pin, Parallell, m6, 4x16	
330	312105-0291	-		3	Screw M6S M4x12 A280	
340	312105-0327	-		2	Screw M6S M5x12 A280	
345	312105-0329	-		1	Screw M6S M5x16 A280	
347	312115-0287	-		2	Screw MC6S M4x8 A280	
350	312605-0314	-		2	Nut Hex. M6M M5 A280	
360	312605-0318	-		3	Nut Hex. M6M M8 A280	
370	315105-0146	-		3	Washer, Plain, BRB, 5,3/10,H=1	
380	315105-0165	-		2	Washer, Plain, BRB, 8,4/16,H=1,5	
390	315202-0218	C		1	O-Ring 26,2x3 mm	
400	315202-0309	C		1	O-Ring 89,5x3 mm	
410	315750-0105	C		1	Retaining Ring for shaft, 8x0,8 mm	
420	321120-0100	C		4	BEARING BUSHING WITHOUT FLANGE,8/10x12	
425	321120-0109	C		2	BEARING BUSHING WITHOUT FLANGE,12/14X10	
430	352113-0101	C		1	CLIP STRIP BLACK 92x2,5mm	

BENDING ROLLER

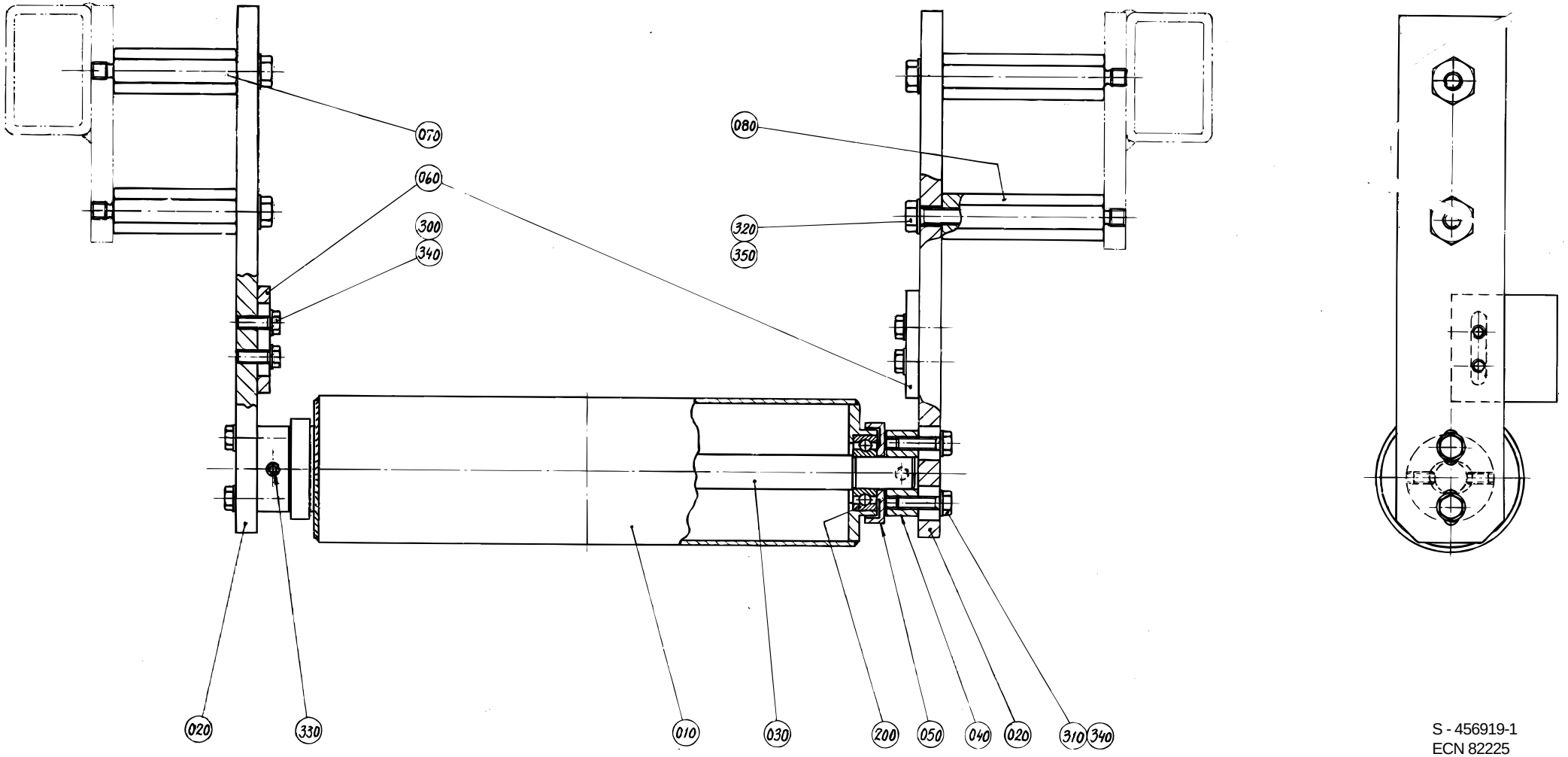

S - 456919-1
ECN 82225

Pos	Part No	SP	UN	Qty	Description	Page No
Common Parts						
010	256984-0000	D		1	BENDING ROLLER	
020	456920-0000	-		2	BRACKET	
030	256985-0000	C		1	SHAFT	
040	265567-0000	D		2	BEARING UNIT	
050	265568-0000	-		2	DUST COVER	
060	456921-0000	-		2	STOP	
070	456922-0001	-		2	STRUT	
080	456922-0002	-		2	STRUT	
200	90214-0098	C		2	BALL BEARING,STAINLESS	
300	312105-0368	-		4	Screw M6S M6x16 A280	
310	312105-0370	-		4	Screw M6S M6x20 A280	
320	312105-0453	-		4	Screw M6S M8x25 A280	
330	312318-0364	-		4	Screw Hex.Sock.Set Cup P.MSK6SS6x10 SS	
340	315105-0153	-		8	Washer, Plain, BRB, 6,4/12,H=1,5	
350	315105-0165	-		4	Washer, Plain, BRB, 8,4/16,H=1,5	

Pos	Part No	SP	UN	Qty	Description	Page No

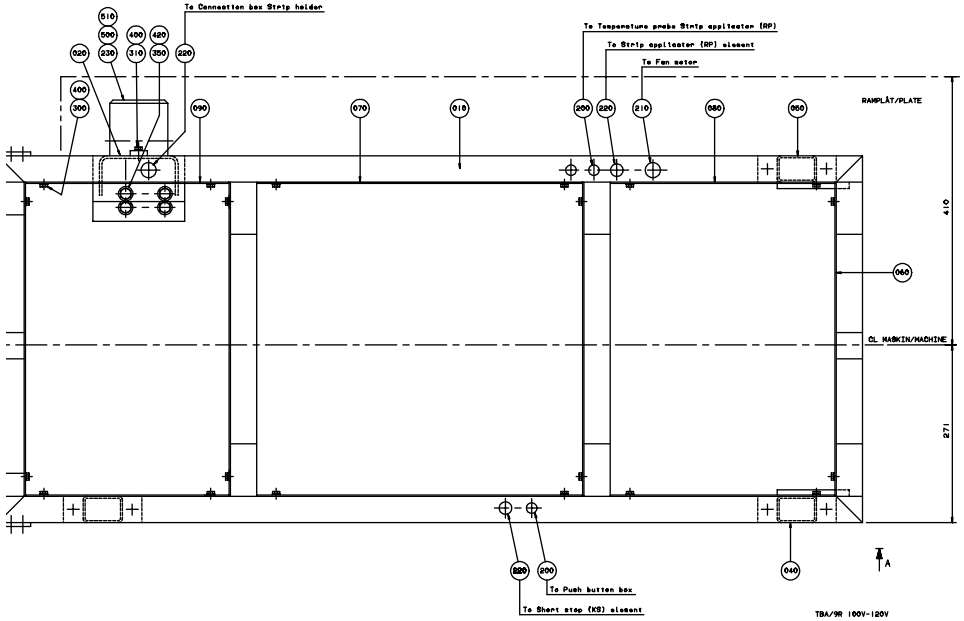
To Connection box Strip holder
To Temperature probe Strip applicator (RP)
To Strip applicator (RP) element
To Fan motor
RAMPLÅT/PLATE
CL MASKIN/MACHINE
410
271
To Push button box
To Sheet stop (KS) element
TBA/9R 100V-120V

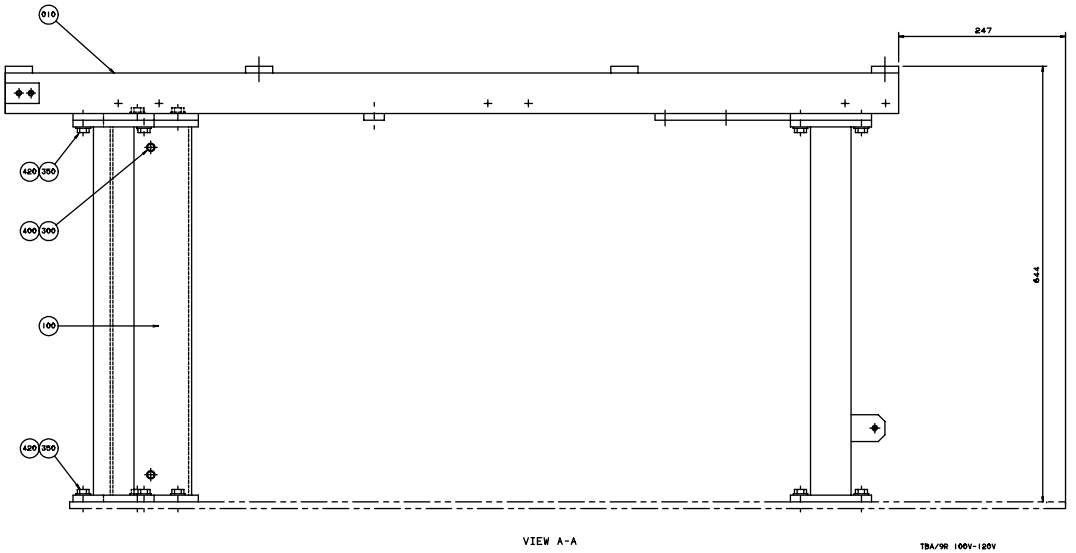
247
644
VIEW A-A
TBA/9R 100V-120V

Pos	Part No	SP	UN	Qty	Description	Page No
SOURCE,TBA/9-100V OR SOURCE,TBA/9-110V						
020	1529089-0000	-		1	LEG	
030	456926-0000	-		1	LEG	
SOURCE,TBA/9-120V						
020	1529090-0000	-		1	LEG	
030	491726-0000	-		1	LEG	
Common Parts						
010	456924-0000	-		1	FRAME	
040	456927-0000	-		1	LEG	
050	456928-0000	-		1	LEG	
060	456929-0000	-		4	LID	
070	456930-0000	-		2	LID	
080	456931-0000	-		2	LID	
090	456932-0000	-		2	LID	
100	456933-0000	-		1	LID	
200	90015-0020	-		2	GLANDS,Lead-in,IP67	
210	90015-0021	-		1	GLANDS,Lead-in,IP67	
220	90015-0023	-		3	GLANDS,Lead-in,IP67	
230	90052-0011	-		1	HORN	
300	312105-0366	-		22	Screw M6S M6x12 A280	
310	312105-0368	-		2	Screw M6S M6x16 A280	
350	312105-0493	-		16	Screw M6S M10x25 A280	
400	315105-0153	-		22	Washer, Plain, BRB, 6,4/12,H=1,5	
420	315105-0173	-		16	Washer, Plain, BRB, 10,5/22,H=2	
500	351150-0403	-	M	1	CABLE OLFLEX 3x0,75 MM2	
510	352103-0110	-		1	CABLE GLAND STR 16	

Pos	Part No	SP	UN	Qty	Description	Page No

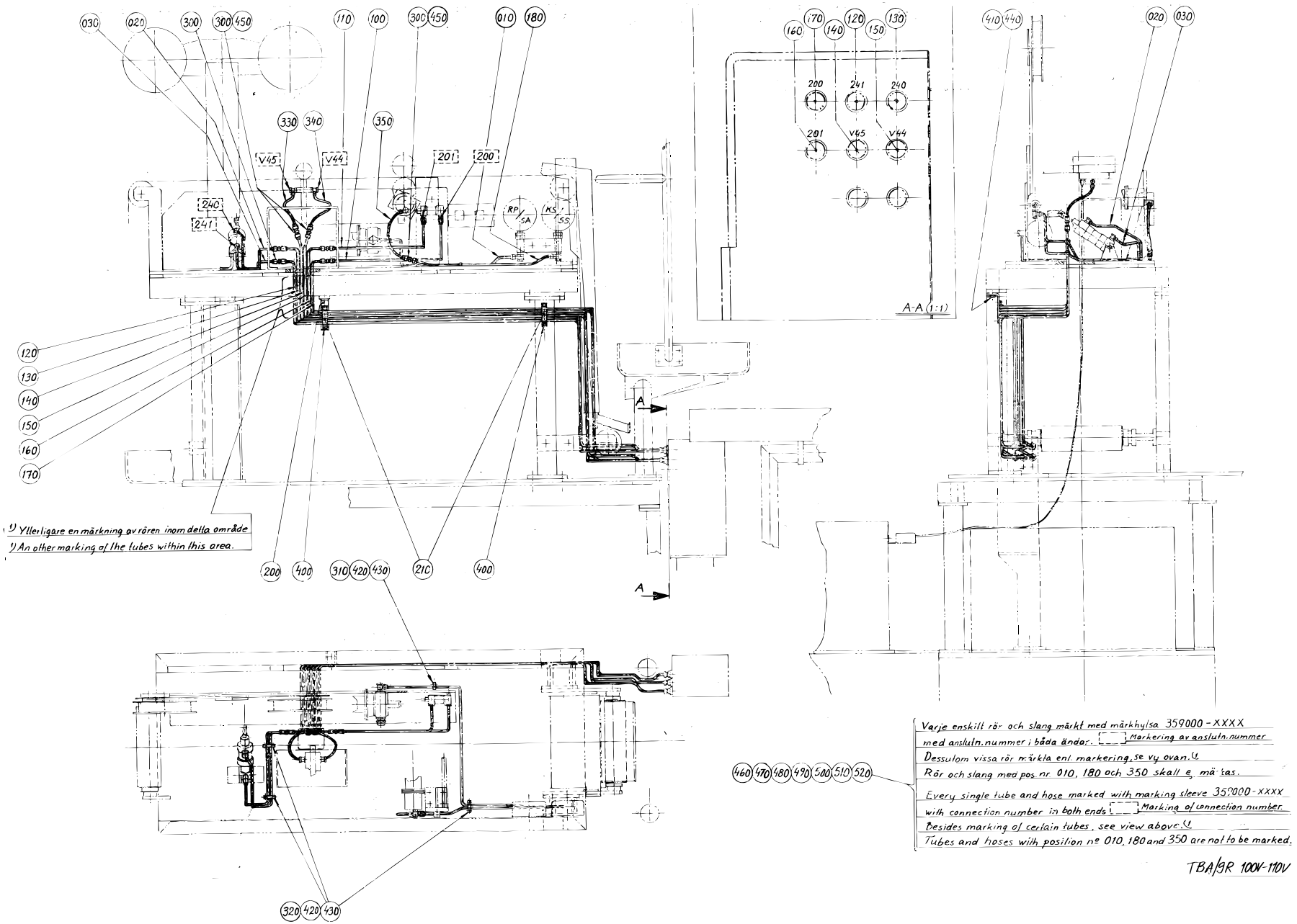
030
020
300
300
450
110
100
300
450
010
180
330
340
350
V45
V44
201
200
240
241
RP
5A
KS
5S
160
170
140
150
120
130
200
241
240
201
V45
V44
A-A (1:1)
410
440
020
030
120
130
140
150
160
170
A
A
1) Ytterligare en märkning av rören inom detta område
1) An other marking of the tubes within this area.
200
400
310
420
430
210
400
320
420
430
460
470
480
490
500
510
520
Varje enskilt rör och slang märkt med märkhylsa 359000 - XXXX
med ansluth. nummer i båda ändar: [ ] Markering av ansluth. nummer
Dessutom vissa rör märkta enl markering, se vy ovan. 1)
Rör och slang med pos. nr 010, 180 och 350 skall ej märkas.
Every single tube and hose marked with marking sleeve 359000 - XXXX
with connection number in both ends [ ] Marking of connection number
Besides marking of certain tubes, see view above. 1)
Tubes and hoses with position nº 010, 180 and 350 are not to be marked.
TBA/3R 100V-110V

Pos	Part No	SP	UN	Qty	Description	Page No
0200B OR 0250B						
010	456731-0001	-		1	PIPE	
020	456737-0001	-		1	PIPE	
030	456738-0001	-		1	PIPE	
100	456730-0001	-		1	PIPE	
110	456730-0002	-		1	PIPE	
0200S						
010	456731-0002	-		1	PIPE	
020	456737-0002	-		1	PIPE	
030	456738-0002	-		1	PIPE	
100	456730-0003	-		1	PIPE	
110	456730-0004	-		1	PIPE	
Common Parts						
120	456938-0000	-		1	PIPE 241	
130	456939-0000	-		1	PIPE 240	
140	456940-0000	-		1	PIPE V45	
150	456941-0000	-		1	PIPE V44	
160	456942-0000	-		1	PIPE 201	
170	456943-0000	-		1	PIPE 200	
180	456732-0000	-		1	PIPE	
200	456936-0000	-		1	FASTENING BRACKET	
210	456937-0000	-		2	CRAMP	
300	90030-0075	-		7	PIPE CONNECTION G-6	
310	90165-0005	-		1	PIPE-CLIPS,FOR SINGLE PIPE,ONE SIDE 6	
320	90165-0006	-		2	CLIP	
350	90166-0132	-	MM	35	TUBE 6 mm PA,Transp.	
400	312105-0364	-		4	Screw M6S M6x10 A280	
410	312105-0451	-		1	Screw M6S 8x20 A280	
420	312125-0285	-		5	Screw Slot.Pan Hd. MCS 4x6 A480	
430	315105-0136	-		5	Washer, Plain, BRB, 4,3/8,H=0,8	
440	315105-0165	-		1	Washer, Plain, BRB, 8,4/16,H=1,5	
450	342708-0101	-		3	ACCESSORIES,REINFORCING RING VSH 6X1	
460	359000-0064	-		6	MARKING CO2/4 OMƒRKT	
470	359000-0400	-		2	MARKING CO2/4"0"	
480	359000-0401	-		1	MARKING COLLAR 2/4 "1" Yellow	
490	359000-0402	-		2	MARKING COLLAR 2/4 "2" Yellow	
500	359000-0404	-		25	MARKING COLLAR PA2/4 "4" Yellow	
510	359000-0405	-		5	MARKING CO2/4"5"	
520	359000-0771	-		1	MARKING CO2/4"V"	

Pos	Part No	SP	UN	Qty	Description	Page No

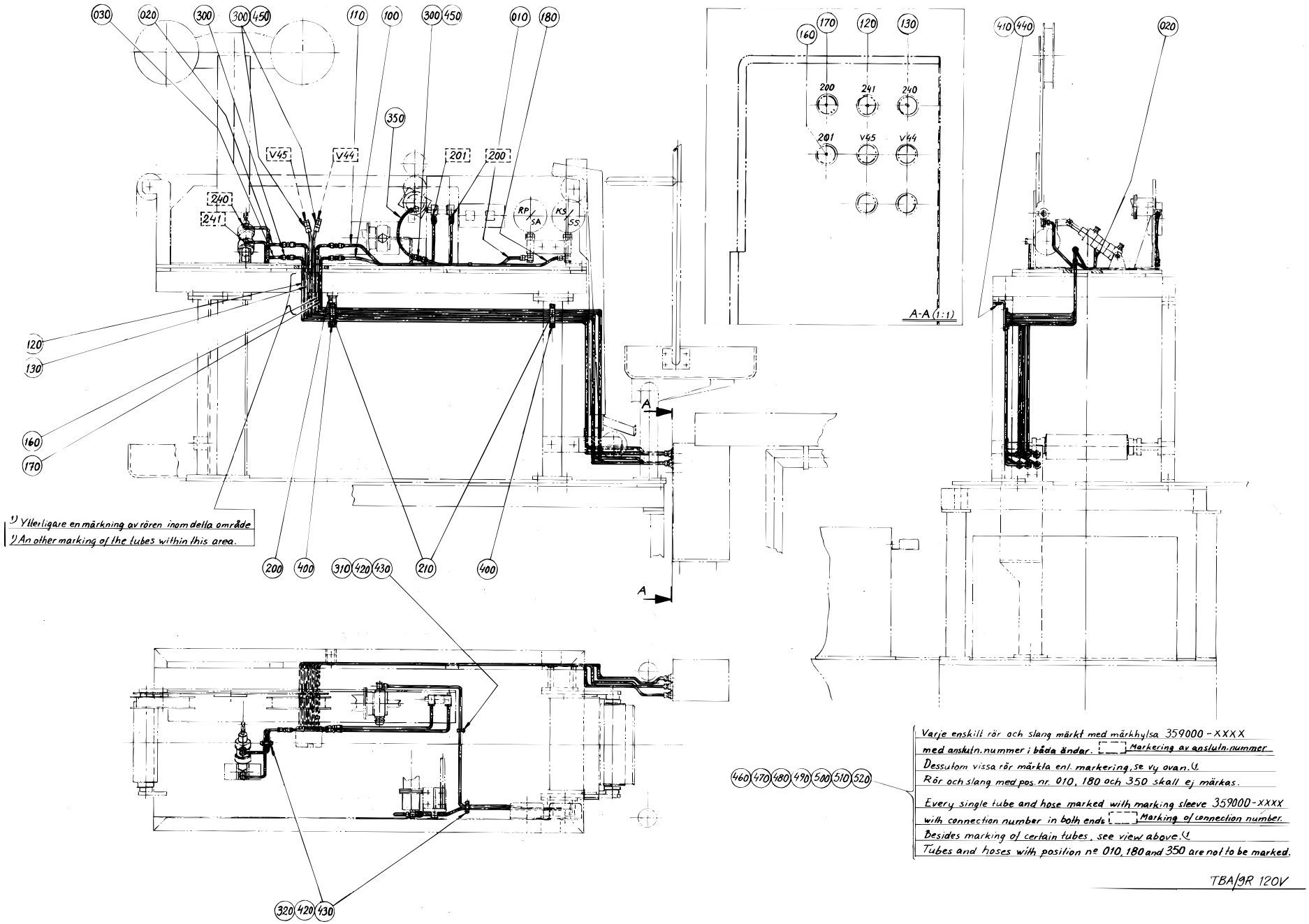
030
020
300
300
450
110
100
300
450
010
180
350
V45
V44
201
200
240
241
RP
SA
KS
155
120
130
160
170
200
400
310
420
430
210
400
A
A
320
420
430
160
170
120
130
200
241
240
201
V45
V44
A-A (1:1)
410
440
020
460
470
480
490
500
510
520
1) Ytterligare en märkning av rören inom detta område
1) An other marking of the tubes within this area.
Varje enskilt rör och slang märkt med märkhylsa 359000-XXXX
med anskutn. nummer i båda ändar. Markering av anskutn. nummer
Dessutom vissa rör märkta enl. markering, se vy ovan. 1)
Rör och slang med pos. nr. 010, 180 och 350 skall ej märkas.
Every single tube and hose marked with marking sleeve 359000-XXXX
with connection number in both ends Marking of connection number.
Besides marking of certain tubes, see view above. 1)
Tubes and hoses with position nº 010, 180 and 350 are not to be marked.
TBA/9R 120V

Pos	Part No	SP	UN	Qty	Description	Page No
0200B OR 0250B						
010	456731-0001	-		1	PIPE	
020	751073-0001	-		1	PIPE 240	
030	751074-0001	-		1	PIPE 241	
100	751080-0001	-		1	PIPE 200	
110	751144-0001	-		1	PIPE 201	
0200S						
010	456731-0002	-		1	PIPE	
020	751073-0002	-		1	PIPE 240	
030	751074-0002	-		1	PIPE 241	
100	751080-0002	-		1	PIPE 200	
110	751144-0002	-		1	PIPE 201	
Common Parts						
120	456938-0000	-		1	PIPE 241	
130	456939-0000	-		1	PIPE 240	
140	456940-0000	-		1	PIPE V45	
150	456941-0000	-		1	PIPE V44	
160	456942-0000	-		1	PIPE 201	
170	456943-0000	-		1	PIPE 200	
180	456732-0000	-		1	PIPE	
200	456936-0000	-		1	FASTENING BRACKET	
210	456937-0000	-		2	CRAMP	
300	90030-0075	-		7	PIPE CONNECTION G-6	
310	90165-0005	-		1	PIPE-CLIPS,FOR SINGLE PIPE,ONE SIDE 6	
320	90165-0006	-		2	CLIP	
350	90166-0132	-	MM	35	TUBE 6 mm PA,Transp.	
400	312105-0364	-		4	Screw M6S M6x10 A280	
410	312105-0451	-		1	Screw M6S 8x20 A280	
420	312125-0285	-		5	Screw Slot.Pan Hd. MCS 4x6 A480	
430	315105-0136	-		5	Washer, Plain, BRB, 4,3/8,H=0,8	
440	315105-0165	-		1	Washer, Plain, BRB, 8,4/16,H=1,5	
450	342708-0101	-		3	ACCESSORIES,REINFORCING RING VSH 6X1	
460	359000-0064	-		6	MARKING CO2/4 OMƒRKT	
470	359000-0400	-		2	MARKING CO2/4"0"	
480	359000-0401	-		1	MARKING COLLAR 2/4 "1" Yellow	
490	359000-0402	-		2	MARKING COLLAR 2/4 "2" Yellow	
500	359000-0404	-		25	MARKING COLLAR PA2/4 "4" Yellow	
510	359000-0405	-		5	MARKING CO2/4"5"	
520	359000-0771	-		1	MARKING CO2/4"V"	

Pos	Part No	SP	UN	Qty	Description	Page No

This page is intentionally left blank

Pos	Part No	SP	UN	Qty	Description	Page No
Common Parts						
010	251279-0000	-		1	COIL HEATER	
020	21903-0000	-		1	ROLL	
030	531733-0000	-		1	GASKET	
040	531734-0000	-		2	GASKET	
050	531735-0000	-		1	GASKET	
060	531736-0000	-		1	GASKET	
070	90206-0031	-		1	HEATING ELEMENT 700+1200W,220V	
	312911-0126	-		1	Heli-Coil M8x1,5D	
	270926-0000	C		6	NUT	
	270927-0000	C		3	SCREW	
	294464-0000	C		1	BASE PLATE	
	312911-0119	-		2	THREADED INSERTS M6X2,0D	
	312911-0115	-		1	THREADED INSERTS M5X2,0D	
	90153-0050	-		1	ADHESIVE	
	321120-0100	-		1	BEARING BUSHING WITHOUT FLANGE,8/10x12	
	321120-0101	-		2	BEARING BUSHING WITHOUT FLANGE,6/8X6	

Pos	Part No	SP	UN	Qty	Description	Page No


Tetra Pak

SPC

Spare Parts Catalogue

This page is intentionally left blank

Pos	Part No	SP	UN	Qty	Description	Page No
Common Parts						
005	A 490590-0100	-		1	CONVEYOR FRAME	**708**
040	A 491942-0100	-		1	(PAPER)REEL TROLLEY	**710**
050	A 295904-0100	-		1	CLAMPING PIECE	**712**
080	A 469294-0100	-		1	TYPE EXTRACTOR	**714**
090	A 531345-0100	-		1	PERSONAL PROTECT. EQ H2O2	**716**
100	A 77099-0100	-		1	TOOL KIT	**720**
110	A 751094-0100	-		1	CREASE WHEEL	**718**
300	491092-0000	-		1	COVERING PLATE	
400	598878-0000	-		1	Machine Sign 2 ADR. EEA	
410	979548-0000	-		8	MACHINE PLATE	
500	1529181-0000	-		1	AIR-DIAGRAM	
540	1529201-0000	-		1	WATER DIAGRAM	
560	1529182-0000	-		1	PANEL SURVEY	
580	751148-0000	-		1	CIRQUIT DIAG.CENTRAL-LUB.	
585	1529259-0000	-		1	ASEPTIC DIAGRAM	
590	491922-0000	-		1	HYDRAULIC DIAGRAM	
910	90347-0079	-		1	Floor plate, Damper, No 470515-01	

Pos	Part No	SP	UN	Qty	Description	Page No

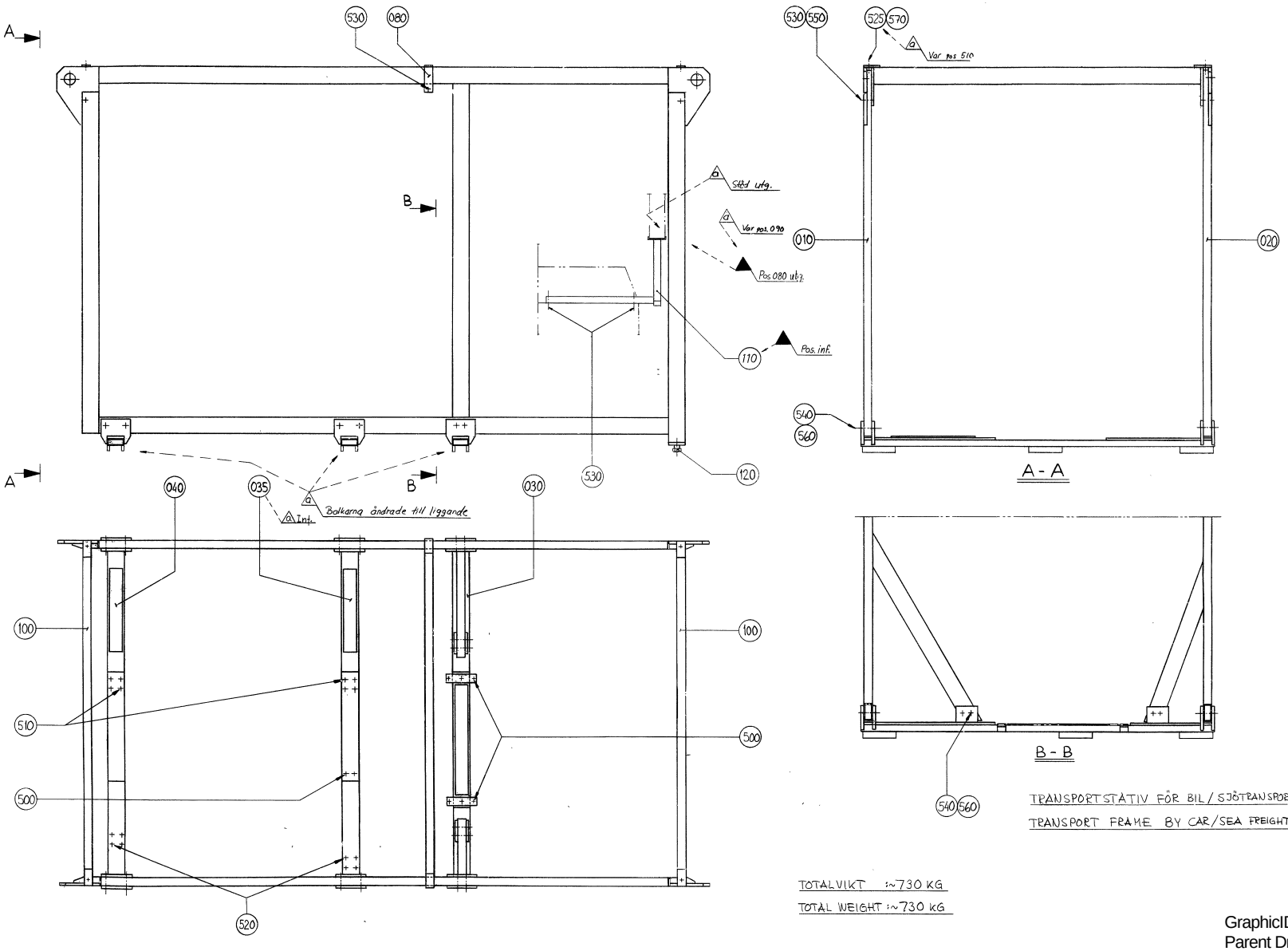

GraphicID: 490590-1_1_AA.eps
Parent Drw: 490590-1
ECN 8822

Pos	Part No	SP	UN	Qty	Description	Page No
By Truck/Sea						
030	B 491465-0000	-		1	GIRDER FRONT	
035	B 491466-0000	-		1	GIRDER MIDDLE	
040	B 491467-0000	-		1	GIRDER REAR	
120	490589-0000	-		2	SPACER BOLT	
By air						
050	B 490583-0000	-		1	BEAM, FRONT.	
060	B 490584-0000	-		1	BEAM, MIDDLE.	
070	B 490585-0000	-		1	BEAM, BACK.	
Common Parts						
010	B 490579-0000	-		1	FRAME RIGHT	
020	B 490580-0000	-		1	FRAME LEFT	
080	469861-0000	-		1	CROSS BAR	
100	490587-0000	-		2	CORNER BAR	
110	491680-0000	-		1	SUPPORT	
500	312101-0493	-		8	Screw M6S M10x25 FZB	
510	312101-0453	-		8	Screw M6S M8x25 FZB	
520	312101-0457	-		8	Screw M6S M8x35 FZB	
525	312101-0538	-		4	Screw M6S M12x35 FZB	
530	312101-0548	-		8	Screw M6S M12x80 FZB	
540	312101-0640	-		16	Screw M6S M16x100 FZB	
550	312810-0322	-		4	Nut Hex. Ny-Lock M12 FZB	
560	312810-0324	-		16	Nut Hex. Ny-Lock M16 FZB	
570	315101-0180	-		4	Washer, Plain, BRB, 14/28 H=2	

Pos	Part No	SP	UN	Qty	Description	Page No

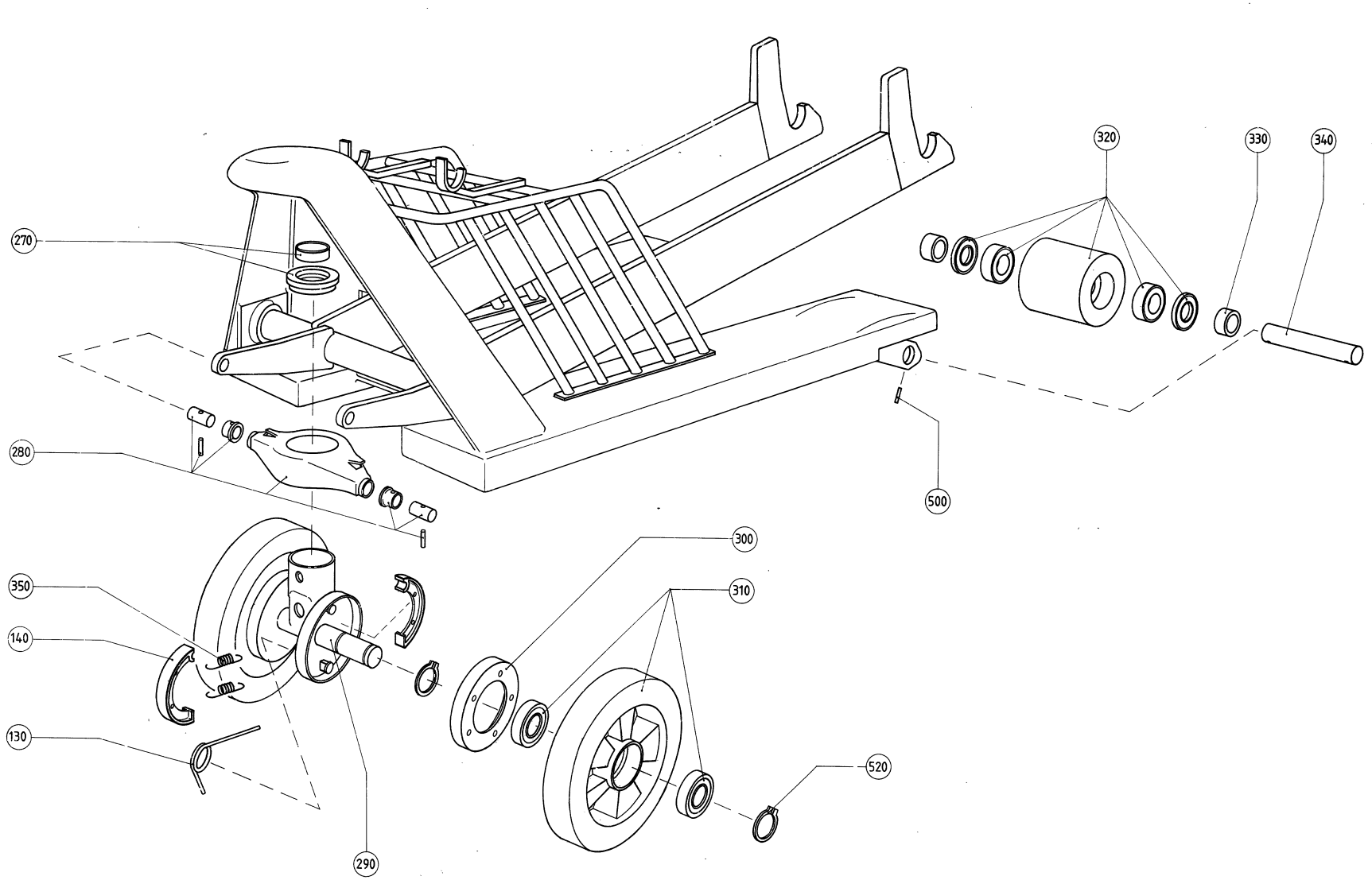

GraphicID: 491942-3_1_AA.eps
Parent Drw: 491942-3
ECN 9891

Pos	Part No	SP	UN	Qty	Description	Page No
Common Parts						
010	295106-0000	-		1	PROTECTION	
020	491189-0000	-		2	SIGN	
030	574658-0000	-		1	LOGOTYPE TP	
040	B 90067-0010	-		1	CARRIAGE	
050	312105-0364	-		5	Screw M6S M6x10 A280	
060	312121-0224	-		3	Screw Slot.Pan Hd. MCS 3x10 FZB	
110	90067-0300	C		1	SPARE PARTS KIT	
120	90067-0301	C		1	BRAKE WIRE, 32 82 138 1	
130	90067-0302	C		2	TORSION SPRING	
140	90067-0317	C		2	BRAKE LINING	
150	90067-0322	C		1	REPAIR KIT	
160	90067-0323	C		1	BEARING KIT	
170	90067-0324	C		1	REPAIR KIT	
180	90067-0325	C		1	PUMP PISTON	
190	90067-0326	C		1	REPAIR KIT	
200	90067-0327	C		1	RETURN SPRING	
210	90067-0328	C		1	VALVE	
220	90067-0329	C		2	COPPER WASHER	
230	90067-0330	C		1	VALVE ARM	
240	90067-0331	C		1	TOP BEARING KIT	
250	90067-0332	C		1	LIFT PISTON	
260	90067-0333	C		1	VALVE	
270	90067-0334	C		1	AXIAL BEARING KIT	
280	90067-0335	C		1	YOKE UNIT	
290	90067-0336	C		1	GUIDE SHAFT UNIT, 32 82 123 3	
300	90067-0337	C		2	BRAKE DRUM	
310	90067-0338	C		2	GUIDE ROLLER	
320	90067-0339	C		2	WHEEL	
330	90067-0340	C		4	SLEEVE	
340	90067-0341	C		2	SHAFT	
350	90067-0342	C		4	TENSION SPRING	
500	311303-0271	C		2	SLOTTED PIRPB4X18FZB	
510	315204-0108	C		2	O-Ring 10,10x1,6 mm	
520	315750-0119	C		4	Retaining Ring for shaft, 25x1,2 mm	

Pos	Part No	SP	UN	Qty	Description	Page No

Clamping Piece

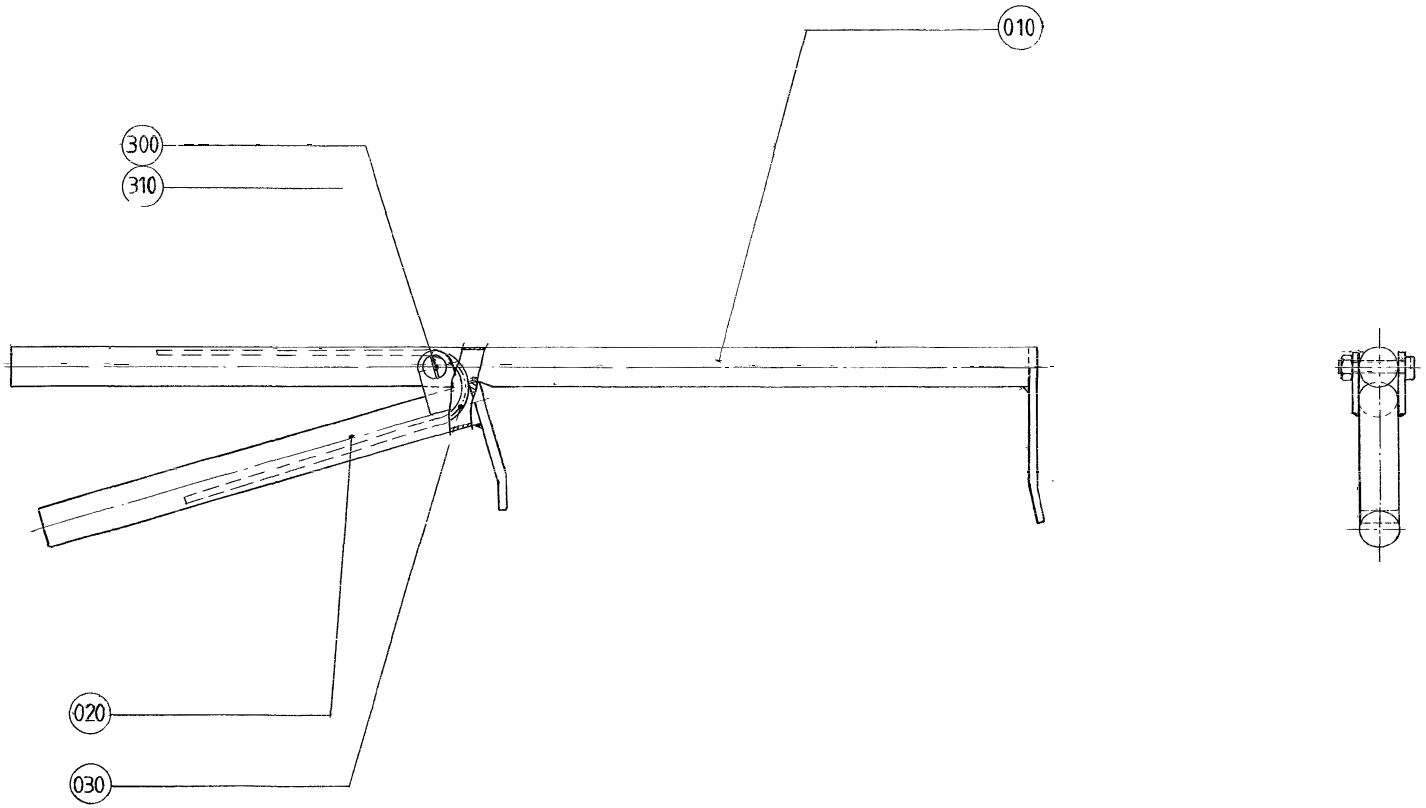

GraphicID: 295904-1_1_AA.eps
Parent Drw: 295904-1
ECN 5669

Pos	Part No	SP	UN	Qty	Description	Page No
TBA 0125S OR TBA 0100B OR TWA 0125S						
010	295905-0001	-		1	HOLDER	
TBA 0160S OR TBA 0200S OR TWA 0200S OR TB 0200S						
010	295905-0002	-		1	HOLDER	
TBA 0250S OR TBA 0200M OR TB 0200M OR TB 0250S						
010	295905-0004	-		1	HOLDER	
TBA 0330S OR TBA 0300S OR TBA 0180B OR TBA 0200B OR TBA 0189B OR TBA 0284B OR TBA 0250B OR TBA 0236B OR TB 0180B OR TB 0200B OR TB 0236B OR TB 0250B						
010	295905-0003	-		1	HOLDER	
TPA 0330SQ						
010	295905-0005	-		1	HOLDER	
Common Parts						
020	295906-0000	-		1	HANDLE	
030	295907-0000	-		1	SPRING	
300	312125-0295	-		1	Screw Pan Head MCS M4X20 RFR	
310	312605-0312	-		1	Nut Hex. M6M M4 A280	

Pos	Part No	SP	UN	Qty	Description	Page No

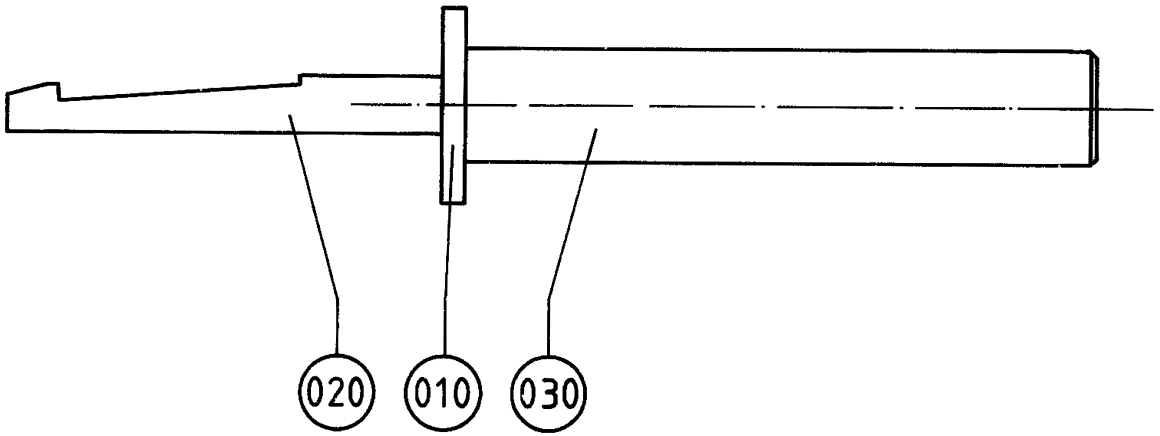

GraphicID: 469294-1_1_AA.eps
Parent Drw: 469294-1
ECN 7347

Pos	Part No	SP	UN	Qty	Description	Page No
Common Parts						
010	274177-0000	-		1	WASHER	
020	469293-0000	-		1	CLAW	
030	274179-0000	-		1	HANDLE	

Pos	Part No	SP	UN	Qty	Description	Page No

This page is intentionally left blank

Pos	Part No	SP	UN	Qty	Description	Page No
Common Parts						
010	90303-0012	-		1	Protective Gloves	
020	90303-0013	-		1	Apron	
030	90303-0011	-		1	Protective Goggles	

Pos	Part No	SP	UN	Qty	Description	Page No

Crease Wheel

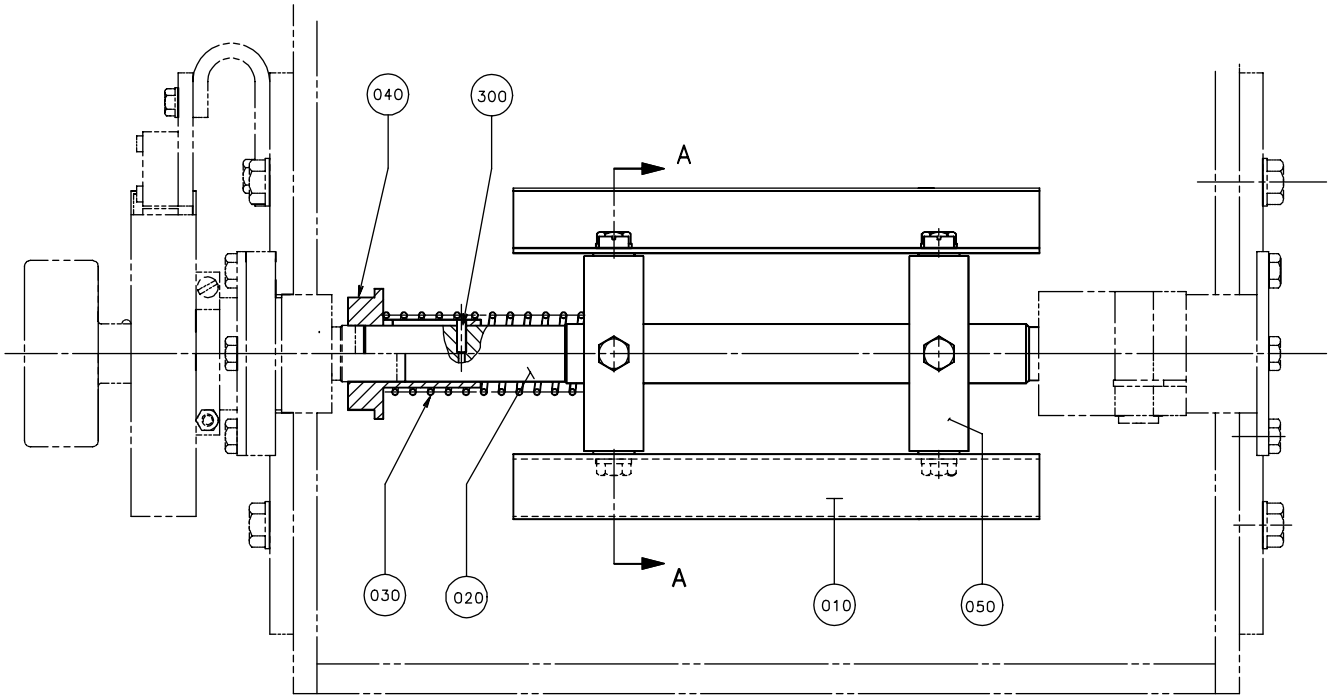

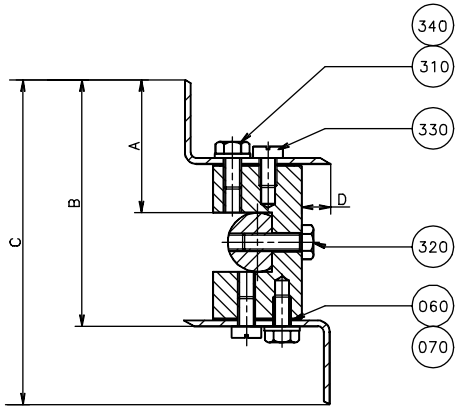

SNITT/SECTION A-A

200 SLIM	62,2	119,4	144,4	8,16
250	56,65	106,8	133,3	9,86
236	52,85	99,2	125,7	9,86
200	45,15	83,8	110,3	9,86
180	41,4	76,3	102,8	9,86
125	43,4	86,8	106,8	4,1
VOLUME	A	B	C	D
THE MEASURES ARE THEORETICAL				

SNITT A-A OMRITAD
SECTION A-A REDRAWED

GraphicID: 751094-1_1_AA.eps
Parent Drw: 751094-1
ECN 10553

Pos	Part No	SP	UN	Qty	Description	Page No
0125S						
010	441551-0000	C		2	CREASE BAR	
050	441556-0007	C		2	SPACER	
0180B						
010	441552-0000	C		2	CREASE BAR	
050	441556-0006	C		2	SPACER	
0200B						
010	441552-0000	C		2	CREASE BAR	
050	441556-0004	C		2	SPACER	
0200S						
010	441554-0000	C		2	CREASE BAR	
050	441556-0009	C		2	SPACER	
0236B						
010	441552-0000	C		2	CREASE BAR	
050	441556-0003	C		2	SPACER	
0250B						
010	441552-0000	C		2	CREASE BAR	
050	441556-0002	C		2	SPACER	
Common Parts						
020	441555-0000	D		1	SHAFT	
030	272001-0000	C		1	COMPRESSION SPRING	
040	295010-0000	C		1	GUIDE SLEEVE	
060	456817-0001	D		8	SHIM	
070	456817-0002	D		4	SHIM	
300	311103-0234	C		1	Pin, Parallell, m6, 3x12	
310	312105-0366	-		4	Screw M6S M6x12 A280	
320	312105-0370	-		2	Screw M6S M6x20 A280	
330	312125-0364	-		4	Screw Slot.Pan Hd. MCS 6x10 A480	
340	315105-0153	-		4	Washer, Plain, BRB, 6,4/12,H=1,5	

Pos	Part No	SP	UN	Qty	Description	Page No

This page is intentionally left blank

Pos	Part No	SP	UN	Qty	Description	Page No
Common Parts						
010	75665-0000	-		1	ASSEMBLY TOOL	
020	72947-0000	-		1	HOOK SPANNER	
030	B 76167-0000	-		1	LOCKING LOOP	
040	76138-0000	-		1	LOCKING LOOP	
050	434841-0000	-		1	GAUGE	
060	76131-0000	-		1	ASSEMBLY CONE	
070	76132-0000	-		1	ASSEMBLY TOOL	
080	76153-0000	-		1	SETTING TOOL	
090	77247-0000	-		1	ASSEMBLY PIN	
210	777120-0215	-		2	SPANNER 6x7	
220	777120-0220	-		2	C-SPANNER	
230	777120-0232	-		2	SPANNER 12x13	
240	777122-0137	-		1	C-SPANNER V=36	
250	777122-0142	-		1	C-SPANNER V=46	
260	777150-0801	-		2	KEY SET ,SEXKANT	
270	777200-0101	-		1	PIPE WRENCEL	

Pos	Part No	SP	UN	Qty	Description	Page No


Tetra Pak

SPC

Spare Parts Catalogue

This page is intentionally left blank

Pos	Part No	SP	UN	Qty	Description	Page No
Common Parts						
0010	A1370872-0100	-		1	Electrical Components	**726**
0020	A1370873-0100	-		1	Cables	**732**
0050	A1370876-0100	-		1	EXTRA EQUIPMENT	**736**
0060	A1370877-0100	-		1	SPARE PART	**738**
0070	A1370878-0100	-		1	CONTROL PANEL	**740**
0080	A1559000-0100	-		1	ELECTRICAL CABINET	**744**
0090	A1559022-0100	-		1	CONTROL PANEL	**766**

Pos	Part No	SP	UN	Qty	Description	Page No

This page is intentionally left blank

Pos	Part No	SP	UN	Qty	Description	Page No
Common Parts						
A002	90430-0067	-		1	Motor drive control PME 1802A CD2	
A002.1	B 68262-0101	-		1	BACKPLANE FRONT RACK 8TE	
A004	B 558230-0301	-		1	TMCC Controller	
A004.1	B 68262-0101	-		1	BACKPLANE FRONT RACK 8TE	
A004.2	B 48890-0101	-		1	TMCC PROGRAMME	
A010	90119-0106	-		1	SAFETY RELAY JOKAB RT 6	
A011	90119-0106	-		1	SAFETY RELAY JOKAB RT 6	
A013	90119-0106	-		1	SAFETY RELAY JOKAB RT 6	
A023	90119-0063	-		1	OPTO-RELAY DC/DC AMMS-10-1	
A024	90119-0063	-		1	OPTO-RELAY DC/DC AMMS-10-1	
A100	90031-0051	-		1	Baseplate 10-Slot	
A100.1	90031-0305	-		1	I/O Expansion Cable 0,3 M	
A102	90031-0058	-		1	PLC,Digital Input Module,fast ,16pt,+/-	
A103	90031-0057	-		1	PLC,Digital Input Module,24VDC,16pt,+/-	
A104	90031-0057	-		1	PLC,Digital Input Module,24VDC,16pt,+/-	
A105	90031-0057	-		1	PLC,Digital Input Module,24VDC,16pt,+/-	
A106	90031-0057	-		1	PLC,Digital Input Module,24VDC,16pt,+/-	
A107	90031-0057	-		1	PLC,Digital Input Module,24VDC,16pt,+/-	
A108	90031-0057	-		1	PLC,Digital Input Module,24VDC,16pt,+/-	
A120	B 90031-0053	-		1	Baseplate,10-Slot	
A121	90031-0059	-		1	PLC,Digital Output Module,24VDC,16pt,+/-	
A122	90031-0059	-		1	PLC,Digital Output Module,24VDC,16pt,+/-	
A123	90031-0059	-		1	PLC,Digital Output Module,24VDC,16pt,+/-	
A124	90031-0059	-		1	PLC,Digital Output Module,24VDC,16pt,+/-	
A125	90031-0059	-		1	PLC,Digital Output Module,24VDC,16pt,+/-	
A126	90031-0059	-		1	PLC,Digital Output Module,24VDC,16pt,+/-	
A127	90031-0059	-		1	PLC,Digital Output Module,24VDC,16pt,+/-	
A128	90031-0059	-		1	PLC,Digital Output Module,24VDC,16pt,+/-	
A129	90031-0059	-		1	PLC,Digital Output Module,24VDC,16pt,+/-	
A201	90410-0051	-		1	TEMPERATURE REGULATOR KS40	
A201.1	359241-0123	-		1	SIGN "PRESTERILISATION"	
A202	90410-0051	-		1	TEMPERATURE REGULATOR KS40	
A202.1	359241-0141	-		1	SIGN "PEROXIDE WATER BATH"	
A203	90410-0051	-		1	TEMPERATURE REGULATOR KS40	
A203.1	359241-0131	-		1	SIGN "LONGITUDINAL SEALING"	
A204	90410-0051	-		1	TEMPERATURE REGULATOR KS40	
A204.1	359241-0130	-		1	SIGN "AIR SUPERHEATER"	
A205	90410-0051	-		1	TEMPERATURE REGULATOR KS40	
A205.1	359241-0126	-		1	SIGN "TEMP.AIR KNIFE"	
A206	90410-0051	-		1	TEMPERATURE REGULATOR KS40	
A206.1	359241-0121	-		1	SIGN "STEAM"	
A207	90410-0051	-		1	TEMPERATURE REGULATOR KS40	
A207.1	359241-0125	-		1	SIGN "TEMP.PEROXIDE BATH"	
A208	90410-0051	-		1	TEMPERATURE REGULATOR KS40	
A208.1	359241-0132	-		1	SIGN "STRIP APPLICATOR"	
A301	90314-0038	-		1	Level control relay RM3	
A302	90314-0038	-		1	Level control relay RM3	
A303	90314-0038	-		1	Level control relay RM3	
A304	90314-0038	-		1	Level control relay RM3	
A305	90314-0038	-		1	Level control relay RM3	
A401	B 67600-0501	-		1	TPIH Generator	
A401.1	90110-0121	-		2	FEMALECONT.15POLE HARTING	
A401.2	90110-0122	-		2	COVER HARTING	
A402	558321-0101	-		1	TPIH-SWITCH	
A402.1	B 68262-0101	-		1	BACKPLANE FRONT RACK 8TE	
A450	90457-1106	-		1	CURRENT RELAY EIH 84 871 010	
A451	90457-1106	-		1	CURRENT RELAY EIH 84 871 010	
D100	90031-0074	-		1	CPU350, no communication	
E001	90297-0007	-		1	FLUORESCENT TUBE 11W	
E001.1	90164-0301	-		1	HOLDING FIXTURE	
F001	90233-0028	-		1	FUSE 10A FERRAZ	
F001.1	90233-0304	-		1	FUSEHOLDER FERRAZ ST10	
F002	90233-0029	-		1	FUSE 25A FERRAZ	
F002.1	90233-0304	-		1	FUSEHOLDER FERRAZ ST10	
F003	B 90233-0027	-		1	FUSE 16A FERRAZ10,3X38,2	
F003.1	90233-0304	-		1	FUSEHOLDER FERRAZ ST10	
F004	B 90233-0027	-		1	FUSE 16A FERRAZ10,3X38,2	
F004.1	90233-0303	-		1	FUSEHOLDER FERRAZ ST10	
F005	B 90233-0027	-		1	FUSE 16A FERRAZ10,3X38,2	
F005.1	90233-0303	-		1	FUSEHOLDER FERRAZ ST10	
F006	90007-0129	-		1	FUSE 1P 10A K	
F007	90007-0129	-		1	FUSE 1P 10A K	
F008	90007-0131	-		1	FUSE 1P 16A K	
F009	90007-0129	-		1	FUSE 1P 10A K	
F020	90007-0147	-		1	FUSE 3P 10A K	
F031	90007-0128	-		1	FUSE 1P 6A K	
F032	90007-0128	-		1	FUSE 1P 6A K	
F101	90007-0118	-		1	FUSE	
F102	90007-0118	-		1	FUSE	

(Cont'd)

This page is intentionally left blank

Pos	Part No	SP	UN	Qty	Description	Page No
(Cont'd)						
G100	B 90031-0068	-		1	PLC, Power supply 240 VAC, High cap.	
G120	B 90031-0068	-		1	PLC, Power supply 240 VAC, High cap.	
K001	B 90075-0125	-		1	CONTACTOR 7,5KW COIL 24VDC	
K002	B 90075-0125	-		1	CONTACTOR 7,5KW COIL 24VDC	
K003	B 90075-0125	-		1	CONTACTOR 7,5KW COIL 24VDC	
K004	B 90075-0125	-		1	CONTACTOR 7,5KW COIL 24VDC	
K005	B 90075-0125	-		1	CONTACTOR 7,5KW COIL 24VDC	
K006	B 90075-0124	-		1	CONTACTOR 4KW COIL 24VDC	
K012	B 90075-0125	-		1	CONTACTOR 7,5KW COIL 24VDC	
K013	B 90075-0125	-		1	CONTACTOR 7,5KW COIL 24VDC	
K014	B 90075-0125	-		1	CONTACTOR 7,5KW COIL 24VDC	
K030	B 90075-0126	-		1	CONTACTOR 22KW COIL 24VDC	
K030.1	90024-0035	-		1	VARISTOR VG B DIL 24;24VDC K&M	
K031	B 90075-0124	-		1	CONTACTOR 4KW COIL 24VDC	
K032	B 90075-0124	-		1	CONTACTOR 4KW COIL 24VDC	
K033	B 90075-0125	-		1	CONTACTOR 7,5KW COIL 24VDC	
K034	B 90075-0125	-		1	CONTACTOR 7,5KW COIL 24VDC	
K035	B 90075-0124	-		1	CONTACTOR 4KW COIL 24VDC	
K036	B 90075-0124	-		1	CONTACTOR 4KW COIL 24VDC	
K037	B 90075-0124	-		1	CONTACTOR 4KW COIL 24VDC	
K038	B 90075-0125	-		1	CONTACTOR 7,5KW COIL 24VDC	
K039	B 90075-0124	-		1	CONTACTOR 4KW COIL 24VDC	
K040	B 90075-0124	-		1	CONTACTOR 4KW COIL 24VDC	
K100	90119-0056	-		1	PLUG-IN RELAY 24VDC	
K100.1	90129-0006	-		1	BASE 11 POLE	
K102	90119-0056	-		1	PLUG-IN RELAY 24VDC	
K102.1	90129-0006	-		1	BASE 11 POLE	
K103	90119-0056	-		1	PLUG-IN RELAY 24VDC	
K103.1	90129-0006	-		1	BASE 11 POLE	
K104	90119-0056	-		1	PLUG-IN RELAY 24VDC	
K104.1	90129-0006	-		1	BASE 11 POLE	
K105	90119-0056	-		1	PLUG-IN RELAY 24VDC	
K105.1	90129-0006	-		1	BASE 11 POLE	
K106	90119-0056	-		1	PLUG-IN RELAY 24VDC	
K106.1	90129-0006	-		1	BASE 11 POLE	
K107	90119-0056	-		1	PLUG-IN RELAY 24VDC	
K107.1	90129-0006	-		1	BASE 11 POLE	
K108	90119-0056	-		1	PLUG-IN RELAY 24VDC	
K108.1	90129-0006	-		1	BASE 11 POLE	
K109	90119-0056	-		1	PLUG-IN RELAY 24VDC	
K109.1	90129-0006	-		1	BASE 11 POLE	
K110	90119-0056	-		1	PLUG-IN RELAY 24VDC	
K110.1	90129-0006	-		1	BASE 11 POLE	
K111	90119-0056	-		1	PLUG-IN RELAY 24VDC	
K111.1	90129-0006	-		1	BASE 11 POLE	
K201	90119-0067	-		1	SOLID-STATE RELAY H12WD	
K202	90119-0067	-		1	SOLID-STATE RELAY H12WD	
K203	90119-0067	-		1	SOLID-STATE RELAY H12WD	
K204	90119-0067	-		1	SOLID-STATE RELAY H12WD	
K205	90119-0067	-		1	SOLID-STATE RELAY H12WD	
K206	90119-0067	-		1	SOLID-STATE RELAY H12WD	
K207	90119-0067	-		1	SOLID-STATE RELAY H12WD	
K208	90119-0067	-		1	SOLID-STATE RELAY H12WD	
L001	90297-0306	-		1	BALLAST COIL 50/60 HZ	
L002	90297-0306	-		1	BALLAST COIL 50/60 HZ	
L004	90297-0306	-		1	BALLAST COIL 50/60 HZ	
P002	90178-0007	-		1	HOUR METER MUELLER 12-48V DC	
P004	90053-0029	-		1	Pack Counter 8 Digits IVO	
P005	B 90332-0019	-		1	Recorder Honeywell 1 Ch.	
Q001	90111-0135	-		1	SWITCH	
Q001.1	359241-0124	-		1	SIGN "MAIN SWITCH"	
Q001.2	359241-0297	-		1	SIGN "400/230V;50Hz;63A"	
Q003	90095-0074	-		1	OVERLOAD PROTECTION PKZM 2,5A	
Q003.1	90259-0313	-		1	AUX. CONTACT K&M NHI21-PKZM0	
Q012	90095-0077	-		1	OVERLOAD PROTECTION PKZM 6-10A	
Q012.1	90259-0313	-		1	AUX. CONTACT K&M NHI21-PKZM0	
Q013	90095-0077	-		1	OVERLOAD PROTECTION PKZM 6-10A	
Q013.1	90259-0313	-		1	AUX. CONTACT K&M NHI21-PKZM0	
Q014	90095-0073	-		1	OVERLOAD PROTECTION PKZM 1,6A	
Q014.1	90259-0313	-		1	AUX. CONTACT K&M NHI21-PKZM0	
Q030	90095-0080	-		1	OVERLOAD PROTECTION PKZM 25A	
Q030.1	90259-0313	-		1	AUX. CONTACT K&M NHI21-PKZM0	
Q033	90095-0077	-		1	OVERLOAD PROTECTION PKZM 6-10A	
Q033.1	90259-0313	-		1	AUX. CONTACT K&M NHI21-PKZM0	
Q034	90095-0073	-		1	OVERLOAD PROTECTION PKZM 1,6A	
Q034.1	90259-0313	-		1	AUX. CONTACT K&M NHI21-PKZM0	
Q035	90095-0075	-		1	OVERLOAD PROTECTION PKZM 4A	
Q035.1	90259-0313	-		1	AUX. CONTACT K&M NHI21-PKZM0	
Q036	90095-0073	-		1	OVERLOAD PROTECTION PKZM 1,6A	
Q036.1	90259-0313	-		1	AUX. CONTACT K&M NHI21-PKZM0	
Q037	90095-0077	-		1	OVERLOAD PROTECTION PKZM 6-10A	
(Cont'd)						

This page is intentionally left blank

Pos	Part No	SP	UN	Qty	Description	Page No
(Cont'd)						
Q037.1	90259-0313	-		1	AUX. CONTACT K&M NHI21-PKZM0	
Q038	90095-0078	-		1	OVERLOAD PROTECTION PKZM0-16	
Q038.1	90259-0313	-		1	AUX. CONTACT K&M NHI21-PKZM0	
Q039	90095-0072	-		1	OVERLOAD PROTECTION PKZM 1,0A	
Q039.1	90259-0313	-		1	AUX. CONTACT K&M NHI21-PKZM0	
Q040	90095-0071	-		1	OVERLOAD PROTECTION PKZM 0-0,63 A	
Q040.1	90259-0313	-		1	AUX. CONTACT K&M NHI21-PKZM0	
Q101	90111-0172	-		1	EARTH FAULT BREAKER	
R003	90130-0017	-		1	Potentiometer 10 kOhm	
R003.1	90130-0301	-		1	KNOB 3-DIGITS	
R003.2	359241-0260	-		1	SIGN "TS RIGHT"	
R004	90130-0017	-		1	Potentiometer 10 kOhm	
R004.1	90130-0301	-		1	KNOB 3-DIGITS	
R004.2	359241-0261	-		1	SIGN "TS LEFT"	
S002	90111-0124	-		1	KEY SWITCH 1NO,1NC Contact	
S002.1	359241-0122	-		1	SIGN "Cl.of Steam Barrier"	
S003	90111-0142	-		1	Thumb-Wheel Selector	
S003.1	359320-0002	-		1	SIGN "TUMB WHEEL UNIT"	
S004	90111-0122	-		1	KEY SWITCH 2 NO Contacts	
S004.1	359241-0133	-		1	SIGN "SERVICE SWITCH"	
S032	90064-0124	-		1	SWITCH,EMERGENCY STOP	
S032.1	486826-0001	-		1	SIGN "EMERGENCY STOP"	
S034	90064-0085	-		1	PUSH BUTTON RED	
S034.1	359301-0110	-		1	SIGN "SHORT STOP"	
T001	90245-0019	-		1	TRANSF.3-Ph.750VA Sec.23A	
T002	23118-0000	-		1	TRANSFORMER	
T003	23139-0000	-		1	TRANSFORMER 1Ph. Auto 2,1 KVA	
V001	90038-0024	-		1	RECTIFIER 50A SKD 50/04A3	
X021	90077-0102	-		1	TERMINAL BK4 KRG 4-POLE	
X023	90077-0102	-		1	TERMINAL BK4 KRG 4-POLE	
X024	90077-0102	-		1	TERMINAL BK4 KRG 4-POLE	
X101	90001-0033	-		1	Wall socket Outlet	
Z002	90024-0060	-		1	Filter, 80A, 230/400 VAC	
Z003	90024-0036	-		1	FILTERED TERMINAL BLOCK	
_1000	B 67388-0102	-		1	RACK FRONTMOUNTED 84TE	
_1010	B 67388-0103	-		1	RACK FRONTMOUNTED 28TE	
_1020	90194-0133	-		1	SIGN "DELIVERED DESIGN"	
_1030	90194-0016	-		4	SIGN "FLASH SIGN" 50X50MM	
_1040	90194-0080	-		1	SIGN "IDENTIF. OF WIRING"	
_1100	351179-0110	-	MM	1	CABLE AWM BLACK 25MM2	
_1110	351179-0107	-	MM	1	CABLE AWM BLACK 6MM2	
_1120	351179-0106	-	MM	1	CABLE AWM BLACK 4MM2	
_1130	351179-0105	-	MM	1	CABLE AWM BLACK 2,5MM2	
_1140	351179-0104	-	MM	1	CABLE AWM BLACK 1,5MM2	
_1150	351179-0102	-	MM	1	CABLE AWM BLACK 0,75MM2	
_1160	351173-0110	-	MM	1	CABLE AWM LIGHTBLUE 25MM2	
_1170	351173-0107	-	MM	1	CABLE AWM LIGHTBLUE 6mm2	
_1180	351173-0105	-	MM	1	CABLE AWM LIGHTBLUE 2,5 MM2	
_1190	351173-0104	-	MM	1	CABLE AWM LIGTHBLUE 1,5MM2	
_1200	351173-0102	-	MM	1	CABLE AWM LIGHTBLUE 0,75MM2	
_1210	351172-0105	-	MM	1	CABLE AWM BLUE 2,5 MM2	
_1220	351172-0102	-	MM	1	CABLE AWM BLUE 0,75MM2	
_1230	351175-0109	-	MM	1	CABLE AWM YELL/GREEN 16mm2	
_1240	351175-0108	-	MM	1	CABLE AWM YELL/GREEN 10MM2	
_1250	351175-0107	-	MM	1	CABLE AWM YELL/GREEN 6MM2	
_1260	351175-0105	-	MM	1	CABLE AWM YELL/GREEN 2,5MM2	
_1270	351175-0104	-	MM	1	CABLE AWM YELL/GREEN 1,5MM2	
_1280	351175-0102	-	MM	1	CABLE AWM YELL/GREEN 0,75MM2	

This page is intentionally left blank

Common Parts

Pos	Part No	SP	UN	Qty	Description	Page No
001	351179-0110	-	MM	5800	CABLE AWM BLACK 25MM2	
002	351179-0110	-	MM	5800	CABLE AWM BLACK 25MM2	
003	351179-0110	-	MM	5800	CABLE AWM BLACK 25MM2	
004	351179-0110	-	MM	5800	CABLE AWM BLACK 25MM2	
005	351120-0167	-	MM	3500	CABLE SIHF 4X6	
006	351120-0167	-	MM	6000	CABLE SIHF 4X6	
007	351120-0145	-	MM	6000	CABLE SIHF 3x2,5 MM2	
008	351120-0145	-	MM	6000	CABLE SIHF 3x2,5 MM2	
009	351120-0144	-	MM	5000	CABLE SIHF 3x1,5 MM2	
010	351120-0144	-	MM	600	CABLE SIHF 3x1,5 MM2	
011	351150-0413	-	MM	4600	CABLE OLFLEX 4x1,5mm2	
012	351150-0413	-	MM	4700	CABLE OLFLEX 4x1,5mm2	
013	351150-0413	-	MM	6000	CABLE OLFLEX 4x1,5mm2	
014	351150-0413	-	MM	6600	CABLE OLFLEX 4x1,5mm2	
015	351150-0413	-	MM	2500	CABLE OLFLEX 4x1,5mm2	
016	351150-0413	-	MM	6600	CABLE OLFLEX 4x1,5mm2	
017	351150-0412	-	MM	5700	CABLE OLFLEX 3x1,5mm2	
018	351150-0413	-	MM	6700	CABLE OLFLEX 4x1,5mm2	
019	351150-0415	-	MM	4000	CABLE OILFLEX 7x1,5mm2	
020	351150-0413	-	MM	2600	CABLE OLFLEX 4x1,5mm2	
021	351150-0413	-	MM	5000	CABLE OLFLEX 4x1,5mm2	
022	90220-0108	-	MM	8000	CABLE,SCREENED 5x1,5mm2	
023	351150-0412	-	MM	5000	CABLE OLFLEX 3x1,5mm2	
024	351150-0412	-	MM	3200	CABLE OLFLEX 3x1,5mm2	
025	351150-0412	-	MM	3800	CABLE OLFLEX 3x1,5mm2	
026	351150-0412	-	MM	5500	CABLE OLFLEX 3x1,5mm2	
027	351120-0144	-	MM	6000	CABLE SIHF 3x1,5 MM2	
028	90220-0034	-	MM	6300	THERMO-CABLE	
029	90220-0034	-	MM	5500	THERMO-CABLE	
030	90220-0034	-	MM	5000	THERMO-CABLE	
031	90220-0034	-	MM	5000	THERMO-CABLE	
032	90220-0034	-	MM	6200	THERMO-CABLE	
033	90220-0034	-	MM	5800	THERMO-CABLE	
034	90220-0034	-	MM	5600	THERMO-CABLE	
035	90220-0034	-	MM	6200	THERMO-CABLE	
036	90220-0034	-	MM	5300	THERMO-CABLE	
039	351150-0407	-	MM	4700	CABLE OLFLEX 12x0,75 MM2	
041	351150-0431	-	MM	6000	Cable Olflex 2x0,75 mm2	
042	351150-0404	-	MM	2800	CABLE OLFLEX 4x0,75 MM2	
043	351150-0405	-	MM	4000	CABLE,OLFLEX 5x0,75 MM2	
044	351150-0405	-	MM	4000	CABLE,OLFLEX 5x0,75 MM2	
046	351150-0405	-	MM	6100	CABLE,OLFLEX 5x0,75 MM2	
047	351150-0403	-	MM	4500	CABLE OLFLEX 3x0,75 MM2	
048	351150-0403	-	MM	4100	CABLE OLFLEX 3x0,75 MM2	
049	351150-0403	-	MM	4300	CABLE OLFLEX 3x0,75 MM2	
050	351150-0404	-	MM	6000	CABLE OLFLEX 4x0,75 MM2	
051	351150-0403	-	MM	4100	CABLE OLFLEX 3x0,75 MM2	
052	351150-0403	-	MM	4600	CABLE OLFLEX 3x0,75 MM2	
053	351150-0405	-	MM	5600	CABLE,OLFLEX 5x0,75 MM2	
054	351150-0403	-	MM	3900	CABLE OLFLEX 3x0,75 MM2	
057	351150-0403	-	MM	4100	CABLE OLFLEX 3x0,75 MM2	
058	351150-0403	-	MM	4000	CABLE OLFLEX 3x0,75 MM2	
059	351150-0403	-	MM	5000	CABLE OLFLEX 3x0,75 MM2	
060	351150-0403	-	MM	4300	CABLE OLFLEX 3x0,75 MM2	
061	351150-0403	-	MM	5000	CABLE OLFLEX 3x0,75 MM2	
062	351150-0403	-	MM	5200	CABLE OLFLEX 3x0,75 MM2	
063	351150-0403	-	MM	4200	CABLE OLFLEX 3x0,75 MM2	
064	351150-0403	-	MM	2900	CABLE OLFLEX 3x0,75 MM2	
065	351150-0405	-	MM	6500	CABLE,OLFLEX 5x0,75 MM2	
066	351150-0427	-	MM	6700	CABLE Olflex 34X0,75mm2	
067	351150-0428	-	MM	4500	CABLE OLFLEX 41x0,75mm2	
068	351150-0406	-	MM	6600	CABLE OLFLEX 7x0,75 MM2	
073	351150-0407	-	MM	4500	CABLE OLFLEX 12x0,75 MM2	
074	351150-0428	-	MM	6300	CABLE OLFLEX 41x0,75mm2	
075	1140285-0007	-		1	COAXIAL CABLE L= 4000 MM	
076	1140285-0007	-		1	COAXIAL CABLE L= 4000 MM	
077	548770-0008	-		1	COAXIAL CABLE L=600 mm	
078	548770-0008	-		1	COAXIAL CABLE L=600 mm	
079	351175-0109	-	MM	4000	CABLE AWM YELL/GREEN 16mm2	
101	351121-0209	-	MM	1	CABLE RADOX 155 1X25 MM2	
102	351121-0209	-	MM	1	CABLE RADOX 155 1X25 MM2	
103	351121-0209	-	MM	1	CABLE RADOX 155 1X25 MM2	
104	351121-0209	-	MM	1	CABLE RADOX 155 1X25 MM2	
105	351150-0413	-	MM	1	CABLE OLFLEX 4x1,5mm2	
114	351150-0403	-	MM	3500	CABLE OLFLEX 3x0,75 MM2	
115	351150-0403	-	MM	4200	CABLE OLFLEX 3x0,75 MM2	
116	351150-0403	-	MM	2000	CABLE OLFLEX 3x0,75 MM2	
117	351150-0406	-	MM	2000	CABLE OLFLEX 7x0,75 MM2	
118	351150-0405	-	MM	2500	CABLE,OLFLEX 5x0,75 MM2	
421	351150-0403	-	MM	3000	CABLE OLFLEX 3x0,75 MM2	
422	351150-0403	-	MM	3100	CABLE OLFLEX 3x0,75 MM2	
423	351150-0403	-	MM	3000	CABLE OLFLEX 3x0,75 MM2	

(Cont'd)

This page is intentionally left blank

Pos	Part No	SP	UN	Qty	Description	Page No
(Cont'd)						
428	351150-0404	-	MM	3100	CABLE OLFLEX 4x0,75 MM2	
429	351150-0403	-	MM	1800	CABLE OLFLEX 3x0,75 MM2	
430	351150-0403	-	MM	1600	CABLE OLFLEX 3x0,75 MM2	
431	351150-0403	-	MM	2500	CABLE OLFLEX 3x0,75 MM2	
432	351150-0405	-	MM	2600	CABLE,OLFLEX 5x0,75 MM2	
433	351150-0405	-	MM	2000	CABLE,OLFLEX 5x0,75 MM2	
434	351150-0405	-	MM	3000	CABLE,OLFLEX 5x0,75 MM2	
435	351150-0405	-	MM	3000	CABLE,OLFLEX 5x0,75 MM2	
614	351150-0405	-	MM	3200	CABLE,OLFLEX 5x0,75 MM2	
615	351150-0431	-	MM	1000	Cable Olflex 2x0,75 mm2	
713	351150-0403	-	MM	2500	CABLE OLFLEX 3x0,75 MM2	

Pos	Part No	SP	UN	Qty	Description	Page No

This page is intentionally left blank

Pos	Part No	SP	UN	Qty	Description	Page No
Common Parts						
0010	90245-0024	-		1	MATCHING TRANSF. 65 kVA	

Pos	Part No	SP	UN	Qty	Description	Page No

This page is intentionally left blank

Pos	Part No	SP	UN	Qty	Description	Page No
Common Parts						
0010	90036-0057	-		5	LIGHT BULB BA9S 28V	
0020	353021-0122	-		1	TERMINALS,DISCONNECTABLE, WTR 2,5 D	
0030	90064-0098	-		1	PUSH BUTTON CLEAR	
0035	90064-0315	-		1	Lamp Remover Olten No:700	
0040	90119-0056	-		1	PLUG-IN RELAY 24VDC	
0050	90119-0067	-		1	SOLID-STATE RELAY H12WD	
0060	B 90233-0027	-		10	FUSE 16A FERRAZ10,3X38,2	
0070	90233-0028	-		10	FUSE 10A FERRAZ	
0080	90233-0029	-		10	FUSE 25A FERRAZ	
0090	352551-0134	-		2	FINE-WIRE FUSE 2 A Slow;5x20mm	
0100	352550-0136	-		2	FINE-WIRE 3,15 A	
0110	90082-0301	-		1	OVERVOLTOLTAGE PROTECTOR	
0120	90332-0323	-		1	RECORDER CHARTS	
0130	90332-0322	-		1	Pen	

Pos	Part No	SP	UN	Qty	Description	Page No

This page is intentionally left blank

Pos	Part No	SP	UN	Qty	Description	Page No
Common Parts						
1000	A1369406-0100	-		1	TERMINAL	**742**
1010	90194-0016	-		1	SIGN "FLASH SIGN" 50X50MM	
PA004	B 558389-0101	-		1	MULTI PURPOSE POTENTIOM.	
PA004.1	551922-0000	-		1	LABEL,POTENTIOMETER DESIGN CORR.	
PA110	1367180-0001	-		1	Circuit board TBA/9-6000	
PA110.1	1367181-0000	-		1	Alarm display TBA/9-6000	
PA111	B 68699-0101	-		1	MULTIPLEXER CARD 56LED	
PA112	B 68699-0101	-		1	MULTIPLEXER CARD 56LED	
PP003	90053-0024	-		1	COUNTER Kubler 24VDC 6 Digits	
PP003.1	90053-0305	-		1	FRAME Kubler F 1 DV	
PS001	90064-0124	-		1	SWITCH,EMERGENCY STOP	
PS001.1	486826-0001	-		1	SIGN "EMERGENCY STOP"	
PS002H	90064-0098	-		1	PUSH BUTTON CLEAR	
PS002H.1	359301-0090	-		1	SIGN "INCHING"	
PS003H	90064-0098	-		1	PUSH BUTTON CLEAR	
PS003H.1	359301-0001	-		1	SIGN "UP"	
PS004H	B 90064-0082	-		1	PUSH BUTTON WHITE	
PS004H.1	359301-0005	-		1	SIGN "DOWN"	
PS006H	90064-0084	-		1	PUSH BUTTON YELLOW	
PS006H.1	359301-0110	-		1	SIGN "SHORT STOP"	
PS007	90111-0120	-		1	SWITCH 2 POS. EA OLTEN	
PS011H	90064-0098	-		1	PUSH BUTTON CLEAR	
PS011H.1	359301-0105	-		1	SIGN "ALARM RESET"	
PS012	90064-0098	-		1	PUSH BUTTON CLEAR	
PS012.1	359301-0130	-		1	SIGN "LAMPTEST"	
PS013	90111-0139	-		1	SWITCH	
PS019	90064-0098	-		1	PUSH BUTTON CLEAR	
PS019.1	359301-0050	-		1	SIGN "DROP CHUTE"	
PS020	90064-0098	-		1	PUSH BUTTON CLEAR	
PS020.1	359301-0170	-		1	SIGN "Manual Flushing FFU"	

Pos	Part No	SP	UN	Qty	Description	Page No

This page is intentionally left blank

Pos	Part No	SP	UN	Qty	Description	Page No
Common Parts						
001	353042-0005	-	MM	220	RAIL TS 35/7.5	
002	353024-0205	-		2	EARTH TERMINAL WPE 4	
003	353021-0212	-		40	FEED THROUGH TERMINAL WDU 2,5 Beige	
004	359011-0807	-		2	MARKING PLATES 5-FW 1-50	

Pos	Part No	SP	UN	Qty	Description	Page No

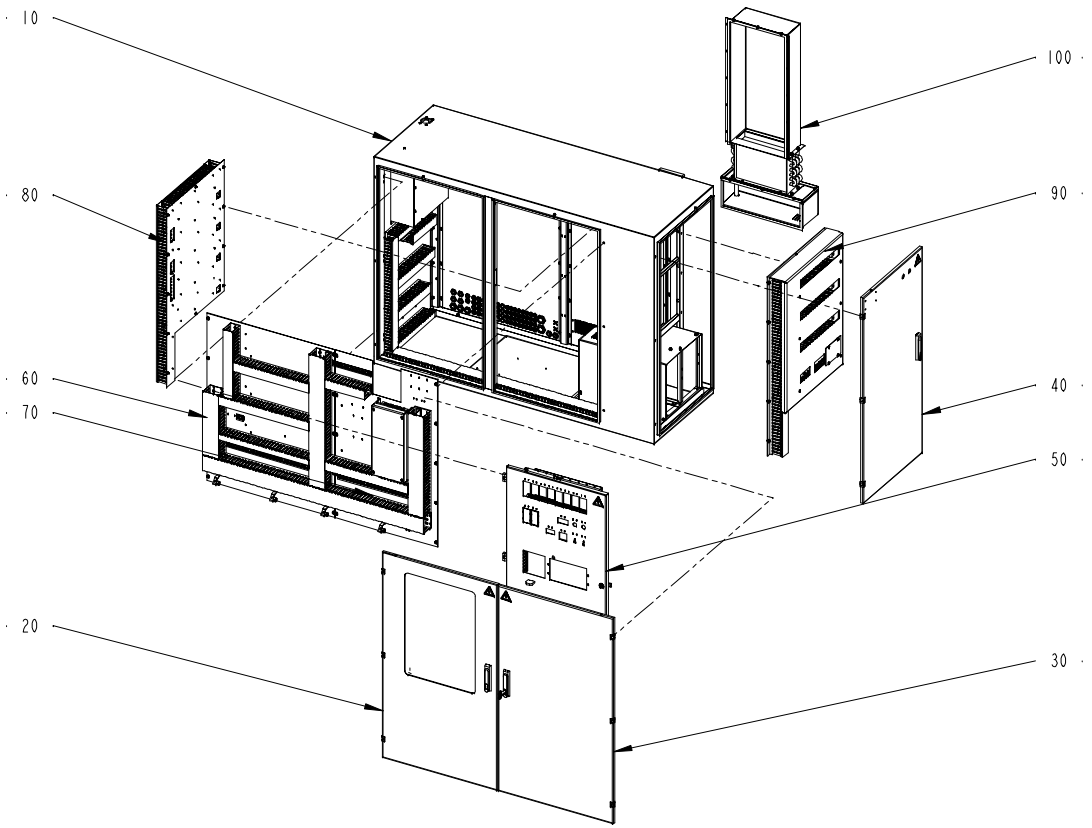
10
80
60
70
20
100
90
40
50
30
1559000-1
ECN 87205

Pos	Part No	SP	UN	Qty	Description	Page No
Common Parts						
010	A1559001-0100	-		1	CABINET	**746**
020	A1559002-0100	-		1	DOOR	**748**
030	A1559003-0100	-		1	DOOR	**750**
040	A1559004-0100	-		1	DOOR	**752**
050	A1559005-0100	-		1	SWING FRAME	**754**
060	A1559006-0100	-		1	MOUNTING PLATE	**756**
070	A1559007-0100	-		1	MOUNTING PLATE	**758**
080	A1559008-0100	-		1	MOUNTING PLATE	**760**
090	A1559009-0100	-		1	MOUNTING PLATE	**762**
100	A1559010-0100	-		1	FAN SYSTEM	**764**

Pos	Part No	SP	UN	Qty	Description	Page No

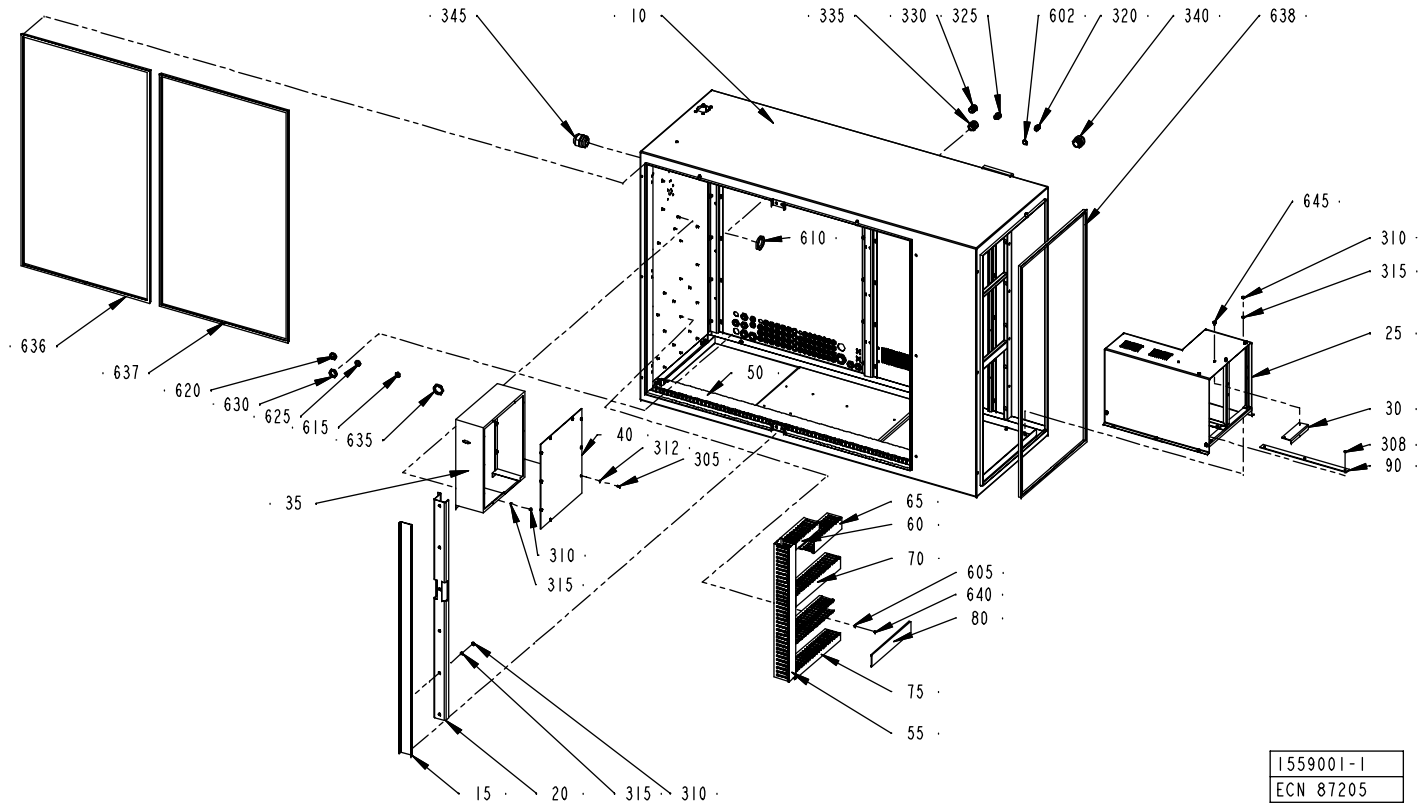
345
10
335
330
325
602
320
340
638
645
310
315
25
30
308
90
610
50
636
637
620
630
625
615
635
40
312
305
35
310
315
65
60
70
605
640
80
75
55
15
20
315
310
1559001-1
ECN 87205

Pos	Part No	SP	UN	Qty	Description	Page No
Common Parts						
010	1559025-0000	-		1	CABINET	
015	1559026-0000	-		1	POST	
020	1559027-0000	-		1	BRACKET	
025	1559028-0000	-		1	COVER	
030	1559043-0000	-		1	BRACKET	
035	1559044-0000	-		1	COVER	
040	1559049-0000	-		1	COVER PLATE	
050	1559053-0000	-		1	CABLE DUCT	
055	1559054-0000	-		1	CABLE DUCT	
060	1559055-0000	-		1	CABLE DUCT	
065	1559056-0000	-		1	CABLE DUCT	
070	1559057-0000	-		1	CABLE DUCT	
075	1559058-0000	-		1	CABLE DUCT	
080	1559059-0000	-		1	CABLE DUCT	
090	731049-0000	-		2	SLIDING STRIP TPIH	
305	312105-0287	-		14	Screw M6S M4x8 A280	
308	312145-0285	-		6	Screw Counters.Slot.Hd. MFS 4x6 SS	
310	312812-0316	-		128	Nut Hex. Ny-Lock M6 A480	
312	315105-0136	-		14	Washer, Plain, BRB, 4,3/8,H=0,8	
315	315105-0153	-		140	Washer, Plain, BRB, 6,4/12,H=1,5	
320	352103-0101	-		32	CABLE GLAND ST 9;PR15,2/PG9	
325	352103-0106	-		25	CABLE GLAND ST 11	
330	352103-0111	-		6	CABLE GLAND ST 16	
335	352103-0116	-		3	CABLE GLAND ST 21	
340	352103-0121	-		2	CABLE GLAND ST 29	
345	352103-0122	-		1	CABLE GLAND ST 36	
602	90002-0009	-		5	BLANK-OFF PLUG 18.6	
605	90005-0158	-		29	Washer,Pl.Rnd.Nyl.4,3/8, H=5	
610	90099-0103	-		1	NUT PR 47 (PG36)	
615	90099-0104	-		32	NUT PR 15,2 (PG9)	
620	90099-0110	-		6	NUT PR 22,5 (PG16)	
625	90099-0117	-		30	NUT PR 18,6 (PG11)	
630	90099-0119	-		3	NUT PR 28,3 (PG21)	
635	90099-0120	-		2	NUT PR 37 (PG29)	
636	90143-0057	-	MM	3760	STRIP EMKA 1011-05 21x11mm	
637	90143-0057	-	MM	3760	STRIP EMKA 1011-05 21x11mm	
638	90143-0057	-	MM	3598	STRIP EMKA 1011-05 21x11mm	
640	90261-0079	-		29	Plug, Blind, Plastic, No. 1955	
645	90287-0157	-		6	Screw M6SF FLAT HEAD M6x10 88	

Pos	Part No	SP	UN	Qty	Description	Page No

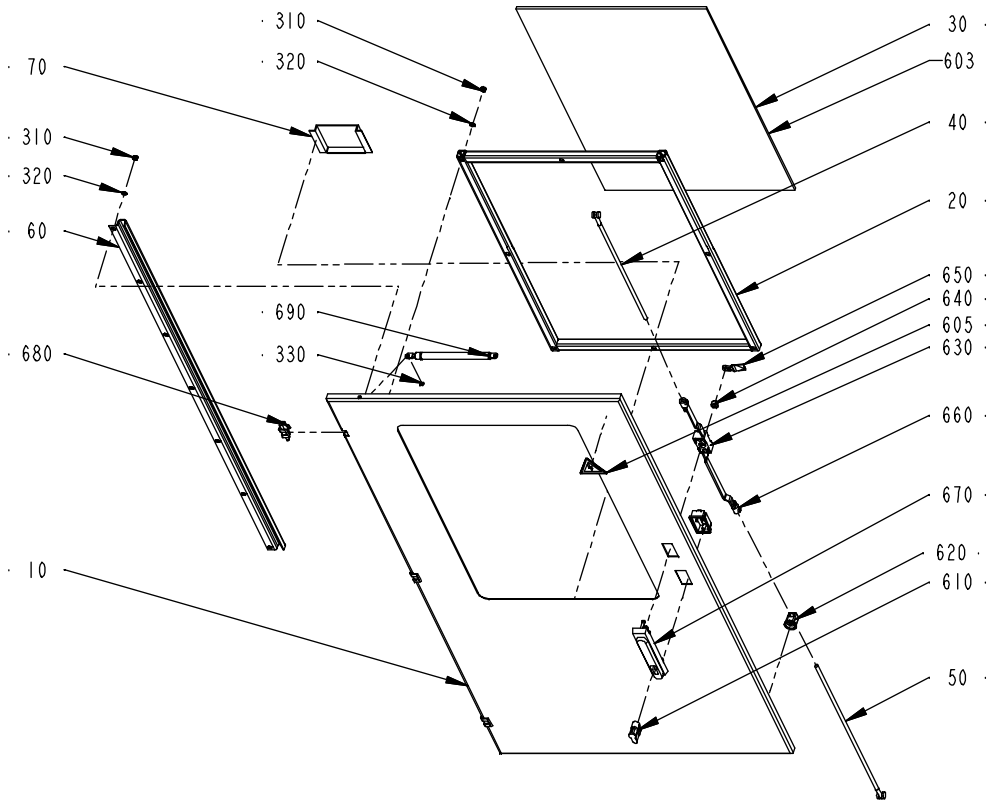

1559002-1
ECN 87205

Pos	Part No	SP	UN	Qty	Description	Page No
Common Parts						
010	1559034-0000	-		1	DOOR	
020	1559035-0000	-		1	FRAME	
030	1559045-0000	-		1	GLASS PANE	
040	1559046-0000	-		1	ROD	
050	1559047-0000	-		1	ROD	
060	1559048-0000	-		1	REINFORCEMENT	
070	970802-0000	-		1	DISCETTE BOX 3,5"	
310	312812-0316	-		15	Nut Hex. Ny-Lock M6 A480	
320	315105-0153	-		15	Washer, Plain, BRB, 6,4/12,H=1,5	
330	315755-0106	-		2	Locking Washer 4	
603	90157-0041	-	L	0,1	SEALING COMPOUND	
605	90194-0016	-		1	SIGN "FLASH SIGN" 50X50MM	
610	90237-0128	-		1	Lock Cylinder, 1109-U3	
620	90237-0151	-		2	Guide, 1001-U11	
630	90237-0153	-		1	Lock Housing, 1121-U26-a	
640	90237-0155	-		1	Lock Adapter, 1121-U40	
650	90237-0156	-		1	Lock Bolt, 1000-16	
660	90237-0158	-		2	ROUND BAR	
670	90237-0176	-		1	TURNING HANDLE	
680	90248-0032	-		3	HINGE	
690	90347-0050	-		1	Gas Spring No. 0306 150 398535	

Pos	Part No	SP	UN	Qty	Description	Page No

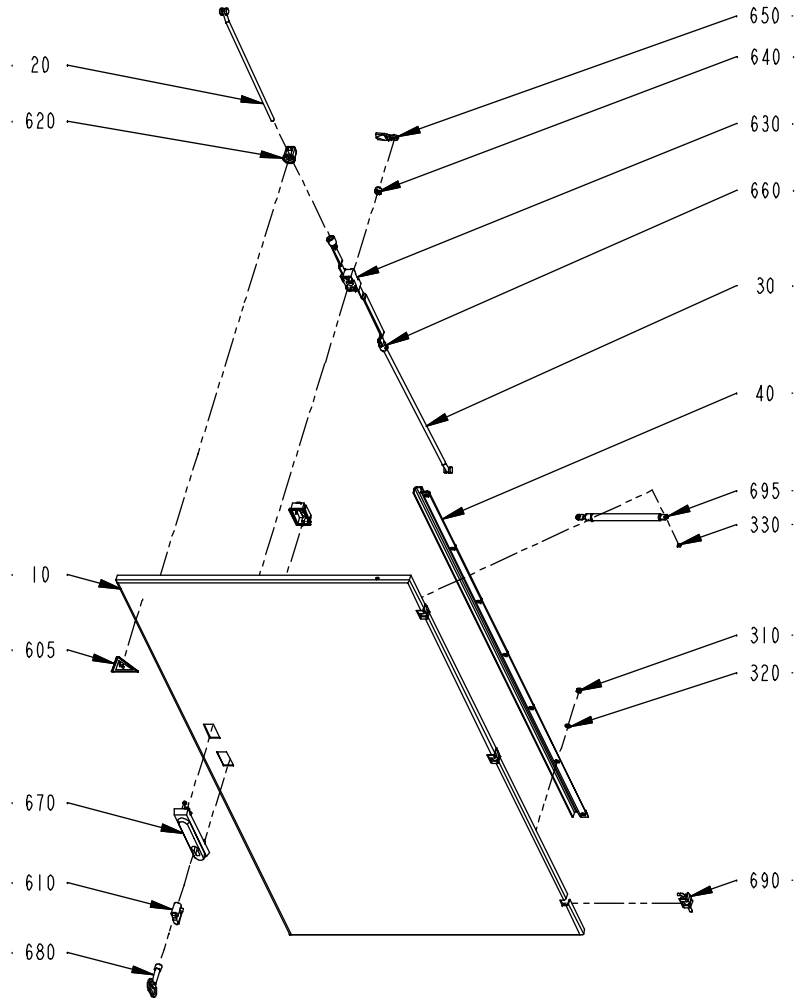
650
640
20
620
630
660
30
40
695
330
10
605
310
320
670
610
690
680
1559003-1
ECN 87205

Pos	Part No	SP	UN	Qty	Description	Page No
Common Parts						
010	1559036-0000	-		1	DOOR	
020	1559046-0000	-		1	ROD	
030	1559047-0000	-		1	ROD	
040	1559048-0000	-		1	REINFORCEMENT	
310	312812-0316	-		7	Nut Hex. Ny-Lock M6 A480	
320	315105-0153	-		7	Washer, Plain, BRB, 6,4/12,H=1,5	
330	315755-0106	-		2	Locking Washer 4	
605	90194-0016	-		1	SIGN "FLASH SIGN" 50X50MM	
610	90237-0129	-		1	Lock Cylinder, 1109-U2	
620	90237-0151	-		2	Guide, 1001-U11	
630	90237-0153	-		1	Lock Housing, 1121-U26-a	
640	90237-0155	-		1	Lock Adapter, 1121-U40	
650	90237-0156	-		1	Lock Bolt, 1000-16	
660	90237-0158	-		2	ROUND BAR	
670	90237-0176	-		1	TURNING HANDLE	
680	90237-0324	-		1	Key,1104-02 for square 8mm	
690	90248-0032	-		3	HINGE	
695	90347-0050	-		1	Gas Spring No. 0306 150 398535	

Pos	Part No	SP	UN	Qty	Description	Page No

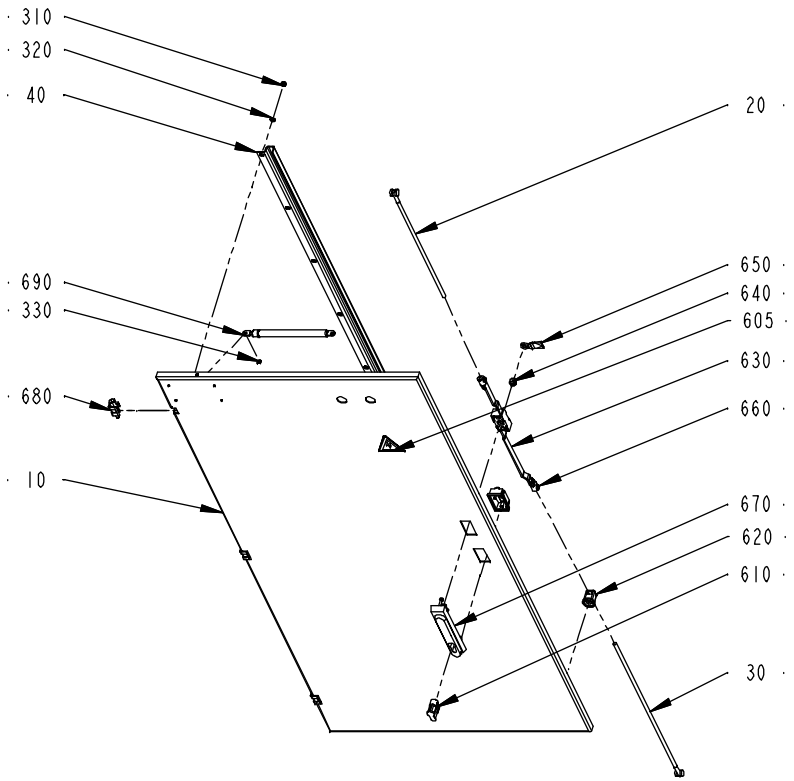

1559004-1
ECN 87205

Pos	Part No	SP	UN	Qty	Description	Page No
Common Parts						
010	1559037-0000	-		1	DOOR	
020	1559046-0000	-		1	ROD	
030	1559047-0000	-		1	ROD	
040	1559048-0000	-		1	REINFORCEMENT	
310	312812-0316	-		7	Nut Hex. Ny-Lock M6 A480	
320	315105-0153	-		7	Washer, Plain, BRB, 6,4/12,H=1,5	
330	315755-0106	-		2	Locking Washer 4	
610	90237-0128	-		1	Lock Cylinder, 1109-U3	
620	90237-0151	-		2	Guide, 1001-U11	
630	90237-0153	-		1	Lock Housing, 1121-U26-a	
640	90237-0155	-		1	Lock Adapter, 1121-U40	
650	90237-0156	-		1	Lock Bolt, 1000-16	
660	90237-0158	-		2	ROUND BAR	
670	90237-0176	-		1	TURNING HANDLE	
680	90248-0032	-		3	HINGE	
690	90347-0050	-		1	Gas Spring No. 0306 150 398535	

Pos	Part No	SP	UN	Qty	Description	Page No

Swing Frame

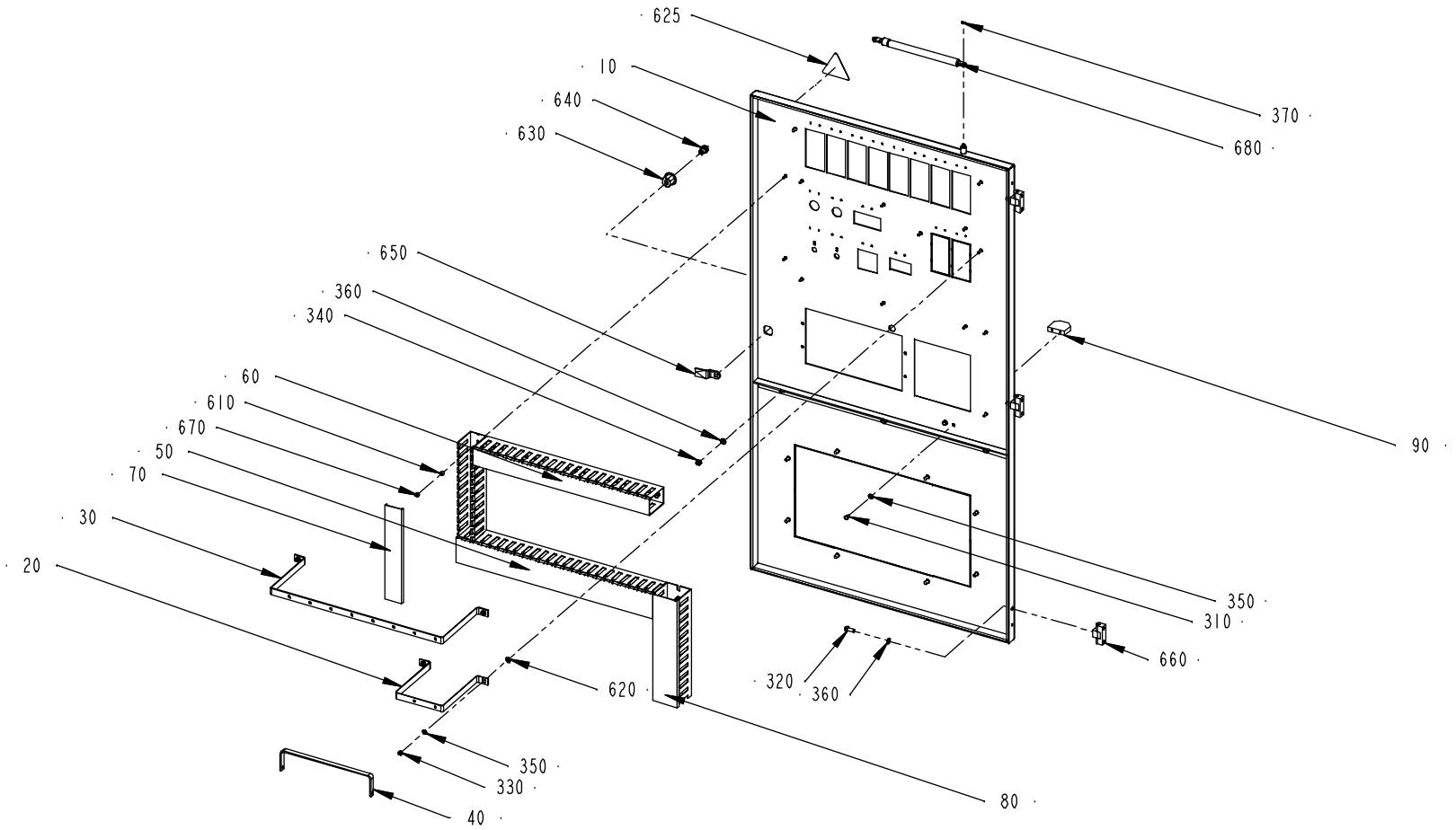
625
10
640
630
650
360
340
60
610
670
50
70
30
20
620
350
330
40
80
320
360
660
310
350
90
680
370
1559005-1
ECN 87205

Pos	Part No	SP	UN	Qty	Description	Page No
Common Parts						
010	1559029-0000	-		1	SWING FRAME	
020	1559050-0000	-		1	COUPLING RAIL	
030	1559051-0000	-		1	COUPLING RAIL	
040	1559052-0000	-		1	COUPLING RAIL	
050	1559060-0000	-		1	CABLE DUCT	
060	1559061-0000	-		1	CABLE DUCT	
070	1559062-0000	-		1	CABLE DUCT	
080	1559063-0000	-		1	CABLE DUCT	
090	970215-0000	-		1	STOP BLOCK	
310	312105-0323	-		2	Screw M6S M5x8 A280	
320	312105-0368	-		3	Screw M6S M6x16 A280	
330	312812-0314	-		4	Nut Hex. Ny-Lock M5 A480	
340	312812-0316	-		3	Nut Hex. Ny-Lock M6 A480	
350	315105-0146	-		6	Washer, Plain, BRB, 5,3/10,H=1	
360	315105-0153	-		6	Washer, Plain, BRB, 6,4/12,H=1,5	
370	315755-0106	-		2	Locking Washer 4	
610	90005-0158	-		10	Washer,Pl.Rnd.Nyl.4,3/8, H=5	
620	90062-0060	-		4	Lock Washer,Serrat.ext.gear,5,3/10 H=0,6	
625	90194-0016	-		1	SIGN "FLASH SIGN" 50X50MM	
630	90237-0142	-		1	Lock Housing, 1000-U45	
640	90237-0202	-		1	Lock, Insert Square,1000-U2 8mm	
650	90237-0335	-		1	LOCKING CATCH	
660	90248-0019	-		3	HINGE 1054-U1	
670	90261-0079	-		10	Plug, Blind, Plastic, No. 1955	
680	90347-0050	-		1	Gas Spring No. 0306 150 398535	

Pos	Part No	SP	UN	Qty	Description	Page No

Mounting Plate

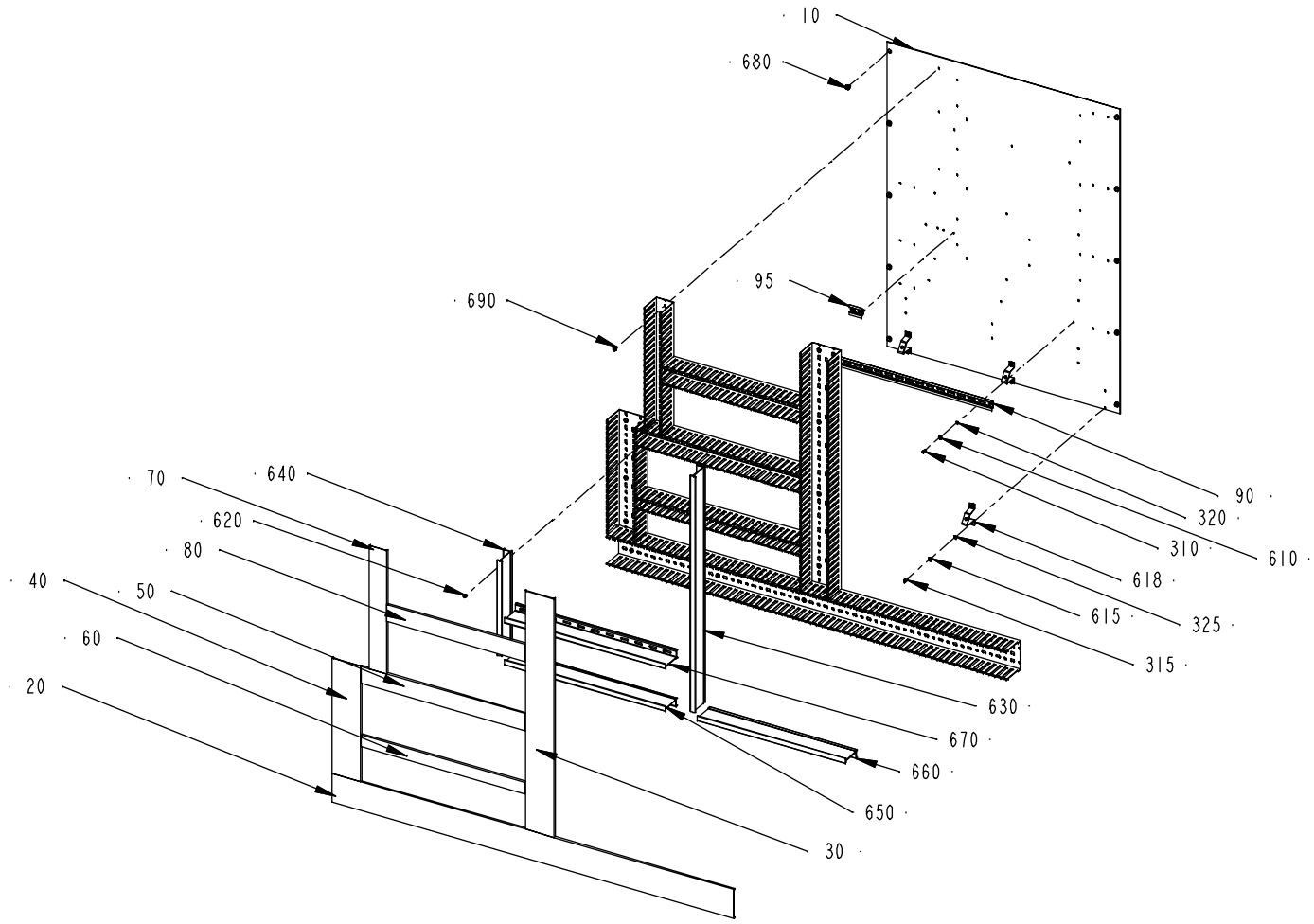

1559006-1
ECN 87205

Pos	Part No	SP	UN	Qty	Description	Page No
Common Parts						
010	1559030-0000	-		1	MOUNTING PLATE	
020	1559064-0000	-		1	CABLE DUCT	
030	1559065-0000	-		1	CABLE DUCT	
040	1559066-0000	-		1	CABLE DUCT	
050	1559067-0000	-		1	CABLE DUCT	
060	1559068-0000	-		1	CABLE DUCT	
070	1559069-0000	-		1	CABLE DUCT	
080	1559070-0000	-		1	CABLE DUCT	
090	1559071-0000	-		1	RAIL	
095	1559089-0000	-		1	RAIL	
310	312125-0291	-		5	Screw Pan Head MCS M4x12 RFR	
315	312125-0327	-		6	Screw Pan Head MCS M5X12 RFR	
320	315105-0136	-		5	Washer, Plain, BRB, 4,3/8,H=0,8	
325	315105-0146	-		6	Washer, Plain, BRB, 5,3/10,H=1	
610	90062-0059	-		5	Lock Washer,Serrat.ext.gear,4,3/8 H=0,5	
615	90062-0060	-		6	Lock Washer,Serrat.ext.gear,5,3/10 H=0,6	
618	90094-0005	-		3	RAIL BRACKET	
620	90181-0064	-		15	LOCK ZP1 FOR CHANNEL T1	
630	90181-0067	-	MM	820	DIVIDING PLATE SEP80	
640	90181-0067	-	MM	330	DIVIDING PLATE SEP80	
650	90181-0067	-	MM	560	DIVIDING PLATE SEP80	
660	90181-0067	-	MM	515	DIVIDING PLATE SEP80	
670	90181-0067	-	MM	560	DIVIDING PLATE SEP80	
680	90287-0157	-		10	Screw M6SF FLAT HEAD M6x10 88	
690	90287-0337	-		32	Screw recessed head M4x10 Wh. Nylon	

Pos	Part No	SP	UN	Qty	Description	Page No

Mounting Plate

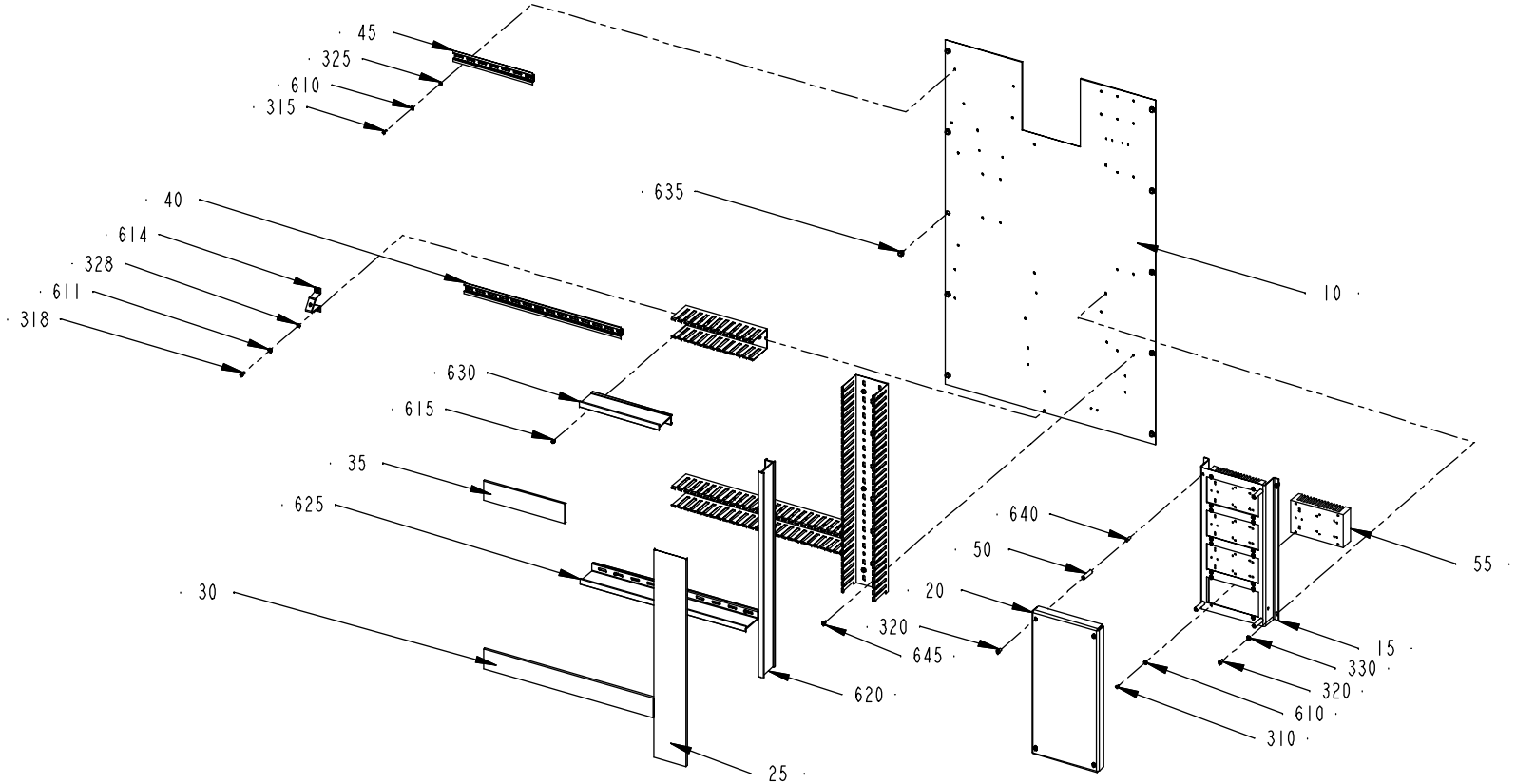

Pos	Part No	SP	UN	Qty	Description	Page No
Common Parts						
010	1559031-0000	-		1	MOUNTING PLATE	
015	1559038-0000	-		1	BRACKET	
020	1559039-0000	-		1	COVER PLATE	
025	1559072-0000	-		1	CABLE DUCT	
030	1559073-0000	-		1	CABLE DUCT	
035	1559074-0000	-		1	CABLE DUCT	
040	1559075-0000	-		1	RAIL	
045	1559076-0000	-		1	RAIL	
050	495130-0040	-		4	SPACER TUBE L=40MM	
055	731771-0000	-		4	COOLING PLATE,SOLIDSTATE	
310	312125-0287	-		16	Screw Pan Head MCS M4X8 RFR	
315	312125-0291	-		5	Screw Pan Head MCS M4x12 RFR	
318	312125-0327	-		2	Screw Pan Head MCS M5X12 RFR	
320	312125-0366	-		8	Screw Pan Head MCS M6X12 RFR	
325	315105-0136	-		5	Washer, Plain, BRB, 4,3/8,H=0,8	
328	315105-0146	-		2	Washer, Plain, BRB, 5,3/10,H=1	
330	315105-0153	-		4	Washer, Plain, BRB, 6,4/12,H=1,5	
610	90062-0059	-		21	Lock Washer,Serrat.ext.gear,4,3/8 H=0,5	
611	90062-0060	-		2	Lock Washer,Serrat.ext.gear,5,3/10 H=0,6	
614	90094-0005	-		1	RAIL BRACKET	
615	90181-0064	-		8	LOCK ZP1 FOR CHANNEL T1	
620	90181-0067	-	MM	630	DIVIDING PLATE SEP80	
625	90181-0067	-	MM	510	DIVIDING PLATE SEP80	
630	90181-0067	-	MM	245	DIVIDING PLATE SEP80	
635	90287-0157	-		10	Screw M6SF FLAT HEAD M6x10 88	
640	90287-0336	-		4	Screw Hex. Sock. Set, M6x20 Plastic	
645	90287-0337	-		11	Screw recessed head M4x10 Wh. Nylon	

Pos	Part No	SP	UN	Qty	Description	Page No

Mounting Plate

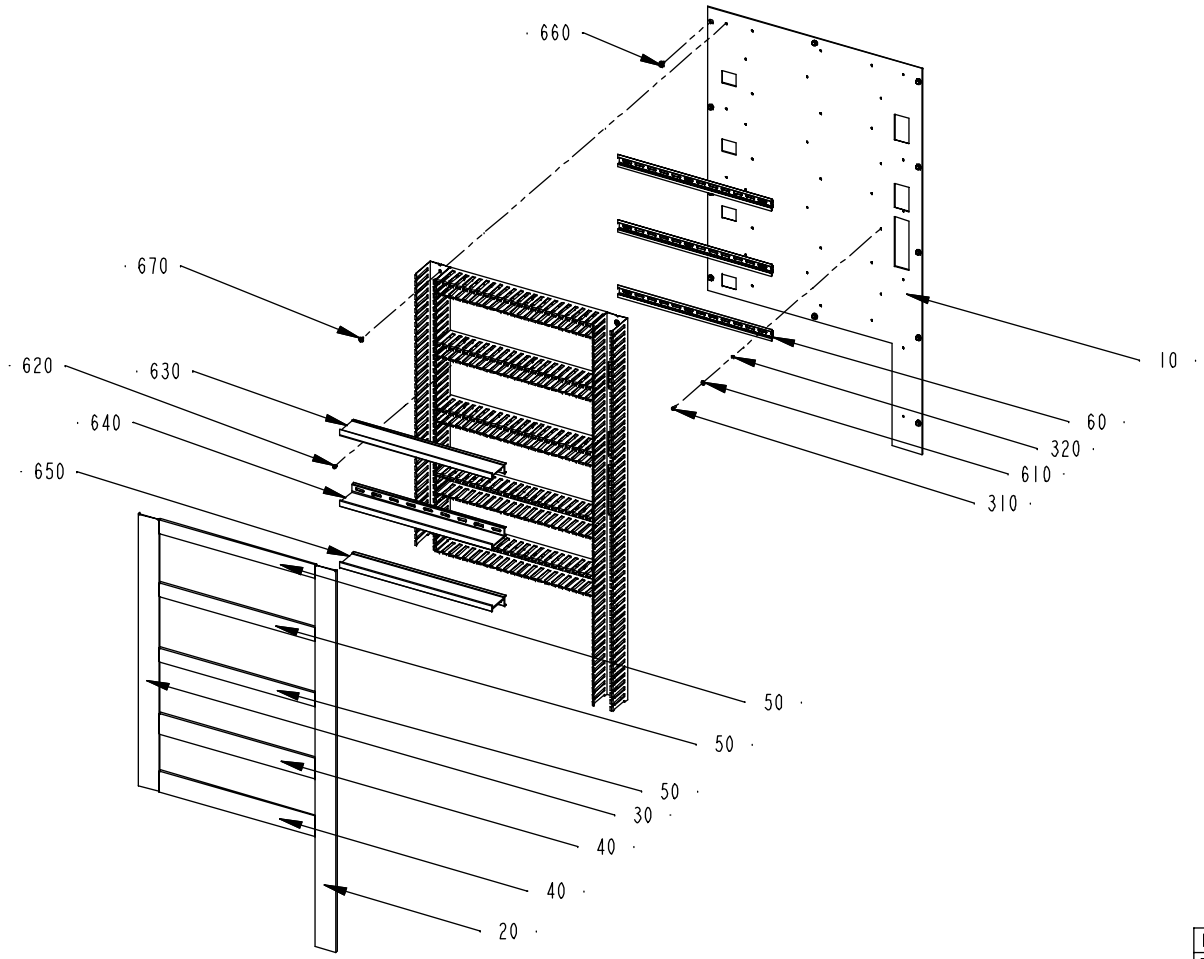

1559008-1
ECN 87205

Pos	Part No	SP	UN	Qty	Description	Page No
Common Parts						
010	1559032-0000	-		1	MOUNTING PLATE	
020	1559077-0000	-		1	CABLE DUCT	
030	1559078-0000	-		1	CABLE DUCT	
040	1559079-0000	-		2	CABLE DUCT	
050	1559080-0000	-		3	CABLE DUCT	
060	1559081-0000	-		3	RAIL	
310	312125-0291	-		9	Screw Pan Head MCS M4x12 RFR	
320	315105-0136	-		9	Washer, Plain, BRB, 4,3/8,H=0,8	
610	90062-0059	-		9	Lock Washer,Serrat.ext.gear,4,3/8 H=0,5	
620	90181-0064	-		6	LOCK ZP1 FOR CHANNEL T1	
630	90181-0067	-	MM	446	DIVIDING PLATE SEP80	
640	90181-0067	-	MM	446	DIVIDING PLATE SEP80	
650	90181-0067	-	MM	446	DIVIDING PLATE SEP80	
660	90287-0157	-		11	Screw M6SF FLAT HEAD M6x10 88	
670	90287-0337	-		25	Screw recessed head M4x10 Wh. Nylon	

Pos	Part No	SP	UN	Qty	Description	Page No

Mounting Plate

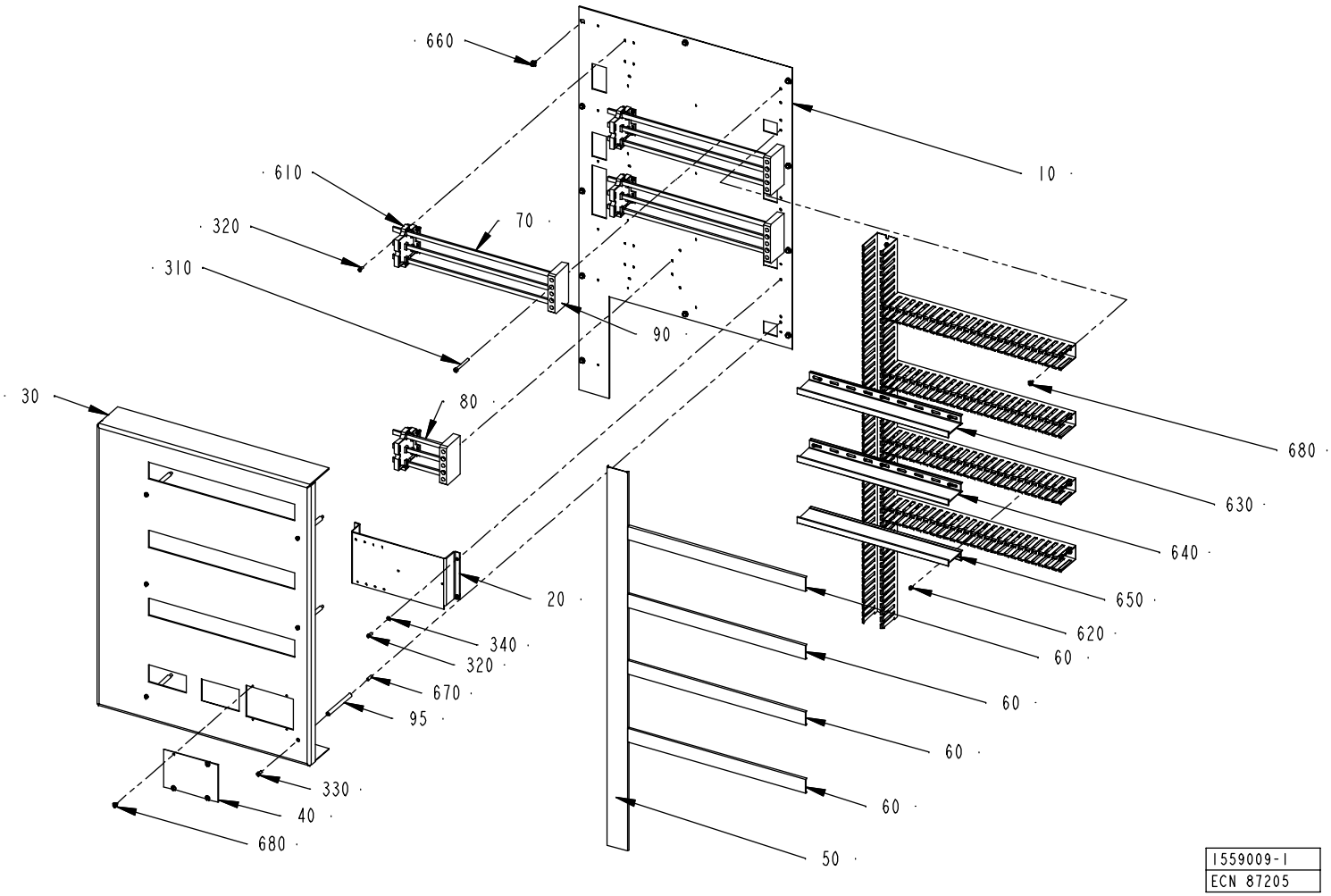

Pos	Part No	SP	UN	Qty	Description	Page No
Common Parts						
010	1559033-0000	-		1	MOUNTING PLATE	
020	1559082-0000	-		1	BRACKET	
030	1559083-0000	-		1	COVER PLATE	
040	1559084-0000	-		1	COVER PLATE	
050	1559085-0000	-		1	CABLE DUCT	
060	1559086-0000	-		4	CABLE DUCT	
070	1559087-0000	-		9	COUPLING RAIL	
080	1559088-0000	-		3	COUPLING RAIL	
090	734789-0000	-		4	SUPPORT F LIVE RAIL	
310	312115-0382	-		8	Screw MC6S M6x60 A280	
320	312125-0327	-		20	Screw Pan Head MCS M5X12 RFR	
330	312125-0366	-		6	Screw Pan Head MCS M6X12 RFR	
340	315105-0146	-		4	Washer, Plain, BRB, 5,3/10,H=1	
610	90135-0031	-		4	BUSBAR HOLDER K&M SHO165/2	
620	90181-0064	-		9	LOCK ZP1 FOR CHANNEL T1	
630	90181-0067	-	MM	446	DIVIDING PLATE SEP80	
640	90181-0067	-	MM	446	DIVIDING PLATE SEP80	
650	90181-0067	-	MM	446	DIVIDING PLATE SEP80	
660	90287-0157	-		11	Screw M6SF FLAT HEAD M6x10 88	
670	90287-0336	-		6	Screw Hex. Sock. Set, M6x20 Plastic	
680	90287-0337	-		22	Screw recessed head M4x10 Wh. Nylon	

Pos	Part No	SP	UN	Qty	Description	Page No

Fan System

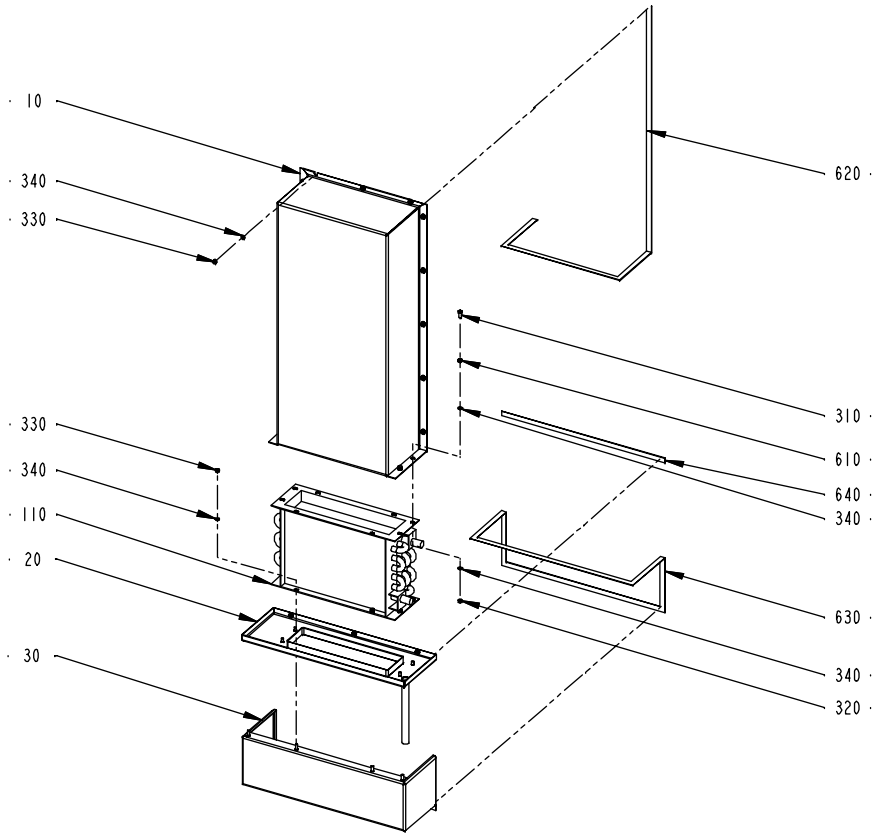

1559010-1
ECN 87205

Pos	Part No	SP	UN	Qty	Description	Page No
Common Parts						
010	1559040-0000	-		1	COVER	
020	1559041-0000	-		1	COVER	
030	1559042-0000	-		1	COVER	
110	495201-0000	-		1	COOLING ELEMENT	
310	312105-0368	-		4	Screw M6S M6x16 A280	
320	312605-0316	-		4	Nut Hex. M6M M6 A280	
330	312812-0316	-		27	Nut Hex. Ny-Lock M6 A480	
340	315105-0153	-		35	Washer, Plain, BRB, 6,4/12,H=1,5	
610	90062-0015	-		4	Lock Washer,Serrat.ext.gear,6,4/11 H=0,7	
620	90143-0073	-	MM	2570	RUBBER STRIP	
630	90143-0073	-	MM	1666	RUBBER STRIP	
640	90143-0073	-	MM	516	RUBBER STRIP	

Pos	Part No	SP	UN	Qty	Description	Page No

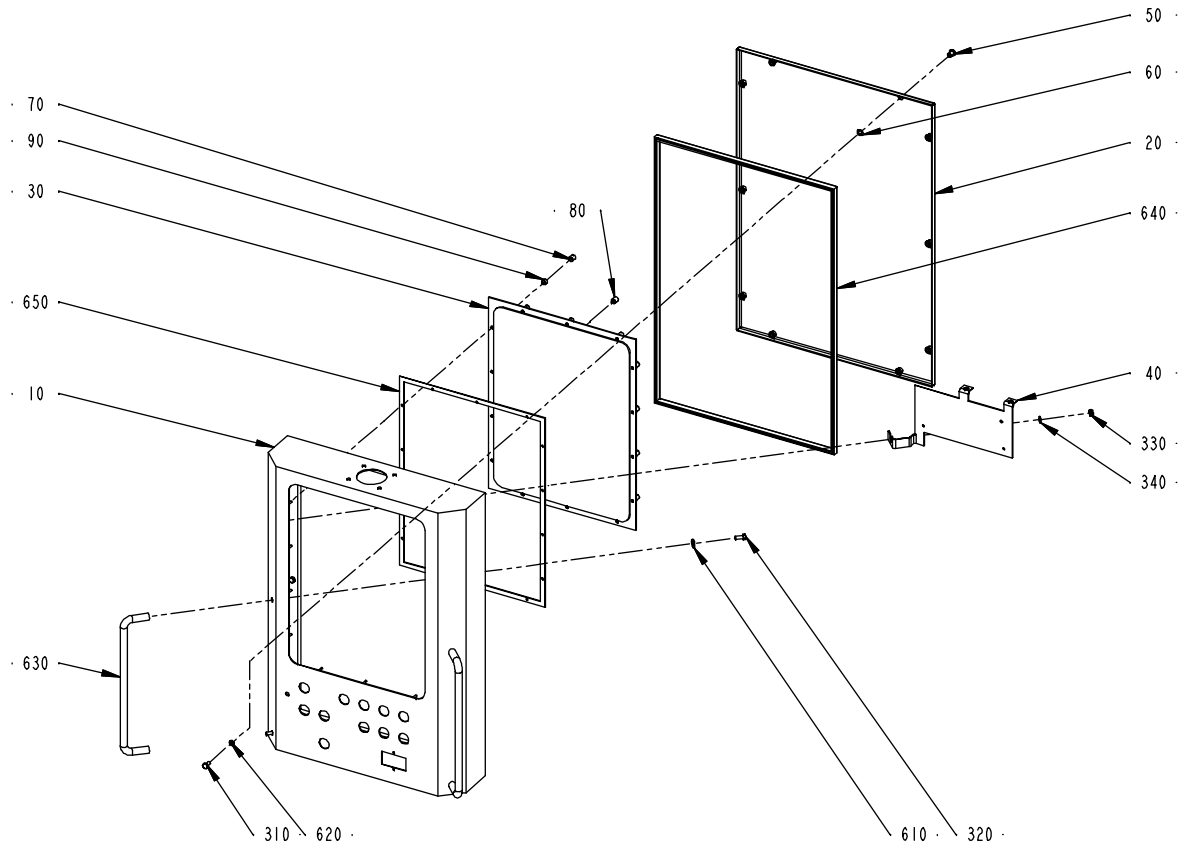
50
60
20
640
70
90
30
80
650
10
40
330
340
630
310
620
610
320
1559022-1
ECN 87205

Pos	Part No	SP	UN	Qty	Description	Page No
Common Parts						
010	1559100-0000	-		1	CABINET	
020	1559101-0000	-		1	DOOR	
030	1559102-0000	-		1	WINDOW	
040	1559103-0000	-		1	MOUNTING PLATE	
050	495722-0000	-		10	SCREW BUSHING	
060	495765-0000	-		10	WASHER	
070	970261-0000	-		14	SPACER SCREW 10,2X10MM	
080	970262-0000	-		12	SPACER NUT	
090	971286-0000	-		14	SPACER H=6MM	
310	312105-0366	-		10	Screw M6S M6x12 A280	
320	312105-0368	-		4	Screw M6S M6x16 A280	
330	312812-0316	-		3	Nut Hex. Ny-Lock M6 A480	
340	315105-0153	-		3	Washer, Plain, BRB, 6,4/12,H=1,5	
610	90005-0077	-		4	Washer,Pl.Rnd.Nyl.8,4/7, H=2	
620	90005-0078	-		10	Washer,Pl.Rnd.Fibre 6/10, H=1,5	
630	90017-0015	-		2	HANDLE,STAINLESS	
640	90143-0059	-	MM	1988	SEAL STRIP 4610069	
650	90144-0072	-	MM	1412	TAPE SCOTCH VHBS 4945 W=12,7mm	

Pos	Part No	SP	UN	Qty	Description	Page No


Tetra Pak

SPC

Spare Parts Catalogue

Part No	Description	Page No
1020290-0201	LOCKING BLOCK	451
106758-0000	WASHER	677, 685
10793-0083	MOUNTING RAIL	167
1091670-0100	OUTFEED TRANSFER	447
1091671-0000	CAM	449
1091672-0000	BRACKET	447
1091673-0000	GUIDE RAIL	453
1091674-0000	Toothed pulley	449
1091675-0000	Toothed pulley	481
1091677-0000	SHAFT	449
1091678-0000	SHAFT	481
1091679-0100	CONVEYOR	447
1091681-0000	PLATE	451
1091682-0000	PLATE	451
1091683-0000	SPACER	451
1091684-0000	RAIL	451
1091685-0000	RAIL	451
1091686-0000	SPACER	451
1091687-0000	GUIDE PLATE	453
1091688-0000	RAIL	451
1091689-0000	HOUSE	479
1091715-0100	PIPE	463, 465
1091716-0000	PIPE	469
1091717-0100	CANTILEVER	477
1091719-0000	BRACKET	451
1091720-0100	DRIVE SHAFT	477
1091725-0000	BRACKET	483
1091727-0000	GUIDE	485
1091728-0000	GUIDE	485
1091729-0000	GUIDE	485
1091730-0000	SHAFT	485
1091731-0000	SHAFT	485
1091732-0000	BRACKET	483
1091733-0100	PROTECTION	393
1091734-0100	DOOR	473
1091735-0000	GUIDE RAIL	473
1091736-0000	COLUMN	461
1091738-0000	FRONT PLATE	461
1091739-0000	LID	475
1091740-0000	COVER	473
1091741-0000	PIN	475
1091742-0000	GLASS PANE	475
1091743-0000	PROTECTIVE COVER	473

Part No	Description	Page No
1091746-0000	RAIL	451
1091747-0000	BRACKET	483
1091748-0000	TUBE	427
1091749-0000	TUBE	427
1091750-0000	TUBE	427
1091751-0000	TUBE	427
1091759-0000	GUIDE RAIL	453
1091760-0000	Carrier	449
1091763-0000	GUIDE RAIL	473
1091766-0000	GUIDE PLATE	453
1091771-0100	SAFETY GUARD	463, 465
1091772-0000	BRACKET	471
1091773-0000	BRACKET	471
1091774-0100	COVER PLATE	459
1091778-0000	HANDLE	463, 465
1110375-0003	Dolly	309, 311, 313, 315
1110530-0000	Inductor	365
1110532-0000	Inductor	365
1110534-0000	Inductor	365
1110535-0000	Inductor	365
1110820-0000	Cutting rail	309, 311, 313, 315
111543-0000	GUIDE CONE	15, 177, 179, 663
1138080-0001	RAIL HOLDER, B50 width 15 mm	451
1138080-0002	RAIL HOLDER, B50 width 30 mm	451
1140285-0007	COAXIAL CABLE L= 4000 MM	733
1143975-0000	DRIVE WHEEL	397
1144943-0000	SPACER	451
12228-0000	COMPRESSION SPRING	299
12242-0001	GASKET	45, 47, 93, 95, 97, 99, 103, 105, 175, 191
12242-0002	GASKET	191
12242-0003	GASKET	53, 59, 93, 95, 97, 99, 123, 125, 191, 203, 205
12242-0005	GASKET	123, 125
1260065-0000	BRACKET	449
1260068-0000	SHAFT	449
1260070-0000	SHAFT	449
1260486-0000	PLATE	197
1260487-0000	PLATE	199
1260490-0000	NUT	197
1260491-0000	NUT	199
1279044-0000	HATCH	243
1279045-0000	HATCH	245
1282444-0000	CARTON STATION WITH BEVEL	395
1282647-0000	KNIFE	333

Part No	Description	Page No
1296815-0100	HATCH RIGHT	209
1334234-0000	HUB	25, 27
1348053-0000	Bracket	309, 311, 313, 315
1348290-0000	LEAF SPRING	217
1348291-0000	LEAF SPRING	217
1360581-0000	LID	479
1367180-0001	Circuit board TBA/9-6000	741
1367181-0000	Alarm display TBA/9-6000	741
1367329-0000	CANTILEVER	479
1367330-0000	DRUM	449
1367331-0000	ROLLER	449
1369406-0100	TERMINAL	741
1370872-0100	Electrical Components	725
1370873-0100	Cables	725
1370876-0100	EXTRA EQUIPMENT	725
1370877-0100	SPARE PART	725
1370878-0100	CONTROL PANEL	725
1484791-0000	Scale	275, 277, 279, 281, 283, 285, 287, 289
1484792-0000	Scale	275, 277, 279, 281, 283, 285, 287, 289
1511572-0000	CLIP	689
1512126-0000	SUPPORT	423
1512127-0000	CLAMP	423
1512128-0000	PLUG	423
1512132-0000	SUPPORT	423
1512133-0000	STOP	423
1517641-0000	FLANGE BUSHING	309, 311, 313, 315, 349, 351, 353, 355, 357, 359, 361, 363, 367, 369
1519227-0000	STOP	341
1519228-0000	STOP	345
1519229-0000	RAIL	365
1520078-0000	INDUCTOR	365
1529009-0000	HOUSE	119
1529010-0000	HOUSE	119
1529014-0000	FRAME	67
1529016-0000	FRAME	171
1529018-0000	PILLAR	661
1529020-0100	STRIP MAGAZINE	639
1529021-0100	PILLAR	649
1529022-0100	DOOR	13
1529023-0100	DOOR	11, 13
1529025-0100	PAPER GUARD	639
1529026-0000	LID	673
1529027-0000	LID	673
1529028-0000	PROTECTION PLATE	673
1529029-0000	SUPPORT	673
1529031-0000	RAILING	255, 257
1529032-0000	RAILING	255, 257
1529033-0100	ALARM DEVICE	255, 257
1529034-0000	COVER PLATE	249, 251
1529035-0000	PLATFORM	249, 251
1529036-0000	COVER	685
1529039-0000	PROTECTION	501
1529041-0000	PROTECTION	501
1529043-0000	BRACKET	617
1529044-0000	PROTECTION	617
1529046-0000	SIDE PIECE	503
1529047-0100	PROTECTION	495, 497
1529049-0000	COVER	25, 27
1529050-0000	SPACER PIECE	583, 585
1529055-0100	PROTECTIVE COVER	393
1529057-0000	ARM	367, 369
1529059-0000	END SECTION	677, 685
1529060-0000	END SECTION	677, 685
1529061-0000	BRACKET	677, 685
1529063-0100	TURNING DEVICE	447
1529064-0000	PLATE	671
1529065-0100	CONNECTION BOX	673
1529066-0100	CONNECTION BOX	495, 497
1529068-0000	CONNECTION BOX	587
1529077-0000	HEATING PIPE	83
1529078-0000	BATH	59
1529079-0000	BATH	53
1529080-0100	BENDING ROLLER	13
1529083-0100	CHANGE-OVER VALVE	11
1529084-0100	HOT AIR ELEMENT	11
1529085-0100	SPRAY SYSTEM	13
1529087-0000	CONNECTION BOX	675
1529088-0100	GAUGE GROUP	11, 13
1529089-0000	LEG	697
1529090-0000	LEG	697
1529091-0100	DOOR	11
1529092-0100	DOOR	11
1529095-0100	CONNECTION BOX	489
1529096-0000	CONNECTION BOX	491
1529097-0000	SPACER	491
1529098-0100	EL.CONNECTION BOX	11, 13

Part No	Description	Page No
1529099-0100	MACHINE BODY	639
1529100-0100	Air panel	561, 563
1529101-0000	SHEET	579, 581
1529103-0100	CUTTING JAW RIGHT	307
1529104-0100	CUTTING JAW LEFT	307
1529106-0100	YOKE RIGHT	307
1529107-0100	YOKE LEFT	307
1529108-0100	TRANSFER RIGHT	307
1529109-0100	TRANSFER LEFT	307
1529111-0100	WORM GEAR	269
1529114-0100	ARM	269
1529116-0100	VALVE PANEL	495, 497
1529117-0100	VALVE PANEL	561, 563
1529118-0000	SHEET	565
1529120-0100	ASEPTIC CHAMBER	13
1529121-0000	PILLAR	115
1529122-0000	PILLAR	115
1529126-0100	PLATFORM TBA/9R	209
1529127-0100	RAILING TBA/9R	209
1529128-0100	MACHINE BODY TBA/9R	209
1529129-0100	DATING UNIT	639
1529130-0100	DATING UNIT	639
1529131-0100	PIPE WORK	639
1529132-0100	DOOR TBA/9R	209
1529133-0100	DOOR TBA/9R	209
1529134-0100	PIPE WORK	393
1529135-0000	DOOR	239
1529136-0000	DOOR	241
1529137-0000	BRACKET	239
1529138-0000	BRACKET	241
1529139-0000	INDICATOR	25, 27
1529140-0100	CREASE ROLLER	11
1529141-0100	CABLE CONNECTION	393
1529142-0100	CANTILEVER	393
1529143-0000	SHIELD PLATE	439
1529144-0000	CHECKER PLATE	463, 465
1529145-0000	HOOD	463, 465
1529146-0000	Washer	463, 465
1529147-0100	OUTFEED TRANSFER	393
1529148-0100	MOUNTING PLATE	393
1529149-0100	COVERING PANEL	393
1529150-0100	PIPE WORK	495, 497
1529151-0000	COVERING PLATE	535, 537
1529151-0100	Link arm, right	269
1529152-0100	LINK ARM, LEFT	269
1529153-0100	PRESSURE JAW RIGHT	307
1529153-0200	PRESSURE JAW RIGHT	307
1529154-0100	PRESSURE JAW LEFT	307
1529154-0200	PRESSURE JAW LEFT	307
1529158-0100	HYDROGEN PEROXIDE	495, 497
1529160-0100	PUMP	621
1529164-0100	BELT STRETCHER	477
1529166-0000	BRACKET	25, 27
1529167-0100	GUIDE	477
1529168-0100	BATH	13
1529170-0000	BRACKET	53
1529171-0100	BATH	11
1529172-0100	CREASE ROLLER	13
1529173-0100	HOT AIR ELEMENT	11
1529174-0100	HOT AIR ELEMENT	11
1529175-0100	HOT AIR ELEMENT	13
1529176-0000	COVER	677
1529178-0100	CHANGE-OVER VALVE	13
1529180-0100	PIPE WORK	619
1529181-0000	AIR-DIAGRAM	707
1529182-0000	PANEL SURVEY	707
1529183-0000	SHEET	249, 251
1529184-0000	SHEET	249, 251
1529185-0100	BENDING ROLLER	11
1529186-0100	MOUNTING PLATE	639
1529187-0100	PIPE WORK	639
1529188-0100	TRANSMISSION TBA/9R	209
1529189-0000	BOX	167
1529190-0100	ASEPTIC CHAMBER	11
1529191-0000	HOUSE	115
1529192-0000	HOUSE	115
1529193-0000	BRACKET	223
1529198-0100	SPRAY SYSTEM	11
1529201-0000	WATER DIAGRAM	707
1529204-0100	AIR INJECTOR	565
1529205-0000	MACHINE BODY	211
1529206-0000	PLATE	211
1529207-0100	MACHINE BODY	495, 497
1529209-0100	COVERING PLATE	495, 497
1529210-0000	MACHINE BODY	583, 585
1529211-0100	CONDUIT	13

Part No	Description	Page No
1529212-0100	CONDUIT	11
1529213-0000	SHEET	249, 251
1529214-0000	PLATE	671
1529215-0000	MOTOR PLATE	25
1529216-0000	PLATE	33
1529217-0000	PLATE	33
1529220-0000	CABLE TRENCH	553, 555
1529221-0100	CABLE TRACK	495, 497
1529222-0100	CABLE TRACK	495, 497
1529223-0100	COVERING PLATE	495, 497
1529225-0100	CARRIAGE	495, 497
1529226-0100	CARRIAGE	501
1529227-0000	PIPE	611
1529228-0000	PIPE	611
1529229-0000	PIPE	611
1529230-0100	MACHINE BODY	495, 497
1529231-0000	CABLE CONDUIT	189
1529232-0000	CABLE CONDUIT	189
1529233-0000	CABLE CONDUIT	187, 189
1529236-0100	CABLE TRENCH	11
1529237-0100	CABLE TRENCH	13
1529238-0100	PIPE WORK-PNEUMATIC	11
1529239-0100	PIPE WORK-PNEUMATIC	11
1529240-0100	PIPE WORK-PNEUMATIC	13
1529241-0000	CABLE CONDUIT	249, 251
1529242-0000	CABLE CONDUIT	249, 251
1529243-0100	Upper filling tube	11
1529244-0000	LEG	673
1529245-0000	SPACER	661
1529246-0000	FASTENING PLATE	673
1529247-0000	CONNECTION BOX	181
1529248-0000	CONNECTION BOX	183, 185
1529249-0000	PIPE HOLDER	103, 105
1529250-0100	SUCTION PIPE	11
1529251-0100	SUCTION PIPE	13
1529252-0000	PIPE	103
1529254-0100	VALVE	11
1529255-0100	PRODUCT VALVE	13
1529256-0100	HOT AIR ELEMENT	13
1529257-0100	AIR KNIFE	11
1529259-0000	ASEPTIC DIAGRAM	707
1529263-0100	CALENDER ROLLER	11
1529264-0100	CALENDER ROLLER	13
1529265-0000	PIPE	181, 183, 185
1529266-0100	PHOTOCELL UNIT	11
1529267-0100	PHOTOCELL UNIT	13
1529268-0000	CABLE DUCT	187
1529269-0000	CABLE DUCT	187
1529270-0000	SIGN	649
1529271-0000	PIPE	181, 183, 185
1529272-0000	PIPE	181, 183, 185
1529273-0000	TANK	631
1529274-0100	PEROXIDE TANK	619
1529280-0000	COVER	673
1532525-0000	BRACKET	379, 381, 383
1532526-0000	ROLLER	379, 381, 383
1539120-0000	VOLUME BULGE	365
1539593-0000	COVER	365
15529-0000	WASHER	33, 35
1559000-0100	ELECTRICAL CABINET	725
1559001-0100	CABINET	745
1559002-0100	DOOR	745
1559003-0100	DOOR	745
1559004-0100	DOOR	745
1559005-0100	SWING FRAME	745
1559006-0100	MOUNTING PLATE	745
1559007-0100	MOUNTING PLATE	745
1559008-0100	MOUNTING PLATE	745
1559009-0100	MOUNTING PLATE	745
1559010-0100	FAN SYSTEM	745
1559022-0100	CONTROL PANEL	725
1559025-0000	CABINET	747
1559026-0000	POST	747
1559027-0000	BRACKET	747
1559028-0000	COVER	747
1559029-0000	SWING FRAME	755
1559030-0000	MOUNTING PLATE	757
1559031-0000	MOUNTING PLATE	759
1559032-0000	MOUNTING PLATE	761
1559033-0000	MOUNTING PLATE	763
1559034-0000	DOOR	749
1559035-0000	FRAME	749
1559036-0000	DOOR	751
1559037-0000	DOOR	753
1559038-0000	BRACKET	759
1559039-0000	COVER PLATE	759

Part No	Description	Page No
1559040-0000	COVER	765
1559041-0000	COVER	765
1559042-0000	COVER	765
1559043-0000	BRACKET	747
1559044-0000	COVER	747
1559045-0000	GLASS PANE	749
1559046-0000	ROD	749, 751, 753
1559047-0000	ROD	749, 751, 753
1559048-0000	REINFORCEMENT	749, 751, 753
1559049-0000	COVER PLATE	747
1559050-0000	COUPLING RAIL	755
1559051-0000	COUPLING RAIL	755
1559052-0000	COUPLING RAIL	755
1559053-0000	CABLE DUCT	747
1559054-0000	CABLE DUCT	747
1559055-0000	CABLE DUCT	747
1559056-0000	CABLE DUCT	747
1559057-0000	CABLE DUCT	747
1559058-0000	CABLE DUCT	747
1559059-0000	CABLE DUCT	747
1559060-0000	CABLE DUCT	755
1559061-0000	CABLE DUCT	755
1559062-0000	CABLE DUCT	755
1559063-0000	CABLE DUCT	755
1559064-0000	CABLE DUCT	757
1559065-0000	CABLE DUCT	757
1559066-0000	CABLE DUCT	757
1559067-0000	CABLE DUCT	757
1559068-0000	CABLE DUCT	757
1559069-0000	CABLE DUCT	757
1559070-0000	CABLE DUCT	757
1559071-0000	RAIL	757
1559072-0000	CABLE DUCT	759
1559073-0000	CABLE DUCT	759
1559074-0000	CABLE DUCT	759
1559075-0000	RAIL	759
1559076-0000	RAIL	759
1559077-0000	CABLE DUCT	761
1559078-0000	CABLE DUCT	761
1559079-0000	CABLE DUCT	761
1559080-0000	CABLE DUCT	761
1559081-0000	RAIL	761
1559082-0000	BRACKET	763
1559083-0000	COVER PLATE	763
1559084-0000	COVER PLATE	763
1559085-0000	CABLE DUCT	763
1559086-0000	CABLE DUCT	763
1559087-0000	COUPLING RAIL	763
1559088-0000	COUPLING RAIL	763
1559089-0000	RAIL	757
1559100-0000	CABINET	767
1559101-0000	DOOR	767
1559102-0000	WINDOW	767
1559103-0000	MOUNTING PLATE	767
179595-0000	CLOSING DEVICE	93, 95
179596-0000	FLOAT	93, 95
18542-0000	WASHER	225, 227, 229, 231, 233
20239-0000	COMPRESSION SPRING	367, 369
2033-0007	WASHER	115, 119
2033-0008	WASHER	151, 157, 659
2033-0009	WASHER	379, 381, 383, 641, 669
2033-0011	WASHER	37, 39, 41, 43, 139, 141, 143, 149, 151, 153, 155, 157, 159, 161
2033-0014	WASHER	379, 381, 383
206913-0000	LOCKING LOOP	545
20702-0000	COVERING PLATE	419
20705-0001	INSULATING PIPE	421
20772-0000	INSULATOR BODY 70x70x15mm	421
208173-0000	SHAFT	541
209145-0000	THROTTLE SCREW	97, 99, 671
209146-0000	BARRIER NUT	97, 99, 671
209181-0000	LID	191
209183-0000	RING	191
209331-0001	GEAR WHEEL	25
209331-0009	GEAR WHEEL	25
209331-0011	GEAR WHEEL	25
21047-0000	LOCK WASHER	413
21521-0000	COMPRESSION SPRING	89, 91, 101
21903-0000	ROLL	641, 669, 703
22463-0000	ROLL	309, 311, 313, 315
22475-0000	CURVE ROLLER	367, 369
22559-0000	GRUB SCREW	665
228652-0000	STOPPER DOWEL	677, 685
228943-0000	THROTTLE	31
229207-0000	BEARING SLEEVE	451
229775-0000	SPACER	541
230107-0000	WASHER	665

Part No	Description	Page No
230551-0000	GASKET	93, 95, 203, 205
230918-0000	WASHER	507
23118-0000	TRANSFORMER	731
23139-0000	TRANSFORMER 1Ph. Auto 2,1 KVA	731
232979-0000	PRESSURE ROLLER	661
23580-0000	SHIFTER HANDLE	177, 179, 663
23582-0000	HOLDER	15, 177, 179, 663
23583-0000	GUIDE FINGER	15, 177, 179, 663
23584-0000	SCREW	15, 177, 179, 663
23762-0002	SIDE PIPE	419
23763-0001	SPACER PIPE	419
23763-0002	SPACER PIPE	419
23763-0005	SPACER PIPE	419
23763-0006	SPACER PIPE	419
23763-0007	SPACER PIPE	419
23763-0009	SPACER PIPE	419
23763-0012	SPACER PIPE	419
23765-0002	INSULATING PIPE	419
23765-0003	INSULATING PIPE	419
23765-0004	INSULATING PIPE	419
23765-0005	INSULATING PIPE	419
23769-0000	STOP PLATE	419
23771-0000	SPACER RING 4x78x1mm	421
237871-0000	BARRIER	123
237873-0000	SHAFT	123
239440-0000	SHAFT	37, 39, 41, 43
240797-0000	HANDLE	377
243132-0000	PROTECTION PLATE	541
243133-0000	SHIELD PLATE	541
243151-0000	SHAFT	647
243218-0000	CANTILEVER	647
24351-0000	BOW CLAMP	15, 663
24352-0000	SHAFT	663
24354-0000	WASHER	177, 179
24355-0000	DOWEL	15, 177, 179, 663
24356-0000	PIECE	15, 177, 179, 663
245039-0000	GUIDE WHEEL	451
245189-0001	ATTACHMENT	665
245210-0000	BODY	177, 179, 663
245221-0000	STOP	541
246342-0000	PAPER SUPPORT	665
246343-0000	FASTENING BRACKET	665
246344-0000	HEAT GUARD	665

Part No	Description	Page No
246388-0200	PRESSURE ROLLER	639
246501-0000	ARM	591
246502-0000	SHAFT	591, 595
247170-0000	BEARING COVER	21, 23, 49, 51
247172-0000	SPACER RING	25, 27, 33, 35, 53, 59
247173-0000	BEARING SEAT	25, 27, 53, 59
247227-0001	AIR NOZZLE	419
247239-0000	WHEEL	53, 59
247248-0000	PIN	53, 59
247349-0000	STEERING	115, 119
247355-0000	LOCK WASHER	115, 119
247357-0000	SPROCKET	115, 119
247358-0000	SHIFTER HANDLE	115, 119
247385-0000	SIGN	607, 609
247386-0000	SIGN	607, 609
24VDC K&M		729
250588-0000	FLANGE	643
250590-0000	BEARING COVER	25, 27
250592-0000	WASHER	25, 27
251279-0000	COIL HEATER	665, 703
251490-0000	FASTENING BRACKET	665
251493-0000	FORK	641
251494-0000	SHAFT	641
251495-0000	SHAFT	641
251496-0000	SHAFT	641
251498-0000	BARRIER	641
251501-0000	FASTENING BRACKET	665
251502-0000	HEAT GUARD	665
251504-0000	HOLDER	665
251505-0000	SPACER	665
252766-0001	INSULATING PIPE	419
252766-0002	INSULATING PIPE	419
252972-0000	SHOULDER SCREW	673
255064-0000	BUSHING	647
255301-0000	HEATING RAIL	541
255416-0000	PLATE	669
255417-0000	WASHER	669
255609-0000	ARM CUTTING JAW	367, 369
255697-0001	INTERMEDIATE PIPE	349, 351, 353, 357, 359, 361
255697-0002	INTERMEDIATE PIPE	349, 351, 353, 357, 359, 361
255742-0000	COMPRESSION SPRING	309, 311, 313, 315
255783-0000	SPACER RING	591, 595
255801-0000	RETAINING RING	309, 311, 313, 315

Part No	Description	Page No
255862-0000	TIMING BELT PULLEY	591, 595
255870-0000	VALVE HOUSING	89, 91
255871-0000 - 1 PIEC		89, 91
255871-0000	PIEC	89, 91
255874-0000	BEARING COVER	89, 91, 101
255875-0000	BUSHING	89, 91, 101
255879-0000	PIPE	103, 105
255897-0004	GEAR WHEEL	25
255897-0007	GEAR WHEEL	25
255897-0008	GEAR WHEEL	25
255898-0000	HUB	25, 27
255905-0000	PIPE	103, 105
255921-0300	LOWER FILLING TUBE	11
255921-0400	LOWER FILLING TUBE	11, 13
255939-0000	WASHER	221
255940-0000	SPACER	221
255942-0000	SLIDER	217
255943-0000	HOLDER	221
255969-0000	SHAFT	37, 39, 41, 43
255970-0000	BUSHING	37, 39, 41, 43
255971-0000	BUSHING	37, 39
255972-0000	BEARING PLATE	37, 39
255974-0000	BRACKET	37, 39
255977-0000	SHAFT	45, 47
255978-0000	FORK	45, 47
255981-0000	NUT	45, 47
255984-0001	CYLINDER BRACKET	65
255986-0000	WHEEL	115, 119
255989-0000	SHAFT	23
255995-0000	SCREW	63, 65
256001-0000	CANTILEVER	53
256005-0000	GASKET	53, 59
256006-0000	AXLE SUPPORT	53, 59
256007-0000	AXLE SUPPORT	53, 59
256010-0000	NUT	53, 59
256011-0000	DOWEL	53
256012-0000	SHAFT	53
256022-0000	BUSHING	63, 65
256031-0000	SHAFT	67, 171
256056-0000	PIVOT ARM	77, 79, 81
256058-0000	LEAD	77, 79
256059-0000	COVER	77, 79
256063-0000	CYLINDER BRACKET	77, 79, 81
256066-0000	GASKET REPBY 0751010-0000	71
256073-0000	SCREW	77, 79
256082-0000	CAP	367, 369
256112-0000	BRACKET	145, 147
256117-0000	BRACKET	145
256148-0000	HOLDER	527
256150-0000	SCREW	527
256163-0000	SHAFT	115, 119
256170-0000	DRIP PLATE	115, 119
256174-0002	PULLEY	271
256176-0000	GEAR WHEEL	271
256177-0000	SHAFT	271
256178-0000	FIXING RING	271
256179-0000	SPACER SLEEVE	271
256180-0000	SPACER	271
256181-0000	SPACER PIPE	271
256190-0000	NUT	443
256199-0300	BELT STRETCHER	269
256200-0300	INTERMEDIARY SHAFT	269
256202-0300	CAM PACKAGE IH	269
256203-0300	HOLD-DOWN DEVICE	269
256206-0200	DESIGN CORRECTION DEVICE RIGHT	307
256207-0200	DESIGN CORRECTION DEVICE LEFT	307
256208-0400	KNIFE HOLDER	307
256209-0300	VOLUME FLAP VERSION 01	307
256210-0300	VOLUME FLAP VERSION 02	307
256214-0400	PRESSURE RAIL	307
256217-0400	GUIDES	307
256222-0200	VOLUME CURVE PIECE IH	307
256223-0400	SUPPORT ROLLER	307
256248-0001	LID	677, 685
256258-0000	CYLINDER BRACKET	37, 39
256276-0000	SHAFT	439
256279-0000	ANGLE	145, 149
256280-0000	DOWEL	139, 141, 143, 149
256309-0000	SHAFT	139, 141, 143
256312-0000	WASHER	139, 141, 143
256355-0000	CANTILEVER	123
256391-0001	BENDING ROLLER	677, 685
256392-0001	SHAFT	677, 685
256392-0003	SHAFT	677, 685
256398-0000	LID	677, 685
256399-0001	SHAFT	677, 685

Part No	Description	Page No
256400-0000	SHAFT	677, 685
256403-0000	TOOTHED WHEEL	677, 685
256406-0000	GABLE PLATE	677, 685
256408-0001	SPACER	677, 685
256409-0000	WASHER	677, 685
256410-0300	INDEXING UNIT	393
256410-0400	INDEXING UNIT	393
256412-0000	HEAD PLATE	407, 409
256415-0000	BEARING HOLDER	283, 285, 287, 289
256418-0000	BEARING BRACKET	283, 285
256421-0000	PULLEY	275, 277, 279, 281
256422-0000	WASHER	275, 277, 279, 281, 283, 285, 287, 289
256426-0001	WASHER	275, 277, 279, 281, 283, 285, 287, 289
256426-0002	WASHER	275, 277, 279, 281, 283, 285, 287, 289
256427-0000	SHAFT	275, 277, 279, 281, 283, 285, 287, 289
256436-0500	PRESSURE DEVICE	393
256437-0200	DISC COUPLING	393
256438-0200	WORM GEAR	393
256461-0000	DOWEL	413
256462-0000	SCREW	413
256463-0000	WASHER	413
256472-0000	WASHER	275, 277, 279, 281, 283, 285, 287, 289, 297
256514-0000	SHAFT	297
256515-0000	END PIECE	283, 285, 287, 289
256516-0000	CAP	283, 285, 287, 289, 297
256517-0000	SCREW	283, 285, 287, 289
256518-0000	SHAFT	297
256519-0000	SPRING BRACKET	297
256547-0300	ELEMENT	393
256548-0000	HEATING CHAMBER	419
256557-0001	WASHER	349, 351, 353, 355, 357, 359, 361, 363
256557-0002	WASHER	349, 351, 353, 355, 357, 359, 361, 363
256557-0003	WASHER	349, 351, 353, 355, 357, 359, 361, 363
256576-0000	ROLL	349, 351, 353, 355, 357, 359, 361, 363
256607-0000	AXLE PIN	309, 311, 313, 315
256621-0000	WASHER	317, 319, 321, 323, 325, 327, 329, 331
256626-0000	EAR	309, 311, 313, 315
256628-0000	PIECE	367, 369
256629-0001	AXLE PIN	367, 369
256629-0003	AXLE PIN	367, 369
256640-0000	HOLDER	455
256641-0000	LEG	455
256653-0000	SPACER	295
256659-0000	OPERATING ROD	309, 311, 313, 315
256665-0200	HATCH LEFT	209
256674-0200	BOTTOM VALVE	393
256689-0000	AIR NOZZLE	145, 147
256692-0000	CARRIER	309, 311, 313, 315
256704-0000	WASHER	367, 369
256705-0000	LACE	319, 323, 327, 331
256706-0000	BEARING PLATE	309, 311, 313, 315
256707-0000	BRACKET	317, 319, 321, 323, 325, 327, 329, 331
256710-0000	SHAFT	367, 369
256712-0400	PULL-DOWN DEVICE	393
256738-0000	WASHER	371
256739-0000	SCREW	371
256769-0000	CUTTING JAW	309, 311, 313, 315
256770-0000	BEARING HOUSING	309, 311, 313, 315
256806-0300	CRANK	269
256812-0000	SHAFT	299
256814-0000	WASHER	299
256816-0000	PIPE	299
256828-0000	SPRING	299
256829-0000	SCREW	367, 369, 371
256831-0001	SPACER	367, 369
256831-0002	SPACER	367, 369
256831-0003	SPACER	367, 369, 371
256831-0004	SPACER	371
256834-0000	YOKE	367, 369
256840-0002	PIPE	97
256840-0003	PIPE	99
256849-0000	VOLUMEFLAP 125 ML	337, 339
256859-0000	SCREW	337, 339
256860-0000	ROLL	337, 339
256870-0000	BRACKET	367, 369
256873-0200	DOOR	495, 497
256875-0200	HATCH	495, 497
256882-0000	WASHER	365
256889-0000	PLUNGER	367, 369
256890-0000	LACE	367, 369
256891-0000	LACE	367, 369
256899-0000	SHAFT	71, 73, 75
256907-0000	WASHER	427
256912-0000	DOWEL	291
256914-0000	SPACER RING	291
256915-0000	SPACER RING	291

Part No	Description	Page No
256916-0000	STRUT	291
256918-0000	WASHER	291
256953-0000	BLOCK RIGHT	367
256954-0000	BLOCK LEFT	369
256966-0200	BENDING ROLLER BRACKET	639
256967-0200	BENDING ROLLER	639
256975-0000	PROTECTION	223
256983-0000	SHAFT	591, 595
256984-0000	BENDING ROLLER	645, 695
256985-0000	SHAFT	643, 645, 695
256986-0001	STRUT	643
256986-0002	STRUT	647
256986-0003	STRUT	647
256986-0004	STRUT	647
256986-0005	STRUT	665
256986-0006	STRUT	665
256986-0007	STRUT	665
256986-0008	STRUT	647
256986-0009	STRUT	665
256987-0000	SECURING PLATE	591, 595
256992-0000	CANTILEVER	645
256993-0000	CANTILEVER	645
257000-0000	NIPPLE	385, 387
257024-0000	SHAFT	591, 595
257040-0000	FORK	37, 39, 41
257041-0000	FORK	37, 39, 41, 43
257042-0000	BRACKET	37, 39, 41, 43
257043-0000	ANGLE BRACKET	37, 39, 41, 43
257044-0000	ROLL	37, 39, 41, 43
257050-0000	SHAFT	37, 39, 41, 43
257089-0000	PLATE	139, 141, 143
257090-0000	SHIFTER HANDLE	139, 141, 143
257097-0000	PRESSURE FLANGE	29
257101-0000	LOCK	29
257141-0000	RETAINING RING	677, 685
257146-0200	LID	495, 497
257151-0000	BRACKET	599
257166-0300	PAPER GUIDE	11
257174-0000	SEALING WASHER	271
257175-0000	WASHER	151, 157
257179-0000	GEAR WHEEL	271, 299
257190-0000	SEPARATION BLOCK	225, 227, 229, 231, 233
257202-0000	STRAINER	625
257213-0000	BUSHING	367, 369
257224-0000	CAP	509
257231-0000	WINDOW	243, 245
257249-0000	SCREW	349, 351, 353, 355, 357, 359, 361, 363
257250-0000	LID	349, 351, 353, 355, 357, 359, 361, 363
257271-0000	STOP	599
257306-0000	ROLL	275, 277, 279, 281
257308-0000	SCREW	275, 277, 279, 281
257309-0000	SHAFT	275, 277, 279, 281, 301, 303
257310-0000	NUT	275, 277, 279, 281, 301, 303
257311-0000	CAP	275, 277, 279, 281, 283, 285, 287, 289, 301, 303
257317-0000	LACE	367, 369
257326-0000	CRANK	299
257327-0000	SLIDER	299
257328-0000	END PIECE	299
257330-0000	PRESSURE ROLLER	45, 203, 205
257334-0000	LEAF SPRING	319, 323, 327, 331
257362-0000	LACE	309, 311, 313, 315
257379-0000	HYDRAULIC PIPE RIGHT	385
257380-0000	HYDRAULIC PIPE LEFT	387
257381-0300	MANIFOLD RIGHT	307
257382-0300	MANIFOLD LEFT	307
257393-0001	NUT	377
257393-0002	NUT	377
257395-0000	WASHER	377
257397-0000	PIN	533
257923-0000	GUIDE WHEEL	647
259580-0000	FLOAT REPBY 0550487-0000	29
259807-0000	WASHER	419
260427-0000	WASHER	413
263150-0000	BRACKET	511
263152-0000	SHAFT	511
263153-0000	NUT	511
263311-0000	WASHER	63, 65
263655-0002	SHAFT	141, 143
263655-0003	SHAFT	145, 149
263655-0004	SHAFT	149, 151, 157
263655-0005	SHAFT	139
263655-0006	SHAFT	37, 39, 41, 115, 119, 151, 157
263655-0007	SHAFT	153, 155, 159, 161
263655-0009	SHAFT	151, 157
263655-0011	SHAFT	141, 143
263655-0016	SHAFT	149

Part No	Description	Page No
263655-0018	SHAFT	153, 155, 159, 161
263655-0019	SHAFT	141, 143
263655-0021	SHAFT	149
263673-0000	GASKET	419
26490-0000	WASHER	139, 141, 143
265567-0000	BEARING UNIT	643, 645, 695
265568-0000	DUST COVER	643, 645, 695
266049-0000	SUPPORT	647
266389-0000	PISTON ROD	85, 87, 163, 165
266390-0000	NUT	85, 87, 163, 165
266391-0000	RING	85, 87, 163, 165
266394-0000	BRACKET	85, 163
266610-0000	GASKET REPBY 0531742-0000	203
266710-0000	WHEEL	511
266727-0000	AIR NOZZLE	669
266728-0000	CANTILEVER	669
266730-0000	HOLDER	669
266731-0000	SHAFT	669
266732-0000	SHAFT	669
266733-0000	MOUNTING BLOCK	669
266734-0000	CAP	669
266737-0000	WASHER	89, 91, 101, 669
266739-0000	CABLE GLAND	145, 147, 669
266740-0003	SPACER	145, 669
266752-0000	MOUNTING SHEET	641
266761-0000	MOUNTING LUG	647
267033-0000	WASHER	115, 119
267306-0000	TOUCH GUARD	665
267311-0000	FASTENING PLATE	671
267315-0100	PAPER GUIDE	639
267316-0000	CANTILEVER	663
267494-0000	COIL HEATER	77, 79, 203
268059-0000	ROLL	37, 39, 41, 43
269053-0001	SHAFT	661
269053-0003	SHAFT	661
269054-0000	ARM	661
269056-0000	CATCH	661
269057-0000	TENSION SPRING	661
269400-0000	VALVE HOUSING	163
269401-0000	HOUSE	85, 163, 165
269443-0000	BRACKET	93, 95
269461-0000	CANISTER	93, 95
269859-0000	BRACKET	93, 95
270926-0000	NUT	203, 703
270927-0000	SCREW	203, 703
271007-0000	POINTER	295
271011-0000	WASHER	533
271017-0200	BENDING ROLLER	501
271036-0000	CANTILEVER	53
271051-0001	BLOCK LEFT	411
271051-0002	BLOCK LEFT	411
271051-0003	BLOCK LEFT	411
271052-0001	BLOCK RIGHT	411
271052-0002	BLOCK RIGHT	411
271052-0003	BLOCK RIGHT	411
271088-0000	SPACER	235, 237
271100-0000	DOWEL	367, 369
271121-0000	FORCE SPRING	233
271128-0300	MOTOR	269
271132-0000	SPACER	319, 323, 327, 331
271163-0000	CANTILEVER	221
271167-0000	VALVE HOUSING	85, 87
271168-0200	BLOCK	591, 595
271169-0200	VALVE	11
271169-0300	VALVE	13
271181-0200	AIR SUPER-HEATER	11
271181-0300	AIR SUPER-HEATER	13
271183-0000	PIPE	17, 19
271184-0000	DISCHARGE TRAY	17, 19
271185-0000	DISCHARGE TRAY	17, 19
271191-0000	LID	419
271211-0000	WASHER	177, 179
271219-0000	HINGE	239, 241
271220-0000	HINGE	239, 241
271221-0000	PIN	239, 241
271229-0000	BOX	557
271239-0000	SLEEVE	519
271241-0000	SCREW	519
271251-0000	DISTANCE SPACER	97
271261-0500	CLEANING SYSTEM	225, 227, 229, 231
271269-0000	BUSHING	49, 51, 77, 79, 81, 83, 145, 147
271280-0000	PIPE	53
271284-0000	BLOCKING PIECE	319, 323, 327, 331
271316-0000	BRACKET	145
271317-0000	CURVE	295
271318-0000	CURVE	295

Part No	Description	Page No
271320-0000	HOLDER	611
271321-0000	HOLDER	611
271322-0000	HOLDER	611
271323-0000	HOLDER	235, 237
271343-0000	HOLDER	235, 237
271344-0000	HOLDER	235, 237
271345-0000	BRACKET	77, 79, 81
271346-0000	FORK	77, 79, 81
271347-0000	ARM	29, 31
271348-0000	LINK	29, 31
271349-0000	LINK	29, 31
271350-0000	THROTTLE	29, 31
271351-0000	SHEAR PIN	29, 31
271380-0000	LINK	551
271381-0000	STRUT	551
271387-0300	SPRAY GUN	393
271414-0200	AIR JET GUN	209
271419-0000	FORK	37, 39, 41, 43
271420-0000	CANTILEVER	37, 39, 41, 43
271421-0000	HOLDER	37, 39, 41
271422-0000	SPRING	37, 39, 41, 43
271423-0001	SHAFT	37, 39, 41, 43
271423-0005	SHAFT	77, 79, 81
271428-0000	HOLDER	551
271433-0000	PIPE	455
271435-0000	WASHER	455
271441-0000	BRACKET	677, 685
271451-0000	BRACKET	557
271452-0200	Detergent pump	495, 497
271453-0200	OIL TANK	495, 497
271453-0300	OIL TANK	495, 497
271454-0200	CATCH HANDLE	501
271456-0000	CATCH LEVER	599
271457-0000	CATCH LEVER	599
271461-0000	GASKET	93, 95, 203, 205
271468-0200	GUIDE	495, 497
271469-0200	GUIDE	495, 497
271472-0000	BRACKET	597
271478-0000	PLATE	427
271499-0000	ELECTRICAL CONNECTION	419
271507-0200	HYDRAULIC SYSTEM	495, 497
271508-0000	BRACKET	187, 189
271509-0000	JUNCTION BLOCK	173

Part No	Description	Page No
271546-0000	BASKET	501
271547-0000	DOOR	501
271548-0000	LINK	501
271558-0000	BRACKET	501
271562-0600	PIPE WORK MACHINE BODY	209
271585-0000	WASHER	459
271586-0001	WASHER	459
271586-0002	WASHER	459
271587-0000	WASHER	425, 459
271591-0000	BUTTON	437
271608-0000	CLAMP SCREW	463, 465
271626-0300	SUSPENSION ARM	539
271632-0000	HOOD	547
271640-0000	LID	93, 95
271641-0300	TABLE	539
271642-0000	RULER	549
271644-0000	RULER	549
271654-0000	RETAINING RING	177, 179
271656-0000	WASHER	33, 35
271689-0000	WASHER	271
271699-0300	SPLICING APPARATUS	495, 497
271708-0000	SLIDE RAIL	463, 465
271717-0000	SPACER	139, 141, 143, 159, 161
271718-0000	WASHER	139, 141, 143, 159, 161
271731-0000	COMPRESSION SPRING	413, 431, 433
271738-0000	KNIFE	389
271744-0000	BENDING ROLLER	21
271747-0000	COTTER	123
271748-0000	BEARING BLOCK	123
271753-0000	SHAFT	499
271759-0000	CURVE	295
271760-0000	CURVE	295
271762-0000	NUT	611
271820-0001	STEERING RAIL	65
271820-0002	STEERING RAIL	63, 65
271823-0000	FILTER	565
271824-0000	AIR KNIFE, MOVABLE	65
271825-0000	FIXED AIR KNIFE	65
271827-0001	HEAD PLATE	65
271827-0002	HEAD PLATE	65
271835-0000	BRACKET	35
271837-0000	BRACKET	33, 35
271841-0000	BEARING SEAT	33, 35

Part No	Description	Page No
271844-0000	WASHER	33, 35, 37, 39, 41, 43, 77, 79, 81
271846-0000	INSULATION NUT	365
271848-0000	SCREW	365
271858-0000	FLANGE	63, 65
271860-0000	CLAMP BLOCK	67, 69, 169, 171
271863-0000	SHAFT	115, 119
271864-0000	WASHER	115, 119
271865-0000	SLEEVE	65
271867-0000	PIPE	611
271868-0000	PIPE	611
271869-0000	PIPE	611
271870-0000	PIPE	611
271871-0000	PIPE	611
271872-0000	PIPE	611
271890-0000	BRANCH PIPE	85
271893-0000	SHAFT	49, 51
271898-0000	SCREW	49, 51
271899-0000	SCREW	49, 51
271911-0000	SHAFT	511
271912-0000	SHAFT	511
271934-0300	PAPER GUIDE PLATE	501
271939-0001	SLIDE SHEET	431, 433
271941-0001	FRAME	65
271941-0002	FRAME	65
271942-0001	AIR GUIDE	65
271942-0002	AIR GUIDE	65
271949-0000	NUT	565
271950-0000	HOLLOW SCREW	565
271959-0000	BRACKET	597
271961-0000	SCREW	597
271992-0200	PAPER HOLDER	495, 497
271993-0000	BEARING	551
271995-0000	SLEEVE	551
272001-0000	COMPRESSION SPRING	33, 35, 719
272002-0000	PROTECTIVE COVER LEFT	115, 119
272003-0000	PROTECTIVE COVER RIGHT	115, 119
272004-0200	BENDING ROLLER	11
272004-0300	BENDING ROLLER	13
272005-0000	BENDING ROLLER	21
272017-0000	AXLE SUPPORT	23
272018-0000	AXLE SUPPORT	21, 23
272022-0000	AIR KNIFE, MOVABLE	65
272023-0000	FIXED AIR KNIFE	65
272025-0300	AIR KNIFE	13
272026-0001	AIR DISTRIBUTOR	65
272026-0002	AIR DISTRIBUTOR	65
272027-0001	GLASS PANE	65
272027-0002	GLASS PANE	65
272033-0000	BRACKET	49, 51
272045-0001	SLIDE SHEET	431, 433
272045-0002	SLIDE SHEET	431, 433
272045-0003	SLIDE SHEET	431, 433
272045-0004	SLIDE SHEET	431, 433
272056-0000	FLOAT	29, 31
272058-0000	LID	211
272083-0000	COVER	145
272084-0200	STRETCHER	501
272085-0000	PENDULUM ARM	507
272087-0000	HOLDER	507
272088-0000	GUIDE	507
272089-0000	SLIDE RAIL	507
272090-0000	SLIDE RAIL	507
272091-0000	BRACKET	507
272095-0000	SHAFT	71, 73, 75
272105-0000	CONNECTION HOUS.(MINOR)	77, 79
272114-0000	HEAT GUARD	77, 79, 81, 83
272116-0000	CAP	275, 277, 279, 281
272118-0000	YOKECAM 236ML	295
272119-0000	ARMCAM 236ML	295
272129-0000	BRACKET	565
272130-0000	SPACER	565
272140-0001	HEAD PLATE	65
272140-0002	HEAD PLATE	65
272141-0001	FILTER	65
272141-0002	FILTER	65
272145-0000	CONNECTION DEVICE	77, 79
272146-0000	BRIDGE CONNECTOR	77, 79
272157-0000	CONTAINER	111
272173-0000	CANTILEVER	647
272177-0000	LINK	647
272184-0000	COVER	671
272186-0000	ATTACHMENT	671
272188-0000	BRACKET	671
272189-0000	LID	671
272190-0000	LACE	671
272191-0000	DISTRIBUTOR	427

Part No	Description	Page No
272231-0300	PAPER GUIDE	501
272236-0000	SPACER SLEEVE	513
272263-0000	BEARING HOUSING	309, 311, 313, 315
272274-0000	CONTAINER	175
272275-0000	LID	175
272276-0000	BOTTOM	175
272277-0000	GASKET	175
272284-0000	HEATING PIPE	77, 79
272286-0000	AXLE SUPPORT	77, 79, 81
272287-0000	AXLE SUPPORT	145, 147
272308-0003	PIPE	97
272312-0000	PIPE	97, 99
272319-0000	DISCHARGE TRAY	175
272320-0000	DISCHARGE TRAY	175
272325-0000	SPIRAL	175
272329-0001	LACE	65
272329-0002	LACE	65
272337-0200	VALVE	11
272337-0300	VALVE	13
272340-0000	PIPE	565
272341-0000	SPINDLE GUIDE	85, 163
272343-0400	PRESSURE ROLLER	639
272349-0001	PIPE	97
272349-0004	PIPE	99
272352-0000	PIPE	123
272356-0000	PIPE	97
272359-0200	BENDING ROLLER	495, 497
272360-0000	CANTILEVER	499
272361-0000	BOW CLAMP	499
272362-0000	BEARING	499
272372-0000	HOUSE	271
272374-0000	CARRIER	271
272376-0000	SHUTTER	271
272377-0001	CRAMP	271
272377-0002	CRAMP	271
272388-0000	CRAMP	271
272407-0200	GENERATOR	11, 13
272415-0000	ARM	367, 369
272419-0000	CARRIER	309, 311, 313, 315
272422-0000	FOLDING FLAP	309, 311, 313, 315
272423-0000	FOLDING FLAP	309, 311, 313, 315
272424-0000	FOLDING FLAP	309, 311, 313, 315
272425-0000	FOLDING FLAP	309, 311, 313, 315
272429-0000	ARM	319, 323, 327, 331
272431-0000	BRACKET	273
272434-0000	SHAFT	273
272440-0000	PIPE	97
272442-0000	CANTILEVER	275, 277, 279, 281
272453-0000	SPACER	533
272454-0000	PIVOT PIN	367, 369
272455-0000	BEARING BRACKET	275, 277, 279, 281
272457-0000	BOW CLAMP	275, 277, 279, 281
272458-0000	ECCENTRIC SHAFT	275, 277, 279, 281
272459-0000	WASHER	275, 277, 279, 281
272460-0000	WASHER	275, 277, 279, 281
272461-0000	WASHER	275, 277, 279, 281
272462-0000	AXLE BOLT	283, 285, 287, 289
272464-0000	ANGLE BRACKET	63, 65
272467-0000	BOW CLAMP	177, 179
272472-0000	END PIECE	301, 303
272473-0100	BENDING ROLLER	501
272474-0000	SHAFT	505
272475-0000	CAP	505
272476-0000	SHAFT	507
272477-0000	HOLDER	507
272479-0000	PRESSURE ROLLER	45, 47, 203, 205
272488-0000	CLAMP RIGHT	349, 351, 353, 355
272489-0000	CLAMP LEFT	357, 359, 361, 363
272490-0000	SLEEVE	371
272491-0000	BRACKET	319, 323, 327, 331
272492-0000	ARM RIGHT	367
272493-0000	ARM LEFT	369
272496-0000	BRACKET RIGHT	367
272497-0000	BRACKET LEFT	369
272498-0000	VOLUME FLAP 236 ML	337, 339
272500-0000	SHAFT	349, 351, 353, 355, 357, 359, 361, 363
272501-0000	BRACKET RIGHT	349, 351, 353, 355
272502-0000	BRACKET LEFT	357, 359, 361, 363
272503-0000	CLAMPING PIECE	349, 351, 353, 355, 357, 359, 361, 363
272506-0000	LACE	349, 351, 353, 355, 357, 359, 361, 363
272510-0000	HINGE	533
272511-0000	HINGE	533
272552-0000	BRACKET	527
272554-0000	TOUCH GUARD	123, 125
272555-0000	TOUCH GUARD	123, 125
272556-0001	TOUCH GUARD	97, 99

Part No	Description	Page No
272557-0001	TOUCH GUARD	97, 99
272559-0000	CABLE TRACK	553, 555
272564-0000	BEARING	501
272565-0000	ARM	291
272566-0000	AXLE PIN	291
272567-0000	ROLL	291
272569-0000	CATCH HANDLE	521
272573-0000	HUB	591, 595
272574-0000	HUB	591, 595
272575-0000	BEAM	591, 595
272576-0000	BRACKET	413
272584-0000	BEARING	509
272586-0000	TOUCH GUARD	97
272596-0000	GUIDE	599
272597-0000	STEERING RAIL	599
272600-0000	ARM	221
272602-0000	SCREW	221
272603-0000	STOP LUG	521
272604-0000	GUIDE LUG	521
272606-0000	CRADLE	297
272607-0000	BELT HOLDER	283, 285, 287, 289
272608-0000	BELT HOLDER	297
272620-0000	GUIDE	597
272621-0000	STEERING RAIL	597
272622-0000	DRINKING STRAW	671
272630-0000	BARRIER	597
272631-0000	BRACKET	597
272632-0000	SILENCER	671
272636-0000	BRACKET	673
272640-0001	COUNTER CAM	317, 321, 325, 329
272640-0002	COUNTER CAM	317, 321, 325, 329
272640-0003	COUNTER CAM	317, 321, 325, 329
272640-0004	COUNTER CAM	317, 321, 325, 329
272640-0005	COUNTER CAM	317, 321, 325, 329
272640-0006	COUNTER CAM	317, 321, 325, 329
272640-0007	COUNTER CAM	317, 321, 325, 329
272640-0008	COUNTER CAM	317, 321, 325, 329
272640-0009	COUNTER CAM	317, 319, 321, 323, 325, 327, 329, 331
272641-0000	PILLAR	319, 323
272642-0000	PILLAR	327, 331
272644-0000	PISTON	349, 351, 353, 357, 359, 361
272645-0000	RAIL	319, 323, 327, 331
272652-0300	CHAIN TENSIONER	439
272654-0000	ECCENTRIC SHAFT	317, 321, 325, 329
272659-0000	SIDE PIECE	437
272660-0000	SIDE PIECE	437
272661-0000	STAIR	437
272664-0000	CANTILEVER	299
272671-0000	CHUTE	211
272673-0000	LEG	437
272679-0000	PIPE	225, 227, 229, 231, 233
272689-0000	BRACKET	371
272690-0000	COVER	299
272691-0000	BRACKET	299
272692-0000	LID	299
272693-0000	RING	299
272694-0000	BARRIER	299
272696-0000	HOLDER	535, 537
272697-0000	BRACKET	501
272698-0000	BRACKET	535, 537
272728-0000	BARRIER	515, 517
272736-0000	CANTILEVER	299
272737-0000	BRACKET	299
272741-0000	SEAL	427
272742-0000	FINGER	221
272743-0000	LID	437
272745-0000	HATCH	437
272746-0000	ROD	415
272747-0000	CONNECTION	415
272751-0000	BOTTOM VALVE	429
272753-0000	STEERING	333
272755-0000	NUT	333
272758-0000	TIMING BELT PULLEY	417
272761-0000	FORK	377
272762-0000	KNIFE	389
272772-0000	ARM	299
272780-0000	COVER SLIP	67, 69
272781-0002	COVER SLIP	169, 171
272782-0000	COVER SLIP	67, 69, 169, 171
272783-0002	GLASS PANE	169, 171
272783-0003	GLASS PANE	67, 69
272784-0002	RUBBER STRIP	169, 171
272785-0000	RUBBER STRIP	67, 69
272786-0000	HINGE	67, 171
272787-0000	WASHER	67, 171
272790-0000	SIDE PIECE	503

Part No	Description	Page No
272791-0000	SPACER ROD	503
272792-0000	HEATING PIPE	17, 19
272793-0000	SUPPORT	17
272794-0000	SUPPORT	17, 19
272797-0000	ROLL	139, 141, 143, 159, 161
272808-0000	BRACKET	97, 99
272810-0001	SLEEVE	519
272810-0002	SLEEVE	519
272810-0003	SLEEVE	519
272813-0000	PLUNGER	519
272814-0000	SLEEVE	515, 517
272815-0001	SLEEVE	517
272815-0002	SLEEVE	517
272815-0003	SLEEVE	517
272816-0001	SHAFT	517, 519
272816-0002	SHAFT	517, 519
272816-0003	SHAFT	517, 519
272816-0004	SHAFT	519
272818-0000	GASKET	621
272820-0000	TIMING BELT PULLEY	295
272821-0000	PROTRACTOR	295
272840-0000	ROD	371
272844-0000	BRACKET	111, 113
272852-0000	HOLDER	221
272853-0000	SCREW	221
272857-0000	RING	293
272862-0000	HOLDER	547
272864-0000	BRACKET	547
272865-0000	SHAFT	547
272866-0000	LOCKING FLANGE	547
272867-0000	SPRING HOUSING	547
272868-0000	STOPPER DOWEL	83, 547
272869-0001	FLAP	547
272869-0002	FLAP	547
272886-0000	RULER	549
272888-0000	RULER	549
272905-0001	ARM	431, 433
272905-0002	ARM	431, 433
272905-0003	ARM	431, 433
272905-0004	ARM	431, 433
272905-0005	ARM	431, 433
272905-0006	ARM	431, 433
272906-0001	ARM	431, 433
272906-0002	ARM	431, 433
272906-0003	ARM	431, 433
272906-0004	ARM	431, 433
272906-0005	ARM	431, 433
272906-0006	ARM	431, 433
272926-0000	FORK	49, 51
272927-0000	PRESSURE ARM	49, 51
272928-0000	ARM	49
272929-0000	BRACKET	49
272935-0000	BLOCK RIGHT	411
272936-0000	BLOCK LEFT	411
272945-0000	LOCK	187, 189
272948-0002	SHAFT	145
272948-0003	SHAFT	147
272949-0000	VOLUME CAM LEFT	377
272953-0000	VOLUME CAM LEFT	377
272954-0000	VOLUME CAM LEFT	377
272955-0000	VOLUME CAM LEFT	377
272956-0000	VOLUME CAM LEFT	377
272957-0000	VOLUME CAM RIGHT	377
272961-0000	VOLUME CAM RIGHT	377
272962-0000	VOLUME CAM RIGHT	377
272963-0000	VOLUME CAM RIGHT	377
272964-0000	VOLUME CAM RIGHT	377
272965-0000	VOLUME CAM LEFT, WIDE	377
272966-0000	VOLUME CAM LEFT, WIDE	377
272967-0000	VOLUME CAM RIGHT, WIDE	377
272968-0000	VOLUME CAM RIGHT, WIDE	377
272969-0000	BRACKET	377
272970-0000	ARM LEFT	377
272971-0000	ARM RIGHT	377
272972-0000	RULER	377
272973-0000	DOWEL	377
272974-0001	BRACKET	379, 381, 383
272974-0002	BRACKET	379, 381, 383
272978-0000	SPINDLE	377
272985-0001	ARM	337, 339
272985-0002	ARM	337, 339
272986-0001	VOLUME SHIM	337, 339
272986-0002	VOLUME SHIM	337, 339
272986-0003	VOLUME SHIM	337, 339
272986-0004	VOLUME SHIM	337, 339
272986-0005	VOLUME SHIM	337, 339

Part No	Description	Page No
272987-0000	VOLUME SHIM	337, 339
272988-0002	VOLUME BULGE	337, 339
272988-0004	VOLUME BULGE	337, 339
272990-0000	VOLUME BULGE	337, 339
272991-0000	VOLUME SHIM	337, 339
272997-0000	STOPPER	423, 439
273429-0000	WASHER	77, 79, 81, 83
273449-0000	SIGN	579, 581
273450-0000	SIGN	579, 581
273452-0000	SIGN	579, 581
273454-0000	SIGN	565
273455-0000	LABEL (COLD WATER)	565, 611
273456-0000	SIGN	565, 611
273458-0000	LABEL (AIR)	565, 611
273937-0000	DIAPHRAGM	53, 59
273953-0000	SEAL	115, 119
273954-0000	SEAL	53, 59
273964-0000	LID	629
273965-0001	WEIGHT	629
273981-0000	GASKET	633
273982-0000	WEIGHT	633
274177-0000	WASHER	715
274179-0000	HANDLE	715
27815-0000	WASHER	53, 59, 379, 381, 383
279008-0000	BUSHING	115, 119
279010-0000	BEARING PLATE	115, 119
279074-0000	TENSION SPRING	641
279480-0000	STEERING RAIL	661
279515-0000	WASHER	605
279589-0000	NUT	97, 99, 671
279590-0000	REDUCTION	671
279672-0000	ATTACHMENT	665
28036-0000	WASHER	71, 73, 75, 123, 671, 677, 685
28037-0000	WASHER	139, 141, 143, 159, 161
283172-0000	BEARING HOUSING	665
283361-0000	AIR NOZZLE	665
28509-0000	WASHER	373, 375
2873-0000	SHAFT	37, 39, 41, 43
292044-0000	SHAFT	683, 693
292409-0000	END SECTION	689
292410-0000	END SECTION	689
292411-0000	CARRIER	689
292412-0000	END SECTION	689
292413-0000	END SECTION	689
292449-0000	PUMP HOUSING	627
292456-0000	BEARING COVER	627
293395-0001	TYPE HOLDER	689
293395-0002	TYPE HOLDER	689
293395-0003	TYPE HOLDER	689
293659-0000	CARRIER	689
293667-0000	DOWEL	683, 693
293669-0001	WASHER	683, 693
293669-0002	WASHER	683, 693
293669-0003	WASHER	683, 693
293669-0004	WASHER	683, 693
293670-0000	SHAFT	683, 693
293671-0000	SPACER	689
293676-0000	CARRIER	689
293684-0200	PRINTING WHEEL NSS	685
293685-0200	PRINTING WHEEL SS	677
293688-0000	CARRIER	689
293690-0000	END SECTION	689
293697-0000	END SECTION	693
29411-0000	SPACER PIPE	421
29413-0000	LACE	421
294464-0000	BASE PLATE	203, 703
295005-0000	Dolly	389
295010-0000	GUIDE SLEEVE	33, 35, 719
295015-0000	BRACKET	513
295016-0000	BRACKET	513
295025-0000	BRACKET	173
295057-0001	RAIL	431, 433
295057-0002	RAIL	431, 433
295057-0003	RAIL	431, 433
295058-0001	RAIL	431, 433
295058-0002	RAIL	431, 433
295058-0003	RAIL	431, 433
295059-0000	RAIL LEFT	431, 433
295060-0000	RAIL	431, 433
295061-0000	RAIL	431, 433
295062-0000	RAIL	431, 433
295072-0000	BUFFER RING	413, 431, 433
295075-0000	PROTECTION	217, 219
295078-0001	PIPE	107
295081-0000	PIPE	107
295083-0000	PIPE	107

Part No	Description	Page No
295097-0000	SLIDER	217, 219
295103-0000	SPACER	65
295106-0000	PROTECTION	711
295110-0000	SPACER	507
295111-0000	BENDING ROLLER	53, 59
295140-0000	PIN	271, 295
295150-0003	PIPE	107
295156-0000	LID	527
295157-0000	ARM	527
295158-0000	DOOR	529
295160-0000	GASKET	85, 87, 163, 165
295196-0002	PIPE	107
295201-0000	FRAME	423
295202-0001	SWIVEL	423
295202-0002	SWIVEL	423
295202-0003	SWIVEL	423
295202-0004	SWIVEL	423
295203-0000	LID	423
295204-0001	SHIM	423
295204-0002	SHIM	423
295204-0003	SHIM	423
295205-0000	SPACER SLEEVE	423
295206-0000	FLAP	423
295207-0000	HOLDER	423
295208-0000	SECURING PLATE	423
295211-0100	FRAME	393
295218-0100	FOLDING BAR	393
295246-0000	HOLDER	529
295247-0000	LEAF SPRING	529
295250-0000	PIPE	123, 125
295252-0000	PRESSURE FLANGE	29
295259-0000	HOLDER	583, 585
295296-0000	CABLE TRACK	553, 555
295300-0000	FORCE SPRING	191, 193
295301-0000	FLUSH PIPE	191, 193
295302-0000	HATCH	211
295306-0000	COVER	419
295307-0000	FLEXIBLE CONDUIT	419
295332-0000	RAIL	459
295334-0000	SIDE PLATE	459
295336-0000	BOTTOM PANEL	459
295340-0000	GABLE PLATE	459
295341-0000	SPACER	459
295342-0000	CRAMP	459
295347-0000	BEARING BRACKET	463, 465
295348-0000	GLASS	463, 465
295349-0000	BEARING BRACKET	463, 465
295355-0000	BEARING BRACKET	463, 465
295356-0000	HOUSING	463, 465
295357-0000	ROD	463, 465
295358-0000	RULER	463, 465
295375-0000	FORK	45
295376-0000	SHAFT	45
295377-0001	HOOD	45, 47
295377-0002	HOOD	45
295384-0000	SUCTION PIPE	557, 601, 603
295386-0000	SIGN BOARD	601, 603
295387-0000	SIGN BOARD	557, 559
295388-0000	GASKET	53, 59, 203, 205
295389-0000	SIGN	601, 603
295390-0000	SIGN	557
295391-0002	THROTTLE SCREW	593
295391-0003	THROTTLE SCREW	593
295395-0000	BRACKET	173
295397-0000	HINGE	173
295398-0000	HINGE	173
295399-0000	HOLDER	221
295408-0000	ARM	551
295409-0000	SHAFT	551
295412-0000	PIPE	455
295417-0000	GASKET	225, 227, 229, 231, 233, 455
295423-0000	SEAL	463, 465
295424-0000	SIGN	579, 581
295425-0000	SIGN	579, 581
295426-0000	CAP	115, 119
295427-0000	LOCK	115, 119
295428-0000	HINGE	115, 119
295429-0000	HANDLE	115, 119
295431-0000	SCREW	423
295434-0000	BUSHING	455
295463-0000	CABLE TRENCH	187
295465-0002	LID	187
295466-0000	LOCK	187, 189
295496-0000	BLOCKING PIECE	565
295523-0300	START-UP KIT	307
295529-0000	PIPE	611

Part No	Description	Page No
295530-0000	PIPE	611
295531-0000	PIPE	611
295533-0000	PIPE	611
295536-0000	PIPE	611
295539-0000	PIPE	611
295540-0000	FASTENING PLATE	611
295541-0000	BRACKET	611
295549-0000	CRAMP	97, 99, 611
295557-0000	PIPE	181, 183, 185
295560-0000	PIPE	181, 183
295568-0000	PIPE	181, 183, 185
295570-0000	PIPE	181, 183
295571-0000	PIPE	181, 183
295575-0000	PIPE	181, 183
295577-0000	PIPE	181, 183
295581-0000	PIPE	181, 183
295583-0000	PIPE	181, 183
295585-0000	PIPE	181, 183
295587-0000	PIPE	181, 183
295588-0000	PIPE	181, 183
295589-0000	PIPE	181, 183
295590-0000	PIPE	181, 183, 185
295591-0000	PIPE	181, 183, 185
295594-0000	PIPE	181, 183, 185
295600-0000	PIPE	181, 183
295601-0000	PIPE	181, 183
295602-0000	PIPE	181, 183
295603-0000	PIPE	181, 183
295604-0000	CRAMP	181, 183, 185
295605-0000	BRACKET	181, 183, 185
295617-0001	AIR NOZZLE	419
295617-0002	AIR NOZZLE	419
295617-0003	AIR NOZZLE	419
295618-0001	AIR NOZZLE	419
295618-0002	AIR NOZZLE	419
295618-0003	AIR NOZZLE	419
295621-0000	AIR NOZZLE	419
295622-0000	AIR NOZZLE	419
295624-0000	LID	167
295639-0000	BOTTOM PANEL	535, 537
295645-0000	COVER, UPPER	535, 537
295646-0000	COVER, LOWER	535, 537
295647-0000	CORNER STRIP	535, 537
295648-0000	CORNER STRIP	535, 537
295650-0000	COVERING PLATE	535, 537
295651-0000	COVERING PLATE	535, 537
295652-0000	COVERING PLATE	535, 537
295653-0000	COVERING PLATE	535, 537
295654-0000	COVERING PLATE	535, 537
295658-0000	COVER SLIP	535, 537
295659-0000	COVER SLIP	535, 537
295661-0000	SHAFT	551
295668-0300	START-UP KIT	639
295716-0000	BOW CLAMP	511
295717-0000	CANTILEVER	511
295729-0000	WASHER	435
295730-0000	SPACER SHEET	123
295734-0000	PIPE	181, 183, 185
295735-0000	PIPE	181, 183, 185
295736-0000	PIPE	181, 183, 185
295737-0000	PIPE	181, 183, 185
295738-0000	PIPE	181, 183, 185
295739-0000	PIPE	181, 183, 185
295740-0000	PIPE	181, 183, 185
295742-0000	PIPE	181, 183
295743-0000	PIPE	181, 183
295744-0000	SCREW	379, 381, 383
295748-0001	BACK PIECE	379, 381, 383
295748-0002	BACK PIECE	379, 381, 383
295748-0003	BACK PIECE	379, 381, 383
295749-0000	ADJUSTING BLOCK	379, 381, 383
295750-0002	STEERING RAIL	379, 381, 383
295758-0000	Dolly	389
295766-0000	SCREW	271
295767-0000	SEALING WASHER	271
295770-0000	AXLE BOLT	275, 277, 279, 281
295773-0000	SPACER	299
295774-0000	BRACKET	317, 321, 325, 329
295775-0000	PIPE	181, 183
295776-0000	PIPE	181, 183
295778-0200	START-UP KIT	11
295778-0300	START-UP KIT	11, 13
295782-0000	CABLE TRENCH	187, 189
295783-0000	LID	187, 189
295785-0000	FORCE SPRING	225, 227, 229, 231, 233
295819-0003	LID	187, 189

Part No	Description	Page No
295839-0200	CONNECTION BOX	501
295843-0001	BRACKET	431, 433
295843-0002	BRACKET	431, 433
295843-0003	BRACKET	431, 433
295843-0004	BRACKET	431, 433
295843-0005	BRACKET	431, 433
295843-0006	BRACKET	431, 433
295862-0001	FOLDING BAR	425
295862-0002	FOLDING BAR	425
295862-0003	FOLDING BAR	425
295862-0004	FOLDING BAR	425
295862-0005	FOLDING BAR	425
295863-0000	FOLDING BAR	425
295864-0000	FOLDING BAR	425
295871-0001	BRACKET	425
295871-0002	BRACKET	425
295871-0003	BRACKET	425
295871-0004	BRACKET	425
295871-0005	BRACKET	425
295871-0006	BRACKET	425
295871-0007	BRACKET	425
295871-0008	BRACKET	425
295871-0009	BRACKET	425
295873-0000	BRACKET	511
295878-0000	THROTTLE SCREW	97
295879-0000	NUT	97
295881-0000	BRACKET	249, 251
295882-0000	BRACKET	249, 251
295891-0300	STRIP APPLICATOR	639
295904-0100	CLAMPING PIECE	707
295905-0001	HOLDER	713
295905-0002	HOLDER	713
295905-0003	HOLDER	713
295905-0004	HOLDER	713
295905-0005	HOLDER	713
295906-0000	HANDLE	713
295907-0000	SPRING	713
295909-0000	BUSHING	77, 79, 81, 83
295910-0000	BUSHING	145, 147
295927-0000	CAM DISC	591, 595
295928-0000	CAM DISC	591, 595
295929-0000	CAM DISC	591, 595
295936-0000	BUSHING	77, 79, 81, 145, 147
295978-0000	PIPE	225, 227, 229, 231, 233
295983-0000	CONNECTION	293
295984-0000	DRIP GUARD	45, 47
295985-0000	FORCE SPRING	233
295987-0000	THROTTLE	29, 31
295993-0000	GASKET HOLDER	175
297195-0000	SPACER	125
297210-0000	INK WELL	683
297211-0000	INK WELL	693
297213-0000	END SECTION	683
297988-0000	COVER	693
297989-0000	COVER	683
29876-0000	COVER	17, 19
30298-0000	INSULATION	17, 19
30310-0001	FF HEATING ELEMENT TOP	421
30310-0002	FF HEATING ELEMENT TOP	421
30310-0003	FF HEATING ELEMENT TOP	421
31017-0000	KNIFE	541
311101-0267	Pin, Parallell, CP, h6, 4x10	275, 277, 279, 281, 283, 285, 287, 289
311103-0232	Pin, Parallell, m6, 3x8	665
311103-0233	Pin, Parallell, m6, 3x10	37, 39, 41, 43, 63, 65
311103-0234	Pin, Parallell, m6, 3x12	33, 35, 71, 73, 377, 633, 719
311103-0236	Pin, Parallell, m6, 3x16	59, 175, 683, 693
311103-0238	Pin, Parallell, m6, 3x20	33, 35, 37, 39, 41, 43, 377, 683, 693
311103-0240	Pin, Parallell, m6, 3x25	349, 351, 353, 357, 359, 361, 679, 687
311103-0242	Pin, Parallell, m6, 3x30	355, 363
311103-0267	Pin, Parallell, m6, 4x10	551, 665
311103-0268	Pin, Parallell, m6, 4x12	367, 369
311103-0270	Pin, Parallell, m6, 4x16	53, 59, 365, 683, 693
311103-0272	Pin, Parallell, m6, 4x20	115, 119, 225, 227, 229, 231, 233, 295, 449
311103-0273	PIN,STRAIGHT M6 4x22 RFR	633
311103-0274	Pin, Parallell, m6, 4x25	515, 517
311103-0276	Pin, Parallell, m6, 4x30	115, 119, 413
311103-0278	Pin, Parallell, m6, 4x35	341, 345
311103-0280	Pin, Parallell, m6, 4x40	341, 343, 345, 347
311103-0308	Pin, Parallell, m6, 5x16	53, 115, 119, 407, 409, 449
311103-0310	Pin, Parallell, m6, 5x20	25, 27, 59, 93, 95, 115, 119, 317, 321, 325, 329
311103-0312	Pin, Parallell, m6, 5x25	151, 157, 309, 311, 313, 315, 349, 351, 353, 355, 357, 359, 361, 363, 435, 679, 687
311103-0314	Pin, Parallell, m6, 5x30	319, 323, 327, 331, 679, 687
311103-0316	Pin, Parallell, m6, 5x35	317, 319, 321, 323, 325, 327, 329, 331
311103-0318	Pin, Parallell, m6, 5x40	679, 687
311103-0320	Pin, Parallell, CP, m6, 5x45	319, 323, 327, 331

Part No	Description	Page No
311103-0350	Pin, Parallell, CP, m6, 6x14	177, 179, 663
311103-0351	Pin, Parallell, m6, 6x16	499
311103-0355	Pin, Parallell, m6, 6x25	299, 377
311103-0356	PIN,STRIGHT M6 6x28 RFR	255, 257
311103-0357	Pin, Parallell, m6, 6x30	629, 679, 687
311103-0361	Pin, Parallell, m6, 6x40	93, 95, 299
311103-0401	Pin, Parallell, m6, 8x20	367, 369, 371
311103-0405	Pin, Parallell, m6, 8x30	201, 379, 381, 383
311103-0407	Pin, Parallell, m6, 8x35	463, 465, 583, 585
311103-0409	Pin, Parallell, m6, 8x40	319, 323, 327, 331
311103-0413	Pin, Parallell, m6, 8x50	69, 169
311103-0415	Pin, Parallell, CP, m6, 8x55	211
311103-0470	Pin, Parallell, m6, 10x60	299
311111-0207	Pin, Straight Slotted Spring FRP 3x14	309, 311, 313, 315
311111-0308	Pin, Straight Slotted Spring FRP 5x20	309, 311, 313, 315
311112-0205	Pin, Straight Slotted Spring FRP 3x10	651
311112-0255	Pin, Straight Slotted Spring FRP 4x18	501
311112-0256	Pin, Straight Slotted Spring FRP 4x20	627
311303-0234	SLOTTED PIRPB3X12FZB	275, 277, 279, 281
311303-0271	SLOTTED PIRPB4X18FZB	711
311305-0274	SLOTTED PIRPC4X25FZB	299
311305-0308	SLOTTED PIRPC5X16FZB	647, 665, 671
311307-0275	SLOTTED PIRPD4X28FZB	299
311411-0140	SPLIT PIN SP1,6X16RFR	37, 39, 41, 43
311411-0150	SPLIT PIN SP2X12RFR	151, 153, 155, 159, 161
311411-0152	SPLIT PIN SP2X16RFR	443
311411-0165	SPLIT PIN SP2,5X16RFR	151, 157
311411-0169	SPLIT PIN SP2,5X25RFR	627
311411-0181	SPLIT PIN SP3,2X20RFR	123
311520-0329	Rivet, Blank 2,4x8	557, 573, 601, 603
311520-0435	Rivet, Blank 3,2x10	239
311521-0142	Blank Rivet 3,2x6	625
312101-0287	Screw M6S M4x8 FZB	681, 689
312101-0297	Screw M6S M4x25 FZB	275, 277, 279, 281, 283, 285, 287, 289, 297, 439
312101-0325	Screw M6S M5x10 FZB	295
312101-0327	Screw M6S M5x12 FZB	565, 569, 591, 595
312101-0329	Screw M6S M5x16 FZB	271, 301, 303, 417, 565, 689
312101-0331	Screw M6S M5x20 FZB	221, 689
312101-0333	Screw M6S M5x25 FZB	283, 285, 287, 289, 297
312101-0337	Screw M6S M5x35 FZB	225, 227, 229, 231, 301, 303
312101-0343	Screw M6S M5x60 FZB	373, 375
312101-0362	Screw M6S M6x8 FZB	275, 277, 279, 281, 283, 285, 287, 289
312101-0364	Screw M6S M6x10 FZB	275, 277, 279, 281, 283, 285, 287, 289, 297, 553, 555,
		681, 689
312101-0366	Screw M6S M6x12 FZB	271
312101-0367	Screw M6S M6x14 FZB	565
312101-0368	Screw M6S M6x16 FZB	215, 271, 275, 277, 279, 281, 283, 285, 287, 289, 555,
		565, 591, 595, 621
312101-0370	Screw M6S M6x20 FZB	271, 557, 591, 595
312101-0371	Screw M6S M6x22 FZB	301, 303
312101-0372	Screw M6S M6x25 FZB	235, 237
312101-0376	Screw M6S M6x35 FZB	271, 301, 303
312101-0378	Screw M6S M6x40 FZB	613
312101-0380	Screw M6S M6x50 FZB	565
312101-0381	Screw M6S M6x55 FZB	515, 517, 519
312101-0385	Screw M6S M6x75 FZB	235, 237
312101-0388	Screw M6S M6x90 FZB	235, 237, 613
312101-0451	Screw M6S M8x20 FZB	565, 579, 581, 609
312101-0453	Screw M6S M8x25 FZB	275, 277, 279, 281, 299, 415, 709
312101-0455	Screw M6S M8x30 FZB	415
312101-0457	Screw M6S M8x35 FZB	273, 297, 709
312101-0459	Screw M6S M8x40 FZB	415, 591, 595, 607
312101-0462	Screw M6S M8x55 FZB	591, 595
312101-0466	Screw M6S M8x75 FZB	679, 687
312101-0488	Screw M6S M10x14 FZB	271
312101-0493	Screw M6S M10x25 FZB	709
312101-0497	Screw M6S M10x35 FZB	275, 277, 279, 281, 283, 285, 287, 289
312101-0499	Screw M6S M10x40 FZB	221, 273
312101-0500	Screw M6S M10x45 FZB	295
312101-0502	Screw M6S M10x55 FZB	301, 303
312101-0504	Screw M6S M10x65 FZB	271, 275, 277, 279, 281, 283, 285, 287, 289
312101-0507	Screw M6S M10x80 FZB	275, 277, 279, 281
312101-0515	Screw M6S M10x120 FZB	283, 285, 287, 289
312101-0530	Screw M6S M12x16 FZB	397
312101-0538	Screw M6S M12x35 FZB	709
312101-0546	Screw M6S M12x70 FZB	291
312101-0548	Screw M6S M12x80 FZB	709
312101-0550	Screw M6S M12x90 FZB	271
312101-0552	Screw M6S M12x100 FZB	417, 439
312101-0640	Screw M6S M16x100 FZB	709
312104-0457	Screw M6S M8x35H FZB	591, 595
312104-0499	Screw M6S M10x40H FZB	299
312104-0505	Screw M6S M10x70H FZB	273
312105-0287	Screw M6S M4x8 A280	25, 27, 71, 73, 75, 93, 95, 145, 147, 197, 199, 507,
		613, 625, 747
312105-0289	Screw M6S M4x10 A280	225, 227, 229, 231

Part No	Description	Page No
312105-0291	Screw M6S M4x12 A280	507, 683, 693
312105-0293	Screw M6S M4x16 A280	63, 65, 299
312105-0295	Screw M6S M4x20 A280	225, 227, 229, 231
312105-0297	Screw M6S M4x25 A280	225, 227, 229, 231, 541
312105-0304	Screw M6S M4x45 A280	541
312105-0323	Screw M6S M5x8 A280	451, 541, 755
312105-0325	Screw M6S M5x10 A280	17, 19, 53, 71, 73, 75, 77, 79, 151, 157, 175, 213, 377, 413, 431, 433, 525, 529, 549, 665, 671
312105-0327	Screw M6S M5x12 A280	81, 83, 115, 119, 211, 225, 227, 229, 231, 233, 239, 241, 341, 345, 419, 463, 465, 483, 545, 621, 651, 673, 679, 683, 687, 693
312105-0329	Screw M6S M5x16 A280	125, 153, 155, 159, 161, 197, 199, 239, 241, 463, 465, 475, 545, 679, 683, 687, 693
312105-0331	Screw M6S M5x20 A280	37, 39, 41, 43, 63, 65, 87, 165, 177, 179, 239, 241, 365, 405, 407, 409
312105-0332	Screw M6S M5x22 A280	53, 59, 141, 143, 153, 155, 159, 161, 463, 465, 679, 687
312105-0333	Screw M6S M5x25 A280	71, 73, 75, 123, 379, 381, 383, 617
312105-0335	Screw M6S M5x30 A280	223, 373, 375, 397
312105-0337	Screw M6S M5x35 A280	37, 39, 41, 43
312105-0341	Screw M6S M5x50 A280	575
312105-0362	Screw M6S M6x8 A280	35, 187, 189, 249, 251, 463, 465, 549
312105-0364	Screw M6S M6x10 A280	33, 37, 39, 41, 43, 45, 47, 49, 51, 63, 65, 77, 79, 81, 83, 97, 99, 101, 115, 119, 125, 145, 147, 187, 189, 191, 223, 225, 227, 229, 231, 233, 425, 439, 501, 533, 541, 547, 613, 671, 679, 687, 699, 701, 711
312105-0366	Screw M6S M6x12 A280	21, 23, 37, 39, 41, 43, 49, 51, 53, 59, 63, 65, 67, 69, 71, 73, 75, 77, 79, 81, 85, 87, 89, 91, 93, 95, 97, 99, 103, 105, 107, 109, 111, 113, 145, 147, 163, 165, 167, 169, 171, 173, 179, 181, 183, 185, 187, 189, 193, 195, 197, 199, 211, 221, 299, 377, 379, 381, 383, 423, 439, 453, 459, 473, 475, 479, 489, 521, 559, 597, 599, 601, 603, 605, 613, 621, 625, 633, 651, 665, 671, 673, 679, 687, 697, 719, 767
312105-0367	Screw M6S M6x14 A280	25, 27, 97, 99
312105-0368	Screw M6S M6x16 A280	17, 19, 35, 37, 39, 41, 43, 53, 59, 63, 65, 77, 79, 81, 83, 101, 103, 105, 115, 119, 139, 145, 147, 149, 151, 157, 175, 177, 179, 201, 211, 221, 299, 319, 323, 327, 331, 341, 345, 367, 369, 413, 419, 425, 431, 433, 451, 455, 459, 501, 511, 513, 577, 583, 585, 605, 613, 621, 625, 631, 641, 647, 651, 663, 665, 673, 679, 687, 695, 697, 755, 765, 767
312105-0370	Screw M6S M6x20 A280	21, 23, 33, 37, 39, 43, 59, 63, 65, 81, 83, 89, 91, 97, 99, 101, 103, 105, 145, 147, 149, 151, 157, 159, 161, 177, 179, 197, 199, 211, 249, 251, 299, 349, 351, 353, 355, 357, 359, 361, 363, 377, 379, 381, 383, 423, 435, 437, 439, 455, 485, 521, 559, 627, 633, 643, 645, 669, 671, 695, 719
312105-0371	Screw M6S M6x22 A280	613
312105-0372	Screw M6S M6x25 A280	25, 27, 41, 43, 45, 47, 53, 83, 97, 99, 103, 105, 115, 119, 139, 141, 143, 145, 147, 221, 225, 227, 229, 231, 259, 319, 323, 327, 331, 341, 345, 371, 413, 419, 425, 427, 435, 455, 467, 485, 513, 671
312105-0374	Screw M6S M6x30 A280	17, 19, 33, 35, 159, 161, 211, 299, 349, 351, 353, 355, 357, 359, 361, 363, 371, 411, 423, 427, 431, 433, 435, 525, 613, 621, 631, 679, 687
312105-0376	Screw M6S M6S M6x35 A280	67, 83, 159, 161, 171, 221, 309, 311, 313, 315, 337, 339, 349, 351, 353, 355, 357, 359, 361, 363, 367, 369, 385, 387, 423, 579, 581, 643
312105-0378	Screw M6S M6x40 A280	115, 119, 173, 225, 227, 229, 231, 233, 427, 463, 465, 513, 605, 613, 633, 655, 657, 665, 679, 687
312105-0379	Screw M6S M6x45 A280	319, 323, 327, 331, 613
312105-0380	Screw M6S M6x50 A280	217, 219, 367, 369, 427, 575
312105-0381	Screw M6S M6x55 A280	151, 157
312105-0382	Screw M6S M6x60 A280	299, 459, 579, 581, 627
312105-0384	Screw M6S M6x70 A280	115, 119, 319, 323, 327, 331, 449, 455
312105-0447	Screw M6S M8x12 A280	51, 63, 93, 95, 349, 351, 353, 355, 357, 359, 361, 363
312105-0448	Screw M6S M8x14 A480	671
312105-0449	Screw M6S M8x16 A280	37, 39, 41, 43, 49, 53, 59, 71, 73, 83, 85, 163, 167, 197, 199, 249, 251, 255, 257, 459, 471, 483, 499, 527, 541, 641, 655, 657, 661, 671
312105-0451	Screw M6S 8x20 A280	25, 27, 33, 35, 37, 39, 41, 43, 59, 69, 87, 93, 95, 115, 119, 123, 125, 139, 141, 143, 149, 165, 167, 169, 211, 221, 377, 437, 451, 455, 459, 463, 465, 499, 509, 511, 547, 551, 625, 631, 643, 645, 647, 665, 669, 671, 673, 679, 687, 699, 701
312105-0452	Screw M6S M8x22 A280	371, 507, 661
312105-0453	Screw M6S M8x25 A280	17, 19, 41, 43, 77, 79, 81, 95, 115, 119, 123, 159, 161, 235, 237, 249, 251, 317, 321, 325, 329, 349, 351, 353, 355, 357, 359, 361, 363, 367, 369, 431, 433, 583, 585, 613, 633, 647, 671, 673, 679, 687, 695
312105-0455	Screw M6S M8x30 A280	17, 19, 49, 83, 145, 147, 149, 191, 221, 255, 257, 319, 323, 327, 331, 349, 351, 353, 355, 357, 359, 361, 363, 367, 369, 371, 431, 433, 447, 449, 463, 465, 545, 551, 661, 679, 687
312105-0457	Screw M6S M8x35 A280	149, 377, 379, 381, 383, 425, 459, 679, 687
312105-0459	Screw M6S M8x40 A280	225, 227, 229, 231, 233, 255, 257, 263, 265, 317, 319, 321, 323, 325, 327, 329, 331, 379, 381, 383, 439, 459, 547, 551, 633, 647, 669, 673, 679, 687
312105-0461	Screw M6S M8x50 A280	65, 629
312105-0462	Screw M6S M8x55 A280	77, 79, 81, 83, 309, 311, 313, 315
312105-0463	Screw M6S M8x60 A280	427, 535, 537
312105-0464	Screw M6S M8x65 A280	63, 455, 535, 537
312105-0489	Screw M6S M10x16 A280	211
312105-0491	Screw M6S M10x20 A280	51, 93, 95, 455, 501, 549, 647
312105-0492	Screw M6S M10x22 A280	463, 465
312105-0493	Screw M6S M10x25 A280	95, 599, 697

Part No	Description	Page No
312105-0495	Screw M6S M10x30 A280	93, 95, 151, 153, 155, 597
312105-0497	Screw M6S M10x35 A280	95
312105-0499	Screw M6S M10x40 A280	115, 119
312105-0500	Screw M6S M10x45 A280	521
312105-0532	Screw M6S M12x20 A280	455
312105-0536	Screw M6S M12x30 A280	37, 39, 41, 43, 49, 51, 151, 153, 155, 159, 161, 479, 507, 583, 585
312105-0538	Screw M6S M12x35 A280	455
312105-0540	Screw M6S M12x40 A280	583, 585
312105-0541	Screw M6S M12x45 A280	401
312105-0544	Screw M6S M12x60 A280	437
312105-0547	Screw M6S M12x75 A280	407, 409
312109-0335	Screw M6S M5x30 A280	199
312109-0374	Screw M6S M6x30 A280	423, 651
312109-0376	Screw M6S M6x35 A280	679, 687
312109-0378	Screw M6S M6x40 A280	217
312109-0381	Screw M6S M6x55H A480	665
312109-0386	Screw M6S M6x80 A280	647
312109-0457	Screw M6S M8x35 A280	81, 83
312109-0459	Screw M6S M8x40 A280	377
312109-0460	Screw M6S M8x45 A280	449
312109-0463	Screw M6S M8x60H A4 80	53, 59, 89, 91
312111-0329	Screw Hex.Sock.Hd.MC6S-TT 5x16 88 FZB	301, 303
312111-0333	Screw Hex.Sock.Hd.MC6S-TT 5x25 88 FZB	607, 609
312111-0335	Screw Hex.Sock.Hd.MC6S-TT 5x30 88 FZB	681, 689
312111-0340	Screw Hex.Sock.Hd.MC6S-TT 5x45 88 FZB	525
312111-0343	Screw Hex.Sock.Hd.MC6S-TT 5x60 88 FZB	607, 609
312111-0368	Screw Hex.Sock.Hd.MC6S-TT 6x16 88 FZB	293
312111-0372	Screw Hex.Sock.Hd.MC6S-TT 6x25 88 FZB	215, 491
312111-0376	Screw Hex.Sock.Hd.MC6S-TT 6x35 88 FZB	275, 277, 279, 281
312111-0378	Screw Hex.Sock.Hd.MC6S-TT 6x40 88 FZB	275, 277, 279, 281
312111-0380	Screw Hex.Sock.Hd.MC6S-TT 6x50 88 FZB	271
312111-0385	Screw Hex.Sock.Hd.MC6S-TT 6x75 88 FZB	215
312111-0465	Screw Hex.Sock.Hd.MC6S-TT 8x70 88 FZB	591, 595
312111-0471	Screw Hex.Sock.Hd.MC6S-TT 8x100 88 FZ	235, 237, 569
312115-0220	Screw Hex.Sock.Hd.MC6S-TT 3x6 A480	249, 251
312115-0224	Screw Hex.Sock.Hd.MC6S-TT 3x10 A480	101
312115-0228	Screw MC6S M3x16 A280	123, 125, 177, 179
312115-0230	Screw MC6S M3x20 A280	25, 27, 481
312115-0285	Screw Hex.Sock.Hd.MC6S-TTS 4x6 A480	221
312115-0287	Screw MC6S M4x8 A280	683, 693
312115-0289	Screw Hex.Sock.Hd.MC6S-TT 4x10 A480	225, 227, 229, 231
312115-0291	Screw MC6S M4x12 A280	25, 27, 131
312115-0293	Screw MC6S M4x16 A280	365
312115-0305	Screw MC6S M4x50 A280	125
312115-0323	Screw MC6S M5x8 A280	25, 27, 549
312115-0325	Screw Hex.Sock.Hd.MC6S-TT 5x10 A480	65, 259
312115-0327	Screw MC6S M5x12 A280	25, 27, 491, 511
312115-0329	Screw MC6S M5x16 A280	55, 61, 97, 99, 115, 119, 123, 125, 249, 251, 473, 605
312115-0331	Screw MC6S M5x20 A280	213, 299, 365
312115-0364	Screw Hex.Sock.Hd.MC6S-TT 6x10 A480	101, 225, 227, 229, 231, 233
312115-0366	Screw MC6S M6x12 A280	15, 53, 59, 63, 65, 77, 79, 177, 179, 309, 311, 313, 315, 659, 661, 663
312115-0368	Screw MC6S M6x16 A280	93, 95, 501, 627, 665
312115-0370	Screw MC6S M6x20 A280	115, 119, 309, 311, 313, 315, 679, 687
312115-0371	Screw Hex.Sock.Hd.MC6S-TT 6x22 A480	349, 351, 353, 355, 357, 359, 361, 363
312115-0372	Screw MC6S M6x25 A280	371, 439, 679, 687
312115-0374	Screw MC6S M6x30 A280	463, 465, 471, 489
312115-0378	Screw MC6S M6x40 A280	471
312115-0380	Screw MC6S M6x50 A280	541
312115-0382	Screw MC6S M6x60 A280	763
312115-0449	Screw MC6S M8x16 A280	337, 339, 413, 501
312115-0451	Screw MC6S M8x20 A280	25
312115-0453	Screw MC6S M8x25 A280	255, 257, 319, 323, 327, 331, 379, 381, 383, 597, 599
312115-0455	Screw MC6S M8x30 A280	45, 47, 413, 431, 433
312115-0457	Screw MC6S M8x35 A280	255, 257
312115-0459	Screw MC6S M8x40 A280	135, 137, 259
312115-0463	Screw MC6S M8x60 A280	243, 245
312115-0467	Screw MC6S M8x80 A280	531
312115-0491	Screw MC6S M10x20 A280	437, 547
312115-0495	Screw MC6S M10x30 A280	547
312115-0497	Screw MC6S M10x35 A280	597
312115-0501	Screw MC6S M10x50 A280	435
312115-0503	Screw MC6S M10x60 A280	211
312115-0536	Screw MC6S M12x30 A280	503
312121-0224	Screw Slot.Pan Hd. MCS 3x10 FZB	711
312121-0285	Screw Slot.Pan Hd. MCS 4x6 FZB	555
312121-0287	Screw Slot.Pan Hd. MCS 4x8 FZB	275, 277, 279, 281, 283, 285, 287, 289, 297, 301, 303, 567
312121-0289	Screw Slot.Pan Hd. MCS 4x10 FZB	301, 303
312121-0291	Screw Slot.Pan Hd. MCS 4x12 FZB	567
312121-0323	Screw Slot.Pan Hd. MCS 5x8 FZB	271
312121-0333	Screw Slot.Pan Hd. MCS 5x25 FZB	573
312122-0287	Screw Pan Head MCS M4X8 NL. PL.	525
312122-0294	Screw Slot.Pan Hd. MCS 4x18 BR NP	373, 375

Part No	Description	Page No
312125-0220	Screw Slot.Pan Hd. MCS 3x6 A480	145, 147, 213, 579, 581, 589, 669
312125-0222	Screw Pan Head MCS M3x8 RFR	77, 79, 223, 533, 661
312125-0224	Screw Slot.Pan Hd. MCS 3x10 A480	679, 687
312125-0226	Screw Pan Head MCS M3X12 RFR	81, 83
312125-0228	Screw Pan Head MCS M3x16 A480	49, 51, 63, 65, 191, 507
312125-0230	Screw Pan Head MCS M3X20 RFR	53, 59, 115, 119, 213, 489, 541, 661, 679, 687
312125-0285	Screw Slot.Pan Hd. MCS 4x6 A480	17, 19, 53, 61, 93, 95, 111, 113, 145, 147, 501, 525, 557, 559, 661, 665, 699, 701
312125-0287	Screw Pan Head MCS M4X8 RFR	225, 227, 229, 231
312125-0287	Screw Pan Head MCS M4X8 RFR	115, 119, 489, 541, 601, 603, 605, 651, 655, 657, 659, 665, 759
312125-0289	Screw Slot.Pan Hd. MCS 4x10 A480	679, 687
312125-0291	Screw Pan Head MCS M4x12 RFR	77, 79, 145, 147, 211, 243, 245, 533, 547, 551, 589, 621, 669, 757, 759, 761
312125-0293	Screw Pan Head MCS M4X16 RFR	587
312125-0295	Screw Pan Head MCS M4X20 RFR	523, 713
312125-0297	Screw Pan Head MCS M4X25 RFR	501
312125-0299	Screw Pan Head MCS M4X30 RFR	77, 79
312125-0323	Screw Pan Head MCS M5X8 RFR	225, 227, 229, 231
312125-0323	Screw Pan Head MCS M5X8 RFR	17, 19, 81, 83, 129, 131, 133, 187, 189, 211, 221, 673
312125-0325	Screw Slot.Pan Hd. MCS 5x10 A480	535, 537, 613, 671
312125-0327	Screw Pan Head MCS M5X12 RFR	757, 759, 763
312125-0329	Screw Pan Head MCS M5X16 RFR	211, 243, 613, 641, 679, 687
312125-0331	Screw Pan Head MCS M5X20 RFR	17, 19, 53, 61
312125-0364	Screw Slot.Pan Hd. MCS 6x10 A480	167, 215, 491, 719
312125-0366	Screw Pan Head MCS M6X12 RFR	17, 19, 679, 687, 759, 763
312125-0370	Screw Pan Head MCS M6X20 RFR	633
312125-0374	Screw Pan Head MCS M6X30 RFR	675
312132-0284	Screw Slot. Pan Head MSCS M4X5	587
312132-0323	Screw Slot. Pan Head MSCS M5X8	675
312145-0220	Screw Counters.Slot.Hd. MFS 3x6 SS	549
312145-0222	Screw Counters.Slot.Hd. MFS 3x8 SS	239, 241
312145-0228	Screw Counters.Slot.Hd. MFS 3x16 SS	145, 147, 679, 687
312145-0238	Screw Counters.Slot.Hd. MFS 3x40 SS	669
312145-0285	Screw Counters.Slot.Hd. MFS 4x6 SS	37, 39, 41, 43, 679, 687, 747
312145-0287	Screw Counters.Slot.Hd. MFS 4x8 SS	33, 35, 77, 79, 81, 507
312145-0289	Screw Counters.Slot.Hd. MFS 4x10 SS	173
312145-0291	Screw Counters.Slot.Hd. MFS 4x12 A4	239, 241, 309, 311, 313, 315, 337, 339, 533, 545
312145-0293	Screw Counters.Slot.Hd. MFS 4x16 SS	679, 687
312145-0323	Screw Counters.Slot.Hd. MFS 5x8 SS	535, 537
312145-0453	Screw Counters.Slot.Hd. MFS 8x25 SS	527
312151-0287	Screw Hex.Sock.Count.MF6S 4x8 FZB	275, 277, 279, 281, 283, 285, 287, 289, 301, 303
312151-0364	Screw Hex.Sock.Count.MF6S 6x10 FZB	275, 277, 279, 281, 283, 285, 287, 289
312151-0366	Screw Hex.Sock.Count.MF6S 6x12 FZB	299
312151-0460	Screw Hex.Sock.Count.MF6S 8x45 FZB	403
312155-0285	Screw Hex.Sock.Count.MF6S M4x6 A480	365
312155-0287	Screw Hex.Sock.Count.MF6S M4x8 A270	365
312155-0289	Screw Hex.Sock.Count.MF6S M4x10 A480	463, 465
312155-0291	Screw Hex.Sock.Count.MF6S M4x12 A480	33, 35, 673, 679, 687
312155-0295	Screw Hex.Sock.Count.MF6S M4x20 A480	413
312155-0299	Screw Hex.Sock.Count.MF6S M4x30 A480	441, 457
312155-0323	Screw Hex.Sock.Count.MF6S M5x8 A280	679, 687
312155-0325	Screw Hex.Sock.Count.MF6S M5x10 A280	211, 475
312155-0327	Screw Hex.Sock.Count.MF6S M5x12 A280	239, 241, 501, 679, 687
312155-0329	Screw Hex.Sock.Count.MF6S M5x16 A280	239, 241, 373, 375
312155-0331	Screw Hex.Sock.Count.MF6S M5x20 A280	451, 473, 617
312155-0364	Screw Hex.Sock.Count.MF6S M6x10 A280	89, 91, 101, 633
312155-0366	Screw Hex.Sock.Count.MF6S M6x12 A280	211, 341, 343, 345, 347, 505, 597, 599
312155-0368	Screw Hex.Sock.Count.MF6S M6x16 A280	221, 341, 343, 345, 347, 399, 401, 403, 459, 463, 465, 507, 511
312155-0370	Screw Hex.Sock.Count.MF6S M6x20 A280	101, 253
312155-0372	Screw Hex.Sock.Count.MF6S M6x25 A280	463, 465
312155-0374	Screw Hex.Sock.Count.MF6S M6x30 A280	89, 91, 599
312155-0376	Screw Hex.Sock.Count.MF6S M6x35 A280	679, 687
312155-0378	Screw Hex.Sock.Count.MF6S M6x40 A280	463, 465
312155-0447	Screw Hex.Sock.Count.MF6S 8x12 SS	271
312155-0449	Screw Hex.Sock.Count.MF6S M8x16 A280	249, 251, 265, 413, 507, 599
312155-0453	Screw Hex.Sock.Count.MF6S M8x25 A280	249, 251, 471
312155-0455	Screw Hex.Sock.Count.MF6S M8x30 A280	463, 465
312155-0461	Screw Hex.Sock.Count.MF6S M8x50 A280	459, 461
312155-0532	Screw Hex.Sock.Count.MF6S 12x20 SS	125
312165-0325	Screw Slot.Rais.Count.Hd.MKFS 5x10 SS	225, 227, 229, 231
312165-0329	Screw Slot.Rais.Count.Hd.MKFS 5x16 SS	529
312303-0378	Screw Stud, Metal End=1d, PS 6x30 SS	55
312311-0321	Screw, Sock.Set Dogpoint M5X6	283, 285, 287, 289
312311-0327	Screw, Sock.Set Dogpoint M5X12	431, 433
312311-0366	Screw, Sock.Set Dogpoint M6X12	273
312316-0283	Screw Hex.Sock.Set Cup P.MSK6SS4x4FZB	663
312316-0291	Screw Hex.Sock.Set Cup P.MSK6SS4x12FZB	663
312316-0323	Screw Hex.Sock.Set Cup P.MSK6SS5x8FZB	591, 595
312318-0283	Screw,Sock.Set Cuppoint MSK6SS M4x4 A4	15, 25, 27, 177, 179, 655, 657
312318-0285	Screw,Sock.Set Cuppoint MSK6SS M4x6 A4	15, 37, 39, 41, 43, 151, 153, 155,

Part No	Description	Page No
159,		161, 177, 179, 641, 663
312318-0287	Screw,Sock.Set Cuppoint MSK6SS M4x8 A4	299, 541
312318-0291	Screw,Sock.Set Cuppoint MSK6SS M4x12 A4	15, 177, 179, 669
312318-0321	Screw Hex.Sock.Set Cup P.MSK6SS 5x6 SS	379, 381, 383, 499, 545
312318-0323	Screw,Sock.Set Cuppoint MSK6SS M5x8 A4	93, 95, 199, 201, 259, 423, 499, 511
312318-0325	Screw Hex.Sock.Set Cup P.MSK6SS5x10 SS	197, 439, 643
312318-0327	Screw,Sock.Set Cuppoint MSK6SS M5x12 A4	49, 51
312318-0360	Screw Hex.Sock.Set Cup P.MSK6SS6x6 SS	67, 171, 367, 369, 499, 505, 507
312318-0362	Screw,Sock.Set Cuppoint MSK6SS M6x8 A4	49, 51, 299, 481, 485, 549, 551, 647, 673, 679, 687
312318-0364	Screw Hex.Sock.Set Cup P.MSK6SS6x10 SS	25, 27, 33, 35, 643, 645, 695
312318-0368	Screw,Sock.Set Cuppoint MSK6SS M6x16 A4	37, 39, 41, 43, 59, 367, 369
312318-0372	Screw,Sock.Set Cuppoint MSK6SS M6x25 A4	43
312318-0451	Screw,Sock.Set Cuppoint MSK6SS M8x20 A4	37, 39, 41
312502-0120	Drive Screw Round Head KDS 0x5	181, 183, 185, 567, 579, 581, 613, 673
312502-0171	Drive Screw Round Head KDS 2x6	609
312502-0221	Drive Screw Round Head KDS 4x6	605
312503-0410	Screw Cross Reces.Rnd.Hd.Tapp. B10x13	529
312601-0316	NUT M6M 6-8 FZB	557
312601-0318	NUT M6M8FZB	275, 277, 279, 281, 283, 285, 287, 289, 567, 579, 581
312601-0320	NUT M6M 10-8 FZB	221, 273
312601-0322	NUT M6M 12-8 FZB	591, 595
312601-0324	NUT M6M 16-8 FZB	283, 285, 287, 289
312602-0312	Nut Hex. M6M M4 BR	373, 375
312605-0310	Nut Hex. M6M M3 A280	37, 39, 41, 43, 55, 61, 223, 541, 679, 687
312605-0312	Nut Hex. M6M M4 A280	15, 55, 57, 61, 71, 73, 75, 77, 79, 93, 95, 111, 113, 177, 179, 243, 245, 501, 533, 621, 625, 663, 713
312605-0314	Nut Hex. M6M M5 A280	55, 61, 63, 65, 67, 69, 169, 171, 175, 177, 179, 225, 227, 229, 231, 233, 239, 241, 299, 451, 473, 525, 533, 535, 537, 613, 625, 669, 679, 683, 687, 693
312605-0316	Nut Hex. M6M M6 A280	25, 27, 37, 39, 41, 43, 55, 63, 65, 77, 79, 97, 99, 115, 119, 159, 161, 187, 189, 249, 251, 259, 413, 427, 453, 455, 459, 463, 465, 471, 473, 511, 513, 559, 579, 581, 613, 621, 631, 633, 641, 647, 651, 655, 657, 665, 675, 679, 687, 765
312605-0318	Nut Hex. M6M M8 A280	37, 39, 41, 45, 47, 55, 61, 71, 73, 75, 77, 79, 81, 83, 89, 91, 149, 221, 249, 251, 255, 257, 309, 311, 313, 315, 377, 449, 471, 485, 527, 545, 647, 651, 665, 669, 673, 679, 683, 687, 693
312605-0320	Nut Hex. M6M M10 A280	37, 39, 41, 43, 55, 61, 65, 93, 95, 299, 413, 431, 433, 521, 627, 653, 665
312605-0322	Nut Hex. M6M M12 A280	265, 507
312605-0324	Nut Hex. M6M M16 A280	543
312605-0326	Nut Hex. M6M M20 A280	177, 179
312621-0318	ROD END,NUT M8	591, 595
312621-0322	NUT ML6M12FZB	301, 303
312621-0324	NUT ML6M16FZB	301, 303
312625-0316	Nut Hex. M6 SS	379, 381, 383
312631-0324	Nut Hex. M16x1,5 FE FZB	501
312705-0314	Nut Hex. Domed Cap MHM-6 M5 A280	239, 241, 249, 251
312705-0316	Nut Hex. Domed Cap MHM-6 M6 A280	187, 189, 459
312705-0318	Nut Hex. Domed Cap MHM-6 M8 A280	459
312805-0106	Nut Round with slots M30x1,5 FE	405
312805-0109	Nut Round with slots M45x1,5 FE	399, 401
312810-0314	Nut Hex. Ny-Lock M5 FZB	243
312810-0322	Nut Hex. Ny-Lock M12 FZB	709
312810-0324	Nut Hex. Ny-Lock M16 FZB	403, 405, 709
312811-0316	Nut Hex.Lock Heli Coil Mid Grip M6 SS	421, 627, 633
312811-0318	Nut Hex.Lock Heli Coil Mid Grip M8 SS	291, 367, 369, 399
312811-0320	Nut Hex.Lock Heli Coil Mid Grip M10 SS	291, 379, 381, 383
312811-0322	Nut Hex.Lock Heli Coil Mid Grip M12 SS	275, 277, 279, 281
312811-0324	Nut Hex.Lock Heli Coil Mid Grip M16 SS	275, 277, 279, 281, 283, 285, 287, 289
312811-0326	Nut Hex.Lock Heli Coil Mid Grip M20 SS	275, 277, 279, 281, 283, 285, 287, 289
312812-0310	Nut Hex. Ny-Lock M3 A480	679, 687
312812-0312	Nut Hex. Ny-Lock M4 A480	673, 679, 687
312812-0314	Nut Hex. Ny-Lock M5 A480	673, 755
312812-0316	Nut Hex. Ny-Lock M6 A480	197, 199, 253, 463, 465, 515, 517, 519, 673, 747, 749, 751, 753, 755, 765, 767
312812-0318	Nut Hex. Ny-Lock M8 A480	197, 199, 673, 679, 687
312901-0324	NUT M6M16VFZB	283, 285, 287, 289
312911-0115	THREADED INSERTS M5X2,0D	703
312911-0119	THREADED INSERTS M6X2,0D	703
312911-0126	Heli-Coil M8x1,5D	703
312923-0122	Nut Blind Rivet PO M5x12,6 SS	535, 537
31390-0100	FF-ELEMENT TOP	419
31390-0110	FF-ELEMENT BOTTOM	419
31418-0000	SHAFT	647
31423-0000	MOUNTING LUG	647
31425-0000	GUIDE WHEEL	647
315101-0136	Washer, Plain, BRB, 4,3/8 H=0,8	275, 277, 279, 281, 283, 285, 287, 289, 297, 439, 489, 681, 691
315101-0146	Washer, Plain, BRB, 5,3/10 H=1	225, 227, 229, 231, 283, 285, 287, 289, 295, 297, 301, 303, 567, 569, 573, 689
315101-0153	Washer, Plain, BRB, 6,4/12 H=1,5	215, 235, 237, 271, 275, 277, 279, 281, 283, 285, 287, 289, 301, 303, 515, 517, 519, 557, 567, 591, 595, 613
315101-0165	Washer, Plain, BRB, 8,4/16 H=1,5	275, 277, 279, 281, 297, 299, 567, 579, 581, 591, 595, 607, 609
315101-0173	Washer, Plain, BRB, 10,5/22 H=2	275, 277, 279, 281, 283, 285, 287, 289, 295

Part No	Description	Page No
315101-0178	Washer, Plain, BRB, 13/24 H=2	417, 591, 595
315101-0180	Washer, Plain, BRB, 14/28 H=2	709
315101-0186	Washer, Plain, BRB, 17/30 H=3	275, 277, 279, 281, 283, 285, 287, 289
315105-0124	Washer, Plain, BRB, 3,2/6,H=0,5	55, 61, 115, 119, 123, 125, 213, 223, 507, 533, 661, 669, 679, 687
315105-0136	Washer, Plain, BRB, 4.3/8,H=0,8	57
315105-0136	Washer, Plain, BRB, 4,3/8,H=0,8	25, 27, 61, 77, 79, 95, 111, 113, 125, 151, 157, 221, 225, 227, 229, 231, 249, 251, 365, 507, 533, 541, 547, 613, 625, 659, 661, 665, 673, 679, 687, 699, 701, 747, 757, 759, 761
315105-0146	Washer, Plain, BRB, 5,3/10,H=1	17, 19, 25, 27, 55, 61, 63, 65, 125, 175, 197, 199, 211, 213, 221, 223, 225, 227, 229, 231, 233, 239, 241, 243, 249, 251, 299, 341, 345, 365, 373, 375, 397, 405, 407, 409, 419, 451, 463, 465, 473, 475, 525, 529, 535, 537, 545, 549, 575, 647, 651, 661, 663, 665, 673, 679, 683, 687, 693, 755, 757, 759, 763
315105-0153	Washer, Plain, BRB, 6,4/12,H=1,5	25, 27, 37, 39, 41, 43, 49, 51, 55, 61, 63, 65, 71, 73, 75, 89, 91, 93, 95, 97, 99, 101, 111, 113, 115, 119, 145, 147, 173, 177, 179, 187, 189, 191, 197, 211, 221, 223, 225, 227, 229, 231, 233, 249, 251, 259, 299, 319, 323, 327, 331, 341, 343, 345, 347, 349, 351, 353, 355, 357, 359, 361, 363, 371, 377, 379, 381, 383, 419, 421, 423, 425, 427, 431, 433, 435, 437, 439, 449, 451, 453, 459, 463, 465, 467, 471, 473, 475, 479, 485, 501, 511, 513, 525, 533, 541, 559, 577, 579, 581, 601, 603, 605, 613, 617, 621, 625, 627, 641, 643, 645, 647, 651, 655, 657, 661, 663, 665, 669, 673, 675, 679, 687, 695, 697, 719, 747, 749, 751, 753, 755, 759, 765, 767
315105-0165	Washer, Plain, BRB, 8,4/16,H=1,5	37, 39, 41, 43, 55, 61, 77, 79, 81, 83, 93, 95, 139, 141, 143, 151, 153, 155, 157, 159, 161, 191, 211, 221, 235, 237, 243, 245, 249, 251, 255, 257, 263, 265, 319, 323, 327, 331, 349, 351, 353, 355, 357, 359, 361, 363, 367, 369, 371, 377, 379, 381, 383, 425, 437, 447, 449, 451, 455, 459, 471, 483, 485, 499, 507, 509, 511, 527, 531, 535, 537, 545, 547, 551, 641, 647, 651, 655, 657, 659, 661, 665, 669, 671, 673, 679, 683, 687, 693, 695, 699, 701
315105-0173	Washer, Plain, BRB, 10,5/22,H=2	65, 93, 95, 379, 381, 383, 463, 465, 597, 599, 627, 647, 653, 665, 697
315105-0178	Washer, Plain, BRB, 13/24,H=2	401, 437, 455, 479, 507, 583, 585
315105-0186	Washer, Plain, BRB, 17/30,H=3	501, 673
315111-0153	Washer, Plain, TBRB 6,4/12 H=3	681, 691
315111-0165	Washer, Plain, TBRB 8,4/16 H=3	273, 291, 439
315111-0173	Washer, Plain, TBRB 10,5/22 H=4	271, 273, 275, 277, 279, 281, 283, 285, 287, 289, 291
315111-0178	Washer, Plain, TBRB 13/24 H=4	271, 407, 409, 439
315111-0186	Washer, Plain, TBRB 17/30 H=6	403, 405
315115-0153	Washer, Plain, TBRB 6,4/12 H=3	49, 51, 115, 119, 125, 197, 199, 309, 311, 313, 315, 349, 351, 353, 355, 357, 359, 361, 363, 367, 369, 385, 387, 411, 421, 463, 465, 533, 575, 621
315115-0165	Washer, Plain, TBRB 8,4/16 H=3	17, 25, 27, 33, 35, 37, 39, 41, 43, 71, 73, 95, 115, 119, 139, 141, 143, 149, 197, 199, 221, 319, 323, 327, 331, 379, 381, 383, 431, 433, 583, 585, 625, 633, 647, 665, 673
315115-0173	Washer, Plain, TBRB 10,5/22 H=4	93, 95, 115, 119
315115-0178	Washer, Plain, TBRB 13/24 H=4	37, 39, 41, 43, 151, 153, 155, 159, 161
315121-0153	Washer, Plain, TBRSB 6,4/22 H=4	271, 299, 417, 641, 669
315121-0173	Washer, Plain, TBRSB 10,5/28 H=6	291, 301, 303
315121-0178	Washer, Plain, TBRSB 13/36 H=6	271, 291
315125-0153	Washer, Plain Round,Chamf. 6,4/22, H=4	45, 47, 83, 97, 99, 115, 119, 611, 643
315125-0165	Washer, Plain Round,Chamf. 8,4/26, H=5	19, 77, 79, 81, 83, 93, 95, 145, 147, 463, 465, 665
315202-0102	O-Ring 4,1x1,6 mm	349, 351, 353, 355, 357, 359, 361, 363, 365
315202-0104	O-Ring 6,1x1,6 mm	531
315202-0105	O-Ring 7,1x1,6 mm	243, 245
315202-0106	O-Ring 8,1x1,6 mm	349, 351, 353, 355, 357, 359, 361, 363, 371
315202-0108	O-Ring 10,1x1,6 mm	349, 351, 353, 355, 357, 359, 361, 363
315202-0109	O-Ring 11,1x1,6 mm	557, 601
315202-0115	O-Ring 17,1x1,6 mm	439
315202-0116	O-Ring 18,1x1,6 mm	575
315202-0117	O-Ring 19,1x1,6 mm	439
315202-0119	O-Ring 25,1x1,6 mm	93, 95
315202-0204	O-Ring 5,3x2,4 mm	371
315202-0206	O-Ring 7,3x2,4 mm	221, 367, 369
315202-0207	O-Ring 8,3x2,4 mm	367, 369, 371
315202-0215	O-Ring 19,2x3 mm	255, 257, 423, 439, 455
315202-0217	O-Ring 24,2x3 mm	441, 457
315202-0218	O-Ring 26,2x3 mm	683, 693
315202-0219	O-Ring 29,2x3 mm	367, 369, 371
315202-0224	O-Ring 42,2x3 mm	689
315202-0225	O-Ring 44,2x3 mm	609
315202-0265	O-Ring 12,3x2,4 mm	309, 311, 313, 315
315202-0301	O-Ring 49,5x3 mm	689
315202-0304	O-Ring 64,5x3 mm	133, 439, 689
315202-0305	O-Ring 69,5x3 mm	689
315202-0306	O-Ring 74,5x3 mm	397, 405
315202-0308	O-Ring 84,5x3 mm	129, 131
315202-0309	O-Ring 89,5x3 mm	399, 401, 403, 683, 693
315202-0710	O-Ring 25,12x1,78 mm	567
315204-0103	O-Ring 5,1x1,6 mm	93, 95
315204-0108	O-Ring 10,10x1,6 mm	711
315204-0109	O-Ring 11,1x1,6 mm	115, 121
315204-0110	O-Ring 12,1x1,6 mm	101
315204-0111	O-Ring 13,1x1,6 mm	49, 51

Part No	Description	Page No
315204-0117	O-Ring 19,1x1,6 mm	625
315204-0119	O-Ring 25,1x1,6 mm	99
315204-0208	O-Ring 9,3x2,4 mm	115, 121
315204-0213	O-Ring 15,2x2,4 mm	55, 61, 93, 95, 111, 113
315204-0214	O-Ring 17,3x2,4 mm	45, 47, 203, 205
315204-0215	O-Ring 19,2x3 mm	55, 129, 131, 133
315204-0217	O-Ring 24,2x3 mm	45, 47, 93, 95
315204-0218	O-Ring 26,2x3 mm	107, 109, 203, 205
315204-0222	O-Ring 36,2x3 mm	97, 99, 101
315204-0223	O-Ring 39,2x3 mm	85, 87, 103, 105, 107, 109, 203, 205, 621
315204-0224	O-Ring 42,2x3 mm	191, 193, 621
315204-0301	O-Ring 49,5x3 mm	45, 47, 103, 105, 133
315204-0302	O-Ring 54,5x3 mm	89, 91, 101, 631
315204-0303	O-Ring 59,5x3 mm	35, 191, 193
315204-0305	O-Ring 69,5x3 mm	25, 61, 111, 113, 419
315204-0306	O-Ring 74,5x3 mm	35
315204-0309	O-Ring 89,5x3 mm	35
315204-0310	O-Ring 94,5x3 mm	25
315204-0313	O-Ring 109,5x3 mm	33
315211-0105	Gasket Bolt head 10,4x15,9x2,1 mm G1/8	235, 237
315211-0107	Gasket Bolt head 12,7x18x1,5 mm M12	455
315211-0108	Gasket Bolt head 13,7x20,6x13,7 mm G1/4	235, 237
315220-0198	V-Rings 45x55x13 mm V-50S	399, 401
315220-0204	V-Rings 49x59x13 mm V-55S	401
315220-0210	V-Rings 54x64x13 mm V-60S	397, 403, 405
315221-0169	Radial Seal 30x47x7 mm	271
315221-0177	Radial Seal 35x52x7 mm	405
315230-0157	Bearing Seal 12x16x3 mm	309, 311, 313, 315
315233-0101	Washer,Pl.Rnd.Nyl.5,2/8,H=1	129, 131, 133, 395
315233-0109	Washer,Pl.Rnd.Nyl.10,3/14,H=1	211, 319, 323, 327, 331, 439, 525, 567, 569, 575, 577
315233-0110	Washer,Pl.Rnd.Nyl.13,3/17,H=1	427, 463, 465, 487, 567, 569, 575, 603, 605
315233-0111	Washer,Pl.Rnd.Nyl.17/22,H=1	221, 439, 463, 465, 569, 571, 575, 605
315233-0113	Washer,Pl.Rnd.Nyl.21,4/27,H=1,2	225, 227, 229, 231, 233, 427, 487, 567, 569, 577, 613
315233-0115	Washer,Pl.Rnd.Nyl.26,6/34,H=1,2	567, 625
315234-0101	Washer,Pl.Rnd.Cu.5/8 H=0,8	413, 431, 433
315234-0109	Washer,Pl.Rnd.Cu.10,3/13,5 H=1,0	77, 79, 145, 147, 225, 227, 229, 231, 355, 363
315234-0110	Washer,Pl.Rnd.Cu.13,5/18 H=1,5	417
315234-0113	Washer,Pl.Rnd.Cu.21,3//26 H=1,5	417
315237-0106	Washer,Pl.Rnd.Al.6/10,H=1	309, 311, 313, 315, 355, 363
315237-0107	Washer,Pl.Rnd.Al.8/14,H=1	355, 363
315237-0109	Washer,Pl.Rnd.Al.10/14,H=1,5	309, 311, 313, 315
315237-0110	Washer,Pl.Rnd.Al.13,5/18,H=1,5	349, 351, 353, 355, 357, 359, 361, 363
315250-0103	Gasket 48x38x5,5 mm	455
315250-0104	Gasket 61x51x5,5 mm	429, 455
315259-0102	Felt Seal 22-47 mm	211
315402-0136	Lock Washer, FBB 4,1	131
315410-0106	Lock Washer MB 6 d=30 H=1,25	405
315410-0109	Lock Washer MB 9 d=45 H=1,25	399, 401
31553-0001	WASHER	415
31559-0000	SPRING PLATE	415
315701-0170	Parallel key with round end 4x4x20 mm	679, 687
315701-0232	KEYS,PARALLEL WITH ROUND ENDS 6X6X20	299
315701-0235	FLAT WEDGE6X6X28	293
315701-0239	KEYS,PARALLEL WITH ROUND ENDS 6X6X40	271, 293
315701-0263	KEYS,PARALLEL WITH ROUND ENDS 8X7X20	407
315701-0263	Parallel key with round end 8x7x20 mm	409
315701-0268	KEYS,PARALLEL WITH ROUND ENDS 8X7X32	271
315701-0271	KEYS,PARALLEL WITH ROUND ENDS 8X7X45	407
315701-0271	Parallel key with round end 8x7x45 mm	409
315701-0335	KEYS,PARALLEL WITH ROUND ENDS 12X8X56	275, 277, 279, 281, 283, 285, 287, 289
315705-0196	Parallel key with round end 5x5x10 mm	627
315705-0265	KEYS,PARALLEL WITH ROUND ENDS 8X7X25	481
315742-0102	Collar, 6/16, H=8	319, 323, 327, 331
315742-0111	Collar, 15/30, H=12	499, 505, 507
315742-0112	Collar, 16/32, H=12	49, 51, 551, 673
315742-0116	Collar, 20/36, H=13	299
315750-0105	Retain. Ring, 8	641
315750-0105	Retaining Ring for shaft, 8x0,8 mm	683, 693
315750-0107	Retaining Ring for shaft, 10x1 mm	669
315750-0112	Retain. Ring, 15	511
315750-0119	Retaining Ring for shaft, 25x1,2 mm	711
315751-0109	Retain. Ring, 12	655, 657
315751-0112	Retain. Ring, 15	55, 61, 653
315752-0123	Retain. Ring, 32	291
315754-0107	LOCKING WAE 5	647
315754-0110	LOCKING WAE 9	647
315754-0113	LOCKING WAE 15	129, 131, 133
315755-0105	Locking Washer 3,2	659
315755-0106	Locking Washer 4	749, 751, 753, 755
315755-0112	Locking Washer 12	25, 27
31653-0001	SHEET	421
31723-0000	TEFLON STRIP	541

Part No	Description	Page No
31724-0000	LOCK BAR	541
318108-0111	V-BELT SPZ 1137x9,5	271
318172-0156	Timing belt T10x1010x16 Polyurethane	447
318201-0150	ROLLER CHAIN SINGLE 3/8"-150	299
318800-0102	HANDLES,SPHERICAL KNOB,INT.THRE.,D.20-M5	661
318800-0103	HANDLES,SPHERICAL KNOB,INT.THRE.,D.25-M6	115, 121
318800-0104	HANDLE,SPHERICAL KNOB,INT.THRE.,D.30-M8	641
32079-0000	WASHER	373, 375
321101-0143	FLANGE BUS 8F7X8	197, 199
321101-0173	FLANGE BUS 12F7x12	541, 665
321101-0202	FLANGE BUS 16F7X12	511, 551
321101-0233	FLANGE BUS 20F7x20	295, 297, 547, 551
321111-0096	BEARING BUSHING WITH FLANGE, 8/12X8	239, 241
321111-0134	BEARING BUSHING WITH FLANGE, 10/16X8	547
321116-0151	BEARING BUSHING WITHOUT FLANGE,12X16X12	547
321120-0098	BEARING BUSHING WITHOUT FLANG,10/12X8	319, 323, 327, 331
321120-0100	BEARING BUSHING WITHOUT FLANGE,8/10x12	683, 693, 703
321120-0101	BEARING BUSHING WITHOUT FLANGE,6/8X6	661, 703
321120-0103	BEARING BUSHING WITHOUT FLANGE,8/10X8	659
321120-0104	BEARING BUSHING WITHOUT FLANGE,10/12x10	641, 659, 669
321120-0109	BEARING BUSHING WITHOUT FLANGE,12/14X10	683, 693
321120-0110	BEARING BUSHING WITHOUT FLANGE, 12X14X12	669
321120-0112	BEARING BUSHING WITHOUT FLANGE,12/14X20	597
321120-0113	BEARING BUSHING WITHOUT FLANGE,12/14X25	655, 657
321120-0118	BEARING BUSHING WITHOUT FLANGE,14/16X15	319, 323, 327, 331
321120-0122	BEARING BUSHING WITHOUT FLANGE,15/17X15	681, 691
321120-0132	BEARING BUSHING WITHOUT FLANGE,18/20X20	349, 351, 353, 355, 357, 359, 361, 363
321120-0138	BEARING BUSHING WITHOUT FLANGE,20/23X20	299
321120-0147	BEARING BUSHING WITHOUT FLANGE 22/25X25	679, 687
321120-0153	BEARING BUSHING WITHOUT FLANGE,24/27X20	319, 323, 327, 331
321123-0107	BEARING BUSHING WITH FLANGE, 16/20X16	591, 595
321127-0100	BEARING BUSHING WITHOUT FLANGE,10/13X10	33, 35, 37, 39, 41, 43, 77, 79, 81, 177, 179
321129-0104	THRUST WASHER 12/24X1,5	655, 657
321129-0117	THRUST WASHER 16/30X1,5	551
321129-0131	THRUST WASHER 20/36X1,5	299
321129-0137	THRUST WASHER 22/38X1,5	275, 277, 279, 281
321306-0105	BALL BEARING 25X47X12	403
321308-0110	BEARINGS,BALL BEARING	399, 401
321308-0202	BALL BEARING 15x32x9	291, 499, 505, 507, 511, 653
321308-0205	BALL BEARING 25X47X12	591, 595
321308-0207	BALL BEARING 35X62X14	271
321313-0105	BALL BEARING 25X52X15	271
321531-0248	NEEDLE SLEHK2016	275, 277, 279, 281, 283, 285, 287, 289, 297
321570-0182	BEARINGS,BEARING ROLLER NA2200-2RS	591
321574-0151	BEARINGS,BEARING ROLLER NATR10	595
321576-0260	BEARINGS,BEARING ROLLER 20X47X25	275, 277, 279, 281, 283, 285, 287, 289
321582-0212	BEARINGS,CAM ROLLER NUKR35A	501
321600-0114	OIL SEAL (LL3052	271
32213-0000	WASHER	665
32215-0000	HOLDER	665
32217-0000	BOTTOM SECTION	665
32219-0000	WASHER	665
32223-0000	BEARING	665
32400-0000	HOLDER	665
32451-0000	AIR DUCT	665
32453-0000	MANTLE	665
32474-0000	ATTACHMENT	665
32544-0000	INSULATION NUT	373, 375
32644-0000	WASHER	365
32668-0000	ARM	665
32691-0000	LOCKING SPRING	681, 689
32919-0000	BEARING BLOCK	677, 685
32923-0000	SPRING	677, 685
32925-0000	CARRIER	677, 685
32927-0000	SHAFT	677, 685
33010-0000	SCREW	683, 693
33011-0000	SLEEVE	681, 689
33182-0000	ROLL	677, 685
33183-0000	SPRING	677, 685
33408-0000	BEARING	309, 311, 313, 315
33577-0000	CANTILEVER	181, 183, 185, 193, 195, 671
341001-0148	COPPER TUBE	567
342221-0110	Elbow, 90, Int/Ext. Thread, Size. 8	609
342221-0113	Elbow, 90, Int/Ext. Thread, Size. 15	609
342700-0205	NIPPLES,HEXAGON,EXT.G-THREAD G1/2"-G1/4"	567
342701-0201	BUSHING,INT./EXT.G-THREAD G1/4"-G1/8"	567, 605
342701-0205	BUSHING,INT./EXT.G-THREAD G1/2"-G1/4"	487, 567
342701-0208	Bushing, Int/Ext. G-Thread No. 3/4-1/4	271, 607, 609
342703-0215	Nut, Pipes & Connectors,NUT M-12 SS	621
342704-0114	ACCESSORIES,FERRULE 15-MSG	569
342706-0114	ACCESSORIES,INSERT SLEEVE 4	601, 603
342706-0148	ACCESSORIES,INSERT SLEEVE 8	601, 603
342707-0113	Sleeve, Int. Thread, No. 2543-1/2	567
342708-0101	ACCESSORIES,REINFORCING RING VSH 6X1	699, 701

Part No	Description	Page No
342708-0107	ACCESSORIES,REINFORCING RING VSH 12X1	427
342708-0109	ACCESSORIES,REINFORCING RING VSH 15X1	613
342710-0115	Reduction RBM 16/8	225, 227, 229, 231, 233
342712-0205	Bushing, Int/Ext. G-Thread No. 1/2X1/4	609
342713-0209	Plug, Ext Thread Hex Socket 8638-00-180	355, 363, 569
342713-0210	Plug, Ext Thread Hex Socket 8638-00-140	569
342713-0211	Plug, Ext Thread Hex Socket 8638-00-380	569, 575, 579, 581
342713-0213	Plug, Ext Thread Hex Socket 8638-00-120	567, 577, 613
342713-0215	Plug, Ext Thread Hex Socket 8638-00-340	615
342713-0310	Plug, Ext. Thread Hex. Socket. BPS14	593
342713-0313	Plug, Ext. Thread Hex. Socket. BPS12	593
342714-0110	Reduction KOR 15/12-L/SY	615
342714-0201	Reduction KOR 8/6-LFZB	609
342714-0203	Reduction KOR 10/8-LFZB	609
342715-0102	Blind plug 6 mm	579, 581
342715-0103	Blind plug 8 mm	579, 581
342716-0203	REDUCER 6-8	579, 581
342716-0209	REDUCER 8-12	579, 581
342720-0102	Conn. Str. GA-6-G1/8	567
342720-0114	Conn. Str. GA-15-G1/2	225, 227, 229, 231, 233, 577, 613
342722-0202	"PIPE COUPLING 1/8"" D=6mm"	235, 237
342722-0202	PIPE COUPLING 1/8" D=6mm	567
342722-0203	STRAIGHT COUPLING	565
342722-0204	PIPE COUPLING	567, 579, 581
342722-0205	STRAIGHT COUPLING D=8-R1/4"	567, 569, 579, 581
342722-0206	STRAIGHT COUPLING D=8-R3/8"	569
342723-0114	Conn. Str. Pipe GI-15-G1/2	615
342725-0114	Conn. Str. Pipe GI-15-G1/2	615
342726-0109	Conn. Pipe G-12	225, 227, 229, 231, 233, 615
342726-0114	Conn. Pipe G-15	615
342727-0102	Conn. Pipe G-6-LFZB	225, 227, 229, 231
342727-0214	Conn. Pipe G-15-L/SY	621
342730-0114	Conn. Elbow WA-15-1/2	567
342731-0108	Conn. Elbow WE 10-LRFZB	609
342732-0102	ELBOW PIPE JOINT	235, 237, 579, 581
342732-0103	ELBOW PIPE JOINT	567, 579, 581
342732-0104	ELBOW PIPE JOINT	579, 581, 607, 609
342732-0105	ELBOW PIPE D8-R3/8"	579, 581
342732-0110	ELBOW PIPE JOINT	567, 579, 581
342732-0801	ELBOW PIPE JOINT	567
342735-0102	ELBOW PIPE JOINT	579, 581
342735-0103	ELBOW PIPE JOINT	561, 563, 567, 579, 581
342735-0109	ELBOW PIPE JOINT	561, 563, 579, 581
342736-0109	Conn. Elbow W-12	225, 227, 229, 231
342736-0114	Conn. Elbow W-15	225, 227, 229, 231, 233
342736-0115	Conn. Elbow W-16	569
342737-0221	Conn. Elbow W-15 LRFR	621
342738-0208	Conn. Elbow Adj.,EXT 8-G1/4	235, 237
342738-0221	Conn. Elbow Adj.,EXT 15-G1/2	613
342742-0104	T-COUPLING,ADJUST,F.PLASTIC TUBE 8-G1/4"	567, 579, 581
342744-0102	Conn. Elbow Adj.,INT 6	609
342746-0114	Conn. T-Pipe T-15	225, 227, 229, 231, 233, 427
342748-0102	T-CONNECTION	561, 563
342748-0103	T-CONNECTION	579, 581
342748-0104	T-CONNECTION	579, 581
342748-0109	T-CONNECTION	579, 581
342752-0103	Conn. Str. GA-8-G1/4	593
342752-0114	Conn. Str. GA-15-G1/2	593, 609
342761-0103	Conn. L-Pipe Adj. ,EVL,INT.T-8	609
342762-0103	Conn. Bulkhead SV 8-LFZB	605, 609
342764-0114	Conn. Elbow Bulkhead LWSV15-LFZB	609
342767-0100	Conn. Bulkhead G1/8	225, 227, 229, 231, 567
342767-0104	Conn. Bulkhead G1/4	567
342767-0114	Conn. Bulkhead G1/2	567
342770-0105	HOSE COUPLING	579, 581
342772-0121	ELBOW FITTING	579, 581
342790-0102	Conn. Press. Gauge MAV6-LRFZB	609
342792-0114	Conn. Banjo,WH 15-G1/2	609
342797-0121	Conn. Banjo, Ringpiece 6-1/8	41, 43, 51, 63, 83, 87, 89, 91, 101, 145, 147, 165, 181, 183, 185, 225, 227, 229, 231, 667, 669
342797-0122	Conn. Banjo, Ringpiece 6-1/4	37, 39, 49, 65, 85, 107, 109, 163, 193, 195, 567, 667, 671
342797-0132	Conn. Banjo, Ringpiece 8-1/4	567
342803-0103	Screw Fitting, Nut, No190615	191, 455
342803-0104	Screw Fitting, Nut, No190616	123, 125
342807-0104	Elbow, 90, No1190763	429
342812-0103	Sleeve, No. 190706	191
342812-0104	Sleeve, No. 190707	123, 125
342903-0111	NUT WITH SPRING 6/4-M10X1	525
342903-0121	NUT WITH SPRING 8/6-M12X1	221, 567
342920-0114	STRAIGHT COUPLING,EXT.THREADED 6/4-R1/4"	567
342920-0122	STRAIGHT COUPLING,EXT.THREADED 8/6-R1/4"	419, 427
342921-0112	STRAIGHT COUPLING,EXT.THREADED 6/4-6M	425
342921-0113	STRAIGHT COUPLING,EXT.THREADED 6/4-G1/8"	173, 181, 183, 185, 525
342921-0115	STRAIGHT COUPLING,EXT.THREADED 6/4-G3/8"	561, 563
342921-0121	"STRAIGHT COUPLING,EXT.THREADED	235, 237

Part No	Description	Page No
342921-0121	STRAIGHT COUPLING,EXT.THREADED 8/6-G1/8"	181, 183, 185, 575, 577
342930-0113	ELBOW 90 COUPL.,EXT.THREAD 6/4-R1/8"	575
342930-0114	ELBOW 90 COUPL.,EXT.THREAD 6/4-R1/4"	621
342930-0121	ELBOW 90 COUPL.,EXT.THREAD 8/6-R1/8"	575
342930-0122	ELBOW 90 COUPL.,EXT.THREAD 8/6-R1/4"	271
342940-0115	T-COUPLING,EXT.THREAD 6/4-R3/8"	561, 563
342960-0112	BULKHEAD COUPLING 6/4	427, 439, 567
342960-0121	BULKHEAD COUPLING 8/6-6/4	427, 567
342960-0122	BULKHEAD COUPLING 8/6	427, 567
342980-0111	BANJO-CONNECTION,RING 6/4-M5	525
342980-0113	BANJO-CONNECTION,RING 6/4-G1/8"	173, 181, 183, 185, 319, 323, 327, 331, 413, 511, 525, 567, 669
342980-0114	BANJO-CONNECTION,RING 6/4-G1/4"	77, 79, 81
342980-0121	"BANJO-CONNECTION,RING 8/6-G1/8"	221
342980-0121	BANJO-CONNECTION,RING 8/6-G1/8"	385, 387, 567, 575
342980-0122	"BANJO-CONNECTION,RING 8/6-G1/4"""	235, 237
342980-0122	BANJO-CONNECTION,RING 8/6-G1/4"	271, 567, 575, 607, 609
342980-0213	BANJO-CONNECTION,T-RING 6/4-G1/8"	429
342980-0301	BANJO-HOLLOW BOLT COUPL.,EXT.THREA.01-M5	525
342980-0303	"BANJO-HOLLOW BOLT COUPL	221
342980-0303	"BANJO-HOLLOW BOLT COUPL,E	225, 227, 229, 231
342980-0303	BANJO-HOLLOW BOLT COUPL,EXT.THR.01-G1/8"	87, 89, 91, 101, 165, 173, 181, ... 183, 185, 319, 323, 327, 331, 385, 387, 413, 429, 525, 567, 575, 669
342980-0304	"BANJO-HOLLOW BOLT COUPL,	235, 237
342980-0304	BANJO-HOLLOW BOLT COUPL,EXT.THR.01-G1/4"	107, 109, 193, 195, 271, 567, 607, 609, 667, 671
342980-0313	BANJO-HOLLOW BOLT COUPL,EXT.THR.02-G1/8"	181, 183, 185, 319, 323, 327, 331, 511, 575
342980-0314	"BANJO-HOLLOW BOLT COUPL,	235, 237
342980-0314	BANJO-HOLLOW BOLT COUPL,EXT.THR.02-G1/4"	567
342991-0100	HOSE CLIP,WORM DRIVE TYPE 10-13	605
342991-0101	HOSE CLIP,WORM DRIVE TYPE (13)-16	417, 605
342991-0103	HOSE CLIP,WORM DRIVE TYPE (19)-23	667, 669
342991-0104	HOSE CLIP,WORM DRIVE TYPE (23)-27	271, 583, 585
342991-0105	HOSE CLIP,WORM DRIVE TYPE (27)-30	501
342991-0106	HOSE CLIP,WORM DRIVE TYPE (30)-36	427, 621, 631
342991-0107	HOSE CLIP 32-44MMRFR	621
342991-0108	HOSE CLIP 38-50MMRFR	671
344502-0021	Grease nipple straight M6	399, 401, 403
351120-0144	CABLE SIHF 3x1,5 MM2	733
351120-0145	CABLE SIHF 3x2,5 MM2	733
351120-0167	CABLE SIHF 4X6	733
351121-0209	CABLE RADOX 155 1X25 MM2	733
351150-0403	CABLE OLFLEX 3x0,75 MM2	697, 733, 735
351150-0404	CABLE OLFLEX 4x0,75 MM2	733, 735
351150-0405	CABLE,OLFLEX 5x0,75 MM2	733, 735
351150-0406	CABLE OLFLEX 7x0,75 MM2	733
351150-0407	CABLE OLFLEX 12x0,75 MM2	733
351150-0412	CABLE OLFLEX 3x1,5mm2	733
351150-0413	CABLE OLFLEX 4x1,5mm2	733
351150-0415	CABLE OILFLEX 7x1,5mm2	733
351150-0427	CABLE Olflex 34X0,75mm2	733
351150-0428	CABLE OLFLEX 41x0,75mm2	733
351150-0431	Cable Olflex 2x0,75 mm2	733, 735
351172-0102	CABLE AWM BLUE 0,75MM2	731
351172-0105	CABLE AWM BLUE 2,5 MM2	731
351173-0102	CABLE AWM LIGHTBLUE 0,75MM2	731
351173-0104	CABLE AWM LIGTHBLUE 1,5MM2	193, 195, 731
351173-0105	CABLE AWM LIGHTBLUE 2,5 MM2	731
351173-0107	CABLE AWM LIGHTBLUE 6mm2	731
351173-0110	CABLE AWM LIGHTBLUE 25MM2	731
351175-0102	CABLE AWM YELL/GREEN 0,75MM2	731
351175-0104	CABLE AWM YELL/GREEN 1,5MM2	731
351175-0105	CABLE AWM YELL/GREEN 2,5MM2	731
351175-0107	CABLE AWM YELL/GREEN 6MM2	731
351175-0108	CABLE AWM YELL/GREEN 10MM2	731
351175-0109	CABLE AWM YELL/GREEN 16mm2	731, 733
351179-0102	CABLE AWM BLACK 0,75MM2	731
351179-0104	CABLE AWM BLACK 1,5MM2	193, 195, 731
351179-0105	CABLE AWM BLACK 2,5MM2	731
351179-0106	CABLE AWM BLACK 4MM2	731
351179-0107	CABLE AWM BLACK 6MM2	731
351179-0110	CABLE AWM BLACK 25MM2	731, 733
352100-0106	CABLE GLANR.18,6-10,5	77, 79, 81, 83
352100-0107	CABLE GLANR.18,6-12	419
352100-0112	CABLE GLANR.22,5-15	187, 189
352100-0121	CABLE GLANR. 37-23,5	17, 19
352101-0102	GLANDS,Lead-in,IP44 PR15,2	215, 549, 587
352101-0103	GLANDS,Lead-in,IP44 PR18,6	567, 579, 581
352101-0105	GLANDS,Lead-in,IP44 PR22,5	559, 615
352101-0107	GLANDS,Lead-in,IP44 PR37	187, 189
352103-0095	CABLE GLAND STR 7	489
352103-0100	"CABLE GLAND STR 9	255, 257
352103-0100	CABLE GLAND STR 9	211, 587, 675
352103-0101	CABLE GLAND ST 9	117, 121, 167, 187, 189, 215, 491, 523, 535, 537, 573, 587, 675, 747

Part No	Description	Page No
352103-0105	CABLE GLAND STR 11	549
352103-0106	CABLE GLAND ST 11	145, 147, 187, 189, 211, 213, 249, 251, 461, 491, 523, 535, 537, 541, 587, 589, 667, 669, 747
352103-0108	CABLE GLAND ST 13	255, 257, 489
352103-0110	CABLE GLAND STR 16	557, 559, 573, 607, 621, 627, 671, 697
352103-0111	CABLE GLAND ST 16	95, 187, 189, 609, 623, 675, 747
352103-0115	CABLE GLAND STR 21	215
352103-0116	CABLE GLAND ST 21	187, 189, 273, 747
352103-0121	CABLE GLAND ST 29	167, 187, 189, 491, 747
352103-0122	CABLE GLAND ST 36	747
352110-0100	CRAMP TK 5-7 White Polyamid	117, 121, 501, 525
352110-0101	CRAMP TK 7-10	501
352110-0102	CRAMP TK 10-14	547, 557, 559
352110-0103	CRAMP TK 14-20	417
352113-0101	CLIP STRIP BLACK 92x2,5mm	225, 227, 229, 231, 557, 559, 561, 563, 601, 603, 683, 693
352113-0102	CLIP-STRIP,Black 188x4,8mm	489, 561, 563, 615, 621
352113-0104	CLIP-STRIP,Black 300x4,8mm	561, 563
352113-0205	ANCHOR TM2S8-C100	489, 555, 621
352135-0106	Spiral Conduit Di=16 mm	489, 589
352136-0127	GLAND FITTING PR 18,6	589
352136-0129	GLAND FITTING PR22,5/PG16 Di=16mm	489, 621
352550-0136	FINE-WIRE 3,15 A	739
352551-0134	FINE-WIRE FUSE 2 A Slow	739
353001-0102	END SLEEVE 0,75mm2	489
353021-0110	CONNECTIONLƒMMA SAK 4PA	215
353021-0122	TERMINALS,DISCONNECTABLE, WTR 2,5 D	739
353021-0212	FEED THROUGH TERMINAL WDU 2,5 Beige	167, 491, 675, 743
353021-0302	TERMINALS,TRIPLE-LEVEL, DLD 2,5/35 PA	167, 491
353024-0205	EARTH TERMINAL WPE 4	167, 491, 675, 743
353032-0104	END PLATE AP 4 PA	215
353032-0302	END PLATE WAP	167, 491
353034-0401	BRIDGE CONLECK Q2	167
353034-0403	BRIDGE CONLECK Q4	491
353034-0404	BRIDGE CONLECK Q10	167
353042-0002	RAIL TS32	215
353042-0004	RAIL TS 35/7,5	675
353042-0005	RAIL TS 35/7.5	743
353101-0123	CABLE SHOE 0,5-1,5mm2 Red	455
353101-0126	CABLE SHOE	455
353101-0132	CABLE SHOE	81, 83
353101-0134	CABLE SHOE	667
353104-0130	CABLE SHOEYAV 025 M 4*	77, 79, 145, 147, 667, 669
353104-0144	CABLE SHOEYAV 06 M 8*	567
35547-0000	SPRING	683, 693
359000-0064	MARKING CO2/4 OMƒRKT	699, 701
359000-0400	"MARKING CO2/4 "0"	225, 227, 229, 231
359000-0400	MARKING CO2/4"0"	173, 181, 183, 185, 501, 561, 563, 579, 581, 615, 699, 701
359000-0401	"MARKING COLLAR 2/4 ""1"" Yellow"	225, 227, 229, 231
359000-0401	MARKING COLLAR 2/4 "1" Yellow	173, 181, 183, 185, 561, 563, 579, 581, 615, 699, 701
359000-0402	"MARKING COLLAR 2/4 ""2"" Yellow"	225, 227, 229, 231
359000-0402	MARKING COLLAR 2/4 "2" Yellow	173, 181, 183, 185, 561, 563, 579, 581, 615, 699, 701
359000-0403	"MARKING COLLAR PA2/4 ""3"" Yellow"	225, 227, 229, 231
359000-0403	MARKING COLLAR PA2/4 "3" Yellow	173, 181, 183, 185, 561, 563, 579, 581, 615
359000-0404	"MARKING COLLAR PA2/4 ""4"" Yellow"	225, 227, 229, 231
359000-0404	MARKING COLLAR PA2/4 "4" Yellow	181, 183, 185, 501, 561, 563, 615, 699, 701
359000-0405	"MARKING CO2/4""5"""	225, 227, 229, 231
359000-0405	MARKING CO2/4"5"	181, 183, 185, 561, 563, 615, 699, 701
359000-0406	"MARKING COLLAR PA2/4 ""6"" Yellow"	225, 227, 229, 231
359000-0406	MARKING COLLAR PA2/4 "6" Yellow	181, 183, 185, 561, 563, 615
359000-0407	"MARKING COLLAR PA2/4 ""7"" Yellow"	225, 227, 229, 231
359000-0407	MARKING COLLAR PA2/4 "7" Yellow	181, 183, 185, 561, 563, 615
359000-0408	MARKING COLLAR PA2/4 "8" Yellow	181, 183, 185, 615
359000-0409	MARKING COLLAR PA2/4 "9" Yellow	173, 181, 183, 185, 561, 563, 615
359000-0771	MARKING CO2/4"V"	173, 181, 183, 185, 561, 563, 615, 699, 701
359011-0202	SIGN BOARD(GROUND)	215
359011-0801	SIGN BOARD BSFW 1-50	215
359011-0807	MARKING PLATES 5-FW 1-50	167, 491, 587, 675, 743
359011-0808	MARKING PLATES 5-FW 51-100	167, 491
359011-0834	SET OF SIGNS 6-GW(EARTH)	167, 491
35918-0000	SHAFT	151, 153, 155, 159, 161
35919-0000	COMPRESSION SPRING	151, 153, 155, 159, 161
359240-0100	SIGN HOLDER	573
359241-0121	SIGN "STEAM"	727
359241-0122	SIGN "Cl.of Steam Barrier"	731
359241-0123	SIGN "PRESTERILISATION"	727
359241-0124	SIGN "MAIN SWITCH"	729
359241-0125	SIGN "TEMP.PEROXIDE BATH"	727
359241-0126	SIGN "TEMP.AIR KNIFE"	727
359241-0130	SIGN "AIR SUPERHEATER"	727
359241-0131	SIGN "LONGITUDINAL SEALING"	727
359241-0132	SIGN "STRIP APPLICATOR"	727
359241-0133	SIGN "SERVICE SWITCH"	731
359241-0140	SIGN "LIGHTING MACHINE"	573

Part No	Description	Page No
359241-0141	SIGN "PEROXIDE WATER BATH"	727
359241-0260	SIGN "TS RIGHT"	731
359241-0261	SIGN "TS LEFT"	731
359241-0297	SIGN "400/230V	729
359301-0001	SIGN "UP"	741
359301-0005	SIGN "DOWN"	741
359301-0050	SIGN "DROP CHUTE"	741
359301-0090	SIGN "INCHING"	741
359301-0100	SIGN "SPLICING"	671
359301-0105	SIGN "ALARM RESET"	741
359301-0110	SIGN "SHORT STOP"	671, 731, 741
359301-0125	SIGN "LUBRICATION"	573
359301-0130	SIGN "LAMPTEST"	741
359301-0170	SIGN "Manual Flushing FFU"	741
359320-0002	SIGN "TUMB WHEEL UNIT"	731
35962-0000	LID	557, 559, 601, 603
36316-0000	PAPER SUPPORT	665
36325-0000	KNOB	151, 153, 155, 159, 161
36749-0000	MANTLE	665
36816-0000	LINK	29, 31
36817-0000	CLAMPING ELEMENT	29, 31
36821-0002	SHEAR PIN	29, 31
37296-0000	ARM	29, 31
37535-0000	SUPPORTING PART 56x56x31,5mm	421
37536-0000	INSULATOR BODY Lower 70x70x15mm	421
37537-0000	SPACER RING Lower 72x78x1mm	421
37638-0000	PENDULUM SUSPENSION	85, 163
37774-0000	PROTECTIVE COVER	549
37775-0000	LAMP HOLDER	549
37877-0300	HEATING BLOCK	539
37879-0000	LOCKING ARM	541
37880-0000	HINGE	541
37882-0000	PROTECTION PLATE	541
37883-0000	LOCK BAR	541
37884-0000	SHAFT	541
37885-0000	TENSION SPRING	541
37886-0000	INSULATING DISK	541
37888-0000	ROLL	541
37889-0000	SHAFT	541
37890-0000	FLANGE ROLLER	541
37892-0000	CONNECTION BOX	541
37893-0000	LID	541
37894-0100	COUNTER RAIL	539
37895-0000	RAIL	543
37896-0000	DOWEL	543
37897-0000	WASHER	543
37901-0000	SHAFT	545
37908-0000	PLATE	549
37910-0000	LOCK	549
37911-0000	LACE	549
37912-0000	LOCK PLATE	549
37913-0000	RULER	549
37917-0000	RULER	549
37927-0000	COMPRESSION SPRING	547
38087-0000	WASHER	459
38535-0001	LOCKING FINGER	29
38535-0002	LOCKING FINGER	29, 31
38630-0003	COUNTER ROLLER	37, 39, 41
434074-0300	INK UNIT	685
434747-0000	BOW CLAMP	683, 693
434774-0300	INK UNIT	677
434787-0000	END SECTION	689
434841-0000	GAUGE	721
436927-0000	NUT	683, 693
440630-0101	VALVE	123
440630-0200	AP-VALVE	125
440632-0000	CYLINDER HOUSING	129, 131
440633-0000	CYLINDER HOUSING	133
440634-0000	HOUSE	127
440635-0000	PISTON ROD	131
440636-0000	PISTON ROD	133
440637-0000	PISTON ROD	129
440638-0000	PISTON	129, 131
440646-0000	PISTON	133
440647-0000	SLEEVE	125
440648-0000	SEALING WASHER	131
440650-0000	WASHER	131
440651-0000	WASHER	129, 131
440652-0000	WASHER	133
440654-0000	SPACER SLEEVE	133
440655-0000	RING	129
440656-0000	WASHER	133
440659-0000	CYLINDRICAL PIN	131
440660-0000	COMPRESSION SPRING	131
440661-0000	COMPRESSION SPRING	131
440662-0000	COMPRESSION SPRING	133

Part No	Description	Page No
440663-0000	COMPRESSION SPRING	129, 131
440664-0000	SEALING WASHER	133
440695-0000	END SECTION	133
440731-0000	PLATE	125
440978-0000	PIPE BEND	123, 125
441024-0000	LACE	271
441027-0000	BRACKET	673
441031-0000	LINK BEARING	371
441067-0000	SIDE COVER LEFT	535, 537
441068-0000	SIDE PLATE	535, 537
441069-0001	BRACKET	535, 537
441069-0002	BRACKET	535, 537
441074-0001	FILLER TUBE	29
441074-0002	FILLER TUBE	29
441077-0000	NOZZLE BRACKET	211
441143-0000	SPACER PIECE	419
441162-0000	PROTECTION PLATE	211
441212-0000	HOLDER	211
441217-0000	BUSHING LOWER	211
441218-0000	BUSHING UPPER	211
441221-0000	WASHER	211
441268-0000	GUIDE	371
441269-0000	GUIDE	371
441271-0100	SAFETY SPROCK	393
441271-0200	SAFETY SPROCK	393
441276-0000	RING	399
441286-0000	NUT	87, 165
441295-0000	HOLDER	611
441296-0000	HOLDER	611
441304-0200	MOVABLE FORMING RING	11, 13
441307-0200	UPPER TUBE SUPPORT	11, 13
441312-0000	CABLE CONDUIT	187
441328-0000	GUIDE PIN	443
441339-0000	SHAFT	293
441348-0000	PAPER SUPPORT	665
441349-0000	CARRIER RIGHT	349, 351, 353
441350-0000	CARRIER LEFT	357, 359, 361
441353-0000	TENSION SPRING	297
441354-0000	HEAT GUARD	669
441355-0000	BLEEDING SCREW	309, 311, 313, 315, 349, 351, 353, 355, 357, 359, 361, 363, 371, 385, 387
441356-0000	BRACKET	271
441359-0000	GUIDE	463, 465
441360-0000	PLATE	271
441385-0000	HUB	349, 351, 353, 355, 357, 359, 361, 363
441387-0000	MOTOR CRADLE	273
441411-0000	CURVE	295
441412-0000	CURVE	295
441421-0000	PROTECTIVE CASING	535
441441-0000	PIPE	181, 183, 185
441444-0000	PIPE	97
441445-0000	PIPE	97
441448-0000	GASKET	259
441449-0001	PIPE	611
441474-0000	SHIM	53, 59
441483-0000	CYLINDER BRACKET	41, 43, 89, 101
441486-0200	DIVIDED FORMING RING	11
441486-0300	DIVIDED FORMING RING	13
441499-0000	HOLDER	427
441500-0000	HOSE	427
441501-0000	INSULATION	175
441512-0000	STRUT END	255, 257
441534-0100	LIGHT FIXTURE	211
441536-0000	GASKET	213
441546-0000	BENDING ROLLER	25
441551-0000	CREASE BAR	719
441552-0000	CREASE BAR	719
441554-0000	CREASE BAR	677, 685, 719
441555-0000	SHAFT	719
441556-0002	SPACER	677, 685, 719
441556-0003	SPACER	719
441556-0004	SPACER	677, 685, 719
441556-0006	SPACER	719
441556-0007	SPACER	719
441556-0009	SPACER	677, 685, 719
441572-0000	COVER	677, 685
441576-0000	SPACER	63
441578-0001	CYLINDER BRACKET	63
441578-0002	CYLINDER BRACKET	51
441583-0000	SHAFT	403
441584-0000	TENSION SPROCKET	403
441587-0000	WASHER	403
441588-0000	SPACER	403
441589-0000	SHIM	403
441593-0000	GASKET	211
441594-0100	TENSION SPROCKET	393

Part No	Description	Page No
441595-0000	MACHINE BODY	437
441596-0000	CANTILEVER	437
441598-0000	SUPPORTING ARM	439
441599-0000	BED	439
441600-0000	LINK ARM	439
441602-0000	SPROCKET	399, 401
441603-0000	BRACKET	455
441624-0000	BENDING ROLLER	53
441635-0000	BEARING SEAT	53
441636-0000	SHAFT	59
441637-0000	DOWEL	59
441658-0000	FRONT PLATE	211
441665-0000	FORCE SPRING	225, 227, 229, 231, 233
441668-0000	HOLDER	239
441677-0000	FRONT PLATE	211
441679-0000	STAIR	265
441687-0000	STRUT	255, 257
441691-0000	PLATE	239, 241
441692-0000	HOLDER	241
441693-0000	HANDLE	419
441695-0100	MACHINE BODY	393
441706-0000	WASHER	367, 369
441709-0000	CYLINDER	349, 351, 353, 357, 359, 361
441710-0000	BEARING HOUSING	349, 351, 353, 355, 357, 359, 361, 363
441712-0000	BEARING HOUSING	349, 351, 353, 355, 357, 359, 361, 363
441718-0000	SPACER	67, 69, 169, 171
441720-0000	SPACER	293
441721-0000	GASKET	97, 99, 203, 205
441723-0000	CANTILEVER	125
441726-0000	COMPRESSION SPRING	333
441727-0000	CUTTING JAW	309, 311, 313, 315
441733-0000	TPC-Bar	389
441735-0000	BRACKET	97, 99
441737-0000	WASHER	69, 115, 119, 169
441739-0000	WASHER	69, 169
441740-0000	HINGE FLANGE	69, 169
441741-0000	HINGE FLANGE	69, 169
441749-0000	CURVE	371
441750-0000	YOKE	371
441751-0000	LACE	371
441752-0000	GABLE PLATE	677, 685
441753-0000	FASTENING PLATE	677, 685
441754-0000	SPACER	677, 685

Part No	Description	Page No
441758-0000	PIPE RIGHT	377
441759-0000	PIPE LEFT	377
441762-0000	CONNECTION RIGHT	349, 351, 353, 355
441763-0000	CONNECTION LEFT	357, 359, 361, 363
441764-0000	SHAFT	349, 351, 353, 355, 357, 359, 361, 363
441784-0000	BEARING SLEEVE	399, 401
441785-0000	CARRIER RING	399
441786-0000	AXLE PIN	399
441787-0000	CARRIER	399
441789-0000	WASHER	399
441790-0000	WASHER	399, 401
441792-0000	HEAD	441, 457
441793-0000	BEARING HOUSING	441, 457
441794-0000	PIVOT PIN	441, 457
441795-0000	WASHER	441, 457
441796-0000	SEAL	441, 457
441797-0000	SHIM	441, 457
441798-0100	ROTOR	439
441799-0000	ATTACHMENT	441
441800-0000	STRAIGHT FITTING	457
441804-0000	COIL HEATER	81, 83, 205
441806-0000	COLLAR	211
441809-0000	FRONT PLATE	211
441810-0000	GASKET	211
441811-0100	ROTOR	455
441828-0000	PLAIN BEARING REPBY 0751230-0000	37, 39
441829-0000	PIPE	463, 465
441839-0000	JUNCTION PIPE	455
441843-0000	BRACKET	87, 165
441845-0000	SPACER RING	399, 401
441871-0000	PENDULUM SUSPENSION	87, 165
441876-0000	ROLL	37, 39, 43
441894-0000	SLEEVE	413, 431, 433
441895-0000	BUFFER RING	413, 431, 433
441896-0000	WASHER	413, 431, 433
441903-0000	ARM	63, 65
441904-0000	ARM	51
441905-0000	RETARD PIN	265
441907-0000	RULING GUIDE	501
441908-0000	BOW CLAMP	501
441918-0000	BRACKET	151, 157
441957-0000	BEARING COVER	101
442072-0000	CARRIER	689

Part No	Description	Page No
442236-0000	THROTTLE SCREW	93
442237-0000	NUT	93, 95, 99
442431-0000	CARRIER	689
445533-0000	SIGN	565
445534-0000	SIGN	565
445535-0000	SIGN	565
445542-0000	MANTEL RUBBER	683, 693
449193-0000	PRESSURE GAUGE TUBE	123, 125
449939-0001	HEATING ELEMENT 15KW	17, 19
450098-0000	SHEET	549
450099-0000	SHEET	549
450100-0000	SPRING	549
450101-0100	TEARING DEVICE	539
450102-0000	PRESSURE ARM	545
450103-0000	KNIFE	545
450278-0000	RULER	549
450355-0000	INK ROLLER	683, 693
450833-0000	FILTER	111, 113
450837-0000	LID	111, 113
451117-0000	ROLL	151, 157
451148-0000	BRACKET	151, 157
451149-0000	SHAFT	151, 157
451348-0100	CONNECTION BOX	495, 497
451423-0000	CIRCUIT BOARD	589
451430-0000	CONNECTION HOUS.(MINOR)	17, 19
456002-0000	BEARING	371
456004-0000	SPACER	371
456005-0001	VOLUME BULGE	337, 339
456005-0003	VOLUME BULGE	337, 339
456009-0000	LINK	333
456011-0000	PIN	389, 575
456012-0000	BEARING SEAT	33, 35
456013-0000	BEARING COVER	33, 35
456017-0000	HOSE HOLDER RIGHT	385
456018-0000	HOSE HOLDER LEFT	387
456022-0000	SLEEVE	647
456023-0000	JOINT	647
456024-0000	GUIDE SHAFT	647
456025-0000	CLAMP HOLDER	647
456026-0000	BRACKET	647
456027-0000	CLAMP HOLDER	647
456028-0000	JOINT	647
456029-0000	JOINT	647
456030-0000	FASTENING BRACKET	647
456031-0000	BRACKET	647
456032-0100	STRIP GUIDE	639
456034-0000	SETTING PLATE	139, 141, 143
456035-0000	CANTILEVER	139, 143
456042-0000	SCREW	139, 141, 143
456072-0000	WASHER	501
456076-0000	ROLL	145, 149
456077-0000	ROLL	145, 149
456078-0000	ROLL	139
456079-0000	ROLL	139
456080-0000	ROLL	139
456081-0000	ROLL	139
456082-0000	ROLL	151, 157
456085-0000	ROLL	151, 157
456086-0000	ROLL	151, 157
456090-0000	ROLL	37, 39, 41
456093-0000	HOLDER	37, 39
456119-0000	SHAFT	177, 179
456121-0000	ARM	177, 179
456123-0000	SUPPORT	17, 19
456124-0000	ANGLE BRACKET	17
456125-0000	FASTENING PLATE	17, 19
456128-0000	FORCE SPRING	225, 227, 229, 231, 233
456129-0001	FORCE SPRING	233
456129-0002	FORCE SPRING	233
456130-0000	LOCK PLATE	37, 39
456131-0000	LOCK PLATE	37, 39
456132-0000	LOCK PLATE	37, 39
456137-0000	HOSE	565
456138-0000	PLATE	139
456139-0000	LOCK PLATE	139
456140-0000	SHAFT	139
456141-0000	SHAFT	139
456143-0000	PIPE	107
456145-0000	DROP CHUTE	217
456146-0000	DROP CHUTE	219
456147-0000	HEAD PLATE	219
456148-0000	HEAD PLATE	219
456149-0000	HEAD PLATE	219
456150-0000	HEAD PLATE	219
456151-0000	HEAD PLATE	217
456152-0000	HEAD PLATE	219

Part No	Description	Page No
456153-0000	HOLDER	145, 149
456154-0000	LOCK PLATE	145, 149
456155-0000	LOCK PLATE	145, 149
456156-0000	SHAFT	145, 149
456158-0000	DROP CHUTE	217
456159-0000	HEAD PLATE	217
456160-0000	HEAD PLATE	217
456161-0000	HEAD PLATE	217
456162-0000	HEAD PLATE	217
456163-0000	HEAD PLATE	217
456164-0000	LEAF SPRING	217, 219
456165-0000	LEAF SPRING	217, 219
456166-0000	LEAF SPRING	217, 219
456167-0000	LEAF SPRING	217, 219
456180-0100	DROP CHUTE	209
456181-0000	SPACER	151, 157
456182-0000	PLATE	151, 153, 155
456183-0000	LOCKING PLATE	151, 157
456184-0000	LOCKING PLATE	151, 157
456185-0000	LOCK PLATE	151, 157
456186-0000	LOCK PLATE	151, 157
456187-0000	LOCK PLATE	151, 157
456188-0000	LOCK PLATE	151, 157
456189-0000	PIPE	93
456198-0000	LOCK PLATE	151, 157
456199-0000	LOCK PLATE	151, 157
456230-0000	ANGLE BRACKET	151, 153, 155
456249-0000	PROTECTIVE COVER	489
456263-0000	SHEET	213
456264-0000	GLASS	213
456269-0000	PIPE	93, 95
456270-0000	PIPE	93, 95
456271-0000	PIPE	93, 95
456272-0000	PLATE	601, 603, 605
456285-0000	COVER	459
456289-0000	BLOCKING PIECE	459
456290-0000	GUSSET PLATE	459
456293-0000	PIPE	455
456304-0000	ROLL	151, 157
456305-0000	ROLL	151, 157
456306-0000	ROLL	151, 157
456309-0200	LOWER FORMING RING	11
456309-0300	LOWER FORMING RING	13

Part No	Description	Page No
456311-0000	TORSION SPRING RIGHT	349, 351, 353, 355
456312-0000	TORSION SPRING LEFT	357, 359, 361, 363
456320-0000	SLEEVE	349, 351, 353, 357, 359, 361
456328-0000	BENDING ROLLER	677, 685
456331-0000	ANGLE BRACKET	677, 685
456333-0000	RAIL	677, 685
456334-0000	SHAFT	677, 685
456335-0000	BRACKET	677
456336-0000	BRACKET	685
456337-0000	CANTILEVER	677, 685
456343-0000	SHAFT	299
456344-0000	SLEEVE	299
456345-0000	BRACKET	299
456373-0000	CURVE	295
456374-0000	CURVE	295
456378-0000	HOSE	601, 603
456393-0000	PIPE	455
456394-0000	SEALING WASHER	455
456395-0000	GASKET	455
456396-0000	GASKET	455
456411-0000	LID	181, 183, 185
456472-0000	ANGLE	53, 59
456474-0000	ADJUSTMENT PLATE	53, 59
456515-0000	SHAFT	25
456516-0000	BEARING COVER	25, 27, 53, 59
456527-0000	BENDING ROLLER	25
456528-0000	BEARING BRACKET	591, 595
456529-0000	CLAMP HOLDER	591, 595
456530-0000	PIPE	107
456544-0000	BENDING ROLLER	499, 505, 507
456545-0000	FLANGE	499
456546-0100	IMPULSE TRANSMITTER	495, 497
456546-0200	IMPULSE TRANSMITTER	495, 497
456554-0000	CANTILEVER	167
456556-0100	PEROXIDE PIPE	11
456556-0200	PEROXIDE PIPE	13
456561-0000	BRACKET	235, 237
456567-0100	SEPARATION INSERT	393
456568-0000	SHEET	445
456569-0000	BRACKET	445
456573-0000	FRONT PLATE	211
456588-0300	CLEANING SYSTEM	393
456589-0001	V-BELT PULLEY	273

Part No	Description	Page No
456589-0002	V-BELT PULLEY	273
456589-0003	V-BELT PULLEY	273
456589-0004	V-BELT PULLEY	273
456591-0002	PIPE	97
456591-0003	PIPE	99
456592-0002	PIPE	97, 99
456597-0000	ATTACHMENT PIPE	611
456598-0000	CABLE CONDUIT	611
456599-0000	PIPE	611
456730-0001	PIPE	699
456730-0002	PIPE	699
456730-0003	PIPE	699
456730-0004	PIPE	699
456731-0001	PIPE	699, 701
456731-0002	PIPE	699, 701
456732-0000	PIPE	699, 701
456737-0001	PIPE	699
456737-0002	PIPE	699
456738-0001	PIPE	699
456738-0002	PIPE	699
456744-0000	HUB	295
456750-0000	APPLIANCE BOX	215
456751-0000	BRACKET	215
456753-0000	SPACER	215
456755-0000	BLOCK	569
456756-0000	BLOCK	569
456758-0000	ATTACHMENT	611
456760-0001	FOLDING FLAP CAM	317, 321, 325, 329
456760-0003	FOLDING FLAP CAM 200S	317, 321, 325, 329
456760-0006	FOLDING FLAP CAM	317, 321, 325, 329
456760-0008	FOLDING FLAP CAM	317, 321, 325, 329
456760-0010	FOLDING FLAP CAM 200B & 125S	325, 329
456760-0011	FOLDING FLAP CAM 250B	317, 321, 325, 329
456767-0000	CREASE BAR	677, 685
456772-0000	PIVOT BRACKET	683
456773-0000	PIVOT BRACKET	693
456776-0000	MANTLE	677, 685
456777-0000	SLEEVE	677, 685
456778-0000	SHAFT	677, 685
456784-0000	LID	53, 59
456794-0000	RING	115, 119
456796-0000	ROLLER	115, 119
456797-0000	AXLE SUPPORT	115, 119
456798-0000	DOWEL	119
456801-0000	ARM	115, 119
456803-0000	PIVOT PIN	115, 119
456809-0000	SHAFT	201
456811-0000	SHAFT	677, 685
456813-0000	SHAFT	677, 685
456817-0001	SHIM	677, 685, 719
456817-0002	SHIM	719
456824-0000	PIPE	611
456825-0000	BRACKET	611
456826-0000	PIPE CLAMP	611
456827-0100	CONNECTION BOX	211
456829-0000	SHIM	239, 241
456836-0200	CLEANING SYSTEM	11
456836-0300	CLEANING SYSTEM	13
456837-0000	HOLDER	37, 39, 41, 43
456838-0000	LOCK PLATE	37, 39, 41, 43
456839-0000	LOCK PLATE	37, 39, 41, 43
456840-0000	LOCK PLATE	37, 39, 41, 43
456852-0000	DISTRIBUTOR	427
456853-0001	PIPE CLAMP	427
456853-0002	PIPE CLAMP	427
456853-0003	PIPE CLAMP	427
456854-0001	CRAMP	427
456854-0002	CRAMP	427
456857-0000	BRACKET	191
456858-0000	PIPE	191
456859-0002	PIPE	191
456864-0001	BLOCK RIGHT	411
456864-0002	BLOCK RIGHT	411
456865-0001	BLOCK LEFT	411
456865-0002	BLOCK LEFT	411
456869-0000	LOCKING PLATE	153, 155, 159, 161
456870-0000	LOCK PLATE	153, 155, 159, 161
456871-0000	LOCK PLATE	153, 155, 159, 161
456872-0000	LOCK PLATE	153, 155, 159, 161
456873-0000	LOCK PLATE	153, 155, 159, 161
456874-0000	LOCK PLATE	153, 155, 159, 161
456881-0000	SHAFT	153, 155, 159, 161
456882-0100	PUSH BUTTON BOX	565
456883-0000	PUSH BUTTON BOX	573
456886-0000	WASHER	85, 163
456890-0000	COVERING PLATE	115, 119

Part No	Description	Page No
456897-0000	PIPE	111, 113
456900-0000	PIPE	111, 113
456902-0000	PIPE	191
456904-0000	PIPE	97, 99
456905-0000	FASTENING PLATE	141, 143
456906-0000	LOCK PLATE	141, 143
456907-0000	LOCK PLATE	141, 143
456908-0000	ROLL	143
456909-0000	ROLL	143
456910-0000	ROLL	143
456912-0000	TOUCH GUARD	97, 99
456913-0000	TOUCH GUARD	97, 99
456914-0000	ROCKER ARM	669
456915-0000	COVER	669
456917-0000	HEAT GUARD	669
456918-0000	PAPER SUPPORT	665
456919-0100	BENDING ROLLER	639
456920-0000	BRACKET	695
456921-0000	STOP	695
456922-0001	STRUT	695
456922-0002	STRUT	695
456924-0000	FRAME	697
456926-0000	LEG	697
456927-0000	LEG	697
456928-0000	LEG	697
456929-0000	LID	697
456930-0000	LID	697
456931-0000	LID	697
456932-0000	LID	697
456933-0000	LID	697
456934-0000	SEALING WASHER	271
456936-0000	FASTENING BRACKET	699, 701
456937-0000	CRAMP	699, 701
456938-0000	PIPE 241	699, 701
456939-0000	PIPE 240	699, 701
456940-0000	PIPE V45	699, 701
456941-0000	PIPE V44	699, 701
456942-0000	PIPE 201	699, 701
456943-0000	PIPE 200	699, 701
456964-0000	CLAMP HOLDER	673
456965-0000	CLAMP HALF	673
456967-0000	SHOULDER SCREW	673
456973-0000	BRACKET	671
456978-0000	PIPE	611
456979-0002	CABLE CONDUIT	255, 257
456993-0000	COVER	53
456994-0000	BENDING ROLLER	53, 59
456995-0000	CARRIER	53, 59
456996-0000	ROLLER	37, 39, 41, 43, 115, 119
457367-0000	SHAFT	197, 199
457368-0000	SPRING	197, 199
457696-0001	JOINT PIECE	451
458379-0000	FRAME	549
458383-0100	PAPER REEL HOLDER	501
458384-0100	PAPER REEL HOLDER	501
458962-0001	ELECTRODE REPBY 0567189-0101	93
464173-0000	LABEL HOLDER	181, 183, 185
464174-0000	SIGN	181, 183, 185
464175-0000	SIGN	181, 183, 185
464176-0000	SIGN	673
464177-0000	SIGN	673
464297-0000	CONNECTION BOX	589
464368-0000	CRAMP	223, 373, 375
466074-0002	SLIDER	451
466474-0000	VALVE HOUSING	101
466477-0000	INNER PIPE	101
466478-0000	OUTER PIPE	101
466479-0000	PIECE	101
466483-0000	CLAMPING PIECE	101
466484-0000	NET	101
469000-0000	HOLDER	235, 237
469001-0000	HOLDER	235, 237
469004-0000	PLATFORM	249, 251
469006-0000	FRAME	249, 251
469007-0000	FRAME SECTION	249, 251
469008-0000	SIDE PIECE	265
469010-0000	FRAME SHEET	249, 251
469013-0000	CABLE DUCT	249, 251
469014-0000	LID	249, 251
469016-0000	FRAME SECTION	249, 251
469017-0000	SHEET	249, 251
469018-0000	PLATFORM	249, 251
469019-0000	LEG	249, 251
469020-0000	LEG	249, 251
469021-0000	LEG	249, 251
469022-0000	FRAME SECTION	249, 251

Part No	Description	Page No
469023-0000	RAILING	255, 257
469025-0000	RAILING	255, 257
469026-0000	INTERMEDIATE PART	255, 257
469028-0000	GASKET	255, 257
469033-0000	COVERING PLATE	535, 537
469034-0000	GUSSET PLATE	535, 537
469035-0000	GUSSET PLATE	535, 537
469036-0000	COVERING PLATE	535
469038-0000	COVERING PLATE	535, 537
469039-0000	COVERING PLATE	535, 537
469041-0000	HOLDER	149
469042-0000	LOCK PLATE	149
469043-0000	LOCK PLATE	149
469044-0000	LOCK PLATE	149
469045-0000	ROLL	149
469046-0000	ROLL	149
469047-0000	ANGLE	149
469050-0000	FRONT GUARD	463, 465
469053-0000	CHECKER PLATE	463, 465
469054-0000	PLATE	463, 465
469056-0000	CHECKER PLATE	463, 465
469058-0000	HANDLE	463, 465
469061-0000	PLATE	463, 465
469063-0000	HEAD	463, 465
469066-0000	SHAFT	463, 465
469068-0000	SLEEVE	463, 465
469069-0000	PLATE	463, 465
469070-0000	WIRING DIAGRAM	17
469071-0000	SPACER	235, 237
469074-0100	SPLICE DETECTOR	11
469074-0200	SPLICE DETECTOR	13
469076-0000	ARM	547
469078-0000	HOLDER	149
469079-0000	LOCK PLATE	149
469080-0000	LOCK PLATE	149
469081-0000	LOCK PLATE	149
469082-0000	ROLL	149
469083-0000	ROLL	149
469084-0000	RULER	549
469085-0000	RULER	549
469088-0000	ROLL	141
469089-0000	ROLL	141
469090-0000	ROLL	141
469091-0200	FILLER TUBE	13
469092-0000	SHIM	115, 119
469095-0000	HOLDER	211, 583, 585
469096-0000	LEG	211, 583, 585
469118-0200	FLOW METER	565
469119-0000	BLOCK	575
469120-0000	HOLDER	575
469121-0200	JUNCTION BLOCK	565
469122-0000	BLOCK	577
469124-0000	ROLL	153, 159
469125-0000	ROLL	153, 159
469126-0000	ROLL	153, 159
469127-0000	ROLL	153, 159
469128-0000	ROLL	153, 159
469134-0000	BRACKET	225, 227, 229, 231, 233
469135-0000	HOLDER	225, 227, 229, 231, 233
469136-0000	ROLL	153, 159
469141-0000	HOLDER	551
469143-0000	LEAD-IN	439
469146-0000	HOSE	225, 227, 229, 231, 233
469148-0000	CANTILEVER	93
469149-0000	PIPE	93
469150-0000	COVER	93, 95
469151-0000	PIPE	93
469152-0000	PIPE	93
469153-0000	PIPE	93, 95
469154-0000	PIPE	93, 95
469155-0000	SUPPORT	93
469156-0000	PIPE	93, 95
469157-0000	PIPE	93, 95
469158-0000	PIPE	93, 95
469159-0000	PIN	115, 119
469160-0000	VIBRATION DAMPER	93, 95
469293-0000	CLAW	715
469294-0100	TYPE EXTRACTOR	707
469328-0000	BANJO CONNECTION	565
469330-0000	SIGN	565
469331-0000	HOLDER	565
469332-0000	ATTACHMENT	565
469336-0000	COVER	213
469337-0000	REFLECTOR	213
469343-0000	CABLE TRENCH	187
469344-0000	CABLE TRENCH	187

Part No	Description	Page No
469345-0000	CABLE TRENCH	187
469346-0000	CABLE TRENCH	187, 189
469347-0000	LID	187, 189
469348-0000	COVER	187, 189
469349-0000	CABLE TRENCH	187, 189
469350-0000	LID	187, 189
469351-0000	LID	187, 189
469352-0000	LID	187, 189
469353-0000	LID	187, 189
469354-0000	LID	187, 189
469355-0000	LID	187, 189
469369-0000	YOKECAM 180ML	295
469370-0000	ARMCAM 180ML	295
469378-0000	PIPE	107
469383-0000	SHIM	399
469384-0100	START-UP KIT	495, 497
469385-0000	PIPE	97, 99
469387-0000	PIPE	97
469405-0000	BLOCKING PIECE	411
469406-0000	BLOCKING PIECE	411
469409-0000	PLATE	605
469410-0000	HOSE ATTACHMENT	605
469416-0000	ATTACHMENT	71, 73
469418-0000	AIR NOZZLE	71, 73
469420-0000	AIR NOZZLE	71, 73
469445-0000	SPACER	249, 251
469452-0100	COMPRESSOR UNIT	11
469452-0200	COMPRESSOR UNIT	13
469453-0000	COVERING PLATE	263
469458-0000	BRACKET	71, 73, 75
469459-0000	BRACKET	71, 73, 75
469460-0000	BRACKET	71, 73, 75
469461-0000	ROLL	71, 73, 75
469463-0000	SHAFT	71, 73, 75
469464-0000	ROLL	71, 73, 75
469466-0000	PLATE	71, 73, 75
469467-0000	PLATE	71, 73
469489-0000	HAND RAIL	255, 257
469490-0000	HAND RAIL	255, 257
469492-0000	SPACER	239, 241
469496-0100	COVERING PLATE	209
469497-0000	PIPE	181, 183, 185
469498-0000	PIPE	181, 183, 185
469499-0000	FORCE SPRING	173
469501-0100	AIR NOZZLE	11
469501-0200	AIR NOZZLE	11
469501-0300	AIR NOZZLE	13
469502-0000	SLIDER	217, 219
469503-0000	ELBOW PIPE	123, 125
469504-0000	WASHER	401
469511-0000	BOTTOM COVER	93, 95
469515-0000	PIPE	111, 113
469516-0000	SIDE PLATE RIGHT	535, 537
469518-0000	PENDULUM ARM	507
469521-0000	BEARING PLATE	115, 119
469522-0000	FORCE SPRING	173
469523-0000	SIGN	605
469524-0000	BRACKET	151, 157
469526-0000	DOOR	533
469527-0000	SETTING PLATE	423
469535-0100	DOOR	495, 497
469549-0000	FILLER TUBE	29
469550-0000	SLEEVE	611
469745-0000	BRACKET	153, 155, 159, 161
469758-0000	FORCE SPRING	173
469759-0000	FORCE SPRING	173
469761-0000	HOLDER	605
469762-0100	LADDER	209
469767-0000	PROTECTIVE GLASS	173
469768-0000	PROTECTIVE GLASS	173
469774-0000	FORCE SPRING	173
469778-0000	FORCE SPRING	173
469781-0100	TUBE FLUSHING DEVICE	11
469781-0200	TUBE FLUSHING DEVICE	13
469786-0000	NIPPLE	53
469791-0000	GASKET REPBY 0751024-0000	71
469792-0000	PIPE-LINE	71, 73
469796-0000	GASKET REPBY 0491983-0000	71
469811-0000	SHAFT	463, 465
469812-0000	BEARING	463, 465
469813-0000	CLAMPING PART	463, 465
469814-0000	LINK ARM	463, 465
469815-0000	END PIECE	463, 465
469816-0000	CAP	463, 465
469817-0000	PIN	463, 465
469818-0000	ROD	463, 465

Part No	Description	Page No
469819-0000	PEEL-OFF SHIM	463, 465
469820-0000	BRACKET	463, 465
469821-0000	CATCH	467
469822-0000	AXLE PIN	467
469831-0004	COVER	211
469832-0001	COVER	211
469832-0002	COVER	211
469842-0000	LEG	673
469843-0000	LEG	673
469846-0000	STOP LUG	673
469847-0000	SHAFT	673
469861-0000	CROSS BAR	709
469867-0000	HOSE HOLDER	271
469921-0000	CANTILEVER	141
469922-0000	SPRING	201
469927-0000	RIM	201
469937-0000	PIPE	211
469962-0000	BOX	53
469964-0000	LID	243
469965-0000	RAILING	255, 257
469967-0000	RAILING	255, 257
469968-0000	EDGE STRIP	463, 465
469969-0000	PIPE	97
469972-0001	FILLING TUBE LOWER	31
469972-0002	FILLING TUBE LOWER	31
469973-0000	PRESSURE FLANGE	31
469977-0000	ELECTRICAL CONNECTION	419
469979-0000	HOLDER	177, 179
469981-0000	BRACKET	177, 179
469982-0000	WASHER	53, 59
469987-0000	CONTAINER	191, 193
469991-0000	RAIL	63
469992-0000	PIPE	103, 105
469994-0000	ATTACHMENT	621
469999-0000	FLANGE	271
476185-0000	VALVE CONE	133
476203-0000	PROTECTION	129
476220-0000	SPACER	451
476354-0000	CANNULAR TUBE	693
476355-0000	CANNULAR TUBE	683
476356-0000	HOLDER FOR INK BOTTLE	683, 693
476398-0000	LID	59
476859-0200	CHANGE-OVER VALVE	97, 99
479236-0000	END SECTION	689
479237-0000	CARRIER	689
479238-0000	CARRIER	689
484190-0000	BALL BEARING	53, 59
484192-0000	VALVE	107, 109
484196-0000	FILTER	111, 113
484536-0000	VALVE	625
484538-0000	VALVE	107, 109
484701-0000	SHUTTER	451, 453
484975-0000	WASHER	129, 131
484998-0000	END SECTION	129, 131
486826-0001	SIGN "EMERGENCY STOP"	731, 741
48890-0101	TMCC PROGRAMME	727
490500-0000	GASKET	259
490506-0000	HOSE	611
490508-0000	PROTECTION	611
490509-0000	SPACER	611
490510-0000	SECURING PLATE	611
490512-0000	HOLDER	611
490513-0000	HOLDER	611
490514-0000	HOLDER	611
490518-0000	HOLDER	41
490538-0000	LOCKING PLATE	41
490539-0000	LOCK PLATE	41
490540-0000	LOCK PLATE	41
490547-0000	ROLL	155, 161
490548-0000	ROLL	155, 161
490549-0000	ROLL	155, 161
490550-0000	ROLL	155, 161
490551-0000	ROLL	155, 161
490552-0000	ROLL	155, 161
490566-0001	TIMING BELT	297
490566-0003	TIMING BELT	297
490579-0000	FRAME RIGHT	709
490580-0000	FRAME LEFT	709
490583-0000	BEAM, FRONT.	709
490584-0000	BEAM, MIDDLE.	709
490585-0000	BEAM, BACK.	709
490587-0000	CORNER BAR	709
490589-0000	SPACER BOLT	709
490590-0100	CONVEYOR FRAME	707
490608-0000	SIGN	611
490609-0000	SEALING WASHER	613

Part No	Description	Page No
490618-0000	BRANCH	427
490619-0000	HOSE	427
490759-0000	BOW CLAMP	513
490760-0000	GUIDING ARBOR	513
490761-0100	DETERGENT PUMP	495, 497
490768-0000	BOX	559
490769-0000	BRACKET	559
490777-0000	BRACKET	605
490778-0000	SCREW	591, 595
490779-0000	BRACKET LEFT	501
490780-0000	BRACKET RIGHT	501
490850-0000	PRESSURE FLANGE	31
490862-0000	PIPE	93, 95
490867-0000	BRACKET	63, 65
490869-0000	FILLING TUBE LOWER	31
490873-0000	HOLDER	199
490874-0000	CANTILEVER	199
490875-0000	FASTENING PLATE	199
490876-0000	BRACKET	197, 199
490882-0000	ROLL	33, 35
490884-0000	BRANCH PIPE	87
490891-0000	PIN	211
490894-0000	OVER HOUSE	119
490895-0000	OVER HOUSE	119
490896-0000	CONTAINER	191, 193
490899-0000	RING	115, 119
490901-0000	SEAL	115, 119
490902-0000	AXLE SUPPORT	115, 119
490903-0000	SHAFT	115, 119
490904-0000	ARM	115, 119
490906-0000	SCREW	103, 105
490907-0000	NUT	103, 105
490912-0100	CATCH	463, 465
490916-0000	AXLE PIN	275, 277, 279, 281, 283, 285, 287, 289
490918-0000	PILLAR	119
490919-0000	PILLAR	119
490932-0000	SLEEVE	439
490933-0000	NUT	439
490940-0000	CYLINDER	355, 363
490942-0000	COMPRESSION SPRING	355, 363, 413
490943-0000	COMPRESSION SPRING	355, 363
490944-0000	PLUNGER	309, 311, 313, 315
490949-0000	SHEET	673
490950-0000	HINGE	673
490955-0000	BACK PLATE	673
490956-0000	HINGE	673
490957-0000	LID	673
490958-0000	BRACKET	673
490964-0000	COVER	115, 119
490965-0000	BRACKET	673
490966-0000	PIPE	109
490967-0000	BRACKET	103, 105
490974-0000	COMPRESSION SPRING	349, 351, 353, 357, 359, 361
490975-0000	COMPRESSION SPRING	349, 351, 353, 357, 359, 361
490976-0000	VALVE HOUSING	165
490979-0000	PIPE	109
490980-0000	CYLINDER	413, 431, 433
490983-0000	PIPE	125
490984-0000	TOUCH GUARD	125
490985-0000	SPACER SHEET	125
490986-0000	SHEET	211
490991-0000	HOSE	107, 109
490994-0000	PIPE	109
490996-0000	PIPE	109
490997-0000	PIPE	95
490998-0000	THROTTLE SCREW	95, 99
491020-0000	PIPE	193, 195
491021-0000	BEARING PLATE	41, 43
491022-0000	CYLINDER BRACKET	41, 43
491089-0000	PIPE	99
491090-0000	PIPE	95
491092-0000	COVERING PLATE	707
491095-0000	PIPE	95
491097-0000	HEAT GUARD	145, 147
491101-0000	HOUSE	87
491125-0000	LID	53
491126-0000	SCREW	59
491127-0000	BRACKET	177, 179
491128-0000	GASKET	115, 119
491130-0000	ROLLER CHAIN	53
491138-0000	STRUT	255, 257
491139-0000	FILLER TUBE	29
491140-0000	PRESSURE FLANGE	29
491141-0000	THROTTLE	29, 31
491142-0000	FLOAT	29, 31
491143-0000	BRACKET	71, 73, 75

Part No	Description	Page No
491148-0000	BRACKET	177
491149-0000	SPRING	177, 179
491153-0000	COMPRESSION GLAND	139, 141, 143
491154-0000	PIPE	99
491165-0000	ROLL	283, 285, 287, 289
491166-0000	SHAFT	283, 285, 287, 289
491169-0000	PIVOT ARM	83
491170-0000	COVER	81, 83
491171-0000	BEARING BLOCK	83
491172-0000	GASKET	83
491173-0000	BRACKET	83
491174-0000	ARM	83
491175-0000	LINK	83
491176-0000	BRACKET	83
491177-0000	ARM	83
491178-0000	BRACKET	71, 73
491181-0000	PIPE	621
491183-0000	PIPE	611
491185-0000	HOSE	611
491186-0000	COVER SLIP	535
491187-0000	PIPE	611
491189-0000	SIGN	711
491190-0000	PIPE	611
491191-0000	CONTAINER	113
491192-0000	NUT	113
491194-0000	LINK HEAD	301, 303
491195-0000	SLIDER	301, 303
491196-0000	FORKED LINK	301, 303
491198-0000	PISTON	301, 303
491200-0000	CARRIER	301, 303
491203-0000	STRUT	625
491209-0001	PIPE	99
491209-0002	PIPE	99
491218-0000	SUPPORT	19
491219-0000	PIPE	99
491220-0000	PIPE	99
491221-0000	PIPE	99
491222-0000	COUNTER ROLLER	37, 39, 41, 43
491223-0000	COVER	147
491224-0000	BRACKET	147
491225-0100	STATION CHAIN	393
491227-0000	SLIDER	395
491228-0001	SHAFT	395
491228-0002	SHAFT	395
491229-0000	BUSHING	395
491230-0000	GRUB SCREW	395
491231-0000	BUSHING	395
491233-0000	GUIDE LUG	239, 241
491235-0000	WASHER	239, 241
491241-0000	HOLDER	611
491242-0000	HOLDER	611
491244-0000	PIPE WATER	235, 237
491245-0000	PIPE CENTRAL LUBRICATION	235, 237
491246-0000	PIPE CENTRAL LUBRICATION	235, 237
491247-0000	PIPE WATER	235, 237
491248-0000	PIPE WATER	235, 237
491249-0000	PIPE HYDRAULIC	235, 237
491250-0000	PIPE HYDRAULIC	235, 237
491251-0000	PIPE WATER	235, 237
491252-0000	PIPE HYDRAULIC	235, 237
491253-0000	PIPE HYDRAULIC	235, 237
491254-0000	DISTRIBUTOR BLOCK RIGHT	235, 237
491255-0000	DISTRIBUTOR BLOCK LEFT	235, 237
491256-0000	DISTRIBUTOR BLOCK LEFT	235, 237
491258-0000	DRIVE WHEEL	397
491259-0100	GUIDE	393
491260-0000	RAIL BRACKET	435
491264-0000	SPACER BLOCK	435
491265-0000	PLATE	435
491266-0000	SHIM	435
491270-0000	FILLING TUBE LOWER	31
491271-0000	PRESSURE FLANGE	31
491274-0000	HUB	271
491286-0000	REFLECTOR	535, 537
491287-0000	PROTECTIVE CASING	537
491291-0000	LID	405
491297-0000	CARRIER RIGHT	355
491298-0000	CARRIER LEFT	363
491299-0000	TOUCH GUARD	99
491303-0000	WASHER	625
491304-0000	WASHER	625
491305-0000	CONN.DIAGRAM AIR SUPERH.	19
491310-0000	GUIDING FLANGE RIGHT	399, 401, 403
491311-0000	GUIDE FLANGE LEFT	399, 401
491312-0000	GUIDE FLANGE LEFT	403
491314-0000	SCREW	115, 119

Part No	Description	Page No
491319-0000	LACE	283, 285, 287, 289
491333-0000	SPACER RING	25, 27
491345-0000	CURVE SEGMENT	295
491346-0000	CURVE SEGMENT	295
491349-0000	BEARING SEAT	367, 369
491350-0000	SLIDER	367, 369
491360-0000	PIPE	103, 105
491363-0000	NUT	53, 59
491364-0000	BEARING HOLDER	53, 59
491365-0000	THRUST BEARING	53, 59
491375-0000	CROSS PIECE	301, 303
491376-0000	COUNTER ROLLER	37, 39, 43
491392-0000	SHAFT	21
491393-0000	AXLE SUPPORT	21
491396-0000	CALENDER ROLLER	49, 51
491397-0000	CALENDER ROLLER	49, 51
491398-0000	PIPE	109
491399-0000	PIPE	109
491409-0000	WASHER	271
491410-0000	LACE	271
491413-0000	BEARING PANEL	25
491414-0000	PLATE	47
491415-0000	FASTENING PLATE	47
491418-0001	O-RING	45, 47
491418-0002	O-RING	115, 119
491423-0000	LID	183, 185
491433-0000	VOLUME CAM LEFT, WIDE	377
491434-0000	VOLUME CAM RIGHT	377
491435-0000	VOLUME CAM RIGHT, WIDE	377
491436-0000	VOLUME CAM LEFT	377
491441-0000	HOOD	47
491453-0000	HOLDER	611
491455-0000	PIPE	611
491456-0000	PLATE	301, 303
491458-0000	LINK	29, 31
491459-0000	CURVE SEGMENT	295
491460-0000	CURVE SEGMENT	295
491461-0000	CURVE SEGMENT	295
491462-0000	CURVE SEGMENT	295
491465-0000	GIRDER FRONT	709
491466-0000	GIRDER MIDDLE	709
491467-0000	GIRDER REAR	709
491470-0000	COVERING PLATE	537

Part No	Description	Page No
491487-0000	BUSHING	83
491488-0000	PROTECTIVE CASING	537
491536-0100	NON-RETURN VALVE	569
491542-0000	CANTILEVER	199
491545-0000	BRACKET	147
491552-0000	MOUNTING SHEET	673
491555-0000	SCREW	355, 363
491576-0000	WATER DIAGRAM TBA/9	611
491578-0000	BRACKET	179
491587-0000	HOLDER	37, 39, 41, 43
491593-0000	COVER	59
491594-0000	BENDING ROLLER	59
491595-0000	LID	59
491596-0000	PIPE	59
491597-0000	PIPE	59
491598-0000	BEARING SEAT	59
491599-0000	CANTILEVER	59
491600-0000	CANTILEVER	59
491601-0000	ROLLER CHAIN	59
491602-0000	GASKET HOLDER	115, 119
491626-0000	BEARING PANEL	35
491627-0000	BEARING PANEL	35
491643-0000	HEATING PIPE	81
491645-0000	PIPE	191
491649-0000	BRACKET	565
491650-0100	DISTRIBUTOR BLOCK	225, 227, 229, 231
491654-0000	SUPPORT	647
491655-0000	PIPE 190	185
491656-0000	PIPE 191	185
491657-0000	PIPE 200	185
491658-0000	PIPE 201	185
491660-0000	PIPE 230	185
491661-0000	PIPE 231	185
491662-0000	PIPE 240	185
491663-0000	PIPE 241	185
491664-0000	PIPE 250	185
491665-0000	PIPE 251	185
491666-0000	PIPE 260	185
491667-0000	PIPE 261	185
491668-0000	PIPE 210	185
491669-0000	PIPE 211	185
491670-0000	PIPE 210	185
491671-0000	PIPE 211	185

Part No	Description	Page No
491672-0000	PIPE 210 (211)	185
491680-0000	SUPPORT	709
491681-0000	GASKET	365
491722-0000	PLATE	677, 685
491723-0000	SPLASH PLATE	677, 685
491724-0000	PLATE	677, 685
491726-0000	LEG	697
491727-0000	DRIVING RING	401
491728-0000	CARRIER	401
491729-0000	STRESS PLATE	401
491730-0000	PEEL-OFF SHIMS	401
491731-0000	WASHER	443
491732-0000	WASHER	443
491737-0000	SHAFT	59
491749-0000	CANTILEVER	95
491750-0000	SUPPORT	95
491755-0000	PIPE	99
491760-0000	PIPE	105
491762-0000	SHAFT	661
491768-0000	DOCUMENT FOLDER	611
491770-0000	BUSHING	627
491771-0000	BRACKET	413
491772-0001	SPINDLE	411
491772-0002	SPINDLE	411
491772-0003	SPINDLE	411
491772-0004	SPINDLE	411
491772-0006	SPINDLE	411
491772-0007	SPINDLE	411
491787-0200	DISCONNECTION LINK RIGHT	269
491788-0200	DISCONNECTION LINK LEFT	269
491798-0000	BLOCKING PIECE	411
491799-0000	BLOCKING PIECE	411
491800-0000	BLOCKING PIECE	411
491802-0000	WASHER	413
491803-0000	HOUSE	413
491804-0000	BLOCKING PIECE	431, 433
491805-0000	BLOCKING PIECE	431, 433
491806-0000	BLOCKING PIECE	431, 433
491807-0000	PIPE	427
491808-0000	CLEANING EQUIPMENT	455
491836-0000	CABLE TRENCH	189
491837-0000	CABLE TRENCH	189
491838-0000	CABLE CONDUIT	189
491846-0100	TENSION SPROCKET	393
491847-0000	TENSION SPROCKET	405
491848-0000	SHAFT	405
491849-0000	ADJUSTING SHIM	405
491850-0100	DRIVE WHEEL	393
491851-0000	LID	397
491864-0000	PIPE	611
491865-0000	HOSE	611
491866-0000	PIPE	611
491868-0000	VOLUME BULGE	337, 339
491870-0000	BRANCH PIPE	225, 227, 229, 231, 233
491880-0000	FASTENING PLATE	199
491881-0001	PIVOT ARM	217, 219
491881-0002	PIVOT ARM	217
491881-0003	PIVOT ARM	217, 219
491886-0000	RAIL	365
491889-0000	HOLDER	605
491890-0100	OIL TANK	495, 497
491891-0000	BOW CLAMP	605
491892-0000	HOSE	605
491894-0100	HYDRAULIC SYSTEM	495, 497
491907-0000	ANGLE BRACKET	159, 161
491916-0000	CAMSEGMENT R	295
491917-0000	CAMSEGMENT L	295
491918-0000	CAMSEGMENT R	295
491919-0000	CAMSEGMENT L	295
491920-0000	CURVE SEGMENT	295
491921-0000	CURVE SEGMENT	295
491922-0000	HYDRAULIC DIAGRAM	707
491929-0000	IMPELLER WHEEL	627
491931-0000	SHAFT	83
491942-0100	(PAPER)REEL TROLLEY	707
491945-0000	CABLE TRACK	555
491946-0000	CABLE TRACK	555
491951-0000	BANJO CONNECTION	565
491954-0000	RAIL	365
491962-0000	RAIL	365
491981-0000	NIPPLE	603
491983-0000	GASKET	73
493652-0100	LID	625, 631
495130-0040	SPACER TUBE L=40MM	759
495201-0000	COOLING ELEMENT	765
495722-0000	SCREW BUSHING	767

Part No	Description	Page No
495765-0000	WASHER	767
497748-0000	PIN	135, 137
497933-0000	BUSHING	129, 131, 133
499255-0100	SEAL KIT	205
499255-0101	SEAL KIT**	203
499501-0000	VALVE	621
50Hz		559, 729
50W		557
525233-0000	GASKET 16x2x6mm	421
525386-0000	PROTECTIVE GRATING	455
525387-0000	WASTE CHUTE	459
525388-0000	FASTENING IRON	459
525392-0000	CHECKER PLATE	459
525393-0000	CHECKER PLATE	459
527120-0000	STEERING	633
527121-0001	BOW CLAMP	633
527121-0002	BOW CLAMP	633
527122-0000	ATTACHMENT	633
527124-0000	BEARING	633
527125-0000	STEERING	633
527126-0000	LEAF SPRING	633
527127-0000	DOWEL	633
527128-0000	GUIDE PIN	633
527705-0000	HEAT EXCHANGER	97, 99
527898-0101	CONTAINER H2O2	619
527905-0000	GASKET	631
527906-0000	GASKET	631
527912-0000	NON-RETURN VALVE	633
530551-0000	WASHER	633
530587-0000	WASHER	133
530588-0000	SEAL RING	87, 133, 165
530589-0000	SEAL RING	129, 131
530590-0000	VALVE CONE	129, 131
530591-0000	HOLDER	131
530592-0000	SEAL RING HOLDER	129
530595-0000	SEAL RING HOLDER	129
530597-0000	WASHER	131
530598-0000	WASHER	131
530599-0000	RING	131
531345-0100	PERSONAL PROTECT. EQ H2O2	707
531730-0000	FLANGE SEAL	419
531731-0000	GASKET	17, 19
531732-0000	GASKET	671
531733-0000	GASKET	665, 703
531734-0000	GASKET	665, 703
531735-0000	GASKET	665, 703
531736-0000	GASKET	665, 703
531737-0000	GASKET	97, 99
531742-0000	GASKET	85, 87, 93, 95, 97, 99, 175, 205
532117-0000	CLAMP RING	135
532118-0000	CLAMP RING	137
532205-0000	LID	631
532206-0000	GASKET	631
532348-0000	SPINDLE GUIDE	87, 165
532349-0000	PLAIN BEARING	87, 165
533169-0000	DIAPHRAGM	129
536374-0000	WASHER	197, 199
536913-0000	HUB	653
536916-0000	AXLE PIN	651
536917-0000	AXLE PIN	655, 657
537308-0000	SPRING	683, 693
537327-0000	SHAFT	653
537329-0100	HUB JUMBO	651
539209-0100	A-CYLINDER	127
539210-0100	C-CYLINDER	127
539211-0100	B-CYLINDER	127
539212-0000	GASKET	127
540869-0000	SHEET	651
540870-0000	ARM	655, 657
541057-0000	ARM	655, 657
541064-0000	FORK	655, 657
541065-0000	SHAFT	655, 657
541066-0000	ROLL	655, 657
541067-0000	SPRING BRACKET	655, 657
541068-0000	SPRING HOLDER	651
541069-0000	SPRING BRACKET	655, 657
541070-0000	SHAFT	655, 657
541163-0100	CLAMP RING	127
541164-0100	CLAMP RING	127
541165-0000	WASHER	135, 137
541166-0000	WASHER	129
541167-0000	SPACER SLEEVE	129
541172-0000	SET SCREW	651
541173-0000	STOP	651
541751-0000	CONICAL BOBBIN	653
542781-0000	ARM	659

Part No	Description	Page No
542782-0000	AXLE PIN	659
542784-0000	LINK ARM	659
542785-0000	ROLL	659
542786-0000	FLAG	659
543125-0000	ANGLE	651
543126-0000	STOP LUG	651
543135-0000	INK TRANSFER ROLLER	683, 693
543470-0000	LEVEL GLASS	59
543575-0000	LOCK SHEET	659
543818-0000	PROTECTION PLATE	651
543819-0000	HINGE	651
543820-0000	SPRING	655, 657
543821-0100	LEVEL PROBE	651
543822-0100	BRAKE ARM	651
543823-0100	STRIP MAGAZINE	649
544392-0000	ROLL	677, 685
544526-0000	MACHINE PLATE TB	253
544527-0000	MACHINE PLATE TBA	253
544533-0000	PLASTIC PEHD 21172-10	253
544536-0100	SET OF SIGNS	249, 251
544725-0000	AXLE PIN	651
544726-0000	AXLE PIN	655, 657
544727-0000	AXLE PIN	651
544730-0000	ROLL	651, 655, 657
544894-0000	SPRING	45
544906-0000	SOLENOID VALVE	111, 113
544974-0000	PILLAR	661
545113-0000	SIGN STRIP MAGAZINE	651
546116-0000	CANTILEVER	643
548770-0008	COAXIAL CABLE L=600 mm	733
550487-0000	FLOAT	31
551922-0000	LABEL,POTENTIOMETER DESIGN CORR.	741
552837-0000	CANTILEVER	621
552838-0000	PIPE	621
553120-0000	ATTACHMENT	625
553126-0000	PEROXIDE TANK	625
553127-0000	PIPE	625
553652-0000	INSULATING PLATE	625
555440-0000	CANTILEVER	633
555540-0000	SPACER	101
555541-0000	BRACKET	101
555542-0000	BRACKET	101
558230-0301	TMCC Controller	727
558321-0101	TPIH-SWITCH	727
558389-0101	MULTI PURPOSE POTENTIOM.	741
560931-0000	BRACKET	59, 95, 111, 113, 625
560931-0000	Bracket	57
563286-0000	GASKET	625
563287-0000	WASHER	625
564543-0000	CLEANING PIPE	191
565461-0000	FILLING TUBE UPPER	45, 47
566015-0000	WASHER	459
566174-0000	ATTACHMENT PIPE	97, 99
566175-0000	ELBOW PIPE	97, 99
566404-0002	TIMING BELT	297
566695-0000	SHAFT	49, 51
566696-0000	GUIDE CONSOLE	51
566697-0000	AXLE SUPPORT	49, 51
567070-0001	Electrode	57
567070-0007	ELECTRODE	111, 113
567070-0008	Electrode	57
567070-0011	ELECTRODE	111, 113
567070-0012	ELECTRODE	59, 95
567070-0016	ELECTRODE	625
567070-0017	ELECTRODE	625
567189-0106	ELECTRODE	53
568921-0000	PIPE	609
568922-0000	PIPE	609
568923-0000	PIPE	609
568924-0000	PIPE	609
568926-0000	PIPE	609
568927-0000	PIPE	609
568928-0000	PIPE	609
568929-0000	PIPE	609
568930-0000	PIPE	609
568931-0000	PIPE	609
568932-0000	PIPE	609
568933-0000	PIPE	609
569016-0000	GASKET	59
569392-0000	Inductor	389
570540-0000	Inductor	389
571872-0000	BUSBAR,LEFT	373, 375
571929-0000	RAIL	491
572252-0000	BRACKET	677, 685
572253-0000	SHEET	677, 685
572254-0000	HANDLE	677, 685

Part No	Description	Page No
572255-0000	SPACER	677, 685
572345-0000	HATCH	531
574344-0000	CARTON STATION WITH BEVEL	395
574364-0000	FOLDING FLAP CAM	319, 323, 327, 331
574365-0000	VOLUMEFLAP 250S	337, 339
574366-0000	VOLUME SHIM	337, 339
574367-0000	VOLUME BULGE	337, 339
574374-0000	WASHER	319, 323, 327, 331
574375-0000	ECCENTRIC SHAFT	319, 323, 327, 331
574377-0000	VOLUME CAM RIGHT, WIDE	377
574378-0000	VOLUME CAM RIGHT	377
574379-0000	VOLUME CAM LEFT, WIDE	377
574380-0000	VOLUME CAM LEFT	377
574385-0000	ROLLER TBA250SL	379, 381, 383
574408-0000	BACK PIECE	379, 381, 383
574412-0000	FILLING TUBE 250S	31
574413-0000	PRESSURE FLANGE 250S	31
574414-0000	FLOATER 250S	31
574435-0000	SLEEVE	519
574448-0000	DROP SHUTE TBA/9 V0250SL	219
574449-0000	SLIDER	219
574450-0000	HEAD PLATE	219
574452-0000	PROTECTION	217, 219
574465-0000	FOLDING BAR	425
574472-0000	ARM	31
574475-0000	LINK	31
574484-0000	RULER	549
574485-0000	RULER	549
574486-0000	RULER	549
574658-0000	LOGOTYPE TP	239, 711
575002-0000	PLUNGER	515, 517
577206-0000	CARTON STATION WITH BEVEL	395
577207-0000	FOLDING BAR	425
577211-0000	VOLUMEFLAP 160 ML	337, 339
577212-0000	VOLUME SHIM	337, 339
577213-0000	VOLUME BULGE 160 ML	337, 339
577214-0000	HEAD PLATE	217
577215-0000	DROP SHUTE TBA/9 V0160	217
577221-0000	VOLUME CAM LEFT	377
577222-0000	VOLUME CAM RIGHT	377
577223-0000	VOLUME CAM LEFT, WIDE	377
577224-0000	VOLUME CAM RIGHT, WIDE	377
577225-0000	FOLDING FLAP CAM	317, 321, 325, 329
577226-0000	LEAF SPRING	217, 219
577227-0000	LEAF SPRING	217, 219
577231-0000	PRESSURE FLANGE	31
577747-0000	ROLL	483
577748-0000	FITTING BOLT	483
579944-0000	HOLDER	373, 375
582038-0000	SETTING PLATE	423
582041-0000	FOLDING BAR	425
582168-0000	DROP CHUTE	217
582170-0000	HEAD PLATE	217
591427-0000	STOPPER	341, 343, 345, 347
591429-0000	SPRING	341, 343, 345, 347
591432-0000	SPACER	341, 343, 345, 347
591433-0000	SLEEVE	341, 343, 345, 347
591434-0000	WASHER	341, 343, 345, 347
591440-0000	SHAFT	293
592586-0000	HOLDER	665
594620-0100	BRAKE ARM	651
594975-0000	LINK	275, 277, 279, 281
594981-0000	BEARING HOLDER	275, 277, 279, 281
596072-0000	CONNECTION	193, 195
598878-0000	Machine Sign 2 ADR. EEA	707
599035-0000	PLATE	45
599037-0000	FASTENING PLATE	45
5x20mm		739
6161-0000	ROLL	71, 73, 75
6278-0000	WASHER	211
63A"		729
67379-0105	Impedance Transformer	373, 375
67379-0114	Impedance Transformer	373, 375
67388-0102	RACK FRONTMOUNTED 84TE	731
67388-0103	RACK FRONTMOUNTED 28TE	731
67600-0501	TPIH Generator	727
68262-0101	BACKPLANE FRONT RACK 8TE	727
68699-0101	MULTIPLEXER CARD 56LED	741
72947-0000	HOOK SPANNER	721
7309-0000	HANDLE	475, 533, 651, 673
731049-0000	SLIDING STRIP TPIH	747
731771-0000	COOLING PLATE,SOLIDSTATE	759
734789-0000	SUPPORT F LIVE RAIL	763
751001-0000	CABLE TRENCH	189
751009-0000	INSULATION	17, 19
751010-0000	GASKET	73, 75, 77, 79

Part No	Description	Page No
751013-0000	GASKET	77, 79
751015-0000	GASKET	145, 147
751016-0000	GASKET	17, 19
751017-0000	GASKET	455
751018-0000	WASHER	145, 147
751019-0000	WASHER	77, 79, 81, 83
751020-0000	GASKET	77, 79, 81, 83
751023-0000	GASKET	77, 79, 81, 83, 145, 147
751024-0000	GASKET	73, 75
751048-0000	SUPPORT	643
751049-0000	HAND RAIL	255, 257
751050-0000	HAND RAIL	255, 257
751051-0000	RAILING	255, 257
751052-0000	RAILING	255, 257
751055-0000	STRUT	255, 257
751056-0000	STRUT END	255, 257
751057-0000	RAILING	255, 257
751059-0000	BRACKET	555
751060-0000	BRACKET	555
751066-0000	PIPE	621
751070-0000	DISTRIBUTOR BLOCK	439
751071-0000	PIPE	181, 183, 185
751073-0001	PIPE 240	701
751073-0002	PIPE 240	701
751074-0001	PIPE 241	701
751074-0002	PIPE 241	701
751075-0002	CABLE CONDUIT	255, 257
751076-0000	CABLE TRENCH	189
751077-0000	LID	189
751078-0000	BRACKET RIGHT	283, 285
751079-0000	BRACKET LEFT	287, 289
751080-0001	PIPE 200	701
751080-0002	PIPE 200	701
751082-0000	PIPE CONNECTION	439
751083-0000	FASTENING PLATE	671
751085-0000	BUSHING	211
751086-0000	NIPPLE	571
751087-0000	BRACKET	665
751093-0000	MOUNTING SHEET	665
751094-0100	CREASE WHEEL	707
751095-0000	PLUG	259
751096-0000	LOCKING CIRCLIP	259
751097-0000	BRAKE RING	259
751098-0000	FRICTION DISC	259
751099-0000	LEAD-IN	259
751100-0000	BEARING HOUSING	259
751105-0000	PIPE 90	185
751106-0000	PIPE 90	185
751107-0000	PIPE	185
751108-0000	SECURING PLATE	259
751109-0000	RAIL RIGHT	435
751110-0000	RAIL LEFT	435
751119-0000	BRACKET RIGHT	435
751120-0000	BRACKET LEFT	435
751121-0000	CLEANING PIPE	191
751124-0000	FRONT PLATE	211
751131-0000	SHAFT	115, 119
751132-0000	SHAFT	49, 51
751143-0000	CYLINDER BRACKET	669
751144-0001	PIPE 201	701
751144-0002	PIPE 201	701
751148-0000	CIRQUIT DIAG.CENTRAL-LUB.	707
751162-0000	INLET PIPE	455
751163-0000	COVER	413, 431, 433
751165-0000	BUSHING	63, 65
751182-0000	GASKET	255, 257
751183-0000	GASKET	255, 257
751209-0000	PLATE	159, 161
751212-0000	ARM	275, 277, 279, 281, 283, 285, 287, 289
751213-0000	BEARING BRACKET	287, 289
751220-0000	FILLER CAP	625
751221-0000	PIPE	625
751222-0000	SPACER	633
751223-0000	LID	631
751230-0000	PLAIN BEARING 41, 43, 115, 119, 139, 141, 143, 149, 151, 153, 155, 157, 159,	161
751231-0000	PLAIN BEARING	153, 155, 159, 161
751243-0000	TOOTHED PULLY	271
751245-0000	FLANGE	271
751254-0000	ROLL	291
751282-0000	AIR NOZZLE	75
751293-0000	GASKET	75
751309-0000	RAILING	255, 257
751316-0000	ELBOW PIPE	627
751318-0000	SHAFT	151, 153, 155, 159, 161
751321-0000	CONNECTION BOX	523

Part No	Description	Page No
751322-0000	BRACKET	525
751323-0000	BRAKE BLOCK	525
751324-0000	HOLDER	525
751325-0000	BRACKET	525
751326-0000	BRACKET	525
751329-0000	WASHER	591, 595
751331-0000	GASKET	59
751332-0100	BRACKET	255, 257
751357-0000	PROTECTION	625
751362-0000	RETURN PIPE	621
751364-0000	PUMP PIPE	621
751366-0000	PIPE	621
751373-0100	PEROXIDE TANK	619
751374-0000	PEROXIDE TANK	625
751375-0000	PIPE COIL	625
751376-0000	INSULATING PLATE	625
751377-0000	INSULATING PLATE	625
751378-0000	INSULATING PLATE	625
751380-0000	FILLER TUBE	625
751381-0000	ATTACHMENT	625
751382-0000	PROTECTION PIPE	625
751383-0000	LEVEL TUBE	625
751393-0100	PEROXIDE PUMP	625
751394-0000	EXTENSION PIPE	627
751395-0000	FLANGE	627
751400-0000	ATTACHMENT PIPE	631
751402-0000	WASHER	631
751403-0000	BRACKET	631
751406-0100	CONNECTION HOUSING	619
751407-0000	FRAME	633
751410-0100	VALVE PANEL	633
751456-0000	HOLDER	197
751457-0000	CANTILEVER	197
751459-0000	AIR NOZZLE	75
751465-0000	ATTACHMENT	671
751467-0000	SHAFT	33, 35
751472-0000	CARTON STATION WITH BEVEL	395
751476-0000	CANTILEVER	199
751477-0000	DOWEL	119
751478-0200	BRAKE	501
751484-0000	CLAMPING RING	255, 257
751485-0000	SCREW	255, 257
751504-0000	ROLL	661
751505-0000	TINPLATE	661
751552-0000	ARM	413
751553-0000	ARM	413
751554-0001	SHAFT	413
751554-0002	SHAFT	413
751555-0000	BUSHING	413
751557-0000	SLEEVE	413
751573-0000	ARM	595
751575-0000	RULERPART R	309, 311
751576-0000	RULERPART L	313, 315
751577-0000	RULERPART R	309, 311
751578-0000	RULERPART L	313, 315
751579-0000	ADJUSTING SCREW	309, 311, 313, 315
751580-0000	SHIM	309, 311, 313, 315
751603-0000	SETTING PLATE	159, 161
751604-0000	SPRING	45, 47
751659-0000	ADJUSTING SCREW	301, 303
751674-0000	HATCH	201
751684-0000	STOP LUG	115, 119
751696-0000	FOLDING BAR LEFT	435
751697-0000	FOLDING BAR RIGHT	435
751698-0000	HOLDER	53, 59
751699-0000	WASHER	53, 59
751702-0100	HATCH	11, 13
751707-0000	FOLDING BAR RIGHT	435
751708-0000	FOLDING BAR LEFT	435
751709-0000	FOLDING BAR RIGHT	435
751710-0000	FOLDING BAR LEFT	435
751722-0000	PIPE-LINE	75
751730-0000	LOCKING CIRCLIP	115, 119
751731-0000	BEARING COVER	89, 91
751732-0000	BRACKET	89, 91
751733-0000	HEATING PIPE	145, 147
751734-0000	LID	77, 79, 81, 83
751735-0000	GASKET	77, 79, 81, 83
751736-0000	PIPE	89, 91
751737-0001	PIPE	89, 91
751737-0002	PIPE	89, 91
751740-0000	STOP	89, 91
751743-0000	PISTON	355, 363
751745-0000	CABLE CONDUIT	255, 257
751760-0000	CYLINDER BRACKET	91
751761-0000	ARM	53, 59

Part No	Description	Page No
751762-0000	SHAFT	53, 59
751763-0000	BRACKET	59
751769-0000	SLEEVE	355, 363
752009-0000	RULERPART R	309, 311
752010-0000	RULERPART R	309, 311
752011-0000	RULERPART L	313, 315
752012-0000	RULERPART L	313, 315
752047-0000	BUSHING	41
752048-0001	CARTON STATION WITH BEVEL	395
752048-0002	CARTON STATION WITH BEVEL	395
752048-0003	CARTON STATION WITH BEVEL	395
752048-0004	CARTON STATION WITH BEVEL	395
752048-0005	CARTON STATION WITH BEVEL	395
752048-0006	CARTON STATION WITH BEVEL	395
752048-0007	CARTON STATION WITH BEVEL	395
752083-0000	PISTON	413, 431, 433
752093-0000	HOLDER	459
752175-0000	STRUT	103, 105
752212-0000	VOLUME FLAP 200 ML	337, 339
752218-0000	ATTACHMENT	75
752250-0000	BEARING COVER	677, 685
752251-0000	BEARING COVER	677, 685
752252-0000	BEARING COVER	677, 685
752292-0000	VOLUMEFLAP 180 ML	337, 339
752425-0000	LINK	343, 347
752501-0000	SLEEVE	111, 113
752512-0000	BEARING CONSOLE	677, 685
752554-0000	SPACER	199
752556-0000	SPACER	341, 345
752559-0000	STOP PERF 1	341
752560-0000	STOP PERF 2	345
752561-0000	STOP PERF 1	341
752562-0000	STOP PERF 2	345
752563-0000	STOP PERF 1	341
752564-0000	STOP PERF 2	345
752566-0000	PIPE	621
752568-0000	PROTECTION	25, 27
752574-0000	END PIECE	309, 311, 313, 315
752575-0000	Dolly	389
752598-0000	SHAFT	337, 339
752612-0001	CARRIER	337, 339
752612-0002	CARRIER	337, 339
752613-0000	PIPE	621
752614-0000	HOLDER	625
752615-0000	SPACER	337, 339
752637-0001	BENDING ROLLER	641
752637-0002	BENDING ROLLER	641, 643
752637-0003	BENDING ROLLER	641, 643
752649-0000	CANTILEVER	379, 381, 383
752651-0000	STEERING RAIL	379, 381, 383
752659-0000	PIPE	621
752660-0000	PIPE	621
752661-0000	HOSE	621
752671-0100	SHOCK ABSORBER	307
752672-0100	SHOCK ABSORBER	307
752673-0000	SPACER	341, 345
752674-0001	SHIM	301, 303
752674-0006	SHIM	301, 303
752675-0000	PIPE	111, 113
752676-0000	PIPE	111, 113
752677-0000	BACK PIECE	301, 303
752678-0000	SPRING PERF 1	343
752679-0000	SPRING PERF 2	347
752680-0000	SLEEVE	341, 345
752681-0000	WASHER	343, 347
752685-0000	GUIDE PIN	301, 303
752694-0000	FILLING TUBE UPPER	45
752739-0000	VOLUME BULGE	337, 339
752741-0000	PIPE	123, 125
752744-0000	SHAFT	33, 35
752745-0000	BEARING COVER	33, 35
752810-0000	METERING DEVICE	631
752864-0000	HOSE	621
752893-0000	LEAF SPRING	219
752999-0000	VOLUME FLAP 200S	337, 339
75665-0000	ASSEMBLY TOOL	721
76131-0000	ASSEMBLY CONE	721
76132-0000	ASSEMBLY TOOL	721
76138-0000	LOCKING LOOP	721
76153-0000	SETTING TOOL	721
76167-0000	LOCKING LOOP	721
77099-0100	TOOL KIT	707
77247-0000	ASSEMBLY PIN	721
777120-0215	SPANNER 6x7	721
777120-0220	C-SPANNER	721
777120-0232	SPANNER 12x13	721

Part No	Description	Page No
777122-0137	C-SPANNER V=36	721
777122-0142	C-SPANNER V=46	721
777150-0801	KEY SET ,SEXKANT	721
777200-0101	PIPE WRENCEL	721
795581-0000	PLATE	25, 27
90001-0033	Wall socket Outlet	731
90002-0009	BLANK-OFF PLUG 18.6	187, 189, 461, 747
90002-0012	BLANK-OFF PLUG 28,3	273
90002-0013	BLANK-OFF PLUG 15,2	167, 187, 189, 491, 623, 675
90005-0003	Gasket Bolt head 6,7x11x1 mm M6	349, 351, 353, 357, 359, 361, 371, 385, 387
90005-0005	"Gasket Bolt head 13,7x20,6x2,1 mm G1/4	385, 387
90005-0006	Gasket Bolt head 16,7x24x1,5 mm M16	93, 95
90005-0007	Gasket Bolt head 8,7x14x1 mm M8	349, 351, 353, 357, 359, 361, 385, 387, 427
90005-0012	Washer,Pl.Rnd.Cu.13,5/17,H=1,5	193, 195
90005-0014	"Gasket Bolt head 21,5x28,6x2,5 mm G1/2	371
90005-0016	"Gasket Bolt head 27/35x2,5 mm G3/4"""	613
90005-0020	"Gasket Bolt head 33,9x42,9x3,4 mm G1""	623
90005-0044	Washer,Pl.Rnd.Cu.15/19,H=1,5	605
90005-0045	Washer, Plain Round 10(3/8)/14,H=2	235, 237, 565
90005-0048	Washer,Pl.Rnd.Cu.18,2/23,9 H=1,5	439
90005-0056	Washer,Pl.Rnd.Nyl.6/8,5,H=1	413, 425
90005-0060	Washer, Plain, RBS 6,4/M6)/18,H=1,5	341, 343, 345, 347, 453, 473, 617, 659
90005-0061	Washer,Pl.Rnd.Fibre 14/24,H=1,5	565, 613
90005-0067	Gasket Bolt head 10x17x1,5 mm M10	455
90005-0077	Washer,Pl.Rnd.Nyl.8,4/7, H=2	767
90005-0078	Washer,Pl.Rnd.Fibre 6/10, H=1,5	767
90005-0082	Washer, Plain Round 4,3(M4)/12,H=1	651, 655, 657
90005-0114	Washer, Plain Round 5,3(M5)/15, H=1	483
90005-0126	Washer, Plain Round 13(M12)/24, H=2	527
90005-0158	Washer,Pl.Rnd.Nyl.4,3/8, H=5	747, 755
90006-0008	BUSHING 657	77, 79
90006-0009	BUSHING 0002004	77, 79
90007-0118	FUSE	727
90007-0128	FUSE 1P 6A K	727
90007-0129	FUSE 1P 10A K	727
90007-0131	FUSE 1P 16A K	727
90007-0147	FUSE 3P 10A K	727
90012-0063	Cable Gland PR 15,2	167, 193, 195
90012-0064	GLAND	193, 195
90012-0137	GLAND,EMC,EXTENDED WITH INSERT	25, 27
90014-0011	ROLLER	399, 401
90015-0020	GLANDS,Lead-in,IP67	187, 189, 249, 251, 697
90015-0021	GLANDS,Lead-in,IP67	187, 189, 601, 603, 605, 613, 697
90015-0022	GLANDS,Lead-in,IP67	613
90015-0023	GLANDS,Lead-in,IP67	187, 189, 697
90015-0024	GLANDS,Lead-in,IP67	107, 109, 187, 189
90015-0028	LEAD-IN BUSHING	439
90016-0010	DISC SPRINGS,50X25,4X2	271
90016-0053	DISC SPRING	399
90016-0054	Spring Washer, Wavy 71,53/55,88	399, 401
90016-0056	Disc Spring, Conical 15x8,2x0,8 mm	303
90016-0056	Spring Washer, Conical, 15/8,2	301
90017-0001	BIKE-HANDLE,RUBBER	521, 541, 545
90017-0015	HANDLE,STAINLESS	767
90020-0027	SLEEVE	133
90020-0028	SLEEVE	129, 131
90024-0035	VARISTOR VG B DIL 24	729
90024-0036	FILTERED TERMINAL BLOCK	731
90024-0060	Filter, 80A, 230/400 VAC	731
90028-0020	Cone tube 2,5mm	275, 277, 279, 281, 283, 285, 287, 289, 297, 371, 385, 387, 413
90028-0021	Cone tube 4 mm	235, 237, 275, 277, 279, 281, 283, 285, 287, 289, 297, 413, 439
90028-0025	Cone tube 6 mm	439
90030-0030	Conn. Bulkhead SV 12-L/SY	613
90030-0058	Conn. T-Pipe T-12	93, 95, 97, 99, 613, 621, 671
90030-0062	Conn. Str. GE 6-1/4-18 NPTF	175
90030-0065	PIPE CONNECTION	235, 237, 349, 351, 353, 355, 357, 359, 361, 363, 385, 387
90030-0067	Conn. Bulkhead SV 8-L/SY	427
90030-0075	PIPE CONNECTION G-6	181, 183, 699, 701
90030-0076	Conn. T-Pipe T-6	111, 113
90030-0091	Conn. Pipe G-8	427, 613
90030-0092	Straight Conn., 6-R1/4,ext. tappered	181, 183, 185
90030-0096	Conn. Elbow W-12	621
90030-0106	Conn. Pipe G-12	93, 613, 621
90030-0109	Conn. Str., 12-R1/2, Ext. Thread	53, 59, 93, 95, 123, 125
90030-0110	ACCESSORIES,FERRULE 12	621
90030-0112	NIPPLE	609
90030-0116	Nipples, Reducing, Ext. Thr. No. 2520	565
90030-0120	Conn. L-Pipe Adj. ,EVL,INT.T-10	609
90030-0121	Conn. Elbow Adj.,INT 10	609
90030-0127	Conn. T-Pipe Adj. ,EVT,INT.T-6	565
90030-0132	ACCESSORIES,PLUG PL-6	123, 125
90030-0140	Conn. Elbow Adj.,INT 8	609
90030-0151	Conn. Str.,15-R1/2, Ext. Thread	225, 227, 229, 231, 233, 427
90030-0152	Conn. T-Pipe 15-L/SY	107

Part No	Description	Page No
90030-0157	Conn. Str. 10-R3/8, Ext. Thread	609
90030-0159	Conn. Bulkhead SV 15-L/SY	613
90030-0166	NIPPLE,REDUCING G1/4"-G1/4"	575
90030-0171	Conn. Elbow Adj.,EXT 6-G1/8	235, 237
90030-0178	Conn. Str., 10-R1/4, Ext. Thread	609
90030-0181	Conn. Str. GE 12-3/8-18 NPTF	621
90030-0184	Conn. Str. GA-6-G1/8	77, 79, 81, 107, 109, 111, 113, 145, 147, 385, 387, 627
90030-0185	Conn. Str. GA-8-G1/4	235, 237, 427, 601, 603
90030-0187	Conn. Str. GA-12-G3/8	59, 77, 79, 81, 83, 89, 91, 93, 95, 97, 99, 123, 125, 145, 147, 469, 621
90030-0188	Conn. Str. GA-15-G1/2	107, 109, 613
90030-0202	Conn. Str., 6-G1/4, Ext. Thread	111, 113
90030-0203	Conn. Elbow Adj.,EXT 6-G1/4	111, 113
90030-0209	REDUCER	623
90030-0221	Conn. Elbow Bulkhead WSV 12	621
90030-0253	Conn. Str. 12-1/4 NPT, Ext. Tappered	621
90030-0339	Conn. Str., 12-G3/8, Ext. Thread	609
90030-0340	Nipples, Ext. Thread, Hexagon, RA-G1/2A3	609
90030-0341	Conn. Str., 12-G1/2, Ext. Thread	609
90031-0051	Baseplate 10-Slot	727
90031-0053	Baseplate,10-Slot	727
90031-0057	PLC,Digital Input Module,24VDC,16pt,+/-	727
90031-0058	PLC,Digital Input Module,fast ,16pt,+/-	727
90031-0059	PLC,Digital Output Module,24VDC,16pt,+/-	727
90031-0068	PLC, Power supply 240 VAC, High cap.	729
90031-0074	CPU350, no communication	727
90031-0305	I/O Expansion Cable 0,3 M	727
90032-0038	Block 2 ways	297, 439
90032-0039	Block 4 ways	283, 285, 287, 289
90032-0040	Block 6 ways	275, 277, 279, 281, 413
90035-0005	COVER	275, 277, 279, 281
90036-0009	LIGHT BULB BA15D 24V	549
90036-0057	LIGHT BULB BA9S 28V	739
90036-0068	BULB 6.5W 24V	261
90037-0001	LAMPHOLDER	549
90038-0024	RECTIFIER 50A SKD 50/04A3	731
90042-0109	SOLENOID VALVE 553-121-000	525
90042-0171	SOLENOID VALVE BUERKERT	111, 113
90042-0172	SOLENOID VALVE 4023/1005/1032 24VDC	565
90042-0173	SOLENOID VALVE BURKERT	565, 569
90042-0184	SOLENOID VALVE ASCO 48VDC	613
90042-0215	Valve body 5/2 unistable	579, 581
90042-0271	Valve body 2X3/2	579, 581
90042-0345	COIL 24V DC	525
90042-0366	CONTACT 2-Pole+Earth Hirschmann	525
90042-0438	CONNECTION RAMP 553-400-001	525
90042-0466	DIAPHRAGM 330.95.2 VITON	203
90042-0519	Blank plate ISO size 1	579, 581
90042-0521	EL.CONNECTION MECMAN 04938 278 04	579, 581
90042-0522	PORTED END PIECE ISO SIZE 1	579, 581
90042-0526	PROTECTIVE SLEEVE MECMAN	579, 581
90042-0528	Blanking kit seals ISO size 1	579, 581
90042-0532	BASE PLATE ISO SIZE 1	579, 581
90042-0538	Pilot valve L=500mm	579, 581
90042-0539	Pilot valve L=350mm	579, 581
90043-0006	PRESSURE GAUGE	565
90043-0021	PRESSURE GAUGE Wiegand 0-1 BAR 1/8"	579, 581
90043-0034	PRESSURE GAUGE	181, 183, 185, 671
90043-0036	PRESSURE GAUGE	565
90043-0050	PRESSURE GAUGE	123, 125
90043-0062	MANOMETER	607, 609
90043-0064	PRESSURE GAUGE	579, 581
90043-0065	PRESSURE GAUGE	579, 581
90043-0095	PRESSURE GAUGE	193, 195
90043-0301	DIAPHRAGM	203
90043-0302	SCREW	181, 183, 185, 671
90044-0084	Limit sw. 14 CE1-4	53, 59, 299
90044-0087	PROXIMITY SWITCH REPL.BY 90044-104	507
90044-0104	PROX.SWITCH IFM IN 3002	49, 51, 63, 65, 123, 125, 177, 179, 191
90044-0124	Prox.sw. 922AB2XM-A9P-050-LZ-876	439
90044-0139	Key saf.sw. AZ16-02 ZVR K-2254	115, 119, 249, 251, 473, 677, 685
90044-0145	Prox.sw. 922 AAIY-A9P-050-LZ876	483
90044-0182	Key saf.sw. AZM 415-22ZPAK 24 VDC	489
90044-0194	Prox.sw. IN5329/IN3002-BPKG	25, 27, 53, 59, 115, 119, 661, 677, 685
90044-0203	Limit sw. D4C-2301-B	301, 303
90044-0310	Key 4215/16B1	115, 119, 239, 241, 475
90045-0079	Motor 3GAA 092001-HSA MT80A	607, 609
90045-0087	Motor 3GAA 071002-CSA M2AA 71B	627
90045-0096	MOTOR ABB REPL.BY 90045-159	273
90045-0102	Roll motor Mini-250	509
90048-0041	Oil pump no container	565
90048-0440	GASKET	605
90050-0008	BOTTLE	683, 693
90050-0011	BOTTLE	557, 559, 601, 603
90050-0012	BOTTLE	683, 693
90051-0045	HANDLE	33, 35

Part No	Description	Page No
90051-0053	HANDLES,KNOB,INTERNAL THREAD,M6 24X17	53
90051-0077	HANDLE	683, 693
90051-0082	HANDLES,KNOB,CIRCUL,THREAD.BUSH,M6 25X21	299
90052-0011	HORN	697
90053-0024	COUNTER Kubler 24VDC 6 Digits	741
90053-0029	Pack Counter 8 Digits IVO	729
90053-0305	FRAME Kubler F 1 DV	741
90055-0100	Y-CONNECTION	197, 199
90055-0118	ELBOW PIPE JOINT -8mm	579, 581
90055-0217	ELBOW PIPE JOINT	579, 581
90056-0071	WORM GEAR	417
90056-0072	WORM GEAR	271
90059-0001	THERMOSTAT	541
90061-0018	ANGLE ENCODER 8BIT GRAY	595
90061-0027	Angle encoder 670900035	591
90062-0015	Lock Washer,Serrat.ext.gear,6,4/11 H=0,7	765
90062-0016	Lock Washer,Serrat.ext.gear,8,4/15 H=0,8	565
90062-0059	Lock Washer,Serrat.ext.gear,4,3/8 H=0,5	757, 759, 761
90062-0060	Lock Washer,Serrat.ext.gear,5,3/10 H=0,6	755, 757, 759
90064-0052	PUSH BUTTON	187, 189
90064-0082	PUSH BUTTON WHITE	741
90064-0084	PUSH BUTTON YELLOW	573, 671, 741
90064-0085	PUSH BUTTON RED	671, 731
90064-0098	PUSH BUTTON CLEAR	739, 741
90064-0124	SWITCH,EMERGENCY STOP	731, 741
90064-0315	Lamp Remover Olten No 700	739
90066-0013	PUSH BUTTON BOX	187, 189
90066-0020	PUSCH BUTTON BOX	671
90067-0010	CARRIAGE	711
90067-0300	SPARE PARTS KIT	711
90067-0301	BRAKE WIRE, 32 82 138 1	711
90067-0302	TORSION SPRING	711
90067-0317	BRAKE LINING	711
90067-0322	REPAIR KIT	711
90067-0323	BEARING KIT	711
90067-0324	REPAIR KIT	711
90067-0325	PUMP PISTON	711
90067-0326	REPAIR KIT	711
90067-0327	RETURN SPRING	711
90067-0328	VALVE	711
90067-0329	COPPER WASHER	711
90067-0330	VALVE ARM	711
90067-0331	TOP BEARING KIT	711
90067-0332	LIFT PISTON	711
90067-0333	VALVE	711
90067-0334	AXIAL BEARING KIT	711
90067-0335	YOKE UNIT	711
90067-0336	GUIDE SHAFT UNIT, 32 82 123 3	711
90067-0337	BRAKE DRUM	711
90067-0338	GUIDE ROLLER	711
90067-0339	WHEEL	711
90067-0340	SLEEVE	711
90067-0341	SHAFT	711
90067-0342	TENSION SPRING	711
90069-0281	Gears, Worm motor OKM87-60E3	25, 27
90069-0359	CARBON BRUSH	203
90074-0001	CLIPS, Cable clips di=10 mm	197, 199
90074-0005	CLIPS, Cable clips di=18 mm	613
90074-0026	CLIPS, Cable clips di=24 mm	271
90075-0124	CONTACTOR 4KW COIL 24VDC	729
90075-0125	CONTACTOR 7,5KW COIL 24VDC	729
90075-0126	CONTACTOR 22KW COIL 24VDC	729
90077-0079	FEED THROUGH TERMINAL AKZ 4PA for TS15	587
90077-0102	TERMINAL BK4 KRG 4-POLE	489, 541, 731
90077-0328	RAIL TS15/5	587
90082-0301	OVERVOLTOLTAGE PROTECTOR	739
90083-0016	PLATE	283, 285, 287, 289, 297
90086-0001	NIPPLE	549
90087-0002	PIPE PLUG	211
90087-0019	PLUG M10x1 Stainless	275, 277, 279, 281, 297, 413
90087-0023	Plug, Ext. Thread Hex. Socket VSTI 3/8-E	609
90087-0036	PLUG	579, 581
90089-0003	SLEEVE PR22,5/18,6	187, 189
90089-0018	TRANSITIONAL NIPPLE 3/4NPT-PG16 Brass	621
90090-0001	STEEL-BALL SKF RB-15,081/111	677, 685
90090-0003	STEEL-BALL SKF RB 12,7mm RJ	37, 39, 41, 43
90090-0005	STEEL-BALL SKF RB 3/111	309, 311, 313, 315, 349, 351, 353, 355, 357, 359, 361, 363
90090-0013	STEEL BALL SKF RB-4/111	413, 431, 433
90090-0014	STEEL BALL RB 7,9389 RJ	377
90090-0016	STEEL BALL SKF RB-15 RS	197, 199
90091-0089	Rod Seal, Glidoring 16x22x2,5 mm	349, 351, 353, 355, 357, 359, 361, 363
90091-0091	Rod Seal, Glidoring 10x14x1,7 mm	309, 311, 313, 315
90091-0106	Scraper 30x40x10 mm	211
90091-0107	Rod Seal, Glidoring 25x32x2,7 mm	349, 351, 353, 357, 359, 361

Part No	Description	Page No
90091-0136	Rod Seal, Glidoring 36x44x3,1 mm	423
90091-0137	Radial Seal Type Varilip 20x35x7 mm	627
90091-0159	Gasket 330x308x9 mm	607, 609
90091-0160	Rod Seal, Stepseal 16x23,5x3,2 mm	413, 431, 433
90091-0162	Wear Ring 16x19x3,2 mm	355, 363, 413, 431, 433
90091-0163	Wear Ring 20x23x3,2 mm	413, 431, 433
90091-0165	Rod Seal, Stepseal 20x27,5x3,2 mm	413, 431, 433
90091-0169	Wear Ring 12x15x3,2 mm	309, 311, 313, 315
90091-0170	Wear Ring 25x30x4,2 mm	355, 363
90091-0180	Gasket 32x25x4,8 mm	85, 87, 105
90091-0182	Gasket 48x38x4,8 mm	85, 87, 163, 165
90091-0214	Rod Seal, Glidoring 16x20,9x2,2 mm	355, 363
90091-0215	Rod Seal, Glidoring 25x32,5x3,2 mm	355, 363
90091-0216	Piston Seal, Glidoring 7,1x12x2,2 mm	309, 311, 313, 315
90091-0304	Radial Seal 45x65x8 mm Dust Lip	479
90092-0048	Oil Brush, Flat, 5/16-24 UNF	439
90092-0052	Metering valve 10 mm3	235, 237, 275, 277, 279, 281, 283, 285, 287, 289, 297, 349, 351, 353, 355, 357, 359, 361, 363, 371, 385, 387
90092-0053	Metering valve 30 mm3	275, 277, 279, 281, 283, 285, 287, 289, 349, 351, 353, 355, 357, 359, 361, 363, 385, 387
90092-0054	Metering valve 50 mm3	367, 369, 413, 439
90094-0004	END SUPPORT EWK 2061.6 WM	215
90094-0005	RAIL BRACKET	757, 759
90095-0071	OVERLOAD PROTECTION PKZM 0-0,63 A	731
90095-0072	OVERLOAD PROTECTION PKZM 1,0A	731
90095-0073	OVERLOAD PROTECTION PKZM 1,6A	729
90095-0074	OVERLOAD PROTECTION PKZM 2,5A	729
90095-0075	OVERLOAD PROTECTION PKZM 4A	729
90095-0077	OVERLOAD PROTECTION PKZM 6-10A	729
90095-0078	OVERLOAD PROTECTION PKZM0-16	731
90095-0080	OVERLOAD PROTECTION PKZM 25A	729
90099-0001	NUT PR 15,2 BRASS	623
90099-0002	NUT Pr 18,6 Brass	213, 541
90099-0003	NUT	557, 559, 623
90099-0011	NUT PR 37 BRASS	187, 189
90099-0057	Nut Hex. M20x1,5	423
90099-0103	NUT PR 47 (PG36)	747
90099-0104	NUT PR 15,2 (PG9)	747
90099-0110	NUT PR 22,5 (PG16)	747
90099-0116	NUT PR 12,5 (PG7)	489
90099-0117	NUT PR 18,6 (PG11)	461, 747
90099-0119	NUT PR 28,3 (PG21)	747
90099-0120	NUT PR 37 (PG29)	747
90110-0078	CONTACT	589
90110-0095	CONTACT 3 POLE+EARTH	593
90110-0114	CONTACT HOUSING BLACK	489
90110-0116	CONTACT PIN AWG 2-8	489
90110-0121	FEMALECONT.15POLE HARTING	727
90110-0122	COVER HARTING	727
90111-0120	SWITCH 2 POS. EA OLTEN	573, 741
90111-0122	KEY SWITCH 2 NO Contacts	731
90111-0124	KEY SWITCH 1NO,1NC Contact	731
90111-0135	SWITCH	729
90111-0139	SWITCH	741
90111-0142	Thumb-Wheel Selector	731
90111-0172	EARTH FAULT BREAKER	731
90113-0044	PRESSURE REGULATOR	607, 609
90113-0072	PRESSURE REGULATOR	565
90113-0090	DIFFERENTIAL PRESSURE	579, 581
90113-0374	SLOW STARTING VALVE	565
90113-0375	PRESSURE DISTRIBUTION	565
90113-0377	SHUT-OFF VALVE	565
90113-0378	SHUT-OFF VALVE	565
90113-0455	QUICKCLAMP	579, 581
90113-0469	MANIFOLD REGULATOR 4 bar	579, 581
90113-0470	MANIFOLD REGULATOR 10 bar	579, 581
90115-0006	ROD ENDS,RE-LUBRICATEABLE	507
90115-0054	ROD ENDS,RE-LUBRICATEABLE 8-M8X1,25RH	545
90115-0068	ROD ENDS,MAINTENANCE FREE,6-M6X1RH	513
90119-0056	PLUG-IN RELAY 24VDC	729, 739
90119-0063	OPTO-RELAY DC/DC AMMS-10-1	727
90119-0067	SOLID-STATE RELAY H12WD	729, 739
90119-0106	SAFETY RELAY JOKAB RT 6	727
90125-0020	PLATE	145, 147, 669
90129-0006	BASE 11 POLE	729
90130-0017	Potentiometer 10 kOhm	731
90130-0301	KNOB 3-DIGITS	731
90132-0021	HOSE CLIP 6-10mm	633
90132-0023	HOSE CLIP S 15/9	633
90134-0019	Conn. Straight, GE 6-LM FZB	235, 237, 565
90134-0031	Sleeve for plastic tube	235, 237, 275, 277, 279, 281, 297, 413, 439
90134-0034	NIPPLE	235, 237
90134-0038	Bushing/Nut inlet/outlet 4 mm	235, 237, 275, 277, 279, 281, 283, 285, 287, 289, 297, 413, 439
90134-0039	Bushing valve connection 2,5 mm	275, 277, 279, 281, 283, 285, 287, 289, 297, 371, 385, 387, 413

Part No	Description	Page No
90134-0040	Bushing valve connection 4 mm	235, 237, 439
90134-0042	Spacer dosing valve	349, 351, 353, 355, 357, 359, 361, 363, 439
90134-0045	Plug M12x1	349, 351, 353, 355, 357, 359, 361, 363, 439
90134-0047	Connection for dosing valve	349, 351, 353, 355, 357, 359, 361, 363
90134-0051	Spacing collar dosing block	439
90134-0052	Plug dosing block	275, 277, 279, 281
90134-0055	Bushing/Nut inlet/outlet 6 mm	439
90134-0058	Connection	271, 275, 277, 279, 281, 283, 285, 287, 289, 297, 301, 303, 309, 311, 313, 315, 349, 351, 353, 355, 357, 359, 361, 363, 367, 369, 371, 413
90134-0066	Connection M6 tube 4 mm	385, 387
90134-0068	Connection	301, 303, 367, 369, 385, 387, 439
90135-0021	EARTH CLAMP	215
90135-0026	EARTH TERMINAL AKE 4PA	587
90135-0031	BUSBAR HOLDER K&M SHO165/2	763
90137-0010	Banjo Conn. M6, d=2,5 mm	211
90141-0011	Retain. Ring, SPEC 12,8	33
90141-0011	Retaining Ring for shaft, 15x1,6 mm	35
90141-0015	Retain. Ring, 8	659
90141-0016	Retain. Ring, 10	83
90141-0017	Retain. Ring, 17	441, 449, 457
90141-0020	Retain. Ring, 42	677, 685
90141-0022	Snap Ring B 16	87, 165
90142-0005	HOSE	271
90143-0010	STRIP	211
90143-0012	STRIP	249, 251
90143-0016	STRIP	463, 465
90143-0020	STRIP	629
90143-0029	STRIP	683, 693
90143-0039	STRIP	463, 465
90143-0047	RUBBER STRIP	533
90143-0049	RUBBERSTRIP 11X21MM	239, 241, 463, 465, 529, 531
90143-0056	STRIP	437
90143-0057	STRIP EMKA 1011-05 21x11mm	747
90143-0059	SEAL STRIP 4610069	767
90143-0060	EDGE STRIP 9,5x6,3mm Black PVC	239, 241
90143-0068	RUBBERSTRIP EMKA 1011-06	243, 245
90143-0073	RUBBER STRIP	765
90144-0003	TAPE	635
90144-0004	TREBOFLON-TAPE W=13mm	625, 627
90144-0030	TAPE	543
90144-0072	TAPE SCOTCH VHBS 4945 W=12,7mm	767
90144-0073	TREBOFLON-TAPE W=13mm	111, 113, 271, 439
90145-0005	WIRE	421
90148-0036	HOSE	609
90152-0001	HOSE L=280mm THREAD M10x1	549
90152-0016	HOSE	247
90152-0017	HOSE	487
90152-0033	Spiral Conduit for PR 15,2(PG 9)	193, 195
90153-0015	ADHESIVE Loctite IS 496/CYANOLIT 303	309, 311, 313, 315
90153-0016	ADHESIVE TUBE 100G RHODORSIL CAF 3	53, 59
90153-0017	ADHESIVE 160 mL	249, 251
90153-0020	ADHESIVE BOSTIK 1782 125ml	17, 19
90153-0035	ADHESIVE	565
90153-0049	ADHESIVE	475
90153-0050	ADHESIVE	703
90153-0054	ADHESIVE	335
90153-0055	ADHESIVE	335
90155-0008	CHAIN	191
90157-0016	LOCKING FLUID	211, 271, 341, 343, 345, 347, 399, 401, 529, 533, 537, 653
90157-0021	LOCKING FLUID	377, 557
90157-0022	SEALING COMPOUND	53, 211, 243, 245, 249, 251, 463, 465, 535, 537
90157-0034	SEALING COMPOUND LOCTITE 572 50 ML	427
90157-0041	SEALING COMPOUND	475, 749
90161-0001	O-Ring Material 3 mm mm	221
90163-0014	Quick Coupling, (M) LP-006-1-WR013	487
90163-0016	Quick Coupling, (F) LP 006-0-WR013	565
90163-0028	Quick Coupling, (F) LP 006-0-WR513	427
90163-0050	Quick Coupling, (M) 5089 / 9	605
90163-0052	HOSE NIPPLE,EXT.THREAD 1/4"-12	417, 605
90163-0057	NIPPLE 1/8" Brass	123, 125
90163-0062	Quick Coupling, (F) 5053-1/8	123, 125
90163-0066	NIPPLE 3/8"	605
90163-0076	Quick Coupling, (F) LP-006-0-WR021	609
90164-001	LIGHT FIXTURE TYPE DWDV 206	249, 251
90164-0301	HOLDING FIXTURE	213, 727
90164-0302	BRACKET	249, 251
90165-0002	CLIP	275, 277, 279, 281, 283, 285, 287, 289, 301, 303
90165-0005	PIPE-CLIPS,FOR SINGLE PIPE,ONE SIDE 6	699, 701
90165-0006	CLIP	699, 701
90165-0009	PIPE-CLIPS,FOR SINGLE PIPE,ONE SIDE 12	611
90165-0010	CLIP	681
90165-0019	CLIP	579, 581
90165-0022	PIPE-CLIPS,FOR SINGLE PIPE,ONE SIDE 2,5	275, 277, 279, 281, 283, 285, 287, 289, 297, 301, 303
90165-0024	PIPE-CLIPS,FOR SINGLE PIPE,ONE SIDE 5	677, 685

Part No	Description	Page No
90165-0039	CLIP	225, 227, 229, 231, 301, 303
90165-0044	CLIP	565, 601, 603, 605
90165-0060	PIPE-CLIPS,FOR SINGLE PIPE,ONE SIDE 5	661
90165-0065	CRAMP	283, 285, 287, 289
90165-0086	CRAMP	253
90166-0008	HOSE 7/10 PVC TRANSP.	557, 559, 605
90166-0013	TUBE 8 mm PA Blue	561, 563, 565, 579, 581, 613
90166-0023	SHRINKABLE HOSE 38mm	489
90166-0049	HOSE PVC 25/33-34	631
90166-0059	HOSE PVC 12/16mm TRANSP.	677, 685
90166-0060	HOSE 19/26-27 Reinf.PVC	271, 501
90166-0068	TUBE 12 mm PA Blue	561, 563, 579, 581
90166-0081	TUBE 6 mm PA Blue	561, 563, 565, 579, 581, 613
90166-0087	HOSE 15/23 Reinf.PVC Transp.	583, 585, 665, 669
90166-0089	HOSE 4/6.2 PE BLUE	429
90166-0101	Hose 6/10 Silicone Rubber	633
90166-0108	TUBE 6 mm PA,Transp.	225, 227, 229, 231
90166-0109	TUBE 4 mm PA,Transp.	225, 227, 229, 231, 283, 285, 287, 289, 385, 387, 413, 439, 601, 603
90166-0111	SHRINKABLE HOSE 6.4 MM(1/4")Black	193, 195
90166-0113	HOSE	417, 605
90166-0117	HOSE 4/6 PVC Blue	413, 427
90166-0118	TUBE 8 mm PA Black	225, 227, 229, 231, 561, 563, 575, 613
90166-0119	HOSE PUR 4/6 Black	173, 181, 183, 185, 561, 563, 575, 613
90166-0124	TUBE 6 mm PA,Transp.	173, 197, 199
90166-0132	TUBE 6 mm PA,Transp.	181, 183, 185, 225, 227, 229, 231, 235, 237, 319, 323, 327, 331, 427, 501, 525, 699, 701
90166-0133	TUBE 8 mm PA,Transp.	225, 227, 229, 231, 271, 419, 427
90166-0138	HOSE	633, 683, 693
90166-0143	TUBE 2,5 mm PA,Transp.	275, 277, 279, 281, 283, 285, 287, 289, 349, 351, 353, 355, 357, 359, 361, 363, 371, 385, 387, 413
90166-0151	HOSE	621
90166-0156	HOSE	621
90166-0159	RUBBER HOSE	337, 339
90166-0194	TUBE 8 mm PUR Blue	579, 581
90178-0007	HOUR METER MUELLER 12-48V DC	729
90181-0064	LOCK ZP1 FOR CHANNEL T1	757, 759, 761, 763
90181-0067	DIVIDING PLATE SEP80	757, 759, 761, 763
90182-0005	CLIP STRIP 79x2,3mm REPL.BY 352113-101	283, 285, 287, 289
90184-0001	Snap-In Ball Lock, 49x9 mm	677, 685
90187-0029	Ball Valve, G1/2, NPBR	53, 59, 565
90187-0051	Ball Valve, G3/8 PTFE	191
90187-0059	Ball Valve, for Hydr.Per. G1/2 3mm hole	125, 631
90187-0120	Flap Valve, G1/4, L=38	609
90189-0019	BALL BUSHING 20X30X30	463, 465
90194-0016	SIGN "FLASH SIGN" 50X50MM	167, 215, 373, 375, 491, 541, 565, 587, 675, 731, 741, 749, 751, 755
90194-0040	FLASH SIGN 37X74MM REPL.BY 90194-0016	523
90194-0080	SIGN "IDENTIF. OF WIRING"	731
90194-0133	SIGN "DELIVERED DESIGN"	731
90195-0020	TERMINAL BK2 KRG 2-POLE	213, 557, 559
90195-0028	TERM.BLOCK 6-POLE STEATIT	17, 19
90195-0029	CONN. LINK NO324 FOR -28	17, 19
90199-0010	LEVEL GLASS	53, 59
90201-0010	VALVE	593
90201-0014	VALVE	607, 609
90201-0016	VALVE	593
90201-0017	VALVE	593
90201-0303	SPARE PARTS KIT	593
90201-0306	BLOCK	593
90201-0307	PLATE	607, 609
90201-0308	PLATE	607, 609
90206-0031	HEATING ELEMENT 700+1200W,220V	145, 147, 203, 205, 669, 703
90206-0053	HEATING ELEMENT 230V 1200W	541
90206-0070	HEATING ELEMENT 6000W 380/220V	53, 59, 203, 205
90206-0322	GASKET	145, 147, 669
90206-0326	CONNECTION BOX	53, 59, 203
90207-0363	GASKET	127
90207-0365	GASKET	127
90207-0368	SEAL RING REPBY 0530588-0000	85, 163
90208-0031	BUSHING	397
90208-0038	BUSHING "REPBY 90208-121"	591
90208-0047	COLLAR	463, 465
90208-0120	Cone Clamp. Element 22/32, L=25	271
90208-0121	Clamping Element with sleeve, 25x34 mm	295, 595
90208-0128	Clamping Element with sleeve, 60x77 mm	295
90214-0035	BALL BEARING REPBY 0090214-0138	15, 177
90214-0040	BALL BEARING,STAINLESS 8X22X7	49, 51
90214-0092	BALL BEARING,STAINLESS 17X30X7	441, 457
90214-0098	BALL BEARING,STAINLESS	21, 23, 25, 27, 33, 35, 49, 51, 643, 645, 679, 685, 695
90214-0120	BEARINGS,BALL BEARING,STAINLESS	481
90214-0122	BALL BEARING	405
90214-0138	BEARINGS,BALL BEARING,STAINLESS	179, 663
90214-0167	BALL BEARING,STAINLESS 10X22X6	483
90214-0225	BEARINGS,BALL BEARING,STAINLESS	449

Part No	Description	Page No
90214-0303	SEALING RING 18,6X35X2	21, 23, 25, 27, 33, 35, 49, 51, 59
90214-0312	SEALING RING 50X74,6X2,5	271
90217-0026	NUT	93, 95
90217-0035	NUT	53, 59
90217-0041	Nipple, No. 190506	455
90220-0034	THERMO-CABLE	733
90220-0108	CABLE,SCREENED 5x1,5mm2	733
90224-0078	Pipe Socket, Art.No RAN 1612	53, 59, 569
90224-0094	NIPPLE	557
90224-0186	NIPPLE	427
90224-0234	BRACKET	255, 257
90224-0296	Conn. Bulkhead, Art.No. 116 1500	565, 613
90224-0297	Reducer, Art. No 166 1215	565
90224-0305	PIPE CONNECTION	613
90224-0307	CONNECTION	123, 125, 181, 183, 185
90224-0308	Conn. Banjo, Art. No. 2023-1/8-1/8	123, 125
90230-0017	NON RETURN VALVE RHD 10-L	607, 609
90230-0018	NON RETURN VALVE VCR-844-1/4"-04	575
90230-0028	NON-RETURN VALVE H 151 R 3/8"	561, 563, 571
90232-0039	PHOTOCELL	501
90233-0027	FUSE 16A FERRAZ10,3X38,2	727, 739
90233-0028	FUSE 10A FERRAZ	727, 739
90233-0029	FUSE 25A FERRAZ	727, 739
90233-0303	FUSEHOLDER FERRAZ ST10	727
90233-0304	FUSEHOLDER FERRAZ ST10	727
90235-0064	VALVE	575
90235-0151	NON-RETURN VALVE	579, 581
90235-0259	VALVE	123, 125
90235-0274	"THROTTLE CHECK VALVES,G1/8"""	63, 123, 125, 145, 665, 669
90235-0275	"THROTTLE CHECK VALVES,G1/4"""	37, 39, 49, 65, 77, 79, 81, 85, 163
90235-0280	THROTTLE CHECK VALVES,M5	173
90235-0282	THROTTLE CHECK VALVES,G1/8	41, 43, 51, 83, 147
90235-0450	PLATE	565
90235-0766	VALVE	565
90237-0044	DOOR HANDLE L^gstrup	529
90237-0071	MAGNETLOCK	239, 241, 673
90237-0128	Lock Cylinder, 1109-U3	749, 753
90237-0129	Lock Cylinder, 1109-U2	751
90237-0142	Lock Housing, 1000-U45	755
90237-0151	Guide, 1001-U11	749, 751, 753
90237-0153	Lock Housing, 1121-U26-a	749, 751, 753
90237-0155	Lock Adapter, 1121-U40	749, 751, 753
90237-0156	Lock Bolt, 1000-16	749, 751, 753
90237-0158	ROUND BAR	749, 751, 753
90237-0176	TURNING HANDLE	749, 751, 753
90237-0202	Lock, Insert Square,1000-U2 8mm	755
90237-0324	Key,1104-02 for square 8mm	751
90237-0335	LOCKING CATCH	755
90239-0012	BRACKET	77, 79
90239-0073	CYLINDER	145
90239-0088	BRACKET	145, 669
90239-0099	BRACKET	145
90239-0127	BRACKET	37, 39, 65, 81
90239-0166	CYLINDER	37, 39, 85, 163
90239-0189	CYLINDER	49, 65, 77, 79, 81
90239-0298	CYLINDER REPL.BY 90450-33	221
90239-0320	BRACKET	49
90239-0357	ROD END,CLEVIS WITH AXLE M10X1,25	319, 323, 327, 331
90239-0405	ROD END,BALL JOINT EYE, M10X1,25	221
90239-0405	ROD END,BALL JOINT EYE,MINI-ISO M10X1,25	51, 319, 323, 327, 331
90239-0442	SEAL KIT	203
90239-0453	BRACKET	41, 43, 51, 63, 89, 91, 101
90239-0460	BRACKET	83
90239-0487	REAR,CLEVIS,MINI-ISO 20-25	147
90239-0488	REAR,CLEVIS,MINI-ISO 32	665
90239-0516	ROD END,CLEVIS WITH AXLE M10X1,25	41, 43, 63, 83, 101, 665
90239-0516	ROD ENDS,CLEVIS WITH AXLE M10X1,25	89, 91
90239-0532	ROD END,CLEVIS WITH AXLE M8	83, 147
90239-0750	CYLINDER	511
90239-0773	CYLINDER	51, 63
90239-0779	CYLINDER	41, 43, 83, 87, 89, 91, 101, 165
90239-0846	Double acting, Mini-ISO, CYL.20-25	669
90239-0847	Double acting, Mini-ISO, CYL.20-50	147
90239-0858	Double acting, Mini-ISO, CYL.32-50	665
90239-0983	CYLINDER	525
90240-0048	PLAIN BEARING,SELF ADJUST.SPER. 25X42X20	275, 277, 279, 281, 283, 285, 287, 289
90240-0050	PLAIN BEARING,SELF ADJUST.SPER. 20X35X24	275, 277, 279, 281, 283, 285, 287, 289, 301, 303
90240-0052	BEARING BUSHING WITHOUT FLANGE, 12x14x15	463, 465
90240-0055	BEARING BUSHING WITHOUT FLANGE, 25X28X25	439
90240-0073	RICTION BEARING	221
90240-0076	RICTION BEARING	463, 465
90240-0083	BEARING BUSHING WITHOUT FLANGE, 8X10X10	463, 465
90240-0093	PLAIN BEARING,SELF ADJUST.SPER. 10X26X12	299
90240-0094	BEARING BUSHING WITHOUT FLANGE, 50X55X40	423

Part No	Description	Page No
90240-0109	BEARING BUSHING WITHOUT FLANGE, 50X55X20	399, 401
90240-0146	BEARING BUSHING WITH FLANGE,15/21X20	53, 59
90240-0180	BEARING BUSHING WITH FLANGE,10/14x15 NFB	379, 381, 383
90240-0331	BUSHING	449
90240-0332	BUSHING	449
90242-0065	O-Ring 24,2x3 mm	621
90242-0084	O-Ring 203,0x3 mm	93, 95, 203, 205
90242-0093	O-RING	309, 311, 313, 315
90242-0148	O-Ring 19,2x3 mm	655, 657
90242-0153	O-RING	627
90242-0163	O-RING	633
90242-0168	O-RING	625
90242-0168	O-ring	57
90242-0171	O-RING	625
90242-0173	O-RING	627
90242-0186	O-RING	625
90242-0188	O-RING REPBY 0315204-0307	625
90242-0189	O-RING	625
90243-0061	FAN NOZZLE	247
90243-0133	CONTAINER	533
90243-0134	FLOW METER	575
90245-0019	TRANSF.3-Ph.750VA Sec.23A	731
90245-0024	MATCHING TRANSF. 65 kVA	737
90248-0013	HINGE 3562E STUV	529
90248-0019	HINGE 1054-U1	755
90248-0022	HINGE	459
90248-0026	HINGE	679, 687
90248-0032	HINGE	749, 751, 753
90256-0001	TAPE HOLDER	533
90257-0002	FILTER PLUG PARTNO 8145-00-120 TYP F12	417
90258-0031	Pin, Straight Slotted Spring FRP 3x20	647
90259-0313	AUX. CONTACT K&M NHI21-PKZM0	729, 731
90261-0008	Plug, Blind, Plastic GPN300F26	583, 585
90261-0018	Plug, Blind, Plastic GPN300F-183	417
90261-0033	Plug, Blind, Plastic GPN300F182	455
90261-0049	Plug, Blind, Plastic, No. SR1750	653
90261-0079	Plug, Blind, Plastic, No. 1955	747, 755
90264-0078	FAN	671
90265-0037	CONNECTION BOX ROSE	211
90266-0006	TUBE	225, 227, 229, 231
90266-0019	PIPE	275, 277, 279, 281, 283, 285, 287, 289, 297, 385, 387
90270-0011	COMPRESSOR RA112 "REPL.BY 90270-17"	93
90270-0017	Compressor NASH/ELMO 112 MB/4-2083	95
90270-0338	SPARE PARTS KIT	203
90270-0345	SHIMS	203
90270-0346	GASKET	203
90270-0347	VALVE	93, 95, 621
90270-0348	MOTOR ELMO RA112/MB42083	203
90274-0029	LEVEL SWITCH HEMOMATIK	605
90274-0045	GUARD	193, 195
90274-0053	LEVEL PROBE	609
90274-0056	PRESSURE SWITCH	565
90274-0065	PRESSURE SWITCH	621
90274-0074	PRESSURE SWITCH	565
90274-0084	PRESSURE SWITCH	565
90277-0041	FILTER / UC-SAB-3101 UCC	609
90277-0045	FILTER / 9900-05-BK	579, 581
90277-0046	FILTER / 9933-05-101	579, 581
90277-0323	FILTER HOUSING / 95S6-1/4 NPT / 122B-40K	565
90277-0324	FILTER CARTRIDGE / 050-11-A	565
90285-0087	SEAL	203
90285-0094	SEAL KIT	203
90287-0009	SPRINGLOADED SCREW M10x19	177, 179, 663
90287-0062	SCREW M6	459, 461, 463, 465, 473, 673
90287-0081	Screw MC6S M6x10 129	271
90287-0106	Screw Springload. Slotted Head M10x21	53, 59, 653
90287-0119	Screw,Sock.Set Flatpoint MMP6SS M5x12 A2	413
90287-0128	Screw, Sock.Set Dogpoint M4x6	309, 311, 313, 315, 349, 351, 353, 357, 359, 361
90287-0134	Screw Pozie, RXS B10x13 A4	445
90287-0143	Screw MC6S M6x25 129	283, 285, 287, 289
90287-0144	Screw MC6S M6x35 129	283, 285, 287, 289
90287-0145	Screw MC6S M5x16 129	295
90287-0149	Screw MC6S M6x8 109	271
90287-0157	Screw M6SF FLAT HEAD M6x10 88	747, 757, 759, 761, 763
90287-0159	Screw, Sock.Set Dogpoint M6x16	627
90287-0208	Screw M6S M5x70 A480	419
90287-0212	Screw MC6S M5x85 129	565
90287-0215	Screw MC6S M5x130 129	565
90287-0336	Screw Hex. Sock. Set, M6x20 Plastic	759, 763
90287-0337	Screw recessed head M4x10 Wh. Nylon	757, 759, 761, 763
90296-0009	SILICONE GREASE TUBE 100 Gr.	25, 27, 33, 35, 51
90296-0012	LUBRICANT	301, 303
90296-0028	OIL (QTY OF STOCK REFLECTS LITERS)	407, 409
90296-0053	OIL	635
90296-0068	Grease Uniway LI 62 Cartridge 400 Gr.	271, 349, 351, 353, 355, 357, 359, 361, 363

Part No	Description	Page No
90296-0070	GREASE	399, 401, 403, 405
90296-0075	OIL 54322-320 Acc to M 1254.322	271, 635
90296-0076	OIL	417
90297-0006	FLUORESCENT TUBE 9W	213
90297-0007	FLUORESCENT TUBE 11W	727
90297-0306	BALLAST COIL 50/60 HZ	729
90298-0012	INHIBITOR	535, 537
90298-0019	DETERGENT	635
90299-0072	INK	683, 693
90303-0011	Protective Goggles	717
90303-0012	Protective Gloves	717
90303-0013	Apron	717
90304-0013	CONTAINER	605
90304-0301	PIPE	605
90304-0302	PIPE FITTING	605
90304-0303	COVER	605
90304-0305	PIPE	605
90314-0038	Level control relay RM3	727
90321-0015	PUMP 502 CFX 7ETV 302 50Hz IP55	455
90321-0017	PUMP C660P 220V 50Hz	557
90321-0018	GEAR PUMP MLPS/T124D	607, 609
90321-0034	PUMP 502 CFX 5ETV 362 60Hz IP55	455
90321-0037	PUMP C-6125P EP 220V	559
90321-0108	PUMP CALPEDA 7001002003Z NT61	623
90321-0381	ACCUMULATOR	607, 609
90321-0382	FLANGE	609
90321-0383	FLANGE	609
90321-0384	DISTANCE PIECE	607, 609
90321-0385	COUPLING	607, 609
90321-0411	GASKET	627
90326-0012	PROTECTIVE COVER 17, 19, 53, 59, 77, 79, 81, 83, 85, 87, 97, 99, 123, 125,	665
90326-0019	THERMOELEMENT	53, 59
90326-0020	PLUG,FEMALE YELLOW CR-AL 17, 19, 53, 59, 77, 79, 81, 83, 85, 87, 97, 99,	123, 125, 665
90326-0048	THERMOELEMENT	77, 79, 81, 83
90326-0051	THERMO COUPLE	17, 19, 85, 87, 97, 99
90326-0052	THERMO ELEMENT	53, 59, 77, 79, 81, 83
90326-0089	THERMOCOUPLE	125, 665
90326-0304	LEAD IN	77, 79, 81, 83, 203
90326-0306	GLAND FITTING 9041-45-KS-KR.1/8"D=4,5mm	53, 59, 77, 79, 81, 83
90328-0001	SILENCER	565
90328-0003	SILENCER	123, 125
90328-0017	SILENCER, d=6 mm	579, 581
90328-0020	SILENCER	525
90328-0024	SILENCER G3/8	579, 581
90330-0020	Elbow, 90 Int. Thread, R-2221/2	625
90330-0021	Nipples, Ext. Thread. R-207R1/2	625
90330-0024	T-Pipe, Int. Thread, Rp1/4	111, 193, 195
90330-0025	Bushing, Int/Ext. Thr. R1/4-Rp1/8	181, 183, 185
90330-0026	Plug, Ext. G-Thread, G1/4	53
90330-0028	Nipples, Ext. Thread. R-207R3/8	191, 469
90330-0029	Plug, Ext. G-Thread, R-236R3/8	93, 95
90330-0032	Nipples, Ext. Thread. R1/8-R1/8	123, 125
90330-0037	Plug, Ext. G-Thread, G1/2	371, 613
90330-0038	Nut, Hexagon, G3/8	671
90330-0043	Nipples, Ext. Thread. R-207R1/4	111
90330-0046	Plug, Ext. G-Thread, R-236G3/4	625
90330-0048	Bushing, Int/Ext. Thr. R1/2-Rp3/8	123, 125
90330-0061	Conn. Straight. R 1/2x12mm R-1322	613
90330-0062	STRIGHT COUPLING R3/8" R131U	123, 125
90330-0066	Plug, Ext. G-Thread, G1/8	181, 183, 185, 309, 311, 313, 315
90330-0067	T-Pipe, Int. Thread, R-221R3/8	469
90330-0078	Bushing, Int/Ext. Thr. R3/4-Rp3/8	77, 79, 439
90330-0080	Nipples, Ext. Thread. R3/4-R1/2	625
90330-0081	Elbow, 90 Int. Thread, R-222R1/4	427, 487
90330-0083	Nipples, Ext. Thread. R3/8-R1/4	193, 195
90330-0085	Bushing, Int/Ext. Thr. R1/2-Rp1/4	417
90330-0093	Nut, Hexagon, G1/2	613
90330-0097	Nipples, Ext. Thread, G1/8	225, 227, 229, 231, 233
90330-0099	Elbow, 90 Int. Thread, R-222R1/8	225, 227, 229, 231
90330-0101	Nipples, Ext. Thread, G1/4	441, 457
90330-0105	Nut, Hexagon, R3/8	181, 183, 185
90330-0120	Nut, Hexagon, G1/4	193, 195
90332-0019	Recorder Honeywell 1 Ch.	729
90332-0322	Pen	739
90332-0323	RECORDER CHARTS	739
90335-0004	SPRING	545
90335-0008	SPRING	139, 141, 143
90335-0011	SPRING	377
90335-0015	SPRING 42360 Barnes	651
90335-0025	SPRING BARNES 22010	515, 517, 519
90335-0055	SPRING	463, 465
90335-0096	SPRING	443
90339-0004	MAGNETIC LOCK	533
90344-0022	SPROCKET	299

Part No	Description	Page No
90347-0004	VIBRATION DAMPER D=30 Th=M8 H=17 H2=21mm	673
90347-0005	VIBRATION DAMPER	551
90347-0011	VIBRATION DAMPER MEGI 781056	597, 599
90347-0012	DAMPER	521
90347-0035	DAMPER	459
90347-0050	Gas Spring No. 0306 150 398535	749, 751, 753, 755
90347-0079	Floor plate, Damper, No 470515-01	707
90347-0189	SHOCK ABSORBER, 370-050-400	423
90348-0007	FREE WHEEL COUPLING	25, 27
90355-0031	FLEXIBLE COUPLING	591, 595
90355-0048	CONNECTION	293
90355-0160	Shaft coupling	271
90360-0005	STEAM TRAP / TYPE 2010	613
90360-0006	ATTACHMENT FOR STEAM TRAP 2010	613
90410-0051	TEMPERATURE REGULATOR KS40	727
90411-0005	INSULATOR	17, 19
90413-0033	CODE INSERT SET 0-9	681, 689
90413-0043	CODE INSERT SET	681, 689
90413-0044	CODE INSERT SET	681, 689
90413-0047	CODE INSERT SET	681, 689
90413-0048	CODE INSERT SET	689
90413-0049	CODE INSERT SET	689
90415-0014	FILTER PI 1844/2020 852939 MIC10+935.832	607
90415-0018	FILTER FOR LIME SEPARATING / D MOD.AD	565
90415-0019	FILTER / ART.NO. HH-M15-Rg	565
90415-0022	"""FILTER / R1 1/2""""" TYP. 1012 """"	455
90415-0029	FILTER / MDF BN 30 G 10 B1-BYP	609
90415-0033	OIL FILTER REFILLING UC-HP-1229-25	605
90415-0034	SUCTION FILTER / B4850	603
90415-0052	FILTER ART NO 12565 C-340-6E FOTVENTI EP	601
90415-0316	FILTER / 6051-200-SS	203, 205
90416-0014	INDEXING DEVICE	407
90416-0021	INDEXING DEVICE	409
90417-0076	Timing belt T10x920x25 Polyurethane	271
90417-0081	Timing belt T5x610x6	679, 687
90417-0088	Timing belt T5x1215x25	591, 595
90422-0008	COOLER	607, 609
90424-0009	NOZZLE	427, 439
90424-0016	NOZZLE	427
90424-0017	NOZZLE	175
90424-0025	NOZZLE	457
90424-0027	NOZZLE	211
90424-0032	NOZZLE	225, 227, 229, 231, 233
90424-0033	NOZZLE	225, 227, 229, 231, 233
90424-0035	NOZZLE	225, 227, 229, 231, 233, 441, 463, 465, 469
90424-0036	NOZZLE	463, 465
90424-0301	SLEEVE	203
90424-0302	GASKET	203
90424-0303	GASKET	203
90424-0304	GASKET	203, 205
90426-0003	HAND SHOWER	487
90430-0067	Motor drive control PME 1802A CD2	727
90432-0023	Brake ORTLINGHAUS	271
90450-0096	CYLINDER	319, 323, 327, 331
90457-0078	PANEL NUT	579, 581
90457-1106	CURRENT RELAY EIH 84 871 010	727
90458-0256	PROXIMITY SWITCH IIA 3010-BPKG/6M	221
90458-0292	BASE KT70-1001	261
90458-0293	LIGHT ELEMENT KL70-401R	261
90458-0294	LIGHT ELEMENT YELLOW KL70-401Y	261
90458-0295	LIGHT ELEMENT BLUE KL70-401L	261
90458-0533	BALL BEARING, 17X35X10	449
90458-0589	SAFETY COUPLING SK1-10-W-20H7-3Nm-1-6Nm	481
90458-0601	PHOTOCELL, SICK PHOTOCELL 1	197, 199
929420-0000	CONNECTION	235, 237
970215-0000	STOP BLOCK	755
970261-0000	SPACER SCREW 10,2X10MM	767
970262-0000	SPACER NUT	767
970802-0000	DISCETTE BOX 3,5"	749
971286-0000	SPACER H=6MM	767
978031-0000	VOLUMEFLAP 284 ML	337, 339
978184-0000	STOPPER	319, 323, 327, 331
978185-0000	SHIM	319, 323, 327, 331
978193-0000	FASTENING PLATE	489
978263-0000	LEAF SPRING	219
978272-0000	BRACKET	275, 277, 279, 281, 283, 285, 287, 289
978366-0000	VOLUME FLAP 250 ML	337, 339
978370-0000	PIPE	625
978371-0000	PIPE	625
978404-0000	DROP CHUTE TB/9 V0180	217
978405-0000	DROP CHUTE TB/9 V0200	217
978406-0000	DROP CHUTE TB/9 V0236	217
978407-0000	DROP CHUTE TB/9 V0250	217
978408-0000	DROP CHUTE TBA/9 V0180	219
978409-0000	DROP CHUTE TBA/9 V0200	219
978410-0000	DROP CHUTE TBA/9 V0236	219

Part No	Description	Page No
978411-0000	DROP CHUTE TBA/9 V0250	219
978412-0000	DROP CHUTE TBA/9 V0284	219
978413-0000	CHUTE	211
978461-0000	PROTECTION PLATE	63, 65
978462-0000	PROTECTION PLATE	49, 51
978478-0000	TANK	609
978479-0000	LID	609
978480-0000	LEVEL TUBE	609
978481-0000	BLOCK	609
978531-0000	BRACKET	115, 119
978532-0000	BRACKET	115, 119
978542-0000	FRAME	69
978543-0000	FRAME	169
978547-0000	TOUCH GUARD	59
978561-0000	SHAFT	627
978562-0000	LOCKING FINGER	31
978569-0000	SHAFT	53, 59
978583-0000	PIPE	565
978584-0000	PIPE	565
978585-0001	PIPE	565
978585-0003	PIPE	565
978586-0000	PIPE	565
978587-0000	PIPE	565
978588-0000	PIPE	565
978589-0000	PIPE	565
978590-0000	PIPE	565
978592-0000	PIPE	565
978593-0000	JUNCTION BLOCK	565
978603-0000	SIGN	579, 581
978607-0000	SIDE PLATE, LEFT	459
978713-0000	KNIFE	335
978735-0000	FASTENING PLATE	197
978745-0000	CATCH	309, 311, 313, 315
978746-0000	CATCH	349, 351, 353, 355, 357, 359, 361, 363
978756-0000	PIN	379, 381, 383
978757-0000	ROLLER 180-284ML	379, 381, 383
978758-0000	ROLLER 125ML	379, 381, 383
978759-0000	ROLLER TB200SL	379, 381, 383
978760-0000	ROLLER TBA200SL	379, 381, 383
978763-0100	CUTTING UNIT	333
978765-0000	KNIFE HOLDER	335
979133-0000	PIPE	565
979217-0000	PIPE	559
979219-0000	SPACER PIPE	579, 581
979548-0000	MACHINE PLATE	707
979719-0000	SPACER	241
979735-0000	CARTON STATION	395
979741-0000	FOLDING BAR	425
979758-0000	STOP PERF 1	341
979759-0000	STOP PERF 2	345
979760-0000	SPACER	341, 345
979761-0000	SLEEVE	341, 345
979766-0000	DROP CHUTE	217
979767-0000	FLAT SPRING	217
979768-0000	FLAT SPRING	217
979777-0000	HEAD PLATE 100	217
979782-0000	BOW CLAMP	547
979862-0000	DROP CHUTE	219
979863-0000	CARTON STATION	395
979866-0000	FOLDING BAR	425
979877-0000	FLAT SPRING	219
979878-0000	HEAD PLATE	219
979879-0000	LEAF SPRING	219
979938-0000	SLIDER	217
988547-0000	CABLE DUCT	53

P

PG11	549
PG16	559, 615
PG16/11	187, 189
PG29	187, 189
PG9	215, 549, 587
PR 18,6	549
PR15,2	211, 587, 675
PR15,2"	255, 257
PR15,2/PG9	117, 121, 167, 187, 189, 215, 491, 523, 535, 537, 573, 587, 675, 747

This page is intentionally left blank


Tetra Pak

SPC binder labels. 40 mm Full width *Note! This page is generated **automaticall***
*using the **variable definitions** made in the **front page** file!!*

TBA/9 6000
648152-6000

Issue: 2001-04
Doc No: SPC-80322-0101

TBA/9 6000
648152-6000

Issue: 2001-04
Doc No: SPC-80322-0101

TBA/9 6000
648152-6000

Issue: 2001-04
Doc No: SPC-80322-0101

TBA/9 6000
648152-6000

Issue: 2001-04
Doc No: SPC-80322-0101

TBA/9 6000
648152-6000

Issue: 2001-04
Doc No: SPC-80322-0101

TBA/9 6000
648152-6000

Issue: 2001-04
Doc No: SPC-80322-0101

TBA/9 6000
648152-6000

Issue: 2001-04
Doc No: SPC-80322-0101

TBA/9 6000
648152-6000

Issue: 2001-04
Doc No: SPC-80322-0101

TBA/9 6000
648152-6000

Issue: 2001-04
Doc No: SPC-80322-0101

TBA/9 6000
648152-6000

Issue: 2001-04
Doc No: SPC-80322-0101

TBA/9 6000
648152-6000

Issue: 2001-04
Doc No: SPC-80322-0101

SPC binder labels. 30 mm Half width *Note! This page is generated **automaticall** using the **variable definitions** made in the **front page** file!!*

TBA/9 6000
648152-6000
Issue: 2001-04
Doc No: SPC-80322-0101

TBA/9 6000
648152-6000
Issue: 2001-04
Doc No: SPC-80322-0101

TBA/9 6000
648152-6000
Issue: 2001-04
Doc No: SPC-80322-0101

TBA/9 6000
648152-6000
Issue: 2001-04
Doc No: SPC-80322-0101

TBA/9 6000
648152-6000
Issue: 2001-04
Doc No: SPC-80322-0101

TBA/9 6000
648152-6000
Issue: 2001-04
Doc No: SPC-80322-0101

TBA/9 6000
648152-6000
Issue: 2001-04
Doc No: SPC-80322-0101

TBA/9 6000
648152-6000
Issue: 2001-04
Doc No: SPC-80322-0101

TBA/9 6000
648152-6000
Issue: 2001-04
Doc No: SPC-80322-0101

TBA/9 6000
648152-6000
Issue: 2001-04
Doc No: SPC-80322-0101

TBA/9 6000
648152-6000
Issue: 2001-04
Doc No: SPC-80322-0101

TBA/9 6000
648152-6000
Issue: 2001-04
Doc No: SPC-80322-0101

TBA/9 6000
648152-6000
Issue: 2001-04
Doc No: SPC-80322-0101

TBA/9 6000
648152-6000
Issue: 2001-04
Doc No: SPC-80322-0101

TBA/9 6000
648152-6000
Issue: 2001-04
Doc No: SPC-80322-0101

This page intentionally left blank