SPC 648118-060V ==>
Pull Tab Device PTS-3

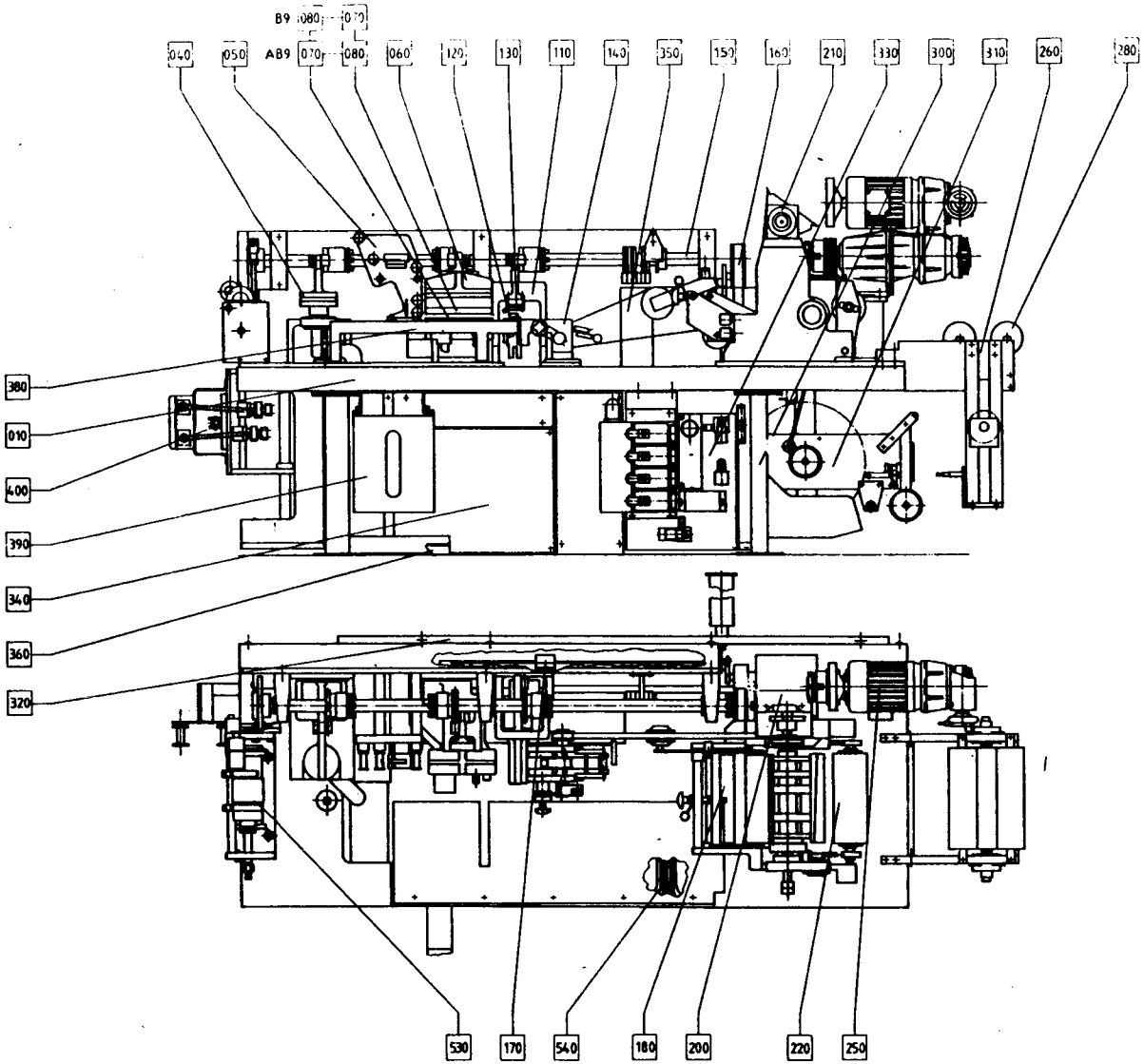
B9
080
070
040
050
AB9
070
080
060
120
130
110
140
350
150
160
210
330
300
310
260
280
380
010
400
390
340
360
320
530
170
540
180
200
220
250

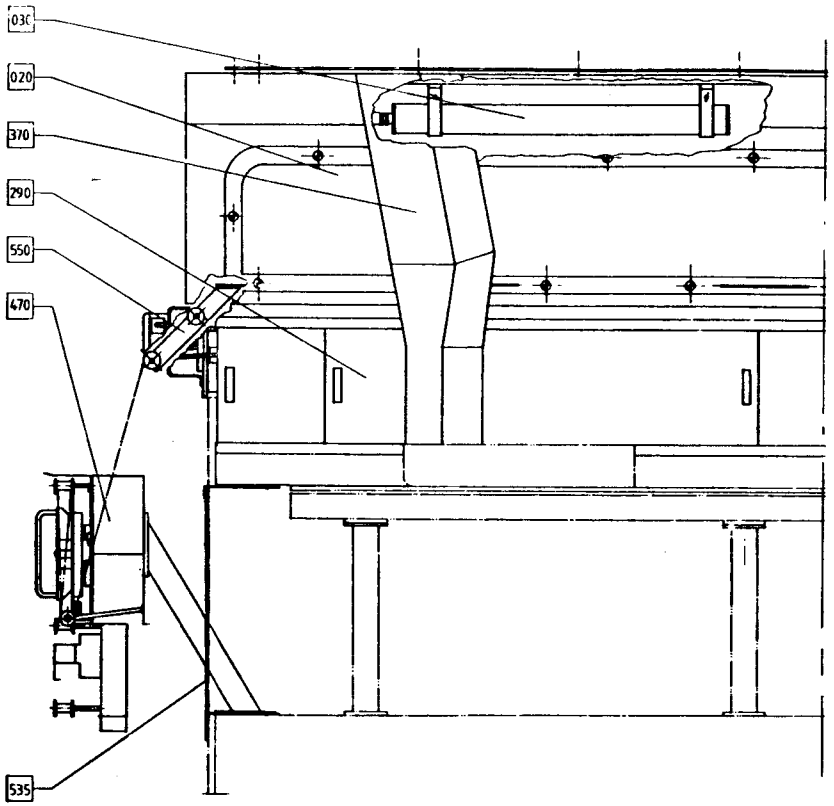
030
020
370
290
550
470
535

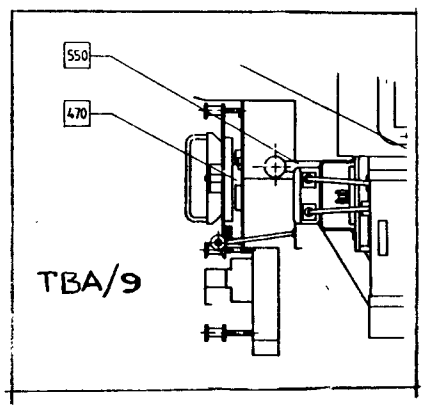
550
470
TBA/9

From	Pos	Part No	SP	UN	Qty	Description
	F010	801-1				MACHINE BODY
	F020	802-1				COVER
	F030	803-1				FLUORESCENT LAMP
	F040	804-1				PUNCH
	F050	805-1				STRIP GUIDE
	F060	806-1				STRIP SEALER
	F070	806-1.1a				. SEALING JAW (TBA/9)
	F070	806-1.1b				. SEALING JAW (TB/9)
	F080	806-1.2a				. COUNTER JAW (TBA/9)
	F080	806-1.2b				. COUNTER JAW (TB/9)
	F110	807-1				PULL TAB SEALING UNIT
	F120	807-1.1				. SEALING JAW PULLTAB
	F130	807-1.2				. COUNTER JAW
	F140	808-1				PULL TAB FEED
	F150	809-1				DRIVE SHAFT
	F160	810-1				BELT TENSIONER
	F170	811-1				BUSBAR (TBA/9)
	F180	815-1/2				BENDING ROLLER
		815-1.1				. BELT TENSIONER
	F200	812-1				BACK FEEDER
	F210	814-1				REEL
	F220	813-1				PAPER FEED
		813-1.1				. PRESSURE ROLLER
		813-1.2				. DRIVE ROLLER
	F250	816-1				DRIVE UNIT
	F260	817-1				PAPER MAGAZINE (TBA/9)
	F280	817-1.1				. ROLLER
	F260	817-1				PAPER MAGAZINE (TB/9)
	F280	817-1.1				. ROLLER
		817-1.2				. ROLLER
	F290	819-1				SLIDE
	F300	820-1				LEG
	F310	821-1				PULL TAB MAGAZINE
		821-2.1				. SPLICING DEVICE
	F320	822-1				COVER PLATE
	F330	823-1/2				VALVE PANEL
	F340	824-1				CONNECTION BOX
	F350	825-1				UPPER CABLE DUCT
	F360	826-1				LOWER CABLE DUCT
	F370	827-1/2				PANEL
	F380	828-1				PAPER GUIDE
	F390	829-1				WASTE BOX

From	Pos	Part No	SP	UN	Qty	Description
	F400	830-1				BRACKET FOR DATING UNIT
		830-1.1				. DATING UNIT
		830-1.1.1				. . PRESSURE PLATE
		830-1.1.2				. . CONNECTION BOX
		830-1.1.3				. . HEATING BLOCK
	F470	831-1				STRIP MAGAZINE COMPLETE
		831-1.1a				. STRIP MAGAZINE
		831-1.1b				. STRIP MAGAZINE
		831-1.2				. BOBBIN
		831-1.3				. BRACKET
		831-1.4				. SPLICING DEVICE
		831-1.5				. CONNECTION BOX
	F530	832-1				BENDING ROLLER, BACK
		832-2				BRAKE
		833-1				PAPER GUARD
	F540	834-1				HOSE INSTALLATION
	F550	835-1				BENDING ROLLER, LS-STRIP
	F600	836-1				START-UP KIT (TBA/9)
	F610	837-1				START-UP KIT (TB/9)

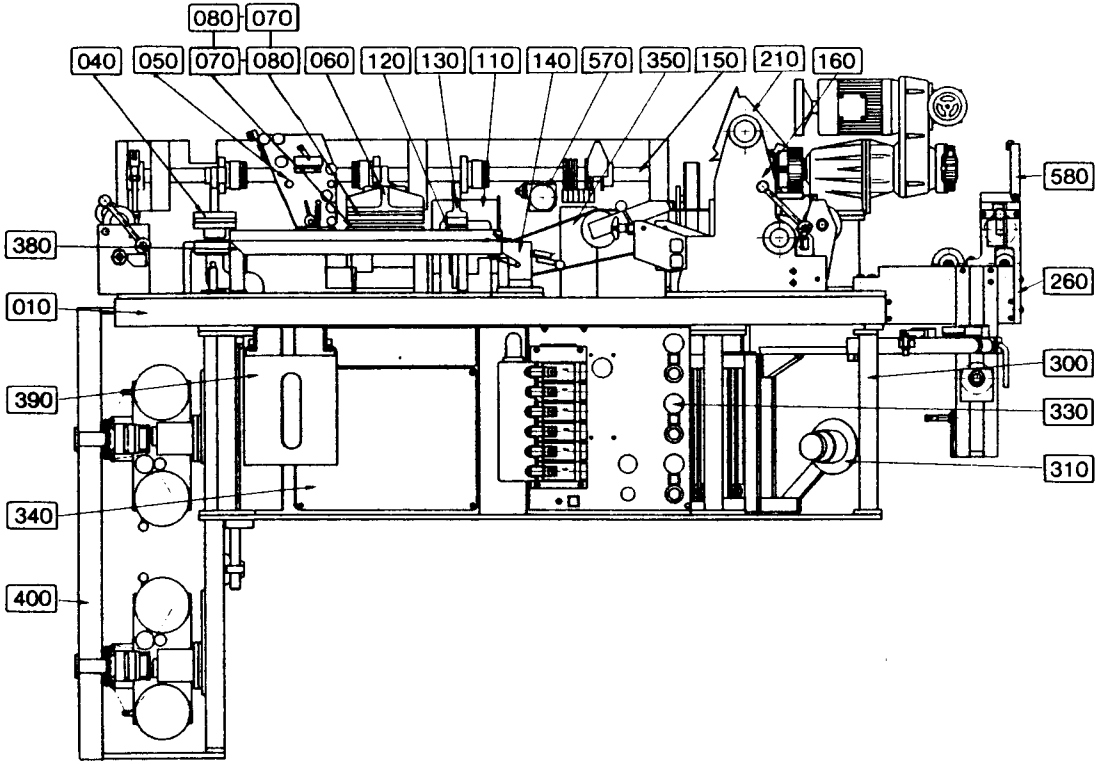
080
070
040
050
070
080
060
120
130
110
140
570
350
150
210
160
580
380
260
010
300
390
330
310
340
400

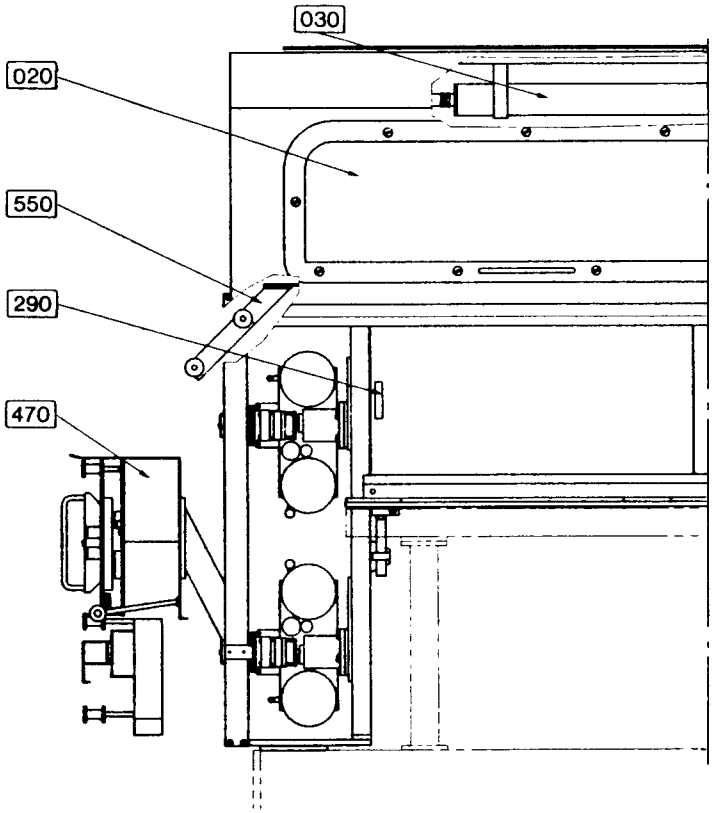
030
020
550
290
470

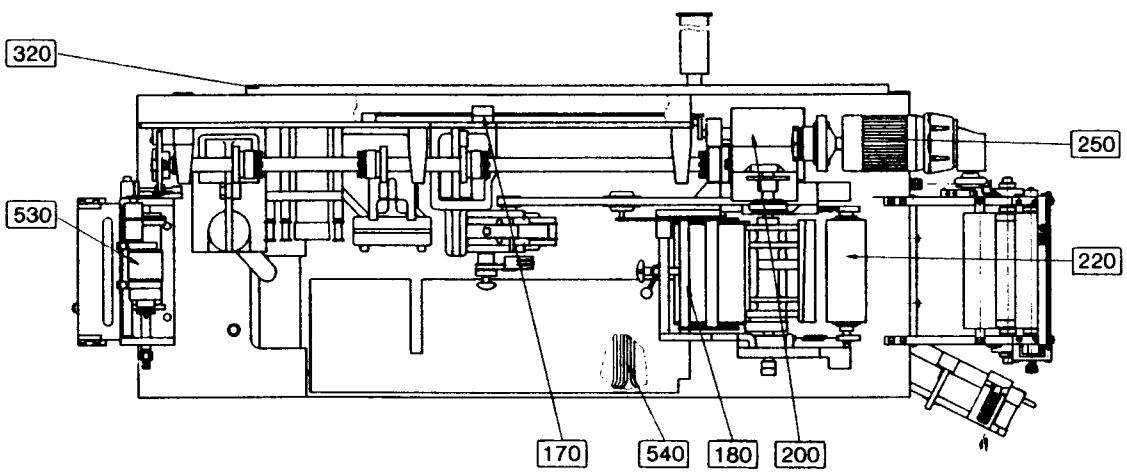
320
250
530
220
170
540
180
200

From	Pos	Part No	SP	UN	Qty	Description
	F010	801-2				MACHINE BODY
	F020	802-1				COVER
	F030	803-1				FLUORESCENT LAMP
	F040	804-2				PUNCH
	F050	805-2				STRIP GUIDE
	F060	806-2				STRIP SEALER
	F070	806-2.1a				. SEALING JAW **(TBA/9)**
	F070	806-2.1b				. SEALING JAW **(TB/9)**
	F080	806-2.2a				. COUNTER JAW **(TBA/9)**
	F080	806-2.2b				. COUNTER JAW **(TB/9)**
	F110	807-1				PULL TAB SEALING UNIT
	F120	807-1.1				. SEALING JAW PULLTAB
	F130	807-1.2				. COUNTER JAW
	F140	808-2				PULL TAB FEED
	F150	809-1				DRIVE SHAFT
	F170	811-1				BUSBAR **(TBA/9)**
	F180	815-2				BENDING ROLLER
		815-1.1				. BELT TENSIONER
	F200	812-1				BACK FEEDER
	F210	814-1				REEL
	F220	813-1				PAPER FEED
		813-1.1				. PRESSURE ROLLER
		813-1.2				. DRIVE ROLLER
	F250	816-1				DRIVE UNIT
	F260	817-2a				PAPER MAGAZINE **(TBA/9)**
		817-1.1				. ROLLER
	F260	817-2b				PAPER MAGAZINE **(TB/9)**
		817-1.1				. ROLLER
	F290	819-2				SLIDE
	F300	820-2a				LEG **(TBA/9)**
	F300	820-2b				LEG **(TB/9)**
	F310	821-2				PULL TAB MAGAZINE
		821-2.1				. SPLICING DEVICE
	F320	822-1				COVER PLATE
	F330	823-3				VALVE PANEL
	F340	824-2				CONNECTION BOX
	F350	825-1				UPPER CABLE DUCT
	F380	828-2				PAPER GUIDE
	F390	829-1				WASTE BOX
	F400	830-2				DATING UNIT
		830-2.1				. CONTROL PANEL
		830-2.2				. CONNECTION BOX

From	Pos	Part No	SP	UN	Qty	Description
	F470	831-2				STRIP MAGAZINE COMPLETE
		831-2.1				. STRIP MAGAZINE
		831-2.2a				. BOBBIN, WIDE STRIP
		831-2.2b				. BOBBIN, NARROW STRIP
		831-2.3				. BRACKET
		831-2.4				. SPLICING DEVICE
		831-2.5				. CONNECTION BOX
	F530	832-3				BRAKE
	F540	834-2				HOSE INSTALLATION
	F550	835-2				BENDING ROLLER, LS-STRIP
	F600	836-2				START-UP KIT **(TBA/9)**
	F610	837-2				START-UP KIT **(TB/9)**
	F570	838-1				TWIST GUARD
	F580	839-1				BLACK TAPE DETECTOR
	F160	840-1				LIFTER

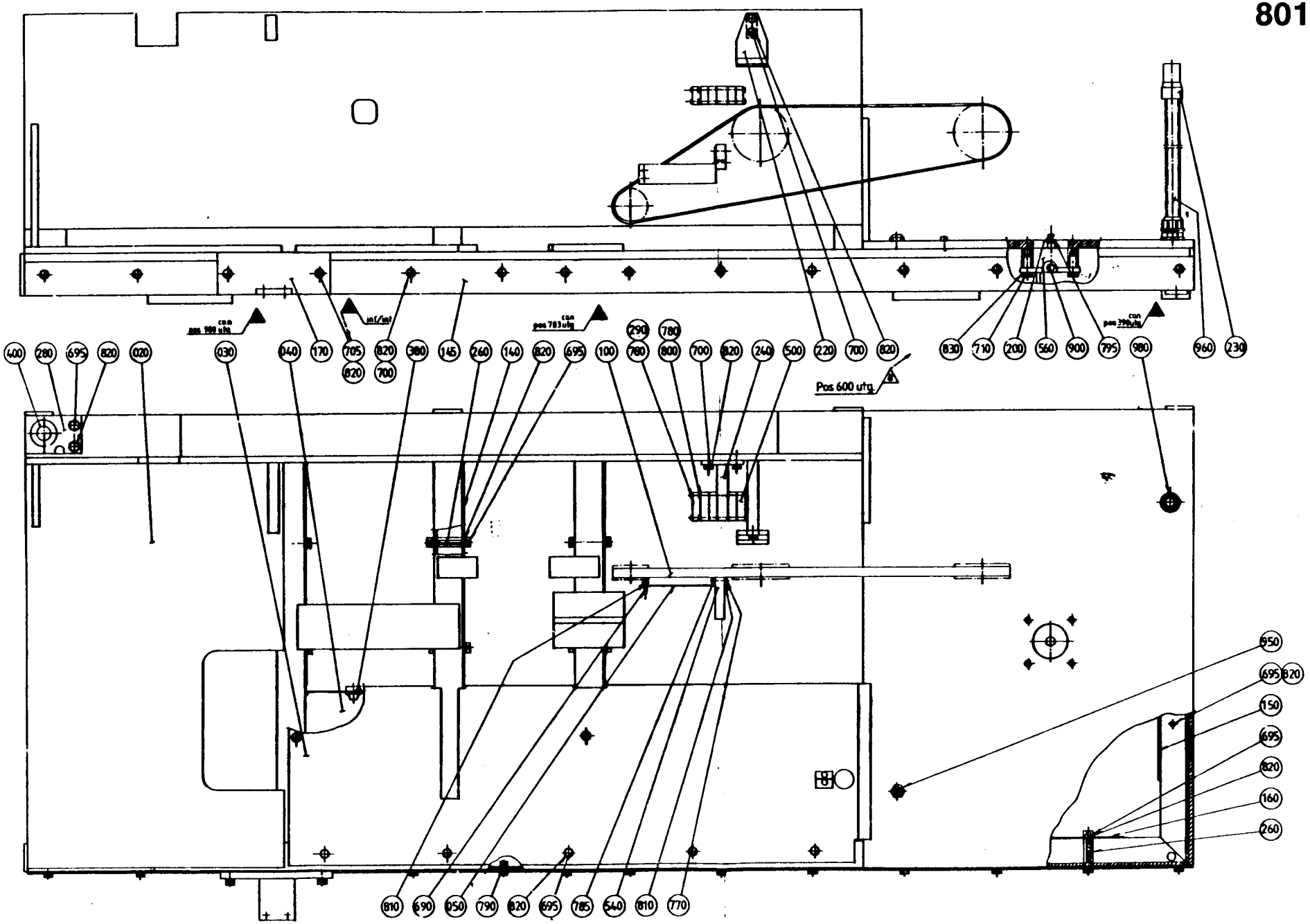
Pos 600 utg.
400
280
695
820
020
030
040
170
705
820
700
380
145
260
140
820
695
100
290
780
780
800
700
820
240
500
220
700
820
830
710
200
560
900
795
980
960
230
950
695
820
150
695
820
160
260
810
690
050
790
820
695
785
540
810
770

From	Pos	Part No	SP	UN	Qty	Description
		TBA/9				
		457867-0101				MACHINE BODY, COMPL (284 ML)
		457867-0102				MACHINE BODY, COMPL (250 ML)
		457867-0103				MACHINE BODY, COMPL (236 ML)
		457867-0104				MACHINE BODY, COMPL (200 ML)
		457867-0106				MACHINE BODY, COMPL (180 ML)
		457867-0107				MACHINE BODY, COMPL (125 ML)
		457867-0109				MACHINE BODY, COMPL (200 ML SLIM)
		TB/9				
		457867-0111				MACHINE BODY, COMPL (284 ML)
		457867-0112				MACHINE BODY, COMPL (250 ML)
		457867-0113				MACHINE BODY, COMPL (236 ML)
		457867-0114				MACHINE BODY, COMPL (200 ML)
		457867-0116				MACHINE BODY, COMPL (180 ML)
		457867-0117				MACHINE BODY, COMPL (125 ML)
		457867-0119				MACHINE BODY, COMPL (200 ML SLIM)
	020	449306	-		1	MACHINE BODY (125 ml)
	020	449307	-		1	MACHINE BODY (180 ml)
	020	449308	-		1	MACHINE BODY (200 ml)
	020	449309	-		1	MACHINE BODY (236 ml)
	020	449310	-		1	MACHINE BODY (250 ml)
	020	449311	-		1	MACHINE BODY (284 ml)
	020	449312	-		1	MACHINE BODY (200 ml SLIM)
	030	469623	-		1	LID (250,200 ml)
	030	469624	-		1	LID (236,180,125 ml)
	030	469625	-		1	LID (284,200 ml SLIM
	040	469626	-		1	BOTTOM (250, 200 ml)
	040	469627	-		1	BOTTOM (236,180,125 ml)
	040	469628	-		1	BOTTOM (284,200 ml SLIM)
	050	449337	-		1	HOLDER (284 ml)
	050	449340	-		1	HOLDER (250 ml)
	050	449341	-		1	HOLDER (236 ml)
	050	449339	-		1	HOLDER (200 ml)
	050	449343	-		1	HOLDER (180 ml)
	050	449344	-		1	HOLDER (125 ml)
	050	449329	-		1	HOLDER (200 mlSLIM

From	Pos	Part No	SP	UN	Qty	Description
	100	90417-0144	S		1	TOOTHED BELT (284,200 mlSLIM)
	100	90417-0145	S		1	TOOTHED BELT (236,180,125 ml)
	100	90417-0146	S		1	TOOTHED BELT (250,200 ml)
	140	469629	-		3	LID
	145	456660	-		1	COVER PLATE
	150	469606	-		1	LID
	160	469607	-		1	LID
	170	469314	-		1	BRACKET
	220	294748	-		1	INDICATOR
	230	456249	C		1	PROTECTIVE COVER
	240	457812	-		1	BRACKET
	260	457815	-		8	SPACER
	280	457828	-		1	HOLDER
	290	312125-0238	-		2	SLOTTED HEMCS3X40 A4 (TBA/9)
	380	90015-0020	-		10	BUSHING
	400	90015-0024	-		1	BUSHING
	500	90044-0104	PU		5	PROXIMITY SWITCH
	540	90232-0038	S		1	PHOTOCELL
	560	90239-0299	S		1	CYLINDER
	690	312105-0293	-		2	SCREW M6S4X16 A4 80
	695	312105-0366	-		31	SCREW M6S6X12RFR
	700	312105-0368	-		16	SCREW M6S6X16RFR
	705	312105-0372	-		2	SCREW M6S6X25RFR
	710	312105-0461	-		4	SCREW M6S8X50RFR
	770	312125-0295	-		2	SLOTTED HEMCS4X20RFR
	780	312125-0234	-		4	SLOTTED HEMCS3X30RFR
	785	312605-0312	-		2	NUT M6M4RFR
	790	312605-0316	-		18	NUT M6M6RFR
	795	312605-0318	-		1	NUT M6M8RFR
	800	315105-0124	-		4	WASHER BRB3,2X6RFR
	810	315105-0136	-		4	WASHER BRB4,3X8RFR
	820	315105-0153	-		65	WASHER BRB6,4X12RFR
	830	315105-0165	-		1	WASHER BRB8,4X16RFR
	900	342921-0114	-		1	PIPE CONNECTION 6/4-1/4"
	950	352101-0102	-		1	LEAD-IN G 15,2
	960	352135-0106	-	MM	325	HOSE .016
	980	352136-0127	-		1	GLAND

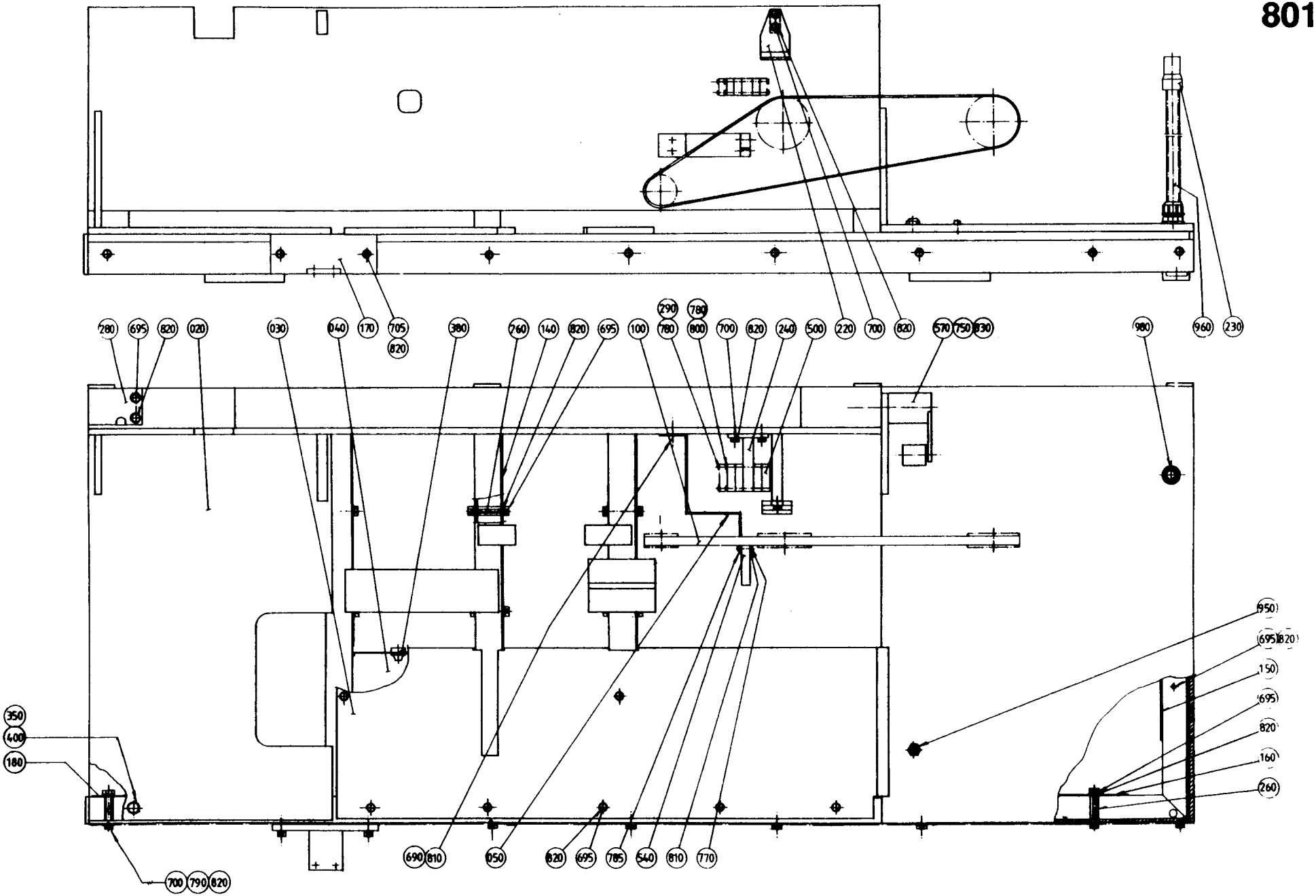
280
695
820
020
030
040
170
705
820
380
760
140
820
695
100
290
780
780
800
700
820
240
500
220
700
820
570
750
830
980
960
230
950
695
820
150
695
820
160
260
350
400
180
700
790
820
690
810
050
820
695
785
540
810
770

From	Pos	Part No	SP	UN	Qty	Description
		TBA/9				
		457867-0201				**MACHINE BODY, COMPL (284 ML)**
		457867-0202				**MACHINE BODY, COMPL (250 ML)**
		457867-0203				**MACHINE BODY, COMPL (236 ML)**
		457867-0204				**MACHINE BODY, COMPL (200 ML)**
		457867-0206				**MACHINE BODY, COMPL (180 ML)**
		457867-0207				**MACHINE BODY, COMPL (125 ML)**
		457867-0209				**MACHINE BODY, COMPL (200 ML SLIM)**
		TB/9				
		457867-0211				**MACHINE BODY, COMPL (284 ML)**
		457867-0212				**MACHINE BODY, COMPL (250 ML)**
		457867-0213				**MACHINE BODY, COMPL (236 ML)**
		457867-0214				**MACHINE BODY, COMPL (200 ML)**
		457867-0216				**MACHINE BODY, COMPL (180 ML)**
		457867-0217				**MACHINE BODY, COMPL (125 ML)**
		457867-0219				**MACHINE BODY, COMPL (200 ML SLIM)**
	020	548021	-		1	MACHINE BODY (125 ml)
	020	548022	-		1	MACHINE BODY (180 ml)
	020	548023	-		1	MACHINE BODY (200 ml)
	020	548024	-		1	MACHINE BODY (236 ml)
	020	548025	-		1	MACHINE BODY (250 ml)
	020	548026	-		1	MACHINE BODY (284 ml)
	020	548027	-		1	MACHINE BODY (200 ml SLIM)
	030	546316	-		1	LID (250,200 ml)
	030	546317	-		1	LID (236,180,125 ml)
	030	546318	-		1	LID (284,200 ml SLIM
	040	556534	-		1	BOTTOM (250,200 ml)
	040	556535	-		1	BOTTOM (236,180,125 ml)
	040	556536	-		1	BOTTOM (284,200 ml SLIM)
	050	554372	-		1	HOLDER (284 ml)
	050	554371	-		1	HOLDER (250 ml)
	050	554370	-		1	HOLDER (236,200 ml)
	050	554369	-		1	HOLDER (180 ml)
	050	554368	-		1	HOLDER (125 ml,200 ml SLIM)

From	Pos	Part No	SP	UN	Qty	Description
	100	90417-0144	S		1	TOOTHED BELT (284,200 mlSLIM)
	100	90417-0145	S		1	TOOTHED BELT (236,180,125 ml)
	100	90417-0146	S		1	TOOTHED BELT (250,200 ml)
	140	469629	-		3	LID
	150	469606	-		1	LID
	160	469607	-		1	LID
	170	554373	-		1	BRACKET
	180	554374	-		1	LID
	220	294748	-		1	INDICATOR
	230	456249	C		1	PROTECTIVE COVER
	240	457812	-		1	BRACKET
	260	457815	-		10	SPACER
	280	556569	-		1	PLATE
	290	312125-0238	-		2	SLOTTED HEMCS3X40 A4 (TBA/9)
	350	352136-0107	-		2	GLAND
	380	90015-0020	-		10	BUSHING
	400	352135-0102	-	MM	350	HOSE 155.010
	500	90044-0104	PU		5	PROXIMITY SWITCH
	540	90232-0038	S		1	PHOTOCELL
	570	90344-0035	C		1	BELT TENSIONER
	690	312105-0293	-		2	SCREW M6S4X16 A4 80
	695	312105-0366	-		33	SCREW M6S6X12RFR
	700	312105-0368	-		16	SCREW M6S6X16RFR
	705	312105-0372	-		2	SCREW M6S6X25RFR
	750	312105-0464	-		1	SCREW M6S8X65RFR
	770	312125-0295	-		2	SLOTTED HEMCS4X20RFR
	780	312125-0234	-		4	SLOTTED HEMCS3X30RFR
	785	312605-0312	-		2	NUT M6M4RFR
	790	312605-0316	-		18	NUT M6M6RFR
	800	315105-0124	-		4	WASHER BRB3,2X6RFR
	810	315105-0136	-		4	WASHER BRB4,3X8RFR
	820	315105-0153	-		67	WASHER BRB6,4X12RFR
	830	315115-0165	-		1	WASHER TBRB8,4X16RFR
	950	352101-0102	-		1	LEAD-IN G 15,2
	960	352135-0106	-	MM	325	HOSE .016
	980	352136-0127	-		1	GLAND

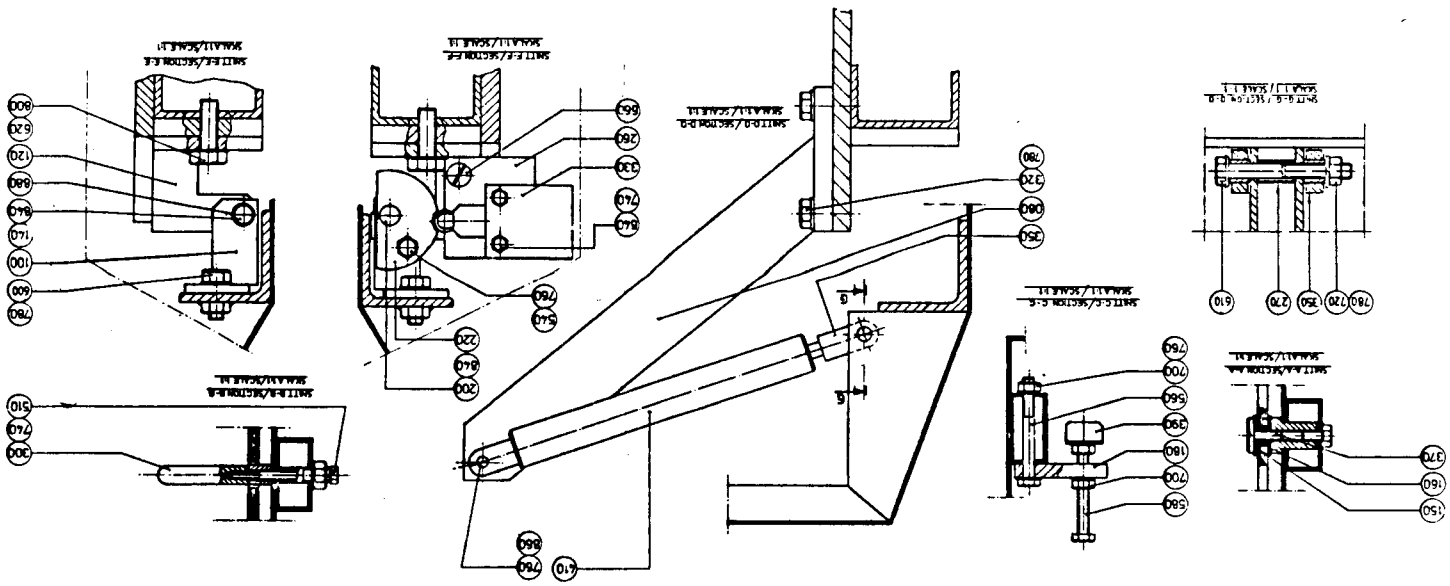

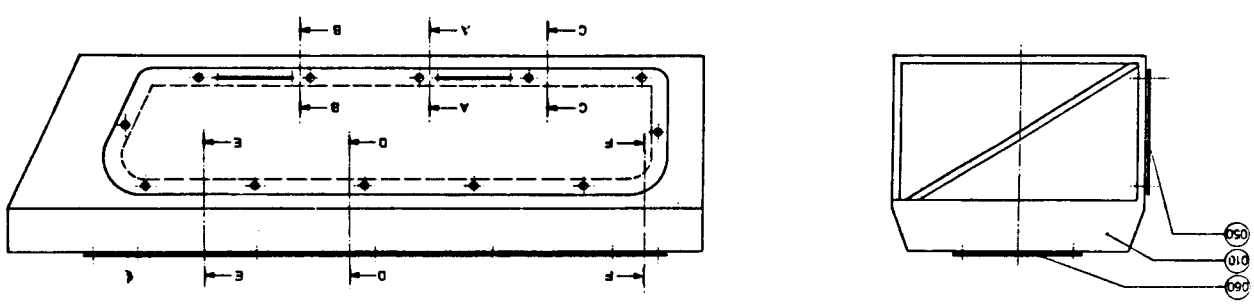

-080V

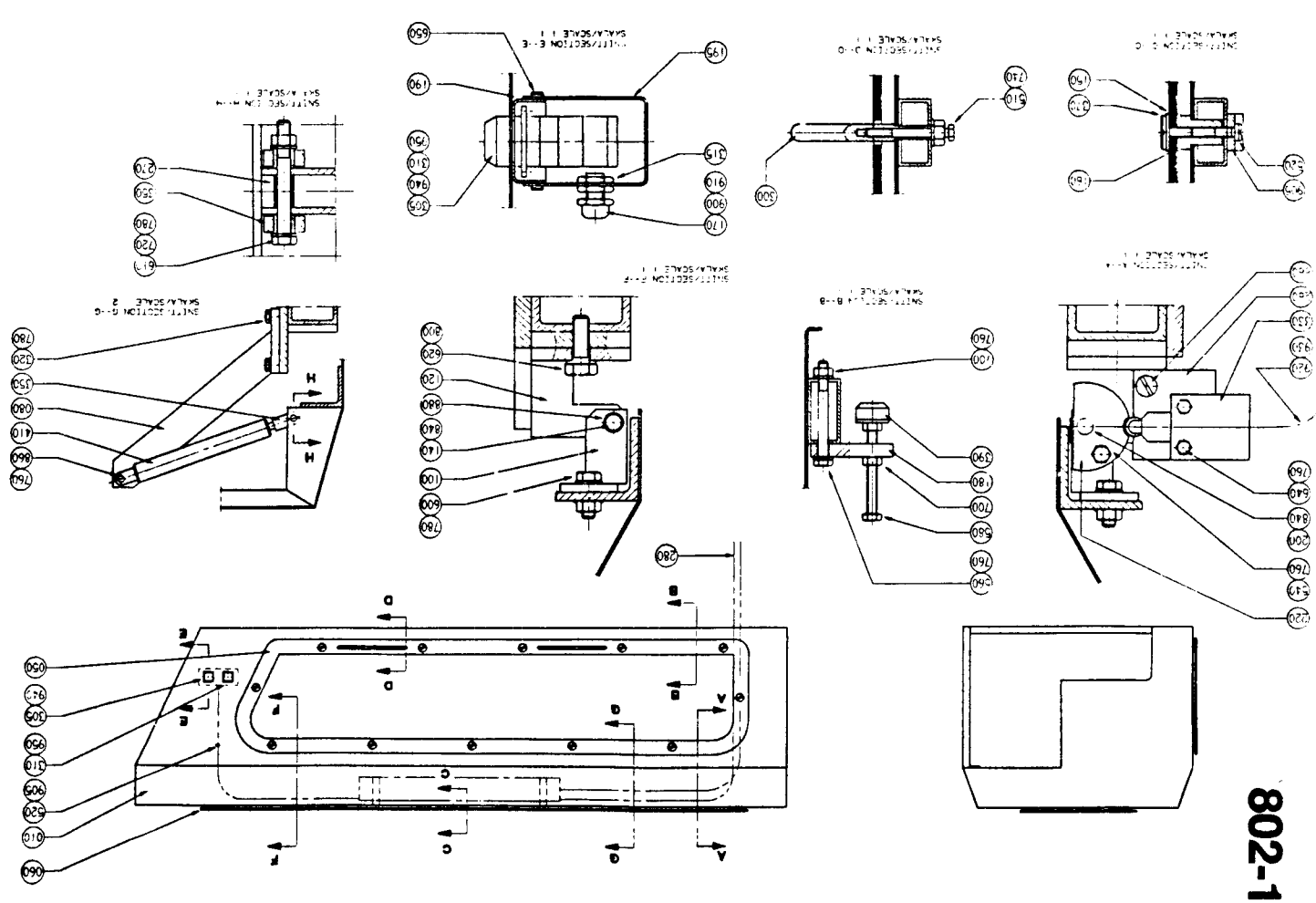

802-1

From	Pos	Part No	SP	UN	Qty	Description
-070V		457853-0201				COVER, COMPL
080V		457853-0301				COVER, COMPL
	010	531673	-		1	COVER
080V	010	546310	-		1	COVER
	050	457843	S		1	GLASS PANE
	060	457844	S		1	GLASS PANE
	080	457845	-		2	BRACKET
	100	294776	C		2	BRACKET
	120	294787	C		2	HANGER
	140	278995	C		1	SHAFT
	150	294734	C		48	WASHER
	160	294735	C		24	SPACER
080V	170	456245	-		1	PROTECTIVE COVER
	180	469205	-		2	BRACKET
080V	190	556537	-		1	BRACKET
080V	195	556538	-		1	GUARD
	200	294826	C		1	SHAFT
	220	294827	C		1	CAM
	260	457846	-		1	PLATE
	270	531652	-		2	SPACER
080V	280	90012-0063	-		1	GLAND
	300	90017-0012	C		2	HANDLE
080V	305	90064-0084	C		1	PUSH BUTTON YELLOW
080V	310	90064-0085	C		1	PUSH BUTTON RED
080V	315	90099-0002	-		1	NUT
	320	312105-0453	-		8	SCREW M6S8X25RFR
	330	90044-0094	S		1	LIMIT SWITCH
	350	90115-0020	C		4	ROD END
	370	90287-0062	C		24	SCREW
	390	90347-0011	C		2	VIBRATION DAMPER
	410	90347-0041	C		4	DAMPER
	510	312105-0341	-		4	SCREW M6S5X50 A4 80
080V	520	312125-0366	-		5	SLOTTED HEMCS6X12RFR
	540	312105-0374	-		1	SCREW M6S6X30RFR
	560	312105-0382	-		4	SCREW M6S6X60RFR
	580	312109-0381	-		2	SCREW M6S6X55HA480
	600	312105-0452	-		12	SCREW M6S8X22RFR
	610	312105-0465	-		2	SCREW M6S8X70RFR
	620	312105-0495	-		4	SCREW M6S10X30RFR
	640	312115-0331	-		2	SCREW 5X20 A4 80
080V	650	312115-0287	-		4	SCREW MC6S 4X8 A4 80
	660	312155-0374	-		2	SCREW MF6S6X30RFR

From	Pos	Part No	SP	UN	Qty	Description
	700	312605-0316	-		8	NUT M6M6RFR
	720	312605-0318	-		6	NUT M6M8RFR
	740	315105-0146	-		14	WASHER BRB5,3X10RFR
	760	315105-0153	-		13	WASHER BRB6,4X12RFR
	780	315105-0165	-		20	WASHER BRB8,4X16RFR
	800	315105-0173	-		4	WASHER BRB10,5X22RFR
	840	315755-0801	S		3	CIRCLIP E 8RFR
	860	315754-0107	S		4	CIRCLIP E 5
	880	321120-0104	-		4	BUSHING 10/12X10
080V	900	352103-0106	-		1	CABLE GLANR.18,6/5-10
080V	905	352113-0204	-		5	ARMATURE TM3-S25
080V	910	90152-0033	-	MM	3100	HOSE
080V	920	352135-0102	-	MM	850	HOSE 155.010
080V	930	352136-0107	-		1	GLAND
080V	940	359301-0051	-		1	SIGN
080V	950	359301-0110	-		1	SIGN

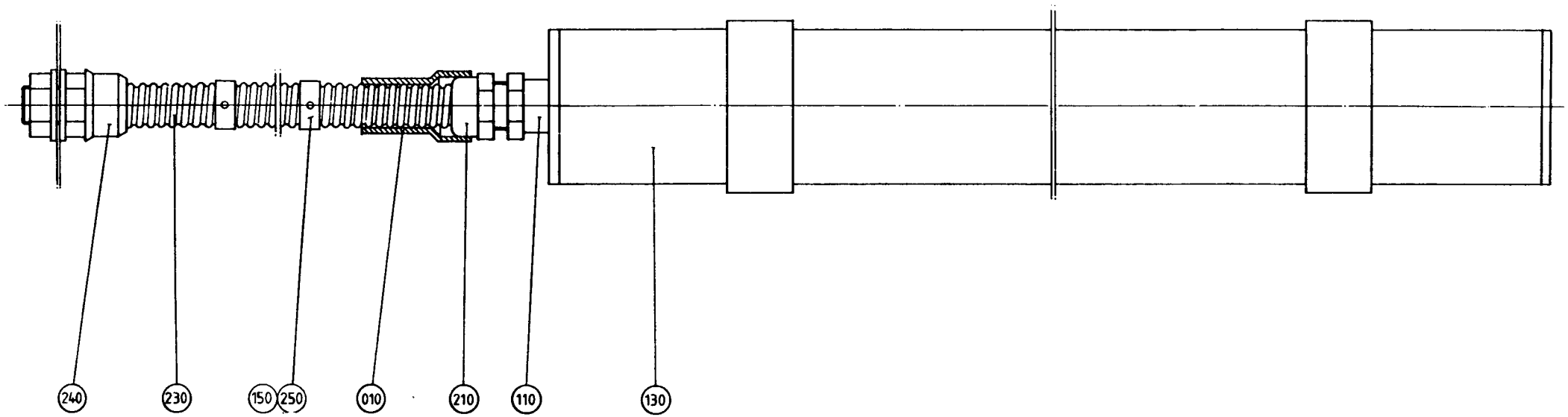

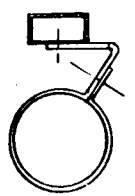

Lysröret fästes i befintliga skruvar i huven.
Fasten the lamp with existing screws to the hood.

Last Alteration: AM 14969 90-08-08

Corresponding C-lists: 469299-010V,-020V
Assembly Drawing: 469299-1,2

Date Printed: 990928

From	Pos	Part No	SP	UN	Qty	Description
-070V		**469299-0101**				**FLUORECENT LAMP, COMPL**
080V		**469299-0201**				**FLUORECENT LAMP, COMPL**
-070V	010	456249	C		1	PROTECTIVE COVER
080V	010	456245	C		1	PROTECTIVE COVER
-070V	110	90089-0007	-		1	SLEEVE
	130	90164-0003	-		1	LIGHT FIXTURE
		90297-0002	P		0	* FLUORESCENT TUBE
080V-	150	312125-0366	-		3	SLOTTED HEMCS6X12RFR
-070V	210	352103-0110	-		1	CABLE GLANR.22,5/4-13
080V	210	352103-0106	-		1	CABLE GLANR.18,6/5-10
-070V	230	352135-0106	-	M	2	HOSE .016
080V	230	352135-0102	-	MM	1750	HOSE .010
-070V	240	352136-0127	-		1	GLAND
080V	240	352136-0107	-		1	GLAND
-070V	250	352113-0204	-		2	ARMATURE TM3-S25
080V	250	352113-0204	-		3	ARMATURE TM3-S25

From	Pos	Part No	SP	UN	Qty	Description

804-1

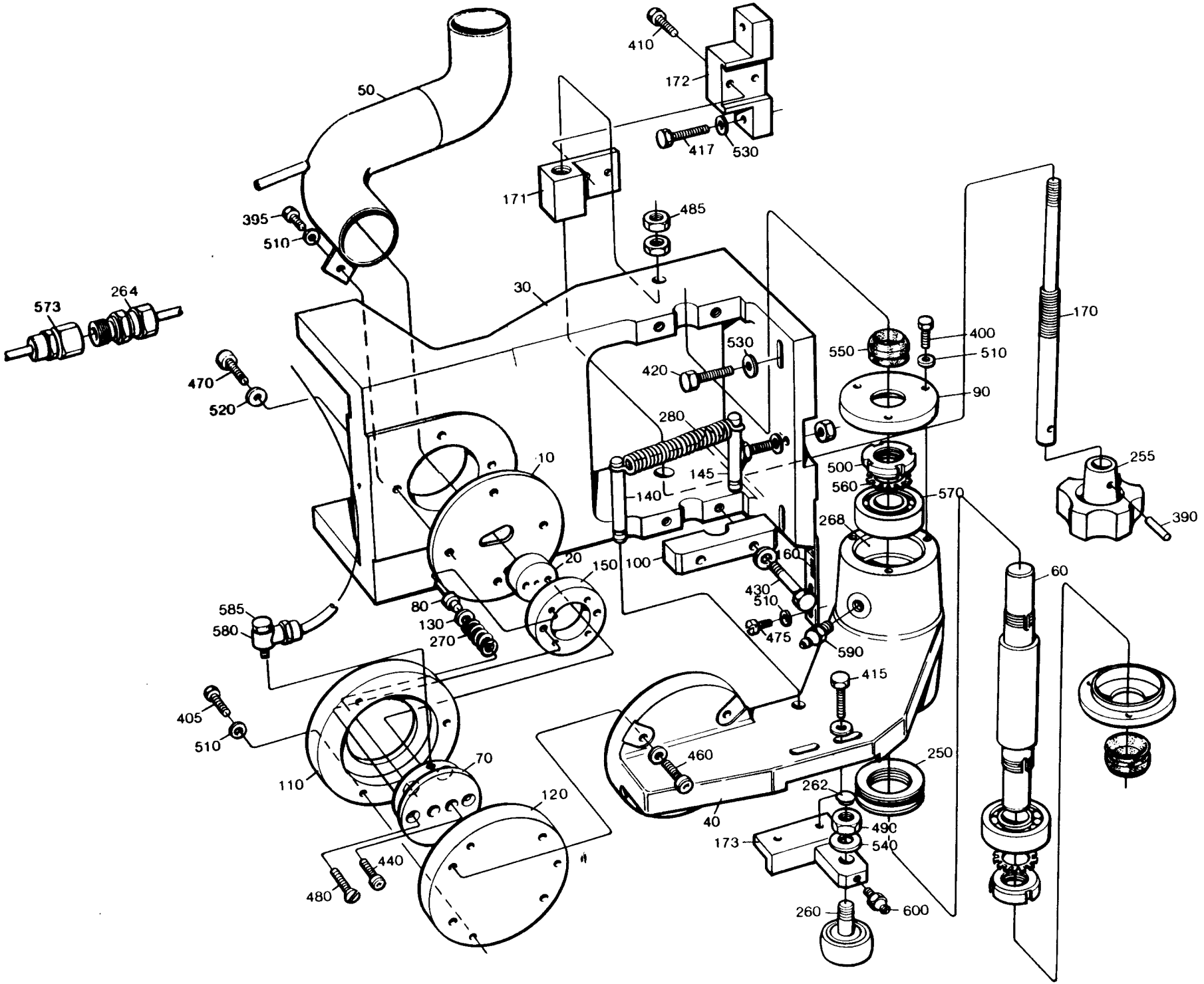

410
172
50
417
530
171
485
395
510
30
264
573
170
400
550
510
530
420
90
470
520
280
10
145
500
255
560
570
140
390
268
20
150
100
160
60
430
510
80
585
130
475
580
270
590
415
405
510
460
250
70
110
262
120
40
490
173
540
440
480
260
600

From	Pos	Part No	SP	UN	Qty	Description
TBA/9, Volume 284 - 180 ml						
	010	457827	PU		1	DIE
	020	457826	PU		1	PUNCH
	050	449398	-		1	OWERFLOW PIPE
	395	312105-0327	-		2	SCREW M6S5X12 A4 80
TBA/9, Volume 100, 125, 200 mlSLIM						
	010	457825	PU		1	DIE
	020	457824	PU		1	PUNCH
	050	449398	-		1	OWERFLOW PIPE
	395	312105-0327	-		2	SCREW M6S5X12 A4 80
TBA/8						
	010	532222	PU		1	DIE
	020	532223	PU		1	PUNCH
	050	294921	-		1	OWERFLOW PIPE
	264	90224-0307	-		1	CONNECTION
	395	312105-0327	-		1	SCREW M6S5X12 A4 80
TBA/3						
	010	457827	PU		1	DIE
	020	457826	PU		1	PUNCH
	050	294921	-		1	OWERFLOW PIPE
	264	90224-0307	-		1	CONNECTION
	395	312105-0327	-		1	SCREW M6S5X12 A4 80
Common Parts						
	030	449276	-		1	BRACKET
	040	449277	C		1	ARM
	060	255513	S		1	SHAFT
	070	267534	C		1	HOLDER
	080	234517	P		4	PIN
	090	255515	-		2	LID
	100	255516	-		2	BRACKET
	110	255519	-		1	RING
	120	255520	S		1	RING
	130	268691	P		4	WASHER
	140	268692	-		1	PIN
	145	273781	-		1	SPRING HOLDER
	150	283555	S		1	PLATE
	160	294971	-		1	INDICATION
	170	294973	-		1	SHAFT
	171	294974	-		1	BLOCK
	172	294975	-		1	BRACKET
	173	294976	-		1	ROLLER BRACKET
	250	90016-0042	S		4	DISC SPRING
	255	90051-0064	-		1	HANDLE

From	Pos	Part No	SP	UN	Qty	Description
	260	90083-0014	S		1	ROLLER
	262	90136-0003	-		1	PLUG
	268	90296-0068	-		X	GREASE
	270	90335-0005	P		4	SPRING
	280	90335-0042	P		2	SPRING
	390	311103-0238	-		1	CYLINDRICACPR3M6X20RFR
	400	312105-0329	-		6	SCREW M6S5X16 A4 80
	405	312105-0331	-		3	SCREW M6S5X20 A4 80
	410	312105-0372	-		2	SCREW M6S6X25RFR
	415	312105-0451	-		2	SCREW M6S8X20RFR
	417	312105-0453	-		2	SCREW M6S8X25RFR
	420	312105-0455	-		2	SCREW M6S8X30RFR
	430	312105-0457	-		4	SCREW M6S8X35RFR
	440	312115-0329	-		4	SCREW 5X16 A4 80
	460	312115-0370	-		4	SCREW 6X20 A4 80
	470	312115-0366	-		4	SCREW 6X12 A4 80
	475	312125-0323	-		2	SLOTTED HEMCS5X8RFR
	480	312145-0335	-		2	SLOTTED HEMFS5X30RFR
	485	312605-0318	-		2	NUT M6M8RFR
	490	312631-0322	-		1	NUT M6M12X1,5FZB
	500	312805-0104	S		2	NUT KM4
	510	315105-0146	-		14	WASHER BRB5,3X10RFR
	520	315105-0153	-		8	WASHER BRB6,4X12RFR
	530	315105-0165	-		10	WASHER BRB8,4X16RFR
	540	315105-0178	-		1	WASHER BRB13X24RFR
	550	315220-0130	S		2	SEAL RING V-16S
	560	315410-0104	S		2	LOCK WASHESKFMB4
	570	321308-0104	S		2	BALL BEARISKF6004RS
	573	342923-0113	-		1	PIPE CONNE6/4-1/8
	580	342980-0111	P		1	BANJO CONNSINGEL 6/4-5M
	585	342980-0301	P		1	BANJO CONN SINGEL 5M
		315233-0101	P		0	* SEAL RINM5
	590	344502-0026	P		1	NIPPLE L AHKR1/8"
	600	344502-0061	P		1	NIPPLE L M6AL

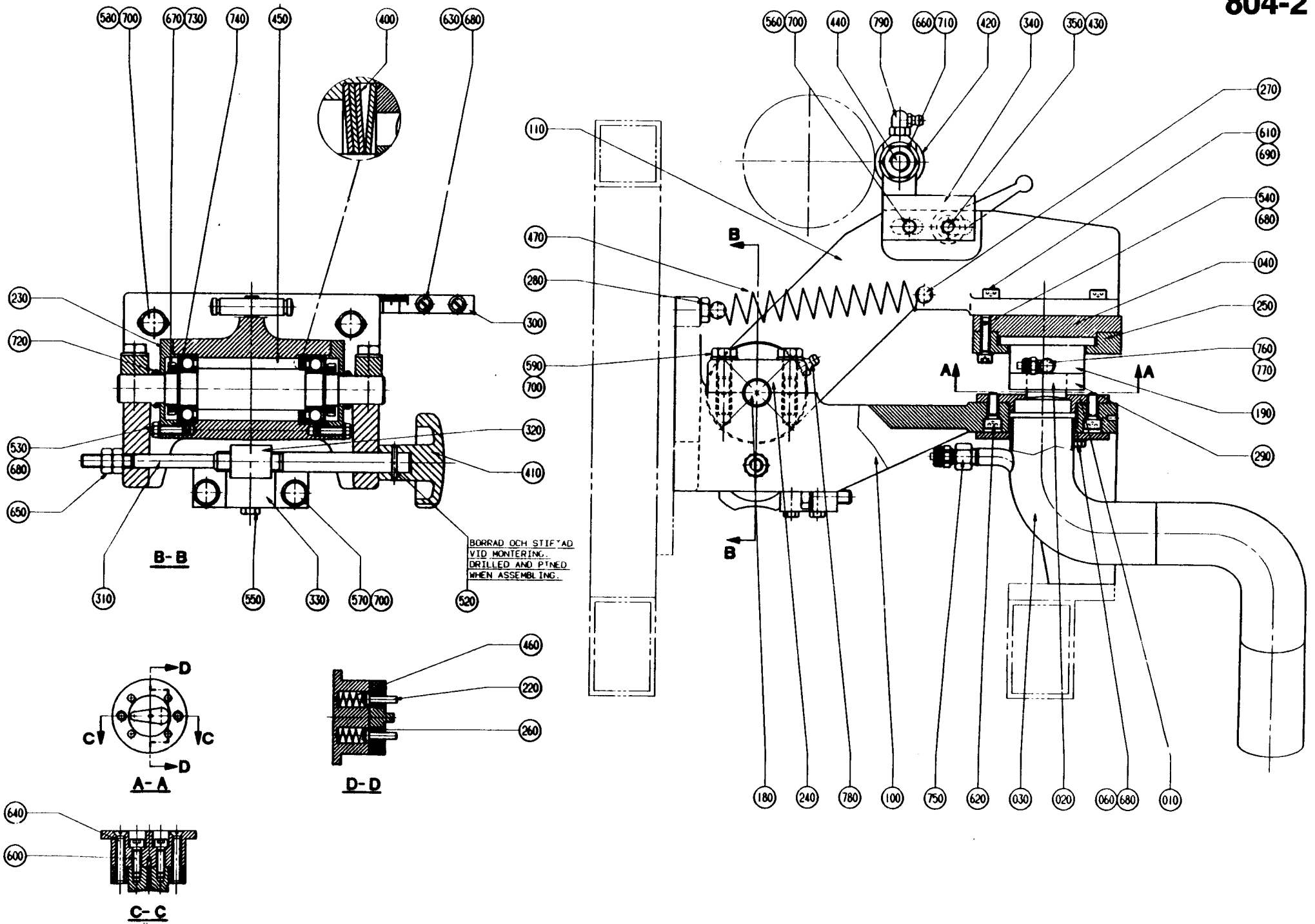
580 700
670 730
740
450
400
630 680
560 700
440
790
660 710
420
340
350 430
270
610
690
540
680
040
250
760
770
190
290
110
470
280
300
590
700
320
410
230
720
530
680
650
310
550
330
570 700
520
BORRAD OCH STIFTAD VID MONTERING.
DRILLED AND PINED WHEN ASSEMBLING.
B-B
B
B
A
A
180
240
780
100
750
620
030
020
060 680
010
D
C
C
D
A-A
460
220
260
D-D
640
600
C-C

From	Pos	Part No	SP	UN	Qty	Description
Volume 284 - 180 ml, HOLE 21						
		548040-0101				**PUNCH, COMPL**
	010	533812	PU		1	DIE
	020	533811	PU		1	PUNCH
	040	255520	S		1	FITTING RING
Volume 125, 200 ml SLIM, HOLE 11						
		548040-0102				**PUNCH, COMPL**
	010	536488	PU		1	DIE
	020	536489	PU		1	PUNCH
	040	536487	S		1	FITTING RING
Volume 284 - 180 ml, HOLE 20						
		548040-0103				**PUNCH, COMPL**
	010	457827	PU		1	DIE
	020	457826	PU		1	PUNCH
	040	255520	S		1	FITTING RING
Volume 125, 200 ml SLIM, HOLE 10						
		548040-0104				**PUNCH, COMPL**
	010	457825	PU		1	DIE
	020	457824	PU		1	PUNCH
	040	255520	S		1	FITTING RING
Common Parts						
	030	449398	-		1	OWERFLOW PIPE
	060	312105-0327	-		2	SCREW M6S5X12 A4 80
	100	G- 449276	-		1	BRACKET
	110	G- 449277	C		1	ARM
	180	255513	S		1	SHAFT
	190	267534	C		1	HOLDER
	220	234517	P		4	PIN
	230	255515	-		2	LID
	240	255516	-		2	BRACKET
	250	255519	-		1	RING
	260	268691	P		4	WASHER
	270	268692	-		1	PIN
	280	273781	-		1	SPRING HOLDER
	290	283555	S		1	PLATE
	300	294971	-		1	INDICATION
	310	294973	-		1	SHAFT
	320	294974	-		1	BLOCK
	330	294975	-		1	BRACKET
	340	543092	-		1	ROLLER BRACKET
	350	544464	-		1	WASHER
	400	90016-0042	S		4	DISC SPRING
	410	90051-0064	-		1	HANDLE

From	Pos	Part No	SP	UN	Qty	Description
	420	90083-0014	S		1	ROLLER
	430	90117-0008	-		1	HANDLE
	440	90136-0003	-		1	PLUG
	450	90296-0068	-		X	GREASE
	460	90335-0005	P		4	SPRING
	470	90335-0127	P		2	SPRING
	520	311103-0238	-		1	CYLINDRICACPR3M6X20RFR
	530	312105-0329	-		6	SCREW M6S5X16 A4 80
	540	312105-0331	-		3	SCREW M6S5X20 A4 80
	550	312105-0372	-		2	SCREW M6S6X25RFR
	570	312105-0453	-		2	SCREW M6S8X25RFR
	580	312105-0455	-		2	SCREW M6S8X30RFR
	590	312105-0457	-		4	SCREW M6S8X35RFR
	600	312115-0329	-		4	SCREW MC6S 5X16 A4 80
	610	312115-0370	-		4	SCREW MC6S 6X20 A4 80
	620	312115-0367	-		4	SCREW MC6S 6X14 A4 80
	630	312125-0323	-		2	SLOTTED HEMCS5X8RFR
	640	312145-0335	-		2	SLOTTED HEMFS5X30RFR
	650	312605-0318	-		2	NUT M6M8RFR
	660	312631-0322	-		1	NUT M6M12X1,5FZB
	670	312805-0104	S		2	NUT KM4
	680	315105-0146	-		14	WASHER BRB5,3X10RFR
	690	315105-0153	-		6	WASHER BRB6,4X12RFR
	700	315115-0165	-		7	WASHER TBRB8,4X16RFR
	710	315105-0178	-		2	WASHER BRB13X24RFR
	720	315220-0130	S		2	SEAL RING V-16S
	730	315410-0104	S		2	LOCK WASHESKFMB4
	740	321308-0104	S		2	BALL BEARISKF6004RS
	750	342923-0113	-		1	PIPE CONNE6/4-1/8
	760	342980-0111	P		1	BANJO CONNSINGEL 6/4-5M
	770	342980-0301	P		1	BANJO CONN SINGEL 5M
		315233-0101	P		0	* SEAL RINM5
	780	344502-0026	P		1	NIPPLE L AHKR1/8"
	790	344502-0061	P		1	NIPPLE L M6AL.

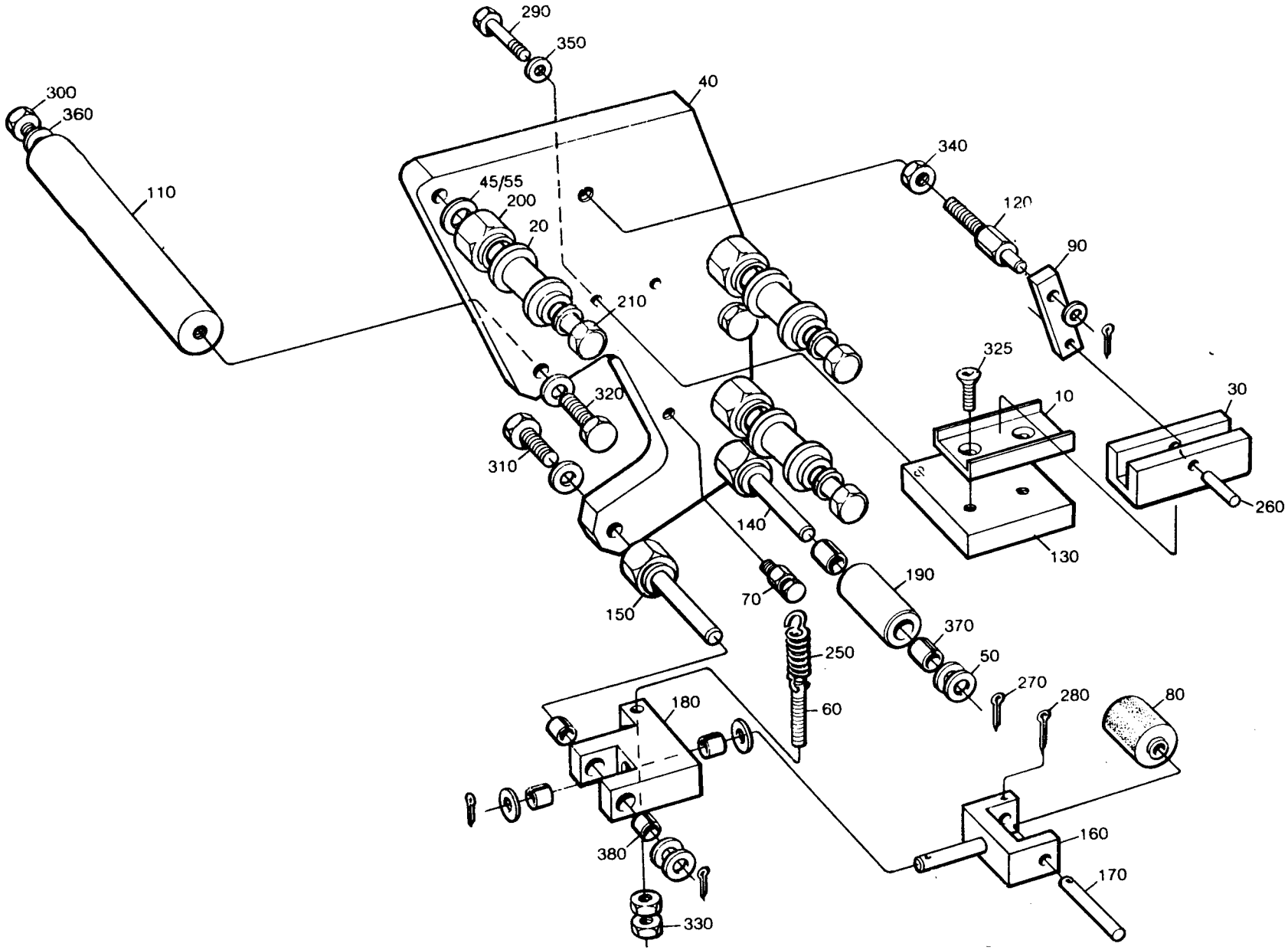
290
350
300
360
40
340
110
45/55
200
20
120
90
210
325
10
30
320
310
140
260
130
190
150
70
370
250
50
270
280
80
60
180
160
380
170
330

From	Pos	Part No	SP	UN	Qty	Description
Volume 284 - 180 ml						
	010	259783-0004	C		1	COUNTER JAW
	020	449230	S		4	ROLLER
	030	449231-0002	-		1	PRESSURE JAW
Volume 125, 200 mlSLIM						
	010	259783-0003	C		1	COUNTER JAW
	020	499192	S		4	ROLLER
	030	449231-0001	-		1	PRESSURE JAW
Common Parts						
	040	449380	-		1	PLATE
	045	1883-0004	-		4	WASHER
	050	1883-0005	-		9	WASHER
	055	1883-0008	-		9	WASHER
	060	19997	-		1	ADJUSTING SCREW
	070	269582-0001	-		1	SPRING HOLDER
	080	276384	S		1	PRESSURE ROLLER
	090	449226	-		1	ARM
	110	449381-0001	-		2	SPACER
	120	449382	-		1	PIN
	130	449383	-		1	BLOCK
	140	449384-0001	C		1	SHAFT
	150	449384-0002	C		1	SHAFT
	160	449385	C		1	FORK
	170	449386	C		1	PIN
	180	449387	-		1	BRACKET
	190	456689	S		1	ROLLER
	200	499190	-		4	NUT
	210	499191	-		4	FITTING BOLT
	250	90335-0014	P		1	SPRING
	260	311103-0314	-		1	CYLINDRICACPR5M6X30RFR
	270	311411-0152	-		4	SPLIT PIN SP2X16RFR
	280	311411-0154	-		1	SPLIT PIN SP2X20RFR
	290	312105-0376	-		2	SCREW M6S6X35RFR
	300	312105-0455	-		2	SCREW M6S8X30RFR
	310	312105-0457	-		2	SCREW M6S8X35RFR
	320	312105-0459	-		2	SCREW M6S8X40RFR
	325	312155-0366	-		2	SCREW MF6S6X12RFR
	330	312605-0316	-		2	NUT M6M6RFR
	340	312605-0318	-		1	NUT M6M8RFR
	350	315105-0153	-		3	WASHER BRB6,4X12RFR
	360	315105-0165	-		12	WASHER BRB8,4X16RFR
	370	321120-0100	S		2	BUSHING 8/10X12
	380	321120-0107	S		4	BUSHING 8/10X10

From	Pos	Part No	SP	UN	Qty	Description

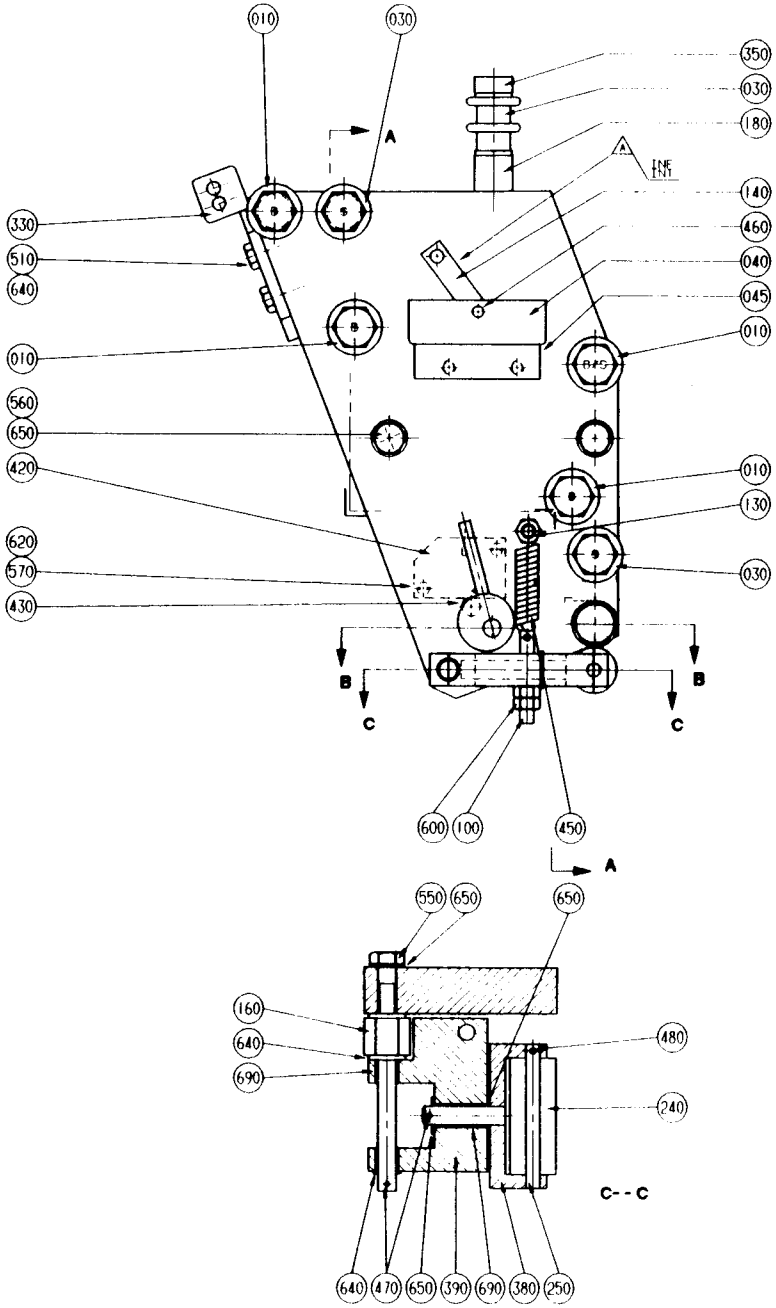
010
030
350
030
180
A
140
460
040
045
010
330
510
640
010
560
650
420
010
130
030
620
570
430
B
C
B
C
600
100
450
A

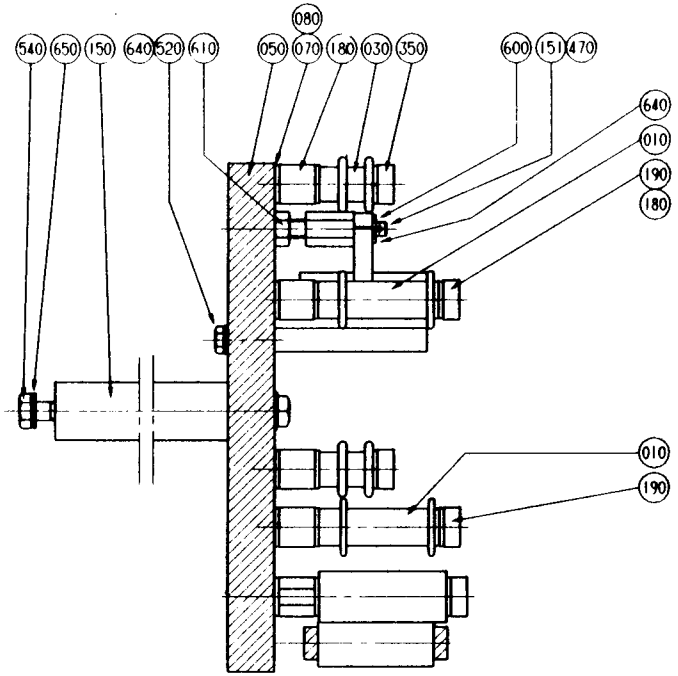
080
540
650
150
640
520
610
050
070
180
030
350
600
151
470
640
010
190
180
010
190

A--A

550
650
650
160
640
690
480
240
640
470
650
390
690
380
250

C--C

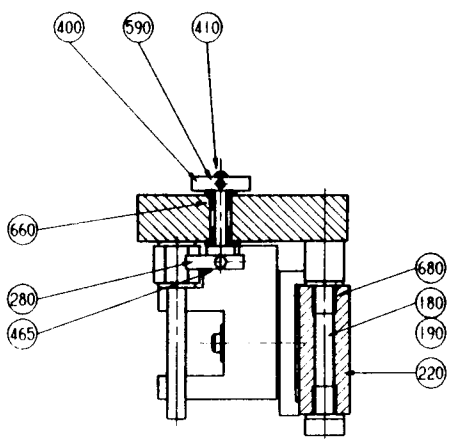
400
590
410
660
280
465
680
180
190
220

B--B

From	Pos	Part No	SP	UN	Qty	Description
Volume 284 - 180 ml, HOLE 21						
	010	537876	S		4	ROLLER
	030	547912	S		3	ROLLER
Volume 125, 200 ml SLIM, HOLE 11						
	010	536497	S		4	ROLLER
	030	543094	S		3	ROLLER
Volume 284 - 180 ml, HOLE 20						
	010	449230	S		4	ROLLER
	030	547912	S		3	ROLLER
Volume 125, 200 ml SLIM, HOLE 10						
	010	499192	S		4	ROLLER
	030	543094	S		3	ROLLER
Common Parts						
	040	543194	-		1	PRESSURE JAW
	045	563735	-		1	COUNTER JAW
	050	549001	-		1	PLATE
	070	1883-0005	-		9	WASHER
	080	1883-0008	-		9	WASHER
	100	19997	-		1	ADJUSTING SCREW
	130	269582-0001	-		1	SPRING HOLDER
	140	449226	-		1	ARM
	150	449381-0001	-		2	SPACER
	151	449382	-		1	PIN
	160	449384-0002	C		1	SHAFT
	180	499190	C		8	NUT
	190	499191	C		5	FITTING BOLT
	220	542044	S		1	ROLLER
	240	542084	S		1	PRESSURE ROLLER
	250	542085	-		1	PIN
	280	543088	-		1	HANDLE
	330	543711	-		1	FORK
	350	547911	-		3	FITTING BOLT
	380	548411	-		1	FORK
	390	549000	-		1	BRACKET
	400	554339	-		1	CAM
	410	554342	-		1	AXLE PIN
	420	90044-0104	S		1	PROXIMITY SWITCH
	430	90287-0112	S		1	SPRINGLOADED SCREW
	450	90335-0014	P		1	SPRING
	460	311103-0314	-		1	CYLINDRICACPR5M6X30RFR
	465	311112-0207	-		1	HOLLOW PINFRP 3X14 RFR
	470	311411-0152	-		3	SPLIT PIN SP2X16RFR
	480	311411-0154	-		1	SPLIT PIN SP2X20RFR

From	Pos	Part No	SP	UN	Qty	Description
	510	312105-0370	-		2	SCREW M6S6X20RFR
	520	312105-0376	-		2	SCREW M6S6X35RFR
	540	312105-0455	-		2	SCREW M6S8X30RFR
	550	312105-0457	-		1	SCREW M6S8X35RFR
	560	312105-0459	-		2	SCREW M6S8X40RFR
	570	312125-0230	-		2	SLOTTED HEMCS3X20RFR
	590	312318-0220	-		1	GRUB SCREW SK6SS3X6RFR
	600	312605-0316	-		2	NUT M6M6RFR
	610	312605-0318	-		1	NUT M6M8RFR
	620	315105-0124	-		2	WASHER BRB3,2X6RFR
	640	315105-0153	-		6	WASHER BRB6,4X12RFR
	650	315105-0165	-		6	WASHER BRB8,4X16RFR
	660	321111-0049	S		2	BUSHING 5E7X8
	680	321120-0100	S		2	BUSHING 8/10X12
	690	321120-0107	S		4	BUSHING 8/10X10

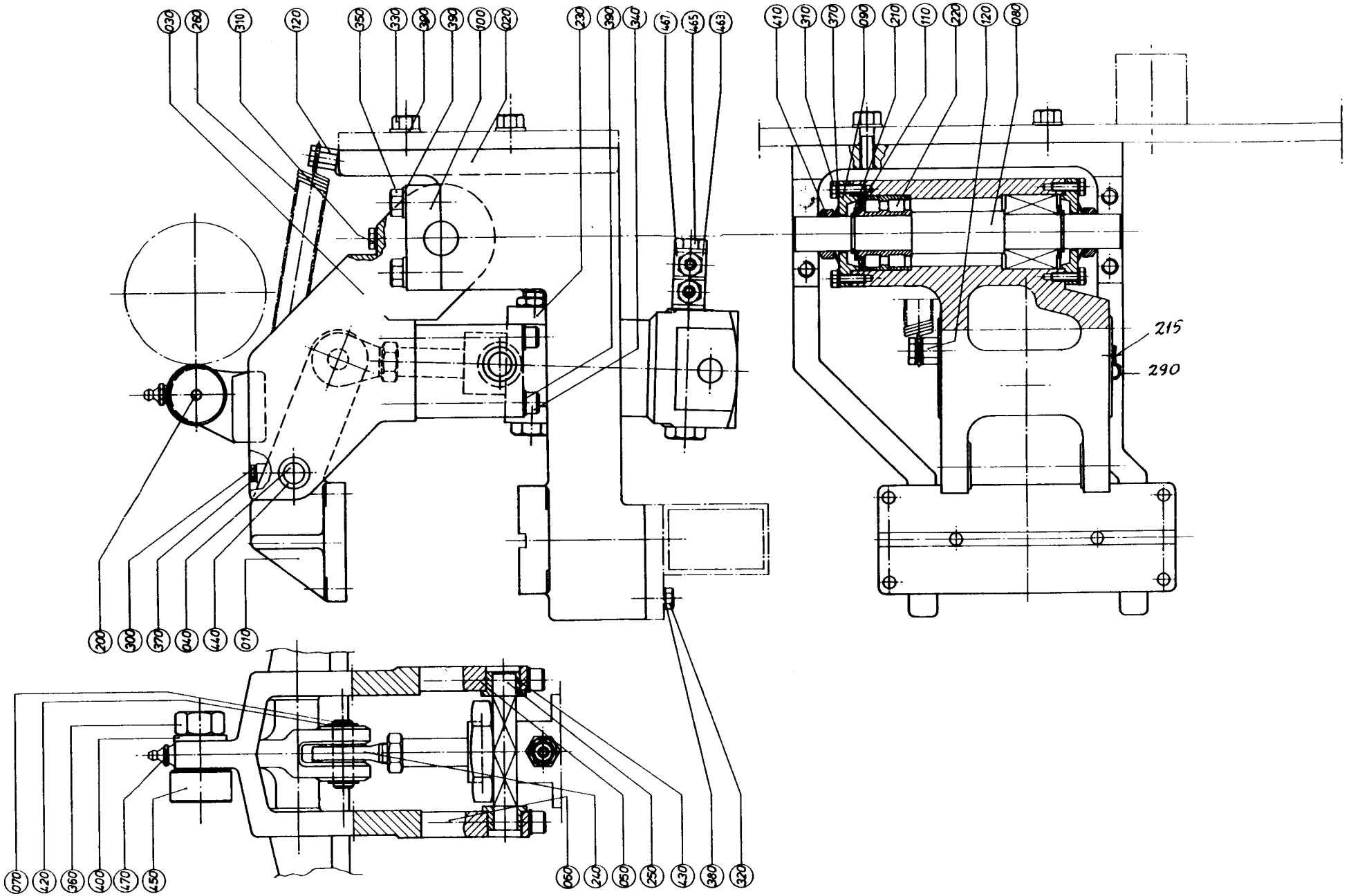
030
260
310
120
350
330
390
390
100
020
230
390
340
461
465
463
410
310
370
090
210
110
220
120
080
215
290
200
300
370
040
440
010
070
420
360
400
470
450
060
240
050
250
430
380
320

From	Pos	Part No	SP	UN	Qty	Description
	010	283535	C		1	BRACKET
	020	283658	-		1	BRACKET
	030	283659	C		1	ARM
	040	255593	S		1	SHAFT
	050	266358	C		1	BRACKET
	060	266359	C		1	BRACKET
	070	266507	S		1	SHAFT
	080	268583	S		1	SHAFT
	090	268585	-		2	LID
	100	268587	-		2	BRACKET
	110	268588	P		2	WASHER
	120	283676-0001	-		2	SPRING HOLDER
	200	90136-0003	P		1	PLUG
	210	315750-0116	P		2	LOCK RING SGA20
	215	90165-0057	-		1	CLIP
	220	90214-0068	S		2	BEARING
	230	90239-0188	S		1	CYLINDER
	240	90239-0321	-		1	BRACKET
	250	90239-0384	-		1	BRACKET
	255	90296-0068	-		X	GREASE
	260	90335-0044	S		1	SPRING
	290	312105-0287	-		1	SCREW M6S4X8 A4 80
	300	312105-0329	-		6	SCREW M6S5X16 A4 80
	305	312105-0333	-		1	SCREW M6S5X25 A4 80
	310	312105-0362	-		2	SCREW M6S6X8RFR
	320	312105-0370	-		2	SCREW M6S6X20RFR
	330	312105-0453	-		4	SCREW M6S8X25RFR
	340	312111-0466	-		4	SCREW MC6S8X75FZB
	350	312115-0457	-		4	SCREW A4 80
	360	312631-0324	-		1	NUT M6M16X1,5FZB
	370	315105-0146	-		7	WASHER BRB5,3X10RFR
	380	315105-0153	-		2	WASHER BRB6,4X12RFR
	390	315105-0165	-		12	WASHER BRB8,4X16RFR
	400	315105-0186	-		1	WASHER BRB17X30RFR
	410	315220-0143	S		2	SEAL RING V-20S
	420	315754-0110	P		2	CIRCLIP E 9
	430	321111-0185	S		2	BUSHING 14E7X14
	440	321116-0159	S		2	BUSHING 12E7/18X12
	450	321582-0212	P		1	CAM ROLLERNUKR35
	463	342980-0115	-		4	BANJO CONNSINGEL 6/4-3/8
	465	342980-0315	-		2	BANJO CONN DUBBEL 3/8
	467	342980-0305	-		2	BANJO CONN SINGEL 3/8
	470	344502-0021	P		1	NIPPLE L AHM6

From	Pos	Part No	SP	UN	Qty	Description

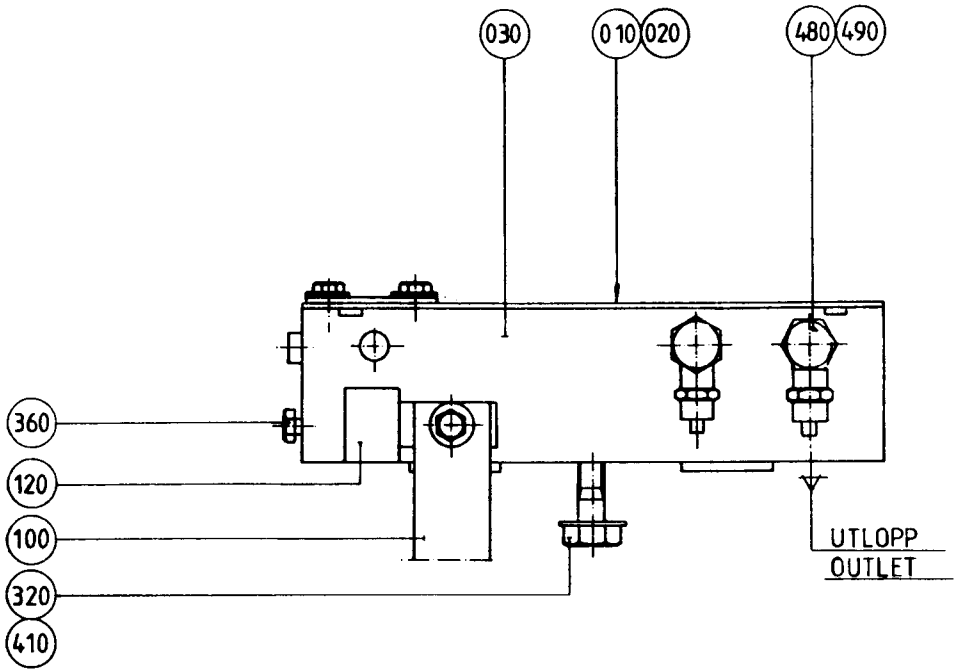

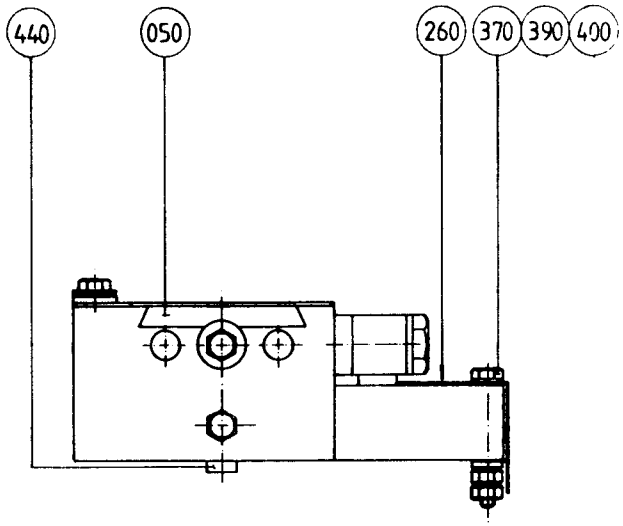

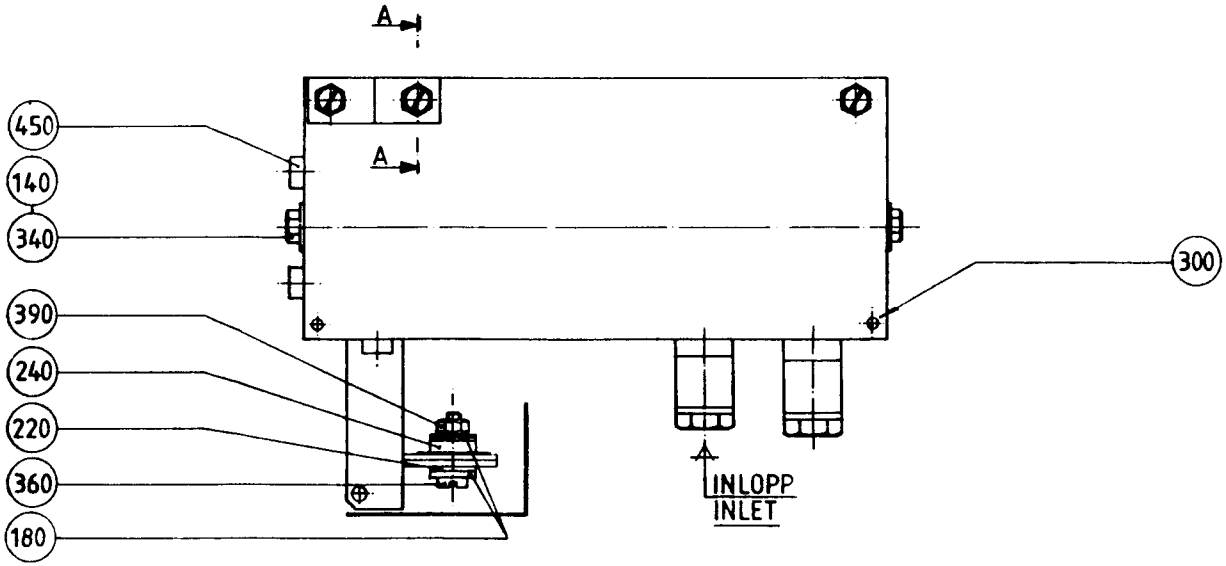

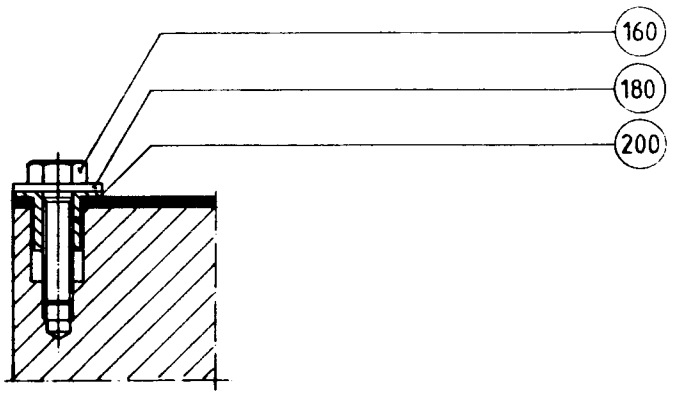

SNITT A-A SECTION A-A
SKALA 2:1 SCALE 2:1

From	Pos	Part No	SP	UN	Qty	Description
Volume 250 ml						
		457866-0102				**SEALING JAW, ASS'Y**
	010	469683	PU		1	INDUCTOR
		457841-0002	P		1	* FABRIC
	030	457850	S		1	INDUCTOR BRACKET
	050	469301-0002	PU		1	DOLLY
Volume 236 ml						
		457866-0103				**SEALING JAW, ASS'Y**
	030	457850	S		1	INDUCTOR BRACKET
	050	469301-0002	PU		1	DOLLY
Volume 200 ml						
		457866-0104				**SEALING JAW, ASS'Y**
	010	535528	PU		1	INDUCTOR
		457841-0001	P		1	* FABRIC
	030	449399	S		1	INDUCTOR BRACKET
	050	469301-0001	PU		1	DOLLY
Volume 180 ml						
		457866-0106				**SEALING JAW, ASS'Y**
	010	535532	PU		1	INDUCTOR
		457841-0001	P		1	* FABRIC
	030	449399	S		1	INDUCTOR BRACKET
	050	469301-0001	PU		1	DOLLY
Volume 125 ml						
		457866-0107				**SEALING JAW, ASS'Y**
	010	456665	PU		1	INDUCTOR
		457841-0001	PU		1	* FABRIC
	030	449399	S		1	INDUCTOR BRACKET
	050	469301-0001	S		1	DOLLY
Volume 200 mlSLIM						
		457866-0109				**SEALING JAW, ASS'Y**
	010	456663	PU		1	INDUCTOR
		457841-0002	PU		1	* FABRIC
	030	457850	S		1	INDUCTOR BRACKET
	050	469301-0002	S		1	DOLLY
Common Parts						
	100	490529	S		1	CABLE
	120	457855	S		1	BUSBAR
	140	2033-0005	P		2	WASHER
	160	28508	P		3	SCREW
	180	28509	P		5	WASHER
	200	28510	P		3	INSULATION NUT
	220	32544	P		1	INSULATION NUT
	240	32644	P		1	WASHER

From	Pos	Part No	SP	UN	Qty	Description
	260	457820	-		1	GUARD
	300	311103-0234	-		2	CYLINDRICACPR3M6X12RFR
	320	312105-0374	-		1	SCREW M6S6X30RFR
	340	312125-0287	-		2	SLOTTED HEMCS4X8RFR
	360	312125-0295	-		2	SLOTTED HEMCS4X20RFR
	370	312125-0299	-		1	SLOTTED HEMCS4X30RFR
	390	312605-0312	-		3	NUT M6M4RFR
	400	315105-0136	-		2	WASHER BRB4,3X8RFR
	410	315105-0153	-		1	WASHER BRB6,4X12RFR
	440	315701-0265	-		2	FLAT WEDGE8X7X25
	450	342713-0208	S		3	BLANK-OFF
	480	342980-0113	-		2	BANJO CONNSINGEL 6/4-1/8
	490	342980-0303	-		2	BANJO CONN SINGEL 1/8"

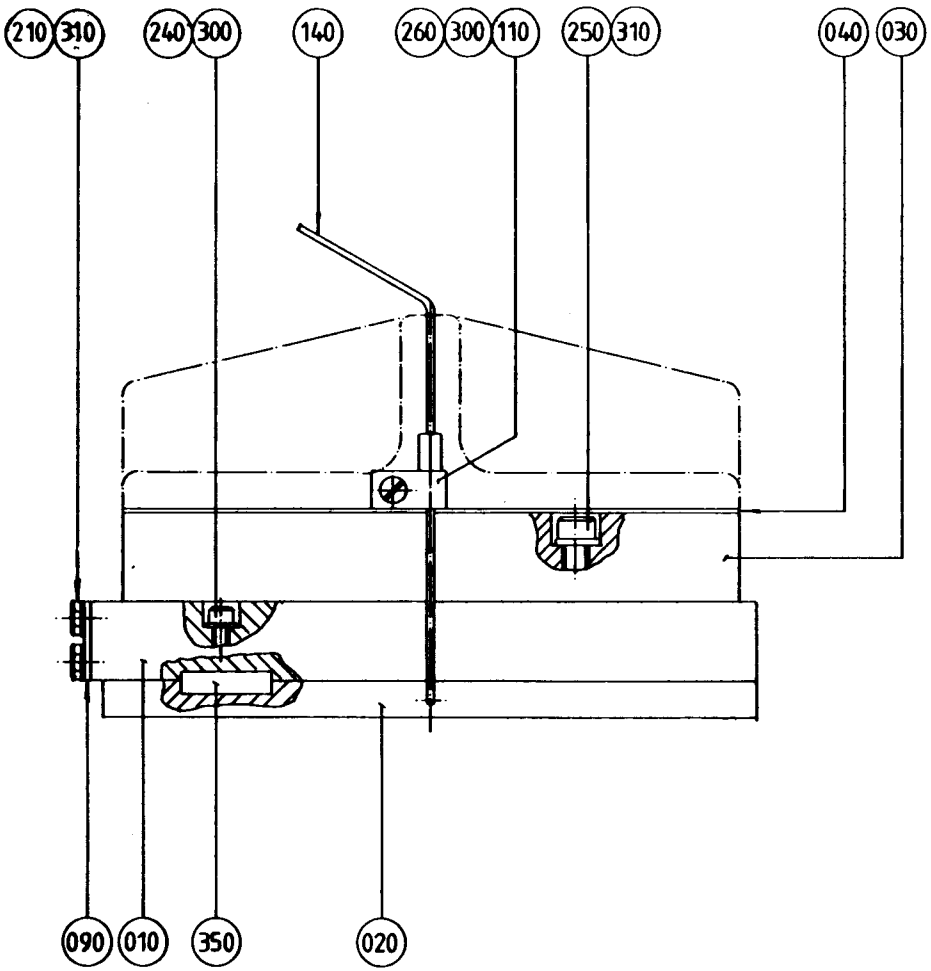
210
310
240
300
140
260
300
110
250
310
040
030
090
010
350
020

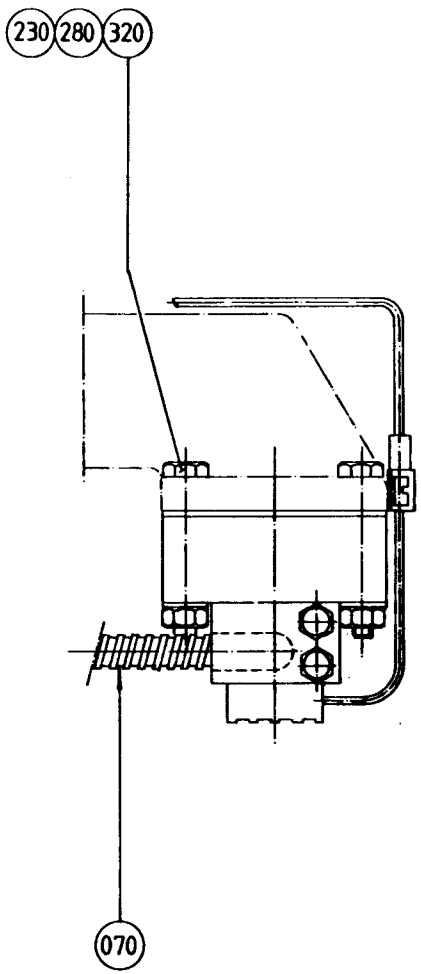
230
280
320
070

From	Pos	Part No	SP	UN	Qty	Description
Volume 250, 236, 200, 180, 125 ml						
		531657-0102				**SEALING JAW, ASS'Y (250 ml)**
		531657-0103				**SEALING JAW, ASS'Y (236 ml)**
		531657-0104				**SEALING JAW, ASS'Y (200 ml)**
		531657-0106				**SEALING JAW, ASS'Y (180 ml)**
		531657-0107				**SEALING JAW, ASS'Y (125 ml)**
Volume 200 ml SLIM						
		531657-0109				**SEALING JAW, ASS'Y**
	010	531658	S		1	HEATING JAW
	020	294918	P		1	HEATING RAIL
Common Parts						
	030	283668	S		1	INSULATING PLATE
	040	283669	S		1	SHIM
	070	531656	PU		1	HEATING ELEMENT
	090	283684	-		1	END WASHER
	110	90165-0057	-		1	CLIP
	140	90326-0060	PU		1	THERMOCOUPLE
	210	312105-0325	-		2	SCREW M6S5X10 A4 80
	230	312105-0378	-		4	SCREW M6S6X40RFR
	240	312115-0295	-		4	SCREW S 4X20 A4 80
	250	312115-0372	-		4	SCREW MC6S6X25 A4 80
	260	312125-0289	-		1	SLOTTED HEMCS4X10RFR
	280	312605-0316	-		4	NUT M6M6RFR
	300	315105-0136	-		5	WASHER BRB4,3X8RFR
	310	315105-0146	-		2	WASHER BRB5,3X10RFR
	320	315105-0153	-		12	WASHER BRB6,4X12RFR
	350	315705-0234	S		2	FLAT WEDGE6X6X25RFR

From	Pos	Part No	SP	UN	Qty	Description

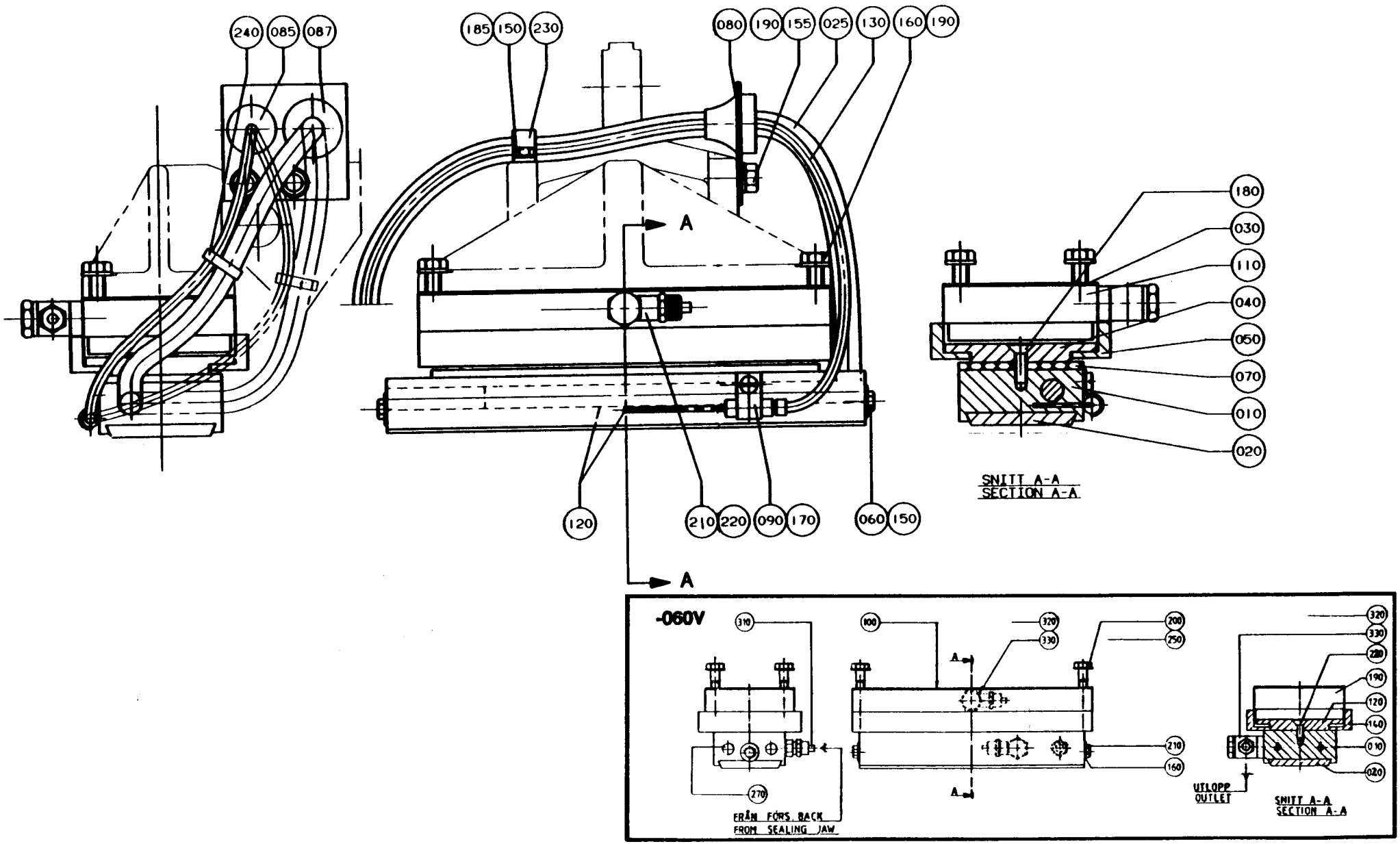
240
085
087
185
150
230
080
190
155
025
130
160
190
A
180
030
110
040
050
070
010
020
SNITT A-A
SECTION A-A
120
210
220
090
170
060
150
A
-060V
310
100
320
330
200
250
A
210
160
270
FRÅN FÖRS. BACK
FROM SEALING JAW
UTLOPP
OUTLET
SNITT A-A
SECTION A-A

From	Pos	Part No	SP	UN	Qty	Description
060V						
Volume 125, 180, 200 ml						
		457868-0102				**COUNTER JAW, ASS'Y**
	010	457819	C		1	COUNTER JAW
	020	469301-0001	S		1	DOLLY
Volume 200 mlSLIM, 236, 250, 284 ml						
		457868-0101				**COUNTER JAW, ASS'Y**
	010	457851	C		1	COUNTER JAW
	020	469301-0002	S		1	DOLLY
Common Parts						
	100	283669	S		2	SHIM
	120	284698	S		1	PLATE
	140	284699	S		1	BRACKET
	160	2033-0005	P		2	WASHER
	190	90239-0734	P		1	CYLINDER
	200	312105-0378	-		4	SCREW M6S6X40RFR
	210	312125-0287	-		2	SLOTTED HEMCS4X8RFR
	220	312145-0329	-		3	SCREW
	250	315105-0153	-		4	WASHER BRB6,4X12RFR
	270	342713-0208	P		3	BLIND PLUG
	310	342921-0113	-		1	PIPE COUPLING
	320	342980-0113	-		2	BANJO CONNSINGEL 6/4-1/8
	330	342980-0303	-		2	BANJO CONN SINGEL 1/8"

From	Pos	Part No	SP	UN	Qty	Description
070V						
Volume 125, 180, 200 ml						
		497534-0201				**COUNTER JAW, ASS'Y**
	010	538976	C		1	COUNTER JAW
	020	469301-0001	S		1	DOLLY
Volume 200 mlSLIM, 236, 250, 284 ml						
		497534-0202				**COUNTER JAW, ASS'Y**
	010	538977	C		1	COUNTER JAW
	020	469301-0002	S		1	DOLLY
Common Parts						
	025	534762	S		1	HEATING CARTRIDGE
	030	283669	S		2	SHIM
	040	284698	S		1	PLATE
	050	284699	S		1	BRACKET
	060	2033-0005	P		2	WASHER
	070	484602	S		1	INSULATING PLATE
	080	534888	-		1	BRACKET
	085	90015-0020	C		1	BUSHING
	087	90015-0023	C		1	BUSHING
	090	90165-0057	-		1	CLIP
	110	90239-0734	P		1	CYLINDER
	120	90298-0033	P		X	WATLUBE HEAT LIQUID
	130	90326-0060	P		1	THERMOCOUPLE
	150	312105-0287	-		3	SCREW M6S4X8 A4 80
	155	312105-0364	-		4	SCREW M6S6X10RFR
	160	312105-0378	-		4	SCREW M6S6X40RFR
	170	312125-0287	-		1	SLOTTED HEMCS4X8RFR
	180	312155-0329	-		3	SCREW MF6S5X16RFR
	185	315105-0136	-		1	WASHER BRB4,3X8RFR
	190	315105-0153	-		8	WASHER BRB6,4X12RFR
	210	342980-0113	-		1	BANJO CONNSINGEL 6/4-1/8
	220	342980-0303	-		1	BANJO CONN SINGEL 1/8"
	230	90074-0001	-		1	CLIP
	240	352113-0101	S		3	RIBBON CLA

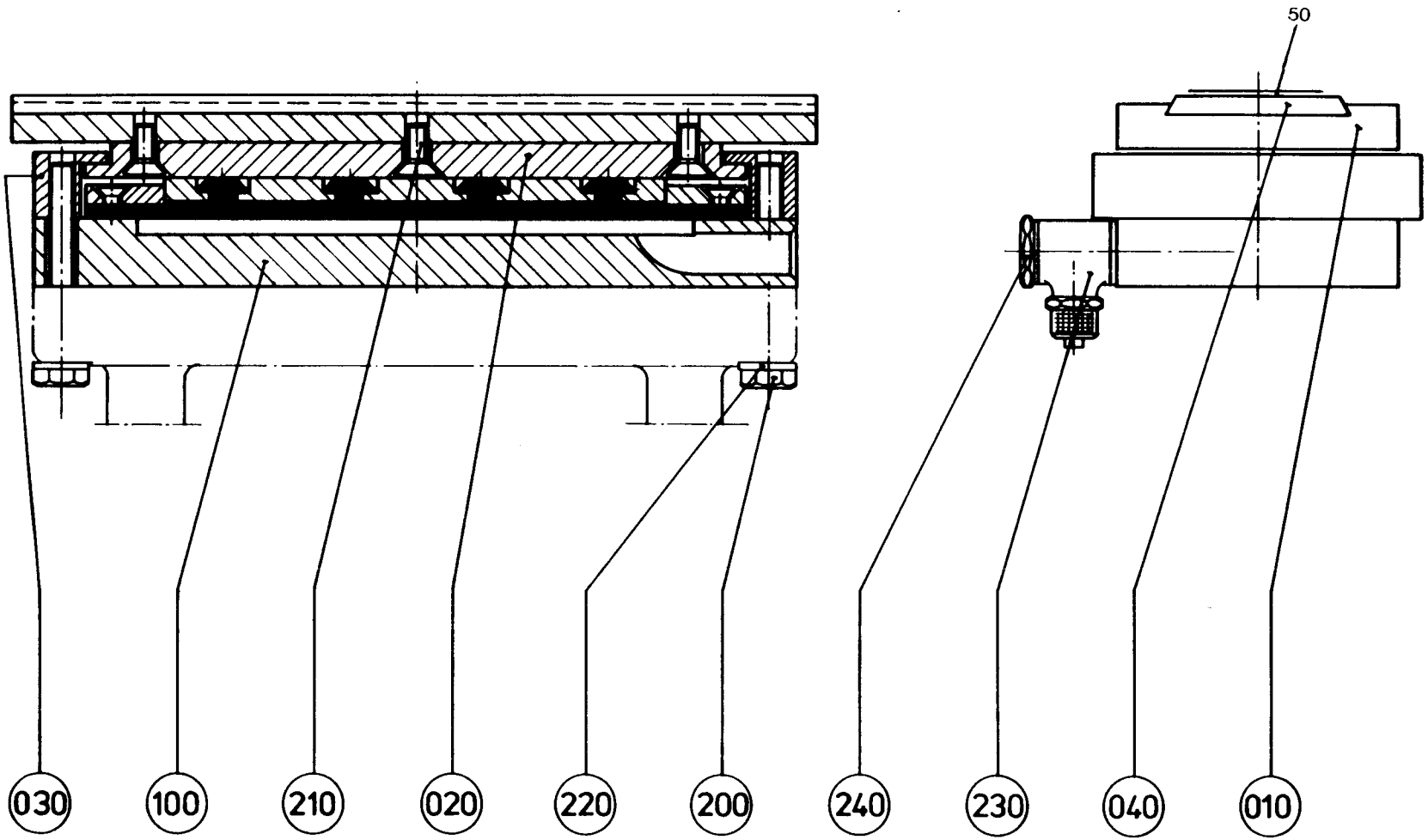
50
030
100
210
020
220
200
240
230
040
010

From	Pos	Part No	SP	UN	Qty	Description
		283614-0101				**COUNTER JAW, ASS'Y**
	010	283677	S		1	RAIL
	040	266098-0002	PU		1	DOLLY
	050	457841-0002	PU		1	FABRIC
	020	284698	S		1	PLATE
	030	284699	S		1	BRACKET
	100	90239-0734	S		1	CYLINDER
	200	312115-0378	-		4	SCREW 6X40 A4 80
	210	312155-0327	-		3	SCREW MF6S5X12RFR
	220	315105-0153	-		4	WASHER BRB6,4X12RFR
	230	342980-0113	-		1	BANJO CONNSINGEL 6/4-1/8
	240	342980-0303	-		1	BANJO CONN SINGEL 1/8"

From	Pos	Part No	SP	UN	Qty	Description

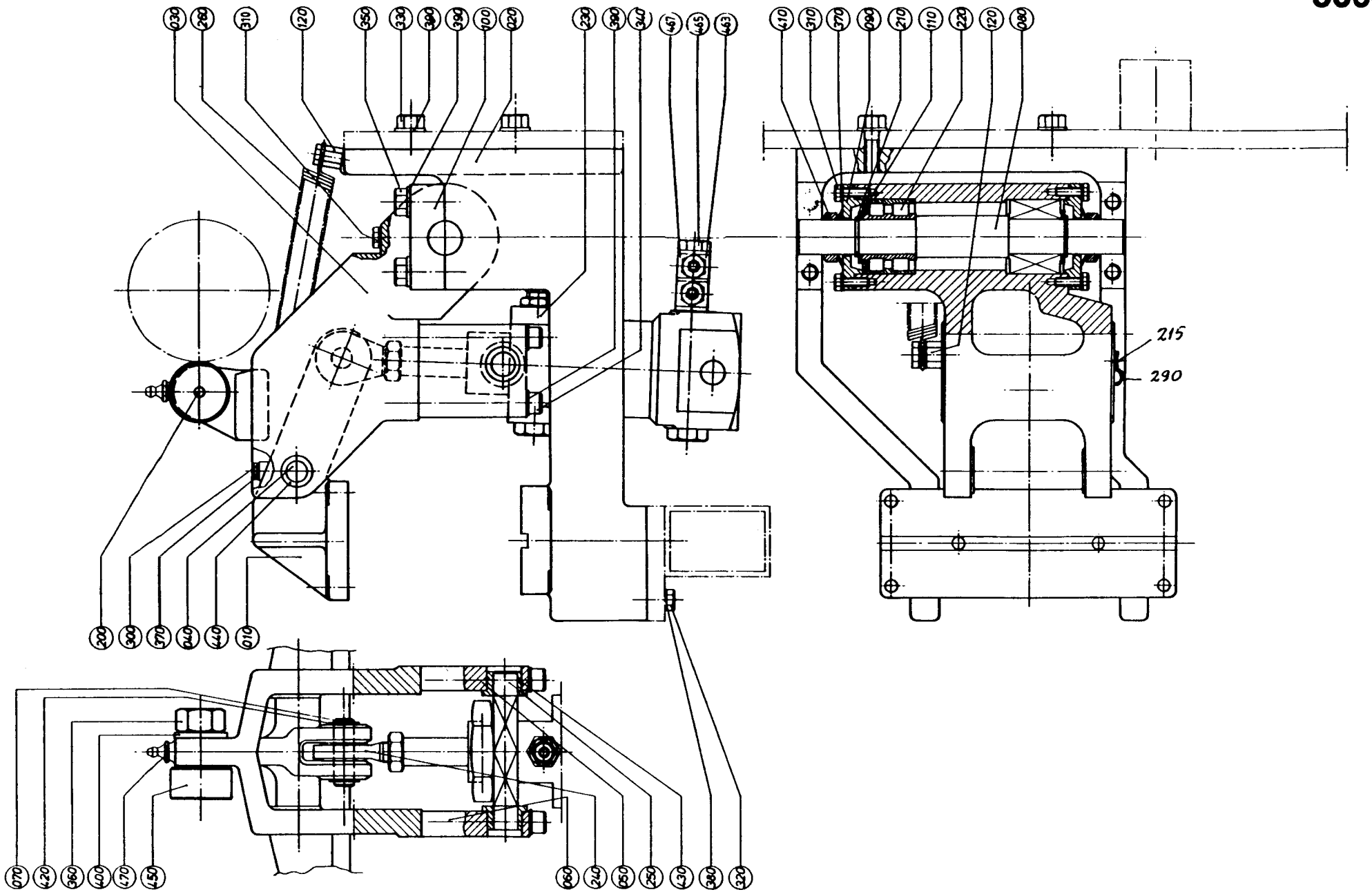
030
260
310
120
350
330
360
390
100
020
230
380
340
467
465
463
410
310
370
080
270
110
220
120
080
215
290
200
300
370
040
440
010
070
420
360
400
470
450
060
240
850
250
430
380
320

From	Pos	Part No	SP	UN	Qty	Description
	010	283535	C		1	BRACKET
	020	283658	-		1	BRACKET
	030	283659	C		1	ARM
	040	255593	S		1	SHAFT
	050	266358	C		1	BRACKET
	060	266359	C		1	BRACKET
	070	266507	S		1	SHAFT
	080	268583	S		1	SHAFT
	090	268585	-		2	LID
	100	268587	-		2	BRACKET
	110	268588	P		2	WASHER
	120	283676-0001	-		2	SPRING HOLDER
	200	90136-0003	P		1	PLUG
	210	315750-0116	P		2	LOCK RING SGA20
	215	90165-0057	-		1	CLIP
	220	90214-0068	S		2	BEARING
	230	90239-0188	S		1	CYLINDER
	240	90239-0321	-		1	BRACKET
	250	90239-0384	-		1	BRACKET
	255	90296-0068	-		X	GREASE
	260	90335-0122	S		1	SPRING
	290	312105-0287	-		1	SCREW M6S4X8 A4 80
	300	312105-0329	-		6	SCREW M6S5X16 A4 80
	305	312105-0333	-		1	SCREW M6S5X25 A4 80
	310	312105-0362	-		2	SCREW M6S6X8RFR
	320	312105-0370	-		2	SCREW M6S6X20RFR
	330	312105-0453	-		4	SCREW M6S8X25RFR
	340	312111-0466	-		4	SCREW MC6S8X75FZB
	350	312115-0457	-		4	SCREW A4 80
	360	312631-0324	-		1	NUT M6M16X1,5FZB
	370	315105-0146	-		7	WASHER BRB5,3X10RFR
	380	315105-0153	-		2	WASHER BRB6,4X12RFR
	390	315105-0165	-		12	WASHER BRB8,4X16RFR
	400	315105-0186	-		1	WASHER BRB17X30RFR
	410	315220-0143	S		2	SEAL RING V-20S
	420	315754-0110	P		2	CIRCLIP E 9
	430	321111-0185	S		2	BUSHING 14E7X14
	440	321116-0159	S		2	BUSHING 12E7/18X12
	450	321582-0212	P		1	CAM ROLLERNUKR35
	463	342980-0115	-		4	BANJO CONNSINGEL 6/4-3/8
	465	342980-0315	-		2	BANJO CONN DUBBEL 3/8
	467	342980-0305	-		2	BANJO CONN SINGEL 3/8
	470	344502-0021	P		1	NIPPLE L AHM6

From	Pos	Part No	SP	UN	Qty	Description

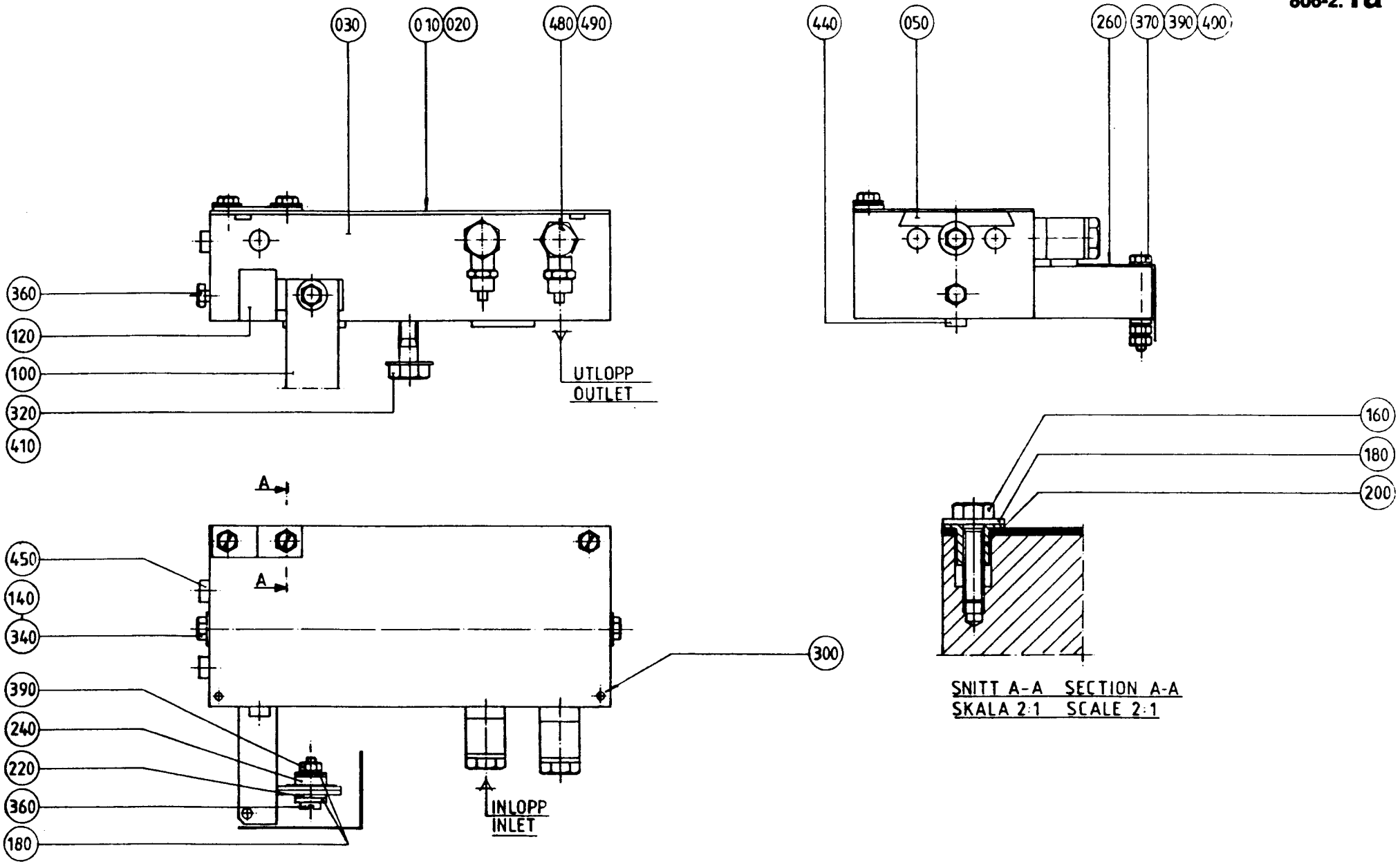
030
010
020
480
490
440
050
260
370
390
400
360
120
100
320
410
UTLOPP
OUTLET
160
180
200
A
A
450
140
340
300
390
240
220
360
180
INLOPP
INLET
SNITT A-A SECTION A-A
SKALA 2:1 SCALE 2:1

From	Pos	Part No	SP	UN	Qty	Description
Volume 250 ml, HOLE 21						
		457866-0202				**SEALING JAW, ASS'Y**
	010	543578	PU		1	INDUCTOR
		457841-0001	P		1	* FABRIC
	020	552044	PU		1	INDUCTOR
		552046-0002	P		1	* FABRIC
	030	541246	S		1	INDUCTOR BRACKET
	050	539642-0002	S		1	DOLLY
Volume 236 ml, HOLE 21						
		457866-0203				**SEALING JAW, ASS'Y**
	030	541246	S		1	INDUCTOR BRACKET
	050	539642-0002	S		1	DOLLY
Volume 200 ml, HOLE 21						
		457866-0204				**SEALING JAW, ASS'Y**
	010	552020	PU		1	INDUCTOR
		457841-0001	P		1	* FABRIC
	020	552023	PU		1	INDUCTOR
		552046-0001	P		1	* FABRIC
	030	549006	S		1	INDUCTOR BRACKET
	050	539642-0001	S		1	DOLLY
Volume 180 ml, HOLE 21						
		457866-0206				**SEALING JAW, ASS'Y**
	030	549006	S		1	INDUCTOR BRACKET
	050	539642-0001	S		1	DOLLY
Volume 125 ml, HOLE 11						
		457866-0207				**SEALING JAW, ASS'Y**
	010	552027	PU		1	INDUCTOR
		457841-0001	PU		1	* FABRIC
	020	549016	PU		1	INDUCTOR
		552046-0001	PU		1	* FABRIC
	030	449399	S		1	INDUCTOR BRACKET
	050	469301-0001	S		1	DOLLY
Volume 200 mlSLIM, HOLE 11						
		457866-0209				**SEALING JAW, ASS'Y**
	010	536900	PU		1	INDUCTOR
		457841-0002	PU		1	* FABRIC
	020	544414	PU		1	INDUCTOR
		457841-0002	PU		1	* FABRIC
	030	457850	S		1	INDUCTOR BRACKET
	050	469301-0002	S		1	DOLLY

From	Pos	Part No	SP	UN	Qty	Description
Volume 250 ml, HOLE 20						
		457866-0212				**SEALING JAW, ASS'Y**
	010	469683	PU		1	INDUCTOR
		457841-0002	P		1	* FABRIC
	020	554376	PU		1	INDUCTOR SMAL LS
		552046-0002	P		1	* FABRIC
	030	457850	S		1	INDUCTOR BRACKET
	050	469301-0002	S		1	DOLLY
Volume 236 ml, HOLE 20						
		457866-0213				**SEALING JAW, ASS'Y**
	030	457850	S		1	INDUCTOR BRACKET
	050	469301-0002	S		1	DOLLY
Volume 200 ml, HOLE 20						
		457866-0214				**SEALING JAW, ASS'Y**
	010	535528	PU		1	INDUCTOR
		457841-0001	P		1	* FABRIC
	020	554378	PU		1	INDUCTOR SMAL LS
		552046-0001	P		1	* FABRIC
	030	449399	S		1	INDUCTOR BRACKET
	050	469301-0001	S		1	DOLLY
Volume 180 ml, HOLE 20						
		457866-0216				**SEALING JAW, ASS'Y**
	010	535532	PU		1	INDUCTOR
		457841-0001	P		1	* FABRIC
	030	449399	S		1	INDUCTOR BRACKET
	050	469301-0001	S		1	DOLLY
Volume 125 ml, HOLE 10						
		457866-0217				**SEALING JAW, ASS'Y**
	010	456665	PU		1	INDUCTOR
		457841-0001	PU		1	* FABRIC
	020	549016	PU		1	INDUCTOR
		552046-0001	PU		1	* FABRIC
	030	449399	S		1	INDUCTOR BRACKET
	050	469301-0001	S		1	DOLLY
Volume 200 mlSLIM, HOLE 10						
		457866-0219				**SEALING JAW, ASS'Y**
	010	456663	PU		1	INDUCTOR
		457841-0002	PU		1	* FABRIC
	020	544414	PU		1	INDUCTOR
		457841-0002	PU		1	* FABRIC
	030	457850	S		1	INDUCTOR BRACKET
	050	469301-0002	S		1	DOLLY

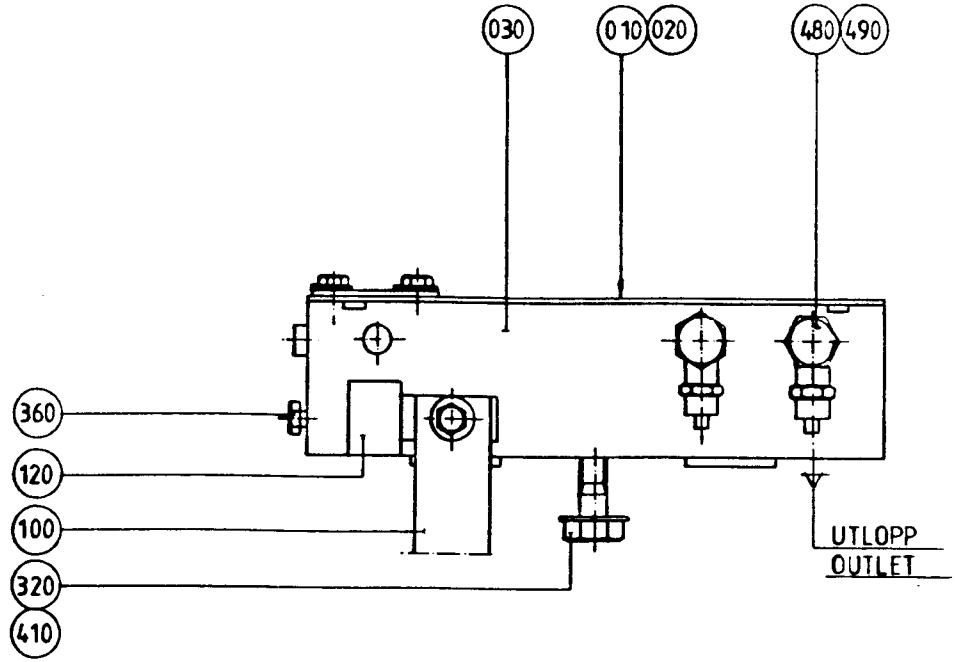

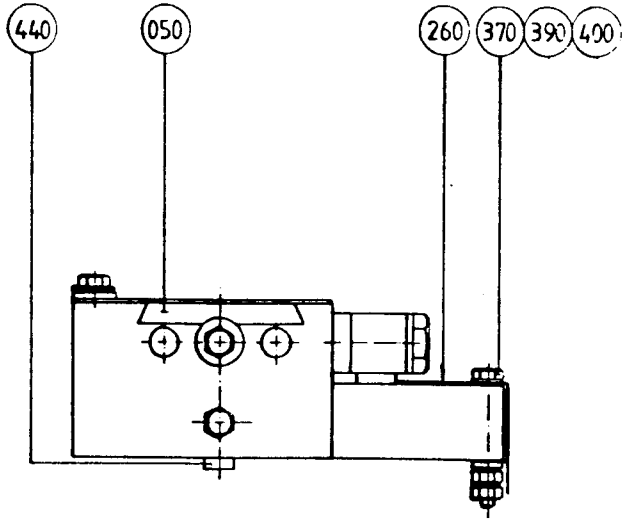

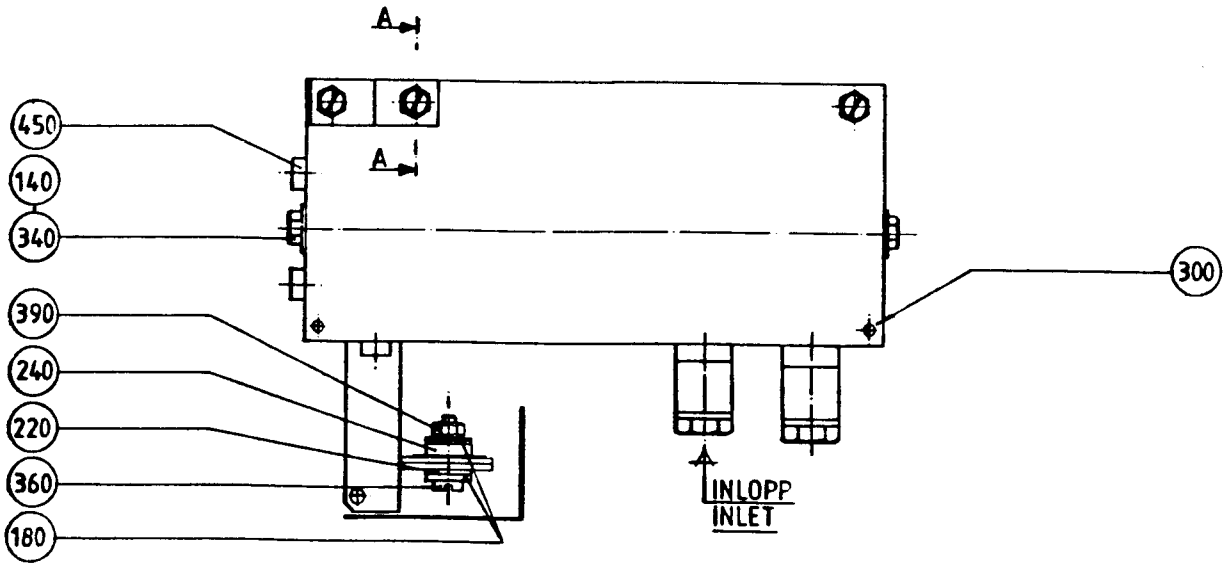

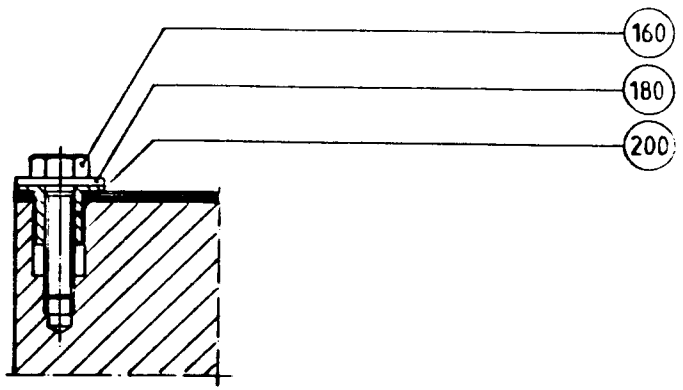

SNITT A-A SECTION A-A
SKALA 2:1 SCALE 2:1

From	Pos	Part No	SP	UN	Qty	Description
Common Parts						
	100	490529	S		1	CABLE
	120	457855	S		1	BUSBAR
	140	2033-0005	P		2	WASHER
	160	28508	P		3	SCREW
	180	28509	P		5	WASHER
	200	28510	P		3	INSULATION NUT
	220	32544	P		1	INSULATION NUT
	240	32644	P		1	WASHER
	260	457820	-		1	GUARD
	300	311103-0234	-		2	CYLINDRICACPR3M6X12RFR
	320	312105-0374	-		1	SCREW M6S6X30RFR
	340	312125-0287	-		2	SLOTTED HEMCS4X8RFR
	360	312125-0295	-		2	SLOTTED HEMCS4X20RFR
	370	312125-0299	-		1	SLOTTED HEMCS4X30RFR
	390	312605-0312	-		3	NUT M6M4RFR
	400	315105-0136	-		2	WASHER BRB4,3X8RFR
	410	315105-0153	-		1	WASHER BRB6,4X12RFR
	440	315701-0265	-		2	FLAT WEDGE8X7X25
	450	342713-0208	S		3	BLANK-OFF
	480	342980-0113	-		2	BANJO CONNSINGEL 6/4-1/8
	490	342980-0303	-		2	BANJO CONN SINGEL 1/8"

From	Pos	Part No	SP	UN	Qty	Description

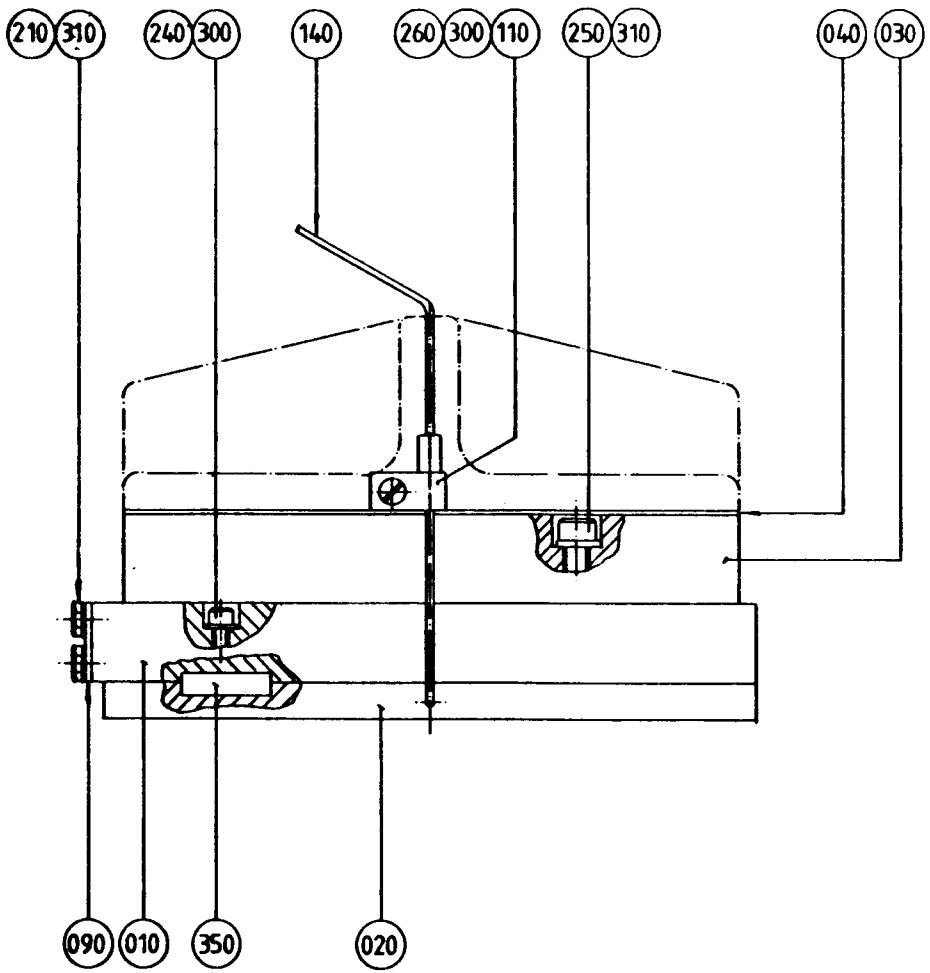
210
310
240
300
140
260
300
110
250
310
040
030
090
010
350
020

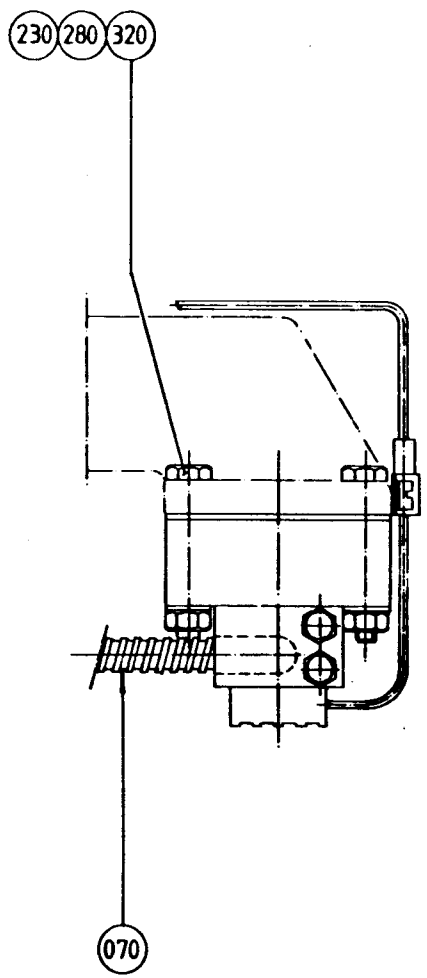
230
280
320
070

From	Pos	Part No	SP	UN	Qty	Description
Volume 250, 236, 200, 180, 125 ml						
		531657-0202				**SEALING JAW, ASS'Y (250 ml), HOLE 21**
		531657-0203				**SEALING JAW, ASS'Y (236 ml), HOLE 21**
		531657-0204				**SEALING JAW, ASS'Y (200 ml), HOLE 21**
		531657-0206				**SEALING JAW, ASS'Y (180 ml), HOLE 21**
		531657-0207				**SEALING JAW, ASS'Y (125 ml), HOLE 11**
		531657-0212				**SEALING JAW, ASS'Y (250 ml), HOLE 20**
		531657-0213				**SEALING JAW, ASS'Y (236 ml), HOLE 20**
		531657-0214				**SEALING JAW, ASS'Y (200 ml), HOLE 20**
		531657-0216				**SEALING JAW, ASS'Y (180 ml), HOLE 20**
		531657-0217				**SEALING JAW, ASS'Y (125 ml), HOLE 10**
Volume 200 ml SLIM						
		531657-0209				**SEALING JAW, ASS'Y, HOLE 11**
		531657-0219				**SEALING JAW, ASS'Y, HOLE 10**
	010	531658	S		1	HEATING JAW
	020	552025	P		1	HEATING RAIL, HOLE 11
	020	294918	P		1	HEATING RAIL, HOLE 10
Common Parts						
	030	283668	S		1	INSULATING PLATE
	040	283669	S		1	SHIM
	070	531656	PU		1	HEATING ELEMENT
	090	283684	-		1	END WASHER
	110	90165-0057	-		1	CLIP
	140	90326-0060	PU		1	THERMOCOUPLE
	210	312105-0325	-		2	SCREW M6S5X10 A4 80
	230	312105-0378	-		4	SCREW M6S6X40RFR
	240	312115-0295	-		4	SCREW S 4X20 A4 80
	250	312115-0372	-		4	SCREW MC6S6X25 A4 80
	260	312125-0289	-		1	SLOTTED HEMCS4X10RFR
	280	312605-0316	-		4	NUT M6M6RFR
	300	315105-0136	-		5	WASHER BRB4,3X8RFR
	310	315105-0146	-		2	WASHER BRB5,3X10RFR
	320	315105-0153	-		12	WASHER BRB6,4X12RFR
	350	315705-0234	S		2	FLAT WEDGE6X6X25RFR

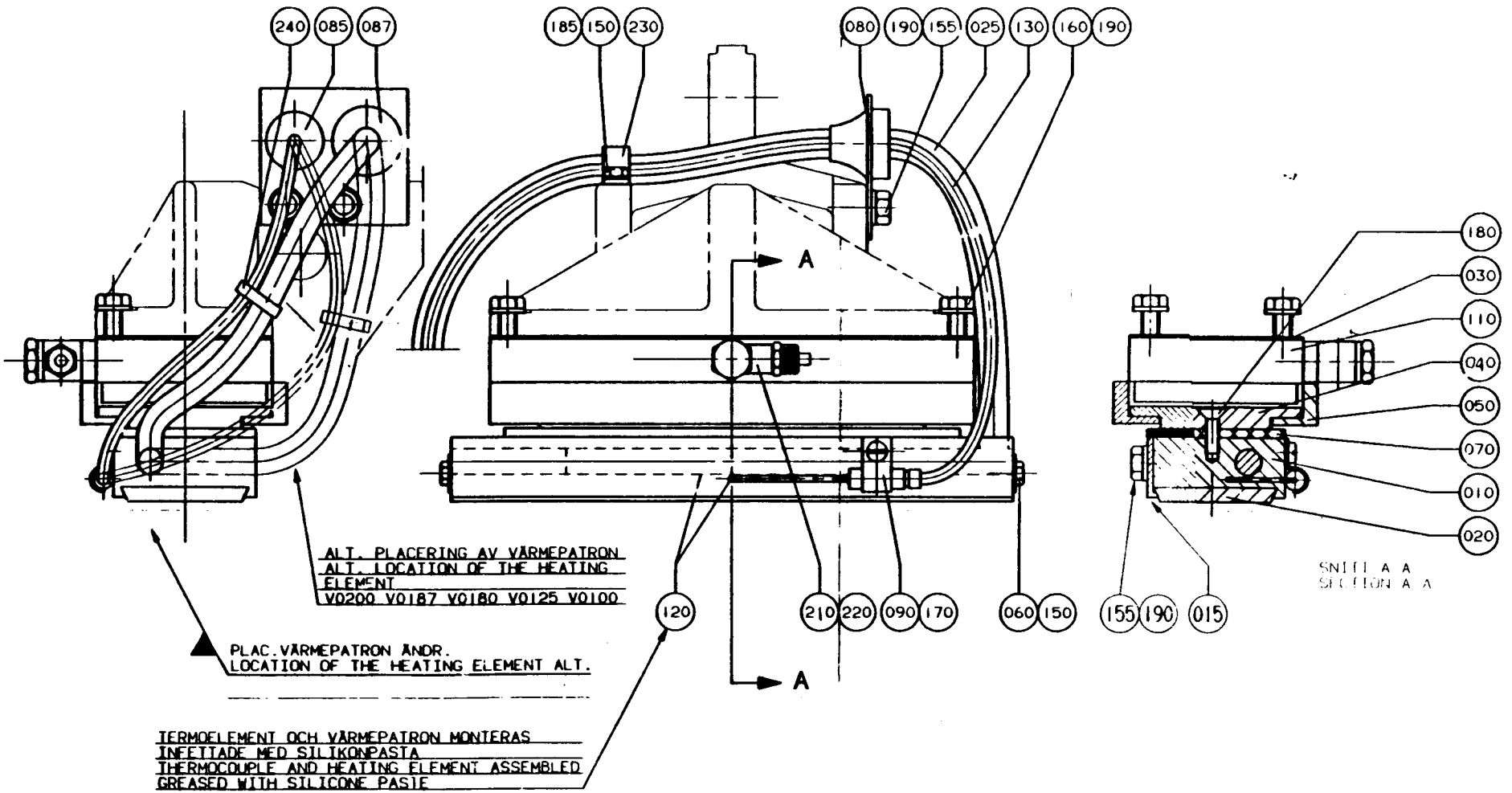
240
085
087
185
150
230
080
190
155
025
130
160
190
180
030
110
040
050
070
010
020
A
A
ALT. PLACERING AV VÄRMEPATRON
ALT. LOCATION OF THE HEATING ELEMENT
V0200 V0187 V0180 V0125 V0100
PLAC. VÄRMEPATRON ÄNDR.
LOCATION OF THE HEATING ELEMENT ALT.
TERMOELEMENT OCH VÄRMEPATRON MONTERAS
INFETTADE MED SILIKONPASTA
THERMOCOUPLE AND HEATING ELEMENT ASSEMBLED
GREASED WITH SILICONE PASTE
120
210
220
090
170
060
150
155
190
015
SNITT A A
SECTION A A

From	Pos	Part No	SP	UN	Qty	Description
Volume 125, 180, 200 ml						
		497534-0307				**COUNTER JAW, ASS'Y (125 ML), HOLE 11**
		497534-0306				**COUNTER JAW, ASS'Y (180 ML), HOLE 21**
		497534-0304				**COUNTER JAW, ASS'Y (200 ML), HOLE 21**
		497534-0317				**COUNTER JAW, ASS'Y (125 ML), HOLE 10**
		497534-0316				**COUNTER JAW, ASS'Y (180 ML), HOLE 20**
		497534-0314				**COUNTER JAW, ASS'Y (200 ML), HOLE 20**
	010	549002	C		1	HOLDER (125 ML), HOLE 11
	010	549004	C		1	HOLDER (180, 200 ML), HOLE 21
	010	538976	C		1	COUNTER JAW, (125 ML), HOLE 10
	010	538976	C		1	COUNTER JAW, (180, 200 ML), HOLE 20
	015	549003	C		1	PLATE (125 ML), HOLE 11
	015	556546	C		1	PLATE (180, 200 ML), HOLE 21
	020	469301-0001	S		1	DOLLY (125 ML), HOLE 11
	020	539642-0001	S		1	DOLLY (180, 200 ML), HOLE 21
	020	469301-0001	S		1	DOLLY (125 ML), HOLE 10
	020	469301-0001	S		1	DOLLY (180, 200 ML), HOLE 20
Volume 200 mlSLIM, 236, 250 ml						
		497534-0309				**COUNTER JAW, ASS'Y (200 mlSLIM), HOLE 11**
		497534-0303				**COUNTER JAW, ASS'Y (236 ML), HOLE 21**
		497534-0302				**COUNTER JAW, ASS'Y (250 ML), HOLE 21**
		497534-0319				**COUNTER JAW, ASS'Y (200 mlSLIM), HOLE 10**
		497534-0313				**COUNTER JAW, ASS'Y (236 ML), HOLE 20**
		497534-0312				**COUNTER JAW, ASS'Y (250 ML), HOLE 20**
	010	549005	C		1	HOLDER (200 mlSLIM), HOLE 11
	010	542829	C		1	HOLDER (236, 250 ML), HOLE 21
	010	538977	C		1	COUNTER JAW, (200 mlSLIM), HOLE 10
	010	538977	C		1	COUNTER JAW, (236, 250 ML), HOLE 20
	015	556545	C		1	PLATE (200 mlSLIM), HOLE 11
	015	542828	C		1	PLATE (236, 250 ML), HOLE 21
	020	469301-0002	S		1	DOLLY (200 mlSLIM), HOLE 11
	020	539642-0002	S		1	DOLLY (236 ML), HOLE 21
	020	554353	S		1	DOLLY (250 ML), HOLE 21
	020	469301-0002	S		1	DOLLY (200 mlSLIM), HOLE 10
	020	469301-0002	S		1	DOLLY (236, 250 ML), HOLE 20

From	Pos	Part No	SP	UN	Qty	Description
Common Parts						
	025	534762	S		1	HEATING CARTRIDGE
	030	283669	S		2	SHIM
	040	284698	S		1	PLATE
	050	284699	S		1	BRACKET
	060	2033-0005	P		2	WASHER
	070	484602	S		1	INSULATING PLATE
	080	534888	-		1	BRACKET
	085	90015-0020	C		1	BUSHING
	087	90015-0023	C		1	BUSHING
	090	90165-0057	-		1	CLIP
	110	90239-0734	P		1	CYLINDER
	120	90298-0033	P		X	WATLUBE HEAT LIQUID
	130	90326-0060	P		1	THERMOCOUPLE
	150	312105-0287	-		3	SCREW M6S4X8 A4 80
	155	312105-0364	-		4	SCREW M6S6X10RFR
	160	312105-0378	-		4	SCREW M6S6X40RFR
	170	312125-0287	-		1	SLOTTED HEMCS4X8RFR
	180	312155-0329	-		3	SCREW MF6S5X16RFR
	185	315105-0136	-		1	WASHER BRB4,3X8RFR
	190	315105-0153	-		8	WASHER BRB6,4X12RFR
	210	342980-0113	-		1	BANJO CONNSINGEL 6/4-1/8
	220	342980-0303	-		1	BANJO CONN SINGEL 1/8"
	230	90165-0008	-		1	CLIP
	240	352113-0101	S		3	RIBBON CLA

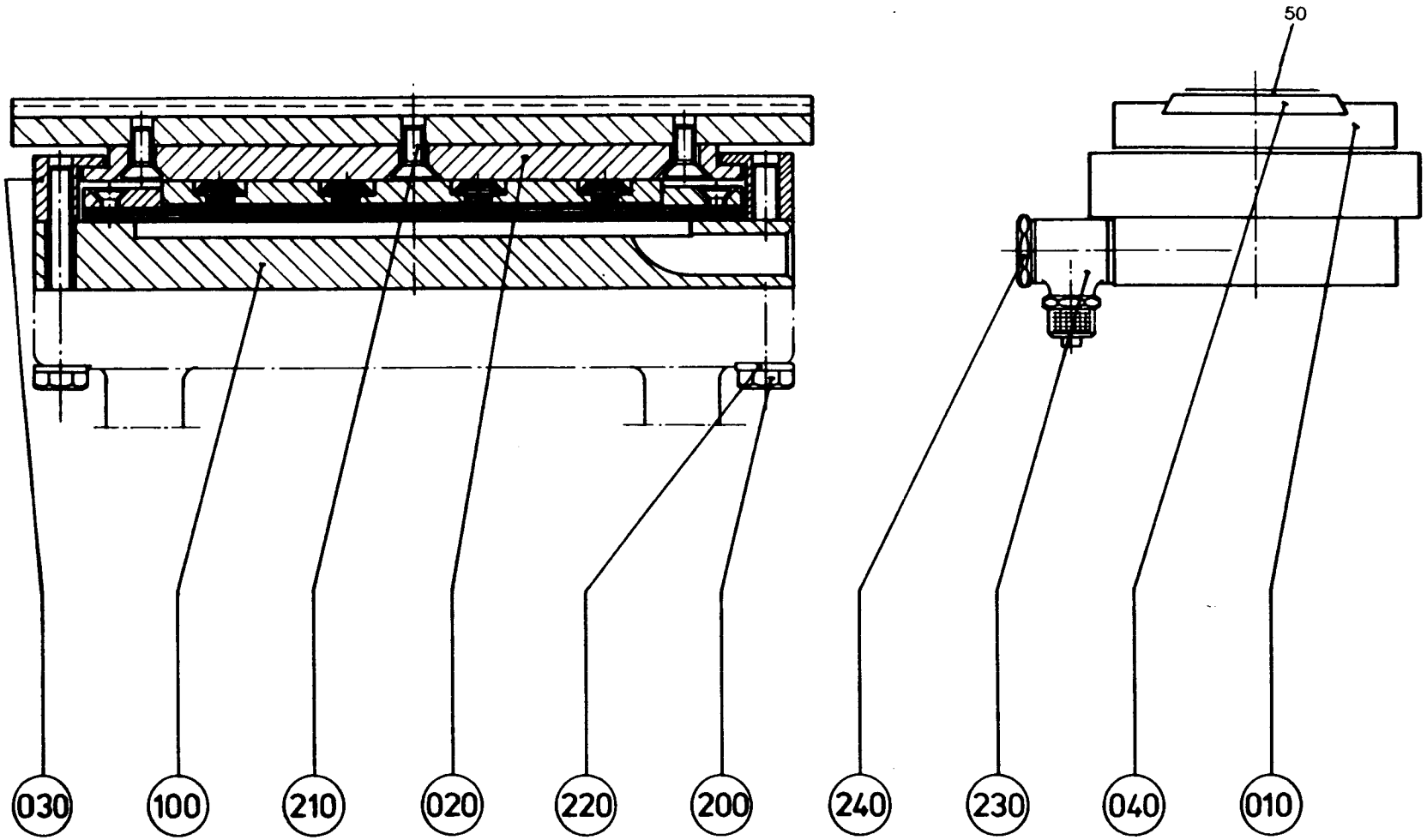
50
030
100
210
020
220
200
240
230
040
010

From	Pos	Part No	SP	UN	Qty	Description
Volume 250 - 125 ml						
		283614-0202				**COUNTER JAW, ASS'Y (250 ML), HOLE 21**
		283614-0203				**COUNTER JAW, ASS'Y (236 ML), HOLE 21**
		283614-0204				**COUNTER JAW, ASS'Y (200 ML), HOLE 21**
		283614-0206				**COUNTER JAW, ASS'Y (180 ML), HOLE 21**
		283614-0207				**COUNTER JAW, ASS'Y (125 ML), HOLE 11**
		283614-0212				**COUNTER JAW, ASS'Y (250 ML), HOLE 20**
		283614-0213				**COUNTER JAW, ASS'Y (236 ML), HOLE 20**
		283614-0214				**COUNTER JAW, ASS'Y (200 ML), HOLE 20**
		283614-0216				**COUNTER JAW, ASS'Y (180 ML), HOLE 20**
		283614-0217				**COUNTER JAW, ASS'Y (125 ML), HOLE 10**
Volume 200 ml SLIM						
		283614-0209				**COUNTER JAW, ASS'Y, HOLE 11**
		283614-0219				**COUNTER JAW, ASS'Y, HOLE 10**
	010	552026	S		1	RAIL , HOLE 11
	010	283677	S		1	RAIL , HOLE 10
	040	266096-0002	PU		1	DOLLY
	050	457841-0002	PU		1	FABRIC
Common Parts						
	020	284698	S		1	PLATE
	030	284699	S		1	BRACKET
	100	90239-0734	S		1	CYLINDER
	200	312115-0378	-		4	SCREW 6X40 A4 80
	210	312155-0327	-		3	SCREW MF6S5X12RFR
	220	315105-0153	-		4	WASHER BRB6,4X12RFR
	230	342980-0113	-		1	BANJO CONNSINGEL 6/4-1/8
	240	342980-0303	-		1	BANJO CONN SINGEL 1/8"

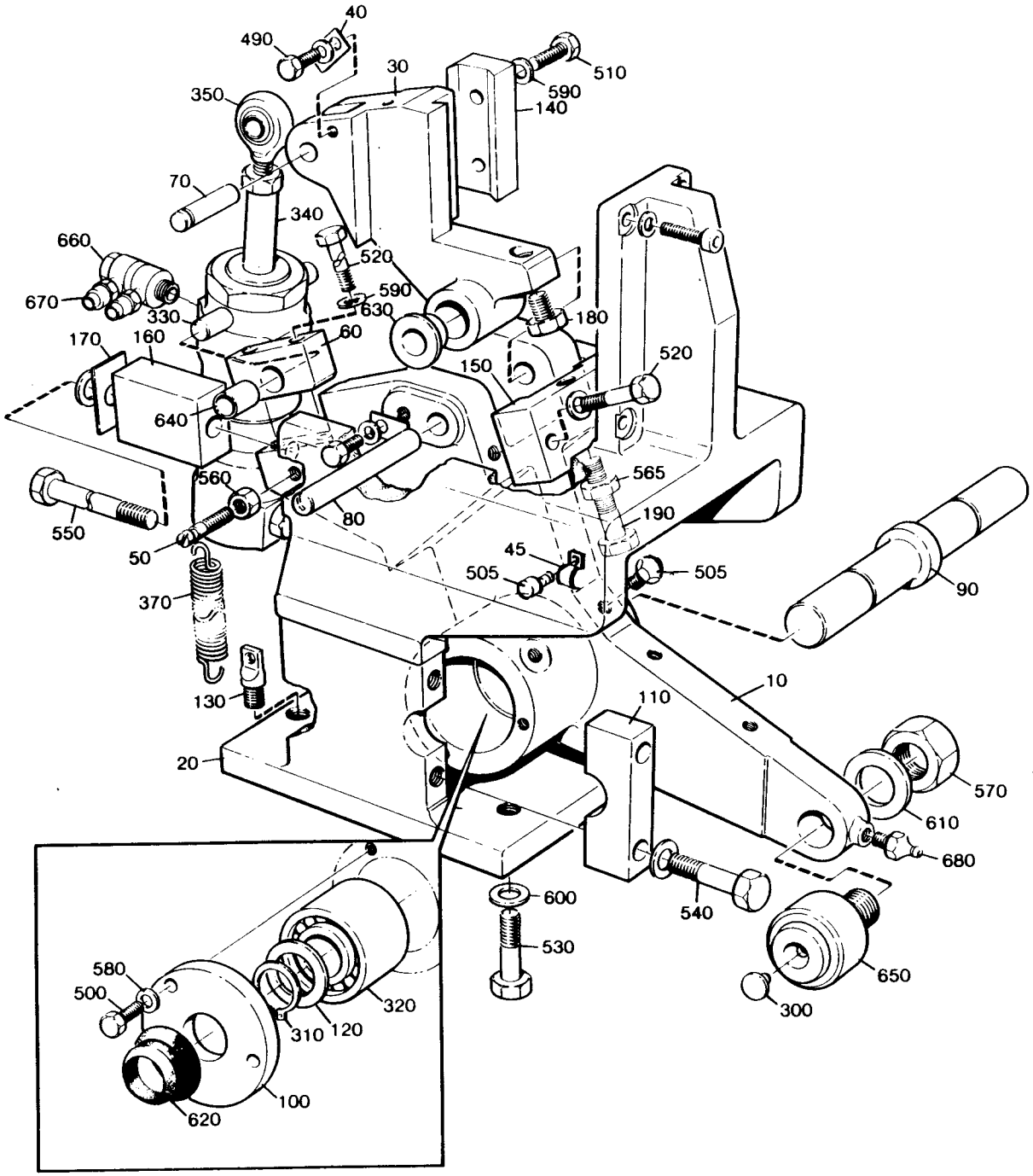
40
490
30
510
590
140
350
70
340
660
520
670
590
630
330
180
60
170
160
150
520
640
565
560
190
80
550
50
45
505
505
90
370
10
130
110
20
570
610
680
600
540
530
650
580
500
320
310
120
300
100
620

From	Pos	Part No	SP	UN	Qty	Description
TBA/3						
080V	660	342980-0114	-		4	BANJO CONNSINGEL 6/4-1/4
080V	670	342980-0314	-		2	BANJO CONN DUBBEL 1/4
TBA/8						
080V	660	342980-0114	-		4	BANJO CONNSINGEL 6/4-1/4
080V	670	342980-0314	-		2	BANJO CONN DUBBEL 1/4
TB, TBA/9						
080V	660	342980-0114	-		4	BANJO CONNSINGEL 6/4-1/4
080V	670	342980-0304	-		2	BANJO CONN SINGEL 1/4
Common Parts						
	010	268580	C		1	ARM
	020	G- 283564	-		1	BRACKET
	030	G- 294576	-		1	ARM
	040	18135	-		2	WASHER
	045	24755	-		1	CLAMP
	050	257710	C		2	PIN
	060	257711	-		2	BLOCK
	070	257712	C		1	SHAFT
	080	263156	C		1	SHAFT
	090	268584	C		1	SHAFT
	100	268585	-		2	LID
	110	268587	-		2	BRACKET
	120	268588	-		2	WASHER
	130	276194	-		2	SPRING HOLDER
	140	294578	C		1	LOCKING LUG
	150	294584	C		1	DOLLY
	160	294660	C		2	BLOCK
	170	294871	S		4	SHIM
	180	294881	C		1	SCREW
	190	312109-0460	-		1	SCREW M6S8X45H A4 80
	300	90136-0003	-		1	PLUG
	310	315750-0116	-		2	LOCK RING SGA20
	320	90214-0068	S		2	BEARING
	330	90239-0126	-		1	BRACKET
	340	90239-0189	S		1	CYLINDER
		90285-0094	S		0	* SEAL
	350	90239-0320	S		1	BRACKET
	360	90296-0068	-		1	GREASE
	370	90335-0044	P		2	SPRING
	490	312105-0327	-		2	SCREW M6S5X12 A4 80
	500	312105-0329	-		6	SCREW M6S5X16 A4 80
	505	312105-0362	-		3	SCREW M6S6X8RFR
	510	312105-0370	-		2	SCREW M6S6X20RFR
	520	312105-0374	-		6	SCREW M6S6X30RFR
	530	312105-0453	-		4	SCREW M6S8X25RFR
	540	312105-0457	-		4	SCREW M6S8X35RFR
	550	312105-0464	-		2	SCREW M6S8X65RFR
	560	312605-0316	-		2	NUT M6M6RFR
	565	312605-0318	-		1	NUT M6M8RFR
	570	312631-0324	-		1	NUT M6M16X1,5FZB
	580	315105-0146	-		8	WASHER BRB5,3X10RFR
	590	315105-0153	-		10	WASHER BRB6,4X12RFR
	600	315105-0165	-		10	WASHER BRB8,4X16RFR
	610	315105-0186	-		1	WASHER BRB17X30RFR
	620	315220-0143	-		2	SEAL RING V-20S
	630	321111-0135	S		2	BUSHING 10E7X10
	640	321120-0099	-		2	BUSHING 10/12,0X12
	650	321582-0212	S		1	CAM ROLLERNUKR35
-070V	660	342980-0114	-		4	BANJO CONNSINGEL 6/4-1/4
-070V	670	342980-0314	-		2	BANJO CONN DUBBEL 1/4
	680	344502-0021	S		1	NIPPLE L AHM6

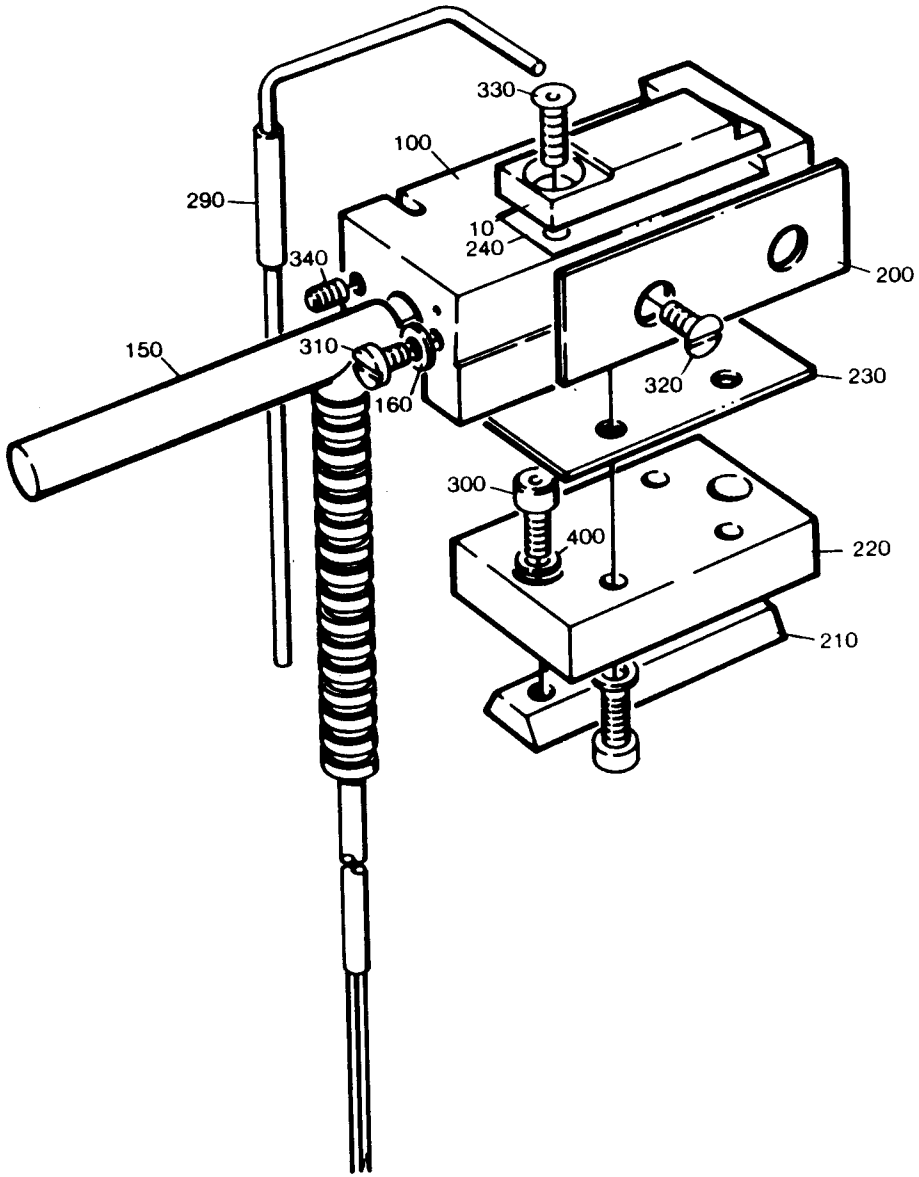
330
100
290
10
240
340
200
150
310
320
230
160
300
400
220
210

From	Pos	Part No	SP	UN	Qty	Description
Volume 284 - 180 ml						
-070V	010	499633	PU		1	HEATING RAIL
080V	010	538191	PU		1	HEATING RAIL (HOLE 21)
080V	010	499633	PU		1	HEATING RAIL (HOLE 20)
Volume 125, 200 ml SLIM						
-070V	010	499632	PU		1	HEATING RAIL
080V	010	543196	PU		1	HEATING RAIL (HOLE 11)
080V	010	499632	PU		1	HEATING RAIL (HOLE 10)
Common Parts						
	100	499560	S		1	HEATING BLOCK
	150	90206-0083	PU		1	HEATING CARTRIDGE
	160	6427	-		1	WASHER
-070V	200	283590	PU		1	KNIFE
080V	200	553137	PU		1	KNIFE
	210	294579	C		1	KEY
	220	294580	S		1	INSULATING PLATE
	230	294870	S		1	SHIM
-070V	270	90296-0051	PU		X	PASTE
080V	270	90298-0033	PU		X	WATLUBE HEAT LIQUID
	290	90326-0060	PU		1	THERMOCOUPLE
	300	312115-0289	-		6	SCREW S4X10 A4 80
-070V	310	312125-0287	-		2	SLOTTED HEMCS4X8RFR
080V	310	312105-0287	-		2	SCREW M6S4X8 A4 80
	320	312145-0287	-		2	SLOTTED HEMFS4X8RFR
	330	312155-0289	-		1	SCREW MF6S4X10RFR
	340	312318-0287	-		1	GRUB SCREW SK6SS4X8RFR
	400	315105-0136	-		6	WASHER BRB4,3X8RFR

From	Pos	Part No	SP	UN	Qty	Description

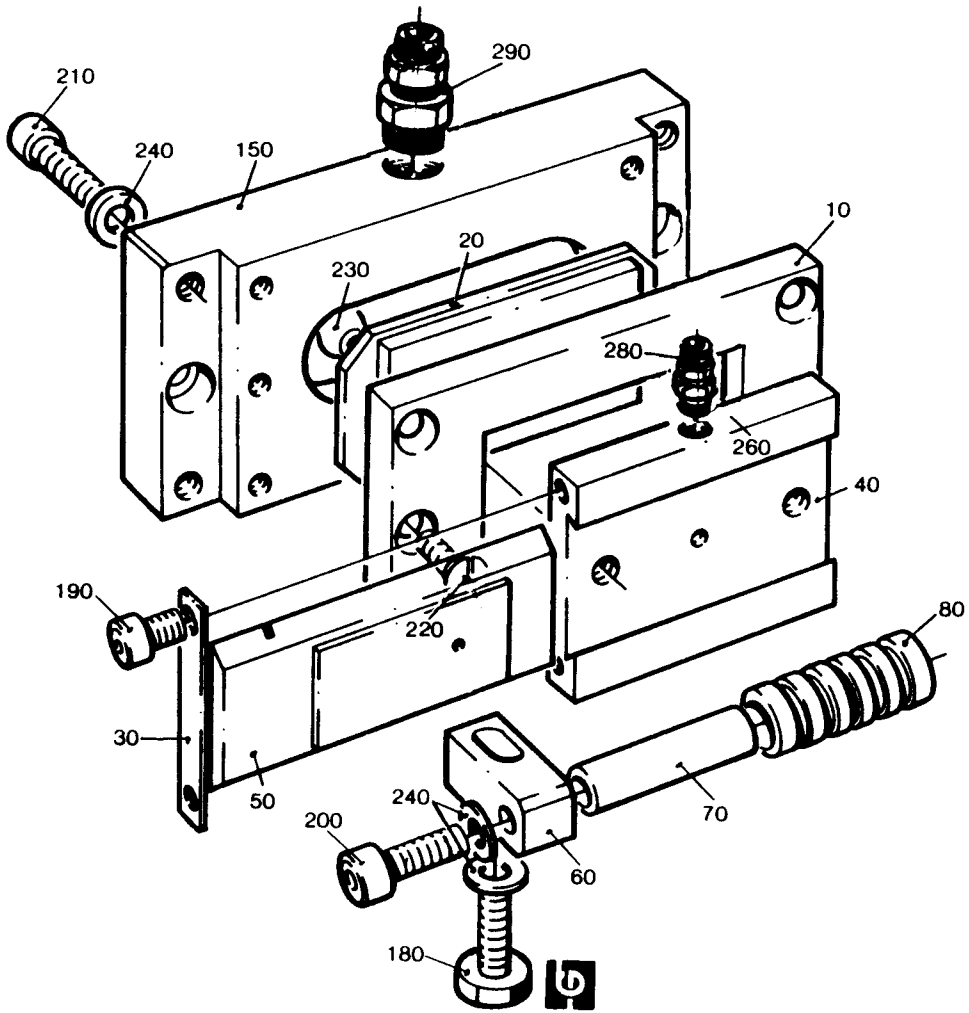
210
290
240
150
10
20
230
280
260
40
190
220
80
30
50
240
70
200
60
180

Last Alteration: AM 15121 90-09-26

Corresponding C-lists: 283607-010V, 020V
Assembly Drawing: 283607-1

Date Printed: 910326

From	Pos	Part No	SP	UN	Qty	Description
	010	257707	C		1	BRACKET
	020	257708	C		1	PLATE
	030	268694	-		2	SHEET
-070V	030	466325	-		2	SHEET **(375 ml)**
	040	283588	S		1	RAIL
-070V	040	466310	S		1	RAIL **(375 ml)**
-070V	050	469206	PU		1	COUNTER RUBBER **(284-180 ml)**
-070V	050	294868	PU		1	COUNTER RUBBER **(125, 200mlSLIM)**
-070V	050	466312	PU		1	COUNTER RUBBER **(375 ml)**
080V	050	541126	PU		1	COUNTER RUBBER **(284-180 ml)**, HOLE 21
080V	050	469206	PU		1	COUNTER RUBBER **(125, 200mlSLIM)**, HOLE 11
080V	050	469206	PU		1	COUNTER RUBBER **(284-180 ml)**, HOLE 20
080V	050	294868	PU		1	COUNTER RUBBER **(125, 200mlSLIM)**, HOLE 10
	060	294594	C		2	BRACKET
	070	294595	C		1	SHAFT
	080	294596	P		1	ROLLER
	150	90239-0732	S		1	CYLINDER
	180	312105-0329	-		2	SCREW M6S5X16 A4 80
	190	312115-0285	-		4	SCREW S 4X6 A4 80
	200	312115-0329	-		2	SCREW 5X16 A4 80
	210	312115-0331	-		4	SCREW 5X20 A4 80
-070V	220	312145-0291	-		6	SLOTTED HEMFS4X12RFR
080V	220	312145-0295	-		6	SLOTTED HEMFS4X20RFR
	230	312145-0327	-		2	SLOTTED HEMFS5X12RFR
	240	315105-0146	-		8	WASHER BRB5,3X10RFR
	280	342921-0111	-		1	PIPE CONNE6/4-5M
		315233-0101	P			* SEAL RING M5
	290	342921-0113	-		1	PIPE CONNE6/4-1/8"

From	Pos	Part No	SP	UN	Qty	Description

808-1

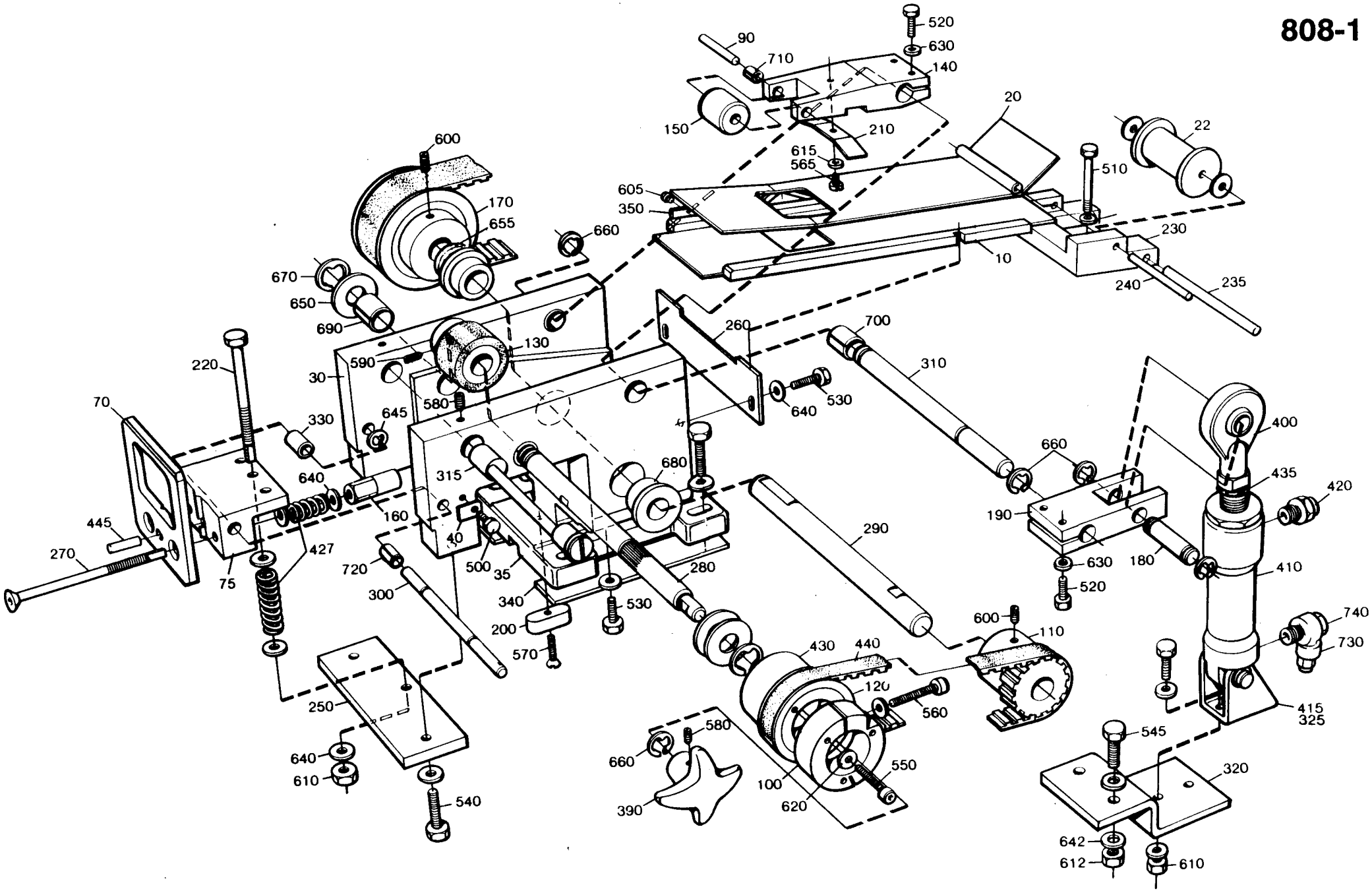

520
630
90
710
140
150
20
210
22
615
565
510
600
605
350
170
655
660
230
10
670
650
690
240
235
260
700
130
590
220
30
310
70
580
530
640
330
645
400
660
680
315
435
420
640
160
190
445
40
290
427
270
500
35
630
180
410
720
75
280
520
300
340
530
200
600
110
740
570
430
440
730
120
560
415
325
250
580
545
640
660
550
320
610
100
540
390
620
642
612
610

From	Pos	Part No	SP	UN	Qty	Description
	010	499642	C		1	CHUTE (125,200 mISLIM)
	010	499542	C		1	CHUTE
	020	499646	C		1	GUIDE PLATE (125,200 mISLIM)
	020	490775	S		1	GUIDE PLATE
	022	457909	P		1	ROLLER (125,200 mISLIM)
	022	457910	P		1	ROLLER
	030	476108	-		1	BRACKET
	035	476109	-		1	BRACKET
	040	19135	-		1	LOCK WASHER
	070	529399	P		1	KNIFE (125,200 mISLIM)
	070	526936	PU		1	KNIFE
	075	550167	P		1	KNIFE HOLDER
	090	257690	P		1	SHAFT
	100	257696	C		1	HUB
	110	259761	S		1	TOOTHED PULLY
	120	259762	S		1	TOOTHED PULLY
	130	259816	P		1	ROLLER
	140	546126	S		1	HOLDER
	150	263701	P		1	ROLLER
	160	266422	-		2	NUT
	170	456687	-		1	TOOTHED PULLY
	180	268934	C		1	SHAFT
	190	268935	C		1	ARM
	200	276143	-		4	KEY
	210	283545	P		1	SPRING
	220	283546	S		1	SCREW
	230	533373	C		1	BRACKET
	235	499580	-		1	SHAFT
	240	499581	S		1	SHAFT
	250	457913	-		1	BRACKET
	260	457914	-		1	HOLDER
	270	283551	C		2	SCREW
	280	457899	S		1	SHAFT
	290	457900	S		1	SHAFT
	300	457898	S		1	SHAFT
	310	457896	S		1	SHAFT
	315	456609	P		1	SHAFT
	320	457854	-		1	BRACKET
	330	456605-0003	-		2	SPACER
	340	499822	P		2	SHIM
	350	499543	S		1	SPRING
	390	90051-0076	-		1	WHEEL
	400	90115-0082	S		1	JOINT
	410	90239-0821	-		1	CYLINDER

From	Pos	Part No	SP	UN	Qty	Description
	415	90239-0487	-		1	BRACKET (125,200 mISLIM)
	415	90239-0487	-		1	BRACKET
	420	90257-0003	S		1	FILTER PLUG
	427	90335-0067	P		3	SPRING
	430	90340-0014	S		1	FREE WHEEL COUPLING
		90340-0309	P		0	* SPRING
	435	312621-0318	-		1	NUT ML6M8FZB
	440	90417-0073	P		1	TOOTHED BELT
	445	311103-0310	-		1	CYLINDRICACPR5M6X20RFR
	500	312105-0291	-		2	SCREW M6S4X12RFR
	510	312115-0293	-		2	SCREW 4 X 16 A4 80
	520	312105-0327	-		4	SCREW M6S5X12 A4 80
	530	312105-0368	-		6	SCREW M6S6X16RFR
	540	312105-0370	-		8	SCREW M6S6X20RFR
	545	312105-0451	-		2	SCREW M6S8X20RFR
	550	312115-0297	-		3	SCREW 4X25 A4 80
	560	312115-0372	-		1	SCREW MC6S6X25 A4 80
	565	312125-0222	-		1	SLOTTED HEMCS3X8RFR
	570	312145-0226	-		4	SLOTTED HEMFS3X12RFR
	580	312318-0285	-		6	GRUB SCREW SK6SS4X6RFR
	590	312318-0321	P		1	GRUB SCREW SK6SS5X6RFR
	600	312318-0323	-		2	GRUB SCREW SK6SS5X8RFR
	605	312504-0221	-		2	SCREW A4
	610	312605-0316	-		3	NUT M6M6RFR
	612	312605-0318	-		2	NUT M6M8RFR
	615	315105-0124	-		1	WASHER BRB3,2X6RFR
	620	315105-0136	-		5	WASHER BRB4,3X8RFR
	630	315105-0146	-		4	WASHER BRB5,3X10RFR
	640	315105-0153	-		22	WASHER BRB6,4X12RFR
	642	315105-0165	-		4	WASHER BRB8,4X16RFR
	650	315105-0173	-		2	WASHER BRB10,5X22RFR
	660	315754-0108	P		5	CIRCLIP E 6
	670	315754-0109	P		2	CIRCLIP E 7
	680	321111-0159	S		2	BUSHING 12E7X12
	690	321120-0099	S		2	BUSHING 10/12,0X12
	700	321120-0100	S		2	BUSHING 8/10X12
	710	321120-0101	S		2	BUSHING 6/8X6
	720	321120-0102	S		2	BUSHING 6/8X10
	730	342980-0113	P		1	BANJO CONNSINGEL 6/4-1/8
	740	342980-0303	P		1	BANJO CONN SINGEL 1/8"

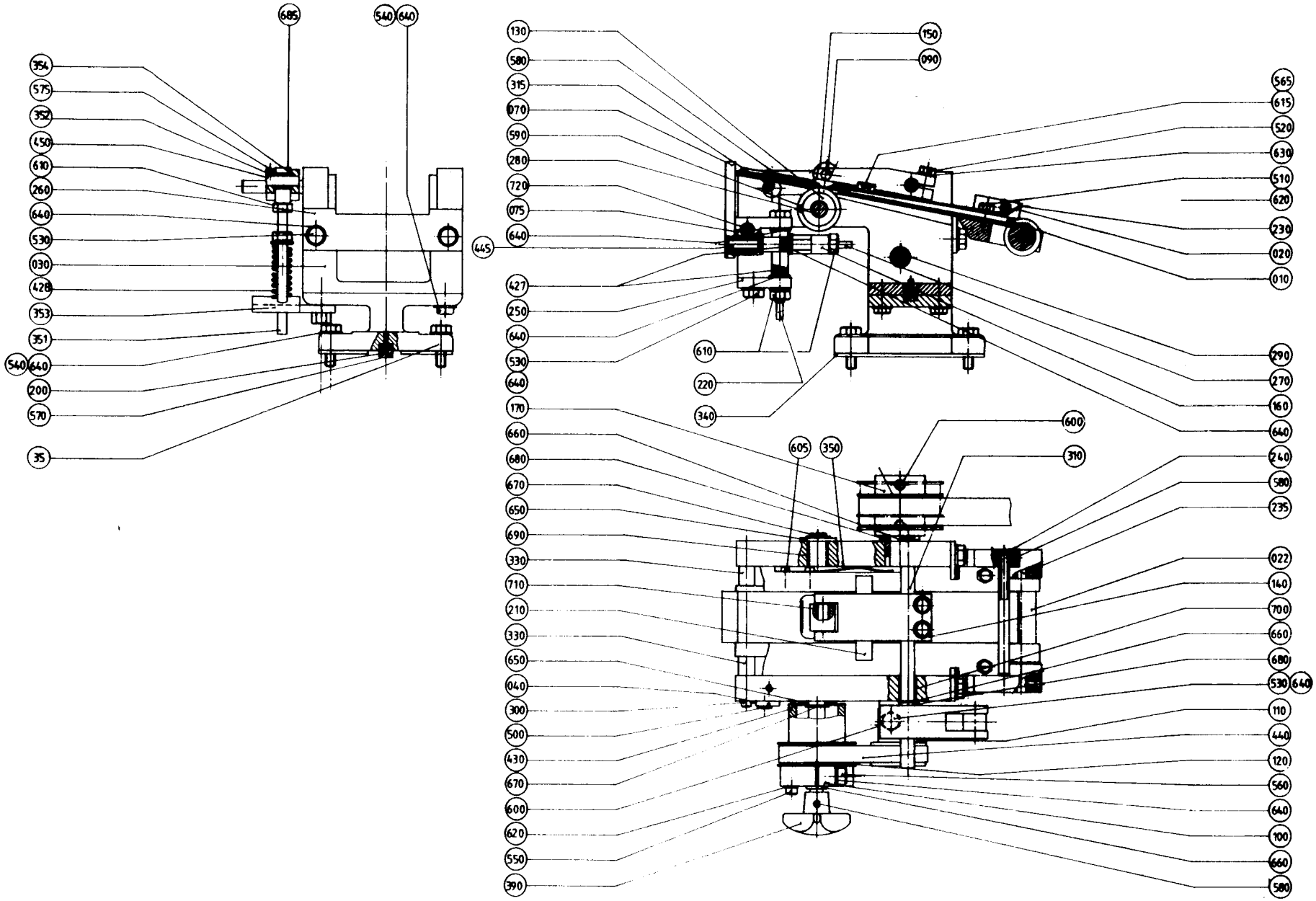
685
540
640
354
575
352
450
610
260
640
530
030
428
353
351
540
640
200
570
35
130
580
315
070
590
280
720
075
640
445
427
250
640
530
640
610
220
340
150
090
565
615
520
630
510
620
230
020
010
290
270
160
640
170
660
680
670
650
690
330
710
210
330
650
040
300
500
430
670
600
620
550
390
605
350
600
310
240
580
235
022
140
700
660
680
530
640
110
440
120
560
640
100
660
580

From	Pos	Part No	SP	UN	Qty	Description
Volume 125, 200 ml SLIM						
	010	536485	C		1	CHUTE, HOLE 11
	010	499642	C		1	CHUTE, HOLE 10
	020	536486	C		1	GUIDE PLATE, HOLE 11
	020	499646	C		1	GUIDE PLATE, HOLE 10
	022	540892	P		1	ROLLER, HOLE 11
	022	457909	P		1	ROLLER, HOLE 10
Volume 250 - 180 ml						
	010	499542	C		1	CHUTE, HOLE 21, 20
	020	490775	C		1	GUIDE PLATE, HOLE 21, 20
	022	457910	P		1	ROLLER, HOLE 21, 20
Common Parts						
	030	G- 476108	-		1	BRACKET
	035	G- 476109	-		1	BRACKET
	040	19135	-		1	LOCK WASHER
	070	526936	P		1	KNIFE
	075	550167	P		1	KNIFE HOLDER
	090	257690	P		1	SHAFT
	100	257696	C		1	HUB
	110	259761	S		1	TOOTHED PULLY
	120	259762	S		1	TOOTHED PULLY
	130	259816	P		1	ROLLER
	140	546126	S		1	HOLDER
	150	263701	P		1	ROLLER
	160	266422	-		2	NUT
	170	456687	S		1	TOOTHED PULLY
	200	276143	-		4	KEY
	210	283545	P		1	SPRING
	220	283546	S		1	SCREW
	230	533373	C		1	BRACKET
	235	499580	-		1	SHAFT
	240	499581	S		1	SHAFT
	250	457913	-		1	BRACKET
	260	457914	-		1	HOLDER
	270	283551	C		2	SCREW
	280	457899	S		1	SHAFT
	290	457900	S		1	SHAFT
	300	457898	S		1	SHAFT
	310	457896	S		1	SHAFT
	315	456609	P		1	SHAFT
	330	456605-0003	-		2	SPACER
	340	499822	P		2	SHIM
	350	499543	S		1	SPRING
	351	548332	S		1	SHAFT
	352	548333	S		1	ARM
	353	548334	S		1	LUG
	354	548335	C		1	BRACKET
	390	90051-0076	-		1	WHEEL
	427	90335-0067	P		3	SPRING
	428	90335-0082	S		1	SPRING
	430	90340-0014	S		1	FREE WHEEL COUPLING
		90340-0309	P		0	* SPRING
	440	90417-0073	P		1	TOOTHED BELT
	445	311103-0310	-		1	CYLINDRICACPR5M6X20RFR
	450	311103-0353	-		1	CYLINDRICACPR6M6X20RFR
	500	312105-0291	-		1	SCREW M6S4X12RFR
	510	312115-0293	-		2	SCREW 4 X 16 A4 80
	520	312105-0327	-		2	SCREW M6S5X12 A4 80
	530	312105-0368	-		5	SCREW M6S6X16RFR
	540	312105-0370	-		8	SCREW M6S6X20RFR
	550	312115-0297	-		3	SCREW 4X25 A4 80
	560	312115-0372	-		1	SCREW MC6S6X25 A4 80
	565	312125-0222	-		1	SLOTTED HEMCS3X8RFR
	570	312145-0226	-		4	SLOTTED HEMFS3X12RFR
	575	312318-0218	-		1	GRUB SCREW SK6SS3X4RFR
	580	312318-0285	-		6	GRUB SCREW SK6SS4X6RFR
	590	312318-0321	P		1	GRUB SCREW SK6SS5X6RFR
	600	312318-0323	-		2	GRUB SCREW SK6SS5X8RFR
	605	312504-0221	-		2	SCREW A4
	610	312605-0316	-		5	NUT M6M6RFR
	615	315105-0124	-		1	WASHER BRB3,2X6RFR
	620	315105-0136	-		5	WASHER BRB4,3X8RFR
	630	315105-0146	-		2	WASHER BRB5,3X10RFR
	640	315105-0153	-		21	WASHER BRB6,4X12RFR
	650	315105-0173	-		2	WASHER BRB10,5X22RFR
	660	315754-0108	P		5	CIRCLIP E 6
	670	315754-0109	P		2	CIRCLIP E 7
	680	321111-0159	S		2	BUSHING 12E7X12
	685	321116-0066	S		1	BUSHING 6E7/10X10
	690	321120-0099	S		2	BUSHING 10/12,0X12
	700	321120-0100	S		2	BUSHING 8/10X12
	710	321120-0101	S		2	BUSHING 6/8X6
	720	321120-0102	S		2	BUSHING 6/8X10

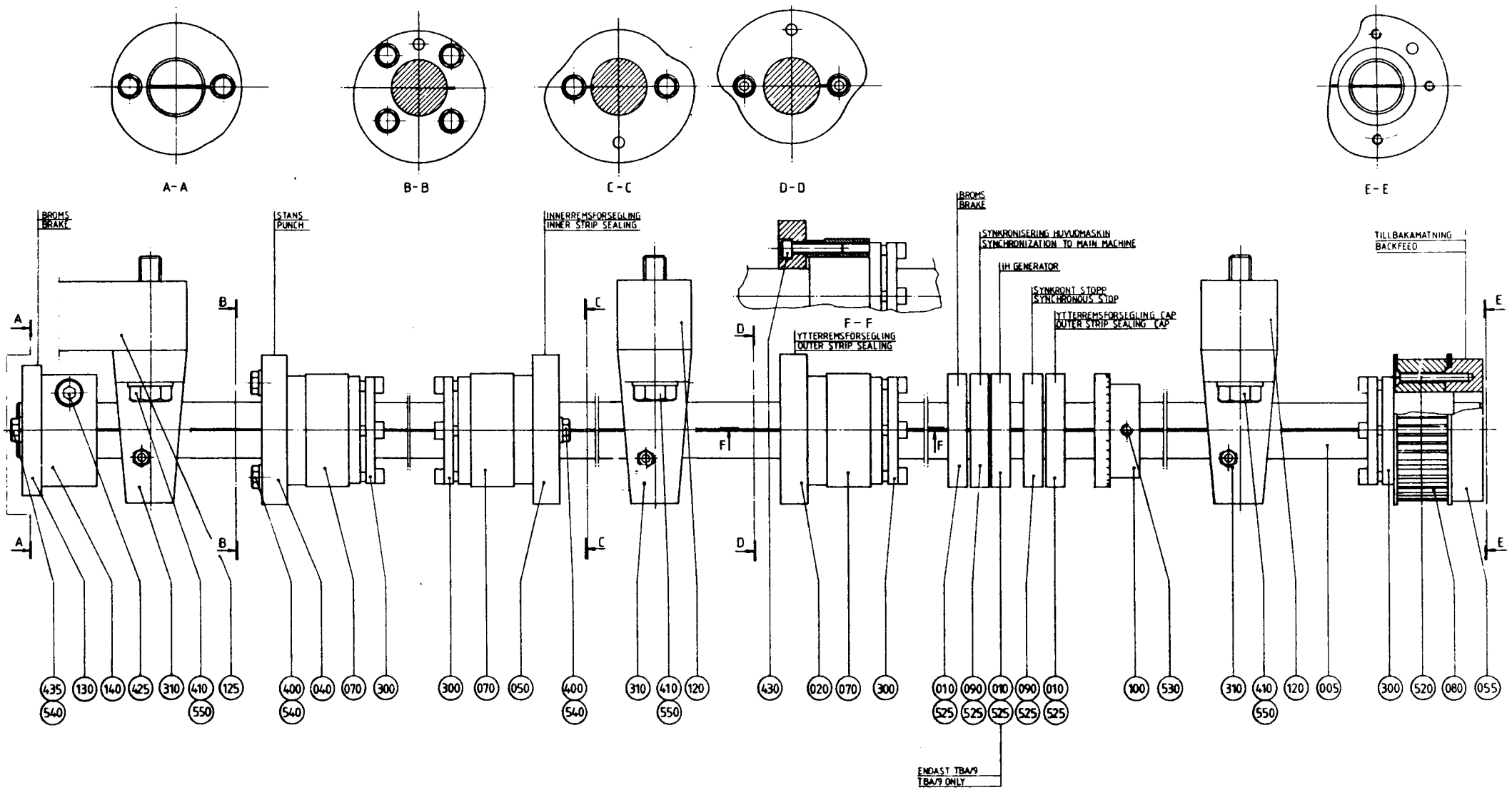
A-A
B-B
C-C
D-D
E-E
BROMS
BRAKE
STANS
PUNCH
INNERREMSFORSEGLING
INNER STRIP SEALING
F-F
YTTERREMSFORSEGLING
OUTER STRIP SEALING
BROMS
BRAKE
SYNKRONISERING HUVUDMASKIN
SYNCHRONIZATION TO MAIN MACHINE
IH GENERATOR
SYNKRONT STOPP
SYNCHRONOUS STOP
YTTERREMSFORSEGLING, CAP
OUTER STRIP SEALING, CAP
TILLBAKAMATNING
BACKFEED
ENDAST TBA/9
TBA/9 ONLY

Last Alteration: AM 12943 89-05-29

Corresponding C-lists:456674-010V, 476349-020V, 030V
Assembly Drawing: 456674-1, 476349-4, 5

Date Printed: 900928

From	Pos	Part No	SP	UN	Qty	Description
TBA/9						
060V		**C- 456674-0101**				**DRIVE SHAFT**
070V		**C- 476349-0201**				**DRIVE SHAFT**
080V		**C- 476349-0301**				**DRIVE SHAFT**
	010	283575	C		3	CAM
070V-	010	484988	C		3	CAM
	525	312318-0323	-		5	GRUB SCREW SK6SS5X8RFR
TB/9						
060V		**C- 456674-0102**				**DRIVE SHAFT**
070V		**C- 476349-0202**				**DRIVE SHAFT**
080V		**C- 476349-0302**				**DRIVE SHAFT**
	010	283575	C		2	CAM
070V-	010	484988	C		2	CAM
	525	312318-0323	-		4	GRUB SCREW SK6SS5X8RFR
Common Parts						
	005	449330	-		1	SHAFT
070V-	005	533396-0007	-		1	SHAFT
	020	456675	C		1	CURVE PT-SEALING
-060V	040	543197	C		1	CAM
	050	456677	C		1	CURVE LS-SEALING
	055	456678	C		1	CAM
	070	266506	C		3	HUB
	080	268056	S		1	TOOTHED PULLY
	090	268289	C		2	CAM
070V-	090	484989	C		2	CAM
	100	268915	C		1	PROTRACTOR
	120	449347	-		2	SPACER
	125	531908	-		1	SPACER
070V-	130	531638	C		1	CAM
070V-	140	531976	-		1	HUB
	300	90208-0053	P		4	CLAMPING ELEMENT
	310	90345-0007	S		3	BEARING
-060V	380	311103-0369	P		6	CYLINDRICAL PIN CPR6 M6X60 RFR
-060V	400	312105-0376	-		6	SCREW M6S6X35RFR
070V-	400	312105-0374	-		6	SCREW M6S6X30RFR
	410	312105-0546	-		6	SCREW M6S12X70RFR
	425	312115-0453	-		1	SCREW 8X25 A4 80
070V-	430	312115-0372	-		2	SCREW MC6S6X25 A4 80
070V-	435	312105-0370	-		2	SCREW M6S6X20RFR
	520	312145-0339	-		3	SLOTTED HEMFS5X40RFR
	530	312318-0364	-		1	GRUB SCREW SK6SS6X10RFR
	540	315105-0153	-		8	WASHER BRB6,4X12RFR
	550	315105-0178	-		6	WASHER BRB13X24RFR
-060V	560	315203-0219	P		4	O-RING 29.2X3 F

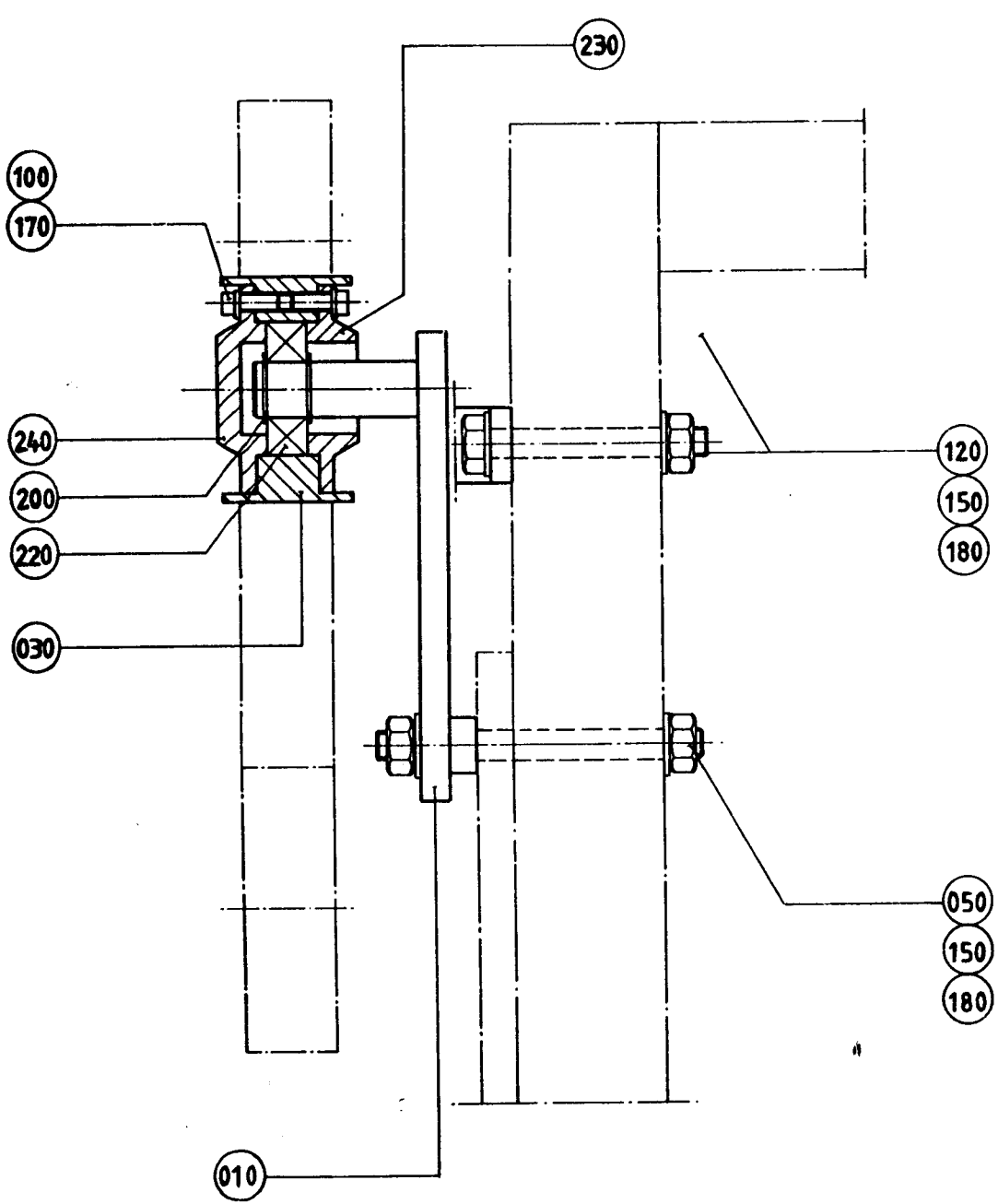
230
100
170
240
200
220
030
120
150
180
050
150
180
010

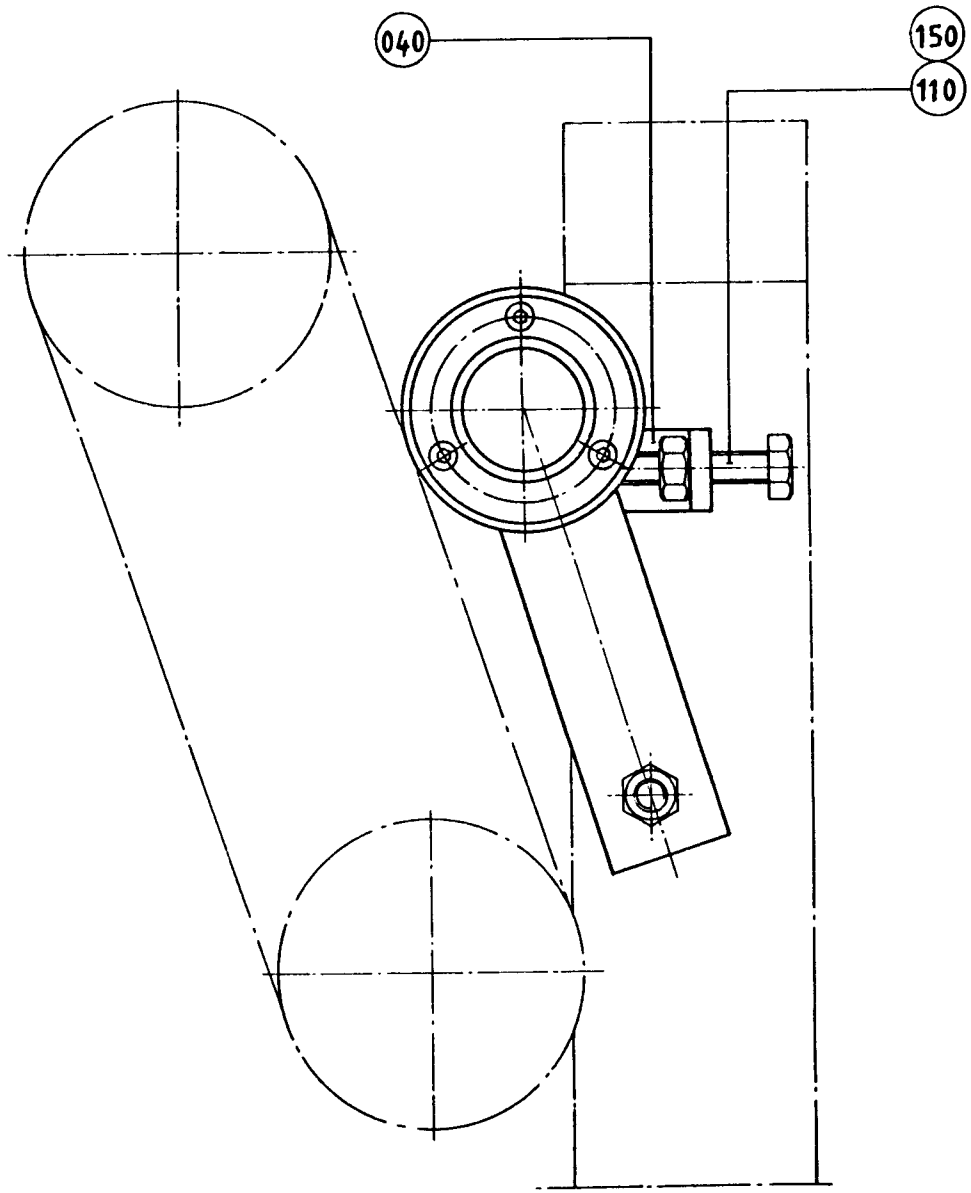
040
150
110

Last Alteration: AM 7341 85-03-12

Corresponding C-lists: 469182-010V
Assembly Drawing: 469182-1

Date Printed: 900926

From	Pos	Part No	SP	UN	Qty	Description
	010	469183	-		1	ARM
	030	294664	C		1	ROLLER
	040	294665	-		1	BRACKET
	050	294666	-		1	PIN
	100	312115-0327	-		6	SCREW MC6S5X12 A4 80
	110	312109-0463	-		1	SCREW
	120	312105-0463	-		2	SCREW M6S8X60RFR
	150	312605-0318	-		5	NUT M6M8RFR
	170	315105-0146	-		6	WASHER BRB5,3X10RFR
	180	315105-0165	-		6	WASHER BRB8,4X16RFR
	200	315750-0112	S		2	LOCK RING SGA15
	220	321313-0102	S		1	BALL BEARISKF6202-2RS
	230	469642	-		1	LID
	240	469646	-		1	LID

From	Pos	Part No	SP	UN	Qty	Description

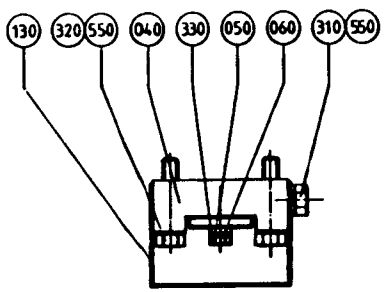

VY D-D / VIEW D-D
SKALA 1:1 / SCALE 1:1

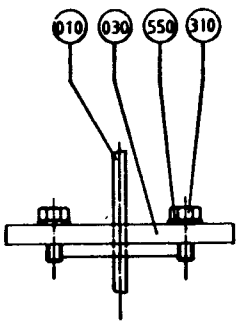

VY C-C / VIEW C-C
SKALA 1:1 / SCALE 1:1

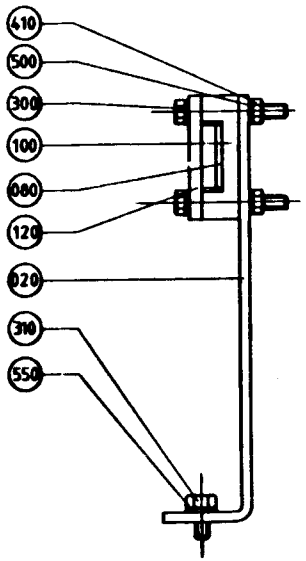

VY B-B / VIEW B-B
SKALA 1:1 / SCALE 1:1

Pos 110 monterad för volymer 125 ml och 200 ml slim
Pos 110 mounted for volumes 125 ml and 200 ml slim

Pos 110 monterad för alla volymer utom 125 ml och 200 ml slim
Pos 110 mounted for all volumes except 125 ml and 200 ml slim

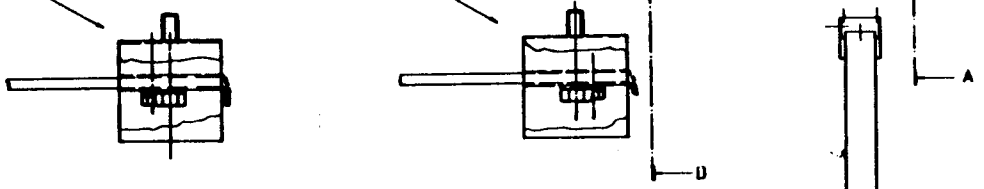

VY A-A / VIEW A-A
SKALA 1:1 / SCALE 1:1

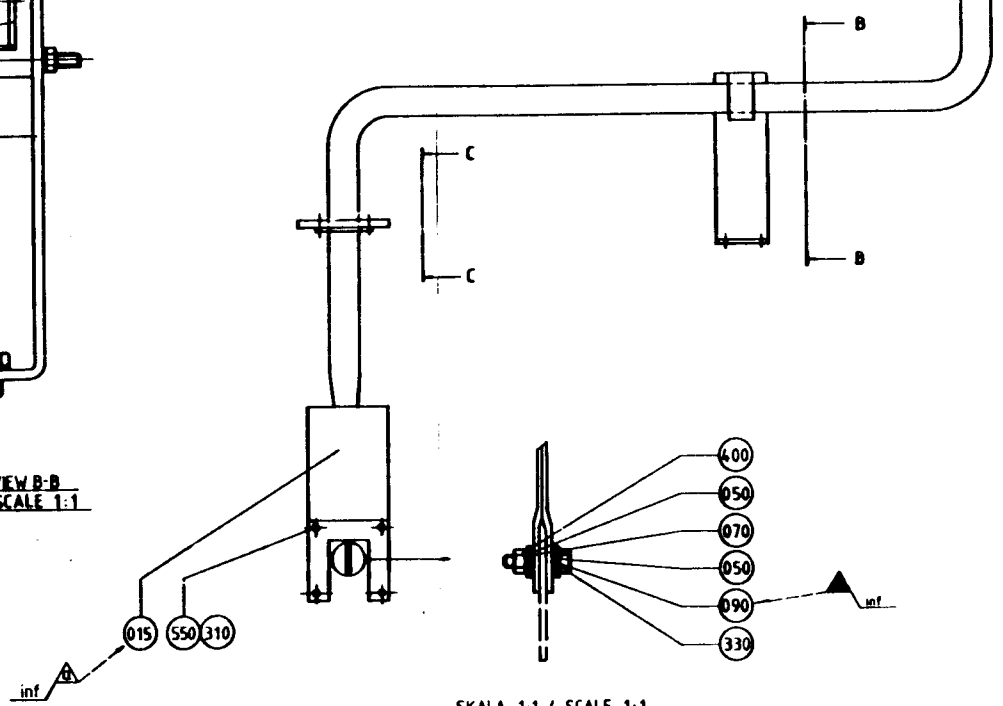

SKALA 1:1 / SCALE 1:1

From	Pos	Part No	SP	UN	Qty	Description
	010	490741	S		1	BUSBAR
	015	490729	-		1	PROTECTIVE COVER
	020	469622	-		1	BRACKET
	030	469630	-		1	HOLDER
	040	490735	-		1	BRACKET
	050	28509	S		3	WASHER
	060	28510	S		1	INSULATION NUT
	070	32079	S		1	WASHER
	080	32136	S		1	SHIM
	090	32544	S		1	INSULATION NUT
	100	276182	S		1	CABLE CLAMP
	120	457848	S		1	SHIM
	130	490765	C		1	GUARD
	300	312105-0339	-		2	SCREW M6S5X40 A4 80
	310	312105-0366	-		12	SCREW M6S6X12RFR
	320	312105-0374	-		2	SCREW M6S6X30RFR
	330	312122-0295	-		2	SLOTTED HEMCS4X20MSGFN
	400	312605-0312	-		1	NUT M6M4RFR
	410	312605-0314	-		2	NUT M6M5RFR
	500	315105-0146	-		4	WASHER BRB5,3X10RFR
	550	315105-0153	-		14	WASHER BRB6,4X12RFR

From	Pos	Part No	SP	UN	Qty	Description

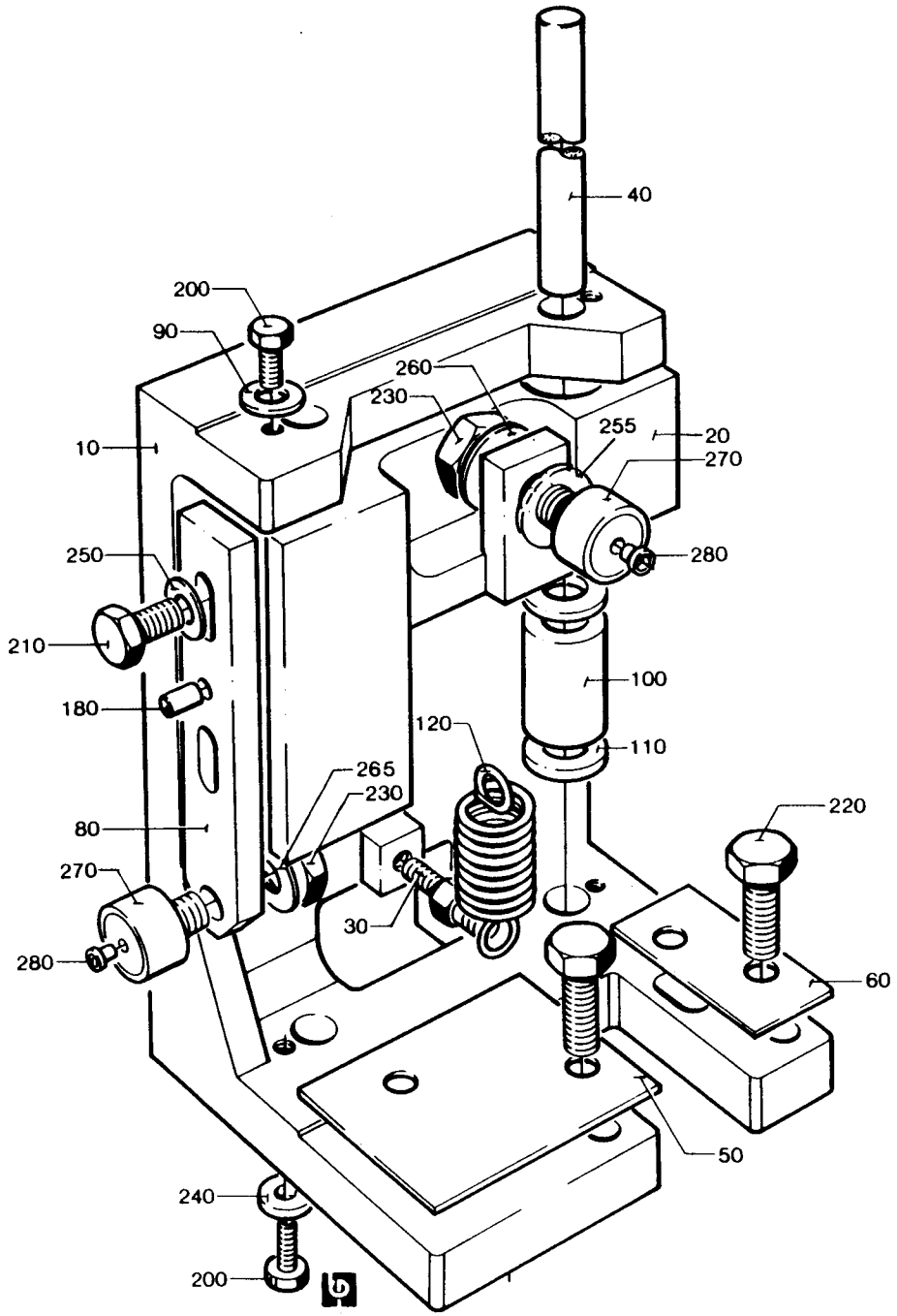
40
200
90
260
230
255
20
270
10
250
280
210
100
180
120
110
265
230
220
80
270
30
280
60
50
240
200

Last Alteration: AM 10738 87-06-21

Corresponding C-lists: 294695-010V
Assembly Drawing: 294696-1

Date Printed: 900926

From	Pos	Part No	SP	UN	Qty	Description
	010	G- 294674	C		1	BRACKET
	020	G- 294675	C		1	GUIDE
	030	456684	C		2	SPRING HOLDER
	040	294628	S		2	SHAFT
	050	294676	-		1	WASHER
	060	294677	-		1	WASHER
	080	294680	-		1	ARM
	090	456685	-		4	WASHER
	120	456695	P		1	SPRING
	100	90189-0021	P		3	BALL BUSHING
	110	90189-0024	P		4	SEAL RING
	180	311103-0350	-		1	CYLINDRICACPR6M6X14RFR
	200	312105-0327	-		4	SCREW M6S5X12 A4 80
	210	312105-0451	-		2	SCREW M6S8X20RFR
	220	312105-0455	-		4	SCREW M6S8X30RFR
	230	312630-0320	-		2	NUT M6M10X1FZB
	250	315105-0165	-		6	WASHER BRB8,4X16RFR
	255	315105-0171	-		1	WASHER BRB10X18RFR
	260	315105-0173	-		1	WASHER BRB10,5X22RFR
	265	315115-0173	-		1	WASHER B 10,5X22 RFR
	270	321582-0149	P		2	CAM ROLLERKR22PP
	280	344510-0101	P		2	GREASE NIPL 1

From	Pos	Part No	SP	UN	Qty	Description

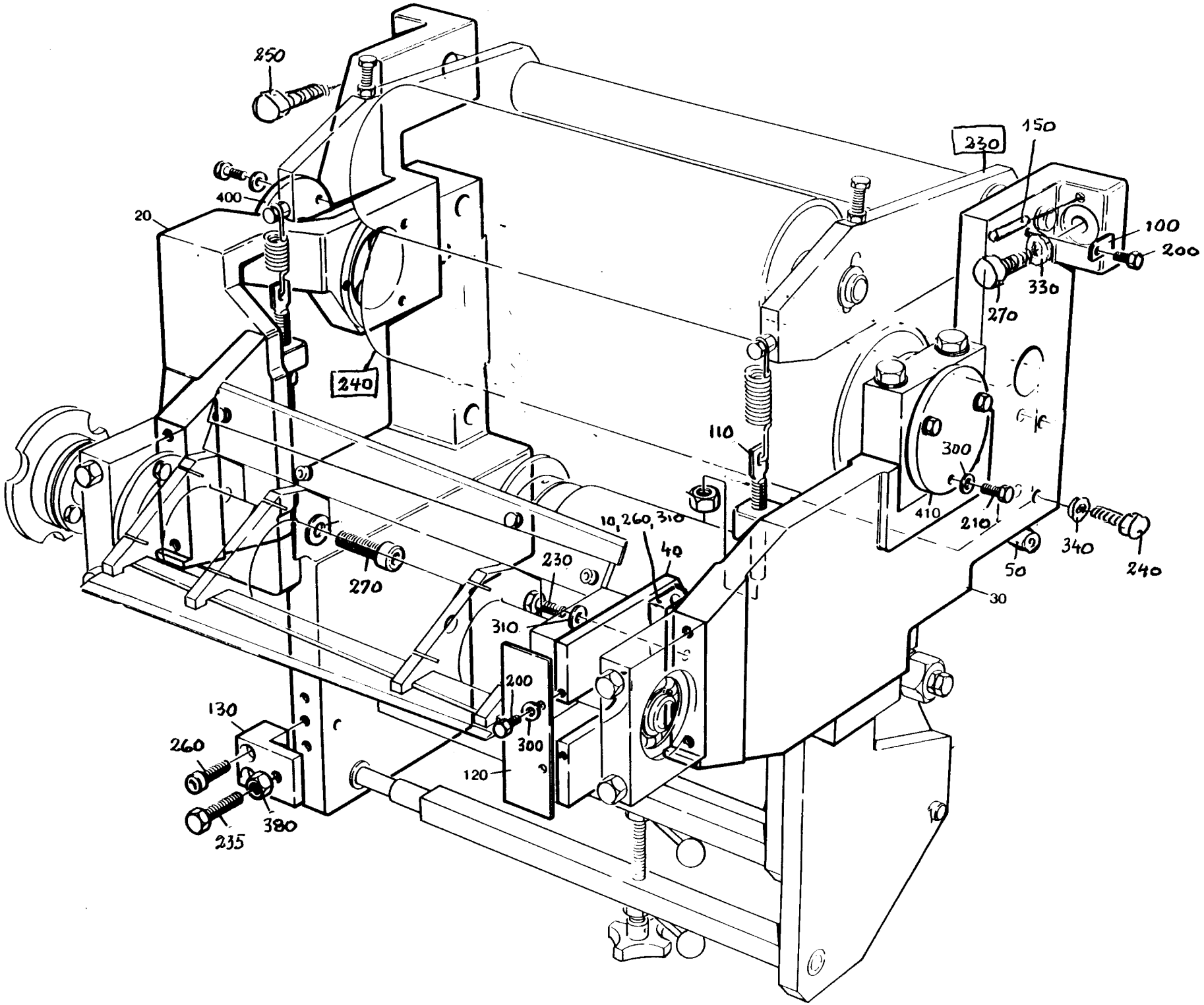
250
400
20
240
230
150
100
200
330
270
110
300
410
210
340
240
50
30
10, 260, 310
40
230
270
310
200
300
120
130
260
380
235

From	Pos	Part No	SP	UN	Qty	Description
060V	000	456696-0101				PAPER FEED
060V	000	456696-0102				PAPER FEED (125, 200 mISLIM)
070V	000	456696-0201				PAPER FEED
070V	000	456696-0202				PAPER FEED (125, 200 mISLIM)
080V	000	456696-0301				PAPER FEED
080V	000	456696-0302				PAPER FEED (125, 200 mISLIM)
	F230	==>813-1.2	-		1	DRIVE ROLLER
	F240	==>813-1.1	-		1	PRESSURE ROLLER
	010	456631	-		1	SPACER (125, 200 mISLIM)
	020	457956	C		1	SIDE PLATE
	030	457955	C		1	GABLE
	040	269439	-		1	PLATE
	050	456622	-		1	TIE ROD
	060	456623	-		1	TIE ROD
	100	18135	-		1	WASHER
	110	476930	-		2	SPRING HOLDER
	120	269440	-		1	PLATE
-060V	130	464146	-		1	LUG
070V-	130	529400-0002	-		1	LUG
	150	311103-0357	-		2	CYLINDRICAL PIN CPR6 M6X30 RFR
070V-	150	90258-0007	-		2	TAPER PIN
	200	312105-0325	-		3	SCREW M6S5X10 A4 80
	210	312105-0327	-		6	SCREW M6S5X12 A4 80
	230	312105-0368	-		1	SCREW M6S6X16RFR
	235	312109-0374	-		1	SCREW M6S6X30H A4 80
070V-	235	312109-0463	-		1	SCREW M6S8X60H A4 80
	240	312105-0449	-		4	SCREW M6S8X16RFR
	250	312105-0495	-		3	SCREW M6S10X30RFR
070V-	260	312115-0374	-		4	SCREW 6X30 A4 80
	270	312115-0495	-		5	SCREW 10X30 A4 80
	300	315105-0146	-		8	WASHER BRB5,3X10RFR
	310	315105-0153	-		3	WASHER BRB6,4X12RFR
	330	315105-0173	-		8	WASHER BRB10,5X22RFR
	340	315121-0165	-		4	WASHER TBRSB8,4X26FZB
070V-	380	312605-0318	-		1	NUT M6M8RFR
	400	469644	-		1	LID
	410	469647	-		1	LID

From	Pos	Part No	SP	UN	Qty	Description

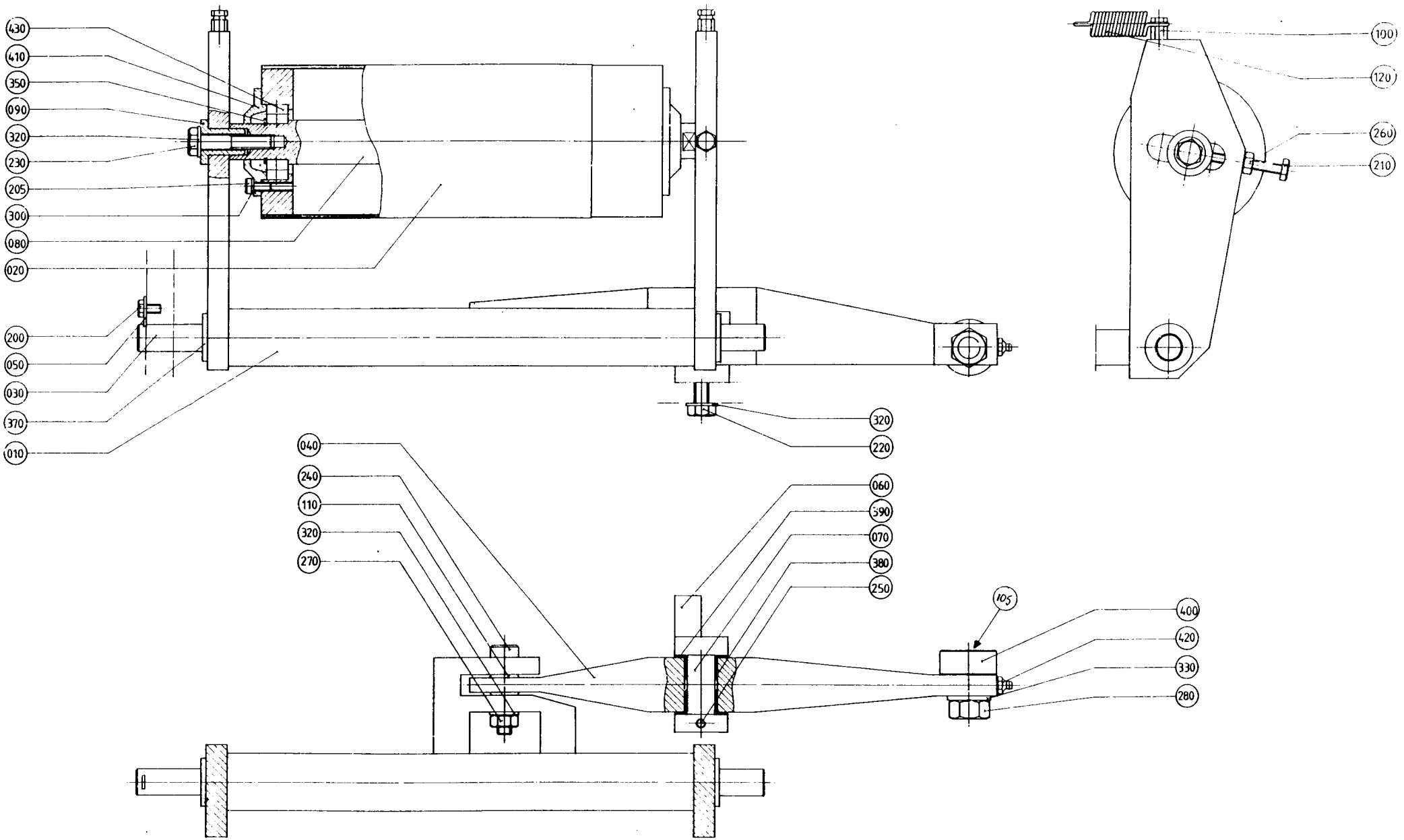
430
410
350
090
320
230
205
300
080
020
200
050
030
370
010
320
220
100
120
260
210
040
240
110
320
270
060
590
070
380
250
105
400
420
330
280

From	Pos	Part No	SP	UN	Qty	Description
	000	**284604-0201**				**PRESSURE ROLLER**
	010	449200-0001	C		1	HOLDER
	020	283587-0003	S		1	PRESSURE ROLLER
	030	449202-0001	S		1	SHAFT
	040	449201	C		1	ARM
	050	18135	-		1	WASHER
	060	449205	C		1	HOLDER
	070	449206	S		1	SHAFT
	080	449203-0001	S		1	SHAFT
	090	449204	S		2	HUB
	100	532095	S		2	SPRING HOLDER
	105	90136-0003	-		1	PLUG
	110	90240-0093	S		1	PLAIN BEARING
	120	532016	P		2	SPRING
	200	312105-0325	-		7	SCREW M6S5X10 A4 80
	210	312104-0378	-		2	SCREW M6S6X40H8.8FZB
	220	312105-0451	-		2	SCREW M6S8X20RFR
	230	312105-0459	-		2	SCREW M6S8X40RFR
	240	312180-0495	-		1	REAMED BOL
	250	312318-0325	-		1	GRUB SCREW SK6SS5X10RFR
	260	312605-0316	-		2	NUT M6M6RFR
	270	312605-0318	-		1	NUT M6M8RFR
	280	312631-0322	-		1	NUT M6M12X1,5FZB
	300	315105-0146	-		6	WASHER BRB5,3X10RFR
	320	315105-0165	-		4	WASHER BRB8,4X16RFR
	330	315105-0178	-		1	WASHER BRB13X24RFR
	350	315750-0116	-		1	LOCK RING SGA20
	370	321111-0212	S		2	BUSHING 15E7X15
	380	321120-0123	S		2	BUSHING 16/18X12
	390	321129-0117	S		2	WASHER 16/30X1,5
	400	321582-0166	-		1	CAM ROLLERKR32PP
	410	469643	-		2	LID
-070V	420	344510-0102	S		1	GREASE NIPL 2
080V	420	344502-0021	S		1	GREASE NIPL AHM6
	430	321308-0204	S		2	BALL BEARISKF6004-2RS

From	Pos	Part No	SP	UN	Qty	Description

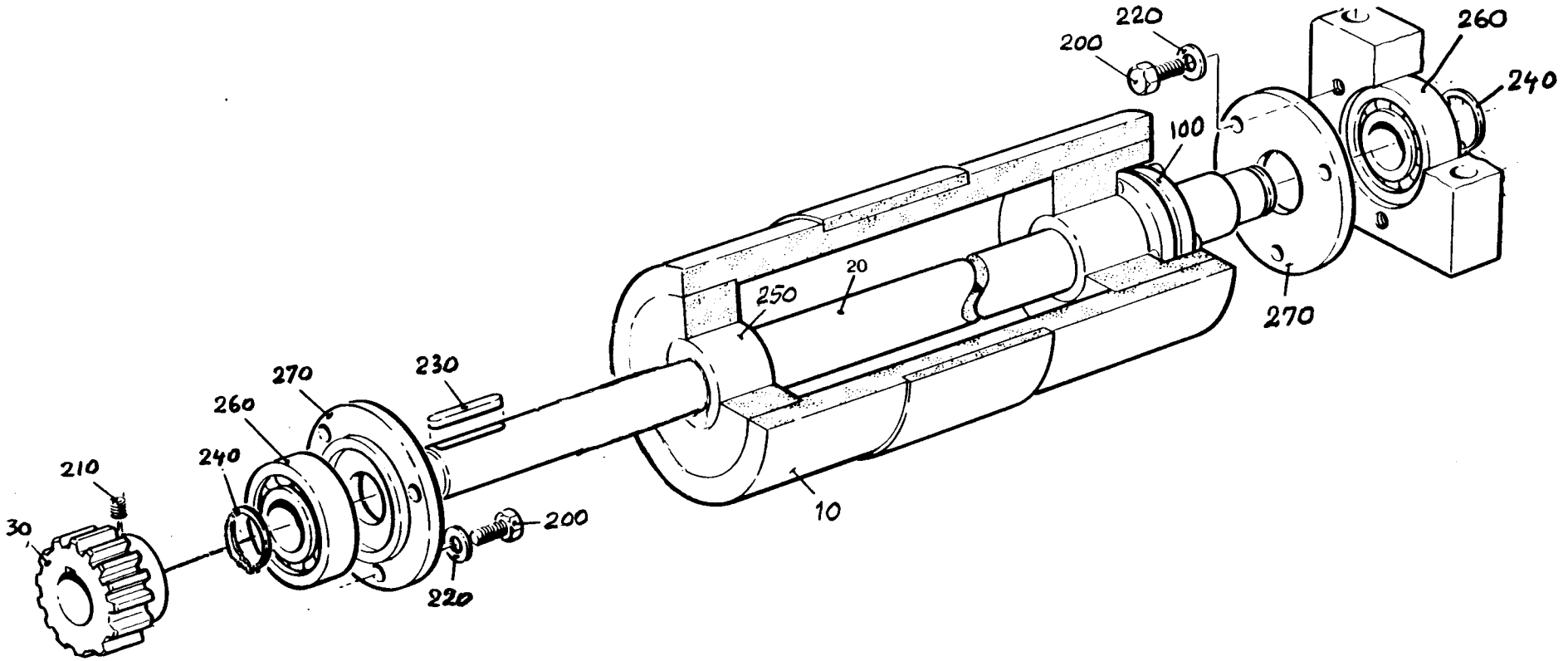
220
200
260
240
100
20
250
270
270
230
260
240
210
30
200
220
10

From	Pos	Part No	SP	UN	Qty	Description
	000	456688-0102				DRIVE ROLLER (250 ml)
	000	456688-0103				DRIVE ROLLER (236 ml)
	000	456688-0104				DRIVE ROLLER (200 ml)
	000	456688-0106				DRIVE ROLLER (180 ml)
	000	456688-0107				DRIVE ROLLER (125 ml)
	000	456688-0109				DRIVE ROLLER (200 mlSLIM)
080V	000	456688-0202				DRIVE ROLLER (250 ml)
080V	000	456688-0203				DRIVE ROLLER (236 ml)
080V	000	456688-0204				DRIVE ROLLER (200 ml)
080V	000	456688-0206				DRIVE ROLLER (180 ml)
080V	000	456688-0207				DRIVE ROLLER (125 ml)
080V	000	456688-0209				DRIVE ROLLER (200 mlSLIM)
	010	294964	S		1	DRIVE ROLLER (250 ml)
080V	010	548405	S		1	DRIVE ROLLER (250 ml)
-070V	010	449242	S		1	DRIVE ROLLER (236 ml)
	010	283681	S		1	DRIVE ROLLER (200 ml)
080V	010	550113	S		1	DRIVE ROLLER (200 ml)
	010	294966	S		1	DRIVE ROLLER (180 ml)
080V	010	550112	S		1	DRIVE ROLLER (180 ml)
	010	283521	S		1	DRIVE ROLLER (125 ml)
080V	010	548404	S		1	DRIVE ROLLER (125 ml)
	010	283583	S		1	DRIVE ROLLER (200 mlSLIM)
080V	010	544463	S		1	DRIVE ROLLER (200 mlSLIM)
	020	269173-0003	S		1	SHAFT
	030	263496	S		1	GEAR
080V	030	401463	S		1	GEAR
	100	90208-0052	S		1	CLAMPING ELEMENT
	200	312105-0327	-		6	SCREW M6S5X12 A4 80
	210	312318-0321	-		2	GRUB SCREW SK6SS5X6RFR
	220	315105-0146	-		6	WASHER BRB5,3X10RFR
	230	315701-0234	S		1	FLAT WEDGE6X6X25
	240	315750-0116	S		2	LOCK RING SGA20
	250	321105-0253	S		1	BUSHING 25F7X35X25
	260	321313-0104	S		2	BALL BEARISKF6204-2RS
	270	469645	-		2	LID

From	Pos	Part No	SP	UN	Qty	Description

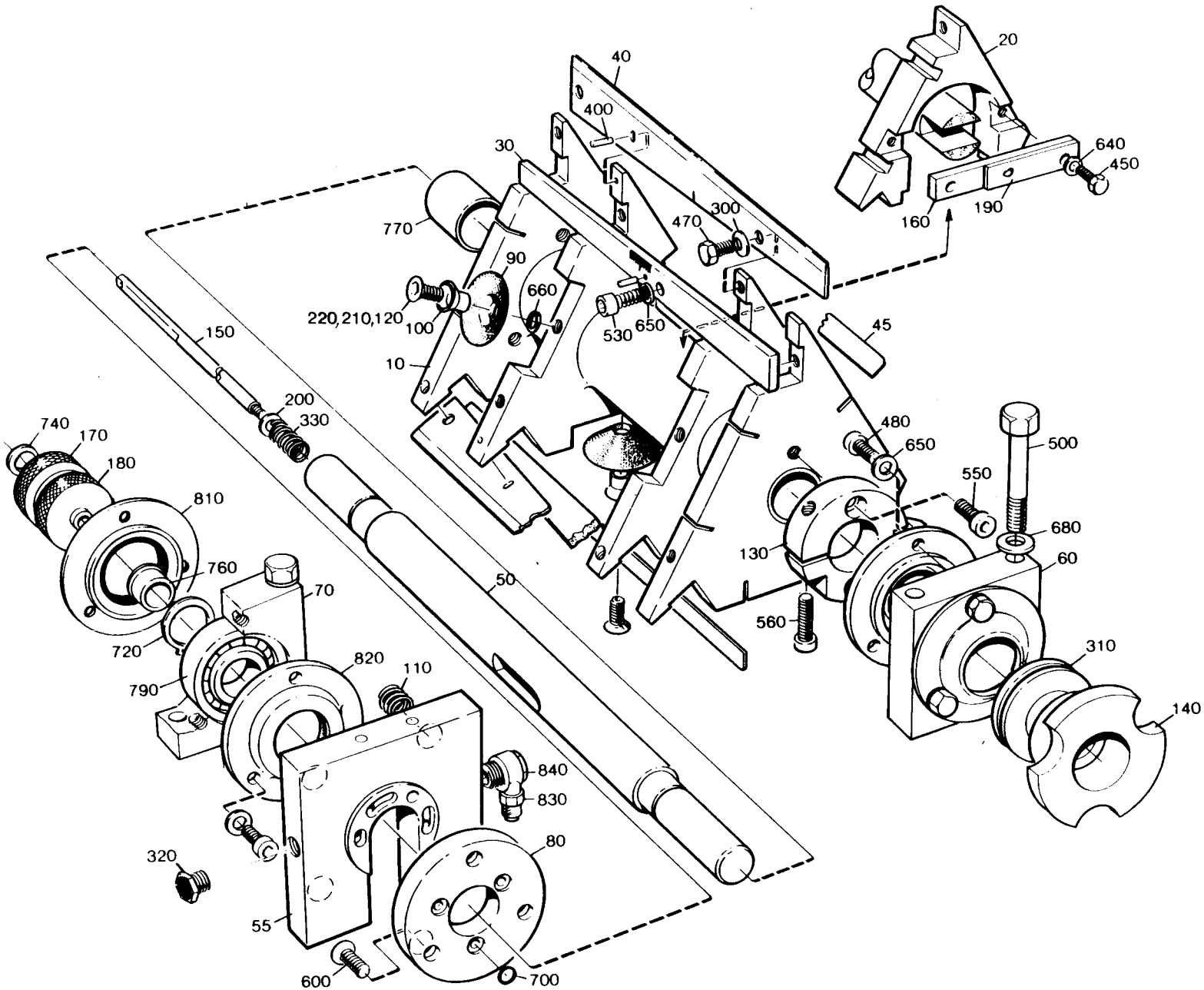
20
40
400
30
640
450
160
190
770
300
470
90
660
220,210,120
100
530
650
45
10
150
200
330
740
170
180
810
480
650
500
550
680
130
60
760
70
50
560
720
820
110
310
790
140
840
830
80
320
55
600
700

From	Pos	Part No	SP	UN	Qty	Description
Volume 250 ml						
	010	456650	C		1	REEL
	020	456643	C		1	CLAMP
	030	456636	-		3	RULER
	040	490791	S		3	CARRIER
	045	283692-0003	-		6	RULER
Volume 236ml						
	010	456649	C		1	REEL
	020	469174	C		1	CLAMP
	030	456636	-		3	RULER
	040	490791	S		3	CARRIER
	045	283692-0003	-		6	RULER
Volume 200 ml						
	010	456648	C		1	REEL
	020	469175	C		1	CLAMP
	030	456636	-		3	RULER
	040	490791	S		3	CARRIER
	045	283692-0003	-		6	RULER
Volume 180 ml						
	010	456647	C		1	REEL
	020	469176	C		1	CLAMP
	030	456636	-		3	RULER
	040	490791	S		3	CARRIER
	045	283692-0003	-		6	RULER
Volume 125 ml						
	010	456646	C		1	REEL
	020	469177	C		1	CLAMP
	030	456635	-		3	RULER
	040	490714	S		3	CARRIER
	045	283692-0002	-		6	RULER
Volume 200 ml SLIM						
	010	456652	C		1	REEL
	020	456645	C		1	CLAMP
	030	456635	-		3	RULER
	040	490714	S		3	CARRIER
	045	283692-0002	-		6	RULER
Common Parts						
	050	456621	C		1	SHAFT
	055	490671	P		1	DISTRIBUTOR BLOCK
	060	456624	-		1	BEARING HOUSING
	070	456625	-		1	BEARING HOUSING
	080	284806	C		1	HUB
	090	120902	PU		6	SUCTION CUP
	100	120904	S		6	BUSHING
	110	252926	P		4	COMPRESSION SPRING
	120	265603	S		6	SCREW
	130	283853	S		1	HUB
	140	294632	C		1	CAM
	150	456626	-		1	ROD
	160	456627	-		1	ROD
	170	456628	C		1	KNOB
	180	456629	C		1	KNOB
	190	456630	C		1	LOCK WASHER
	200	490660	-		1	WASHER
	210	2033-0013	-		18	WASHER
	220	255119	-		18	WASHER
	300	90016-0052	P		6	DISC SPRING
	310	90208-0051	S		1	CLAMPING ELEMENT
	320	90257-0003	S		1	FILTER PLUG
	325	90258-0002	S		3	HOLLOW PIN
	330	90335-0027	P		1	SPRING
	400	311103-0208	S		3	CYLINDRICACPR2,5M6X12RFR
	450	312105-0291	-		2	SCREW M6S4X12RFR
	470	312125-0323	-		6	SLOTTED HEMCS5X8RFR
	480	312105-0327	-		12	SCREW M6S5X12 A4 80
	500	312105-0469	-		4	SCREW M6S8X90RFR
	530	312115-0325	-		3	SCREW 5X10 A4 80
	550	312115-0367	-		2	SCREW 6X14 A4 80
	560	312115-0370	-		1	SCREW 6X20 A4 80
	600	312155-0368	-		3	SCREW MF6S6X16RFR
	640	315105-0136	-		2	WASHER BRB4,3X8RFR
	650	315105-0146	-		16	WASHER BRB5,3X10RFR
	660	315105-0153	-		19	WASHER BRB6,4X12RFR
	680	315105-0165	-		4	WASHER BRB8,4X16RFR
	700	315202-0103	S		3	O-RING 5,1X1,6
	720	315750-0116	S		2	LOCK RING SGA20
	740	315755-0105	S		1	CIRCLIP E 3,2 RFR
	760	321101-0163	-		1	BUSHING 10F7X10
	770	321120-0159	-		2	BUSHING 25/28X25
	790	321313-0104	S		2	BALL BEARISKF6204-2RS
	810	469644	-		2	LID
	820	469645	-		2	LID
	830	342980-0114	P		1	BANJO CONNSINGEL 6/4-1/4
	840	342980-0304	P		1	BANJO CONN SINGEL 1/4

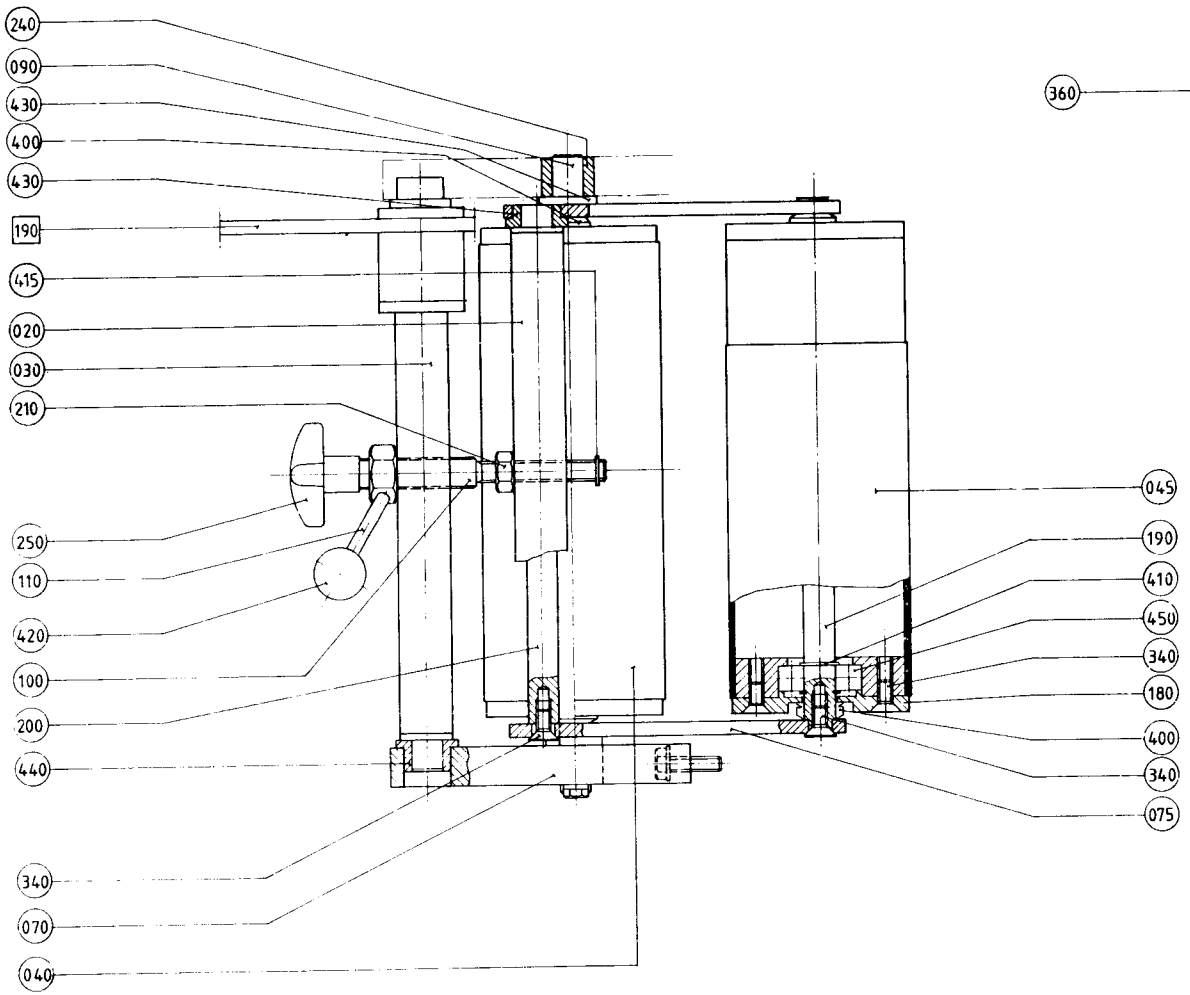
240
090
430
400
430
190
415
020
030
210
250
110
420
100
200
440
340
070
040
045
190
410
450
340
180
400
340
075

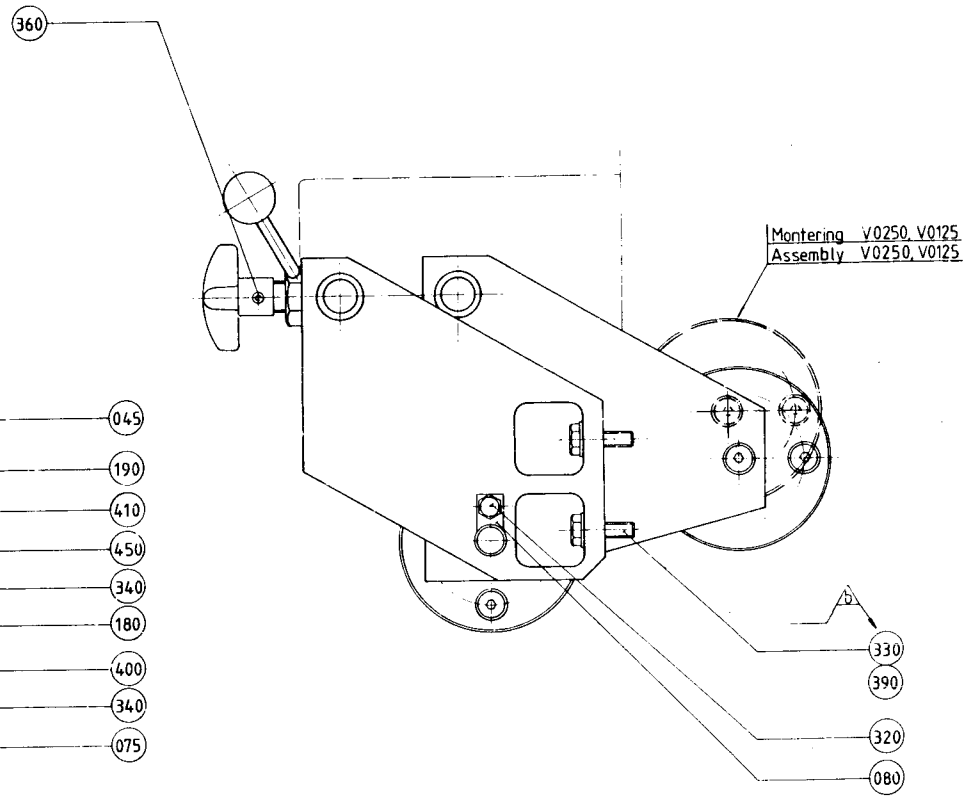
360
Montering V0250, V0125
Assembly V0250, V0125
330
390
320
080

From	Pos	Part No	SP	UN	Qty	Description
	F190	==>815-1.1	-		1	BELT TENSIONER
	020	269798-0004	-		1	SHAFT
	030	269799-0005	-		1	SHAFT
	040	283591-0003	C		1	BENDING ROLLER
	045	294829-0003	-		1	BENDING ROLLER
	070	283595	C		1	GABLE
	075	294935	-		2	GABLE
	080	18135	-		1	WASHER
	090	269438-0003	-		1	SHAFT
	100	449281	S		1	SCREW
	110	269803	S		1	LOCK NUT
	180	294830	-		4	LID
	190	456613-0001	-		1	SHAFT
	200	456614-0001	-		1	SPACER
	210	294938	-		1	NUT
	240	532149	-		1	BUSHING
	250	90051-0076	C		1	WHEEL
	320	312105-0327	-		1	SCREW M6S5X12 A4 80
	330	312105-0370	-		2	SCREW M6S6X20RFR
	340	312155-0366	-		16	SCREW MF6S6X12RFR
	350	312155-0368	-		2	SCREW MF6S6X16RFR
	360	312316-0283	-		1	GRUB SCREW SK6SS4X4FZB
	390	315105-0153	-		2	WASHER BRB6,4X12RFR
	400	315220-0117	S		4	SEAL RING V-12S
	410	315750-0109	-		4	LOCK RING SGA12
	415	315755-0107	-		1	CIRCLIP E 5RFR
	420	318800-0102	-		1	KNOB LA D.20-M5
	430	321111-0157	S		4	BUSHING 12E7X8
	440	321111-0159	S		2	BUSHING 12E7X12
	450	321313-0101	S		4	BALL BEARISKF6201-2RS

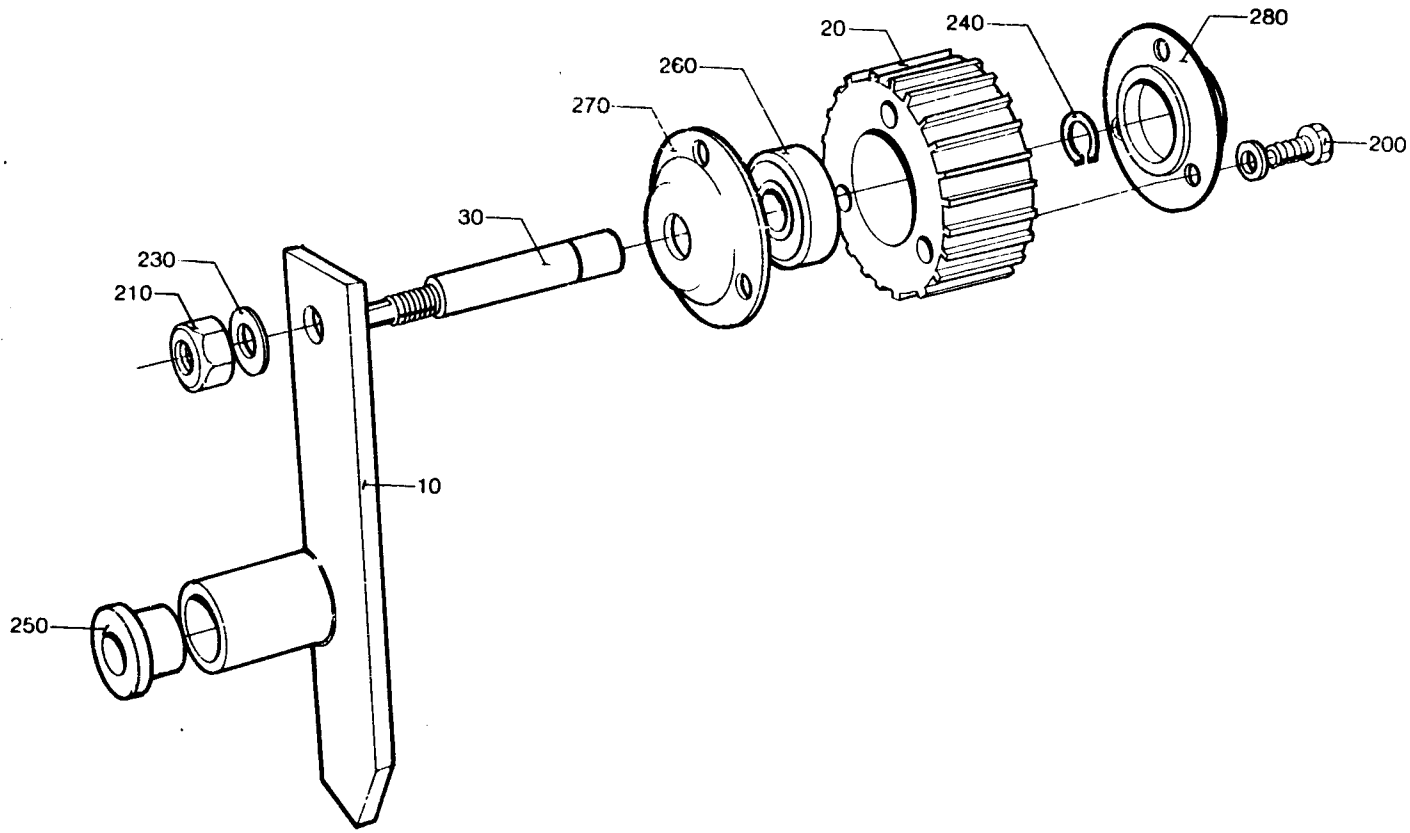
20
240
280
260
270
200
30
230
210
10
250

Last Alteration: AM 8653 86-11-21

Corresponding C-lists: 283619-010V, 476080-020V
Assembly Drawing: 283619-1, 476080-2

Date Printed: 900926

From	Pos	Part No	SP	UN	Qty	Description
-060V	010	283680	-		1	ARM
	010	532330-0001	-		1	ARM (TBA/9)
	010	532330-0002	-		1	ARM (TBA/3)
	020	284997	C		1	TOOTHED PULLY
	030	284998	C		1	SHAFT
-060V	200	312105-0328	-		6	SCREW M6S5X14 A4 80
	200	312115-0327	-		6	SCREW MC6S5X12 A4 80
	210	312605-0320	-		1	NUT M6M10RFR
-060V	220	315105-0146	-		1	WASHER BRB 5,3X10RFR
	230	315105-0173	-		1	WASHER BRB10,5X22RFR
	240	315750-0112	-		1	LOCK RING SGA15
	250	321101-0222	S		2	BUSHING 18F7X12
	260	321312-0102	S		2	BALL BEARISKF6202RS
	270	469642	-		1	LID
	280	469646	-		1	LID

From	Pos	Part No	SP	UN	Qty	Description

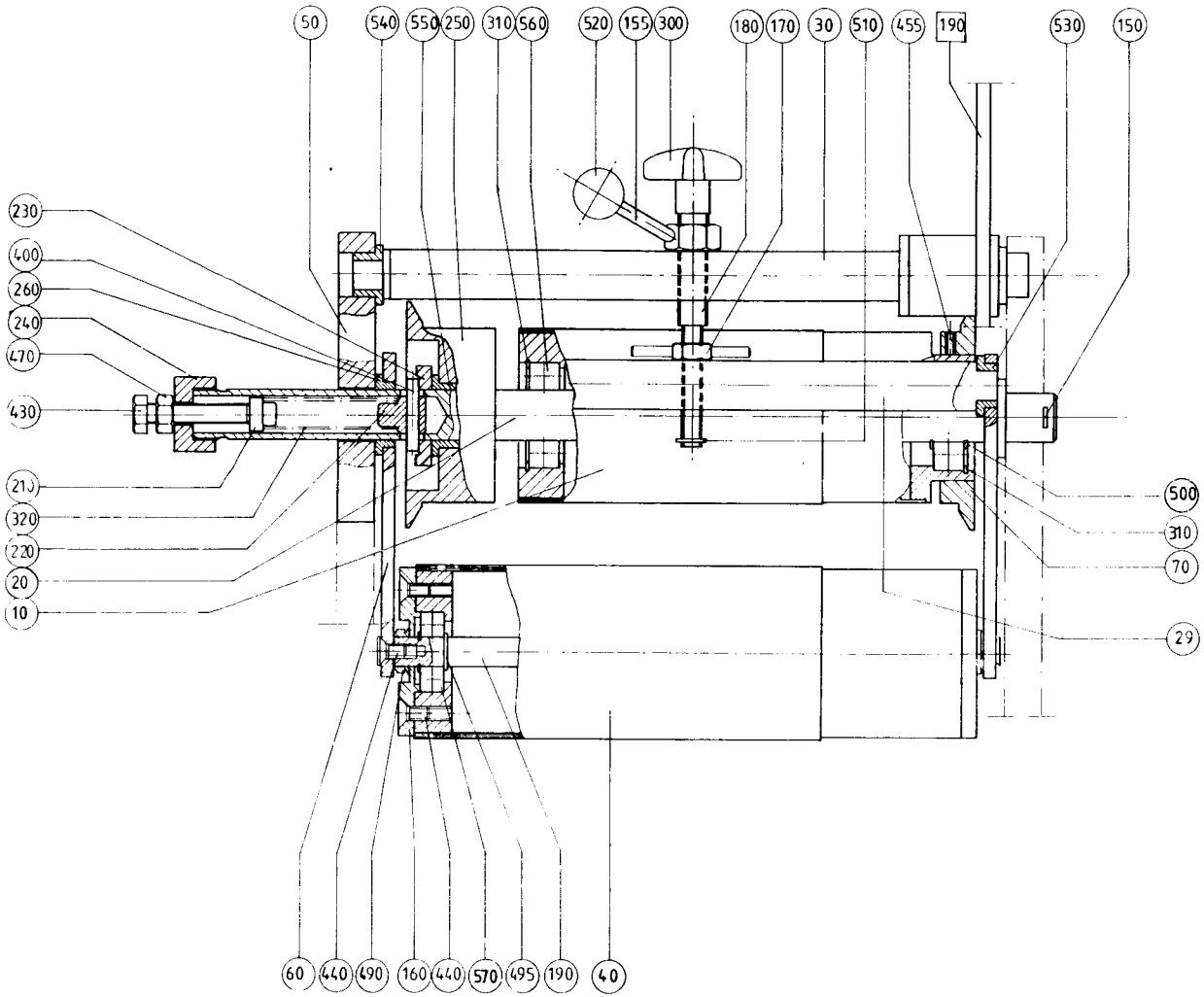
50
540
550
250
310
560
520
155
300
180
170
30
510
455
190
530
150
230
400
260
240
470
430
210
320
220
20
10
500
310
70
29
60
440
490
160
440
570
495
190
40

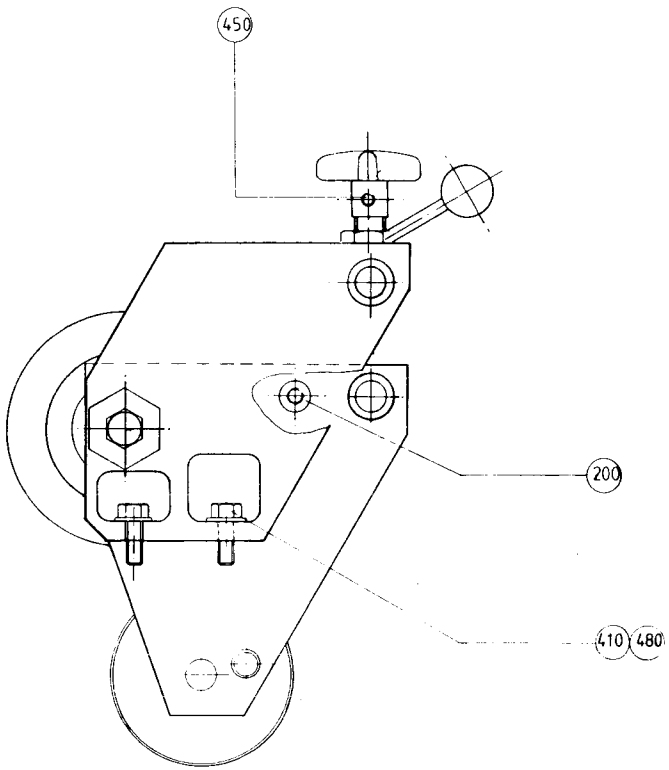
450
200
410
480

From	Pos	Part No	SP	UN	Qty	Description
	F190	==>815-1.1	-		1	BELT TENSIONER
Volume 284 - 180 ml						
	010	532183-0001	C		1	BENDING ROLLER
	020	532184-0001	C		1	SHAFT
Volume 200 ml SLIM						
	010	532183-0002	C		1	BENDING ROLLER
	020	532184-0002	C		1	SHAFT
Volume 125 ml						
	010	532183-0003	C		1	BENDING ROLLER
	020	532231	C		1	SHAFT
Common Parts						
	029	269798-0004	-		1	SHAFT
	030	269799-0005	-		1	SHAFT
	040	294829-0003	-		1	BENDING ROLLER
	050	532185	-		1	BRACKET
	060	532186	-		2	GABLE
	070	532187	-		1	FLANGE
	150	18135	-		1	WASHER
	155	269803	-		1	LOCK NUT
	160	294830	-		2	LID
	170	294938	C		1	NUT
	180	449281	C		1	SCREW
	190	456613-0001	-		1	SHAFT
	200	456614-0001	-		1	SPACER
	210	486974	-		1	GUIDE
	220	486978	-		1	GUIDE
	230	486980	-		1	RING
	240	522429	-		1	SLEEVE
	250	532188	-		1	FLANGE
	260	532245	S		2	BUSHING
	300	90051-0076	C		1	WHEEL
	310	90141-0020	-		2	LOCK RING
	320	90335-0064	S		1	SPRING
	400	311103-0314	-		1	CYLINDRICACPR5M6X30RFR
	410	312105-0370	-		2	SCREW M6S6X20RFR
	430	312109-0459	-		1	SCREW M6S8X40H A4 80
	440	312155-0366	-		10	SCREW MF6S6X12RFR
	450	312316-0283	-		1	GRUB SCREW SK6SS4X4FZB
	455	312318-0321	-		1	GRUB SCREW SK6SS5X6RFR
	470	312605-0318	-		1	NUT M6M8RFR
	480	315105-0153	-		2	WASHER BRB6,4X12RFR
	490	315220-0117	S		2	SEAL RING V-12S
	495	315750-0109	-		4	LOCK RING SGA12
	500	315751-0116	-		2	LOCK RING SGA20 RFR
	510	315755-0107	-		1	CIRCLIP E 5RFR
	520	318800-0102	C		1	KNOB LA D.20-M5
	530	321111-0157	S		2	BUSHING 12E7X8
	540	321111-0159	S		2	BUSHING 12E7X12
	550	321111-0306	S		1	BUSHING 20E7X25
	560	321308-0104	S		2	BALL BEARISKF6004RS
	570	321313-0101	S		2	BALL BEARISKF6201-2RS

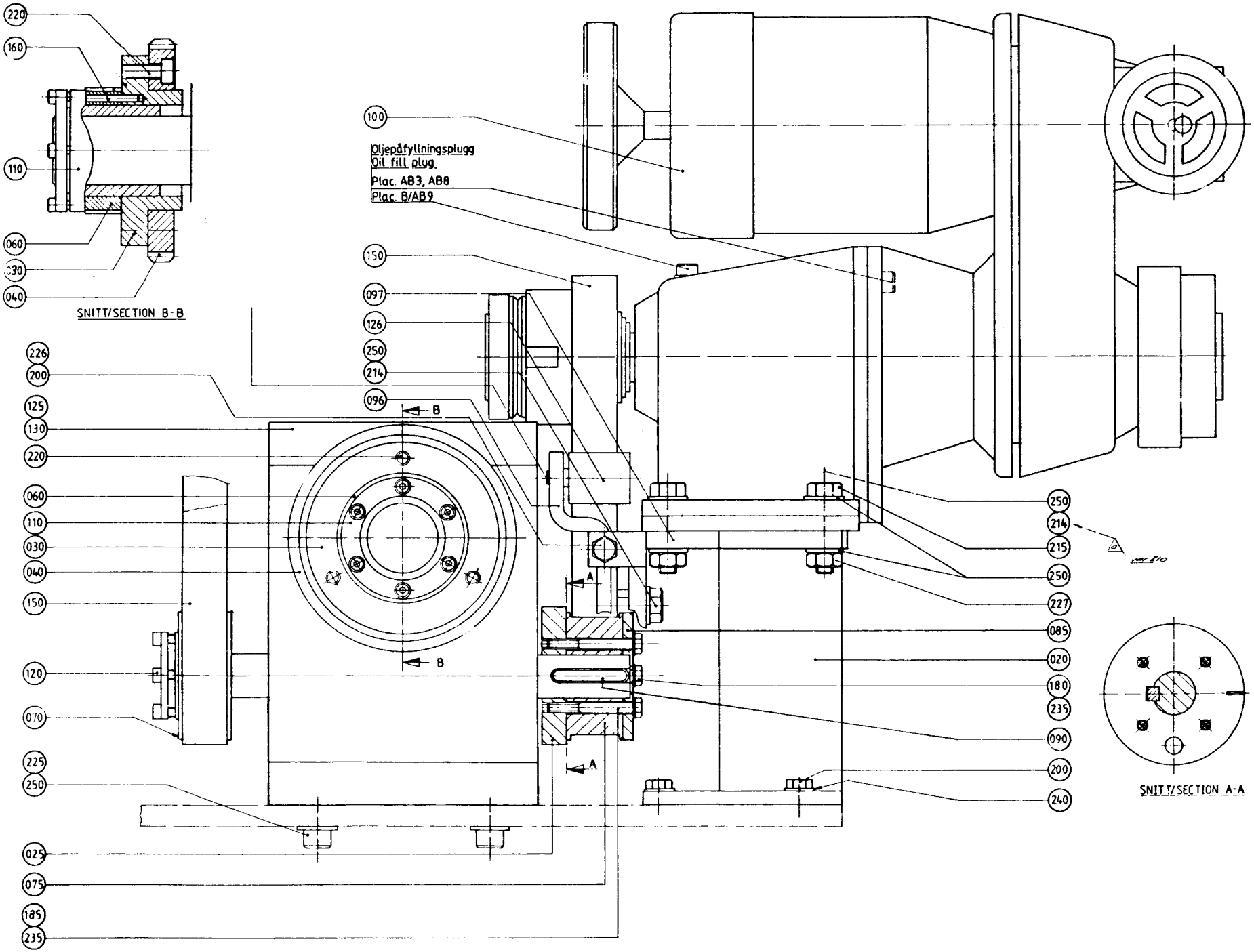
220
160
110
060
030
040
SNITT/SECTION B-B
100
Oljepåfyllningsplugg
Oil fill plug.
Plac. AB3, AB8
Plac. B/AB9
150
097
126
250
214
096
226
200
125
130
220
060
110
030
040
150
120
070
225
250
025
075
185
235
B
A
250
214
215
250
227
085
020
180
235
090
200
240
SNITT/SECTION A-A

From	Pos	Part No	SP	UN	Qty	Description
	020	294519	-		1	BRACKET
	025	469178	C		1	CAM
	030	257875	C		1	HUB
	040	257876	C		1	GEAR
080V	040	401462	C		1	GEAR
	060	257883	S		1	PULLEY
	070	265914	S		1	TOOTHED PULLY
	075	469179	S		1	TOOTHED PULLY
	085	469180	C		1	PLATE
	090	469181	C		1	KEY
-060V	095	469738	C		2	INSERT
070V-	096	497934	-		1	HOLDER
070V-	097	497935	-		1	BRACKET
	100	449346	S		1	VARIATOR UNIT
		90038-0034	PU		0	* RECTIFIER
		90069-0360	S		0	* BELT
		90069-0369	S		0	* REGULATOR
		90069-0370	S		0	* BRAKE
		90069-0371	S		0	* SHAFT COUPLING
		90069-0372	S		0	* ROTOR
		90069-0373	S		0	* DUST COVER
		90069-0374	S		0	* BAR
		90069-0375	S		0	* FLANGE
		90091-0200	S		0	* SEAL RING
	110	90208-0054	S		1	CLAMPING ELEMENT
	120	90208-0052	S		1	CLAMPING ELEMENT
-070V	125	90296-0076	-	ML	X	OIL
080V-	125	90296-0072	-	ML	X	OIL
070V-	126	90344-0300	-		1	ROLLER
	130	90416-0011	C		1	INDEXING DEVICE
	150	90417-0120	P		2	TOOTHED BELT
070V-	160	311103-0276	-		3	CYLINDRICACPR4M6X30RFR
-060V	180	312105-0366	-		1	SCREW M6S6X12RFR
070V-	180	312105-0368	-		1	SCREW M6S6X16RFR
-060V	185	312105-0381	-		4	SCREW M6S6X55RFR
070V-	185	312105-0380	-		4	SCREW M6S6X50RFR
	200	312105-0453	-		5	SCREW M6S8X25RFR
-060V	210	312105-0493	-		2	SCREW M6S10X25RFR
070V-	214	312105-0495	-		3	SCREW M6S10X30RFR
070V-	215	312104-0501	-		2	SCREW M6S10X50H8.8FZB
	220	312115-0451	-		3	SCREW 8X20 A4 80
	225	312115-0493	-		4	SCREW 10X25 A4 80
070V-	226	312605-0318	-		1	NUT M6M8RFR
070V-	227	312605-0320	-		2	NUT M6M10RFR
	235	315105-0153	-		5	WASHER BRB6,4X12RFR
	240	315105-0165	-		4	WASHER BRB8,4X16RFR
	250	315105-0173	-		11	WASHER BRB10,5X22RFR

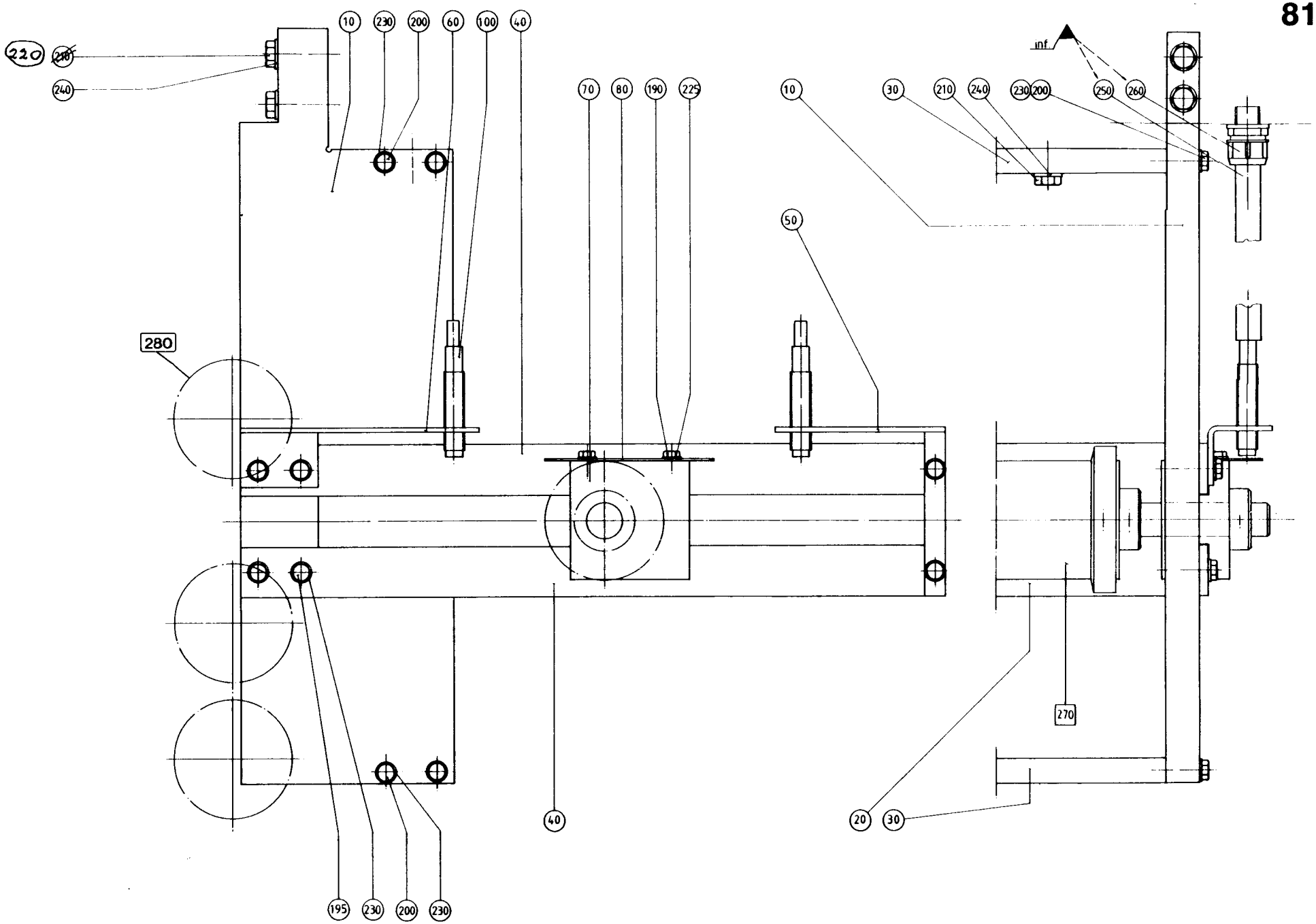
220
240
10
230
200
60
100
40
70
80
190
225
280
195
230
200
230
40
10
50
inf
30
210
240
230
200
250
260
270
20
30

From	Pos	Part No	SP	UN	Qty	Description
	F280	==>817-1.1	-		3	ROLLER (TB/9)
	F280	==>817-1.1	-		2	ROLLER (TBA/9)
	F270	==>817-1.2	-		1	ROLLER
	010	456681	-		2	BRACKET (TB/9)
	010	456682	-		2	BRACKET (TBA/9)
	090	546309	-		2	BRACKET (TBA/9)
	095	312105-0455	-		4	SCREW M6S8X30RFR (TBA/9)
	020	449332	-		1	SUPPORT
	030	449334	-		2	SUPPORT
	040	456686	-		4	BRACKET
	050	449336	-		1	BRACKET
	060	456683	-		1	BRACKET
	070	457929	C		2	BLOCK
	080	457930	-		1	FLAG
	100	90044-0085	S		2	SENSOR
	190	312105-0327	-		2	SCREW M6S5X12 A4 80
	195	312105-0370	-		12	SCREW M6S6X20RFR
	200	312105-0374	-		8	SCREW M6S6X30RFR
	210	312105-0453	-		2	SCREW M6S8X25RFR
	220	312105-0460	-		4	SCREW M6S8X45RFR
	225	315105-0146	-		2	WASHER BRB5,3X10RFR
	230	315105-0153	-		20	WASHER BRB6,4X12RFR
	240	315105-0165	-		10	WASHER BRB8,4X16RFR
	250	352135-0102	-	MM	1500	HOSE .010
	260	352136-0107	-		2	GLAND

From	Pos	Part No	SP	UN	Qty	Description

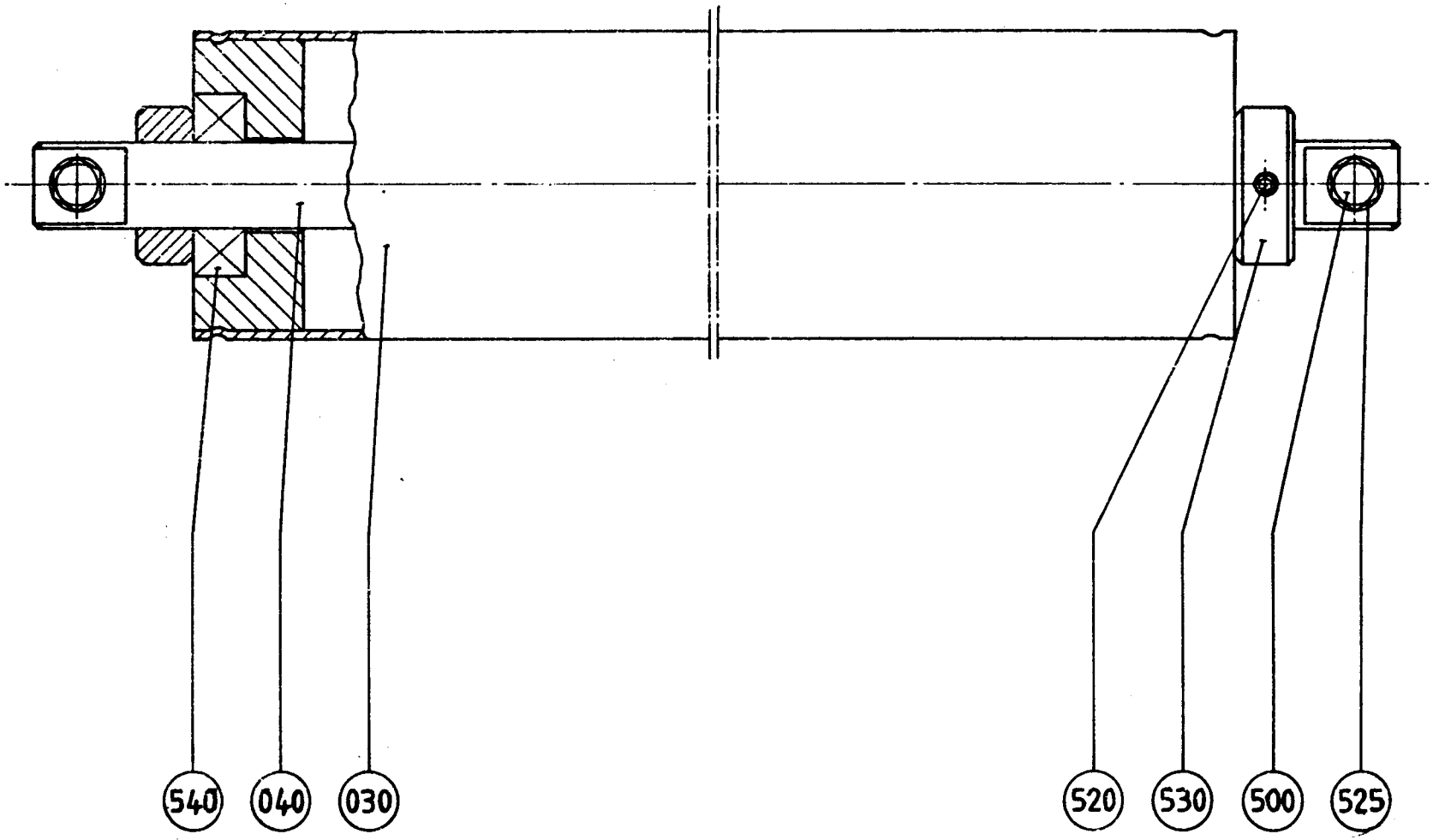
540
040
030
520
530
500
525

From	Pos	Part No	SP	UN	Qty	Description
	030	449295	C		1	ROLLER
	040	449296	-		1	SHAFT
	500	312105-0370	-		2	SCREW M6S6X20RFR
	520	312318-0362	-		2	GRUB SCREW SK6SS6X8RFR
	525	315105-0153	-		2	WASHER BRB6,4X12RFR
	530	315742-0116	-		2	RETAINING 20SMS199RFR
	540	321308-0204	S		2	BALL BEARISKF6004-2RS

From	Pos	Part No	SP	UN	Qty	Description

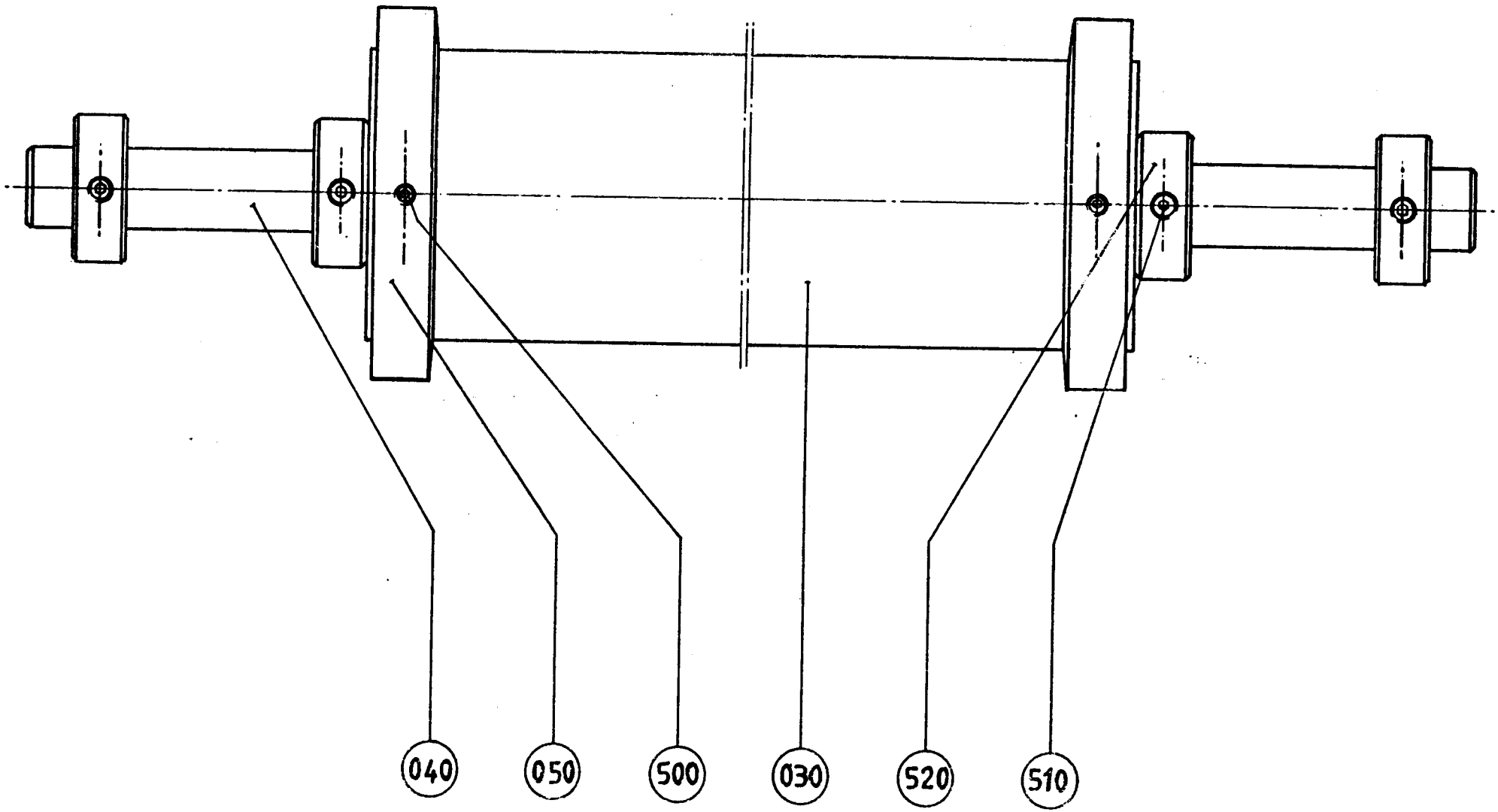
040
050
500
030
520
510

Last Alteration: AM 8363 86-12-04

Corresponding C-lists: 283630-020V
Assembly Drawing: 283630-2

Date Printed: 900928

From	Pos	Part No	SP	UN	Qty	Description
	030	449294	C		1	ROLLER
	040	449297	C		2	FLANGE
	050	499589	C		1	SHAFT
	500	312318-0323	-		4	GRUB SCREW SK6SS5X8RFR
	510	312318-0362	-		4	GRUB SCREW SK6SS6X8RFR
	520	315742-0116	-		4	RETAINING 20SMS199RFR

From	Pos	Part No	SP	UN	Qty	Description

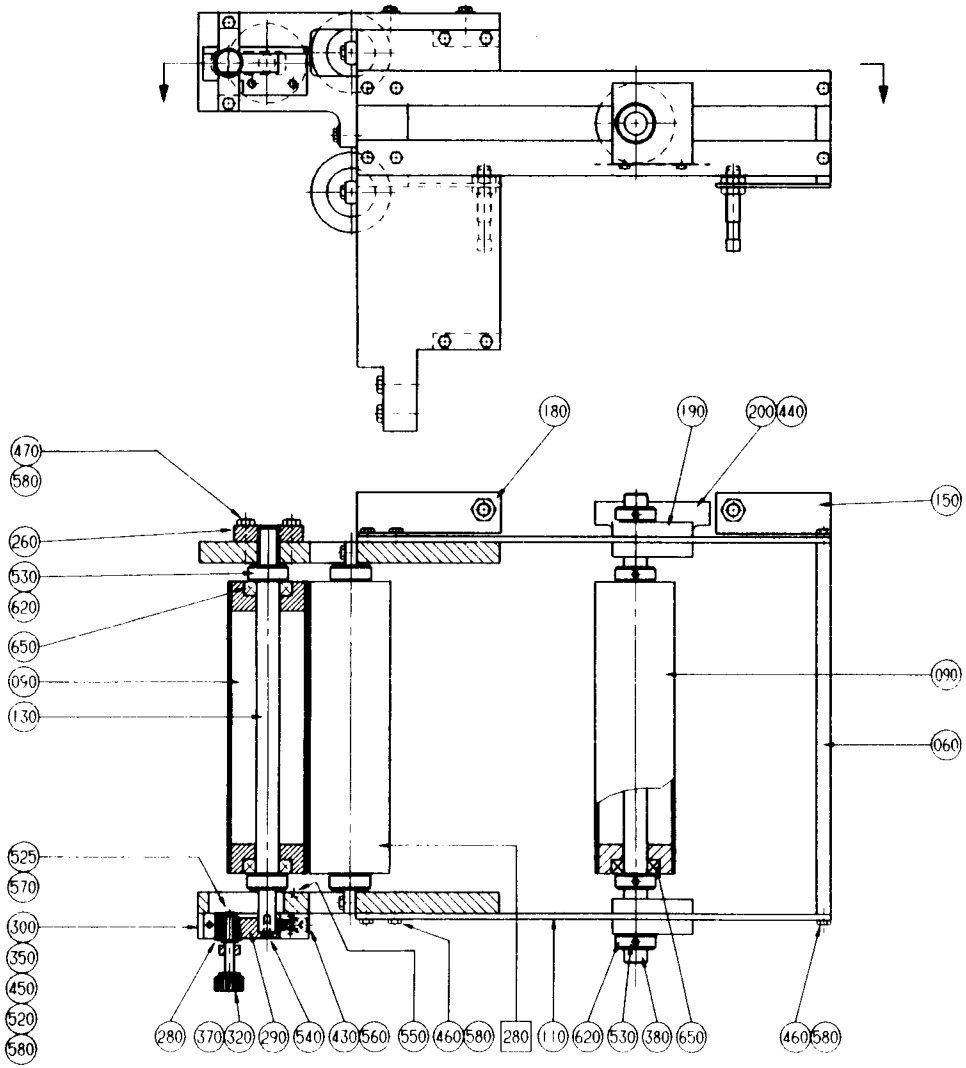
180
190
200
440
470
580
150
260
530
620
650
090
130
060
525
570
300
350
450
520
580
280
370
320
290
540
430
560
550
460
580
280
110
620
530
380
650
460
580

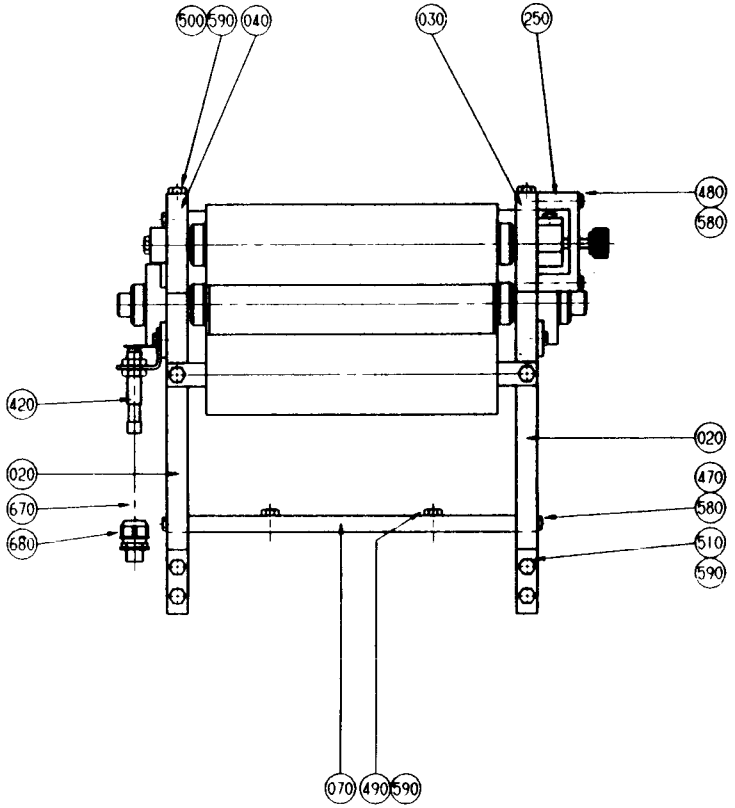
500
590
040
030
250
480
580
420
020
020
670
680
470
580
510
590
070
490
590

From	Pos	Part No	SP	UN	Qty	Description
	F280	==>817-1.1	-		2	ROLLER
	020	552031	-		2	BRACKET
	030	552032	-		1	BRACKET
	040	552033	-		1	BRACKET
	060	449332	-		1	SUPPORT
	070	449334	-		2	SUPPORT
	090	449295	-		2	ROLLER
	110	456686	-		4	BRACKET
	130	552029	-		1	SHAFT
	150	449336	-		1	BRACKET
	180	554380	-		1	BRACKET
	190	457929	-		2	BLOCK
	200	457930	-		1	FLAG
	250	552034	-		1	CLAMP
	260	552035	-		1	HOLDER
	280	751509	-		1	SLIDER
	290	751510	-		1	SLIDER
	300	751511	-		1	LUG
	320	751514	-		1	ADJUSTING SCREW
	350	751522	-		1	PLATE
	370	752243	-		1	WASHER
	380	554343	-		1	SHAFT
	420	90044-0085	S		2	SENSOR
	430	90335-0067	C		1	SPRING
	440	312105-0327	-		2	SCREW M6S5X12 A4 80
	450	312105-0368	-		1	SCREW M6S6X16RFR
	460	312105-0370	-		12	SCREW M6S6X20RFR
	470	312105-0374	-		10	SCREW M6S6X30RFR
	480	312105-0380	-		2	SCREW M6S6X50RFR
	490	312105-0453	-		2	SCREW M6S8X25RFR
	500	312105-0455	-		6	SCREW M6S8X30RFR
	510	312105-0460	-		4	SCREW M6S8X45RFR
	520	312115-0226	-		2	SCREW S 3X12 A4 80
	525	312125-0287	-		1	SLOTTED HEMCS4X8RFR
	530	312318-0362	-		12	GRUB SCREW SK6SS6X8RFR
	540	312155-0366	-		1	SCREW MF6S6X12RFR
	550	312155-0457	-		2	SCREW MF6S8X35RFR
	560	312316-0528	-		1	GRUB SCREW SK6SS12X12FZB
	570	315105-0136	-		1	WASHER BRB4,3X8RFR
	580	315105-0153	-		25	WASHER BRB6,4X12RFR
	590	315105-0165	-		9	WASHER BRB8,4X16RFR
	620	315742-0116	-		6	RETAINING 20SMS199RFR
	650	321308-0204	-		4	BALL BEARISKF6004-2RS
	670	352135-0102	-	MM	1500	HOSE .010
	680	352136-0107	-		2	GLAND

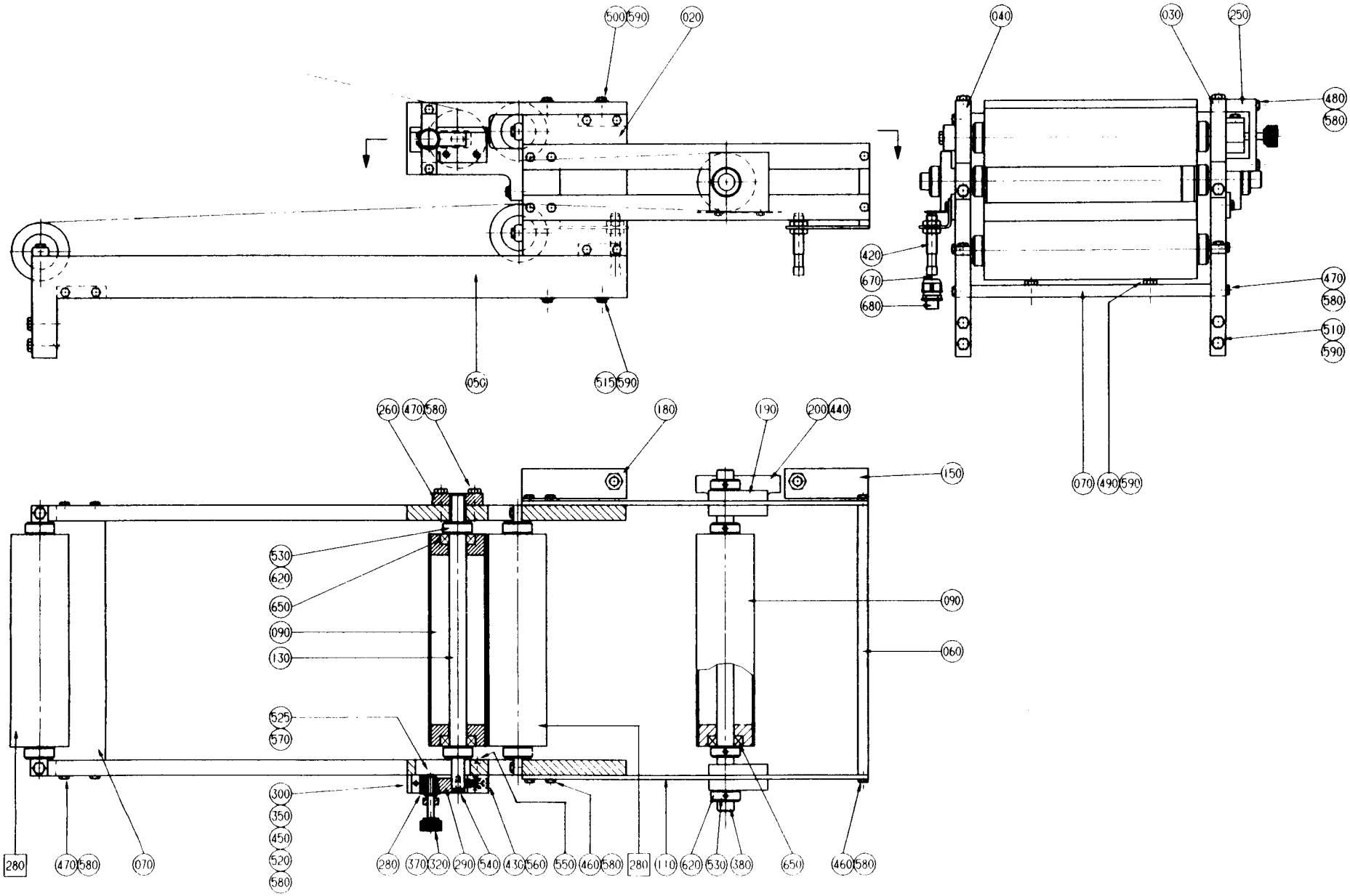
500 590
020
040
030
250
480
580
420
670
680
470
580
510
590
050
515 590
070 490 590
260 470 580
180
190
200 440
150
530
620
650
090
130
090
060
525
570
300
350
450
520
580
280
470 580
070
280 370 320 290 540 430 560 550 460 580
280
110 620 530 380
650
460 580

Last Alteration: AM 15283 90-10-31

Corresponding C-lists: 552036-010V
Assembly Drawing: 552036-1

Date Printed: 910326

From	Pos	Part No	SP	UN	Qty	Description
	F280	==>817-1.1	-		3	ROLLER
	020	552037	-		2	BRACKET
	030	552032	-		1	BRACKET
	040	552033	-		1	BRACKET
	060	449332	-		1	SUPPORT
	070	449334	-		2	SUPPORT
	090	449295	-		2	ROLLER
	110	456686	-		4	BRACKET
	130	552029	-		1	SHAFT
	150	449336	-		1	BRACKET
	180	554380	-		1	BRACKET
	190	457929	-		2	BLOCK
	200	457930	-		1	FLAG
	250	552034	-		1	CLAMP
	260	552035	-		1	HOLDER
	280	751509	-		1	SLIDER
	290	751510	-		1	SLIDER
	300	751511	-		1	LUG
	320	751514	-		1	ADJUSTING SCREW
	350	751522	-		1	PLATE
	370	752243	-		1	WASHER
	380	554343	-		1	SHAFT
	420	90044-0085	S		2	SENSOR
	430	90335-0067	C		1	SPRING
	440	312105-0327	-		2	SCREW M6S5X12 A4 80
	450	312105-0368	-		1	SCREW M6S6X16RFR
	460	312105-0370	-		12	SCREW M6S6X20RFR
	470	312105-0374	-		10	SCREW M6S6X30RFR
	480	312105-0380	-		2	SCREW M6S6X50RFR
	490	312105-0453	-		2	SCREW M6S8X25RFR
	500	312105-0455	-		6	SCREW M6S8X30RFR
	510	312105-0460	-		4	SCREW M6S8X45RFR
	515	312105-0464	-		4	SCREW M6S8X65RFR
	520	312115-0226	-		2	SCREW S 3X12 A4 80
	525	312125-0287	-		1	SLOTTED HEMCS4X8RFR
	530	312318-0362	-		12	GRUB SCREW SK6SS6X8RFR
	540	312155-0366	-		1	SCREW MF6S6X12RFR
	550	312155-0457	-		2	SCREW MF6S8X35RFR
	560	312316-0528	-		1	GRUB SCREW SK6SS12X12FZB
	570	315105-0136	-		1	WASHER BRB4,3X8RFR
	580	315105-0153	-		25	WASHER BRB6,4X12RFR
	590	315105-0165	-		9	WASHER BRB8,4X16RFR
	620	315742-0116	-		6	RETAINING 20SMS199RFR
	650	321308-0204	-		4	BALL BEARISKF6004-2RS
	670	352135-0102	-	MM	1500	HOSE .010
	680	352136-0107	-		2	GLAND

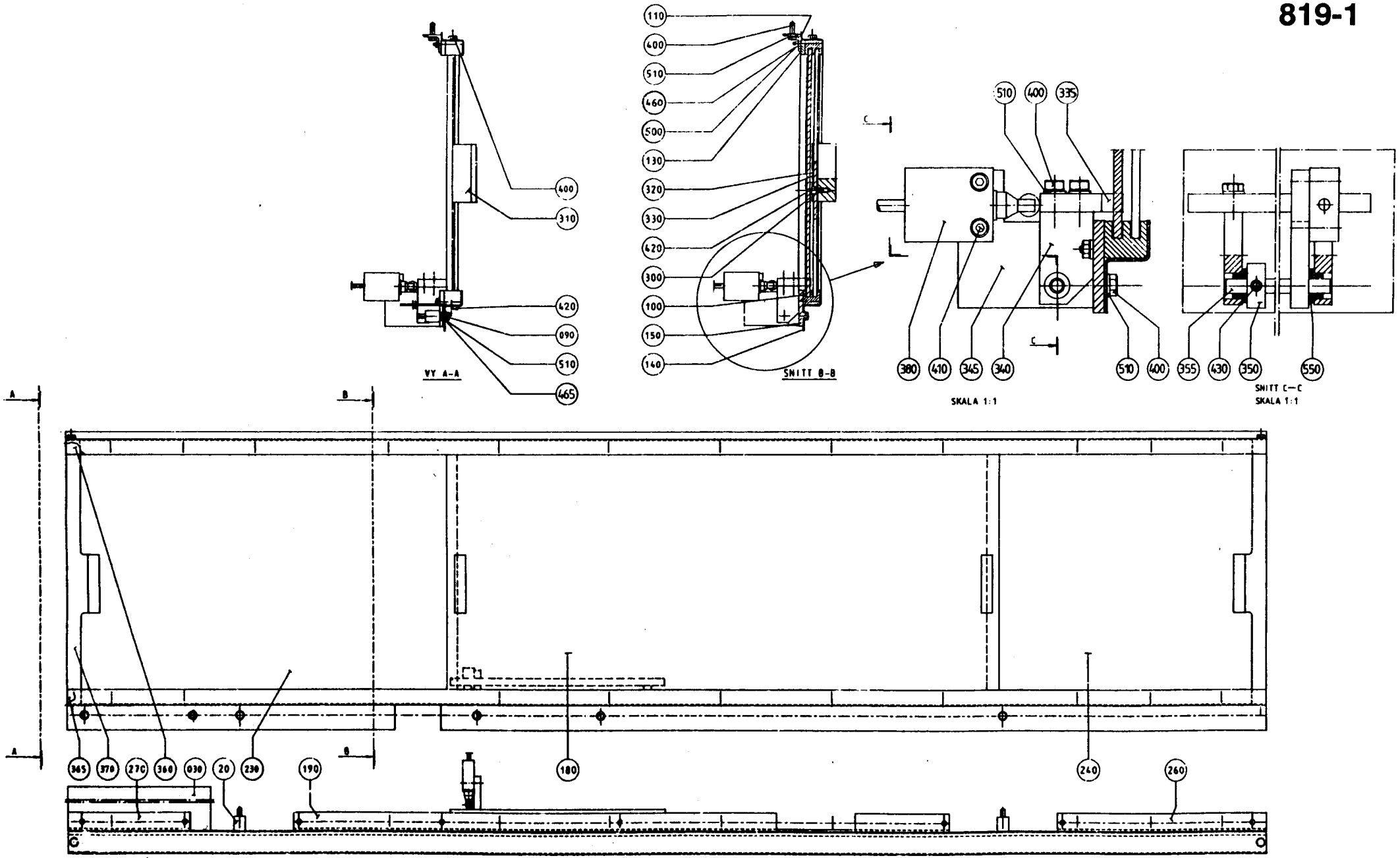
400
310
420
090
510
465
VY A-A
110
400
510
460
500
130
320
330
420
300
100
150
140
SNITT B-B
510
400
335
380
410
345
340
510
400
SKALA 1:1
355
430
350
550
SNITT C-C
SKALA 1:1
A
B
A
B
345
370
270
360
030
20
230
190
180
240
260

From	Pos	Part No	SP	UN	Qty	Description
Volume 284 - 180 ml						
	030	490712	-		1	PROTECTION PLATE
	090	312105-0372	-		2	SCREW M6S6X25RFR
Volume 125 ml						
	020	457954	-		2	SPACER
	030	490711	-		1	PROTECTION PLATE
	090	312105-0378	-		2	SCREW M6S6X40RFR
Volume 200 mlSLIM						
	020	457953	-		2	SPACER
	030	490678	-		1	PROTECTION PLATE
	090	312105-0376	-		2	SCREW M6S6X35RFR
Common Parts						
	100	457938	-		2	RAIL
	110	457939	-		1	SUPPORT UPPER
	130	457941	-		1	FLAT STEEL
	140	469268	-		1	SUPPORT LOWER
	150	469269	-		1	FLAT BAR LOWER
	180	457943	-		1	GLASS PANE
	190	457944	-		1	BRACKET
	230	457945	-		1	GLASS PANE
	240	457946	-		1	GLASS PANE
	260	457948	-		1	BRACKET
	270	457949	-		1	BRACKET
	300	294735	-		8	SPACER
	310	457950	-		4	HANDLE
	320	457951	-		4	WASHER
	330	457952	-		8	RUBBER WASHER
	335	490673	-		1	SLIDE RAIL
	340	490674	-		2	BEARING HOLDER
	345	490675	-		1	HOLDER
	350	490676	-		1	HOLDER
	355	490677	-		1	SHAFT
	360	490727	-		2	STOP
	365	490728	-		2	STOP
	370	490730	-		2	BAR
	380	90044-0094	S		1	LIMIT SWITCH
	400	312105-0370	-		19	SCREW M6S6X20RFR
	410	312115-0331	-		2	SCREW 5X20 A4 80
	420	312155-0368	-		10	SCREW MF6S6X16RFR
	430	312318-0360	-		1	GRUB SCREW SK6SS6X6RFR
	460	312605-0314	-		22	NUT M6M5RFR
	465	312605-0316	-		2	NUT M6M6RFR
	500	315105-0146	-		22	WASHER BRB5,3X10RFR
	510	315105-0153	-		23	WASHER BRB6,4X12RFR
	550	321101-0143	S		2	BUSHING 8F7X8

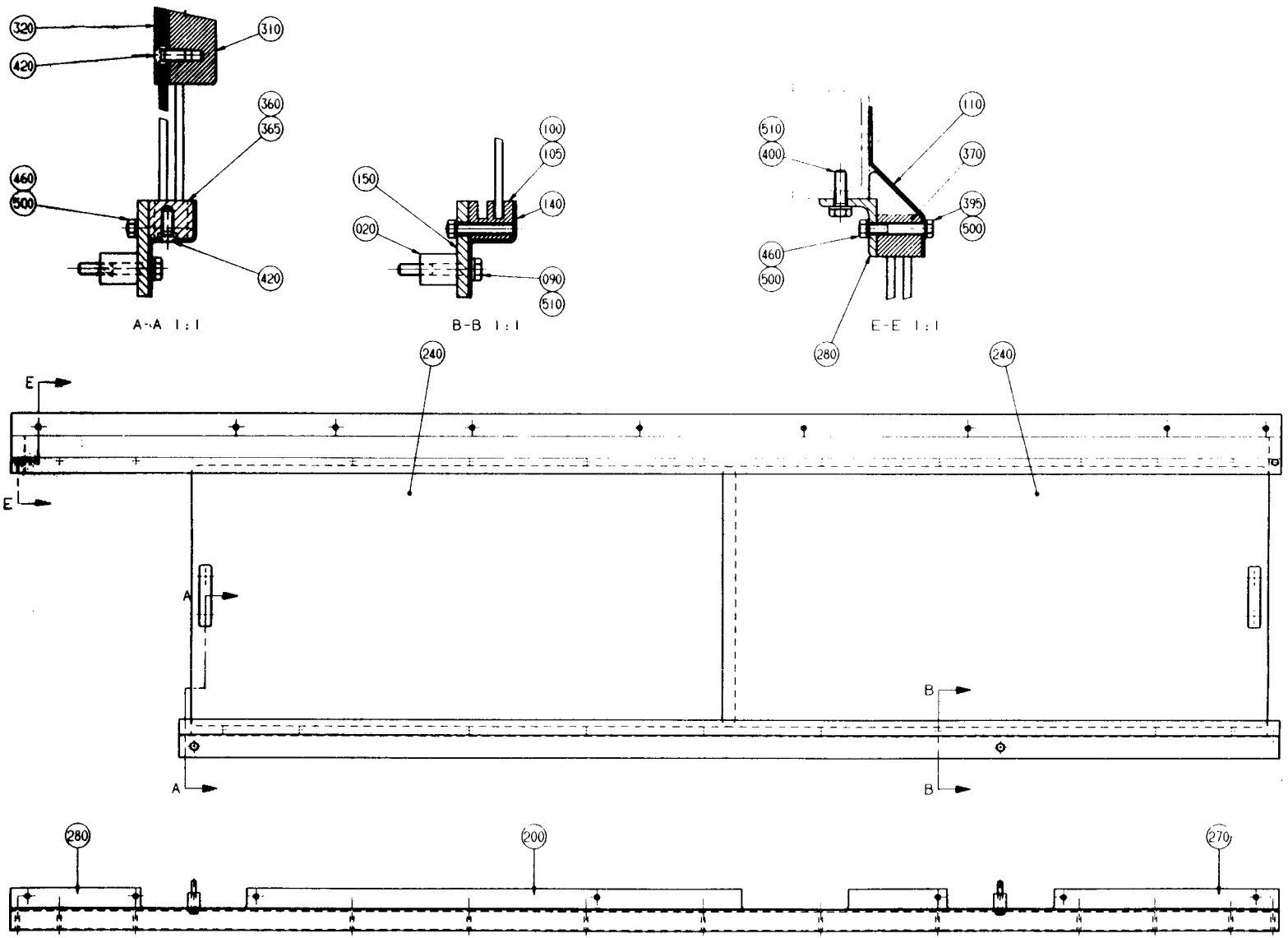
320
310
420
360
365
460
500
420
A-A 1:1
100
105
150
140
020
090
510
B-B 1:1
110
510
400
370
395
500
460
500
280
E-E 1:1
240
240
E
E
A
A
B
B
280
200
270

From	Pos	Part No	SP	UN	Qty	Description
Volume 284 - 180 ml						
	090	312105-0372	-		2	SCREW M6S6X25RFR
Volume 125 ml						
	020	457954	-		2	SPACER
	090	312105-0378	-		2	SCREW M6S6X40RFR
Volume 200 ml SLIM						
	020	457953	-		2	SPACER
	090	312105-0376	-		2	SCREW M6S6X35RFR
Common Parts						
	100	547928	-		1	RAIL
	105	548986	-		1	RAIL LOWER
	110	547929	-		1	SUPPORT UPPER
	140	547931	-		1	SUPPORT LOWER
	150	547932	-		1	FLATBAR LOWER
	200	563731	-		1	ANGLE BAR UPPER
	240	547934	-		2	GLASS PANEL
	270	563730	-		1	ANGLE BAR UPPER
	280	563732	-		1	ANGLE BAR UPPER
	310	457950	-		2	HANDLE
	320	457951	-		2	WASHER
	360	490727	-		1	STOP
	365	490728	-		1	STOP
	370	547935	-		2	END PIECE
	395	312105-0337	-		2	SCREW M6S5X35RFR
	400	312105-0370	-		10	SCREW M6S6X20RFR
	420	312155-0368	-		6	SCREW MF6S6X16RFR
	460	312605-0314	-		22	NUT M6M5RFR
	500	315105-0146	-		24	WASHER BRB5,3X10RFR
	510	315105-0153	-		12	WASHER BRB6,4X12RFR

From	Pos	Part No	SP	UN	Qty	Description

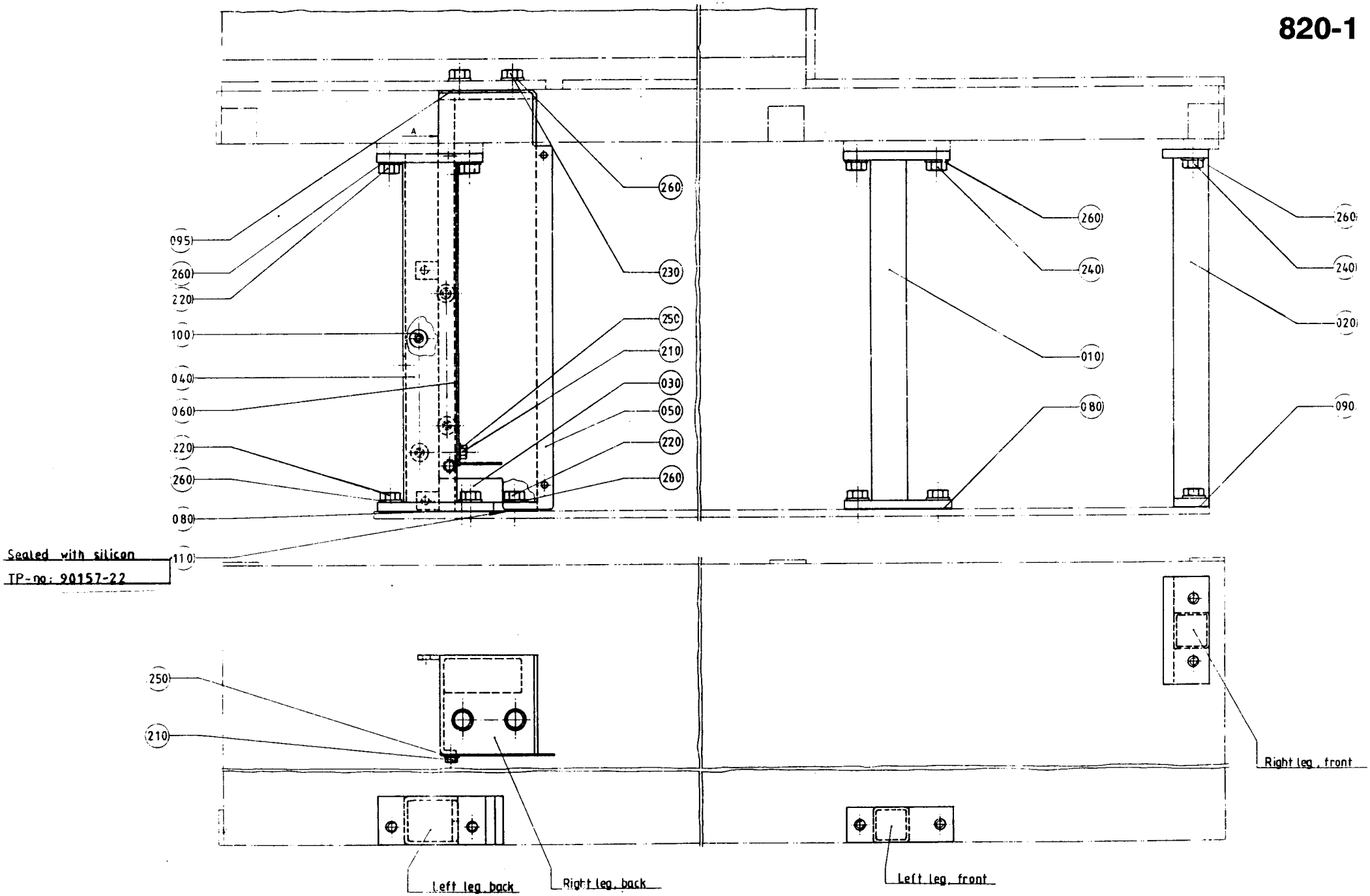
095
260
220
100
040
060
220
260
080
110
260
230
250
210
030
050
220
260
260
240
010
080
260
240
020
090
Sealed with silicon
TP-no: 90157-22
250
210
Left leg, back
Right leg, back
Left leg, front
Right leg, front

From	Pos	Part No	SP	UN	Qty	Description
	010	469620	-		1	LEG **(TBA/9)**
070V-	010	533429	-		1	LEFT LEG REAR **(TB/9)**
	030	469638	-		1	RIGHT LEG REAR **(TBA/9)**
070V-	030	533430	-		1	RIGHT LEG REAR **(TB/9)**
	040	457830	-		1	LEFT LEG REAR **(TBA/9)**
070V-	040	533431	-		1	LEFT LEG REAR **(TB/9)**
	020	456672	-		1	LEG
	050	457804	-		1	LID
	060	457875	-		1	LID
	080	469631	-		2	SHIM
	090	469632	-		1	SHIM
	095	469659	-		1	SHIM
	100	90015-0020	-		4	BUSHING
	110	90157-0022	-		1	SEALING COMPOUND
	210	312105-0364	-		4	SCREW M6S6X10RFR
	220	312105-0491	-		8	SCREW M6S10X20RFR
	230	312105-0492	-		2	SCREW M6S10X22RFR
	240	312105-0493	-		6	SCREW M6S10X25RFR
	250	315105-0153	-		4	WASHER BRB6,4X12RFR
	260	315105-0173	-		16	WASHER BRB10,5X22RFR

From	Pos	Part No	SP	UN	Qty	Description

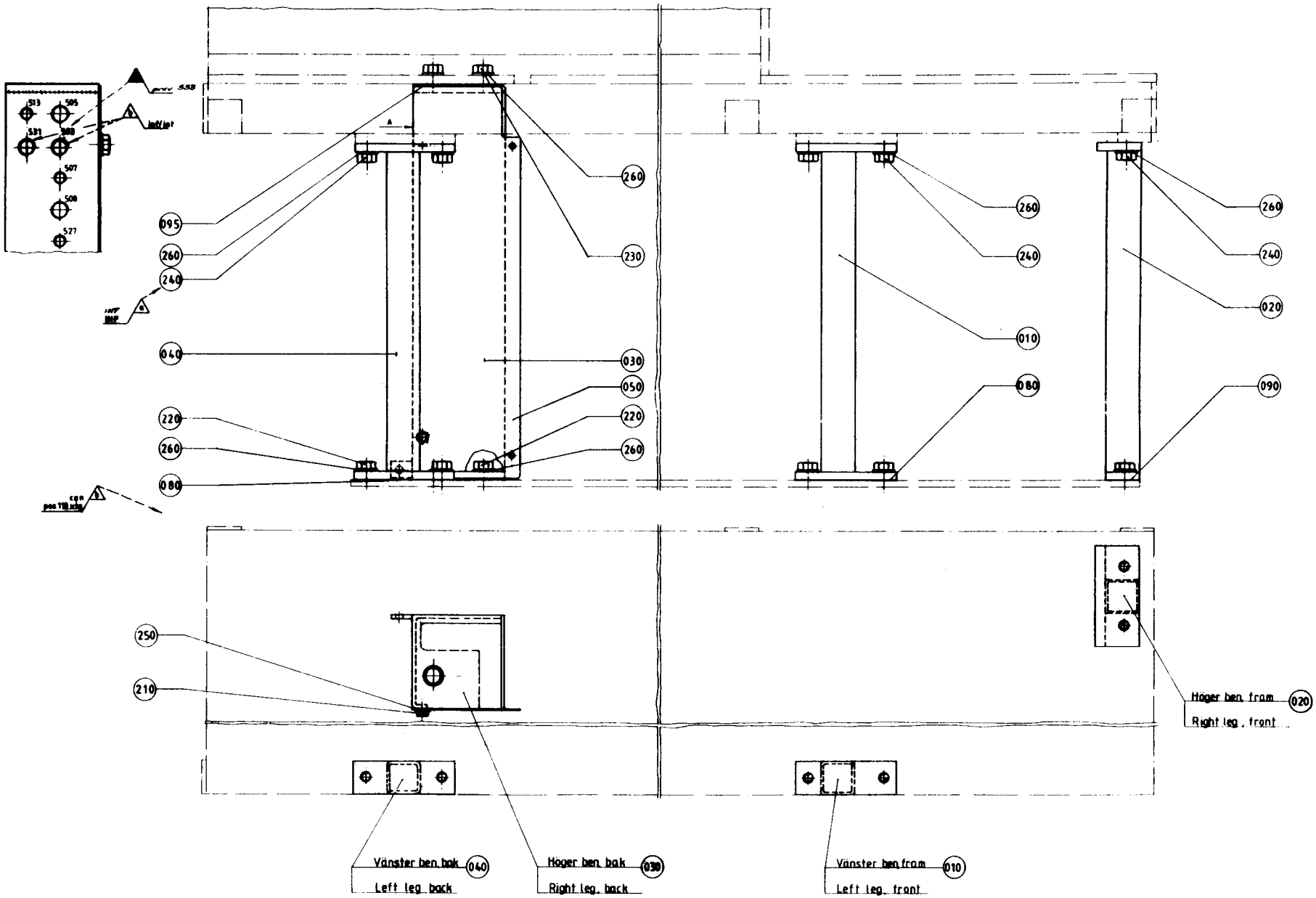
095
260
240
260
230
260
240
260
240
020
010
080
090
040
030
050
220
260
080
250
210
Höger ben fram
Right leg , front
020
Vänster ben bak
Left leg back
040
Höger ben bak
Right leg, back
030
Vänster ben fram
Left leg, front
010

From	Pos	Part No	SP	UN	Qty	Description	
	010	469620	-		1	LEFT LEG FRONT	
	020	554344	-		1	RIGHT LEG FRONT	
	030	546313	-		1	RIGHT LEG REAR	
	040	546311	-		1	LEFT LEG REAR	
	050	546315	-		1	LID	
	080	469631	-		2	SHIM	
	090	469632	-		1	SHIM	
	095	469659	-		1	SHIM	
	210	312105-0364	-		2	SCREW	M6S6X10RFR
	220	312105-0491	-		6	SCREW	M6S10X20RFR
	230	312105-0492	-		2	SCREW	M6S10X22RFR
	240	312105-0493	-		8	SCREW	M6S10X25RFR
	250	315105-0153	-		2	WASHER	BRB6,4X12RFR
	260	315105-0173	-		16	WASHER	BRB10,5X22RFR

From	Pos	Part No	SP	UN	Qty	Description

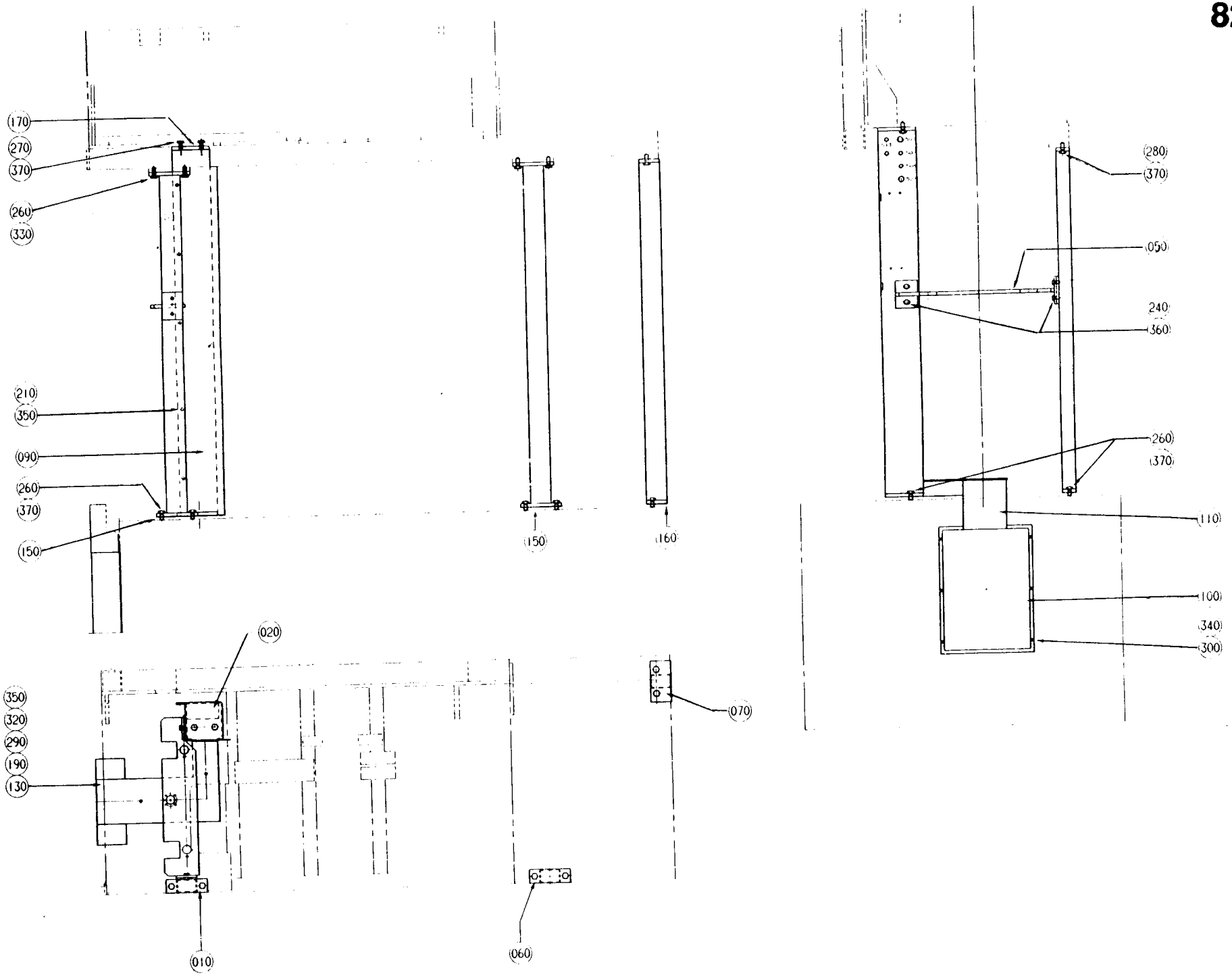
170
270
370
260
330
210
350
090
260
370
150
150
160
280
370
050
240
360
260
370
110
100
340
300
020
350
320
290
190
130
010
060
070

From	Pos	Part No	SP	UN	Qty	Description
	010	546312	-		1	LEFT LEG REAR
	020	546314	-		1	RIGHT LEG REAR
	050	552016	-		1	BEAM
	060	552018	-		1	LEFT LEG FRONT
	070	552019	-		1	RIGHT LEG FRONT
	090	552022	-		1	LID
	100	552039	-		1	COVER
	110	552040	-		1	CABLE DUCT
	130	552041	-		1	LID
	150	469631	-		2	SHIM
	160	469632	-		1	SHIM
	170	469659	-		1	SHIM
	190	552042	-		2	SCREW
	210	312105-0364	-		8	SCREW M6S6X10RFR
	240	312105-0449	-		4	SCREW M6S8X16RFR
	260	312105-0491	-		8	SCREW M6S10X20RFR
	270	312105-0492	-		2	SCREW M6S10X22RFR
	280	312105-0493	-		6	SCREW M6S10X25RFR
	290	312125-0364	-		6	SLOTTED HEMCS6X10RFR
	300	312605-0314	-		6	NUT M6M5RFR
	310	312705-0316	-		2	CAP NUT MHM 6 A2
	340	315105-0146	-		6	WASHER BRB5,3X10RFR
	350	315105-0153	-		10	WASHER BRB6,4X12RFR
	360	315105-0165	-		4	WASHER BRB8,4X16RFR
	370	315105-0173	-		16	WASHER BRB10,5X22RFR

From	Pos	Part No	SP	UN	Qty	Description

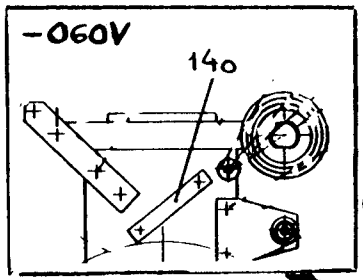
-060V
140

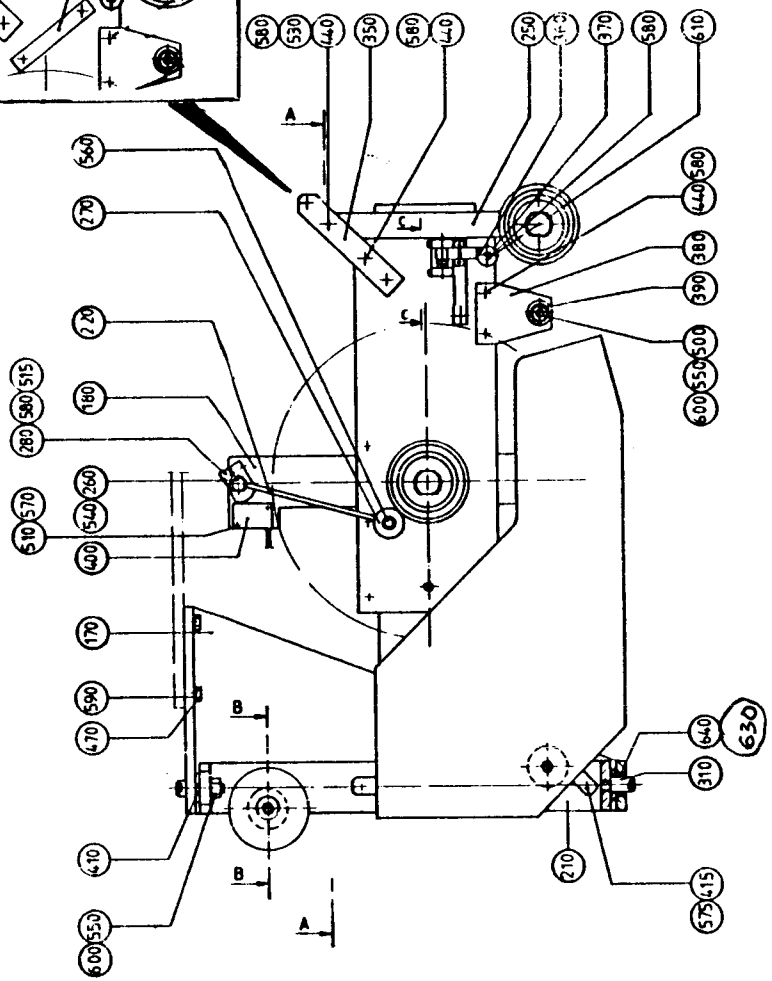
580 530 440 350 580 440 250 370 580 610
A
560
270
220
180
280 580 515
260
570
540
510
400
170
590
470
410
600 550
B
B
A
580 440 380 390 500 550 600
640 630
310
210
575 415

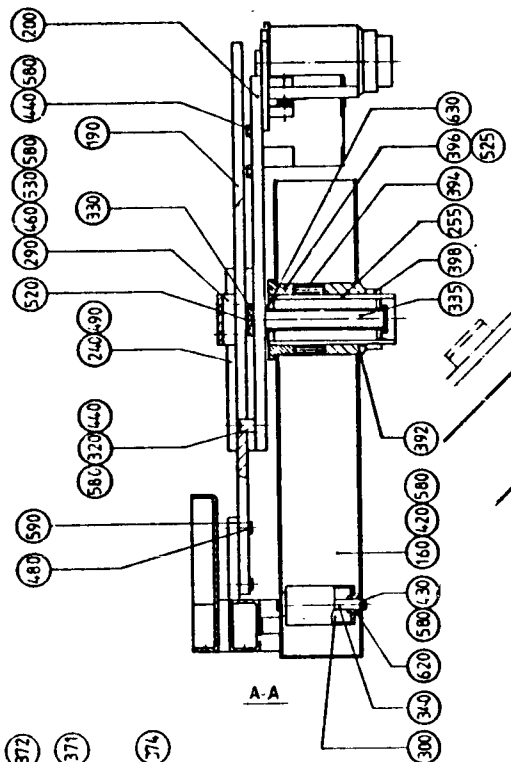
200
580 440
190
580 330
460
290
520
240 490
440
320
580
590
480
630
396 525
394
255
398
335
392
580
420
160
430
580
620
340
300
A-A

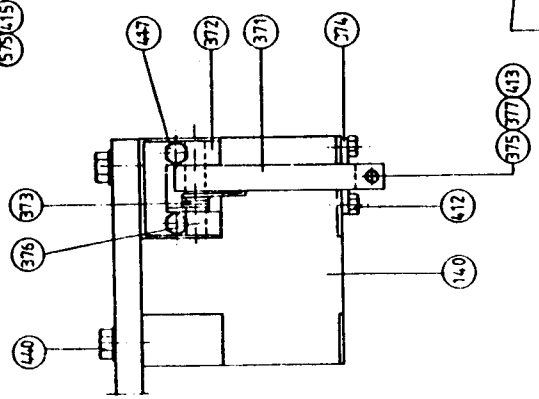
447
372
371
374
413
377
375
373
376
412
140
440
C-C skalu 1:1

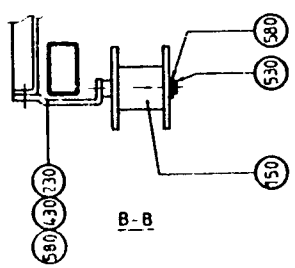
580
530
150
230
430
580
B-B

From	Pos	Part No	SP	UN	Qty	Description
	140	469571	-		1	JIG (284-180 ml)
	140	469585	-		1	JIG (125,200 mlSLIM)
070V	140	534826-0002	-		1	JIG (284-180 ml)
070V	140	534826-0001	-		1	JIG (125,200 mlSLIM)
	150	469324	S		1	ROLLER (284-180 ml)
	150	469325	S		1	ROLLER (125,200 mlSLIM)
	160	469248	-		1	MAGAZINE
	170	469249	-		1	FRAME
	180	469250	-		1	BRACKET
	190	469251	S		1	PLATE
	200	469252	-		1	BRACKET
	210	469253	-		1	HOLDER
	220	469254	-		1	ARM
	230	469256	-		1	ROLLER BRACKET
	240	469257	S		2	SLIDE RAIL
	250	469565	-		1	ARM
	255	469616	-		2	HOUSE
	260	469258	C		1	AXLE PIN
	270	469259	S		1	ROLLER
	280	469260	S		1	CLAMP
	290	469261	-		2	SPACER
	300	469263	S		1	ROLLER
	310	469265	C		2	AXLE PIN
	320	469266	-		1	STOP
	330	469271	-		2	WASHER
	335	469556	-		2	SHAFT
	340	469561	-		1	SHAFT
	350	469564	-		1	BRACKET
	360	469566	S		1	ROLLER
	370	469567	C		1	SHAFT
070V	371	534827	-		1	LOCK HANDLE
070V	372	534828	-		1	BRACKET
070V	373	534829	S		1	TOROSION SPRING
070V	374	534830	-		1	CATCH
070V	375	534831	-		1	LOCKING CLAMP
070V	376	534832	-		1	SHAFT
070V	377	534833	-		1	WASHER
	380	469569	-		1	BRACKET
	390	469570	S		1	ROLLER
	392	469619	S		2	RING
	394	469591	S		2	RUBBER RING
	396	469592	-		2	FLANGE
	398	469617	-		2	RING

From	Pos	Part No	SP	UN	Qty	Description
	400	90044-0104	P		1	PROXIMITY SWITCH
	410	90287-0106	S		1	SPRINGLOADED SCREW
070V	412	312105-0287	-		2	SCREW M6S4X8 A4 80
070V	413	312105-0289	-		1	SCREW M6S4X10 A4 80
	415	312105-0323	-		2	SCREW M6S5X8 A4 80
070V	417	312105-0335	-		2	SCREW M6S5X30 A4 80
	420	312105-0362	-		2	SCREW M6S6X8RFR
	430	312105-0366	-		4	SCREW M6S6X12RFR
	440	312105-0370	-		11	SCREW M6S6X20RFR
	460	312105-0376	-		4	SCREW M6S6X35RFR
	470	312105-0449	-		4	SCREW M6S8X16RFR
	480	312105-0451	-		4	SCREW M6S8X20RFR
	490	312115-0455	-		6	SCREW 8X30 A4 80
	500	312111-0511	-		1	SCREW MC6S10X100FZB
	510	312125-0228	-		2	SLOTTED HEMCS3X16RFR
	515	312155-0372	-		1	SCREW MF6S6X25RFR
	520	312155-0493	-		2	SCREW MF6S10X25RFR
	525	312318-0362	-		4	GRUB SCREW SK6SS6X8RFR
	530	312605-0316	-		5	NUT M6M6RFR
	540	312605-0318	-		1	NUT M6M8RFR
	550	312605-0320	-		1	NUT M6M10RFR
	560	312812-0316	-		1	LOCK NUT A4-M6RFR
	570	315105-0124	-		2	WASHER BRB3,2X6RFR
	575	315105-0146	-		2	WASHER BRB5,3X10RFR
	580	315105-0153	-		37	WASHER BRB6,4X12RFR
	590	315105-0165	-		8	WASHER BRB8,4X16RFR
	600	315105-0173	-		1	WASHER BRB10,5X22RFR
	610	315755-0106	-		1	CIRCLIP E 4RFR
	620	321101-0162	S		2	BUSHING 10F7X8
	630	321111-0241	S		4	BUSHING 16E7X16
	640	321101-0202	S		2	BUSHING 16F7X12

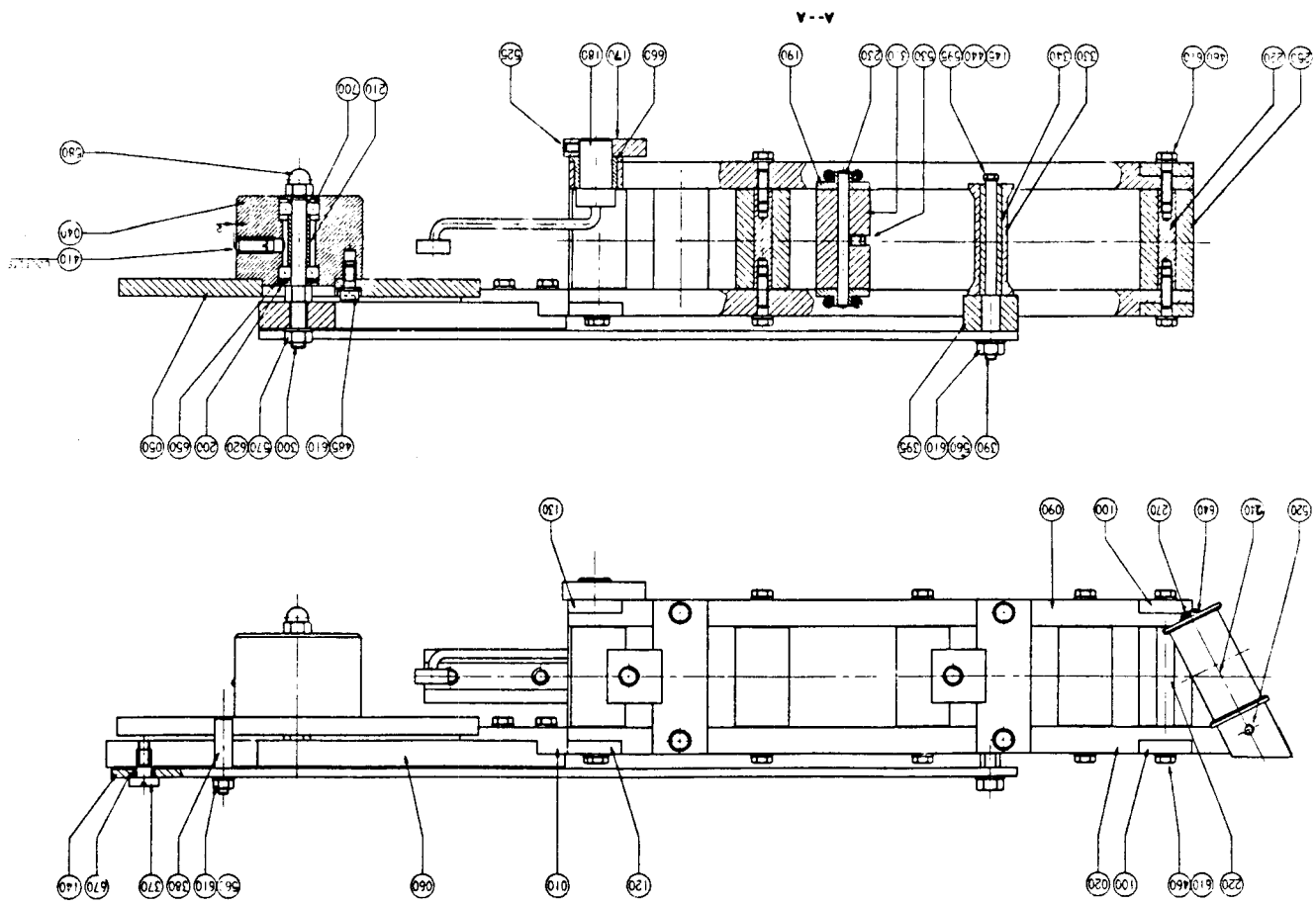

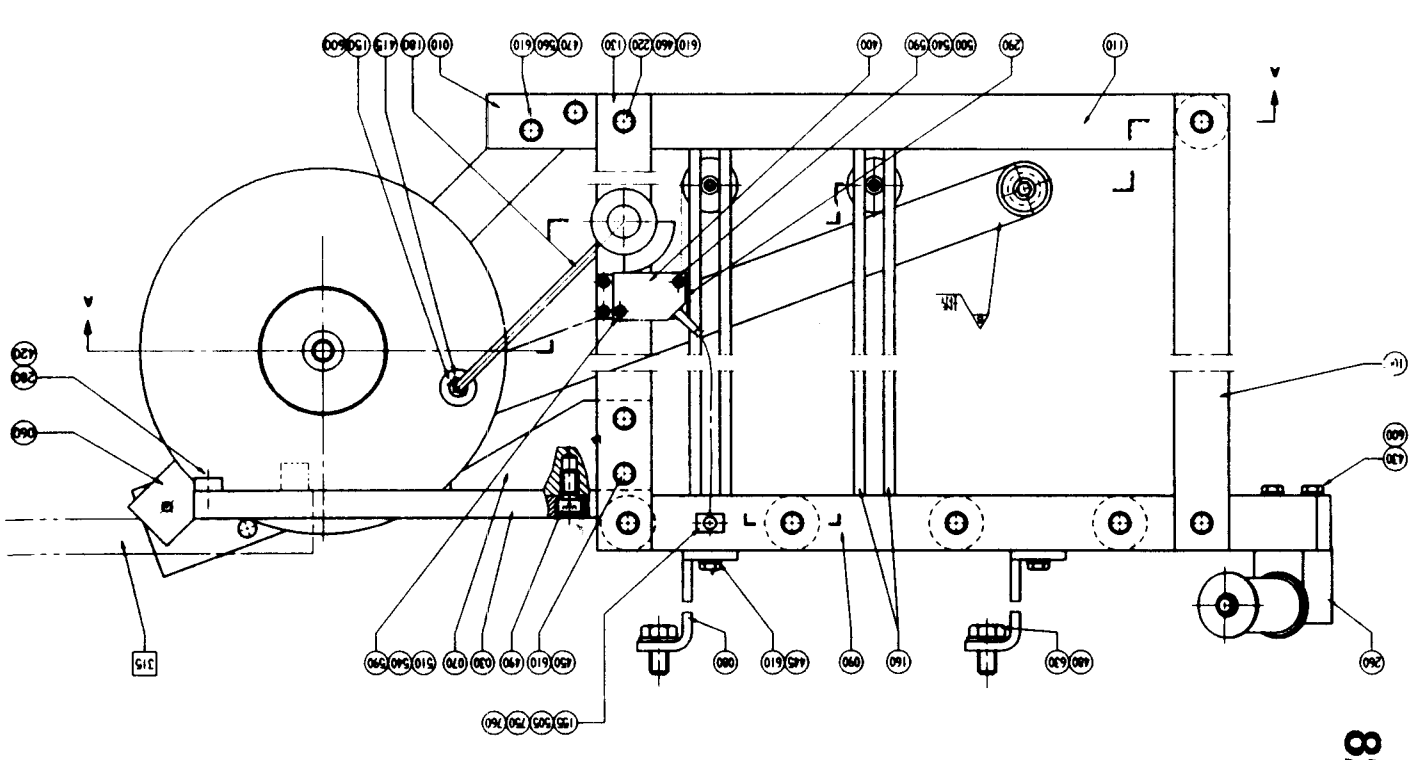

From	Pos	Part No	SP	UN	Qty	Description
	F315	==>821-2.1	-		1	SPLICING DEVICE
	010	546286	-		1	BEAM
	020	546287	-		1	BEAM
	030	546288	-		1	SLIDE RAIL
	040	546256	-		1	BOBBIN HOLDER
	050	556539	-		1	STOP PLATE
	060	546290	-		1	BEAM
	070	546291	-		1	BRACKET
	080	546292	-		2	BRACKET
	090	546293	-		1	BEAM
	100	546294	-		2	BEAM
	110	546295	-		1	BEAM
	120	546296	-		1	BEAM
	130	546297	-		1	BEAM
	140	556540	-		1	ARM
	145	2032-0013	-		1	WASHER
	150	234844	-		1	WHEEL
	155	456256	-		1	PROTECTIVE COVER
	160	533183	-		8	POST
	170	533972	-		1	INDICATOR CURVE
	180	533973	-		1	ARM
	190	534497	-		4	SPACER
	200	538726	-		2	WASHER
	210	538740-0003	-		1	SPACER
	220	546298	-		7	SHAFT
	230	546299	-		2	SHAFT
	240	546300	-		1	ROLLER
	250	546301	-		5	ROLLER
	260	546302	-		1	BLOCK
	270	546303	-		1	SHAFT
	280	546304	-		1	STOP LUG
	290	546305	-		1	PLATE
	300	546306	-		1	SHAFT
	310	546307	-		2	ROLLER
	330	547745	-		1	ROLLER
	340	547746	-		1	ROLLER
	370	556541	-		1	SCREW
	380	556542	-		1	PIN
	390	556543	-		1	SHAFT
	395	556544	-		1	SPACER
	400	90044-0104	S		1	PROXIMITY SWITCH
	410	90287-0009	C		1	SPRINGLOADED SCREW

From	Pos	Part No	SP	UN	Qty	Description
	415	311411-0138	-		2	SPLIT PIN SP1,6X12RFR
	420	312155-0329	-		2	SCREW MF6S5X16RFR
	430	312105-0339	-		2	SCREW M6S5X40 A4 80
	440	312105-0287	-		1	SCREW M6S4X8 A4 80
	445	312105-0368	-		4	SCREW M6S6X16RFR
	450	312105-0370	-		4	SCREW M6S6X20RFR
	460	312105-0372	-		18	SCREW M6S6X25RFR
	470	312105-0376	-		2	SCREW M6S6X35RFR
	480	312105-0491	-		2	SCREW M6S10X20RFR
	485	312115-0368	-		2	SCREW MC6S 6X16 A4 80
	490	312115-0449	-		2	SCREW 8X16 A4 80
	500	312125-0230	-		3	SLOTTED HEMCS3X20RFR
	505	312125-0289	-		1	SLOTTED HEMCS4X10RFR
	510	90287-0069	-		1	SCREW MCS 3X35 A4
	520	312318-0285	-		1	GRUB SCREW SK6SS4X6RFR
	525	312318-0323	-		1	GRUB SCREW SK6SS5X8RFR
	530	312318-0364	-		2	GRUB SCREW SK6SS6X10RFR
	540	312605-0310	-		4	NUT M6M3RFR
	560	312605-0316	-		4	NUT M6M6RFR
	570	312605-0318	-		3	NUT M6M8RFR
	580	312705-0318	-		1	CAP NUT MHM 8 A2
	590	315105-0124	-		4	WASHER BRB3,2X6RFR
	595	315105-0136	-		1	WASHER BRB4,3X8RFR
	600	315105-0146	-		4	WASHER BRB5,3X10RFR
	610	315105-0153	-		28	WASHER BRB6,4X12RFR
	620	315105-0165	-		1	WASHER BRB8,4X16RFR
	630	315105-0173	-		2	WASHER BRB10,5X22RFR
	640	315750-0107	-		1	LOCK RING SGA10
	650	315753-0117	-		1	LOCK RING GH 22 RFR
	660	321111-0274	-		1	BUSHING 18E7X18
	670	321116-0095	-		1	BUSHING 8E7/12X6
	700	321300-0098	-		2	BALL BEARISKF608
	750	352113-0202	-		1	ARMATURE STA-TM2-S8
	760	352135-0102	-	MM	650	HOSE 155.010

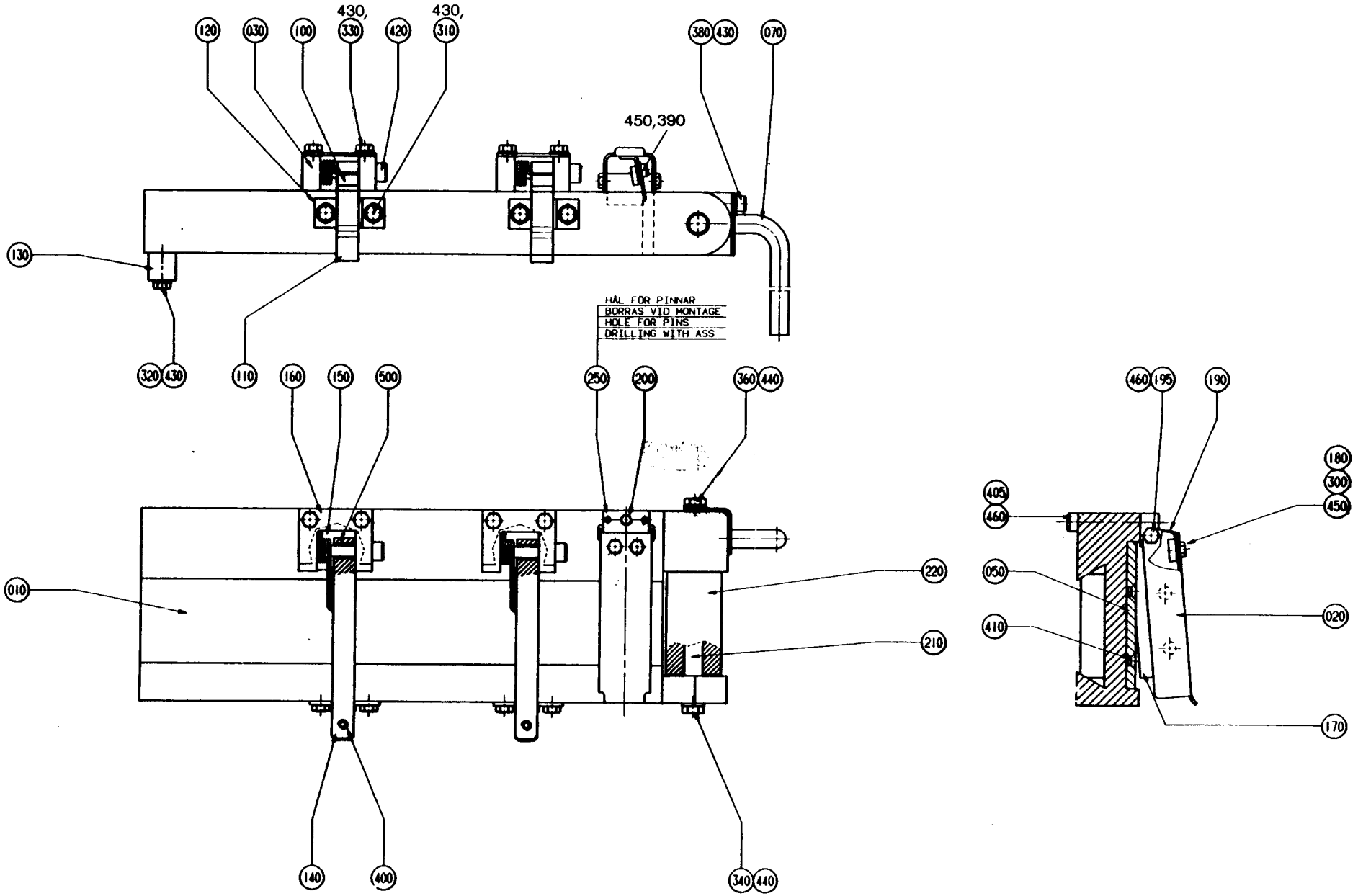
120
030
100
430, 330
420
430, 310
380 430
070
450,390
130
320 430
110
160
150
500
HÅL FÖR PINNAR
BORRAS VID MONTAGE
HOLE FOR PINS
DRILLING WITH ASS
250
200
360 440
010
220
210
140
400
340 440
460 195
190
180
300
450
405
460
050
410
020
170

Last Alteration: AM 15283 90-10-31

Corresponding C-lists: 544420-010V
Assembly Drawing: 544420-1

Date Printed: 910327

From	Pos	Part No	SP	UN	Qty	Description
	010	544421	-		1	SPLICING TABLE
	020	522376	-		1	KNIFE HOLDER
	030	532017	-		2	LUG
	050	544422	S		1	KNIFE
	070	544424	-		1	HANDLE
	100	532020	-		2	LOCK WASHER
	110	532021	-		2	LOCKING CLAMP
	120	532022	-		2	LOCK BAR
	130	544425	-		1	STOP LUG
	140	544426	-		2	LOCK HANDLE
	150	544427	S		2	TORSION SPRING
	160	544428	-		2	PLATE
	170	522388-0002	S		1	KNIFE
	180	522393	-		1	NUT
	190	522394	S		1	SPRING
	195	522395	-		2	SCREW
	200	552049	-		1	LUG
	210	546298	-		1	SHAFT
	220	546301	-		1	ROLLER
	250	90258-0031	-		2	HOLLOW PIN
	300	312105-0287	-		2	SCREW M6S4X8 A4 80
	310	312105-0327	-		4	SCREW M6S5X12 A4 80
	320	312105-0333	-		2	SCREW M6S5X25 A4 80
	330	312105-0335	-		4	SCREW M6S5X30 A4 80
	340	312105-0372	-		1	SCREW M6S6X25RFR
	360	312105-0379	-		1	SCREW M6S6X45RFR
	380	312105-0364	-		1	SCREW M6S6X10RFR
	390	312115-0287	-		4	SCREW MC6S 4X8 A4 80
	400	312155-0291	-		2	SCREW MF6S4X12RFR
	405	312115-0379	-		1	SCREW 6X45 A4 80
	410	312155-0325	-		2	SCREW MF6S5X10RFR
	420	312180-0374	-		2	REAMED BOL
	430	315105-0146	-		10	WASHER BRB5,3X10RFR
	440	315105-0153	-		5	WASHER BRB6,4X12RFR
	450	315402-0136	-		4	WASHER FBB4,1RFR
	460	315402-0156	-		3	WASHER FBB6,5RFR
	500	321120-0102	-		2	BUSHING 6/8X10

From	Pos	Part No	SP	UN	Qty	Description

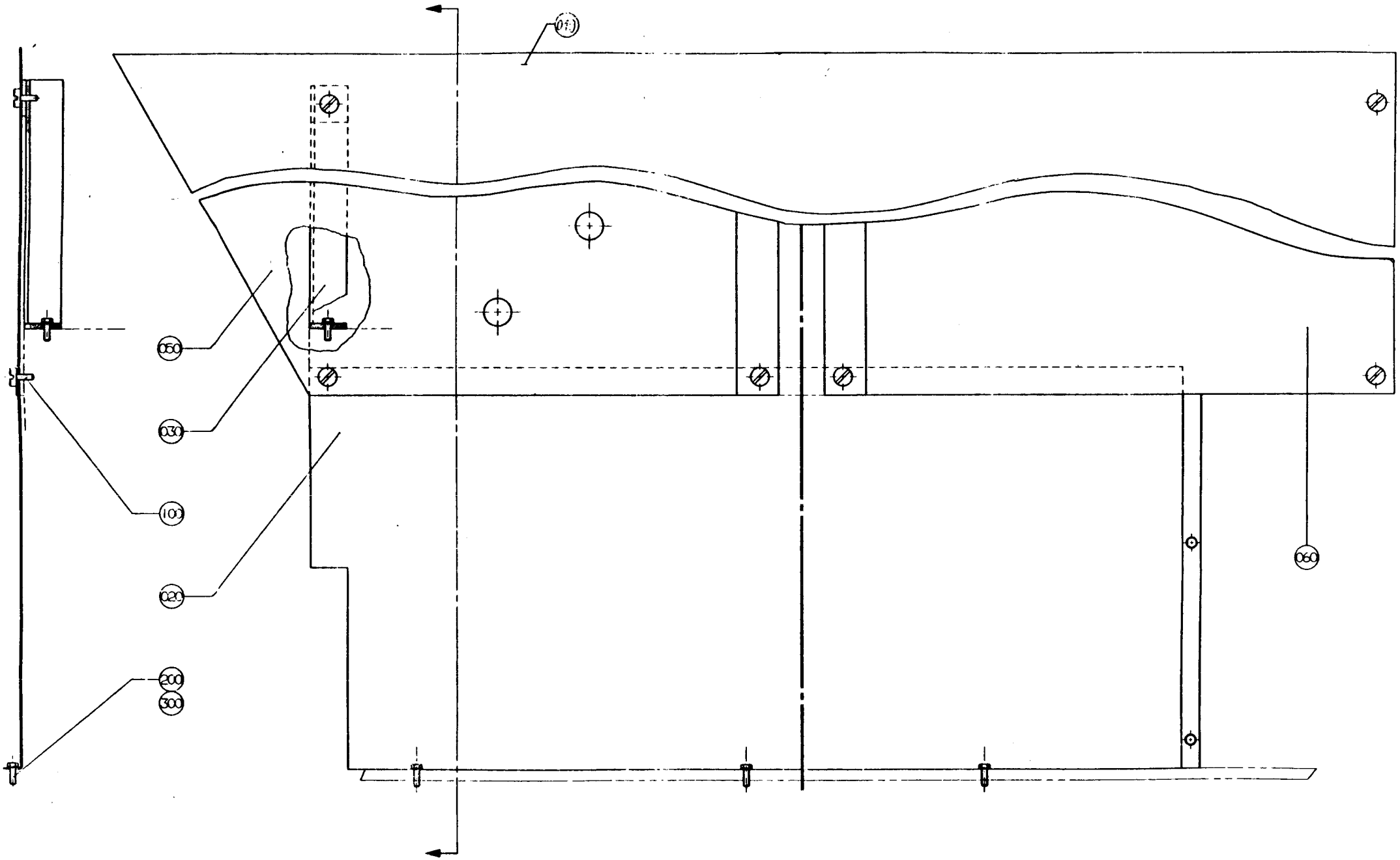
010
060
030
100
020
060
200
300

From	Pos	Part No	SP	UN	Qty	Description
TB/9						
	020	531661	-		1	COVER PLATE
	050	469693	-		1	COVER PLATE
	060	469694	-		1	COVER PLATE
TBA/9						
	010	469636	-		1	COVER PLATE
	020	469637	-		1	COVER PLATE
Common Parts						
	030	469639	-		1	BRACKET
	100	90287-0062	-		8	SCREW
	200	312105-0368	-		6	SCREW M6S6X16RFR
	300	315105-0153	-		6	WASHER BRB6,4X12RFR

From	Pos	Part No	SP	UN	Qty	Description

823-1

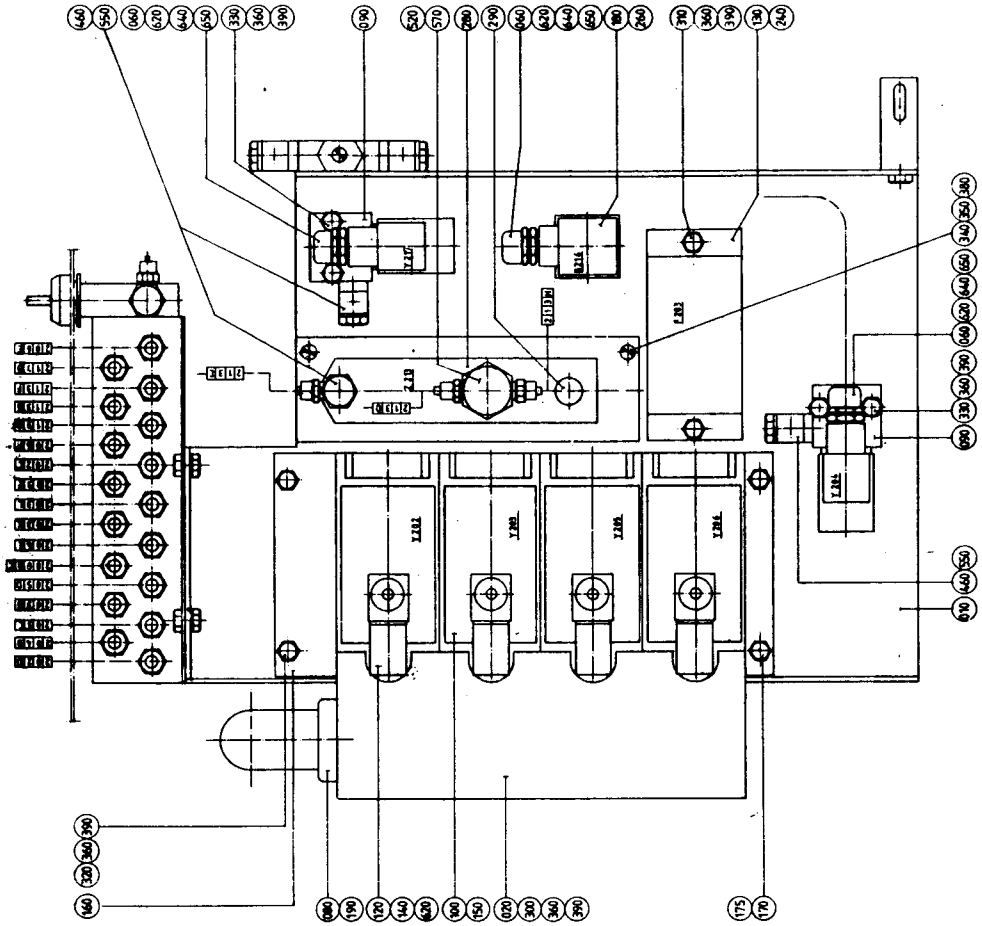

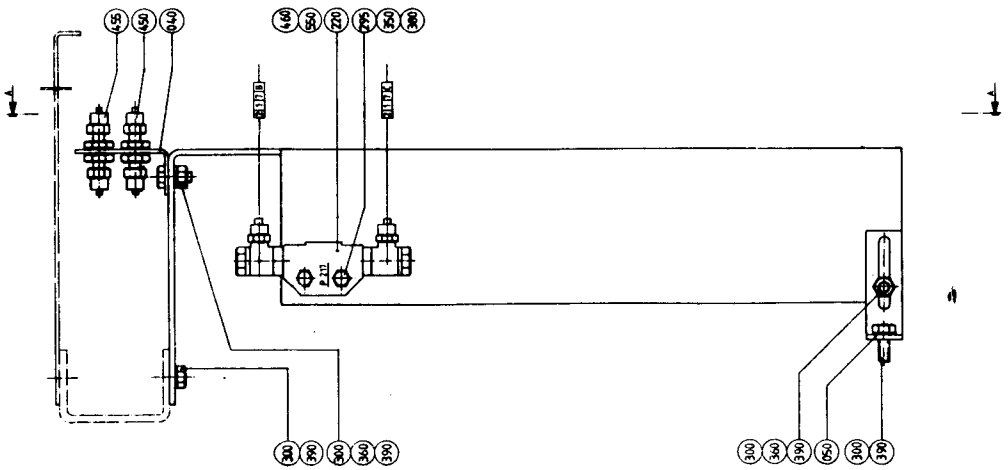

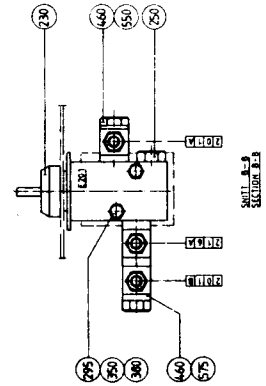

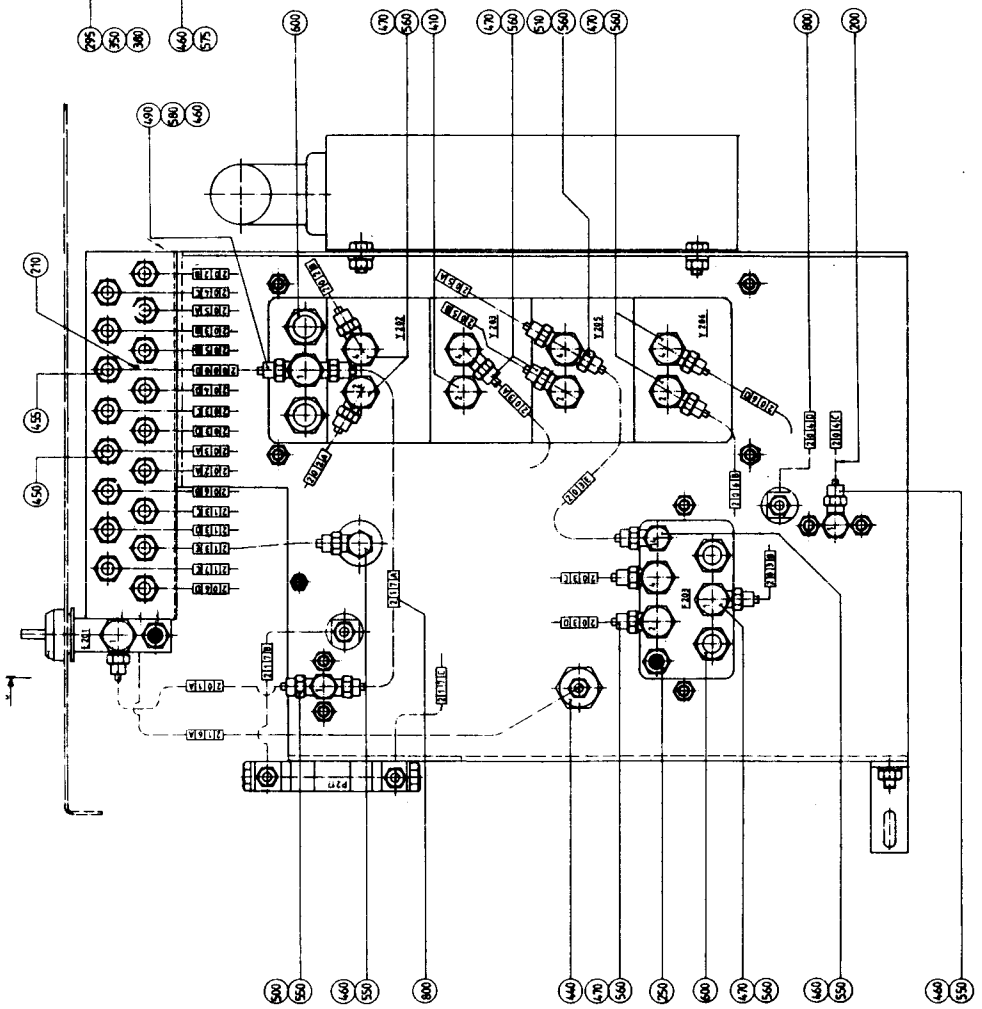

Last Alteration: AM 9161 86-06-17

Corresponding C-lists: 457924-010V
Assembly Drawing: 457924-1/2

Date Printed: 900928

From	Pos	Part No	SP	UN	Qty	Description
	010	469317	-		1	PLATE
	020	456615	-		1	CABLE DUCT
	040	469595	-		1	BRACKET
	050	469594	-		1	BRACKET
	060	456244	S		3	PROTECTIVE COVER
	080	90012-0062	-		2	GLAND
	090	90042-0052	S		2	SOLENOID VALVE
	100	90042-0074	S		4	SOLENOID VALVE
		90042-0371	P		0	* WEAR & TEAR PARTS KIT
	120	90042-0326	P		4	COIL
	130	90042-0360	-		1	PLATE
	140	90042-0366	S		4	CONTACT
	150	90042-0367	-		4	PLATE
	160	90042-0368	-		1	CONNECTION
	170	90042-0369	-		1	END PIECE
	175	90042-0374	-		1	SEAL KIT
	180	90110-0095	P		1	CONTAKT
	190	90152-0031	-	M	1	HOSE
	200	90166-0132	-	M	5	HOSE
	210	90166-0133	-	MM	500	HOSE
	220	90235-0032	-		1	VALVE
	230	90235-0204	S		1	VALVE
		90235-0403	S		1	* SEAL KIT
	240	90235-0276	S		1	VALVE
	250	90257-0003	-		2	FILTER PLUG
	260	90274-0044	S		1	GUARD
	280	90364-0012	S		1	PUMP
		90364-0328	S		2	* FLAP
		90364-0331	S		1	* FILTER
		90364-0339	S		1	* GASKET
		90364-0340	S		1	* GASKET
	290	90364-0327	C		1	SILENCER
	295	312105-0297	-		5	SCREW M6S4X25 A4 80
	300	312105-0368	-		8	SCREW M6S6X16RFR
	310	312105-0370	-		4	SCREW M6S6X20RFR
	320	312105-0378	-		4	SCREW M6S6X40RFR
	330	312105-0380	-		4	SCREW M6S6X50RFR
	340	312125-0301	-		2	SLOTTED HEMCS4X35RFR
	350	312605-0312	-		7	NUT M6M4RFR
	360	312605-0316	-		16	NUT M6M6RFR
	380	315105-0136	-		7	WASHER BRB4,3X8RFR
	390	315105-0153	-		16	WASHER BRB6,4X12RFR
	410	342713-0210	-		1	BLANK-OFF

From	Pos	Part No	SP	UN	Qty	Description
	440	342923-0115	-		1	PIPE CONNE6/4-3/8
	450	342960-0112	-		16	GROMMET 6/4
	455	342960-0122	-		1	GROMMET 8/6
	460	342980-0113	-		11	BANJO CONNSINGEL 6/4-1/8
	470	342980-0114	-		10	BANJO CONNSINGEL 6/4-1/4
	490	342980-0122	-		1	BANJO CONNSINGEL 8/6-1/4
	500	342980-0213	-		1	BANJO CONNDUBBEL 6/4-1/8
	510	342980-0214	-		1	BANJO CONNDUBBEL 6/4-1/4
	520	342980-0216	-		1	BANJO CONNDUBBEL 6/4-1/2
	550	342980-0303	-		10	BANJO CONN SINGEL 1/8"
	560	342980-0304	-		10	BANJO CONN SINGEL 1/4
	570	342980-0306	-		1	BANJO CONN SINGEL 1/2
	575	342980-0313	-		1	BANJO CONN DUBBEL 1/8
	580	342980-0314	-		1	BANJO CONN DUBBEL 1/4
	600	346800-0110	-		4	SILENCER FILTER R1/4"
	620	352103-0101	-		7	CABLE GLANR.15,2/4-8
	640	352135-0102	-	MM	2500	HOSE .010
	650	352136-0107	-		3	GLAND
	800	359000-0400	-		50	MARKING CO2/4"0"
	800	359000-0401	-		40	MARKING CO2/4"1"
	800	359000-0402	-		50	MARKING CO2/4"2"
	800	359000-0403	-		20	MARKING CO2/4"3"
	800	359000-0404	-		20	MARKING CO2/4"4"
	800	359000-0405	-		10	MARKING CO2/4"5"
	800	359000-0406	-		10	MARKING CO2/4"6"
	800	359000-0407	-		10	MARKING CO2/4"7"
	800	359000-0408	-		10	MARKING CO2/4"8"
	800	359000-0409	-		10	MARKING CO2/4"9"
	800	359000-0750	-		15	MARKING CO2/4"A"
	800	359000-0751	-		15	MARKING CO2/4"B"
	800	359000-0752	-		15	MARKING CO2/4"C"
	800	359000-0753	-		15	MARKING CO2/4"D"
	800	359000-0754	-		15	MARKING CO2/4"E"
	800	359000-0757	-		5	MARKING CO2/4"H"

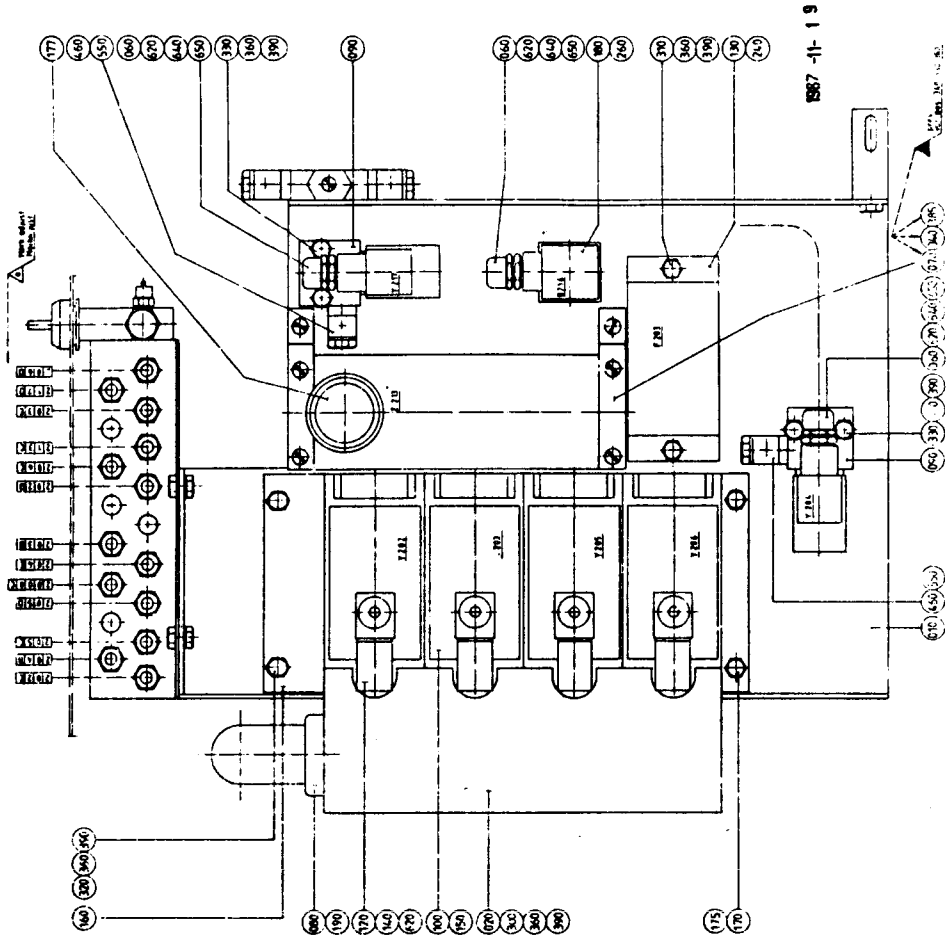

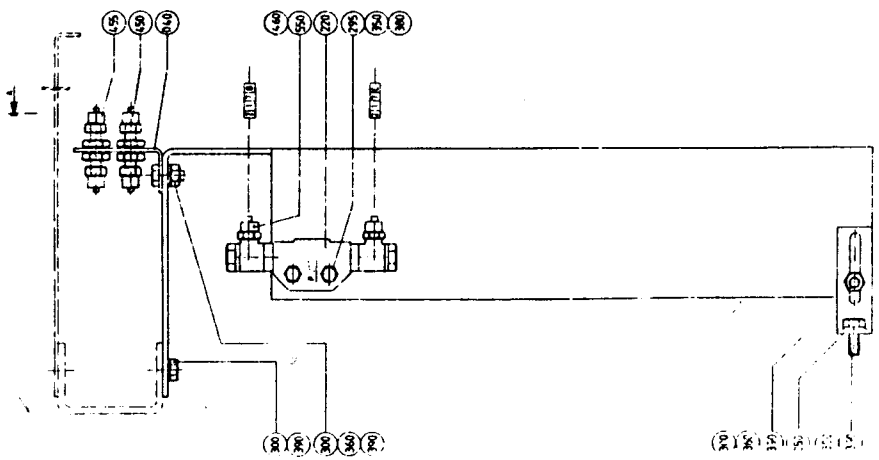

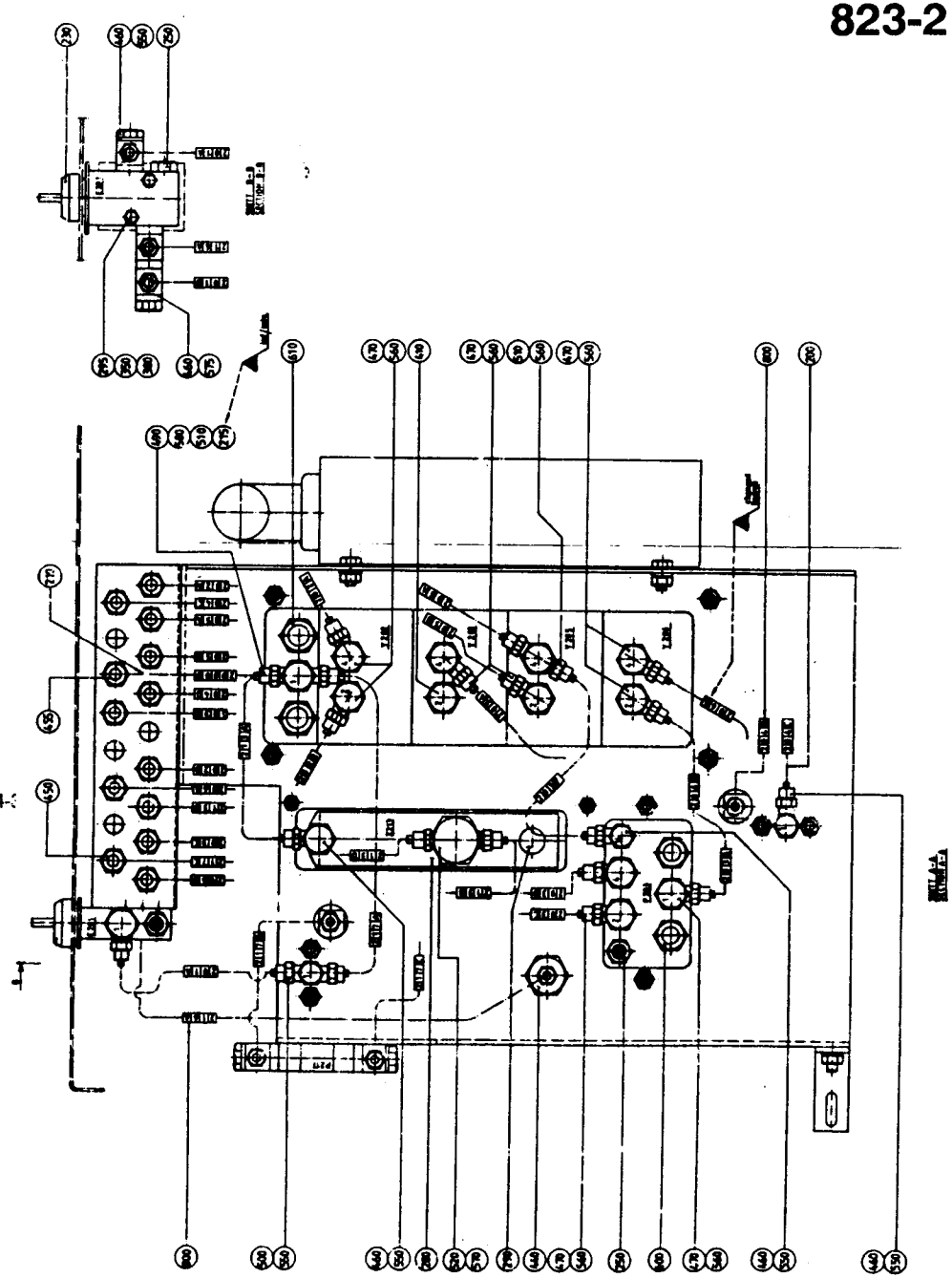

From	Pos	Part No	SP	UN	Qty	Description
	010	531664	-		1	PLATE
	020	456615	-		1	CABLE DUCT
	040	469595	-		1	BRACKET
	050	469594	-		1	BRACKET
	060	456244	S		3	PROTECTIVE COVER
	070	536885	-		2	BRACKET
	080	90012-0062	-		2	GLAND
	090	90042-0052	S		2	SOLENOID VALVE
	100	90042-0074	S		4	SOLENOID VALVE
		90042-0371	P		0	* WEAR & TEAR PARTS KIT
	120	90042-0326	P		4	COIL
	130	90042-0360	-		1	PLATE
	140	90042-0366	S		4	CONTACT
	150	90042-0367	-		4	PLATE
	160	90042-0368	-		1	CONNECTION
	170	90042-0369	-		1	END PIECE
	175	90042-0374	-		1	SEAL KIT
	177	90043-0076	S		1	MANOMETER
	180	90110-0095	P		1	CONTAKT
	190	90152-0031	-	M	1	HOSE
	200	90166-0132	-	M	5	HOSE
	210	90166-0133	-	MM	500	HOSE
	215	90224-0154	-		1	SLEEVE
	220	90235-0032	-		1	VALVE
	230	90235-0204	S		1	VALVE
		90235-0403	S		1	* SEAL KIT
	240	90235-0276	S		1	VALVE
	250	90257-0003	-		2	FILTER PLUG
	260	90274-0044	S		1	GUARD
	280	90364-0012	S		1	PUMP
		90364-0328	S		2	* FLAP
		90364-0331	S		1	* FILTER
		90364-0339	S		1	* GASKET
		90364-0340	S		1	* GASKET
	290	90364-0327	C		1	SILENCER
	295	312105-0297	-		5	SCREW M6S4X25 A4 80
	300	312105-0368	-		8	SCREW M6S6X16RFR
	310	312105-0370	-		4	SCREW M6S6X20RFR
	320	312105-0378	-		4	SCREW M6S6X40RFR
	330	312105-0380	-		4	SCREW M6S6X50RFR
	340	312125-0325	-		6	SLOTTED HEMCS5X10RFR
	350	312605-0312	-		5	NUT M6M4RFR
	360	312605-0316	-		16	NUT M6M6RFR

From	Pos	Part No	SP	UN	Qty	Description
	380	315105-0136	-		5	WASHER BRB4,3X8RFR
	385	315105-0146	-		6	WASHER BRB5,3X10RFR
	390	315105-0153	-		16	WASHER BRB6,4X12RFR
	410	342713-0210	-		1	BLANK-OFF
	440	342923-0115	-		1	PIPE CONNE6/4-3/8
	450	342960-0112	-		12	GROMMET 6/4
	455	342960-0122	-		1	GROMMET 8/6
	460	342980-0113	-		10	BANJO CONNSINGEL 6/4-1/8
	470	342980-0114	-		10	BANJO CONNSINGEL 6/4-1/4
	490	342980-0122	-		1	BANJO CONNSINGEL 8/6-1/4
	500	342980-0213	-		1	BANJO CONNDUBBEL 6/4-1/8
	510	342980-0214	-		2	BANJO CONNDUBBEL 6/4-1/4
	520	342980-0216	-		1	BANJO CONNDUBBEL 6/4-1/2
	550	342980-0303	-		10	BANJO CONN SINGEL 1/8"
	560	342980-0304	-		10	BANJO CONN SINGEL 1/4
	570	342980-0306	-		1	BANJO CONN SINGEL 1/2
	575	342980-0313	-		1	BANJO CONN DUBBEL 1/8
	580	342980-0314	-		1	BANJO CONN DUBBEL 1/4
	600	346800-0110	-		2	SILENCER FILTER R1/4"
	610	346800-0111	-		2	SILENCER FILTER R3/8"
	620	352103-0101	-		7	CABLE GLANR.15,2/4-8
	640	352135-0102	-	MM	2500	HOSE .010
	650	352136-0107	-		3	GLAND
	800	359000-0400	-		50	MARKING CO2/4"0"
	800	359000-0401	-		40	MARKING CO2/4"1"
	800	359000-0402	-		50	MARKING CO2/4"2"
	800	359000-0403	-		20	MARKING CO2/4"3"
	800	359000-0404	-		20	MARKING CO2/4"4"
	800	359000-0405	-		10	MARKING CO2/4"5"
	800	359000-0406	-		10	MARKING CO2/4"6"
	800	359000-0407	-		10	MARKING CO2/4"7"
	800	359000-0408	-		10	MARKING CO2/4"8"
	800	359000-0409	-		10	MARKING CO2/4"9"
	800	359000-0750	-		15	MARKING CO2/4"A"
	800	359000-0751	-		15	MARKING CO2/4"B"
	800	359000-0752	-		15	MARKING CO2/4"C"
	800	359000-0753	-		15	MARKING CO2/4"D"
	800	359000-0754	-		15	MARKING CO2/4"E"
	800	359000-0757	-		5	MARKING CO2/4"H"

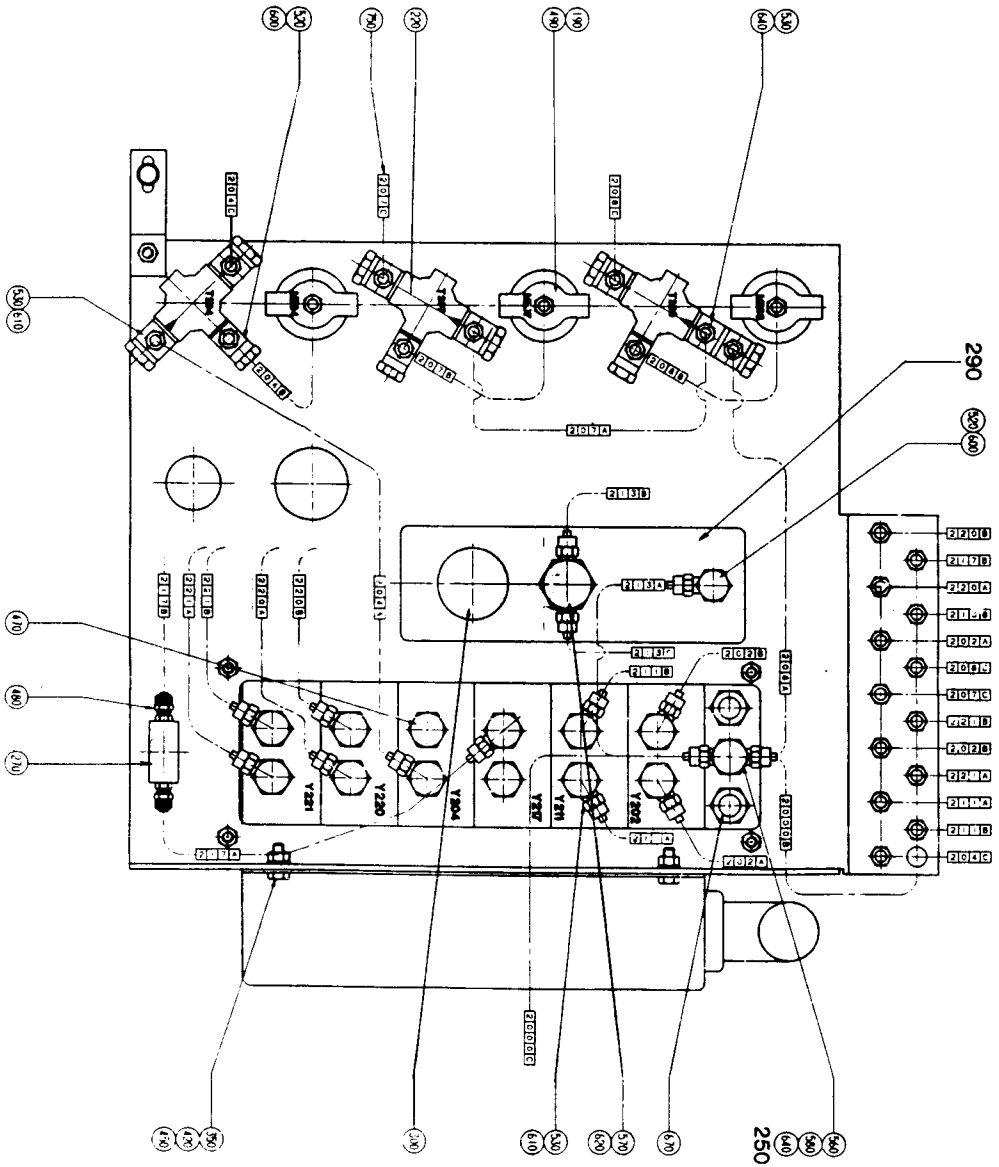
290
250

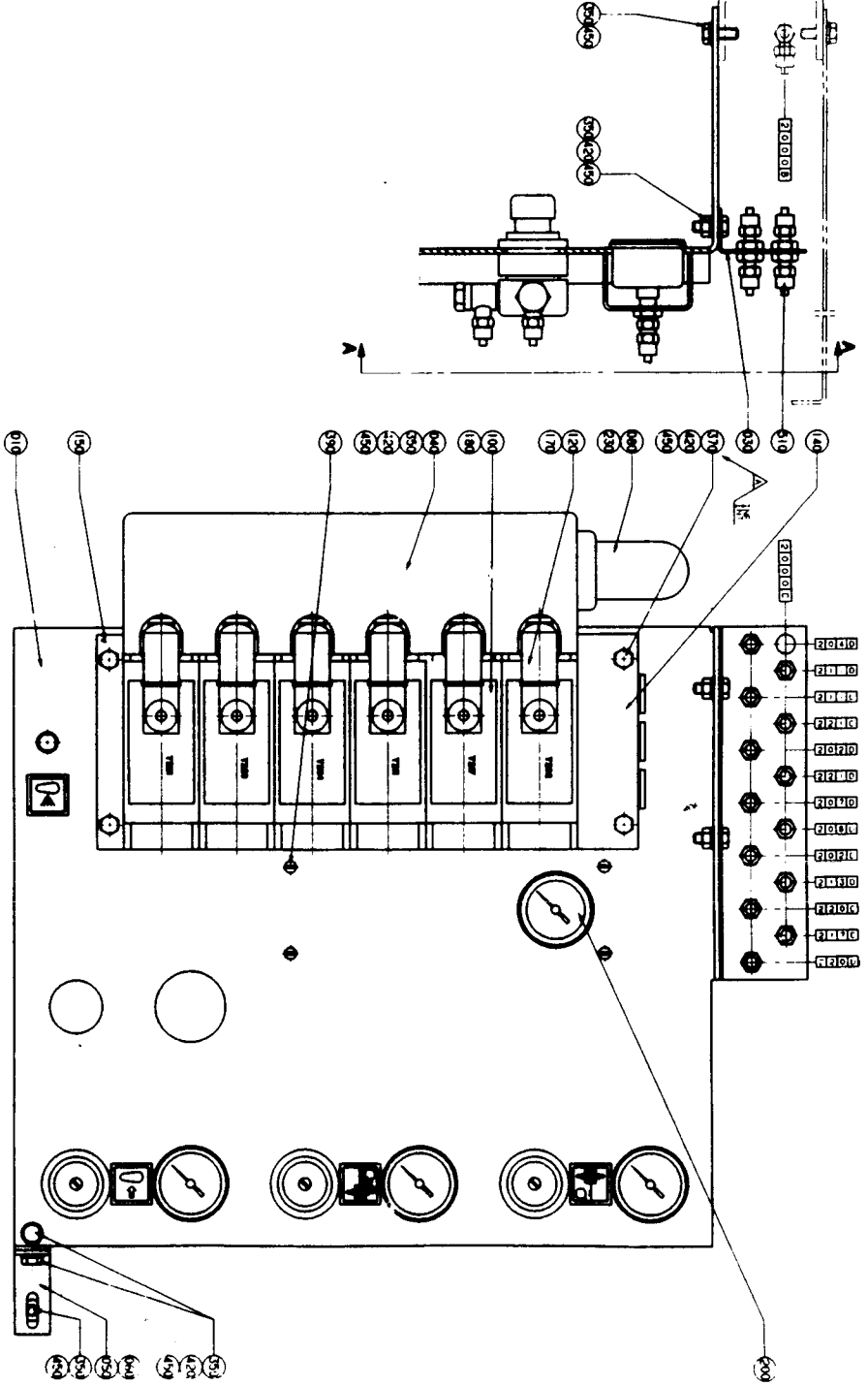

From	Pos	Part No	SP	UN	Qty	Description
	010	536858	-		1	PLATE
	030	536860	-		1	BRACKET
	040	548987	-		1	CABLE DUCT
	050	563733	-		1	BRACKET
	060	563734	-		1	BRACKET
	080	90012-0062	-		2	GLAND
	100	90042-0108	S		6	SOLENOID VALVE
		90042-0451	SP		1	* WEAR & TEAR PARTS KIT
	120	90042-0345	P		6	COIL
	140	90042-0368	-		1	CONNECTION
	150	90042-0369	-		1	END PIECE
	170	90042-0392	S		6	CONTACT
	180	90042-0431	-		6	PLATE
	190	90043-0065	S		3	PRESSURE GAUGE
	200	90043-0076	S		1	MANOMETER
	220	90113-0021	S		3	REGULATOR
	230	90152-0031	-	MM	400	HOSE
	240	90166-0132	-	M	10	HOSE
	250	90224-0154	-		1	SLEEVE
	270	90235-0251	-		1	VALVE
	290	90364-0012	S		1	PUMP
		90364-0328	S		2	* FLAP
		90364-0331	S		1	* FILTER
	300	90364-0327	C		1	SILENCER
	350	312105-0368	-		10	SCREW M6S6X16RFR
	370	312105-0378	-		4	SCREW M6S6X40RFR
	390	312125-0327	-		4	SLOTTED HEMCS5X12RFR
	420	312605-0316	-		10	NUT M6M6RFR
	450	315105-0153	-		15	WASHER BRB6,4X12RFR
	470	342713-0210	-		2	BLANK-OFF
	480	342921-0113	-		2	PIPE CONNE6/4-1/8"
	490	342923-0113	-		3	PIPE CONNE6/4-1/8
	510	342960-0112	-		13	GROMMET 6/4
	520	342980-0113	-		4	BANJO CONNSINGEL 6/4-1/8
	530	342980-0114	-		17	BANJO CONNSINGEL 6/4-1/4
	560	342980-0214	-		1	BANJO CONNDUBBEL 6/4-1/4
	570	342980-0216	-		1	BANJO CONNDUBBEL 6/4-1/2
	580	342980-0122	-		1	BANJO CONNSINGEL 8/6-1/4
	600	342980-0303	-		4	BANJO CONN SINGEL 1/8"
	610	342980-0304	-		15	BANJO CONN SINGEL 1/4
	620	342980-0306	-		1	BANJO CONN SINGEL 1/2
	640	342980-0314	-		2	BANJO CONN DUBBEL 1/4
	670	346800-0111	C		2	SILENCER FILTER R3/8"

From	Pos	Part No	SP	UN	Qty	Description
	750	359000-0400	-		100	MARKING CO2/4"0"
	750	359000-0401	-		55	MARKING CO2/4"1"
	750	359000-0402	-		140	MARKING CO2/4"2"
	750	359000-0403	-		10	MARKING CO2/4"3"
	750	359000-0404	-		20	MARKING CO2/4"4"
	750	359000-0405	-		5	MARKING CO2/4"5"
	750	359000-0406	-		5	MARKING CO2/4"6"
	750	359000-0407	-		25	MARKING CO2/4"7"
	750	359000-0408	-		10	MARKING CO2/4"8"
	750	359000-0750	-		30	MARKING CO2/4"A"
	750	359000-0751	-		25	MARKING CO2/4"B"
	750	359000-0752	-		20	MARKING CO2/4"C"
	750	359000-0753	-		10	MARKING CO2/4"D"
	750	359000-0754	-		10	MARKING CO2/4"E"
	750	359000-0755	-		10	MARKING CO2/4"F"
	750	359000-0756	-		5	MARKING CO2/4"G"
	750	359000-0757	-		10	MARKING CO2/4"H"

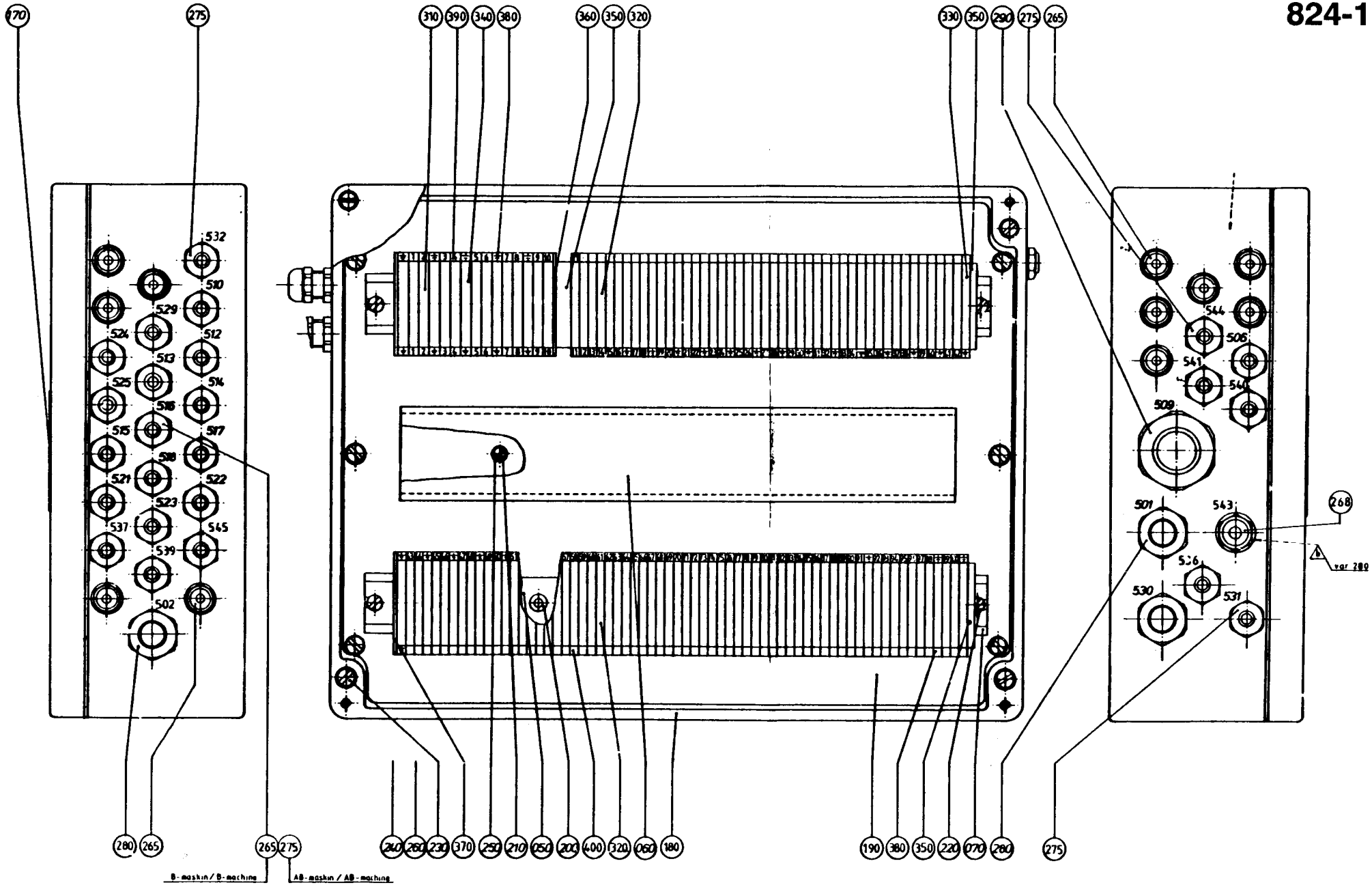
170
275
310
390
340
380
360
350
320
330
350
290
275
265
532
510
529
512
524
513
514
525
516
515
517
518
521
522
523
537
545
539
502
544
506
541
540
509
501
543
268
526
530
531
280
265
265
275
240
260
230
370
250
210
050
200
400
320
060
180
190
380
350
220
070
280
275
B-maskin / B-machine
AB-maskin / AB-machine

From	Pos	Part No	SP	UN	Qty	Description
	050	457821	-		2	BRACKET
	060	457822	-		1	CABLE DUCT
	070	469304	-		2	RAIL
	170	90194-0016	-		1	SIGN
	180	90265-0054	-		1	ACCESSORY BOX
	190	90265-0320	-		1	PLATE
	200	311520-0649	-		4	BLANK RIVE4,8X12,5
	210	312125-0287	-		2	SLOTTED HEMCS4X8RFR
	220	312125-0325	-		4	SLOTTED HEMCS5X10RFR
	230	312125-0378	-		4	SLOTTED HEMCS6X40RFR
	240	312605-0316	-		4	NUT M6M6RFR
	250	315105-0136	-		2	WASHER BRB4,3X8RFR
	260	315105-0153	-		4	WASHER BRB6,4X12RFR
	265	352101-0102	-		10	LEAD-IN G 15,2
	268	352101-0105	-		1	LEAD-IN G 22,5
	275	352103-0101	-		26	CABLE GLANR.15,2/4-8
	280	352103-0111	-		3	CABLE GLANR.PR22,5/10-14
	290	352103-0121	-		1	CABLE GLANR.37,0/18-25
	310	353021-0213	-		10	TERMINAL
	320	353021-0216	-		90	TERMINAL
	330	353024-0204	-		22	EARTH CLIPL#MMA WPE 2,5
	340	353024-0205	-		5	EARTH CLIPL#MMA WPE 4
	350	353031-0201	-		3	END PLATE EW35
	360	353032-0004	-		1	END PLATE
	370	353032-0005	-		2	END PLATE
	380	359011-0202	-		2	LABEL (GROUND)
	390	359011-0807	-		2	SET OF SIG5-FW 1-50
	400	359011-0808	-		2	SET OF SIG5-FW 51-100

From	Pos	Part No	SP	UN	Qty	Description

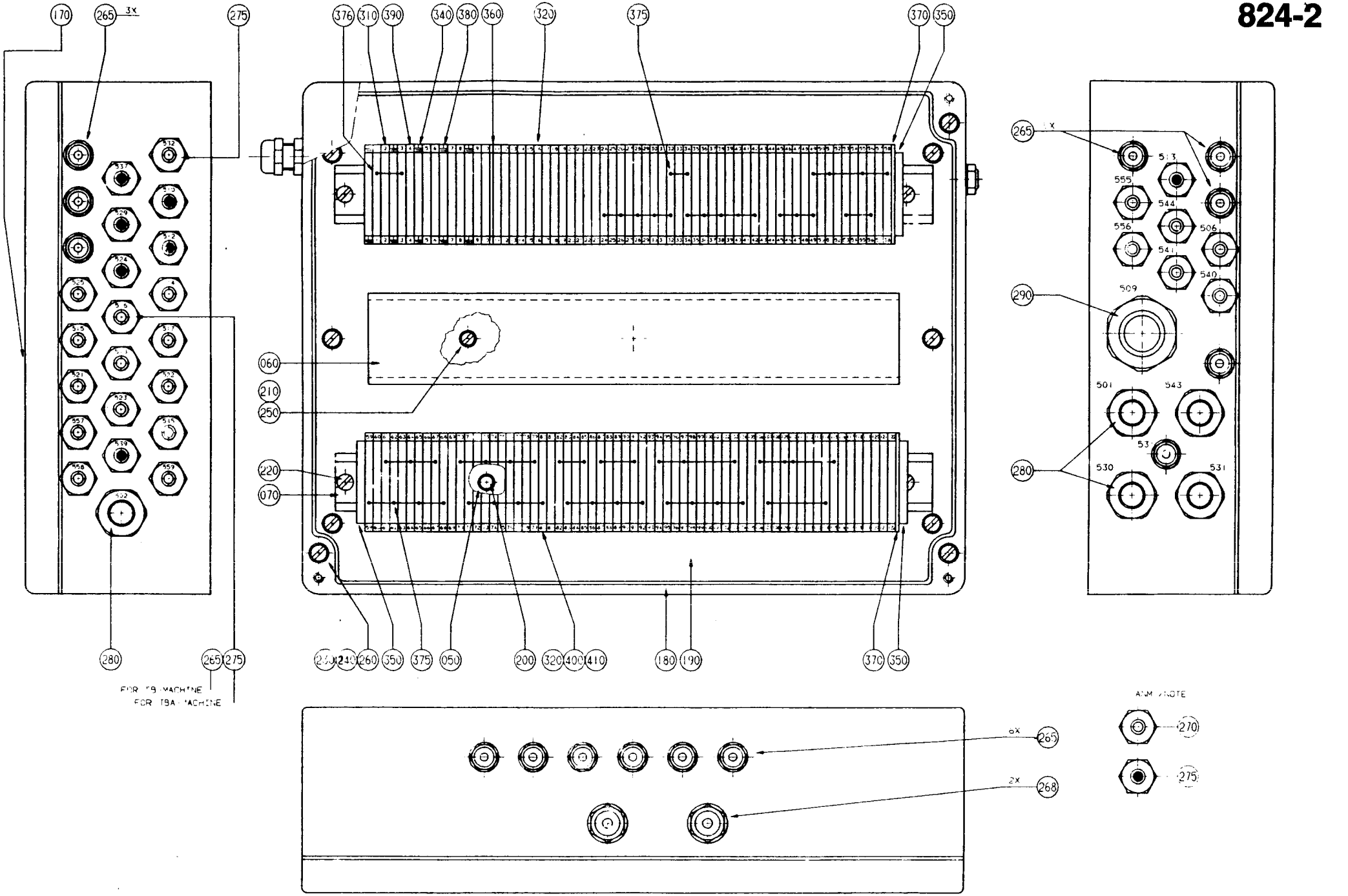
170
265
3X
275
376
310
390
340
380
360
320
375
370
350
060
210
250
220
070
280
265
275
FOR TB MACHINE
FOR TBA MACHINE
230
240
260
350
375
050
200
320
400
410
180
190
370
350
265
290
280
513
555
544
556
506
541
540
509
501
543
530
531
6X
265
2X
268
270
275

From	Pos	Part No	SP	UN	Qty	Description
	050	457821	-		2	BRACKET
	060	556570	-		1	CABLE DUCT
	070	469304	-		2	RAIL
	170	90194-0016	-		1	SIGN
	180	554363	-		1	ACCESSORY BOX
	190	90265-0320	-		1	PLATE
	200	311520-0649	-		4	BLANK RIVE4,8X12,5
	210	312125-0287	-		2	SLOTTED HEMCS4X8RFR
	220	312125-0325	-		4	SLOTTED HEMCS5X10RFR
	230	312125-0378	-		4	SLOTTED HEMCS6X40RFR
	240	312605-0316	-		4	NUT M6M6RFR
	250	315105-0136	-		2	WASHER BRB4,3X8RFR
	260	315105-0153	-		4	WASHER BRB6,4X12RFR
	265	352101-0102	-		15	LEAD-IN G 15,2
	268	352101-0105	-		2	LEAD-IN G 22,5
	270	352103-0100	-		20	CABLE GLANR.15,2/2-6
	275	352103-0101	-		8	CABLE GLANR.15,2/4-8
	280	352103-0110	-		5	CABLE GLANR.22,5/4-13
	290	352103-0121	-		1	CABLE GLANR.37,0/18-25
	310	353021-0213	-		10	TERMINAL
	320	353021-0216	-		112	TERMINAL
	340	353024-0205	-		5	EARTH CLIPL#MMA WPE 4
	350	353031-0201	-		3	END PLATE EW35
	360	353032-0004	-		1	END PLATE WAP 2,5-10
	370	353032-0005	-		2	END PLATE 2,5-10
	375	353034-0030	-		15	BRIDGE
	376	353034-0031	-		1	BRIDGE
	380	359011-0819	-		1	SET OF SIG5-GW(GROUND)
	390	359011-0807	-		2	SET OF SIG5-FW 1-50
	400	359011-0808	-		2	SET OF SIG5-FW 51-100
	410	359011-0809	-		2	SET OF SIG5-FW 101-150

From	Pos	Part No	SP	UN	Qty	Description

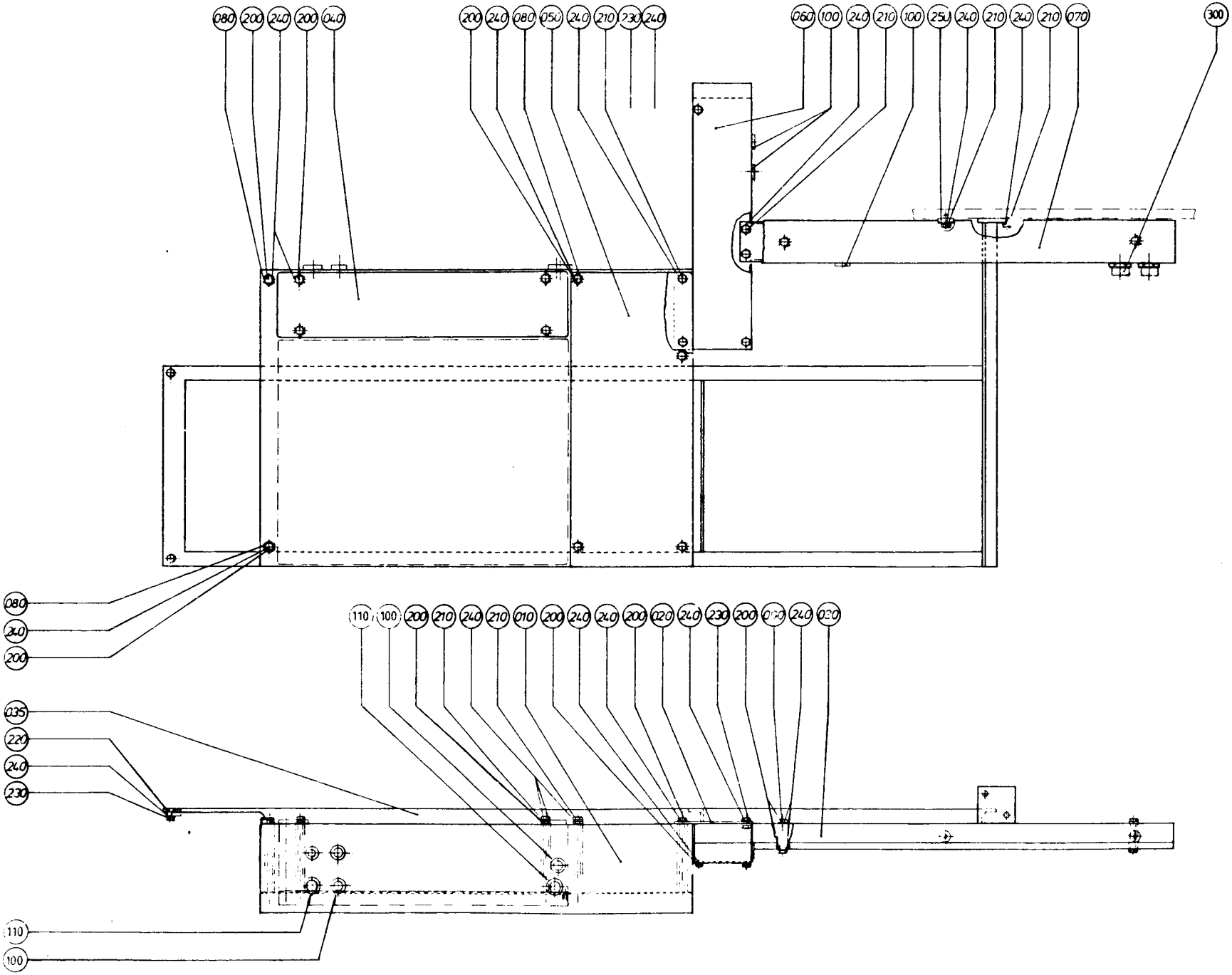
080
200
240
200
040
200
240
080
050
240
210
230
240
060
100
240
210
100
250
240
210
240
210
070
300
080
340
200
110
100
200
210
240
210
010
200
240
240
200
020
240
230
200
240
030
035
220
240
230
110
100

From	Pos	Part No	SP	UN	Qty	Description
-070V	010	457805	-		1	PROTECTIVE COVER
080V-	010	556566	-		1	PROTECTIVE COVER
-070V	020	457809	-		1	CABLE DUCT
080V-	020	556568	-		1	CABLE DUCT
-070V	030	457813	-		1	CABLE DUCT
080V-	030	556567	-		1	CABLE DUCT
	035	457960	-		1	FRAME
	040	457806	-		1	LID
	050	457807	-		1	LID
-060V	060	457810	-		1	LID
070V-	060	531671	-		1	LID (TB/9)
070V-	060	531672	-		1	LID (TBA/9)
	070	457814	-		1	LID
	080	457808	-		10	SPACER
	090	457815	-		2	SPACER
	100	90015-0020	-		4	BUSHING
	110	90015-0023	-		2	BUSHING
	200	312105-0366	-		22	SCREW M6S6X12RFR
	210	312105-0368	-		12	SCREW M6S6X16RFR
	220	312155-0370	-		2	SCREW MF6S6X20RFR
	230	312605-0316	-		6	NUT M6M6RFR
	240	315105-0153	-		42	WASHER BRB6,4X12RFR
	250	315121-0153	-		2	WASHER TBRSB6,4X22FZB
080V-	300	352136-0107	-		2	GLAND

From	Pos	Part No	SP	UN	Qty	Description

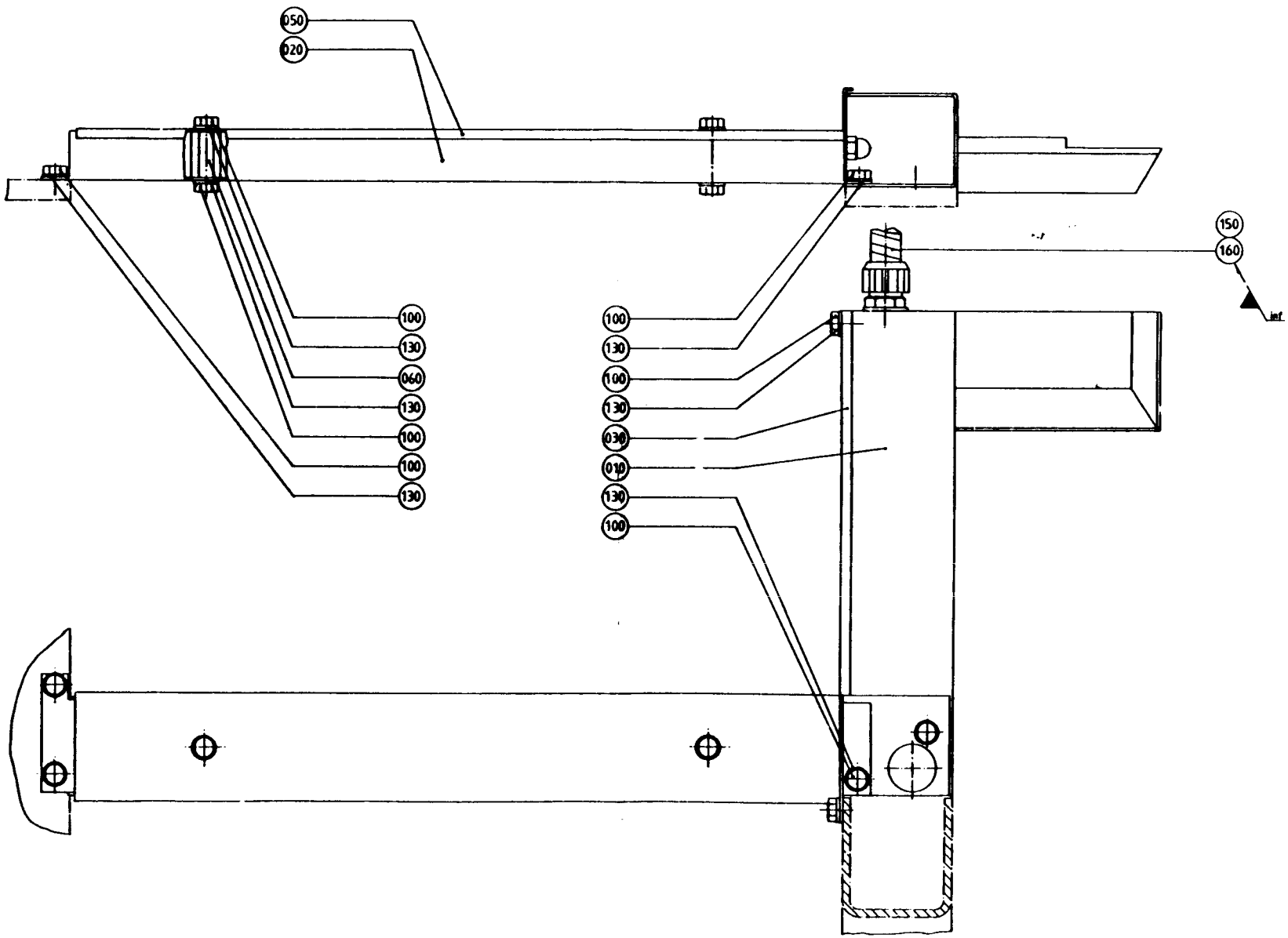
050
020
100
130
060
130
100
100
130
100
130
030
010
130
100
150
160
inf

From	Pos	Part No	SP	UN	Qty	Description
	010	457876	-		1	CABLE DUCT
	020	469295	-		1	CABLE DUCT
	030	457877	-		1	LID
	050	469296	-		1	LID
	060	457874	-		2	SPACER
	100	312105-0366	-		10	SCREW M6S6X12RFR
	130	315105-0153	-		10	WASHER BRB6,4X12RFR
	150	352135-0102	-	MM	370	HOSE .010
	160	352136-0107	-		1	GLAND

From	Pos	Part No	SP	UN	Qty	Description

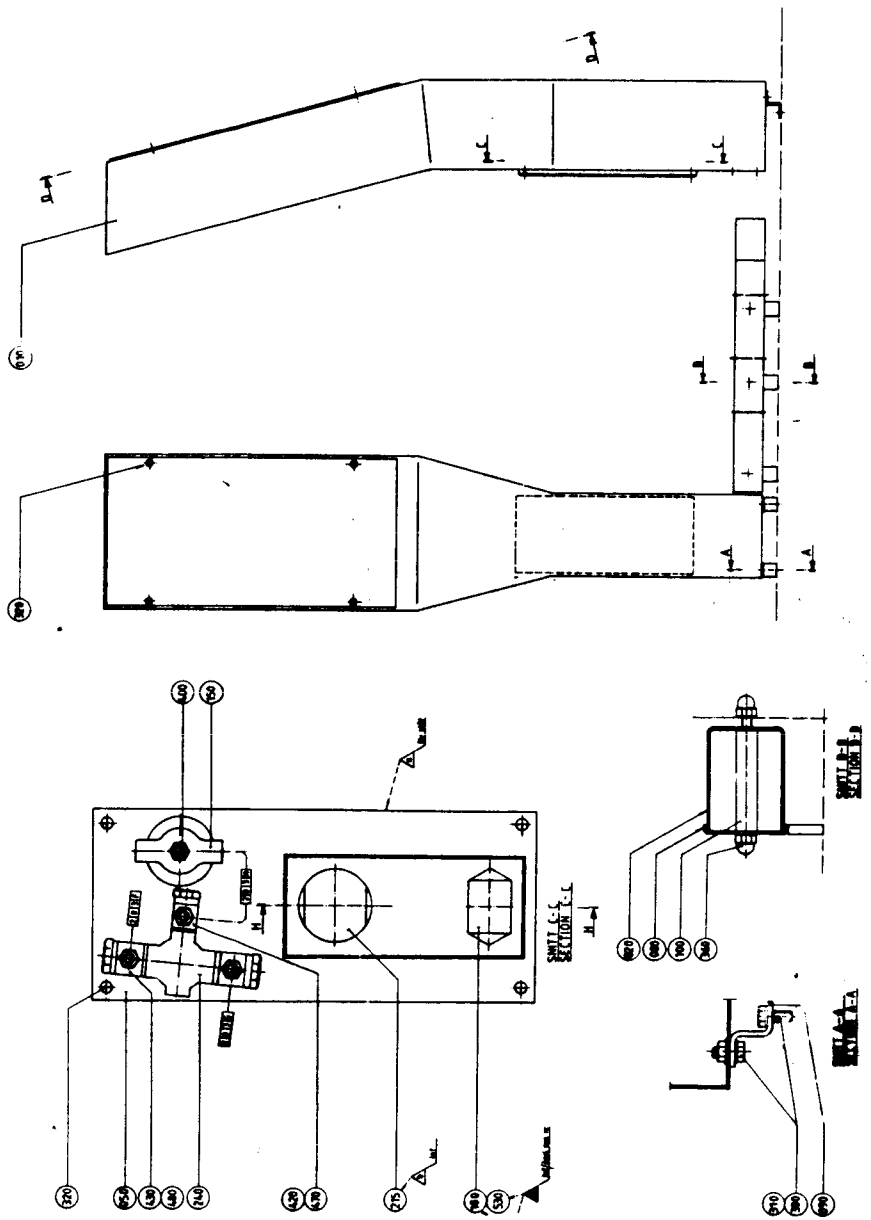

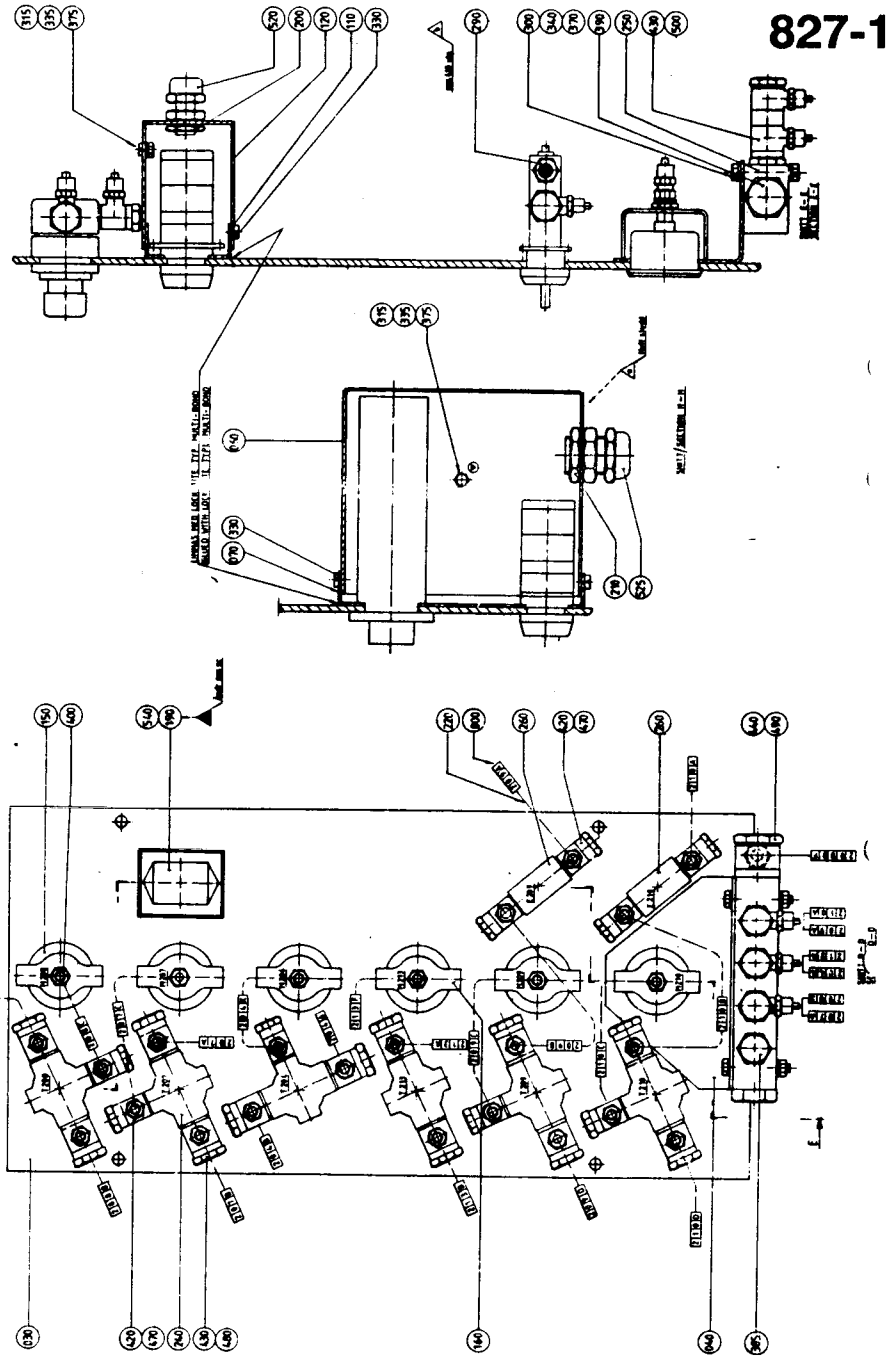

From	Pos	Part No	SP	UN	Qty	Description
	010	457160	-		1	COLUMN
	020	457163	-		1	CABLE DUCT
	030	469225	-		1	PLATE
	040	457901	-		1	BRACKET
	050	469562	-		1	PANEL PLATE
	060	469599	-		1	GUARD
	070	469600	-		1	LID
	080	457164	-		1	LID
	090	457165	-		2	BRACKET
	100	457168	-		2	SPACER
	110	469276	-		1	BRACKET
	120	469277	-		1	GUARD
	150	90043-0065	S		6	PRESSURE GAUGE
	160	90043-0076	S		1	MANOMETER
	180	90064-0084	S		1	PUSH BUTTON YELLOW
	190	90064-0085	S		1	PUSH BUTTON RED
	200	90099-0001	-		1	NUT
	210	90099-0003	-		1	NUT
	215	90111-0137	S		1	SWITCH
	220	90166-0132	-	M	8	HOSE
	240	90113-0021	S		7	REGULATOR
	250	90224-0270	-		1	PLATE
	260	90235-0208	S		2	VALVE
	290	90257-0003	-		2	FILTER PLUG
	300	312105-0337	-		2	SCREW M6S5X35RFR
	310	312105-0368	-		8	SCREW M6S6X16RFR
	315	312125-0291	-		2	SLOTTED HEMCS4X12RFR
	320	312165-0366	-		8	SLOTTED HEMKFS6X12RFR
	330	312503-0221	-		6	DRIVE SCRERXKB4X6,5FZB
	335	312605-0312	-		2	NUT M6M4RFR
	340	312605-0314	-		2	NUT M6M5RFR
	360	312705-0316	-		4	CAP NUT MHM 6 A2
	370	315105-0146	-		4	WASHER BRB5,3X10RFR
	375	315105-0136	-		2	WASHER BRB4,3X8RFR
	380	315105-0153	-		8	WASHER BRB6,4X12RFR
	385	342713-0210	-		1	BLANK-OFF
	390	342713-0213	-		1	BLANK-OFF
	400	342923-0113	-		7	PIPE CONNE6/4-1/8
	420	342980-0113	-		10	BANJO CONNSINGEL 6/4-1/8
	430	342980-0114	-		20	BANJO CONNSINGEL 6/4-1/4
	440	342980-0124	-		1	BANJO CONNSINGEL 8/6-1/2
	470	342980-0303	-		10	BANJO CONN SINGEL 1/8"
	480	342980-0304	-		14	BANJO CONN SINGEL 1/4
	490	342980-0306	-		1	BANJO CONN SINGEL 1/2
	500	342980-0314	-		3	BANJO CONN DUBBEL 1/4
	520	352103-0101	-		1	CABLE GLANR.15,2/4-8
	525	352103-0111	-		1	CABLE GLANR.PR22,5/10-14
	530	359301-0051	-		1	SIGN
	540	359301-0110	-		1	SIGN
	800	359000-0400	-		40	MARKING CO2/4"0"
	800	359000-0401	-		15	MARKING CO2/4"1"
	800	359000-0402	-		40	MARKING CO2/4"2"
	800	359000-0403	-		10	MARKING CO2/4"3"
	800	359000-0404	-		10	MARKING CO2/4"4"
	800	359000-0407	-		10	MARKING CO2/4"7"
	800	359000-0408	-		10	MARKING CO2/4"8"
	800	359000-0409	-		10	MARKING CO2/4"9"
	800	359000-0750	-		20	MARKING CO2/4"A"
	800	359000-0751	-		20	MARKING CO2/4"B"
	800	359000-0752	-		20	MARKING CO2/4"C"
	800	359000-0753	-		5	MARKING CO2/4"D"
	800	359000-0755	-		5	MARKING CO2/4"F"
	800	359000-0756	-		5	MARKING CO2/4"G"
	800	359000-0757	-		5	MARKING CO2/4"H"

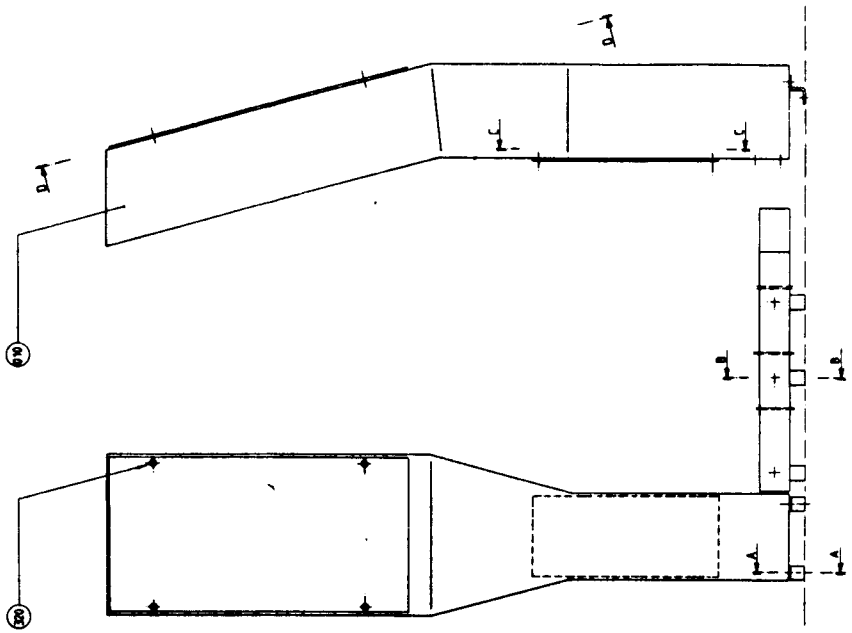

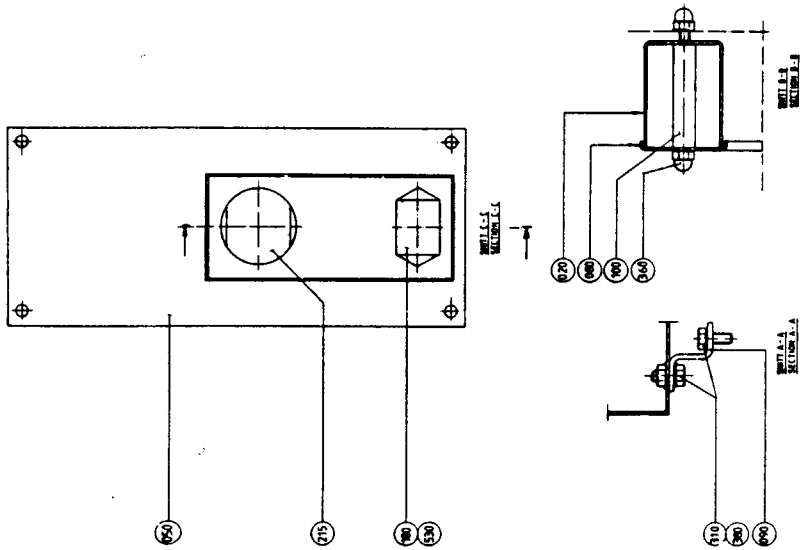

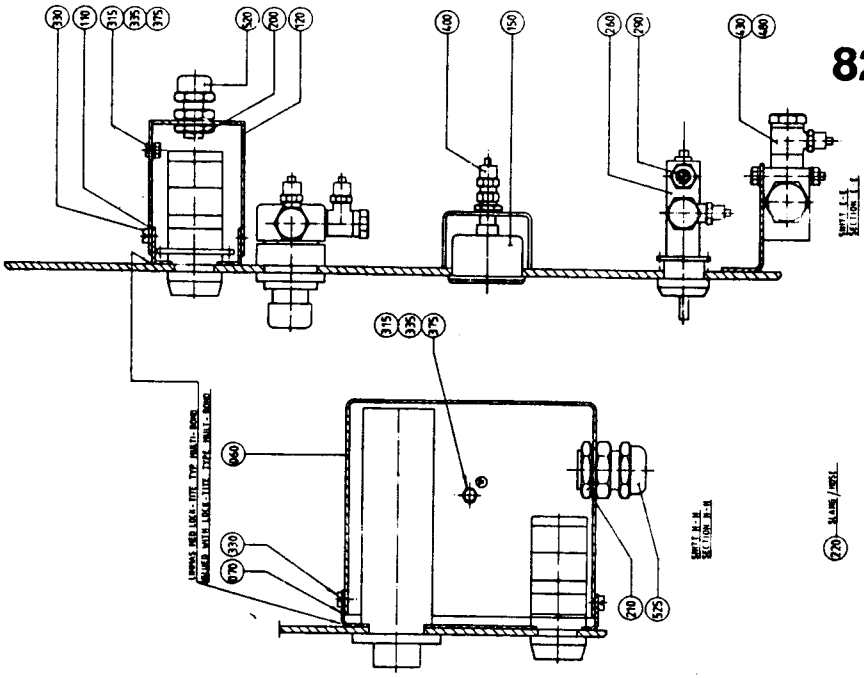

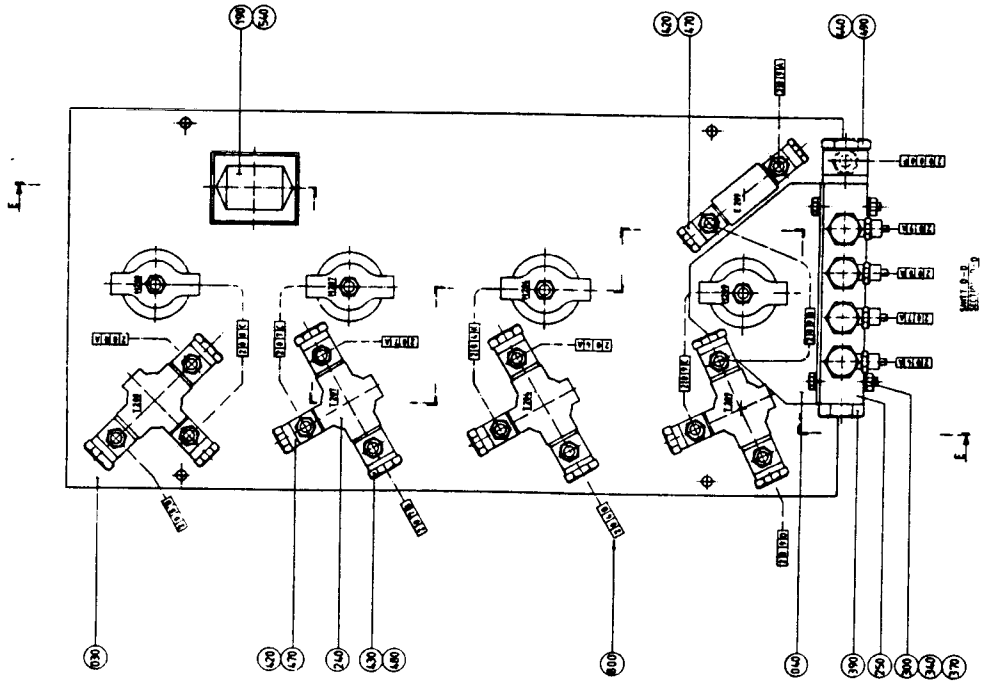

From	Pos	Part No	SP	UN	Qty	Description
	010	457160	-		1	COLUMN
	020	457163	-		1	CABLE DUCT
	030	531662	-		1	PANEL PLATE
	040	457901	-		1	BRACKET
	050	531663	-		1	PANEL PLATE
	060	469599	-		1	GUARD
	070	469600	-		1	LID
	080	457164	-		1	LID
	090	457165	-		2	BRACKET
	100	457168	-		2	SPACER
	110	469276	-		1	BRACKET
	120	469277	-		1	GUARD
	150	90043-0065	S		4	PRESSURE GAUGE
	180	90064-0084	S		1	PUSH BUTTON YELLOW
	190	90064-0085	S		1	PUSH BUTTON RED
	200	90099-0001	-		1	NUT
	210	90099-0003	-		1	NUT
	215	90111-0137	S		1	SWITCH
	220	90166-0132	-	M	8	HOSE
	240	90113-0021	S		4	REGULATOR
	250	90224-0270	-		1	PLATE
	260	90235-0208	S		1	VALVE
	290	90257-0003	-		1	FILTER PLUG
	300	312105-0337	-		2	SCREW M6S5X35RFR
	310	312105-0368	-		8	SCREW M6S6X16RFR
	315	312125-0291	-		2	SLOTTED HEMCS4X12RFR
	320	312165-0366	-		8	SLOTTED HEMKFS6X12RFR
	330	312503-0221	-		6	DRIVE SCRERXKB4X6,5FZB
	335	312605-0312	-		2	NUT M6M4RFR
	340	312605-0314	-		2	NUT M6M5RFR
	360	312705-0316	-		4	CAP NUT MHM 6 A2
	370	315105-0146	-		4	WASHER BRB5,3X10RFR
	375	315105-0136	-		2	WASHER BRB4,3X8RFR
	380	315105-0153	-		8	WASHER BRB6,4X12RFR
	390	342713-0213	-		1	BLANK-OFF
	400	342923-0113	-		4	PIPE CONNE6/4-1/8
	420	342980-0113	-		6	BANJO CONNSINGEL 6/4-1/8
	430	342980-0114	-		12	BANJO CONNSINGEL 6/4-1/4
	440	342980-0124	-		1	BANJO CONNSINGEL 8/6-1/2
	470	342980-0303	-		6	BANJO CONN SINGEL 1/8"
	480	342980-0304	-		12	BANJO CONN SINGEL 1/4
	490	342980-0306	-		1	BANJO CONN SINGEL 1/2
	520	352103-0101	-		1	CABLE GLANR.15,2/4-8

From	Pos	Part No	SP	UN	Qty	Description
	525	352103-0111	-		1	CABLE GLANR.PR22,5/10-14
	530	359301-0051	-		1	SIGN
	540	359301-0110	-		1	SIGN
	800	359000-0400	-		40	MARKING CO2/4"0"
	800	359000-0401	-		15	MARKING CO2/4"1"
	800	359000-0402	-		40	MARKING CO2/4"2"
	800	359000-0403	-		10	MARKING CO2/4"3"
	800	359000-0404	-		10	MARKING CO2/4"4"
	800	359000-0407	-		10	MARKING CO2/4"7"
	800	359000-0408	-		10	MARKING CO2/4"8"
	800	359000-0409	-		10	MARKING CO2/4"9"
	800	359000-0750	-		20	MARKING CO2/4"A"
	800	359000-0751	-		20	MARKING CO2/4"B"
	800	359000-0752	-		20	MARKING CO2/4"C"
	800	359000-0753	-		5	MARKING CO2/4"D"
	800	359000-0755	-		5	MARKING CO2/4"F"
	800	359000-0756	-		5	MARKING CO2/4"G"
	800	359000-0757	-		5	MARKING CO2/4"H"

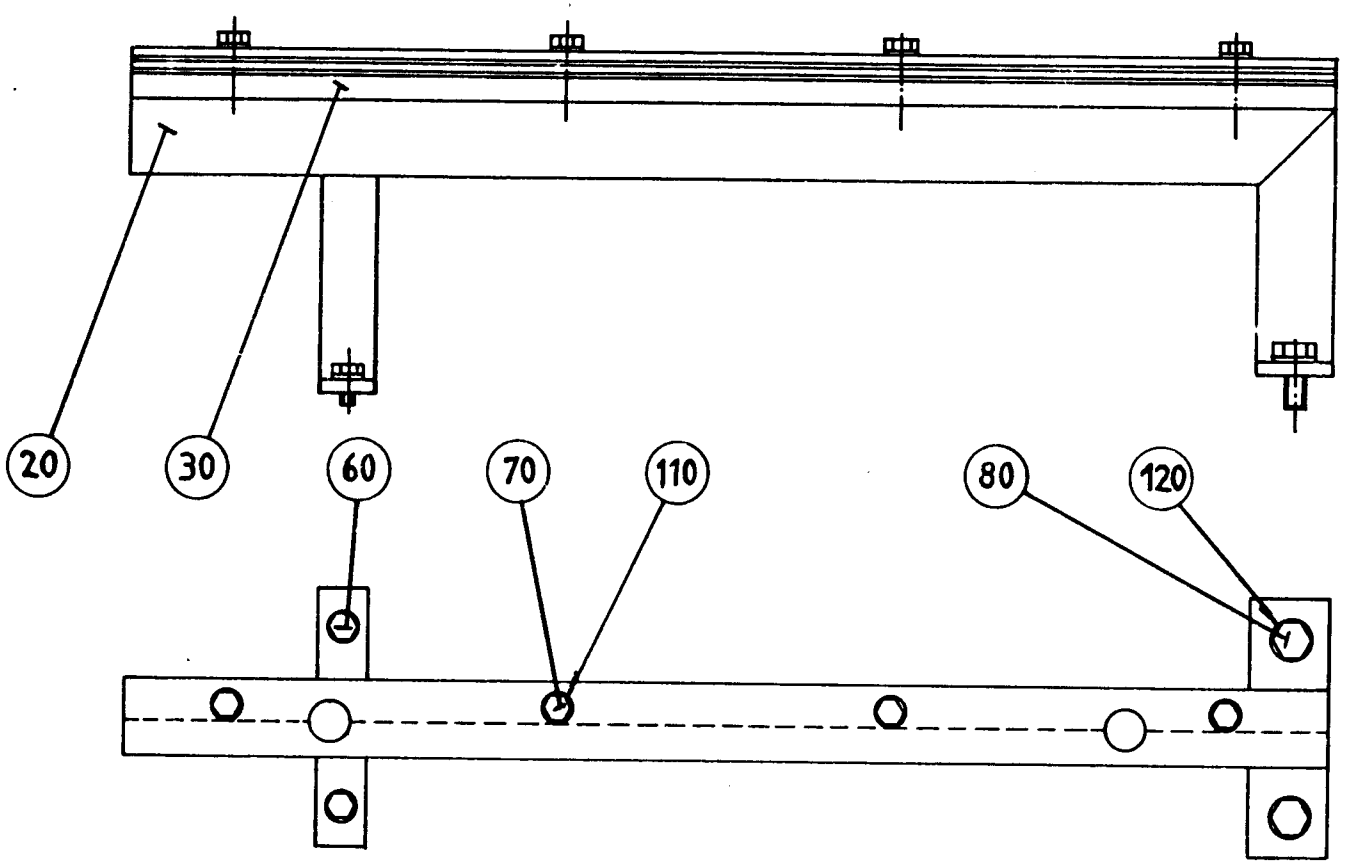
20
30
60
70
110
80
120

From	Pos	Part No	SP	UN	Qty	Description	
Volume 200 mlSLIM							
	020	469650	-		1	SUPPORT	
	030	469653	S		1	GUIDE RAIL	
Volume 236, 180, 125 ml							
	020	469651	-		1	SUPPORT	
	030	469654	S		1	GUIDE RAIL	
Volume 250, 200 ml							
	020	469652	-		1	SUPPORT	
	030	469655	S		1	GUIDE RAIL	
Common Parts							
	060	312105-0366	-		2	SCREW	M6S6X12RFR
	070	312105-0374	-		4	SCREW	M6S6X30RFR
	080	312105-0451	-		2	SCREW	M6S8X20RFR
	110	315105-0153	-		6	WASHER	BRB6,4X12RFR
	120	315105-0165	-		2	WASHER	BRB8,4X16RFR

From	Pos	Part No	SP	UN	Qty	Description

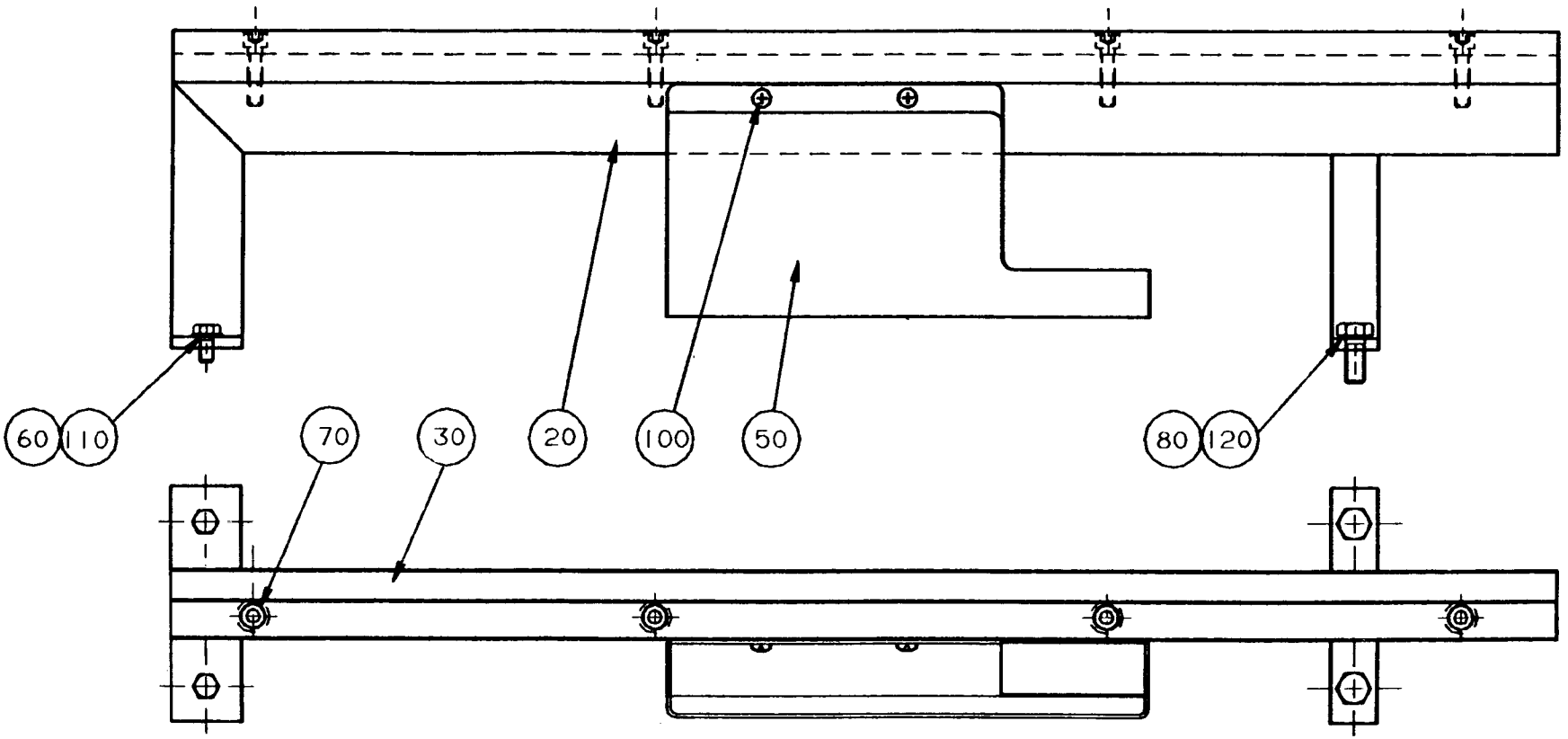
60
110
70
30
20
100
50
80
120

From	Pos	Part No	SP	UN	Qty	Description
Volume 200 ml SLIM, 284 ml						
	020	548037	-		1	SUPPORT
	030	547602	-		1	GUIDE RAIL
Volume 236, 180, 125 ml						
	020	548038	-		1	SUPPORT
	030	547603	-		1	GUIDE RAIL
Volume 250, 200 ml						
	020	548039	-		1	SUPPORT
	030	547604	-		1	GUIDE RAIL
Common Parts						
	050	560447	-		1	BOX
	060	312105-0366	-		2	SCREW M6S6X12RFR
	070	312115-0372	-		4	SCREW MC6S6X25 A4 80
	080	312105-0449	-		2	SCREW M6S8X16RFR
	100	311521-0152	-		2	BLANK RIVET 4,0X8,0 RFR
	110	315105-0153	-		2	WASHER BRB6,4X12RFR
	120	315105-0165	-		2	WASHER BRB8,4X16RFR

From	Pos	Part No	SP	UN	Qty	Description

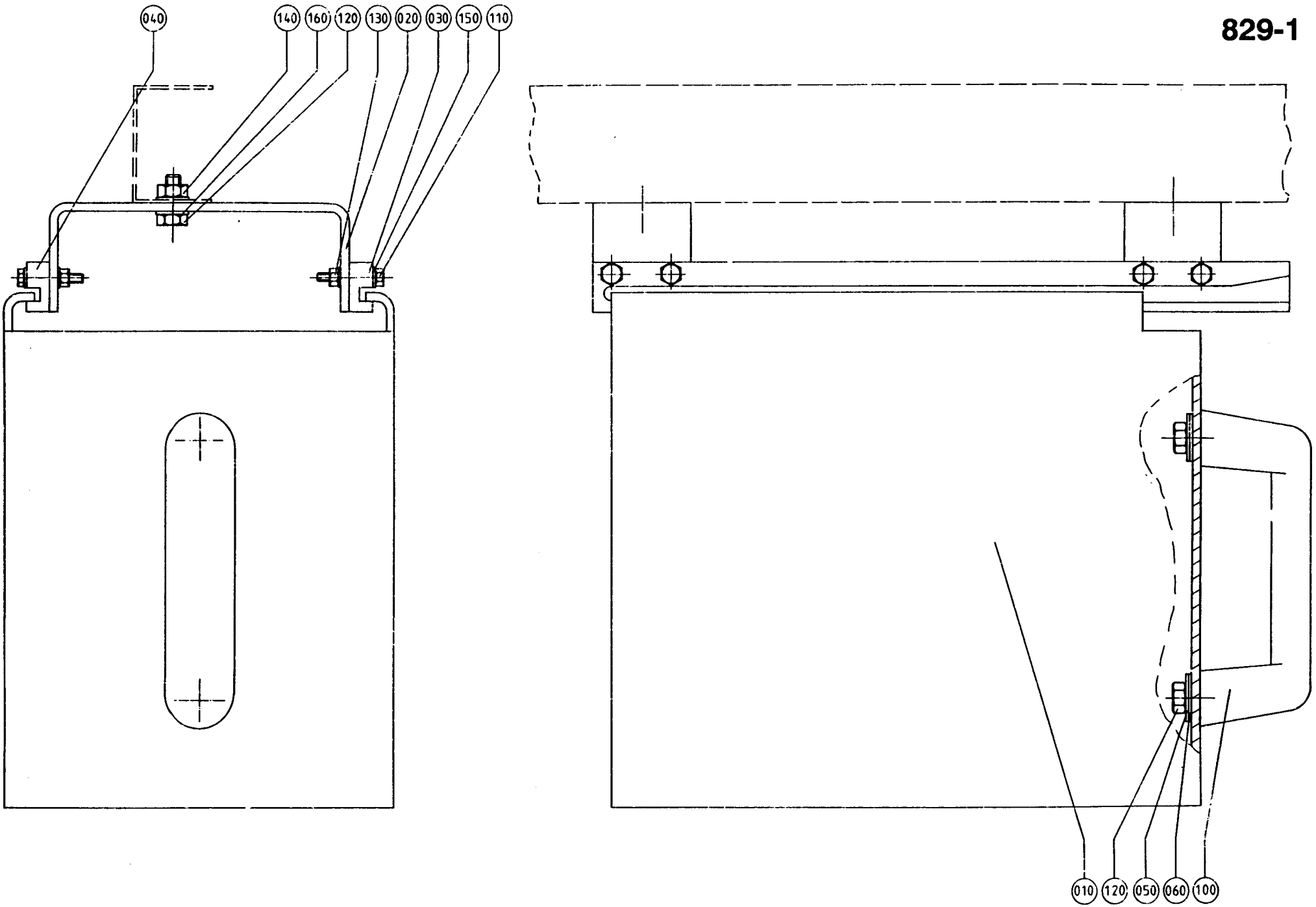
040
140
160
120
130
020
030
150
110
010
120
050
060
100

Last Alteration: AM 6295 84-04-17

Corresponding C-lists: 456679-010V
Assembly Drawing: 456679-1

Date Printed: 900928

From	Pos	Part No	SP	UN	Qty	Description
	010	457999	-		1	BOX
	020	449391	-		2	HOLDER
	030	449392	-		1	RAIL
	040	449393	-		1	RAIL
	050	28036	-		2	WASHER
	060	294734	-		2	WASHER
	100	90017-0014	-		1	HANDLE
	110	312105-0374	-		8	SCREW M6S6X30RFR
	120	312105-0451	-		4	SCREW M6S8X20RFR
	130	312605-0316	-		8	NUT M6M6RFR
	140	312605-0318	-		2	NUT M6M8RFR
	150	315105-0153	-		16	WASHER BRB6,4X12RFR
	160	315105-0165	-		4	WASHER BRB8,4X16RFR

From	Pos	Part No	SP	UN	Qty	Description

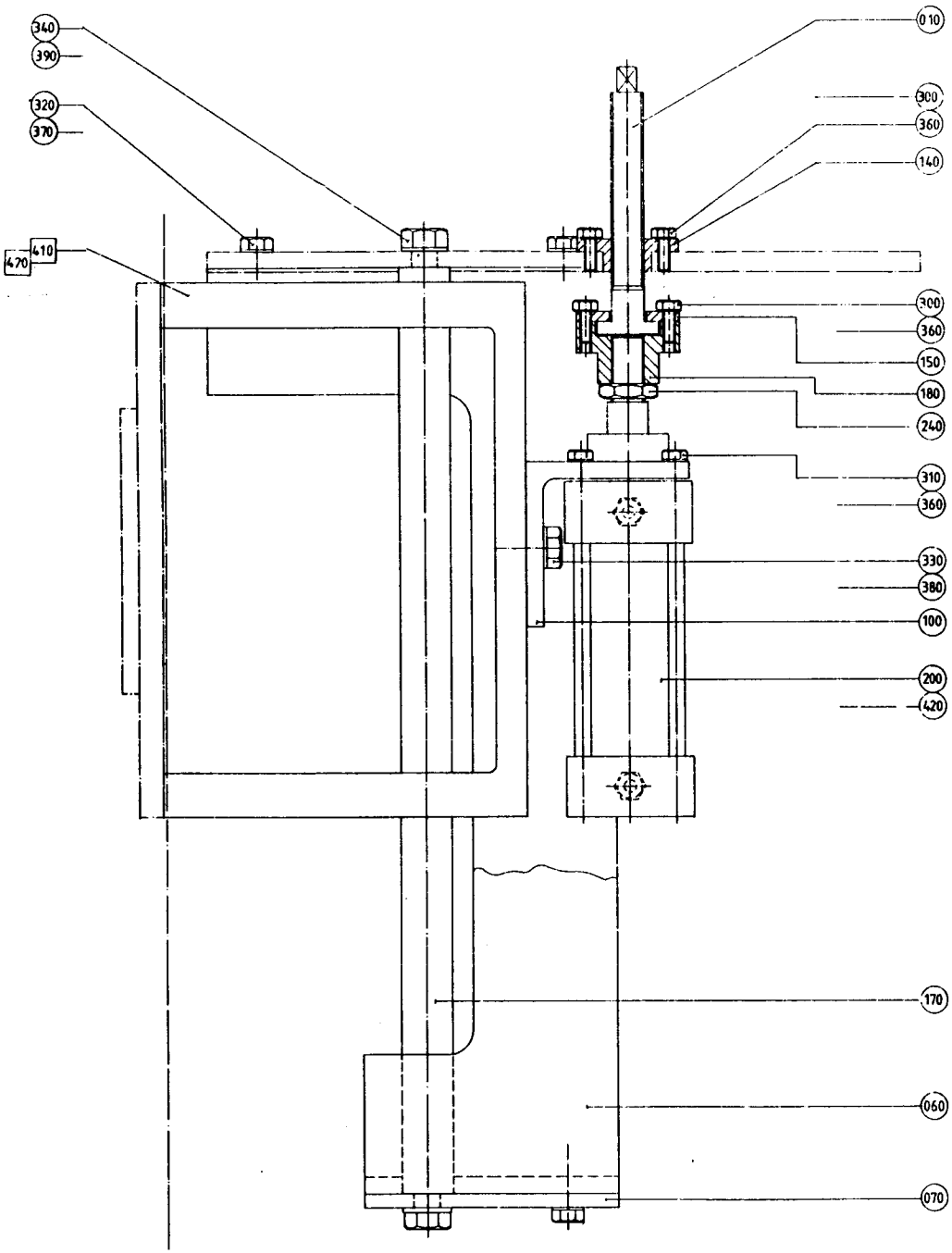
340
390
320
370
410
420
010
300
360
140
300
360
150
180
240
310
360
330
380
100
200
420
170
060
070

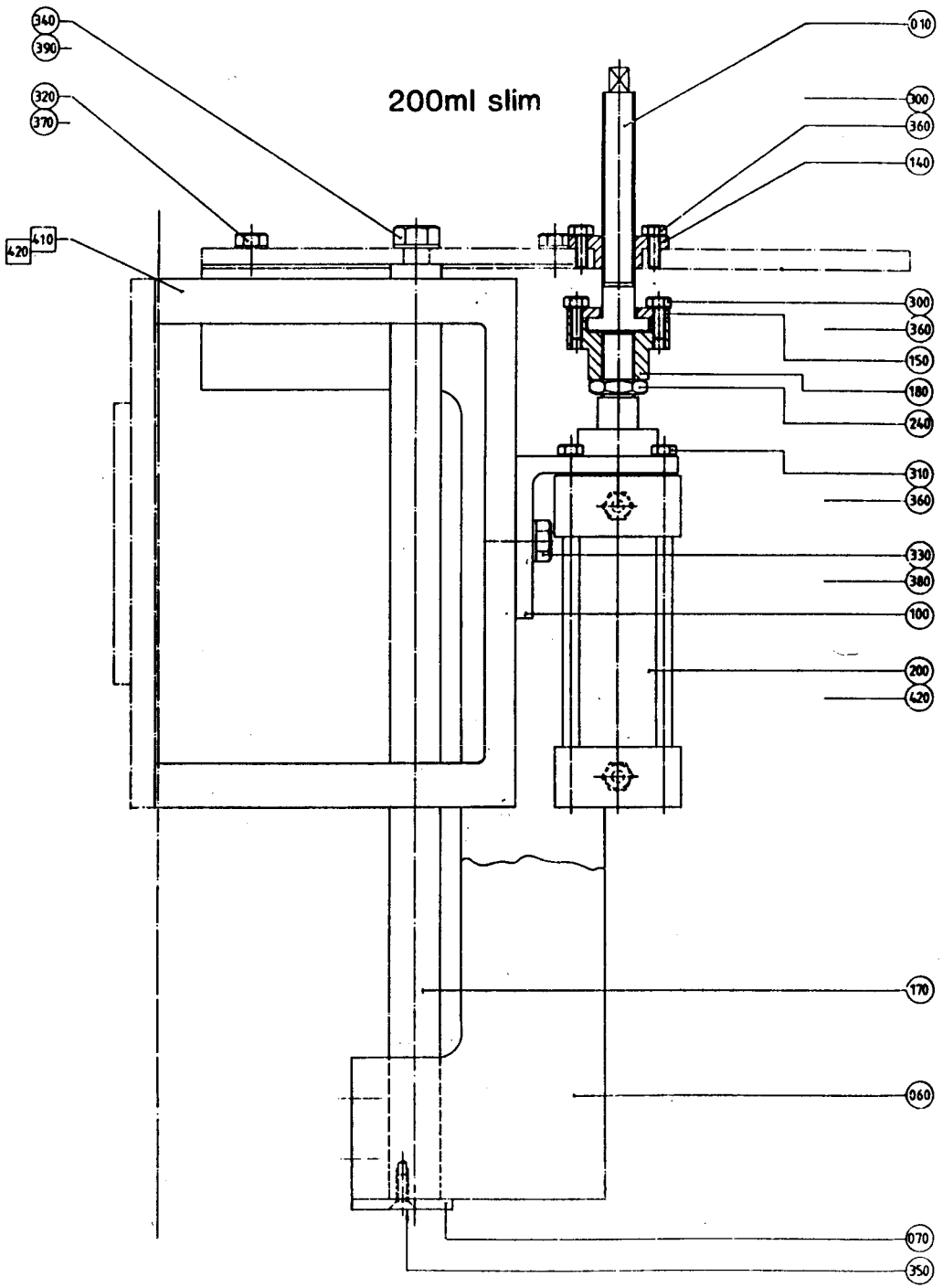
200ml slim
340
390
320
370
410
420
010
300
360
140
300
360
150
180
240
310
360
330
380
100
200
420
170
060
070
350

From	Pos	Part No	SP	UN	Qty	Description
	F410	==>830-1.1	-		1	DATING UNIT
	010	449244-0001	-		1	ADJUSTING SCREW
	010	449244-0002	-		1	ADJUSTING SCREW
	060	449250	-		2	GABLE
	060	531653	-		2	GABLE
	070	449253	-		1	PLATE
	070	531654	-		1	PLATE
	170	449249	-		2	ROD
	170	531655	-		2	ROD
	320	312105-0451	-		10	SCREW M6S8X20RFR
	340	312105-0536	-		4	SCREW M6S12X30RFR
	350	312155-0368	-		4	SCREW MF6S6X16RFR
	370	315105-0165	-		10	WASHER BRB8,4X16RFR
	390	315105-0178	-		4	WASHER BRB13X24RFR
	100	449245	-		1	CYLINDER BRACKET
	140	449243	-		1	SHIM
	150	449246	-		1	LID
	180	449298	-		1	ADAPTER
	230	90239-0813	S		1	CYLINDER
		90239-0444	S		1	* SEAL KIT
	240	90099-0048	-		1	NUT
	300	312105-0368	-		8	SCREW M6S6X16RFR
	310	312105-0370	-		4	SCREW M6S6X20RFR
	330	312105-0493	-		2	SCREW M6S10X25RFR
	360	315105-0153	-		12	WASHER BRB6,4X12RFR
	380	315105-0173	-		2	WASHER BRB10,5X22RFR
	420	342920-0114	-		2	PIPE CONNE6/4-1/4

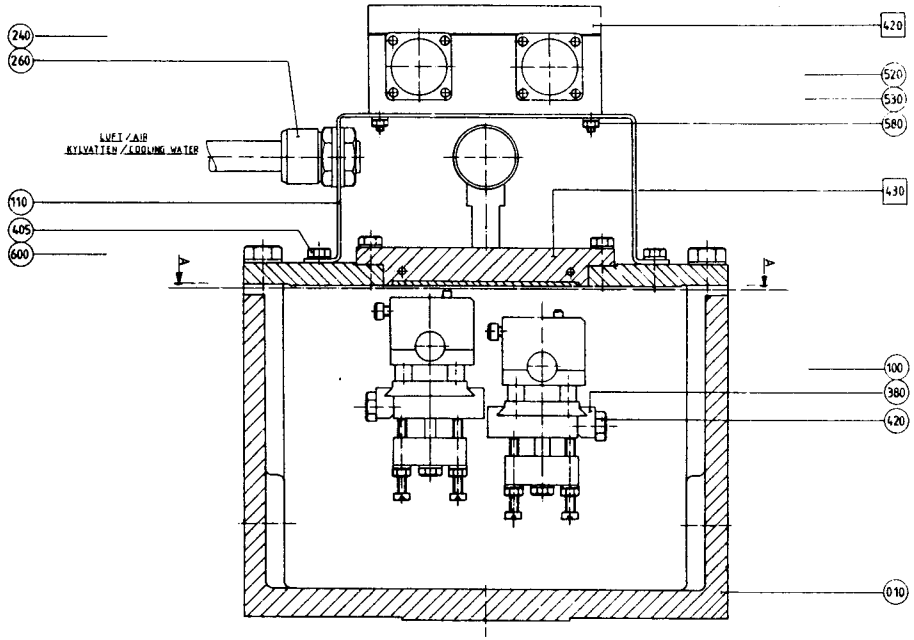
LUFT / AIR
KYLVATTEN / COOLING WATER
240
260
110
405
600
420
520
530
580
430
100
380
420
010

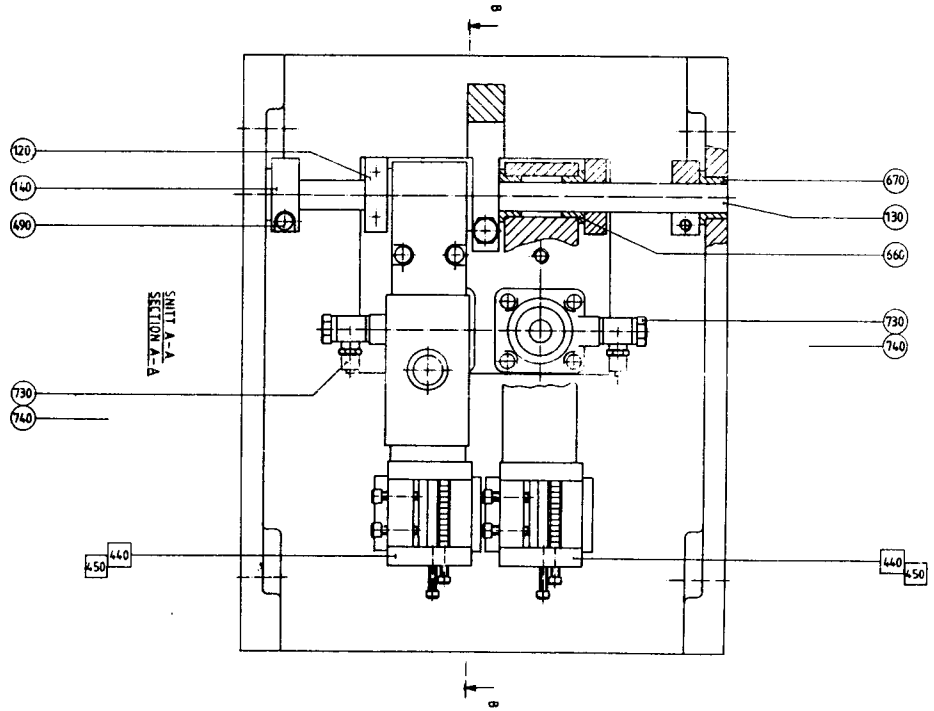
SNITT A-A
SECTION A-A
120
140
490
730
740
670
130
660
730
740
440
450
440
450

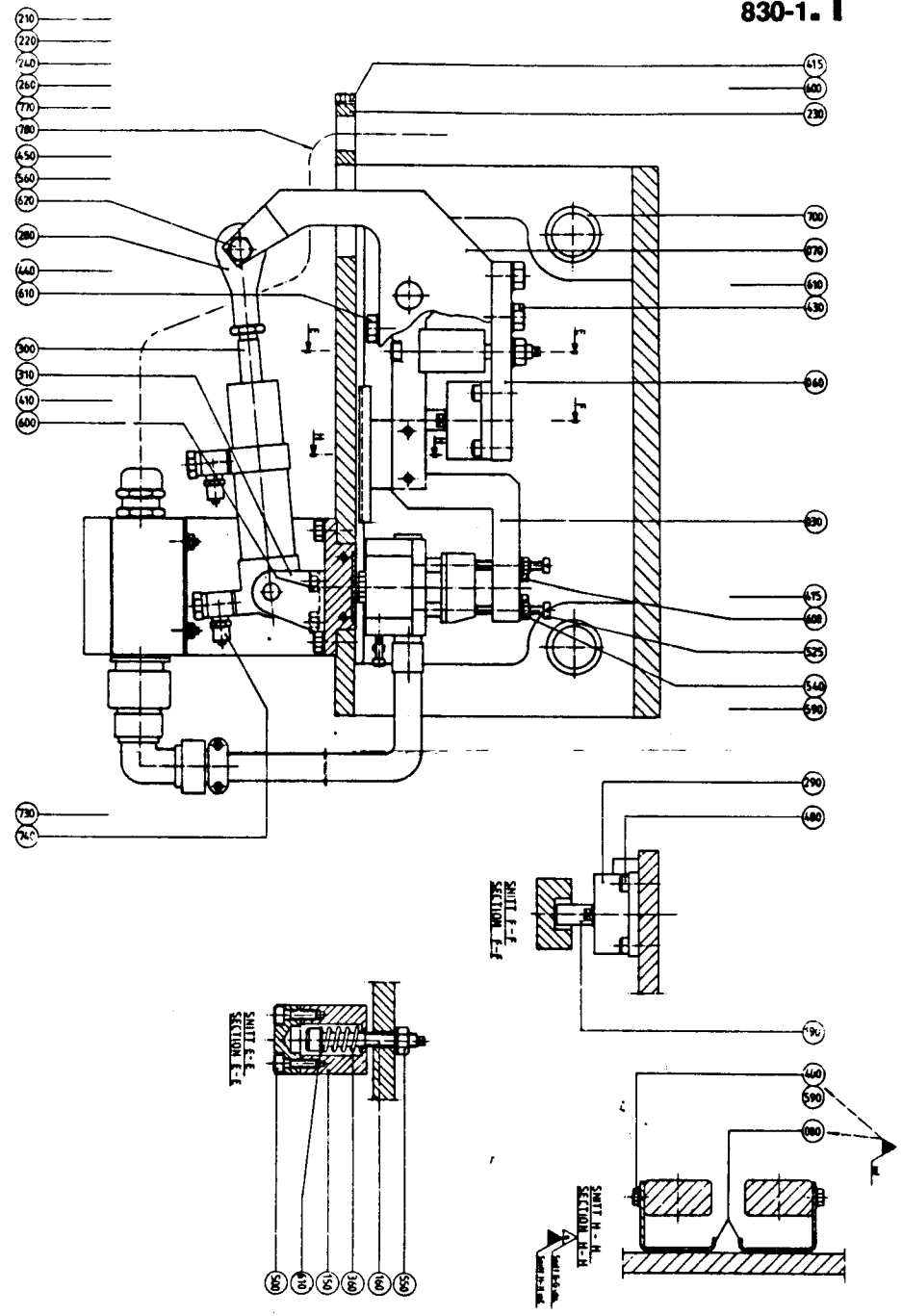
210
220
240
260
770
780
450
560
620
280
440
610
300
310
410
600
415
600
230
700
070
610
430
060
830
415
600
525
540
590
730
740
290
480
190
440
590
080
SNITT F-F
SECTION F-F
SNITT E-E
SECTION E-E
500
610
150
360
160
550
SNITT H-H
SECTION H-H

From	Pos	Part No	SP	UN	Qty	Description
	F420	==>830-1.1.2	-		1	CONNECTION BOX
	F430	==>830-1.1.1	-		1	PRESSURE PLATE
	F440	==>830-1.1.3	-		2	HEATING BLOCK
		456608-0101				. ELEMENT, compl ass'y
	010	449279	-		1	BRACKET
	030	449318	-		2	ARM
	060	441248	-		1	PLATE
	070	441249	-		1	LEVER
	080	441255	-		2	GUIDE PLATE
	100	457879	-		2	BRACKET
	110	457971	-		1	BRACKET
	120	441257	-		2	BRACKET
	130	441258	-		1	SHAFT
	140	441259	-		2	CLAMP RING
	150	441260	-		2	SPRING HOUSING
	160	441261	-		2	SCREW
	190	441264	-		2	BRACKET
	210	456244	-		2	PROTECTIVE COVER
	220	456249	-		2	PROTECTIVE COVER
	230	456610	-		1	HOLDER
	240	352136-0127	-		3	GLAND
	260	352135-0106	-	MM	1500	HOSE .016
	280	90239-0405	-		1	ROD END
	290	90239-0750	-		2	CYLINDER
	300	90239-0814	-		1	CYLINDER
	310	90239-0488	-		1	BRACKET
	360	90335-0037	S		2	SPRING
	380	311103-0271	-		4	CYLINDRICACPR4M6X18RFR
	400	312105-0327	-		4	SCREW M6S5X12 A4 80
	405	312105-0366	-		4	SCREW M6S6X12RFR
	410	312105-0368	-		2	SCREW M6S6X16RFR
	415	312105-0378	-		6	SCREW M6S6X40RFR
	420	312105-0449	-		2	SCREW M6S8X16RFR
	430	312105-0453	-		6	SCREW M6S8X25RFR
	440	312105-0455	-		1	SCREW M6S8X30RFR
	450	312105-0495	-		1	SCREW M6S10X30RFR
	480	312115-0329	-		12	SCREW 5X16 A4 80
	490	312115-0368	-		2	SCREW 6X16 A4 80
	500	312115-0370	-		4	SCREW 6X20 A4 80
	520	312125-0293	-		2	SLOTTED HEMCS4X16RFR
	525	312125-0339	-		8	SLOTTED HEMCS5X40RFR

From	Pos	Part No	SP	UN	Qty	Description
	530	312605-0312	-		2	NUT M6M4RFR
	540	312605-0314	-		8	NUT M6M5RFR
	550	312605-0318	-		2	NUT M6M8RFR
	560	312605-0320	-		1	NUT M6M10RFR
	580	315105-0136	-		2	WASHER BRB4,3X8RFR
	590	315105-0146	-		12	WASHER BRB5,3X10RFR
	600	315105-0153	-		16	WASHER BRB6,4X12RFR
	610	315105-0165	-		7	WASHER BRB8,4X16RFR
	620	315105-0173	-		1	WASHER BRB10,5X22RFR
	660	321111-0240	-		4	BUSHING 16E7X12
	670	321111-0241	-		2	BUSHING 16E7X16
	700	321116-0362	-		4	BUSHING 25E7/32X20
	730	342980-0113	-		4	BANJO CONNSINGEL 6/4-1/8
	740	342980-0303	-		4	BANJO CONN SINGEL 1/8"
	770	352135-0102	-	MM	1500	HOSE .010
	780	352136-0107	-		2	GLAND

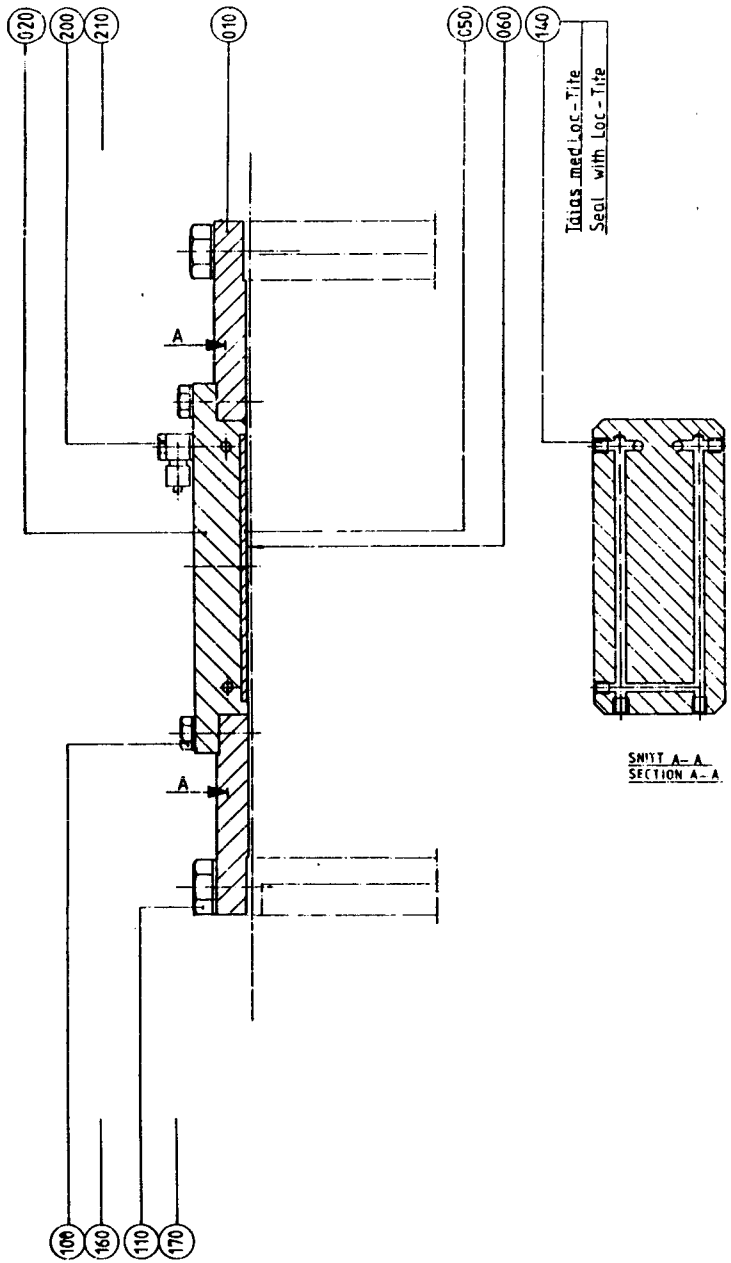
020
200
210
010
050
060
140
Tätas med Loc-Tite
Seal with Loc-Tite
A
A
SNITT A–A
SECTION A–A
100
160
110
170

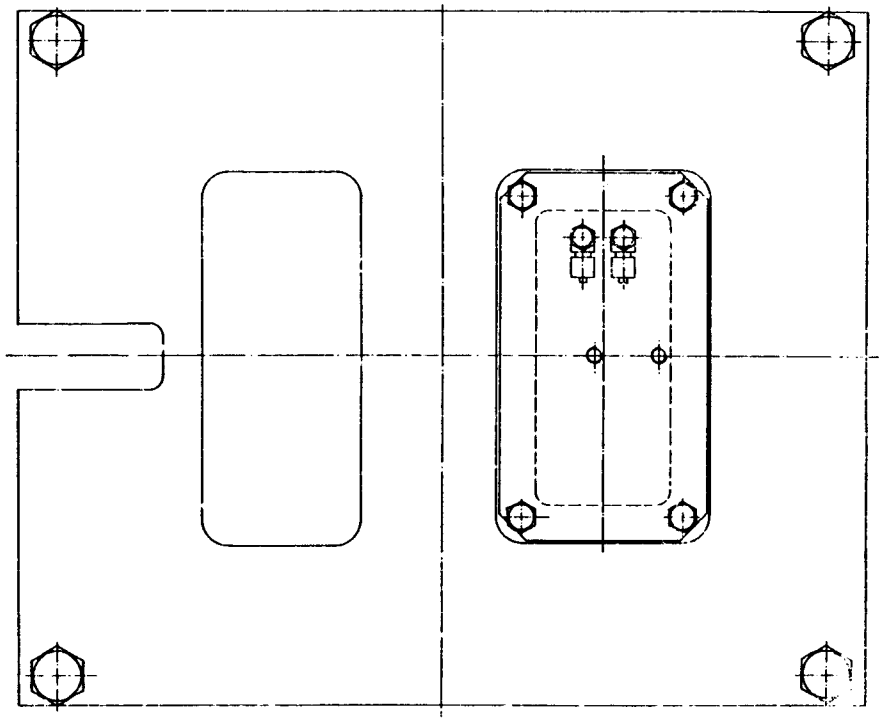

Last Alteration: AM 6292 84-04-25

Corresponding C-lists: 449315-010V
Assembly Drawing: 449315-1

Date Printed: 900928

From	Pos	Part No	SP	UN	Qty	Description
	010	449270	-		1	PLATE
	020	449317	-		1	PLATE
	050	449320	P		1	RUBBER
	060	449321	P		1	TEFLON TAPE
	100	312105-0370	-		4	SCREW M6S6X20RFR
	110	312105-0493	-		4	SCREW M6S10X25RFR
	140	312318-0321	-		5	GRUB SCREW SK6SS5X6RFR
	160	315105-0153	-		4	WASHER BRB6,4X12RFR
	170	315105-0173	-		4	WASHER BRB10,5X22RFR
	200	342980-0113	-		2	BANJO CONNSINGEL 6/4-1/8
	210	342980-0303	-		2	BANJO CONN SINGEL 1/8"

From	Pos	Part No	SP	UN	Qty	Description

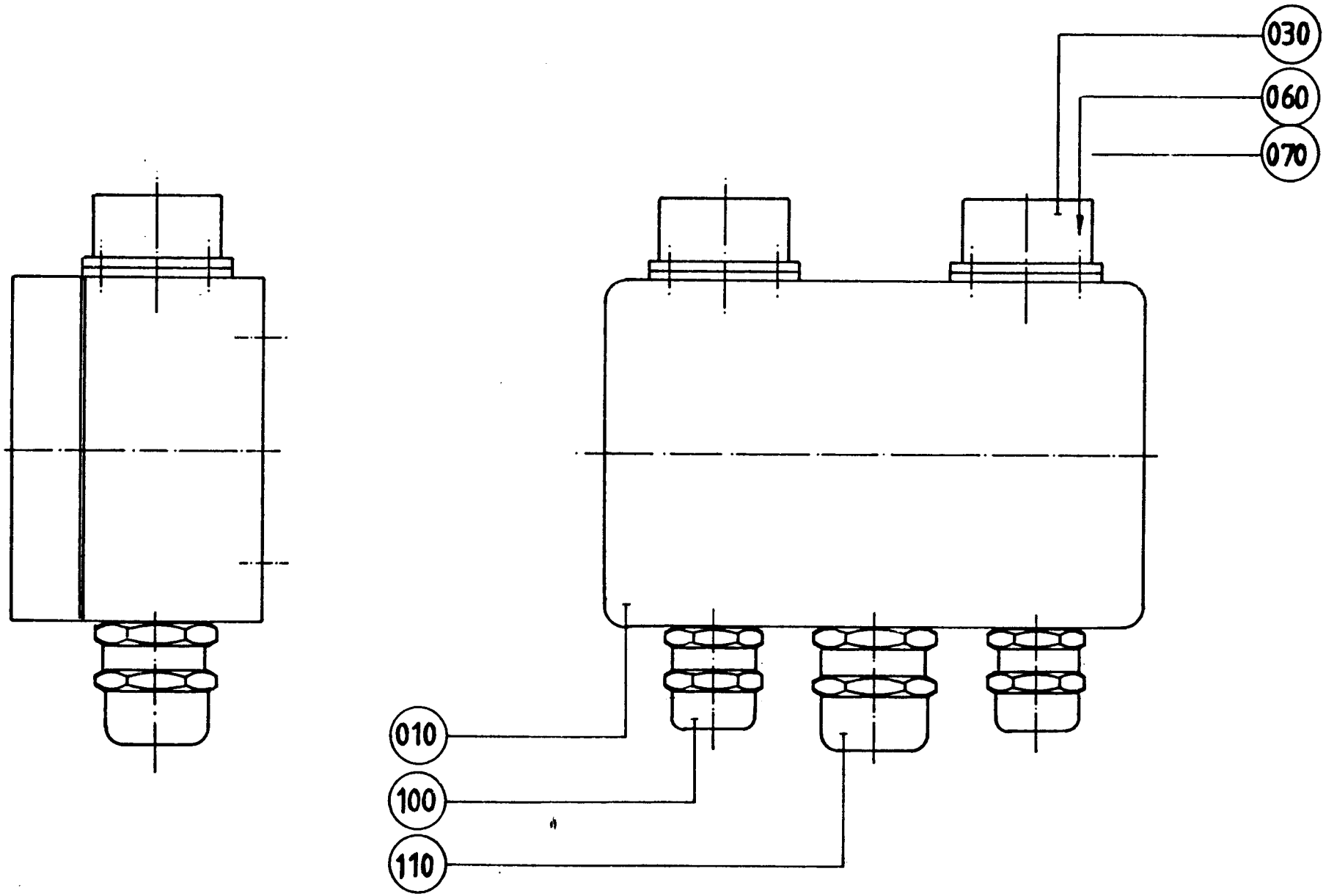
030
060
070
010
100
110

Last Alteration: AM 6292 84-04-25

Corresponding C-lists: 456600-010V
Assembly Drawing: 456600-1

Date Printed: 900928

From	Pos	Part No	SP	UN	Qty	Description
	010	456601	-		1	CONNECTION BOX
	030	90110-0098	-		2	CONTACT UNIT
	060	312125-0222	-		8	SLOTTED HEMCS3X8RFR
	070	315105-0124	-		8	WASHER BRB3,2X6RFR
	100	352103-0101	-		2	CABLE GLANR.15,2/4-8
	110	352103-0111	-		1	CABLE GLANR.PR22,5/10-14

From	Pos	Part No	SP	UN	Qty	Description

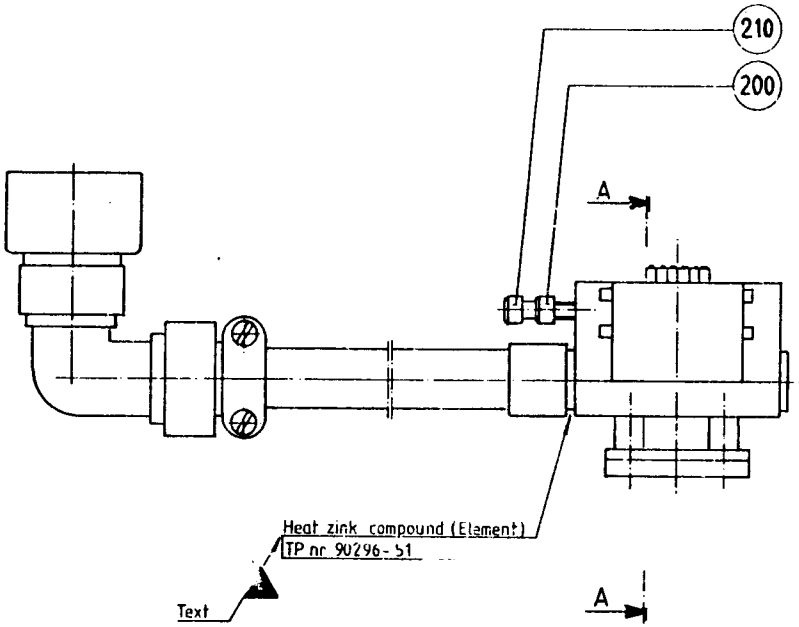
210
200
A
Heat zink compound (Element)
TP nr 90296-51
Text
A

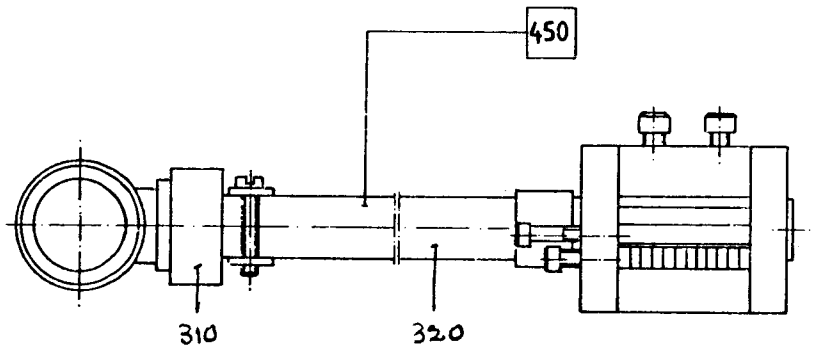
450
310
320

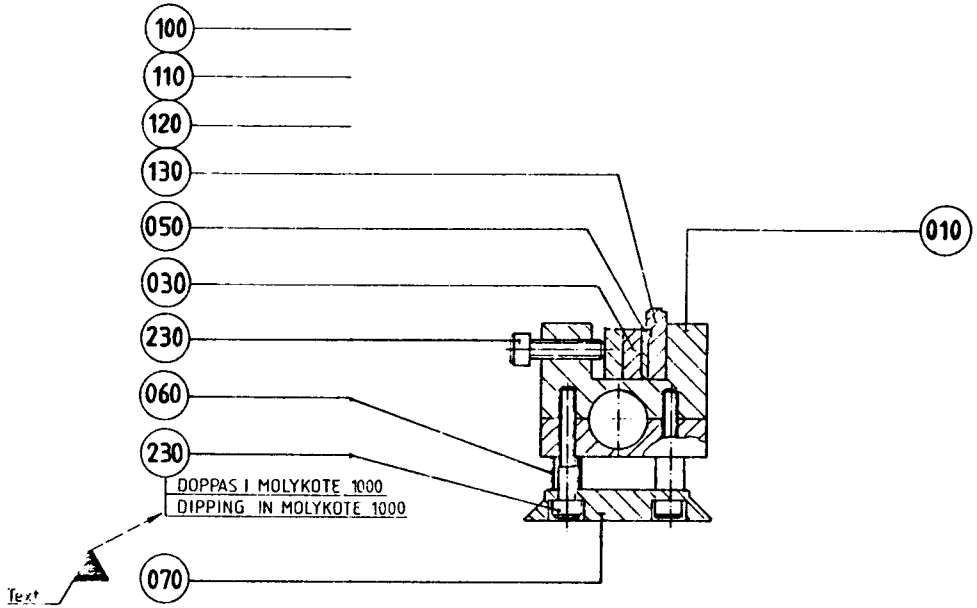
100
110
120
130
050
030
230
060
230
010
DOPPAS I MOLYKOTE 1000
DIPPING IN MOLYKOTE 1000
Text
070

SECTION A-A

From	Pos	Part No	SP	UN	Qty	Description
	F450	C- 456608-0101	PU		1	ELEMENT, COMPL ASS'Y
		90206-0079				. HEATING ELEMENT
		90110-0097				. CONTACT UNIT
	010	457878	S		1	HEATING BLOCK
	030	260989	S		2	PRESSURE PLATE
	050	260991	S		1	PRESSURE PLATE
	060	260992	-		4	JIG
	070	457880	-		1	GUIDE
	100	90413-0183	S		1	SET OF NUMERALS 22 X 4 MM
	110	90413-0184	S		1	SET OF LETTERS 26 X 4 MM
	120	90413-0185	S		1	SET OF NUMERALS 10 X 4 MM
	130	90413-0186	S		1	SET OF SPACERS 8 X 4 MM
	150	90427-0327	-		1	ACCESSORIES-FITTINGS
	200	312115-0293	-		1	SCREW 4 X 16 A4 80
	210	312115-0297	-		1	SCREW 4X25 A4 80
	230	312115-0333	-		6	SCREW A4 80

From	Pos	Part No	SP	UN	Qty	Description

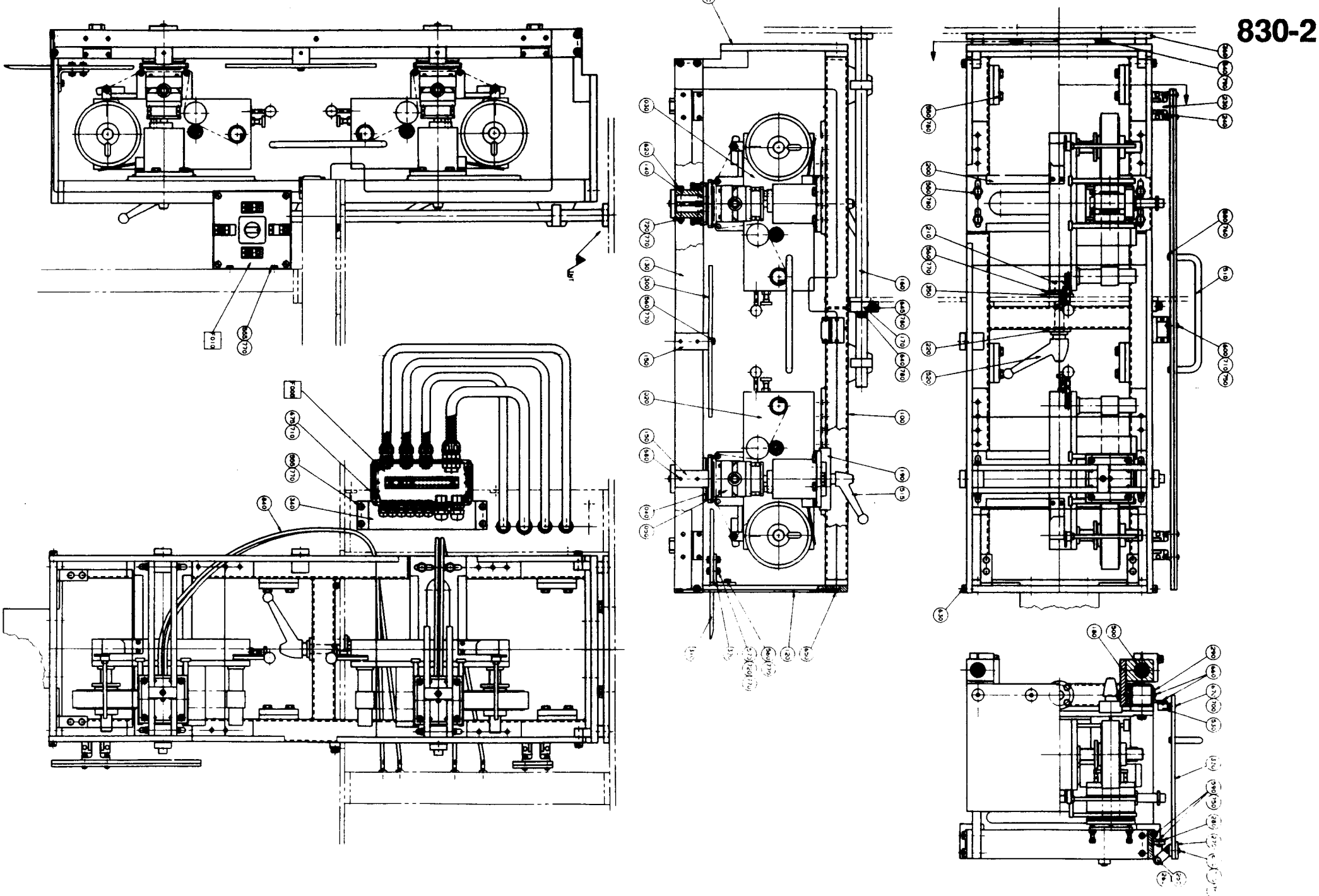

From	Pos	Part No	SP	UN	Qty	Description
	F005	==>830-2.2	-		1	**CONNECTION BOX**
	F010	==>830-2.1	-		1	**CONTROL PANEL**
Volume 284-200 ml, 200 ml SLIM						
		548057-0101				**DATING UNIT, ASS'Y**
	020	90427-0005	-		1	DATING UNIT
		90044-0104	S		2	* PROXIMITY SWITCH
		90206-0099	S		1	* HEATING ELEMENT
		90326-0063	S		1	* THERMOCOUPLE
		90427-0509	S		1	* GASKET KIT
	030	90427-0006	-		1	DATING UNIT
Volume 125, 180 ml						
		548057-0102				**DATING UNIT, ASS'Y**
	030	90427-0006	-		2	DATING UNIT
		90044-0104	S		2	* PROXIMITY SWITCH
		90206-0099	S		1	* HEATING ELEMENT
		90326-0063	S		1	* THERMOCOUPLE
		90427-0509	S		1	* GASKET
Common Parts						
	000	90413-0504	-		1	CODE INSERT SET
	040	90427-0507	-		2	DOLLY
		90427-0510	S		1	* COUNTER RUBBER
	050	90427-0506	-		2	TYPE HOLDER
	100	546321	-		1	MACHINE BODY
	110	548049	-		1	PLATE
	120	548028	-		1	PLATE
	130	548046	-		2	ROD
	140	548047	-		4	ROD
	150	548041	-		6	BRACKET
	160	548048	-		2	ROD
	170	548043	-		2	CLAMP
	180	548029	-		4	BEARING BRACKET
	190	548051	-		2	PLATE
	200	548030	-		2	PLATE
	210	549602	-		1	SCREW
	220	548044	-		1	WASHER BEARING
	230	272510	-		2	HINGE
	240	272511	-		2	HINGE
	250	257397	-		2	PIN
	260	271011	-		4	WASHER
	270	544370	-		1	STRIP
	280	544371	-		2	BRACKET

From	Pos	Part No	SP	UN	Qty	Description	
	290	544372	-		1	BRACKET	
	300	544373	-		1	GUARD	
	310	544374	-		1	GUARD	
	320	544375	-		2	BRACKET	
	330	544376	-		1	DOOR	
	340	544378	-		1	BRACKET	
	350	449243	-		1	SHIM	
	360	563736	-		1	BRACKET	
	500	321116-0302	-		4	BUSHING	20E7/26X15
	510	90017-0012	-		1	HANDLE	
	515	90117-0001	-		2	HANDLE	
	520	90117-0003	-		1	HANDLE	
	530	90339-0011	-		1	LOCK	
	540	312105-0492	-		2	SCREW	M6S10X22RFR
	550	312105-0451	-		16	SCREW	M6S8X20RFR
	555	312105-0364	-		6	SCREW	M6S6X10RFR
	560	312105-0368	-		8	SCREW	M6S6X16RFR
	570	312105-0370	-		4	SCREW	M6S6X20RFR
	580	312105-0328	-		2	SCREW	M6S5X14 A4 80
	590	312105-0289	-		8	SCREW	M6S4X10 A4 80
	600	312105-0295	-		1	SCREW	M6S4X20 A4 80
	610	312105-0297	-		4	SCREW	M6S4X25 A4 80
	620	312115-0382	-		8	SCREW	6X60 A4 80
	630	312115-0451	-		8	SCREW	8X20 A4 80
	640	312115-0455	-		2	SCREW	8X30 A4 80
	645	312115-0459	-		2	SCREW	8X40 A4 80
	650	312155-0493	-		8	SCREW	MF6S10X25RFR
	660	312125-0222	-		4	SLOTTED	HEMCS3X8RFR
	670	312125-0226	-		2	SLOTTED	HEMCS3X12RFR
	675	312125-0293	-		2	SLOTTED	HEMCS4X16RFR
	680	312318-0364	-		12	GRUB SCREW	SK6SS6X10RFR
	700	312605-0310	-		2	NUT	M6M3RFR
	710	312605-0312	-		7	NUT	M6M4RFR
	720	312605-0316	-		12	NUT	M6M6RFR
	750	315105-0136	-		13	WASHER	BRB4,3X8RFR
	760	315105-0146	-		2	WASHER	BRB5,3X10RFR
	770	315105-0153	-		28	WASHER	BRB6,4X12RFR
	780	315105-0165	-		20	WASHER	BRB8,4X16RFR
	790	315105-0173	-		2	WASHER	BRB10,5X22RFR

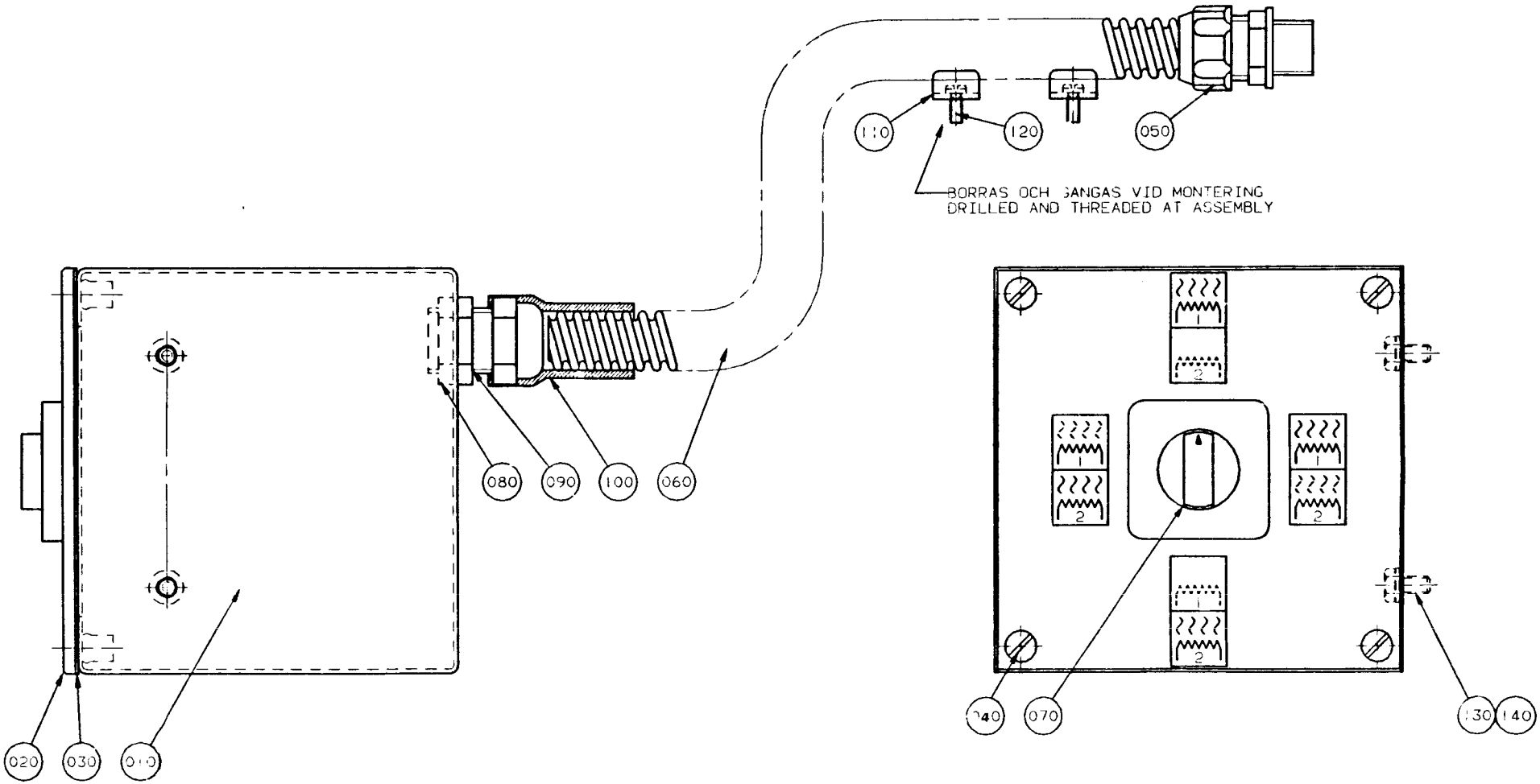
110
120
050
BORRAS OCH GÄNGAS VID MONTERING
DRILLED AND THREADED AT ASSEMBLY
080
090
100
060
020
030
010
140
070
130
140

From	Pos	Part No	SP	UN	Qty	Description
	010	544386	-		1	BOX
	020	544387	-		1	PANEL
	030	544388	-		1	GASKET
	040	312145-0370	-		4	SLOTTED HEMFS6X20RFR
	050	352136-0127	-		1	GLAND
	060	352135-0106	-	MM	500	HOSE 155.016
	070	90111-0137	-		1	SWITCH
	080	90099-0003	-		1	NUT
	090	352103-0110	-		1	CABLE GLANR.22,5/4-13
	100	456249	-		1	PROTECTIVE COVER
	110	352113-0203	-		2	ARMATURE
	120	312125-0289	-		2	SLOTTED HEMCS4X10RFR
	130	312105-0366	-		2	SCREW M6S6X12RFR
	140	315105-0153	-		2	WASHER BRB6,4X12RFR

From	Pos	Part No	SP	UN	Qty	Description

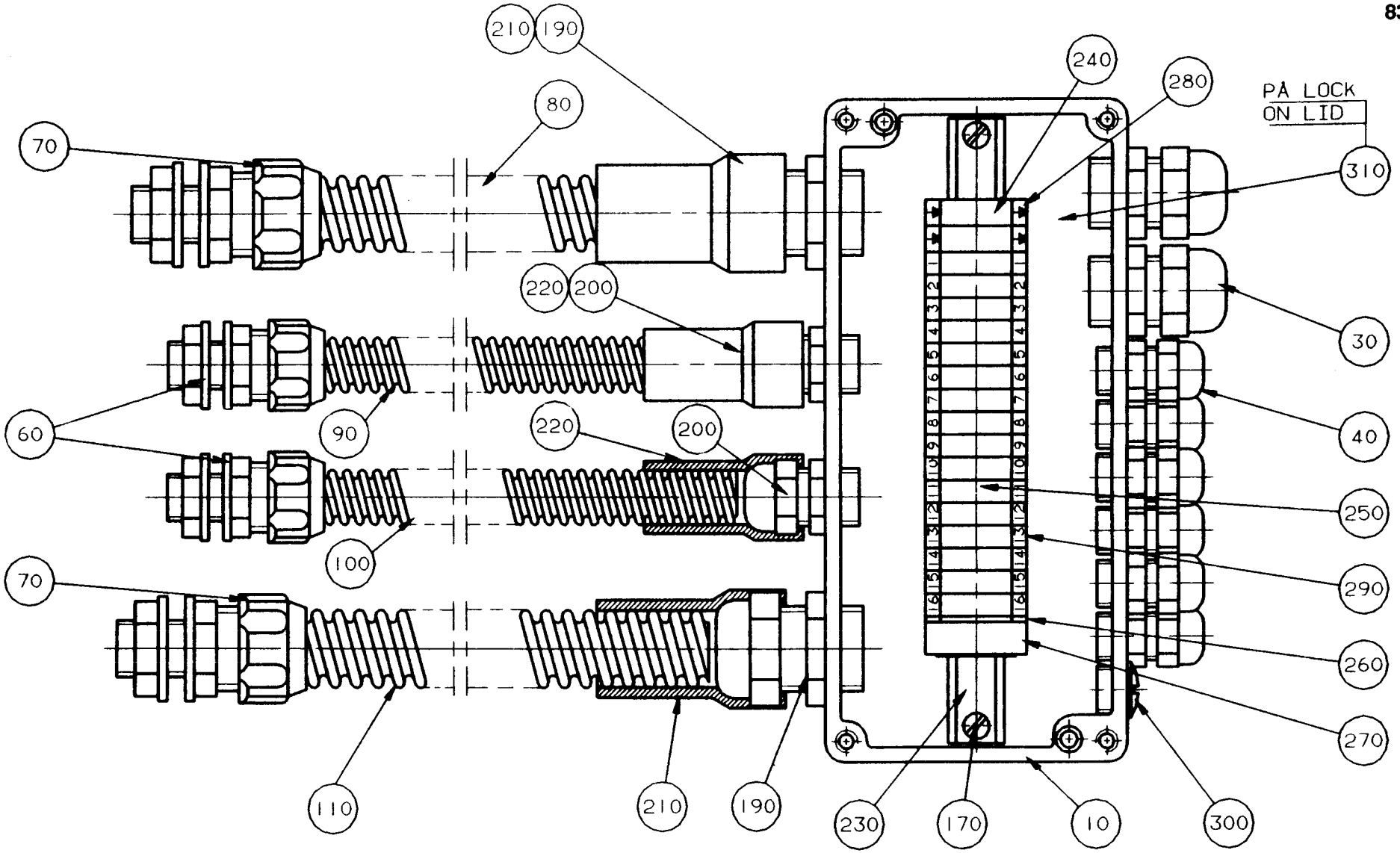
210
190
240
280
PA LOCK
ON LID
80
70
310
220
200
30
60
90
220
200
40
250
100
290
70
260
270
110
210
190
230
170
10
300

Last Alteration: AM 15283 90-10-31

Corresponding C-lists: 544390-010V
Assembly Drawing: 544390-1

Date Printed: 910327

From	Pos	Part No	SP	UN	Qty	Description
	010	561551	-		1	APPLIANCE BOX
	030	352103-0106	-		2	CABLE GLANR.18,6/5-10
	040	352103-0096	-		6	CABLE GLANR.STP-7
	060	352136-0107	-		2	GLAND
	070	352136-0127	-		2	GLAND
	080	352135-0106	-	MM	400	HOSE .016
	090	352135-0102	-	MM	400	HOSE .010
	100	352135-0102	-	MM	500	HOSE .010
	110	352135-0106	-	MM	600	HOSE .016
	170	312125-0285	-		2	SLOTTED HEMCS4X6RFR
	190	352103-0110	-		2	CABLE GLANR.22,5/4-13
	200	352103-0100	-		2	CABLE GLANR.15,2/2-6
	210	456249	-		2	PROTECTIVE COVER
	220	456244	-		2	PROTECTIVE COVER
	230	552015	-		1	MOUNTING RAIL
	240	90135-0026	-		2	EARTH CLIP
	250	90077-0079	-		16	TERMINAL BLOCK
	260	90077-0307	-		1	END PLATE
	270	90077-0308	-		1	END SUPPORT
	280	359011-0202	-		4	LABEL (GROUND)
	290	359011-0807	-		2	SET OF SIGNS 5-FW 1-50
	300	90002-0018	-		1	BLANK-OFF PLUG
	310	90194-0016	-		1	SIGN

From	Pos	Part No	SP	UN	Qty	Description

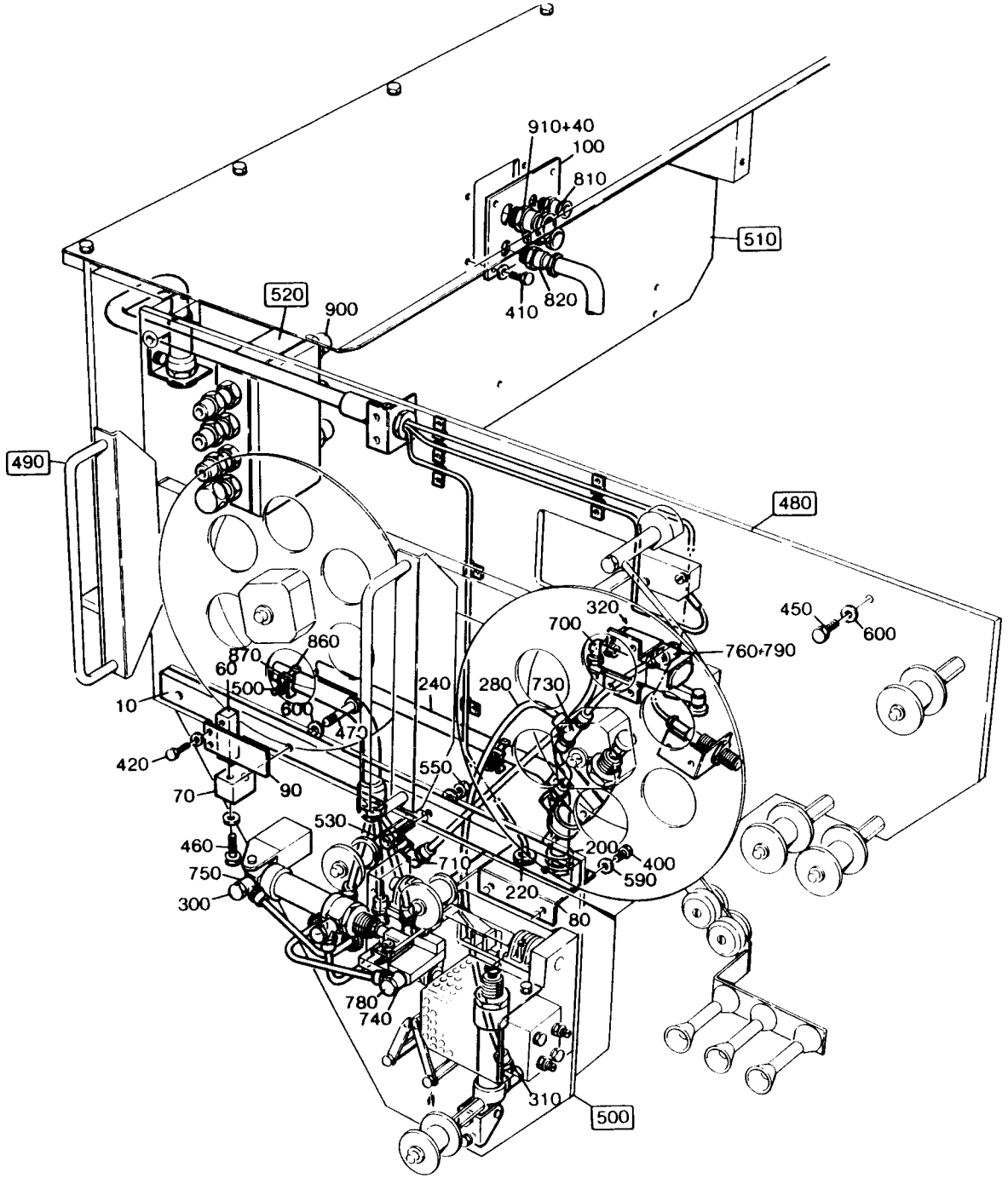
910+40
100
810
510
520
900
410
820
490
480
320
700
450
600
760+790
860
870
60
500
600
10
470
240
280
730
420
550
70
90
530
460
750
300
710
200
400
590
220
80
780
740
310
500

Last Alteration: AM 9205 86-08-04

Corresponding C-lists: 490600-010V, 020V
Assembly Drawing: 490600-1/2

Date Printed: 900928

From	Pos	Part No	SP	UN	Qty	Description
060V	F480	==>831-1.1a	-		1	**STRIP MAGAZINE**
070V	F480	==>831-1.1b	-		1	**STRIP MAGAZINE**
	F490	==>831-1.2	-		2	**BOBBIN**
	F500	==>831-1.4	-		1	**SPLICING DEVICE**
	F510	==>831-1.3	-		1	**BRACKET**
	F520	==>831-1.5	-		1	**CONNECTION BOX**
	010	484911	-		1	SPACER
	040	456249	-		3	PROTECTIVE COVER
	060	490603	-		1	BRACKET
	070	490604	-		1	SPACER
	080	490605	-		1	BRACKET
	090	490606	S		1	LIP
	100	490607	-		1	PLATE
	200	90012-0063	-		1	GLAND
	220	90015-0020	-		4	BUSHING
	240	90152-0033	-	M	1	HOSE
	280	90166-0132	-	M	15	HOSE
	300	90235-0290	-		2	VALVE
	310	90235-0292	-		2	THROTTLE CHECK VALVE
	320	90328-0003	-		1	SILENCER
	400	312105-0325	-		2	SCREW M6S5X10 A4 80
	410	312105-0327	-		4	SCREW M6S5X12 A4 80
	420	312105-0329	-		2	SCREW M6S5X16 A4 80
	450	312105-0367	-		2	SCREW M6S6X14RFR
	460	312105-0372	-		1	SCREW M6S6X25RFR
	470	312105-0376	-		1	SCREW M6S6X35RFR
	500	312125-0287	-		4	SLOTTED HEMCS4X8RFR
	530	312155-0376	-		3	SCREW MF6X35RFR
	550	312605-0316	-		3	NUT M6M6RFR
	580	315105-0136	-		4	WASHER BRB4,3X8RFR
	590	315105-0146	-		8	WASHER BRB5,3X10RFR
	600	315105-0153	-		7	WASHER BRB6,4X12RFR
	700	342930-0113	-		1	ELBOW COUP6/4-1/8
	710	342936-0112	-		4	ELBOW COUP6/4
	730	342946-0112	-		1	T-PIECE 6/4
	740	342980-0111	-		1	BANJO CONNSINGEL 6/4-5M
	750	342980-0112	-		5	BANJO CONNSINGEL
	760	342980-0113	-		1	BANJO CONNSINGEL 6/4-1/8
	780	342980-0301	-		1	BANJO CONN SINGEL 5M
		315233-0101	P		0	* SEAL RINM5
	790	342980-0303	-		1	BANJO CONN SINGEL 1/8"
	810	352103-0100	-		1	CABLE GLANR.15,2/2-6
	820	352103-0101	-		1	CABLE GLANR.15,2/4-8
	830	352103-0106	-		3	CABLE GLANR.18,6/5-10
	840	352103-0110	-		1	CABLE GLANR.22,5/4-13
	860	352113-0102	-		4	RIBBON CLA
	870	352113-0202	-		4	ARMATURE -TM2-S8
	900	352135-0106	-	M	2	HOSE .016
	910	352136-0127	-		5	GLAND
	950	359020-0001	-		1	SIGN
	950	359020-0002	-		4	SIGN
	950	359020-0003	-		1	SIGN
	950	359020-0006	-		2	SIGN
	950	359020-0010	-		5	SIGN
	950	359020-0104	-		1	SIGN
	950	359020-0103	-		1	SIGN
	950	359020-0106	-		1	SIGN
	950	359020-0101	-		1	SIGN

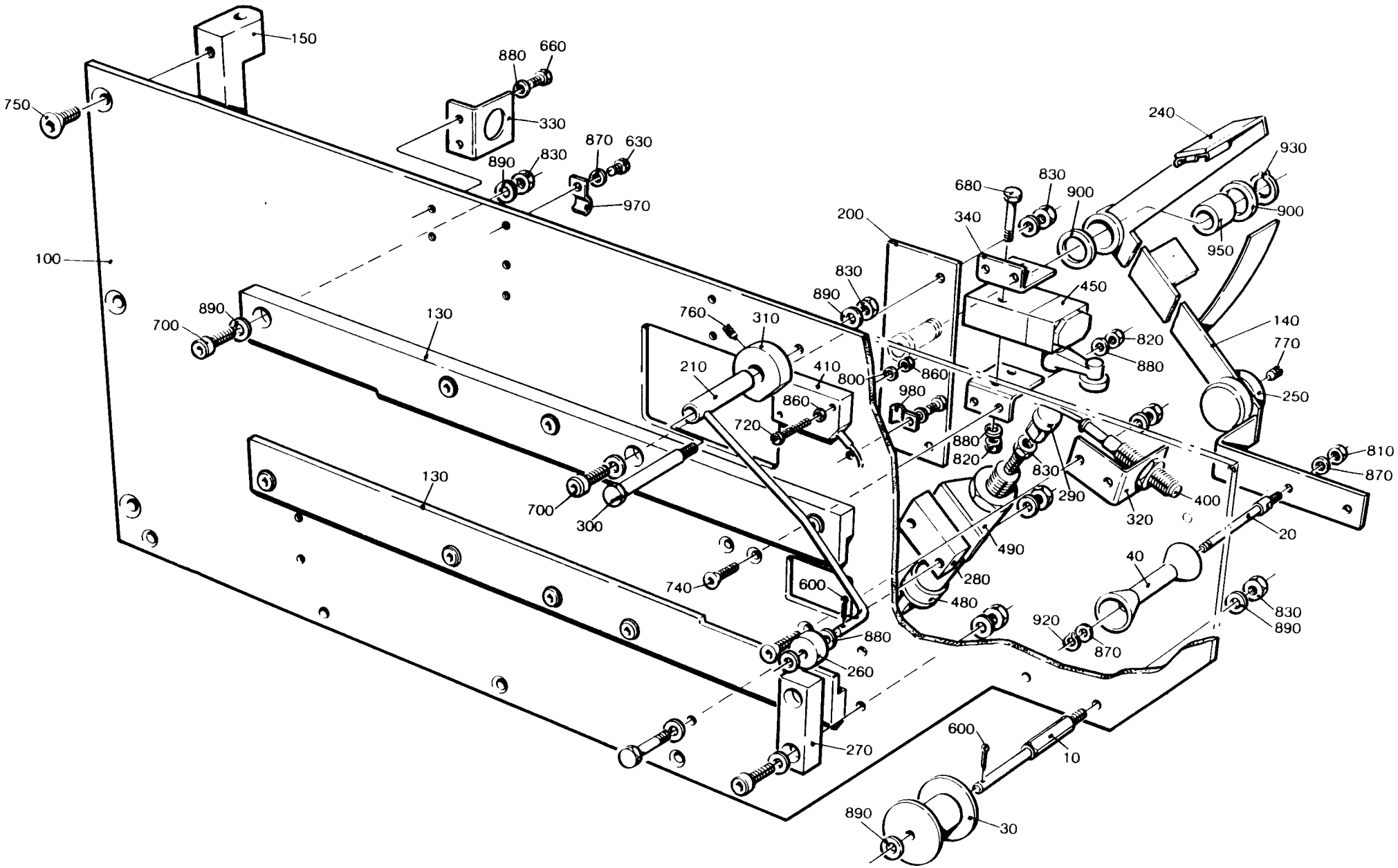
150
880
660
750
330
870
630
890
830
970
100
890
700
130
760
310
210
410
800
860
860
720
130
700
300
740
600
880
260
270
200
830
890
680
830
900
340
450
240
930
900
950
820
880
140
770
250
980
880
820
830
290
320
400
810
870
20
490
280
480
40
920
870
830
890
600
10
890
30

From	Pos	Part No	SP	UN	Qty	Description
Volume 284 - 180 ml						
	010	469717	-		3	SHAFT
	020	449359	C		3	SHAFT
	030	469719	C		3	ROLLER
	040	449360	-		3	ROLLER
Volume 125, 200 mlSLIM						
	010	469704	-		3	SHAFT
	020	267945	C		3	SHAFT
	030	469735	C		3	ROLLER
	040	267946	-		3	ROLLER
Common Parts						
	100	469702	-		1	PLATE
	130	469282	-		2	GUIDE
	140	469711	C		1	BRAKE ARM
	150	469712	-		1	HINGE
	200	469287	-		1	BRACKET
	210	469703	-		1	ARM
	240	15810	PU		1	BRAKE SHOE
	250	19893	-		2	WEIGHT
	260	234844	C		1	WHEEL
	270	469288	-		1	BLOCK
	280	469706	-		1	SPACER
	290	469707	-		1	KNOB
	300	469708	-		1	SCREW
	310	469709	-		1	RING
	320	469710	-		1	BRACKET
	330	469720	-		1	BRACKET
	340	490754	-		2	BRACKET
	400	90044-0085	PU		1	SENSOR
	410	90044-0104	S		1	PROXIMITY SWITCH
	450	90235-0041	C		1	VALVE
		90235-0311	S		1	* WEAR & TEAR PARTS KIT
	460	90236-0020	-		1	BRACKET
	480	90239-0910	C		1	CYLINDER
		90239-0562	S		1	* PLASTIC PLUG
	490	90239-0479	-		1	BRACKET
	600	311411-0137	-		5	SPLIT PIN SP1,6X10RFR
	630	312105-0287	-		8	SCREW M6S4X8 A4 80
	660	312105-0325	-		2	SCREW M6S5X10 A4 80
	680	312105-0335	-		4	SCREW M6S5X30 A4 80
	700	312115-0370	-		10	SCREW 6X20 A4 80
	720	312125-0232	-		2	SLOTTED HEMCS3X25RFR
	740	312151-0329	-		6	SCREW MF6S5X16FZB
	750	312151-0449	-		3	SCREW MF6S8X16FZB
	760	312318-0285	-		1	GRUB SCREW SK6SS4X6RFR
	770	312318-0362	-		2	GRUB SCREW SK6SS6X8RFR
	800	312605-0310	-		2	NUT M6M3RFR
	810	312605-0312	-		3	NUT M6M4RFR
	820	312605-0314	-		10	NUT M6M5RFR
	830	312605-0316	-		15	NUT M6M6RFR
	860	315105-0124	-		4	WASHER BRB3,2X6RFR
	870	315105-0136	-		14	WASHER BRB4,3X8RFR
	880	315105-0146	-		20	WASHER BRB5,3X10RFR
	890	315105-0153	-		27	WASHER BRB6,4X12RFR
	900	315105-0178	-		2	WASHER BRB13X24RFR
	920	315750-0101	-		3	LOCK RING SGA4
	930	315751-0109	-		1	LOCK RING SGA12 RFR
	950	321105-0174	-		1	BUSHING 12F7X18X16
	970	352110-0099	-		5	CLIP TK 3-5
	980	352110-0100	-		3	CLIP TK 5-7

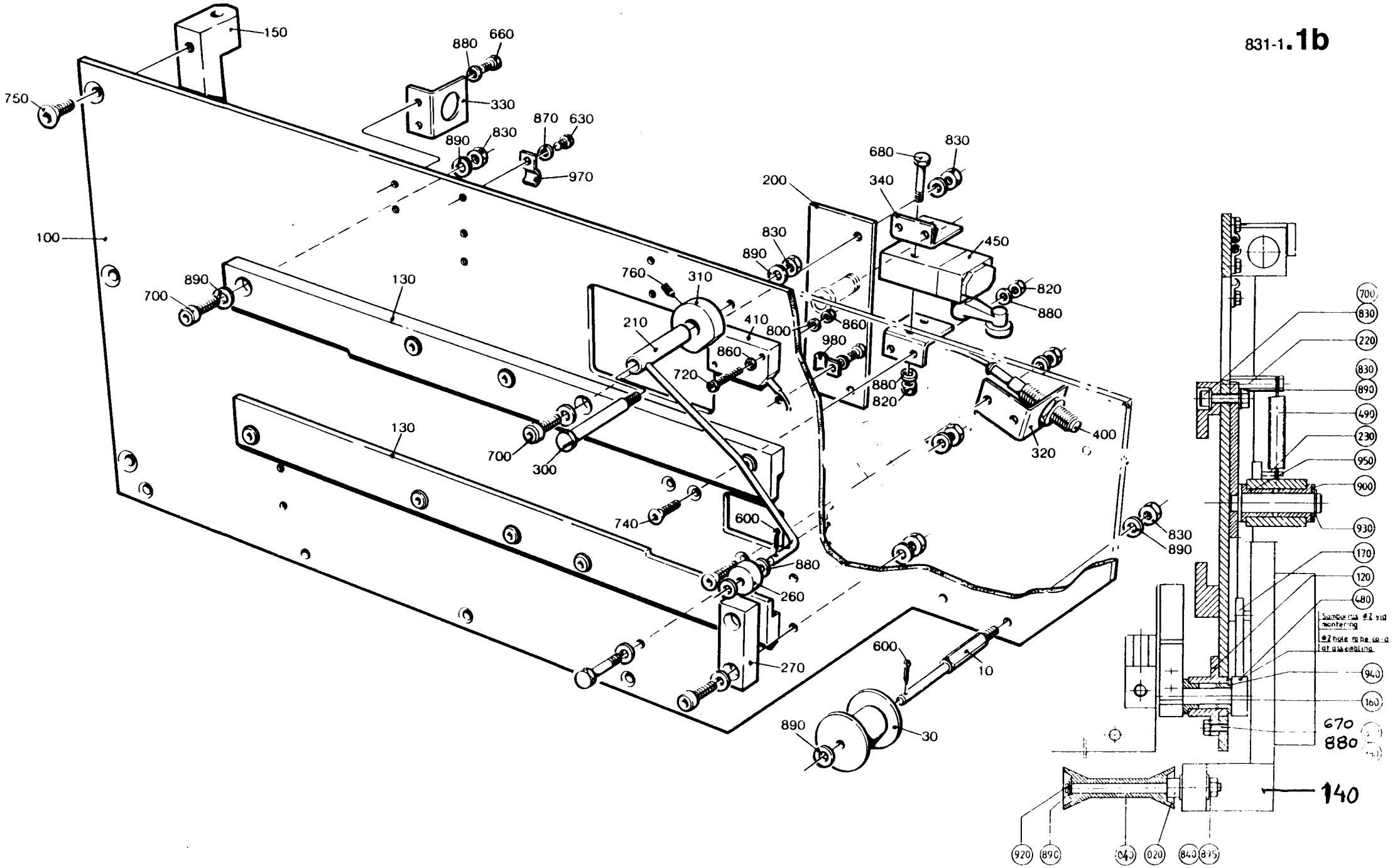
831-1.1b
150
750
880
660
330
870
630
890
830
970
100
680
830
200
340
830
890
450
760
310
820
880
890
700
130
210
410
800
860
980
860
720
880
820
130
700
300
400
320
740
600
830
890
880
260
270
600
10
890
30
700
830
220
830
890
490
230
950
900
930
170
120
480
Samborrus ø2 vid montering
ø2 hole to be co-d at assembling
940
160
670
880
140
920
890
040
020
840
895

From	Pos	Part No	SP	UN	Qty	Description
Volume 284 - 180 ml						
	010	539193	-		3	SHAFT
	020	539195	C		3	SHAFT
	030	469719	C		3	ROLLER
	040	539196	-		3	ROLLER
Volume 125, 200 mlSLIM						
	010	538972	-		3	SHAFT
	020	538675	C		3	SHAFT
	030	469735	C		3	ROLLER
	040	538678	-		3	ROLLER
Common Parts						
	100	541273	-		1	PLATE
	110	538673	-		1	ARM
	120	538681	-		1	HUB
	130	469282	-		2	GUIDE
	140	538672	C		1	BRAKE ARM
	150	469712	-		1	HINGE
	160	538683	-		1	SHAFT
	170	538684	-		1	ARM
	180	538686	-		1	PLATE
	190	538741	PU		1	LIP
	200	538674	-		1	BRACKET
	210	469703	-		1	ARM
	220	539197	-		1	SPRING HOLDER
	230	269582-0001	-		1	SPRING HOLDER
	260	234844	C		1	WHEEL
	270	469288	-		1	BLOCK
	300	469708	-		1	SCREW
	310	469709	-		1	RING
	320	538682	-		1	BRACKET
	330	469720	-		1	BRACKET
	340	490754	-		2	BRACKET
	400	90044-0085	PU		1	SENSOR
	410	90044-0104	S		1	PROXIMITY SWITCH
	450	90235-0041	C		1	VALVE
		90235-0311	S		1	* WEAR & TEAR PARTS KIT
	480	90258-0001	-		1	HOLLOW PIN
	490	90335-0084	P		1	TENSION SPRING
	600	311411-0137	-		4	SPLIT PIN SP1,6X10RFR
	630	312105-0287	-		8	SCREW M6S4X8 A4 80
	640	312105-0291	-		2	SCREW M6S4X12RFR
	660	312105-0325	-		2	SCREW M6S5X10 A4 80
	670	312105-0327	-		3	SCREW M6S5X12 A4 80
	680	312105-0335	-		2	SCREW M6S5X30 A4 80
	700	312115-0372	-		10	SCREW MC6S6X25 A4 80
	720	312125-0232	-		2	SLOTTED HEMCS3X25RFR
	740	312151-0329	-		6	SCREW MF6S5X16FZB
	750	312151-0449	-		3	SCREW MF6S8X16FZB
	760	312318-0285	-		1	GRUB SCREW SK6SS4X6RFR
	770	312318-0323	-		1	GRUB SCREW SK6SS5X8RFR
	800	312605-0310	-		2	NUT M6M3RFR
	820	312605-0314	-		8	NUT M6M5RFR
	830	312605-0316	-		14	NUT M6M6RFR
	840	312605-0318	-		3	NUT M6M8RFR
	860	315105-0124	-		4	WASHER BRB3,2X6RFR
	870	315105-0136	-		7	WASHER BRB4,3X8RFR
	880	315105-0146	-		13	WASHER BRB5,3X10RFR
	890	315105-0153	-		29	WASHER BRB6,4X12RFR
	895	315105-0165	-		6	WASHER BRB8,4X16RFR
	900	315105-0178	-		1	WASHER BRB13X24RFR
	920	315751-0103	-		3	LOCK RING SGA 6 RFR
	930	315751-0109	-		1	LOCK RING SGA12 RFR
	940	321111-0135	S		2	BUSHING 10E7X10
	950	321111-0163	S		2	BUSHING 12E7X20
	970	352110-0099	-		5	CLIP TK 3-5
	980	352110-0100	-		3	CLIP TK 5-7

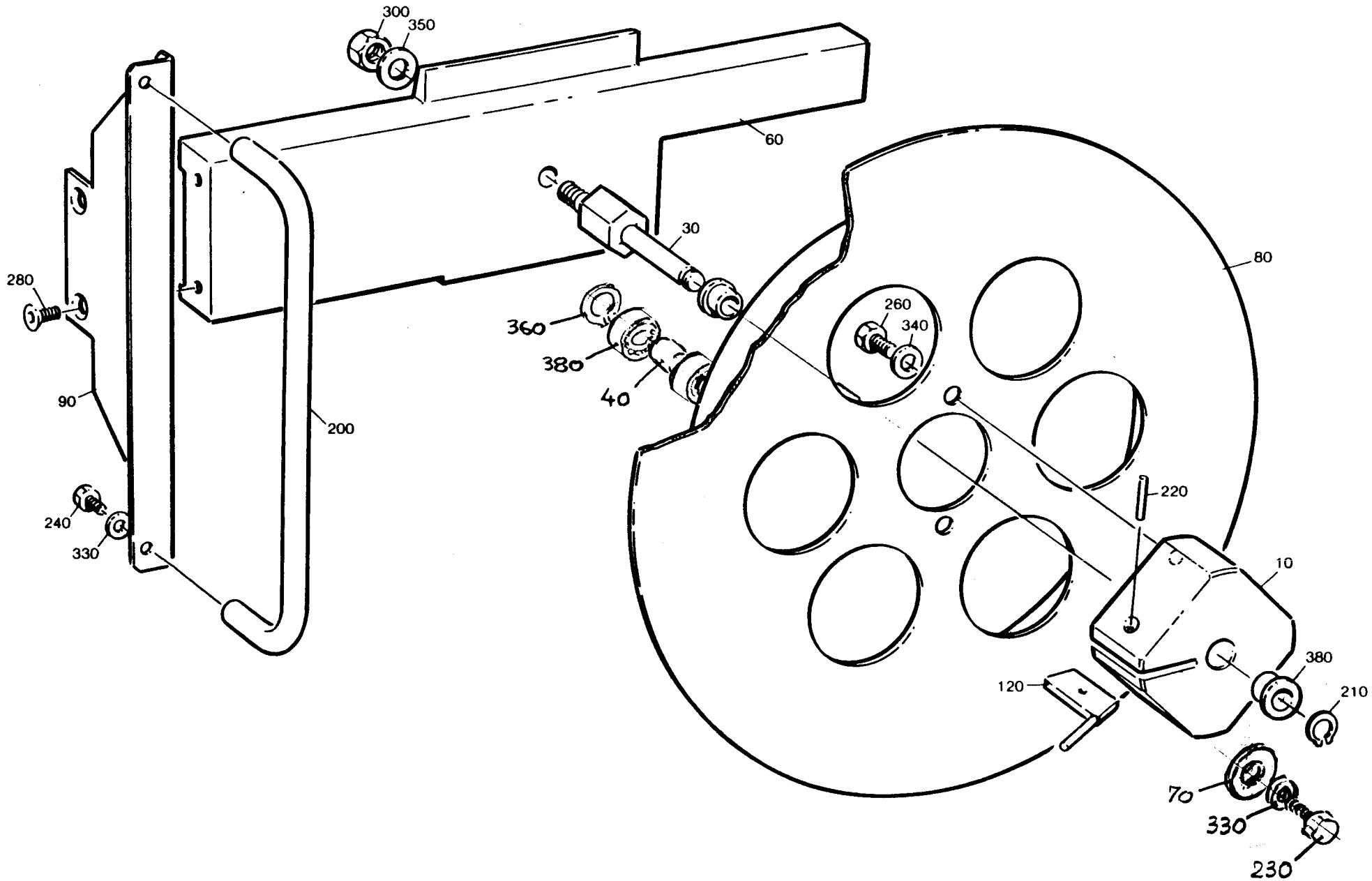
300
350
60
30
280
360
380
40
260
340
80
90
200
240
330
220
10
120
380
210
70
330
230

From	Pos	Part No	SP	UN	Qty	Description
Volume 284 - 180 ml						
	010	484860	-		1	BOBBIN HOLDER
070V	010	538724-0004	-		1	BOBBIN HOLDER
	030	484862	S		1	SHAFT
070V	030	538725-0004	S		1	SHAFT
070V	040	538740-0004	S		1	SPACER
Volume 125, 200 mlSLIM, TBA/3, TBA/8						
	010	484861	-		1	BOBBIN HOLDER
070V	010	538724-0001	-		1	BOBBIN HOLDER
	030	484863	S		1	SHAFT
070V	030	538725-0001	S		1	SHAFT
070V	040	538740-0001	S		1	SPACER
Common Parts						
	060	484859	-		1	SLIDE
070V	070	538726	S		2	WASHER
	080	283569	-		1	BRAKE DRUM
	090	469286	-		1	BRACKET
	120	532168	-		1	ECCENTRIC
	200	90017-0012	-		1	HANDLE
-060V	210	90141-0015	-		1	LOCK RING
	220	311103-0238	-		1	CYLINDRICACPR3M6X20RFR
	230	312105-0325	-		1	SCREW M6S5X10 A4 80
	240	312105-0327	-		2	SCREW M6S5X12 A4 80
	260	312105-0366	-		2	SCREW M6S6X12RFR
	280	312155-0366	-		2	SCREW MF6S6X12RFR
	300	312605-0318	-		1	NUT M6M8RFR
	330	315105-0146	-		3	WASHER BRB5,3X10RFR
	340	315105-0153	-		2	WASHER BRB6,4X12RFR
	350	315105-0165	-		2	WASHER BRB8,4X16RFR
070V	360	315753-0117	-		1	LOCK RING GH 22 RFR
-060V	380		S		2	BUSHING 8E7X8
070V	380	321300-0098	-		2	BALL BEARISKF608

From	Pos	Part No	SP	UN	Qty	Description

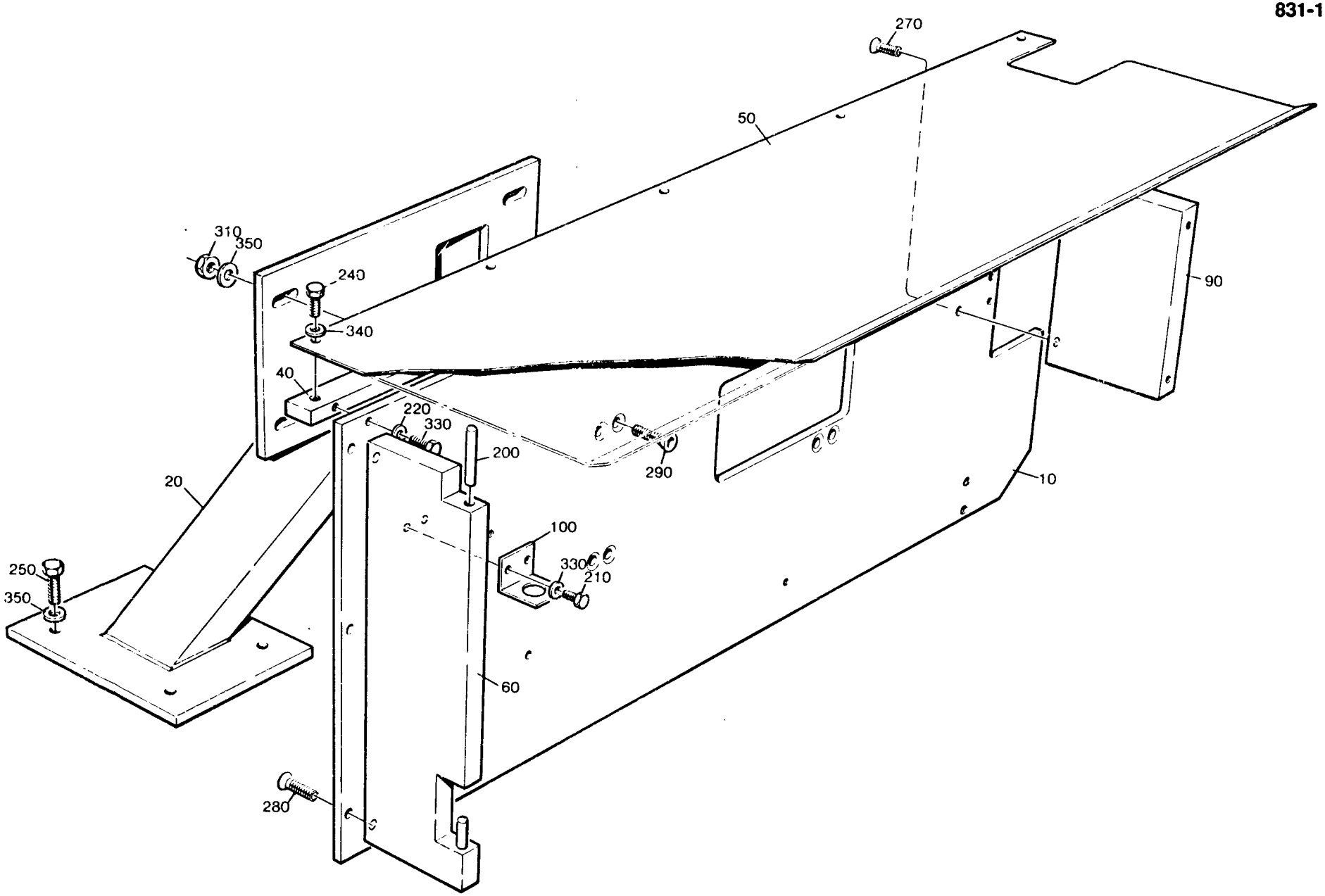
270
50
310
350
240
340
90
40
220
330
200
290
10
20
100
330
210
250
350
60
280

From	Pos	Part No	SP	UN	Qty	Description
	010	484951	-		1	PLATE
	020	469884	-		1	BRACKET
	040	484952	-		1	BAR
	050	484953	-		1	PLATE
	060	484954	-		1	HANGER
	090	484955	-		1	SPACER
	100	469720	-		1	BRACKET
	200	311103-0411	-		2	CYLINDRICACPR8M6X45RFR
	210	312105-0325	-		2	SCREW M6S5X10 A4 80
	220	312105-0329	-		6	SCREW M6S5X16 A4 80
	240	312105-0364	-		5	SCREW M6S6X10RFR
	250	312105-0453	-		4	SCREW M6S8X25RFR
	270	312155-0451	-		5	SCREW MF6S8X20RFR
	290	312155-0455	-		4	SCREW MF6S8X30RFR
	310	312605-0318	-		4	NUT M6M8RFR
	330	315105-0146	-		8	WASHER BRB5,3X10RFR
	340	315105-0153	-		5	WASHER BRB6,4X12RFR
	350	315105-0165	-		8	WASHER BRB8,4X16RFR

From	Pos	Part No	SP	UN	Qty	Description

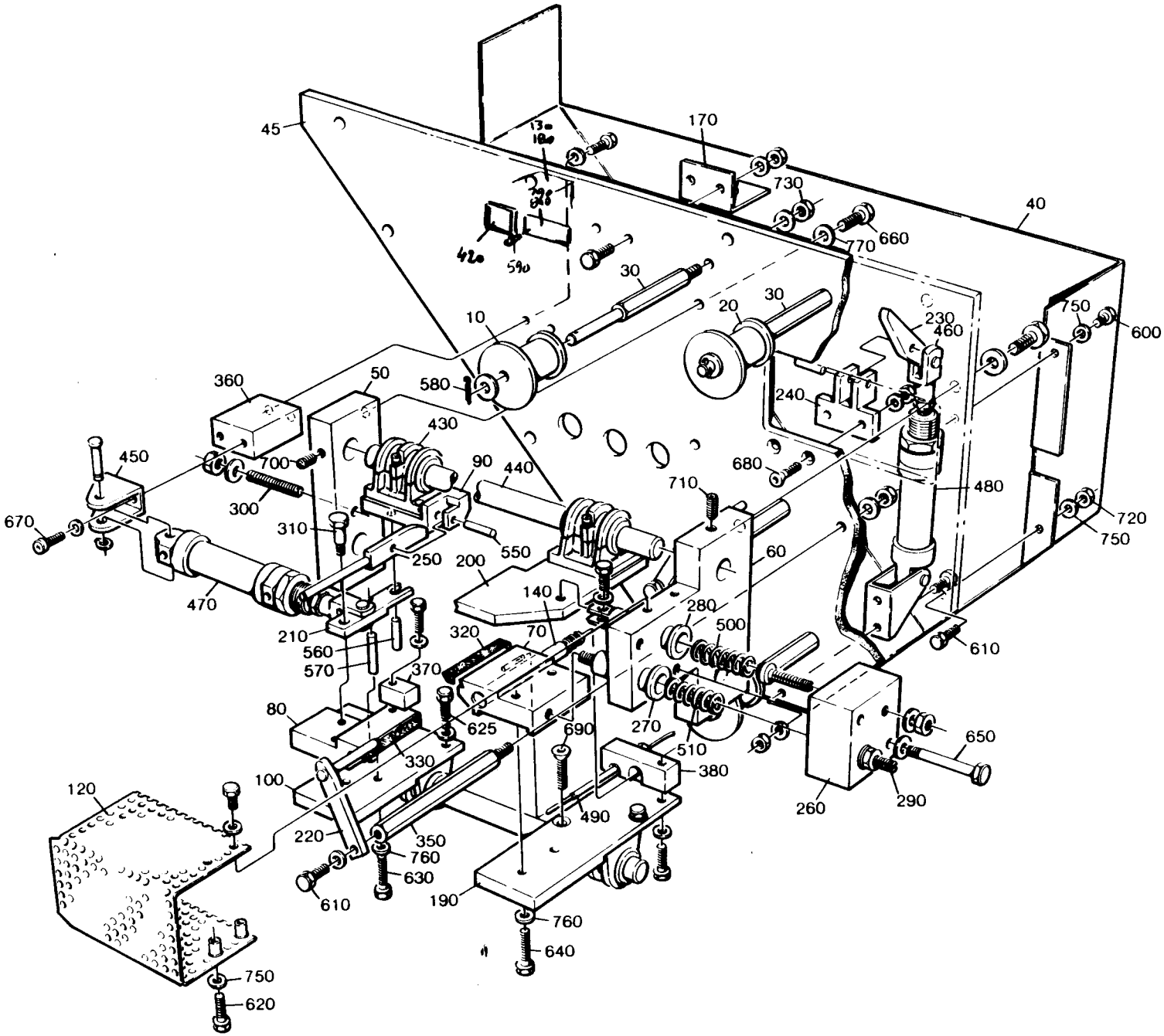
45
170
730
40
660
770
30
20
30
10
230
460
750
600
360
50
580
240
430
450
700
90
440
680
480
710
300
670
310
550
250
200
60
720
750
470
140
280
210
320
70
500
560
570
370
610
80
625
690
270
650
330
510
380
100
120
490
260
290
220
350
760
630
610
190
760
640
750
620

From	Pos	Part No	SP	UN	Qty	Description
	010	469719	C		2	ROLLER
	010	469735	C		2	ROLLER (125, 200 mISLIM)
	020	484986	C		1	ROLLER
	020	484930	C		1	ROLLER (125, 200 mISLIM)
	030	539194	S		3	SHAFT
	030	538973	S		3	SHAFT (125, 200 mISLIM)
	040	484903	-		1	PROTECTIVE COVER
	045	484985	-		1	PLATE
	045	484985	-		1	PLATE (125, 200 mISLIM)
	050	484905	-		1	GABLE
	060	484906	-		1	GABLE
	070	484907	S		1	HEATING JAW
	080	484908	-		1	COUNTER JAW
	090	484909	S		1	HINGE
	100	484910	-		1	PLATE
	120	484912	-		1	TOUCH GUARD
	140	484914	PU		1	HEATING ELEMENT
	170	469720	-		1	BRACKET
	190	484916	-		1	PLATE
	200	484917	-		1	DOLLY
	210	484918	-		1	ARM
	220	484919	-		2	ARM
	230	484920	-		1	ARM
	240	484921	-		1	HOLDER
	250	484922	C		1	PIN
	260	484923	-		1	SPRING HOUSING
	270	484924	-		1	SLEEVE
	280	484925	C		1	SLEEVE
	290	484926	-		2	SCREW
	300	484927	-		1	SCREW
	310	484928	-		1	REAMED BOLT
	320	484929	PU		1	FABRIC
	330	532235	PU		1	FABRIC
	350	484932	-		2	SPACER
	360	484933	-		1	SPACER
	370	484934	-		1	STOP LUG
	380	484935	-		1	CLIP
	430	90189-0030	S		4	BALL BUSHING
	440	90189-0031	S		2	AXLE
	450	90239-0486	-		2	BRACKET
	460	90239-0489	-		2	BRACKET
	470	90239-0816	S		1	CYLINDER
	480	90239-0910	S		1	CYLINDER
	480.1	90239-0562	S		1	* PLASTIC PLUG
	490	90326-0060	P		1	THERMOCOUPLE
	500	90335-0005	S		1	SPRING
	510	90335-0100	S		1	COMPR. SPRING
	550	311103-0271	-		2	CYLINDRICACPR4M6X18RFR
	560	311103-0351	-		1	CYLINDRICACPR6M6X16RFR
	570	311103-0311	-		1	CYLINDRICACPR5M6X22RFR
	580	311411-0138	-		3	SPLIT PIN SP1,6X12RFR
	600	312105-0323	-		5	SCREW M6S5X8 A4 80
	610	312105-0327	-		11	SCREW M6S5X12 A4 80
	610	312105-0327	-		11	SCREW M6S5X12 A4 80(125,200 mISLIM)
	620	312105-0329	-		6	SCREW M6S5X16 A4 80
	625	312105-0366	-		1	SCREW M6S6X12RFR
	630	312105-0368	-		8	SCREW M6S6X16RFR
	640	312105-0370	-		2	SCREW M6S6X20RFR
	650	312105-0378	-		2	SCREW M6S6X40RFR
	660	312105-0451	-		4	SCREW M6S8X20RFR
	670	312115-0329	-		4	SCREW 5X16 A4 80
	680	312155-0329	-		2	SCREW MF6S5X16RFR
	690	312155-0366	-		1	SCREW MF6S6X12RFR
	700	312318-0323	-		2	GRUB SCREW SK6SS5X8RFR
	710	312318-0327	-		2	GRUB SCREW SK6SS5X12RFR
	720	312605-0314	-		12	NUT M6M5RFR
	720	312605-0314	-		12	NUT M6M5RFR (125,200 mISLIM)
	730	312605-0316	-		8	NUT M6M6RFR
	750	315105-0146	-		22	WASHER BRB5,3X10RFR
	750	315105-0146	-		22	WASHER BRB5,3X10RFR(125,200 mISLIM)
	760	315105-0153	-		24	WASHER BRB6,4X12RFR
	770	315105-0165	-		4	WASHER BRB8,4X16RFR

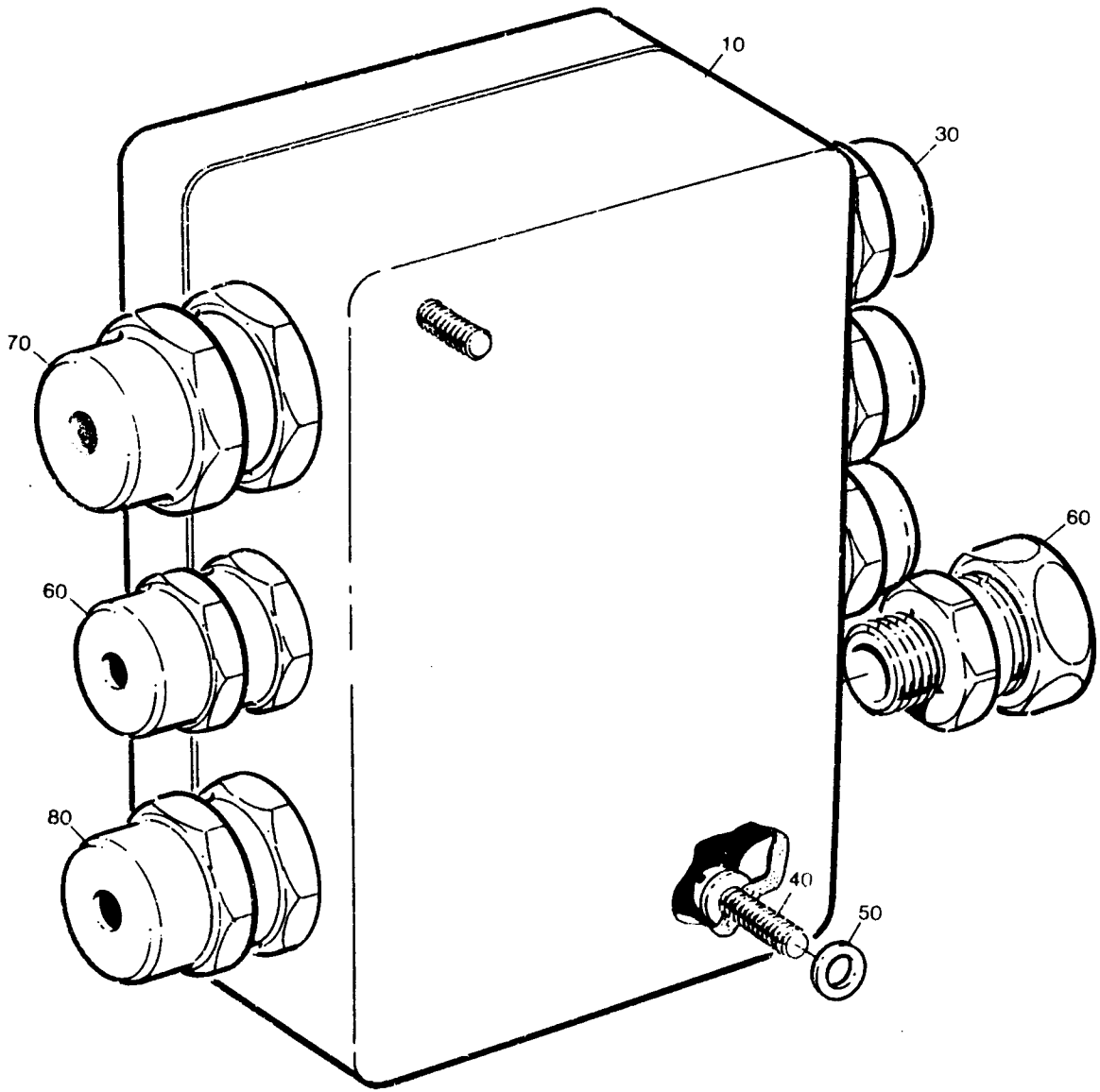
10
30
70
60
60
80
40
50

Last Alteration: AM 7827 85-07-17

Corrasponding C-lists: 490601-010V
Assembly Drawing: 490601-1

Date Printed: 900928

From	Pos	Part No	SP	UN	Qty	Description
	010	490602	-		1	CONNECTION BOX
	030	90012-0063	-		1	GLAND
	040	312125-0295	-		2	SLOTTED HEMCS4X20RFR
	050	315105-0136	-		4	WASHER BRB4,3X8RFR
	060	352103-0101	-		4	CABLE GLANR.15,2/4-8
	070	352103-0106	-		1	CABLE GLANR.18,6/5-10
	080	352103-0110	-		1	CABLE GLANR.22,5/4-13

From	Pos	Part No	SP	UN	Qty	Description

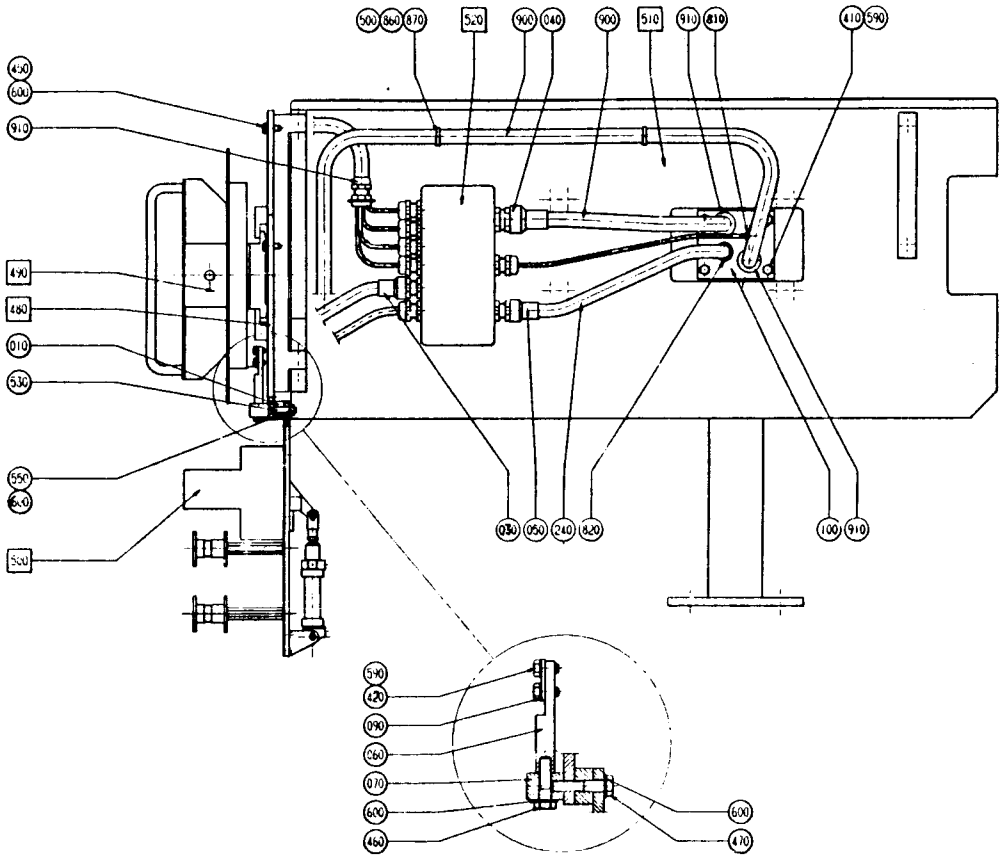
500 860 870
520
900 040
900
510
910 810
410 590
430
600
910
490
480
010
530
550
560
500
030 050 240 820
100 910
590
420
090
060
070
600
460
600
470

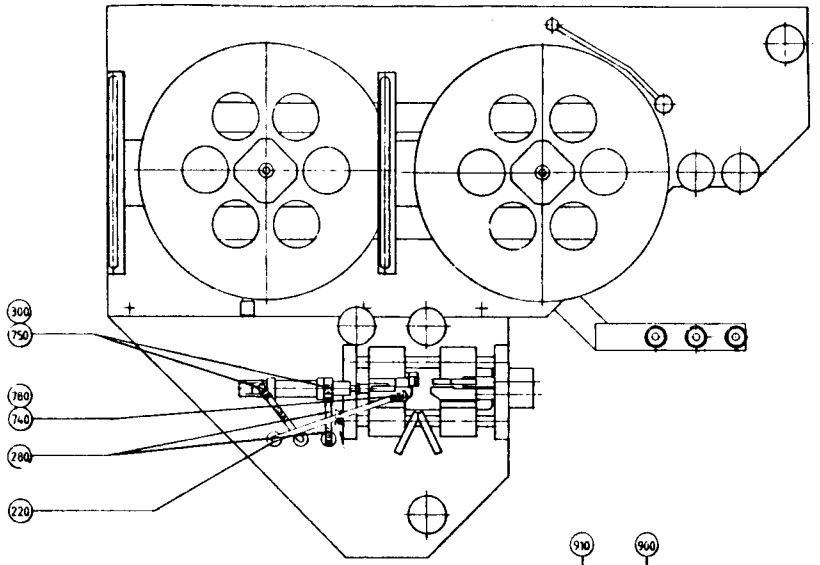
300
750
780
740
280
220
A - A

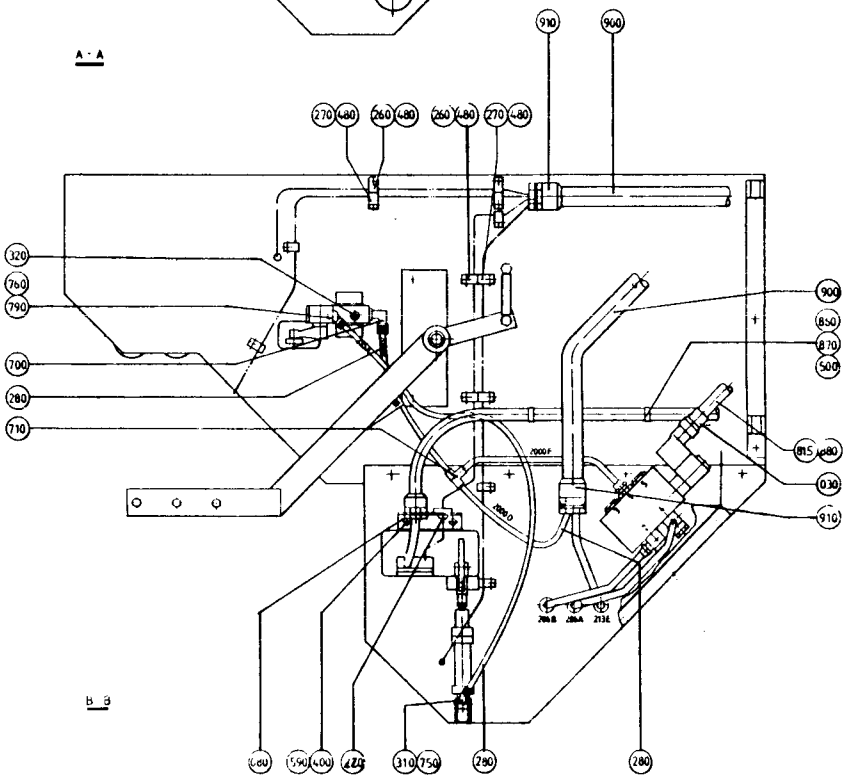
910
900
270 480
260 480
260 480
270 480
320
760
790
700
280
710
900
850
870
500
815 480
030
910
B - B
660
590 400
310 750
280
280

From	Pos	Part No	SP	UN	Qty	Description
	F480	**==>831-2.1**	-		1	**STRIP MAGAZINE**
	F490	**==>831-2.2a**	-		2	**BOBBIN, WIDE STRIP**
	F490	**==>831-2.2b**	-		2	**BOBBIN, NARROW STRIP**
		==>831-2.2b	-			**. BOBBIN**
	F500	**==>831-2.4**	-		1	**SPLICING DEVICE**
	F510	**==>831-2.3**	-		1	**BRACKET**
	F520	**==>831-2.5**	-		1	**CONNECTION BOX**
	010	484911	-		1	SPACER
	030	456244	-		2	PROTECTIVE COVER
	040	456249	-		1	PROTECTIVE COVER
	050	456245	-		1	PROTECTIVE COVER
	060	544449	-		1	BRACKET
	070	544450	-		1	SPACER
	080	490605	-		1	BRACKET
	090	490606	S		1	LIP
	100	553155	-		1	PLATE
	220	90015-0020	-		4	BUSHING
	240	90152-0033	-	MM	300	HOSE
	260	90165-0056	-		5	CLIP
	270	90165-0060	-		8	CLIP
	280	90166-0132	-	M	6	HOSE
	300	90235-0290	-		2	VALVE
	310	90235-0292	-		1	THROTTLE CHECK VALVE
	320	90328-0003	-		1	SILENCER
	400	312105-0325	-		2	SCREW M6S5X10 A4 80
	410	312105-0327	-		4	SCREW M6S5X12 A4 80
	420	312105-0329	-		2	SCREW M6S5X16 A4 80
	450	312105-0367	-		2	SCREW M6S6X14RFR
	460	312105-0372	-		1	SCREW M6S6X25RFR
	470	312105-0376	-		1	SCREW M6S6X35RFR
	480	312125-0285	-		13	SLOTTED HEMCS4X6RFR
	500	312125-0287	-		4	SLOTTED HEMCS4X8RFR
	530	312155-0376	-		3	SCREW MF6X35RFR
	550	312605-0316	-		3	NUT M6M6RFR
	590	315105-0146	-		8	WASHER BRB5,3X10RFR
	600	315105-0153	-		7	WASHER BRB6,4X12RFR
	700	342930-0113	-		1	ELBOW COUP6/4-1/8
	710	342946-0112	-		1	T-UNION COUP6/4
	740	342980-0111	-		1	BANJO CONNSINGEL 6/4-5M
	750	342980-0112	-		3	BANJO CONNSINGEL
	760	342980-0113	-		1	BANJO CONNSINGEL 6/4-1/8
	780	342980-0301	-		1	BANJO CONN SINGEL 5M

From	Pos	Part No	SP	UN	Qty	Description
		315233-0101	P		0	* SEAL RINM5
	790	342980-0303	-		1	BANJO CONN SINGEL 1/8"
	810	352103-0100	-		1	CABLE GLANR.15,2/2-6
	815	352103-0101	-		1	CABLE GLANR.15,2/4-8
	820	90012-0063	-		1	GLAND
	860	352113-0102	-		4	RIBBON CLA
	870	352113-0202	-		4	ARMATURE -TM2-S8
	880	352135-0102	-	MM	200	HOSE .010
	900	352135-0106	-	MM	1730	HOSE .016
	910	352136-0127	-		5	GLAND

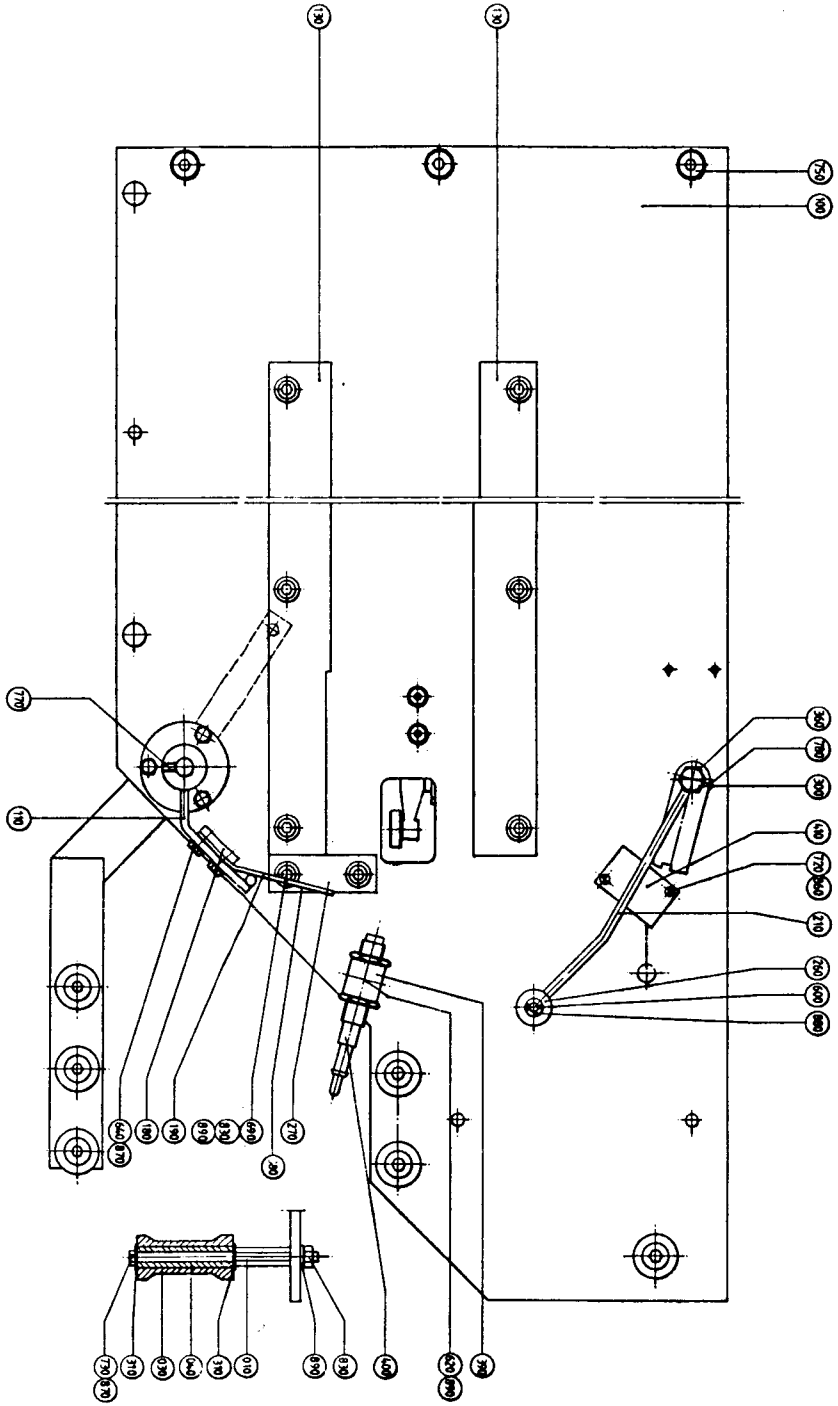

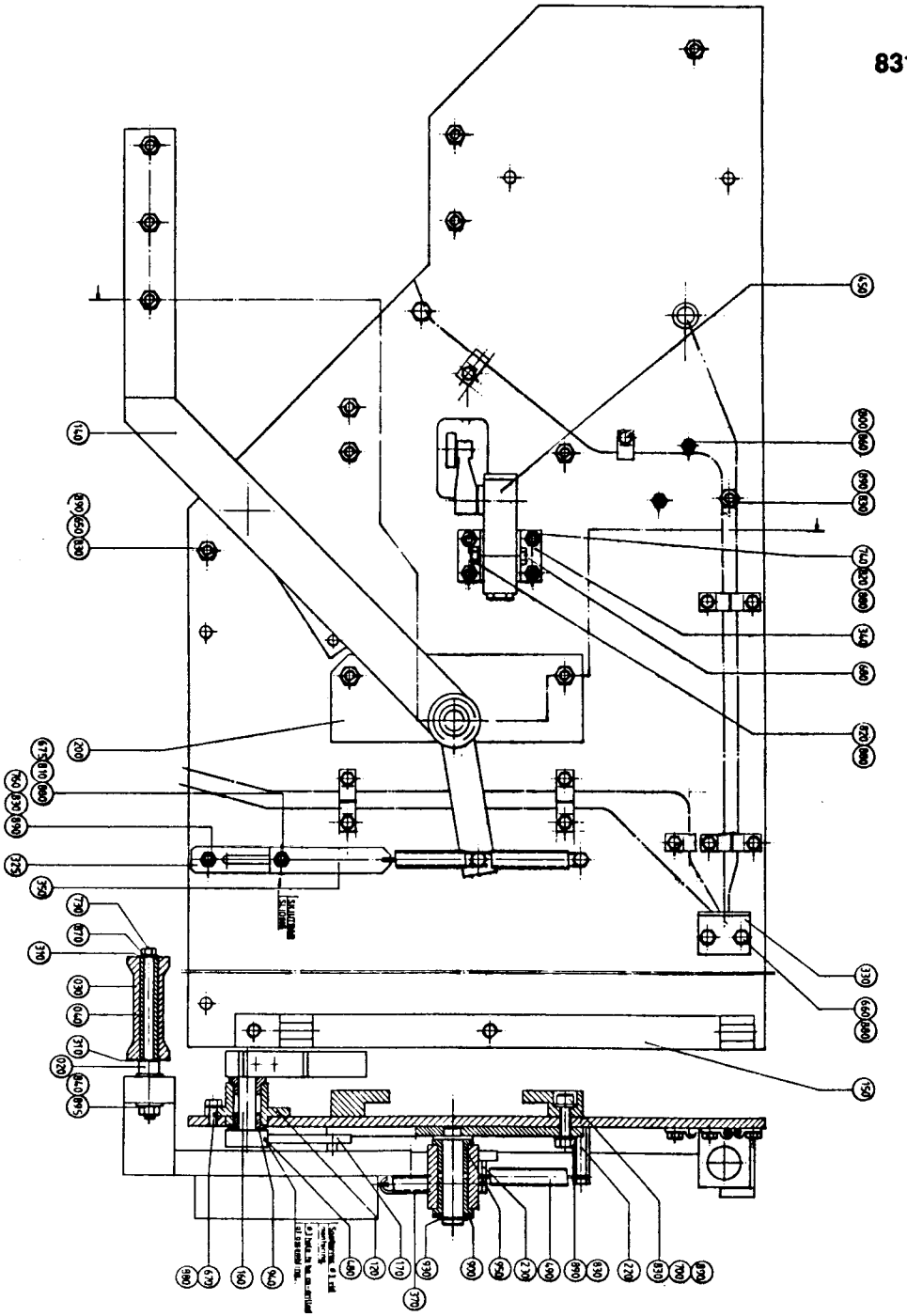

From	Pos	Part No	SP	UN	Qty	Description
Volume 284 - 180 ml						
	010	547747	-		3	SHAFT, HOLE 21
	010	545466	-		3	SHAFT, HOLE 20
	020	547748	C		3	SHAFT, HOLE 21
	020	545467	C		3	SHAFT, HOLE 20
	030	547745	C		6	ROLLER, HOLE 21
	030	545464	C		6	ROLLER, HOLE 20
	040	547746	-		6	ROLLER, HOLE 21
	040	545465	-		6	ROLLER, HOLE 20
Volume 125, 200 ml SLIM						
	010	545466	-		3	SHAFT, HOLE 11
	010	547742	-		3	SHAFT, HOLE 10
	020	545467	C		3	SHAFT, HOLE 11
	020	547743	C		3	SHAFT, HOLE 10
	030	545464	C		6	ROLLER, HOLE 11
	030	547741	C		6	ROLLER, HOLE 10
	040	545465	-		6	ROLLER, HOLE 11
	040	547740	-		6	ROLLER, HOLE 10
Common Parts						
	100	550122	-		1	PLATE
	110	538673	-		1	ARM
	120	538681	-		1	HUB
	130	469282	-		2	GUIDE
	140	553150	C		1	BRAKE ARM
	150	469712	-		1	HINGE
	160	538683	-		1	SHAFT
	170	538684	-		1	ARM
	180	538686	-		1	PLATE
	190	538741	PU		1	LIP
	200	538674	-		1	BRACKET
	210	469703	-		1	ARM
	220	539197	-		1	SPRING HOLDER
	230	544461	-		1	SPRING HOLDER
	260	234844	C		1	WHEEL
	270	469288	-		1	BLOCK
	300	469708	-		1	SCREW
	310	2033-0013	PU		12	WASHER
	325	544459	-		1	BRACKET
	330	469720	-		1	BRACKET
	340	490754	-		2	BRACKET
	350	544460	-		1	CLAMP
	360	544458	-		1	ARM
	370	90335-0120	PU		1	SPRING
	380	543612	PU		1	SPRING
	390	544454	-		1	BRACKET
	400	90044-0085	PU		1	SENSOR
	410	90044-0104	S		1	PROXIMITY SWITCH
	450	90235-0041	C		1	VALVE
		90235-0311	S		1	* WEAR & TEAR PARTS KIT
	480	90258-0031	-		1	HOLLOW PIN
	490	90335-0121	P		1	SPRING
	600	311411-0137	-		3	SPLIT PIN SP1,6X10RFR
	620	312105-0367	-		1	SCREW M6S6X14RFR
	640	312105-0291	-		2	SCREW M6S4X12RFR
	650	312105-0378	-		1	SCREW M6S6X40RFR
	660	312105-0325	-		2	SCREW M6S5X10 A4 80
	670	312105-0327	-		3	SCREW M6S5X12 A4 80
	675	312105-0329	-		1	SCREW M6S5X16 A4 80
	680	312105-0335	-		2	SCREW M6S5X30 A4 80
	690	312115-0370	-		8	SCREW MC6S 6X20 A4 80
	700	312115-0372	-		3	SCREW MC6S6X25 A4 80
	720	312125-0232	-		2	SLOTTED HEMCS3X25RFR
	730	312105-0287	-		6	SCREW M6S4X8 A4 80
	740	312155-0329	-		6	SCREW MF6S5X16FZB
	750	312155-0449	-		3	SCREW MF6S8X16FZB
	760	312155-0378	-		1	SCREW MF6S6X40RFR
	770	312318-0323	-		2	GRUB SCREW SK6SS5X8RFR
	780	312318-0220	-		1	GRUB SCREW SK6SS3X6RFR
	800	312605-0310	-		2	NUT M6M3RFR
	810	312812-0314	-		1	LOCK NUT A4-M5RFR
	820	312605-0314	-		8	NUT M6M5RFR
	830	312605-0316	-		14	NUT M6M6RFR
	840	312605-0318	-		3	NUT M6M8RFR
	860	315105-0124	-		4	WASHER BRB3,2X6RFR
	870	315105-0136	-		6	WASHER BRB4,3X8RFR
	880	315105-0146	-		20	WASHER BRB5,3X10RFR
	890	315105-0153	-		29	WASHER BRB6,4X12RFR
	895	315105-0165	-		6	WASHER BRB8,4X16RFR
	900	315105-0178	-		1	WASHER BRB13X24RFR
	930	315751-0109	-		1	LOCK RING SGA12 RFR
	940	321111-0135	S		2	BUSHING 10E7X10
	950	321111-0163	S		2	BUSHING 12E7X20

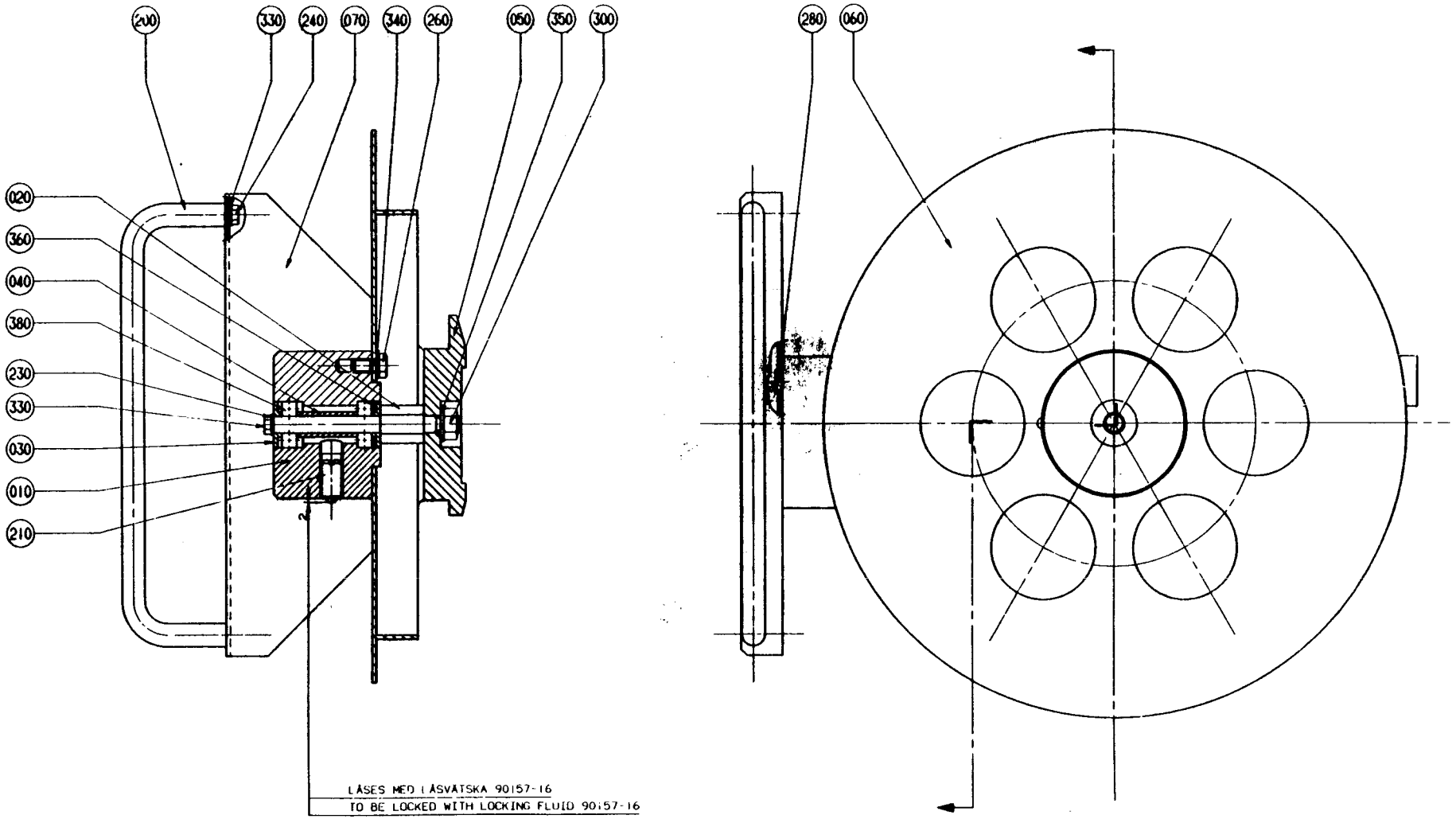
200
330
240
070
340
260
050
350
300
020
360
040
380
230
330
030
010
210
280
060
LÅSES MED LÅSVÄTSKA 90157-16
TO BE LOCKED WITH LOCKING FLUID 90157-16

Last Alteration: AM 15550 91-01-09

Corresponding C-lists: 484858-030V
Assembly Drawing: 484858-3

Date Printed: 910327

From	Pos	Part No	SP	UN	Qty	Description
	010	546256	C		1	BOBBIN HOLDER
	020	538725-0003	-		1	SHAFT
	030	538726	-		2	WASHER
	040	538740-0003	-		1	SPACER
	050	484859	C		1	SLIDE
	060	283569	C		1	BRAKE DRUM
	070	564537	-		1	BRACKET
	200	90017-0012	-		1	HANDLE
	210	90287-0106	-		1	SPRINGLOADED SCREW
	230	312105-0325	-		1	SCREW M6S5X10 A4 80
	240	312105-0327	-		2	SCREW M6S5X12 A4 80
	260	312105-0366	-		2	SCREW M6S6X12RFR
	280	312155-0366	-		2	SCREW MF6S6X12RFR
	300	312605-0318	-		1	NUT M6M8RFR
	330	315105-0146	-		3	WASHER BRB5,3X10RFR
	340	315105-0153	-		2	WASHER BRB6,4X12RFR
	350	315105-0165	-		2	WASHER BRB8,4X16RFR
	360	315753-0117	-		1	LOCK RING GH 22 RFR
	380	321300-0098	-		2	BALL BEARISKF608

From	Pos	Part No	SP	UN	Qty	Description

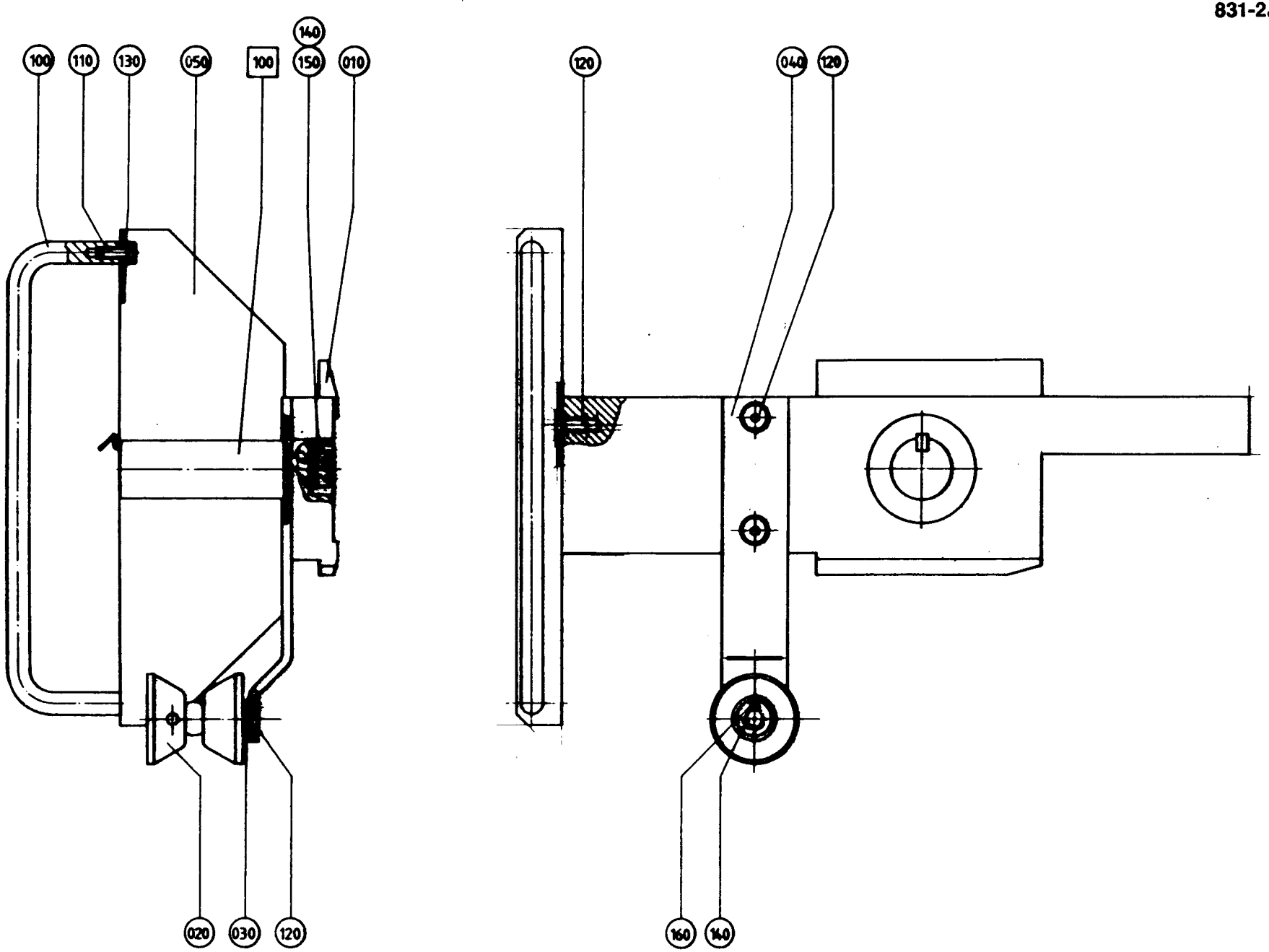
100
110
130
050
140
100
150
010
020
030
120
120
040
120
160
140

From	Pos	Part No	SP	UN	Qty	Description
	F100	**C- 7003-0101**	**-**		**1**	**BOBBIN**
	010	545455	-		1	SLIDE
	020	521166	C		1	ROLLER
	030	543182	C		1	SHAFT
	040	543181	-		1	BRACKET
	050	564537	-		1	BRACKET
	100	90017-0012	-		1	HANDLE
	110	312115-0327	-		2	SCREW MC6S5X12 A4 80
	120	312155-0366	-		5	SCREW MF6S6X12RFR
	130	315105-0146	-		2	WASHER BRB5,3X10RFR
	140	315105-0165	-		2	WASHER BRB8,4X16RFR
	150	312605-0318	-		1	NUT M6M8RFR
	160	311411-0152	-		1	SPLIT PIN SP2X16RFR

From	Pos	Part No	SP	UN	Qty	Description

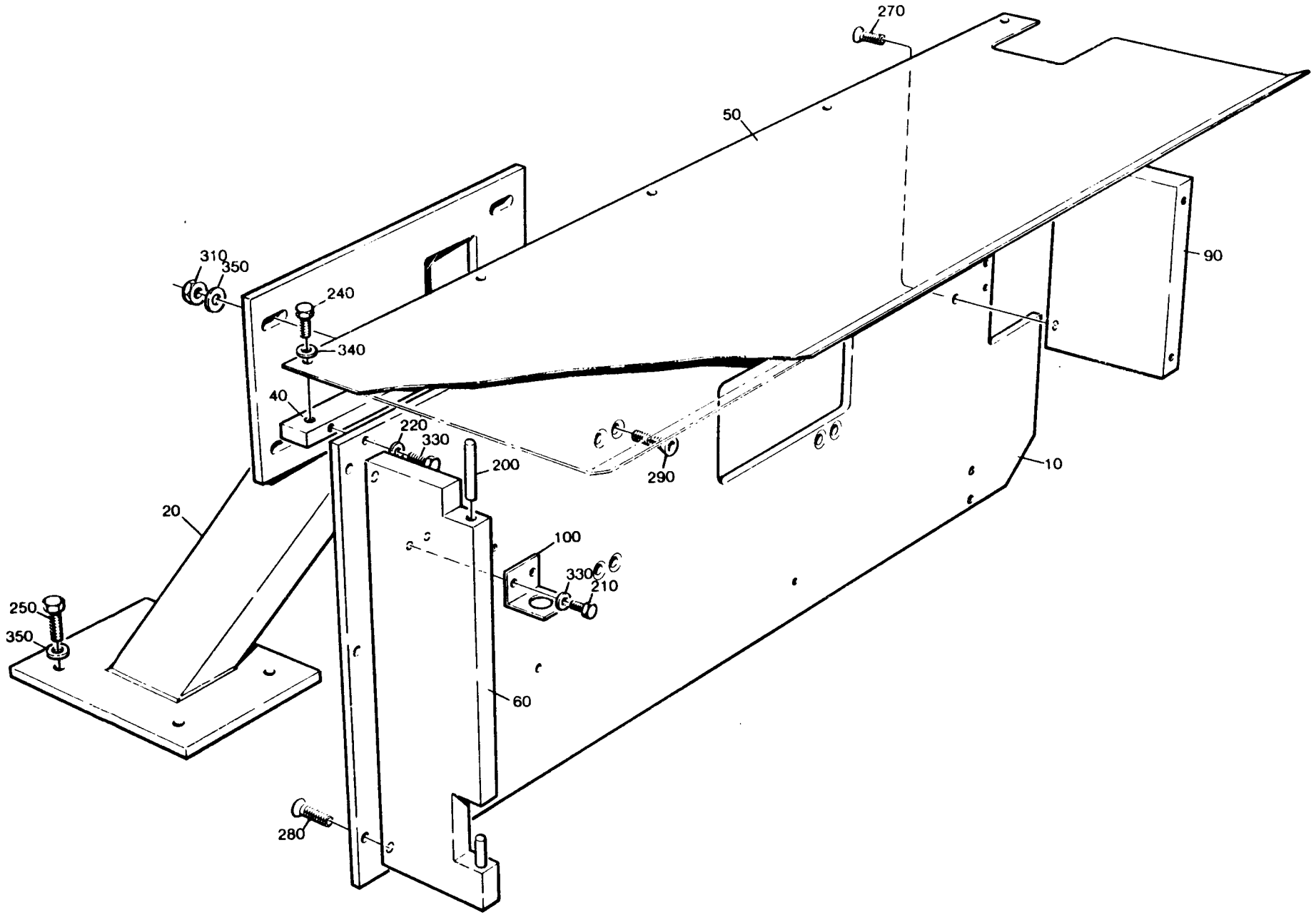
270
50
310
350
240
340
40
220
330
200
290
90
10
20
100
330
210
250
350
60
280

Last Alteration: AM 12944 89-08-29

Corresponding C-lists: 484950-02DV
Assembly Drawing: 484950-1

Date Printed: 990928

From	Pos	Part No	SP	UN	Qty	Description
	010	484951	-		1	PLATE
	020	549014	-		1	BRACKET
	040	484952	-		1	BAR
	050	484953	-		1	PLATE
	060	484954	-		1	HANGER
	090	484955	-		1	SPACER
	100	469720	-		1	BRACKET
	200	311103-0411	-		2	CYLINDRICACPR8M6X45RFR
	210	312105-0325	-		2	SCREW M6S5X10 A4 80
	220	312105-0329	-		6	SCREW M6S5X16 A4 80
	240	312105-0364	-		5	SCREW M6S6X10RFR
	250	312105-0453	-		4	SCREW M6S8X25RFR
	270	312155-0451	-		5	SCREW MF6S8X20RFR
	290	312155-0455	-		4	SCREW MF6S8X30RFR
	310	312605-0318	-		4	NUT M6M8RFR
	330	315105-0146	-		8	WASHER BRB5,3X10RFR
	340	315105-0153	-		5	WASHER BRB6,4X12RFR
	350	315105-0165	-		8	WASHER BRB8,4X16RFR

From	Pos	Part No	SP	UN	Qty	Description

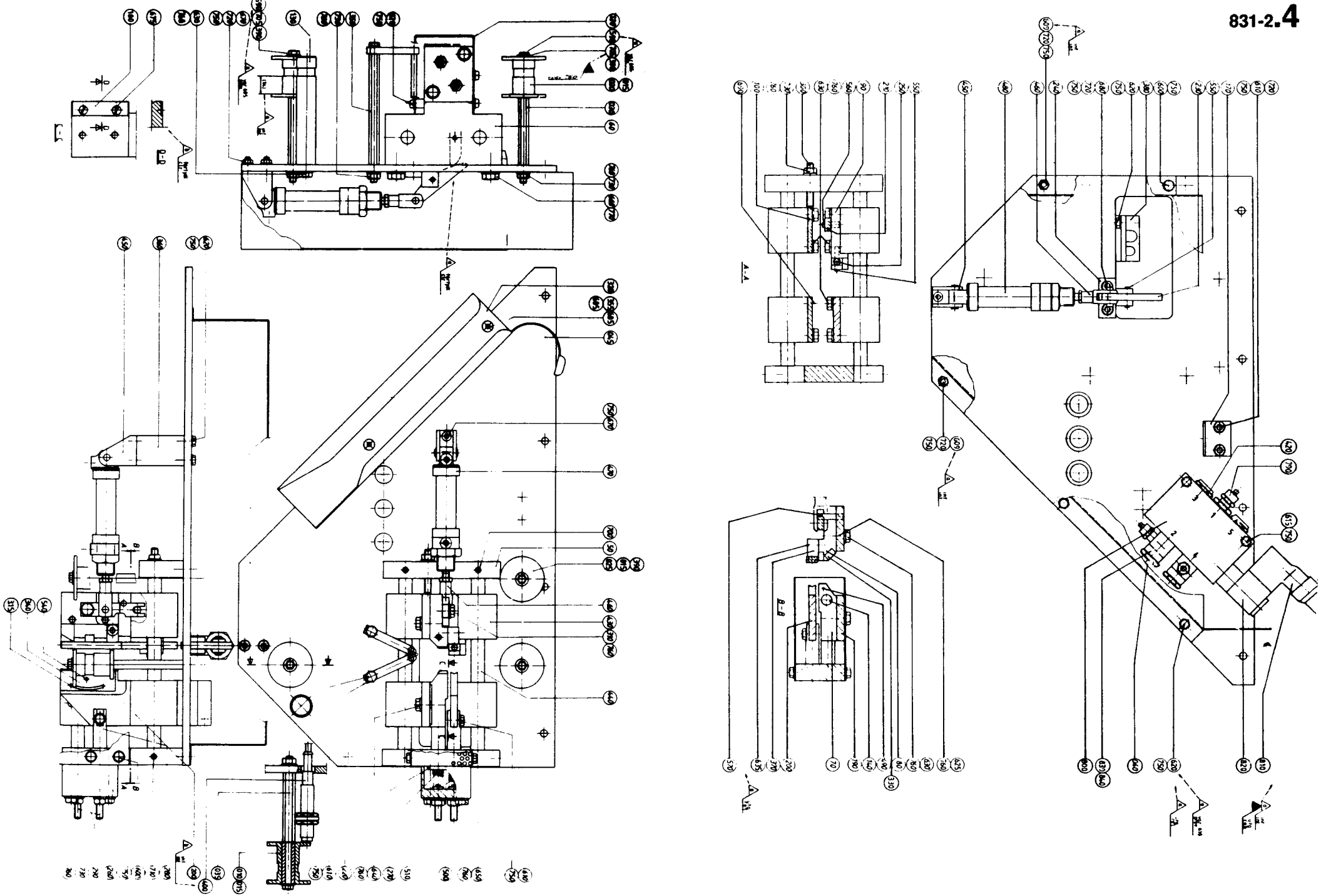

From	Pos	Part No	SP	UN	Qty	Description
Volume 284 - 180 ml, HOLE 21						
	010	550116	C		1	ROLLER
	015	545446	-		3	ROLLER
	020	545444	C		1	ROLLER
	025	545445	-		1	ROLLER
	030	550114	S		2	SHAFT
	035	550115	-		1	SHAFT
	070	550117	S		1	HEATING BLOCK
	080	550118	S		1	COUNTER JAW
	180	545456	-		1	KNIFE
	200	545454	-		1	PLATE
	250	544448	C		1	PIN
	320	545450	-		1	CHUTE
	330	537889	PU		1	FABRIC
	340	545453	-		1	DOLLY
	370	545452	-		1	GUIDE RAIL
Volume 284 - 180 ml, HOLE 20						
	010	553132	C		1	ROLLER
	015	553133	-		3	ROLLER
	020	553131	C		1	ROLLER
	025	553130	-		1	ROLLER
	030	553134	S		2	SHAFT
	035	553135	-		1	SHAFT
	070	545461	S		1	HEATING JAW
	080	543175	S		1	COUNTER JAW
	180	544457	-		1	KNIFE
	200	543173	-		1	PLATE
	250	484922	C		1	PIN
	320	548399	-		1	CHUTE
	330	550119	PU		1	FABRIC
	340	543174	-		1	DOLLY
	370	553149	-		1	GUIDE RAIL
Volume 125. 200 ml SLIM, HOLE 11						
	010	548400	C		1	ROLLER
	015	543180	-		3	ROLLER
	020	548396	C		1	ROLLER
	025	543178	-		1	ROLLER
	030	548394	S		2	SHAFT
	035	548395	-		1	SHAFT
	070	545461	S		1	HEATING JAW
	080	543175	S		1	COUNTER JAW
	180	544457	-		1	KNIFE
	200	543173	-		1	PLATE
	250	484922	C		1	PIN
	320	548399	-		1	CHUTE
	330	550119	PU		1	FABRIC
	340	543174	-		1	DOLLY
	370	548403	-		1	GUIDE RAIL
Volume 125. 200 ml SLIM, HOLE 10						
	010	545460	C		1	ROLLER
	015	543186	-		3	ROLLER
	020	543188	C		1	ROLLER
	025	543191	-		1	ROLLER
	030	550139	S		2	SHAFT
	035	550138	-		1	SHAFT
	070	545461	S		1	HEATING JAW
	080	543175	S		1	COUNTER JAW
	180	544457	-		1	KNIFE
	200	543173	-		1	PLATE
	250	484922	C		1	PIN
	320	544781	-		1	CHUTE
	330	550119	PU		1	FABRIC
	340	543174	-		1	DOLLY
	370	543192	-		1	GUIDE RAIL

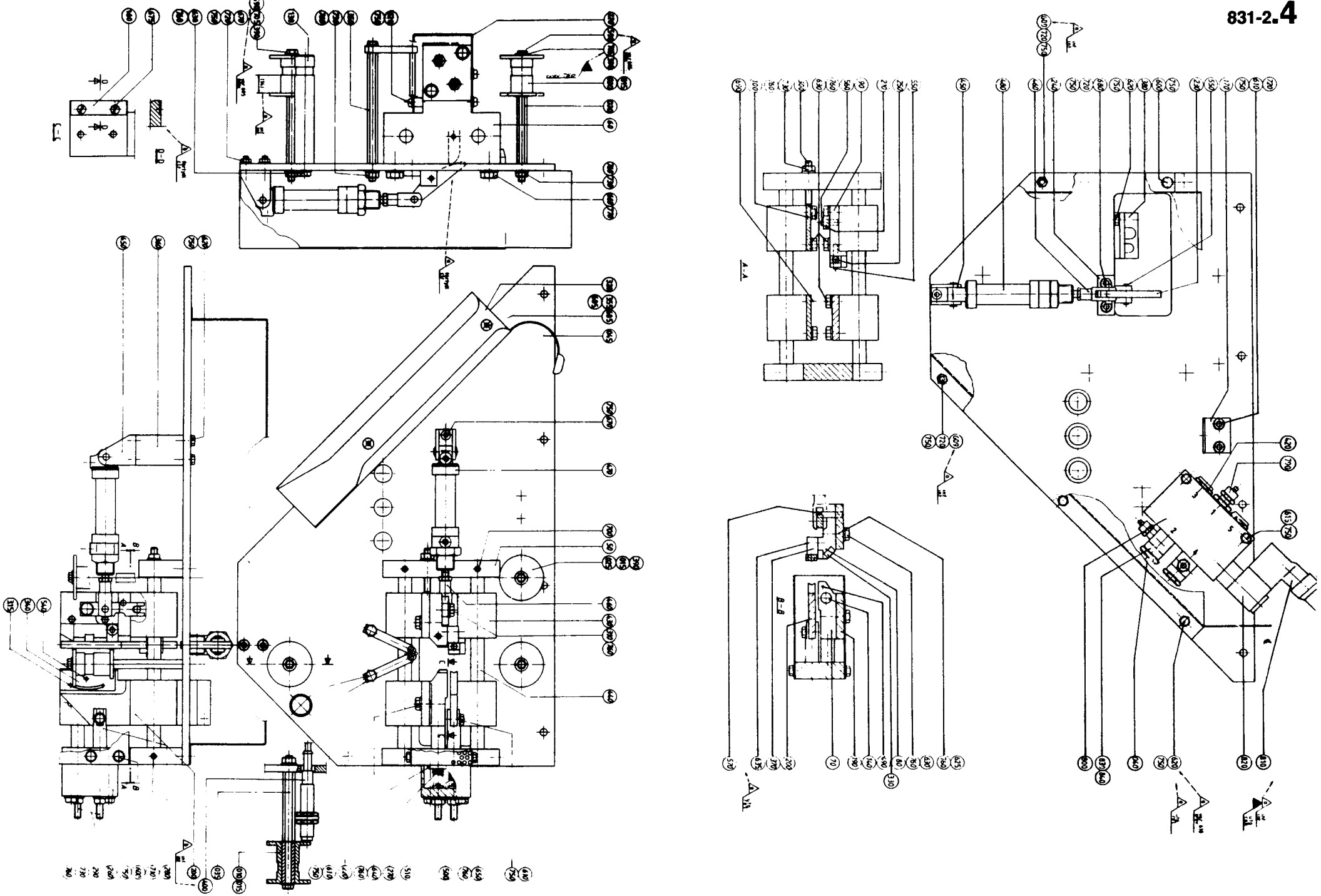

From	Pos	Part No	SP	UN	Qty	Description
Common Parts						
	040	484903	-		1	PROTECTIVE COVER
	045	550123	-		1	PLATE
	050	484905	-		1	GABLE
	060	484906	-		1	GABLE
	090	484909	S		1	HINGE
	100	484910	-		1	PLATE
	120	484912	-		1	TOUCH GUARD
	130	544451	-		1	PIN
	140	484914	PU		1	HEATING ELEMENT
	170	469720	-		1	BRACKET
	190	484916	-		1	PLATE
	210	550120	-		1	ARM
	220	484919	-		2	ARM
	230	484920	-		1	ARM
	240	484921	-		1	HOLDER
	260	484923	-		1	SPRING HOUSING
	270	484924	-		1	SLEEVE
	280	484925	C		1	SLEEVE
	290	484926	-		2	SCREW
	300	484927	-		1	SCREW
	310	484928	-		1	REAMED BOLT
	315	543185	PU		1	LOCKING WIRE
	350	484932	-		2	SPACER
	355	544782	-		2	NUT
	360	484933	-		1	SPACER
	380	484935	-		1	CLIP
	390	2033-0013	-		6	WASHER
	400	90044-0085	-		1	PROXIMITY SWITCH
	420	90257-0001	-		2	FILTER PLUG
	430	90189-0030	S		4	BALL BUSHING
	440	90189-0031	S		2	AXLE
	450	90239-0486	-		2	BRACKET
	460	90239-0489	-		2	BRACKET
	470	90239-0816	S		1	CYLINDER
	480	90239-0910	S		1	CYLINDER
		90239-0562	S		1	* PLASTIC PLUG
	490	90326-0060	P		1	THERMOCOUPLE
	500	90335-0005	S		1	SPRING
	510	90335-0100	S		1	COMPR. SPRING
	540	311103-0232	-		1	CYLINDRICACPR3M6X8RFR
	550	311103-0271	-		2	CYLINDRICACPR4M6X18RFR
	560	311103-0351	-		1	CYLINDRICACPR6M6X16RFR
	570	311103-0311	-		1	CYLINDRICACPR5M6X22RFR
	590	312105-0287	-		3	SCREW M6S4X8 A4 80
	600	312105-0323	-		3	SCREW M6S5X8 A4 80
	605	312105-0325	-		3	SCREW M6S5X10 A4 80
	609	312105-0328	-		4	SCREW M6S5X14 A4 80
	610	312105-0327	-		5	SCREW M6S5X12 A4 80
	615	312105-0337	-		2	SCREW M6S5X35RFR
	620	312105-0329	-		8	SCREW M6S5X16 A4 80
	625	312105-0366	-		1	SCREW M6S6X12RFR
	630	312105-0368	-		9	SCREW M6S6X16RFR
	635	312155-0331	-		1	SCREW MF6S5X20RFR
	640	312105-0370	-		2	SCREW M6S6X20RFR
	650	312105-0378	-		2	SCREW M6S6X40RFR
	660	312105-0451	-		4	SCREW M6S8X20RFR
	670	312115-0329	-		4	SCREW 5X16 A4 80
	675	312151-0287	-		2	SCREW MF6S4X8FZB
	680	312155-0329	-		2	SCREW MF6S5X16RFR
	685	312155-0325	-		2	SCREW MF6S5X10RFR
	690	312155-0366	-		1	SCREW MF6S6X12RFR
	700	312318-0323	-		2	GRUB SCREW SK6SS5X8RFR
	705	315105-0136	-		3	WASHER BRB4,3X8RFR
	710	312318-0327	-		2	GRUB SCREW SK6SS5X12RFR
	720	312605-0314	-		12	NUT M6M5RFR
	730	312605-0316	-		8	NUT M6M6RFR
	750	315105-0146	-		28	WASHER BRB5,3X10RFR
	760	315105-0153	-		25	WASHER BRB6,4X12RFR
	770	315105-0165	-		4	WASHER BRB8,4X16RFR
	790	342921-0114	-		1	PIPE CONNE6/4-1/4"
	800	90042-0167	-		1	SOLENOID VALVE
	810	90042-0392	-		1	CONTACT
	820	90042-0345	-		1	COIL
	830	342980-0114	-		2	BANJO CONNSINGEL 6/4-1/4
	840	342980-0304	-		2	BANJO CONN SINGEL 1/4

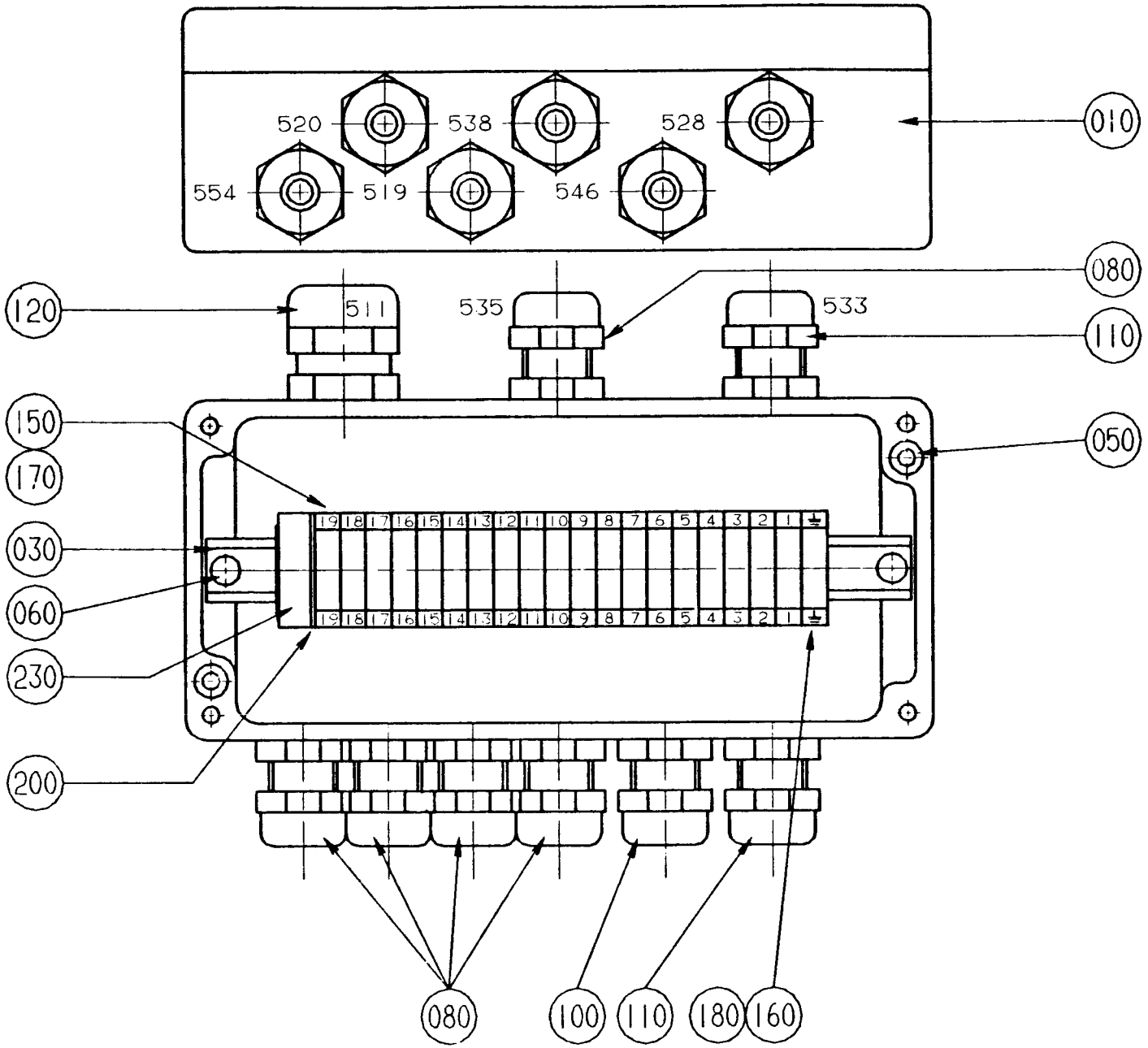
520
538
528
554
519
546
010
080
120
511
535
533
110
150
170
050
030
060
230
200
080
100
110
180
160

From	Pos	Part No	SP	UN	Qty	Description
	010	552014	-		1	APPLIANCE BOX
	030	552015	-		1	RAIL
	050	312125-0295	-		2	SLOTTED HEMCS4X20RFR
	060	312132-0284	-		2	SLOTTED HEMSCS4X5MSGFN
	080	352103-0100	-		5	CABLE GLANR.15,2/2-6
	100	352103-0101	-		1	CABLE GLANR.15,2/4-8
	110	352103-0106	-		2	CABLE GLANR.18,6/5-10
	120	352103-0110	-		1	CABLE GLANR.22,5/4-13
	150	90077-0079	-		19	TERMINAL BLOCK
	160	90135-0026	-		1	EARTH CLIP
	170	359011-0807	-		2	SET OF SIGNS 5-FW 1-50
	180	359011-0202	-		2	LABEL (GROUND)
	200	90077-0307	-		1	END PLATE
	230	90077-0308	-		1	END SUPPORT

From	Pos	Part No	SP	UN	Qty	Description

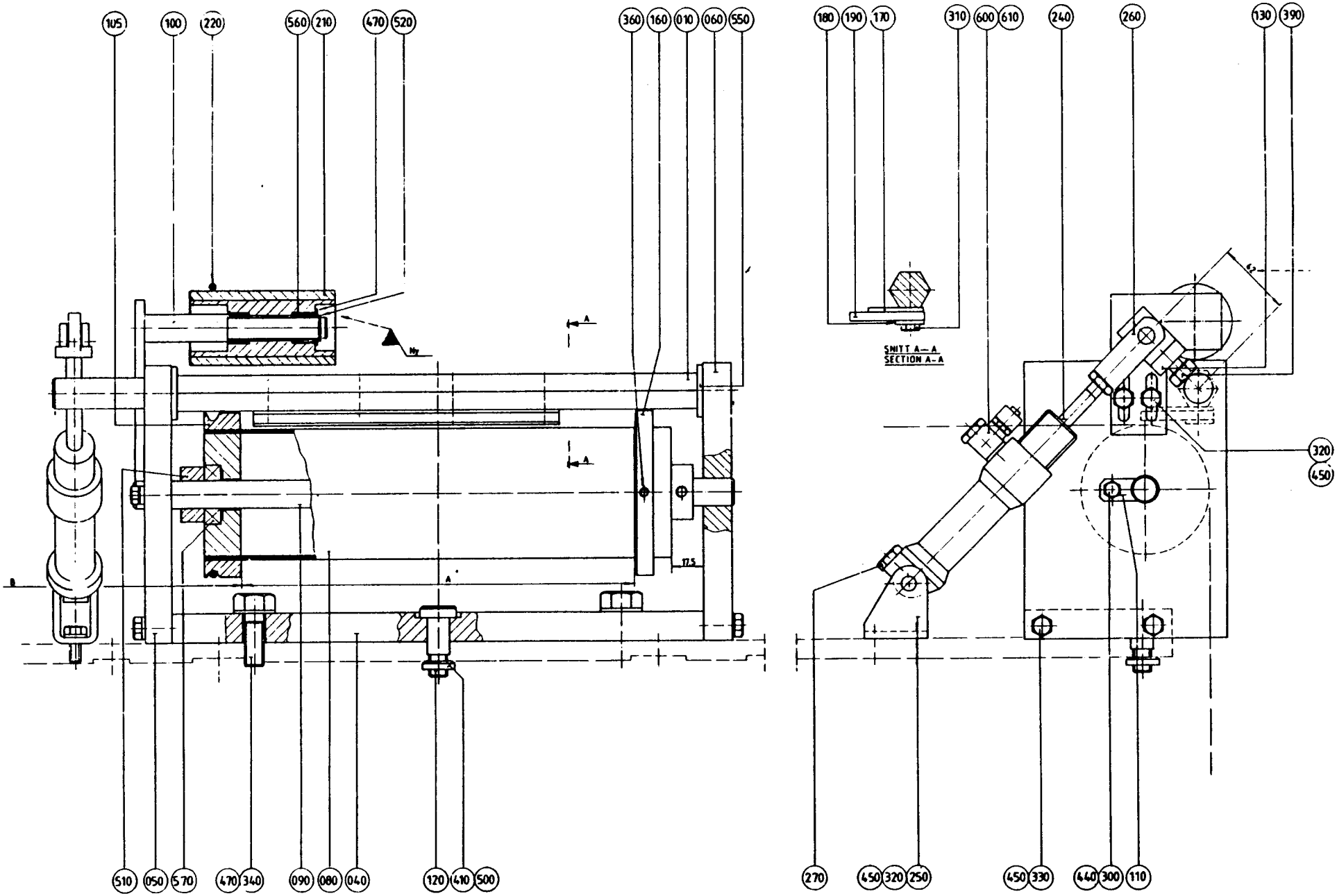
105
100
220
560
210
470
520
360
160
010
060
550
180
190
170
310
600
610
240
260
130
390
SNITT A—A
SECTION A-A
320
450
510
050
570
470
340
090
080
040
120
410
500
270
450
320
250
450
330
440
300
110

From	Pos	Part No	SP	UN	Qty	Description
	010	469222	-		1	SHAFT (200,236,284, 200mlSLIM)
	010	490767	-		1	SHAFT (125,180,189,250 ml)
	040	449288	-		1	PLATE
	050	449289	-		1	GABLE
	060	449290	-		1	GABLE
	080	456544	C		1	BENDING ROLLER
	090	469223	C		1	SHAFT
	100	469668	-		1	HOLDER
	105	469669	-		1	FLANGE
	110	18135	-		1	WASHER
	120	449284	-		1	REAMED BOLT
	130	449286	-		1	BRACKET
	160	456545	C		1	FLANGE
	170	469216-0001	-		1	PLATE
	180	469216-0002	-		1	PLATE
	190	469217	S		1	RUBBER STRIP
	210	469688	C		1	ROLLER
	220	522432	S		1	BELT
	240	90239-0821	S		1	CYLINDER
	250	90239-0487	-		1	BRACKET
	260	90239-0490	-		1	BRACKET
	270	90257-0003	-		1	FILTER PLUG
	300	312105-0327	-		2	SCREW M6S5X12 A4 80
	310	312105-0329	-		4	SCREW M6S5X16 A4 80
	320	312105-0368	-		4	SCREW M6S6X16RFR
	330	312105-0372	-		4	SCREW M6S6X25RFR
	340	312105-0536	-		2	SCREW M6S12X30RFR
	360	312318-0323	-		4	GRUB SCREW SK6SS5X8RFR
	390	312605-0318	-		1	NUT M6M8RFR
	410	312805-0100	-		1	NUT KM0
	440	315105-0146	-		2	WASHER BRB5,3X10RFR
	450	315105-0153	-		8	WASHER BRB6,4X12RFR
	470	315105-0178	-		5	WASHER BRB13X24RFR
	500	315410-0100	-		1	LOCK WASHESKFMB0
	510	315742-0111	-		2	RETAINING 15SMS199RFR
	520	315751-0109	S		1	LOCK RING SGA12 RFR
	550	321111-0241	S		2	BUSHING 16E7X16
	560	321116-0151	S		2	BUSHING 12E7/16X12
	570	321308-0202	S		2	BALL BEARISKF6002-2RS
	600	342980-0113	-		1	BANJO CONNSINGEL 6/4-1/8
	610	342980-0303	-		1	BANJO CONN SINGEL 1/8"

From	Pos	Part No	SP	UN	Qty	Description

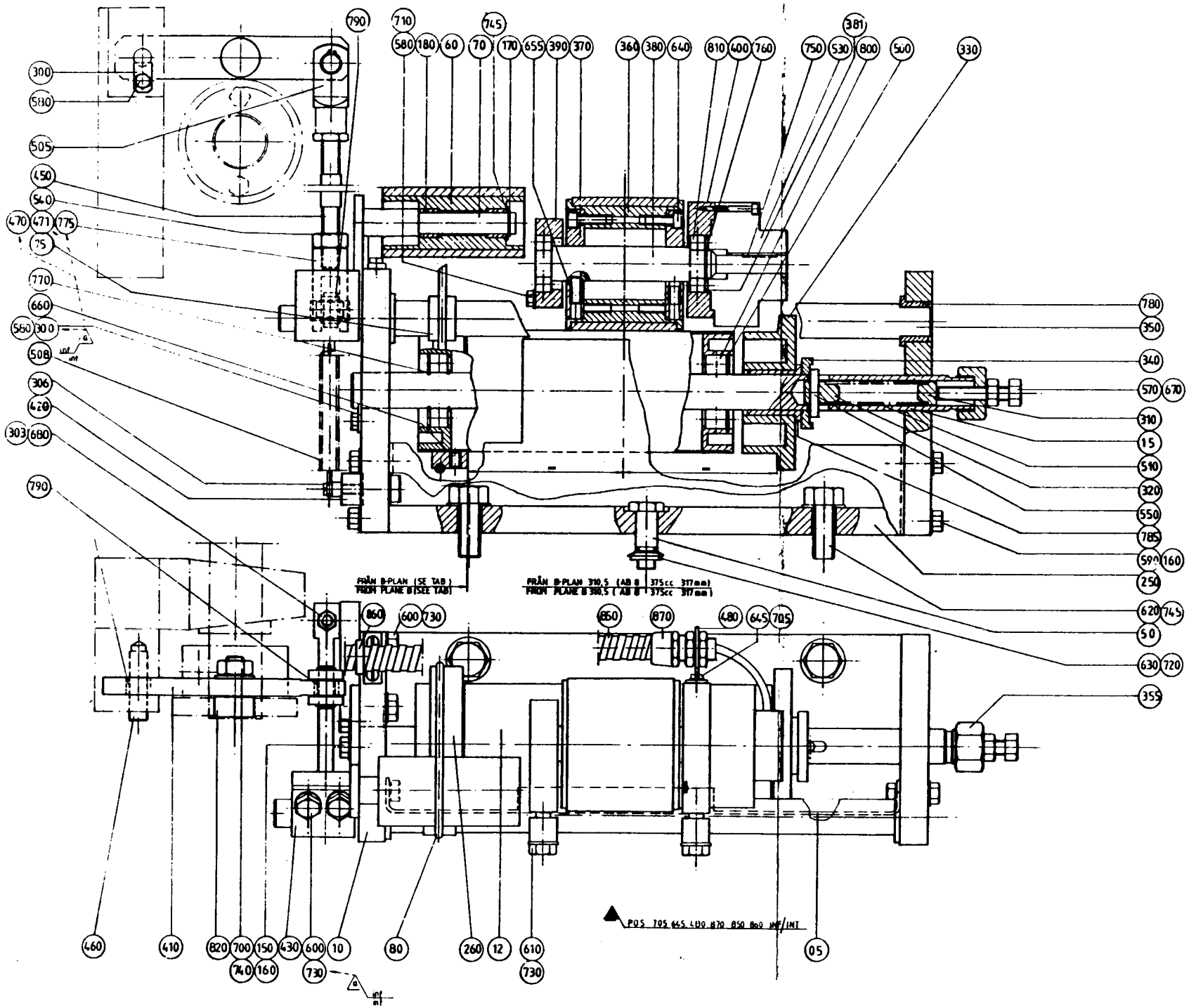
790
710
745
381
580
180
60
70
170
655
390
370
360
380
640
810
400
760
750
530
800
500
330
300
580
505
450
540
470
471
775
75
770
660
560
300
508
306
420
303
680
790
780
350
340
570
670
310
15
540
320
550
785
590
160
250
620
745
50
630
720
355
FRÅN B-PLAN (SE TAB.)
FROM PLANE B (SEE TAB.)
FRÅN B-PLAN 310,5 (AB B 375cc 317mm)
FROM PLANE B 310,5 (AB B 375cc 317mm)
860
600
730
850
870
480
645
705
460
410
820
700
150
430
600
10
80
260
12
610
730
740
160
05
POS 705 645 480 870 850 860 INT/INT

From	Pos	Part No	SP	UN	Qty	Description
	005	534890	-		1	GUIDE PLATE
	010	522412	-		2	GABLE
	012	522413-0001	C		1	ROLLER (125 ml)
	012	522413-0002	C		1	ROLLER (200 mlSLIM)
	012	522413-0003	C		1	ROLLER (284-180 ml)
	015	522415-0001	C		1	SHAFT (125 ml)
	015	522415-0002	C		1	SHAFT (200 mlSLIM)
	015	522415-0003	C		1	SHAFT (284-180 ml)
	050	449284	C		1	REAMED BOLT
	060	469688	S		1	ROLLER
	070	522430	C		1	HOLDER
	075	522431	S		1	PULLEY
	080	522432	P		1	BELT
	150	312105-0370	-		2	SCREW M6S6X20RFR
	160	315105-0153	-		10	WASHER BRB6,4X12RFR
	170	315751-0109	-		1	LOCK RING SGA12 RFR
	180	321116-0151	S		2	BUSHING 12E7/16X12
	250	449288	-		1	PLATE
	260	522414	C		1	FLANGE
	300	18135	-		2	WASHER
	303	476930	C		1	SPRING HOLDER
	306	269582-0001	C		1	SPRING HOLDER
	310	486974	C		1	GUIDE
	320	486978	C		1	GUIDE
	330	486979	-		1	FLANGE
	340	486980	C		1	RING
	350	522425	C		1	SHAFT
	355	522429	-		1	SLEEVE
	360	531641	S		1	BRAKE SLEEVE
	370	531642	-		2	HUB
	380	531643	C		1	SHAFT
	381	531644	C		1	SPACER
	390	531909	-		1	GABLE
	400	531910	-		1	GABLE
	410	531911	C		1	ARM
	420	531974-0001	-		1	BRACKET
	430	531975-0001	C		1	ARM
	450	531978	C		1	STUD BOLT
	460	531979	C		1	PIN
	470	539728	C		1	BOLT
	471	539729	C		1	BRACKET
	480	542270	-		1	BRACKET

From	Pos	Part No	SP	UN	Qty	Description
	500	90141-0020	-		2	LOCK RING
	505	90239-0357	C		1	BRACKET
	508	90335-0009	P		1	SPRING
	510	90335-0064	P		1	SPRING
	530	90432-0012	-		1	BRAKE
	540	312902-0320	-		1	NUT M6M10VRFR
	550	311103-0314	-		1	CYLINDRICACPR5M6X30RFR
	570	312109-0459	-		1	SCREW M6S8X40H A4 80
	580	312105-0325	-		4	SCREW M6S5X10 A4 80
	590	312105-0372	-		8	SCREW M6S6X25RFR
	600	312105-0453	-		4	SCREW M6S8X25RFR
	610	312105-0455	-		2	SCREW M6S8X30RFR
	620	312105-0536	-		2	SCREW M6S12X30RFR
	630	312805-0100	-		1	NUT KM0
	640	312115-0329	-		8	SCREW 5X16 A4 80
	645	312125-0291	-		4	SLOTTED HEMCS4X12RFR
	655	312311-0368	-		2	GRUB SCREW T6SS6X16FZB
	660	312318-0323	-		2	GRUB SCREW SK6SS5X8RFR
	670	312605-0318	-		1	NUT M6M8RFR
	680	312621-0318	-		2	NUT ML6M8FZB
	700	312635-0320	-		2	NUT 10X1 RFR
	705	315105-0136	-		4	WASHER BRB4,3X8RFR
	710	315105-0146	-		2	WASHER BRB5,3X10RFR
	720	315410-0100	-		1	LOCK WASHESKFMB0
	730	315105-0165	-		6	WASHER BRB8,4X16RFR
	740	315105-0173	-		1	WASHER BRB10,5X22RFR
	745	315105-0178	-		3	WASHER BRB13X24RFR
	750	315701-0138	S		1	FLAT WEDGE3X3X18
	760	315751-0112	S		1	LOCK RING SGA15 RFR
	770	315751-0116	S		2	LOCK RING SGA20 RFR
	775	315755-0801	-		2	CIRCLIP E 8RFR
	780	321111-0241	S		2	BUSHING 16E7X16
	785	321111-0307	S		2	BUSHING 20E7X30
	790	321116-0127	S		3	BUSHING 10E7/14X10
	800	321308-0104	S		2	BALL BEARISKF6004RS
	810	321308-0202	S		2	BALL BEARISKF6002-2RS
	820	321582-0149	S		1	CAM ROLLERKR22PP
	850	352135-0102	-	MM	800	HOSE .010
	860	352135-0200	-		1	CLIP 10
	870	352136-0107	-		2	GLAND

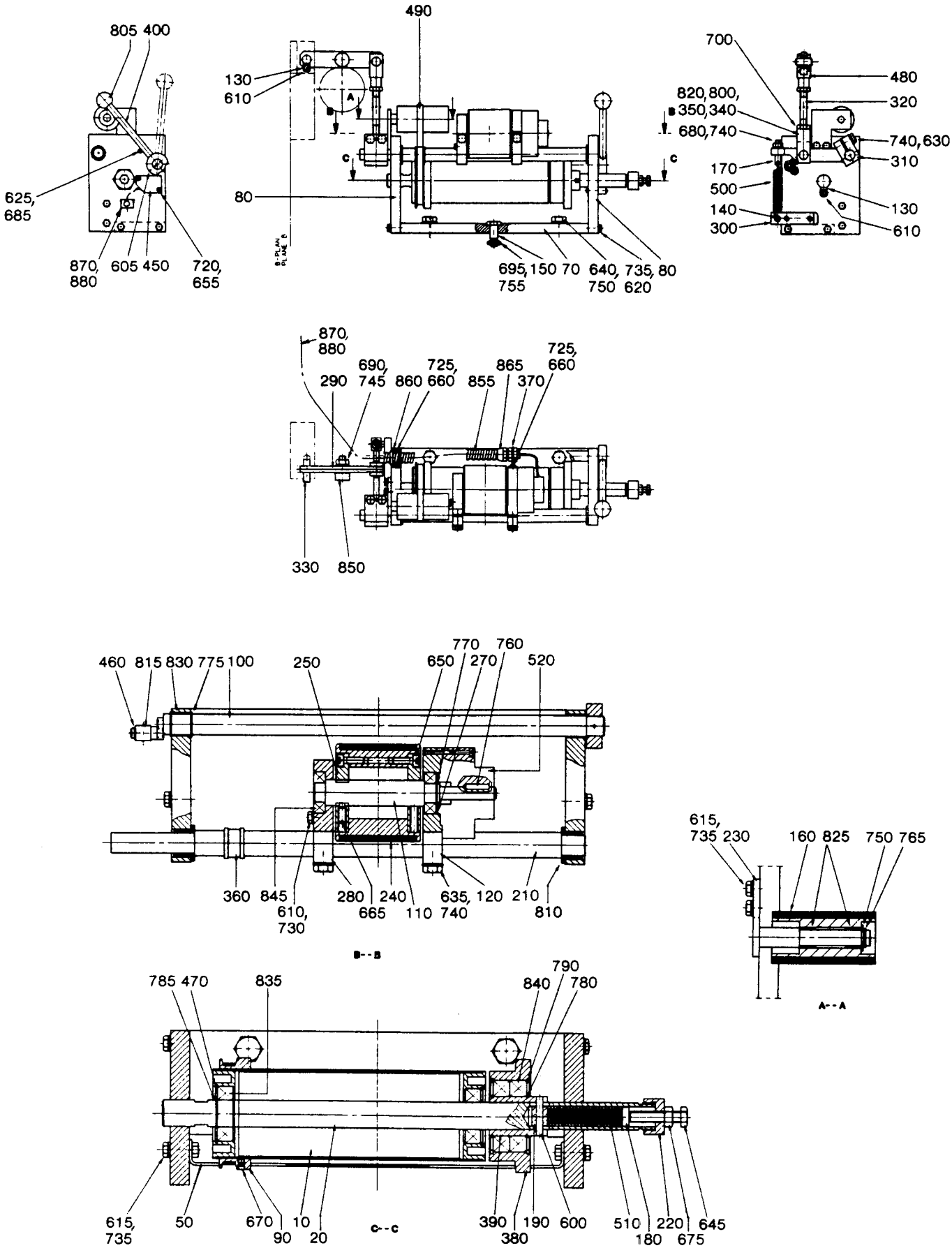
805 400
625, 685
870, 880
605 450
720, 655
490
130
610
80
B-PLAN PLANE B
695, 755
150 70
640, 750
735, 620
80
700
480
320
820, 800, 350, 340
680, 740
740, 630
310
170
500
140
300
130
610
870, 880
290
690, 745
860
725, 660
855
865
370
725, 660
330
850
460 815 830 775 100
250
650
770 270
760
520
360 845
610, 730
280 665
240
110
635, 740
120
210
810
B--B
615, 735 230
160 825
750 765
A--A
785 470
835
840
790
780
615, 735
50
670 90
10 20
C--C
390 380
190
600
510 180
220 675
645

Last Alteration: AM 15283 90-10-31

Corresponding C-lists: 554360-010V
Assembly Drawing: 554360-1/2

Issue Date: 910327

From	Pos	Part No	SP	UN	Qty	Description
	010	522413-0001	C		1	ROLLER (125 ml)
	010	522413-0002	C		1	ROLLER (200 mlSLIM)
	010	522413-0003	C		1	ROLLER (284-180 ml)
	020	522415-0001	C		1	SHAFT (125 ml)
	020	522415-0002	C		1	SHAFT (200 mlSLIM)
	020	522415-0003	C		1	SHAFT (284-180 ml)
	230	522430	C		1	HOLDER (125, 200 mlSLIM)
	230	469668	C		1	HOLDER (284-180 ml)
	050	534890	-		1	GUIDE PLATE
	070	449288	-		1	PLATE
	080	554375	-		2	GABLE
	090	544456	C		1	FLANGE
	100	554355	-		1	SHAFT
	110	554361	-		1	SHAFT
	120	555632	-		1	GABLE
	130	18135	-		2	WASHER
	140	269582-0001	C		1	SPRING HOLDER
	150	449284	C		1	REAMED BOLT
	160	469688	S		1	ROLLER
	170	476930	C		1	SPRING HOLDER
	180	486974	C		1	GUIDE
	190	486978	C		1	GUIDE
	210	522425	C		1	SHAFT
	220	522429	-		1	SLEEVE
	240	531641	S		1	BRAKE SLEEVE
	250	531642	-		2	HUB
	270	531644	C		1	SPACER
	280	531909	-		1	GABLE
	290	531911	C		1	ARM
	300	531974-0001	-		1	BRACKET
	310	531975-0001	C		1	ARM
	320	531978	C		1	STUD BOLT
	330	531979	C		1	PIN
	340	539728	C		1	BOLT
	350	539729	C		1	BRACKET
	360	540708	S		1	PULLEY
	370	542270	-		1	BRACKET
	380	548385	-		1	FLANGE
	390	548386	C		1	BUSHING
	400	556547	-		1	LEVER
	450	90044-0104	PU		1	PROXIMITY SWITCH
	460	90141-0015	-		1	LOCK RING
	470	90141-0020	-		2	LOCK RING
	480	90239-0357	C		1	BRACKET
	490	90252-0034	P		1	DRIVE BELT
	500	90335-0009	P		1	SPRING
	510	90335-0064	P		1	SPRING
	520	90432-0012	C		1	BRAKE
	600	311103-0314	-		1	CYLINDRICACPR5M6X30RFR
	605	311112-0262	-		1	HOLLOW PINRP 4X32 RFR
	610	312105-0323	-		4	SCREW M6S5X8 A4 80
	615	312105-0370	-		2	SCREW M6S6X20RFR
	620	312105-0372	-		8	SCREW M6S6X25RFR
	625	312105-0378	-		1	SCREW M6S6X40RFR
	630	312105-0453	-		4	SCREW M6S8X25RFR
	635	312105-0455	-		2	SCREW M6S8X30RFR
	640	312105-0536	-		2	SCREW M6S12X30RFR
	645	312109-0459	-		1	SCREW M6S8X40H A4 80
	650	312115-0329	-		8	SCREW 5X16 A4 80
	655	312125-0232	-		2	SLOTTED HEMCS3X25RFR
	660	312125-0291	-		4	SLOTTED HEMCS4X12RFR
	665	312311-0368	-		2	GRUB SCREW T6SS6X16FZB
	670	312318-0321	-		2	GRUB SCREW SK6SS5X6RFR
	675	312605-0318	-		1	NUT M6M8RFR
	680	312621-0318	-		2	NUT ML6M8FZB
	685	312625-0316	-		1	NUT M 6
	690	312635-0320	-		1	NUT 10X1 RFR
	695	312805-0100	-		1	NUT KM0
	700	312902-0320	-		1	NUT M6M10VRFR
	720	315105-0124	-		2	WASHER BRB3,2X6RFR
	725	315105-0136	-		4	WASHER BRB4,3X8RFR
	730	315105-0146	-		2	WASHER BRB5,3X10RFR
	735	315105-0153	-		10	WASHER BRB6,4X12RFR
	740	315105-0165	-		6	WASHER BRB8,4X16RFR
	745	315105-0173	-		1	WASHER BRB10,5X22RFR
	750	315105-0178	-		3	WASHER BRB13X24RFR
	755	315410-0100	-		1	LOCK WASHESKFMB0
	760	315701-0138	-		1	FLAT WEDGE3X3X18
	765	315751-0109	-		1	LOCK RING SGA12 RFR
	770	315751-0112	-		1	LOCK RING SGA15 RFR
	775	315751-0113	-		2	LOCK RING SGA16 RFR
	780	315751-0122	-		2	LOCK RING SGA30 RFR
	785	315751-0116	-		2	LOCK RING SGA20 RFR
	790	315753-0133	-		2	LOCK RING GH 55 RFR
	800	315755-0801	-		2	CIRCLIP E 8RFR
	805	318800-0103	-		1	KNOB LA D.25-M6

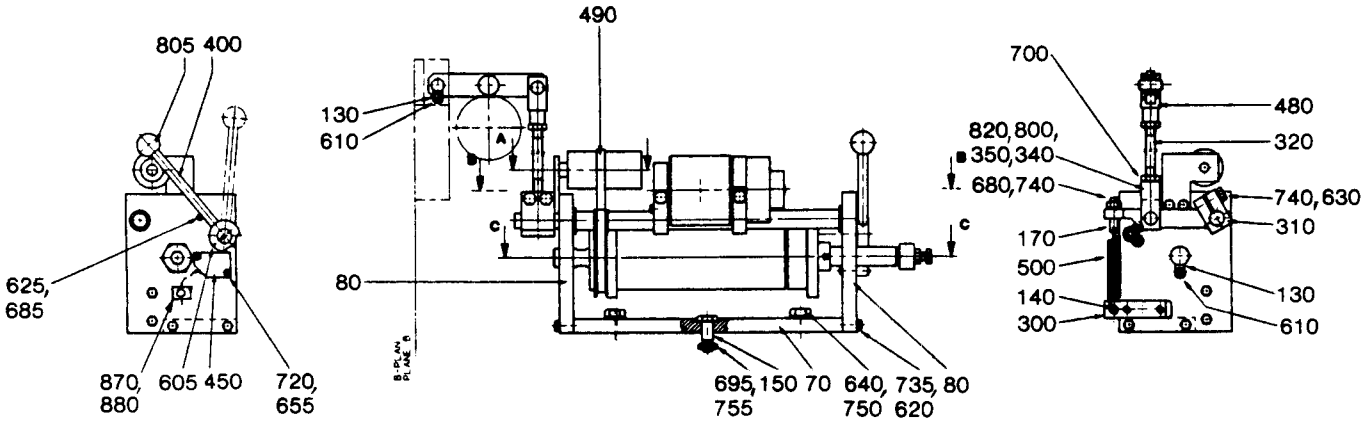
805 400
625, 685
870, 880
605 450
720, 655
490
130
610
80
695, 755
150 70
640, 750
735, 620
700
480
820, 800,
350, 340
320
680, 740
740, 630
310
170
500
140
300
130
610

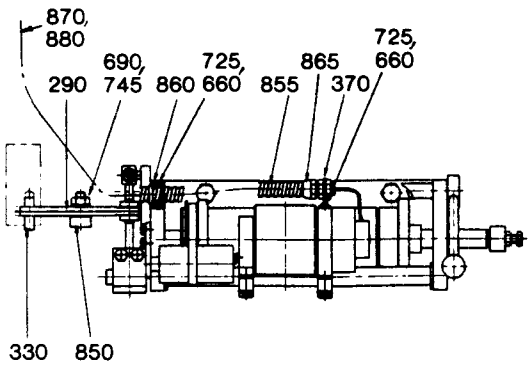
870, 880
690, 290 745
725, 860 660
855
865
370
725, 660
330
850

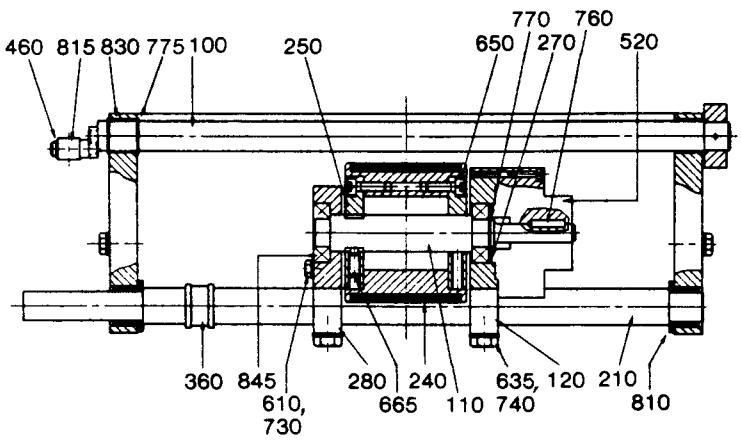
460 815 830 775 100
250
770 760
650 270
520
360
845
610, 730
280
665
240
110
635, 740
120
210
810

B--B

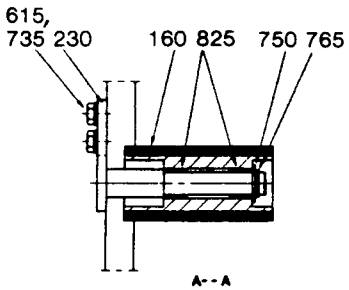
615, 735 230
160 825
750 765

A--A

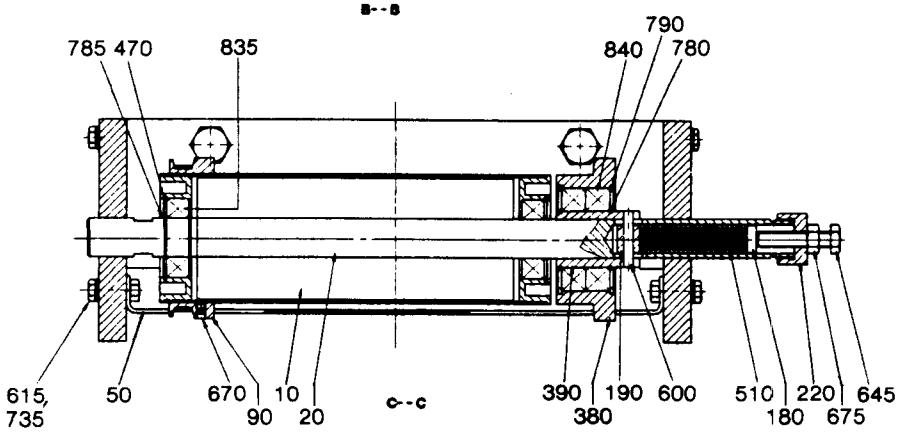
785 470
835
790
840 780
615, 735
50
670
90
10
20
390
380
190
600
510
180
220
675
645

C--C

From	Pos	Part No	SP	UN	Qty	Description
	810	321111-0241	-		2	BUSHING 16E7X16
	815	321116-0097	-		1	BUSHING 8E7/12X12
	820	321116-0127	-		3	BUSHING 10E7/14X10
	825	321116-0151	-		2	BUSHING 12E7/16X12
	830	321120-0125	-		2	BUSHING 16/18X15
	835	321308-0104	-		2	BALL BEARISKF6004RS
	840	321308-0106	-		2	BALL BEARISKF6006RS
	845	321308-0202	-		2	BALL BEARISKF6002-2RS
	850	321582-0149	-		1	CAM ROLLERKR22PP
	855	352135-0102	-	MM	800	HOSE .010
	860	352135-0200	-		1	CLIP 10
	865	352136-0107	-		1	GLAND
	870	312125-0289	-		2	SLOTTED HEMCS4X10RFR
	880	352113-0202	-		2	ARMATURE STA-TM2-S8

From	Pos	Part No	SP	UN	Qty	Description

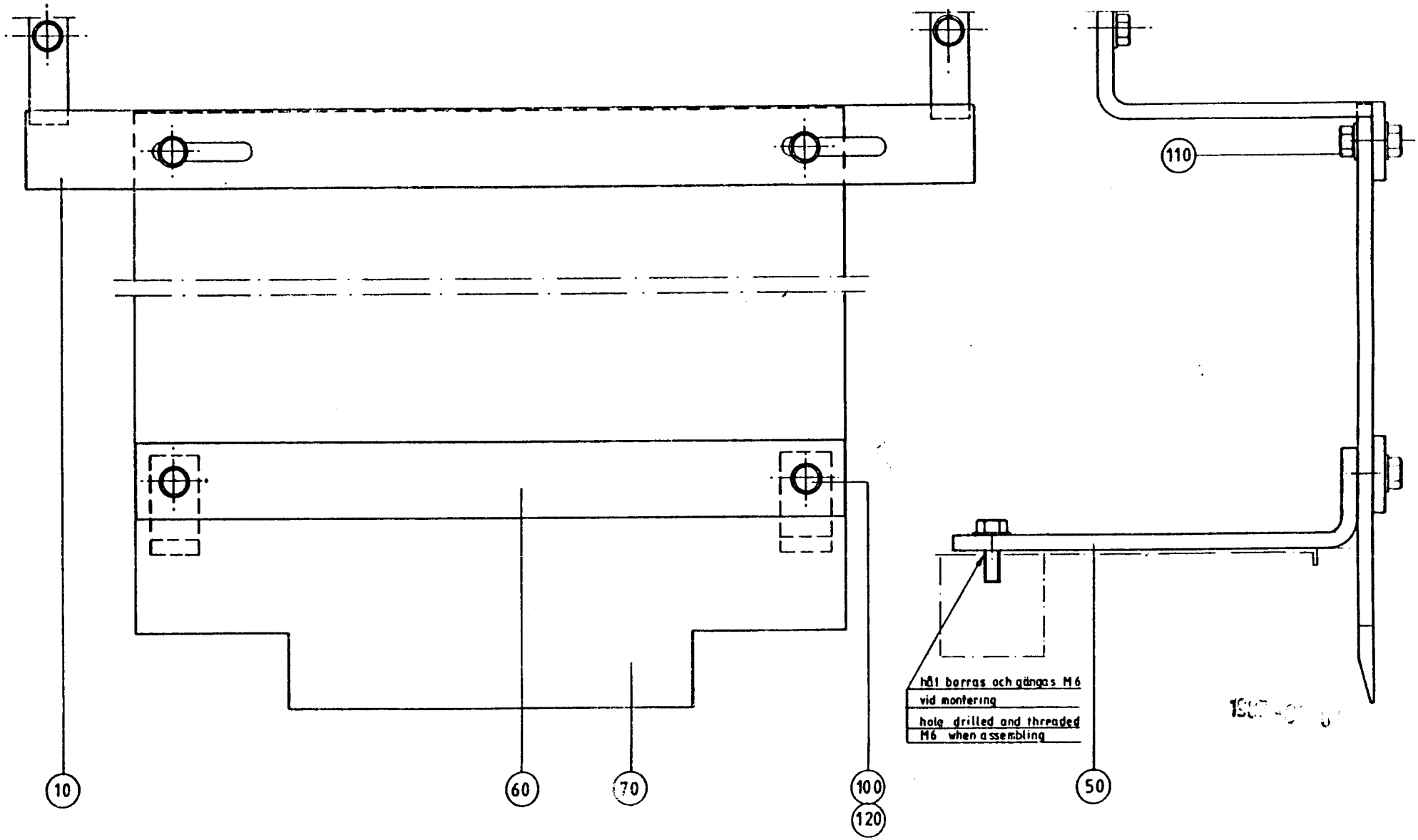
10
60
70
100
120
110
50
hål borras och gängas M6
vid montering
hole drilled and threaded
M6 when assembling

From	Pos	Part No	SP	UN	Qty	Description
	010	534382	-		1	BRACKET
	050	534383	-		2	BRACKET
	060	534384	-		1	BRACKET
	070	534385	-		1	GUARD
	100	312105-0370	-		10	SCREW M6S6X20RFR
	110	312605-0316	-		2	NUT M6M6RFR
	120	315105-0153	-		10	WASHER BRB6,4X12RFR

From	Pos	Part No	SP	UN	Qty	Description

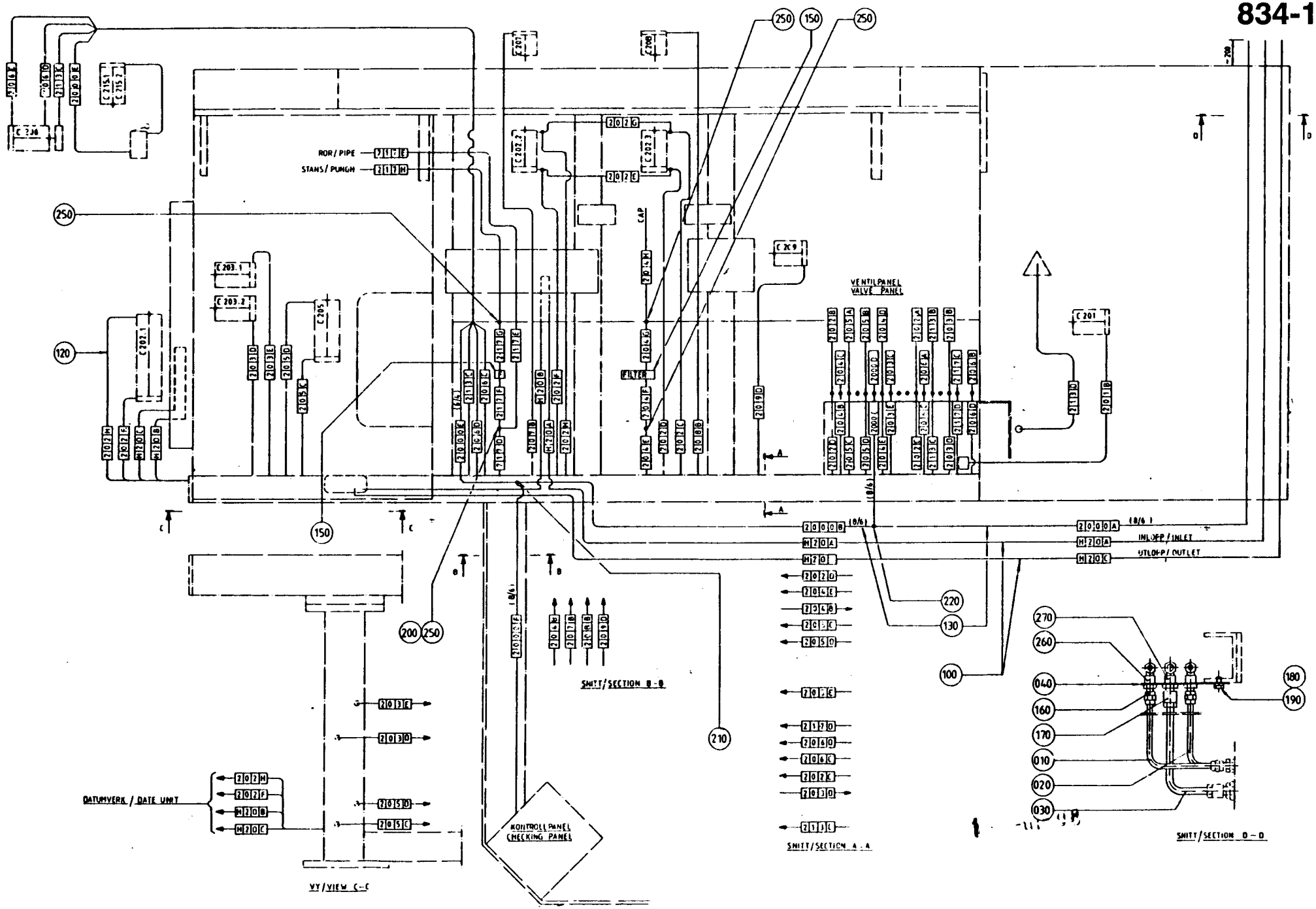
ROR / PIPE
STANS / PUNCH
CAP
FILTER
VENTILPANEL
VALVE PANEL
INLOPP / INLET
UTLOPP / OUTLET
DATUMVERK / DATE UNIT
KONTROLLPANEL
CHECKING PANEL
SNITT / SECTION B - B
SNITT / SECTION A - A
SNITT / SECTION D - D
VY / VIEW C - C

From	Pos	Part No	SP	UN	Qty	Description
070V	010	535201	-		1	PIPE
070V	020	535202	-		1	PIPE
070V	030	535203	-		1	PIPE
070V	040	535204	-		1	BRACKET
	100	90166-0119	-	M	6	HOSE
	120	90166-0132	-	M	50	HOSE
	130	90166-0133	-	M	3	HOSE
	150	90277-0035	S		2	AIR-PRESSURE FILTER
070V	160	90224-0307	-		2	CONNECTION
070V	170	90224-0324	-		1	CONNECTION
070V	180	312105-0364	-		2	SCREW M6S6X10RFR
070V	190	315105-0153	-		2	WASHER BRB6,4X12RFR
	200	342946-0112	-		1	T-PIECE 6/4
	210	342946-0121	-		1	T-PIECE 8/6-6/4
	220	342946-0122	-		1	T-PIECE 8/6
	250	342960-0121	-		4	GROMMET 8/6-6/4
070V	260	342933-0113	-		2	ELBOW COUP6/4-1/8
070V	270	342933-0121	-		1	ELBOW COUP8/6-1/8

From	Pos	Part No	SP	UN	Qty	Description

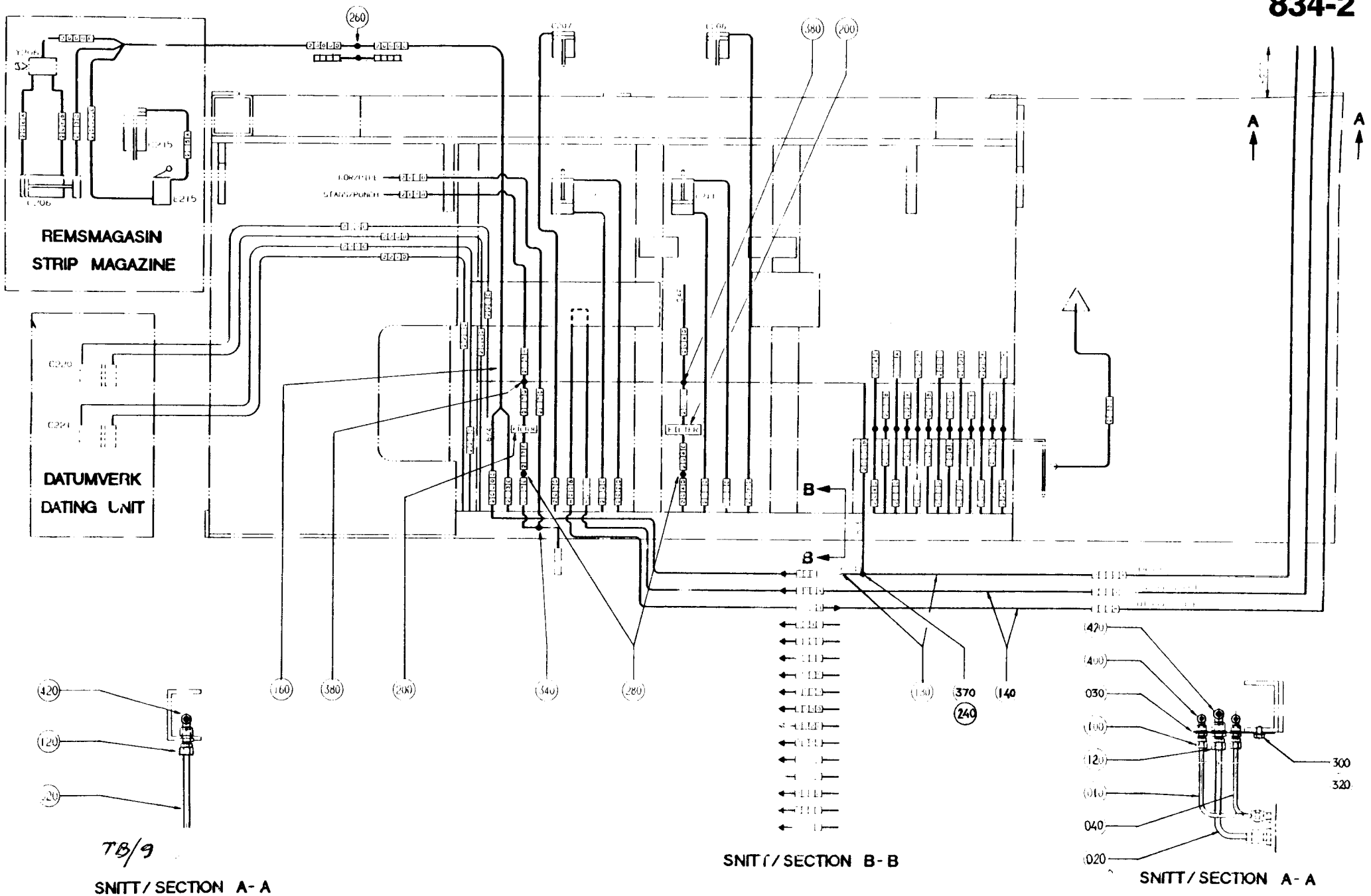

SNITT / SECTION A - A

SNITT / SECTION B - B

SNITT / SECTION A - A

From	Pos	Part No	SP	UN	Qty	Description
TBA/9						
	010	548033	-		1	PIPE
	020	548034	-		1	PIPE
	030	548035	-		1	BRACKET
	040	548036	-		1	PIPE
	100	90030-0184	-		2	PIPE CONNECTION
	140	90166-0119	-	M	6	HOSE
	240	342923-0114	-		1	PIPE CONNE6/4-1/4
	300	312105-0364	-		2	SCREW M6S6X10RFR
	320	315105-0153	-		2	WASHER BRB6,4X12RFR
	370	342950-0122	-		1	L-COUP8/6-1/4
	400	342933-0113	-		2	ELBOW COUP6/4-1/8
TB/9						
	020	554345	-		1	PIPE
	360	342946-0121	-		1	T-PIECE 8/6-6/4
Common Parts						
	120	90030-0185	-		1	PIPE CONNECTION
	160	90166-0132	-	M	50	HOSE
	180	90166-0133	-	M	3	HOSE
	200	90277-0035	S		2	AIR-PRESSURE FILTER
	260	342926-0112	-		2	PIPE CONNE6/4
	280	342926-0121	-		2	PIPE CONNE8/6-6/4
	340	342946-0112	-		1	T-PIECE 6/4
	380	342960-0121	-		2	GROMMET 8/6-6/4
	420	342933-0122	-		1	ELBOW COUP8/6-1/4

From	Pos	Part No	SP	UN	Qty	Description

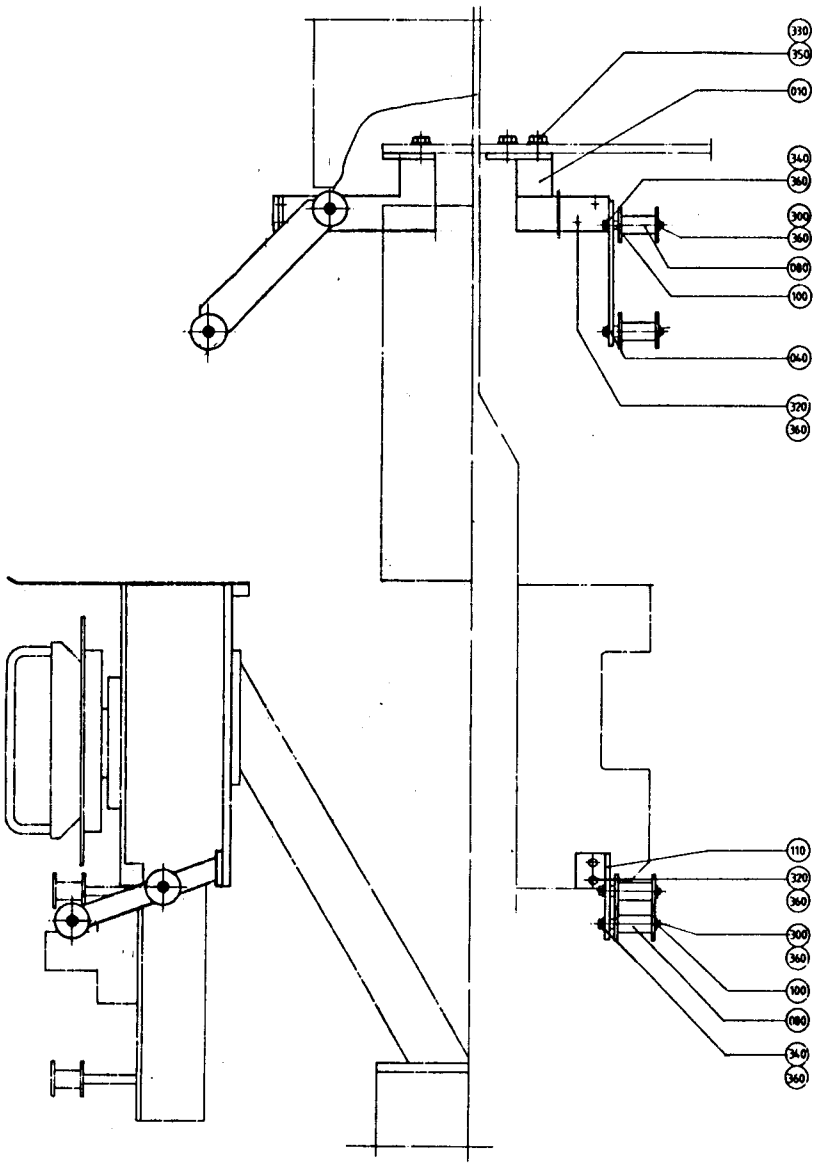
330
350
010
340
360
300
360
080
100
040
320
360
110
320
360
300
360
100
080
340
360

B9

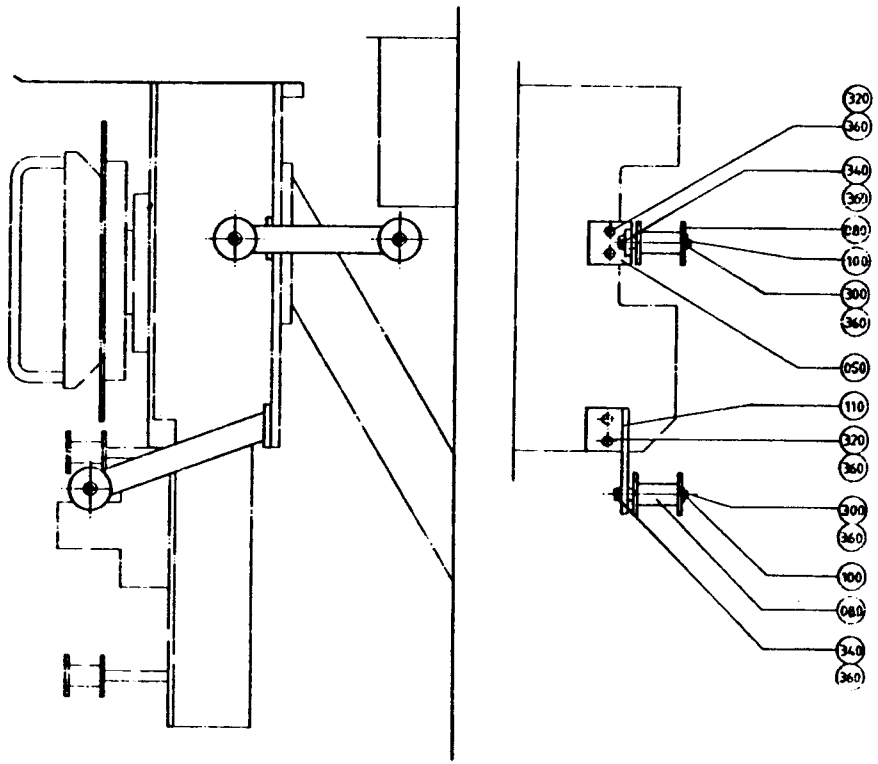
320
360
340
360
280
100
300
360
050
110
320
360
300
360
100
080
340
360

From	Pos	Part No	SP	UN	Qty	Description
TB/9						
	050	490613	-		1	BRACKET
	080	469719	C		3	ROLLER
	080	469735	C		3	ROLLER (200 mISLIM)
	100	490615	C		3	SHAFT
	100	490616	C		3	SHAFT (200 mISLIM)
	300	311411-0137	-		3	SPLIT PIN SP1,6X10RFR
	340	312605-0316	-		3	NUT M6M6RFR
	360	315105-0153	-		10	WASHER BRB6,4X12RFR
TBA/9						
	010	490611	-		1	BRACKET
070V-	010	499527	-		1	BRACKET
	040	490614	-		1	HOLDER
070V-	040	539213	-		1	HOLDER
	080	469719	C		4	ROLLER
	080	469735	C		4	ROLLER (125, 200 mISLIM)
	100	490615	C		4	SHAFT
	100	490616	C		4	SHAFT (125, 200 mISLIM)
	300	311411-0137	-		4	SPLIT PIN SP1,6X10RFR
	330	312105-0491	-		2	SCREW M6S10X20RFR
	340	312605-0316	-		4	NUT M6M6RFR
	350	315105-0173	-		2	WASHER BRB10,5X22RFR
	360	315105-0153	-		11	WASHER BRB6,4X12RFR
Common Parts						
	110	490612	-		1	BRACKET
	320	312105-0370	-		4	SCREW M6S6X20RFR

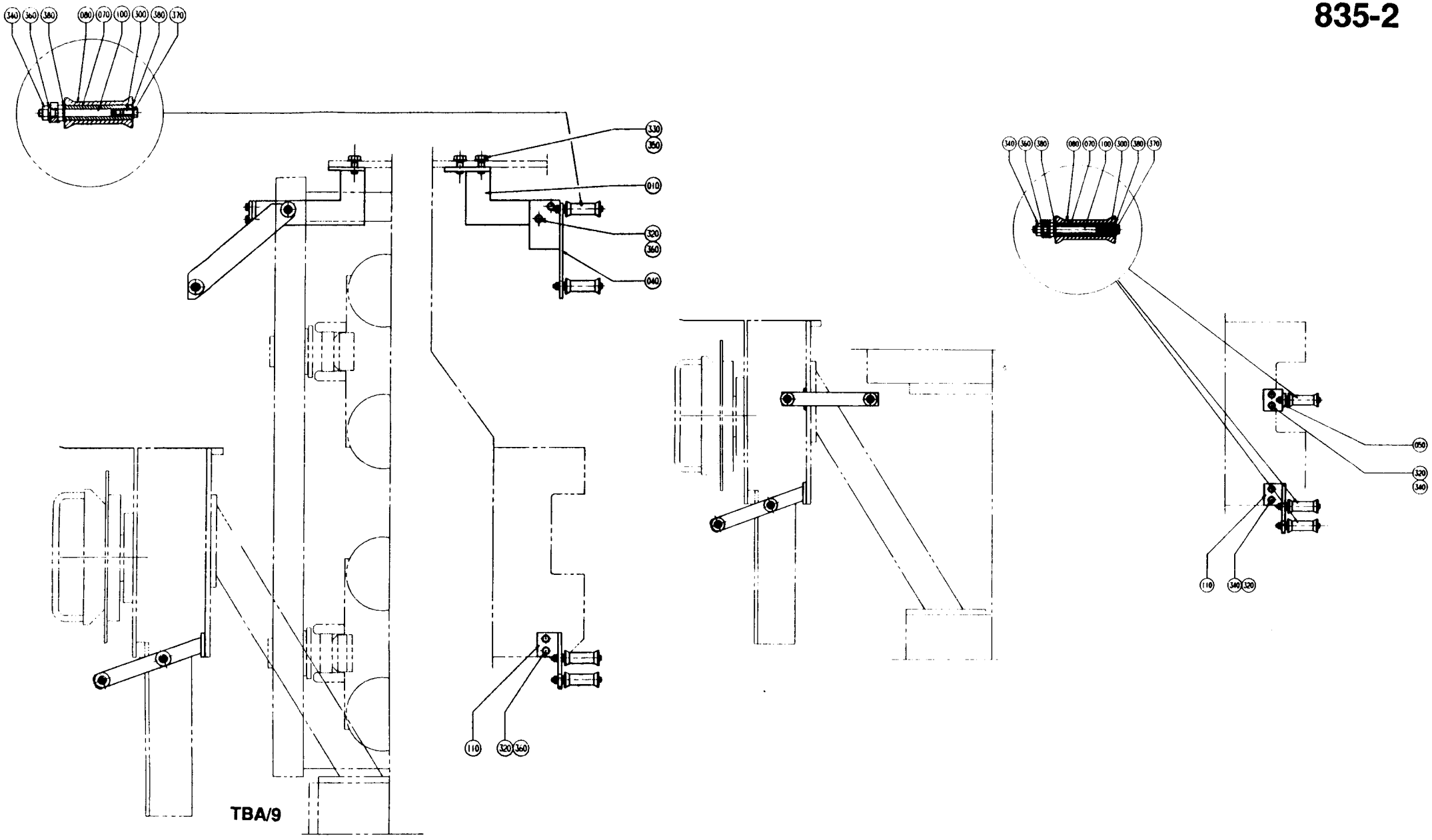
340
360
380
080
070
100
300
380
370
330
350
010
320
360
040
110
320
360
TBA/9
340
360
380
080
070
100
300
380
370
050
320
340
110
340
320

From	Pos	Part No	SP	UN	Qty	Description
TB/9						
	050	490613	-		1	BRACKET
	070	547746	C		3	ROLLER, HOLE 21
	070	545465	C		3	ROLLER **(200 mISLIM)**, HOLE 11
	080	547745	C		3	ROLLER, HOLE 21
	080	545464	C		3	ROLLER **(200 mISLIM)**, HOLE 11
	100	547749	C		3	SHAFT, HOLE 21
	100	545468	C		3	SHAFT **(200 mISLIM)**, HOLE 11
	300	312105-0287	-		3	SCREW M6S4X8 A4 80
	340	312605-0316	-		3	NUT M6M6RFR
	370	315105-0136	-		3	WASHER BRB4,3X8RFR
	380	2033-0013	-		6	WASHER
TBA/9						
	010	499527	-		1	BRACKET
	040	539213	-		1	HOLDER
	070	547746	C		4	ROLLER, HOLE 21
	070	545465	C		4	ROLLER, HOLE 11, 20
	070	547741	C		4	ROLLER, HOLE 10
	080	547745	C		4	ROLLER, HOLE 21
	080	545464	C		4	ROLLER, HOLE 11, 20
	080	547740	C		4	ROLLER, HOLE 10
	100	547749	C		4	SHAFT, HOLE 21
	100	545468	C		4	SHAFT, HOLE 11, 20
	100	547744	C		4	SHAFT, HOLE 10
	300	312105-0287	-		4	SCREW M6S4X8 A4 80
	330	312105-0491	-		2	SCREW M6S10X20RFR
	340	312605-0316	-		4	NUT M6M6RFR
	350	315105-0173	-		2	WASHER BRB10,5X22RFR
	370	315105-0136	-		4	WASHER BRB4,3X8RFR
	380	2033-0013	-		8	WASHER
Common Parts						
	110	490612	-		1	BRACKET
	320	312105-0370	-		4	SCREW M6S6X20RFR
	360	315105-0153	-		8	WASHER BRB6,4X12RFR

From	Pos	Part No	SP	UN	Qty	Description

From	Pos	Part No	SP	UN	Qty	Description
	F005	C- 456608-0101	-		1	ELEMENT
Volume 250 ml						
	010	469683	-		1	INDUCTOR
		457841-0002	P		1	* FABRIC
	015	457827	-		1	DIE
	020	499633	-		1	HEATING RAIL
	030	469301-0002	-		1	DOLLY
	040	469206	-		1	COUNTER RUBBER
	050	457826	-		1	PUNCH
Volume 236 ml (Not complete)						
	015	457827	-		1	DIE
	020	499633	-		1	HEATING RAIL
	030	469301-0002	-		1	DOLLY
	040	469206	-		1	COUNTER RUBBER
	050	457826	-		1	PUNCH
Volume 200 ml						
	010	535528	-		1	INDUCTOR
		457841-0001	P		1	* FABRIC
	015	457827	-		1	DIE
	020	499633	-		1	HEATING RAIL
	030	469301-0001	-		1	DOLLY
	040	469206	-		1	COUNTER RUBBER
	050	457826	-		1	PUNCH
Volume 180 ml						
	010	535532	-		1	INDUCTOR
		457841-0001	P		1	* FABRIC
	015	457827	-		1	DIE
	020	499633	-		1	HEATING RAIL
	030	469301-0001	-		1	DOLLY
	040	469206	-		1	COUNTER RUBBER
	050	457826	-		1	PUNCH
Volume 125 ml						
	010	456665	-		1	INDUCTOR
		457841-0001	P		1	* FABRIC
	015	457825	-		1	DIE
	020	499632	-		1	HEATING RAIL
	030	469301-0001	-		1	DOLLY
	040	294868	-		1	COUNTER RUBBER
	050	457824	-		1	PUNCH

From	Pos	Part No	SP	UN	Qty	Description
Volume 200 ml SLIM						
	010	456663	-		1	INDUCTOR
		457841-0002	P		1	* FABRIC
	015	457825	-		1	DIE
	020	499632	-		1	HEATING RAIL
	030	469301-0002	-		1	DOLLY
	040	294868	-		1	COUNTER RUBBER
	050	457824	-		1	PUNCH
Common Parts						
	110	484914	-		1	HEATING ELEMENT
	130	15810	-		1	BRAKE SHOE
	140	120902	-		1	SUCTION CUP
	150	283590	-		1	KNIFE
	160	484929	-		1	FABRIC
	200	90038-0030	-		1	RECTIFIER
	210	90044-0085	-		1	SENSOR
	220	90044-0104	-		1	PROXIMITY SWITCH
	225	90206-0083	-		1	HEATING CARTRIDGE
	230	90296-0051	-		1	PASTE
	240	90326-0060	-		1	THERMOCOUPLE

From	Pos	Part No	SP	UN	Qty	Description
	010	550125	-		1	BRACKET
	020	550126	C		1	SHAFT
	030	550127	-		1	LEVER
	100	90044-0104	-		1	PROXIMITY SWITCH
	105	311112-0258	-		1	HOLLOW PINRP 4X24 RFR
	110	311112-0262	-		1	HOLLOW PINRP 4X32 RFR
	120	312105-0323	-		1	SCREW M6S5X8 A4 80
	130	312105-0372	-		2	SCREW M6S6X25RFR
	140	312125-0230	-		2	SLOTTED HEMCS3X20RFR
	150	312605-0310	-		2	NUT M6M3RFR
	160	315105-0124	-		4	WASHER BRB3,2X6RFR
	170	315105-0153	-		2	WASHER BRB6,4X12RFR
	180	318800-0103	-		1	KNOB LA D.25-M6
	190	321129-0117	-		1	WASHER 16/30X1,5

From	Pos	Part No	SP	UN	Qty	Description

From	Pos	Part No	SP	UN	Qty	Description
Volume 250 ml						
	010	543578	-		1	INDUCTOR, HOLE 21
	010	469683	-		1	INDUCTOR, HOLE 20
	012	552044	-		1	INDUCTOR, HOLE 21
	012	554376	-		1	INDUCTOR SMAL LS, HOLE 20
	015	533812	-		1	DIE, HOLE 21
	015	457827	-		1	DIE, HOLE 20
	020	538191	-		1	HEATING RAIL, HOLE 21
	020	499633	-		1	HEATING RAIL, HOLE 20
	030	539642-0002	-		1	DOLLY, HOLE 21
	030	469301-0002	-		1	DOLLY, HOLE 20
	035	554353	-		1	DOLLY, HOLE 21
	040	541126	-		1	COUNTER RUBBER, HOLE 21
	040	469206	-		1	COUNTER RUBBER, HOLE 20
	050	533811	-		1	PUNCH, HOLE 21
	050	457826	-		1	PUNCH, HOLE 20
	120	537889	-		1	FABRIC, HOLE 21
	130	550119	-		1	FABRIC, HOLE 20
	170	90144-0052	-		1	TAPE 33X14 MM, HOLE 21
	170	90144-0054	-		1	TAPE 27X14 MM, HOLE 20
Volume 236 ml						
	015	533812	-		1	DIE, HOLE 21
	015	457827	-		1	DIE, HOLE 20
	020	538191	-		1	HEATING RAIL, HOLE 21
	020	499633	-		1	HEATING RAIL, HOLE 20
	030	539642-0002	-		1	DOLLY, HOLE 21
	030	469301-0002	-		1	DOLLY, HOLE 20
	040	541126	-		1	COUNTER RUBBER, HOLE 21
	040	469206	-		1	COUNTER RUBBER, HOLE 20
	050	533811	-		1	PUNCH, HOLE 21
	050	457826	-		1	PUNCH, HOLE 20
	120	537889	-		1	FABRIC, HOLE 21
	120	550119	-		1	FABRIC, HOLE 20
	170	90144-0052	-		1	TAPE 33X14 MM, HOLE 21
	170	90144-0054	-		1	TAPE 27X14 MM, HOLE 20
Volume 200 ml						
	010	552020	-		1	INDUCTOR, HOLE 21
	010	535528	-		1	INDUCTOR, HOLE 20
	012	552023	-		1	INDUCTOR, HOLE 21
	012	554378	-		1	INDUCTOR SMAL LS, HOLE 20
	015	533812	-		1	DIE, HOLE 21
	015	457827	-		1	DIE, HOLE 20
	020	538191	-		1	HEATING RAIL, HOLE 21
	020	499633	-		1	HEATING RAIL, HOLE 20
	030	539642-0001	-		1	DOLLY, HOLE 21
	030	469301-0002	-		1	DOLLY, HOLE 20
	040	541126	-		1	COUNTER RUBBER, HOLE 21
	040	469206	-		1	COUNTER RUBBER, HOLE 20
	050	533811	-		1	PUNCH, HOLE 21
	050	457826	-		1	PUNCH, HOLE 20
	120	537889	-		1	FABRIC, HOLE 21
	130	550119	-		1	FABRIC, HOLE 20
	170	90144-0052	-		1	TAPE 33X14 MM, HOLE 21
	170	90144-0054	-		1	TAPE 27X14 MM, HOLE 20
Volume 180 ml						
	010	535532	-		1	INDUCTOR, HOLE 20
	015	533812	-		1	DIE, HOLE 21
	015	457827	-		1	DIE, HOLE 20
	020	538191	-		1	HEATING RAIL, HOLE 21
	020	499633	-		1	HEATING RAIL, HOLE 20
	030	539642-0001	-		1	DOLLY, HOLE 21
	030	469301-0001	-		1	DOLLY, HOLE 20
	040	541126	-		1	COUNTER RUBBER, HOLE 21
	040	469206	-		1	COUNTER RUBBER, HOLE 20
	050	533811	-		1	PUNCH, HOLE 21
	050	457826	-		1	PUNCH, HOLE 20
	120	537889	-		1	FABRIC, HOLE 21
	120	550119	-		1	FABRIC, HOLE 20
	170	90144-0052	-		1	TAPE 33X14 MM, HOLE 21
	170	90144-0054	-		1	TAPE 27X14 MM, HOLE 20
Volume 125 ml						
	010	552027	-		1	INDUCTOR, HOLE 11
	010	456665	-		1	INDUCTOR, HOLE 10
	012	549016	-		1	INDUCTOR, HOLE 11, 10
	015	536488	-		1	DIE, HOLE 11
	015	457825	-		1	DIE, HOLE 10
	020	543196	-		1	HEATING RAIL, HOLE 11
	020	499632	-		1	HEATING RAIL, HOLE 10
	030	469301-0001	-		1	DOLLY, HOLE 11, 10
	040	469206	-		1	COUNTER RUBBER, HOLE 11
	040	294868	-		1	COUNTER RUBBER, HOLE 10
	050	536489	-		1	PUNCH, HOLE 11
	050	457824	-		1	PUNCH, HOLE 10
	130	550119	-		1	FABRIC, HOLE 11, 10
	170	90144-0052	-		1	TAPE 33X14 MM, HOLE 11
	170	90144-0054	-		1	TAPE 27X14 MM, HOLE 10

From	Pos	Part No	SP	UN	Qty	Description
Volume 200 ml SLIM						
	010	536900	-		1	INDUCTOR, HOLE 11
	010	456663	-		1	INDUCTOR, HOLE 10
	012	544414	-		1	INDUCTOR, HOLE 11, 10
	015	536488	-		1	DIE, HOLE 11
	015	457825	-		1	DIE, HOLE 10
	020	543196	-		1	HEATING RAIL, HOLE 11
	020	499632	-		1	HEATING RAIL, HOLE 10
	030	469301-0002	-		1	DOLLY, HOLE 11, 10
	040	469206	-		1	COUNTER RUBBER, HOLE 11
	040	294868	-		1	COUNTER RUBBER, HOLE 10
	050	536489	-		1	PUNCH, HOLE 11
	050	457824	-		1	PUNCH, HOLE 10
	130	550119	-		1	FABRIC, HOLE 11, 10
	170	90144-0052	-		1	TAPE 33X14 MM, HOLE 11
	170	90144-0054	-		1	TAPE 27X14 MM, HOLE 10
Common Parts						
	070	538741	-		1	LIP
	100	543612	-		1	SPRING
	110	484914	-		1	HEATING ELEMENT
	140	120902	-		1	SUCTION CUP
	150	553137	-		1	KNIFE
	160	543185	-		1	LOCKING WIRE
	300	90038-0031	-		1	RECTIFIER
	320	90044-0085	-		1	SENSOR
	340	90044-0104	-		1	PROXIMITY SWITCH
	350	90144-0050	-		1	TAPE 7X14 MM
	355	90144-0051	-		1	TAPE 14X14 MM
	360	90206-0083	-		1	HEATING CARTRIDGE
	380	90206-0099	-		1	HEATING ELEMENT
	390	90298-0033	-		1	WATLUBE HEAT LIQUID
	400	90326-0060	-		1	THERMOCOUPLE
	420	90326-0063	-		1	THERMOCOUPLE
	440	90335-0120	-		1	SPRING
	500	90427-0508	-		4	INK ROLLER

From	Pos	Part No	SP	UN	Qty	Description

From	Pos	Part No	SP	UN	Qty	Description
	F005	C- 456608-0101	-		1	ELEMENT
Volume 250 ml						
	010	457827	-		1	DIE
	020	499633	-		1	HEATING RAIL
	040	469206	-		1	COUNTER RUBBER
	045	457826	-		1	PUNCH
Volume 236 ml						
	010	457827	-		1	DIE
	020	499633	-		1	HEATING RAIL
	040	469206	-		1	COUNTER RUBBER
	045	457826	-		1	PUNCH
Volume 200 ml						
	010	457827	-		1	DIE
	020	499633	-		1	HEATING RAIL
	040	469206	-		1	COUNTER RUBBER
	045	457826	-		1	PUNCH
Volume 180 ml						
	010	457827	-		1	DIE
	020	499633	-		1	HEATING RAIL
	040	469206	-		1	COUNTER RUBBER
	045	457826	-		1	PUNCH
Volume 125 ml						
	010	457825	-		1	DIE
	045	457824	-		1	PUNCH
Volume 200 ml SLIM						
	010	457825	-		1	DIE
	020	499632	-		1	HEATING RAIL
	040	294868	-		1	COUNTER RUBBER
	045	457824	-		1	PUNCH
	050	457841-0002	-		1	FABRIC
	080	531656	-		1	HEATING ELEMENT
Common Parts						
	100	90206-0083	-		1	HEATING CARTRIDGE
	110	484914	-		1	HEATING ELEMENT
	130	15810	-		1	BRAKE SHOE
	140	120902	-		1	SUCTION CUP
	150	283590	-		1	KNIFE
	160	484929	-		1	FABRIC
	200	90038-0030	-		1	RECTIFIER
	210	90044-0085	-		1	SENSOR
	220	90044-0104	-		1	PROXIMITY SWITCH
	230	90296-0051	-		1	PASTE
	240	90326-0060	-		1	THERMOCOUPLE

From	Pos	Part No	SP	UN	Qty	Description

From	Pos	Part No	SP	UN	Qty	Description
Volume 250 ml						
	010	533812	-		1	DIE, HOLE 21
	010	457827	-		1	DIE, HOLE 20
	020	538191	-		1	HEATING RAIL, HOLE 21
	020	499633	-		1	HEATING RAIL, HOLE 20
	040	541126	-		1	COUNTER RUBBER, HOLE 21
	040	469206	-		1	COUNTER RUBBER, HOLE 20
	045	533811	-		1	PUNCH, HOLE 21
	045	457826	-		1	PUNCH, HOLE 20
	085	90144-0052	-		1	TAPE 33X14 MM, HOLE 21
	085	90144-0054	-		1	TAPE 27X14 MM, HOLE 20
Volume 236 ml						
	010	533812	-		1	DIE, HOLE 21
	010	457827	-		1	DIE, HOLE 20
	020	538191	-		1	HEATING RAIL, HOLE 21
	020	499633	-		1	HEATING RAIL, HOLE 20
	040	541126	-		1	COUNTER RUBBER, HOLE 21
	040	469206	-		1	COUNTER RUBBER, HOLE 20
	045	533811	-		1	PUNCH, HOLE 21
	045	457826	-		1	PUNCH, HOLE 20
	085	90144-0052	-		1	TAPE 33X14 MM, HOLE 21
	085	90144-0054	-		1	TAPE 27X14 MM, HOLE 20
Volume 200 ml						
	010	533812	-		1	DIE, HOLE 21
	010	457827	-		1	DIE, HOLE 20
	020	538191	-		1	HEATING RAIL, HOLE 21
	020	499633	-		1	HEATING RAIL, HOLE 20
	040	541126	-		1	COUNTER RUBBER, HOLE 21
	040	469206	-		1	COUNTER RUBBER, HOLE 20
	045	533811	-		1	PUNCH, HOLE 21
	045	457826	-		1	PUNCH, HOLE 20
	085	90144-0052	-		1	TAPE 33X14 MM, HOLE 21
	085	90144-0054	-		1	TAPE 27X14 MM, HOLE 20
Volume 180 ml						
	010	533812	-		1	DIE, HOLE 21
	010	457827	-		1	DIE, HOLE 20
	020	538191	-		1	HEATING RAIL, HOLE 21
	020	499633	-		1	HEATING RAIL, HOLE 20
	040	541126	-		1	COUNTER RUBBER, HOLE 21
	040	469206	-		1	COUNTER RUBBER, HOLE 20
	045	533811	-		1	PUNCH, HOLE 21
	045	457826	-		1	PUNCH, HOLE 20
	085	90144-0052	-		1	TAPE 33X14 MM, HOLE 21
	085	90144-0054	-		1	TAPE 27X14 MM, HOLE 20

From	Pos	Part No	SP	UN	Qty	Description
Volume 125 ml						
	010	536488	-		1	DIE, HOLE 11
	010	457825	-		1	DIE, HOLE 10
	020	499632	-		1	HEATING RAIL, HOLE 10
	040	469206	-		1	COUNTER RUBBER, HOLE 11
	040	294868	-		1	COUNTER RUBBER, HOLE 10
	045	536489	-		1	PUNCH, HOLE 11
	045	457824	-		1	PUNCH, HOLE 10
	085	90144-0052	-		1	TAPE 33X14 MM, HOLE 11
	085	90144-0054	-		1	TAPE 27X14 MM, HOLE 10
Volume 200 ml SLIM						
	010	536488	-		1	DIE, HOLE 11
	010	457825	-		1	DIE, HOLE 10
	020	543196	-		1	HEATING RAIL, HOLE 11
	020	499632	-		1	HEATING RAIL, HOLE 10
	040	469206	-		1	COUNTER RUBBER, HOLE 11
	040	294868	-		1	COUNTER RUBBER, HOLE 10
	045	536489	-		1	PUNCH, HOLE 11
	045	457824	-		1	PUNCH, HOLE 10
	050	457841-0002	-		1	FABRIC, HOLE 11, 10
	080	531656	-		1	HEATING ELEMENT, HOLE 11, 10
	085	90144-0052	-		1	TAPE 33X14 MM, HOLE 11
	085	90144-0054	-		1	TAPE 27X14 MM, HOLE 10
Common Parts						
	070	266098-0002	-		1	DOLLY
	090	538741	-		1	LIP
	100	543612	-		1	SPRING
	110	484914	-		1	HEATING ELEMENT
	120	537889	-		1	FABRIC
	130	550119	-		1	FABRIC
	140	120902	-		1	SUCTION CUP
	150	553137	-		1	KNIFE
	160	543185	-		1	LOCKING WIRE
	300	90038-0031	-		1	RECTIFIER
	320	90044-0085	-		1	SENSOR
	340	90044-0104	-		1	PROXIMITY SWITCH
	350	90144-0050	-		1	TAPE 7X14 MM
	350	90144-0051	-		1	TAPE 14X14 MM
	360	90206-0083	-		1	HEATING CARTRIDGE
	380	90206-0099	-		1	HEATING ELEMENT
	390	90298-0033	-		1	WATLUBE HEAT LIQUID
	400	90326-0060	-		1	THERMOCOUPLE
	420	90326-0063	-		1	THERMOCOUPLE
	440	90335-0120	-		1	SPRING
	500	90427-0508	-		4	INK ROLLER

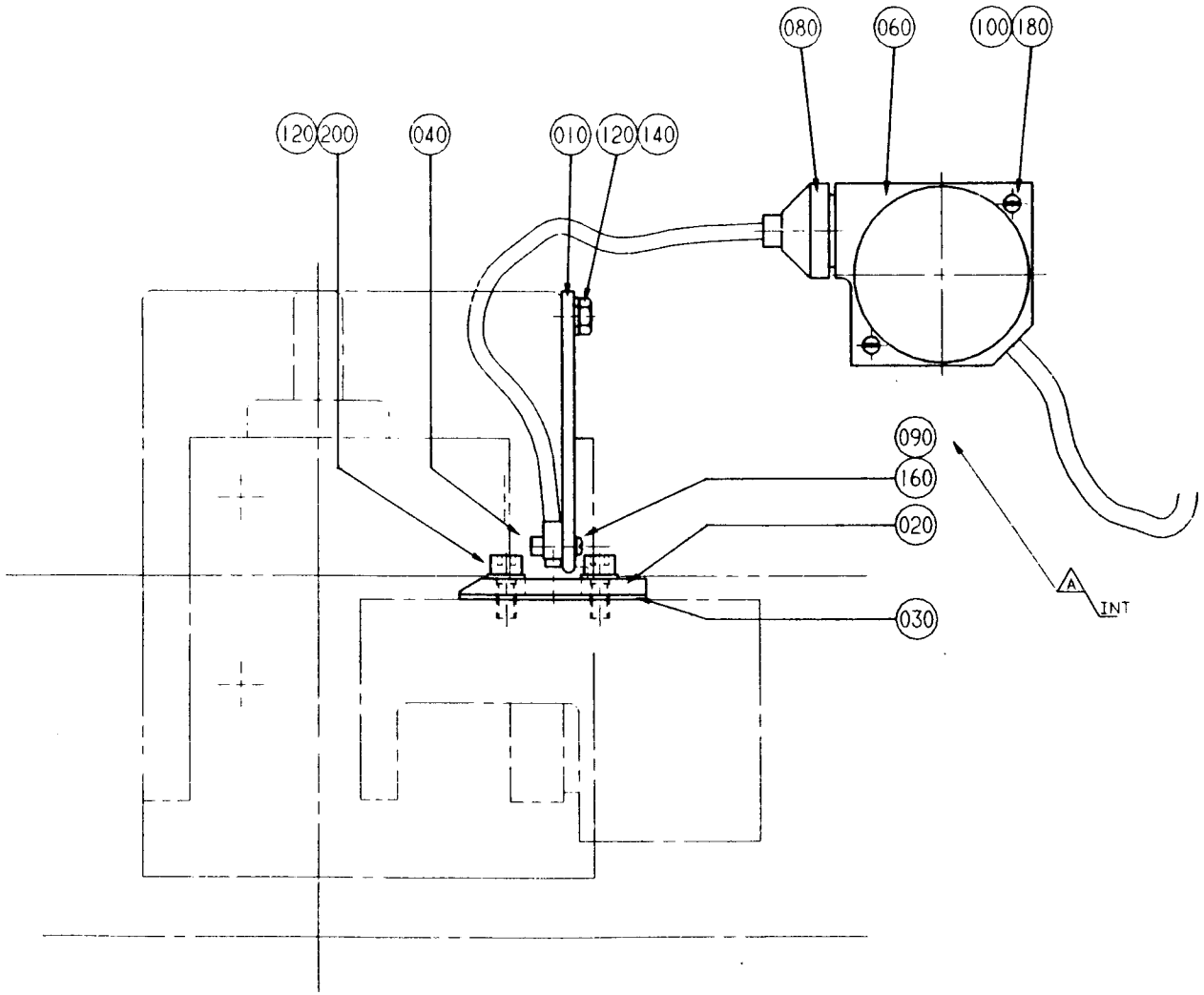
080
060
100
180
120
200
040
010
120
140
090
160
020
030
A
INT

From	Pos	Part No	SP	UN	Qty	Description
	010	552047	-		1	BRACKET
	020	552048	-		1	PLATE
	030	552050	-		1	SHIM
	040	554340	-		1	LOCK BOARD
	060	90232-0074	S		1	PHOTOCELL
	080	90232-0324	S		1	CABLE
	090	315105-0124	-		1	WASHER BRB3,2X6RFR
	100	315105-0136	-		2	WASHER BRB4,3X8RFR
	120	315105-0153	-		4	WASHER BRB6,4X12RFR
	140	312105-0368	-		2	SCREW M6S6X16RFR
	160	312125-0228	-		2	SLOTTED HEMCS3X16RFR
	180	312125-0297	-		2	SLOTTED HEMCS4X25RFR
	200	312115-0368	-		2	SCREW MC6S6X16 A4 80

From	Pos	Part No	SP	UN	Qty	Description

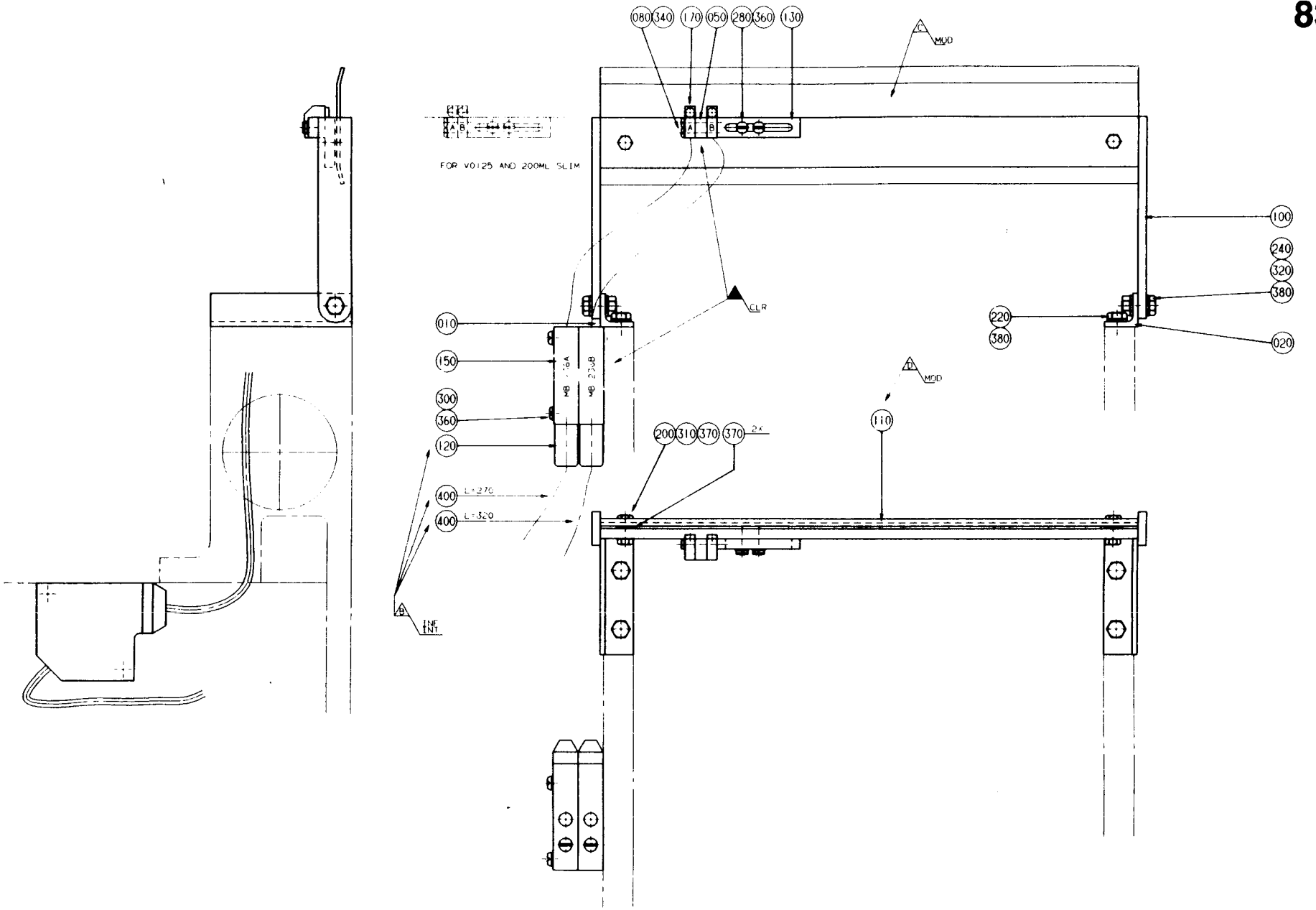
080
340
170
050
280
360
130
MOD
FOR V0125 AND 200ML SLIM
CLR
100
240
320
380
220
380
020
010
150
300
360
120
MB 15A
MB 20xB
400 L=270
400 L=320
200
310
370
370
2x
MOD
110
INF INT

From	Pos	Part No	SP	UN	Qty	Description
TBA/9 250-180 ml						
	010	554349	-		1	BRACKET LEFT
	020	554350	-		1	BRACKET RIGHT
	050	554364	-		1	SPACER
	080	312125-0232	-		2	SLOTTED HEMCS3X25RFR
TBA/9 125, 200 mlSLIM						
	010	554349	-		1	BRACKET LEFT
	020	554350	-		1	BRACKET RIGHT
	080	312125-0228	-		2	SLOTTED HEMCS3X16RFR
TB/9 250-180 ml						
	010	554351	-		1	BRACKET LEFT
	020	554352	-		1	BRACKET RIGHT
	050	554364	-		1	SPACER
	080	312125-0232	-		2	SLOTTED HEMCS3X25RFR
TB/9 125, 200 mlSLIM						
	010	554351	-		1	BRACKET LEFT
	020	554352	-		1	BRACKET RIGHT
	080	312125-0228	-		2	SLOTTED HEMCS3X16RFR
Common Parts						
	100	554347	-		1	ARM
	110	563738	-		1	RAIL
	120	456256	-		2	PROTECTIVE COVER
	130	554365	-		1	BRACKET
	150	90232-0074	S		2	PHOTOCELL
	170	90232-0324	S		2	CABLE
	200	312105-0329	-		2	SCREW M6S5X16 A4 80
	220	312105-0366	-		4	SCREW M6S6X12RFR
	240	312105-0368	-		2	SCREW M6S6X16RFR
	280	312125-0291	-		2	SLOTTED HEMCS4X12RFR
	300	312125-0303	-		2	SLOTTED HEMCS4X40RFR
	310	312605-0314	-		2	NUT M6M5RFR
	320	312605-0316	-		2	NUT M6M6RFR
	340	315105-0124	-		2	WASHER BRB3,2X6RFR
	360	315105-0136	-		4	WASHER BRB4,3X8RFR
	370	315105-0146	-		6	WASHER BRB5,3X10RFR
	380	315105-0153	-		8	WASHER BRB6,4X12RFR
	400	352135-0102	-	MM	600	HOSE 155.010

From	Pos	Part No	SP	UN	Qty	Description

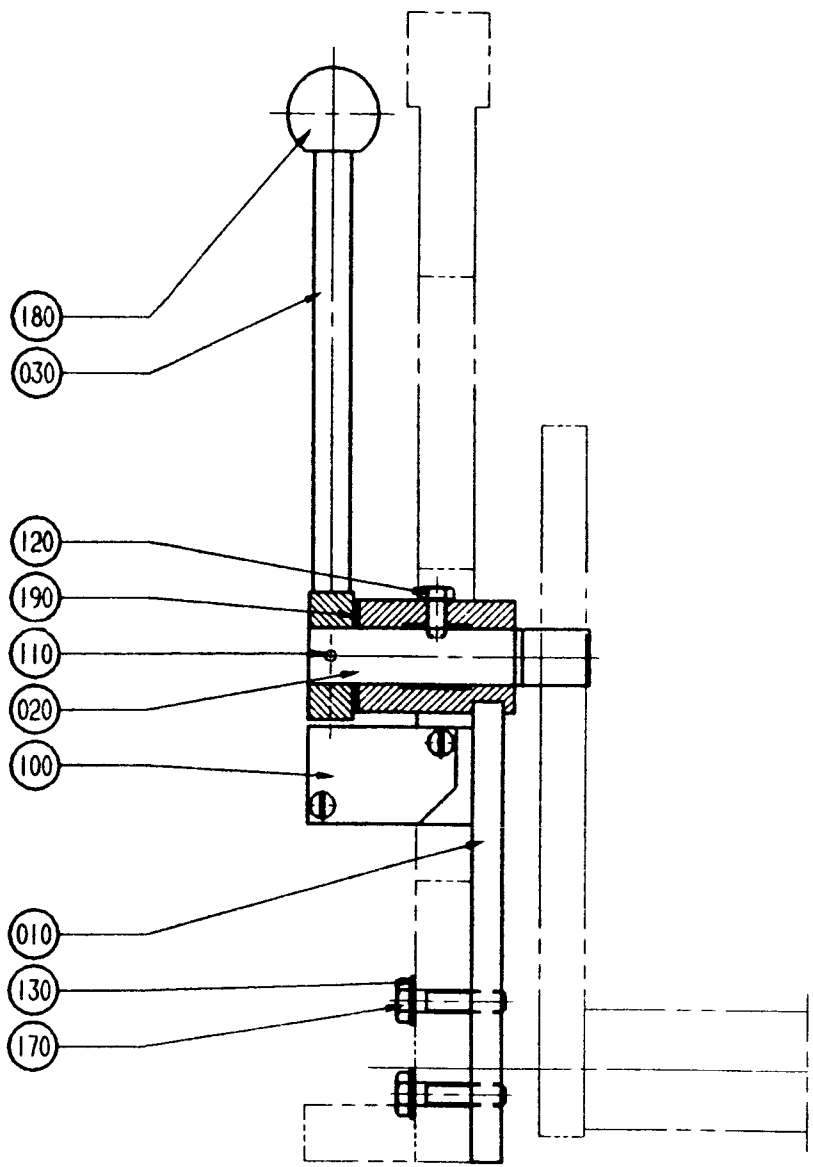
180
030
120
190
110
020
100
010
130
170

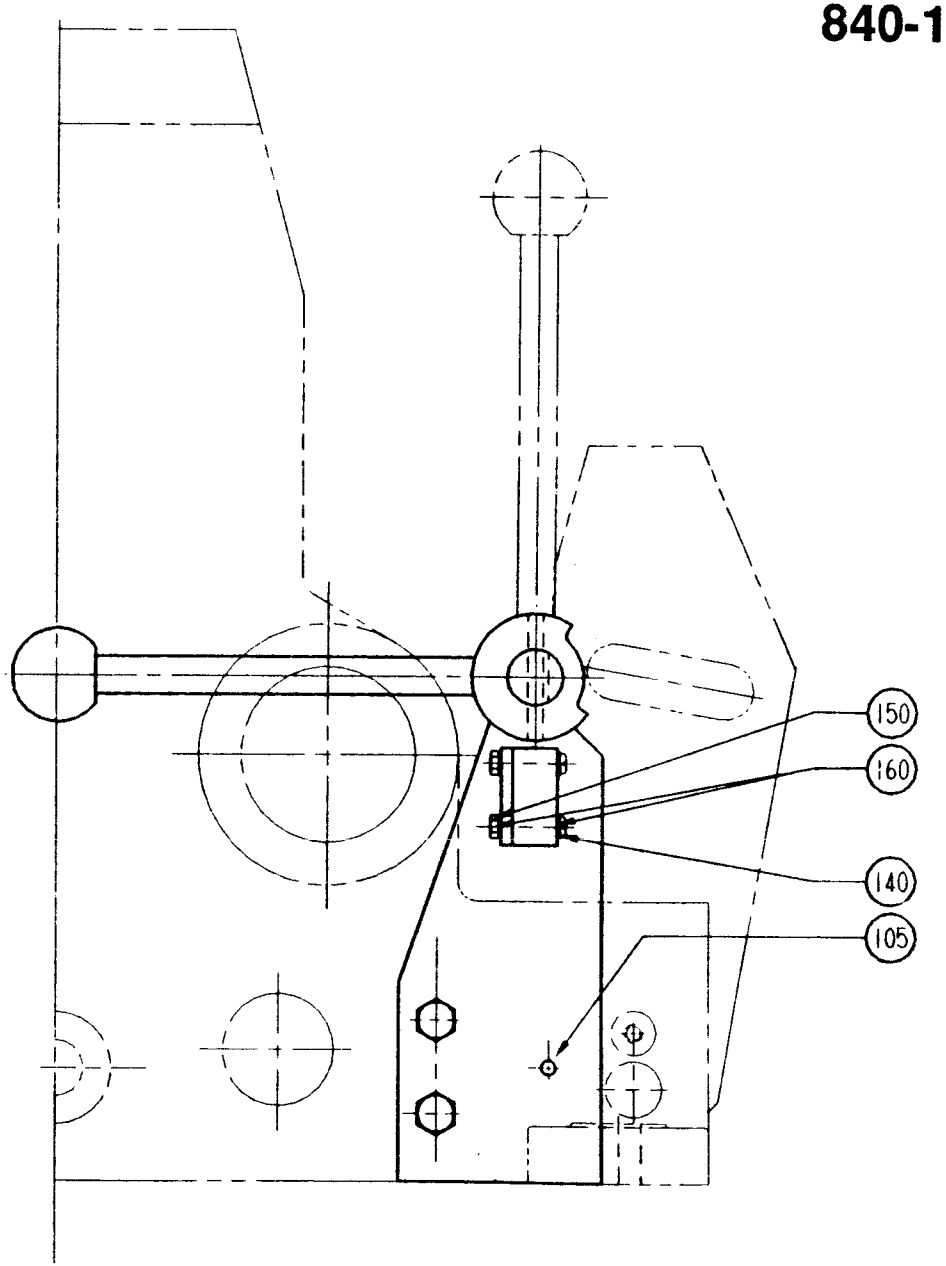
150
160
140
105