Main groups
LH side of machine

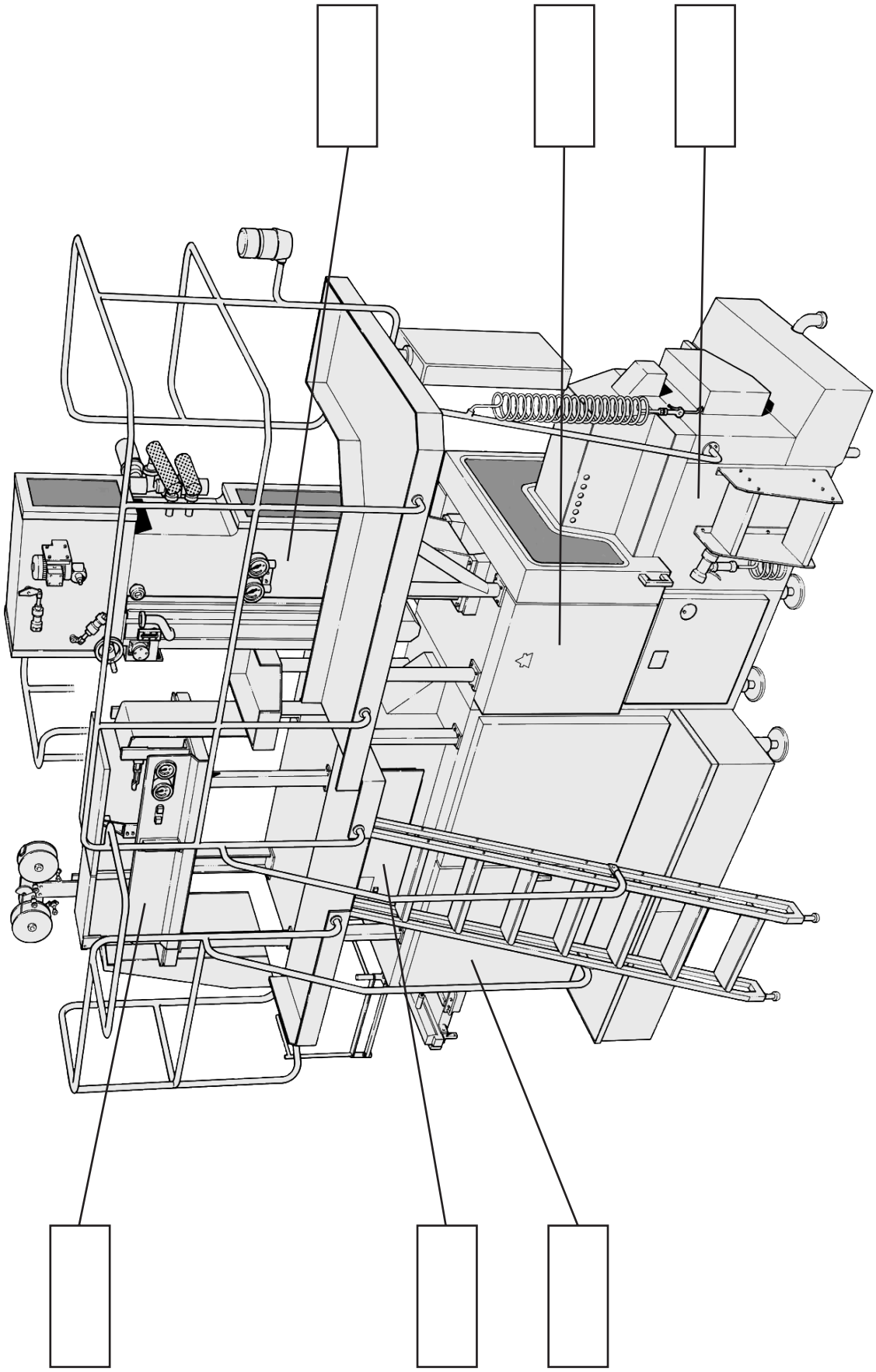

Main groups

RH side of machine

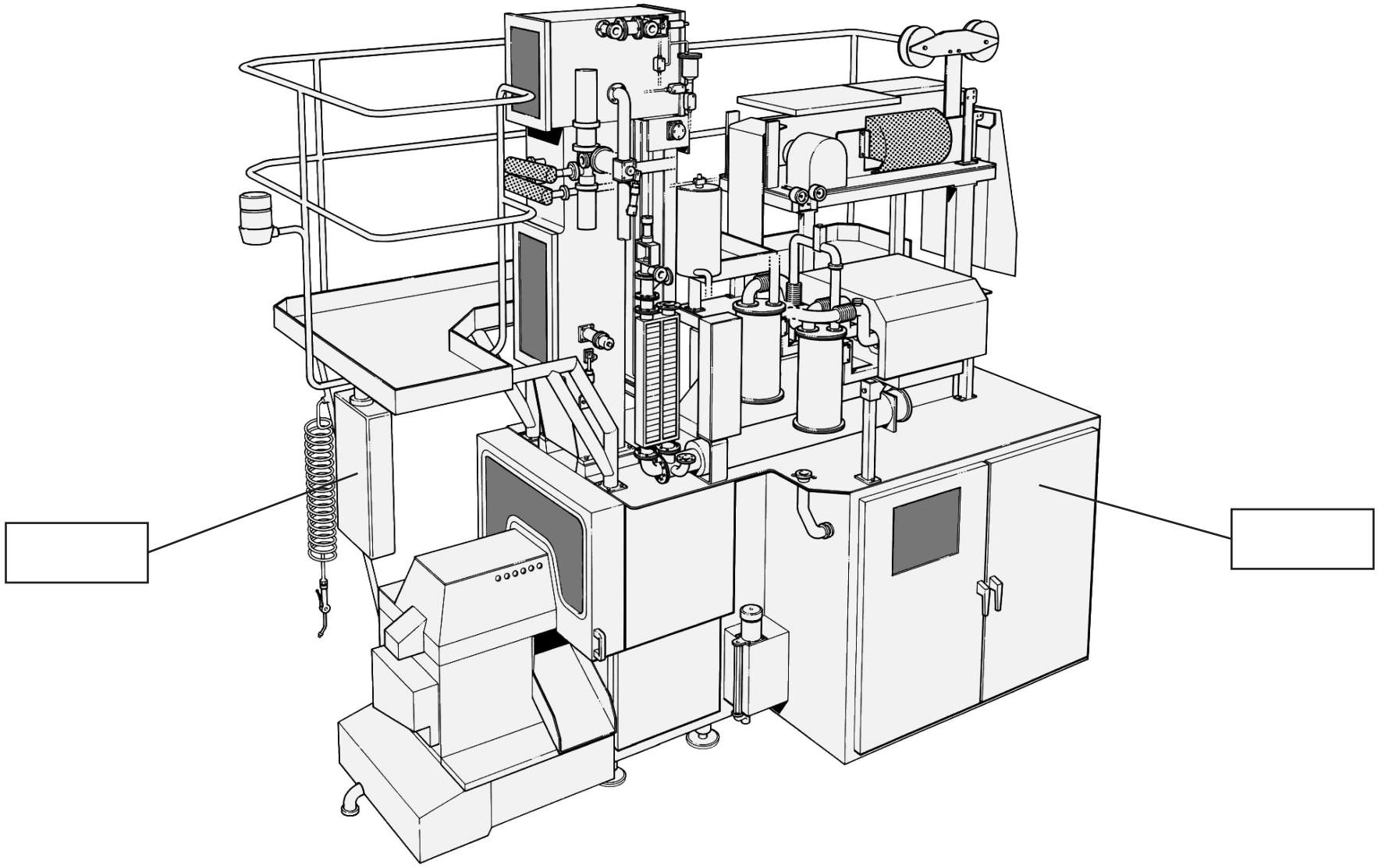

Technical Training Centre
Lund, Sweden

Machine type
TBA/9

Issue
1/0203

OH 1169:2

Drive unit, TB/9 and TBA/9

Electrical brake

Level relay

Peroxide spray quantity

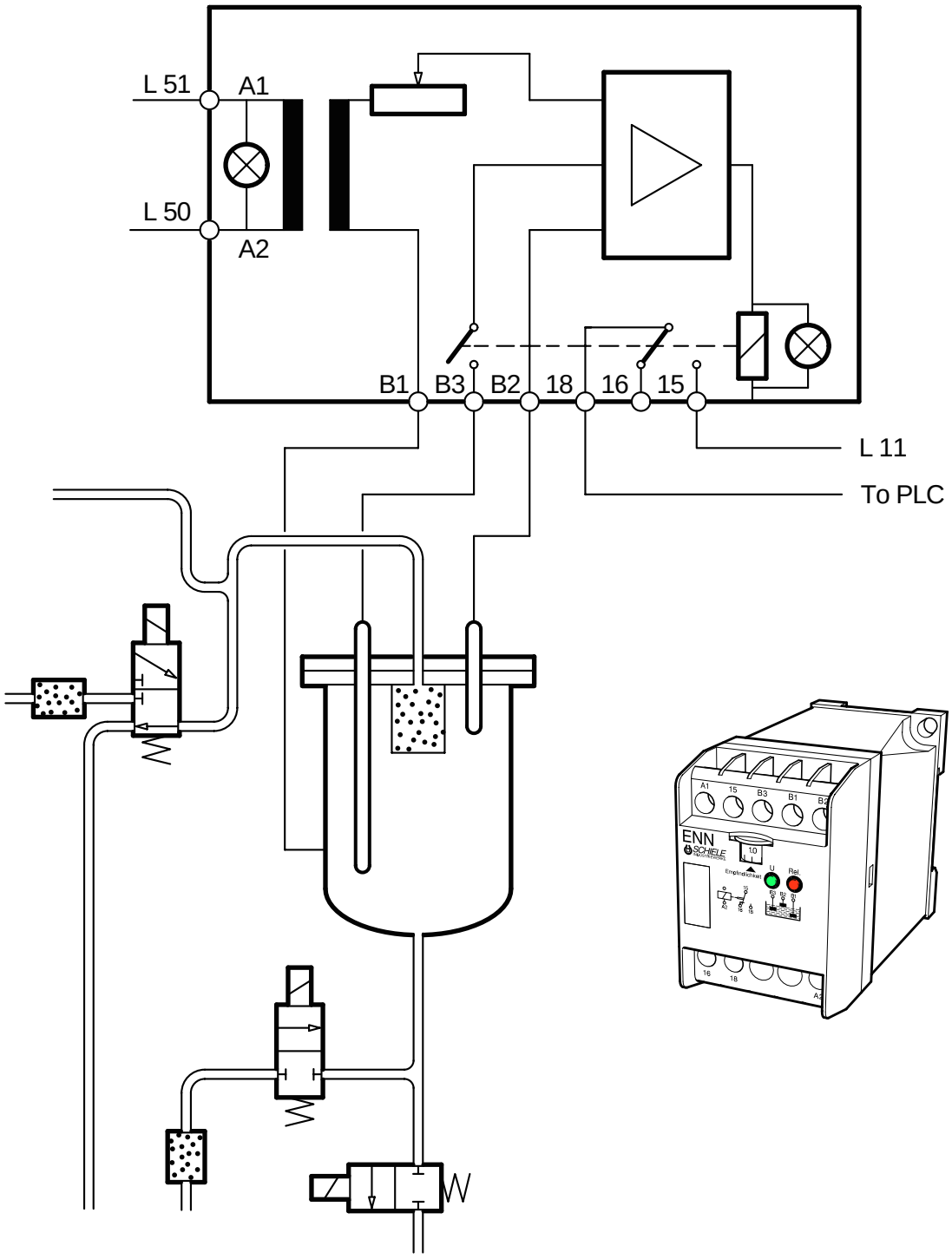

Technical Training Centre Lund, Sweden	Machine type TBA/9	Issue 1/0203	OH 1172

Technical Training Centre
Lund, Sweden

Machine
TBA/9

Model
1985

Issue
2/8902

OH 119

Tetra Brik Aseptic, TBA/9, with strip applicator

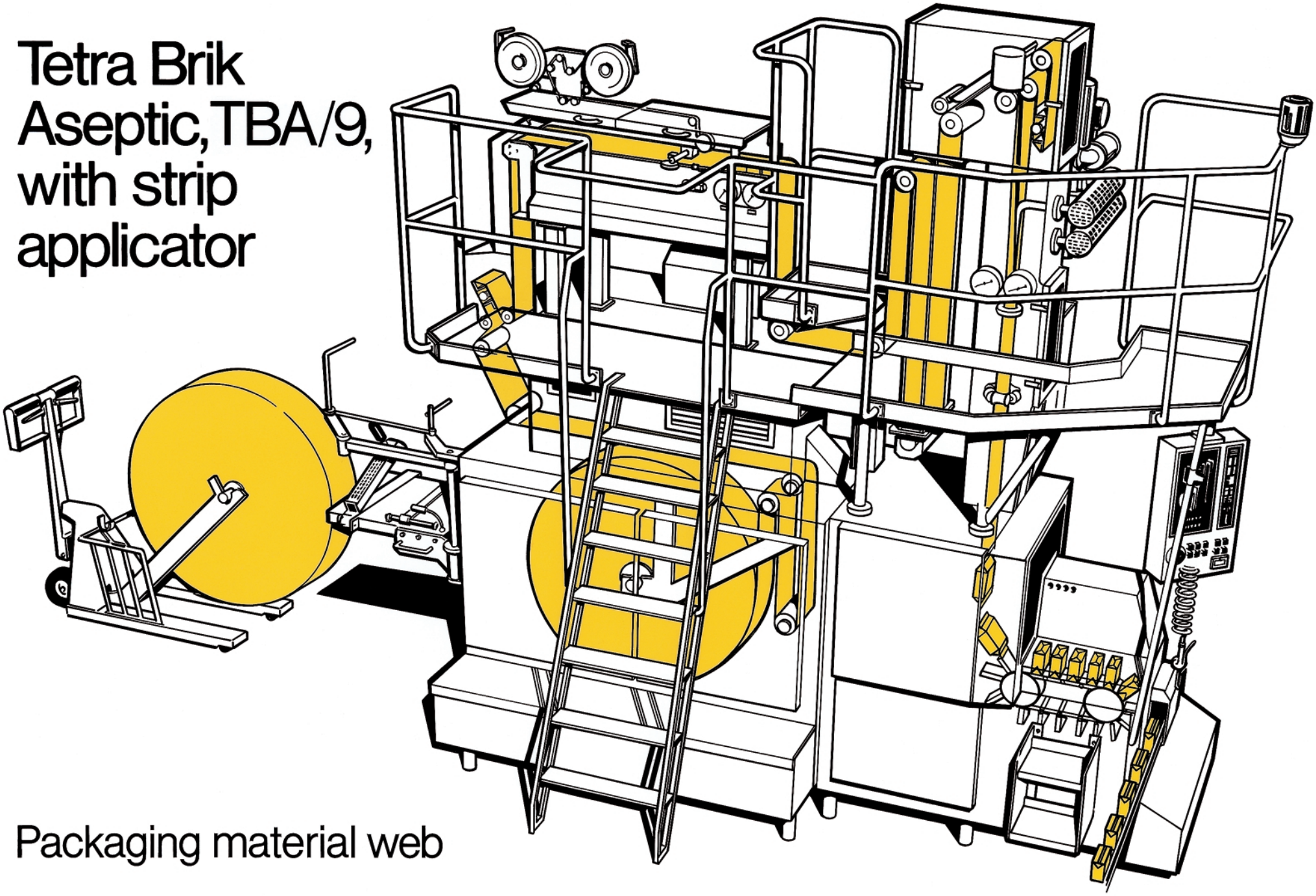

Packaging material web

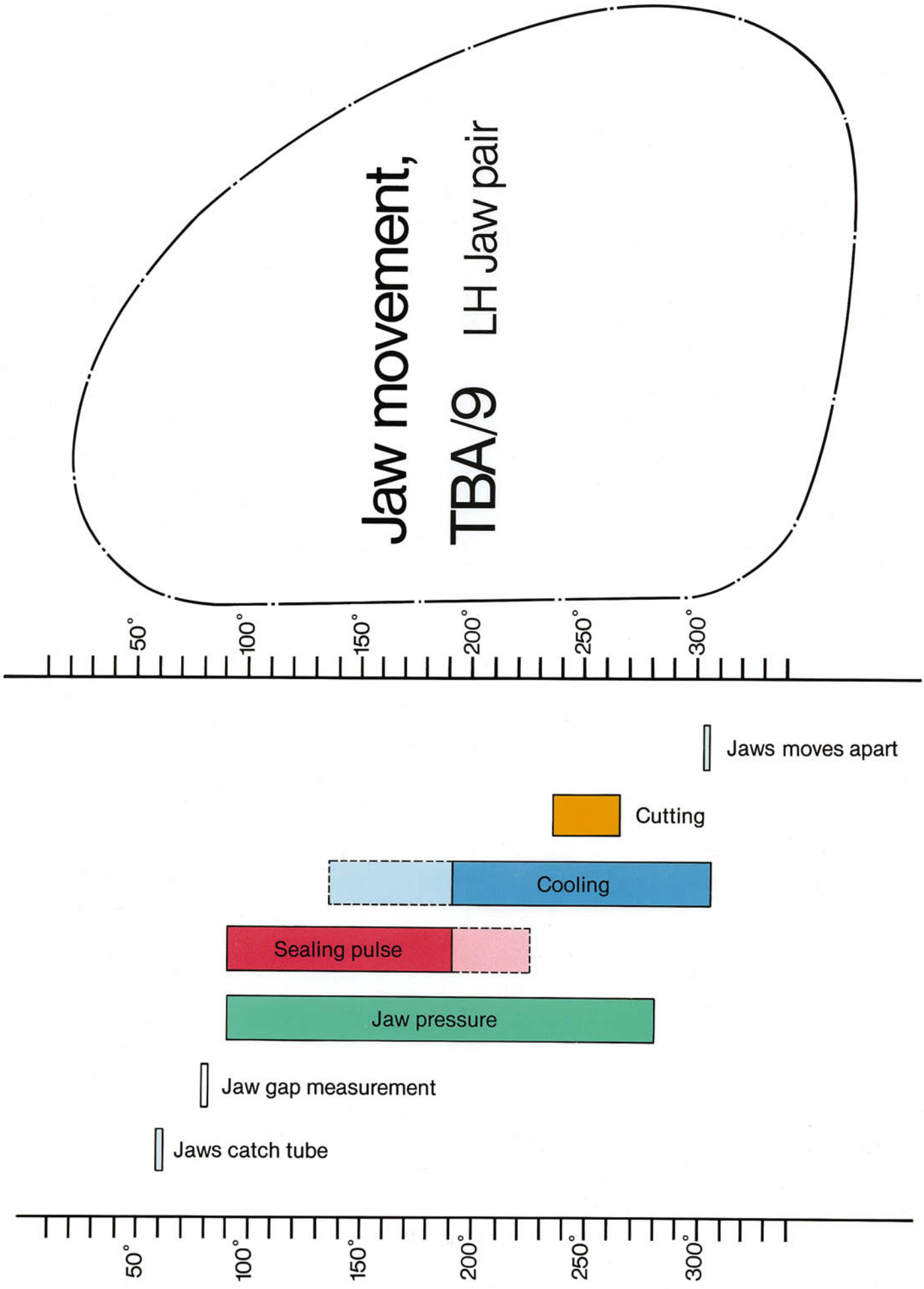

Technical Training Centre Lund, Sweden	Machine	Model 1983-84	Issue 2/8902	OH 133:1

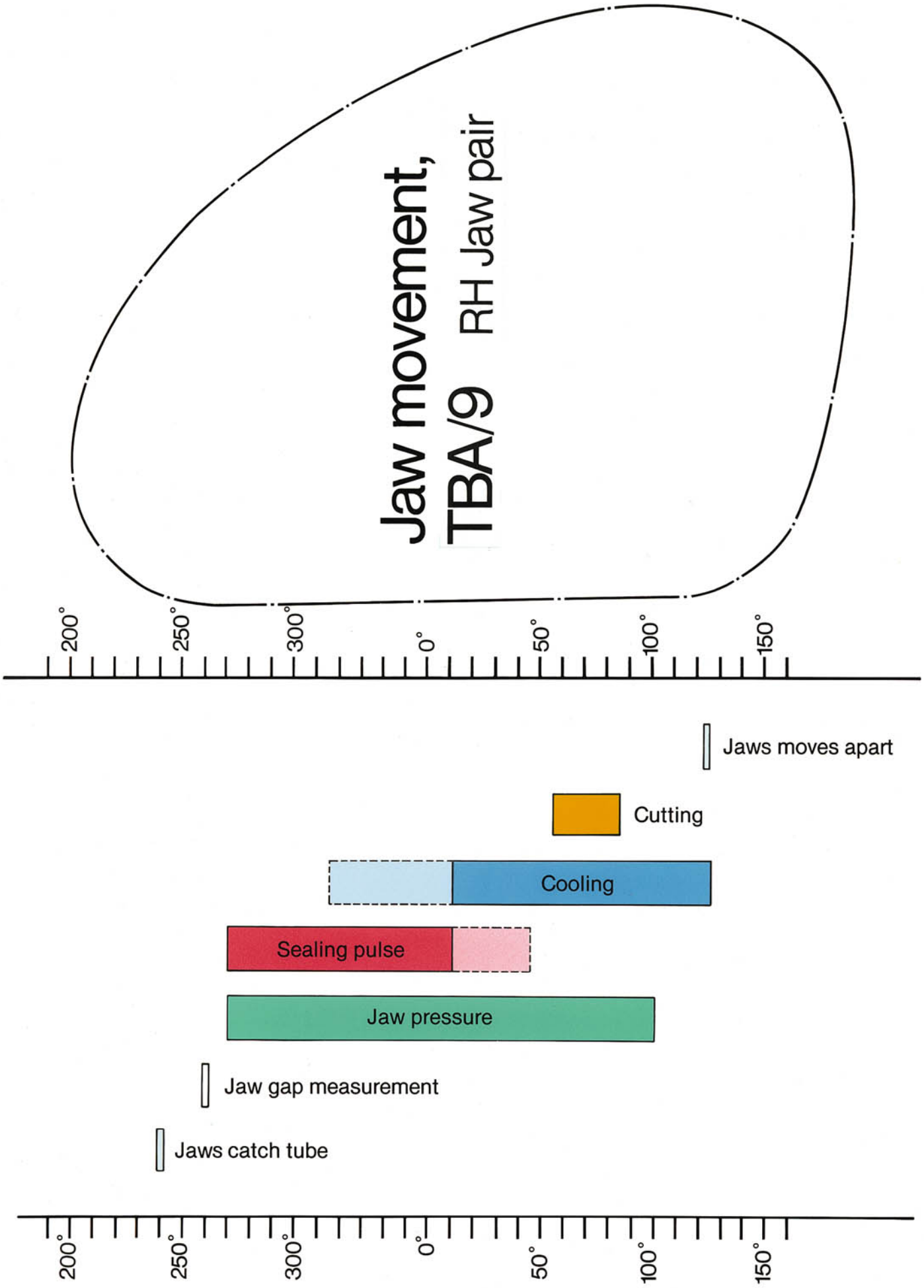

Technical Training Centre Lund, Sweden	Machine TBA/9	Model 1983-84	Issue	OH 133:2

How to thread the packaging material...
...through the cassette, TBA/9



Technical Training Centre Lund, Sweden	Machine	Model	Issue	
TETRA PAK®	TBA/9	1983 →		OH 134

TBA/9, LH side

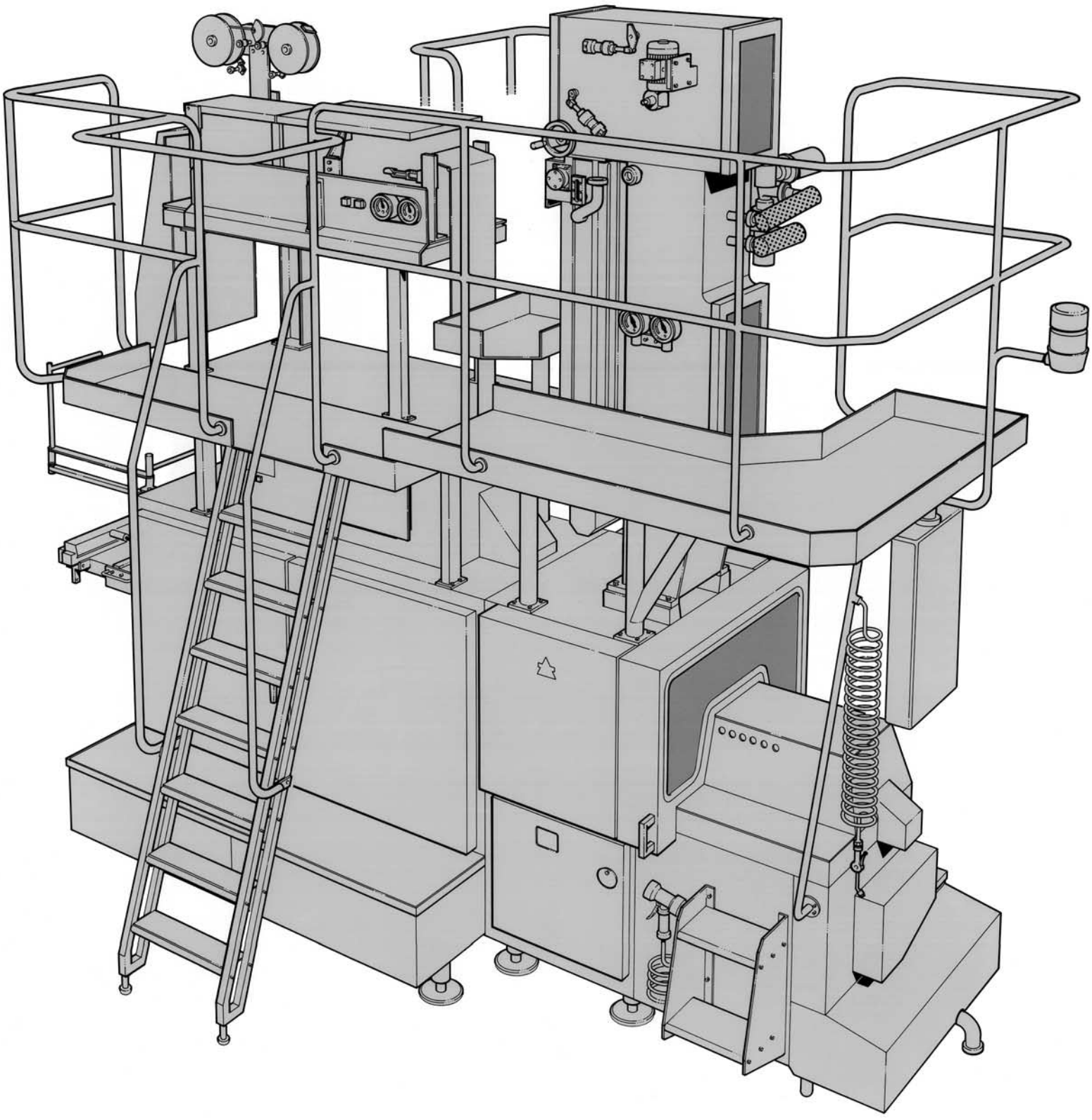

Technical Training Centre Lund, Sweden	Machine TBA/9	Model 1985	Issue 2/8902	OH 148 :1

TBA/9, RH side

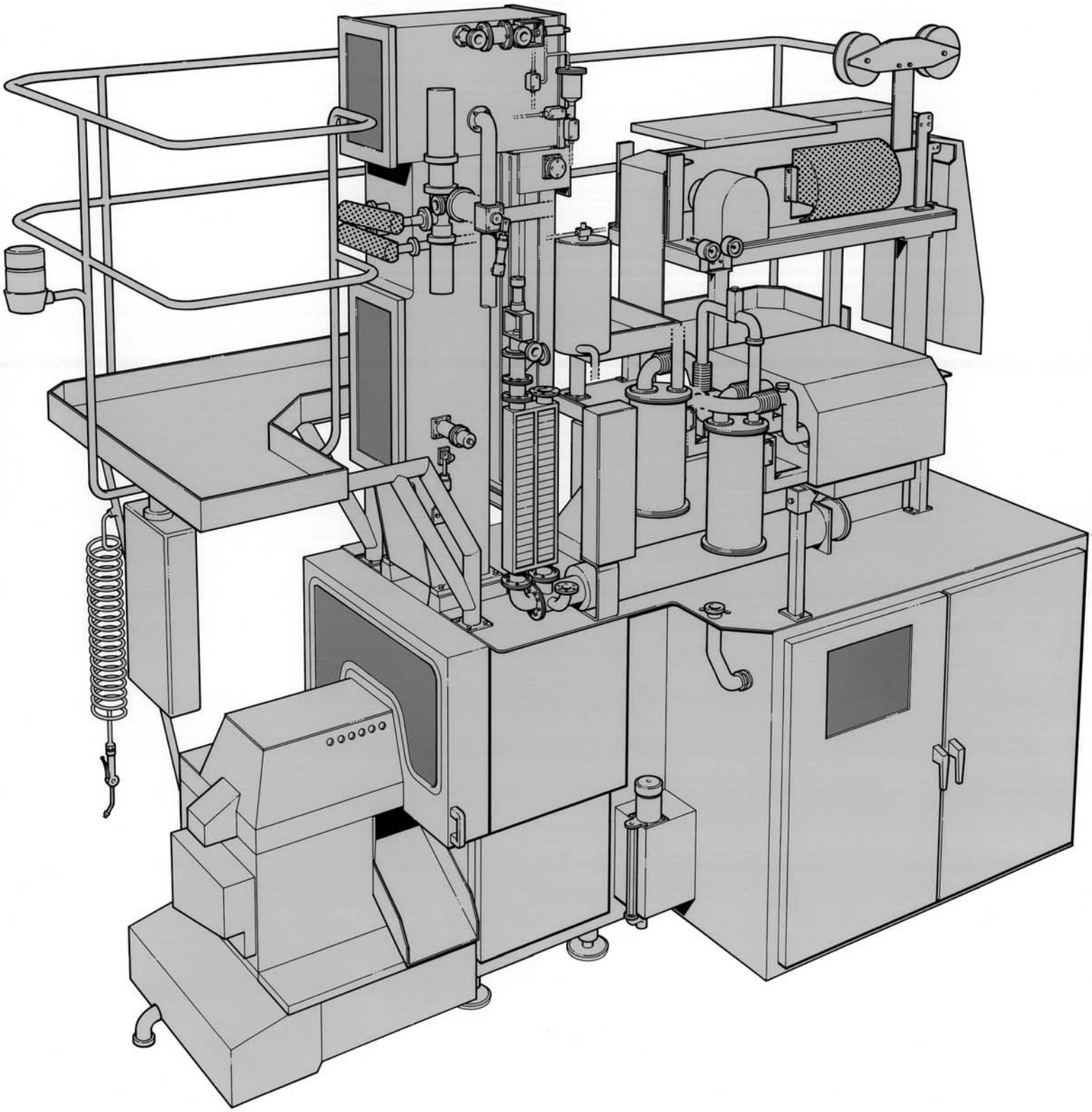

Technical Training Centre Lund, Sweden	Machine TBA/9	Model 1985	Issue 2/8902	OH 148:2

Final folder

The drive of the discharge unit

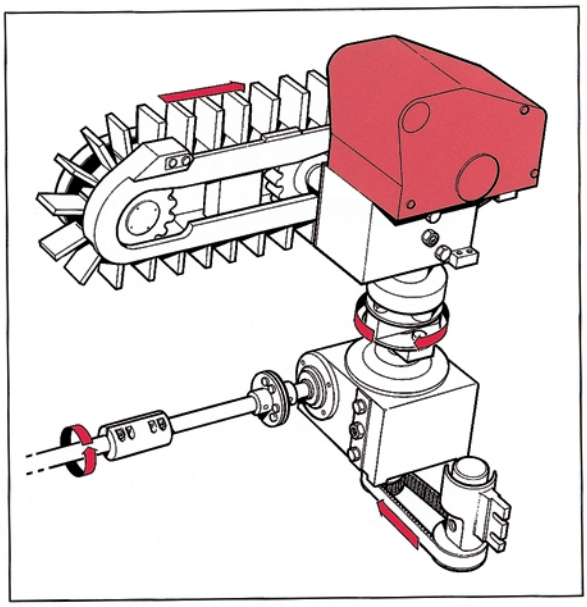

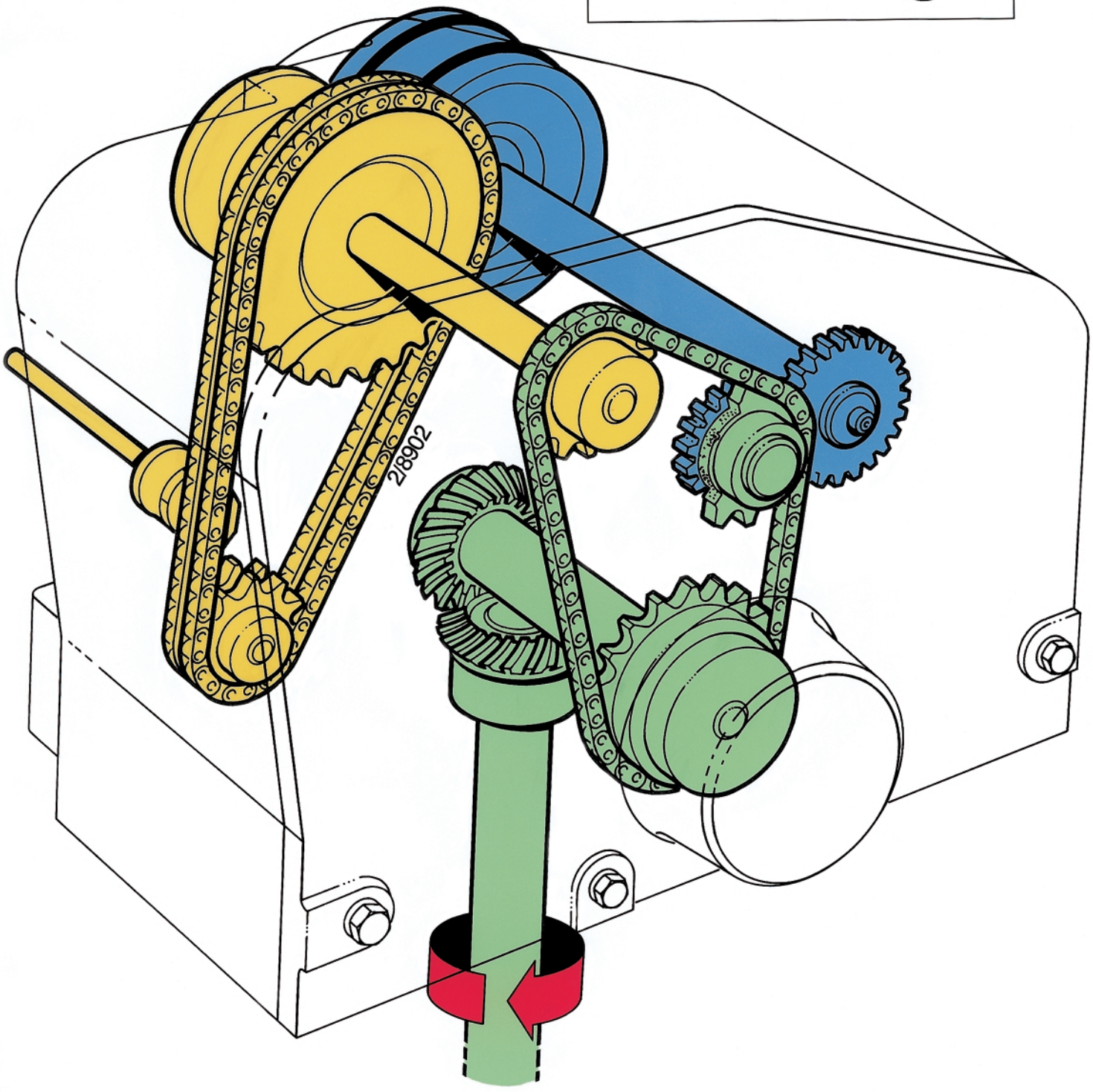

Final folder

Discharge unit adjustments

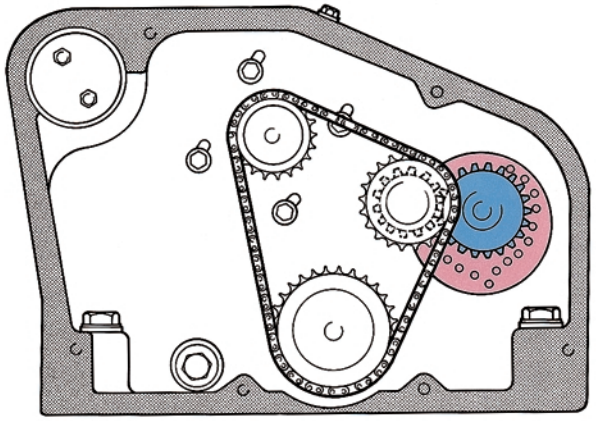

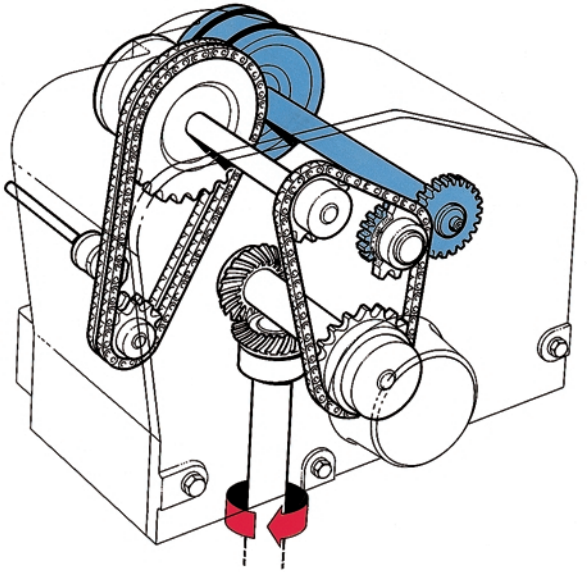

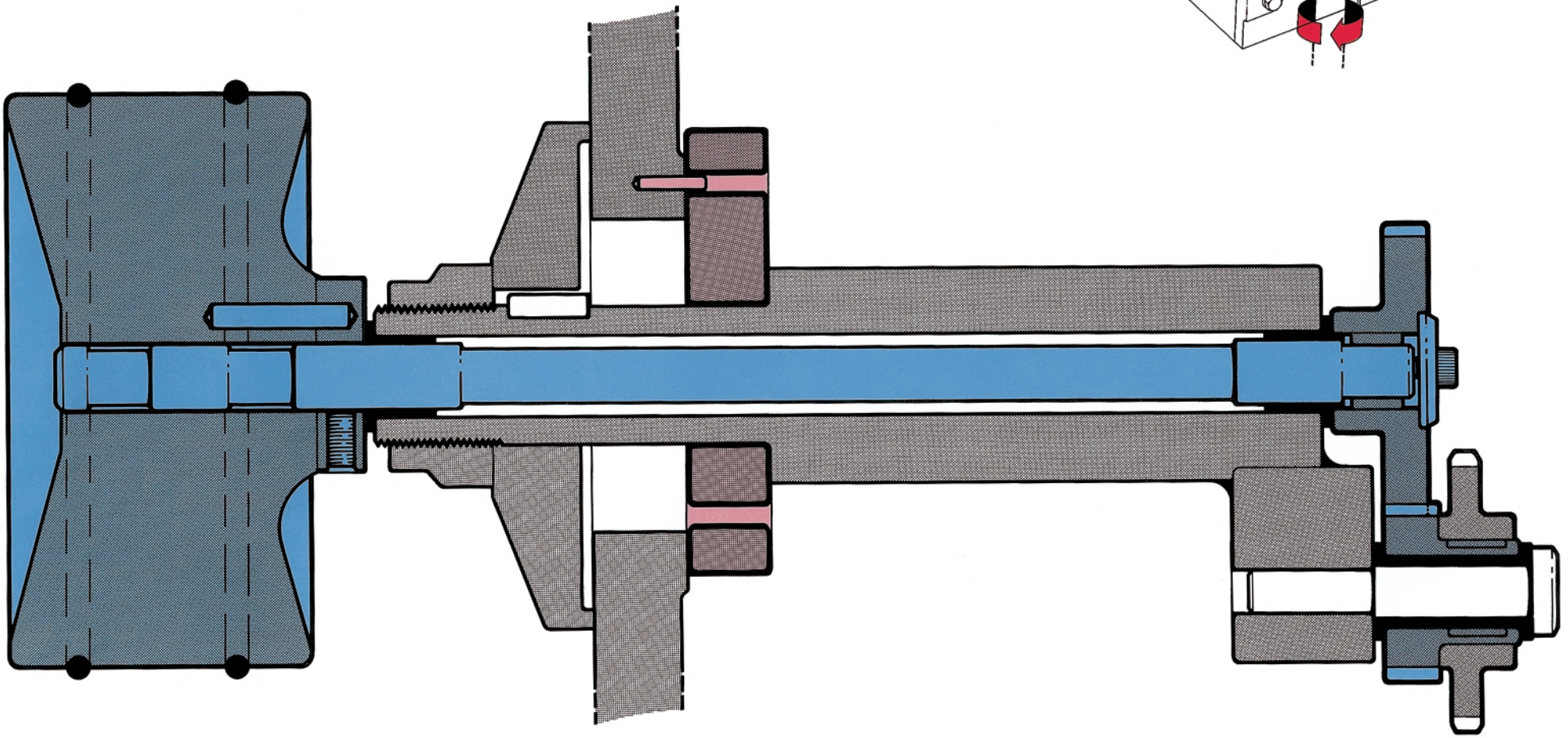

Technical Training Centre Lund, Sweden	Machine	Model	Issue	
TETRA PAK®	TB/9, TBA/9	1985	2/8902	OH 150:3

Flap sealing element

Nozzle adjustments

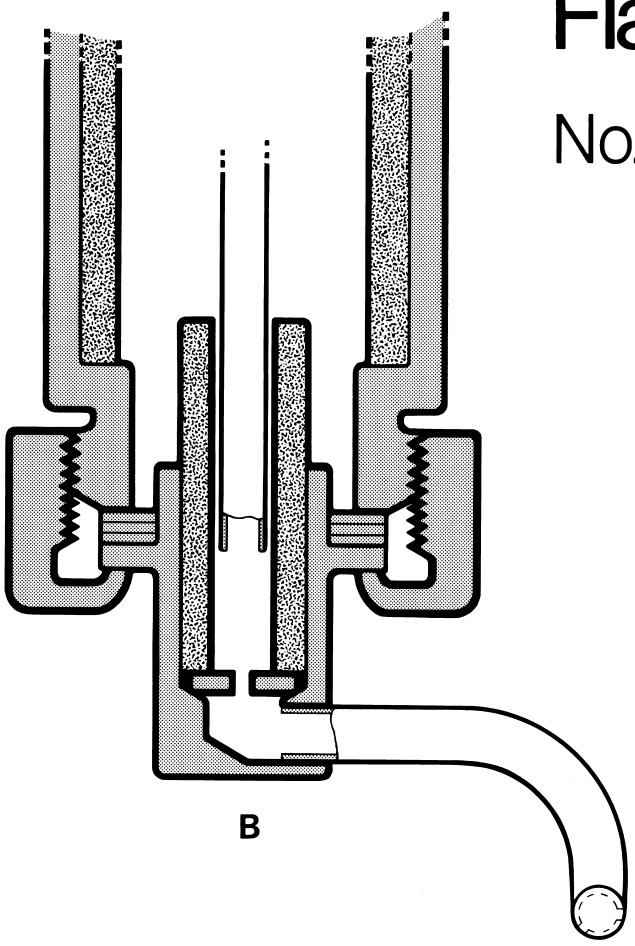

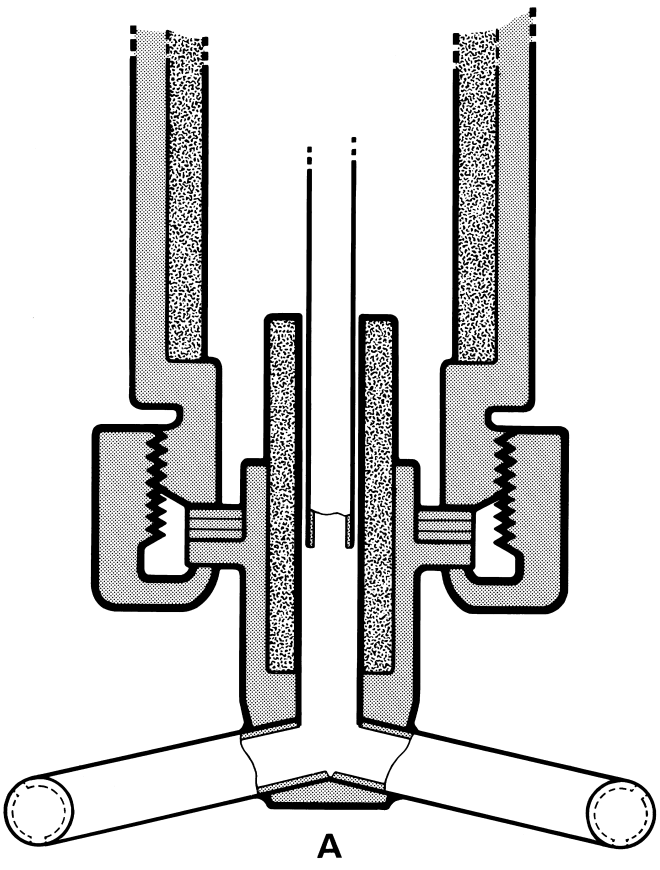

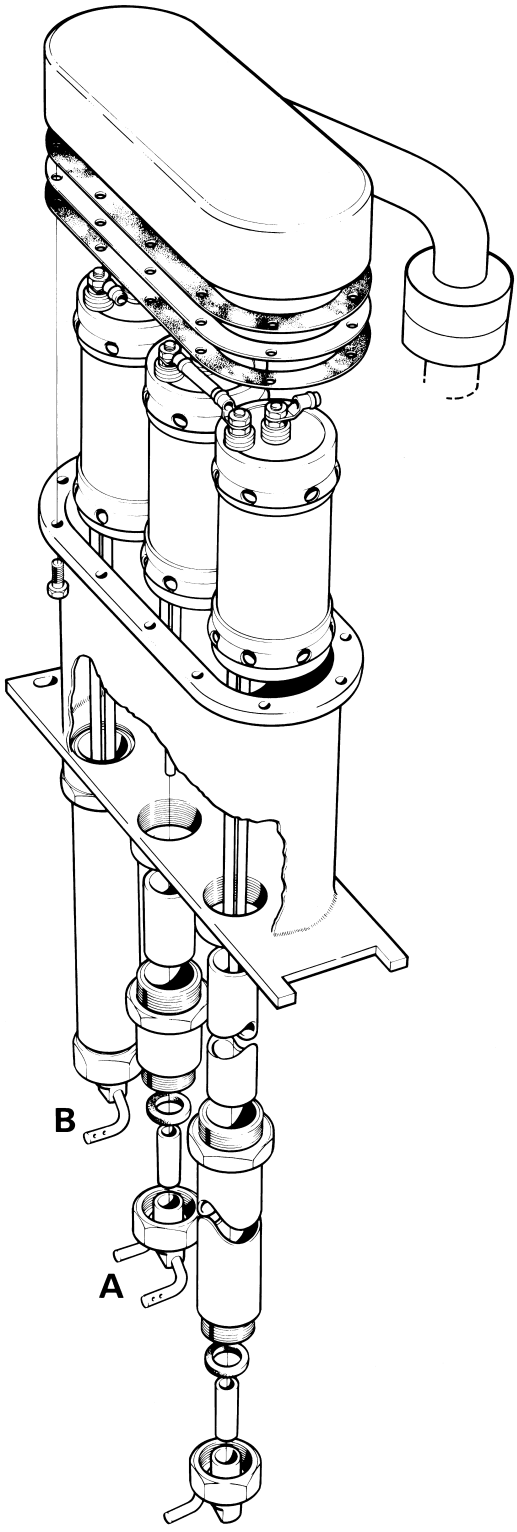

Control panel, TBA/9

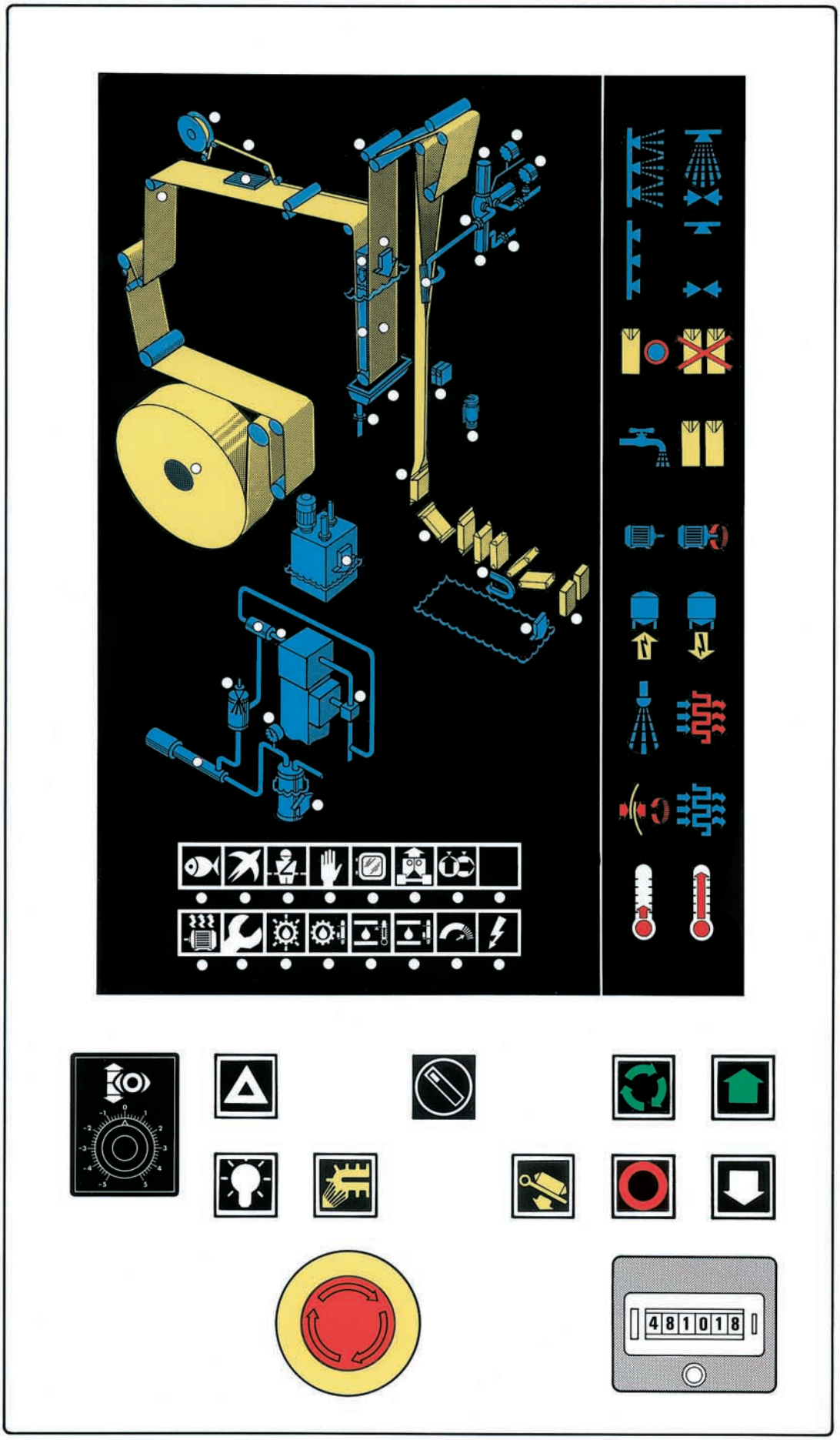

Control panel, TBA/9

Supervision panel

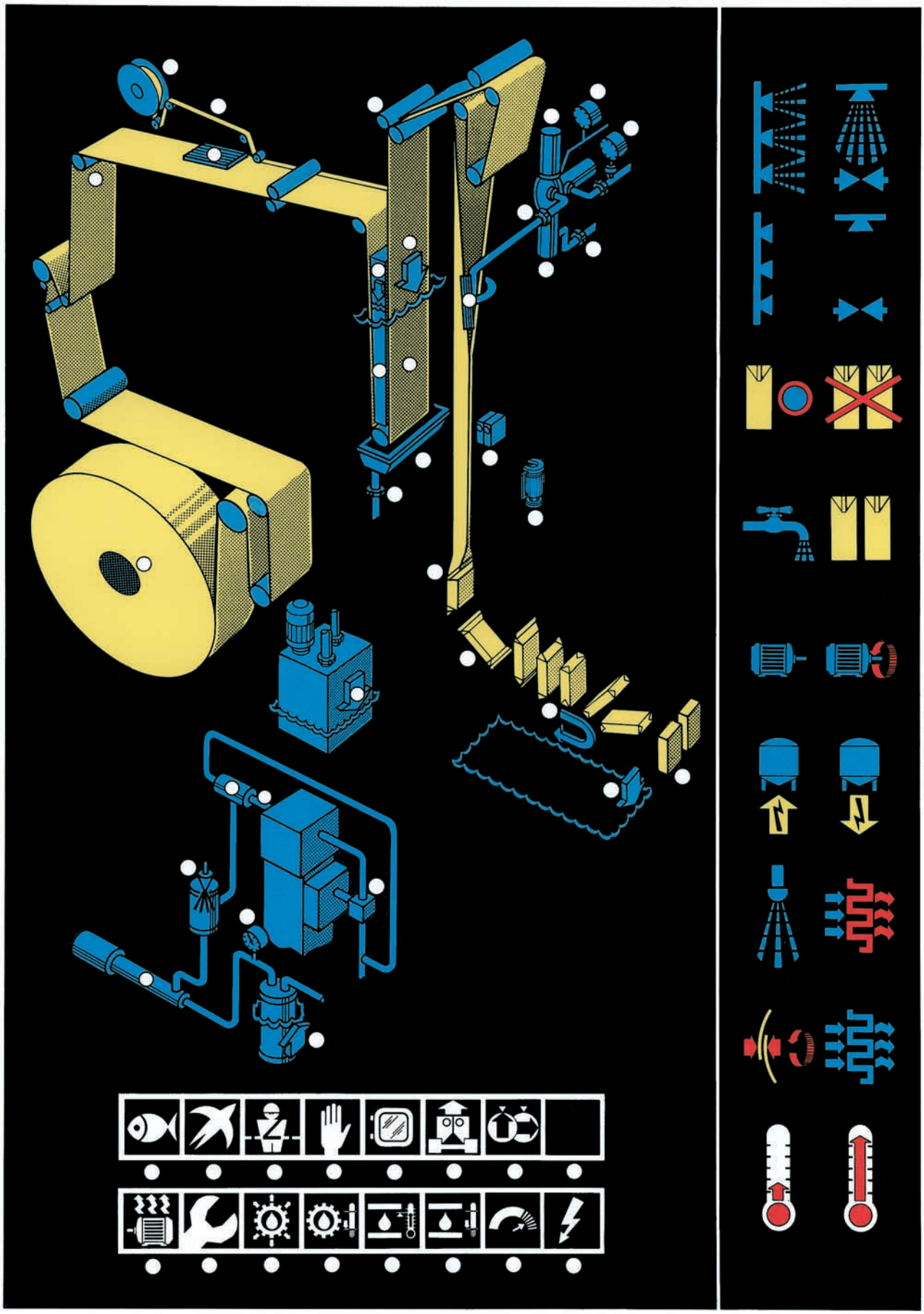

Technical Training Centre Lund, Sweden	Machine type TBA/9 130V	Issue 1/9202	OH 438:2

Cleaning in place (CIP) of filling system, TBA/9

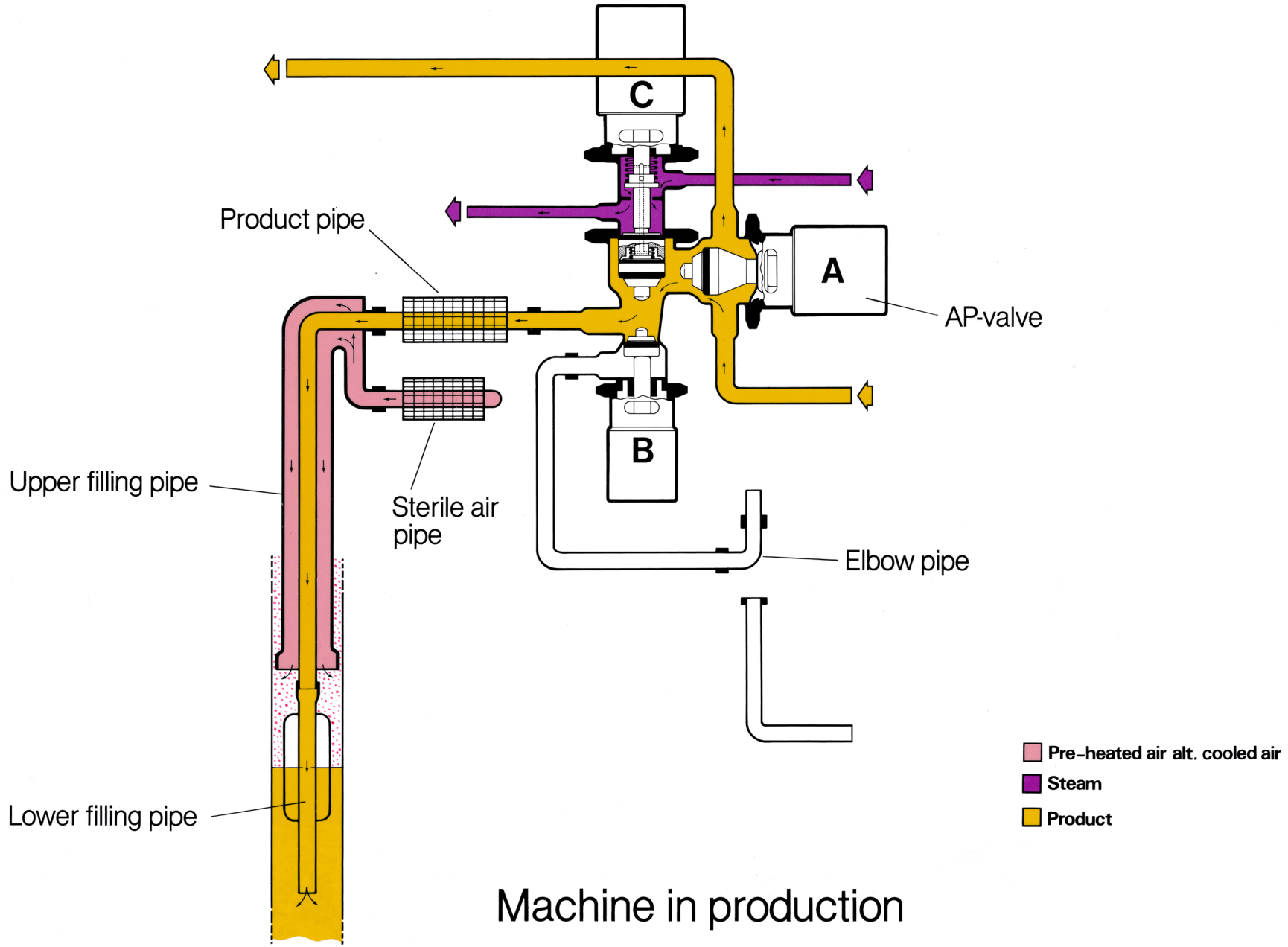

Machine in production

TETRA PAK®
Technical Training Centre
Lund, Sweden
Machine TBA/9
Model
Issue 2/8902
OH 45:1

Cleaning in place (CIP) of filling system, TBA/9

Technical Training Centre
Lund, Sweden
Machine TBA/9
Model
Issue 2/8902
OH 45:2

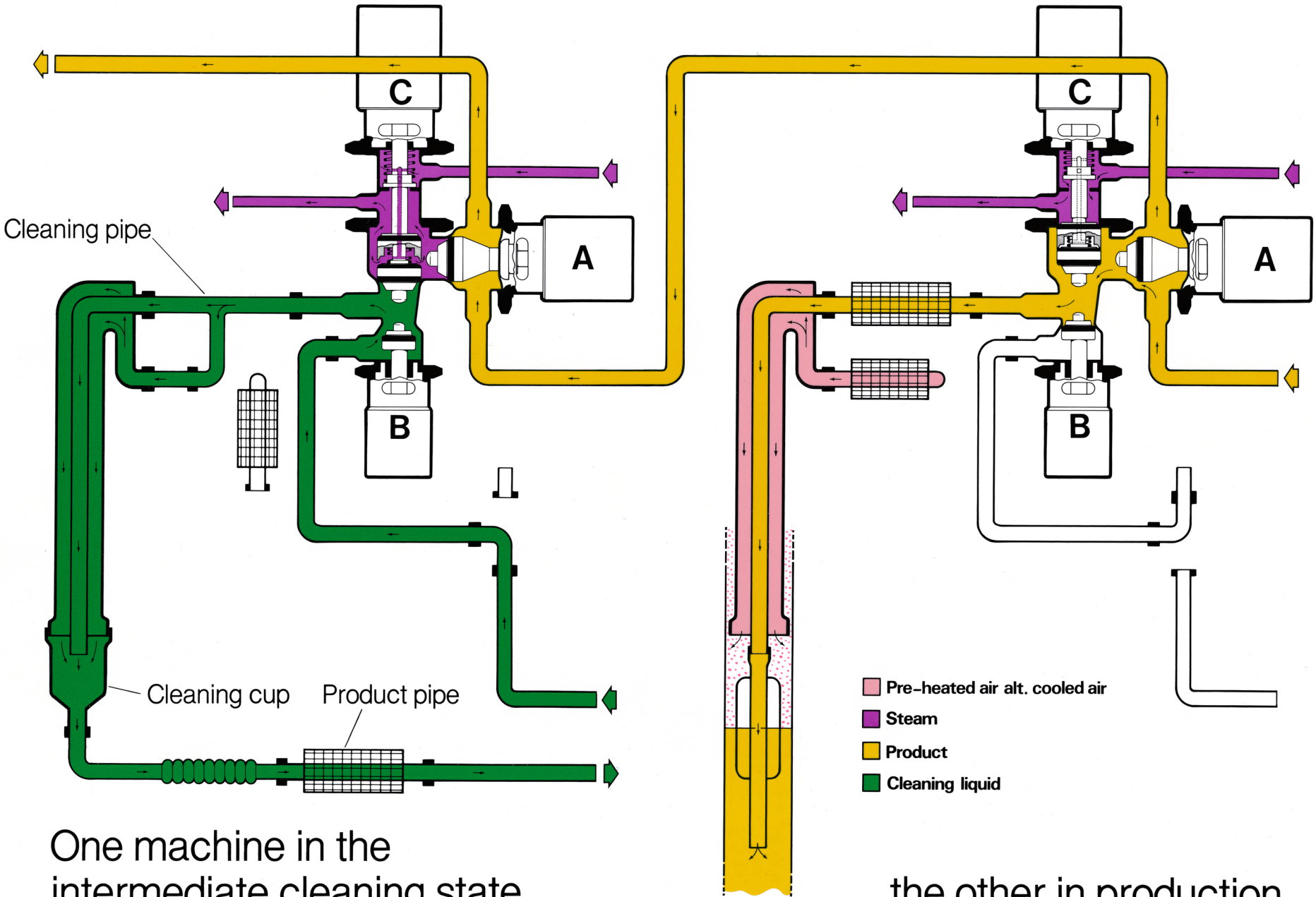

One machine in the intermediate cleaning state,...

...the other in production

Valve panel TBA/9

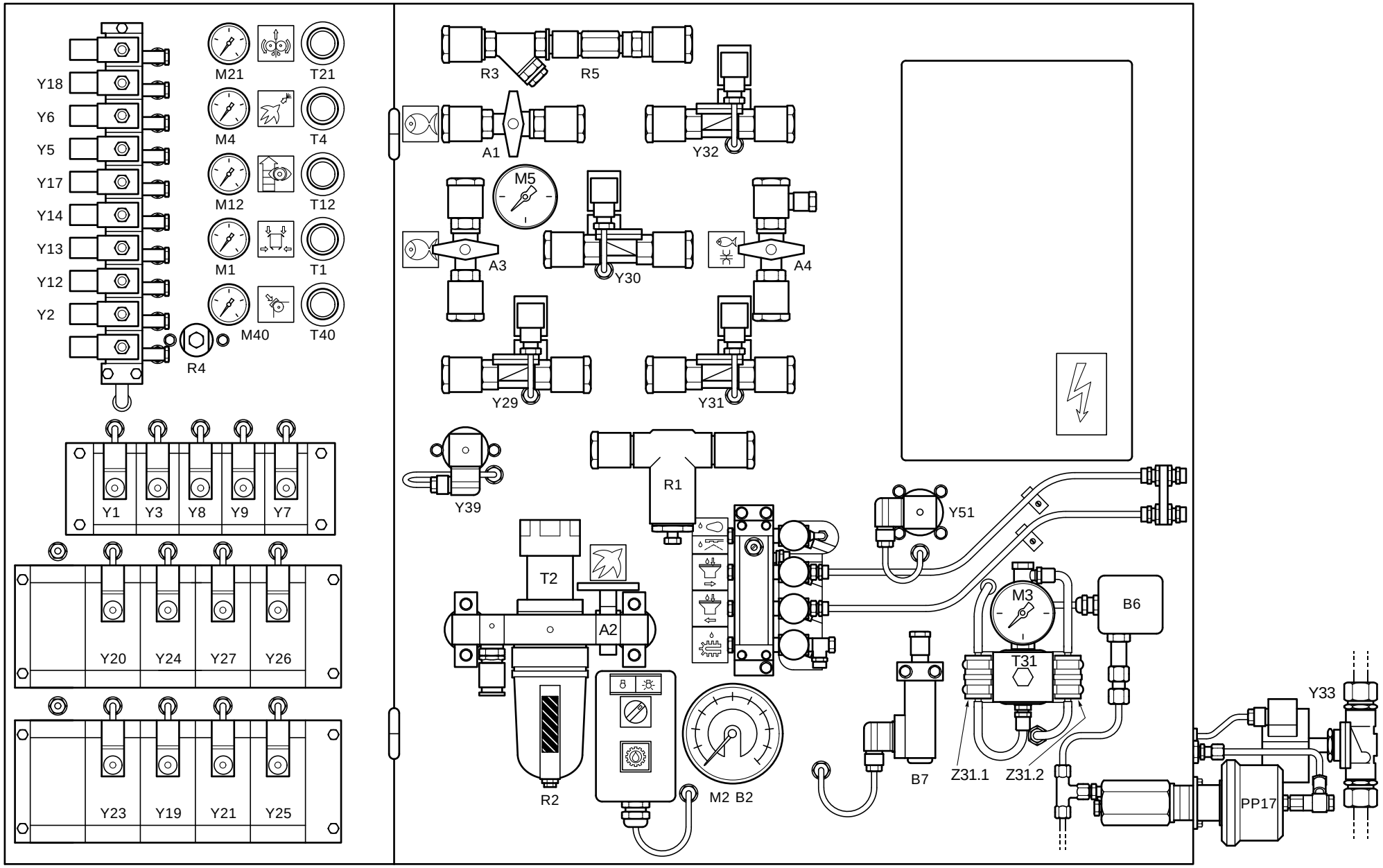

Tetra Pak Technical Service AB
Technical Training Centre

Machine type
TBA/9 120V

Issue
1/9304

OH 461

Valve panel TBA/9

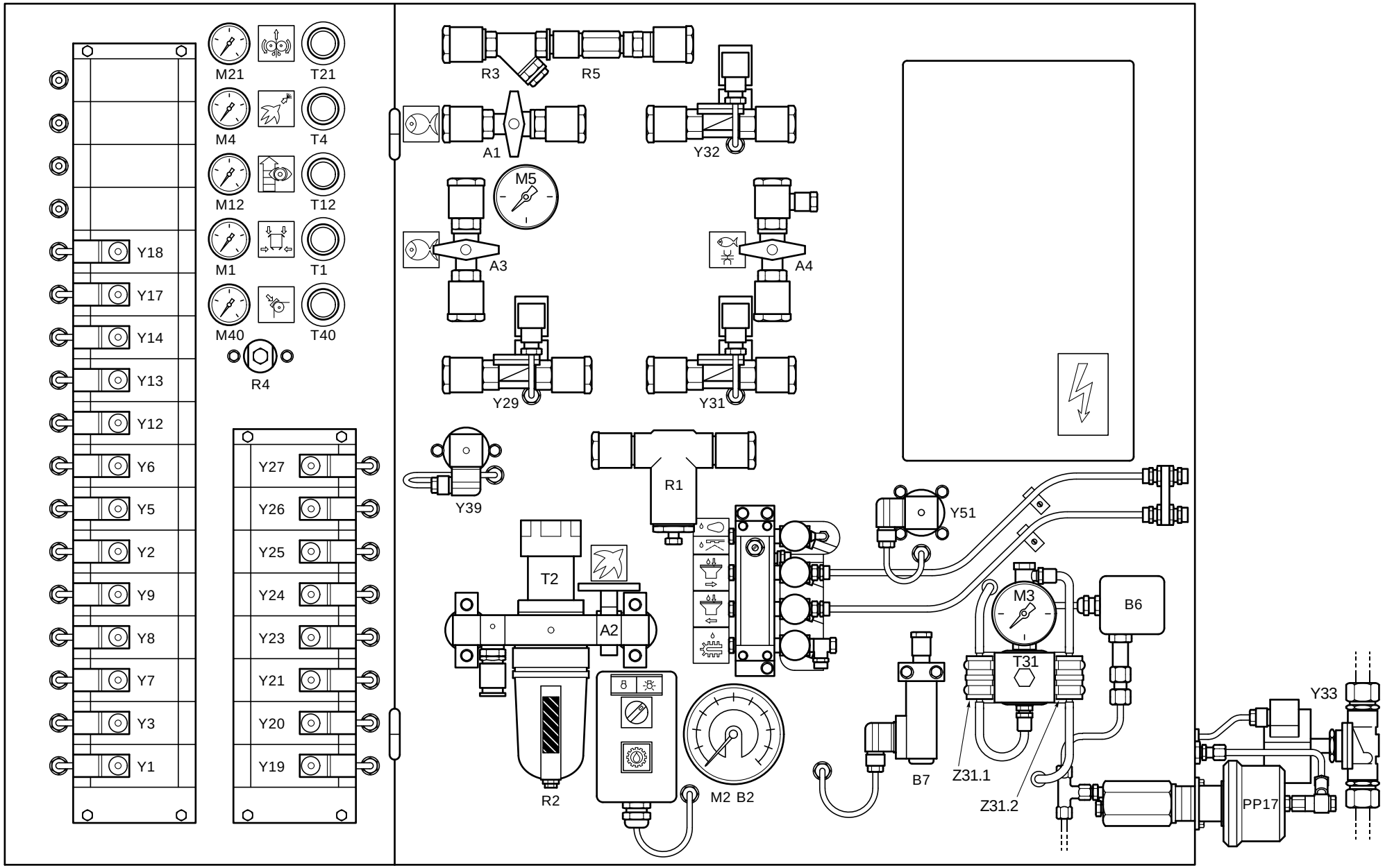

Tetra Pak Technical Service AB
Technical Training Centre

Machine type
TBA/9 130V

Issue
1/9304

OH 462

Valve panel TBA/9

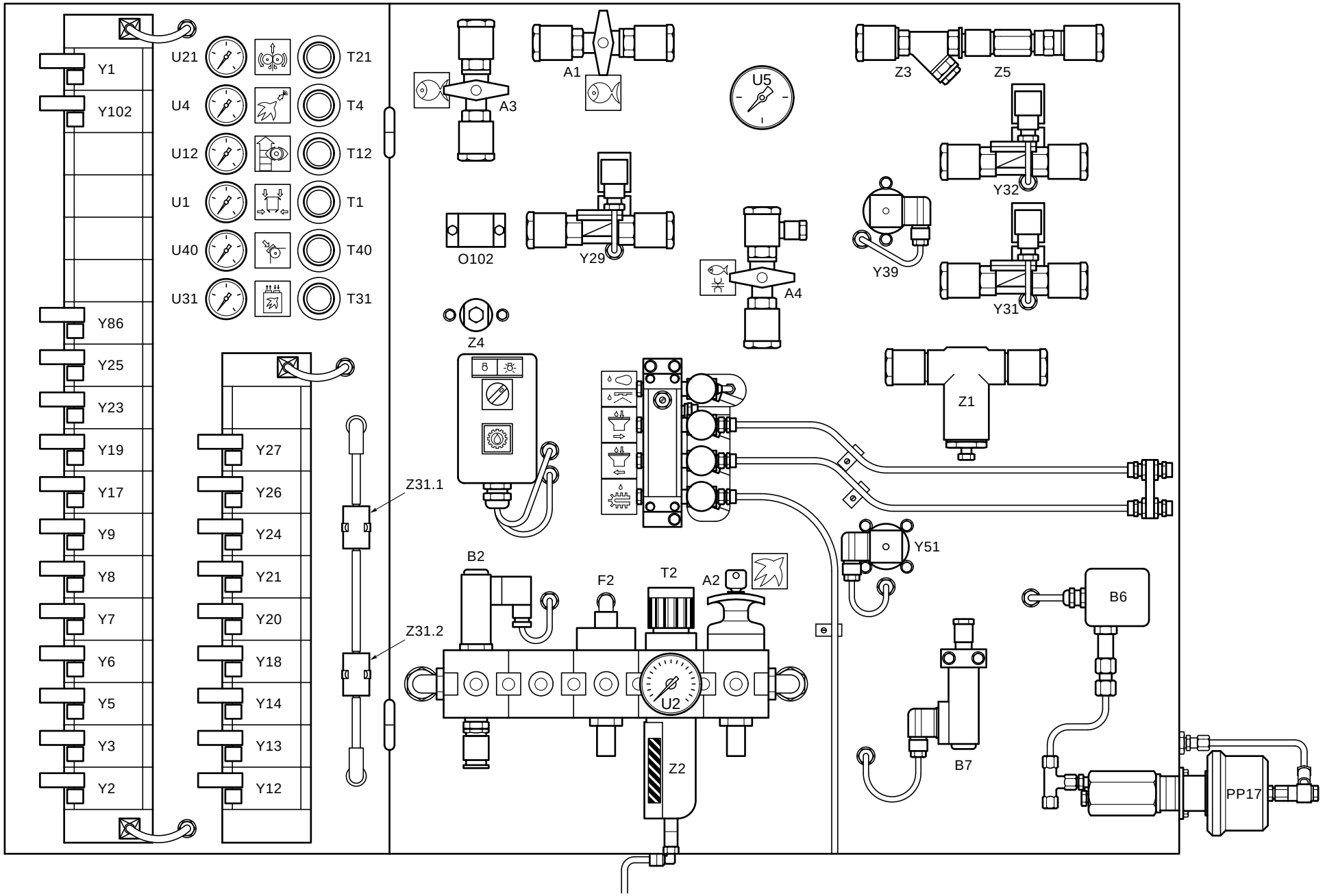

Tetra Pak Technical Service AB
Technical Training Centre

Machine type
TBA/9 140V

Issue
1/9303

OH 463

Ladder diagram

Symbol Name Criteria Function

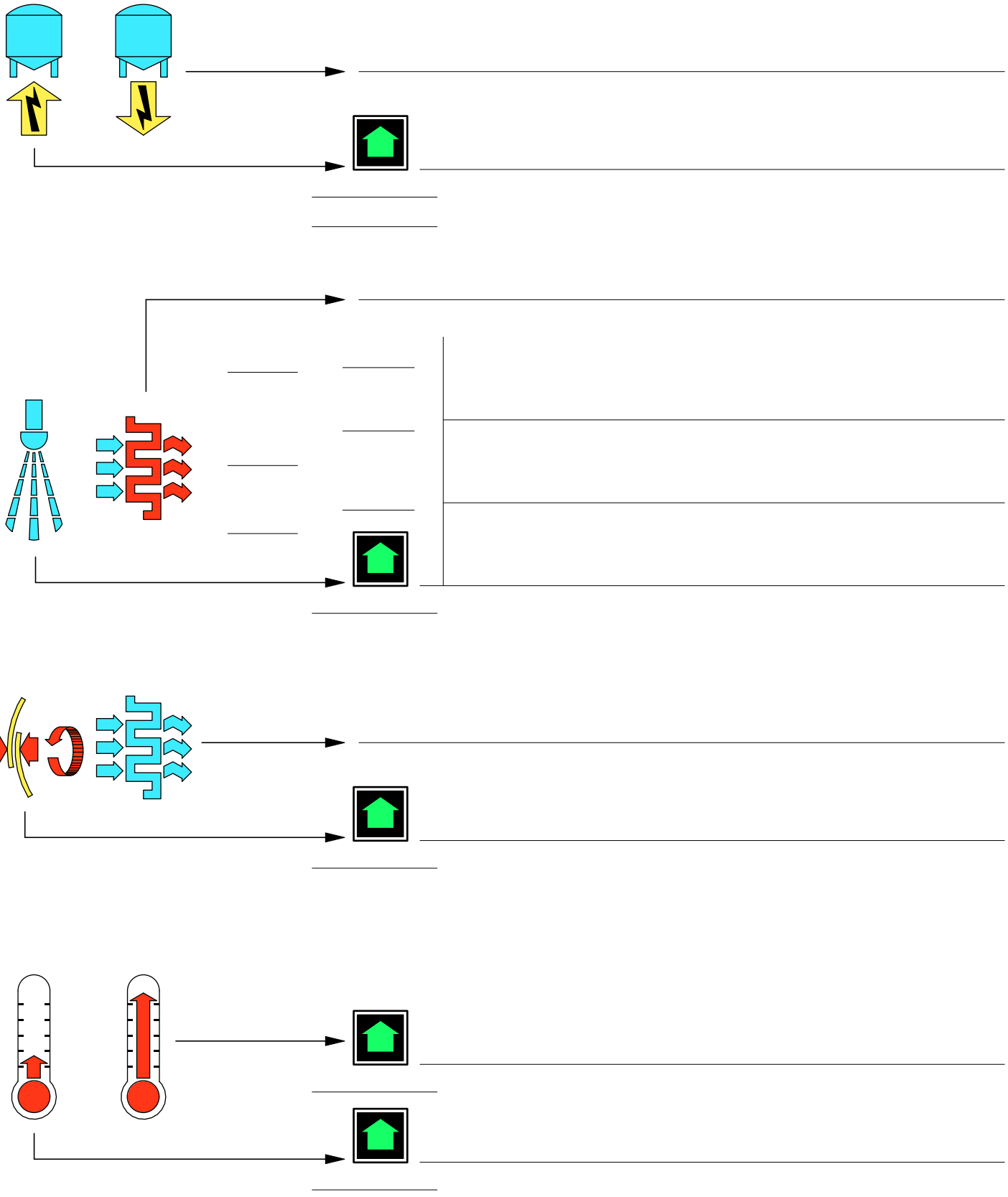

Ladder diagram

Symbol Name Criteria Function

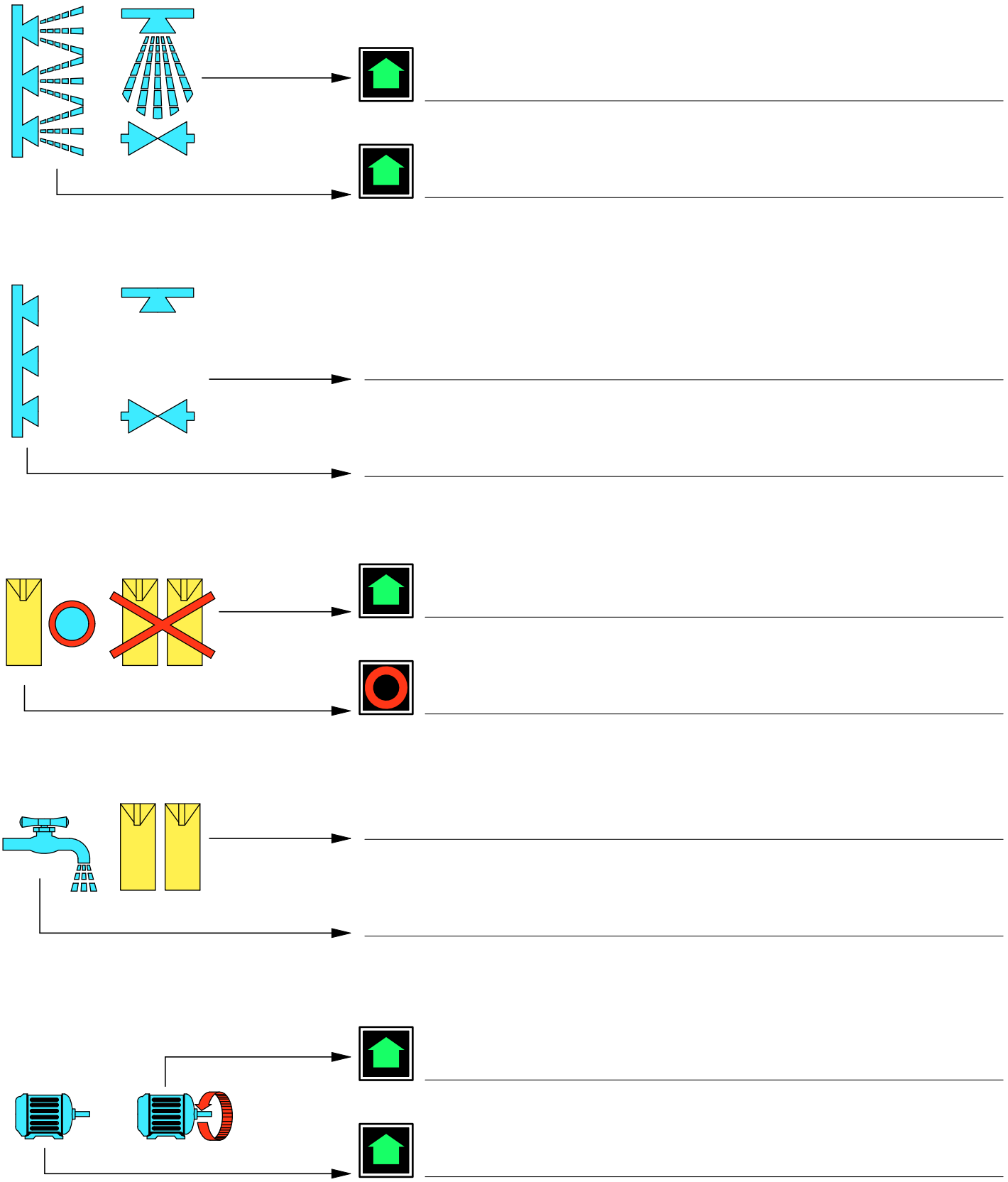

Suction valve

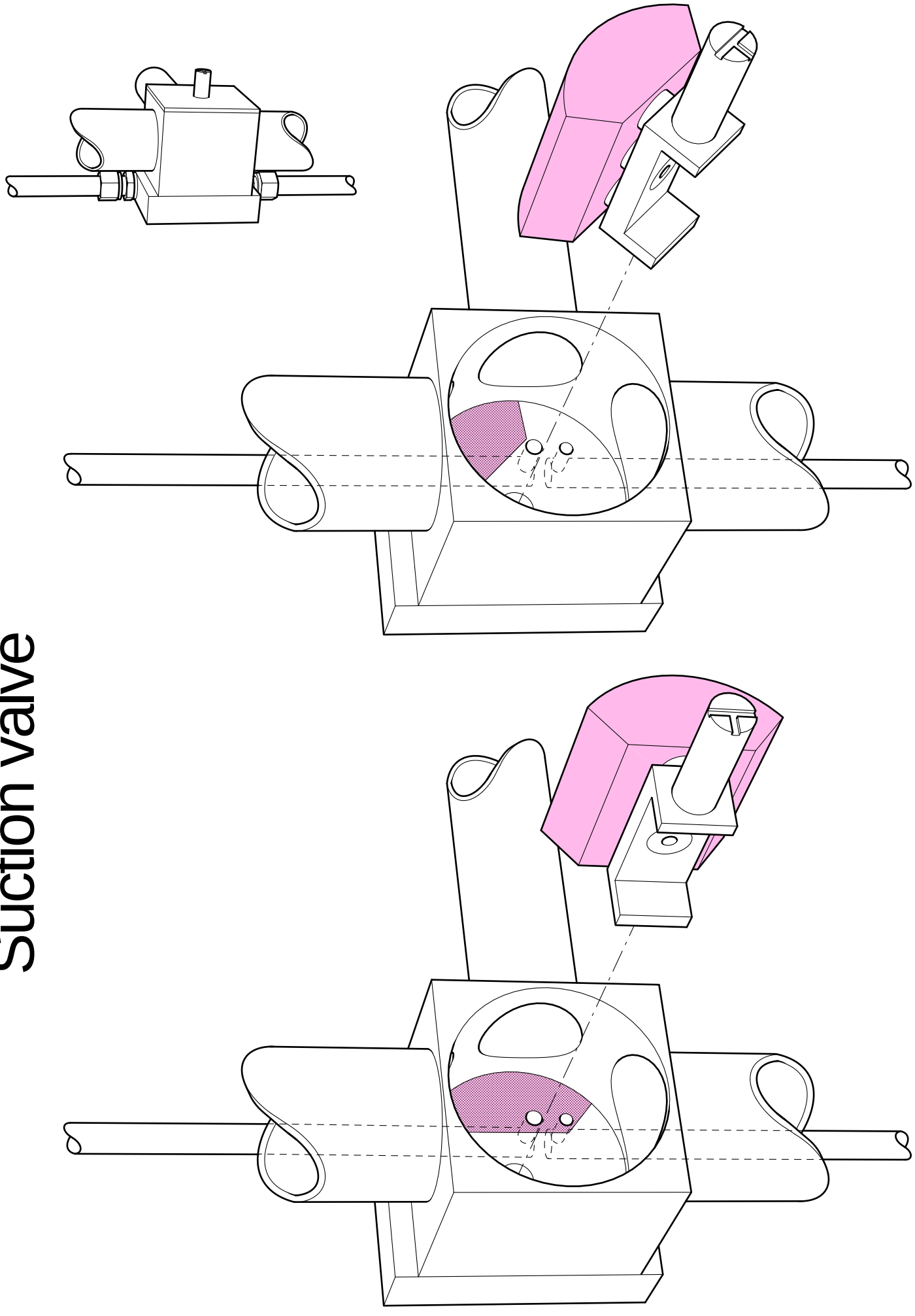

Tetra Pak Processing & Packaging Systems AB Technical Training Centre, Lund, Sweden	Machine type TBA/9	Issue 1/9402	OH 477

High pressure lubrication system, TB/9 and TBA/9

Principle function

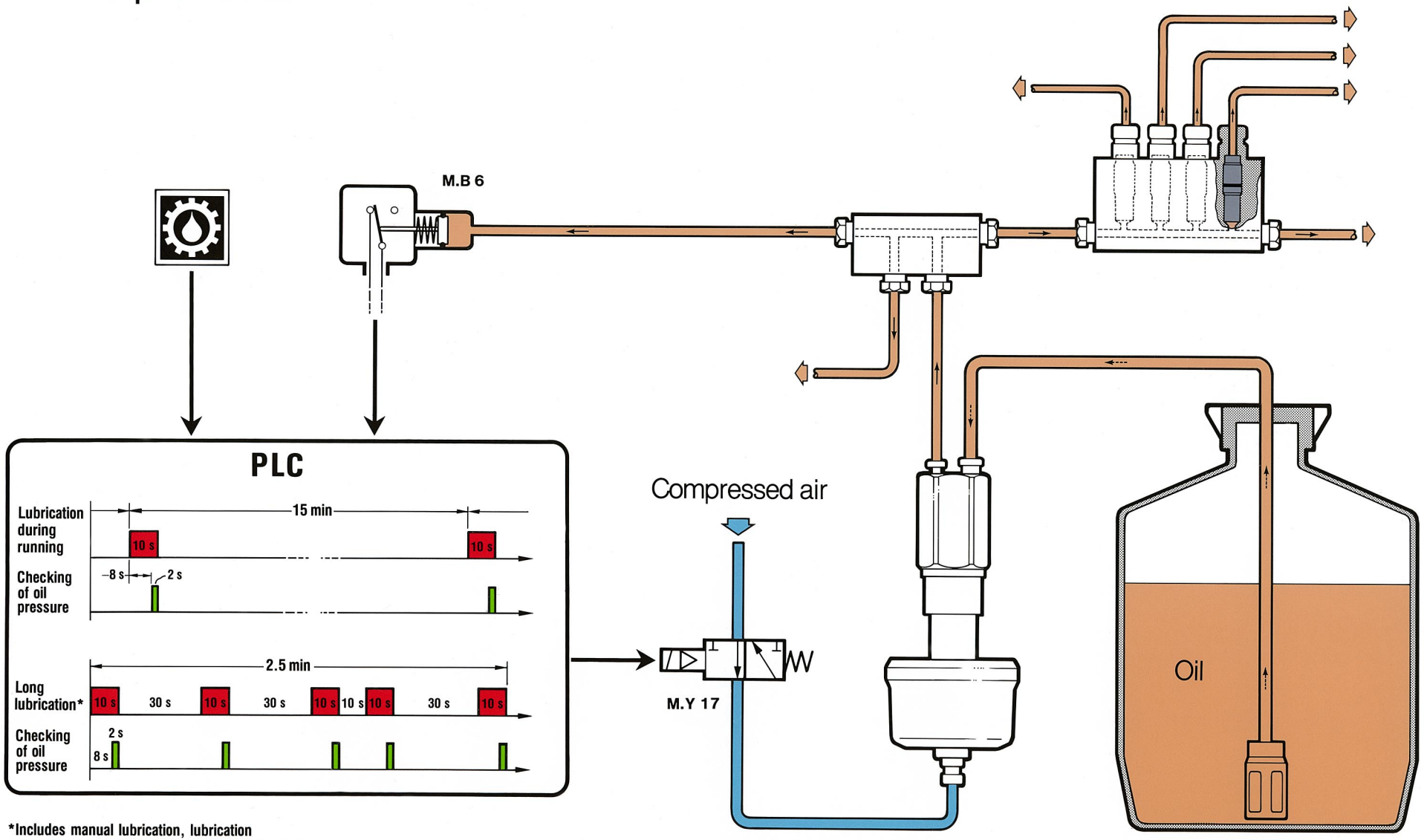

*Includes manual lubrication, lubrication after cleaning and lubrication at first motor start.

Drive unit, TB/9 and TBA/9

Worm gear and motor

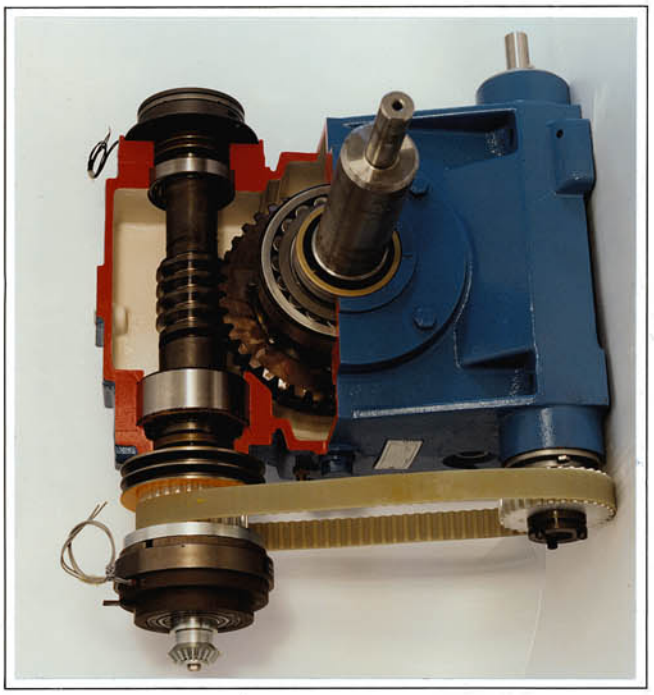

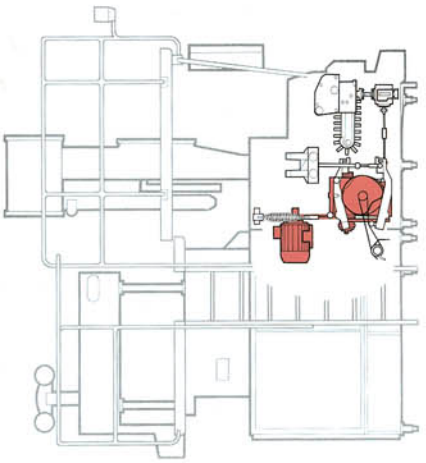

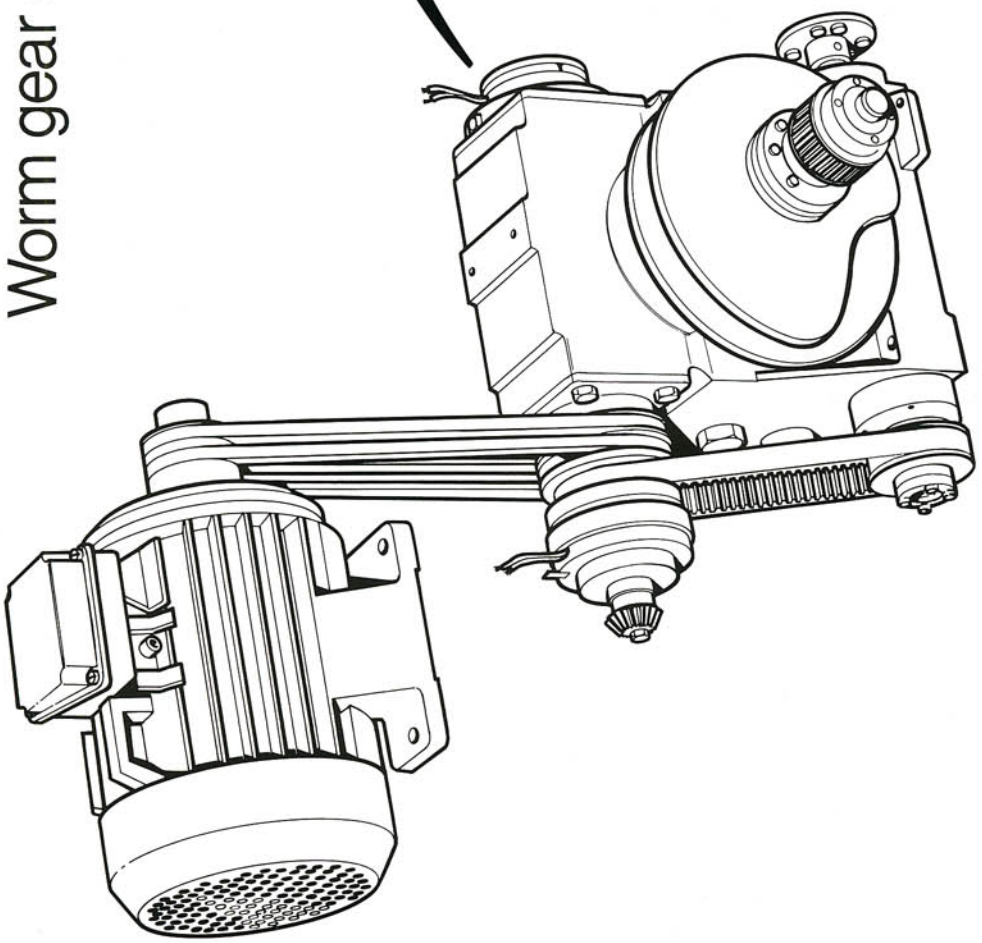

Drive unit, TB/9 and TBA/9

Worm gear, motor and final folder

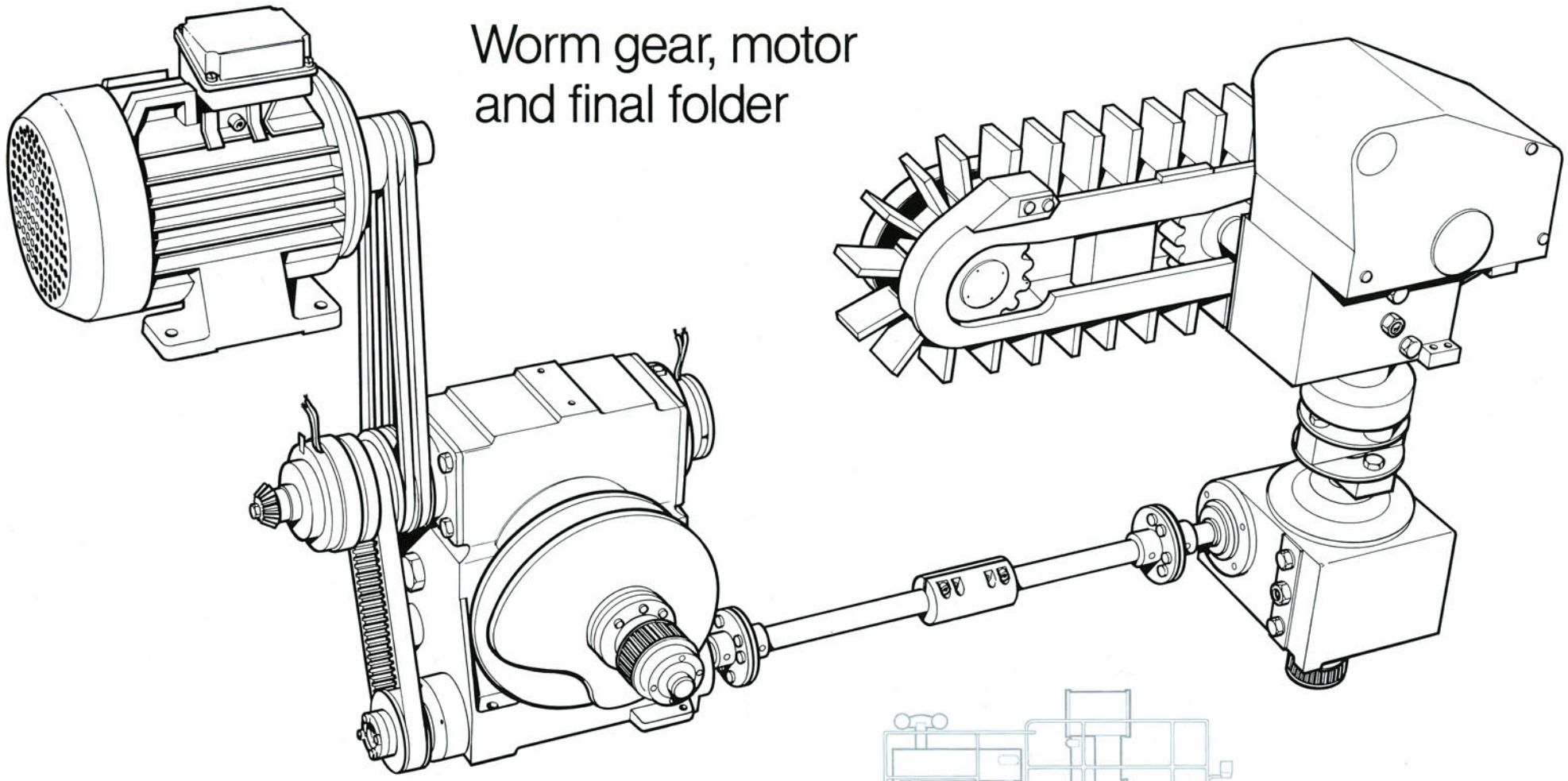

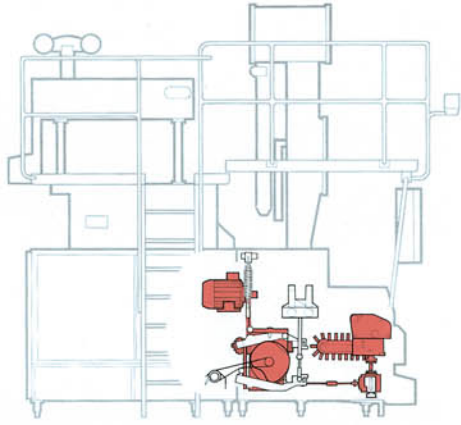

Technical Training Centre Lund, Sweden	Machine	Model	Issue	
	TB/9, TBA/9	1985	2/8902	OH 95:2

Drive unit, TB/9 and TBA/9

Worm gear, motor, final folder and angle encoders

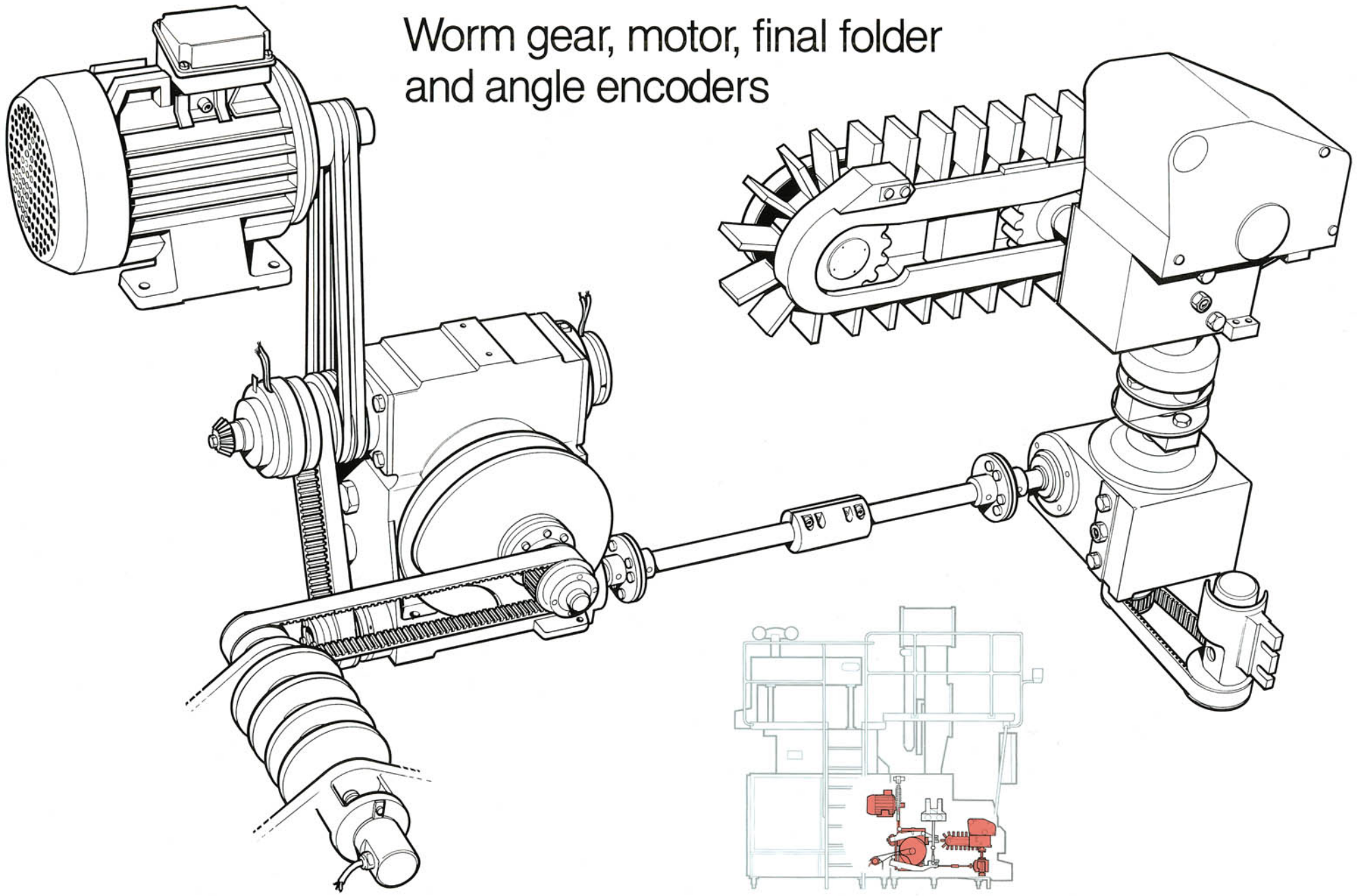

TETRA PAK®
Technical Training Centre
Lund, Sweden

Machine	Model	Issue
TB/9, TBA/9	1985	2/8902

OH 95:3