Technical Training Centre
Lund, Sweden

Machine
TBA/9

Model
1985

Issue
2/8902

OH 119

Tetra Brik Aseptic, TBA/9, with strip applicator

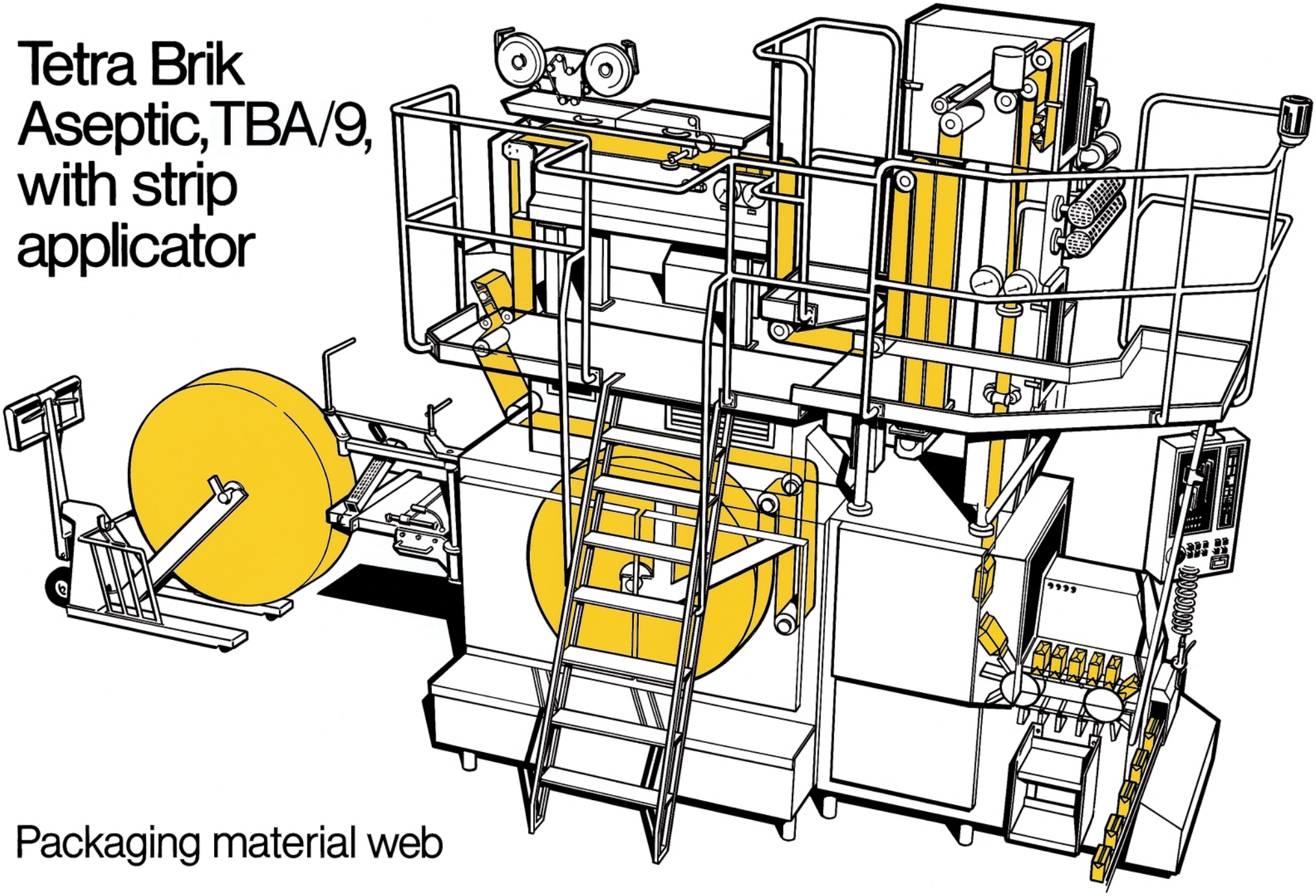

Packaging material web