TBA/9, RH side

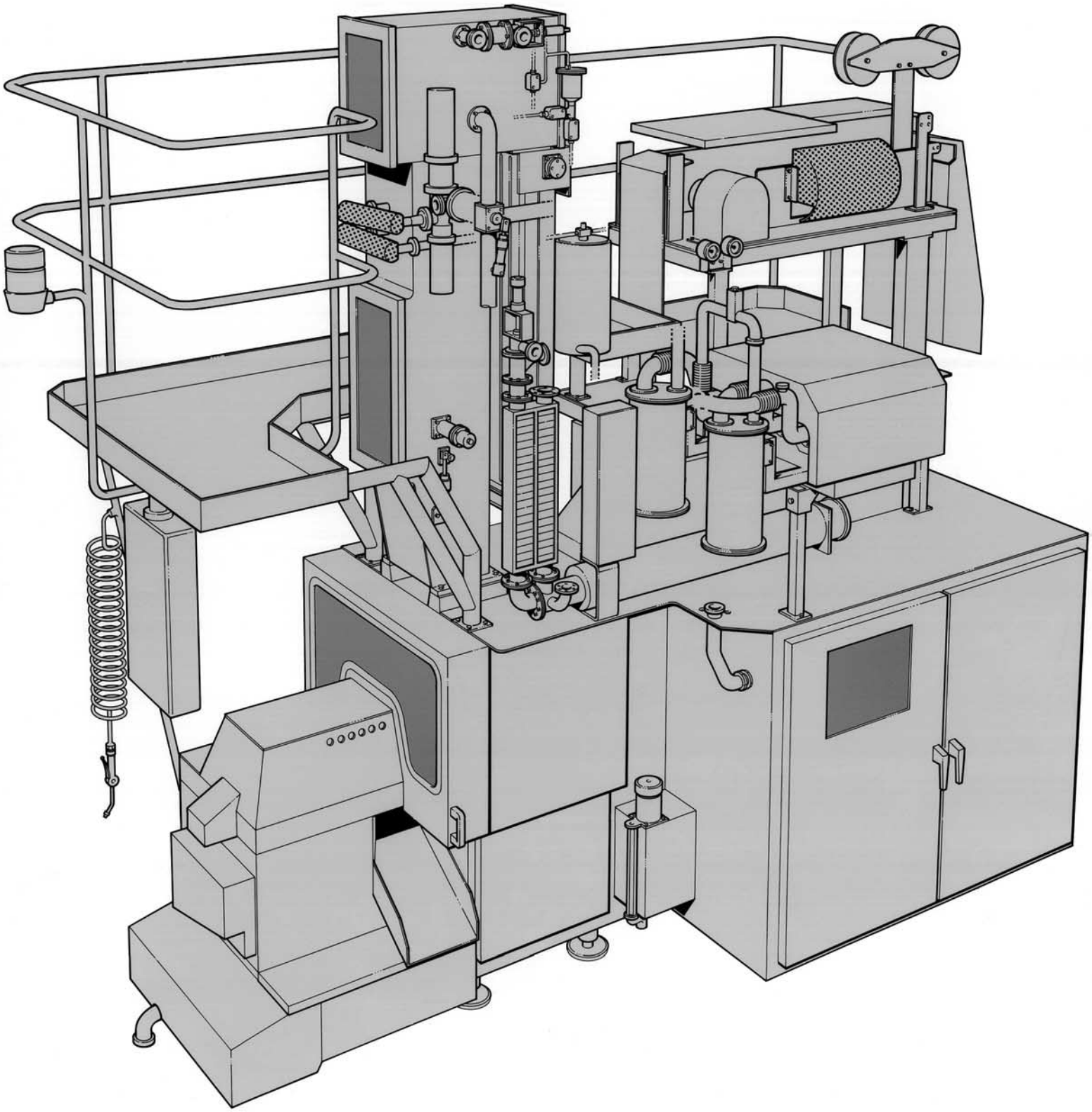

Technical Training Centre Lund, Sweden	Machine TBA/9	Model 1985	Issue 2/8902	OH 148:2