Final folder

Discharge unit adjustments

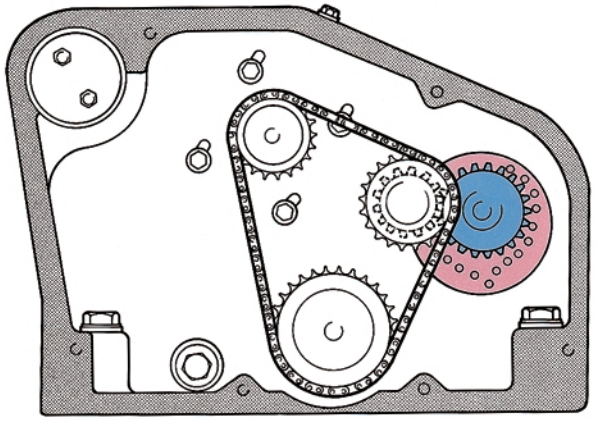

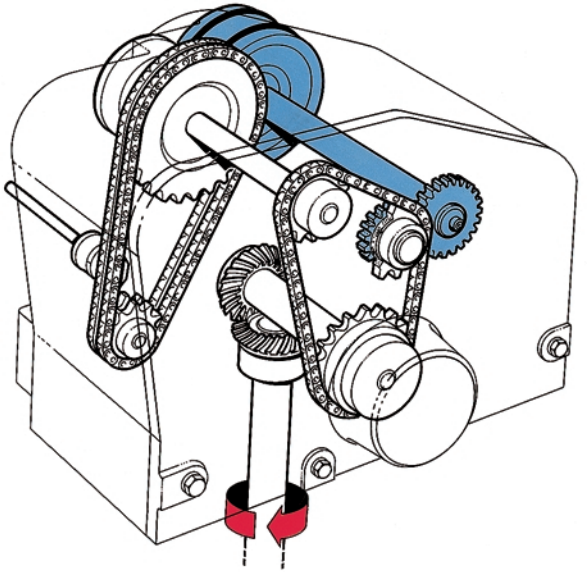

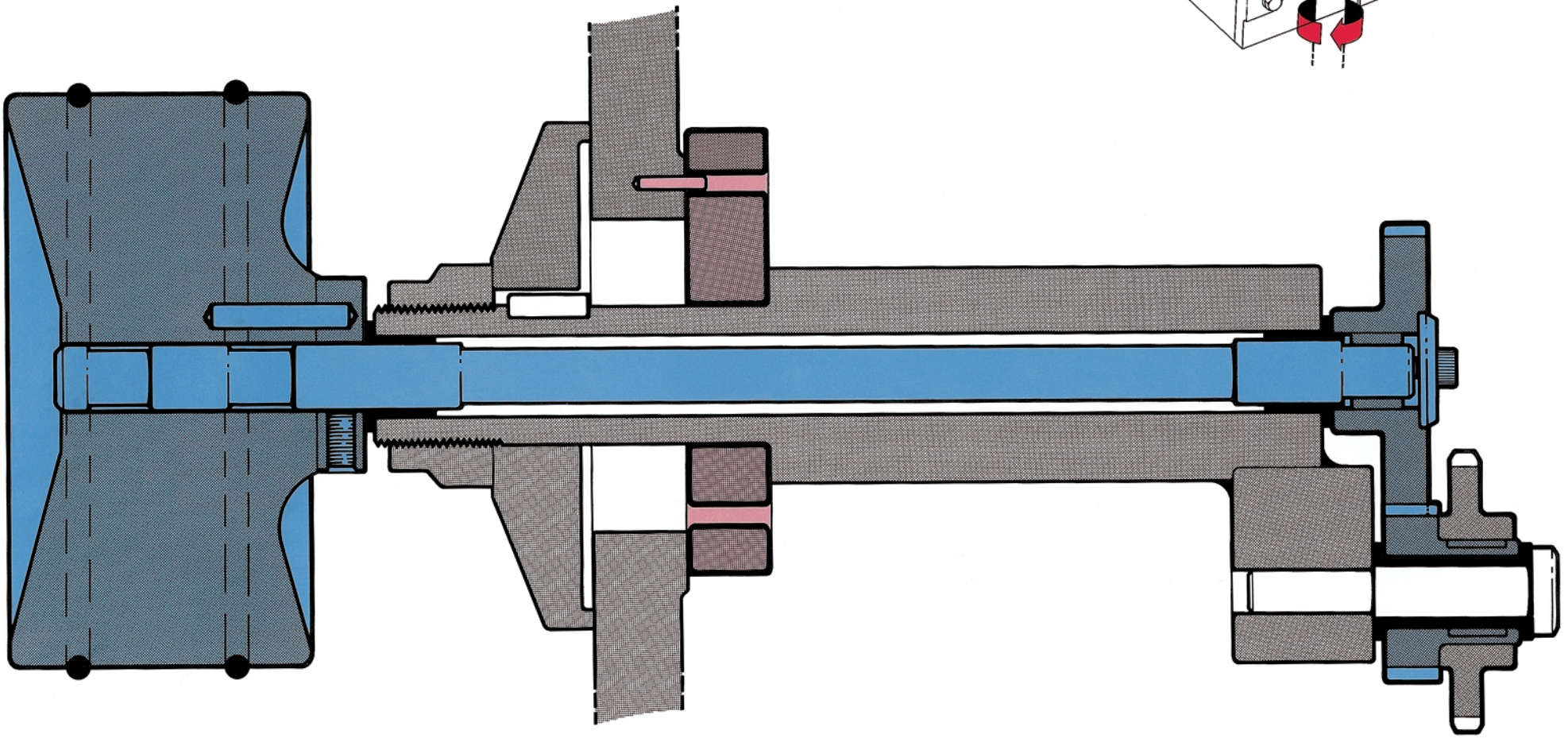

Technical Training Centre Lund, Sweden	Machine	Model	Issue	
TETRA PAK®	TB/9, TBA/9	1985	2/8902	OH 150:3