Cleaning in place (CIP) of filling system, TBA/9

Technical Training Centre
Lund, Sweden
Machine TBA/9
Model
Issue 2/8902
OH 45:2

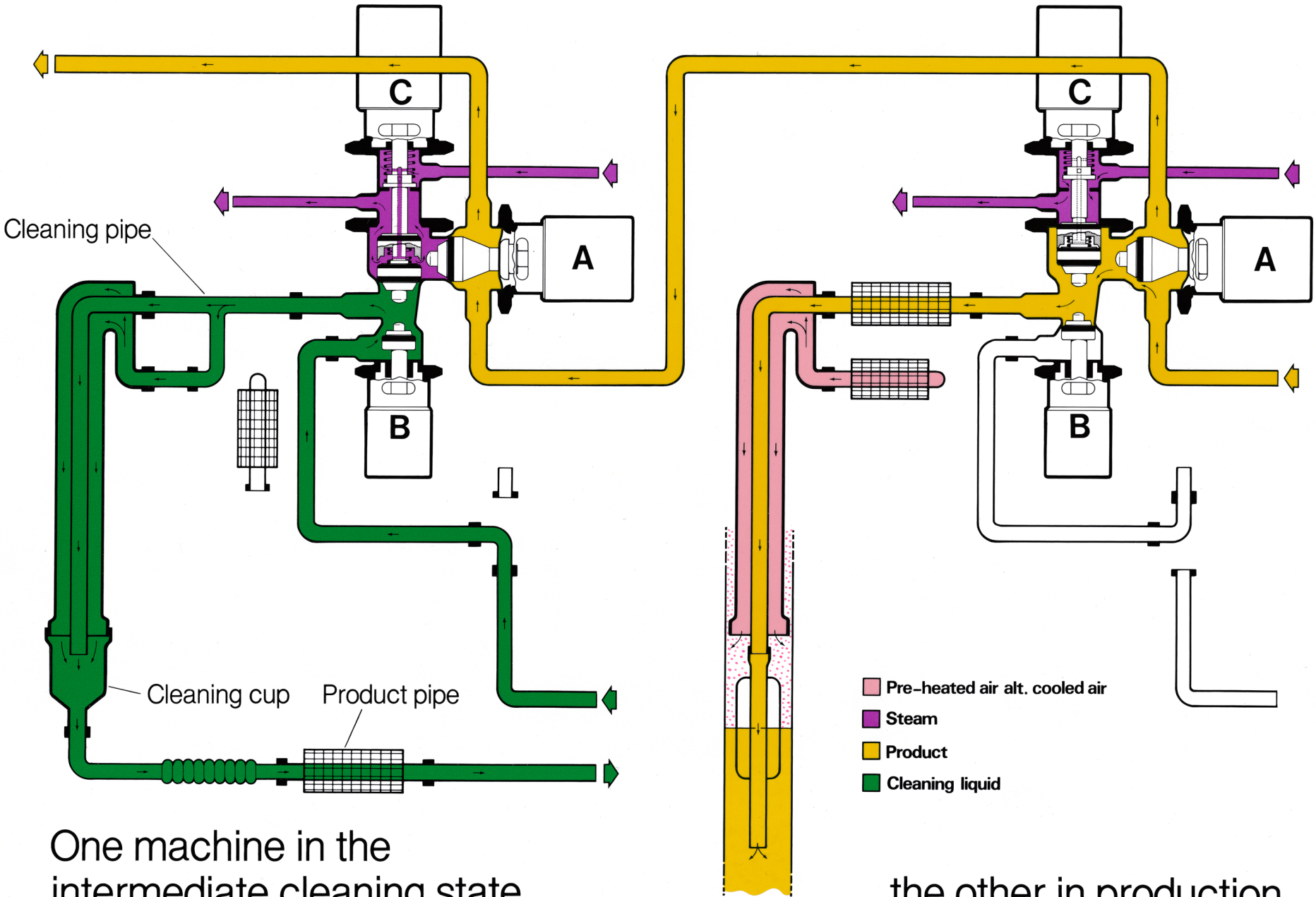

One machine in the intermediate cleaning state,...

...the other in production