Drive unit, TB/9 and TBA/9

Worm gear, motor, final folder and angle encoders

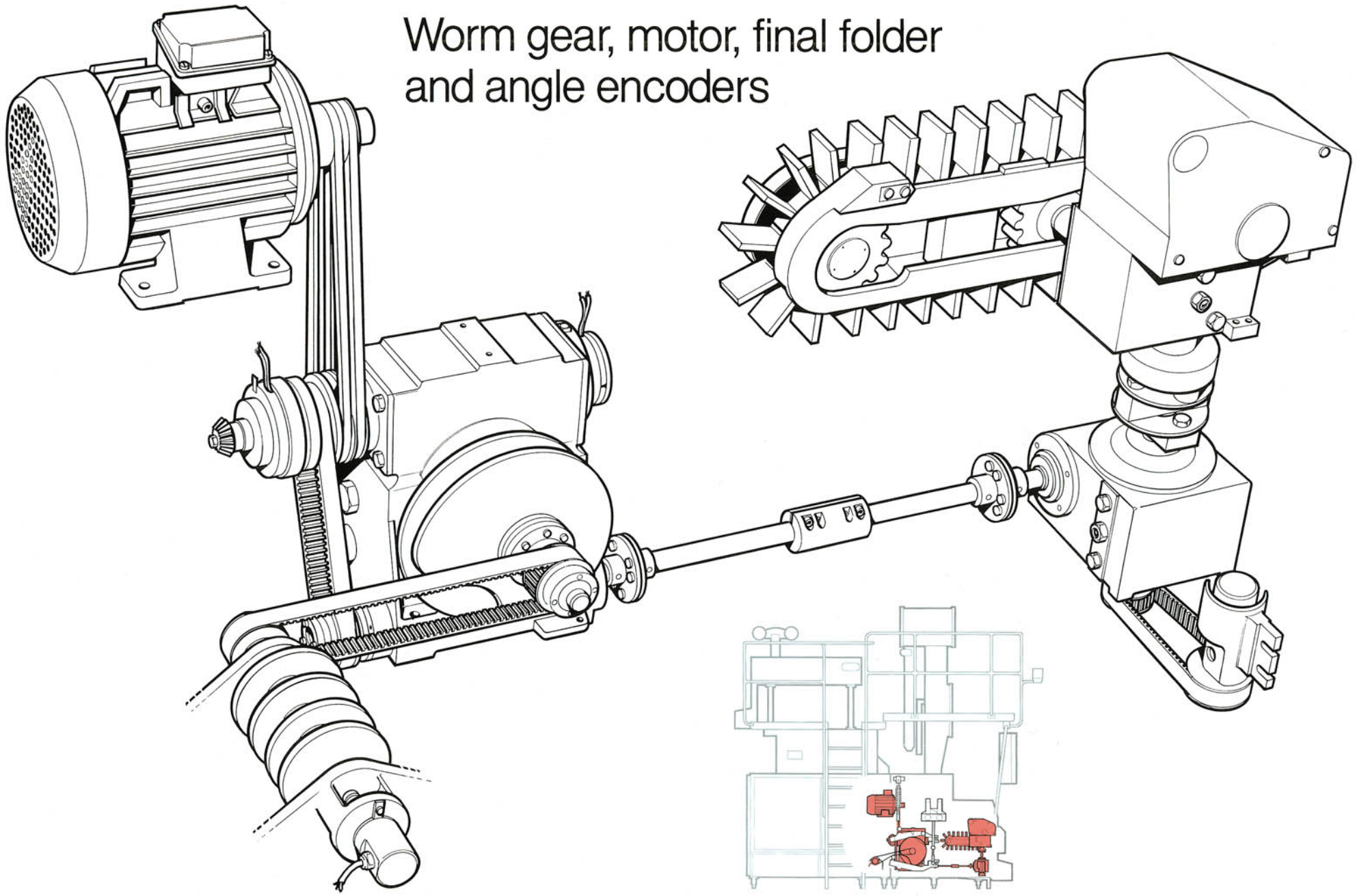

TETRA PAK®
Technical Training Centre
Lund, Sweden

Machine	Model	Issue
TB/9, TBA/9	1985	2/8902

OH 95:3