TBA/9

Training Document

This Training Document is intended for Training purposes only, and must not be used for any other purpose.

The Training Document does not replace any instructions or procedures (e.g. OM, MM, TeM, IM, SPC) intended for specific equipment, and must not be used as such.

Note!

For safe and proper procedures, refer to the equipment specific documentation.

Name:

.....

.....

Course Introduction	1
TBA/9 Introduction	2
Exercises	3
Sterile System Compoments	4
Drive Unit	5
Jaw System	6
Final Folder	7
Valve Panel	8
Hydraulic System	9
Lubrication System	10
Air and Water System	11
Package Integrity	12
Cleaning	13
Tube Forming	14
Design Correction System	15
Electrical	16
TPMC	17
Allan-Bradley	18
TPMS	19
OH	20

Tetra Pak

Technical Training Centre
Lund, Sweden
WB16-01
Issue 2/0408

1

Course Introduction

Information regarding Safety Regulations at the Technical Training Centre in Lund

This list summarizes a number of items which may concern you, as a participant in this training course. Read the list, and if anything remains less than clear, or if you have any questions, feel free to contact your instructor.

1. Study and follow the sections on Safety in the course literature, for instance the OM, MM and EM.
2. You are entitled to ask persons who have no business to be near the machine, to stay at distance, for safety reasons.
3. Never touch any other machines than those used in your own training course.
4. There may be cables which are still electrically live, although they have been disconnected from their terminals.
5. In some machines, safety switches may be bridged or disconnected, for training reasons.
6. Find out exactly where the emergency stop switches for the machine as well as the conveyor are located.
7. When starting a machine, the **person doing the starting** must make absolutely sure that this does not expose anyone else to danger.
8. Certain chemicals, used in your training course, may be hazardous to your health and constitute a danger of fire or explosion. Make sure you know how such chemicals are marked and how to handle them.
9. It is strictly prohibited to wear rings, watch, or necktie when working with the machine. This prohibition also applies to loose-fitting clothes or anything else that might get caught in the machinery.
10. A first aid kit and stretcher are kept in the machine hall.
11. Study the information on what to do in case of fire and which escape routes to follow. A diagram of escape and evacuation routes is posted in every classroom.
12. If you observe or discover anything that might jeopardize safety, immediately tell your instructor.

Information to Course Participants at the Technical Training Centre in Lund

Welcome to Technical Training Centre!

Here is some information which might be helpful to you as a course participant. If you need additional information or help, feel free to ask your instructor.

Start of course

Normally, the first day of your course begins at 08.30. Your instructor will meet and welcome you in the coffee room.

Daily time schedule

Classes	08.00 - 09.30
Breakfast	09.30 - 10.00
Classes	10.00 - 12.00
Lunch	12.00 - 13.00
Classes	13.00 - 16.00

Your instructor will tell you if there are any changes in the schedule.

Breakfast

Breakfast is free of charge and served in the restaurant, where a special area has been reserved for Technical Training Centre course participants. Breakfast consists of coffee or tea and bread rolls.
If you want anything in additional, for instance from the serving counters of the restaurant or cafeteria, you have to pay for it yourself. Your instructor will help you with the procedure.

Lunch

Lunch is served in the restaurant. You can choose among several dishes; menus are posted in the restaurant and in the coffee room.
If you are a customer course participant, your instructor will give you a cash card. For participants other than customers, cash cards are for sale in the cafeteria. Your instructor will help you with the procedure.

Coffee room

You are invited to use the coffee room and the vending machine during all breaks in classes.

Smoking

The entire Tetra Pak plant, outdoors as well as indoors, is a no smoking area. Smoking is allowed though in special smoking areas.

Telephones

If you need to call long-distance within Sweden or abroad, please use the phone in the telephone room. There is also a telephone in the coffee room for local or internal calls only. When using the phones, please be brief, as there may be others who wish to make calls.

Computers There are three computers for the use of course participants. Two computers in the machine hall and one in the coffee room. The computers accesses the Tetra Pak Intranet and the World Wide Web.

ID card On your first day you will receive an ID card. This card must be returned at the Tetra Pak Main reception at the end of the course. Anyone not handing the card back will be charged SEK 400.

Safety regulations At the start of the course, your instructor will go through the Safety Regulations (TM-00001). These regulations must be strictly observed. In case you are uncertain about anything in the regulations, you must clarify it with your instructor.

Course evaluation You are requested to write down your comments on the Course Evaluation form. At the end of the course your instructor will collect all the forms.

Working clothes It is necessary to wear safety shoes in the Technical Training Centre, while working at the machines. If you didn't bring your own, safety shoes are for sale in the Support Centre. Your instructor will take you there. For your use during the course, you may borrow a set of coveralls.

Each participant is given a locker in the changing-room. The instructor will hand you the locker key. You may then select a set of coveralls from the cabinet in the changing-room. Your instructor will help you if needed.

You may exchange your coveralls for clean ones every Monday morning. Tell your instructor if you need to change at any other time. Used and soiled coveralls are to be placed in the laundry basket in the changing-room.

At the end of the course you have to empty and lock your locker and return the key to the instructor. If you wish to retain your locker for a subsequent training course, tell your instructor.

Valuables You are responsible for your own valuables.

Money exchange To change currency or cash traveller's cheques, please go to the Exchange service at Support Centre, which is open 08.00 - 16.30.

Hotels In the coffee room, there is a list of the various hotels, with addresses, phone numbers, etc. If you want to change hotel during the course period, please contact the course co-ordinator at Technical Training Centre.

Transport Certain hotels provide free of charge transport to and from Tetra Pak. Ask the hotel receptionist about this. If you wish to use this service, you must tell the receptionist the day before.

Travel arrangements Go to the Resespecialisterna travel agency at Tetra Pak for reservations, reservation changes, or confirmation of reservations. The travel agency accept credit cards or invoicing but not cash. They are open 08.00 - 17.00.

Medical care For medical care, unless it is an emergency situation, go to Citykliniken, located in the centre of Lund. Information concerning this clinic is posted on the notice board in the coffee room.

Leisure time In the coffee room you will find information about the city of Lund and the surrounding region as well as on available facilities and activities.

Sport Centre Bookings for the Tetra Pak Sport Centre are free of charge and can be made at the Main Guard, located next to the Main Reception. If you visit the Sport Centre, you must enter and leave via the Main Guard.

Gifts and souvenirs Gifts, souvenirs, articles of clothing, etc. are for sale in the Support Centre, which is open 08.00 - 16.30.

Tetra Pak

Part of the plant at
Ruben Rausings gata
Lund

1. Main Reception
2. Main Guard
3. Technical Training Centre
4. Restaurant
5. Support Centre
6. Resespecialisterna Travel agency
7. Sport Centre

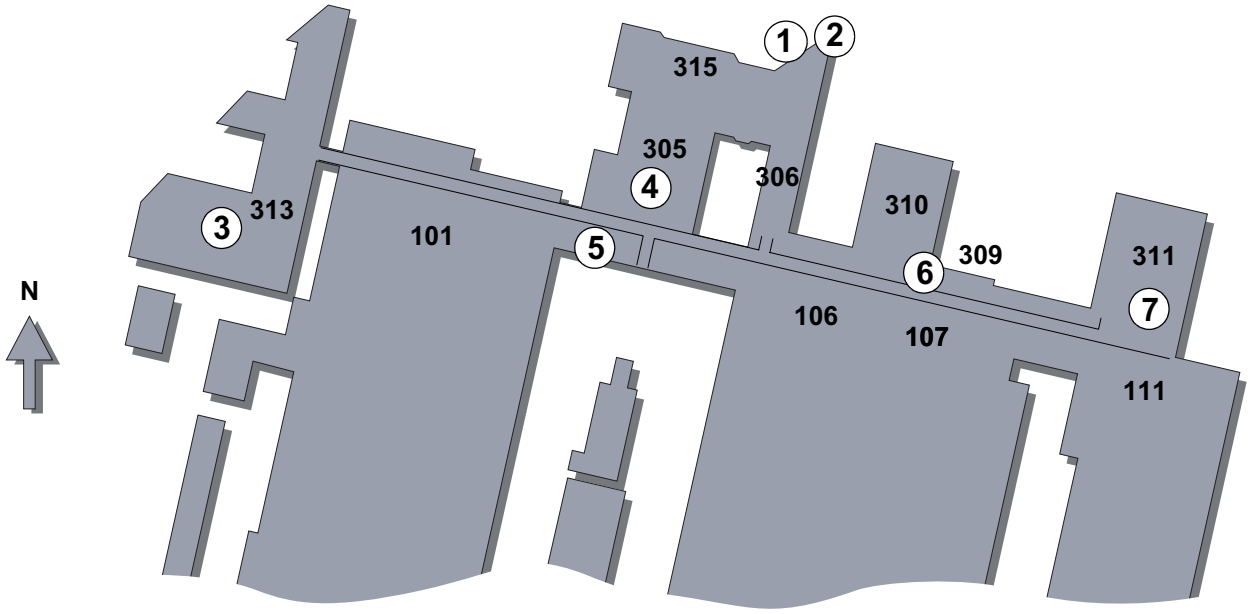

2

TBA/9 Introduction

Tetra Pak

Tetra Brik Aseptic packaging machine
Type: TBA/9 with strip applicator

The machine packages liquid food in Tetra Brik Aseptic packages.

The packaging material may be manufactured with perforated, straight tear opening. To facilitate the opening of the package, the filling machine may, as extra equipment, be provided with a perforation heater. The packaging material may also be manufactured with prepunched holes for drinking straws.
Registered printed design is achieved by means of a bar code printed on the packaging material.
As a standard, the machine is equipped with a system for external cleaning of the jaw system and final folder, i e the units in which the packages are formed, sealed, and folded.

Capacity
- Packages per hour: 6000
- Package volumes: See table. Headspace equipment may provide intermediate volumes.

Electric power
- Input voltage, Hz, V: 3N~, 50/60, 380/220
- Recommended mains fuse, A: 63
- Other voltages require adaption transformer.
- Consumption during preheating, kW: 20
- Consumption during sterilization, kW: 24
- Consumption during production, kW: 26
- Consumption during cleaning, kW: 5

Compressed air
- Supply pressure, kPa (bar) [psi]: 600–700 (6–7) [87–102]
- Consumption, Nl/min (cu ft/min): 500±100 (17.7±3.5)

Cooling water
- Supply pressure, kPa (bar) [psi]: 300–450 (3–4.5) [43.5–65]
- Max inlet temperature, °C (°F): 20 (68)
- Consumption, l/min (Imp gal/min): 14 (3.1)
- Of the total consumption, appr 5 l/min may be recirculated by means of extra equipment.

Steam
- Supply pressure (overpressure), kPa (bar) [psi]: 170±30 (1.7±0.3) [25±4.5]
- Temperature, °C (°F): 130±4 (266±7)
- Consumption, kg/h: 2.4

Hydrogen peroxide, H_2O_2
- Consumption, l/h: 0.6–1.0

Product
- Supply pressure, kPa (bar) [psi]: 50-200±10 (0.5-2±0.1) [7.5–29±1.5]

External cleaning system
- Supply pressure, kPa (bar) [psi]: 300–450 (3–4.5) [43.5–65]
- Hot water consumption, litres per cleaning cycle: 300
- Hot water temperature, °C (°F): 65–75 (149–167)
- Special detergent consumption, litres per cleaning cycle: 0.8

Extra equipment
- Equipment for underfilling; provides up to 10% headspace (20% of 200 and 250 cm^3).
- Equipment for automatic splicing of new reel of longitudinal strip.
- Perforations heater; improves tear opening facility.
- Equipment of recirculation of cooling water, see above.
- Equipment for external handling of Jumbo reels.
- Separate cleaning (CIP) unit for cleaning product valve and filling pipe.
- Platform to be fitted to several machines in line.

Packing for shipment
The machine is shipped in a wooden crate with the following dimensions in mm (ft in) and weights in kg (lbs).

Length	4100 (13'6")
Width	2300 (7'7")
Height	3200 (10'6")
Net weight	5400 (11907)
Gross weight	6300 (13891)

Installation according to drawing No 2-469389-1 and -2.

Dimensions of packages and packaging material

Package				Packaging material	
	 Dimensions				
Volume, cm^3 (ml)	A	B	C	Appr quantity of packages per reel	Appr weight of reel, kg
125	86	32	47	7300 (29000*)	36 (145*)
180	75.5	41	63	5000	38
200	83	41	63	5000 (23500*)	40 (185*)
200S	119.3	38	47	19000*	170*
236.6	100	41	63	4500 (21000*)	40 (195*)
250	106	41	63	4500 (20000*)	43 (190*)

S = Slim (package with slim profile)
*Jumbo reel

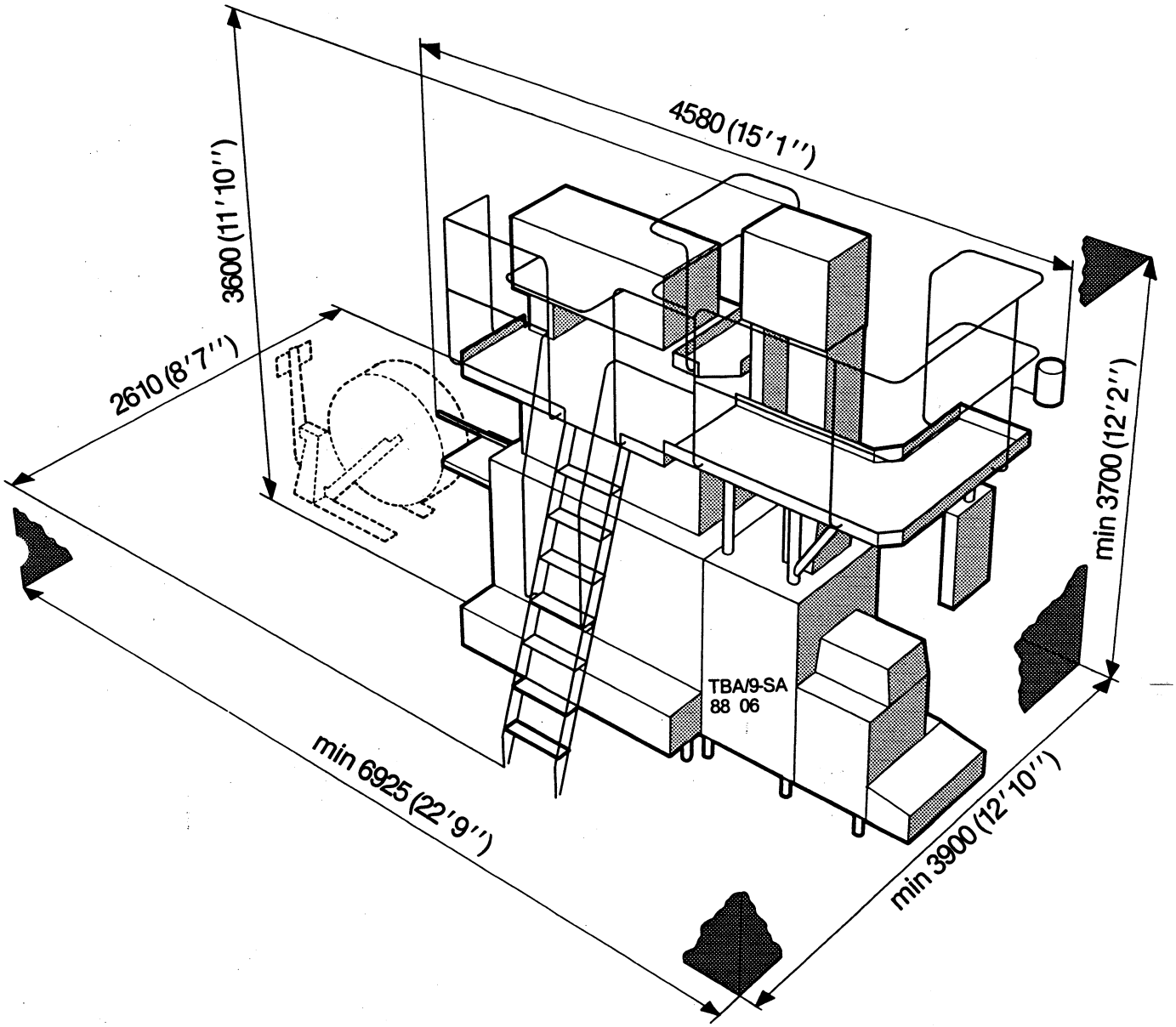

Internal code 7296 B. Date 8.88

AB Tetra Pak Promotional Material
Ruben Rausings gata S-221 86 Lund Sweden

We reserve the right to introduce design modifications without prior notice. Tetra Brik Aseptic is a trademark belonging to the Tetra Pak Group.

Extra equipment

Equipment for external handling of Jumbo reels.
Recirculation of cooling water, see above.
Separate CIP (cleaning-in-place) unit for cleaning of product valve and filling pipe.
Platform for installation of several machines in a row.
Equipment for headspace. Headspace is achieved either by injecting sterile air or inert gas, or through regulation by means of a constant-flow valve.
Equipment to enable the packaging of high-viscosity products.
Equipment for flexible automatic splicing in of reels of material, ASU-Flex (Automatic Splicing Unit).

Packing for shipment

The machine is shipped in a wooden crate with the following dimensions in millimetres (ft in) and weights in kilogrammes (lbs).

Length	4100 (13'6")
Width	2300 (7'7")
Height	3200 (10'6")
Net weight	5400 (11907)
Gross weight	6300 (13891)

Installation according to drawing Nos 560582 -1 and -2.

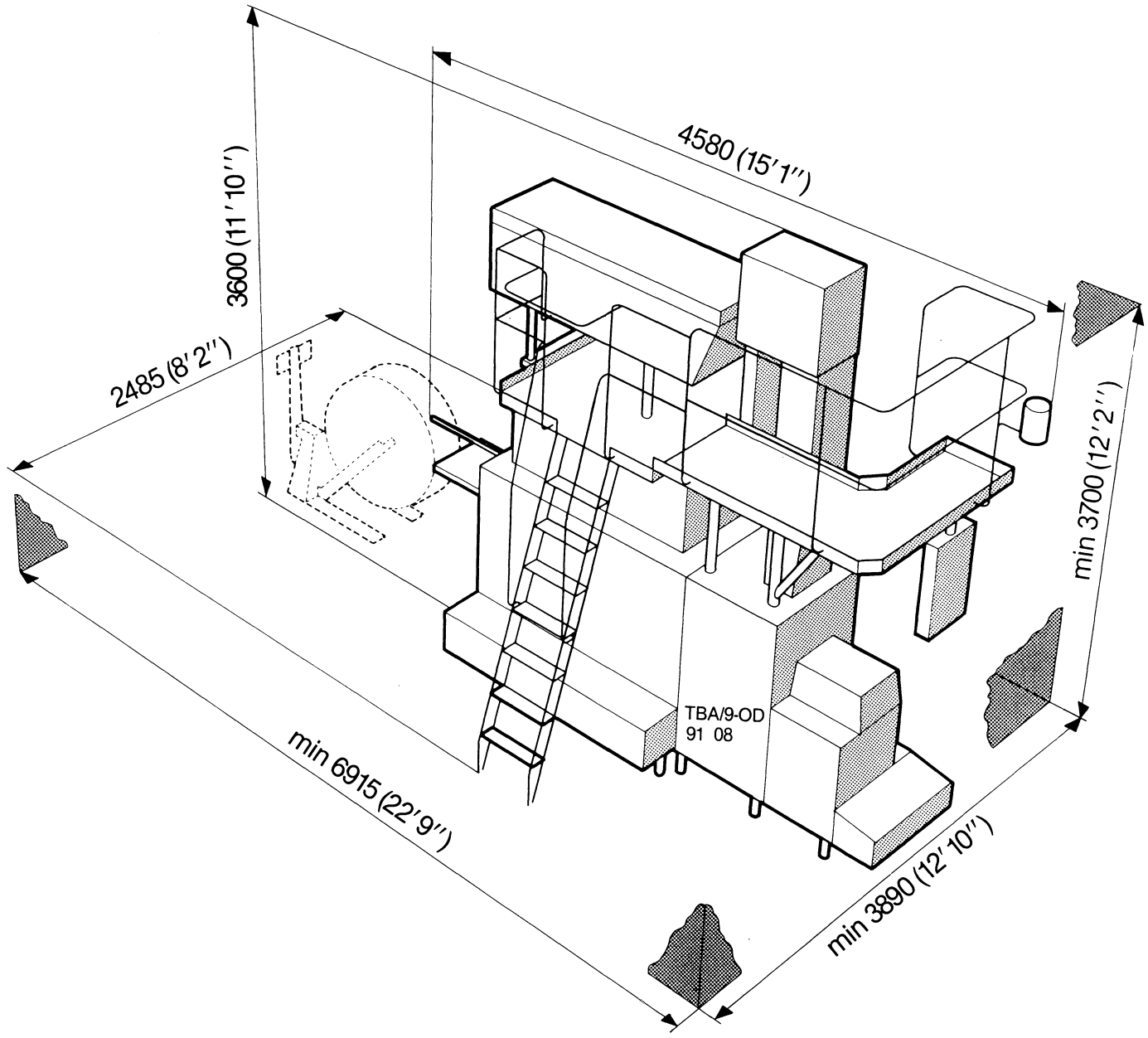

Internal code 7226 B. Date 2.92

AB Tetra Pak Promotional Material
Ruben Rausings gata S-221 86 Lund Sweden

We reserve the right to introduce design modification without prior notice. Tetra Brik Aseptic is a trademark belonging to the Tetra Pak Group.

Tetra Pak

Tetra Brik Aseptic packaging machine
Type: TBA/9 with pull tab unit

The machine packages liquid food in Tetra Brik Aseptic packages.

The package is provided with an opening arrangement, a so-called pull tab, which is a tear strip attached over a prepunched hole in the packaging material.

Printed design in register is achieved by means of a bar code, printed on the packaging material.

As a standard, the machine is equipped with an external cleaning system for the jaw system and final folder, i e those units by which the packages are formed, sealed, and shaped.

Capacity
- Packages per hour: 6000
- Package volumes, cm^3 (ml): See table. Headspace equipment will give intermediate volumes.

Electric power
- Type, frequency Hz, voltage V: 3N~, 50/60, 380/220
- Other voltages require adaption transformer.
- Recommended main fuse to obtain selectivity, A: 100
- Consumption during preheating, kW: 25–37
- Consumption during sterilization, kW: 27
- Consumption during production, kW: 29
- Consumption during cleaning, kW: 5

Compressed air
- Supply pressure, kPa (bar) [psi]: 600–700 (6–7) [87–102]
- Consumption, Nl/min (cu ft/min): 500±100 (17.7±3.5)

Cooling water
- Supply pressure, kPa (bar) [psi]: 300–450 (3–4.5) [43.5–65]
- Max inlet temperature, °C (°F): 20 (68)
- Consumption, l/min (US gal/min): 14 (3.7)

Of the total consumption, appr. 5 litre per minute (1.3 US galllon per minute) is recirculated by means of extra equipment.

Steam
- Supply pressure, overpressure, kPa (bar) [psi]: 170 (1.7) [25]
- Maximum pressure fluctuation, kPa (bar) [psi]: ±30 (±0.3) [±4.5]
- Temperature, °C (F°): 130±4 (266±7)
- Consumption, kg/h (lbs/h): 2.4 (5.3)

Hydrogen peroxide, H_2O_2
- Consumption, l/h: 0.6–1.0

Product
- Supply pressure, kPa (bar) [psi]: 50–150 (0.5–1.5) [7.5–22]
- Maximum pressure fluctuation, kPa (bar) [psi]: ±10 (±0.1) [±1.5]

External cleaning system
- Supply pressure, kPa (bar) [psi]: 300–450 (3–4.5) [43.5–65]
- Hot water consumption, litres per cleaning cycle: 300
- Hot water temperature, °C (°F): 50–75 (122–167)
- Special detergent consumption, litres per cleaning cycle: 0.8

Dimensions of packages and packaging material

Package

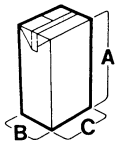

Packaging material

Volume, cm^3 (ml)	Dimensions, mm A	B	C	Appr qty packages per reel	Appr weight of reel, kg
125	86	32	47	7300 (29000*)	36 (145*)
180	75.5	41	63	5000	38
200	83	41	63	5000 (23500*)	40 (185*)
200S	119.3	38	47	19000*	170*
236	99.7	41	63	4500 (21000*)	40 (195*)
250	106	41	63	4500 (20000*)	43 (190*)

S = slim profile package
*Jumbo reel

Tetra Pak

Tetra Brik Aseptic packaging machine
Type: TBA/9 C

The machine packages food in Tetra Brik Aseptic packages.

Due to its design, this machine utilizes available floor space extremely well. The packaging material can be manufactured with a straight opening perforation. To facilitate opening of the package, the machine may, as extra equipment, be provided with a zone heater. The packaging material may also be manufactured with a prepunched hole for a drinking straw.

Printed design in register is achieved by means of a bar code, printed on the packaging material.

As a standard, the machine is equipped with an external cleaning system for the jaw system and final folder, i e those units by which the packages are formed, sealed and shaped.

Capacity
- Packages per hour: 6000
- Package volumes: See table. Headspace equipment may give intermediate volumes.

Electric power
- Type, frequency Hz, voltage V: 3N~, 50/60, 380/220
- Recommended main fuse to obtain cut-out selectivity, A: 100

Other voltages require adaption transformer.
- Consumption during preheating, kW: 25–37
- Consumption during sterilization, kW: 27
- Consumption during production, kW: 29
- Consumption during cleaning, kW: 5

Compressed air
- Supply pressure, kPa (bar) [psi]: 600–700 (6–7) [87–102]
- Consumption, Nl/min (N cu ft/min): 500±100 (17.7±3.5)

Cooling water
- Supply pressure, kPa (bar) [psi]: 300–450 (3–4.5) [43.5–65]
- Max inlet temperature, °C (°F): 20 (68)
- Consumption, litres/minute (US gal/min): 14 (3.7)

Of the total consumption, appr 5 l/min (1.3 US gal/min) is recirculated by means of extra equipment.

Steam
- Supply pressure, kPa (e) [bar] (psi): 170±30 [1.7±0.3] (2.5±4.5)
- Temperature, °C (°F): 130±4 (266±7)
- Consumption, kg/h (lbs/h): 2.4 (5.3)

Hydrogen peroxide, H_2O_2
- Consumption, l/h (US gal/h): 0.6–1.0 (0.16–0.26)

Product
- Supply pressure, kPa (bar) [psi]: 50–150 (0.5–1.5) [7.5–22]
- Max pressure variation, kPa (bar) [psi]: ±10 (±0.1) [±1.5]

External cleaning system
- Supply pressure, kPa (bar) [psi]: 300–450 (3–4.5) [44–65]
- Hot water consumption, litres (US gal) per cleaning cycle: 300 (3.2)
- Hot water temperature, °C (°F): 50–75 (122–167)
- Special detergent consumption, litres (US gal) per cleaning cycle: 0.8 (0.2)

Extra equipment

Equipment for under-filling; allows up to 10% headspace (20% in 200 and 250 cm³ packages).
Equipment for automatic splicing in of longitudinal sealing strip.
Zone heater for better tear opening.
Recirculation of cooling water, see above.
Equipment for external handling of Jumbo reels.
Separate CIP (cleaning-in-place) unit for cleaning of product valve and filling pipe.
Platform for installation of several machines in a row.

Dimensions of packages and packaging material

Package				Packaging material	
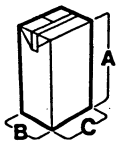					
Volume, cm³ (ml)	Dimensions, mm			Approximate quantity packages per reel	Approximate weight of reel, kg
	A	B	C		
125	86	32	47	7300 (29000*)	36 (145*)
180	75.5	41	63	5000	38
200	83	41	63	5000 (23500*)	40 (185*)
200 S	119.3	38	47	19000*	170*
236	100	41	63	4500 (21000*)	40 (195*)
250	106	41	63	4500 (20000*)	43 (190*)
284	119.7	41	63	4000 (18000*)	43 (190*)

S = slim profile package

*Jumbo reel

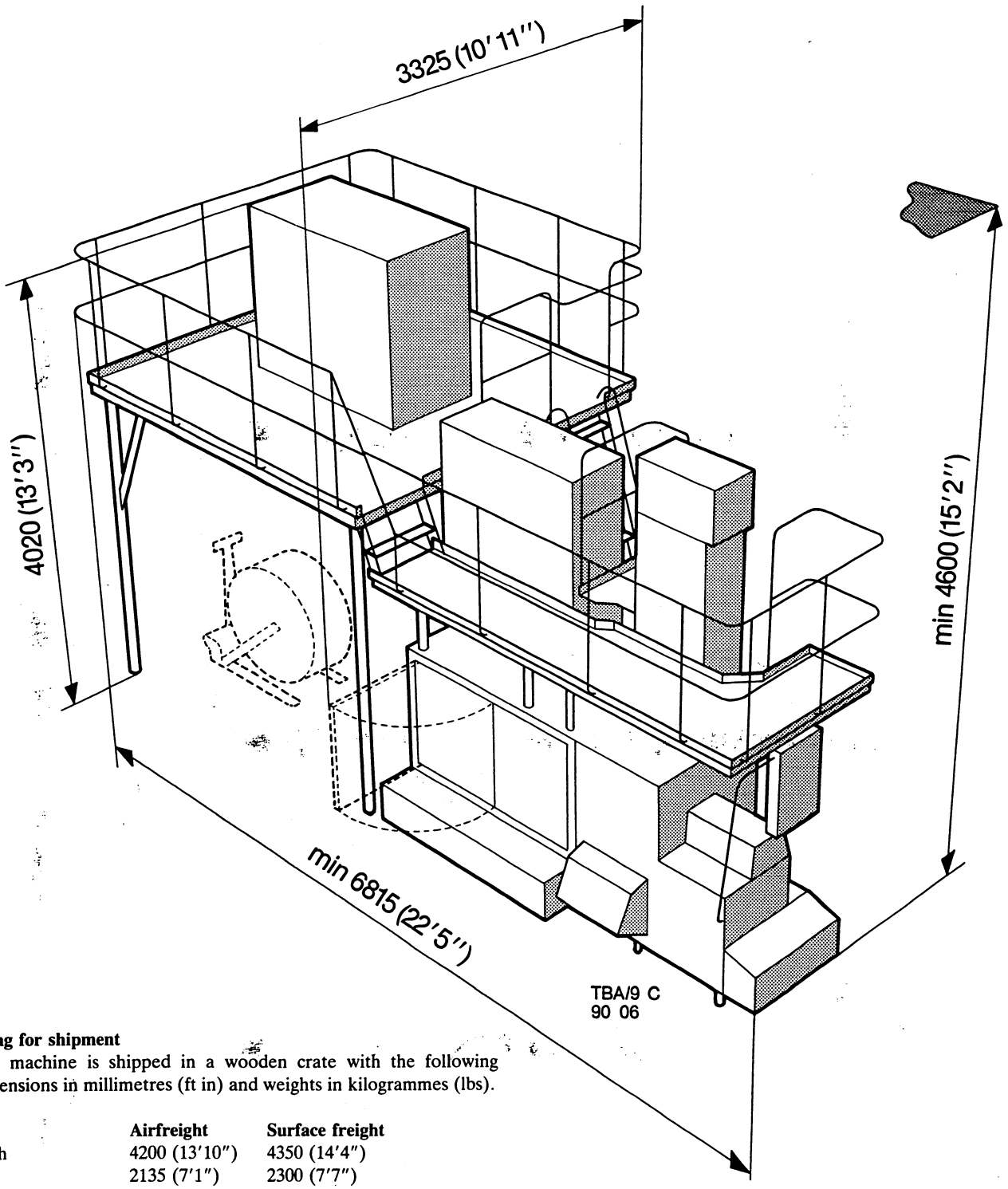

Packing for shipment

The machine is shipped in a wooden crate with the following mensions in millimetres (ft in) and weights in kilogrammes (lbs).

	Airfreight	**Surface freight**
Length	4200 (13'10")	4350 (14'4")
Width	2135 (7'1")	2300 (7'7")
Height	3030 (10')	3230 (10'8")
Net weight	4310 (9500)	5310 (11700)
Gross weight	4900 (10800)	5900 (13000)

Installation of TBA/9 C-0130 V according to drawing No 1-978257.

Internal code 7228 B. Date 8.90

AB Tetra Pak Promotional Material
Ruben Rausings gata S-221 86 Lund Sweden

We reserve the right to introduce design modifications without prior notice.
Tetra Brik Aseptic is a trademark belonging to the Tetra Pak Group.

TBA/9 LH side

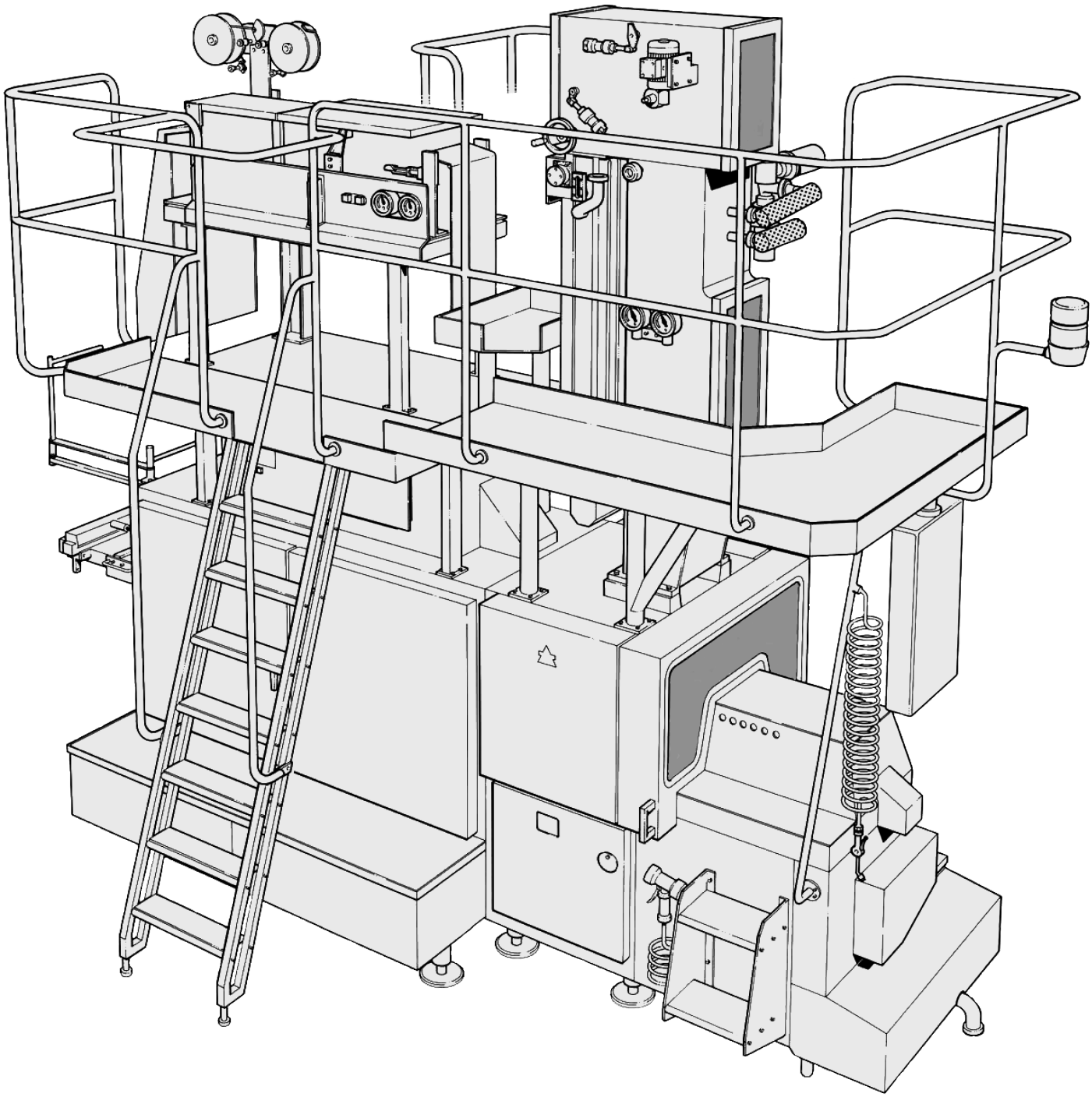

TBA/9 RH side

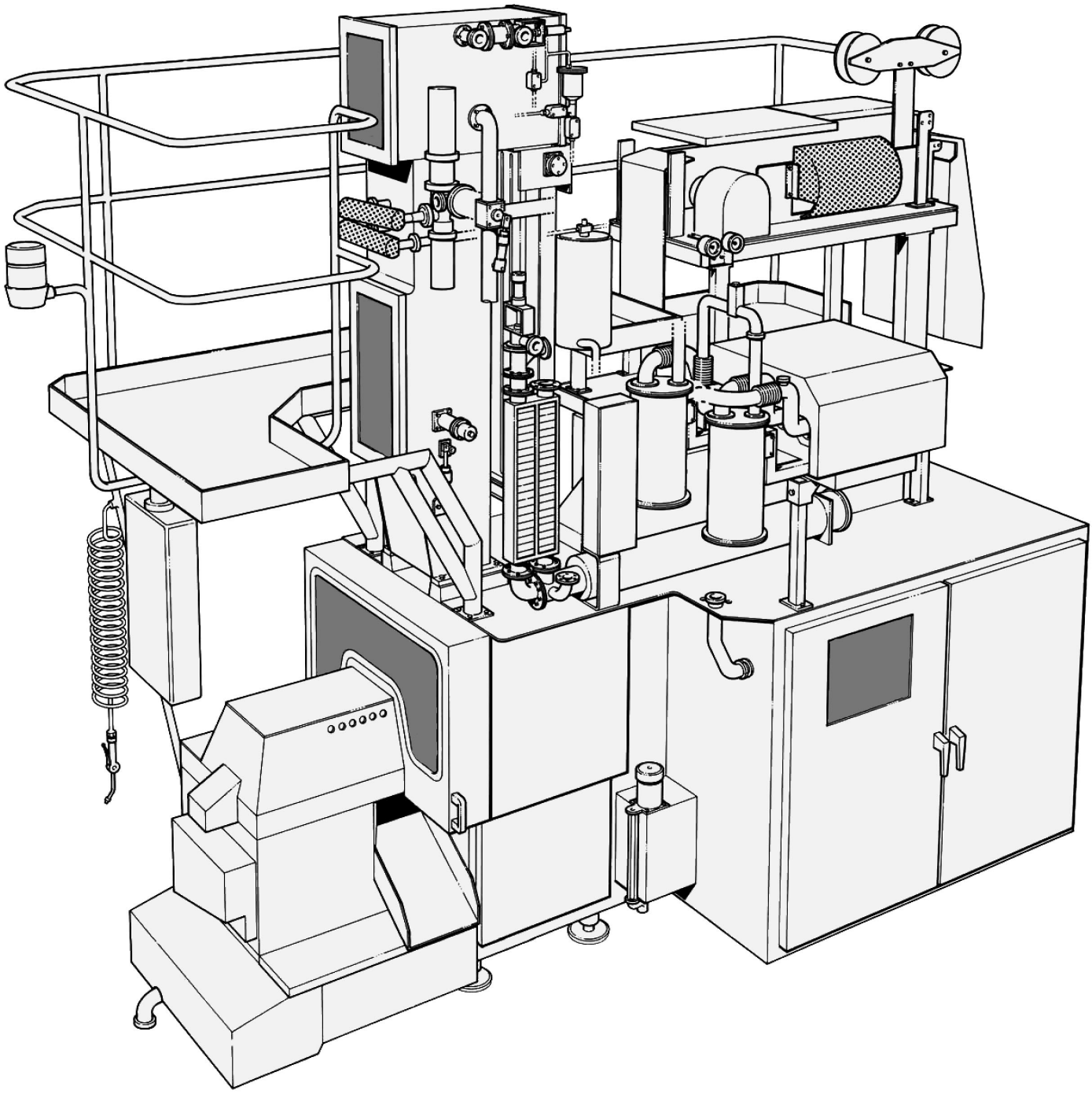

Tetra Brik Aseptic, TBA/9 with strip applicator

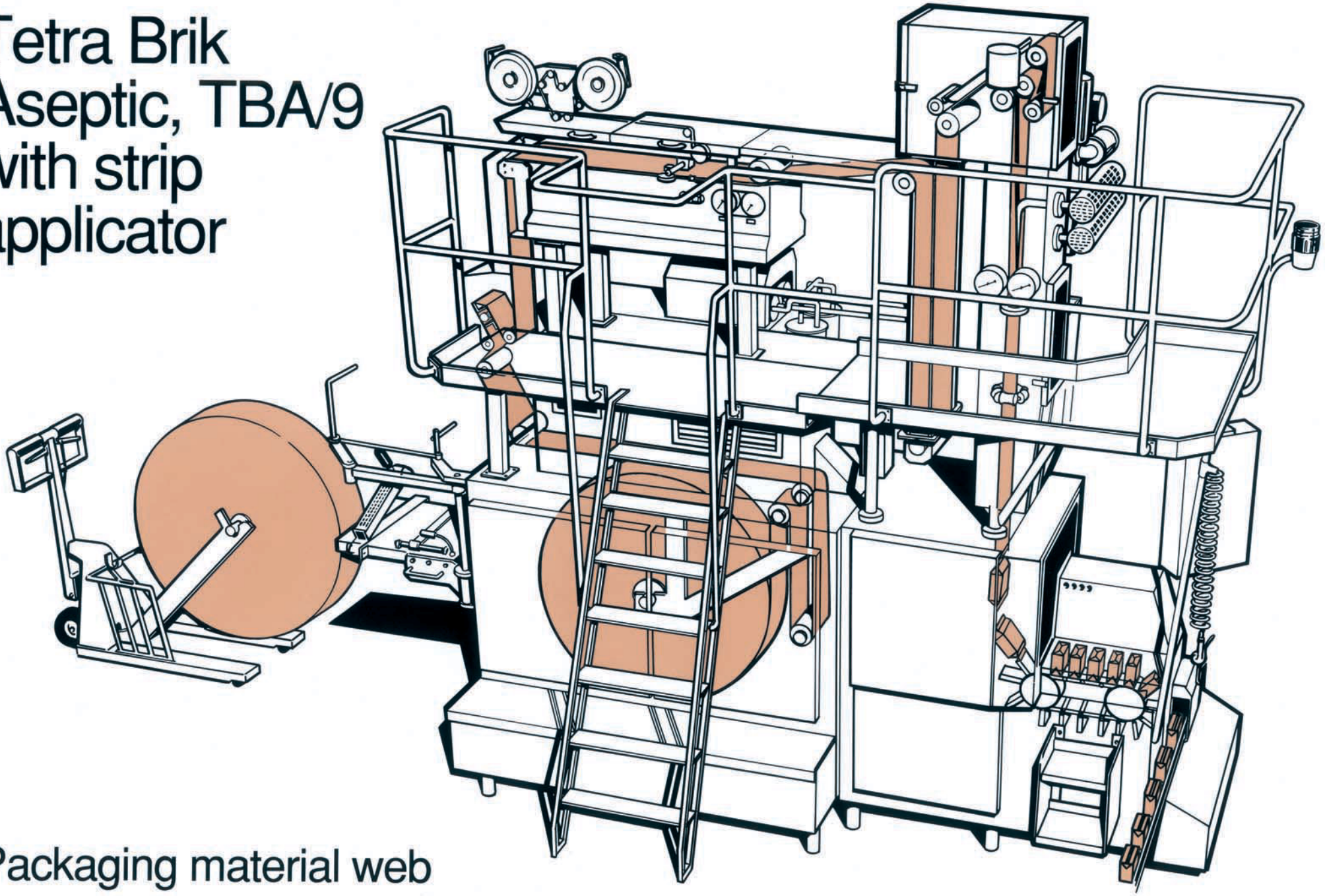

Packaging material web

Technical Training Centre Lund, Sweden	Machine type	Issue	
	TBA/9 130V	1/9205	OH 449

How to thread the packaging material...
...through the cassette, TBA/9



Technical Training Centre Lund, Sweden	Machine	Model	Issue
TETRA PAK®	TBA/9	1983 →	

OH 134

Control panel, TBA/9

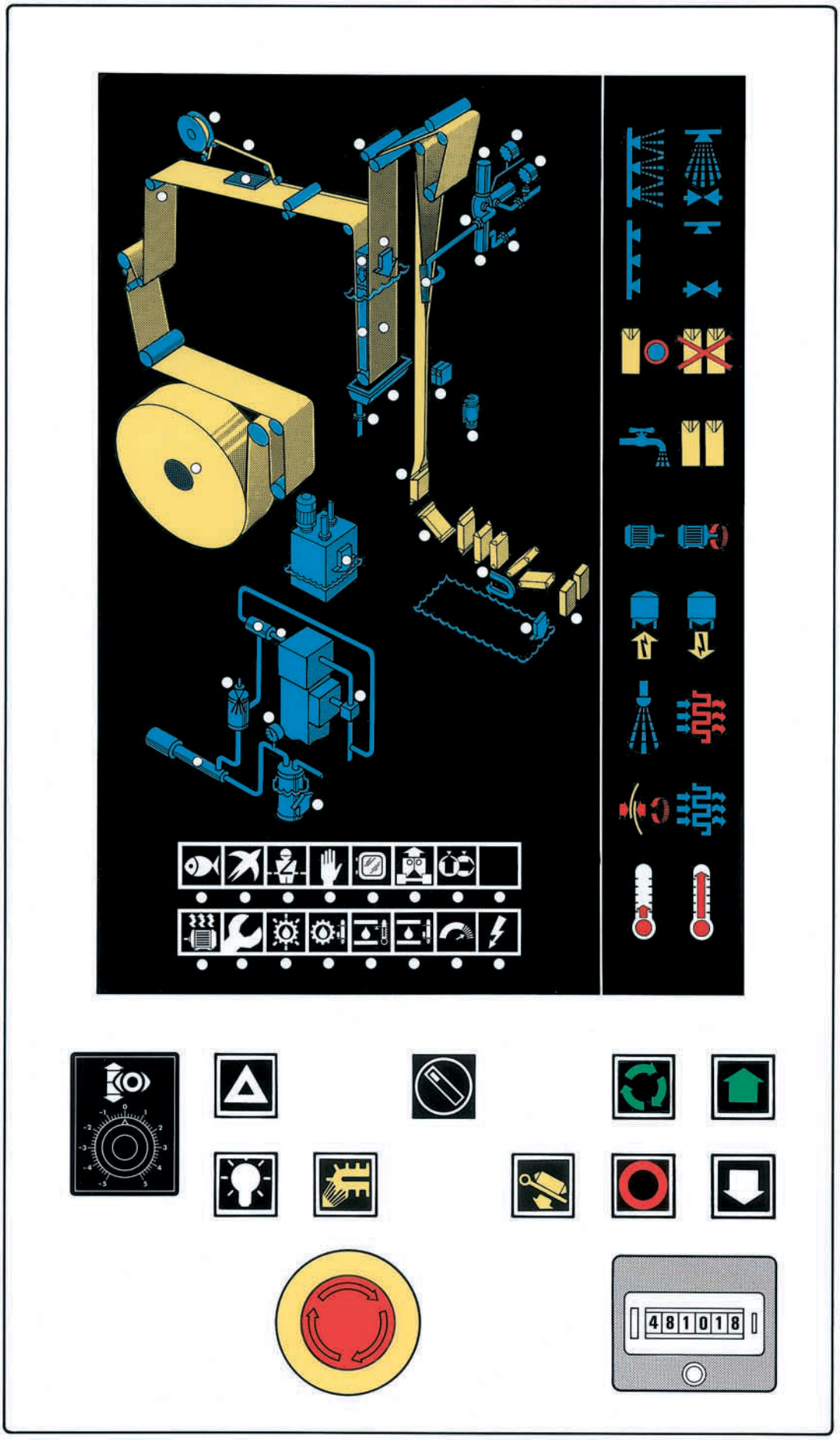

TETRA PAK Technical Training Centre Lund, Sweden	Machine type TBA/9 130V	Issue 1/9202	OH 438:1

Control panel, TBA/9

Supervision panel

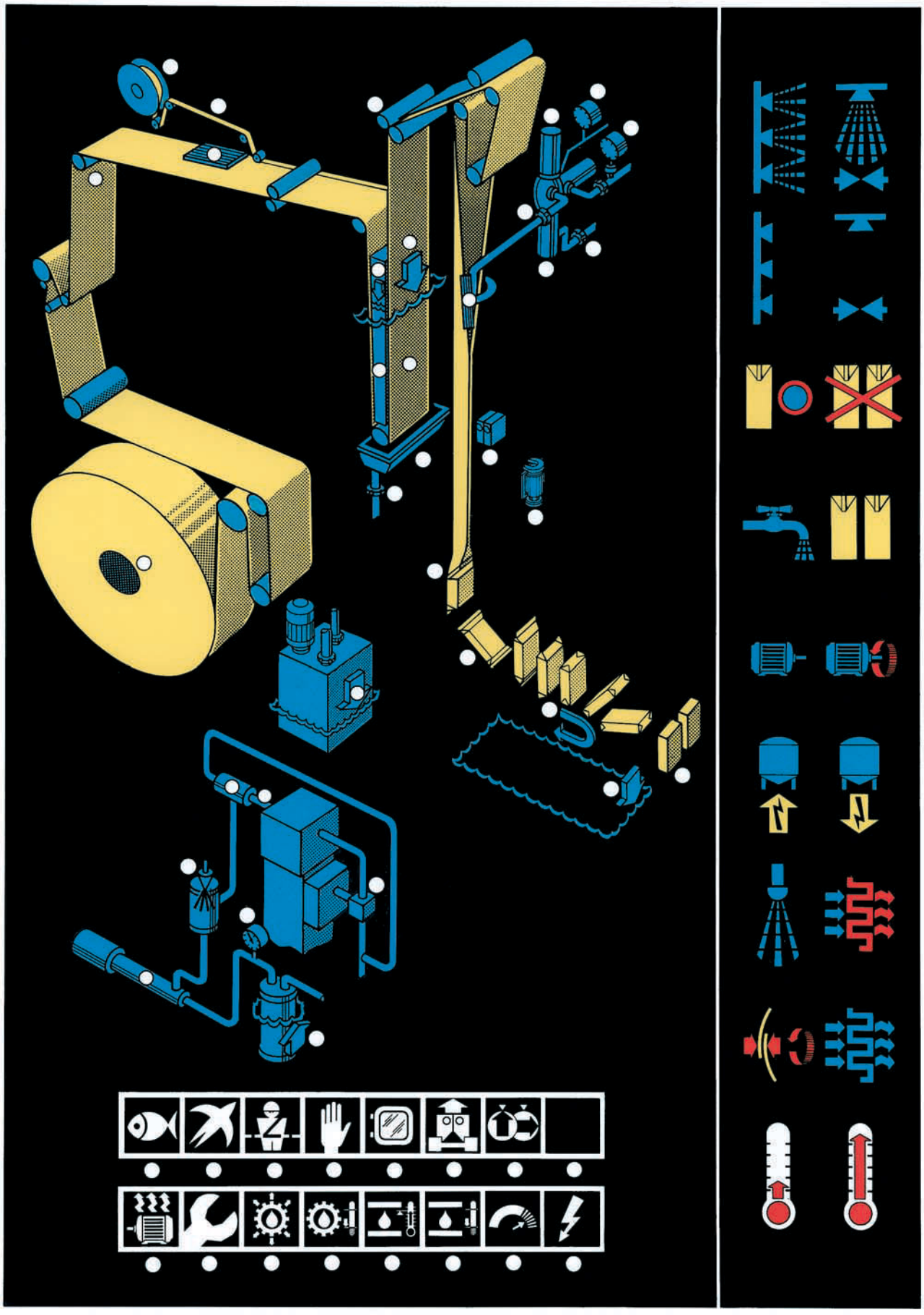

Technical Training Centre Lund, Sweden	Machine type TBA/9 130V	Issue 1/9202	OH 438:2

Control panel, TBA/9

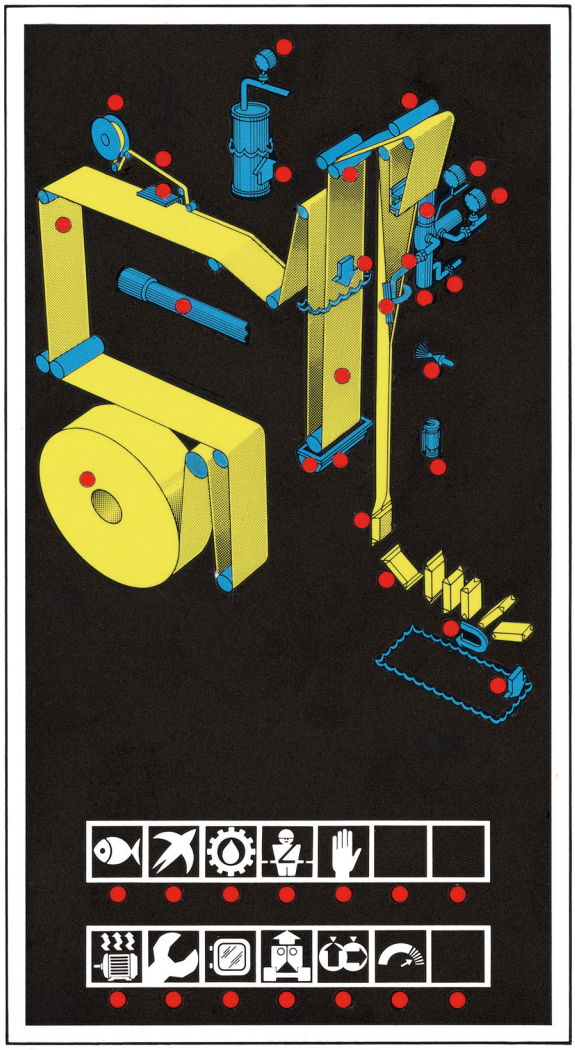

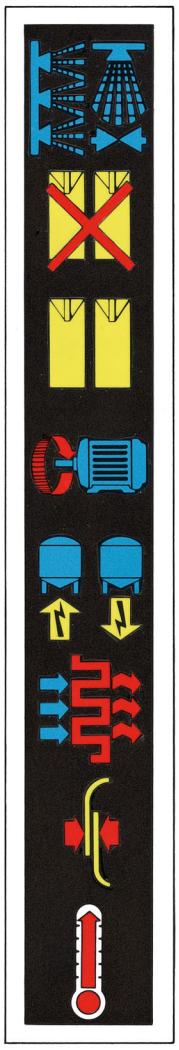





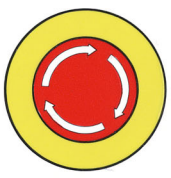

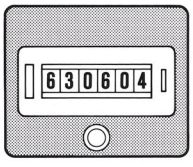

3

Exercises

Main groups
LH side of machine

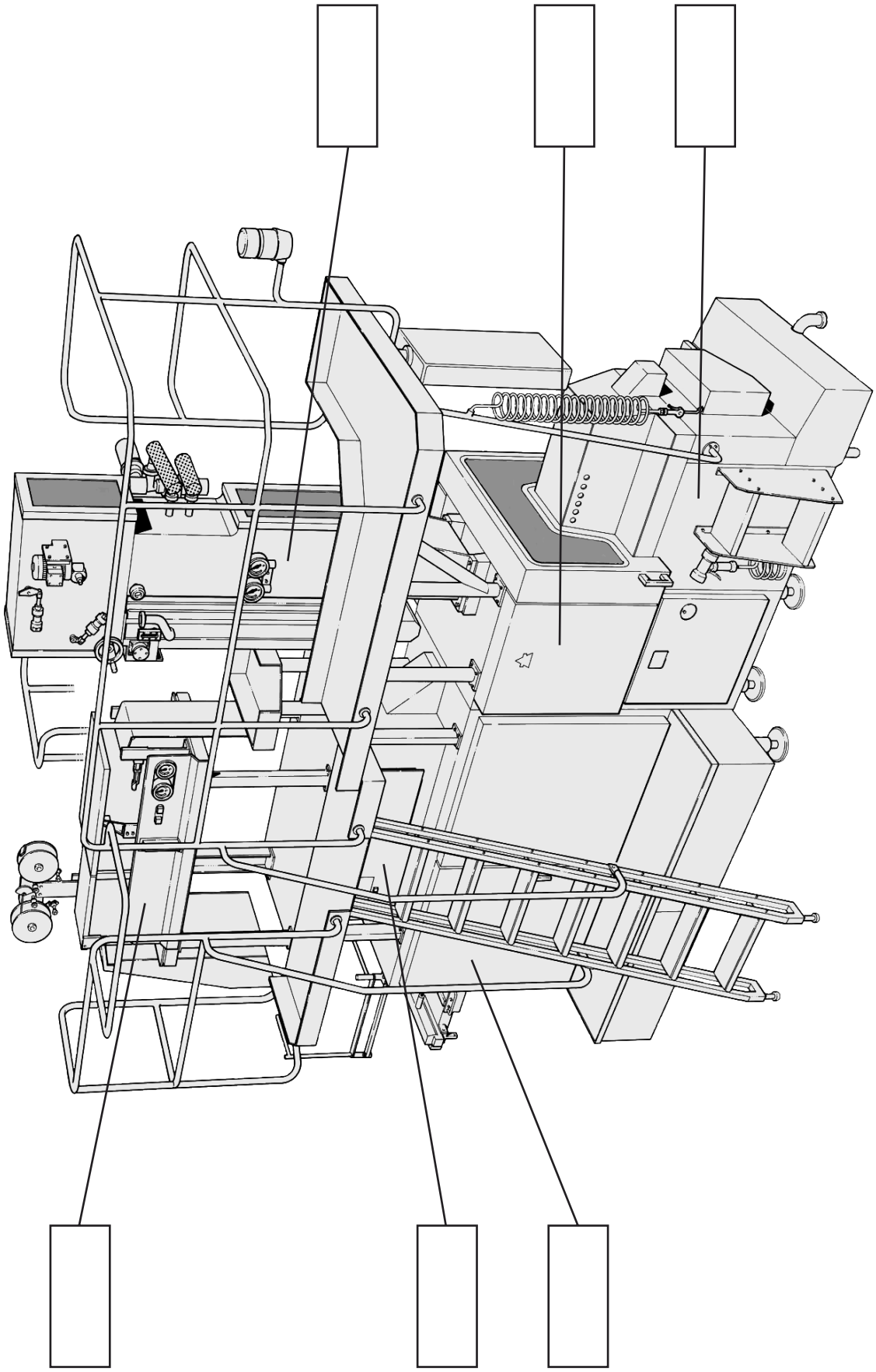

Main groups

RH side of machine

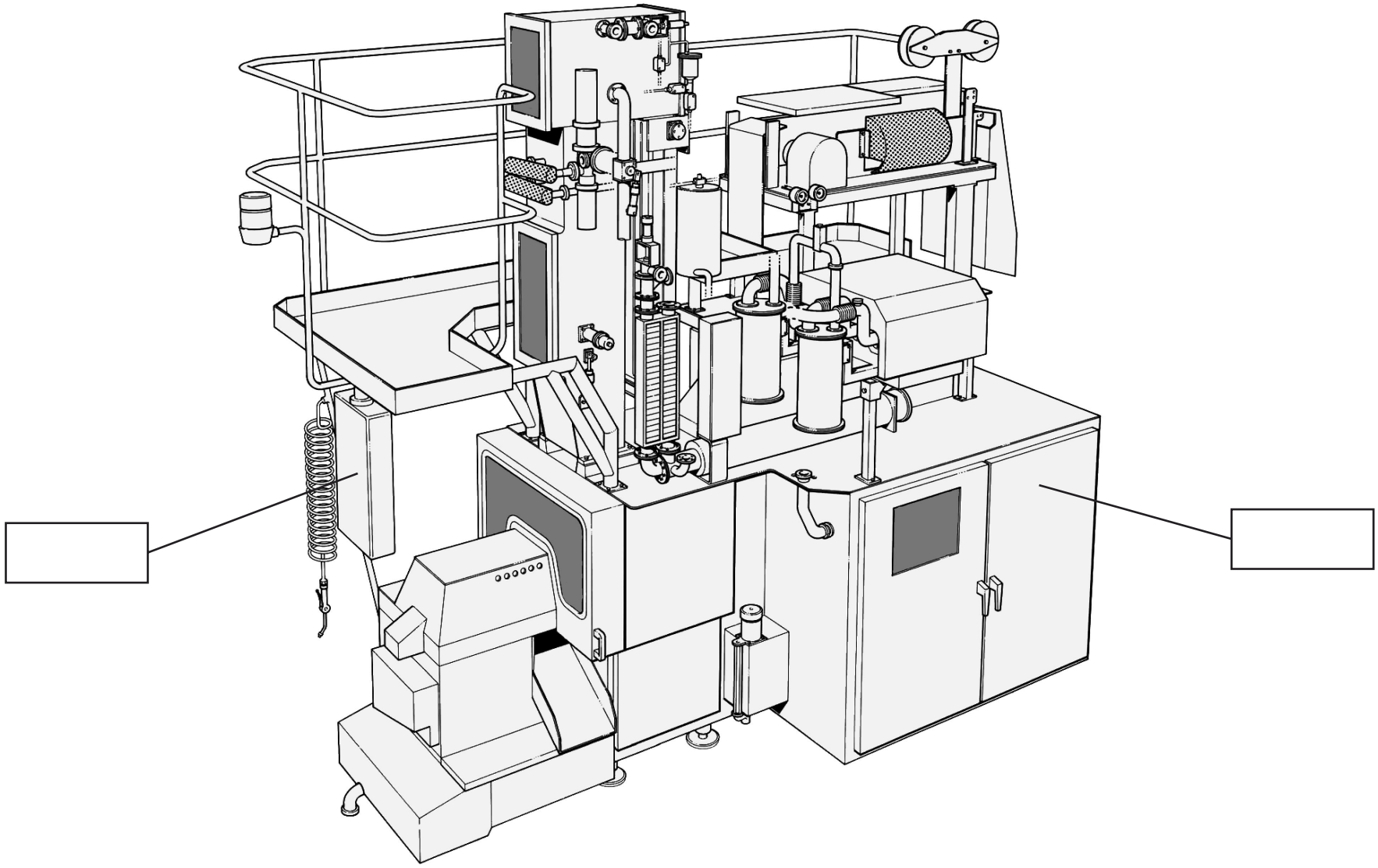

Technical Training Centre
Lund, Sweden

Machine type
TBA/9

Issue
1/0203

OH 1169:2

Machine parts

LH side of machine

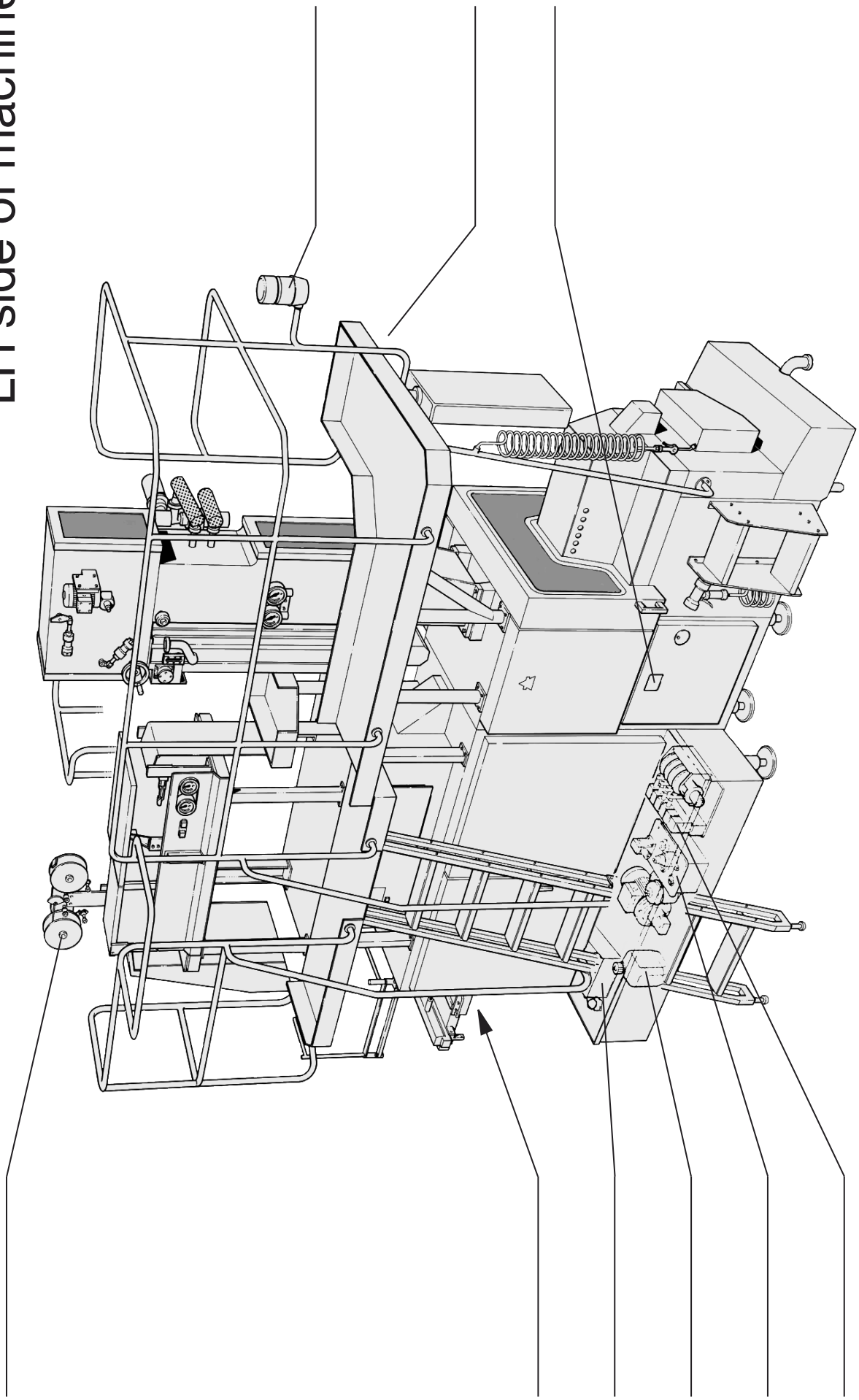

Machine parts

RH side of machine

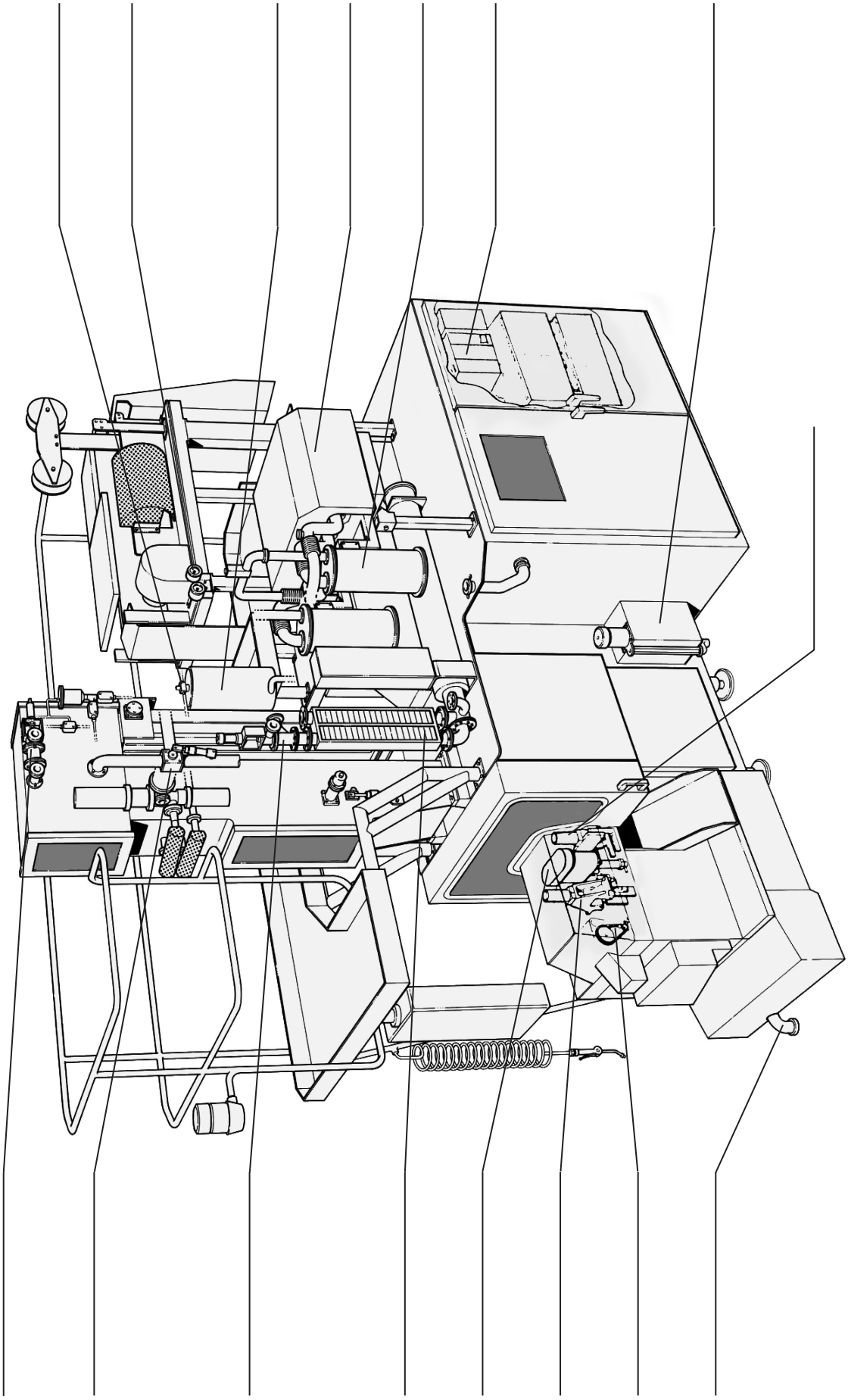

Ladder diagram

Symbol Name Criteria Function

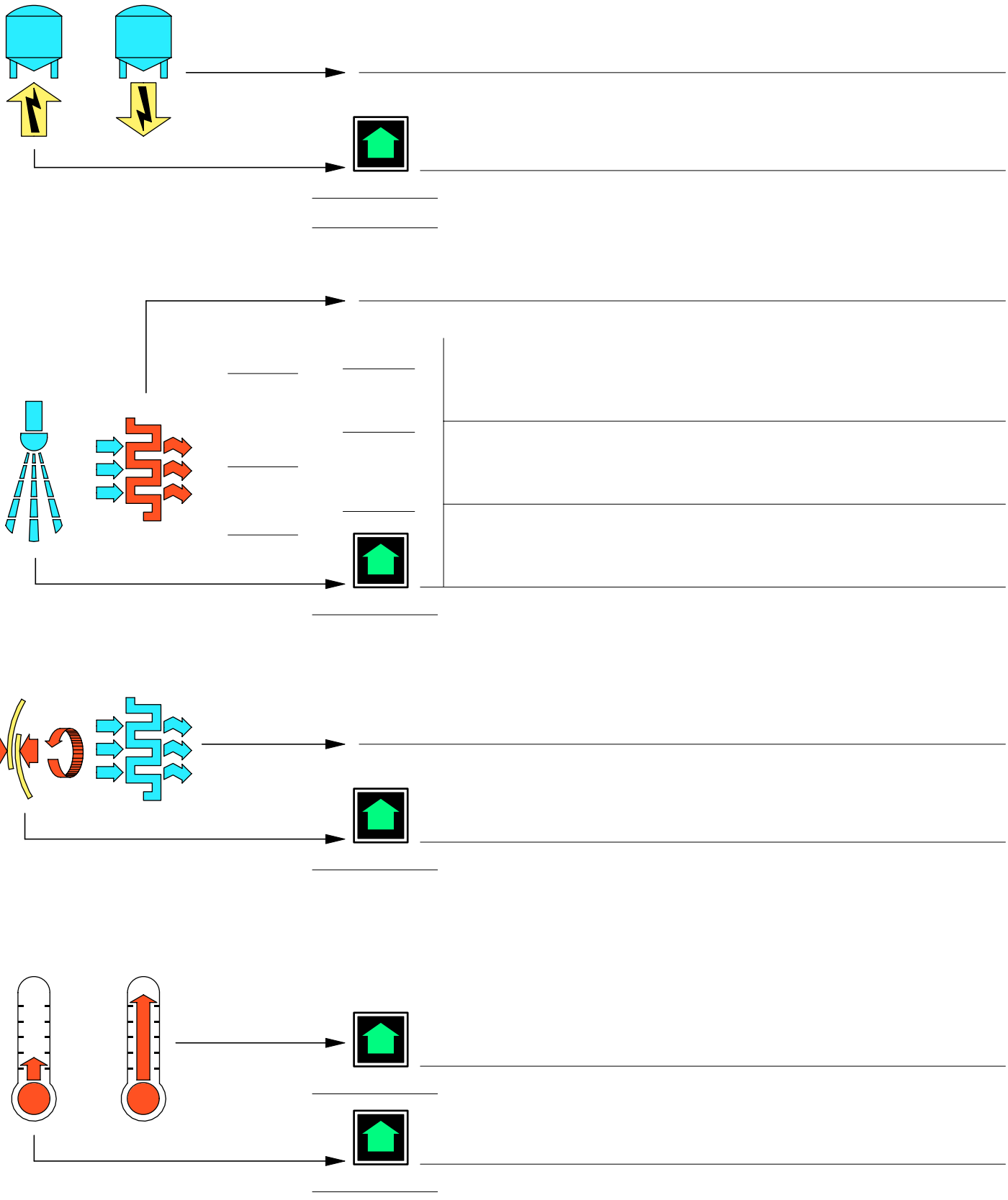

Ladder diagram

Symbol Name Criteria Function

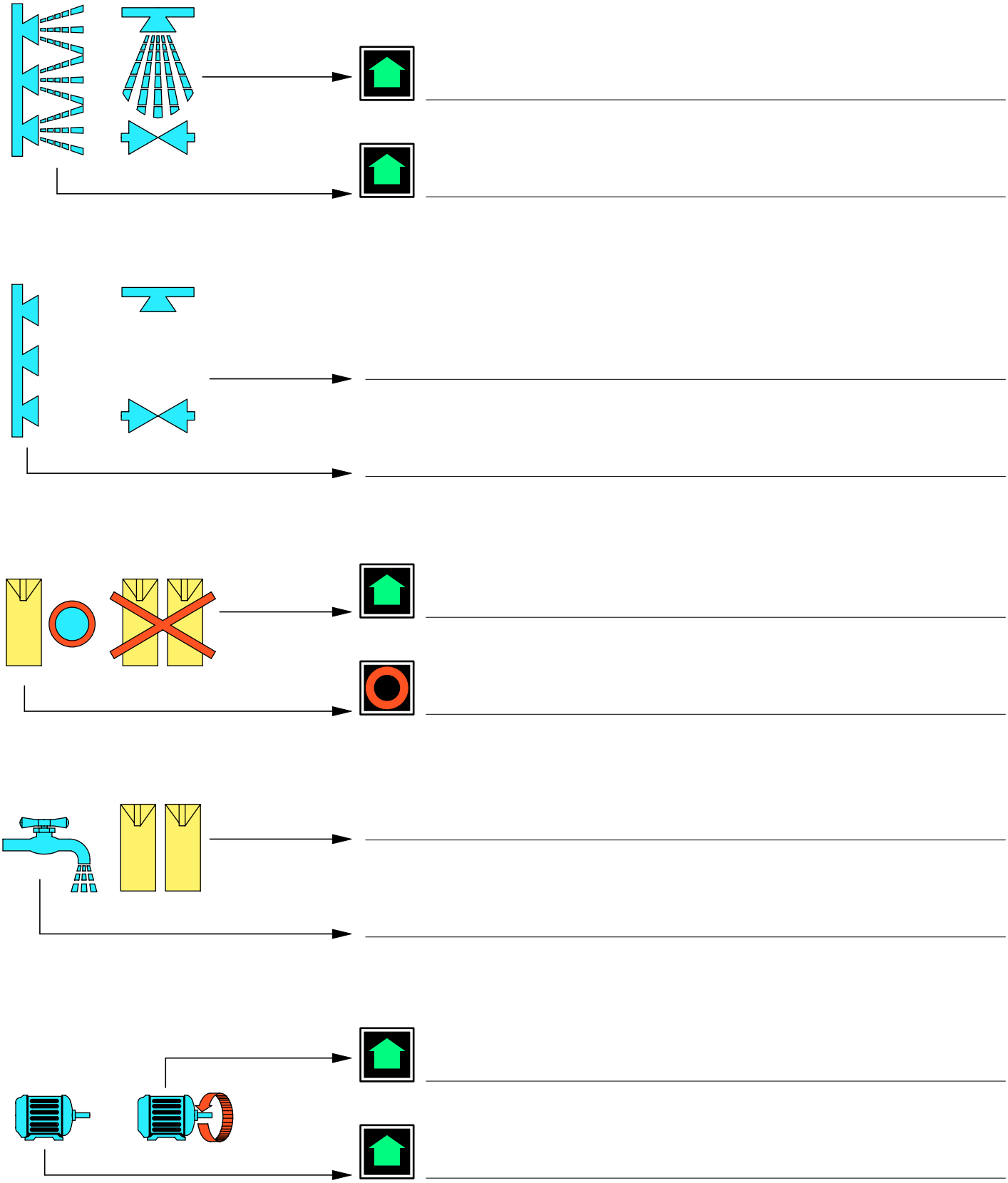

Sterile system TBA/9 130V

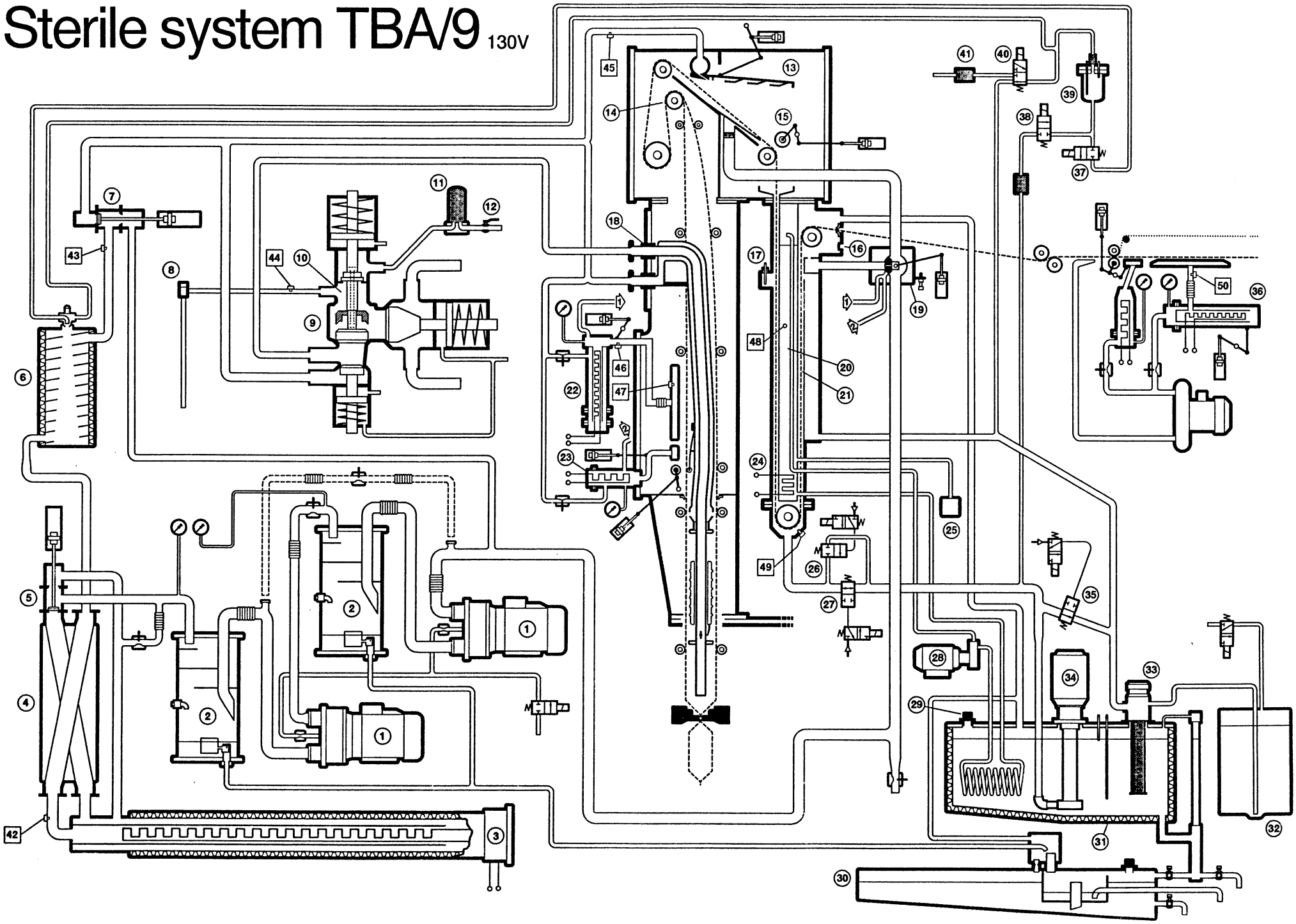

Ladder diagram

Symbol Name Criteria Function

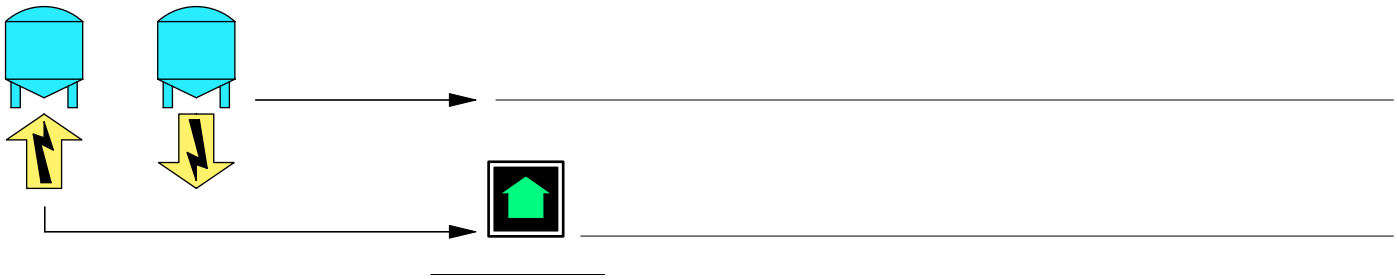

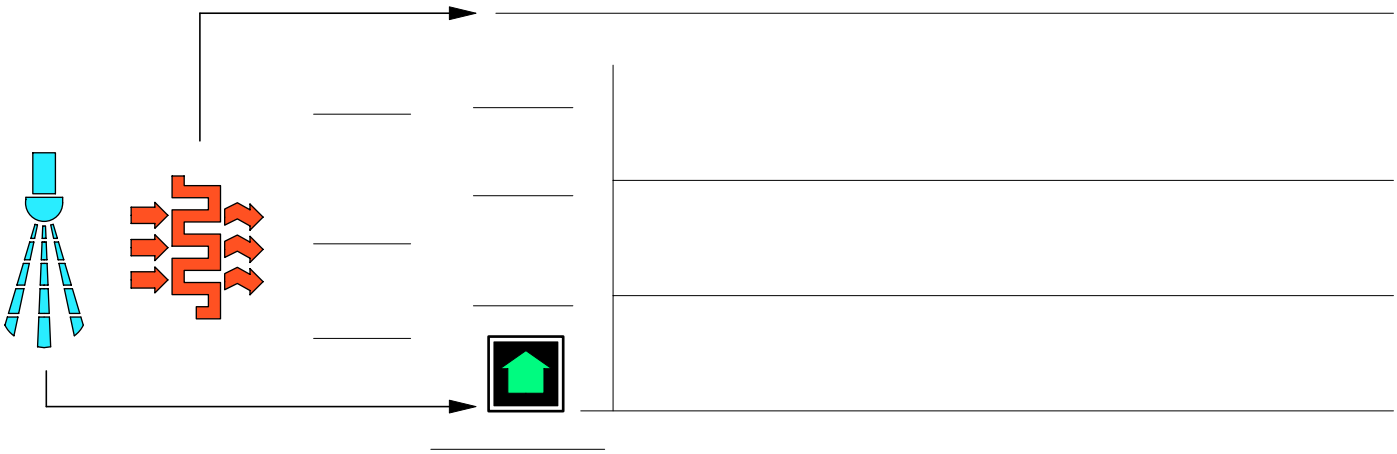

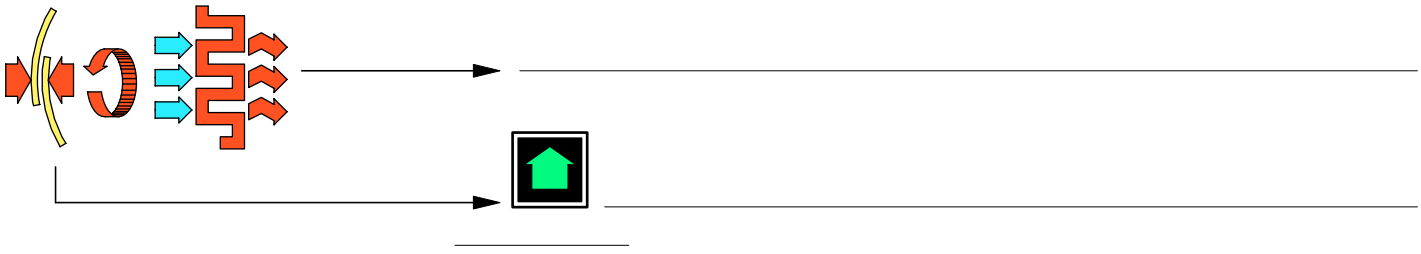



Ladder diagram

Symbol Name Criteria Function

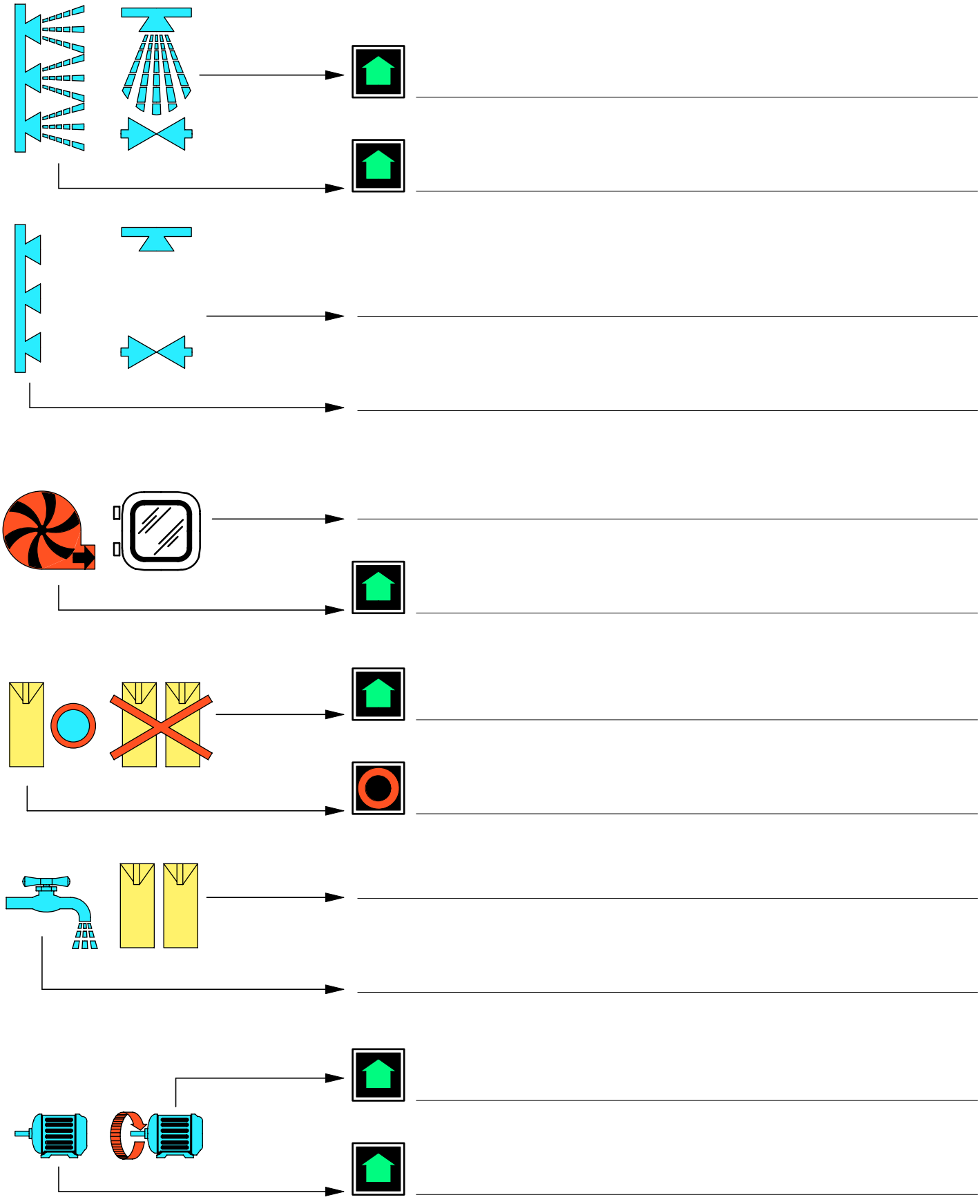

Package terminology

Front side

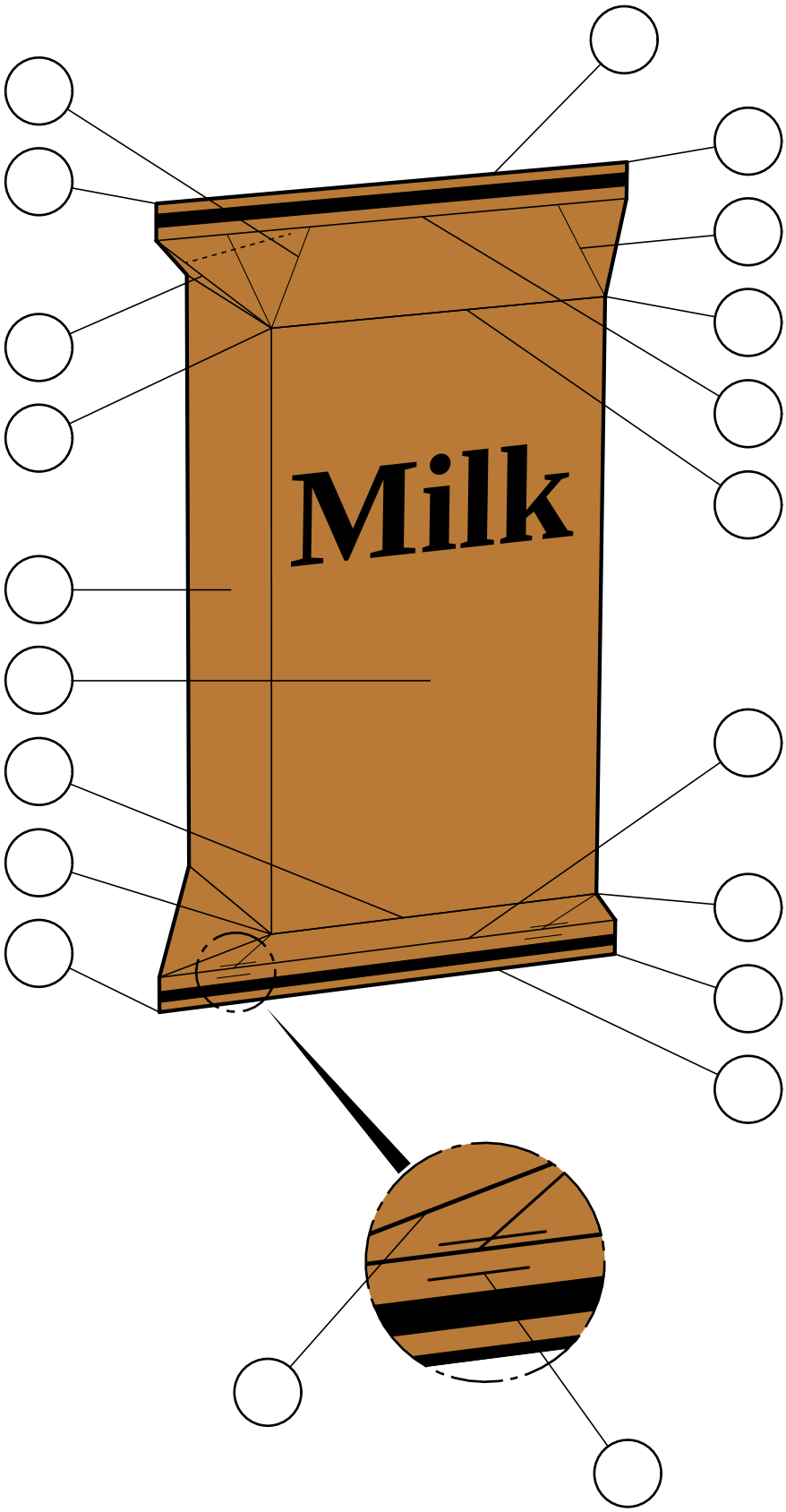

1 Bottom left fin corner
2 Bottom flap crease
3 Bottom front left corner
4 Bottom crease
5 Front side of package/ panel 3
6 Left side of package/ panel 2
7 Top front left corner
8 Top flap crease
9 Top left fin corner
10 Spout crease
11 Bottom cutting line
12 Top cutting line
13 Top right fin corner
14 Top fin crease
15 Longitudinal crease
16 Top front right corner
17 Top crease
18 Bottom front right corner
19 Double crease
20 Bottom fin crease
21 Bottom right fin corner

Package terminology

Rear side

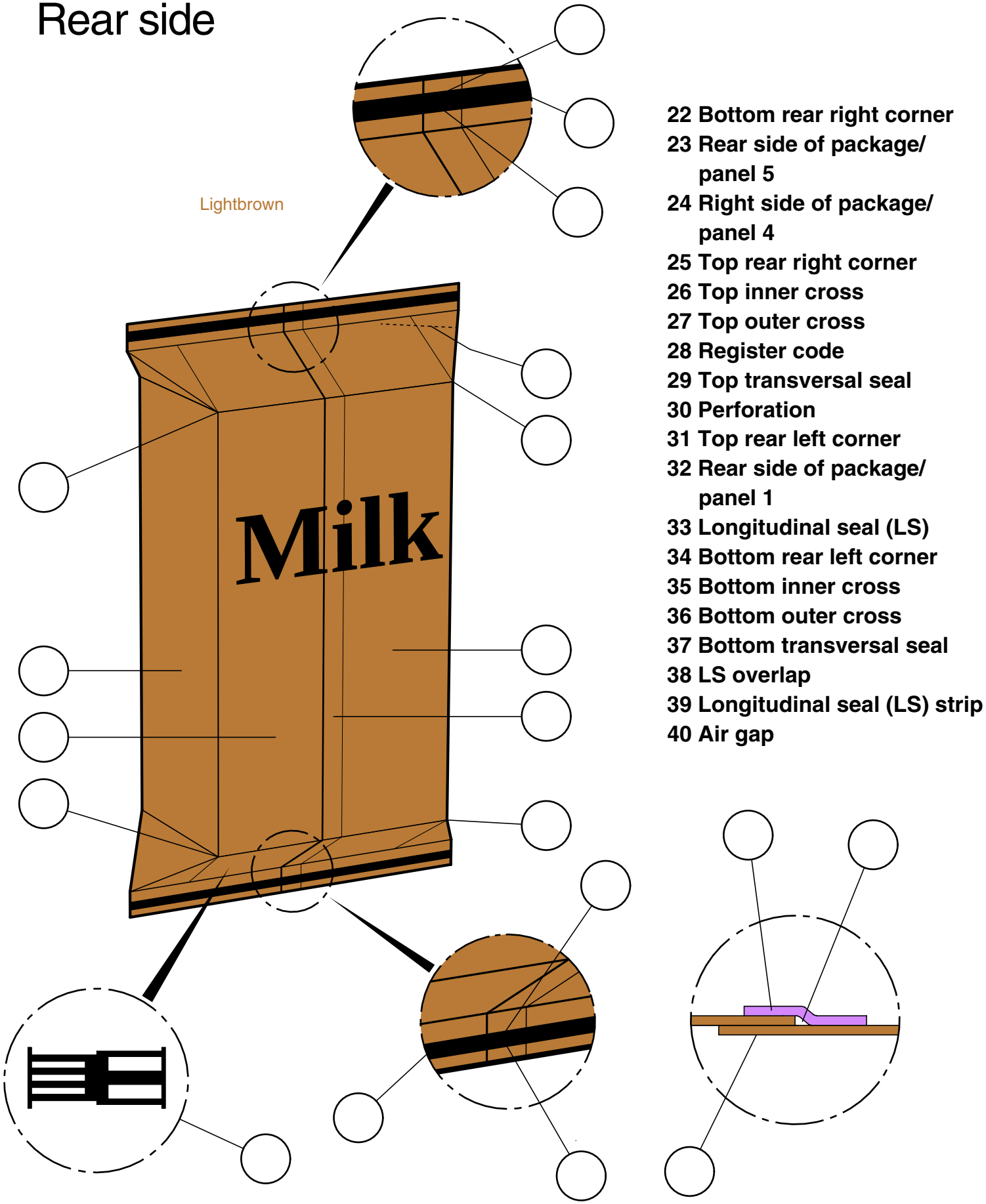

22 Bottom rear right corner
23 Rear side of package/ panel 5
24 Right side of package/ panel 4
25 Top rear right corner
26 Top inner cross
27 Top outer cross
28 Register code
29 Top transversal seal
30 Perforation
31 Top rear left corner
32 Rear side of package/ panel 1
33 Longitudinal seal (LS)
34 Bottom rear left corner
35 Bottom inner cross
36 Bottom outer cross
37 Bottom transversal seal
38 LS overlap
39 Longitudinal seal (LS) strip
40 Air gap

Creases Alt. 1

Lightbrown

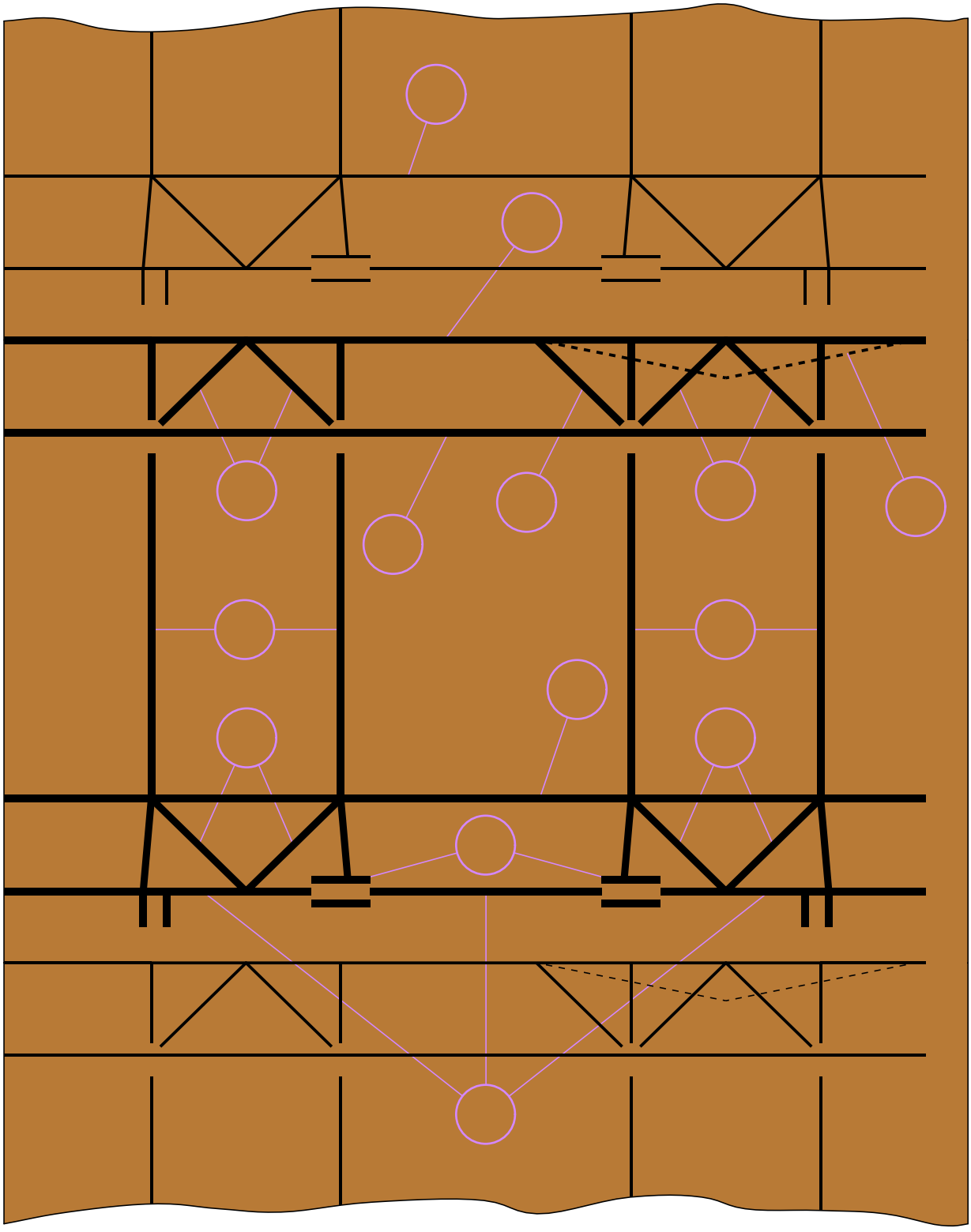

1 Top fin crease
2 Top crease
3 Longitudinal crease
4 Bottom crease
5 Bottom fin crease
6 Double crease
7 Top flap crease
8 Bottom flap crease
9 Spout crease
10 Perforation

Creases Alt. 2

Lightbrown

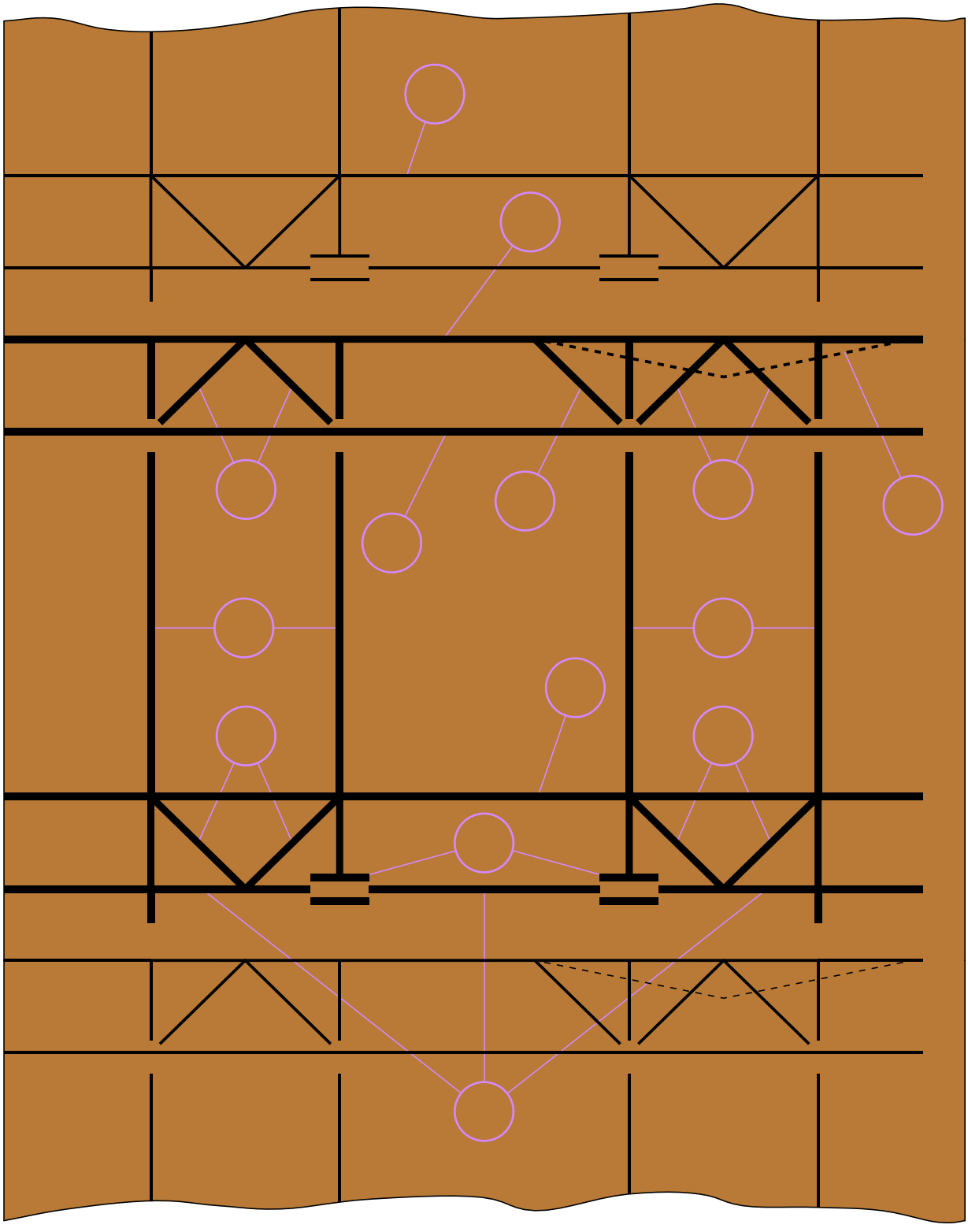

1 Top fin crease
2 Top crease
3 Longitudinal crease
4 Bottom crease
5 Bottom fin crease
6 Double crease
7 Top flap crease
8 Bottom flap crease
9 Spout crease
10 Perforation

Packaging material

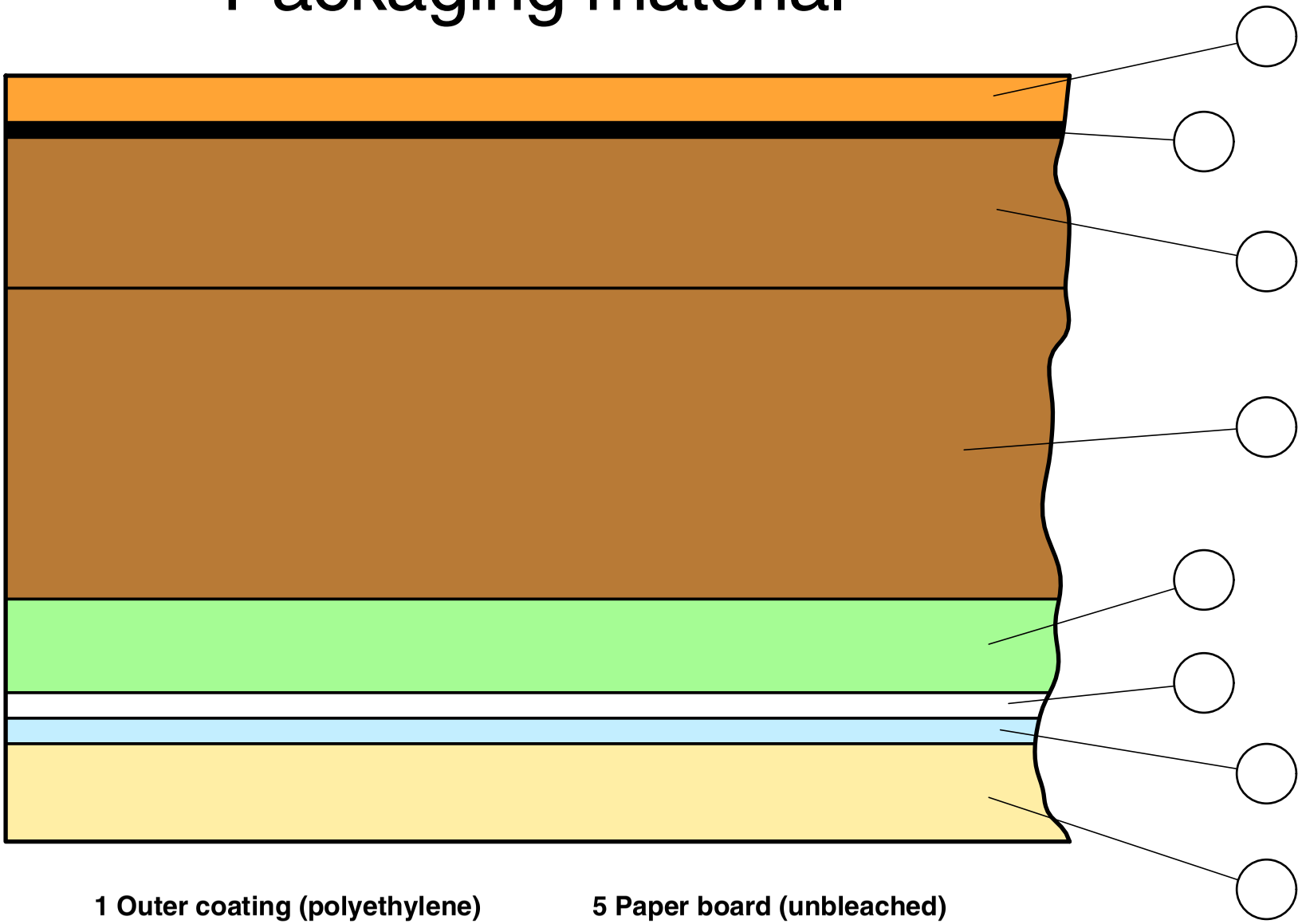

1 Outer coating (polyethylene)
2 Paper board (Bleached)
3 Alifoil
4 Internal coating 1
5 Paper board (unbleached)
6 Printing
7 Lamination (polyethylene)
8 Internal coating 2 (polyethylene)

TETRA PAK
Technical Training Centre
Lund, Sweden
Machine type
TBA/3 –8 –9
Issue
3/9003
OH 135:5

4

Sterile System Components

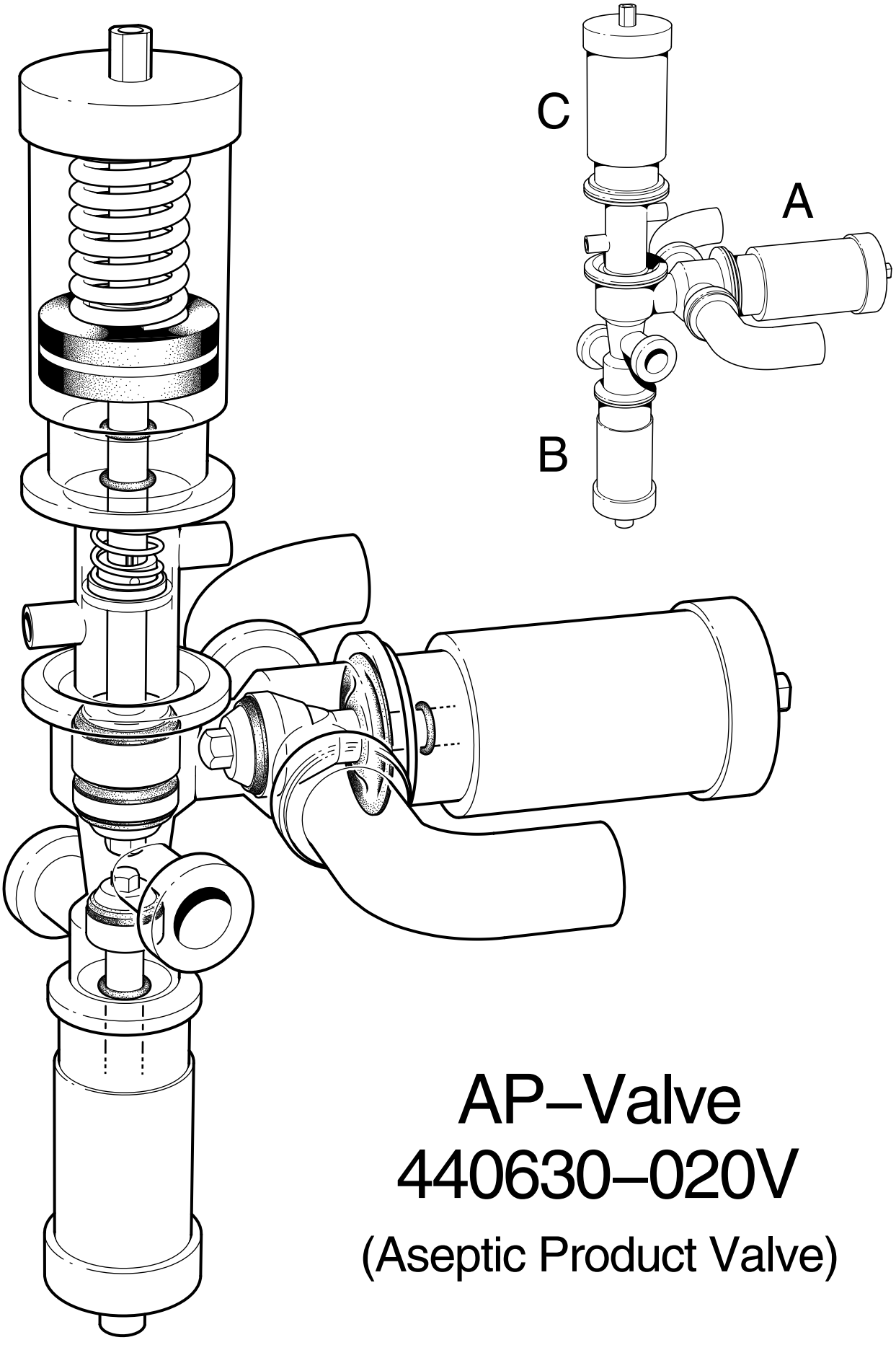

AP–Valve
440630–020V
(Aseptic Product Valve)

Sterile system

Water ring compressor

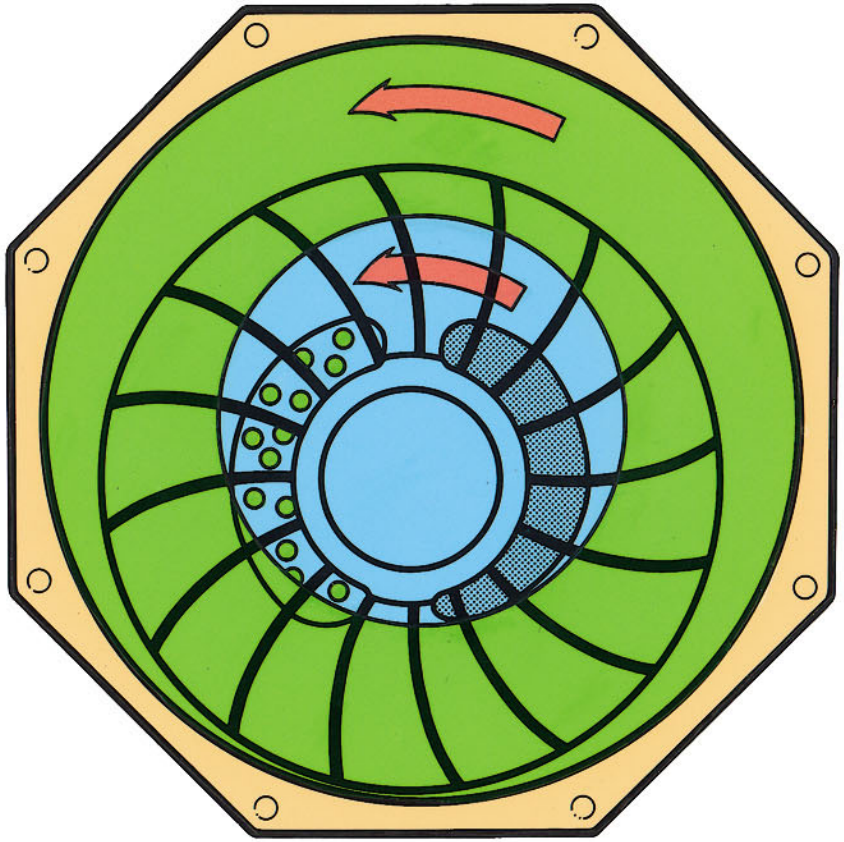

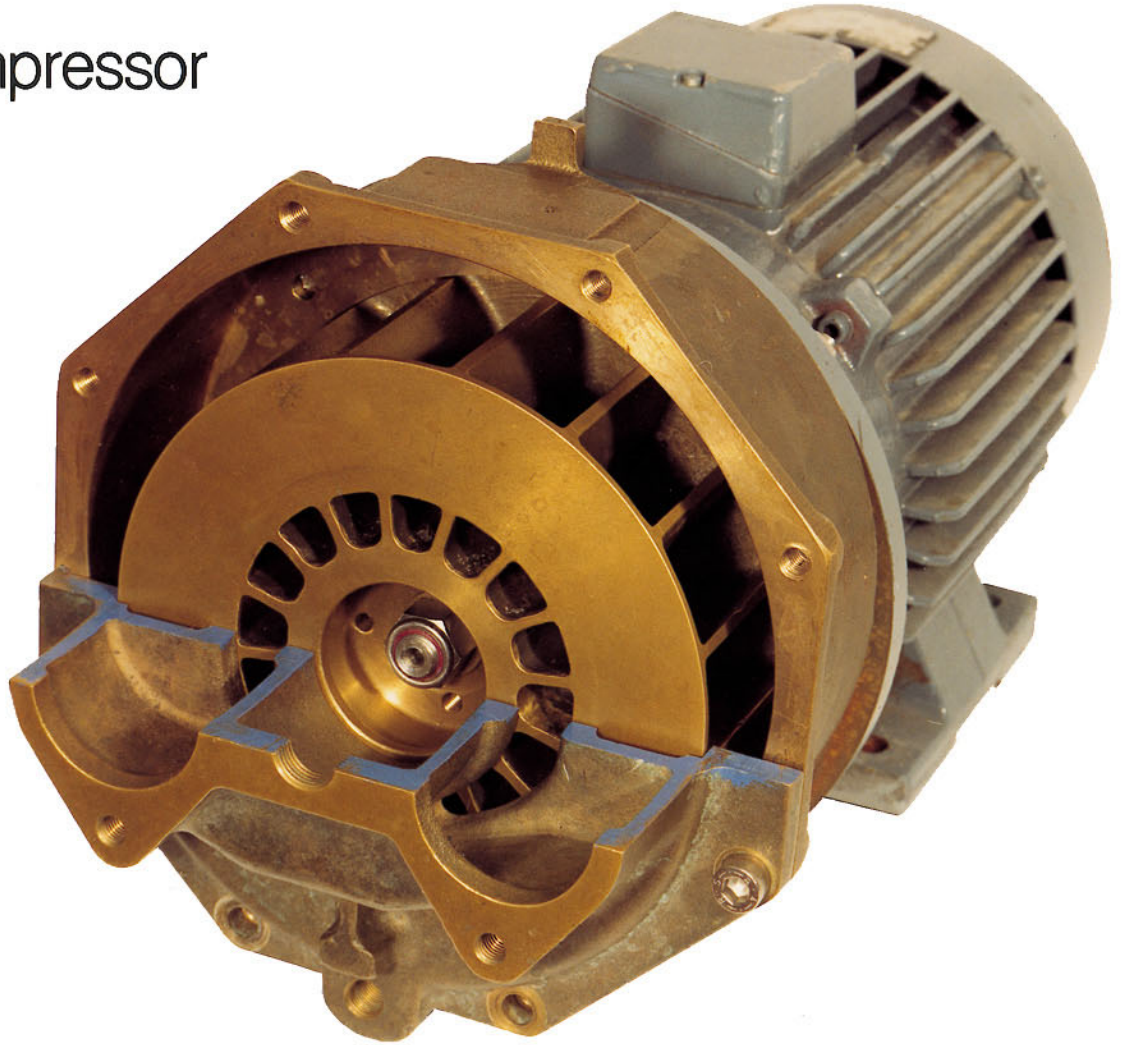

- Air inlet
- Rotating water ring
- Air and water outlet

Technical Training Centre Lund, Sweden	Machine	Model	Issue	
	TBA/3, -8, -9		2/8902	OH 104

Principle of constant flow valve

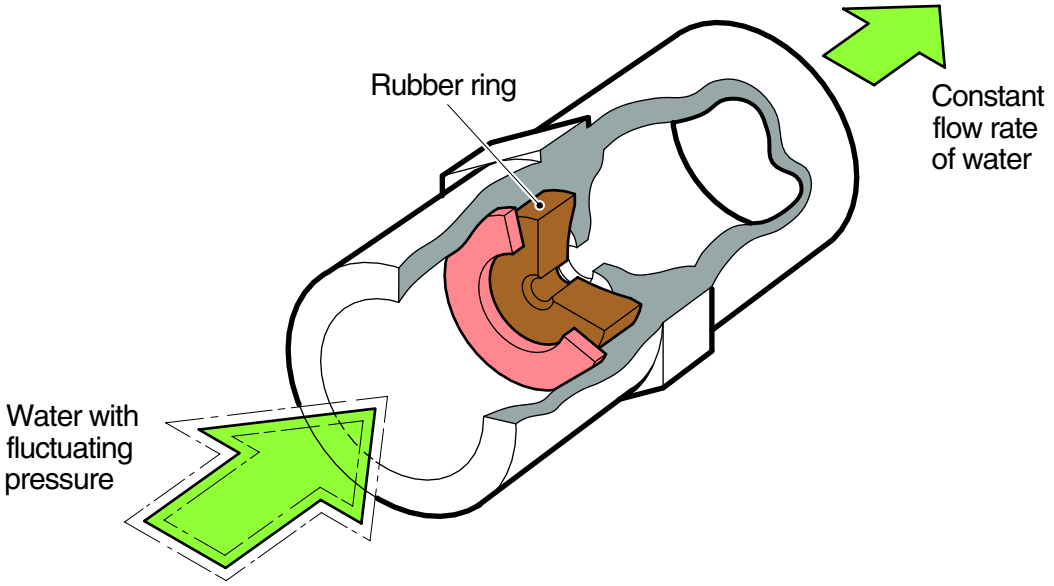

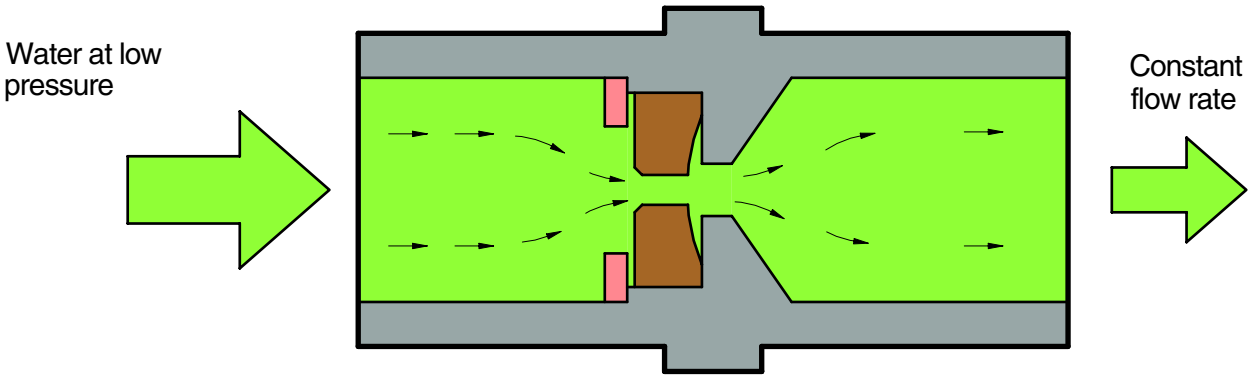

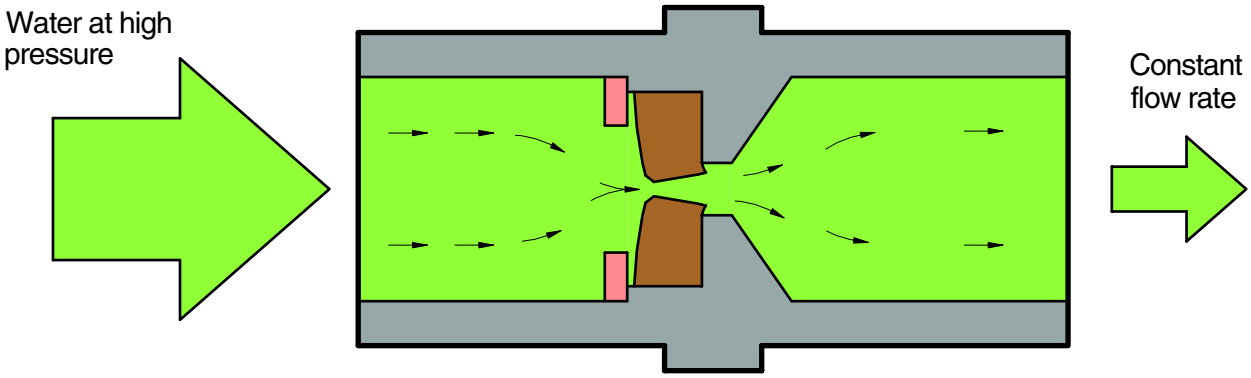

Sterile system, TBA/9

Water separator

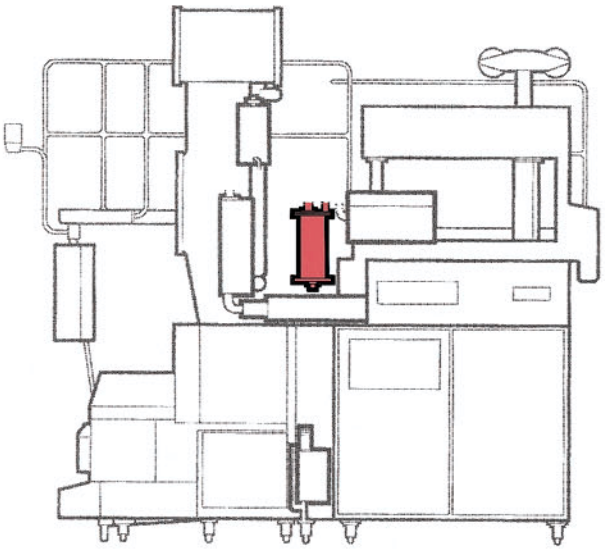

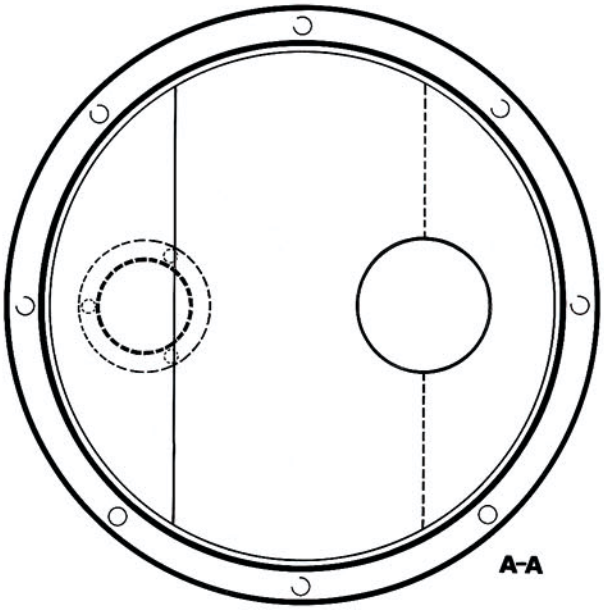

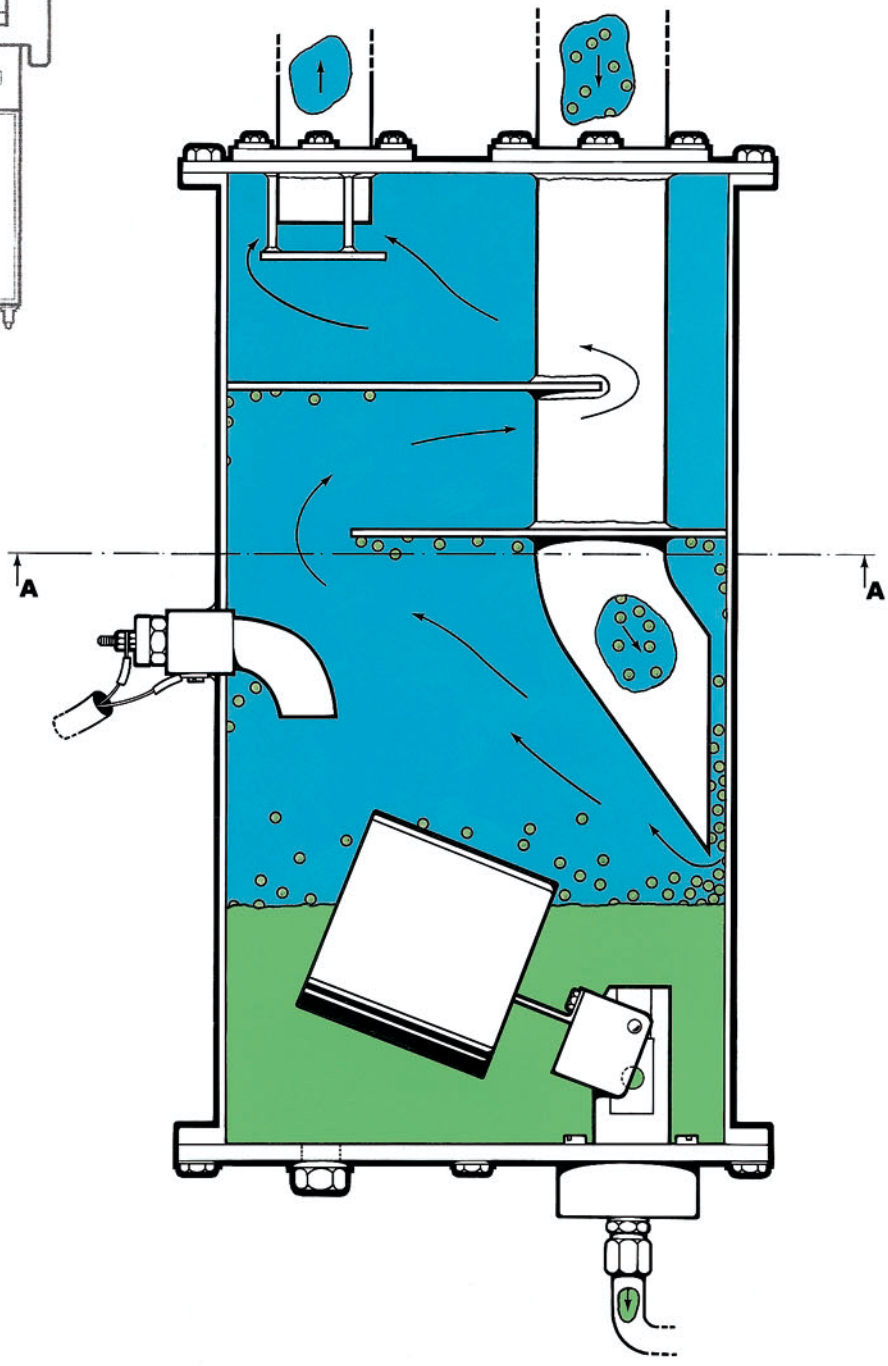

Water

Air

Technical Training Centre Lund, Sweden	Machine	Model 1985	Issue	OH 101

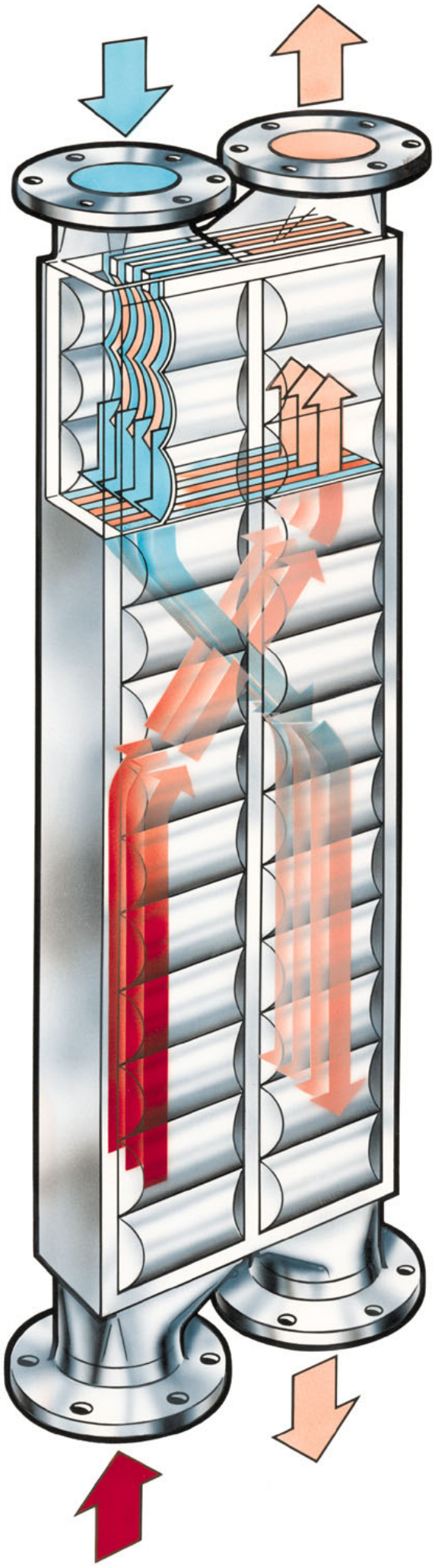

Sterile system

Principle function of heat exchanger

Air

Hot air

Pre-heated air alt. cooled air

Air superheater

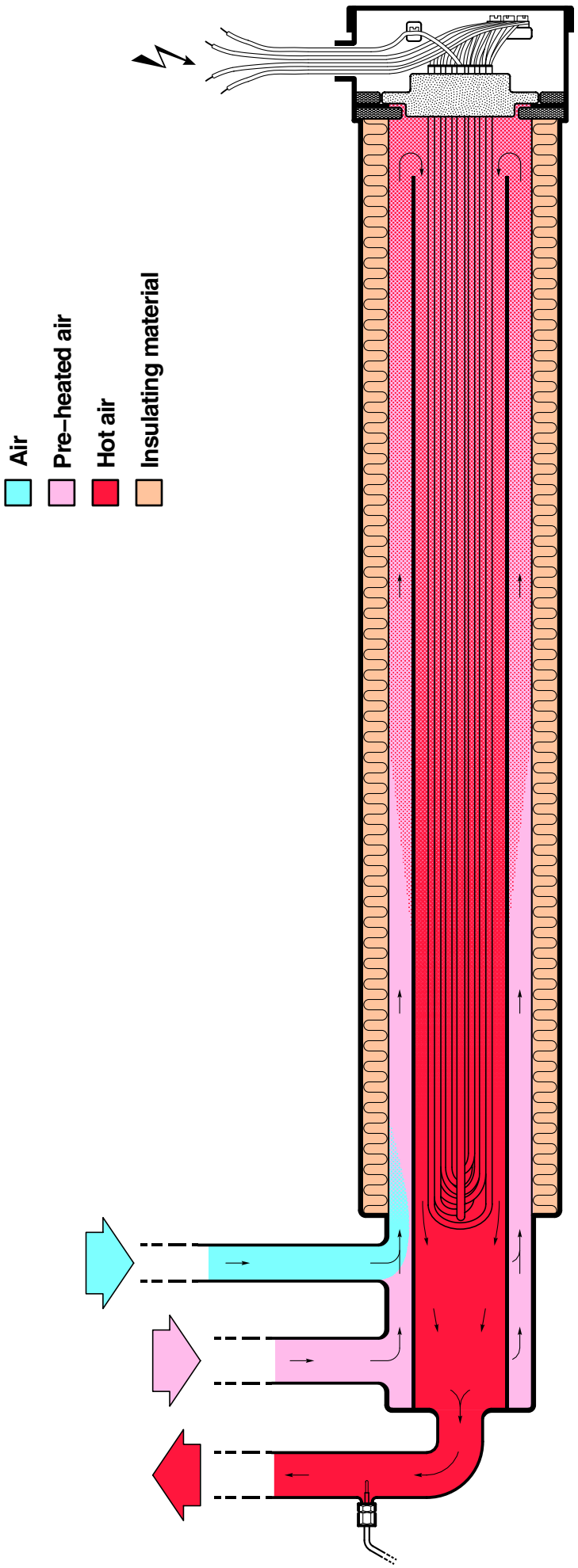

Technical Training Centre Lund, Sweden	Machine type TBA/19 TBA/21 TBA/22	Issue 3/9508	OH 107

Sterile system

Peroxide evaporator

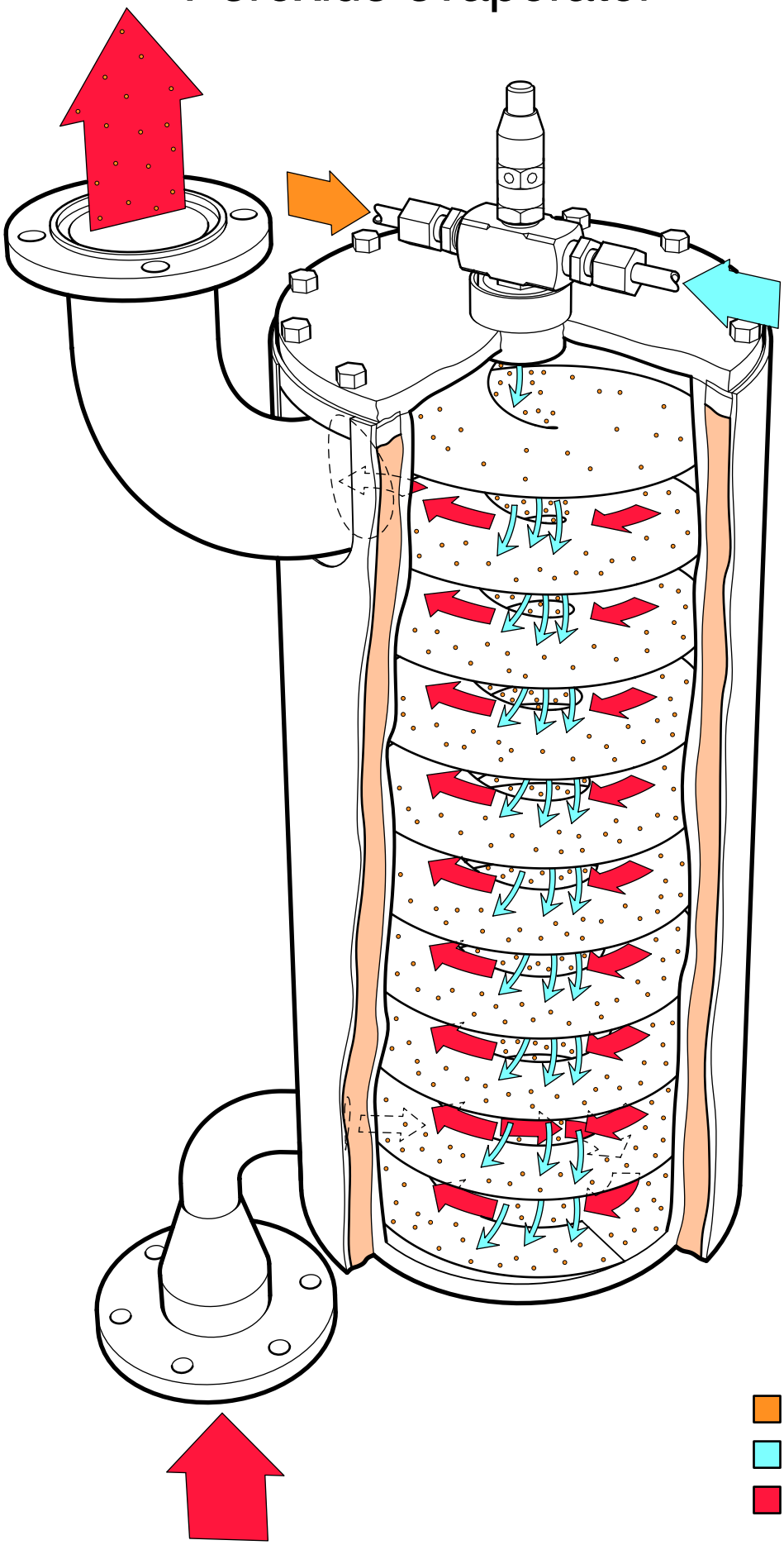

Technical Training Centre Lund, Sweden	Machine type TBA/9, TBA/19	Issue 1/9804	OH 775

Peroxide evaporator

Spray nozzle

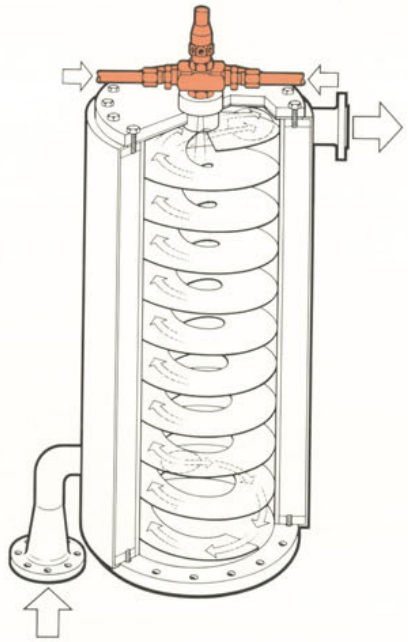

Technical Training Centre Lund, Sweden	Machine	Model	Issue	
TETRA PAK	TBA/9	1983 →	2/8902	OH 105 :2

5

Drive Unit

Drive unit, TB/9 and TBA/9

Worm gear and motor

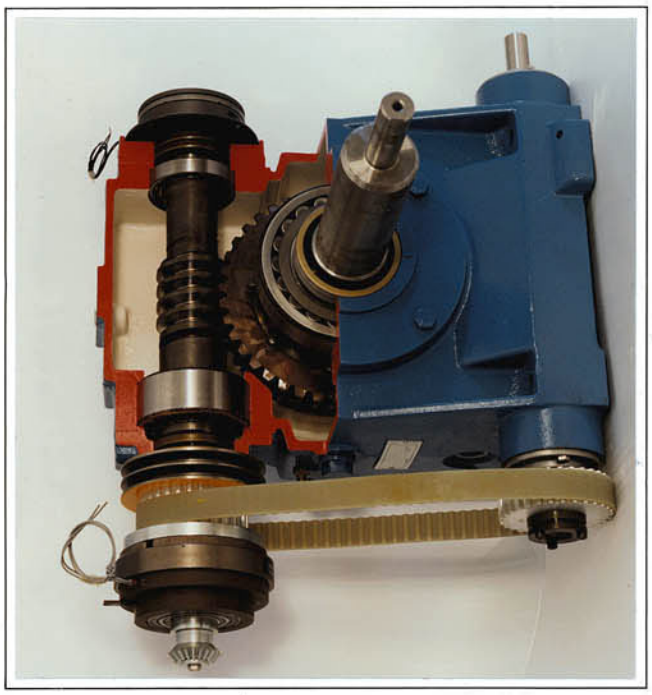

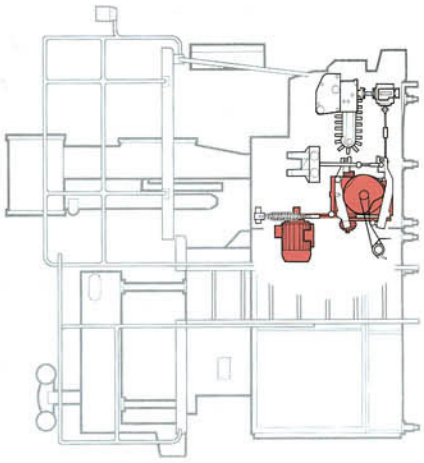

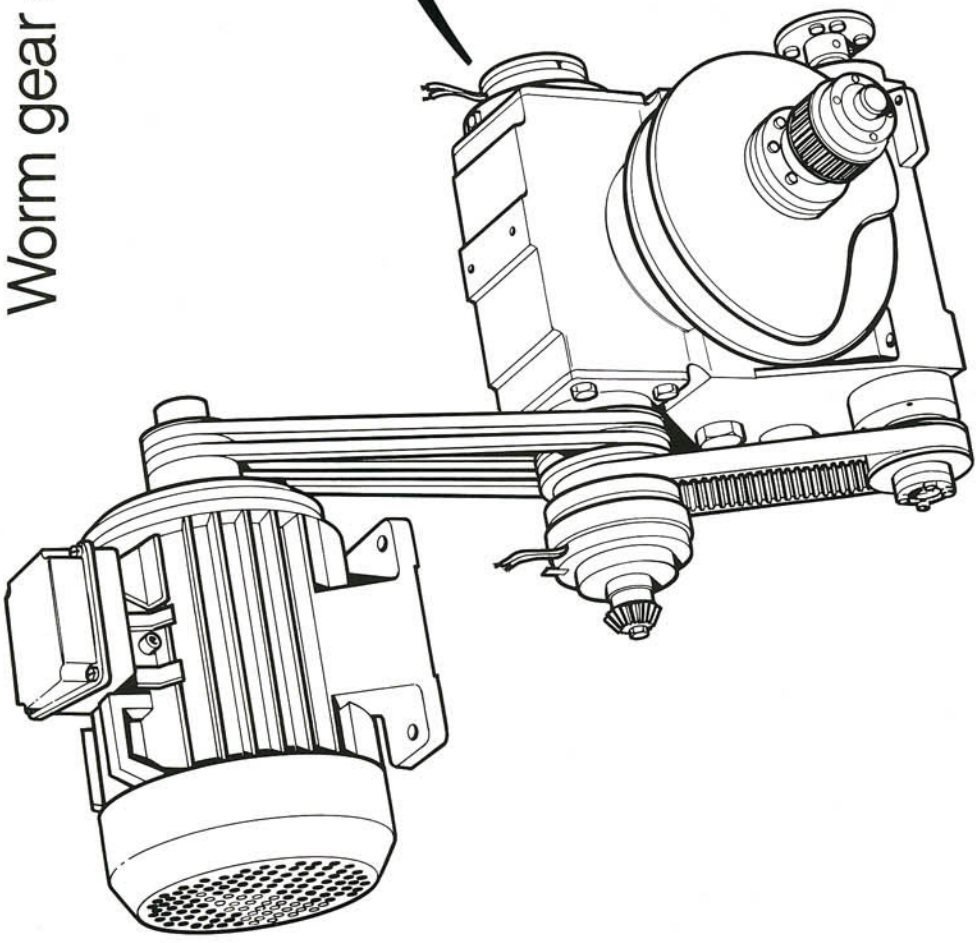

Drive unit, TB/9 and TBA/9

Yoke and Link system

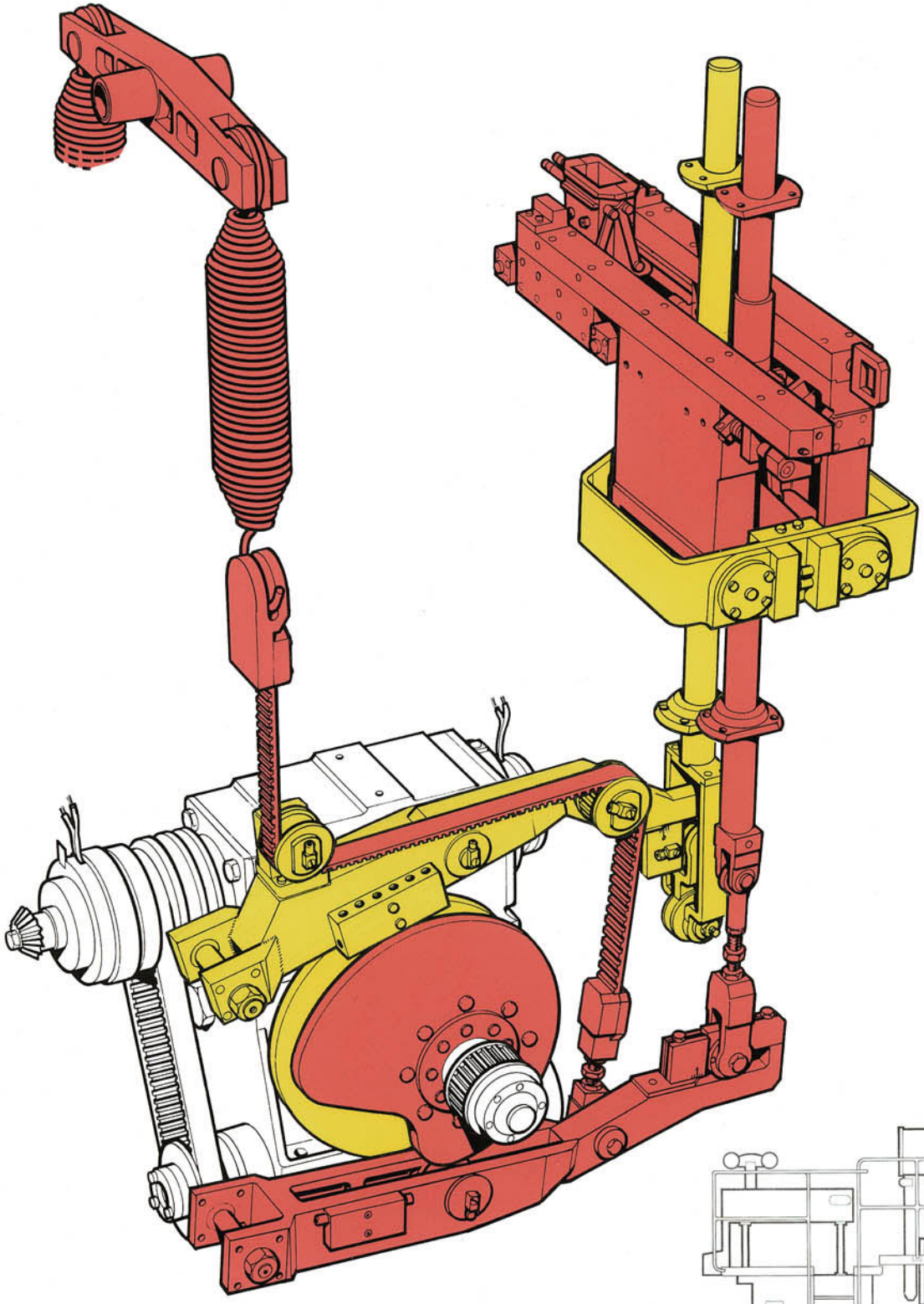

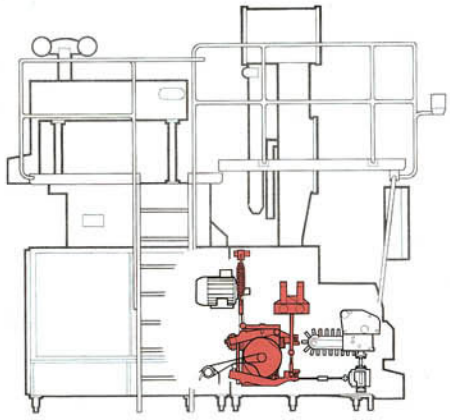

Technical Training Centre Lund, Sweden	Machine	Model	Issue	
	TB/9, TBA/9	1985	2/8902	OH 98:1

Drive unit, TB/9 and TBA/9

Yoke system

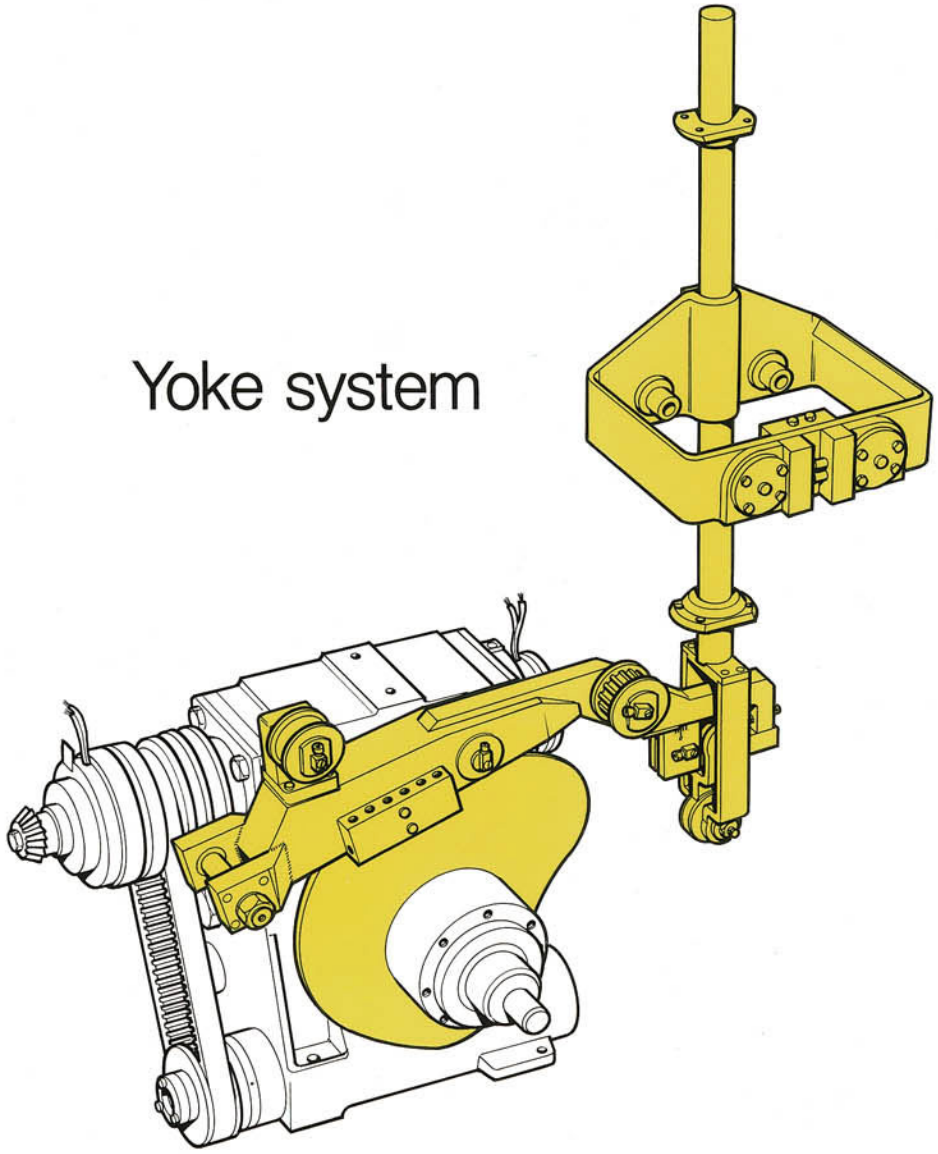

Link system

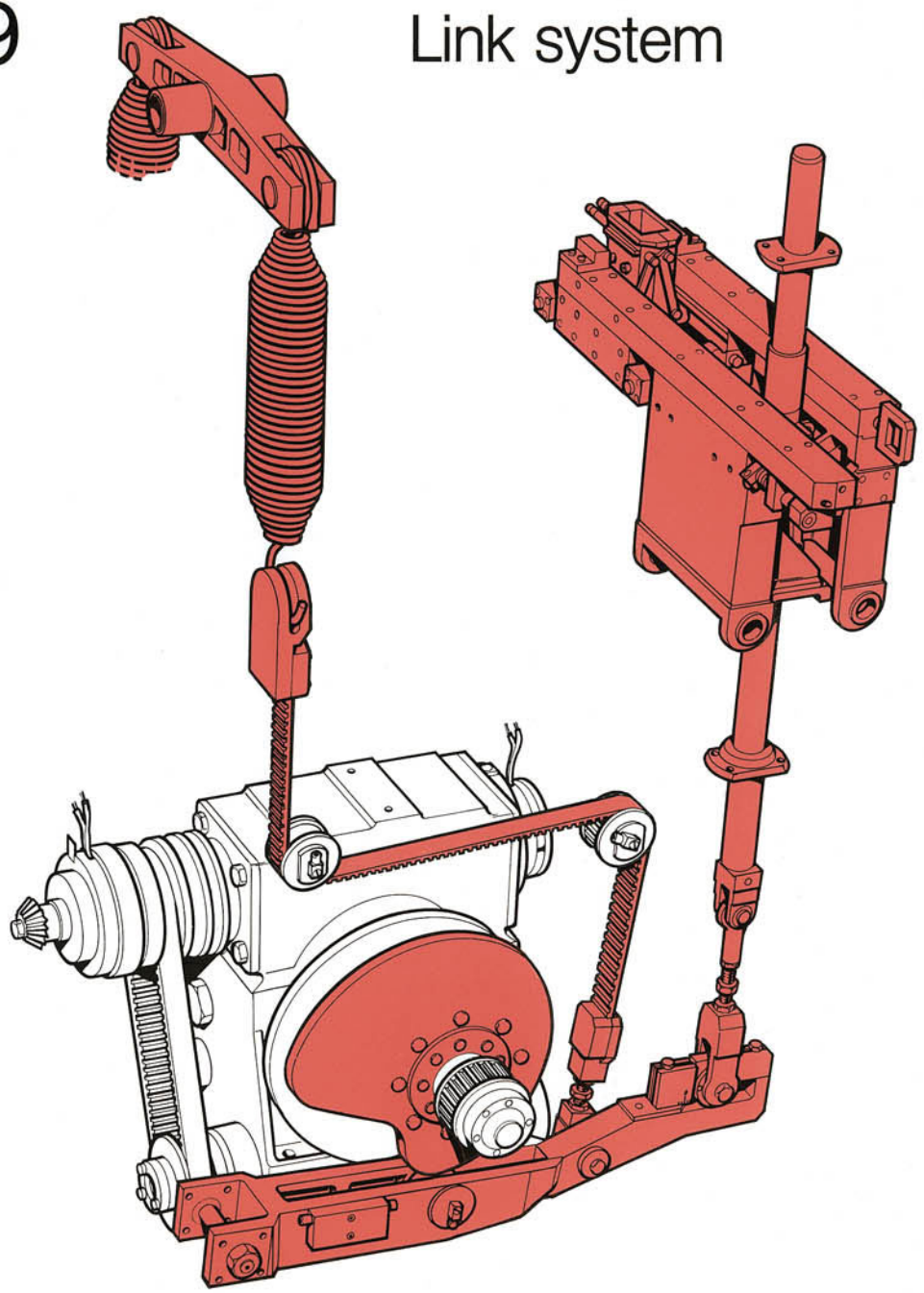

Technical Training Centre Lund, Sweden	Machine	Model	Issue	
TETRA PAK®	TB/9, TBA/9	1985	2/8902	OH 98:2

Drive unit, TB/9 and TBA/9

Worm gear, motor, final folder and angle encoders

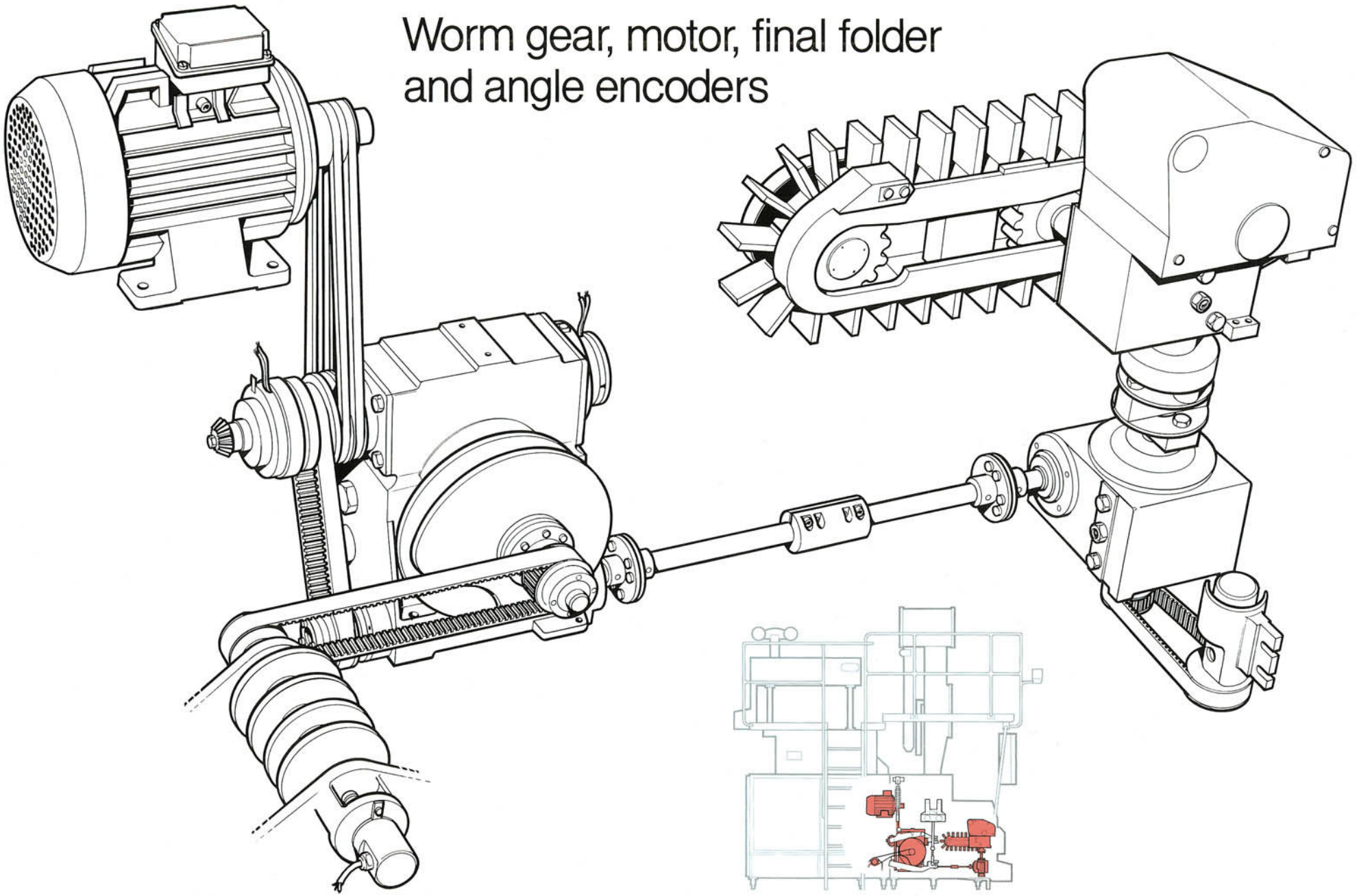

Technical Training Centre Lund, Sweden	Machine	Model	Issue	
TETRA PAK®	TB/9, TBA/9	1985	2/8902	OH 95:3

Drive unit

Electrical clutch

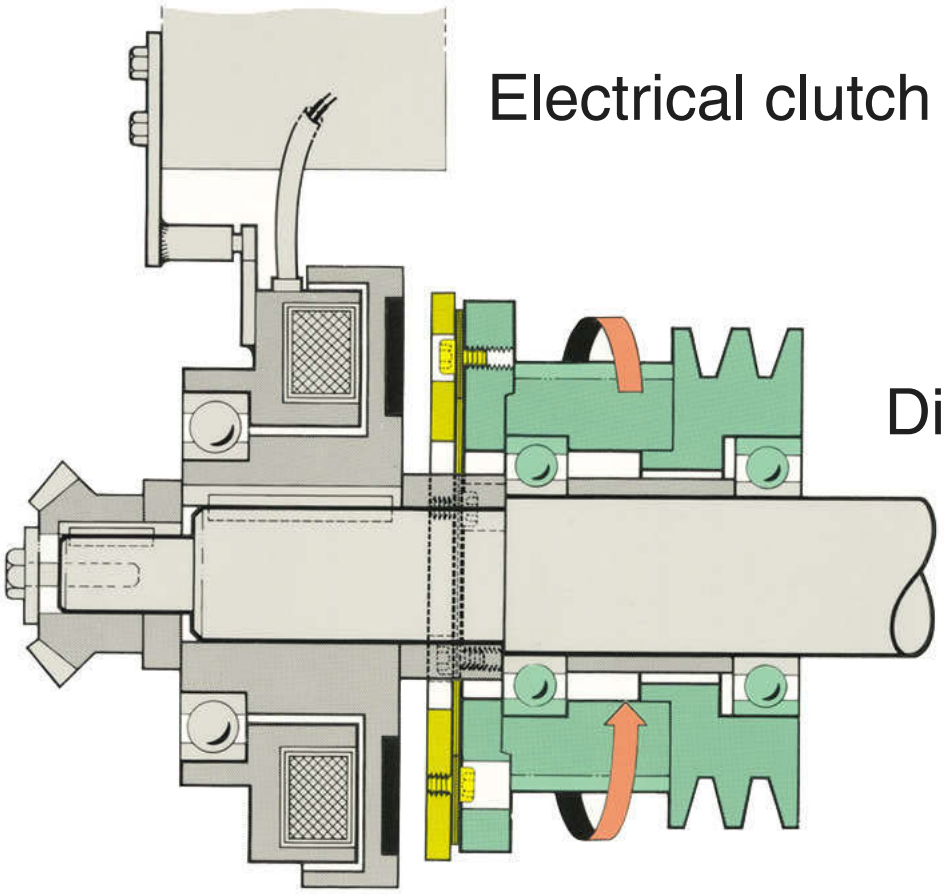

Disengaged

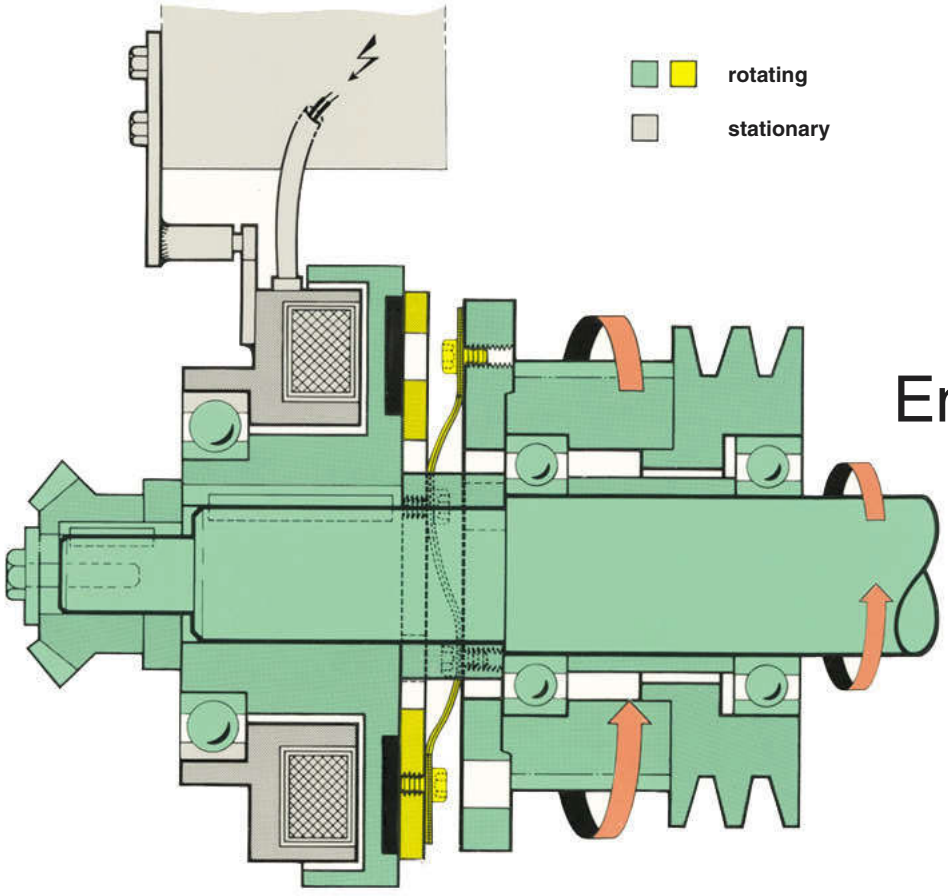

Engaged

Drive unit

Electrical brake

Disengaged

Engaged

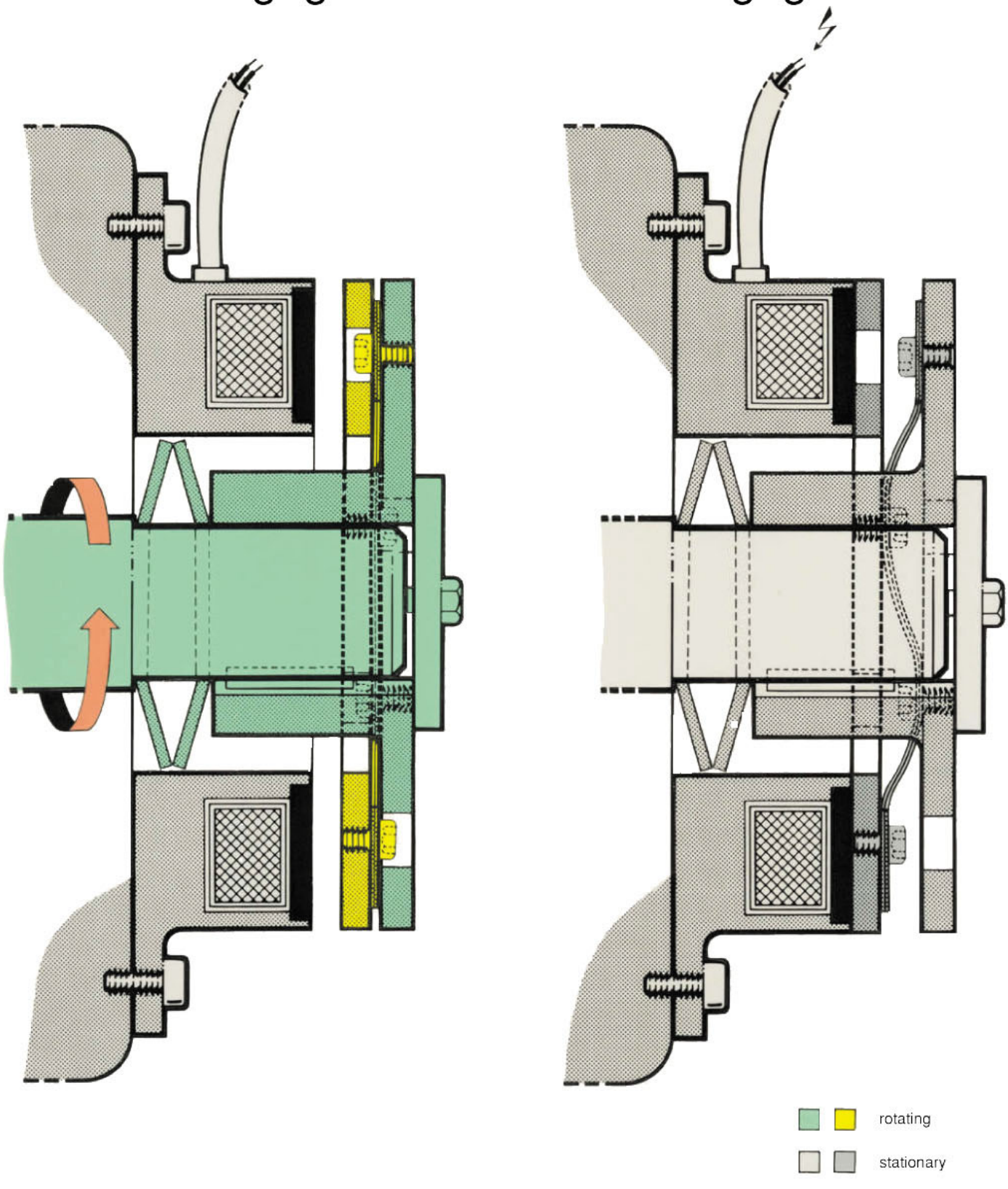

Drive unit

Crank mechanism

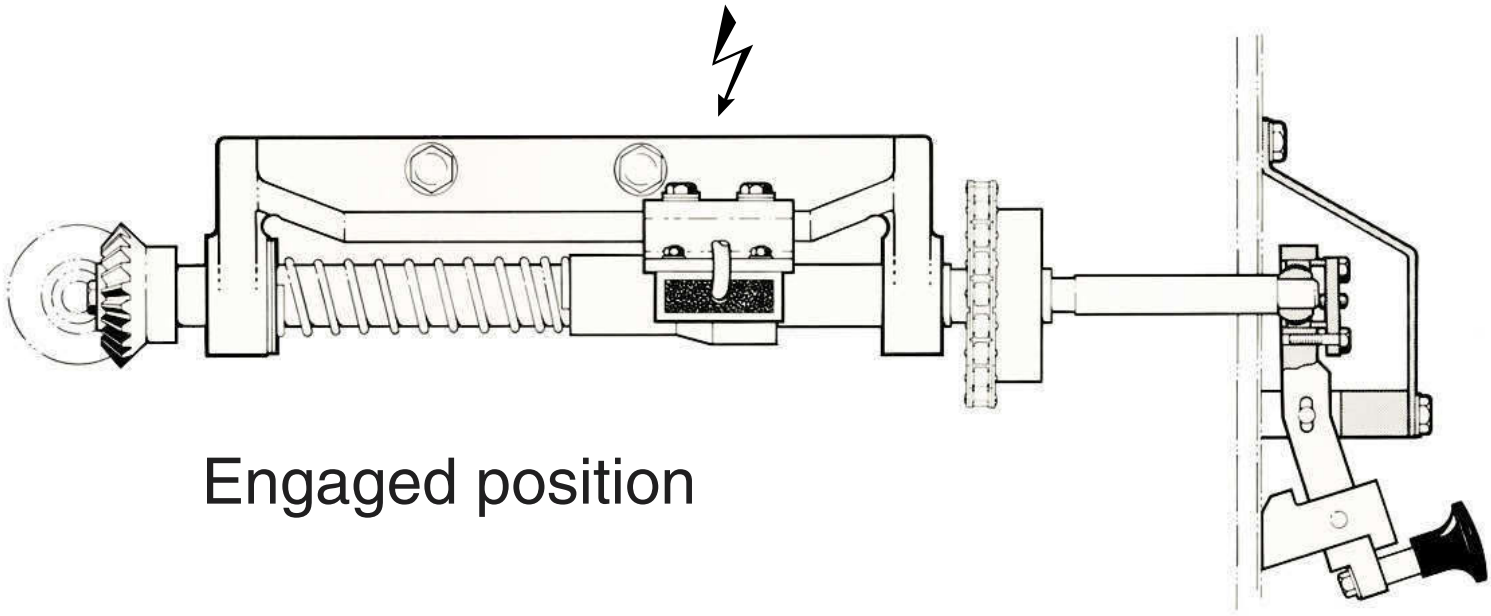

Engaged position

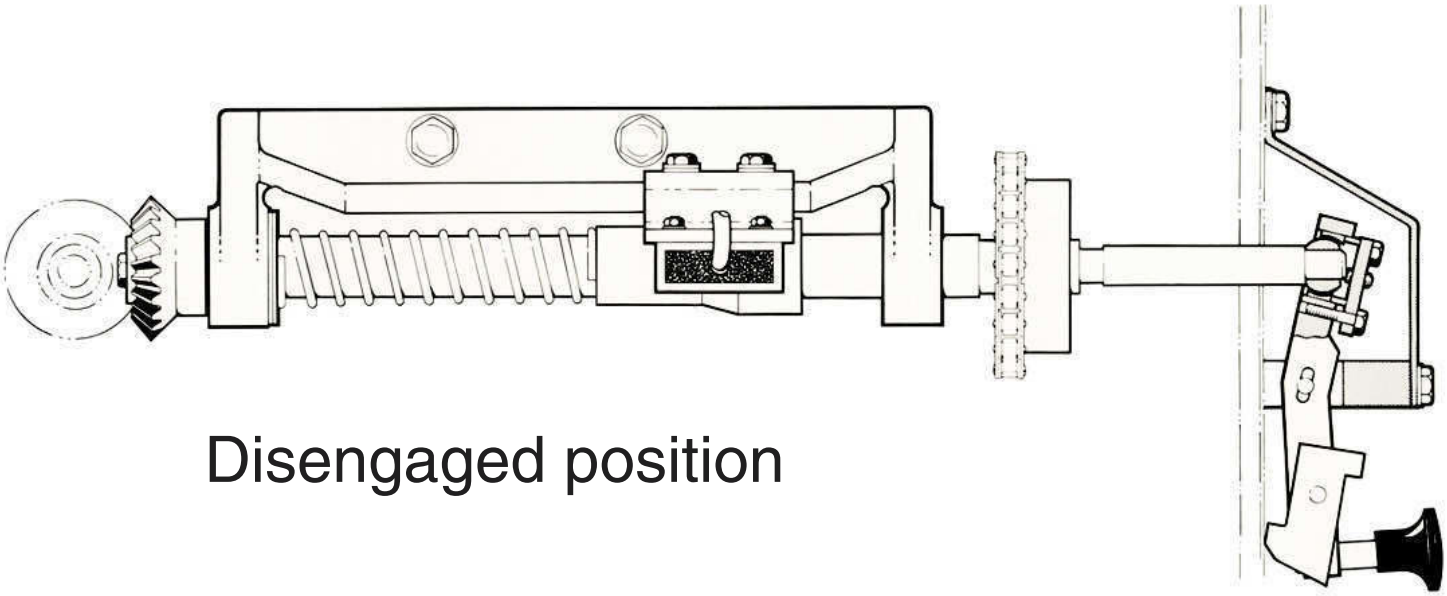

Disengaged position

Drive unit

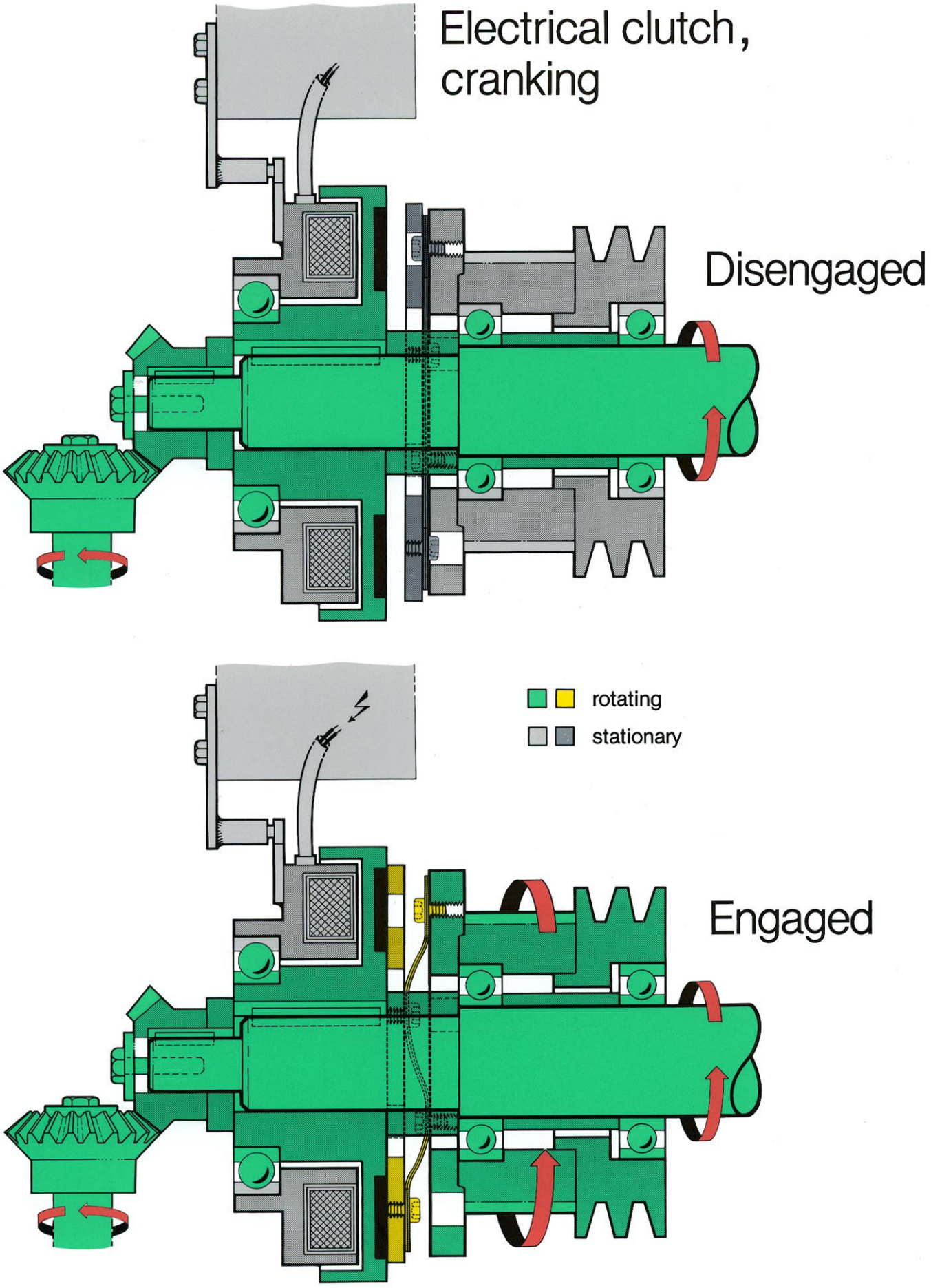
Electrical clutch, cranking
Disengaged
rotating
stationary
Engaged

Drive unit, TB/9 and TBA/9

Cranking, electrical clutch engaged

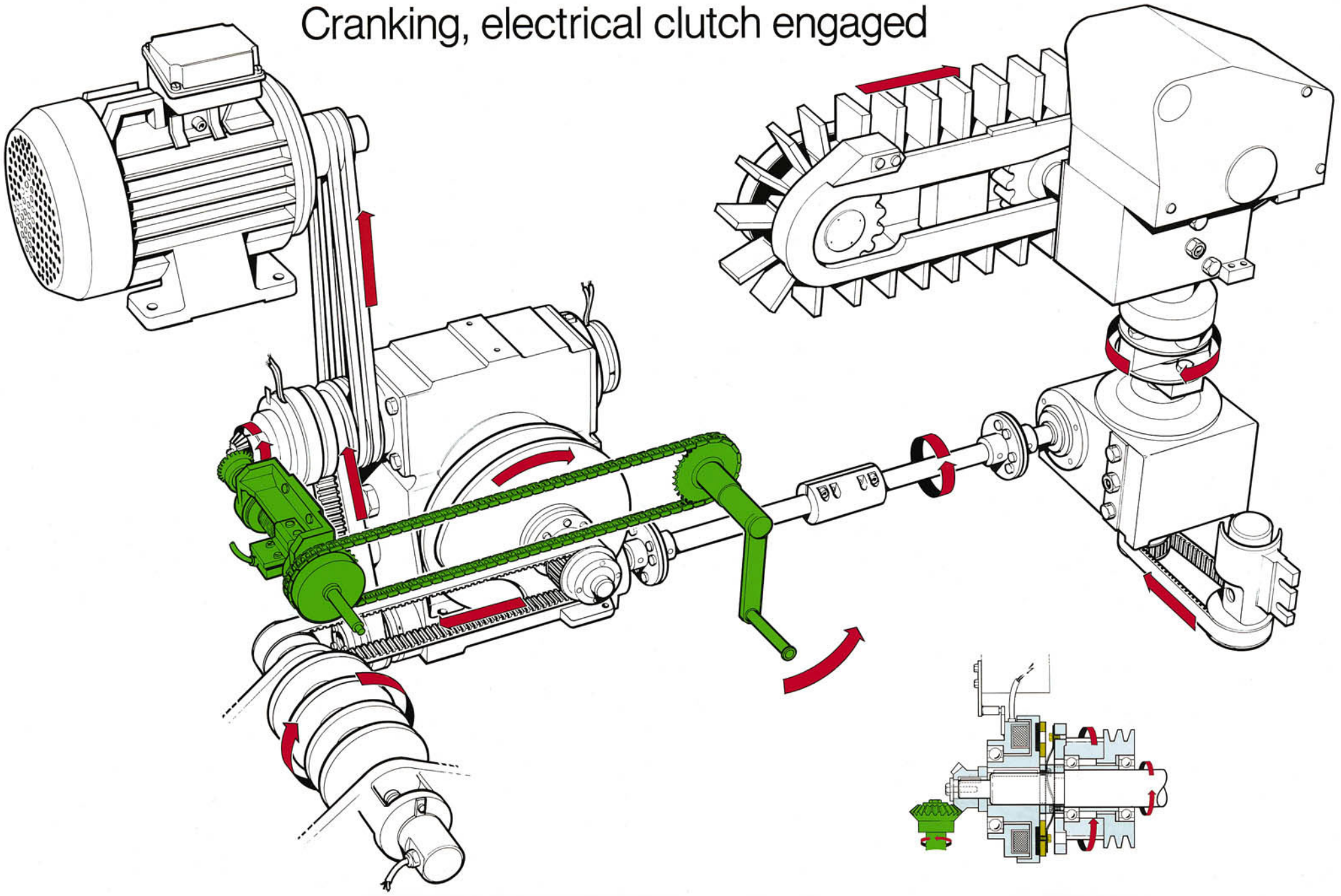

Technical Training Centre Lund, Sweden	Machine	Model	Issue	
TETRA PAK®	TB/9, TBA/9	1985	2/8902	OH 97:2

Drive unit, TB/9 and TBA/9

Cranking, electrical clutch disengaged

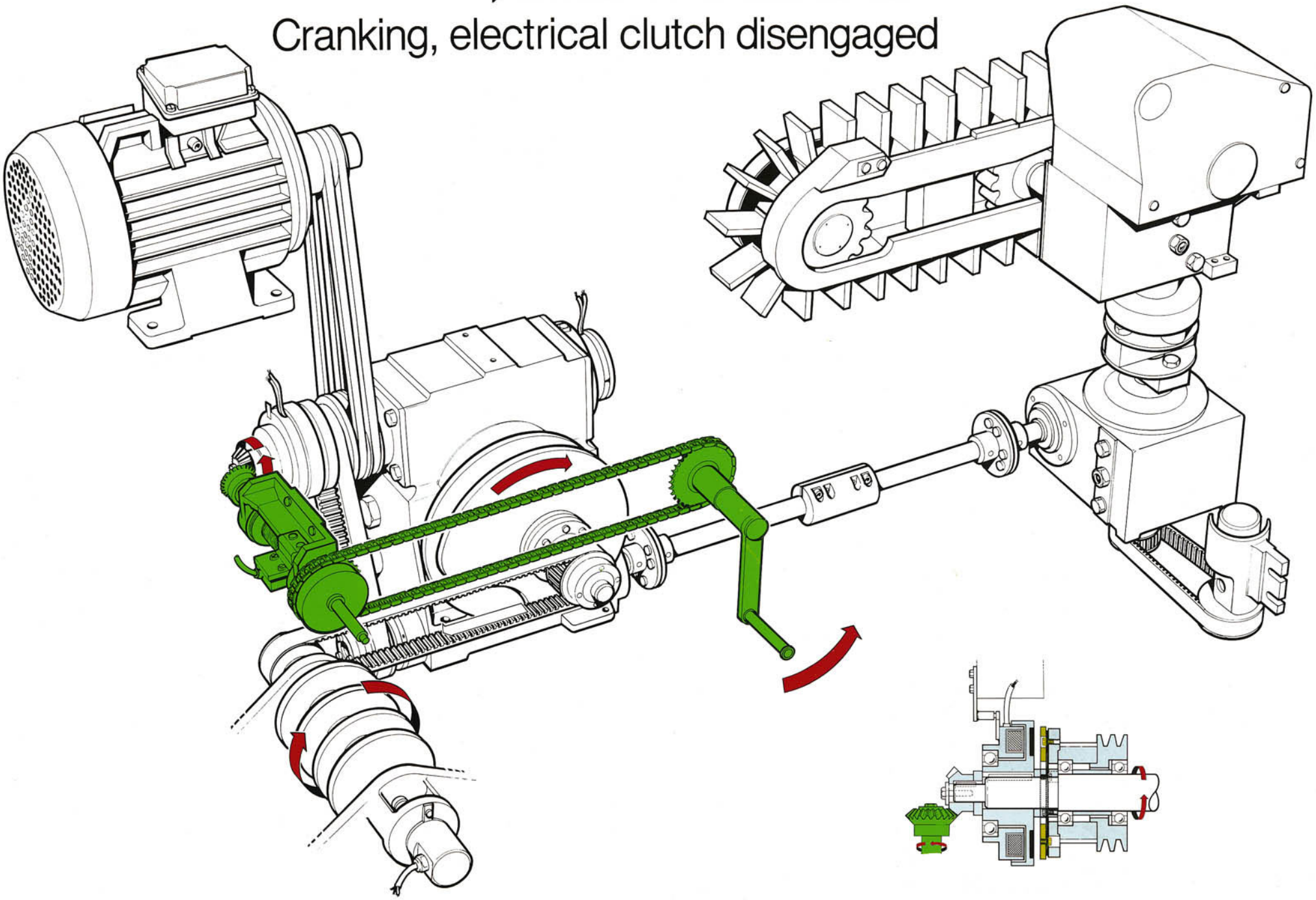

Technical Training Centre Lund, Sweden	Machine	Model	Issue	
	TB/9, TBA/9	1985	2/8902	OH 97:1

Drive unit, TB/9 and TBA/9

Production

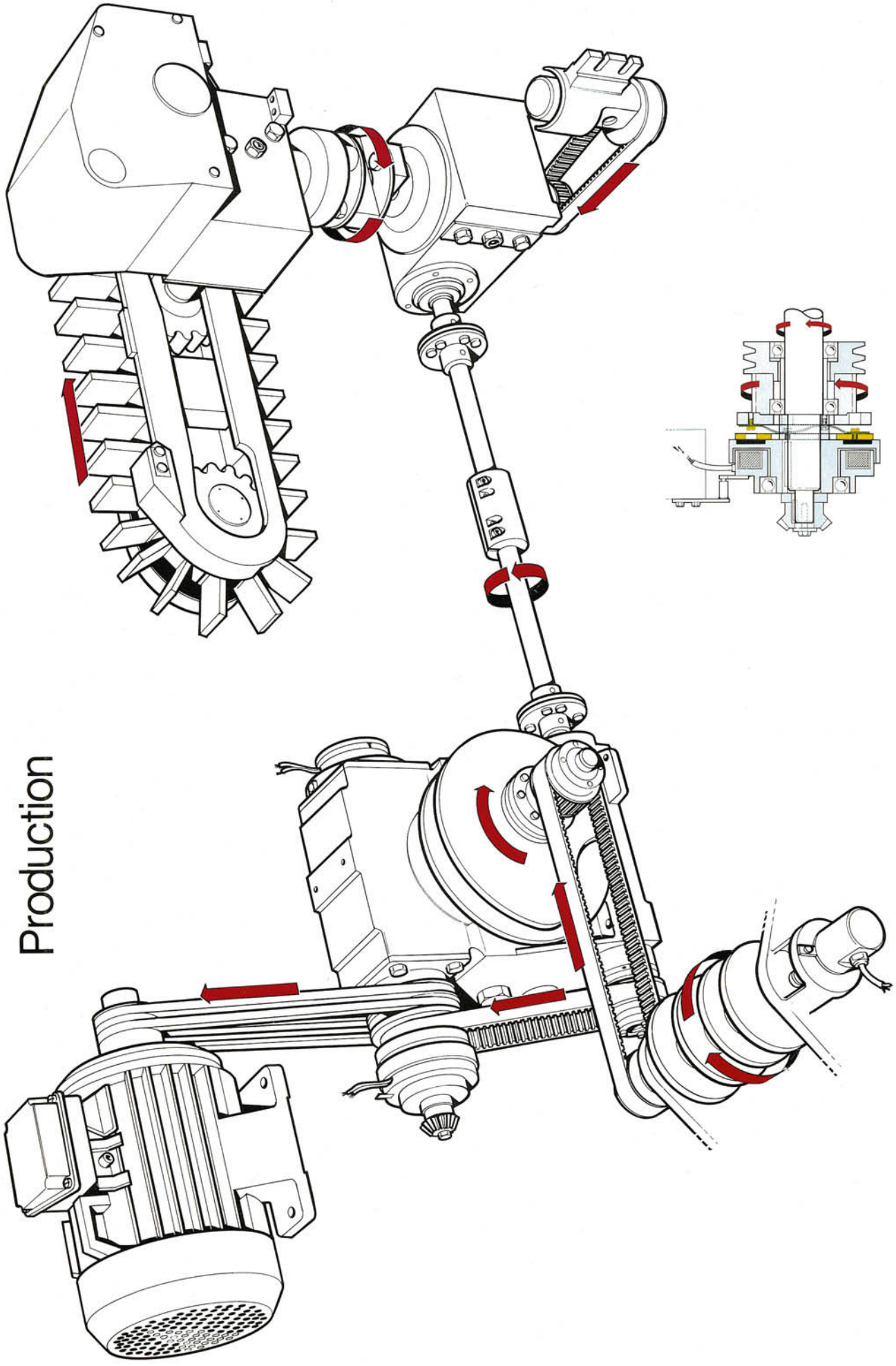

Drive unit, TB/9 and TBA/9

Electrical clutch

Technical Training Centre Lund, Sweden	Machine TB/9, TBA/9	Model 1983 →	Issue 2/8902	OH 116

Drive unit, TB/9 and TBA/9

Electrical brake

ETP Bushing

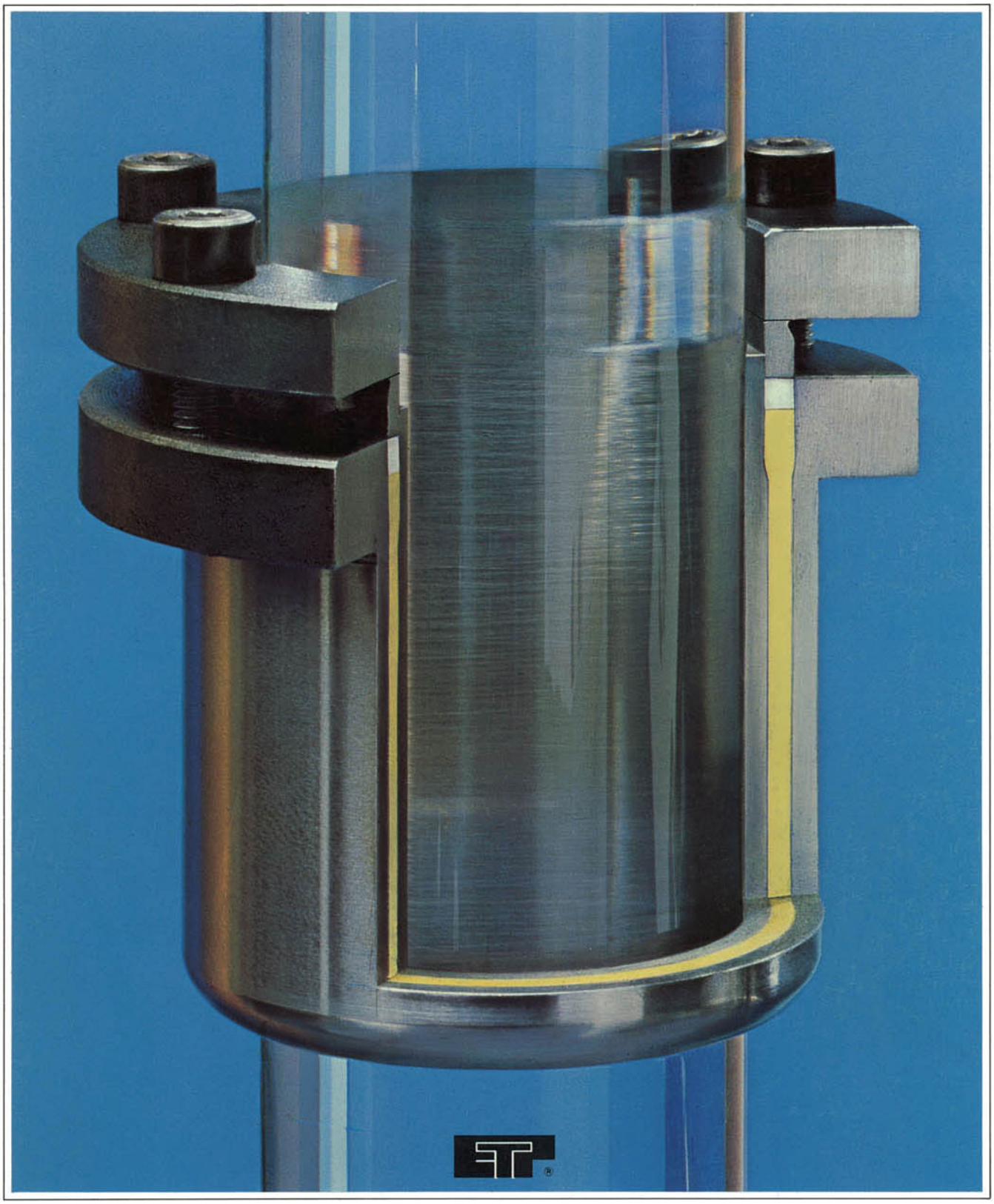

Technical Training Centre Lund, Sweden	Machine	Model	Issue 1/8409	OH 14

ETP Bushing

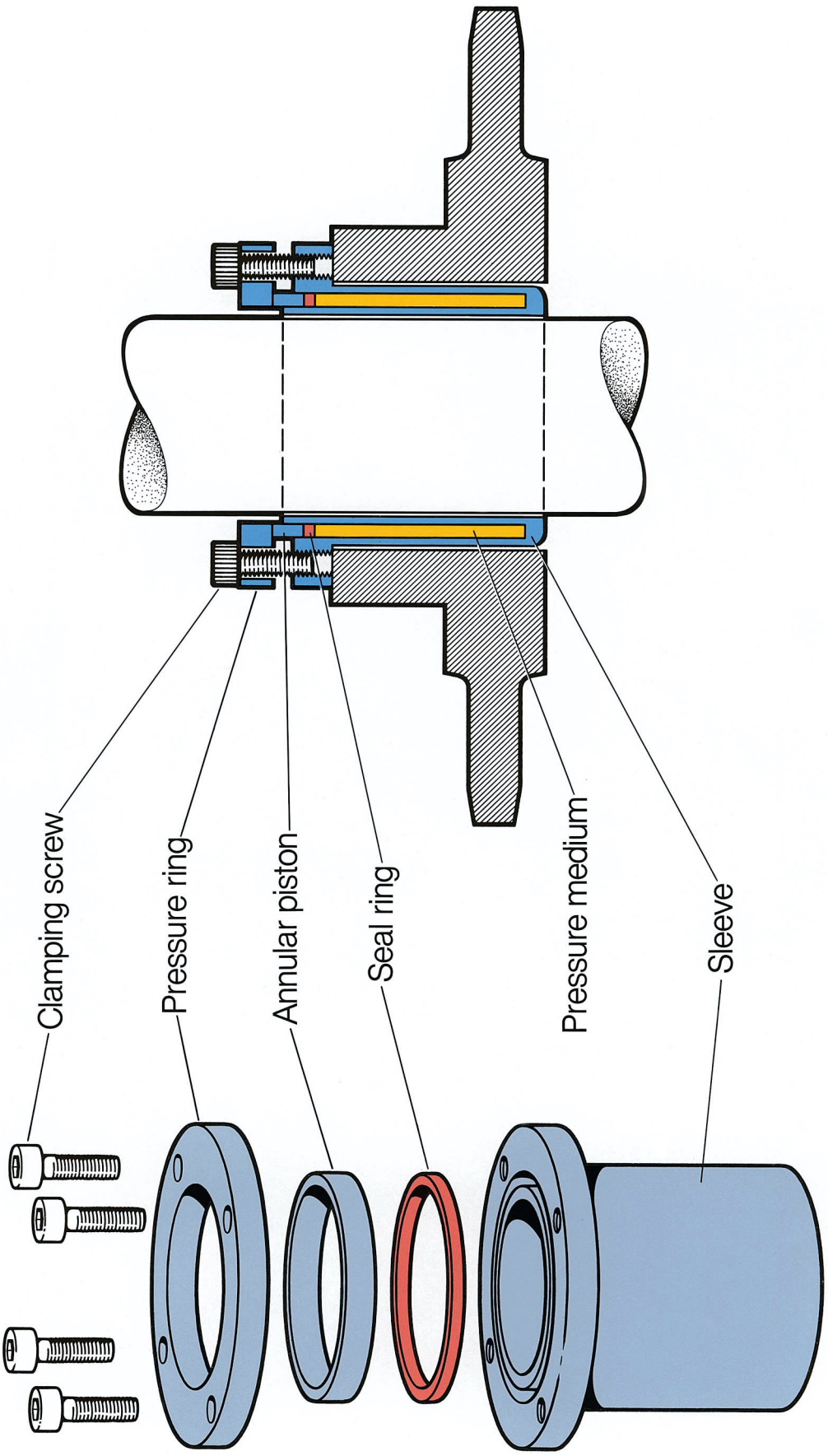
Clamping screw
Pressure ring
Annular piston
Seal ring
Pressure medium
Sleeve

Final folder

Principle function of flap sealing element

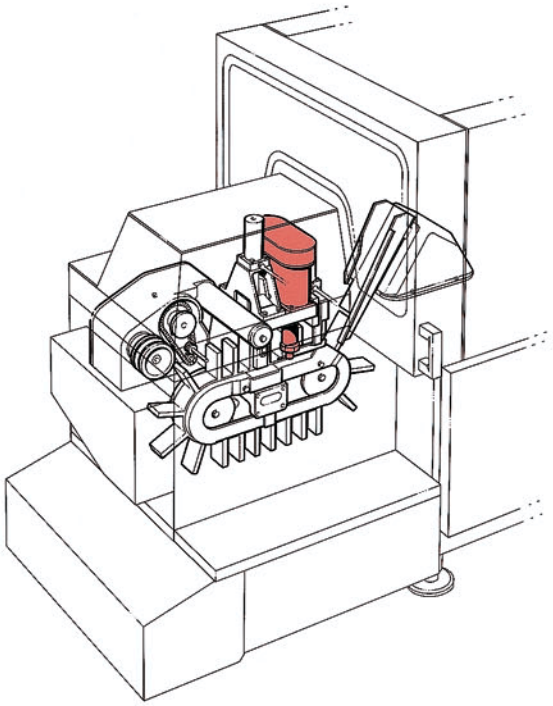

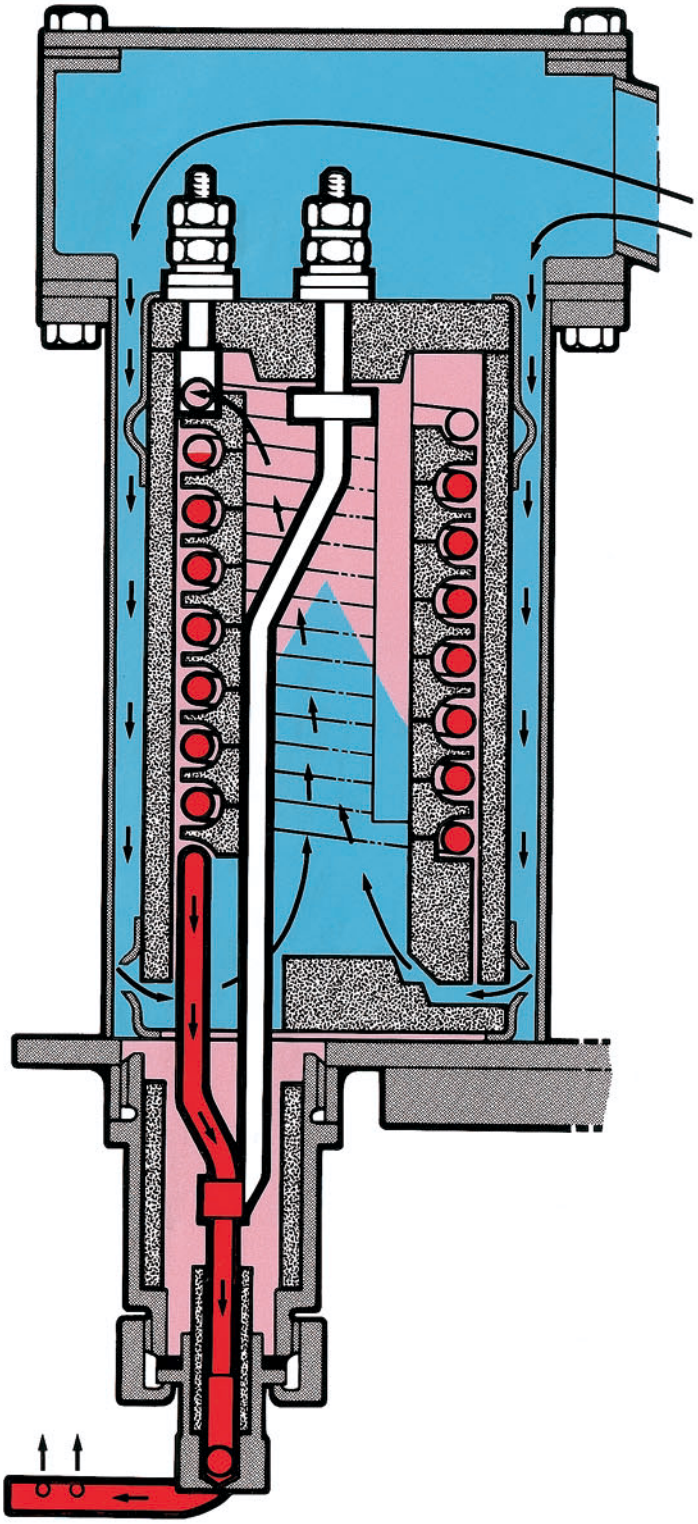

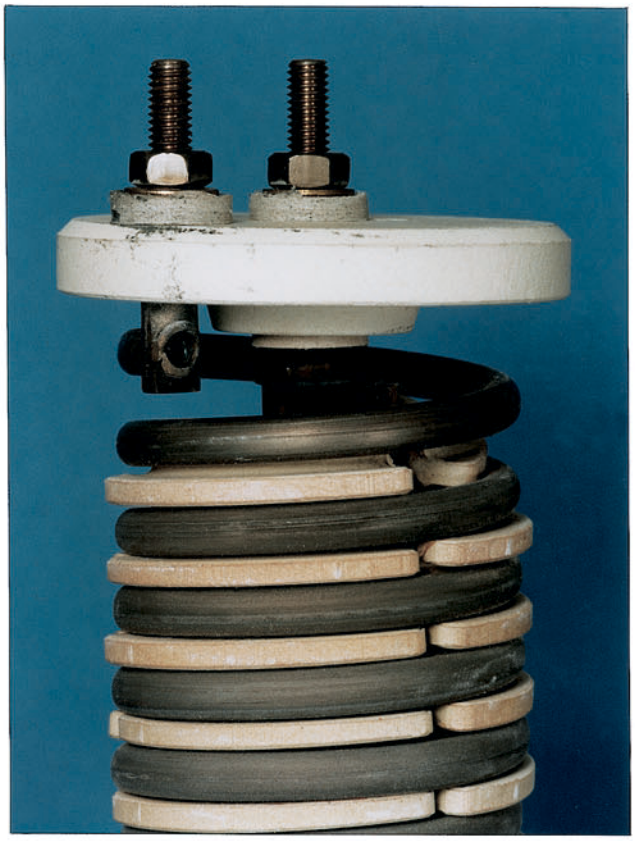

Air
Hot air

Flap sealing element

Nozzle adjustments

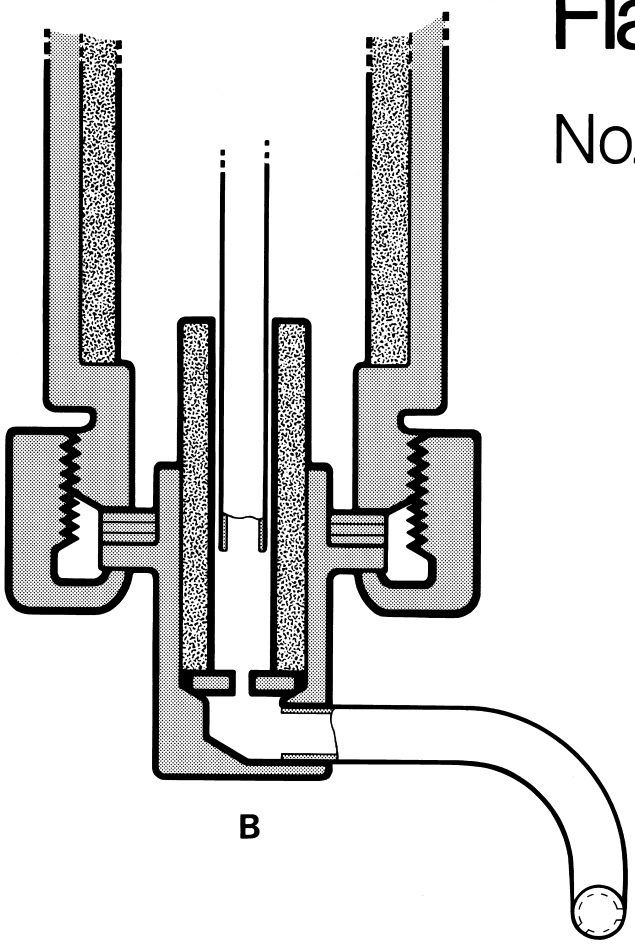

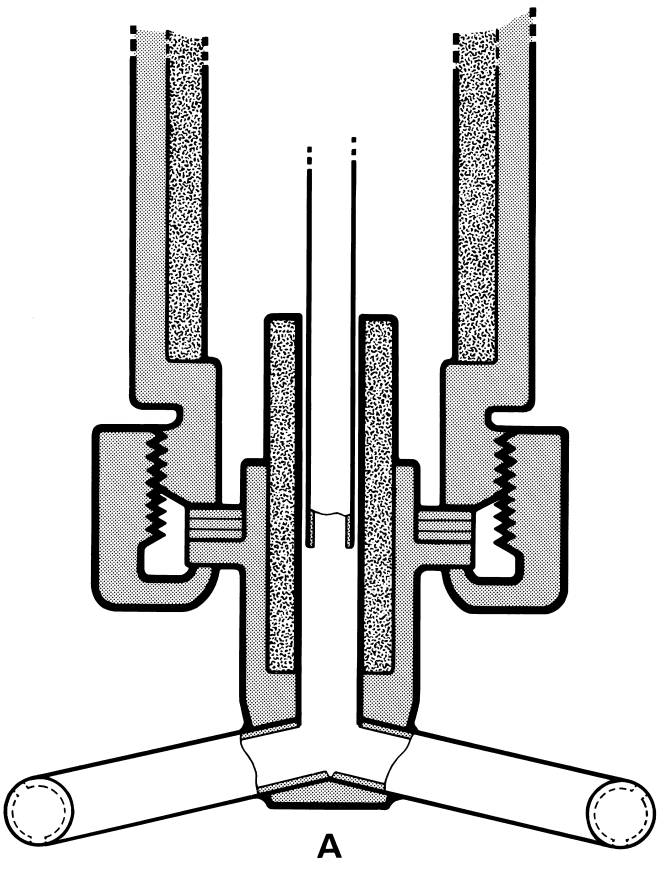

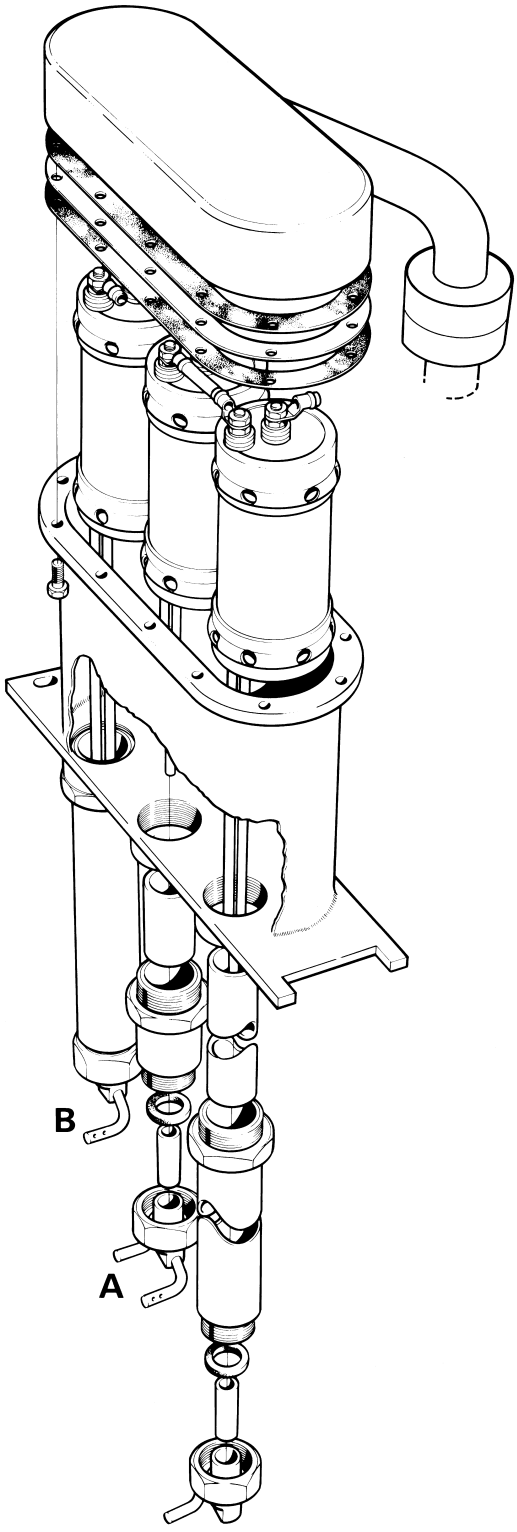

Function of the ETP Bushing

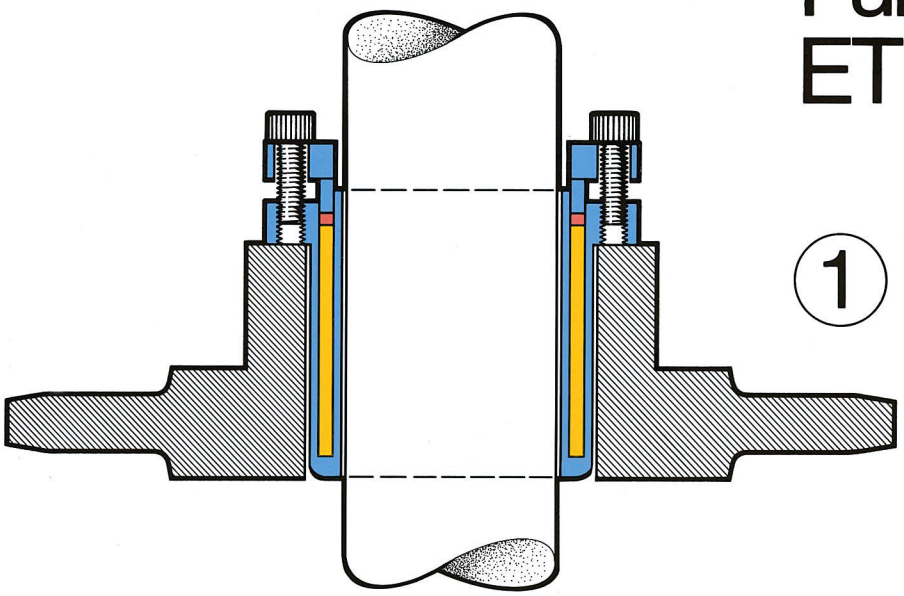

1 The ETP bushing is fitted in place.

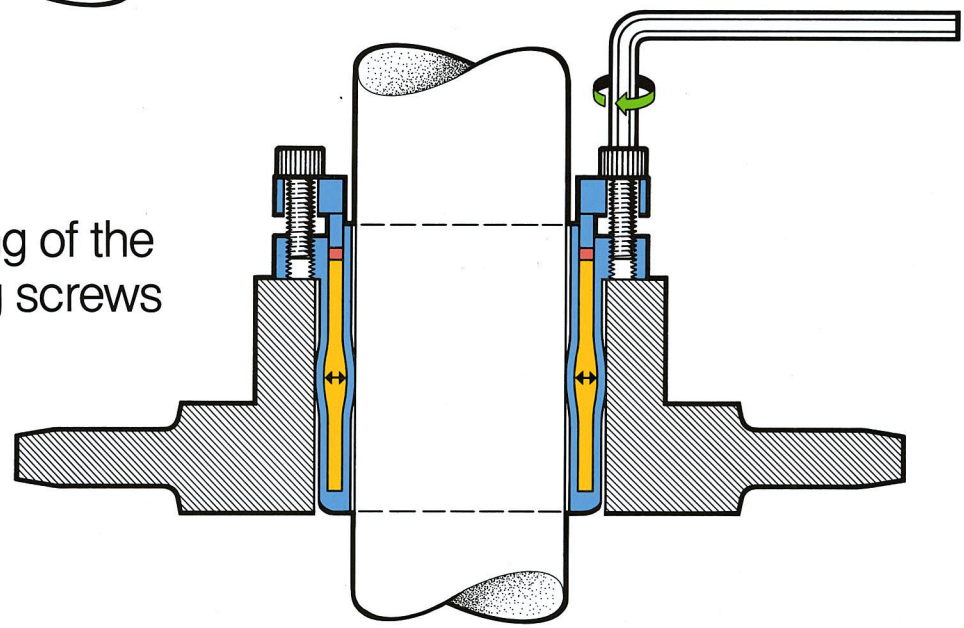

2 Tightening of the clamping screws begins.

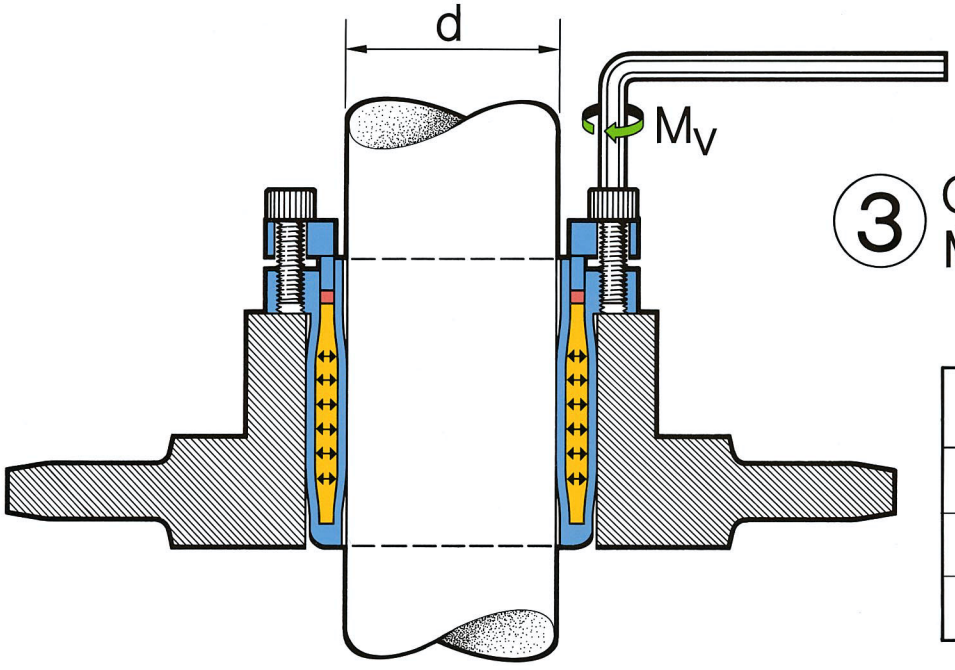

3 Correct torque value M_V is reached.

d (mm)	M_V (Nm)
20-42	8.0
45-65	13.0
70-100	32.0

6

Jaw System

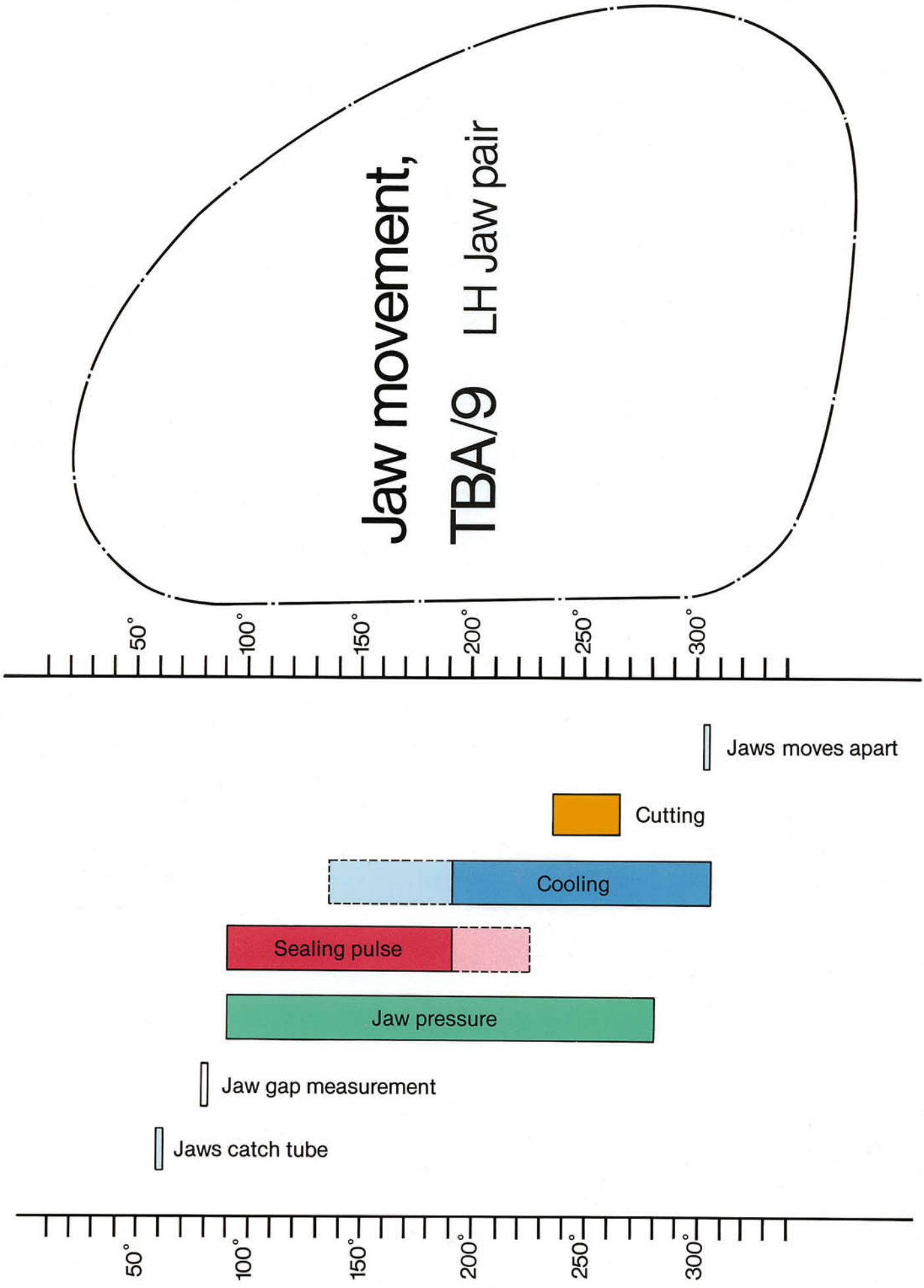

Technical Training Centre Lund, Sweden	Machine	Model 1983-84	Issue 2/8902	OH 133:1

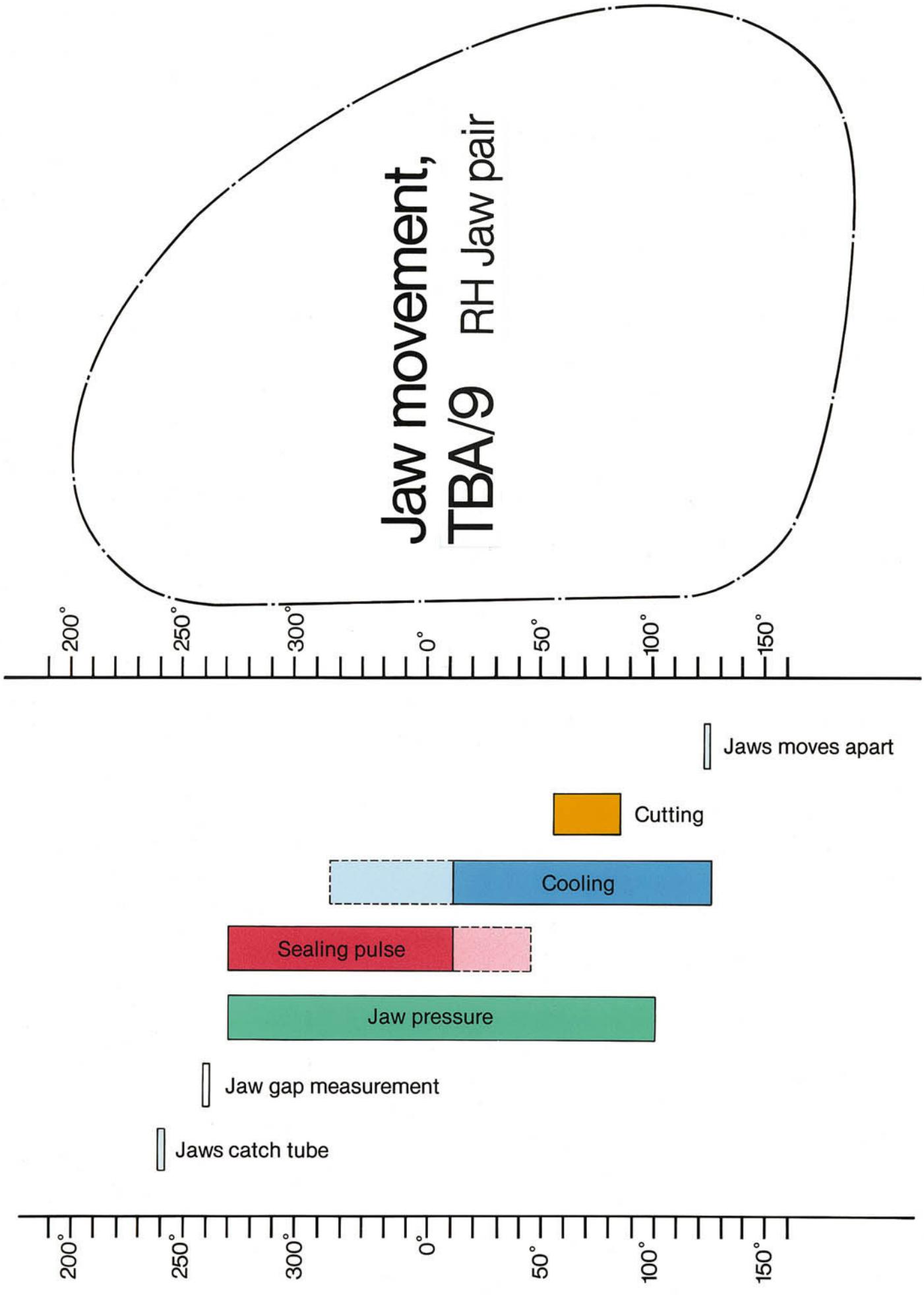

Technical Training Centre Lund, Sweden	Machine	Model	Issue	
	TBA/9	1983-84		OH 133:2

Package forming

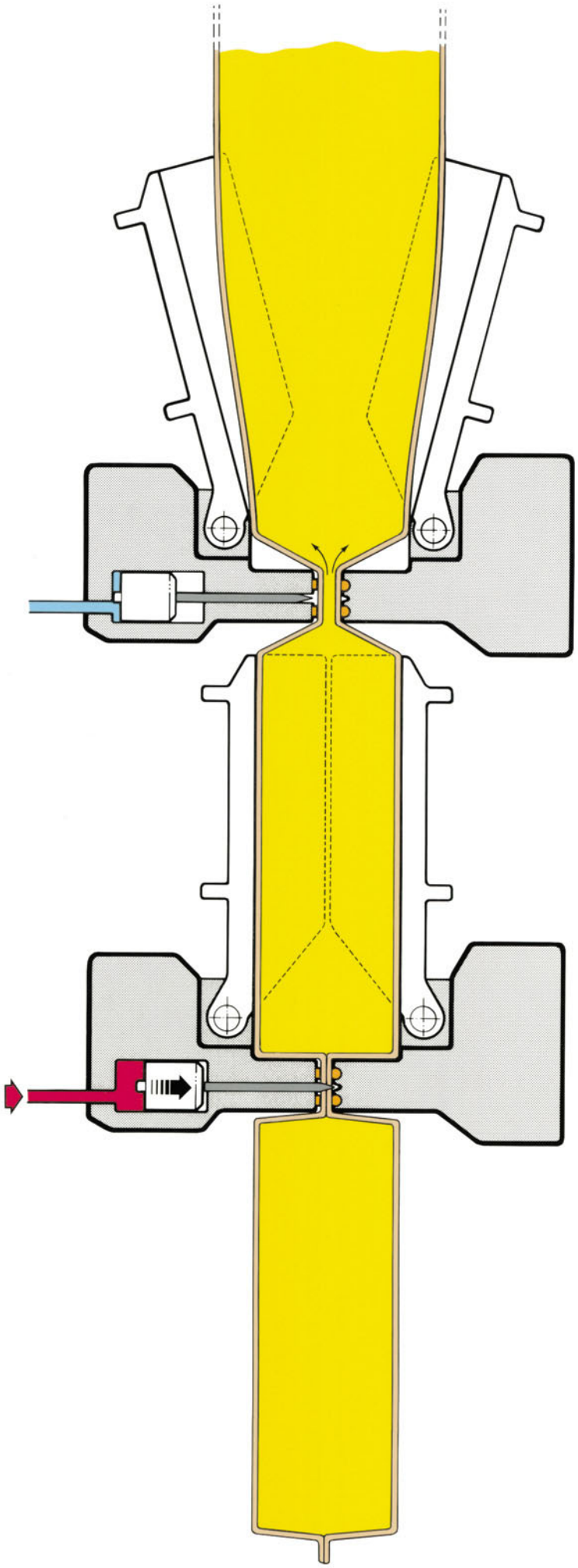

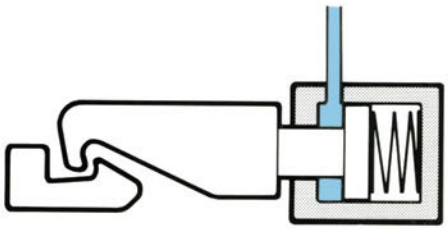

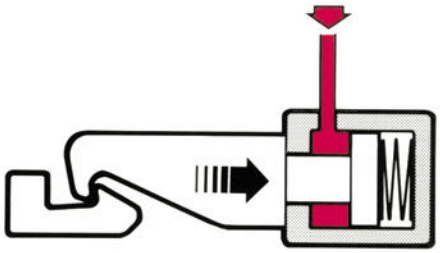

Product

Hydraulic oil not under pressure

Hydraulic oil with full pressure

Package forming

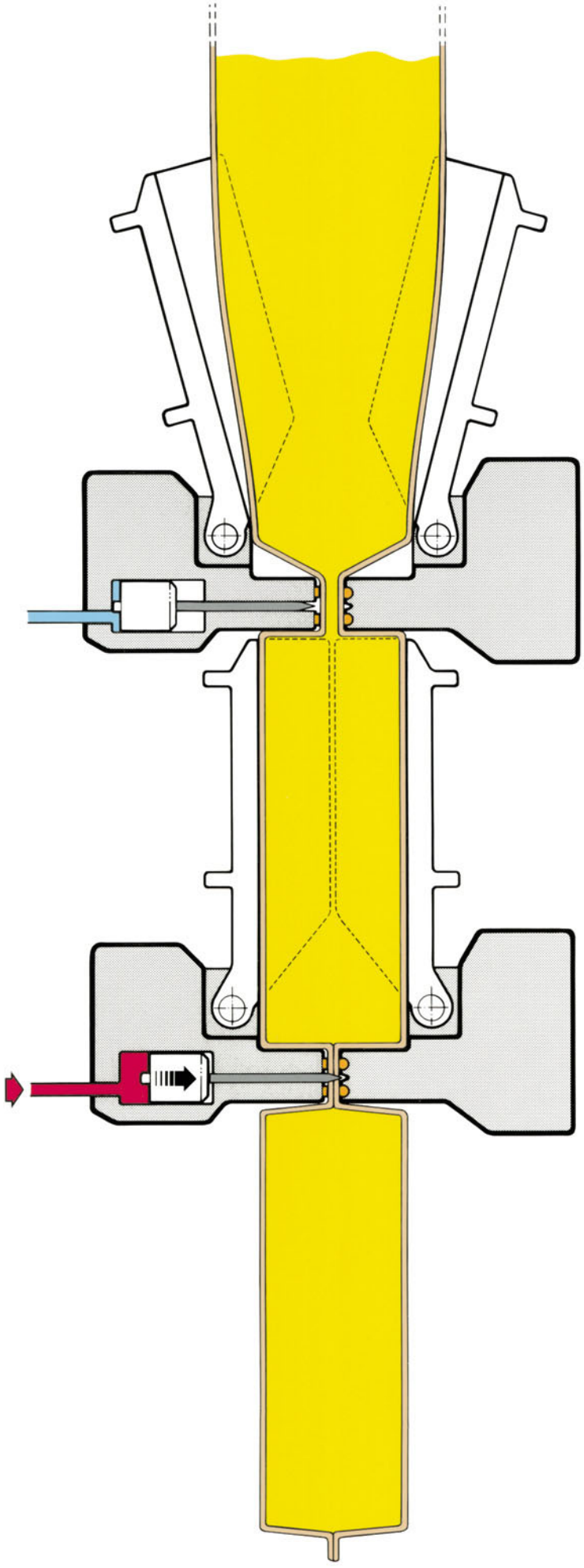

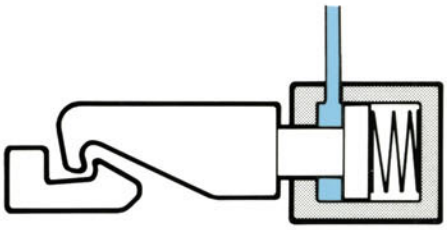

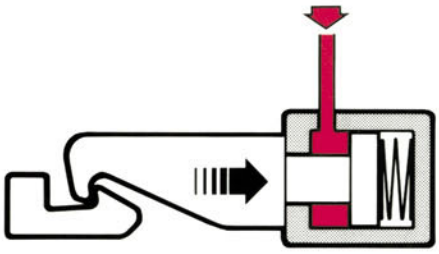

Product

Hydraulic oil not under pressure

Hydraulic oil with full pressure

Package forming

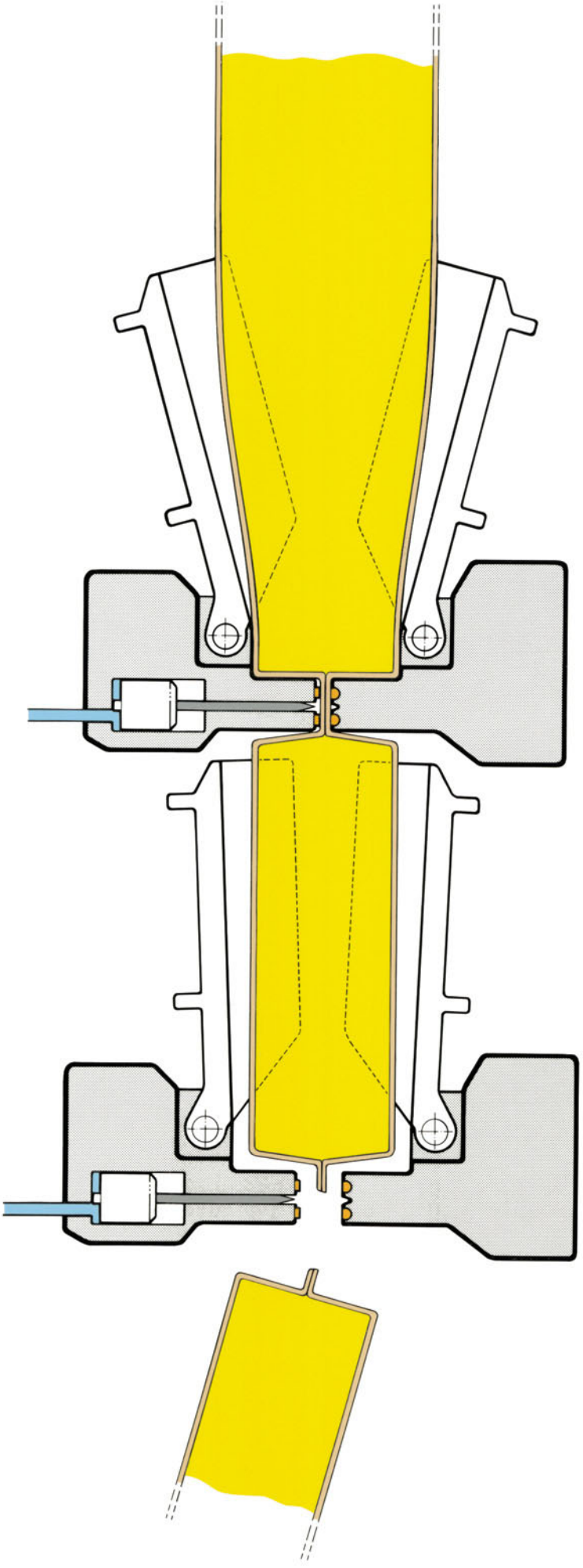

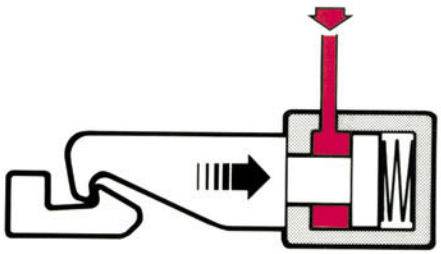

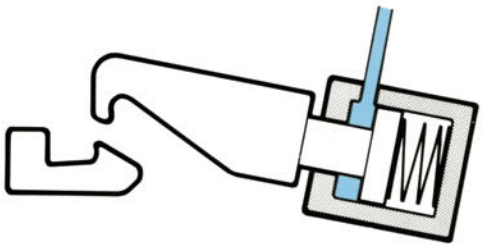

- Product
- Hydraulic oil not under pressure
- Hydraulic oil with full pressure

Principle of ridge inductor sealing

Product
Paper board
Cooling water
Inner coating

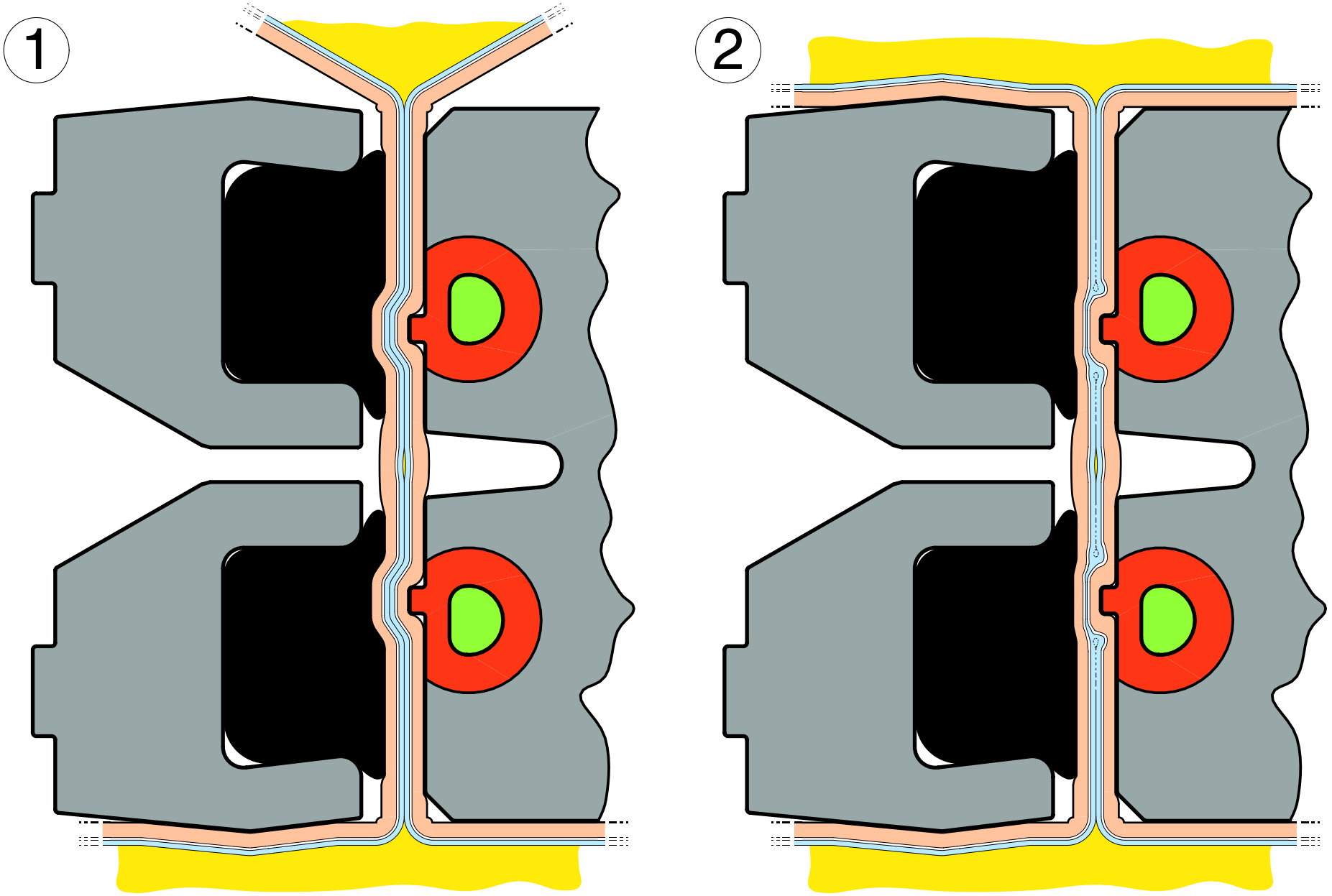

Tetra Pak Processing & Packaging Systems AB
Technical Training Centre, Lund, Sweden

Machine type

Issue
3/0008

OH 225

SETTING SEQUENCE-JAW SYSTEM TBA/9 120V

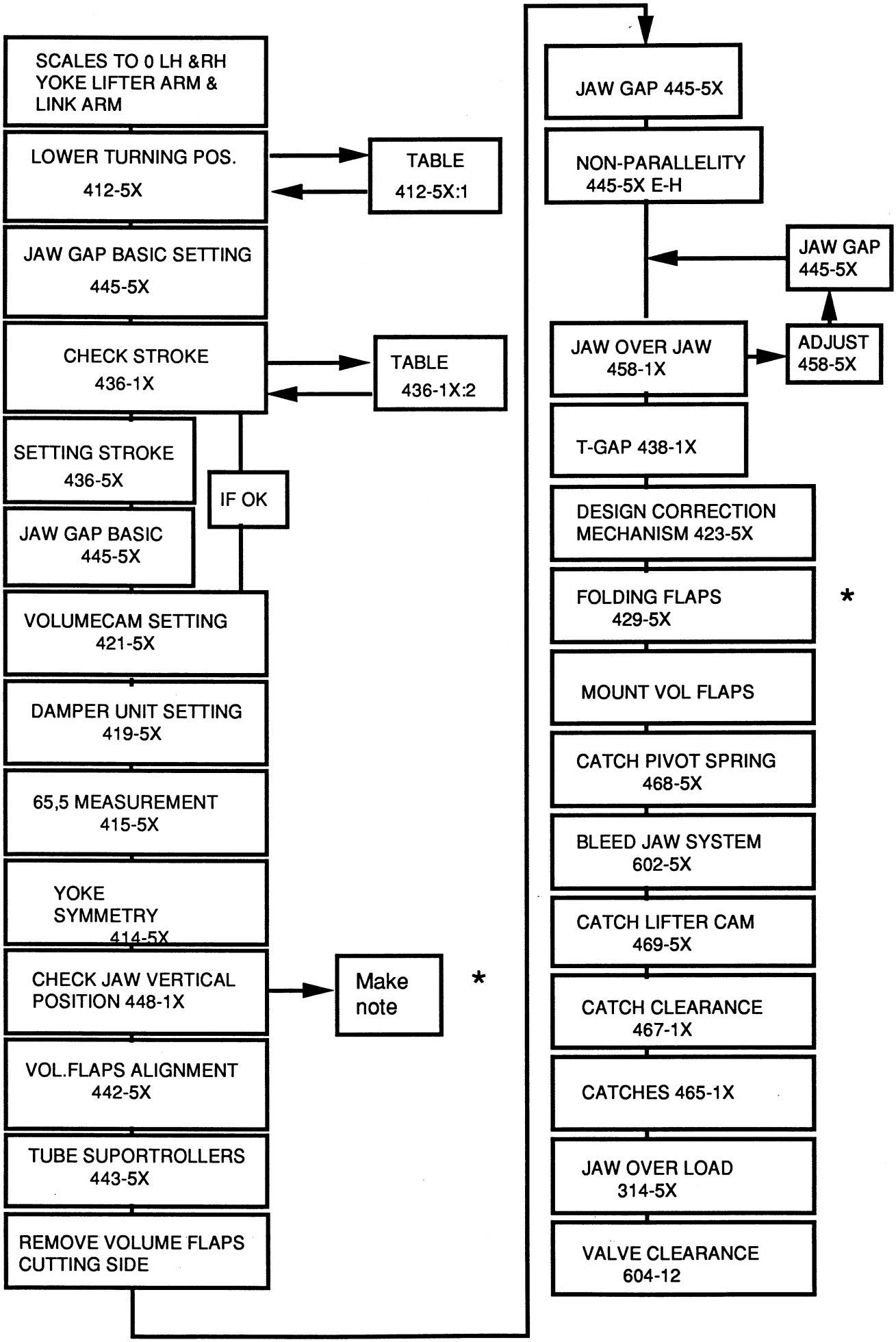

Purpose of different jawsettings

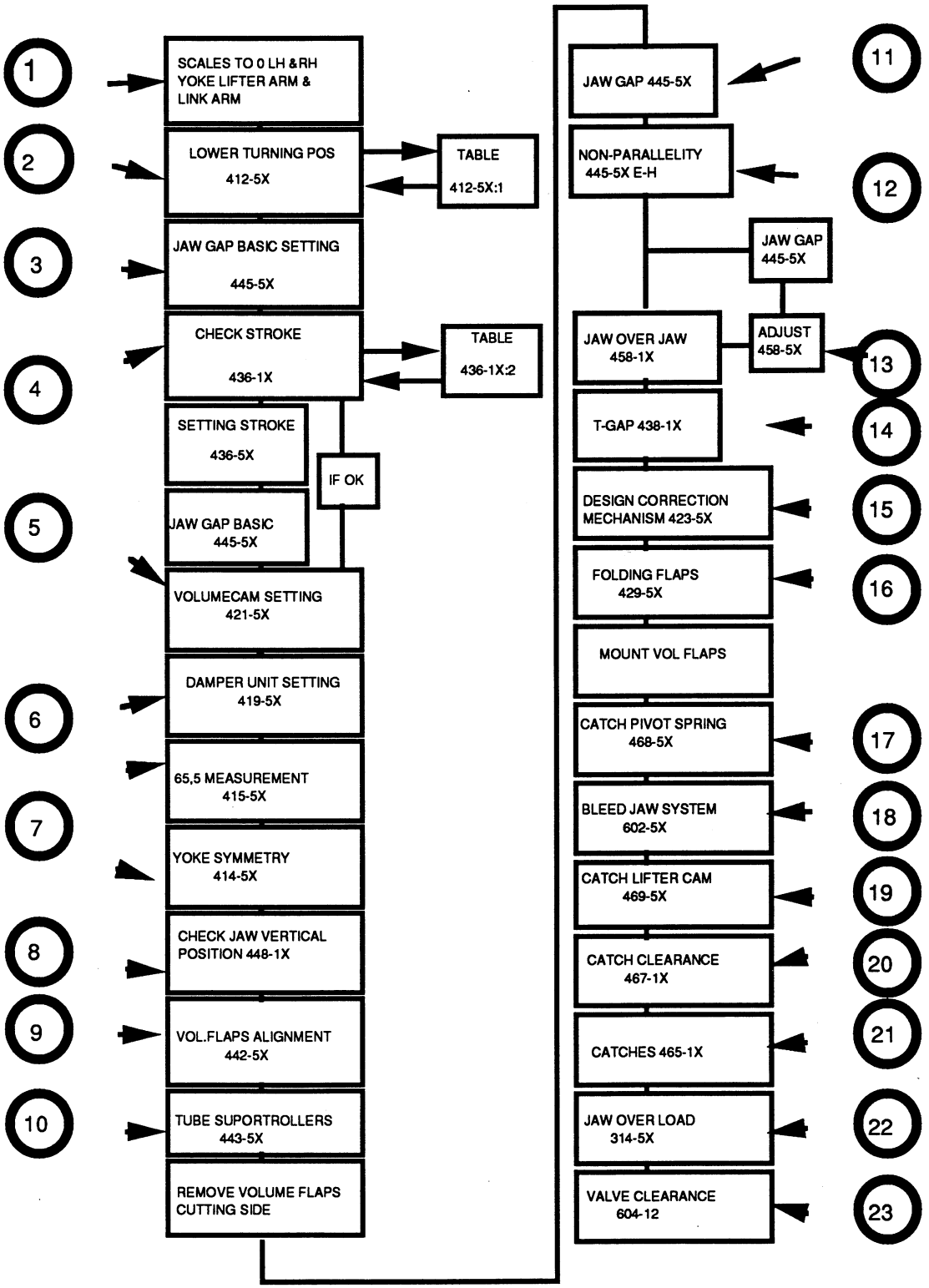

7

Final Folder

Final folder

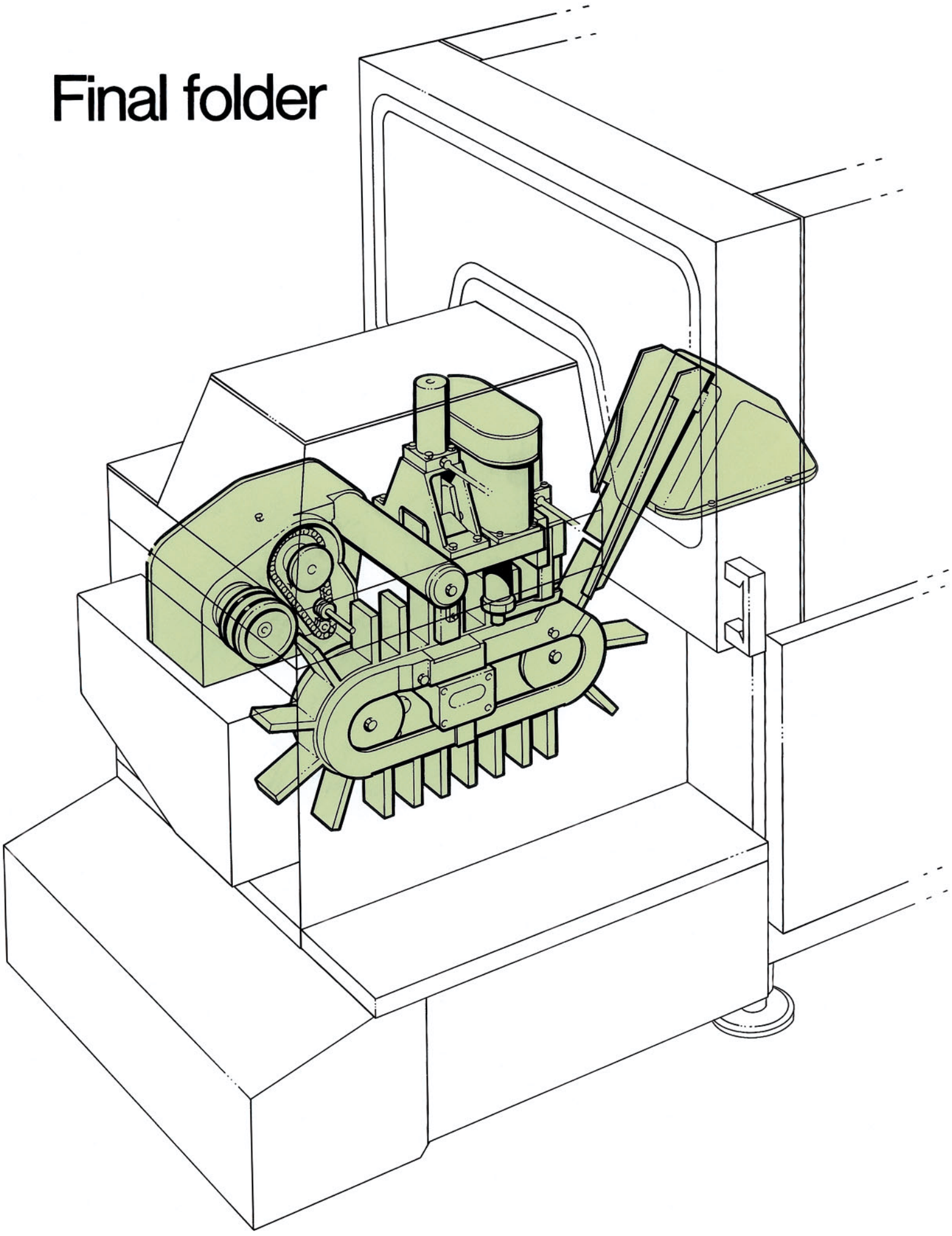

Final folder

Drop chute

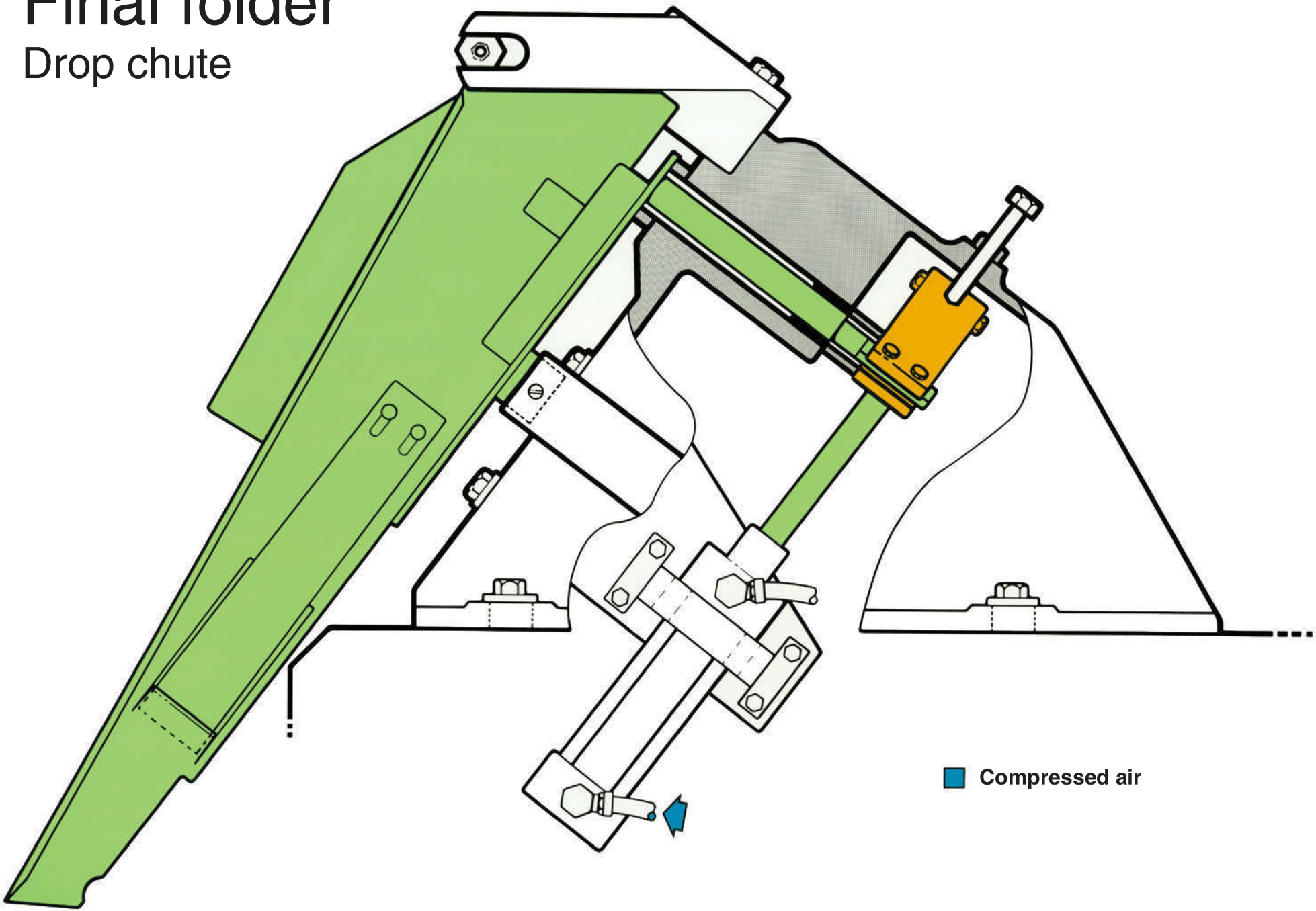

Final folder

Pressure unit

Hydraulic oil not under pressure
Hydraulic oil under pressure

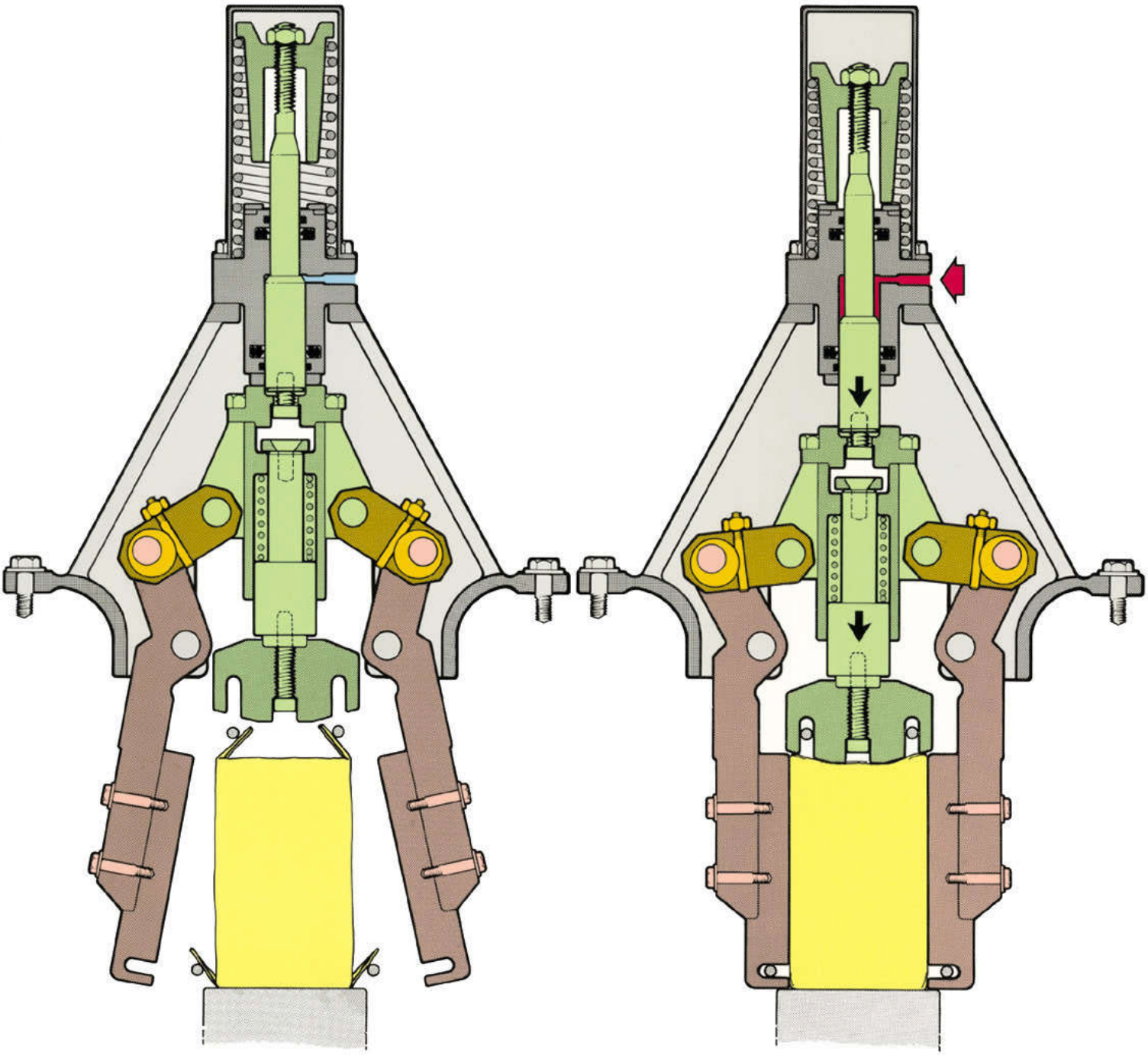

Final folder

The drive of the discharge unit

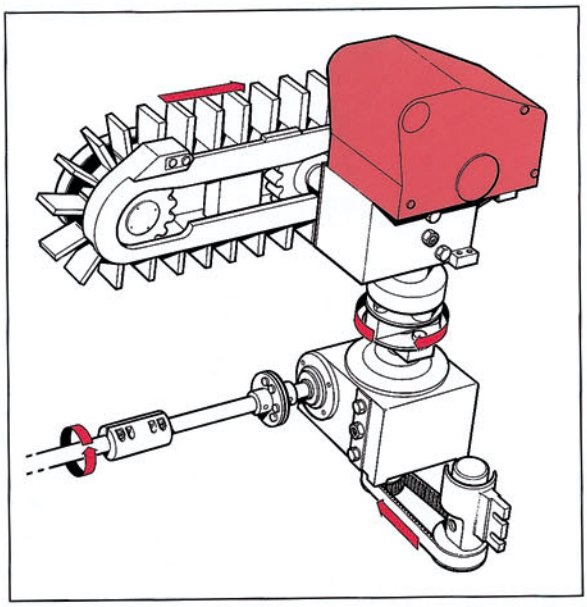

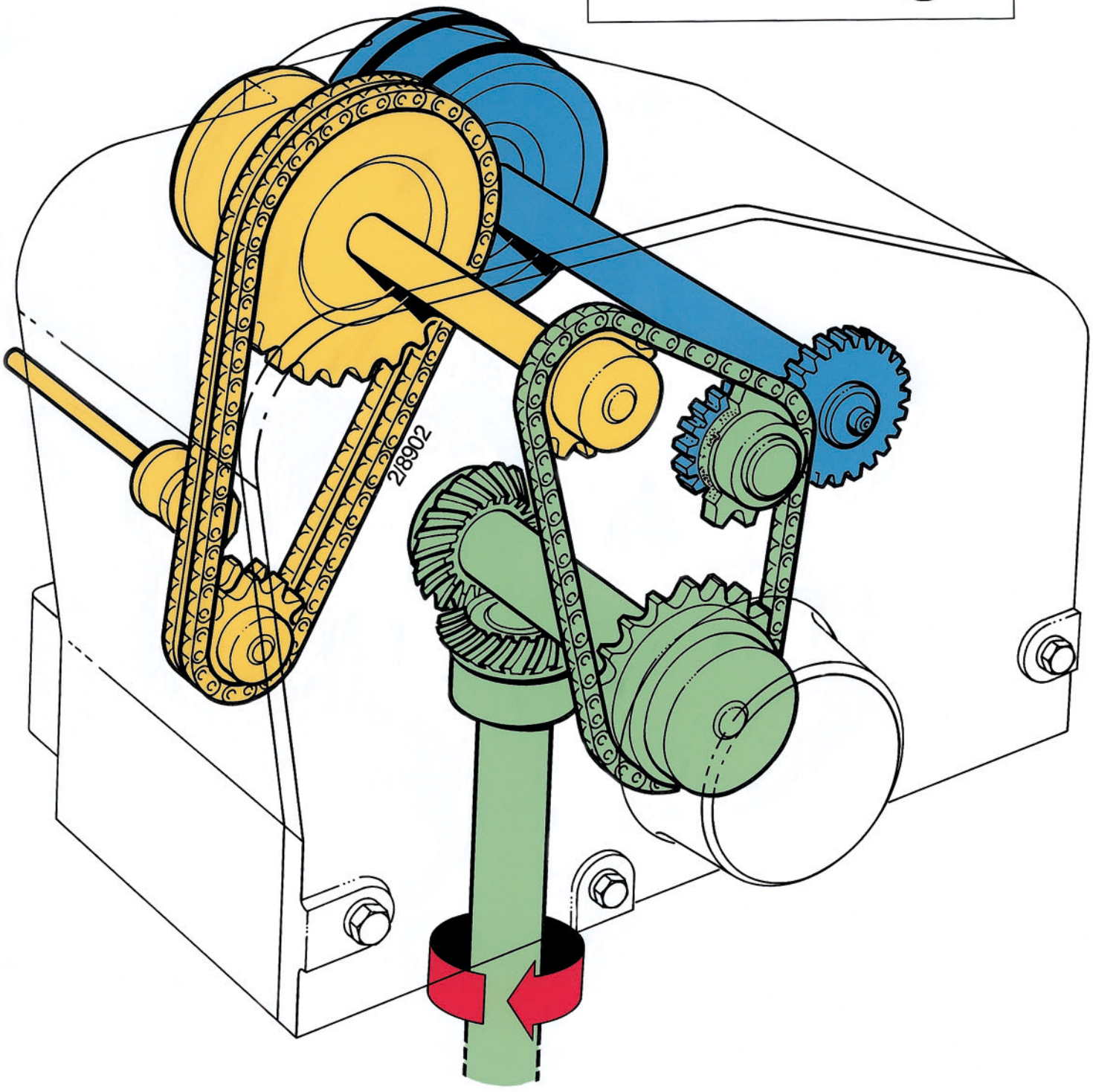

Final folder

Pull down device

Hydraulic oil not under pressure

Hydraulic oil under pressure

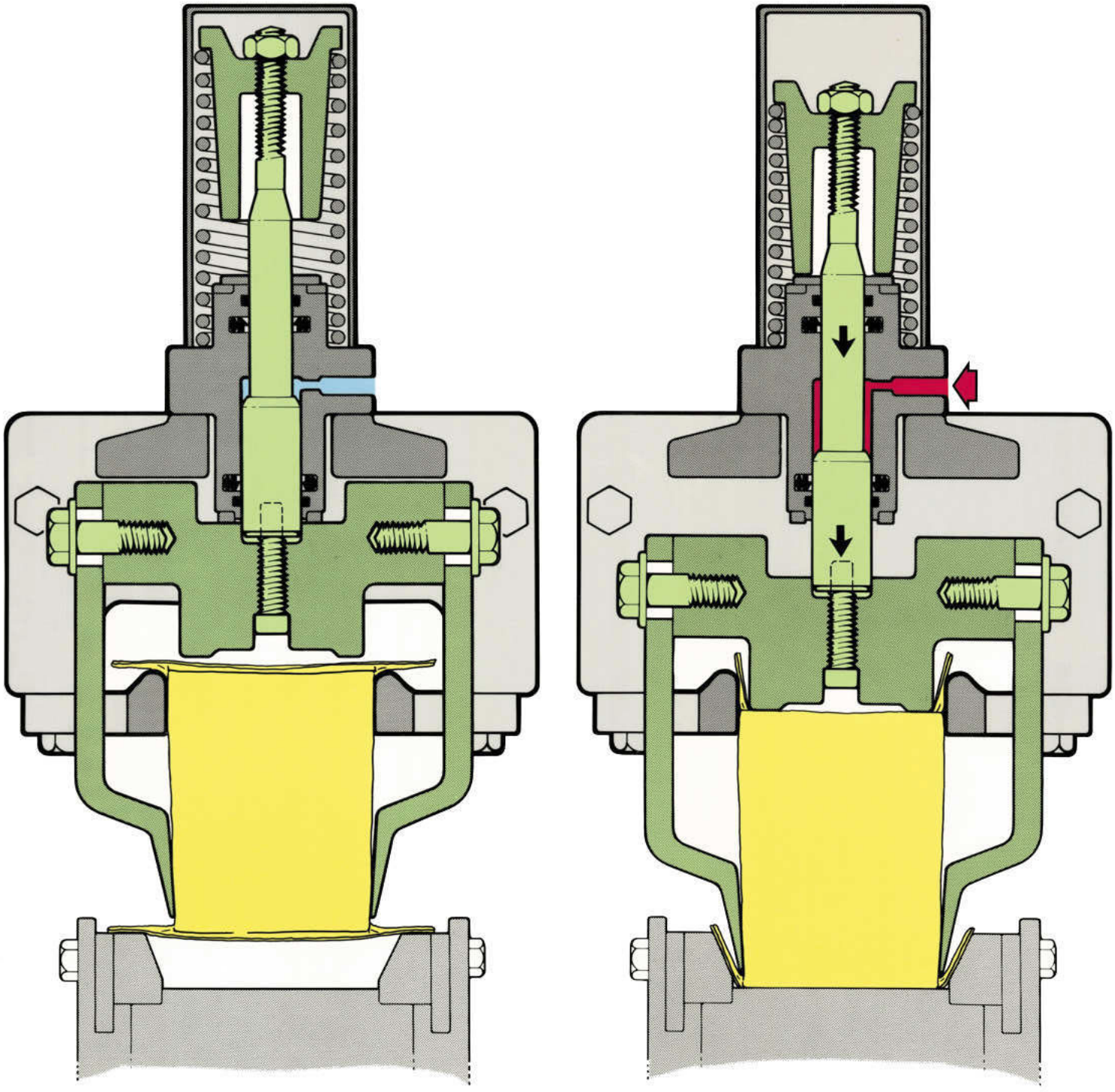

Final folder

Fitting of chain with chain tensioner

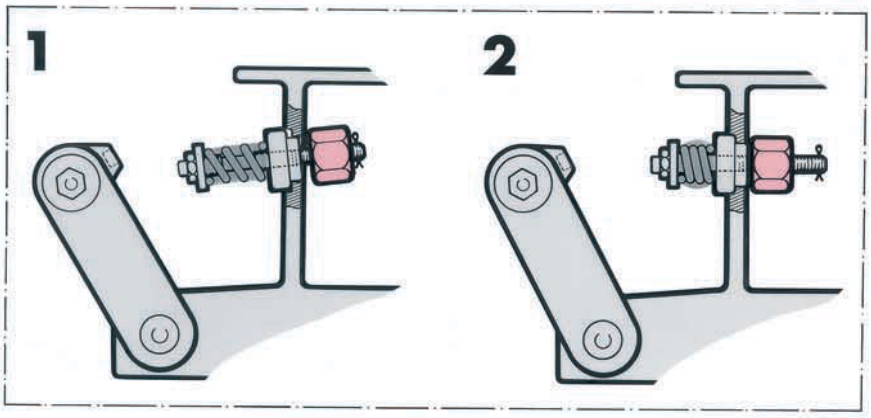

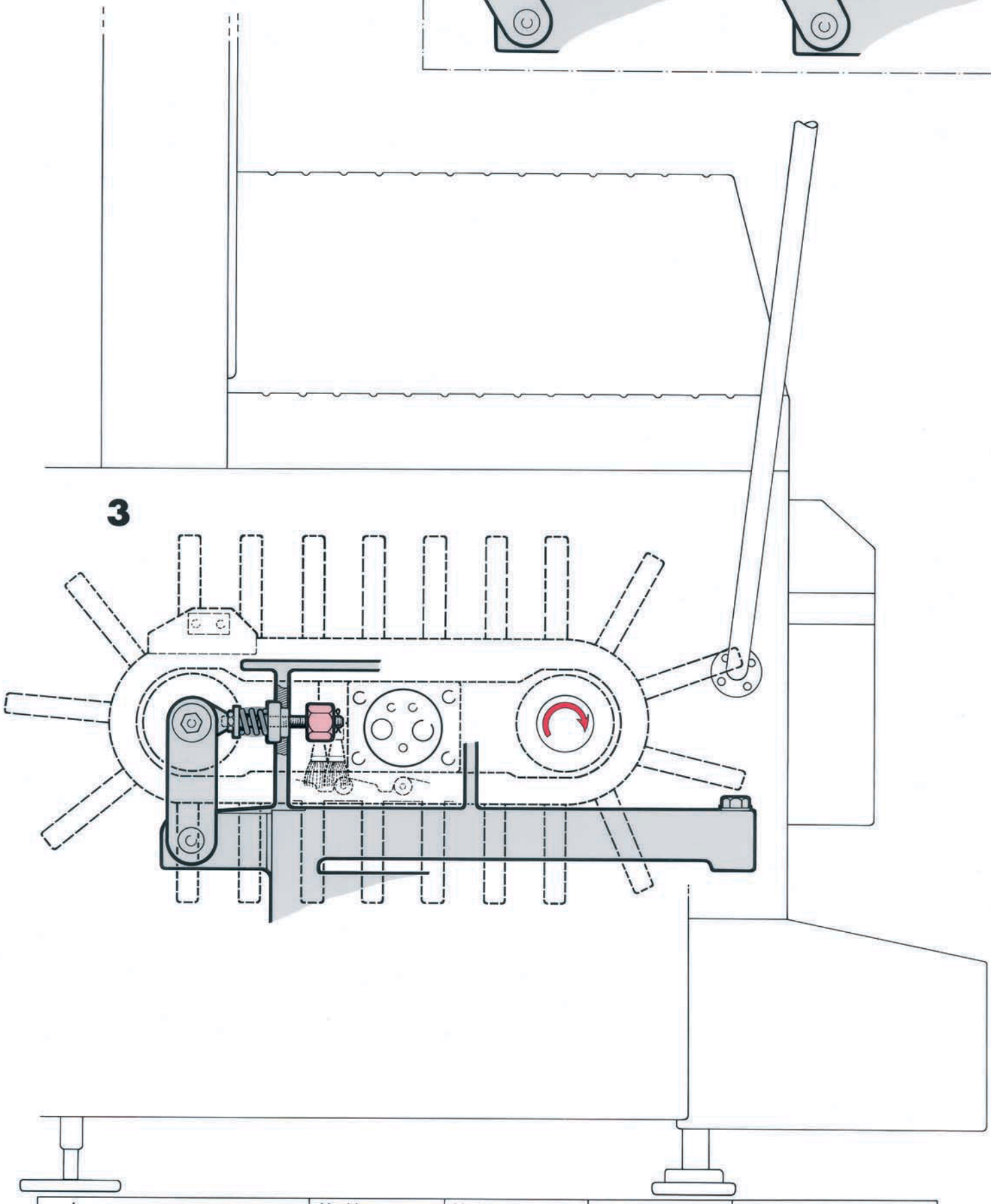

Principle function of Indexing unit

Indexing

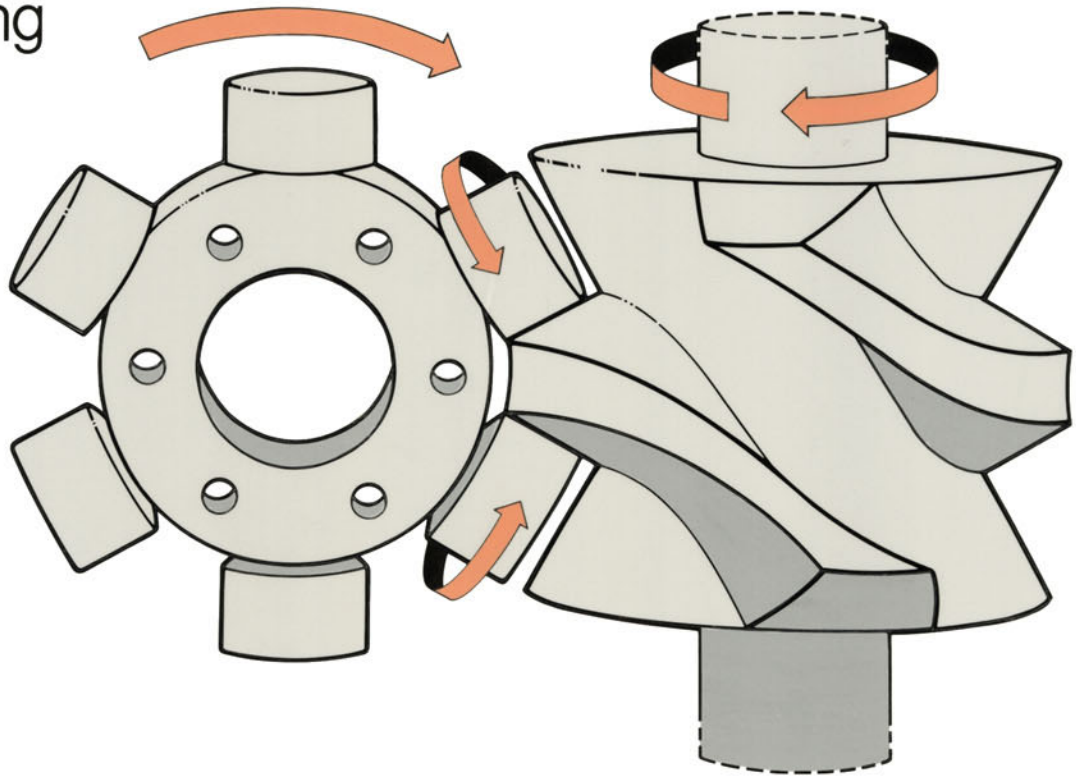

Idle

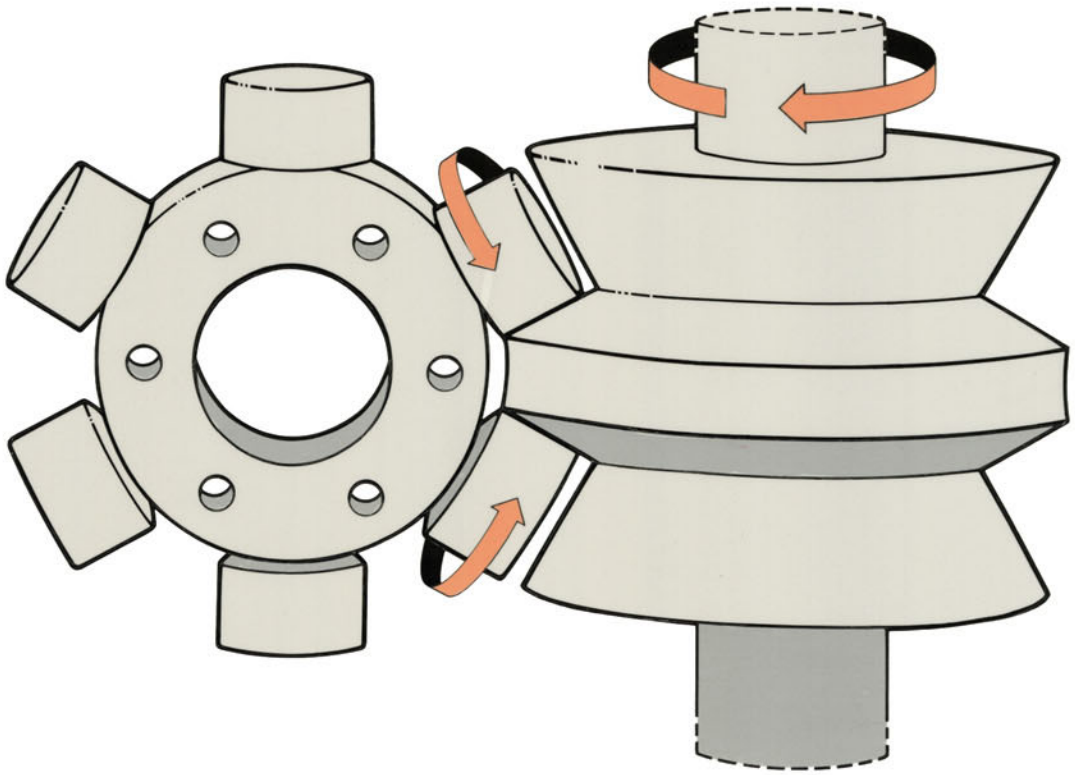

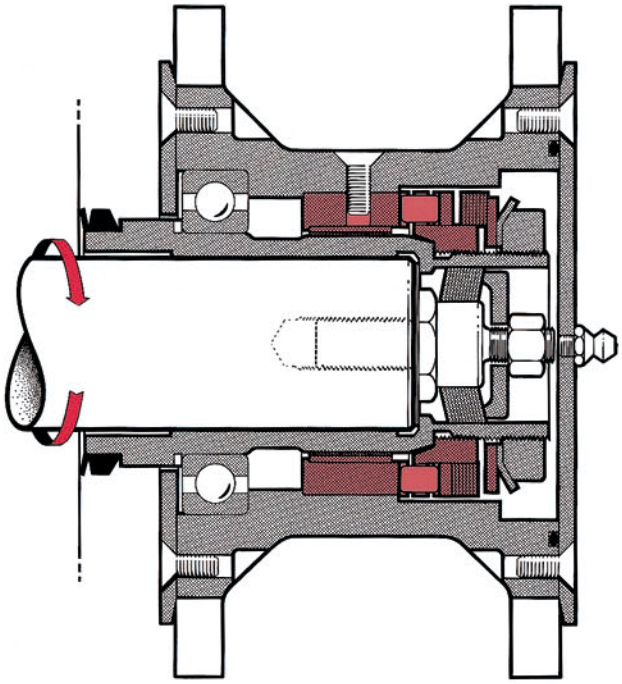

Function of safety sprocket

Clutch engaged

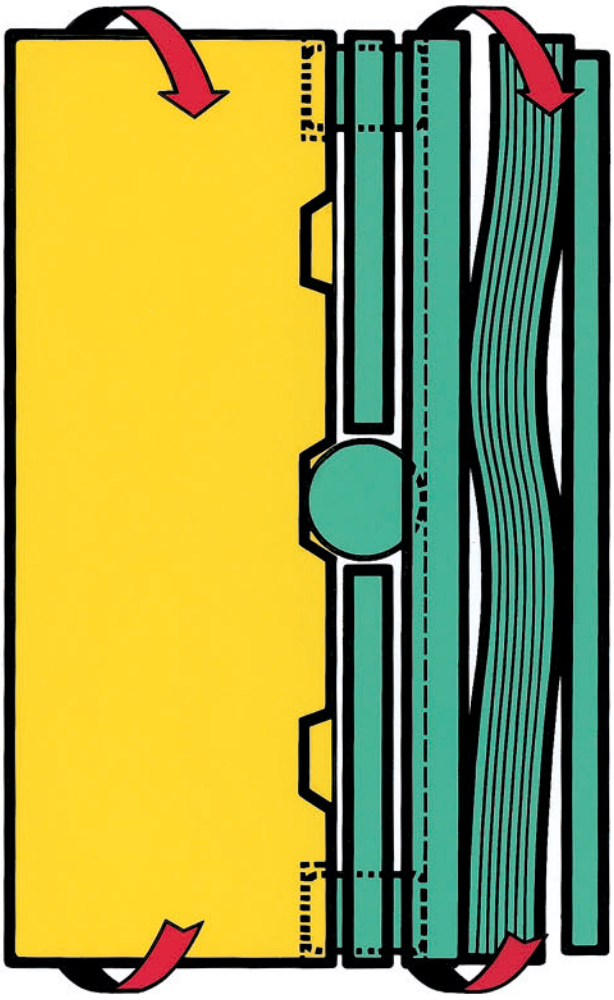

Clutch cut out

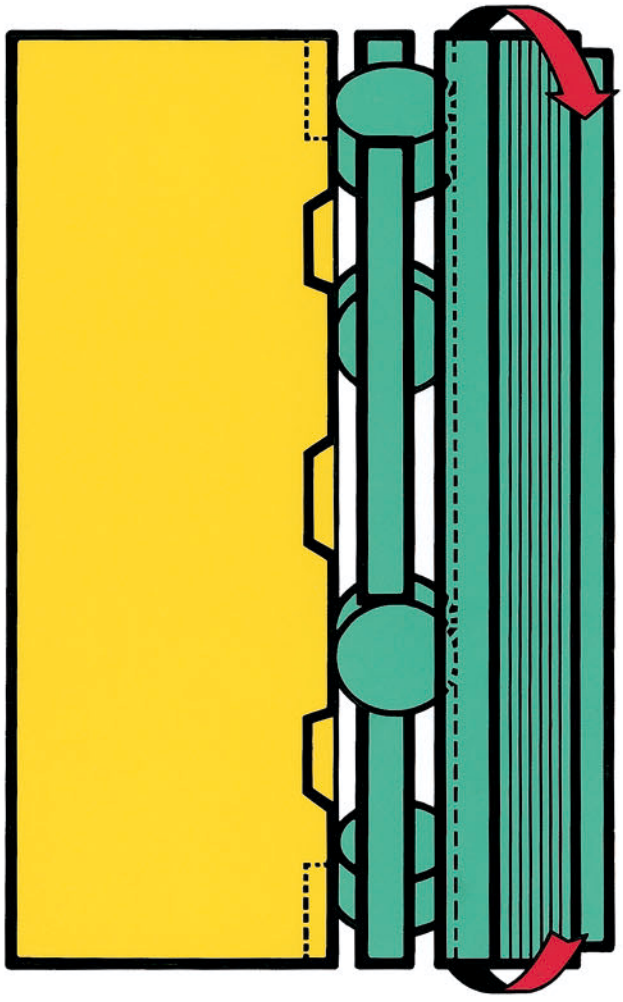

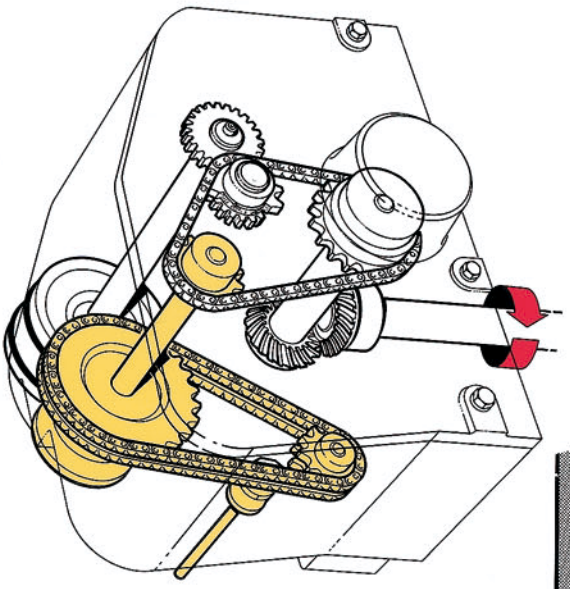

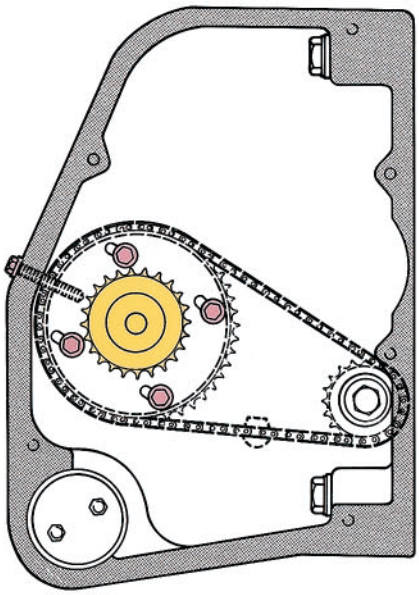

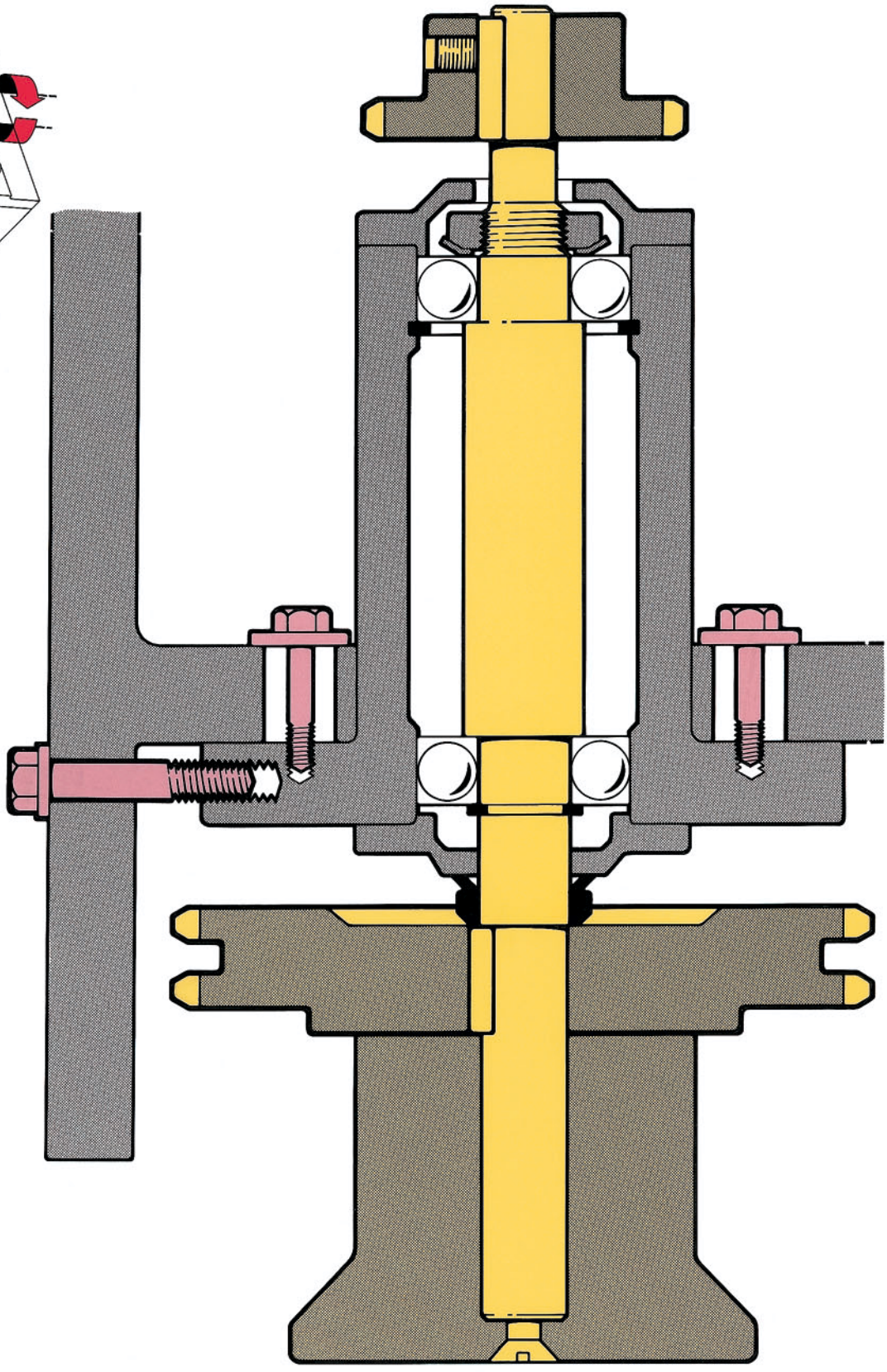

Final folder

Discharge unit adjustments

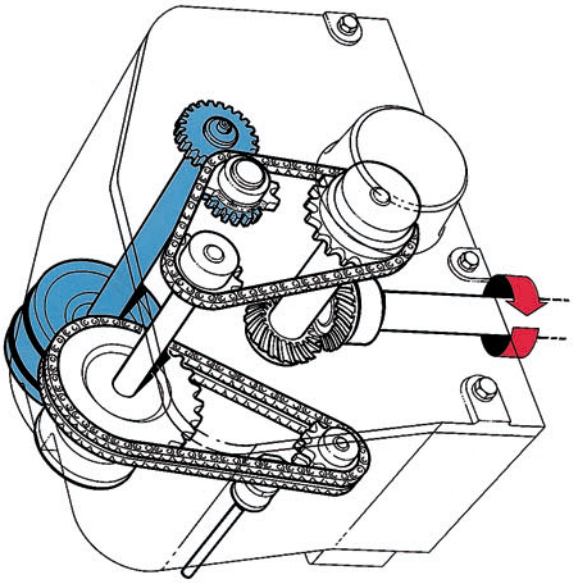

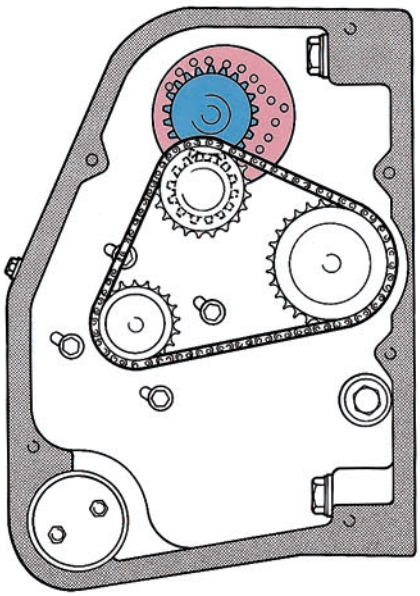

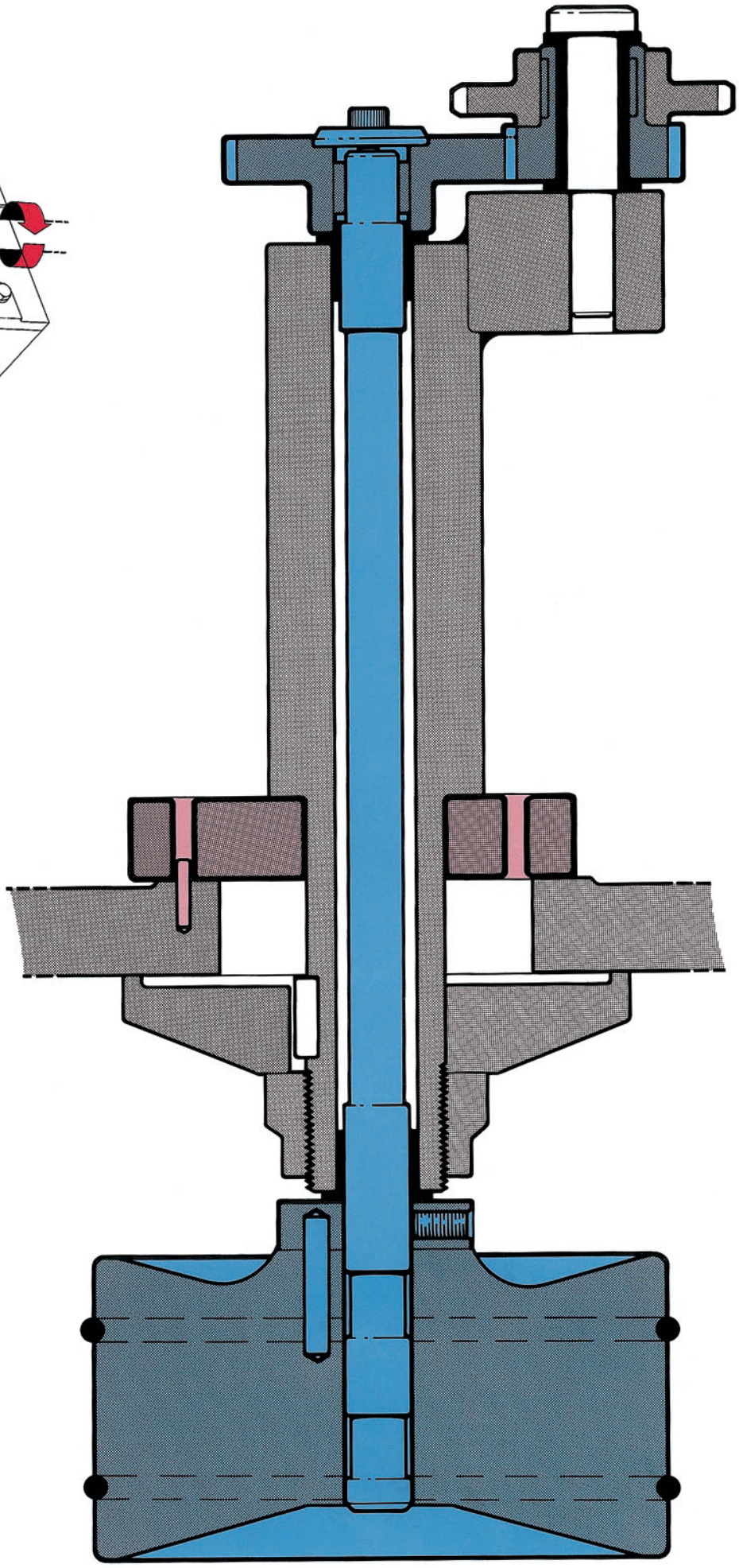

Final folder

Discharge unit adjustments

SETTING SEQUENCE

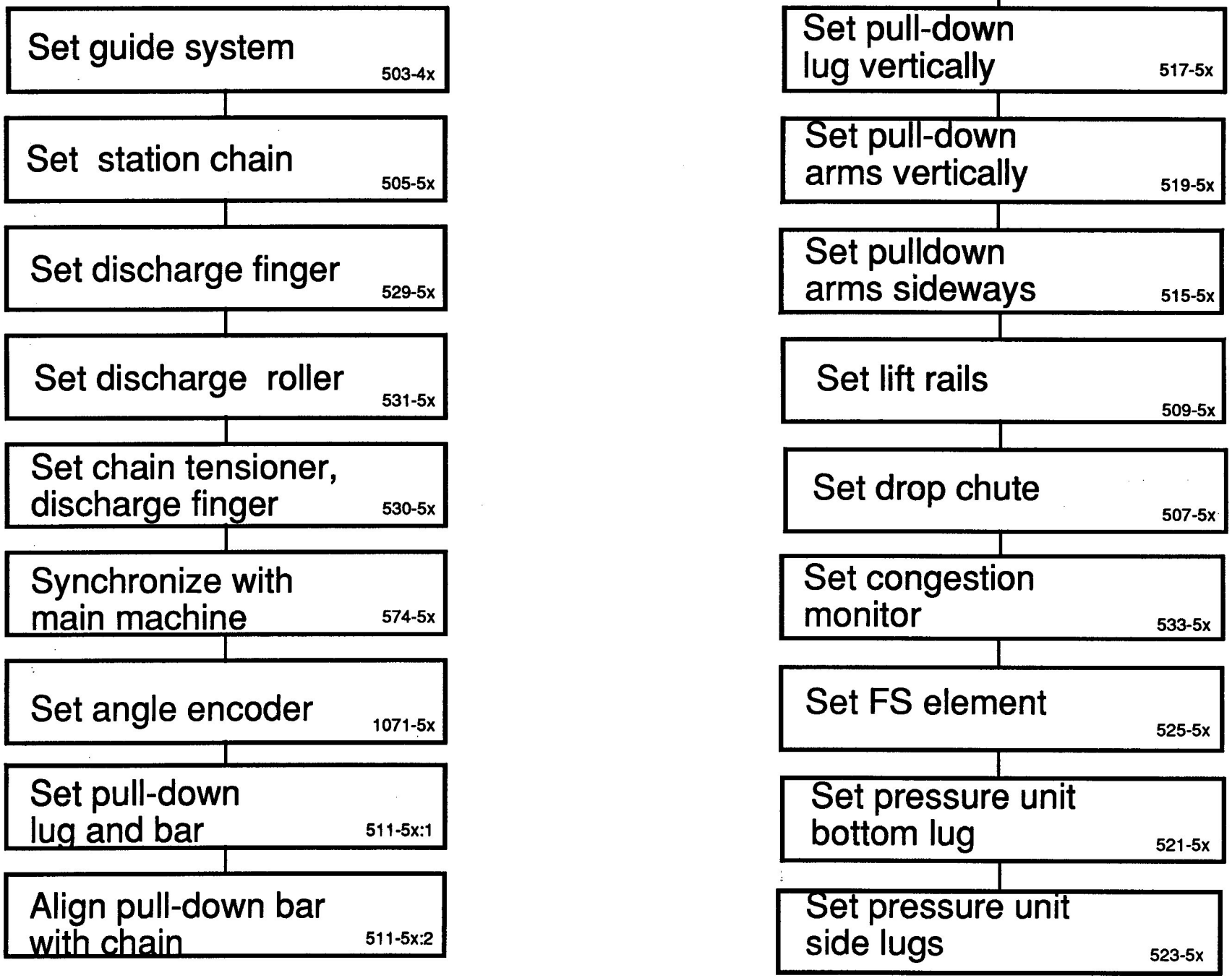

8

Valve Panel

Valve panel, TBA/9

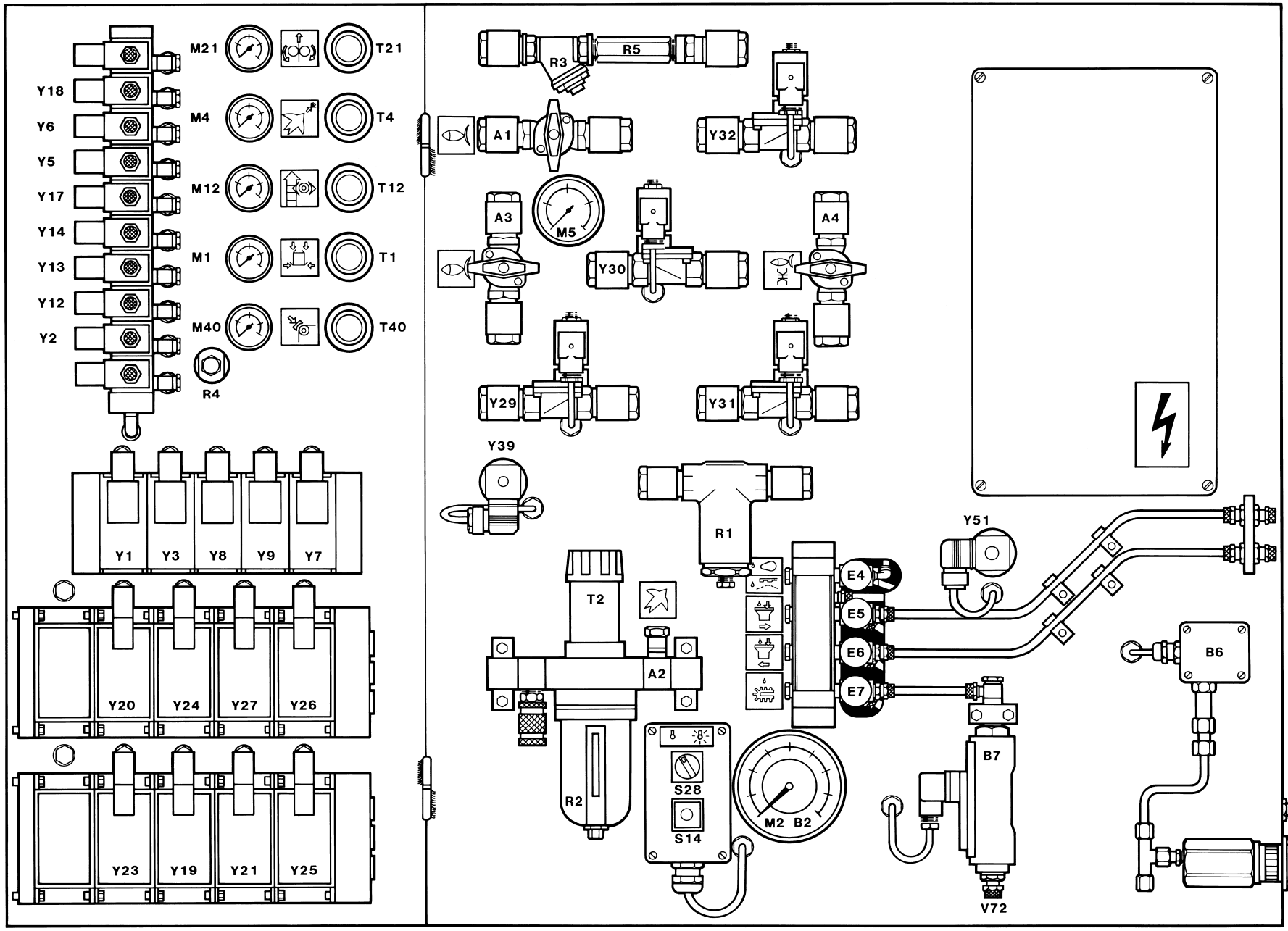

Technical Training Centre Lund, Sweden	Machine	Model	Issue	
TETRA PAK®	TBA/9	1985	2/8902	OH 114

Valve panel, TBA/9

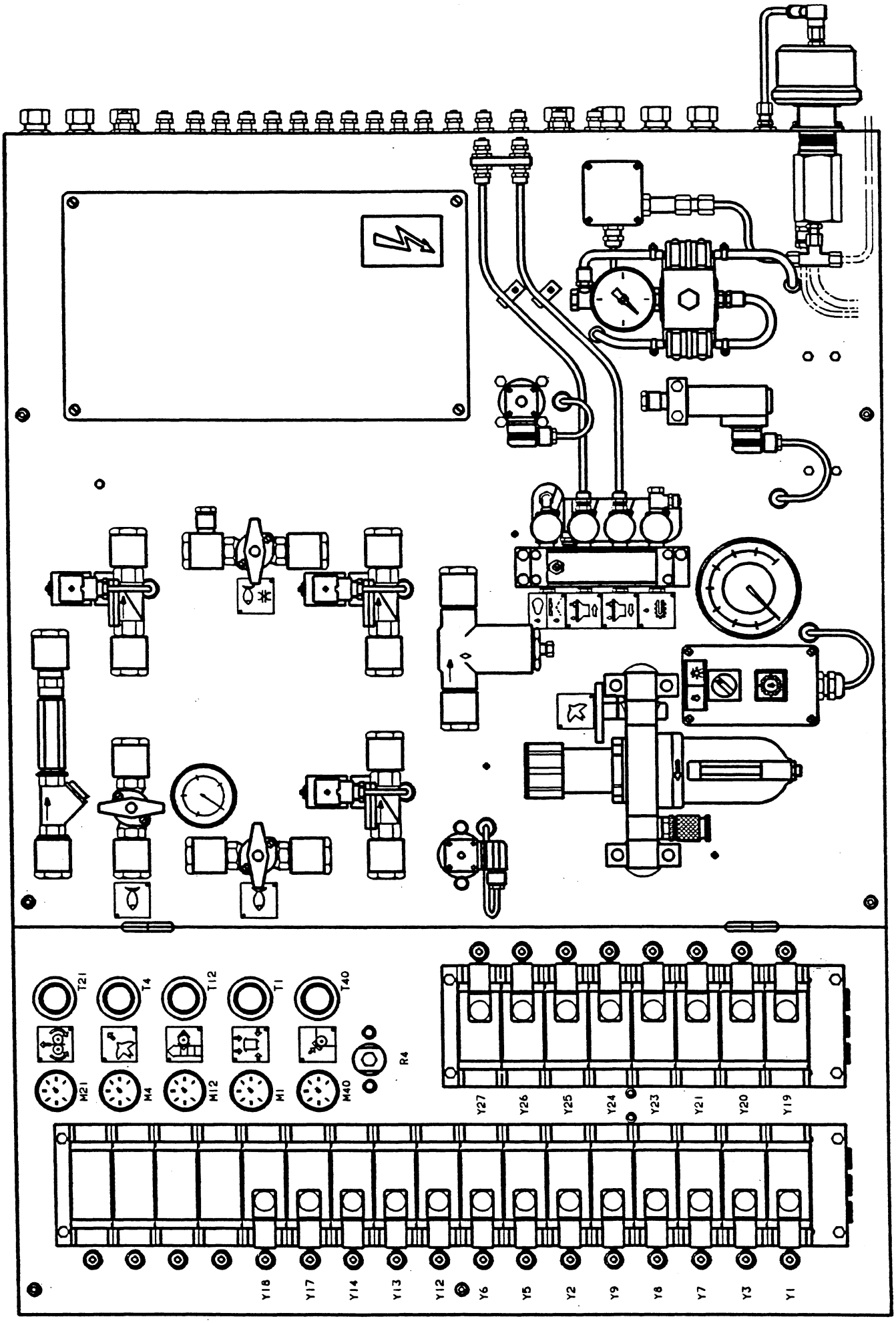

Technical Training Centre Lund, Sweden	Machine TBA/9 130 V	Issue	OH

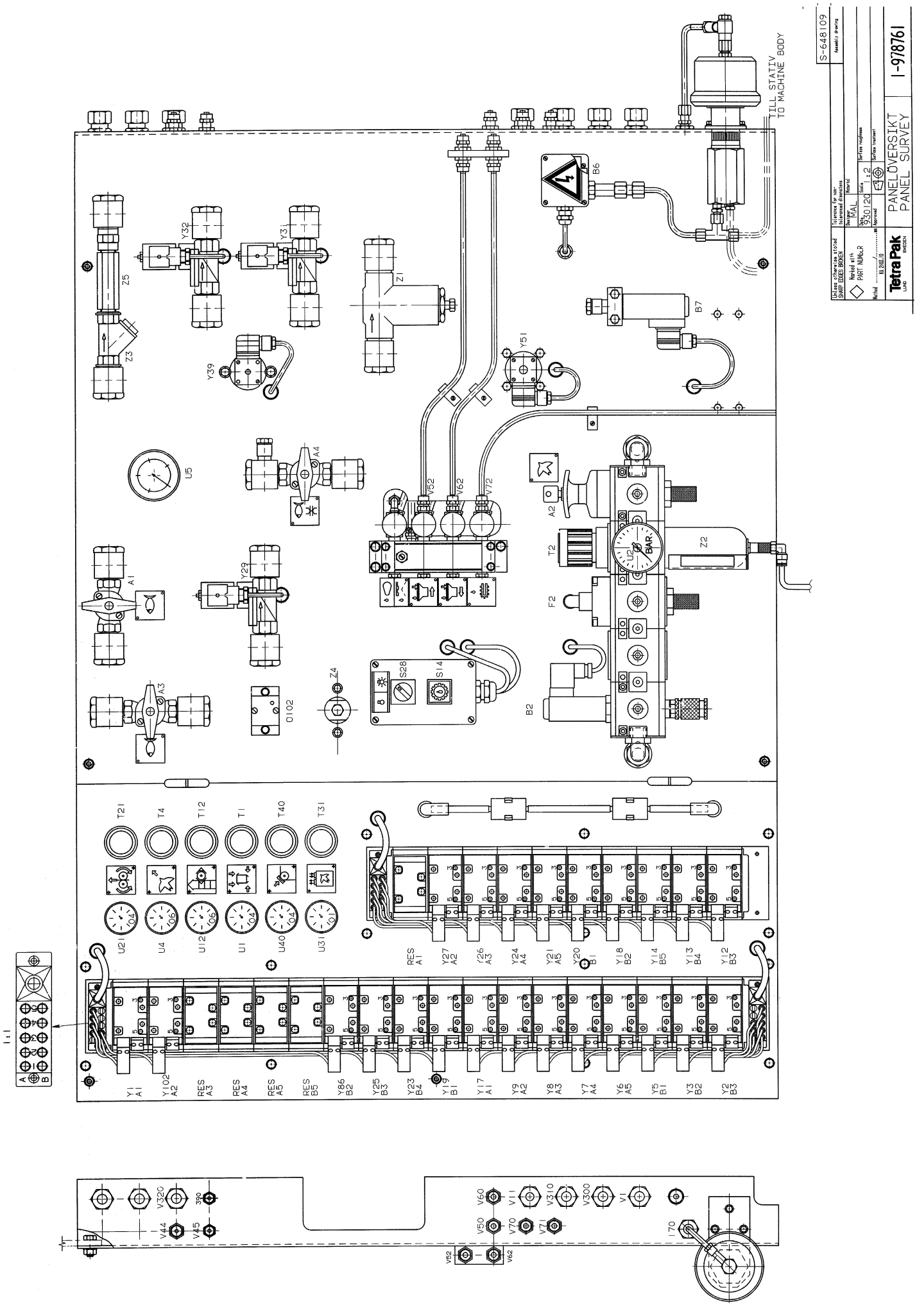
S-648109
Tetra Pak
PANELÖVERSIKT
PANEL SURVEY
I-978761
TILL STATIV
TO MACHINE BODY
BAR
U2
U21
U4
U12
U1
U40
U31
T21
T4
T12
T1
T40
T31
Y1 A1
Y102 A2
RES A3
RES A4
RES A5
RES B5
Y86 B2
Y25 B3
Y23 B4
Y19 B1
Y17 A1
Y9 A2
Y8 A3
Y7 A4
Y6 A5
Y5 B1
Y3 B2
Y2 B3
RES A1
Y27 A2
Y26 A3
Y24 A4
Y21 A5
Y20 B1
Y18 B2
Y14 B5
Y13 B4
Y12 B3
1:1
A
B
V320
V44
V45
390
V60
V50
V70
V11
V310
V71
V300
V1
I70
V62
V62
A1
A2
A3
A4
B2
B6
B7
F2
T2
Z1
Z2
Z3
Z4
Z5
Y29
Y32
Y31
Y39
Y51
V52
V62
V72
S28
S14
0102
U5

9

Hydraulic System

Function of hydraulic system

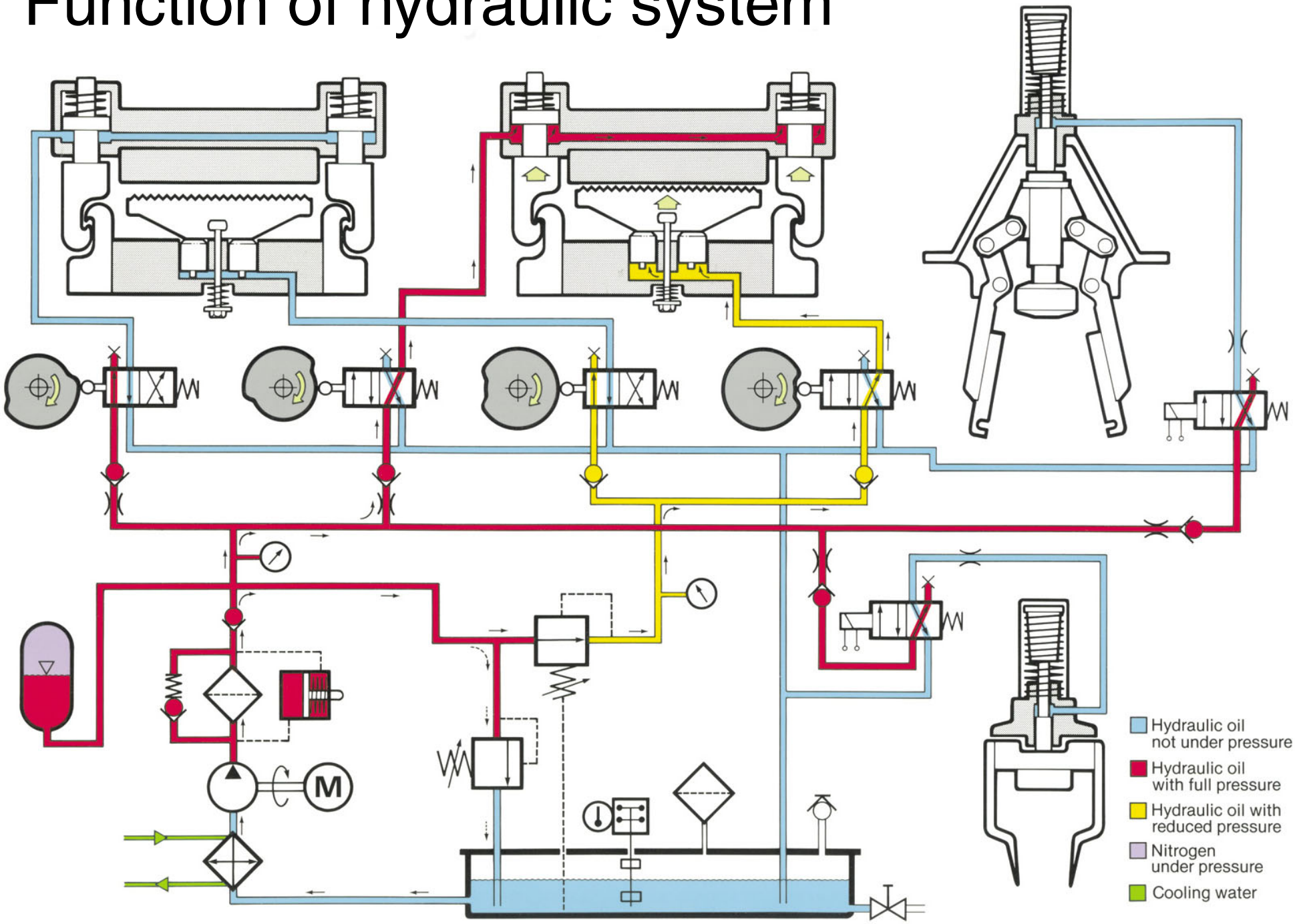

Pressure regulation

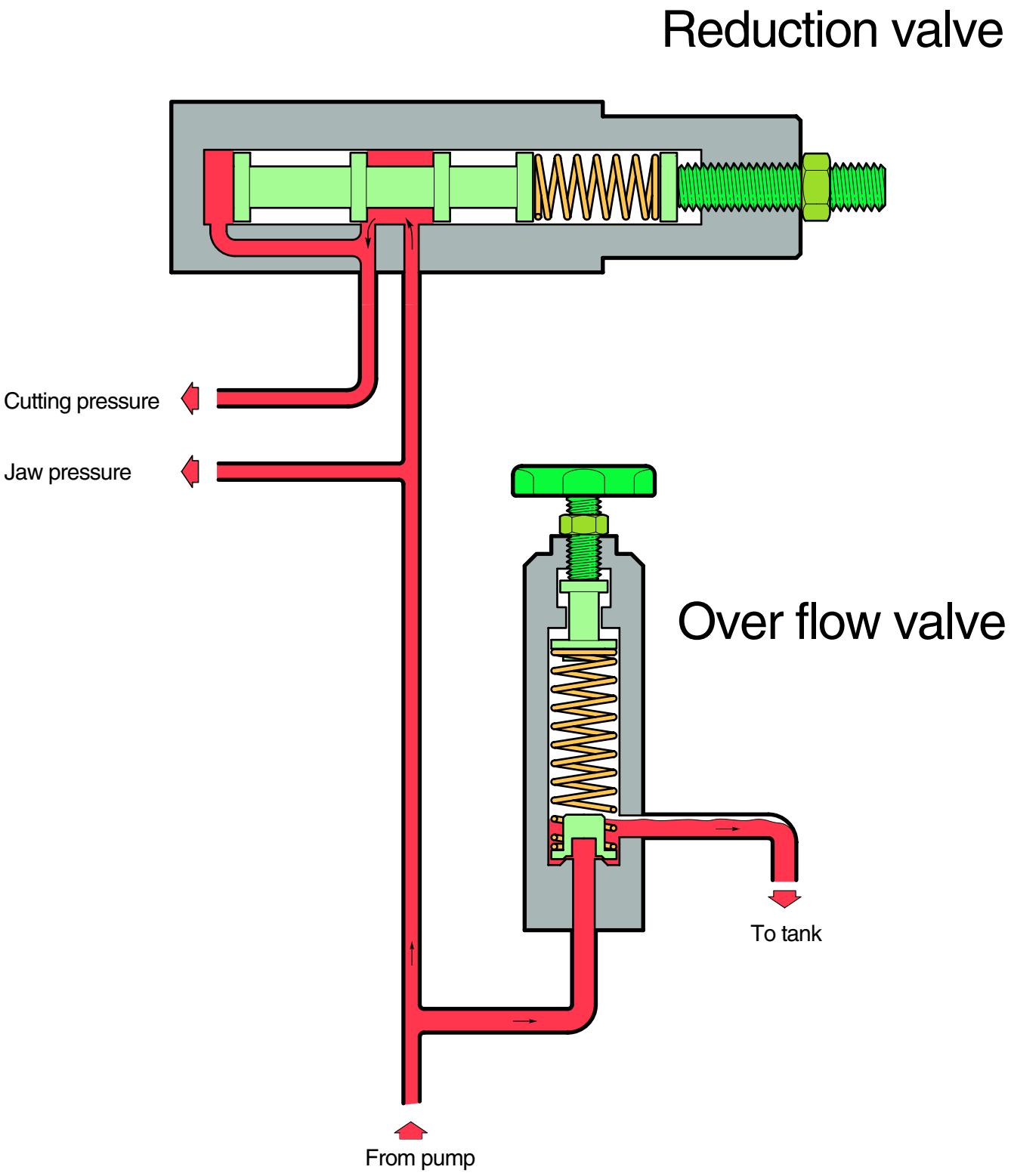

10

Lubrication System

High pressure lubrication system, TB/9 and TBA/9

Principle function

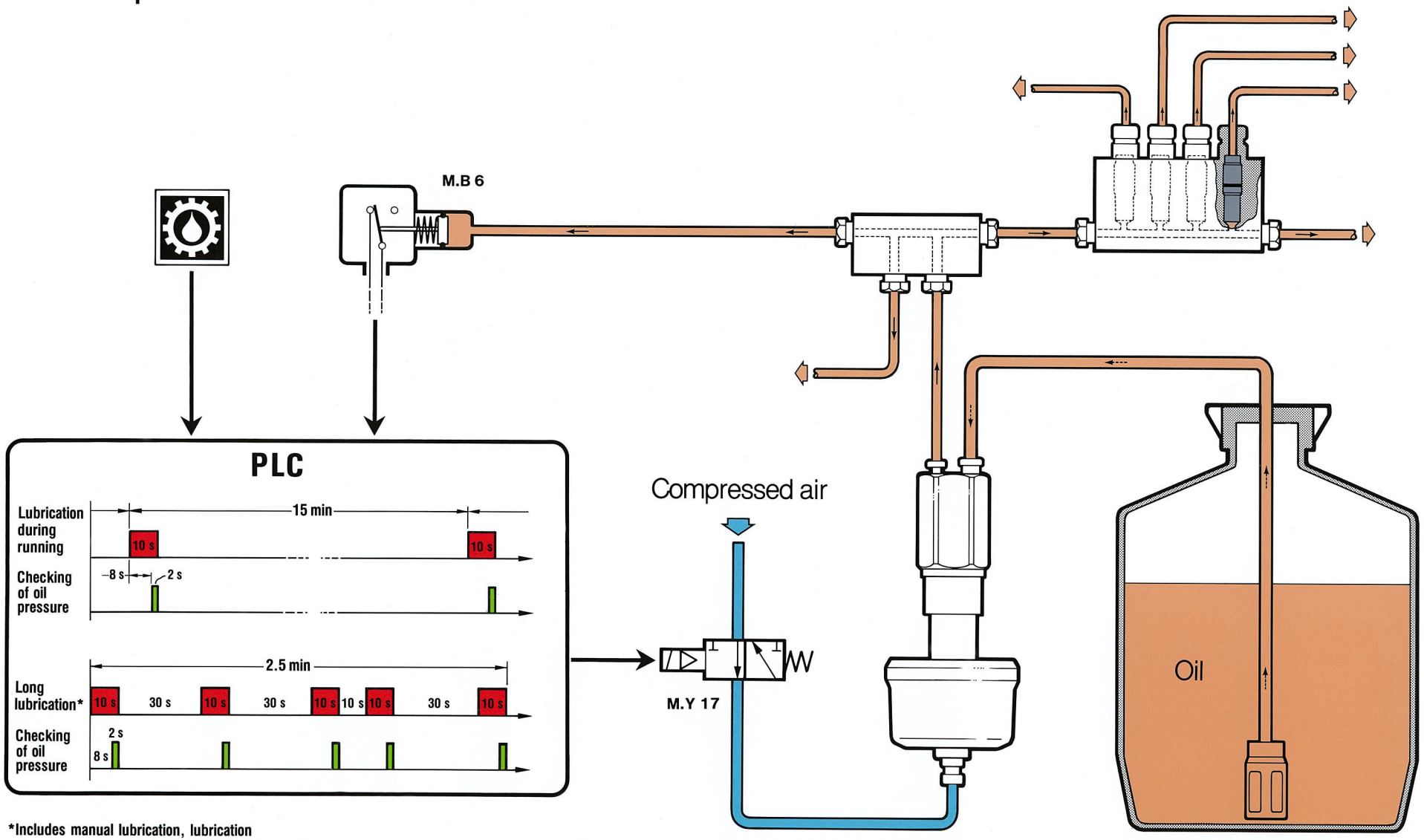

*Includes manual lubrication, lubrication after cleaning and lubrication at first motor start.

Central lubrication pump and dosing valve

Rest position

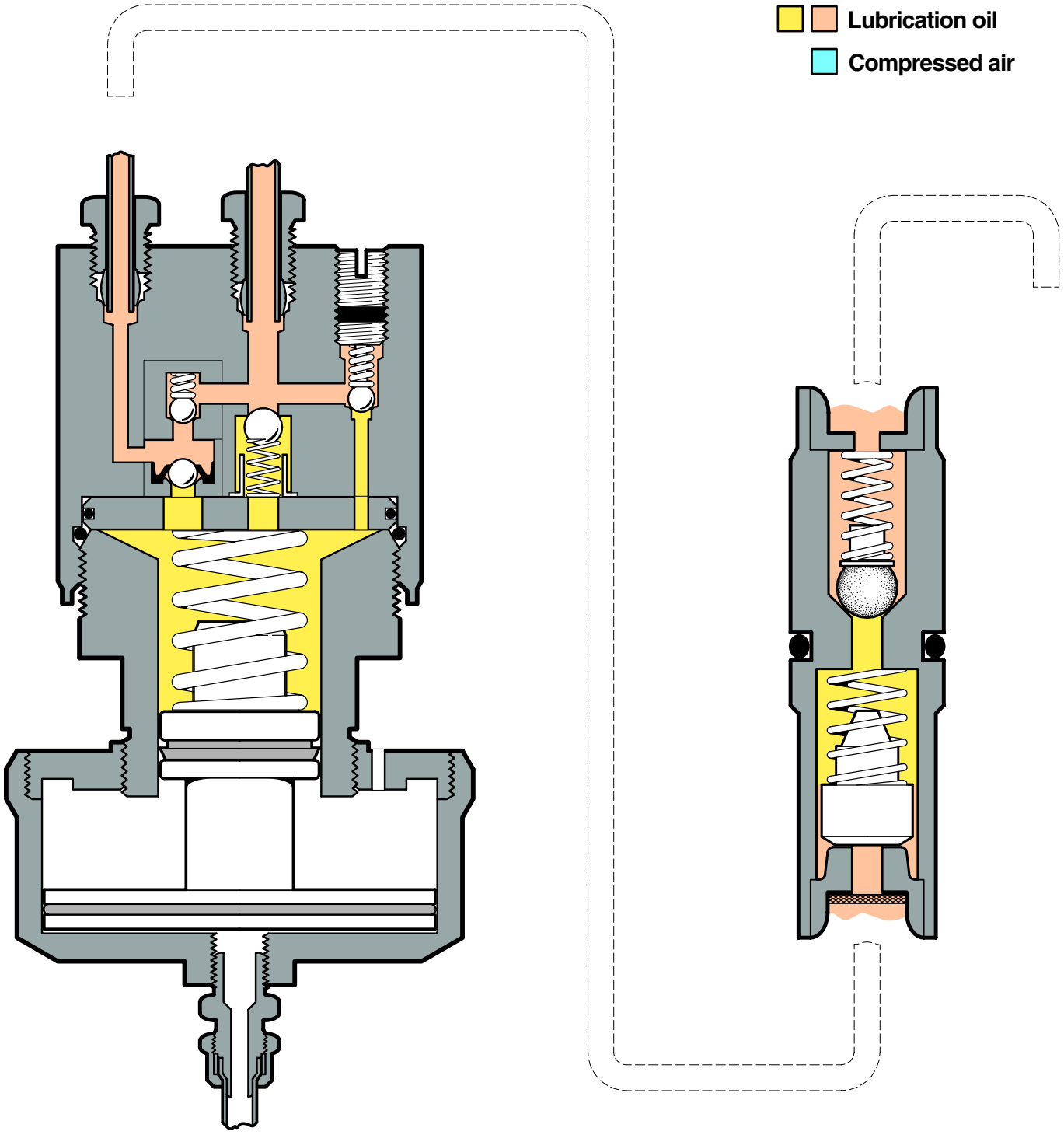

Central lubrication pump and dosing valve

Pressure stroke

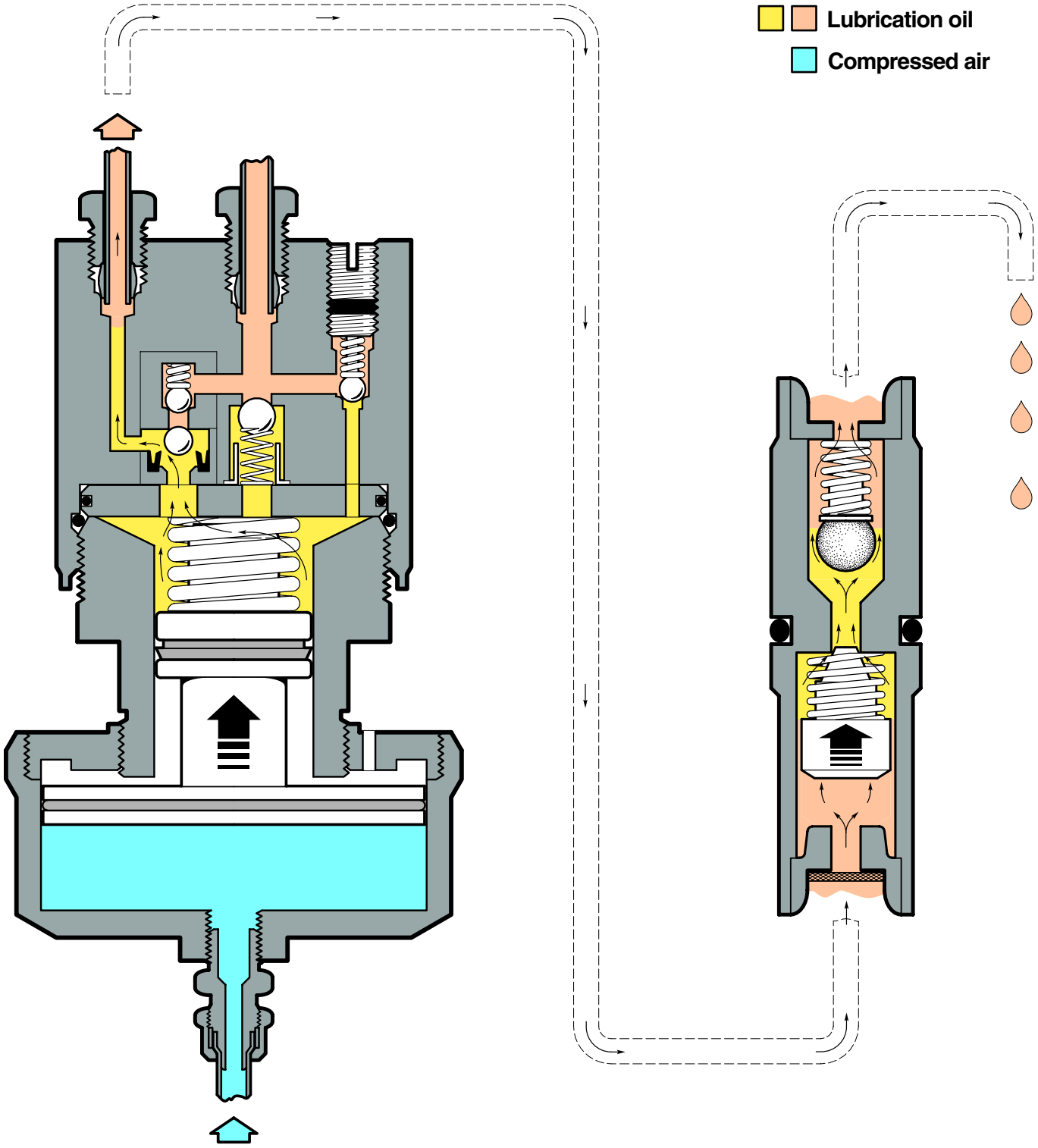

Central lubrication pump and dosing valve

Discharge pressure

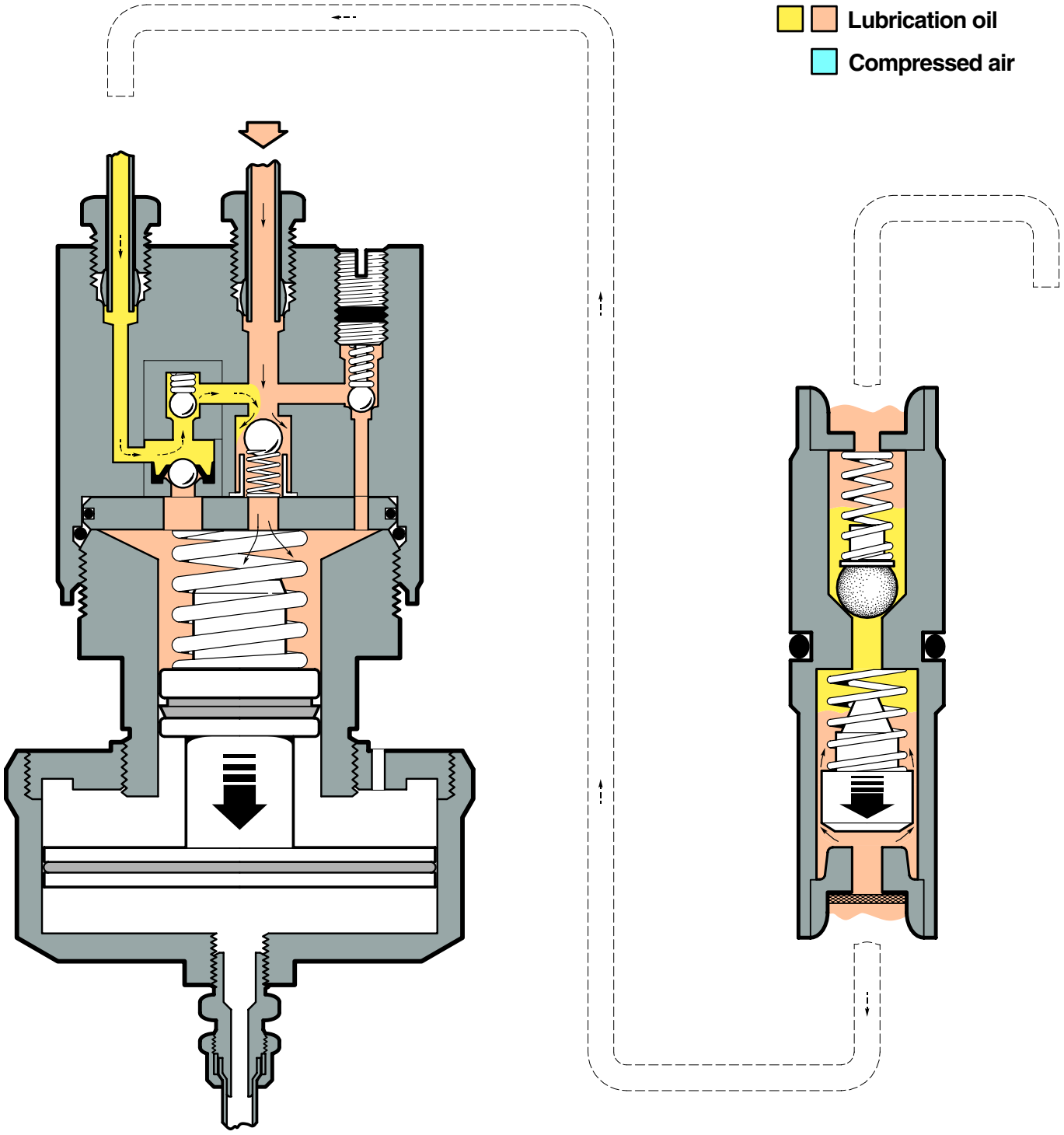

High pressure lubrication system

Oil pump



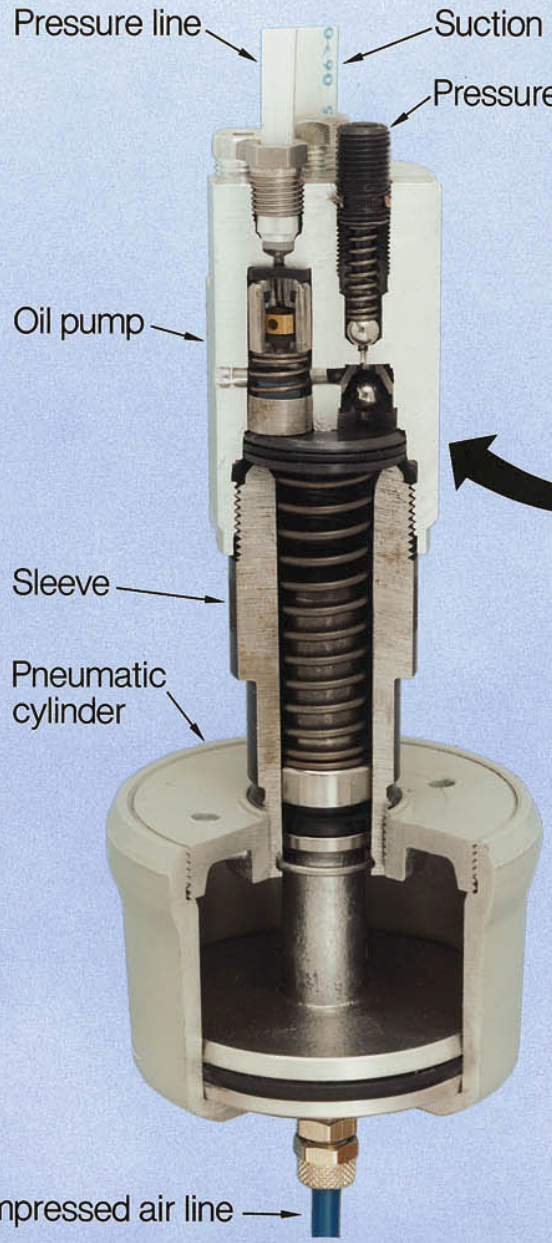

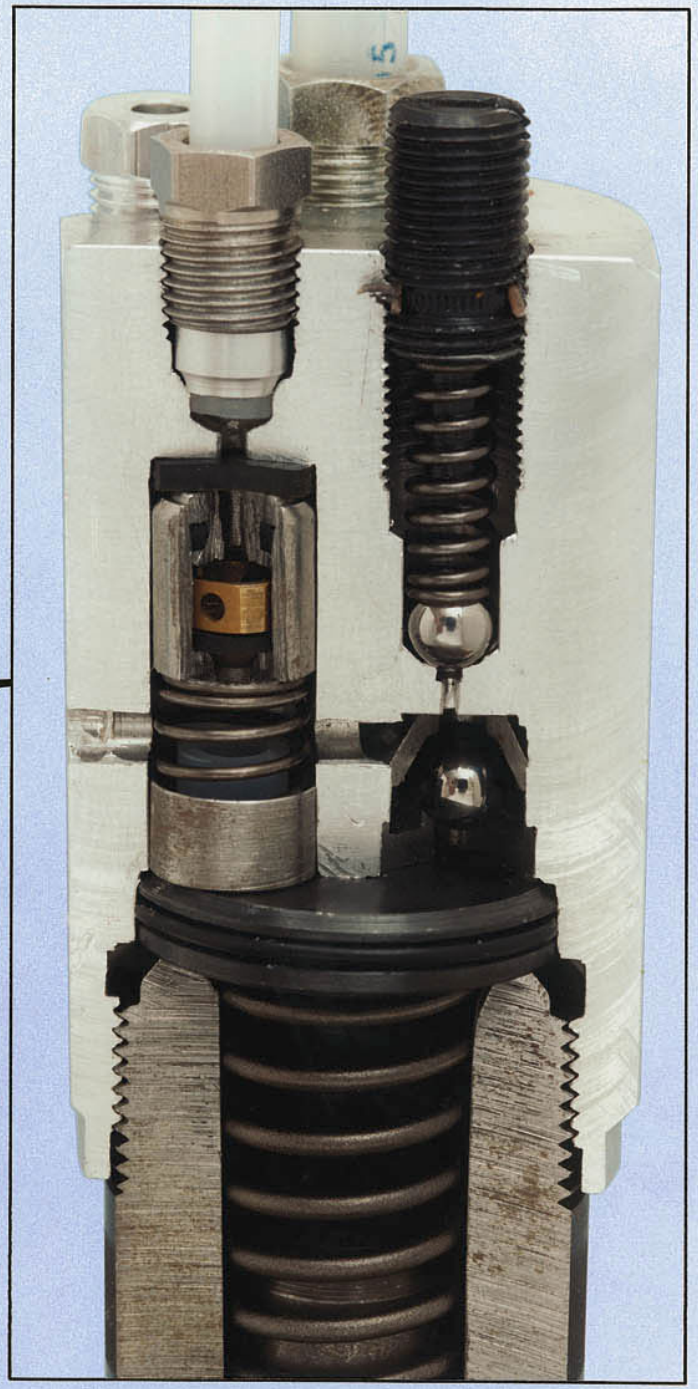

Technical Training Centre Lund, Sweden	Machine	Model	Issue	OH 65
			1/8505	

High pressure lubrication system

Distribution block

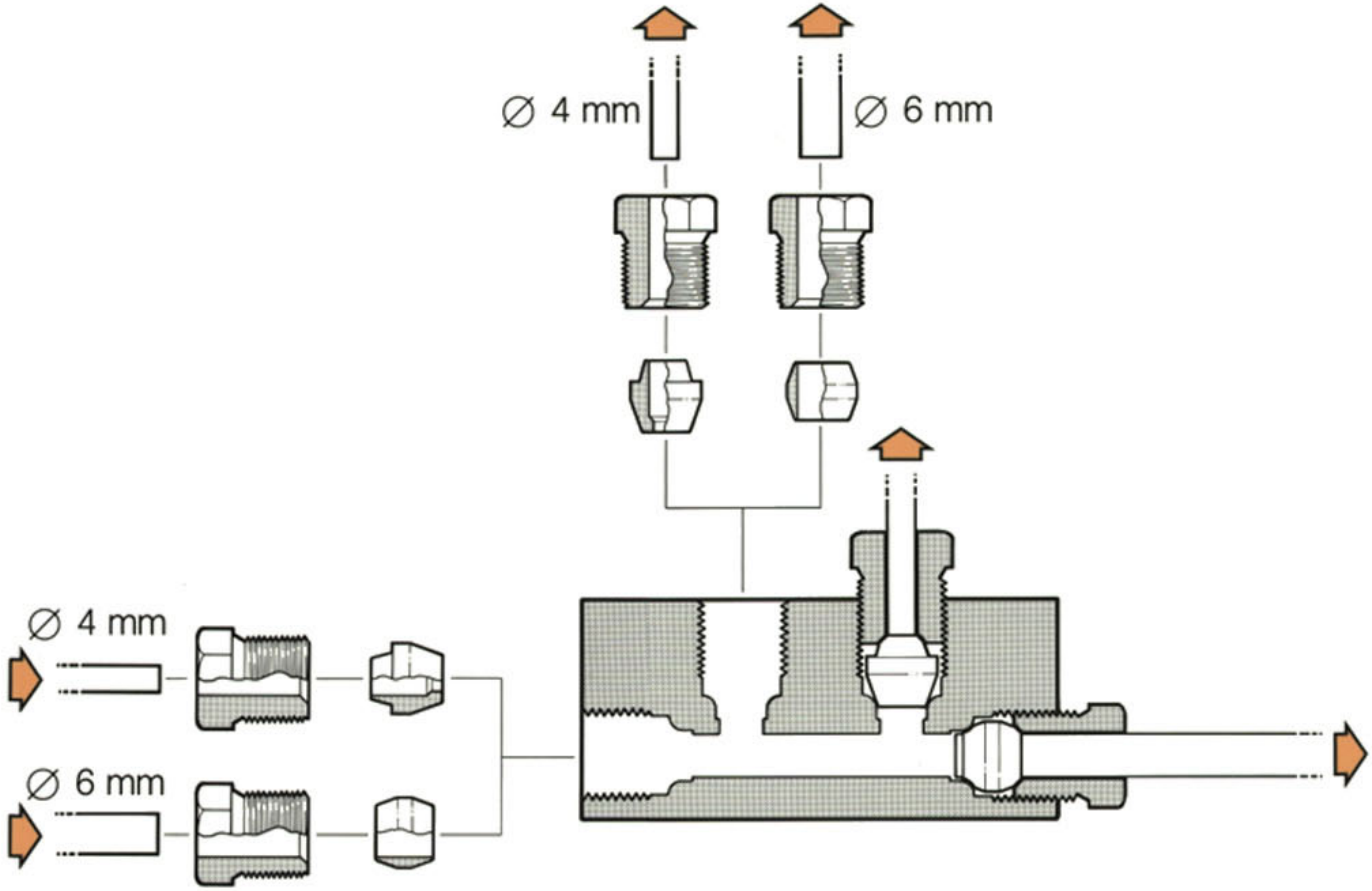

High pressure lubrication system

Dosing block

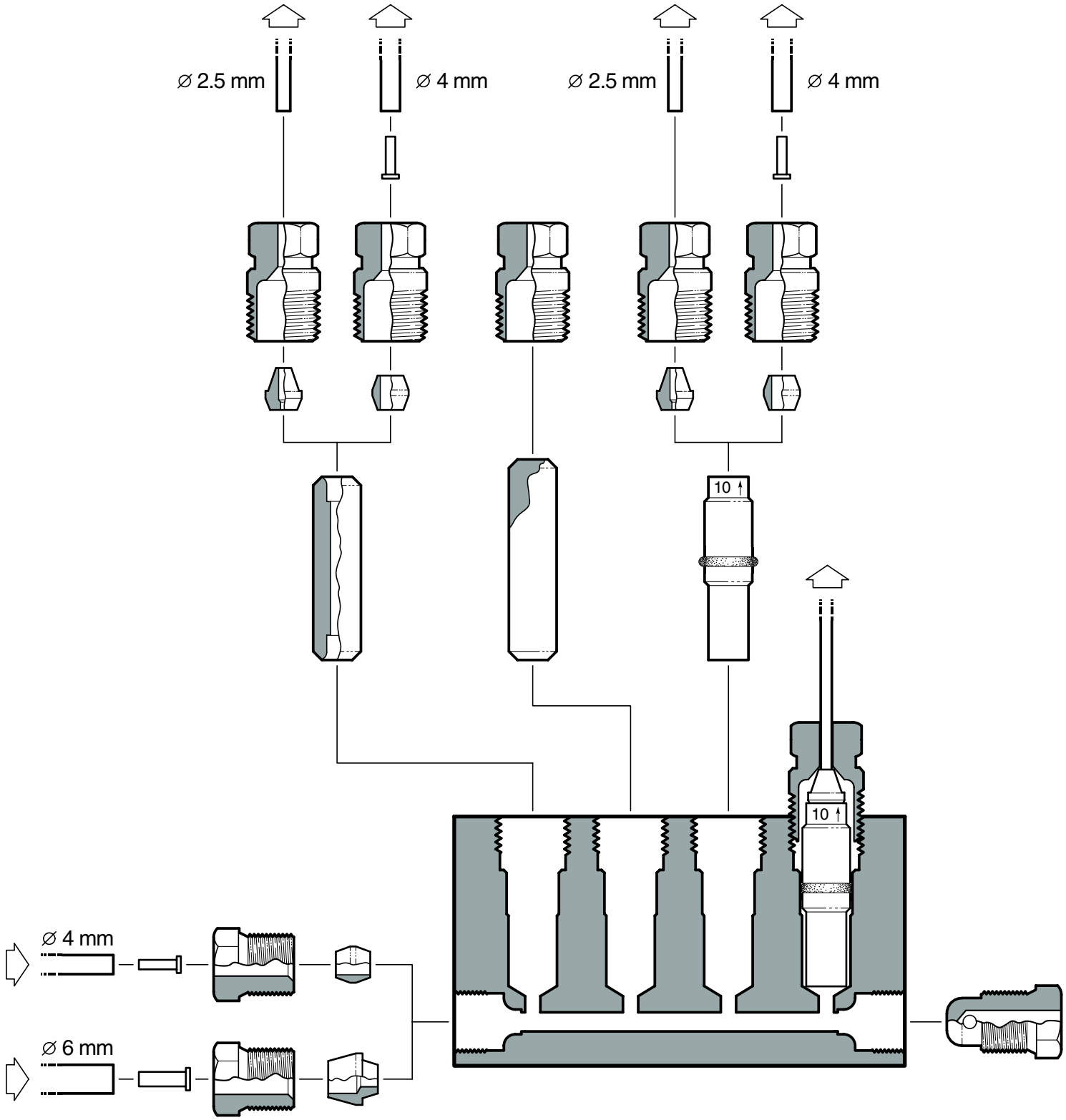

Lubricating diagram

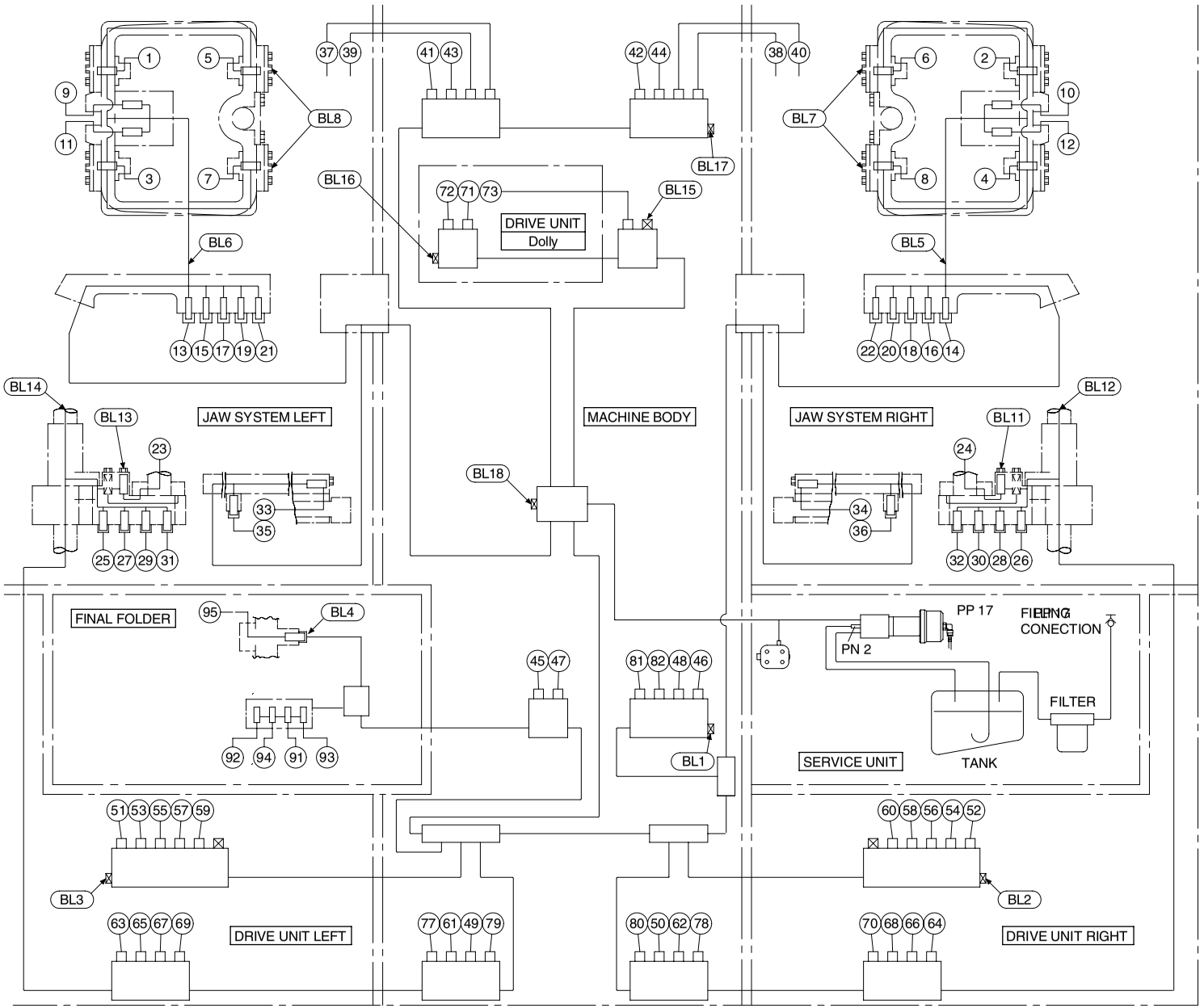

POS L	POS R	LUBRICATION POINT	C–GROUP	Distributor Size
		JAW SYSTEM		
1	2	Pivot pin	Yoke	10
3	4	Pivot pin	Yoke	10
5	6	Pivot pin	Yoke	10
7	8	Pivot pin	Yoke	10
9	10	Guide	Yoke	10
11	12	Guide	Yoke	10
13	14	Housing	Cutting saw	30
15	16	Roller	Yoke	10
17	18	Block	Yoke	10
19	20	Arm	Yoke	10
21	22	Roller	Yoke	10
23	24	Bearing	Guides	10
25	26	Link upper	Guides	10
27	28	Link lower	Guides	10
29	30	Link upper	Guides	10
31	32	Link lower	Guides	10
33	34	Housing	Pressure jaw	30
35	36	Roller catch	Pressure jaw	10
37	38	Roller volume flap	Volume flap	30
39	40	Roller volume flap	Volume flap	30
		MACHINE BODY		
41	42	Brushing guide	Machine body	30
43	44	Brushing guide	Machine body	30
45	46	Brushing guide	Machine body	30
47	48	Brushing guide	Machine body	30
		DRIVE UNIT		
49	50	Bracket	Arm	10
51	52	Roller	Arm	30
53	54	Pulley	Arm	10
55	56	Link upper	Arm	10
57	58	Link lower	Arm	10
59	60	Pulley	Arm	10
61	62	Bracket	Link	10
63	64	Roller	Link	30
65	66	Belt holder	Link	10
67	68	Link upper	Link	10
69	70	Link lower	Link	10
71	72	Spring holder	Dolly	10
73		Bracket	Dolly	10
77	78	Bracket	Arm	10
79	80	Bracket	Arm	10
81	82	Bearing	Worm gear	10
		FINAL FOLDER		
91	92	Station chain	Bracket	50
93	94	Station chain	Bracket	50
95		Delivery unit	Delivery unit	50

Technical Training Centre
Lund, Sweden

Machine type
TBA/9

Issue
1/0203

OH 1167

11

Air and Water System

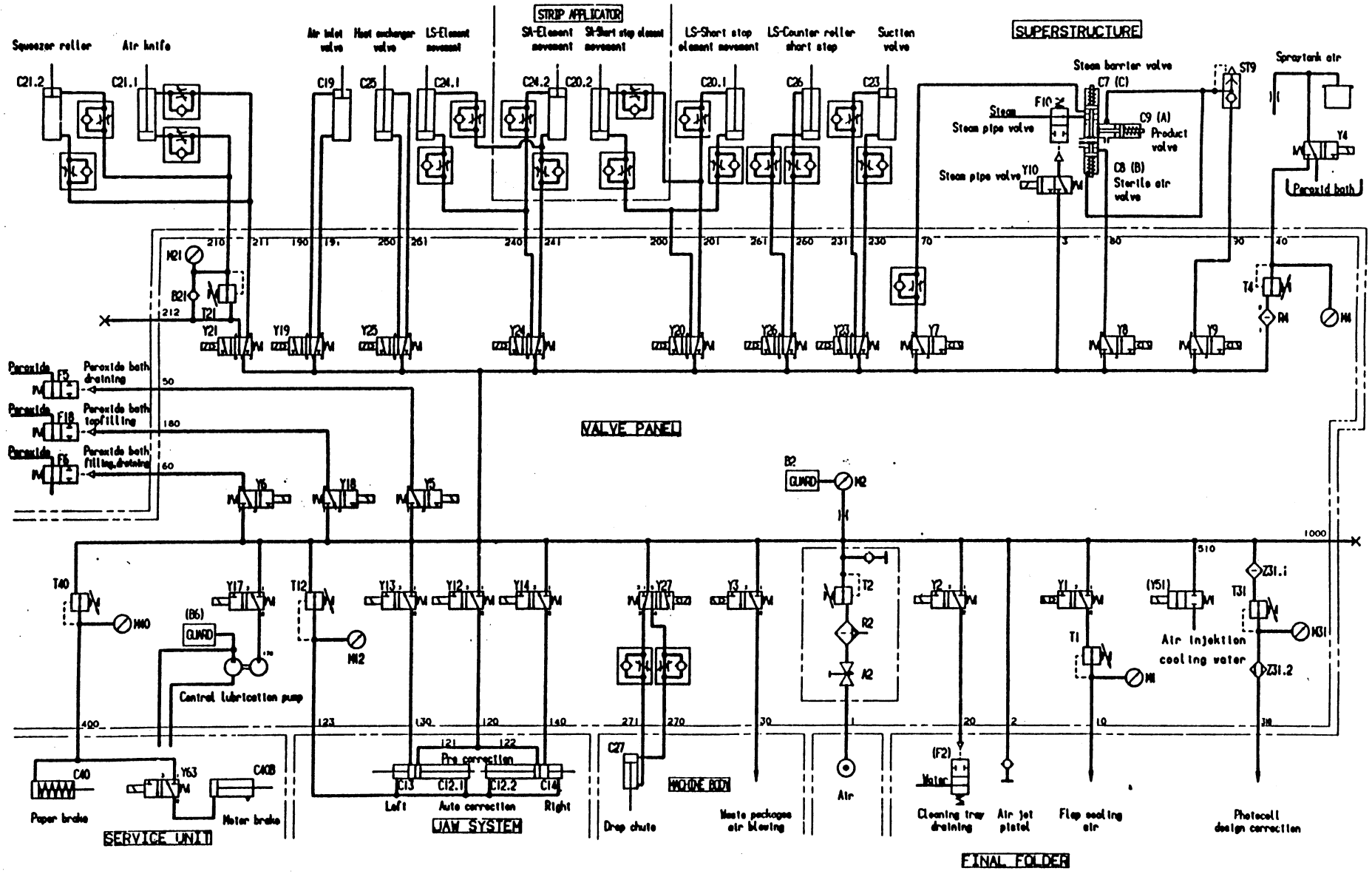
Squeezer roller
Air knife
Air inlet valve
Heat exchanger valve
LS-Element movement
STRIP APPLICATOR
SA-Element movement
SA-Short step element movement
LS-Short step element movement
LS-Counter roller short step
Suction valve
SUPERSTRUCTURE
Steam barrier valve
Steam
Steam pipe valve
Steam pipe valve
Product valve
Sterile air valve
Spraytank air
Peroxid bath
Peroxide
Peroxide bath draining
Peroxide bath topfilling
Peroxide bath filling,draining
VALVE PANEL
Control lubrication pump
Paper brake
Motor brake
SERVICE UNIT
Pre correction
Left
Auto correction
Right
JAW SYSTEM
Drop chute
MACHINE BODY
Waste packages air blowing
Air
Cleaning tray draining
Air jet pistol
Flap cooling air
Air injektion cooling water
Photocell design correction
FINAL FOLDER

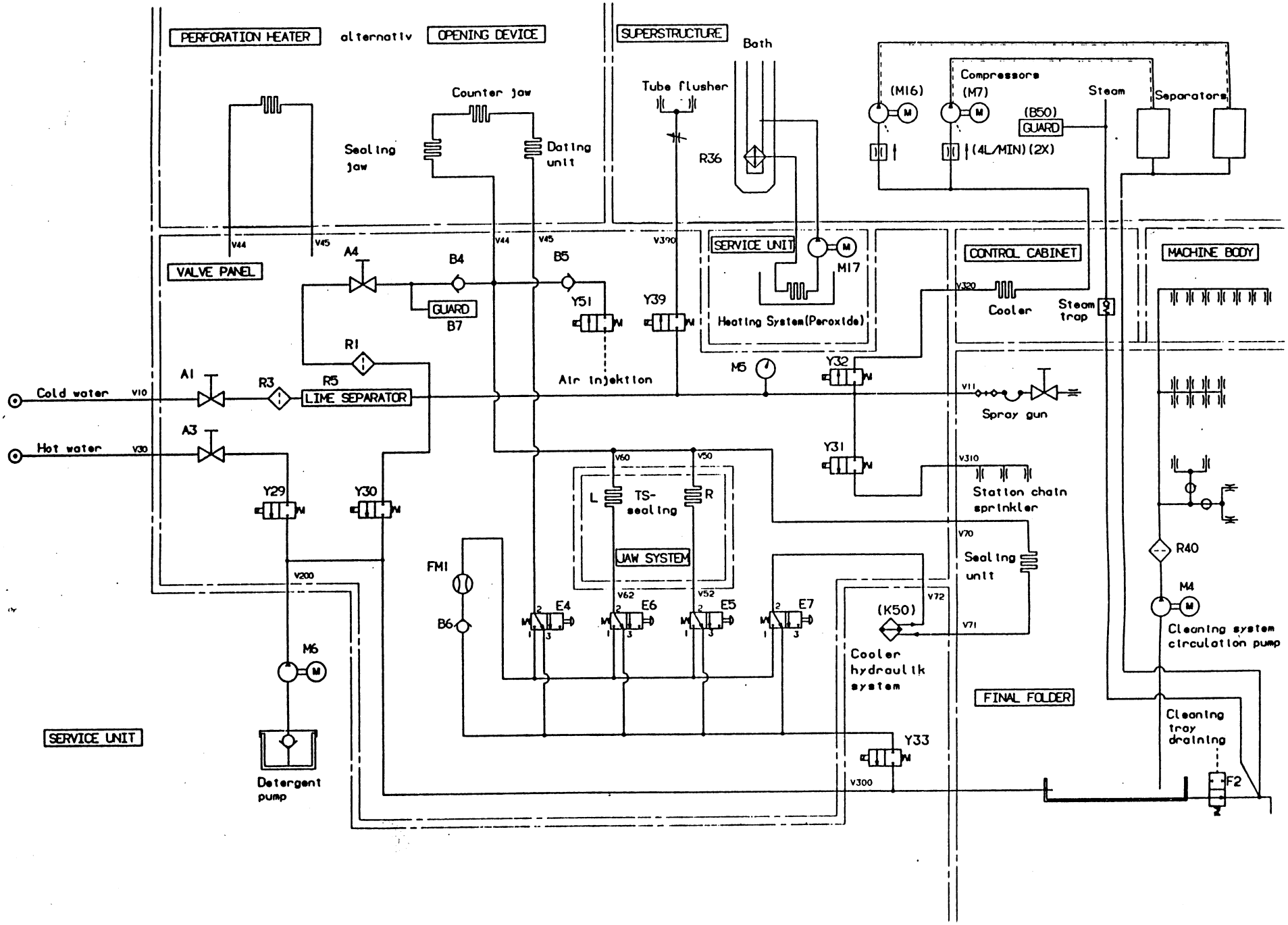
PERFORATION HEATER
alternativ
OPENING DEVICE
SUPERSTRUCTURE
Bath
Tube flusher
Counter jaw
Sealing jaw
Dating unit
R36
(M16)
Compressors
(M7)
Steam
Separators
(B50)
GUARD
(4L/MIN)(2X)
V44
V45
V390
SERVICE UNIT
M17
Heating System(Peroxide)
CONTROL CABINET
MACHINE BODY
VALVE PANEL
A4
B4
B5
Y51
Y39
GUARD
B7
V320
Cooler
Steam trap
R1
Air injektion
M5
Y32
A1
R3
R5
LIME SEPARATOR
Cold water
V10
V11
Spray gun
A3
Hot water
V30
Y31
V310
Station chain sprinkler
V60
V50
L
TS-sealing
R
Y29
Y30
JAW SYSTEM
V70
Sealing unit
R40
FM1
V200
V62
V52
E4
E6
E5
E7
B6
(K50)
V72
V71
M4
Cleaning system circulation pump
M6
Cooler hydraulik system
FINAL FOLDER
Cleaning tray draining
Y33
V300
F2
SERVICE UNIT
Detergent pump

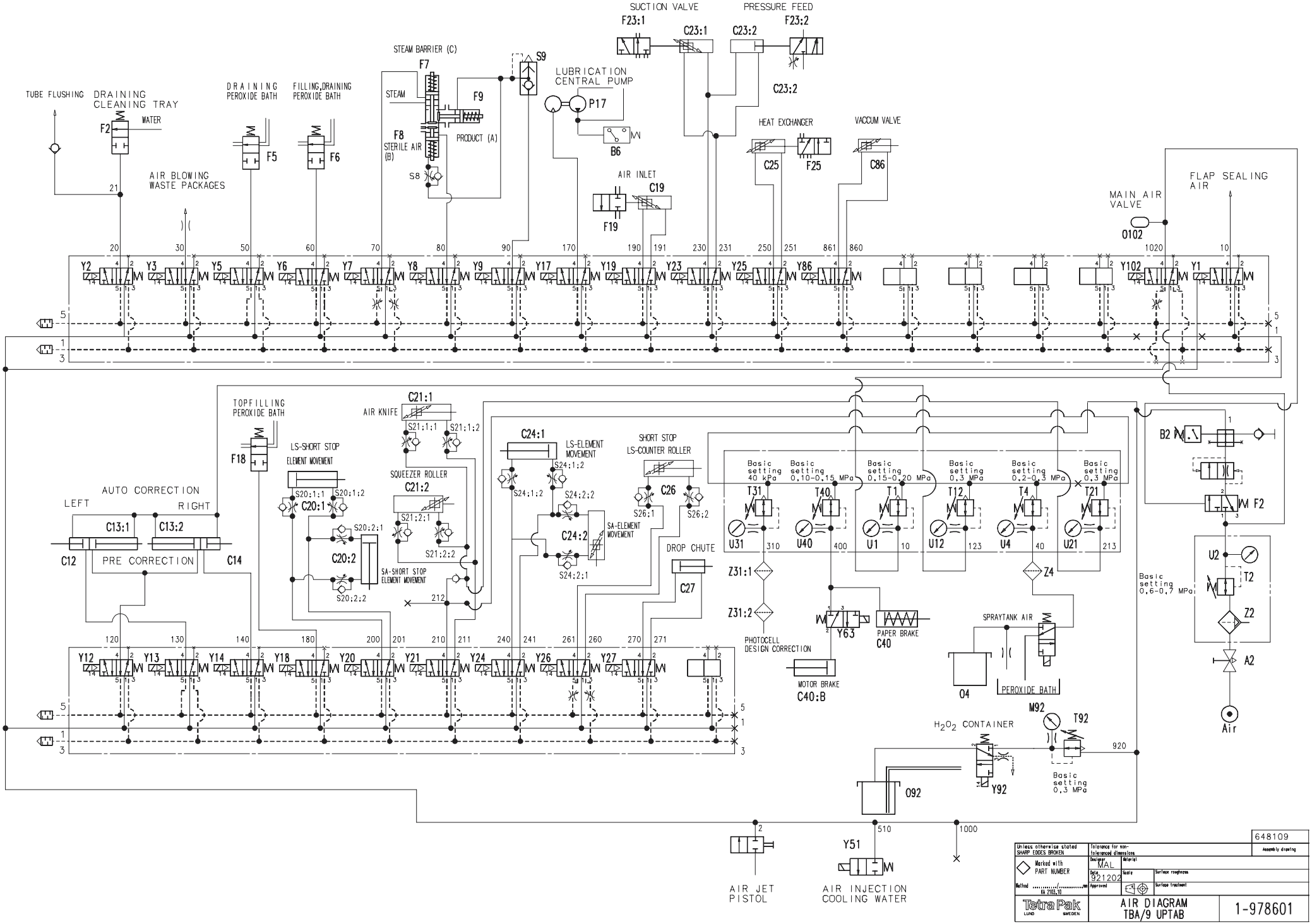

Unless otherwise stated SHARP EDGES BROKEN	Tolerance for non-toleranced dimensions	648109
Marked with PART NUMBER	Designer MAL	Assembly drawing
Method ..... KA 2103.10	Date 921202	Material
	Approved	Scale
		Surface roughness
		Surface treatment
Tetra Pak LUND SWEDEN	AIR DIAGRAM TBA/9 UPTAB	1-978601

12

Package Integrity

Induction Heating

Used for Transversal Sealing TBA

To perform a transversal seal on a TBA machine is required:

- Pressure
- Heat
- Cooling

The heating application used is induction heating (IH). This is a clean form of heating. One of its advantages is that the heating takes place in the work space, the aluminium foil. This reduces the losses, normally associated with heating, to a minimum. The heat causes the plastic to melt and thus the packages can be sealed. The seal will be cooled before the pressure is released.

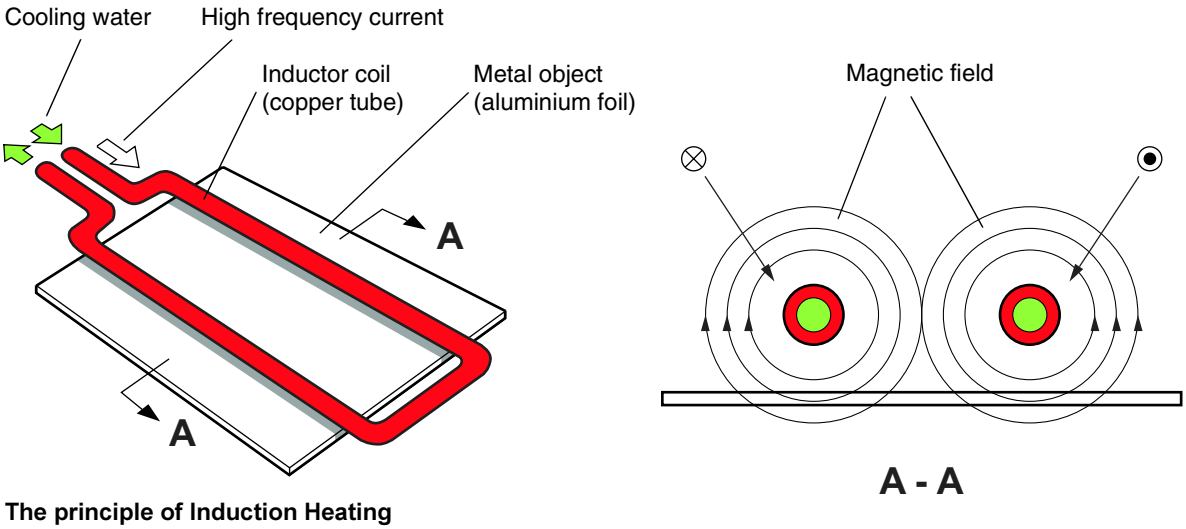

The principle of Induction Heating

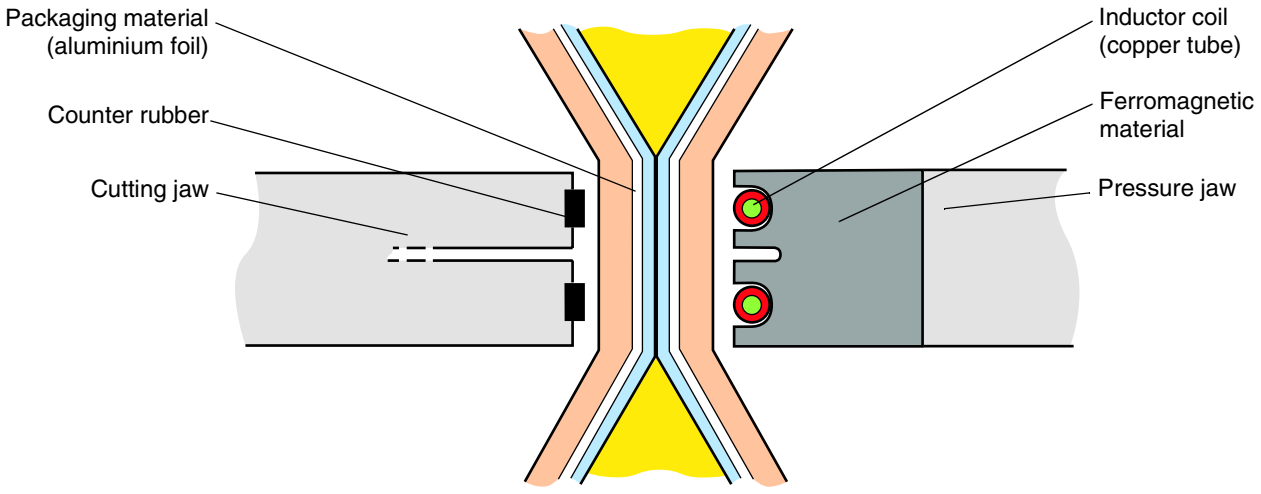

Transversal sealing TBA

Principle of ridge inductor sealing

Product
Paper board
Cooling water
Inner coating

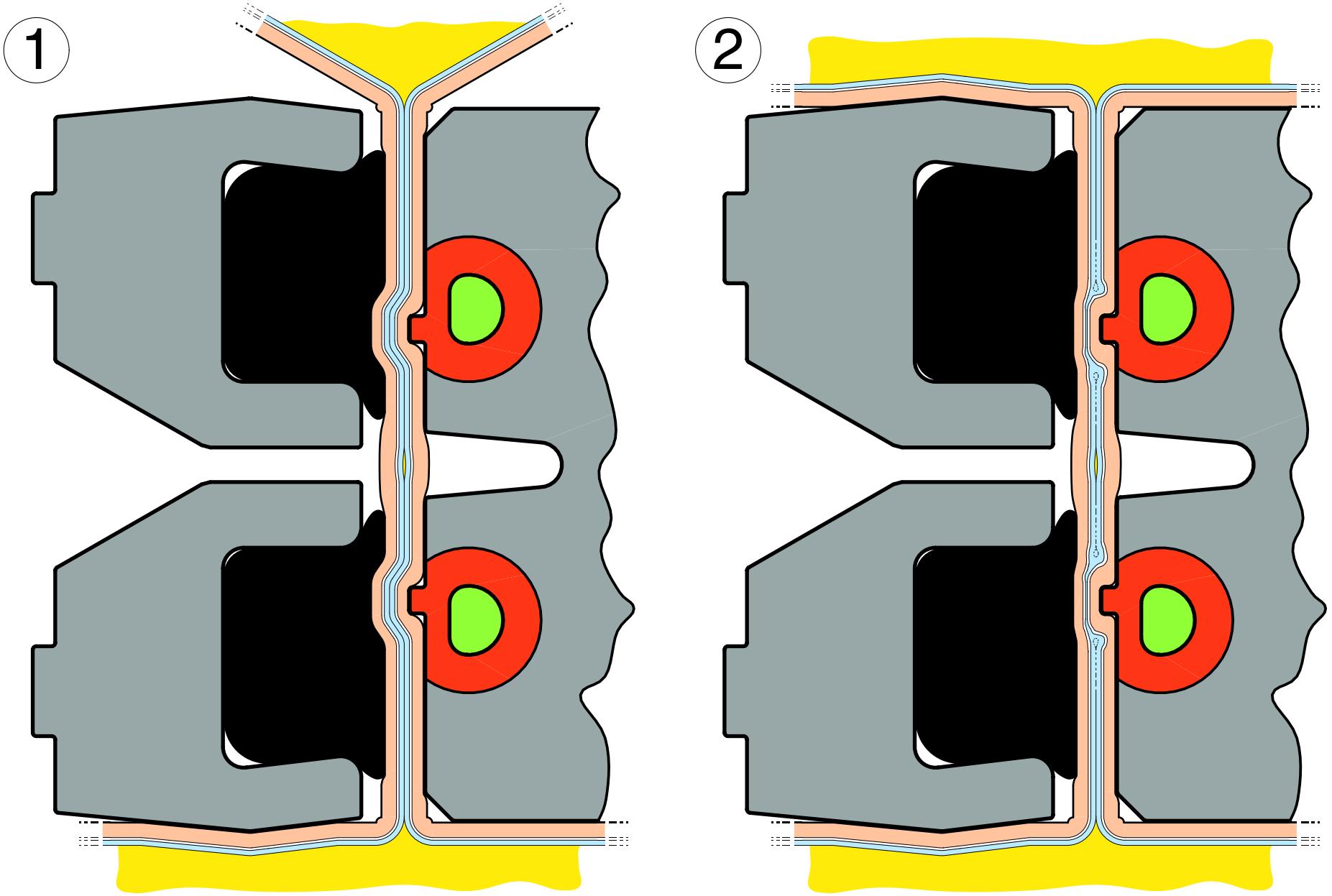

Tetra Pak Processing & Packaging Systems AB
Technical Training Centre, Lund, Sweden

Machine type

Issue
3/0008

OH 225

Ridge inductor sealing



Product

Blocked area

Aluminum foil

Sealed area

Ridge

Sealed area

Paperboard

Outer coating

Knife

Seal evaluation (Exercise)

Sample No

LH package

Top left seal ☐ Good ☐ Bad

Reasons: _____

Other observations: _____

Bottom left seal: ☐ Good ☐ Bad

Reasons: _____

Other observations: _____

RH packages:

Top right seal: ☐ Good ☐ Bad

Reasons: _____

Other observations: _____

Bottom right seal: ☐ Good ☐ Bad

Reason: _____

Other observations: _____

Packaging material, TBA/m and TBA/j

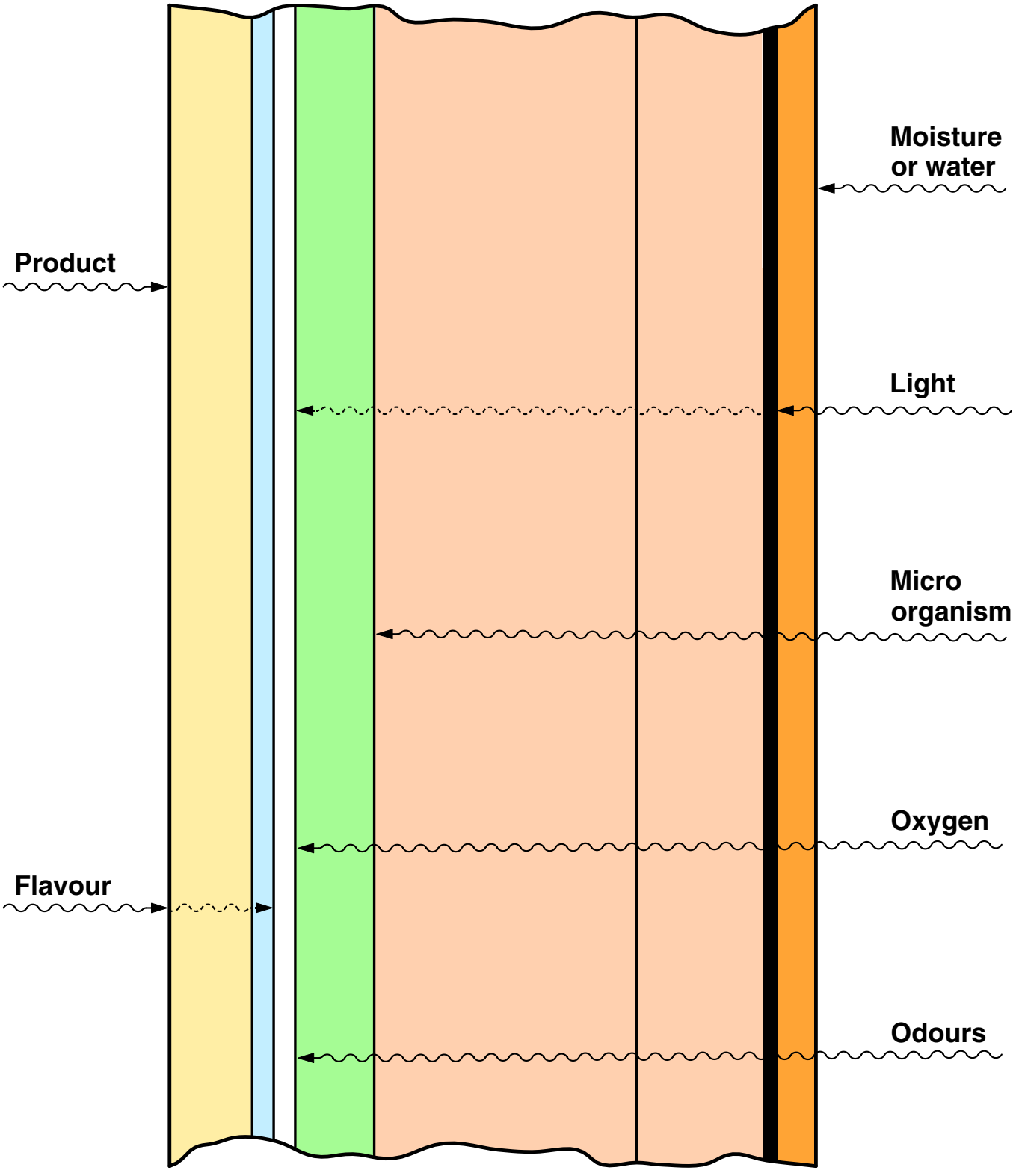

Technical Training Centre Lund, Sweden	Machine type Tetra Brik Aseptic	Issue 1/9501	OH 526

Labels

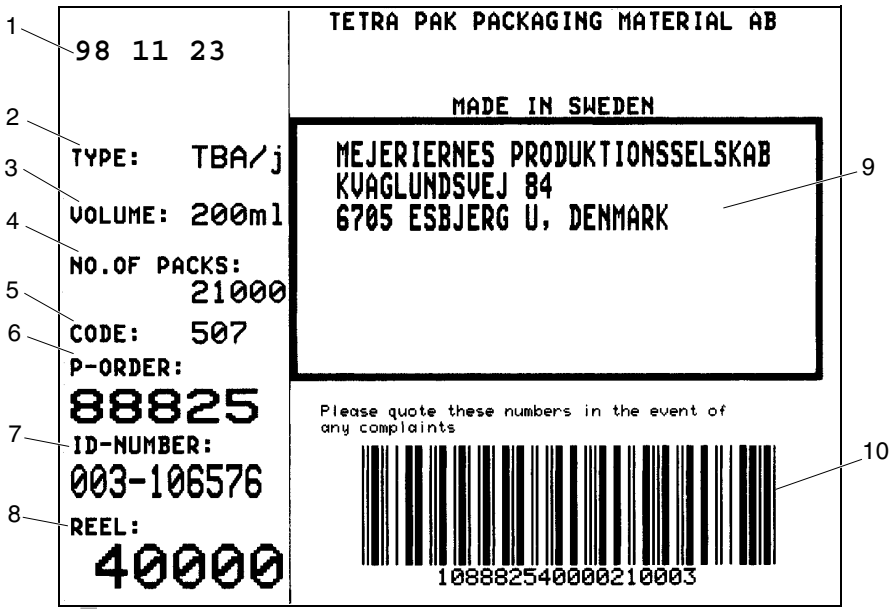

The label contains the following information:

1. Date of production
2. Type of packaging material
3. Volume of package
4. Quantity of packages on the reel
5. Pallet packaging alternative (Code)
6. Production order number
7. Id-number
8. Web position number (Reel number)
9. Customer adress
10. Bar-code containing parts of above information

Longitudinal seal (LS) strips

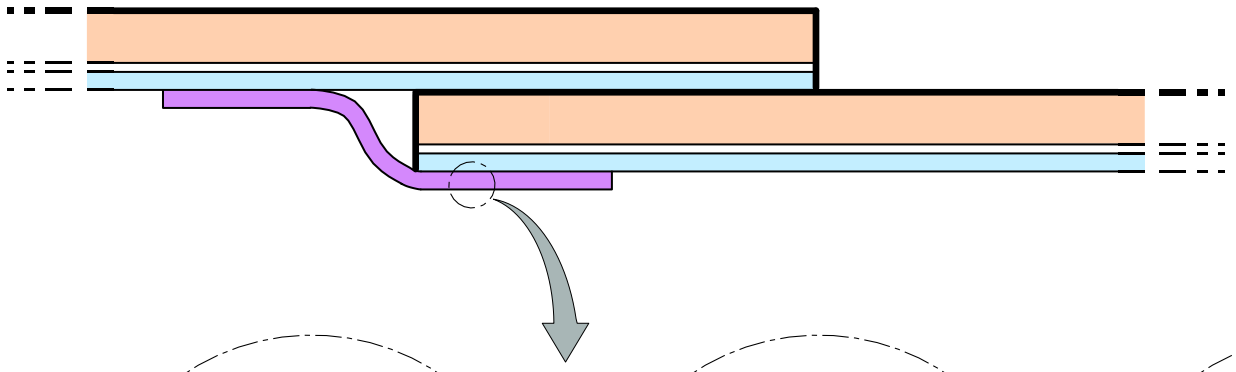

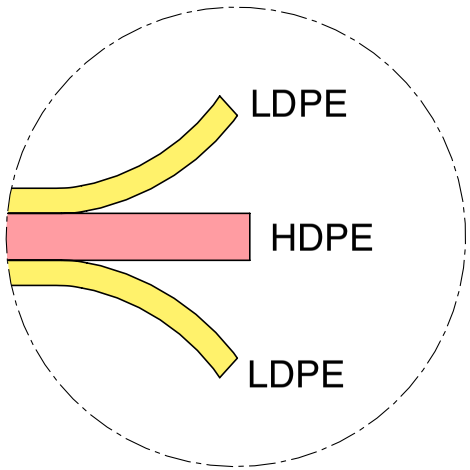

LHL–STRIPS
7,5/0,1
62125
code number

Normally used for
UHT milk and water

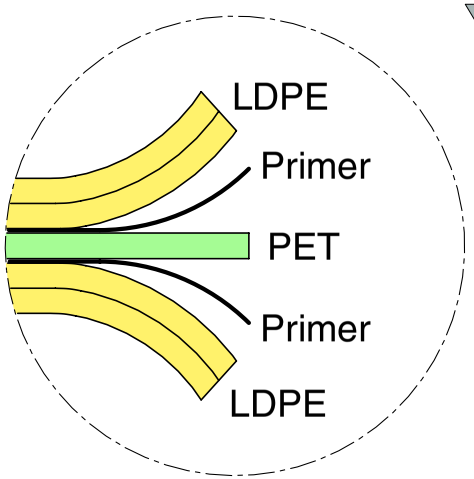

PPP–STRIPS
7,5/0,075
409813
code number

Used for most
filling products

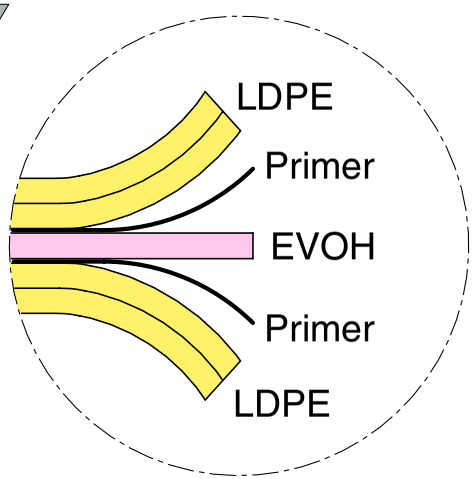

LSE–STRIPS
7,5/0,075
115382
code number

Used for products
sensitive to exposure
of oxygen

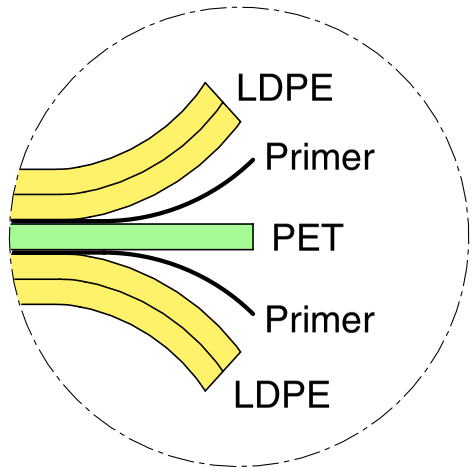

WINE–STRIPS
7,5/0,075
144536
code number

Must be used
when filling wine

13

Cleaning

Cleaning in Place

Cleaning steps

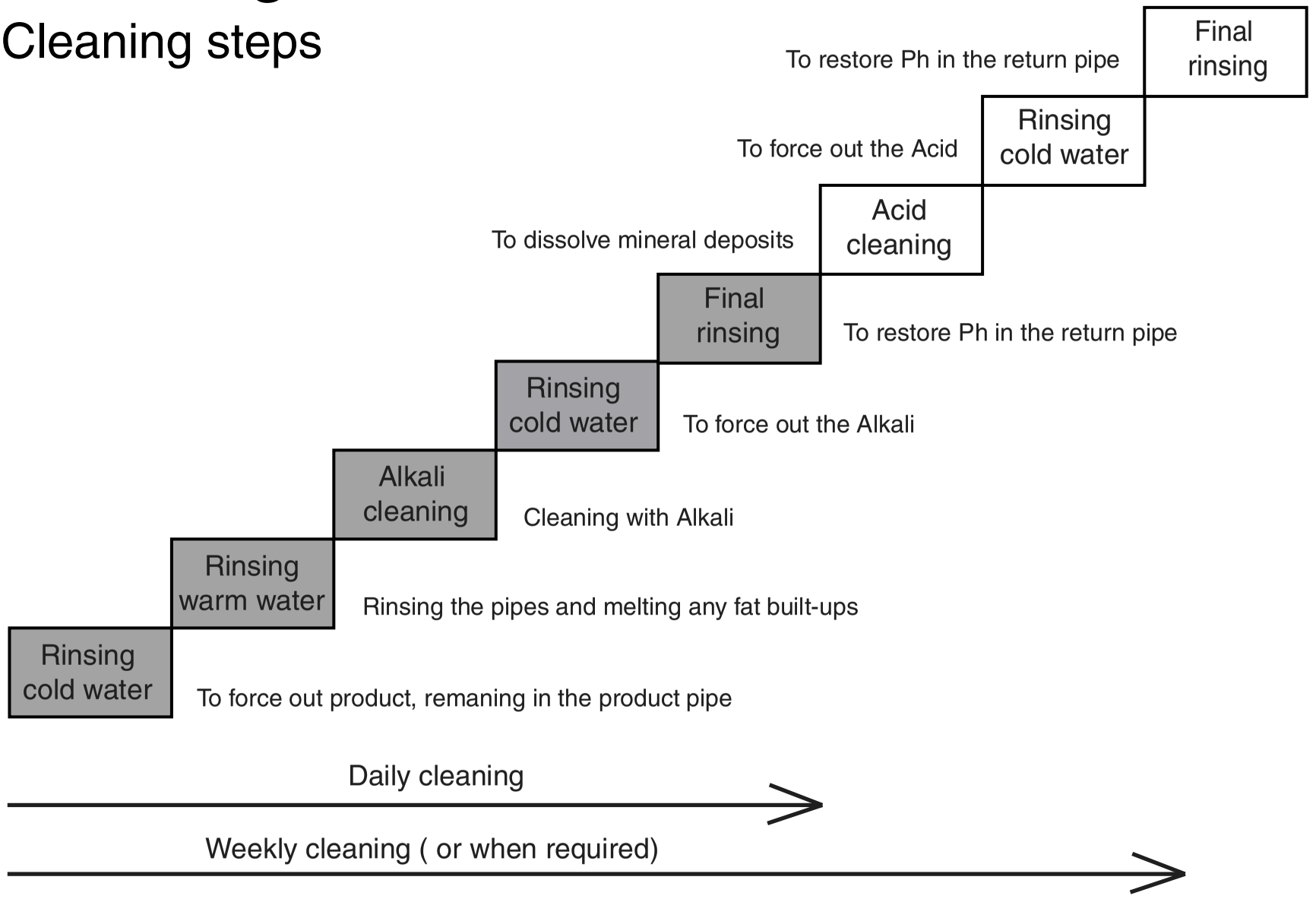

5. CLEANING

EXTERNAL CLEANING

Provision has been made on the Tetra Brik Aseptic filling machine to externally wash certain parts directly concerned with the sealing of packages.

This cleaning function, regularly applied, has the following objectives:

- To remove deposits released from the packaging material.
- To loosen and wash away any product deposits.
- To remove surplus oil deposits.
- To drastically reduce any microbial concentrations.

External cleaning is applied to:

- the jaw system,
- the final folder.

Usually on a regular basis. It is recommended that external cleaning is performed every (production) day from the outset, and this frequency be balanced against the results.

In addition, it is recommended that the jaw system and final folder are hand-cleaned weekly to remove deposits in inaccessible places.

5. CLEANING

EXTERNAL CLEANING - DATA

Special detergent is available from Tetra Pak, part No. 90298-19, which is Unilever product SU 1128.

This special detergent must be used unless Tetra Pak recommends other suppliers as and when such products fulfil the necessary performance standards required by Tetra Pak.

Specifications and Consumption Figures (per cleaning cycle)

	TBA/8	TBA/9
Connection Pressure	300-450 kPa (3-4.5 bar)	300-450 kPa (3-4.5 bar)
Consumption Hot Water/Cycle	500 L	300 L
Temperature	65-75°C (149-167°F)	70°C (158°F)
Special Detergent	2 L	0.8 L
Time	Approx 30 minutes	Approx 30 minutes

CLEANING PROGRAMME

	Time
1 Prerinsing	
Start to rinse with cold water to remove remaining product, and finish with warm to hot water, 50°-60°. (See comments on next page.)	
Short circuit — Machine cleaning	
Long circuit — Several machines cleaned in series after each other, or machine cleaned together with product line and sterilizer.	
Short and long circuit	5-10 min
2 Circulation with Alkali (daily)	
NaOH = Alkali	
Temperature registration of the return pipe to the cleaning tank, at least 80°C.	
Short and long circuit	15-20 min
3 Rinsing after cleaning	
Short circuit	3- 5 min
Long circuit	5-10 min
4 Circulation with Acid (at least once a week)	
HNO_3 = Nitric Acid H_3PO_4 = Phosphoric Acid	
Temperature registration of the return pipe to the cleaning tank, 60°-80°C.	
Short and long circuit	15-20 min
5 Final rinsing	
Cold water.	
Short circuit	3- 5 min
Long circuit	5-10 min

COMMENTS TO CLEANING PROGRAMME

LOW ACID PRODUCTS

Milk products

Prerinsing: You must always start with cold water and the end temperature must be 50°-60°C, i.e. above the melting point of fat. At 70°C the whey proteines will be denatured.

Pipelines and machine: Alkali cleaning every day.
Acid cleaning at least once a week.
EDTA or NTA cleaning once a month.

HIGH ACID PRODUCTS

Juice

Rinse with cold water.

Alkali cleaning every day.
Acid cleaning once a week.
EDTA or NTA cleaning once a month.

Fermented milk

You must always start with cold water and the end temperature must be 50°-60°C, i.e. above the melting point of fat (see "Milk products").

Alkali cleaning every day.
Acid cleaning once a week.
EDTA or NTA cleaning once a month.

GENERAL

Concentration

Alkali: 1-1.5%*, pH min 13.5
Acid: 0.6-1.2%*, pH max 1.5
EDTA or NTA: at least 0.3%* of alkali conc; added to the alkali.

Ex: If conc. of 1% alkali is used and you need 0.3% EDTA of alkali conc. the following applies:

$$\frac{1\ (\text{Alkali}) \times 0.3\ \text{EDTA}}{100} = 0.003$$

* Percentage calculated on 100% alkali, acid, EDTA, or NTA.

EDTA and NTA are complex binders for metals.
Acid can be Nitric Acid or Phosphoric Acid.

EDTA = Ethylene-Diamine-Tetra-Acetic-Acid
NTA = Nitrilo-Tri-Acetic-Acid
Flow rate: 8000-9000 l/h in return pipe.

INTERMEDIATE CLEANING

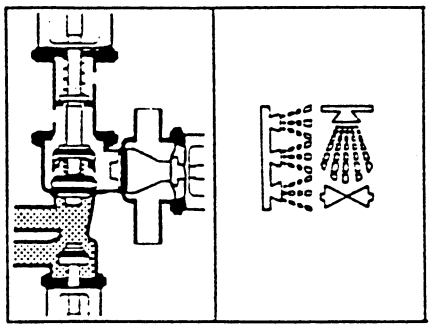

Cleaning in this position must be used whenever sterile product remains in the product line. In this case you have a steam barrier between cleaning solution and product.

This cleaning is to be done immediately after stop, except when cleaning according to FINAL CLEANING can be done within one hour.

Programme step CLEANING.

FINAL CLEANING

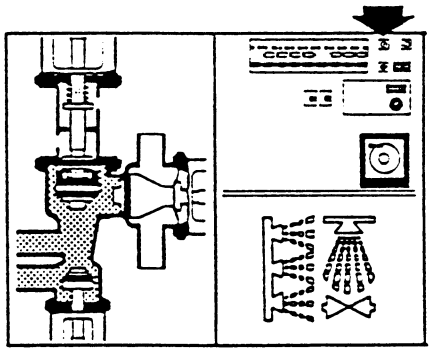

In order to clean all parts in contact with product in the valve, cleaning of the steam barrier space must be done every day or as soon as production is finished.

Remember never to clean the steam barrier space when product still remains in the product line.

Programme step CLEANING. Programme selector switch in position for cleaning of steam barrier space.

Cleaning in place (CIP) of filling system, TBA/9

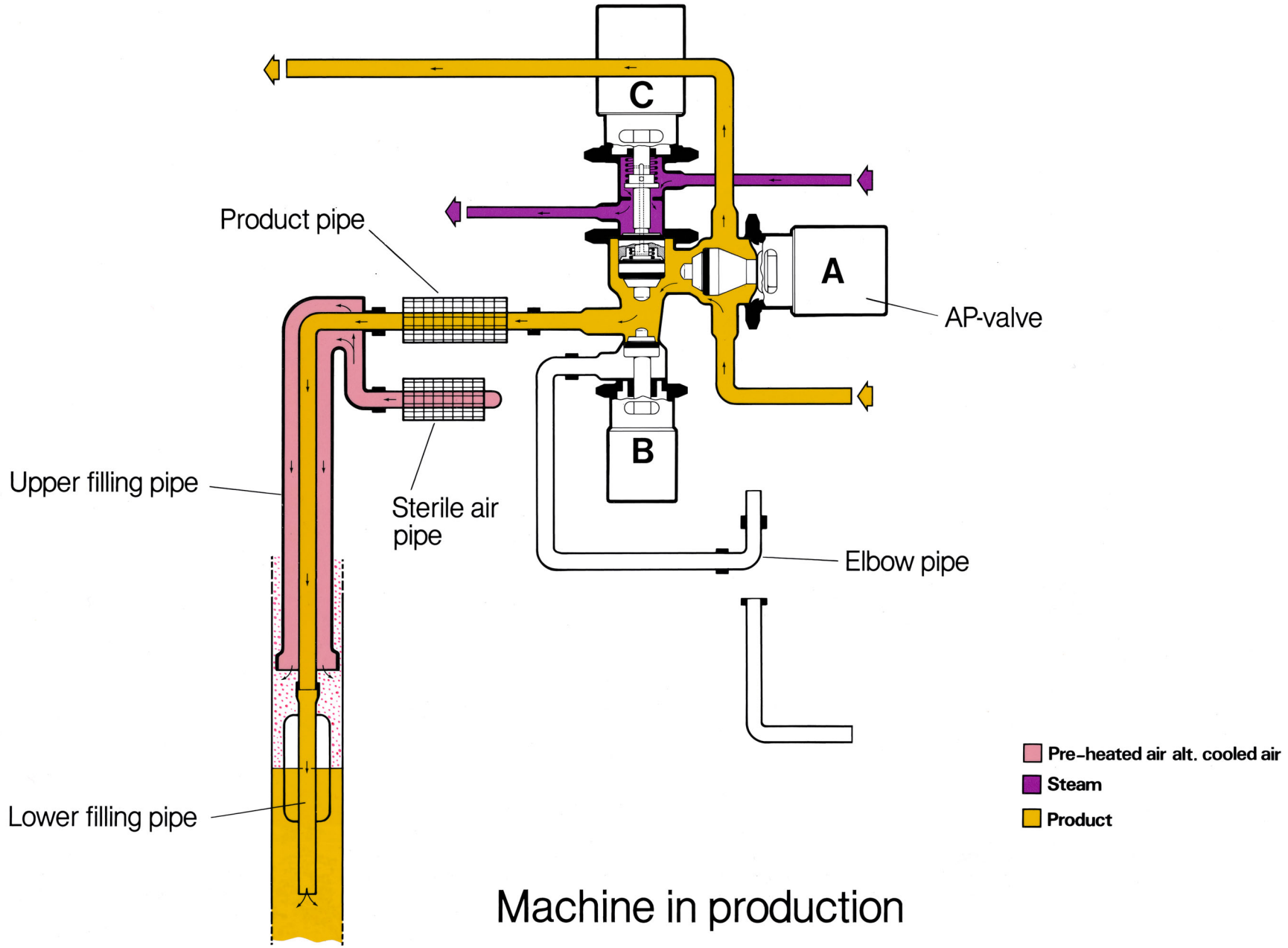

Machine in production

Technical Training Centre Lund, Sweden	Machine	Model	Issue	
TETRA PAK®	TBA/9		2/8902	OH 45:1

Cleaning in place (CIP) of filling system, TBA/9

Technical Training Centre
Lund, Sweden
Machine TBA/9
Model
Issue 2/8902
OH 45:2

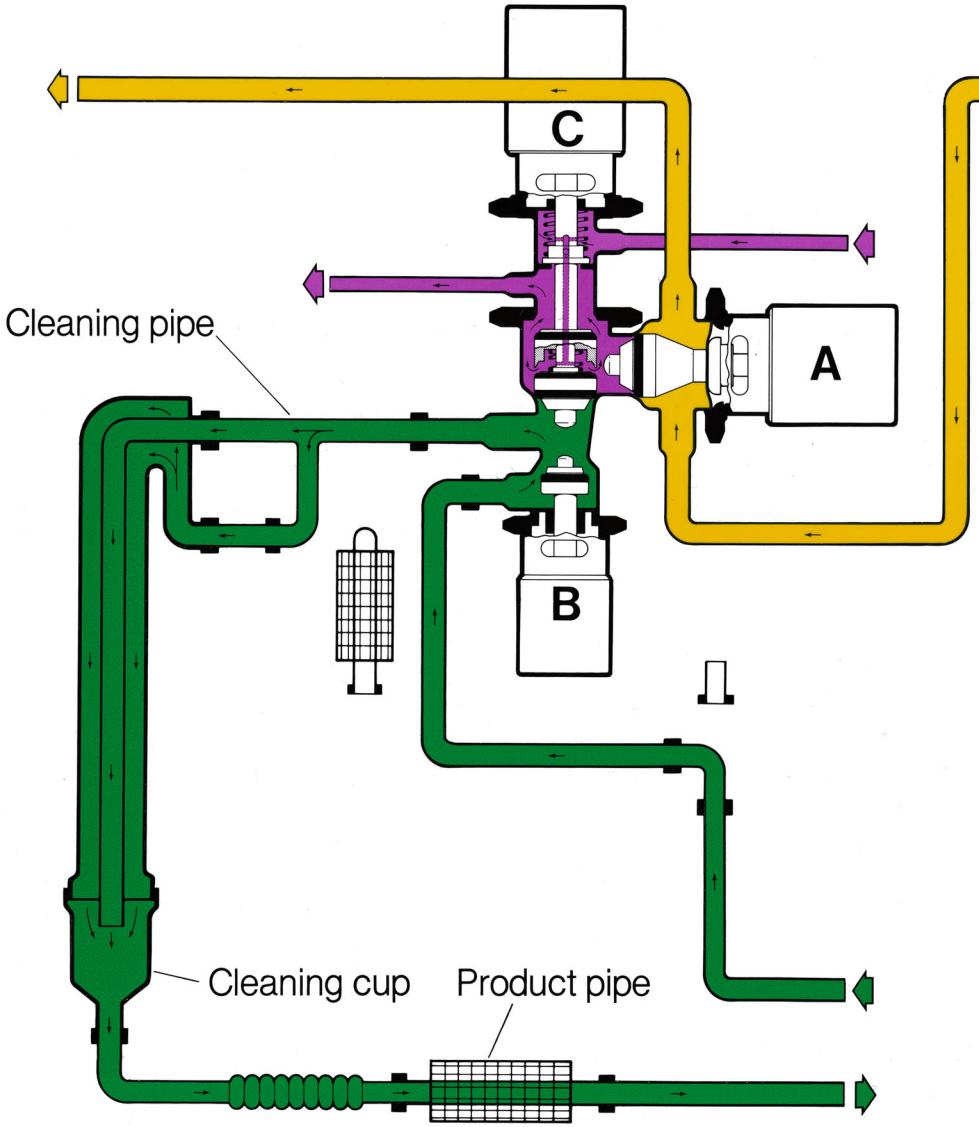

One machine in the intermediate cleaning state,...

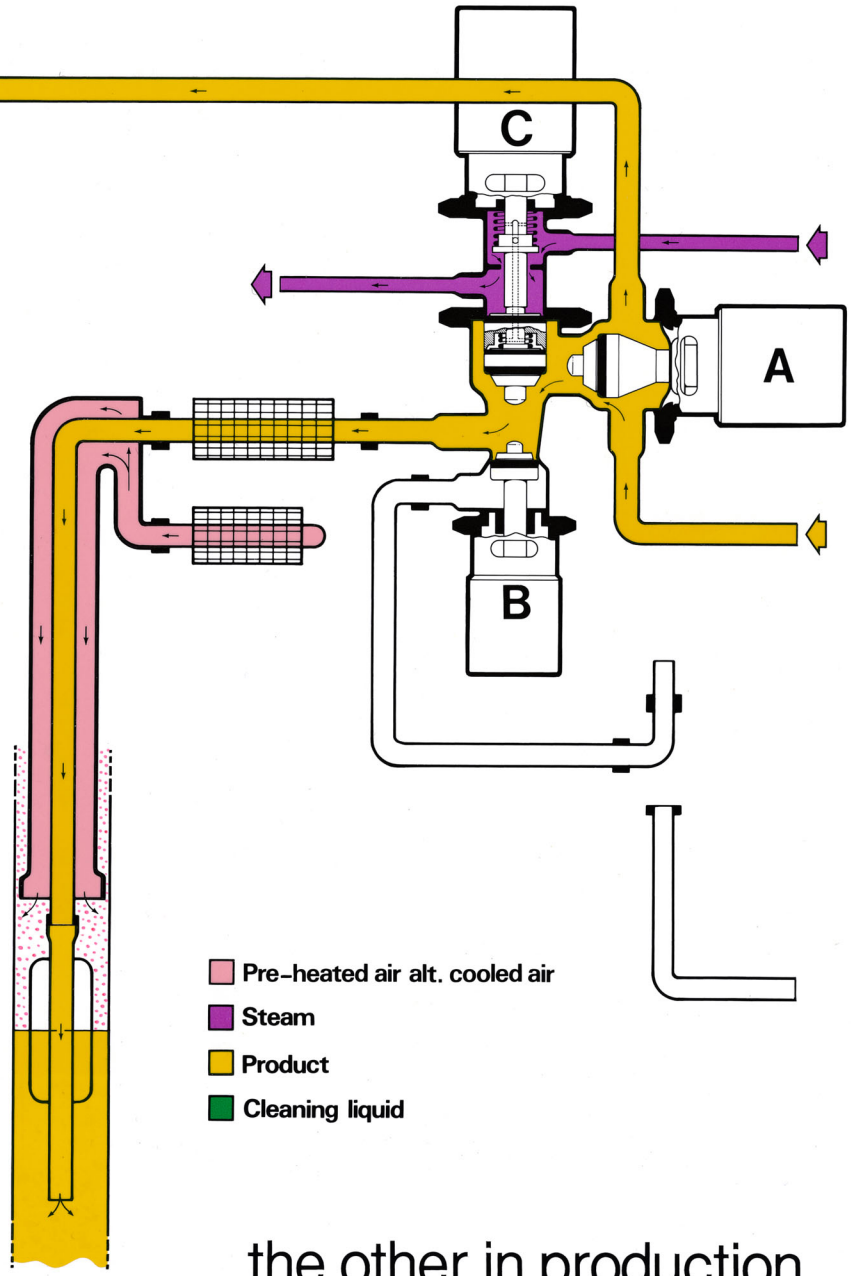

...the other in production

Cleaning in place (CIP) of filling system, TBA/9

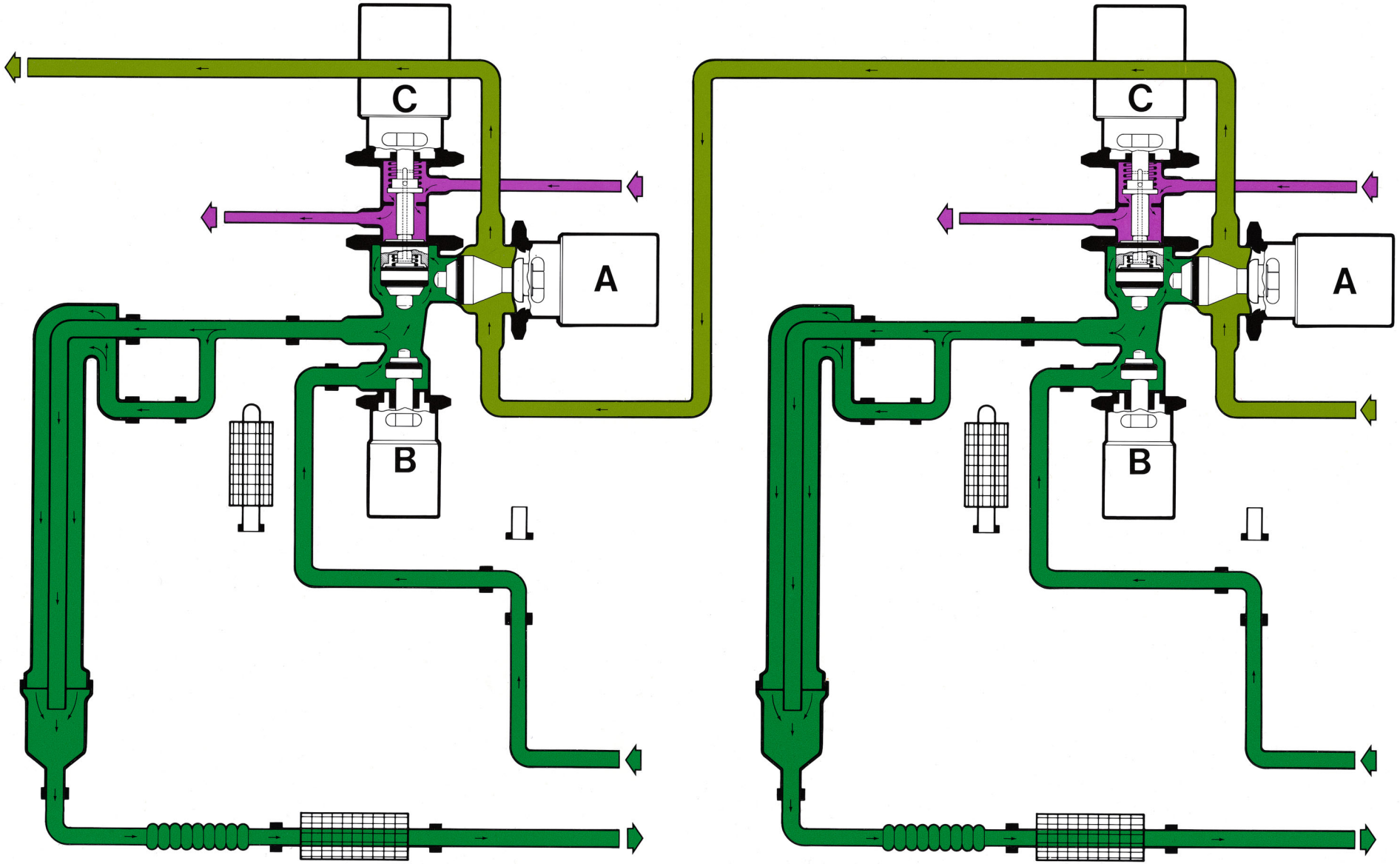

Both machines in the final cleaning state

Steam
Cleaning liquid
Cleaning liquid

Technical Training Centre Lund, Sweden	Machine	Model	Issue	
TETRA PAK®	TBA/9		2/8902	OH 45:3

14

Tube Forming

Forming of the tube

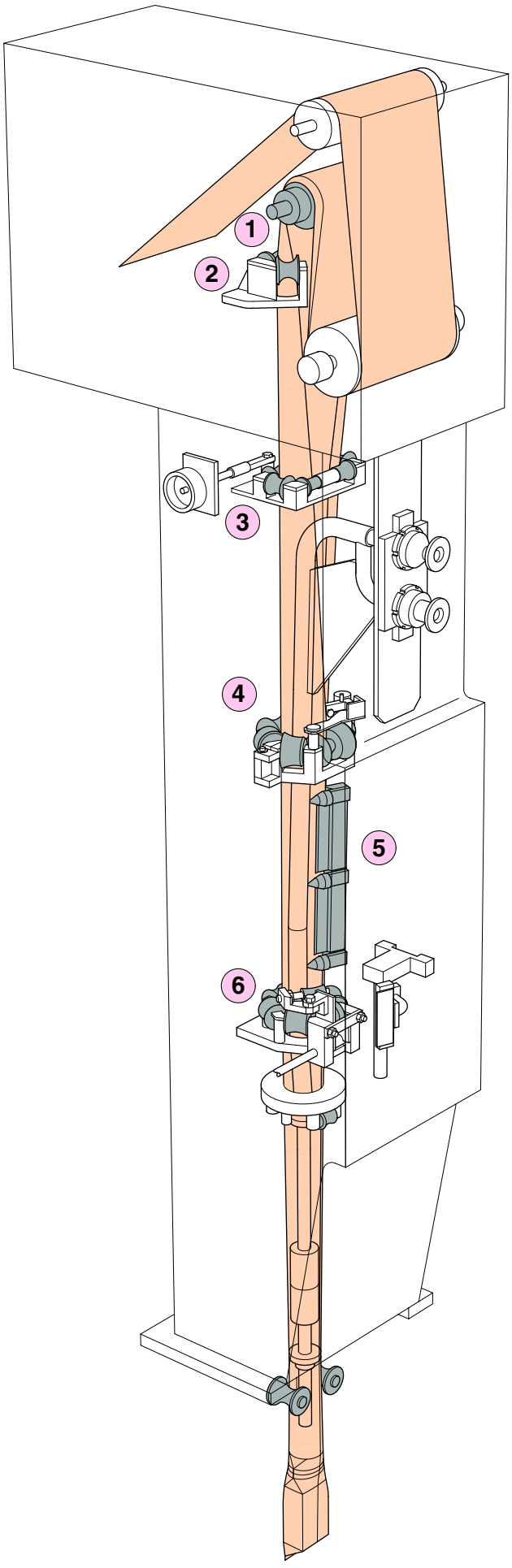

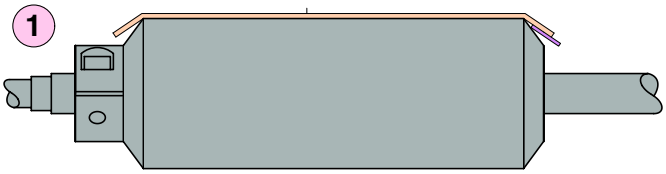

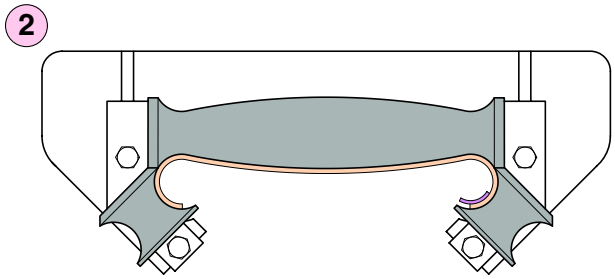

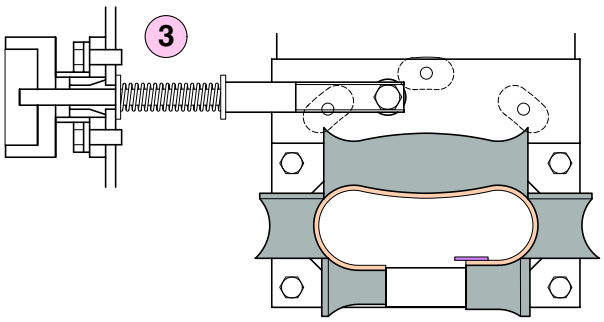

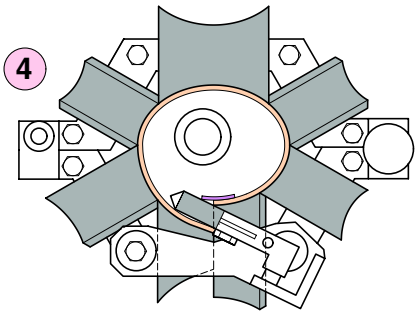

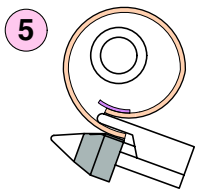

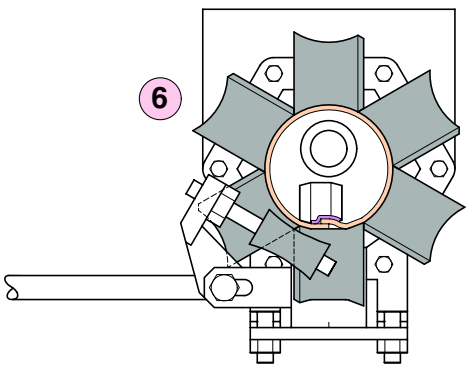

Technical Training Centre Lund, Sweden	Machine type TBA/9, TBA/19	Issue 1/9509	OH 554

15

Design Correction System

Textbook

Design correction

TBA/9 100V–130V

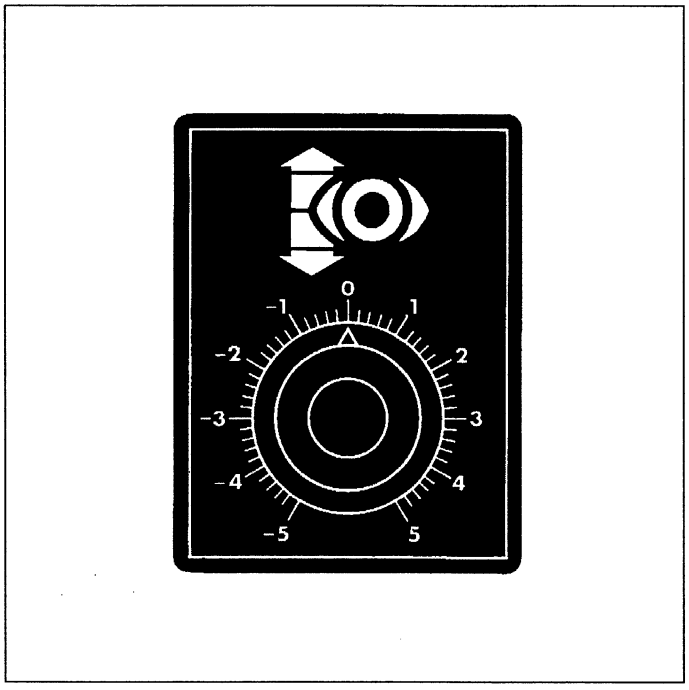

MT–83000–2

Technical Training Centre
Lund, Sweden

This textbook has been compiled by the Technical Training Centre in Lund, Sweden.

Some of the pictures in the textbook are also available as OH pictures.

For further information on training material, please contact the Technical Training Centre.

Issue 1/9304

© 1993, Technical Training Centre

No part of this publication may be reproduced, stored in a retrieval system or transmitted in any form or by any means: electronic, electrostatic, magnetic tape, mechanical, photocopying, recording or otherwise, without permission in writing from Technical Training Centre.

Design correction

TBA/9

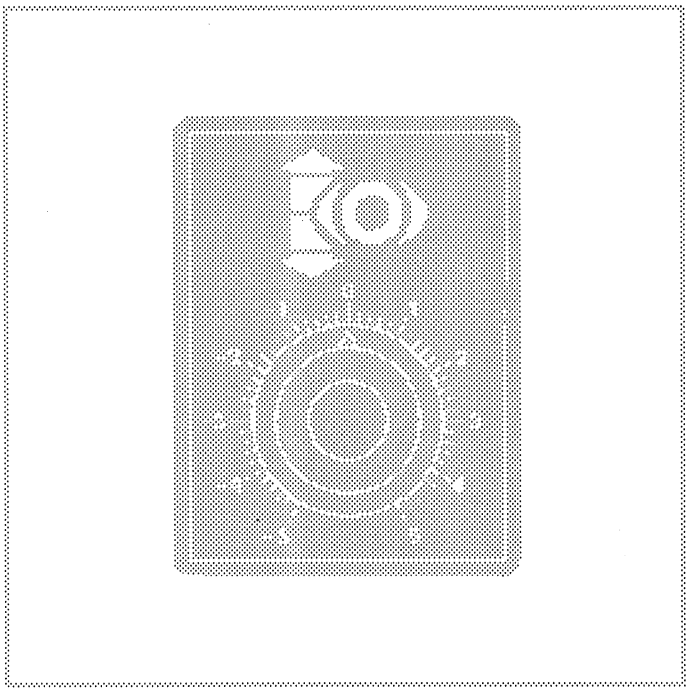

This book describes the function in principle of the following machine system and development steps:

TBA/9 100V–130V

Technical Training Centre

Contents

General 3
Construction 5
Function 7
Design correction mechanism & folding flaps, TBA/9 14
Work sheets 17

General

Most Tetra Brik packaging machines produce packages from **creased** packaging material. The creases are folding impressions to facilitate the forming of the package.

Creased packaging material

The shaded area shows the part of the packaging material used to make **one** package.

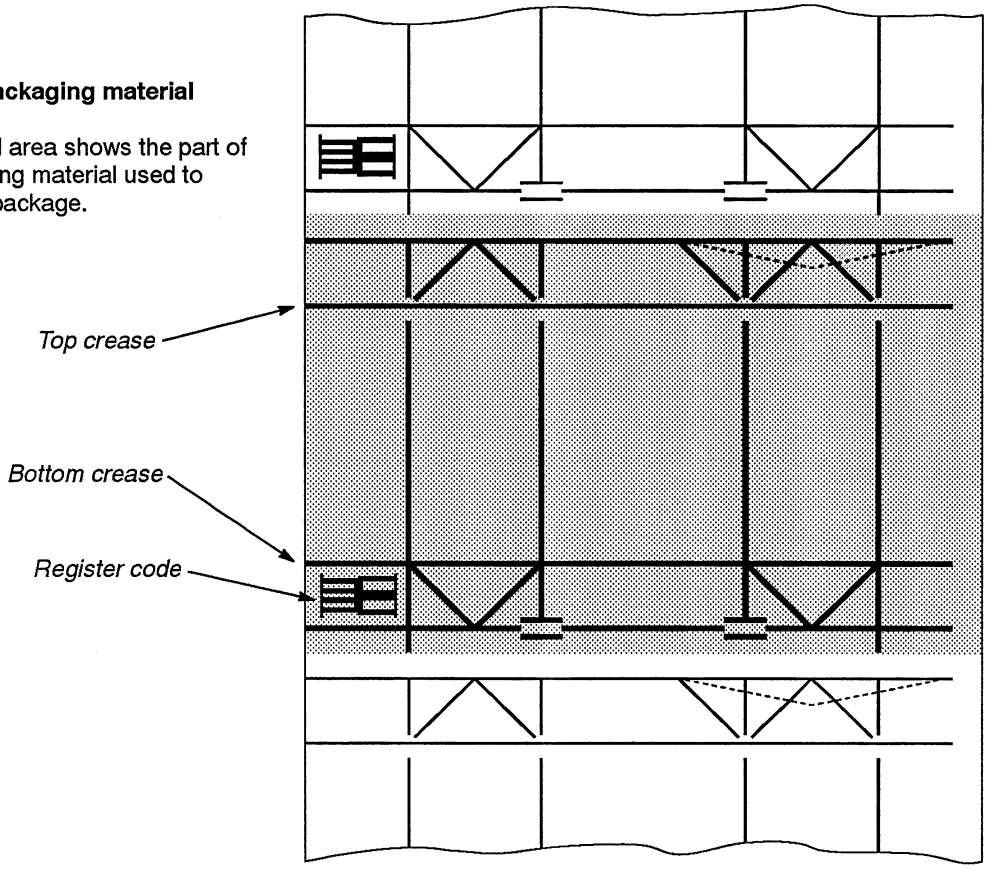

On a finished package, the creases coincide with the edges of the package. This means that the package must be made from a particular section of the packaging material web. In order to achieve this, the machine must:

1. synchronize the material web with the jaw system, so that the jaws seal and cut the package in the right places,
2. feed the material one package at a time in order to maintain synchronization with the jaws.

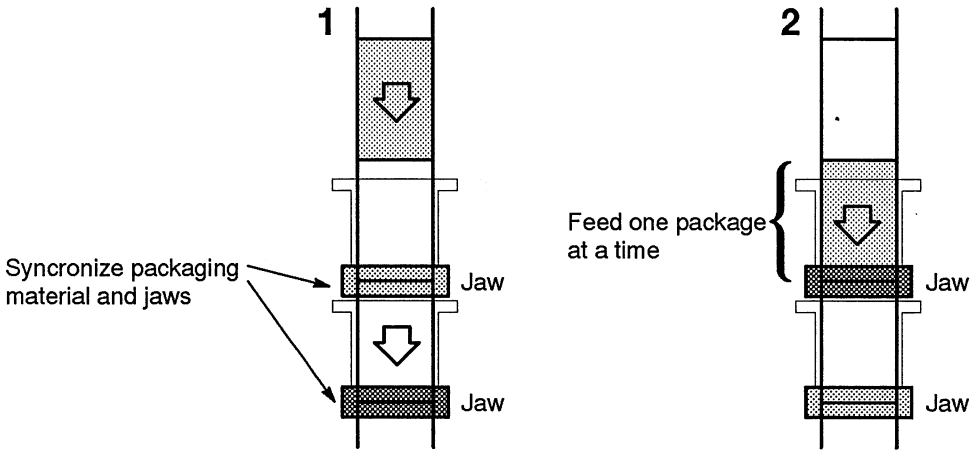

It is the **Design Correction system** (Printed Design Correction system) which synchronizes material and jaws and causes one package at a time to be fed forward. When this is done, the creases of the package are correctly placed as the jaws move against the tube, so that the machine produces packages of the **right shape.**

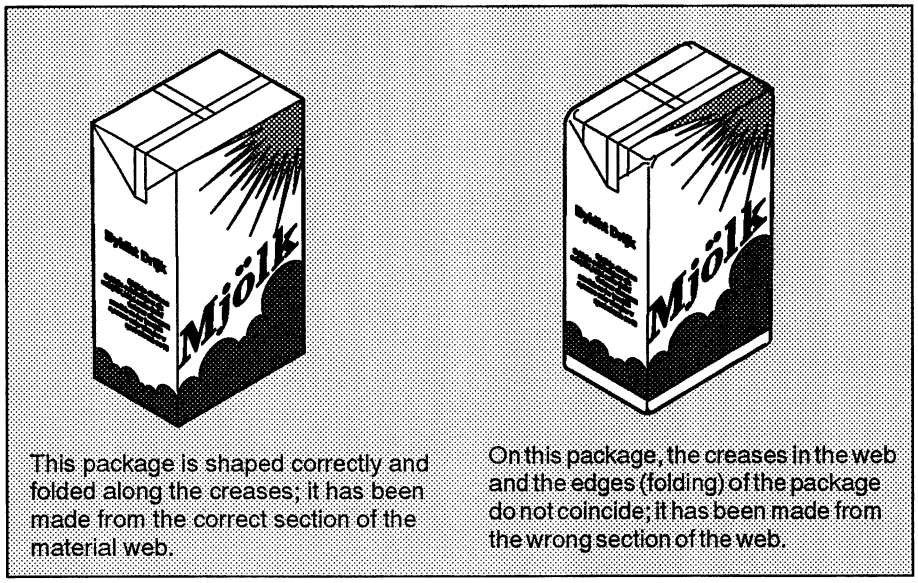

This package is shaped correctly and folded along the creases; it has been made from the correct section of the material web.

On this package, the creases in the web and the edges (folding) of the package do not coincide; it has been made from the wrong section of the web.

Principle

The principle of the design correction is that the jaws do not have to touch a precisely defined spot on the tube in order to give the package its correct shape. The position of the creases relative the jaws may vary within a **narrow tolerance range**. In order to keep them within this range, or area, **the design correction system regulates the feeding of packaging material.**

If the creases are positioned high relative the jaws, a little more than one package is fed forward – the crease position is lowered.

If the creases are positioned low, a little less than one package is fed forward – the crease position is raised.

In this way, the design correction continually endeavours to shift the crease position close to the middle of the tolerance range.

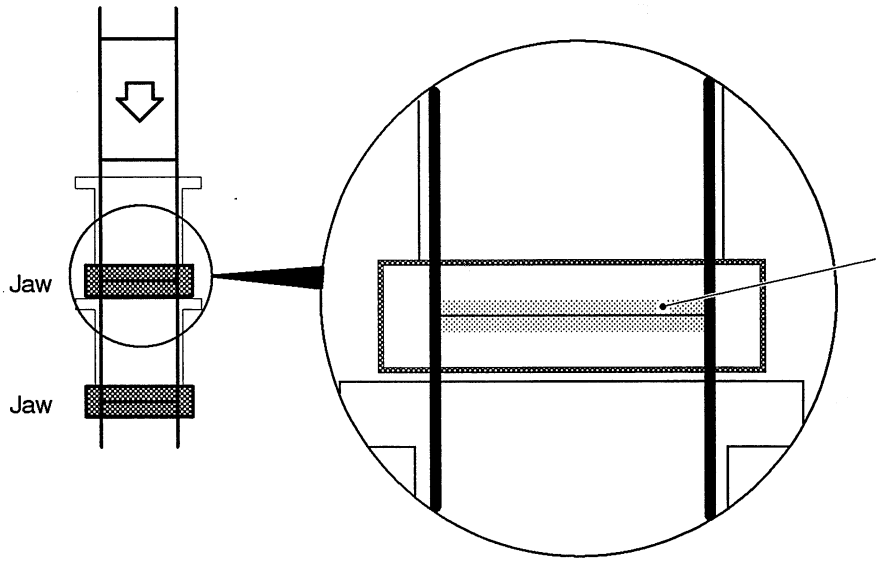

The centre of the jaws must touch the tube within the shaded area in order to give the packages their correct shape.

Construction

This picture shows the components that make up the design correction system.

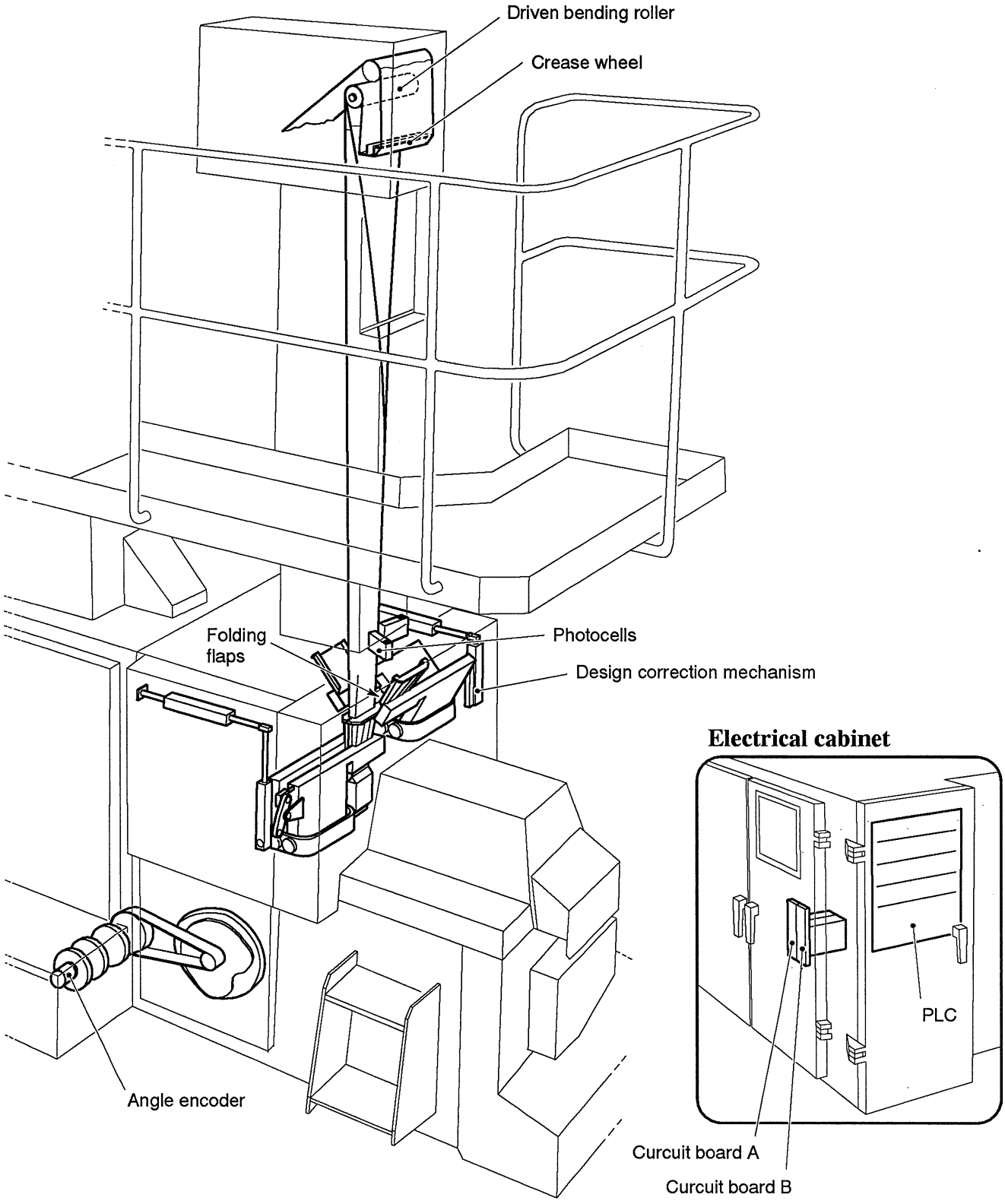

The **folding flaps** regulate the feed of packaging material. How much they affect the feed, is determined by the position of the **design correction mechanism**. There are three positions:

- **Full paper feed**: The folding flaps pull down the tube with full stroke, and the tube moves down by more than one whole package – tube overfeed.
- **Correction**: The folding flaps pull down the tube with reduced stroke, and the tube moves down by less than one whole package – tube underfeed.
- **Precorrection**: The folding flaps pull down the tube with only a short stroke, and the tube moves down by much less than one whole package.

The speed of the **driven bending roller** also affects the feed of packaging material. Fine adjustment of the feed is achieved by altering the speed of the bending roller.

Circuit board A receives those signals which indicate the relationship between crease position and jaw position. Board A then determines, based on these signals, whether to overfeed or underfeed the tube. Board A is also called the printed design circuit board.

Circuit board B decodes the signals from the photocells, converting them into a design signal, defining the position of the creases. This board also regulates the speed of the driven bending roller. Board B is also called the code circuit board.

The **PLC** is the control system of the machine. For instance, it controls the position of the design correction mechanism, but it also controls other design correction functions.

The **angle encoder** is connected to the drive of the machine and defines continuously the position of the machine in the form of an electric signal. As the jaws are connected to the drive via cams and links, this signal also defines the position of the jaws. The position of the machine (machine angle) is shown on a degree scale on the main cam as well as on the display of the angle encoder.

The **photocells** sense the design register code, a mark printed on every package. When the register code mark passes in front of the photocells, those signals are triggered which are decoded by board B.

If you would like to find out more about how the register code is sensed and decoded, refer to Design Correction, Level 2.

The **crease wheel** has "wings" that fit the crease pattern of the packaging material. The signal from the proximity switch defines the position of the creases. The crease wheel/proximity switch combination is only in use if the machine does not have photocells.

Function

What happens?

Through its stroke, the jaw system provides the fixed and major feed of packaging material. The design correction then adds a **small amount of web feed** by means of the folding flaps. During production, the folding flaps perform either **full paper feed** or **correction.**

If the creases are positioned high, the machine carries out full paper feed. With full stroke, the folding flaps pull down the web, i e tube, in order to lower the crease position on the next package. A little more tube than the equivalent of one package length is fed down – **overfeed.**

If the creases are positioned low, the machine carries out correction. With reduced stroke, the flaps pull down less web so that the crease position is raised on the next package. A little less tube than the equivalent of one package length is fed down – **underfeed.**

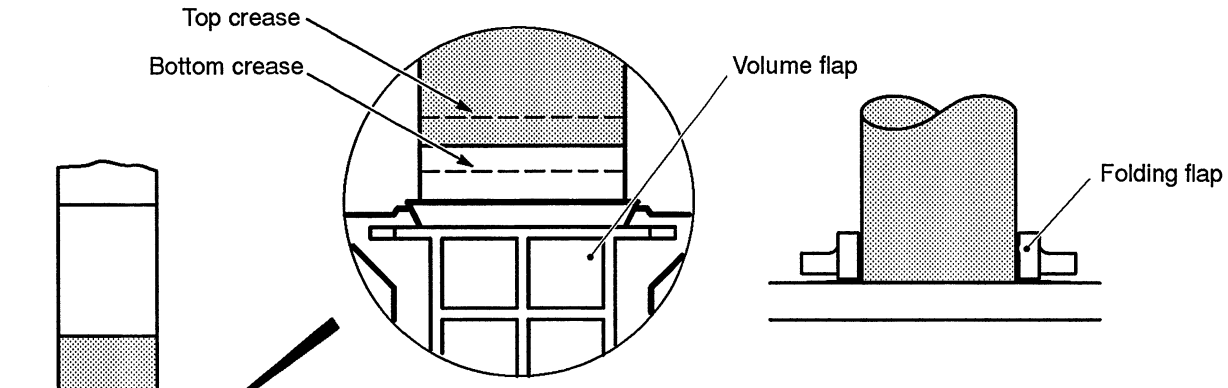

When the creases are high, the machine carries out **full paper feed.** The tube is overfed in order to lower the crease position on the next package.

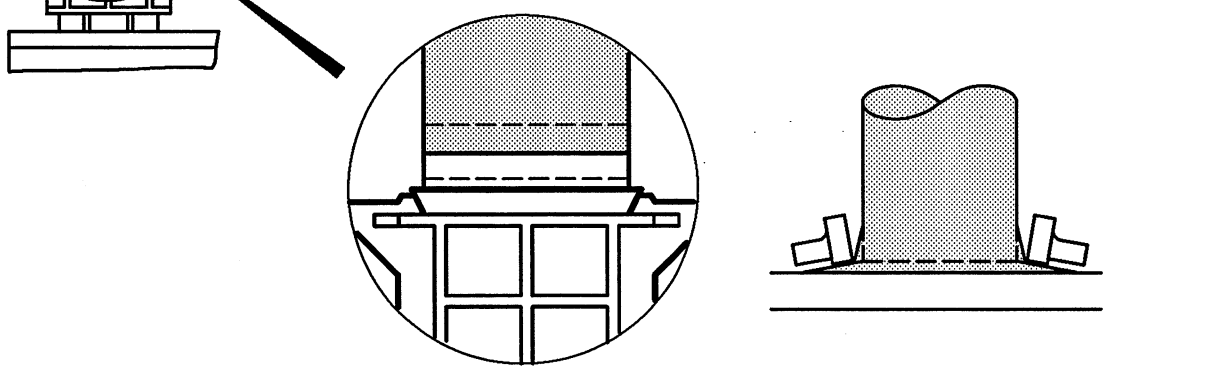

When the creases are low, the machine carries out **correction.** The tube is underfed in order to raise the crease position on the next package.

Design signal

To be able to determine whether to overfeed or underfeed the tube, the machine must compare the crease position with the jaw position. The **design signal** (1) (see diagram overleaf) is a pulse indicating the crease position, and the angle encoder provides information on the jaw position. The comparison is then performed by board A.

There are two design alternatives to provide a design signal:

- Photocells sense a register code, which is decoded into a design signal on board B. The register code is printed on the packaging material in a defined position relative the creases. Consequently, the position of the register code also defines the crease position.
- A crease wheel triggers a proximity switch, which transmits a design signal. The position of the crease wheel defines the crease position.

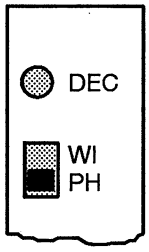

Board B

With a switch on board B, either design alternative is selected.
PH = photocells, **WI** = crease wheel; the **DEC** light-emitting diode (LED) indicates design signal.

The design signal goes from board B to a **delay timer** on **board A**, where it can be delayed by 0–60 ms (milliseconds). The length of the delay is determined by means of a potentiometer on the control panel. Normally, the delay should be 30 ms (potentiometer zero setting). It is the delayed design signal (2) which is to be compared with the machine position. LED D1 indicates a delayed design signal.

If the package is to be acceptable and correctly shaped, the delayed signal must be received when the machine, and thus the jaws, is positioned within a defined angle sector.

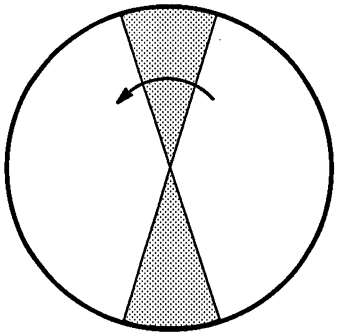
Angle sectors for acceptable packages.

An angle sector is defined as being within two degree values. When the machine position is between these degree values, it is within this angle sector.

For the determination of whether to overfeed or underfeed the tube, this angle sector is divided. If the signal is received while the machine is within the **correction angle sector**, the tube is to be underfed, i e the folding flaps are to perform correction. If the signal arrives outside the correction sector but still within the total angle sector for acceptable packages, the folding flaps perform full paper feed.

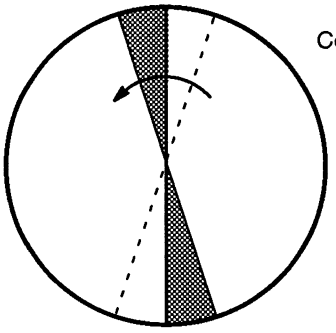
Correction angle sectors

There are two sets of angle sectors in one machine cycle, one for each pair of jaws

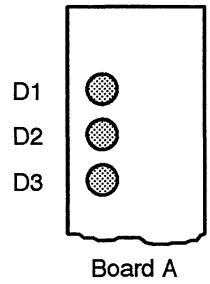

A **sector decoder** on board A is connected to the angle encoder. The sector decoder creates the two correction angle sectors, one for each jaw pair. When the machine is positioned within one of the correction angle sectors for either jaw pair, the sector decoder transmits a signal (3), and LED D2 lights up.

An **& function** on board A "decides" if the folding flaps are to perform correction or full paper feed. If the delayed signal is received at the same time as a correction angle sector is being decoded, i e signals are received by both inputs of the & function, a correction signal (4) is transmitted via the output of the & function. If the delayed signal arrives outside the correction angle, there will be no correction signal from the & function output. Consequently, the folding flaps will perform full paper feed. The PLC program relays the "decision" to the **cylinders** operating the design correction mechanism. LED D3 and the LED by the potentiometer indicates correction signal.

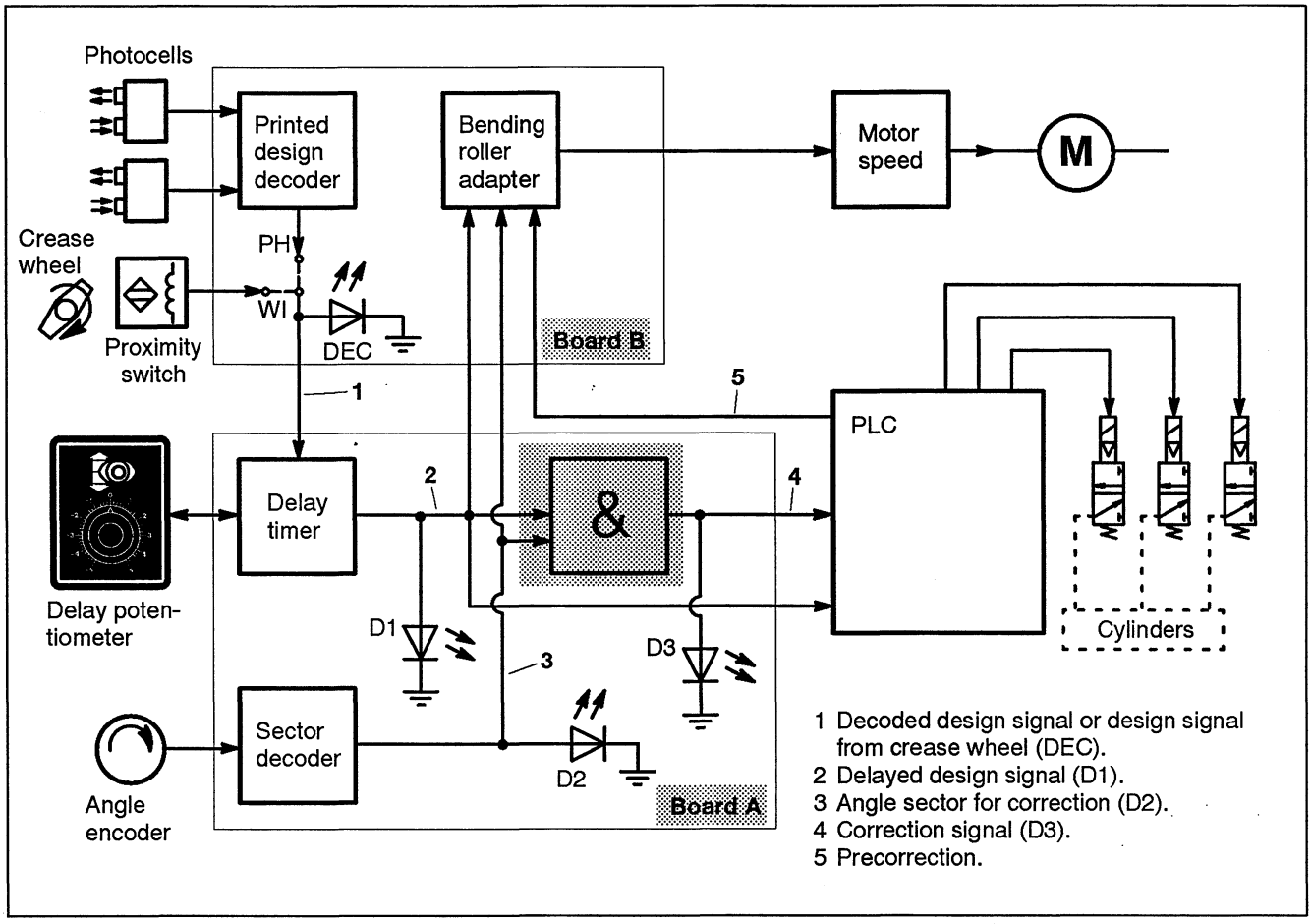

Summary of the LEDs – DEC, D1, D2 and D3:

- DEC indicates design signal.
- D1 indicates delayed design signal.
- D2 indicates correction sector.
- D3 indicates correction signal.

Note
The crease position can in principle be sensed anywhere along the material web, as the material is taut all the way. Sensing accuracy improves, the closer to the jaws sensing is done.

Example

Below is shown an example of what happens when the signal is received with the machine in the angle sector for correction and in the "angle sector" for full paper feed. During production, the signal alternates between these two sectors, and thus the packages are given the correct shape.

Each time the register code passes the photocells, the design signal is decoded. If the machine is not equipped with photocells, a proximity switch is triggered and thus sends the design signal. The position of the design signal relative the jaw position determines whether the creases are placed high or low.

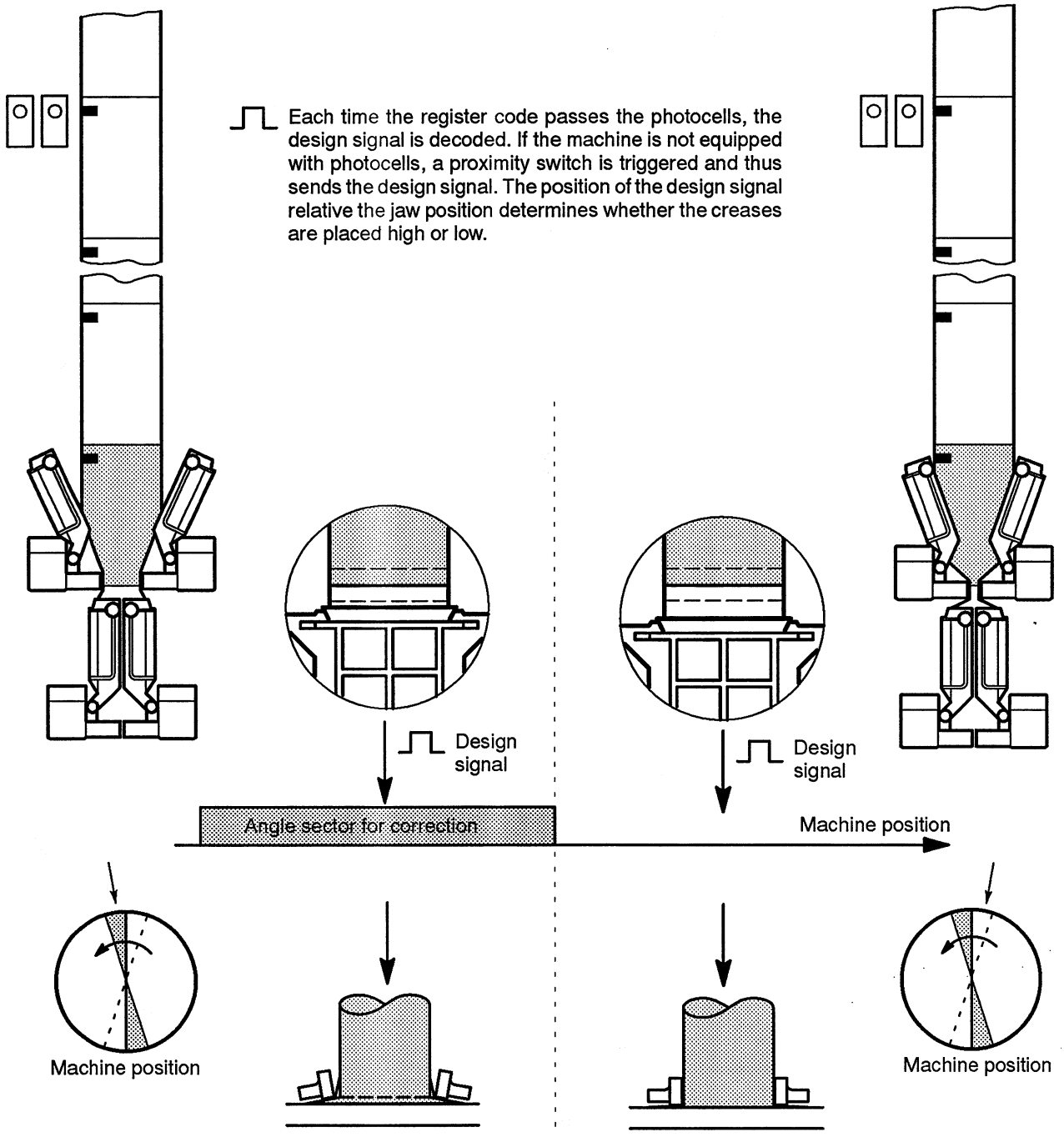

When the creases are placed low, the design signal arrives early in relation to the machine position. It arrives in the angle sector for correction, and the machine performs correction in order to raise the crease position on the following package. The next signal will then arrive either later on in the correction sector or in the "sector" for full paper feed.

When the creases are placed high, the design signal arrives late in relation to the machine position. It arrives outside the angle sector for correction, and the machine performs full paper feed in order to lower the crease position on the following package. The next signal will then arrive either earlier on in the full paper feed "sector" or in the correction sector.

Driven bending roller

The speed of the driven bending roller also affects the feed of packaging material. At high speed, more material is being fed than at low speed.

The speed is **altered** (increases or decreases) variously, dependning where in the sector the design signal is received. If the signal arrives within a range in the middle of the sector, the bending roller speed is not altered at all. This range is called the **dead zone**. (The signal arrives so close to the ideal position that no speed alteration is needed.)

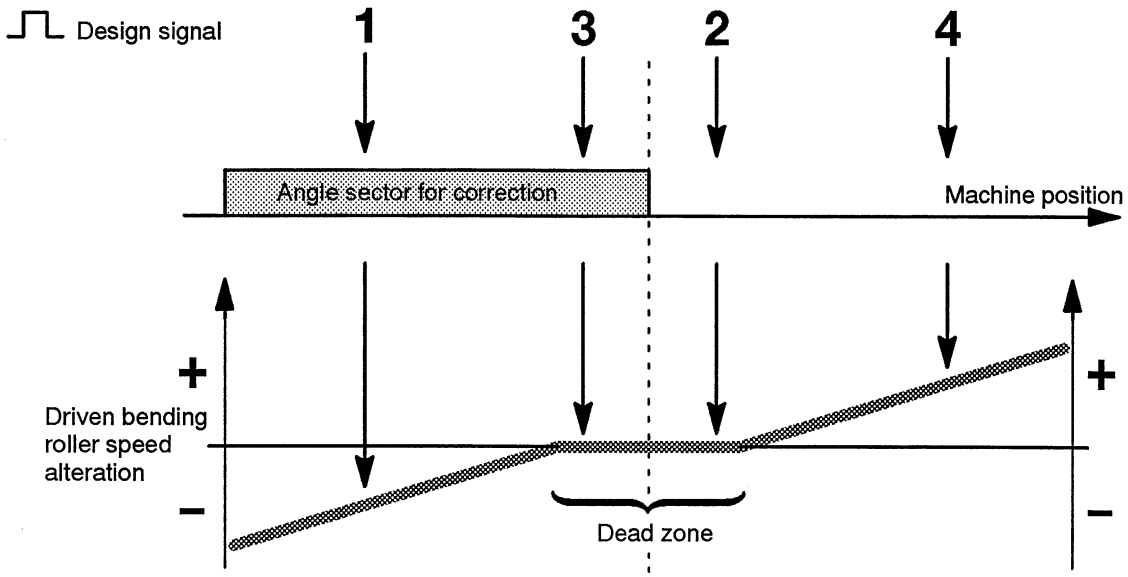

Example 1
The design signal is received in the correction sector, and the machine performs correction in order to raise the crease position. In addition, the driven bending roller speed is decreased to further reduce the feed of packaging material.

Example 2
The design signal is received outside the correction sector, and the machine performs full paper feed in order to lower the crease position. But as the signal arrives within the dead zone, the driven bending roller speed remains constant.

Example 3
The design signal is received in the correction sector, and the machine performs correction in order to raise the crease position again. But as the signal arrives within the dead zone, the driven bending roller speed remains constant.

Example 4
The design signal is received outside the correction sector, and the machine performs full paper feed in order to lower the crease position again. But the signal arrives outside the dead zone, so the driven bending roller speed is increased to further increase the feed of packaging material.

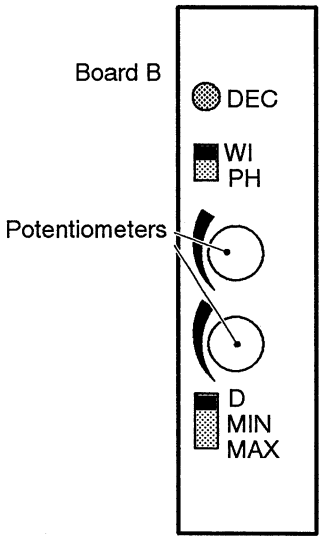

The bending roller adapter on board B controls the speed of the bending roller. It measures the time difference between the positive flank of the correction sector and the design signal. This time difference defines exactly where in the sector the signal is received.

The driven bending roller has a defined working range, i e a minimum and a maximum speed. These speeds are set on board B by means of potentiometers. The upper potentiometer determines the minimum speed and the lower one the working range. The maximum speed then follows as the minimum speed plus the working range.

What happens?

We shall now take a look at the lower part of the tube and show in greater detail what happens when the driven bending roller revolves at high or low speed.

The interesting part of the tube is the length between A and B (in the picture). The unbroken line shows the tube at high bending roller speed, and the broken line represents the tube at low roller speed.

At low speed, the tube is stretched, while at high speed, the tube bulges out to a greater extent. As the distance between A and B is longer along the unbroken line, it is obvious that more material is being fed forward at high speed than at low speed.

High bending roller speed will thus affect the crease position in the same direction as full paper feed, i e the crease position will be lowered. Inversely, low bending roller speed raises the crease position.

It should be pointed out, however, that the influence of the driven bending roller speed on the paper feed is slight. It is merely supplementary to the effect of the folding flaps.

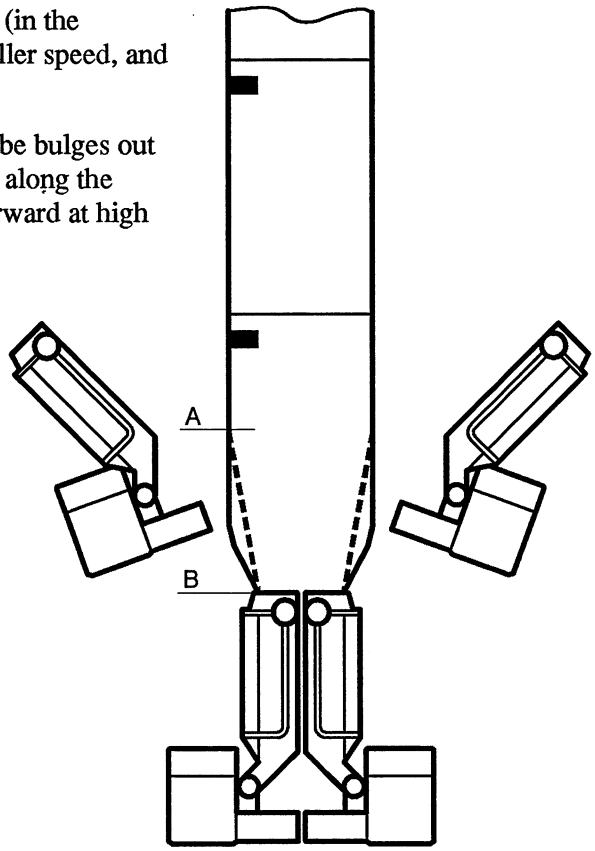

Design monitor

The function of the design monitor is to ensure that no packages with incorrectly positioned creases are produced. If the design signal is received within the angle sector of the design monitor several times in sequence, the product valve is closed, and the machine changes over to precorrection in order to readjust the crease position. All packages with incorrect crease position are ejected, except the first one. The design monitor is a PLC function.

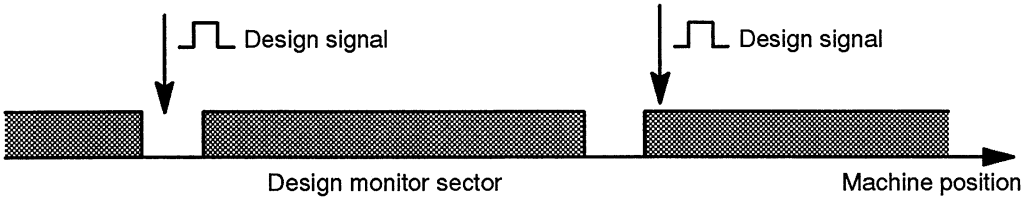

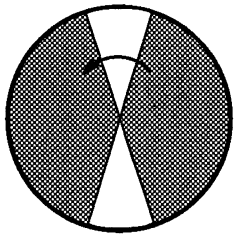

Design monitor sectors

Correction frequency

The correction frequency shows how often the folding flaps perform correction and full paper feed. The ideal correction frequency is 50%, but variations in packaging material and product characteristics can cause the correction frequency to fluctuate considerably.

Note
Overfeeding of the packaging material forms part of the basic mechanical setting of the jaw system. The correction frequency is determined by the extent of overfeeding. High overfeed gives high correction frequency. Ideal setting of the jaw system gives a correction frequency of 50%.

Precorrection

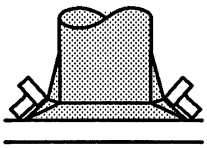

Before the machine is in production position, or if the design monitor has interrupted production, the machine performs precorrection. This means that the folding flaps pull the tube with a short stroke while the driven bending roller revolves at constant speed, preset on board B. The result is a slow feed of material relative the cycling of the machine, which thus quickly finds the correct crease position.

When the machine performs precorrection, and a design signal arrives while the machine is within the angle sector for **filling**, the product valve opens, and the tube is filled with product.

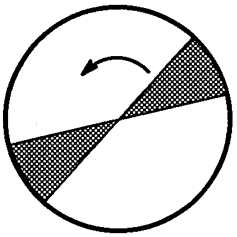

Filling ON angle sectors

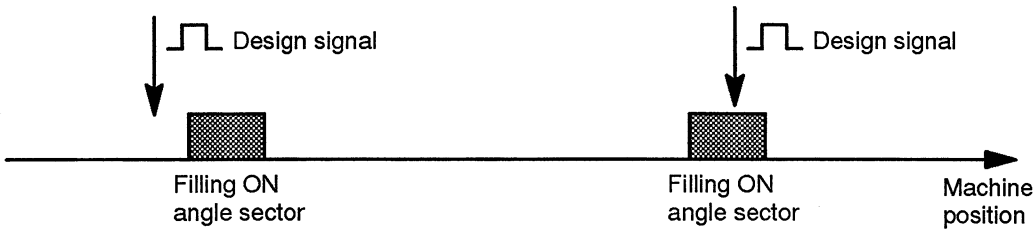

Now the machine searches for a position where the design signal arrives at the same time as the machine is within the angle sector for **precorrection OFF**. When the machine has found this position, the folding flaps are lowered and begin to perform correction or full paper feed; in other words, the machine operates with functioning design correction.

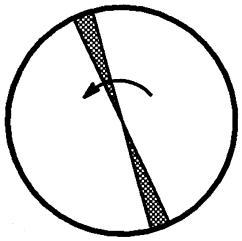

Precorrection OFF angle sectors

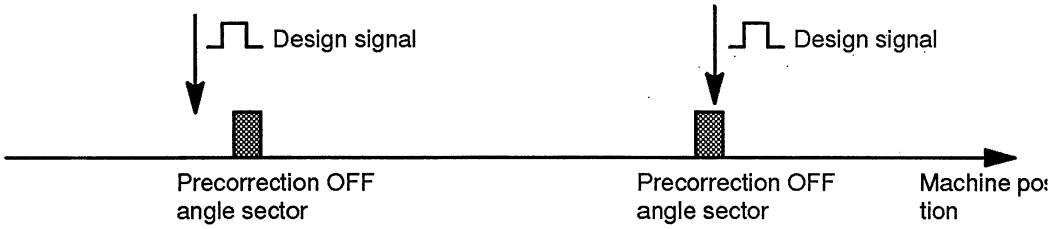

The first packages subject to design correction by the machine are ejected. After that, the crease position should be correct, and the design monitor begins to function. Production is under way, and the machine produces well-shaped packages which pass on to the final folder.

Design correction mechanism & folding flaps, TBA/9

The folding flaps regulate the feeding of packaging material, and the design correction mechanism controls how the much folding flaps should affect the feed.

Function

Via link, an air cylinder alters the position of an eccentric shaft, which shifts the folding flap cam sideways. The sideways position of the folding flap cam determines how much the folding flaps affect the feed of packaging material.

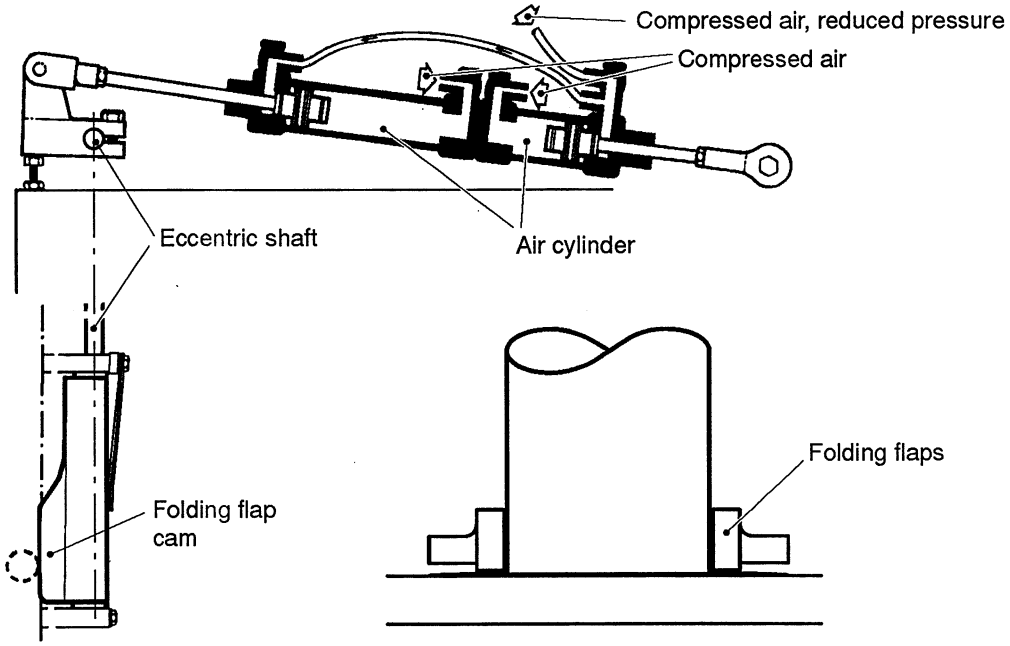

The three positions of the design correction mechanism are illustrated overleaf; as previously described, they are:

- **Precorrection** – the folding flaps pull down the tube with a short stroke, and the tube is fed by much less than the length of a package.
- **Full paper feed** – the folding flaps pull down the tube with a full stroke, and the tube is fed by a little more than the length of a package – the tube is overfed.
- **Correction** – the folding flaps pull down the tube with a reduced stroke, and the tube is fed by a little less than the length of a package – the tube is underfed.

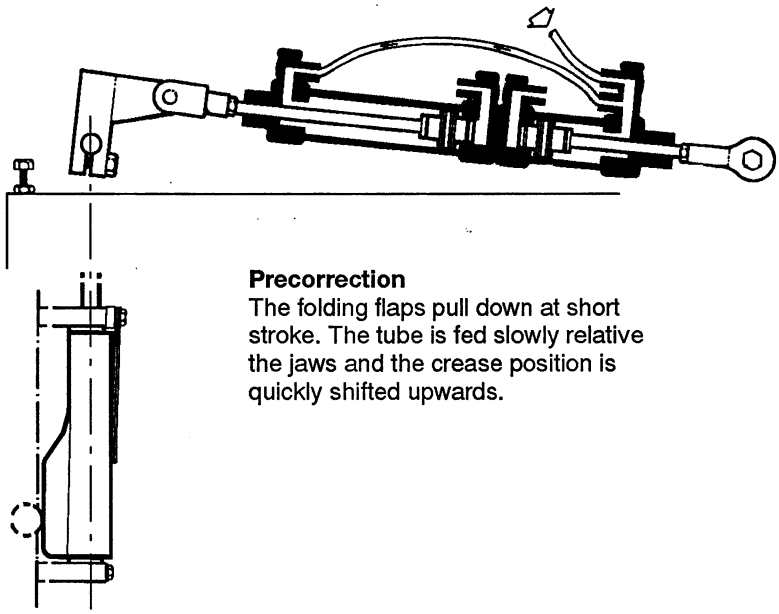

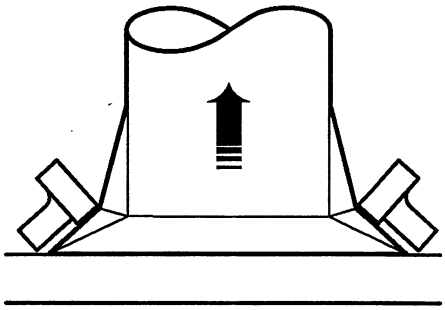

Precorrection
The folding flaps pull down at short stroke. The tube is fed slowly relative the jaws and the crease position is quickly shifted upwards.

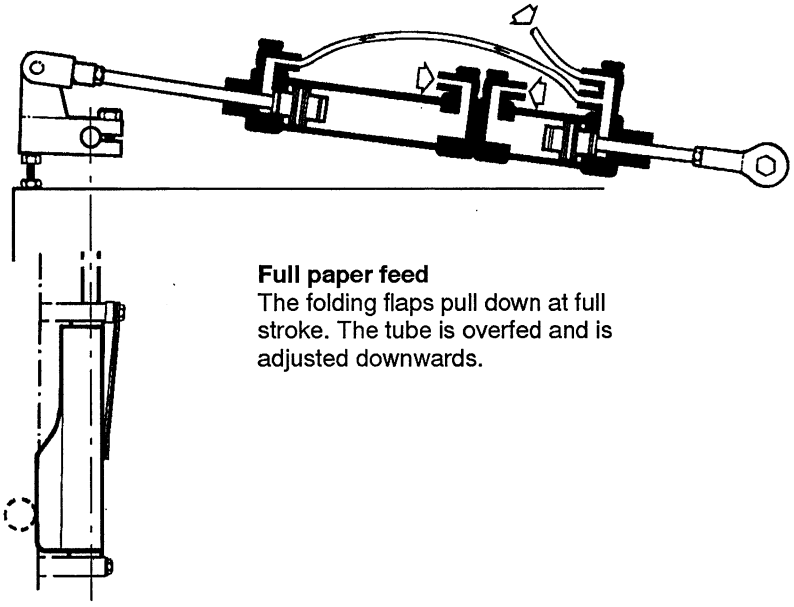

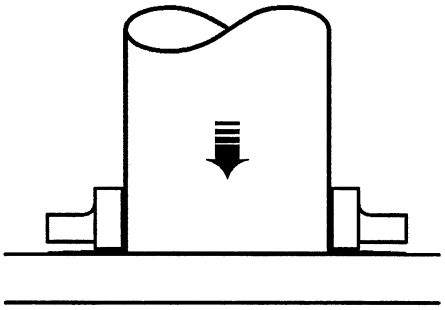

Full paper feed
The folding flaps pull down at full stroke. The tube is overfed and is adjusted downwards.

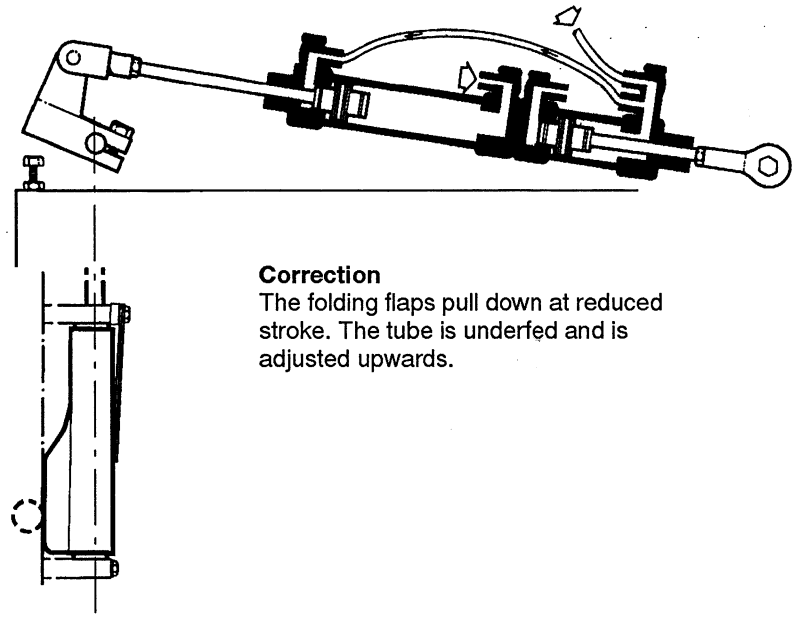

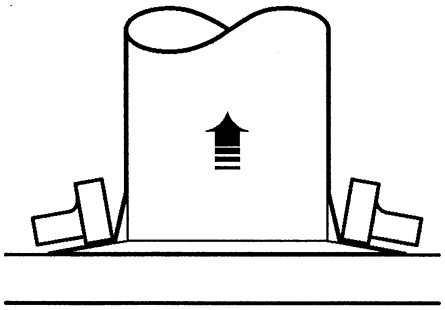

Correction
The folding flaps pull down at reduced stroke. The tube is underfed and is adjusted upwards.

Work sheets

Settings

Set the design correction system according to MS 148–51.

The following settings are to be done; the chart below may serve as an instant reference.

Board B
(Code circuit board)
Basic setting

Driven bending roller
Basic setting

Photocells
Basic setting, height

Photocells
Setting of gap and sensitivity

Photocells
Parallellity

Design correction
Setting during operation

Here follow explanations of what the various settings mean, and why they have to be done.

Board B

Potentiometer **P1** determines the relationship between the design deviation and the speed of the driven bending roller, i e how much the speed is altered as a result of a certain design deviation.

Potentiometer **P2** defines the dead zone of the bending roller, i e how great a design deviation is tolerated before the speed of the bending roller is altered.

Potentiometer **S3** determines the starting speed of the bending roller, for instance after a short stop.

Driven bending roller

This setting defines the working range of the bending roller, i e its minimum and maximum speed.

Photocells Height

This setting is done to ensure that the distance between the photocells and jaws is correct. The distance varies between different package volumes. Subsequent fine adjustment is made during production.

Photocells
Gap and sensitivity

Each photocell has **two light sources**. When one has been used up, you change over to the other one by turning the program selector.

There is to be a gap of 9±1 mm between the photocells and the tube. This **gap** has to be set; if the gap is incorrectly set, the photocells cannot sense the register code.

The register code consists of dark and light areas. That is why the **sensitivity** of the photocells must be set so that they can distinguish between dark and light (black and white).

Note
The photocells can also distinguish between different colours in the printed design, but a register code is required to enable a design signal to be decoded.

Below follows an instant reference list on how to to set the sensitivity of the photocells.

1. Turn the program selector to the Memory position. Make sure the photocells are sensing white.
2. Turn the selector to Adjustment.
3. Make sure the photocells are sensing black.
4. Turn the sensitivity knob counter-clockwise until the signal lamp lights up.
5. Turn the sensitivity knob clockwise until the signal lamp goes out*.
6. Turn the program selector to Operation.

* *To ensure that the setting is right for both white and unbleached background to the register code, do as follows: When the signal lamp goes out, turn the sensitivity knob counter-clockwise by one turn.*

Photocells

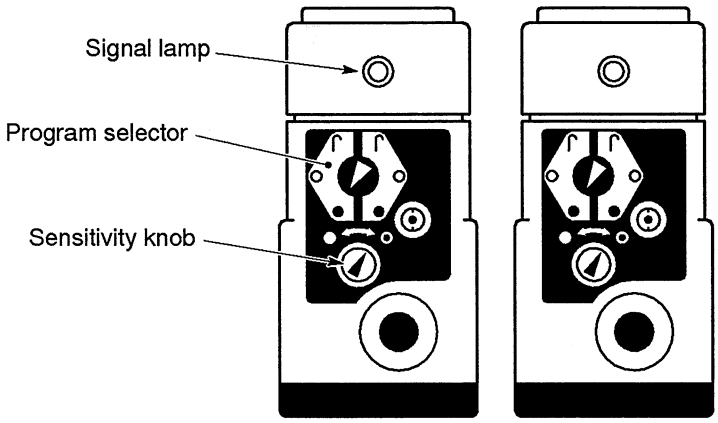

Program selector

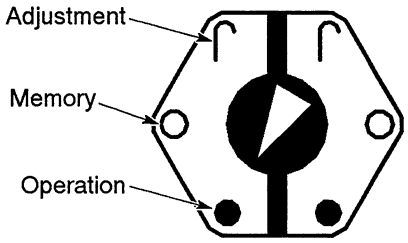

Note
Both photocells have to be adjusted as described.

Photocells Parallellity

To enable the photocells to sense the register code correctly, they must be parallel. They work alternately in such a way that each one "tells" the other when to sense.

Design correction During operation

Check that D1 (delayed design signal) flashes during operation and that the cylinders work. Then set the delay potentiometer at zero. If the packages are not well-shapen, adjust the photocells vertically so that the machine produces packages of the correct shape.

Tetra Pak

Register code reading

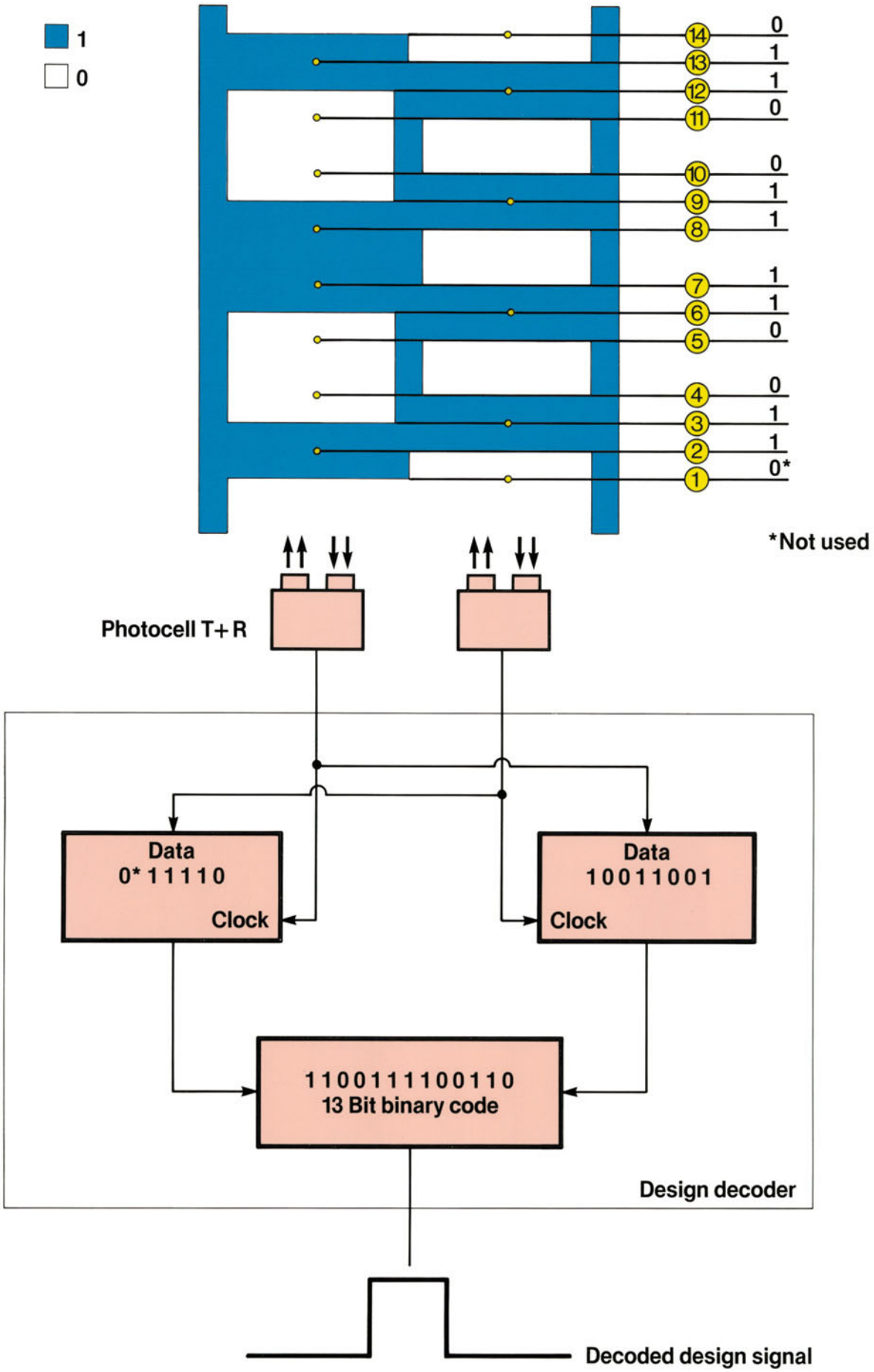

Design correction

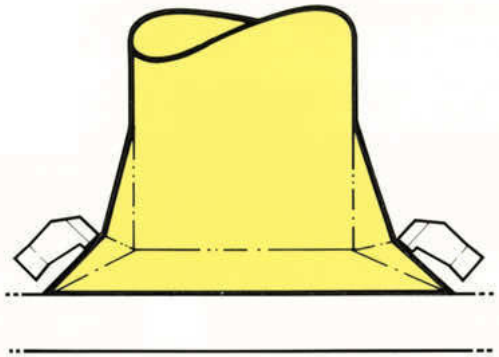



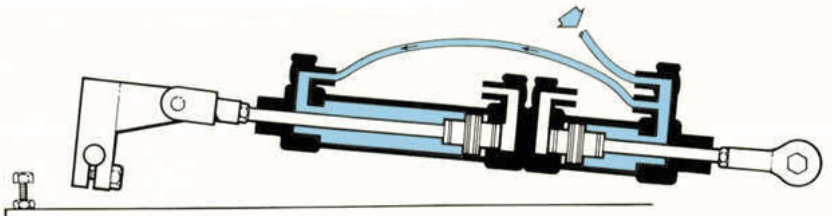

Pre correction

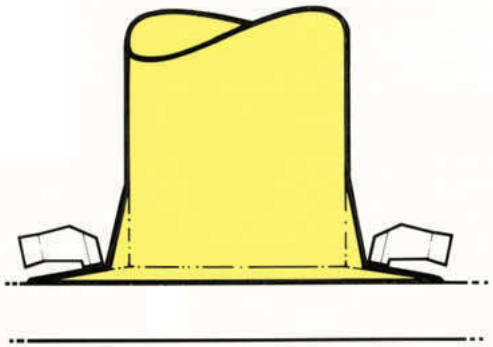



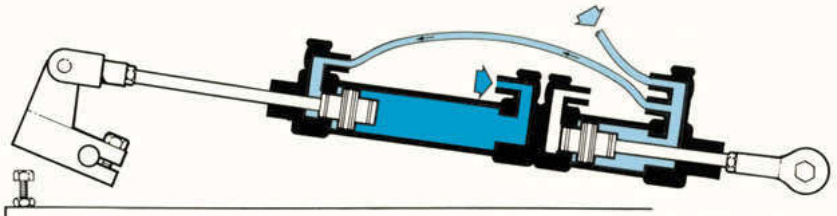

Correction

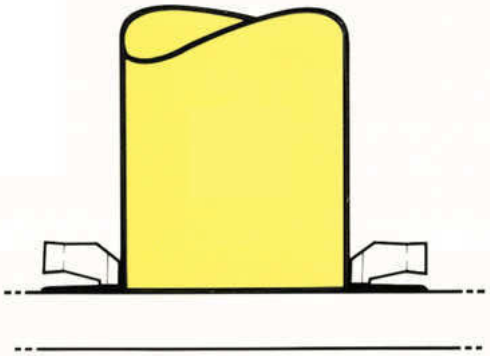



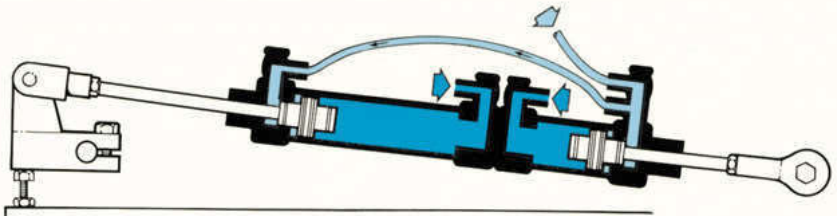

Full paper feed

Compressed air low

Compressed air high

Technical Training Centre
Lund, Sweden

Machine type
TB/9, TBA/9, TB/19, TBA/19

Issue
4/9910

OH 166:1

Design correction system

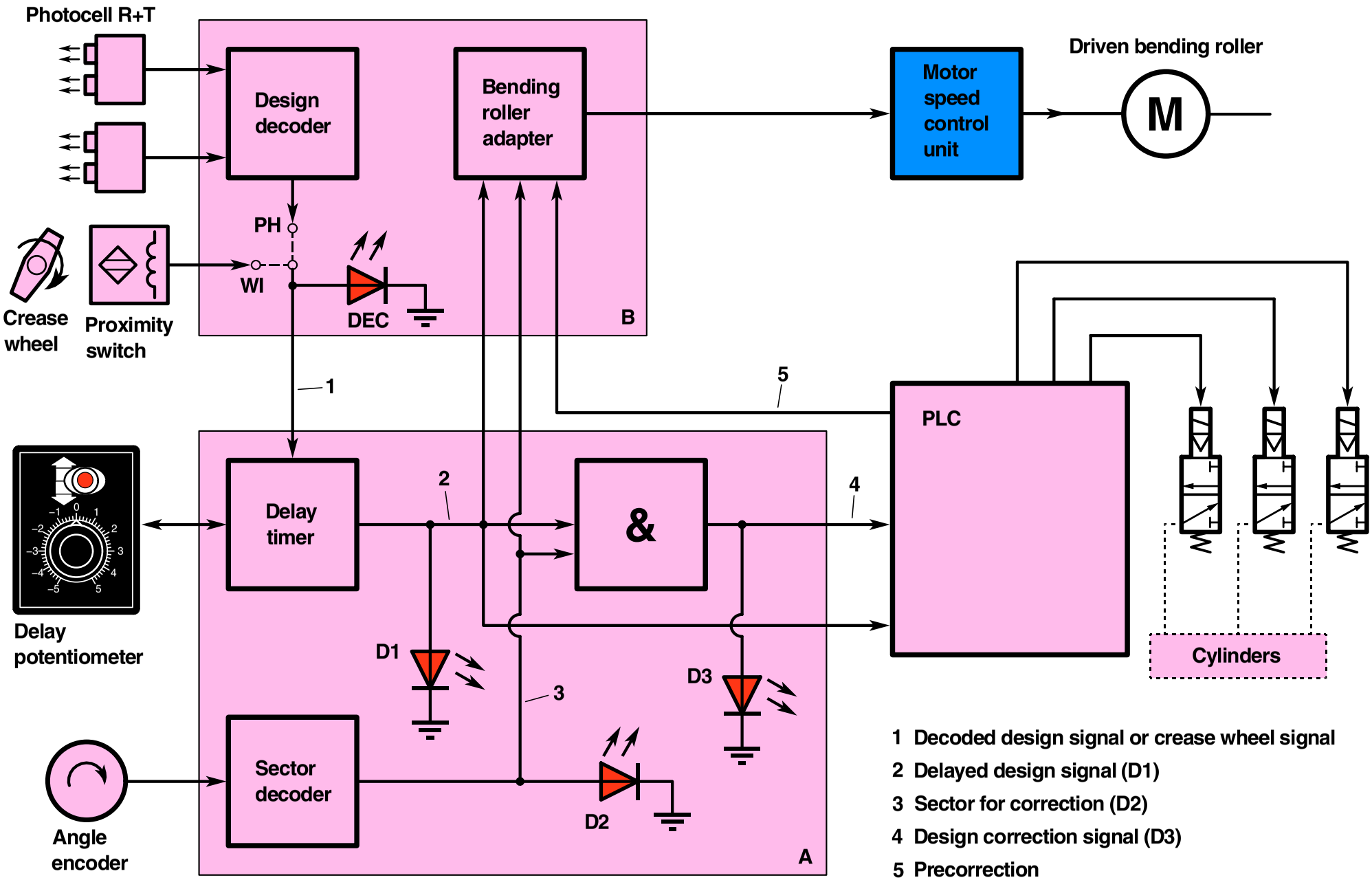

1 Decoded design signal or crease wheel signal
2 Delayed design signal (D1)
3 Sector for correction (D2)
4 Design correction signal (D3)
5 Precorrection

DC - Motor Drive Control

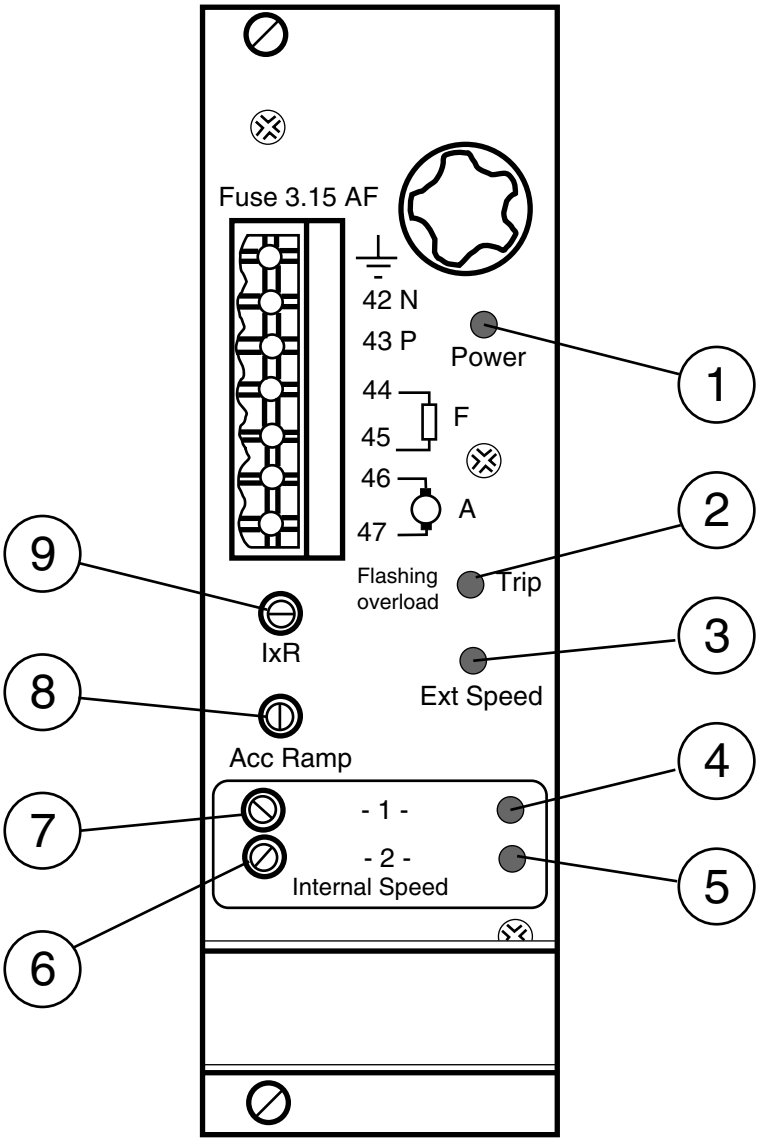

1. POWER indicator.
2. TRIP, indicates an overload on the output. Flashing at current limit. Fixed light, when switched off due to overload.
3. EXT SPEED, indicates that external speed is selected.
4. INTERNAL SPEED 1, indicates that internal speed 1 is selected.
5. INTERNAL SPEED 2, indicates that internal speed 2 is selected.
6. Potentiometer for setting internal speed 2.
7. Potentiometer for setting internal speed 1.
8. ACC. RAMP, potentiometer for setting acceleration ramp.
9. I x R compensation. Adjustment for different motor powers. Too high settings will result in unstable motion.

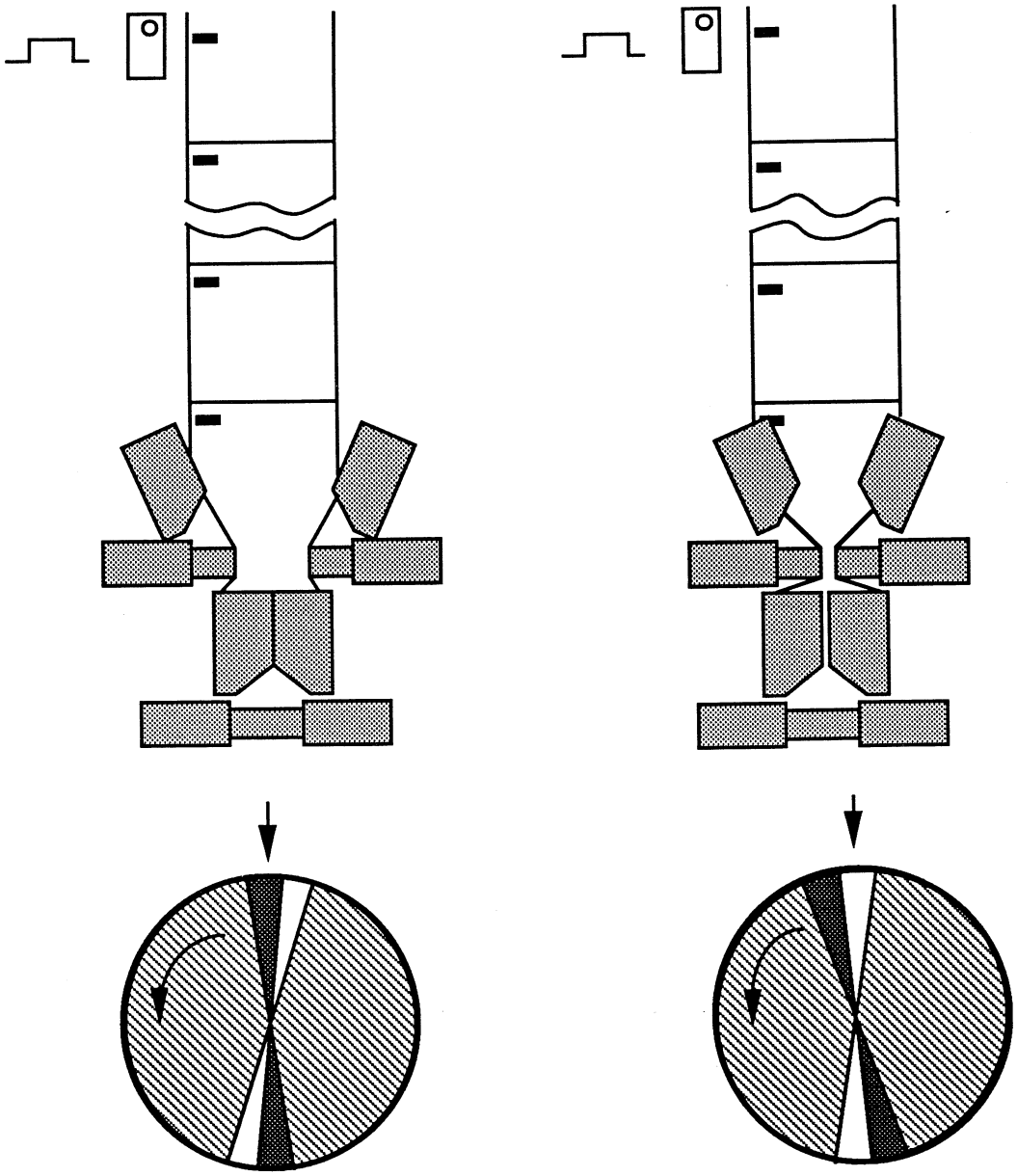

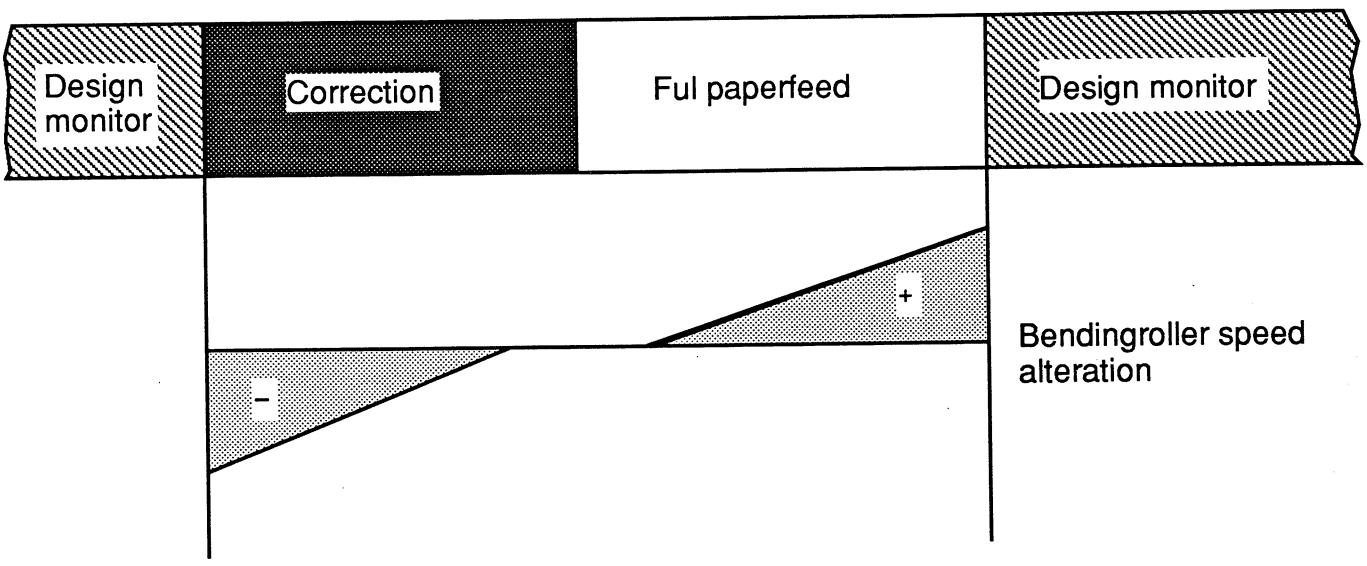
Design monitor
Correction
Ful paperfeed
Design monitor
+
-
Bendingroller speed alteration

Tube regulation by web tension

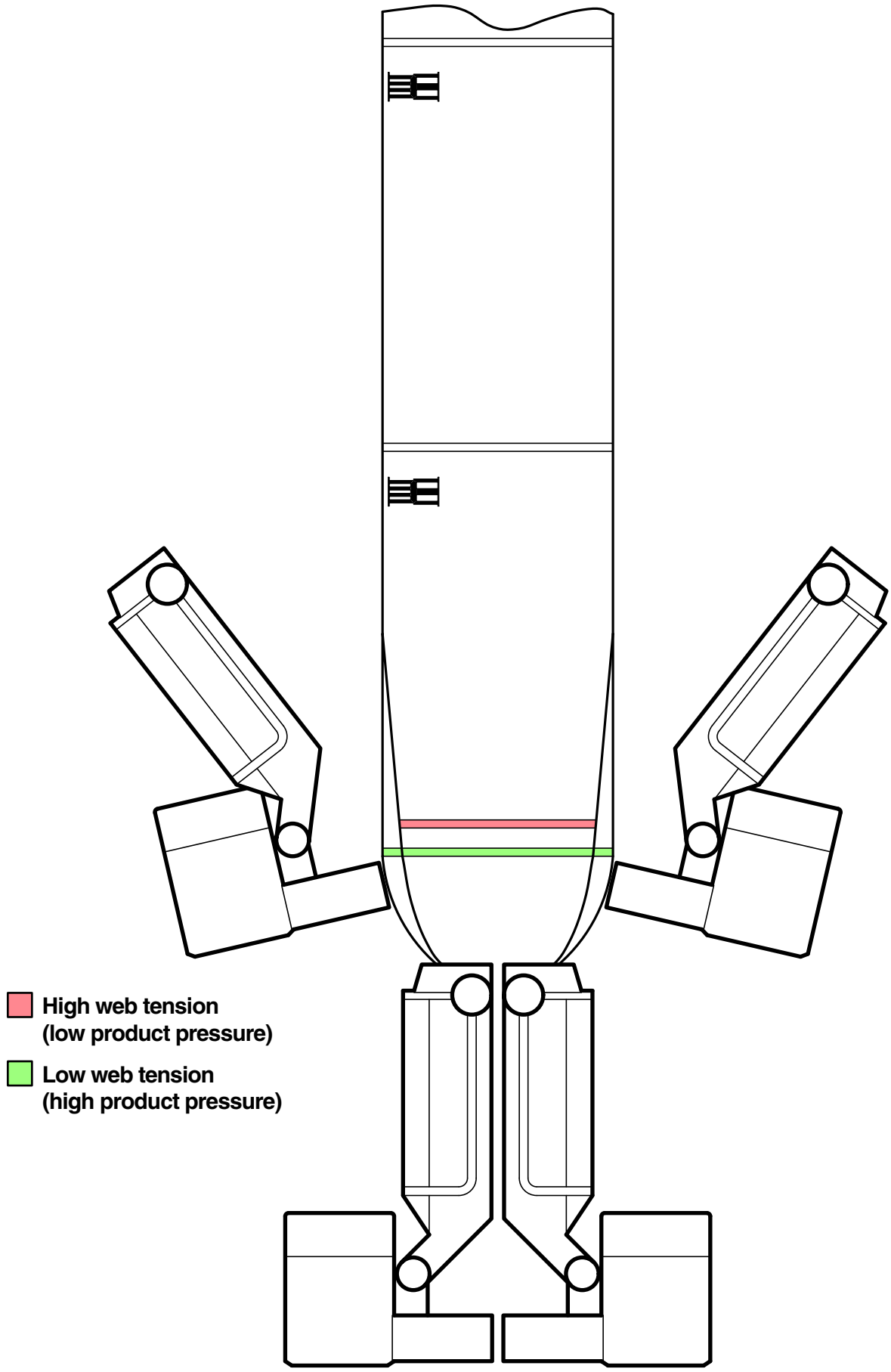

PHOTOCELL SENSITIVITY ADJUSTMENT

1.	SET	▷ O	PHOTOCELL LOOKING AT "WHITE" BACKGROUND
2.	SET	▷ J	PHOTOCELL MEMORISE "WHITE"
3.		▷ J	PHOTOCELL LOOKING AT "BLACK" BACKGROUND
4.	ADJUST	∩	LED LIGHTS UP (BLACK BACKGROUND)
5.	*) ADJUST	∩	LED GOES OUT (BLACK BACKGROUND)
6.	SET	▷ ●	"RUN" POSITION

*) IF BOTH WHITE AND UNBLEACHED BACKGROUND ARE USED TURN CW TILL LED GOES OUT, THEN ONE TURN CCW.

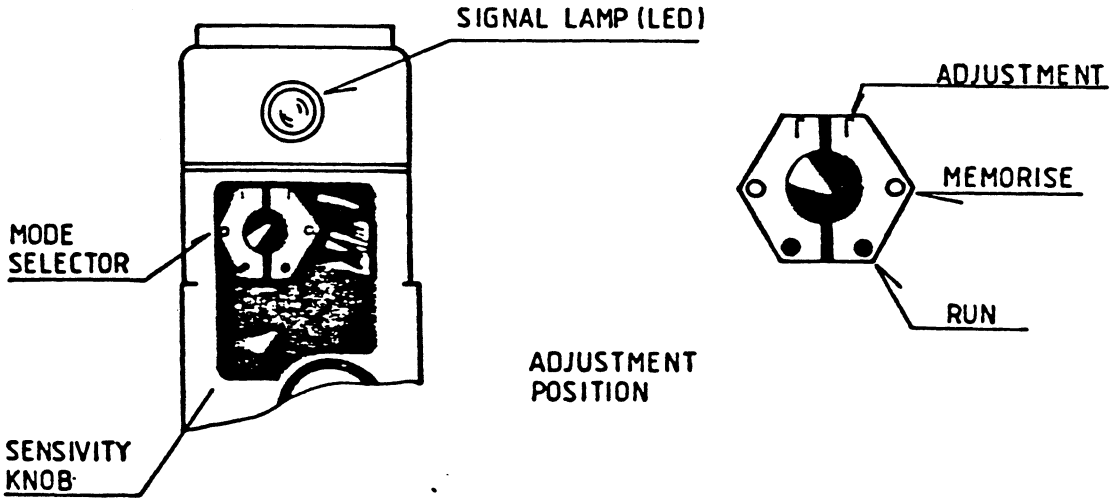

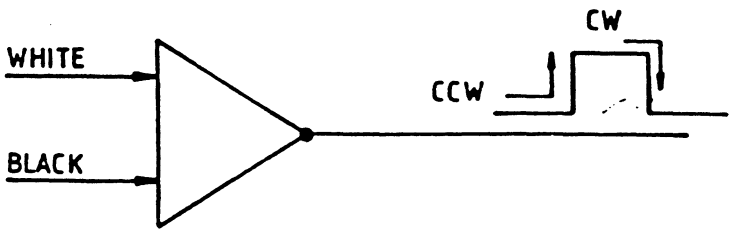

16

Electrical

TETRA PAK

INDEX FOR TBA/9-1401

DATE: 930310
SIGN: HK/UTH

4-571516

1	BE-LIST	
2		
3	CE-LIST,	CONTROL CABINET
4		CONTROL PANEL
5		MACHINE
6		EQUIPMENT
7		EXTRA EQUIPMENT
8		SPARE PART KIT
9		TPIH
10		ELECTRICAL DOCUMENT
11	CIRCUIT DIAGRAM,	POSITION SUMMARY
12		DRAWINGS
13		GROUND CONNECTION
14		LINE SUMMARY
15		TERMINAL SUMMARY
16		ALTERATION MESSAGES
17		
18	PLC,	LIST OF BLOCKS
19		LIST OF ADDRESSES
20		VARIANT SETTINGS
21		SEQUENCE DIAGRAM
22		FUNCTIONS
23	MOUNT. DRAWINGS,	CONTROL CABINET
24		CONTROL PANEL
25		MACHINE
26		TPIH CABINET
27	CONNECTION DIAGRAM	
28	MAINS CONNECTION	
29	TERMINALS	
30	FUSE PANEL LABEL	
31		

USED IN ASSEMB. 648152

ECN NUMBER:	EC 17786	EC 17872	EC 17873	EC 19260	EC 19261	EC 19262	EC 19721	EC 20080
DATE DISTRIBUTED	93-01-19	93-01-19	93-01-19	93-03-17	93-03-17	93-03-17	93-04-20	93-09-15

GROUP

VARIANT DESCRIP: -1401 TBA/9-1401 S.A.
-1402 TBA/9-1402 P.T.
-1403 TBA/9-1403 C.

POS	PART TITLE / REMARKS	PART NUMBER	R	SP	UN	1401	1402	1403
0010	CTRL CAB. TBA/9-1401 S.A.	CE- 41723-0101		-		1	-	-
0020	CTRL.PAN. TBA/9-1401 S.A.	CE- 41724-0101		-		1	-	-
0030	MACHINE	CE- 41725-0101		-		1	-	-
0040	EQUIPMENT TBA/9-1401 S.A.	CE- 41726-0101		-		1	-	-
0050	EXTRA EQU TBA/9-1401 S.A.	CE- 41727-0101		-		1	-	-
0060	SP. PARTS TBA/9-1401 S.A.	CE- 41728-0101		-		1	-	-
0070	EL-DOC. TBA/9-1401 S.A.	CE- 41729-0101		-		1	-	-
0080	EL-EQUIPMENT TPIH	CE- 41766-0101		-		1	1	1
0090	CTRL CAB. TBA/9-1402 P.T.	CE- 41750-0101		-		-	1	-
0100	CTRL.PAN. TBA/9-1402 P.T.	CE- 41751-0101		-		-	1	-
0110	MACHINE TBA/9-1402 P.T.	CE- 41752-0101		-		-	1	-
0120	EQUIPMENT TBA/9-1402 P.T.	CE- 41753-0101		-		-	1	-
0130	EXTRA EQU TBA/9-1402 P.T.	CE- 41754-0101		-		-	1	-
0140	SP. PARTS TBA/9-1402 P.T.	CE- 41755-0101		-		-	1	-
0150	EL-DOC. TBA/9-1402 P.T.	CE- 41756-0101		-		-	1	-
0160	EL-EQUIPMENT IH-GENERATOR	BE- 649411-0101		-		-	1	-
0170	ELECTRIC MATERIALS	CE- 69884-0101		-		-	1	-
0180	ELECTRICAL DOCUMENT	CE- 69885-0101		-		-	1	-
0190	ELECTRIC MATERIALS	CE- 69886-0101		-		-	1	-
0200	ELECTRICAL DOCUMENT	CE- 69887-0101		-		-	1	-
0210	CTRL CAB. TBA/9-1403 C.	CE- 41757-0101		-		-	-	1
0220	CTRL.PAN. TBA/9-1403 C.	CE- 41758-0101		-		-	-	1
0230	MACHINE TBA/9-1403 C.	CE- 41759-0101		-		-	-	1
0240	EQUIPMENT TBA/9-1403 C.	CE- 41760-0101		-		-	-	1
0250	EXTRA EQU TBA/9-1403 C.	CE- 41761-0101		-		-	-	1
0260	SP. PARTS TBA/9-1403 C.	CE- 41762-0101		-		-	-	1

ENGINEER: HK 92-04-22 CONTROL: HK EL-EQUIPMENT TBA/9-140V BE- 649205-140V

USED IN ASSEMB. 41729 649205

	ECN NUMBER:	EC 17786	EC 19260	EC 20080	EC 20398	EC 20406
DATE DISTRIBUTED		93-01-19	93-03-17	93-09-15	93-10-01	93-10-18

POS	PART TITLE / REMARKS		PART NUMBER	R	SP	UN	0101
	MOUNTING DRAWING, CABINET	4-	52471-05:01				X
	MOUNTING DRAWING, CABINET	4-	52471-06:01				X
	MOUNTING DRAWING, CABINET	4-	52471-07:01				X
	MOUNTING DRAWING, CABINET	4-	52471-08:01				X
	MOUNTING DRAWING, CABINET	4-	52471-09:01				X
	MOUNTING DRAWING, CABINET	4-	52471-10:01				X
	MOUNTING DRAWING, RACK	4-	52471-11:01				X
A001:1	BACKPLANE FRONT RACK 8TE	C-	68262-0101		S		1
A16A	PRINTED DESIGN CORR.LOGIC	C-	68471-0101		S		1
A16A:1	BACKPLANE FRONT RACK 8TE	C-	68262-0101		S		1
A16B	CIRCUIT BOARD	C-	67058-0301		S		1
A16B:1	BACKPLANE FRONT RACK 8TE	C-	68262-0101		S		1
A16B:2	FRONT PLATE	C-	68445-0106		S		1
R110	CIRCUIT BOARD	C-	68444-0101		US		1
0010	RACK	C-	67388-0102		C		1
0010:1	FRONT PLATE	C-	68445-0106		S		2
0010:2	FRONT PLATE	C-	68445-0101		S		2
0010:3	FRONT PLATE	C-	68445-0102		S		2
0010:4	FRONT PLATE	C-	68445-0103		S		2
0010:5	FRONT PLATE	C-	68445-0104		S		2
0010:6	FRONT PLATE	C-	68445-0105		S		2
A001	MOTOR DRIVE CONTROL	2-	90430-0037		S		1
A002	SAFETY RELAY	2-	90119-0072		C		1
A004	TEMPERATURE REGULATOR	2-	90410-0044		P		1
A004:1	SIGN"PRESTERILISATION V."		359241-0123		C		1
A006	TEMPERATURE REGULATOR	2-	90410-0044		P		1
A006:1	SIGN"PEROXIDE BATH WATER"		359241-0141		C		1
A008	TEMPERATURE REGULATOR	2-	90410-0044		P		1
A008:1	SIGN"LONGITUDINAL SEALING		359241-0131		C		1
A010	TEMPERATURE REGULATOR	2-	90410-0044		P		1

POS	PART TITLE / REMARKS	PART NUMBER	R	SP	UN	0101
K036:1	BASE	3- 90129-0006	S			1
K036:2	CLAMP	90119-0312	S			1
K046	RELAY	3- 90119-0056	UF			1
K046:1	BASE	3- 90129-0006	S			1
K046:2	CLAMP	90119-0312	S			1
K048	CONTACTOR 4KW	2- 90075-0124	US			1
	CONSISTS OF / SPARE PART			SP	UN	QTY
	3- 90075-0313 AUXILIARY CONTACT					
K051	CONTACTOR 4KW	2- 90075-0124	US			1
	CONSISTS OF / SPARE PART			SP	UN	QTY
	3- 90075-0313 AUXILIARY CONTACT					
K052	RELAY	3- 90119-0056	UF			1
K052:1	BASE	3- 90129-0006	S			1
K052:2	CLAMP	90119-0312	S			1
K053	RELAY	3- 90119-0056	UF			1
K053:1	BASE	3- 90129-0006	S			1
K053:2	CLAMP	90119-0312	S			1
K054	RELAY	3- 90119-0056	UF			1
K054:1	BASE	3- 90129-0006	S			1
K054:2	CLAMP	90119-0312	S			1
K071	CONTACTOR 7,5KW	2- 90075-0128	US			1
K075	CONTACTOR 7,5KW	2- 90075-0125	US			1
	CONSISTS OF / SPARE PART			SP	UN	QTY
	3- 90075-0313 AUXILIARY CONTACT					
K077	CONTACTOR 7,5KW	2- 90075-0125	US			1
	CONSISTS OF / SPARE PART			SP	UN	QTY
	3- 90075-0313 AUXILIARY CONTACT					
K081	CONTACTOR 4KW	2- 90075-0124	US			1
	CONSISTS OF / SPARE PART			SP	UN	QTY
	3- 90075-0313 AUXILIARY CONTACT					
K082	CONTACTOR 4KW	2- 90075-0124	US			1

>>>>>> CONTINUES ON NEXT PAGE >>>>>>>

POS	PART TITLE / REMARKS	PART NUMBER	R	SP	UN	0101
K098	CONTACTOR 7,5KW	2- 90075-0125		US		1
	CONSISTS OF / SPARE PART			SP	UN	QTY
	3- 90075-0313 AUXILIARY CONTACT					
K099	CONTACTOR 4KW	2- 90075-0124		US		1
	CONSISTS OF / SPARE PART			SP	UN	QTY
	3- 90075-0313 AUXILIARY CONTACT					
K105	SOLID-STATE RELAY	3- 90119-0067		UP		1
K106	SOLID-STATE RELAY	3- 90119-0067		UP		1
K108	SOLID-STATE RELAY	3- 90119-0067		UP		1
K110	OPTO SWITCH	3- 90119-0043		UP		1
K111	SOLID-STATE RELAY	3- 90119-0067		UP		1
K112	SOLID-STATE RELAY	3- 90119-0067		UP		1
K113	SOLID-STATE RELAY	3- 90119-0067		UP		1
K114	SOLID-STATE RELAY	3- 90119-0067		UP		1
K201	CONTACTOR 4KW	2- 90075-0124		US		1
	CONSISTS OF / SPARE PART			SP	UN	QTY
	3- 90075-0313 AUXILIARY CONTACT					
K207	SOLID-STATE RELAY	3- 90119-0067		UP		1
L001	BALLAST COIL 50/60HZ	90297-0306		S		1
L002	BALLAST COIL 50/60HZ	90297-0306		S		1
L004	BALLAST COIL 50/60HZ	90297-0306		S		1
M002	FAN	90264-0026		C		1
M002:1	COOLING ELEMENT	3- 495201		C		1
M002:2	PIPE COUPLGI-15-1/2"	342723-0114		C		1
P002	HOUR METER	90178-0007		S		1
P004	COUNTING APPARATUS	90053-0029		S		1
P004:1	SIGN"PACKAGE COUNTER L 1"	359241-0199		C		1
P005	RECORDER 50HZ	90332-0007		C		1
	CONSISTS OF / SPARE PART			SP	UN	QTY
	4- 90332-0308 KEY					
	90333-0004 GRAPH PAPER					
Q001	SWITCH	2- 90111-0135		C		1
Q001:1	SIGN	359241-0124		C		1

POS	PART TITLE / REMARKS	PART NUMBER	R	SP	UN	0101
S004	KEY SWITCH	3- 90111-0122	S			1
S004:1	SIGN"SERVICE SWITCH"	359241-0133	C			1
S032	EMERGENCY STOP	3- 90064-0105	S			1
S032:1	SIGN	4- 486826-0001	C			1
S034	PUSH BUTTON RED	3- 90064-0085	S			1
S034:1	SIGN"SHORT STOP"	359301-0110	C			1
S034:2	TOUCH GUARD	90064-0317	C			1
T001	TRANSFORMER	2- 90245-0019	C			1
T002	TRANSFORMER	3- 23118	C			1
T009	TRANSFORMER	3- 23139	C			1
V003	RECTIFIER	3- 90038-0024	S			1
V010	FEED THROUKLAMMA WTRD 2,5 * SEE TERMINAL DRWG: 571519	3- 353021-0122	-			-
V011	FEED THROUKLAMMA WTRD 2,5 * SEE TERMINAL DRWG: 571519	3- 353021-0122	-			-
W406	CABLE	90220-0059	C		MM	5000
W407	CABLE	90220-0059	C		MM	5000
W408	CABLE	90220-0059	C		MM	5000
W409	CABLE	90220-0059	C		MM	5000
W410	CABLE	90220-0059	C		MM	5000
W411	CABLE	90220-0059	C		MM	5000
W412	CABLE	90220-0059	C		MM	5000
W447	CABLE	90220-0036	C		MM	4000
W448	CABLE	90220-0036	C		MM	4000
W450	CABLE	90220-0059	C		MM	5000
W604	CABLE	90220-0059	C		MM	5000
XL01	TERMINAL DRAWING XL1-3	4- 571525	-			1
XL02	TERMINAL DRAWING XL1-3	4- 571525	-			-
XL03	TERMINAL DRAWING XL1-3	4- 571525	-			-
XL10	TERMINAL DRAWING XL, X009	4- 571519	-			1
XL11	TERMINAL DRAWING XL, X009	4- 571519	-			-
XL12	TERMINAL DRAWING XL, X009	4- 571519	-			-
XL20	TERMINAL DRAWING XL, X009	4- 571519	-			-
XL50	TERMINAL DRAWING XL, X009	4- 571519	-			-
XL51	TERMINAL DRAWING XL, X009	4- 571519	-			-

GENERAL REMARKS: THE FOLLOWING CABLES ARE PRE-WIRED COMPONENT CABLES: 0010, 0011, 0012, 0015, 0102, 0103, 0104, 0105, 0106, 0107, 0201, 0202, 0203, 0204, 0307, 0313, 0314, 0315, 0332, 0333, 0334, 0353, 0414, 0415, 0421, 0422, 0423, 0424, 0433, 0435, 0440, 0443, 0447, 0448, 0451, 0454, 0455, 0456, 0607, 0608, 0609, 0611

*

*

CABLE 0001-0026 BELONG TO BODY.
CABLE 0101-0199 BELONG TO DRIVING UNIT.
CABLE 0201-0299 BELONG TO FINAL FOLDER UNIT.
CABLE 0301-0399 BELONG TO SERVICE UNIT.
CABLE 0401-0499 BELONG TO SUPERSTRUCTURE.
CABLE 0601-0699 BELONG TO STRIP APPLICATOR.

USED IN ASSEMB. 41729 649205

ECN NUMBER: EC 19260 EC 20080
DATE DISTRIBUTED 93-03-17 93-09-15

POS	PART TITLE / REMARKS	PART NUMBER	R	SP	UN	0101
0001	CABLE AWM BLACK 25,0	351179-0110	C	MM		5800
0002	CABLE AWM BLACK 25,0	351179-0110	C	MM		5800
0003	CABLE AWM BLACK 25,0	351179-0110	C	MM		5800
0004	CABLE AWM BLACK 25,0	351179-0110	C	MM		5800
0005	CABLE OILFLEX 4G2,5	351150-0418	C	MM		6600
0006	CABLE OILFLEX 3G1,5	351150-0412	C	MM		3800
0007	CABLE OILFLEX 3G1,5	351150-0412	C	MM		3200
0008	CABLE OILFLEX N2X0,75	351150-0122	C	MM		5500
0013	CABLE OILFLEX N2X0,75	351150-0122	C	MM		900
0017	CABLE OILFLEX 16G0,75	351150-0408	C	MM		4700
0018	DATA CABLE	90220-0073	C	MM		5300
0019	CABLE OILFLEX 3G1,5	351150-0412	C	MM		4550
0022	CABLE OILFLEX 4G2,5	351150-0418	C	MM		2600
0023	CABLE OILFLEX 4G2,5	351150-0418	C	MM		6700
0025	CABLE OILFLEX 27G0,75	351150-0409	C	MM		6700
0026	CABLE OILFLEX N2X0,75	351150-0122	C	MM		4550
0101	CABLE OILFLEX 7G2,5	351150-0420	C	MM		3250
0108	CABLE OILFLEX 27G0,75	351150-0409	C	MM		3550

07:07 93.9.16

USED IN ASSEMB. 41729 649205

	ECN NUMBER:	EC 19260	EC 20398	EC 20406
	DATE DISTRIBUTED	93-03-17	93-10-01	93-10-18

GROUP

C VARIANT DESCRIP: -0101 400/230V, 60 HZ.
C -0102 ANY MAINVOLTAGE 50HZ. EXCEPT 400/230V.
C -0103 ANY MAINVOLTAGE 60HZ. EXCEPT 400/230V.
C -0104 ANY MAINVOLTAGE 60HZ.-USA- EXCEPT 400/230V.

POS	PART TITLE / REMARKS	PART NUMBER	R	SP	UN	0101	0102	0103	0104
P005	RECORDER	90332-0008	C			1	-	1	1
	CONSISTS OF / SPARE PART			SP	UN	QTY			
	4= 90332-0308 KEY								
	90333-0004 GRAPH PAPER								
P016	RECORDER	2= 90332-0015	S			=	=	=	1
	CONSISTS OF / SPARE PART			SP	UN	QTY	ECN		
	4= 90332-0310 WRITING PAPER						17049		
	4= 90332-0311 RIBBON CASSETTE						17049		
Q001:3	SIGN,VOLTAGE/FREQ./CURR.	4= 359241-0298	C			1	-	1	1
I Q077	MOTOR SWITCH 6-10A	3= 90259-0026	S			1	=	1	1
0010	TRANSFORMER	2= 90245-0024	C			-	1	1	1

TETRA Development Center

BILL-OF-MATERIAL "0" DATE PRINTED: 93-09-15

USED IN ASSEMB. 41729 649205

ECN NUMBER: EC 19260 EC 20080
DATE DISTRIBUTED 93-03-17 93-09-15

POS	PART TITLE / REMARKS		PART NUMBER	R	SP	UN	0101
0010	LIGHT BULB BA9S 28V		90036-0057	-		10	
0020	CONTACTOR 4KW	2-	90075-0127	-		1	
0030	CONTACTOR 7,5KW	2-	90075-0128	-		1	
0040	AUXILIARY CONTACT	3-	90075-0313	-		1	
0050	RELAY	3-	90119-0056	-		1	
0060	TOOL		90064-0315	-		1	
0070	SOLID-STATE RELAY	3-	90119-0067	-		1	
0080	PUSH BUTTON YELLOW	3-	90064-0084	-		1	
0090	TUBE FUSE		90233-0009	-		5	
0100	TUBE FUSE		90233-0019	-		5	
0110	TUBE FUSE		90233-0020	-		5	
0120	TUBE FUSE 16A	4-	90233-0027	-		5	
0130	TUBE FUSE 10A	4-	90233-0028	-		5	
0140	TUBE FUSE	4-	90233-0029	-		5	
0150	GRAPH PAPER		90333-0004	-		5	
0160	PADLOCK		779910-0101	-		1	

07:07 93.9.16

ENGINEER: HK 92-04-23 CONTROL: HK SP. PARTS TBA/9-1401 S.A. CE- 41728-010V

USED IN ASSEMB. 41729 41756 41763 649205

	ECN NUMBER:	EC 17786	EC 19260	EC 20080
DATE DISTRIBUTED		93-01-19	93-03-17	93-09-15

POS	PART TITLE / REMARKS	PART NUMBER	R	SP	UN	0101
	MOUNTING DRAWING, TPIH	4- 52471-20:01				X
	MOUNTING DRAWING, TPIH	4- 52471-21:01				X
	MOUNTING DRAWING, TPIH	4- 52471-22:01				X
	MOUNTING DRAWING, TPIH	4- 52471-23:01				X
	MOUNTING DRAWING, TPIH	4- 52471-24:01				X
	MOUNTING DRAWING, TPIH	4- 52471-25:01				X
A401	TPIH 2000 GENERATOR	C- 67600-0501	C			1
A402	TPIH 2000 GENERATOR	C- 67600-0501	C			1
A401:1	CONTACT UNIT	90110-0121	C			2
A401:2	COVER	90110-0122	C			2
A401:3	SIGN	359241-0261	C			1
A401:4	SIGN HOLDER	2- 359240-0100	C			1
A402:1	CONTACT UNIT	90110-0121	C			2
A402:2	COVER	90110-0122	C			2
A402:3	SIGN	359241-0261	C			1
A402:4	SIGN HOLDER	2- 359240-0100	C			1
M001	FAN	90264-0025	C			1
W370	COAXIAL CABLE L= 1150 MM	4- 551969-0003	C			1
W371	COAXIAL CABLE L= 1150 MM	4- 551969-0003	C			1
X100	TERMINAL DRWG X100, TPIH	4- 571524	-			1
0010	SIGN"FLASH SIGN"	90194-0016	C			1
0020	BLANK-OFF PLUG 22,5	4- 90002-0004	C			1
0030	NUT	90099-0110	C			1
0040	GLAND FITT	352136-0142	C			3

Machine: 649205

ECN 19260 'D'
19930317 HK

Position	Sheet	Position	Sheet	Position	Sheet	Position	Sheet	Position	Sheet
A001	11:01	A106	45:01	M.B010	37:01	M.B046	40:01	M.E001C	06:01
A002	35:01	A106	46:01	M.B011	37:01	M.B047	40:01	E004	06:01
A004	18:01	A108	17:01	M.B012	37:01	M.B048A	41:01	M.E011	32:01
A006	18:01	A114	61:01	M.B013	24:01	M.B048B	41:01		
A008	19:01	A114	62:01	M.B014	06:01	M.B050	20:01	F001	06:01
A010	19:01	A115	63:01	M.B015	37:01	M.B051	40:01	F003	32:01
A013	20:01	A115	64:01	M.B016A	41:01	M.B053	40:01	F005	07:01
A014	20:01	A116	65:01	M.B016B	41:01	M.B054	25:01	F008	07:01
A015	24:01	A116	66:01	M.B018	41:01	M.B055	20:01	F010	08:01
P.A016:1	88:01	A117	67:01	M.B020	45:01	M.B061	40:01	F017	11:01
A016A	34:01	A117	68:01	M.B021A	37:01	M.B062	41:01	F019	16:01
A016B	34:01	A118	17:01	M.B021B	37:01	M.B063	40:01	F028A	08:01
A017	24:01	A120	69:01	M.B021C	37:01	M.B064	25:01	F028B	08:01
A018	25:01	A120	70:01	M.B024	39:01	M.B071	45:01	F028C	08:01
A019	25:01	A121	71:01	M.B025	39:01	M.B080A	34:01	F029A	08:01
A022	26:01	A121	72:01	M.B030A	38:01	M.B080B	34:01	F029B	08:01
A023	30:01	A128	17:01	M.B030B	38:01	M.B085	41:01	F029C	08:01
A024	30:01	A202	21:01	M.B032	39:01	M.B092	45:01	F030	10:01
A025	72:01	A401	14:01	M.B033	39:01	M.B094	45:01	F031	10:01
A030	21:01	A402	14:01	M.B034	25:01	M.B095	26:01	F041A	07:01
P.A100	17:01	A450	27:01	M.B035	40:01	M.B104	40:01	F041B	07:01
A101	36:01	A451	27:01	M.B036	21:01	M.B108	37:01	F042A	07:01
A102	37:01			M.B037A	19:01	M.B233	36:01	F042B	07:01
A102	38:01	M.B001	26:01	M.B037B	19:01			F055A	16:01
A103	39:01	M.B002	38:01	M.B038	18:01	C001	06:01	F055B	16:01
A103	40:01	M.B004	21:01	M.B039	19:01			F055C	16:01
A104	41:01	M.B006	38:01	M.B040	18:01	D108	17:01	F056A	14:01
A104	42:01	M.B007	38:01	M.B043	24:01			F056B	14:01
A105	43:01	M.B008	39:01	M.B044	39:01	M.E001A	06:01	F056C	14:01
A105	44:01	M.B009	39:01	M.B045	41:01	M.E001B	06:01	F202	07:01

Training Document. For training purpose only.

CIRCUIT DIAGRM

COMPONENTS SUMMARY	WHERE TO FIND THE COMPONENTS IN THE EL DRAWINGS
DRAWINGS	SHOWING THE ELECTRICAL CIRCUITS
GROUND CONNECTION	SHOWING THE EARTHING (GROUNDING) OF THE CONTROL CAB
LINE SUMMARY	SHOWING THE ACTUAL LINEWIRING ON THE MACHINE
TERMINAL SUMMARY	WHERE TO FIND THE TERMINALS IN THE EL DRAWINGS

Letters used in electrical documentation

ACCORDING TO TP 89 STANDARD

A	Temperature Regulator, Level Relay, TPMC Modules
B	Sensors (Photocells, Proximity Switches etc.)
C	Capacitor
D	TPMC Central Unit
E	Light Tubes
F	Fuses
G	Frequency Converter, TPMC Power Supply
H	Bulb, LED
K	Contactor, Solid State Relay
M	Motor 3-phase
P	Hour Meter, Package Counter
Q	Main Switch, Overload Protection.
R	Resistor, Heating Element, Potentiometer
S	Switch, Contact
T	Transformer
V	Rectifier, Diode
X	Terminal, Socket
Y	Solenoid Valve, Brake
Z	Filter.

Identification of wiring

ATTENTION

IDENTIFICATION OF WIRING

EARTH CONDUCTORS	GREEN AND YELLOW
NEUTRAL CONDUCTORS	LIGHT BLUE
A.C. OR D.C. POWER CIRCUITS	BLACK
A.C. CONTROL CIRCUITS	RED
D.C. CONTROL CIRCUITS	BLUE
INTERLOCKING CONTROL CIRCUITS SUPPLIED FROM EXTERNAL POWER	ORANGE

Tetra Pak
LUND SWEDEN

This drawing must not without the consent of Tetra Pak be copied, transmitted or disclosed to any third party.

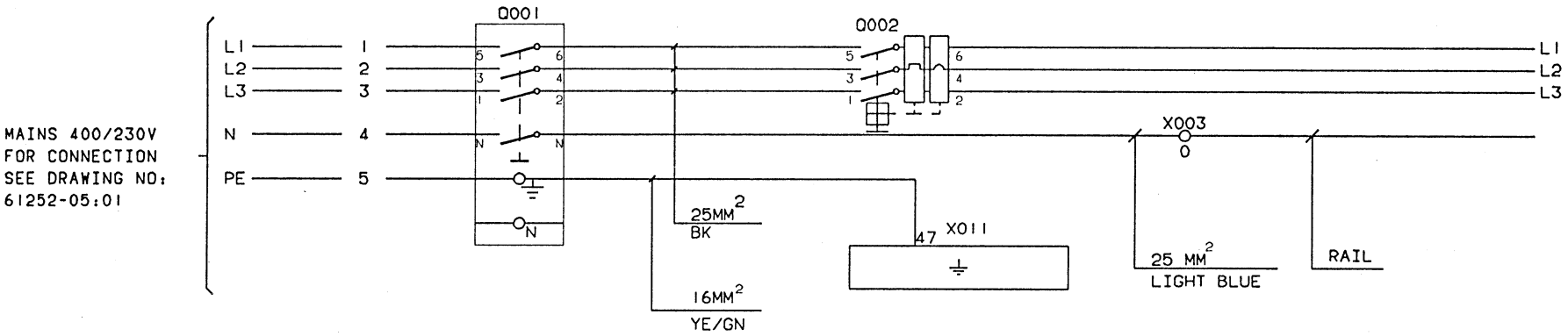

FOR TYPE OF WIRE, WIRING INSTRUCTIONS ETC.
SEE SPECIFICATION FOR SUBSUPPLIERS TPUS 3502.22

WHERE NOTHING ELSE IS SAID: WIRE 0.75 mm² BU
OR LINESUMMARY IS VALID

INTRODUCED WITH AM NO.			19260		DATE: 930310			SIGN. HK/UTH					DESCRIPTION: MAINS CONNECTION		
ISSUE															
AM NO.															
DATE															
SIGN.													MACHINE: TBA/9-1401 S.A.		44093-05:01
												DRAWING REMARKS			

ALTERATIONS ONLY IN CADAM

Tetra Pak
MODENA ITALY

This drawing must not without the consent of Tetra Pak be copied, transmitted or disclosed to any third party

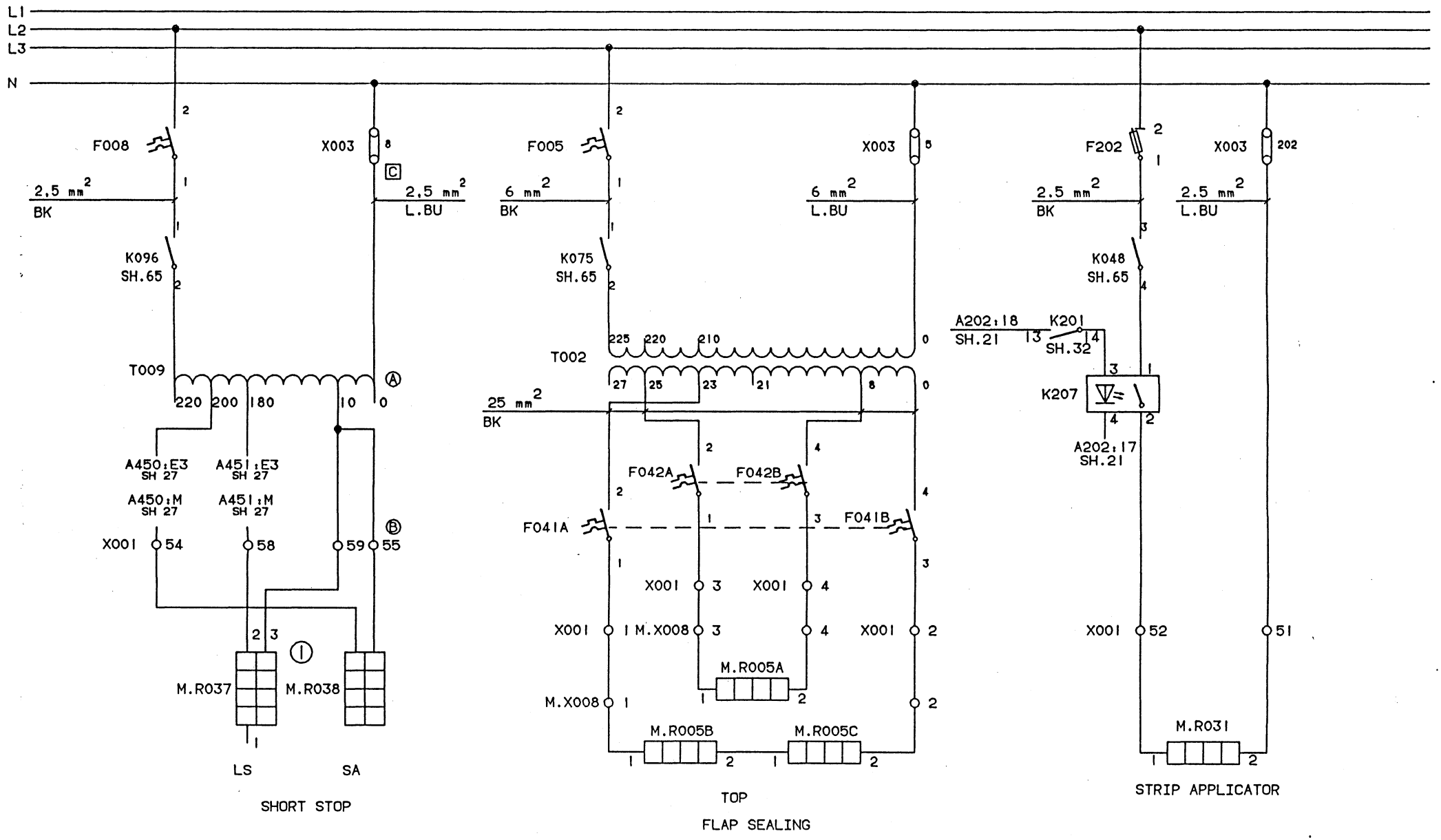

INTRODUCED WITH AM NO	19260		DATE 930310	SIGN HK/UTH	ELEMENT PIN CONFIGURATION	DESCRIPTION ELEMENTS
ISSUE	A	B			1-2= 1200W	
AM NO	20080	20398			1-3= 700W	
DATE	930909	930930			2-3= 450W	MACHINE TBA/9-1401 S.A.
SIGN	HK/MRT	HK/MRT			DRAWING REMARKS	44093-07:01

Tetra Pak
LUND SWEDEN

This drawing must not without the consent of Tetra Pak be copied, transmitted or disclosed to any third party.

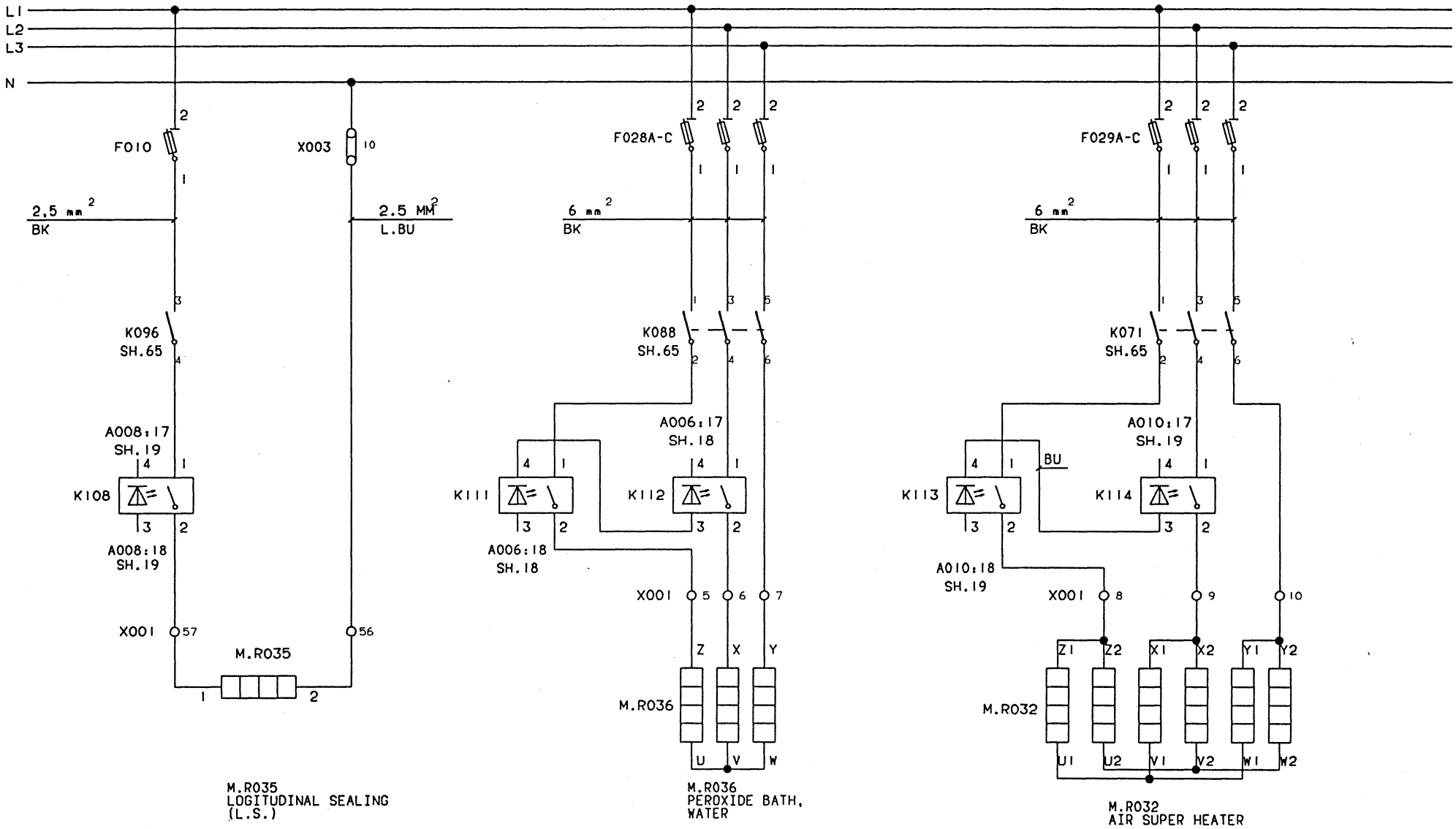

M.R035
LOGITUDINAL SEALING
(L.S.)

M.R036
PEROXIDE BATH,
WATER

M.R032
AIR SUPER HEATER

INTRODUCED WITH AM NO.	19260			DATE: 930310		SIGN. HK/UTH					
ISSUE											
AM NO.											
DATE											
SIGN.											

DRAWING REMARKS

ALTERATIONS ONLY IN CADAM

DESCRIPTION: ELEMENTS

MACHINE: TBA/9-1401 S.A.

44093-08:01

Tetra Pak
MODENA ITALY

This drawing must not without the consent of Tetra Pak be copied, transmitted or disclosed to any third party.

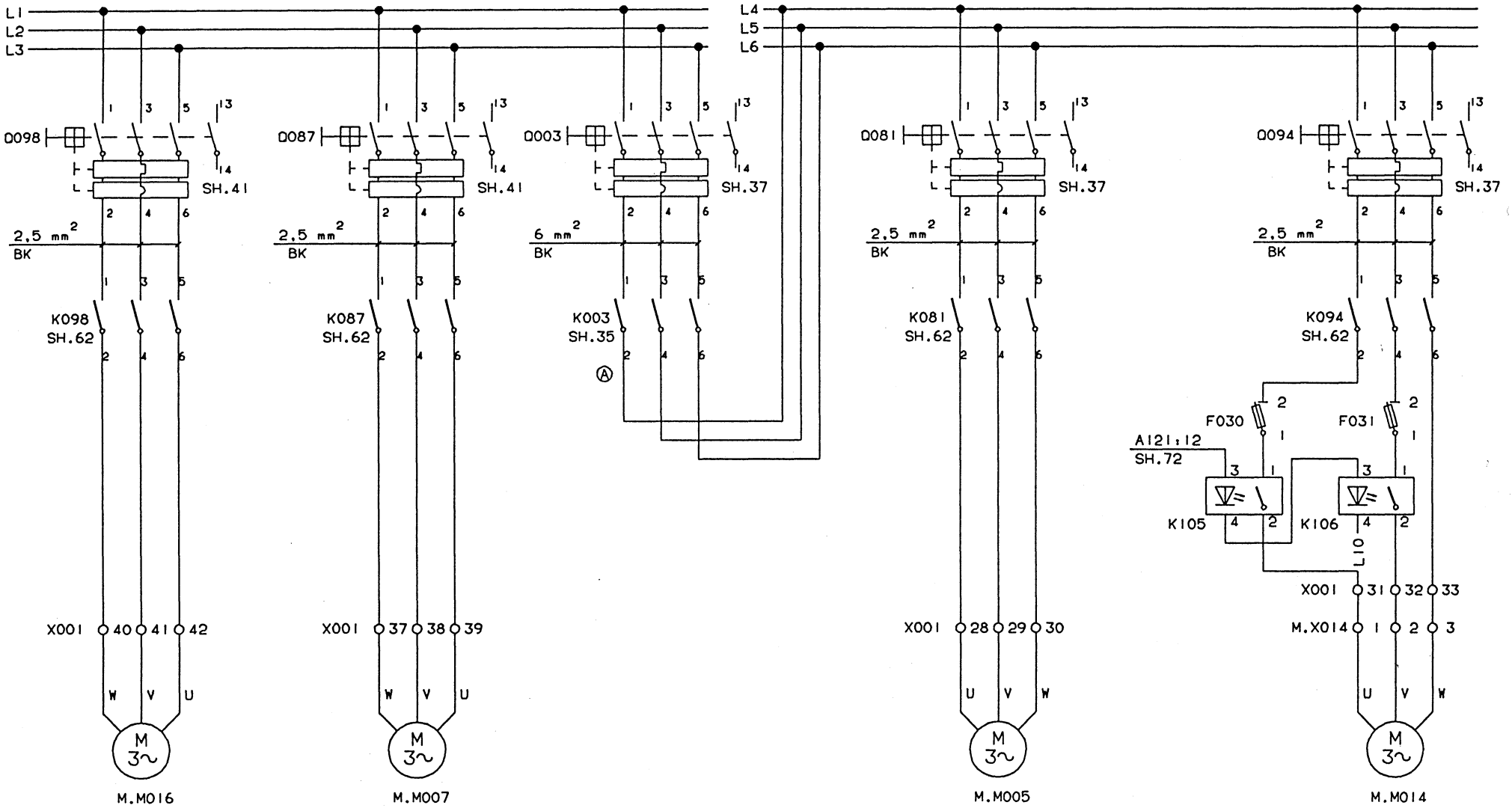

INTRODUCED WITH AM NO.	19260		DATE: 930310		SIGN. HK/UTH				DESCRIPTION: MOTORS		
ISSUE	A										
AM NO.	20080										
DATE	930909								MACHINE: TBA/9-1401 S.A		44093-10:01
SIGN.	HK/MRI							DRAWING REMARKS			

ALTERATIONS ONLY IN CADAM

Tetra Pak
MODENA ITALY

This drawing must not without the consent of Tetra Pak be copied, transmitted or disclosed to any third party.

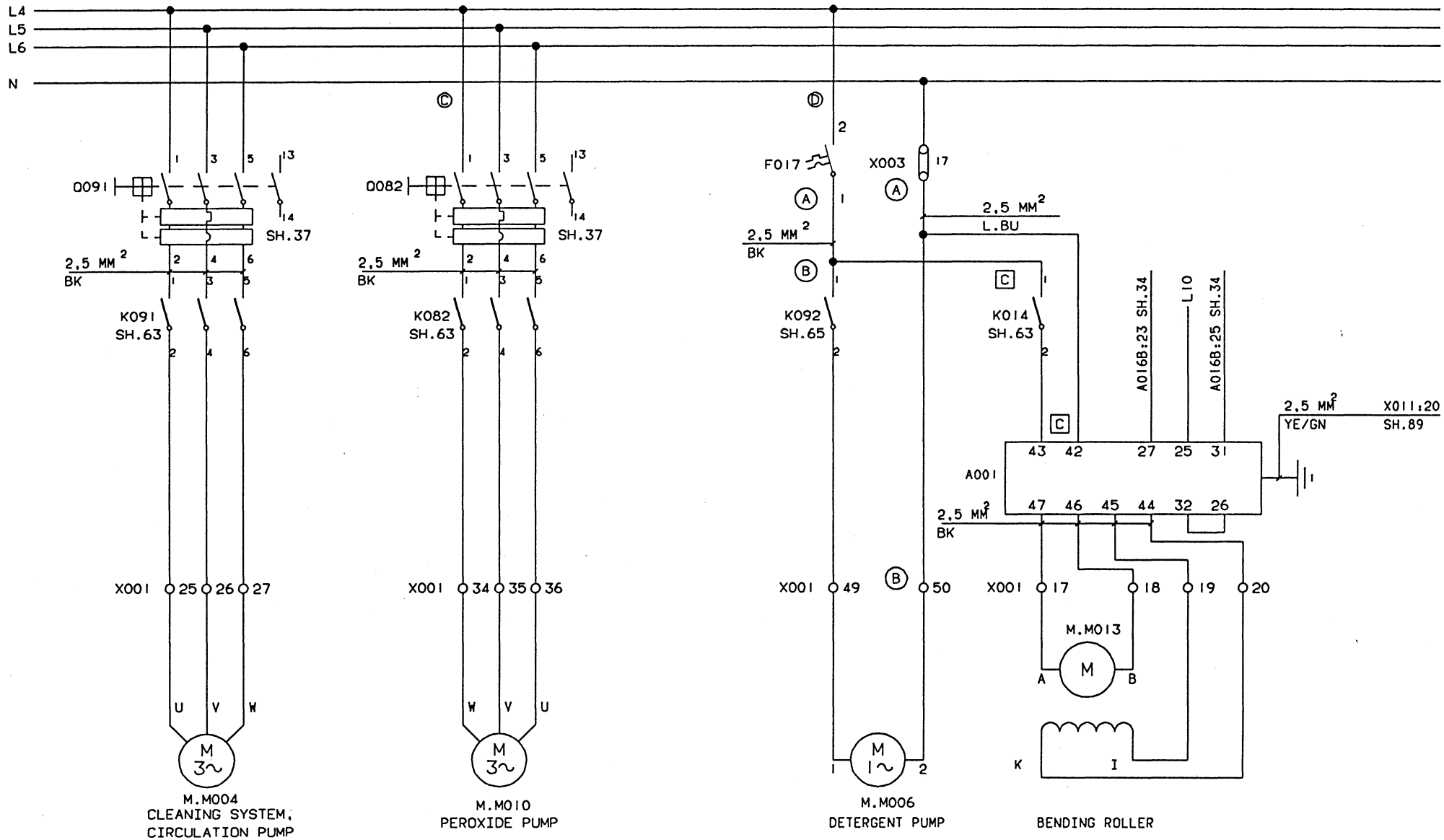

INTRODUCED WITH AM NO.	19260			DATE: 930310		SIGN. HK/UTH					
ISSUE	A										
AM NO.	20080										
DATE	930909										
SIGN.	HK/MRI										

DRAWING REMARKS

DESCRIPTION: MOTORS

MACHINE: TBA/9-1401 S.A

44093-11:01

ALTERATIONS ONLY IN CADAM

Tetra Pak
MODENA ITALY

This drawing must not without the consent of Tetra Pak be copied, transmitted or disclosed to any third party.

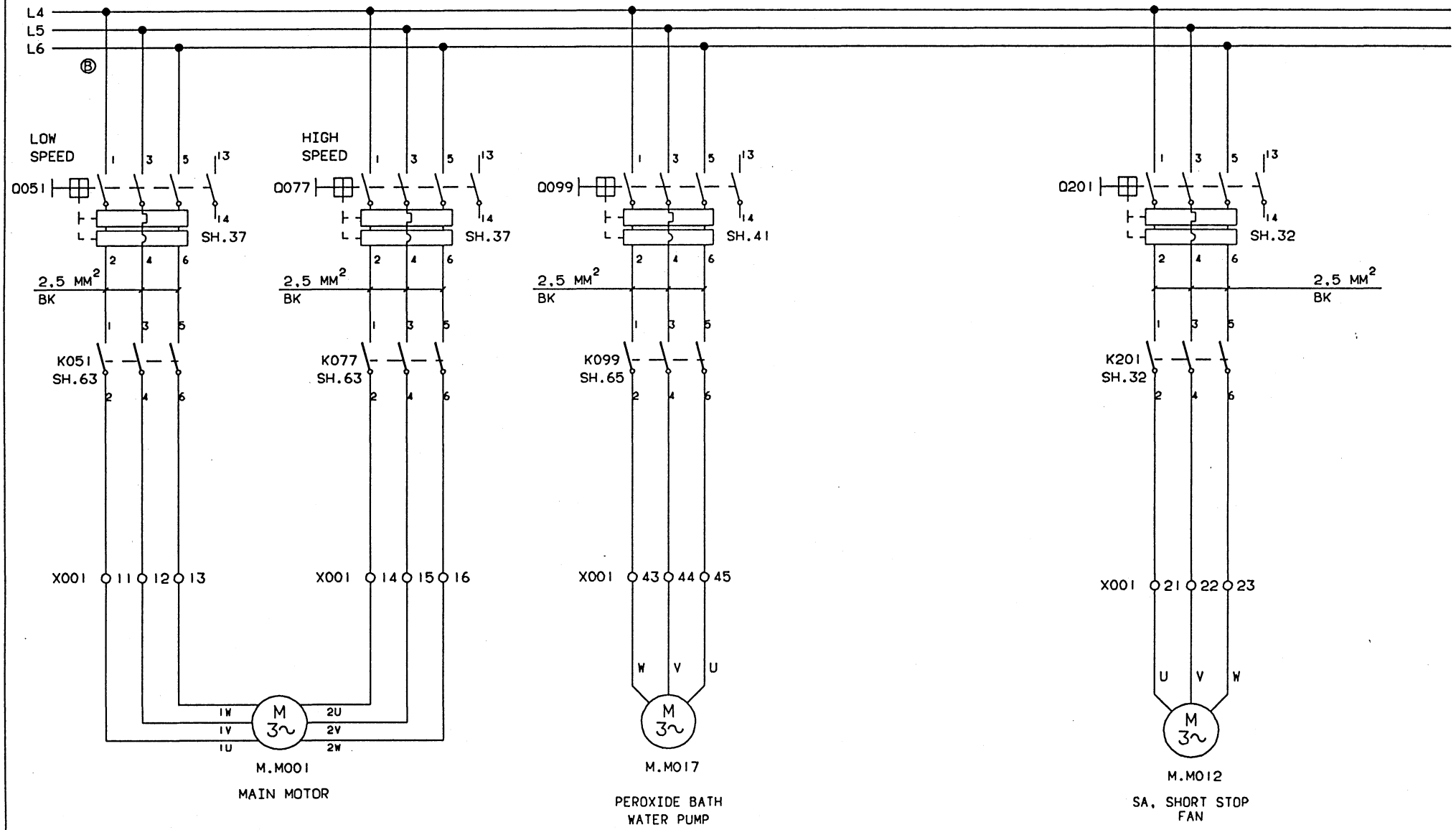

INTRODUCED WITH AM NO.	19260			DATE. 930310		SIGN. HK/UTH			DESCRIPTION: MOTORS	
ISSUE	A									
AM NO.	20080								MACHINE: TBA/9-1401 S.A	44093-12:01
DATE	930909									
SIGN.	HK/MRI							DRAWING REMARKS		

ALTERATIONS ONLY IN CADAM

Tetra Pak
MODENA ITALY

This drawing must not without the consent of Tetra Pak be copied, transmitted or disclosed to any third party.

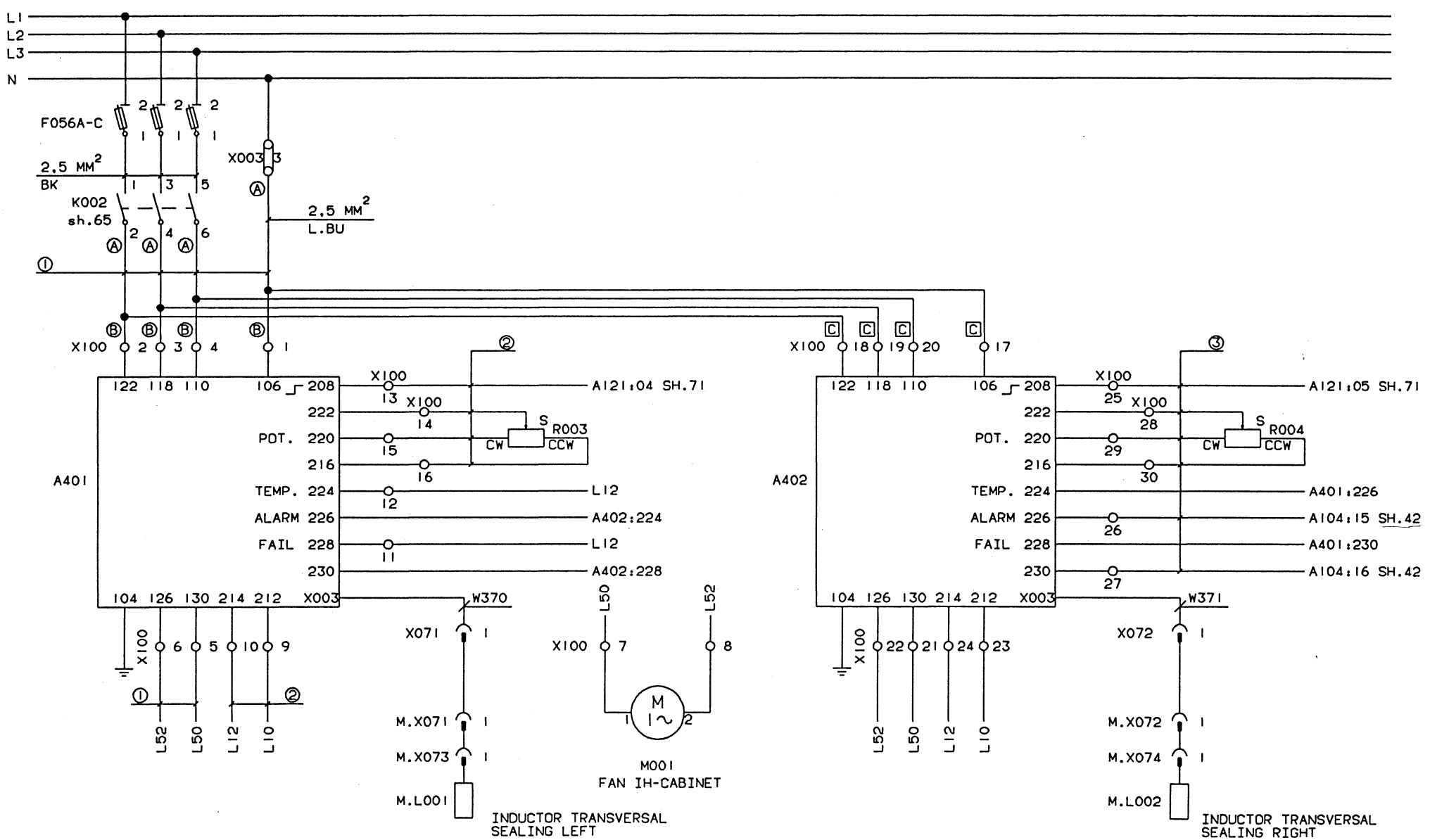

INTRODUCED WITH AM NO. 19260	DATE. 930310	SIGN. HK/UTH	① GOES THROUGH HOSE 1, SEE DRWG 52471-06 AND -25.	DESCRIPTION. IH-GENERATOR	
ISSUE A			② GOES THROUGH HOSE 2, SEE DRWN 52471-06 AND -25.		
AM NO. 20080			③ GOES THROUGH HOSE 3, SEE DRWN 52471-06 AND -25.		
DATE 930909				MACHINE. TBA/9-1401 S.A.	44093-14:01
SIGN. HK/MRI			DRAWING REMARKS		

ALTERATIONS ONLY IN CADAM

Tetra Pak
MODENA ITALY

This drawing must not without the consent of Tetra Pak be copied, transmitted or disclosed to any third party.

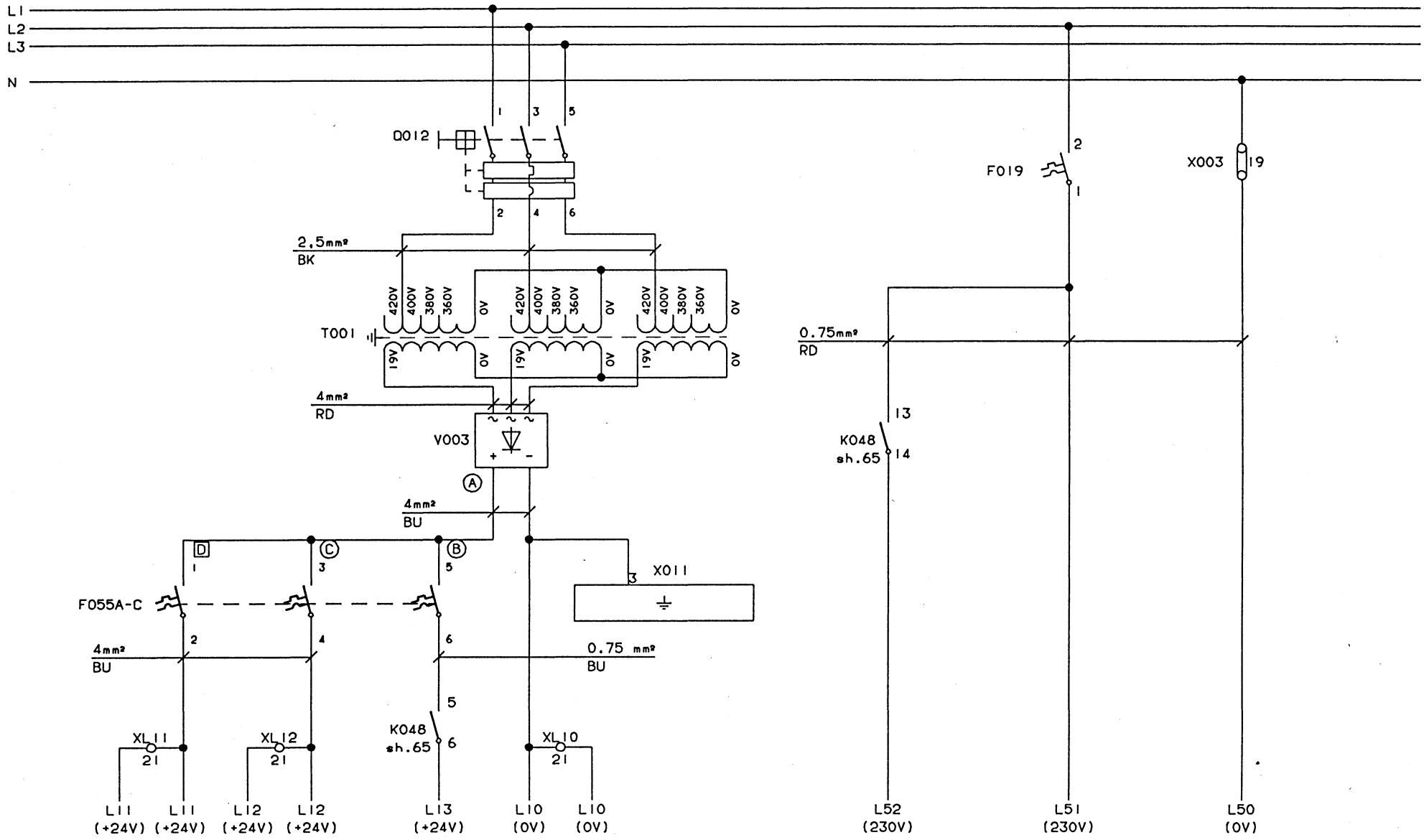

INTRODUCED WITH AM NO.	19260			DATE: 930310		SIGN. HK/UTH			DESCRIPTION: CONTROL VOLTAGE	
ISSUE	A									
AM NO.	20080									
DATE	930909								MACHINE: TBA/9-1401 S.A	44093-16:01
SIGN.	HK/MRI							DRAWING REMARKS		

ALTERATIONS ONLY IN CADAM

Tetra Pak
LUND SWEDEN

This drawing must not without the consent of Tetra Pak be copied, transmitted or disclosed to any third party.

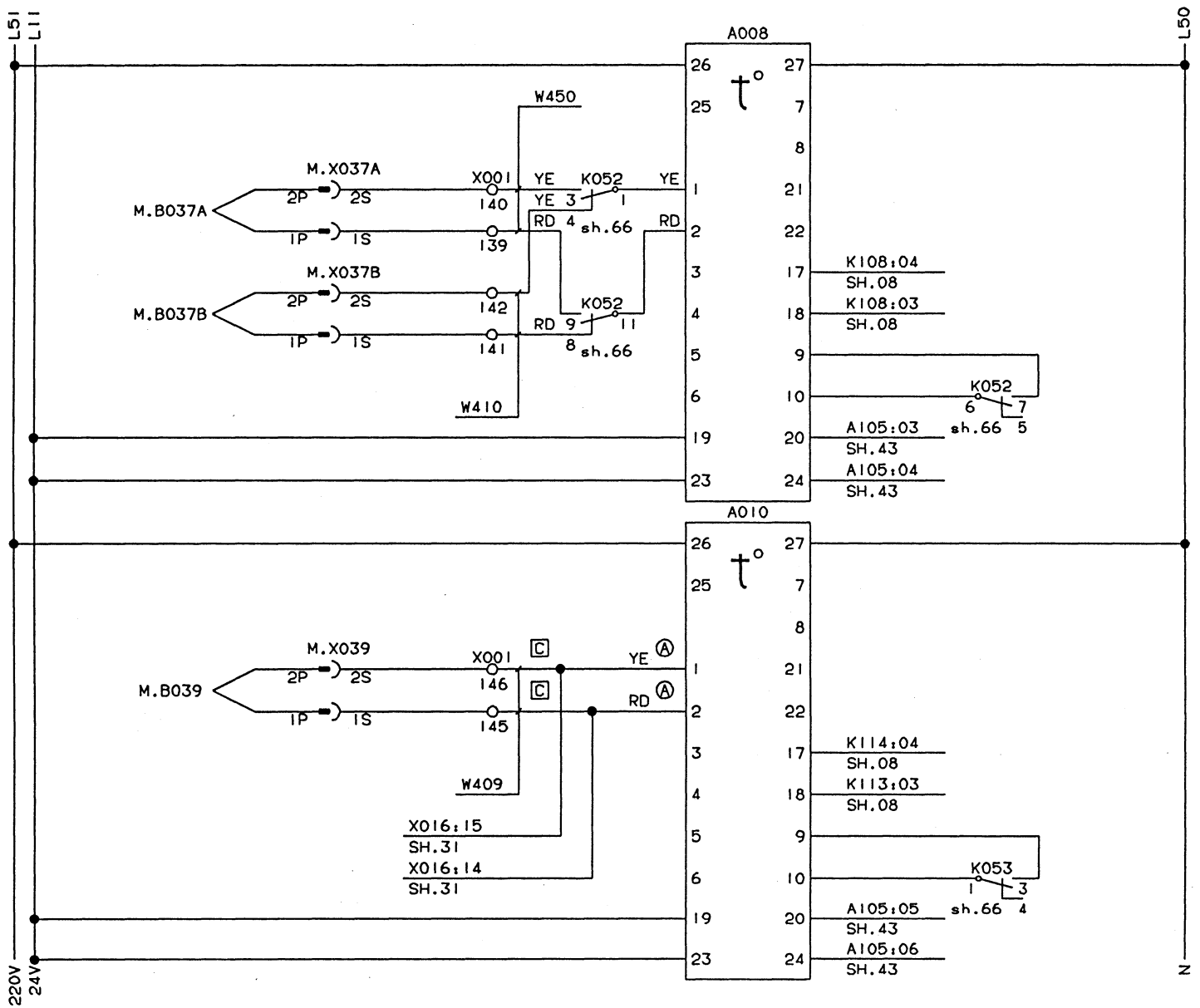

A008 TEMP. REGULATOR LS

M.B037A LS SEALED TUBE, TEMP.

M.B037B LS-ELEMENT, TEMP.

A010 TEMP. REGULATOR AIR SUPERHEATER

M.B039 AIR SUPERHEATER, TEMP.

INTRODUCED WITH AM NO.	19260			DATE. 930310		SIGN. HK/UTH				DESCRIPTION. REGULATORS	
ISSUE											
AM NO.											
DATE										MACHINE. TBA/9-1401 S.A	44093-19:01
SIGN.									DRAWING REMARKS		

ALTERATIONS ONLY IN CADAM

Tetra Pak
LUND SWEDEN

This drawing must not without the consent of Tetra Pak be copied, transmitted or disclosed to any third party.

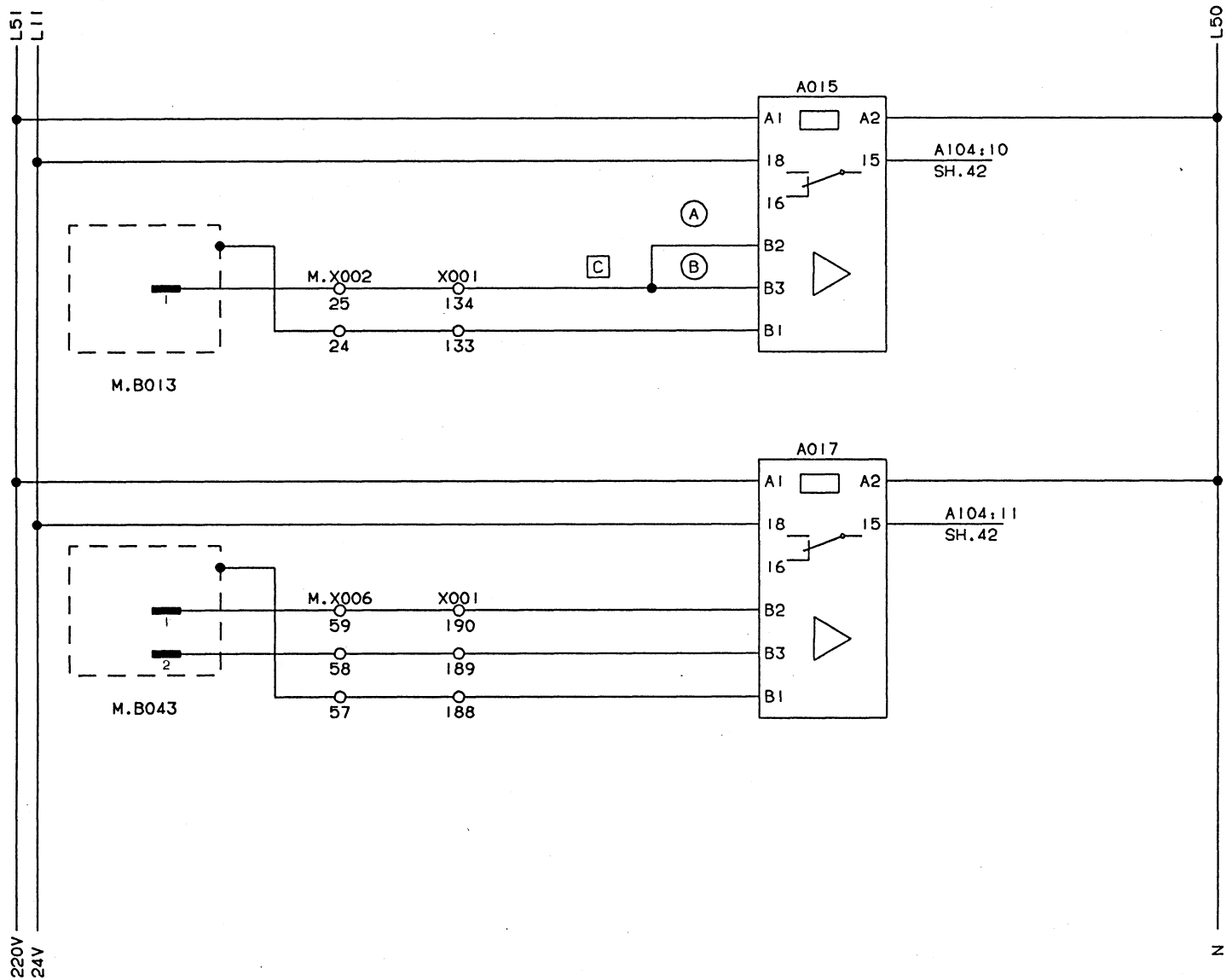

A015 CLEANING TRAY, LEVEL

M.B013 LEVEL SENSOR

A017 SPRAY TANK, LEVEL MAX/MIN

M.B043:1 LEVEL SENSOR MAX
M.B043:2 LEVEL SENSOR MIN

INTRODUCED WITH AM NO.	19260			DATE. 930310		SIGN. HK/UTH				DESCRIPTION: LEVEL MONITORS	
ISSUE											
AM NO.											
DATE										MACHINE: TBA/9-1401 S.A.	44093-24:01
SIGN.									DRAWING REMARKS		

ALTERATIONS ONLY IN CADAM

Tetra Pak
LUND SWEDEN

This drawing must not without the consent of Tetra Pak: be copied, transmitted or disclosed to any third party.

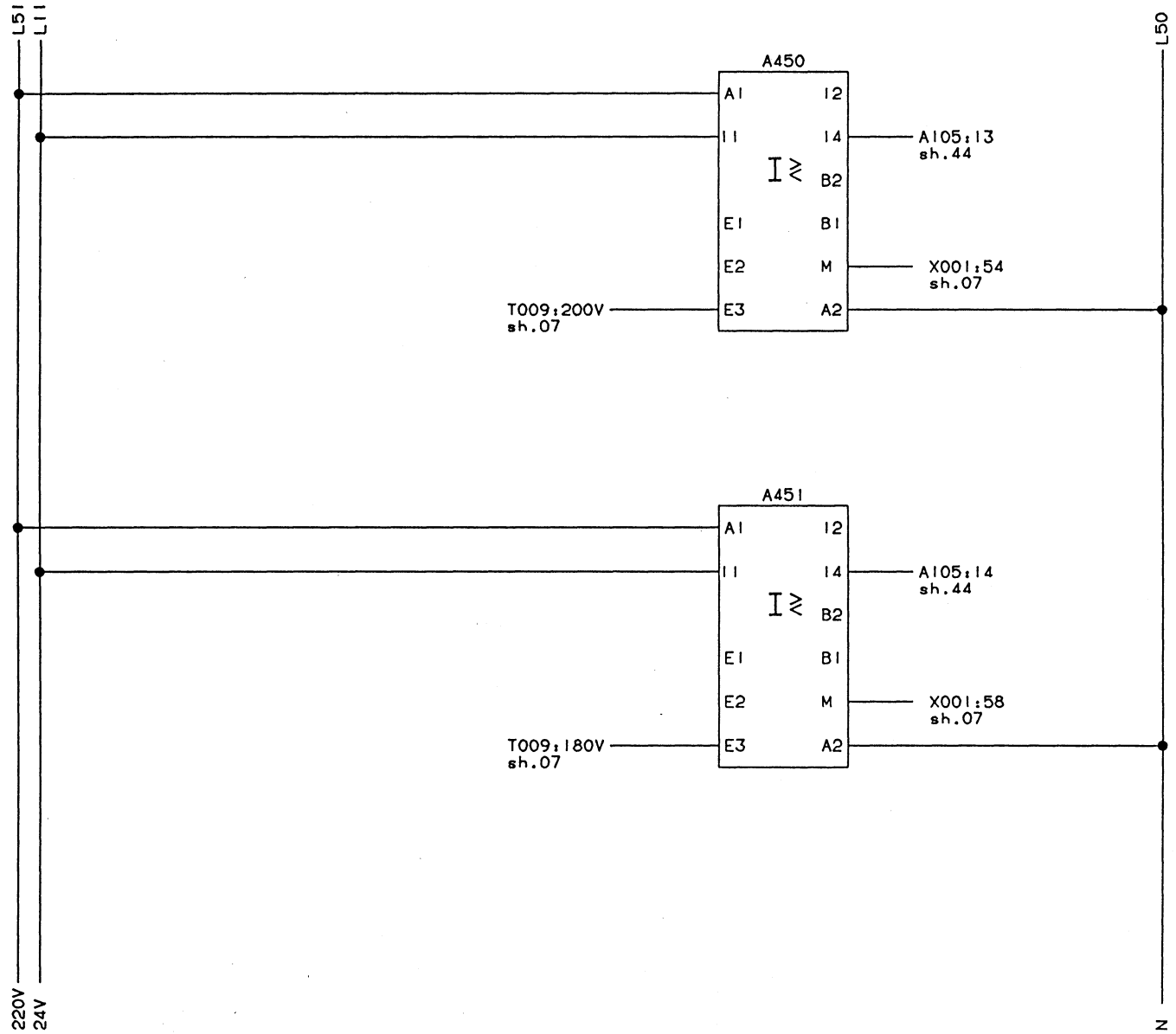

A450 SUPERVISION
SA SHORT STOP ELEMENT

A451 SUPERVISION
LS SHORT STOP ELEMENT

INTRODUCED WITH AM NO.	19260			DATE: 930310		SIGN. HK/UTH					
ISSUE											
AM NO.											
DATE											
SIGN.									DRAWING REMARKS		

DESCRIPTION: CURRENT MONITORS

MACHINE: TBA/9-1401 S.A. 44093-27:01

ALTERATIONS ONLY IN CADAM

Tetra Pak
MODENA ITALY

This drawing must not without the consent of Tetra Pak: be copied, transmitted or disclosed to any third party.

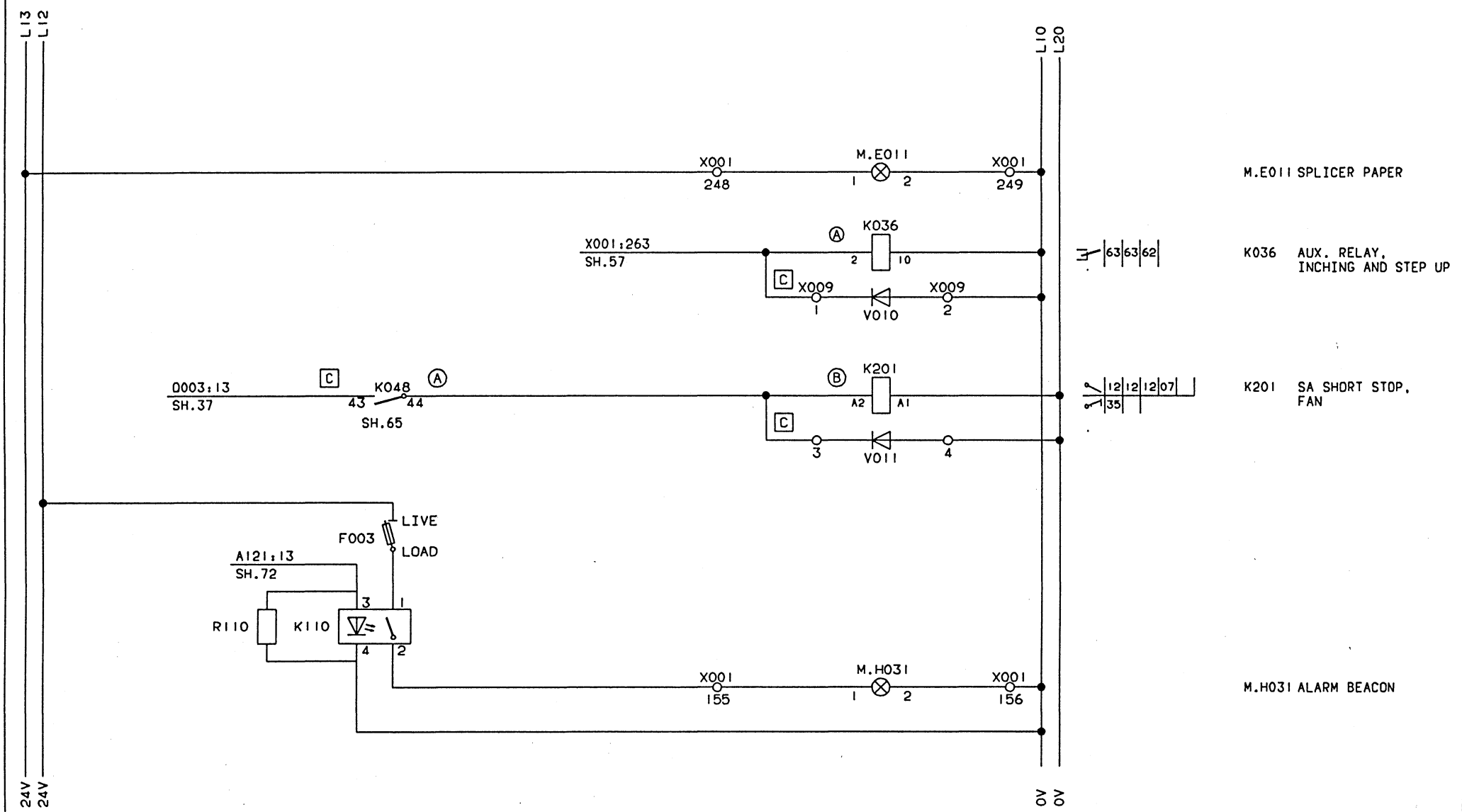

INTRODUCED WITH AM NO.	19260			DATE: 930310			SIGN. HK/UTH				
ISSUE	A										
AM NO.	20080										
DATE	930909										
SIGN.	HK/MRI									DRAWING REMARKS	

DESCRIPTION: AUXILIARY RELAYS

MACHINE: TBA/9-1401 S.A

44093-32:01

ALTERATIONS ONLY IN CADAM

Tetra Pak
MODENA ITALY

This drawing must not without the consent of Tetra Pak be copied, transmitted or disclosed to any third party.

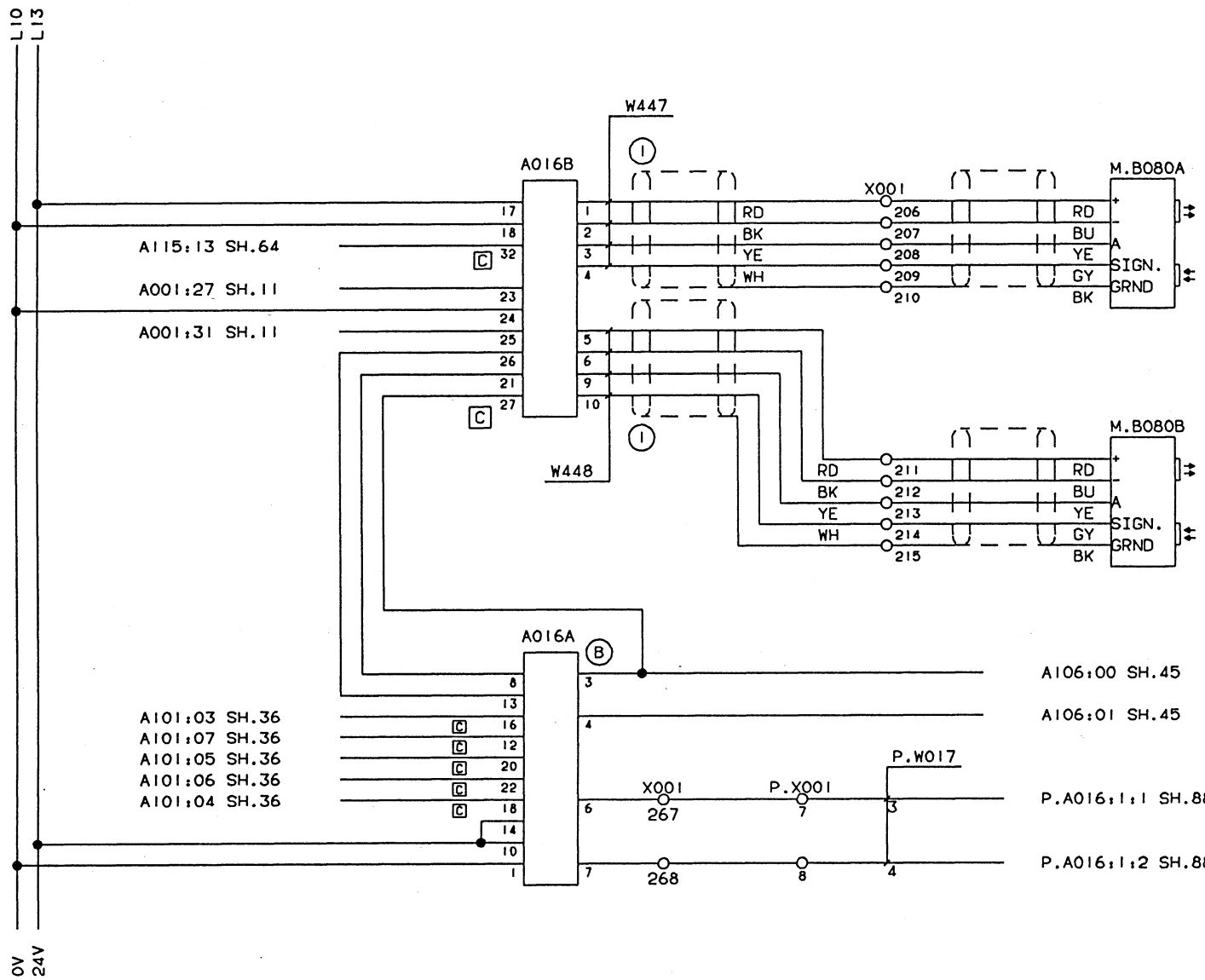

M.B080A DESIGN ADJUSTMENT DATA LEFT

M.B080B DESIGN ADJUSTMENT CLOCK RIGHT

INTRODUCED WITH AM NO.	19260			DATE: 930310		SIGN. HK/UTH			① SHIELD SHALL BE CUT OFF AT A016B	DESCRIPTION: PRINTED DESIGN CORRECTION	
ISSUE	A										
AM NO.	20080										
DATE	930909									MACHINE: TBA/9-1401 S.A	44093-34:01
SIGN.	HK/MRI								DRAWING REMARKS		

ALTERATIONS ONLY IN CADAM

Tetra Pak
LUND SWEDEN

This drawing must not without the consent of Tetra Pak be copied, transmitted or disclosed to any third party.

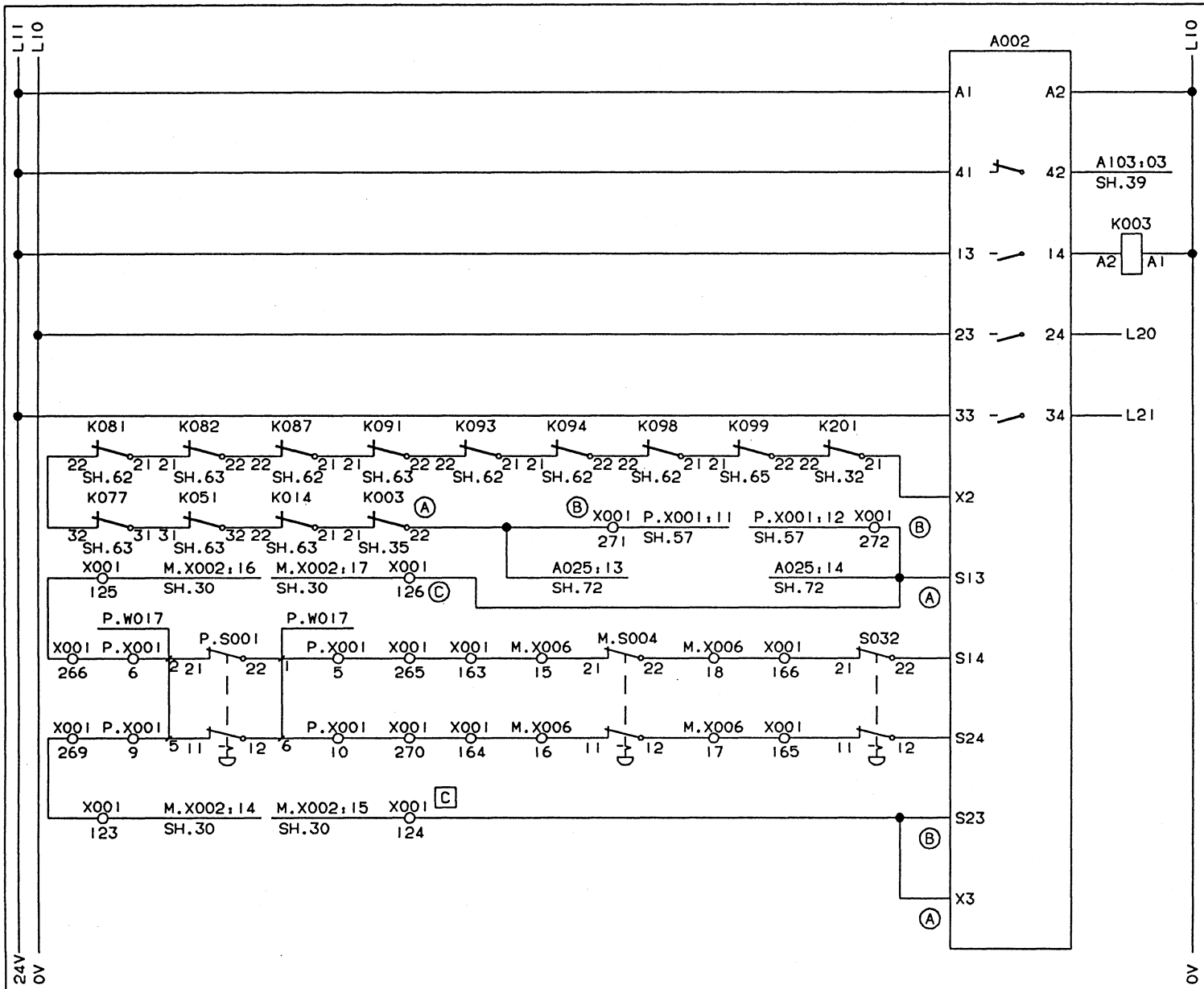

A002 EMERGENCY STOP MODULE

CONTACTOR TO ENSURE REDUNDANCE

K003 – K201 AUXILIARY CONTACTS ON EMERGENCY- AND SAFETY-MODULE CONTACTORS

P.S001
M.S004
S032 EMERGENCY STOP

| | | |

Tetra Pak
MODENA · ITALY

This drawing must not without the consent of Tetra Pak be copied, transmitted or disclosed to any third party.

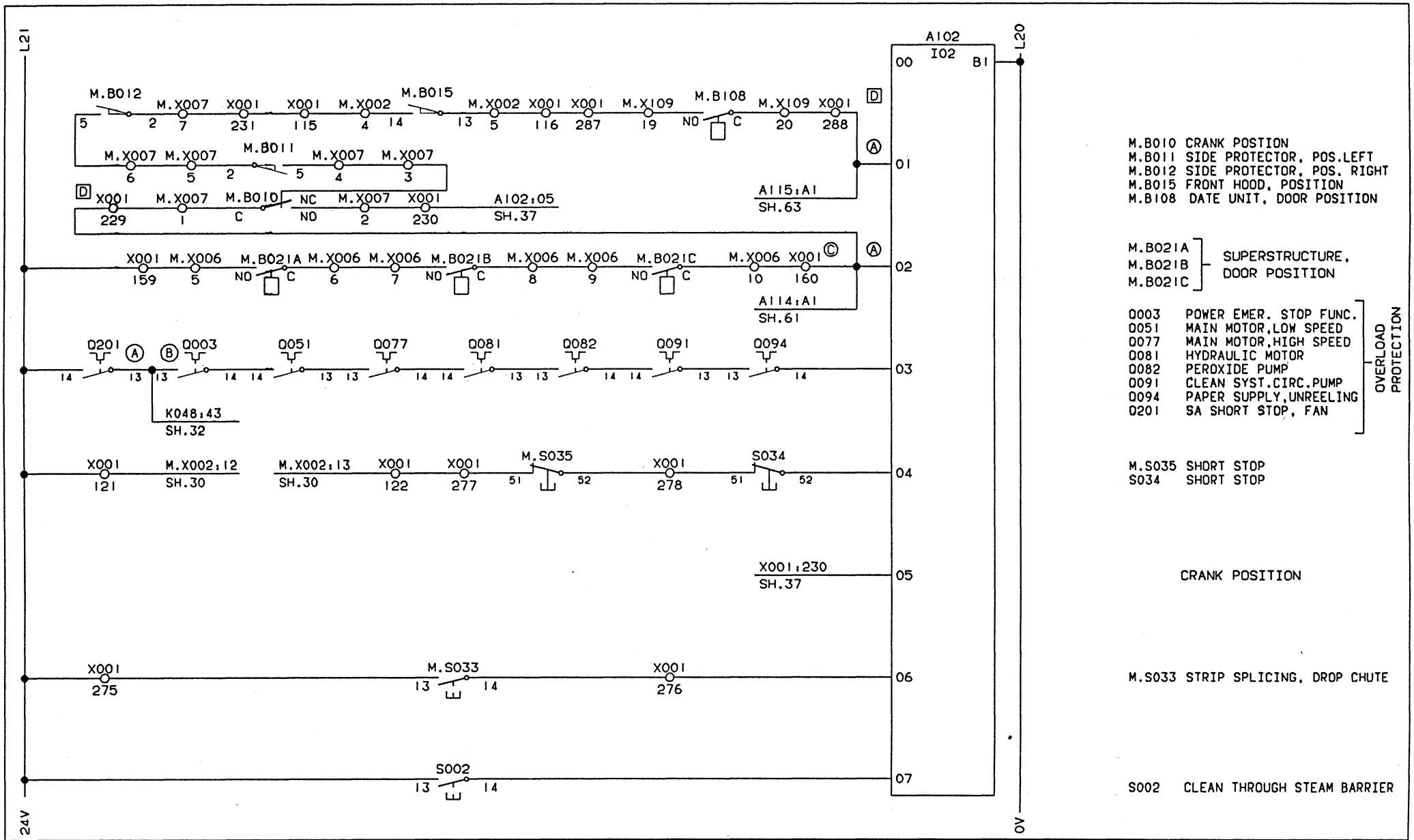

M.B010 CRANK POSTION
M.B011 SIDE PROTECTOR, POS.LEFT
M.B012 SIDE PROTECTOR, POS. RIGHT
M.B015 FRONT HOOD, POSITION
M.B108 DATE UNIT, DOOR POSITION

M.B021A, M.B021B, M.B021C — SUPERSTRUCTURE, DOOR POSITION

OVERLOAD PROTECTION
Q003 POWER EMER. STOP FUNC.
Q051 MAIN MOTOR,LOW SPEED
Q077 MAIN MOTOR,HIGH SPEED
Q081 HYDRAULIC MOTOR
Q082 PEROXIDE PUMP
Q091 CLEAN SYST.CIRC.PUMP
Q094 PAPER SUPPLY,UNREELING
Q201 SA SHORT STOP, FAN

M.S035 SHORT STOP
S034 SHORT STOP

CRANK POSITION

M.S033 STRIP SPLICING, DROP CHUTE

S002 CLEAN THROUGH STEAM BARRIER

INTRODUCED WITH AM NO.	19260			DATE: 930310		SIGN. HK/UTH			DESCRIPTION: PLC-IN, MACHINE CONTROL	
ISSUE	A									
AM NO.	20080									
DATE	930909								MACHINE: TBA/9-1401 S.A	44093-37:01
SIGN.	HK/MRI								DRAWING REMARKS	

ALTERATIONS ONLY IN CADAM

Tetra Pak
LUND SWEDEN

This drawing must not without the consent of Tetra Pak be copied, transmitted or disclosed to any third party.

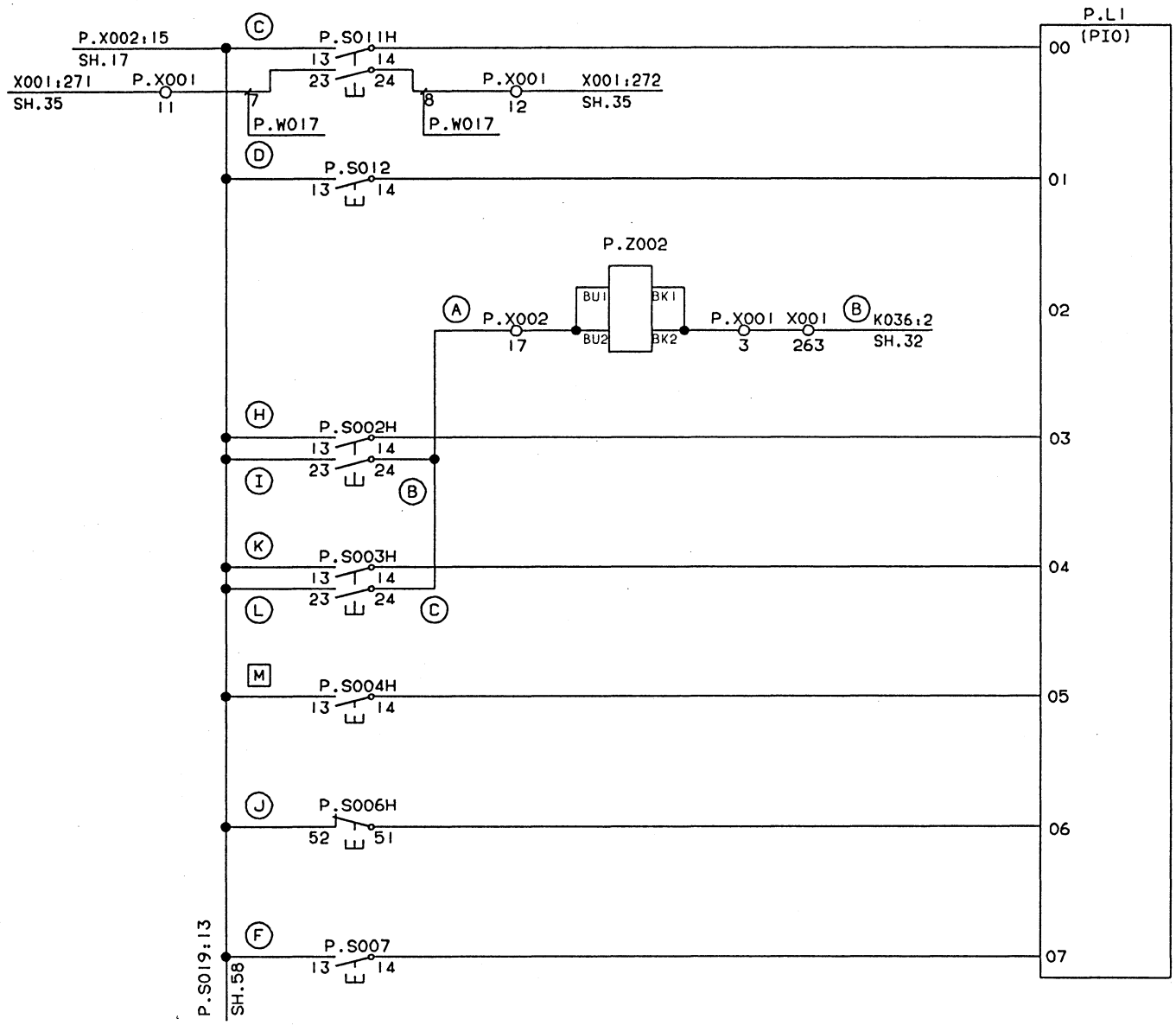

INTRODUCED WITH AM NO.	19260			DATE: 930310			SIGN. HK/UTH				
ISSUE	A										
AM NO.	20080										
DATE	930825										
SIGN.	HK/PSG										

DRAWING REMARKS

ALTERATIONS ONLY IN CADAM

DESCRIPTION: PANEL INTERFACE, IN

MACHINE: TBA/9-1401 S.A

44093-57:01

Tetra Pak
LUND SWEDEN

This drawing must not without the consent of Tetra Pak be copied, transmitted or disclosed to any third party.

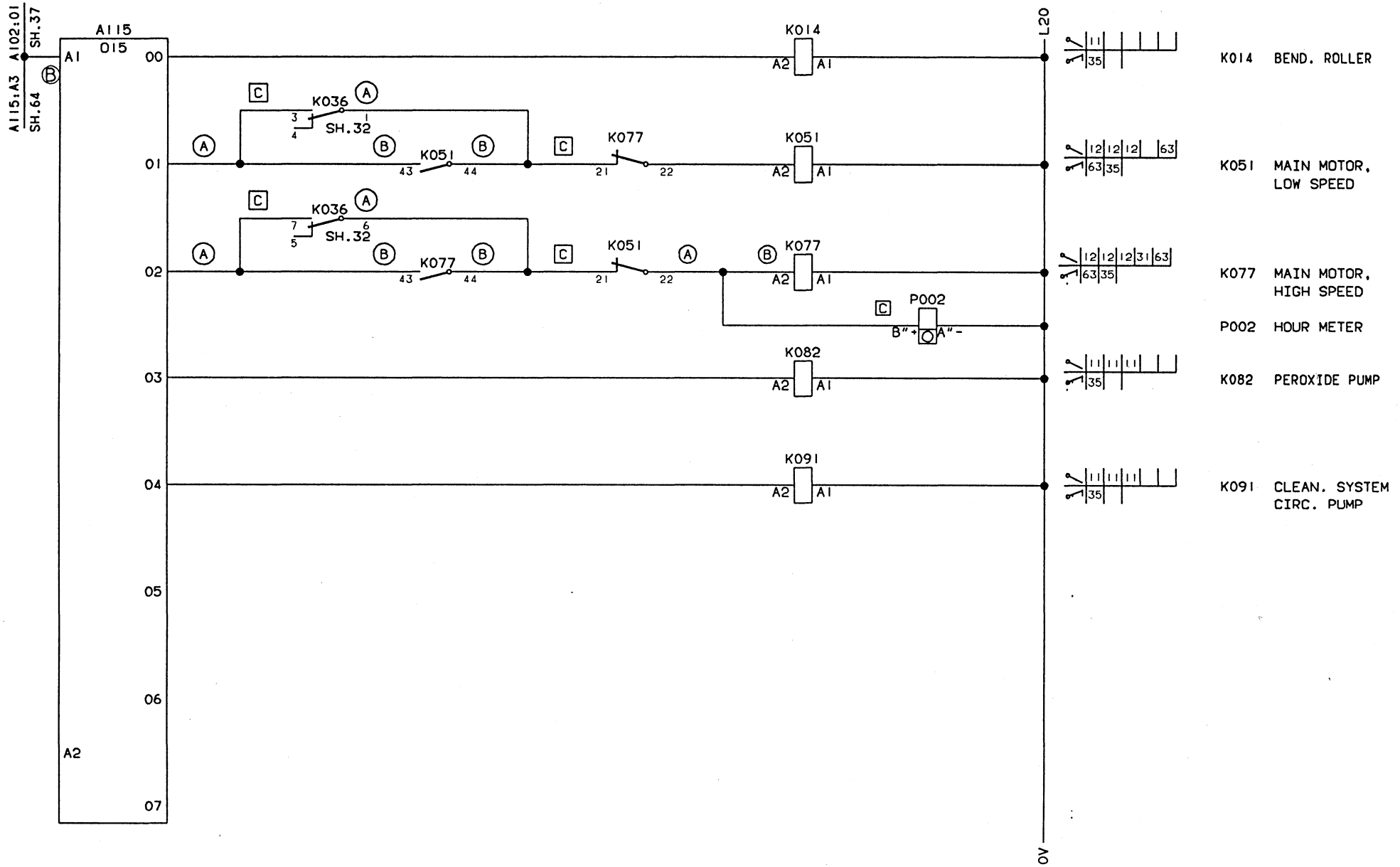

| | | |

Tetra Pak
LUND SWEDEN

This drawing must not without the consent of Tetra Pak be copied, transmitted or disclosed to any third party.

571517

OVERLOAD PROTECTIONS

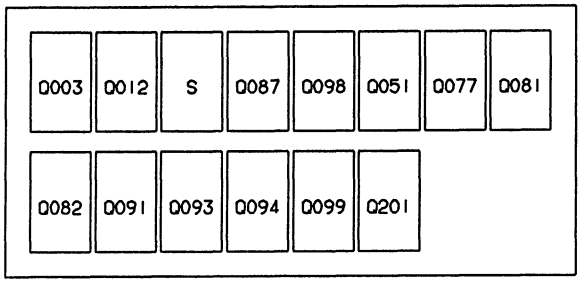

POS.	SETTING	FUNCTION
Q003	50Hz-25A/40°C 60Hz-25A/40°C	MAIN POWER
Q012	50Hz-2,0A/40°C 60Hz-2,0A/40°C	CONTROL TRANSFORMER
Q051	50Hz-7,0A/40°C 60Hz-6,0A/40°C	MAIN MOTOR, LOW SPEED
Q077	50Hz-10A/40°C 60Hz-10A/40°C	MAIN MOTOR HIGH SPEED
Q081	50Hz-2,9A/40°C 60Hz-2,9A/40°C	HYDRAULIC PUMP

POS.	SETTING	FUNCTION
Q082	50Hz-1,5A/40°C 60Hz-1,5A/40°C	PEROXIDE PUMP
Q087	50Hz-9,2A/40°C 60Hz-9,4A/40°C	COMPRESSOR, INLET
Q091	50Hz-6,8A/40°C 60Hz-8,0A/40°C	CLEANING SYSTEM, CIRCULATION PUMP
Q093	50Hz-1,2A/40°C 60Hz-1,3A/40°C	EXTERNAL CONVEYOR
Q094	50Hz-0,45A/40°C 60Hz-0,45A/40°C	PAPER SUPPLY

POS.	SETTING	FUNCTION
Q098	50Hz-9,2A/40°C 60Hz-9,4A/40°C	COMPRESSOR SUCTION
Q099	50Hz-0,94A/40°C 60Hz-0,94A/40°C	PEROXIDE BATH, WATER PUMP
Q201	50Hz-1,3A/40°C 60Hz-1,3A/40°C	SA, SHORT STOP, FAN

FUSE PANEL

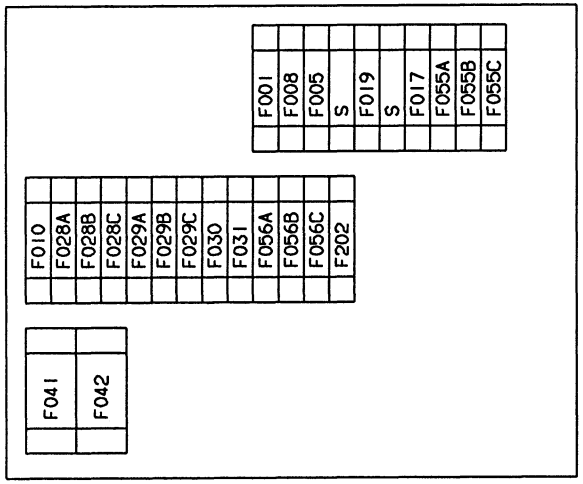

POS.		FUNCTION
F001	10A	TIME RECORDER, WALL SOCKET FAN MOTOR, SPLICER, LIGHT FIXTURES
F005	16A	FLAP SEALING TOP/BOTTOM
F008	10A	LS, SHORT STOP
F010	16A	LONGITUDINAL SEALING
F017	6A	DETERGENT PUMP, BENDING ROLLER
F019	6A	CONTROL VOLTAGE, 220V AC TPMC, UNITS
F028	16A	PEROXIDE BATH, WATER

POS.	SIZE	FUNCTION
F029	25A	AIR SUPER HEATER
F030	10A	PAPER SUPPLY, UNREELING
F031	10A	PAPER SUPPLY, UNREELING
F041	80A	FLAP SEALING, TOP
F042	80A	FLAP SEALING, BOTTOM
F055	10A	CONTROL VOLTAGE, 24V DC
F056	10A	TPIH

POS.		FUNCTION
F202	16A	STRIP APPLICATOR

MAX LOAD CIRCUIT BREAKER

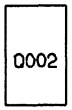

POS.	SETTING	MAGNETIC SETTING	FUNCTION
Q002	63A/55°C	400A/55°C	MAINS, EL CABINET

TBA/9-1401 S.A.

INTRODUCED WITH AM NO.	17786			DATE: 930115	SIGN. HK/UTH			DESCRIPTION:	FUSE PANEL LABEL
ISSUE	A	B	C	D					
AM NO.	19260	20080	20398	20513				MACHINE:	TBA/9-1401 S.A
DATE	930310	930427	931001	940427					571517
SIGN.	HK/UTH	HK/PSG	HK/MRI	HK/MRI					

DRAWING REMARKS

ALTERATIONS ONLY IN CADAM

11:45 94.10.31

LIST OF BLOCKS

05	PULSE AND FLASHGENERATING
06	POSITIONS MACHINELADDER, STEP UP CONDITIONS
07	PREHEATING 1, PEROXID TANK HANDLING AND PREHEATING 2
08	TUBESEALING AND PRESTERILIZING
09	SPRAYING
10	DRYING, PREHEATING 3
11	SIGNALS TO AND FROM STERILIZER
12	STARTSEQUENZER FOR RUNNING PRODUCTION
13	ROTATION/CONG/FFU/STRIP/JAW/WATER BATH/PAPER SUPPLY/SUCT.,AIR-INLET AND B-VALVE
14	DRIVEMOTOR AND PRODUCTION
17	TRANSVERSAL SEALING
18	DESIGN CORRECTION
19	DUMPING OF PACKAGES
20	NO PRODUCTION ALLOWED
23	PRODUCTION ENDED, INTERNAL CLEANING
24	EXTERNAL CLEANING
25	LUBRICATION
26	6-CHANNEL RECORDER
27	MAINS INTERRUPT AND ALARMDELAYS
28	JUMP TO MACHINELADDERPOSITION "STERILIZATION FULLFILLED" (POSITION 3)
29	JUMP TO ZEROPOSITION IN MACHINELADDER
30	ALARM 1 TO 16 ON ALARMDISPLAY/BEACON
31	ALARM 17 TO 32 ON ALARMDISPLAY
32	ALARM 33 T0 48 ON ALARMDISPLAY
33	ALARM 49 T0 64 ON ALARMDISPLAY
90	
99	FAST FUNCTIONS, TS, DESIGN PULSE

11:49 94.10.31

LIST OF ADDRESSES

Address	Position	Function		used in rungs
M00.00		Aux. output position 00	ladder	0605, 0608, 0616, *0617, 0620, 0703, 0705, 0706, 0718, 0720, 0727, 1009, 1215, 1905, 2304, 2317, 2402, 2507, 2907, 3004, 3008, 3104, 3106, 3111, 3303, 3304, 3307
M00.01		Aux. output position 10	ladder	0509, 0608, 0610, *0617, 0619, 0620, 0716, 0718, 0722, 0725, 0726, 0728, 0729, 0802, 0803, 0806, 1012, 1413, 3011
M00.02		Aux. output position 20	ladder	0609, 0611, *0617, 0619, 0620, 0729, 0804, 0806, 0902, 0907, 1012
M00.03		Aux. output position 30	ladder	0607, 0613, *0617, 0620, 0729, 0902, 1002, 1102, 1409, 1411, 1412
M00.04		Aux. output position 40	ladder	0611, 0612, 0614, *0617, 0621, 0704, 1106, 1202, 1203, 1218
M00.05		Aux. output position 50	ladder	0611, 0613, 0615, *0617, 0621, 0702, 1203, 1205, 1428, 1431, 1433, 2803
M00.06		Aux. output position 60	ladder	0602, 0614, 0616, *0618, 0621, 1107, 1202, 1203, 1305, 1428, 1429, 1432, 1438, 1442, 1705, 1803, 1811, 2006, 2316, 2803
M00.07		Aux. output position 70	ladder	0606, 0611, *0618, 0702, 0718, 2304, 2315, 2320, 2405, 3010, 3107
M00.15		Aux. output position 05	ladder	0606, 0609, *0617, 0619, 0620, 0716, 0718, 1413, 3005, 3018, 3103
M00.17		Ladderposition 40-60		*0618, 1102, 1103, 1203, 1806, 2906, 3014
M01.00		Ladderposition 10-70		0718, *0718, 0720, 0805, 0904, 0910, 1012, 2304, 2405, 2907, 3015, 3018, 3109
M01.04		Aux. output position 40	ladder	*0612, 1203
M02.00		Output for	stepup pulse	*0502, 0509, 0610, 0611, 0613, 0616, 0717, 0803, 1203, 2319, 2404, 2405, 3010
M02.01		Output for	stepdown pulse	*0503, 0606, 0607, 0608, 0609, 0611, 0613, 0803, 2305
M02.02		Pulse short stop		*0504, 1821, 2006
M02.03		Output for	designpulse	*0505, 0615, 1806, 1809, 1810, 1814, 1815, 1816, 1817, 1822

11:49 94.10.31

Tetra Pak
MODENA ITALY

This drawing must not without the consent of Tetra Pak be copied, transmitted or disclosed to any third party.

RUNG	REFERENCE INSTRUCTION	ADDRESS	VOLUME						
			125 cc	160 cc	236 cc	250 cc	284 cc	200 cc SLIM	250 CC SLIM
615	PUT R0000	S00.07	100-127 300-327	130-157 330-357		130-157 330-357	130-157 330-357	130-157 330-357	130-157 330-357
615	PUT R0000	S00.08	110-137 310-337	140-167 340-367		140-167 340-367	140-167 340-367	140-167 340-367	140-167 340-367
506		S00.05	120-123 320-323	50-53 250-253		50-53 250-253	50-53 250-253	50-53 250-253	50-53 250-253
9906	L M04.05	S00.10	6-14 206-214	6-14 206-214		6-14 206-214	6-14 206-214	6-14 206-214	6-14 206-214
610	PUT R0000	T0023.2	39S0-1M00S0	37S0-1M00S0		34S0-35S0	31S0-1M00S0	32S0-1M00S0	29S0-30S0
621	M06.00	T0005.1	35S0-2M00S0	26S0-2M00S0		27S0-2M00S0	21S0-2M00S0	22S0-2M00S0	17S0-2M00S0
1907	T000.3 PUT R0010	AND	KFC7EH	KFE3EH		KFF1EH	KFF1EH	KFF1EH	KFF1EH
1908	T000.3 PUT R0011	AND	K3FFFH	K0FFFH		K00FFH	K003FH	K003FH	K001FH
1909	T000.3 PUT R0012	AND	K0000H	KF000H		K7FC0H	KE7F0H	KCFF0H	KF9FCH
1910	T000.3 PUT R0013	AND	KF3FEH	KFFC7H		KFFFEH	KFFFFH	KFFFFH	KFFFFH
1911	M02.15 I02.06 PUT R0012	AND	KFFFFH	KFFFFH		KE7FFH	KFE7FH	KFCFFH	KFF9FH
1912	M02.15 I02.06 PUT R0013	AND	KFF3FH	KFFFCH		KFFFFH	KFFFFH	KFFFFH	KFFFFH
1434	M02.15 PUT R0022	AND	KFFFFH	K9FFFH		KFCFFH	KFF3FH	KFF9FH	KFFCFH
1435	M02.15 PUT R0023	AND	KFFE7H	KFFFFH		KFFFFH	KFFFFH	KFFFFH	KFFFFH
1406	E01.07 E01.07	K- K+	K00010 K00118	K00010 K00118		K00010 K00118	K00010 K00118	K00010 K00118	K00118 K00010
1408	M02.16 M10.15	S00.14	37-160 237-360	37-160 237-360		37-160 237-360	37-160 237-360	37-160 237-360	17-140 217-340
INTRODUCED ON ECN:	20080		20080	20513		20080	20080	20080	20698

INTRODUCED WITH AM NO.	20080	DATE: 930909	SIGN. HK
ISSUE	A	B	C
AM NO.	20406	20698	20513
DATE	931015	931122	940427
SIGN.	HK/MRI	HK/MRI	HK/MRI

DRAWING REMARKS

DESCRIPTION: VOLUME ADAPTION DOCUMENT

MACHINE: TBA/9-1401 S.A

47615-03:01

ALTERATIONS ONLY IN CADAM

11:49 94.10.31

TBA/9-1401 S.A.
47615 200ML ECN20555

940916 HK/MRI
940426 HK/RAI

Type: 64.1
Size: 8387
Blocks: 27
Rungs: 368
Addresses: 594

I/O Map:

RACK	0	1	2	3	4	5	6	7
	I4	O4	O0 O4					
P								
O	C E1 I5	O5	O1					
W								
E	U I2 I6	O6						
R								
	I3	O7						

Fast I/O: Block90
Block99 E01 I06 O21

Scan time: Block05-89: 10
Block90-98: 2
Block99: 1

Sector: 0 = E01 1 = E01 2 = 3 = 4 = 5 = 6 = 7 =

SPRAYING

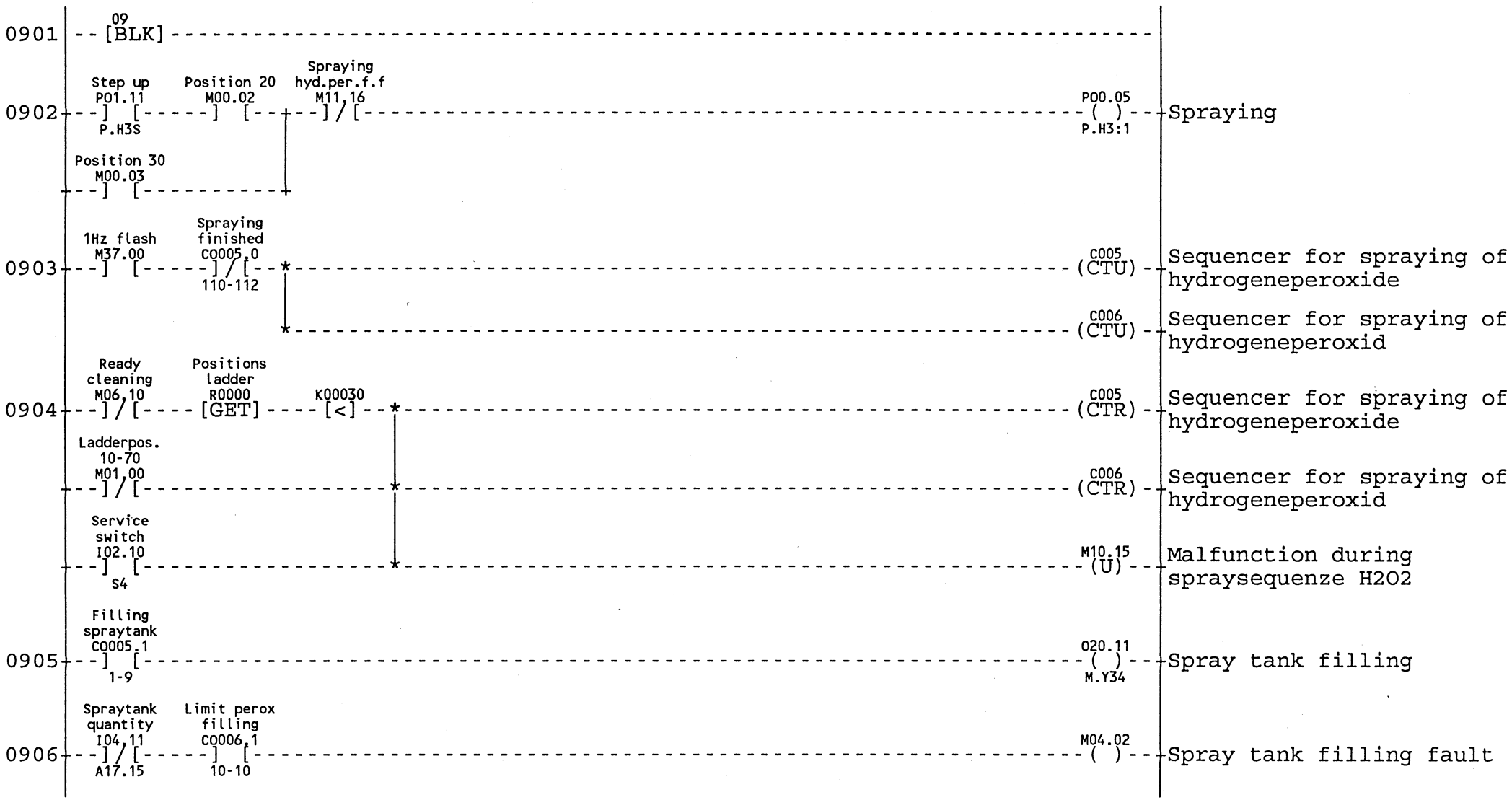
0901
09
[BLK]
0902
Step up
P01.11
P.H3S
Position 20
M00.02
Spraying
hyd.per.f.f
M11.16
Position 30
M00.03
P00.05
P.H3:1
Spraying
0903
1Hz flash
M37.00
Spraying
finished
C0005.0
110-112
C005
(CTU)
Sequencer for spraying of hydrogeneperoxide
C006
(CTU)
Sequencer for spraying of hydrogeneperoxid
0904
Ready
cleaning
M06.10
Positions
ladder
R0000
[GET]
K00030
[<]
C005
(CTR)
Sequencer for spraying of hydrogeneperoxide
Ladderpos.
10-70
M01.00
C006
(CTR)
Sequencer for spraying of hydrogeneperoxid
Service
switch
I02.10
S4
M10.15
(U)
Malfunction during spraysequenze H2O2
0905
Filling
spraytank
C0005.1
1-9
O20.11
M.Y34
Spray tank filling
0906
Spraytank
quantity
I04.11
A17.15
Limit perox
filling
C0006.1
10-10
M04.02
Spray tank filling fault

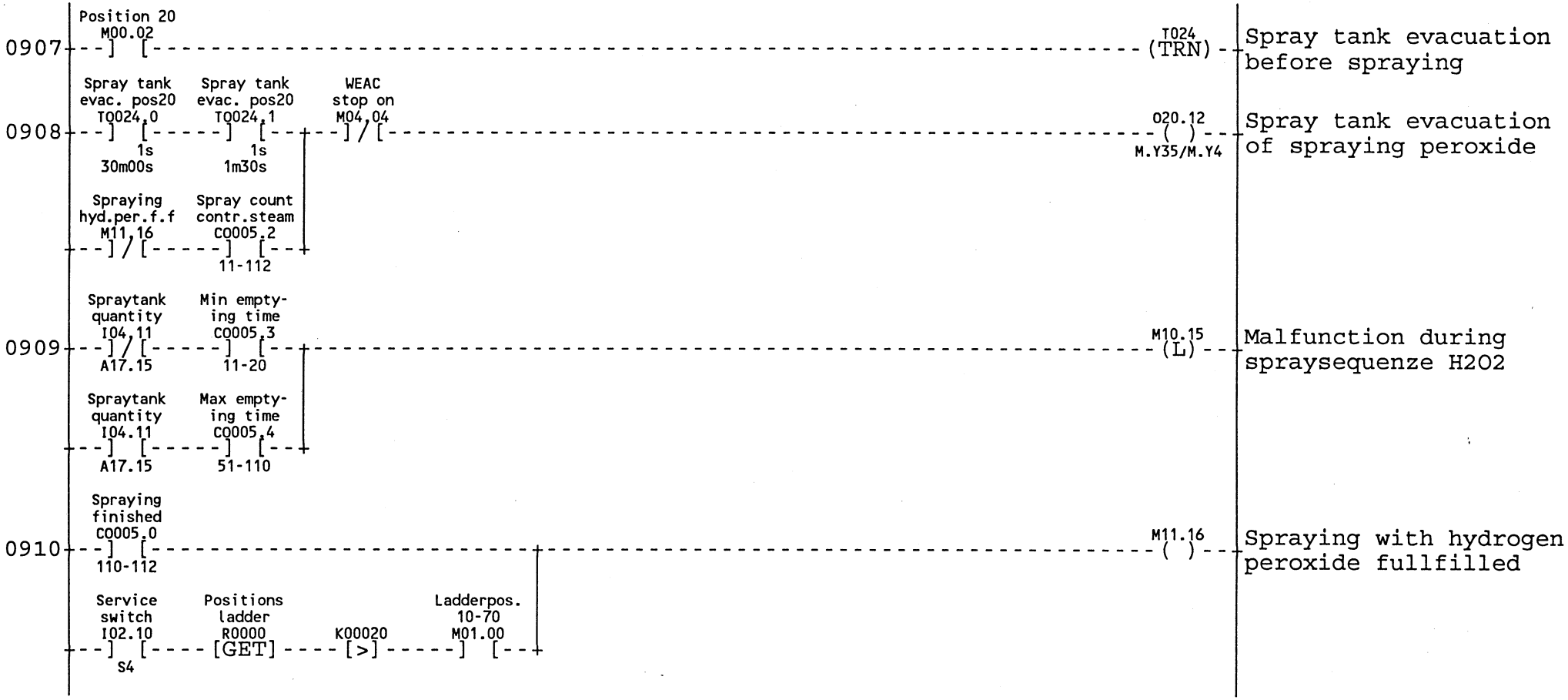
0907
Position 20
M00.02
T024
(TRN)
Spray tank evacuation before spraying
0908
Spray tank evac. pos20
T0024.0
1s
30m00s
Spray tank evac. pos20
T0024.1
1s
1m30s
WEAC stop on
M04.04
O20.12
M.Y35/M.Y4
Spray tank evacuation of spraying peroxide
Spraying hyd.per.f.f
M11.16
Spray count contr.steam
C0005.2
11-112
0909
Spraytank quantity
I04.11
A17.15
Min empty-ing time
C0005.3
11-20
M10.15
(L)
Malfunction during spraysequenze H2O2
Spraytank quantity
I04.11
A17.15
Max empty-ing time
C0005.4
51-110
0910
Spraying finished
C0005.0
110-112
M11.16
Spraying with hydrogen peroxide fullfilled
Service switch
I02.10
S4
Positions ladder
R0000
[GET]
K00020
[>]
Ladderpos. 10-70
M01.00

DRYING, PREHEATING 3

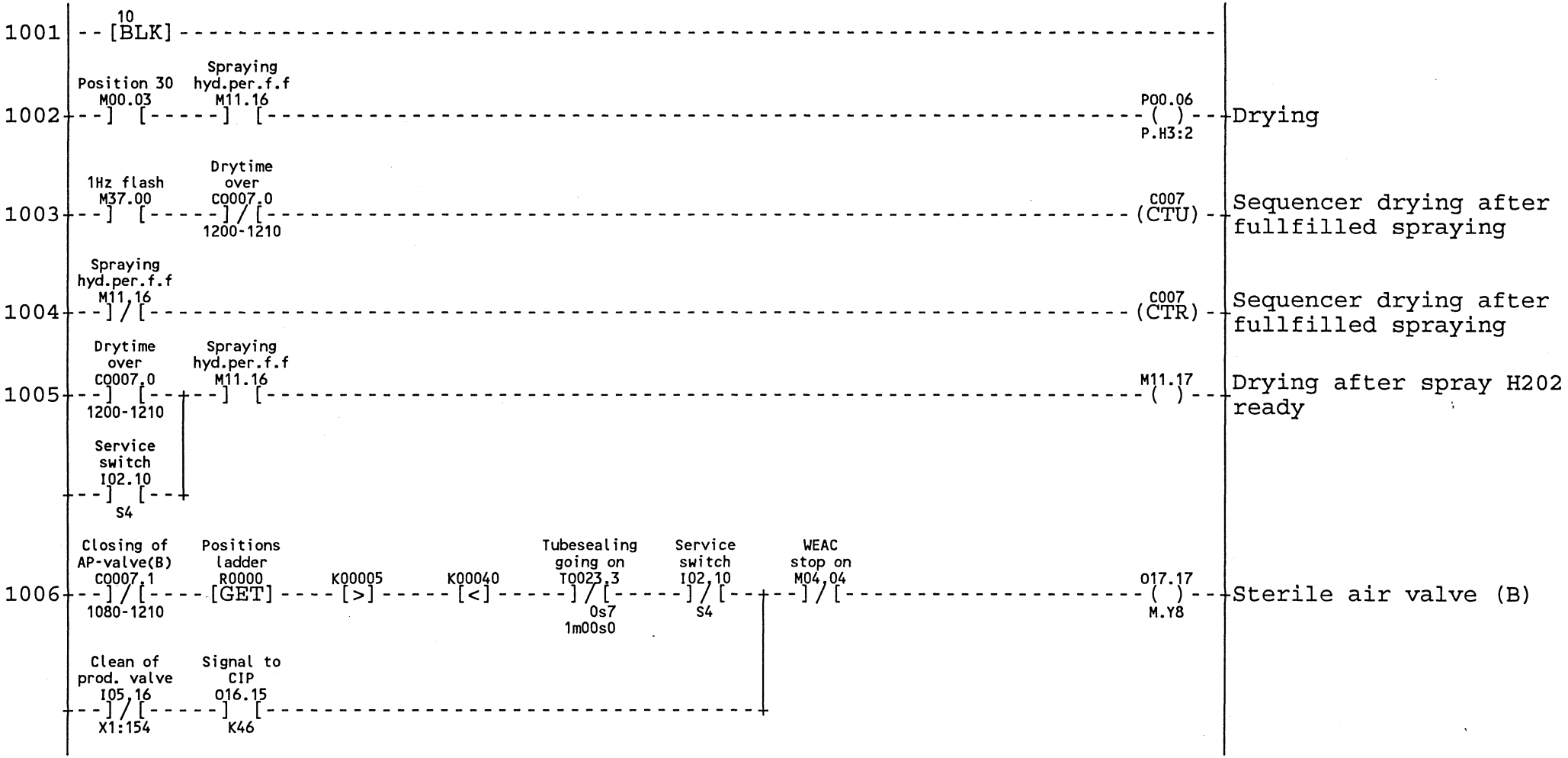

DESIGN CORRECTION

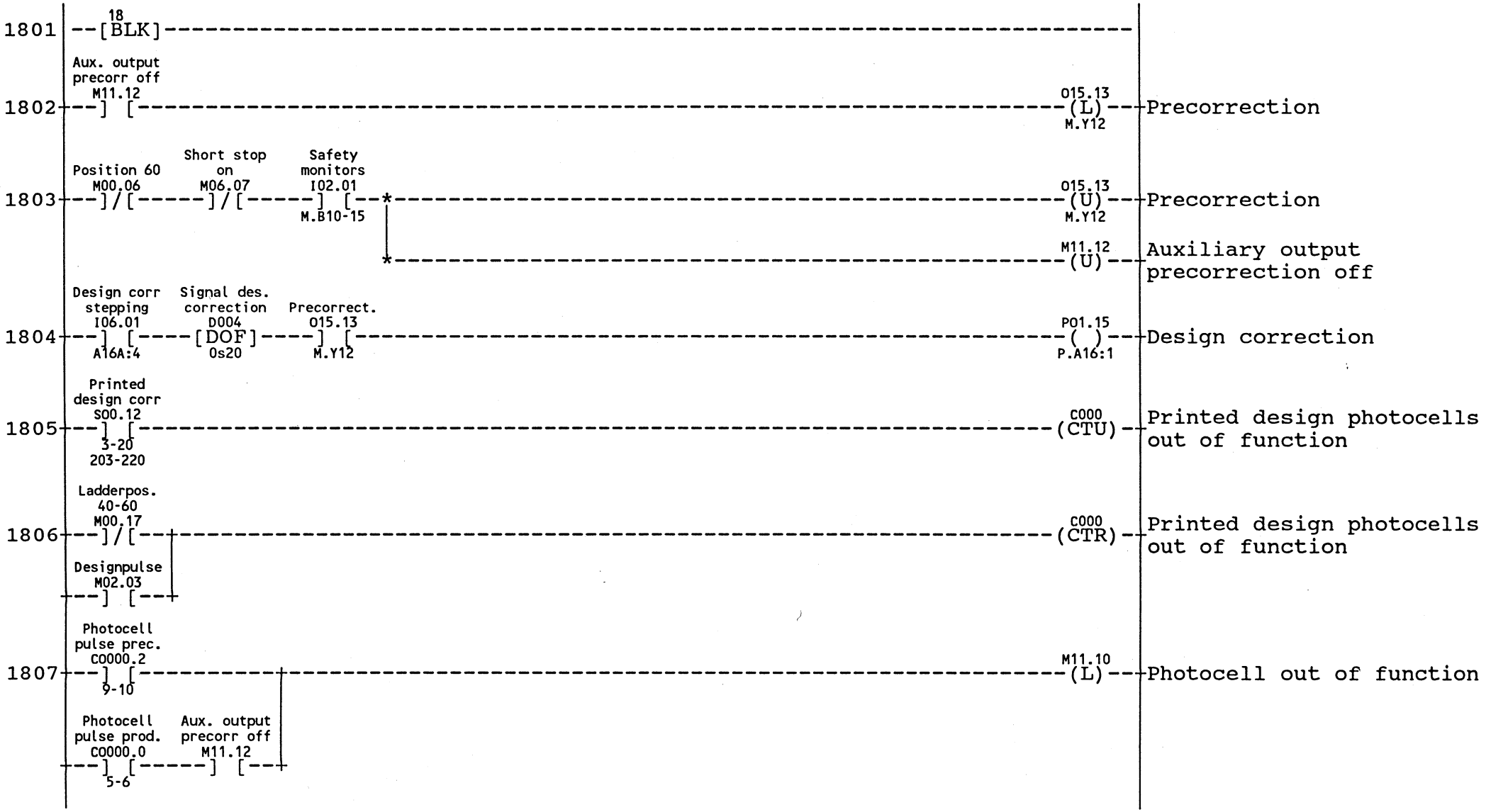

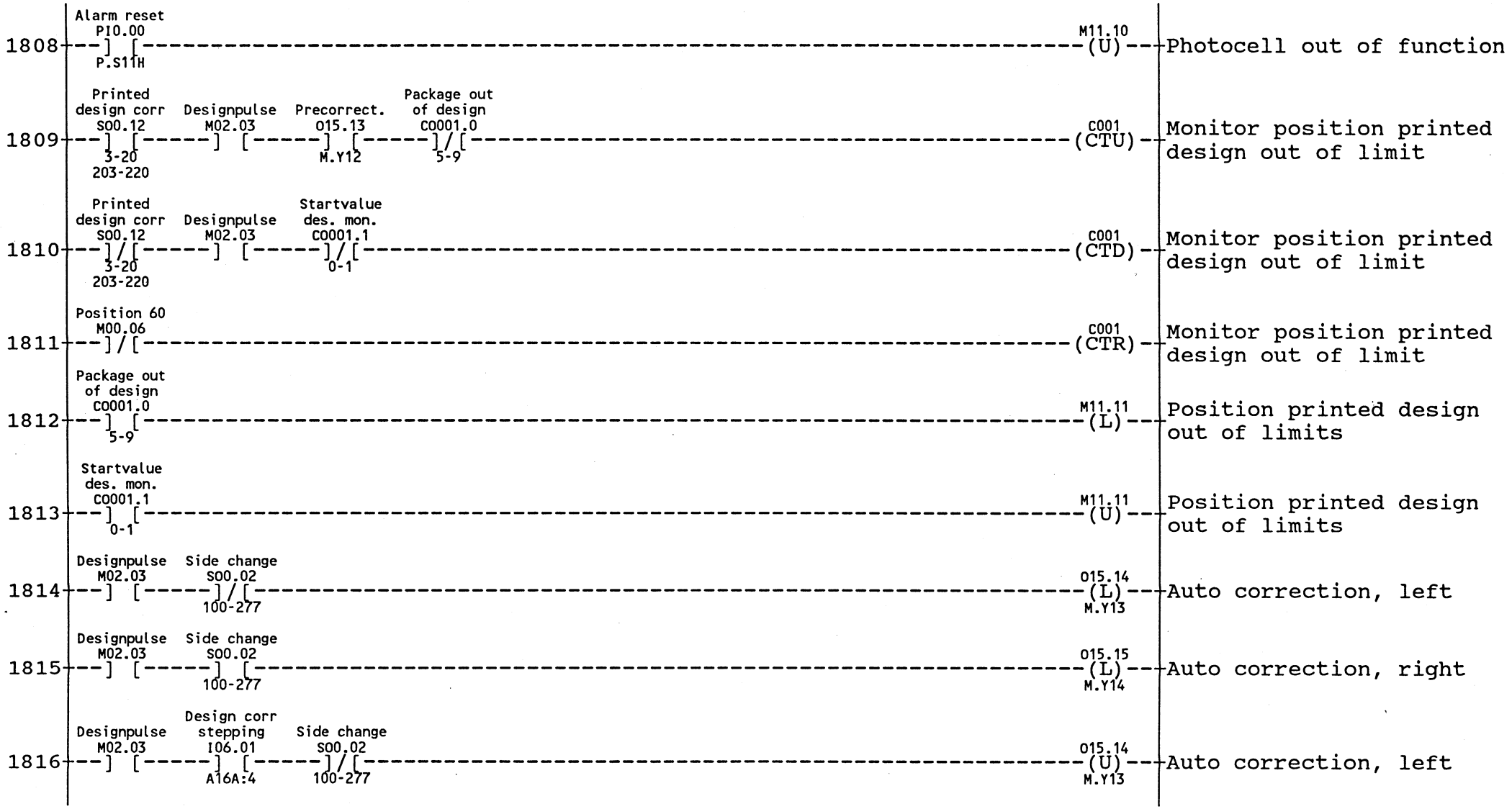
1808
Alarm reset
PI0.00
P.S11H
M11.10
(U)
Photocell out of function
1809
Printed design corr
S00.12
3-20
203-220
Designpulse
M02.03
Precorrect.
O15.13
M.Y12
Package out of design
C0001.0
5-9
C001
(CTU)
Monitor position printed design out of limit
1810
Printed design corr
S00.12
3-20
203-220
Designpulse
M02.03
Startvalue des. mon.
C0001.1
0-1
C001
(CTD)
Monitor position printed design out of limit
1811
Position 60
M00.06
C001
(CTR)
Monitor position printed design out of limit
1812
Package out of design
C0001.0
5-9
M11.11
(L)
Position printed design out of limits
1813
Startvalue des. mon.
C0001.1
0-1
M11.11
(U)
Position printed design out of limits
1814
Designpulse
M02.03
Side change
S00.02
100-277
O15.14
(L)
M.Y13
Auto correction, left
1815
Designpulse
M02.03
Side change
S00.02
100-277
O15.15
(L)
M.Y14
Auto correction, right
1816
Designpulse
M02.03
Design corr stepping
I06.01
A16A:4
Side change
S00.02
100-277
O15.14
(U)
M.Y13
Auto correction, left

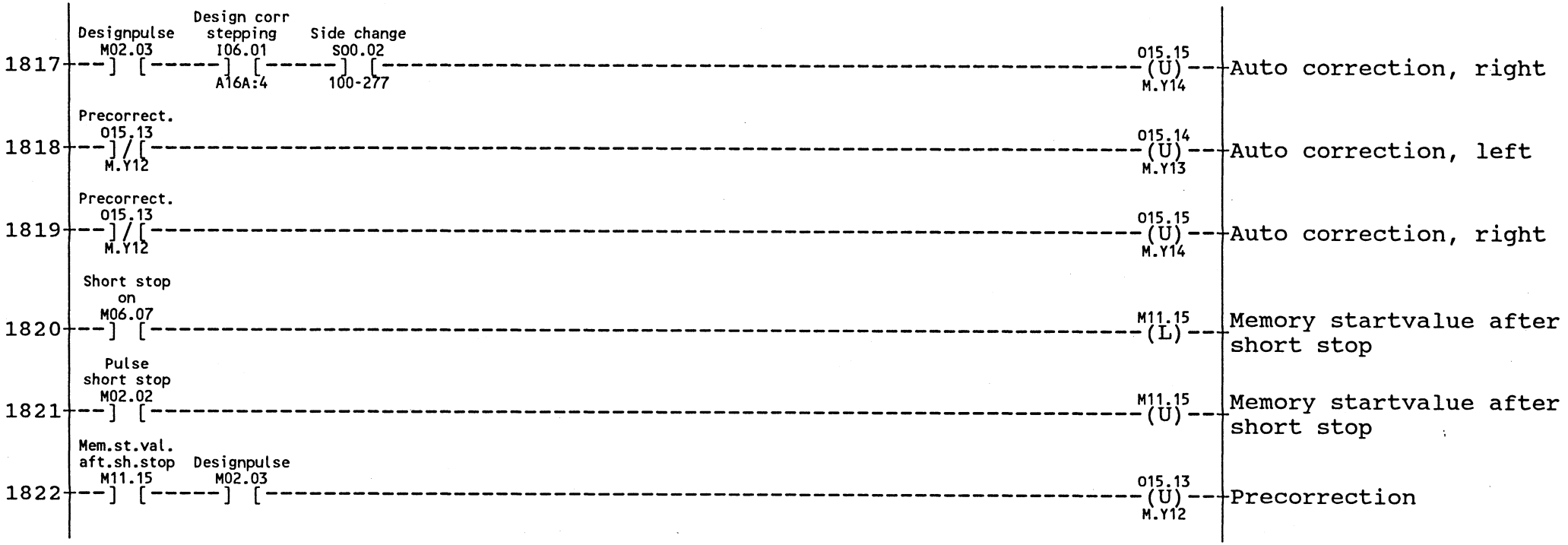
1817
Designpulse
M02.03
Design corr stepping
I06.01
A16A:4
Side change
S00.02
100-277
O15.15
(U)
M.Y14
Auto correction, right
1818
Precorrect.
O15.13
M.Y12
O15.14
(U)
M.Y13
Auto correction, left
1819
Precorrect.
O15.13
M.Y12
O15.15
(U)
M.Y14
Auto correction, right
1820
Short stop on
M06.07
M11.15
(L)
Memory startvalue after short stop
1821
Pulse short stop
M02.02
M11.15
(U)
Memory startvalue after short stop
1822
Mem.st.val. aft.sh.stop
M11.15
Designpulse
M02.03
O15.13
(U)
M.Y12
Precorrection

DUMPING OF PACKAGES

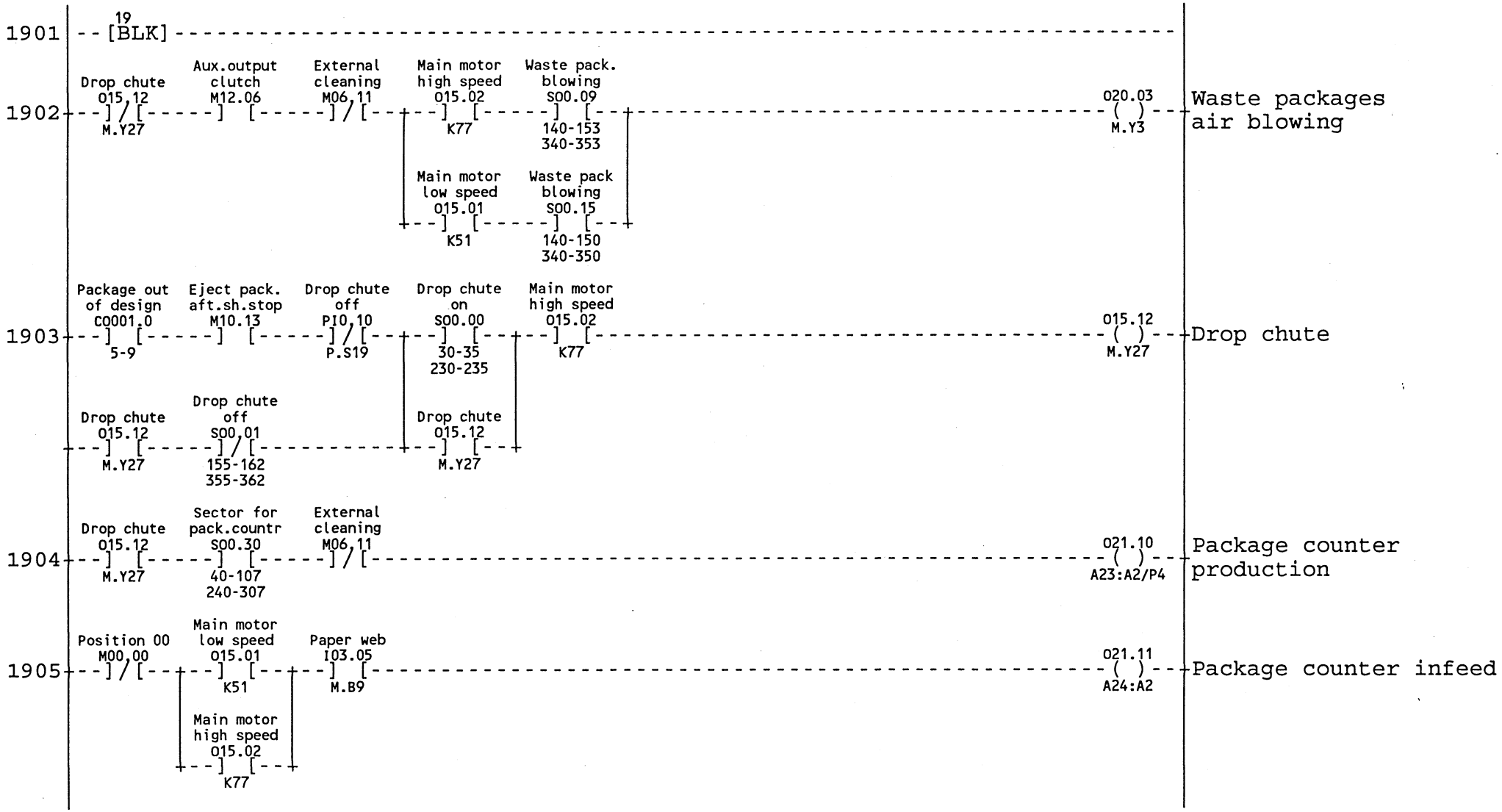

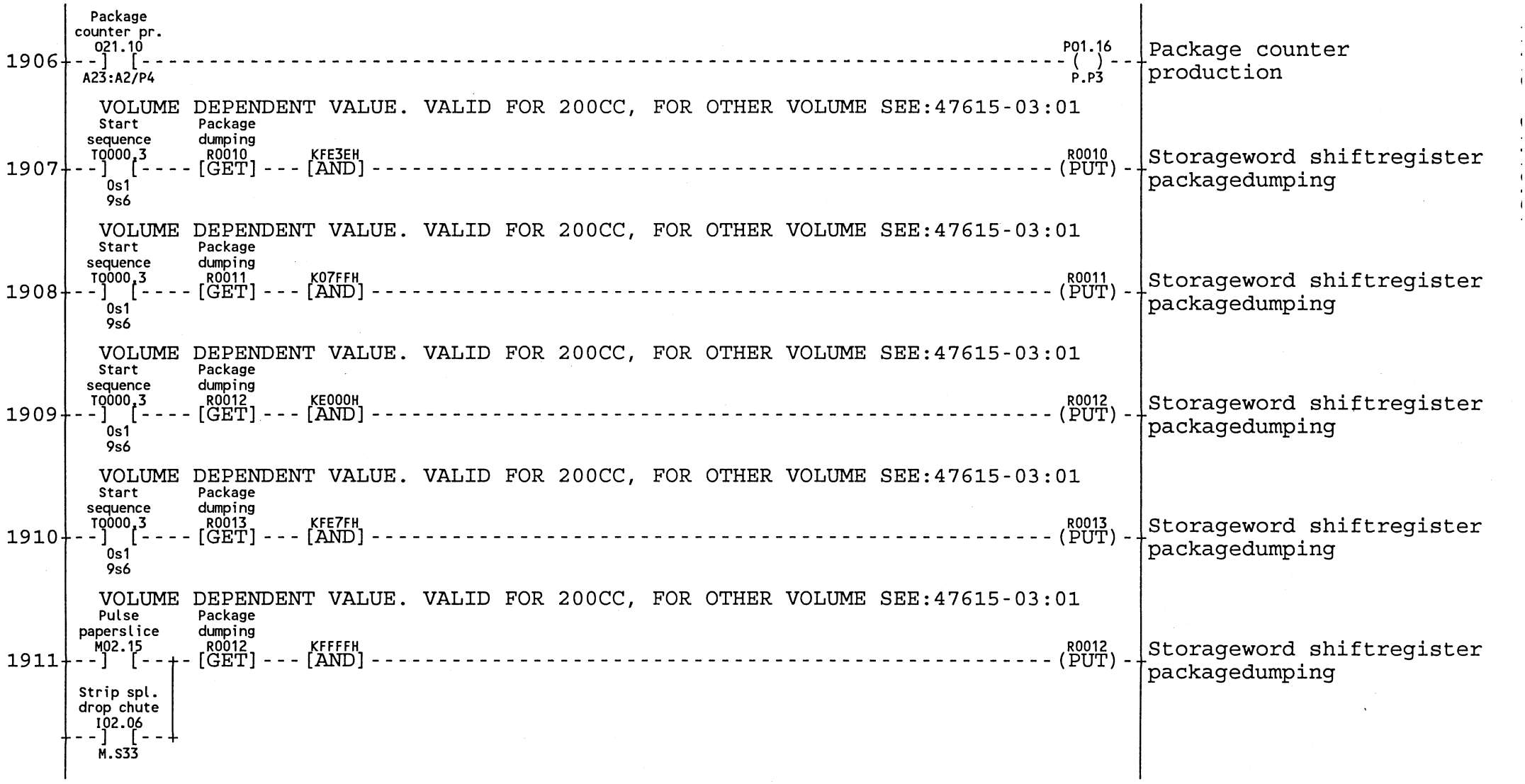
1906
Package counter pr. O21.10
A23:A2/P4
P01.16
P.P3
Package counter production
VOLUME DEPENDENT VALUE. VALID FOR 200CC, FOR OTHER VOLUME SEE:47615-03:01
1907
Start sequence T0000.3
0s1
9s6
Package dumping R0010
GET
KFE3EH
AND
R0010
PUT
Storageword shiftregister packagedumping
VOLUME DEPENDENT VALUE. VALID FOR 200CC, FOR OTHER VOLUME SEE:47615-03:01
1908
Start sequence T0000.3
0s1
9s6
Package dumping R0011
GET
K07FFH
AND
R0011
PUT
Storageword shiftregister packagedumping
VOLUME DEPENDENT VALUE. VALID FOR 200CC, FOR OTHER VOLUME SEE:47615-03:01
1909
Start sequence T0000.3
0s1
9s6
Package dumping R0012
GET
KE000H
AND
R0012
PUT
Storageword shiftregister packagedumping
VOLUME DEPENDENT VALUE. VALID FOR 200CC, FOR OTHER VOLUME SEE:47615-03:01
1910
Start sequence T0000.3
0s1
9s6
Package dumping R0013
GET
KFE7FH
AND
R0013
PUT
Storageword shiftregister packagedumping
VOLUME DEPENDENT VALUE. VALID FOR 200CC, FOR OTHER VOLUME SEE:47615-03:01
1911
Pulse paperslice M02.15
Strip spl. drop chute I02.06
M.S33
Package dumping R0012
GET
KFFFFH
AND
R0012
PUT
Storageword shiftregister packagedumping

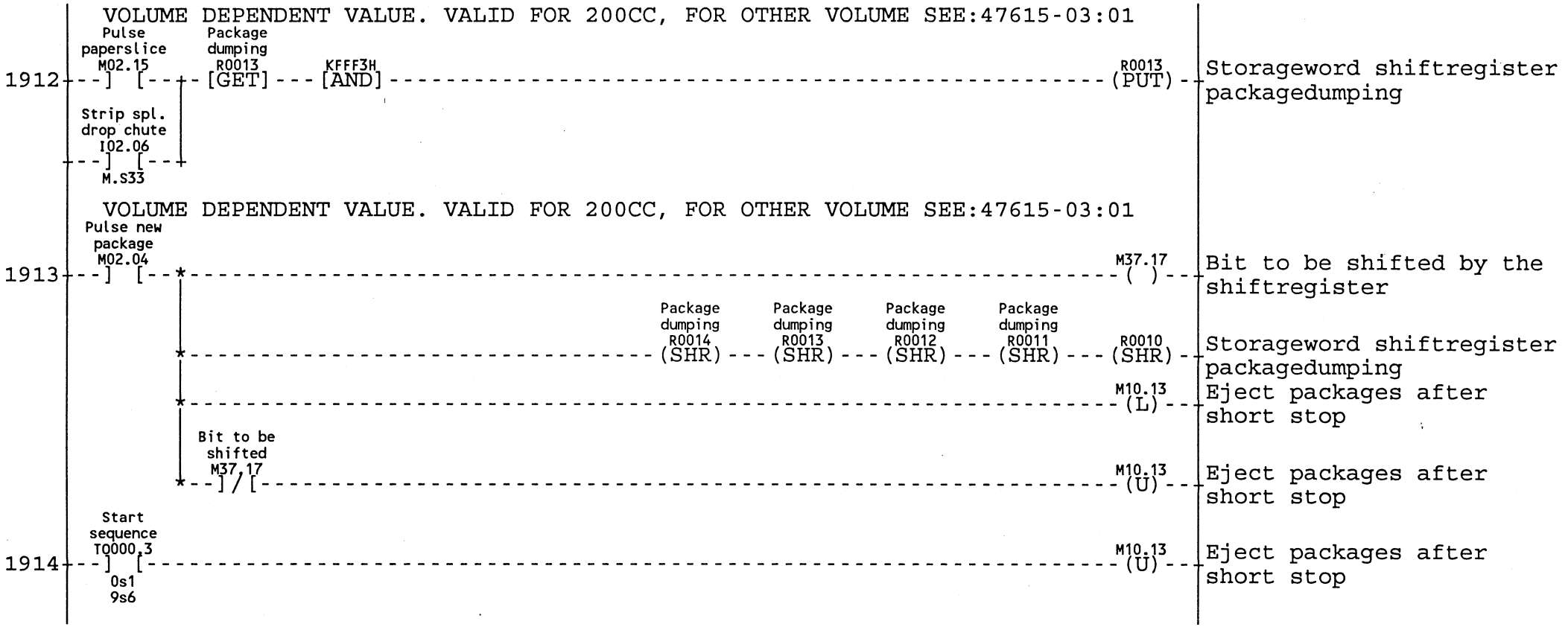
VOLUME DEPENDENT VALUE. VALID FOR 200CC, FOR OTHER VOLUME SEE:47615-03:01
Pulse paperslice M02.15
Package dumping R0013
KFFF3H
R0013
Storageword shiftregister packagedumping
1912
[GET]
[AND]
(PUT)
Strip spl. drop chute I02.06
M.S33
VOLUME DEPENDENT VALUE. VALID FOR 200CC, FOR OTHER VOLUME SEE:47615-03:01
Pulse new package M02.04
M37.17
Bit to be shifted by the shiftregister
1913
( )
Package dumping R0014
Package dumping R0013
Package dumping R0012
Package dumping R0011
R0010
Storageword shiftregister packagedumping
(SHR)
(SHR)
(SHR)
(SHR)
(SHR)
M10.13
Eject packages after short stop
(L)
Bit to be shifted M37.17
M10.13
Eject packages after short stop
(U)
Start sequence T0000.3
M10.13
Eject packages after short stop
1914
(U)
0s1
9s6

FAST FUNCTIONS, TS, DESIGN PULSE

```
                99
9901 --[BLK]-------------------
```

Shiftregister

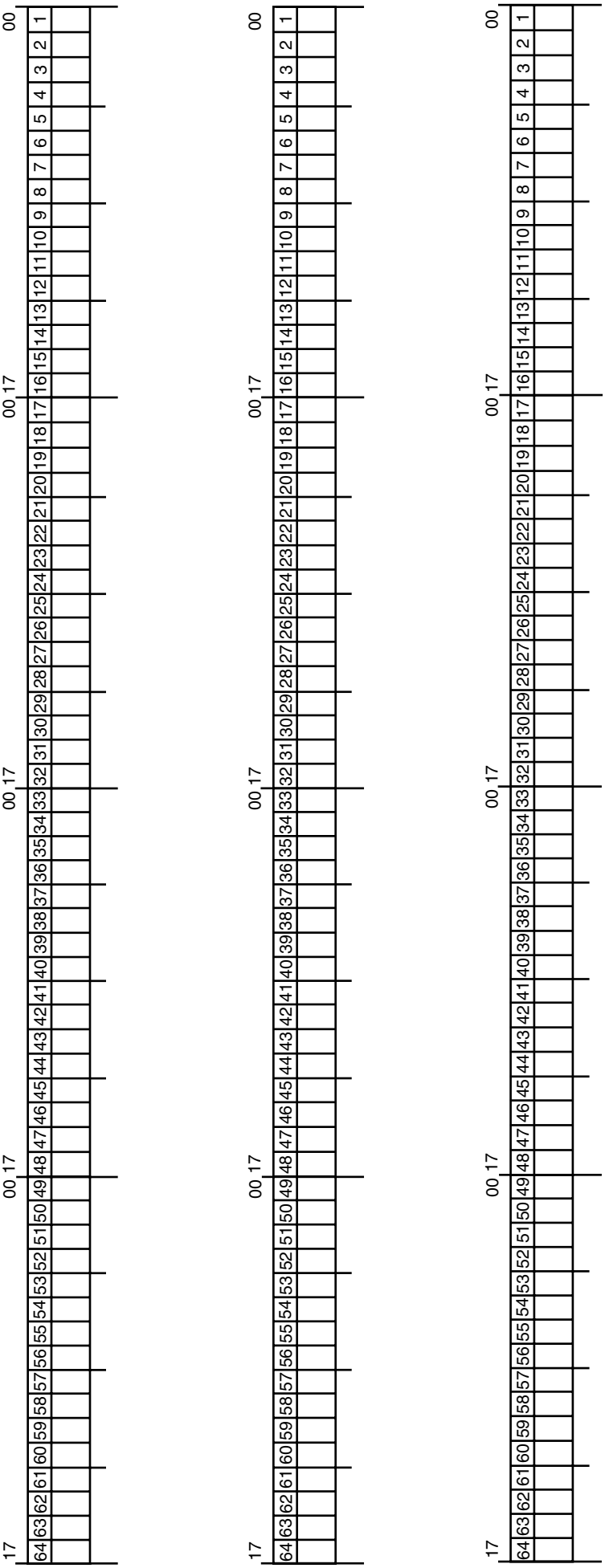

Line voltages

Line	Voltage
L50	_____
L51	_____
L10	_____
L11,12	_____
L21	_____

Level relay

Peroxide spray quantity

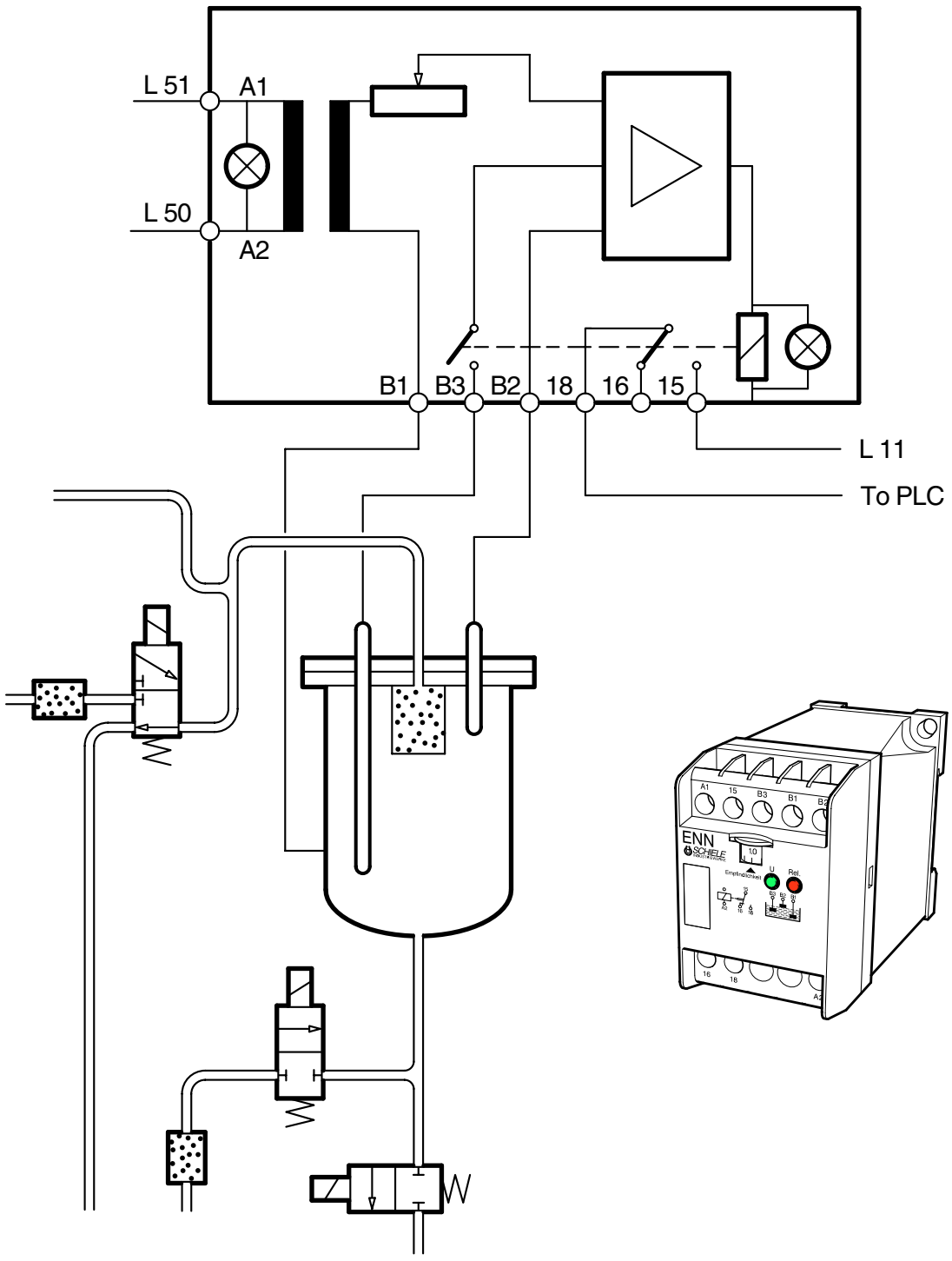

Technical Training Centre Lund, Sweden	Machine type TBA/9	Issue 1/0203	OH 1172

Temperature regulating principle

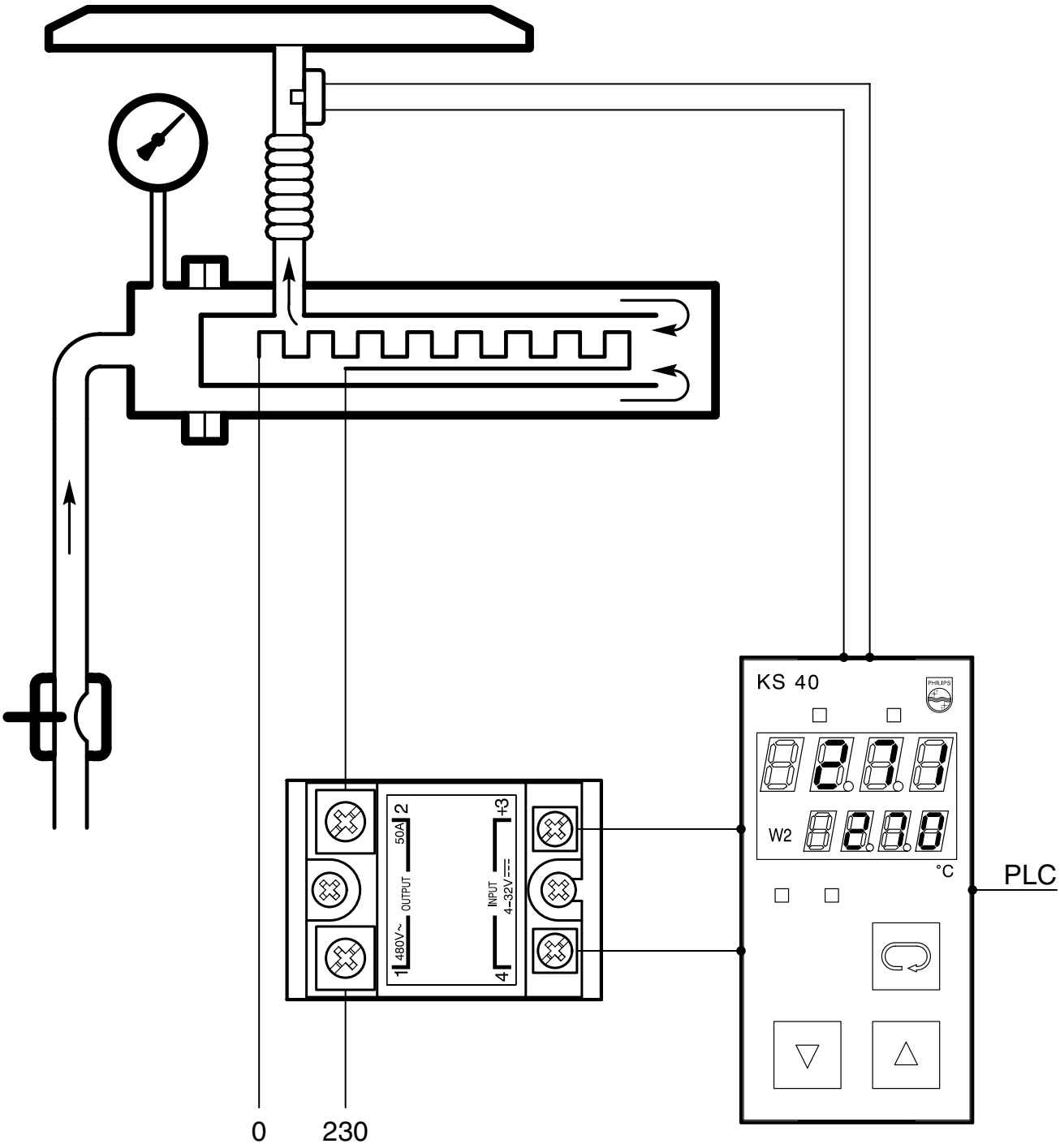

Solid state relay

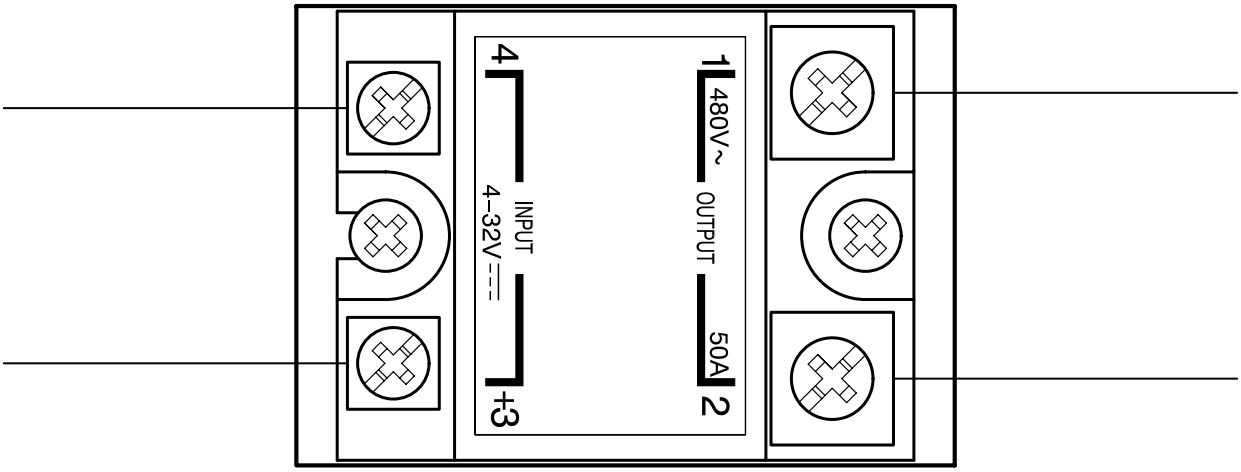

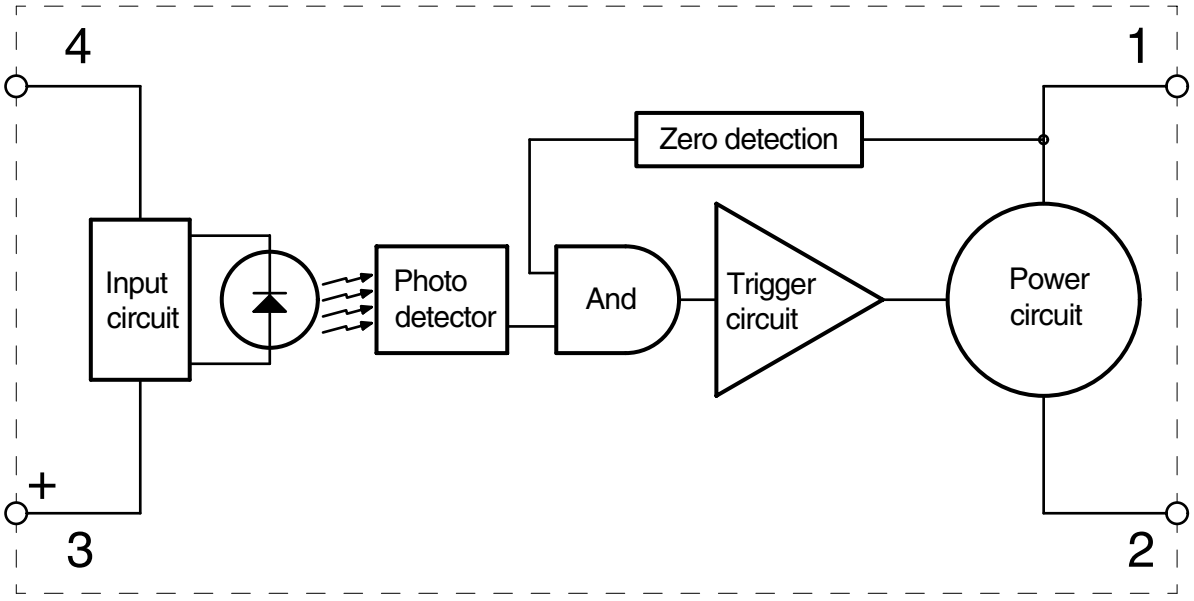

Temperature controller

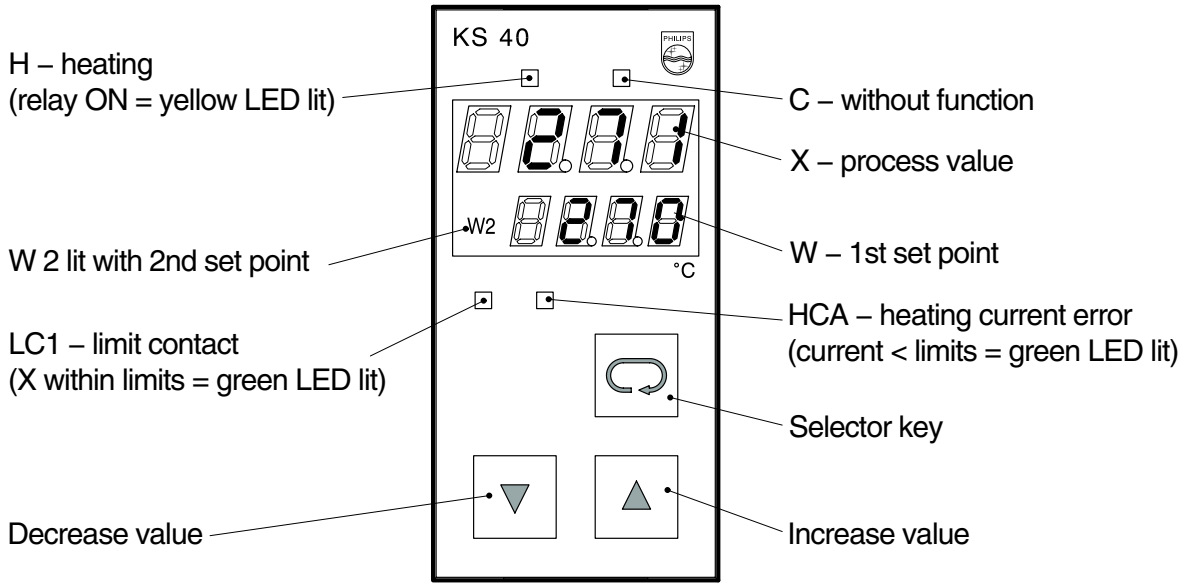

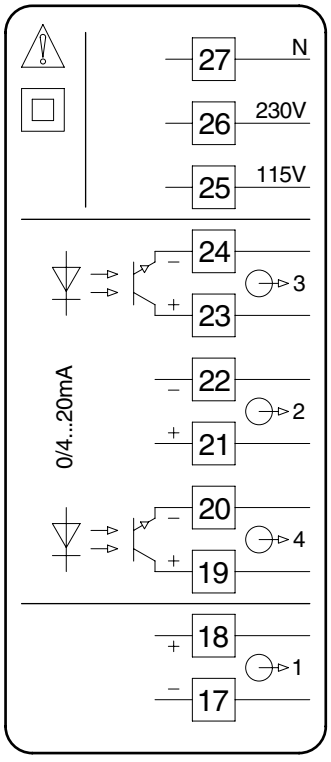

Mains

Alarm 1

Continous output
0/4 ... 20mA

Alarm 2

Heating (logic output)
0/≥5V DC Typical 13 V DC

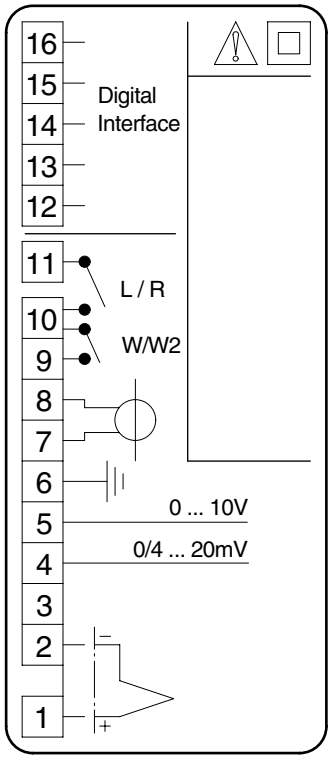

Digital interface

Local (open) / remote

1st set–point (open) 2nd set–point

Current converter
9404 407 50001

Earth terminal

Voltage

Current

Pt 100

0

Thermocouple

Thermocouple type K

Material: Nickel–Cromium v Nickel–Aluminium (NiCr – NiAl)

Voltage: DC 4mV / 100 ˚C

Colour: Overall — yellow

NiCr — yellow — positive

NiAl — red — negativ

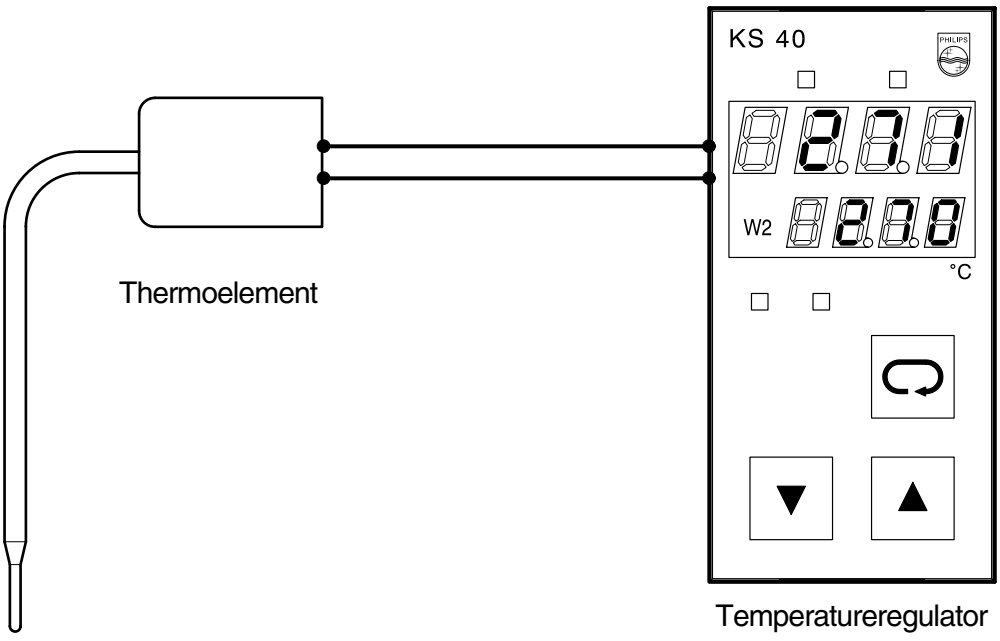

Symbols Temp. Regulators

W	Set point 1
SP2	Set point 2
Pt2	Acceleration time between W---SP2
LCL1	Limit Contact Low 1 (Valid for W)
LCH1	Limit Contact High 1 (Valid for W)
LCL2	Limit Contact Low 2 (Valid for SP2)
LCH2	Limit Contact High 2 (Valid for SP2)

Loc Operation Locking

SPL	Set Point Low Limit	
SPH	Set Point High Limit	
Pb 1	Proportional Band Heating	(0,1---999.9%)
ti	Integral time	(0---9999sec)
fd	Derivative time tv	(0---9999sec)
t1	Cycle time Heating	(0,4---999.9sec)

Temperature settings, principal

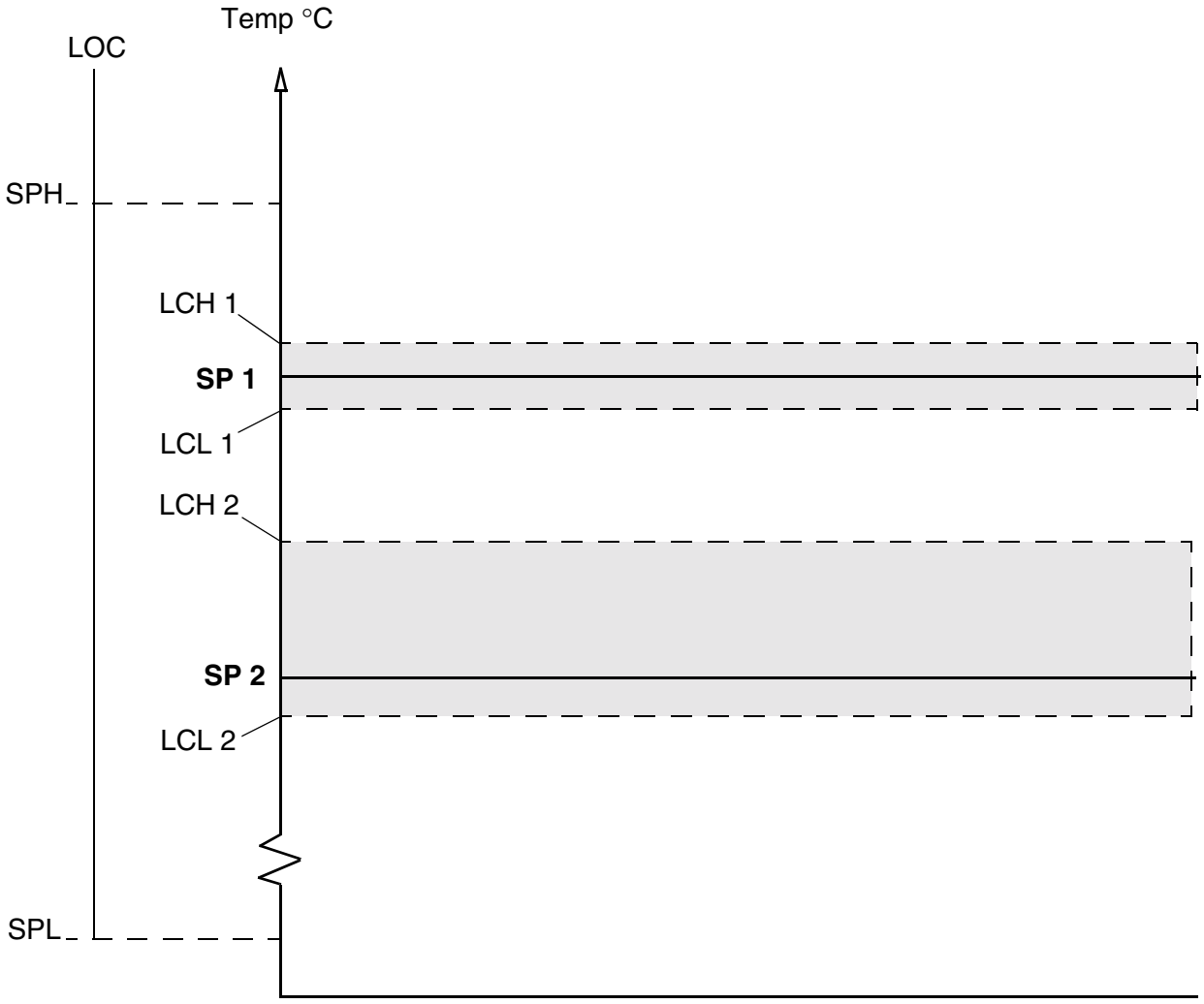

Training Document. For training purpose only.

Temperature Controlling

Principal

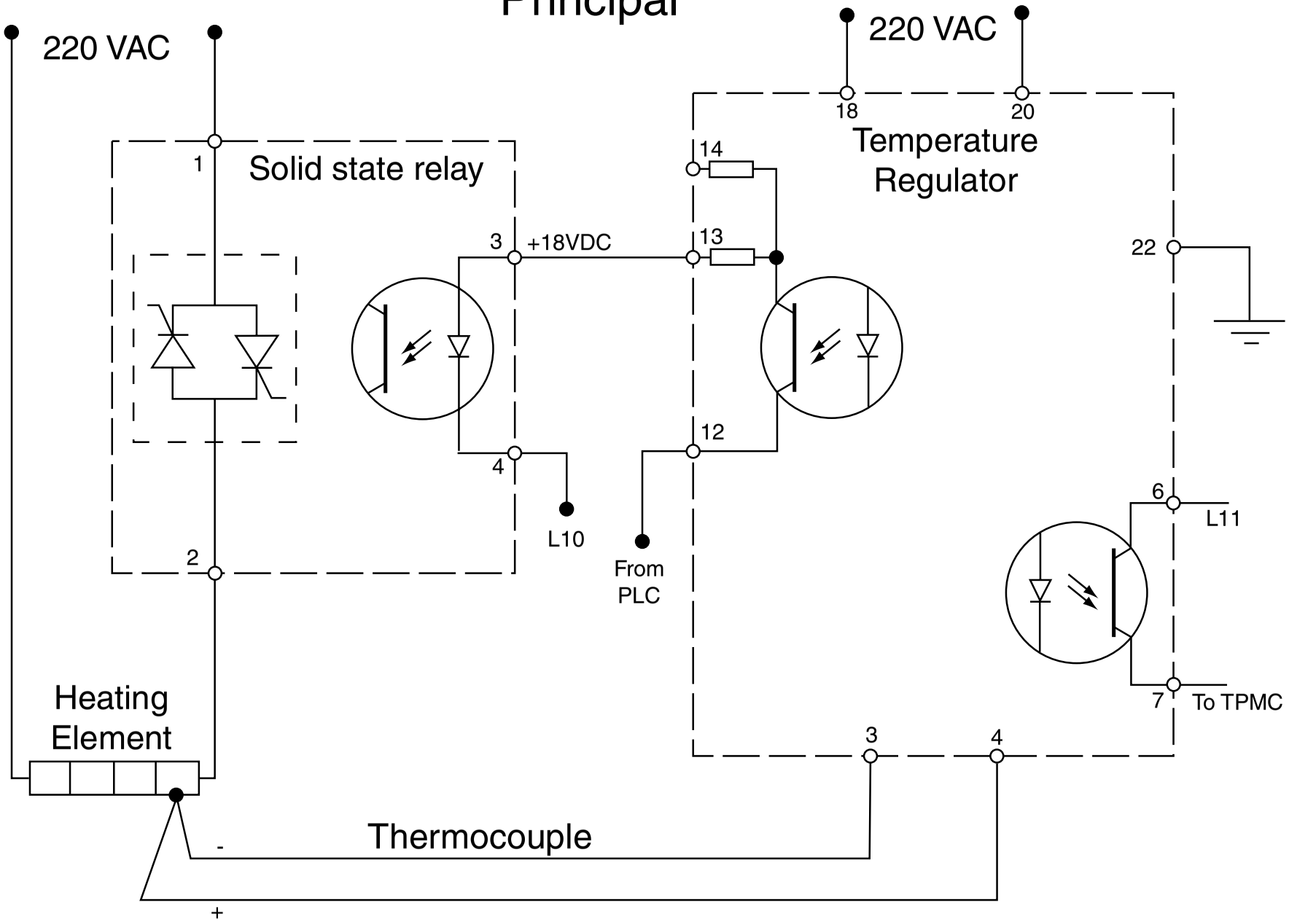

Temperature Controller

Monitor

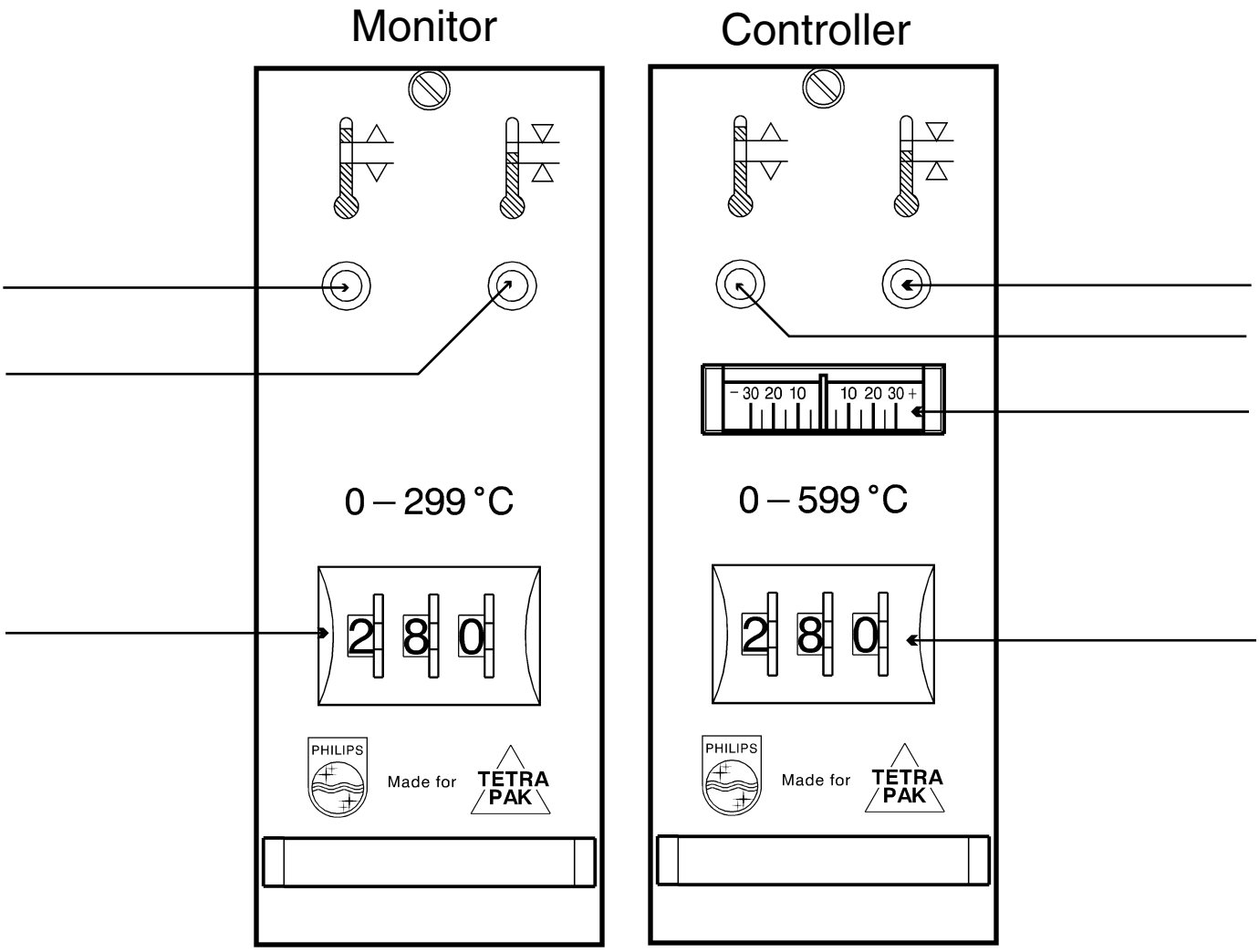

Controller (Top view)

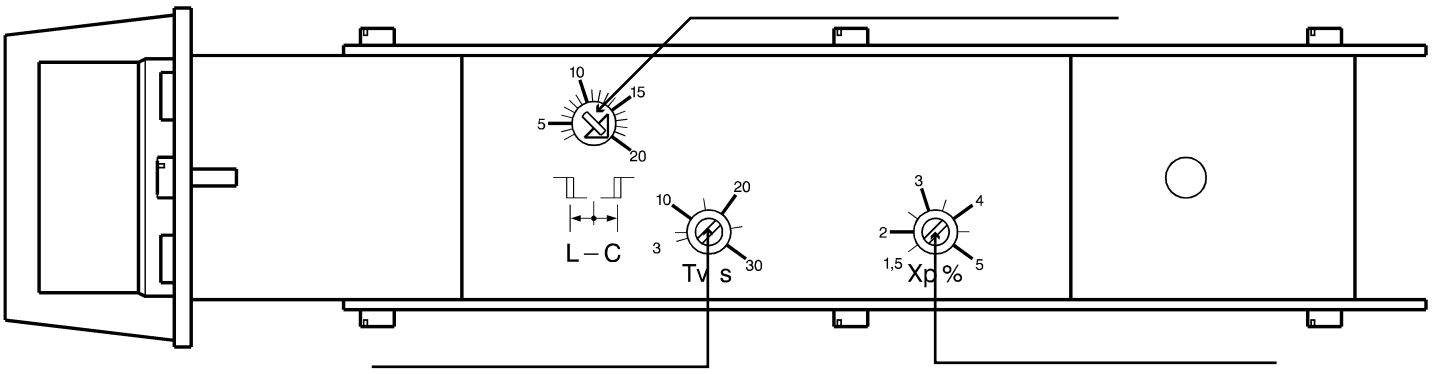

TM-00423

Training Document. For training purpose only.

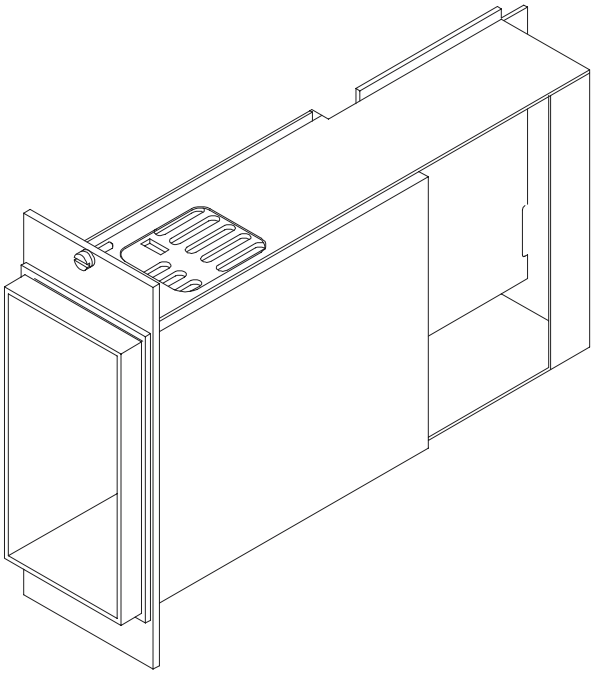

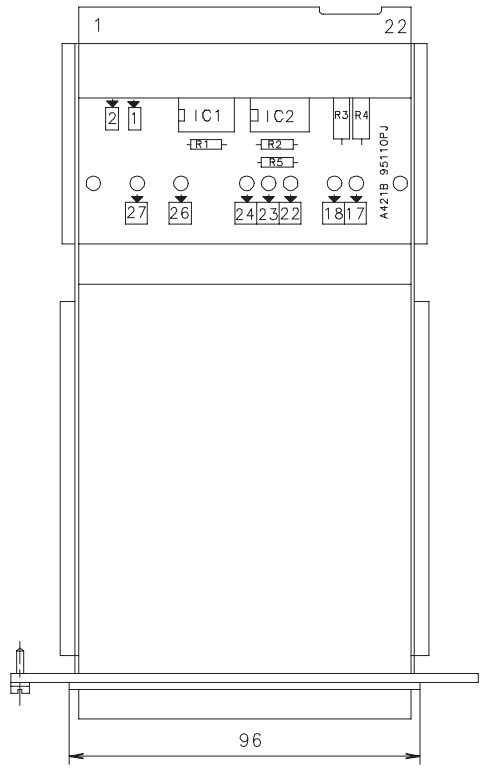

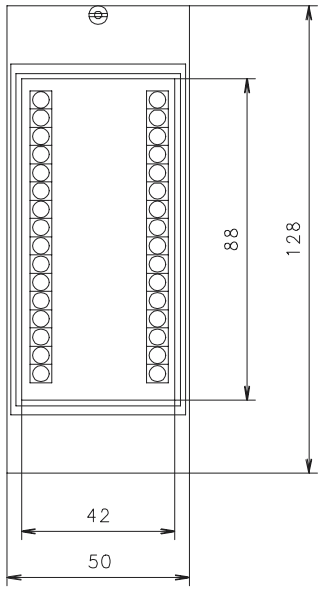

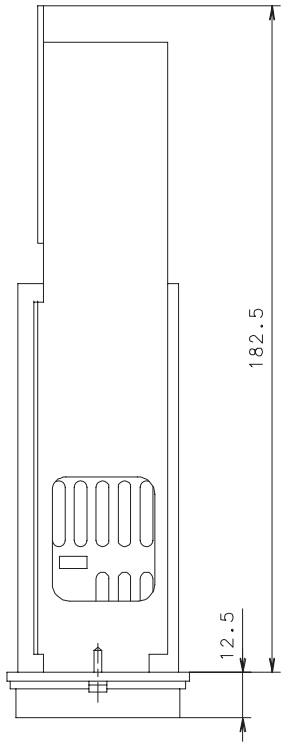

GENERAL

EMPTY ADAPTER FOR REPLACEMENT OF RACK MOUNTED TEMPERATURE REGULATOR OR SIGNALLER 90410-20,-21 ,-22,-27,-34,-35,-40 OR -42 BY THIS ADAPTER AND NEW TEMPERATURE REGULATOR 90410-44 OR -51

SCHEMATIC WIRING DIAGRAM

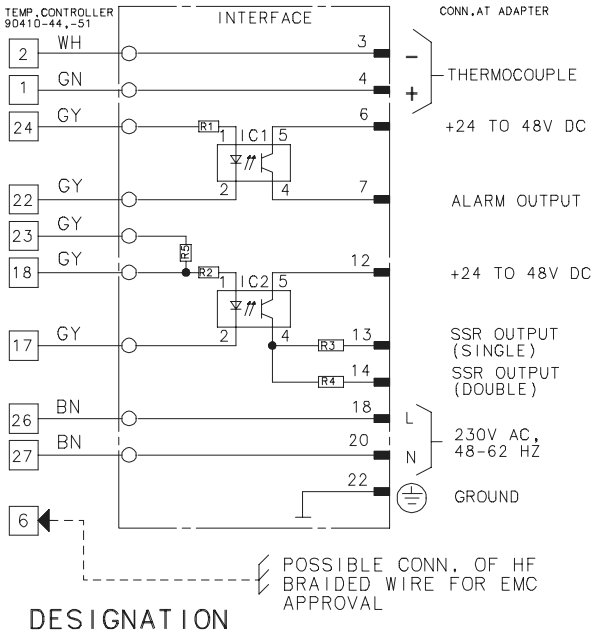

DESIGNATION

ADAPTER PHILIPS 9404-436-89001

MANUFACTURE

PHILIPS

Marked with PART NUMBER Artikel ...../..... B 2103.10	Unless otherwise stated SHARP EDGES BROKEN Doc. class --- Designer JBN	Tolerance for non-toleranced dimensions --- Material Surface roughness
Scale 1:1	Date 960229	Surface treatment
Tetra Pak	Approved CW Date 960301	Denomination ADAPTER ADAPTER
Company Tetra Pak P&PS Service AB	Drawing No 2-90410-342	Page 1/1

Emergency stop module

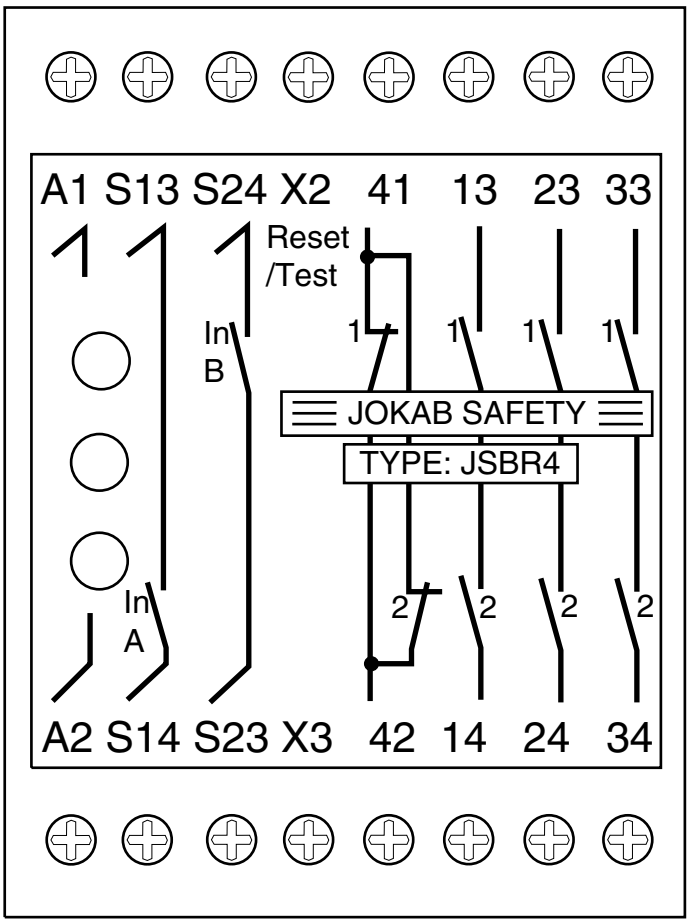

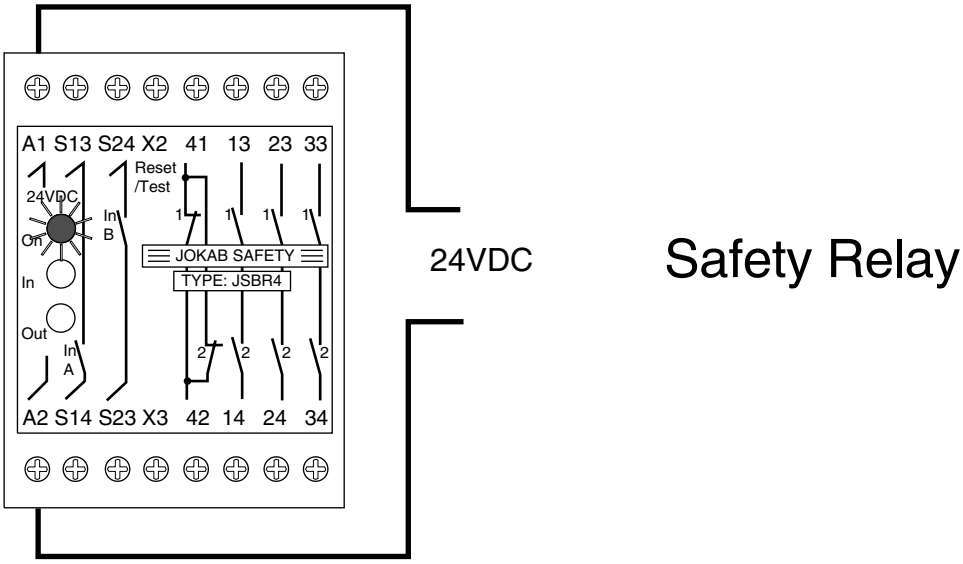

Safety Relay

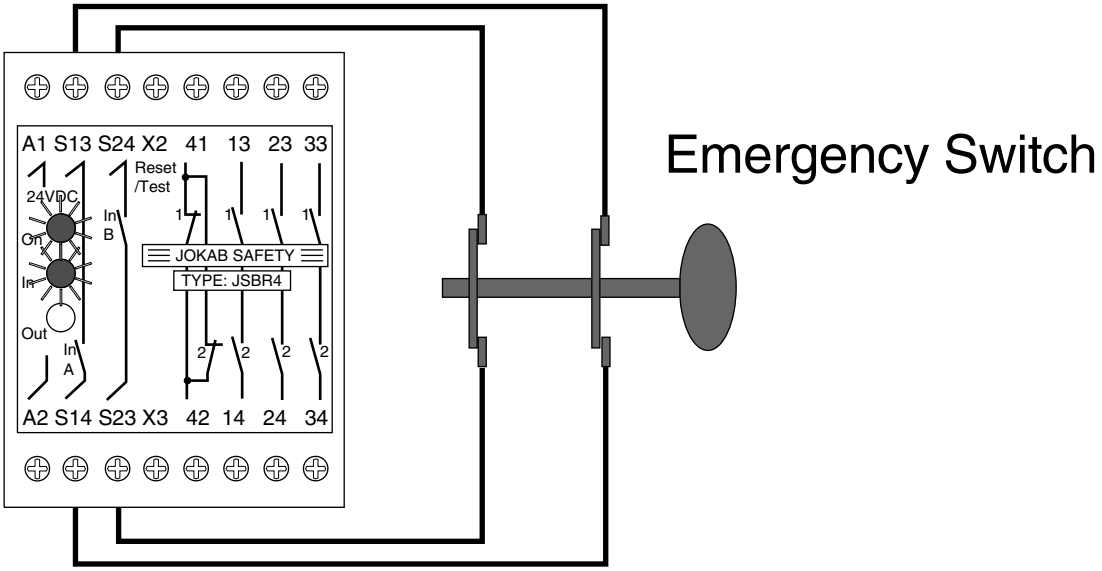

Emergency Switch

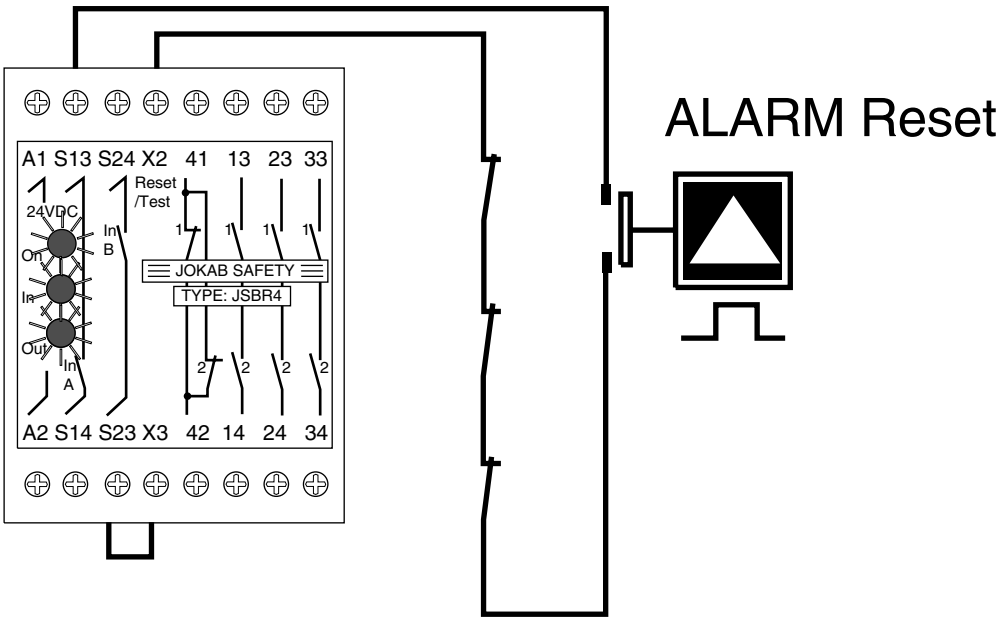

ALARM Reset

TBA/9 140V
Emergency Stop Module

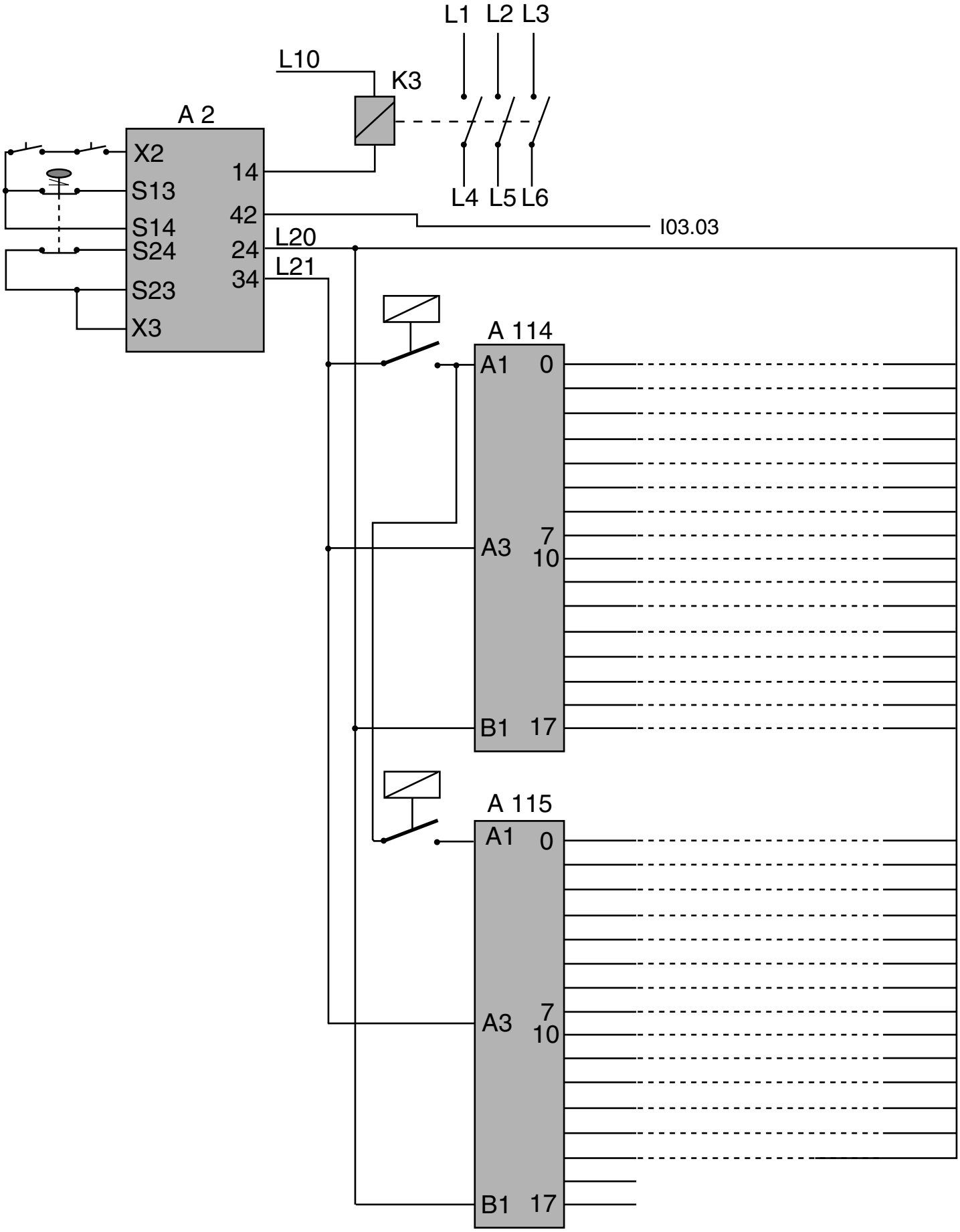

TBA/9-140V

Pos. Nr	Sheet in Cirk. Diagr	Line / Voltage	Function	PLC In/Out	Spare part number:	Terminals / Connection Points	Where on the machine
M.B2							
K87							
				O17.03			
						X1.34,35,36	
				IO6.00			
F55							
			Symbol: Step up				
Q87							
PO0.02							

TBA/9-080V

Pos. Nr	Sheet in Cirk. Diagr	Line / Voltage	Function	PLC In/Out	Spare part number:	Terminals / Connection Points	Where on the machine
M.B2							
K87							
				O07.03			
						X1.57,58,59	
				IO4.00			
F54							
			Symbol: Step up				
Q87							
PO0.02							

TBA/9-050V

Pos. Nr	Sheet in Cirk. Diagr	Line / Voltage	Function	PLC In/Out	Spare part number:	Terminals / Connection Points	Where on the machine
M.B2							
K87							
				12313			
						X1.52,53,54	
				12115			
F54							
			Symbol: Motorstart				
Q87							
P.S.3H							

DC - Motor Drive Control

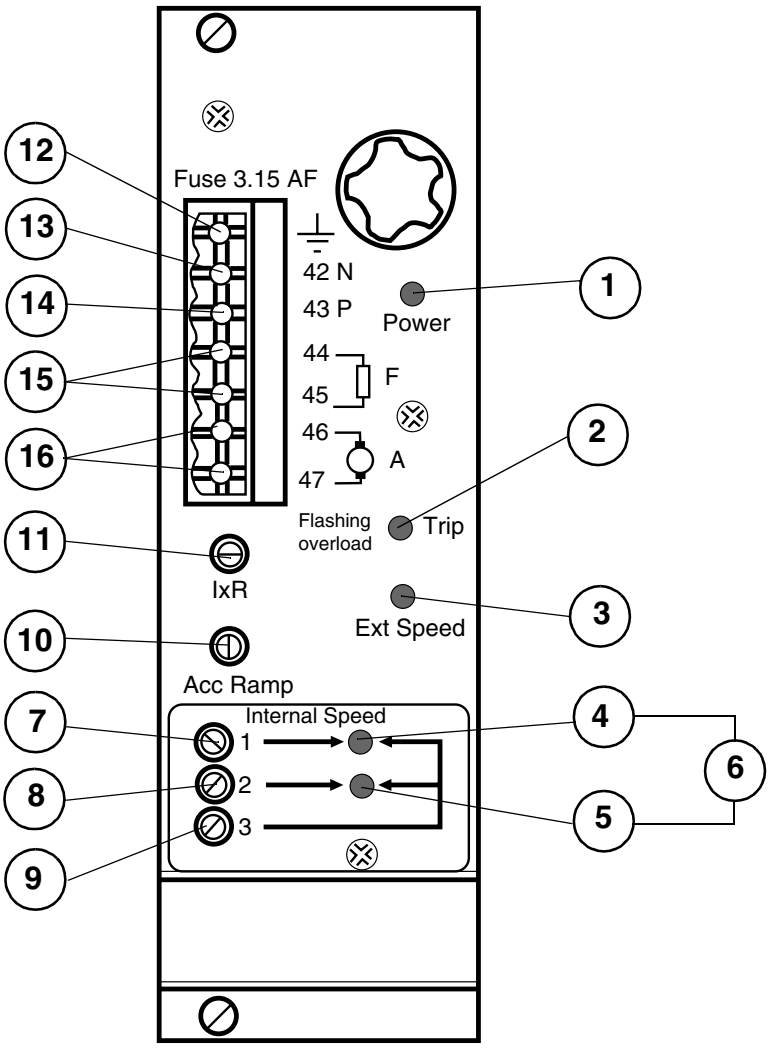

1. POWER indicator.
2. TRIP, indicates an overload on the output. Flashing at current limit. Fixed light, when switched off due to overload.
3. EXT SPEED, indicates that external speed is selected.
4. INTERNAL SPEED 1, indicates that internal speed 1 is selected.
5. INTERNAL SPEED 2, indicates that internal speed 2 is selected.
6. INTERNA SPEED LED 1 + 2, indicates that internal speed 3 is selected.
7. Potentiometer for setting internal speed 1.
8. Potentiometer for setting internal speed 2.
9. Potentiometer for setting internal speed 3.
10. ACC. RAMP, potentiometer for setting acceleration ramp.
11. I x R compensation. Adjustment for different motor powers. Too high settings will result in unstable motion.
12. PROTECTIVE EARTH
13. NEUTRAL
14. PHASE
15. FIELD
16. ARMATURE

Current relay principle

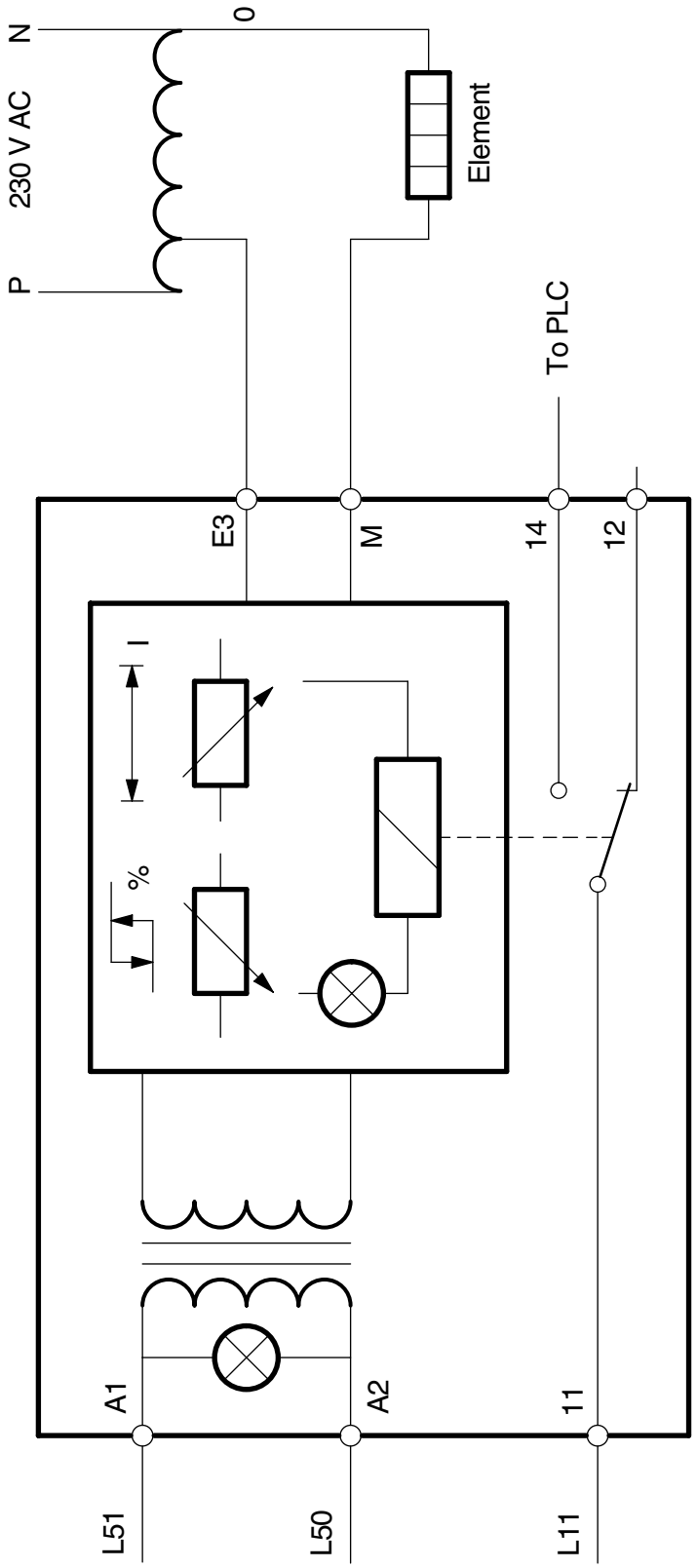

Technical Training Centre Lund, Sweden	Machine type	Issue 1/9903	OH 808

Textbook

TPIH-2000

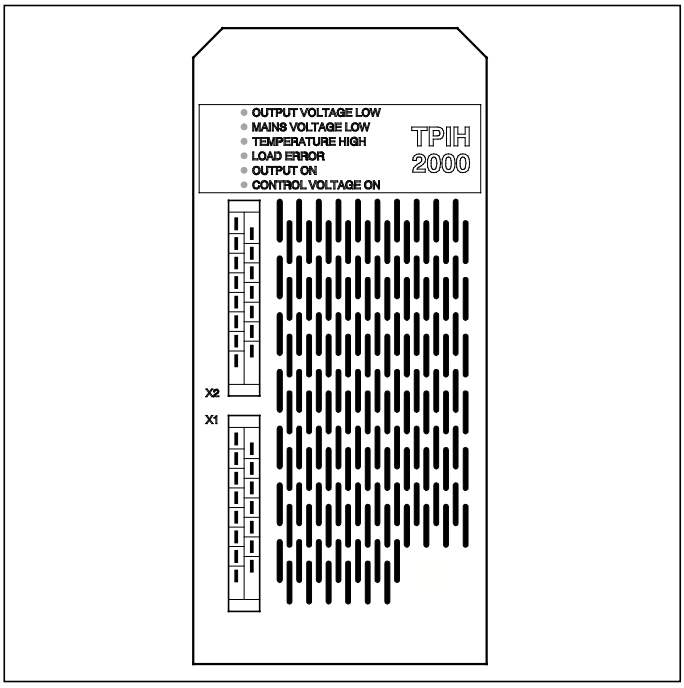

MT-83014-2

Technical Training Centre
Lund, Sweden

This textbook has been compiled by the Technical Training Centre in Lund.

Some of the pictures in the book are also available as OH pictures.

For further information on training material, please contact the Technical Training Centre.

Issue 2/9608

© 1998, Technical Training Centre

No part of this publication may be reproduced, stored in a retrieval system or transmitted in any form or by any means: electronic, electrostatic, magnetic tape, mechanical photocopying, recording or otherwise, without permission in writing from Technical Training Centre.

TPIH-2000

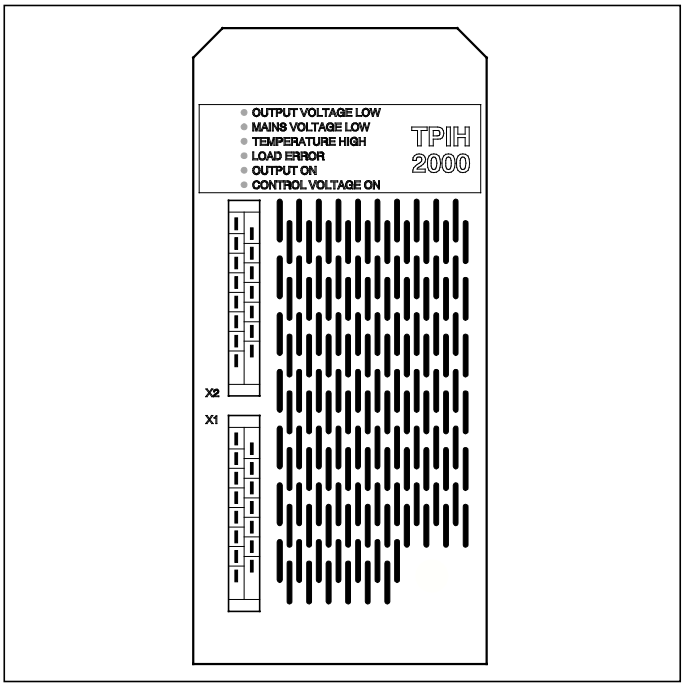

Training Document

This Training Document is intended for Training purpose only, and must not be used for other purpose.

The Training Document is not replacing any instructions or procedures (e.g. OM, MM, TeM, IM, SPC) intended for specific equipment, and must not be used as such.

Note!

For safe and proper procedures, refer to the equipment specific documentation.

Technical Training Centre

Contents

General information on IH 5
TPIH-2000 8
Comparison between TPIH- 2000 and older IH generators 13
TPIH test instrument 14

General information on IH

Induce = to bring about, to produce

TPIH-2000 is a generator, which generates a high–frequency current. This current is utilized to induce heat in the packaging material, for instance in transversal sealing. TPIH stands for **T**etra **P**ak **I**nduction **H**eating.

IH = induction heating

The TBA machines are equipped with IH generators, and the high–frequency current induces heat in the aluminium foil layer of the packaging material. The heat causes the plastic (PE layers) to melt, and thus the packages can be sealed.

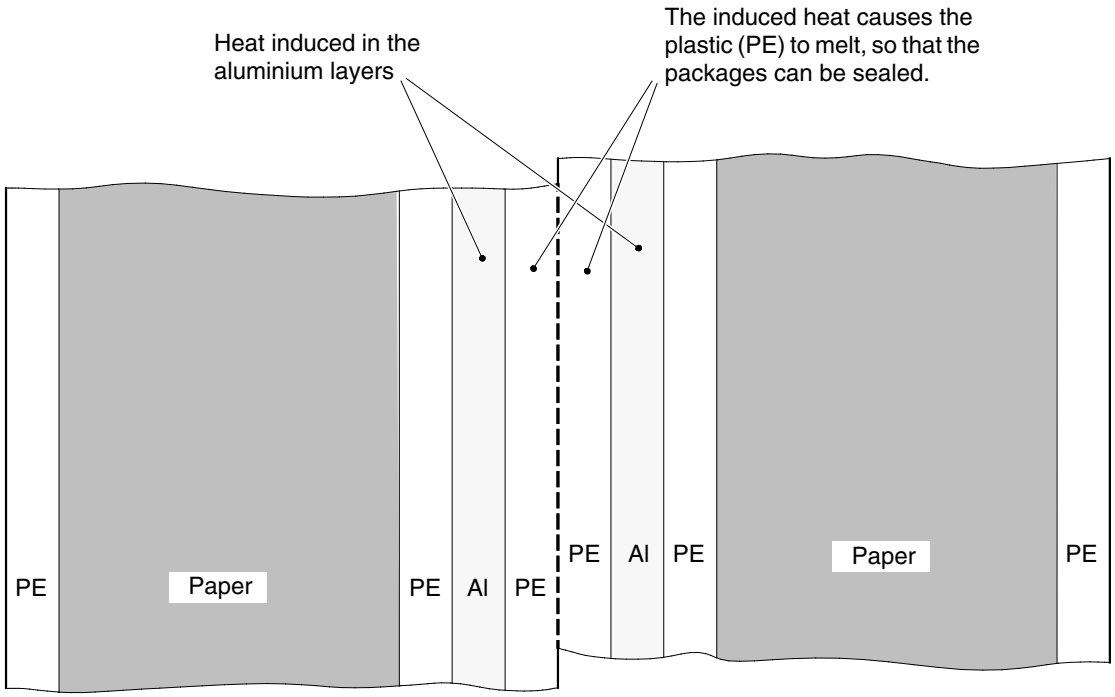

PE=Polyethylene Al=Aluminium

Induction heating is also employed to heat the PE layer at the opening arrangement of the package. The heat changes the structure of the PE layer, making the plastic more brittle. For this reason, the package becomes easier to open.

The method of heating a material without a direct source of heat, i e to produce heat in the material, is based on a current of high frequency. One could say that the high–frequency current transfers energy to the material,

There are two ways of producing heat by means of high–frequency current:

- **Induction heating** (for instance transversal sealing in TBA machines)
- **Dielectric heating** (for instance in a microwave oven)

Induction heating

Induction heating is used to heat materials which are electrically conductive (metals). This is the method employed in the TBA machines for transversal sealing, zone heating at the opening arrangement of the package, longitudinal sealing (TBA/21), strip application (TBA/21), and splicing of the packaging material (TBA/21).

The diagram below shows the principle of this method.

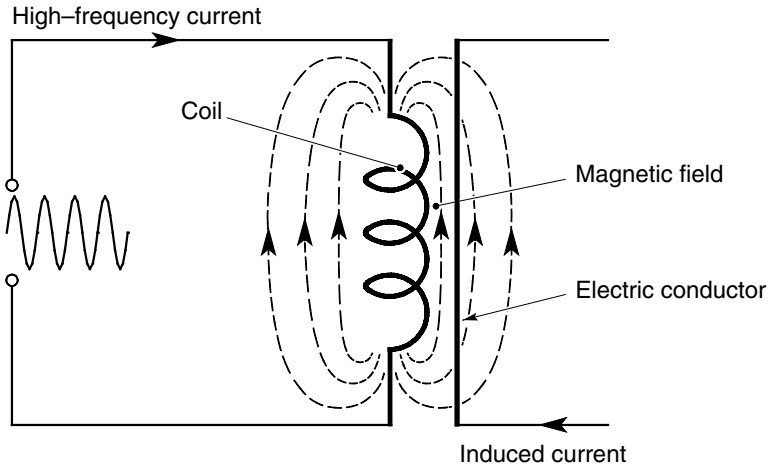

The high–frequency current creates a magnetic field around the coil. This magnetcic field oscillates in time (at the same frequency) with the current, inducing a current in an electric conductor placed in the magnetic field. In its turn, the induced current oscillates in time with the magnetic field and produces the energy that heats the material.

In the TBA machines, induction heating works as shown in the diagram below.

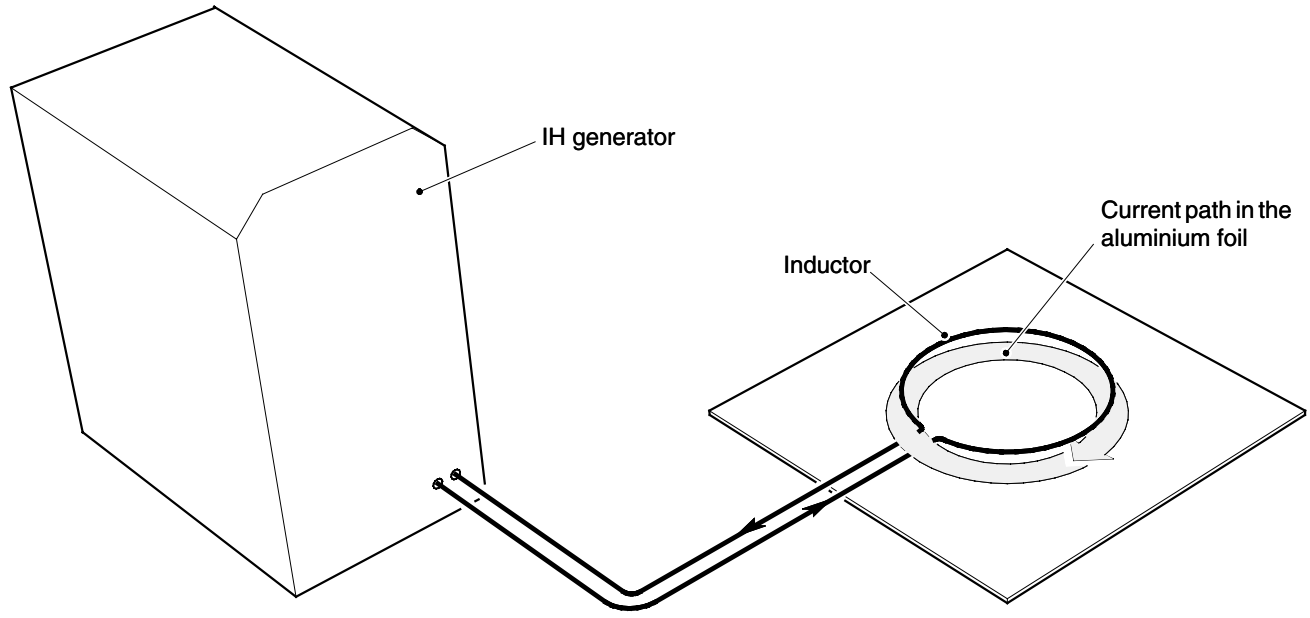

The IH generator (TPIH-2000) generates a current of high frequency. The inductor functions as a coil and creates a magnetic field. Heat is induced in the packaging material as a result of a current being induced in the aluminium foil. This leads to the melting of the PE layers, so that they can be sealed.

Dielectric heating

Dielectric heating is used to heat non–conductive materials, such as wood. This method is also employed in microwave ovens.

The diagram below shows the principle of this method.

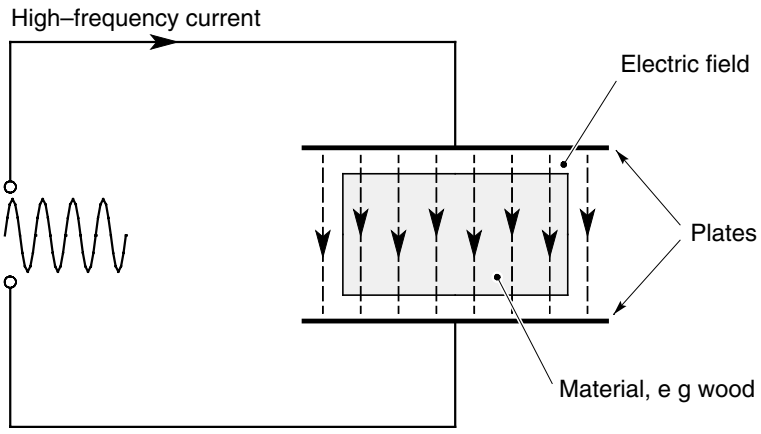

The high–frequency current produces an electric field between the plates. The field oscillates in time with the current, and the molecules of the material will in their turn also oscillate in time with the field. The oscillations produce energy, which heats the material.

Note
In order for this method to work, the material must contain ions or polar molecules, i e molecules which are influenced by electric fields. Water molecules are polar, and as wood always contains a certain amount of moisture, it is perfectly possible to heat wood according to this method.

TPIH-2000

An IH system incorporating a TPIH generator is designed as the diagram below shows.

IH system

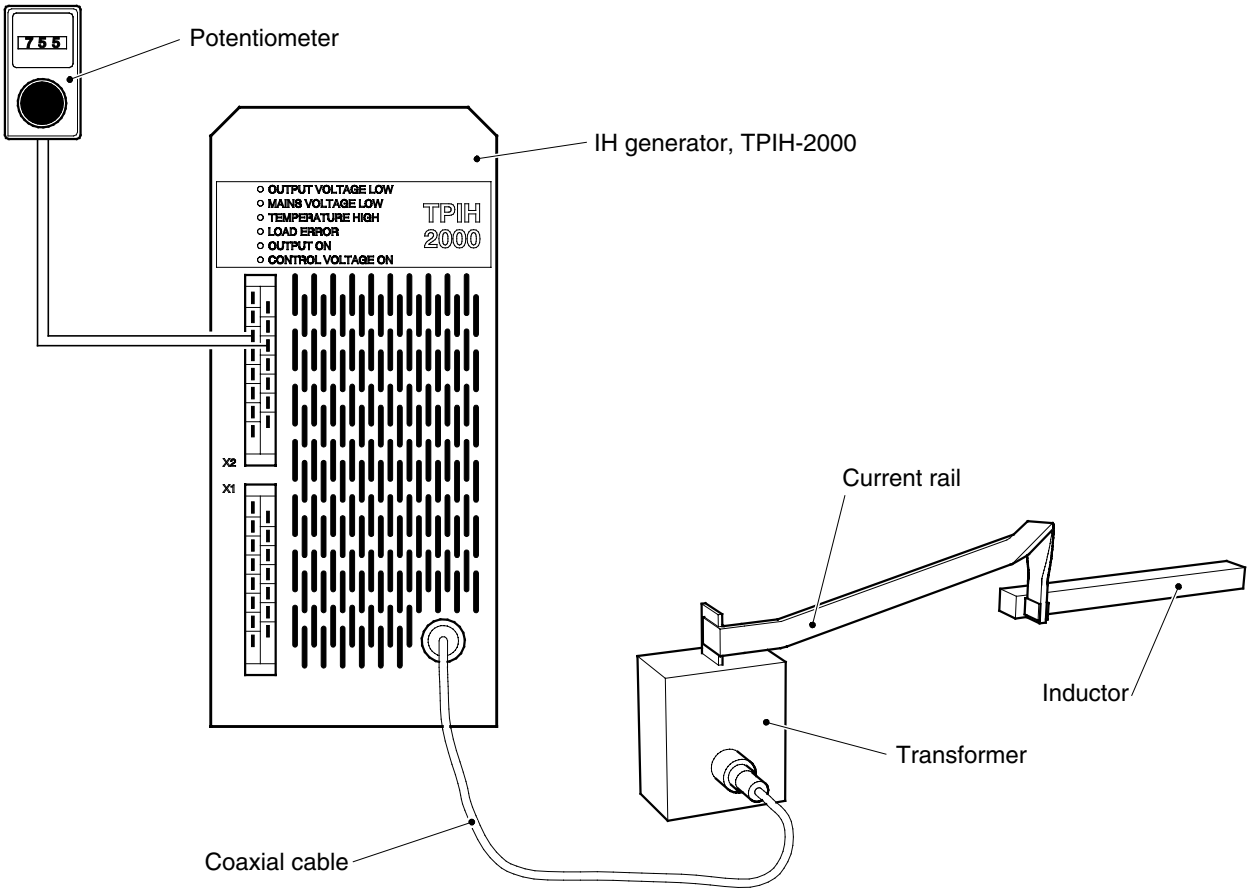

The generator converts the mains voltage to a high–frequency voltage. The magnitude of the high–frequency voltage is set by means of the potentiometer as a percentage of the maximum voltage; for instance, 850 translates as 85% of the maximum voltage. In its turn, the high–frequency voltage determines the power in the inductor. This relationship of the voltage is proportional to the square of the power; for instance, if the potentiometer is set at 850, the power in the inductor becomes 0.85 x 0.85 = 0.72, i e 72% of the maximum power. On page 10, more can be found on the relationship between voltage and power.

The coaxial cable conducts the high–frequency current to a transformer near the inductor. The transformer has a transformation ratio of 5:1, i e it reduces the voltage and increases the current by a factor of 5. Consequently, the power remains unchanged, but low voltage in the inductor cuts down the danger of spark–over and improves safety.

The last part of the passage of the current to the inductor goes through a current rail. In the current rail, power losses occur, and for this reason, the rail is made as short as possible.

The inductor functions as a coil and creates a magnetic field which induces current in the packaging material.

Usually, a TBA machine is equipped with several IH generators, for instance three, one for each pair of jaws and one for the zone heater.

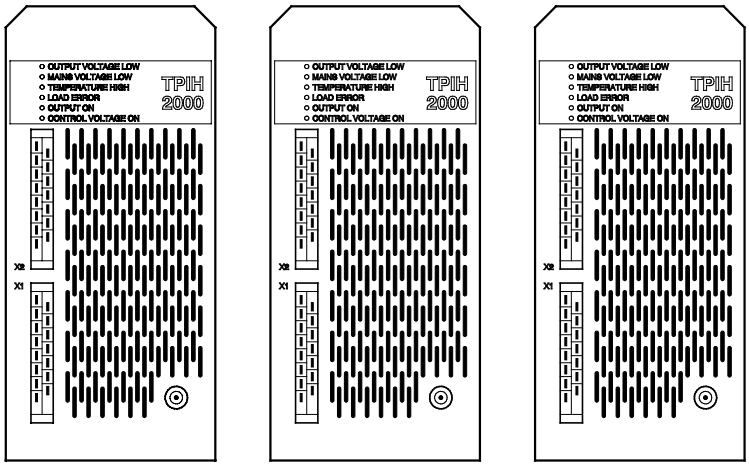

Generator TPIH-2000

On the front of the generator, there is an alarm panel, connections for control signals and power inputs, and an output for high–frequency current. The light–emitting diodes on the alarm panel indicate faults and errors etc, and can be used to facilitate fault–finding.

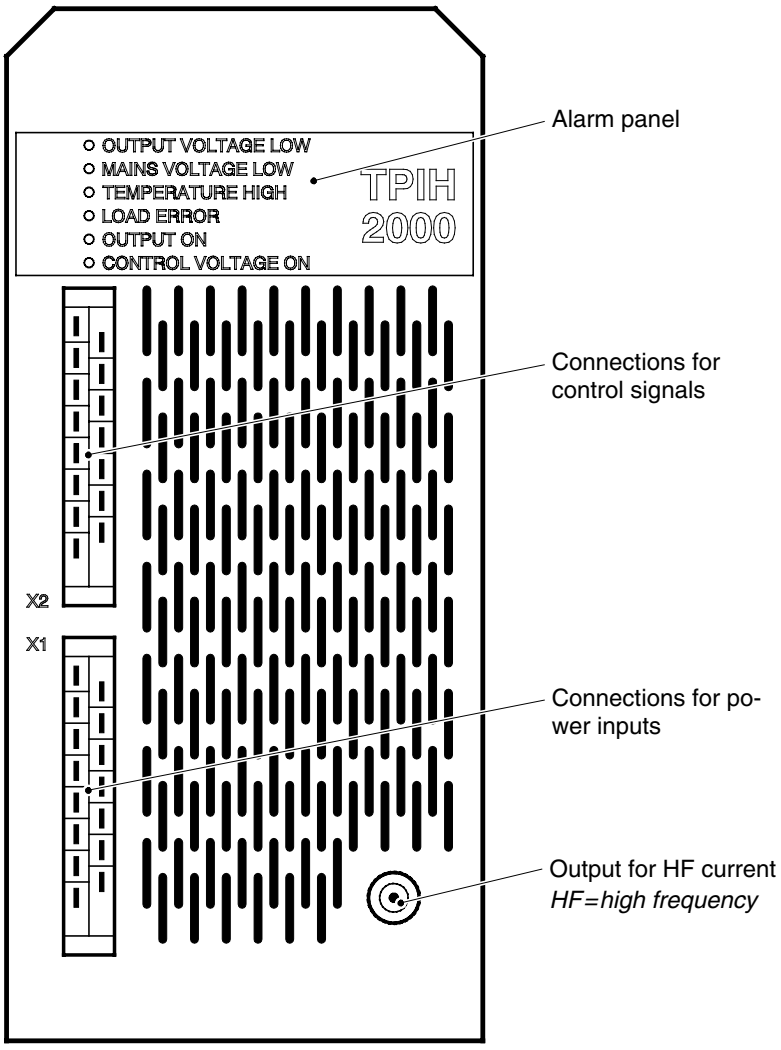

Explanation of the light–emitting diodes on the alarm panel:

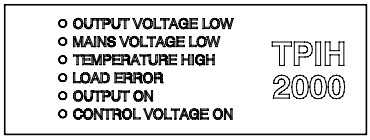

Output Voltage Low (red). If this is the only red light–emitting diode that is on, one of the following faults has occurred: **1**) The generator is defective and must be replaced. **2**) 10 V DC is not being supplied to the potentiometer. **3**) The potentiometer has been set at too low a value. **4**) The potentiometer is defective.

Mains Voltage Low (red). Power feed to the generator is insufficient. At least one of the phases supplies less than 85% of the nominal power, and the generator cannot in its turn provide the correct power. Check the input power fuses.

Temperature High (red). The temperature inside the generator is too high. Most likely, the fan is defective. If this is the case, the complete generator assembly must be replaced.

Load Error (red). There is an error in the load, i e the coaxial cable, current rail, transformer, or inductor.

Output On (green). Lights up when a pulse is being converted into the correct load, i e when the system functions correctly.

Control Voltage On (green). The power feed to the control section functions correctly.

The diagram below shows the connections for the control signals and input power. The No at each connection, shows how the cable concerned is marked.

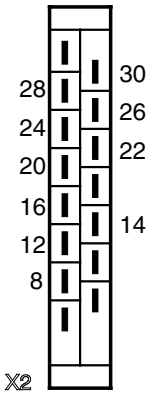

30, 28 } Power alarm. Common alarm to PLC for: Output Voltage Low, Mains Voltage Low, and Load Error.

26, 24 } Temperature alarm to PLC.

22 Power setting from POT.
20 10 V DC to POT
16 0 V

14 24 V DC
12 0 V

8 Sealing pulse from PLC

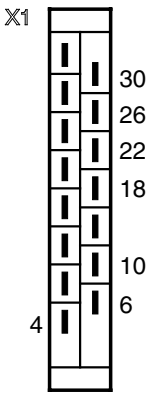

30 Neutral
26, 230 V AC 50/60 Hz

Three–phase 230/400 V AC 50/60 Hz
22 Phase R
18 Phase S
10 Phase T
6 Neutral

4 Ground

Function

The TPIH-2000 generator works in accordance with the block diagram below. It comprises an **power section** and a **control section**.

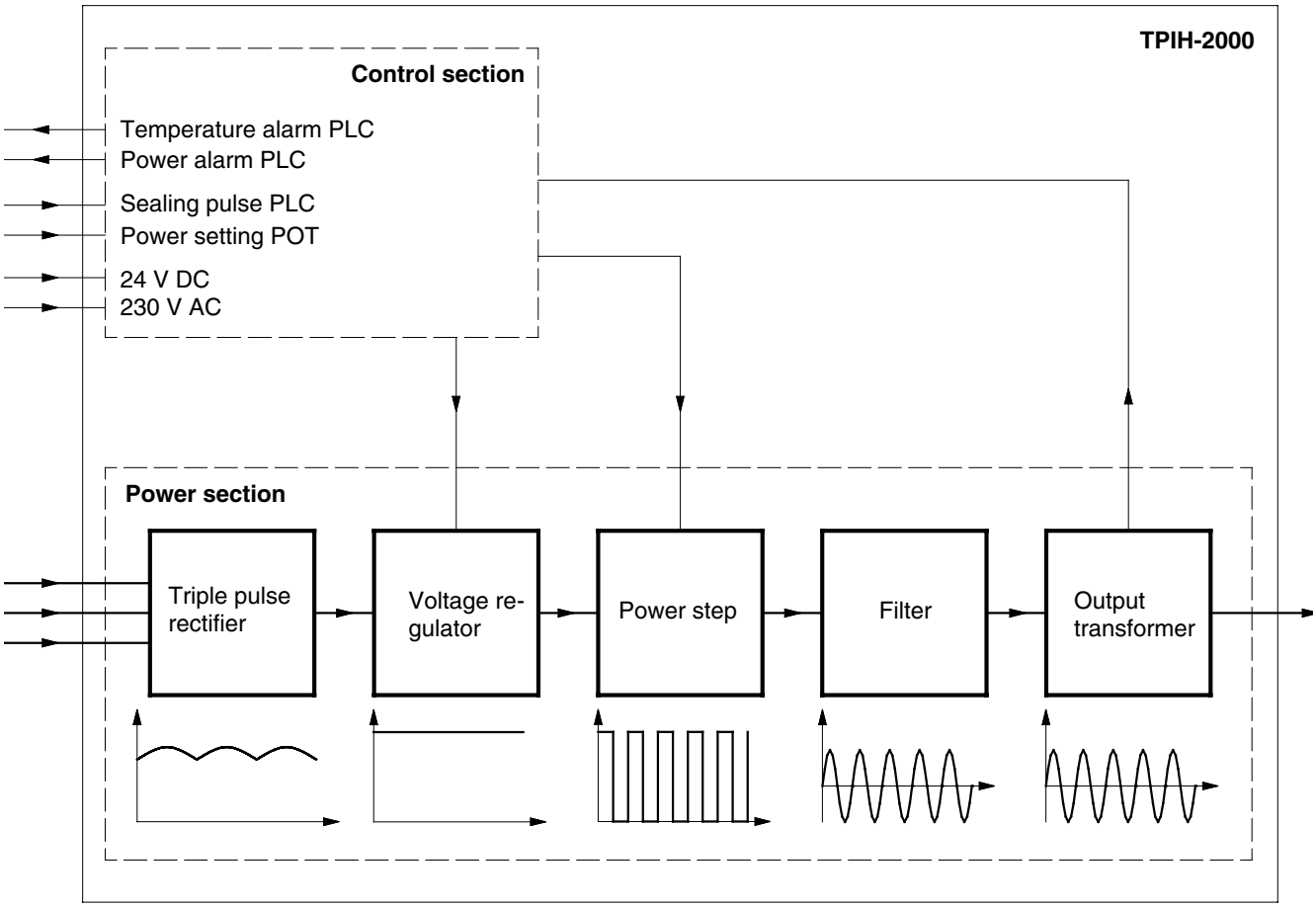

The control section is powered by 230 V AC and 24 V DC. It controls, for instance, voltage and frequency, and monitors the unit. It also controls the alarm panel.

The power section is powered by 3x400 V AC and incorporates the following functions:

Triple pulse rectifier, which converts the alternating voltage (AC) into a direct current (DC) of appr 325 V.

Voltage regulator, which stabilises the direct voltage at appr 350 V.

Power step, which converts the direct voltage into a high–frequency square pulse of 350 V, 0.5 MHz.

Filter, which generates a sinus–shaped high–frequency alternating voltage of 300 V, 0.5 MHz.

Transformer, with a ratio of 1:1, which is used to isolate the load from the generator. The load comprises the coaxial cable, transformer, current rail, and inductor.

Power regulation

As previously mentioned, the power in the inductor is determined by the output voltage from the generator. In order to understand how the output voltage is regulated, we have to take a closer look at what happens in the **filter section** of the generator.

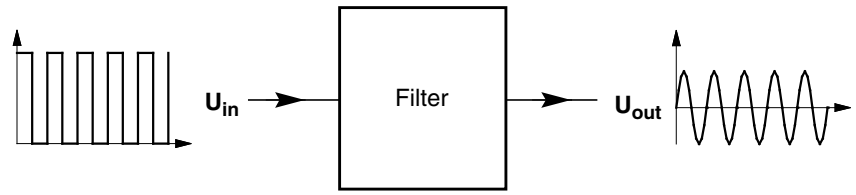

In order to regulate the output voltage, the fact is exploited that the ratio between the output and input voltages (U_{out}/U_{in}) in the filter is not constant. This ratio depends on the frequency, as shown in the diagram below.

At the **resonance frequency**, the ratio between output and input voltage reaches maximum.

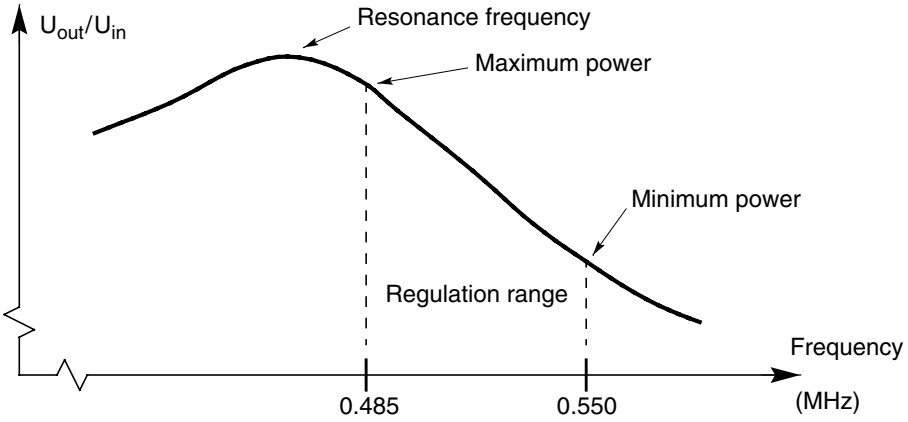

The 0.485-0.550 MHz frequency range is utilized to regulate the output voltage and thus the output power. Within this frequency range, the ratio between output and input voltage is virtually linear. Thus it is the frequency which is altered in order to regulate the power. The setting of 999 on the potentiometer is equal to a frequency of 0.485 MHz, which gives maximum power (2kW). The setting of 850 corresponds to a frequency which gives the power of 0.85^2 x maximum power (0.85^2 x 2 = 1.4 kW), etc.

Note

This way of calculating disregards the fact that the phase angle, cosine φ, varies with the power. At low power, cosine φ is reduced; for instance, at a potentiometer setting of 440, the power may be ***0.9*** *x* 0.44^2 *x maximum power.*

Comparison between TPIH-2000 and older IH generators

TPIH-2000 has been installed in the following machines from the development step specified.

- TBA/8 060V
- TBA/9 140V
- TBA/10 120V
- TBA/21

The significant difference between TPIH-2000 and the older model generator is that TPIH-2000 is a transistor generator, while the older model is an electronic valve generator. A comparison between the two generator types shows the following differences:

- The output power of TPIH-2000 is adjustable while the machine is running. This is not possible with the older IH generator.
- In TPIH-2000, the output power is not dependent on the mains voltage (within a range of -15 to +10 per cent of the nominal value). In the old model, there is a direct relationship between mains voltage and output power.
- TPIH-2000 consumes 1.5 kW while the old model uses up appr 4 kW. Nevertheless, the inductor power is equally high, appr 1 kW, which is due to the losses in the TPIH-2000 system being lower.

Much of the loss occurs in the current rail. In the TPIH-2000 system, a major part of the current rail has been replaced by a coaxial cable. But the coaxial cable cannot cope with as high an amperage as a rail, so therefore the current is transformed in a transformer near the inductor instead of in the generator itself.

TPIH-2000

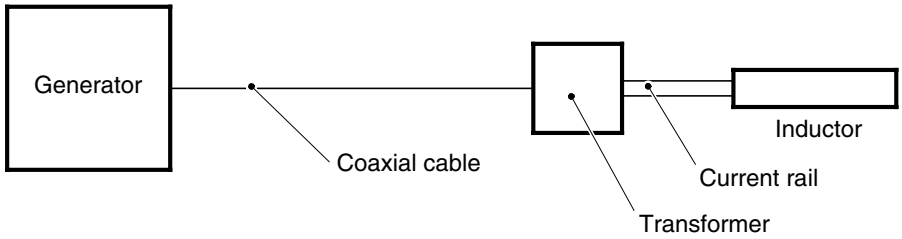

Old model IH generator

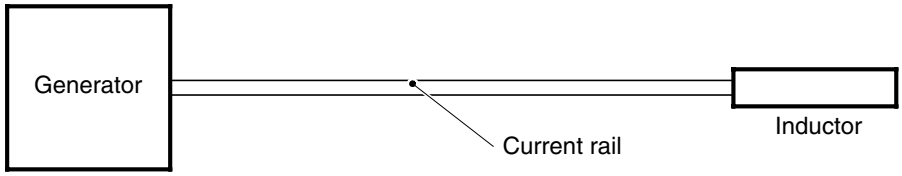

- The voltage across the inductor in the TPIH-2000 system is 40-50 V; in the old IH generator it is appr 90 V. Low voltage is preferable as it reduces the danger of spark–over and improves safety.
- The frequency in TPIH-2000 is 0.5 MHz, compared with 1.8 MHz in the old generator.
- TPIH-2000 is based on transistor technology, and the old model IH generator on electronic valves. Transistors are very reliable with a long working life, while valves have a limited life.
- Inside TPIH-2000, there is no high-tension. Maximum voltage is 400 V, while the high-tension section of the old model generator carries 5000 V.

TPIH test instrument

For TPIH-2000, there is a special test instrument (TP 68462-101). It can be used for the measuring of:

- HF voltage
- HF current
- Load phase angle (cosine φ)
- Pulse time (duration)

The test instrument is intended to be connected in series with the coaxial cable from the generator, as shown in the diagram below.

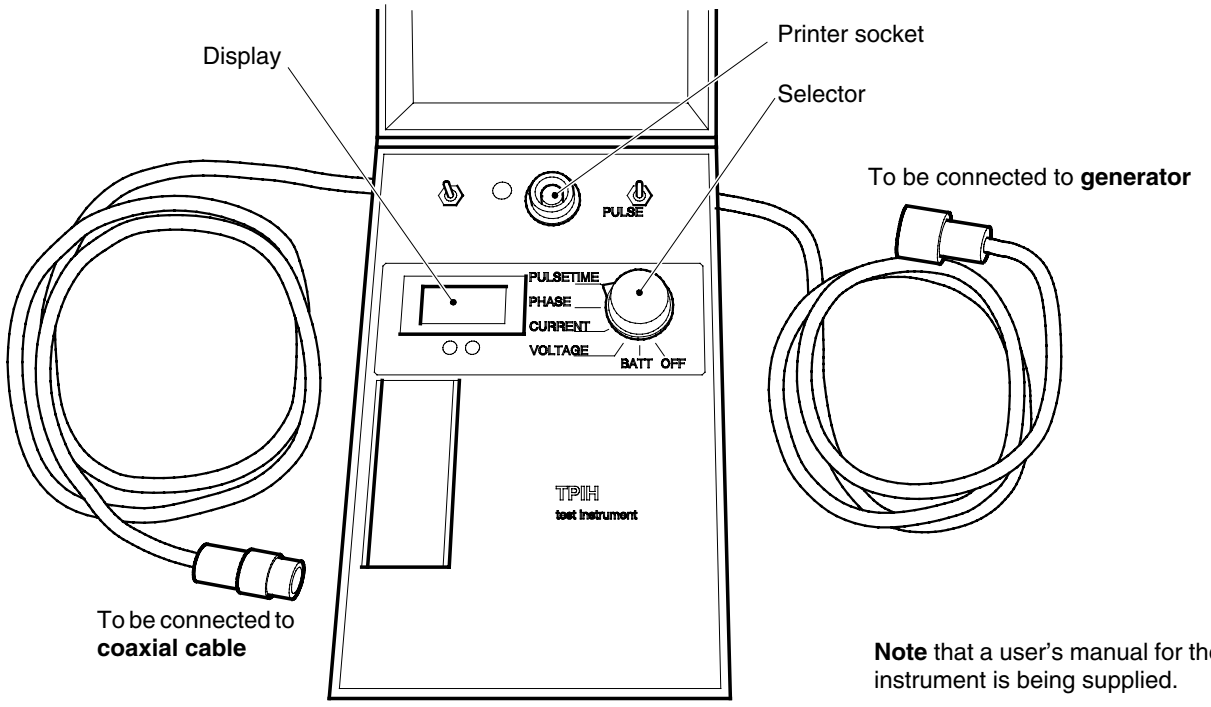

Note that a user's manual for the instrument is being supplied.

The measuring results can be used to calculate the power and impedance of the load.

P=UxIxcosφ (Power = Voltage x Amperage x Cosine φ)

Z=U/I (Impedance = Voltage/Amperage)

Impedance is to be roughly 50 Ω. Normal value is 40-65 Ω.

Note
The pulse time is determined by the machine PLC and does not require adjustment.

Pulse time meter
HF voltmeter

If the special test instrument for TPIH-2000 is not available, the pulse time can be measured by means of a pulse time meter (TP 102 90243-90) and the HF voltage by means of an HF voltmeter (TP 103 90243-114). In this case, measuring is done at the copper rail by the inductor (secondary transformer side).

Instruction manual

***Note**: The following is copy of the instruction manual enclosed to the TPIH test instrument 68462.*

TPIH test instrument 68462

Instructions (rev Sep 91)

The TPIH test instrument is used for checking the high frequency part of a TPIH system.

1 Connecting

The instrument is connected in series with the coaxial cable between the generator and the IH-transformer, usually closest to the generator.

NOTE: Connection and disconnection of the test instrument must be done, when the generator is not pulsing e g with the machine in the short stop position.

2 On and off

The instrument is started with a rotary switch. Approximately five minutes after the latest activation of the switch, the instrument is automatically turned off.

3 Measuring

Voltage (V), Current (A), Phase angle between voltage and current (degrees) and Pulsetime can all be measured. Disregard any numbers that are displayed prior to the measurements. When the measurement is finished note the values directly.

a **Pulses**

The toggle switch to the right is put in position ”pulse”. The instrument measures and stores pulse time after every pulse. The voltage, current and phase angle are measured and stored after half the pulse time. In order for the instruments to make correct measurements, i e in the middle of the pulses, **at least 2 pulses are needed**. The LED ”pulse” lights up during the pulse and ”sample” lights up when a measurement is taking place. Put the toggle switch in position ”hold” when no more new measurements are needed.

b **Continuous signals**

The toggle switch to the right is put in position ”Continuous”. The instrument shows the measurements for voltage, current and phase angle appr. 3 times/second. If, at a certain point, the measurements are to be stored, the toggle switch is put in position ”hold”.

c **Single pulse**

The rotary switch is turned to position ”pulse time” and the toggle switch to the right to position ”Continuous”. The toggle switch to the left is used to preset an expected pulse time (N.B.! Pos. values). Change the toggle switch to the right to position ”pulse”. It is now possible to measure a single pulse.

4 Power, energy etc

By using the measured values several others can be calculated.

Power = Voltage x Current x Cos (phase angle) (W).

Pulse energy = Power x Pulse time (mWs).

The Impedance's absolute value = Voltage/Current (ohm).

Cos 0° = 1 Cos ±5 = 0.996 Cos ±10 = 0.985

Cos X $1 - x^2 : 6700$ $-40° < x < 40°$

5 Trouble shooting for load error

If there is a load problem only short pulses are delivered by the generator. The results from the measurements will be approximate but they could make trouble shooting easier. During a pulse with load problem the LED "sample" is lit up during the entire pulse, while LED "pulse" is off.

Load examples (Test instrument connected closest to the generator)	**Phaseangle (Degrees)**	**Voltage/Current (Ohm)**
Optimal load (no load problem)	0	50
Normal load (no load problem)	±15	40 - 65
Short circuit in coax. cable, contacts, primary of IH-transf.	pos (3)	1 - 10 (1)
Open circuit in same as above.	neg (3)	200 - 2000 (2)
Short circuit in inductor, current rail, secondary of IH-transformer.	pos	10 - 20
Open circuit in same as above	neg	2 - 5
No packaging material on the inductor.	neg	5 - 15

(1) = The greater value, the greater distance between problem and instrument.

(2) = The greater value, the shorter distance between problem and instrument.

(3) = The greater phase difference, the greater distance between problem and instrument.

6 Connection of chart recorder

To record voltage, current and phase as a function of time a chart recorder e g Brush can be connected.

1 Connect the included cable to the recorder.

marking "V" :	Voltage	100 mv = 100 V
marking "C" :	Current	50 mv = 1 A
marking "P" :	Phase	10 mv = 1 ˚
marking "O" :	O	

2 Isolate cables that are not used.

3 Connect to the instrument. The toggle switch to the right is put in position "pulse".

7 Battery

The instrument is powered with a standard 9 V battery e g 6LR61. An alcaline battery gives approximately 40 hours operation. When approximately 5 hours operation are left, ”batt” is displayed. The instrument gives correct values until 000 is displayed and it switches off automatically. The battery eliminator is used when you want to measure during long time, e g with a recorder. With the battery eliminator connected and the rotary switch in position ”batt” the display should show 8,5 V - 14 V.

8 Accuracy

Accuracy for new instruments used according to 3a and 3b.

Voltage	± (2 % + 1 V)	100 - 350 V
Current	± (2 % + 0,03 A)	2 - 7 A
Phase	± (5 % + 2 ˚)	-30° - +30°
Pulse time	± (2 % + 2 ms)	10 - 1000 ms

To compare two instruments, connect them in series. Then interchange them since the values depend on the distance from the load, especially if the load differs from 50 ohm.

9 General

The instrument can operate in temperatures from 0 to 45 ˚C.

It should not be used immediately after major temerature change.

Store the instrument in a dry place.

Temporary storage temperature: -20 to +60 ˚C

Do not use the instrument if water has penetrated into it.

Do not dismantle the instrument when the coaxial cables are connected.

The panel can be opened if the lower screw in the middle is loosened.

17

TPMC

Textbook

TPMC PLC

64.1

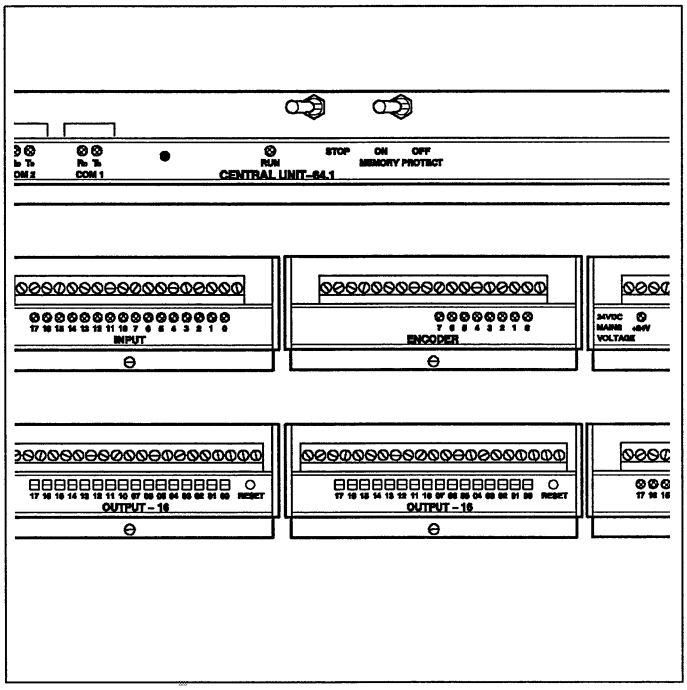

MT–83008–2

Technical Training Centre
Lund, Sweden

System components

Rack

All the modules and units of the TPMC system are fitted in racks. The racks are frames for the modules with built-in communication and power supply.

Construction

A TPMC system always has a **main rack** with slots for the central unit, power supply unit, and seven input/output (I/O) modules. The system can then be expanded with up to seven **expansion racks**. Each expansion rack holds, depending on type, eight or four I/O modules.

In the last rack, there is to be a rack termination plug.

ID selector

By means of the Identity selector, you can give a unique address to the central unit. This facility is used only if the TPMC communicates with an other processor.

Main rack for TPMC 64.1

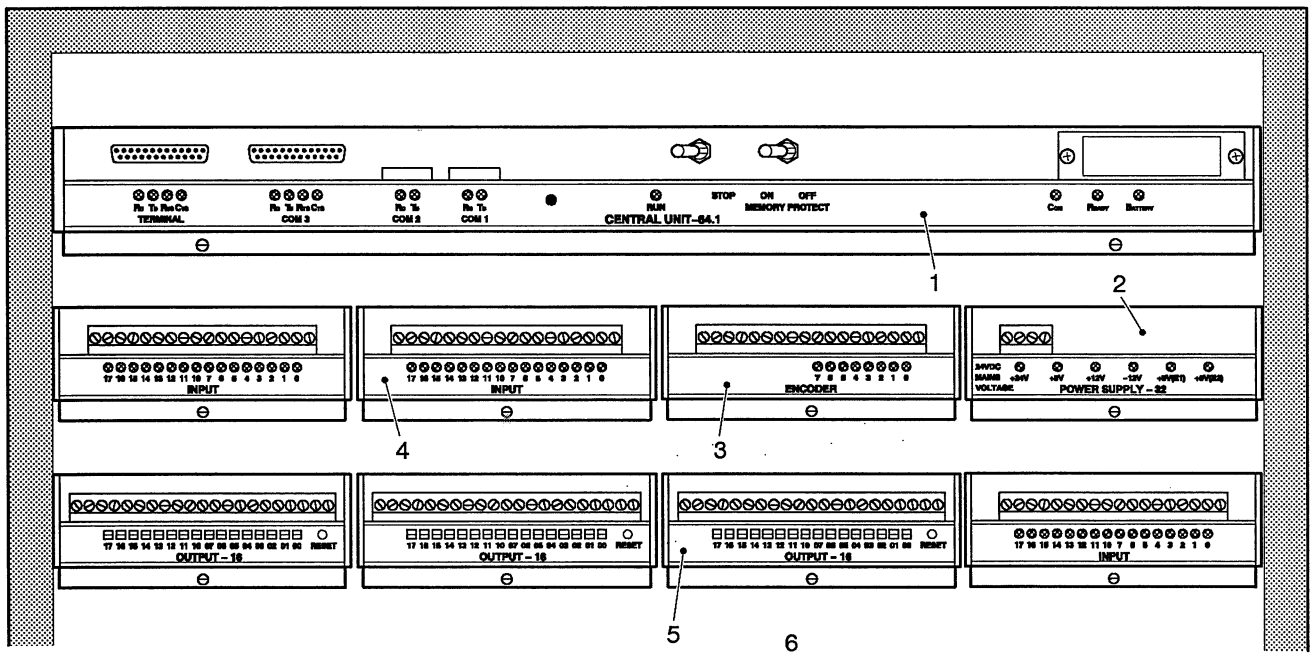

1 Central unit
2 Power supply unit
3 Encoder module
4 Input module
5 Output module
6 ID selector

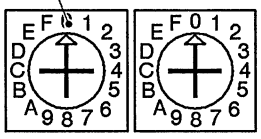

The ID selector is fitted in the rack behind the central unit. Access to the ID selector requires the central unit to be removed.

Signal lamps

There are signal lamps (light-emitting diodes, LED) on every type of module in the TPMC. They are either green, red, or yellow, and the colours signify the following: Green = OK; Red = fault; Yellow = status

Central unit

The central unit is the controlling part of the TPMC. It contains the program which controls a machine. The central unit consists of two main parts: the processor and the memory.

- The **processor** executes the commands issued in the program and handles all communications with the I/O modules and the terminal.
- The **memory** contains the program and is subdivided into three parts: the program memory, the working memory and the backup memory.

To eliminate the risk of erasing the memory in case of power failure, there is a back-up battery which supplies voltage to the memory if mains power fails.

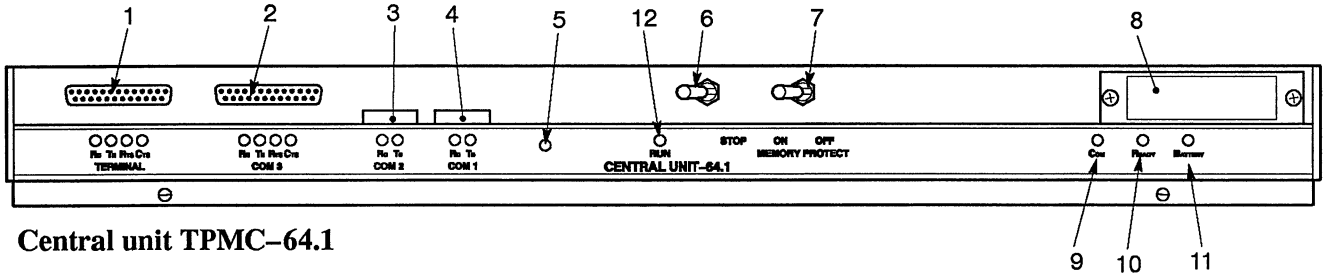

Central unit TPMC–64.1

1 Connection for terminal, TERMINAL
2 Connection for panel interface, COM 3
3 Connection for communication, COM 2
4 Connection for communication, COM 1
5 Reset button, RESET; pushing this button stops the program and zeroes the working memory.
6 Switch, RUN/STOP
7 Switch, MEMORY PROTECT
8 Battery
9 Signal lamp COM; lights up when communication with panel interface works. Flashes at overload or hardware fault.
10 Signal lamp READY; lights up when TPMC is in operation.
11 Signal lamp BATTERY; flashes when battery needs replacing.
12 Signal lamp RUN; lights up when the program is being executed.

Marking of light-emitting diodes (LED):

RD (Receive Data); lights up when data is read
TD (Transmit Data); lights up when data is transmitted
TON (Transmit ON); lights up when channel is active
RTS (Request To Send)
CTS (Clear To Send)

Switches

To the left of the COM 1 and COM 2 sockets, there are switches used to connect end resistors on the end node of the SattBus network.

RUN/STOP

The RUN/STOP switch (item 6 above) is used to start and stop the program.

RUN; the program is being executed.

STOP; the program is stopped. Note that the program must not be stopped while the packaging machine is in production.

Note
If the RUN/STOP switch is in the RUN position, the program can be started and stopped from the terminal. The RUN command starts the program and STOP stops it (see page 60).

Memory protect

The MEMORY PROTECT switch (item 7 in the picture on the previous page) protects the memory against unintentional alterations. It may be in either the ON or OFF position.

ON; the program or program values cannot be altered. In normal operation, the switch is to be at ON.

OFF; the program and program values can be altered.

Inputs

The inputs receive signals from the transmitters and adapt their voltage to communicate with the central unit. This means that signals to the central unit must consist of either logic 1 or logic 0.

What happens?

Each input has a LED which lights up when the input is active. The inputs are active within a voltage range of 16–54 V. An active input transmits a logic 1 to the central unit.

Construction

The inputs are grouped into **modules** of 16 inputs. The modules are fitted in the racks.

1 LEDs, 0–17; light up when the input concerned is active.
2 Connection terminal for inputs
3 Connection points for inputs 00–17
4 0 V connections B1, B2

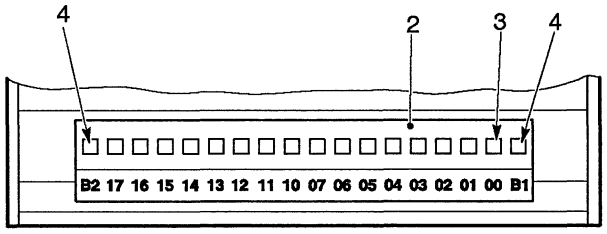

Input module, top

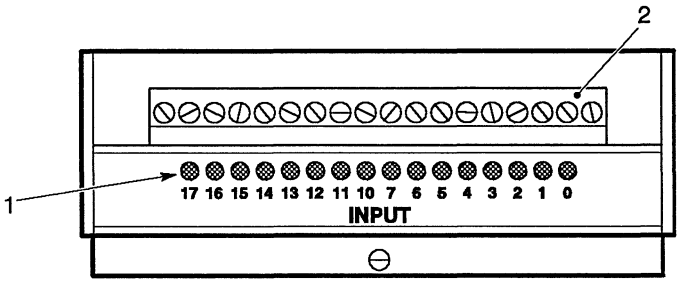

Input module, front

Outputs

The outputs connect and disconnect the executing components in accordance with the commands from the central unit. The outputs adapt the voltage of the signals of the central unit to enable them to control the executing components.

Construction

The outputs are grouped into **modules** with 8 or 16 outputs, **output–8** and **output –16**. The modules are fitted in the racks.

Output–8

Each output has two light-emitting diodes (LED), one yellow and one red. The yellow LED lights up when the output is active, and the red LED lights up if the fuse of the output cuts out. Each output is protected by a 1 A fuse (fast).

The outputs are subdivided into two groups with separate power supply. Outputs 0–3 are supplied from connection A1 and outputs 4–7 from connection A2. When an output becomes active, it gets the same voltage as either A1 or A2. In this way, two different output voltages can be used within the same module.

The output voltage from an active output may be 16–54 V, and the output current must not exceed 0.8 A for any individual output. The total output current from the module must not exceed 3.2 A.

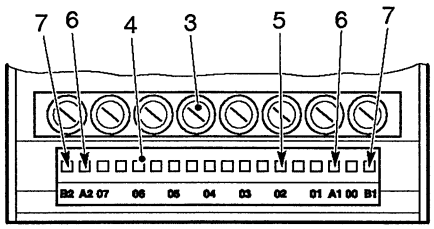

Output–8, top

1 Yellow LEDs 0–7; light up when output concerned is active.
2 Red LEDs: light up when fuse has cut out.
3 Fuses
4 Connection terminal for outputs
5 Connection points for outputs 00–07
6 Power supply A1, A2
7 0 V connections B1, B2

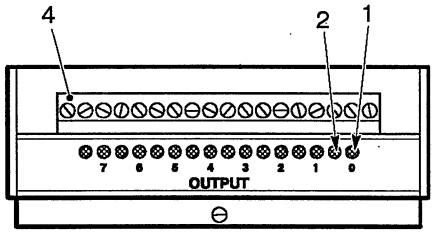

Output–8, front

Output–16

Each output has two LEDs, one yellow and one red. The yellow LED lights up when the output is active, and the red LED lights up if the overcurrent protection of the output cuts out. To reset the overcurrent protection, push RESET (item 3 in the picture).

The outputs are subdivided into two groups with separate power supply. Outputs 0–7 are supplied from connection A1 or A2, outputs 10–17 are supplied from connection A3 or A4. When an output becomes active, it gets the same voltage as its power supply. In this way, two different output voltages can be used within the same module.

The output voltage from an active output may be 19–27 V, and the output current must not exceed 1 A for any individual output. The total output current from the module must not exceed 10 A.

1 Yellow LEDs 00–17; light up when output concerned is active
2 Red LEDs: light up when overcurrent protection has cut out
3 Reset button for overcurrent protection
4 Connection terminal for outputs
5 Connection points for outputs 00–17
6 Power supply A1–A4
7 0 V connections B1

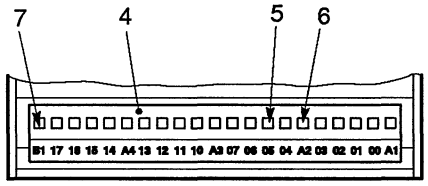

Output–16, top

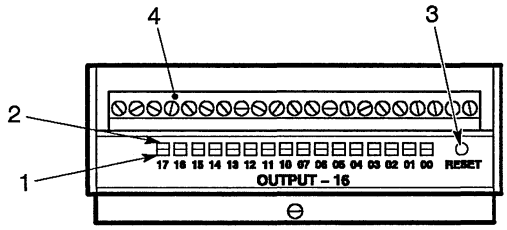

Output–16, front

Analogue inputs

An analogue input receives a signal from an analogue transmitter, for instance a level meter or temperature sensor. The signal is converted to a digital value, which the central unit is capable of processing.

The difference between an analogue transmitter and a discrete (digital) transmitter, connected to an "ordinary" input, is that the analogue transmitter gives a value, for instance 8 V, while a discrete transmitter gives a status, i e ON or OFF. To exemplify, 8 V might represent 80 °C, while ON/OFF might indicate whether a motor is running or at a standstill.

Encoder module

The signal from the angle encoder consists of a **gray code**. The encoder module converts the gray code signal into a **binary angle value**, a so-called BCO code, which the central unit can process.

Example:
For an angle value of 45 degrees octal, the angle encoder gives gray code 00110111, which is decoded by the encoder module as binary angle value 00100101, i e octal 045.

The encoder module may be regarded as an input module with eight inputs. Each input has a LED which lights up when the input is active. Together, these LEDs show the gray code of an angle value. The LEDs cannot be read as octal degrees in binary form.

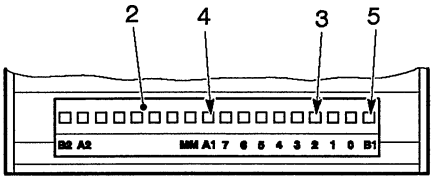

Encoder module, top

1 LEDs; show gray code
2 Connection terminal
3 Connection points for inputs 0–7
4 Power supply A1
5 0 V connection B1

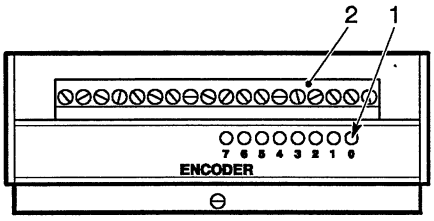

Encoder module, front

For more information on binary numbers and codes, see page 65. Would you like to know more about gray code, see page 69.

Power supply unit

The power supply unit provides the TPMC with electric power. It provides five voltages:

- **+5V** (VCC); internal main voltage for TPMC system.
- **+12V** and **–12V**; are not used i TPMC 64.1 (voltages for communication with terminal and printer).
- **+5V** (E1) and **+5V** (E2); voltages for communication with control panel and master computer.

For each voltage, there is a green LED which lights up when the power supply unit provides the correct voltage. The power supply unit is feed by 24 V DC.

Power supply–32, top

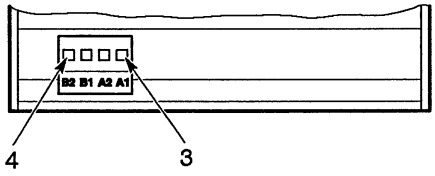

1 LEDs; indicate correct voltage.
2 Connections for input power
3 Power supply A1, A2
4 0 V connections B1, B2
5 LED; indicates correct input voltage to power supply unit.

Power supply–32, front

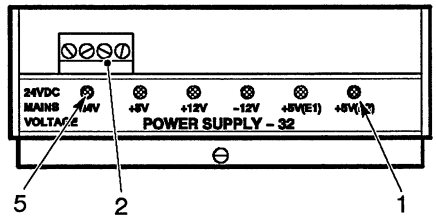

Addressing

Each input and output has a unique **address**, which determines its location in the rack. The address is also a bit in the memory where status for that particular input or output is stored so that the program can use the information.

Structure

The addresses are octal and consist of five positions. These digits have the following significance:

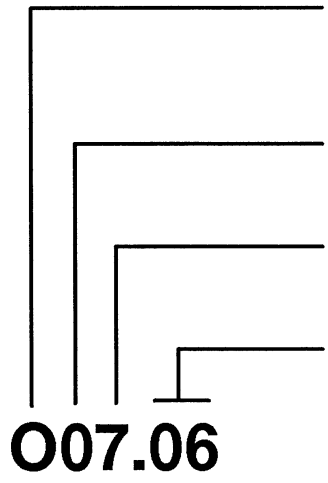

The **first** position specifies the type of module, in which the address is located: I=input module, O=output module, E=encoder module, AI=analogue input module, and AO=anlogue output module.

The **second** position specifies in which rack the address is located. It may be 0–7.

The **third** position specifies in which module position within a rack the address is located. It may be 0–7. In each rack, there are eight module positions.

The **fourth** and **fifth** positions specify an input or an output within a module. It might be 00–07 or 10–17 for input modules, output modules, and encoder modules. For analogue input and output modules, it might be 00–03.

Below is shown how racks and module positions are addressed.

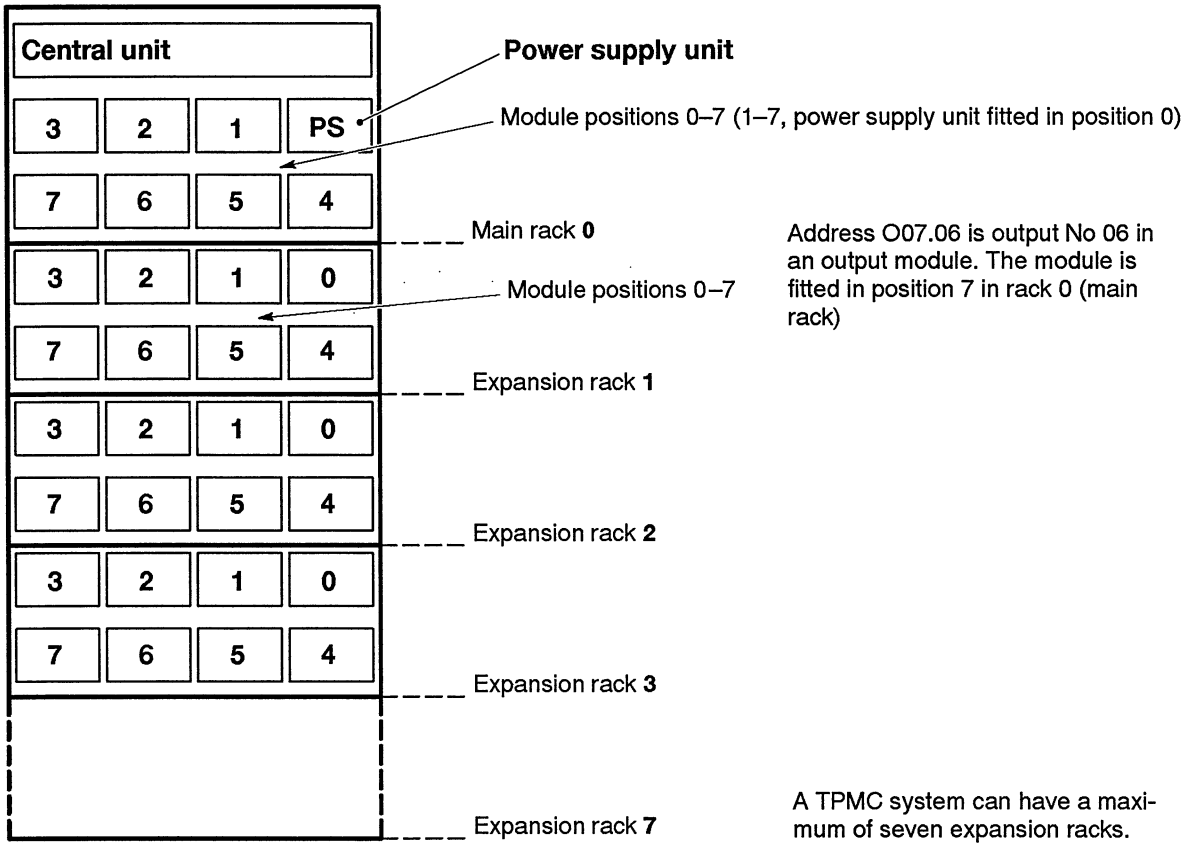

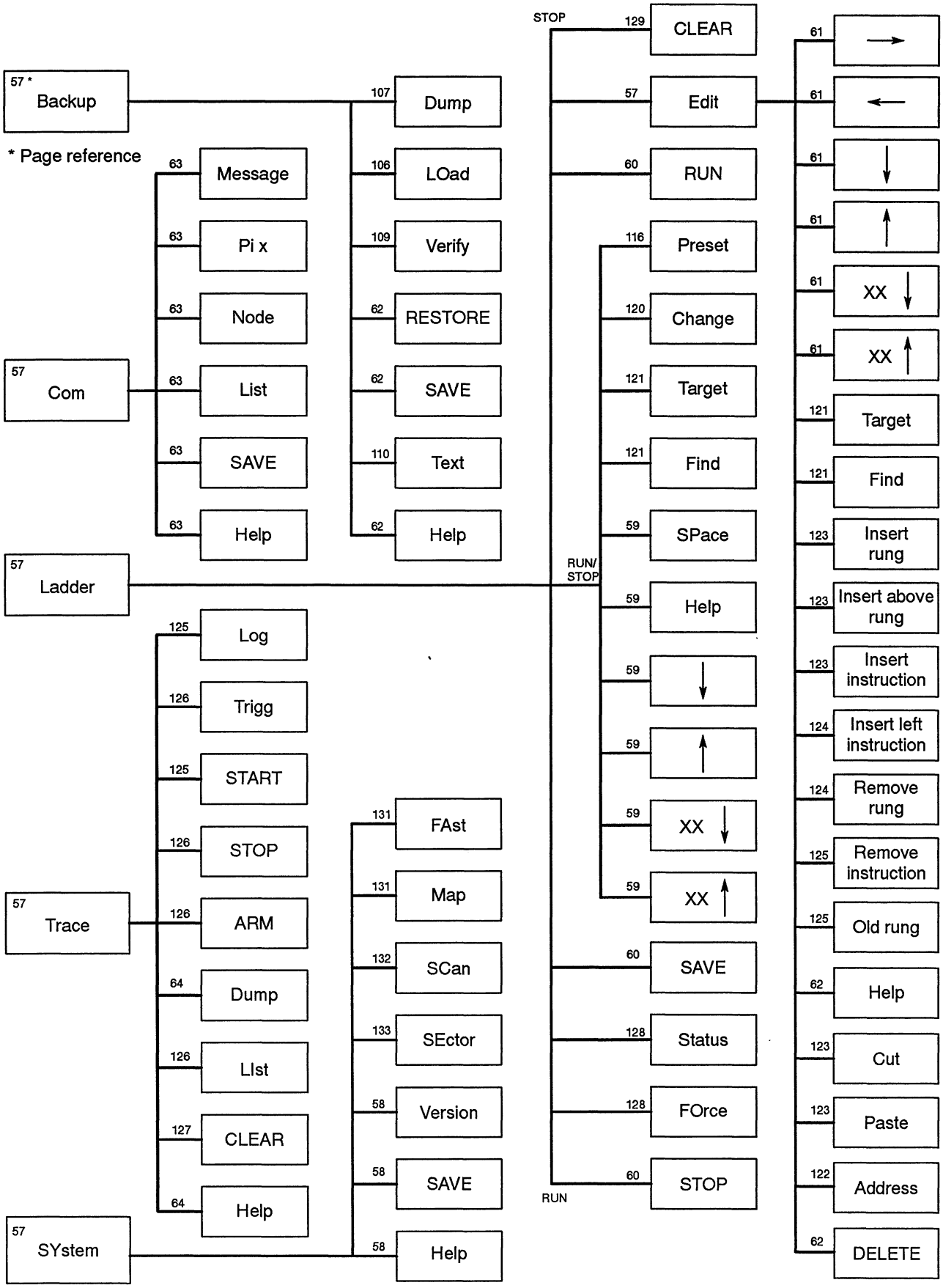
57 *
Backup
* Page reference
57
Com
63 Message
63 Pi x
63 Node
63 List
63 SAVE
63 Help
107 Dump
106 LOad
109 Verify
62 RESTORE
62 SAVE
110 Text
62 Help
57
Ladder
125 Log
126 Trigg
125 START
126 STOP
126 ARM
64 Dump
126 LIst
127 CLEAR
64 Help
57
Trace
131 FAst
131 Map
132 SCan
133 SEctor
58 Version
58 SAVE
58 Help
57
SYstem
STOP
129 CLEAR
57 Edit
60 RUN
RUN/ STOP
116 Preset
120 Change
121 Target
121 Find
59 SPace
59 Help
59 ↓
59 ↑
59 XX ↓
59 XX ↑
60 SAVE
128 Status
128 FOrce
60 STOP
RUN
61 →
61 ←
61 ↓
61 ↑
61 XX ↓
61 XX ↑
121 Target
121 Find
123 Insert rung
123 Insert above rung
123 Insert instruction
124 Insert left instruction
124 Remove rung
125 Remove instruction
125 Old rung
62 Help
123 Cut
123 Paste
122 Address
62 DELETE

Operation

Connection – start of TIT

The illustration below shows how to connect a terminal to the TPMC. Overleaf, it is explained how to start TIT.

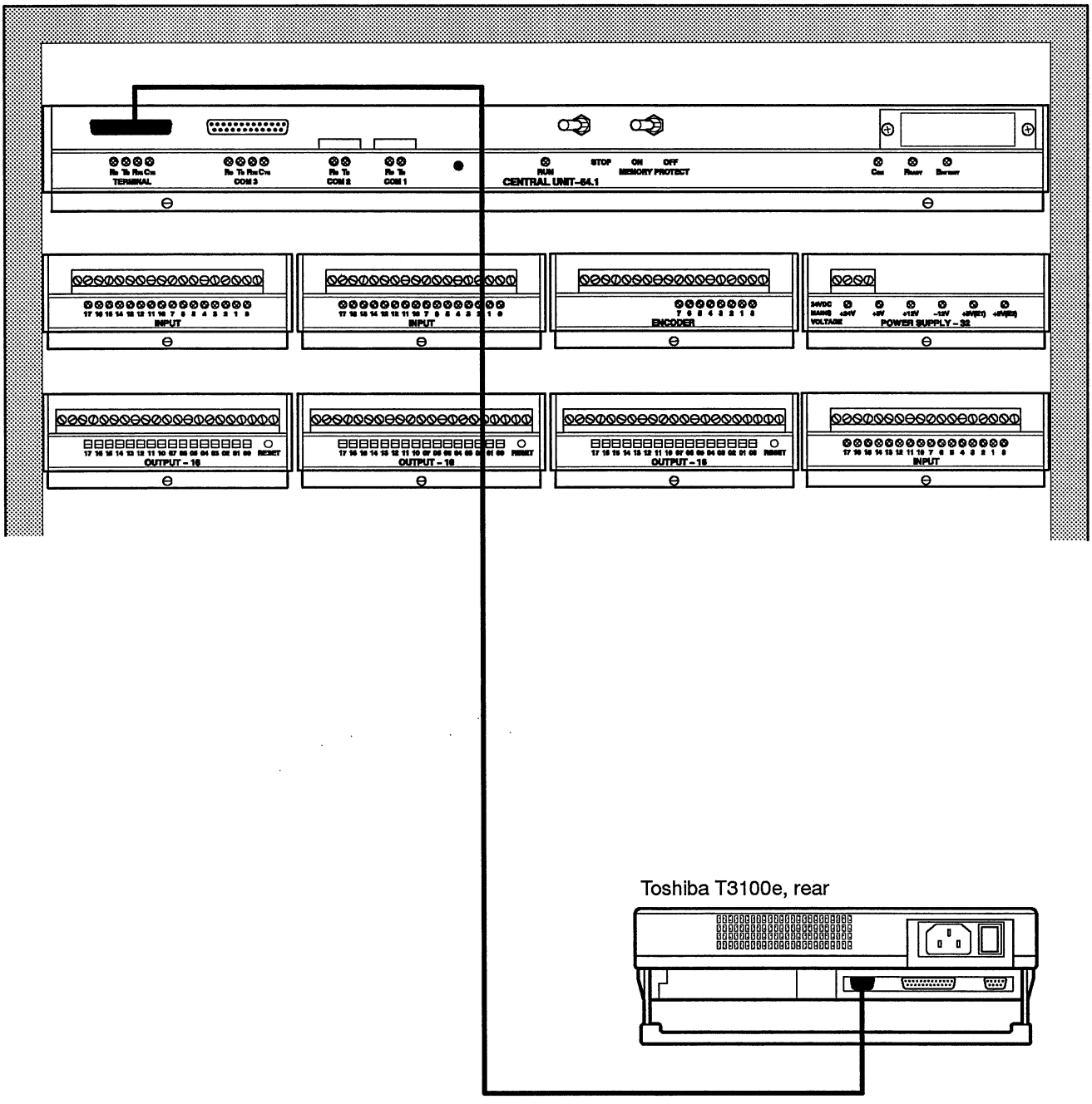

TIT is a program for communication between the TPMC and a PC. It can be started either from DOS or from a menu program.

To start **TIT from DOS**, do as follows:

At **C:\>** type **cd tit** and press ENTER.

At **C:\TIT>** type **tit** and press ENTER.

To exit from TIT, push **ALT + Q** (the ALT key and the letter Q key simultaneously).

Program transfer

Disc formatting

A disc must be formatted before it can be used. Formatting can be done in either DOS or TIT. If the disc is to be used in a TPIT, it must be formatted in TIT.

Note
*Formatting **erases** all information on the disc.*

How to format discs in DOS is explained in the DOS manual supplied with the computer.

How to format discs in TIT, see page 134.

Load program

For a program to be loaded, the TPMC must be in BACKUP. Furthermore, the MEMORY PROTECT switch must be in the OFF position and the program stopped (the RUN/STOP switch in the STOP position).

When you have made sure of this, you can load the program as follows:

Type **LO** (LOad) and press ENTER.

The following text is displayed on the screen:
"BAUDRATE 9600 19200 38400 57600: 19200"

Push ENTER. This gives a baudrate (transfer rate) of 19 200, which has been preselected. If a different transfer rate is required, change the value before pushing ENTER.

This text will be displayed on the screen:
" COMMANDS: Tape recorder, Eeprom, Industrial terminal, <exit> "
" LOAD FROM?: "

Type **I** (Industrial terminal) and press ENTER.

This text will be displayed on the screen:
" TIT – Floppy side (1, 2) or DOS File (D): "

Type **D** (Dos) and press ENTER.

This will be displayed on the screen:

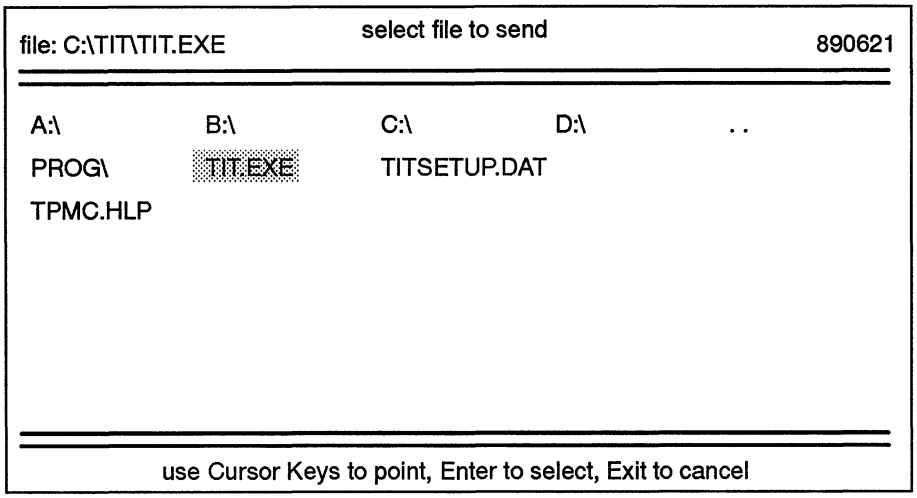

Activate the unit or **the directory** in which the program is stored. Use the cursor keys to point and press ENTER to select.

This will be displayed on the screen:

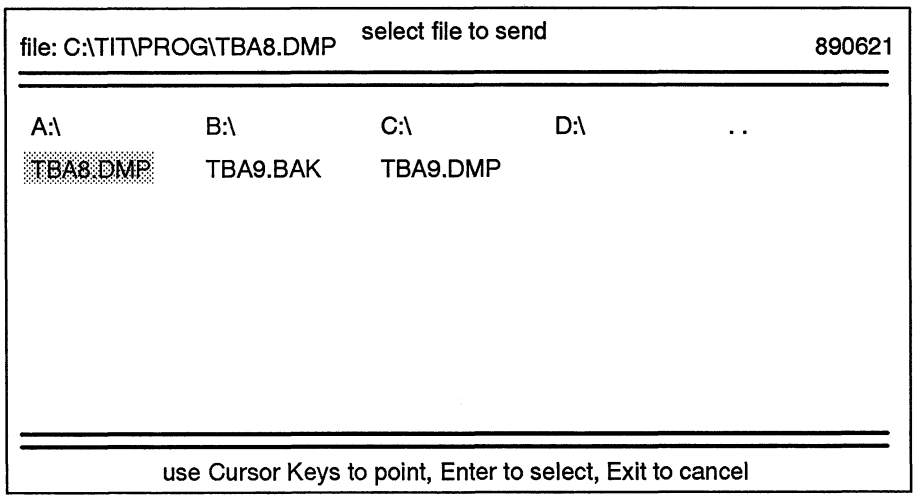

Use the cursor keys to **select the program** to be loaded. Then press ENTER to start the loading procedure.

This text will be displayed:
" LOADING "
" LOAD READY WITH VERIFY "

The program has now been loaded.

Save program

To allow a program to be saved, the TPMC must be in BACKUP.

Then you can save the program as follows:

Type **D** (Dump) and press ENTER.

This text will be displayed on the screen:
" COMMANDS: Tape recorder, Eeprom, Industrial terminal, <exit> "
" DUMP TO?: "

Type **I** (Industrial terminal) and press ENTER.

This will be displayed on the screen:
" TIT – Floppy side (1, 2) or DOS File (D): "

Type **D** (Dos) and press ENTER

This will be displayed on the screen:

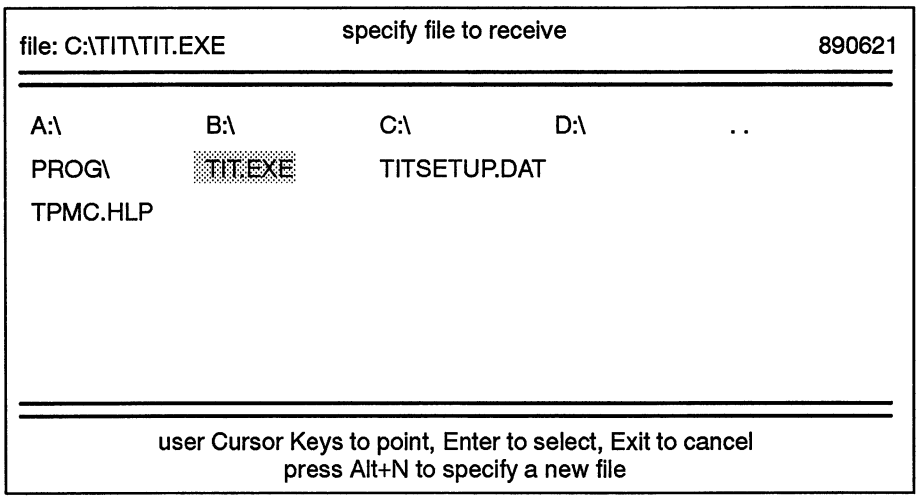

Activate the unit or **the directory** in which the program is to be saved. Use the cursor keys to point and press ENTER to select.

This will be displayed on the screen:

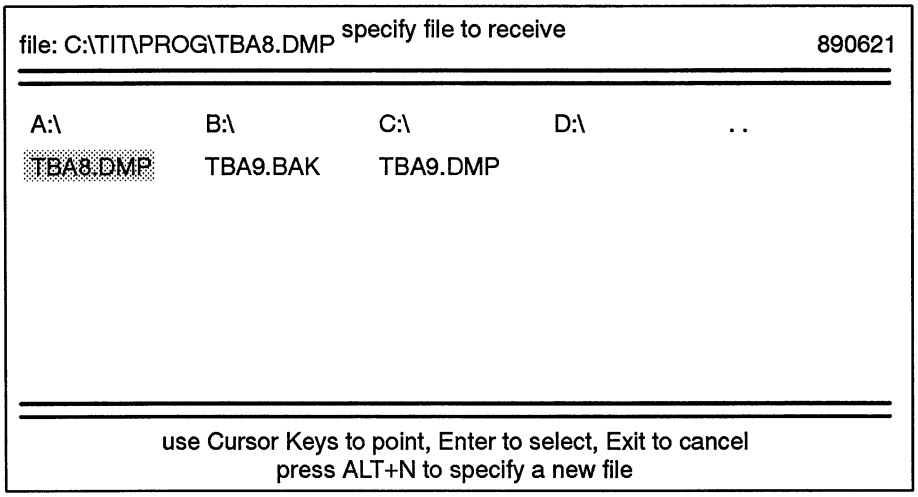

Use the cursor keys to **select the program** to be saved. Then press ENTER to start the saving procedure.

If the program is not available from before, you have to create a new file. This is done as follows:

Press **ALT + N** (do not to press ENTER).

This will be displayed on the screen:

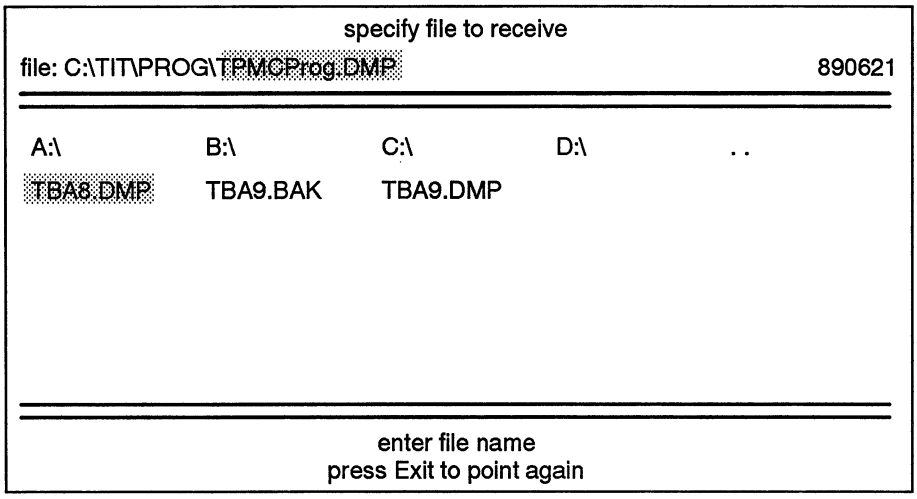

Type the **name** of the new program and press ENTER to save it.

The name may consist of up to eight characters, and only the letters A–Z and numbers must be used. Note that there must be no spaces within the name. It is recommended to conclude the name with ".DMP". *Example of a name: "TBA99058.DMP".*

This will be displayed on the screen:
" DUMPING "
" DUMP READY "

The program has now been saved.

Verify program

Verification of the program means that the program in the TPMC is compared with the program on the disc or hard disc. If these are not identical, you will receive an error message. The reason may be that there has been an error in the loading process. If so, repeat the loading procedure.

To enable a program in the TPMC to be verified with a saved program, the TPMC must be in BACKUP. Furthermore, the MEMORY PROTECT switch must be in the OFF position and the program stopped (the RUN/STOP switch in the STOP position).

When you have made sure of this, you can verify the program as follows:

Type **V** (Verify) and press ENTER.

This text will be displayed on the screen:
" COMMANDS: Tape recorder, Eeprom, Industrial terminal, <exit> "
" VERIFY WITH?: "

Type **I** (Industrial terminal) and press ENTER.

This text will be displayed on the screen:
" TIT – Floppy side (1, 2) or DOS File (D): "

Type **D** (Dos) and press ENTER.

This will be displayed on the screen:

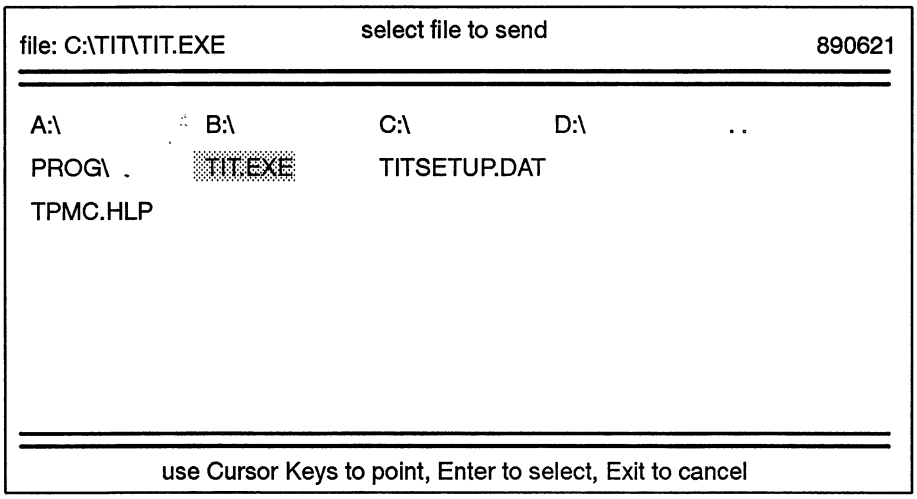

Activate the unit or **the directory** in which the program is stored. Use the cursor keys to point and press ENTER to select.

This will be displayed on the screen:

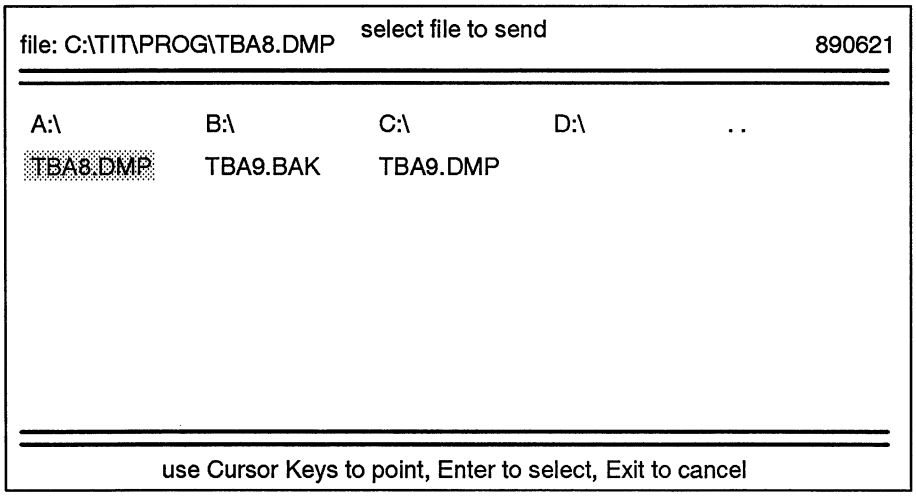

Use the cursor keys to **select the program** to be verified. Then press ENTER to start verification.

This text will be displayed:
"VERIFYING"
"VERIFY READY"

The program in the TPMC has now been verified with the program on the disc.

Program naming

When a program is to be named and numbered, the TPMC is to be in BACKUP. Do as follows:

Type **T** (Text) and press ENTER.

Now you can edit (alter, write) the text as required. Push ENTER after you have finished.

Programming and changing PR values and sector cells

PR values

When you program or change PR values, the TPMC is to be in LADDER mode and the MEMORY PROTECT switch in the OFF position.

You use the command Preset. The value is to be given directly in hours (H), minutes (M), and seconds (S). Below, a few examples show how to specify values.

Example: 3H16M8S, i e 3 hours, 16 minutes, and 8 seconds.

The time base is defined by the number of zeroes after the S in the PR value.

Example: 10M38S gives a time base of 1 s, 10M38S0 gives a time base of 0.1 s, 10M38S00 gives a time base of 0.01s.

The following are a few examples of how to program.

Delay

The delay D000 is to be given a PR value of 11 minutes and 36 seconds, and a time base of 0.1 s.

Type **P D0** and press ENTER.



The text "DP0:" will be displayed on the screen.

Type **11M36S0** and press ENTER.





The text "DP0 11M36S0" will be displayed.

Press ENTER.



Now you can use the up or down arrow keys to program additional delays. Arrow down moves to the next address, and Arrow up to the preceding address.

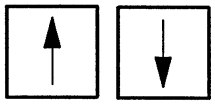

The PR value has now been programmed or changed. To clear a PR value, do as follows:

Type **P D0 C** and press ENTER (C=Clear).

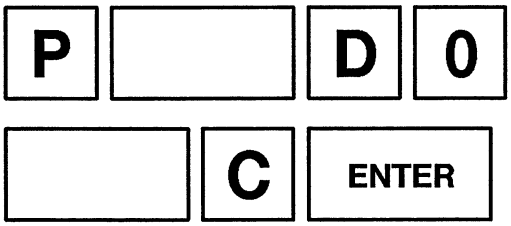

Timer

The timer T000 is to have a PR value of 5–25 s for output 0 and 10–12 s for output 1, with a time base of 1s.

Type **P T0.0** and press ENTER.

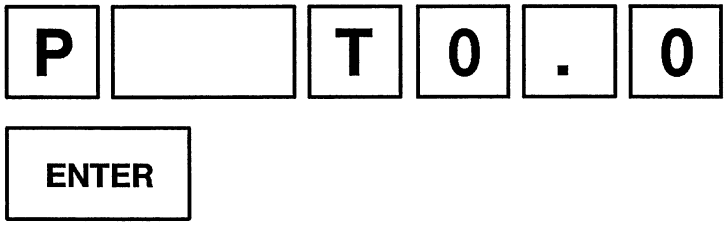

The text "TP0.0:" is displayed.

Type **5S–25S** and press ENTER.

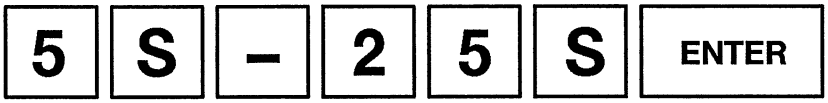

The text "TP0.0 5S–25S:" is displayed.

Press ENTER.



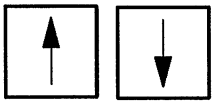

Now you can use the up or down arrow keys to program additional outputs. Arrow down moves to the next output, and Arrow up to the preceding output.

Push arrow down. The text "TP0.1:" is displayed.

Write **10S–12S** and press ENTER.

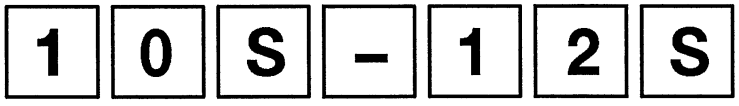



The text "TP0.1 10S–12S:" is displayed.

Press ENTER.



The PR values have now been programmed or changed, To clear all the PR values of a timer circuit, do as follows.

Type **P T0 C** and press ENTER.

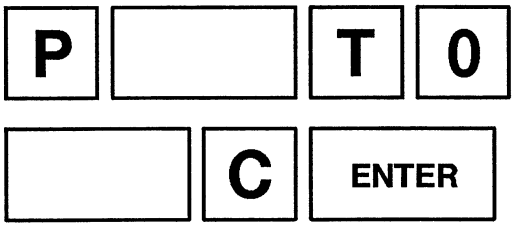

If the time base is to be changed, the timer must be cleared.

The counter C014 is to have a PR value of 10–100 for output 0.

Counters

Type **P C14.0** and press ENTER.

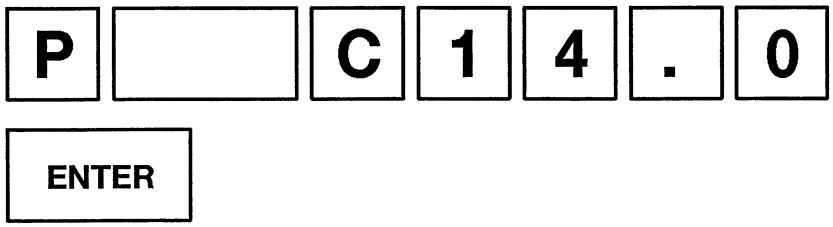

The text "CP14.0:" is displayed

Type **10–100** and press ENTER.

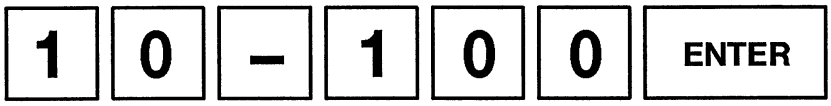

The text "CP14.0 10–100:" is displayed

Press ENTER.



Now you can use the up or down arrow keys to program additional outputs. Arrow down moves to the next output, and Arrow up to the preceding output.

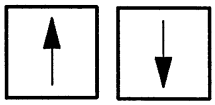

Sector cells

When you program sector cells, the TPMC is to be in LADDER mode and the MEMORY PROTECT switch in the OFF position.

You use the command Preset. The value is to be given directly in octal degrees. Overleaf, two examples show how to program sectors.

Example 1. Sector output SO0.00 is to be true in the 50–177 degree sector.

Type **P S0.0** and press ENTER.

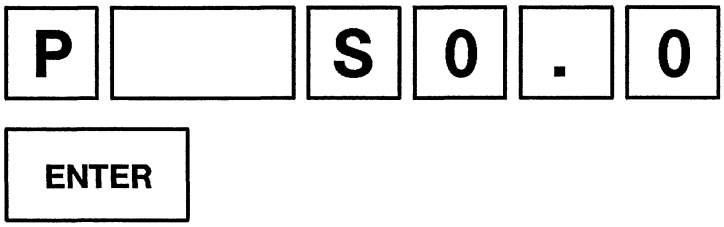

The text "SP0.0:" is displayed on the screen.

Type **50–177** and press ENTER.

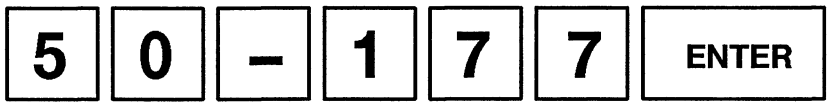

The 50–177 angle sector has now been programmed for sector output SO0.0.

Example 2 Sector output SO0.01is to be true in the 60–210 and 260–10 degree sectors.

Type **P S0.1** and press ENTER.

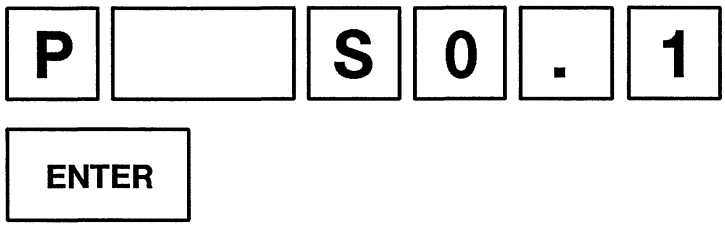

The text "SP0.1:" is displayed.

Type **20–210, 260–10** and press ENTER.

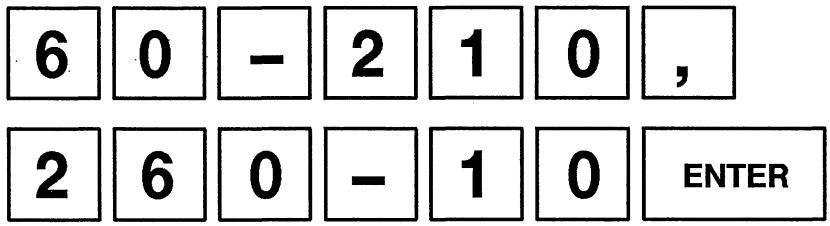

The 20–210 and 260–10 angle sectors have now been programmed for sector output SO0.1.

To clear a sector output, do as follows:

Type **P S0.0** and press ENTER (C=Clear).

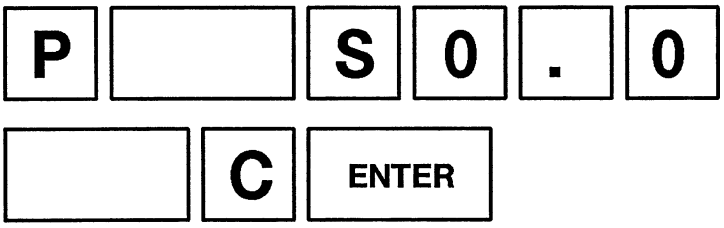

To clear an entire sector cell, do as follows:

Type **P S0 C** and press ENTER.

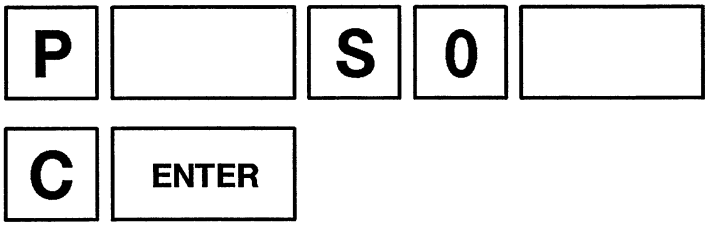

Changing AC values

To change an AC value, use the command Change. The TPMC is to be in LADDER mode and the MEMORY PROTECT switch in the OFF position.

Example; Change the AC value for timer circuit T037 to 10 s.

Type **C T37** and press ENTER.



The text "TV37 5S73:" is displayed.

Type **10S** and press ENTER.

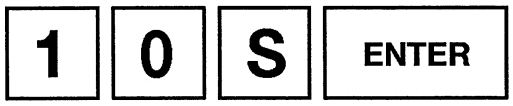

The text "TV37 10S00:" is displayed on the screen. The AC value has been changed, and we can also see that the time base is 0.01s.

Note
The time base is determined by the PR value and cannot be changed separately.

Miscellaneous

Status

In order to view a current AC value, the command Status is used. The TPMC is to be in LADDER mode.

.To view current status of a Timer, do as follows:

Write S **TV0** and press ENTER (TV=Timer Value)

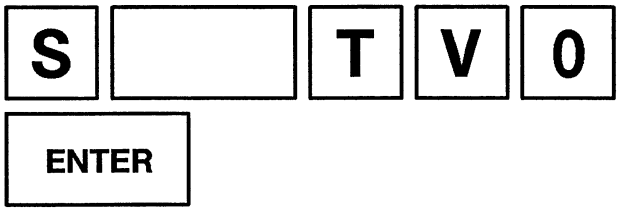

The status will be diplayed on the screen: " TV00 2M4S00 ".

The AC value of the timer circuit is 2 minutes and 4 seconds. You can also see that the time base is 0.01 second. To erase the text, do as follows:

Write S C and press ENTER.

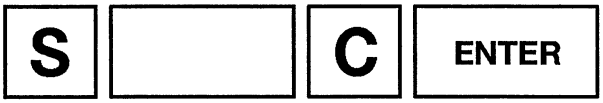

This command erases all statuses on the screen.

The table below shows possible addresses for the command Status.

Irmx.yy, Ormx.yy, Irm, Orm	Inputs/outputs
Mxxx.yy, Mxxx	Memory cells
PLxy.zz, PIxy.zz, POxy.zz	Panel inputs/outputs/alarms
PLxy, PIxy, POxy	
Rxxxx	Registers
CVxxx, DVxxx, TVxxx	AC values
SVxx	Sector cell values
COxxx.y, SOx.yy, TOxxx.y	Outputs for counters, timer circuits and sector cells.
AIrm, AOrm, Urm	Analogue inputs/outputs

FOrce

In order to force an address to 1, the command Force on is used, and to force an addres to 0, the command Force off is used. The TPMC is to be in LADDER mode and the MEMORY PROTECT switch in the OFF position.

A maximum of ten addresses can be forced at the same time.

Example 1. FOrce on at address O05.03.

Type **FO O05.03 1** and press ENTER.

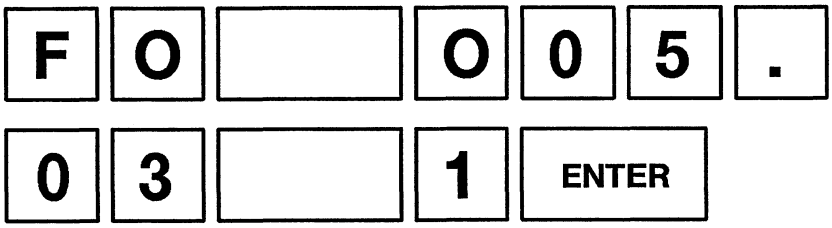

Example 2. FOrce off at address I03.02.

Type **FO I03.02 0** and press ENTER.

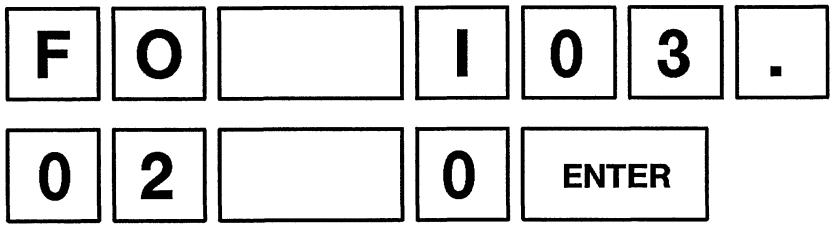

To remove the forces, do as follows:

Write **FO C** and press ENTER.



Another way of removing the forces is to remove the communication cable from TPMC to the terminal

In order to see which addresses have been forced, and their statuses (1 or 0), do as follows:

Write **FO** and press ENTER.

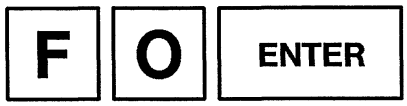

Erasing the program

To erase the program, use the command CLEAR. The TPMC is to be in LADDER mode and the MEMORY PROTECT switch in the OFF position.

Type **CLEAR** and press ENTER.

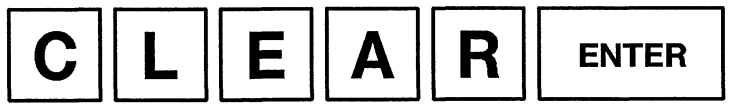

The screen displays the question "Are you sure? Y/N".

To erase, type Y, or to cancel, write N.



Note
CLEAR will erase the entire program and reset all system settings. CLEAR must not be used when making changes in a machine program.

18

Allen-Bradley

Textbook

Allen–Bradley PLC

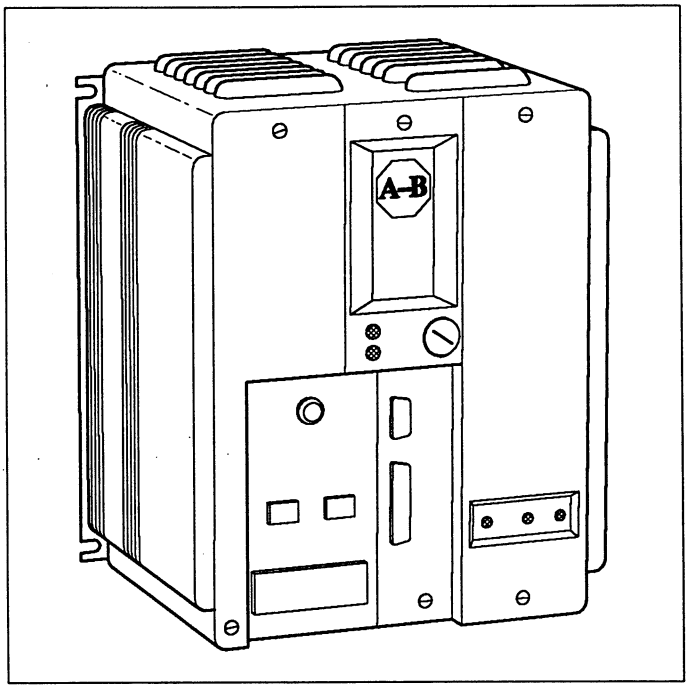

MT–83019–2

Technical Training Centre
Lund, Sweden

PLC system

General

Control and regulation system

PLC is short for **Programmable Logic Controller**. The PLC is the brain in a control and regulation system.

A **control and regulation system** controls and regulates the functions of a machine. It consists of **signal transmitters, control unit,** and **executing components.**

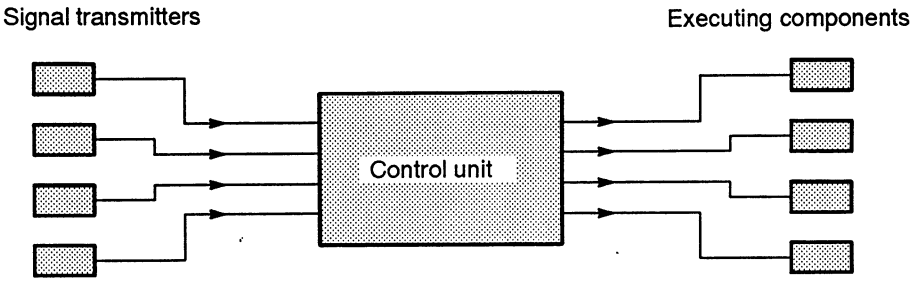

- Signal transmitters; provide the central unit with information.
- Control unit; interprets the information and determines what to execute.
- Executing components; execute commands given by the central unit.

PLC

The control unit in a control and regulation system may be a PLC system, but it can also be some other type of electronic or mechanical device.

In a PLC system, there is a microcomputer and a **program**, which control a machine. For each combination of signals from the transmitters, the program has predetermined which executing components are to be activated.

The program consists of a number of logic conditions which may be either **true** or **false**, depending on the signals from the transmitters. The status of the conditions affects in its turn the executing components. In the PLC system, there are only signals which are either true or false; these could also be termed **ones (1)** or **zeroes (0)**. There are no intermediary values.

Status *(one (1) or zero (0))*

Below are shown different ways of representing one and zero.

Logic	Potential level	Contact	Lamp	Valve
1 One	0 V High	 Closed	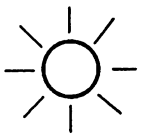 On	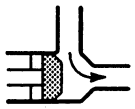 Open
0 Zero	0 V Low	 Open	 Off	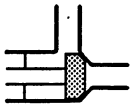 Closed

The transmitters send signals to the PLC system inputs, and the executing components receive signals from its outputs. The inputs and outputs may be **logic 1** or **logic 0**.

The program is continuously being executed, all the time reading the inputs. If an input signal from a transmitter is altered, a condition in the program is affected. The corresponding output signal changes status and one or more executing components change position or function.

Note
The system reads the program approximately 100 times per second.

The advantages of a PLC system compared with an electronic or mechanical control unit in a control and regulating system are:

- It is simple to alter a function in a machine. New components or rewiring will not be necessary. All that is needed is to alter the program.
- It is easier to build up many and complex functions.
- Certain alterations can be made while running.
- A PLC system incorporates no moving parts, which gives it high reliability.

Allen–Bradley PLC

The Allen–Bradley PLC system is used as the control unit of the control and regulation systems in Tetra Pak machines.

Structure

The PLC system is structured as shown by this block diagram.

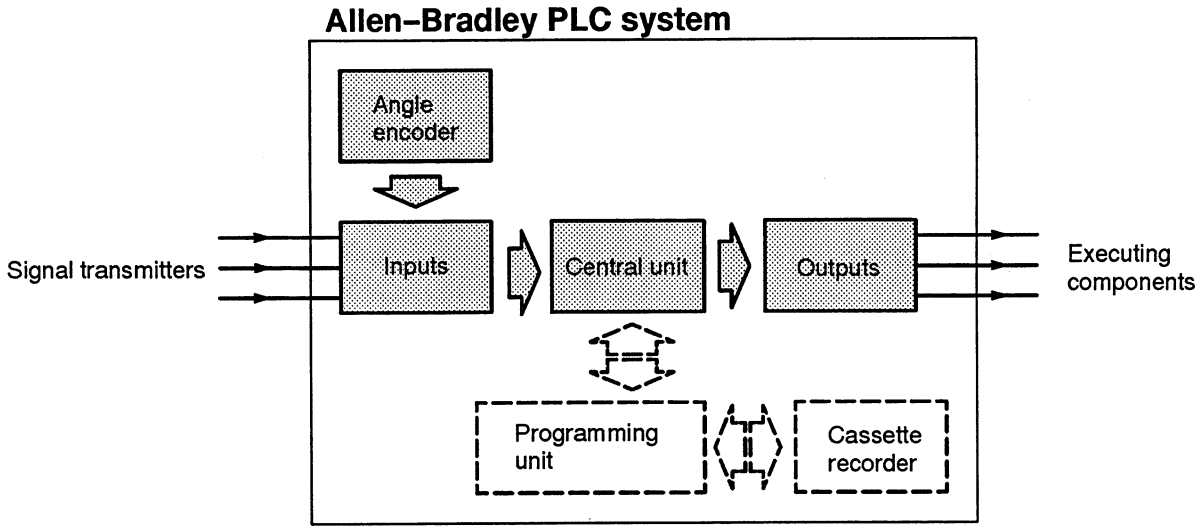

What happens?

The **Inputs** receive signals from signal transmitters and angle encoders and adapt the signals so that the central unit in the PLC system can interpret them. The **central unit** contains the program which controls a machine. For each possible combination of input signals, it is predetermined in the program what the output signals should look like, i e what is to happen in the machine. The **Outputs** adapt the output signals from the central unit to signals which the executing components of the machine can interpret.

The **angle encoder** converts the angular position of the machine into an electric signal.

Would you like to know...

- ... how to connect the components of a PLC system, see page 61.

Below, the various components of the PLC system are illustrated.

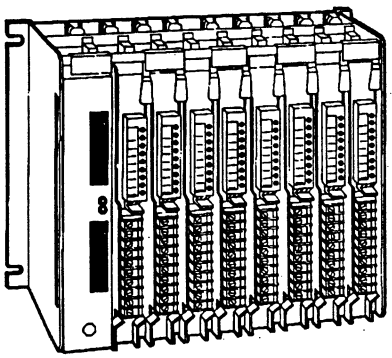

Racks with inputs/outputs

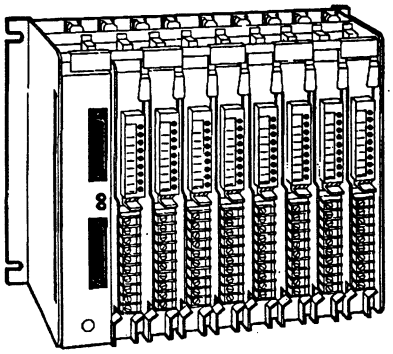

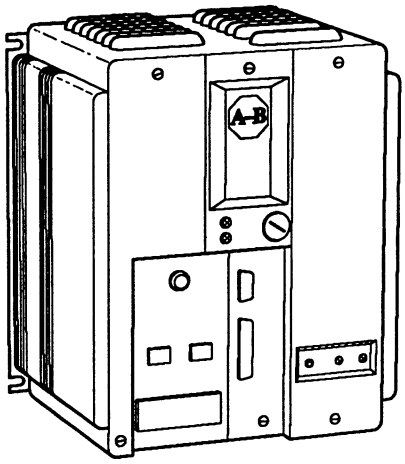

Central unit

Angle encoder

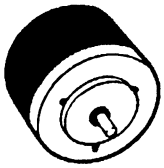

You can connect a programming unit to the central unit. It is used to make alterations in the program, view the program, and view the status of conditions, inputs, and outputs. It is also used to save and load the programs. The programming unit may be either a **PC** of the **laptop** type or an **industrial terminal 1770.**

Laptop type PC

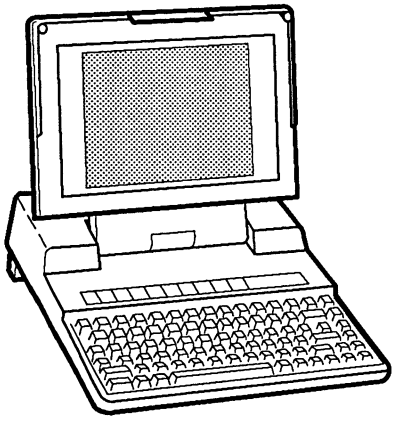

Industrial terminal 1770

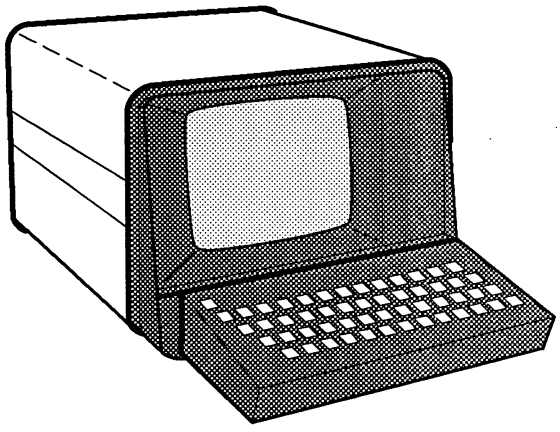

If you use an industrial terminal, a **cassette recorder** is required to load and save programs. If you have a laptop PC, you load programs from discettes and save programs on discettes. The PC incorporates a **discette drive.**

System components

Central unit

The central unit is the controlling centre of the PLC system. It contains the program which controls a machine. The central unit consists of a memory module, processor module, processor interface module, and system power supply module.

- The **memory module** contains the program.
- The **processor module** executes the commands issued in the program.
- The **processor interface module** transfers signals between the central unit, the inputs and outputs, and the programming unit.
- The **system power supply module** provides voltage to the central unit and one rack.

Note
To eliminate the risk of erasing the contents of the memory in case of power failure, a back–up battery supplies voltage to the memory module if mains power fails.

1 System power supply module.
2 Processor interface module.
3 Processor module.
4 Memory module.
5 Mode selector switch.
6 Program panel socket.
7 I/O rack socket.
8 Standby low indicator. Flashes when battery voltage is low.
9 Memory fault indicator. Lights up to indicate fault in memory module.
10 Processor fault indicator. Lights up to indicate fault in processor module.
11 Mains power connections.
12 I/O rack power sockets.
13 Main input fuse 2A.
14 DC ON indicator.
15 RUN indicator.

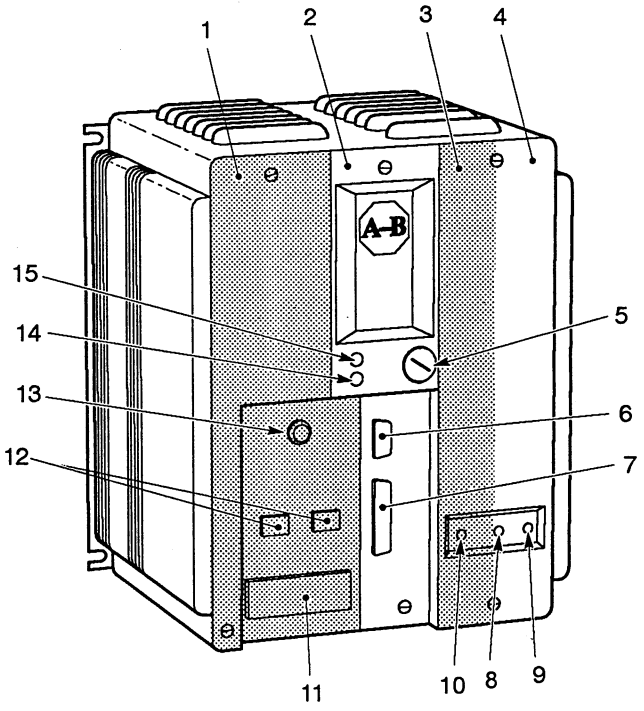

Mode selector switch

The position of the mode selector switch *(item 5 in illustration on previous page)* determines the function of the central unit. There are four positions with the following four functions:

PROG. The program is stopped; this function is used when programming or altering the program.

TEST. Test running; the program is run without activating the executing components.

RUN. Normal running of the program.

RUN/PROG. Normal running of the program, but with the option to alter numerical values in the program during running.

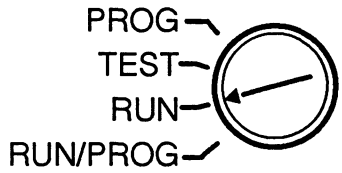

Memory module

In the memory module, there are **memory segments** storing the program. There is also a **battery unit** to provide back–up voltage to the memory in case of mains power failure. The memory contents will, in such a case, not be erased.

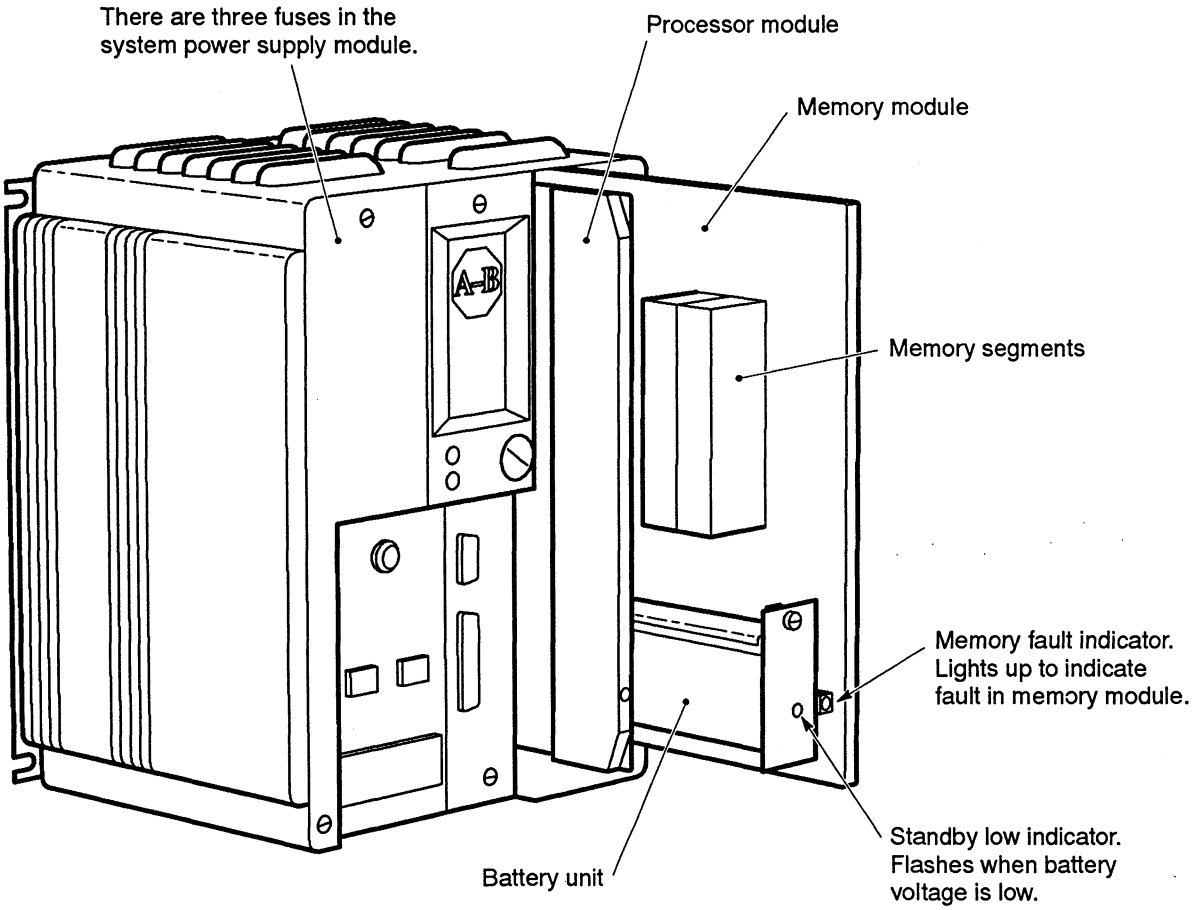

Inputs

The inputs receive signals from the transmitters and adapt their voltage to communicate with the central unit. This means that signals to the central unit must consist of either logic 1 or logic 0.

What happens?

Each input has a light–emitting diode *(LED)* which lights up when the input is activated. The inputs are active within a voltage range of 24–48 V. An active input transmits a logic 1 to the central unit.

Construction

The inputs are collected in **modules** of eight inputs. These modules are fitted in racks, and in this manner several modules can be combined to a unit.

Note
In the modules, the external voltages and signals are adapted to the internal signals within the PLC system. This means that an incorrect signal, e g 220 V, can only harm a single module, not the entire PLC system.

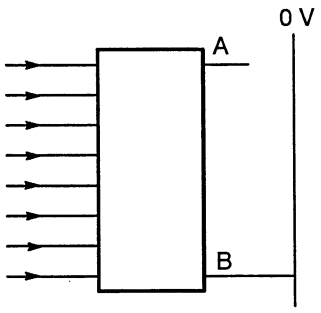

Input module

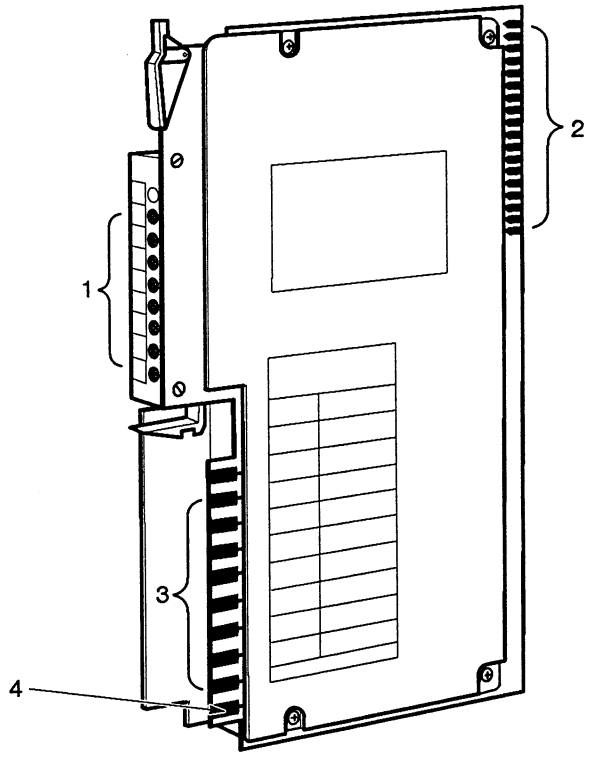

1 LEDs. Light up when the input is active.
2 Connections with I/O chassis slots in rack.
3 Input connections.
4 B connection *(0 V)*.

Outputs

The outputs connect and disconnect the executing components in accordance with the commands from the central unit. The outputs adapt the voltage of the signals of the central unit to enable them to control the executing components.

Construction

The outputs are collected into **modules** of eight outputs. These modules are fitted in racks, and in this manner several modules can be combined into a unit.

What happens?

Each output has an LED which lights up on activation. Each output is protected by a 2 A fuse. If any fuse blows, an LED located at the top of the module lights up.

Whenever an output is active, it gives the same voltage which is fed to the A connection of the module; this voltage may be 24 V or 48 V.

Output module

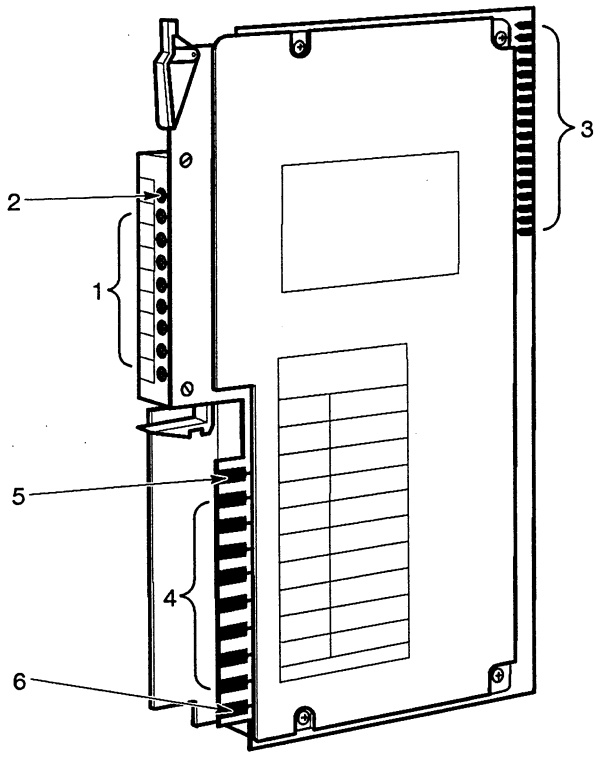

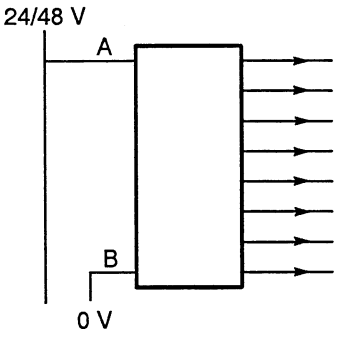

Output module, lefthand side

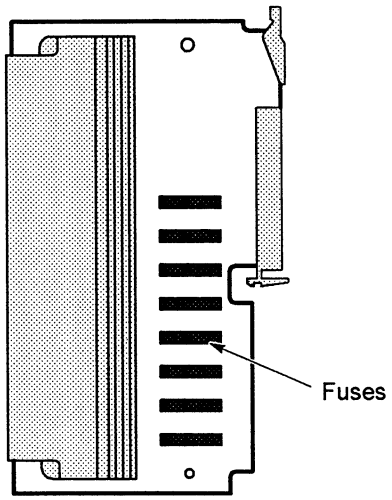

1 LEDs (2–9). Light up when the output is active.
2 LED (1). Lights up when a fuse has blown.
3 Connections with I/O chassis slots in rack.
4 Output connections.
5 A connection *(Power supply)*.
6 B connection *(0 V)*.

Encoder module

The signal from the angle encoder consists of a **gray code**. The encoder module converts the gray code signal into a **binary angle value,** which the central unit can process.

Example:
For an angle value of 45° octal, the angle encoder gives gray code 00110111, which is decoded by the encoder module as binary angle value 00100101, i e octal 045.

The LEDs on the encoder module indicate gray code and cannot be read as binary octal degrees.

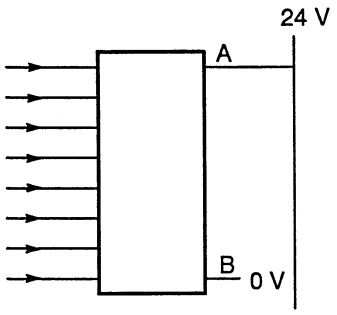

Encoder module

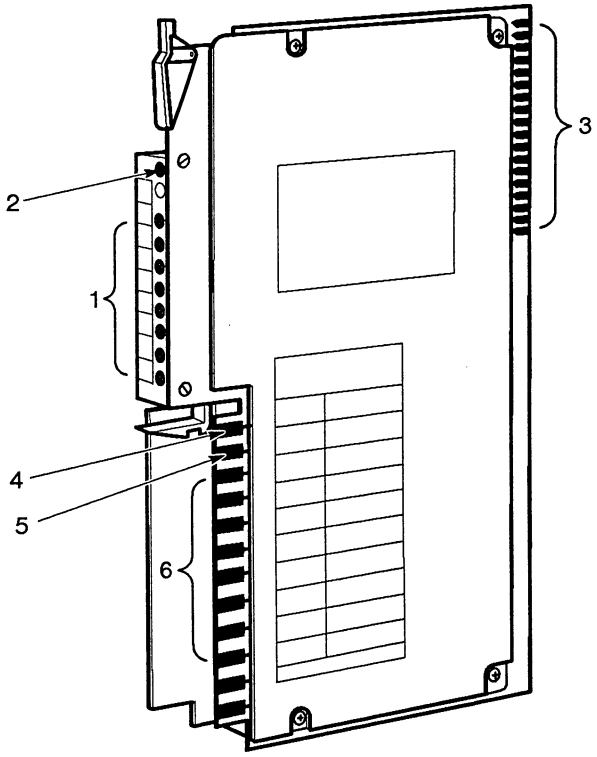

1 LEDs. Indicate gray code.
2 LED. Lights up when the angle encoder has been idle for a certain period of time. *
3 Connections with I/O chassis slots in rack.
4 A connection *(power supply)*.
5 B connection *(0 V)*.
6 Inputs for signals *(gray code)*.

* Not utilized.

Would you like to know more about...

- ... binary values and codes, see chapter 9.
- ... gray codes, see page 53.

Racks

The input and output modules and the encoder modules are collected into racks with up to 16 modules.

A rack is constructed as this picture shows.

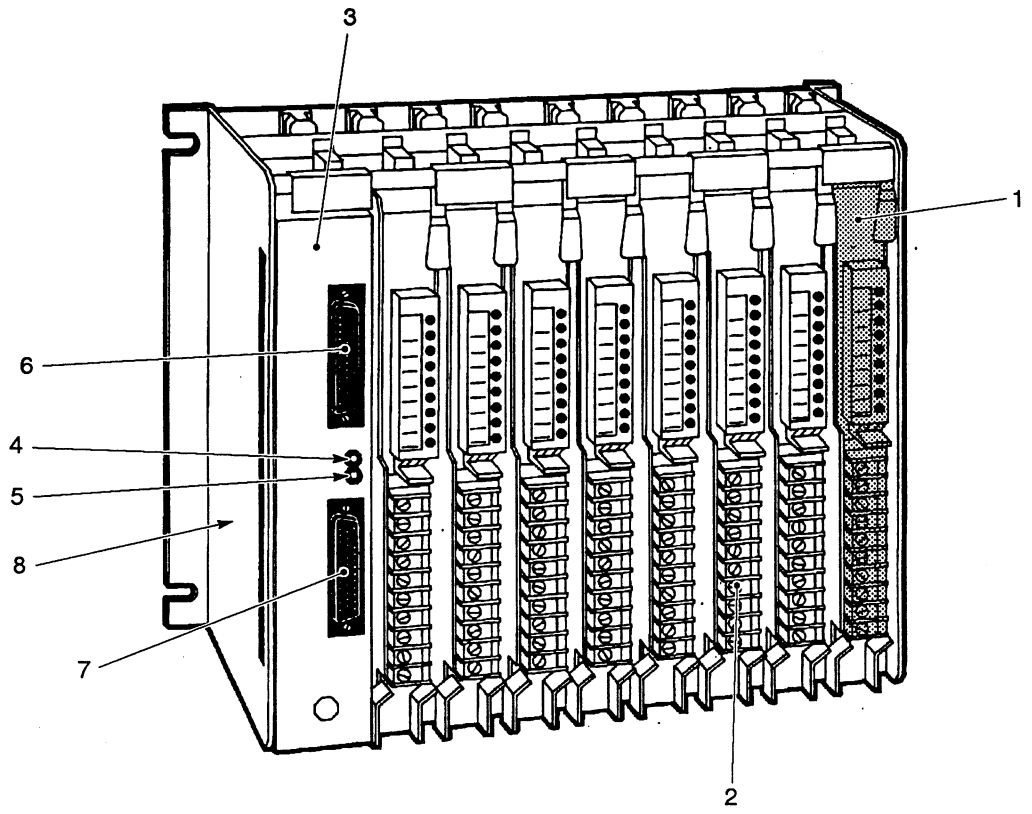

1 Input module, output module, or encoder module.
2 Connection arm.
3 I/O adapter module.
4 Active indicator. Shows green light when rack is connected.
5 Rack fault indicator. Shows red light to indicate fault in rack.
6 Connection from central unit or preceding rack.
7 Connection to succeeding rack or terminal plug.
8 Rack switch group *(behind I/O adapter module).*

I/O adapter module

In the adapter module (3), all the signals are collected into a **communication cable** which conducts the signals to and from the central unit (6, 7). There are also two **indicators** (4, 5).

Rack switch group

The rack switch group *(item 8 in the picture on the previous page)* consists of eight switches.

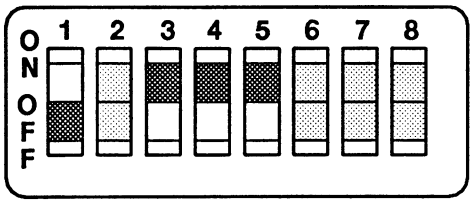

Setting of rack switch group.

RACK ADR.	SWITCH		
	3	4	5
1	ON	ON	ON
2	ON	ON	OFF

- Switch **1** is to be in **OFF** position. This means that the outputs are deactivated in case of a fault in the system.
  If switch 1 is in the ON position, the outputs retain their latest status in case a fault occurs.
- Switches **3, 4,** and **5** are used to set the rack address.
- Switches **2, 6, 7,** and **8** are not used.

Several racks can be combined into a system. Each rack must have a unique address, even if only a single rack is utilized. This address is set by means of the rack switch group in accordance with the table.

Auxiliary power supply unit

The system power supply module of the central unit can only supply power for the central unit and one rack. If another rack is employed, it must receive its power from an auxiliary power supply unit.

Auxiliary power supply unit

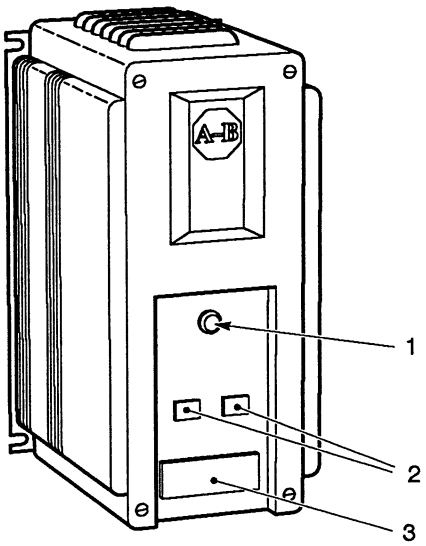

1 Main input fuse 2 A.
2 I/O rack power sockets.
3 Mains power connection.

Angle encoder

The angle encoder converts the angle position of a shaft into an electric signal. The electric signal is a **gray code** with eight bits.

Construction

The vital part of the angle encoder is a **code disc** fitted to a shaft. The code disc carries a pattern, consisting of transparent and non–transparent sections. These sections constitute the code. For each octal angle value, there is a unique combination of sections, which can be translated into logic 1s or 0s.

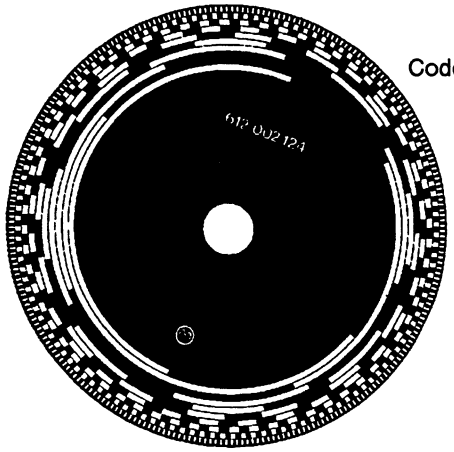

Code disc with gray code

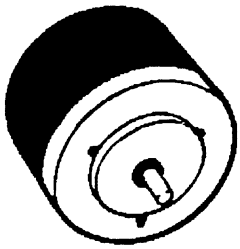

Angle encoder

On one side of the code disc, there are **LEDs**, and on the other side **photo transistors**.

Function

The LEDs light up the code disc, and the photo transistors sense when there is light or not light, depending on the position of the disc. The photo transistors state the position of the disc as a binary signal.

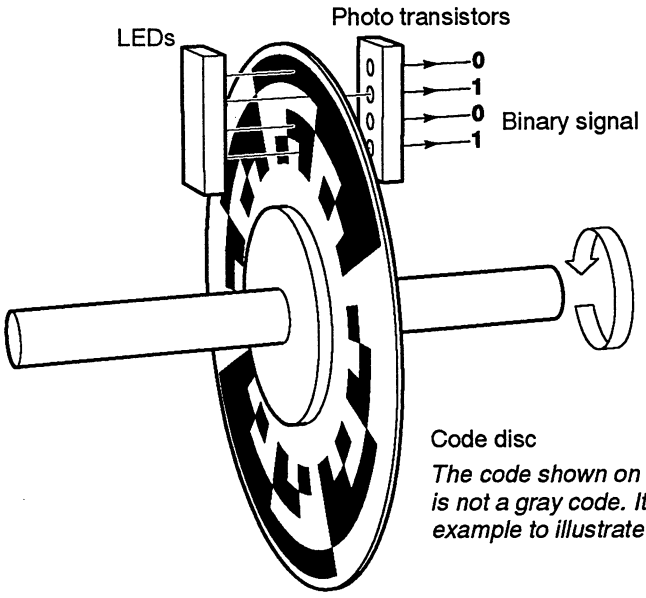

Code disc

The code shown on this code disc is not a gray code. It is only an example to illustrate the function.

What happens?

As the disc rotates, a signal is continously registered, corresponding to the angle position of the shaft to which the angle encoder is coupled. This signal is connected to the encoder module which translates it into a binary value, for the central unit to process.

Programming unit

The programming unit is used to:

- Program the central unit.
- Alter the program.
- View the program.
- View status of conditions, inputs, and outputs.
- Save and load programs.

The programming unit can be either some form of laptop type **PC** or an **Industrial terminal 1770**. The following description assumes a Toshiba T3100e laptop PC, and an Industrial terminal 1770.

Toshiba T3100e

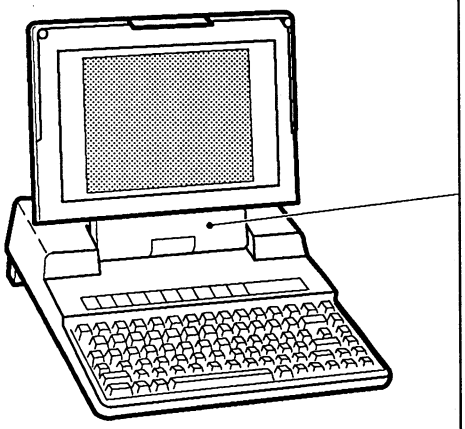

Indication lamps

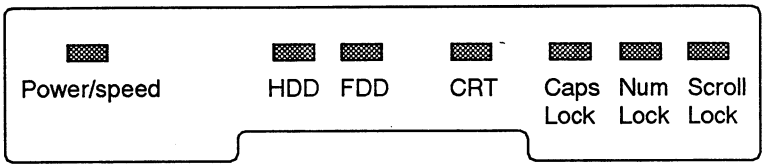

Power/speed Indicates that power has been switched on and the frequency of the microprocessor.
Green light = 12 MHz
Red light = 6 MHz

HDD Indicates that the hard disc is active.

FDD Indicates that the discette is active.

CRT Indicates that the display information is transmitted to an external monitor.

Caps/Num/Scroll Lock Indicates when either of these functions has been activated.

Rear side

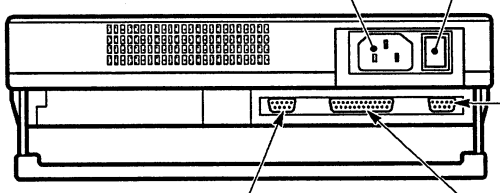

Mains power in socket

Power on/off switch

RGB port. For external monitor.

Serial A port, for communication with external equipment. This port is also called **COM 1.**
Here you can connect the **ICOM** cable for communicating with the central unit or an Allen–Bradley cassette recorder.

Parallel port, for printer or external disc unit. Is also called **LPT 1.**

Left side

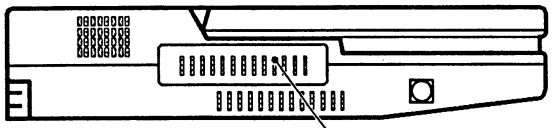

Internal hard disc drive

3 1/2" discette drive

Right side

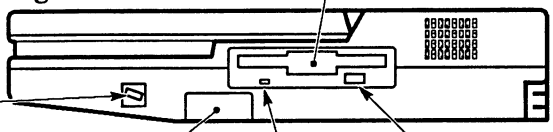

A B PRT switch. Defines the parallel port. The switch is to be in position PRT.

Eject button

Serial B port, for communication with external equipment. This port is also called **COM 2.**
Is used in the same way as **COM 1.**

Disc-in-use indicator

Industrial terminal 1770

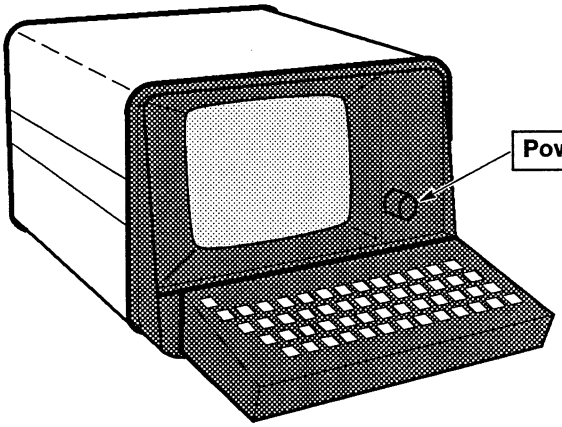

Power switch

Mains power socket

Rear side

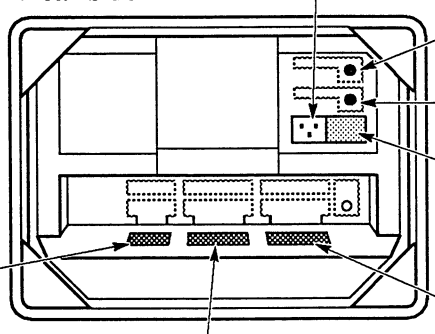

Brightness control

Volume control

Fuse

PLC-2 port.
For cable to central unit.

Peripheral port.
Here you connect cassette recorder.

Not in use.

Addressing

Each input and output has a unique **address**, which determines its location in the rack. The address is also a bit in the memory where status for that particular input or output is stored, so that the program can exploit the information.

Structure

The addresses are numbered octally and consist of five numerals. The various numerals have the following meaning:

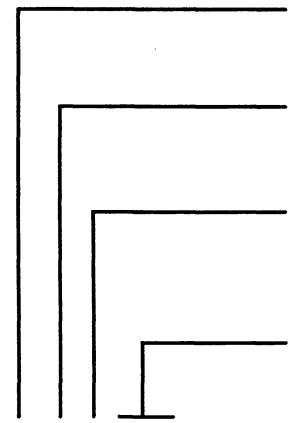

The **first** numeral states whether the address is an input or an output. 1=input, 0=output.

The **second** numeral states in which rack the address can be found. It may be 1 or 2.

The **third** numeral states in which module group within a rack the address can be found. It can be 0–7. In each rack, there are eight module groups, each one consisting of two modules.

The **fourth** and **fifth** numerals state an input or an output within a module group. It can be 00–07 or 10–17.

Note
Input and output modules can be placed in the same module group.

Example:
An output has the address 02113. If it where an input, the address would be 12113.

The picture below shows the numbering of a fully utilized rack.

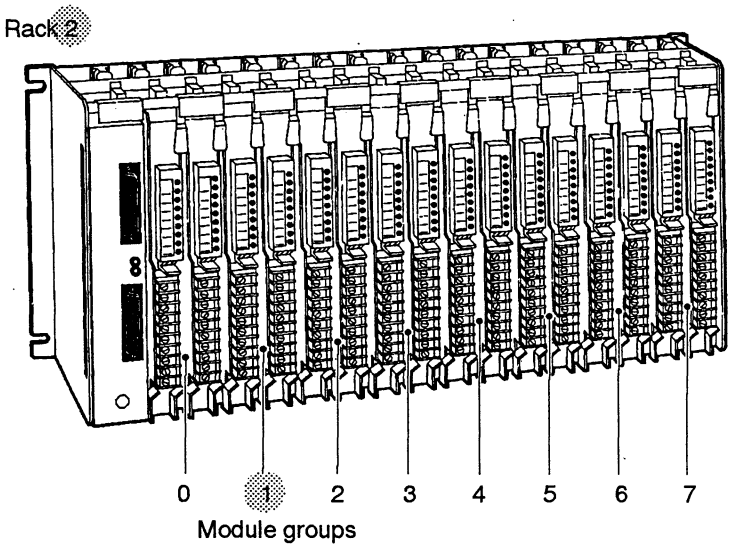

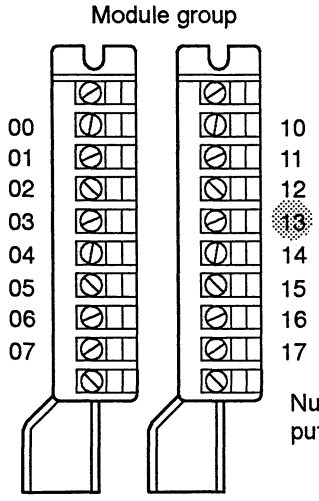

Numbering of inputs and outputs within a module group.

Memory, scanning

In the memory are stored the **program, status of inputs and outputs,** and **numerical values.**

Structure

The memory consists of a number of **memory words.** A memory word is a binary value of 16 bits. Each word may also be divided into two bytes. One byte equals eight bits.

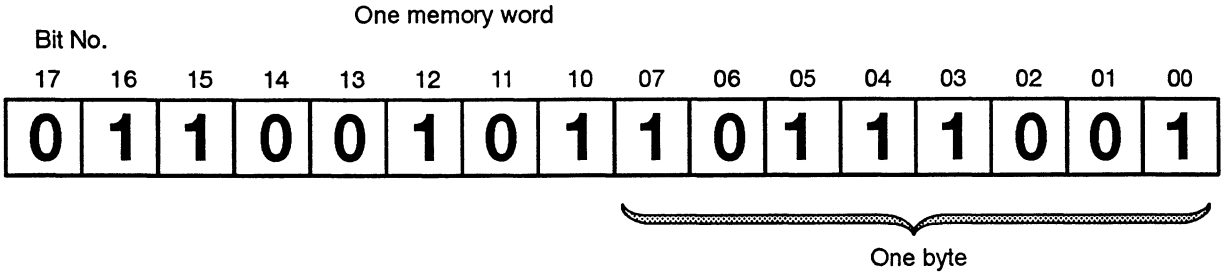

To illustrate the structure of the memory, one could say it is similar to a surface area. The width of the area is one word, and the height of the area is a number of words in the memory. The number of words will then determine the size/capacity of the memory.

The entire available memory is a read–and–write memory, which means that the information can be read and written into every word.

Each bit in the memory has a **unique address.** The address consists of a **word address** and a **bit address.** An address can be stated with three, four or five numerals. Three numerals specify a word, four a byte, and five a bit.

Example:
The address 02513 points at word 025 on the memory surface area and bit 13 in this word. The address 0241 points at byte 1 in word 024, or bits 02410–02417.

The memory is subdivided into two main sections: the **data table** and the **program memory.**

Data table

In the data table, input and output status and numerical values, such as angle values and time delays, are stored.

The size of the data table is adjustable. It should be set for maximum size, which is **256/257** memory words. If it is set for a different size, program transfer is not possible.

The memory organization is shown below.

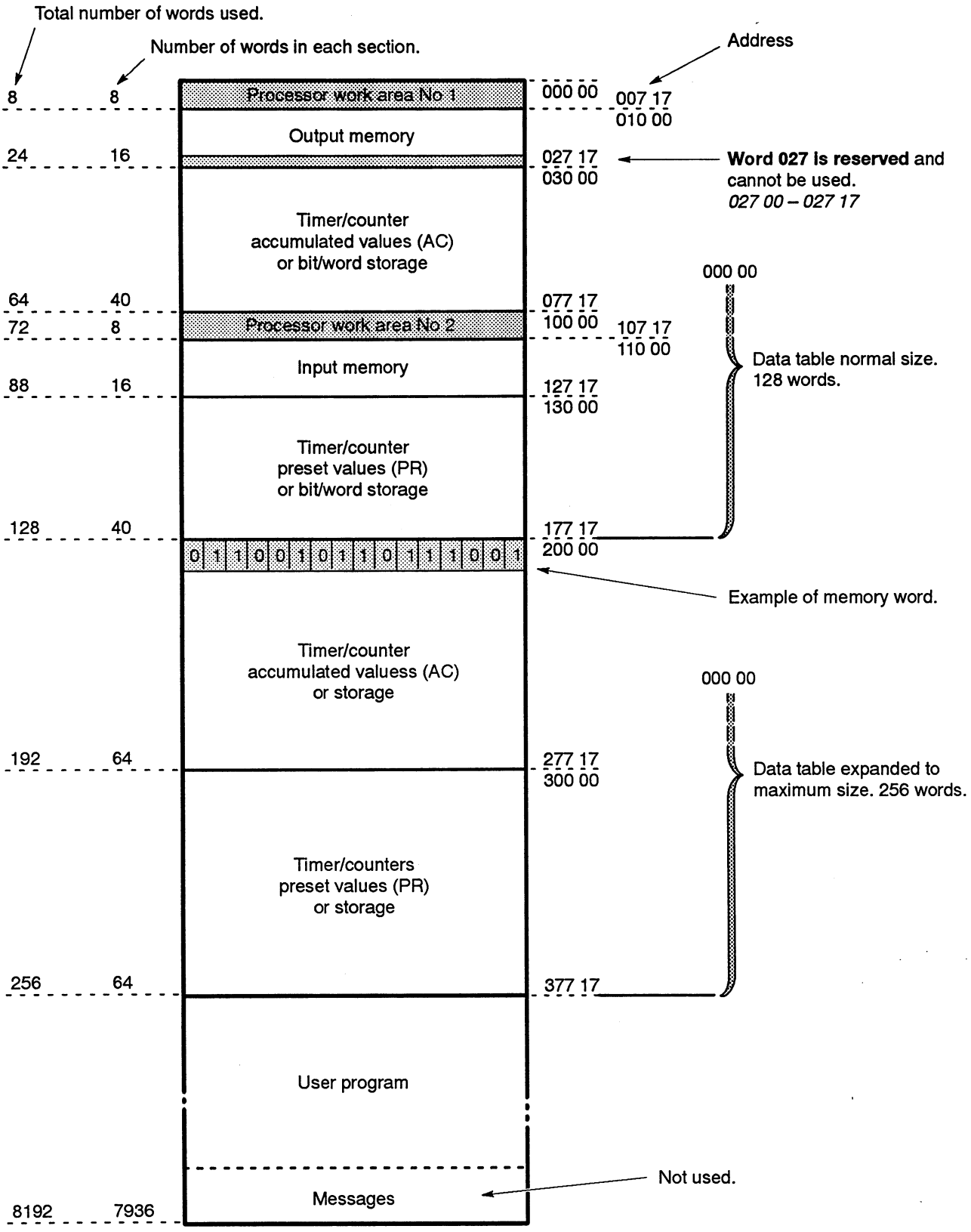

Note
When the program is erased, the data table size is reduced to normal size, 128 words. This may happen if a fault in the PLC system occurs. If this is the case, the size of the data table must be altered to 256/257 words.

Program memory

The program is stored in the program memory. It is erased only if the supply of power to the memory is interrupted, or if the command **clear memory 99** *(see page 63)* is given. The size of the program is stated in words, e g 2520 words.

What happens?

When the program is executed, the memory is scanned approximately 100 times per second. The following is a description of a **scanning cycle** and what happens during it. A scanning cycle has a duration of approximately 10 milliseconds.

1 First of all, all inputs are read and their status copied into the input memory.
2 The next step is that the program is read, rung by rung. The rung conditions are set in accordance with the information in the input memory and the outputs are activated or deactivated in accordance with the rung conditions. The status of the outputs is stored in the output memory.
3 Lastly, in the scanning cycle, the output memory activates the outputs according to the information stored in the output memory.
4 A new scanning cycle commences.

Note
The length of the scanning time depends on the size of the program and racks. Furthermore, it increases by 1 millisecond if a terminal is connected. The I/O scan (1,3) is 1 ms, and the program scan (2) is 5 ms /1000 words.

Would you like to know...

- ... how to reset the data table to 256/257 words, see page 64.

Example of scanning cycle.

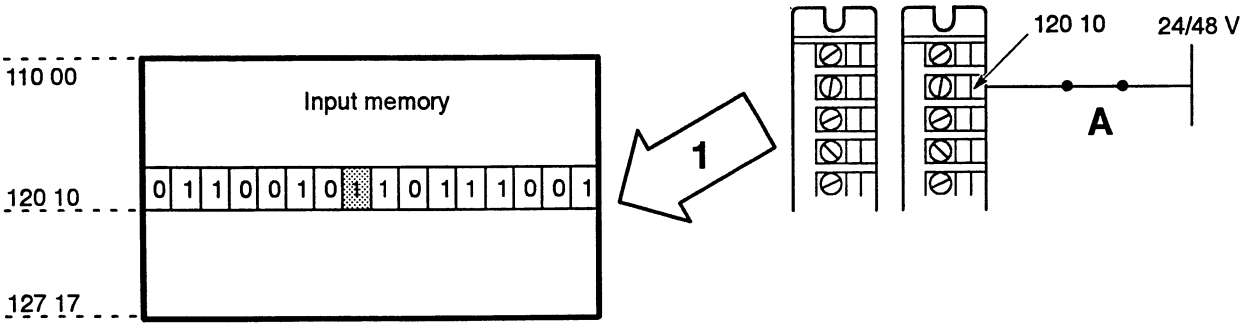

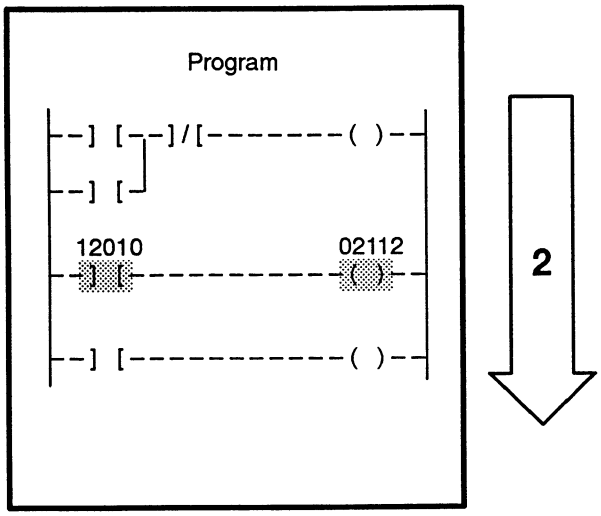

1 *Contact A is closed, which activates input 12010. This information is copied into the input memory and stored there.*

2 *Now the program is read. The input instruction is activated as there is a logic 1 on address 12010. Output 02112 becomes active and a logic 1 is stored in address 02112 in the output memory.*

3 *The output memory now activates output 02112 and lamp B lights up.*

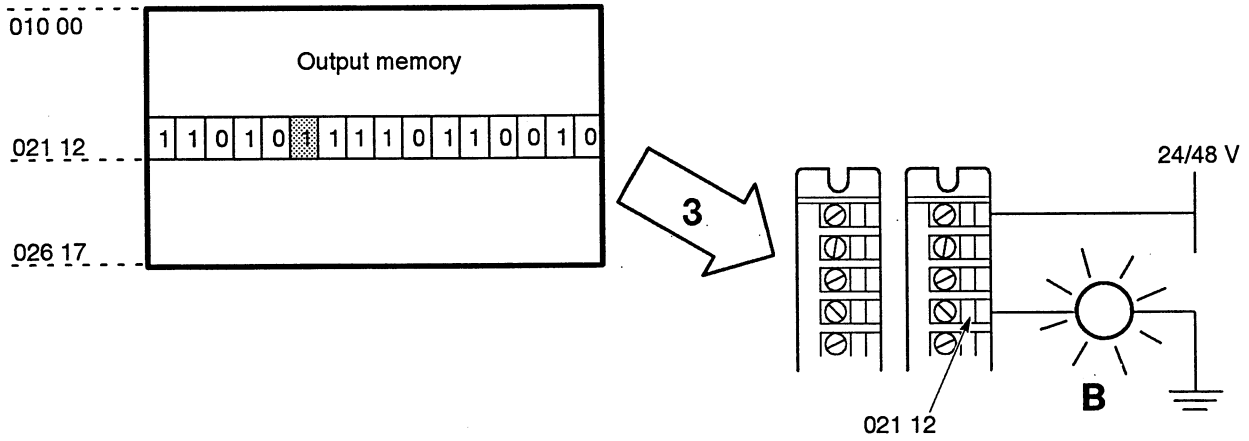

If an Output Latch and an Output Unlatch are activated simultaneously, the instruction placed last in the program will determine the status of the output.

Note
In case of a power failure all active output latch instructions are temporarily deactivated. When power is restored, they all go back to logic 1, irrespective of rung conditions.

Timer instructions

Timer instructions are used to delay switching on and switching off. There are four timer instructions: **TON**, **TOF**, **RTO**, and **RTR**. TON and RTO are switch–on delays, TOF is a switch–off delay, and RTR resets an RTO instruction.

In order to achieve a delay, it must be defined in the instruction. The delay is defined by a **time base** and a **PR value** *(preset value)*; it is the product of time base multiplied by PR value.

The time base may be 1.0 s, 0.1 s, or 0.01 s.

The PR value may be 1–999.

This means that the delay can vary from 0.01 s to 999 s *(16 min and 39 s)*.

Example:
To obtain a delay of 2.8 s, the time base can, for instance, be set at 0.1 and the PR value at 028.

In addition an **AC value** *(accumulated value)* is displayed by the instruction. The AC value shows how far the delay has progressed.

Example of how a delay is achieved.

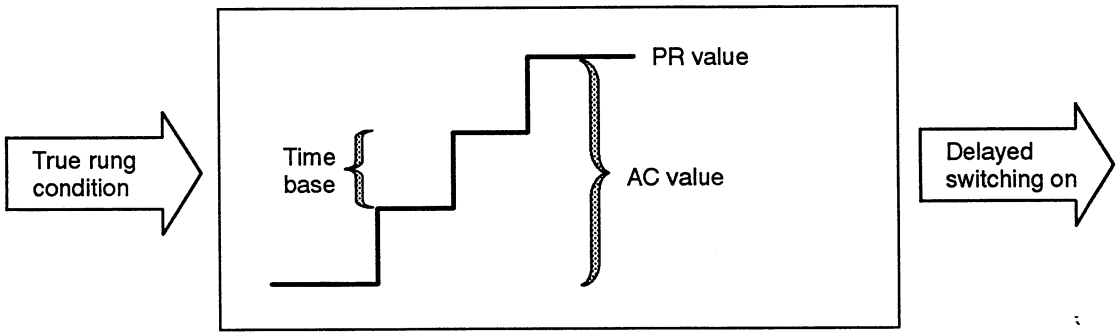

Example of a swith–on delay.

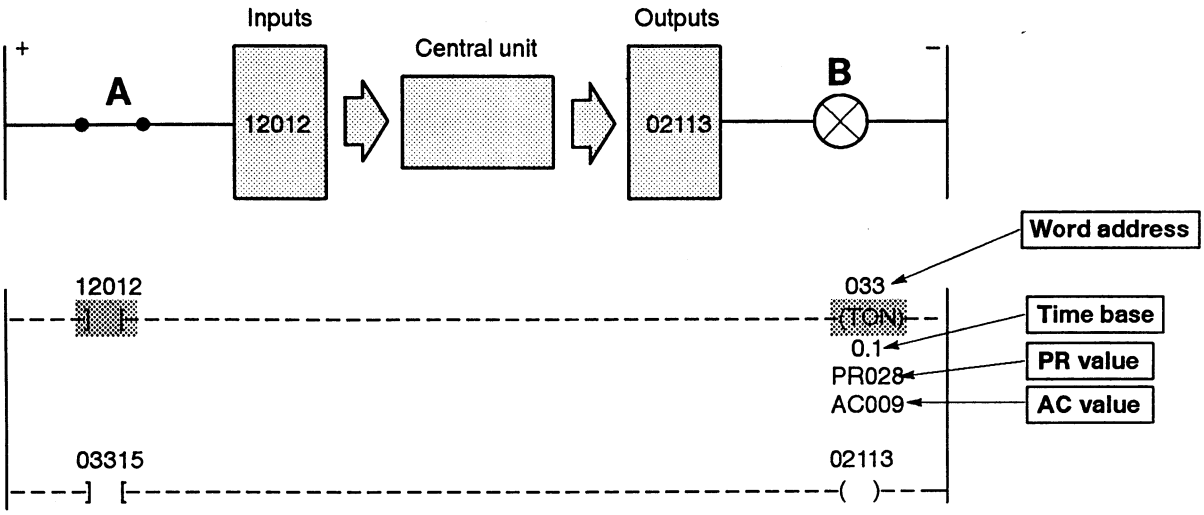

Lamp B lights up when contact A has been closed for 2.8 seconds.

The timer instructions have a **word address** stated in the instruction. It can be 030–077 or 200–277. A time function utilizes a memory word to store the **AC value** and **other information bits.**

A memory word for a timer instruction, e g 033.

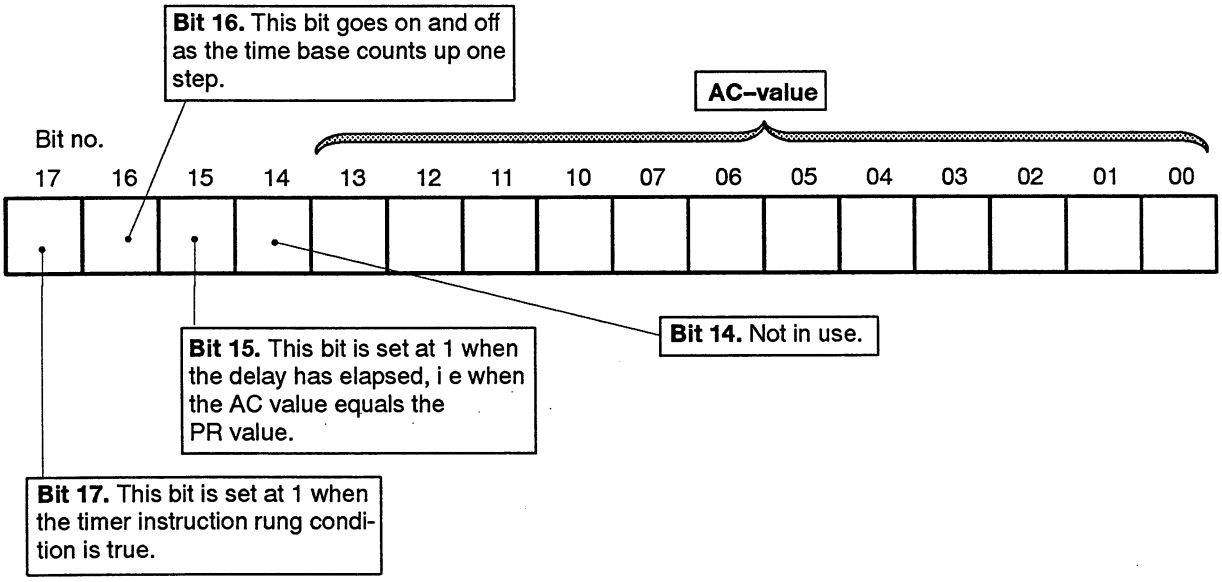

As the illustration above shows, it is always bit **XXX15** which is used for switch–on or switch–off delays.

Counter instructions

A counter is used to count, for instance, how many times a contact has closed. There are three instructions to set up a counter. They are **CTU** *(counts up)*, **CTD** *(counts down)*, and **CTR** *(resets counter)*. It is not necessary to utilize all three instructions in each counter.

A counter has a **word address** specified in the instruction. It can be 030–077 or 200–277. The counter also has a PR value *(preset value)* allocated to the counter and an AC value *(accumulated value)*.

The AC value can be maximum 999, which means that a counter can count a maximum of 999 pulses. If more than 999 pulses are to be counted, several counters can be connected in cascade.

CTU CTU *(Up counter)* –(CTU)– increases the AC value by one each time its rung condition becomes true.

CTD CTD *(Down counter)* –(CTD)– reduces the AC value by one each time its rung condition becomes true.

CTR CTR *(Counter reset)* –(CTR)– resets the AC value of a counter to zero when its rung condition becomes true.

A counter uses a memory word to store the **AC value** and the **other information bits.**

A memory word for a counter, e g 046.

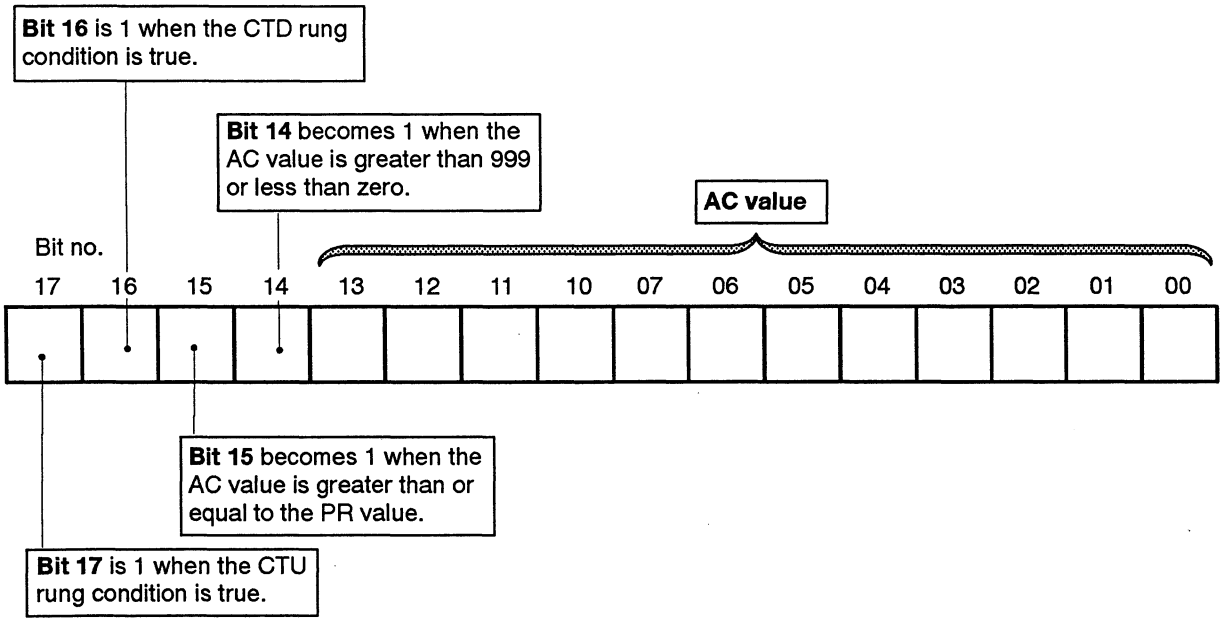

As is shown by the diagram above, it is bit **XXX15** which is used to indicate that the counter has finished counting, i e that the AC value is greater than or equal to the PR value. Bit **XXX14** can be utilized to cascade–connect several counters.

Table 1

Octal degrees	Gray code	Decimal degrees											
0	00000000	0	100	01100000	90.0	200	11000000	180.0	300	10100000	270.0
1	00000001	1.4	101	01100001	91.4	201	11000001	181.4	301	10100001	271.4
2	00000011	2.8	102	01100011	92.8	202	11000011	182.8	302	10100011	272.8
3	00000010	4.2	103	01100010	94.2	203	11000010	184.2	303	10100010	274.2
4	00000110	5.6	104	01100110	95.6	204	11000110	185.6	304	10100110	275.6
5	00000111	7.0	105	01100111	97.0	205	11000111	187.0	305	10100111	277.0
6	00000101	8.4	106	01100101	98.4	206	11000101	188.4	306	10100101	278.4
7	00000100	9.8	107	01100100	99.8	207	11000100	189.8	307	10100100	279.8
10	00001100	11.3	110	01101100	101.3	210	11001100	191.3	310	10101100	281.3
11	00001101	12.7	111	01101101	102.7	211	11001101	192.7	311	10101101	282.7
12	00001111	14.1	112	01101111	104.1	212	11001111	194.1	312	10101111	284.1
13	00001110	15.5	113	01101110	105.5	213	11001110	195.5	313	10101110	285.5
14	00001010	16.9	114	01101010	106.9	214	11001010	196.9	314	10101010	286.9
15	00001011	18.3	115	01101011	108.3	215	11001011	198.3	315	10101011	288.3
16	00001001	19.7	116	01101001	109.7	216	11001001	199.7	316	10101001	289.7
17	00001000	21.1	117	01101000	111.1	217	11001000	201.1	317	10101000	291.1
20	00011000	22.5	120	01111000	112.5	220	11011000	202.5	320	10111000	292.5
21	00011001	23.9	121	01111001	113.9	221	11011001	203.9	321	10111001	293.9
22	00011011	25.3	122	01111011	115.3	222	11011011	205.3	322	10111011	295.3
23	00011010	26.7	123	01111010	116.7	223	11011010	206.7	323	10111010	296.7
24	00011110	28.1	124	01111110	118.1	224	11011110	208.1	324	10111110	298.1
25	00011111	29.5	125	01111111	119.5	225	11011111	209.5	325	10111111	299.5
26	00011101	30.9	126	01111101	120.9	226	11011101	210.9	326	10111101	300.9
27	00011100	32.3	127	01111100	122.3	227	11011100	212.3	327	10111100	302.3
30	00010100	33.8	130	01110100	123.8	230	11010100	213.8	330	10110100	303.8
31	00010101	35.2	131	01110101	125.2	231	11010101	215.2	331	10110101	305.2
32	00010111	36.6	132	01110111	126.6	232	11010111	216.6	332	10110111	306.6
33	00010110	38.0	133	01110110	128.0	233	11010110	218.0	333	10110110	308.0
34	00010010	39.4	134	01110010	129.4	234	11010010	219.4	334	10110010	309.4
35	00010011	40.8	135	01110011	130.8	235	11010011	220.8	335	10110011	310.8
36	00010001	42.2	136	01110001	132.2	236	11010001	222.2	336	10110001	312.2
37	00010000	43.6	137	01110000	133.6	237	11010000	223.6	337	10110000	131.6
40	00110000	45.0	140	01010000	135.0	240	11110000	225.0	340	10010000	315.0
41	00110001	46.4	141	01010001	136.4	241	11110001	226.4	341	10010001	316.4
42	00110011	47.8	142	01010011	137.8	242	11110011	227.8	342	10010011	317.8
43	00110010	49.2	143	01010010	139.2	243	11110010	229.2	343	10010010	319.2
44	00110110	50.6	144	01010110	140.6	244	11110110	230.6	344	10010110	320.6
45	00110111	52.0	145	01010111	142.0	245	11110111	232.0	345	10010111	322.0
46	00110101	53.4	146	01010101	143.4	246	11110101	233.4	346	10010101	323.4
47	00110100	54.8	147	01010100	144.8	247	11110100	234.8	347	10010100	324.8
50	00111100	56.3	150	01011100	146.3	250	11111100	236.3	350	10011100	326.3
51	00111101	57.7	151	01011101	147.7	251	11111101	237.7	351	10011101	327.7
52	00111111	59.1	152	01011111	149.1	252	11111111	239.1	352	10011111	329.1
53	00111110	60.5	153	01011110	150.5	253	11111110	240.5	353	10011110	330.5
54	00111010	61.9	154	01011010	151.9	254	11111010	241.9	354	10011010	331.9
55	00111011	63.3	155	01011011	153.3	255	11111011	243.3	355	10011011	333.3
56	00111001	64.7	156	01011001	154.7	256	11111001	244.7	356	10011001	334.7
57	00111000	66.1	157	01011000	156.1	257	11111000	246.1	357	10011000	336.1
60	00101000	67.5	160	01001000	157.5	260	11101000	247.5	360	10001000	337.5
61	00101001	68.9	161	01001001	158.9	261	11101001	248.9	361	10001001	338.9
62	00101011	70.3	162	01001011	160.3	262	11101011	250.3	362	10001011	340.3
63	00101010	71.7	163	01001010	161.7	263	11101010	251.7	363	10001010	341.7
64	00101110	73.1	164	01001110	163.1	264	11101110	253.1	364	10001110	343.1
65	00101111	74.5	165	01001111	164.5	265	11101111	254.5	365	10001111	344.5
66	00101101	75.9	166	01001101	165.9	266	11101101	255.9	366	10001101	345.9
67	00101100	77.3	167	01001100	167.3	267	11101100	257.3	367	10001100	347.3
70	00100100	78.8	170	01000100	168.8	270	11100100	258.8	370	10000100	348.8
71	00100101	80.2	171	01000101	170.2	271	11100101	260.2	371	10000101	350.2
72	00100111	81.6	172	01000111	171.6	272	11100111	261.6	372	10000111	351.6
73	00100110	83.0	173	01000110	173.0	273	11100110	263.0	373	10000110	353.0
74	00100010	84.4	174	01000010	174.4	274	11100010	264.4	374	10000010	354.4
75	00100011	85.8	175	01000011	175.8	275	11100011	265.8	375	10000011	355.8
76	00100001	87.2	176	01000001	177.2	276	11100001	267.2	376	10000001	357.2
77	00100000	88.6	177	01000000	178.6	277	11100000	268.6	377	10000000	358.6

Table 2

Decimal number	Binary number	Hexadecimal number	BCD code	Octal number	BCO code
0	0000 0000 0000 0000	0000	0000 0000 0000 0000	0	00 000 000
1	0000 0000 0000 0001	0001	0000 0000 0000 0001	1	00 000 001
2	0000 0000 0000 0010	0002	0000 0000 0000 0010	2	00 000 010
3	0000 0000 0000 0011	0003	0000 0000 0000 0011	3	00 000 011
4	0000 0000 0000 0100	0004	0000 0000 0000 0100	4	00 000 100
5	0000 0000 0000 0101	0005	0000 0000 0000 0101	5	00 000 101
6	0000 0000 0000 0110	0006	0000 0000 0000 0110	6	00 000 110
7	0000 0000 0000 0111	0007	0000 0000 0000 0111	7	00 000 111
8	0000 0000 0000 1000	0008	0000 0000 0000 1000	10	00 001 000
9	0000 0000 0000 1001	0009	0000 0000 0000 1001	11	00 001 001
10	0000 0000 0000 1010	000A	0000 0000 0001 0000	12	00 001 010
11	0000 0000 0000 1011	000B	0000 0000 0001 0001	13	00 001 011
12	0000 0000 0000 1100	000C	0000 0000 0001 0010	14	00 001 100
13	0000 0000 0000 1101	000D	0000 0000 0001 0011	15	00 001 101
14	0000 0000 0000 1110	000E	0000 0000 0001 0100	16	00 001 110
15	0000 0000 0000 1111	000F	0000 0000 0001 0101	17	00 001 111
16	0000 0000 0001 0000	0010	0000 0000 0001 0110	20	00 010 000
17	0000 0000 0001 0001	0011	0000 0000 0001 0111	21	00 010 001
18	0000 0000 0001 0010	0012	0000 0000 0001 1000	22	00 010 010
19	0000 0000 0001 0011	0013	0000 0000 0001 1001	23	00 010 011
20	0000 0000 0001 0100	0014	0000 0000 0010 0000	24	00 010 100
21	0000 0000 0001 0101	0015	0000 0000 0010 0001	25	00 010 101
22	0000 0000 0001 0110	0016	0000 0000 0010 0010	26	00 010 110
23	0000 0000 0001 0111	0017	0000 0000 0010 0011	27	00 010 111
24	0000 0000 0001 1000	0018	0000 0000 0010 0100	30	00 011 000
25	0000 0000 0001 1001	0019	0000 0000 0010 0101	31	00 011 001
26	0000 0000 0001 1010	001A	0000 0000 0010 0110	32	00 011 010
27	0000 0000 0001 1011	001B	0000 0000 0010 0111	33	00 011 011
28	0000 0000 0001 1100	001C	0000 0000 0010 1000	34	00 011 100
29	0000 0000 0001 1101	001D	0000 0000 0010 1001	35	00 011 101
30	0000 0000 0001 1110	001E	0000 0000 0011 0000	36	00 011 110
31	0000 0000 0001 1111	001F	0000 0000 0011 0001	37	00 011 111
32	0000 0000 0010 0000	0020	0000 0000 0011 0010	40	00 100 000
33	0000 0000 0010 0001	0021	0000 0000 0011 0011	41	00 100 001
34	0000 0000 0010 0010	0022	0000 0000 0011 0100	42	00 100 010
35	0000 0000 0010 0011	0023	0000 0000 0011 0101	43	00 100 011
36	0000 0000 0010 0100	0024	0000 0000 0011 0110	44	00 100 100
37	0000 0000 0010 0101	0025	0000 0000 0011 0111	45	00 100 101
38	0000 0000 0010 0110	0026	0000 0000 0011 1000	46	00 100 110
39	0000 0000 0010 0111	0027	0000 0000 0011 1001	47	00 100 111
40	0000 0000 0010 1000	0028	0000 0000 0100 0000	50	00 101 000
111	0000 0000 0110 1111	006F	0000 0001 0001 0001	157	01 101 111
222	0000 0000 1101 1110	00DE	0000 0010 0010 0010	336	11 011 110
252	0000 0000 1111 1100	00FC	0000 0010 0101 0010	374	11 111 100
255	0000 0000 1111 1111	00FF	0000 0010 0101 0101	377	11 111 111
377	0000 0001 0111 1001	0179	0000 0011 0111 0111		
1000	0000 0011 1110 1000	03E8	0001 0000 0000 0000		
9999	0010 0111 0000 1111	270F	1001 1001 1001 1001		
65535	1111 1111 1111 1111	FFFF			

User's manual

Connection

The diagram below shows how to connect the various principal components of the Allen–Bradley PLC system.

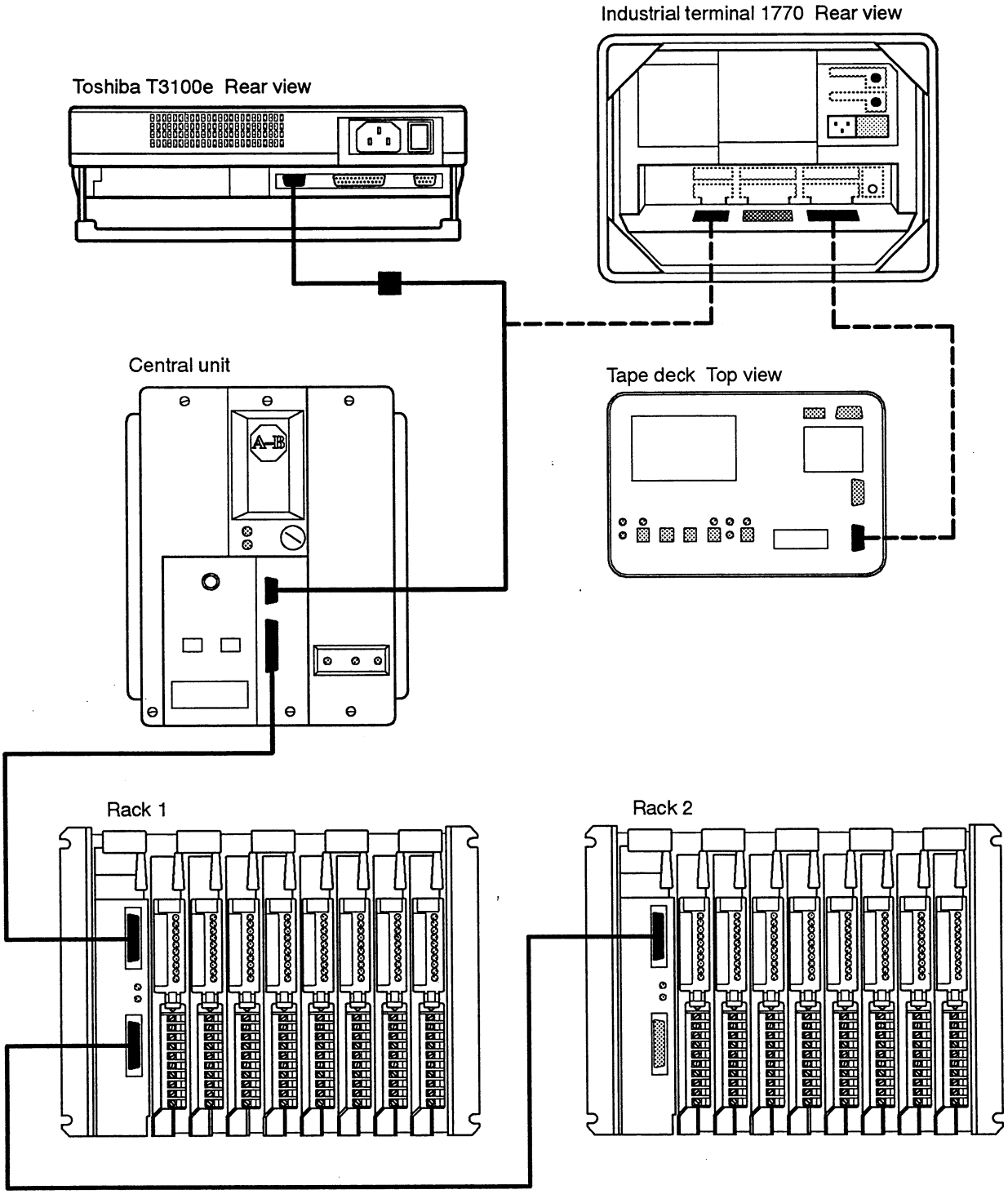

Program transfer

Loading program from disc

To load a new program from a disc or discette into the PLC system, via Toshiba laptop, do as follows:

Connect the laptop terminal and turn the mode selector switch of the central unit to position **PROG**.

Start the ICOM program.

Select the program to be loaded. If the program to be loaded is not found in the menu, the program can be loaded from a discette by pushing down the **INS** *(insert)* key and writing **A:\ Filename**. Then push **ENTER** and **Y** *(yes)*. Now the new program has been incorporated in the menu.

Note
Make sure the discette is not write protected.

Note
If there is a program already in the PLC system, it has to be saved or erased.

Select **No 3** *(On Line Progamming)*.

When the program function is **on line**, push key **F6** *(Record Function)*.

The menu Record Function Help is displayed on the screen; if not push key **F10**.

Select **No 0** *(Load/Save to Disk File)*.

The menu Disk Functions is displayed on the screen.

Select **No 1** *(Read Program from Disk File into PLC)*.

The name of the program is displayed on the screen, as is the question whether it is OK to load the program. *(OK to write to PLC memory (Y/N)?)*

If it is OK to load the program push **Y**; if not, push **N**.

The program has now been loaded and will be displayed on the screen.

Saving program to disc

To save a program on a disc or discette, via Toshiba Laptop, do as follows.

Connect the laptop terminal and turn the mode selector switch of the central unit to position **PROG**.

State the ICOM program.

Select the program to be saved, or insert new name.

Note
Make sure the discette is not write protected.

Select **No 3** *(On Line Programming).*

When the program function is **on line**, push key **F6** *(Record Function).*

The menu Record Function Help is displayed on the screen, if not push key **F10**.

Select **No 0** *(Load/Save to Disk File).*

The menu Disk Functions is displayed on the screen.

Select **No 0** *(Write Program to Disk File).*

After a few seconds, you will be asked if it is OK to save the program with the displayed name. *(Saving Program (Drive:\Dir\Filename) OK?)*

If it is OK to save the program push **Y**; if not, N.

The program has now been saved.

Loading program from cassette

To load a new program from a cassette recorder into a PLC system, do as follows:

Connect the terminal and cassette recorder and turn the mode selector switch of the central unit to position **PROG**.

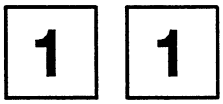

Start the terminal and push keys **1 – 1**, for the programming function.

Move the cursor to the first rung in the old program. If there is no program, there will be only one rung with the instruction end.

Erase program



If there is already a program, it has to be erased.

Push the following keys: **CLEAR MEMORY – 9 – 9 .**

The old program has now been erased and there is only one line left with the instruction end.

Insert the program cassette into the cassette recorder and rewind it, **REWIND.**

Push the following keys: **CANCEL COMMAND – RECORD – 0 .**



The screen now displays the text "CASSETTE FUNCTION".

Push the **READ FROM TAPE** button on the cassette recorder.

The tape starts and the screen displays the text "CASSETTE FUNCTION – LOADING FROM TAPE".

The DATA OUT signal lamp on the tape deck lights up.

The transfer takes a little while, depending on the size of the program. When the transfer has been completed, the DATA OUT signal lamp goes out and the screen displays "REWIND TAPE AND PRESS "READ FROM TAPE/ PLAY" FOR VERIFICATION".

In order to verify the transfer, the tape is to be run once more.

Rewind the tape, **REWIND.**

Push the **READ FROM TAPE** button on the cassette recorder.

The DATA OUT signal lamp lights up.

When the check has been carried out, the first rungs of the new program are displayed on the screen. The screen also displays the text "0 PROGRAM ERROR(S) FOUND AND DATA TABLE HAS NO ERRORS".

The program has now been loaded and the mode selector switch can be turned to position **RUN**, in order to run the program.

Errors that may occur on loading a program are as follows:

Errors

- If an error is discovered during the verification, the text "3 PROGRAM ERROR(S) FOUND AND DATA TABLE HAS NOT VERIFIED". Repeat the program loading procedure.
- If the data table is erroneous, the tape is stopped during loading and the screen displays the text "PRESS SEARCH 50 AND CHANGE DATA TABLE".
  In the latter case do as follows:

Push the keys: **SEARCH – 5 – 0 .**

Set data table



The screen displays the text "DATA TABLE ADJUSTMENT".

State the new values for the number of racks (**2**) and the number of timer/ counters (**104**). *(If the same value is to be used in anyone of the cases, state it anyway.)*

Push the **CANCEL COMMAND** button.



Load the program once more.

Saving program on cassette

In order to save a program on a cassette, do as follows.

Connect the terminal and cassette recorder and turn the mode selector switch of the central unit to position **PROG.**

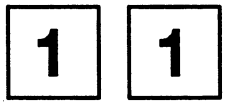

Start the terminal and push keys **1 – 1**, for the programming function.

Move the cursor to the first rung in the program.



Push the following keys: **CANCEL COMMAND – RECORD – 0** .

The screen will now display the text "CASSETTE FUNCTION".

Push the **RECORD ON TAPE** button on the cassette recorder.

The tape starts and the screen shows the text "CASSETTE FUNCTION – DUMPING ON TAPE".

The DATA IN signal lamp on the cassette recorder lights up.

The transfer take a while, depending on the size of the program. When the transfer has been completed, the DATA IN signal lamp goes out and the screen shows the text "REWIND TAPE AND PRESS "READ FROM TAPE/PLAY" FOR VERIFICATION".

In order to verify the transfer, the tape is to be run once more.

Rewind the tape, **REWIND.**

Push the **READ FROM TAPE** button on the cassette recorder.

The DATA OUT signal lamp lights up.

After the check the text "0 PROGRAM ERROR(S) FOUND AND DATA TABLE HAS NO ERRORS" will be displayed.

The program has now been saved.

Errors

If errors are found during checking the screen displays the text "2 PROGRAM ERROR(S) FOUND AND DATA TABLE HAS NO ERRORS".

Save the program once more.

Note
If this does not work, check that the cassette is not protected against recording.

Programming

This section is not intended to be comprehensive, but only to show two very simple programming examples, and how to proceed to program them.

Make sure that the program function is **on line**, and that no program has already loaded. Also turn the key selector switch to position **PROG**.

With Toshiba

Start the terminal and push **1 – 1** for programming function. The screen now shows the text "PROGRAM LOAD MODE" and the first rungs of any program already loaded. If the latter is the case, save or erase this program. Also turn the key selector switch to position **PROG**.

With industrial terminal 1770

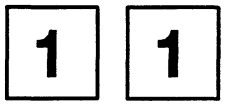

Example 1

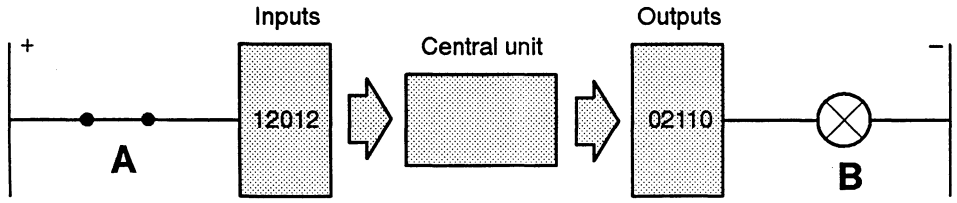

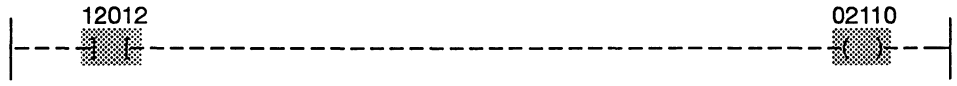

In order to create this simple program, do as follows.

Push the key for Examine on –] [–.

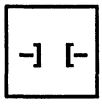

State the address **1 – 2 – 0 – 1 – 2.**

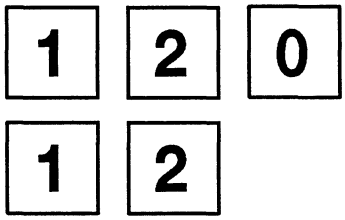

Push the Output Energize key –( )–.



State the address **0 – 2 – 1 – 1 – 0.**

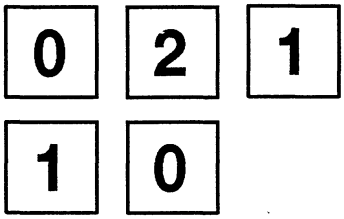

This program has now been completed.

Example 2

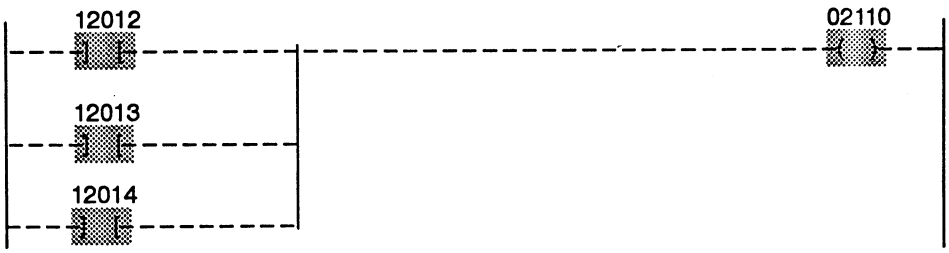

To create this program, do as follows:

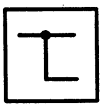

Push the Branch Start key.

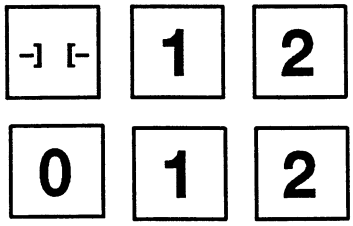

Push the Examine on key and state the address.



Push the Branch Start key.

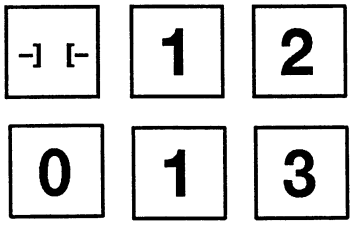

Push the Examine on key and state the address.

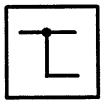

Push the Branch Start key.

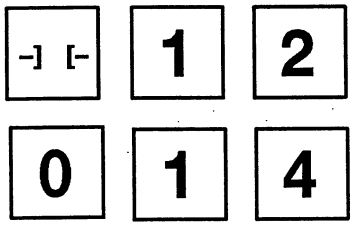

Push the Examine on key and state the address.

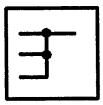

Push the Branch End key.

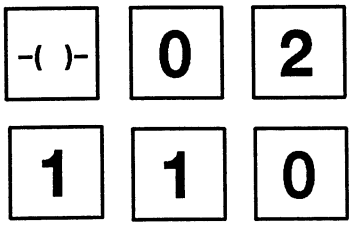

Push the Output Energize key and state the address.

Now this program sequence has been completed.

Editing

Program search

In order to search and find a particular instruction, do as follows:

Example: To find the counter with address 031, push the following keys:

CANCEL COMMAND – SEARCH – –(CTU)– 0 – 3 – 1.

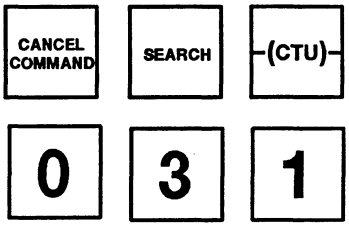

The screen now displays the rung with this instruction.

To find a particular address, do as follows:

Example: To find address 12011, push the following keys:

CANCEL COMMAND – SEARCH – 8 – 1 – 2 – 0.



Push the SEARCH key repeatedly until the instruction with address 12011 is displayed.

The arrow keys are used to move the cursor up, down, and sideways.

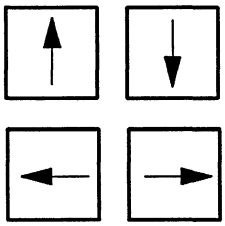

To move the cursor to the beginning of the program, push the following keys: **CANCEL COMMAND – SEARCH – ARROW UP.**



To move the cursor to the end of the program, push the following keys: **CANCEL COMMAND – SEARCH – ARROW DOWN.**

To move the cursor to the beginning of a rung, push the following keys: **CANCEL COMMAND – SEARCH – ARROW LEFT.**

To move the cursor to the end of a rung, push the following keys: **CANCEL COMMAND – SEARCH – ARROW RIGHT.**

Altering time values

To alter a time value in a timer instruction, do as follows:

Turn the mode selector switch to position **RUN/PROG.**

Search and find and set the cursor at the timer instruction to be altered, (TON, TOF or RTO).



To alter the time value, push **CANCEL COMMAND – SEARCH – 5 – 1.**



The screen now displays the text "ON LINE DATA CHANGE ENTERING DIGIT 000 FOR PRESET VALUE".



State the new PR value, e g **1 – 7 – 5.**

The screen now displays the text "ON LINE DATA CHANGE ENTERING DIGIT 175 FOR PRESET VALUE".

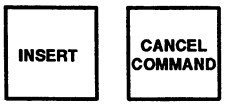

Now push **INSERT – CANCEL COMMAND**; the timer instruction has been given a new PR value.

Altering counters

To alter the values in counters, do as follows:

Turn the mode selector switch to position **RUN/PROG.**

Search and find and set the cursor at the counter to be altered (CTU or CTD).



To alter values, push **CANCEL COMMAND – SEARCH – 5 – 1.**



The screen now displays the text "ON LINE DATA CHANGE ENTERING DIGIT 000 FOR PRESET VALUE".



State the new PR value, e g **0 – 2 – 0.**

The screen now displays the text "ON LINE DATA CHANGE ENTERING DIGIT 020 FOR PRESET VALUE".

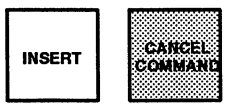

Push **INSERT.**

If the AC value is not to be altered, push **CANCEL COMMAND.**



State the new AC value, e g **0 – 2 – 0.**

The screen now displays the text "ON LINE DATA CHANGE ENTERING DIGIT 020 FOR ACCUMULATED VALUE".

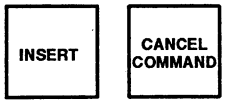

Now push **INSERT – CANCEL COMMAND**; the counter has been given a new PR and AC value.

Altering angle values

Turn the mode selector switch to position **RUN/PROG.**

Search and find and set the cursor at the angle value to be altered.

Thereafter, give the command to alter values, **CANCEL COMMAND – SEARCH – 5 – 1.**

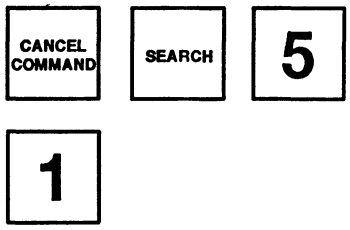

The screen now displays the text "ON LINE DATA CHANGE ENTERING DIGIT 000 FOR HIGH LIMIT".

State the upper limit value *(octal degrees),* e g **1 – 7 – 7.**



The screen now displays the text "ON LINE DATA CHANGE ENTERING DIGIT 177 FOR HIGH LIMIT".

Push **INSERT.**



State the lower limit value, e g **0 – 2 – 5.**



Push **INSERT – CANCEL COMMAND.**

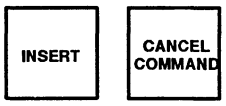

The alteration of angle values has now been completed.

Altering an instruction

To alter an instruction, first set the cursor at the instruction to be altered; then alter the instruction.

Example:
GET 030 is to have the address altered to 031.

Turn the mode selector switch to position **PROG.**

Set the cursor at the instruction concerned.

Push **–[G]– – 0 – 3 – 1.**

Example:
Examine on 12010 is to be altered to Examine off.

Set the cursor at Examine on 12010.

Push **–] / [– – 12010.**

Contact histogram

A contact histogram registers status of a memory bit. It also registers how long this memory bit will retain a certain status. The contact histogram can be displayed on the terminal screen, or shown as a printout.

Example: A contact histogram for input 12012 might look like this:

–ON 00:02:30.00 –OFF 00:10:30.05 –ON 01:20:00.00 –

This means that the input has been active first for 2 minutes and 30 seconds. Subsequently, it has been non–active for 10 minutes and 30.05 seconds and thereafter active for 1 hour and 20 minutes.

To create a contact histogram, do as follows:

Turn the mode selector switch to position **RUN** or **RUN/PROG**.



Push the following keys: **CANCEL COMMAND** – **SEARCH** – **6** *(or – 7).*

SEARCH 6 gives automatic image sequence.
SEARCH 7 gives manual image sequence.

The screen now displays the text "CONTACT HISTOGRAM FOR ADDRESS 01000".

State the intended address **XXXXX**.

The screen now displays the text "CONTACT HISTOGRAM FOR ADDRESS XXXXX".



If **SEARCH 7** has been selected, push **DISPLAY** to obtain a new image.



To conclude the histogram, push **CANCEL COMMAND**.

19

TPMS

20

OH

Sterile system TBA/9 140V

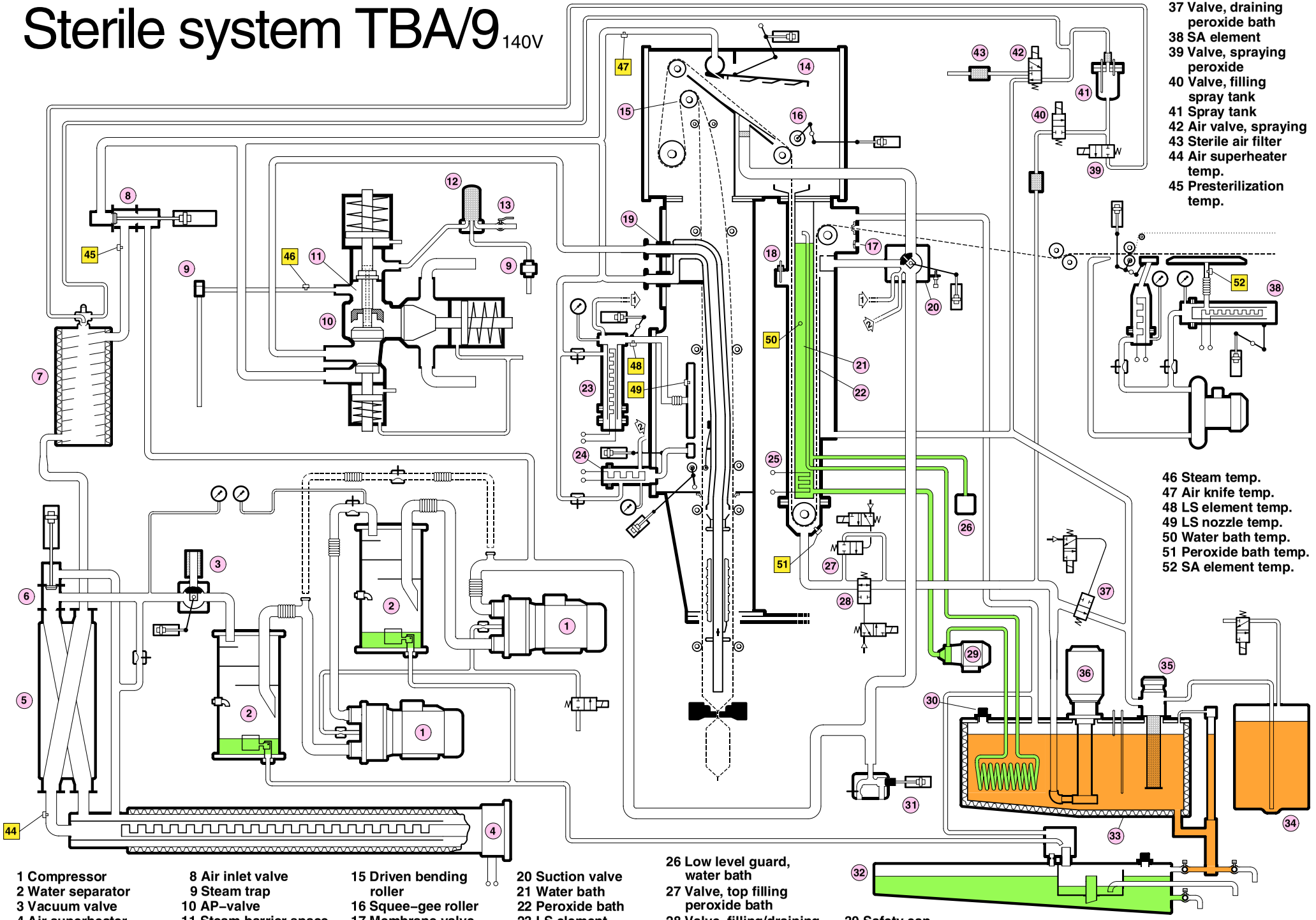

1 Compressor
2 Water separator
3 Vacuum valve
4 Air superheater
5 Heat exchanger
6 Heat exchanger valve
7 Peroxide evaporator
8 Air inlet valve
9 Steam trap
10 AP–valve
11 Steam barrier space
12 Steam filter
13 Valve, steam pipe
14 Air knife
15 Driven bending roller
16 Squee–gee roller
17 Membrane valve
18 Level sensor, peroxide bath
19 Filling pipe
20 Suction valve
21 Water bath
22 Peroxide bath
23 LS element
24 LS, short stop element
25 Water bath heater
26 Low level guard, water bath
27 Valve, top filling peroxide bath
28 Valve, filling/draining peroxide bath
29 Circulation pump, hot water
30 Safety cap
31 Fluctuating valve
32 Diluting tank
33 Peroxide tank
34 Container
35 Filter
36 Peroxide pump
37 Valve, draining peroxide bath
38 SA element
39 Valve, spraying peroxide
40 Valve, filling spray tank
41 Spray tank
42 Air valve, spraying
43 Sterile air filter
44 Air superheater temp.
45 Presterilization temp.
46 Steam temp.
47 Air knife temp.
48 LS element temp.
49 LS nozzle temp.
50 Water bath temp.
51 Peroxide bath temp.
52 SA element temp.

Technical Training Centre
Lund, Sweden

Machine type
TBA/9 140V

Issue
1/9404

OH 466:1

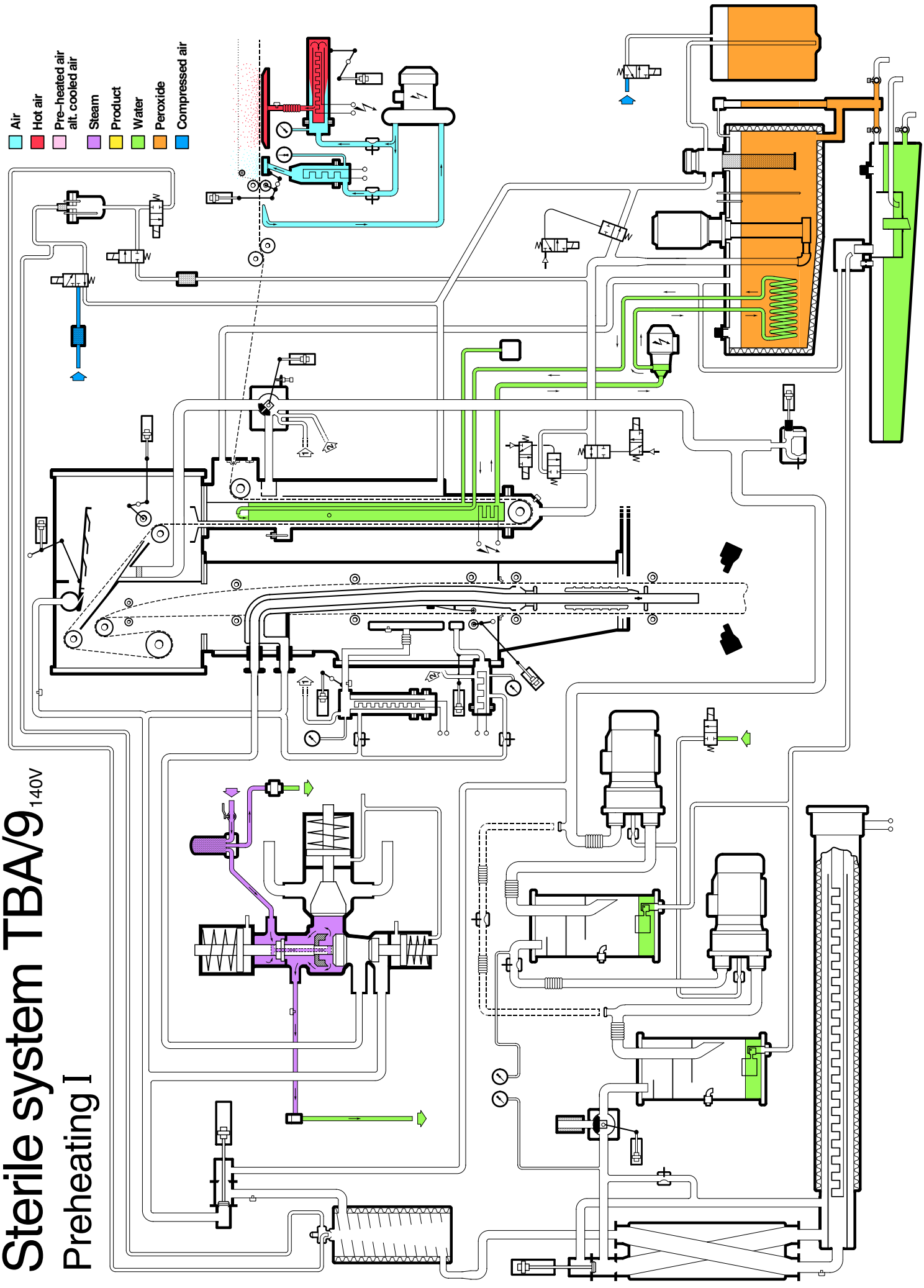

Sterile system TBA/9 140V

Preheating I

Technical Training Centre Lund, Sweden	Machine type TBA/9 140V	Issue 1/9404	OH 466:2

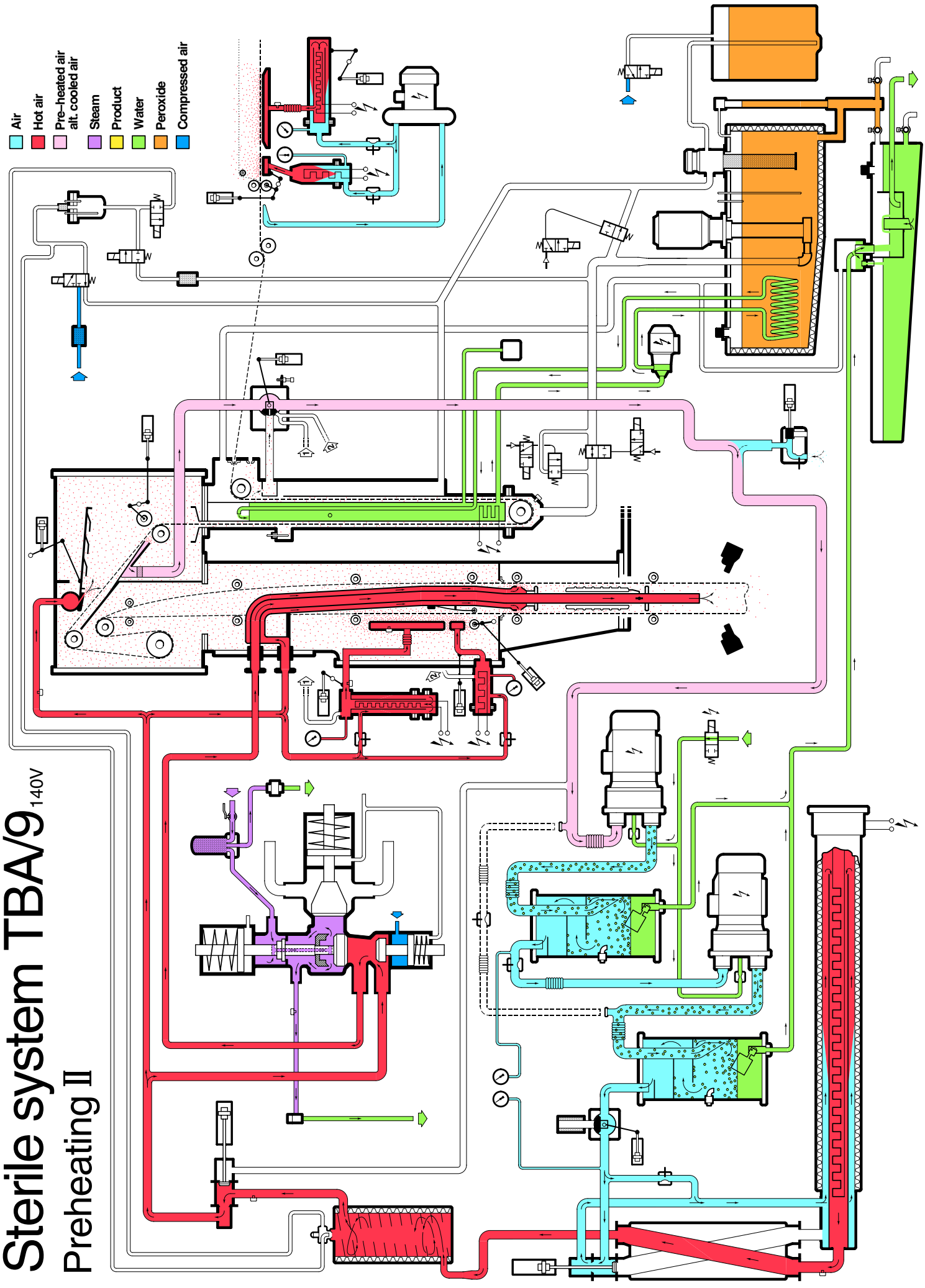

Sterile system TBA/9 140V

Preheating II

Technical Training Centre Lund, Sweden	Machine type TBA/9 140V	Issue 1/9404	OH 466:3

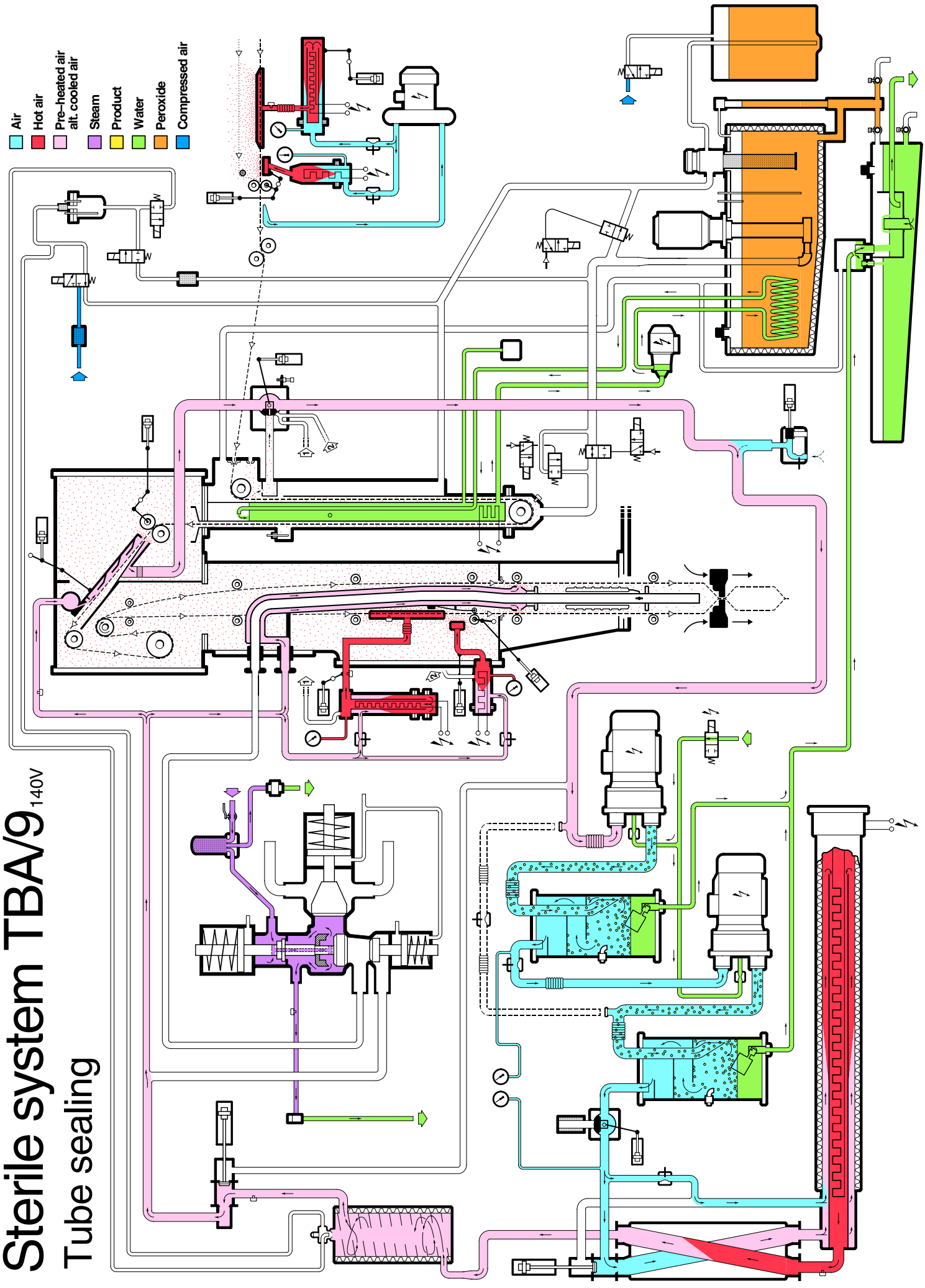

Technical Training Centre Lund, Sweden	Machine type TBA/9 140V	Issue 1/9404	OH 466:4

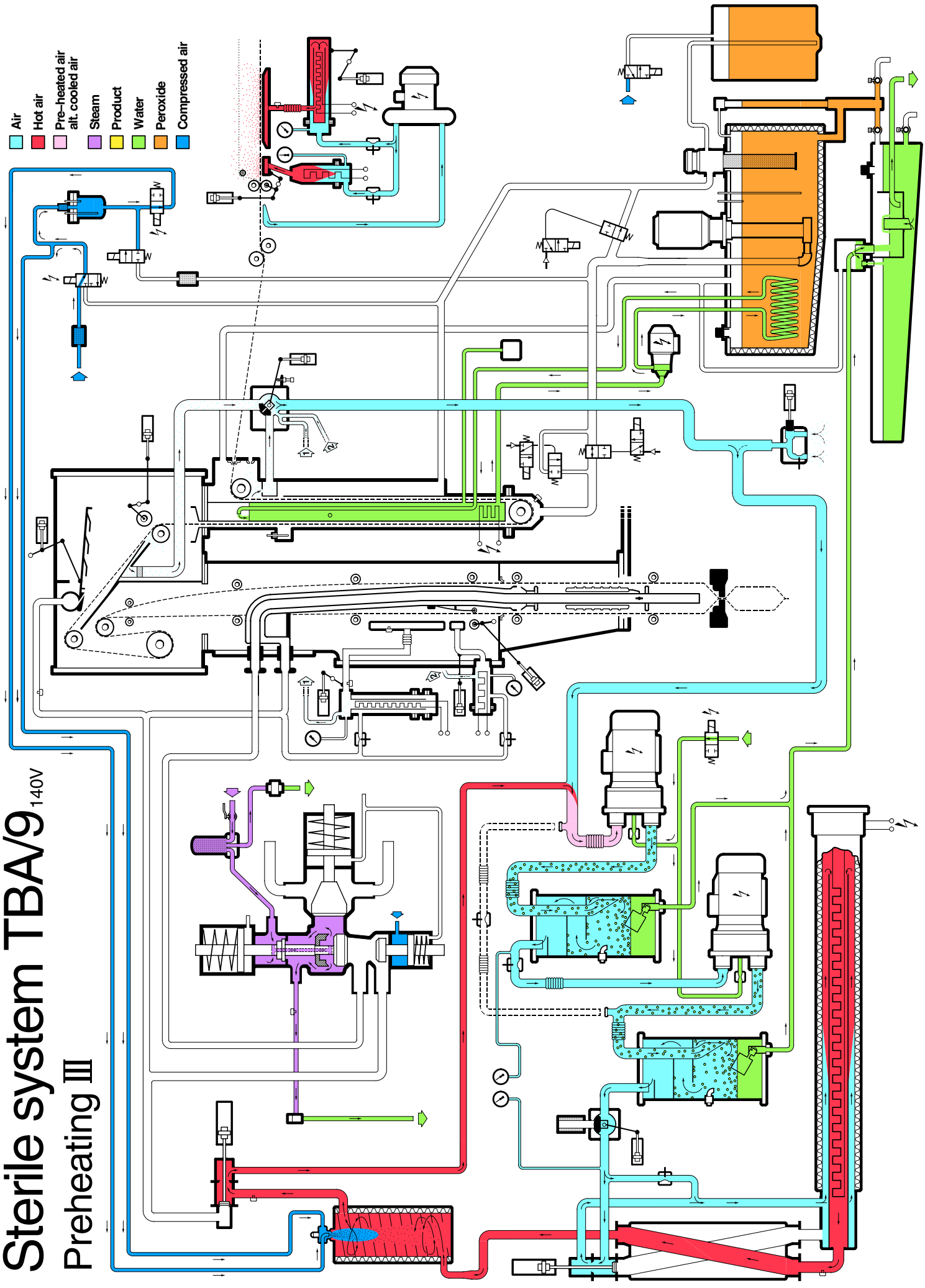

Sterile system TBA/9 140V

Preheating III

Technical Training Centre Lund, Sweden	Machine type TBA/9 140V	Issue 1/9404	OH 466:5

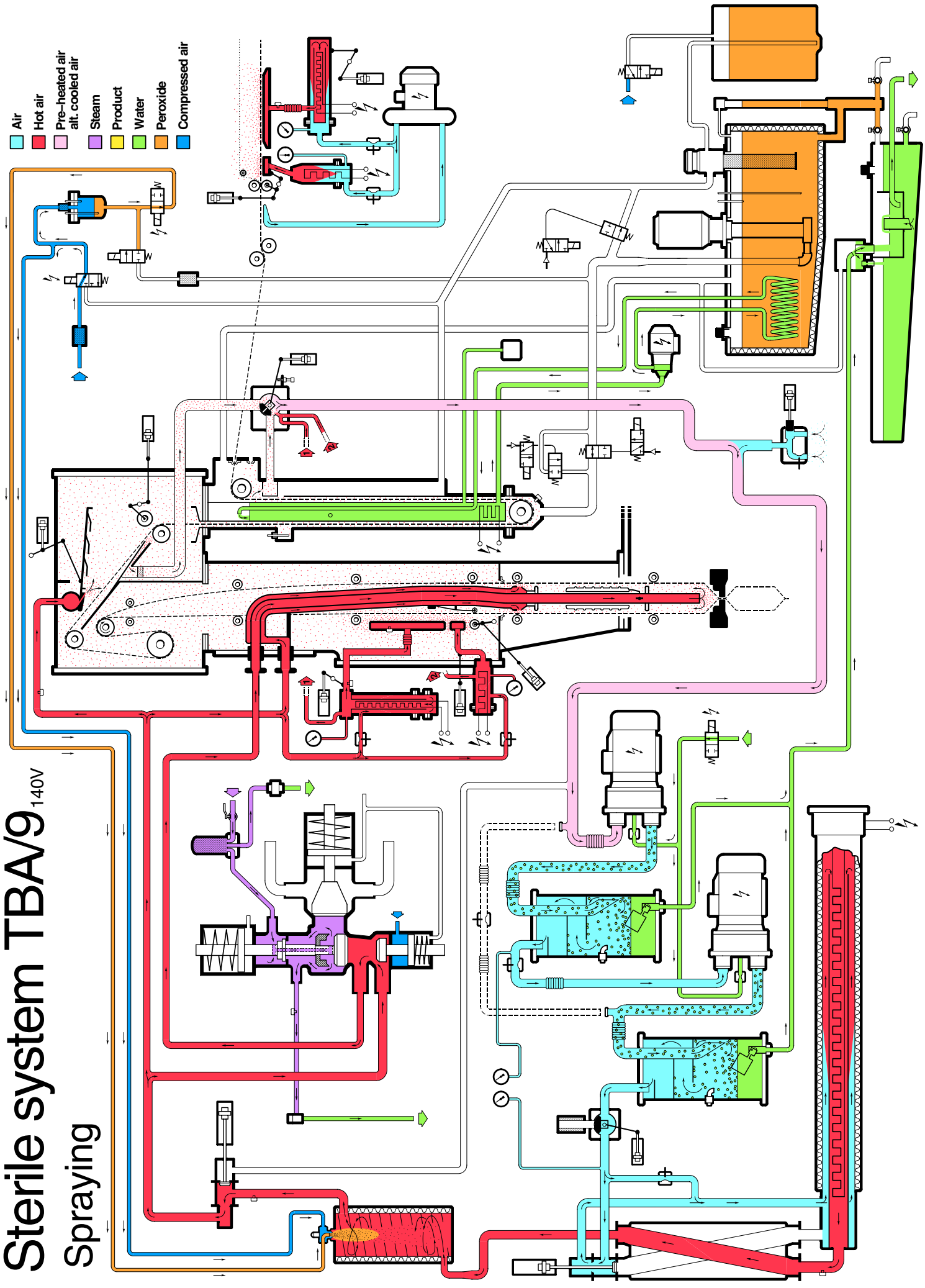

Technical Training Centre Lund, Sweden	Machine type TBA/9 140V	Issue 1/9404	OH 466:6

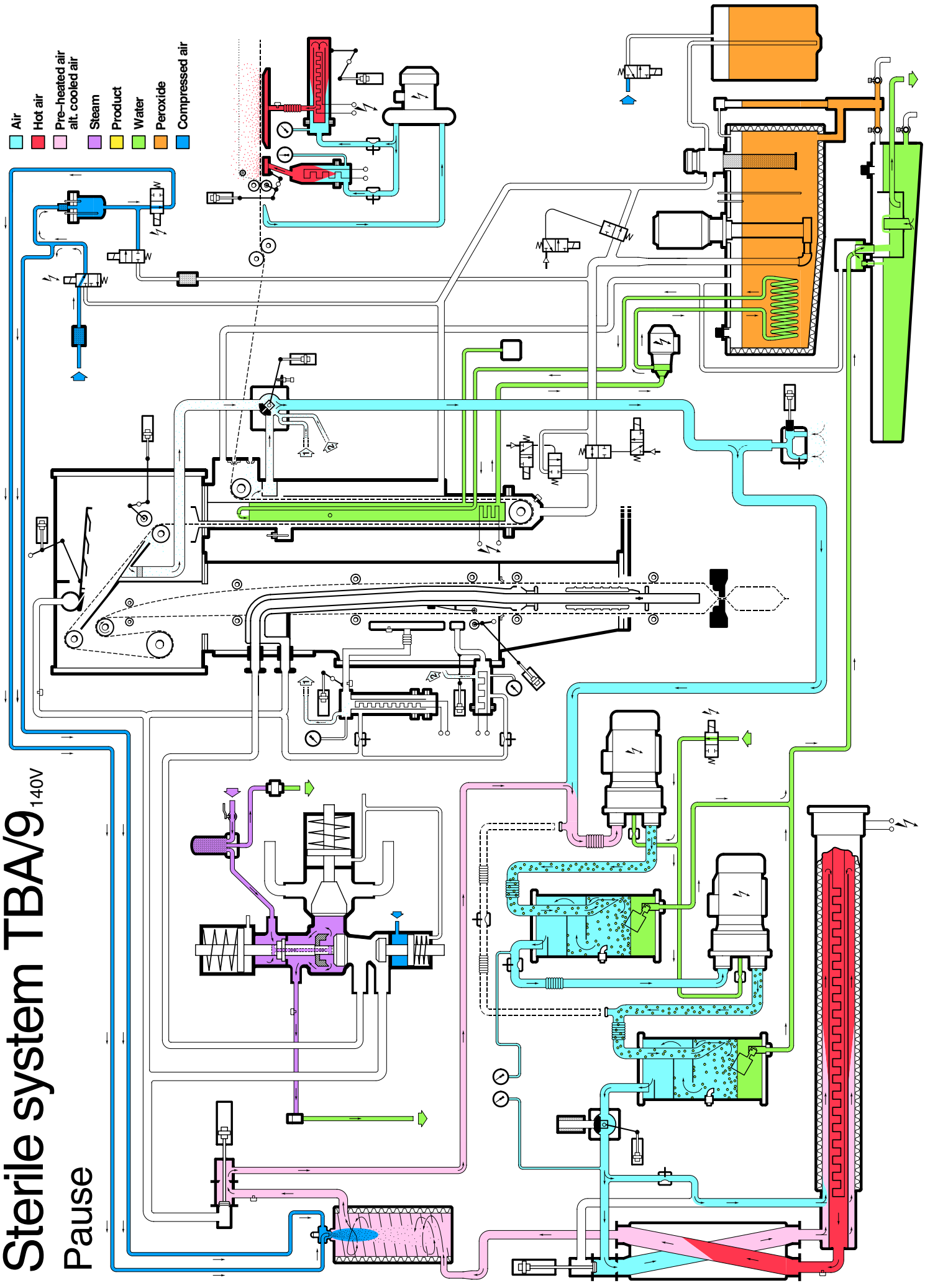

Technical Training Centre Lund, Sweden	Machine type TBA/9 140V	Issue 1/9404	OH 466:7

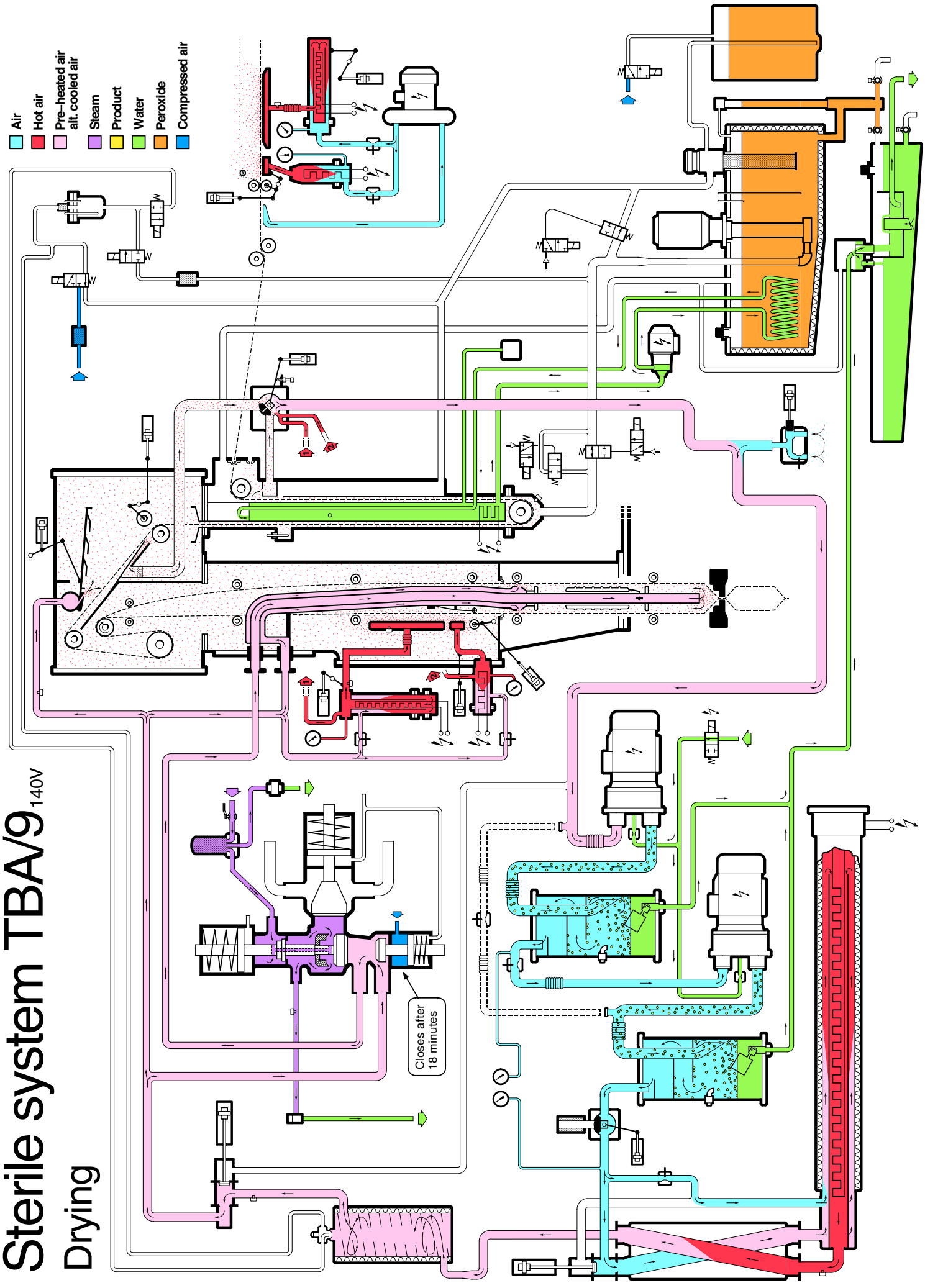

Sterile system TBA/9 140V

Drying

Technical Training Centre Lund, Sweden	Machine type TBA/9 140V	Issue 1/9404	OH 466:8

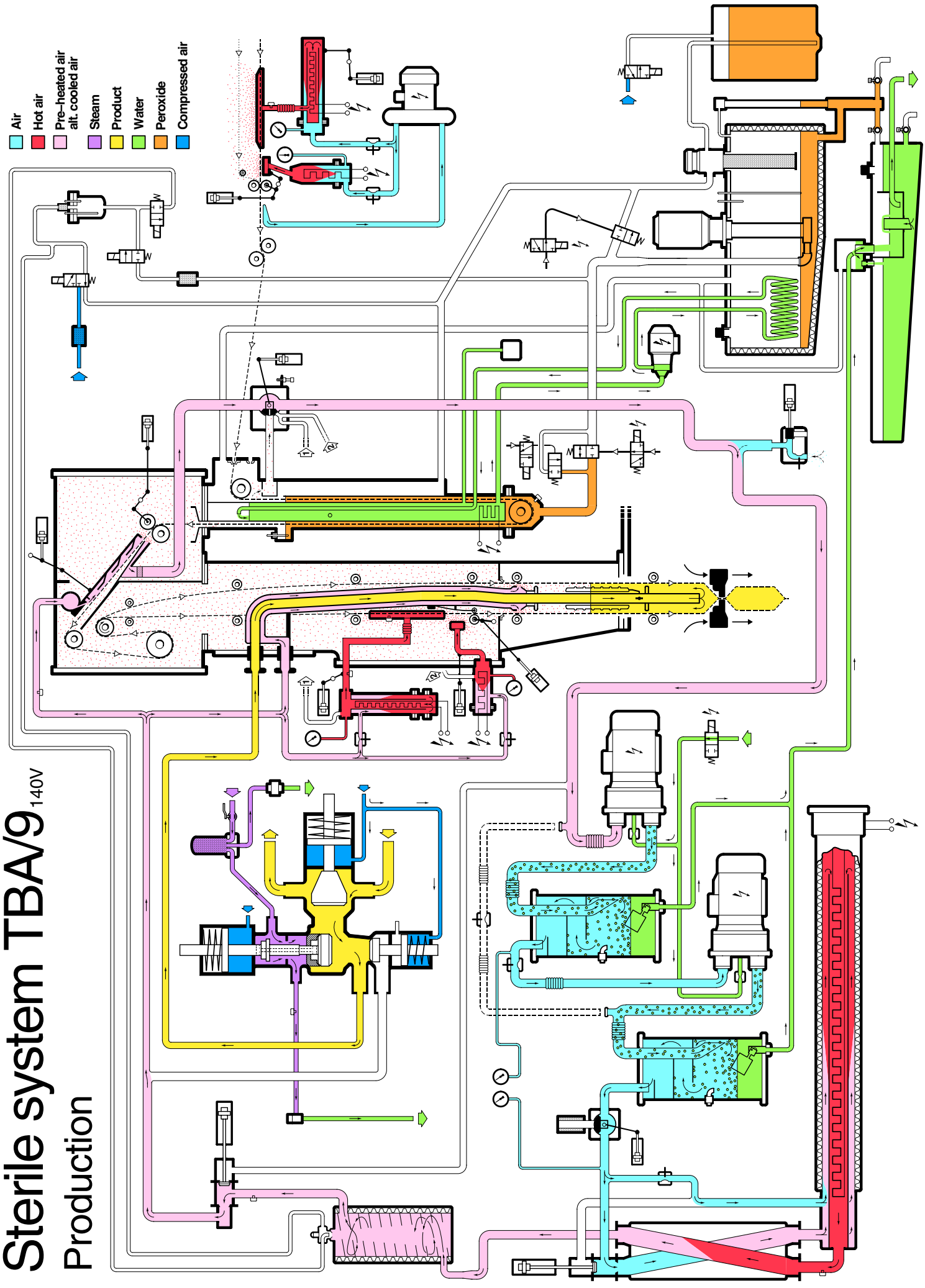

Sterile system TBA/9 140V

Production

Technical Training Centre Lund, Sweden	Machine type TBA/9 140V	Issue 1/9404	OH 466:9

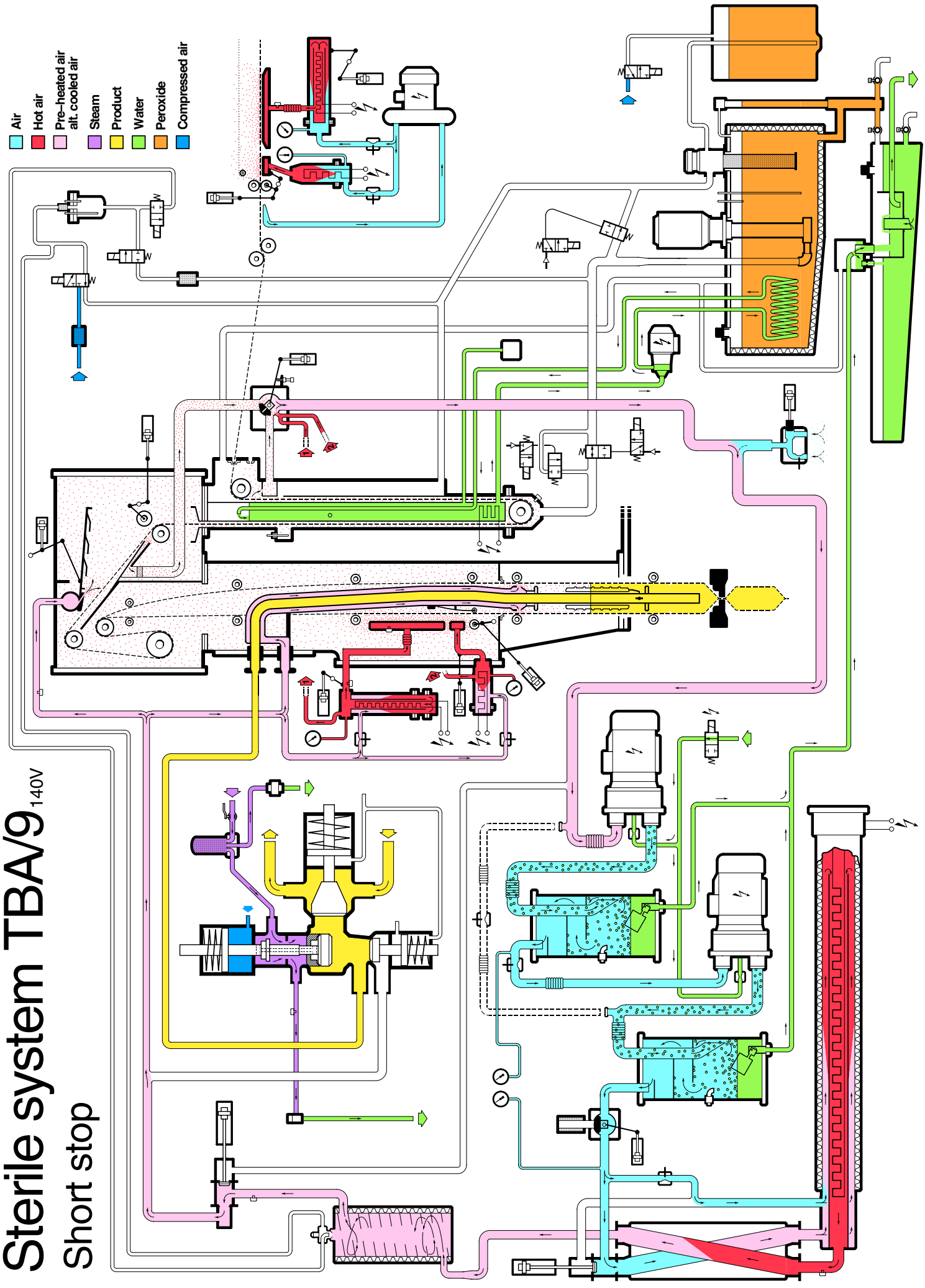

Technical Training Centre Lund, Sweden	Machine type TBA/9 140V	Issue 1/9404	OH 466:10

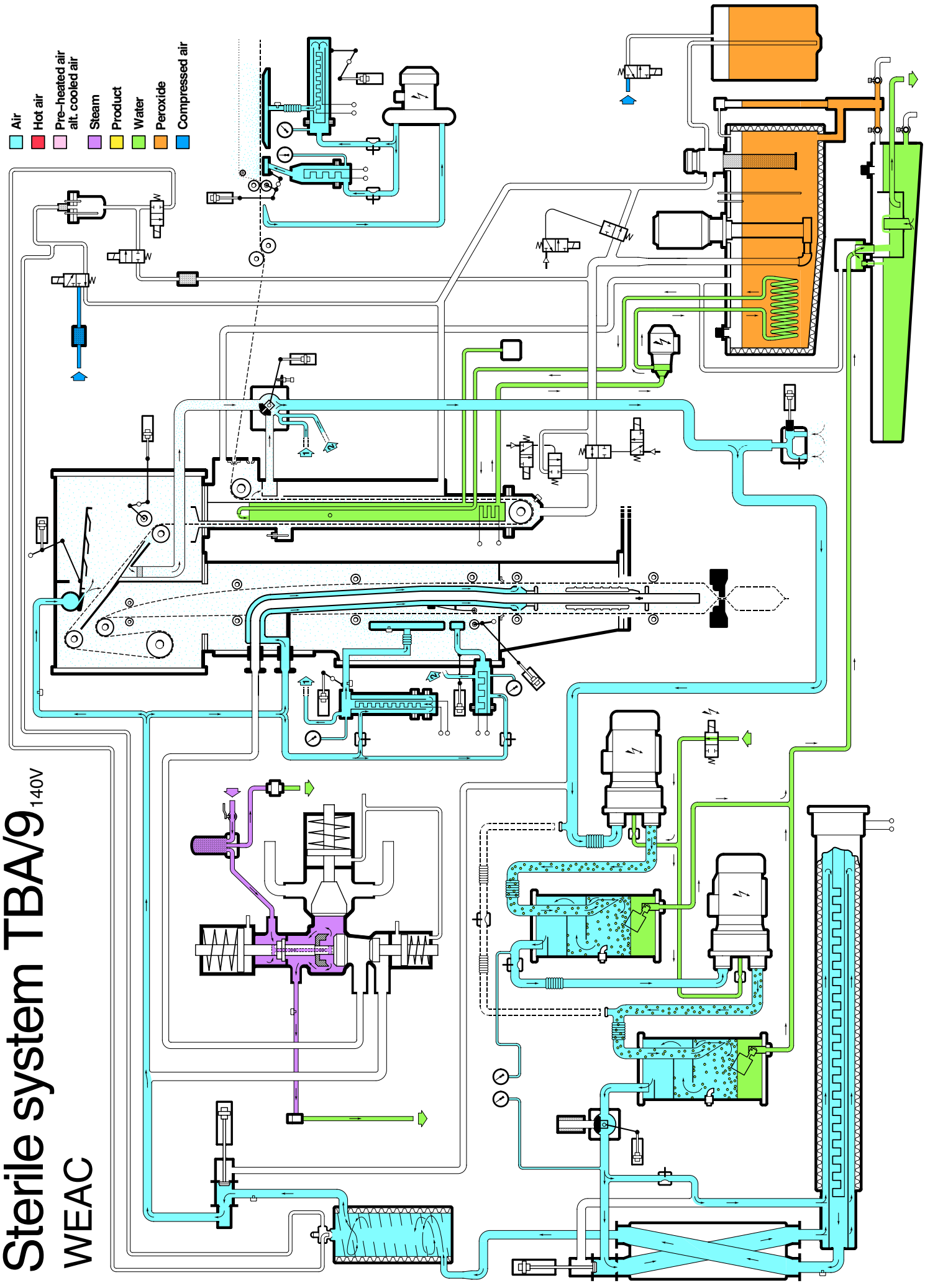

Sterile system TBA/9 140V
WEAC

Technical Training Centre Lund, Sweden	Machine type TBA/9 140V	Issue 1/9404	OH 466:11

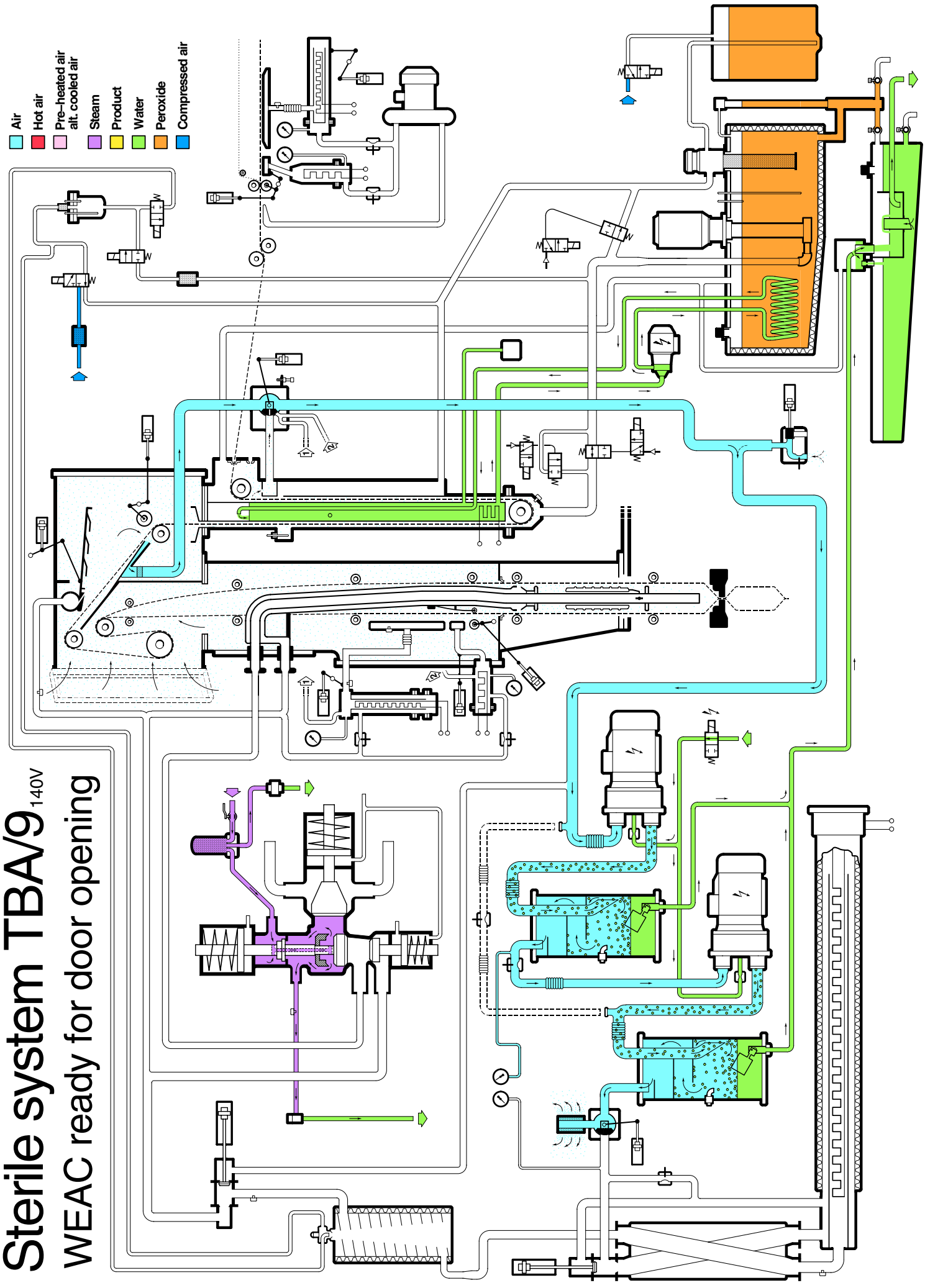

Sterile system TBA/9 140V

WEAC ready for door opening

Technical Training Centre Lund, Sweden	Machine type TBA/9 140V	Issue 1/9404	OH 466:12

Sterile system TBA/9 140V

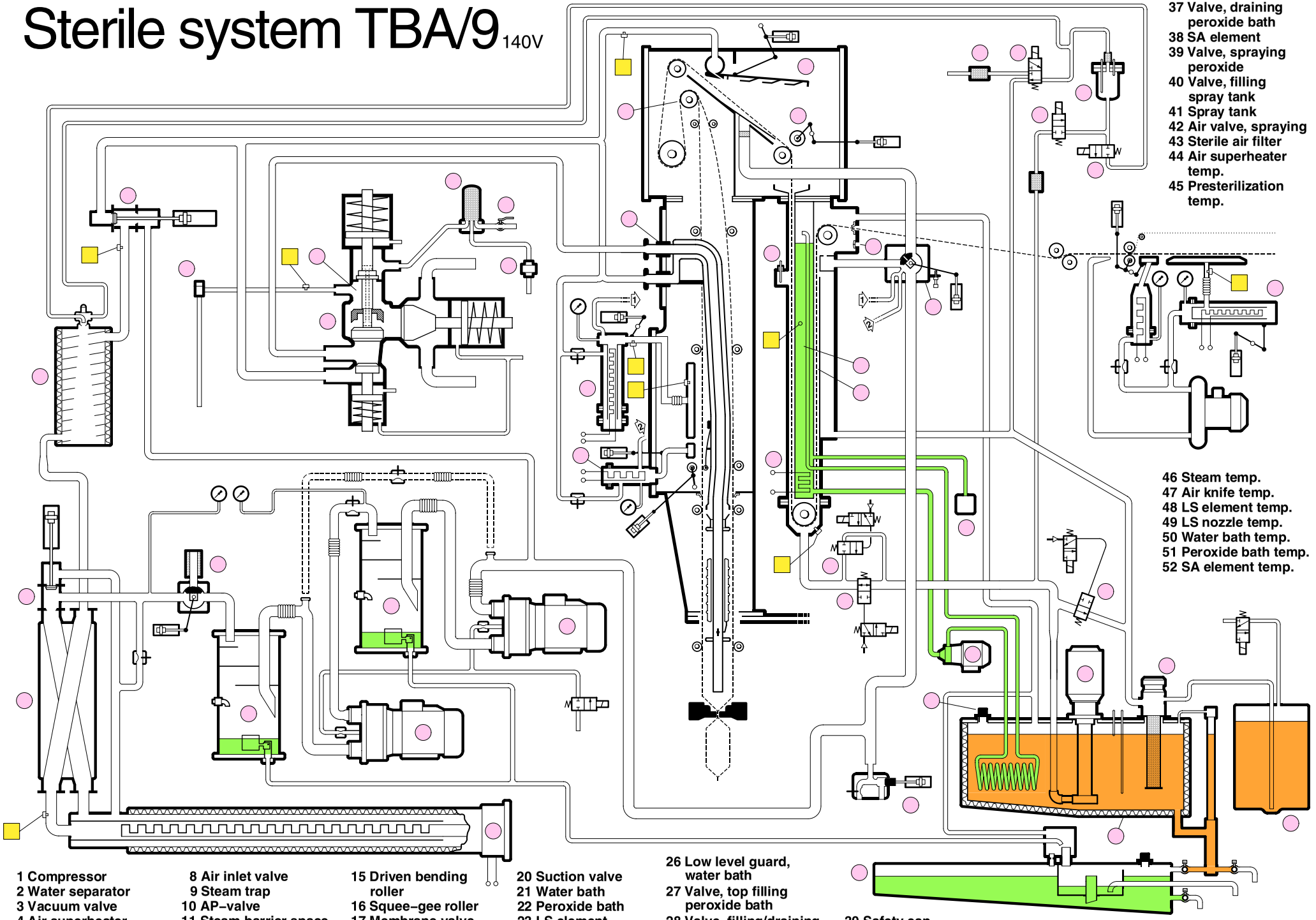

1 Compressor
2 Water separator
3 Vacuum valve
4 Air superheater
5 Heat exchanger
6 Heat exchanger valve
7 Peroxide evaporator
8 Air inlet valve
9 Steam trap
10 AP–valve
11 Steam barrier space
12 Steam filter
13 Valve, steam pipe
14 Air knife
15 Driven bending roller
16 Squee–gee roller
17 Membrane valve
18 Level sensor, peroxide bath
19 Filling pipe
20 Suction valve
21 Water bath
22 Peroxide bath
23 LS element
24 LS, short stop element
25 Water bath heater
26 Low level guard, water bath
27 Valve, top filling peroxide bath
28 Valve, filling/draining peroxide bath
29 Circulation pump, hot water
30 Safety cap
31 Fluctuating valve
32 Diluting tank
33 Peroxide tank
34 Container
35 Filter
36 Peroxide pump
37 Valve, draining peroxide bath
38 SA element
39 Valve, spraying peroxide
40 Valve, filling spray tank
41 Spray tank
42 Air valve, spraying
43 Sterile air filter
44 Air superheater temp.
45 Presterilization temp.
46 Steam temp.
47 Air knife temp.
48 LS element temp.
49 LS nozzle temp.
50 Water bath temp.
51 Peroxide bath temp.
52 SA element temp.

Technical Training Centre
Lund, Sweden

Machine type
TBA/9 140V

Issue
1/9404

OH 466:13

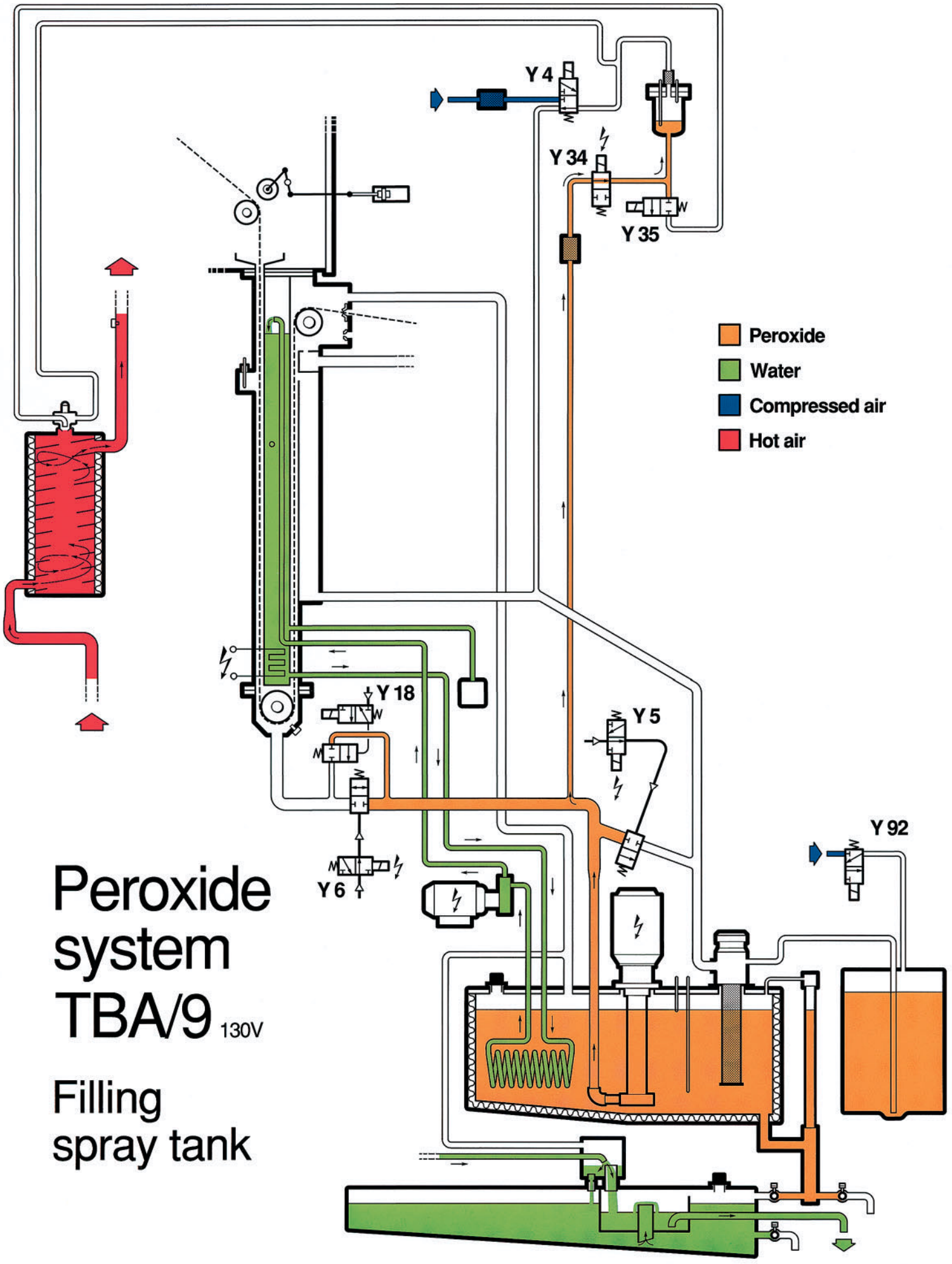

Peroxide system TBA/9 130V

Filling spray tank

Technical Training Centre Lund, Sweden	Machine type TBA/9 130V	Issue 1/9103	OH 398:1

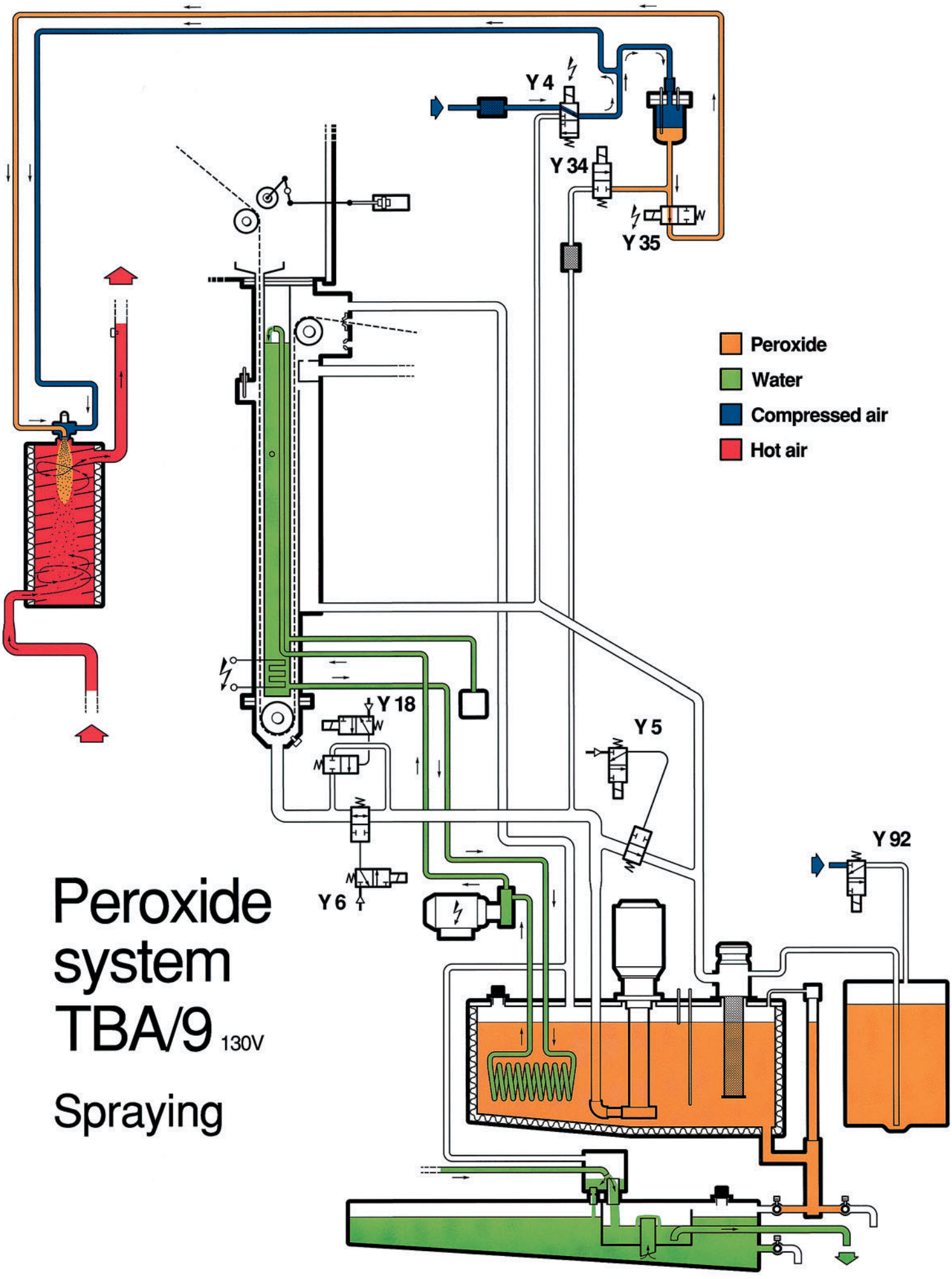

Peroxide system TBA/9 130V

Spraying

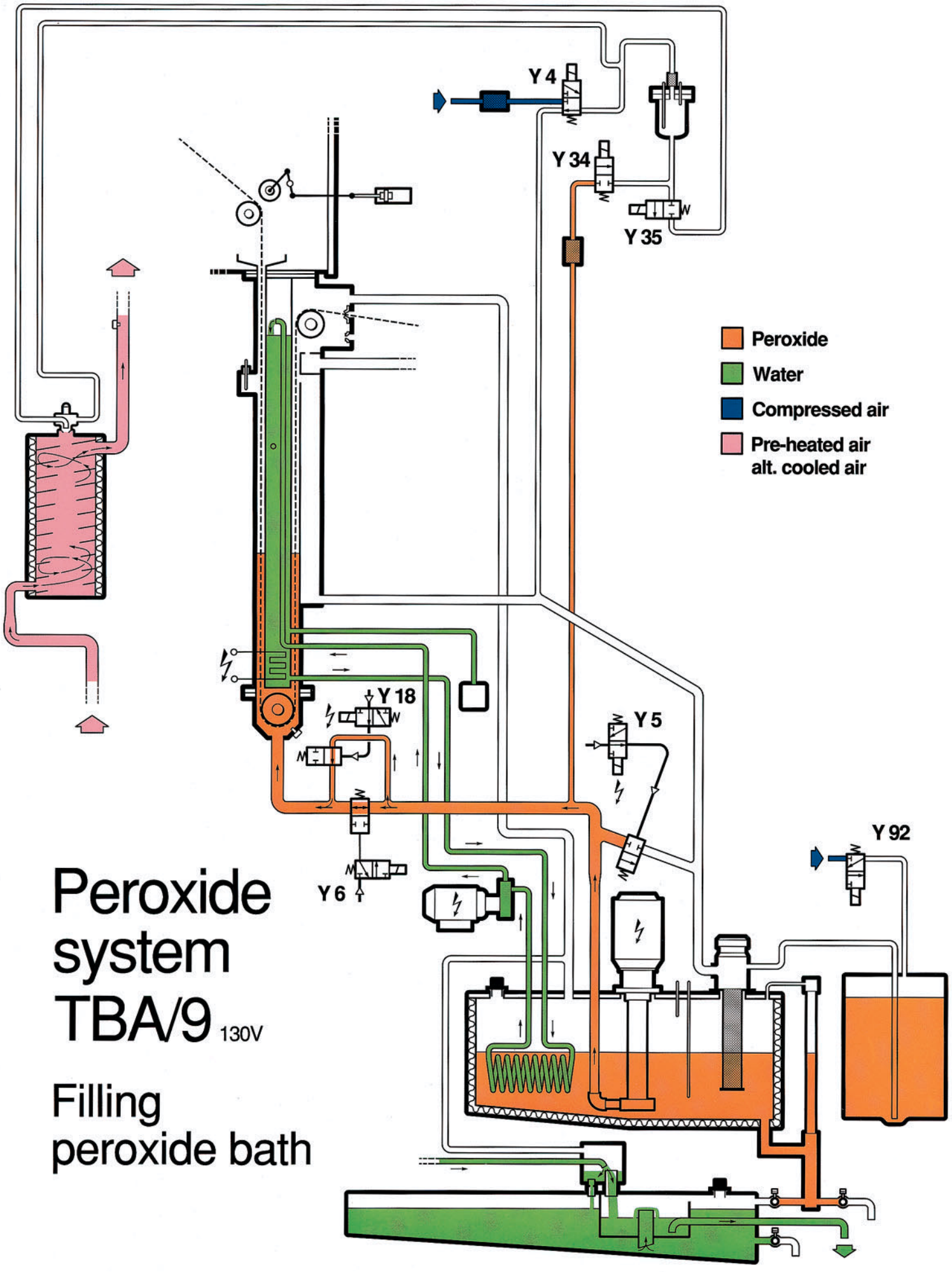

Peroxide system TBA/9 130V

Filling peroxide bath

Technical Training Centre Lund, Sweden	Machine type TBA/9 130V	Issue 1/9103	OH 398:3

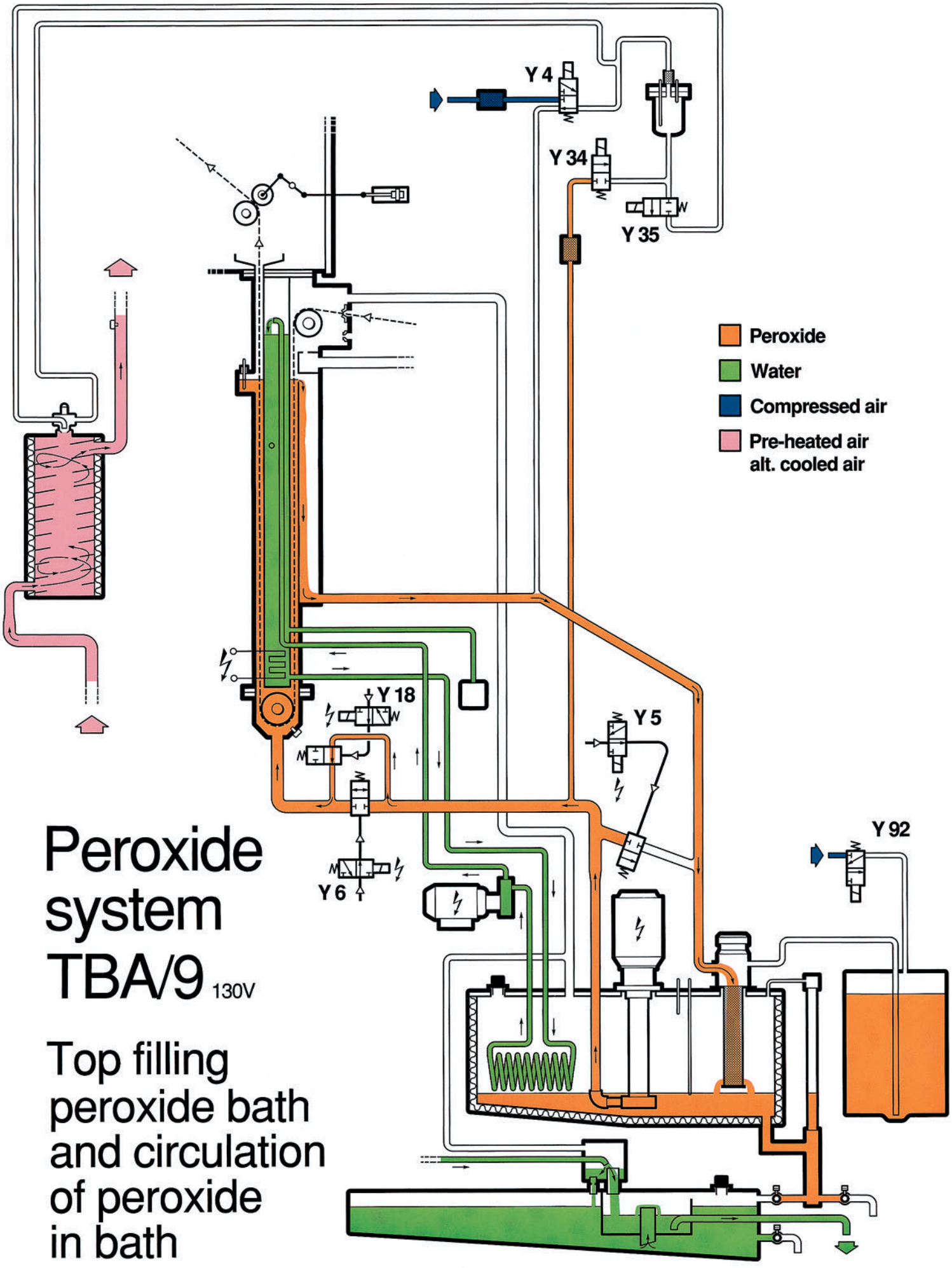

Peroxide system TBA/9 130V

Top filling peroxide bath and circulation of peroxide in bath

Technical Training Centre Lund, Sweden	Machine type TBA/9 130V	Issue 1/9103	OH 398:4

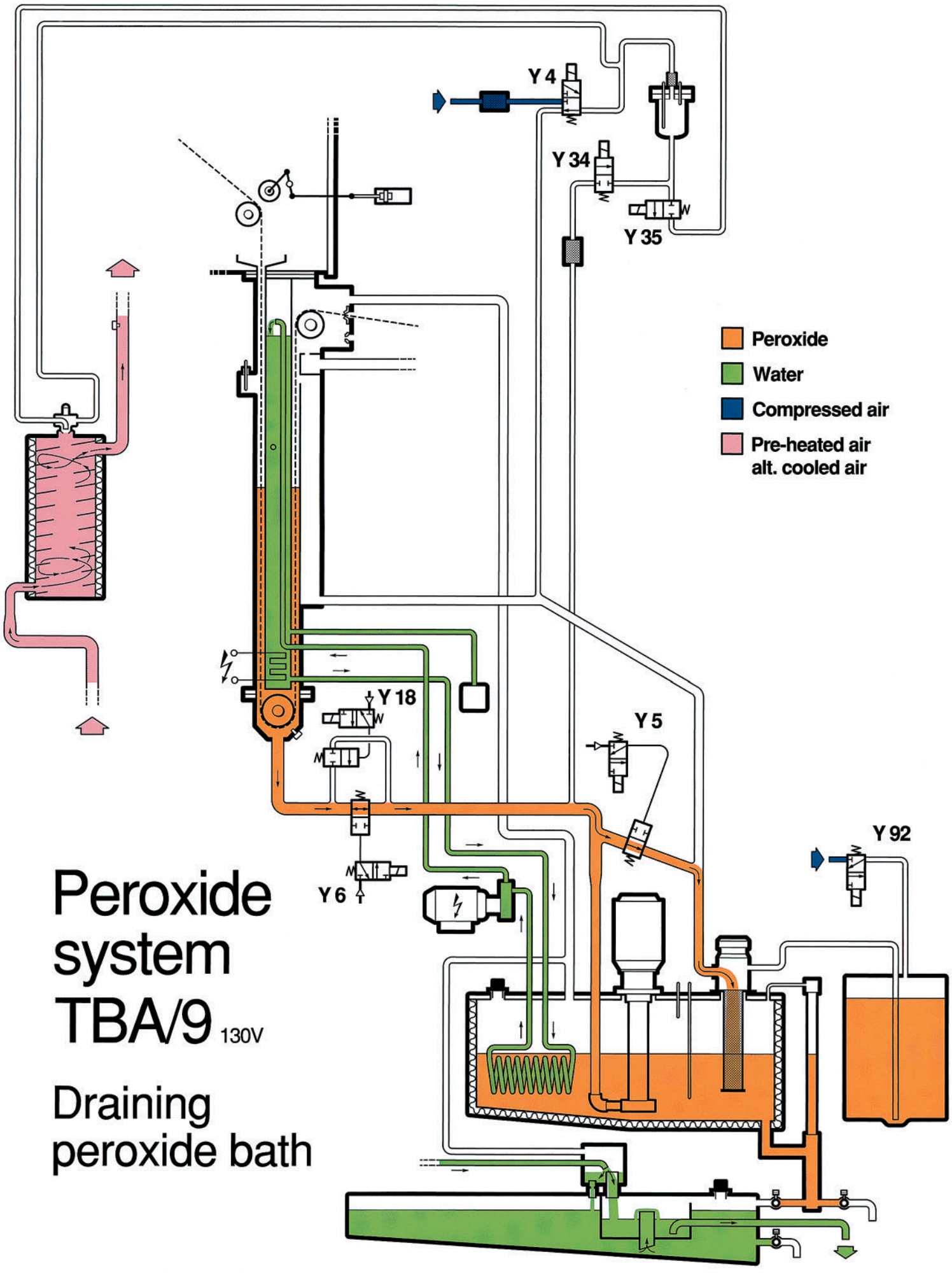

Peroxide system TBA/9 130V

Draining peroxide bath

Peroxide handling TBA/9

Draining diluting tank

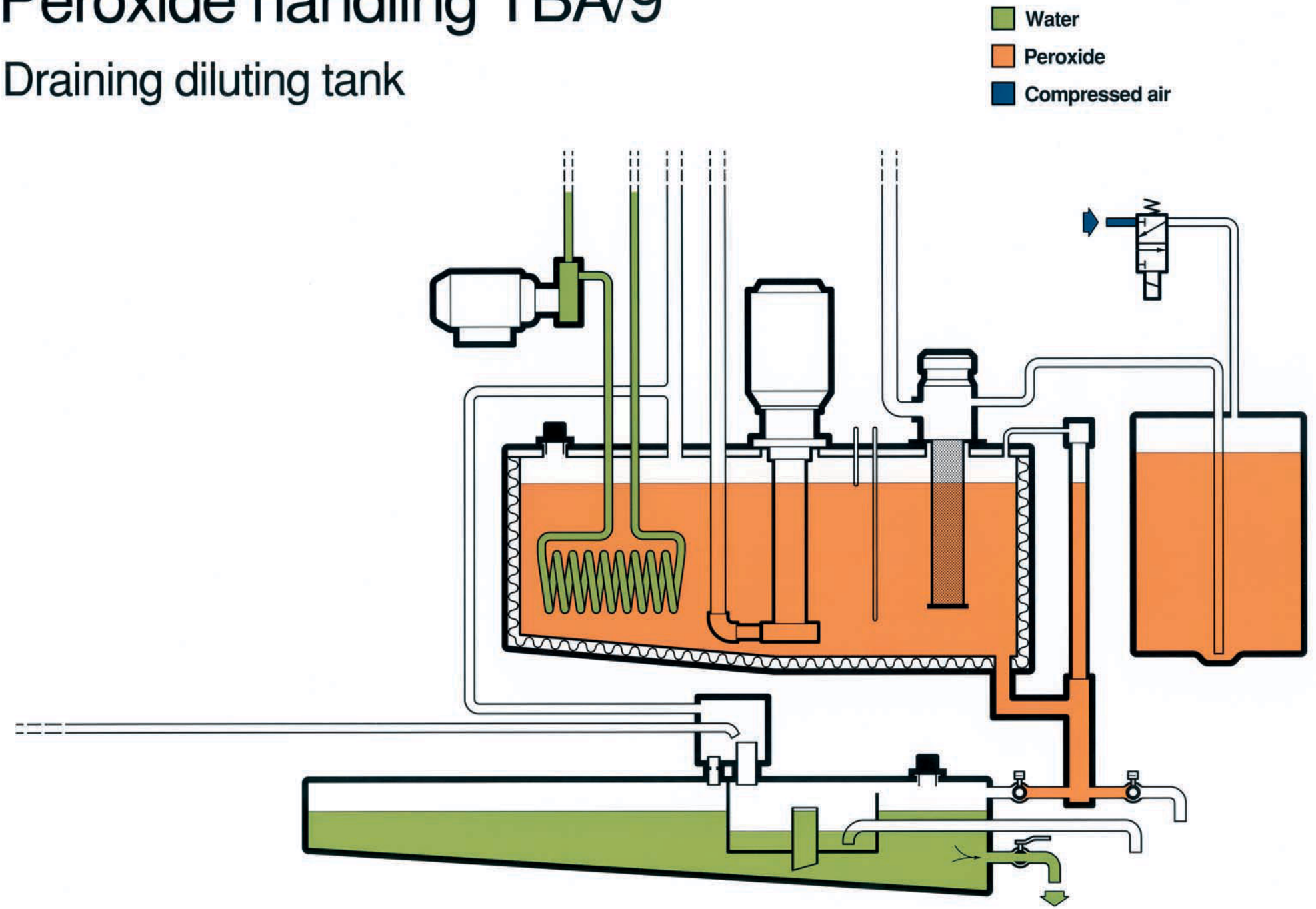

Technical Training Centre Lund, Sweden	
Machine type	TBA/9 130V
Issue	1/9103
	OH 392:1

Peroxide handling TBA/9

Emptying peroxide tank

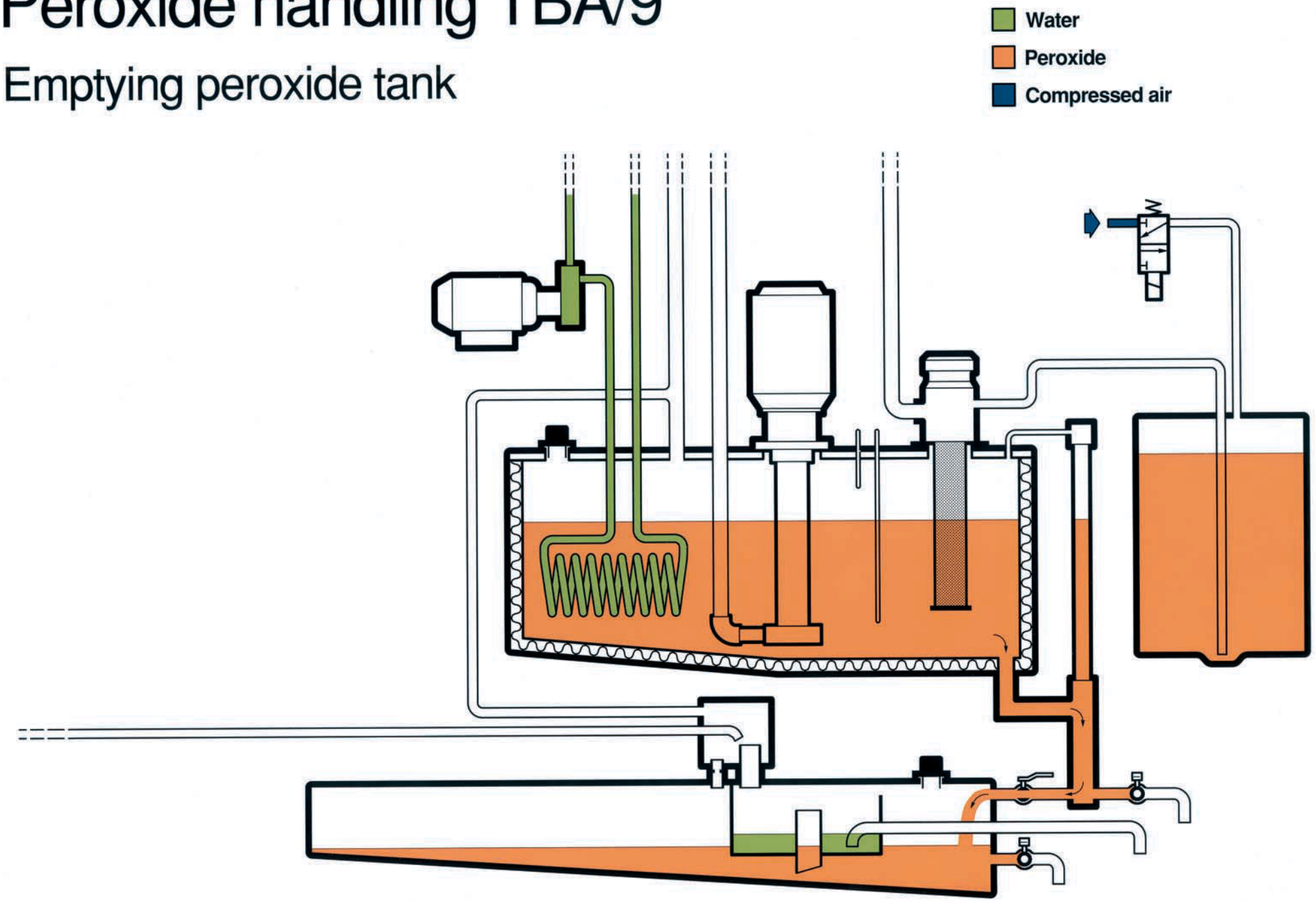

Technical Training Centre
Lund, Sweden

Machine type
TBA/9 130V

Issue
1/9103

OH 392:2

Peroxide handling TBA/9

Filling new peroxide

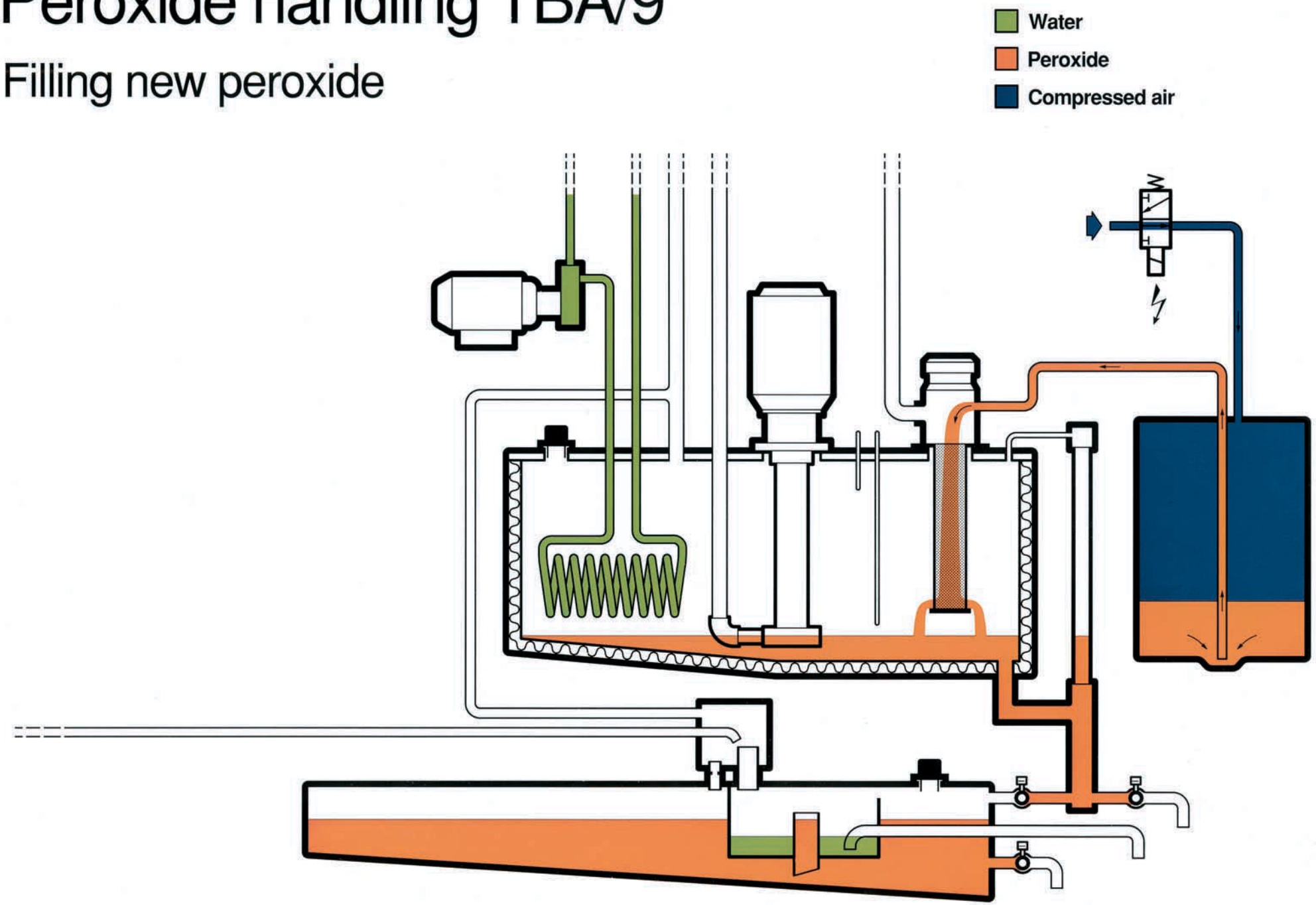

TETRA PAK
Technical Training Centre
Lund, Sweden
Machine type
TBA/9 130V
Issue
1/9103
OH 392:3

Peroxide handling TBA/9

Diluting peroxide during compressor run

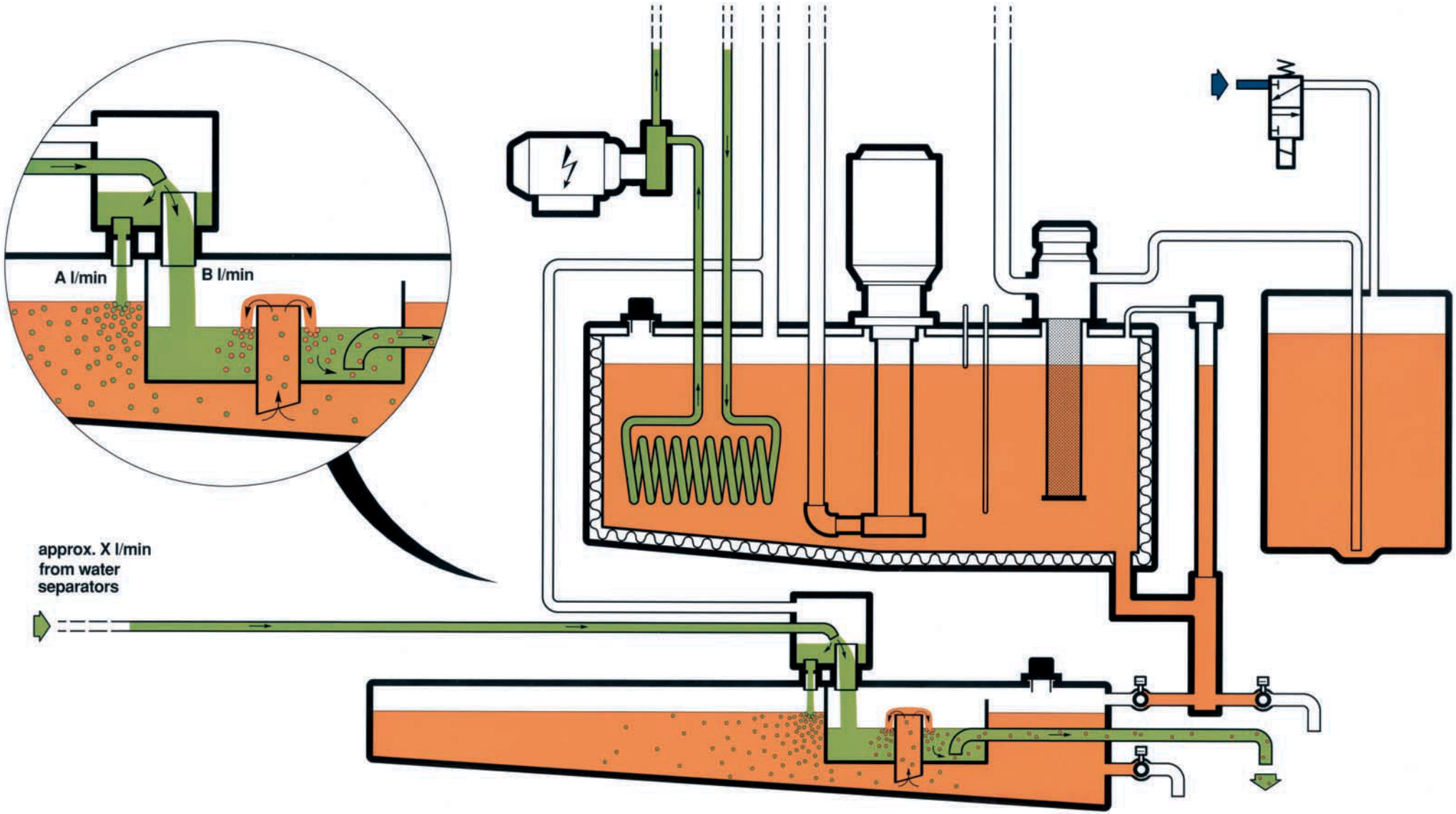

Technical Training Centre
Lund, Sweden

Machine type
TBA/9 130V

Issue
1/9103

OH 392:4