SPC
Spare Parts Catalogue

TBA/21 050V

648570-0500

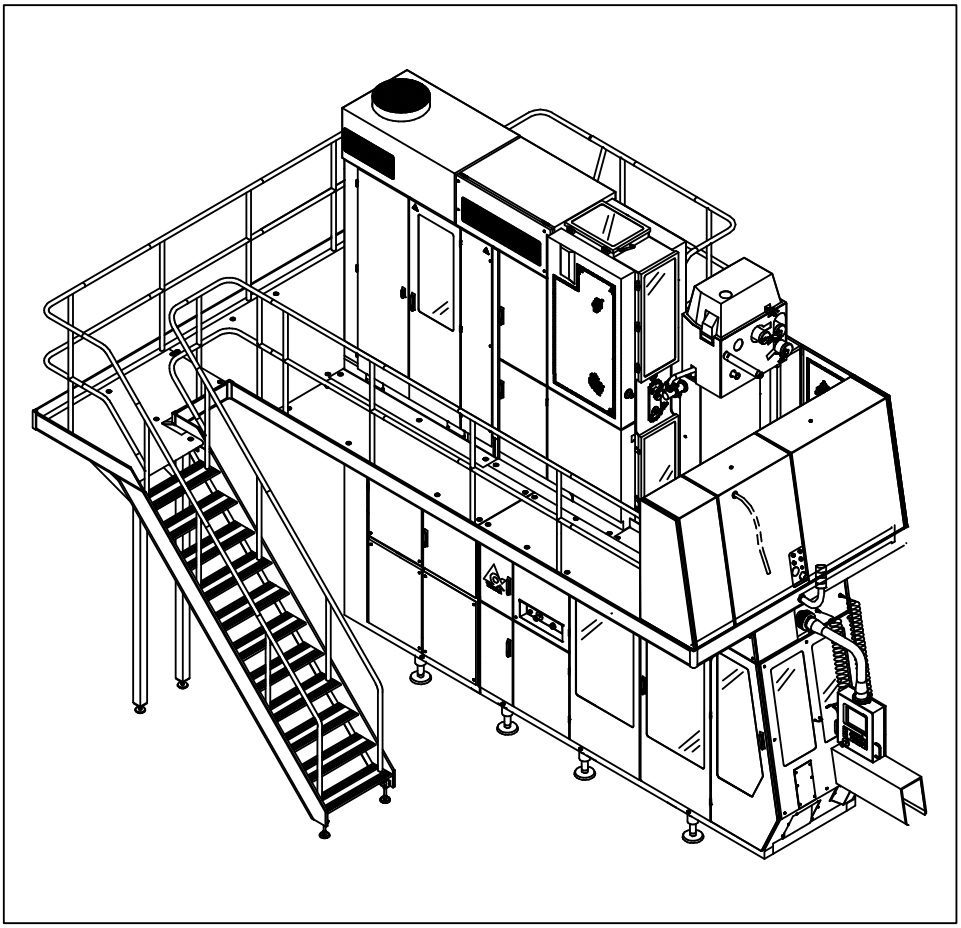

Tetra Pak

Doc. No: SPC-81545-0107

Main Groups of the Machine

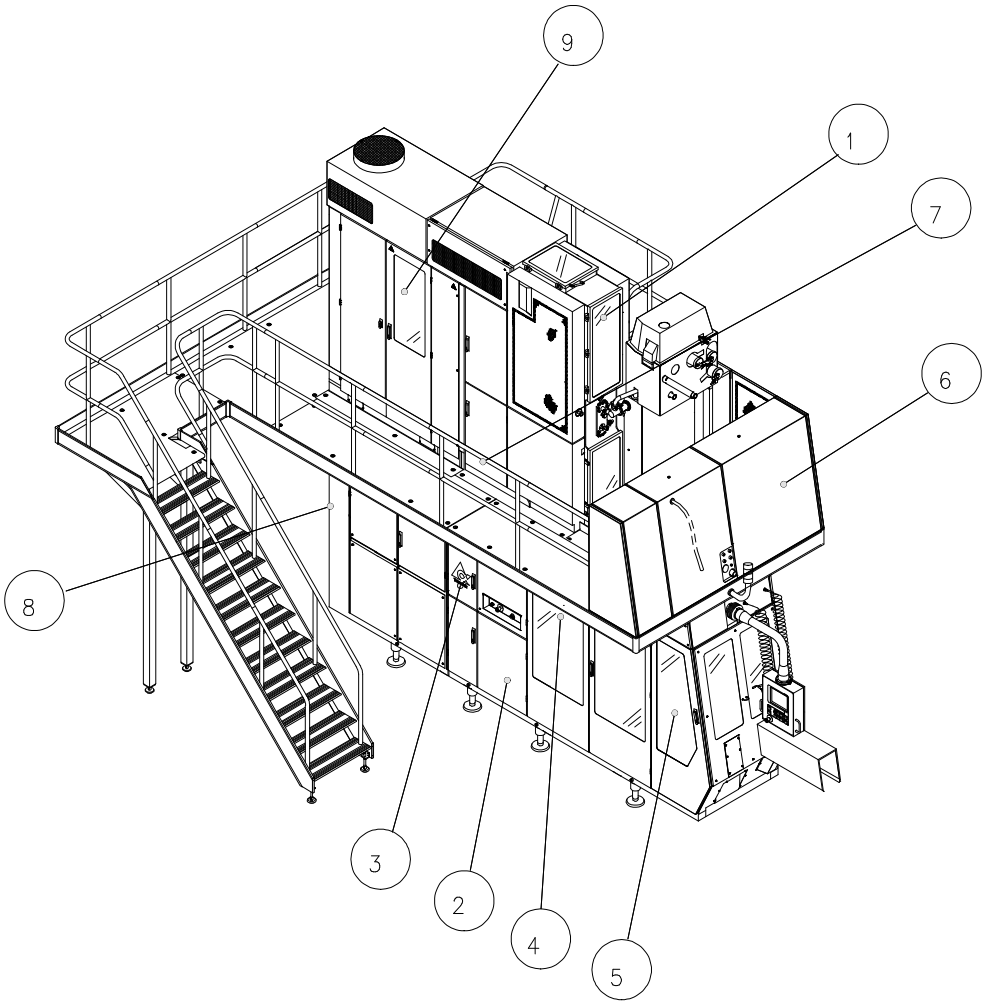

1 - Superstructure
2 - Machine Body
3 - Drive
4 - Jaw System TBA/21
5 - Final Folder
6 - Service Unit
7 - Strip Applicator
8 - Automatic Splicing Unit
9 - Electrical Cabinet

For the correct machine data, check your machine specification, supplied with the machine!

This document is valid for:

Series No/Machine No Sign.

SPC
Spare Parts Catalogue

Tetra Brik Aseptic
TBA/21
648570-0500

Table of Content:

Introduction ..... , **5**

Superstructure
B- 648511-0600 ..... , **9**

Machine Body
B- 648502-0600 ..... , **233**

Drive
B- 648503-0500 ..... , **421**

Jaw System TBA/21
B- 648504-0500 ..... , **467**

Final Folder
B- 648515-0200 ..... , **583**

Service Unit
B- 648506-0400 ..... , **717**

Strip Applicator
B- 648507-0400 ..... , **789**

Automatic Splicing Unit
B- 648513-0400 ..... , **823**

Electrical Cabinet
B- 648517-0500 ..... , **979**

Regular Accessories
B- 648509-0600 ..... , **1065**

Electric Equipment
B- 649418-0500 ..... , **1087**

Optional Accessories
B- 648519-0500 ..... , **1091**

Part Number Index ..... , **1165**

Doc. No: SPC-81545-0107

Issue 2001-12

Tetra Pak

Tetra Pak Carton Ambient

General information

Manufacturer

This machine is produced by:
Tetra Pak Carton Ambient S.p.A.
Via Delfini 1
41100 Modena /Italy

Document producer

This document has been produced by:
Tetra Pak Carton Ambient S.p.A.
Technical Publications
Via Delfini 1
41100 Modena / Italy

Number of pages

This document contains totally **1236 pages,** including the first **8** introduction pages.

Copyright © 2001 Tetra Pak Carton Ambient

All rights reserved. No parts of this document may be reproduced or copied in any forms or by any means, without written permission from Tetra Pak Carton Ambient.

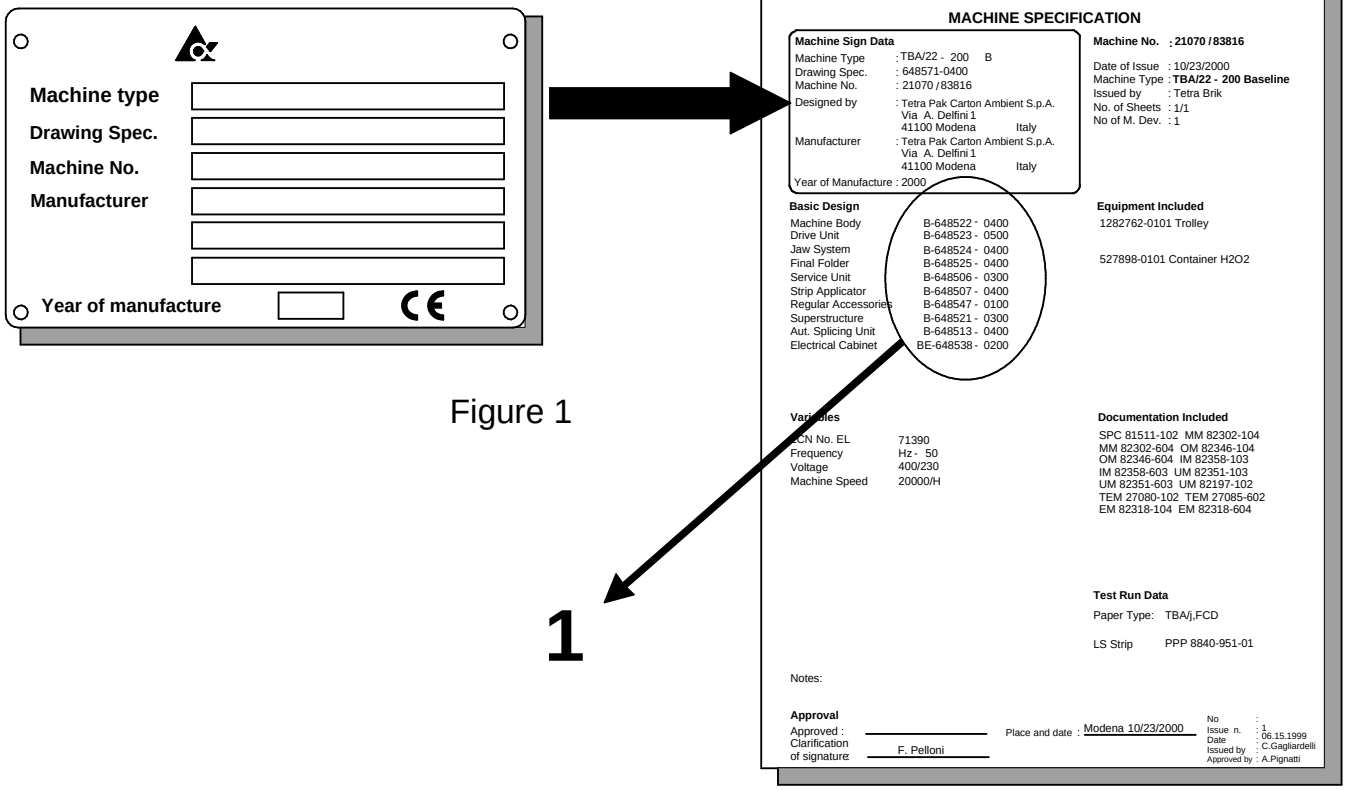

Figure 1

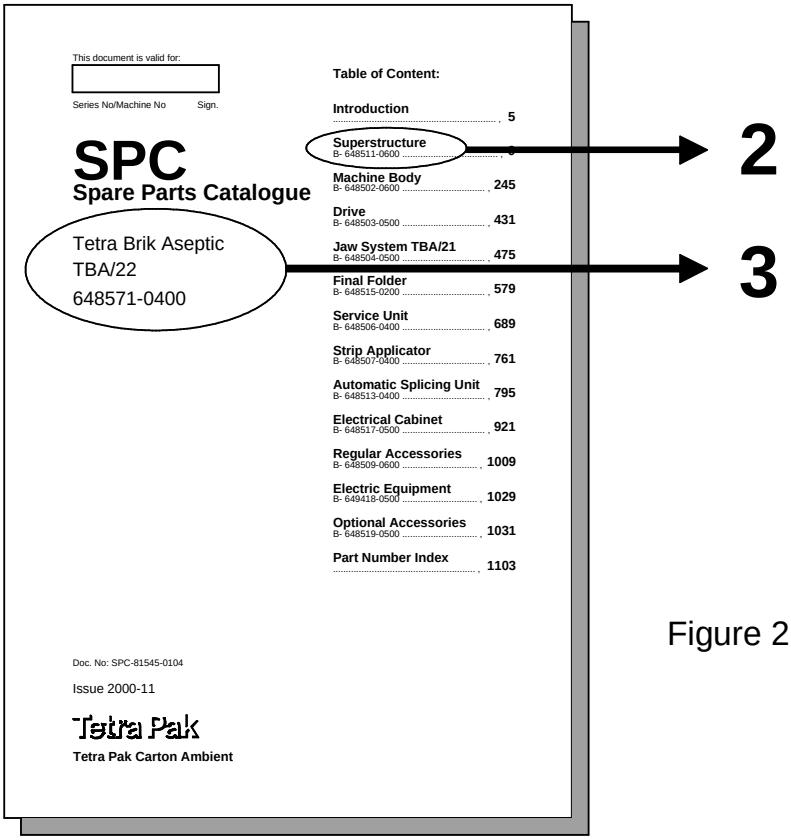

Figure 2

Figure 3 A-648571-0400

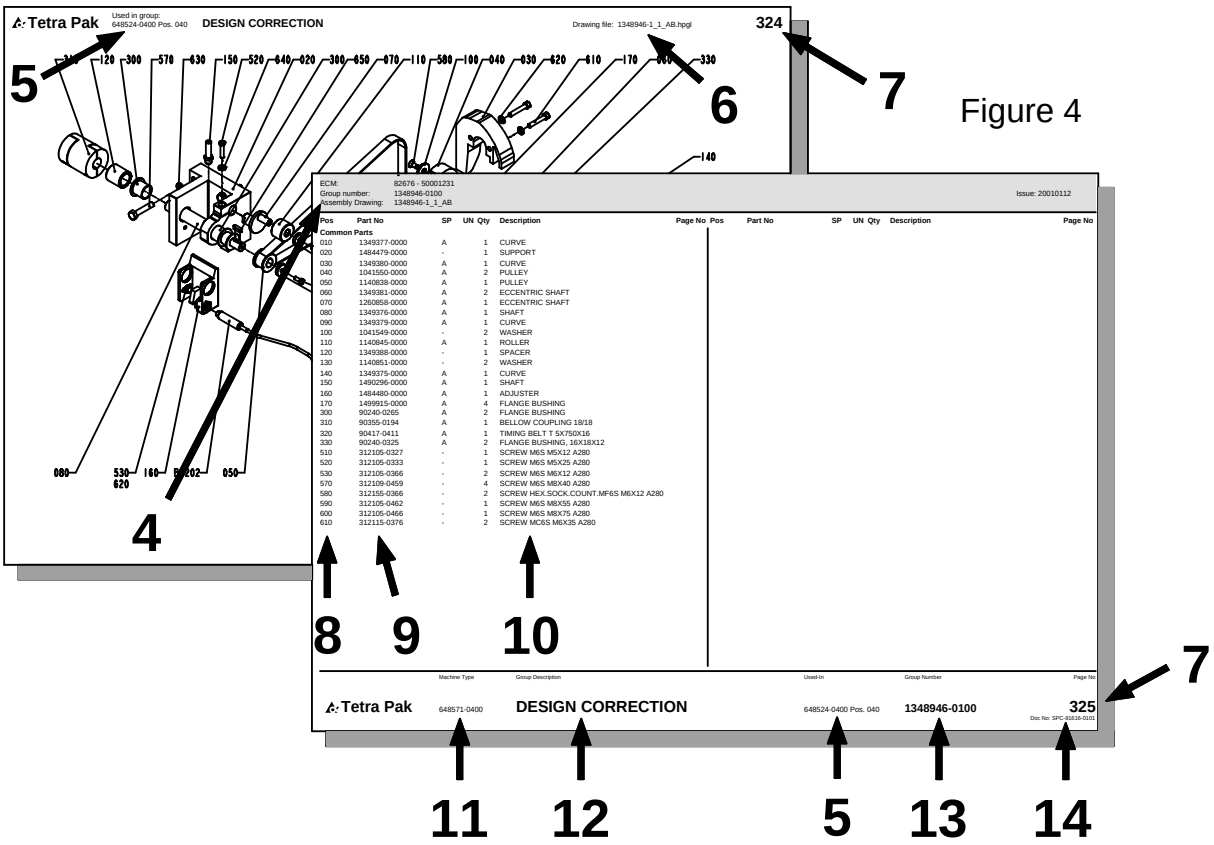

Figure 4

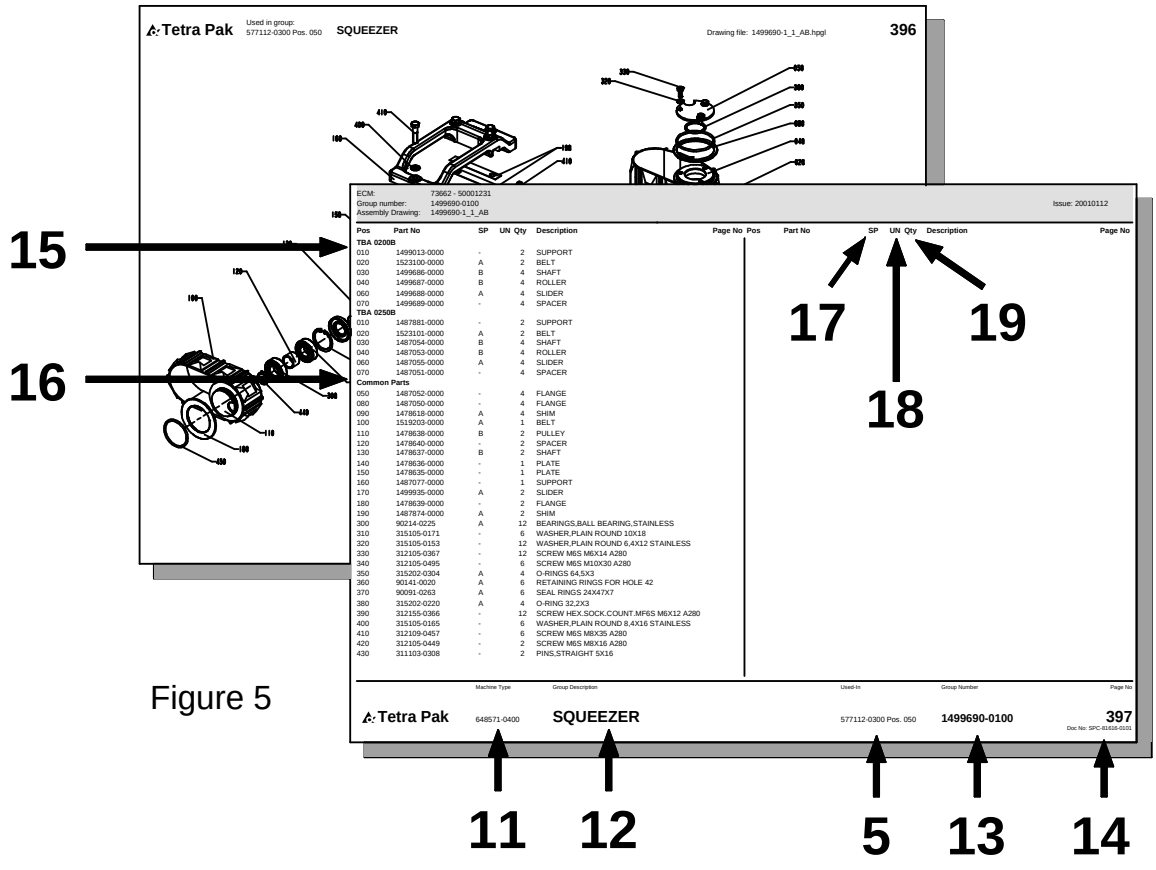

Figure 5

General information

Service

When ordering spare parts for your machine, contact the nearest Tetra Pak service station.

Machine identification

This machine plate is an example of the type of machine plate, attached to the machine frame. The plate carries data needed when contacting Tetra Pak concerning this particular machine **(see Figure 1).**

Purpose of the Spare Parts Catalogue

The purpose of the Spare Parts Catalogue (SPC) is to provide the technicians and contact personnel with information on how to find and order spare parts for maintenance and service of the machine.
For instructions of how to replace parts and adjust machine setup, see the Maintenance Manual (MM).

Delivered documentation

The technical documentation delivered with this machine is started in the Machine Specification.
Note! If any of these documents is missing, it must be reported in the document **Start Up Machine Quality Report**. For more information, see chapter 8 Preparation for Commissioning in the Installation Manual.
It is important that you keep these documents for the life of the equipment, and pass the documents on to any subsequent holder or user of the equipment.

Design modification

The content of this document is in accordance with the design and construction of the machine at the time it was delivered from the Tetra Pak machine production facility.

Further copies

Additional copies can be ordered from the nearst Tetra Pak service station. When ordering technical publications, always quote the document number printed on the front cover of the document concerned.

Tetra Pak Part numbering system

The third and forth digits in the sub-number, specify one unique group which can be ordered. If the forth digit is replaced by a "0", the number combination only points to a bill-of-material document.
The first and second digits in the sub-number, specify the development step (model) of the machine or group. **(see fig. 3)**
Main number of machine /group /article, depending on level.
Prefix, giving information about level, eg.
A = Machine
B = Main section (*)
C = Groups and subgroups
*) Customized distribution machines are registered as B-level as well.

How to find the correct Spare Part Number

A. Check that the data on yuor machine sign, and/or machine specification, corresponds with the catalogue. **(see fig.1)**

1) Main groups of the machine

B. The second catalogue sheet contains a table of content for the main groups, included in the catalogue. The information regarding machine and main group page status MUST correspond with your machine specification.
Locate and choose the main groups page number (1), in which you want to search for spare parts. **(see fig.2)**

2) Main group
3) Machine type

C. Search in the main group illustration, the item number, which may hold yuor wanted spare part. Go to the text page below and find the page number for the actual group. **(see fig. 4)**

4) Internal information, such as latest Engineering Change, Bill-of-Material included in the catalogue page and the Assembly Drawing required
5) Used-In reference to next higher level in the machine structure
6) Assembly drawing number including the archive file extension
7) Continuous page numbering through the document
8) Pos number corresponding to illustration
9) Group or article number
10) Group or article description. The letter "B" in front of some article numbers indicates that this article contains other parts, directly listed below the B-article. Letter "A" indicates a subgroup number with an own page directly after the actual page
11) Machine type including development status
12) Group description
13) Group number (bill-of-material) including development status
14) Document number

D. Continue to the found page number, and search in the illustration for your spare part. Go to the text row for the found item number, and read the part number. Take eventual variant headings in consideration; if you are unsure, read your machine specification. **(see fig. 5)**

15) Variant heading, eg volume, left/right etc.
16) Heading for common parts
17) SP = Code for articles, which are included into various spare part kits.
    A = Critical Spare Part
    B = Non Critical Spares Part
    C = Don't stop function, can bypassed
    D = Seldom break, long time production
18) UN = Short code for measure units, eg mm, kg etc.
19) Qty = Number of items needed in the complete assembly.

SPC
Spare Parts Catalogue

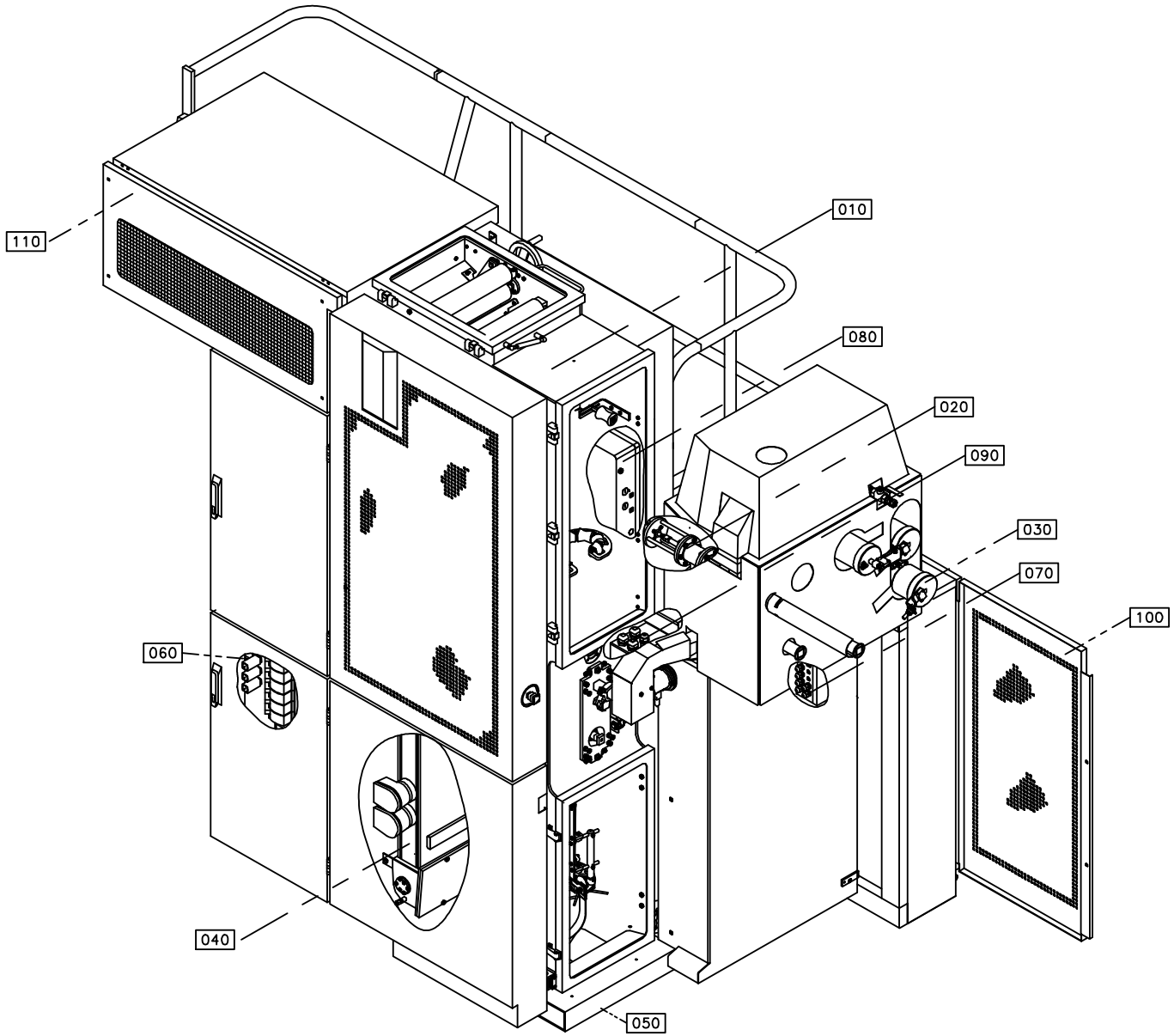
110
010
080
020
090
030
070
100
060
040
050

Pos	Part No	SP	UN	Qty	Description	Page No
Common Parts						
010	A1095881-0300	-		1	ASEPTIC CHAMBER	**13**
020	A1095755-0200	-		1	STERILE AIR SYSTEM	**83**
030	A1095782-0300	-		1	FILLING SYSTEM	**109**
040	A1095833-0400	-		1	HYDROGEN PEROXIDE	**159**
050	A1095791-0400	-		1	FRAME SECTION,UPPER	**173**
060	A1095686-0300	-		1	PNEUMATIC SYSTEM	**197**
070	A1095823-0100	-		1	CONNECTION BOX	**215**
080	A1095824-0300	-		1	CONNECTION BOX	**217, 219**
090	A1095822-0300	-		1	CABLE TRENCH	**223, 225**
100	A1095918-0200	-		1	COVERING PANEL	**227**
110	A1095740-0200	-		1	COVERING PANEL	**229**
120	A1185038-0100	-		1	TRANSPORT UNIT	**231**

Pos	Part No	SP	UN	Qty	Description	Page No

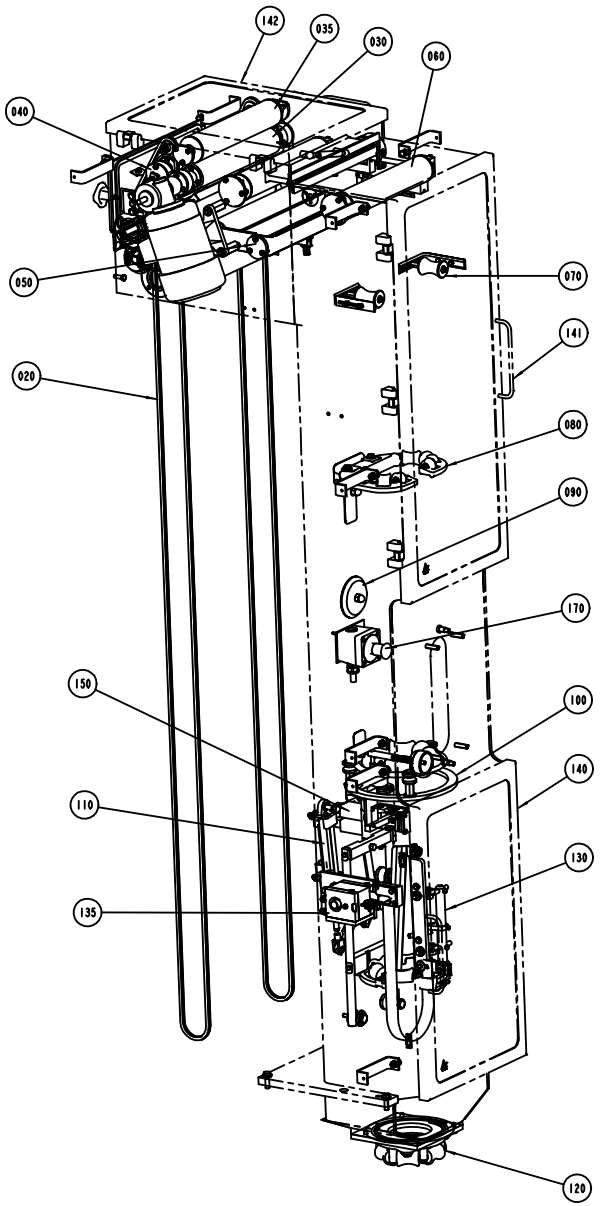
142
035
030
060
040
050
070
141
020
080
090
170
150
100
140
110
130
135
120

ECM: 81285 - 20001012
Group number: 1095881-0300
Assembly Drawing: 1095881-4_1_AA

Issue: 20011217

Pos	Part No	SP	UN	Qty	Description	Page No
Common Parts						
010	A1035001-0400	-		1	PILLAR	**15, 17**
020	A996451-0100	-		1	CRANK	**19**
030	A996427-0200	-		1	DRIVE UNIT	**21**
035	A577099-0200	-		1	BENDING ROLLER	**23**
040	A1282884-0200	-		1	CALENDER ROLLER	**25**
050	A996425-0300	-		1	PENDULUM ROLLER	**27**
060	A996428-0300	-		1	PAPER GUIDE	**29**
070	A996449-0100	-		1	EDGE ROLLER	**31, 33**
080	A996392-0200	-		1	UPPER TUBE SUPPORT	**35, 37, 39**
090	A1035113-0100	-		1	UPPER TUBE SUPPORT	**41, 43**
100	A1195343-0300	-		1	UPPER FORMING RING	**45, 47, 49, 51**
110	A1095907-0300	-		1	LOWER FORMING RING	**53**
120	A996456-0200	-		1	SEAL	**59, 61**
130	A1095746-0100	-		1	LONGITUDINAL SEALING	**63, 65, 67**
135	A1095749-0100	-		1	IH EQUIPMENT	**69**
140	A1317976-0100	-		1	DOOR	**71**
141	A1317977-0100	-		1	DOOR	**73**
142	A1317978-0100	-		1	DOOR	**75**
150	A1095864-0300	-		1	SPRAY SYSTEM	**77, 79**
170	A1035382-0100	-		1	EMERGENCY STOP	**81**

Pos	Part No	SP	UN	Qty	Description	Page No

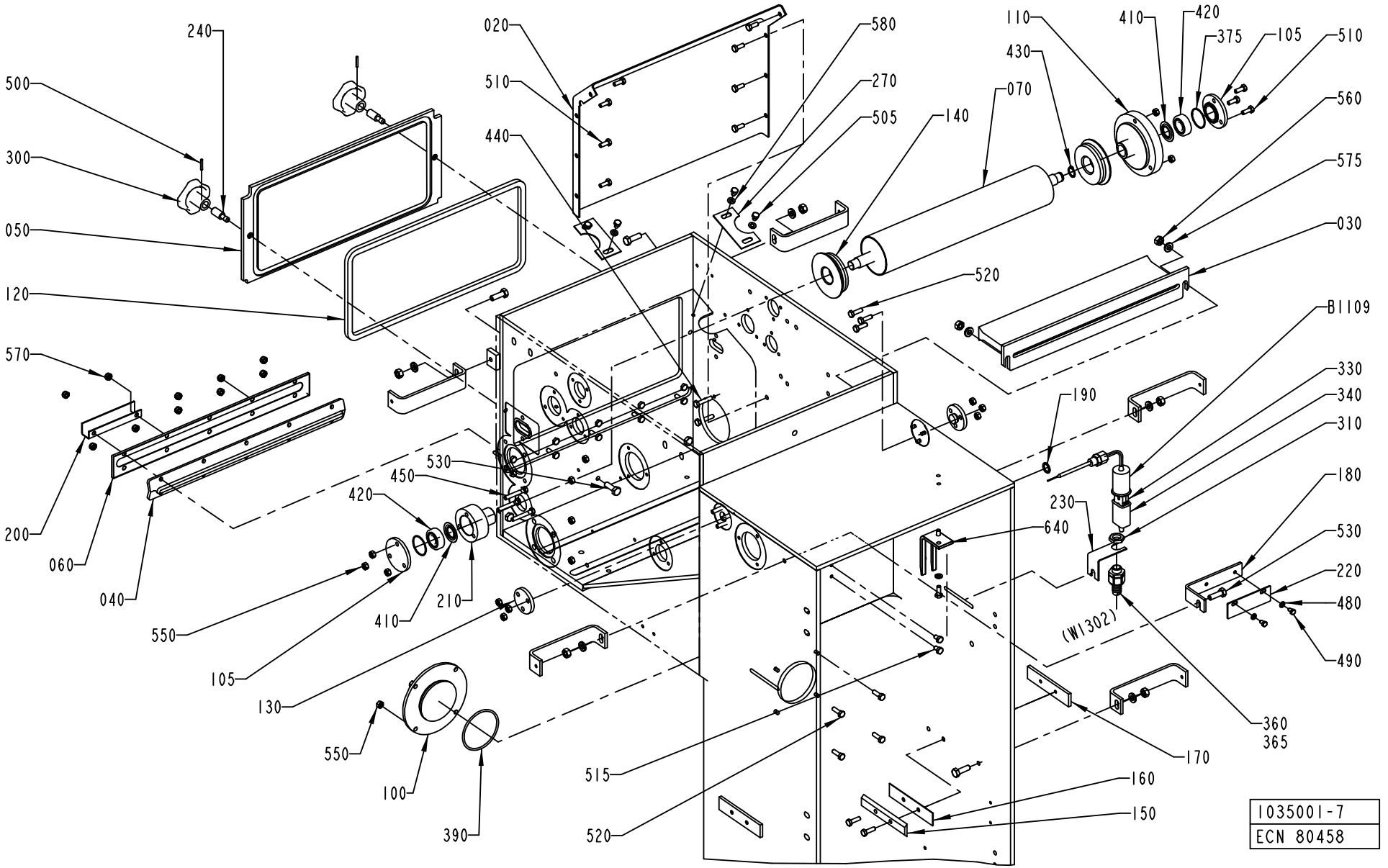

1035001-7
ECN 80458

ECM: 93988 - 20010917
Group number: 1035001-0400
Assembly Drawing: 1035001-7_1_AD

Issue: 20011217

Pos	Part No	SP	UN	Qty	Description	Page No
Common Parts						
010	1255320-0000	-		1	PILLAR	
020	1036344-0000	-		1	SHEET	
030	1036419-0000	-		1	TUNNEL	
040	273961-0000	A		1	SEAL	
050	1036465-0000	-		1	LID	
060	476087-0000	-		1	LID	
070	1511703-0000	A		1	BENDING ROLLER	
085	1038349-0000	-		1	BRACKET	
090	1037456-0000	-		9	BRACKET	
100	1038698-0000	-		1	LID	
105	1511704-0000	-		2	LID	
110	1511706-0000	A		1	FLANGE	
120	1036478-0000	A		1	GASKET	
130	1038429-0000	-		2	LID	
140	1296820-0000	A		2	WHEEL	
150	1348958-0000	-		2	COVER PLATE	
160	1036694-0000	-		2	GASKET	
170	1350876-0000	-		2	PLATE	
180	1498185-0000	-		1	BRACKET	
190	315237-0110	-		1	WASHER,PL.RND.AL.13,5/18,H=1,5	
200	1487759-0000	-		1	RULER	
210	1511705-0000	-		1	FLANGE	
220	1498184-0000	-		1	RULER	
230	1036373-0000	-		1	HOLDER	
240	1036475-0000	-		2	PIN	
260	1535006-0000	A		1	CABLE	
270	1129649-0000	-		2	PLATE	
280	1558909-0000	-		1	HOOK	
290	2504627-0000	-		1	GASKET	
300	90051-0045	-		2	STELLAR KNOB, NO. 8323-2575	
310	90099-0104	-		1	NUT PR 15,2 (PG9)	
330	90326-0020	-		1	PLUG,FEMALE YELLOW CR-AL	
340	90326-0012	-		1	PROTECTIVE COVER	
360	353243-0001	-		1	GLAND,HOSE,EXTENDED,WITHOUT INSERT PG9	
365	353249-0008	-		1	GLAND,INSERT,SINGLE HOLE,EXTEND.4-6,5	
375	315204-0122	A		2	O-RING 32,1X1,6 MM	
380	90242-0227	A		1	O-RING 66X2,5 MM	
390	315204-0305	A		1	O-RING 69,5X3 MM	
400	90153-0002	-		1	ADHESIVE	
410	90214-0303	A		2	SEALING RING, 18,6X35X2 MM	
420	90458-0572	A		2	BALL BEARING, 15X35X11 MM	
430	315751-0112	-		1	RETAIN. RING, 15	
440	312109-0374	-		3	SCREW M6S M6X30 A280	
450	312109-0378	-		3	SCREW M6S M6X40 A280	
480	315105-0146	-		4	WASHER PLAIN, BRB, 5,3/10,H=1	
490	312105-0323	-		2	SCREW M6S M5X8 A280	
500	90258-0031	-		2	PIN, STRAIGHT SLOTTED SPRING FRP 3X20	
505	312105-0362	-		4	SCREW M6S M6X8 A280	
510	312105-0368	-		19	SCREW M6S M6X16 A280	
515	312105-0364	-		2	SCREW M6S M6X10 A280	
520	312105-0370	-		24	SCREW M6S M6X20 A280	
530	312105-0453	-		13	SCREW M6S M8X25 A280	
540	312105-0497	-		4	SCREW M6S M10X35 A280	
550	312605-0316	-		24	HEXAGON NUT, M6M M6 A280	
560	312605-0318	-		12	HEXAGON NUT, M6M M8 A280	
570	312812-0316	-		10	HEXAGON NUT, NY-LOCK M6 A480	
575	315115-0165	-		13	WASHER PLAIN, TBRB 8,4/16 H=3	
580	315105-0153	-		6	WASHER PLAIN, BRB, 6,4/12,H=1,5	
590	315115-0173	-		4	WASHER PLAIN, TBRB 10,5/22 H=4	
600	352113-0204	-		3	ANCHOR TM3S25-M	
610	312125-0366	-		3	SCREW PAN HEAD MCS M6X12 SS	
620	312105-0447	-		1	SCREW M6S M8X12 A280	
640	1524273-0000	-		1	THERMOCOUPLE PROTECTION	
650	1535010-0000	A		1	SUPPORT BLOCK	
660	1535009-0000	A		1	SUPPORT BLOCK	
670	312105-0333	-		2	SCREW M6S M5X25 A280	
B1109	90458-0341	A		1	THERMOCOUPLE 5130050-001	

Machine Type | Group Description | Used-In | Group Number | Page No

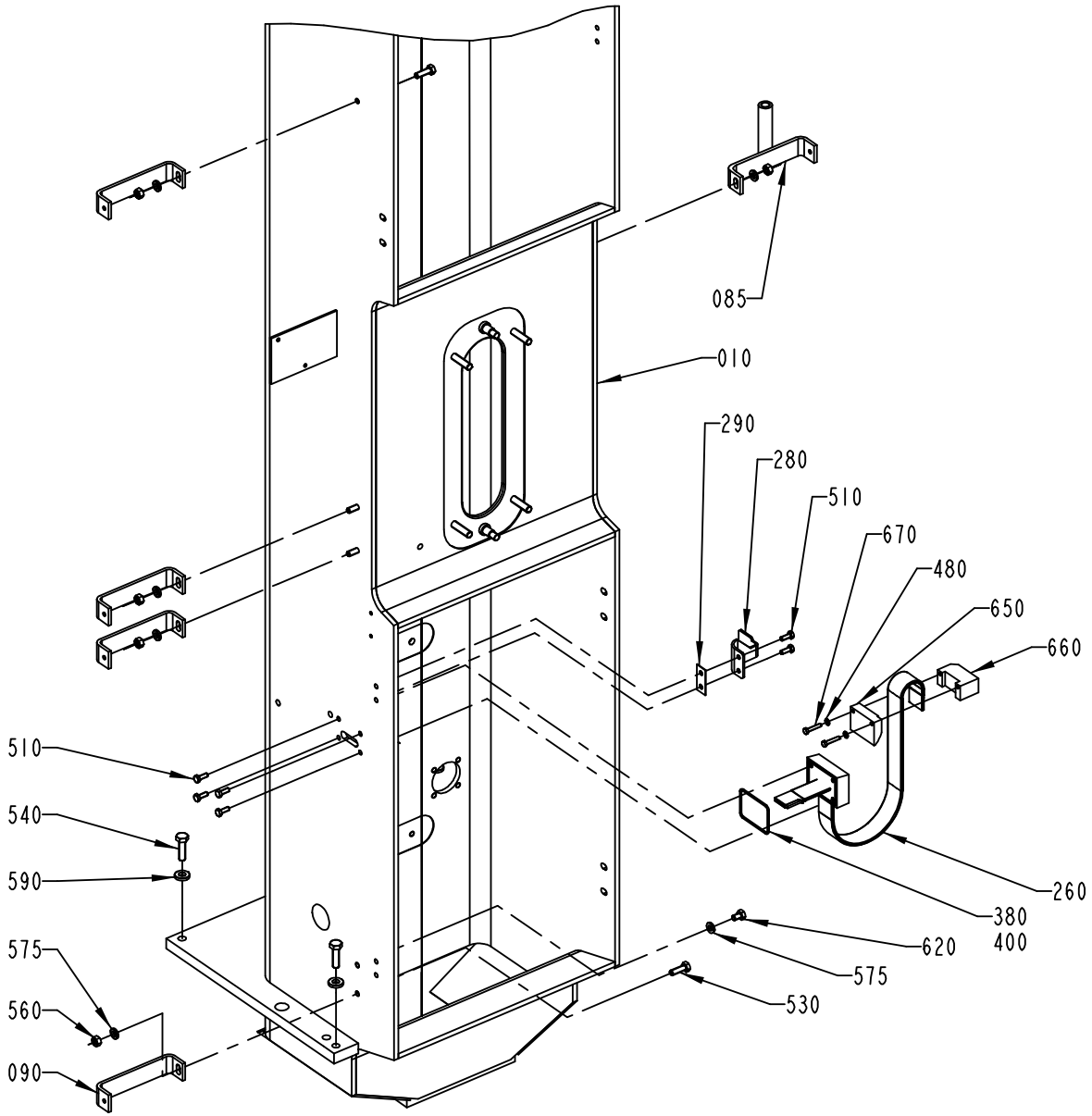

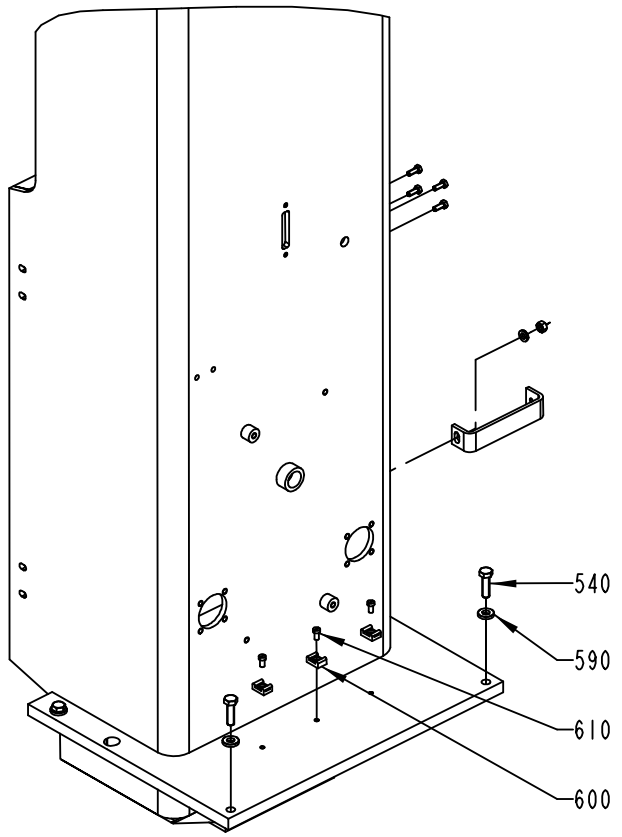

1035001-8
ECN 92369

ECM: 93988 - 20010917
Group number: 1035001-0400
Assembly Drawing: 1035001-8_1_AC

Issue: 20011217

Pos	Part No	SP	UN	Qty	Description	Page No
Common Parts						
010	1255320-0000	-		1	PILLAR	
020	1036344-0000	-		1	SHEET	
030	1036419-0000	-		1	TUNNEL	
040	273961-0000	A		1	SEAL	
050	1036465-0000	-		1	LID	
060	476087-0000	-		1	LID	
070	1511703-0000	A		1	BENDING ROLLER	
085	1038349-0000	-		1	BRACKET	
090	1037456-0000	-		9	BRACKET	
100	1038698-0000	-		1	LID	
105	1511704-0000	-		2	LID	
110	1511706-0000	A		1	FLANGE	
120	1036478-0000	A		1	GASKET	
130	1038429-0000	-		2	LID	
140	1296820-0000	A		2	WHEEL	
150	1348958-0000	-		2	COVER PLATE	
160	1036694-0000	-		2	GASKET	
170	1350876-0000	-		2	PLATE	
180	1498185-0000	-		1	BRACKET	
190	315237-0110	-		1	WASHER,PL.RND.AL.13,5/18,H=1,5	
200	1487759-0000	-		1	RULER	
210	1511705-0000	-		1	FLANGE	
220	1498184-0000	-		1	RULER	
230	1036373-0000	-		1	HOLDER	
240	1036475-0000	-		2	PIN	
260	1535006-0000	A		1	CABLE	
270	1129649-0000	-		2	PLATE	
280	1558909-0000	-		1	HOOK	
290	2504627-0000	-		1	GASKET	
300	90051-0045	-		2	STELLAR KNOB, NO. 8323-2575	
310	90099-0104	-		1	NUT PR 15,2 (PG9)	
330	90326-0020	-		1	PLUG,FEMALE YELLOW CR-AL	
340	90326-0012	-		1	PROTECTIVE COVER	
360	353243-0001	-		1	GLAND,HOSE,EXTENDED,WITHOUT INSERT PG9	
365	353249-0008	-		1	GLAND,INSERT,SINGLE HOLE,EXTEND.4-6,5	
375	315204-0122	A		2	O-RING 32,1X1,6 MM	
380	90242-0227	A		1	O-RING 66X2,5 MM	
390	315204-0305	A		1	O-RING 69,5X3 MM	
400	90153-0002	-		1	ADHESIVE	
410	90214-0303	A		2	SEALING RING, 18,6X35X2 MM	
420	90458-0572	A		2	BALL BEARING, 15X35X11 MM	
430	315751-0112	-		1	RETAIN. RING, 15	
440	312109-0374	-		3	SCREW M6S M6X30 A280	
450	312109-0378	-		3	SCREW M6S M6X40 A280	
480	315105-0146	-		4	WASHER PLAIN, BRB, 5,3/10,H=1	
490	312105-0323	-		2	SCREW M6S M5X8 A280	
500	90258-0031	-		2	PIN, STRAIGHT SLOTTED SPRING FRP 3X20	
505	312105-0362	-		4	SCREW M6S M6X8 A280	
510	312105-0368	-		19	SCREW M6S M6X16 A280	
515	312105-0364	-		2	SCREW M6S M6X10 A280	
520	312105-0370	-		24	SCREW M6S M6X20 A280	
530	312105-0453	-		13	SCREW M6S M8X25 A280	
540	312105-0497	-		4	SCREW M6S M10X35 A280	
550	312605-0316	-		24	HEXAGON NUT, M6M M6 A280	
560	312605-0318	-		12	HEXAGON NUT, M6M M8 A280	
570	312812-0316	-		10	HEXAGON NUT, NY-LOCK M6 A480	
575	315115-0165	-		13	WASHER PLAIN, TBRB 8,4/16 H=3	
580	315105-0153	-		6	WASHER PLAIN, BRB, 6,4/12,H=1,5	
590	315115-0173	-		4	WASHER PLAIN, TBRB 10,5/22 H=4	
600	352113-0204	-		3	ANCHOR TM3S25-M	
610	312125-0366	-		3	SCREW PAN HEAD MCS M6X12 SS	
620	312105-0447	-		1	SCREW M6S M8X12 A280	
640	1524273-0000	-		1	THERMOCOUPLE PROTECTION	
650	1535010-0000	A		1	SUPPORT BLOCK	
660	1535009-0000	A		1	SUPPORT BLOCK	
670	312105-0333	-		2	SCREW M6S M5X25 A280	
B1109	90458-0341	A		1	THERMOCOUPLE 5130050-001	

Machine Type | Group Description | Used-In | Group Number | Page No

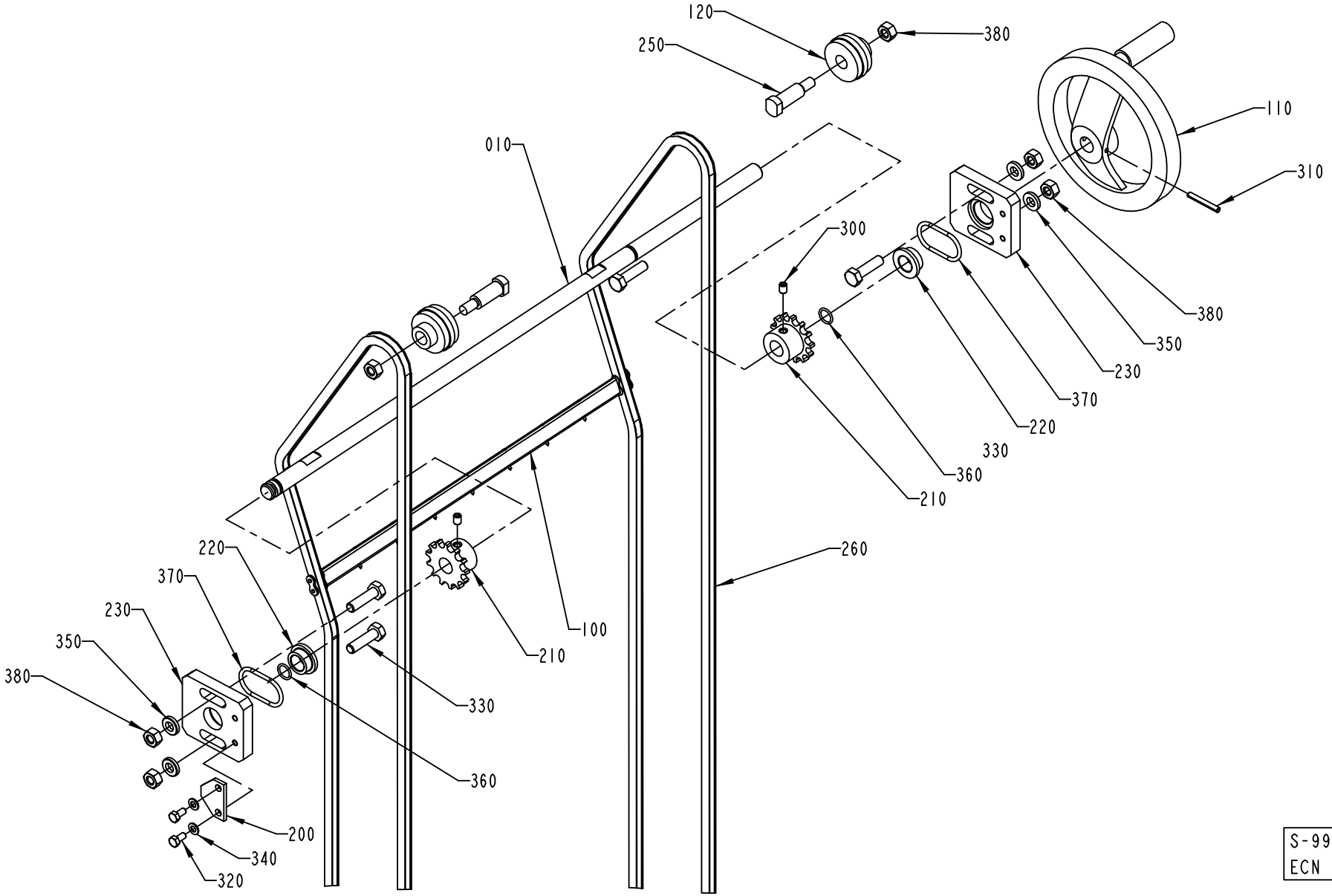

S-996451-1
ECN 73102

ECM: 73102 - 20000224
Group number: 996451-0100
Assembly Drawing: 996451-1_1_AB

Issue: 20011217

Pos	Part No	SP	UN	Qty	Description	Page No
Common Parts						
010	1036841-0000	D		1	SHAFT	
100	1040777-0000	C		1	CARRIER	
110	247358-0000	-		1	SHIFTER HANDLE	
120	1036832-0000	C		2	WHEEL	
200	247355-0000	-		1	LOCK WASHER	
210	1038464-0000	D		2	SPROCKET	
220	531191-0000	C		2	BUSHING	
230	1484823-0000	D		2	PLATE	
250	1036833-0000	D		2	SCREW	
260	1036868-0000	D		2	CHAIN	
300	312318-0362	-		2	SCREW SOCK.SET CUP P MSK6SS M6X8 A4	
310	311112-0262	-		1	PIN, STRAIGHT SLOTTED SPRING FRP 4X32	
320	312105-0325	-		2	SCREW M6S M5X10 A280	
330	312105-0455	-		4	SCREW M6S M8X30 A280	
340	315105-0146	-		2	WASHER PLAIN, BRB, 5,3/10,H=1	
350	315115-0165	-		4	WASHER PLAIN, TBRB 8,4/16 H=3	
360	315204-0109	C		2	O-RING 11,1X1,6 MM	
370	315204-0221	C		2	O-RING 34,2X3 MM	
380	312605-0318	-		6	HEXAGON NUT, M6M M8 A280	

Pos	Part No	SP	UN	Qty	Description	Page No

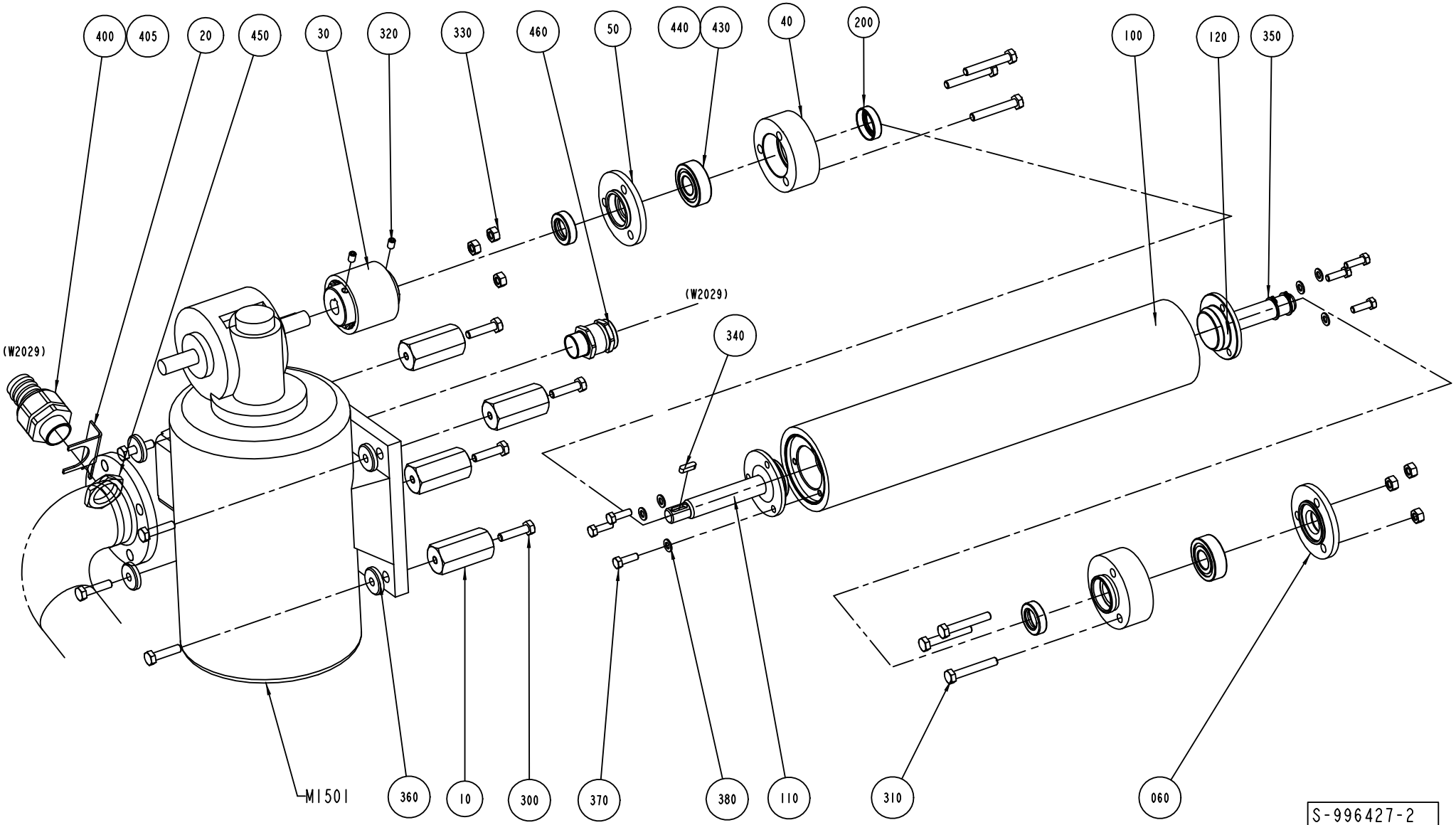
400
405
20
450
30
320
330
460
50
440
430
40
200
100
120
350
(W2029)
(W2029)
340
M1501
360
10
300
370
380
110
310
060
S-996427-2
ECN 71588

ECM: 73494 - 20000710
Group number: 996427-0200
Assembly Drawing: 996427-2_1_AA

Issue: 20011217

Pos	Part No	SP	UN	Qty	Description	Page No
Common Parts						
010	1036371-0000	-		4	SPACER SLEEVE	
020	1129086-0000	-		1	BRACKET	
030	1129298-0000	C		1	SHAFT COUPLING	
040	1478279-0000	D		2	BALL BEARING HOUSING	
050	1478280-0000	D		1	LID	
060	1484131-0000	D		1	LID	
100	1519773-0000	C		1	ROLLER	
110	1348954-0000	D		1	SHAFT	
120	1347546-0000	D		1	SHAFT	
200	90091-0429	C		3	VARILIP 15X26X7 MM	
300	312105-0372	-		8	SCREW M6S M6X25 A280	
310	312109-0378	-		6	SCREW M6S M6X40 A280	
320	312318-0323	-		2	SCREW SOCK.SET CUP P MSK6SS M5X8 A4	
330	312605-0316	-		6	HEXAGON NUT, M6M M6 A280	
340	315701-0167	-		1	PARALLEL KEY W. ROUND ENDS 4X4X16 MM	
350	315751-0112	-		2	RETAIN. RING, 15	
360	315125-0153	-		4	WASHER PLAIN ROUND,CHAMF. 6,4/22, H=4	
370	312105-0329	-		6	SCREW M6S M5X16 A280	
380	315105-0146	-		6	WASHER PLAIN, BRB, 5,3/10,H=1	
400	353243-0005	-		1	GLANDS,HOSE,EXTENDED WITHOUT INSERT PG16	
405	353249-0014	-		1	GLAND,INSERT,SINGLE HOLE,EXTE.11,5-15,5	
430	90214-0098	C		2	BALL BEARING, 15X35X11 MM	
440	90296-0091	-		1	LUBRICATION GREASE	
450	90099-0110	-		1	NUT PR 22,5 (PG16)	
460	90012-0137	-		1	GLAND,EMC,EXTENDED WITH INSERT	
M1501	90069-0613	D		1	GEARS, WORM MOTOR ODM120-80BE3	

Pos	Part No	SP	UN	Qty	Description	Page No

Machine Type | Group Description | Used-In | Group Number | Page No

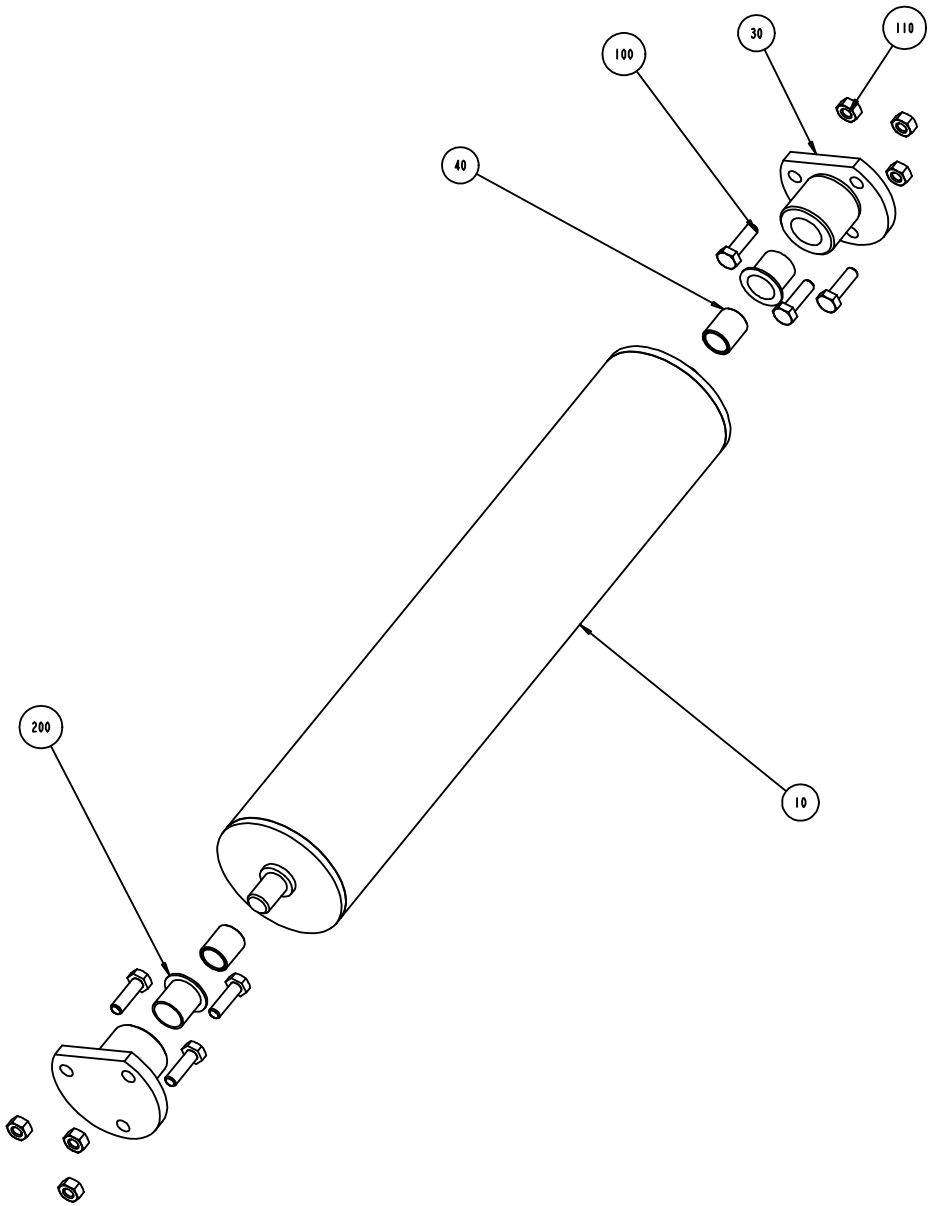
100
30
110
40
200
10

ECM: 71741 - 19980902
Group number: 577099-0200
Assembly Drawing: 577099-2_1_AA

Issue: 20011217

Pos	Part No	SP	UN	Qty	Description	Page No
Common Parts						
010	1255520-0000	D		1	ROLLER	
030	1255522-0000	D		2	FLANGE	
040	1040813-0000	C		2	SLEEVE	
100	312105-0370	-		6	SCREW M6S M6X20 A280	
110	312605-0316	-		6	HEXAGON NUT, M6M M6 A280	
200	90240-0264	C		2	FLANGE BUSHING, 15X17X17 MM	

Pos	Part No	SP	UN	Qty	Description	Page No

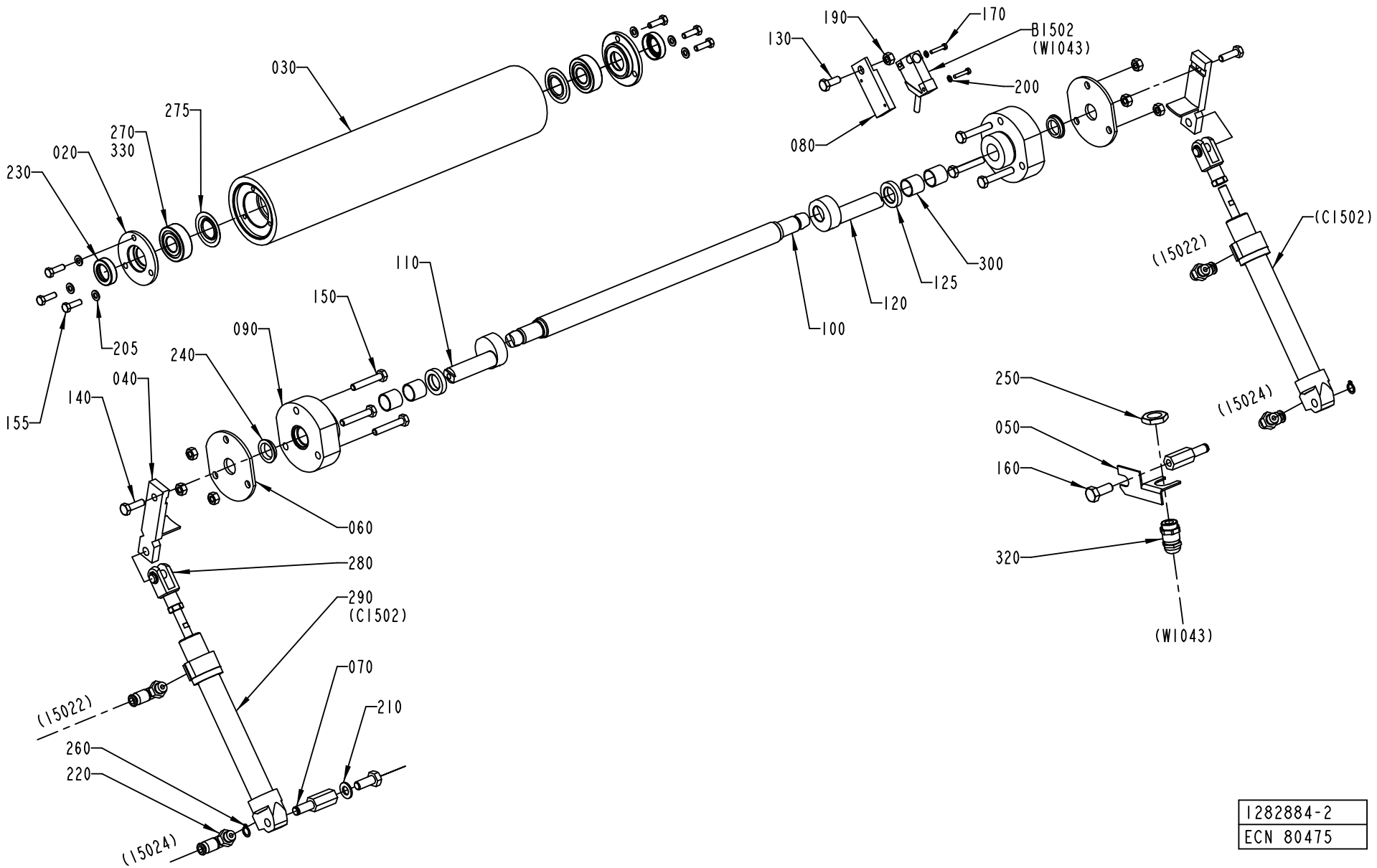

1282884-2
ECN 80475

ECM: 84306 - 20001102
Group number: 1282884-0200
Assembly Drawing: 1282884-2_1_AB

Issue: 20011217

Pos	Part No	SP	UN	Qty	Description	Page No
Common Parts						
020	1348647-0000	D		2	FLANGE	
030	1519773-0000	C		1	ROLLER	
040	1036609-0000	C		2	LEVER	
050	1036610-0000	-		1	BRACKET	
060	1036611-0000	-		2	LID	
070	1036612-0000	C		2	SHAFT	
080	1348984-0000	-		1	BRACKET	
090	1282885-0000	D		2	BEARING COVER	
100	1348417-0000	C		1	SHAFT	
110	1348646-0000	C		1	ECCENTRIC SHAFT	
120	1348645-0000	C		1	ECCENTRIC SHAFT	
125	1348983-0000	-		2	SPACER	
130	312105-0368	-		1	SCREW M6S M6X16 A280	
140	312105-0370	-		2	SCREW M6S M6X20 A280	
150	312109-0376	-		6	SCREW M6S M6X35 A280	
155	312105-0329	-		6	SCREW M6S M5X16 A280	
160	312105-0451	-		2	SCREW M6S 8X20 A280	
170	312125-0228	-		2	SCREW PAN HEAD MCS M3X16 A480	
190	312605-0316	-		7	HEXAGON NUT, M6M M6 A280	
200	315105-0124	-		2	WASHER PLAIN, BRB, 3,2/6,H=0,5	
205	315105-0146	-		6	WASHER PLAIN, BRB, 5,3/10,H=1	
210	315105-0165	-		1	WASHER PLAIN, BRB, 8,4/16,H=1,5	
220	342732-0102	-		4	ELBOW PIPE JOINT	
230	90091-0429	C		2	VARILIP 15X26X7 MM	
240	90091-0357	C		2	VARISEAL ROTO 15X23X4 MM	
250	90099-0104	-		1	NUT PR 15,2 (PG9)	
260	90141-0015	-		2	RETAIN. RING, 8	
270	90214-0098	C		2	BALL BEARING, 15X35X11 MM	
275	90214-0303	C		2	SEALING RING, 18,6X35X2 MM	
280	90239-0532	D		2	ROD END,CLEVIS WITH AXLE M8	
290	90239-0824	C		2	DOUBLE ACTING, MINI-ISO, CYL.20-100	
300	90240-0258	C		4	BUSHING, 15X17X15 MM	
320	90012-0123	-		1	GLAND FITTING	
330	90296-0091	-		1	LUBRICATION GREASE	
B1502	90044-0194	C		1	PROX.SW. IN5329/IN3002-BPKG	

Pos	Part No	SP	UN	Qty	Description	Page No

Machine Type | Group Description | Used-In | Group Number | Page No

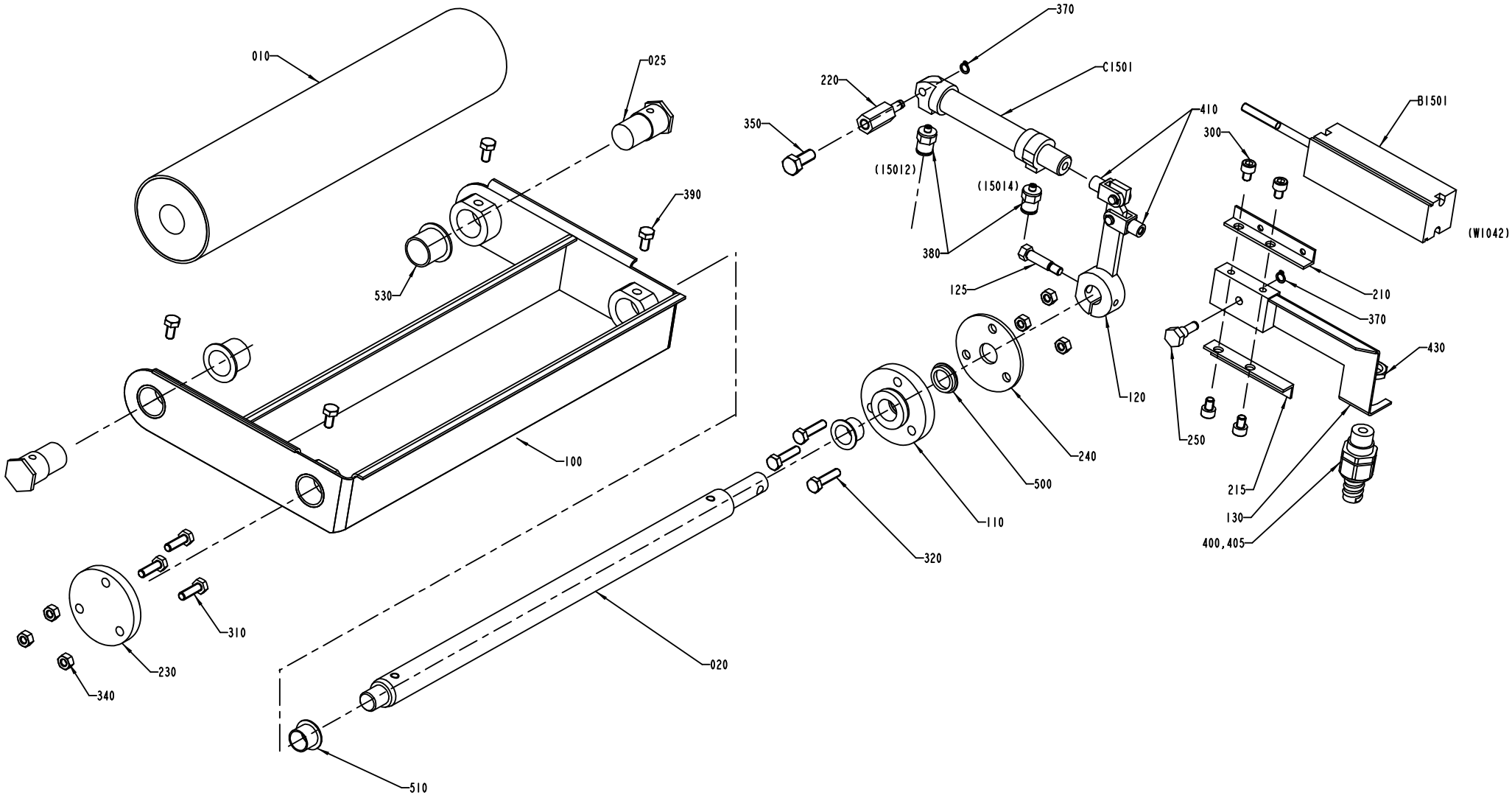
010
025
390
530
100
370
C1501
220
350
410
B1501
300
(15012)
(15014)
380
(W1042)
125
210
370
120
430
240
500
250
110
215
130
320
400,405
230
310
340
020
510

Pos	Part No	SP	UN	Qty	Description	Page No
Common Parts						
010	1255186-0000	D		1	ROLL	
020	1255187-0000	C		1	SHAFT	
025	1255188-0000	C		2	SHAFT	
100	1255189-0000	D		1	BRACKET	
110	1036174-0000	D		1	BEARING COVER	
120	1041687-0000	D		1	LEVER	
125	1041688-0000	-		1	FITTING BOLT	
130	1038362-0000	-		1	BRACKET	
210	1255184-0000	-		1	BRACKET	
215	1255185-0000	-		1	BRACKET	
220	1036178-0000	C		1	SHAFT	
230	1036328-0000	-		1	LID	
240	1036370-0000	-		1	LID	
250	1038363-0000	D		1	SCREW	
300	312115-0362	-		4	SCREW MC6S M6X8 A280	
310	312105-0370	-		3	SCREW M6S M6X20 A280	
320	312105-0372	-		3	SCREW M6S M6X25 A280	
340	312605-0316	-		6	HEXAGON NUT, M6M M6 A280	
350	312105-0451	-		1	SCREW M6S 8X20 A280	
370	315751-0103	-		2	RETAIN. RING, 6	
380	342722-0197	-		2	STRAIGHT COUPLING	
390	312105-0366	-		4	SCREW M6S M6X12 A280	
400	353243-0001	-		1	GLAND,HOSE,EXTENDED,WITHOUT INSERT PG9	
405	353249-0008	-		1	GLAND,INSERT,SINGLE HOLE,EXTEND.4-6,5	
410	90239-0489	C		2	ROD END,CLEVIS WITH AXLE M6	
430	90099-0104	-		1	NUT PR 15,2 (PG9)	
500	90091-0357	C		1	VARISEAL ROTO 15X23X4 MM	
510	90240-0263	C		2	FLANGE BUSHING, 15X17X12 MM	
530	90240-0265	C		2	FLANGE BUSHING, 20X23X21 MM	
B1501	90130-0025	C		1	POTENTIOMETER, 5 KOHM	
C1501	90239-0817	C		1	DOUBLE ACTING, MINI-ISO, CYL.16-50	

Pos	Part No	SP	UN	Qty	Description	Page No

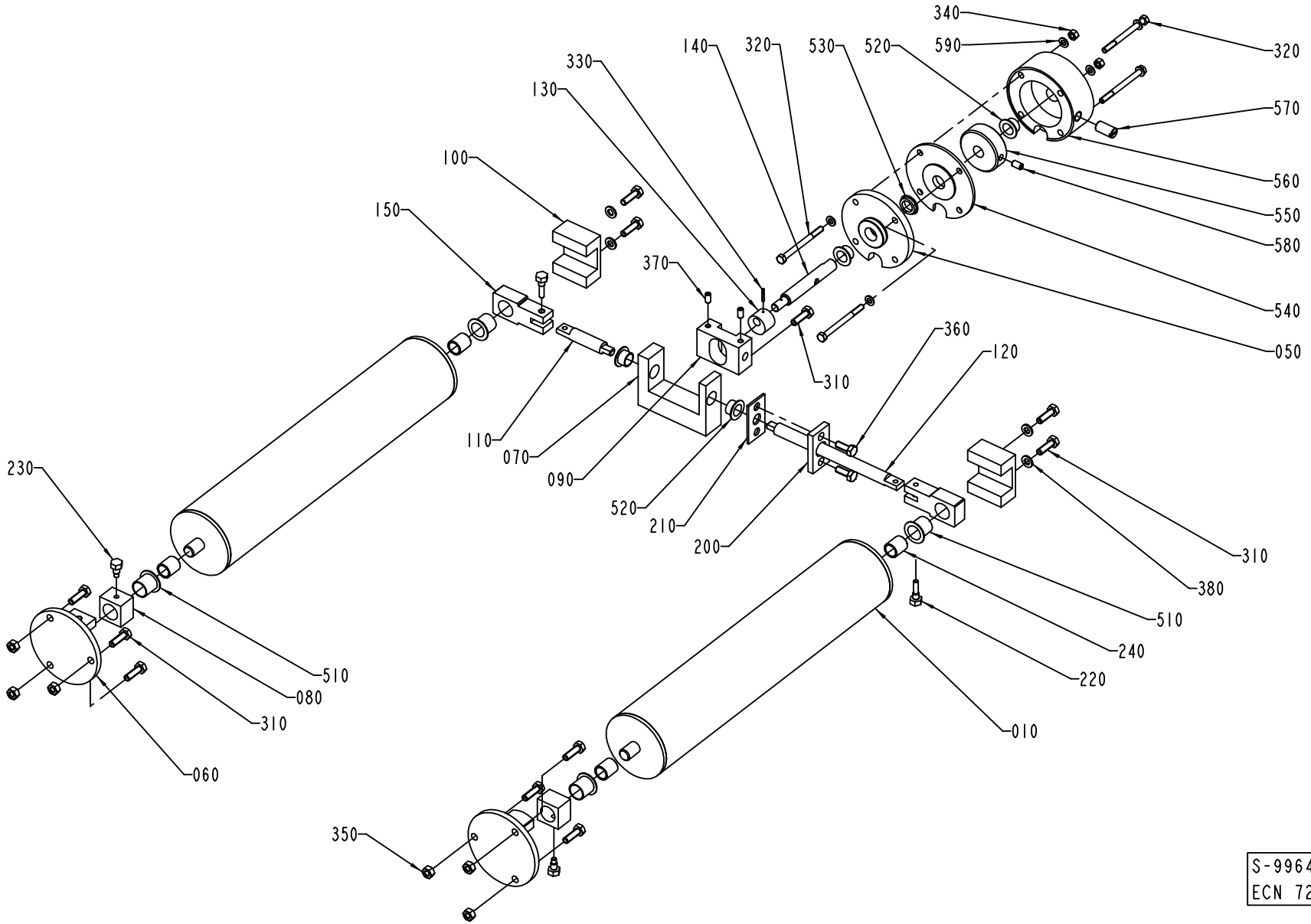

S-996428-3
ECN 72957

Pos	Part No	SP	UN	Qty	Description	Page No
Common Parts						
010	1036249-0000	D		2	ROLL	
050	1036242-0000	D		1	BEARING COVER	
060	1038377-0000	D		2	FLANGE	
070	1129076-0000	-		1	BRACKET	
080	1036247-0000	D		2	SLIDER	
090	1129075-0000	-		1	BLOCKING PIECE	
100	1036251-0000	C		2	GUIDE	
110	1038379-0000	C		1	ROD	
120	1038393-0000	C		1	ROD	
130	1129073-0000	-		1	ECCENTRIC	
140	1254059-0000	-		1	SHAFT	
150	1036257-0000	C		2	GUIDE	
200	1036243-0000	-		1	WASHER	
210	1036244-0000	C		1	GASKET	
220	1036248-0000	C		2	SCREW	
230	1036252-0000	C		2	SCREW	
240	1040813-0000	C		4	SLEEVE	
310	312105-0370	-		11	SCREW M6S M6X20 A280	
320	312105-0343	-		4	SCREW M6S M5X60 A280	
330	311112-0167	-		1	PIN, STRAIGHT SLOTTED SPRING FRP 2X14	
340	312605-0314	-		2	HEXAGON NUT, M6M M5 A280	
350	312605-0316	-		6	HEXAGON NUT, M6M M6 A280	
360	312105-0368	-		2	SCREW M6S M6X16 A280	
370	312318-0325	-		2	SCREW HEX.SOCK.SET CUP P.MSK6SS5X10 SS	
380	315105-0153	-		4	WASHER PLAIN, BRB, 6,4/12,H=1,5	
510	90240-0264	C		4	FLANGE BUSHING, 15X17X17 MM	
520	90240-0261	C		4	FLANGE BUSHING, 12X14X9 MM	
530	90091-0355	C		1	VARISEAL ROTO 12X20X3,6 MM	
540	1254057-0000	-		1	LID	
550	1254060-0000	-		1	WHEEL	
560	1254058-0000	-		1	HOUSE	
570	90287-0106	-		1	SCREW SPRINGLOAD. SLOTTED HEAD M10X21	
580	312318-0364	-		1	SCREW HEX.SOCK.SET CUP P.MSK6SS6X10 SS	
590	315105-0146	-		6	WASHER PLAIN, BRB, 5,3/10,H=1	

Pos	Part No	SP	UN	Qty	Description	Page No

Machine Type | Group Description | Used-In | Group Number | Page No

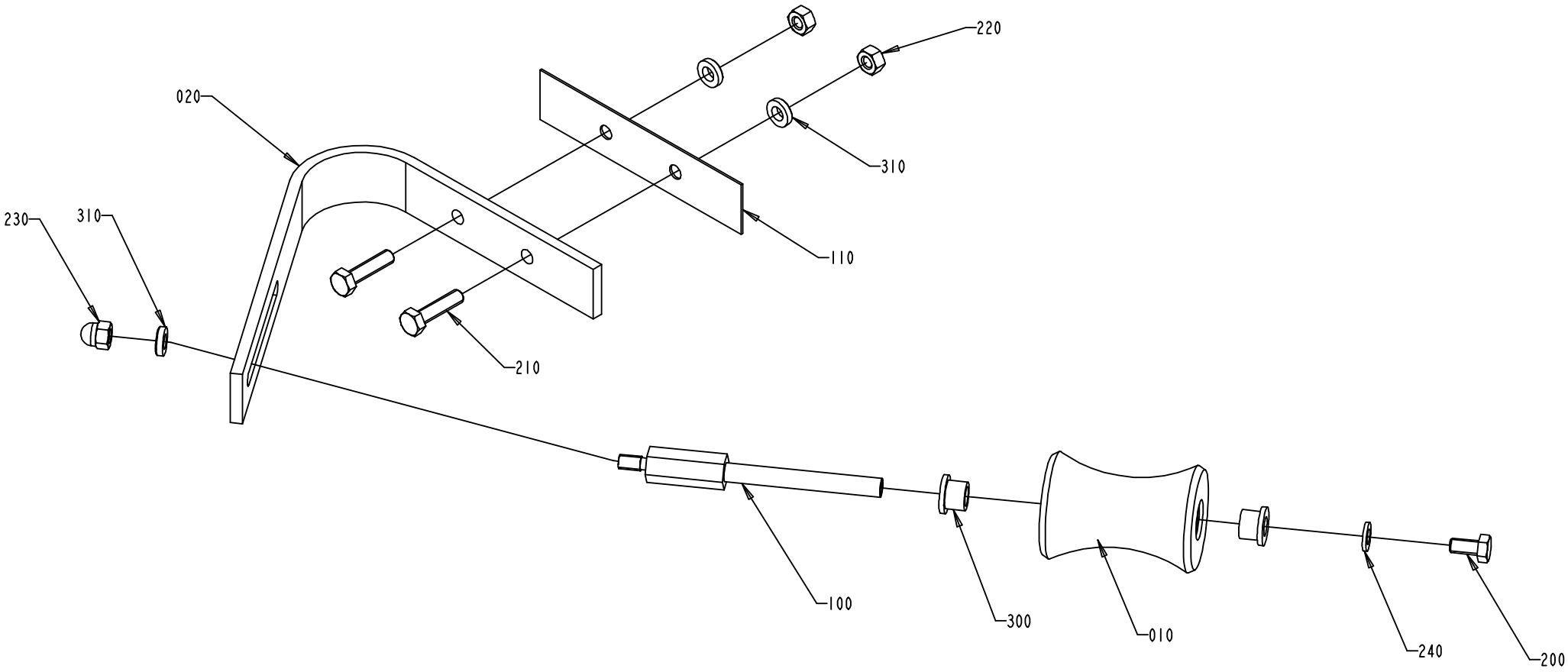
220
020
310
230
310
110
210
100
300
010
240
200

Pos	Part No	SP	UN	Qty	Description	Page No
TBA 0200S						
020	1334496-0000	A		2	BRACKET	
220	312605-0316	-		4	HEXAGON NUT, M6M M6 A280	
230	312705-0316	-		2	NUT HEX. DOMED CAP MHM-6 M6 A280	
310	315115-0153	-		6	WASHER PLAIN, TBRB 6,4/12 H=3	
TBA 0500S OR TBA 0500B OR TBA 1000S OR TBA 1000SQ OR TBA 1000B OR TBA 0200B OR TBA 0250B OR TPA 1000S OR TBA 1500S OR TPA 0330SQ						
020	1346355-0000	A		1	BRACKET	
025	1346354-0000	A		1	BRACKET	
030	1350876-0000	-		2	PLATE	
230	312705-0316	-		6	NUT HEX. DOMED CAP MHM-6 M6 A280	
Common Parts						
010	1478359-0000	A		2	ROLLER	
100	458791-0000	A		2	SHAFT	
110	1036694-0000	A		2	GASKET	
200	312105-0366	-		2	SCREW M6S M6X12 A280	
210	312105-0372	-		4	SCREW M6S M6X25 A280	
240	315105-0153	-		4	WASHER PLAIN, BRB, 6,4/12,H=1,5	
300	90240-0172	A		4	FLANGE BUSHING,8X12X10 MM NFB	

Pos	Part No	SP	UN	Qty	Description	Page No

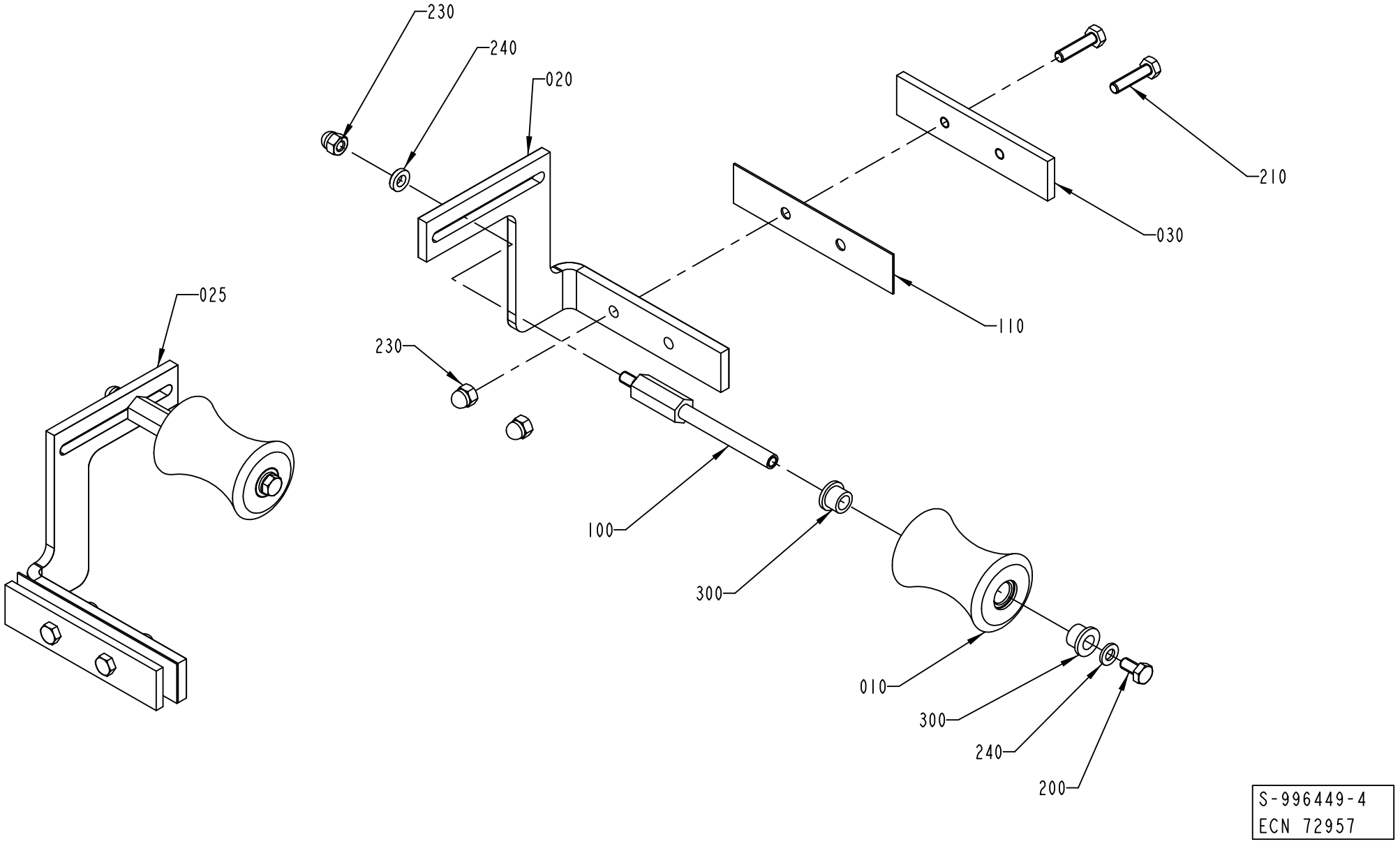
230
240
020
210
030
025
110
230
100
300
010
300
240
200
S-996449-4
ECN 72957

Pos	Part No	SP	UN	Qty	Description	Page No
TBA 0200S						
020	1334496-0000	A		2	BRACKET	
220	312605-0316	-		4	HEXAGON NUT, M6M M6 A280	
230	312705-0316	-		2	NUT HEX. DOMED CAP MHM-6 M6 A280	
310	315115-0153	-		6	WASHER PLAIN, TBRB 6,4/12 H=3	
TBA 0500S OR TBA 0500B OR TBA 1000S OR TBA 1000SQ OR TBA 1000B OR TBA 0200B OR TBA 0250B OR TPA 1000S OR TBA 1500S OR TPA 0330SQ						
020	1346355-0000	A		1	BRACKET	
025	1346354-0000	A		1	BRACKET	
030	1350876-0000	-		2	PLATE	
230	312705-0316	-		6	NUT HEX. DOMED CAP MHM-6 M6 A280	
Common Parts						
010	1478359-0000	A		2	ROLLER	
100	458791-0000	A		2	SHAFT	
110	1036694-0000	A		2	GASKET	
200	312105-0366	-		2	SCREW M6S M6X12 A280	
210	312105-0372	-		4	SCREW M6S M6X25 A280	
240	315105-0153	-		4	WASHER PLAIN, BRB, 6,4/12,H=1,5	
300	90240-0172	A		4	FLANGE BUSHING,8X12X10 MM NFB	

Pos	Part No	SP	UN	Qty	Description	Page No

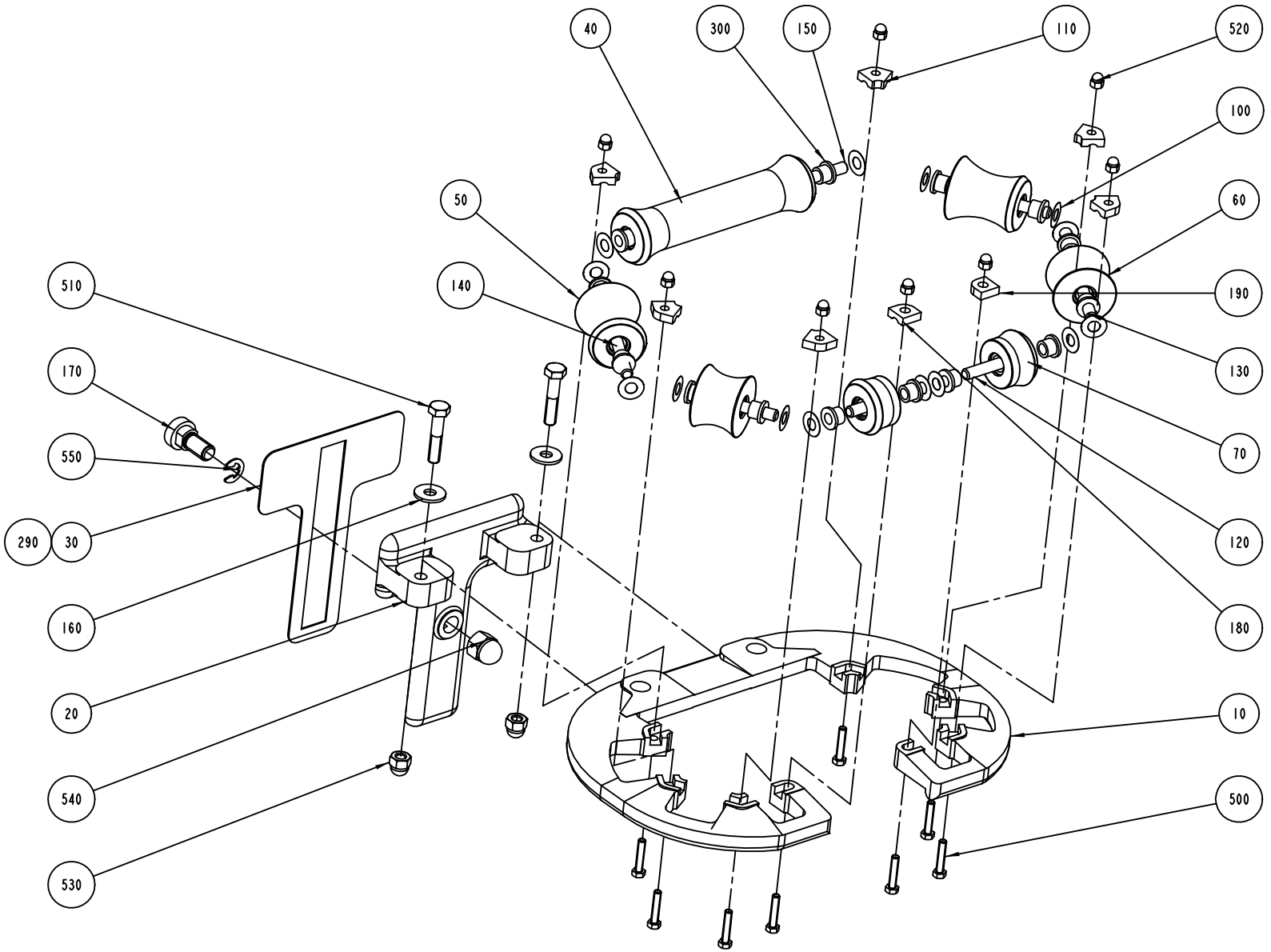

S-996392-I
ECN 72079

ECM: 92147 - 20010709
Group number: 996392-0200
Assembly Drawing: 996392-1_1_AC

Issue: 20011217

Pos	Part No	SP	UN	Qty	Description	Page No
TBA 0200B OR TBA 0250B						
010	1254083-0000	-		1	FORMING RING	
020	1036286-0000	-		1	ANGLE BRACKET	
030	1036352-0000	B		1	GASKET	
040	1254084-0000	A		2	ROLLER	
050	1254085-0000	A		1	ROLLER	
100	2033-0011	A		6	WASHER	
110	469044-0000	A		2	LOCK PLATE	
120	752186-0006	A		2	SHAFT	
150	752186-0017	A		1	SHAFT	
160	1036353-0000	-		2	WASHER	
180	1254086-0000	A		1	LOCK PLATE	
190	1254087-0000	A		1	LOCK PLATE	
300	90240-0172	A		6	FLANGE BUSHING,8X12X10 MM NFB	
500	312105-0372	-		4	SCREW M6S M6X25 A280	
510	312109-0459	-		2	SCREW M6S M8X40 A280	
520	312705-0316	-		4	NUT HEX. DOMED CAP MHM-6 M6 A280	
530	312705-0318	-		2	NUT HEX. DOMED CAP MHM-6 M8 A280	
TBA 0200S						
020	1347812-0000	-		1	LID	
030	1348073-0000	B		1	GASKET	
TBA 0500B OR TBA 1000B OR TBA 1500S						
010	1255103-0000	-		1	FORMING RING	
020	1036286-0000	-		1	ANGLE BRACKET	
030	1036352-0000	B		1	GASKET	
040	1255180-0000	A		1	ROLLER	
050	1255110-0000	A		2	ROLLER	
060	1255179-0000	A		2	ROLLER	
070	1478360-0000	A		2	ROLLER	
100	2033-0011	A		14	WASHER	
110	490538-0000	A		6	LOCKING PLATE	
120	263655-0002	A		2	SHAFT	
130	752186-0004	A		2	SHAFT	
140	752186-0016	A		2	SHAFT	
150	752186-0017	A		1	SHAFT	
160	1036353-0000	-		2	WASHER	
180	1036359-0000	A		1	LOCK PLATE	
190	1038273-0000	A		1	LOCK PLATE	
300	90240-0172	A		14	FLANGE BUSHING,8X12X10 MM NFB	
500	312105-0333	-		8	SCREW M6S M5X25 A280	
510	312105-0459	-		2	SCREW M6S M8X40 A280	
520	312705-0314	-		8	NUT HEX. DOMED CAP MHM-6 M5 A280	
530	312705-0318	-		2	NUT HEX. DOMED CAP MHM-6 M8 A280	
TBA 0500S						
010	1511718-0000	-		1	FORMING RING	
020	1036286-0000	-		1	ANGLE BRACKET	
030	1036352-0000	B		1	GASKET	
040	1511856-0000	A		1	ROLLER	
050	1511855-0000	A		2	ROLLER	
060	1511854-0000	A		2	ROLLER	
070	1511853-0000	A		2	ROLLER	
100	2033-0011	A		14	WASHER	
110	1512111-0000	A		6	LOCK PLATE	
120	752186-0003	A		2	SHAFT	
130	752186-0012	A		2	SHAFT	
140	263655-0023	A		2	SHAFT	
150	752186-0018	A		1	SHAFT	
160	1036353-0000	-		2	WASHER	
180	1036359-0000	A		1	LOCK PLATE	
190	1038273-0000	A		1	LOCK PLATE	
300	90240-0172	A		14	FLANGE BUSHING,8X12X10 MM NFB	
500	312105-0333	-		8	SCREW M6S M5X25 A280	
510	312105-0460	-		2	SCREW M6S M8X45 A280	
520	312705-0314	-		8	NUT HEX. DOMED CAP MHM-6 M5 A280	
530	312705-0318	-		2	NUT HEX. DOMED CAP MHM-6 M8 A280	
TBA 1000S						
010	1282649-0000	-		1	FORMING RING	
020	1036286-0000	-		1	ANGLE BRACKET	
030	1036352-0000	B		1	GASKET	
040	569095-0000	A		1	ROLLER	
050	569094-0000	A		2	ROLLER	
060	1041312-0000	A		2	ROLLER	
070	1478841-0000	A		2	ROLLER	
100	2033-0011	A		14	WASHER	
110	490538-0000	A		6	LOCKING PLATE	
120	263655-0002	A		2	SHAFT	
130	752186-0003	A		2	SHAFT	
140	263655-0012	A		2	SHAFT	
150	263655-0024	A		1	SHAFT	
160	1036353-0000	-		2	WASHER	

Machine Type Group Description Used-In Group Number Page No

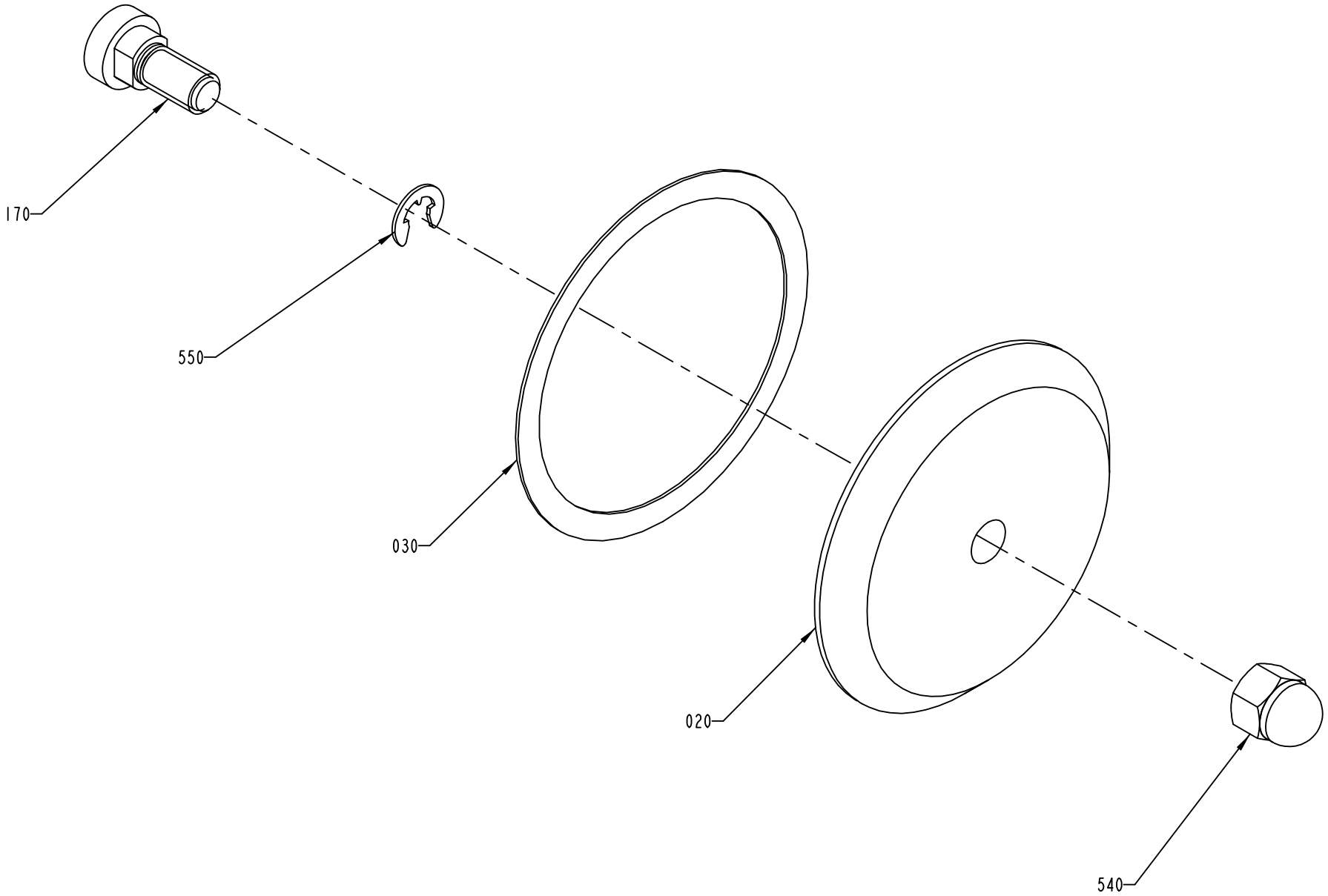
170
550
030
020
540

Pos	Part No	SP	UN	Qty	Description	Page No
TBA 1000S (Cont'd)						
180	469081-0000	A		2	LOCK PLATE	
300	90240-0172	A		14	FLANGE BUSHING,8X12X10 MM NFB	
500	312105-0333	-		8	SCREW M6S M5X25 A280	
510	312105-0460	-		2	SCREW M6S M8X45 A280	
520	312705-0314	-		8	NUT HEX. DOMED CAP MHM-6 M5 A280	
530	312705-0318	-		2	NUT HEX. DOMED CAP MHM-6 M8 A280	
TBA 1000SQ						
010	1498041-0000	-		1	FORMING RING	
020	1036286-0000	-		1	ANGLE BRACKET	
030	1036352-0000	B		1	GASKET	
040	1490439-0000	A		1	ROLLER	
050	1490438-0000	A		2	ROLLER	
060	1490440-0000	A		2	ROLLER	
070	1490441-0000	A		2	ROLLER	
100	2033-0011	A		14	WASHER	
110	490538-0000	A		6	LOCKING PLATE	
120	263655-0002	A		2	SHAFT	
130	752186-0003	A		2	SHAFT	
140	263655-0012	A		2	SHAFT	
150	263655-0024	A		1	SHAFT	
160	1036353-0000	-		2	WASHER	
180	469081-0000	A		2	LOCK PLATE	
300	90240-0172	A		14	FLANGE BUSHING,8X12X10 MM NFB	
500	312105-0333	-		8	SCREW M6S M5X25 A280	
510	312105-0460	-		2	SCREW M6S M8X45 A280	
520	312705-0314	-		8	NUT HEX. DOMED CAP MHM-6 M5 A280	
530	312705-0318	-		2	NUT HEX. DOMED CAP MHM-6 M8 A280	
TPA 0330SQ						
010	1254083-0000	-		1	FORMING RING	
020	1036286-0000	-		1	ANGLE BRACKET	
030	1036352-0000	B		1	GASKET	
040	1532983-0000	A		2	ROLLER	
050	1532982-0000	A		1	ROLLER	
100	2033-0011	A		6	WASHER	
110	469044-0000	A		2	LOCK PLATE	
120	752186-0006	A		2	SHAFT	
150	752186-0017	A		1	SHAFT	
160	1036353-0000	-		2	WASHER	
180	1254086-0000	A		1	LOCK PLATE	
190	1254087-0000	A		1	LOCK PLATE	
300	90240-0172	A		6	FLANGE BUSHING,8X12X10 MM NFB	
500	312105-0372	-		4	SCREW M6S M6X25 A280	
510	312109-0459	-		2	SCREW M6S M8X40 A280	
520	312705-0316	-		4	NUT HEX. DOMED CAP MHM-6 M6 A280	
530	312705-0318	-		2	NUT HEX. DOMED CAP MHM-6 M8 A280	
TPA 1000S						
010	1255795-0000	-		1	FORMING RING	
020	1036286-0000	-		1	ANGLE BRACKET	
030	1036352-0000	B		1	GASKET	
040	752583-0000	A		1	ROLLER	
050	752584-0000	A		2	ROLLER	
060	1317950-0000	A		2	ROLLER	
070	1478842-0000	A		2	ROLLER	
100	2033-0008	A		14	WASHER	
110	1255885-0000	A		6	LOCK PLATE	
120	263655-0021	A		2	SHAFT	
130	263655-0012	A		2	SHAFT	
140	263655-0023	A		2	SHAFT	
150	263655-0024	A		1	SHAFT	
160	1036353-0000	-		2	WASHER	
180	1350883-0000	A		1	LOCK PLATE	
190	1350884-0000	A		1	LOCK PLATE	
300	90240-0172	A		14	FLANGE BUSHING,8X12X10 MM NFB	
500	312105-0333	-		8	SCREW M6S M5X25 A280	
510	312105-0459	-		2	SCREW M6S M8X40 A280	
520	312705-0314	-		8	NUT HEX. DOMED CAP MHM-6 M5 A280	
530	312705-0318	-		2	NUT HEX. DOMED CAP MHM-6 M8 A280	
Common Parts						
170	1036354-0000	B		1	SCREW	
290	90153-0016	-		1	ADHESIVE TUBE 100G RHODORSIL CAF 3	
540	312705-0322	-		1	NUT HEX. DOMED CAP MHM-6 M12 A2	
550	315755-0110	-		1	LOCKING WASHER 9	

Machine Type | Group Description | Used-In | Group Number | Page No

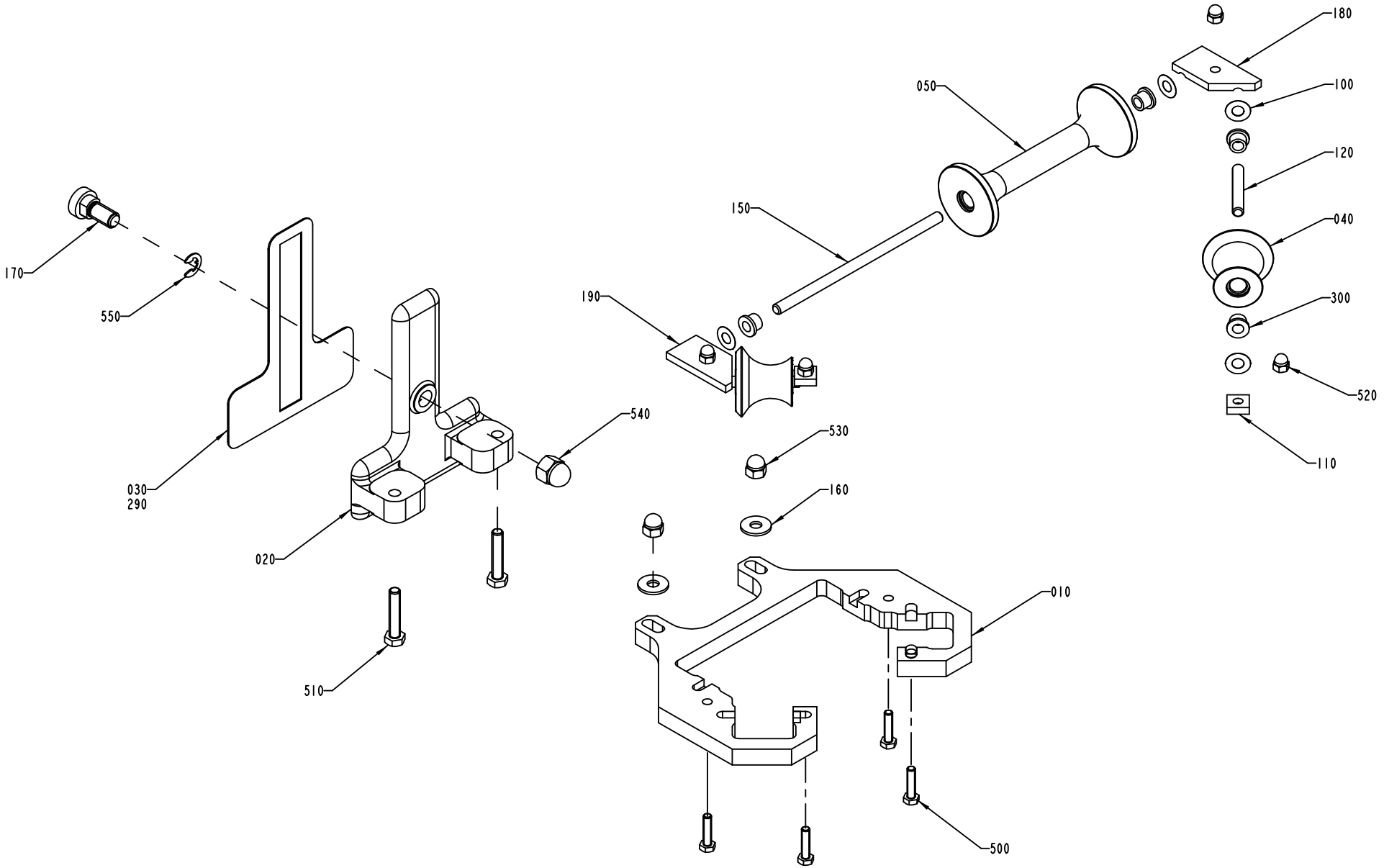
180
100
050
120
150
040
190
300
520
530
540
110
160
170
550
030
290
020
010
510
500

Pos	Part No	SP	UN	Qty	Description	Page No	Pos	Part No	SP	UN	Qty	Description	Page No

SEE PREVIOUS LISTS PAGES: 35, 37.

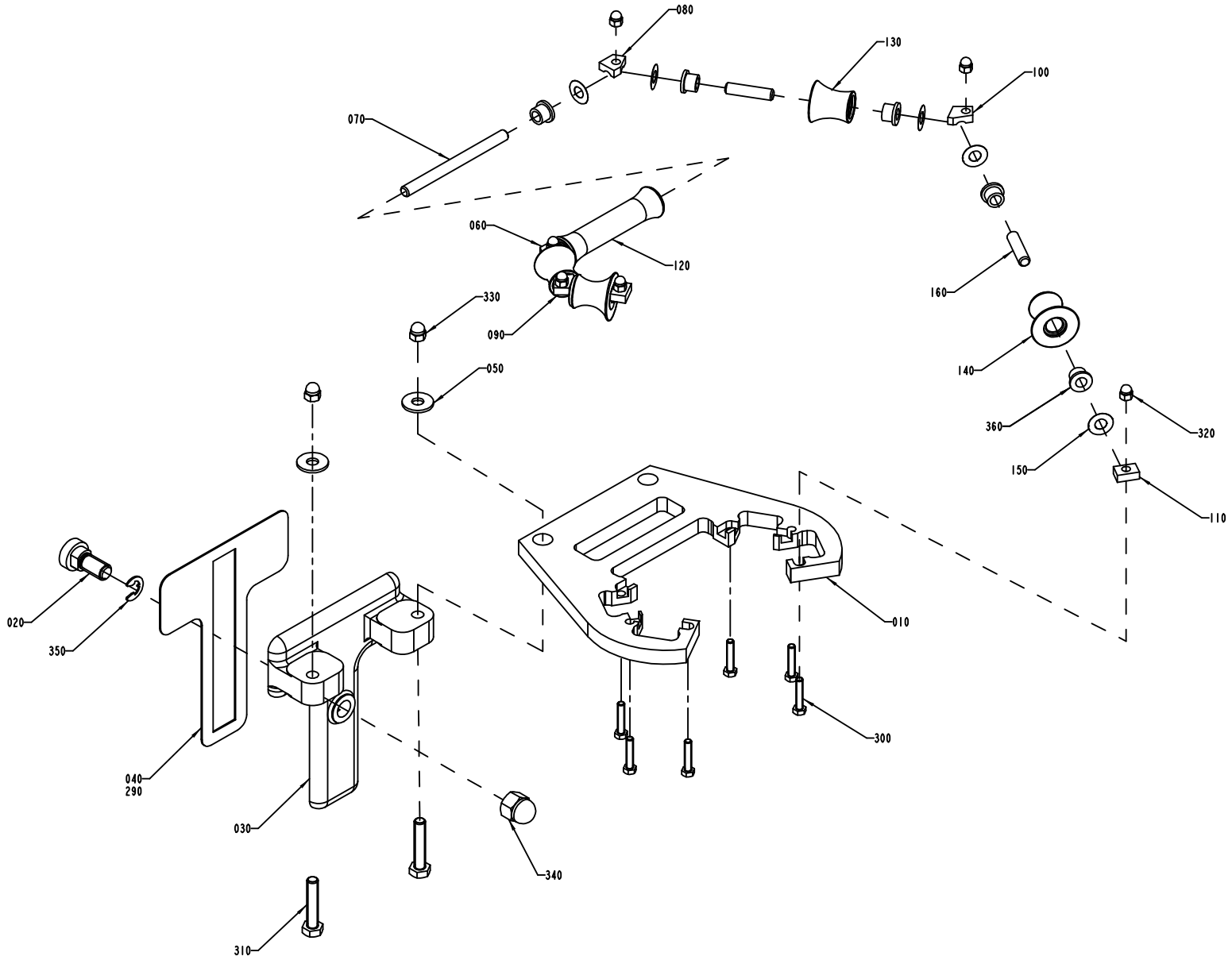
080
130
100
070
060
120
160
330
090
050
140
360
320
150
110
020
350
010
040
290
300
030
340
310

ECM: 92146 - 20010709
Group number: 1035113-0100
Assembly Drawing: 1035113-2_1_AC

Issue: 20011217

Pos	Part No	SP	UN	Qty	Description	Page No
TBA 0200S						
010	1296272-0000	-		1	UPPER TUBE SUPPORT	
030	1036286-0000	-		1	ANGLE BRACKET	
040	1036352-0000	B		1	GASKET	
050	315125-0165	-		2	WASHER PLAIN ROUND,CHAMF. 8,4/26, H=5	
060	1296273-0000	A		1	LOCKING PLATE	
070	1296274-0000	A		1	SHAFT	
080	1296275-0000	A		1	LOCKING PLATE	
090	1296276-0000	A		1	LOCKING PLATE	
100	1296277-0000	A		1	LOCKING PLATE	
110	1296278-0000	A		2	LOCKING PLATE	
120	1296279-0000	A		1	ROLLER	
130	1296280-0000	A		2	ROLLER	
140	1296281-0000	A		2	ROLLER	
150	2033-0011	A		10	WASHER	
160	752186-0002	A		4	SHAFT	
290	90153-0016	-		1	ADHESIVE TUBE 100G RHODORSIL CAF 3	
300	312105-0333	-		6	SCREW M6S M5X25 A280	
310	312109-0459	-		2	SCREW M6S M8X40 A280	
320	312705-0314	-		6	NUT HEX. DOMED CAP MHM-6 M5 A280	
330	312705-0318	-		2	NUT HEX. DOMED CAP MHM-6 M8 A280	
360	90240-0172	A		10	FLANGE BUSHING,8X12X10 MM NFB	
TBA 0500S OR TBA 0500B OR TBA 1000S OR TBA 1000SQ OR TBA 1000B OR TBA 0200B OR TBA 0250B OR TPA 1000S OR TBA 1500S OR TPA 0330SQ						
170	1036325-0000	-		1	LID	
180	1036327-0000	B		1	GASKET	
Common Parts						
020	1036354-0000	A		1	SCREW	
340	312705-0322	-		1	NUT HEX. DOMED CAP MHM-6 M12 A2	
350	315755-0110	-		1	LOCKING WASHER 9	

Pos	Part No	SP	UN	Qty	Description	Page No

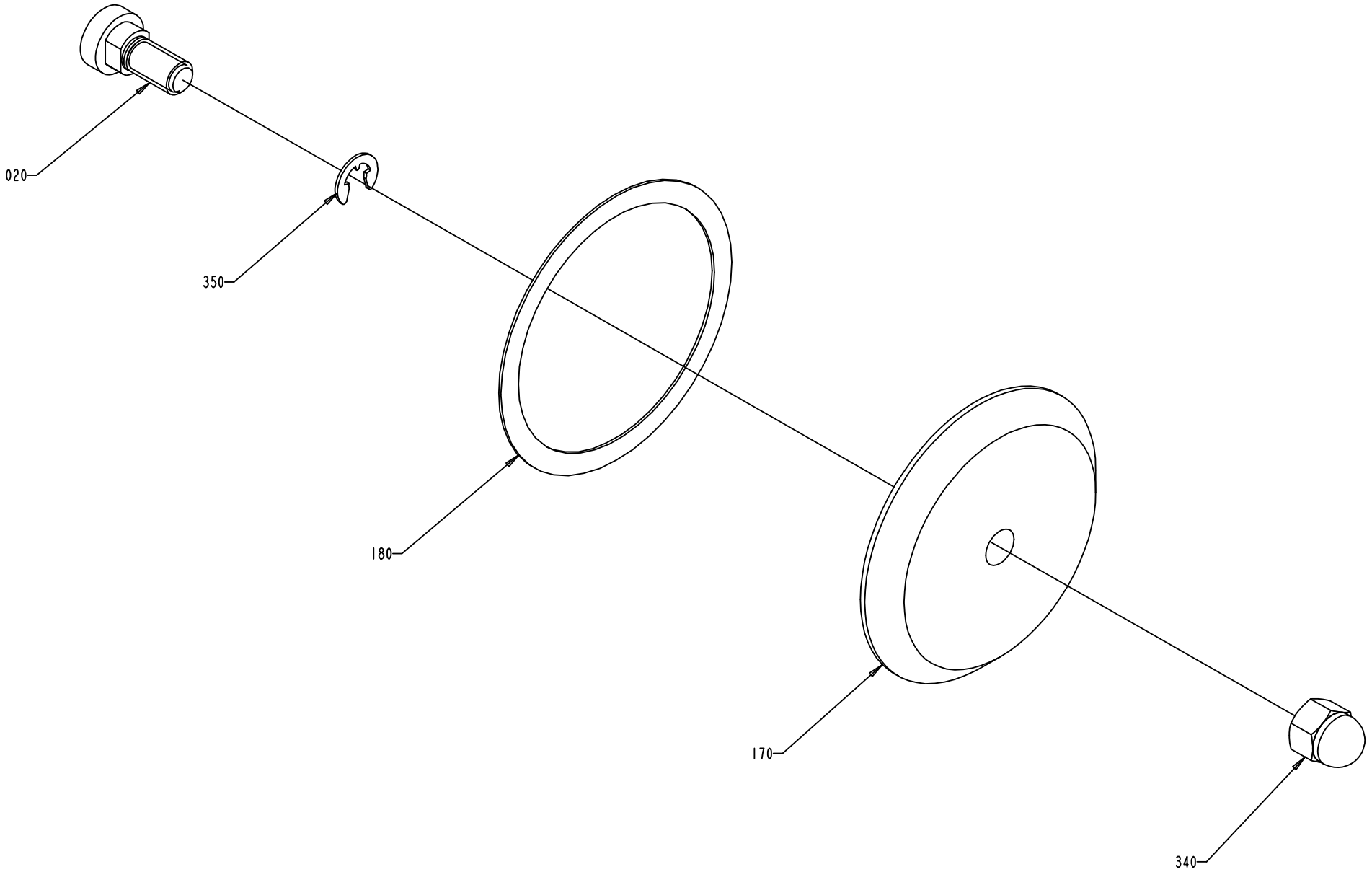
020
350
180
170
340

ECM: 92146 - 20010709
Group number: 1035113-0100
Assembly Drawing: 1035113-3_1_AB

Issue: 20011217

Pos	Part No	SP	UN	Qty	Description	Page No
TBA 0200S						
010	1296272-0000	-		1	UPPER TUBE SUPPORT	
030	1036286-0000	-		1	ANGLE BRACKET	
040	1036352-0000	B		1	GASKET	
050	315125-0165	-		2	WASHER PLAIN ROUND,CHAMF. 8,4/26, H=5	
060	1296273-0000	A		1	LOCKING PLATE	
070	1296274-0000	A		1	SHAFT	
080	1296275-0000	A		1	LOCKING PLATE	
090	1296276-0000	A		1	LOCKING PLATE	
100	1296277-0000	A		1	LOCKING PLATE	
110	1296278-0000	A		2	LOCKING PLATE	
120	1296279-0000	A		1	ROLLER	
130	1296280-0000	A		2	ROLLER	
140	1296281-0000	A		2	ROLLER	
150	2033-0011	A		10	WASHER	
160	752186-0002	A		4	SHAFT	
290	90153-0016	-		1	ADHESIVE TUBE 100G RHODORSIL CAF 3	
300	312105-0333	-		6	SCREW M6S M5X25 A280	
310	312109-0459	-		2	SCREW M6S M8X40 A280	
320	312705-0314	-		6	NUT HEX. DOMED CAP MHM-6 M5 A280	
330	312705-0318	-		2	NUT HEX. DOMED CAP MHM-6 M8 A280	
360	90240-0172	A		10	FLANGE BUSHING,8X12X10 MM NFB	
TBA 0500S OR TBA 0500B OR TBA 1000S OR TBA 1000SQ OR TBA 1000B OR TBA 0200B OR TBA 0250B OR TPA 1000S OR TBA 1500S OR TPA 0330SQ						
170	1036325-0000	-		1	LID	
180	1036327-0000	B		1	GASKET	
Common Parts						
020	1036354-0000	A		1	SCREW	
340	312705-0322	-		1	NUT HEX. DOMED CAP MHM-6 M12 A2	
350	315755-0110	-		1	LOCKING WASHER 9	

Pos	Part No	SP	UN	Qty	Description	Page No

Machine Type | Group Description | Used-In | Group Number | Page No

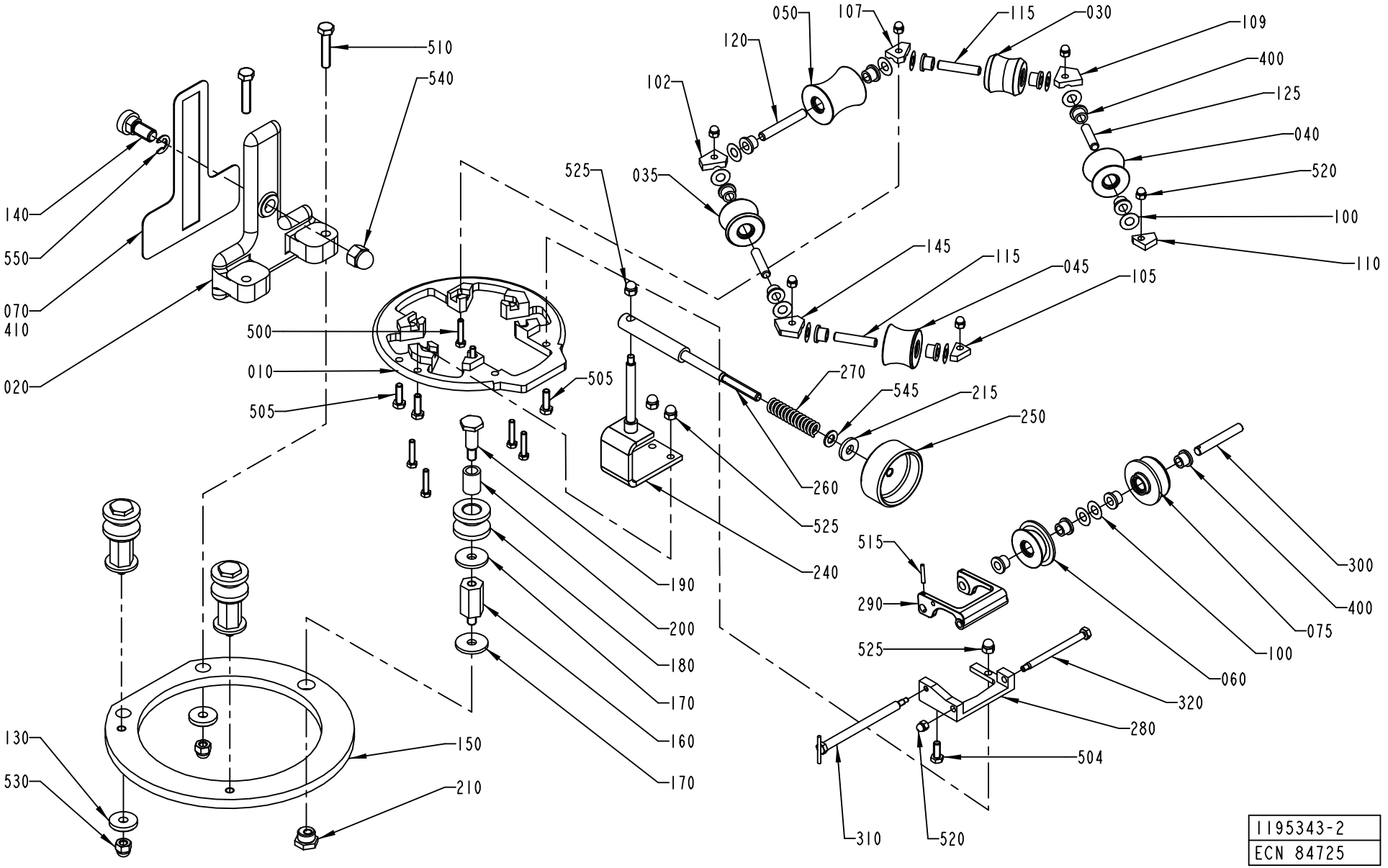
510
540
140
550
070
410
020
500
010
505
505
525
035
050
107
115
030
109
120
102
400
125
040
520
100
110
145
115
045
105
270
545
215
250
260
525
240
190
200
180
170
160
170
515
290
525
300
400
075
100
060
320
280
504
310
520
130
530
150
210
1195343-2
ECN 84725

ECM: 92154 - 20010709
Group number: 1195343-0300
Assembly Drawing: 1195343-2_1_AC

Issue: 20011217

Pos	Part No	SP	UN	Qty	Description	Page No
TBA 0200B OR TBA 0250B						
010	1255010-0000	-		1	UPPER FORMING RING	
030	1549115-0000	A		1	ROLLER	
035	1549110-0000	A		1	ROLLER	
040	1549112-0000	A		1	ROLLER	
045	1549113-0000	A		1	ROLLER	
050	1549114-0000	A		1	ROLLER	
060	1549109-0000	A		1	ROLLER	
075	1549111-0000	A		1	ROLLER	
090	2033-0007	A		1	WASHER	
100	2033-0011	A		12	WASHER	
102	456183-0000	A		1	LOCKING PLATE	
105	456184-0000	A		1	LOCKING PLATE	
107	1255016-0000	A		1	LOCKING PLATE	
109	1255017-0000	A		1	LOCKING PLATE	
110	1038411-0000	A		1	LOCKING PLATE	
115	752186-0004	A		1	SHAFT	
120	752186-0005	A		3	SHAFT	
125	752186-0007	A		2	SHAFT	
145	1038412-0000	A		1	LOCKING PLATE	
150	1255011-0000	-		1	RING	
240	1255012-0000	-		1	GUIDE PIN	
260	1195084-0000	-		1	ROD	
500	312105-0372	-		4	SCREW M6S M6X25 A280	
505	312105-0368	-		2	SCREW M6S M6X16 A280	
510	312105-0378	-		2	SCREW M6S M6X40 A280	
520	312705-0314	-		2	NUT HEX. DOMED CAP MHM-6 M5 A280	
525	312705-0316	-		7	NUT HEX. DOMED CAP MHM-6 M6 A280	
TBA 0200S						
010	1260808-0000	-		1	UPPER FORMING RING	
030	1317940-0000	A		1	ROLLER	
035	1317936-0000	A		1	ROLLER	
040	1317942-0000	A		1	ROLLER	
045	1317930-0000	A		1	ROLLER	
050	1317938-0000	A		1	GUIDE ROLLER	
060	1334049-0000	A		1	GUIDE ROLLER	
075	1334050-0000	A		1	GUIDE ROLLER	
100	2033-0011	A		14	WASHER	
102	456869-0000	A		1	LOCKING PLATE	
105	1296051-0000	A		1	LOCKING PLATE	
107	1296053-0000	A		1	LOCKING PLATE	
109	1296052-0000	A		1	LOCKING PLATE	
110	1296050-0000	A		1	LOCKING PLATE	
115	752186-0003	A		3	SHAFT	
120	752186-0006	A		1	SHAFT	
125	752186-0002	A		1	SHAFT	
145	1037842-0000	A		1	LOCKING PLATE	
150	1195082-0000	-		1	RING	
240	1195083-0000	-		1	GUIDE PIN	
260	1195084-0000	-		1	ROD	
280	1260809-0000	-		1	HOLDER	
290	1260810-0000	-		1	BRACKET	
300	1282653-0000	A		1	SHAFT	
310	1282654-0000	A		1	SCREW	
320	1282655-0000	A		1	SCREW	
500	312105-0333	-		6	SCREW M6S M5X25 A280	
504	312105-0368	-		1	SCREW M6S M6X16 A280	
505	312105-0370	-		3	SCREW M6S M6X20 A280	
510	312109-0459	-		2	SCREW M6S M8X40 A280	
515	311103-0238	-		1	PARALLELL PIN, M6, 3X20 MM	
520	312705-0314	-		7	NUT HEX. DOMED CAP MHM-6 M5 A280	
525	312705-0316	-		4	NUT HEX. DOMED CAP MHM-6 M6 A280	
TBA 0500B OR TBA 1000B OR TBA 1500S						
010	1195338-0000	-		1	UPPER FORMING RING	
030	1195350-0000	A		4	ROLLER	
040	1195351-0000	A		1	ROLLER	
050	1346325-0000	A		1	ROLLER	
060	1282650-0000	A		1	GUIDE ROLLER	
100	2033-0011	A		14	WASHER	
110	490538-0000	A		6	LOCKING PLATE	
120	752186-0015	A		6	SHAFT	
150	1195340-0000	-		1	RING	
240	1195331-0000	-		1	GUIDE PIN	
260	1195339-0000	-		1	ROD	
500	312105-0333	-		6	SCREW M6S M5X25 A280	
505	312105-0370	-		2	SCREW M6S M6X20 A280	
510	312105-0462	-		2	SCREW M6S M8X55 A280	
520	312705-0314	-		4	NUT HEX. DOMED CAP MHM-6 M5 A280	
525	312705-0316	-		3	NUT HEX. DOMED CAP MHM-6 M6 A280	
TBA 0500S						
010	1511034-0000	-		1	UPPER FORMING RING	

Machine Type | Group Description | Used-In | Group Number | Page No

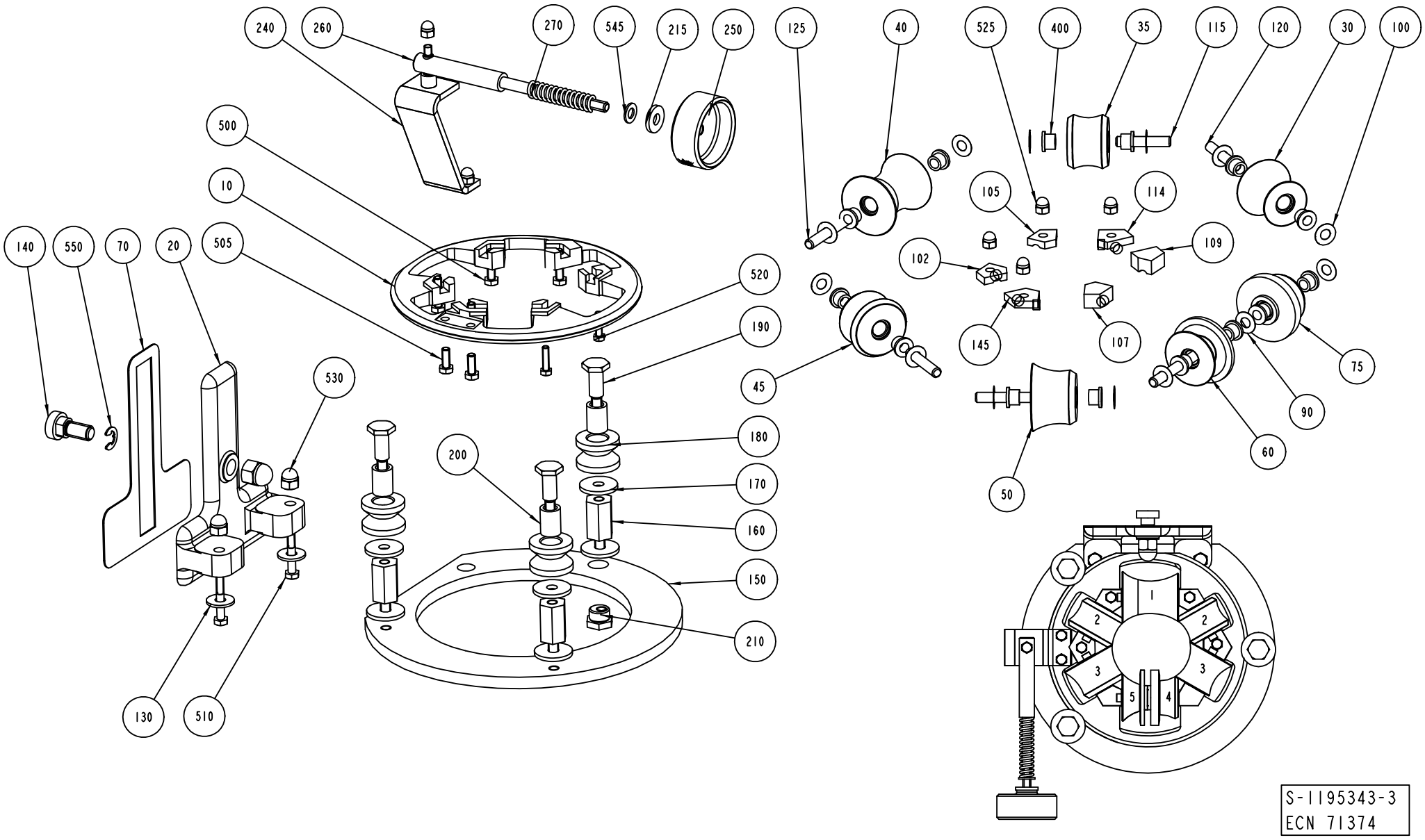
240
260
270
545
215
250
125
40
525
400
35
115
120
30
100
500
10
105
114
109
102
140
550
70
20
505
520
190
145
107
75
530
45
90
60
50
200
180
170
160
150
210
130
510
1
2
2
3
3
5
4
S-1195343-3
ECN 71374

Pos	Part No	SP	UN	Qty	Description	Page No
TBA 0500S (Cont'd)						
030	1511005-0000	A		4	ROLLER	
040	1511031-0000	A		1	ROLLER	
050	1511033-0000	A		1	ROLLER	
060	1511032-0000	A		1	ROLLER	
100	2033-0008	A		14	WASHER	
110	490538-0000	A		6	LOCKING PLATE	
120	569100-0000	A		6	SHAFT	
150	1195340-0000	-		1	RING	
240	1255882-0000	-		1	GUIDE PIN	
260	1255920-0000	-		1	ROD	
500	312105-0372	-		6	SCREW M6S M6X25 A280	
505	312105-0372	-		2	SCREW M6S M6X25 A280	
510	312105-0462	-		2	SCREW M6S M8X55 A280	
525	312705-0316	-		9	NUT HEX. DOMED CAP MHM-6 M6 A280	
TBA 1000S						
010	1260525-0000	-		1	UPPER FORMING RING	
030	1296040-0000	A		4	ROLLER	
040	1296039-0000	A		1	ROLLER	
050	1484204-0000	A		1	ROLLER	
060	1296041-0000	A		1	GUIDE ROLLER	
100	2033-0011	A		14	WASHER	
110	490538-0000	A		6	LOCKING PLATE	
120	263655-0009	A		6	SHAFT	
150	1195340-0000	-		1	RING	
240	1195331-0000	-		1	GUIDE PIN	
260	1195339-0000	-		1	ROD	
500	312105-0333	-		6	SCREW M6S M5X25 A280	
505	312105-0370	-		2	SCREW M6S M6X20 A280	
510	312105-0462	-		2	SCREW M6S M8X55 A280	
520	312705-0314	-		4	NUT HEX. DOMED CAP MHM-6 M5 A280	
525	312705-0316	-		3	NUT HEX. DOMED CAP MHM-6 M6 A280	
TBA 1000SQ						
010	1260525-0000	-		1	UPPER FORMING RING	
030	1548531-0000	A		4	ROLLER	
040	1548540-0000	A		1	ROLLER	
050	1548541-0000	A		1	ROLLER	
060	1548542-0000	A		1	ROLLER	
100	2033-0011	A		14	WASHER	
110	490538-0000	A		6	LOCKING PLATE	
120	263655-0009	A		6	SHAFT	
150	1195340-0000	-		1	RING	
240	1195331-0000	-		1	GUIDE PIN	
260	1195339-0000	-		1	ROD	
500	312105-0333	-		6	SCREW M6S M5X25 A280	
505	312105-0370	-		2	SCREW M6S M6X20 A280	
510	312105-0462	-		2	SCREW M6S M8X55 A280	
520	312705-0314	-		7	NUT HEX. DOMED CAP MHM-6 M5 A280	
525	312705-0316	-		3	NUT HEX. DOMED CAP MHM-6 M6 A280	
TPA 0330SQ						
010	1538251-0000	-		1	UPPER FORMING RING	
030	1532984-0000	A		1	ROLLER	
035	1532985-0000	A		1	ROLLER	
040	1532986-0000	A		1	ROLLER	
045	1532987-0000	A		1	ROLLER	
050	1532988-0000	A		1	ROLLER	
060	1532989-0000	A		1	ROLLER	
075	1532990-0000	A		1	GUIDE ROLLER	
090	2033-0007	A		1	WASHER	
100	2033-0011	A		12	WASHER	
110	1538266-0000	A		6	LOCKING PLATE	
120	752186-0019	A		6	SHAFT	
150	1255011-0000	-		1	RING	
240	1255012-0000	-		1	GUIDE PIN	
260	1195084-0000	-		1	ROD	
500	312105-0372	-		4	SCREW M6S M6X25 A280	
505	312105-0368	-		2	SCREW M6S M6X16 A280	
510	312105-0378	-		2	SCREW M6S M6X40 A280	
525	312705-0316	-		9	NUT HEX. DOMED CAP MHM-6 M6 A280	
TPA 1000S						
010	1255793-0000	-		1	UPPER FORMING RING	
030	1350279-0000	A		4	ROLLER	
040	1350277-0000	A		1	ROLLER	
050	1484206-0000	A		1	ROLLER	
060	1350283-0000	A		1	GUIDE ROLLER	
100	2033-0008	A		14	WASHER	
110	1255881-0000	A		6	LOCKING PLATE	
120	263655-0009	A		6	SHAFT	
150	1195340-0000	-		1	RING	
240	1255882-0000	-		1	GUIDE PIN	

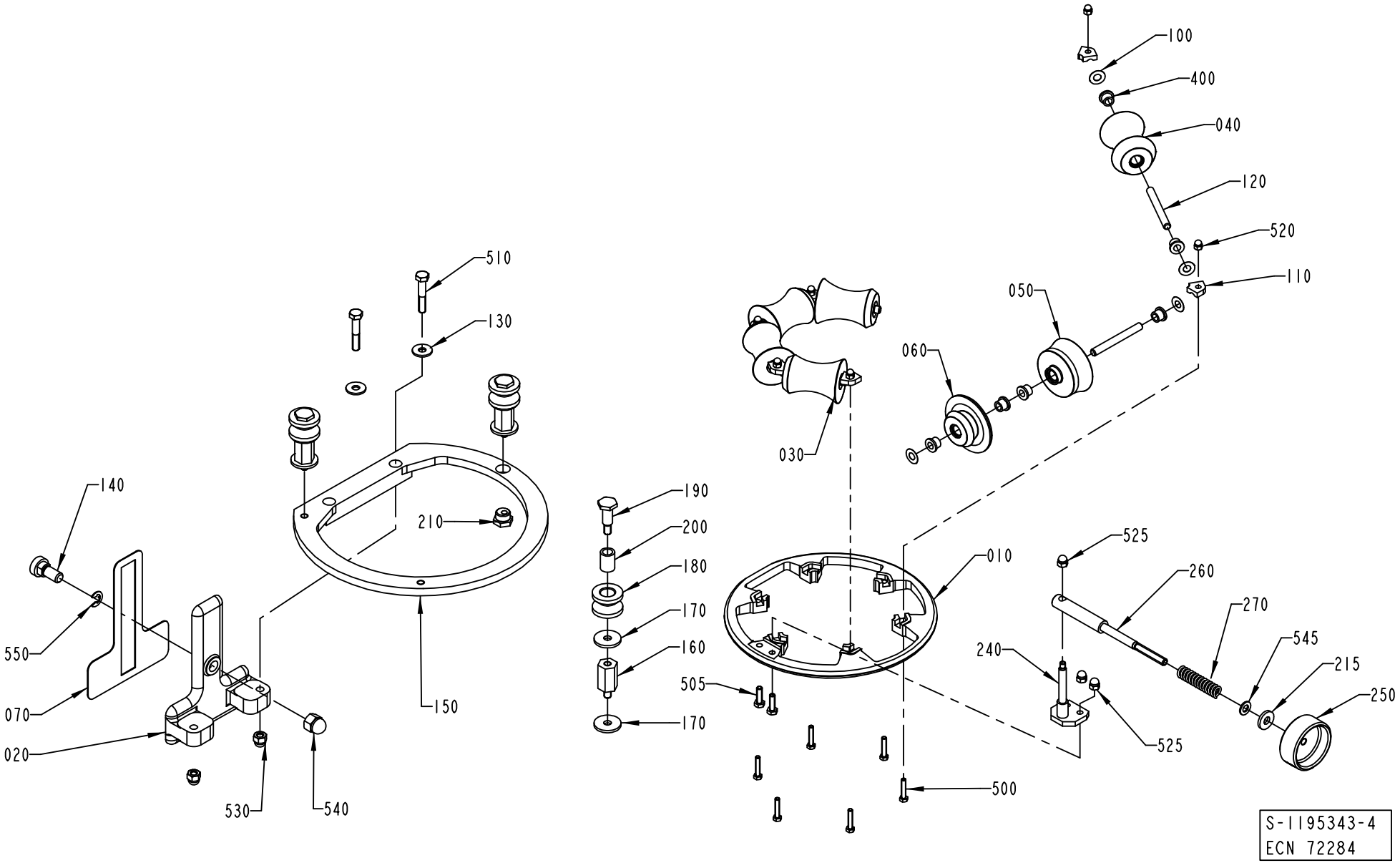
100
400
040
120
520
110
050
060
030
510
130
140
210
550
070
020
530
540
150
190
200
180
170
160
170
505
010
525
260
270
545
215
250
240
525
500
S-1195343-4
ECN 72284

Pos	Part No	SP	UN	Qty	Description	Page No
TPA 1000S (Cont'd)						
260	1255920-0000	-		1	ROD	
500	312105-0372	-		6	SCREW M6S M6X25 A280	
505	312105-0372	-		2	SCREW M6S M6X25 A280	
510	312105-0462	-		2	SCREW M6S M8X55 A280	
525	312705-0316	-		9	NUT HEX. DOMED CAP MHM-6 M6 A280	
Common Parts						
020	1036286-0000	-		1	ANGLE BRACKET	
070	1036352-0000	-		1	GASKET	
130	315125-0165	-		2	WASHER PLAIN ROUND,CHAMF. 8,4/26, H=5	
140	1036354-0000	-		1	SCREW	
160	1147084-0000	A		3	SPACER SCREW	
170	28037-0000	A		6	WASHER	
180	436302-0000	A		3	ROLLER	
190	436355-0000	A		3	REAMED BOLT	
200	436356-0000	A		3	BUSHING	
210	436357-0000	-		1	NUT	
215	436403-0000	-		1	WASHER	
250	257090-0000	-		1	SHIFTER HANDLE	
270	1881-0001	A		1	COMPRESSION SPRING	
400	90240-0172	A		14	FLANGE BUSHING,8X12X10 MM NFB	
410	90153-0016	-		1	ADHESIVE TUBE 100G RHODORSIL CAF 3	
530	312705-0318	-		2	NUT HEX. DOMED CAP MHM-6 M8 A280	
540	312705-0322	-		1	NUT HEX. DOMED CAP MHM-6 M12 A2	
545	315105-0165	-		1	WASHER PLAIN, BRB, 8,4/16,H=1,5	
550	315755-0110	-		1	LOCKING WASHER 9	

Pos	Part No	SP	UN	Qty	Description	Page No

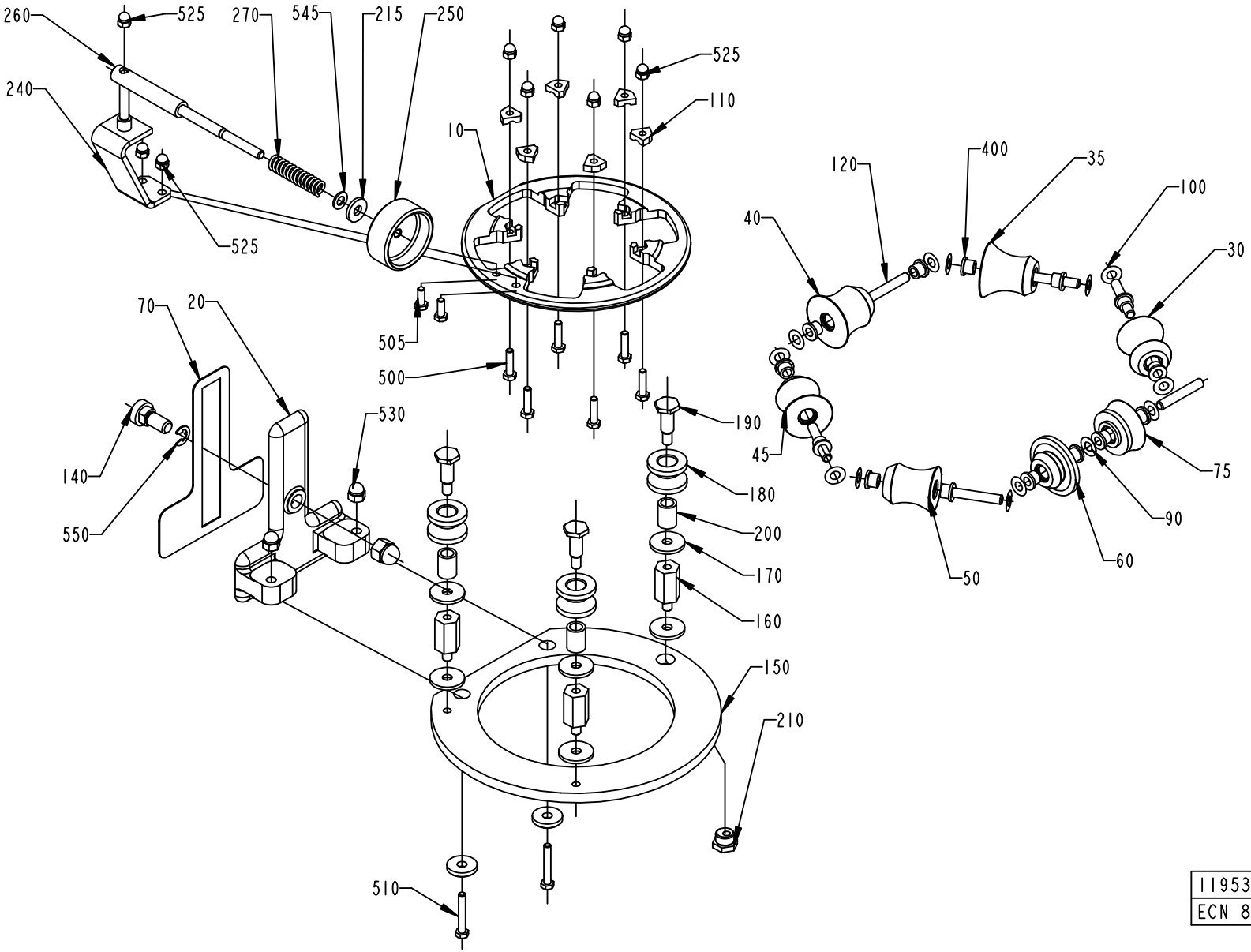

1195343-5
ECN 80470

Pos	Part No	SP	UN	Qty	Description	Page No

SEE PREVIOUS LISTS PAGES: 45, 47, 49.

Pos	Part No	SP	UN	Qty	Description	Page No

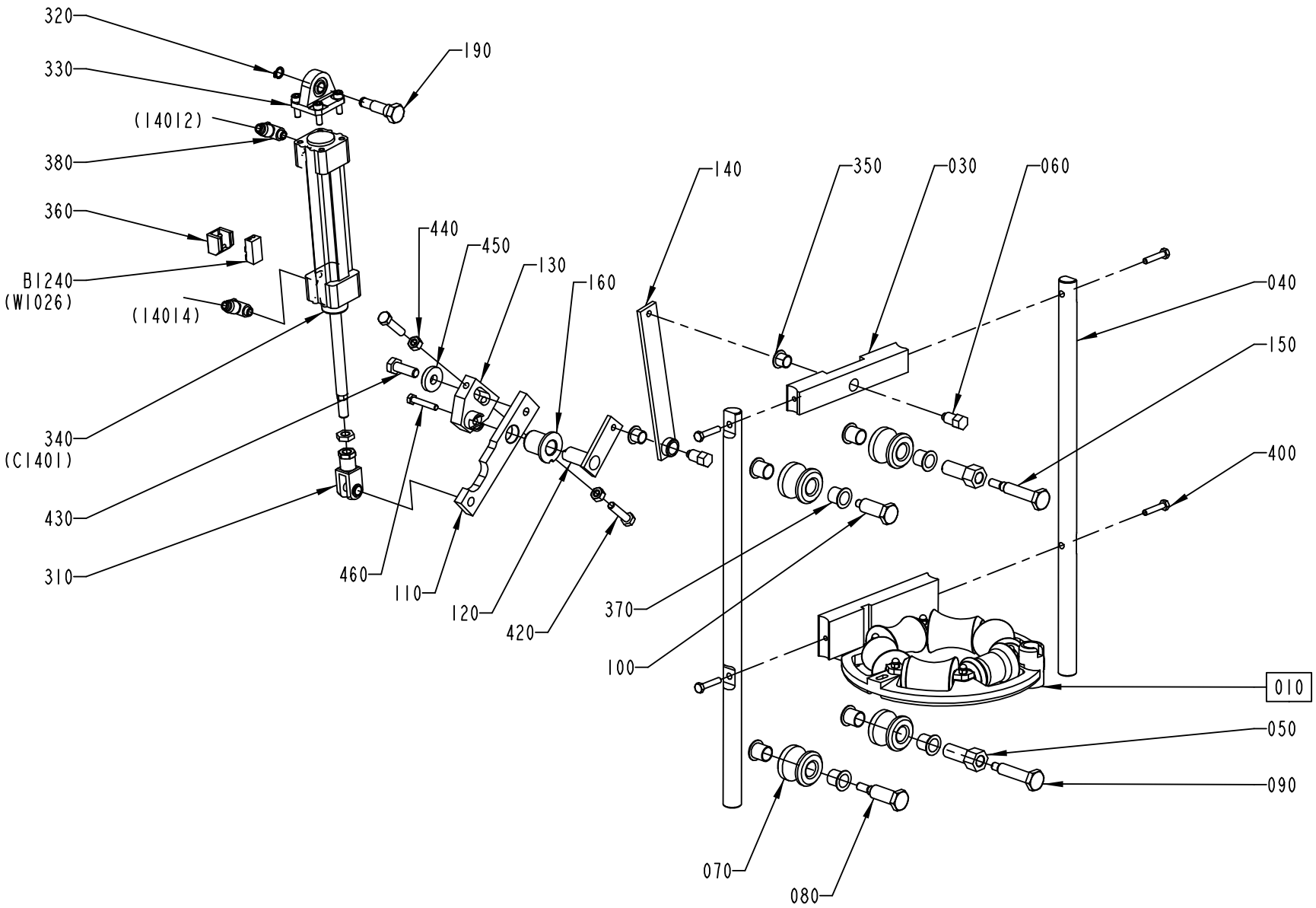

S-1095907-4
ECN 73102

ECM: 73102 - 20000224
Group number: 1095907-0300
Assembly Drawing: 1095907-4_1_AB

Issue: 20011217

Pos	Part No	SP	UN	Qty	Description	Page No
Common Parts						
010	A1095908-0300	-		1	FORMING RING	**55, 57**
030	1478419-0000	D		1	DISTANCE PIECE LOCK	
040	1349435-0000	D		2	GUIDE ROD	
050	1478729-0000	D		2	ECCENTRIC BUSHING	
060	1129517-0000	C		2	SCREW	
070	1478724-0000	D		4	ROLLER	
080	1478726-0000	D		1	DOWEL	
090	1478728-0000	D		1	DOWEL	
100	1478725-0000	D		1	DOWEL	
110	1348183-0000	C		1	ARM	
120	1116039-0000	C		1	ARM	
130	1348182-0000	-		1	LEVER	
140	1478575-0000	D		1	LEVER BAR	
150	1478727-0000	D		1	DOWEL	
160	1346983-0000	C		1	BEARING BUSHING	
190	1478819-0000	C		1	SCREW	
310	90239-0516	C		1	ROD END,CLEVIS WITH AXLE M10X1,25	
320	90141-0016	-		1	RETAIN. RING, 10	
330	90450-0756	C		1	BRACKET, REAR EYE 32	
340	90450-0282	C		1	DOUBLE ACTING,PROFILE,CYL 32-100	
350	90240-0262	C		2	FLANGE BUSHING, 12X14X12 MM	
360	90450-0669	-		1	SENSOR,BRACKET,SERIES 168	
370	90240-0264	C		8	FLANGE BUSHING, 15X17X17 MM	
380	90235-0288	C		2	VALVE	
400	312109-0374	-		4	SCREW M6S M6X30 A280	
420	312109-0457	-		2	SCREW M6S M8X35 A280	
430	312105-0495	-		1	SCREW M6S M10X30 A280	
440	312605-0318	-		2	HEXAGON NUT, M6M M8 A280	
450	315125-0173	-		1	WASHER PLAIN ROUND,CHAMF. 10,5/28,H=6	
460	312109-0376	-		1	SCREW M6S M6X35 A280	
B1240	90044-0116	D		1	CYLINDER,SENSOR	

Pos	Part No	SP	UN	Qty	Description	Page No

Machine Type | Group Description | Used-In | Group Number | Page No

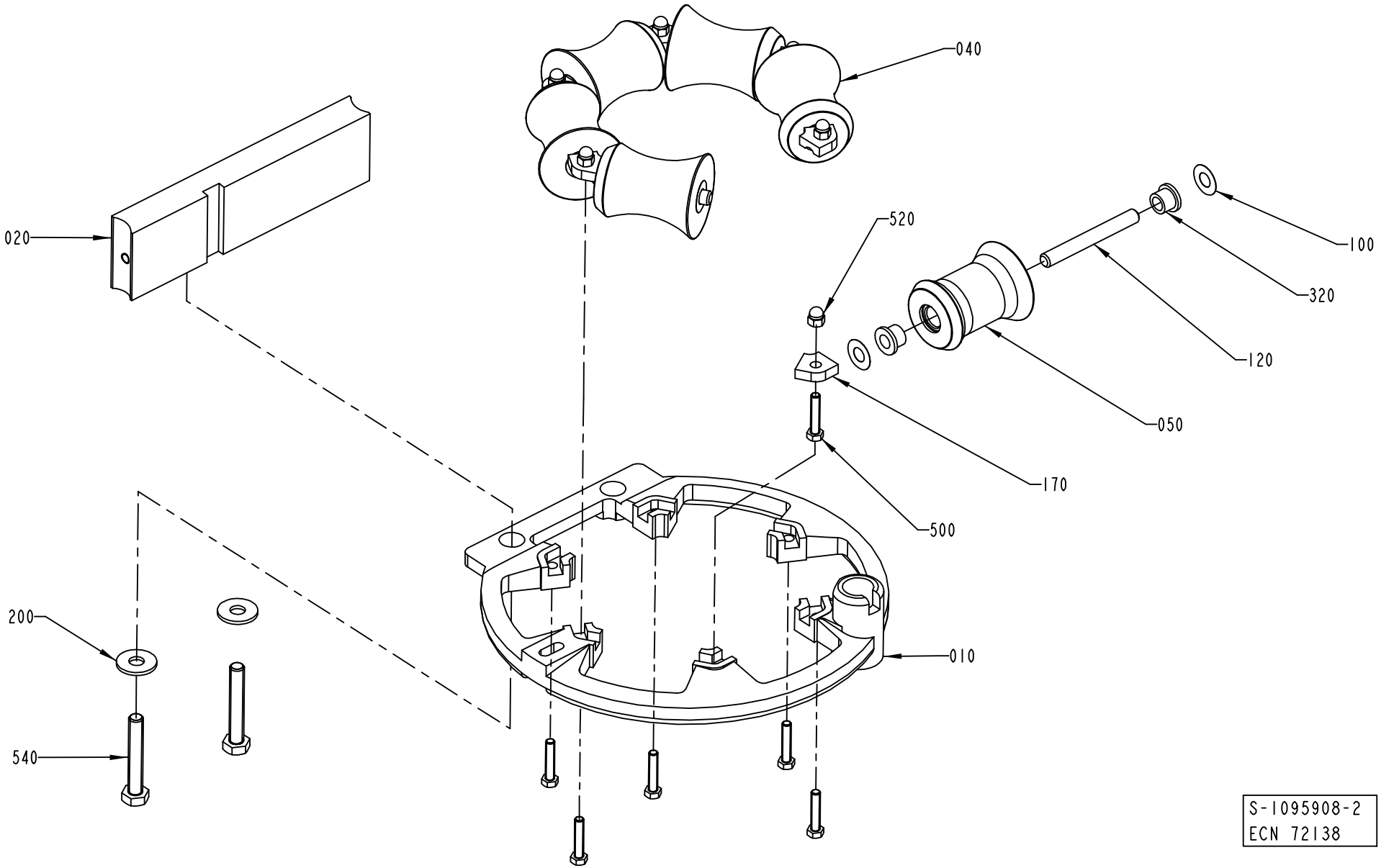
040
020
520
100
320
120
050
170
500
200
010
540
S-1095908-2
ECN 72138

Pos	Part No	SP	UN	Qty	Description	Page No
TBA 0200B OR TBA 0250B						
010	1129539-0000	-		1	LOWER FORMING RING	
040	751502-0000	A		5	ROLLER	
050	B751503-0000	A		1	COUNTER ROLLER	
	90166-0179	*-*	*M*	*1*	*SHRINKABLE HOSE*	
100	2033-0011	A		12	WASHER	
120	752186-0005	A		6	SHAFT	
170	490538-0000	A		6	LOCKING PLATE	
500	312105-0333	-		6	SCREW M6S M5X25 A280	
520	312705-0314	-		6	NUT HEX. DOMED CAP MHM-6 M5 A280	
TBA 0200S						
010	1129535-0000	-		1	LOWER FORMING RING	
040	1317933-0000	A		5	ROLLER	
050	B752140-0000	A		1	COUNTER ROLLER	
	90166-0179	*-*	*M*	*1*	*SHRINKABLE HOSE*	
100	2033-0011	A		12	WASHER	
120	752186-0003	A		6	SHAFT	
170	1279092-0000	A		6	LOCKING PLATE	
500	312105-0372	-		6	SCREW M6S M6X25 A280	
520	312705-0316	-		6	NUT HEX. DOMED CAP MHM-6 M6 A280	
TBA 0500B OR TBA 1000B OR TBA 1500S						
010	1129529-0000	-		1	LOWER FORMING RING	
040	1349851-0000	A		5	ROLL	
050	1532582-0000	A		1	COUNTER ROLLER	
100	2033-0011	A		24	WASHER	
120	752186-0014	A		6	SHAFT	
170	490538-0000	A		6	LOCKING PLATE	
500	312105-0333	-		6	SCREW M6S M5X25 A280	
520	312705-0314	-		6	NUT HEX. DOMED CAP MHM-6 M5 A280	
TBA 0500S						
010	1499679-0000	-		1	LOWER FORMING RING	
040	1499636-0000	A		5	ROLLER	
050	1524308-0000	A		1	COUNTER ROLLER	
100	2033-0011	A		12	WASHER	
120	752186-0006	A		6	SHAFT	
170	490538-0000	A		6	LOCKING PLATE	
500	312105-0333	-		6	SCREW M6S M5X25 A280	
520	312705-0314	-		6	NUT HEX. DOMED CAP MHM-6 M5 A280	

Pos	Part No	SP	UN	Qty	Description	Page No
TBA 1000S						
010	1129540-0000	-		1	LOWER FORMING RING	
040	567746-0001	A		5	ROLLER, (STD.SIZE)	
050	1490933-0000	A		1	COUNTER ROLLER	
100	2033-0011	A		12	WASHER	
120	569100-0000	A		6	SHAFT	
170	490538-0000	A		6	LOCKING PLATE	
500	312105-0333	-		6	SCREW M6S M5X25 A280	
520	312705-0314	-		6	NUT HEX. DOMED CAP MHM-6 M5 A280	
TBA 1000SQ						
010	1129540-0000	-		1	LOWER FORMING RING	
040	1490765-0000	A		5	ROLLER	
050	1499411-0000	A		1	COUNTER ROLLER	
100	2033-0011	A		12	WASHER	
120	569100-0000	A		6	SHAFT	
170	490538-0000	A		6	LOCKING PLATE	
500	312105-0333	-		6	SCREW M6S M5X25 A280	
520	312705-0314	-		6	NUT HEX. DOMED CAP MHM-6 M5 A280	
TPA 0330SQ						
010	1129539-0000	-		1	LOWER FORMING RING	
040	929279-0000	A		5	ROLLER	
050	929280-0000	A		1	COUNTER ROLLER	
100	2033-0011	A		12	WASHER	
120	752186-0005	A		6	SHAFT	
170	490538-0000	A		6	LOCKING PLATE	
500	312105-0333	-		6	SCREW M6S M5X25 A280	
520	312705-0314	-		6	NUT HEX. DOMED CAP MHM-6 M5 A280	
TPA 1000S						
010	1255794-0000	-		1	LOWER FORMING RING	
040	1490764-0000	A		5	ROLLER	
050	1490768-0000	A		1	ROLLER	
100	2033-0008	A		12	WASHER	
120	263655-0022	A		6	SHAFT	
170	1255881-0000	A		6	LOCKING PLATE	
500	312105-0333	-		6	SCREW M6S M5X25 A280	
Common Parts						
020	1478438-0000	A		1	DISTANCE PIECE LOCK	
200	315125-0165	-		2	WASHER PLAIN ROUND,CHAMF. 8,4/26, H=5	

Machine Type | Group Description | Used-In | Group Number | Page No

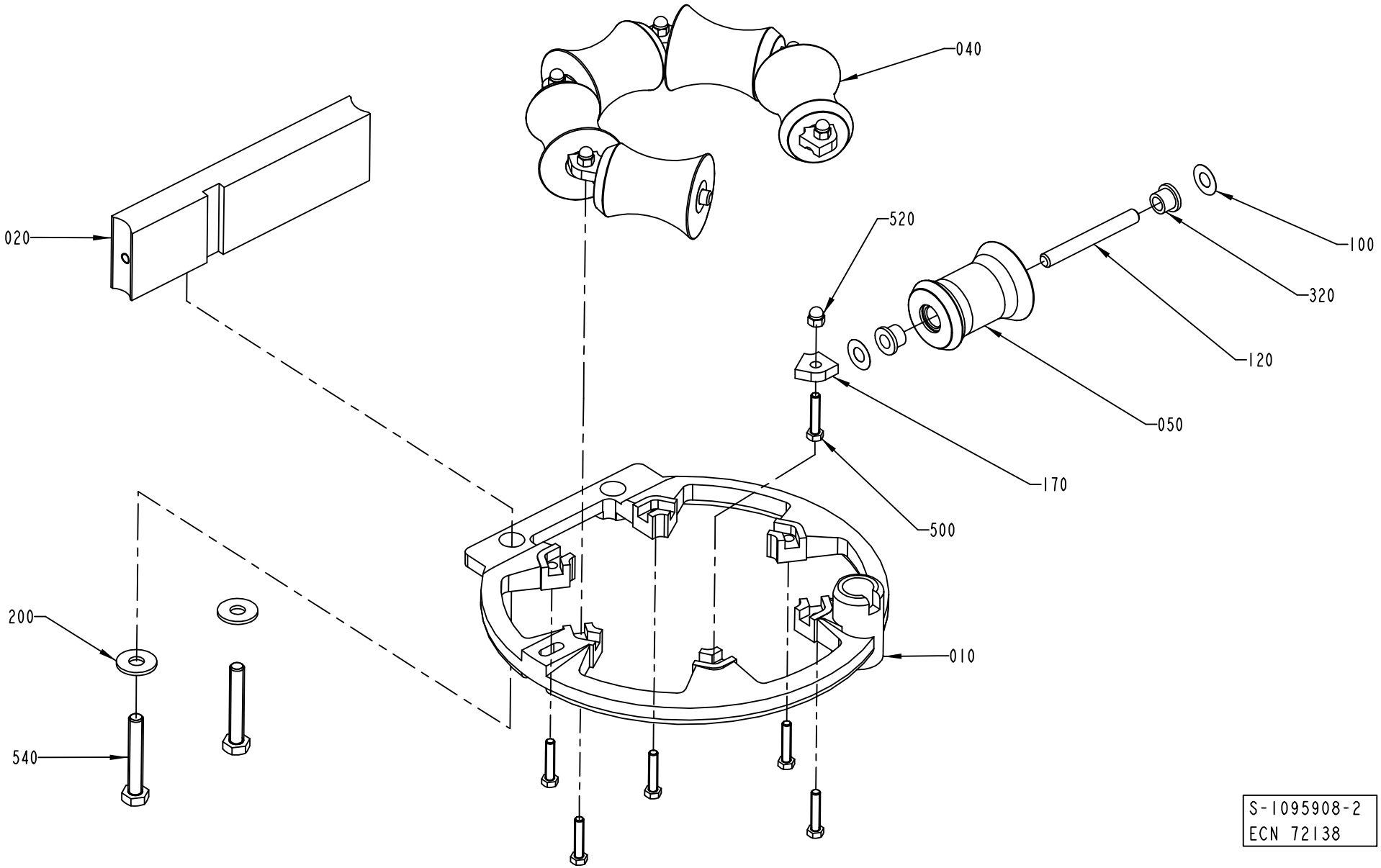
040
020
520
100
320
120
050
170
500
200
010
540
S-1095908-2
ECN 72138

Pos	Part No	SP	UN	Qty	Description	Page No
Common Parts (Cont'd)						
320	90240-0172	A		12	FLANGE BUSHING,8X12X10 MM NFB	
540	312109-0461	-		2	SCREW M6S M8X50 A280	

Pos	Part No	SP	UN	Qty	Description	Page No

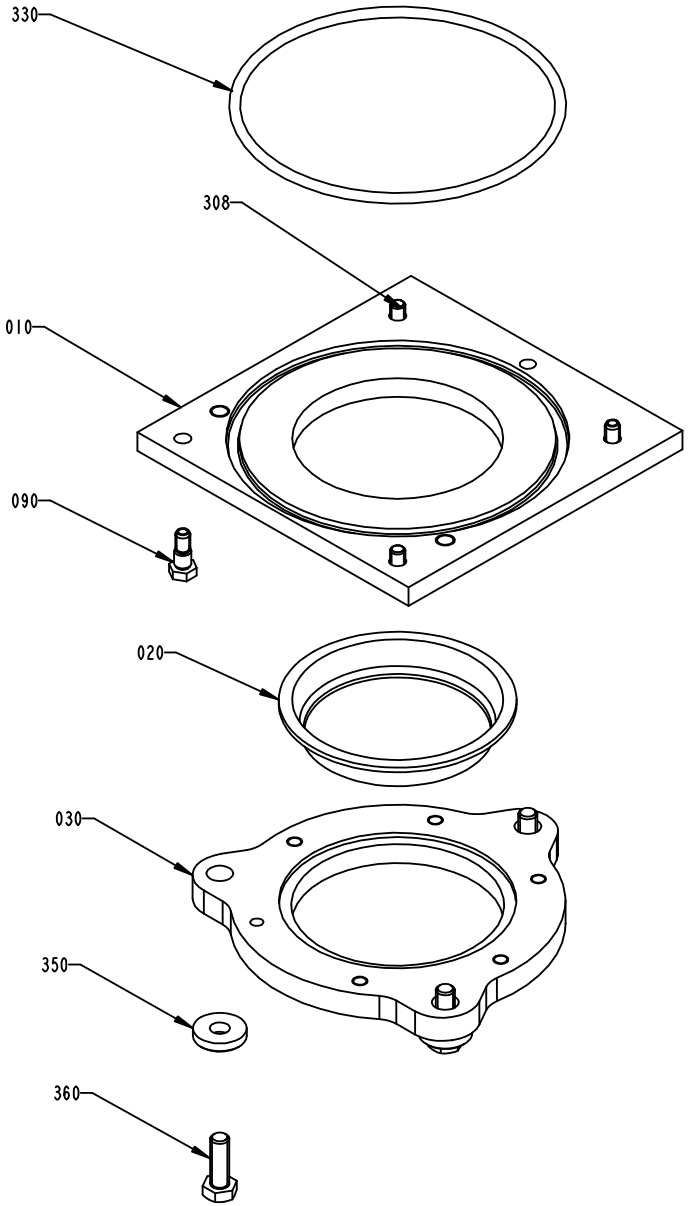
330
308
010
090
020
030
350
360

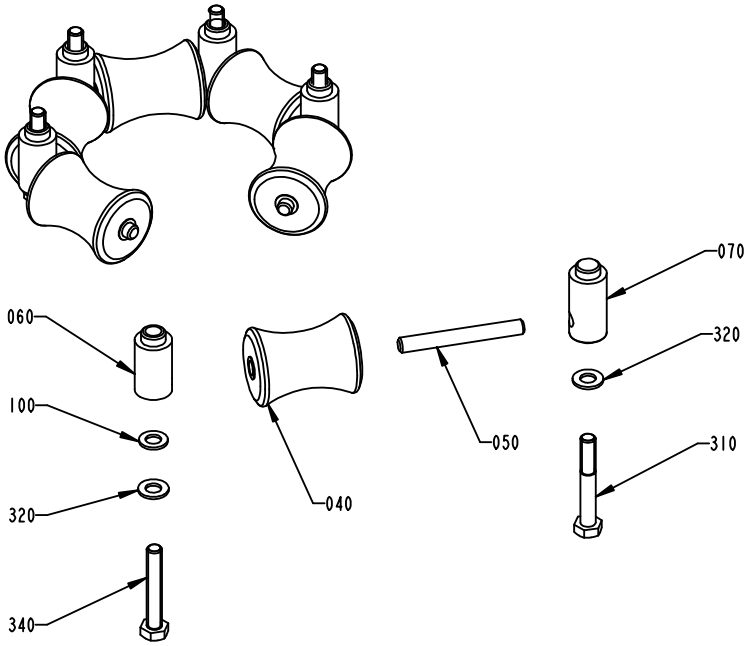
060
100
320
340
040
050
070
320
310

Pos	Part No	SP	UN	Qty	Description	Page No
TBA 0200B OR TBA 0250B						
010	1255316-0000	-		1	PLATE	
020	273953-0000	A		1	SEAL	
030	1255318-0000	-		1	RING	
040	456796-0000	A		2	ROLLER	
050	263655-0006	A		2	SHAFT	
060	1038576-0000	-		4	AXLE SUPPORT	
310	312105-0370	-		4	SCREW M6S M6X20 A280	
320	315125-0153	-		4	WASHER PLAIN ROUND,CHAMF. 6,4/22, H=4	
340	312109-0459	-		4	SCREW M6S M8X40 A280	
370	315105-0153	-		4	WASHER PLAIN, BRB, 6,4/12,H=1,5	
TBA 0200S						
010	1255191-0000	-		1	PLATE	
020	490901-0000	A		1	SEAL	
030	1255194-0000	-		1	RING	
040	456996-0000	A		2	ROLLER	
050	490903-0000	A		2	SHAFT	
060	490902-0000	-		4	AXLE SUPPORT	
070	751230-0000	A		4	PLAIN BEARING	
310	312105-0370	-		4	SCREW M6S M6X20 A280	
320	315125-0153	-		4	WASHER PLAIN ROUND,CHAMF. 6,4/22, H=4	
340	312109-0378	-		4	SCREW M6S M6X40 A280	
370	315105-0153	-		4	WASHER PLAIN, BRB, 6,4/12,H=1,5	
TBA 0500B OR TBA 1000B OR TBA 1500S						
010	1255190-0000	-		1	PLATE	
020	466042-0000	A		1	SEAL	
030	1255192-0000	-		1	RING	
040	466046-0000	A		6	ROLLER	
050	263655-0009	A		6	SHAFT	
060	1036954-0000	-		4	AXLE SUPPORT	
070	1036955-0000	A		2	AXLE SUPPORT	
100	1129431-0000	A		4	WASHER	
310	312105-0462	-		2	SCREW M6S M8X55 A280	
320	315105-0165	-		6	WASHER PLAIN, BRB, 8,4/16,H=1,5	
340	312109-0461	-		4	SCREW M6S M8X50 A280	
350	315125-0173	-		3	WASHER PLAIN ROUND,CHAMF. 10,5/28,H=6	
360	312105-0495	-		3	SCREW M6S M10X30 A280	
TBA 0500S						
010	1346326-0000	-		1	PLATE	
020	466089-0000	A		1	SEAL	
030	1499944-0000	-		1	RING	
040	466092-0000	A		6	ROLL	
050	263655-0007	A		6	SHAFT	
060	1036954-0000	-		4	AXLE SUPPORT	
070	1036955-0000	A		2	AXLE SUPPORT	
100	1129431-0000	A		4	WASHER	
310	312105-0462	-		2	SCREW M6S M8X55 A280	
320	315105-0165	-		6	WASHER PLAIN, BRB, 8,4/16,H=1,5	
340	312109-0461	-		4	SCREW M6S M8X50 A280	
350	315125-0173	-		3	WASHER PLAIN ROUND,CHAMF. 10,5/28,H=6	
360	312105-0495	-		3	SCREW M6S M10X30 A280	
TBA 1000S						
010	1255190-0000	-		1	PLATE	
020	567743-0000	A		1	SEAL	
030	1255192-0000	-		1	RING	
040	573504-0000	A		6	ROLLER	
050	263655-0009	A		6	SHAFT	
060	1036954-0000	-		4	AXLE SUPPORT	
070	1036955-0000	A		2	AXLE SUPPORT	
100	1129431-0000	A		4	WASHER	
310	312105-0462	-		2	SCREW M6S M8X55 A280	
320	315105-0165	-		6	WASHER PLAIN, BRB, 8,4/16,H=1,5	
340	312109-0461	-		4	SCREW M6S M8X50 A280	
350	315125-0173	-		3	WASHER PLAIN ROUND,CHAMF. 10,5/28,H=6	
360	312105-0495	-		3	SCREW M6S M10X30 A280	
TBA 1000SQ						
010	1255190-0000	-		1	PLATE	
020	579318-0000	A		1	SEAL	
030	1517557-0000	-		1	RING	
040	1490762-0000	A		6	ROLLER	
050	263655-0009	A		6	SHAFT	
060	1036954-0000	-		4	AXLE SUPPORT	
070	1036955-0000	A		2	AXLE SUPPORT	
100	1129431-0000	A		4	WASHER	
310	312105-0462	-		2	SCREW M6S M8X55 A280	
320	315105-0165	-		6	WASHER PLAIN, BRB, 8,4/16,H=1,5	
340	312109-0461	-		4	SCREW M6S M8X50 A280	
350	315125-0173	-		3	WASHER PLAIN ROUND,CHAMF. 10,5/28,H=6	
360	312105-0495	-		3	SCREW M6S M10X30 A280	

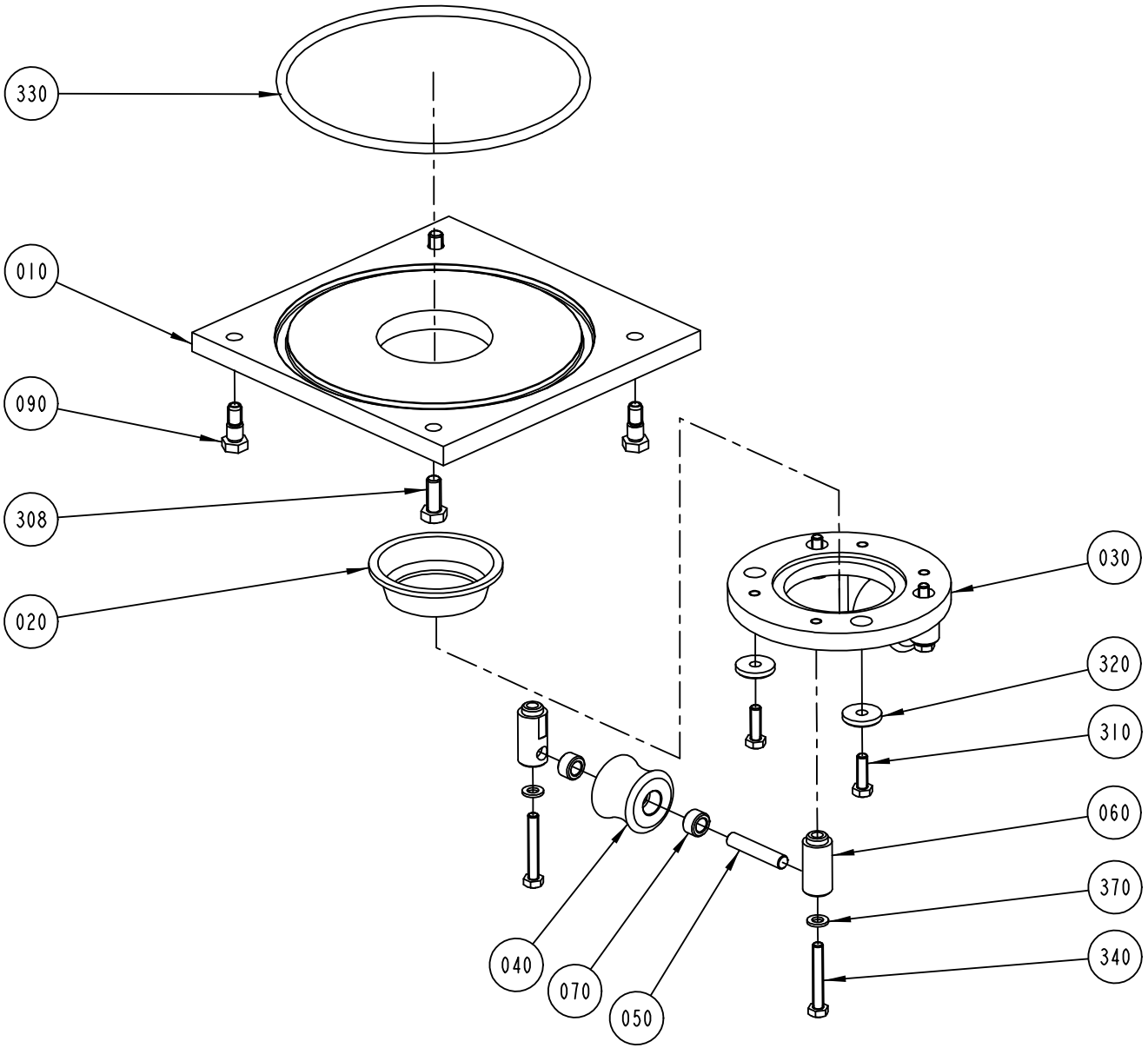

S-996456-4
ECN 72279

Pos	Part No	SP	UN	Qty	Description	Page No
TPA 0330SQ (Cont'd)						
010	1255316-0000	-		1	PLATE	
020	929286-0000	A		1	SEAL	
030	1255318-0000	-		1	RING	
040	929284-0000	A		2	ROLLER	
050	263655-0006	A		2	SHAFT	
060	1038576-0000	-		4	AXLE SUPPORT	
310	312105-0370	-		4	SCREW M6S M6X20 A280	
320	315125-0153	-		4	WASHER PLAIN ROUND,CHAMF. 6,4/22, H=4	
340	312109-0459	-		4	SCREW M6S M8X40 A280	
370	315105-0153	-		4	WASHER PLAIN, BRB, 6,4/12,H=1,5	
TPA 1000S						
010	1317478-0000	-		1	PLATE	
020	544015-0000	A		1	SEAL	
030	1317479-0000	-		1	RING	
040	544012-0000	A		6	ROLLER	
050	263655-0008	A		6	SHAFT	
060	1036954-0000	-		4	AXLE SUPPORT	
070	1036955-0000	A		2	AXLE SUPPORT	
100	1129431-0000	A		4	WASHER	
310	312105-0462	-		2	SCREW M6S M8X55 A280	
320	315105-0165	-		6	WASHER PLAIN, BRB, 8,4/16,H=1,5	
340	312109-0460	-		4	SCREW M6S M8X45 A280	
350	315125-0173	-		3	WASHER PLAIN ROUND,CHAMF. 10,5/28,H=6	
360	312105-0495	-		3	SCREW M6S M10X30 A280	
Common Parts						
090	1037885-0000	-		2	REAMED BOLT	
308	312105-0451	-		2	SCREW M6S 8X20 A280	
330	315204-0324	A		1	O-RING 164,3X5,7 MM	

Pos	Part No	SP	UN	Qty	Description	Page No

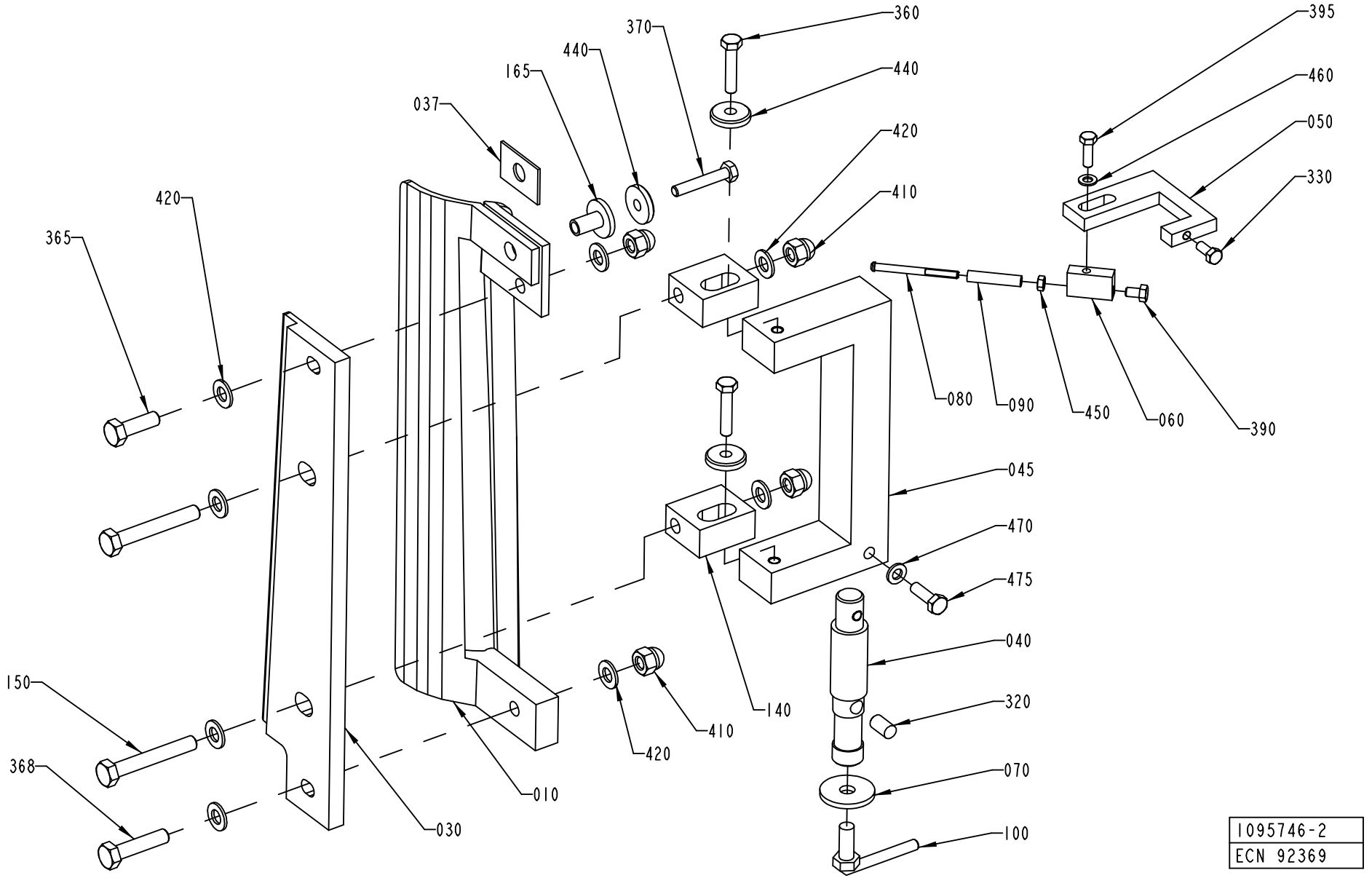
360
370
440
165
037
440
420
410
395
460
050
330
420
365
080
090
450
060
390
045
470
475
040
320
070
100
140
410
420
150
368
010
030
1095746-2
ECN 92369

ECM: 94938 - 20010917
Group number: 1095746-0100
Assembly Drawing: 1095746-2_1_AB

Issue: 20011217

Pos	Part No	SP	UN	Qty	Description	Page No
TBA 0200B OR TBA 0250B						
010	1334791-0000	A		1	LS-INDUCTOR	
030	1347635-0000	A		1	INSULATING PLATE	
045	1347935-0000	-		1	HOLDER	
050	1285515-0000	-		1	HOLDER	
140	1285512-0000	-		2	FASTENING PLATE	
150	312105-0462	-		2	SCREW M6S M8X55 A280	
330	312105-0327	-		1	SCREW M6S M5X12 A280	
360	312109-0374	-		2	SCREW M6S M6X30 A280	
365	312105-0453	-		1	SCREW M6S M8X25 A280	
368	312105-0455	-		1	SCREW M6S M8X30 A280	
395	312105-0329	-		1	SCREW M6S M5X16 A280	
410	312705-0318	-		4	NUT HEX. DOMED CAP MHM-6 M8 A280	
420	315105-0165	-		8	WASHER PLAIN, BRB, 8,4/16,H=1,5	
440	315125-0153	-		3	WASHER PLAIN ROUND,CHAMF. 6,4/22, H=4	
460	315105-0146	-		1	WASHER PLAIN, BRB, 5,3/10,H=1	
470	315105-0153	-		1	WASHER PLAIN, BRB, 6,4/12,H=1,5	
475	312105-0370	-		1	SCREW M6S M6X20 A280	
TBA 0200S						
010	1334857-0000	A		1	LS-INDUCTOR	
030	1347636-0000	A		1	INSULATING PLATE	
045	1347935-0000	-		1	HOLDER	
050	1285515-0000	-		1	HOLDER	
140	1285512-0000	-		2	FASTENING PLATE	
150	312105-0462	-		2	SCREW M6S M8X55 A280	
330	312105-0327	-		1	SCREW M6S M5X12 A280	
360	312109-0374	-		2	SCREW M6S M6X30 A280	
365	312105-0453	-		1	SCREW M6S M8X25 A280	
368	312105-0455	-		1	SCREW M6S M8X30 A280	
395	312105-0329	-		1	SCREW M6S M5X16 A280	
410	312705-0318	-		4	NUT HEX. DOMED CAP MHM-6 M8 A280	
420	315105-0165	-		8	WASHER PLAIN, BRB, 8,4/16,H=1,5	
440	315125-0153	-		3	WASHER PLAIN ROUND,CHAMF. 6,4/22, H=4	
460	315105-0146	-		1	WASHER PLAIN, BRB, 5,3/10,H=1	
470	315105-0153	-		1	WASHER PLAIN, BRB, 6,4/12,H=1,5	
475	312105-0370	-		1	SCREW M6S M6X20 A280	
TBA 0500B OR TBA 1000B OR TBA 1500S						
010	1524224-0000	A		1	INDUCTOR	
030	1524225-0000	A		1	INSULATING PLATE	
045	1484636-0000	-		1	HOLDER	
050	1535024-0000	-		1	HOLDER	
140	1348468-0000	-		2	FASTENING PLATE	
150	312105-0372	-		2	SCREW M6S M6X25 A280	
180	1129638-0000	-		2	WASHER	
360	312109-0374	-		3	SCREW M6S M6X30 A280	
395	312105-0327	-		3	SCREW M6S M5X12 A280	
400	312705-0316	-		2	NUT HEX. DOMED CAP MHM-6 M6 A280	
440	315125-0153	-		1	WASHER PLAIN ROUND,CHAMF. 6,4/22, H=4	
460	315105-0146	-		3	WASHER PLAIN, BRB, 5,3/10,H=1	
470	315105-0153	-		6	WASHER PLAIN, BRB, 6,4/12,H=1,5	
475	312105-0370	-		2	SCREW M6S M6X20 A280	
480	312105-0362	-		1	SCREW M6S M6X8 A280	
TBA 0500S						
010	1511488-0000	A		1	INDUCTOR	
030	1511489-0000	A		1	INSULATING PLATE	
045	1511524-0000	-		1	HOLDER	
050	1535024-0000	-		1	HOLDER	
140	1348468-0000	-		2	FASTENING PLATE	
150	312105-0372	-		2	SCREW M6S M6X25 A280	
180	1129638-0000	-		2	WASHER	
360	312109-0374	-		2	SCREW M6S M6X30 A280	
368	312105-0457	-		1	SCREW M6S M8X35 A280	
395	312105-0327	-		3	SCREW M6S M5X12 A280	
410	312705-0318	-		2	NUT HEX. DOMED CAP MHM-6 M8 A280	
420	315105-0165	-		6	WASHER PLAIN, BRB, 8,4/16,H=1,5	
440	315125-0153	-		1	WASHER PLAIN ROUND,CHAMF. 6,4/22, H=4	
460	315105-0146	-		3	WASHER PLAIN, BRB, 5,3/10,H=1	
470	315105-0153	-		1	WASHER PLAIN, BRB, 6,4/12,H=1,5	
475	312105-0370	-		1	SCREW M6S M6X20 A280	
480	312105-0362	-		1	SCREW M6S M6X8 A280	
TBA 1000S						
010	1487428-0000	A		1	INDUCTOR	
030	1484637-0000	A		1	INSULATING PLATE	
045	1484636-0000	-		1	HOLDER	
050	1535024-0000	-		1	HOLDER	
140	1348468-0000	-		2	FASTENING PLATE	
150	312105-0372	-		2	SCREW M6S M6X25 A280	
180	1129638-0000	-		2	WASHER	
360	312109-0374	-		2	SCREW M6S M6X30 A280	
368	312105-0372	-		1	SCREW M6S M6X25 A280	

Machine Type Group Description Used-In Group Number Page No

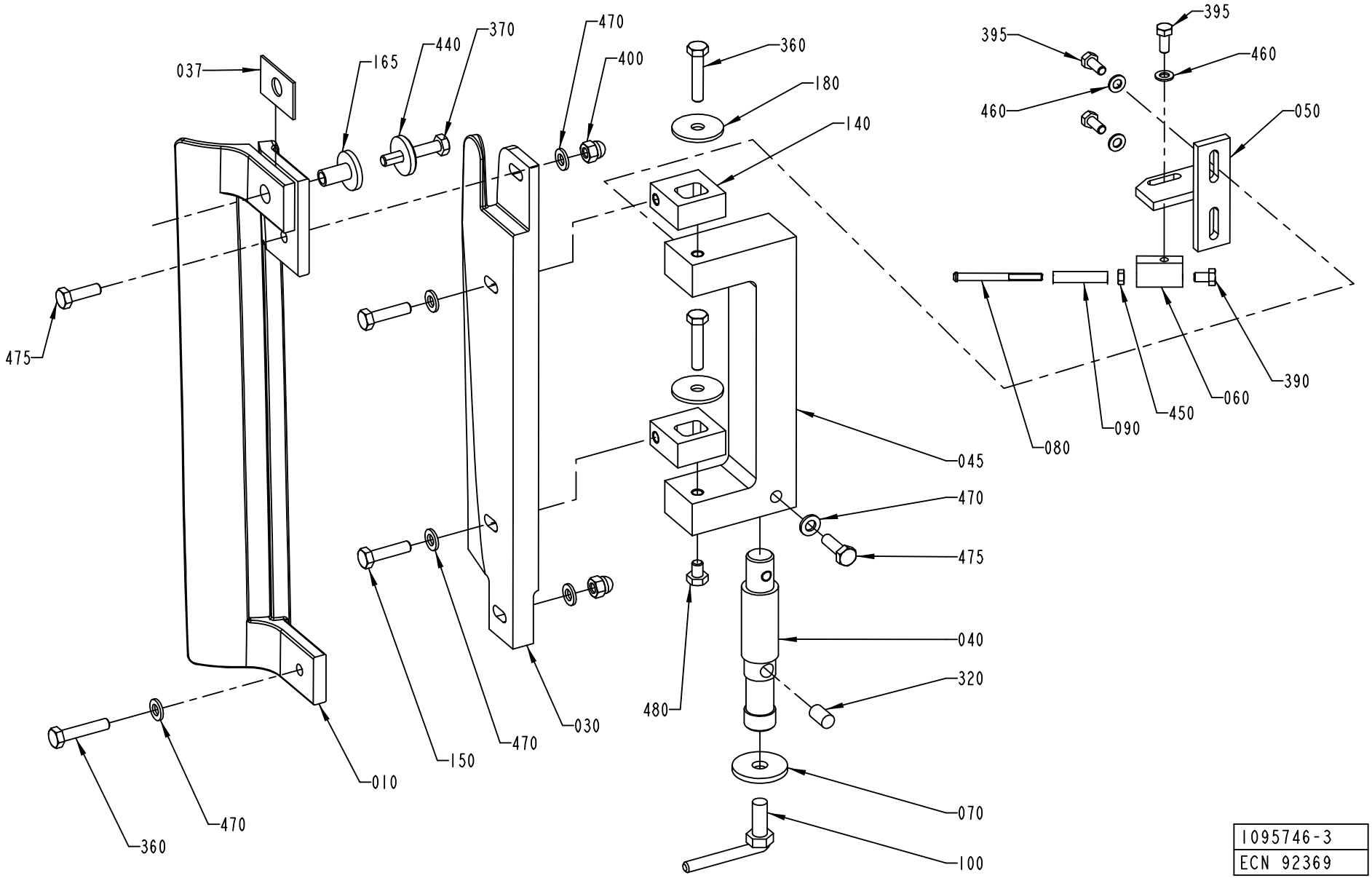

1095746-3
ECN 92369

Pos	Part No	SP	UN	Qty	Description	Page No
TBA 1000S (Cont'd)						
395	312105-0327	-		3	SCREW M6S M5X12 A280	
410	312705-0316	-		2	NUT HEX. DOMED CAP MHM-6 M6 A280	
420	315105-0165	-		4	WASHER PLAIN, BRB, 8,4/16,H=1,5	
440	315125-0153	-		1	WASHER PLAIN ROUND,CHAMF. 6,4/22, H=4	
460	315105-0146	-		3	WASHER PLAIN, BRB, 5,3/10,H=1	
470	315105-0153	-		3	WASHER PLAIN, BRB, 6,4/12,H=1,5	
475	312105-0370	-		2	SCREW M6S M6X20 A280	
480	312105-0362	-		1	SCREW M6S M6X8 A280	
TBA 1000SQ						
010	1498057-0000	A		1	INDUCTOR	
030	1498058-0000	A		1	INSULATING PLATE	
045	1484636-0000	-		1	HOLDER	
050	1535024-0000	-		1	HOLDER	
140	1348468-0000	-		2	FASTENING PLATE	
150	312105-0372	-		2	SCREW M6S M6X25 A280	
180	1129638-0000	-		2	WASHER	
360	312109-0374	-		2	SCREW M6S M6X30 A280	
368	312105-0372	-		1	SCREW M6S M6X25 A280	
395	312105-0327	-		3	SCREW M6S M5X12 A280	
410	312705-0316	-		2	NUT HEX. DOMED CAP MHM-6 M6 A280	
420	315105-0165	-		4	WASHER PLAIN, BRB, 8,4/16,H=1,5	
440	315125-0153	-		1	WASHER PLAIN ROUND,CHAMF. 6,4/22, H=4	
460	315105-0146	-		3	WASHER PLAIN, BRB, 5,3/10,H=1	
470	315105-0153	-		3	WASHER PLAIN, BRB, 6,4/12,H=1,5	
475	312105-0370	-		2	SCREW M6S M6X20 A280	
480	312105-0362	-		1	SCREW M6S M6X8 A280	
TPA 0330SQ						
010	1532992-0000	A		1	LS-INDUCTOR	
030	1532991-0000	A		1	INSULATING PLATE	
045	1347935-0000	-		1	HOLDER	
050	1285515-0000	-		1	HOLDER	
140	1285512-0000	-		2	FASTENING PLATE	
150	312105-0462	-		2	SCREW M6S M8X55 A280	
330	312105-0327	-		1	SCREW M6S M5X12 A280	
365	312105-0453	-		1	SCREW M6S M8X25 A280	
368	312105-0455	-		1	SCREW M6S M8X30 A280	
395	312105-0329	-		1	SCREW M6S M5X16 A280	
410	312705-0318	-		4	NUT HEX. DOMED CAP MHM-6 M8 A280	
420	315105-0165	-		8	WASHER PLAIN, BRB, 8,4/16,H=1,5	
460	315105-0146	-		1	WASHER PLAIN, BRB, 5,3/10,H=1	
470	315105-0153	-		1	WASHER PLAIN, BRB, 6,4/12,H=1,5	
475	312105-0370	-		1	SCREW M6S M6X20 A280	
TPA 1000S						
010	1317225-0000	A		1	LS-INDUCTOR	
030	1347634-0000	A		1	INSULATING PLATE	
045	1347934-0000	-		1	HOLDER	
050	1285515-0000	-		1	HOLDER	
140	1285512-0000	-		2	FASTENING PLATE	
150	312105-0462	-		2	SCREW M6S M8X55 A280	
330	312105-0327	-		1	SCREW M6S M5X12 A280	
360	312109-0374	-		2	SCREW M6S M6X30 A280	
365	312105-0453	-		1	SCREW M6S M8X25 A280	
368	312105-0457	-		1	SCREW M6S M8X35 A280	
395	312105-0329	-		1	SCREW M6S M5X16 A280	
410	312705-0318	-		4	NUT HEX. DOMED CAP MHM-6 M8 A280	
420	315105-0165	-		8	WASHER PLAIN, BRB, 8,4/16,H=1,5	
440	315125-0153	-		3	WASHER PLAIN ROUND,CHAMF. 6,4/22, H=4	
460	315105-0146	-		1	WASHER PLAIN, BRB, 5,3/10,H=1	
470	315105-0153	-		1	WASHER PLAIN, BRB, 6,4/12,H=1,5	
475	312105-0370	-		1	SCREW M6S M6X20 A280	
Common Parts						
037	1255571-0000	A		1	WASHER	
040	1285514-0000	-		1	POST	
060	1255003-0000	-		1	HOLDER	
070	28037-0000	A		1	WASHER	
080	469463-0000	A		1	SHAFT	
090	469464-0000	A		1	ROLL	
100	1036948-0000	-		1	SCREW	
165	1285507-0000	A		1	SPACER BUSHING	
320	311103-0399	-		1	PARALLELL PIN, CP, M6, 8X16 MM	
370	312109-0376	-		1	SCREW M6S M6X35 A280	
390	312105-0323	-		1	SCREW M6S M5X8 A280	
450	312605-0312	-		1	HEXAGON NUT, M6M M4 A280	

Machine Type | Group Description | Used-In | Group Number | Page No

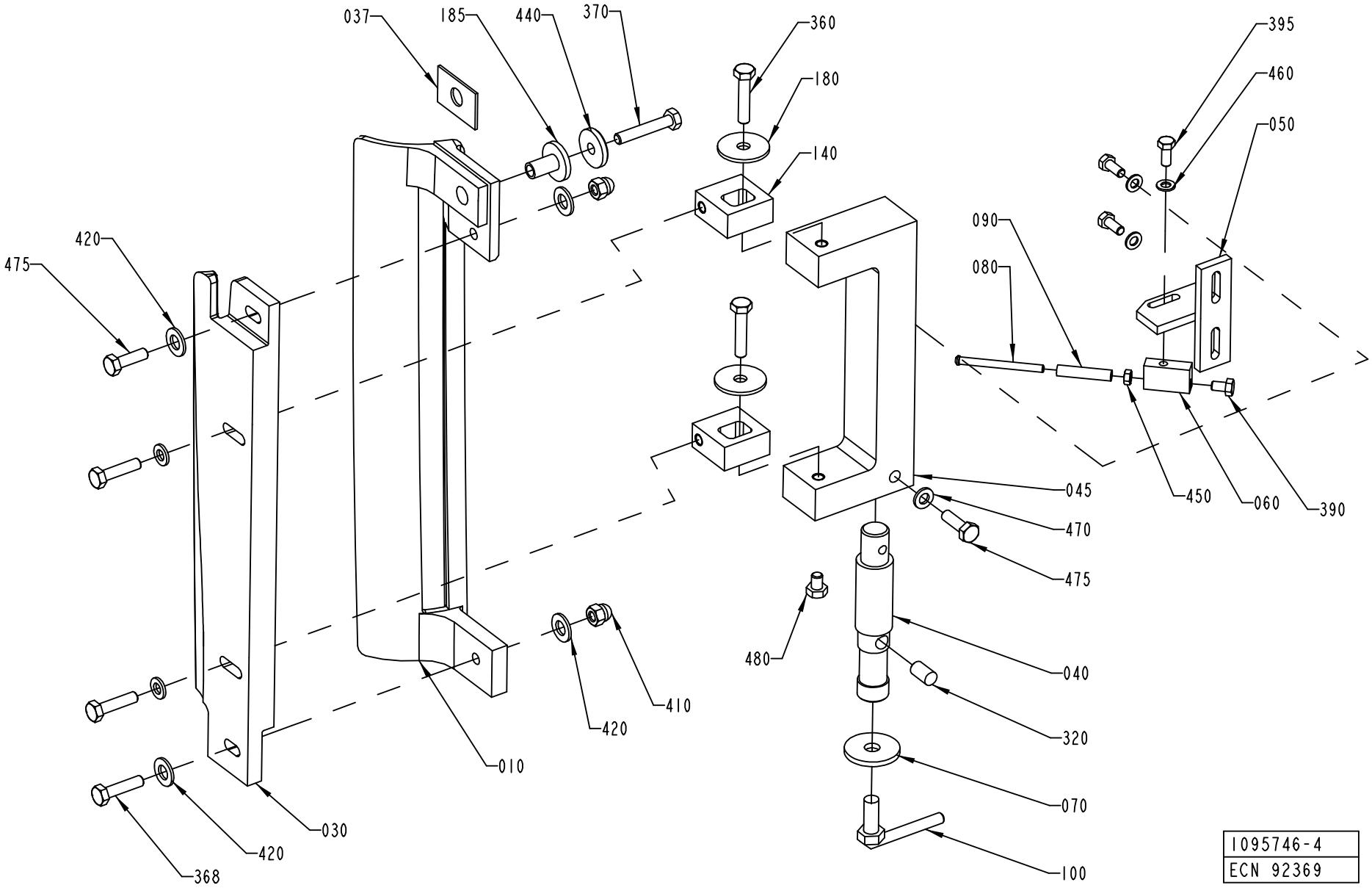
037
185
440
370
360
180
140
395
460
050
090
080
420
475
045
470
475
450
060
390
480
040
320
070
100
410
420
010
030
420
368
1095746-4
ECN 92369

Pos	Part No	SP	UN	Qty	Description	Page No
SEE PREVIOUS LISTS PAGES: 63, 65.						

Pos	Part No	SP	UN	Qty	Description	Page No

Machine Type	Group Description	Used-In	Group Number	Page No

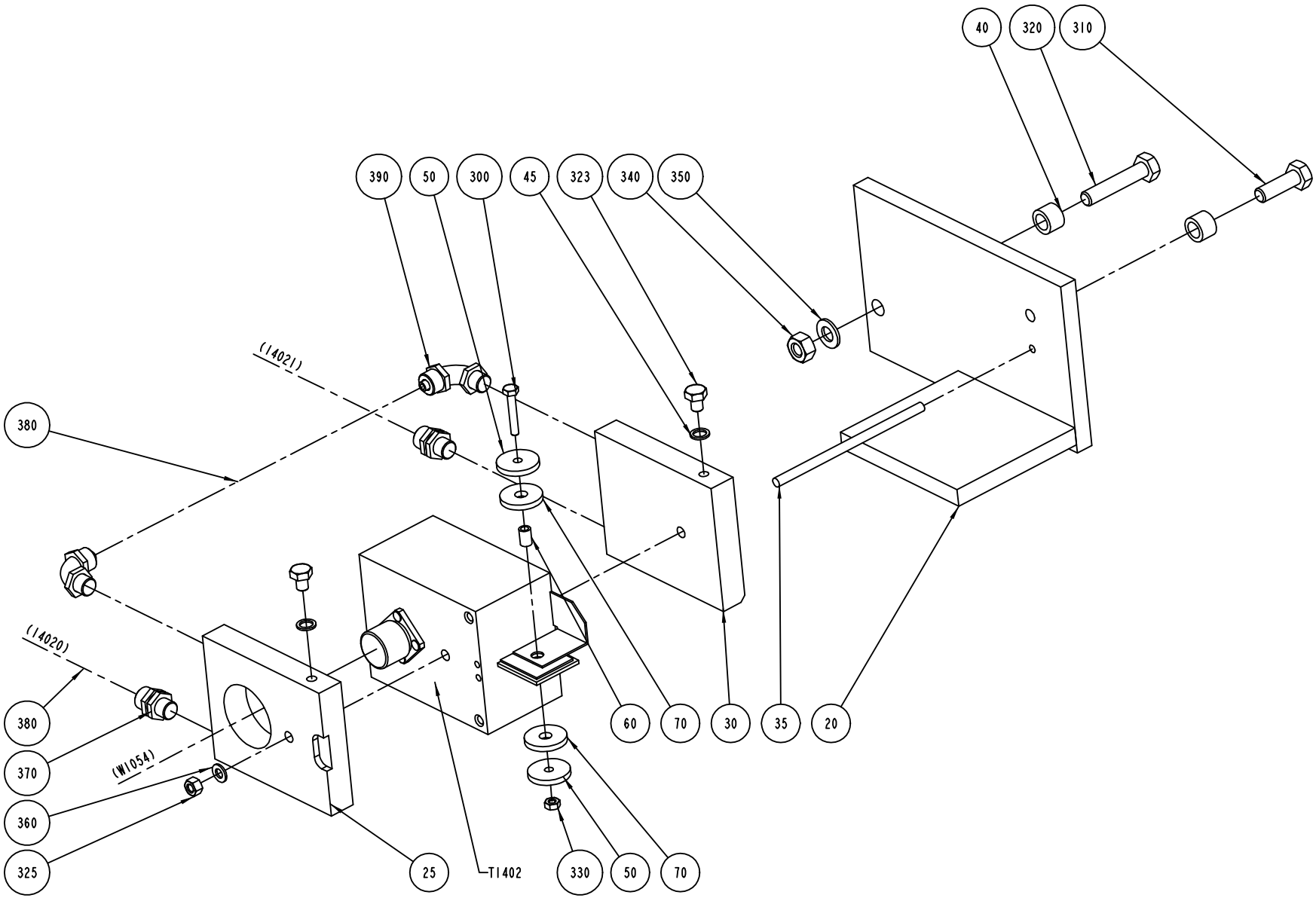

S-1095749-1
ECN 71937

Pos	Part No	SP	UN	Qty	Description	Page No
TBA 0200B						
T1402	67379-0115	A		1	IMPEDANCE TRANSFORMER	
TBA 0200S						
T1402	67379-0229	A		1	IMPEDANCE TRANSFORMER	
TBA 0250B						
T1402	67379-0108	A		1	IMPEDANCE TRANSFORMER	
TBA 0500B OR TBA 1000S OR TBA 1000B OR TPA 1000S OR TBA 1500S						
T1402	67379-0211	A		1	IMPEDANCE TRANSFORMER	
TBA 0500S						
T1402	67379-0247	A		1	IMPEDANCE TRANSFORMER	
TBA 1000SQ						
T1402	67379-0245	A		1	IMPEDANCE TRANSFORMER	
TPA 0330SQ						
T1402	67379-0109	A		1	IMPEDANCE TRANSFORMER	
Common Parts						
020	1140508-0000	-		1	CANTILEVER	
025	1129839-0000	-		1	COOLING PLATE	
030	1129869-0000	-		1	COOLING PLATE	
035	1140515-0000	-		1	SCREW	
040	1037005-0000	-		2	SLEEVE	
045	1140077-0000	-		2	RING	
050	583859-0000	-		2	WASHER	
060	583861-0000	-		1	SLEEVE	
070	583860-0000	-		2	WASHER	
300	312105-0297	-		1	SCREW M6S M4X25 A280	
310	312105-0453	-		1	SCREW M6S M8X25 A280	
320	312105-0459	-		1	SCREW M6S M8X40 A280	
323	312105-0362	-		2	SCREW M6S M6X8 A280	
325	312605-0314	-		1	HEXAGON NUT, M6M M5 A280	
330	312605-0312	-		1	HEXAGON NUT, M6M M4 A280	
340	312605-0318	-		1	HEXAGON NUT, M6M M8 A280	
350	315105-0165	-		1	WASHER PLAIN, BRB, 8,4/16,H=1,5	
360	315105-0146	-		1	WASHER PLAIN, BRB, 5,3/10,H=1	
370	342921-0121	-		2	STRAIGHT COUPLING,EXT.THREADED 8/6-G1/8"	
380	90166-0139	-	M	4	TUBE PA BLACK	
390	342931-0121	-		2	ELBOW 90 COUPL.,EXT.THREAD 8/6-G1/8"	

Machine Type | Group Description | Used-In | Group Number | Page No

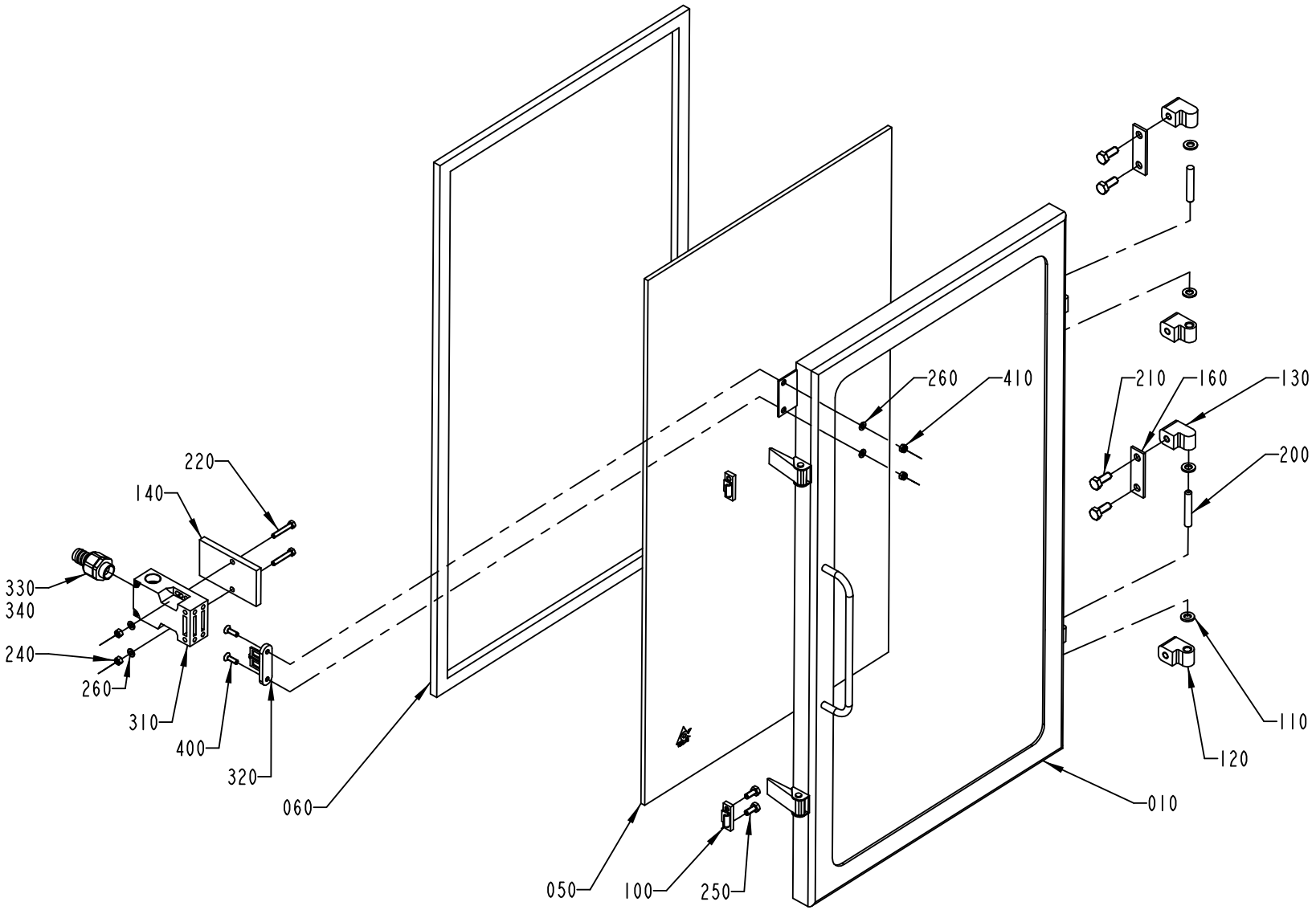

1317976-1
ECN 92369

ECM: 94740 - 20010917
Group number: 1317976-0100
Assembly Drawing: 1317976-1_1_AD

Issue: 20011217

Pos	Part No	SP	UN	Qty	Description	Page No
Common Parts						
010	1036754-0000	-		1	FRAME	
050	1037042-0000	-		1	GLASS PANE	
060	1037043-0000	B		1	GASKET	
100	271860-0000	-		2	CLAMP BLOCK	
110	441739-0000	-		4	WASHER	
120	1041979-0000	-		2	HINGE FLANGE	
130	1041978-0000	-		2	HINGE FLANGE	
140	1037048-0000	-		1	PLATE	
160	441737-0000	-		2	WASHER	
200	311103-0413	-		2	PARALLELL PIN, M6, 8X50 MM	
210	312105-0451	-		4	SCREW M6S 8X20 A280	
220	312109-0335	-		2	SCREW M6S M5X30 A280	
240	312605-0314	-		2	HEXAGON NUT, M6M M5 A280	
250	312105-0367	-		2	SCREW M6S M6X14 A280	
260	315105-0146	-		4	WASHER PLAIN, BRB, 5,3/10,H=1	
310	90044-0139	A		1	KEY SAF.SW. AZ16-02 ZVR K-2254	
320	90044-0310	A		1	KEY FOR SAFETY SWITCH, AZ 15/16 B1	
330	353243-0003	-		1	GLAND,HOSE,EXTENDED WITHOUT INSERT PG11	
340	353249-0011	-		1	GLAND,INSERT,SINGLE HOLE,EXTEND.7-10,5	
400	312155-0329	-		2	SCREW HEX.SOCK.COUNT.MF6S M5X16 A280	
410	312812-0314	-		2	HEXAGON NUT, NY-LOCK M5 A480	

Pos	Part No	SP	UN	Qty	Description	Page No

Machine Type | Group Description | Used-In | Group Number | Page No

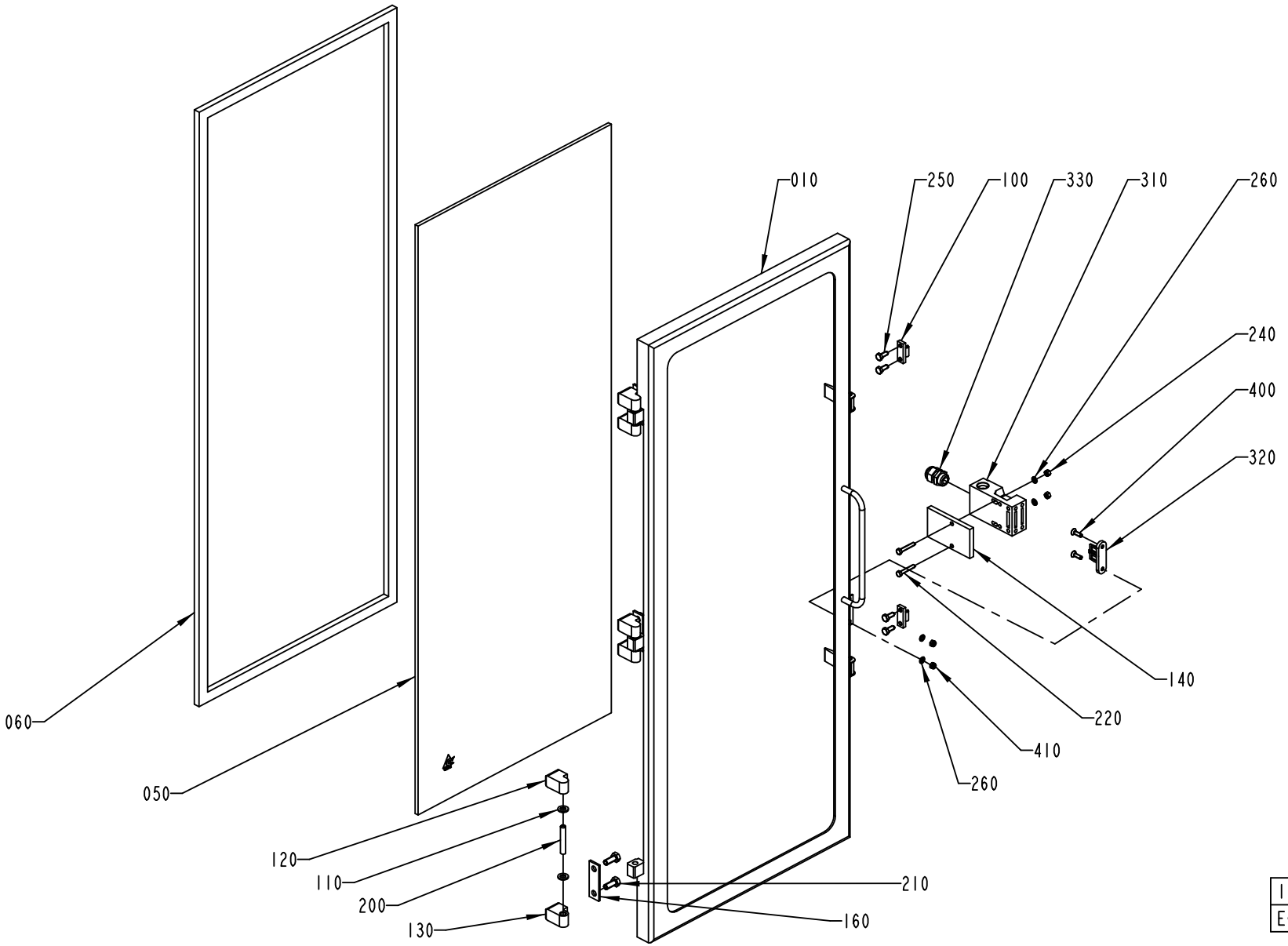

1317977-1
ECN 84725

ECM: 86469 - 20010116
Group number: 1317977-0100
Assembly Drawing: 1317977-1_1_AB

Issue: 20011217

Pos	Part No	SP	UN	Qty	Description	Page No
Common Parts						
010	1037051-0000	-		1	FRAME	
050	1037050-0000	-		1	GLASS PANE	
060	1037049-0000	B		1	GASKET	
100	271860-0000	-		2	CLAMP BLOCK	
110	441739-0000	-		6	WASHER	
120	1041979-0000	-		3	HINGE FLANGE	
130	1041978-0000	-		3	HINGE FLANGE	
140	1037048-0000	-		1	PLATE	
160	441737-0000	-		3	WASHER	
200	311103-0413	-		3	PARALLELL PIN, M6, 8X50 MM	
210	312105-0451	-		6	SCREW M6S 8X20 A280	
220	312109-0335	-		2	SCREW M6S M5X30 A280	
240	312605-0314	-		2	HEXAGON NUT, M6M M5 A280	
250	312105-0367	-		4	SCREW M6S M6X14 A280	
260	315105-0146	-		4	WASHER PLAIN, BRB, 5,3/10,H=1	
310	90044-0139	A		1	KEY SAF.SW. AZ16-02 ZVR K-2254	
320	90044-0310	A		1	KEY FOR SAFETY SWITCH, AZ 15/16 B1	
330	352103-0106	-		1	CABLE GLAND ST 11	
400	312155-0329	-		2	SCREW HEX.SOCK.COUNT.MF6S M5X16 A280	
410	312812-0314	-		2	HEXAGON NUT, NY-LOCK M5 A480	

Pos	Part No	SP	UN	Qty	Description	Page No

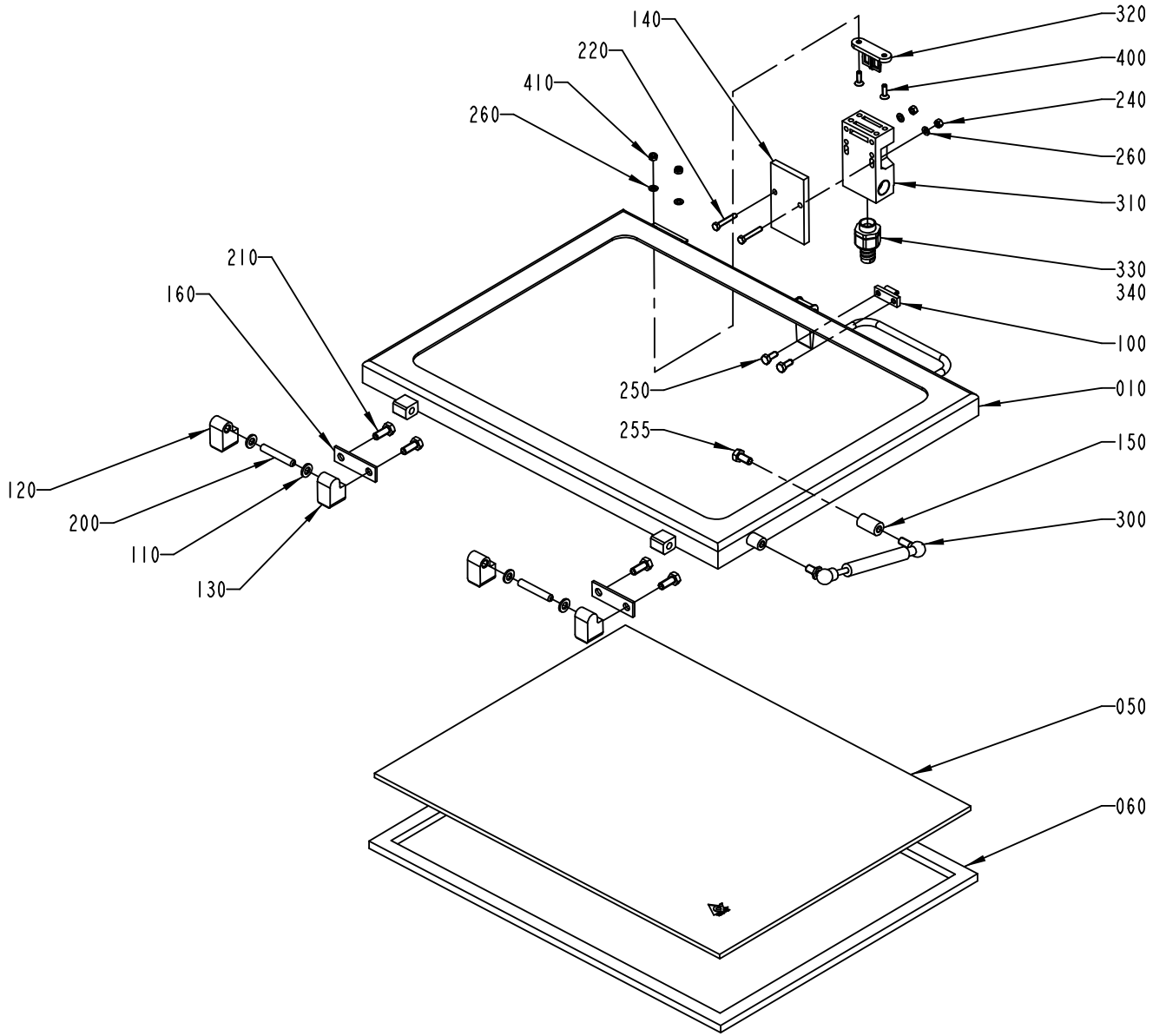

1317978-1
ECN 84725

ECM: 81847 - 20010116
Group number: 1317978-0100
Assembly Drawing: 1317978-1_1_AC

Issue: 20011217

Pos	Part No	SP	UN	Qty	Description	Page No
Common Parts						
010	1037079-0000	-		1	FRAME	
050	1037080-0000	-		1	GLASS PANE	
060	1037081-0000	B		1	GASKET	
100	271860-0000	-		1	CLAMP BLOCK	
110	441739-0000	-		4	WASHER	
120	1041979-0000	-		2	HINGE FLANGE	
130	1041978-0000	-		2	HINGE FLANGE	
140	1037048-0000	-		1	PLATE	
150	1037089-0000	-		1	SPACER	
160	441737-0000	-		2	WASHER	
200	311103-0413	-		2	PARALLELL PIN, M6, 8X50 MM	
210	312105-0451	-		4	SCREW M6S 8X20 A280	
220	312109-0335	-		2	SCREW M6S M5X30 A280	
240	312605-0314	-		2	HEXAGON NUT, M6M M5 A280	
250	312105-0367	-		2	SCREW M6S M6X14 A280	
255	312105-0449	-		1	SCREW M6S M8X16 A280	
260	315105-0146	-		4	WASHER PLAIN, BRB, 5,3/10,H=1	
300	90347-0039	B		1	DAMPER	
310	90044-0139	A		1	KEY SAF.SW. AZ16-02 ZVR K-2254	
320	90044-0310	A		1	KEY FOR SAFETY SWITCH, AZ 15/16 B1	
330	353243-0003	-		1	GLAND,HOSE,EXTENDED WITHOUT INSERT PG11	
340	353249-0011	-		1	GLAND,INSERT,SINGLE HOLE,EXTEND.7-10,5	
400	312155-0329	-		2	SCREW HEX.SOCK.COUNT.MF6S M5X16 A280	
410	312812-0314	-		2	HEXAGON NUT, NY-LOCK M5 A480	

Pos	Part No	SP	UN	Qty	Description	Page No

Machine Type | Group Description | Used-In | Group Number | Page No

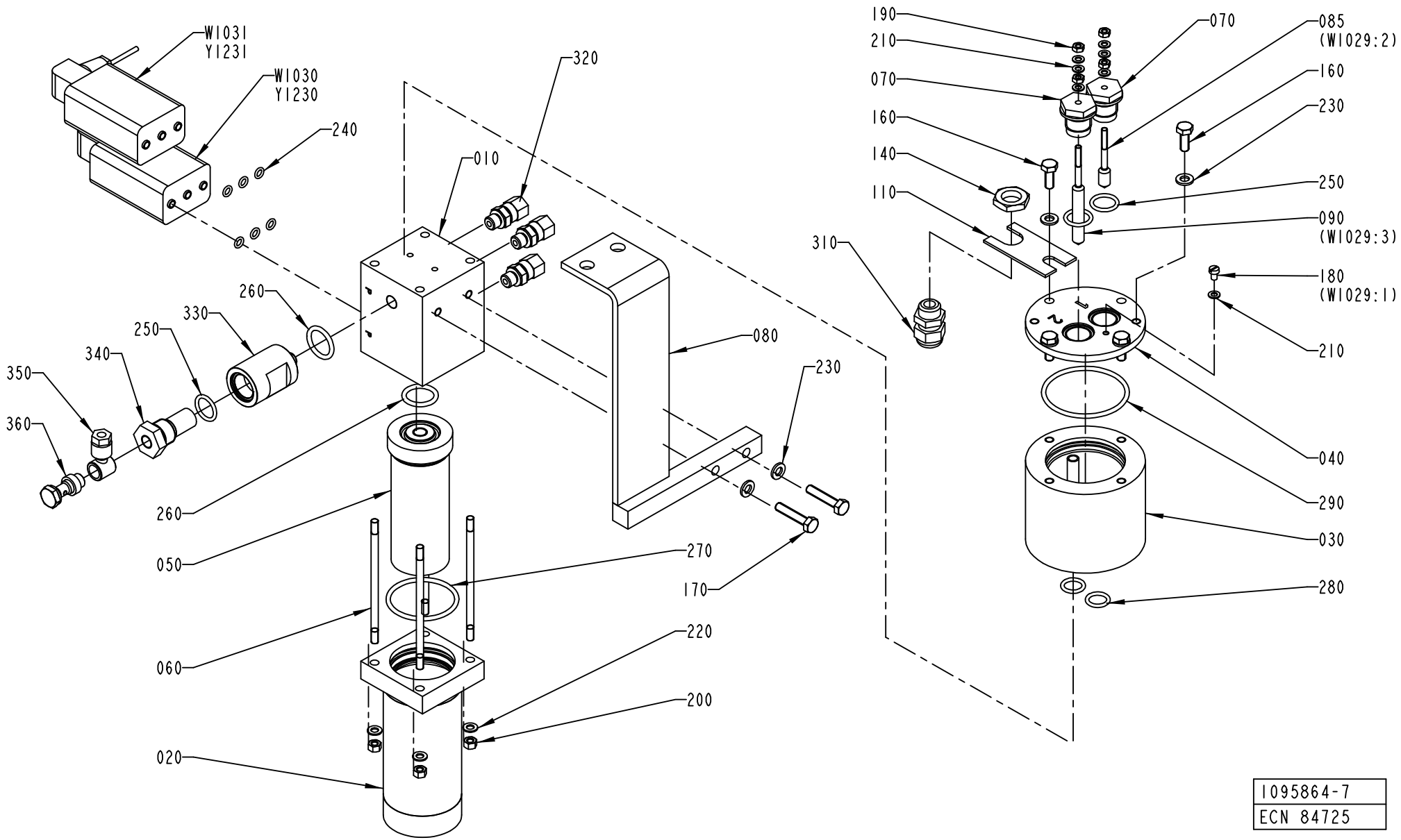
W1031
Y1231
W1030
Y1230
240
320
010
260
330
250
340
350
360
080
230
260
050
270
170
060
220
200
020
190
210
070
160
140
110
310
070
085
(W1029:2)
160
230
250
090
(W1029:3)
180
(W1029:1)
210
040
290
030
280
1095864-7
ECN 84725

ECM: 87582 - 20010116
Group number: 1095864-0300
Assembly Drawing: 1095864-7_1_AB

Issue: 20011217

Pos	Part No	SP	UN	Qty	Description	Page No
HI						
035	1140215-0000	A		1	BLOCK FITTING	
055	1140216-0000	A		1	SPRAY TANK	
060	1140221-0000	A		4	STUD	
070	560931-0000	A		3	BRACKET	
085	567070-0013	A		2	ELECTRODE	
155	312105-0340	-		4	SCREW M6S M5X45 A280	
180	312125-0285	-		2	SCREW SLOT.PAN HD. MCS 4X6 A480	
190	312605-0312	-		6	HEXAGON NUT, M6M M4 A280	
210	315105-0136	-		11	WASHER PLAIN, BRB, 4,3/8,H=0,8	
235	315204-0206	A		1	O-RING 7,3X2,4 MM	
240	927420-0001	A		9	O-RING 5.1X1.6 SILICON	
250	927421-0004	A		3	O-RING 15.3X2.4 SILICON	
280	927421-0002	A		5	O-RING 12.3X2.4 SILICON	
310	352103-0101	-		2	CABLE GLAND ST 9;PR15,2/PG9	
W9112	351150-0403	-	MM	2000	CABLE OLFLEX 3X0,75 MM2 LIGHT/GREY	
W9113	351150-0403	-	MM	2000	CABLE OLFLEX 3X0,75 MM2 LIGHT/GREY	
Y9112	90042-0203	-		1	SOLENOID VALVE BURKERT	
NOHI						
060	554585-0000	A		4	STUD SCREW	
070	560931-0000	A		2	BRACKET	
085	567070-0013	A		1	ELECTRODE	
180	312125-0285	-		1	SCREW SLOT.PAN HD. MCS 4X6 A480	
190	312605-0312	-		4	HEXAGON NUT, M6M M4 A280	
210	315105-0136	-		7	WASHER PLAIN, BRB, 4,3/8,H=0,8	
240	927420-0001	A		6	O-RING 5.1X1.6 SILICON	
250	927421-0004	A		3	O-RING 15.3X2.4 SILICON	
280	927421-0002	A		2	O-RING 12.3X2.4 SILICON	
Common Parts						
010	1487114-0000	A		1	BLOCK	
020	554142-0000	A		1	FILTER HOUSING	
030	1478170-0000	A		1	CONTAINER	
040	549267-0000	A		1	LID	
050	554141-0000	A		1	FILTER	
080	1484413-0000	-		1	BRACKET	
090	567070-0019	A		1	ELECTRODE	
110	1040970-0000	-		1	BRACKET	
140	90099-0104	-		1	NUT PR 15,2 (PG9)	
160	312105-0368	-		4	SCREW M6S M6X16 A280	
170	312109-0374	-		2	SCREW M6S M6X30 A280	
200	312605-0314	-		4	HEXAGON NUT, M6M M5 A280	
220	315105-0146	-		4	WASHER PLAIN, BRB, 5,3/10,H=1	
230	315105-0153	-		6	WASHER PLAIN, BRB, 6,4/12,H=1,5	
260	927422-0001	A		2	O-RING 19.2X3 SILICON	
270	927422-0007	A		1	O-RING 44.2X3 SILICON	
290	927422-0009	A		1	O-RING 54.5X3 SILICON	
310	352103-0101	-		1	CABLE GLAND ST 9;PR15,2/PG9	
320	90030-0184	-		3	CONN. STR. GA-6-G1/8	
330	1519486-0000	-		1	FILTER HOUSE	
340	450833-0000	A		1	FILTER	
350	342797-0121	-		1	CONN. BANJO, RINGPIECE 6-1/8	
360	342980-0303	-		1	BANJO-HOLLOW BOLT COUPL,EXT.THR.01-G1/8"	
Y1230	90042-0203	-		1	SOLENOID VALVE BURKERT	
Y1231	90042-0203	-		1	SOLENOID VALVE BURKERT	

Machine Type | Group Description | Used-In | Group Number | Page No

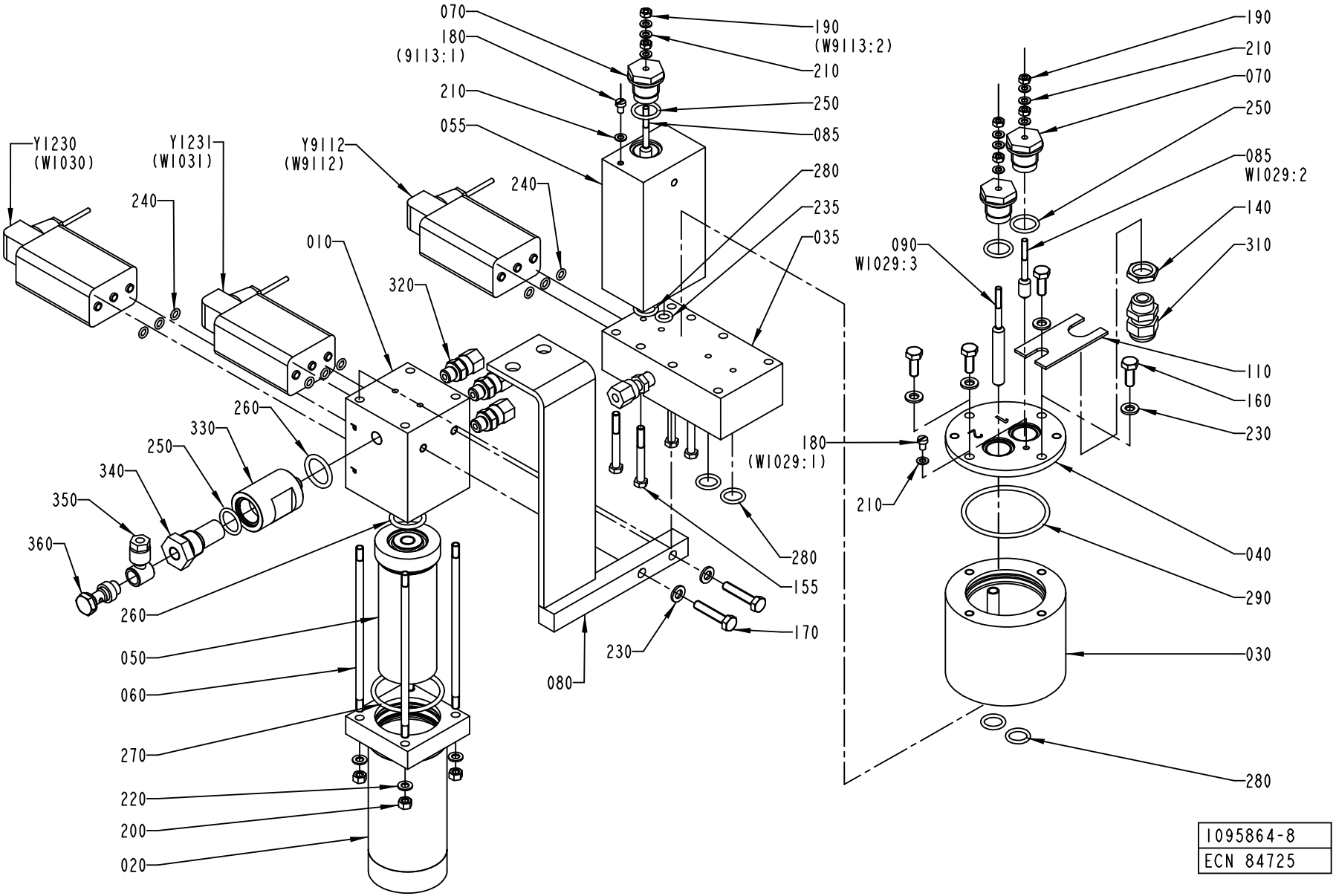
070
180
(9113:1)
210
055
Y1230
(W1030)
Y1231
(W1031)
Y9112
(W9112)
240
240
010
320
260
330
250
340
350
360
260
050
060
270
220
200
020
190
(W9113:2)
210
250
085
280
235
035
280
155
170
230
080
190
210
070
250
085
W1029:2
140
310
090
W1029:3
110
160
230
180
(W1029:1)
210
040
290
030
280
1095864-8
ECN 84725

ECM: 87582 - 20010116
Group number: 1095864-0300
Assembly Drawing: 1095864-8_1_AB

Issue: 20011217

Pos	Part No	SP	UN	Qty	Description	Page No
HI						
035	1140215-0000	A		1	BLOCK FITTING	
055	1140216-0000	A		1	SPRAY TANK	
060	1140221-0000	A		4	STUD	
070	560931-0000	A		3	BRACKET	
085	567070-0013	A		2	ELECTRODE	
155	312105-0340	-		4	SCREW M6S M5X45 A280	
180	312125-0285	-		2	SCREW SLOT.PAN HD. MCS 4X6 A480	
190	312605-0312	-		6	HEXAGON NUT, M6M M4 A280	
210	315105-0136	-		11	WASHER PLAIN, BRB, 4,3/8,H=0,8	
235	315204-0206	A		1	O-RING 7,3X2,4 MM	
240	927420-0001	A		9	O-RING 5.1X1.6 SILICON	
250	927421-0004	A		3	O-RING 15.3X2.4 SILICON	
280	927421-0002	A		5	O-RING 12.3X2.4 SILICON	
310	352103-0101	-		2	CABLE GLAND ST 9;PR15,2/PG9	
W9112	351150-0403	-	MM	2000	CABLE OLFLEX 3X0,75 MM2 LIGHT/GREY	
W9113	351150-0403	-	MM	2000	CABLE OLFLEX 3X0,75 MM2 LIGHT/GREY	
Y9112	90042-0203	-		1	SOLENOID VALVE BURKERT	
NOHI						
060	554585-0000	A		4	STUD SCREW	
070	560931-0000	A		2	BRACKET	
085	567070-0013	A		1	ELECTRODE	
180	312125-0285	-		1	SCREW SLOT.PAN HD. MCS 4X6 A480	
190	312605-0312	-		4	HEXAGON NUT, M6M M4 A280	
210	315105-0136	-		7	WASHER PLAIN, BRB, 4,3/8,H=0,8	
240	927420-0001	A		6	O-RING 5.1X1.6 SILICON	
250	927421-0004	A		3	O-RING 15.3X2.4 SILICON	
280	927421-0002	A		2	O-RING 12.3X2.4 SILICON	
Common Parts						
010	1487114-0000	A		1	BLOCK	
020	554142-0000	A		1	FILTER HOUSING	
030	1478170-0000	A		1	CONTAINER	
040	549267-0000	A		1	LID	
050	554141-0000	A		1	FILTER	
080	1484413-0000	-		1	BRACKET	
090	567070-0019	A		1	ELECTRODE	
110	1040970-0000	-		1	BRACKET	
140	90099-0104	-		1	NUT PR 15,2 (PG9)	
160	312105-0368	-		4	SCREW M6S M6X16 A280	
170	312109-0374	-		2	SCREW M6S M6X30 A280	
200	312605-0314	-		4	HEXAGON NUT, M6M M5 A280	
220	315105-0146	-		4	WASHER PLAIN, BRB, 5,3/10,H=1	
230	315105-0153	-		6	WASHER PLAIN, BRB, 6,4/12,H=1,5	
260	927422-0001	A		2	O-RING 19.2X3 SILICON	
270	927422-0007	A		1	O-RING 44.2X3 SILICON	
290	927422-0009	A		1	O-RING 54.5X3 SILICON	
310	352103-0101	-		1	CABLE GLAND ST 9;PR15,2/PG9	
320	90030-0184	-		3	CONN. STR. GA-6-G1/8	
330	1519486-0000	-		1	FILTER HOUSE	
340	450833-0000	A		1	FILTER	
350	342797-0121	-		1	CONN. BANJO, RINGPIECE 6-1/8	
360	342980-0303	-		1	BANJO-HOLLOW BOLT COUPL,EXT.THR.01-G1/8"	
Y1230	90042-0203	-		1	SOLENOID VALVE BURKERT	
Y1231	90042-0203	-		1	SOLENOID VALVE BURKERT	

Machine Type | Group Description | Used-In | Group Number | Page No

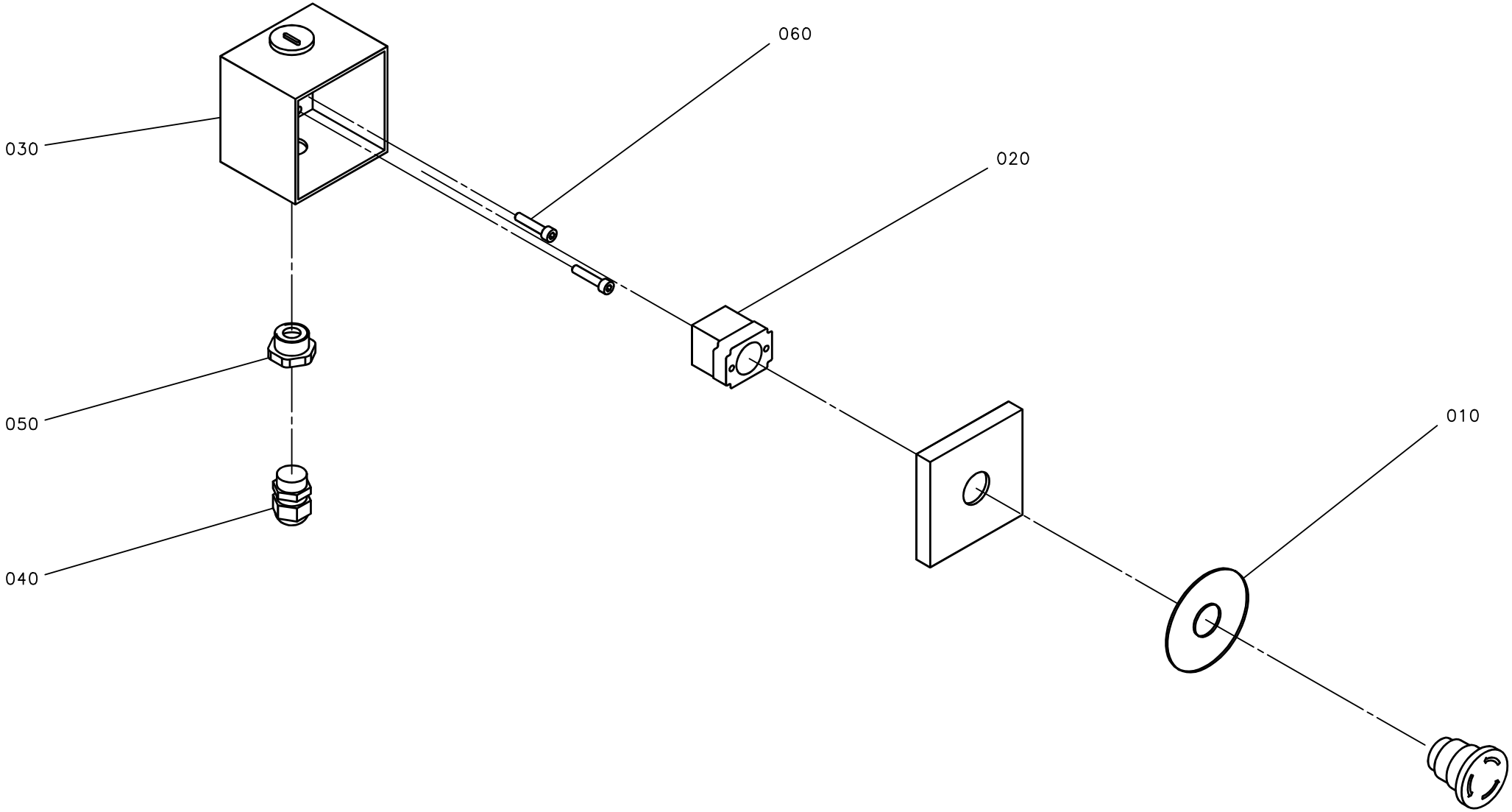
060
030
020
050
010
040

ECM: 96603 - 20010920
Group number: 1035382-0100
Assembly Drawing: 1035382-1_1_AA

Issue: 20011217

Pos	Part No	SP	UN	Qty	Description	Page No
Common Parts						
010	486826-0001	-		1	SIGN "EMERGENCY STOP"	
020	90064-0124	B		1	SWITCH,EMERGENCY STOP	
030	90066-0021	-		1	PUSH BUTTON BOX XAP-M1501 TELEMECANIQUE	
040	90012-0071	-		1	GLAND FITTING	
050	90089-0021	-		1	REDUCTION SLEEVE,PLASTIC GREY	
060	312115-0333	-		2	SCREW MC6S M5X25 A280	

Pos	Part No	SP	UN	Qty	Description	Page No

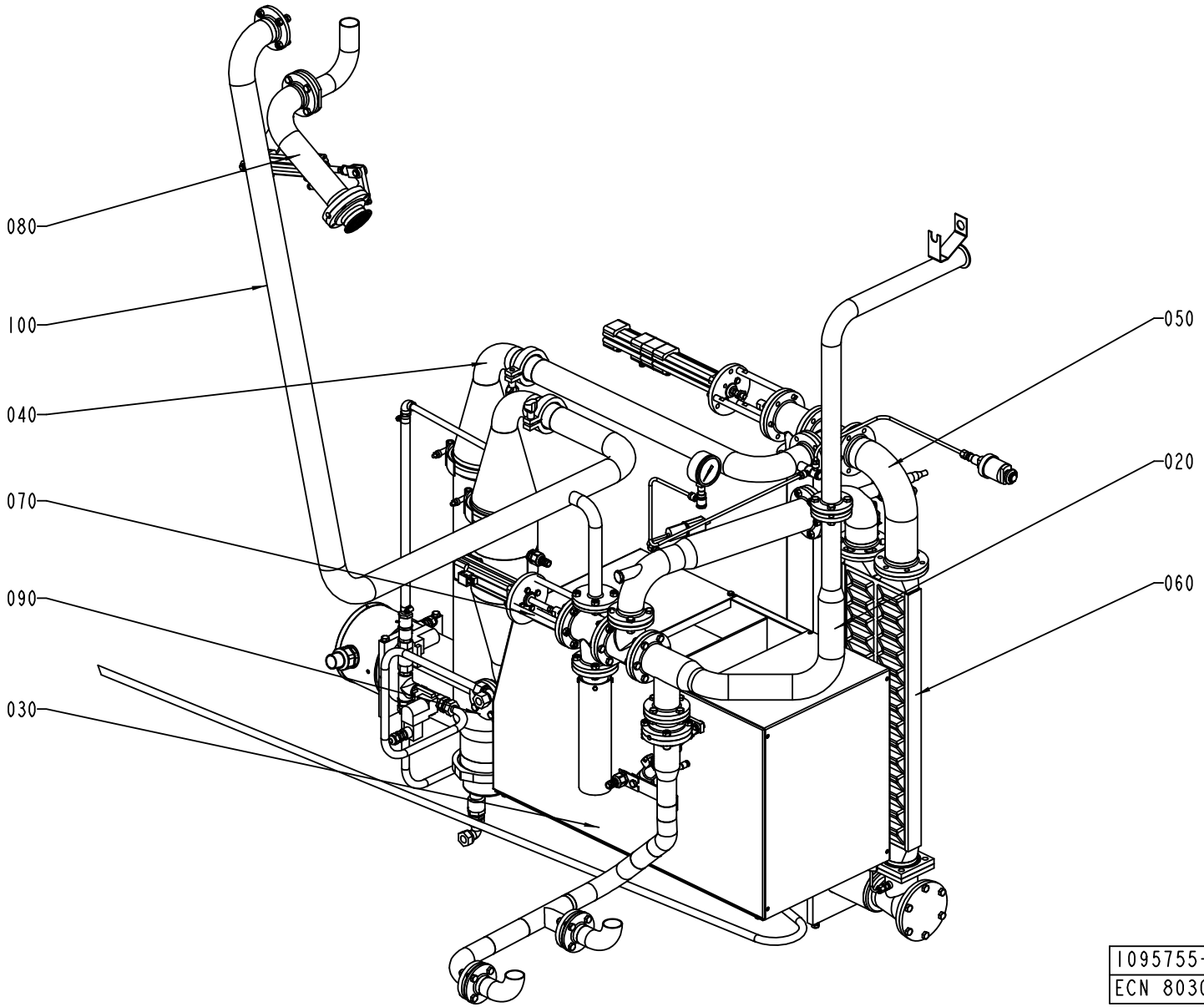
080
100
040
070
090
030
050
020
060
1095755-2
ECN 80308

ECM: 81287 - 20001012
Group number: 1095755-0200
Assembly Drawing: 1095755-2_1_AC

Issue: 20011217

Pos	Part No	SP	UN	Qty	Description	Page No
Common Parts						
020	A1095830-0300	-		1	PIPE-LINE	**85**
030	A996475-0200	-		1	COMPRESSOR UNIT	**89**
040	A1095754-0100	-		1	SEPARATOR	**91**
050	A996477-0100	-		1	VALVE HEAT EXCHANGER	**93**
060	A996478-0200	-		1	AIR SUPER-HEATER	**95, 97**
070	A996479-0200	-		1	AIR VALVE	**99**
080	A996481-0300	-		1	VALVE REF.POINT	**101**
090	A996482-0100	-		1	PRESSURE REGULATOR	**103, 105**
100	A996483-0300	-		1	SCRUBBER	**107**

Pos	Part No	SP	UN	Qty	Description	Page No

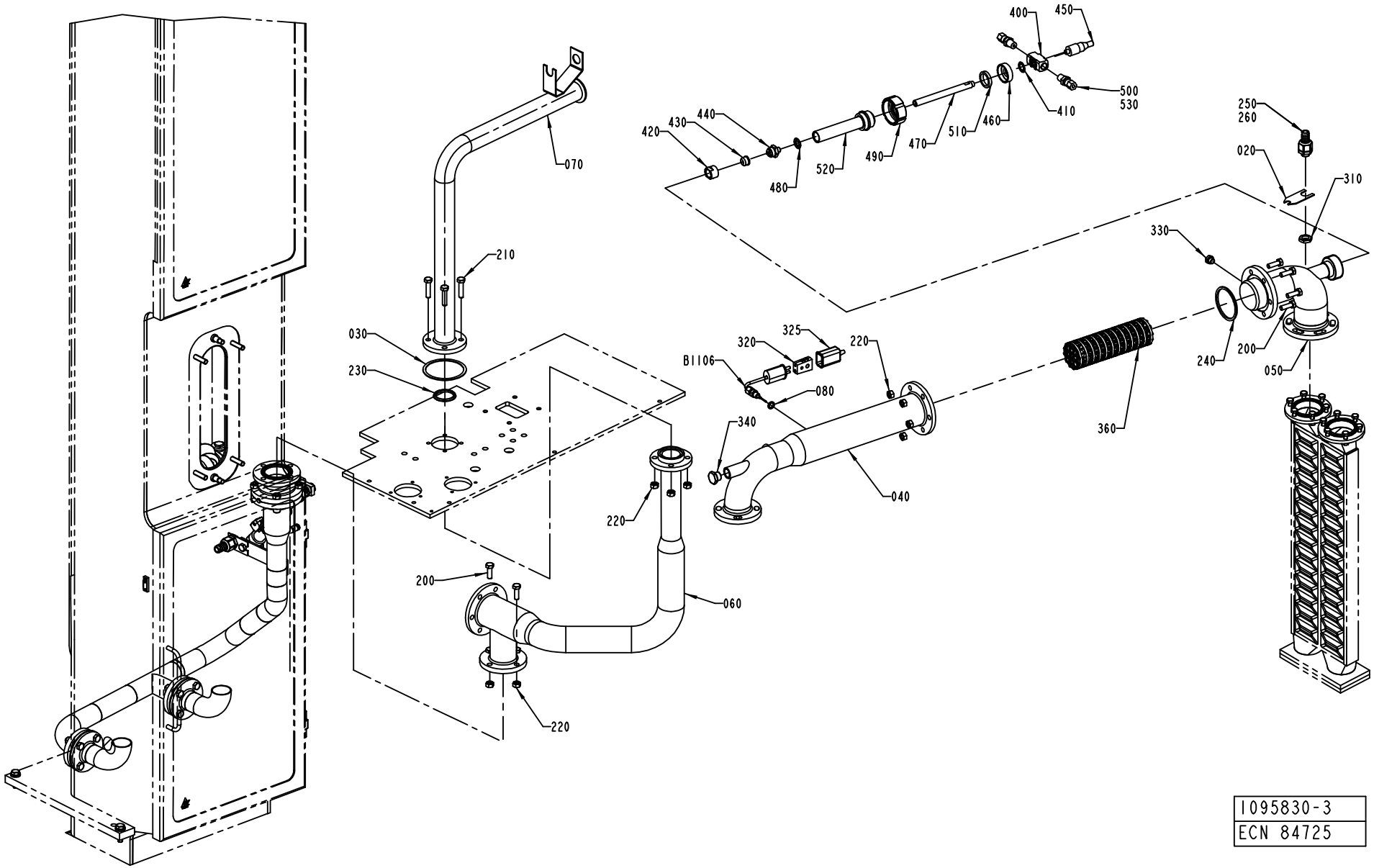

1095830-3
ECN 84725

Pos	Part No	SP	UN	Qty	Description	Page No
Common Parts						
010	A1490043-0100	-		1	BUTTERFLY VALVE	**87**
020	1036293-0000	-		1	HOLDER	
030	1036294-0000	B		1	GASKET	
040	1498171-0000	A		1	PIPE	
050	1512320-0000	-		1	PIPE	
060	1129336-0000	-		1	PIPE	
070	1129344-0000	-		1	PIPE	
080	273429-0000	-		1	WASHER	
200	312105-0453	-		10	SCREW M6S M8X25 A280	
210	312109-0457	-		4	SCREW M6S M8X35 A280	
220	312605-0318	-		14	HEXAGON NUT, M6M M8 A280	
230	315229-0204	B		1	GASKET 34,8X42,8X3,7 MM 1"1/2	
240	315229-0206	B		1	GASKET 60,2X68,2X3,7 MM 2"1/2	
250	353243-0001	-		1	GLAND,HOSE,EXTENDED,WITHOUT INSERT PG9	
260	353249-0008	-		1	GLAND,INSERT,SINGLE HOLE,EXTEND.4-6,5	
310	90099-0104	-		1	NUT PR 15,2 (PG9)	
320	90326-0020	-		1	PLUG,FEMALE YELLOW CR-AL	
325	90326-0012	-		1	PROTECTIVE COVER	
330	90330-0066	-		1	PLUG, EXT. G-THREAD, G1/8	
340	90330-0029	-		1	PLUG, EXT. G-THREAD, R-236R3/8	
360	1549526-0000	A		1	CONTAINER	
400	1512319-0000	-		1	SPRAY NOZZLE BODY	
410	1512302-0000	B		1	SPRAY NOZZLE GASKET	
420	1512300-0000	-		1	SPRAY NOZZLE NUT	
430	1512299-0000	-		1	SPRAY NOZZLE DOME	
440	1512409-0000	A		1	SPRAY NOZZLE INJECTOR	
450	1512410-0000	-		1	SPRAY NOZZLE PLUG	
460	1512836-0000	-		1	LID	
470	1499634-0000	-		1	INTERNAL PIPE	
480	1512301-0000	A		1	SPACER	
490	1512405-0000	-		1	NUT	
500	90030-0062	-		2	CONN. STR. GE 6-1/4-18 NPTF	
510	12242-0001	B		1	GASKET	
520	1512835-0000	-		1	EXTERNAL PIPE	
530	90144-0007	-		1	TAPE	
B1106	90326-0051	A		1	THERMO COUPLE	

Pos	Part No	SP	UN	Qty	Description	Page No

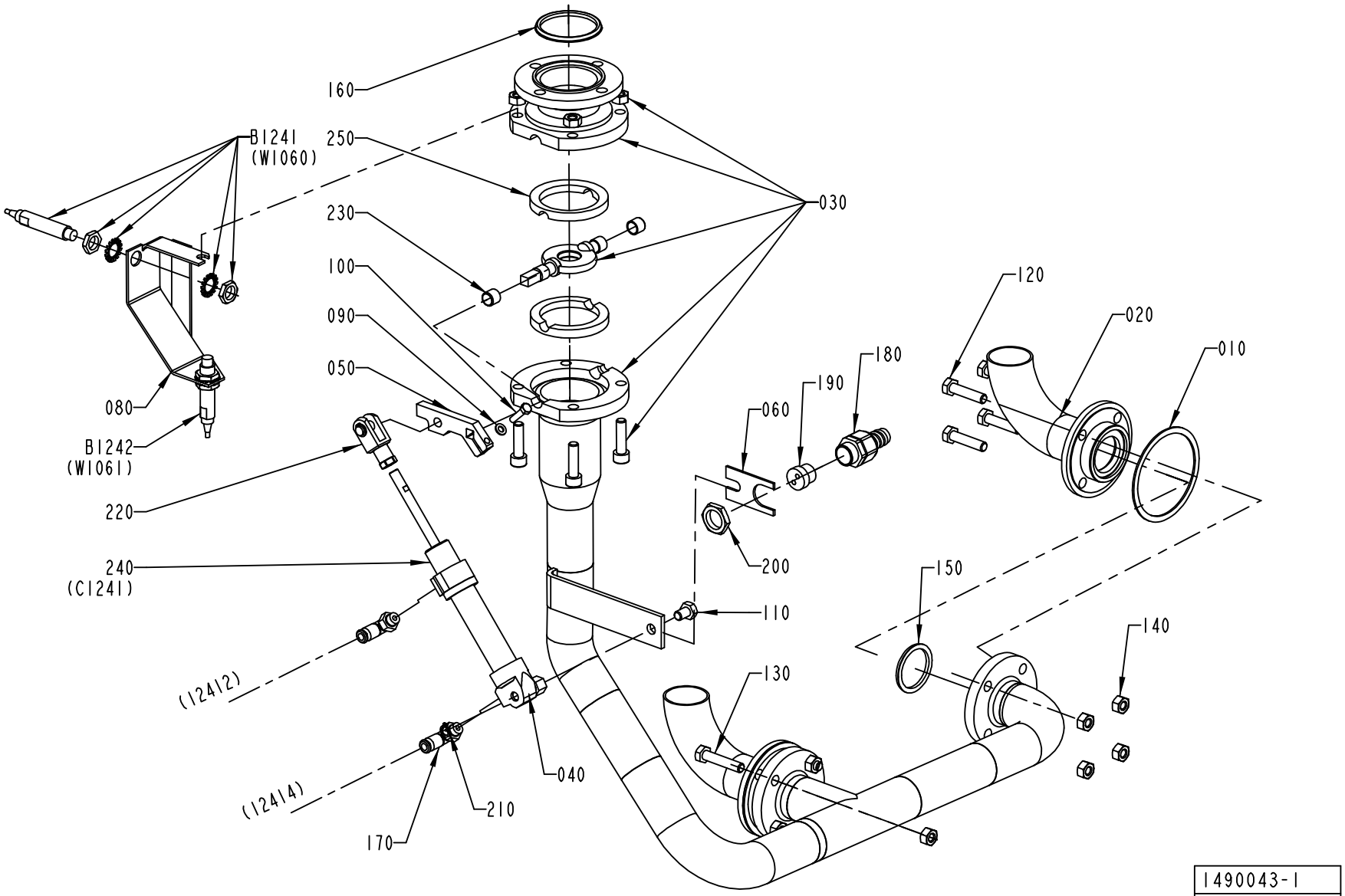

1490043-1
ECM 83763

ECM: 98209 - 50001231
Group number: 1490043-0100
Assembly Drawing: 1490043-1_1_AB

Issue: 20011217

Pos	Part No	SP	UN	Qty	Description	Page No
Common Parts						
010	1036294-0000	A		2	GASKET	
020	1255957-0000	-		2	PIPE	
030	B1349761-0000	-		1	PIPE	
	1487261-0000	*C*		*1*	*SEAL RING*	
	90240-0302	*C*		*2*	*BUSHING*	
040	1349762-0000	-		1	SHAFT	
050	2503593-0000	A		1	LEVER	
060	1487263-0000	-		1	BRACKET	
080	1558396-0000	-		1	SWITCH BRACKET	
100	312105-0331	-		1	SCREW M6S M5X20 A280	
110	312105-0447	-		1	SCREW M6S M8X12 A280	
120	312109-0457	-		7	SCREW M6S M8X35 A280	
130	312109-0459	-		1	SCREW M6S M8X40 A280	
140	312605-0318	-		8	HEXAGON NUT, M6M M8 A280	
150	315229-0204	A		2	GASKET 34,8X42,8X3,7 MM 1"1/2	
160	315229-0205	A		1	GASKET 47,5X55,5X3,7 MM 2"	
170	342732-0102	-		2	ELBOW PIPE JOINT	
180	353243-0002	-		1	GLAND,HOSE,EXTENDED,WITHOUT INSERT PG11	
190	353249-0036	-		1	GLAND,INSERT,MULTI HOLE,EXTENDED 2X4	
200	90099-0117	-		1	NUT PR 18,6 (PG11)	
210	90141-0015	-		1	RETAIN. RING, 8	
220	90239-0532	A		1	ROD END,CLEVIS WITH AXLE M8	
230	90240-0302	A		2	BUSHING	
240	90239-0822	A		1	DOUBLE ACTING, MINI-ISO, CYL.20-50	
250	1487261-0000	A		2	SEAL RING	
B1241	90458-0672	A		1	PROXIMITY SENSOR E2E2-X5MB1-5M	
B1242	90458-0672	A		1	PROXIMITY SENSOR E2E2-X5MB1-5M	

Pos	Part No	SP	UN	Qty	Description	Page No

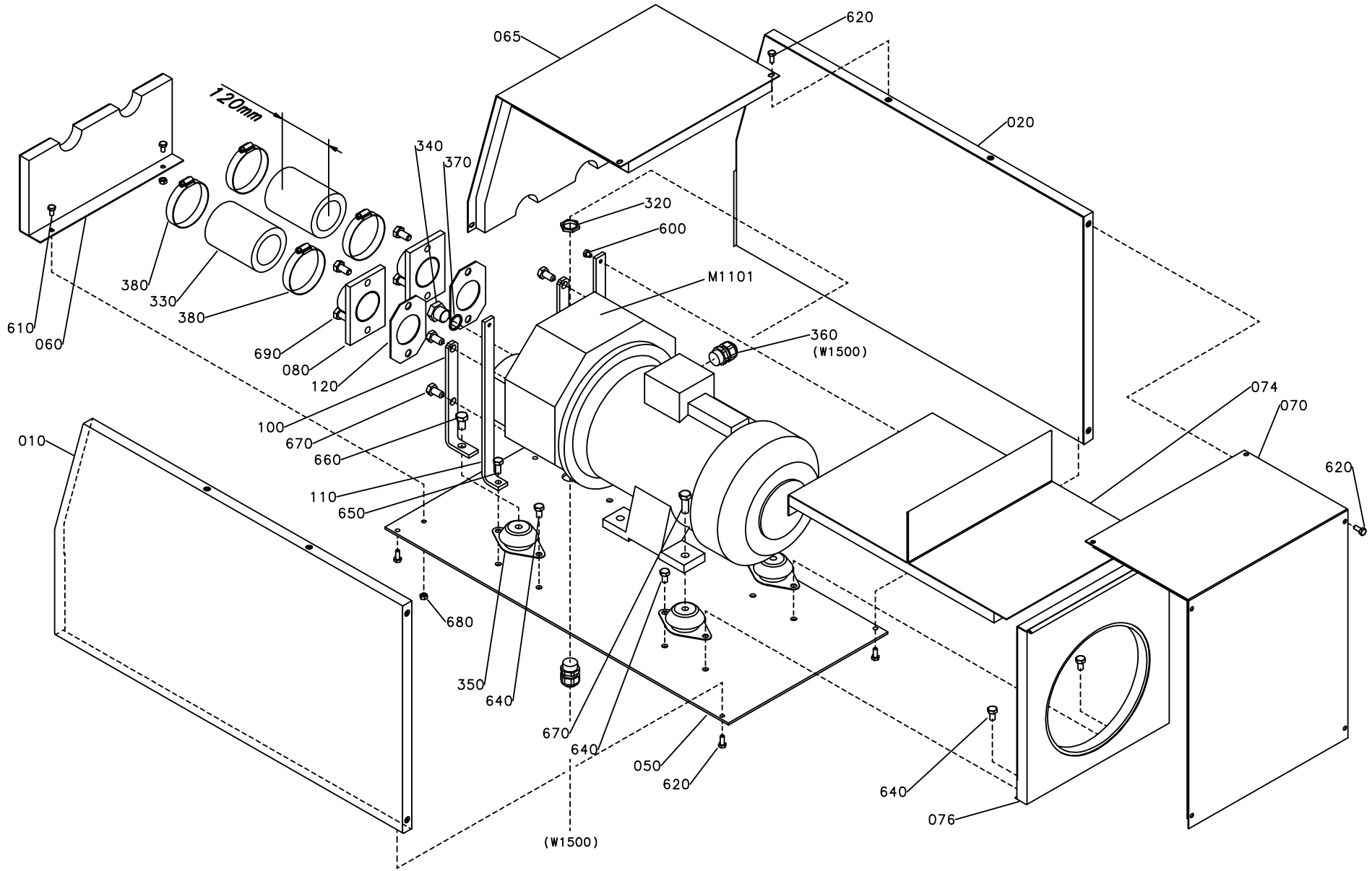
065
620
020
120mm
340
370
320
600
M1101
360
(W1500)
380
330
380
610
060
690
080
120
100
670
660
110
650
010
074
070
620
680
350
640
670
640
050
620
640
076
(W1500)

ECM: 71741 - 19980902
Group number: 996475-0200
Assembly Drawing: 996475-2_1_AB

Issue: 20011217

Pos	Part No	SP	UN	Qty	Description	Page No
Common Parts						
010	1040859-0000	-		1	COVER	
020	1040874-0000	-		1	COVER	
050	1036314-0000	-		1	BOTTOM PANEL	
060	1036315-0000	-		1	FRONT PLATE	
065	1040875-0000	-		1	COVER	
070	1040876-0000	-		1	COVER	
074	1040877-0000	-		1	PLATE	
076	1040878-0000	-		1	PLATE	
080	1036318-0000	-		2	PIPE	
100	269859-0000	-		2	BRACKET	
110	1036319-0000	-		2	BRACKET	
120	230551-0000	C		2	GASKET	
320	90099-0110	-		1	NUT PR 22,5 (PG16)	
330	90166-0199	C	MM	240	RUBBER HOSE	
340	342713-0213	-		1	PLUG, EXT THREAD HEX SOCKET 8638-00-120	
350	90347-0144	-		4	VIBRATION DAMPER, NO. RA 40EM-A	
360	352103-0111	-		2	CABLE GLAND ST 16	
370	315234-0113	C		1	WASHER PL.RND.CU.21,3//26 H=1,5	
380	342991-0111	-		4	HOSE CLIP,WORM DRIVE TYPE (63)-73	
600	312105-0362	-		2	SCREW M6S M6X8 A280	
610	312105-0366	-		2	SCREW M6S M6X12 A280	
620	312105-0368	-		14	SCREW M6S M6X16 A280	
640	312105-0449	-		6	SCREW M6S M8X16 A280	
650	312105-0451	-		2	SCREW M6S 8X20 A280	
660	312105-0491	-		2	SCREW M6S M10X20 A280	
670	312105-0495	-		6	SCREW M6S M10X30 A280	
680	312605-0316	-		2	HEXAGON NUT, M6M M6 A280	
690	312105-0493	-		4	SCREW M6S M10X25 A280	
M1101	90270-0017	D		1	COMPRESSOR NASH/ELMO 112 MB/4-2083	

Pos	Part No	SP	UN	Qty	Description	Page No

Machine Type | Group Description | Used-In | Group Number | Page No

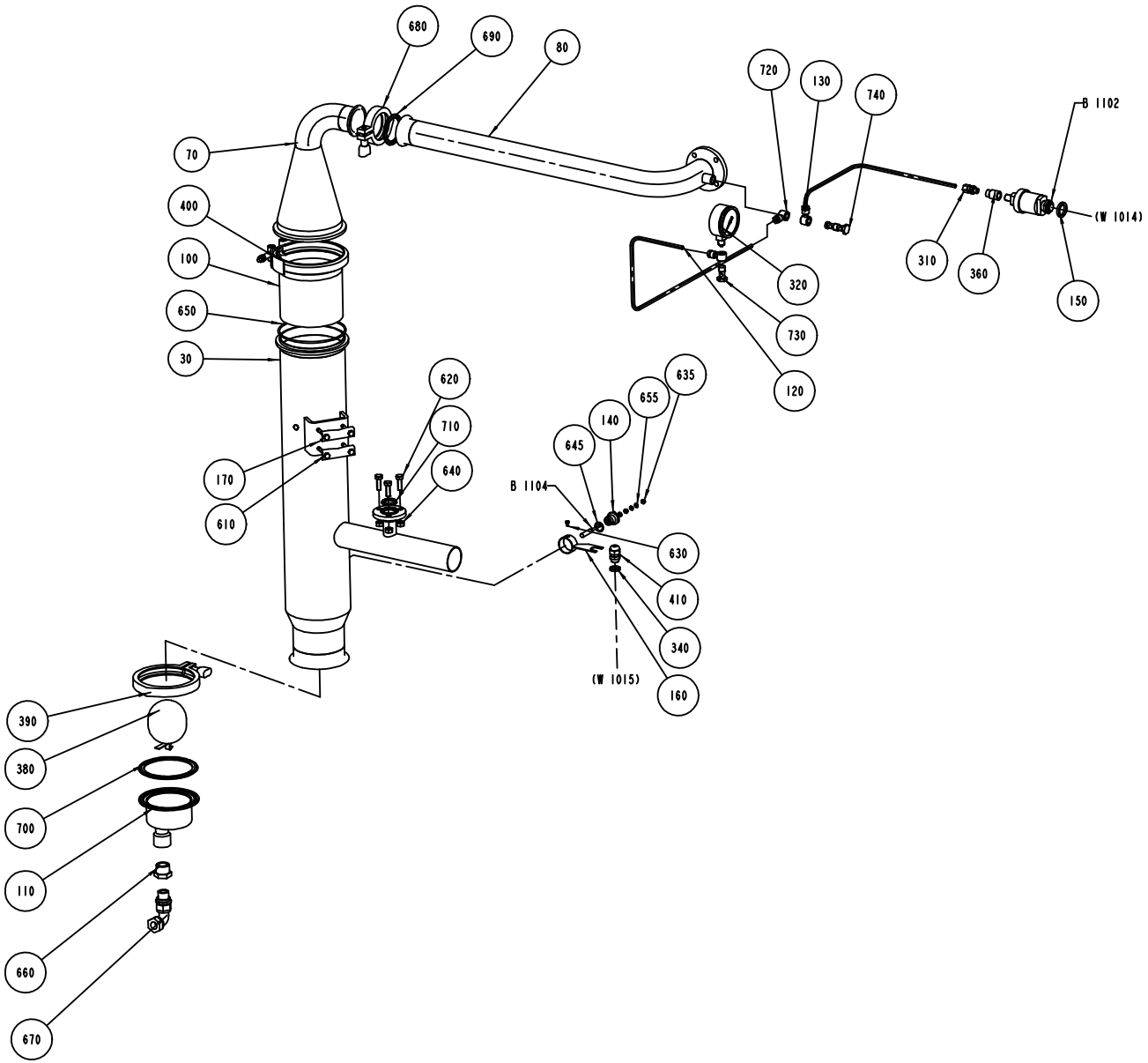
680
690
80
720
130
740
B 1102
70
400
100
650
30
(W 1014)
310
360
150
320
730
120
620
710
640
635
655
140
645
170
610
B 1104
630
410
340
160
(W 1015)
390
380
700
110
660
670

ECM: 71741 - 19980902
Group number: 1095754-0100
Assembly Drawing: 1095754-1_1_AC

Issue: 20011217

Pos	Part No	SP	UN	Qty	Description	Page No
Common Parts						
030	1038866-0000	-		1	INTERMEDIARY SECTION	
070	1036753-0000	-		1	UPPER SECTION	
080	1036760-0000	-		1	PIPE	
100	546929-0000	C		1	FILTER	
110	1038634-0000	D		1	DRAINING	
120	1038356-0000	-		1	PIPE	
130	1129204-0000	-		1	PIPE	
140	560931-0000	C		1	BRACKET	
150	479234-0000	-		1	WASHER	
160	1036810-0000	-		1	HOLDER	
170	1036811-0000	-		2	CLAMP	
310	90030-0184	-		1	CONN. STR. GA-6-G1/8	
320	90043-0095	D		1	PRESSURE GAUGE, 2740, D=63 MM, GLYC.	
330	90157-0037	D	L	1	SEALING COMPOUND	
340	90099-0104	-		1	NUT PR 15,2 (PG9)	
360	90330-0012	-		1	SLEEVE, REDUCTION, INT, R-2021/4X1/8	
380	90360-0305	C		1	FLOAT	
390	342840-0108	-		1	CLAMP, 101,6 MM 3-A PCS+PMCS	
400	90132-0030	-		1	HOLDER MV 87177 KS 580T	
410	352103-0101	-		1	CABLE GLAND ST 9;PR15,2/PG9	
610	312105-0381	-		4	SCREW M6S M6X55 A280	
620	312105-0453	-		3	SCREW M6S M8X25 A280	
630	312125-0285	-		1	SCREW SLOT.PAN HD. MCS 4X6 A480	
635	312605-0312	-		2	HEXAGON NUT, M6M M4 A280	
640	312605-0318	-		3	HEXAGON NUT, M6M M8 A280	
645	315204-0213	C		1	O-RING 15,2X2,4 MM	
650	315204-0317	C		1	O-RING 129,5X3 MM	
655	315105-0136	-		3	WASHER PLAIN, BRB, 4,3/8,H=0,8	
660	342206-0109	-		1	BUSHING, TAPERED, INT/EXT. THRÿNO. R211	
670	342738-0221	-		1	ADJUSTABLE ELBOW CONNECTION,EXT 15-G1/2	
680	342840-0105	-		1	CLAMPING PIECE	
690	342850-0405	C		1	GASKET 47,8X62,6X5,2 MM 2" FDA	
700	342850-0408	C		1	GASKET 97X117,7X5,2 MM 4" FDA	
710	315229-0203	C		1	GASKET 34,8X42,8X3,7 MM 1"1/2	
720	342797-0122	-		3	CONN. BANJO, RINGPIECE 6-1/4	
730	342980-0304	-		1	BANJO-HOLLOW BOLT COUPL,EXT.THR.01-G1/4"	
740	342980-0314	-		1	BANJO-HOLLOW BOLT COUPL,EXT.THR.02-G1/4"	
B1102	90274-0045	D		1	GUARD	
B1104	979500-0003	D		1	ELECTRODE	

Pos	Part No	SP	UN	Qty	Description	Page No

Machine Type | Group Description | Used-In | Group Number | Page No

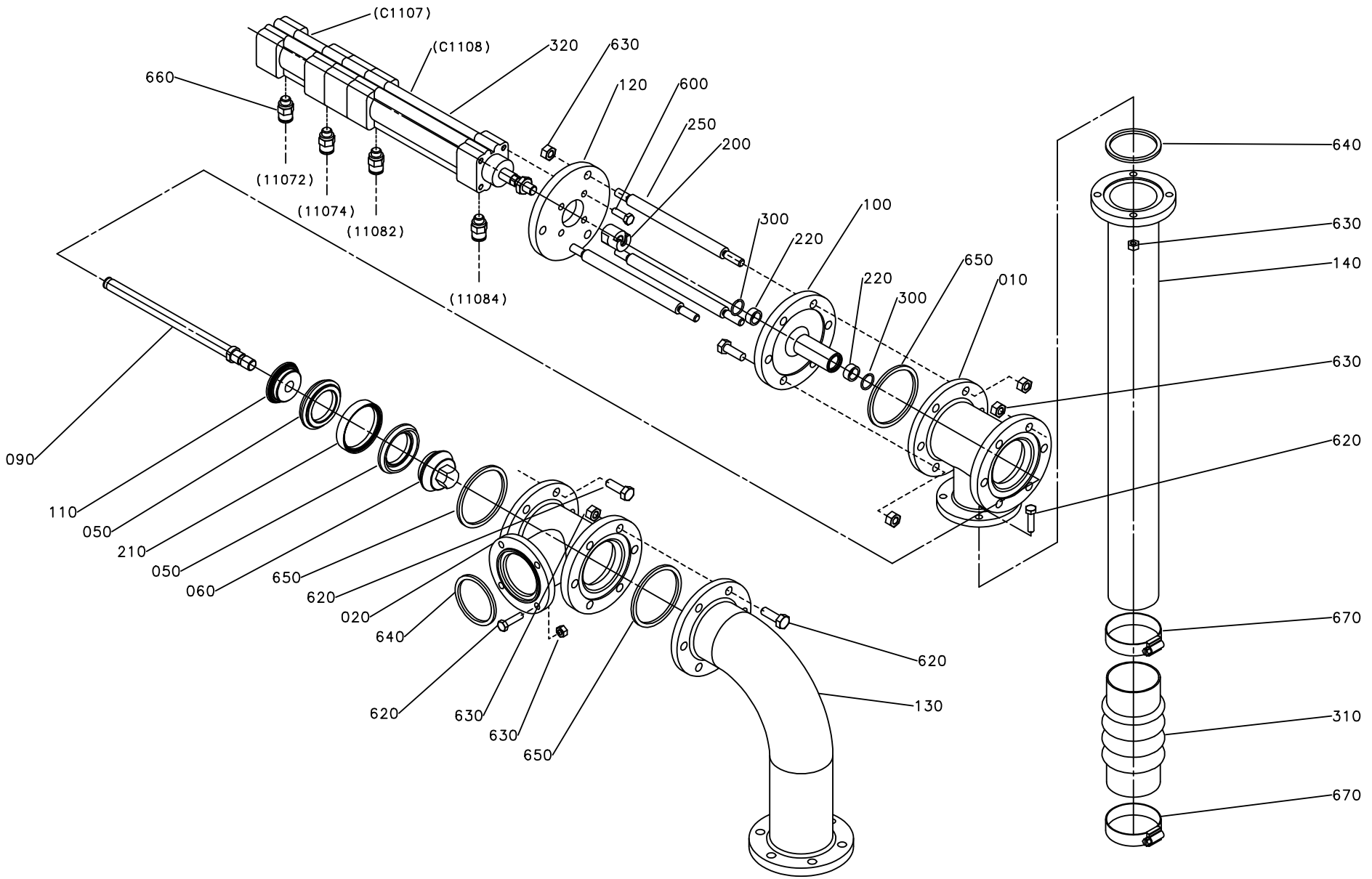
(C1107)
(C1108)
320
630
660
120
600
250
200
(11072)
(11074)
(11082)
(11084)
300
220
100
650
010
220
300
640
630
140
630
620
090
110
050
210
050
060
650
620
020
640
620
630
630
650
620
130
670
310
670

ECM: 71741 - 19980902
Group number: 996477-0100
Assembly Drawing: 996477-1_1_AB

Issue: 20011217

Pos	Part No	SP	UN	Qty	Description	Page No
Common Parts						
010	1036187-0000	-		1	T-PIPE	
020	1036194-0000	-		1	T-PIPE	
050	530589-0000	C		2	SEAL RING	
060	530590-0000	D		1	VALVE CONE	
090	1036188-0000	C		1	SHAFT	
100	1036189-0000	D		1	SPINDLE GUIDE	
110	1036191-0000	D		1	SEAL HOLDER	
120	1036193-0000	D		1	CYLINDER BRACKET	
130	1036586-0000	-		1	PIPE	
140	1036587-0000	-		1	PIPE	
200	441871-0000	D		1	PENDULUM SUSPENSION	
210	530599-0000	D		1	RING	
220	532349-0000	C		2	PLAIN BEARING	
250	1036604-0000	-		3	SPACER ROD	
300	90141-0022	C		2	SNAP RING B 16	
310	90342-0022	D		1	BELLOWS	
320	90450-0305	C		1	CYLINDER	
600	312105-0370	-		4	SCREW M6S M6X20 A280	
620	312105-0453	-		23	SCREW M6S M8X25 A280	
630	312605-0318	-		29	HEXAGON NUT, M6M M8 A280	
640	315229-0205	C		2	GASKET 47,5X55,5X3,7 MM 2"	
650	315229-0206	C		3	GASKET 60,2X68,2X3,7 MM 2"1/2	
660	342722-0202	-		4	PIPE COUPLING 1/8" D=6MM	
670	342991-0109	-		2	HOSE CLIP,WORM DRIVE TYPE (48)-50	

Pos	Part No	SP	UN	Qty	Description	Page No

Machine Type | Group Description | Used-In | Group Number | Page No

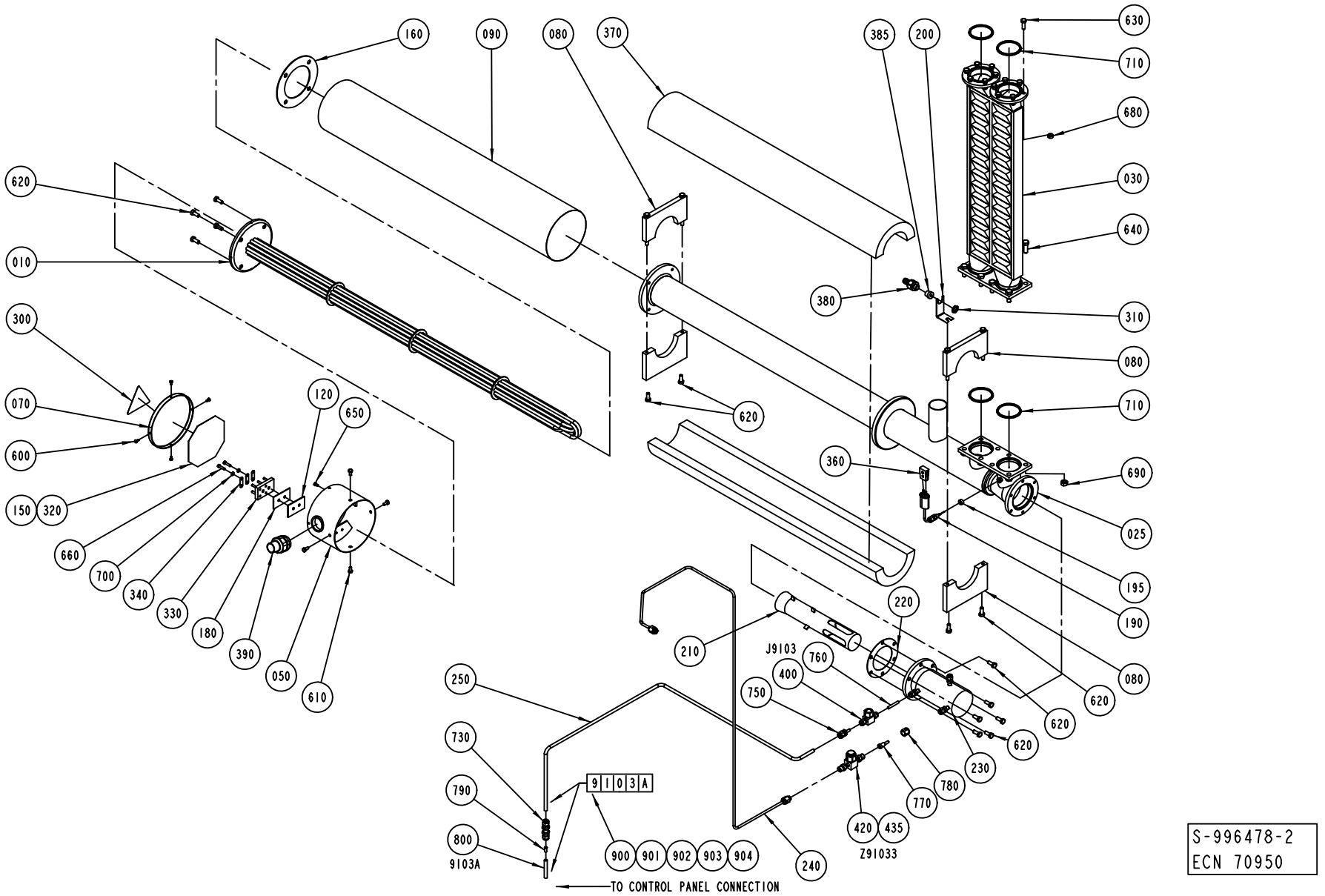

S-996478-2
ECN 70950

ECM: 72703 - 19990723
Group number: 996478-0200
Assembly Drawing: 996478-2_1_AB

Issue: 20011217

Pos	Part No	SP	UN	Qty	Description	Page No
HI						
210	927413-0000	D		1	PIPE	
230	927415-0000	D		1	COIL	
240	1254478-0000	D		1	PIPE	
250	1347937-0000	-		1	PIPE	
400	90230-0064	D		1	CHECK VALVE, 6 MM HIGH TEMP.	
420	1254484-0000	D		1	FILTER	
435	90277-0347	C		1	FILTER	
620	312105-0451	-		14	SCREW M6S 8X20 A280	
730	90030-0598	-		1	CONN. BULKHEAD SV 8-	
750	90030-0597	-		1	REDUCTION, M6 TUR M8-316	
760	1347932-0000	D		1	PIPE	
770	1347414-0000	D		1	ADAPTER	
780	90030-0321	-		1	NUT,PIPE & CONNECTORS, SS-4-VCO-4	
790	342706-0148	-		1	ACCESSORIES, INSERT SLEEVE 8 MM	
800	90166-0013	-	MM	3000	TUBE 8 MM PA BLUE	
900	359000-0400	-		3	MARKING CO2/4"0"	
901	359000-0401	-		3	MARKING COLLAR 2/4 "1" YELLOW	
902	359000-0403	-		3	MARKING COLLAR PA2/4 "3" YELLOW	
903	359000-0409	-		3	MARKING COLLAR PA2/4 "9" YELLOW	
904	359000-0750	-		3	MARKING CO2/4"A"	
NOHI						
260	1348953-0000	-		1	FLANGE	
620	312105-0451	-		8	SCREW M6S 8X20 A280	
Common Parts						
010	B449939-0001	C		1	HEATING ELEMENT 15KW	
	449938-0003	*C*		*2*	*HEATING PIPE*	
	449938-0002	*C*		*2*	*HEATING PIPE*	
	449938-0001	*C*		*2*	*HEATING PIPE*	
025	927411-0000	D		1	HEATING PIPE	
030	1035943-0000	C		1	HEAT EXCHANGER	
050	B451430-0000	-		1	CONNECTION HOUS.(MINOR)	
	312605-0312	*-*		*4*	*HEXAGON NUT, M6M M4 A280*	
070	29876-0000	-		1	COVER	
080	B456123-0000	-		2	SUPPORT	
	315105-0165	*-*		*2*	*WASHER PLAIN, BRB, 8,4/16,H=1,5*	
	312105-0471	*-*		*2*	*SCREW M6S M8X100 A280*	
090	1036372-0000	-		1	PIPE	
120	30298-0000	-		1	INSULATION	
150	491305-0000	D		1	CONN.DIAGRAM AIR SUPERH.	
160	531731-0000	C		1	GASKET	
180	751009-0000	-		1	INSULATION	
190	90326-0051	C		1	THERMO COUPLE	
195	273429-0000	-		1	WASHER	
200	1036373-0000	-		1	HOLDER	
220	927454-0000	C		1	GASKET	
300	90194-0016	-		1	SIGN, FLASH, ELECTRIC EQUIPMENT SYMBOL	
310	90099-0104	-		1	NUT PR 15,2 (PG9)	
320	90153-0020	-	L	1	ADHESIVE BOSTIK 1782 125ML	
330	90195-0028	D		1	TERM.BLOCK 6-POLE STEATIT	
340	90195-0029	D		3	CONN. LINK NO324 FOR -28	
360	90326-0020	D		1	PLUG,FEMALE YELLOW CR-AL	
370	90411-0005	-	MM	900	INSULATOR	
380	353243-0001	-		1	GLAND,HOSE,EXTENDED,WITHOUT INSERT PG9	
385	353249-0008	-		1	GLAND,INSERT,SINGLE HOLE,EXTEND.4-6,5	
390	90012-0126	-		1	GLANDS,HOSE,NORMAL,WITHOUT INSERT PG29	
600	312105-0287	-		4	SCREW M6S M4X8 A280	
610	312105-0366	-		4	SCREW M6S M6X12 A280	
630	312105-0453	-		12	SCREW M6S M8X25 A280	
640	312105-0495	-		8	SCREW M6S M10X30 A280	
650	312125-0323	-		1	SCREW PAN HEAD MCS M5X8 SS	
660	312125-0331	-		2	SCREW PAN HEAD MCS M5X20 SS	
680	312605-0318	-		12	HEXAGON NUT, M6M M8 A280	
690	312605-0320	-		8	HEXAGON NUT, M6M M10 A280	
700	315105-0146	-		2	WASHER PLAIN, BRB, 5,3/10,H=1	
710	315229-0206	C		4	GASKET 60,2X68,2X3,7 MM 2"1/2	

Machine Type | Group Description | Used-In | Group Number | Page No

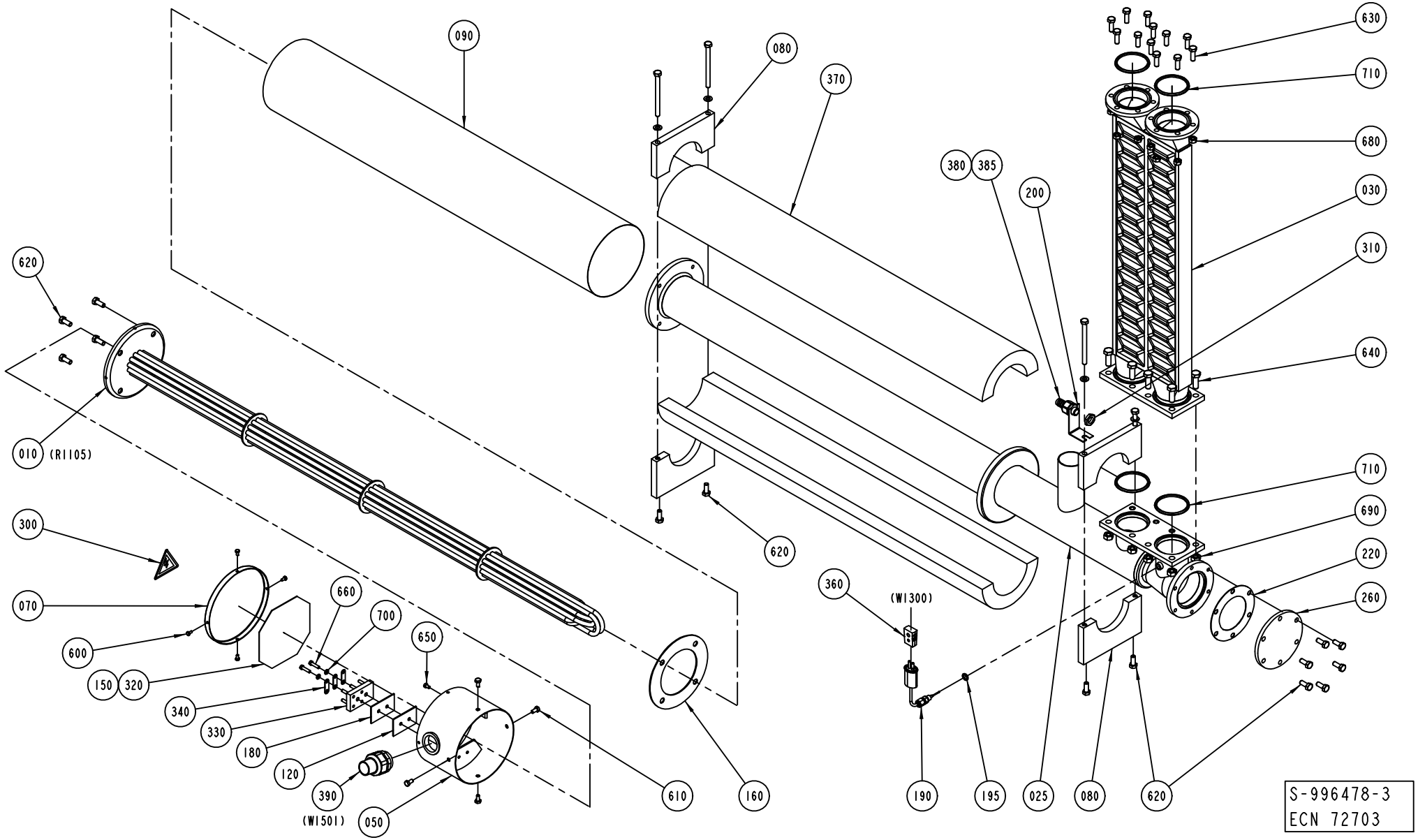
090
080
370
630
710
680
380
385
200
030
310
620
640
010 (R1105)
710
690
220
260
300
360
(W1300)
070
660
700
650
600
150
320
340
330
180
120
390
(W1501)
050
610
160
620
190
195
025
080
620
S-996478-3
ECN 72703

ECM: 72703 - 19990723
Group number: 996478-0200
Assembly Drawing: 996478-3_1_AA

Issue: 20011217

Pos	Part No	SP	UN	Qty	Description	Page No
HI						
210	927413-0000	D		1	PIPE	
230	927415-0000	D		1	COIL	
240	1254478-0000	D		1	PIPE	
250	1347937-0000	-		1	PIPE	
400	90230-0064	D		1	CHECK VALVE, 6 MM HIGH TEMP.	
420	1254484-0000	D		1	FILTER	
435	90277-0347	C		1	FILTER	
620	312105-0451	-		14	SCREW M6S 8X20 A280	
730	90030-0598	-		1	CONN. BULKHEAD SV 8-	
750	90030-0597	-		1	REDUCTION, M6 TUR M8-316	
760	1347932-0000	D		1	PIPE	
770	1347414-0000	D		1	ADAPTER	
780	90030-0321	-		1	NUT,PIPE & CONNECTORS, SS-4-VCO-4	
790	342706-0148	-		1	ACCESSORIES, INSERT SLEEVE 8 MM	
800	90166-0013	-	MM	3000	TUBE 8 MM PA BLUE	
900	359000-0400	-		3	MARKING CO2/4"0"	
901	359000-0401	-		3	MARKING COLLAR 2/4 "1" YELLOW	
902	359000-0403	-		3	MARKING COLLAR PA2/4 "3" YELLOW	
903	359000-0409	-		3	MARKING COLLAR PA2/4 "9" YELLOW	
904	359000-0750	-		3	MARKING CO2/4"A"	
NOHI						
260	1348953-0000	-		1	FLANGE	
620	312105-0451	-		8	SCREW M6S 8X20 A280	
Common Parts						
010	B449939-0001	C		1	HEATING ELEMENT 15KW	
	449938-0003	*C*		*2*	*HEATING PIPE*	
	449938-0002	*C*		*2*	*HEATING PIPE*	
	449938-0001	*C*		*2*	*HEATING PIPE*	
025	927411-0000	D		1	HEATING PIPE	
030	1035943-0000	C		1	HEAT EXCHANGER	
050	B451430-0000	-		1	CONNECTION HOUS.(MINOR)	
	312605-0312	*-*		*4*	*HEXAGON NUT, M6M M4 A280*	
070	29876-0000	-		1	COVER	
080	B456123-0000	-		2	SUPPORT	
	315105-0165	*-*		*2*	*WASHER PLAIN, BRB, 8,4/16,H=1,5*	
	312105-0471	*-*		*2*	*SCREW M6S M8X100 A280*	
090	1036372-0000	-		1	PIPE	
120	30298-0000	-		1	INSULATION	
150	491305-0000	D		1	CONN.DIAGRAM AIR SUPERH.	
160	531731-0000	C		1	GASKET	
180	751009-0000	-		1	INSULATION	
190	90326-0051	C		1	THERMO COUPLE	
195	273429-0000	-		1	WASHER	
200	1036373-0000	-		1	HOLDER	
220	927454-0000	C		1	GASKET	
300	90194-0016	-		1	SIGN, FLASH, ELECTRIC EQUIPMENT SYMBOL	
310	90099-0104	-		1	NUT PR 15,2 (PG9)	
320	90153-0020	-	L	1	ADHESIVE BOSTIK 1782 125ML	
330	90195-0028	D		1	TERM.BLOCK 6-POLE STEATIT	
340	90195-0029	D		3	CONN. LINK NO324 FOR -28	
360	90326-0020	D		1	PLUG,FEMALE YELLOW CR-AL	
370	90411-0005	-	MM	900	INSULATOR	
380	353243-0001	-		1	GLAND,HOSE,EXTENDED,WITHOUT INSERT PG9	
385	353249-0008	-		1	GLAND,INSERT,SINGLE HOLE,EXTEND.4-6,5	
390	90012-0126	-		1	GLANDS,HOSE,NORMAL,WITHOUT INSERT PG29	
600	312105-0287	-		4	SCREW M6S M4X8 A280	
610	312105-0366	-		4	SCREW M6S M6X12 A280	
630	312105-0453	-		12	SCREW M6S M8X25 A280	
640	312105-0495	-		8	SCREW M6S M10X30 A280	
650	312125-0323	-		1	SCREW PAN HEAD MCS M5X8 SS	
660	312125-0331	-		2	SCREW PAN HEAD MCS M5X20 SS	
680	312605-0318	-		12	HEXAGON NUT, M6M M8 A280	
690	312605-0320	-		8	HEXAGON NUT, M6M M10 A280	
700	315105-0146	-		2	WASHER PLAIN, BRB, 5,3/10,H=1	
710	315229-0206	C		4	GASKET 60,2X68,2X3,7 MM 2"1/2	

Machine Type | Group Description | Used-In | Group Number | Page No

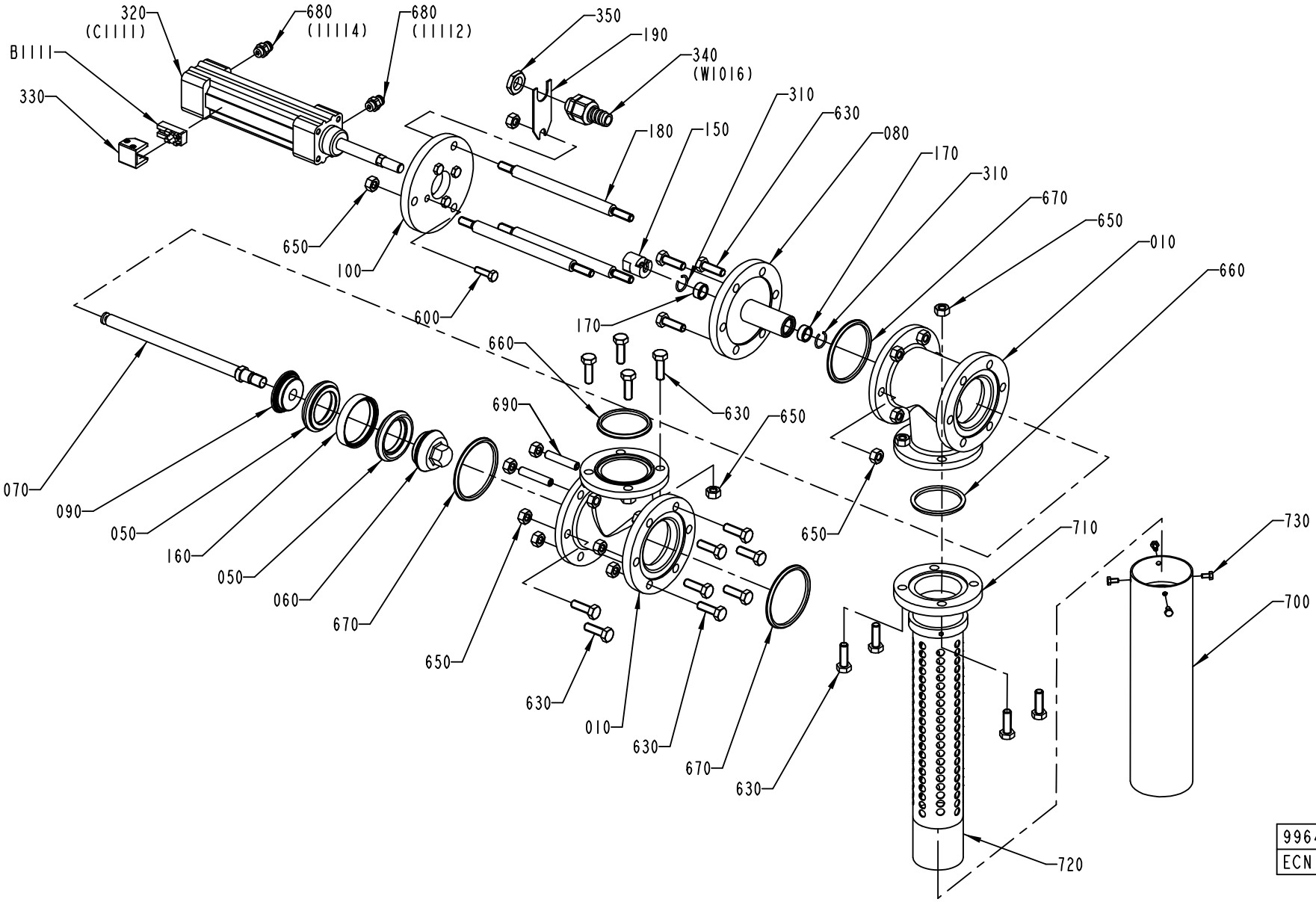
320
(C1111)
680
(11114)
680
(11112)
350
190
340
(W1016)
B1111
330
310
630
080
170
310
670
650
010
660
180
150
650
100
600
170
660
690
630
650
650
070
090
050
160
050
060
670
650
630
010
630
670
630
710
730
700
720
996479-2
ECN 87923

Pos	Part No	SP	UN	Qty	Description	Page No
Common Parts						
010	1036187-0000	-		2	T-PIPE	
050	530589-0000	A		2	SEAL RING	
060	530590-0000	-		1	VALVE CONE	
070	1036188-0000	-		1	SHAFT	
080	1036189-0000	A		1	SPINDLE GUIDE	
090	1036191-0000	A		1	SEAL HOLDER	
100	1036193-0000	-		1	CYLINDER BRACKET	
150	441871-0000	A		1	PENDULUM SUSPENSION	
160	530599-0000	A		1	RING	
170	532349-0000	A		2	PLAIN BEARING	
180	1036192-0000	-		3	SPACER ROD	
190	1036293-0000	-		1	HOLDER	
310	90141-0022	A		2	SNAP RING B 16	
320	90450-0281	A		1	DOUBLE ACTING,PROFILE,CYL 32-80	
330	90450-0669	A		1	SENSOR,BRACKET,SERIES 168	
340	90012-0123	-		1	GLAND FITTING	
350	90099-0104	-		1	NUT PR 15,2 (PG9)	
600	312105-0370	-		4	SCREW M6S M6X20 A280	
630	312105-0453	-		21	SCREW M6S M8X25 A280	
650	312605-0318	-		31	HEXAGON NUT, M6M M8 A280	
660	315229-0205	B		2	GASKET 47,5X55,5X3,7 MM 2"	
670	315229-0206	-		3	GASKET 60,2X68,2X3,7 MM 2"1/2	
680	342722-0202	-		2	PIPE COUPLING 1/8" D=6MM	
690	312318-0459	-		2	SCREW SOCK.SET CUP P MSK6SS M8X40 A4	
700	1511503-0000	-		1	PIPE	
710	1517482-0000	-		1	TUBE	
720	1517483-0000	-		1	NET	
730	312105-0287	-		4	SCREW M6S M4X8 A280	
B1111	90457-0047	A		1	SENSOR,2750-1-5111-1 INCL. ADAPTER, PNP	

Pos	Part No	SP	UN	Qty	Description	Page No

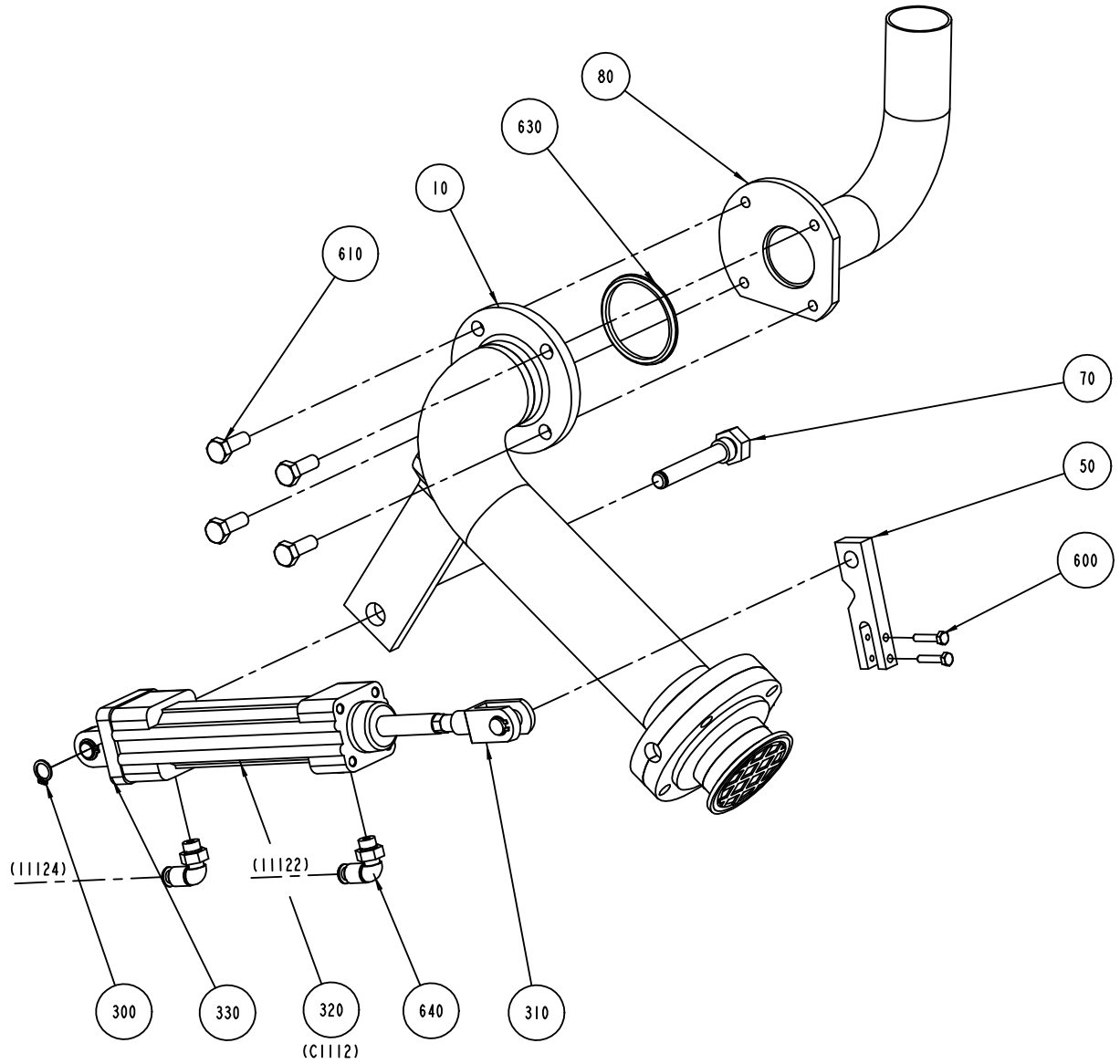

S-996481-3
ECN 72284

ECM: 72284 - 19990315
Group number: 996481-0300
Assembly Drawing: 996481-3_1_AA

Issue: 20011217

Pos	Part No	SP	UN	Qty	Description	Page No
Common Parts						
010	1487224-0000	-		1	PIPE	
050	1037128-0000	-		1	BRACKET	
070	1038340-0000	-		1	SCREW	
080	1350774-0000	-		1	PIPE BEND	
300	90141-0016	-		1	RETAIN. RING, 10	
310	90239-0516	C		1	ROD END,CLEVIS WITH AXLE M10X1,25	
320	90450-0281	C		1	DOUBLE ACTING,PROFILE,CYL 32-80	
330	90450-0654	-		1	BRACKET,REAR,EYE WITH AXLE 32	
600	312105-0295	-		2	SCREW M6S M4X20 A280	
610	312105-0452	-		4	SCREW M6S M8X22 A280	
630	315229-0205	C		1	GASKET 47,5X55,5X3,7 MM 2"	
640	342732-0102	-		2	ELBOW PIPE JOINT	

Pos	Part No	SP	UN	Qty	Description	Page No

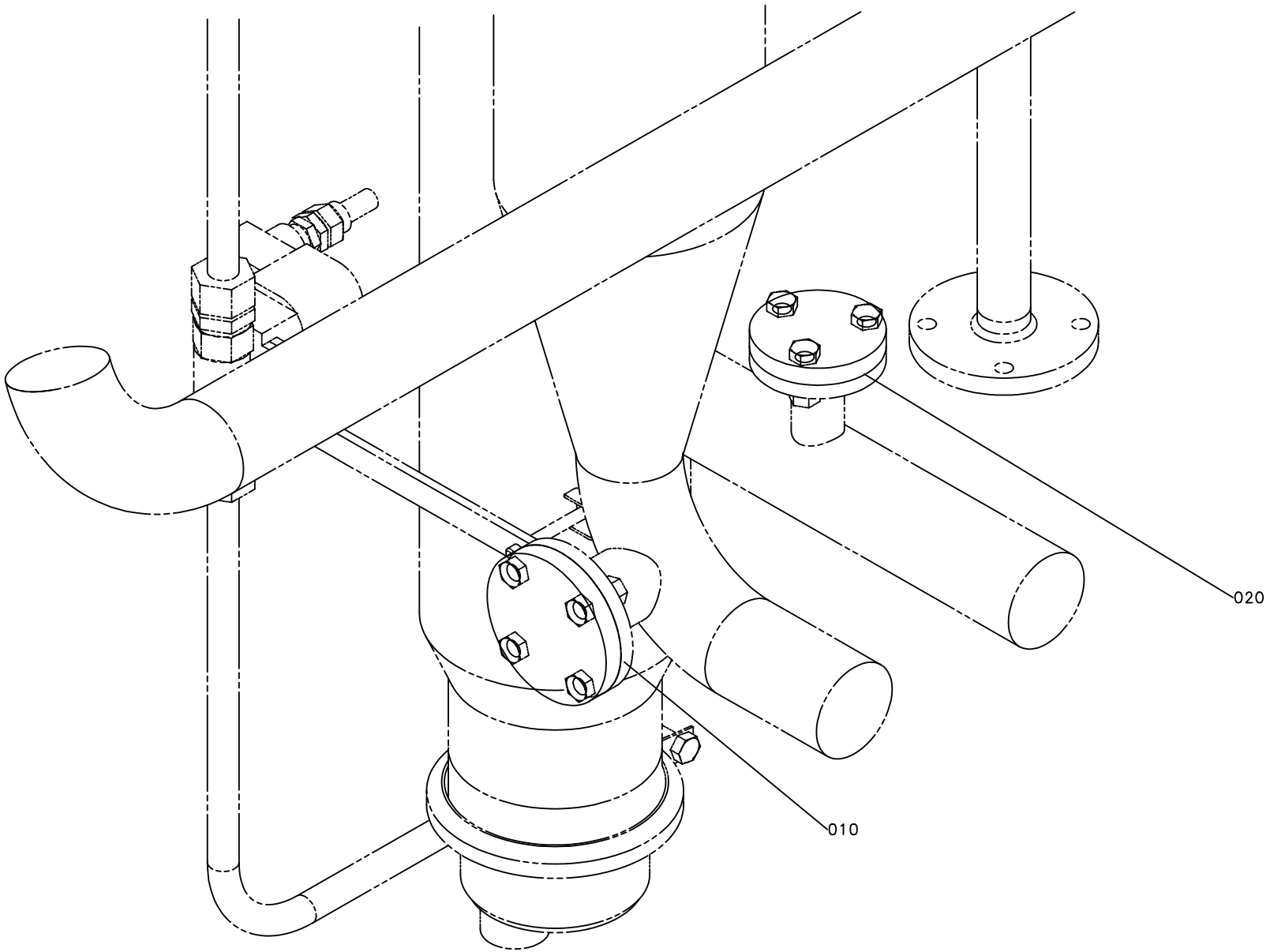
020
010

ECM: 71741 - 19980902
Group number: 996482-0100
Assembly Drawing: 996482-1_1_AA

Issue: 20011217

Pos	Part No	SP	UN	Qty	Description	Page No
50HZ						
010	1037268-0000	D		1	LID	
020	1037129-0000	D		1	LID	
60HZ						
050	1037266-0000	-		1	PIPE	
060	1037267-0000	-		1	PIPE	
070	442237-0000	-		1	NUT	
080	490998-0000	-		1	THROTTLE SCREW	
600	312105-0453	-		3	SCREW M6S M8X25 A280	
610	312605-0318	-		3	HEXAGON NUT, M6M M8 A280	
620	315202-0119	C		1	O-RING 25,1X1,6 MM	
630	315229-0203	C		1	GASKET 34,8X42,8X3,7 MM 1"1/2	

Pos	Part No	SP	UN	Qty	Description	Page No

PRESSURE REGULATOR

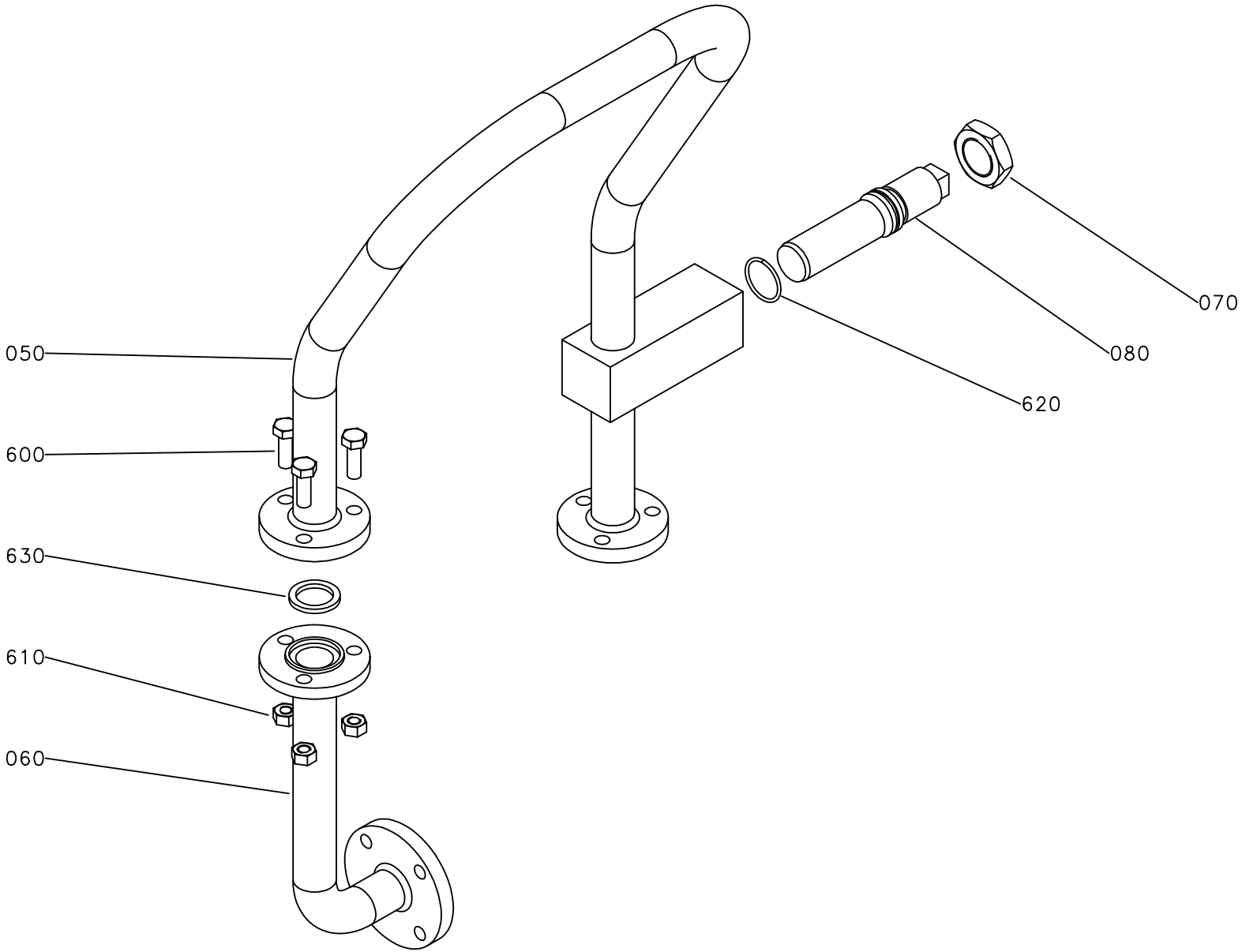

ECM: 71741 - 19980902
Group number: 996482-0100
Assembly Drawing: 996482-2_1_AA

Issue: 20011217

Pos	Part No	SP	UN	Qty	Description	Page No
50HZ						
010	1037268-0000	D		1	LID	
020	1037129-0000	D		1	LID	
60HZ						
050	1037266-0000	-		1	PIPE	
060	1037267-0000	-		1	PIPE	
070	442237-0000	-		1	NUT	
080	490998-0000	-		1	THROTTLE SCREW	
600	312105-0453	-		3	SCREW M6S M8X25 A280	
610	312605-0318	-		3	HEXAGON NUT, M6M M8 A280	
620	315202-0119	C		1	O-RING 25,1X1,6 MM	
630	315229-0203	C		1	GASKET 34,8X42,8X3,7 MM 1"1/2	

Pos	Part No	SP	UN	Qty	Description	Page No

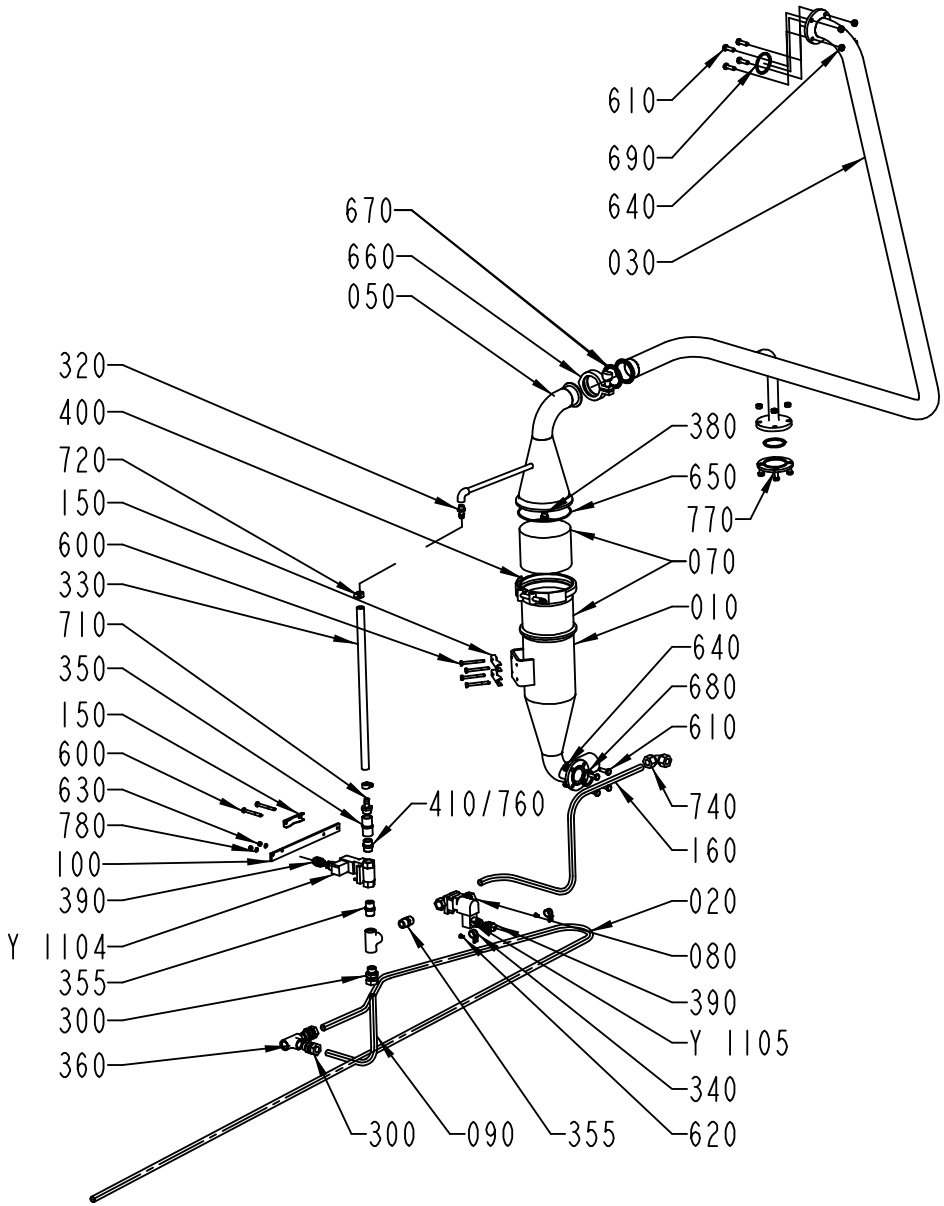

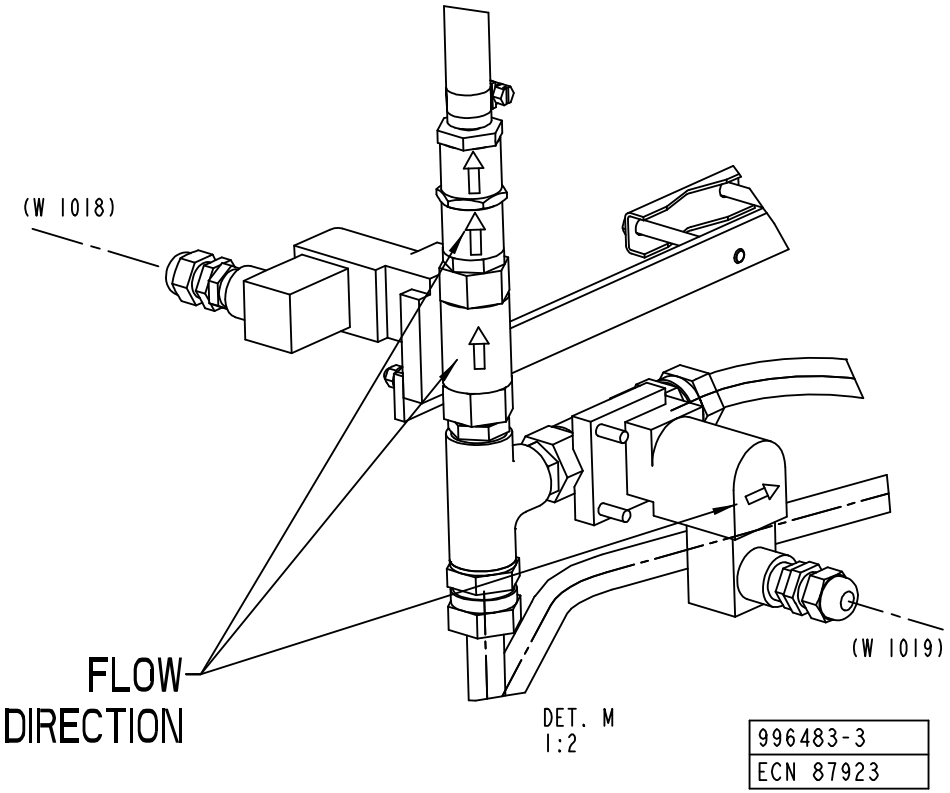

996483-3
ECN 87923

ECM: 89253 - 20010406
Group number: 996483-0300
Assembly Drawing: 996483-3_1_AB

Issue: 20011217

Pos	Part No	SP	UN	Qty	Description	Page No
Common Parts						
010	1036911-0000	-		1	CONTAINER	
020	1129173-0000	-		1	PIPE	
030	1037008-0000	-		1	PIPE	
050	1036910-0000	-		1	UPPER SECTION	
070	546929-0000	A		2	FILTER	
080	1038659-0000	-		1	STRAIGHT PIPE UNION	
090	1037011-0000	-		1	PIPE	
100	1037041-0000	-		1	HOLDER	
150	1036811-0000	-		3	CLAMP	
160	1103393-0000	-		1	PIPE	
300	90030-0188	-		3	CONN. STR. GA-15-G1/2	
320	90163-0052	-		1	HOSE NIPPLE, EXT.THR. 1/4-12 MM	
330	90166-0121	A	MM	450	HOSE	
340	90165-0039	-		2	PIPE CLAMP, RSGU 1.15/12, D=15 MM	
350	90270-0349	A		1	FLOW VALVE DOLE 2GALL/MIN	
355	90330-0021	-		2	NIPPLES, EXT. THREAD. R-207R1/2	
360	90330-0049	-		2	T-PIPE, INT. THREAD, R-221R1/2	
380	90424-0054	A		1	SPRAY NOZZLE 120 DEG	
390	352103-0101	-		2	CABLE GLAND ST 9;PR15,2/PG9	
400	90132-0030	-		1	HOLDER MV 87177 KS 580T	
410	90144-0073	-		1	TREBOFLON-TAPE W=13MM	
600	312105-0381	-		6	SCREW M6S M6X55 A280	
610	312105-0453	-		12	SCREW M6S M8X25 A280	
620	312125-0323	-		2	SCREW PAN HEAD MCS M5X8 SS	
630	312605-0314	-		2	HEXAGON NUT, M6M M5 A280	
640	312605-0318	-		12	HEXAGON NUT, M6M M8 A280	
650	315204-0317	B		1	O-RING 129,5X3 MM	
660	342840-0105	-		1	CLAMPING PIECE	
670	342850-0405	B		1	GASKET 47,8X62,6X5,2 MM 2" FDA	
680	315229-0204	B		1	GASKET 34,8X42,8X3,7 MM 1"1/2	
690	315229-0205	B		2	GASKET 47,5X55,5X3,7 MM 2"	
710	342901-0105	-		1	HOSE NIPPLE, EXT.THR. G1/2-12 MM	
720	342991-0101	-		2	HOSE CLIP,WORM DRIVE TYPE (13)-16	
740	342737-0221	-		1	CONN. ELBOW W-15 LRFR	
760	479261-0000	-		1	NIPPLE	
770	1498746-0000	-		1	PLUG	
780	315105-0146	-		2	WASHER PLAIN, BRB, 5,3/10,H=1	
Y1104	B90042-0172	A		1	SOLENOID VALVE 4023/1005/1032 24VDC	
	90042-0467	*A*		*1*	*COIL 24VDC GSR*	
Y1105	B90042-0172	A		1	SOLENOID VALVE 4023/1005/1032 24VDC	
	90042-0467	*A*		*1*	*COIL 24VDC GSR*	

Pos	Part No	SP	UN	Qty	Description	Page No

Machine Type	Group Description	Used-In	Group Number	Page No

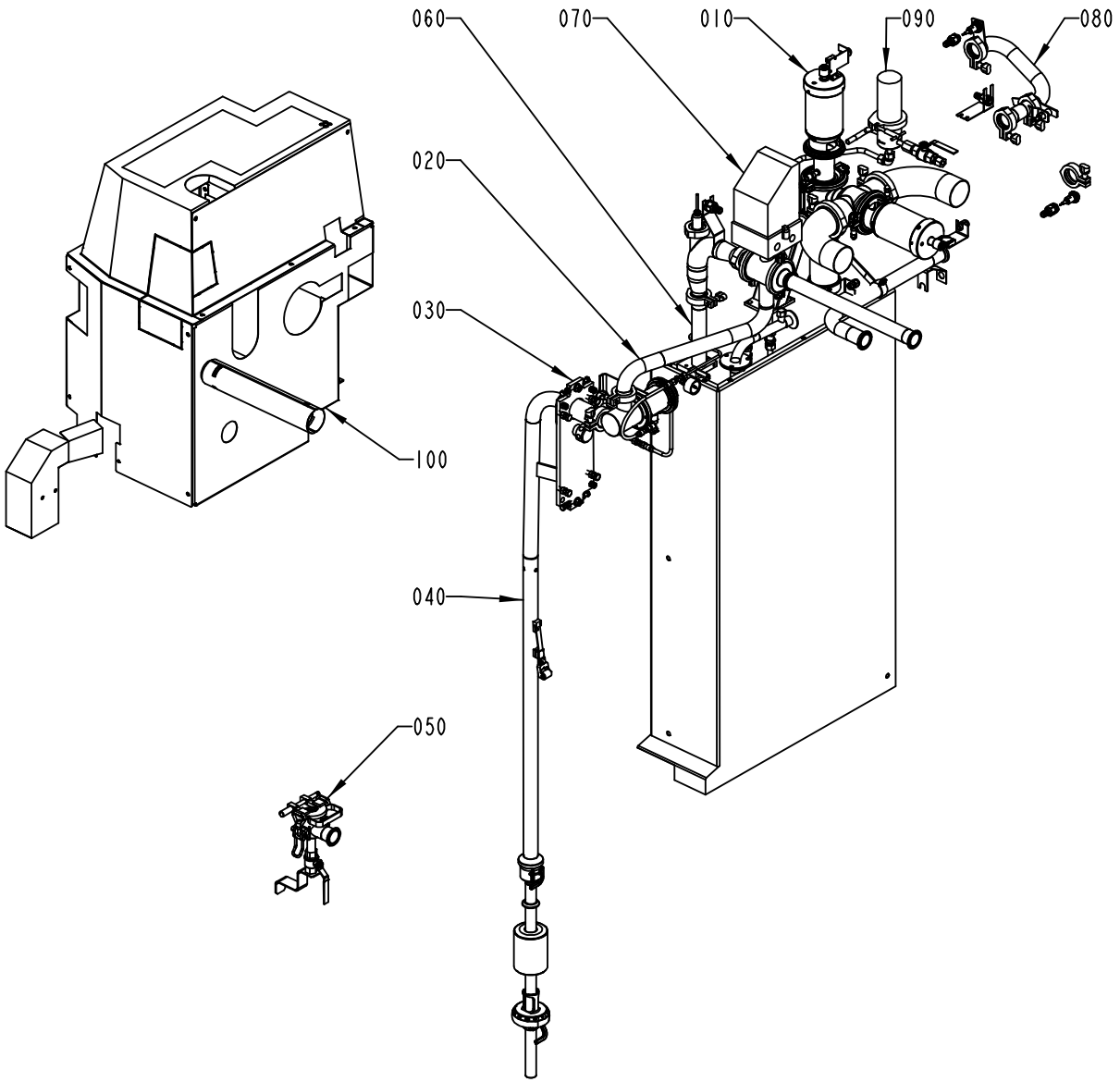

1095782-3
ECN 95438

ECM: 95441 - 20010712
Group number: 1095782-0300
Assembly Drawing: 1095782-3_1_AA

Issue: 20011217

Pos	Part No	SP	UN	Qty	Description	Page No
Common Parts						
010	A1035016-0300	-		1	PRODUCT VALVE GROUP	**111**
020	A1095774-0300	-		1	FLOW REGULATOR	**127, 129**
030	A1334992-0100	-		1	FASTENING PLATE	**135, 137**
040	A1334991-0100	-		1	FILLING PIPE	**139, 141**
050	A1334990-0100	-		1	CLEANING CUP	**143**
060	A1095781-0200	-		1	CLEANING PIPE	**145, 147**
070	A1035259-0200	-		1	INTERMEDIATE PART	**149, 151**
080	A1035107-0300	-		1	CIP SWITCH	**153**
090	A1346549-0200	-		1	STEAM SYSTEM	**155**
100	A1095685-0200	-		1	PROTECTION	**157**

Pos	Part No	SP	UN	Qty	Description	Page No

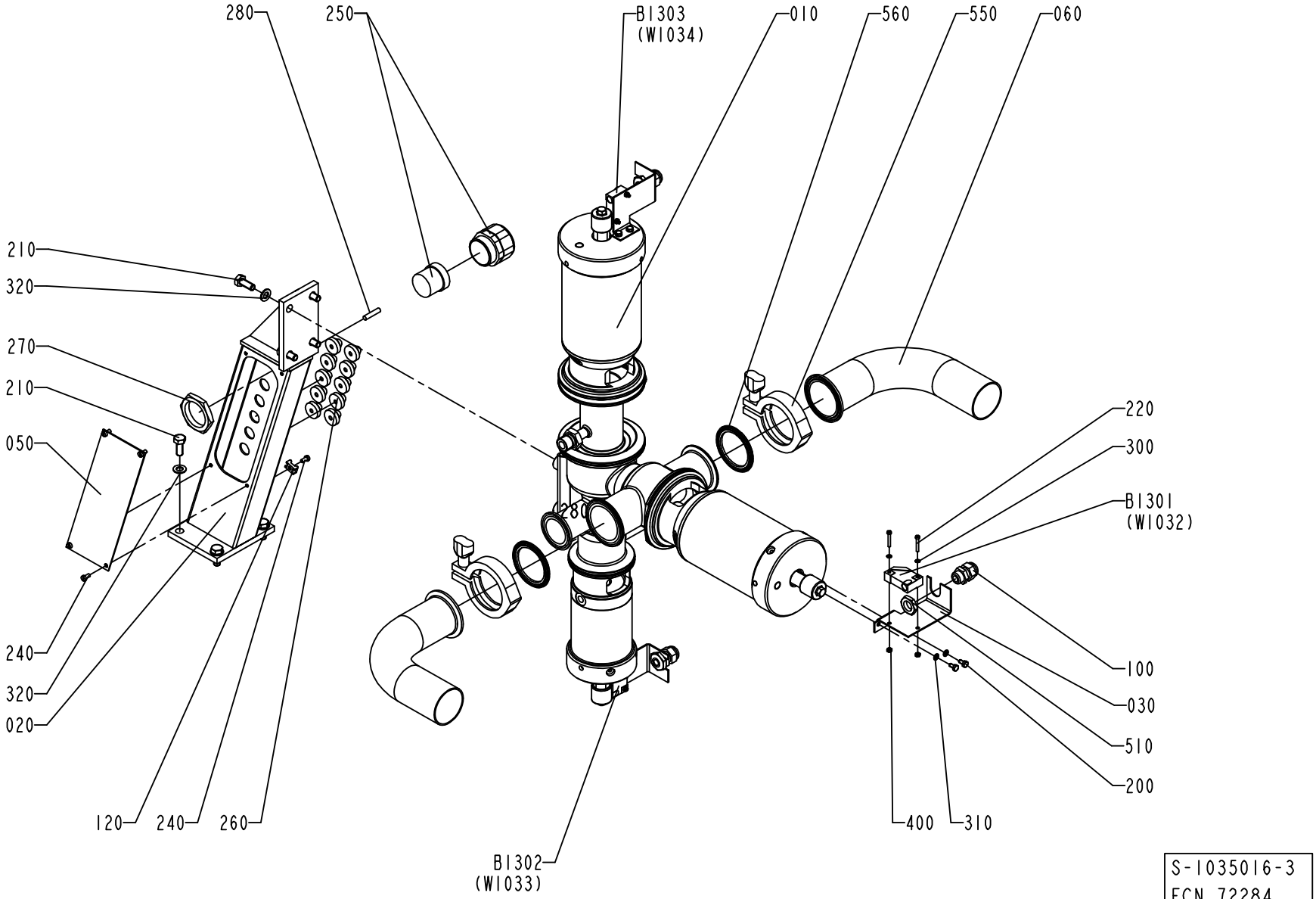
280
250
BI303
(WI034)
010
560
550
060
210
320
270
210
050
240
320
020
120
240
260
280
BI302
(WI033)
220
300
BI301
(WI032)
100
030
510
200
400
310
S-1035016-3
ECN 72284

ECM: 72284 - 19990315
Group number: 1035016-0300
Assembly Drawing: 1035016-3_1_AA

Issue: 20011217

Pos	Part No	SP	UN	Qty	Description	Page No
2"						
010	A576434-0100	-		1	AP-VALVE 51-38	**113**
060	1129801-0000	-		2	PIPE	
550	342840-0105	-		2	CLAMPING PIECE	
560	342850-0305	C		2	GASKET 47,8X62,6X5,2 MM 2" FDA	
3"						
010	A576435-0100	-		1	AP-VALVE 76-38	**125**
060	1129802-0000	-		2	PIPE	
550	342840-0107	-		2	CLAMPING PIECE	
560	342850-0307	C		2	GASKET 72,9X89,6X5,2 MM 3" FDA	
Common Parts						
020	1129277-0000	-		1	VALVE BRACKET	
030	1037093-0000	-		3	SENSOR BRACKET	
050	1347758-0000	-		1	COVER	
100	352103-0101	-		3	CABLE GLAND ST 9;PR15,2/PG9	
120	352113-0205	-		1	ANCHOR TM2S8-C100	
200	312105-0287	-		6	SCREW M6S M4X8 A280	
210	312105-0451	-		8	SCREW M6S 8X20 A280	
220	312125-0230	-		6	SCREW PAN HEAD MCS M3X20 SS	
240	312125-0287	-		5	SCREW PAN HEAD MCS M4X8 SS	
250	90012-0107	-		1	GLAND FITTING	
260	90015-0020	-		10	GLANDS,LEAD-IN,IP67	
270	90099-0120	-		1	NUT PR 37 (PG29)	
280	353249-0303	-		1	GLANDS,SEALING PIN 5,3X25	
300	315105-0124	-		6	WASHER PLAIN, BRB, 3,2/6,H=0,5	
310	315105-0136	-		6	WASHER PLAIN, BRB, 4,3/8,H=0,8	
320	315105-0165	-		8	WASHER PLAIN, BRB, 8,4/16,H=1,5	
400	312605-0310	-		6	HEXAGON NUT, M6M M3 A280	
510	90099-0104	-		3	NUT PR 15,2 (PG9)	
B 1301	90044-0104	C		1	PROX.SWITCH IFM IN 3002	
B 1302	90044-0104	C		1	PROX.SWITCH IFM IN 3002	
B 1303	90044-0104	C		1	PROX.SWITCH IFM IN 3002	

Pos	Part No	SP	UN	Qty	Description	Page No

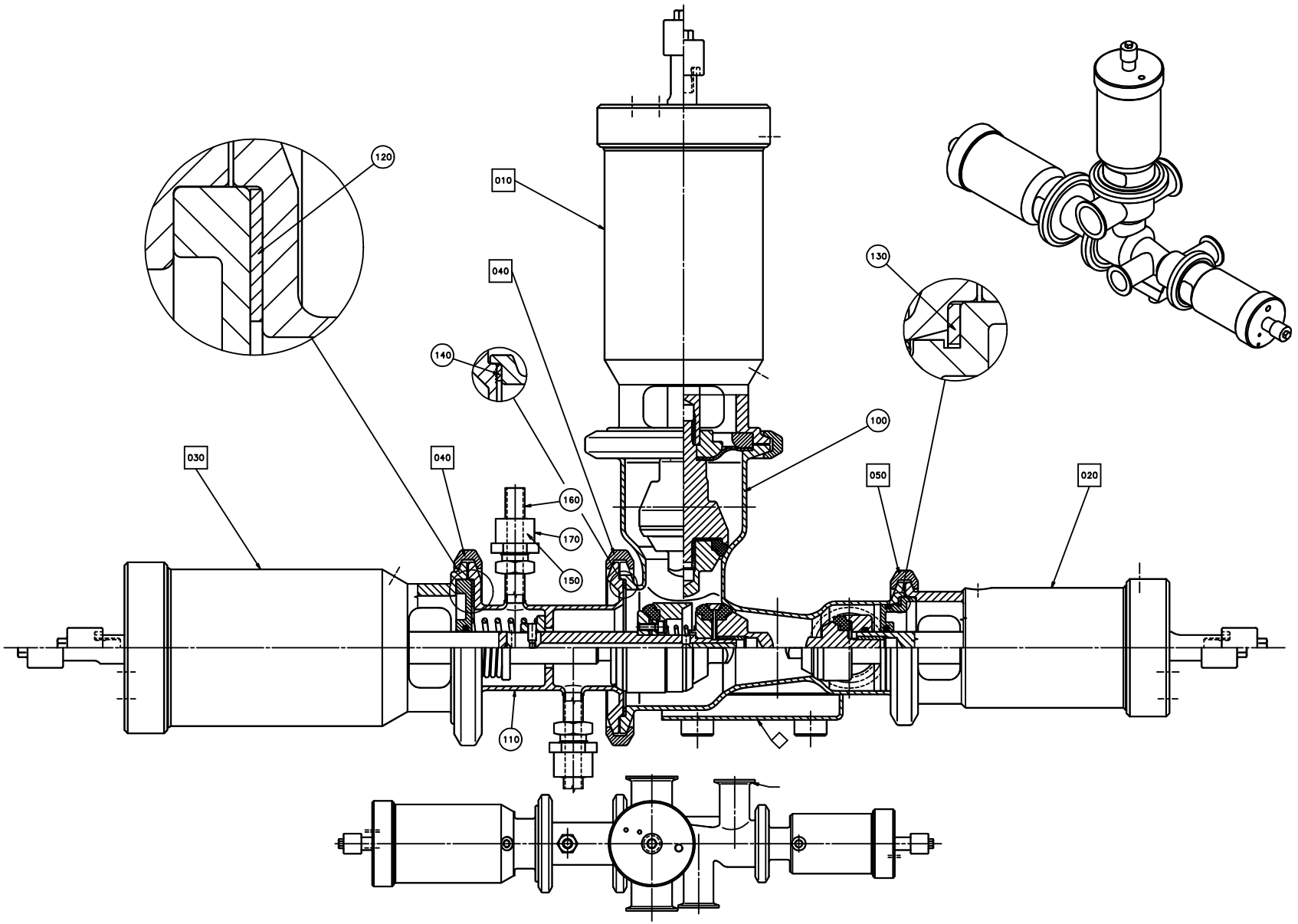
120
010
040
130
140
100
030
040
050
020
160
170
150
110

ECM: 72766 - 19990728
Group number: 576434-0100
Assembly Drawing: 576434-1_1_AA

Issue: 20011217

Pos	Part No	SP	UN	Qty	Description	Page No
Common Parts						
010	A576436-0100	-		1	A-CYLINDER	**115**
020	A576438-0100	-		1	B-CYLINDER	**117**
030	A576437-0100	-		1	C-CYLINDER	**119**
040	A541163-0200	-		3	CLAMP RING	**121**
050	A541164-0200	-		1	CLAMP RING	**123**
100	556702-0000	D		1	AP-VALVE-BODY (51-38)	
110	567018-0000	D		1	STEAM HOUSE	
120	539212-0000	C		1	GASKET	
130	90207-0365	C		1	GASKET	
140	90207-0363	C		1	GASKET	
150	90091-0266	C		2	SEAL RING 10,4X16,3X2,5 MM	
160	90030-0336	-		2	CONN. STRAIGHT, 316L-12M-BVCO-3	
170	90030-0338	-		2	NUT, PIPE & CONNECTORS, SS-8-BVCO-4	

Pos	Part No	SP	UN	Qty	Description	Page No

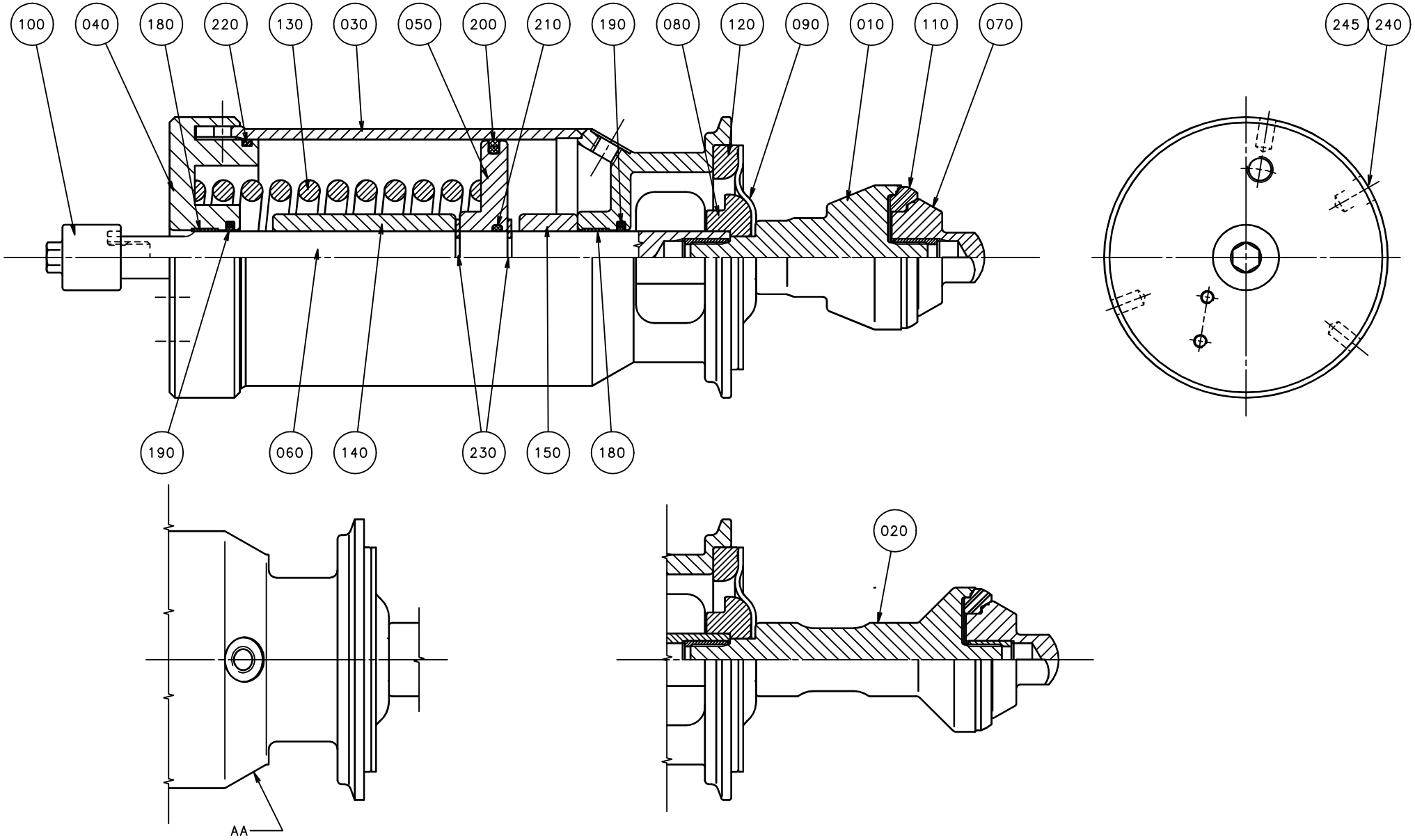
100
040
180
220
130
030
050
200
210
190
080
120
090
010
110
070
245
240
190
060
140
230
150
180
020
AA

Pos	Part No	SP	UN	Qty	Description	Page No
2"						
010	530592-0000	D		1	SEAL RING HOLDER	
3"						
020	530595-0000	D		1	SEAL RING HOLDER	
Common Parts						
030	576439-0000	-		1	CYLINDER HOUSING	
040	576440-0000	-		1	END SECTION	
050	576441-0000	D		1	PISTON	
060	576446-0000	C		1	PISTON ROD	
070	530590-0000	D		1	VALVE CONE	
080	541166-0000	D		1	WASHER	
090	533169-0000	C		1	DIAPHRAGM	
100	553607-0000	-		1	SLEEVE	
110	530589-0000	C		1	SEAL RING	
120	440655-0000	D		1	RING	
130	440663-0000	D		1	COMPRESSION SPRING	
140	576448-0000	-		1	SPACER	
150	576449-0000	-		1	SPACER	
180	90091-0238	C		2	WEAR RING 20X22X10 MM	
190	90091-0237	C		2	ROD SEAL, GLIDORING 20X27,5X3 MM	
200	90091-0336	C		1	PISTON SEAL, GLIDORING 79X90X4 MM	
210	315204-0215	C		1	O-RING 19,2X3 MM	
220	315202-0308	C		1	O-RING 84,5X3 MM	
230	315754-0113	-		2	LOCKING WAE 15	
240	312125-0323	-		1	SCREW PAN HEAD MCS M5X8 SS	
245	315233-0101	-		1	WASHER PL.RND.NYL.5,2/8,H=1	

Pos	Part No	SP	UN	Qty	Description	Page No

Machine Type | Group Description | Used-In | Group Number | Page No

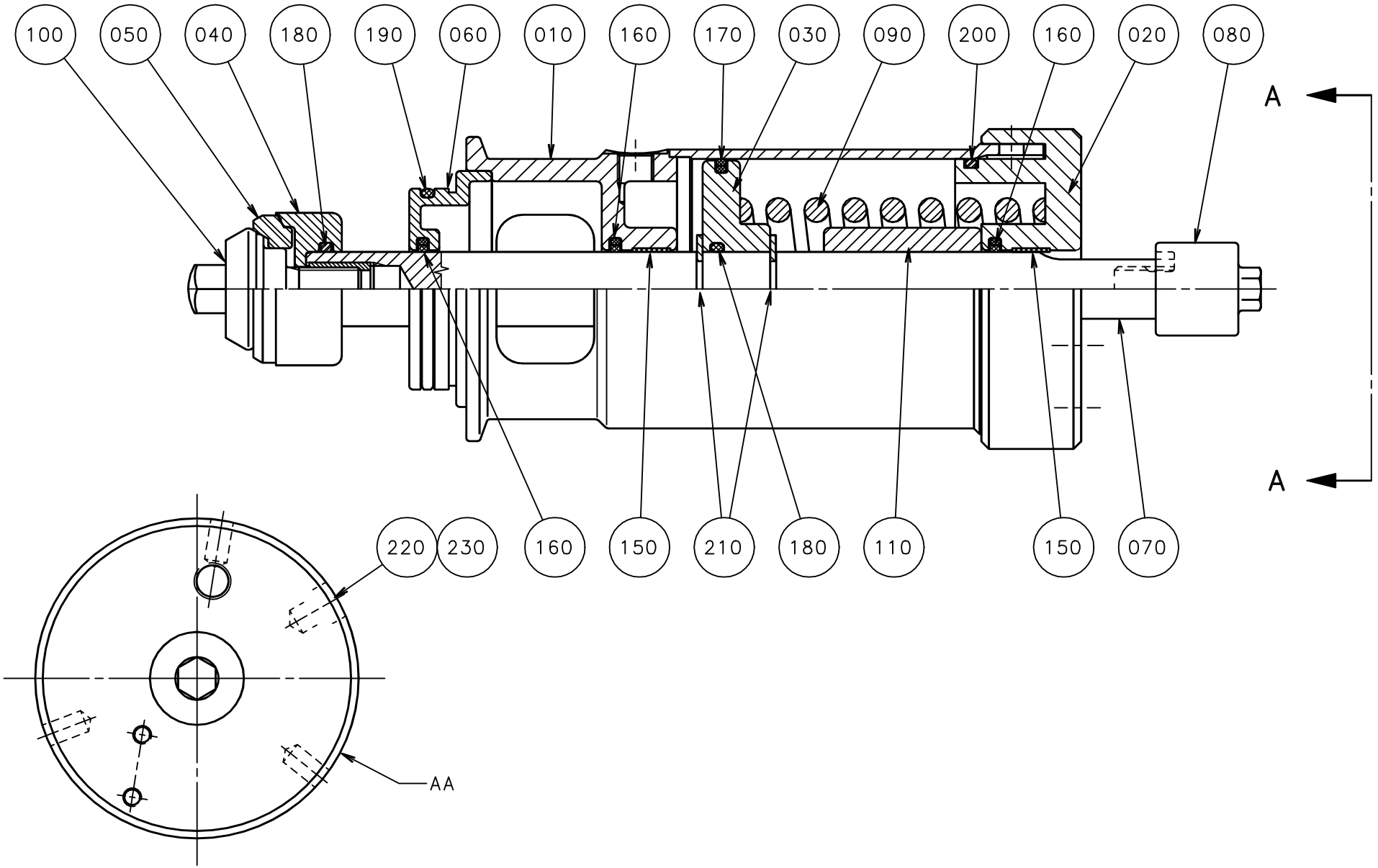
100
050
040
180
190
060
010
160
170
030
090
200
160
020
080
A
A
220
230
160
150
210
180
110
150
070
AA

ECM: 72766 - 19990728
Group number: 576438-0100
Assembly Drawing: 576438-1_1_AA

Issue: 20011217

Pos	Part No	SP	UN	Qty	Description	Page No
Common Parts						
010	576443-0000	-		1	CYLINDER HOUSING	
020	576444-0000	-		1	END SECTION	
030	576445-0000	D		1	PISTON	
040	530587-0000	D		1	WASHER	
050	530588-0000	C		1	SEAL RING	
060	556133-0000	-		1	SEALING WASHER	
070	576447-0000	C		1	PISTON ROD	
080	553607-0000	-		1	SLEEVE	
090	440662-0000	D		1	COMPRESSION SPRING	
100	476185-0000	D		1	VALVE CONE	
110	576451-0000	-		1	SPACER	
150	90091-0238	C		2	WEAR RING 20X22X10 MM	
160	90091-0237	C		3	ROD SEAL, GLIDORING 20X27,5X3 MM	
170	90091-0335	C		1	PISTON SEAL,GLIDORING 62,5X70X3 MM	
180	315204-0215	C		2	O-RING 19,2X3 MM	
190	315204-0301	C		1	O-RING 49,5X3 MM	
200	315202-0304	C		1	O-RING 64,5X3 MM	
210	315754-0113	-		2	LOCKING WAE 15	
220	312125-0323	-		1	SCREW PAN HEAD MCS M5X8 SS	
230	315233-0101	-		1	WASHER PL.RND.NYL.5,2/8,H=1	

Pos	Part No	SP	UN	Qty	Description	Page No

Machine Type | Group Description | Used-In | Group Number | Page No

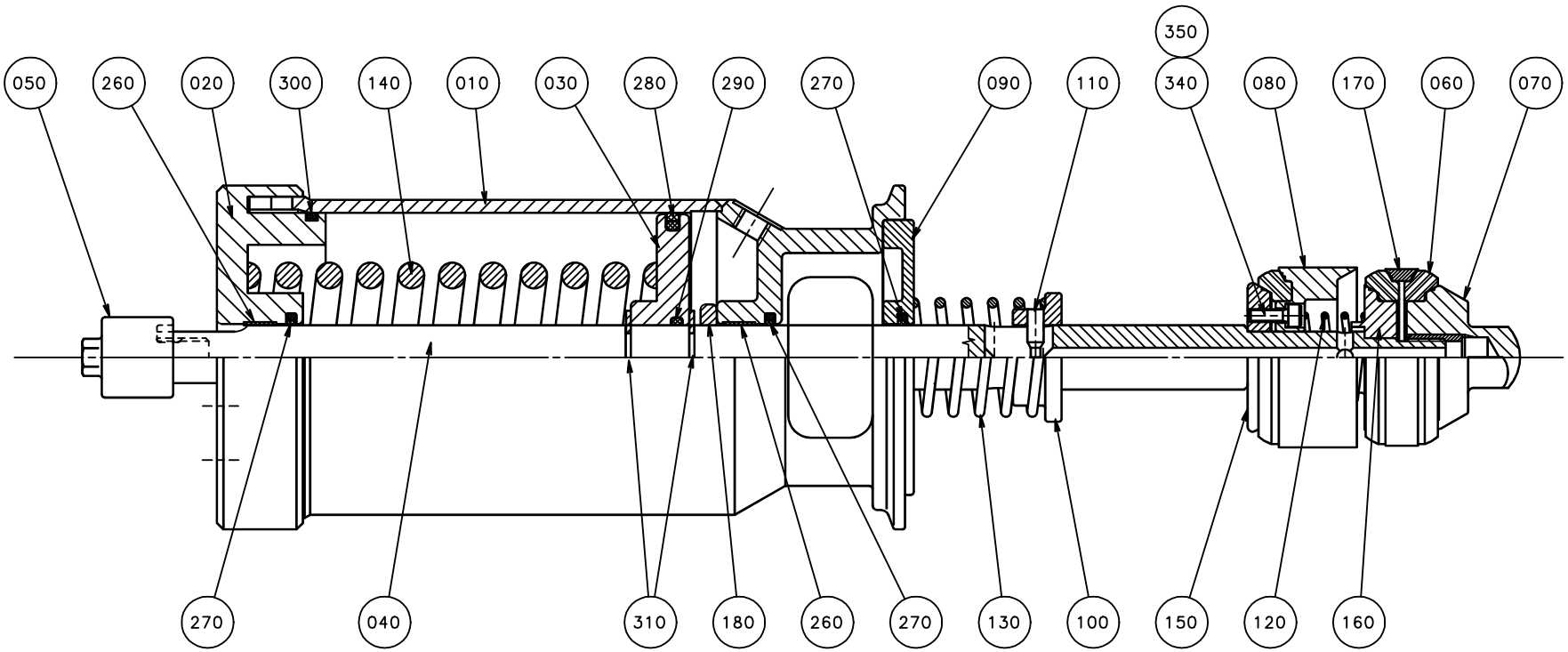
050
260
020
300
140
010
030
280
290
270
090
110
350
340
080
170
060
070
270
040
310
180
260
270
130
100
150
120
160

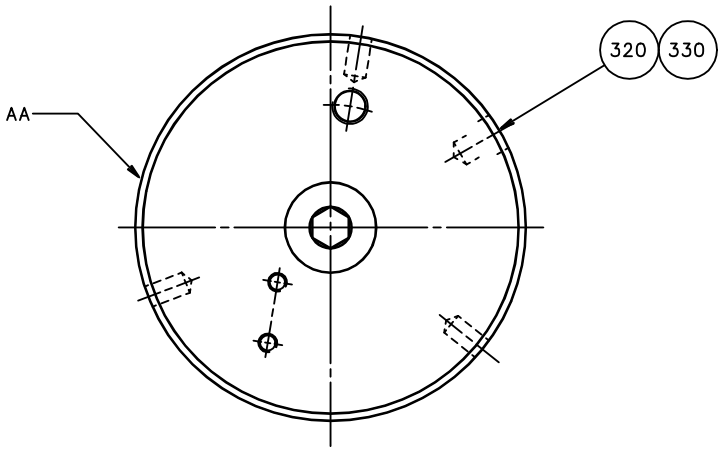
AA
320
330

ECM: 72766 - 19990728
Group number: 576437-0100
Assembly Drawing: 576437-1_1_AA

Issue: 20011217

Pos	Part No	SP	UN	Qty	Description	Page No
Common Parts						
010	576439-0000	-		1	CYLINDER HOUSING	
020	576440-0000	-		1	END SECTION	
030	576441-0000	D		1	PISTON	
040	576442-0000	C		1	PISTON ROD	
050	553607-0000	-		1	SLEEVE	
060	530589-0000	C		3	SEAL RING	
070	530590-0000	-		1	VALVE CONE	
080	530591-0000	-		1	HOLDER	
090	555458-0000	-		1	SEALING WASHER	
100	440650-0000	-		1	WASHER	
110	440659-0000	-		1	CYLINDRICAL PIN	
120	440660-0000	D		1	COMPRESSION SPRING	
130	440661-0000	D		1	COMPRESSION SPRING	
140	440663-0000	D		1	COMPRESSION SPRING	
150	530597-0000	-		1	WASHER	
160	530598-0000	-		1	WASHER	
170	530599-0000	-		2	RING	
180	576450-0000	-		1	SPACER	
260	90091-0238	C		2	WEAR RING 20X22X10 MM	
270	90091-0237	C		3	ROD SEAL, GLIDORING 20X27,5X3 MM	
280	90091-0336	C		1	PISTON SEAL, GLIDORING 79X90X4 MM	
290	315204-0215	C		1	O-RING 19,2X3 MM	
300	315202-0308	C		1	O-RING 84,5X3 MM	
310	315754-0113	-		2	LOCKING WAE 15	
320	312125-0323	-		1	SCREW PAN HEAD MCS M5X8 SS	
330	315233-0101	-		1	WASHER PL.RND.NYL.5,2/8,H=1	
340	312115-0291	-		4	SCREW MC6S M4X12 A280	
350	315402-0136	-		4	LOCK WASHER FBB 4,1	

Pos	Part No	SP	UN	Qty	Description	Page No

Machine Type | Group Description | Used-In | Group Number | Page No

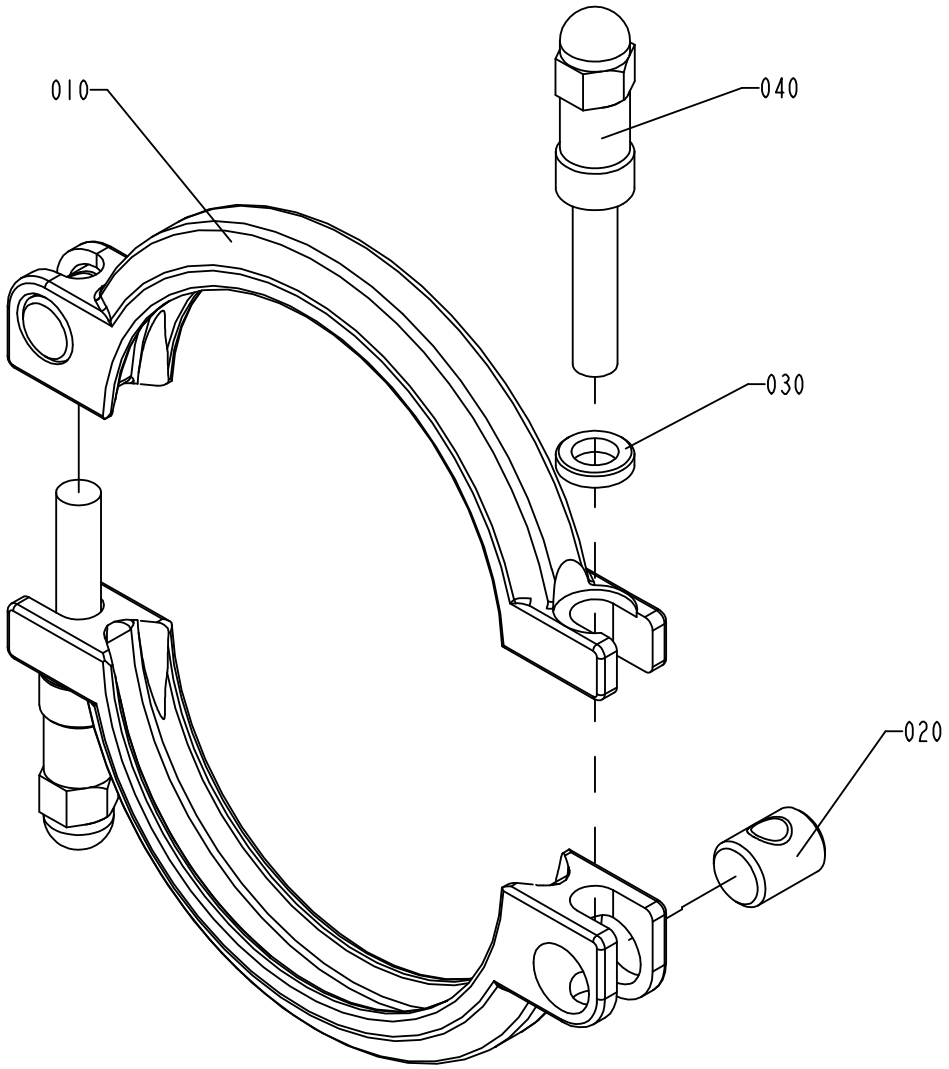

S-541163-2
ECN 71956

ECM: 71956 - 19990524
Group number: 541163-0200
Assembly Drawing: 541163-2_1_AB

Issue: 20011217

Pos	Part No	SP	UN	Qty	Description	Page No
Common Parts						
010	532117-0000	-		2	CLAMP RING	
020	497748-0000	-		2	PIN	
030	541165-0000	-		2	WASHER	
040	554162-0000	-		2	SCREW	

Pos	Part No	SP	UN	Qty	Description	Page No

Machine Type | Group Description | Used-In | Group Number | Page No

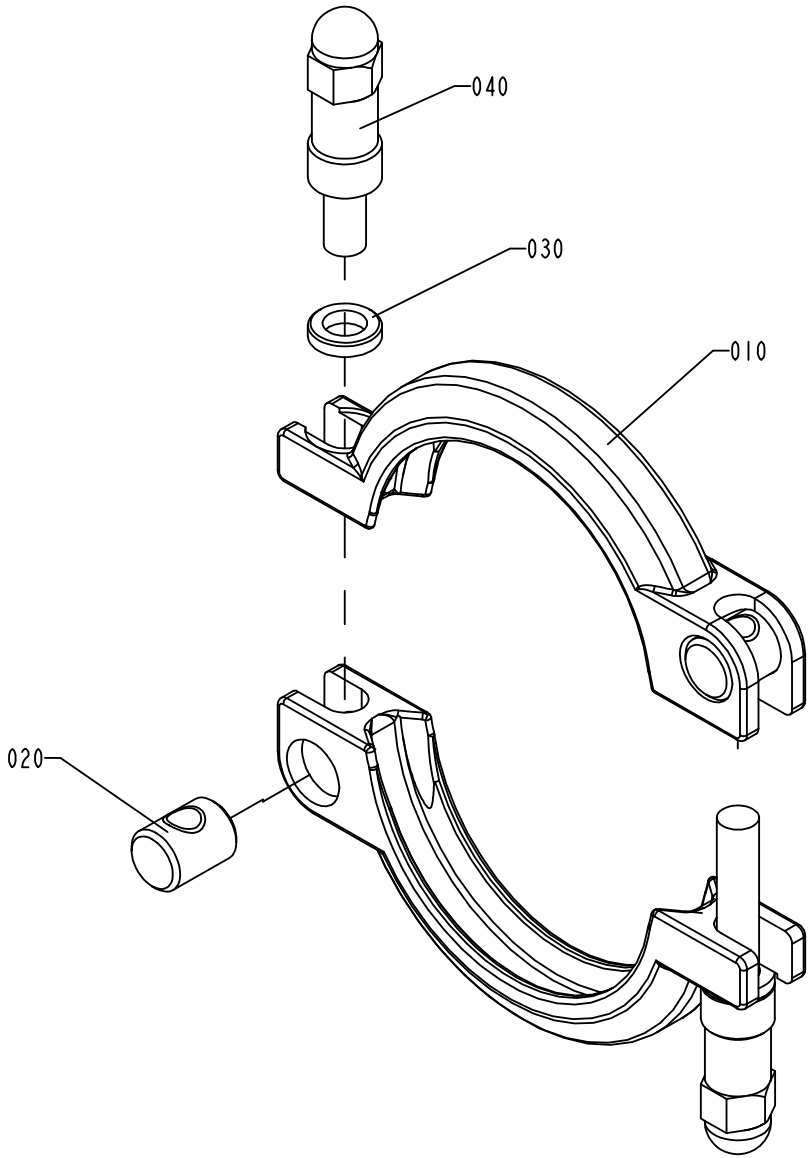

S-541164-2
ECN 71956

ECM: 81910 - 20000814
Group number: 541164-0200
Assembly Drawing: 541164-2_1_AB

Issue: 20011217

Pos	Part No	SP	UN	Qty	Description	Page No
Common Parts						
010	532118-0000	A		2	CLAMP RING	
020	497748-0000	A		2	PIN	
030	541165-0000	A		2	WASHER	
040	554162-0000	A		2	SCREW	

Pos	Part No	SP	UN	Qty	Description	Page No

Machine Type	Group Description	Used-In	Group Number	Page No

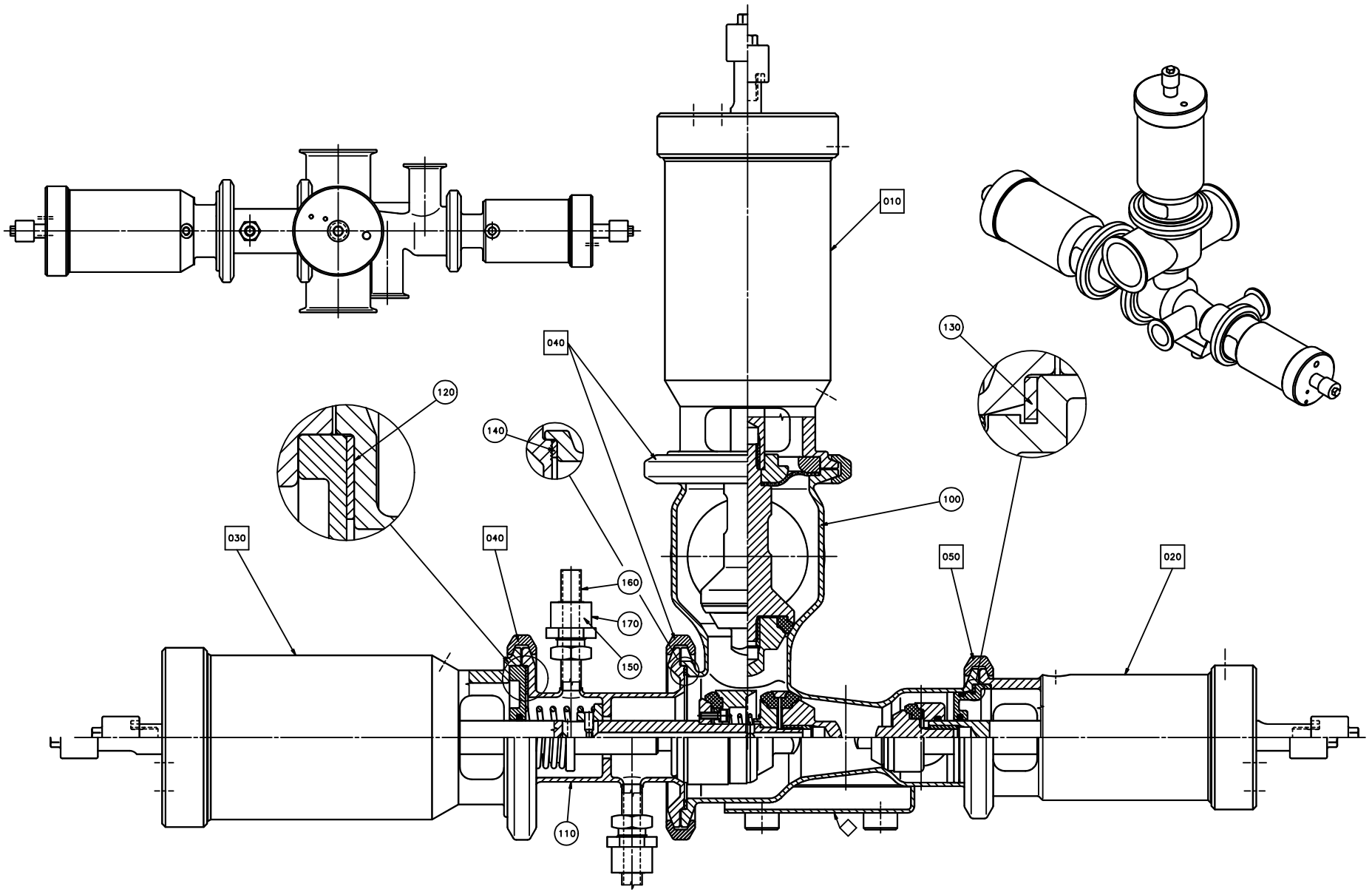
010
020
030
040
040
050
100
110
120
130
140
150
160
170

ECM: 71741 - 19980902
Group number: 576435-0100
Assembly Drawing: 576435-1_1_AA

Issue: 20011217

Pos	Part No	SP	UN	Qty	Description	Page No
Common Parts						
010	A576436-0100	-		1	A-CYLINDER	**115**
020	A576438-0100	-		1	B-CYLINDER	**117**
030	A576437-0100	-		1	C-CYLINDER	**119**
040	A541163-0200	-		3	CLAMP RING	**121**
050	A541164-0200	-		1	CLAMP RING	**123**
100	556703-0000	-		1	AP-VALVE-BODY (76-38)	
110	567018-0000	-		1	STEAM HOUSE	
120	539212-0000	C		1	GASKET	
130	90207-0365	C		1	GASKET	
140	90207-0363	C		1	GASKET	
150	90091-0266	C		2	SEAL RING 10,4X16,3X2,5 MM	
160	90030-0336	-		2	CONN. STRAIGHT, 316L-12M-BVCO-3	
170	90030-0338	-		2	NUT, PIPE & CONNECTORS, SS-8-BVCO-4	

Pos	Part No	SP	UN	Qty	Description	Page No

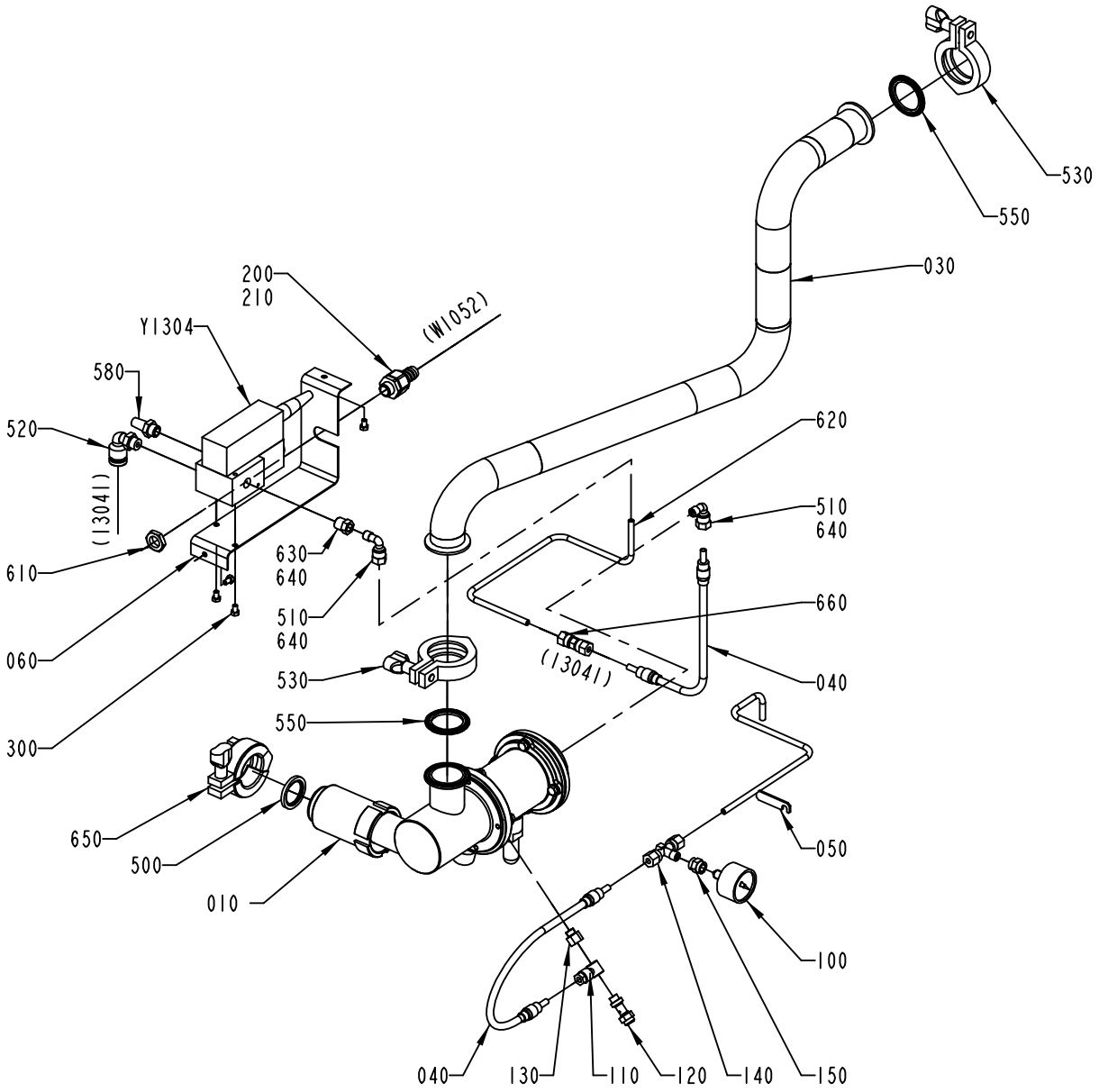

1095774-6
ECN 92369

ECM: 95044 - 20010917
Group number: 1095774-0300
Assembly Drawing: 1095774-6_1_AD

Issue: 20011217

Pos	Part No	SP	UN	Qty	Description	Page No
HI						
030	1487612-0000	-		1	PIPE	
NOHI						
030	1129089-0000	-		1	PIPE	
Common Parts						
010	A1095772-0200	-		1	REGULATING VALVE	**131, 133**
040	90458-1111	A		2	TUBE 6 MM TEFLON	
050	1548337-0000	-		1	AIR PIPE	
060	1036853-0000	-		1	BRACKET	
100	90043-0021	-		1	PRESSURE GAUGE WIEGAND 0-1 BAR 1/8"	
110	342797-0121	-		1	CONN. BANJO, RINGPIECE 6-1/8	
120	90235-0282	-		1	THROTTLE CHECK VALVES,G1/8	
130	90030-0212	-		1	NIPPLES, REDUSING, INT. THR. NO. 2521	
140	342741-0202	-		1	CONN. T-PIPE TE-6-R1/8	
150	342707-0109	-		1	SLEEVE, INT. THREAD, NO. 2543-1/8	
200	353243-0001	-		1	GLAND,HOSE,EXTENDED,WITHOUT INSERT PG9	
210	353249-0009	-		1	GLAND,INSERT,SINGLE HOLE,EXTEND.6,5-9,5	
300	312105-0323	-		4	SCREW M6S M5X8 A280	
500	90217-0346	A		1	GASKET 38X27,6X4 MM	
510	90030-0137	-		2	CONN. ELBOW WA 6-R1/8	
520	342732-0109	-		1	ELBOW PIPE JOINT	
530	342840-0103	-		2	CLAMPING PIECE	
550	342850-0304	A		2	GASKET 35,4X49,1X5,2 MM 1"1/2 FDA	
580	346800-0110	-		1	SILENCER FILTER R1/4"	
610	90099-0104	-		1	NUT PR 15,2 (PG9)	
620	2506817-0000	-		1	PIPE	
630	90330-0025	-		1	BUSHING, INT/EXT. THR. R1/4-RP1/8	
640	90144-0073	-	MM	1	TREBOFLON-TAPE W=13MM	
650	1532503-0000	-		1	LOCKING DEVICE	
660	90030-0075	-		1	PIPE CONNECTION G-6	
Y1304	90274-0099	A		1	IP-TRANSDUCER	

Pos	Part No	SP	UN	Qty	Description	Page No

Machine Type	Group Description	Used-In	Group Number	Page No

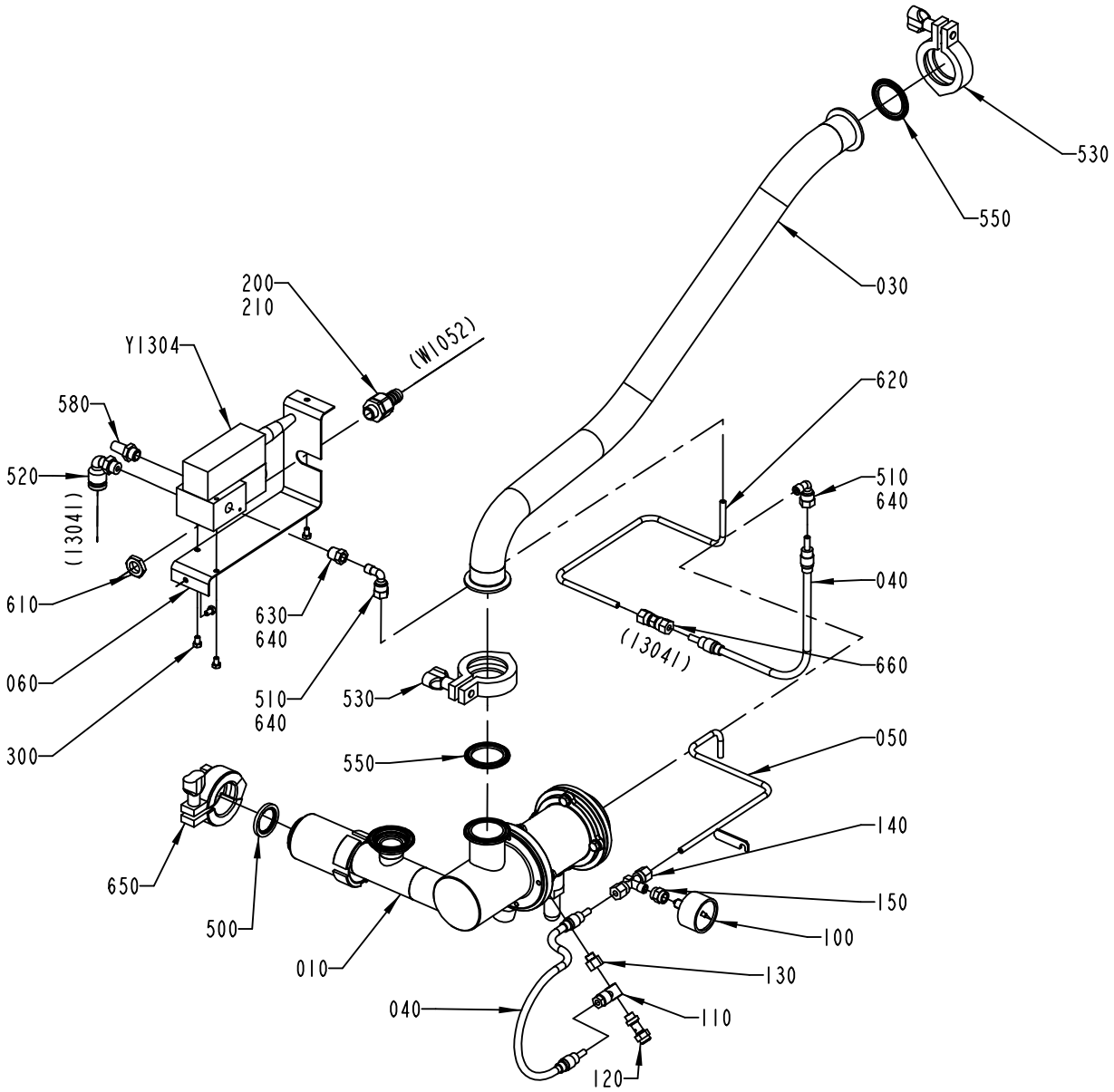

1095774-7
ECN 92369

ECM: 95044 - 20010917
Group number: 1095774-0300
Assembly Drawing: 1095774-7_1_AD

Issue: 20011217

Pos	Part No	SP	UN	Qty	Description	Page No
HI						
030	1487612-0000	-		1	PIPE	
NOHI						
030	1129089-0000	-		1	PIPE	
Common Parts						
010	A1095772-0200	-		1	REGULATING VALVE	**131, 133**
040	90458-1111	A		2	TUBE 6 MM TEFLON	
050	1548337-0000	-		1	AIR PIPE	
060	1036853-0000	-		1	BRACKET	
100	90043-0021	-		1	PRESSURE GAUGE WIEGAND 0-1 BAR 1/8"	
110	342797-0121	-		1	CONN. BANJO, RINGPIECE 6-1/8	
120	90235-0282	-		1	THROTTLE CHECK VALVES,G1/8	
130	90030-0212	-		1	NIPPLES, REDUSING, INT. THR. NO. 2521	
140	342741-0202	-		1	CONN. T-PIPE TE-6-R1/8	
150	342707-0109	-		1	SLEEVE, INT. THREAD, NO. 2543-1/8	
200	353243-0001	-		1	GLAND,HOSE,EXTENDED,WITHOUT INSERT PG9	
210	353249-0009	-		1	GLAND,INSERT,SINGLE HOLE,EXTEND.6,5-9,5	
300	312105-0323	-		4	SCREW M6S M5X8 A280	
500	90217-0346	A		1	GASKET 38X27,6X4 MM	
510	90030-0137	-		2	CONN. ELBOW WA 6-R1/8	
520	342732-0109	-		1	ELBOW PIPE JOINT	
530	342840-0103	-		2	CLAMPING PIECE	
550	342850-0304	A		2	GASKET 35,4X49,1X5,2 MM 1"1/2 FDA	
580	346800-0110	-		1	SILENCER FILTER R1/4"	
610	90099-0104	-		1	NUT PR 15,2 (PG9)	
620	2506817-0000	-		1	PIPE	
630	90330-0025	-		1	BUSHING, INT/EXT. THR. R1/4-RP1/8	
640	90144-0073	-	MM	1	TREBOFLON-TAPE W=13MM	
650	1532503-0000	-		1	LOCKING DEVICE	
660	90030-0075	-		1	PIPE CONNECTION G-6	
Y1304	90274-0099	A		1	IP-TRANSDUCER	

Pos	Part No	SP	UN	Qty	Description	Page No

Machine Type | Group Description | Used-In | Group Number | Page No

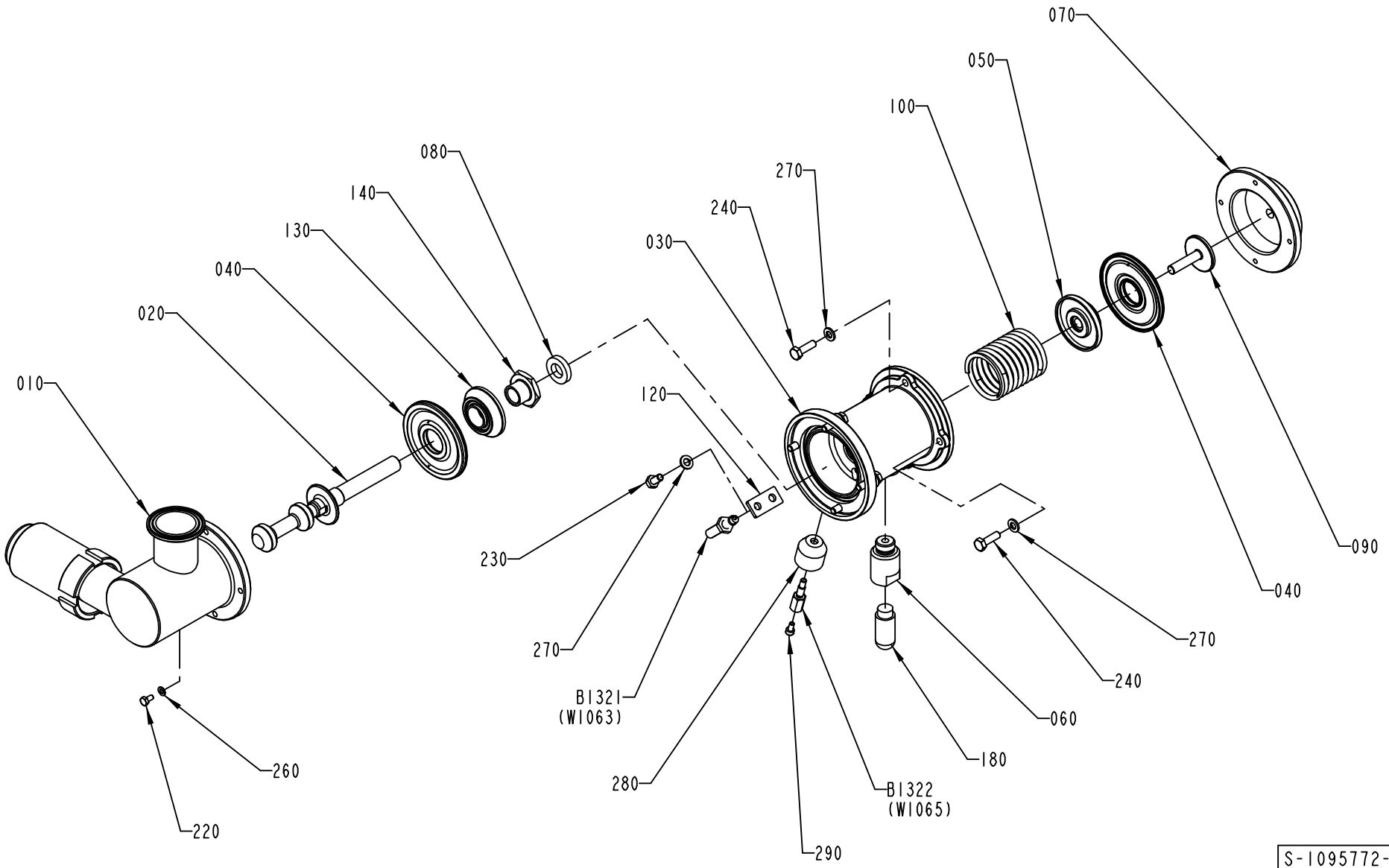
070
050
100
080
270
140
240
130
030
040
020
010
120
090
040
230
270
270
240
B1321
(W1063)
060
180
280
B1322
(W1065)
260
220
290
S-1095772-2
ECN 72957

Pos	Part No	SP	UN	Qty	Description	Page No
TBA 0200B HI OR TBA 0250B HI OR TBA 0200S HI OR TPA 0330SQ HI						
010	1498281-0000	-		1	REGULATOR BODY	
020	927007-0000	A		1	SHUTTER	
TBA 0250B NOHI OR TBA 0200B NOHI OR TBA 0200S NOHI						
010	1487029-0000	-		1	REGULATOR BODY	
020	927007-0000	A		1	SHUTTER	
TBA 0500S HI						
010	1511531-0000	-		1	REGULATOR BODY	
020	1511530-0000	A		1	SHUTTER	
TBA 0500S NOHI OR TBA 0500B NOHI						
010	1511529-0000	-		1	REGULATOR BODY	
020	1511530-0000	A		1	SHUTTER	
TBA 1000S HI OR TBA 1000SQ HI OR TBA 1000B HI OR TPA 1000S HI OR TBA 1500S NOHI						
010	1499052-0000	-		1	REGULATOR BODY	
020	1129321-0000	A		1	SHUTTER	
TBA 1000S NOHI OR TBA 1000SQ NOHI OR TBA 1000B NOHI OR TPA 1000S NOHI OR TBA 1500S NOHI						
010	1487030-0000	-		1	REGULATOR BODY	
020	1129321-0000	A		1	SHUTTER	
Common Parts						
030	927194-0000	-		1	BODY	
040	925998-0000	A		2	DIAPHRAGM	
050	926906-0000	-		1	SPACER	
060	927044-0000	-		1	SPACER	
070	927203-0000	-		1	COVER	
080	736514-0000	A		1	SHOCK ABSORBER	
090	926907-0000	-		1	SCREW	
100	926909-0000	A		1	COMPRESSION SPRING	
120	926934-0000	-		1	SUPPORT	
130	1511600-0000	-		1	SPACER	
140	979434-0000	-		1	FERRULE	
180	90328-0026	A		1	SILENCER G1/4	
220	312105-0287	-		1	SCREW M6S M4X8 A280	
230	312105-0366	-		1	SCREW M6S M6X12 A280	
240	312105-0370	-		8	SCREW M6S M6X20 A280	
260	315105-0136	-		1	WASHER PLAIN, BRB, 4,3/8,H=0,8	
270	315105-0153	-		9	WASHER PLAIN, BRB, 6,4/12,H=1,5	
280	1478813-0000	-		1	SPACER	
290	312115-0287	-		1	SCREW MC6S M4X8 A280	
B1321	90044-0145	A		1	PROX.SW. 922 AAIY-A9P-050-LZ876	
B1322	1478814-0000	A		1	SENSOR	

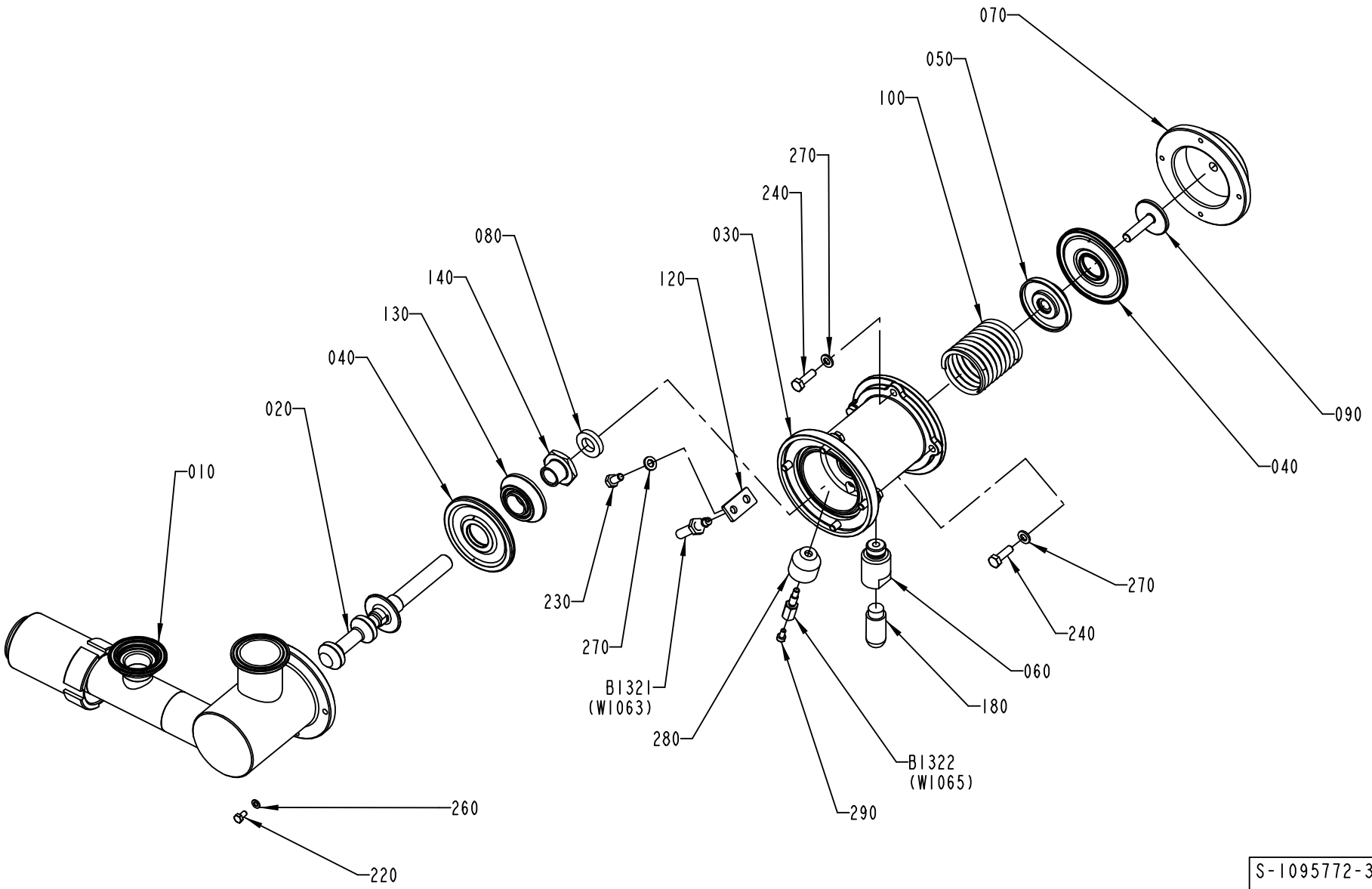

S-1095772-3
ECN 72957

Pos	Part No	SP	UN	Qty	Description	Page No
TBA 0200B HI OR TBA 0250B HI OR TBA 0200S HI OR TPA 0330SQ HI						
010	1498281-0000	-		1	REGULATOR BODY	
020	927007-0000	A		1	SHUTTER	
TBA 0250B NOHI OR TBA 0200B NOHI OR TBA 0200S NOHI						
010	1487029-0000	-		1	REGULATOR BODY	
020	927007-0000	A		1	SHUTTER	
TBA 0500S HI						
010	1511531-0000	-		1	REGULATOR BODY	
020	1511530-0000	A		1	SHUTTER	
TBA 0500S NOHI OR TBA 0500B NOHI						
010	1511529-0000	-		1	REGULATOR BODY	
020	1511530-0000	A		1	SHUTTER	
TBA 1000S HI OR TBA 1000SQ HI OR TBA 1000B HI OR TPA 1000S HI OR TBA 1500S NOHI						
010	1499052-0000	-		1	REGULATOR BODY	
020	1129321-0000	A		1	SHUTTER	
TBA 1000S NOHI OR TBA 1000SQ NOHI OR TBA 1000B NOHI OR TPA 1000S NOHI OR TBA 1500S NOHI						
010	1487030-0000	-		1	REGULATOR BODY	
020	1129321-0000	A		1	SHUTTER	
Common Parts						
030	927194-0000	-		1	BODY	
040	925998-0000	A		2	DIAPHRAGM	
050	926906-0000	-		1	SPACER	
060	927044-0000	-		1	SPACER	
070	927203-0000	-		1	COVER	
080	736514-0000	A		1	SHOCK ABSORBER	
090	926907-0000	-		1	SCREW	
100	926909-0000	A		1	COMPRESSION SPRING	
120	926934-0000	-		1	SUPPORT	
130	1511600-0000	-		1	SPACER	
140	979434-0000	-		1	FERRULE	
180	90328-0026	A		1	SILENCER G1/4	
220	312105-0287	-		1	SCREW M6S M4X8 A280	
230	312105-0366	-		1	SCREW M6S M6X12 A280	
240	312105-0370	-		8	SCREW M6S M6X20 A280	
260	315105-0136	-		1	WASHER PLAIN, BRB, 4,3/8,H=0,8	
270	315105-0153	-		9	WASHER PLAIN, BRB, 6,4/12,H=1,5	
280	1478813-0000	-		1	SPACER	
290	312115-0287	-		1	SCREW MC6S M4X8 A280	
B1321	90044-0145	A		1	PROX.SW. 922 AAIY-A9P-050-LZ876	
B1322	1478814-0000	A		1	SENSOR	

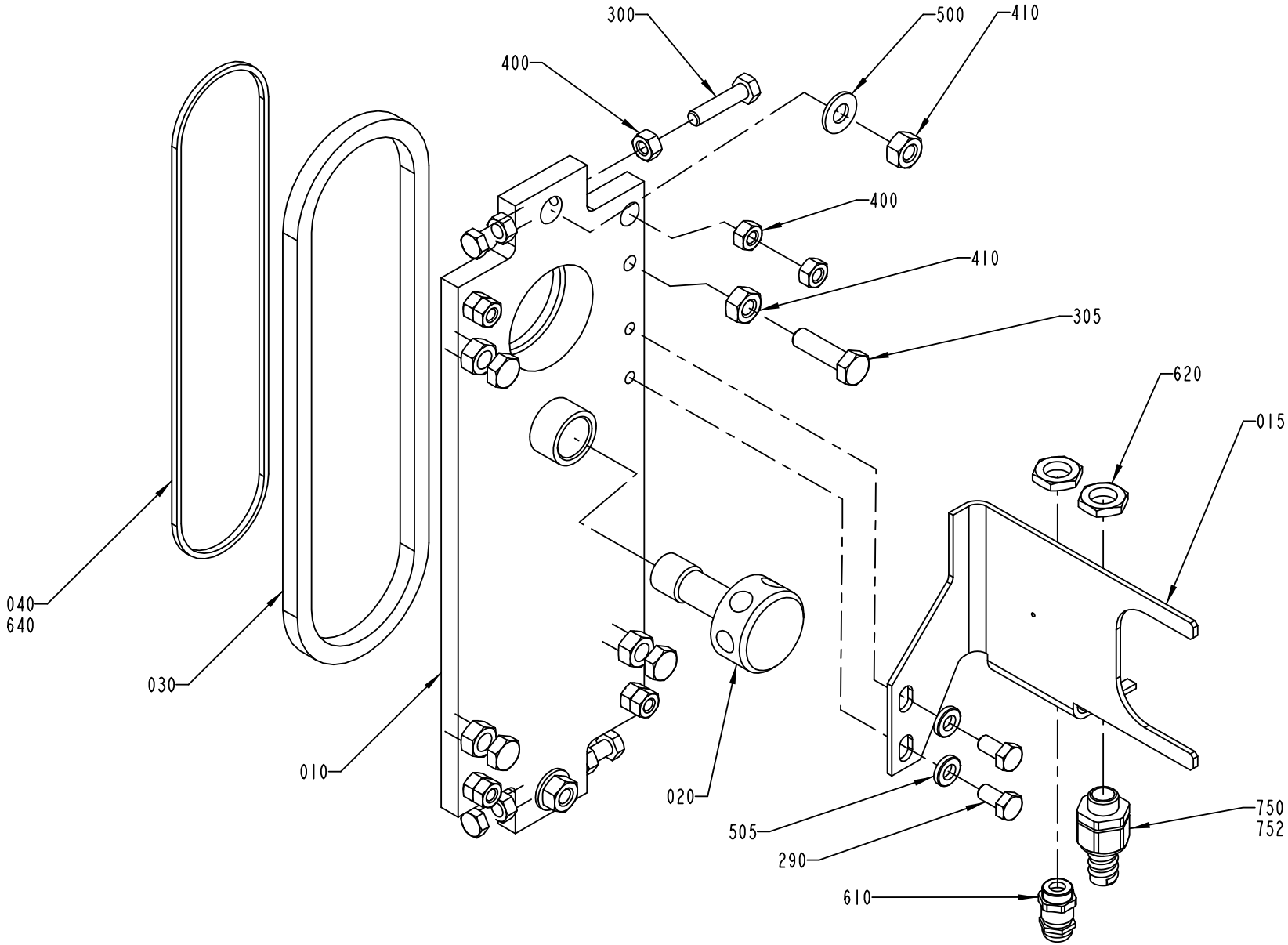

1334992-1
ECN 73485

ECM: 73485 - 20000331
Group number: 1334992-0100
Assembly Drawing: 1334992-1_1_AA

Issue: 20011217

Pos	Part No	SP	UN	Qty	Description	Page No
HI						
015	1487491-0000	-		1	HOLDER	
050	312115-0295	-		4	SCREW MC6S M4X20 A280	
080	1487701-0000	-		1	HOLDER	
082	1254475-0000	D		1	VALVE BODY	
085	1487702-0000	D		1	PIPE	
090	1487703-0000	D		1	PIPE	
170	1498282-0006	D		1	NOZZLE	
170	1498282-0005	D		1	NOZZLE	
170	1498282-0004	D		1	NOZZLE	
170	1498282-0003	D		1	NOZZLE	
260	12242-0001	C		1	GASKET	
261	978380-0000	D		1	BLIND PLUG	
262	978381-0000	-		1	WASHER 56X2MM	
266	209183-0000	-		2	RING	
268	978440-0000	D		1	CRAMP	
270	312105-0368	-		2	SCREW M6S M6X16 A280	
295	312105-0451	-		2	SCREW M6S 8X20 A280	
310	312125-0285	-		2	SCREW SLOT.PAN HD. MCS 4X6 A480	
415	312105-0333	-		1	SCREW M6S M5X25 A280	
420	312105-0366	-		1	SCREW M6S M6X12 A280	
425	312812-0314	-		1	HEXAGON NUT, NY-LOCK M5 A480	
430	315105-0146	-		2	WASHER PLAIN, BRB, 5,3/10,H=1	
435	315105-0153	-		1	WASHER PLAIN, BRB, 6,4/12,H=1,5	
440	315204-0208	C		2	O-RING 9,3X2,4 MM	
445	90030-0549	-		2	CONN. STRAIGHT, BULKHEAD, SS-4-VCO-61	
450	90155-0008	-	MM	300	HANGER CHAIN, 18	
455	90242-0162	C		5	O-RING 6,07X1,78 MM	
470	90141-0017	-		1	RETAIN. RING, 17	
475	1348046-0000	-		1	HOLDER	
480	353243-0005	-		2	GLANDS,HOSE,EXTENDED WITHOUT INSERT PG16	
485	1511332-0000	-		2	GLAND,INSERT, NORMAL E154G 4X5	
486	90099-0110	-		1	NUT PR 22,5 (PG16)	
490	90152-0051	-	MM	1000	GLANDS,HOSE 25X18	
505	315115-0165	-		4	WASHER PLAIN, TBRB 8,4/16 H=3	
507	315125-0153	-		2	WASHER PLAIN ROUND,CHAMF. 6,4/22, H=4	
540	342732-0102	-		1	ELBOW PIPE JOINT	
550	342840-0103	-		2	CLAMPING PIECE	
620	90099-0104	-		4	NUT PR 15,2 (PG9)	
660	979813-0000	-		1	PLUG	
670	342850-0304	-		1	GASKET 35,4X49,1X5,2 MM 1"1/2 FDA	
690	90328-0003	-		1	SILENCER	
700	90187-0176	C		1	ACTUATOR ECC 008 FOR DIAPHR. VALVE	
710	90187-0325	C		1	DIAPHRAGM, 214/300 AO08 4-B -20-150§C	
720	312145-0228	-		1	SCREW COUNTERS.SLOT.HD. MFS 3X16 SS	
730	90326-0020	-		1	PLUG,FEMALE YELLOW CR-AL	
740	90326-0022	-		2	PLUG,MALE YELLOW CR-AL	
750	353243-0001	-		3	GLAND,HOSE,EXTENDED,WITHOUT INSERT PG9	
751	90152-0059	-	MM	1000	HOSE 18X12	
752	353249-0009	-		3	GLAND,INSERT,SINGLE HOLE,EXTEND.6,5-9,5	
800	359000-0400	-		2	MARKING CO2/4"0"	
805	359000-0401	-		2	MARKING COLLAR 2/4 "1" YELLOW	
810	359000-0404	-		2	MARKING COLLAR PA2/4 "4" YELLOW	
815	359000-0405	-		2	MARKING CO2/4"5"	
820	359000-0409	-		2	MARKING COLLAR PA2/4 "9" YELLOW	
B9106	90326-0060	C		1	THERMOCOUPLE CR-AL	
B9107	90044-0124	C		1	PROX.SW. 922AB2XM-A9P-050-LZ-876	
B9108	90044-0124	C		1	PROX.SW. 922AB2XM-A9P-050-LZ-876	
B9109	90044-0124	C		1	PROX.SW. 922AB2XM-A9P-050-LZ-876	
B9110	90044-0124	-		1	PROX.SW. 922AB2XM-A9P-050-LZ-876	
W9106	90220-0034	-	MM	6000	THERMOCOUPLE CABLE K/ 2X0,5MM2	
NOHI						
015	1041781-0000	-		1	HOLDER	
505	315115-0165	-		2	WASHER PLAIN, TBRB 8,4/16 H=3	
620	90099-0104	-		2	NUT PR 15,2 (PG9)	
750	353243-0001	-		1	GLAND,HOSE,EXTENDED,WITHOUT INSERT PG9	
752	353249-0009	-		1	GLAND,INSERT,SINGLE HOLE,EXTEND.6,5-9,5	
Common Parts						
010	1350954-0000	D		1	MOUNTING PLATE	
020	1195476-0000	D		1	SCREW	
030	1036778-0000	C		1	GASKET	
040	1036777-0000	C		1	GASKET	
290	312105-0449	-		2	SCREW M6S M8X16 A280	
300	312109-0457	-		4	SCREW M6S M8X35 A280	
305	312105-0497	-		4	SCREW M6S M10X35 A280	
400	312605-0318	-		12	HEXAGON NUT, M6M M8 A280	
410	312605-0320	-		6	HEXAGON NUT, M6M M10 A280	
500	315105-0173	-		2	WASHER PLAIN, BRB, 10,5/22,H=2	
610	90012-0123	-		1	GLAND FITTING	
640	90153-0016	-		1	ADHESIVE TUBE 100G RHODORSIL CAF 3	

Machine Type | Group Description | Used-In | Group Number | Page No

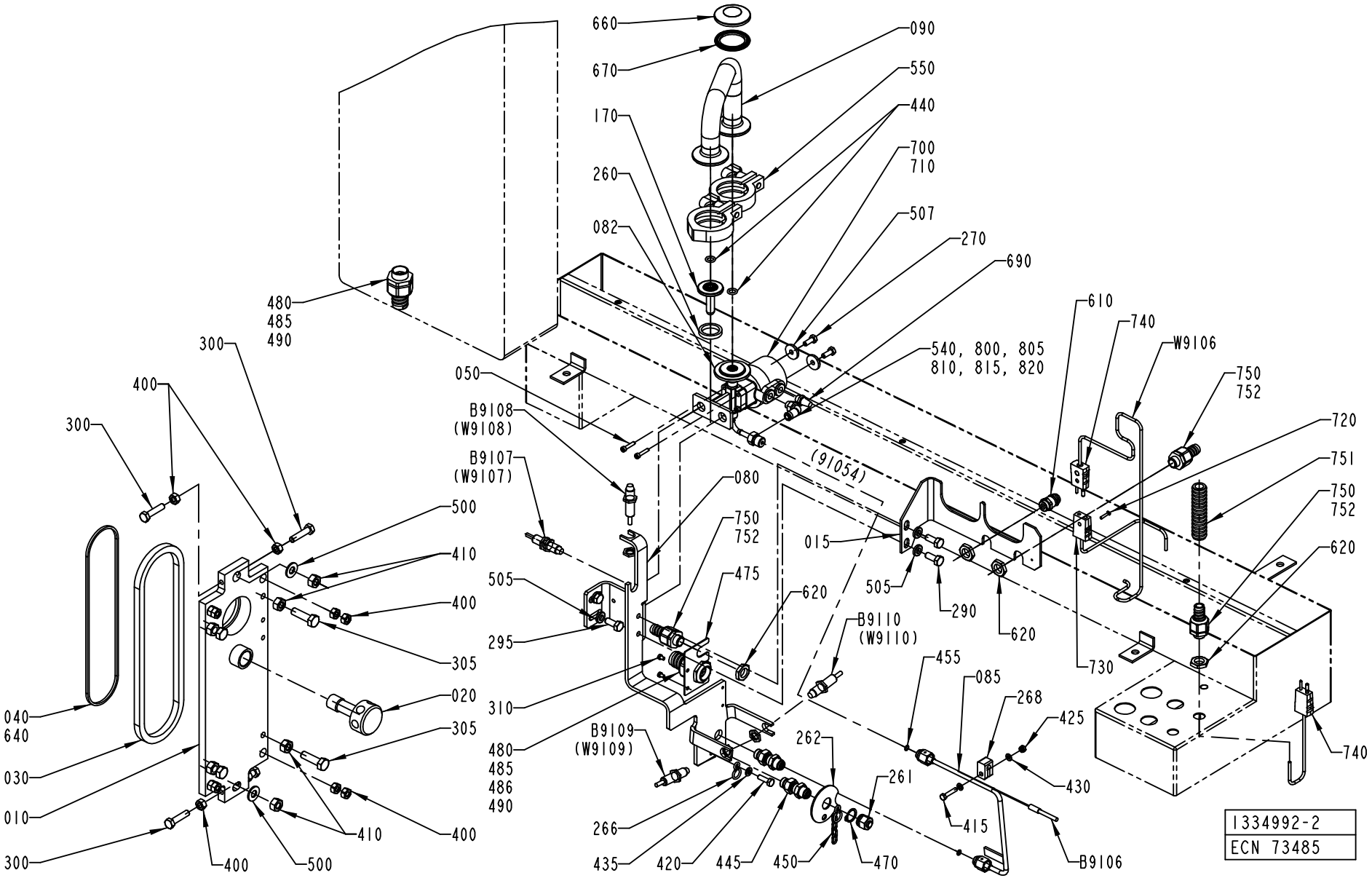
660
670
170
260
082
480
485
490
300
400
300
050
B9108
(W9108)
B9107
(W9107)
500
410
400
305
020
305
040
640
030
010
300
410
400
400
500
505
295
310
480
485
486
490
B9109
(W9109)
266
435
420
445
450
470
B9106
080
750
752
475
620
(91054)
090
550
440
700
710
507
270
690
540, 800, 805
810, 815, 820
610
740
W9106
750
752
720
751
750
752
620
730
740
015
505
290
620
B9110
(W9110)
455
085
268
425
430
262
261
415
1334992-2
ECN 73485

ECM: 73485 - 20000331
Group number: 1334992-0100
Assembly Drawing: 1334992-2_1_AA

Issue: 20011217

Pos	Part No	SP	UN	Qty	Description	Page No
HI						
015	1487491-0000	-		1	HOLDER	
050	312115-0295	-		4	SCREW MC6S M4X20 A280	
080	1487701-0000	-		1	HOLDER	
082	1254475-0000	D		1	VALVE BODY	
085	1487702-0000	D		1	PIPE	
090	1487703-0000	D		1	PIPE	
170	1498282-0006	D		1	NOZZLE	
170	1498282-0005	D		1	NOZZLE	
170	1498282-0004	D		1	NOZZLE	
170	1498282-0003	D		1	NOZZLE	
260	12242-0001	C		1	GASKET	
261	978380-0000	D		1	BLIND PLUG	
262	978381-0000	-		1	WASHER 56X2MM	
266	209183-0000	-		2	RING	
268	978440-0000	D		1	CRAMP	
270	312105-0368	-		2	SCREW M6S M6X16 A280	
295	312105-0451	-		2	SCREW M6S 8X20 A280	
310	312125-0285	-		2	SCREW SLOT.PAN HD. MCS 4X6 A480	
415	312105-0333	-		1	SCREW M6S M5X25 A280	
420	312105-0366	-		1	SCREW M6S M6X12 A280	
425	312812-0314	-		1	HEXAGON NUT, NY-LOCK M5 A480	
430	315105-0146	-		2	WASHER PLAIN, BRB, 5,3/10,H=1	
435	315105-0153	-		1	WASHER PLAIN, BRB, 6,4/12,H=1,5	
440	315204-0208	C		2	O-RING 9,3X2,4 MM	
445	90030-0549	-		2	CONN. STRAIGHT, BULKHEAD, SS-4-VCO-61	
450	90155-0008	-	MM	300	HANGER CHAIN, 18	
455	90242-0162	C		5	O-RING 6,07X1,78 MM	
470	90141-0017	-		1	RETAIN. RING, 17	
475	1348046-0000	-		1	HOLDER	
480	353243-0005	-		2	GLANDS,HOSE,EXTENDED WITHOUT INSERT PG16	
485	1511332-0000	-		2	GLAND,INSERT, NORMAL E154G 4X5	
486	90099-0110	-		1	NUT PR 22,5 (PG16)	
490	90152-0051	-	MM	1000	GLANDS,HOSE 25X18	
505	315115-0165	-		4	WASHER PLAIN, TBRB 8,4/16 H=3	
507	315125-0153	-		2	WASHER PLAIN ROUND,CHAMF. 6,4/22, H=4	
540	342732-0102	-		1	ELBOW PIPE JOINT	
550	342840-0103	-		2	CLAMPING PIECE	
620	90099-0104	-		4	NUT PR 15,2 (PG9)	
660	979813-0000	-		1	PLUG	
670	342850-0304	-		1	GASKET 35,4X49,1X5,2 MM 1"1/2 FDA	
690	90328-0003	-		1	SILENCER	
700	90187-0176	C		1	ACTUATOR ECC 008 FOR DIAPHR. VALVE	
710	90187-0325	C		1	DIAPHRAGM, 214/300 AO08 4-B -20-150§C	
720	312145-0228	-		1	SCREW COUNTERS.SLOT.HD. MFS 3X16 SS	
730	90326-0020	-		1	PLUG,FEMALE YELLOW CR-AL	
740	90326-0022	-		2	PLUG,MALE YELLOW CR-AL	
750	353243-0001	-		3	GLAND,HOSE,EXTENDED,WITHOUT INSERT PG9	
751	90152-0059	-	MM	1000	HOSE 18X12	
752	353249-0009	-		3	GLAND,INSERT,SINGLE HOLE,EXTEND.6,5-9,5	
800	359000-0400	-		2	MARKING CO2/4"0"	
805	359000-0401	-		2	MARKING COLLAR 2/4 "1" YELLOW	
810	359000-0404	-		2	MARKING COLLAR PA2/4 "4" YELLOW	
815	359000-0405	-		2	MARKING CO2/4"5"	
820	359000-0409	-		2	MARKING COLLAR PA2/4 "9" YELLOW	
B9106	90326-0060	C		1	THERMOCOUPLE CR-AL	
B9107	90044-0124	C		1	PROX.SW. 922AB2XM-A9P-050-LZ-876	
B9108	90044-0124	C		1	PROX.SW. 922AB2XM-A9P-050-LZ-876	
B9109	90044-0124	C		1	PROX.SW. 922AB2XM-A9P-050-LZ-876	
B9110	90044-0124	-		1	PROX.SW. 922AB2XM-A9P-050-LZ-876	
W9106	90220-0034	-	MM	6000	THERMOCOUPLE CABLE K/ 2X0,5MM2	
NOHI						
015	1041781-0000	-		1	HOLDER	
505	315115-0165	-		2	WASHER PLAIN, TBRB 8,4/16 H=3	
620	90099-0104	-		2	NUT PR 15,2 (PG9)	
750	353243-0001	-		1	GLAND,HOSE,EXTENDED,WITHOUT INSERT PG9	
752	353249-0009	-		1	GLAND,INSERT,SINGLE HOLE,EXTEND.6,5-9,5	
Common Parts						
010	1350954-0000	D		1	MOUNTING PLATE	
020	1195476-0000	D		1	SCREW	
030	1036778-0000	C		1	GASKET	
040	1036777-0000	C		1	GASKET	
290	312105-0449	-		2	SCREW M6S M8X16 A280	
300	312109-0457	-		4	SCREW M6S M8X35 A280	
305	312105-0497	-		4	SCREW M6S M10X35 A280	
400	312605-0318	-		12	HEXAGON NUT, M6M M8 A280	
410	312605-0320	-		6	HEXAGON NUT, M6M M10 A280	
500	315105-0173	-		2	WASHER PLAIN, BRB, 10,5/22,H=2	
610	90012-0123	-		1	GLAND FITTING	
640	90153-0016	-		1	ADHESIVE TUBE 100G RHODORSIL CAF 3	

Machine Type | Group Description | Used-In | Group Number | Page No

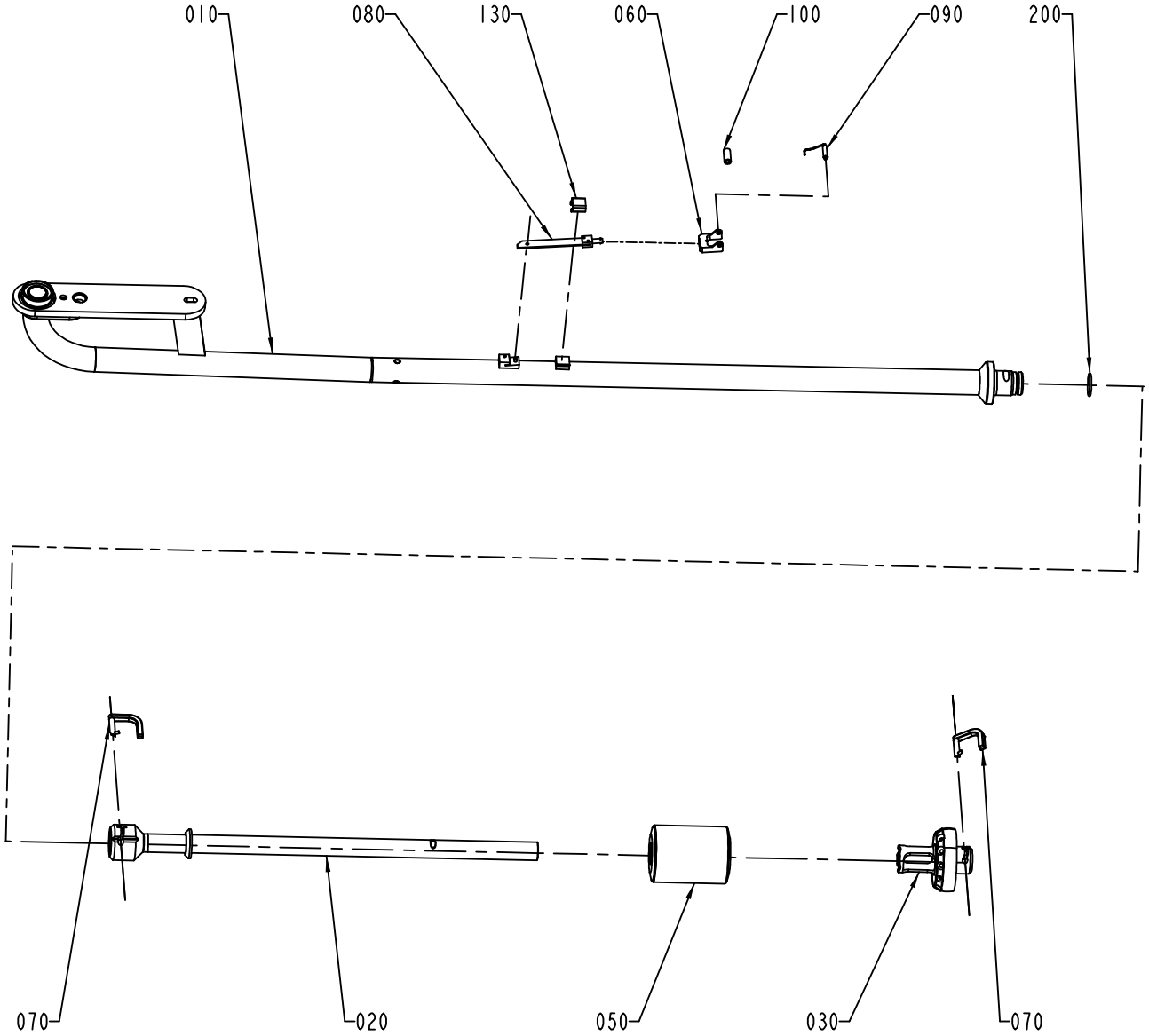

S-1334991-1
ECN 72687

Pos	Part No	SP	UN	Qty	Description	Page No
TBA 0200B						
010	1538031-0000	A		1	FILLING PIPE	
020	1538088-0000	A		1	LOWER FILLING PIPE	
030	1548321-0000	A		1	PRESSURE FLANGE	
050	979326-0000	A		1	FLOAT	
060	1317438-0000	A		1	FORK	
070	1548364-0000	A		3	LOCKING PIN	
080	1498621-0000	A		1	SPRING	
090	1334051-0000	A		1	SHAFT	
100	257330-0000	A		1	PRESSURE ROLLER	
130	295377-0003	A		1	HOOD	
200	315204-0215	A		1	O-RING 19,2X3 MM	
210	1498143-0000	A		1	LOCKING RING	
TBA 0200S						
010	1538031-0000	A		1	FILLING PIPE	
020	1487379-0000	A		1	LOWER FILLING PIPE	
030	1548312-0000	A		1	PRESSURE FLANGE	
050	979330-0000	A		1	FLOATER	
060	255978-0000	A		1	FORK	
070	1548364-0000	A		3	LOCKING PIN	
080	751604-0000	A		1	SPRING	
090	255977-0000	A		1	SHAFT	
100	272479-0000	A		1	PRESSURE ROLLER	
130	295377-0001	A		1	HOOD	
200	315204-0215	A		1	O-RING 19,2X3 MM	
210	1499114-0000	A		1	LOCKING RING	
TBA 0250B						
010	1538031-0000	A		1	FILLING PIPE	
020	1487376-0000	A		1	LOWER FILLING PIPE	
030	1548321-0000	A		1	PRESSURE FLANGE	
050	979326-0000	A		1	FLOAT	
060	1317438-0000	A		1	FORK	
070	1548364-0000	A		3	LOCKING PIN	
080	1498621-0000	A		1	SPRING	
090	1334051-0000	A		1	SHAFT	
100	257330-0000	A		1	PRESSURE ROLLER	
130	295377-0003	A		1	HOOD	
200	315204-0215	A		1	O-RING 19,2X3 MM	
210	1498143-0000	A		1	LOCKING RING	

Pos	Part No	SP	UN	Qty	Description	Page No
TBA 0500B OR TBA 1000B						
010	1487374-0000	A		1	FILLING PIPE	
020	1349869-0000	A		1	LOWER FILLING PIPE	
030	1349871-0000	A		1	PRESSURE FLANGE	
050	1317010-0000	A		1	FLOATER	
060	1348048-0000	A		1	FORK	
070	1487706-0000	A		2	LOCKING PIN LOWER	
080	1517053-0000	A		1	SPRING	
090	1348051-0000	A		1	SHAFT	
100	232979-0000	A		1	PRESSURE ROLLER	
130	14600-0000	A		1	HOOD	
200	315204-0219	A		1	O-RING 29,2X3 MM	
TBA 0500S						
010	1499883-0000	A		1	FILLING PIPE	
020	1517254-0000	A		1	LOWER FILLING PIPE	
030	1517178-0000	A		1	PRESSURE FLANGE	
050	1517180-0000	A		1	FLOAT	
060	1348049-0000	A		1	FORK	
070	1487706-0000	A		2	LOCKING PIN LOWER	
080	1517053-0000	A		1	SPRING	
090	1348052-0000	A		1	SHAFT	
100	499387-0000	A		1	PRESSURE ROLLER	
130	434665-0000	A		1	HOOD	
200	315204-0219	A		1	O-RING 29,2X3 MM	
TBA 1000S						
010	1487374-0000	A		1	FILLING PIPE	
020	1490177-0000	A		1	LOWER FILLING PIPE	
030	1349797-0000	A		1	PRESSURE FLANGE	
050	1317010-0000	A		1	FLOATER	
060	1348047-0000	A		1	FORK	
070	1487706-0000	A		2	LOCKING PIN LOWER	
080	1347111-0000	A		1	SPRING	
090	1348050-0000	A		1	SHAFT	
100	499387-0000	A		1	PRESSURE ROLLER	
130	434665-0000	A		1	HOOD	
200	315204-0219	A		1	O-RING 29,2X3 MM	
TBA 1000SQ						
010	1487374-0000	A		1	FILLING PIPE	
020	1490177-0000	A		1	LOWER FILLING PIPE	

Machine Type Group Description Used-In Group Number Page No

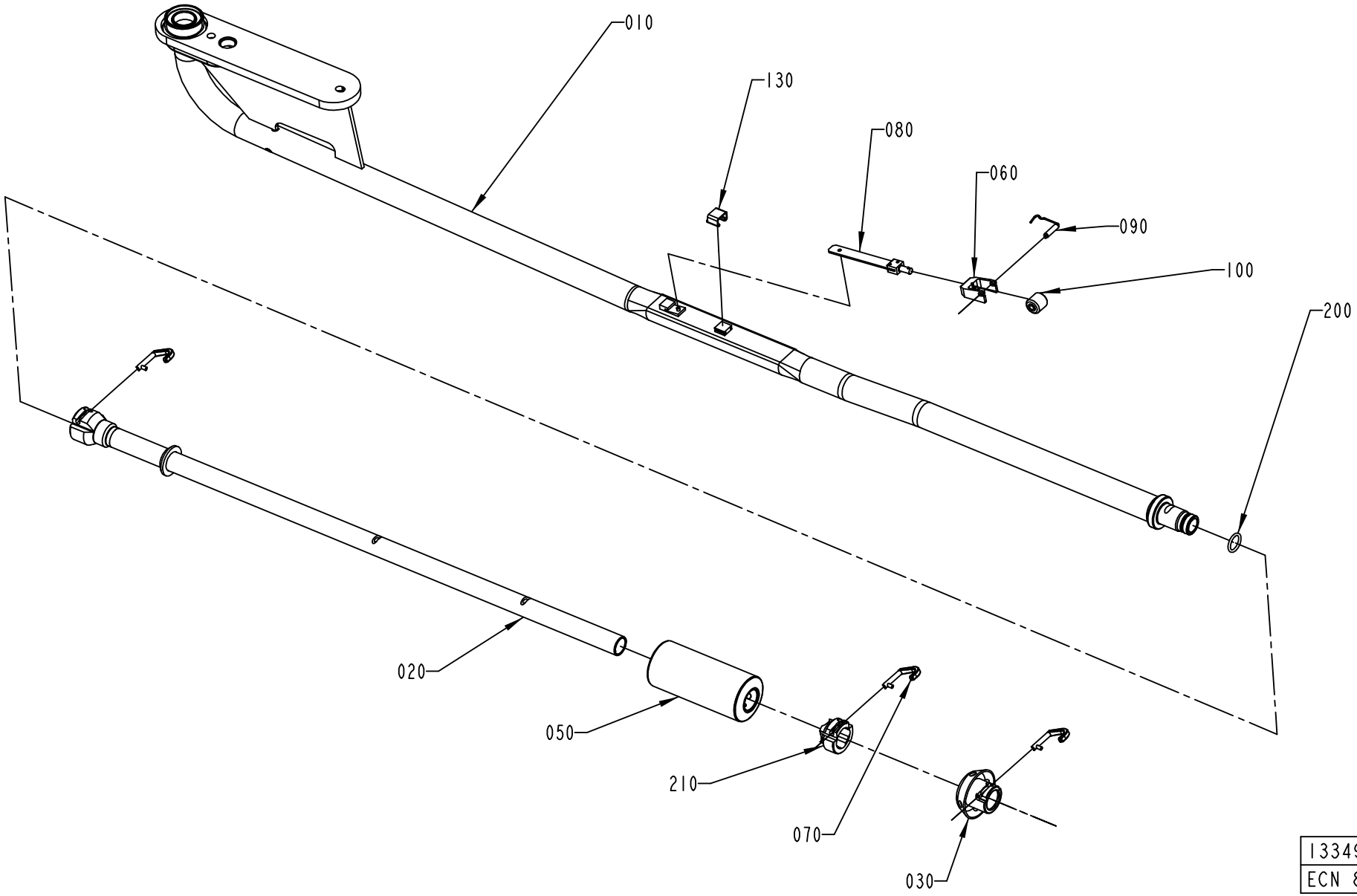

1334991-2
ECN 87850

Pos	Part No	SP	UN	Qty	Description	Page No
TBA 1000SQ (Cont'd)						
030	1517179-0000	A		1	PRESSURE FLANGE	
050	1349795-0000	A		1	FLOATER	
060	1348049-0000	A		1	FORK	
070	1487706-0000	A		2	LOCKING PIN LOWER	
080	1347111-0000	A		1	SPRING	
090	1348052-0000	A		1	SHAFT	
100	257330-0000	A		1	PRESSURE ROLLER	
130	434665-0000	A		1	HOOD	
200	315204-0219	A		1	O-RING 29,2X3 MM	
TBA 1500S						
010	1487374-0000	A		1	FILLING PIPE	
020	1499454-0000	A		1	LOWER FILLING PIPE	
030	1499455-0000	A		1	PRESSURE FLANGE	
050	1317010-0000	A		1	FLOATER	
060	1348048-0000	A		1	FORK	
070	1487706-0000	A		2	LOCKING PIN LOWER	
080	1517053-0000	A		1	SPRING	
090	1348051-0000	A		1	SHAFT	
100	232979-0000	A		1	PRESSURE ROLLER	
130	14600-0000	A		1	HOOD	
200	315204-0219	A		1	O-RING 29,2X3 MM	
TPA 0330SQ						
010	1538031-0000	A		1	FILLING PIPE	
020	1532996-0000	A		1	LOWER FILLING PIPE	
030	1532995-0000	A		1	PRESSURE FLANGE	
050	929276-0000	A		1	FLOAT	
060	568583-0000	A		1	FORK	
070	1548364-0000	A		3	LOCKING PIN	
080	544894-0000	A		1	SPRING	
090	295376-0000	A		1	SHAFT	
100	257330-0000	A		1	PRESSURE ROLLER	
130	295377-0003	A		1	HOOD	
200	315204-0215	A		1	O-RING 19,2X3 MM	
210	1498143-0000	A		1	LOCKING RING	
TPA 1000S						
010	1487374-0000	A		1	FILLING PIPE	
020	1538510-0000	A		1	FILLING PIPE LOWER	
030	1538327-0000	A		1	PRESSURE FLANGE	

Pos	Part No	SP	UN	Qty	Description	Page No
050	1349795-0000	A		1	FLOATER	
060	1348049-0000	A		1	FORK	
070	1487706-0000	A		2	LOCKING PIN LOWER	
080	1517053-0000	A		1	SPRING	
090	1348052-0000	A		1	SHAFT	
100	499387-0000	A		1	PRESSURE ROLLER	
130	434665-0000	A		1	HOOD	
200	315204-0219	A		1	O-RING 29,2X3 MM	

Machine Type | Group Description | Used-In | Group Number | Page No

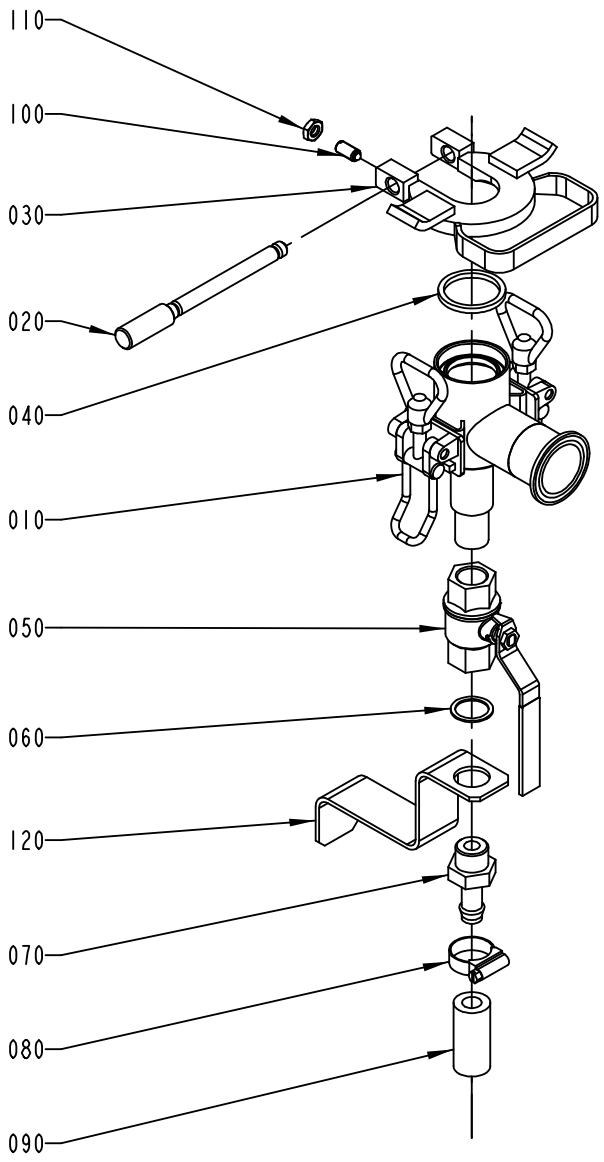

S-1334990-I
ECN 72687

ECM: 92152 - 20010709
Group number: 1334990-0100
Assembly Drawing: 1334990-1_1_AA

Issue: 20011217

Pos	Part No	SP	UN	Qty	Description	Page No
TBA 0200B OR TBA 0200S OR TBA 0250B OR TPA 0330SQ						
010	1348294-0000	A		1	CLEANING CUP	
030	1348295-0000	A		1	CLAMP	
040	315229-0104	A		1	GASKETS, 35,8X42,8X3,7 MM 1"1/2 FD	
TBA 0500S OR TBA 0500B OR TBA 1000S OR TBA 1000SQ OR TBA 1000B OR TPA 1000S OR TBA 1500S						
010	1348381-0000	A		1	CLEANING CUP	
030	1350885-0000	A		1	CLAMP	
040	1348501-0000	A		1	GASKET	
Common Parts						
020	1348206-0000	A		1	LOCK PIN	
050	90187-0082	A		1	BALL VALVE G1/2	
060	315233-0113	-		1	WASHER PL.RND.NYL.21,4/27,H=1,2	
070	90055-0071	-		1	HOSE NIPPLE, EXT.THR. R1/2X13 MM	
080	342991-0104	-		1	HOSE CLIP,WORM DRIVE TYPE (23)-27	
090	90148-0021	-	M	1	HOSE	
100	90287-0112	-		1	SCREW SPRINGLOAD. SLOTTED HEAD M8X16	
110	312625-0318	-		1	NUT HEX. M8 SS	
120	1490733-0000	-		1	BRACKET	

Pos	Part No	SP	UN	Qty	Description	Page No

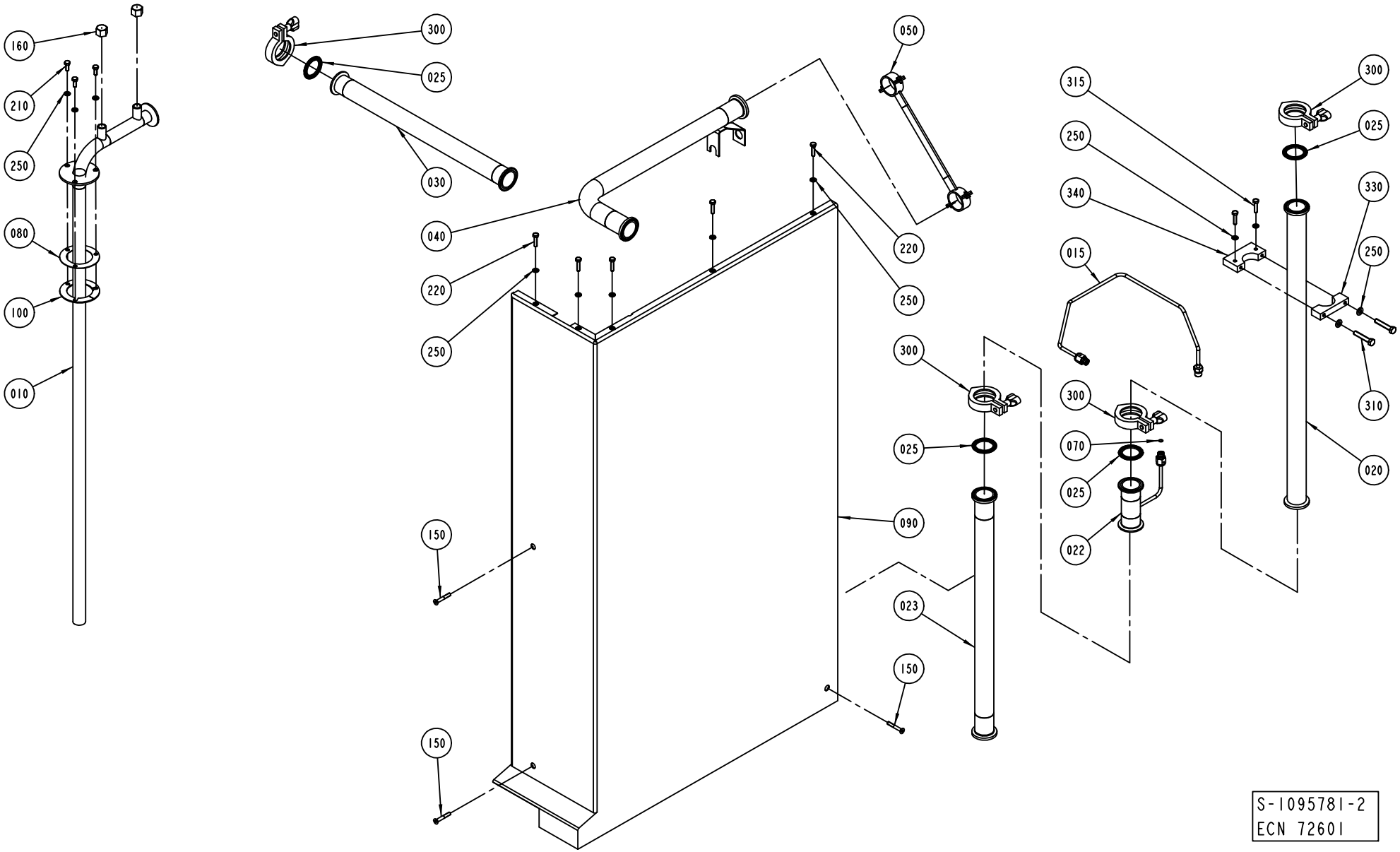
160
210
250
080
100
010
300
025
030
040
220
250
050
220
250
300
025
090
023
150
150
315
300
250
025
340
330
015
250
300
310
070
020
025
022
S-1095781-2
ECN 72601

ECM: 72601 - 19991210
Group number: 1095781-0200
Assembly Drawing: 1095781-2_1_AC

Issue: 20011217

Pos	Part No	SP	UN	Qty	Description	Page No
HI						
015	1347911-0000	D		1	PIPE	
020	1348060-0000	-		1	PIPE	
022	979256-0000	D		1	CLEANING PIPE	
023	1347465-0000	-		1	PIPE	
025	342850-0304	-		2	GASKET 35,4X49,1X5,2 MM 1"1/2 FDA	
070	90242-0162	-		1	O-RING 6,07X1,78 MM	
300	342840-0103	-		2	CLAMPING PIECE	
NOHI						
020	1140025-0000	-		1	PIPE	
Common Parts						
010	1255505-0000	-		1	PIPE	
025	342850-0304	-		2	GASKET 35,4X49,1X5,2 MM 1"1/2 FDA	
030	1255580-0000	-		1	PIPE	
040	1038964-0000	-		1	INTERMEDIATE PART	
050	1038965-0000	-		1	HOLDER	
080	1129078-0000	-		1	GASKET	
090	1129176-0000	-		1	COVER PLATE	
100	1255582-0000	-		2	SPACER	
100	1255585-0000	-		4	SPACER	
150	90226-0458	-		3	MOUNTING SCREW	
160	90055-0224	-		2	CAP NUT	
210	312105-0368	-		3	SCREW M6S M6X16 A280	
220	312105-0372	-		5	SCREW M6S M6X25 A280	
250	315105-0153	-		12	WASHER PLAIN, BRB, 6,4/12,H=1,5	
300	342840-0103	-		2	CLAMPING PIECE	
310	312109-0376	-		2	SCREW M6S M6X35 A280	
315	312105-0372	-		2	SCREW M6S M6X25 A280	
330	1478014-0000	-		1	SUPPORT	
340	1478015-0000	-		1	SUPPORT	

Pos	Part No	SP	UN	Qty	Description	Page No

Machine Type | Group Description | Used-In | Group Number | Page No

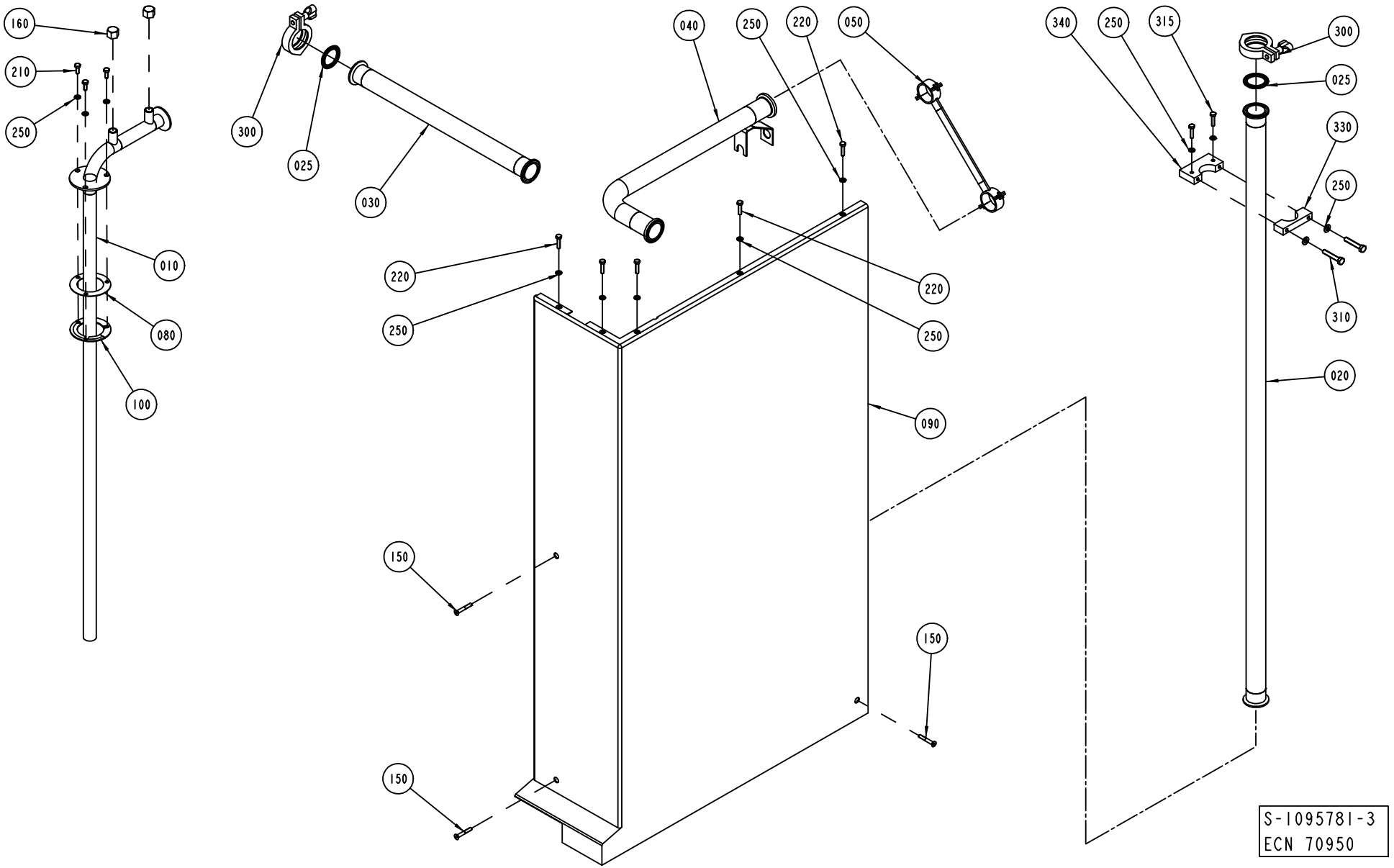
160
210
250
010
080
100
300
025
030
040
250
220
050
220
250
220
250
090
150
150
150
340
250
315
300
025
330
250
310
020
S-1095781-3
ECN 70950

ECM: 72601 - 19991210
Group number: 1095781-0200
Assembly Drawing: 1095781-3_1_AB

Issue: 20011217

Pos	Part No	SP	UN	Qty	Description	Page No
HI						
015	1347911-0000	D		1	PIPE	
020	1348060-0000	-		1	PIPE	
022	979256-0000	D		1	CLEANING PIPE	
023	1347465-0000	-		1	PIPE	
025	342850-0304	-		2	GASKET 35,4X49,1X5,2 MM 1"1/2 FDA	
070	90242-0162	-		1	O-RING 6,07X1,78 MM	
300	342840-0103	-		2	CLAMPING PIECE	
NOHI						
020	1140025-0000	-		1	PIPE	
Common Parts						
010	1255505-0000	-		1	PIPE	
025	342850-0304	-		2	GASKET 35,4X49,1X5,2 MM 1"1/2 FDA	
030	1255580-0000	-		1	PIPE	
040	1038964-0000	-		1	INTERMEDIATE PART	
050	1038965-0000	-		1	HOLDER	
080	1129078-0000	-		1	GASKET	
090	1129176-0000	-		1	COVER PLATE	
100	1255582-0000	-		2	SPACER	
100	1255585-0000	-		4	SPACER	
150	90226-0458	-		3	MOUNTING SCREW	
160	90055-0224	-		2	CAP NUT	
210	312105-0368	-		3	SCREW M6S M6X16 A280	
220	312105-0372	-		5	SCREW M6S M6X25 A280	
250	315105-0153	-		12	WASHER PLAIN, BRB, 6,4/12,H=1,5	
300	342840-0103	-		2	CLAMPING PIECE	
310	312109-0376	-		2	SCREW M6S M6X35 A280	
315	312105-0372	-		2	SCREW M6S M6X25 A280	
330	1478014-0000	-		1	SUPPORT	
340	1478015-0000	-		1	SUPPORT	

Pos	Part No	SP	UN	Qty	Description	Page No

Machine Type | Group Description | Used-In | Group Number | Page No

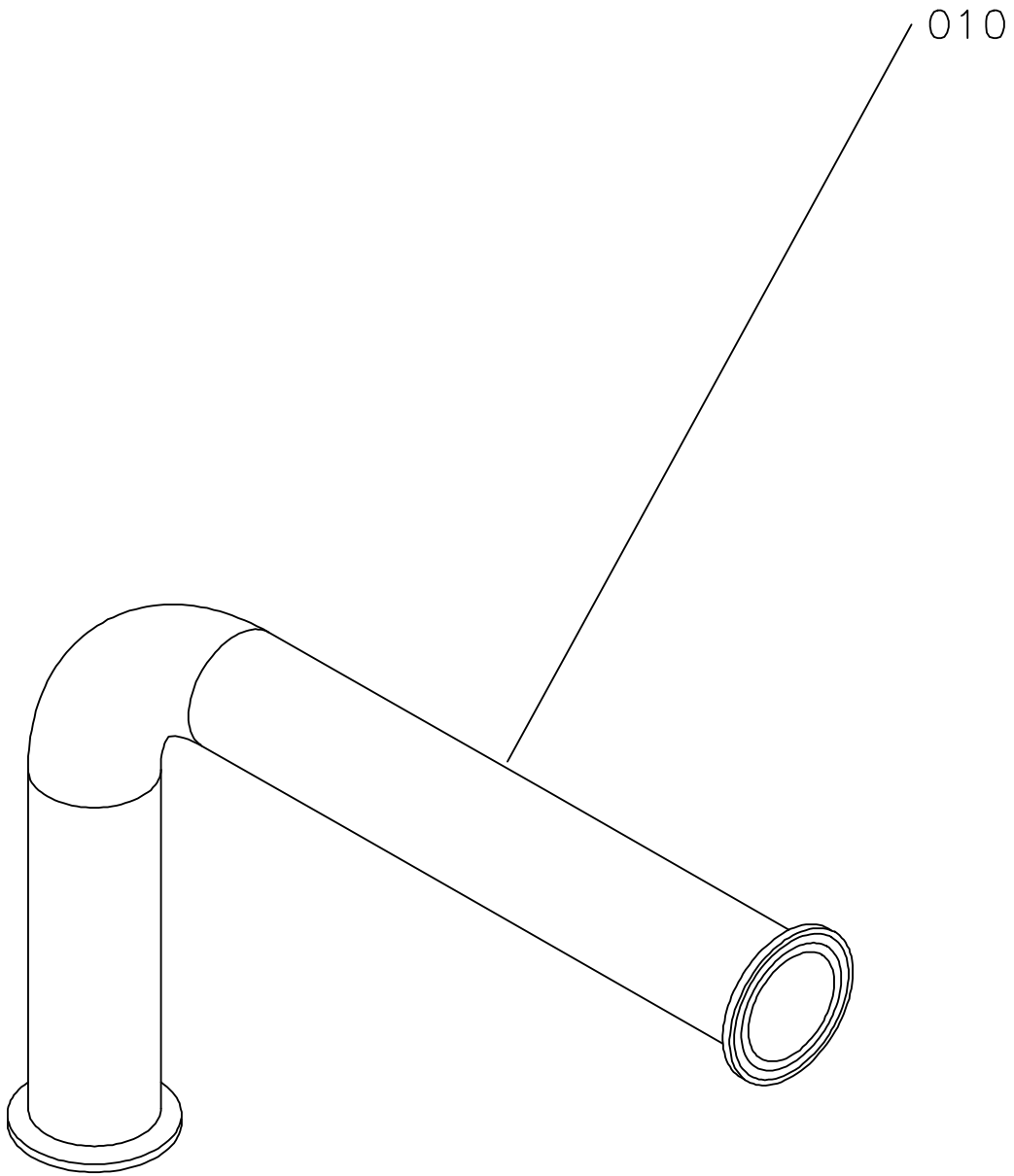
010

Pos	Part No	SP	UN	Qty	Description	Page No
CIPSUPERV						
020	1037461-0000	-		1	CONDUCTIVITY PIPE	
300	342840-0103	-		2	CLAMPING PIECE	
310	342850-0304	-		2	GASKET 35,4X49,1X5,2 MM 1"1/2 FDA	
600	353243-0003	-		1	GLAND,HOSE,EXTENDED WITHOUT INSERT PG11	
605	353249-0011	-		1	GLAND,INSERT,SINGLE HOLE,EXTEND.7-10,5	
610	353244-0002	-		2	GLANDS,HOSE,EXT.W.OUT INS.F.HI.TE.PG13,5	
620	90099-0117	-		1	NUT PR 18,6 (PG11)	
650	353249-0018	-		2	INSERT,SINGLE HOLE,EXTEN,HI TEMP.6,5-9,5	
B1315	B90243-0321	-		1	CONDUCTIVITY CELL	
	90242-0198	*-*		*1*	*O-RING*	
B1316	B90243-0430	-		1	FLOW METER, MAG 1100 FOOD PFA	
	90458-1617	*-*		*1*	*GASKET, DN40 FOR MAG 1100 FOOD*	
NOCIPSUPERV						
010	1038334-0000	-		1	PIPE	

Pos	Part No	SP	UN	Qty	Description	Page No

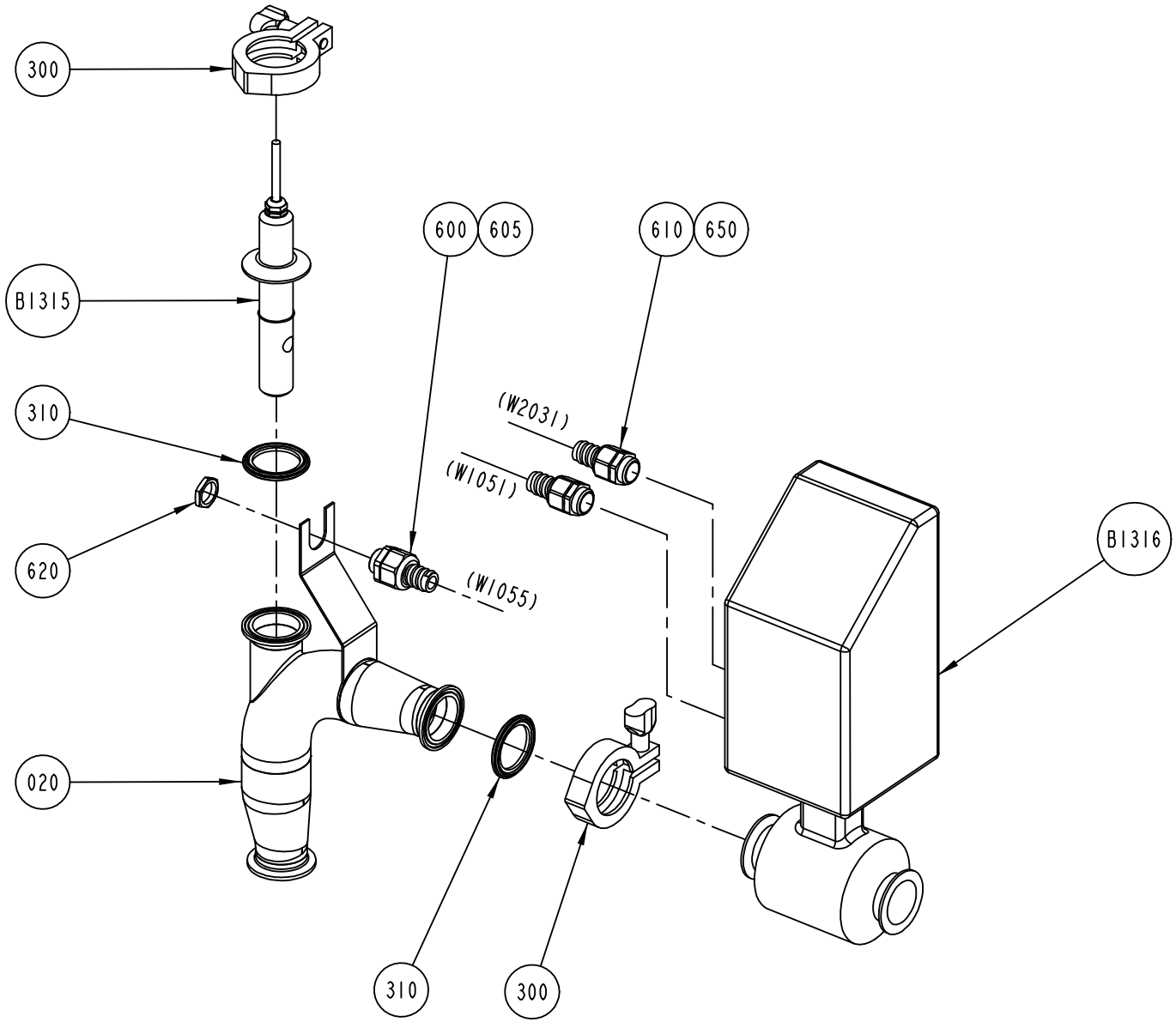

S-1035259-5
ECN 72829

Pos	Part No	SP	UN	Qty	Description	Page No
CIPSUPERV						
020	1037461-0000	-		1	CONDUCTIVITY PIPE	
300	342840-0103	-		2	CLAMPING PIECE	
310	342850-0304	-		2	GASKET 35,4X49,1X5,2 MM 1"1/2 FDA	
600	353243-0003	-		1	GLAND,HOSE,EXTENDED WITHOUT INSERT PG11	
605	353249-0011	-		1	GLAND,INSERT,SINGLE HOLE,EXTEND.7-10,5	
610	353244-0002	-		2	GLANDS,HOSE,EXT.W.OUT INS.F.HI.TE.PG13,5	
620	90099-0117	-		1	NUT PR 18,6 (PG11)	
650	353249-0018	-		2	INSERT,SINGLE HOLE,EXTEN,HI TEMP.6,5-9,5	
B1315	B90243-0321	-		1	CONDUCTIVITY CELL	
	90242-0198	*-*		*1*	*O-RING*	
B1316	B90243-0430	-		1	FLOW METER, MAG 1100 FOOD PFA	
	90458-1617	*-*		*1*	*GASKET, DN40 FOR MAG 1100 FOOD*	
NOCIPSUPERV						
010	1038334-0000	-		1	PIPE	

Pos	Part No	SP	UN	Qty	Description	Page No

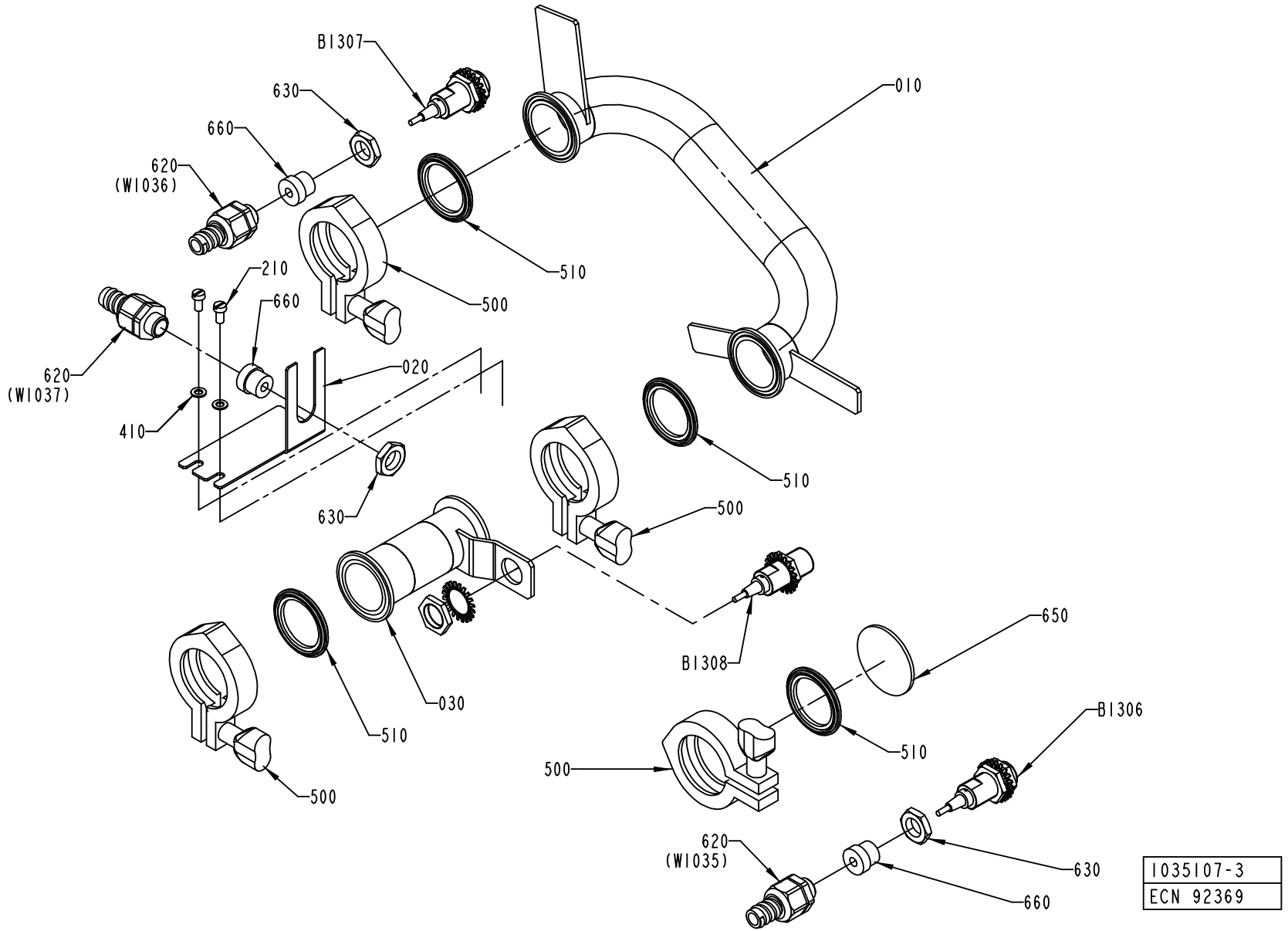
B1307
630
660
620
(W1036)
010
510
500
210
660
620
(W1037)
020
410
630
510
500
B1308
650
030
510
B1306
500
510
500
620
(W1035)
630
660
1035107-3
ECN 92369

ECM: 92933 - 20010917
Group number: 1035107-0300
Assembly Drawing: 1035107-3_1_AB

Issue: 20011217

Pos	Part No	SP	UN	Qty	Description	Page No
Common Parts						
010	1538064-0000	-		1	SWITCH OVER PIPE	
020	1538083-0000	-		1	HOLDER	
030	1558891-0000	-		1	PIPE	
060	312605-0314	-		2	HEXAGON NUT, M6M M5 A280	
210	312125-0325	-		2	SCREW SLOT.PAN HD. MCS 5X10 A480	
410	315105-0146	-		2	WASHER PLAIN, BRB, 5,3/10,H=1	
500	342840-0103	-		4	CLAMPING PIECE	
510	342850-0304	A		4	GASKET 35,4X49,1X5,2 MM 1"1/2 FDA	
620	353243-0001	-		3	GLAND,HOSE,EXTENDED,WITHOUT INSERT PG9	
630	90099-0104	-		3	NUT PR 15,2 (PG9)	
650	90217-0332	-		1	SOLID END CAP ISO2852, FOR TUBE 38,1 MM	
660	353249-0008	-		3	GLAND,INSERT,SINGLE HOLE,EXTEND.4-6,5	
B1306	90458-0676	A		1	PROXIMITY SWITCH,E2EG-X5B1-6M	
B1307	90458-0676	A		1	PROXIMITY SWITCH,E2EG-X5B1-6M	
B1308	90458-0676	A		1	PROXIMITY SWITCH,E2EG-X5B1-6M	

Pos	Part No	SP	UN	Qty	Description	Page No

Machine Type | Group Description | Used-In | Group Number | Page No

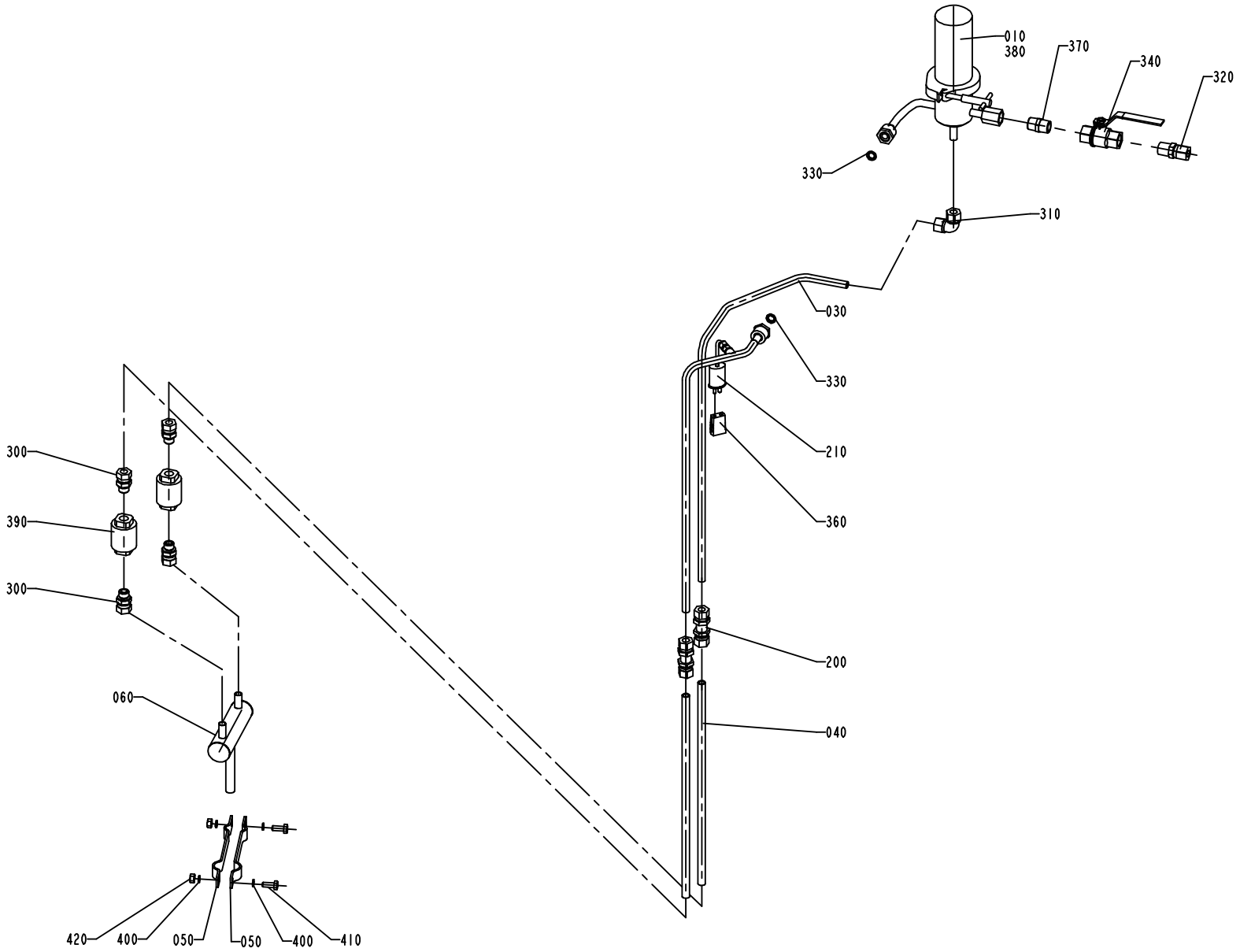
010
380
370
340
320
330
310
030
330
210
360
200
040
300
390
300
060
420
400
050
050
400
410

Pos	Part No	SP	UN	Qty	Description	Page No
Common Parts						
010	B1129137-0000	D		1	HOUSE	
	90277-0088	-		*1*	*FILTER HOUSING / ECS4463G1076*	
020	1346550-0000	-		1	PIPE	
030	1346548-0000	-		1	PIPE	
040	1346547-0000	-		2	PIPE	
050	1347665-0000	-		2	BRACKET	
060	1346554-0000	-		1	ATTACHMENT PIPE	
200	90030-0030	-		2	CONN. BULKHEAD SV 12-L/SY	
210	90326-0089	-		1	THERMOCOUPLE	
300	90030-0187	-		4	CONN. STR. GA-12-G3/8	
310	90030-0096	-		1	CONN. ELBOW W-12	
320	90030-0180	-		1	CONN. STR. GE 12-1/2-14 NPTF	
330	90091-0266	C		2	SEAL RING 10,4X16,3X2,5 MM	
340	90187-0082	-		1	BALL VALVE G1/2	
360	90326-0020	-		1	PLUG,FEMALE YELLOW CR-AL	
370	90330-0021	-		1	NIPPLES, EXT. THREAD. R-207R1/2	
380	90337-0315	C		1	FILTERINSERT / MCS 4463	
390	B90360-0020	C		2	STEAM TRAP / MK36/51 3/8"	
	90360-0310	-		*1*	*CAPSULE*	
	90360-0309	-		*1*	*STRAINER*	
400	315105-0153	-		4	WASHER PLAIN, BRB, 6,4/12,H=1,5	
410	312105-0451	-		2	SCREW M6S 8X20 A280	
420	312605-0318	-		2	HEXAGON NUT, M6M M8 A280	

Pos	Part No	SP	UN	Qty	Description	Page No

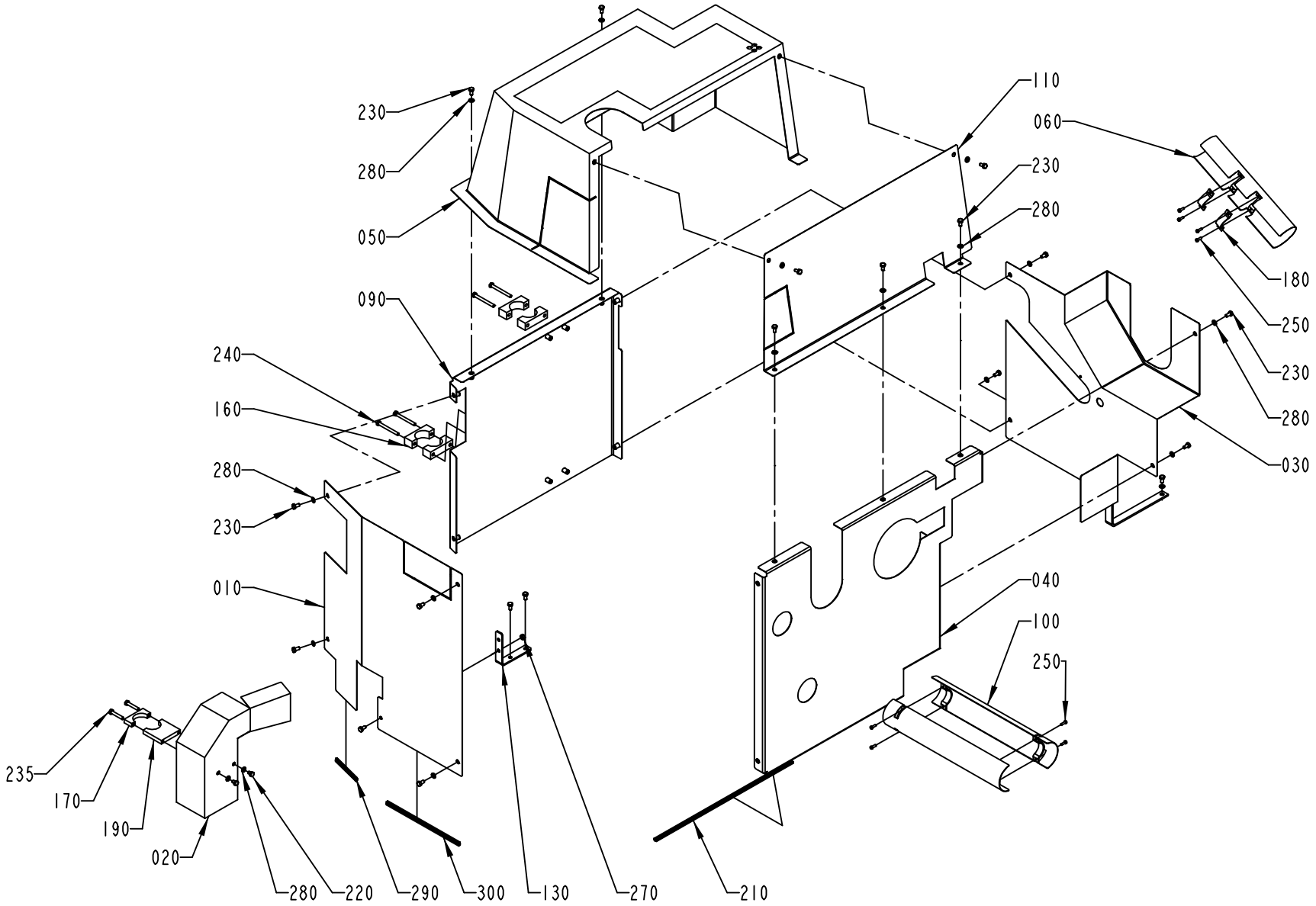

1095685-1
ECN 92369

Pos	Part No	SP	UN	Qty	Description	Page No
Common Parts						
010	2506816-0000	-		1	PROTECTION	
020	1140478-0000	-		1	PROTECTION	
030	1129024-0000	-		1	PROTECTION	
040	1140524-0000	-		1	PROTECTION	
050	B1517304-0000	-		1	PROTECTION	
	312925-0104	*-*		*2*	*NUT BLIND RIVET M6X14,5 SS*	
060	1538066-0000	-		1	PROTECTION	
090	B1140516-0000	-		1	PROTECTION	
	312925-0104	*-*		*10*	*NUT BLIND RIVET M6X14,5 SS*	
100	1041989-0000	-		2	PROTECTION	
110	1517305-0000	-		1	PROTECTION	
130	1103342-0000	-		1	BRACKET	
160	735041-0000	-		4	CONNECTION CLAMP	
170	1041988-0000	-		1	CLAMP	
180	1129058-0000	-		2	CLAMP	
190	1140480-0000	-		1	CLAMP	
210	90143-0060	-	MM	440	EDGE STRIP 9,5X6,3MM BLACK PVC	
220	312105-0362	-		2	SCREW M6S M6X8 A280	
230	312105-0366	-		19	SCREW M6S M6X12 A280	
235	312105-0376	-		2	SCREW M6S M6S M6X35 A280	
240	312105-0382	-		4	SCREW M6S M6X60 A280	
250	312125-0291	-		8	SCREW PAN HEAD MCS M4X12 SS	
270	312605-0316	-		1	HEXAGON NUT, M6M M6 A280	
280	315105-0153	-		18	WASHER PLAIN, BRB, 6,4/12,H=1,5	
290	90143-0060	-	MM	90	EDGE STRIP 9,5X6,3MM BLACK PVC	
300	90143-0060	-	MM	250	EDGE STRIP 9,5X6,3MM BLACK PVC	

Pos	Part No	SP	UN	Qty	Description	Page No

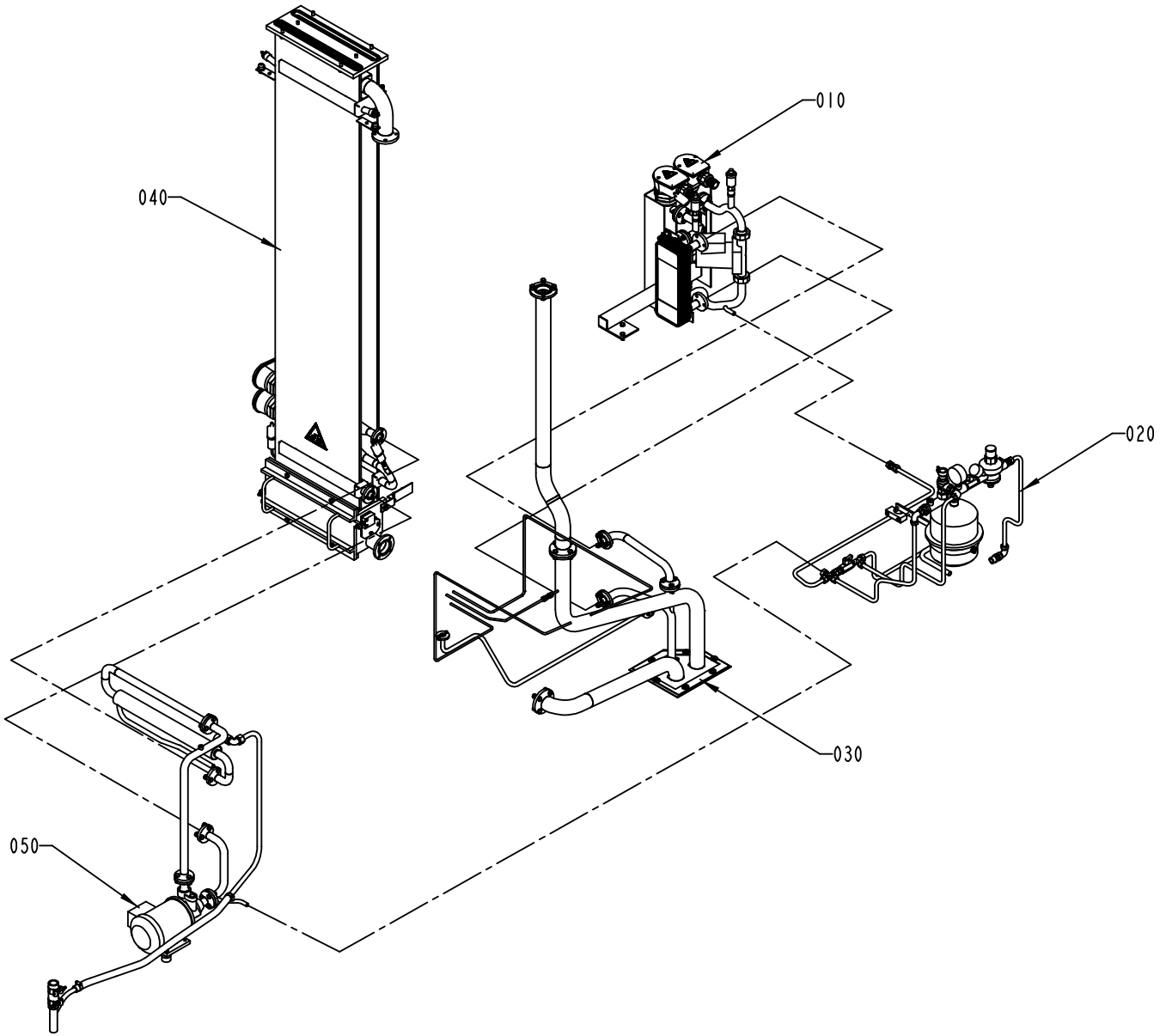

1095833-3
ECN 80366

ECM: 80501 - 20010301
Group number: 1095833-0400
Assembly Drawing: 1095833-3_1_AB

Issue: 20011217

Pos	Part No	SP	UN	Qty	Description	Page No
Common Parts						
010	A1334506-0200	-		1	HEATING UNIT	**161**
020	A996353-0400	-		1	PRESSURISING UNIT	**163**
030	A1334515-0200	-		1	PEROXIDE PIPE	**165, 167**
040	A1035008-0400	-		1	BATH	**169**
050	A996352-0300	-		1	WATER CIRCULATION	**171**

Pos	Part No	SP	UN	Qty	Description	Page No

Machine Type | Group Description | Used-In | Group Number | Page No

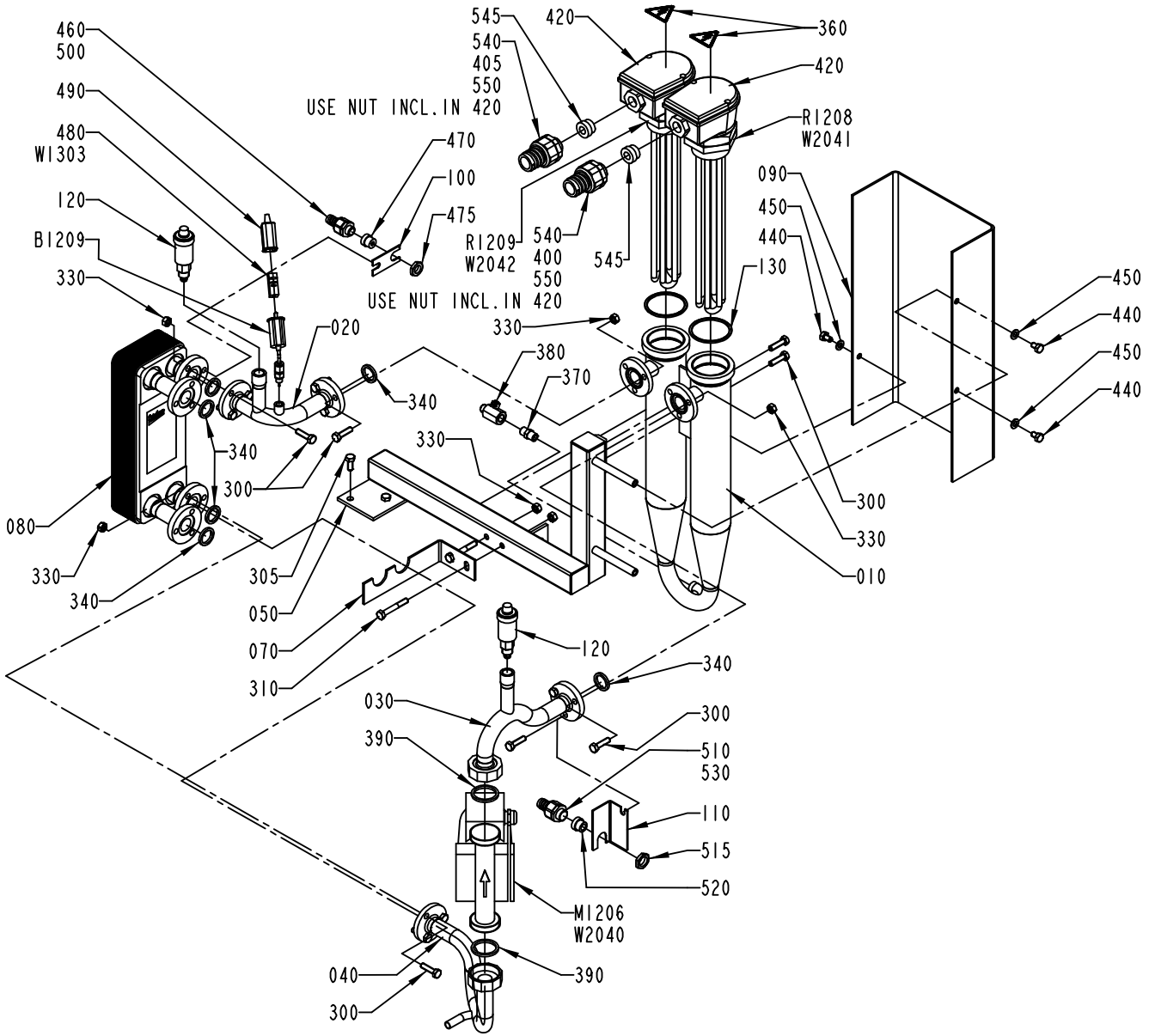

1334506-2
ECN 92369

ECM: 94846 - 20010917
Group number: 1334506-0200
Assembly Drawing: 1334506-2_1_AD

Issue: 20011217

Pos	Part No	SP	UN	Qty	Description	Page No
50HZ						
M1206	90321-0134	A		1	CIRC. PUMP TMB 40/2 230V50HZ	
60HZ						
M1206	90321-0135	A		1	CIRC. PUMP TMB 40/2 230V60HZ	
Common Parts						
010	1334507-0000	-		1	TUBE	
020	1538048-0000	-		1	PIPE	
030	1538049-0000	-		1	PIPE	
040	1334516-0000	-		1	PIPE	
050	1349505-0000	-		1	FRAME	
070	1349608-0000	-		1	HOLDER	
080	1346568-0000	A		1	HEAT EXCHANGER	
090	1346574-0000	-		1	PROTECTION	
100	1040970-0000	-		1	BRACKET	
110	1517707-0000	-		1	BRACKET	
120	90187-0105	A		2	PURGING VALVE, G3/8 FOR WATER	
130	90269-0308	A		2	GASKET 59X68X3 MM	
300	312105-0455	-		14	SCREW M6S M8X30 A280	
305	312105-0451	-		2	SCREW M6S 8X20 A280	
310	312105-0462	-		2	SCREW M6S M8X55 A280	
330	312605-0318	-		14	HEXAGON NUT, M6M M8 A280	
340	315229-0103	A		6	GASKETS, 23,1X30,1X3,7 MM 1" FDA	
360	359705-0015	-		2	WARNING SIGN ISO, RISK OF ELECTRIC SHOCK	
370	90330-0043	-		1	NIPPLES, EXT. THREAD. R-207R1/4	
380	90187-0158	A		1	THROTTLE BALL VALVE G1/4, R1/4	
390	315229-0104	-		2	GASKETS, 35,8X42,8X3,7 MM 1"1/2 FD	
400	90152-0051	-	MM	1800	GLANDS,HOSE 25X18	
405	90152-0051	-	MM	1800	GLANDS,HOSE 25X18	
420	90206-0326	-		2	CONNECTION BOX	
440	312105-0447	-		3	SCREW M6S M8X12 A280	
450	315105-0165	-		3	WASHER PLAIN, BRB, 8,4/16,H=1,5	
460	353243-0001	-		1	GLAND,HOSE,EXTENDED,WITHOUT INSERT PG9	
470	353249-0008	-		1	GLAND,INSERT,SINGLE HOLE,EXTEND.4-6,5	
475	90099-0104	-		1	NUT PR 15,2 (PG9)	
480	90326-0020	-		1	PLUG,FEMALE YELLOW CR-AL	
490	90326-0012	-		1	PROTECTIVE COVER	
500	90152-0050	-	MM	1500	GLANDS,HOSE 20X13	
510	353243-0003	-		1	GLAND,HOSE,EXTENDED WITHOUT INSERT PG11	
515	90099-0117	-		1	NUT PR 18,6 (PG11)	
520	353249-0011	-		1	GLAND,INSERT,SINGLE HOLE,EXTEND.7-10,5	
530	90152-0050	-	MM	1750	GLANDS,HOSE 20X13	
540	353243-0007	-		2	GLAND,HOSE,EXTENDED,WITHOUT INSERT PG21	
545	353249-0013	-		2	GLAND,INSERT,SINGLE HOLE,EXTEND.9-13	
550	90157-0034	-			SEALING COMPOUND LOCTITE 572 50 ML	
B1209	90326-0057	A		1	THERMOCOUPLE CR-AL	
R1208	B90206-0070	A		1	HEATING ELEMENT 6000W 380/220V	
	90206-0326	-		*1*	*CONNECTION BOX*	
	90269-0308	-		*1*	*GASKET 59X68X3 MM*	
R1209	B90206-0070	A		1	HEATING ELEMENT 6000W 380/220V	
	90206-0326	-		*1*	*CONNECTION BOX*	
	90269-0308	-		*1*	*GASKET 59X68X3 MM*	
W1303	90220-0034	-	M	5	THERMOCOUPLE CABLE K/ 2X0,5MM2	
W2040	351150-0412	-	M	4	CABLE OLFLEX 3X1,5 MM2 LIGHT/GREY	
W2041	351120-0164	-	M	4	CABLE SIHF 4X15MM2 GREEN/YELLOW	
W2042	351120-0164	-	M	4	CABLE SIHF 4X15MM2 GREEN/YELLOW	

Machine Type | Group Description | Used-In | Group Number | Page No

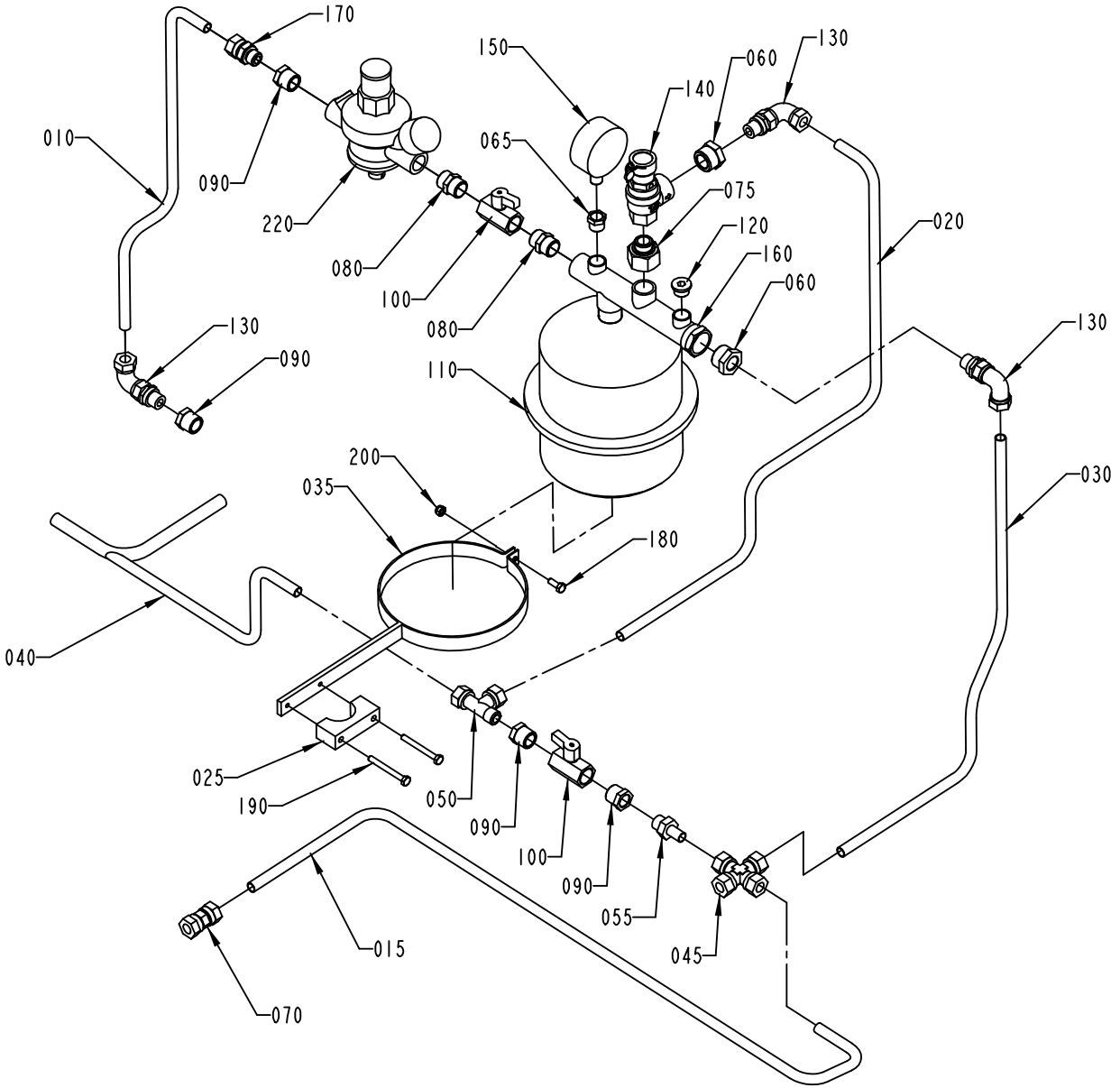

996353-4
ECN 80366

Pos	Part No	SP	UN	Qty	Description	Page No
Common Parts						
010	1524873-0000	-		1	PIPE	
015	1346575-0000	-		1	PIPE	
020	1348985-0000	-		1	PIPE	
025	1140645-0000	-		1	BRACKET	
030	1129100-0000	-		1	PIPE	
035	1129101-0000	-		1	BRACKET	
040	1348986-0000	-		1	PIPE	
045	90030-0599	-		1	CONN. CROSS, 12	
050	342751-0215	-		1	CONN. L-PIPE, EXT. LE-12-R3/8	
055	90030-0239	-		1	PIPE SOCKET RS-12	
060	342701-0209	-		2	BUSHING,INT./EXT.G-THREAD G3/4"-G3/8"	
065	342701-0203	-		1	BUSHING, INT/EXT. G-THREAD NO. 3/8-1/4	
070	90030-0106	-		1	CONN. PIPE G-12	
075	90458-0751	-		1	BUSHING,INT./EXT.G-THREAD G3/4"-G1/2"	
080	342700-0113	-		2	NIPPLES,HEXAGON,EXT.G-THREAD G1/2"-G1/2"	
090	90330-0048	-		4	BUSHING, INT/EXT. THR. R1/2-RP3/8	
100	90187-0062	A		2	BALL VALVE G1/2, NPBR	
110	90304-0020	A		1	LIQUID CONTAINER	
120	342713-0211	-		1	PLUG, EXT THREAD HEX SOCKET 8638-00-380	
130	90030-0136	-		3	ADJUSTABLE ELBOW CONNECTION,EXT 12-G3/8	
140	90458-0200	A		1	PEROX. SAFETY VALVE, NO. 527-430 1/2X3/4	
150	90043-0002	B		1	PRESSURE GAUGE, 2040 D=63 MM	
160	90304-0307	-		1	ATTACHMENT PIPE	
170	90030-0187	-		1	CONN. STR. GA-12-G3/8	
180	312105-0368	-		1	SCREW M6S M6X16 A280	
190	312105-0381	-		2	SCREW M6S M6X55 A280	
200	312812-0316	-		1	HEXAGON NUT, NY-LOCK M6 A480	
210	90144-0073	-			TREBOFLON-TAPE W=13MM	
220	90458-0201	A		1	FLUID AUT. FEEDER, ALINOX 1/2 46.04.00	

Pos	Part No	SP	UN	Qty	Description	Page No

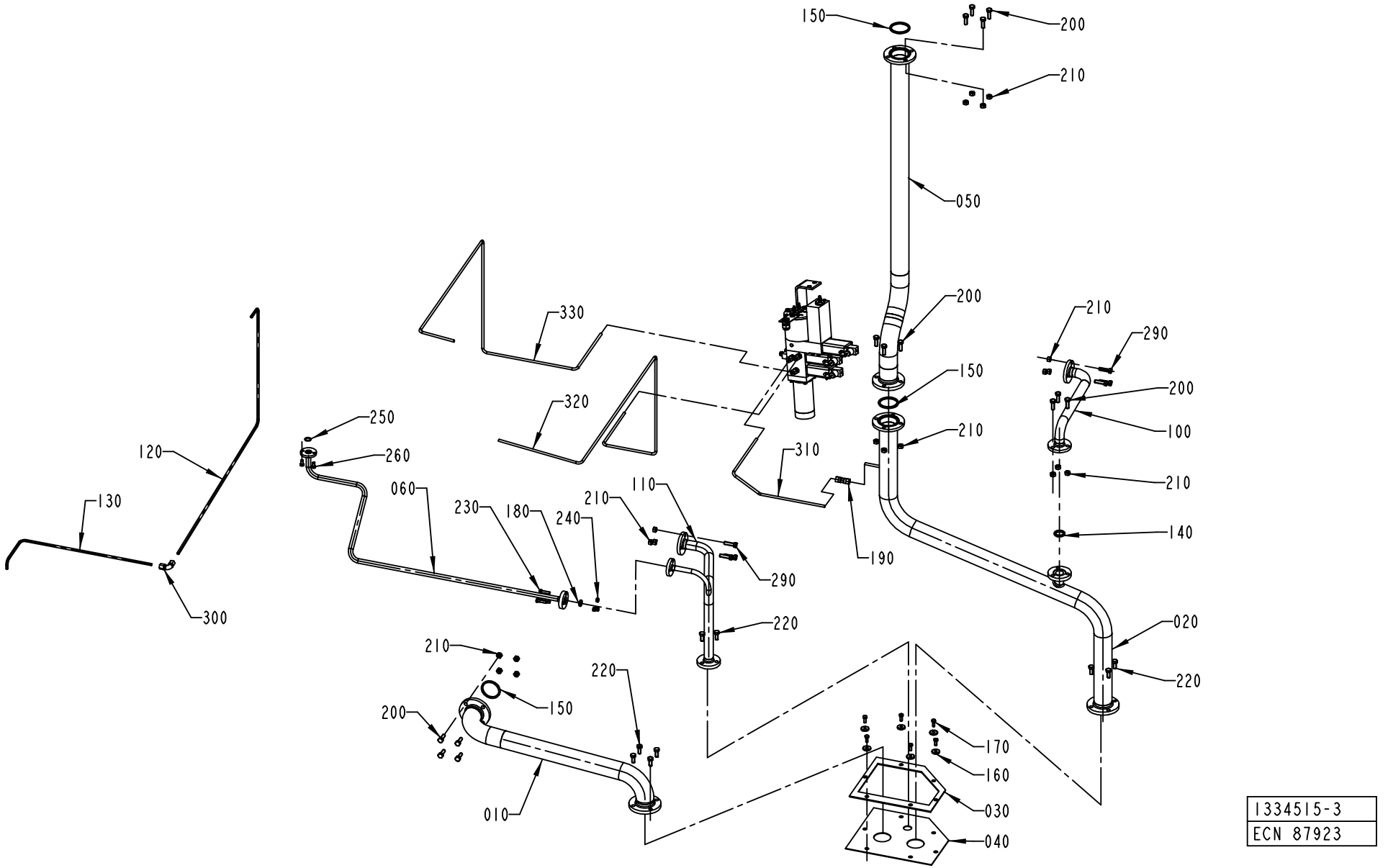

1334515-3
ECN 87923

Pos	Part No	SP	UN	Qty	Description	Page No
HI						
120	1347936-0000	-		1	PIPE	
130	1347943-0000	-		1	PIPE	
300	342737-0204	-		1	CONN. ELBOW W-6 LRFR	
Common Parts						
010	1282889-0000	-		1	PIPE	
020	1334510-0000	-		1	PIPE	
030	1038688-0000	-		1	HOLDER	
040	1255551-0000	-		1	SEAL CLOTH	
050	1334514-0000	-		1	PIPE	
060	1347681-0000	-		1	PIPE	
100	1334511-0000	-		1	PIPE	
110	1334512-0000	-		1	PIPE	
140	315229-0103	B		1	GASKETS, 23,1X30,1X3,7 MM 1" FDA	
150	315229-0105	B		3	GASKETS, 48,5X55,5X3,7 MM 2" FDA	
160	315125-0153	-		6	WASHER PLAIN ROUND,CHAMF. 6,4/22, H=4	
170	312105-0368	-		6	SCREW M6S M6X16 A280	
180	315229-0101	B		1	GASKETS, 10,4X17,4X3,7 MM 1/2" FDA	
190	90030-0075	-		1	PIPE CONNECTION G-6	
200	312105-0453	-		15	SCREW M6S M8X25 A280	
210	312605-0318	-		21	HEXAGON NUT, M6M M8 A280	
220	312105-0451	-		11	SCREW M6S 8X20 A280	
230	312105-0372	-		3	SCREW M6S M6X25 A280	
240	312605-0316	-		3	HEXAGON NUT, M6M M6 A280	
250	927421-0003	B		1	O-RING 13.3X2.4 SILICON	
260	312105-0366	-		2	SCREW M6S M6X12 A280	
290	312105-0455	-		6	SCREW M6S M8X30 A280	
310	1512337-0000	-		1	PIPE	
320	1512335-0000	-		1	PIPE	
330	1512336-0000	-		1	PIPE	

Pos	Part No	SP	UN	Qty	Description	Page No

Machine Type | Group Description | Used-In | Group Number | Page No

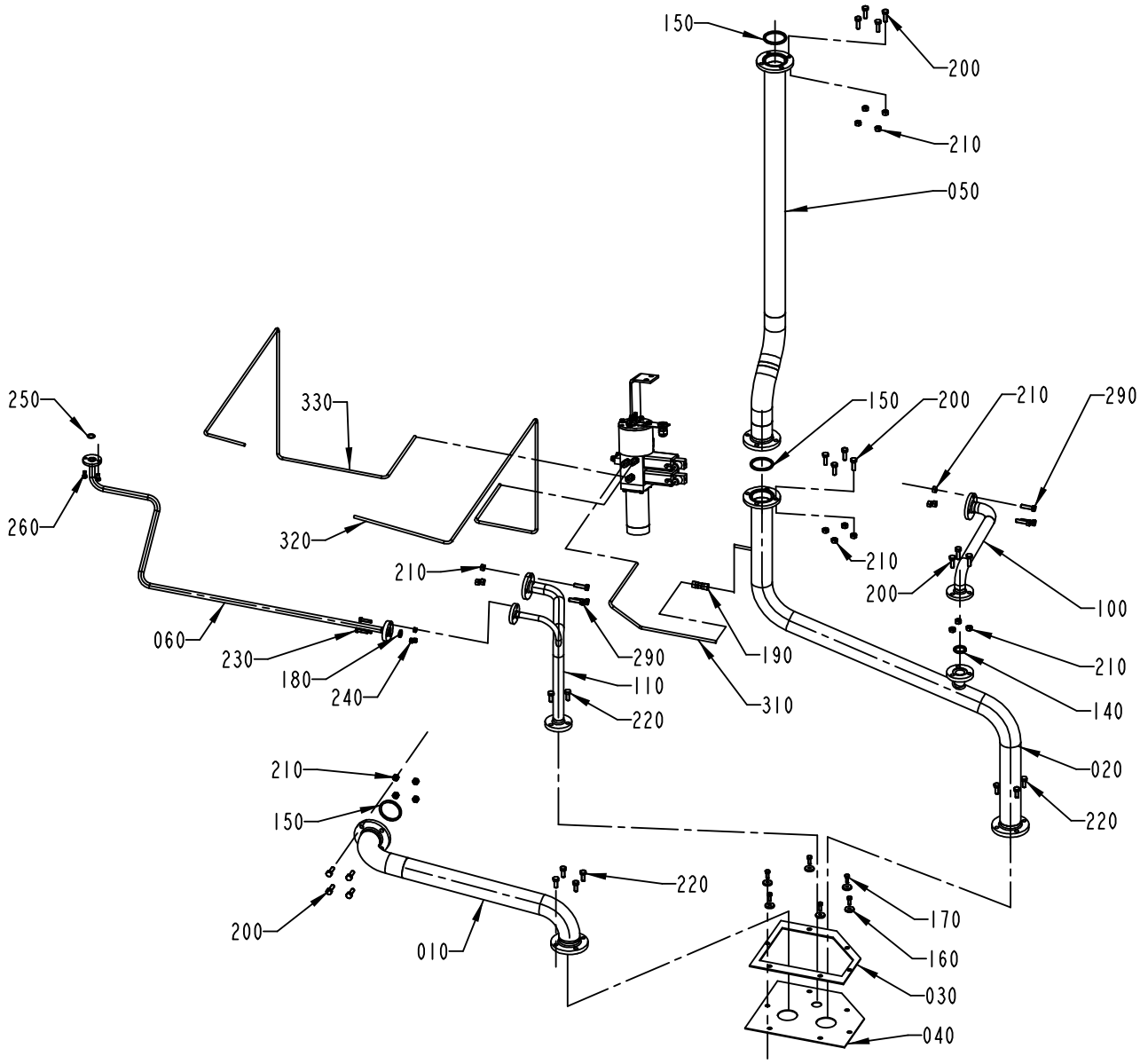

1334515-4
ECN 87923

ECM: 88123 - 20010406
Group number: 1334515-0200
Assembly Drawing: 1334515-4_1_AB

Issue: 20011217

Pos	Part No	SP	UN	Qty	Description	Page No
HI						
120	1347936-0000	-		1	PIPE	
130	1347943-0000	-		1	PIPE	
300	342737-0204	-		1	CONN. ELBOW W-6 LRFR	
Common Parts						
010	1282889-0000	-		1	PIPE	
020	1334510-0000	-		1	PIPE	
030	1038688-0000	-		1	HOLDER	
040	1255551-0000	-		1	SEAL CLOTH	
050	1334514-0000	-		1	PIPE	
060	1347681-0000	-		1	PIPE	
100	1334511-0000	-		1	PIPE	
110	1334512-0000	-		1	PIPE	
140	315229-0103	B		1	GASKETS, 23,1X30,1X3,7 MM 1" FDA	
150	315229-0105	B		3	GASKETS, 48,5X55,5X3,7 MM 2" FDA	
160	315125-0153	-		6	WASHER PLAIN ROUND,CHAMF. 6,4/22, H=4	
170	312105-0368	-		6	SCREW M6S M6X16 A280	
180	315229-0101	B		1	GASKETS, 10,4X17,4X3,7 MM 1/2" FDA	
190	90030-0075	-		1	PIPE CONNECTION G-6	
200	312105-0453	-		15	SCREW M6S M8X25 A280	
210	312605-0318	-		21	HEXAGON NUT, M6M M8 A280	
220	312105-0451	-		11	SCREW M6S 8X20 A280	
230	312105-0372	-		3	SCREW M6S M6X25 A280	
240	312605-0316	-		3	HEXAGON NUT, M6M M6 A280	
250	927421-0003	B		1	O-RING 13.3X2.4 SILICON	
260	312105-0366	-		2	SCREW M6S M6X12 A280	
290	312105-0455	-		6	SCREW M6S M8X30 A280	
310	1512337-0000	-		1	PIPE	
320	1512335-0000	-		1	PIPE	
330	1512336-0000	-		1	PIPE	

Pos	Part No	SP	UN	Qty	Description	Page No

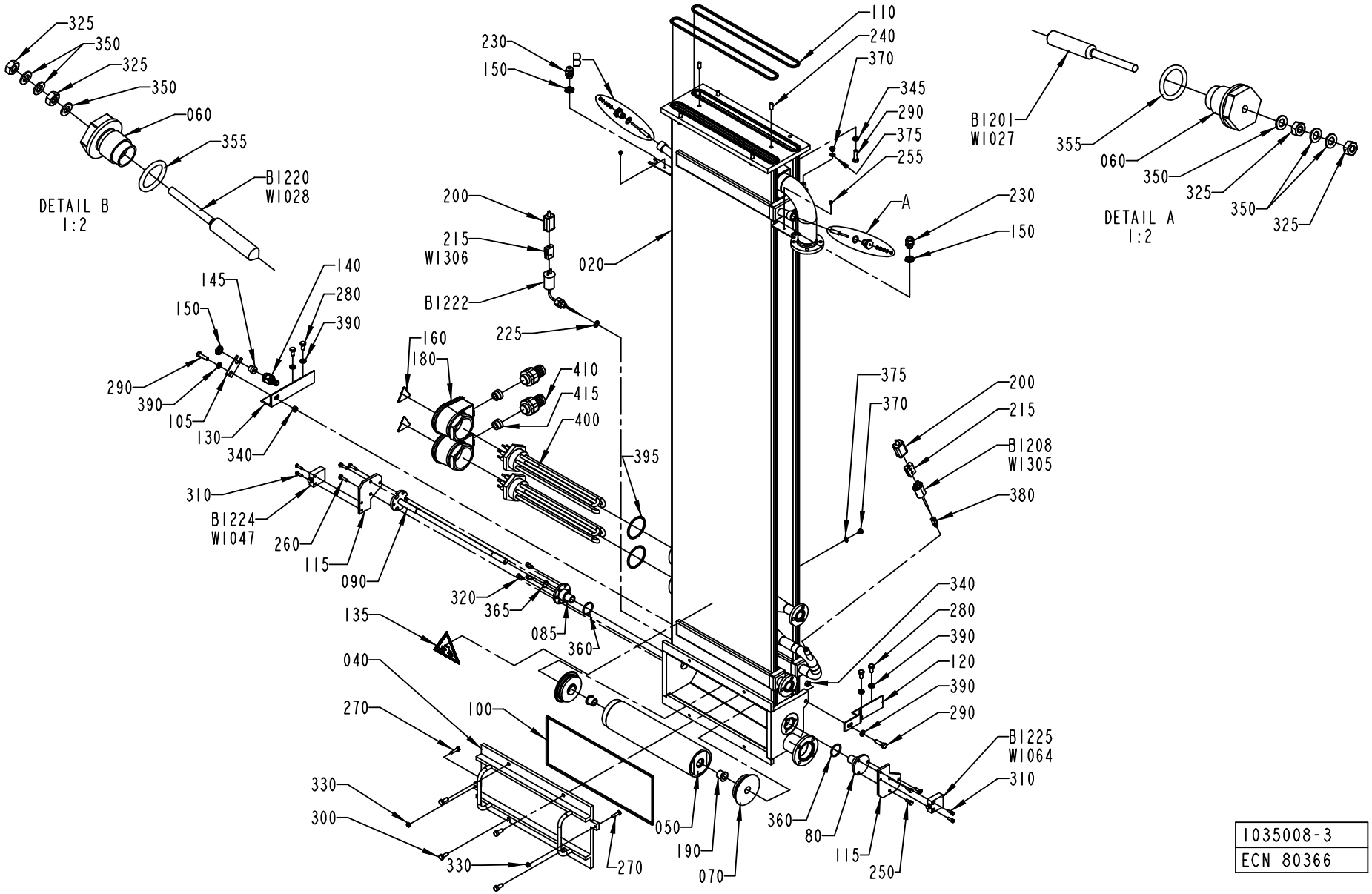

1035008-3
ECN 80366

ECM: 80521 - 20010301
Group number: 1035008-0400
Assembly Drawing: 1035008-3_1_AC

Issue: 20011217

Pos	Part No	SP	UN	Qty	Description	Page No
Common Parts						
020	1346571-0000	-		1	BATH	
040	1346558-0000	-		1	COVER	
050	541177-0000	A		1	BENDING ROLLER	
060	1484428-0000	-		2	PLASTIC PLUG	
070	1036553-0000	A		2	WHEEL	
080	1038857-0000	A		1	FLANGE	
085	1038858-0000	-		1	FLANGE	
090	1255839-0000	A		1	SHAFT	
100	1347671-0000	A		1	GASKET	
105	1040970-0000	-		1	BRACKET	
110	1346557-0000	A		2	GASKET	
115	1195460-0000	-		2	BRACKET	
120	1038860-0000	-		1	BRACKET	
130	1038861-0000	-		1	BRACKET	
135	359705-0004	-		1	WARNING SIGN ISO, DANGEROUS CHEMICALS	
140	353243-0001	-		1	GLAND,HOSE,EXTENDED,WITHOUT INSERT PG9	
145	353249-0008	-		1	GLAND,INSERT,SINGLE HOLE,EXTEND.4-6,5	
150	90099-0104	-		3	NUT PR 15,2 (PG9)	
160	359705-0015	-		2	WARNING SIGN ISO, RISK OF ELECTRIC SHOCK	
180	90206-0326	-		2	CONNECTION BOX	
190	90240-0146	A		2	FLANGE BUSHING,15X21X20 MM	
200	90326-0012	-		2	PROTECTIVE COVER	
215	90326-0020	-		2	PLUG,FEMALE YELLOW CR-AL	
225	315237-0110	A		1	WASHER,PL.RND.AL.13,5/18,H=1,5	
230	352103-0101	-		2	CABLE GLAND ST 9;PR15,2/PG9	
240	311103-0401	-		2	PARALLELL PIN, M6, 8X20 MM	
250	312105-0368	-		3	SCREW M6S M6X16 A280	
255	312132-0284	-		2	SCREW SLOT. PAN HEAD MSCS M4X5	
260	312105-0371	-		3	SCREW M6S M6X22 A280	
270	312105-0372	-		2	SCREW M6S M6X25 A280	
280	312105-0449	-		4	SCREW M6S M8X16 A280	
290	312105-0455	-		6	SCREW M6S M8X30 A280	
300	312105-0451	-		4	SCREW M6S 8X20 A280	
310	312115-0329	-		4	SCREW MC6S M5X16 A280	
320	312115-0366	-		3	SCREW MC6S M6X12 A280	
325	312605-0312	-		4	HEXAGON NUT, M6M M4 A280	
330	312605-0316	-		2	HEXAGON NUT, M6M M6 A280	
340	312605-0318	-		2	HEXAGON NUT, M6M M8 A280	
345	315105-0165	-		4	WASHER PLAIN, BRB, 8,4/16,H=1,5	
350	315105-0136	-		6	WASHER PLAIN, BRB, 4,3/8,H=0,8	
355	927421-0004	A		2	O-RING 15.3X2.4 SILICON	
360	90242-0265	A		2	O-RING 32,2X3 MM	
365	90242-0264	A		1	O-RING 16,1X1,6 MM	
370	342713-0209	-		2	PLUG, EXT THREAD HEX SOCKET 8638-00-180	
375	315234-0109	-		2	WASHER,PL.RND.CU.10,3/13,5 H=1,0	
380	90326-0306	-		1	GLAND FITTING 9041-45-KS-KR.1/8"D=4,5MM	
390	315115-0165	-		6	WASHER PLAIN, TBRB 8,4/16 H=3	
395	90269-0308	A		2	GASKET 59X68X3 MM	
400	90157-0034	-			SEALING COMPOUND LOCTITE 572 50 ML	
410	353243-0007	-		2	GLAND,HOSE,EXTENDED,WITHOUT INSERT PG21	
415	353249-0013	-		2	GLAND,INSERT,SINGLE HOLE,EXTEND.9-13	
B1201	567070-0011	A		1	ELECTRODE	
B1208	90326-0038	A		1	THERMOELEMENT CR-AL	
B1220	567070-0011	A		1	ELECTRODE	
B1222	90326-0053	A		1	THERMO ELEMENT	
B1224	90044-0084	A		1	LIMIT SW. 14 CE1-4	
B1225	90044-0084	A		1	LIMIT SW. 14 CE1-4	
R1206	B90206-0070	A		1	HEATING ELEMENT 6000W 380/220V	
	90206-0326	-		*1*	*CONNECTION BOX*	
	90269-0308	-		*1*	*GASKET 59X68X3 MM*	
R1207	B90206-0070	A		1	HEATING ELEMENT 6000W 380/220V	
	90206-0326	-		*1*	*CONNECTION BOX*	
	90269-0308	-		*1*	*GASKET 59X68X3 MM*	

Machine Type	Group Description	Used-In	Group Number	Page No

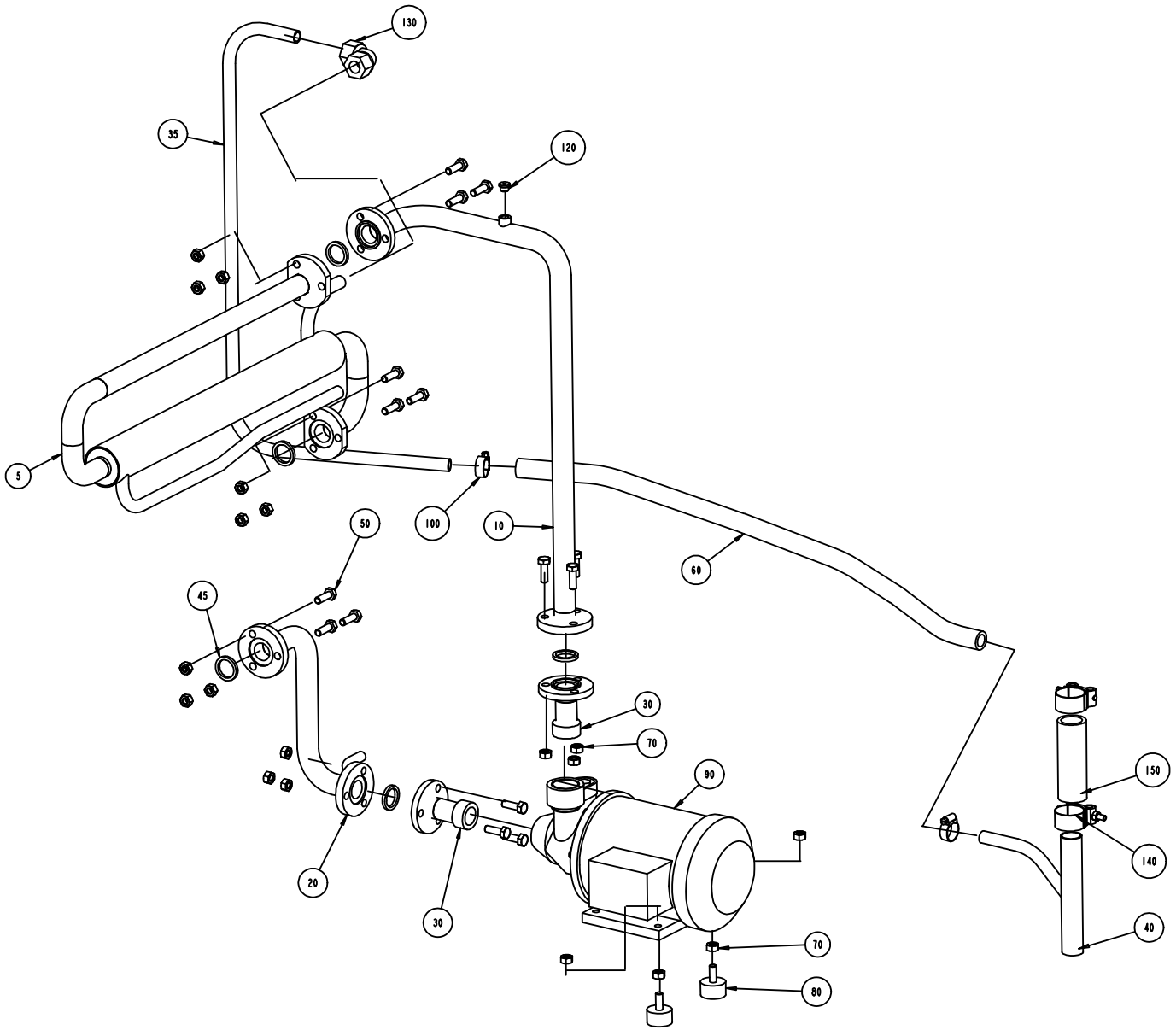
130
35
120
5
100
10
60
50
45
30
70
90
150
140
20
30
70
40
80

ECM: 71741 - 19980902
Group number: 996352-0300
Assembly Drawing: 996352-3_1_AA

Issue: 20011217

Pos	Part No	SP	UN	Qty	Description	Page No
50HZ						
090	B90321-0100	D		1	PUMP PBK 16/A 220/380V 50 HZ 3 PH.	
	90321-0567	*-*		*1*	*IMPELLER*	
	90321-0568	*-*		*1*	*SEAL*	
	90321-0569	*-*		*1*	*O-RING*	
60HZ						
090	90321-0127	D		1	CENTRIFUGAL PUMP LOWARA	
Common Parts						
005	1282902-0000	D		1	HEAT EXCHANGER	
010	1103391-0000	-		1	PIPE	
020	1037313-0000	-		1	PIPE	
030	1037314-0000	-		2	PIPE CONNECTION	
035	1350705-0000	-		1	PIPE	
035	1103394-0000	-		1	PIPE	
040	1350706-0000	-		1	PIPE	
045	315229-0103	C		5	GASKETS, 23,1X30,1X3,7 MM 1" FDA	
050	312105-0453	-		15	SCREW M6S M8X25 A280	
060	90166-0087	C	MM	750	HOSE 15/23 REINF.PVC TRANSP.	
070	312605-0318	-		19	HEXAGON NUT, M6M M8 A280	
080	90347-0004	-		2	VIBRATION DAMPER D=30 TH=M8 H=17 H2=21MM	
100	342991-0103	-		2	HOSE CLIP,WORM DRIVE TYPE (19)-23	
120	342713-0209	-		1	PLUG, EXT THREAD HEX SOCKET 8638-00-180	
130	342737-0221	-		1	CONN. ELBOW W-15 LRFR	
140	90165-0147	-		2	HOSE CLIP	
150	90166-0233	C	MM	100	HOSE	

Pos	Part No	SP	UN	Qty	Description	Page No

Machine Type | Group Description | Used-In | Group Number | Page No

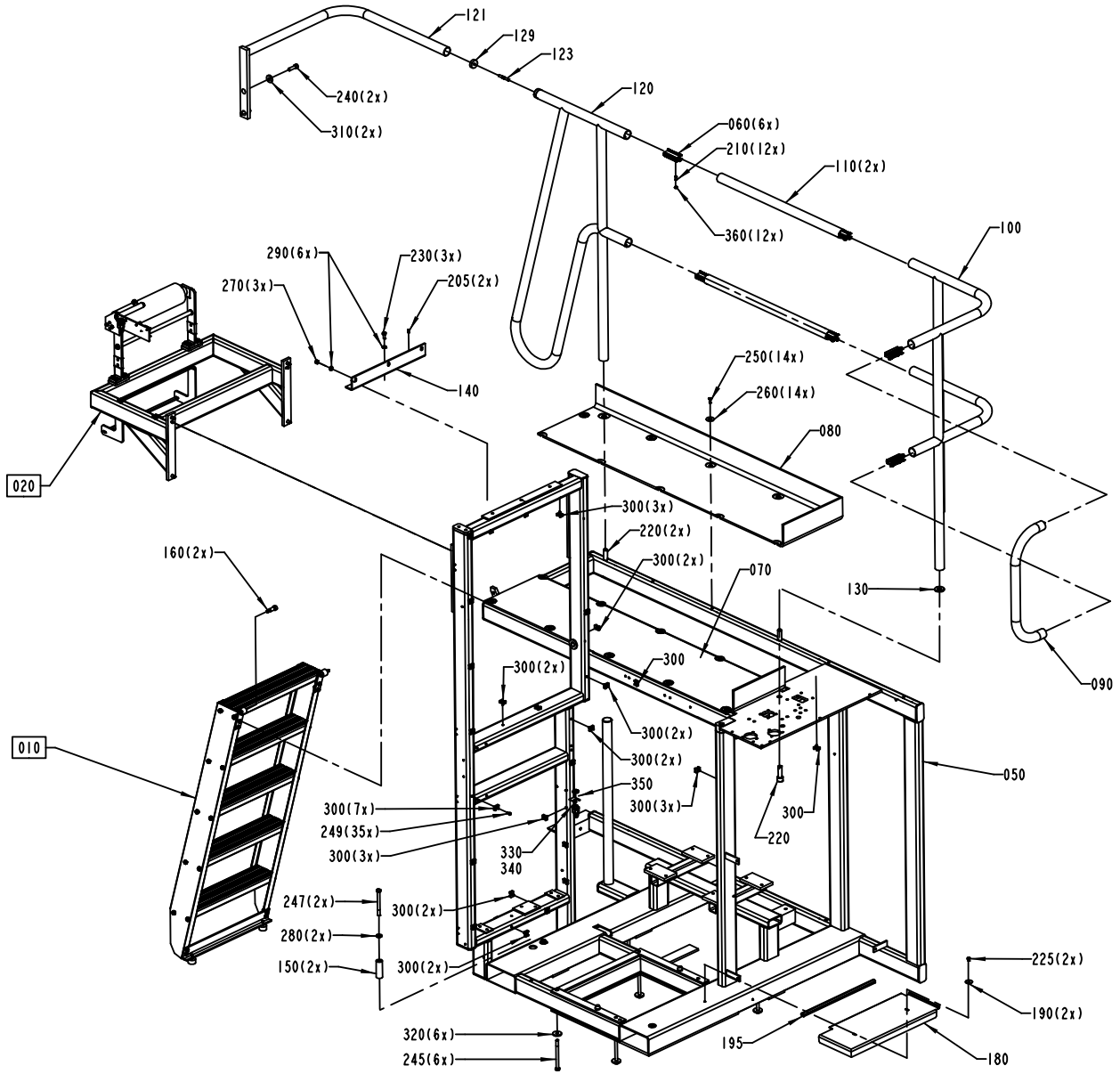

S-1095791-4
ECN 72151

ECM: 72151 - 19990412
Group number: 1095791-0400
Assembly Drawing: 1095791-4_1_AB

Issue: 20011217

Pos	Part No	SP	UN	Qty	Description	Page No
Common Parts						
010	A1095862-0100	-		1	LADDER	**175**
020	A1487743-0100	-		1	BENDING ROLLER BRACKET	**177**
050	1484412-0000	-		1	FRAME SECTION,UPPER	
060	B1035654-0000	-		6	CONNECTION	
	1035653-0000	*-*		*1*	*PROFILE*	
070	1038837-0000	-		1	CHECKER PLATE	
080	1038838-0000	-		1	CHECKER PLATE	
090	1037014-0000	-		1	RAILING	
100	B1010822-0000	-		1	RAILING	
	1140619-0000	*-*		*2*	*PLUG*	
110	1037044-0000	-		2	RAILING	
120	1129741-0000	-		1	RAILING	
121	1129742-0000	-		1	RAILING	
123	751485-0000	-		1	SCREW	
129	578640-0000	-		1	CLAMPING RING	
130	1037054-0000	-		1	WASHER	
140	1038850-0000	-		1	ANGLE BRACKET	
150	1040856-0000	-		2	SPACER	
160	312180-0534	-		2	SCREW, HEX.SOCK.HEAD SHOULD. M10/12X25	
180	1254106-0000	-		1	COVER PLATE	
190	1129638-0000	-		2	WASHER	
195	1129641-0000	-		1	SILICON RUBBER PROFILE	
205	311103-0350	-		2	PARALLELL PIN, CP, M6, 6X14 MM	
210	312318-0449	-		12	SCREW SOCK.SET CUP P MSK6SS M8X16 A4	
220	312115-0630	-		3	SCREW MC6S M16X50 A280	
225	312105-0362	-		2	SCREW M6S M6X8 A280	
230	312105-0451	-		3	SCREW M6S 8X20 A280	
240	312115-0497	-		2	SCREW MC6S M10X35 A280	
245	312105-0517	-		6	SCREW M6S M10X130 A280	
247	312105-0513	-		2	SCREW M6S M10X110 A280	
249	312125-0364	-		35	SCREW SLOT.PAN HD. MCS 6X10 A480	
250	312155-0370	-		14	SCREW HEX.SOCK.COUNT.MF6S M6X20 A280	
260	1036241-0000	-		14	WASHER	
270	312605-0318	-		3	HEXAGON NUT, M6M M8 A280	
280	315115-0173	-		2	WASHER PLAIN, TBRB 10,5/22 H=4	
290	315115-0165	-		6	WASHER PLAIN, TBRB 8,4/16 H=3	
300	352113-0204	-		35	ANCHOR TM3S25-M	
310	1254410-0000	-		2	WASHER	
320	118298-0000	-		6	WASHER	
330	353243-0001	-		1	GLAND,HOSE,EXTENDED,WITHOUT INSERT PG9	
340	353249-0008	-		1	GLAND,INSERT,SINGLE HOLE,EXTEND.4-6,5	
350	90099-0104	-		1	NUT PR 15,2 (PG9)	
360	90261-0068	-		12	PLUG, BLIND, PLASTIC, NO. 55-10100-1	

Machine Type | Group Description | Used-In | Group Number | Page No

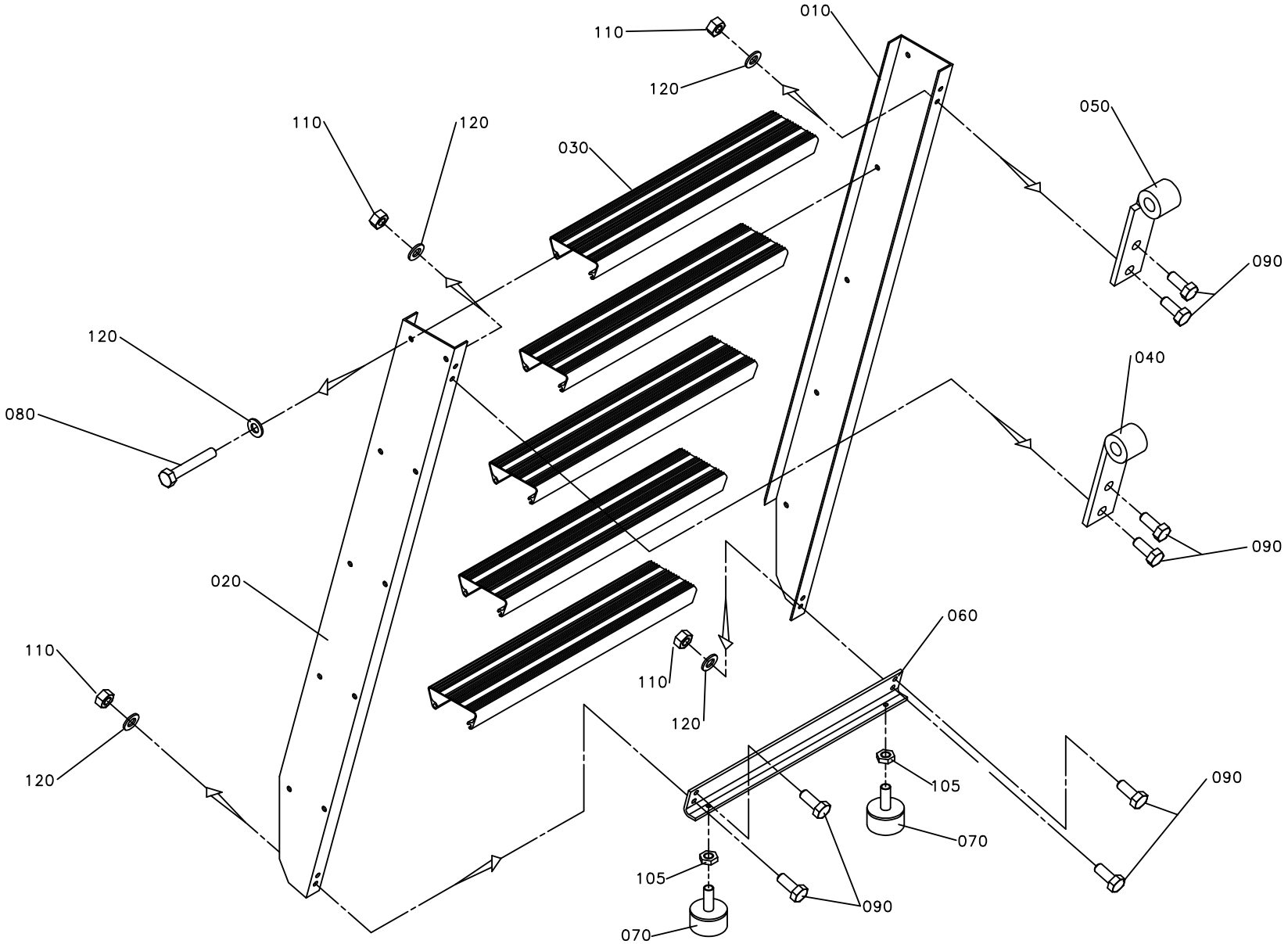
010
110
120
050
110
120
030
090
120
080
040
090
020
060
110
120
105
090
070
105
090
070

ECM: 71741 - 19980902
Group number: 1095862-0100
Assembly Drawing: 1095862-1_1_AA

Issue: 20011217

Pos	Part No	SP	UN	Qty	Description	Page No
Common Parts						
010	1036939-0000	-		1	SIDE PIECE	
020	1036940-0000	-		1	SIDE PIECE	
030	1129643-0000	-		5	STAIR	
040	1036963-0000	-		1	HOOK HOLDER	
050	1036965-0000	-		1	HOOK HOLDER	
060	1129644-0000	-		2	BRACKET	
070	90347-0004	-		2	VIBRATION DAMPER D=30 TH=M8 H=17 H2=21MM	
080	312104-0461	-		20	SCREW M6S M8X50H FZB	
090	312105-0451	-		8	SCREW M6S 8X20 A280	
105	312625-0318	-		2	NUT HEX. M8 SS	
110	312605-0318	-		8	HEXAGON NUT, M6M M8 A280	
120	315101-0165	-		28	WASHER PLAIN, BRB, 8,4/16 H=1,5	

Pos	Part No	SP	UN	Qty	Description	Page No

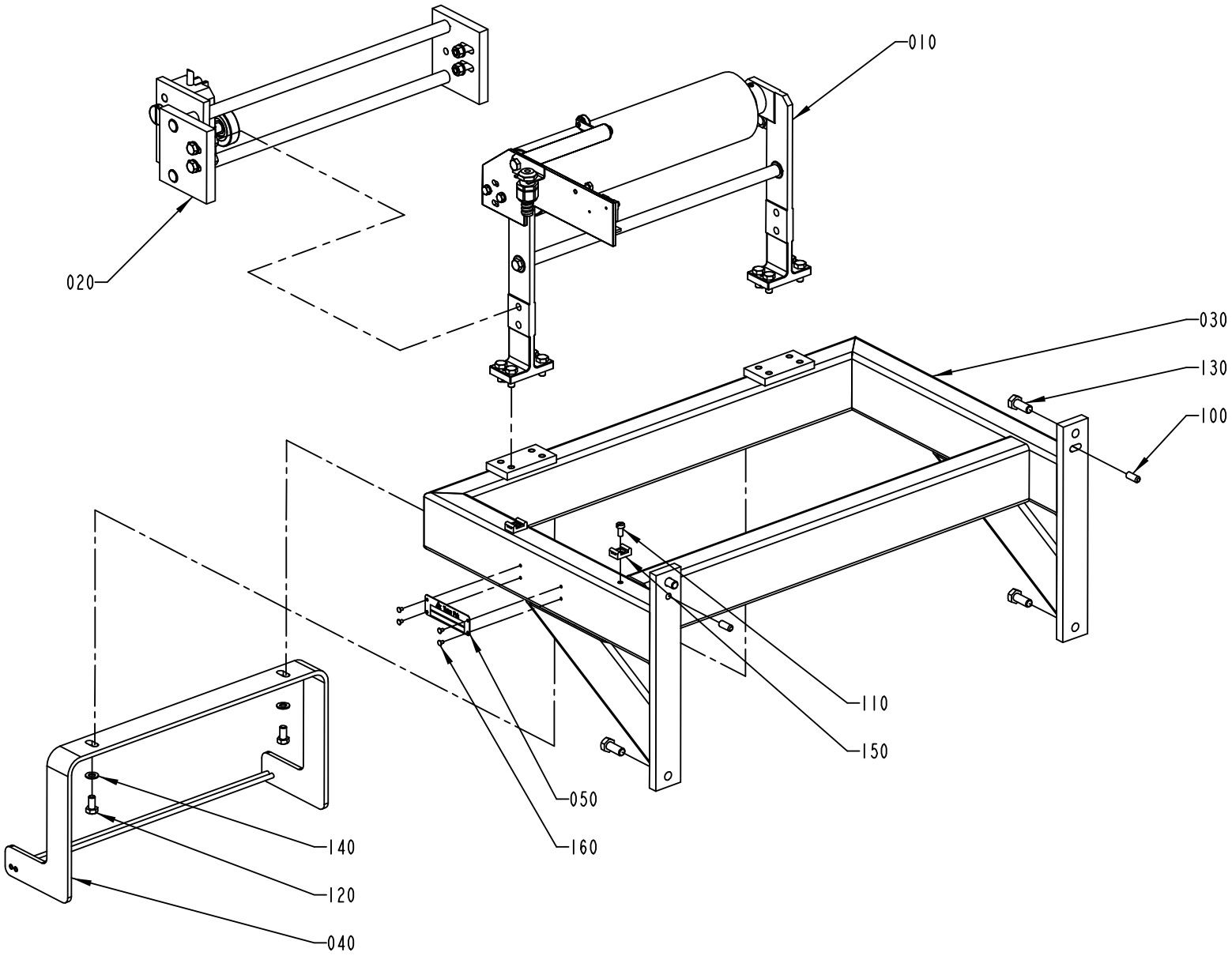

S-1487743-1
ECN 73102

ECM: 73102 - 20000224
Group number: 1487743-0100
Assembly Drawing: 1487743-1_1_AC

Issue: 20011217

Pos	Part No	SP	UN	Qty	Description	Page No
NOPT						
020	A1487852-0100	-		1	PAPER GUIDE	**179**
PT21						
020	A1498276-0100	-		1	TAB FOLDING AND PAPER GUIDE	**183, 185**
Common Parts						
010	A1487748-0100	-		1	BENDING ROLLER	**193**
030	1487601-0000	-		1	FRAME	
040	1487760-0000	-		1	PAPER GUIDE	
050	979548-0000	-		1	MACHINE PLATE	
100	311103-0401	-		2	PARALLELL PIN, M6, 8X20 MM	
110	312125-0366	-		2	SCREW PAN HEAD MCS M6X12 SS	
120	312105-0449	-		2	SCREW M6S M8X16 A280	
130	312105-0493	-		4	SCREW M6S M10X25 A280	
140	315105-0165	-		2	WASHER PLAIN, BRB, 8,4/16,H=1,5	
150	352113-0204	-		2	ANCHOR TM3S25-M	
160	311521-0143	-		4	BLANK RIVET 3,2X8	

Pos	Part No	SP	UN	Qty	Description	Page No

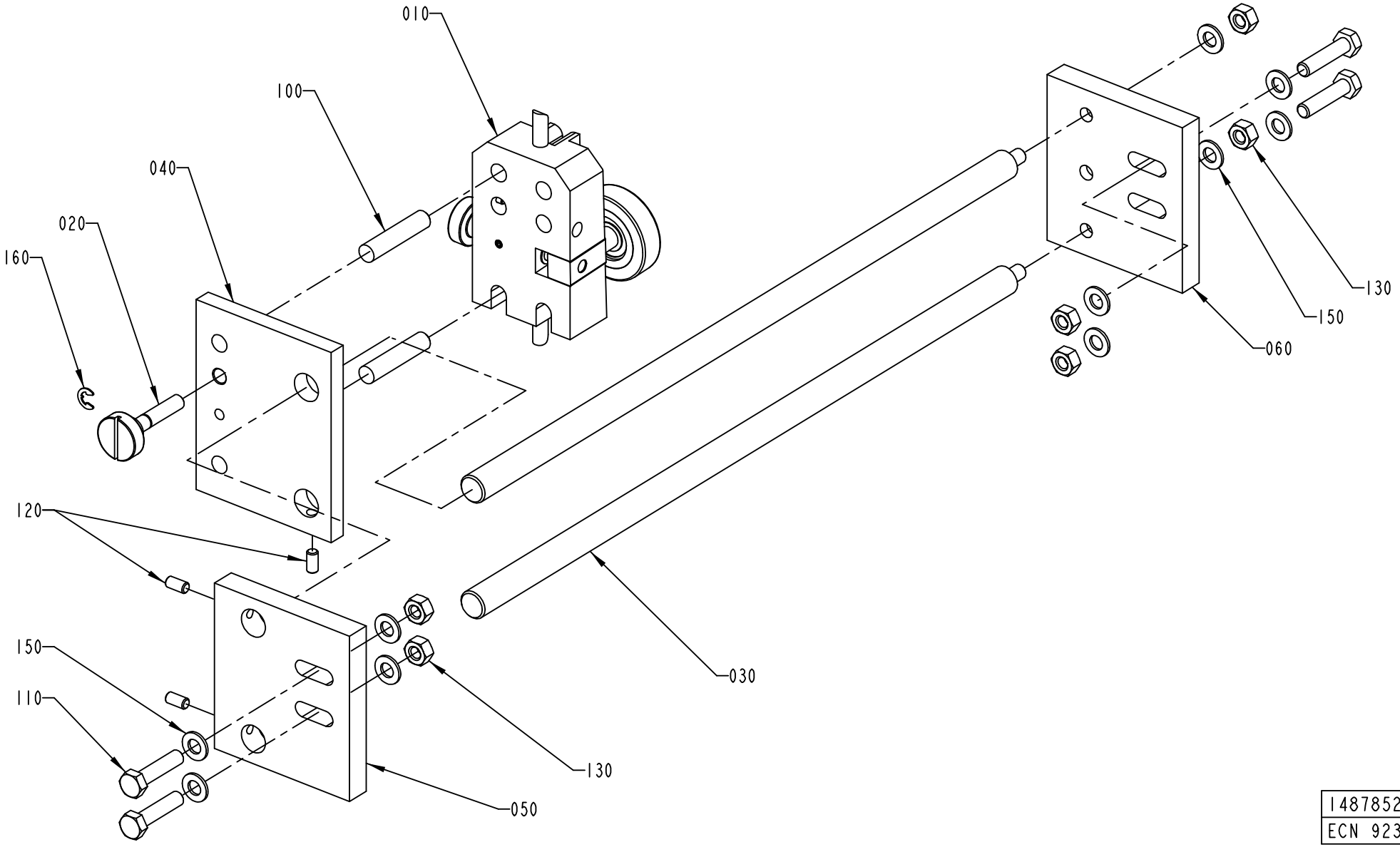

1487852-1
ECN 92369

ECM: 92586 - 20010917
Group number: 1487852-0100
Assembly Drawing: 1487852-1_1_AB

Issue: 20011217

Pos	Part No	SP	UN	Qty	Description	Page No
Common Parts						
010	A1334620-0100	-		1	PAPER GUIDE	**181**
020	1317713-0000	A		1	SHAFT	
030	1478043-0000	-		2	AXLE PIN	
040	1478045-0000	-		1	BRACKET	
050	1487924-0000	-		1	PLATE	
060	1487925-0000	-		1	PLATE	
100	311103-0466	-		2	PARALLELL PIN, M6, 10X50 MM	
110	312109-0457	-		4	SCREW M6S M8X35 A280	
120	312318-0366	-		3	SCREW SOCK.SET CUP P MSK6SS M6X12 A4	
130	312605-0318	-		6	HEXAGON NUT, M6M M8 A280	
150	315105-0165	-		10	WASHER PLAIN, BRB, 8,4/16,H=1,5	
160	315755-0108	-		1	LOCKING WASHER 6	

Pos	Part No	SP	UN	Qty	Description	Page No

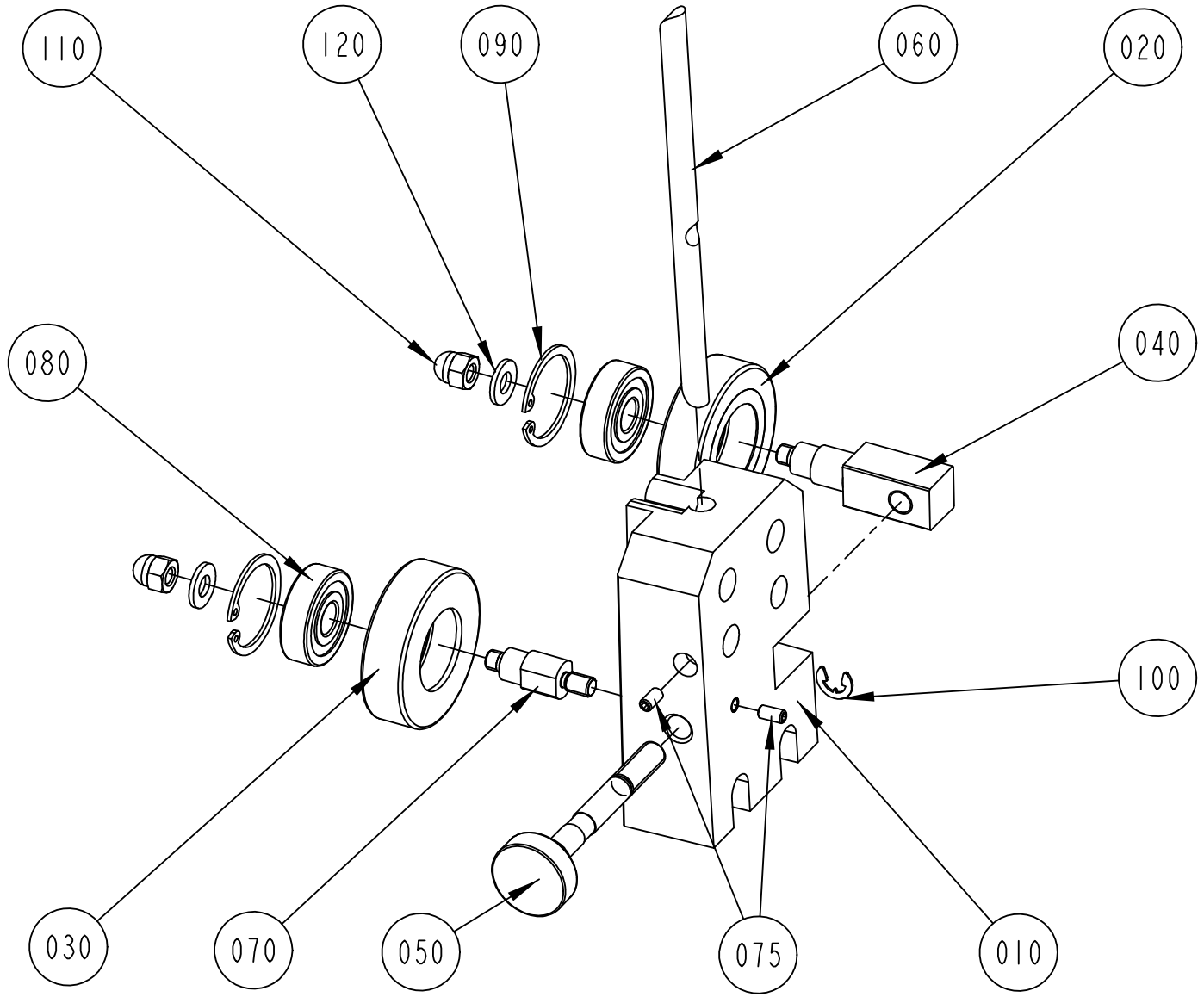

S-1334620-I
ECN 72145

ECM: 84975 - 20001108
Group number: 1334620-0100
Assembly Drawing: 1334620-1_1_AC

Issue: 20011217

Pos	Part No	SP	UN	Qty	Description	Page No
Common Parts						
010	1317716-0000	-		1	BRACKET	
020	1036623-0000	A		1	GUIDE ROLLER	
030	1036622-0000	A		1	GUIDE ROLLER	
040	1317711-0000	A		1	SHAFT	
050	1317712-0000	-		1	SHAFT	
060	1317714-0000	-		1	STEERING	
070	583727-0000	A		1	SHAFT	
075	312318-0287	-		2	SCREW SOCK.SET CUP P MSK6SS M4X8 A4	
080	321313-0100	A		2	BALL BEARING, 2 SEALS, 10X30X9 MM	
090	315753-0122	-		2	RETAIN. RING, 30	
100	315755-0108	-		1	LOCKING WASHER 6	
110	312705-0316	-		2	NUT HEX. DOMED CAP MHM-6 M6 A280	
120	315105-0156	-		2	WASHER PLAIN, BRB, 6,7/14,H=1,5	

Pos	Part No	SP	UN	Qty	Description	Page No

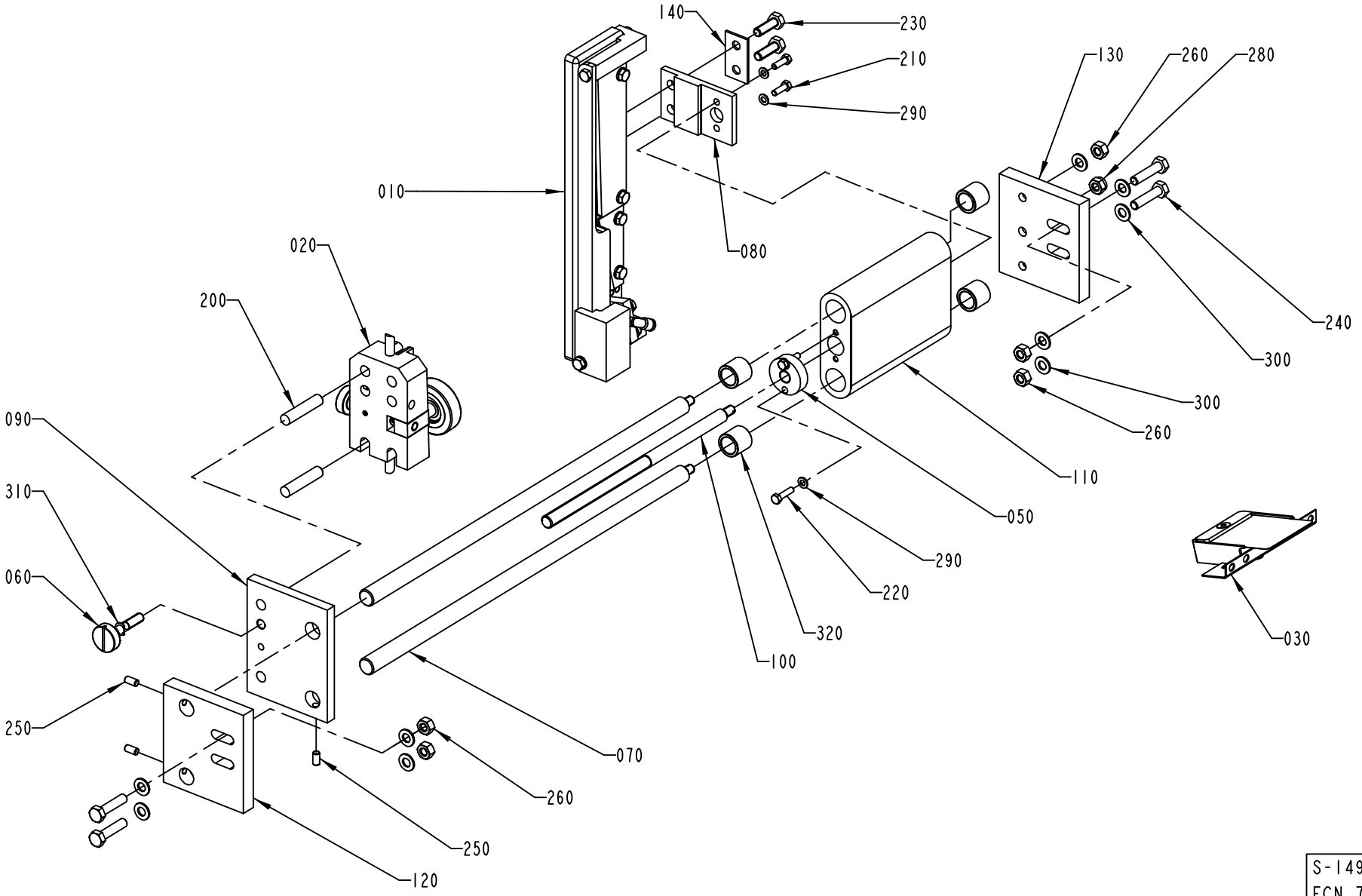

S-1498276-1
ECN 73397

ECM: 92339 - 20010709
Group number: 1498276-0100
Assembly Drawing: 1498276-1_1_AB

Issue: 20011217

Pos	Part No	SP	UN	Qty	Description	Page No
TBA 0500S HOLE55 OR TBA 1000S HOLE45 OR TBA 1000S HOLE85 OR TBA 1000B HOLE85 OR TBA 1000B HOLE45 OR TBA 1500S HOLE45 OR TBA 1500S HOLE85						
010	A1498391-0100	-		1	TAB FOLDER	**187**
020	A1334620-0100	-		1	PAPER GUIDE	**181**
030	A530600-0200	-		1	GUIDING PULLTAB TBA/8	**189**
050	1145139-0000	B		1	NUT	
060	1317713-0000	A		1	SHAFT	
070	1478043-0000	B		2	AXLE PIN	
080	1478044-0000	-		1	BRACKET	
090	1478045-0000	-		1	BRACKET	
100	1478601-0000	B		1	AXLE PIN	
110	1478602-0000	-		1	HOUSING	
120	1487924-0000	-		1	PLATE	
130	1487925-0000	-		1	PLATE	
140	907983-0000	-		1	PLATE	
200	311103-0466	-		2	PARALLELL PIN, M6, 10X50 MM	
210	312105-0329	-		2	SCREW M6S M5X16 A280	
220	312105-0331	-		2	SCREW M6S M5X20 A280	
230	312105-0453	-		2	SCREW M6S M8X25 A280	
240	312109-0457	-		4	SCREW M6S M8X35 A280	
250	312318-0366	-		3	SCREW SOCK.SET CUP P MSK6SS M6X12 A4	
260	312605-0318	-		6	HEXAGON NUT, M6M M8 A280	
280	312812-0318	-		1	HEXAGON NUT, NY-LOCK M8 A480	
290	315105-0146	-		4	WASHER PLAIN, BRB, 5,3/10,H=1	
300	315105-0165	-		10	WASHER PLAIN, BRB, 8,4/16,H=1,5	
310	315755-0108	-		1	LOCKING WASHER 6	
320	321105-0204	A		4	BUSHING 16F7X22X20	
TBA 1000SQ HOLE85 OR TPA 1000S HOLE60						
010	A1498107-0100	-		1	TAB FOLDER	**191**
020	A1334620-0100	-		1	PAPER GUIDE	**181**
030	A530600-0200	-		1	GUIDING PULLTAB TBA/8	**189**
050	1145139-0000	B		1	NUT	
060	1317713-0000	A		1	SHAFT	
070	1478043-0000	B		2	AXLE PIN	
090	1478045-0000	-		1	BRACKET	
100	1478601-0000	B		1	AXLE PIN	
110	1478602-0000	-		1	HOUSING	
120	1499599-0000	-		1	PLATE	
130	1498531-0000	-		1	PLATE	
150	1484884-0000	-		1	PLATE	
160	1478046-0000	-		1	SUPPORT	
200	311103-0466	-		2	PARALLELL PIN, M6, 10X50 MM	
210	312105-0329	-		4	SCREW M6S M5X16 A280	
220	312105-0331	-		2	SCREW M6S M5X20 A280	
240	312109-0457	-		4	SCREW M6S M8X35 A280	
250	312318-0366	-		3	SCREW SOCK.SET CUP P MSK6SS M6X12 A4	
260	312605-0318	-		6	HEXAGON NUT, M6M M8 A280	
280	312812-0318	-		1	HEXAGON NUT, NY-LOCK M8 A480	
290	315105-0146	-		6	WASHER PLAIN, BRB, 5,3/10,H=1	
300	315105-0165	-		10	WASHER PLAIN, BRB, 8,4/16,H=1,5	
310	315755-0108	-		1	LOCKING WASHER 6	
320	321105-0204	A		4	BUSHING 16F7X22X20	
330	312115-0327	-		4	SCREW MC6S M5X12 A280	
340	312105-0368	-		2	SCREW M6S M6X16 A280	
350	312318-0285	-		4	SCREW SOCK.SET CUP P MSK6SS M4X6 A4	
360	315105-0153	-		2	WASHER PLAIN, BRB, 6,4/12,H=1,5	

Machine Type | Group Description | Used-In | Group Number | Page No

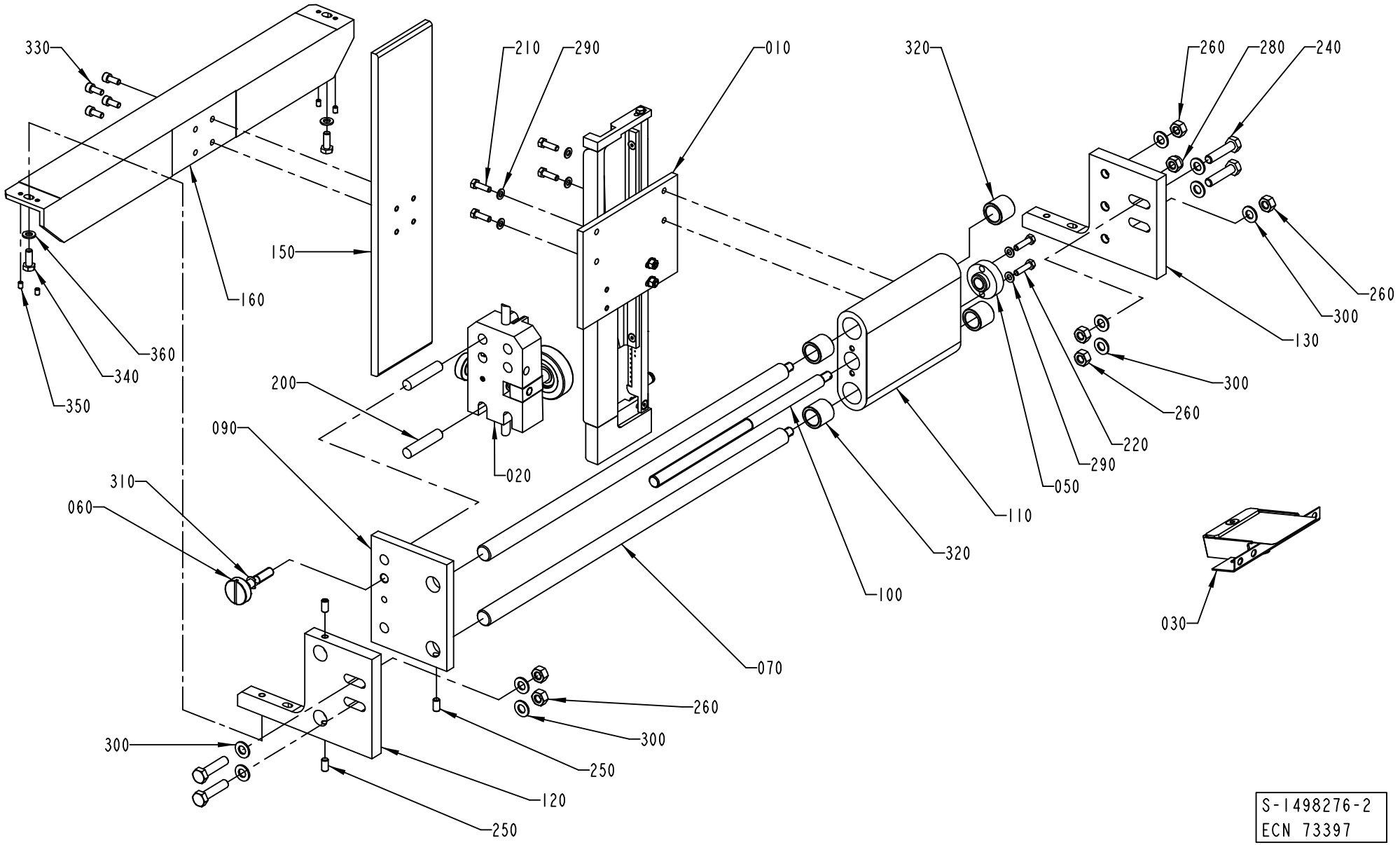

S-1498276-2
ECN 73397

Pos	Part No	SP	UN	Qty	Description	Page No
TBA 0500S HOLE55 OR TBA 1000S HOLE45 OR TBA 1000S HOLE85 OR TBA 1000B HOLE85 OR TBA 1000B HOLE45 OR TBA 1500S HOLE45 OR TBA 1500S HOLE85						
010	A1498391-0100	-		1	TAB FOLDER	**187**
020	A1334620-0100	-		1	PAPER GUIDE	**181**
030	A530600-0200	-		1	GUIDING PULLTAB TBA/8	**189**
050	1145139-0000	B		1	NUT	
060	1317713-0000	A		1	SHAFT	
070	1478043-0000	B		2	AXLE PIN	
080	1478044-0000	-		1	BRACKET	
090	1478045-0000	-		1	BRACKET	
100	1478601-0000	B		1	AXLE PIN	
110	1478602-0000	-		1	HOUSING	
120	1487924-0000	-		1	PLATE	
130	1487925-0000	-		1	PLATE	
140	907983-0000	-		1	PLATE	
200	311103-0466	-		2	PARALLELL PIN, M6, 10X50 MM	
210	312105-0329	-		2	SCREW M6S M5X16 A280	
220	312105-0331	-		2	SCREW M6S M5X20 A280	
230	312105-0453	-		2	SCREW M6S M8X25 A280	
240	312109-0457	-		4	SCREW M6S M8X35 A280	
250	312318-0366	-		3	SCREW SOCK.SET CUP P MSK6SS M6X12 A4	
260	312605-0318	-		6	HEXAGON NUT, M6M M8 A280	
280	312812-0318	-		1	HEXAGON NUT, NY-LOCK M8 A480	
290	315105-0146	-		4	WASHER PLAIN, BRB, 5,3/10,H=1	
300	315105-0165	-		10	WASHER PLAIN, BRB, 8,4/16,H=1,5	
310	315755-0108	-		1	LOCKING WASHER 6	
320	321105-0204	A		4	BUSHING 16F7X22X20	
TBA 1000SQ HOLE85 OR TPA 1000S HOLE60						
010	A1498107-0100	-		1	TAB FOLDER	**191**
020	A1334620-0100	-		1	PAPER GUIDE	**181**
030	A530600-0200	-		1	GUIDING PULLTAB TBA/8	**189**
050	1145139-0000	B		1	NUT	
060	1317713-0000	A		1	SHAFT	
070	1478043-0000	B		2	AXLE PIN	
090	1478045-0000	-		1	BRACKET	
100	1478601-0000	B		1	AXLE PIN	
110	1478602-0000	-		1	HOUSING	
120	1499599-0000	-		1	PLATE	
130	1498531-0000	-		1	PLATE	
150	1484884-0000	-		1	PLATE	
160	1478046-0000	-		1	SUPPORT	
200	311103-0466	-		2	PARALLELL PIN, M6, 10X50 MM	
210	312105-0329	-		4	SCREW M6S M5X16 A280	
220	312105-0331	-		2	SCREW M6S M5X20 A280	
240	312109-0457	-		4	SCREW M6S M8X35 A280	
250	312318-0366	-		3	SCREW SOCK.SET CUP P MSK6SS M6X12 A4	
260	312605-0318	-		6	HEXAGON NUT, M6M M8 A280	
280	312812-0318	-		1	HEXAGON NUT, NY-LOCK M8 A480	
290	315105-0146	-		6	WASHER PLAIN, BRB, 5,3/10,H=1	
300	315105-0165	-		10	WASHER PLAIN, BRB, 8,4/16,H=1,5	
310	315755-0108	-		1	LOCKING WASHER 6	
320	321105-0204	A		4	BUSHING 16F7X22X20	
330	312115-0327	-		4	SCREW MC6S M5X12 A280	
340	312105-0368	-		2	SCREW M6S M6X16 A280	
350	312318-0285	-		4	SCREW SOCK.SET CUP P MSK6SS M4X6 A4	
360	315105-0153	-		2	WASHER PLAIN, BRB, 6,4/12,H=1,5	

Machine Type | Group Description | Used-In | Group Number | Page No

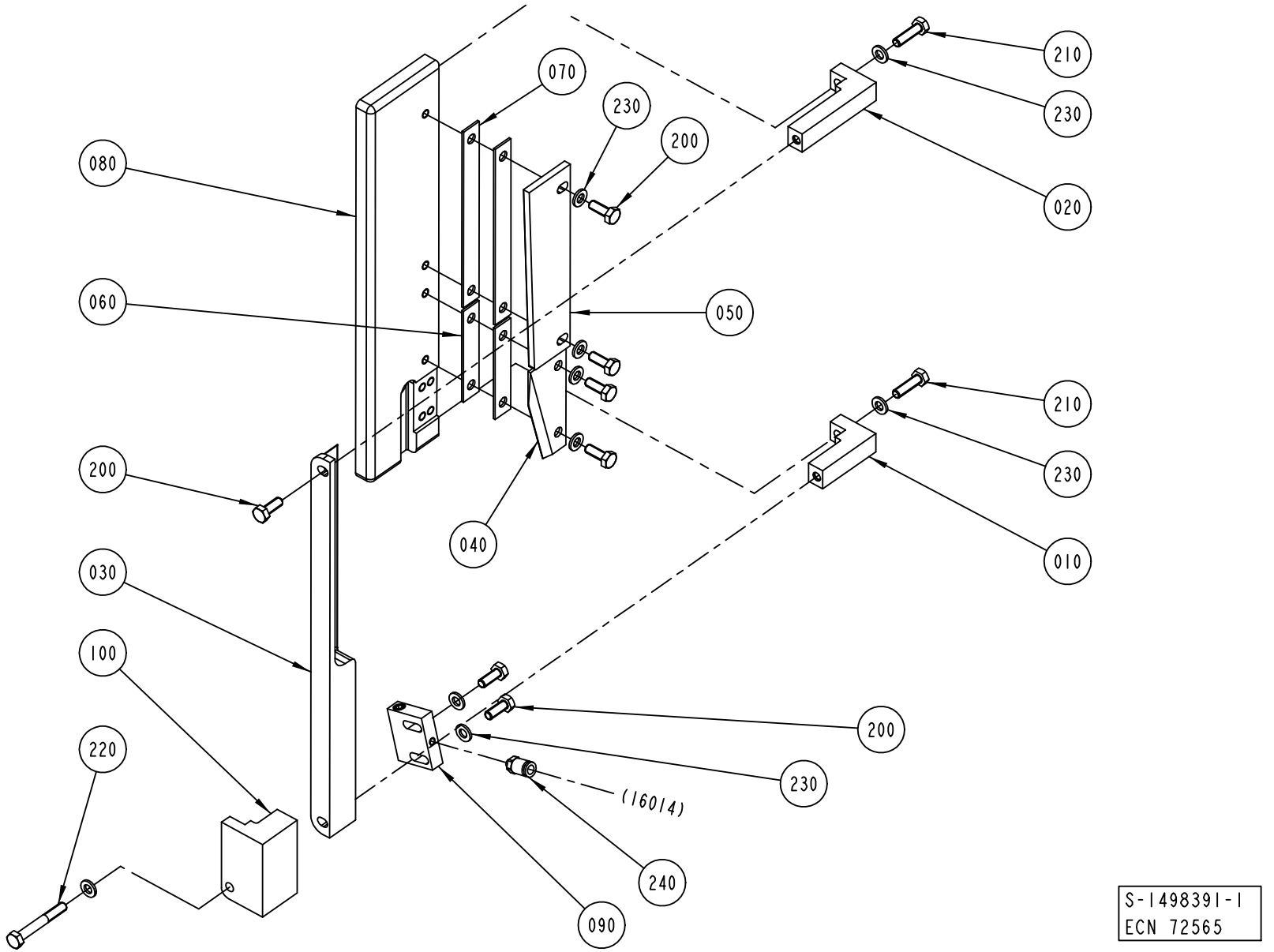
070
230
200
080
060
050
040
200
030
100
220
090
240
230
200
(16014)
210
230
020
210
230
010
S-1498391-1
ECN 72565

ECM: 73397 - 20000407
Group number: 1498391-0100
Assembly Drawing: 1498391-1_1_AA

Issue: 20011217

Pos	Part No	SP	UN	Qty	Description	Page No
Common Parts						
010	907938-0001	D		1	BRACKET	
020	907938-0002	D		1	BRACKET	
030	907940-0000	D		1	RAIL	
040	908170-0000	C		1	GUIDE PLATE	
050	908171-0000	C		1	GUIDE PLATE	
060	908174-0001	C		2	SHIM	
070	908174-0002	C		2	SHIM	
080	1143204-0000	D		1	PLATE	
090	1143205-0000	D		1	AIR NOZZLE	
100	1499208-0000	D		1	BRACKET	
200	312105-0368	-		7	SCREW M6S M6X16 A280	
210	312105-0371	-		2	SCREW M6S M6X22 A280	
220	312105-0379	-		1	SCREW M6S M6X45 A280	
230	315105-0153	-		9	WASHER PLAIN, BRB, 6,4/12,H=1,5	
240	90457-0922	-		1	ELBOW PIPE JOINT, EXT.THREAD,D=6MM M5	

Pos	Part No	SP	UN	Qty	Description	Page No

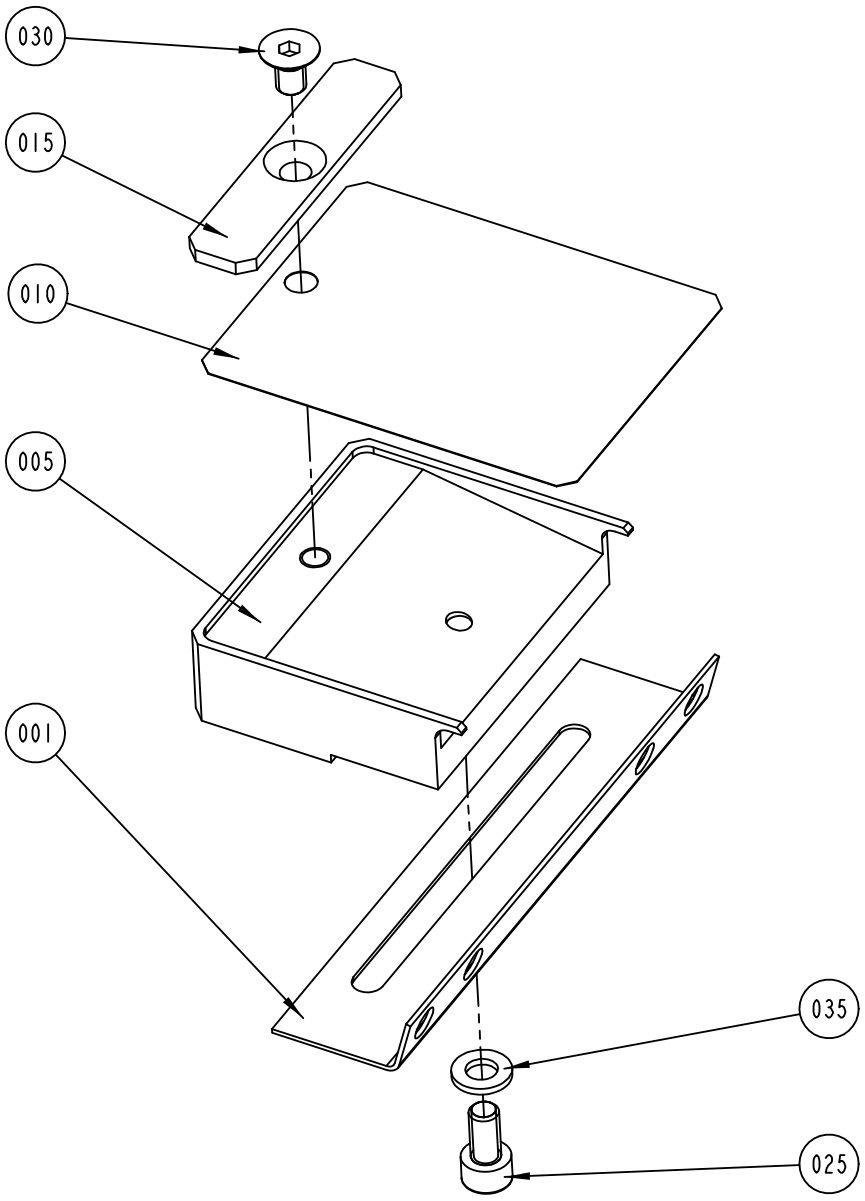

S-530600-2
ECN 72398

ECM: 72398 - 19990428
Group number: 530600-0200
Assembly Drawing: 530600-2_1_AA

Issue: 20011217

Pos	Part No	SP	UN	Qty	Description	Page No
Common Parts						
001	1347933-0000	-		1	ANGLE BRACKET	
005	529147-0000	-		1	SPRING BRACKET	
010	529148-0000	-		1	STEERING	
015	529149-0000	D		1	DOLLY WASHER	
025	312115-0366	-		1	SCREW MC6S M6X12 A280	
030	312155-0364	-		1	SCREW HEX.SOCK.COUNT.MF6S M6X10 A280	
035	315105-0153	-		1	WASHER PLAIN, BRB, 6,4/12,H=1,5	

Pos	Part No	SP	UN	Qty	Description	Page No

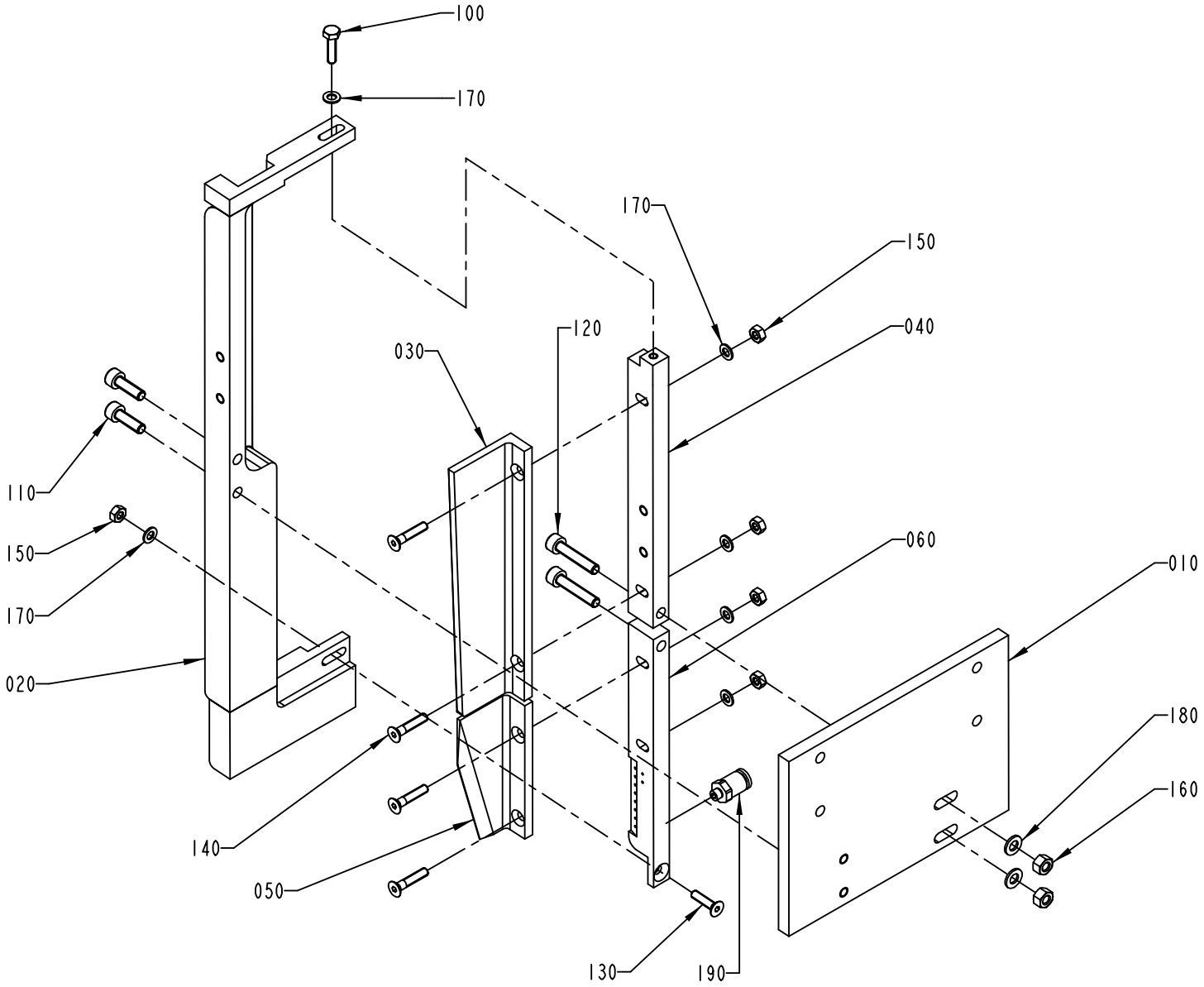

S-1498107-1
ECN 72660

Pos	Part No	SP	UN	Qty	Description	Page No
Common Parts						
010	1478038-0000	-		1	SUPPORT	
020	929821-0000	-		1	PLATE	
030	929823-0000	C		1	PAPER GUIDE	
040	929824-0000	-		1	PLATE	
050	929825-0000	C		1	PAPER GUIDE	
060	929831-0000	-		1	PLATE	
100	312105-0293	-		1	SCREW M6S M4X16 A280	
110	312115-0329	-		2	SCREW MC6S M5X16 A280	
120	312115-0333	-		2	SCREW MC6S M5X25 A280	
130	312155-0293	-		1	SCREW HEX.SOCK.COUNT.MF6S M4X16 A480	
140	312155-0295	-		4	SCREW HEX.SOCK.COUNT.MF6S M4X20 A480	
150	312605-0312	-		5	HEXAGON NUT, M6M M4 A280	
160	312605-0314	-		2	HEXAGON NUT, M6M M5 A280	
170	315105-0136	-		6	WASHER PLAIN, BRB, 4,3/8,H=0,8	
180	315105-0146	-		2	WASHER PLAIN, BRB, 5,3/10,H=1	
190	342722-0197	-		1	STRAIGHT COUPLING	

Pos	Part No	SP	UN	Qty	Description	Page No

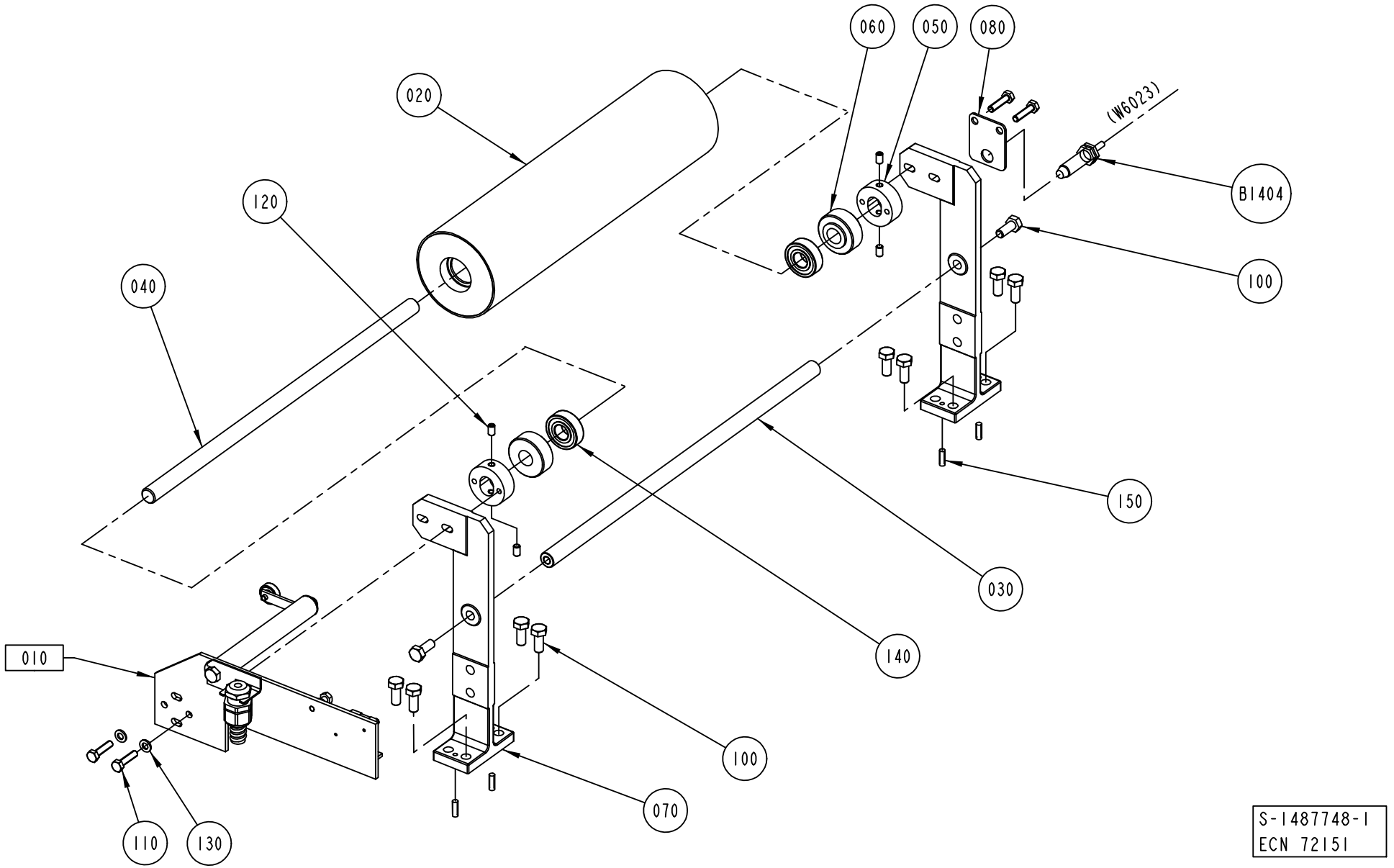
060
050
080
020
(W6023)
120
B1404
040
100
150
030
140
010
100
070
110
130
S-1487748-1
ECN 72151

ECM: 72829 - 19990910
Group number: 1487748-0100
Assembly Drawing: 1487748-1_1_AA

Issue: 20011217

Pos	Part No	SP	UN	Qty	Description	Page No
Common Parts						
010	A1095806-0200	-		1	SPLICE DETECTOR	**195**
020	1490246-0000	D		1	ROLLER	
030	265569-0001	-		1	STRUT	
040	265566-0001	C		1	SHAFT	
050	265567-0000	D		2	BEARING UNIT	
060	927852-0000	-		2	SPACER	
070	546116-0000	-		2	CANTILEVER	
080	1490291-0000	-		1	PLATE	
100	312105-0451	-		10	SCREW M6S 8X20 A280	
110	312105-0372	-		4	SCREW M6S M6X25 A280	
120	312318-0364	-		4	SCREW HEX.SOCK.SET CUP P.MSK6SS6X10 SS	
130	315105-0153	-		2	WASHER PLAIN, BRB, 6,4/12,H=1,5	
140	321313-0102	C		2	BALL BEARING, 2 SEALS, 15X35X11 MM	
150	311305-0308	-		4	SLOTTED PIRPC5X16FZB	
B1404	90044-0124	C		1	PROX.SW. 922AB2XM-A9P-050-LZ-876	

Pos	Part No	SP	UN	Qty	Description	Page No

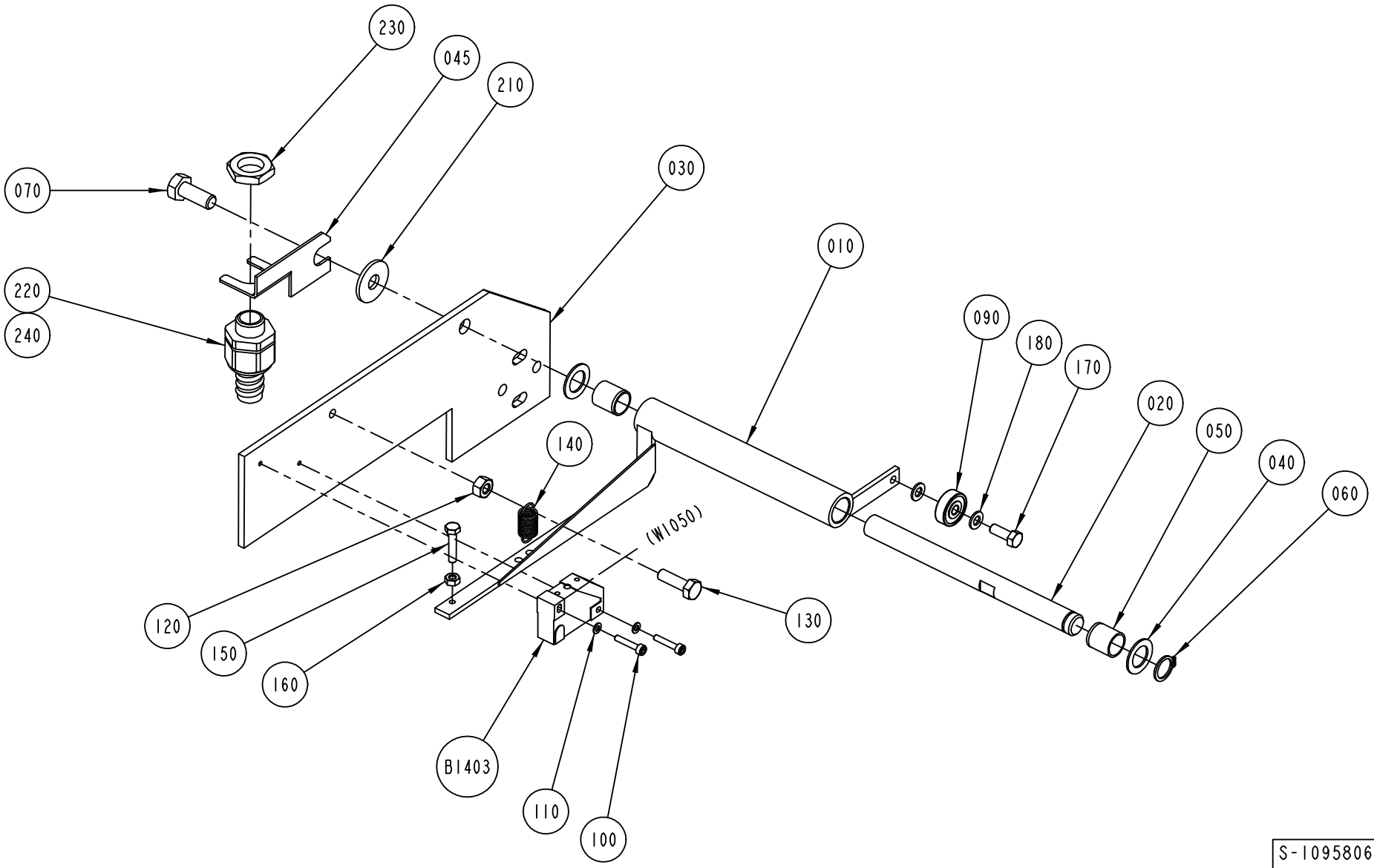

S-1095806-2
ECN 72151

Pos	Part No	SP	UN	Qty	Description	Page No
Common Parts						
010	1035898-0000	-		1	BRACKET	
020	1035897-0000	-		1	SHAFT	
030	1038095-0000	-		1	HOLDER	
040	266737-0000	-		2	WASHER	
045	1036610-0000	-		1	BRACKET	
050	321120-0111	-		2	BEARING BUSHING WITHOUT FLANGE,12/14X15	
060	315751-0109	-		1	RETAIN. RING, 12	
070	312105-0451	-		1	SCREW M6S 8X20 A280	
090	90214-0138	C		1	BALL BEARING, 5X19X6 MM	
100	312115-0228	-		2	SCREW MC6S M3X16 A280	
110	315105-0124	-		2	WASHER PLAIN, BRB, 3,2/6,H=0,5	
120	312605-0316	-		1	HEXAGON NUT, M6M M6 A280	
130	312105-0370	-		1	SCREW M6S M6X20 A280	
140	90335-0089	C		1	SPRING	
150	312105-0295	-		1	SCREW M6S M4X20 A280	
160	312605-0312	-		1	HEXAGON NUT, M6M M4 A280	
170	312105-0328	-		1	SCREW M6S M5X14 A280	
180	315105-0146	-		2	WASHER PLAIN, BRB, 5,3/10,H=1	
210	90005-0116	-		1	WASHER PLAIN ROUND 8,4(M8)/24, H=2	
220	353243-0001	-		1	GLAND,HOSE,EXTENDED,WITHOUT INSERT PG9	
230	90099-0104	-		1	NUT PR 15,2 (PG9)	
240	353249-0008	-		1	GLAND,INSERT,SINGLE HOLE,EXTEND.4-6,5	
B1403	90044-0104	C		1	PROX.SWITCH IFM IN 3002	

Pos	Part No	SP	UN	Qty	Description	Page No

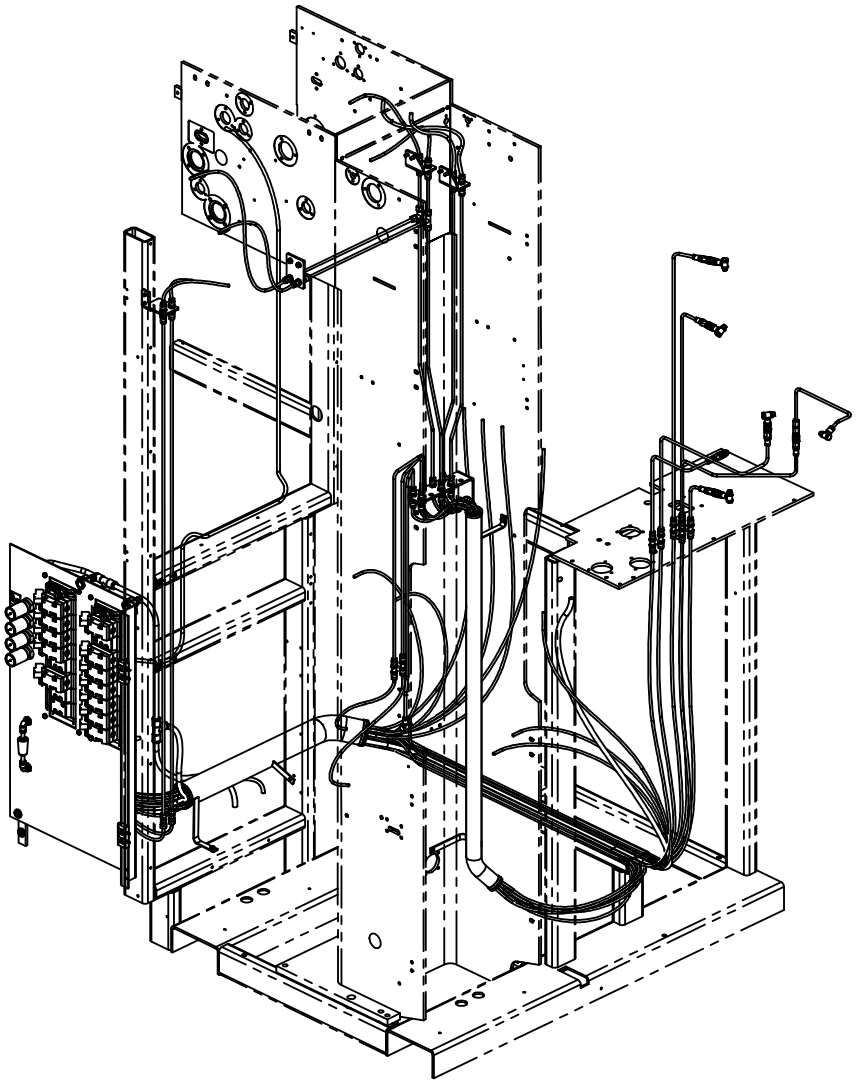

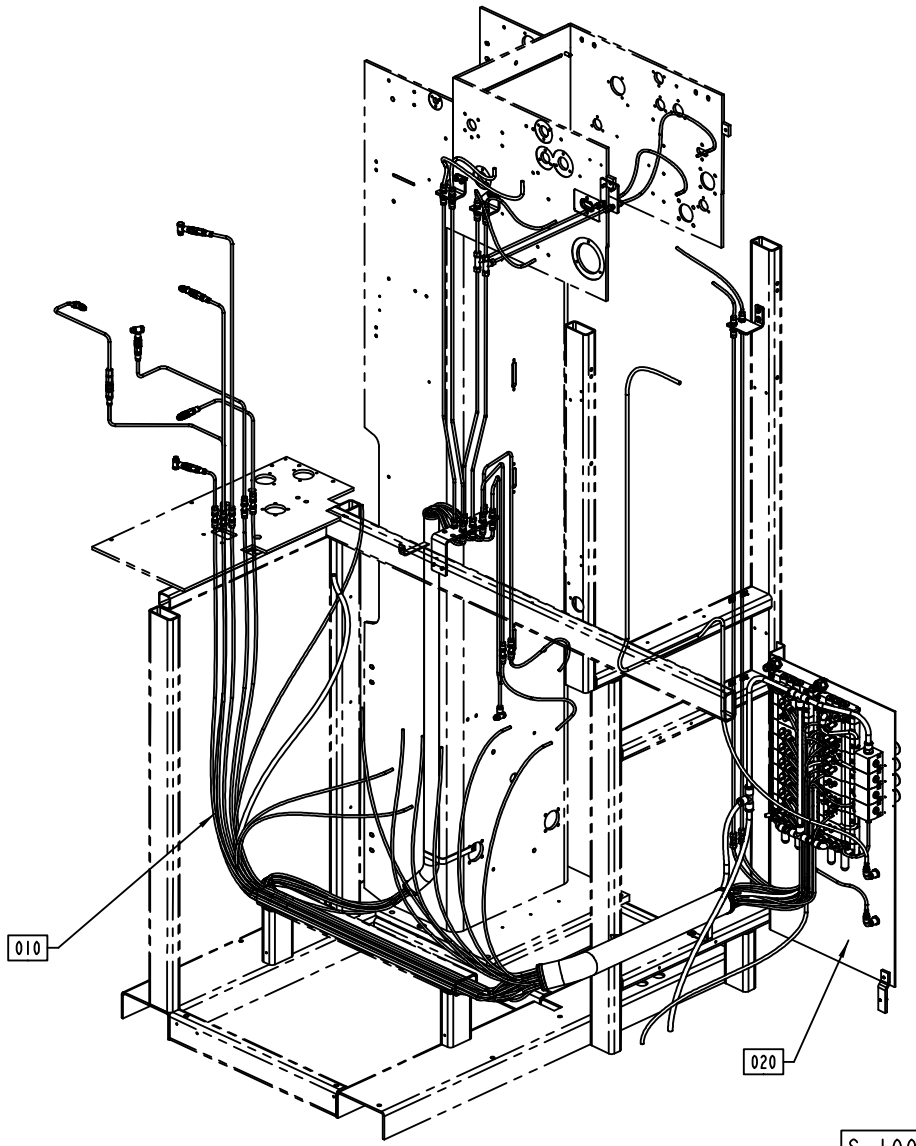

S-1095686-5
ECN 72527

ECM: 73186 - 20000308
Group number: 1095686-0300
Assembly Drawing: 1095686-5_1_AA

Issue: 20011217

Pos	Part No	SP	UN	Qty	Description	Page No
Common Parts						
010	A1095826-0300	-		1	HOSE INSTALLATION PNEUM	**199, 201**
020	A1095687-0400	-		1	VALVE PANEL SUPERSTRUCT.	**203**

Pos	Part No	SP	UN	Qty	Description	Page No

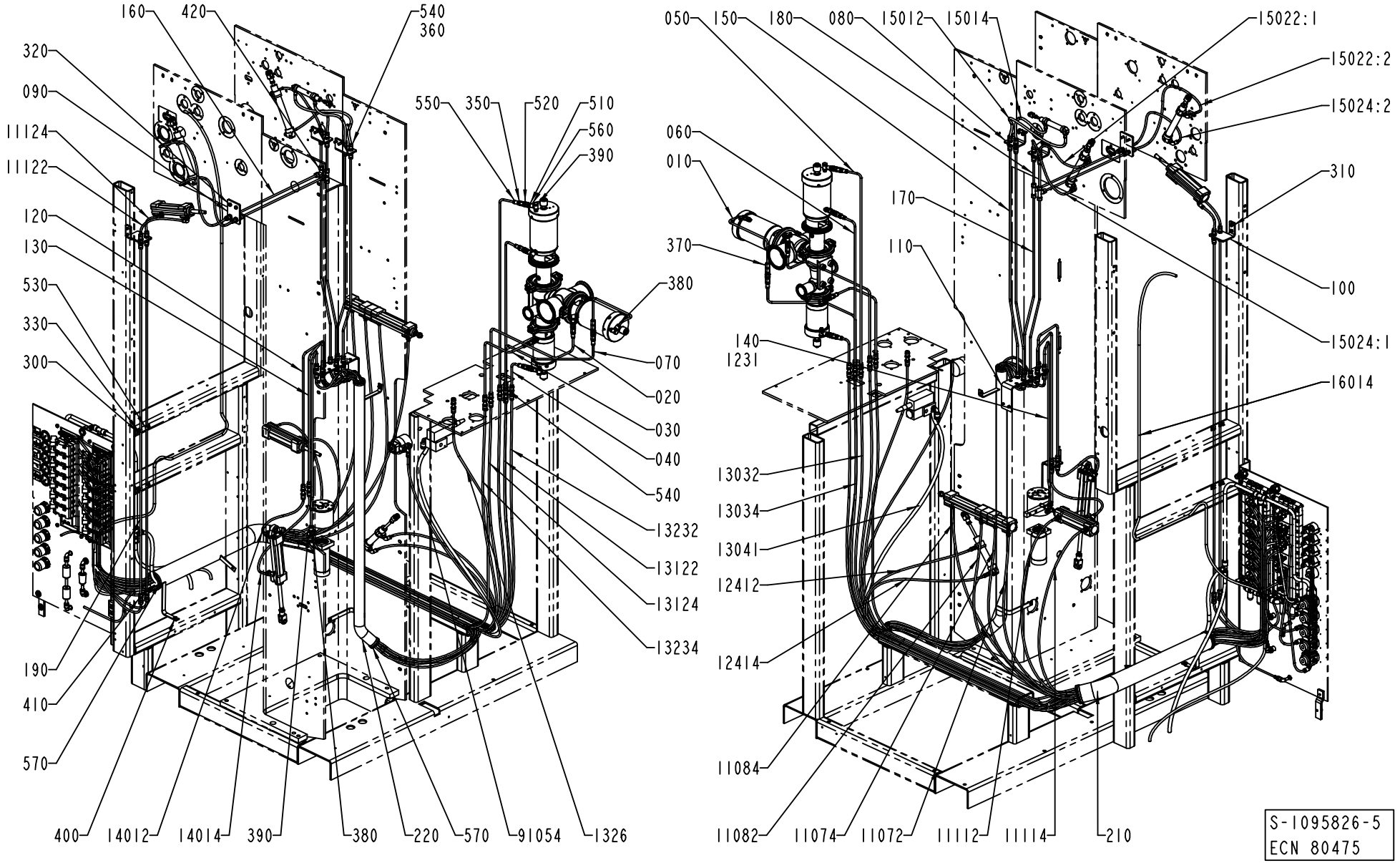
160
420
540
360
320
090
11124
11122
120
130
530
330
300
550
350
520
510
560
390
380
070
020
030
040
540
13232
13122
13124
13234
190
410
570
400
14012
14014
390
380
220
570
91054
1326
050
150
180
080
15012
15014
15022:1
15022:2
15024:2
310
060
010
370
170
110
100
15024:1
140
1231
16014
13032
13034
13041
12412
12414
11084
11082
11074
11072
11112
11114
210
S-1095826-5
ECN 80475

ECM: 88122 - 20010406
Group number: 1095826-0300
Assembly Drawing: 1095826-5_1_AC

Issue: 20011217

Pos	Part No	SP	UN	Qty	Description	Page No
HI						
91054	90166-0193	-	MM	3000	TUBE 6 MM PUR BLUE	
PT21						
16014	90166-0193	-	MM	4000	TUBE 6 MM PUR BLUE	
Common Parts						
010	1484405-0000	-		1	PIPE	
020	1484406-0000	-		1	PIPE	
030	1484407-0000	-		1	PIPE	
040	1484408-0000	-		1	PIPE	
050	1484409-0000	-		1	PIPE	
060	1484410-0000	-		1	PIPE	
070	1484411-0000	-		1	PIPE	
080	1484414-0000	-		2	PLATE	
090	1484415-0000	-		1	PLATE	
100	1484416-0000	-		1	BRACKET	
110	1484418-0000	-		1	PLATE	
11072	90166-0193	-	MM	2300	TUBE 6 MM PUR BLUE	
11074	90166-0193	-	MM	2300	TUBE 6 MM PUR BLUE	
11082	90166-0193	-	MM	2300	TUBE 6 MM PUR BLUE	
11084	90166-0193	-	MM	2200	TUBE 6 MM PUR BLUE	
11112	90166-0193	-	MM	2400	TUBE 6 MM PUR BLUE	
11114	90166-0193	-	MM	2400	TUBE 6 MM PUR BLUE	
11122	90166-0193	-	MM	2600	TUBE 6 MM PUR BLUE	
11124	90166-0193	-	MM	2500	TUBE 6 MM PUR BLUE	
120	1484419-0000	-		1	PIPE	
1231	90166-0193	-	MM	4900	TUBE 6 MM PUR BLUE	
12412	90166-0193	-	MM	4000	TUBE 6 MM PUR BLUE	
12414	90166-0193	-	MM	4000	TUBE 6 MM PUR BLUE	
130	1484420-0000	-		1	PIPE	
13032	90166-0193	-	MM	4800	TUBE 6 MM PUR BLUE	
13034	90166-0193	-	MM	4700	TUBE 6 MM PUR BLUE	
13041	90166-0068	-	MM	3000	TUBE 12 MM PA BLUE	
13122	90166-0193	-	MM	5000	TUBE 6 MM PUR BLUE	
13124	90166-0193	-	MM	5000	TUBE 6 MM PUR BLUE	
13232	90166-0193	-	MM	5000	TUBE 6 MM PUR BLUE	
13234	90166-0193	-	MM	5000	TUBE 6 MM PUR BLUE	
1326	90166-0193	-	MM	5000	TUBE 6 MM PUR BLUE	
140	1524348-0000	-		1	PIPE	
14012	90166-0193	-	MM	4500	TUBE 6 MM PUR BLUE	
14014	90166-0193	-	MM	4700	TUBE 6 MM PUR BLUE	
150	1484422-0000	-		2	PIPE	
15012	90166-0193	-	MM	5300	TUBE 6 MM PUR BLUE	
15014	90166-0193	-	MM	5200	TUBE 6 MM PUR BLUE	
15022:1	90166-0193	-	MM	5100	TUBE 6 MM PUR BLUE	
15022:2	90166-0193	-	MM	900	TUBE 6 MM PUR BLUE	
15024:1	90166-0193	-	MM	5100	TUBE 6 MM PUR BLUE	
15024:2	90166-0193	-	MM	700	TUBE 6 MM PUR BLUE	
160	1484423-0000	-		2	PIPE	
170	1484424-0000	-		2	PIPE	
180	1484425-0000	-		2	PIPE	
190	1484426-0000	-		2	PIPE	
210	1129314-0000	-		1	PIPE	
220	1129315-0000	-		1	PIPE	
300	312105-0287	-		4	SCREW M6S M4X8 A280	
310	312105-0366	-		4	SCREW M6S M6X12 A280	
320	312105-0368	-		6	SCREW M6S M6X16 A280	
330	315105-0136	-		4	WASHER PLAIN, BRB, 4,3/8,H=0,8	
350	315237-0109	-		6	WASHER,PL.RND.AL.10/14,H=1,5	
360	342706-0130	-		28	ACCESSORIES, INSERT SLEEVE 6 MM	
370	342724-0102	-		1	CONN. STR. PIPE GI 6-G1/8	
380	342797-0121	-		2	CONN. BANJO, RINGPIECE 6-1/8	
390	342980-0303	-		5	BANJO-HOLLOW BOLT COUPL,EXT.THR.01-G1/8"	
400	312105-0362	-		2	SCREW M6S M6X8 A280	
410	342727-0102	-		2	CONN. PIPE G-6-LFZB	
420	342747-0102	-		2	CONN. T-PIPE T-6	
510	90163-0057	-		6	NIPPLE 1/8" BRASS	
520	90163-0062	-		6	QUICK COUPLING, (F) 5053-1/8	
530	90165-0057	-		4	PIPE CLIP FOR TUBE D=6 MM	
540	90224-0349	-		24	BULKHEAD LEAD-IN	
550	90224-0307	-		6	STRAIGHT FITTING, 6MM, 1/8",	
560	90224-0308	-		4	CONN. BANJO, ART. NO. 2023-1/8-1/8	
570	90143-0059	-	MM	700	SEAL STRIP 4610069	
580	90235-0274	-		1	THROTTLE CHECK VALVES,G1/8"	

Machine Type Group Description Used-In Group Number Page No

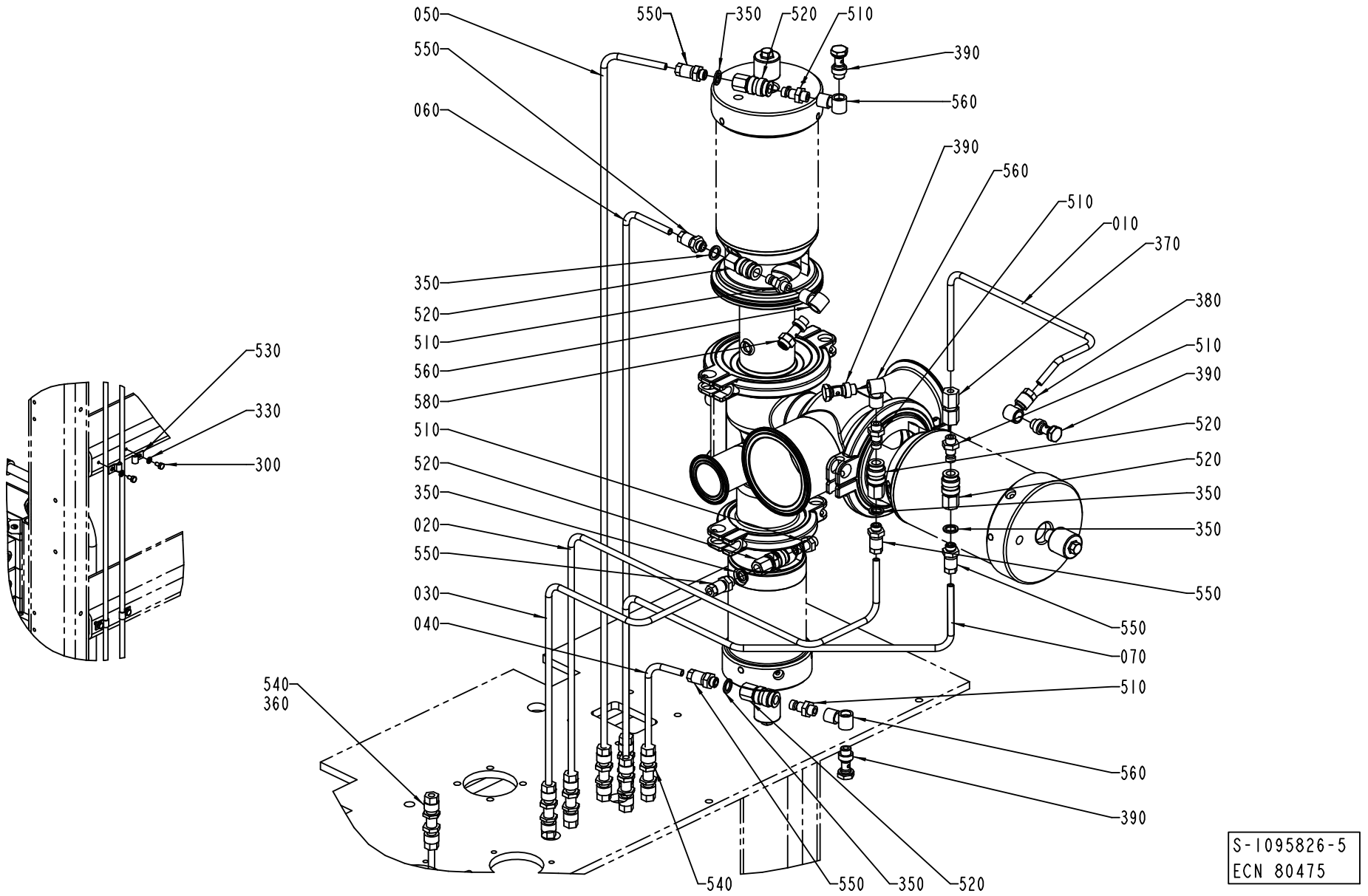
050
550
060
350
520
510
560
580
510
520
350
020
550
030
040
540
360
530
330
300
550
350
520
510
390
560
390
560
510
010
370
380
510
390
520
520
350
350
550
550
070
510
560
390
540
550
350
520
S-1095826-5
ECN 80475

ECM: 88122 - 20010406
Group number: 1095826-0300
Assembly Drawing: 1095826-5_2_AC

Issue: 20011217

Pos	Part No	SP	UN	Qty	Description	Page No
HI						
91054	90166-0193	-	MM	3000	TUBE 6 MM PUR BLUE	
PT21						
16014	90166-0193	-	MM	4000	TUBE 6 MM PUR BLUE	
Common Parts						
010	1484405-0000	-		1	PIPE	
020	1484406-0000	-		1	PIPE	
030	1484407-0000	-		1	PIPE	
040	1484408-0000	-		1	PIPE	
050	1484409-0000	-		1	PIPE	
060	1484410-0000	-		1	PIPE	
070	1484411-0000	-		1	PIPE	
080	1484414-0000	-		2	PLATE	
090	1484415-0000	-		1	PLATE	
100	1484416-0000	-		1	BRACKET	
110	1484418-0000	-		1	PLATE	
11072	90166-0193	-	MM	2300	TUBE 6 MM PUR BLUE	
11074	90166-0193	-	MM	2300	TUBE 6 MM PUR BLUE	
11082	90166-0193	-	MM	2300	TUBE 6 MM PUR BLUE	
11084	90166-0193	-	MM	2200	TUBE 6 MM PUR BLUE	
11112	90166-0193	-	MM	2400	TUBE 6 MM PUR BLUE	
11114	90166-0193	-	MM	2400	TUBE 6 MM PUR BLUE	
11122	90166-0193	-	MM	2600	TUBE 6 MM PUR BLUE	
11124	90166-0193	-	MM	2500	TUBE 6 MM PUR BLUE	
120	1484419-0000	-		1	PIPE	
1231	90166-0193	-	MM	4900	TUBE 6 MM PUR BLUE	
12412	90166-0193	-	MM	4000	TUBE 6 MM PUR BLUE	
12414	90166-0193	-	MM	4000	TUBE 6 MM PUR BLUE	
130	1484420-0000	-		1	PIPE	
13032	90166-0193	-	MM	4800	TUBE 6 MM PUR BLUE	
13034	90166-0193	-	MM	4700	TUBE 6 MM PUR BLUE	
13041	90166-0068	-	MM	3000	TUBE 12 MM PA BLUE	
13122	90166-0193	-	MM	5000	TUBE 6 MM PUR BLUE	
13124	90166-0193	-	MM	5000	TUBE 6 MM PUR BLUE	
13232	90166-0193	-	MM	5000	TUBE 6 MM PUR BLUE	
13234	90166-0193	-	MM	5000	TUBE 6 MM PUR BLUE	
1326	90166-0193	-	MM	5000	TUBE 6 MM PUR BLUE	
140	1524348-0000	-		1	PIPE	
14012	90166-0193	-	MM	4500	TUBE 6 MM PUR BLUE	
14014	90166-0193	-	MM	4700	TUBE 6 MM PUR BLUE	
150	1484422-0000	-		2	PIPE	
15012	90166-0193	-	MM	5300	TUBE 6 MM PUR BLUE	
15014	90166-0193	-	MM	5200	TUBE 6 MM PUR BLUE	
15022:1	90166-0193	-	MM	5100	TUBE 6 MM PUR BLUE	
15022:2	90166-0193	-	MM	900	TUBE 6 MM PUR BLUE	
15024:1	90166-0193	-	MM	5100	TUBE 6 MM PUR BLUE	
15024:2	90166-0193	-	MM	700	TUBE 6 MM PUR BLUE	
160	1484423-0000	-		2	PIPE	
170	1484424-0000	-		2	PIPE	
180	1484425-0000	-		2	PIPE	
190	1484426-0000	-		2	PIPE	
210	1129314-0000	-		1	PIPE	
220	1129315-0000	-		1	PIPE	
300	312105-0287	-		4	SCREW M6S M4X8 A280	
310	312105-0366	-		4	SCREW M6S M6X12 A280	
320	312105-0368	-		6	SCREW M6S M6X16 A280	
330	315105-0136	-		4	WASHER PLAIN, BRB, 4,3/8,H=0,8	
350	315237-0109	-		6	WASHER,PL.RND.AL.10/14,H=1,5	
360	342706-0130	-		28	ACCESSORIES, INSERT SLEEVE 6 MM	
370	342724-0102	-		1	CONN. STR. PIPE GI 6-G1/8	
380	342797-0121	-		2	CONN. BANJO, RINGPIECE 6-1/8	
390	342980-0303	-		5	BANJO-HOLLOW BOLT COUPL,EXT.THR.01-G1/8"	
400	312105-0362	-		2	SCREW M6S M6X8 A280	
410	342727-0102	-		2	CONN. PIPE G-6-LFZB	
420	342747-0102	-		2	CONN. T-PIPE T-6	
510	90163-0057	-		6	NIPPLE 1/8" BRASS	
520	90163-0062	-		6	QUICK COUPLING, (F) 5053-1/8	
530	90165-0057	-		4	PIPE CLIP FOR TUBE D=6 MM	
540	90224-0349	-		24	BULKHEAD LEAD-IN	
550	90224-0307	-		6	STRAIGHT FITTING, 6MM, 1/8",	
560	90224-0308	-		4	CONN. BANJO, ART. NO. 2023-1/8-1/8	
570	90143-0059	-	MM	700	SEAL STRIP 4610069	
580	90235-0274	-		1	THROTTLE CHECK VALVES,G1/8"	

Machine Type | Group Description | Used-In | Group Number | Page No

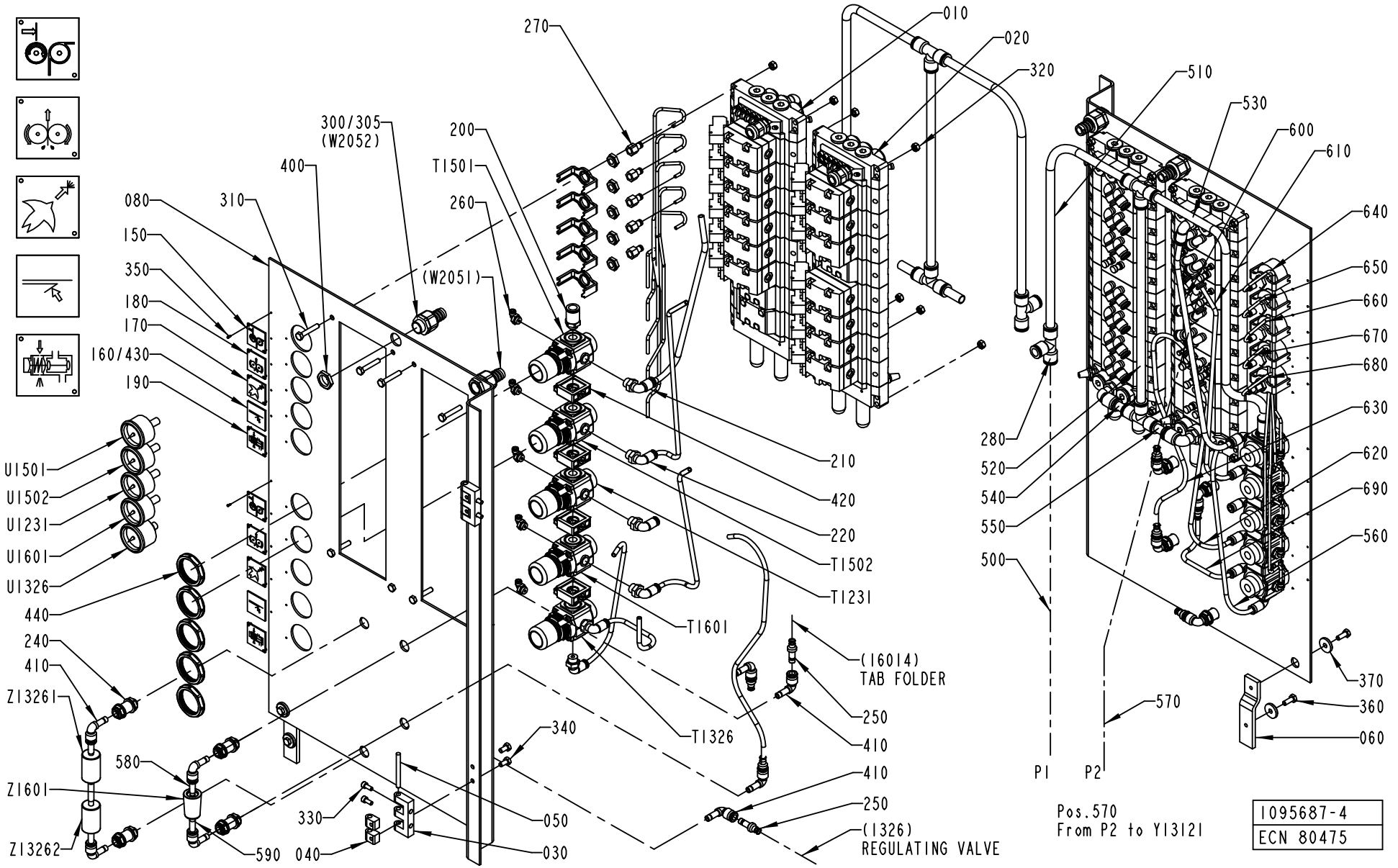
270
010
020
320
510
530
600
610
640
650
660
670
680
630
620
690
560
300/305
(W2052)
400
200
T1501
260
080
310
150
350
180
170
160/430
190
(W2051)
210
420
220
T1502
T1231
T1601
T1326
(16014)
TAB FOLDER
250
410
410
250
(1326)
REGULATING VALVE
340
330
050
030
590
040
580
U1501
U1502
U1231
U1601
U1326
440
240
410
Z13261
Z1601
Z13262
280
520
540
550
500
P1
P2
570
370
360
060
Pos.570
From P2 to Y13121
1095687-4
ECN 80475

ECM: 83380 - 20001102
Group number: 1095687-0400
Assembly Drawing: 1095687-4_1_AB

Issue: 20011217

Pos	Part No	SP	UN	Qty	Description	Page No
Common Parts						
010	A1317563-0300	-		1	VALVE RAMP SUPERSTRUCT.	**205, 207, 209, 211**
020	A1317562-0200	-		1	VALVE RAMP SUPERSTRUCT.	**213**
030	1035792-0000	-		2	E-HINGE	
040	1129770-0000	-		4	BLOCKING PIECE	
050	988685-0000	-		2	PIN	
060	1140380-0000	-		1	BRACKET	
080	1512173-0000	-		1	PLATE	
150	1041937-0000	-		2	SIGN	
160	359307-0007	-		2	SYMBOL SKYLT "TAB FOLDING"	
170	273450-0000	-		2	SIGN	
180	273452-0000	-		2	SIGN	
190	1548001-0000	-		2	SIGN	
200	342722-0209	-		1	STRAIGHT COUPLING D=12-G1/4"	
210	342732-0104	-		1	ELBOW PIPE JOINT	
220	342732-0103	-		5	ELBOW PIPE JOINT	
240	342768-0103	-		4	BULKHEAD CONNECTOR, 8 MM	
250	342716-0203	-		4	REDUCER 6-8	
260	342732-0100	-		5	ELBOW PIPE JOINT	
270	342770-0101	-		5	STRAIGHT COUPLING INT, D=4 MM - G1/8	
280	342748-0109	-		3	T-CONNECTION	
300	353243-0003	-		2	GLAND,HOSE,EXTENDED WITHOUT INSERT PG11	
305	353249-0011	-		2	GLAND,INSERT,SINGLE HOLE,EXTEND.7-10,5	
310	312109-0376	-		8	SCREW M6S M6X35 A280	
320	312605-0316	-		8	HEXAGON NUT, M6M M6 A280	
330	312115-0327	-		4	SCREW MC6S M5X12 A280	
340	312105-0366	-		4	SCREW M6S M6X12 A280	
350	312502-0120	-		16	DRIVE SCREW ROUND HEAD KDS 0X5	
360	312105-0368	-		2	SCREW M6S M6X16 A280	
370	315125-0153	-		2	WASHER PLAIN ROUND,CHAMF. 6,4/22, H=4	
400	90099-0117	-		2	NUT PR 18,6 (PG11)	
410	90055-0118	-		8	ELBOW PIPE JOINT -8MM	
420	90113-0140	-		4	QUICK CLAMP	
430	90144-0043	-		1	TEJP TYGAFLOR	
440	90457-0078	-		5	PANEL NUT	
500	90166-0068	-	MM	800	TUBE 12 MM PA BLUE	
510	90166-0068	-	MM	600	TUBE 12 MM PA BLUE	
520	90166-0068	-	MM	350	TUBE 12 MM PA BLUE	
530	90166-0068	-	MM	600	TUBE 12 MM PA BLUE	
540	90166-0068	-	MM	50	TUBE 12 MM PA BLUE	
550	90166-0068	-	MM	50	TUBE 12 MM PA BLUE	
560	90166-0081	-	MM	350	TUBE 6 MM PA BLUE	
570	90166-0013	-	MM	1500	TUBE 8 MM PA BLUE	
580	90166-0013	-	MM	50	TUBE 8 MM PA BLUE	
590	90166-0013	-	MM	50	TUBE 8 MM PA BLUE	
600	90166-0013	-	MM	350	TUBE 8 MM PA BLUE	
610	90166-0013	-	MM	400	TUBE 8 MM PA BLUE	
620	90166-0081	-	MM	400	TUBE 6 MM PA BLUE	
630	90166-0081	-	MM	600	TUBE 6 MM PA BLUE	
640	90166-0095	-	MM	500	TUBE 4 MM PA BLUE	
650	90166-0095	-	MM	500	TUBE 4 MM PA BLUE	
660	90166-0095	-	MM	500	TUBE 4 MM PA BLUE	
670	90166-0095	-	MM	500	TUBE 4 MM PA BLUE	
680	90166-0095	-	MM	500	TUBE 4 MM PA BLUE	
690	90166-0081	-	MM	300	TUBE 6 MM PA BLUE	
T1231	90113-0470	D		1	MANIFOLD REGULATOR 10 BAR	
T1326	90457-0144	-		1	REGULATOR 0,3-2 BAR	
T1501	90113-0469	D		1	MANIFOLD REGULATOR 4 BAR	
T1502	90113-0469	D		1	MANIFOLD REGULATOR 4 BAR	
T1601	90113-0469	D		1	MANIFOLD REGULATOR 4 BAR	
U1231	90043-0065	D		1	PRESSURE GAUGE, 2048 D=40 MM	
U1326	90043-0090	-		1	PRESSURE GAUGE, 2048 D=40 MM	
U1501	90043-0064	D		1	PRESSURE GAUGE, 2048 D=40 MM	
U1502	90043-0064	D		1	PRESSURE GAUGE, 2048 D=40 MM	
U1601	90043-0064	D		1	PRESSURE GAUGE, 2048 D=40 MM	
Z13261	90277-0045	B		1	FILTER / 9900-05-BK	
Z13262	90277-0046	B		1	FILTER / 9933-05-101	
Z1601	90277-0035	B		1	FILTER / DFU 9933-05-A	

Machine Type | Group Description | Used-In | Group Number | Page No

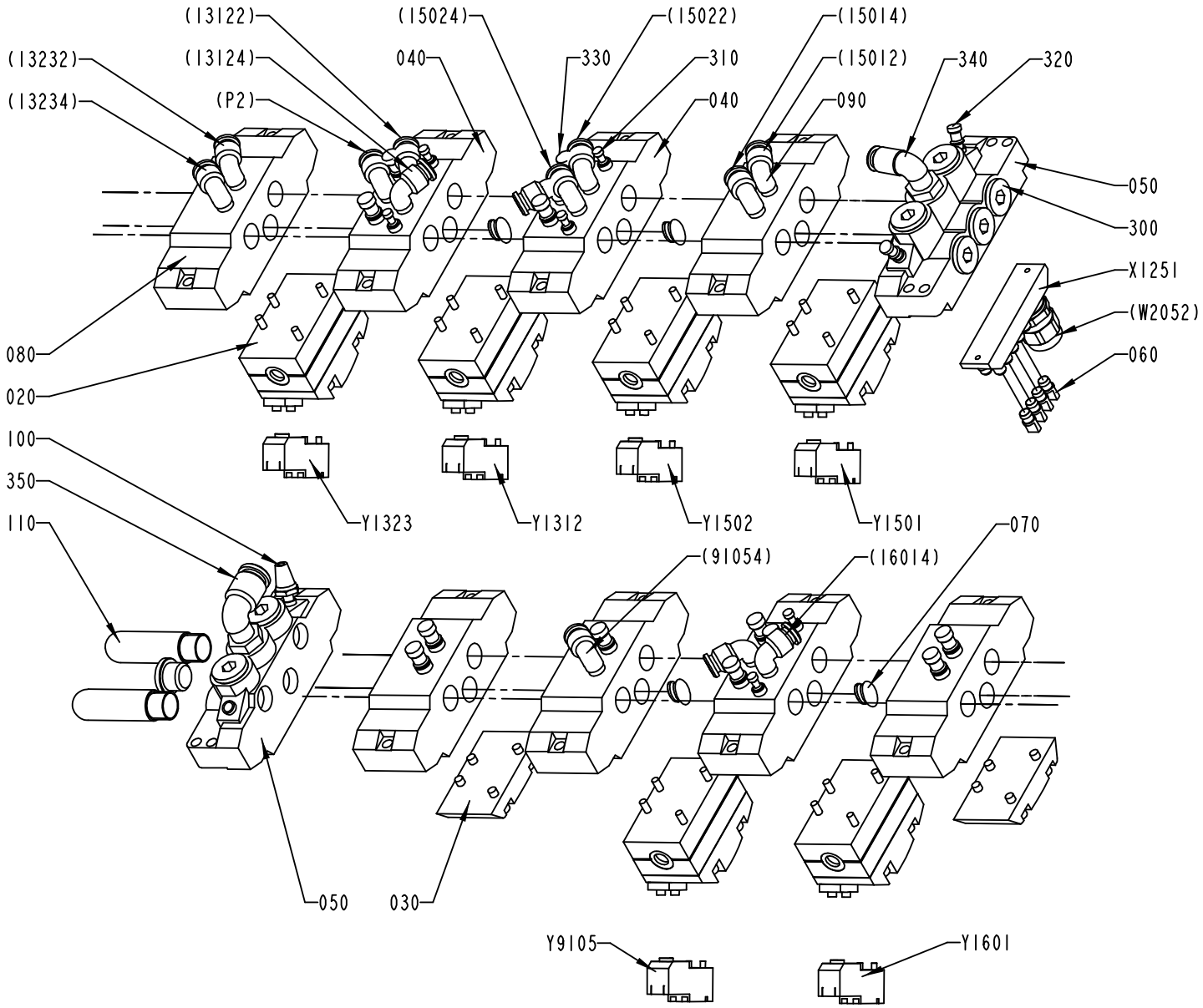

S-1317563-3
ECN 73186

ECM: 73186 - 20000308
Group number: 1317563-0300
Assembly Drawing: 1317563-3_1_AB

Issue: 20011217

Pos	Part No	SP	UN	Qty	Description	Page No
NOPT HI						
010	1346993-0000	-		1	PNEUMATIC DIAGRAM	
090	90055-0173	-		12	ELBOW WITH TAILPIECE 8/6 MM	
330	342715-0103	-		13	BLIND PLUG 8 MM	
NOPT NOHI						
010	1346992-0000	-		1	PNEUMATIC DIAGRAM	
090	90055-0173	-		11	ELBOW WITH TAILPIECE 8/6 MM	
330	342715-0103	-		14	BLIND PLUG 8 MM	
PT21 HI						
010	1487169-0000	-		1	PNEUMATIC DIAGRAM	
090	90055-0173	-		13	ELBOW WITH TAILPIECE 8/6 MM	
330	342715-0103	-		12	BLIND PLUG 8 MM	
PT21 NOHI						
010	1484417-0000	-		1	PNEUMATIC DIAGRAM	
090	90055-0173	-		12	ELBOW WITH TAILPIECE 8/6 MM	
330	342715-0103	-		13	BLIND PLUG 8 MM	
Common Parts						
020	90042-0215	-		6	VALVE BODY 5/2 UNISTABLE	
030	90042-0519	-		2	BLANK PLATE ISO SIZE 1	
040	90042-0520	-		3	BASE PLATE ISO SIZE 1	
050	90042-0522	-		2	PORTED END PIECE ISO SIZE 1	
060	90042-0550	-		4	PROTECTION PLUG FOR UNUSED CONNECTION	
070	90042-0528	-		4	BLANKING KIT SEALS ISO SIZE 1	
080	90042-0532	-		5	BASE PLATE ISO SIZE 1	
100	90328-0017	-		1	SILENCER, D=6 MM	
110	90328-0024	-		2	SILENCER G3/8	
300	342713-0211	-		8	PLUG, EXT THREAD HEX SOCKET 8638-00-380	
310	342715-0100	-		6	BLIND PLUG 4 MM	
320	342715-0102	-		2	BLIND PLUG 6 MM	
340	342732-0105	-		1	ELBOW PIPE D8-R3/8"	
350	342732-0110	-		1	ELBOW PIPE JOINT	
X1251	90042-0535	-		1	TERMINAL BOARD 19 CORDS	
Y1312	90042-0538	-		1	PILOT VALVE L=500MM	
Y1323	90042-0538	-		1	PILOT VALVE L=500MM	
Y1501	90042-0538	-		1	PILOT VALVE L=500MM	
Y1502	90042-0538	-		1	PILOT VALVE L=500MM	
Y1601	90042-0538	-		1	PILOT VALVE L=500MM	
Y9105	90042-0538	-		1	PILOT VALVE L=500MM	

Pos	Part No	SP	UN	Qty	Description	Page No

Machine Type | Group Description | Used-In | Group Number | Page No

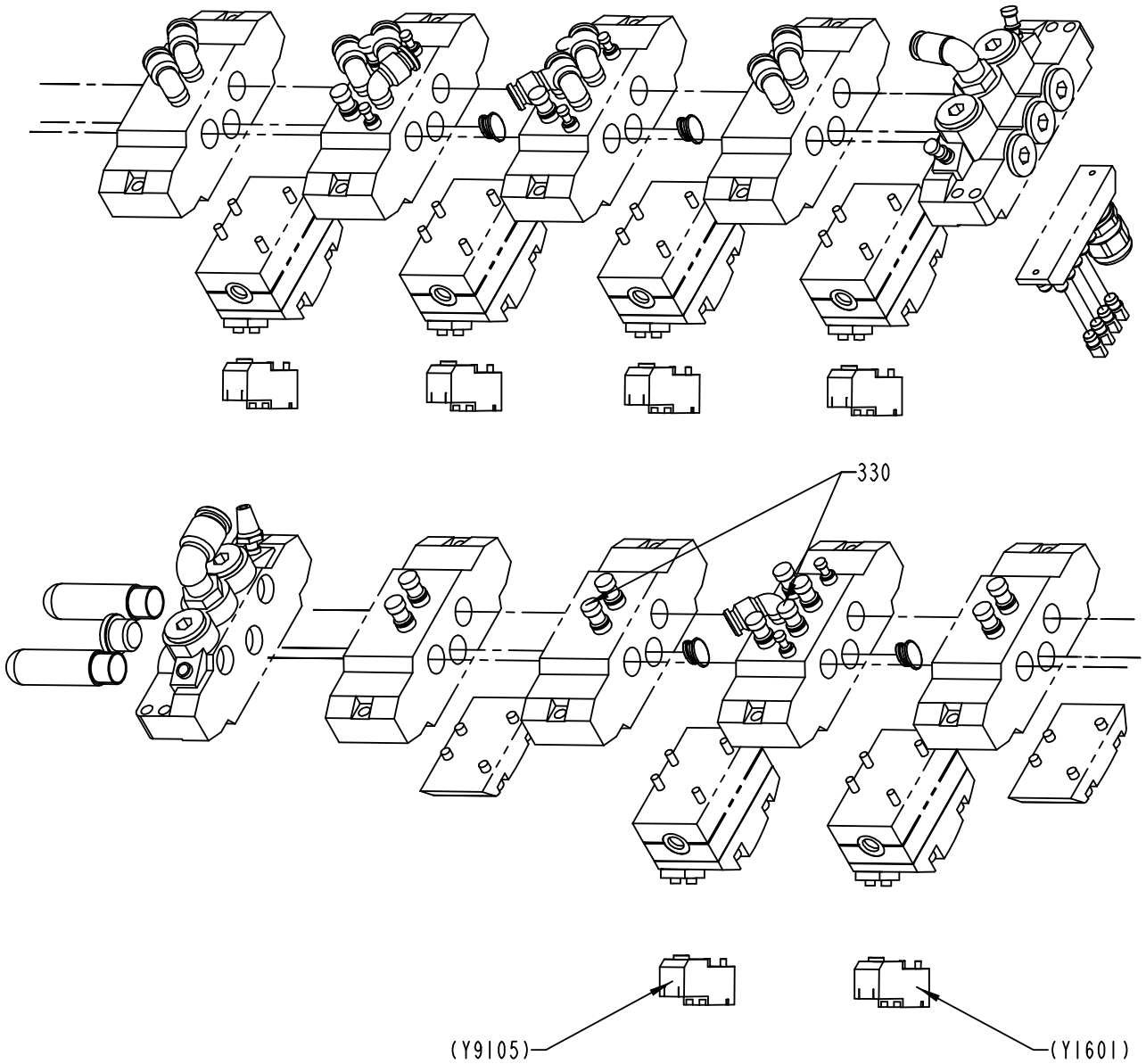

S-1317563-3
ECN 73186

ECM: 73186 - 20000308
Group number: 1317563-0300
Assembly Drawing: 1317563-3_2_AB

Issue: 20011217

Pos	Part No	SP	UN	Qty	Description	Page No
NOPT HI						
010	1346993-0000	-		1	PNEUMATIC DIAGRAM	
090	90055-0173	-		12	ELBOW WITH TAILPIECE 8/6 MM	
330	342715-0103	-		13	BLIND PLUG 8 MM	
NOPT NOHI						
010	1346992-0000	-		1	PNEUMATIC DIAGRAM	
090	90055-0173	-		11	ELBOW WITH TAILPIECE 8/6 MM	
330	342715-0103	-		14	BLIND PLUG 8 MM	
PT21 HI						
010	1487169-0000	-		1	PNEUMATIC DIAGRAM	
090	90055-0173	-		13	ELBOW WITH TAILPIECE 8/6 MM	
330	342715-0103	-		12	BLIND PLUG 8 MM	
PT21 NOHI						
010	1484417-0000	-		1	PNEUMATIC DIAGRAM	
090	90055-0173	-		12	ELBOW WITH TAILPIECE 8/6 MM	
330	342715-0103	-		13	BLIND PLUG 8 MM	
Common Parts						
020	90042-0215	-		6	VALVE BODY 5/2 UNISTABLE	
030	90042-0519	-		2	BLANK PLATE ISO SIZE 1	
040	90042-0520	-		3	BASE PLATE ISO SIZE 1	
050	90042-0522	-		2	PORTED END PIECE ISO SIZE 1	
060	90042-0550	-		4	PROTECTION PLUG FOR UNUSED CONNECTION	
070	90042-0528	-		4	BLANKING KIT SEALS ISO SIZE 1	
080	90042-0532	-		5	BASE PLATE ISO SIZE 1	
100	90328-0017	-		1	SILENCER, D=6 MM	
110	90328-0024	-		2	SILENCER G3/8	
300	342713-0211	-		8	PLUG, EXT THREAD HEX SOCKET 8638-00-380	
310	342715-0100	-		6	BLIND PLUG 4 MM	
320	342715-0102	-		2	BLIND PLUG 6 MM	
340	342732-0105	-		1	ELBOW PIPE D8-R3/8"	
350	342732-0110	-		1	ELBOW PIPE JOINT	
X1251	90042-0535	-		1	TERMINAL BOARD 19 CORDS	
Y1312	90042-0538	-		1	PILOT VALVE L=500MM	
Y1323	90042-0538	-		1	PILOT VALVE L=500MM	
Y1501	90042-0538	-		1	PILOT VALVE L=500MM	
Y1502	90042-0538	-		1	PILOT VALVE L=500MM	
Y1601	90042-0538	-		1	PILOT VALVE L=500MM	
Y9105	90042-0538	-		1	PILOT VALVE L=500MM	

Machine Type	Group Description	Used-In	Group Number	Page No

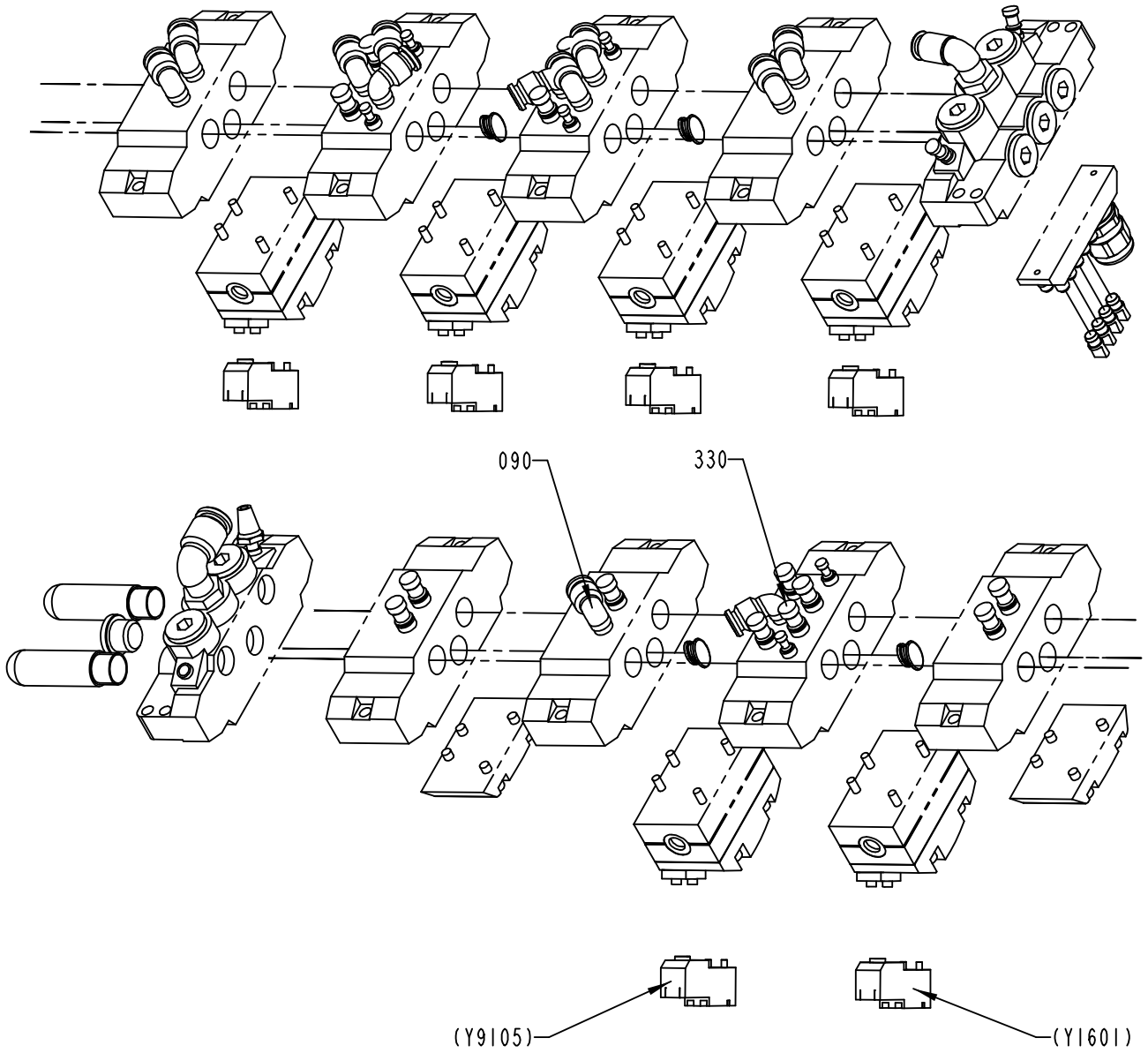

S-1317563-3
ECN 73186

ECM: 73186 - 20000308
Group number: 1317563-0300
Assembly Drawing: 1317563-3_3_AB

Issue: 20011217

Pos	Part No	SP	UN	Qty	Description	Page No
NOPT HI						
010	1346993-0000	-		1	PNEUMATIC DIAGRAM	
090	90055-0173	-		12	ELBOW WITH TAILPIECE 8/6 MM	
330	342715-0103	-		13	BLIND PLUG 8 MM	
NOPT NOHI						
010	1346992-0000	-		1	PNEUMATIC DIAGRAM	
090	90055-0173	-		11	ELBOW WITH TAILPIECE 8/6 MM	
330	342715-0103	-		14	BLIND PLUG 8 MM	
PT21 HI						
010	1487169-0000	-		1	PNEUMATIC DIAGRAM	
090	90055-0173	-		13	ELBOW WITH TAILPIECE 8/6 MM	
330	342715-0103	-		12	BLIND PLUG 8 MM	
PT21 NOHI						
010	1484417-0000	-		1	PNEUMATIC DIAGRAM	
090	90055-0173	-		12	ELBOW WITH TAILPIECE 8/6 MM	
330	342715-0103	-		13	BLIND PLUG 8 MM	
Common Parts						
020	90042-0215	-		6	VALVE BODY 5/2 UNISTABLE	
030	90042-0519	-		2	BLANK PLATE ISO SIZE 1	
040	90042-0520	-		3	BASE PLATE ISO SIZE 1	
050	90042-0522	-		2	PORTED END PIECE ISO SIZE 1	
060	90042-0550	-		4	PROTECTION PLUG FOR UNUSED CONNECTION	
070	90042-0528	-		4	BLANKING KIT SEALS ISO SIZE 1	
080	90042-0532	-		5	BASE PLATE ISO SIZE 1	
100	90328-0017	-		1	SILENCER, D=6 MM	
110	90328-0024	-		2	SILENCER G3/8	
300	342713-0211	-		8	PLUG, EXT THREAD HEX SOCKET 8638-00-380	
310	342715-0100	-		6	BLIND PLUG 4 MM	
320	342715-0102	-		2	BLIND PLUG 6 MM	
340	342732-0105	-		1	ELBOW PIPE D8-R3/8"	
350	342732-0110	-		1	ELBOW PIPE JOINT	
X1251	90042-0535	-		1	TERMINAL BOARD 19 CORDS	
Y1312	90042-0538	-		1	PILOT VALVE L=500MM	
Y1323	90042-0538	-		1	PILOT VALVE L=500MM	
Y1501	90042-0538	-		1	PILOT VALVE L=500MM	
Y1502	90042-0538	-		1	PILOT VALVE L=500MM	
Y1601	90042-0538	-		1	PILOT VALVE L=500MM	
Y9105	90042-0538	-		1	PILOT VALVE L=500MM	

Machine Type	Group Description	Used-In	Group Number	Page No

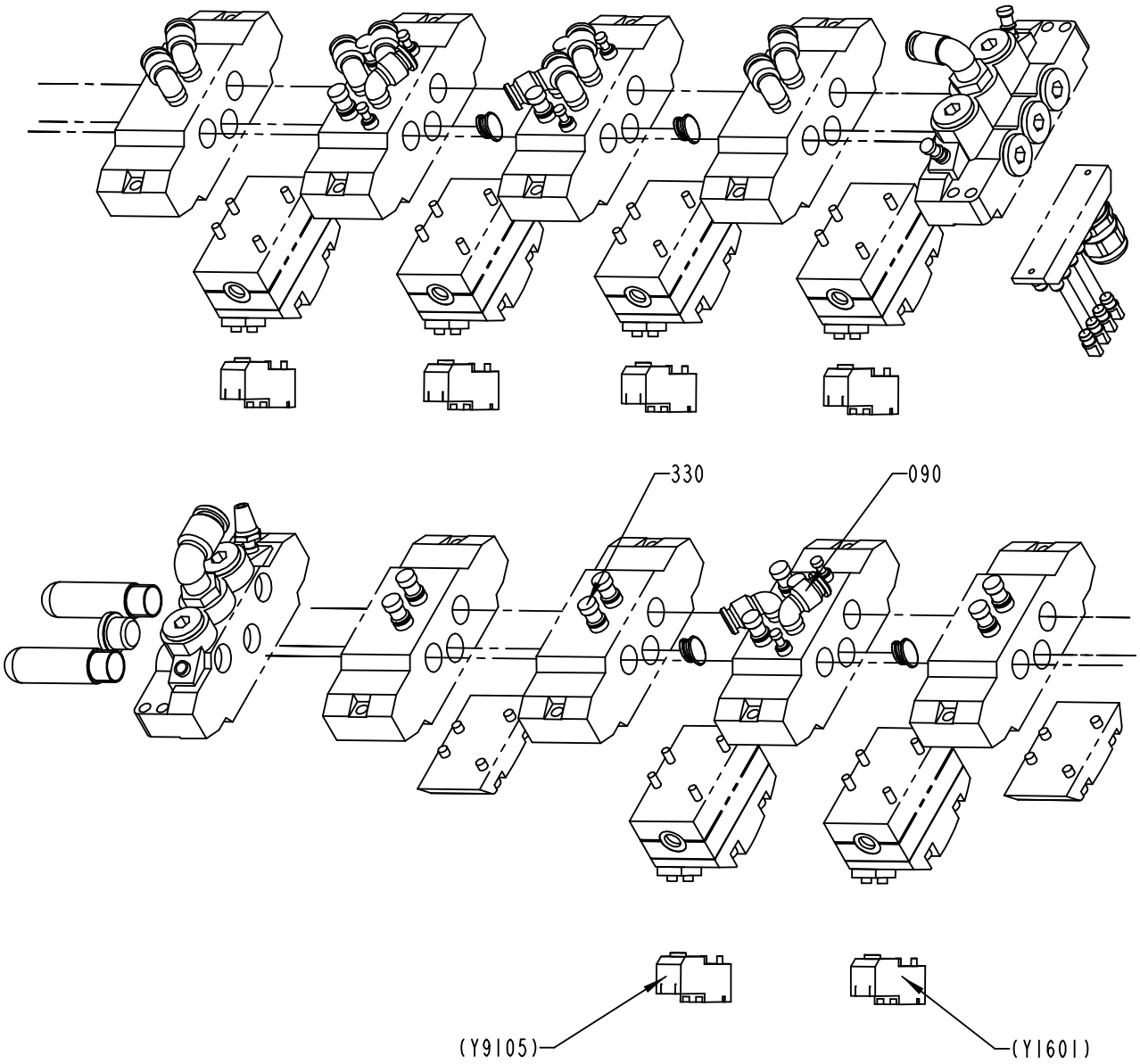

S-1317563-3
ECN 73186

ECM: 73186 - 20000308
Group number: 1317563-0300
Assembly Drawing: 1317563-3_4_AB

Issue: 20011217

Pos	Part No	SP	UN	Qty	Description	Page No
NOPT HI						
010	1346993-0000	-		1	PNEUMATIC DIAGRAM	
090	90055-0173	-		12	ELBOW WITH TAILPIECE 8/6 MM	
330	342715-0103	-		13	BLIND PLUG 8 MM	
NOPT NOHI						
010	1346992-0000	-		1	PNEUMATIC DIAGRAM	
090	90055-0173	-		11	ELBOW WITH TAILPIECE 8/6 MM	
330	342715-0103	-		14	BLIND PLUG 8 MM	
PT21 HI						
010	1487169-0000	-		1	PNEUMATIC DIAGRAM	
090	90055-0173	-		13	ELBOW WITH TAILPIECE 8/6 MM	
330	342715-0103	-		12	BLIND PLUG 8 MM	
PT21 NOHI						
010	1484417-0000	-		1	PNEUMATIC DIAGRAM	
090	90055-0173	-		12	ELBOW WITH TAILPIECE 8/6 MM	
330	342715-0103	-		13	BLIND PLUG 8 MM	
Common Parts						
020	90042-0215	-		6	VALVE BODY 5/2 UNISTABLE	
030	90042-0519	-		2	BLANK PLATE ISO SIZE 1	
040	90042-0520	-		3	BASE PLATE ISO SIZE 1	
050	90042-0522	-		2	PORTED END PIECE ISO SIZE 1	
060	90042-0550	-		4	PROTECTION PLUG FOR UNUSED CONNECTION	
070	90042-0528	-		4	BLANKING KIT SEALS ISO SIZE 1	
080	90042-0532	-		5	BASE PLATE ISO SIZE 1	
100	90328-0017	-		1	SILENCER, D=6 MM	
110	90328-0024	-		2	SILENCER G3/8	
300	342713-0211	-		8	PLUG, EXT THREAD HEX SOCKET 8638-00-380	
310	342715-0100	-		6	BLIND PLUG 4 MM	
320	342715-0102	-		2	BLIND PLUG 6 MM	
340	342732-0105	-		1	ELBOW PIPE D8-R3/8"	
350	342732-0110	-		1	ELBOW PIPE JOINT	
X1251	90042-0535	-		1	TERMINAL BOARD 19 CORDS	
Y1312	90042-0538	-		1	PILOT VALVE L=500MM	
Y1323	90042-0538	-		1	PILOT VALVE L=500MM	
Y1501	90042-0538	-		1	PILOT VALVE L=500MM	
Y1502	90042-0538	-		1	PILOT VALVE L=500MM	
Y1601	90042-0538	-		1	PILOT VALVE L=500MM	
Y9105	90042-0538	-		1	PILOT VALVE L=500MM	

Pos	Part No	SP	UN	Qty	Description	Page No

Machine Type | Group Description | Used-In | Group Number | Page No

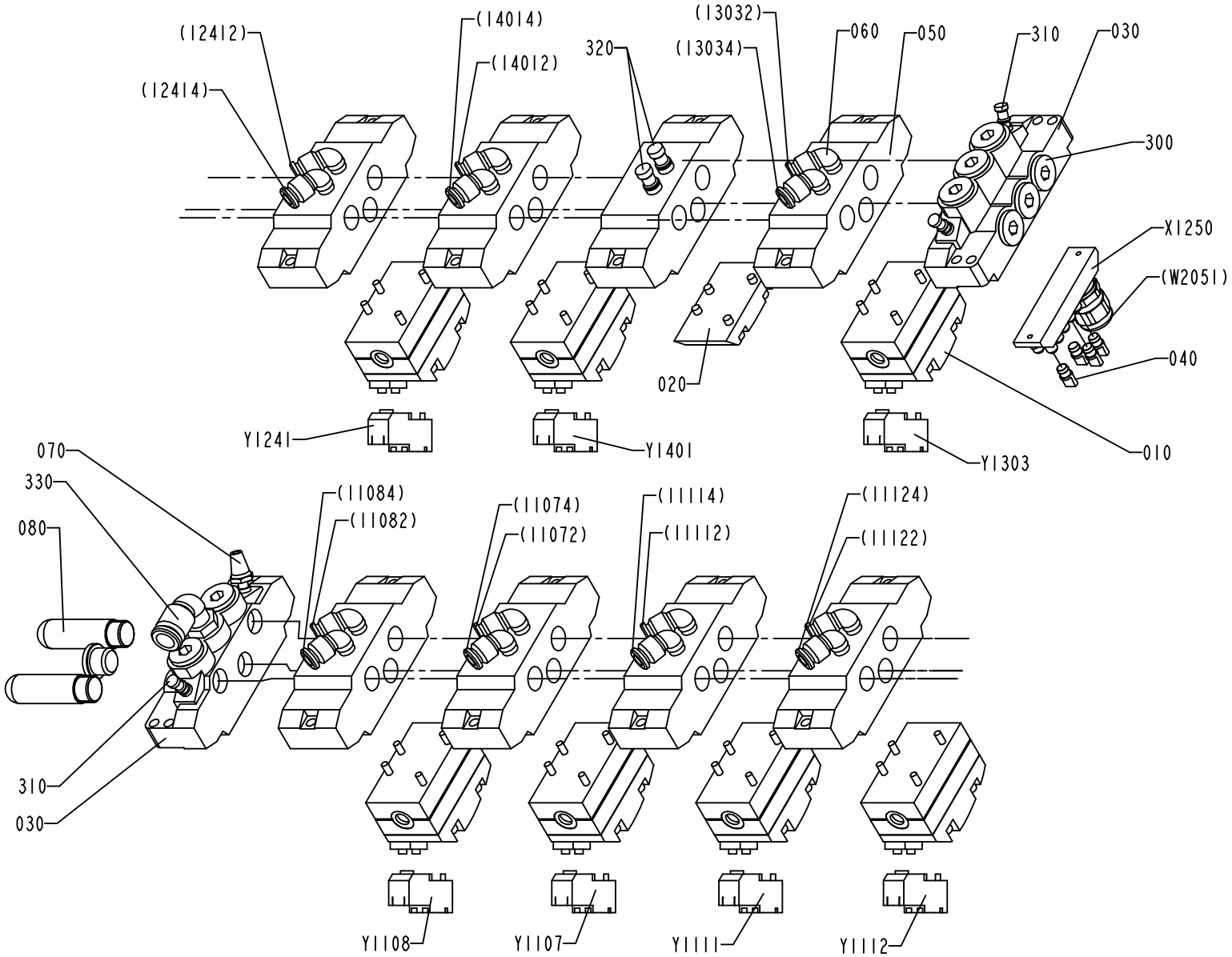

S-1317562-3
ECN 72473

ECM: 72829 - 19990910
Group number: 1317562-0200
Assembly Drawing: 1317562-3_1_AA

Issue: 20011217

Pos	Part No	SP	UN	Qty	Description	Page No
Common Parts						
010	90042-0215	-		7	VALVE BODY 5/2 UNISTABLE	
020	90042-0519	-		1	BLANK PLATE ISO SIZE 1	
030	90042-0522	-		2	PORTED END PIECE ISO SIZE 1	
040	90042-0550	-		4	PROTECTION PLUG FOR UNUSED CONNECTION	
050	90042-0532	-		8	BASE PLATE ISO SIZE 1	
060	90055-0173	-		14	ELBOW WITH TAILPIECE 8/6 MM	
070	90328-0017	-		1	SILENCER, D=6 MM	
080	90328-0024	-		2	SILENCER G3/8	
300	342713-0211	-		9	PLUG, EXT THREAD HEX SOCKET 8638-00-380	
310	342715-0102	-		3	BLIND PLUG 6 MM	
320	342715-0103	-		2	BLIND PLUG 8 MM	
330	342732-0110	-		1	ELBOW PIPE JOINT	
X1250	90042-0535	-		1	TERMINAL BOARD 19 CORDS	
Y1107	90042-0538	-		1	PILOT VALVE L=500MM	
Y1108	90042-0538	-		1	PILOT VALVE L=500MM	
Y1111	90042-0538	-		1	PILOT VALVE L=500MM	
Y1112	90042-0538	-		1	PILOT VALVE L=500MM	
Y1241	90042-0538	-		1	PILOT VALVE L=500MM	
Y1303	90042-0538	-		1	PILOT VALVE L=500MM	
Y1401	90042-0538	-		1	PILOT VALVE L=500MM	

Pos	Part No	SP	UN	Qty	Description	Page No

Machine Type | Group Description | Used-In | Group Number | Page No

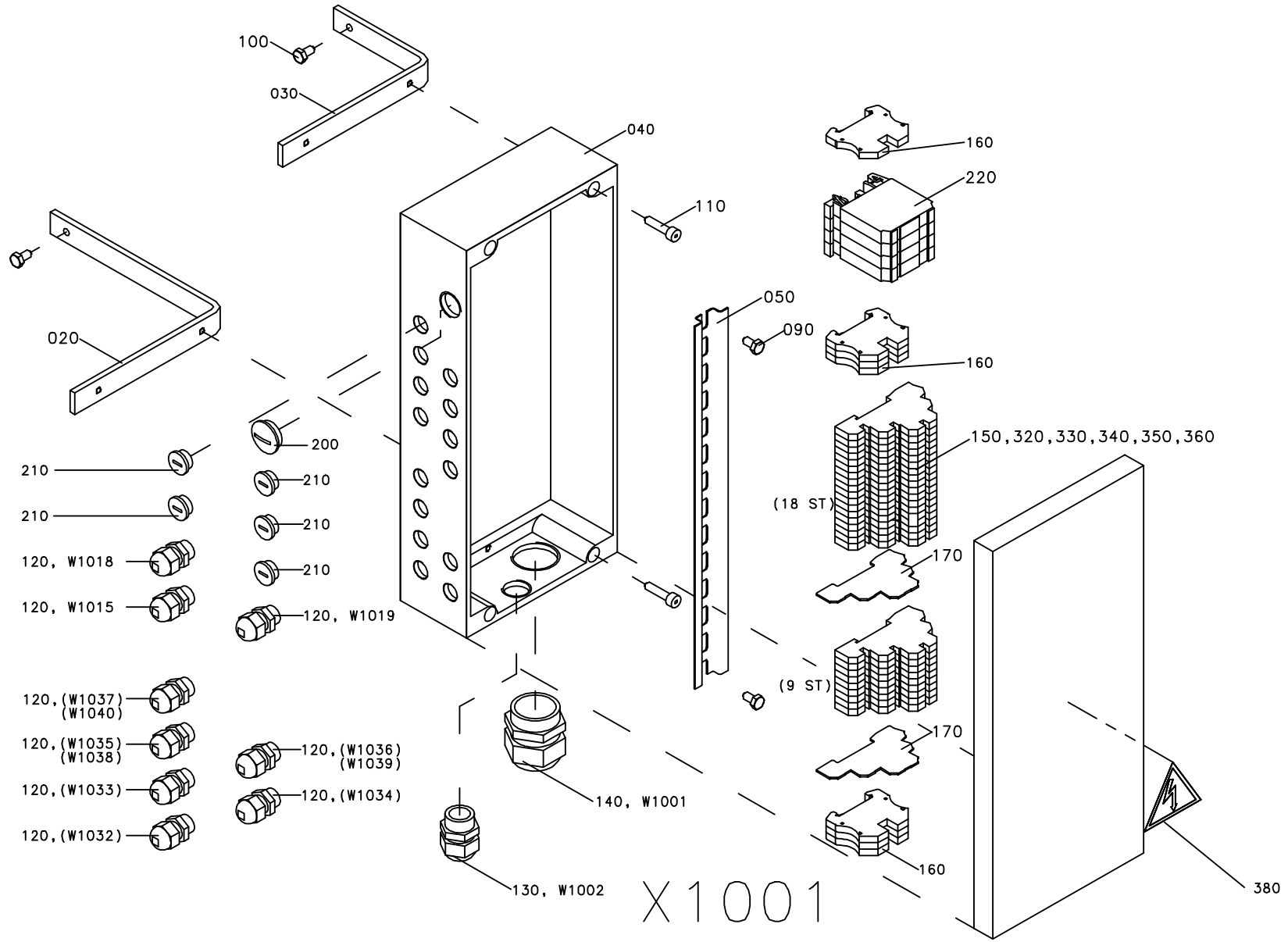
100
030
040
160
220
110
020
050
090
160
200
150,320,330,340,350,360
210
(18 ST)
210
170
120, W1018
120, W1015
210
210
210
120, W1019
120,(W1037)
(W1040)
(9 ST)
120,(W1035)
(W1038)
120,(W1036)
(W1039)
170
120,(W1033)
120,(W1034)
120,(W1032)
140, W1001
160
130, W1002
X1001
380

ECM: 71009 - 19970912
Group number: 1095823-0100
Assembly Drawing: 1095823-1_1_AC

Issue: 20011217

Pos	Part No	SP	UN	Qty	Description	Page No
Common Parts						
020	1129420-0000	-		1	HOLDER	
030	1129419-0000	-		1	HOLDER	
040	1129421-0000	-		1	CONNECTION BOX	
050	1129422-0000	-		1	RAIL	
090	312125-0325	-		2	SCREW SLOT.PAN HD. MCS 5X10 A480	
100	312105-0366	-		2	SCREW M6S M6X12 A280	
110	312115-0372	-		4	SCREW MC6S M6X25 A280	
120	352103-0101	-		9	CABLE GLAND ST 9;PR15,2/PG9	
130	352103-0111	-		1	CABLE GLAND ST 16	
140	352103-0116	-		1	CABLE GLAND ST 21	
150	353021-0302	-		27	TERMINALS,TRIPLE-LEVEL, DLD 2,5/35 PA	
160	353024-0205	-		7	EARTH TERMINAL, 1010.1	
170	353032-0302	-		2	END PLATE WAP	
200	90002-0004	-		1	BLANK-OFF PLUG 22,5	
210	90002-0013	-		5	BLANK-OFF PLUG 15,2	
220	90119-0063	-		4	OPTO-RELAY DC/DC AMMS-10-1	
320	353034-0404	-		6	BRIDGE CONNECTOR Q10, 13131.0	
330	353034-0401	-		4	BRIDGE CONNECTOR Q2, 13125.0	
340	359011-0823	-		2	SET OF SIGNS 6-FW 101-150	
350	359011-0832	-		2	SET OF SIGNS 6-GW (+)	
360	359011-0833	-		2	SET OF SIGNS 6-GW (-)	
370	359011-0834	-		1	SET OF SIGNS 6-GW(EARTH)	
380	90194-0016	-		1	SIGN, FLASH, ELECTRIC EQUIPMENT SYMBOL	
W1001	351150-0425	-	MM	5500	CABLE OLFLEX 25X0,75 MM2 LIGHT/GREY	
W1002	351150-0407	-	MM	5500	CABLE OLFLEX 12X0,75 MM2 LIGHT/GREY	
W1015	351150-0403	-	MM	4300	CABLE OLFLEX 3X0,75 MM2 LIGHT/GREY	
W1018	351150-0403	-	MM	3500	CABLE OLFLEX 3X0,75 MM2 LIGHT/GREY	
W1019	351150-0403	-	MM	3600	CABLE OLFLEX 3X0,75 MM2 LIGHT/GREY	

Pos	Part No	SP	UN	Qty	Description	Page No

Machine Type | Group Description | Used-In | Group Number | Page No

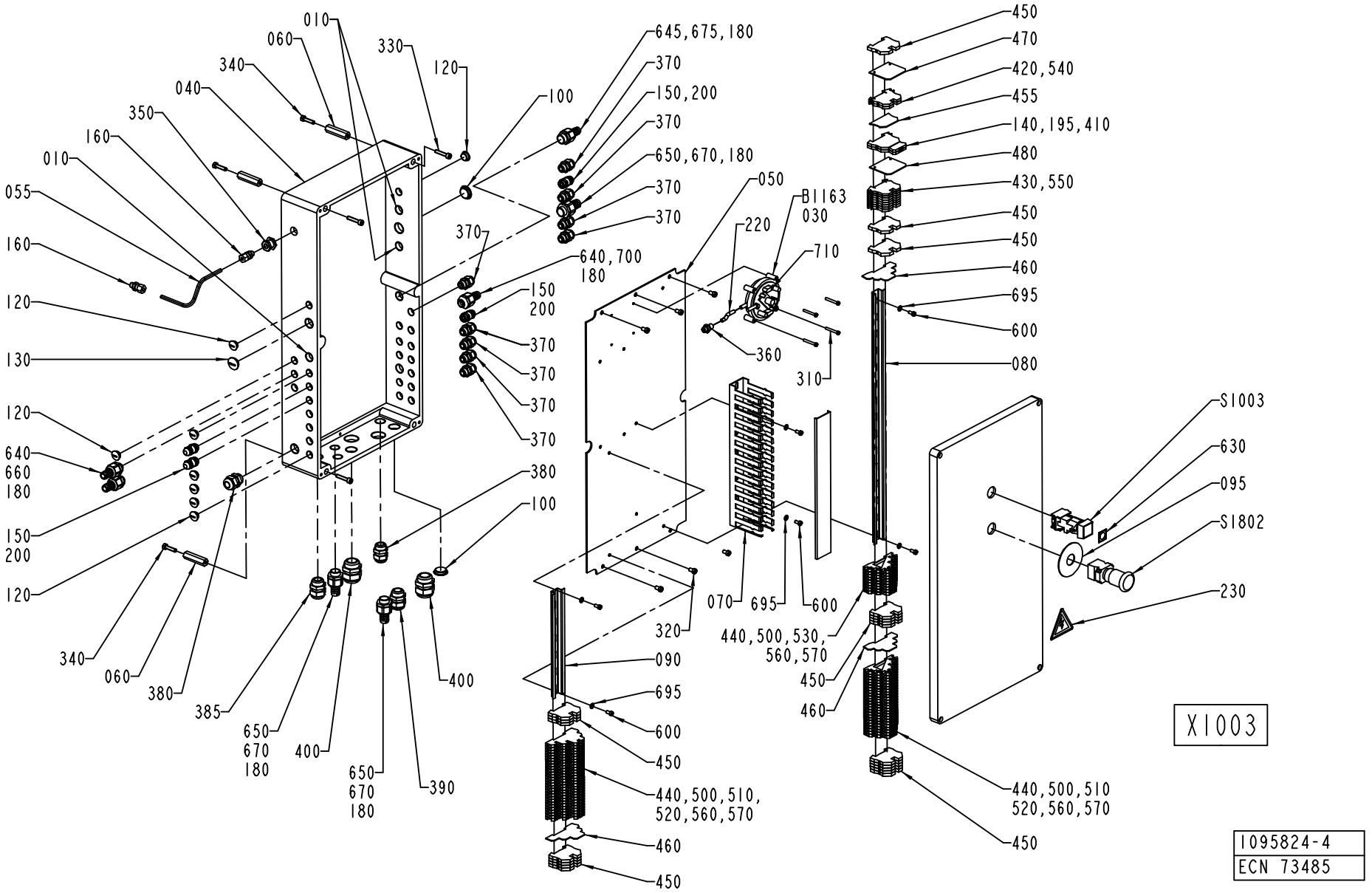

1095824-4
ECN 73485

ECM: 73485 - 20000331
Group number: 1095824-0300
Assembly Drawing: 1095824-4_1_AA

Issue: 20011217

Pos	Part No	SP	UN	Qty	Description	Page No
FLOATER						
130	90002-0016	-		1	BLANK-OFF PLUG 20.4	
600	312125-0325	-		6	SCREW SLOT.PAN HD. MCS 5X10 A480	
Common Parts						
010	A1095878-0300	-		1	CLEANING EQUIPMENT	**221**
030	351172-0102	-	MM	4500	CABLE AWM 1X 0,75 MM2 DARK-BLUE	
040	1487826-0000	-		1	CONNECTION BOX	
050	1349872-0000	-		1	MOUNTING PLATE	
055	1038358-0000	-		1	PIPE	
060	1129475-0000	-		3	HOLDER	
070	1129480-0000	-		1	CABLE DUCT	
080	1037615-0000	-		1	RAIL	
090	1129479-0000	-		1	RAIL	
095	486826-0001	-		1	SIGN "EMERGENCY STOP"	
100	90002-0004	-		2	BLANK-OFF PLUG 22,5	
120	90002-0013	-		8	BLANK-OFF PLUG 15,2	
140	90038-0049	-		1	DIODE	
150	90012-0123	-		4	GLAND FITTING	
160	90030-0184	-		2	CONN. STR. GA-6-G1/8	
180	90152-0050	-	M	10	GLANDS,HOSE 20X13	
195	90121-0127	-		1	RESISTANCE FIXED, 1,5 KOHM, 0,25 W	
200	90152-0058	-	MM	3400	GLANDS,HOSE 15X9	
210	90152-0059	-	M	3	HOSE 18X12	
220	90166-0176	-	MM	50	RUBBER HOSE	
230	90194-0016	-		1	SIGN, FLASH, ELECTRIC EQUIPMENT SYMBOL	
310	312125-0299	-		4	SCREW PAN HEAD MCS M4X30 SS	
320	312125-0364	-		6	SCREW SLOT.PAN HD. MCS 6X10 A480	
330	312115-0374	-		3	SCREW MC6S M6X30 A280	
340	312105-0372	-		3	SCREW M6S M6X25 A280	
350	342767-0100	-		1	CONN. BULKHEAD G1/8	
360	342921-0113	-		1	STRAIGHT COUPLING,EXT.THREADED 6/4-G1/8"	
370	352103-0101	-		9	CABLE GLAND ST 9;PR15,2/PG9	
380	352103-0108	-		2	CABLE GLAND ST 13	
385	352103-0110	-		1	CABLE GLAND STR 16	
390	352103-0111	-		1	CABLE GLAND ST 16	
400	352103-0116	-		2	CABLE GLAND ST 21	
410	353021-0127	-		2	TERMINAL DISCONNECTBLE, WTR 2,5+WSD 2,5	
420	353021-0212	-		2	FEED THROUGH TERMINAL, 10200.0	
430	353021-0216	-		8	FEED THROUGH TERMINAL, 10200.8	
440	353021-0302	-		59	TERMINALS,TRIPLE-LEVEL, DLD 2,5/35 PA	
450	353024-0205	-		19	EARTH TERMINAL, 1010.1	
455	353032-0004	-		1	END PLATE WAP 2,5-10 BEIGE	
460	353032-0302	-		3	END PLATE WAP	
470	353033-0105	-		1	PARTITITION, 10501.0	
480	353033-0106	-		1	PARTITITION, 10501.8	
500	353034-0404	-		14	BRIDGE CONNECTOR Q10, 13131.0	
510	353034-0401	-		8	BRIDGE CONNECTOR Q2, 13125.0	
520	359011-0823	-		2	SET OF SIGNS 6-FW 101-150	
530	359011-0824	-		2	SET OF SIGNS 6-FW 151-200	
540	359011-0807	-		2	MARKING PLATES 5-FW 1-50	
550	359011-0810	-		2	MARKING PLATES 5-FW 151-200	
560	359011-0832	-		3	SET OF SIGNS 6-GW (+)	
570	359011-0833	-		3	SET OF SIGNS 6-GW (-)	
580	359011-0834	-		1	SET OF SIGNS 6-GW(EARTH)	
630	359301-0110	-		1	SIGN "SHORT STOP"	
640	353243-0001	-		3	GLAND,HOSE,EXTENDED,WITHOUT INSERT PG9	
645	353243-0002	-		1	GLAND,HOSE,EXTENDED,WITHOUT INSERT PG11	
650	353243-0003	-		3	GLAND,HOSE,EXTENDED WITHOUT INSERT PG11	
660	353249-0009	-		2	GLAND,INSERT,SINGLE HOLE,EXTEND.6,5-9,5	
670	353249-0011	-		3	GLAND,INSERT,SINGLE HOLE,EXTEND.7-10,5	
675	353249-0036	-		1	GLAND,INSERT,MULTI HOLE,EXTENDED 2X4	
695	315105-0146	-		6	WASHER PLAIN, BRB, 5,3/10,H=1	
700	353249-0008	-		1	GLAND,INSERT,SINGLE HOLE,EXTEND.4-6,5	
710	90097-0017	-		2	FLAT PIN PLUG 6,3MM	
B1163	90274-0088	C		1	PRESSURE SWITCH	
S1003	90064-0084	C		1	PUSH BUTTON YELLOW	
S1802	90064-0124	C		1	SWITCH,EMERGENCY STOP	
W1003	351150-0425	-	MM	5300	CABLE OLFLEX 25X0,75 MM2 LIGHT/GREY	
W1004	351150-0425	-	M	5	CABLE OLFLEX 25X0,75 MM2 LIGHT/GREY	
W1006	351150-0407	-	MM	4900	CABLE OLFLEX 12X0,75 MM2 LIGHT/GREY	
W1011	351150-0405	-	M	2	CABLE OLFLEX 5X0,75 MM2 LIGHT/GREY	
W1027	351150-0403	-	MM	800	CABLE OLFLEX 3X0,75 MM2 LIGHT/GREY	
W1028	351150-0403	-	M	2	CABLE OLFLEX 3X0,75 MM2 LIGHT/GREY	
W1029	351150-0404	-	M	2	CABLE OLFLEX 4X0,75 MM2 LIGHT/GREY	
W1030	351150-0403	-	M	2	CABLE OLFLEX 3X0,75 MM2 LIGHT/GREY	
W1031	351150-0403	-	M	2	CABLE OLFLEX 3X0,75 MM2 LIGHT/GREY	
W1044	351150-0405	-	MM	1200	CABLE OLFLEX 5X0,75 MM2 LIGHT/GREY	
W1045	351150-0405	-	MM	700	CABLE OLFLEX 5X0,75 MM2 LIGHT/GREY	
W1046	351150-0405	-	M	2	CABLE OLFLEX 5X0,75 MM2 LIGHT/GREY	
W1048	351150-0405	-	MM	1100	CABLE OLFLEX 5X0,75 MM2 LIGHT/GREY	
W1052	351150-0404	-	M	2	CABLE OLFLEX 4X0,75 MM2 LIGHT/GREY	
W1058	351150-0403	-	MM	1200	CABLE OLFLEX 3X0,75 MM2 LIGHT/GREY	
W1065	351150-0403	-	MM	1500	CABLE OLFLEX 3X0,75 MM2 LIGHT/GREY	

Machine Type | Group Description | Used-In | Group Number | Page No

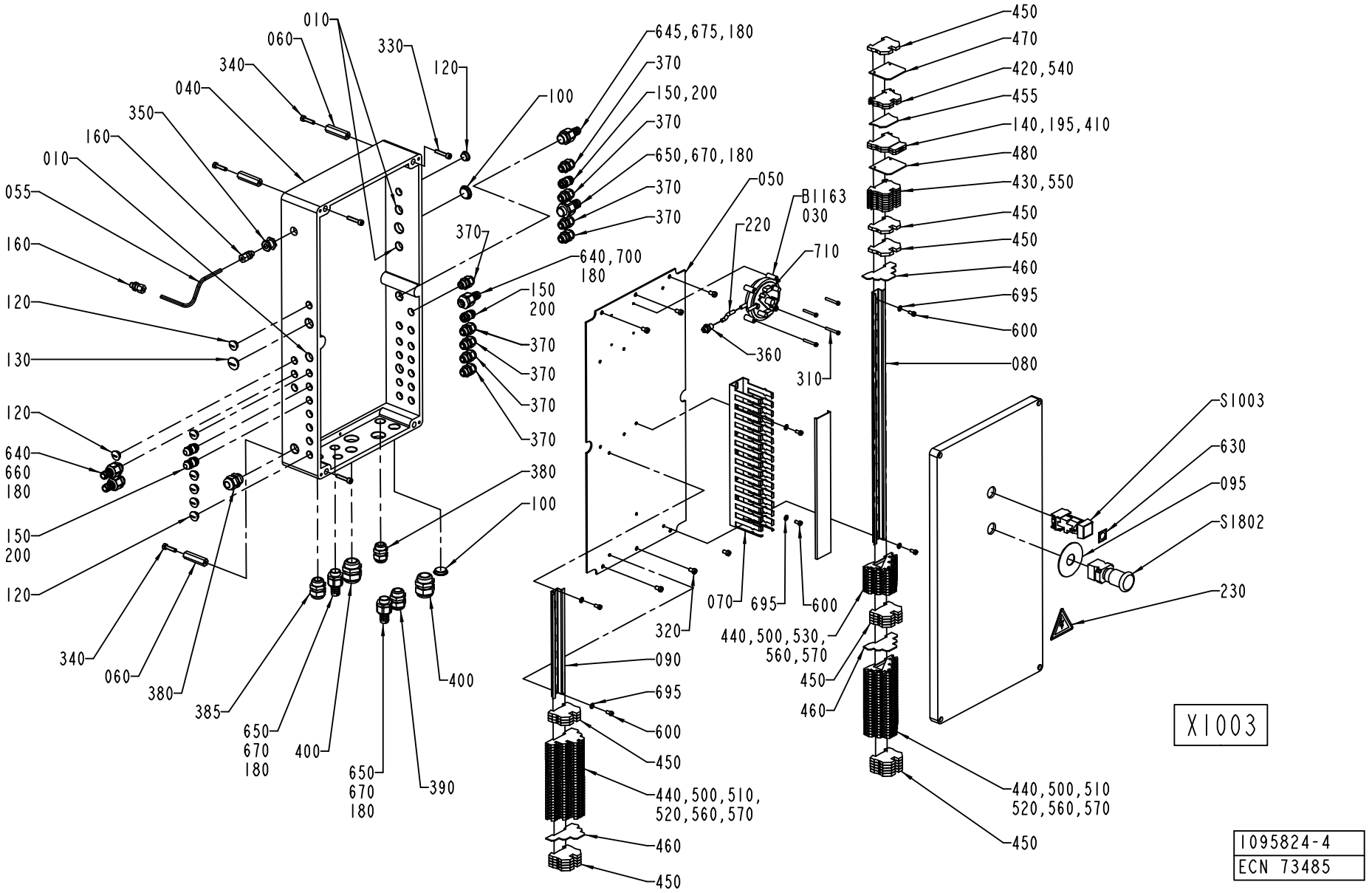
010
060
340
040
350
160
010
055
160
120
130
120
640
660
180
150
200
120
340
060
380
385
650
670
180
400
650
670
180
390
400
330
120
100
645,675,180
370
150,200
370
650,670,180
370
370
370
640,700
180
150
200
370
370
370
370
380
100
050
220
B1163
030
710
360
310
320
070
695
600
090
695
600
450
440,500,510,
520,560,570
460
450
440,500,530,
560,570
450
460
450
470
420,540
455
140,195,410
480
430,550
450
450
460
695
600
080
S1003
630
095
S1802
230
X1003
440,500,510
520,560,570
450
1095824-4
ECN 73485

Pos	Part No	SP	UN	Qty	Description	Page No
Common Parts (Cont'd)						
W2028	90220-0162	-	M	7	SCR. CABLE 10X0,25MM2	
W2030	351150-0412	-	M	4	CABLE OLFLEX 3X1,5 MM2 LIGHT/GREY	

Pos	Part No	SP	UN	Qty	Description	Page No

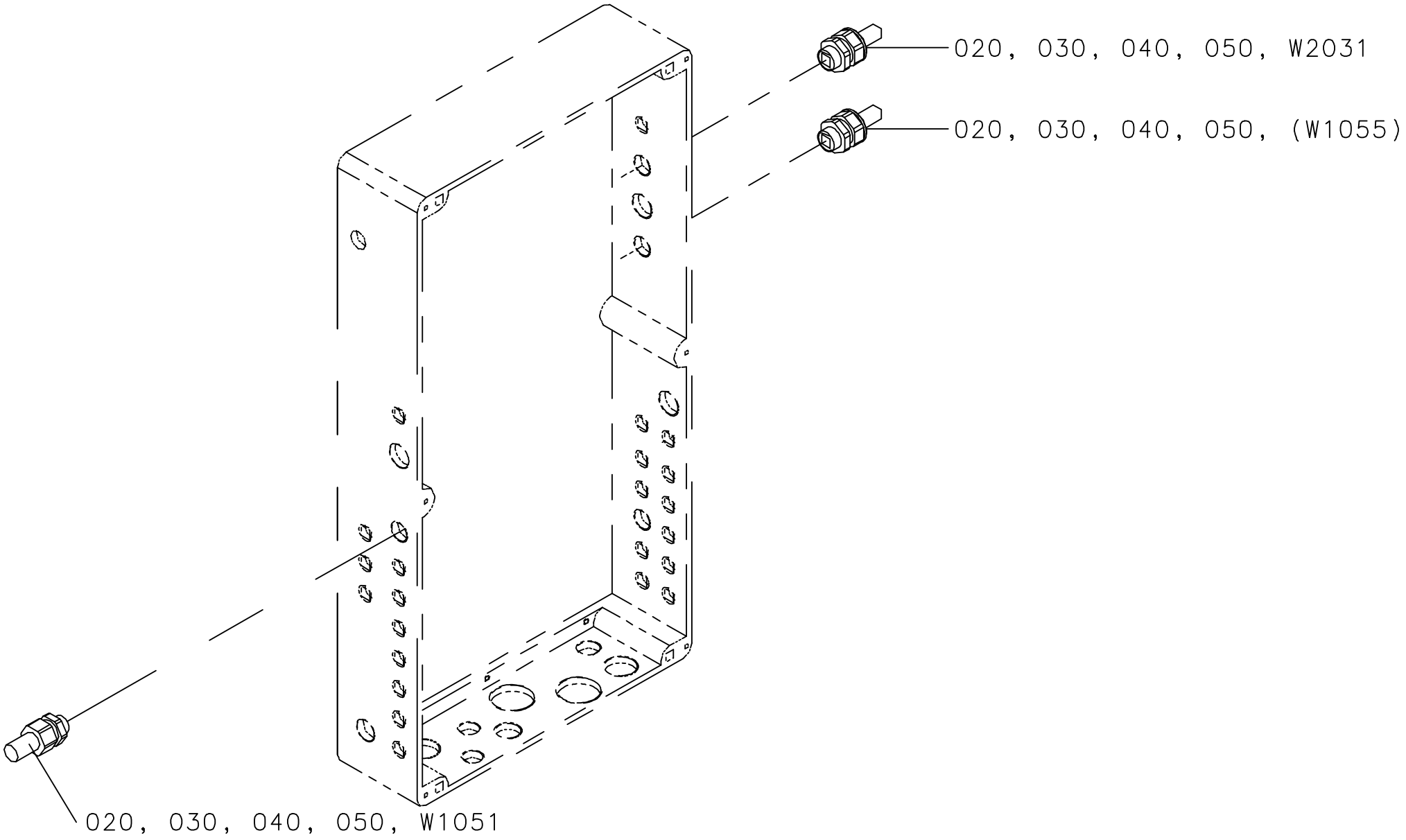
020, 030, 040, 050, W2031
020, 030, 040, 050, (W1055)
020, 030, 040, 050, W1051

Pos	Part No	SP	UN	Qty	Description	Page No
CIPSUPERV						
020	90152-0050	-	M	7	GLANDS,HOSE 20X13	
040	353243-0003	-		3	GLAND,HOSE,EXTENDED WITHOUT INSERT PG11	
050	353249-0011	-		3	GLAND,INSERT,SINGLE HOLE,EXTEND.7-10,5	
W1051	351150-0403	-	M	1	CABLE OLFLEX 3X0,75 MM2 LIGHT/GREY	
W2031	351150-0412	-	MM	1800	CABLE OLFLEX 3X1,5 MM2 LIGHT/GREY	
NOCIPSUPERV						
030	90002-0009	-		3	BLANK-OFF PLUG 18.6	

Pos	Part No	SP	UN	Qty	Description	Page No

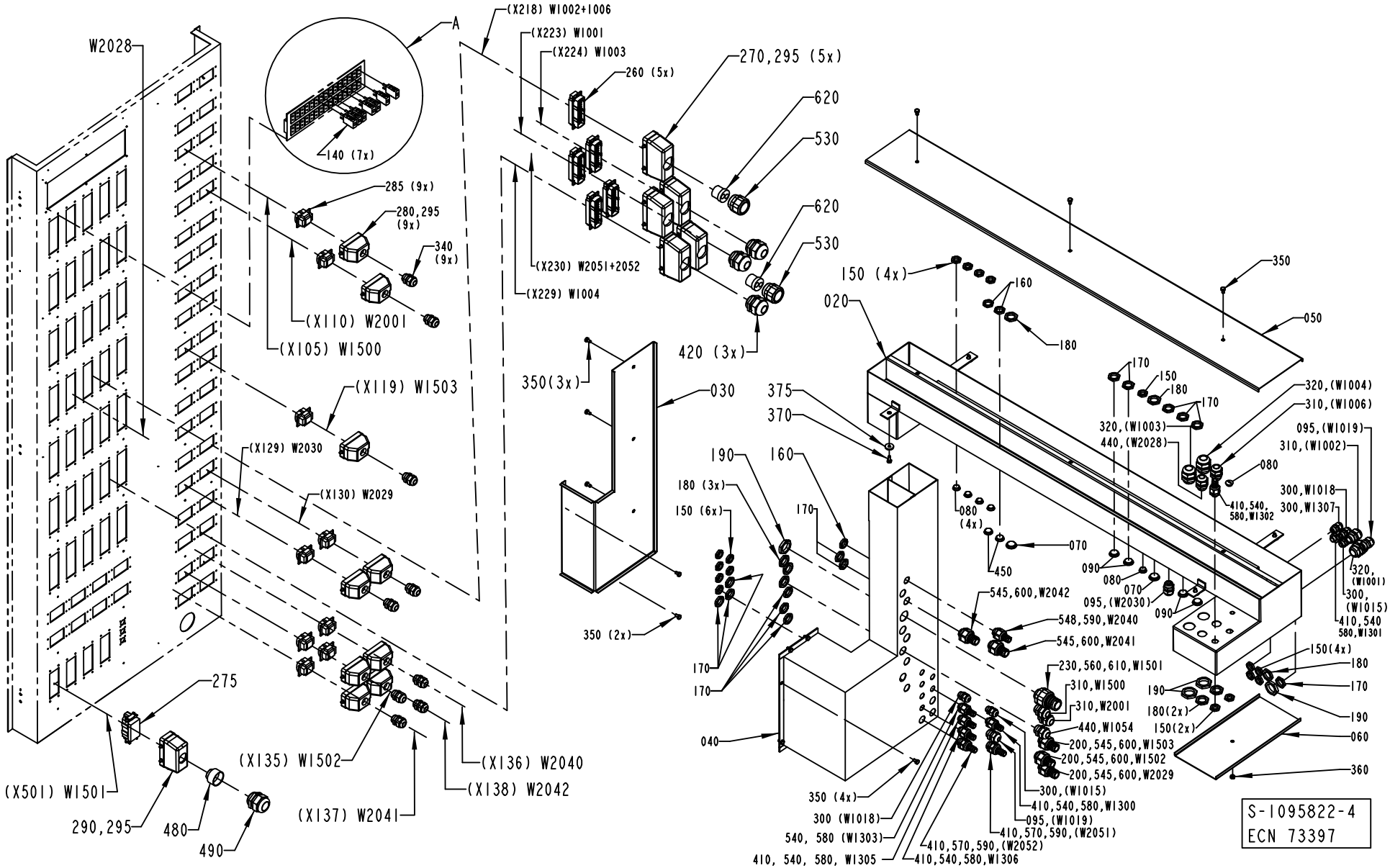
W2028
A
(X218) W1002+1006
(X223) W1001
(X224) W1003
260 (5x)
270,295 (5x)
620
530
620
530
140 (7x)
285 (9x)
280,295 (9x)
340 (9x)
(X230) W2051+2052
(X229) W1004
(X110) W2001
(X105) W1500
420 (3x)
350(3x)
030
(X119) W1503
(X129) W2030
(X130) W2029
350 (2x)
275
(X501) W1501
290,295
480
490
(X135) W1502
(X136) W2040
(X138) W2042
(X137) W2041
150 (4x)
160
180
020
350
050
170
150
180
170
320,(W1004)
310,(W1006)
320,(W1003)
440,(W2028)
095,(W1019)
310,(W1002)
080
410,540, 580,W1302
300,W1018
300,W1307
375
370
190
160
180 (3x)
150 (6x)
170
080 (4x)
070
450
090
080
070
095,(W2030)
090
320, (W1001)
300, (W1015)
410,540 580,W1301
545,600,W2042
548,590,W2040
545,600,W2041
150(4x)
180
170
190
230,560,610,W1501
310,W1500
310,W2001
440,W1054
200,545,600,W1503
200,545,600,W1502
200,545,600,W2029
190
180(2x)
150(2x)
060
360
170
170
040
350 (4x)
300 (W1018)
540, 580 (W1303)
410, 540, 580, W1305
300,(W1015)
410,540,580,W1300
095,(W1019)
410,570,590,(W2051)
410,570,590,(W2052)
410,540,580,W1306
S-1095822-4
ECN 73397

Pos	Part No	SP	UN	Qty	Description	Page No
Common Parts						
020	1255887-0000	-		1	CABLE DUCT	
030	1129368-0000	-		1	LID	
040	1129367-0000	-		1	CABLE DUCT	
050	1129372-0000	-		1	LID	
060	1129373-0000	-		1	LID	
070	90002-0004	-		2	BLANK-OFF PLUG 22,5	
080	90002-0013	-		6	BLANK-OFF PLUG 15,2	
090	90002-0016	-		4	BLANK-OFF PLUG 20.4	
095	90012-0049	-		3	CABLE GLAND STR13	
140	90326-0022	-		8	PLUG,MALE YELLOW CR-AL	
150	90099-0104	-		17	NUT PR 15,2 (PG9)	
160	90099-0117	-		3	NUT PR 18,6 (PG11)	
170	90099-0118	-		14	NUT PR 20,4 (PG13,5)	
180	90099-0110	-		8	NUT PR 22,5 (PG16)	
190	90099-0119	-		4	NUT PR 28,3 (PG21)	
200	90152-0051	-	MM	6600	GLANDS,HOSE 25X18	
230	90152-0070	-	MM	1100	GLANDS,HOSE 32,5X26	
260	90110-0150	-		5	MALE INSERT 121110 0000	
270	90110-0152	-		5	CABLE HOOD 24-POL 70.352.2428.1	
275	90110-0156	-		1	MALE INSERT 70.210.0653.0	
280	90110-0157	-		9	CABLE HOOD 6-POL 70.352.0628.1	
285	90110-0159	-		9	MALE INSERT 70.310.0640.0	
290	90110-0160	-		1	CABLE HOOD 6-16-POL 70.352.1628.1	
295	90110-0385	-		2	HOLDER	
300	352103-0101	-		5	CABLE GLAND ST 9;PR15,2/PG9	
310	352103-0111	-		4	CABLE GLAND ST 16	
320	352103-0116	-		3	CABLE GLAND ST 21	
340	352103-0108	-		9	CABLE GLAND ST 13	
350	312105-0364	-		12	SCREW M6S M6X10 A280	
360	312605-0316	-		1	HEXAGON NUT, M6M M6 A280	
370	312105-0367	-		4	SCREW M6S M6X14 A280	
375	315125-0153	-		4	WASHER PLAIN ROUND,CHAMF. 6,4/22, H=4	
410	90152-0050	-	MM	9700	GLANDS,HOSE 20X13	
420	352103-0120	-		3	CABLE GLAND STR 29	
440	352103-0110	-		2	CABLE GLAND STR 16	
450	90002-0009	-		2	BLANK-OFF PLUG 18.6	
480	90089-0015	-		1	SLEEVE PR28,3/37:PG21/29	
490	352103-0121	-		1	CABLE GLAND ST 29	
510	359005-0050	-		3	MARKING LABEL KIT X, 04.841.4550.0	
520	359005-0010	-		18	MARKING LABEL KIT 0 - 9, 04.841.2150.0	
530	353240-0006	-		2	GLANDS,NORMAL WITHOUT INSERT PG 29	
540	353243-0001	-		6	GLAND,HOSE,EXTENDED,WITHOUT INSERT PG9	
545	353243-0004	-		5	GLANDS,HOSE,EXTEND.WITHOUT INSERT PG13,5	
548	353243-0003	-		1	GLAND,HOSE,EXTENDED WITHOUT INSERT PG11	
560	353243-0007	-		1	GLAND,HOSE,EXTENDED,WITHOUT INSERT PG21	
570	353243-0009	-		2	GLANDS,HOSE,EXTEN.WHOUT.INSERT PG13,5/16	
580	353249-0008	-		6	GLAND,INSERT,SINGLE HOLE,EXTEND.4-6,5	
590	353249-0011	-		3	GLAND,INSERT,SINGLE HOLE,EXTEND.7-10,5	
600	353249-0014	-		5	GLAND,INSERT,SINGLE HOLE,EXTE.11,5-15,5	
610	353249-0061	-		1	GLAND,INSERT,SINGLE HOLE,EXTEND.17-20,5	
620	353249-0060	-		2	GLAND,INSERT,MULTI HOLE,NORMAL 2X13	
W1054	548770-0001	C		1	COAXIAL CABLE L=5000 MM	
W1300	90220-0034	-	MM	5500	THERMOCOUPLE CABLE K/ 2X0,5MM2	
W1301	90220-0034	-	MM	6500	THERMOCOUPLE CABLE K/ 2X0,5MM2	
W1302	90220-0034	-	MM	7000	THERMOCOUPLE CABLE K/ 2X0,5MM2	
W1305	90220-0034	-	MM	4500	THERMOCOUPLE CABLE K/ 2X0,5MM2	
W1306	90220-0034	-	MM	5000	THERMOCOUPLE CABLE K/ 2X0,5MM2	
W1307	90220-0034	-	MM	6500	THERMOCOUPLE CABLE K/ 2X0,5MM2	
W1500	351150-0418	-	MM	5000	CABLE OLFLEX 4X2,5 MM2 LIGHT/GREY	
W1501	351120-0168	-	MM	4000	CABLE SIHF 4X10MM2 GREEN/YELLOW	
W1502	351120-0164	-	MM	3500	CABLE SIHF 4X15MM2 GREEN/YELLOW	
W1503	351120-0164	-	MM	3500	CABLE SIHF 4X15MM2 GREEN/YELLOW	
W2001	351150-0418	-	MM	4000	CABLE OLFLEX 4X2,5 MM2 LIGHT/GREY	
W2029	90220-0104	-	MM	5200	SCR. CABLE 4X1,5MM2	

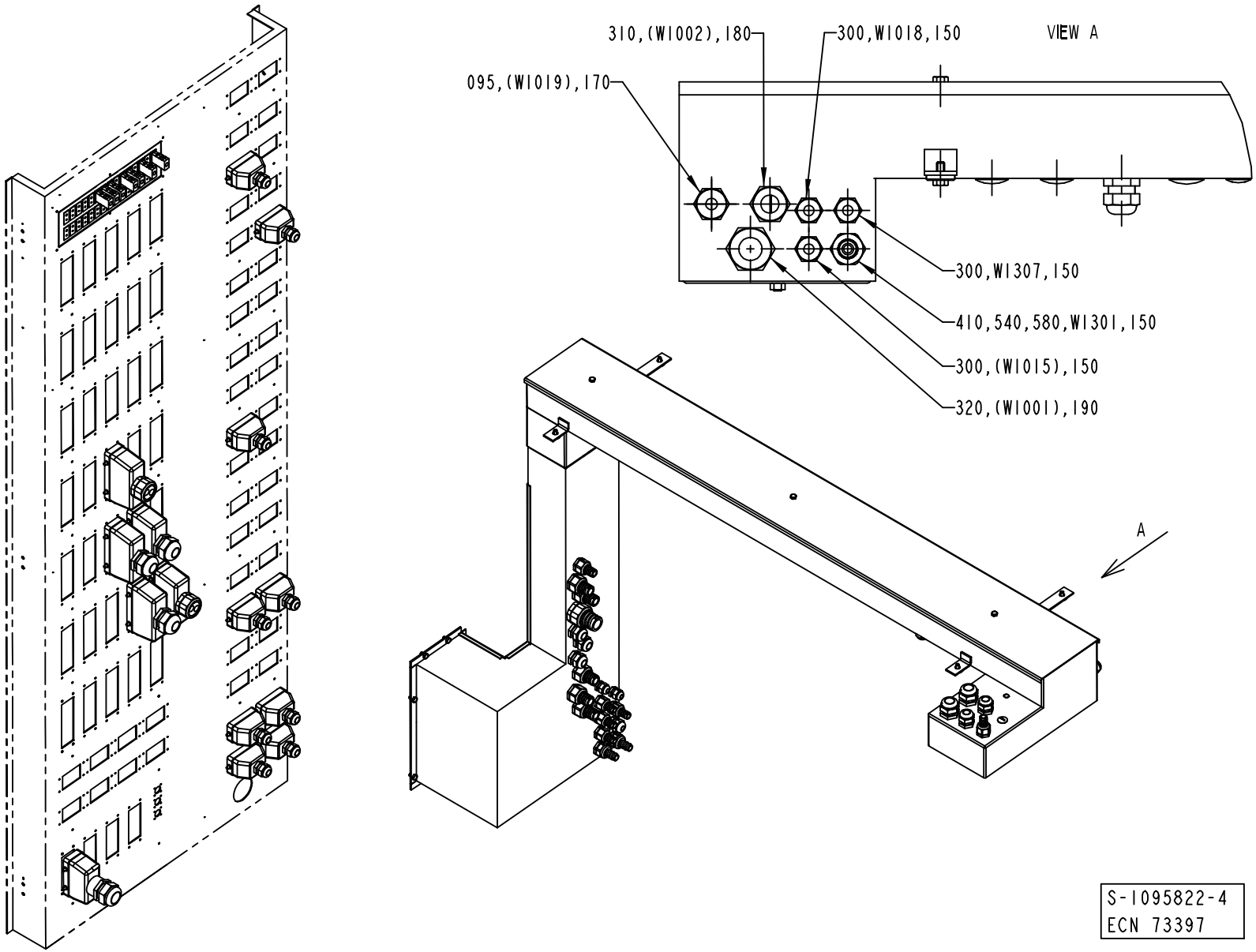
310,(W1002),180
300,W1018,150
VIEW A
095,(W1019),170
300,W1307,150
410,540,580,W1301,150
300,(W1015),150
320,(W1001),190
A
S-1095822-4
ECN 73397

Pos	Part No	SP	UN	Qty	Description	Page No
Common Parts						
020	1255887-0000	-		1	CABLE DUCT	
030	1129368-0000	-		1	LID	
040	1129367-0000	-		1	CABLE DUCT	
050	1129372-0000	-		1	LID	
060	1129373-0000	-		1	LID	
070	90002-0004	-		2	BLANK-OFF PLUG 22,5	
080	90002-0013	-		6	BLANK-OFF PLUG 15,2	
090	90002-0016	-		4	BLANK-OFF PLUG 20.4	
095	90012-0049	-		3	CABLE GLAND STR13	
140	90326-0022	-		8	PLUG,MALE YELLOW CR-AL	
150	90099-0104	-		17	NUT PR 15,2 (PG9)	
160	90099-0117	-		3	NUT PR 18,6 (PG11)	
170	90099-0118	-		14	NUT PR 20,4 (PG13,5)	
180	90099-0110	-		8	NUT PR 22,5 (PG16)	
190	90099-0119	-		4	NUT PR 28,3 (PG21)	
200	90152-0051	-	MM	6600	GLANDS,HOSE 25X18	
230	90152-0070	-	MM	1100	GLANDS,HOSE 32,5X26	
260	90110-0150	-		5	MALE INSERT 121110 0000	
270	90110-0152	-		5	CABLE HOOD 24-POL 70.352.2428.1	
275	90110-0156	-		1	MALE INSERT 70.210.0653.0	
280	90110-0157	-		9	CABLE HOOD 6-POL 70.352.0628.1	
285	90110-0159	-		9	MALE INSERT 70.310.0640.0	
290	90110-0160	-		1	CABLE HOOD 6-16-POL 70.352.1628.1	
295	90110-0385	-		2	HOLDER	
300	352103-0101	-		5	CABLE GLAND ST 9;PR15,2/PG9	
310	352103-0111	-		4	CABLE GLAND ST 16	
320	352103-0116	-		3	CABLE GLAND ST 21	
340	352103-0108	-		9	CABLE GLAND ST 13	
350	312105-0364	-		12	SCREW M6S M6X10 A280	
360	312605-0316	-		1	HEXAGON NUT, M6M M6 A280	
370	312105-0367	-		4	SCREW M6S M6X14 A280	
375	315125-0153	-		4	WASHER PLAIN ROUND,CHAMF. 6,4/22, H=4	
410	90152-0050	-	MM	9700	GLANDS,HOSE 20X13	
420	352103-0120	-		3	CABLE GLAND STR 29	
440	352103-0110	-		2	CABLE GLAND STR 16	
450	90002-0009	-		2	BLANK-OFF PLUG 18.6	
480	90089-0015	-		1	SLEEVE PR28,3/37:PG21/29	
490	352103-0121	-		1	CABLE GLAND ST 29	
510	359005-0050	-		3	MARKING LABEL KIT X, 04.841.4550.0	
520	359005-0010	-		18	MARKING LABEL KIT 0 - 9, 04.841.2150.0	
530	353240-0006	-		2	GLANDS,NORMAL WITHOUT INSERT PG 29	
540	353243-0001	-		6	GLAND,HOSE,EXTENDED,WITHOUT INSERT PG9	
545	353243-0004	-		5	GLANDS,HOSE,EXTEND.WITHOUT INSERT PG13,5	
548	353243-0003	-		1	GLAND,HOSE,EXTENDED WITHOUT INSERT PG11	
560	353243-0007	-		1	GLAND,HOSE,EXTENDED,WITHOUT INSERT PG21	
570	353243-0009	-		2	GLANDS,HOSE,EXTEN.WHOUT.INSERT PG13,5/16	
580	353249-0008	-		6	GLAND,INSERT,SINGLE HOLE,EXTEND.4-6,5	
590	353249-0011	-		3	GLAND,INSERT,SINGLE HOLE,EXTEND.7-10,5	
600	353249-0014	-		5	GLAND,INSERT,SINGLE HOLE,EXTE.11,5-15,5	
610	353249-0061	-		1	GLAND,INSERT,SINGLE HOLE,EXTEND.17-20,5	
620	353249-0060	-		2	GLAND,INSERT,MULTI HOLE,NORMAL 2X13	
W1054	548770-0001	C		1	COAXIAL CABLE L=5000 MM	
W1300	90220-0034	-	MM	5500	THERMOCOUPLE CABLE K/ 2X0,5MM2	
W1301	90220-0034	-	MM	6500	THERMOCOUPLE CABLE K/ 2X0,5MM2	
W1302	90220-0034	-	MM	7000	THERMOCOUPLE CABLE K/ 2X0,5MM2	
W1305	90220-0034	-	MM	4500	THERMOCOUPLE CABLE K/ 2X0,5MM2	
W1306	90220-0034	-	MM	5000	THERMOCOUPLE CABLE K/ 2X0,5MM2	
W1307	90220-0034	-	MM	6500	THERMOCOUPLE CABLE K/ 2X0,5MM2	
W1500	351150-0418	-	MM	5000	CABLE OLFLEX 4X2,5 MM2 LIGHT/GREY	
W1501	351120-0168	-	MM	4000	CABLE SIHF 4X10MM2 GREEN/YELLOW	
W1502	351120-0164	-	MM	3500	CABLE SIHF 4X15MM2 GREEN/YELLOW	
W1503	351120-0164	-	MM	3500	CABLE SIHF 4X15MM2 GREEN/YELLOW	
W2001	351150-0418	-	MM	4000	CABLE OLFLEX 4X2,5 MM2 LIGHT/GREY	
W2029	90220-0104	-	MM	5200	SCR. CABLE 4X1,5MM2	

Machine Type | Group Description | Used-In | Group Number | Page No

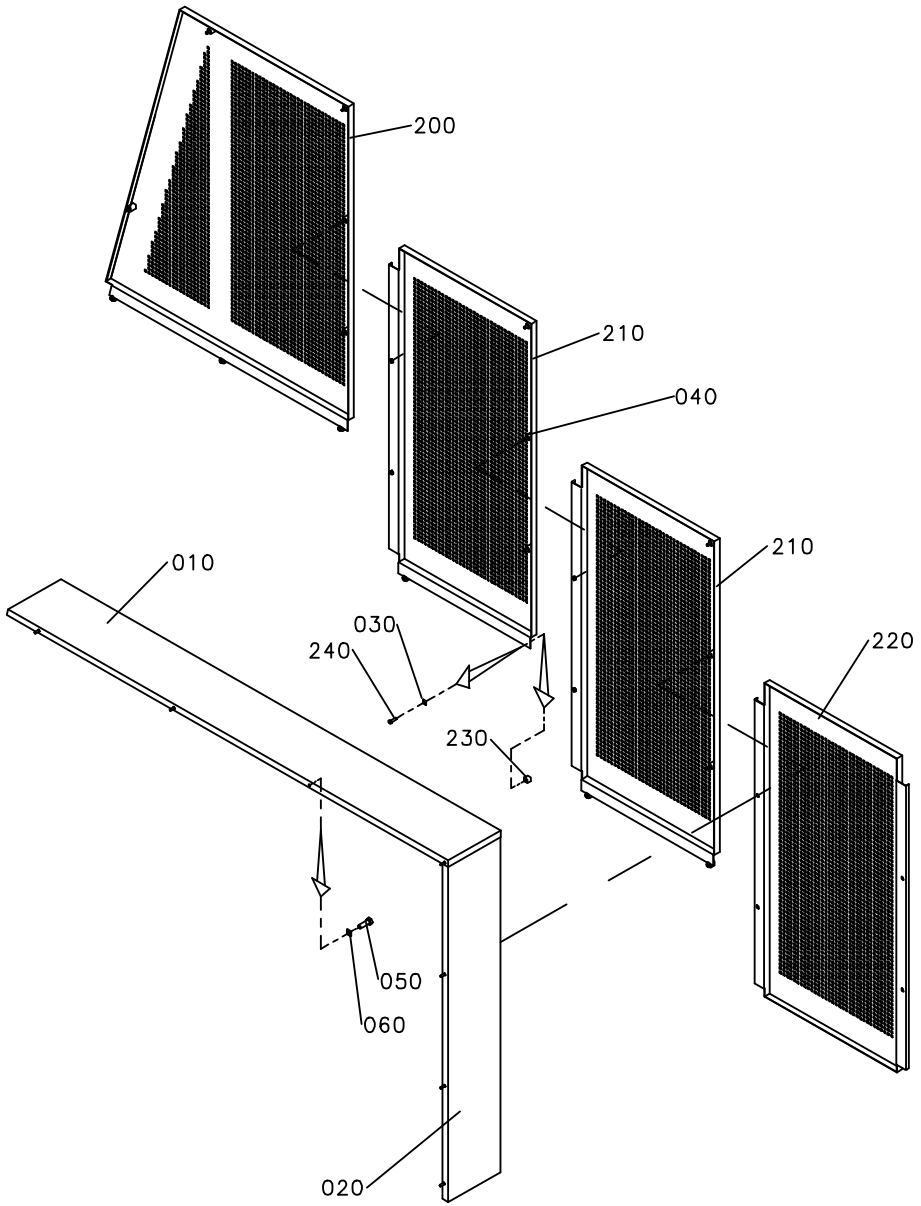
200
210
040
210
010
030
240
220
230
050
060
020

ECM: 71035 - 19971031
Group number: 1095918-0200
Assembly Drawing: 1095918-2_1_AA

Issue: 20011217

Pos	Part No	SP	UN	Qty	Description	Page No
Common Parts						
010	1037535-0000	-		1	COVERING PLATE	
020	1037548-0000	-		1	COVERING PLATE	
030	1260303-0000	-		7	WASHER	
040	90226-0458	-		12	MOUNTING SCREW	
050	312105-0366	-		7	SCREW M6S M6X12 A280	
060	315105-0153	-		7	WASHER PLAIN, BRB, 6,4/12,H=1,5	
200	1037502-0000	-		1	COVERING PLATE	
210	1037508-0000	-		2	COVERING PLATE	
220	1037528-0000	-		1	COVERING PLATE	
230	1037552-0000	-		7	SPACER	
240	312105-0372	-		7	SCREW M6S M6X25 A280	

Pos	Part No	SP	UN	Qty	Description	Page No

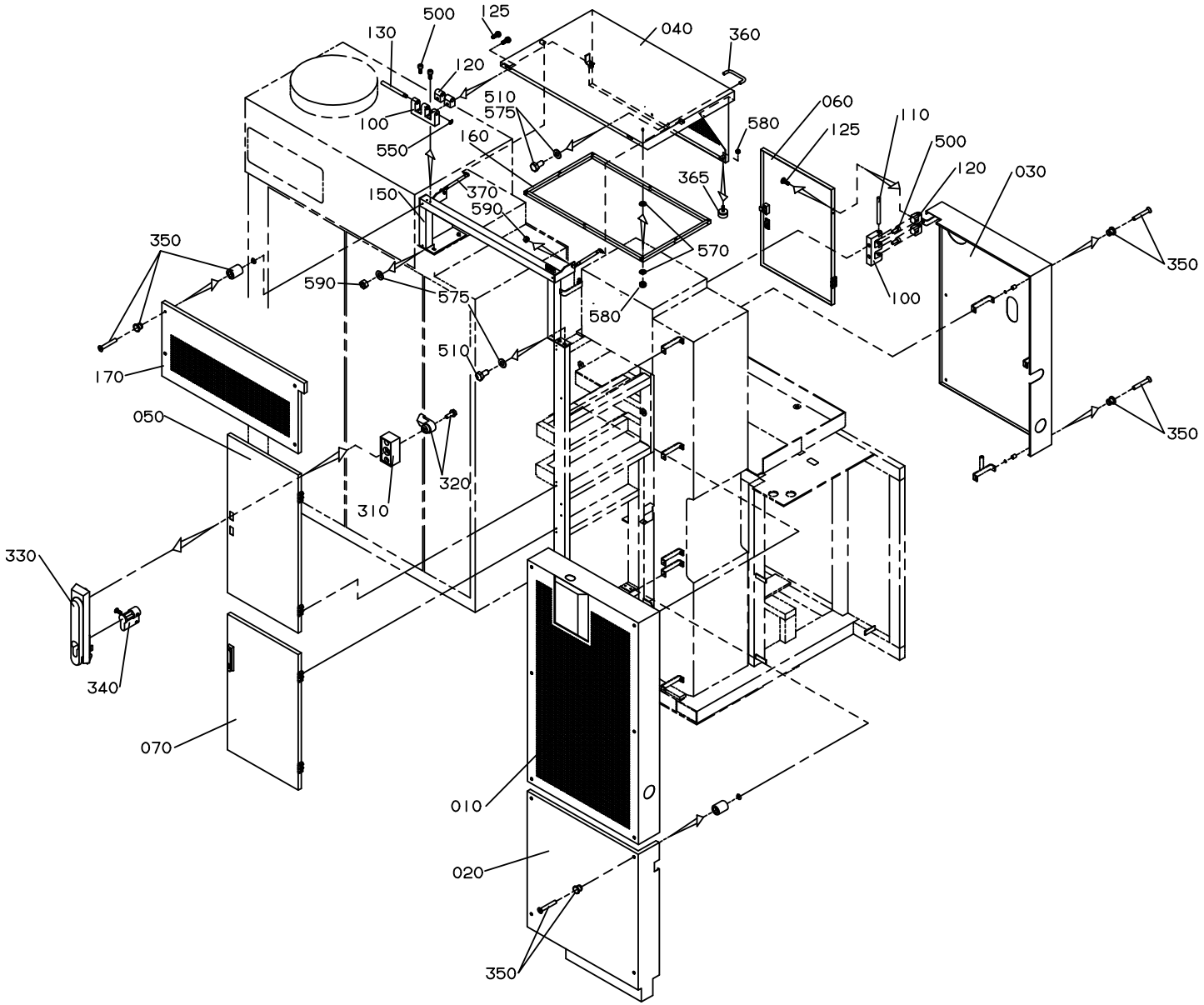
500
125
130
040
360
120
510
575
100
580
060
110
160
125
550
500
120
030
365
370
150
590
570
350
590
575
580
100
350
510
170
050
320
310
330
340
070
010
020
350

ECM: 72703 - 19990723
Group number: 1095740-0200
Assembly Drawing: 1095740-1_1_AA

Issue: 20011217

Pos	Part No	SP	UN	Qty	Description	Page No
Common Parts						
010	1490964-0000	-		1	COVER	
020	1038842-0000	-		1	COVERING PLATE	
030	1129037-0000	-		1	COVERING PLATE	
040	1129195-0000	-		1	OPENING	
050	1129198-0000	-		1	DOOR	
060	1129199-0000	-		1	DOOR	
070	1037497-0000	-		1	DOOR	
100	1035792-0000	-		8	E-HINGE	
110	988685-0000	-		6	PIN	
120	1129770-0000	-		16	BLOCKING PIECE	
125	1129767-0000	-		16	SCREW	
130	1036329-0000	-		2	PIN	
150	1129194-0000	-		1	FRAME	
160	1129196-0000	-		1	FRAME	
170	1129197-0000	-		1	OPENING	
310	90237-0154	-		3	LOCK HOUSING, 1121-U60-0C	
320	90237-0165	-		3	LATCH	
330	90237-0175	-		3	TURNING HANDLE	
340	90237-0128	-		3	LOCK CYLINDER, 1109-U3	
350	90226-0458	C		24	MOUNTING SCREW	
360	90017-0016	-		1	HANDLE, NO. 14.4012.02.120	
365	90347-0034	-		2	VIBRATION DAMPER	
370	90347-0127	-		2	DAMPER	
500	312115-0327	-		16	SCREW MC6S M5X12 A280	
510	312105-0449	-		4	SCREW M6S M8X16 A280	
550	315755-0106	-		2	LOCKING WASHER 4	
570	315105-0153	-		16	WASHER PLAIN, BRB, 6,4/12,H=1,5	
575	315105-0165	-		6	WASHER PLAIN, BRB, 8,4/16,H=1,5	
580	312812-0316	-		10	HEXAGON NUT, NY-LOCK M6 A480	
590	312605-0318	-		3	HEXAGON NUT, M6M M8 A280	

Pos	Part No	SP	UN	Qty	Description	Page No

Machine Type | Group Description | Used-In | Group Number | Page No

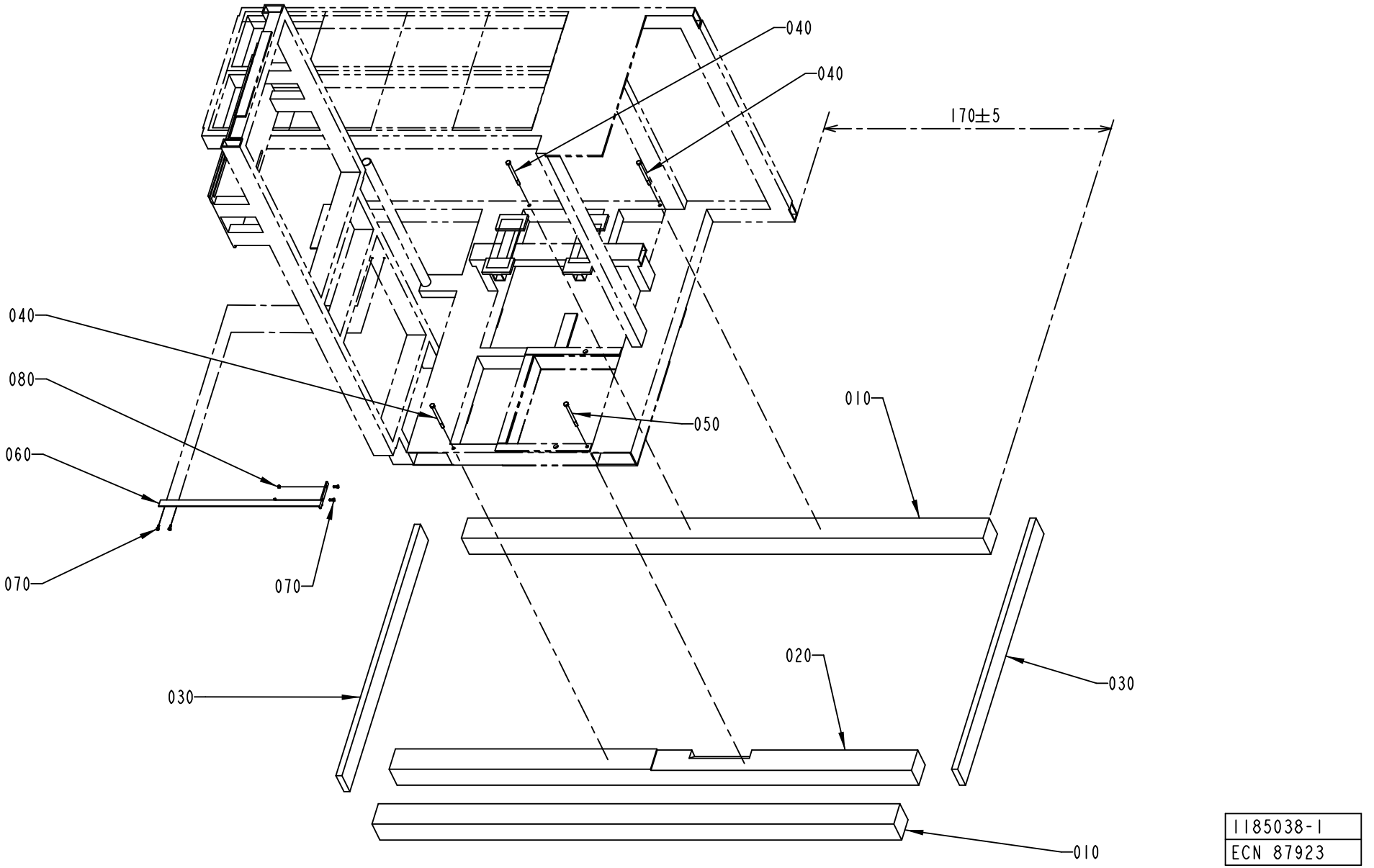
040
040
170±5
040
080
060
070
070
050
010
030
020
030
010
1185038-1
ECN 87923

ECM: 89975 - 20010406
Group number: 1185038-0100
Assembly Drawing: 1185038-1_1_AC

Issue: 20011217

Pos	Part No	SP	UN	Qty	Description	Page No
Common Parts						
010	1140685-0000	-		2	BEAM	
020	1140684-0000	-		1	BEAM	
030	1140741-0000	-		2	BEAM	
040	312230-0148	-		3	SCREW HEX.HEAD WOOD T6S 10X120 SS	
050	312230-0150	-		1	SCREW HEX.HEAD WOOD T6S 10X160 SS	
060	598092-0000	-		1	BRACKET	
070	312105-0368	-		4	SCREW M6S M6X16 A280	
080	312605-0316	-		2	HEXAGON NUT, M6M M6 A280	

Pos	Part No	SP	UN	Qty	Description	Page No

Tetra Pak

SPC
Spare Parts Catalogue

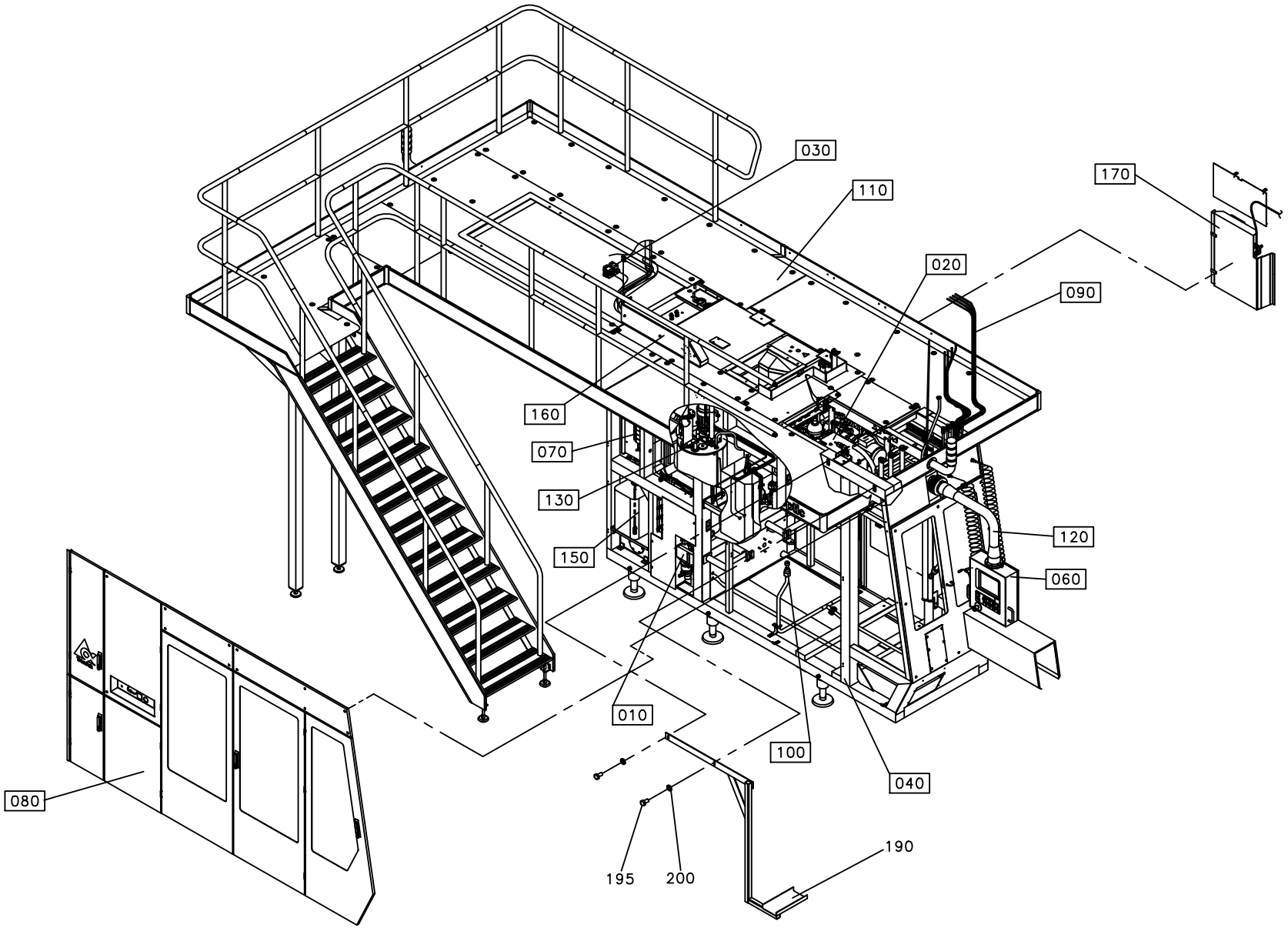
030
110
170
020
090
160
070
130
150
120
060
080
010
100
040
190
195
200

Pos	Part No	SP	UN	Qty	Description	Page No
HI						
170	A1035488-0100	-		1	CONTROL PANEL	**237, 239**
Common Parts						
010	A1255273-0200	-		1	LUBRICATING SYSTEM	**245**
020	A1255133-0300	-		1	HYDRAULIC SYSTEM	**251**
030	A1095856-0400	-		1	ELECTRICAL SUPPLY	**267**
040	A1095843-0300	-		1	MACHINE BODY	**295, 297, 299**
060	A1349772-0100	-		1	TPOP PANEL 12"	**309**
070	A1095691-0300	-		1	PNEUMATIC SYSTEM	**317**
080	A1095729-0400	-		1	DOORS AND COVERS	**337**
090	A1095846-0400	-		1	PIPE WORK	**371**
100	A1095837-0300	-		1	EXT. CLEANING PIPEWORK	**381**
110	A1524871-0100	-		1	PLATFORM	**387**
120	A1095863-0100	-		1	PIVOT ARM	**399**
130	A1095831-0300	-		1	HYDROGEN PEROXIDE	**401**
150	A1095794-0200	-		1	CHEMICALS UNIT	**417**
160	A1095876-0100	-		1	CABLE DUCT	**419**
190	598093-0000	-		1	BRACKET	
195	312109-0501	-		2	SCREW M6S M10X50 A280	
200	90062-0032	-		2	WASHER LOCK 10,2X 16,1, T= 2,5 DIN 798	

Pos	Part No	SP	UN	Qty	Description	Page No

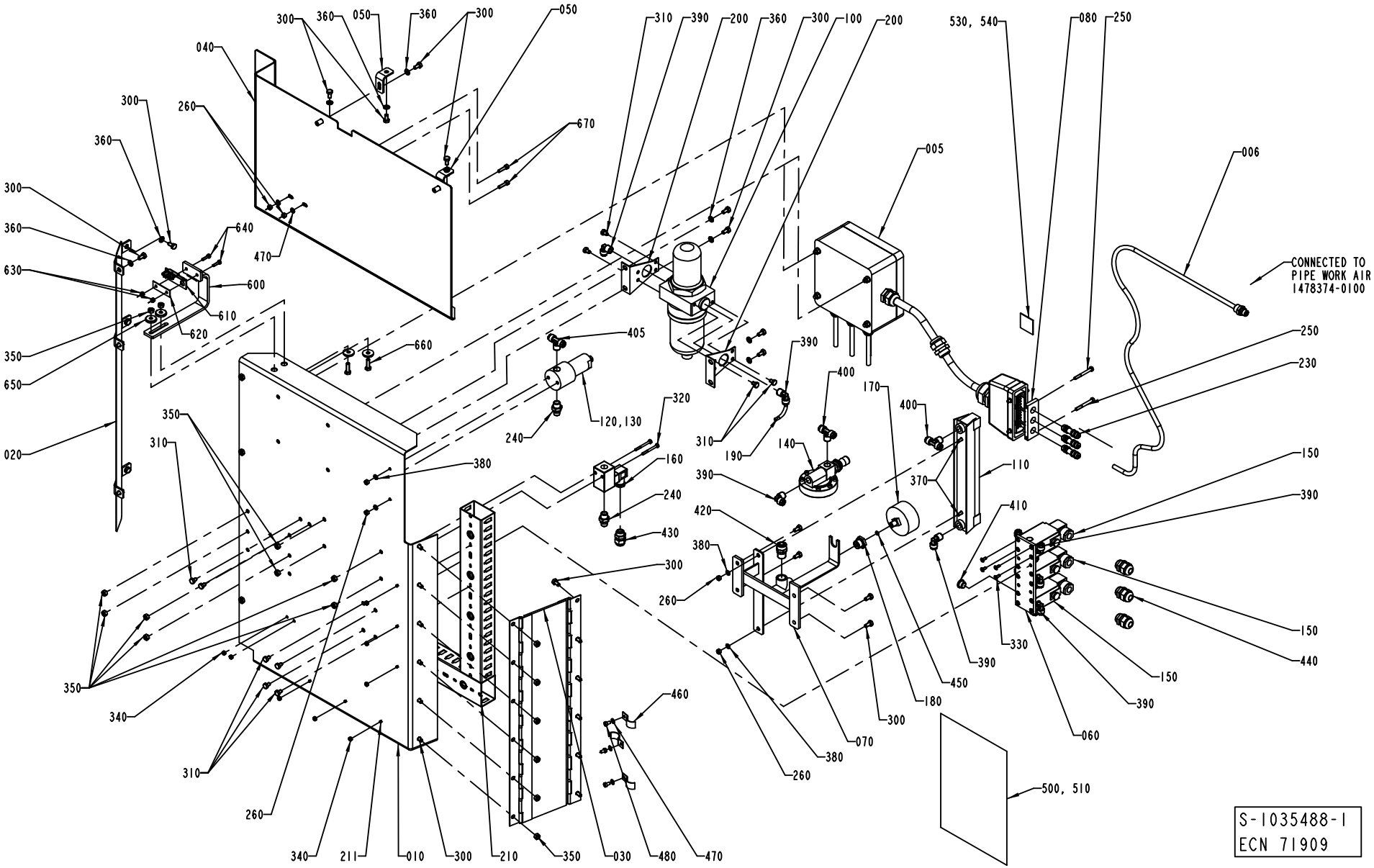
CONNECTED TO PIPE WORK AIR 1478374-0100
S-1035488-1
ECN 71909

ECM: 93876 - 20010709
Group number: 1035488-0100
Assembly Drawing: 1035488-1_1_AD

Issue: 20011217

Pos	Part No	SP	UN	Qty	Description	Page No
TBA 0200B HI OR TBA 0250B HI OR TBA 0200S HI OR TPA 0330SQ HI						
140	90113-0054	A		1	REGULATOR	
TBA 0500S OR TBA 1000S HI OR TBA 1000B HI OR TPA 1000S HI						
140	90113-0058	A		1	REDUCTION VALVE	
Common Parts						
005	A1035298-0100	-		1	CONNECTION BOX	**241**
006	A1035305-0100	-		1	N2 PANEL SUPPLY	**243**
010	1037711-0000	-		1	SUPPORT	
020	1511331-0000	-		1	TOUCH GUARD	
030	1037395-0000	-		1	HINGE	
040	1348787-0000	-		1	PROTECTION PLATE	
050	1129947-0000	-		2	HOLDER	
060	1129970-0000	-		1	FASTENING PLATE	
070	1129948-0000	-		1	HOLDER	
080	1254481-0000	-		1	HOLDER	
100	B90277-0040	A		1	FILTER	
	90277-0326	*C*		*1*	*FILTER INSERT*	
110	B90243-0152	A		1	FLOW METER	
	90243-0153	*C*		*1*	*MEASURING CYLINDER*	
	90243-0154	*C*		*1*	*FLOAT*	
120	90277-0323	A		1	FILTER HOUSING / 95S6-1/4 NPT / 122B-40K	
130	90277-0324	A		1	FILTER CARTRIDGE / 050-11-A	
150	B90042-0171	A		3	SOLENOID VALVE BUERKERT	
	90042-0466	*C*		*1*	*DIAPHRAGM 330.95.2 VITON*	
160	90274-0110	A		1	PRESSURE SWITCH	
170	90043-0006	A		1	PRESSURE GAUGE, 2041 D=63 MM	
180	926011-0000	-		1	REDUCTION	
190	90166-0013	-	M	6	TUBE 8 MM PA BLUE	
200	90236-0012	-		1	BRACKET	
210	1347691-0000	-		2	CABLE DUCT	
211	90287-0169	-		6	SCREW	
230	342960-0122	-		3	BULKHEAD COUPLING 8/6	
240	342921-0122	-		2	STRAIGHT COUPLING,EXT.THREADED 8/6-G1/4"	
250	312105-0340	-		2	SCREW M6S M5X45 A280	
260	312605-0314	-		6	HEXAGON NUT, M6M M5 A280	
300	312105-0368	-		32	SCREW M6S M6X16 A280	
310	312105-0362	-		10	SCREW M6S M6X8 A280	
320	312105-0303	-		2	SCREW M6S M4X40 A280	
330	312155-0289	-		4	SCREW HEX.SOCK.COUNT.MF6S M4X10 A480	
340	312605-0312	-		8	HEXAGON NUT, M6M M4 A280	
350	312605-0316	-		16	HEXAGON NUT, M6M M6 A280	
360	315105-0153	-		16	WASHER PLAIN, BRB, 6,4/12,H=1,5	
370	312105-0327	-		2	SCREW M6S M5X12 A280	
380	315105-0146	-		6	WASHER PLAIN, BRB, 5,3/10,H=1	
390	342930-0122	-		12	ELBOW 90 COUPL.,EXT.THREAD 8/6-R1/4"	
400	342940-0122	-		3	T-COUPLING,EXT.THREAD 8/6-R1/4"	
405	342940-0114	-		1	T-COUPLING,EXT.THREAD 6/4-R1/4"	
410	342713-0210	-		1	PLUG, EXT THREAD HEX SOCKET 8638-00-140	
420	342920-0123	-		1	STRAIGHT COUPLING,EXT.THREADED 8/6-R3/8"	
430	352103-0101	-		1	CABLE GLAND ST 9;PR15,2/PG9	
440	352103-0106	-		3	CABLE GLAND ST 11	
450	315233-0101	-		1	WASHER PL.RND.NYL.5,2/8,H=1	
460	90074-0001	-		3	CLIPS, CABLE CLIPS DI=10 MM	
470	315105-0146	-		5	WASHER PLAIN, BRB, 5,3/10,H=1	
480	312125-0323	-		3	SCREW PAN HEAD MCS M5X8 SS	
500	1140265-0000	-		1	PNEUMATIC DIAGRAM	
510	1140278-0000	-		1	DIAGRAM FOR HI TBA/21	
530	1347703-0000	A		1	SIGN BOARD	
540	90153-0049	-		1	ADHESIVE	
550	359000-0400	-		24	MARKING CO2/4"0"	
551	359000-0401	-		36	MARKING COLLAR 2/4 "1" YELLOW	
552	359000-0402	-		8	MARKING COLLAR 2/4 "2" YELLOW	
553	359000-0403	-		4	MARKING COLLAR PA2/4 "3" YELLOW	
554	359000-0409	-		24	MARKING COLLAR PA2/4 "9" YELLOW	
555	359000-0750	-		14	MARKING CO2/4"A"	
556	359000-0765	-		6	MARKING CO2/4"P"	
557	359000-0767	-		4	MARKING CO2/4"R"	
600	1037714-0000	-		1	ARM	
610	975917-0000	-		1	KEY FOR SAFETY SWITCH 90044-103	
620	1036563-0000	-		1	WASHER	
630	312812-0312	-		2	HEXAGON NUT, NY-LOCK M4 A480	
640	312105-0293	-		2	SCREW M6S M4X16 A280	
650	315125-0153	-		4	WASHER PLAIN ROUND,CHAMF. 6,4/22, H=4	
660	312105-0370	-		2	SCREW M6S M6X20 A280	
670	312115-0331	-		2	SCREW MC6S M5X20 A280	

Machine Type | Group Description | Used-In | Group Number | Page No

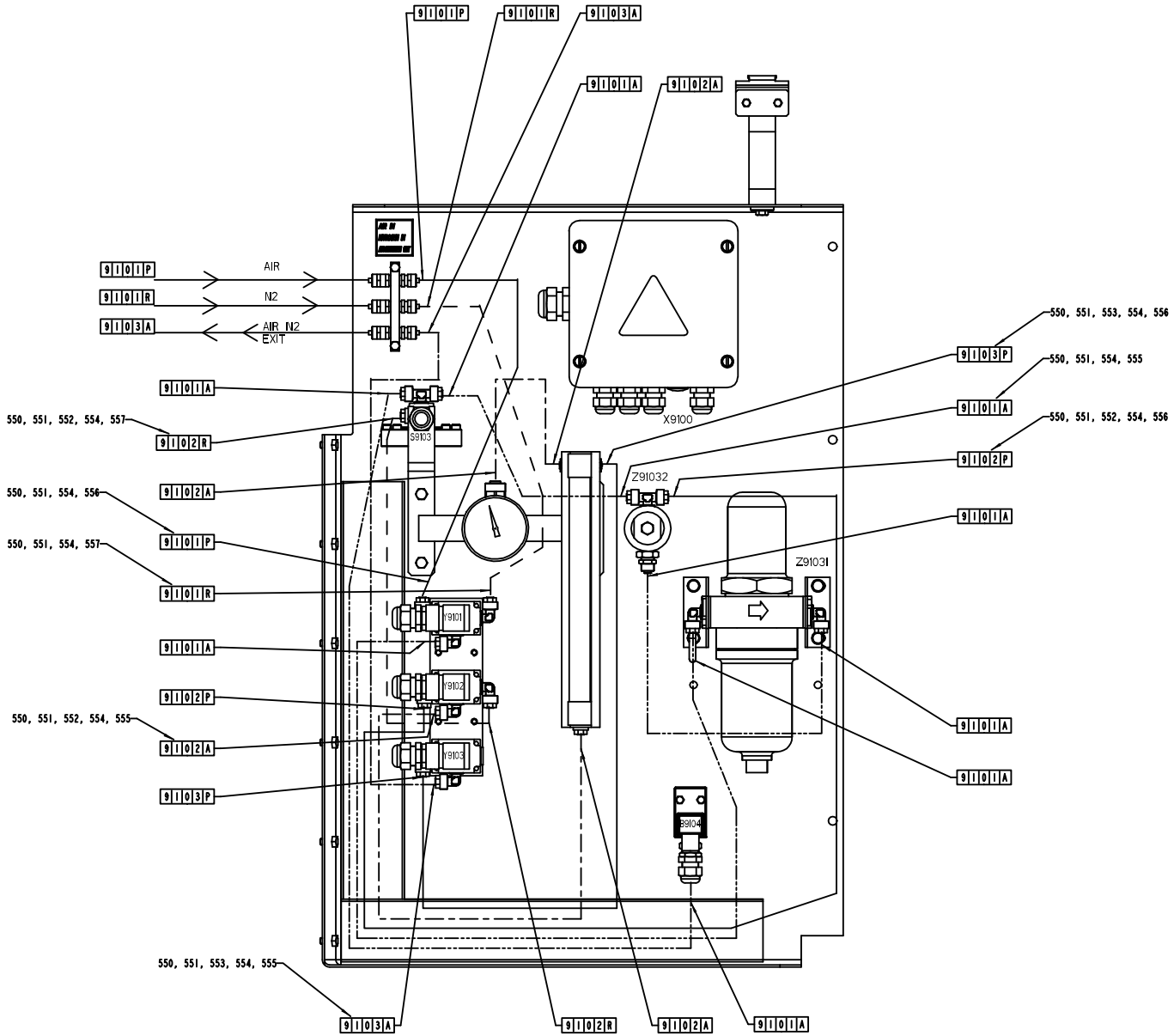
9101P
9101R
9103A
9101A
9102A
AIR
N2
AIR IN2
EXIT
X9100
S9103
Z91032
Z91031
Y9101
Y9102
Y9103
B9104
550, 551, 552, 554, 557
550, 551, 554, 556
550, 551, 554, 557
550, 551, 552, 554, 555
550, 551, 553, 554, 555
550, 551, 553, 554, 556
550, 551, 554, 555
550, 551, 552, 554, 556

ECM: 93876 - 20010709
Group number: 1035488-0100
Assembly Drawing: 1035488-1_2_AD

Issue: 20011217

Pos	Part No	SP	UN	Qty	Description	Page No
TBA 0200B HI OR TBA 0250B HI OR TBA 0200S HI OR TPA 0330SQ HI						
140	90113-0054	A		1	REGULATOR	
TBA 0500S OR TBA 1000S HI OR TBA 1000B HI OR TPA 1000S HI						
140	90113-0058	A		1	REDUCTION VALVE	
Common Parts						
005	A1035298-0100	-		1	CONNECTION BOX	**241**
006	A1035305-0100	-		1	N2 PANEL SUPPLY	**243**
010	1037711-0000	-		1	SUPPORT	
020	1511331-0000	-		1	TOUCH GUARD	
030	1037395-0000	-		1	HINGE	
040	1348787-0000	-		1	PROTECTION PLATE	
050	1129947-0000	-		2	HOLDER	
060	1129970-0000	-		1	FASTENING PLATE	
070	1129948-0000	-		1	HOLDER	
080	1254481-0000	-		1	HOLDER	
100	B90277-0040	A		1	FILTER	
	90277-0326	*C*		*1*	*FILTER INSERT*	
110	B90243-0152	A		1	FLOW METER	
	90243-0153	*C*		*1*	*MEASURING CYLINDER*	
	90243-0154	*C*		*1*	*FLOAT*	
120	90277-0323	A		1	FILTER HOUSING / 95S6-1/4 NPT / 122B-40K	
130	90277-0324	A		1	FILTER CARTRIDGE / 050-11-A	
150	B90042-0171	A		3	SOLENOID VALVE BUERKERT	
	90042-0466	*C*		*1*	*DIAPHRAGM 330.95.2 VITON*	
160	90274-0110	A		1	PRESSURE SWITCH	
170	90043-0006	A		1	PRESSURE GAUGE, 2041 D=63 MM	
180	926011-0000	-		1	REDUCTION	
190	90166-0013	-	M	6	TUBE 8 MM PA BLUE	
200	90236-0012	-		1	BRACKET	
210	1347691-0000	-		2	CABLE DUCT	
211	90287-0169	-		6	SCREW	
230	342960-0122	-		3	BULKHEAD COUPLING 8/6	
240	342921-0122	-		2	STRAIGHT COUPLING,EXT.THREADED 8/6-G1/4"	
250	312105-0340	-		2	SCREW M6S M5X45 A280	
260	312605-0314	-		6	HEXAGON NUT, M6M M5 A280	
300	312105-0368	-		32	SCREW M6S M6X16 A280	
310	312105-0362	-		10	SCREW M6S M6X8 A280	
320	312105-0303	-		2	SCREW M6S M4X40 A280	
330	312155-0289	-		4	SCREW HEX.SOCK.COUNT.MF6S M4X10 A480	
340	312605-0312	-		8	HEXAGON NUT, M6M M4 A280	
350	312605-0316	-		16	HEXAGON NUT, M6M M6 A280	
360	315105-0153	-		16	WASHER PLAIN, BRB, 6,4/12,H=1,5	
370	312105-0327	-		2	SCREW M6S M5X12 A280	
380	315105-0146	-		6	WASHER PLAIN, BRB, 5,3/10,H=1	
390	342930-0122	-		12	ELBOW 90 COUPL.,EXT.THREAD 8/6-R1/4"	
400	342940-0122	-		3	T-COUPLING,EXT.THREAD 8/6-R1/4"	
405	342940-0114	-		1	T-COUPLING,EXT.THREAD 6/4-R1/4"	
410	342713-0210	-		1	PLUG, EXT THREAD HEX SOCKET 8638-00-140	
420	342920-0123	-		1	STRAIGHT COUPLING,EXT.THREADED 8/6-R3/8"	
430	352103-0101	-		1	CABLE GLAND ST 9;PR15,2/PG9	
440	352103-0106	-		3	CABLE GLAND ST 11	
450	315233-0101	-		1	WASHER PL.RND.NYL.5,2/8,H=1	
460	90074-0001	-		3	CLIPS, CABLE CLIPS DI=10 MM	
470	315105-0146	-		5	WASHER PLAIN, BRB, 5,3/10,H=1	
480	312125-0323	-		3	SCREW PAN HEAD MCS M5X8 SS	
500	1140265-0000	-		1	PNEUMATIC DIAGRAM	
510	1140278-0000	-		1	DIAGRAM FOR HI TBA/21	
530	1347703-0000	A		1	SIGN BOARD	
540	90153-0049	-		1	ADHESIVE	
550	359000-0400	-		24	MARKING CO2/4"0"	
551	359000-0401	-		36	MARKING COLLAR 2/4 "1" YELLOW	
552	359000-0402	-		8	MARKING COLLAR 2/4 "2" YELLOW	
553	359000-0403	-		4	MARKING COLLAR PA2/4 "3" YELLOW	
554	359000-0409	-		24	MARKING COLLAR PA2/4 "9" YELLOW	
555	359000-0750	-		14	MARKING CO2/4"A"	
556	359000-0765	-		6	MARKING CO2/4"P"	
557	359000-0767	-		4	MARKING CO2/4"R"	
600	1037714-0000	-		1	ARM	
610	975917-0000	-		1	KEY FOR SAFETY SWITCH 90044-103	
620	1036563-0000	-		1	WASHER	
630	312812-0312	-		2	HEXAGON NUT, NY-LOCK M4 A480	
640	312105-0293	-		2	SCREW M6S M4X16 A280	
650	315125-0153	-		4	WASHER PLAIN ROUND,CHAMF. 6,4/22, H=4	
660	312105-0370	-		2	SCREW M6S M6X20 A280	
670	312115-0331	-		2	SCREW MC6S M5X20 A280	

Machine Type | Group Description | Used-In | Group Number | Page No

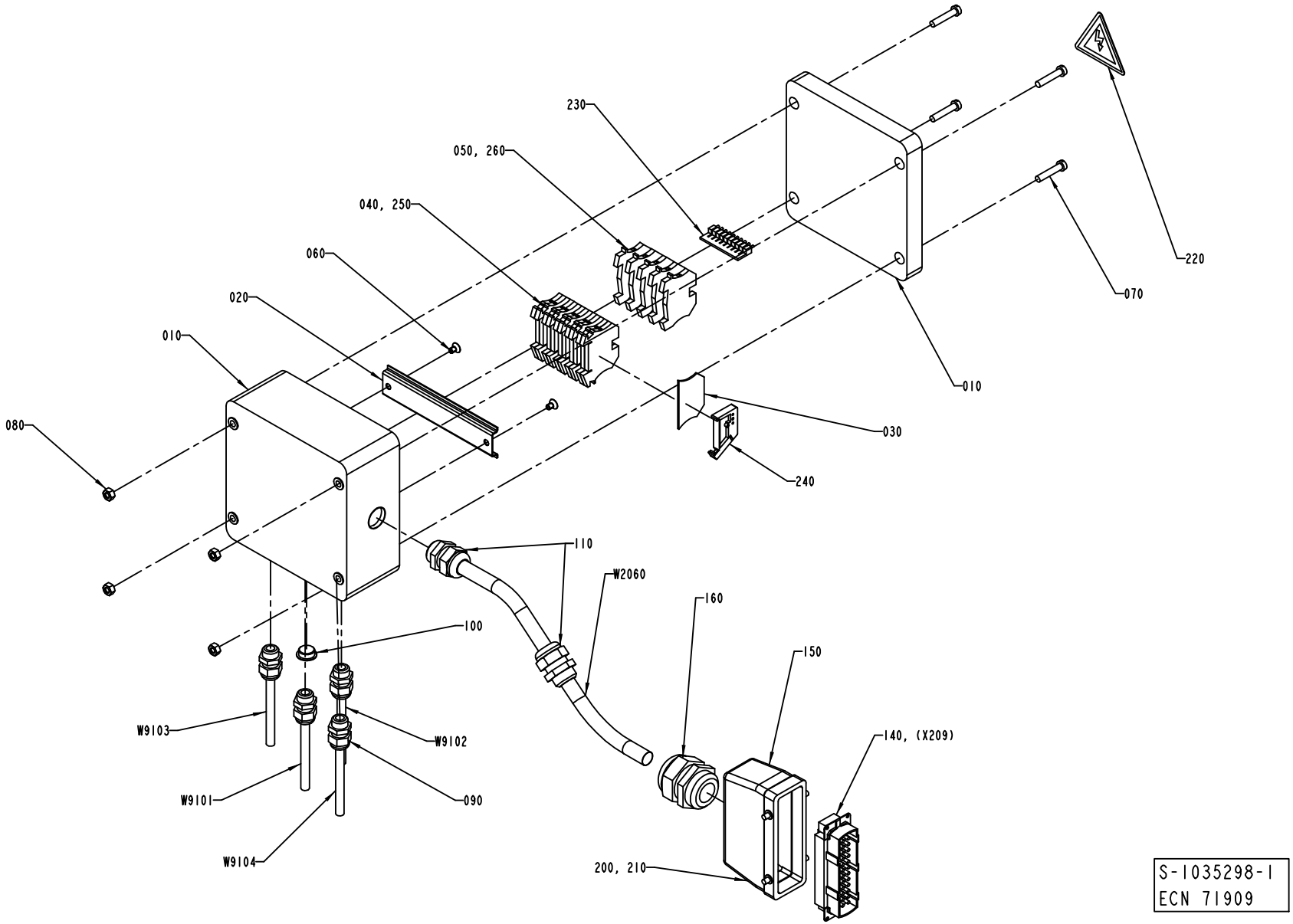

S-1035298-1
ECN 71909

Pos	Part No	SP	UN	Qty	Description	Page No
HI						
010	1129946-0000	-		1	CONNECTION BOX	
020	1140311-0000	-		1	RAIL	
030	353032-0005	-		1	END PLATE WAP 2,5-10 BLUE	
040	353021-0216	-		10	FEED THROUGH TERMINAL, 10200.8	
050	353024-0204	-		5	EARTH TERMINAL WPE 2,5	
060	312155-0323	-		2	SCREW HEX.SOCK.COUNT.MF6S M5X8 A280	
070	312125-0374	-		4	SCREW PAN HEAD MCS M6X30 SS	
080	312605-0316	-		4	HEXAGON NUT, M6M M6 A280	
090	352103-0101	-		4	CABLE GLAND ST 9;PR15,2/PG9	
100	90002-0013	-		1	BLANK-OFF PLUG 15,2	
110	352103-0111	-		2	CABLE GLAND ST 16	
140	90110-0150	-		1	MALE INSERT 121110 0000	
150	90110-0152	-		1	CABLE HOOD 24-POL 70.352.2428.1	
160	352103-0120	-		1	CABLE GLAND STR 29	
200	359005-0050	-		1	MARKING LABEL KIT X, 04.841.4550.0	
210	359005-0010	-		1	MARKING LABEL KIT 0 - 9, 04.841.2150.0	
220	90194-0016	-		1	SIGN, FLASH, ELECTRIC EQUIPMENT SYMBOL	
230	353034-0030	-		1	BRIDGE CONNECTOR WQV 2,5/10, 10544.6	
240	353031-0201	-		1	END BRACKET EW35	
250	359011-0809	-		2	MARKING PLATES 5-FW 101-150	
260	359011-0819	-		1	MARKING PLATES 5-GW (EARTH)	
W 2060	351150-0406	-	M	8	CABLE OLFLEX 7X0,75 MM2 LIGHT/GREY	
W 9101	351150-0403	-	M	1	CABLE OLFLEX 3X0,75 MM2 LIGHT/GREY	
W 9102	351150-0403	-	M	1	CABLE OLFLEX 3X0,75 MM2 LIGHT/GREY	
W 9103	351150-0403	-	M	1	CABLE OLFLEX 3X0,75 MM2 LIGHT/GREY	
W 9104	351150-0403	-	M	1	CABLE OLFLEX 3X0,75 MM2 LIGHT/GREY	

Pos	Part No	SP	UN	Qty	Description	Page No

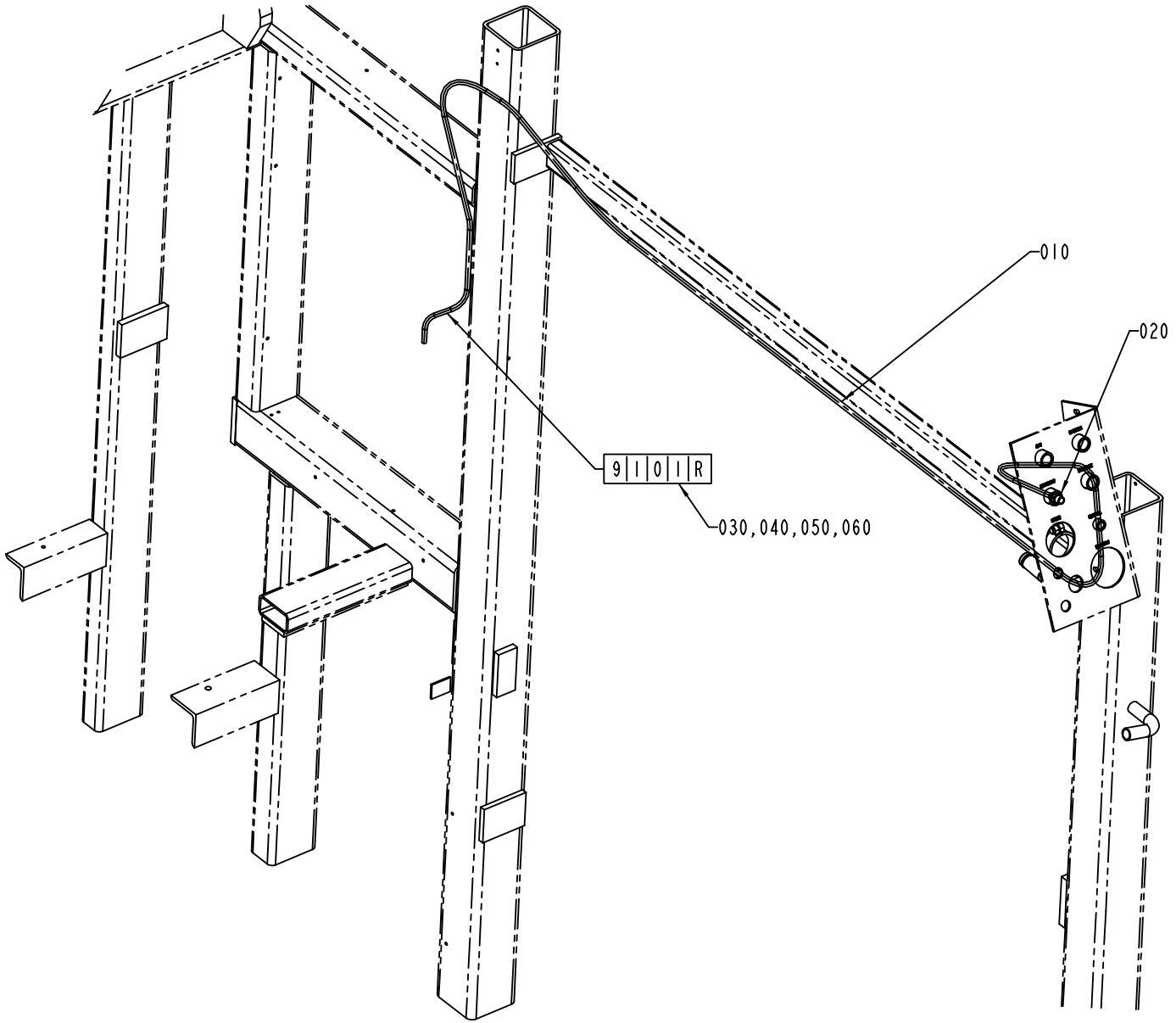

S-1035305-1
ECN 73055

ECM: 73055 - 19991210
Group number: 1035305-0100
Assembly Drawing: 1035305-1_1_AB

Issue: 20011217

Pos	Part No	SP	UN	Qty	Description	Page No
Common Parts						
010	90166-0013	-	MM	5000	TUBE 8 MM PA BLUE	
020	342921-0122	-		1	STRAIGHT COUPLING,EXT.THREADED 8/6-G1/4"	
030	359000-0400	-		2	MARKING CO2/4"0"	
040	359000-0401	-		4	MARKING COLLAR 2/4 "1" YELLOW	
050	359000-0409	-		2	MARKING COLLAR PA2/4 "9" YELLOW	
060	359000-0767	-		2	MARKING CO2/4"R"	

Pos	Part No	SP	UN	Qty	Description	Page No

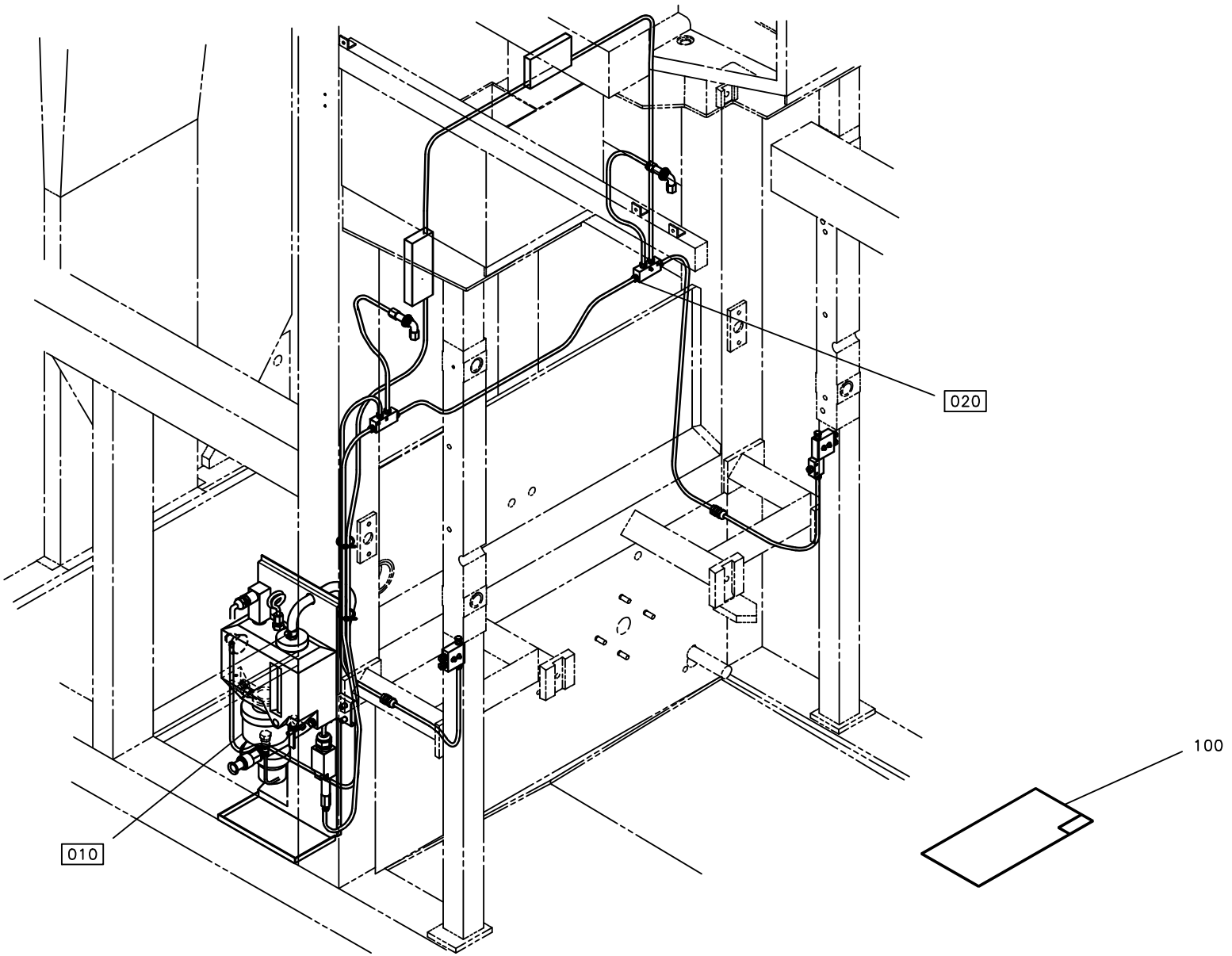
020
010
100

ECM: 72369 - 19990427
Group number: 1255273-0200
Assembly Drawing: 1255273-2_1_AA

Issue: 20011217

Pos	Part No	SP	UN	Qty	Description	Page No
Common Parts						
010	A1095911-0100	-		1	CENTRAL LUBRICATION	**247**
020	A1255274-0200	-		1	CENTR. LUBRIC. HOSE INST.	**249**
100	1255275-0000	-		1	LUBRICATION DIAGRAM	

Pos	Part No	SP	UN	Qty	Description	Page No

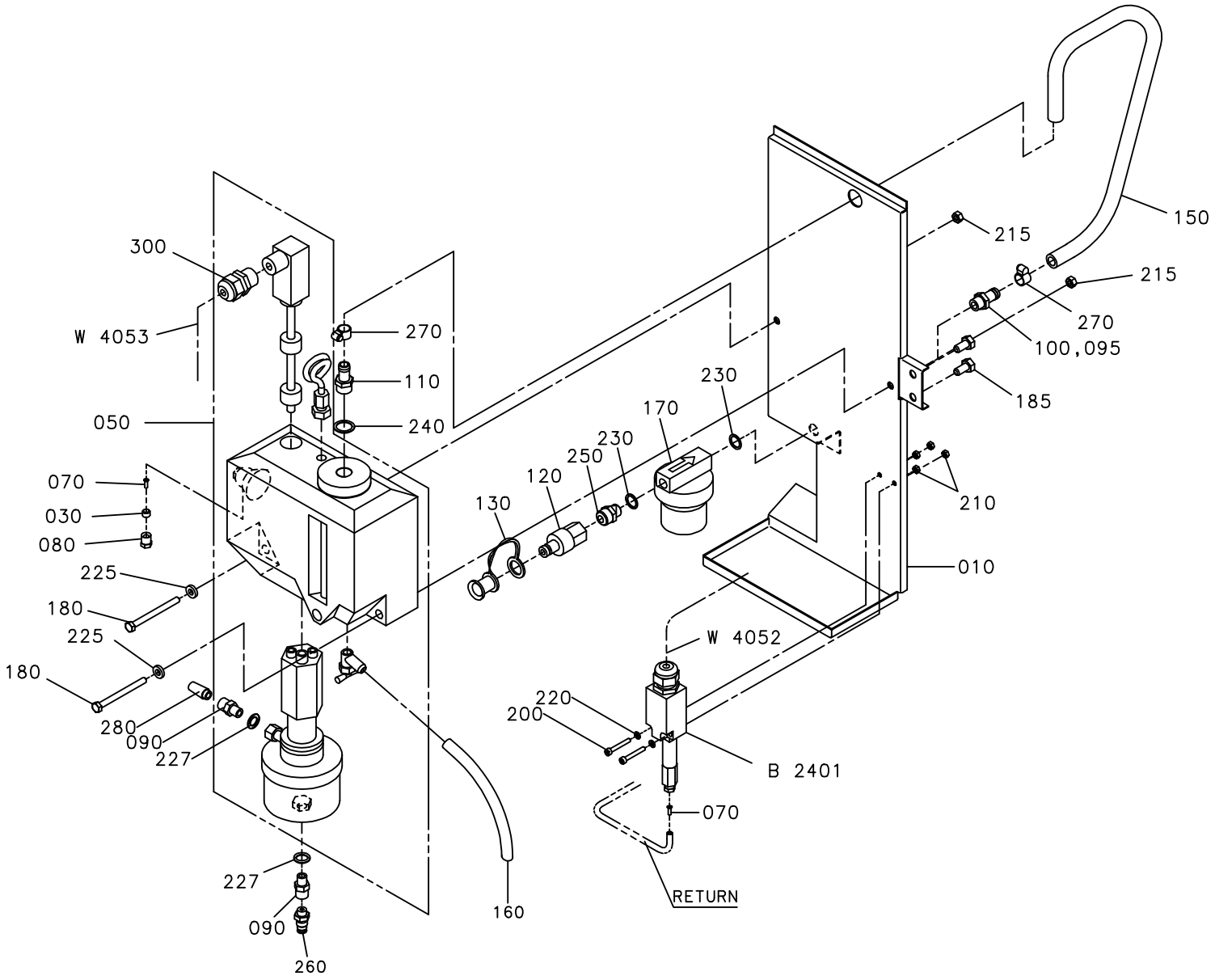
300
W 4053
270
110
240
050
070
030
080
225
180
225
180
280
090
227
227
090
260
160
130
120
250
230
170
230
150
215
215
270
100,095
185
210
010
W 4052
220
200
B 2401
070
RETURN

Pos	Part No	SP	UN	Qty	Description	Page No
Common Parts						
010	1129544-0000	D		1	MOUNTING SHEET	
030	90028-0022	-		1	CONE TUBE 6 MM	
050	90048-0037	C		1	OIL PUMP INCL. CONTAINER 1,5 L	
070	90134-0030	-		2	SLEEVE FOR PLASTIC TUBE	
080	90134-0055	-		1	BUSHING/NUT INLET/OUTLET 6 MM	
090	90134-0081	-		2	REDUCTION SLEEVE M10X1/R 1/8"	
095	90157-0034	-	L	1	SEALING COMPOUND LOCTITE 572 50 ML	
100	90163-0014	-		1	QUICK COUPLING, (M) LP-006-1-WR013	
110	90163-0041	-		1	HOSE NIPPLE, EXT.THR. 3/8-12 MM	
120	90163-0064	-		1	QUICK COUPLING, (M) LP-006-2-WR517	
130	90163-0304	-		1	QUICK COUPLING, LP-006-5-74-KU (DUST CAP	
150	90166-0113	-	MM	650	HOSE	
160	90166-0126	-	MM	300	TUBE 12 MM PA,TRANSP.	
170	B90415-0033	C		1	OIL FILTER REFILLING UC-HP-1229-25	
	90415-0330	*C*		*1*	*FILTER INSERT / ART NO HR-1229-25 UCC*	
180	312105-0383	-		2	SCREW M6S M6X65 A280	
185	312105-0449	-		2	SCREW M6S M8X16 A280	
200	312125-0299	-		2	SCREW PAN HEAD MCS M4X30 SS	
210	312605-0312	-		2	HEXAGON NUT, M6M M4 A280	
215	312605-0316	-		2	HEXAGON NUT, M6M M6 A280	
220	315105-0136	-		2	WASHER PLAIN, BRB, 4,3/8,H=0,8	
225	315115-0153	-		2	WASHER PLAIN, TBRB 6,4/12 H=3	
227	315233-0109	-		2	WASHER PL.RND.NYL.10,3/14,H=1	
230	315233-0110	-		2	WASHER PL.RND.NYL.13,3/17,H=1	
240	315233-0111	-		1	WASHER PL.RND.NYL.17/22,H=1	
250	342700-0203	-		1	NIPPLES,HEXAGON,EXT.G-THREAD G3/8"-G1/4"	
260	342722-0202	-		1	PIPE COUPLING 1/8" D=6MM	
270	342991-0101	-		2	HOSE CLIP,WORM DRIVE TYPE (13)-16	
280	346800-0109	-		1	SILENCER FILTER R1/8"	
300	352103-0101	-		1	CABLE GLAND ST 9;PR15,2/PG9	
B2401	90274-0084	C		1	PRESSURE SWITCH	
W4052	351150-0403	-	MM	3000	CABLE OLFLEX 3X0,75 MM2 LIGHT/GREY	
W4053	351150-0404	-	MM	3000	CABLE OLFLEX 4X0,75 MM2 LIGHT/GREY	

Pos	Part No	SP	UN	Qty	Description	Page No

Machine Type | Group Description | Used-In | Group Number | Page No

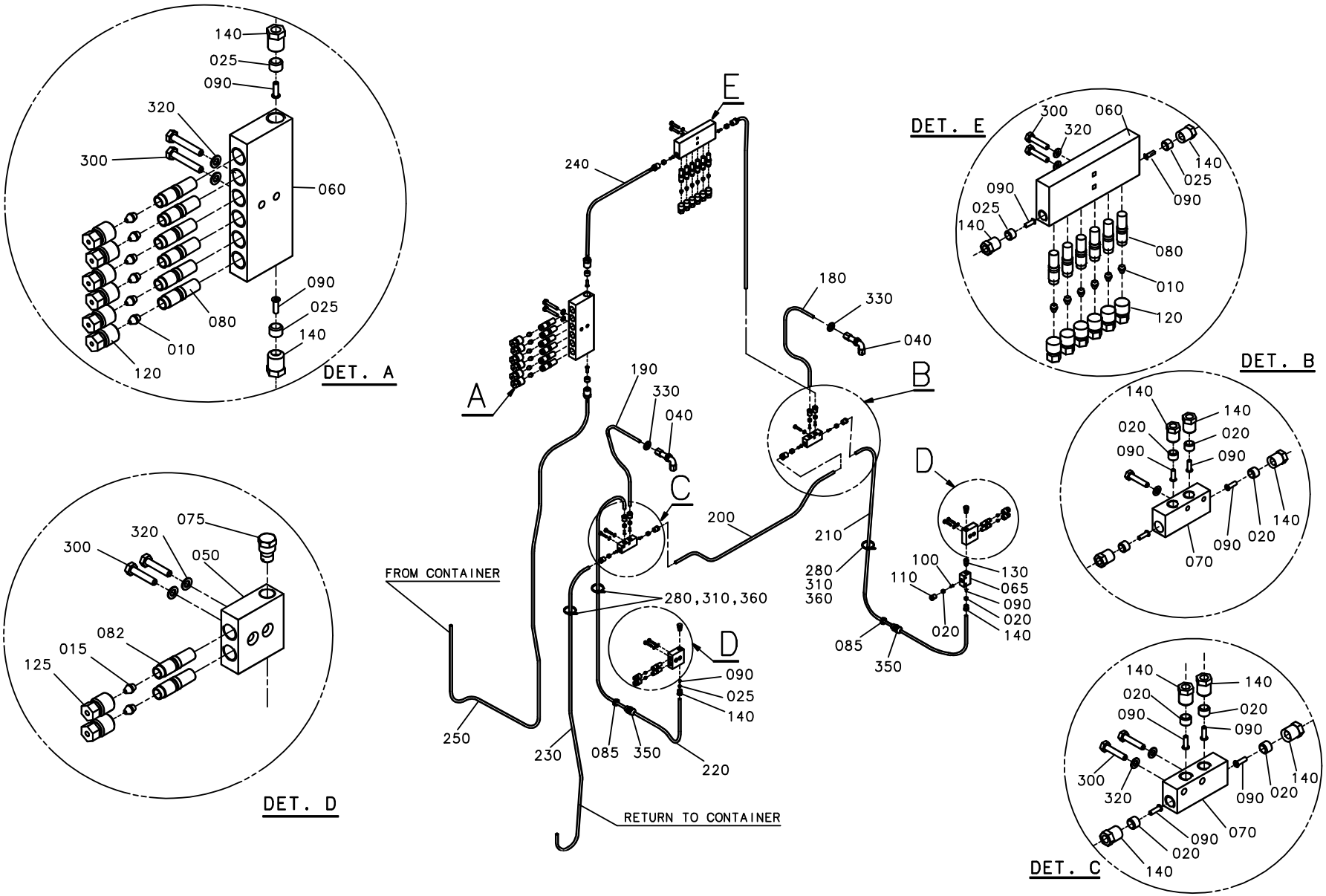
DET. A
140
025
090
320
300
060
080
010
120
DET. D
075
320
300
050
082
015
125
DET. E
300
060
320
140
025
090
090
025
140
080
010
120
DET. B
140
140
020
020
090
090
140
090
020
070
DET. C
140
140
020
020
090
090
300
320
140
090
020
070
090
020
140
A
B
C
D
E
240
180
330
040
190
330
040
200
210
280
310
360
100
110
130
065
090
020
140
020
085
350
FROM CONTAINER
280,310,360
250
230
085
350
220
090
025
140
RETURN TO CONTAINER

ECM: 72369 - 19990427
Group number: 1255274-0200
Assembly Drawing: 1255274-2_1_AA

Issue: 20011217

Pos	Part No	SP	UN	Qty	Description	Page No
Common Parts						
010	90028-0020	-		12	CONE TUBE 2,5MM	
015	90028-0021	-		4	CONE TUBE 4 MM	
020	90028-0022	-		10	CONE TUBE 6 MM	
025	90028-0025	-		4	CONE TUBE 6 MM	
040	90030-0219	-		2	CONN. ELBOW BULKHEAD WSV 6	
050	90032-0038	-		2	BLOCK 2 WAYS	
060	90032-0040	-		2	BLOCK 6 WAYS	
065	90032-0043	-		1	DISTRIBUTION BLOCK 3 WAYS	
070	90032-0044	-		2	DISTRIBUTION BLOCK 4 WAYS	
075	90087-0019	-		2	PLUG M10X1 STAINLESS	
080	90092-0052	-		12	METERING VALVE 10 MM3	
082	90092-0053	-		4	METERING VALVE 30 MM3	
085	90099-0104	-		2	NUT PR 15,2 (PG9)	
090	90134-0030	-		16	SLEEVE FOR PLASTIC TUBE	
100	90134-0030	-		1	SLEEVE FOR PLASTIC TUBE	
110	90134-0055	-		1	BUSHING/NUT INLET/OUTLET 6 MM	
120	90134-0039	-		12	BUSHING VALVE CONNECTION 2,5 MM	
125	90134-0040	-		4	BUSHING VALVE CONNECTION 4 MM	
130	90134-0054	-		1	BLOCK CONNECTION M10X1	
140	90134-0055	-		14	BUSHING/NUT INLET/OUTLET 6 MM	
180	90166-0108	-	MM	310	TUBE 6 MM PA,TRANSP.	
190	90166-0108	-	MM	310	TUBE 6 MM PA,TRANSP.	
200	90166-0108	-	MM	700	TUBE 6 MM PA,TRANSP.	
210	90166-0108	-	MM	940	TUBE 6 MM PA,TRANSP.	
220	90166-0108	-	MM	1100	TUBE 6 MM PA,TRANSP.	
230	90166-0108	-	MM	1150	TUBE 6 MM PA,TRANSP.	
240	90166-0108	-	MM	1300	TUBE 6 MM PA,TRANSP.	
250	90166-0108	-	MM	1500	TUBE 6 MM PA,TRANSP.	
280	90182-0005	-		3	CLIP STRIP 79X2,3MM REPL.BY 352113-101	
300	312105-0295	-		10	SCREW M6S M4X20 A280	
310	312125-0285	-		3	SCREW SLOT.PAN HD. MCS 4X6 A480	
320	315105-0136	-		10	WASHER PLAIN, BRB, 4,3/8,H=0,8	
330	315105-0176	-		2	WASHER PLAIN, BRB, 12/22 H=2	
350	352103-0101	-		2	CABLE GLAND ST 9;PR15,2/PG9	
360	352113-0102	-		3	CLIP-STRIP, BLACK 188X4,8 MM	

Pos	Part No	SP	UN	Qty	Description	Page No

Machine Type | Group Description | Used-In | Group Number | Page No

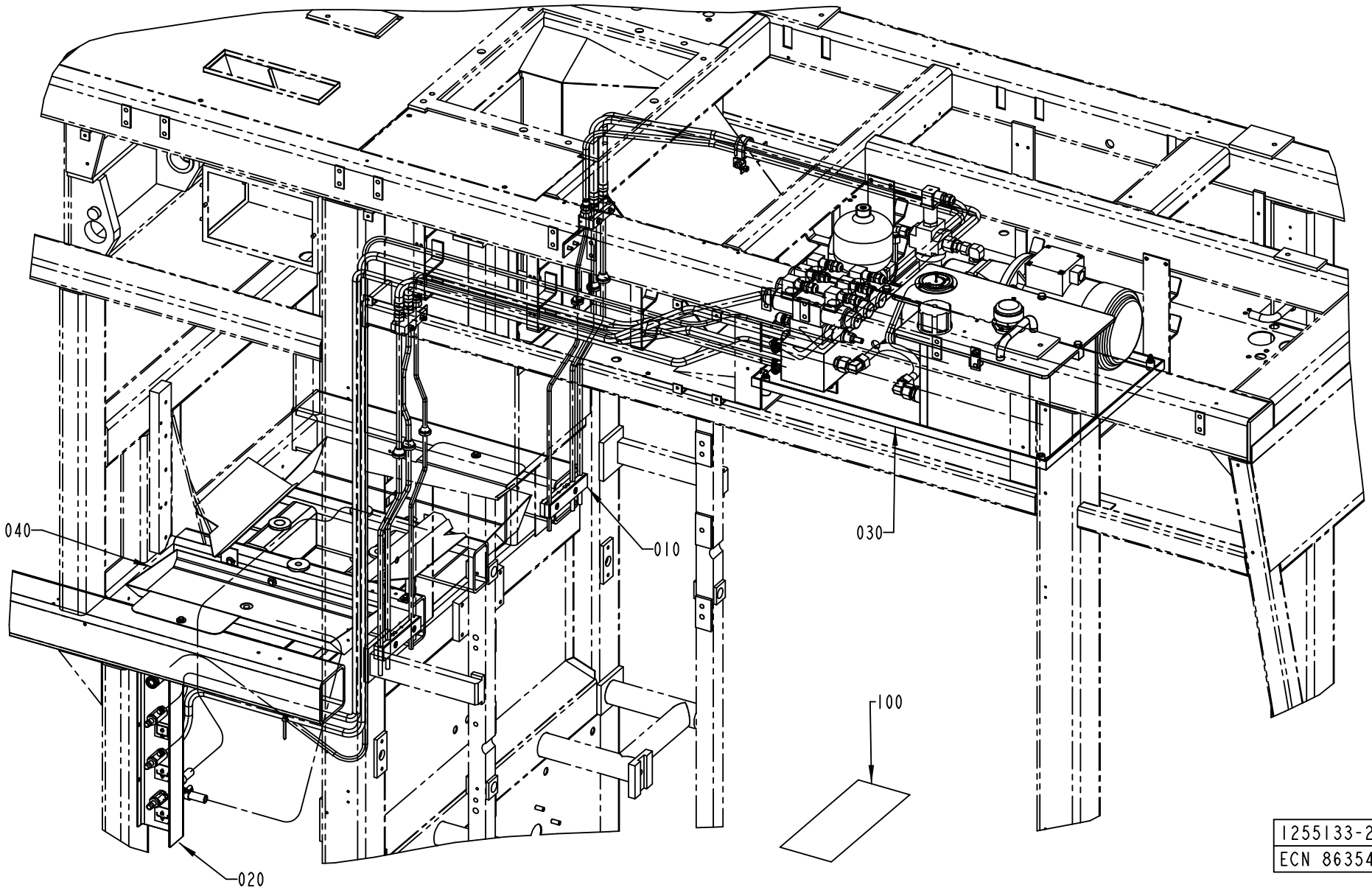
040
010
030
100
020
1255133-2
ECN 86354

Pos	Part No	SP	UN	Qty	Description	Page No
Common Parts						
010	A1260800-0100	-		1	PIPE WORK-HYDRAULIC	**253**
020	A1255134-0200	-		1	DRAINING	**255**
030	A1549211-0100	-		1	HYDRAULIC UNIT	**257**
040	A1487493-0100	-		1	DRAINING	**265**
100	1517503-0000	-		1	HYDRAULIC DIAGRAM	

Pos	Part No	SP	UN	Qty	Description	Page No

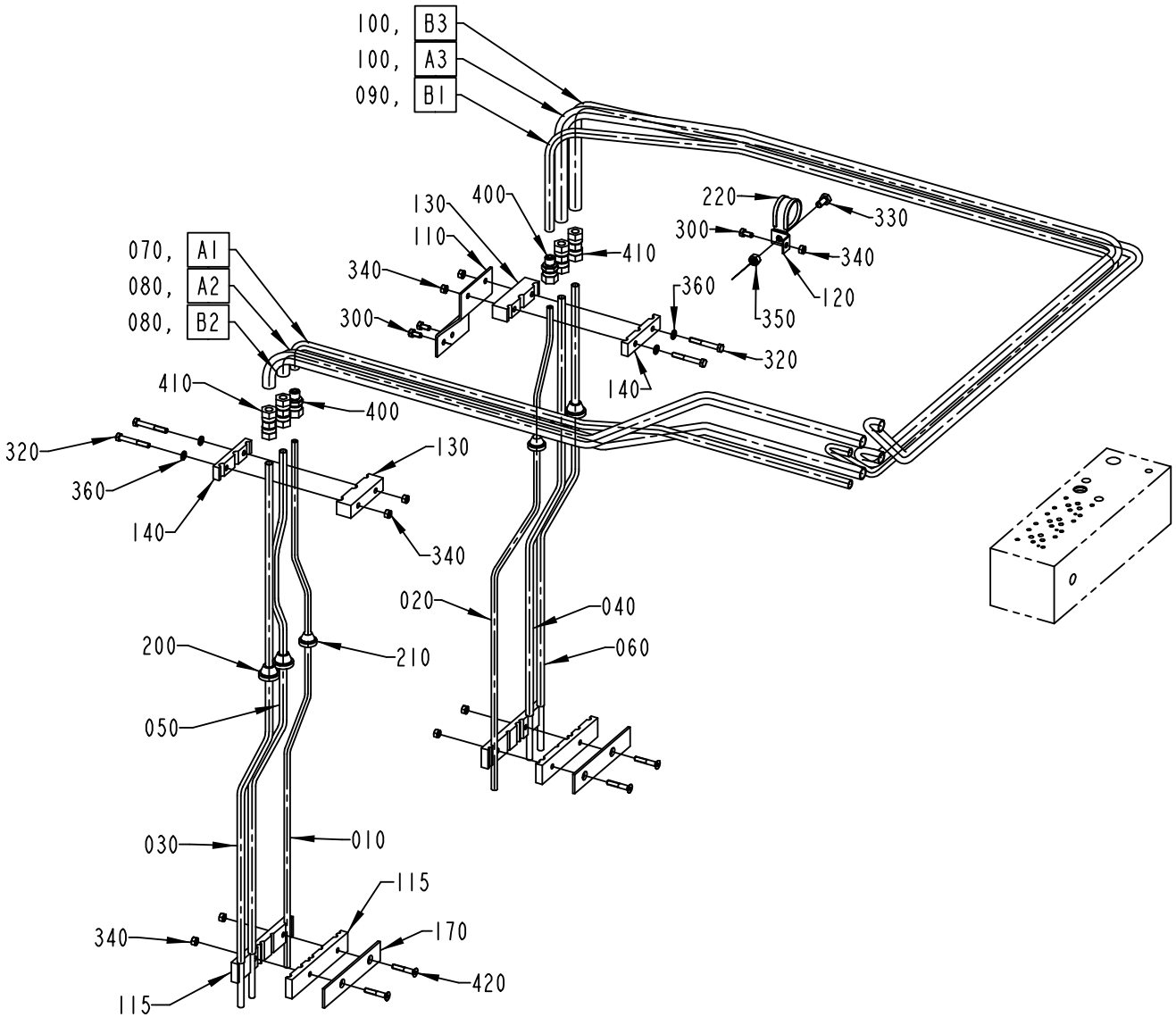

1260800-1
ECN 86354

Pos	Part No	SP	UN	Qty	Description	Page No
Common Parts						
010	1260795-0000	A		1	HYDRAULIC PIPE	
020	1260796-0000	A		1	HYDRAULIC PIPE	
030	1260797-0000	A		1	HYDRAULIC PIPE	
040	1260798-0000	A		1	HYDRAULIC PIPE	
050	1260799-0000	A		1	HYDRAULIC PIPE	
060	1260801-0000	A		1	HYDRAULIC PIPE	
070	1129404-0000	A		1	HYDRAULIC HOSE	
080	1129405-0000	A		2	HYDRAULIC HOSE	
090	1129406-0000	A		1	HYDRAULIC HOSE	
100	1129407-0000	A		2	HYDRAULIC HOSE	
110	1260802-0000	-		1	BRACKET	
115	1260803-0000	-		4	CLAMP	
120	1129354-0000	-		1	BRACKET	
130	1260804-0000	-		2	PIPE CLAMP	
140	1260805-0000	-		2	PIPE CLAMP	
170	1260806-0000	-		2	COVER PLATE	
200	90015-0021	-		4	GLANDS,LEAD-IN,IP67	
210	90015-0023	-		2	GLANDS,LEAD-IN,IP67	
220	90165-0149	-		1	HOSE HOLDER	
300	312105-0366	-		3	SCREW M6S M6X12 A280	
320	312105-0379	-		4	SCREW M6S M6X45 A280	
330	312105-0449	-		1	SCREW M6S M8X16 A280	
340	312605-0316	-		9	HEXAGON NUT, M6M M6 A280	
350	312605-0318	-		1	HEXAGON NUT, M6M M8 A280	
360	315105-0153	-		4	WASHER PLAIN, BRB, 6,4/12,H=1,5	
400	342727-0103	-		2	CONN. PIPE G-8-LFZB	
410	342727-0108	-		4	CONN. PIPE G-10-LFZB	
420	312155-0376	-		4	SCREW HEX.SOCK.COUNT.MF6S M6X35 A280	

Pos	Part No	SP	UN	Qty	Description	Page No

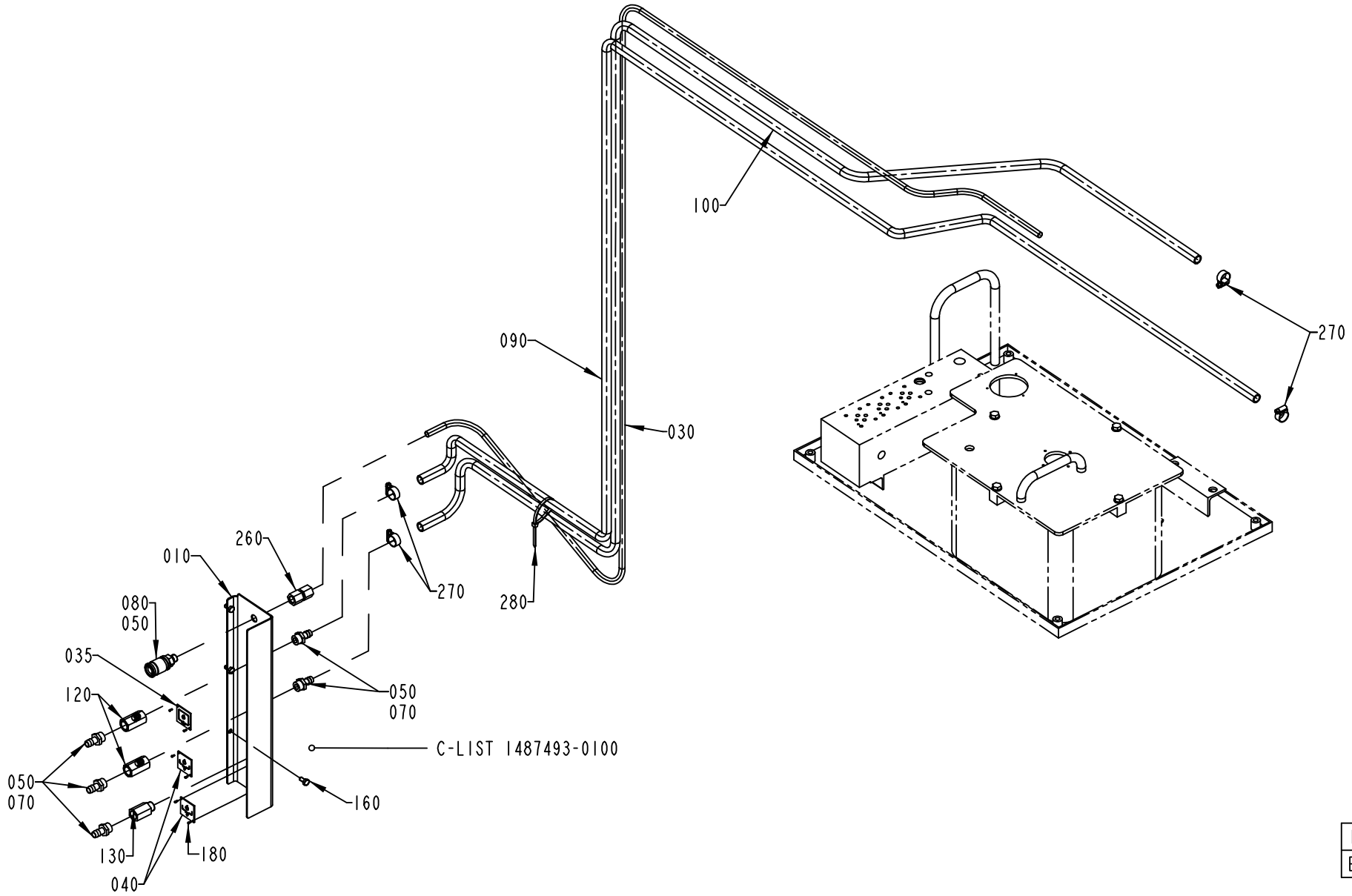

1255134-2
ECN 86354

ECM: 87267 - 19991101
Group number: 1255134-0200
Assembly Drawing: 1255134-2_1_AB

Issue: 20011217

Pos	Part No	SP	UN	Qty	Description	Page No
Common Parts						
010	1349912-0000	-		1	PANEL	
030	1255362-0000	A		1	HYDRAULIC HOSE	
035	1129463-0000	-		1	SIGN	
040	1129464-0000	-		2	SIGN	
050	90157-0034	-		1	SEALING COMPOUND LOCTITE 572 50 ML	
070	90163-0041	-		5	HOSE NIPPLE, EXT.THR. 3/8-12 MM	
080	B90163-0013	B		1	QUICK COUPLING, (F) LP 006-0-WR013-01-2	
	90163-0301	*-*		*1*	*GASKET VITON REPL.BY 90163-312*	
090	90166-0113	-	M	3	HOSE	
100	90166-0113	-	M	3	HOSE	
120	90187-0054	B		2	BALL VALVE G3/8	
130	90187-0058	-		1	BALL VALVE R3/8, CRBR	
160	312105-0366	-		3	SCREW M6S M6X12 A280	
180	312502-0120	-		6	DRIVE SCREW ROUND HEAD KDS 0X5	
260	342724-0108	-		1	CONN. STR. PIPE GI-10-G1/4	
270	342991-0102	-		4	HOSE CLIP,WORM DRIVE TYPE (16)-19	
280	352113-0102	-		1	CLIP-STRIP, BLACK 188X4,8 MM	

Pos	Part No	SP	UN	Qty	Description	Page No

Machine Type | Group Description | Used-In | Group Number | Page No

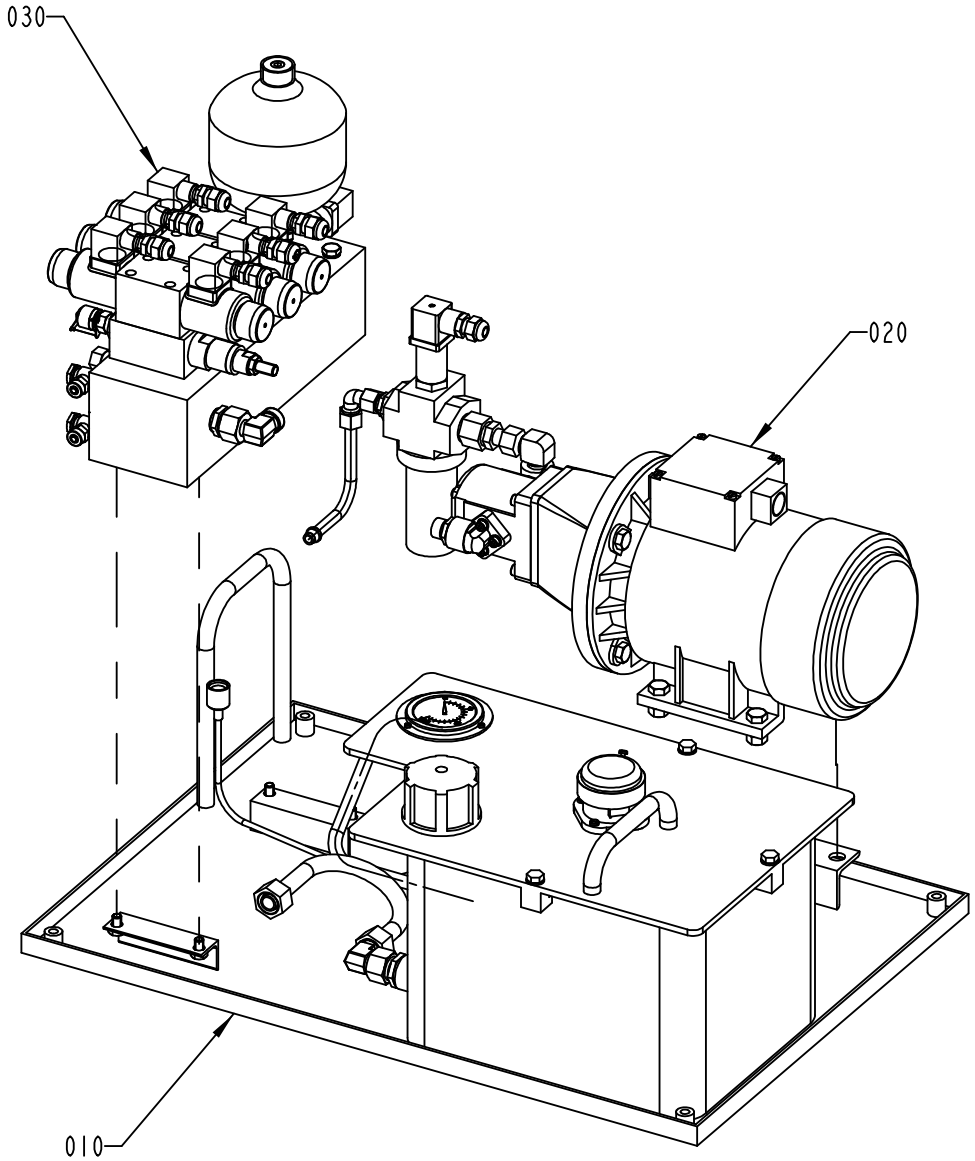

1549211-1
ECN 86354

Pos	Part No	SP	UN	Qty	Description	Page No
Common Parts						
010	A1549209-0100	-		1	TANK	**259**
020	A1549210-0100	A		1	PUMP	**261**
030	A1549208-0100	-		1	HYDRAULIC VALVE	**263**

Pos	Part No	SP	UN	Qty	Description	Page No

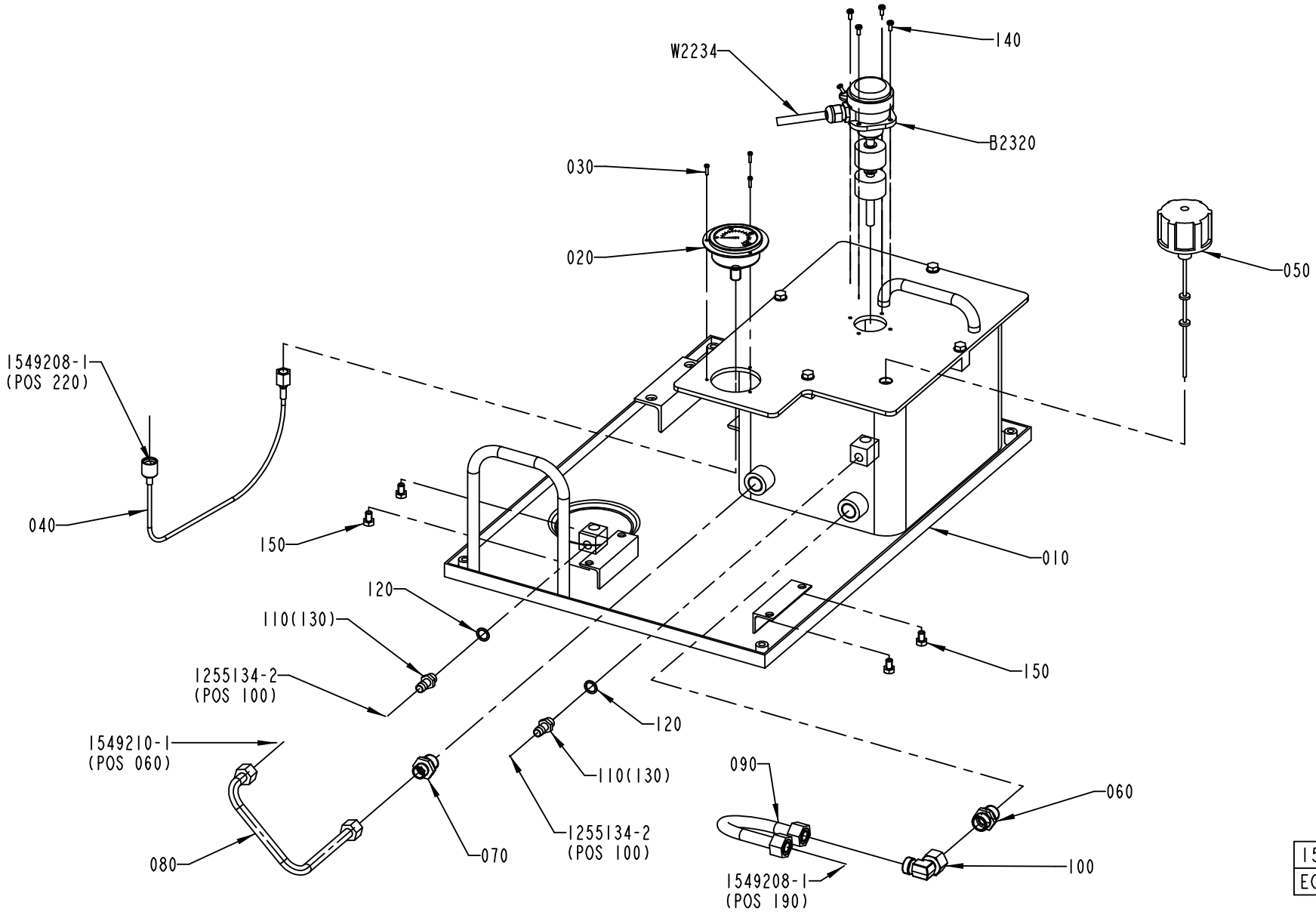

1549209-1
ECN 86354

ECM: 86358 - 19991101
Group number: 1549209-0100
Assembly Drawing: 1549209-1_1_AA

Issue: 20011217

Pos	Part No	SP	UN	Qty	Description	Page No
Common Parts						
010	B90457-0064	-		1	TANK AND LID, AI-15346 + AI-15345	
	90091-0159	-		*1*	*GASKET 330X308X9 MM*	
020	90043-0132	B		1	PRESSURE GAUGE, 2757 D=63 MM	
030	312125-0228	-		3	SCREW PAN HEAD MCS M3X16 A480	
040	90148-0101	A		1	HOSE	
050	90277-0086	B		1	AIR FILTER / ART NO BK 464125 (70)	
060	90457-0035	-		1	REDUCING UNIUN	
070	90457-0034	-		1	REDUCING UNIUN	
080	90457-0032	-		1	PIPE	
090	90457-0033	-		1	PIPE	
100	90030-0628	-		1	ELBOW 90ø FITTING, NO. VB 15-L	
110	90163-0052	-		2	HOSE NIPPLE, EXT.THR. 1/4-12 MM	
120	315234-0110	-		2	WASHER,PL.RND.CU.13,5/18 H=1,5	
130	342713-0210	-		2	PLUG, EXT THREAD HEX SOCKET 8638-00-140	
140	312132-0289	-		4	SCREW SLOT. PAN HEAD MSCS M4X10	
150	312105-0449	-		4	SCREW M6S M8X16 A280	
B 2320	90457-0019	A		1	LEVEL PROBE, HMFB-S=45-0=80-0=90-T70	
W 2234	351150-0406	-	MM	2500	CABLE OLFLEX 7X0,75 MM2 LIGHT/GREY	

Pos	Part No	SP	UN	Qty	Description	Page No

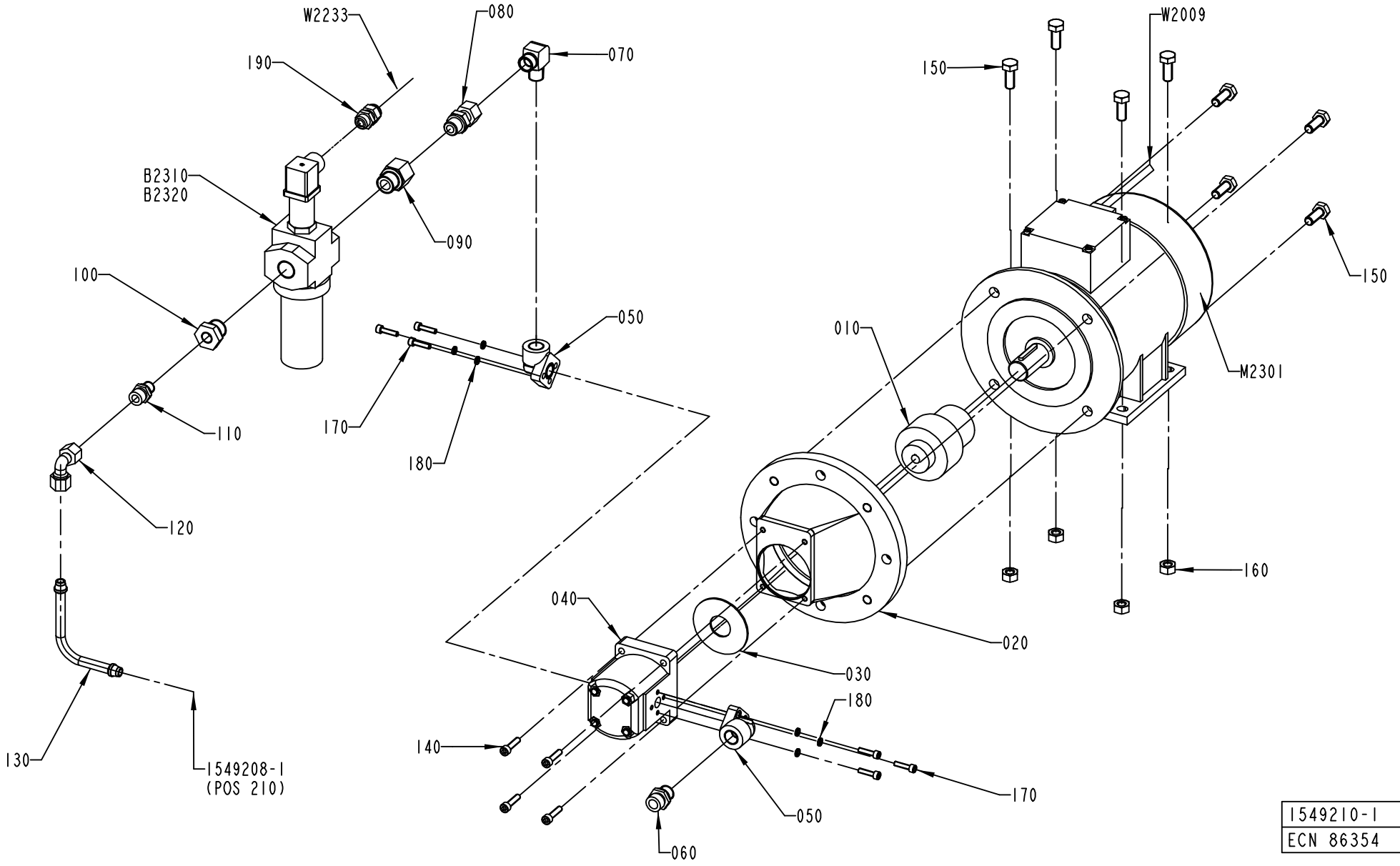
W2233
080
070
190
B2310
B2320
090
100
050
110
170
180
120
130
1549208-1
(POS 210)
W2009
150
150
010
M2301
160
040
020
030
180
140
170
050
060
1549210-1
ECN 86354

Pos	Part No	SP	UN	Qty	Description	Page No
Common Parts						
010	90321-0575	A		1	SHAFT COUPLING	
020	90321-0574	-		1	PUMP BRACKET LSE-201	
030	90457-0046	-		1	WASHER PLAIN ROUND 25,4/67,5, H=2	
040	90457-0037	A		1	HYDR. PUMP TFP100 3/8-S-C001	
050	90457-0039	A		2	PUMP CONN. ELBOW FLANGE T-26/12-3/8	
060	90457-0045	-		1	CONN.STRAIGHT G3/8-12 MM, A 12-RL/WD	
070	90457-0040	A		1	CONN. ELBOW, 12 MM - R3/8K, B12-RL	
080	90030-0339	-		1	CONN. STR., 12-G3/8, EXT. THREAD	
090	90457-0041	A		1	NIPPLES, REDUCING, INT.THREAD, G1/2-G3/8	
100	90457-0043	A		1	BUSHING, INT/EXT. G-THREAD NO. 1/2-1/4	
110	90457-0044	A		1	CONN.STRAIGHT G1/4-10 MM, A 10-RL/WD	
120	90030-0121	-		1	CONN. ELBOW ADJ.,INT 10	
130	90457-0038	A		1	PIPE	
140	312115-0372	-		4	SCREW MC6S M6X25 A280	
150	312105-0491	-		8	SCREW M6S M10X20 A280	
160	312605-0320	-		4	HEXAGON NUT, M6M M10 A280	
170	312115-0331	-		6	SCREW MC6S M5X20 A280	
180	90062-0029	-		6	WASHER LOCK 5,1X 8,6, T= 1,5 DIN 7980	
190	352103-0101	-		1	CABLE GLAND ST 9;PR15,2/PG9	
B 2310	90415-0057	A		1	FULL PR. FILTER MDFBNHC 30G-10-C-1.0/-B6	
B 2320	90457-0042	A		1	FILTER 10 M 0030-D-010-BN3HC	
M 2301	90457-0036	A		1	3-PHASE MOTOR,FOOT MOUNT.1,1KW,1410 RPM	
W 2009	351150-0403	-	MM	2500	CABLE OLFLEX 3X0,75 MM2 LIGHT/GREY	
W 2233	351150-0403	-	MM	2500	CABLE OLFLEX 3X0,75 MM2 LIGHT/GREY	

Pos	Part No	SP	UN	Qty	Description	Page No

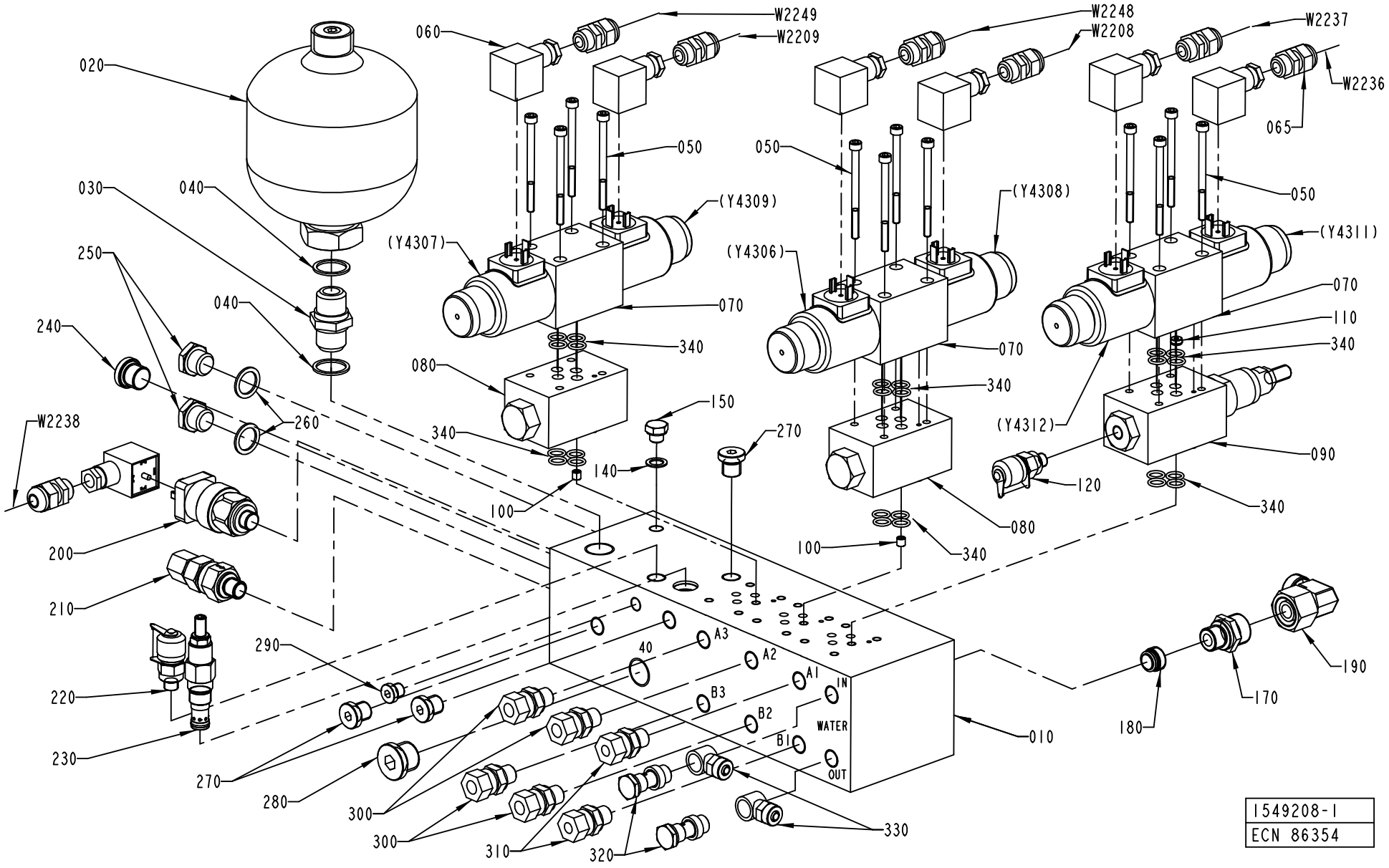
W2249
W2209
060
020
050
(Y4309)
030
040
(Y4307)
250
070
040
340
080
240
150
W2238
260
340
140
270
100
200
210
290
A3
40
A2
A1
IN
B3
B2
WATER
B1
OUT
220
230
270
280
300
300
310
320
330
010
W2248
W2208
W2237
W2236
065
050
(Y4308)
(Y4306)
(Y4311)
070
110
340
070
340
(Y4312)
090
120
080
340
100
340
190
170
180
1549208-1
ECN 86354

ECM: 86357 - 19991101
Group number: 1549208-0100
Assembly Drawing: 1549208-1_1_AA

Issue: 20011217

Pos	Part No	SP	UN	Qty	Description	Page No
Common Parts						
010	90201-0458	A		1	WATER HYDR. MANIFOLD BLOCK, NO AI-15382	
020	90321-0381	A		1	HYDR.ACCUMULATOR, SBO-210-0.75E1/112-0/1	
030	90030-0340	-		1	NIPPLES, EXT. THREAD, HEXAGON, RA-G1/2A3	
040	315211-0111	-		2	GASKET BOLT HEAD 21,5X28,6X2,5 MM G1/2	
050	90201-0456	-		12	BOLT KIT, NO. BK 464125M	
060	90110-0095	A		7	CONNECTOR 3 POLE + EARTH	
065	352103-0101	-		7	CABLE GLAND ST 9;PR15,2/PG9	
070	B90457-0170	A		3	DIRECTION VALVE, NO. 0 810 091 212	
	90457-0169	*-*		*1*	*SOL. COIL, 24VDC/1,4A, NO 1837001227*	
080	90201-0136	A		2	DIRECT CHECK VALVE, NO. DGMDC-3-Y-PK-41	
090	90201-0135	A		1	PRESSURE REDUCING VALVE	
100	90457-0177	A		2	FLOW-RESTRICTOR, 2,0 MM, M6	
110	90457-0185	A		1	FLOW RESTRICTOR 1810120020, D=1,5 MM	
120	90201-0132	A		1	VALVE	
140	90201-0452	A		1	WASHER, SEALING, 10(1/8)/15, H=1 CU	
150	90330-0066	-		1	PLUG, EXT. G-THREAD, G1/8	
170	90201-0457	A		1	VALVE CONNECTION, NO. A15-L/R 3/8"/WD	
180	90201-0134	A		1	CHECK VALVE, G 3/8	
190	90030-0628	-		1	ELBOW 90ø FITTING, NO. VB 15-L	
200	90274-0124	A		1	PRESSURE SWITCH	
210	90201-0130	A		1	CHECK VALVE, NO. RZ10-RL/WD	
220	90201-0133	A		1	VALVE	
230	90201-0131	A		1	VALVE	
240	90201-0448	-		1	PLUG	
250	90330-0029	-		2	PLUG, EXT. G-THREAD, R-236R3/8	
260	90201-0453	A		2	WASHER, SEALING, 17(3/8)/23, H=1,5 CU	
270	90201-0449	-		2	PLUG	
280	342732-0104	-		1	ELBOW PIPE JOINT	
290	90201-0450	-		1	PLUG	
300	342752-0104	-		4	CONN. STR. GA-10-G1/4	
310	342752-0103	-		2	CONN. STR. GA-8-G1/4	
320	342980-0304	-		2	BANJO-HOLLOW BOLT COUPL,EXT.THR.01-G1/4"	
330	342980-0122	-		2	BANJO-CONNECTION,RING 8/6-G1/4"	
340	90457-0134	A		24	O-RING	
W2208	351150-0403	-	MM	1500	CABLE OLFLEX 3X0,75 MM2 LIGHT/GREY	
W2209	351150-0403	-	MM	1900	CABLE OLFLEX 3X0,75 MM2 LIGHT/GREY	
W2236	351150-0403	-	MM	1600	CABLE OLFLEX 3X0,75 MM2 LIGHT/GREY	
W2237	351150-0403	-	MM	2000	CABLE OLFLEX 3X0,75 MM2 LIGHT/GREY	
W2238	351150-0403	-	MM	2100	CABLE OLFLEX 3X0,75 MM2 LIGHT/GREY	
W2248	351150-0403	-	MM	1500	CABLE OLFLEX 3X0,75 MM2 LIGHT/GREY	
W2249	351150-0403	-	MM	1900	CABLE OLFLEX 3X0,75 MM2 LIGHT/GREY	

Pos	Part No	SP	UN	Qty	Description	Page No

Machine Type | Group Description | Used-In | Group Number | Page No

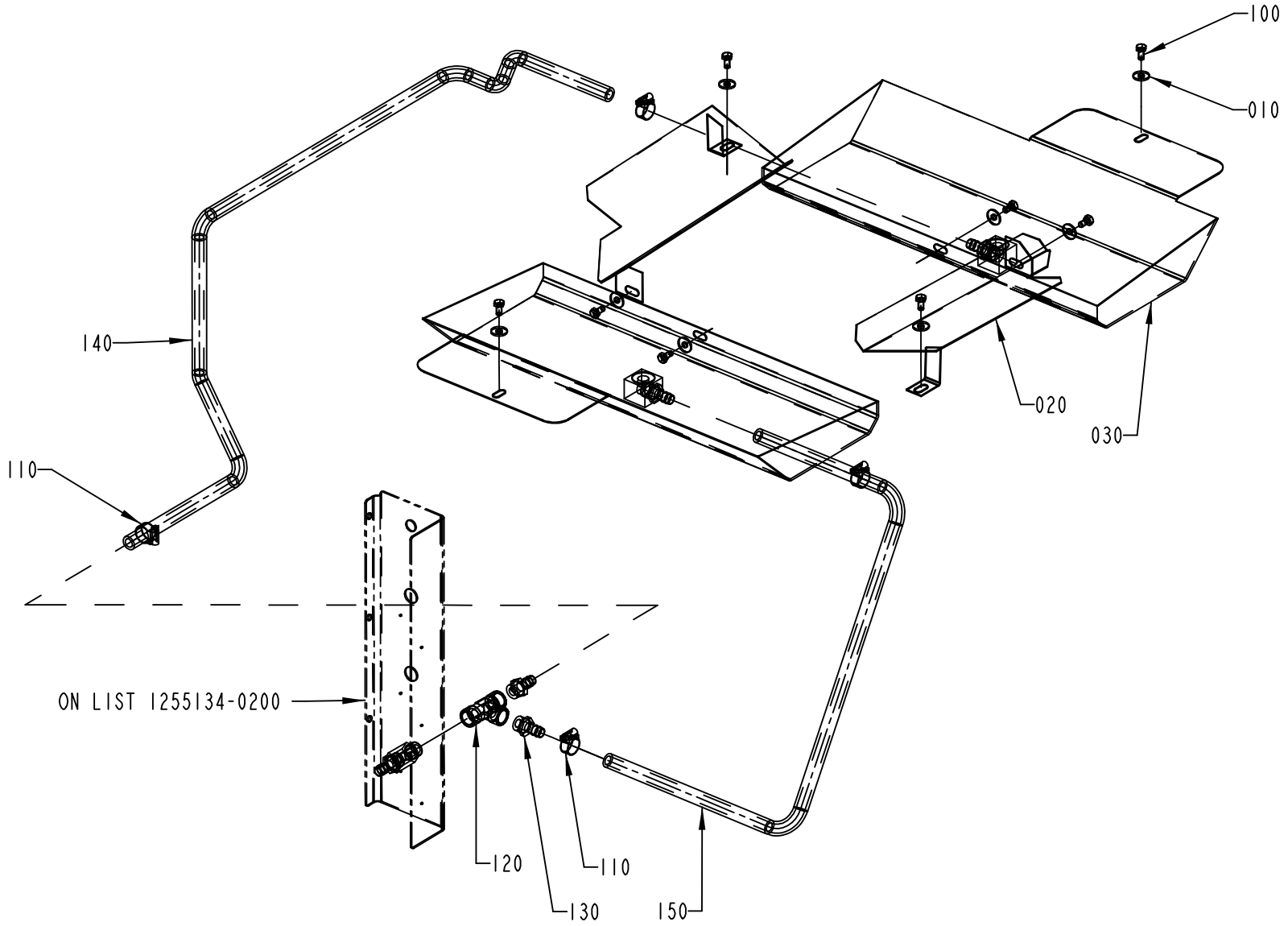

1487493-1
ECN 86354

ECM: 87266 - 19991101
Group number: 1487493-0100
Assembly Drawing: 1487493-1_1_AB

Issue: 20011217

Pos	Part No	SP	UN	Qty	Description	Page No
Common Parts						
010	6278-0000	-		8	WASHER	
020	1349164-0000	-		2	COVER PLATE	
030	1349224-0000	-		2	COVER PLATE	
100	312105-0366	-		8	SCREW M6S M6X12 A280	
110	342991-0102	-		4	HOSE CLIP,WORM DRIVE TYPE (16)-19	
120	90140-0016	-		1	T-PIPE, INT. THREAD, 2003-3/8	
130	90163-0041	-		4	HOSE NIPPLE, EXT.THR. 3/8-12 MM	
140	90166-0113	-	MM	1200	HOSE	
150	90166-0113	-	MM	800	HOSE	

Pos	Part No	SP	UN	Qty	Description	Page No

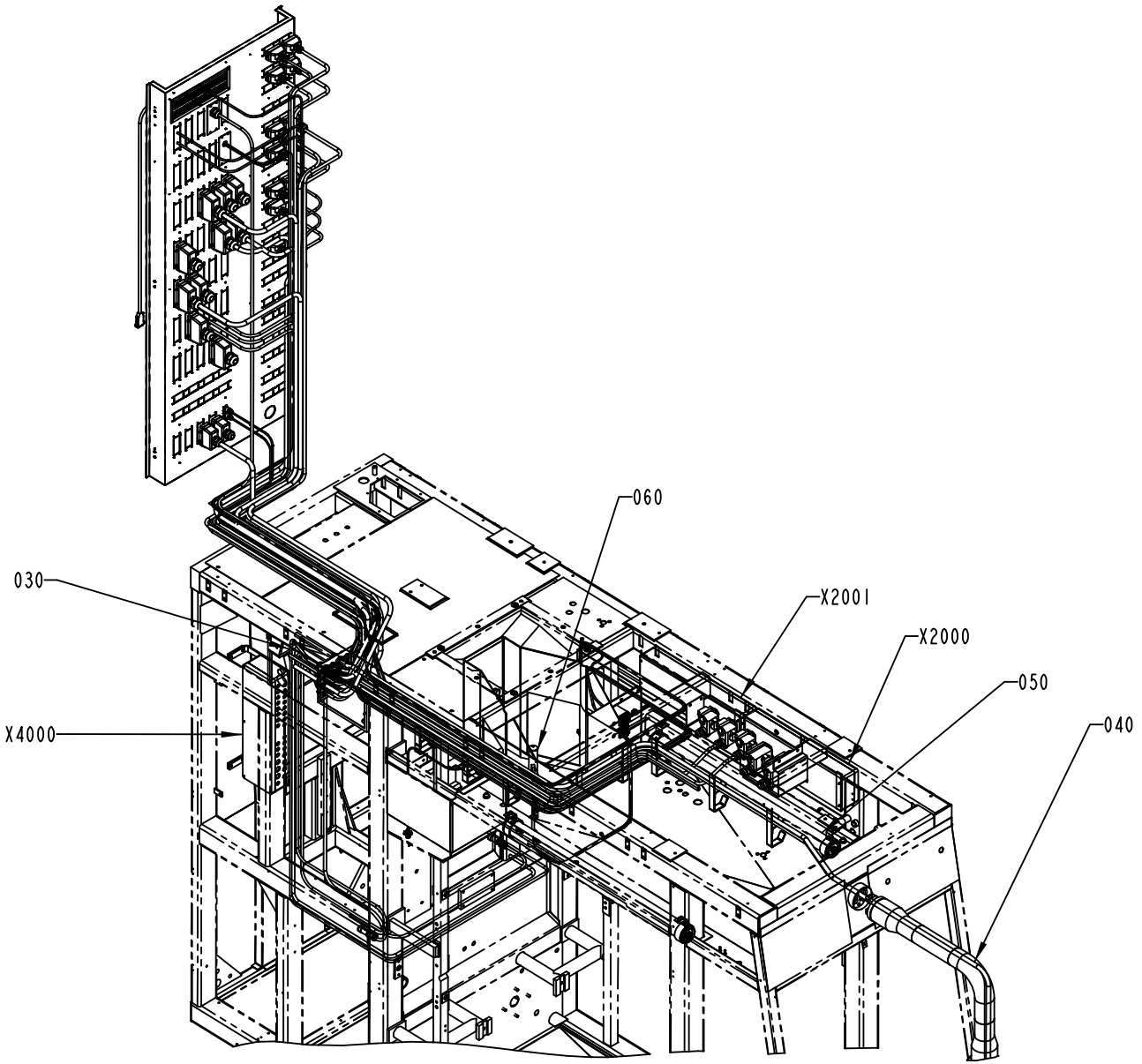

1095856-5
ECN 72879

Pos	Part No	SP	UN	Qty	Description	Page No
FLOATER						
060	A1523216-0100	-		1	LEVEL CONTROL DEVICE	**269**
Common Parts						
030	A1095748-0300	-		1	CABLE HARNESS	**279, 281**
040	A1095752-0400	-		1	CABLE HARNESS	**283, 285**
050	A1095861-0100	-		1	LIGHT FIXTURE	**287**
X2000	A1282765-0200	-		1	CONNECTION BOX	**289**
X2001	A1282766-0100	-		1	CONNECTION BOX	**291**
X4000	A1095750-0200	-		1	CONNECTION BOX	**293**

Pos	Part No	SP	UN	Qty	Description	Page No

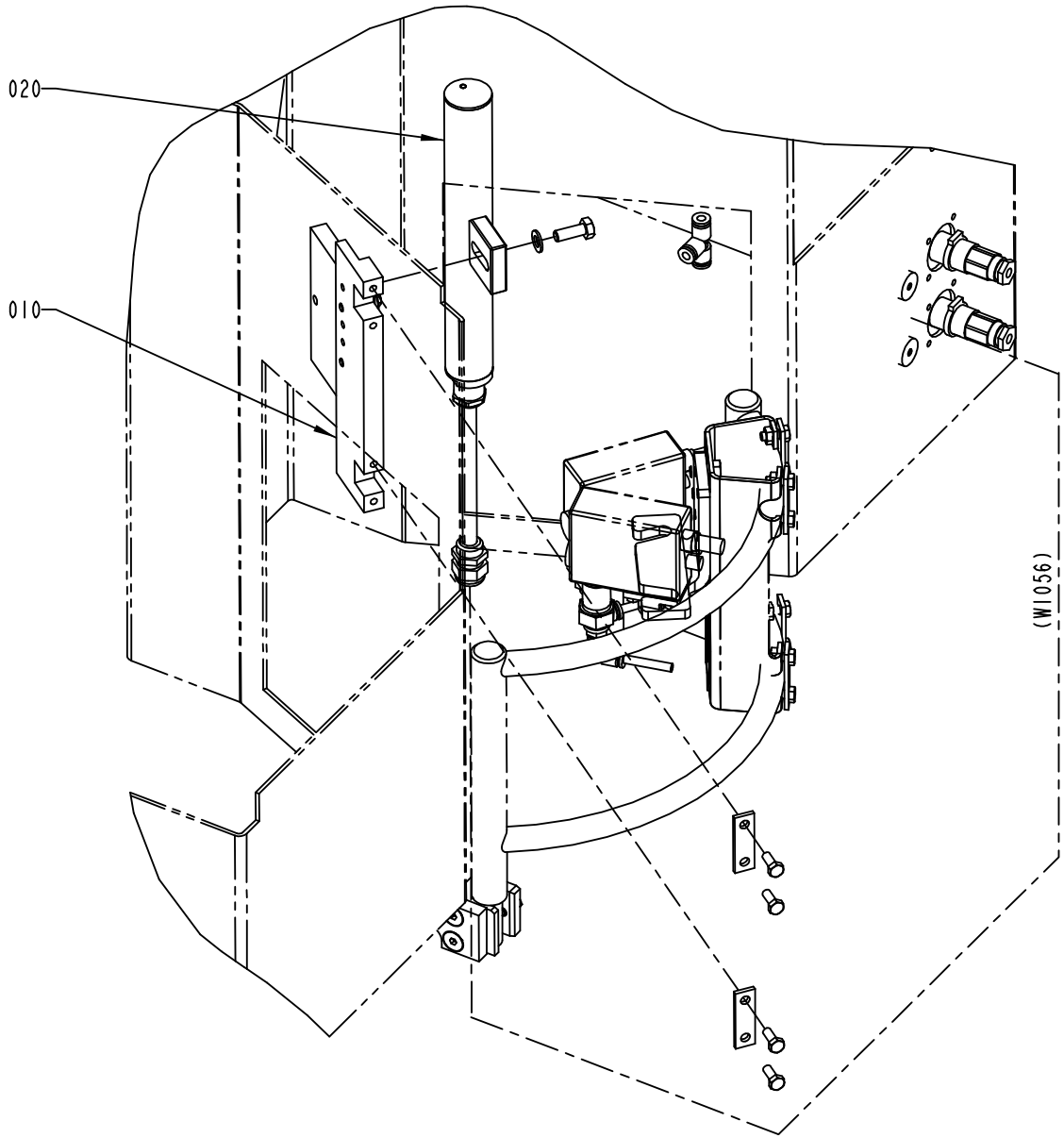

1523216-1
ECN 72879

Pos	Part No	SP	UN	Qty	Description	Page No
Common Parts						
010	A1487338-0100	-		1	SUPPORT LEVEL DETECTOR	**271, 273**
020	A1334989-0100	-		1	LEVEL PROBE	**275**

Pos	Part No	SP	UN	Qty	Description	Page No

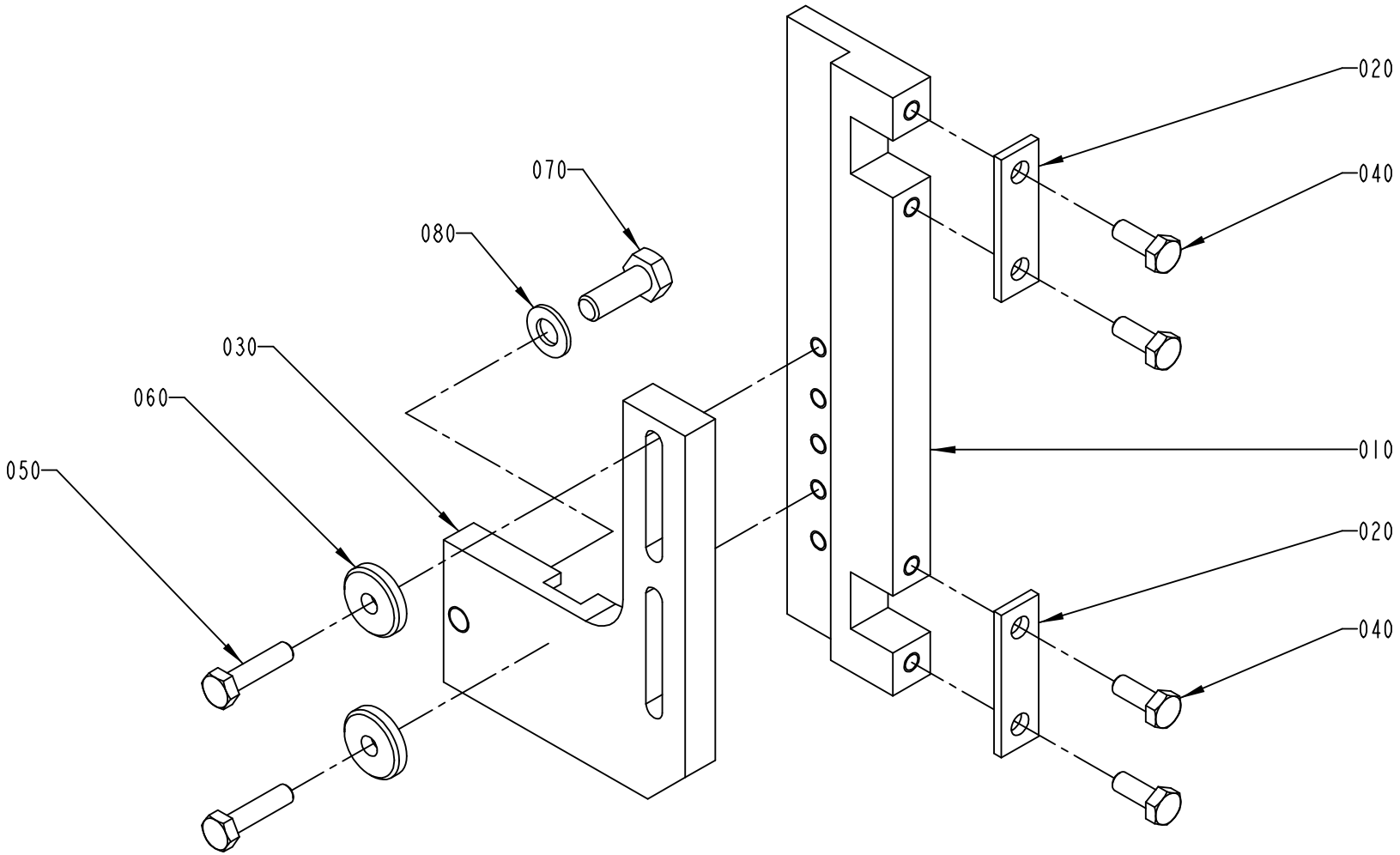

S-1487338-1
ECN 72879

Pos	Part No	SP	UN	Qty	Description	Page No
TBA 0200B OR TBA 0200S OR TBA 0250B OR TPA 0330SQ						
030	1348359-0000	-		1	BRACKET	
TBA 0500S OR TBA 0500B OR TBA 1000S OR TBA 1000SQ OR TBA 1000B OR TPA 1000S OR TBA 1500S						
030	1317475-0000	-		1	BRACKET	
Common Parts						
010	1317476-0000	-		1	BRACKET	
020	1036673-0000	-		2	WASHER	
040	312105-0368	-		4	SCREW M6S M6X16 A280	
050	312105-0372	-		2	SCREW M6S M6X25 A280	
060	315125-0153	-		2	WASHER PLAIN ROUND,CHAMF. 6,4/22, H=4	
070	312105-0452	-		1	SCREW M6S M8X22 A280	
080	315105-0165	-		1	WASHER PLAIN, BRB, 8,4/16,H=1,5	

Pos	Part No	SP	UN	Qty	Description	Page No

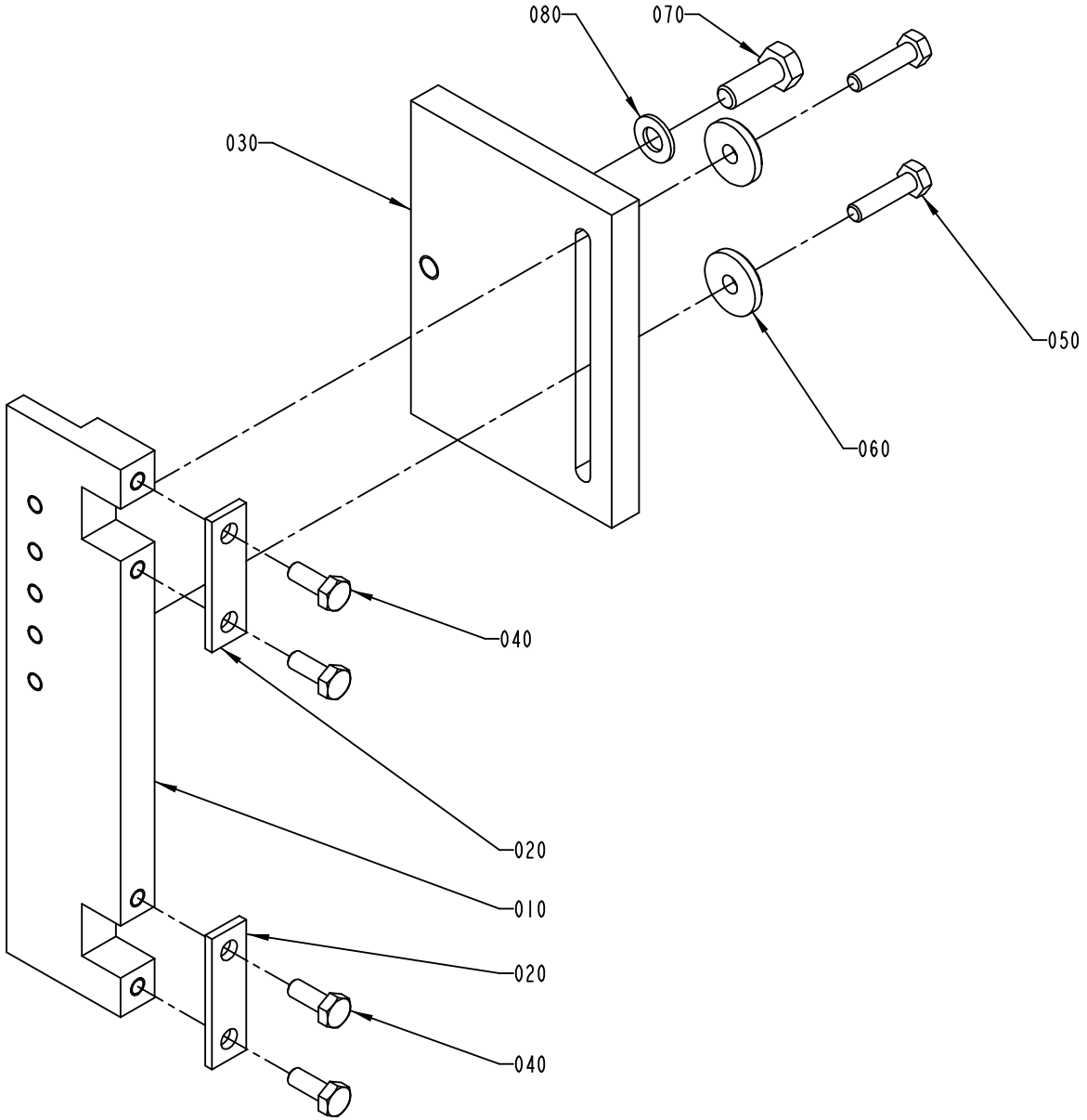

S-1487338-2
ECN 72879

Pos	Part No	SP	UN	Qty	Description	Page No
TBA 0200B OR TBA 0200S OR TBA 0250B OR TPA 0330SQ						
030	1348359-0000	-		1	BRACKET	
TBA 0500S OR TBA 0500B OR TBA 1000S OR TBA 1000SQ OR TBA 1000B OR TPA 1000S OR TBA 1500S						
030	1317475-0000	-		1	BRACKET	
Common Parts						
010	1317476-0000	-		1	BRACKET	
020	1036673-0000	-		2	WASHER	
040	312105-0368	-		4	SCREW M6S M6X16 A280	
050	312105-0372	-		2	SCREW M6S M6X25 A280	
060	315125-0153	-		2	WASHER PLAIN ROUND,CHAMF. 6,4/22, H=4	
070	312105-0452	-		1	SCREW M6S M8X22 A280	
080	315105-0165	-		1	WASHER PLAIN, BRB, 8,4/16,H=1,5	

Pos	Part No	SP	UN	Qty	Description	Page No

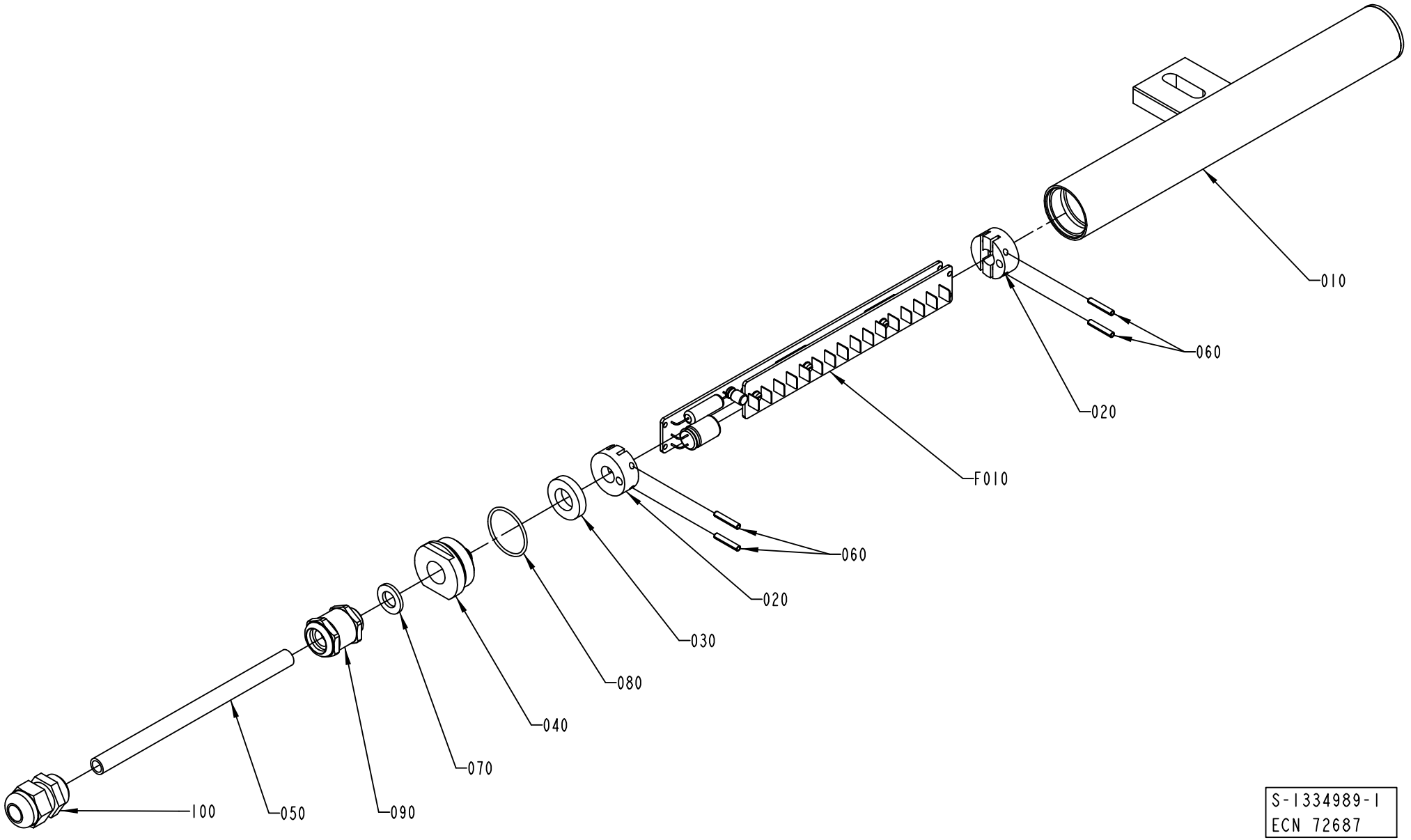
010
060
020
F010
060
020
030
080
040
070
090
050
100
S-1334989-1
ECN 72687

ECM: 72687 - 20000214
Group number: 1334989-0100
Assembly Drawing: 1334989-1_1_AA

Issue: 20011217

Pos	Part No	SP	UN	Qty	Description	Page No
Common Parts						
010	925999-0000	C		1	PROTECTION PIPE	
020	925877-0000	C		2	SUPPORT	
030	736514-0000	C		1	SHOCK ABSORBER	
040	926820-0000	C		1	PLUG	
050	90220-0085	-	M	11	CABLES, MULTI-CONDUCTOR SCREENED	
060	311111-0209	-		4	PIN, STRAIGHT SLOTTED SPRING FRP 3X18	
070	315105-0171	-		1	WASHER PLAIN, BRB, 10/18,H=2	
080	315202-0120	C		1	O-RING 27,1X1,6 MM	
090	90012-0119	-		1	GLAND,EMC,EXTENDED WITH INSERT	
100	352103-0106	-		1	CABLE GLAND ST 11	
F010	A42063-0100	C		1	LEVEL DETECTOR	**277**

Pos	Part No	SP	UN	Qty	Description	Page No

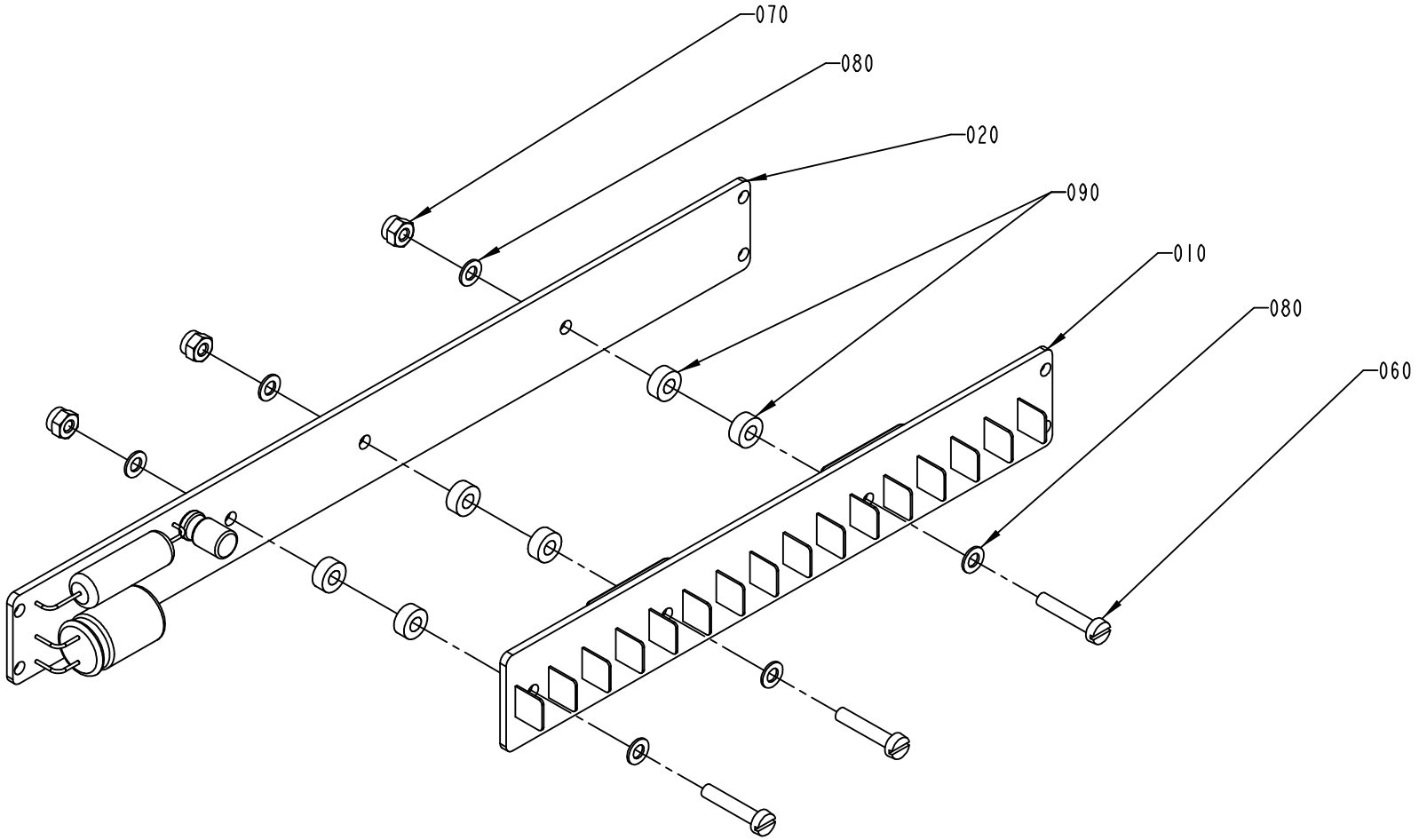

S-42063-I
ECN 72792

ECM: 72687 - 20000214
Group number: 42063-0100
Assembly Drawing: 42063-1_1_AA

Issue: 20011217

Pos	Part No	SP	UN	Qty	Description	Page No
Common Parts						
010	A42067-0100	C		1	SENSOR BOARD	
020	A42068-0100	C		1	CONVERTER BOARD	
060	312125-0228	-		3	SCREW PAN HEAD MCS M3X16 A480	
070	312812-0310	-		3	HEXAGON NUT, NY-LOCK M3 A480	
080	315105-0124	-		6	WASHER PLAIN, BRB, 3,2/6,H=0,5	
090	90005-0143	-		6	SPACER 3,3/7, H=3	

Pos	Part No	SP	UN	Qty	Description	Page No

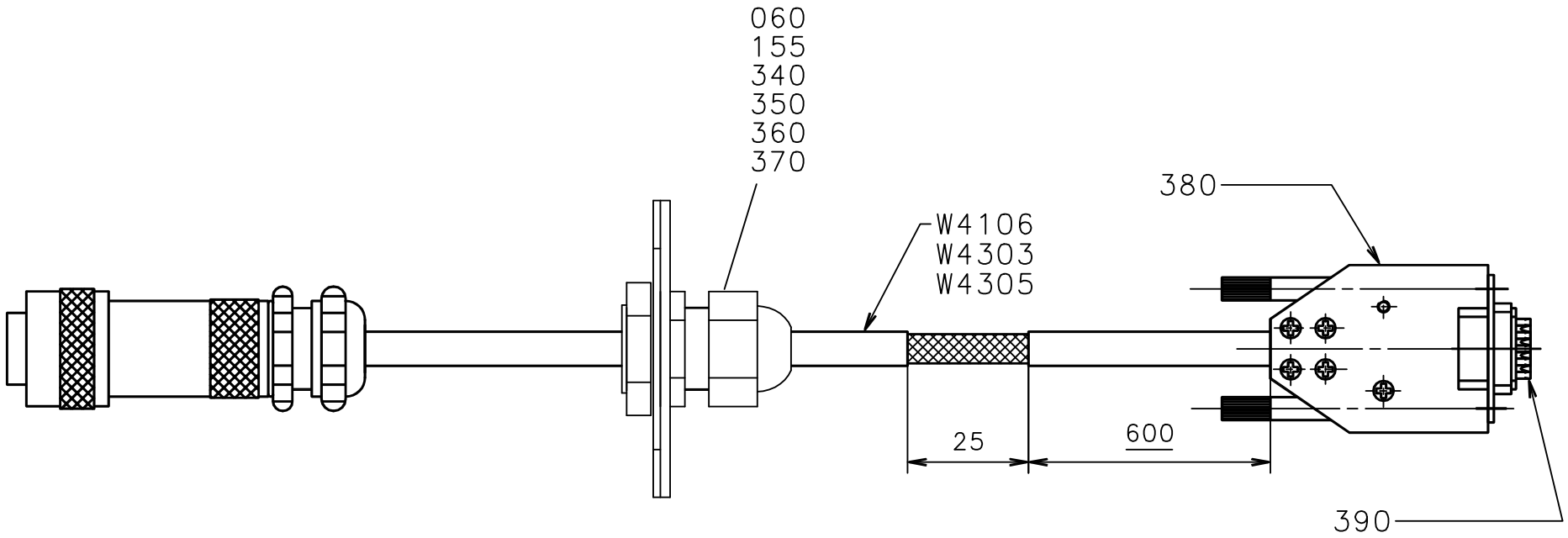
060
155
340
350
360
370
W4106
W4303
W4305
380
25
600
390

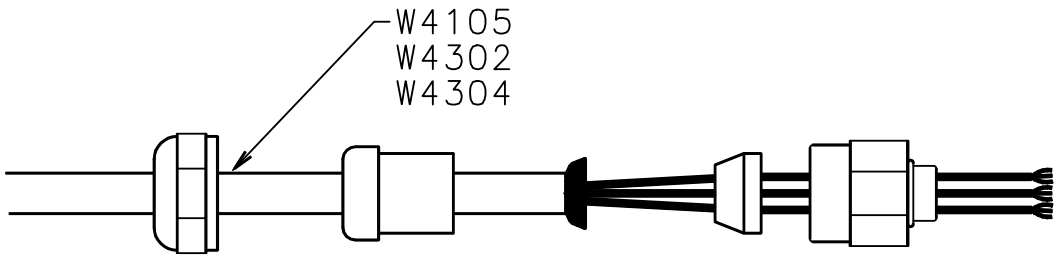
W4105
W4302
W4304

ECM: 72625 - 19991105
Group number: 1095748-0300
Assembly Drawing: 1095748-3_1_AC

Issue: 20011217

Pos	Part No	SP	UN	Qty	Description	Page No
Common Parts						
005	1255865-0000	-		1	MOUNTING PLATE	
010	1037673-0000	-		2	SLEEVE	
020	312125-0226	-		16	SCREW PAN HEAD MCS M3X12 SS	
030	315105-0124	-		8	WASHER PLAIN, BRB, 3,2/6,H=0,5	
040	352103-0101	-		2	CABLE GLAND ST 9;PR15,2/PG9	
050	352103-0106	-		2	CABLE GLAND ST 11	
060	352103-0108	-		10	CABLE GLAND ST 13	
070	352103-0111	-		3	CABLE GLAND ST 16	
080	352103-0116	-		7	CABLE GLAND ST 21	
090	352103-0120	-		3	CABLE GLAND STR 29	
130	90002-0004	-		3	BLANK-OFF PLUG 22,5	
140	90099-0104	-		2	NUT PR 15,2 (PG9)	
150	90099-0117	-		2	NUT PR 18,6 (PG11)	
155	90099-0118	-		6	NUT PR 20,4 (PG13,5)	
160	90099-0110	-		6	NUT PR 22,5 (PG16)	
170	90099-0119	-		4	NUT PR 28,3 (PG21)	
180	90110-0152	-		3	CABLE HOOD 24-POL 70.352.2428.1	
190	90110-0150	-		3	MALE INSERT 121110 0000	
195	90110-0156	-		1	MALE INSERT 70.210.0653.0	
200	90110-0157	-		4	CABLE HOOD 6-POL 70.352.0628.1	
210	90110-0159	-		4	MALE INSERT 70.310.0640.0	
215	90110-0160	-		1	CABLE HOOD 6-16-POL 70.352.1628.1	
220	90089-0028	-		2	MUFF	
230	315202-0211	-		2	O-RING 13,3X2,4 MM	
240	359005-0050	-		2	MARKING LABEL KIT X, 04.841.4550.0	
250	359005-0010	-		20	MARKING LABEL KIT 0 - 9, 04.841.2150.0	
290	352113-0204	-		30	ANCHOR TM3S25-M	
300	312125-0364	-		30	SCREW SLOT.PAN HD. MCS 6X10 A480	
310	315105-0153	-		4	WASHER PLAIN, BRB, 6,4/12,H=1,5	
320	312605-0316	-		4	HEXAGON NUT, M6M M6 A280	
340	1255864-0000	-		1	COVER PLATE	
350	1129550-0000	-		1	GASKET	
360	315105-0136	-		4	WASHER PLAIN, BRB, 4,3/8,H=0,8	
370	312125-0289	-		4	SCREW SLOT.PAN HD. MCS 4X10 A480	
380	90110-0145	-		3	COVER 8630-5169014-15-01	
390	90110-0142	-		3	PLUG DA15P064TX	
400	90165-0065	-		1	PIPE CLAMP, RSGU 1.8/9, D=8 MM	
410	312812-0312	-		1	HEXAGON NUT, NY-LOCK M4 A480	
420	315105-0136	-		1	WASHER PLAIN, BRB, 4,3/8,H=0,8	
430	315105-0136	-		1	WASHER PLAIN, BRB, 4,3/8,H=0,8	
440	90110-0349	-		2	COOVER/TOOL PX 0733	
480	90152-0058	-	MM	1500	GLANDS,HOSE 15X9	
490	90152-0058	-	MM	1500	GLANDS,HOSE 15X9	
W1304	90220-0034	-	MM	6500	THERMOCOUPLE CABLE K/ 2X0,5MM2	
W2002	351150-0418	-	MM	6500	CABLE OLFLEX 4X2,5 MM2 LIGHT/GREY	
W2011	1140285-0009	C		1	COAXIAL CABLE L= 5100 MM	
W2012	1140285-0009	C		1	COAXIAL CABLE L= 5100 MM	
W2056	351150-0425	-	MM	5000	CABLE OLFLEX 25X0,75 MM2 LIGHT/GREY	
W2057	351150-0425	-	MM	4500	CABLE OLFLEX 25X0,75 MM2 LIGHT/GREY	
W2058	351150-0425	-	MM	5500	CABLE OLFLEX 25X0,75 MM2 LIGHT/GREY	
W2071	351150-0412	-	MM	7500	CABLE OLFLEX 3X1,5 MM2 LIGHT/GREY	
W2254	351150-0405	-	MM	3500	CABLE OLFLEX 5X0,75 MM2 LIGHT/GREY	
W2255	351150-0405	-	MM	3500	CABLE OLFLEX 5X0,75 MM2 LIGHT/GREY	
W4016	90220-0165	-	MM	9000	SCR. CABLE 5X0,34MM2	
W4017	90220-0165	-	MM	9000	SCR. CABLE 5X0,34MM2	
W4054	351150-0406	-	M	2	CABLE OLFLEX 7X0,75 MM2 LIGHT/GREY	
W4105	90220-0125	-	MM	6500	MOTORCABLE(4X4,0)+(2X1,0)+(2X0,75)+SHIEL	
W4106	90220-0131	-	MM	9200	PAIR TWISTED CABLE 3X2X0,25MM2	
W4110	351150-0122	-	MM	3500	CABLE " REPL.BY 351150-431"	
W4302	90220-0116	-	MM	7000	MOTOR CABLE 4X1,0+2(2X0,5)+SHIELD	
W4303	90220-0131	-	MM	7700	PAIR TWISTED CABLE 3X2X0,25MM2	
W4304	90220-0116	-	MM	7000	MOTOR CABLE 4X1,0+2(2X0,5)+SHIELD	
W4305	90220-0131	-	MM	7700	PAIR TWISTED CABLE 3X2X0,25MM2	
X1304	90326-0020	-		1	PLUG,FEMALE YELLOW CR-AL	
X309	90326-0022	-		1	PLUG,MALE YELLOW CR-AL	
X4050:1	90110-0208	-		1	CABLE CONTACT	
X4050:2	90110-0209	-		8	CONTACT PIN, RC20M13K	
X4050:3	90012-0117	-		1	GLAND,EMC,EXTENDED WITH INSERT	
X4051:1	90110-0208	-		1	CABLE CONTACT	
X4051:2	90110-0209	-		8	CONTACT PIN, RC20M13K	
X4051:3	90012-0117	-		1	GLAND,EMC,EXTENDED WITH INSERT	
X4054	90110-0236	-		1	CHASSIS CONTACT PX0767/S	
X4055	90110-0236	-		1	CHASSIS CONTACT PX0767/S	
X4056:1	90110-0208	-		1	CABLE CONTACT	
X4056:2	90110-0209	-		8	CONTACT PIN, RC20M13K	
X4056:3	90012-0117	-		1	GLAND,EMC,EXTENDED WITH INSERT	
X4057	90110-0229	-		1	CABLE CONTACT, PX0740/S	
X4100	90110-0229	-		1	CABLE CONTACT, PX0740/S	

Machine Type | Group Description | Used-In | Group Number | Page No

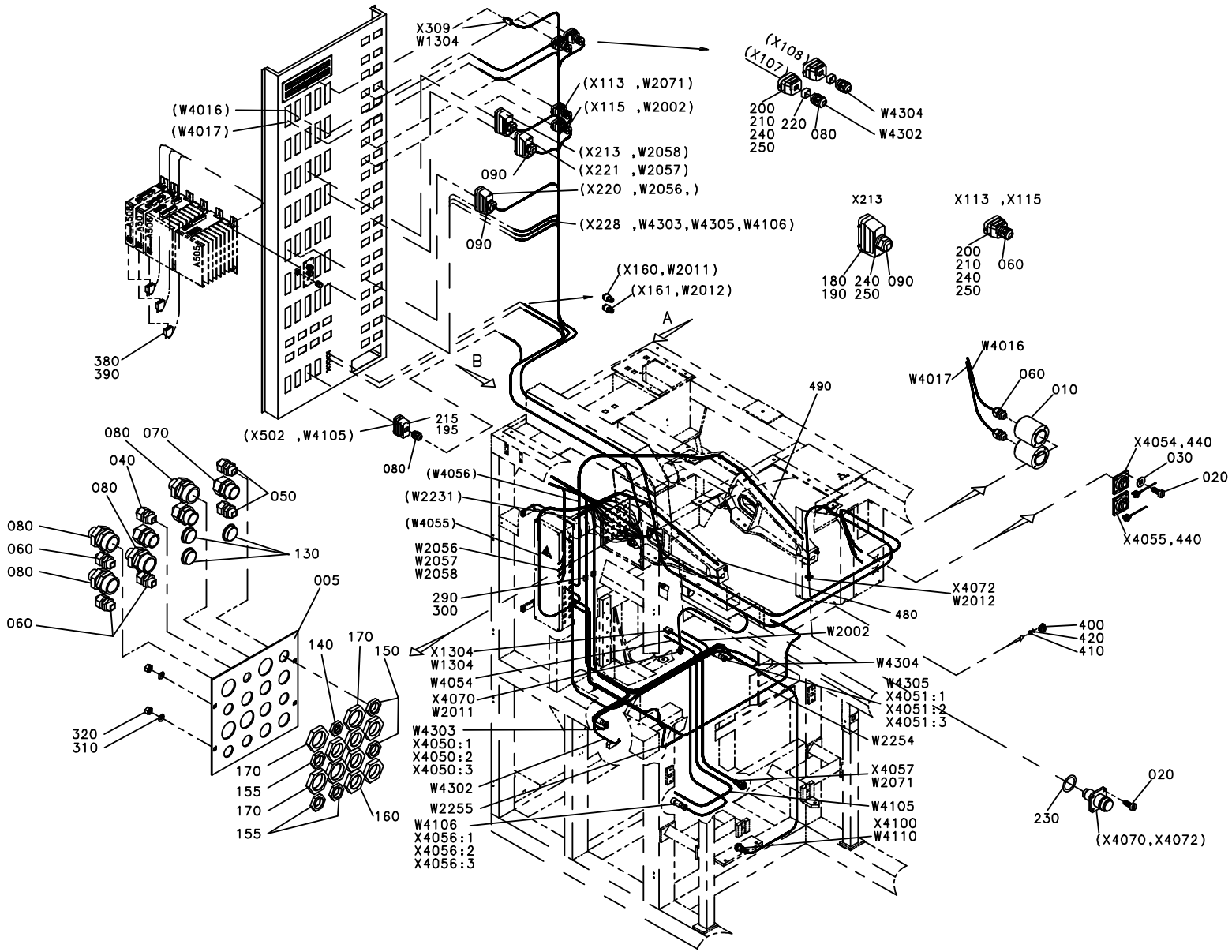
X309
W1304
(X113 ,W2071)
(X115 ,W2002)
(X213 ,W2058)
(X221 ,W2057)
(X220 ,W2056,)
(X228 ,W4303,W4305,W4106)
(X160,W2011)
(X161,W2012)
(W4016)
(W4017)
090
090
(X108)
(X107)
200
210
240
250
220
080
W4304
W4302
X213
180
190
240
250
090
X113 ,X115
200
210
240
250
060
380
390
A
B
490
W4016
W4017
060
010
(X502 ,W4105)
215
195
080
080
070
040
080
050
130
080
060
080
060
005
140
170
150
170
155
170
155
160
320
310
(W4056)
(W2231)
(W4055)
W2056
W2057
W2058
290
300
X1304
W1304
W4054
X4070
W2011
W4303
X4050:1
X4050:2
X4050:3
W4302
W2255
W4106
X4056:1
X4056:2
X4056:3
X4072
W2012
480
W2002
W4304
W4305
X4051:1
X4051:2
X4051:3
W2254
X4057
W2071
W4105
X4100
W4110
X4054,440
030
020
X4055,440
400
420
410
020
230
(X4070,X4072)

Pos	Part No	SP	UN	Qty	Description	Page No
Common Parts						
005	1255865-0000	-		1	MOUNTING PLATE	
010	1037673-0000	-		2	SLEEVE	
020	312125-0226	-		16	SCREW PAN HEAD MCS M3X12 SS	
030	315105-0124	-		8	WASHER PLAIN, BRB, 3,2/6,H=0,5	
040	352103-0101	-		2	CABLE GLAND ST 9;PR15,2/PG9	
050	352103-0106	-		2	CABLE GLAND ST 11	
060	352103-0108	-		10	CABLE GLAND ST 13	
070	352103-0111	-		3	CABLE GLAND ST 16	
080	352103-0116	-		7	CABLE GLAND ST 21	
090	352103-0120	-		3	CABLE GLAND STR 29	
130	90002-0004	-		3	BLANK-OFF PLUG 22,5	
140	90099-0104	-		2	NUT PR 15,2 (PG9)	
150	90099-0117	-		2	NUT PR 18,6 (PG11)	
155	90099-0118	-		6	NUT PR 20,4 (PG13,5)	
160	90099-0110	-		6	NUT PR 22,5 (PG16)	
170	90099-0119	-		4	NUT PR 28,3 (PG21)	
180	90110-0152	-		3	CABLE HOOD 24-POL 70.352.2428.1	
190	90110-0150	-		3	MALE INSERT 121110 0000	
195	90110-0156	-		1	MALE INSERT 70.210.0653.0	
200	90110-0157	-		4	CABLE HOOD 6-POL 70.352.0628.1	
210	90110-0159	-		4	MALE INSERT 70.310.0640.0	
215	90110-0160	-		1	CABLE HOOD 6-16-POL 70.352.1628.1	
220	90089-0028	-		2	MUFF	
230	315202-0211	-		2	O-RING 13,3X2,4 MM	
240	359005-0050	-		2	MARKING LABEL KIT X, 04.841.4550.0	
250	359005-0010	-		20	MARKING LABEL KIT 0 - 9, 04.841.2150.0	
290	352113-0204	-		30	ANCHOR TM3S25-M	
300	312125-0364	-		30	SCREW SLOT.PAN HD. MCS 6X10 A480	
310	315105-0153	-		4	WASHER PLAIN, BRB, 6,4/12,H=1,5	
320	312605-0316	-		4	HEXAGON NUT, M6M M6 A280	
340	1255864-0000	-		1	COVER PLATE	
350	1129550-0000	-		1	GASKET	
360	315105-0136	-		4	WASHER PLAIN, BRB, 4,3/8,H=0,8	
370	312125-0289	-		4	SCREW SLOT.PAN HD. MCS 4X10 A480	
380	90110-0145	-		3	COVER 8630-5169014-15-01	
390	90110-0142	-		3	PLUG DA15P064TX	
400	90165-0065	-		1	PIPE CLAMP, RSGU 1.8/9, D=8 MM	
410	312812-0312	-		1	HEXAGON NUT, NY-LOCK M4 A480	
420	315105-0136	-		1	WASHER PLAIN, BRB, 4,3/8,H=0,8	
430	315105-0136	-		1	WASHER PLAIN, BRB, 4,3/8,H=0,8	
440	90110-0349	-		2	COOVER/TOOL PX 0733	
480	90152-0058	-	MM	1500	GLANDS,HOSE 15X9	
490	90152-0058	-	MM	1500	GLANDS,HOSE 15X9	
W1304	90220-0034	-	MM	6500	THERMOCOUPLE CABLE K/ 2X0,5MM2	
W2002	351150-0418	-	MM	6500	CABLE OLFLEX 4X2,5 MM2 LIGHT/GREY	
W2011	1140285-0009	C		1	COAXIAL CABLE L= 5100 MM	
W2012	1140285-0009	C		1	COAXIAL CABLE L= 5100 MM	
W2056	351150-0425	-	MM	5000	CABLE OLFLEX 25X0,75 MM2 LIGHT/GREY	
W2057	351150-0425	-	MM	4500	CABLE OLFLEX 25X0,75 MM2 LIGHT/GREY	
W2058	351150-0425	-	MM	5500	CABLE OLFLEX 25X0,75 MM2 LIGHT/GREY	
W2071	351150-0412	-	MM	7500	CABLE OLFLEX 3X1,5 MM2 LIGHT/GREY	
W2254	351150-0405	-	MM	3500	CABLE OLFLEX 5X0,75 MM2 LIGHT/GREY	
W2255	351150-0405	-	MM	3500	CABLE OLFLEX 5X0,75 MM2 LIGHT/GREY	
W4016	90220-0165	-	MM	9000	SCR. CABLE 5X0,34MM2	
W4017	90220-0165	-	MM	9000	SCR. CABLE 5X0,34MM2	
W4054	351150-0406	-	M	2	CABLE OLFLEX 7X0,75 MM2 LIGHT/GREY	
W4105	90220-0125	-	MM	6500	MOTORCABLE(4X4,0)+(2X1,0)+(2X0,75)+SHIEL	
W4106	90220-0131	-	MM	9200	PAIR TWISTED CABLE 3X2X0,25MM2	
W4110	351150-0122	-	MM	3500	CABLE " REPL.BY 351150-431"	
W4302	90220-0116	-	MM	7000	MOTOR CABLE 4X1,0+2(2X0,5)+SHIELD	
W4303	90220-0131	-	MM	7700	PAIR TWISTED CABLE 3X2X0,25MM2	
W4304	90220-0116	-	MM	7000	MOTOR CABLE 4X1,0+2(2X0,5)+SHIELD	
W4305	90220-0131	-	MM	7700	PAIR TWISTED CABLE 3X2X0,25MM2	
X1304	90326-0020	-		1	PLUG,FEMALE YELLOW CR-AL	
X309	90326-0022	-		1	PLUG,MALE YELLOW CR-AL	
X4050:1	90110-0208	-		1	CABLE CONTACT	
X4050:2	90110-0209	-		8	CONTACT PIN, RC20M13K	
X4050:3	90012-0117	-		1	GLAND,EMC,EXTENDED WITH INSERT	
X4051:1	90110-0208	-		1	CABLE CONTACT	
X4051:2	90110-0209	-		8	CONTACT PIN, RC20M13K	
X4051:3	90012-0117	-		1	GLAND,EMC,EXTENDED WITH INSERT	
X4054	90110-0236	-		1	CHASSIS CONTACT PX0767/S	
X4055	90110-0236	-		1	CHASSIS CONTACT PX0767/S	
X4056:1	90110-0208	-		1	CABLE CONTACT	
X4056:2	90110-0209	-		8	CONTACT PIN, RC20M13K	
X4056:3	90012-0117	-		1	GLAND,EMC,EXTENDED WITH INSERT	
X4057	90110-0229	-		1	CABLE CONTACT, PX0740/S	
X4100	90110-0229	-		1	CABLE CONTACT, PX0740/S	

Machine Type	Group Description	Used-In	Group Number	Page No

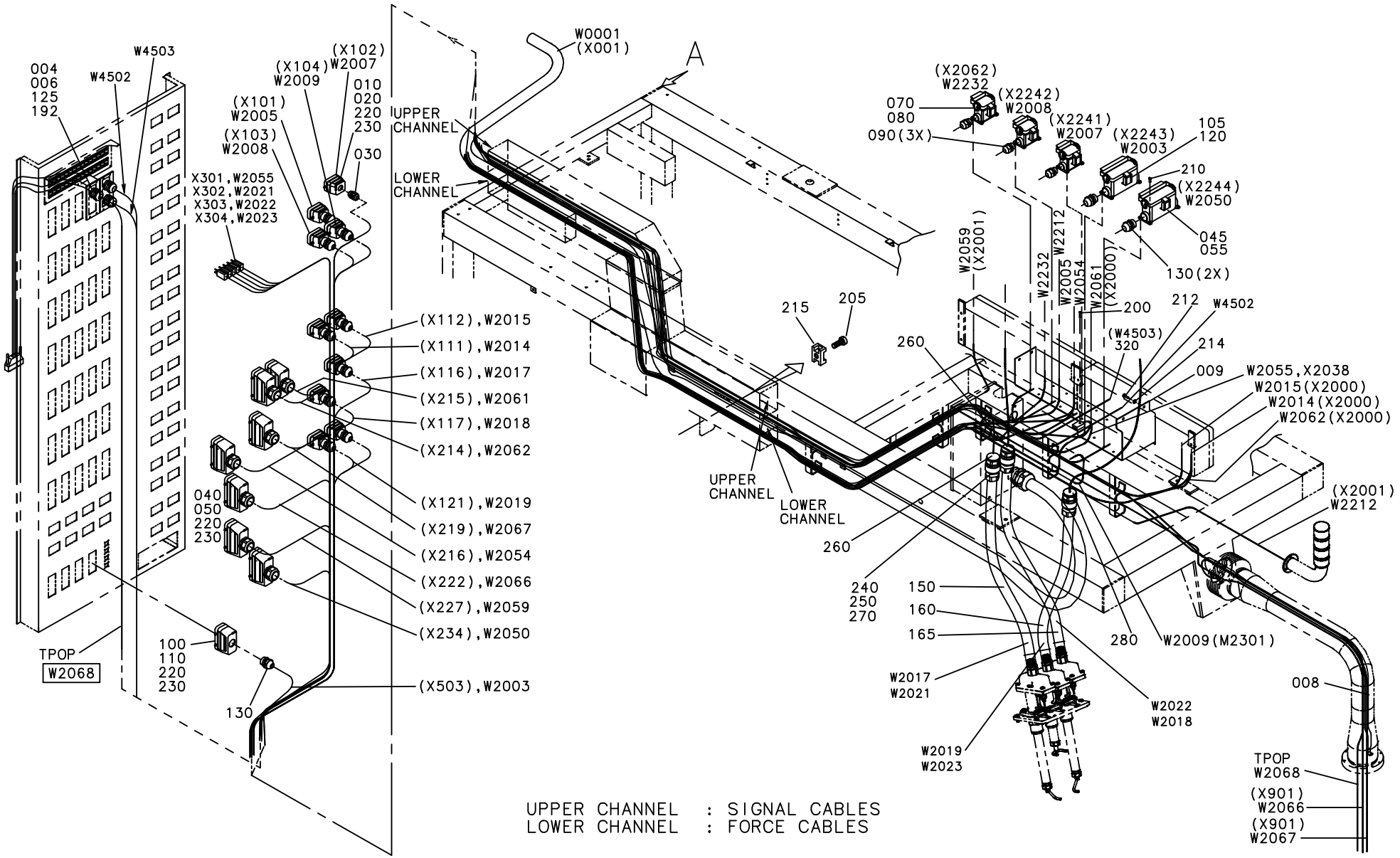
W0001
(X001)
A
UPPER CHANNEL
LOWER CHANNEL
004
006
125
192
W4503
W4502
(X102)
W2007
(X104)
W2009
(X101)
W2005
(X103)
W2008
010
020
220
230
030
X301,W2055
X302,W2021
X303,W2022
X304,W2023
(X112),W2015
(X111),W2014
(X116),W2017
(X215),W2061
(X117),W2018
(X214),W2062
(X121),W2019
(X219),W2067
(X216),W2054
(X222),W2066
(X227),W2059
(X234),W2050
(X503),W2003
040
050
220
230
100
110
220
230
130
TPOP
W2068
(X2062)
W2232
(X2242)
W2008
(X2241)
W2007
(X2243)
W2003
070
080
090(3X)
105
120
210
(X2244)
W2050
045
055
130(2X)
W2059
(X2001)
W2232
W2005
W2054
W2212
W2061
(X2000)
215
205
200
212
W4502
(W4503)
320
214
260
009
W2055,X2038
W2015(X2000)
W2014(X2000)
W2062(X2000)
(X2001)
W2212
240
250
270
150
160
165
280
W2009(M2301)
W2017
W2021
W2022
W2018
W2019
W2023
008
TPOP
W2068
(X901)
W2066
(X901)
W2067
UPPER CHANNEL : SIGNAL CABLES
LOWER CHANNEL : FORCE CABLES

ECM: 72625 - 19991105
Group number: 1095752-0400
Assembly Drawing: 1095752-4_1_AB

Issue: 20011217

Pos	Part No	SP	UN	Qty	Description	Page No
Common Parts						
004	1129550-0000	-		2	GASKET	
006	1038876-0000	-		1	COVERING PLATE	
008	1129600-0000	-		1	BRAID	
009	1129710-0000	-		1	CANTILEVER	
010	90110-0157	-		10	CABLE HOOD 6-POL 70.352.0628.1	
020	90110-0159	D		10	MALE INSERT 70.310.0640.0	
030	352103-0108	-		10	CABLE GLAND ST 13	
040	90110-0152	-		7	CABLE HOOD 24-POL 70.352.2428.1	
045	90110-0225	-		1	CHASSIS HOUSING 310168-33	
050	90110-0150	-		7	MALE INSERT 121110 0000	
055	90110-0151	-		1	FEMALE INSERT 24-POL 121130 0000	
060	352103-0120	-		7	CABLE GLAND STR 29	
070	90110-0221	-		3	CHASSIS HOUSING 310162-33	
080	90110-0163	-		3	FEMALE INSERT 70 300 0640 0	
090	352103-0110	-		3	CABLE GLAND STR 16	
100	90110-0160	-		1	CABLE HOOD 6-16-POL 70.352.1628.1	
105	90110-0224	-		1	CHASSIS HOUSING 310166-33	
110	90110-0156	-		1	MALE INSERT 70.210.0653.0	
120	90110-0247	D		1	FEMALE INSERT 70.200.0653.0	
125	352103-0115	-		1	CABLE GLAND STR 21	
130	352103-0116	-		3	CABLE GLAND ST 21	
150	90152-0070	-	MM	800	GLANDS,HOSE 32,5X26	
160	90152-0070	-	MM	800	GLANDS,HOSE 32,5X26	
165	90152-0070	-	MM	800	GLANDS,HOSE 32,5X26	
170	90012-0134	-		2	GLAND FITTING	
192	90099-0004	-		1	NUT	
200	312145-0230	-		1	SCREW COUNTERS.SLOT.HD. MFS 3X20 SS	
205	312125-0364	-		8	SCREW SLOT.PAN HD. MCS 6X10 A480	
210	312125-0287	-		20	SCREW PAN HEAD MCS M4X8 SS	
212	312105-0366	-		4	SCREW M6S M6X12 A280	
214	315105-0153	-		4	WASHER PLAIN, BRB, 6,4/12,H=1,5	
215	352113-0204	-		8	ANCHOR TM3S25-M	
220	359005-0050	-		3	MARKING LABEL KIT X, 04.841.4550.0	
230	359005-0010	-		25	MARKING LABEL KIT 0 - 9, 04.841.2150.0	
240	353241-0003	-		3	GLANDS,EXTENDED WITHOUT INSERT PG 21	
250	1285865-0000	-		3	NUT	
260	1487854-0000	-		4	INSERT	
270	353247-0005	-		3	GLANDS,EMC,HOSE,EXTEND,WITH INSERT PG21	
280	1487926-0000	-		2	INSERT	
290	352103-0101	-		1	CABLE GLAND ST 9;PR15,2/PG9	
300	90099-0104	-		1	NUT PR 15,2 (PG9)	
310	1487850-0000	-		1	COVER PLATE	
320	1487761-0000	-		1	CABLE SERIAL	
W 0001	351150-0426	-	M	6	CABLE OLFLEX 5X25 MM2 LIGHT/GREY	
W 2003	351150-0418	-	MM	4500	CABLE OLFLEX 4X2,5 MM2 LIGHT/GREY	
W 2005	351150-0413	-	MM	7500	CABLE OLFLEX 4X1,5 MM2 LIGHT/GREY	
W 2007	351150-0418	-	MM	6500	CABLE OLFLEX 4X2,5 MM2 LIGHT/GREY	
W 2008	351150-0418	-	MM	6500	CABLE OLFLEX 4X2,5 MM2 LIGHT/GREY	
W 2009	351150-0418	-	M	7	CABLE OLFLEX 4X2,5 MM2 LIGHT/GREY	
W 2014	351150-0418	-	MM	6700	CABLE OLFLEX 4X2,5 MM2 LIGHT/GREY	
W 2015	351150-0418	-	MM	6700	CABLE OLFLEX 4X2,5 MM2 LIGHT/GREY	
W 2017	351150-0412	-	MM	6500	CABLE OLFLEX 3X1,5 MM2 LIGHT/GREY	
W 2018	351150-0412	-	MM	6500	CABLE OLFLEX 3X1,5 MM2 LIGHT/GREY	
W 2019	351150-0417	-	MM	6500	CABLE OLFLEX 3X2,5 MM2 LIGHT/GREY	
W 2021	90220-0034	C	MM	6500	THERMOCOUPLE CABLE K/ 2X0,5MM2	
W 2022	90220-0034	C	MM	6500	THERMOCOUPLE CABLE K/ 2X0,5MM2	
W 2023	90220-0034	C	MM	6500	THERMOCOUPLE CABLE K/ 2X0,5MM2	
W 2050	351150-0425	-	M	5	CABLE OLFLEX 25X0,75 MM2 LIGHT/GREY	
W 2054	351150-0425	-	M	6	CABLE OLFLEX 25X0,75 MM2 LIGHT/GREY	
W 2055	90220-0034	C	M	6	THERMOCOUPLE CABLE K/ 2X0,5MM2	
W 2059	351150-0425	-	M	5	CABLE OLFLEX 25X0,75 MM2 LIGHT/GREY	
W 2061	351150-0425	-	MM	5800	CABLE OLFLEX 25X0,75 MM2 LIGHT/GREY	
W 2062	351150-0425	-	MM	6200	CABLE OLFLEX 25X0,75 MM2 LIGHT/GREY	
W 2066	351150-0425	-	M	8	CABLE OLFLEX 25X0,75 MM2 LIGHT/GREY	
W 2067	351150-0425	-	MM	8500	CABLE OLFLEX 25X0,75 MM2 LIGHT/GREY	
W 2068	1363297-0000	-		1	CABLE LVDS 10M	
W 2212	351150-0406	-	M	3	CABLE OLFLEX 7X0,75 MM2 LIGHT/GREY	
W 2232	351150-0406	-	MM	1500	CABLE OLFLEX 7X0,75 MM2 LIGHT/GREY	
W 4502	90220-0091	-	MM	9500	PAIR TWISTED CABLE 2X2X0,25MM2	
X 2038	90326-0020	-		1	PLUG,FEMALE YELLOW CR-AL	
X 301	90326-0022	-		1	PLUG,MALE YELLOW CR-AL	
X 302	90326-0022	-		1	PLUG,MALE YELLOW CR-AL	
X 303	90326-0022	-		1	PLUG,MALE YELLOW CR-AL	
X 304	90326-0022	-		1	PLUG,MALE YELLOW CR-AL	

Machine Type | Group Description | Used-In | Group Number | Page No

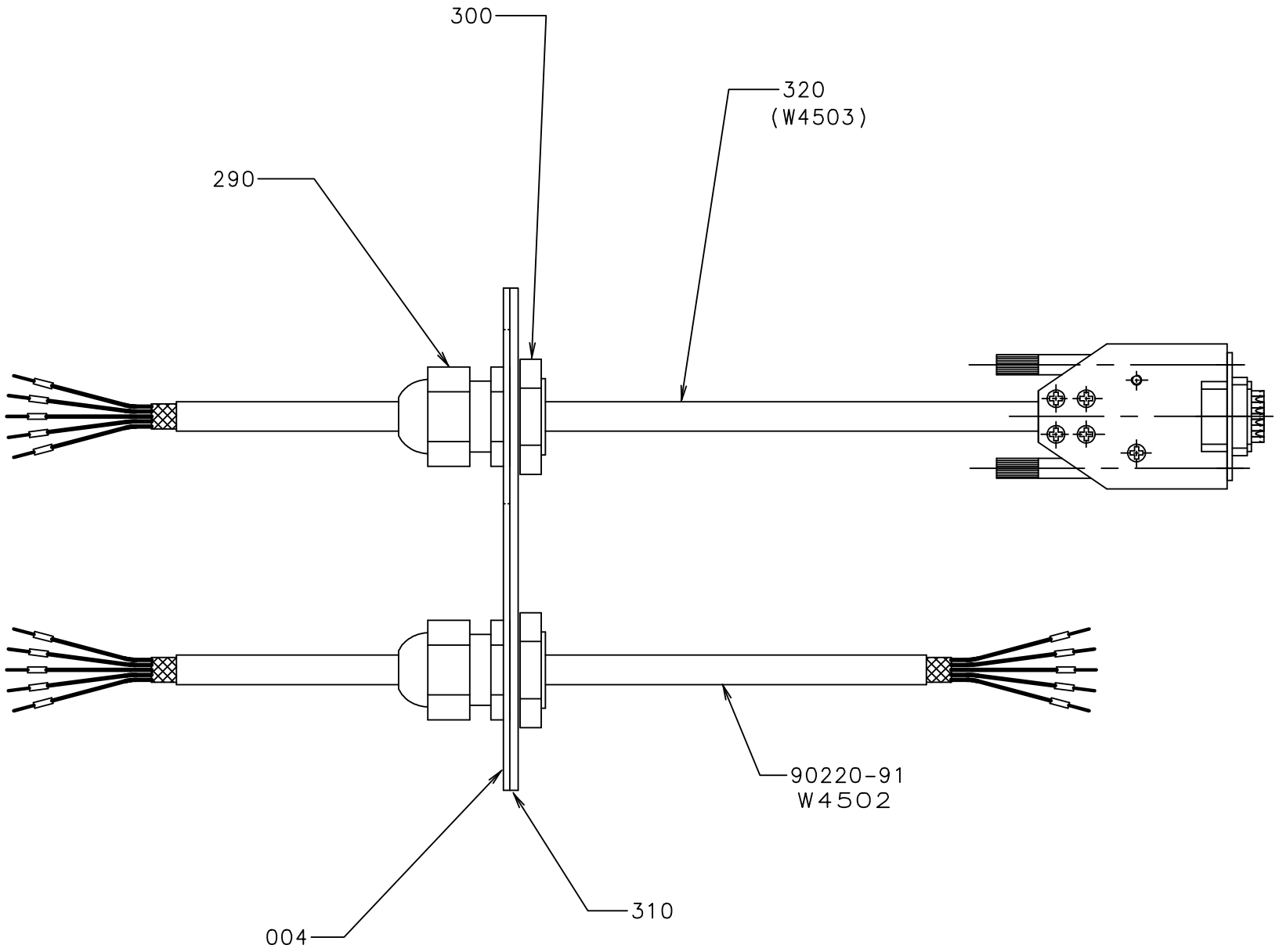
300
320
(W4503)
290
90220-91
W4502
004
310

ECM: 72625 - 19991105
Group number: 1095752-0400
Assembly Drawing: 1095752-5_1_AA

Issue: 20011217

Pos	Part No	SP	UN	Qty	Description	Page No
Common Parts						
004	1129550-0000	-		2	GASKET	
006	1038876-0000	-		1	COVERING PLATE	
008	1129600-0000	-		1	BRAID	
009	1129710-0000	-		1	CANTILEVER	
010	90110-0157	-		10	CABLE HOOD 6-POL 70.352.0628.1	
020	90110-0159	D		10	MALE INSERT 70.310.0640.0	
030	352103-0108	-		10	CABLE GLAND ST 13	
040	90110-0152	-		7	CABLE HOOD 24-POL 70.352.2428.1	
045	90110-0225	-		1	CHASSIS HOUSING 310168-33	
050	90110-0150	-		7	MALE INSERT 121110 0000	
055	90110-0151	-		1	FEMALE INSERT 24-POL 121130 0000	
060	352103-0120	-		7	CABLE GLAND STR 29	
070	90110-0221	-		3	CHASSIS HOUSING 310162-33	
080	90110-0163	-		3	FEMALE INSERT 70 300 0640 0	
090	352103-0110	-		3	CABLE GLAND STR 16	
100	90110-0160	-		1	CABLE HOOD 6-16-POL 70.352.1628.1	
105	90110-0224	-		1	CHASSIS HOUSING 310166-33	
110	90110-0156	-		1	MALE INSERT 70.210.0653.0	
120	90110-0247	D		1	FEMALE INSERT 70.200.0653.0	
125	352103-0115	-		1	CABLE GLAND STR 21	
130	352103-0116	-		3	CABLE GLAND ST 21	
150	90152-0070	-	MM	800	GLANDS,HOSE 32,5X26	
160	90152-0070	-	MM	800	GLANDS,HOSE 32,5X26	
165	90152-0070	-	MM	800	GLANDS,HOSE 32,5X26	
170	90012-0134	-		2	GLAND FITTING	
192	90099-0004	-		1	NUT	
200	312145-0230	-		1	SCREW COUNTERS.SLOT.HD. MFS 3X20 SS	
205	312125-0364	-		8	SCREW SLOT.PAN HD. MCS 6X10 A480	
210	312125-0287	-		20	SCREW PAN HEAD MCS M4X8 SS	
212	312105-0366	-		4	SCREW M6S M6X12 A280	
214	315105-0153	-		4	WASHER PLAIN, BRB, 6,4/12,H=1,5	
215	352113-0204	-		8	ANCHOR TM3S25-M	
220	359005-0050	-		3	MARKING LABEL KIT X, 04.841.4550.0	
230	359005-0010	-		25	MARKING LABEL KIT 0 - 9, 04.841.2150.0	
240	353241-0003	-		3	GLANDS,EXTENDED WITHOUT INSERT PG 21	
250	1285865-0000	-		3	NUT	
260	1487854-0000	-		4	INSERT	
270	353247-0005	-		3	GLANDS,EMC,HOSE,EXTEND,WITH INSERT PG21	
280	1487926-0000	-		2	INSERT	
290	352103-0101	-		1	CABLE GLAND ST 9;PR15,2/PG9	
300	90099-0104	-		1	NUT PR 15,2 (PG9)	
310	1487850-0000	-		1	COVER PLATE	
320	1487761-0000	-		1	CABLE SERIAL	
W 0001	351150-0426	-	M	6	CABLE OLFLEX 5X25 MM2 LIGHT/GREY	
W 2003	351150-0418	-	MM	4500	CABLE OLFLEX 4X2,5 MM2 LIGHT/GREY	
W 2005	351150-0413	-	MM	7500	CABLE OLFLEX 4X1,5 MM2 LIGHT/GREY	
W 2007	351150-0418	-	MM	6500	CABLE OLFLEX 4X2,5 MM2 LIGHT/GREY	
W 2008	351150-0418	-	MM	6500	CABLE OLFLEX 4X2,5 MM2 LIGHT/GREY	
W 2009	351150-0418	-	M	7	CABLE OLFLEX 4X2,5 MM2 LIGHT/GREY	
W 2014	351150-0418	-	MM	6700	CABLE OLFLEX 4X2,5 MM2 LIGHT/GREY	
W 2015	351150-0418	-	MM	6700	CABLE OLFLEX 4X2,5 MM2 LIGHT/GREY	
W 2017	351150-0412	-	MM	6500	CABLE OLFLEX 3X1,5 MM2 LIGHT/GREY	
W 2018	351150-0412	-	MM	6500	CABLE OLFLEX 3X1,5 MM2 LIGHT/GREY	
W 2019	351150-0417	-	MM	6500	CABLE OLFLEX 3X2,5 MM2 LIGHT/GREY	
W 2021	90220-0034	C	MM	6500	THERMOCOUPLE CABLE K/ 2X0,5MM2	
W 2022	90220-0034	C	MM	6500	THERMOCOUPLE CABLE K/ 2X0,5MM2	
W 2023	90220-0034	C	MM	6500	THERMOCOUPLE CABLE K/ 2X0,5MM2	
W 2050	351150-0425	-	M	5	CABLE OLFLEX 25X0,75 MM2 LIGHT/GREY	
W 2054	351150-0425	-	M	6	CABLE OLFLEX 25X0,75 MM2 LIGHT/GREY	
W 2055	90220-0034	C	M	6	THERMOCOUPLE CABLE K/ 2X0,5MM2	
W 2059	351150-0425	-	M	5	CABLE OLFLEX 25X0,75 MM2 LIGHT/GREY	
W 2061	351150-0425	-	MM	5800	CABLE OLFLEX 25X0,75 MM2 LIGHT/GREY	
W 2062	351150-0425	-	MM	6200	CABLE OLFLEX 25X0,75 MM2 LIGHT/GREY	
W 2066	351150-0425	-	M	8	CABLE OLFLEX 25X0,75 MM2 LIGHT/GREY	
W 2067	351150-0425	-	MM	8500	CABLE OLFLEX 25X0,75 MM2 LIGHT/GREY	
W 2068	1363297-0000	-		1	CABLE LVDS 10M	
W 2212	351150-0406	-	M	3	CABLE OLFLEX 7X0,75 MM2 LIGHT/GREY	
W 2232	351150-0406	-	MM	1500	CABLE OLFLEX 7X0,75 MM2 LIGHT/GREY	
W 4502	90220-0091	-	MM	9500	PAIR TWISTED CABLE 2X2X0,25MM2	
X 2038	90326-0020	-		1	PLUG,FEMALE YELLOW CR-AL	
X 301	90326-0022	-		1	PLUG,MALE YELLOW CR-AL	
X 302	90326-0022	-		1	PLUG,MALE YELLOW CR-AL	
X 303	90326-0022	-		1	PLUG,MALE YELLOW CR-AL	
X 304	90326-0022	-		1	PLUG,MALE YELLOW CR-AL	

Machine Type | Group Description | Used-In | Group Number | Page No

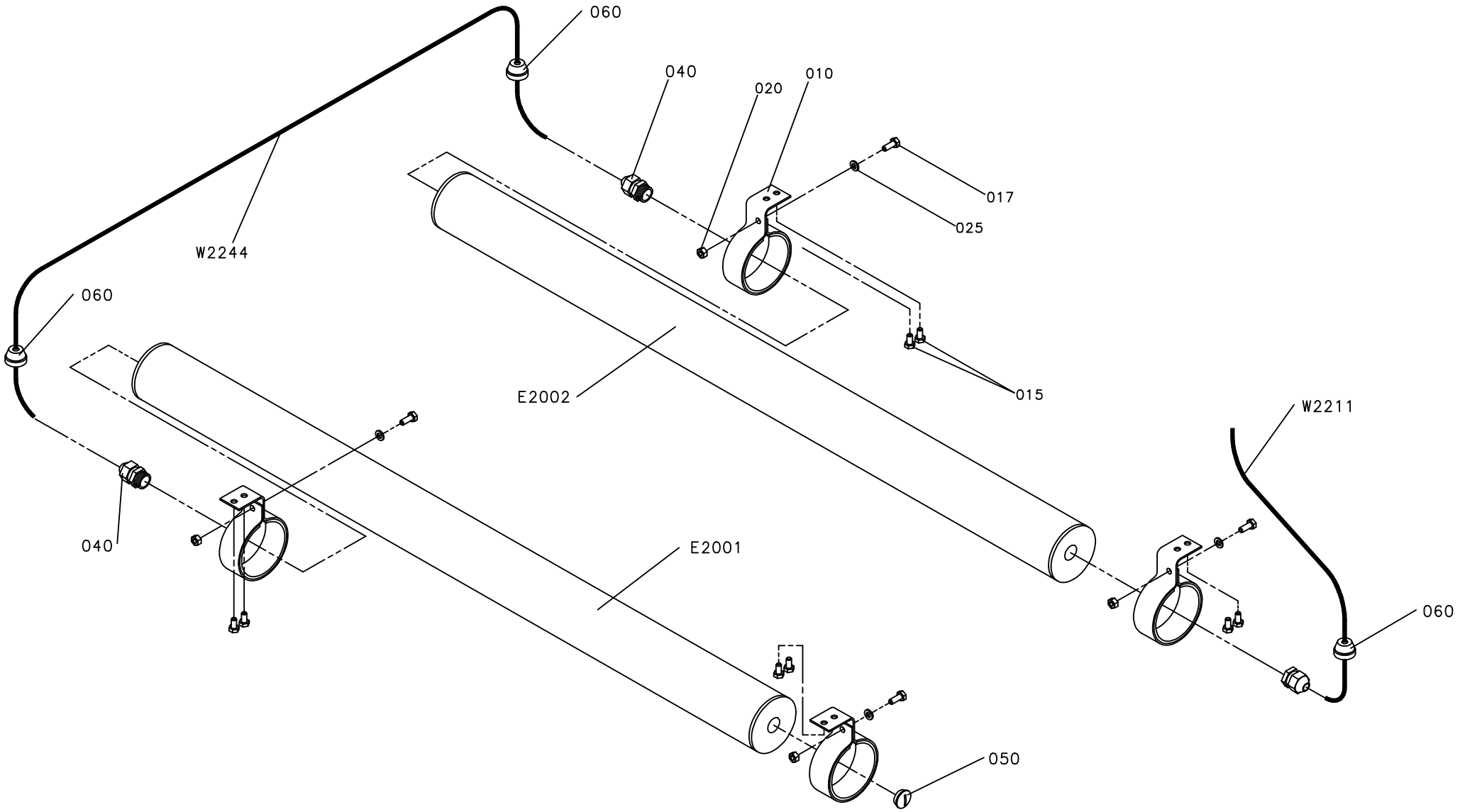
060
040
020
010
017
025
W2244
060
E2002
015
W2211
040
E2001
060
050

ECM: 81705 - 20001031
Group number: 1095861-0100
Assembly Drawing: 1095861-1_1_AB

Issue: 20011217

Pos	Part No	SP	UN	Qty	Description	Page No
Common Parts						
010	1140129-0000	-		4	HOLDER	
015	312105-0366	-		8	SCREW M6S M6X12 A280	
017	312105-0368	-		4	SCREW M6S M6X16 A280	
020	312605-0316	-		4	HEXAGON NUT, M6M M6 A280	
025	315105-0153	-		4	WASHER PLAIN, BRB, 6,4/12,H=1,5	
040	352103-0106	-		3	CABLE GLAND ST 11	
050	90002-0009	-		1	BLANK-OFF PLUG 18.6	
060	90015-0023	-		3	GLANDS,LEAD-IN,IP67	
E 2001	B90457-0149	B		1	LIGHT FIXTURE	
	90297-0002	*-*		*1*	*FLUORESCENT TUBE 18W*	
	90164-0303	*-*		*1*	*BRACKET SK2202 WALDMANN*	
	90164-0302	*-*		*1*	*BRACKET*	
E 2002	B90457-0149	B		1	LIGHT FIXTURE	
	90297-0002	*-*		*1*	*FLUORESCENT TUBE 18W*	
	90164-0303	*-*		*1*	*BRACKET SK2202 WALDMANN*	
	90164-0302	*-*		*1*	*BRACKET*	
W 2211	351150-0412	-	MM	1800	CABLE OLFLEX 3X1,5 MM2 LIGHT/GREY	
W 2244	351150-0412	-	MM	2000	CABLE OLFLEX 3X1,5 MM2 LIGHT/GREY	

Pos	Part No	SP	UN	Qty	Description	Page No

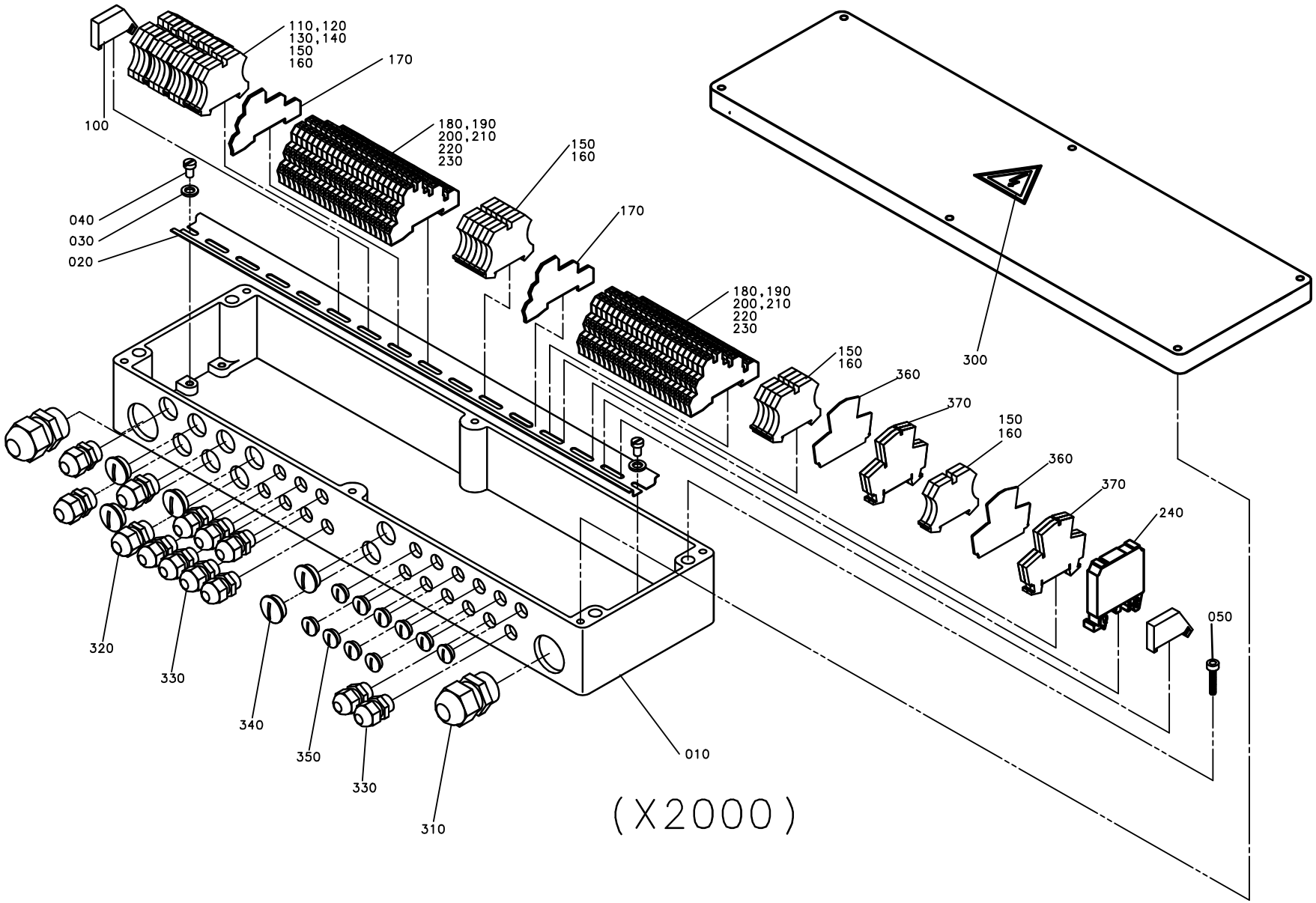
110,120
130,140
150
160
170
100
180,190
200,210
220
230
150
160
170
040
030
020
180,190
200,210
220
230
150
160
360
370
150
160
360
370
240
300
050
320
330
340
350
330
310
010
(X2000)

ECM: 72625 - 19991105
Group number: 1282765-0200
Assembly Drawing: 1282765-3_1_AA

Issue: 20011217

Pos	Part No	SP	UN	Qty	Description	Page No
Common Parts						
010	1282767-0000	-		1	CONNECTION BOX	
020	1129504-0000	-		1	MOUNTING RAIL	
030	315105-0153	-		2	WASHER PLAIN, BRB, 6,4/12,H=1,5	
040	312125-0364	-		2	SCREW SLOT.PAN HD. MCS 6X10 A480	
050	312115-0372	-		4	SCREW MC6S M6X25 A280	
100	353031-0203	-		2	END PLATE, 10612.0	
110	353021-0213	-		9	FEED THROUGH TERMINAL, 10201.0	
120	359011-0821	-		2	SET OF SIGNS 6-FW 1-50	
130	353024-0205	-		3	EARTH TERMINAL, 1010.1	
140	359011-0834	-		1	SET OF SIGNS 6-GW(EARTH)	
150	353024-0204	-		14	EARTH TERMINAL WPE 2,5	
160	359011-0819	-		1	MARKING PLATES 5-GW (EARTH)	
170	353032-0302	-		2	END PLATE WAP	
180	353034-0404	-		8	BRIDGE CONNECTOR Q10, 13131.0	
190	353034-0401	-		12	BRIDGE CONNECTOR Q2, 13125.0	
200	353021-0302	-		44	TERMINALS,TRIPLE-LEVEL, DLD 2,5/35 PA	
210	359011-0823	-		2	SET OF SIGNS 6-FW 101-150	
220	359011-0832	-		2	SET OF SIGNS 6-GW (+)	
230	359011-0833	-		2	SET OF SIGNS 6-GW (-)	
240	90119-0063	-		1	OPTO-RELAY DC/DC AMMS-10-1	
250	359011-0809	-		2	MARKING PLATES 5-FW 101-150	
260	359011-0810	-		2	MARKING PLATES 5-FW 151-200	
300	90194-0016	-		1	SIGN, FLASH, ELECTRIC EQUIPMENT SYMBOL	
310	352103-0120	-		2	CABLE GLAND STR 29	
320	352103-0111	-		4	CABLE GLAND ST 16	
330	352103-0101	-		12	CABLE GLAND ST 9;PR15,2/PG9	
340	90002-0004	-		5	BLANK-OFF PLUG 22,5	
350	90002-0013	-		7	BLANK-OFF PLUG 15,2	
360	353032-0010	-		2	END PLATE WAP	
370	353021-0120	-		4	FEED THROUGH TERMINAL, 10215.8	

Pos	Part No	SP	UN	Qty	Description	Page No

Machine Type | Group Description | Used-In | Group Number | Page No

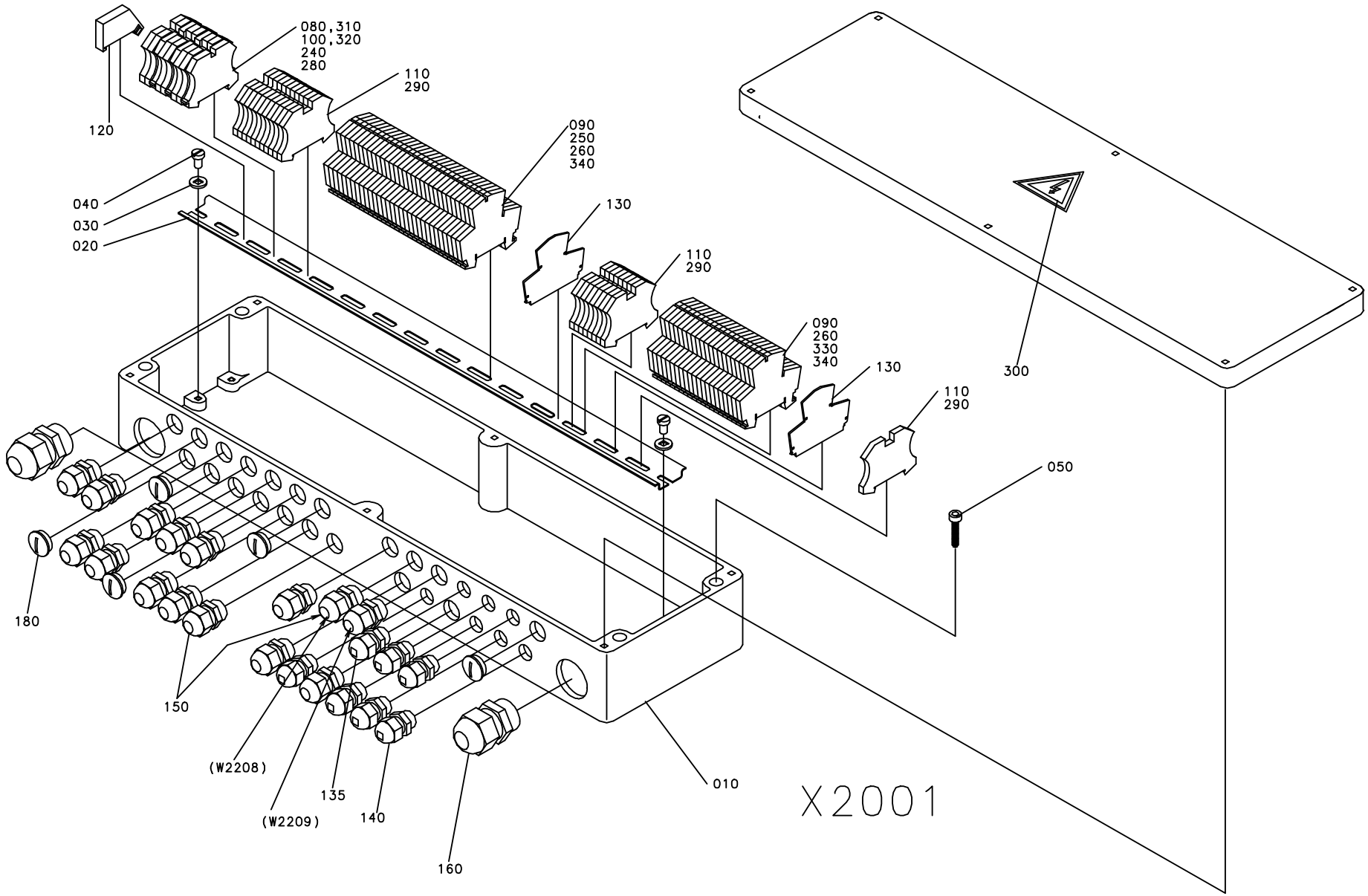
080,310
100,320
240
280
110
290
120
090
250
260
340
130
110
290
040
030
020
090
260
330
340
130
110
290
300
050
180
150
(W2208)
135
(W2209)
140
160
010
X2001

ECM: 71320 - 19980511
Group number: 1282766-0100
Assembly Drawing: 1282766-1_1_AB

Issue: 20011217

Pos	Part No	SP	UN	Qty	Description	Page No
Common Parts						
010	1282768-0000	-		1	CONNECTION BOX	
020	1129504-0000	-		1	MOUNTING RAIL	
030	315105-0153	-		2	WASHER PLAIN, BRB, 6,4/12,H=1,5	
040	312125-0364	-		2	SCREW SLOT.PAN HD. MCS 6X10 A480	
050	312115-0372	-		4	SCREW MC6S M6X25 A280	
080	353021-0213	-		6	FEED THROUGH TERMINAL, 10201.0	
090	353021-0120	-		52	FEED THROUGH TERMINAL, 10215.8	
100	353024-0205	-		3	EARTH TERMINAL, 1010.1	
110	353024-0204	-		20	EARTH TERMINAL WPE 2,5	
120	353031-0201	-		1	END BRACKET EW35	
130	353032-0010	-		2	END PLATE WAP	
135	352103-0100	-		1	CABLE GLAND STR 9;PR15,2	
140	352103-0101	-		6	CABLE GLAND ST 9;PR15,2/PG9	
150	352103-0106	-		15	CABLE GLAND ST 11	
160	352103-0120	-		2	CABLE GLAND STR 29	
180	90002-0009	-		5	BLANK-OFF PLUG 18.6	
240	359011-0821	-		2	SET OF SIGNS 6-FW 1-50	
250	359011-0809	-		2	MARKING PLATES 5-FW 101-150	
260	359011-0810	-		2	MARKING PLATES 5-FW 151-200	
280	359011-0834	-		1	SET OF SIGNS 6-GW(EARTH)	
290	359011-0819	-		1	MARKING PLATES 5-GW (EARTH)	
300	90194-0016	-		1	SIGN, FLASH, ELECTRIC EQUIPMENT SYMBOL	
310	353034-0039	-		1	BRIDGE CONN. WQV 4/4	
320	353034-0031	-		1	BRIDGE CONNECTOR, WQV 4/10, 10520.6	
330	353034-0042	-		1	JUMPER BAR 3 P	
340	353034-0030	-		7	BRIDGE CONNECTOR WQV 2,5/10, 10544.6	

Pos	Part No	SP	UN	Qty	Description	Page No

Machine Type | Group Description | Used-In | Group Number | Page No

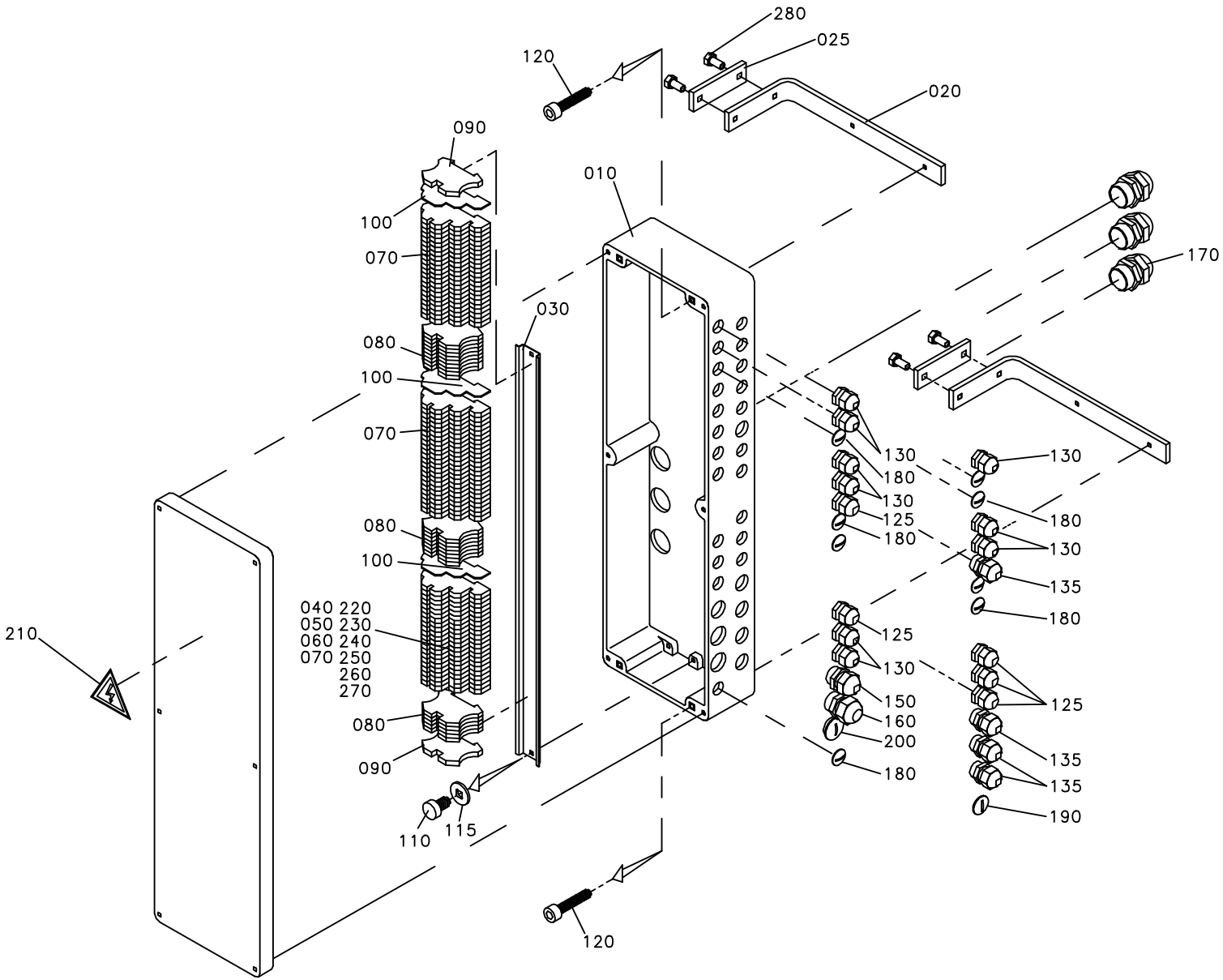
280
025
020
120
090
010
100
070
030
080
100
070
080
100
040 220
050 230
060 240
070 250
260
270
080
090
210
110
115
120
170
130
180
130
125
180
130
180
130
135
180
125
130
150
160
200
180
125
135
135
190

ECM: 70932 - 19971127
Group number: 1095750-0200
Assembly Drawing: 1095750-2_1_AB

Issue: 20011217

Pos	Part No	SP	UN	Qty	Description	Page No
Common Parts						
010	1255838-0000	-		1	CONNECTION BOX	
020	1129050-0000	-		2	FASTENING BRACKET	
025	1129051-0000	-		2	SPACER PLATE	
030	1129504-0000	-		1	MOUNTING RAIL	
040	353034-0404	-		12	BRIDGE CONNECTOR Q10, 13131.0	
050	353034-0403	-		5	BRIDGE CONNECTOR Q4, 13127,0	
060	353034-0401	-		15	BRIDGE CONNECTOR Q2, 13125.0	
070	353021-0302	-		68	TERMINALS,TRIPLE-LEVEL, DLD 2,5/35 PA	
080	353024-0204	-		20	EARTH TERMINAL WPE 2,5	
090	353024-0205	-		2	EARTH TERMINAL, 1010.1	
100	353032-0302	-		3	END PLATE WAP	
110	312125-0364	-		2	SCREW SLOT.PAN HD. MCS 6X10 A480	
115	315105-0153	-		2	WASHER PLAIN, BRB, 6,4/12,H=1,5	
120	312115-0372	-		4	SCREW MC6S M6X25 A280	
125	352103-0100	-		5	CABLE GLAND STR 9;PR15,2	
130	352103-0101	-		9	CABLE GLAND ST 9;PR15,2/PG9	
135	352103-0106	-		4	CABLE GLAND ST 11	
150	352103-0108	-		1	CABLE GLAND ST 13	
160	352103-0111	-		1	CABLE GLAND ST 16	
170	352103-0116	-		3	CABLE GLAND ST 21	
180	90002-0013	-		8	BLANK-OFF PLUG 15,2	
190	90002-0009	-		1	BLANK-OFF PLUG 18.6	
200	90002-0004	-		1	BLANK-OFF PLUG 22,5	
210	90194-0016	-		1	SIGN, FLASH, ELECTRIC EQUIPMENT SYMBOL	
220	359011-0823	-		2	SET OF SIGNS 6-FW 101-150	
230	359011-0819	-		1	MARKING PLATES 5-GW (EARTH)	
240	359011-0834	-		1	SET OF SIGNS 6-GW(EARTH)	
250	359011-0832	-		3	SET OF SIGNS 6-GW (+)	
260	359011-0833	-		3	SET OF SIGNS 6-GW (-)	
270	359011-0824	-		2	SET OF SIGNS 6-FW 151-200	
280	312105-0451	-		4	SCREW M6S 8X20 A280	

Pos	Part No	SP	UN	Qty	Description	Page No

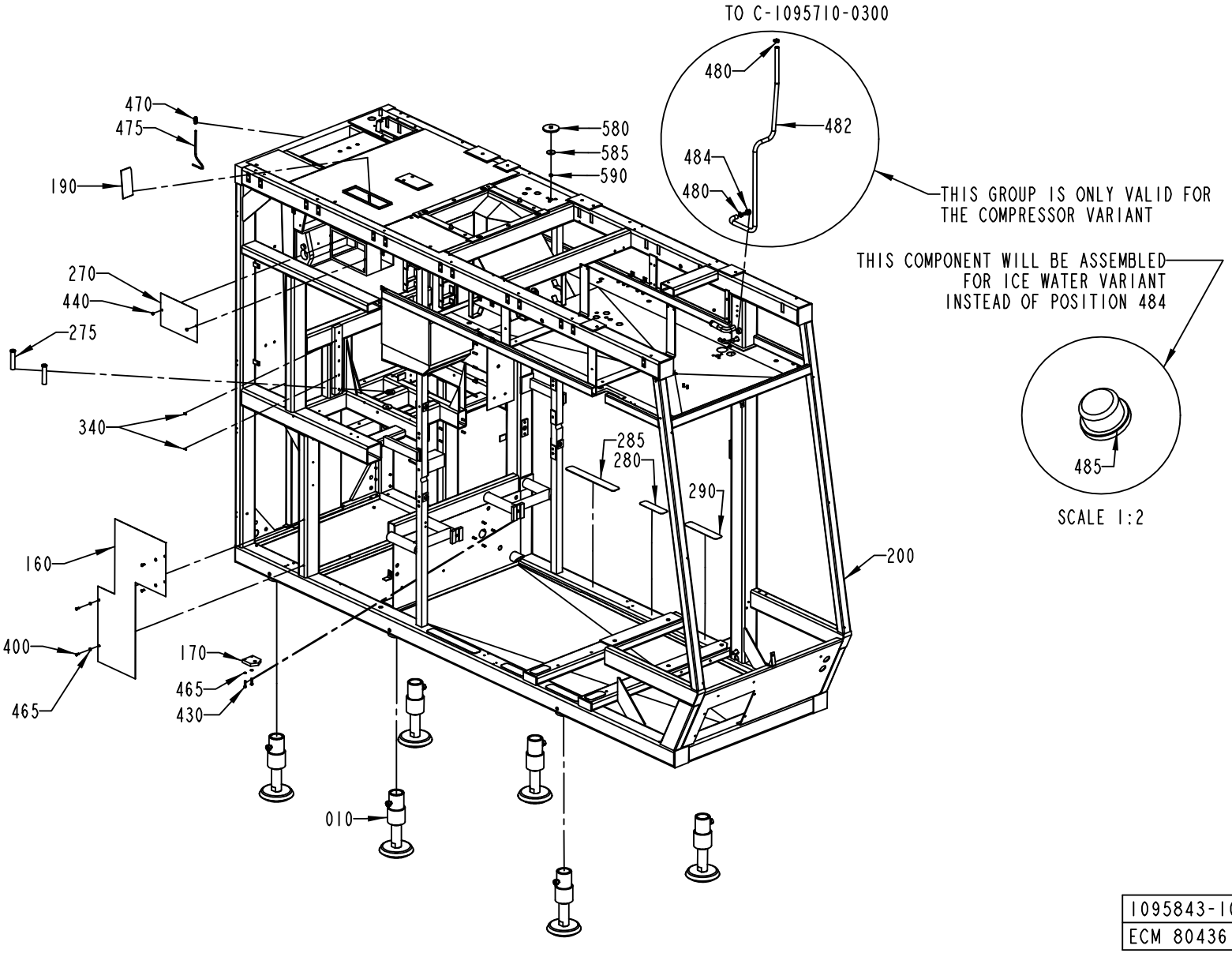

1095843-10
ECM 80436

ECM: 80419 - 50001231
Group number: 1095843-0300
Assembly Drawing: 1095843-10_1_AA

Issue: 20011217

Pos	Part No	SP	UN	Qty	Description	Page No
Common Parts						
010	A1035076-0200	-		6	LEG	**301, 963**
020	A1095803-0100	-		1	BENDING ROLLER	**303**
030	A1254275-0100	-		2	LID	**305**
040	A1095880-0100	-		1	DRAINING	**307**
160	1487348-0000	-		1	PROTECTION PLATE	
170	1260435-0000	-		1	BRACKET	
180	591341-0000	-		2	PIN	
190	590227-0000	-		1	PLATE	
200	1349016-0000	-		1	MACHINE BODY	
210	1279797-0000	-		1	PIPE	
220	1129527-0000	-		1	GLASS PANE	
240	1279798-0000	-		1	PIPE	
250	1129536-0000	-		2	BOW	
260	1037832-0000	-		1	BEAM	
270	1037592-0000	-		1	HATCH	
275	1129569-0000	-		2	SLEEVE	
280	1103298-0000	-		2	NON-SKID	
285	1103299-0000	-		2	NON-SKID	
290	1103300-0000	-		2	NON-SKID	
300	1296833-0000	-		2	NON-SKID	
320	1037762-0000	-		2	PIN	
330	1037761-0000	-		2	PIN	
340	311103-0308	-		4	PARALLELL PIN, M6, 5X16 MM	
350	311103-0456	-		4	PARALLELL PIN, M6, 10X25 MM	
370	312105-0449	-		4	SCREW M6S M8X16 A280	
390	90458-0672	A		1	PROXIMITY SENSOR E2E2-X5MB1-5M	
400	312105-0366	-		14	SCREW M6S M6X12 A280	
410	312115-0501	-		2	SCREW MC6S M10X50 A280	
420	90347-0160	-		4	DAMPER	
424	312318-0378	-		4	SCREW HEX.SOCK.SET CUP P.MSK6SS6X40 SS	
426	90261-0070	-		2	PLASTIC PLUG SS 0082.31	
430	312109-0374	-		2	SCREW M6S M6X30 A280	
440	312605-0316	-		6	HEXAGON NUT, M6M M6 A280	
445	315220-0198	-		1	V-RINGS 45X55X13 MM V-50S	
450	315220-0180	-		1	V-RINGS 34X42X10,5 MM V-38S	
460	312105-0368	-		12	SCREW M6S M6X16 A280	
465	315105-0153	-		32	WASHER PLAIN, BRB, 6,4/12,H=1,5	
467	90157-0041	-		1	SEALING COMPOUND	
470	342768-0102	-		2	BULKHEAD CONNECTOR, 6 MM	
475	90166-0081	-	MM	500	TUBE 6 MM PA BLUE	
480	342991-0101	-		1	HOSE CLIP,WORM DRIVE TYPE (13)-16	
482	90166-0121	-	MM	1700	HOSE	
484	342901-0105	-		1	HOSE NIPPLE, EXT.THR. G1/2-12 MM	
485	342713-0213	-		1	PLUG, EXT THREAD HEX SOCKET 8638-00-120	
488	90166-0059	-	MM	2000	HOSE PVC 12/16MM TRANSP.	
490	90261-0057	-		4	PLUG, BLIND, PLASTIC	
492	90015-0022	-		1	GLANDS,LEAD-IN,IP67	
494	90015-0021	-		2	GLANDS,LEAD-IN,IP67	
496	90015-0024	-		1	GLANDS,LEAD-IN,IP67	
510	90166-0260	-	MM	2	HOSE	
530	90411-0020	-	MM	2	INSULATING TUBE	
540	342991-0104	-		2	HOSE CLIP,WORM DRIVE TYPE (23)-27	
550	352113-0104	-		8	CLIP-STRIP,BLACK 300X4,8MM	
560	1498050-0000	-		1	BRACKET	
570	312155-0368	-		1	SCREW HEX.SOCK.COUNT.MF6S M6X16 A280	
580	1511244-0000	-		1	COVER	
585	1511245-0000	-		1	WASHER	
590	312605-0318	-		1	HEXAGON NUT, M6M M8 A280	

Machine Type | Group Description | Used-In | Group Number | Page No

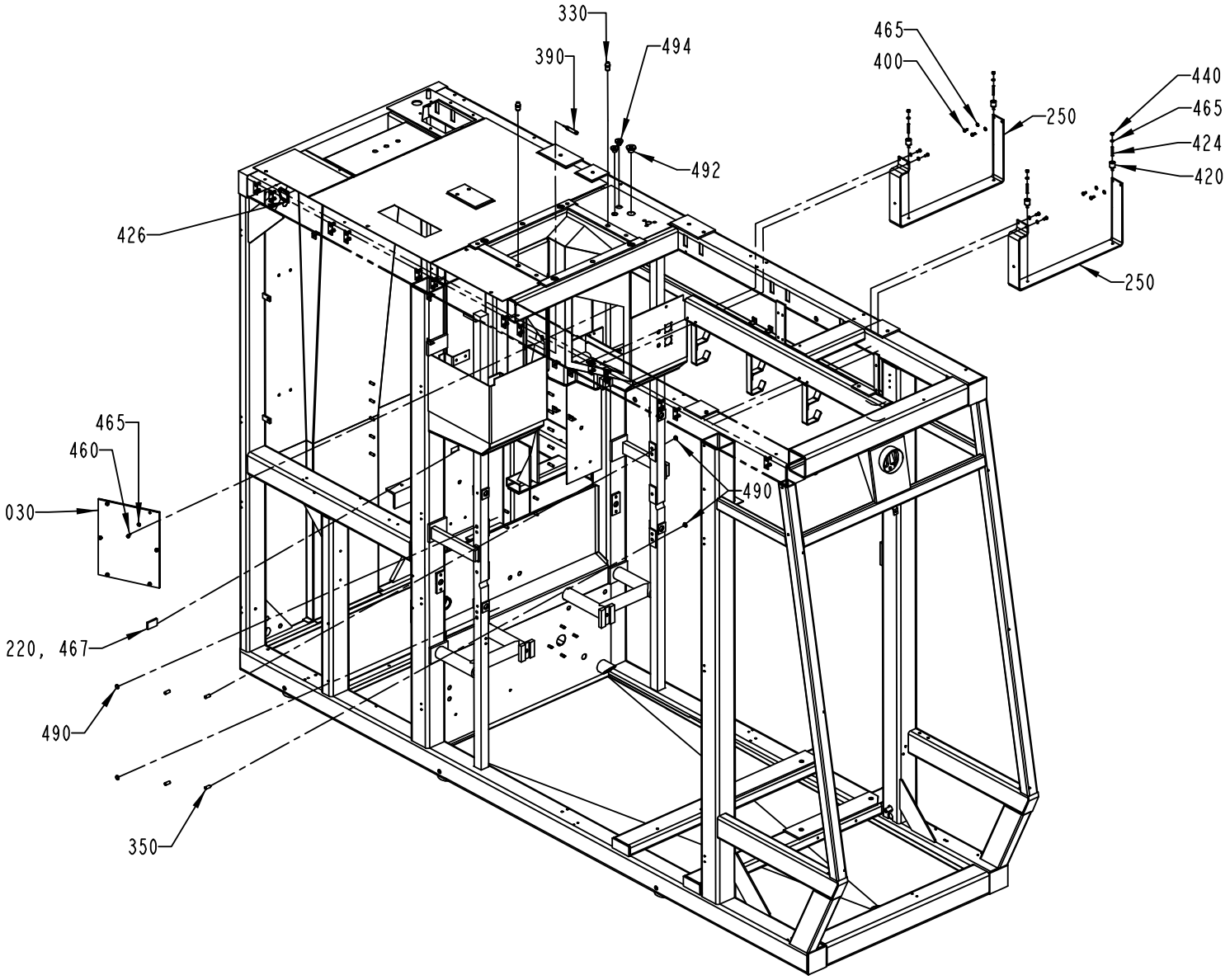

1095843-10
ECM 80436

ECM: 80419 - 50001231
Group number: 1095843-0300
Assembly Drawing: 1095843-10_2_AA

Issue: 20011217

Pos	Part No	SP	UN	Qty	Description	Page No
Common Parts						
010	A1035076-0200	-		6	LEG	**301, 963**
020	A1095803-0100	-		1	BENDING ROLLER	**303**
030	A1254275-0100	-		2	LID	**305**
040	A1095880-0100	-		1	DRAINING	**307**
160	1487348-0000	-		1	PROTECTION PLATE	
170	1260435-0000	-		1	BRACKET	
180	591341-0000	-		2	PIN	
190	590227-0000	-		1	PLATE	
200	1349016-0000	-		1	MACHINE BODY	
210	1279797-0000	-		1	PIPE	
220	1129527-0000	-		1	GLASS PANE	
240	1279798-0000	-		1	PIPE	
250	1129536-0000	-		2	BOW	
260	1037832-0000	-		1	BEAM	
270	1037592-0000	-		1	HATCH	
275	1129569-0000	-		2	SLEEVE	
280	1103298-0000	-		2	NON-SKID	
285	1103299-0000	-		2	NON-SKID	
290	1103300-0000	-		2	NON-SKID	
300	1296833-0000	-		2	NON-SKID	
320	1037762-0000	-		2	PIN	
330	1037761-0000	-		2	PIN	
340	311103-0308	-		4	PARALLELL PIN, M6, 5X16 MM	
350	311103-0456	-		4	PARALLELL PIN, M6, 10X25 MM	
370	312105-0449	-		4	SCREW M6S M8X16 A280	
390	90458-0672	A		1	PROXIMITY SENSOR E2E2-X5MB1-5M	
400	312105-0366	-		14	SCREW M6S M6X12 A280	
410	312115-0501	-		2	SCREW MC6S M10X50 A280	
420	90347-0160	-		4	DAMPER	
424	312318-0378	-		4	SCREW HEX.SOCK.SET CUP P.MSK6SS6X40 SS	
426	90261-0070	-		2	PLASTIC PLUG SS 0082.31	
430	312109-0374	-		2	SCREW M6S M6X30 A280	
440	312605-0316	-		6	HEXAGON NUT, M6M M6 A280	
445	315220-0198	-		1	V-RINGS 45X55X13 MM V-50S	
450	315220-0180	-		1	V-RINGS 34X42X10,5 MM V-38S	
460	312105-0368	-		12	SCREW M6S M6X16 A280	
465	315105-0153	-		32	WASHER PLAIN, BRB, 6,4/12,H=1,5	
467	90157-0041	-		1	SEALING COMPOUND	
470	342768-0102	-		2	BULKHEAD CONNECTOR, 6 MM	
475	90166-0081	-	MM	500	TUBE 6 MM PA BLUE	
480	342991-0101	-		1	HOSE CLIP,WORM DRIVE TYPE (13)-16	
482	90166-0121	-	MM	1700	HOSE	
484	342901-0105	-		1	HOSE NIPPLE, EXT.THR. G1/2-12 MM	
485	342713-0213	-		1	PLUG, EXT THREAD HEX SOCKET 8638-00-120	
488	90166-0059	-	MM	2000	HOSE PVC 12/16MM TRANSP.	
490	90261-0057	-		4	PLUG, BLIND, PLASTIC	
492	90015-0022	-		1	GLANDS,LEAD-IN,IP67	
494	90015-0021	-		2	GLANDS,LEAD-IN,IP67	
496	90015-0024	-		1	GLANDS,LEAD-IN,IP67	
510	90166-0260	-	MM	2	HOSE	
530	90411-0020	-	MM	2	INSULATING TUBE	
540	342991-0104	-		2	HOSE CLIP,WORM DRIVE TYPE (23)-27	
550	352113-0104	-		8	CLIP-STRIP,BLACK 300X4,8MM	
560	1498050-0000	-		1	BRACKET	
570	312155-0368	-		1	SCREW HEX.SOCK.COUNT.MF6S M6X16 A280	
580	1511244-0000	-		1	COVER	
585	1511245-0000	-		1	WASHER	
590	312605-0318	-		1	HEXAGON NUT, M6M M8 A280	

Machine Type | Group Description | Used-In | Group Number | Page No

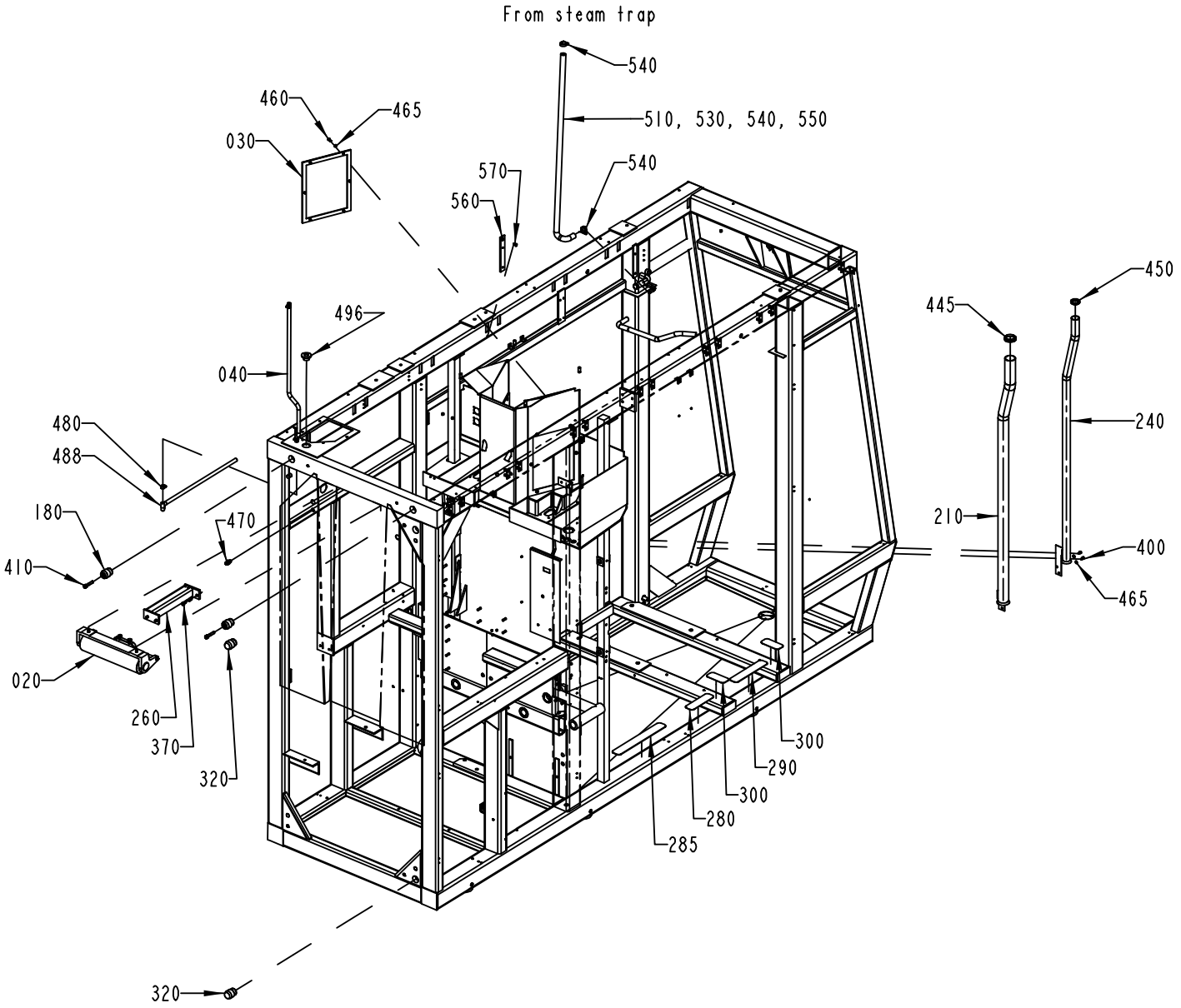

1095843-10
ECM 80436

ECM: 80419 - 50001231
Group number: 1095843-0300
Assembly Drawing: 1095843-10_3_AA

Issue: 20011217

Pos	Part No	SP	UN	Qty	Description	Page No
Common Parts						
010	A1035076-0200	-		6	LEG	**301, 963**
020	A1095803-0100	-		1	BENDING ROLLER	**303**
030	A1254275-0100	-		2	LID	**305**
040	A1095880-0100	-		1	DRAINING	**307**
160	1487348-0000	-		1	PROTECTION PLATE	
170	1260435-0000	-		1	BRACKET	
180	591341-0000	-		2	PIN	
190	590227-0000	-		1	PLATE	
200	1349016-0000	-		1	MACHINE BODY	
210	1279797-0000	-		1	PIPE	
220	1129527-0000	-		1	GLASS PANE	
240	1279798-0000	-		1	PIPE	
250	1129536-0000	-		2	BOW	
260	1037832-0000	-		1	BEAM	
270	1037592-0000	-		1	HATCH	
275	1129569-0000	-		2	SLEEVE	
280	1103298-0000	-		2	NON-SKID	
285	1103299-0000	-		2	NON-SKID	
290	1103300-0000	-		2	NON-SKID	
300	1296833-0000	-		2	NON-SKID	
320	1037762-0000	-		2	PIN	
330	1037761-0000	-		2	PIN	
340	311103-0308	-		4	PARALLELL PIN, M6, 5X16 MM	
350	311103-0456	-		4	PARALLELL PIN, M6, 10X25 MM	
370	312105-0449	-		4	SCREW M6S M8X16 A280	
390	90458-0672	A		1	PROXIMITY SENSOR E2E2-X5MB1-5M	
400	312105-0366	-		14	SCREW M6S M6X12 A280	
410	312115-0501	-		2	SCREW MC6S M10X50 A280	
420	90347-0160	-		4	DAMPER	
424	312318-0378	-		4	SCREW HEX.SOCK.SET CUP P.MSK6SS6X40 SS	
426	90261-0070	-		2	PLASTIC PLUG SS 0082.31	
430	312109-0374	-		2	SCREW M6S M6X30 A280	
440	312605-0316	-		6	HEXAGON NUT, M6M M6 A280	
445	315220-0198	-		1	V-RINGS 45X55X13 MM V-50S	
450	315220-0180	-		1	V-RINGS 34X42X10,5 MM V-38S	
460	312105-0368	-		12	SCREW M6S M6X16 A280	
465	315105-0153	-		32	WASHER PLAIN, BRB, 6,4/12,H=1,5	
467	90157-0041	-		1	SEALING COMPOUND	
470	342768-0102	-		2	BULKHEAD CONNECTOR, 6 MM	
475	90166-0081	-	MM	500	TUBE 6 MM PA BLUE	
480	342991-0101	-		1	HOSE CLIP,WORM DRIVE TYPE (13)-16	
482	90166-0121	-	MM	1700	HOSE	
484	342901-0105	-		1	HOSE NIPPLE, EXT.THR. G1/2-12 MM	
485	342713-0213	-		1	PLUG, EXT THREAD HEX SOCKET 8638-00-120	
488	90166-0059	-	MM	2000	HOSE PVC 12/16MM TRANSP.	
490	90261-0057	-		4	PLUG, BLIND, PLASTIC	
492	90015-0022	-		1	GLANDS,LEAD-IN,IP67	
494	90015-0021	-		2	GLANDS,LEAD-IN,IP67	
496	90015-0024	-		1	GLANDS,LEAD-IN,IP67	
510	90166-0260	-	MM	2	HOSE	
530	90411-0020	-	MM	2	INSULATING TUBE	
540	342991-0104	-		2	HOSE CLIP,WORM DRIVE TYPE (23)-27	
550	352113-0104	-		8	CLIP-STRIP,BLACK 300X4,8MM	
560	1498050-0000	-		1	BRACKET	
570	312155-0368	-		1	SCREW HEX.SOCK.COUNT.MF6S M6X16 A280	
580	1511244-0000	-		1	COVER	
585	1511245-0000	-		1	WASHER	
590	312605-0318	-		1	HEXAGON NUT, M6M M8 A280	

Machine Type | Group Description | Used-In | Group Number | Page No

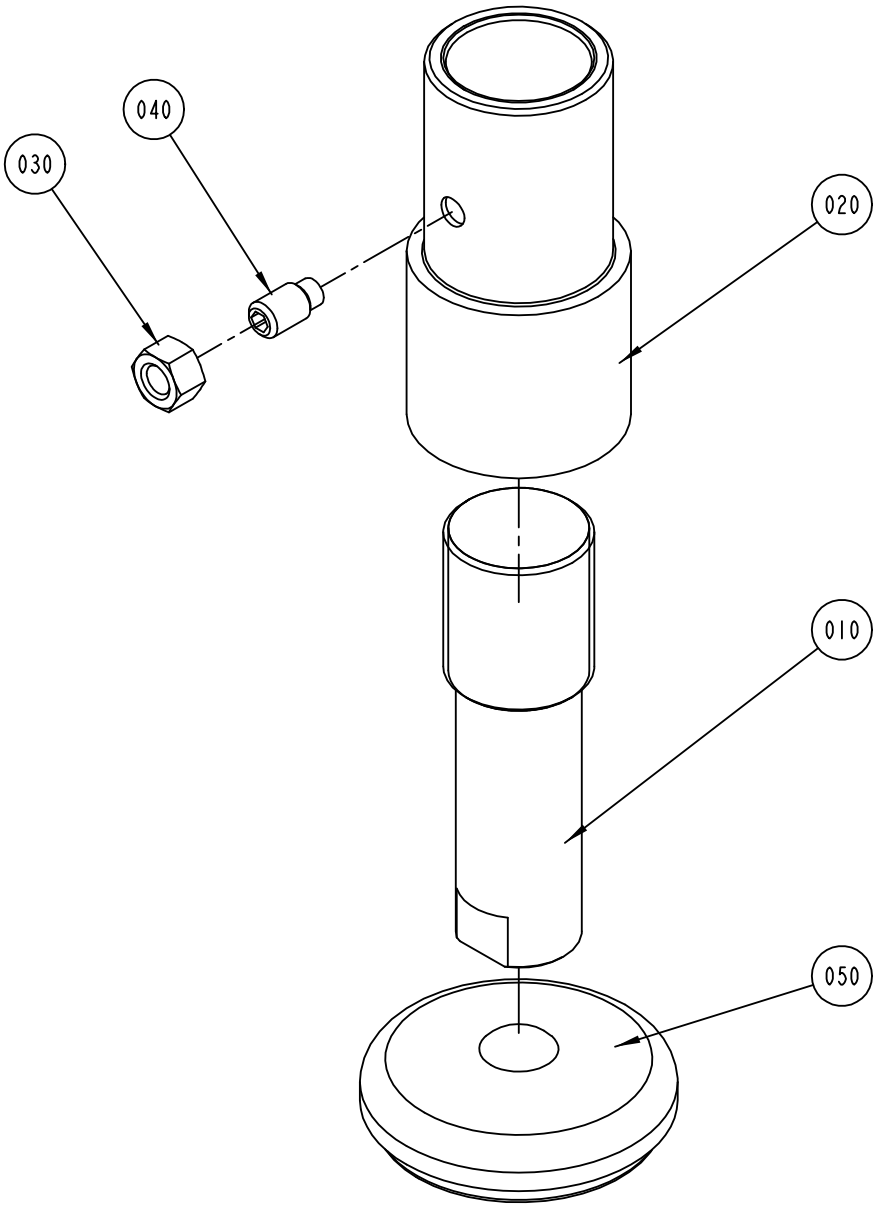

S-1035076-2
ECN 71457

ECM: 71457 - 20000215
Group number: 1035076-0200
Assembly Drawing: 1035076-2_1_AB

Issue: 20011217

Pos	Part No	SP	UN	Qty	Description	Page No
Common Parts						
010	1487712-0000	-		1	LEG	
020	1036120-0000	-		1	SLEEVE	
030	312605-0324	-		1	HEXAGON NUT, M6M M16 A280	
040	312311-0624	-		1	SCREW HEX.SOCK.SET DOG P.MT6SS 16X30 FZB	
050	90347-0175	-		1	MACHINE SHOE BRIK T 125	

Pos	Part No	SP	UN	Qty	Description	Page No

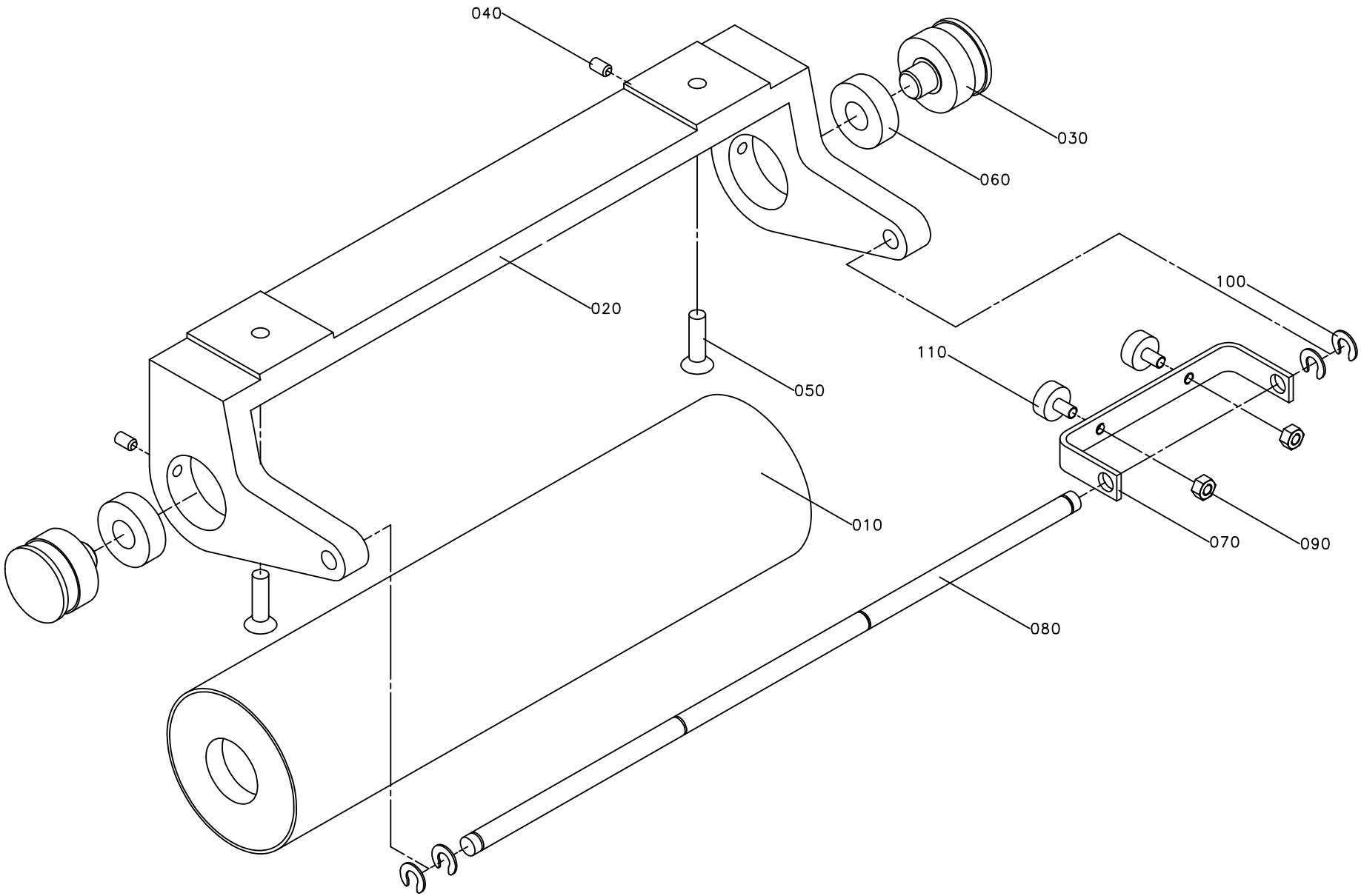
040
030
060
020
100
110
050
010
070
090
080

ECM: 71742 - 19980903
Group number: 1095803-0100
Assembly Drawing: 1095803-1_1_AA

Issue: 20011217

Pos	Part No	SP	UN	Qty	Description	Page No
Common Parts						
010	1035882-0000	D		1	BENDING ROLLER	
020	1036516-0000	-		1	CANTILEVER	
030	1037012-0000	D		2	AXLE PIN	
040	312318-0364	-		2	SCREW HEX.SOCK.SET CUP P.MSK6SS6X10 SS	
050	312155-0453	-		2	SCREW HEX.SOCK.COUNT.MF6S M8X25 A280	
060	321313-0102	C		2	BALL BEARING, 2 SEALS, 15X35X11 MM	
070	1041603-0000	-		1	BRACKET	
080	1041606-0000	D		1	SHAFT	
090	312605-0316	-		2	HEXAGON NUT, M6M M6 A280	
100	315755-0801	-		4	LOCKING WASHER 8	
110	90347-0007	D		2	VIBRATION DAMPER	

Pos	Part No	SP	UN	Qty	Description	Page No

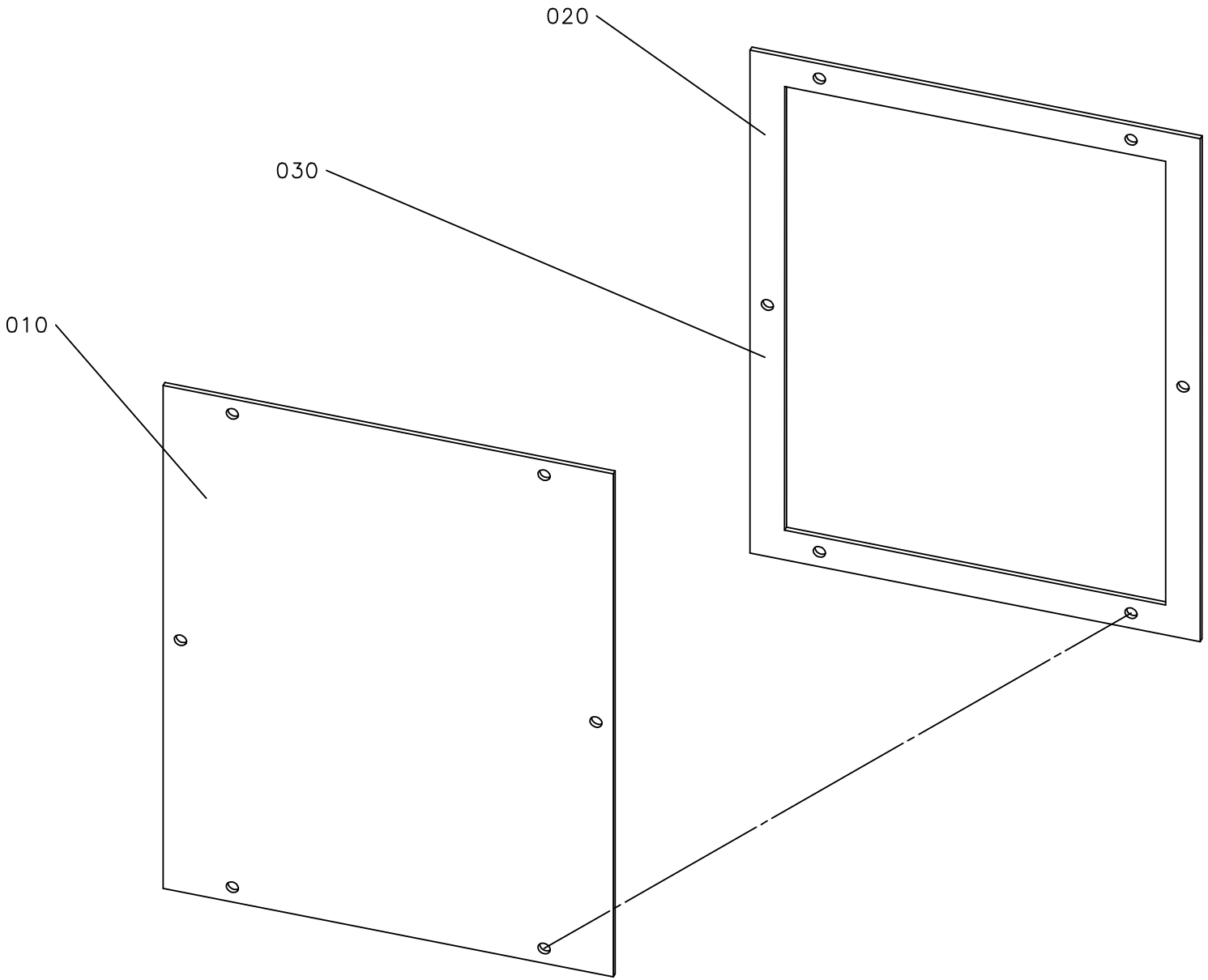
020
030
010

ECM: 71742 - 19980903
Group number: 1254275-0100
Assembly Drawing: 1254275-1_1_AA

Issue: 20011217

Pos	Part No	SP	UN	Qty	Description	Page No
Common Parts						
010	1260433-0000	-		1	LID	
020	1260434-0000	D		1	GASKET	
030	90157-0041	-		1	SEALING COMPOUND	

Pos	Part No	SP	UN	Qty	Description	Page No

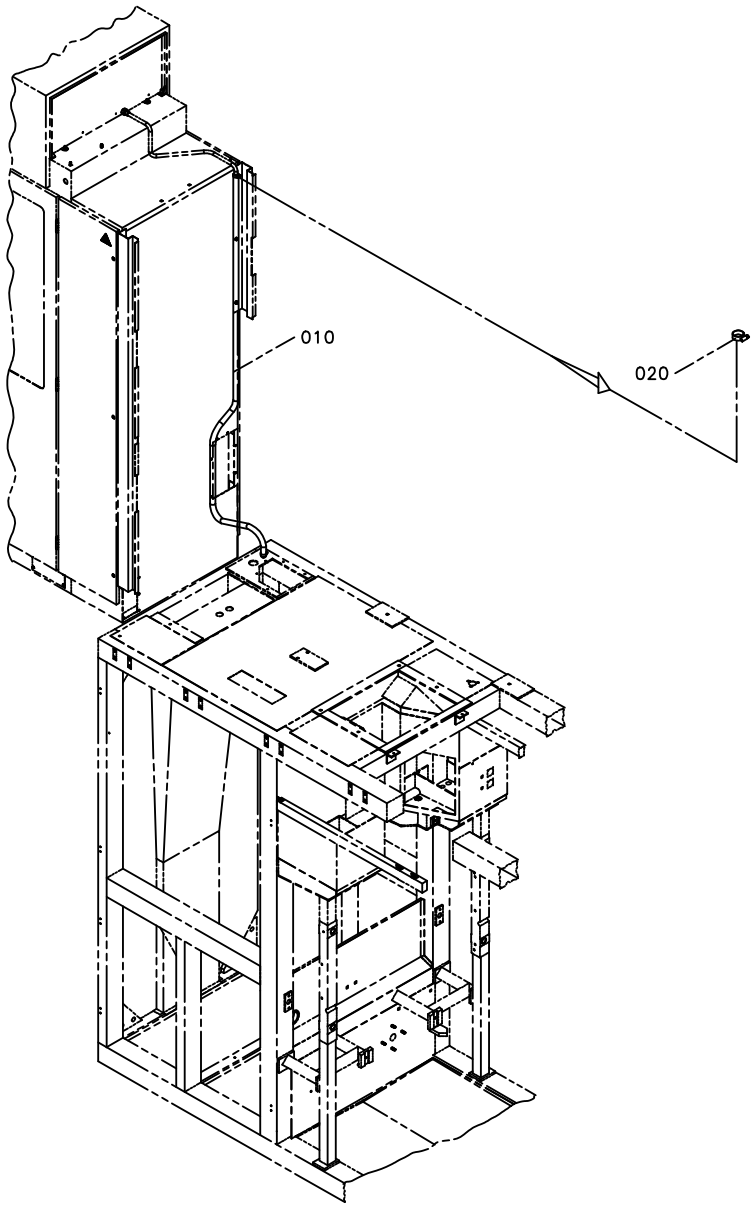
010
020

ECM: 71124 - 19971028
Group number: 1095880-0100
Assembly Drawing: 1095880-1_1_AB

Issue: 20011217

Pos	Part No	SP	UN	Qty	Description	Page No
Common Parts						
010	90166-0059	-	MM	2100	HOSE PVC 12/16MM TRANSP.	
020	342991-0101	-		2	HOSE CLIP,WORM DRIVE TYPE (13)-16	

Pos	Part No	SP	UN	Qty	Description	Page No

Machine Type | Group Description | Used-In | Group Number | Page No

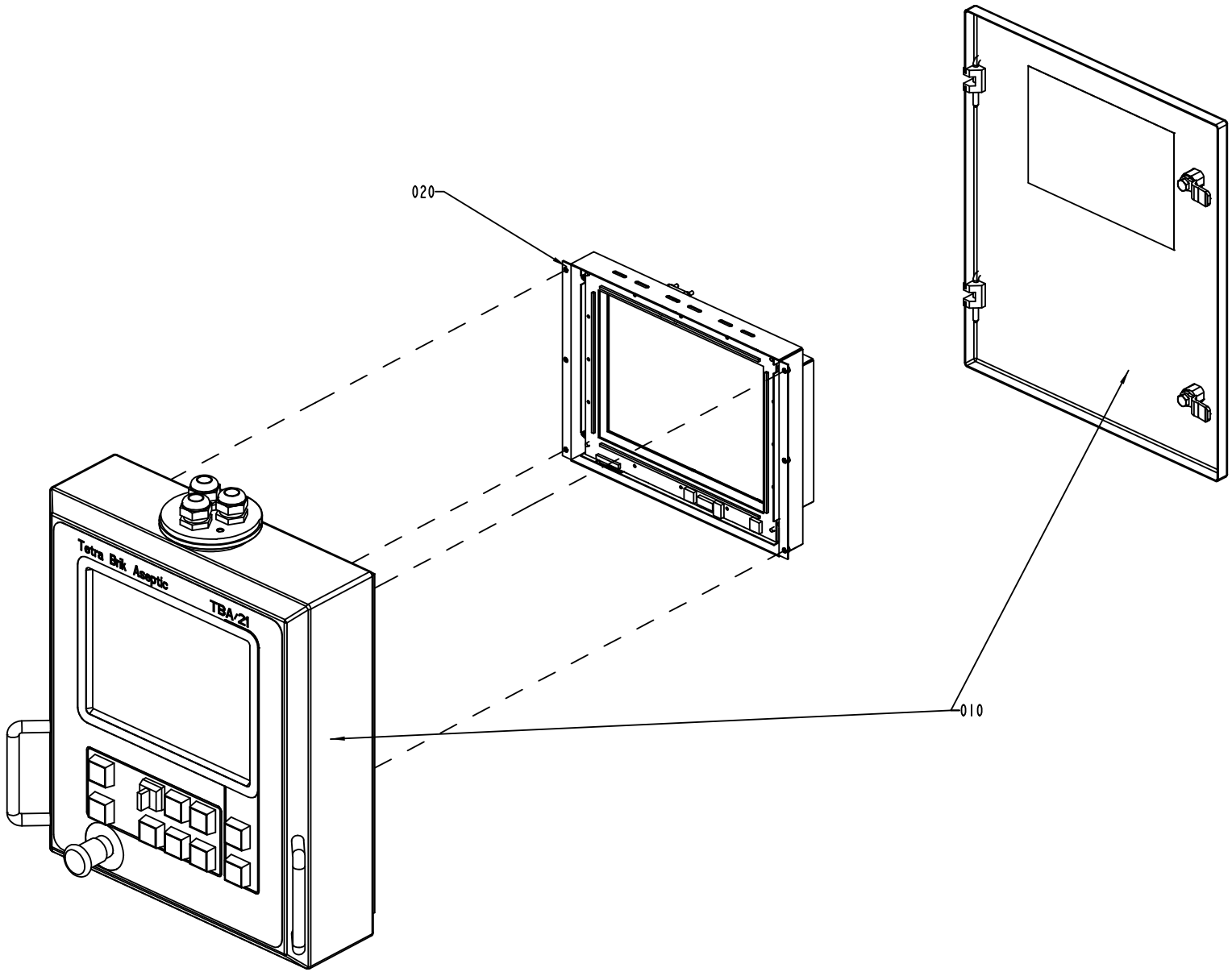

S-1349772-1
ECN 72608

ECM: 72608 - 19990604
Group number: 1349772-0100
Assembly Drawing: 1349772-1_1_AB

Issue: 20011217

Pos	Part No	SP	UN	Qty	Description	Page No
Common Parts						
010	A1349774-0100	-		1	PANEL UNIT 12"	**311**
020	A1348707-0100	-		1	DISPLAY UNIT 12"	**315**

Pos	Part No	SP	UN	Qty	Description	Page No

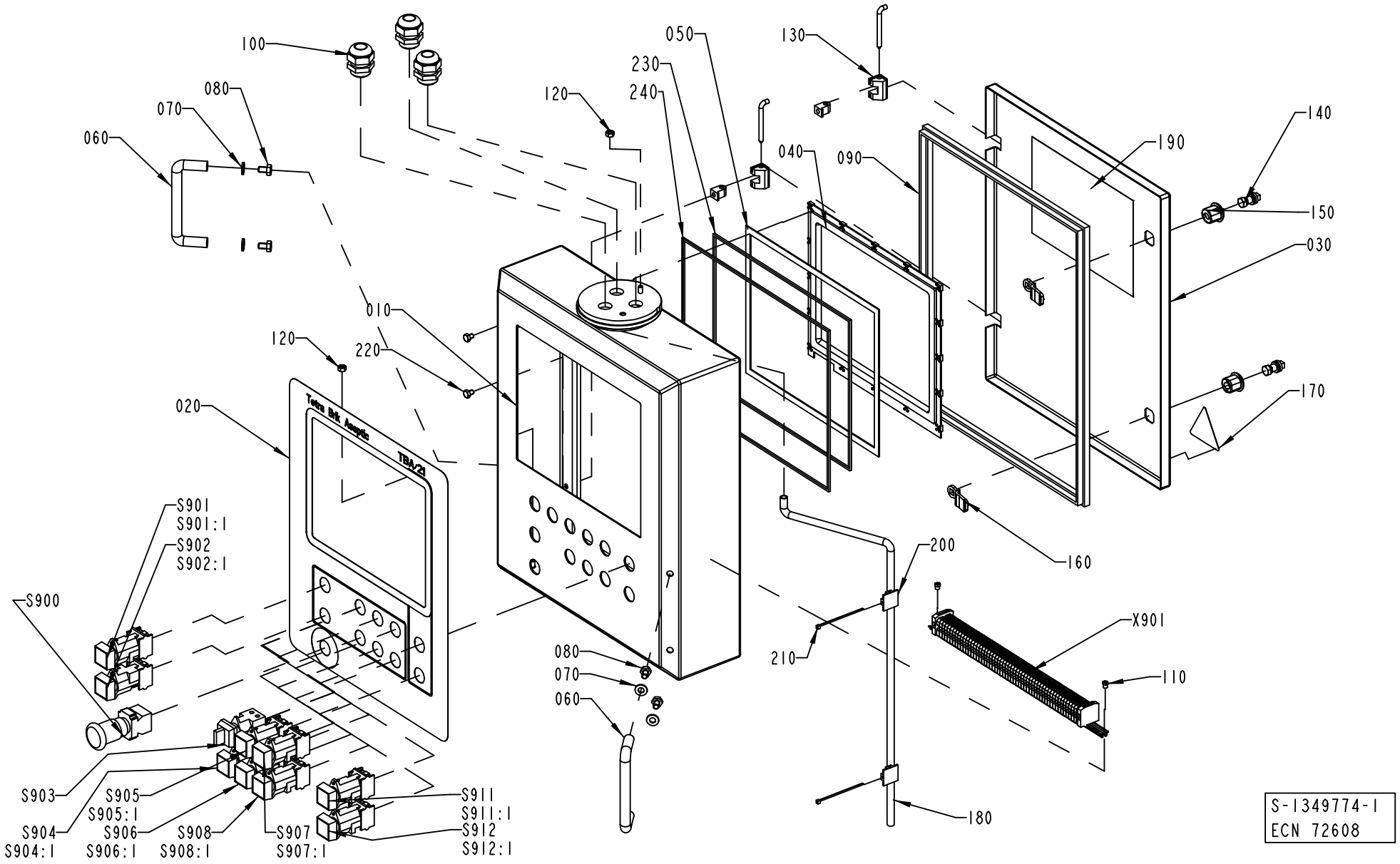
100
080
070
060
120
050
230
240
130
040
090
190
140
150
030
010
120
220
020
170
160
200
210
X901
110
180
080
070
060
S901
S901:1
S902
S902:1
S900
S903
S905
S905:1
S904
S906
S908
S904:1
S906:1
S908:1
S907
S907:1
S911
S911:1
S912
S912:1
Tetra Brik Aseptic
TBA/21
S-1349774-1
ECN 72608

ECM: 72941 - 19991027
Group number: 1349774-0100
Assembly Drawing: 1349774-1_1_AB

Issue: 20011217

Pos	Part No	SP	UN	Qty	Description	Page No
Common Parts						
010	1349773-0000	-		1	PANEL	
020	1349778-0000	-		1	FOIL	
030	1349777-0000	-		1	DOOR	
040	90041-0095	-		1	FRAME 12"	
060	90017-0016	-		2	HANDLE, NO. 14.4012.02.120	
070	90005-0077	-		4	WASHER PL.RND.NYL.8,4/7, H=2	
080	312105-0447	-		4	SCREW M6S M8X12 A280	
090	90143-0057	-	MM	1800	STRIP EMKA 1011-05 21X11MM	
100	352103-0115	-		3	CABLE GLAND STR 21	
110	1041609-0000	-		2	NUT	
120	312605-0316	-		1	HEXAGON NUT, M6M M6 A280	
130	90248-0047	-		2	HINGE, 1150-U50	
140	90237-0320	-		2	LOCK HOUSING, 1000-U136	
150	90237-0319	-		2	LOCK HOUSING, 1000-U134	
160	90237-0157	-		2	LOCK BOLT, 1000-230	
170	90194-0016	-		1	SIGN, FLASH, ELECTRIC EQUIPMENT SYMBOL	
180	90166-0008	-	MM	650	HOSE 7/10 PVC TRANSP.	
190	90194-0133	-		1	SIGN "DELIVERED DESIGN"	
200	352113-0206	-		2	ANCHOR 25,4X25,4MM ABM100-AT-CO	
210	90182-0005	-		2	CLIP STRIP 79X2,3MM REPL.BY 352113-101	
220	312105-0362	-		2	SCREW M6S M6X8 A280	
230	90144-0075	-		1	SHIELDING SEAL STRIP EMC, 1,02X3,18 MM	
240	90144-0075	-		1	SHIELDING SEAL STRIP EMC, 1,02X3,18 MM	
S900	90064-0124	D		1	SWITCH,EMERGENCY STOP	
S901	B90064-0082	D		1	PUSH BUTTON WHITE	
	90036-0057	*B*		*1*	*LIGHT BULB BA9S 28V*	
S901:1	359301-0519	-		1	SIGN "TPOP RESET"	
S902	B90064-0082	D		1	PUSH BUTTON WHITE	
	90036-0057	*B*		*1*	*LIGHT BULB BA9S 28V*	
S902:1	359301-0130	-		1	SIGN "LAMPTEST"	
S903	90111-0120	D		1	SWITCH 2 POS. EA OLTEN	
S904	B90064-0082	D		1	PUSH BUTTON WHITE	
	90036-0057	*B*		*1*	*LIGHT BULB BA9S 28V*	
S904:1	359301-0170	-		1	SIGN "MANUAL FLUSHING FFU"	
S905	90064-0098	D		1	PUSH BUTTON CLEAR	
S905:1	359301-0091	-		1	SIGN "INCHING FFU"	
S906	B90064-0082	D		1	PUSH BUTTON WHITE	
	90036-0057	*B*		*1*	*LIGHT BULB BA9S 28V*	
S906:1	359301-0050	-		1	SIGN "DROP CHUTE"	
S907	90064-0098	D		1	PUSH BUTTON CLEAR	
S907:1	359301-0090	-		1	SIGN "INCHING"	
S908	90064-0084	D		1	PUSH BUTTON YELLOW	
S908:1	359301-0110	-		1	SIGN "SHORT STOP"	
S911	B90064-0093	D		1	PUSH BUTTON GREEN	
	90036-0057	*C*		*1*	*LIGHT BULB BA9S 28V*	
S911:1	359301-0001	-		1	SIGN "UP"	
S912	B90064-0082	D		1	PUSH BUTTON WHITE	
	90036-0057	*B*		*1*	*LIGHT BULB BA9S 28V*	
S912:1	359301-0005	-		1	SIGN "DOWN"	
X901	A1095597-0100	-		1	TERMINAL	**313**

Machine Type	Group Description	Used-In	Group Number	Page No

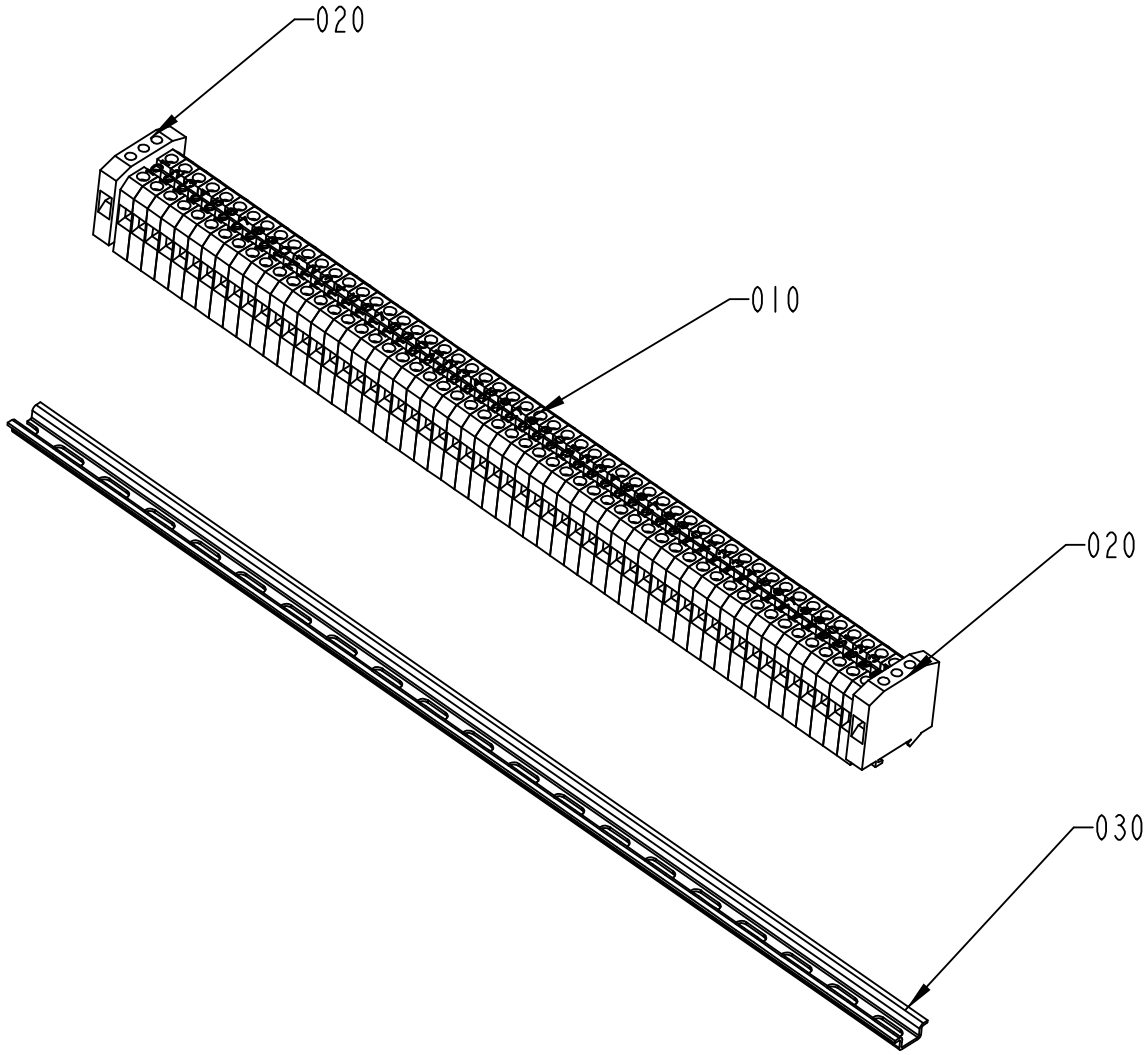

S-1095597-1
ECN 72608

ECM: 72608 - 19990604
Group number: 1095597-0100
Assembly Drawing: 1095597-1_1_AB

Issue: 20011217

Pos	Part No	SP	UN	Qty	Description	Page No
Common Parts						
010	90077-0079	-		56	FEED THROUGH TERMINAL, 02943.6	
020	90135-0026	-		2	EARTH TERMINAL, 3802.6	
030	90077-0328	-	MM	390	RAIL TS15/5	
040	359011-0821	-		2	SET OF SIGNS 6-FW 1-50	
050	359011-0819	-		1	MARKING PLATES 5-GW (EARTH)	

Pos	Part No	SP	UN	Qty	Description	Page No

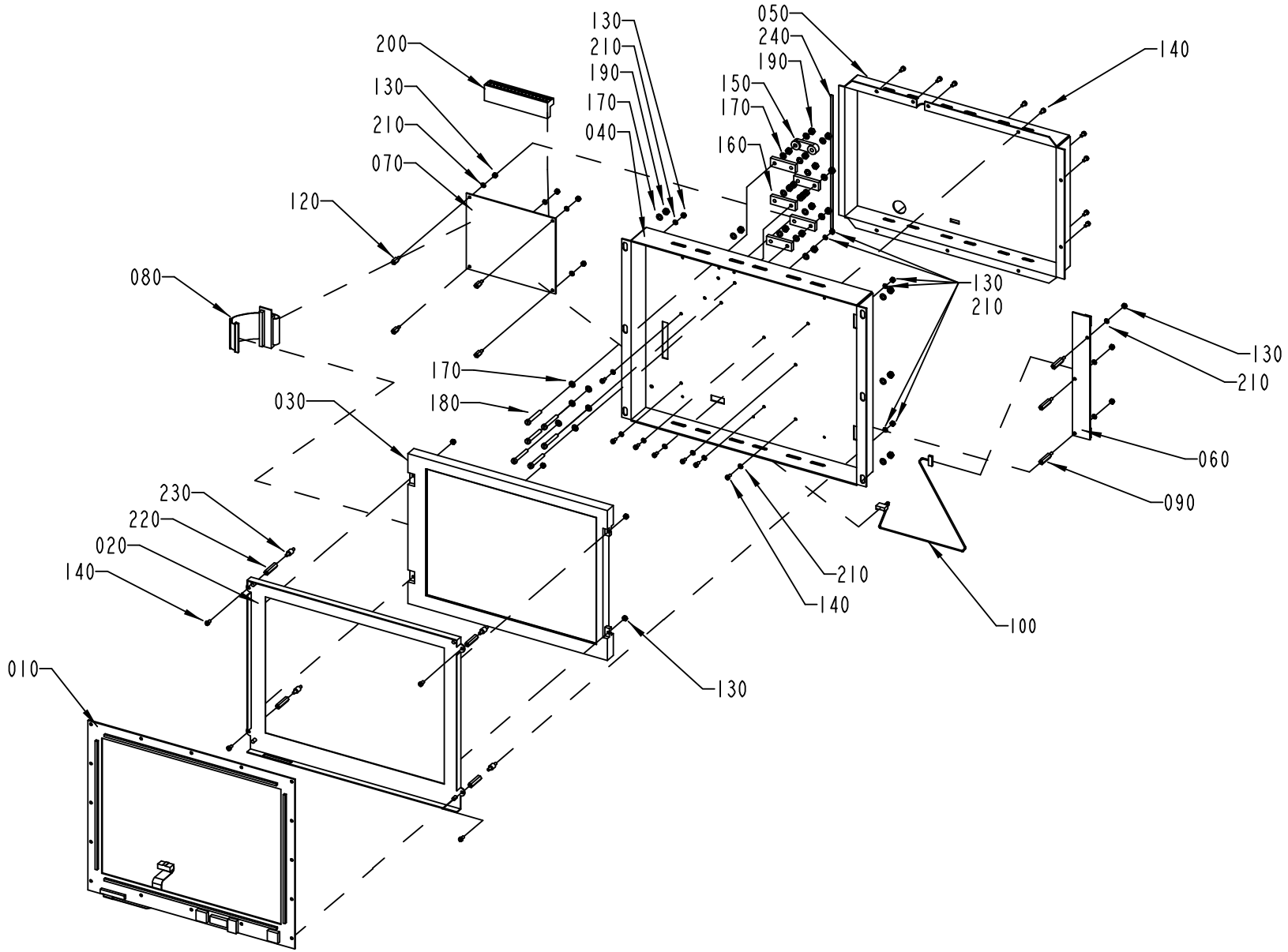

1348707-1
ECN 73356

Pos	Part No	SP	UN	Qty	Description	Page No
Common Parts						
010	90041-0099	A		1	IR TOUCH PCB, 12.1"	
020	90041-0104	-		1	CHASSIS FOR TOUCH 12,1"	
030	90041-0093	A		1	DISPLAY TOSHIBA 12,1"	
040	1348708-0000	-		1	COVER PLATE	
050	1348709-0000	-		1	COVER PLATE	
060	90041-0079	A		1	ADAPTER BACKLIGHT	
070	90041-0078	A		1	REMOTE COMMUNICATION LINK BOARD	
080	90041-0103	A		1	DATACABLE DISPLAY L=150MM	
090	90316-0022	-		3	SPACER NUT DSNF M3060X20	
100	90041-0082	A		1	CABLE DISPLAY POWER	
120	90316-0023	-		4	SPACER NUT DSM M3055X8	
130	312605-0310	-		15	HEXAGON NUT, M6M M3 A280	
140	312125-0220	-		16	SCREW SLOT.PAN HD. MCS 3X6 A480	
150	90220-0302	-		1	CLAMP FOR SCR.CABLE 16MM	
160	90220-0304	-		5	CLAMP FOR SCR.CABLE 24MM	
170	315105-0136	-		24	WASHER PLAIN, BRB, 4,3/8,H=0,8	
180	312125-0299	-		6	SCREW PAN HEAD MCS M4X30 SS	
190	312605-0312	-		20	HEXAGON NUT, M6M M4 A280	
200	B1129570-0000	-		1	LDS, LVDS TERMINAL 1	
	90194-0154	-		*1*	*TERM. MARKING LABEL KIT, BLA-BSTB, 1-24*	
	90110-0282	-		*1*	*PLINTH, BLA18, 128336*	
210	315105-0124	-		18	WASHER PLAIN, BRB, 3,2/6,H=0,5	
220	90316-0029	-		4	SPACER NUT M3X16	
230	90316-0030	-		4	ELASTIC SCREW INNOSCAN 15060002	
240	90144-0074	-		1	SHIELDING SEAL STRIP EMC, 3,17X3,17 MM	

Pos	Part No	SP	UN	Qty	Description	Page No

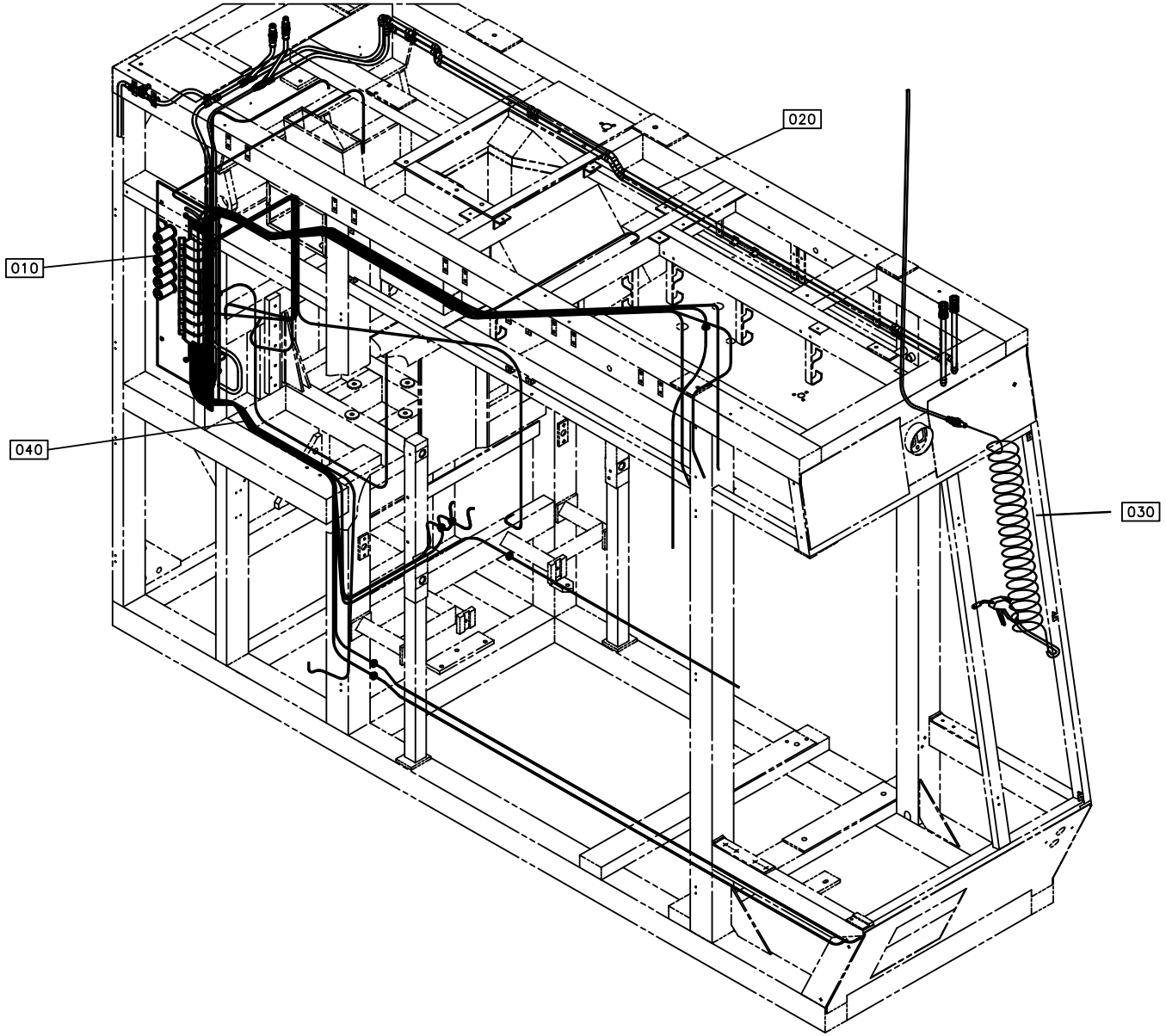
020
010
040
030

Pos	Part No	SP	UN	Qty	Description	Page No
Common Parts						
010	A1095692-0400	-		1	VALVE PANEL	**319**
020	A1095857-0200	-		1	PIPE WORK-AIR	**323, 325, 327, 329**
030	A1095682-0100	-		1	AIR JET GUN	**331**
040	A1095695-0300	-		1	HOSE INSTALLATION	**333**

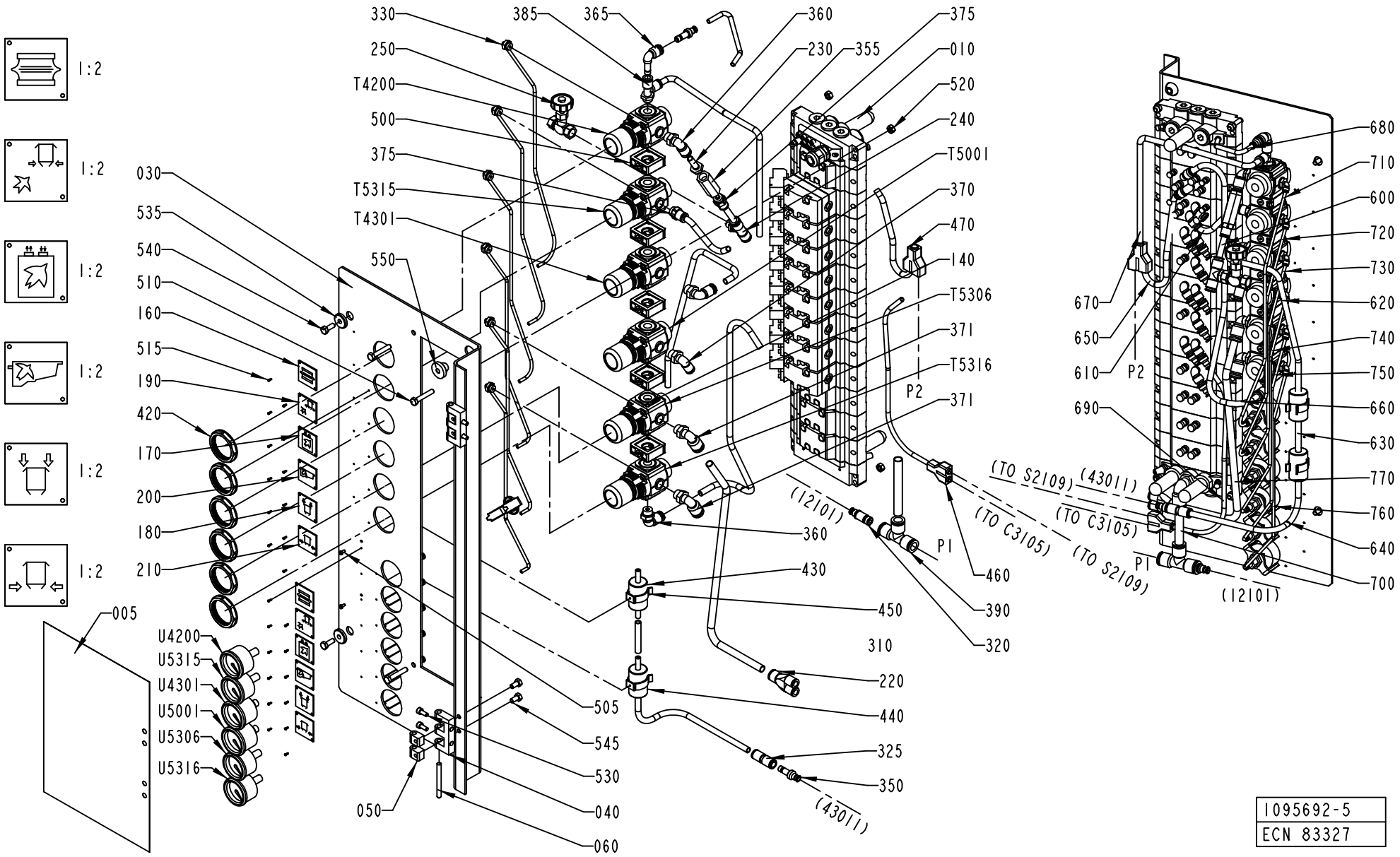

1095692-5
ECN 83327

ECM: 83324 - 20010110
Group number: 1095692-0400
Assembly Drawing: 1095692-5_1_AB

Issue: 20011217

Pos	Part No	SP	UN	Qty	Description	Page No
HI						
005	1487577-0000	-		1	PNEUMATIC DIAGRAM	
NOHI						
005	1487564-0000	-		1	PNEUMATIC DIAGRAM	
Common Parts						
010	A1095693-0400	-		1	VALVE RAMP	**321**
030	1517229-0000	-		1	PLATE	
040	1035792-0000	-		2	E-HINGE	
050	1129770-0000	-		4	BLOCKING PIECE	
060	988685-0000	-		2	PIN	
140	90087-0036	-		1	PLUG	
160	1041936-0000	-		2	SIGN	
170	978603-0000	-		2	SIGN	
180	1144606-0000	-		2	SIGN	
190	1129370-0000	-		2	SIGN	
200	479964-0000	-		2	SIGN	
210	1144607-0000	-		2	SIGN	
220	90055-0228	-		1	Y-CONNECTION, 8-10	
230	90055-0232	-		1	NIPPLE-8 MM G1/4"	
240	342742-0104	-		1	T-COUPLING,ADJUST,F.PLASTIC TUBE 8-G1/4"	
250	90187-0072	D		1	VALVE	
310	342770-0101	-		6	STRAIGHT COUPLING INT, D=4 MM - G1/8	
320	342716-0210	-		1	REDUCER 6-12	
325	342728-0103	-		1	PIPE COUPLING 8 MM	
330	342732-0100	-		6	ELBOW PIPE JOINT	
350	342716-0203	-		2	REDUCER 6-8	
355	90230-0068	D		1	NON-RETURN VALVE 1/4"	
360	342732-0104	-		3	ELBOW PIPE JOINT	
365	90055-0118	-		1	ELBOW PIPE JOINT -8MM	
370	342732-0103	-		1	ELBOW PIPE JOINT	
371	342732-0113	-		2	ELBOW PIPE JOINT	
375	342722-0205	-		2	STRAIGHT COUPLING D=8-G1/4"	
385	342772-0122	-		1	ELBOW FITTING, 8 - G1/4	
390	342748-0109	-		1	T-CONNECTION	
420	90457-0078	-		6	PANEL NUT	
430	90277-0045	B		1	FILTER / 9900-05-BK	
440	90277-0046	C		1	FILTER / 9933-05-101	
450	90165-0019	-		2	TOOL CLIP, 81/3, OPEN, 20 - 30 MM	
460	90055-0100	-		1	Y-CONNECTION	
470	90055-0101	-		1	Y-CONNECTION	
500	90113-0140	-		5	QUICK CLAMP	
505	312125-0220	-		2	SCREW SLOT.PAN HD. MCS 3X6 A480	
510	312109-0376	-		4	SCREW M6S M6X35 A280	
515	312502-0120	-		24	DRIVE SCREW ROUND HEAD KDS 0X5	
520	312605-0316	-		4	HEXAGON NUT, M6M M6 A280	
530	312115-0327	-		4	SCREW MC6S M5X12 A280	
535	315121-0153	-		2	WASHER PLAIN, TBRSB 6,4/22 H=4	
540	312105-0368	-		2	SCREW M6S M6X16 A280	
545	312105-0366	-		4	SCREW M6S M6X12 A280	
550	90015-0023	-		1	GLANDS,LEAD-IN,IP67	
600	90166-0013	-	MM	100	TUBE 8 MM PA BLUE	
610	90166-0013	-	MM	150	TUBE 8 MM PA BLUE	
620	90166-0013	-	MM	250	TUBE 8 MM PA BLUE	
630	90166-0013	-	MM	100	TUBE 8 MM PA BLUE	
640	90166-0013	-	MM	250	TUBE 8 MM PA BLUE	
650	90166-0013	-	MM	280	TUBE 8 MM PA BLUE	
660	90166-0013	-	MM	600	TUBE 8 MM PA BLUE	
670	90166-0013	-	MM	450	TUBE 8 MM PA BLUE	
680	90166-0081	-	MM	100	TUBE 6 MM PA BLUE	
690	90166-0081	-	MM	450	TUBE 6 MM PA BLUE	
700	90166-0068	-	MM	100	TUBE 12 MM PA BLUE	
710	90166-0095	-	MM	500	TUBE 4 MM PA BLUE	
720	90166-0095	-	MM	500	TUBE 4 MM PA BLUE	
730	90166-0095	-	MM	500	TUBE 4 MM PA BLUE	
740	90166-0095	-	MM	500	TUBE 4 MM PA BLUE	
750	90166-0095	-	MM	500	TUBE 4 MM PA BLUE	
760	90166-0095	-	MM	500	TUBE 4 MM PA BLUE	
770	90166-0140	-	MM	450	HOSE	
T4200	90113-0469	D		1	MANIFOLD REGULATOR 4 BAR	
T4301	90457-0144	A		1	REGULATOR 0,3-2 BAR	
T5001	90457-0144	A		1	REGULATOR 0,3-2 BAR	
T5306	90113-0469	D		1	MANIFOLD REGULATOR 4 BAR	
T5315	90113-0469	D		1	MANIFOLD REGULATOR 4 BAR	
T5316	90113-0469	D		1	MANIFOLD REGULATOR 4 BAR	
U4200	90043-0064	B		1	PRESSURE GAUGE, 2048 D=40 MM	
U4301	90043-0090	B		1	PRESSURE GAUGE, 2048 D=40 MM	
U5001	90043-0090	B		1	PRESSURE GAUGE, 2048 D=40 MM	
U5306	90043-0064	B		1	PRESSURE GAUGE, 2048 D=40 MM	
U5315	90043-0064	B		1	PRESSURE GAUGE, 2048 D=40 MM	
U5316	90043-0064	B		1	PRESSURE GAUGE, 2048 D=40 MM	

Machine Type | Group Description | Used-In | Group Number | Page No

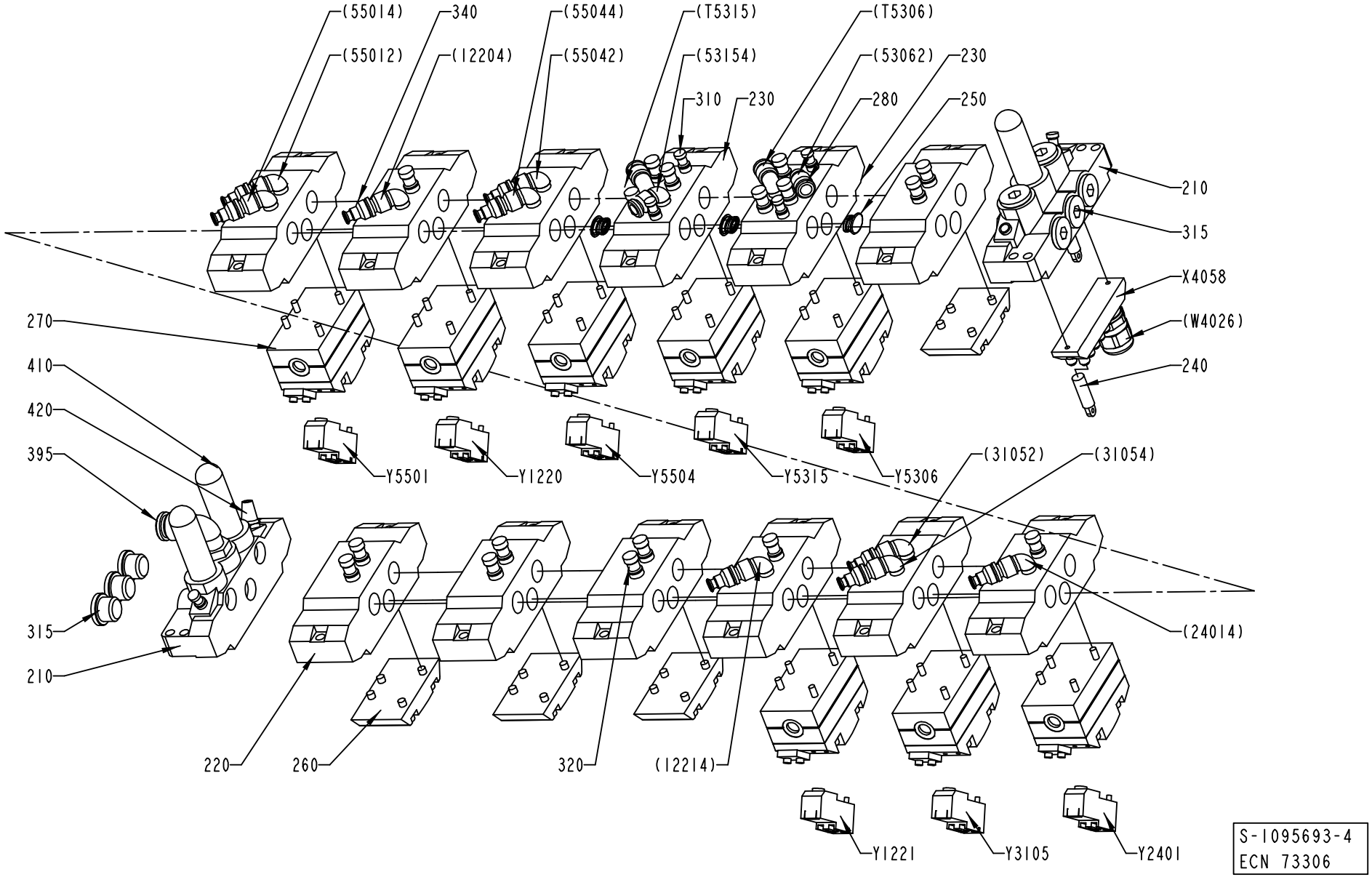
(55014)
340
(55044)
(T5315)
(T5306)
(55012)
(12204)
(55042)
(53154)
(53062)
230
310
230
280
250
210
315
X4058
(W4026)
240
270
410
420
395
Y5501
Y1220
Y5504
Y5315
Y5306
(31052)
(31054)
315
210
(24014)
220
260
320
(12214)
Y1221
Y3105
Y2401
S-1095693-4
ECN 73306

Pos	Part No	SP	UN	Qty	Description	Page No
Common Parts						
210	90042-0522	-		2	PORTED END PIECE ISO SIZE 1	
220	90042-0532	-		10	BASE PLATE ISO SIZE 1	
230	90042-0520	-		2	BASE PLATE ISO SIZE 1	
240	90042-0526	-		2	PROTECTIVE SLEEVE MECMAN	
250	90042-0528	-		3	BLANKING KIT SEALS ISO SIZE 1	
260	90042-0519	-		4	BLANK PLATE ISO SIZE 1	
270	90042-0215	-		8	VALVE BODY 5/2 UNISTABLE	
280	90055-0172	-		13	ELBOW PIPE JOINT	
310	342715-0102	-		6	BLIND PLUG 6 MM	
315	342713-0211	-		8	PLUG, EXT THREAD HEX SOCKET 8638-00-380	
320	342715-0103	-		17	BLIND PLUG 8 MM	
340	342716-0203	-		9	REDUCER 6-8	
345	342728-0103	-		1	PIPE COUPLING 8 MM	
350	342716-0210	-		1	REDUCER 6-12	
385	342732-0105	-		1	ELBOW PIPE D8-R3/8"	
390	342748-0109	-		1	T-CONNECTION	
395	342732-0110	-		1	ELBOW PIPE JOINT	
410	90328-0024	-		3	SILENCER G3/8	
420	90328-0017	-		1	SILENCER, D=6 MM	
X4058	90042-0535	-		1	TERMINAL BOARD 19 CORDS	
Y1220	90042-0538	-		1	PILOT VALVE L=500MM	
Y1221	90042-0538	-		1	PILOT VALVE L=500MM	
Y2401	90042-0538	-		1	PILOT VALVE L=500MM	
Y3105	90042-0538	-		1	PILOT VALVE L=500MM	
Y5306	90042-0538	-		1	PILOT VALVE L=500MM	
Y5315	90042-0538	-		1	PILOT VALVE L=500MM	
Y5501	90042-0538	-		1	PILOT VALVE L=500MM	
Y5504	90042-0538	-		1	PILOT VALVE L=500MM	

Pos	Part No	SP	UN	Qty	Description	Page No

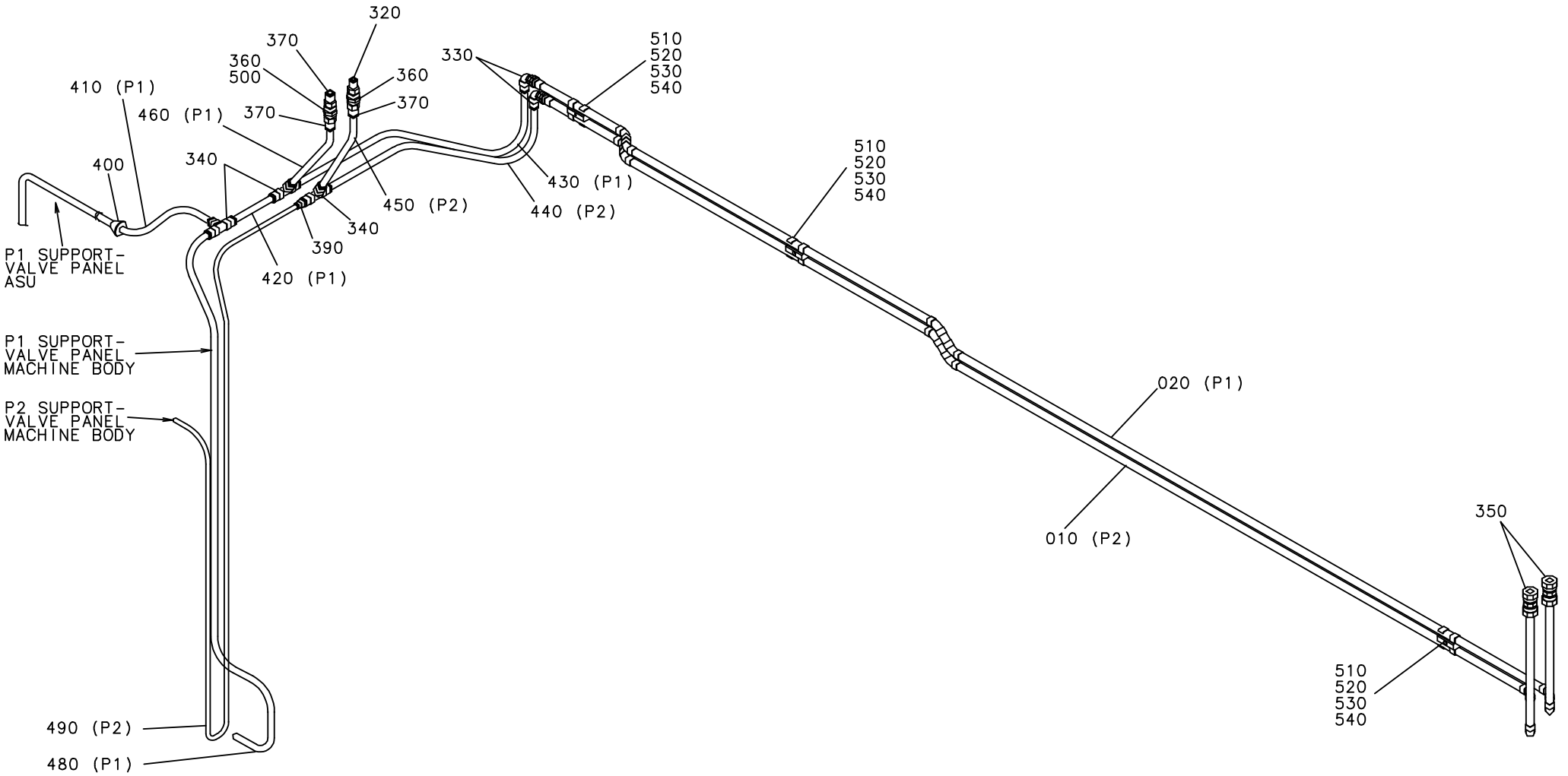
320
370
360
500
360
370
370
330
510
520
530
540
410 (P1)
460 (P1)
400
340
340
450 (P2)
430 (P1)
440 (P2)
510
520
530
540
P1 SUPPORT-
VALVE PANEL
ASU
390
420 (P1)
P1 SUPPORT-
VALVE PANEL
MACHINE BODY
020 (P1)
P2 SUPPORT-
VALVE PANEL
MACHINE BODY
010 (P2)
350
510
520
530
540
490 (P2)
480 (P1)

ECM: 71788 - 19981028
Group number: 1095857-0200
Assembly Drawing: 1095857-3_1_AC

Issue: 20011217

Pos	Part No	SP	UN	Qty	Description	Page No
NOPT HI						
340	342748-0109	-		4	T-CONNECTION	
390	342716-0209	-		2	REDUCER 8-12	
415	90166-0068	-	MM	70	TUBE 12 MM PA BLUE	
430	90166-0068	-	MM	615	TUBE 12 MM PA BLUE	
470	90166-0013	-	MM	2000	TUBE 8 MM PA BLUE	
550	359000-0400	-		2	MARKING CO2/4"0"	
551	359000-0401	-		4	MARKING COLLAR 2/4 "1" YELLOW	
552	359000-0409	-		2	MARKING COLLAR PA2/4 "9" YELLOW	
553	359000-0765	-		2	MARKING CO2/4"P"	
NOPT NOHI						
340	342748-0109	-		3	T-CONNECTION	
390	342716-0209	-		1	REDUCER 8-12	
430	90166-0068	-	MM	750	TUBE 12 MM PA BLUE	
PT21 HI						
340	342748-0109	-		4	T-CONNECTION	
380	342768-0109	-		1	BULKHEAD CONNECTOR, 12 MM	
390	342716-0209	-		1	REDUCER 8-12	
415	90166-0068	-	MM	70	TUBE 12 MM PA BLUE	
430	90166-0068	-	MM	615	TUBE 12 MM PA BLUE	
470	90166-0013	-	MM	2000	TUBE 8 MM PA BLUE	
550	359000-0400	-		2	MARKING CO2/4"0"	
551	359000-0401	-		4	MARKING COLLAR 2/4 "1" YELLOW	
552	359000-0409	-		2	MARKING COLLAR PA2/4 "9" YELLOW	
553	359000-0765	-		2	MARKING CO2/4"P"	
PT21 NOHI						
340	342748-0109	-		3	T-CONNECTION	
380	342768-0109	-		1	BULKHEAD CONNECTOR, 12 MM	
405	90166-0068	-	MM	5500	TUBE 12 MM PA BLUE	
430	90166-0068	-	MM	750	TUBE 12 MM PA BLUE	
Common Parts						
010	B1129389-0000	-		1	PIPE	
	342402-0106	-		*1*	*ADAPTER, INT. CONN. NO. 7272-15X3/8*	
	90418-0054	-		*5*	*ELBOW, 45, INT. CONN. NO. 7041-15*	
	90418-0053	-		*1*	*ELBOW, 90, INT. CONN. NO. 7090-15*	
020	B1129390-0000	-		1	PIPE	
	342402-0106	-		*1*	*ADAPTER, INT. CONN. NO. 7272-15X3/8*	
	90418-0054	-		*5*	*ELBOW, 45, INT. CONN. NO. 7041-15*	
	90418-0053	-		*1*	*ELBOW, 90, INT. CONN. NO. 7090-15*	
320	342722-0206	-		1	STRAIGHT COUPLING D=8-G3/8"	
330	342732-0110	-		2	ELBOW PIPE JOINT	
350	342726-0114	-		2	CONN. PIPE G-15	
360	342707-0111	-		2	SLEEVE, INT. THREAD, NO. 2543-3/8	
370	342722-0210	-		3	STRAIGHT COUPLING D=12-G3/8"	
400	90015-0021	-		1	GLANDS,LEAD-IN,IP67	
410	90166-0068	-	MM	3250	TUBE 12 MM PA BLUE	
420	90166-0068	-	MM	260	TUBE 12 MM PA BLUE	
440	90166-0068	-	MM	750	TUBE 12 MM PA BLUE	
450	90166-0068	-	MM	520	TUBE 12 MM PA BLUE	
460	90166-0068	-	MM	520	TUBE 12 MM PA BLUE	
480	90166-0068	-	MM	880	TUBE 12 MM PA BLUE	
490	90166-0013	-	MM	1800	TUBE 8 MM PA BLUE	
500	90157-0034	-		1	SEALING COMPOUND LOCTITE 572 50 ML	
510	90165-0148	-		3	T-CLIP T15 FOR TUBE D=15 -17 MM	
520	90165-0303	-		3	SPACER F. T-CLIP, 818 716 000 TYPE D15	
530	312151-0335	-		3	SCREW HEX.SOCK.COUNT.MF6S 5X30 FZB	
540	315125-0153	-		3	WASHER PLAIN ROUND,CHAMF. 6,4/22, H=4	

Machine Type | Group Description | Used-In | Group Number | Page No

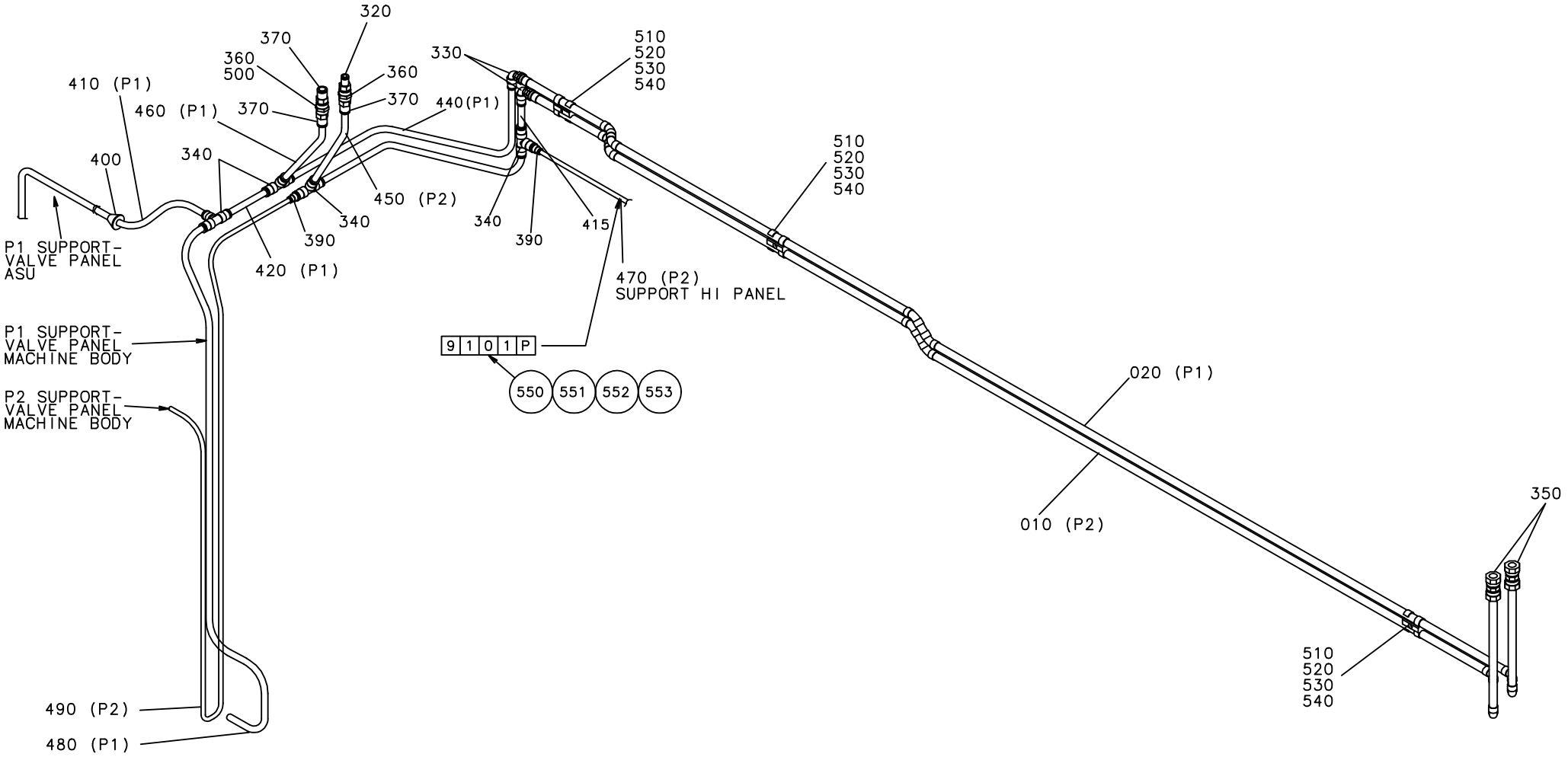
320
370
360
500
360
370
330
510
520
530
540
410 (P1)
460 (P1)
370
440(P1)
400
340
450 (P2)
340
390
340
390
415
510
520
530
540
P1 SUPPORT-
VALVE PANEL
ASU
420 (P1)
470 (P2)
SUPPORT HI PANEL
P1 SUPPORT-
VALVE PANEL
MACHINE BODY
9 1 0 1 P
550 551 552 553
020 (P1)
P2 SUPPORT-
VALVE PANEL
MACHINE BODY
010 (P2)
350
510
520
530
540
490 (P2)
480 (P1)

ECM: 71788 - 19981028
Group number: 1095857-0200
Assembly Drawing: 1095857-4_1_AD

Issue: 20011217

Pos	Part No	SP	UN	Qty	Description	Page No
NOPT HI						
340	342748-0109	-		4	T-CONNECTION	
390	342716-0209	-		2	REDUCER 8-12	
415	90166-0068	-	MM	70	TUBE 12 MM PA BLUE	
430	90166-0068	-	MM	615	TUBE 12 MM PA BLUE	
470	90166-0013	-	MM	2000	TUBE 8 MM PA BLUE	
550	359000-0400	-		2	MARKING CO2/4"0"	
551	359000-0401	-		4	MARKING COLLAR 2/4 "1" YELLOW	
552	359000-0409	-		2	MARKING COLLAR PA2/4 "9" YELLOW	
553	359000-0765	-		2	MARKING CO2/4"P"	
NOPT NOHI						
340	342748-0109	-		3	T-CONNECTION	
390	342716-0209	-		1	REDUCER 8-12	
430	90166-0068	-	MM	750	TUBE 12 MM PA BLUE	
PT21 HI						
340	342748-0109	-		4	T-CONNECTION	
380	342768-0109	-		1	BULKHEAD CONNECTOR, 12 MM	
390	342716-0209	-		1	REDUCER 8-12	
415	90166-0068	-	MM	70	TUBE 12 MM PA BLUE	
430	90166-0068	-	MM	615	TUBE 12 MM PA BLUE	
470	90166-0013	-	MM	2000	TUBE 8 MM PA BLUE	
550	359000-0400	-		2	MARKING CO2/4"0"	
551	359000-0401	-		4	MARKING COLLAR 2/4 "1" YELLOW	
552	359000-0409	-		2	MARKING COLLAR PA2/4 "9" YELLOW	
553	359000-0765	-		2	MARKING CO2/4"P"	
PT21 NOHI						
340	342748-0109	-		3	T-CONNECTION	
380	342768-0109	-		1	BULKHEAD CONNECTOR, 12 MM	
405	90166-0068	-	MM	5500	TUBE 12 MM PA BLUE	
430	90166-0068	-	MM	750	TUBE 12 MM PA BLUE	
Common Parts						
010	B1129389-0000	-		1	PIPE	
	342402-0106	-		*1*	*ADAPTER, INT. CONN. NO. 7272-15X3/8*	
	90418-0054	-		*5*	*ELBOW, 45, INT. CONN. NO. 7041-15*	
	90418-0053	-		*1*	*ELBOW, 90, INT. CONN. NO. 7090-15*	
020	B1129390-0000	-		1	PIPE	
	342402-0106	-		*1*	*ADAPTER, INT. CONN. NO. 7272-15X3/8*	
	90418-0054	-		*5*	*ELBOW, 45, INT. CONN. NO. 7041-15*	
	90418-0053	-		*1*	*ELBOW, 90, INT. CONN. NO. 7090-15*	
320	342722-0206	-		1	STRAIGHT COUPLING D=8-G3/8"	
330	342732-0110	-		2	ELBOW PIPE JOINT	
350	342726-0114	-		2	CONN. PIPE G-15	
360	342707-0111	-		2	SLEEVE, INT. THREAD, NO. 2543-3/8	
370	342722-0210	-		3	STRAIGHT COUPLING D=12-G3/8"	
400	90015-0021	-		1	GLANDS,LEAD-IN,IP67	
410	90166-0068	-	MM	3250	TUBE 12 MM PA BLUE	
420	90166-0068	-	MM	260	TUBE 12 MM PA BLUE	
440	90166-0068	-	MM	750	TUBE 12 MM PA BLUE	
450	90166-0068	-	MM	520	TUBE 12 MM PA BLUE	
460	90166-0068	-	MM	520	TUBE 12 MM PA BLUE	
480	90166-0068	-	MM	880	TUBE 12 MM PA BLUE	
490	90166-0013	-	MM	1800	TUBE 8 MM PA BLUE	
500	90157-0034	-		1	SEALING COMPOUND LOCTITE 572 50 ML	
510	90165-0148	-		3	T-CLIP T15 FOR TUBE D=15 -17 MM	
520	90165-0303	-		3	SPACER F. T-CLIP, 818 716 000 TYPE D15	
530	312151-0335	-		3	SCREW HEX.SOCK.COUNT.MF6S 5X30 FZB	
540	315125-0153	-		3	WASHER PLAIN ROUND,CHAMF. 6,4/22, H=4	

Machine Type | Group Description | Used-In | Group Number | Page No

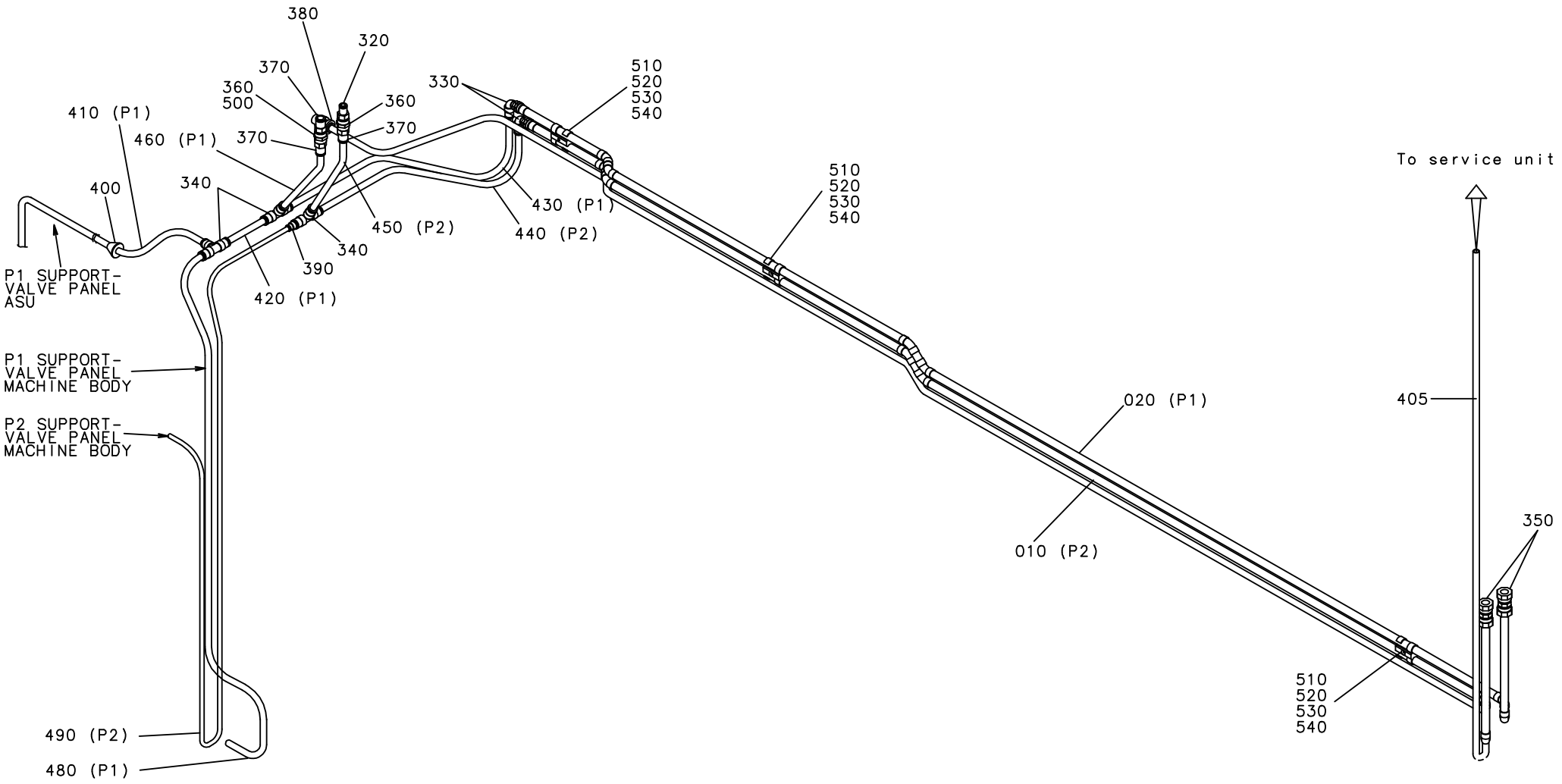
380
320
370
360
500
360
370
330
510
520
530
540
410 (P1)
460 (P1)
370
400
340
450 (P2)
430 (P1)
440 (P2)
510
520
530
540
To service unit
340
390
420 (P1)
P1 SUPPORT-
VALVE PANEL
ASU
P1 SUPPORT-
VALVE PANEL
MACHINE BODY
P2 SUPPORT-
VALVE PANEL
MACHINE BODY
020 (P1)
405
010 (P2)
350
510
520
530
540
490 (P2)
480 (P1)

ECM: 71788 - 19981028
Group number: 1095857-0200
Assembly Drawing: 1095857-5_1_AB

Issue: 20011217

Pos	Part No	SP	UN	Qty	Description	Page No
NOPT HI						
340	342748-0109	-		4	T-CONNECTION	
390	342716-0209	-		2	REDUCER 8-12	
415	90166-0068	-	MM	70	TUBE 12 MM PA BLUE	
430	90166-0068	-	MM	615	TUBE 12 MM PA BLUE	
470	90166-0013	-	MM	2000	TUBE 8 MM PA BLUE	
550	359000-0400	-		2	MARKING CO2/4"0"	
551	359000-0401	-		4	MARKING COLLAR 2/4 "1" YELLOW	
552	359000-0409	-		2	MARKING COLLAR PA2/4 "9" YELLOW	
553	359000-0765	-		2	MARKING CO2/4"P"	
NOPT NOHI						
340	342748-0109	-		3	T-CONNECTION	
390	342716-0209	-		1	REDUCER 8-12	
430	90166-0068	-	MM	750	TUBE 12 MM PA BLUE	
PT21 HI						
340	342748-0109	-		4	T-CONNECTION	
380	342768-0109	-		1	BULKHEAD CONNECTOR, 12 MM	
390	342716-0209	-		1	REDUCER 8-12	
415	90166-0068	-	MM	70	TUBE 12 MM PA BLUE	
430	90166-0068	-	MM	615	TUBE 12 MM PA BLUE	
470	90166-0013	-	MM	2000	TUBE 8 MM PA BLUE	
550	359000-0400	-		2	MARKING CO2/4"0"	
551	359000-0401	-		4	MARKING COLLAR 2/4 "1" YELLOW	
552	359000-0409	-		2	MARKING COLLAR PA2/4 "9" YELLOW	
553	359000-0765	-		2	MARKING CO2/4"P"	
PT21 NOHI						
340	342748-0109	-		3	T-CONNECTION	
380	342768-0109	-		1	BULKHEAD CONNECTOR, 12 MM	
405	90166-0068	-	MM	5500	TUBE 12 MM PA BLUE	
430	90166-0068	-	MM	750	TUBE 12 MM PA BLUE	
Common Parts						
010	B1129389-0000	-		1	PIPE	
	342402-0106	-		*1*	*ADAPTER, INT. CONN. NO. 7272-15X3/8*	
	90418-0054	-		*5*	*ELBOW, 45, INT. CONN. NO. 7041-15*	
	90418-0053	-		*1*	*ELBOW, 90, INT. CONN. NO. 7090-15*	
020	B1129390-0000	-		1	PIPE	
	342402-0106	-		*1*	*ADAPTER, INT. CONN. NO. 7272-15X3/8*	
	90418-0054	-		*5*	*ELBOW, 45, INT. CONN. NO. 7041-15*	
	90418-0053	-		*1*	*ELBOW, 90, INT. CONN. NO. 7090-15*	
320	342722-0206	-		1	STRAIGHT COUPLING D=8-G3/8"	
330	342732-0110	-		2	ELBOW PIPE JOINT	
350	342726-0114	-		2	CONN. PIPE G-15	
360	342707-0111	-		2	SLEEVE, INT. THREAD, NO. 2543-3/8	
370	342722-0210	-		3	STRAIGHT COUPLING D=12-G3/8"	
400	90015-0021	-		1	GLANDS,LEAD-IN,IP67	
410	90166-0068	-	MM	3250	TUBE 12 MM PA BLUE	
420	90166-0068	-	MM	260	TUBE 12 MM PA BLUE	
440	90166-0068	-	MM	750	TUBE 12 MM PA BLUE	
450	90166-0068	-	MM	520	TUBE 12 MM PA BLUE	
460	90166-0068	-	MM	520	TUBE 12 MM PA BLUE	
480	90166-0068	-	MM	880	TUBE 12 MM PA BLUE	
490	90166-0013	-	MM	1800	TUBE 8 MM PA BLUE	
500	90157-0034	-		1	SEALING COMPOUND LOCTITE 572 50 ML	
510	90165-0148	-		3	T-CLIP T15 FOR TUBE D=15 -17 MM	
520	90165-0303	-		3	SPACER F. T-CLIP, 818 716 000 TYPE D15	
530	312151-0335	-		3	SCREW HEX.SOCK.COUNT.MF6S 5X30 FZB	
540	315125-0153	-		3	WASHER PLAIN ROUND,CHAMF. 6,4/22, H=4	

Machine Type | Group Description | Used-In | Group Number | Page No

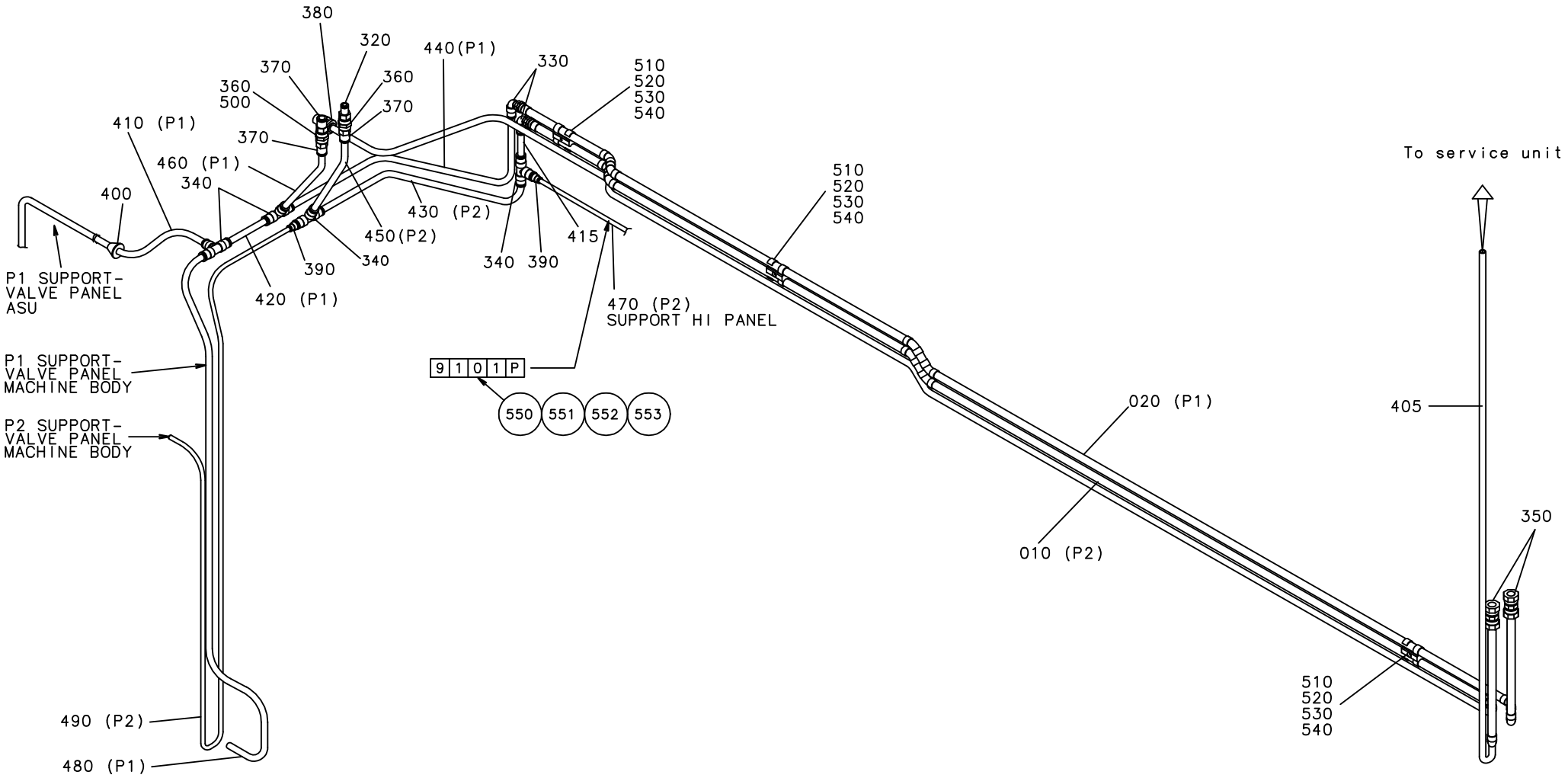
380
320
440(P1)
330
370
360
360
500
370
510
520
530
540
410 (P1)
370
460 (P1)
340
400
510
520
530
540
To service unit
430 (P2)
450(P2)
415
340
390
340
390
420 (P1)
P1 SUPPORT-
VALVE PANEL
ASU
470 (P2)
SUPPORT HI PANEL
P1 SUPPORT-
VALVE PANEL
MACHINE BODY
9 1 0 1 P
020 (P1)
405
P2 SUPPORT-
VALVE PANEL
MACHINE BODY
550 551 552 553
350
010 (P2)
510
520
530
540
490 (P2)
480 (P1)

ECM: 71788 - 19981028
Group number: 1095857-0200
Assembly Drawing: 1095857-6_1_AB

Issue: 20011217

Pos	Part No	SP	UN	Qty	Description	Page No
NOPT HI						
340	342748-0109	-		4	T-CONNECTION	
390	342716-0209	-		2	REDUCER 8-12	
415	90166-0068	-	MM	70	TUBE 12 MM PA BLUE	
430	90166-0068	-	MM	615	TUBE 12 MM PA BLUE	
470	90166-0013	-	MM	2000	TUBE 8 MM PA BLUE	
550	359000-0400	-		2	MARKING CO2/4"0"	
551	359000-0401	-		4	MARKING COLLAR 2/4 "1" YELLOW	
552	359000-0409	-		2	MARKING COLLAR PA2/4 "9" YELLOW	
553	359000-0765	-		2	MARKING CO2/4"P"	
NOPT NOHI						
340	342748-0109	-		3	T-CONNECTION	
390	342716-0209	-		1	REDUCER 8-12	
430	90166-0068	-	MM	750	TUBE 12 MM PA BLUE	
PT21 HI						
340	342748-0109	-		4	T-CONNECTION	
380	342768-0109	-		1	BULKHEAD CONNECTOR, 12 MM	
390	342716-0209	-		1	REDUCER 8-12	
415	90166-0068	-	MM	70	TUBE 12 MM PA BLUE	
430	90166-0068	-	MM	615	TUBE 12 MM PA BLUE	
470	90166-0013	-	MM	2000	TUBE 8 MM PA BLUE	
550	359000-0400	-		2	MARKING CO2/4"0"	
551	359000-0401	-		4	MARKING COLLAR 2/4 "1" YELLOW	
552	359000-0409	-		2	MARKING COLLAR PA2/4 "9" YELLOW	
553	359000-0765	-		2	MARKING CO2/4"P"	
PT21 NOHI						
340	342748-0109	-		3	T-CONNECTION	
380	342768-0109	-		1	BULKHEAD CONNECTOR, 12 MM	
405	90166-0068	-	MM	5500	TUBE 12 MM PA BLUE	
430	90166-0068	-	MM	750	TUBE 12 MM PA BLUE	
Common Parts						
010	B1129389-0000	-		1	PIPE	
	342402-0106	-		*1*	*ADAPTER, INT. CONN. NO. 7272-15X3/8*	
	90418-0054	-		*5*	*ELBOW, 45, INT. CONN. NO. 7041-15*	
	90418-0053	-		*1*	*ELBOW, 90, INT. CONN. NO. 7090-15*	
020	B1129390-0000	-		1	PIPE	
	342402-0106	-		*1*	*ADAPTER, INT. CONN. NO. 7272-15X3/8*	
	90418-0054	-		*5*	*ELBOW, 45, INT. CONN. NO. 7041-15*	
	90418-0053	-		*1*	*ELBOW, 90, INT. CONN. NO. 7090-15*	
320	342722-0206	-		1	STRAIGHT COUPLING D=8-G3/8"	
330	342732-0110	-		2	ELBOW PIPE JOINT	
350	342726-0114	-		2	CONN. PIPE G-15	
360	342707-0111	-		2	SLEEVE, INT. THREAD, NO. 2543-3/8	
370	342722-0210	-		3	STRAIGHT COUPLING D=12-G3/8"	
400	90015-0021	-		1	GLANDS,LEAD-IN,IP67	
410	90166-0068	-	MM	3250	TUBE 12 MM PA BLUE	
420	90166-0068	-	MM	260	TUBE 12 MM PA BLUE	
440	90166-0068	-	MM	750	TUBE 12 MM PA BLUE	
450	90166-0068	-	MM	520	TUBE 12 MM PA BLUE	
460	90166-0068	-	MM	520	TUBE 12 MM PA BLUE	
480	90166-0068	-	MM	880	TUBE 12 MM PA BLUE	
490	90166-0013	-	MM	1800	TUBE 8 MM PA BLUE	
500	90157-0034	-		1	SEALING COMPOUND LOCTITE 572 50 ML	
510	90165-0148	-		3	T-CLIP T15 FOR TUBE D=15 -17 MM	
520	90165-0303	-		3	SPACER F. T-CLIP, 818 716 000 TYPE D15	
530	312151-0335	-		3	SCREW HEX.SOCK.COUNT.MF6S 5X30 FZB	
540	315125-0153	-		3	WASHER PLAIN ROUND,CHAMF. 6,4/22, H=4	

Machine Type | Group Description | Used-In | Group Number | Page No

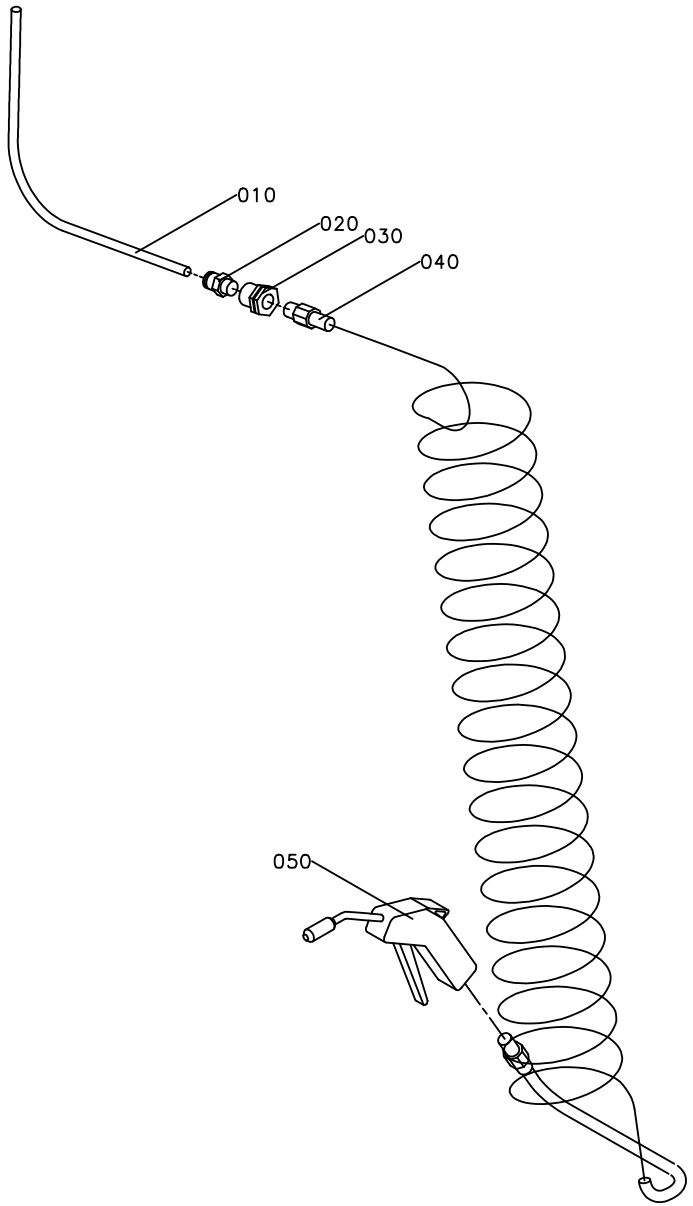
010
020
030
040
050

ECM: 71742 - 19980903
Group number: 1095682-0100
Assembly Drawing: 1095682-1_1_AA

Issue: 20011217

Pos	Part No	SP	UN	Qty	Description	Page No
Common Parts						
010	90166-0013	-	MM	1800	TUBE 8 MM PA BLUE	
020	342920-0122	-		1	STRAIGHT COUPLING,EXT.THREADED 8/6-R1/4"	
030	342767-0104	-		1	CONN. BULKHEAD G1/4	
040	90152-0016	-		1	HOSE	
050	90243-0061	-		1	FAN NOZZLE	

Pos	Part No	SP	UN	Qty	Description	Page No

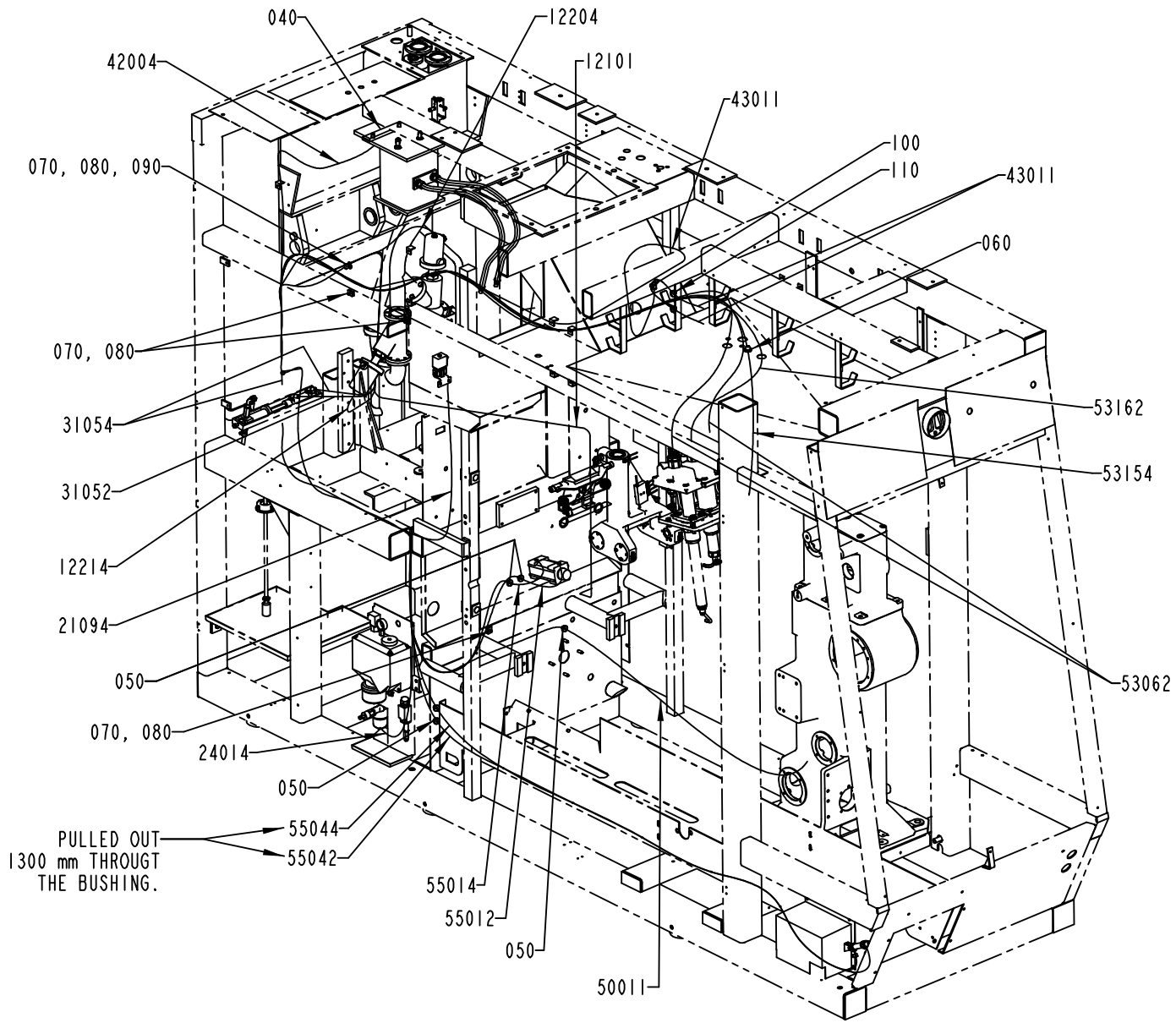

1095695-4
ECM 80436

Pos	Part No	SP	UN	Qty	Description	Page No
Common Parts						
040	A1487502-0100	-		1	AIR TANK	**335**
050	90015-0020	-		7	GLANDS,LEAD-IN,IP67	
060	90015-0023	-		1	GLANDS,LEAD-IN,IP67	
070	352113-0204	-		4	ANCHOR TM3S25-M	
080	312125-0364	-		4	SCREW SLOT.PAN HD. MCS 6X10 A480	
090	312605-0316	-		1	HEXAGON NUT, M6M M6 A280	
100	90055-0112	-		1	HOSE,T-JUNCTION COUPL.,FPT, 13X6MM	
110	90015-0020	-		2	GLANDS,LEAD-IN,IP67	
12101	90166-0081	-	MM	3500	TUBE 6 MM PA BLUE	
12204	90166-0081	-	MM	2300	TUBE 6 MM PA BLUE	
12214	90166-0081	-	MM	2700	TUBE 6 MM PA BLUE	
21094	90166-0081	-	MM	2000	TUBE 6 MM PA BLUE	
24014	90166-0081	-	MM	2500	TUBE 6 MM PA BLUE	
31052	90166-0081	-	MM	2500	TUBE 6 MM PA BLUE	
31054	90166-0081	-	MM	2500	TUBE 6 MM PA BLUE	
42004	90166-0013	-	MM	2500	TUBE 8 MM PA BLUE	
43011	90166-0081	-	MM	5600	TUBE 6 MM PA BLUE	
50011	90166-0081	-	MM	5200	TUBE 6 MM PA BLUE	
53062	90166-0013	-	MM	5500	TUBE 8 MM PA BLUE	
53154	90166-0013	-	MM	5500	TUBE 8 MM PA BLUE	
53162	90166-0160	-	MM	5500	TUBE 10 MM PA BLUE	
55012	90166-0081	-	MM	3500	TUBE 6 MM PA BLUE	
55014	90166-0081	-	MM	3500	TUBE 6 MM PA BLUE	
55042	90166-0081	-	MM	4800	TUBE 6 MM PA BLUE	
55044	90166-0081	-	MM	4800	TUBE 6 MM PA BLUE	

Pos	Part No	SP	UN	Qty	Description	Page No

Machine Type | Group Description | Used-In | Group Number | Page No

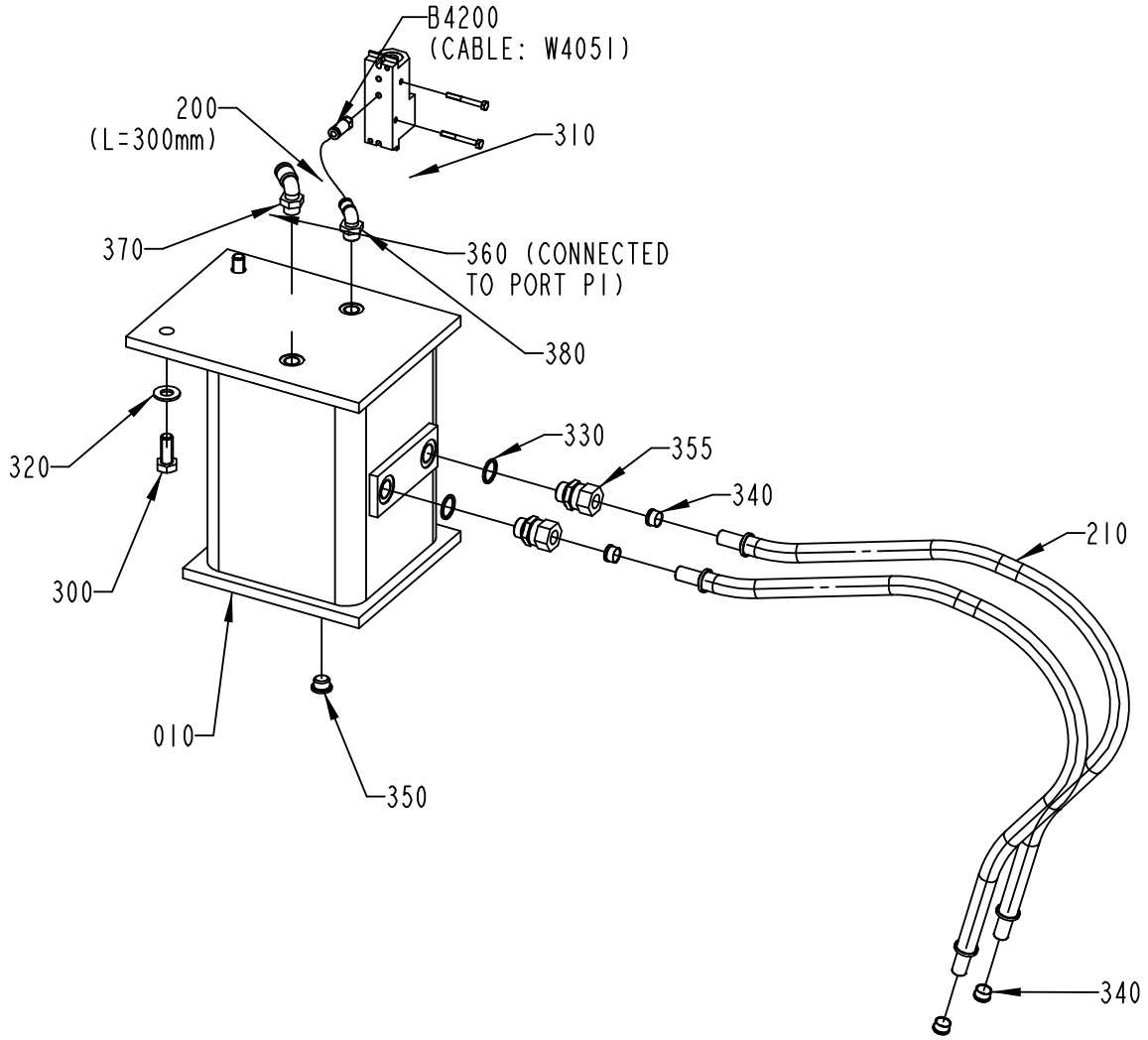

1487502-1
ECN 80476

ECM: 83321 - 20001027
Group number: 1487502-0100
Assembly Drawing: 1487502-1_1_AB

Issue: 20011217

Pos	Part No	SP	UN	Qty	Description	Page No
Common Parts						
010	1040977-0000	-		1	TANK	
200	90166-0009	-	MM	300	TUBE 5 MM PA BLUE	
210	1523080-0000	-		2	HOSE	
300	312101-0493	-		2	SCREW M6S M10X25 FZB	
310	312105-0301	-		2	SCREW M6S M4X35 A280	
320	315101-0173	-		2	WASHER PLAIN, BRB, 10,5/22 H=2	
330	315234-0111	C		2	WASHER,PL.RND.CU.17,5//21 H=1,5	
340	342704-0109	-		4	ACCESSORIES, FERRULE 12-MSG	
350	342713-0210	-		1	PLUG, EXT THREAD HEX SOCKET 8638-00-140	
355	342720-0109	-		2	CONN. STR. GA-12-G3/8	
360	342722-0195	-		1	PIPE COUPL-M5	
370	342732-0104	-		1	ELBOW PIPE JOINT	
380	342732-0112	-		1	ELBOW PIPE 5-1/4	
B 4200	90274-0089	C		1	PRESSURE SWITCH FESTO PEN-M5	

Pos	Part No	SP	UN	Qty	Description	Page No

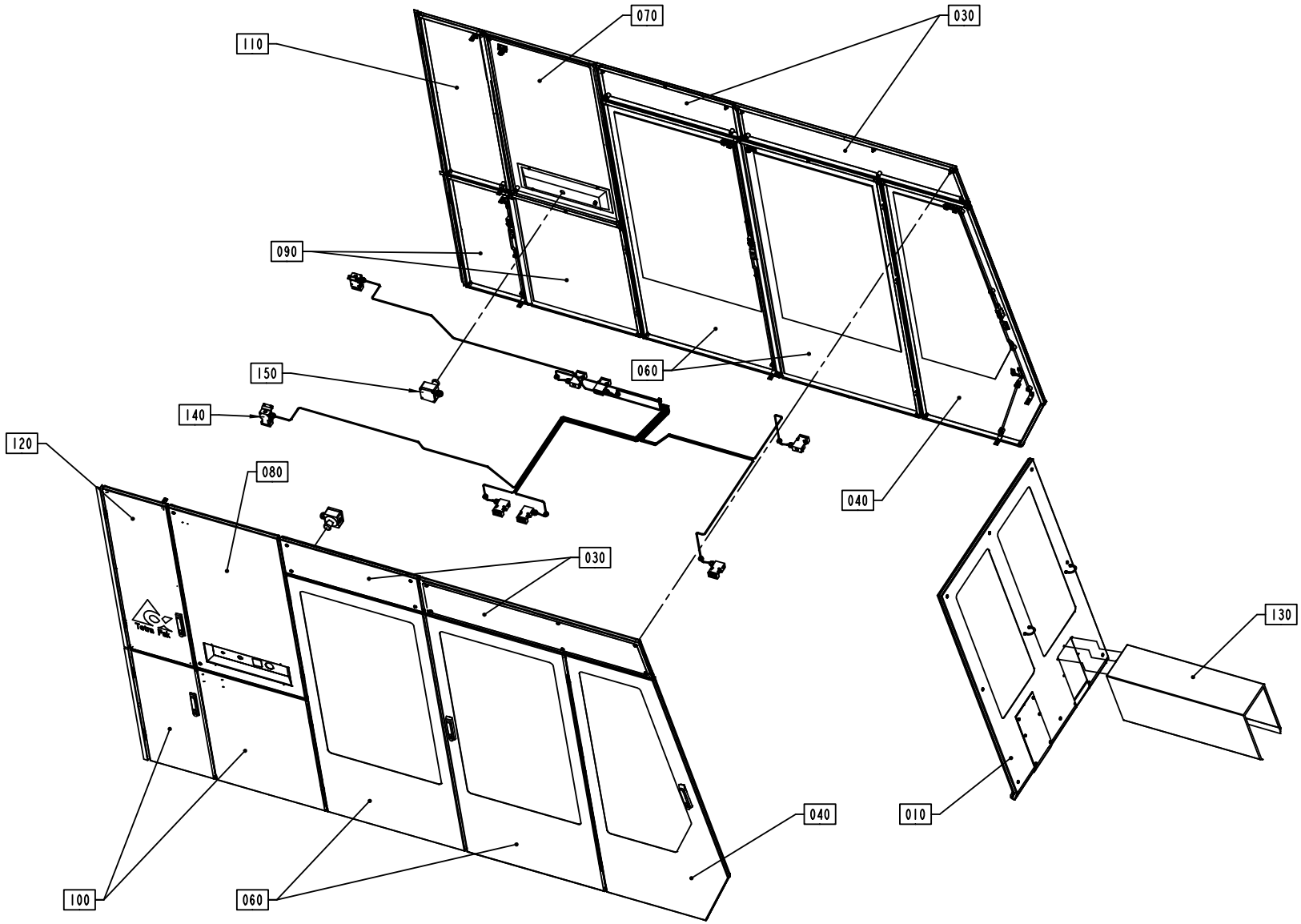
070
030
110
090
150
060
140
120
080
040
030
130
040
010
100
060
S-1095729-4
ECN 72400

Pos	Part No	SP	UN	Qty	Description	Page No
HI						
070	A1478169-0100	-		1	COVER	**339**
NOHI						
070	A1095737-0200	-		1	COVER	**341**
Common Parts						
010	A1285690-0200	-		1	FRONT COVER	**343**
030	A1095645-0200	-		1	COVERS	**347**
040	A1285958-0100	-		1	DOOR	**349**
060	A1095732-0200	-		2	DOORS	**351**
080	A1317402-0100	-		1	COVER	**353**
090	A1095734-0200	-		1	DOORS	**355**
100	A1095735-0200	-		1	DOOR	**357**
110	A1095736-0200	-		1	DOOR	**359**
120	A1095730-0200	-		1	DOOR	**361**
130	A1095738-0300	-		1	PROTECTIVE COVER	**365**
140	A1095739-0200	-		1	DOOR SAFETY SWITCH	**367**
150	A1095743-0200	-		1	EMERGENCY STOP	**369**

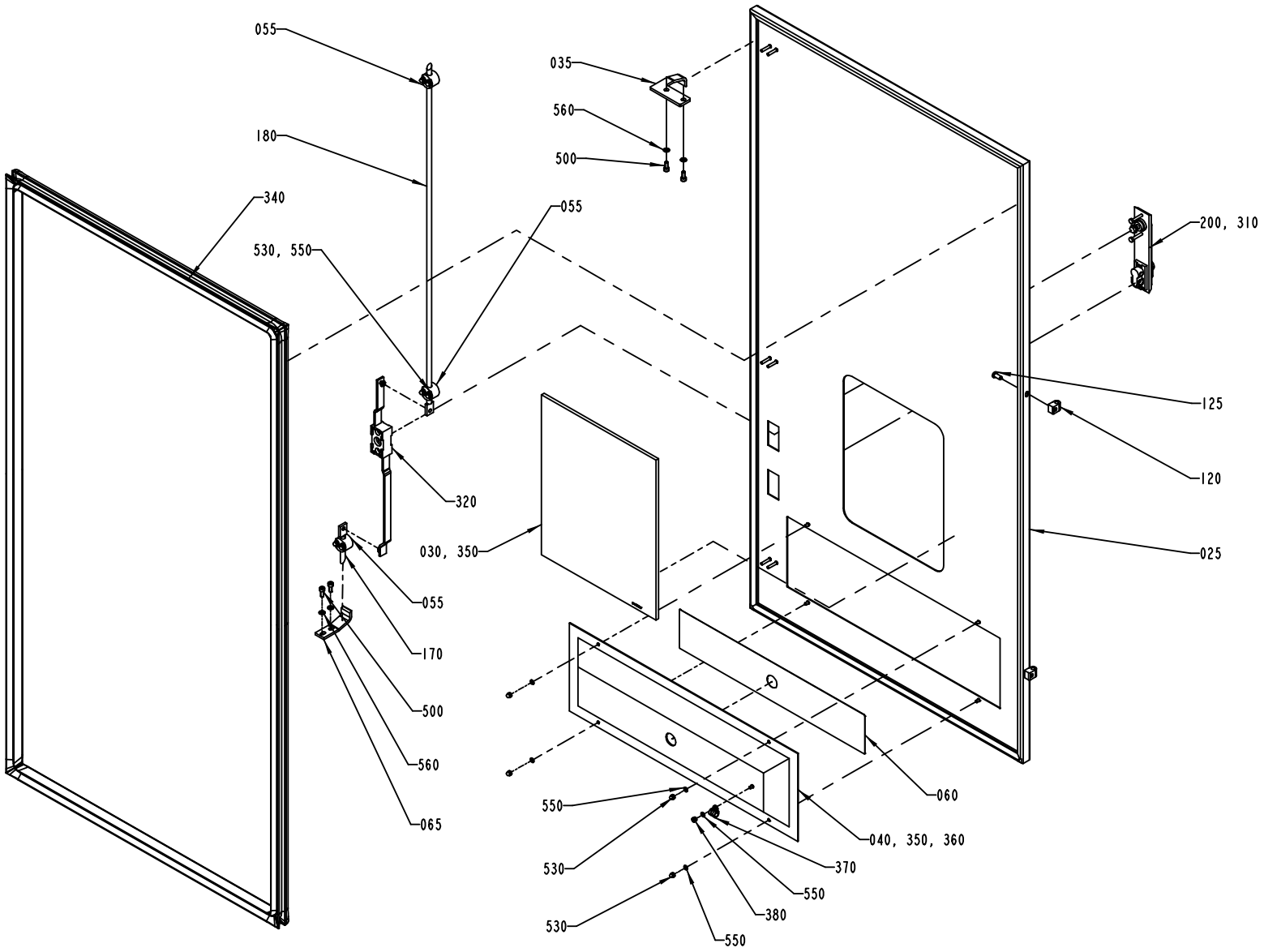

S-1478169-1
ECN 71909

ECM: 71909 - 20000215
Group number: 1478169-0100
Assembly Drawing: 1478169-1_1_AC

Issue: 20011217

Pos	Part No	SP	UN	Qty	Description	Page No
Common Parts						
025	1105716-0000	-		1	DOOR	
030	1129825-0000	-		1	GLASS PANE	
035	1348634-0000	-		1	BRACKET	
040	1041169-0000	-		1	COVERING PLATE	
055	1129274-0000	-		3	GUIDE LUG	
060	1041171-0000	-		1	FOIL	
065	1348045-0000	-		1	BRACKET	
120	1129770-0000	-		2	BLOCKING PIECE	
125	1129767-0000	-		2	SCREW	
170	1036304-0001	-		1	LOCKING ARM	
180	1036304-0005	-		1	LOCKING ARM	
200	90237-0175	-		1	TURNING HANDLE	
310	90237-0128	-		1	LOCK CYLINDER, 1109-U3	
320	90237-0153	-		1	LOCK HOUSING, 1121-U26-0B	
340	1279079-0000	-		1	SEALING STRIP	
350	90157-0041	-		1	SEALING COMPOUND	
360	90153-0049	-		1	ADHESIVE	
370	90165-0065	-		1	PIPE CLAMP, RSGU 1.8/9, D=8 MM	
380	312812-0312	-		1	HEXAGON NUT, NY-LOCK M4 A480	
500	312115-0327	-		4	SCREW MC6S M5X12 A280	
530	312705-0312	-		15	NUT HEX. DOMED CAP MHM-6 M4 A280	
550	315105-0136	-		16	WASHER PLAIN, BRB, 4,3/8,H=0,8	
560	315105-0146	-		4	WASHER PLAIN, BRB, 5,3/10,H=1	

Pos	Part No	SP	UN	Qty	Description	Page No

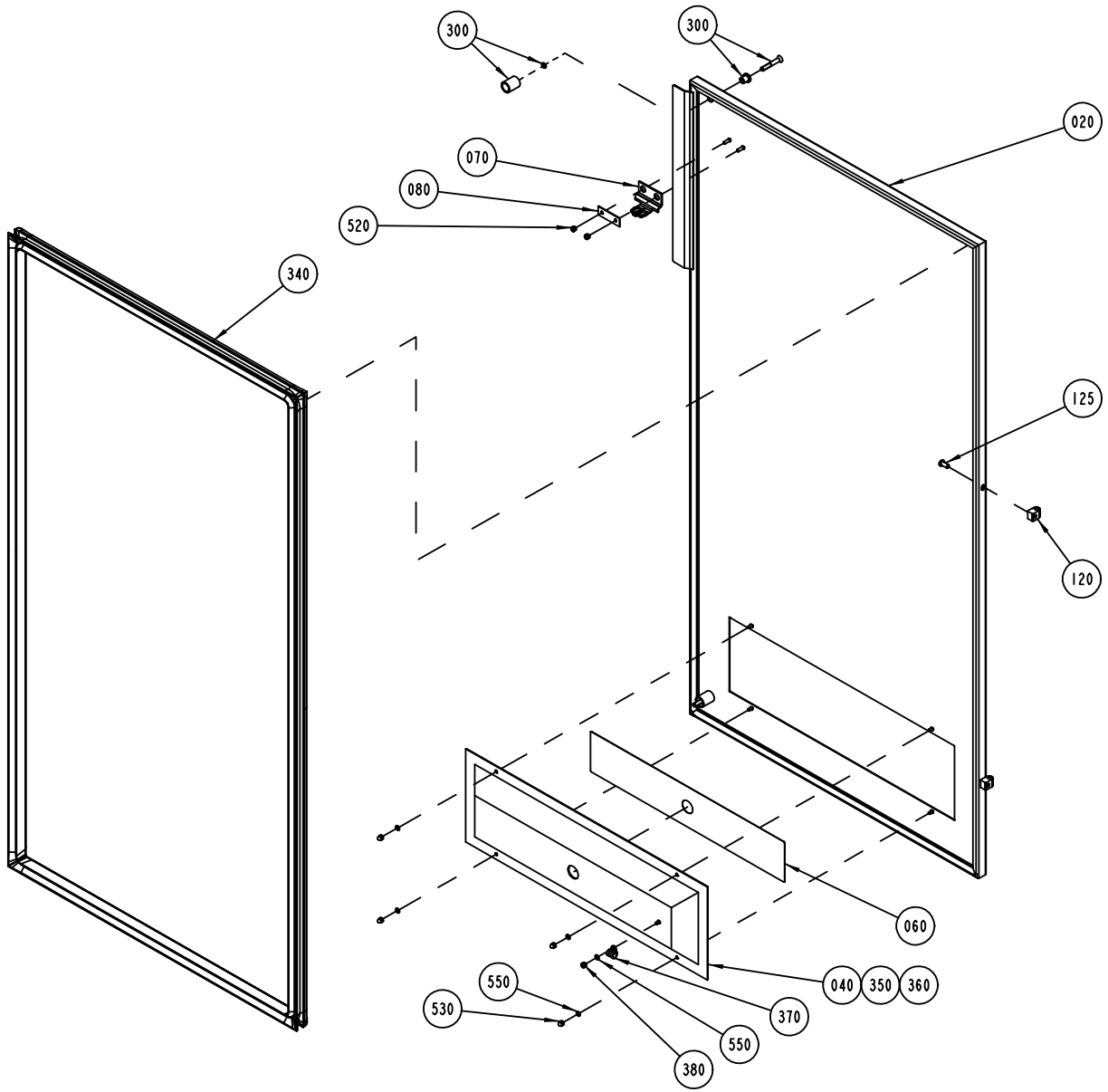

S-1095737-3
ECN 71788

Pos	Part No	SP	UN	Qty	Description	Page No
Common Parts						
020	1105715-0000	-		1	HATCH	
040	1041169-0000	-		1	COVERING PLATE	
060	1041171-0000	-		1	FOIL	
070	975917-0000	-		1	KEY FOR SAFETY SWITCH 90044-103	
080	1036563-0000	-		1	WASHER	
120	1129770-0000	-		2	BLOCKING PIECE	
125	1129767-0000	-		2	SCREW	
300	90226-0458	-		2	MOUNTING SCREW	
340	1279079-0000	-		2	SEALING STRIP	
350	90157-0041	-		1	SEALING COMPOUND	
360	90153-0049	-		1	ADHESIVE	
370	90165-0065	-		1	PIPE CLAMP, RSGU 1.8/9, D=8 MM	
380	312812-0312	-		1	HEXAGON NUT, NY-LOCK M4 A480	
520	312812-0312	-		2	HEXAGON NUT, NY-LOCK M4 A480	
530	312705-0312	-		4	NUT HEX. DOMED CAP MHM-6 M4 A280	
550	315105-0136	-		5	WASHER PLAIN, BRB, 4,3/8,H=0,8	

Pos	Part No	SP	UN	Qty	Description	Page No

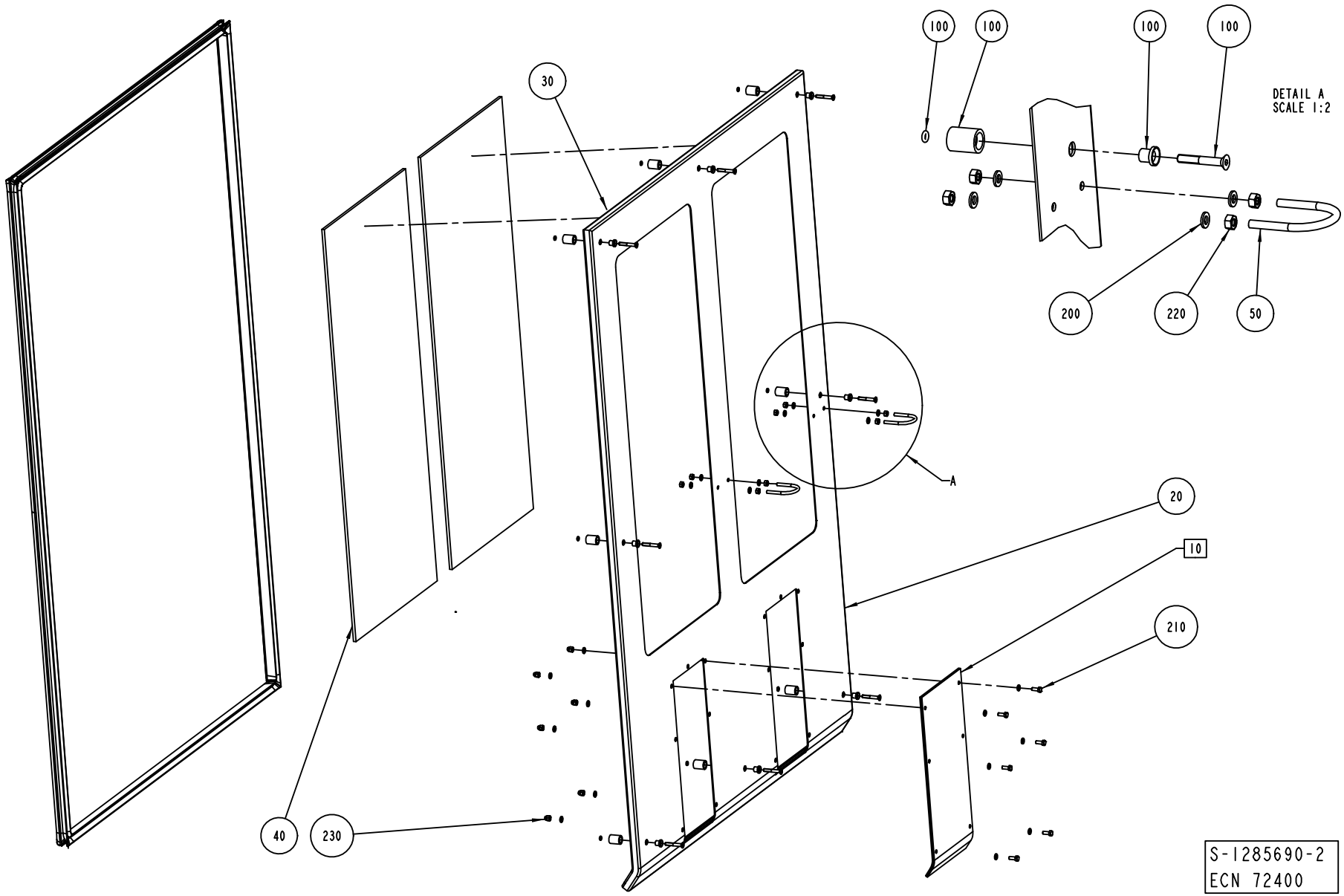
100
100
100
100
DETAIL A
SCALE 1:2
200
220
50
30
A
20
10
210
40
230
S-1285690-2
ECN 72400

ECM: 72400 - 19990430
Group number: 1285690-0200
Assembly Drawing: 1285690-2_1_AA

Issue: 20011217

Pos	Part No	SP	UN	Qty	Description	Page No
Common Parts						
010	A1296218-0200	-		1	LID	**345**
020	1478388-0000	-		1	FRONT GUARD	
030	1478390-0000	C		1	SEALING STRIP	
040	1296203-0000	C		2	GLASS PANE	
050	531616-0000	-		2	HOLDER	
100	90226-0458	-		8	MOUNTING SCREW	
110	90157-0041	-		1	SEALING COMPOUND	
200	315105-0153	-		20	WASHER PLAIN, BRB, 6,4/12,H=1,5	
210	312105-0368	-		6	SCREW M6S M6X16 A280	
220	312605-0316	-		8	HEXAGON NUT, M6M M6 A280	
230	312705-0316	-		12	NUT HEX. DOMED CAP MHM-6 M6 A280	

Pos	Part No	SP	UN	Qty	Description	Page No

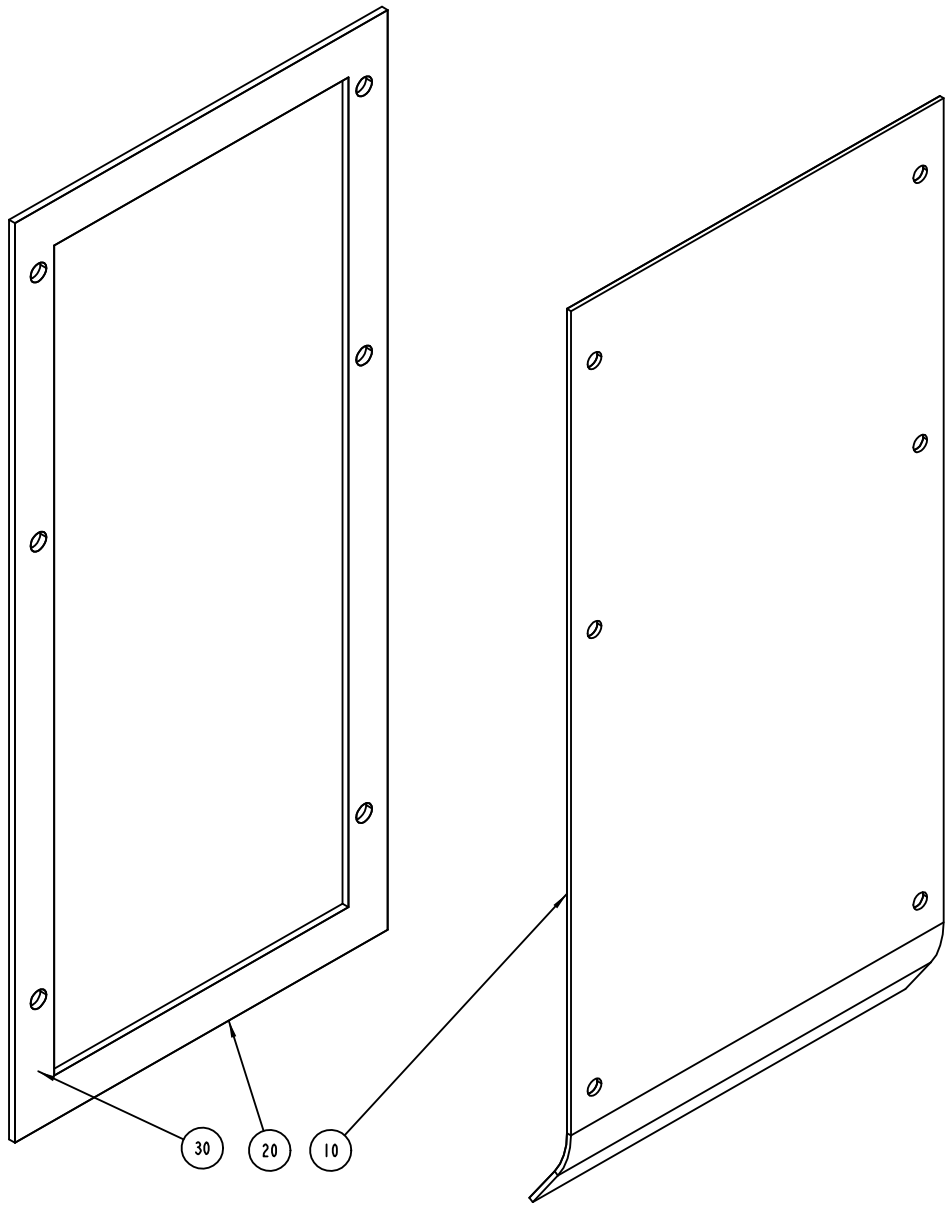

S-1296218-2
ECN 72400

Pos	Part No	SP	UN	Qty	Description	Page No
Common Parts						
010	1478389-0000	-		1	COVERING PLATE	
020	1478391-0000	-		1	GASKET	
030	90157-0041	-		1	SEALING COMPOUND	

Pos	Part No	SP	UN	Qty	Description	Page No

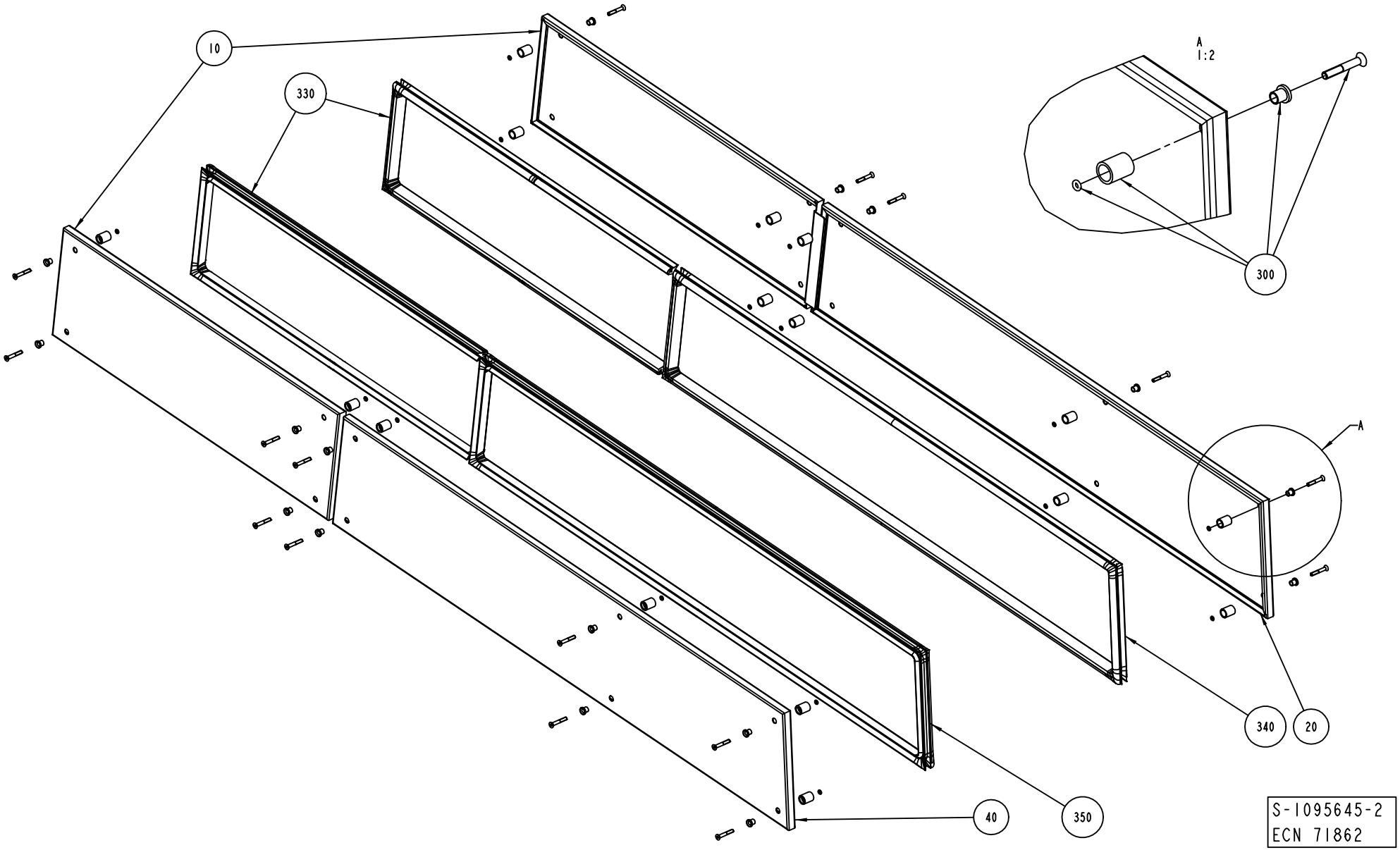
10
330
A
1:2
300
A
340
20
40
350
S-1095645-2
ECN 71862

ECM: 71862 - 19990419
Group number: 1095645-0200
Assembly Drawing: 1095645-2_1_AC

Issue: 20011217

Pos	Part No	SP	UN	Qty	Description	Page No
Common Parts						
010	1105712-0000	-		2	HATCH	
020	1105713-0000	-		1	HATCH	
040	1105714-0000	-		1	HATCH	
300	90226-0458	-		20	MOUNTING SCREW	
310	312155-0374	-		20	SCREW HEX.SOCK.COUNT.MF6S M6X30 A280	
330	1279072-0000	-		2	SEALING STRIP	
340	1279073-0000	-		1	SEALING STRIP	
350	1279074-0000	-		1	SEALING STRIP	

Pos	Part No	SP	UN	Qty	Description	Page No

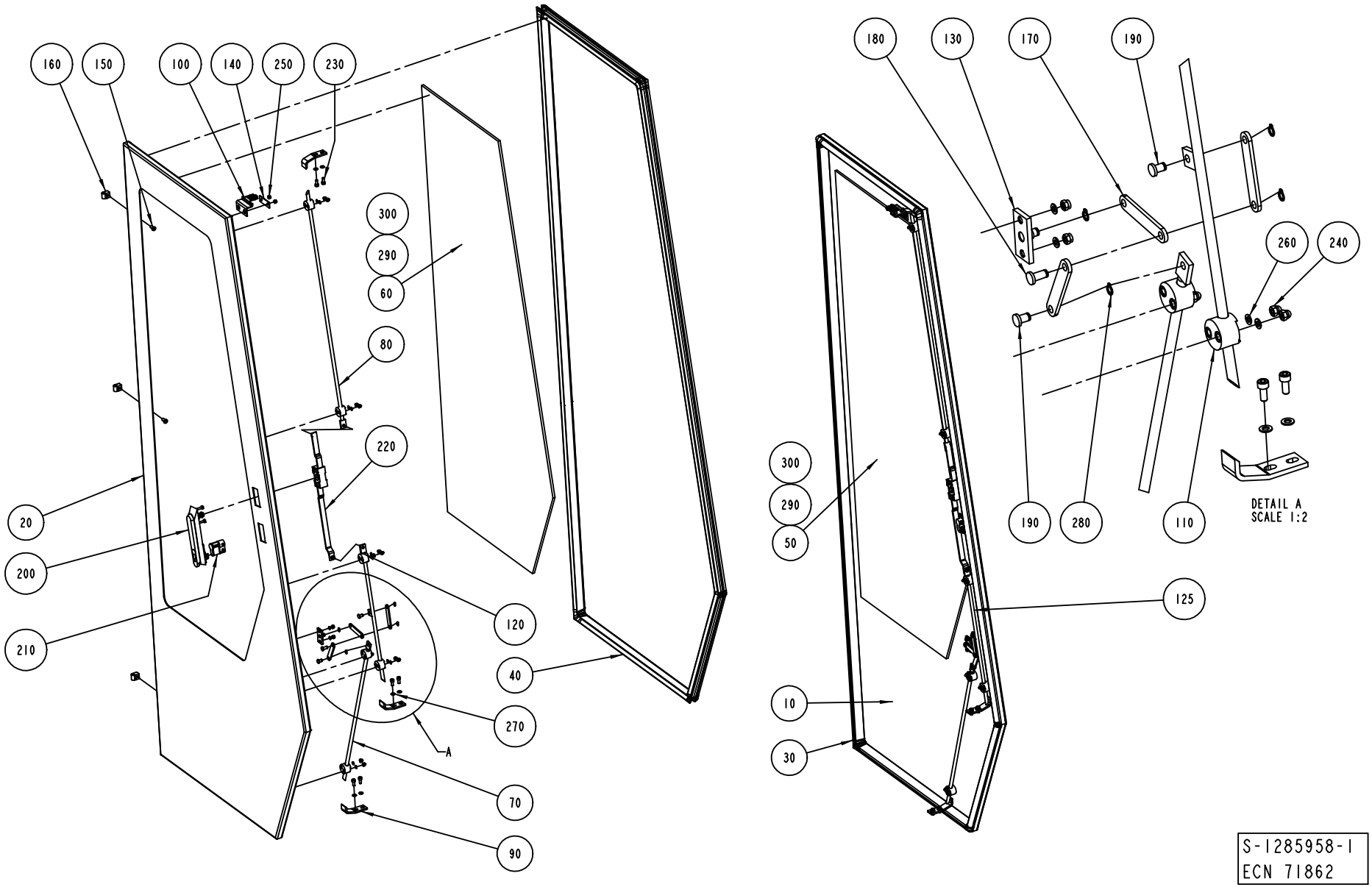
160
150
100
140
250
230
300
290
60
80
220
20
200
210
120
40
270
A
70
90
180
130
170
190
260
240
300
290
50
190
280
110
DETAIL A
SCALE 1:2
125
10
30
S-1285958-1
ECN 71862

ECM: 71862 - 19990419
Group number: 1285958-0100
Assembly Drawing: 1285958-1_1_AB

Issue: 20011217

Pos	Part No	SP	UN	Qty	Description	Page No
Common Parts						
010	1285842-0000	-		1	DOOR	
020	1285843-0000	-		1	DOOR	
030	1279075-0000	-		1	SEALING STRIP	
040	1279076-0000	-		1	SEALING STRIP	
050	1296204-0001	-		1	GLASS PANE	
060	1296204-0002	-		1	GLASS PANE	
070	1350708-0000	-		2	LOCKING ARM	
080	1036304-0018	-		2	LOCKING ARM	
090	1036227-0000	-		6	BRACKET	
100	1129042-0000	-		2	KEY	
110	1129274-0000	-		12	GUIDE LUG	
120	1285844-0000	-		1	LOCKING ARM	
125	1478005-0000	-		1	LOCKING ARM	
130	1285845-0000	-		2	BRACKET	
140	1036563-0000	-		2	WASHER	
150	1129767-0000	-		6	SCREW	
160	1129770-0000	-		6	BLOCKING PIECE	
170	1285846-0000	-		6	LINK	
180	1285847-0000	-		2	SHAFT	
190	1285848-0000	-		4	SHAFT	
200	90237-0126	-		2	TURNING HANDLE "REPBY 90237-175"	
210	90237-0128	-		2	LOCK CYLINDER, 1109-U3	
220	90237-0153	-		2	LOCK HOUSING, 1121-U26-0B	
230	312115-0327	-		12	SCREW MC6S M5X12 A280	
240	312705-0312	-		24	NUT HEX. DOMED CAP MHM-6 M4 A280	
250	312812-0312	-		8	HEXAGON NUT, NY-LOCK M4 A480	
260	315105-0136	-		28	WASHER PLAIN, BRB, 4,3/8,H=0,8	
270	315105-0146	-		12	WASHER PLAIN, BRB, 5,3/10,H=1	
280	315751-0103	-		8	RETAIN. RING, 6	
290	90153-0049	-		1	ADHESIVE	
300	90157-0041	-		1	SEALING COMPOUND	

Pos	Part No	SP	UN	Qty	Description	Page No

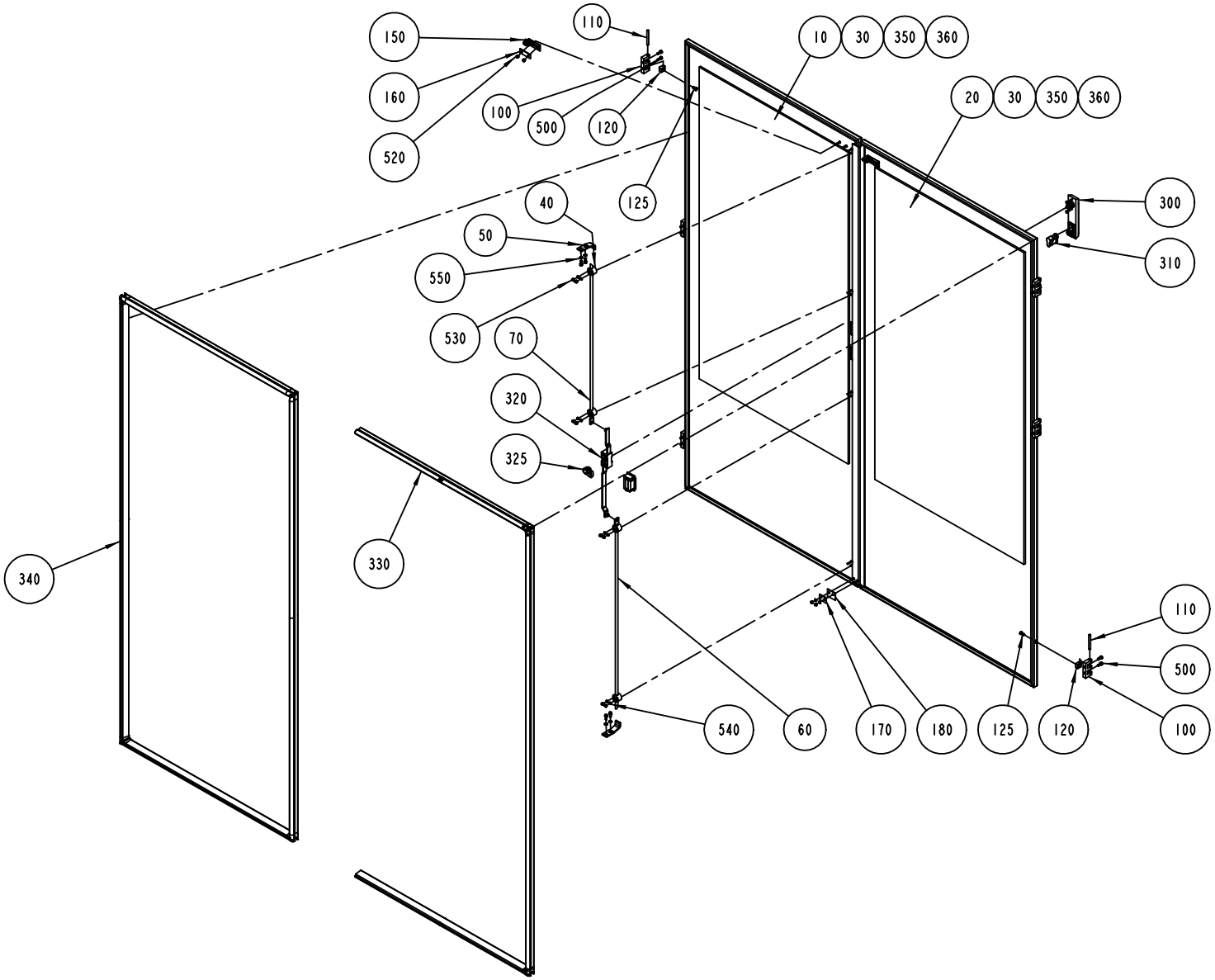

S-1095732-2
ECN 71862

ECM: 71862 - 19990419
Group number: 1095732-0200
Assembly Drawing: 1095732-2_1_AC

Issue: 20011217

Pos	Part No	SP	UN	Qty	Description	Page No
Common Parts						
010	1105521-0000	-		1	DOOR	
020	1105688-0000	-		1	DOOR	
030	1129064-0000	-		2	GLASS PANE	
040	1129274-0000	-		4	GUIDE LUG	
050	1036227-0000	-		2	BRACKET	
060	1036304-0006	-		1	LOCKING ARM	
070	1036304-0013	-		1	LOCKING ARM	
100	1035792-0000	-		6	E-HINGE	
110	988685-0000	-		6	PIN	
120	1129770-0000	-		6	BLOCKING PIECE	
125	1129767-0000	-		6	SCREW	
150	1129042-0000	-		2	KEY	
160	1036563-0000	-		2	WASHER	
170	1129324-0000	-		1	WASHER	
180	1129325-0000	-		1	SEALING FLANGE	
300	90237-0176	-		1	TURNING HANDLE	
310	90237-0128	-		1	LOCK CYLINDER, 1109-U3	
320	90237-0153	-		1	LOCK HOUSING, 1121-U26-0B	
325	90237-0165	-		1	LATCH	
330	1279078-0000	-		1	SEALING STRIP	
340	1279077-0000	-		1	SEALING STRIP	
350	90157-0041	-		1	SEALING COMPOUND	
360	90153-0049	-		1	ADHESIVE	
500	312115-0327	-		16	SCREW MC6S M5X12 A280	
520	312812-0312	-		6	HEXAGON NUT, NY-LOCK M4 A480	
530	312705-0312	-		8	NUT HEX. DOMED CAP MHM-6 M4 A280	
540	315105-0136	-		10	WASHER PLAIN, BRB, 4,3/8,H=0,8	
550	315105-0146	-		4	WASHER PLAIN, BRB, 5,3/10,H=1	

Pos	Part No	SP	UN	Qty	Description	Page No

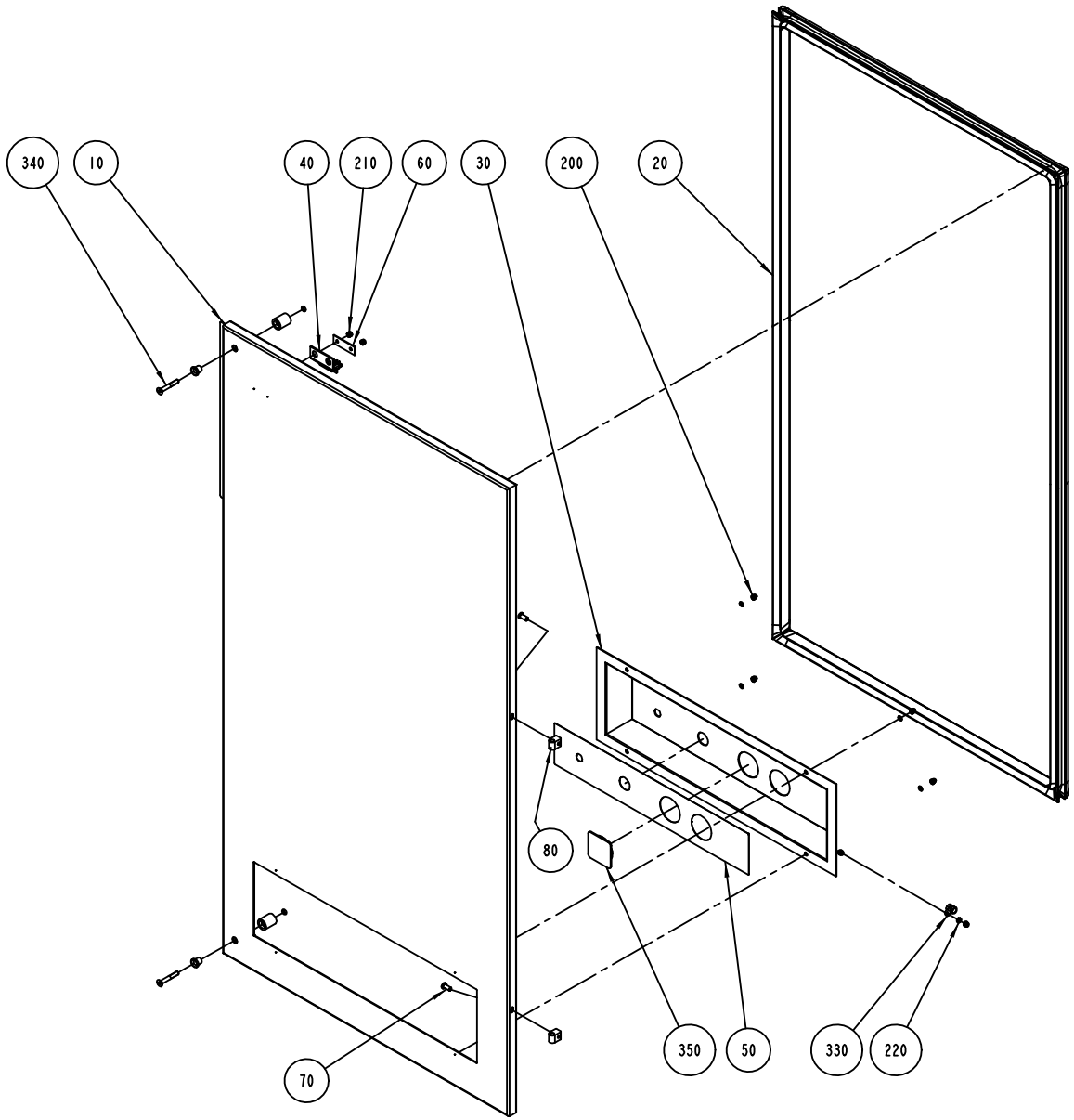

S-1317402-I
ECN 71862

ECM: 71862 - 19990419
Group number: 1317402-0100
Assembly Drawing: 1317402-1_1_AB

Issue: 20011217

Pos	Part No	SP	UN	Qty	Description	Page No
Common Parts						
010	1317405-0000	-		1	COVER	
020	1279079-0000	C		1	SEALING STRIP	
030	1317406-0000	-		1	COVERING PLATE	
040	975917-0000	-		1	KEY FOR SAFETY SWITCH 90044-103	
050	1317407-0000	-		1	FOIL	
060	1036563-0000	-		1	WASHER	
070	1129767-0000	-		2	SCREW	
080	1129770-0000	-		2	BLOCKING PIECE	
200	312705-0312	-		4	NUT HEX. DOMED CAP MHM-6 M4 A280	
210	312812-0312	-		2	HEXAGON NUT, NY-LOCK M4 A480	
220	315105-0136	-		4	WASHER PLAIN, BRB, 4,3/8,H=0,8	
300	90153-0049	-		1	ADHESIVE	
310	90157-0041	-		1	SEALING COMPOUND	
330	90226-0458	-		2	MOUNTING SCREW	
340	90261-0070	-		1	PLASTIC PLUG SS 0082.31	

Pos	Part No	SP	UN	Qty	Description	Page No

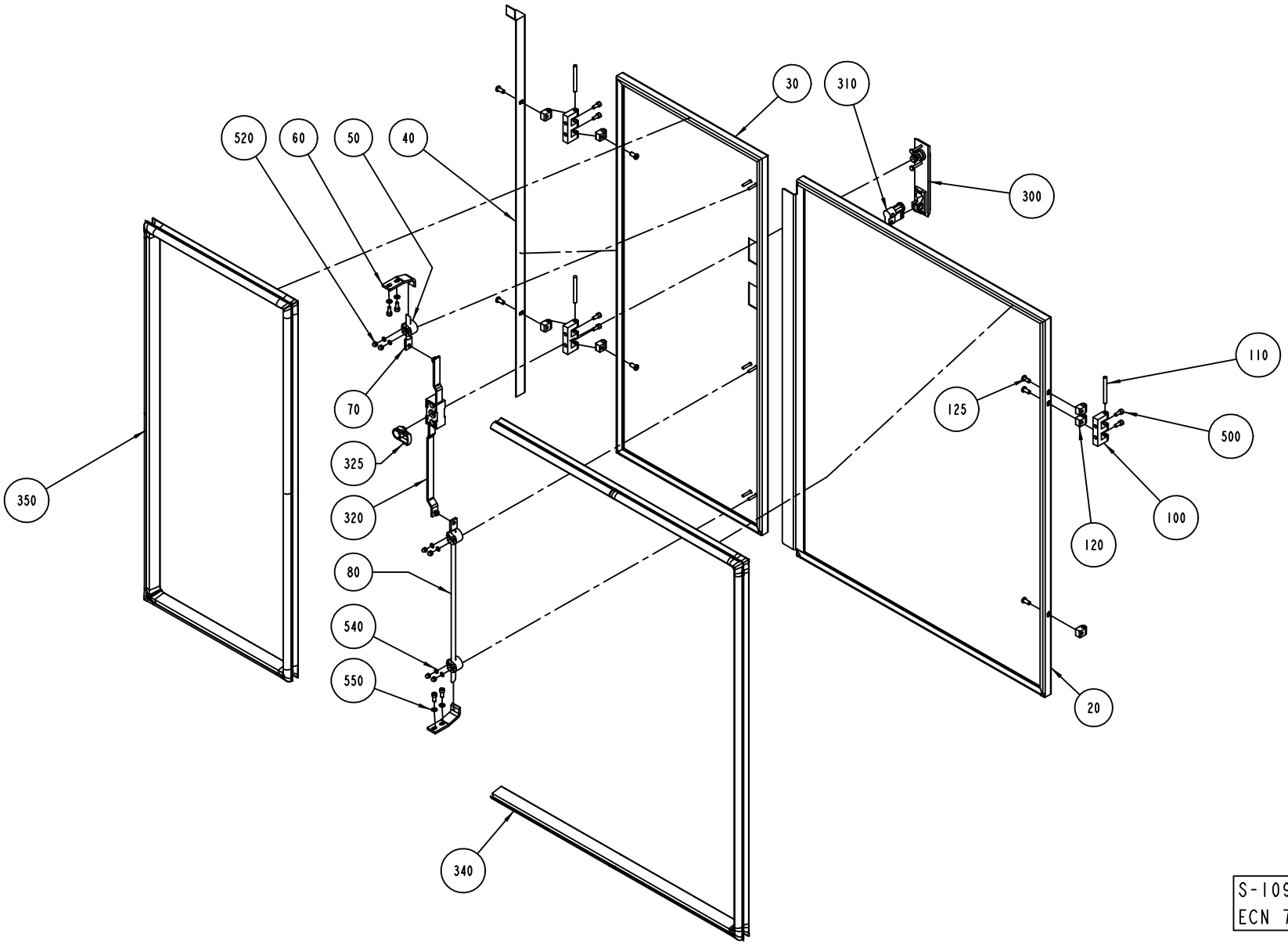
520
60
50
40
30
310
300
110
125
500
100
120
70
325
320
80
540
550
350
340
20
S-1095734-2
ECN 71862

ECM: 71862 - 19990419
Group number: 1095734-0200
Assembly Drawing: 1095734-2_1_AC

Issue: 20011217

Pos	Part No	SP	UN	Qty	Description	Page No
Common Parts						
020	1105718-0000	-		1	DOOR	
030	1105729-0000	-		1	DOOR	
040	1129038-0000	-		1	COVERING PLATE	
050	1129274-0000	-		3	GUIDE LUG	
060	1036227-0000	-		2	BRACKET	
070	1036304-0001	-		1	LOCKING ARM	
080	1036304-0002	-		1	LOCKING ARM	
100	1035792-0000	-		3	E-HINGE	
110	988685-0000	-		3	PIN	
120	1129770-0000	-		7	BLOCKING PIECE	
125	1129767-0000	-		7	SCREW	
300	90237-0175	-		1	TURNING HANDLE	
310	90237-0128	-		1	LOCK CYLINDER, 1109-U3	
320	90237-0153	-		1	LOCK HOUSING, 1121-U26-0B	
325	90237-0165	-		1	LATCH	
340	1279080-0000	-		1	SEALING STRIP	
350	1279081-0000	-		1	SEALING STRIP	
500	312115-0327	-		10	SCREW MC6S M5X12 A280	
520	312705-0312	-		6	NUT HEX. DOMED CAP MHM-6 M4 A280	
540	315105-0136	-		6	WASHER PLAIN, BRB, 4,3/8,H=0,8	
550	315105-0146	-		4	WASHER PLAIN, BRB, 5,3/10,H=1	

Pos	Part No	SP	UN	Qty	Description	Page No

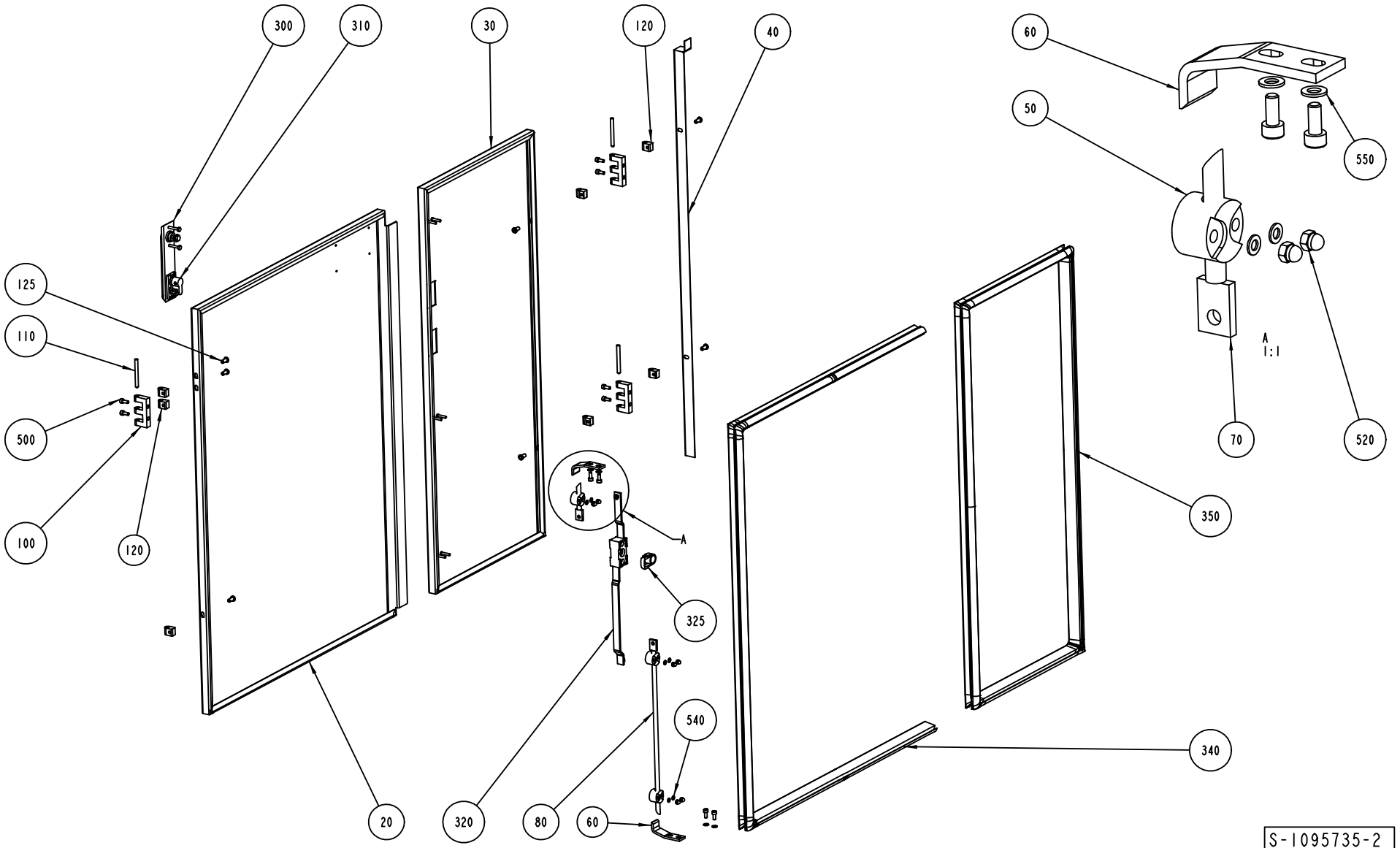
300
310
30
120
40
60
50
550
125
110
500
100
120
A
1:1
70
520
350
325
540
340
20
320
80
60
S-1095735-2
ECN 71862

ECM: 71862 - 19990419
Group number: 1095735-0200
Assembly Drawing: 1095735-2_1_AC

Issue: 20011217

Pos	Part No	SP	UN	Qty	Description	Page No
Common Parts						
020	1105730-0000	-		1	DOOR	
030	1116029-0000	-		1	DOOR	
040	1129039-0000	-		1	COVERING PLATE	
050	1129274-0000	-		3	GUIDE LUG	
060	1036227-0000	-		2	BRACKET	
070	1036304-0001	-		1	LOCKING ARM	
080	1036304-0002	-		1	LOCKING ARM	
100	1035792-0000	-		3	E-HINGE	
110	988685-0000	-		3	PIN	
120	1129770-0000	-		7	BLOCKING PIECE	
125	1129767-0000	-		7	SCREW	
300	90237-0175	-		1	TURNING HANDLE	
310	90237-0128	-		1	LOCK CYLINDER, 1109-U3	
320	90237-0153	-		1	LOCK HOUSING, 1121-U26-0B	
325	90237-0165	-		1	LATCH	
340	1279080-0000	-		1	SEALING STRIP	
350	1279081-0000	-		1	SEALING STRIP	
500	312115-0327	-		10	SCREW MC6S M5X12 A280	
520	312705-0312	-		6	NUT HEX. DOMED CAP MHM-6 M4 A280	
540	315105-0136	-		6	WASHER PLAIN, BRB, 4,3/8,H=0,8	
550	315105-0146	-		4	WASHER PLAIN, BRB, 5,3/10,H=1	

Pos	Part No	SP	UN	Qty	Description	Page No

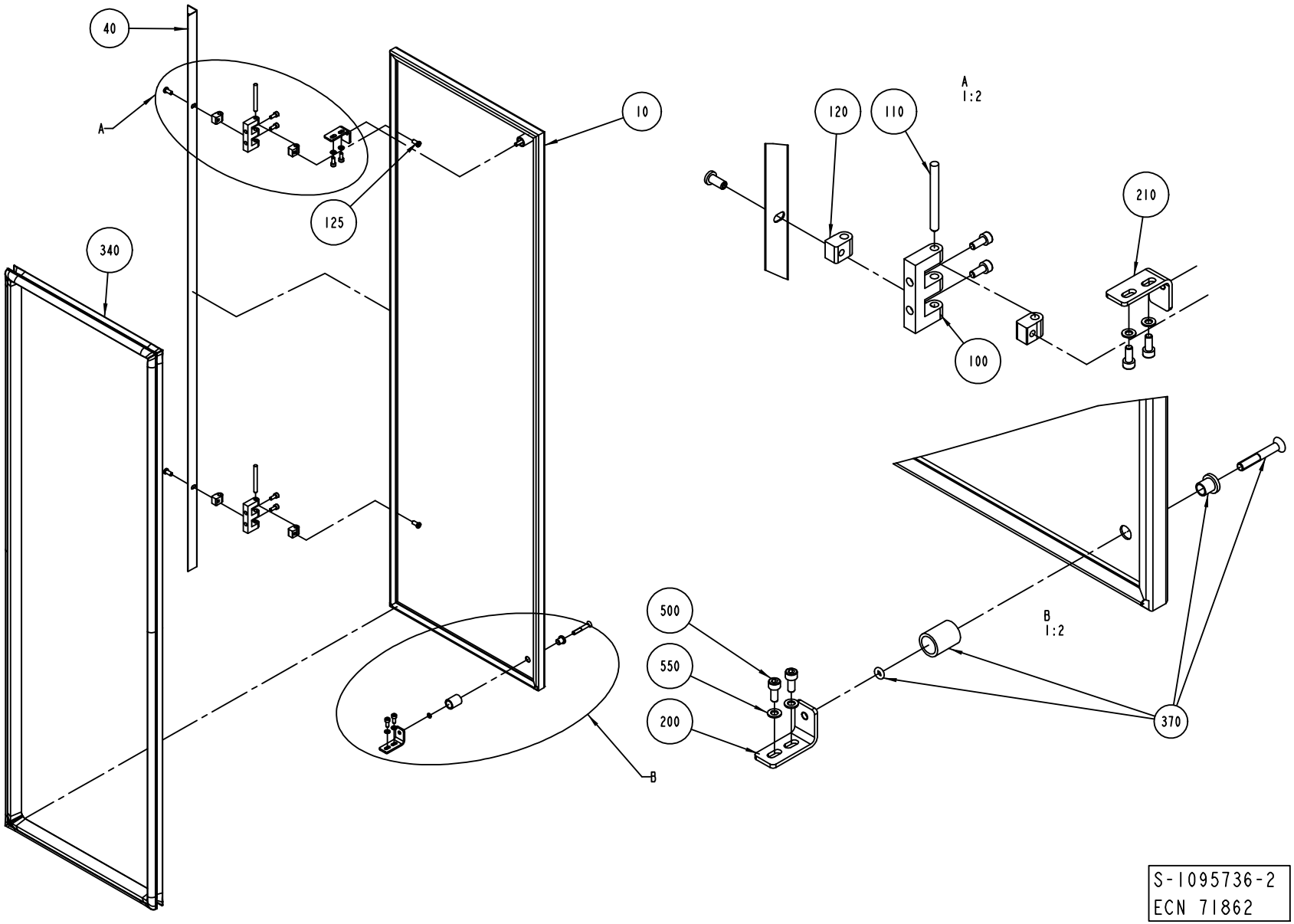
40
A
10
125
340
A
1:2
120
110
210
100
500
550
200
B
B
1:2
370
S-1095736-2
ECN 71862

ECM: 71862 - 19990419
Group number: 1095736-0200
Assembly Drawing: 1095736-2_1_AC

Issue: 20011217

Pos	Part No	SP	UN	Qty	Description	Page No
Common Parts						
010	1116030-0000	-		1	DOOR	
040	1036980-0000	-		1	COVERING PLATE	
100	1035792-0000	-		2	E-HINGE	
110	988685-0000	-		2	PIN	
120	1129770-0000	-		6	BLOCKING PIECE	
125	1129767-0000	-		4	SCREW	
200	590202-0000	-		1	BRACKET	
210	590203-0000	-		1	BRACKET	
340	1279082-0000	-		1	SEALING STRIP	
370	90226-0458	-		2	MOUNTING SCREW	
500	312115-0327	-		8	SCREW MC6S M5X12 A280	
550	315105-0146	-		4	WASHER PLAIN, BRB, 5,3/10,H=1	

Pos	Part No	SP	UN	Qty	Description	Page No

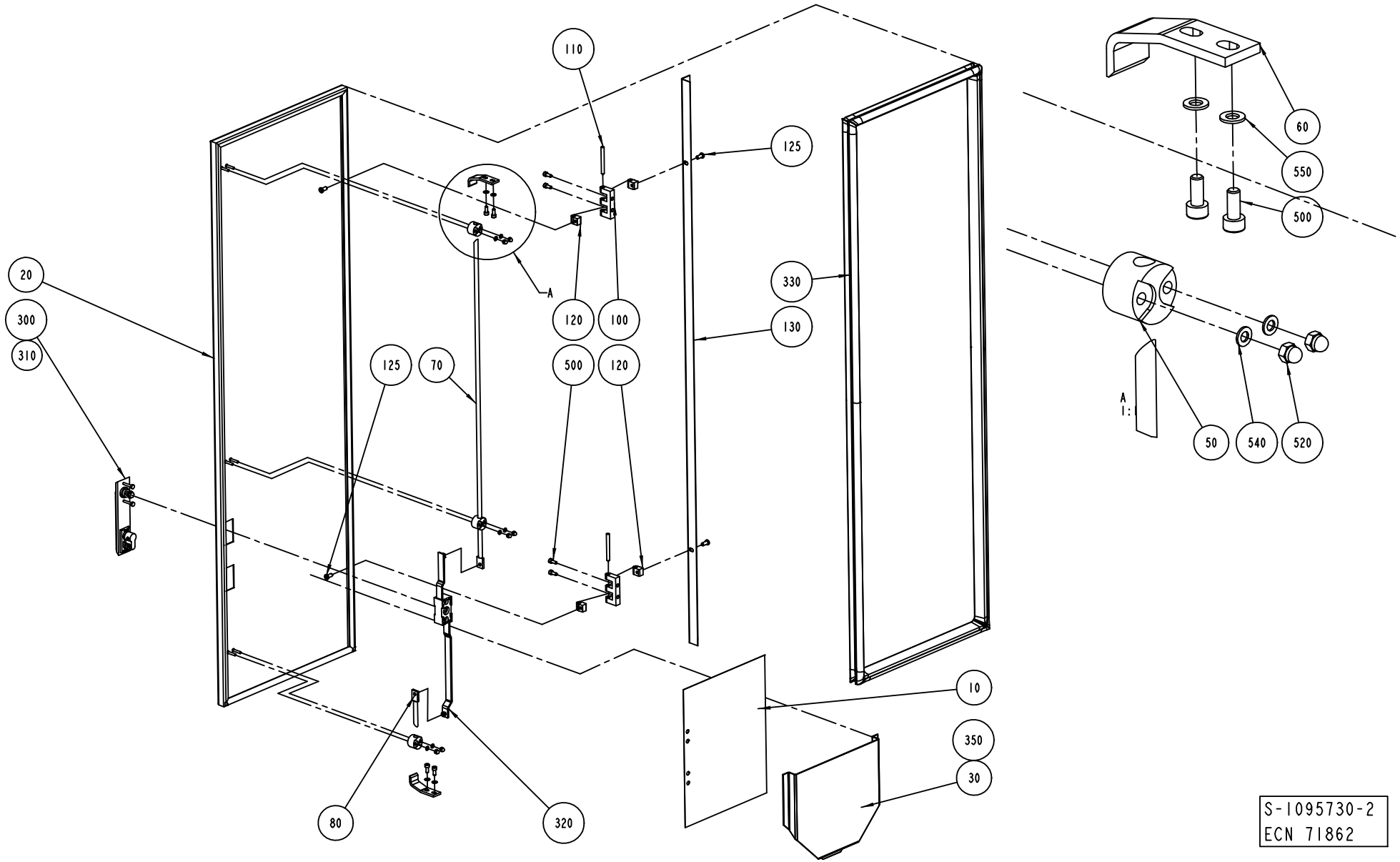

S-1095730-2
ECN 71862

ECM: 73114 - 20001005
Group number: 1095730-0200
Assembly Drawing: 1095730-2_1_AC

Issue: 20011217

Pos	Part No	SP	UN	Qty	Description	Page No
Common Parts						
010	A1255619-0200	-		1	DIAGRAM	**363**
020	1116031-0000	-		1	DOOR	
030	1129275-0000	-		1	BOX FOR DIAGRAM	
050	1129274-0000	-		3	GUIDE LUG	
060	1036227-0000	-		2	BRACKET	
070	1036304-0005	-		1	LOCKING ARM	
080	1036304-0001	-		1	LOCKING ARM	
100	1035792-0000	-		2	E-HINGE	
110	988685-0000	-		2	PIN	
120	1129770-0000	-		6	BLOCKING PIECE	
125	1129767-0000	-		6	SCREW	
130	1036980-0000	-		1	COVERING PLATE	
300	90237-0175	-		1	TURNING HANDLE	
310	90237-0128	-		1	LOCK CYLINDER, 1109-U3	
320	90237-0153	-		1	LOCK HOUSING, 1121-U26-0B	
330	1279082-0000	-		1	SEALING STRIP	
350	90157-0041	-		1	SEALING COMPOUND	
500	312115-0327	-		8	SCREW MC6S M5X12 A280	
510	312605-0314	-		1	HEXAGON NUT, M6M M5 A280	
520	312705-0312	-		6	NUT HEX. DOMED CAP MHM-6 M4 A280	
540	315105-0136	-		6	WASHER PLAIN, BRB, 4,3/8,H=0,8	
550	315105-0146	-		5	WASHER PLAIN, BRB, 5,3/10,H=1	

Pos	Part No	SP	UN	Qty	Description	Page No

This page is intentionally left blank.

Pos	Part No	SP	UN	Qty	Description	Page No
Common Parts						
010	1129150-0000	-		1	PNEUMATIC DIAGRAM	
020	1129998-0000	-		1	PNEUMATIC DIAGRAM	
030	1140265-0000	-		1	PNEUMATIC DIAGRAM	
040	1334229-0000	-		1	PNEUMATIC DIAGRAM	
050	1487813-0000	-		1	PNEUMATIC DIAGRAM	
055	1487814-0000	-		1	PNEUMATIC DIAGRAM	
060	1484417-0000	-		1	PNEUMATIC DIAGRAM	
065	1487169-0000	-		1	PNEUMATIC DIAGRAM	
070	1487564-0000	-		1	PNEUMATIC DIAGRAM	
080	1487577-0000	-		1	PNEUMATIC DIAGRAM	
090	1490074-0000	-		1	PNEUMATIC DIAGRAM	
120	1255364-0000	-		1	WATER DIAGRAM	
130	1511629-0000	-		1	WATER DIAGRAM	
140	1517503-0000	-		1	HYDRAULIC DIAGRAM	
150	1346071-0000	-		1	HYDRAULIC DIAGRAM	
170	1255275-0000	-		1	LUBRICATION DIAGRAM	
200	1129005-0000	-		1	DIAGRAM FILLING STANDARD	
210	1129456-0000	-		1	EXTERNAL CLEANING DIAGRAM	
220	1140278-0000	-		1	DIAGRAM FOR HI TBA/21	
230	1478174-0000	-		1	DIAGRAM PEROXIDE SYSTEM	
240	1499405-0000	-		1	DIAGRAM	

Pos	Part No	SP	UN	Qty	Description	Page No

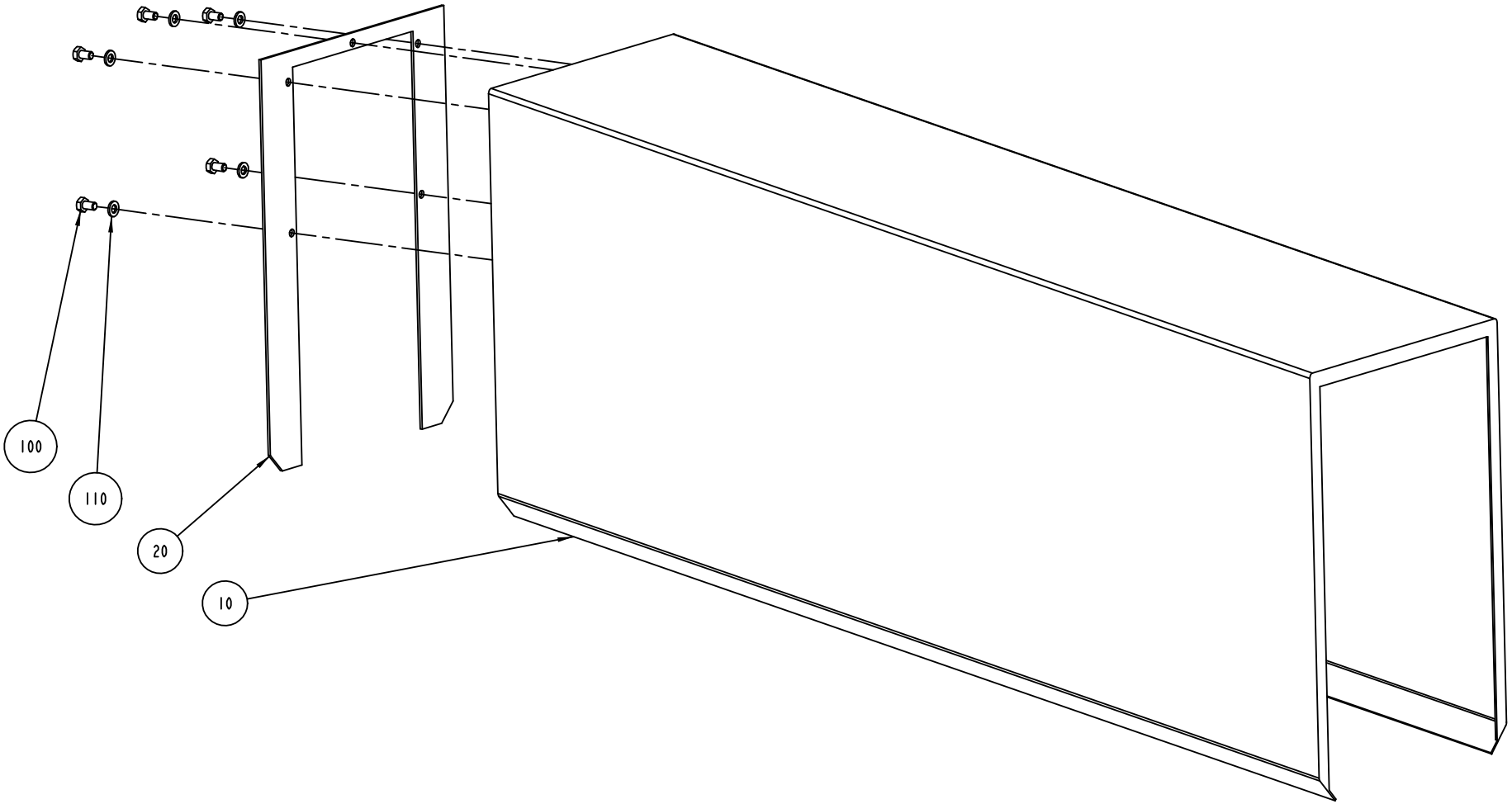

S-1095738-3
ECN 72400

ECM: 72400 - 19990430
Group number: 1095738-0300
Assembly Drawing: 1095738-3_1_AB

Issue: 20011217

Pos	Part No	SP	UN	Qty	Description	Page No
Common Parts						
010	1296289-0000	-		1	TUNNEL	
020	1296290-0000	-		1	GASKET	
100	312105-0364	-		5	SCREW M6S M6X10 A280	
110	315105-0153	-		5	WASHER PLAIN, BRB, 6,4/12,H=1,5	

Pos	Part No	SP	UN	Qty	Description	Page No

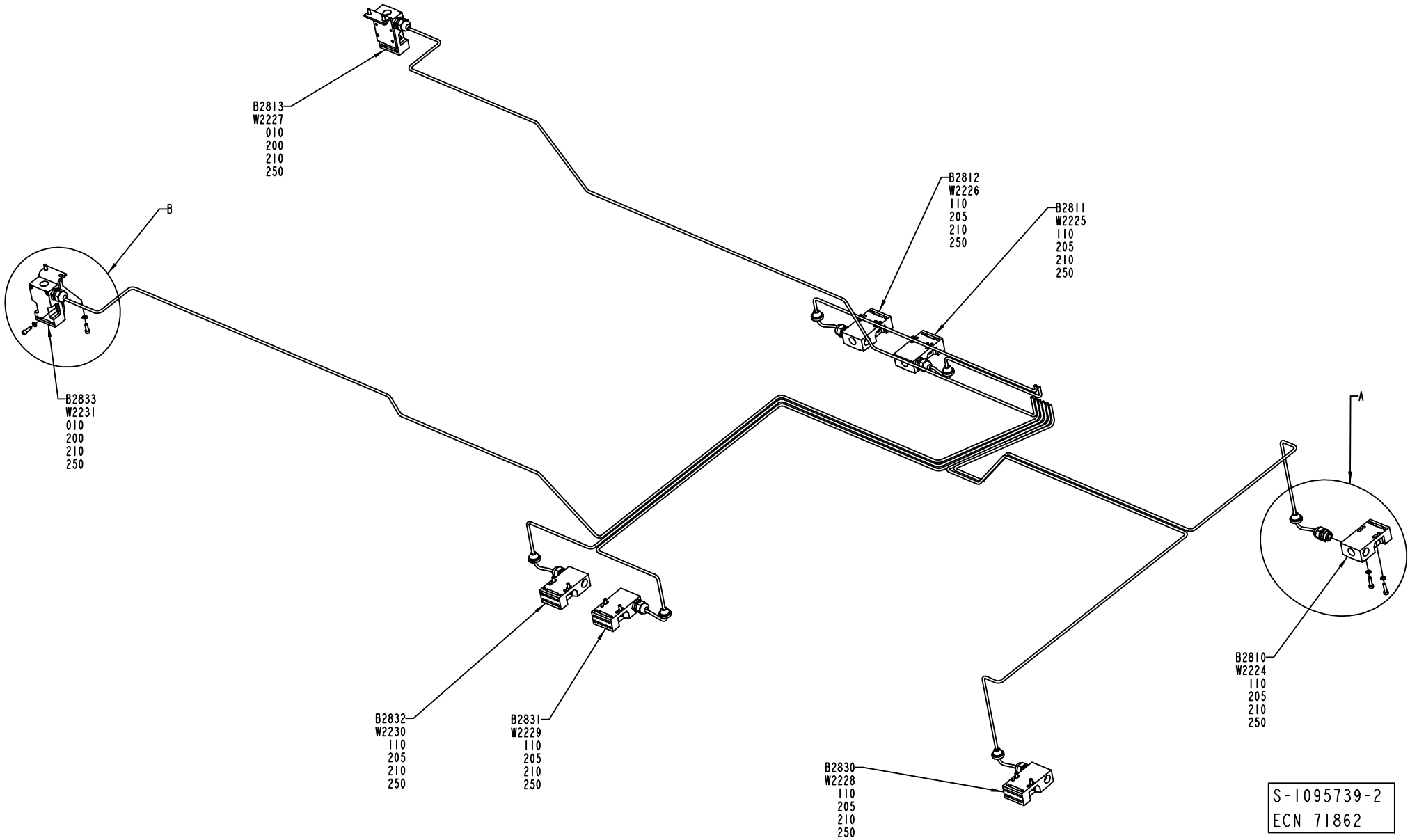
B2813
W2227
010
200
210
250
B2812
W2226
110
205
210
250
B2811
W2225
110
205
210
250
B
B2833
W2231
010
200
210
250
A
B2832
W2230
110
205
210
250
B2831
W2229
110
205
210
250
B2830
W2228
110
205
210
250
B2810
W2224
110
205
210
250
S-1095739-2
ECN 71862

ECM: 71862 - 19990419
Group number: 1095739-0200
Assembly Drawing: 1095739-2_1_AB

Issue: 20011217

Pos	Part No	SP	UN	Qty	Description	Page No
Common Parts						
010	1037076-0000	-		2	BRACKET	
110	90015-0023	-		6	GLANDS,LEAD-IN,IP67	
200	312115-0329	-		8	SCREW MC6S M5X16 A280	
205	312115-0331	-		12	SCREW MC6S M5X20 A280	
210	315105-0146	-		20	WASHER PLAIN, BRB, 5,3/10,H=1	
250	352103-0106	-		8	CABLE GLAND ST 11	
B 2810	90044-0139	C		1	KEY SAF.SW. AZ16-02 ZVR K-2254	
B 2811	90044-0139	C		1	KEY SAF.SW. AZ16-02 ZVR K-2254	
B 2812	90044-0139	C		1	KEY SAF.SW. AZ16-02 ZVR K-2254	
B 2813	90044-0139	C		1	KEY SAF.SW. AZ16-02 ZVR K-2254	
B 2830	90044-0139	C		1	KEY SAF.SW. AZ16-02 ZVR K-2254	
B 2831	90044-0139	C		1	KEY SAF.SW. AZ16-02 ZVR K-2254	
B 2832	90044-0139	C		1	KEY SAF.SW. AZ16-02 ZVR K-2254	
B 2833	90044-0139	C		1	KEY SAF.SW. AZ16-02 ZVR K-2254	
W 2224	351150-0405	-	MM	2500	CABLE OLFLEX 5X0,75 MM2 LIGHT/GREY	
W 2225	351150-0405	-	MM	1000	CABLE OLFLEX 5X0,75 MM2 LIGHT/GREY	
W 2226	351150-0405	-	MM	1400	CABLE OLFLEX 5X0,75 MM2 LIGHT/GREY	
W 2227	351150-0405	-	MM	2600	CABLE OLFLEX 5X0,75 MM2 LIGHT/GREY	
W 2228	351150-0405	-	MM	2900	CABLE OLFLEX 5X0,75 MM2 LIGHT/GREY	
W 2229	351150-0405	-	MM	2400	CABLE OLFLEX 5X0,75 MM2 LIGHT/GREY	
W 2230	351150-0405	-	MM	2500	CABLE OLFLEX 5X0,75 MM2 LIGHT/GREY	
W 2231	351150-0405	-	MM	3400	CABLE OLFLEX 5X0,75 MM2 LIGHT/GREY	

Pos	Part No	SP	UN	Qty	Description	Page No

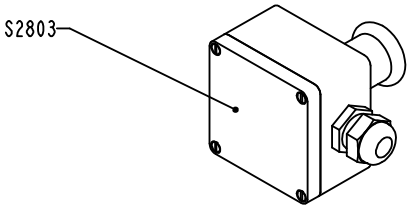

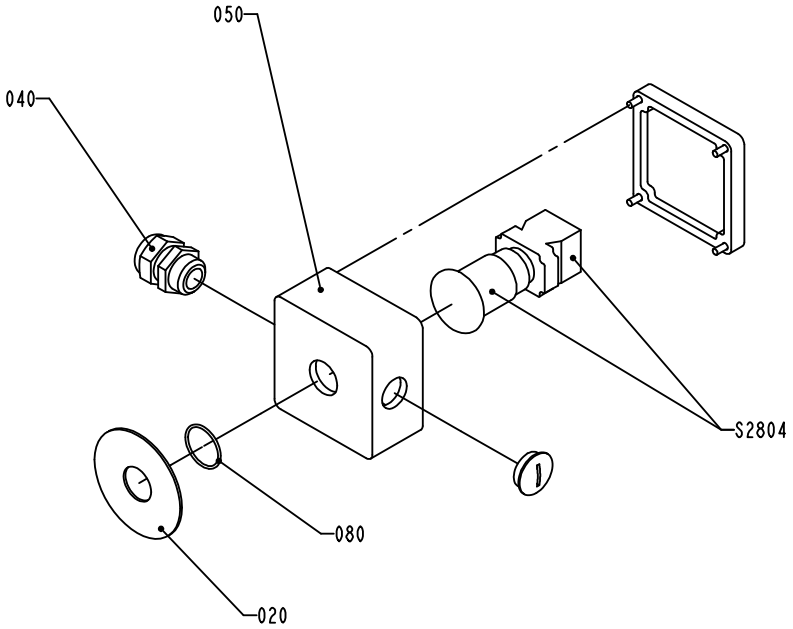

S-1095743-2
ECN 71862

ECM: 71862 - 19990419
Group number: 1095743-0200
Assembly Drawing: 1095743-2_1_AB

Issue: 20011217

Pos	Part No	SP	UN	Qty	Description	Page No
Common Parts						
020	486826-0001	-		2	SIGN "EMERGENCY STOP"	
040	352103-0110	-		2	CABLE GLAND STR 16	
050	1037130-0000	-		2	CONNECTION BOX	
080	315202-0119	-		2	O-RING 25,1X1,6 MM	
S2803	90064-0124	C		1	SWITCH,EMERGENCY STOP	
S2804	90064-0124	C		1	SWITCH,EMERGENCY STOP	

Pos	Part No	SP	UN	Qty	Description	Page No

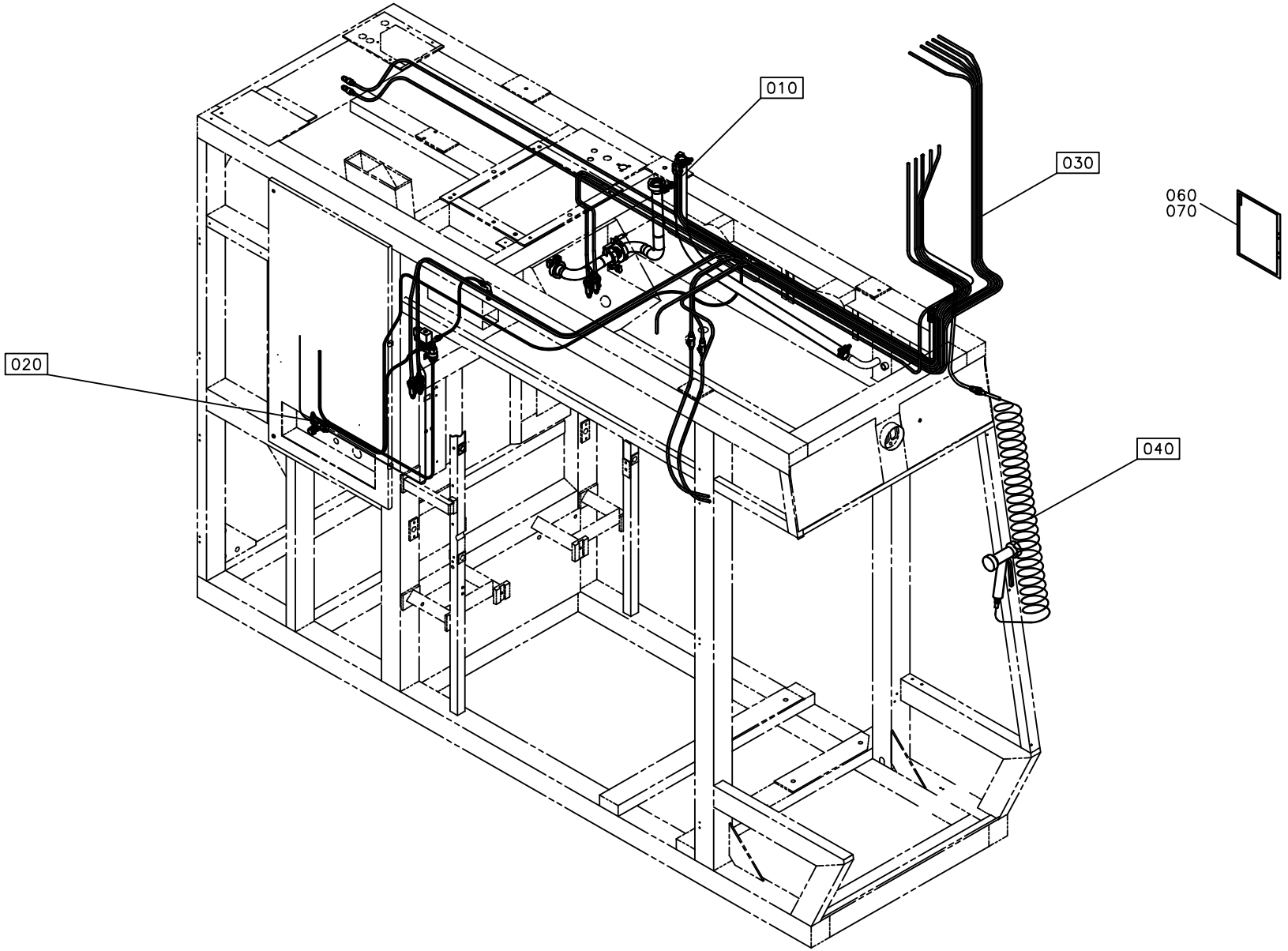
010
020
030
040
060
070

ECM: 72625 - 19991105
Group number: 1095846-0400
Assembly Drawing: 1095846-3_1_AA

Issue: 20011217

Pos	Part No	SP	UN	Qty	Description	Page No
Common Parts						
010	A1095840-0300	-		1	PIPE WORK	**373**
020	A1095847-0100	-		1	TUBE FLUSHING	**375**
030	A1095848-0300	-		1	COOLING HOSES	**377**
040	A1095681-0100	-		1	SPRAY GUN	**379**

Pos	Part No	SP	UN	Qty	Description	Page No

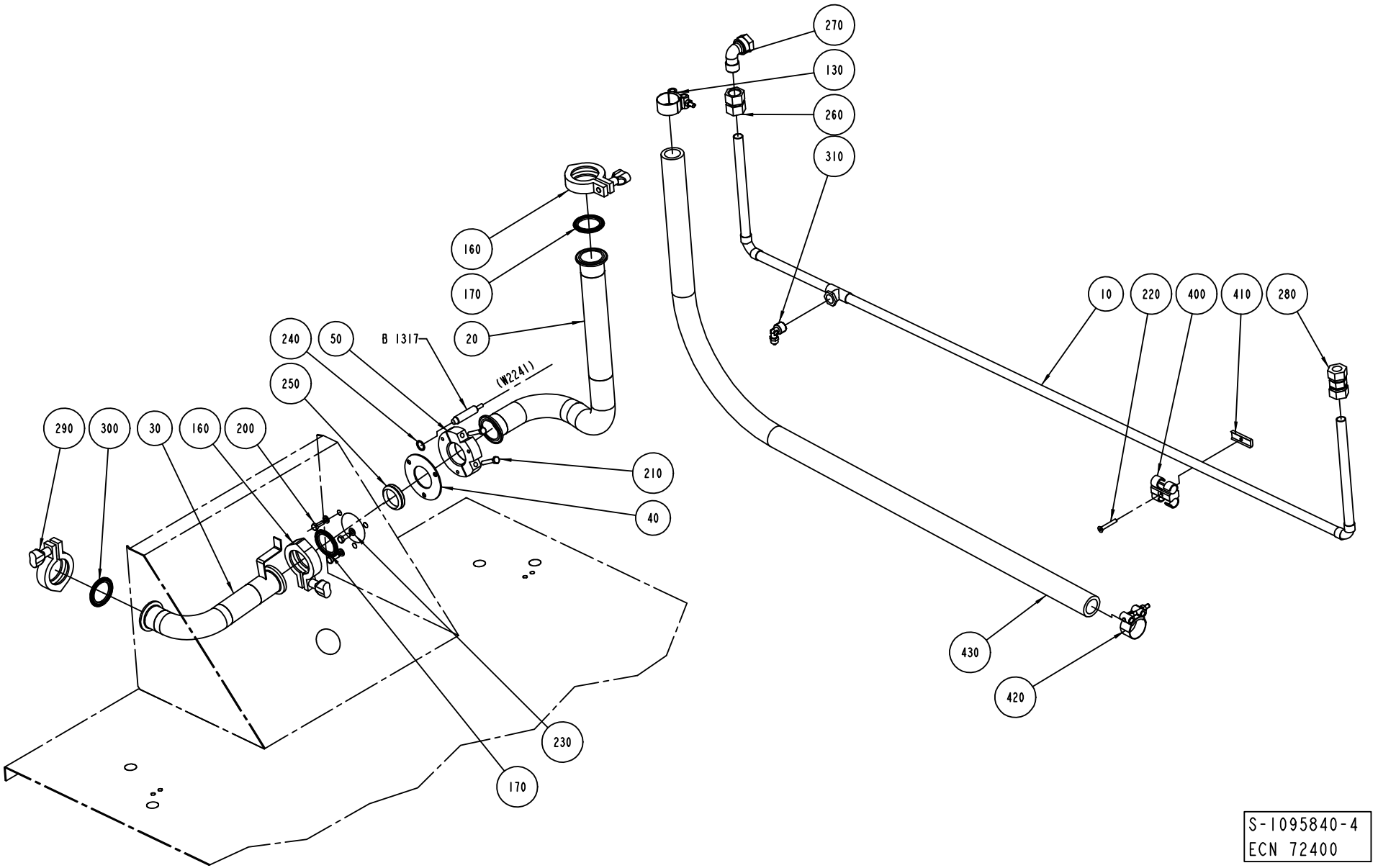
270
130
260
310
160
170
20
240
50
B 1317
(W2241)
250
290
300
30
160
200
210
40
230
170
10
220
400
410
280
430
420
S-1095840-4
ECN 72400

ECM: 72400 - 19990430
Group number: 1095840-0300
Assembly Drawing: 1095840-4_1_AA

Issue: 20011217

Pos	Part No	SP	UN	Qty	Description	Page No
Common Parts						
010	1129366-0000	-		1	PIPE	
020	1478474-0000	-		1	PIPE	
030	1041987-0000	-		1	PIPE	
040	1478477-0000	-		1	GASKET	
050	1478475-0000	-		1	CLAMP	
200	312105-0368	-		3	SCREW M6S M6X16 A280	
210	312105-0376	-		2	SCREW M6S M6S M6X35 A280	
220	312155-0337	-		1	SCREW HEX.SOCK.COUNT.MF6S 5X35 SS	
230	315105-0153	-		3	WASHER PLAIN, BRB, 6,4/12,H=1,5	
240	315233-0110	-		1	WASHER PL.RND.NYL.13,3/17,H=1	
250	315220-0180	-		1	V-RINGS 34X42X10,5 MM V-38S	
260	342723-0114	-		1	CONN. STR. PIPE GI-15-G1/2	
270	342731-0221	-		1	CONN. ELBOW WA 15-R1/2	
280	342726-0114	-		1	CONN. PIPE G-15	
290	342840-0103	-		3	CLAMPING PIECE	
300	342850-0304	-		3	GASKET 35,4X49,1X5,2 MM 1"1/2 FDA	
310	342930-0115	-		1	ELBOW 90 COUPL.,EXT.THREAD 6/4-R3/8"	
400	90165-0148	-		1	T-CLIP T15 FOR TUBE D=15 -17 MM	
410	90165-0303	-		1	SPACER F. T-CLIP, 818 716 000 TYPE D15	
420	90165-0147	-		2	HOSE CLIP	
430	90166-0233	-	MM	1400	HOSE	
B 1317	90044-0124	-		1	PROX.SW. 922AB2XM-A9P-050-LZ-876	

Pos	Part No	SP	UN	Qty	Description	Page No

Machine Type | Group Description | Used-In | Group Number | Page No

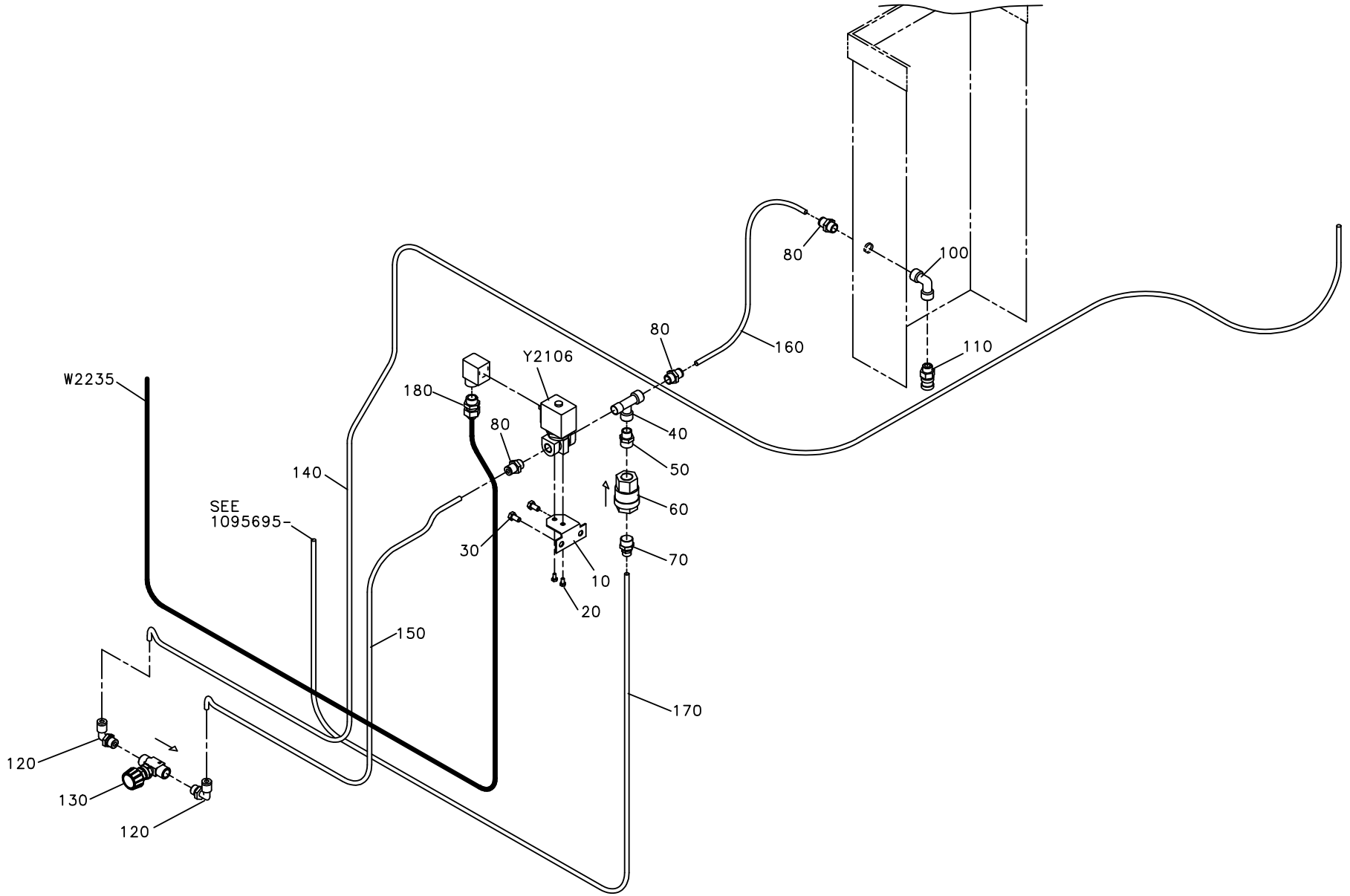
W2235
180
Y2106
80
140
SEE
1095695-
30
10
20
150
170
120
130
120
80
160
80
100
110
40
50
60
70

ECM: 71742 - 19980903
Group number: 1095847-0100
Assembly Drawing: 1095847-1_1_AA

Issue: 20011217

Pos	Part No	SP	UN	Qty	Description	Page No
Common Parts						
010	1129408-0000	-		1	CANTILEVER	
020	312105-0287	-		2	SCREW M6S M4X8 A280	
030	312105-0366	-		2	SCREW M6S M6X12 A280	
040	342245-0102	-		1	T-PIPE, INT. THREAD, R1/4XKR1/4	
050	342700-0203	-		1	NIPPLES,HEXAGON,EXT.G-THREAD G3/8"-G1/4"	
060	90230-0028	-		1	NON-RETURN VALVE H 151 R 3/8"	
070	342921-0115	-		1	STRAIGHT COUPLING,EXT.THREADED 6/4-G3/8"	
080	342722-0203	-		3	STRAIGHT COUPLING	
100	90140-0019	-		1	ELBOW, 90, INT. THREAD, NO. 2013-1/4	
110	90163-0069	-		1	QUICK COUPLING, (F) 5051-1/4	
120	342732-0103	-		2	ELBOW PIPE JOINT	
130	90187-0149	-		1	THROTTLE VALVE, G1/4, G1/4, MALE	
140	90166-0124	-	MM	3000	TUBE 6 MM PA,TRANSP.	
150	90166-0124	-	MM	1100	TUBE 6 MM PA,TRANSP.	
160	90166-0124	-	MM	450	TUBE 6 MM PA,TRANSP.	
170	90166-0081	-	MM	2000	TUBE 6 MM PA BLUE	
180	352103-0101	-		1	CABLE GLAND ST 9;PR15,2/PG9	
W 2235	351150-0403	-	MM	3000	CABLE OLFLEX 3X0,75 MM2 LIGHT/GREY	
Y 2106	90042-0248	-		1	SOLENOID VALVE OFFICIENE DI ENSINO	

Pos	Part No	SP	UN	Qty	Description	Page No

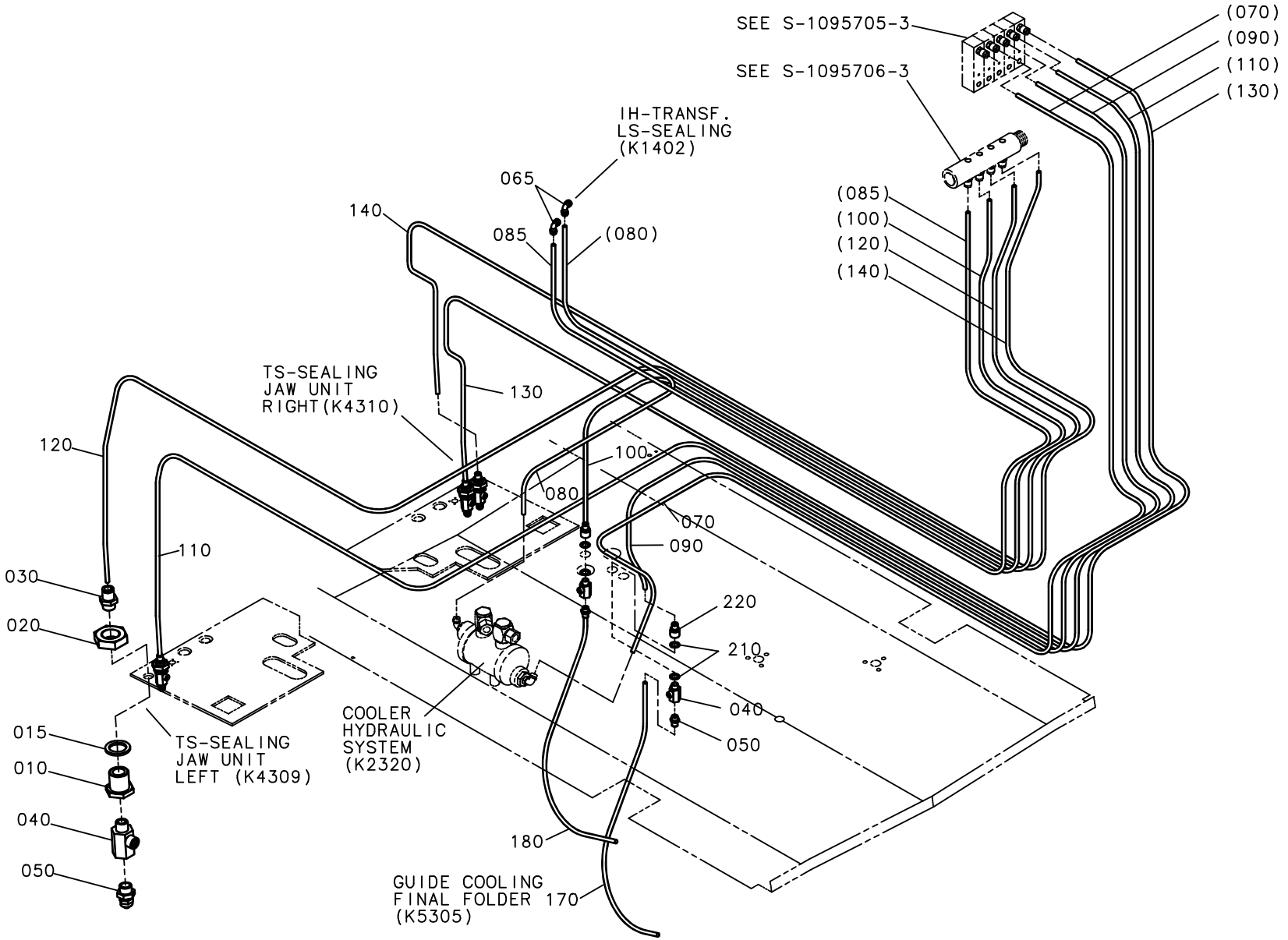
SEE S-1095705-3
SEE S-1095706-3
(070)
(090)
(110)
(130)
IH-TRANSF.
LS-SEALING
(K1402)
065
140
085
(080)
(085)
(100)
(120)
(140)
TS-SEALING
JAW UNIT
RIGHT(K4310)
130
120
100
080
070
090
110
030
020
220
210
040
050
015
010
040
050
TS-SEALING
JAW UNIT
LEFT (K4309)
COOLER
HYDRAULIC
SYSTEM
(K2320)
180
GUIDE COOLING
FINAL FOLDER 170
(K5305)

ECM: 72616 - 19990604
Group number: 1095848-0300
Assembly Drawing: 1095848-3_1_AA

Issue: 20011217

Pos	Part No	SP	UN	Qty	Description	Page No
Common Parts						
010	276398-0000	-		4	HEXAGON NIPPLE	
015	315233-0113	-		4	WASHER PL.RND.NYL.21,4/27,H=1,2	
020	90330-0093	-		4	NUT, HEXAGON, G1/2	
030	342722-0205	-		6	STRAIGHT COUPLING D=8-G1/4"	
040	90187-0158	-		6	THROTTLE BALL VALVE G1/4, R1/4	
050	342921-0122	-		6	STRAIGHT COUPLING,EXT.THREADED 8/6-G1/4"	
060	90015-0023	-		2	GLANDS,LEAD-IN,IP67	
065	342936-0122	-		2	ELBOW 90 COUPL.,UNION 8/6	
070	90166-0139	-	MM	4000	TUBE PA BLACK	
080	90166-0139	-	MM	1250	TUBE PA BLACK	
085	90166-0139	-	MM	3000	TUBE PA BLACK	
090	90166-0139	-	MM	3700	TUBE PA BLACK	
100	90166-0139	-	MM	3200	TUBE PA BLACK	
110	90166-0139	-	MM	5000	TUBE PA BLACK	
120	90166-0139	-	MM	4500	TUBE PA BLACK	
130	90166-0139	-	MM	4500	TUBE PA BLACK	
140	90166-0139	-	MM	4000	TUBE PA BLACK	
170	90166-0139	-	MM	1000	TUBE PA BLACK	
180	90166-0139	-	MM	1000	TUBE PA BLACK	
210	315233-0110	-		4	WASHER PL.RND.NYL.13,3/17,H=1	
220	342770-0108	-		2	HOSE COUPLING	

Pos	Part No	SP	UN	Qty	Description	Page No

Machine Type | Group Description | Used-In | Group Number | Page No

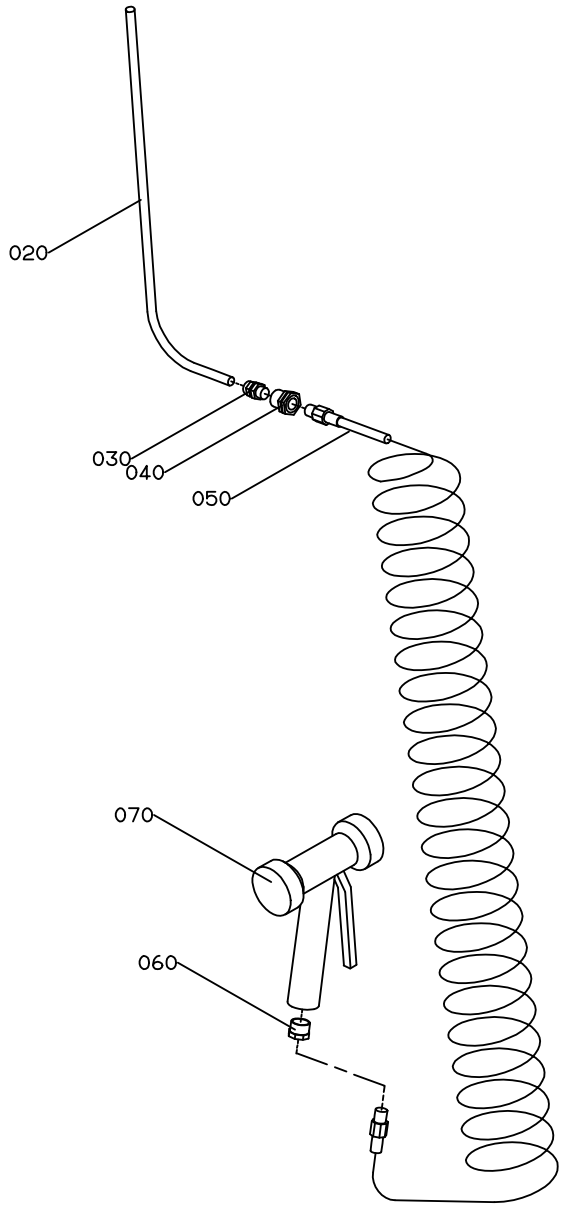
020
030
040
050
070
060

ECM: - -
Group number: 1095681-0100
Assembly Drawing: 1095681-1_1_AA

Issue: 20011217

Pos	Part No	SP	UN	Qty	Description	Page No
Common Parts						
020	90166-0135	-	MM	1000	TUBE 10 MM PA BLACK	
030	342920-0132	-		1	STRAIGHT COUPL.,EXT.THREADED 10/8-R1/4"	
040	342767-0104	-		1	CONN. BULKHEAD G1/4	
050	90152-0017	-		1	HOSE	
060	342701-0205	-		1	BUSHING,INT./EXT.G-THREAD G1/2"-G1/4"	
070	90426-0003	-		1	HAND SHOWER	

Pos	Part No	SP	UN	Qty	Description	Page No

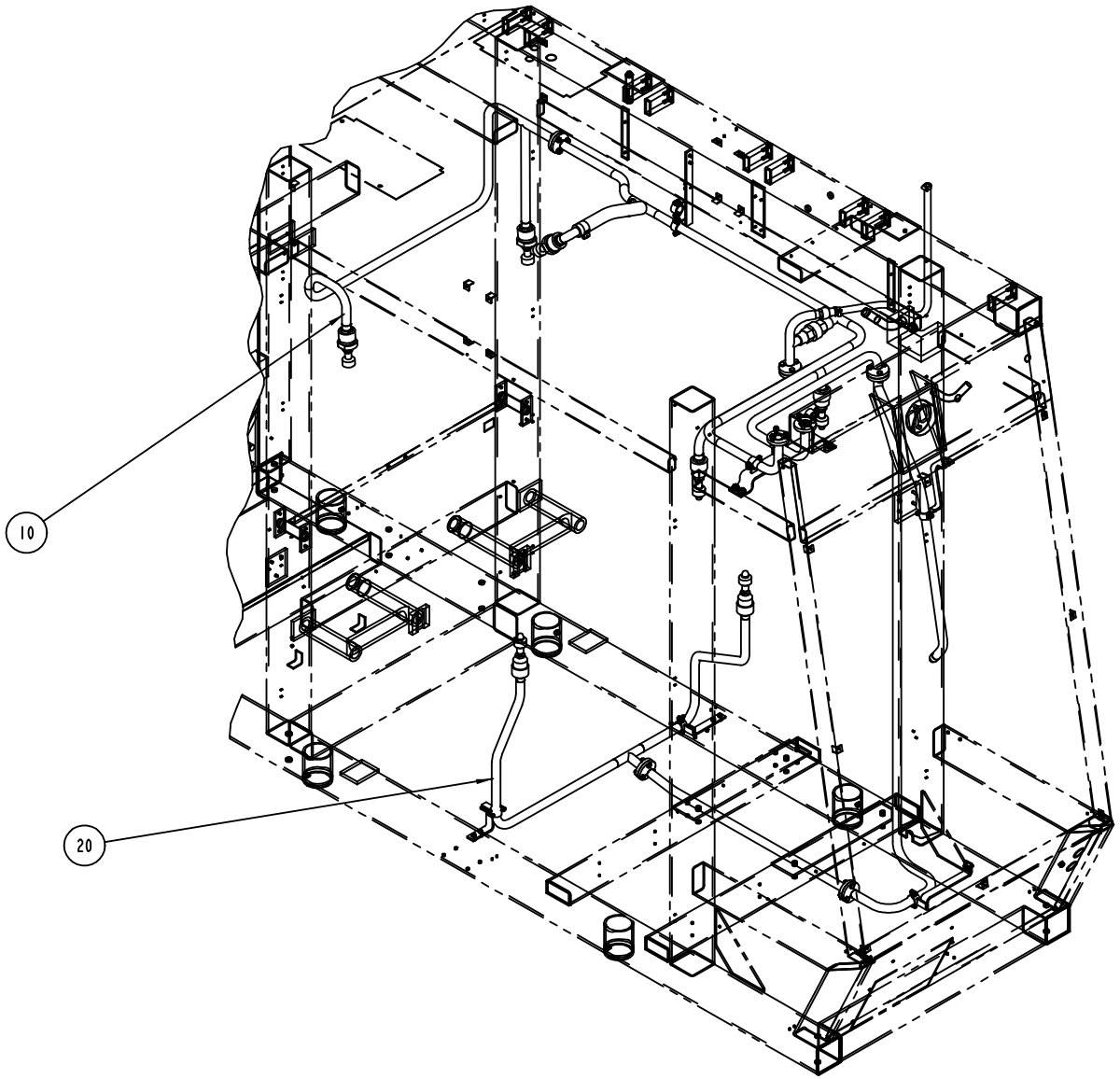

S-1095837-5
ECN 72252

ECM: 72252 - 19990429
Group number: 1095837-0300
Assembly Drawing: 1095837-5_1_AA

Issue: 20011217

Pos	Part No	SP	UN	Qty	Description	Page No
Common Parts						
010	A1095838-0300	-		1	CLEANING PIPEWORK	**383**
020	A1095839-0300	-		1	CLEANING SYSTEM	**385**

Pos	Part No	SP	UN	Qty	Description	Page No

Machine Type | Group Description | Used-In | Group Number | Page No

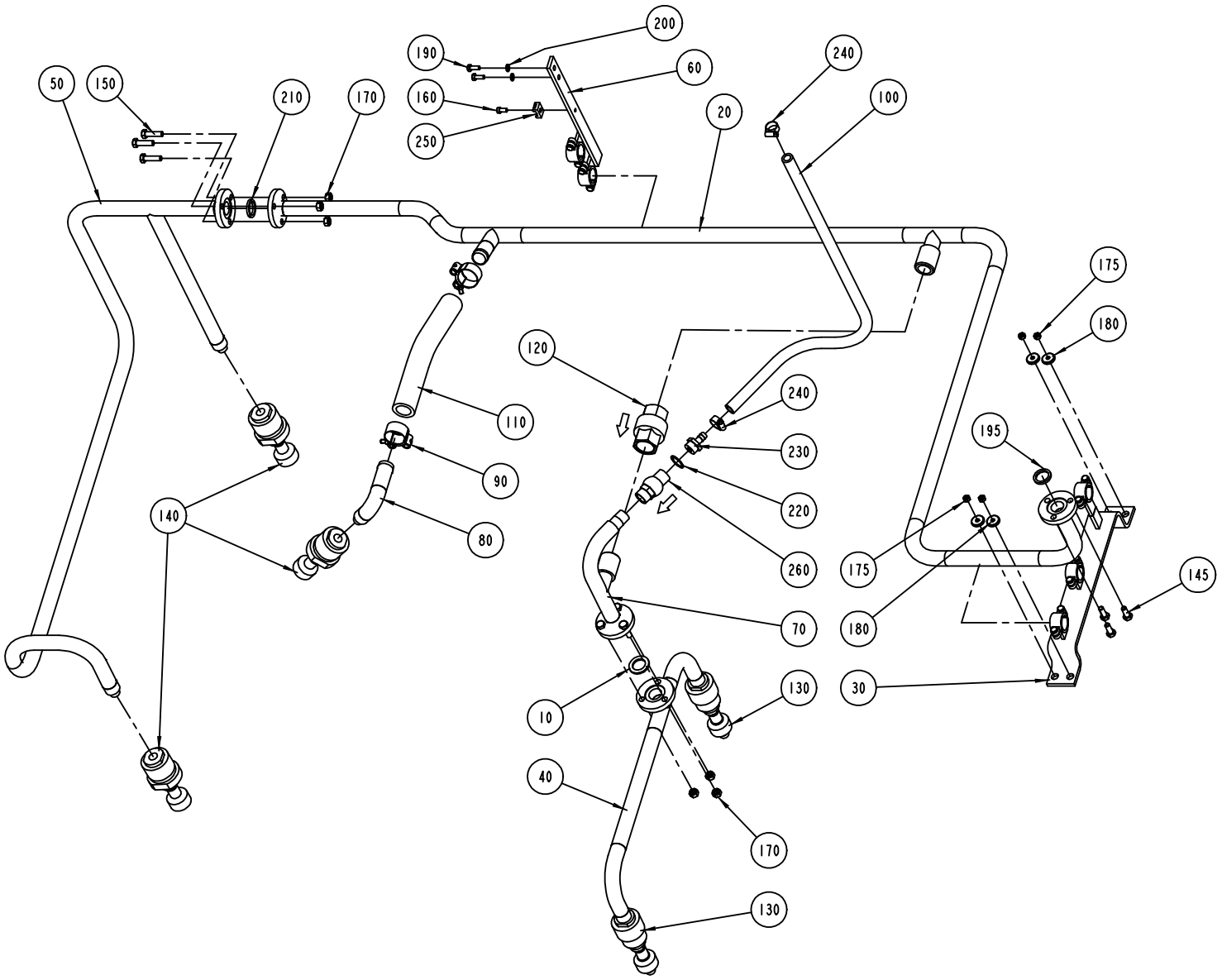

S-1095838-3
ECN 72625

ECM: 72625 - 19991105
Group number: 1095838-0300
Assembly Drawing: 1095838-3_1_AB

Issue: 20011217

Pos	Part No	SP	UN	Qty	Description	Page No
Common Parts						
010	1037443-0000	-		2	GASKET	
020	1487240-0000	-		1	PIPE	
030	B1129378-0000	-		1	BRACKET	
	90165-0089	*-*		*3*	*PIPE CLAMP*	
040	1348186-0000	-		1	CLEANING PIPE	
050	B1254141-0000	-		1	PIPE	
	1129438-0000	*-*		*2*	*ADAPTOR*	
	343421-0103	*-*		*1*	*FLANGE FOR AIR & PER. PIPE F D=25,4 MM*	
	90217-0129	*-*		*1*	*WELD. T - PIPE D=25,4 MM PMCS 3-A*	
	90217-0097	*-*		*5*	*PIPE ELBOW 90 DEGR. D=12,7 MM PMCS 3-A*	
060	1255492-0000	-		1	BRACKET	
070	B1255493-0000	-		1	PIPE	
	343421-0103	*-*		*1*	*FLANGE FOR AIR & PER. PIPE F D=25,4 MM*	
	90330-0059	*-*		*1*	*NIPPLES, EXT. THREAD WELD. R-208/KR1/2*	
	90217-0129	*-*		*1*	*WELD. T - PIPE D=25,4 MM PMCS 3-A*	
	90217-0097	*-*		*1*	*PIPE ELBOW 90 DEGR. D=12,7 MM PMCS 3-A*	
080	B1129383-0000	-		1	PIPE	
	1129438-0000	*-*		*1*	*ADAPTOR*	
	1129269-0000	*-*		*1*	*HOSE CONNECTION*	
090	90165-0147	-		2	HOSE CLIP	
100	90166-0121	-	MM	1000	HOSE	
110	90166-0233	-	MM	300	HOSE	
120	B90230-0044	C		1	NON-RETURN VALVE 1"	
	90230-0308	*C*		*1*	*GASKET KIT*	
130	90424-0066	C		2	ROT.SPRAY NOZZLE, D26984-R3/8-PVDF 4.5	
140	90424-0071	C		3	ROT.SPRAY NOZZLE, D40140-R3/8-PVDF 4.5	
145	312105-0451	-		3	SCREW M6S 8X20 A280	
150	312105-0455	-		3	SCREW M6S M8X30 A280	
160	312125-0366	-		1	SCREW PAN HEAD MCS M6X12 SS	
170	312605-0318	-		6	HEXAGON NUT, M6M M8 A280	
175	312605-0316	-		4	HEXAGON NUT, M6M M6 A280	
180	315125-0153	-		4	WASHER PLAIN ROUND,CHAMF. 6,4/22, H=4	
190	312105-0368	-		2	SCREW M6S M6X16 A280	
195	315229-0103	-		1	GASKETS, 23,1X30,1X3,7 MM 1" FDA	
200	315105-0153	-		2	WASHER PLAIN, BRB, 6,4/12,H=1,5	
210	315229-0103	-		2	GASKETS, 23,1X30,1X3,7 MM 1" FDA	
220	315233-0113	-		1	WASHER PL.RND.NYL.21,4/27,H=1,2	
230	342901-0105	-		1	HOSE NIPPLE, EXT.THR. G1/2-12 MM	
240	342991-0102	-		2	HOSE CLIP,WORM DRIVE TYPE (16)-19	
250	352113-0204	-		1	ANCHOR TM3S25-M	
260	90230-0042	C		1	NON-RETURN VALVE 1/2"	

Machine Type	Group Description	Used-In	Group Number	Page No

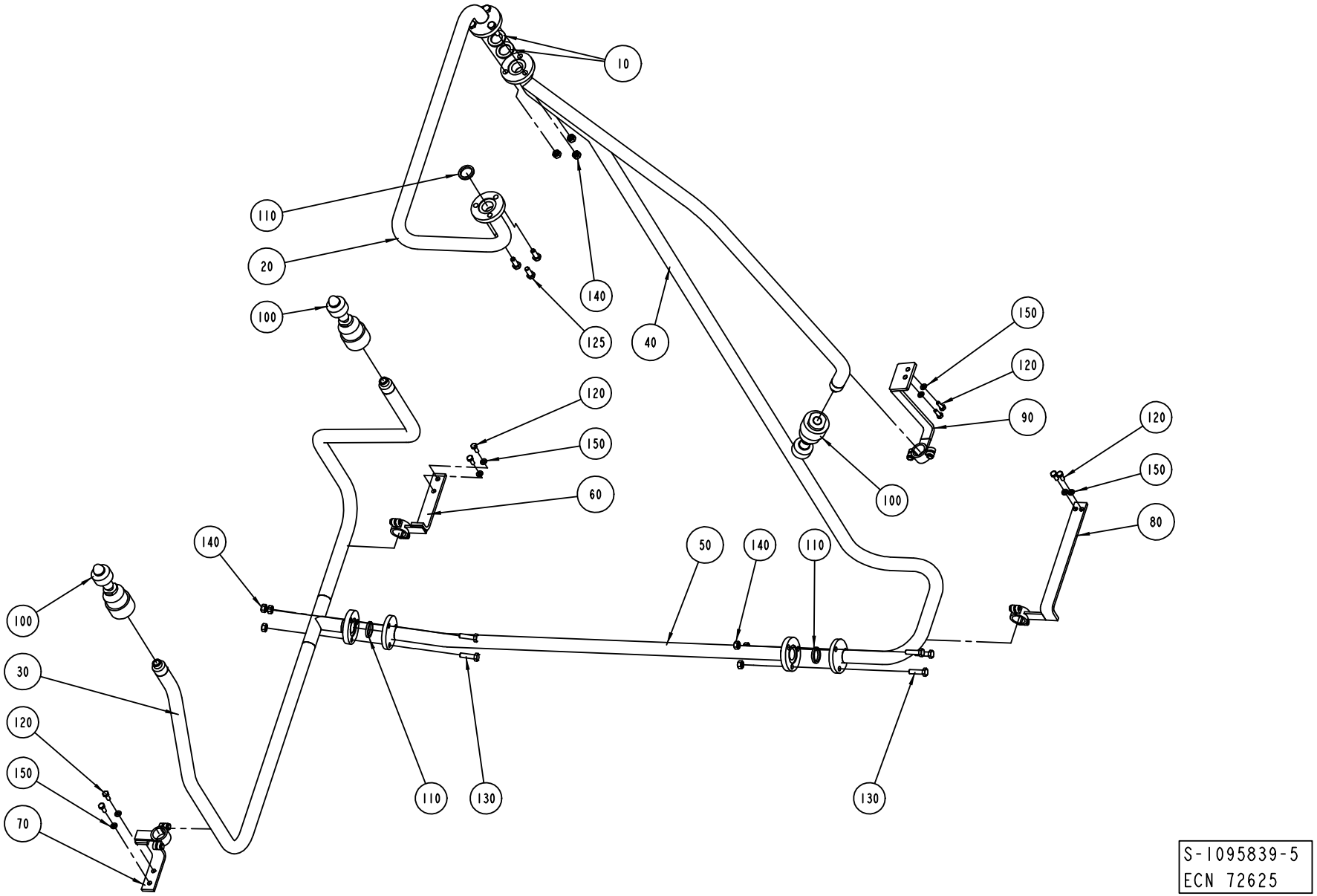
10
110
20
140
100
125
40
150
120
90
120
150
60
100
120
150
80
140
50
140
110
100
30
120
150
70
110
130
130
S-1095839-5
ECN 72625

Pos	Part No	SP	UN	Qty	Description	Page No
Common Parts						
010	1037443-0000	-		2	GASKET	
020	1487239-0000	-		1	PIPE	
030	1478837-0000	-		1	CLEANING PIPE	
040	1484877-0000	-		1	CLEANING PIPE	
050	B1279099-0000	-		1	CLEANING PIPE	
	343421-0103	-		*1*	*FLANGE FOR AIR & PER. PIPE F D=25,4 MM*	
	343421-0203	-		*1*	*FLANGE FOR AIR & PER. PIPE M D=25,4 MM*	
060	B1129459-0000	-		1	BRACKET	
	90165-0089	-		*1*	*PIPE CLAMP*	
070	B1279400-0000	-		1	BRACKET	
	90165-0089	-		*1*	*PIPE CLAMP*	
080	1487246-0000	-		1	BRACKET	
090	1487501-0000	-		1	BRACKET	
100	90424-0066	C		3	ROT.SPRAY NOZZLE, D26984-R3/8-PVDF 4.5	
110	315229-0103	-		3	GASKETS, 23,1X30,1X3,7 MM 1" FDA	
120	312105-0368	-		4	SCREW M6S M6X16 A280	
125	312105-0451	-		3	SCREW M6S 8X20 A280	
130	312105-0455	-		6	SCREW M6S M8X30 A280	
140	312605-0318	-		9	HEXAGON NUT, M6M M8 A280	
150	315105-0153	-		8	WASHER PLAIN, BRB, 6,4/12,H=1,5	

Pos	Part No	SP	UN	Qty	Description	Page No

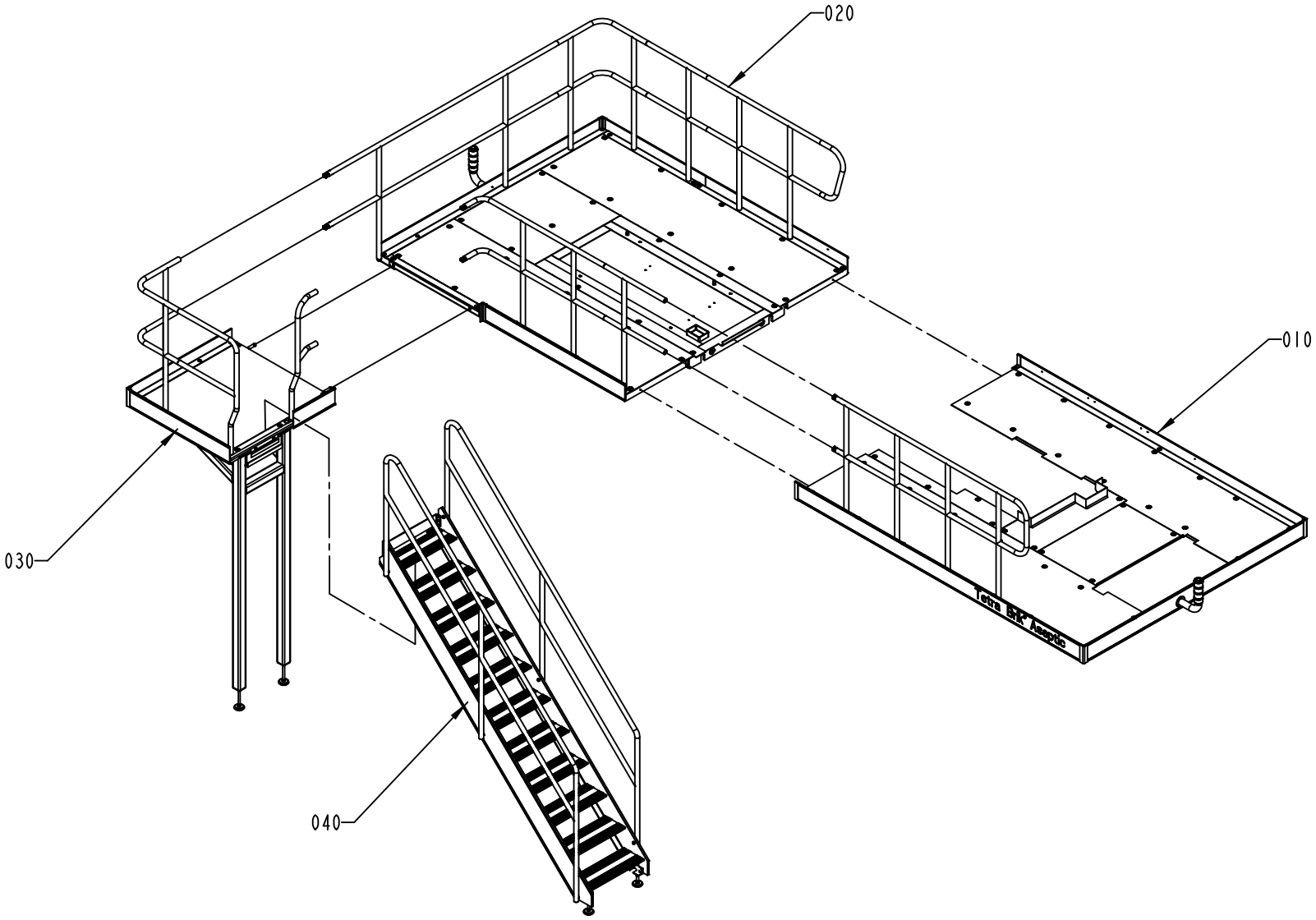

1524871-1
ECN 80365

ECM: 80427 - 20010221
Group number: 1524871-0100
Assembly Drawing: 1524871-1_1_AA

Issue: 20011217

Pos	Part No	SP	UN	Qty	Description	Page No
Common Parts						
010	A1524866-0100	-		1	FRONT PLATFORM	**389**
020	A1524845-0100	-		1	BACK PLATFORM	**393**
030	A1538870-0100	-		1	PLATFORM	**395**
040	A1523777-0100	-		1	STAIR CASE	**397**

Pos	Part No	SP	UN	Qty	Description	Page No

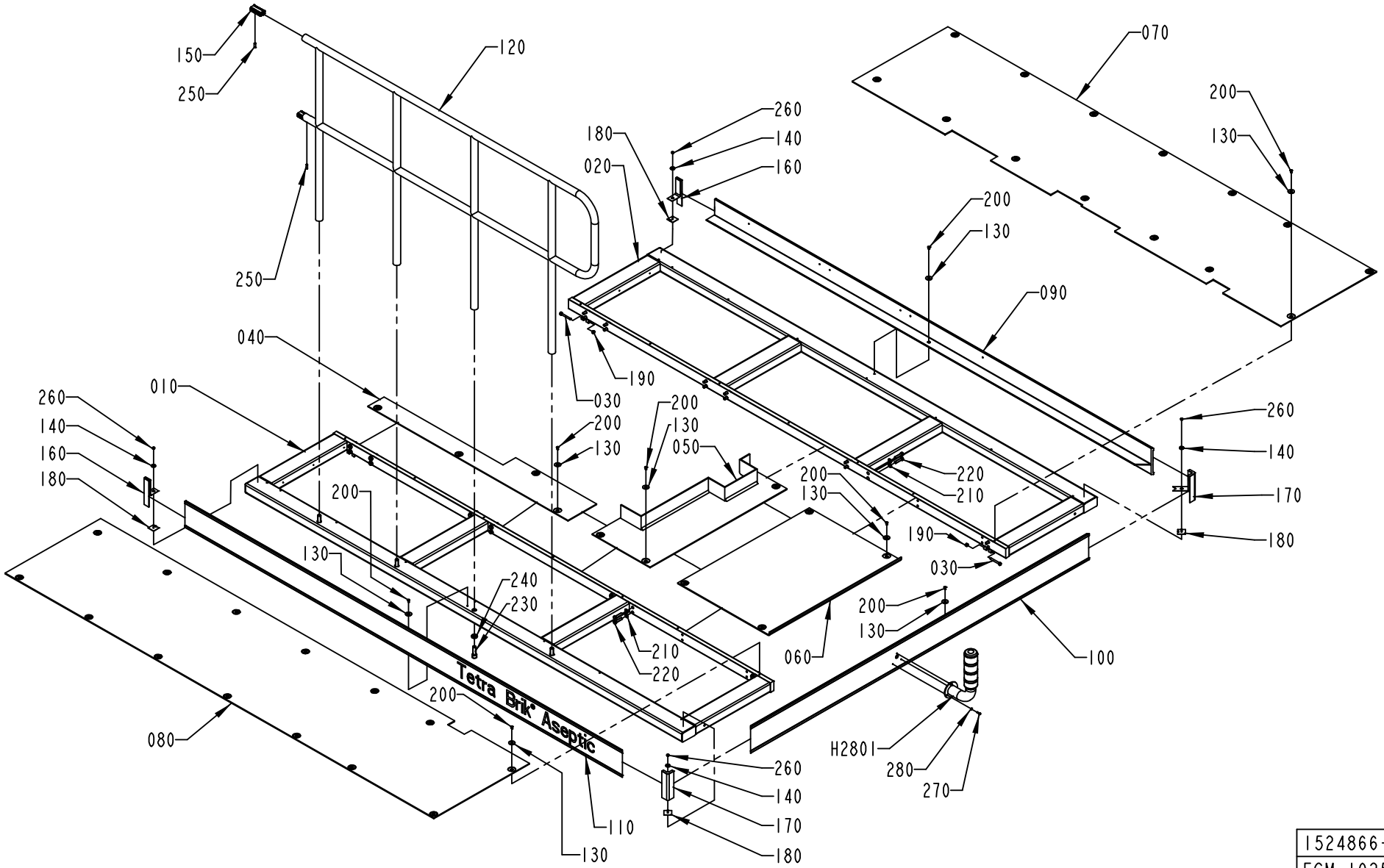

1524866-1
ECM 102537

ECM: 102539 - 50001231
Group number: 1524866-0100
Assembly Drawing: 1524866-1_1_AC

Issue: 20011217

Pos	Part No	SP	UN	Qty	Description	Page No
Common Parts						
010	1524867-0000	-		1	PLATFORM	
020	1524868-0000	-		1	PLATFORM	
030	1523780-0000	-		4	SHAFT	
040	1254118-0000	-		1	CHECKER PLATE	
050	1041949-0000	-		1	CHECKER PLATE	
060	1254030-0000	-		1	CHECKER PLATE	
070	1523781-0000	-		1	CHECKER PLATE	
080	1523782-0000	-		1	CHECKER PLATE	
090	1523783-0000	-		1	TOE PLATE	
100	1523784-0000	-		1	TOE PLATE	
110	1524869-0000	-		1	TOE PLATE	
120	1524870-0000	-		1	RAILING	
130	1036241-0000	-		42	WASHER	
140	315125-0153	-		4	WASHER PLAIN ROUND,CHAMF. 6,4/22, H=4	
150	B985328-0000	-		2	CONNECTION	
	985327-0000	-		*1*	*PROFILE*	
160	1254025-0000	-		2	STRIP	
170	1254027-0000	-		2	CORNER STRIP	
180	1254028-0000	-		4	FASTENING PLATE	
190	312812-0318	-		4	HEXAGON NUT, NY-LOCK M8 A480	
200	312155-0366	-		42	SCREW HEX.SOCK.COUNT.MF6S M6X12 A280	
210	315105-0173	-		28	WASHER PLAIN, BRB, 10,5/22,H=2	
220	90458-2845	-		28	SCREW	
230	312115-0630	-		4	SCREW MC6S M16X50 A280	
240	315111-0186	-		4	WASHER PLAIN, TBRB 17/30 H=6	
250	312318-0453	-		4	SCREW SOCK.SET CUP P MSK6SS M8X25 A4	
260	312605-0316	-		4	HEXAGON NUT, M6M M6 A280	
270	312115-0329	-		3	SCREW MC6S M5X16 A280	
280	315105-0146	-		3	WASHER PLAIN, BRB, 5,3/10,H=1	
H2801	A1317983-0100	-		1	ALARM BEACON	**391, 939**

Pos	Part No	SP	UN	Qty	Description	Page No

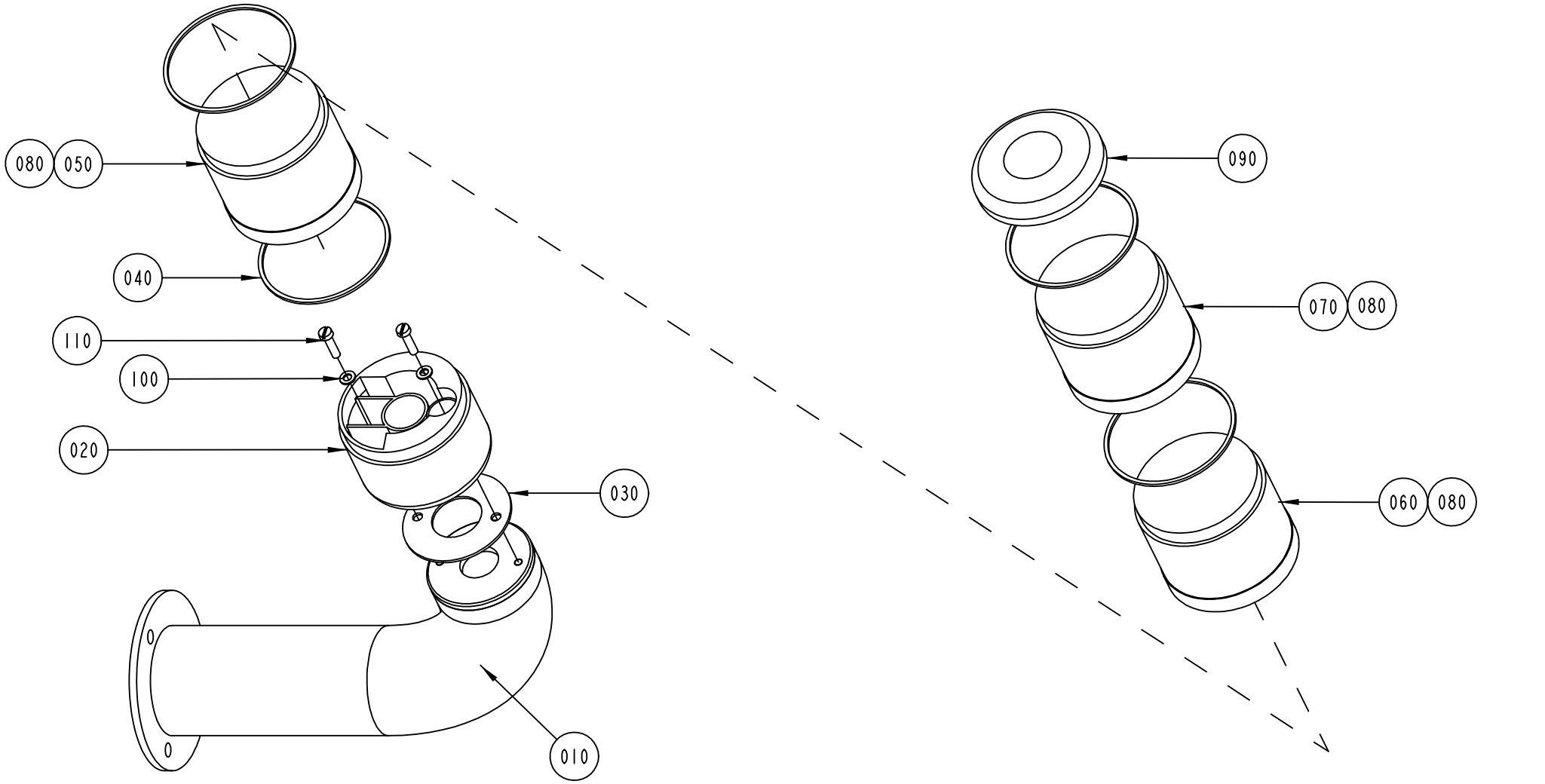

S-1317983-1
ECN 71634

ECM: 90290 - 20010302
Group number: 1317983-0100
Assembly Drawing: 1317983-1_1_AA

Issue: 20011217

Pos	Part No	SP	UN	Qty	Description	Page No
Common Parts						
010	1317793-0000	B		1	BASE	
020	1317794-0000	-		1	BASE	
030	90419-0310	A		1	GASKET	
040	90419-0307	A		4	GASKET	
050	90419-0013	B		1	LIGHT ELEMENT, BLUE	
060	90419-0014	B		1	LIGHT ELEMENT, YELLOW	
070	90419-0012	B		1	LIGHT ELEMENT, RED	
080	90036-0068	A		3	BULB 6.5W 24V	
090	90419-0017	-		1	BASE	
100	315105-0136	-		2	WASHER PLAIN, BRB, 4,3/8,H=0,8	
110	312125-0293	-		2	SCREW PAN HEAD MCS M4X16 SS	

Pos	Part No	SP	UN	Qty	Description	Page No

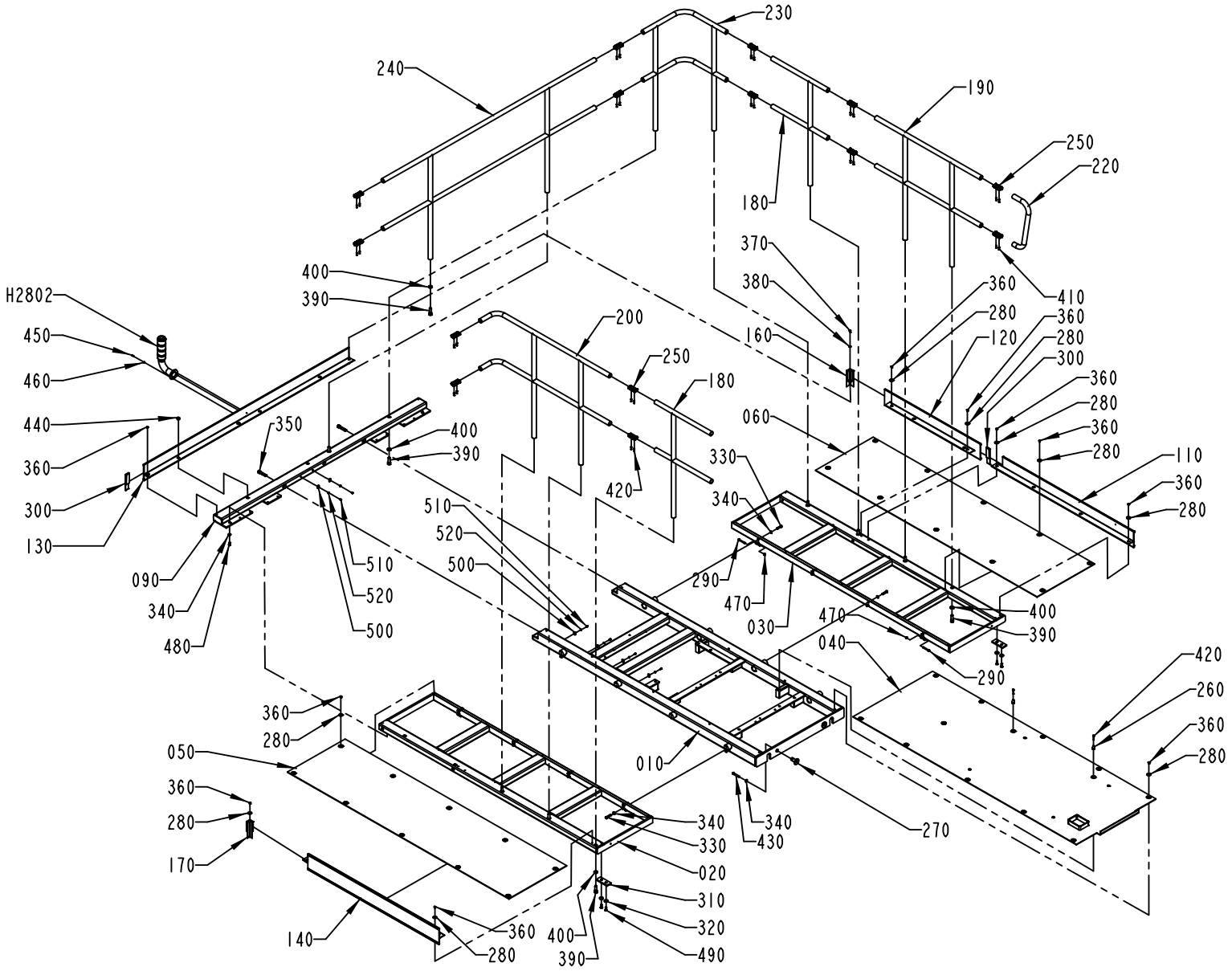

1524845-1
ECN 102537

ECM: 102540 - 50001231
Group number: 1524845-0100
Assembly Drawing: 1524845-1_1_AC

Issue: 20011217

Pos	Part No	SP	UN	Qty	Description	Page No
Common Parts						
010	1535043-0000	-		1	PLATFORM	
020	1524847-0000	-		1	PLATFORM	
030	1524848-0000	-		1	PLATFORM	
040	1535038-0000	-		1	CHECKER PLATE	
050	1524850-0000	-		1	CHECKER PLATE	
060	1524851-0000	-		1	CHECKER PLATE	
090	1524854-0000	-		1	BEAM	
110	1524855-0000	-		1	TOE PLATE	
120	1524856-0000	-		1	TOE PLATE	
130	1523793-0000	-		1	TOE PLATE	
140	1524857-0000	-		1	TOE PLATE	
160	1524167-0000	-		1	CORNER STRIP	
170	1524168-0000	-		1	CORNER STRIP	
180	1524859-0000	-		2	RAILING	
190	1524860-0000	-		1	RAILING	
200	1524861-0000	-		1	RAILING	
220	1558795-0000	-		1	RAILING	
230	B1010822-0000	-		1	RAILING	
	1140619-0000	-		*2*	*PLUG*	
240	1548211-0000	-		1	RAILING	
250	B985328-0000	-		14	CONNECTION	
	985327-0000	-		*1*	*PROFILE*	
260	1037571-0000	-		2	GUIDE BUSHING	
270	1116048-0000	-		2	SPACER	
280	1036241-0000	-		38	WASHER	
290	1523780-0000	-		4	SHAFT	
300	1558947-0000	-		2	STRIP	
310	1535036-0000	-		2	PLATE	
320	1535042-0000	-		4	WASHER	
330	90458-2845	-		16	SCREW	
340	315105-0173	-		20	WASHER PLAIN, BRB, 10,5/22,H=2	
350	312115-0634	-		2	SCREW MC6S M16X70 A280	
360	312155-0366	-		38	SCREW HEX.SOCK.COUNT.MF6S M6X12 A280	
370	312105-0366	-		1	SCREW M6S M6X12 A280	
380	315105-0165	-		1	WASHER PLAIN, BRB, 8,4/16,H=1,5	
390	312115-0630	-		10	SCREW MC6S M16X50 A280	
400	315111-0186	-		10	WASHER PLAIN, TBRB 17/30 H=6	
410	312318-0453	-		28	SCREW SOCK.SET CUP P MSK6SS M8X25 A4	
420	312109-0378	-		2	SCREW M6S M6X40 A280	
430	312105-0505	-		2	SCREW M6S M10X70 A280	
440	90261-0033	-		3	PLUG, BLIND, PLASTIC GPN300F182	
450	312115-0329	-		3	SCREW MC6S M5X16 A280	
460	315105-0146	-		3	WASHER PLAIN, BRB, 5,3/10,H=1	
470	312812-0318	-		4	HEXAGON NUT, NY-LOCK M8 A480	
480	312105-0491	-		2	SCREW M6S M10X20 A280	
490	312155-0495	-		4	SCREW HEX.SOCK.COUNT.MF6S M10X30 A280	
500	352113-0204	-		6	ANCHOR TM3S25-M	
510	312125-0366	-		6	SCREW PAN HEAD MCS M6X12 SS	
520	315105-0153	-		6	WASHER PLAIN, BRB, 6,4/12,H=1,5	
H2802	A1317983-0100	-		1	ALARM BEACON	**391, 939**

Machine Type	Group Description	Used-In	Group Number	Page No

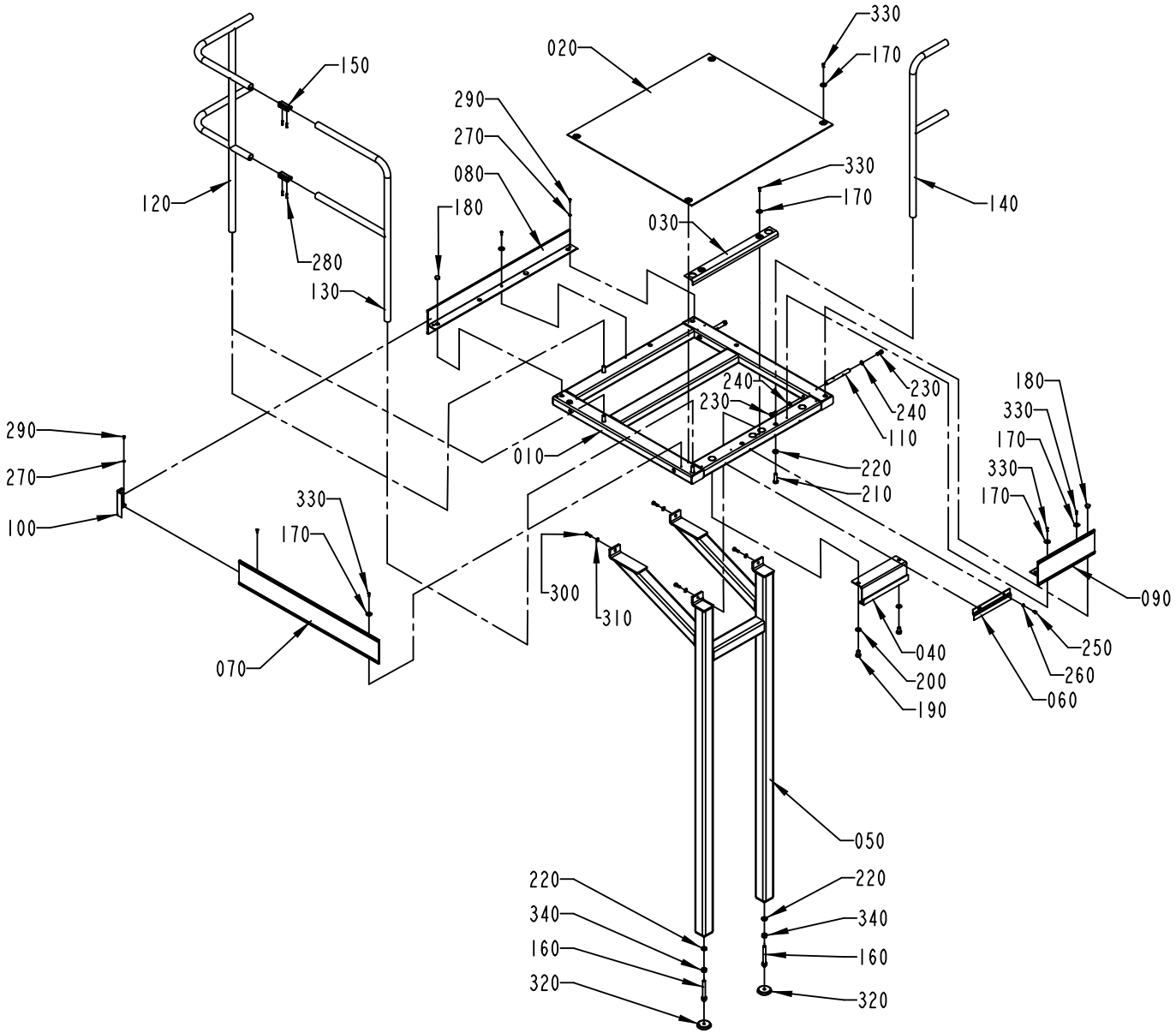

1538870-1
ECN 93149

ECM: 93183 - 20010715
Group number: 1538870-0100
Assembly Drawing: 1538870-1_1_AB

Issue: 20011217

Pos	Part No	SP	UN	Qty	Description	Page No
Common Parts						
010	1524171-0000	-		1	FRAME	
020	1524172-0000	-		1	CHECKER PLATE	
030	1524173-0000	-		1	CHECKER PLATE	
040	1524174-0000	-		1	HOOK	
050	1524175-0000	-		1	LEG	
060	1524176-0000	-		1	CLAMP	
070	1524177-0000	-		1	TOE PLATE	
080	1524178-0000	-		1	TOE PLATE	
090	1524179-0000	-		1	TOE PLATE	
100	1524167-0000	-		1	CORNER STRIP	
110	1524181-0000	-		2	PIN	
120	B1010822-0000	-		1	RAILING	
	1140619-0000	-		*2*	*PLUG*	
130	1524182-0000	-		1	RAILING	
140	1524864-0000	-		1	RAILING	
150	B985328-0000	-		2	CONNECTION	
	985327-0000	-		*1*	*PROFILE*	
160	1524185-0000	-		2	EXTENSION PIECE	
170	1036241-0000	-		11	WASHER	
180	90261-0033	-		3	PLUG, BLIND, PLASTIC GPN300F182	
190	312105-0622	-		2	SCREW M6S M16X25 A280	
200	315105-0186	-		2	WASHER PLAIN, BRB, 17/30,H=3	
210	312101-0630	-		4	SCREW M6S M16X50 FZB	
220	315111-0186	-		6	WASHER PLAIN, TBRB 17/30 H=6	
230	312105-0536	-		4	SCREW M6S M12X30 A280	
240	315105-0178	-		4	WASHER PLAIN, BRB, 13/24,H=2	
250	312105-0447	-		2	SCREW M6S M8X12 A280	
260	315105-0165	-		2	WASHER PLAIN, BRB, 8,4/16,H=1,5	
270	315105-0153	-		2	WASHER PLAIN, BRB, 6,4/12,H=1,5	
280	312318-0453	-		4	SCREW SOCK.SET CUP P MSK6SS M8X25 A4	
290	90458-0072	-		2	SCREW, HEX.SOCK.BUTTON HEAD M6X12	
300	312105-0495	-		4	SCREW M6S M10X30 A280	
310	315105-0173	-		4	WASHER PLAIN, BRB, 10,5/22,H=2	
320	90347-0009	-		2	FLOOR PLATE, NO 1256730	
330	312155-0370	-		11	SCREW HEX.SOCK.COUNT.MF6S M6X20 A280	
340	312605-0324	-		2	HEXAGON NUT, M6M M16 A280	

Pos	Part No	SP	UN	Qty	Description	Page No

Machine Type | Group Description | Used-In | Group Number | Page No

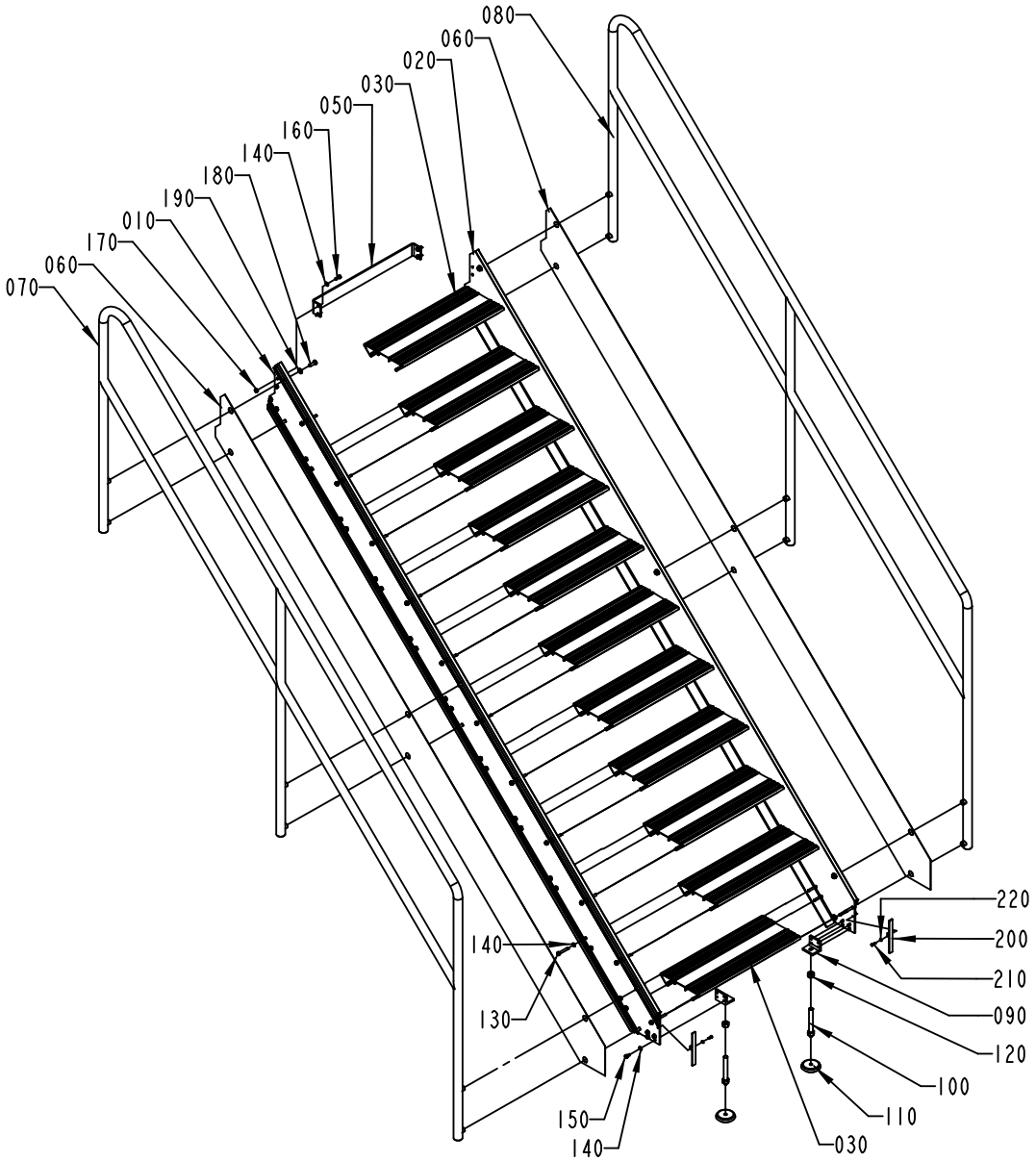

1523777-1
ECN 93149

ECM: 93184 - 20010715
Group number: 1523777-0100
Assembly Drawing: 1523777-1_1_AB

Issue: 20011217

Pos	Part No	SP	UN	Qty	Description	Page No
Common Parts						
010	1524186-0000	-		1	PROFILE	
020	1524187-0000	-		1	PROFILE	
030	1524188-0000	-		10	STAIR	
050	1524190-0000	-		1	BRACKET	
060	1524191-0000	-		2	RIM	
070	1524192-0000	-		1	RAILING	
080	1524193-0000	-		1	RAILING	
090	1037391-0000	-		2	CANTILEVER	
100	1524185-0000	-		2	EXTENSION PIECE	
110	90347-0009	-		2	FLOOR PLATE, NO 1256730	
120	312605-0324	-		2	HEXAGON NUT, M6M M16 A280	
130	312104-0461	-		88	SCREW M6S M8X50H FZB	
140	315105-0165	-		94	WASHER PLAIN, BRB, 8,4/16,H=1,5	
150	312105-0449	-		8	SCREW M6S M8X16 A280	
160	312105-0451	-		6	SCREW M6S 8X20 A280	
170	312605-0318	-		4	HEXAGON NUT, M6M M8 A280	
180	312105-0495	-		12	SCREW M6S M10X30 A280	
190	315105-0173	-		12	WASHER PLAIN, BRB, 10,5/22,H=2	
200	1558946-0000	-		2	PLUG	
210	312115-0327	-		2	SCREW MC6S M5X12 A280	
220	315105-0146	-		2	WASHER PLAIN, BRB, 5,3/10,H=1	

Pos	Part No	SP	UN	Qty	Description	Page No

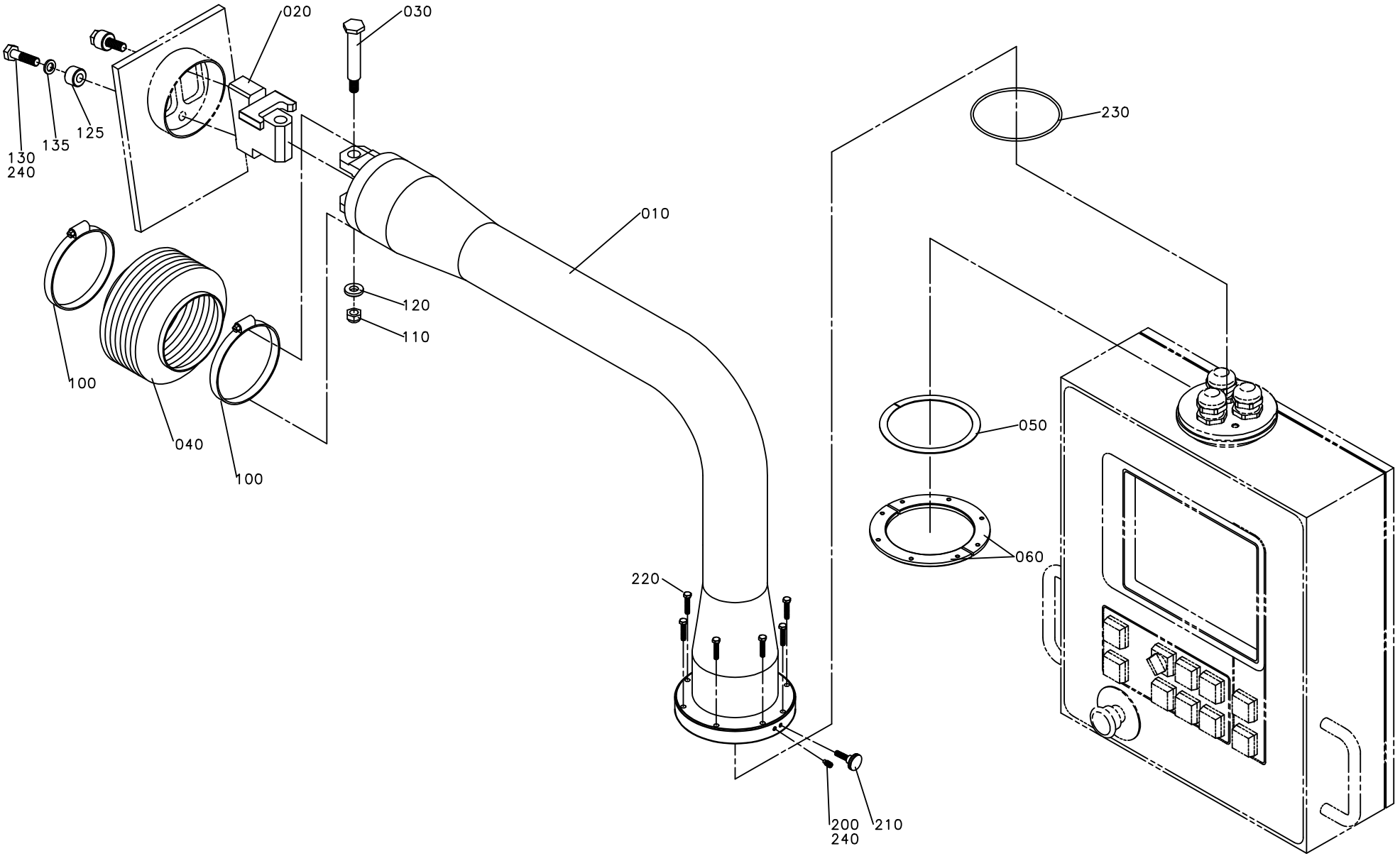
020
030
125
135
130
240
010
230
120
110
100
040
100
050
060
220
200
240
210

ECM: 72625 - 19991105
Group number: 1095863-0100
Assembly Drawing: 1095863-1_1_AC

Issue: 20011217

Pos	Part No	SP	UN	Qty	Description	Page No
Common Parts						
010	1129493-0000	-		1	PIPE BRACKET	
020	1129494-0000	-		1	BLOCKING PIECE	
030	1041598-0000	-		1	FITTING BOLT	
040	90342-0024	C		1	RUBBER BELLOWS, 100X100 MM	
050	1129633-0000	C		2	RING	
060	1041597-0000	C		2	PLATE	
100	342991-0114	-		2	HOSE CLIP,WORM DRIVE TYPE (93)-110	
110	312812-0320	-		1	HEXAGON NUT, NY-LOCK M10 A480	
120	315115-0173	-		1	WASHER PLAIN, TBRB 10,5/22 H=4	
125	1254494-0000	-		2	SPACER	
130	312115-0499	-		2	SCREW MC6S M10X40 A280	
135	315402-0173	-		2	LOCK WASHER FBB 10,2	
200	312311-0327	-		1	SCREW, SOCK.SET DOGPOINT M5X12	
210	318860-0106	-		1	KNOB, ADJUST.HI.EXT.THREAD, NO 8324-3674	
220	312105-0333	-		8	SCREW M6S M5X25 A280	
230	315202-0312	C		1	O-RING 104,5X3 MM	
240	90157-0021	-	KG	1	LOCKING FLUID	

Pos	Part No	SP	UN	Qty	Description	Page No

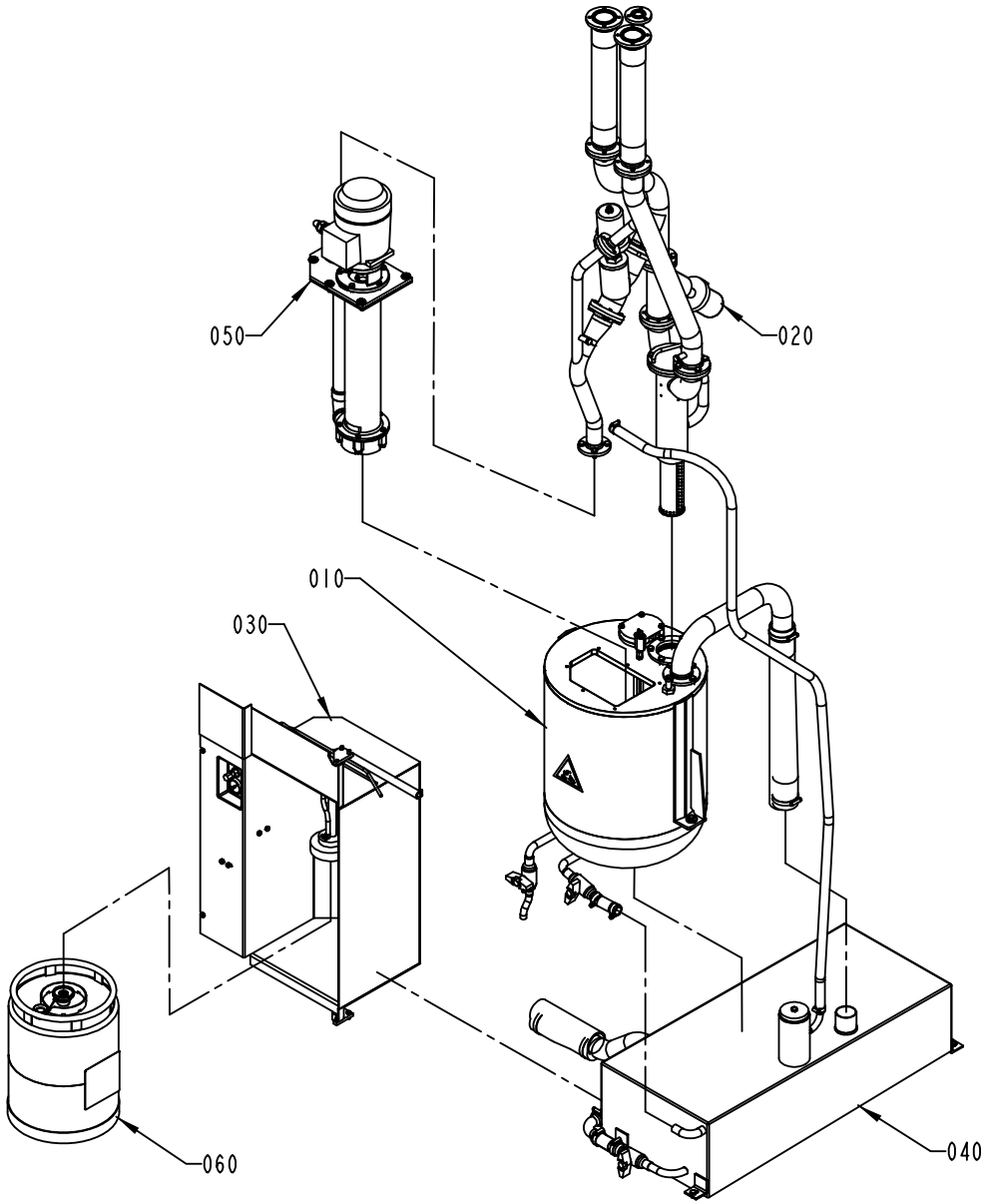

1095831-3
ECN 80462

ECM: 81744 - 20000812
Group number: 1095831-0300
Assembly Drawing: 1095831-3_1_AB

Issue: 20011217

Pos	Part No	SP	UN	Qty	Description	Page No
Common Parts						
010	A1282894-0100	-		1	PEROXIDE TANK	**403**
020	A1282895-0100	-		1	PEROXIDE PIPE	**405**
030	A1095825-0100	-		1	CABINET	**407**
040	A1282896-0100	-		1	TANK	**409**
050	A996388-0400	-		1	PEROXIDE PUMP	**413**
060	A527898-0100	-		1	CONTAINER H2O2	**415, 1143**

Pos	Part No	SP	UN	Qty	Description	Page No

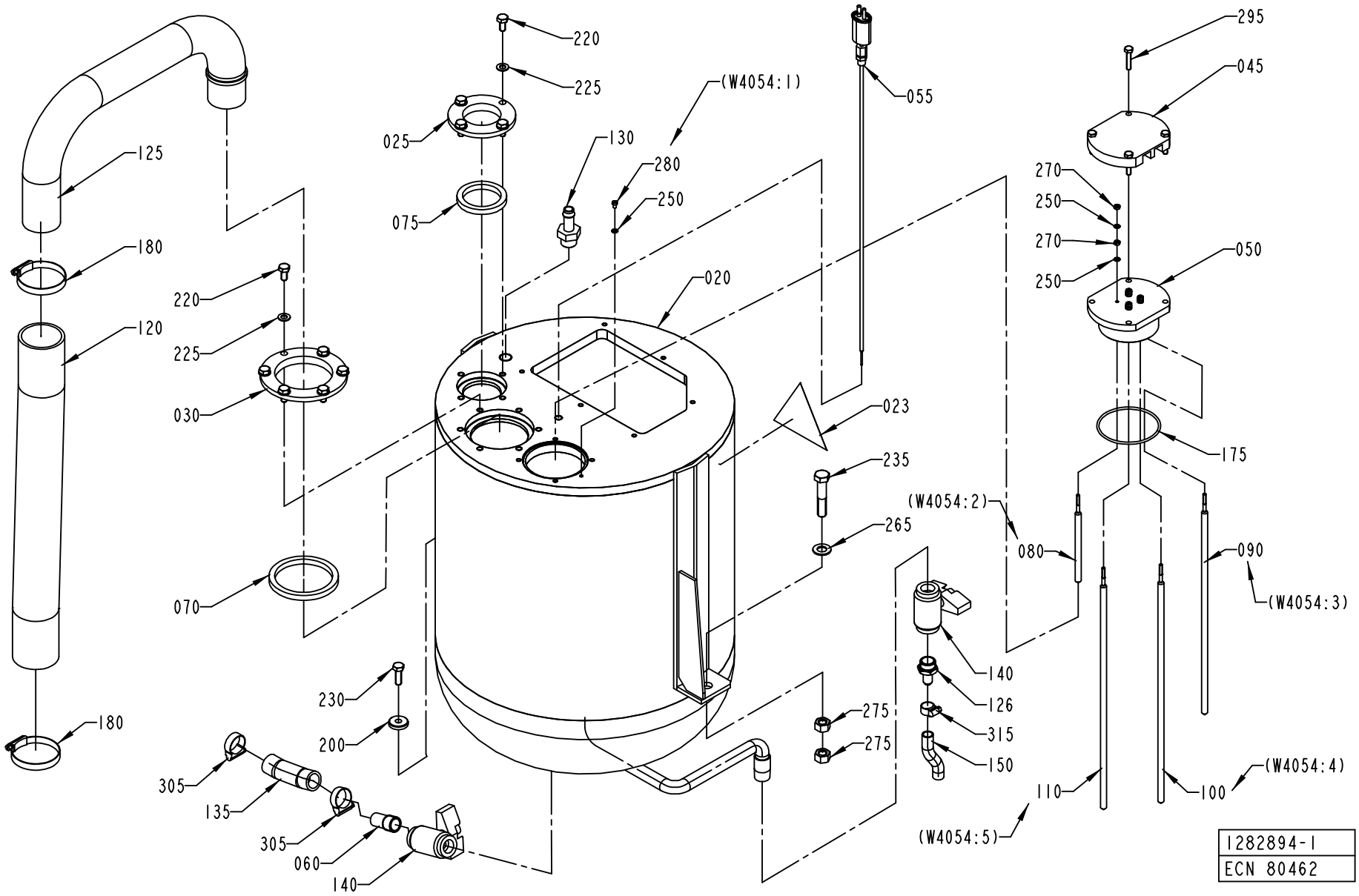
220
225
(W4054:1)
055
025
130
280
250
075
020
125
180
220
225
030
120
023
235
265
070
230
200
275
275
305
135
305
060
140
295
045
270
250
270
250
050
175
(W4054:2)
080
090
(W4054:3)
140
126
315
150
110
100
(W4054:4)
(W4054:5)
1282894-1
ECN 80462

Pos	Part No	SP	UN	Qty	Description	Page No
Common Parts						
020	1255559-0000	-		1	PEROXIDE TANK	
023	359705-0004	-		1	WARNING SIGN ISO, DANGEROUS CHEMICALS	
025	1040840-0000	-		1	FLANGE	
030	1040841-0000	-		1	FLANGE	
045	1282903-0000	-		1	FLANGE	
050	1282904-0000	-		1	LID	
055	B1347704-0000	D		1	THERMOCOUPLE	
	1040890-0000	*D*		*1*	*THERMOCOUPLE*	
	90326-0306	*-*		*1*	*GLAND FITTING 9041-45-KS-KR.1/8"D=4,5MM*	
060	1037102-0000	-		1	SPACER PIPE	
070	1040852-0000	C		1	SEALING RING	
075	1040853-0000	C		1	SEALING RING	
080	1129441-0001	D		1	ELECTRODE	
090	1129441-0002	D		1	ELECTRODE	
100	1129441-0003	D		1	ELECTRODE	
110	1129441-0004	D		1	ELECTRODE	
120	1282899-0000	C		1	HOSE	
125	1282891-0000	-		1	PIPE	
126	1282906-0000	-		1	NIPPLE	
130	90055-0051	-		1	HOSE NIPPLE, EXT.THR. R3/8X13 MM	
135	90166-0151	C	MM	140	HOSE	
140	90187-0059	C		2	BALL VALVE FOR HYDR.PER. G1/2 3MM HOLE	
150	90166-0138	C	MM	85	HOSE	
175	927422-0016	C		1	O-RING 79.5X3 SILICON	
180	342991-0110	-		2	HOSE CLIP,WORM DRIVE TYPE (54)-63	
200	315125-0165	-		1	WASHER PLAIN ROUND,CHAMF. 8,4/26, H=5	
220	312105-0449	-		10	SCREW M6S M8X16 A280	
225	315105-0165	-		10	WASHER PLAIN, BRB, 8,4/16,H=1,5	
230	312105-0453	-		1	SCREW M6S M8X25 A280	
235	312109-0544	-		1	SCREW M6S M12X60 H A280	
250	315105-0136	-		9	WASHER PLAIN, BRB, 4,3/8,H=0,8	
265	315105-0178	-		1	WASHER PLAIN, BRB, 13/24,H=2	
270	312605-0312	-		8	HEXAGON NUT, M6M M4 A280	
275	312605-0322	-		2	HEXAGON NUT, M6M M12 A280	
280	312125-0285	-		1	SCREW SLOT.PAN HD. MCS 4X6 A480	
295	312109-0374	-		4	SCREW M6S M6X30 A280	
305	342991-0104	-		2	HOSE CLIP,WORM DRIVE TYPE (23)-27	
315	342991-0101	-		1	HOSE CLIP,WORM DRIVE TYPE (13)-16	

Pos	Part No	SP	UN	Qty	Description	Page No

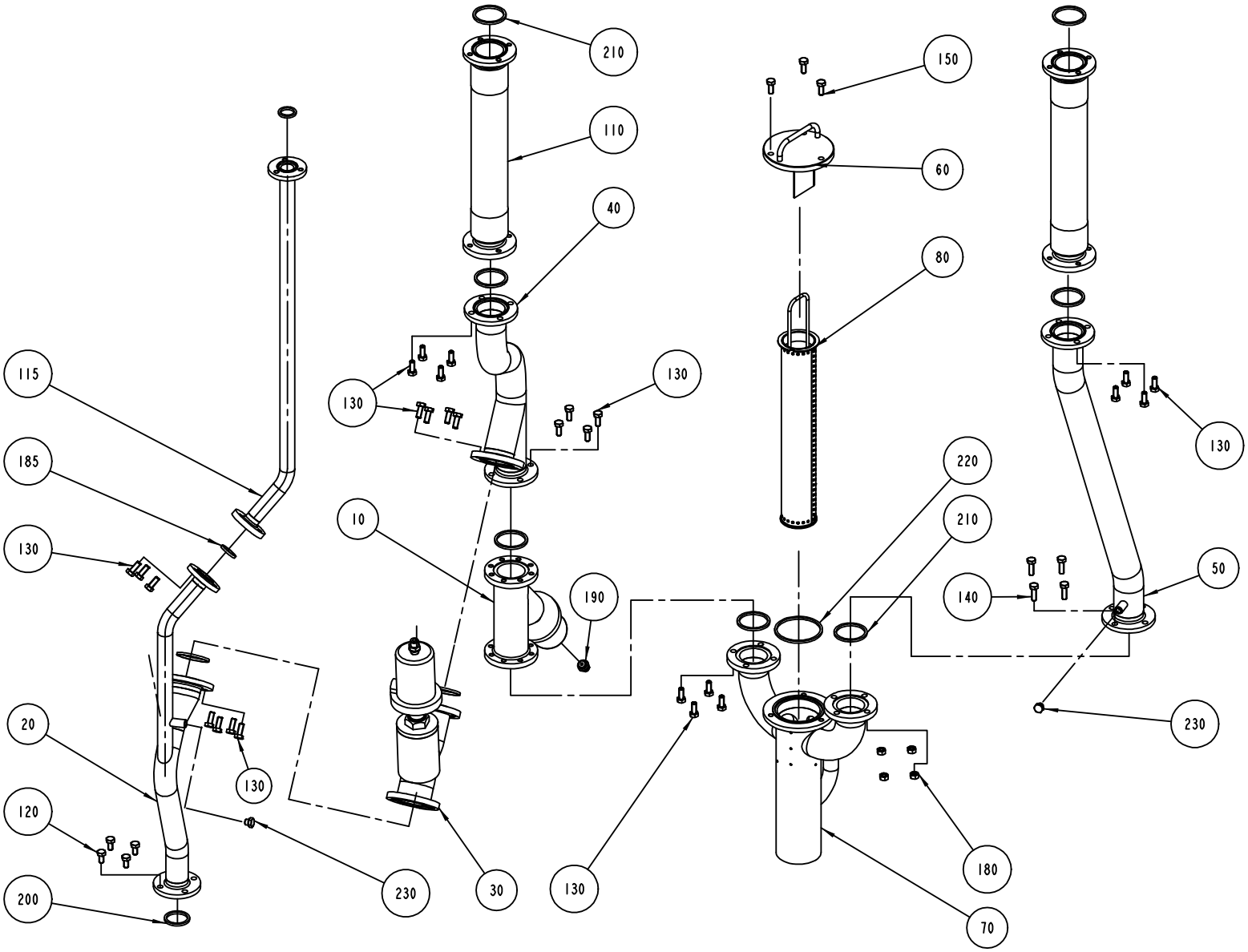

S-1282895-1
ECN 71744

ECM: 72431 - 19990511
Group number: 1282895-0100
Assembly Drawing: 1282895-1_1_AC

Issue: 20011217

Pos	Part No	SP	UN	Qty	Description	Page No
Common Parts						
010	B978999-0000	D		1	VALVE	
	90235-0483	*C*		*1*	*WASHER,PL.RND.AL, 60/68,H=2,5*	
020	1282874-0000	-		1	PIPE	
030	B1346565-0000	D		1	VALVE	
	90235-0483	*C*		*1*	*WASHER,PL.RND.AL, 60/68,H=2,5*	
040	1282876-0000	-		1	PIPE	
050	1282877-0000	-		1	PIPE	
060	1348530-0000	-		1	LID	
070	1282879-0000	-		1	CONNECTING PIPE	
080	1348529-0000	C		1	STRAINER	
110	1285426-0000	C		2	PIPE	
115	1282901-0000	-		1	PIPE	
120	312105-0449	-		4	SCREW M6S M8X16 A280	
130	312105-0451	-		27	SCREW M6S 8X20 A280	
140	312105-0453	-		4	SCREW M6S M8X25 A280	
150	312105-0451	-		3	SCREW M6S 8X20 A280	
180	312605-0318	-		4	HEXAGON NUT, M6M M8 A280	
185	315229-0103	C		2	GASKETS, 23,1X30,1X3,7 MM 1" FDA	
190	342722-0203	-		2	STRAIGHT COUPLING	
200	315229-0104	C		1	GASKETS, 35,8X42,8X3,7 MM 1"1/2 FD	
210	315229-0105	C		9	GASKETS, 48,5X55,5X3,7 MM 2" FDA	
220	315229-0107	C		1	GASKETS, 61,2X68,2X3,7 MM 2"1/2 FD	
230	90330-0066	-		2	PLUG, EXT. G-THREAD, G1/8	

Pos	Part No	SP	UN	Qty	Description	Page No

Machine Type | Group Description | Used-In | Group Number | Page No

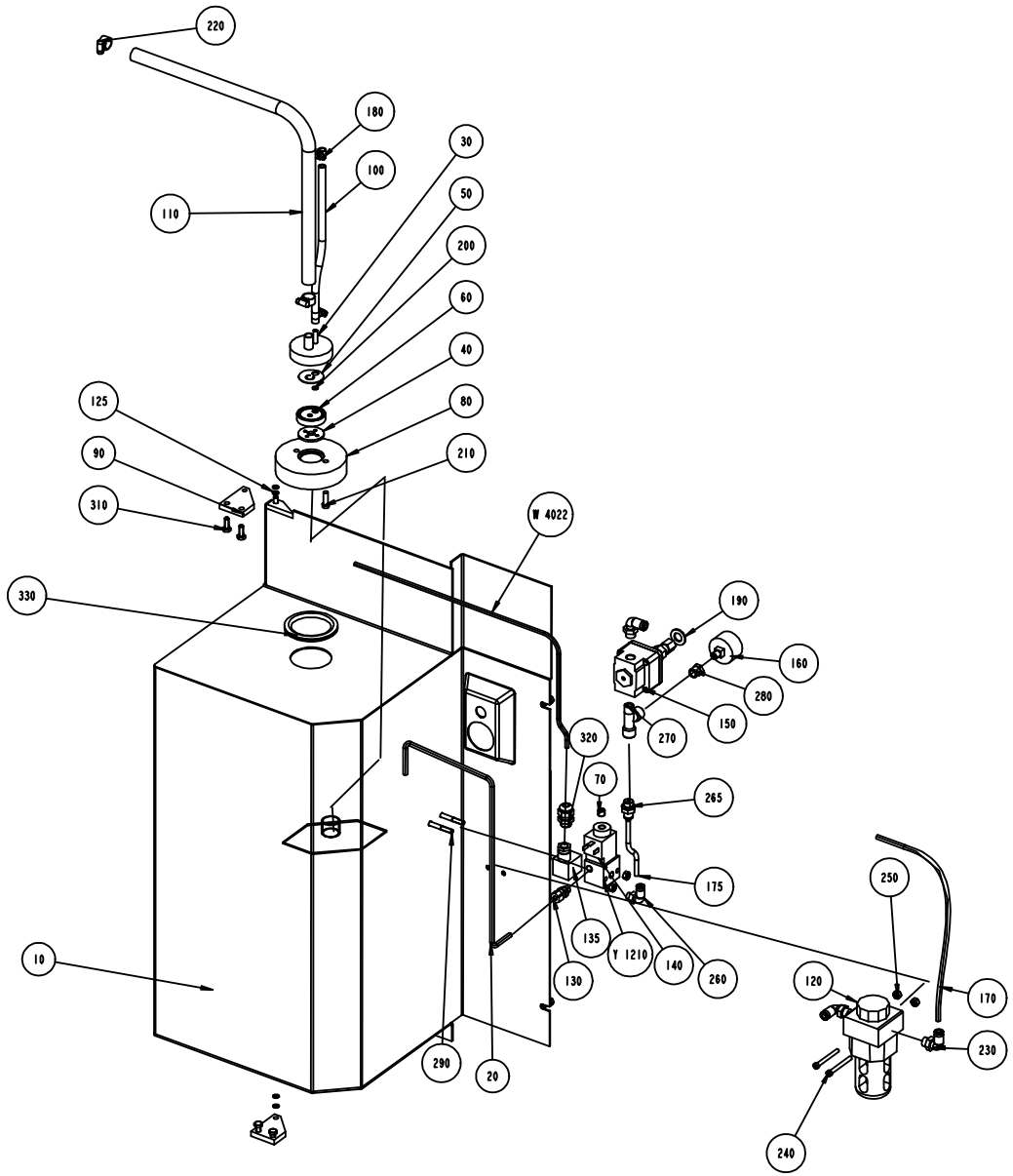
220
180
100
110
30
50
200
60
40
80
210
125
90
310
W 4022
330
190
160
280
150
270
320
70
265
175
250
135
Y 1210
140
260
130
10
120
170
230
290
20
240

ECM: 71742 - 19980903
Group number: 1095825-0100
Assembly Drawing: 1095825-1_1_AC

Issue: 20011217

Pos	Part No	SP	UN	Qty	Description	Page No
Common Parts						
010	1129329-0000	-		1	CABINET	
020	1038540-0000	-		1	PIPE	
030	1129328-0000	D		1	ATTACHMENT	
040	273981-0000	C		1	GASKET	
050	527912-0000	C		1	NON-RETURN VALVE	
060	530551-0000	D		1	WASHER	
070	563285-0000	-		1	BLIND PLUG	
080	1038541-0000	D		1	WEIGHT	
090	1129316-0000	-		2	BRACKET	
100	90166-0101	C	MM	250	HOSE, SILICONE, 60 SHORE, 6/10 MM	
110	90166-0161	C	MM	1500	HOSE	
120	B90277-0039	C		1	FILTER TYP LF -1/4-S-5M-B	
	90277-0346	*C*		*1*	*FILTER CARTRIDGE / LFP-1/4-S-5M*	
	90234-0328	*C*		*1*	*COVER*	
125	90005-0056	-		4	WASHER PL.RND.NYL.6/8,5,H=1	
130	90030-0184	-		1	CONN. STR. GA-6-G1/8	
135	90042-0398	C		1	CONTACT 3 POLE+EARTH	
140	90042-0487	C		1	COIL 24 VDC MECMAN	
150	90113-0056	C		1	REGULATOR	
160	90043-0021	D		1	PRESSURE GAUGE WIEGAND 0-1 BAR 1/8"	
170	90166-0081	C	MM	380	TUBE 6 MM PA BLUE	
175	90166-0081	C	MM	110	TUBE 6 MM PA BLUE	
180	90132-0021	-		2	HOSE CLIP 6-10MM	
190	315105-0178	-		1	WASHER PLAIN, BRB, 13/24,H=2	
200	315204-0103	C		1	O-RING 5,1X1,6 MM	
210	312125-0370	-		2	SCREW PAN HEAD MCS M6X20 SS	
220	342991-0101	-		2	HOSE CLIP,WORM DRIVE TYPE (13)-16	
230	342732-0103	-		3	ELBOW PIPE JOINT	
240	312125-0341	-		2	SCREW SLOT.PAN HD. MCS 5X50 A480	
250	312605-0316	-		4	HEXAGON NUT, M6M M6 A280	
260	342732-0102	-		1	ELBOW PIPE JOINT	
265	342722-0203	-		1	STRAIGHT COUPLING	
270	342245-0102	-		1	T-PIPE, INT. THREAD, R1/4XKR1/4	
280	342701-0201	-		1	BUSHING,INT./EXT.G-THREAD G1/4"-G1/8"	
290	312105-0378	-		2	SCREW M6S M6X40 A280	
310	312105-0368	-		6	SCREW M6S M6X16 A280	
320	352103-0101	-		1	CABLE GLAND ST 9;PR15,2/PG9	
330	90143-0060	-	MM	195	EDGE STRIP 9,5X6,3MM BLACK PVC	
W4022	351150-0403	-	M	3	CABLE OLFLEX 3X0,75 MM2 LIGHT/GREY	
Y1210	90042-0206	C		1	SOLENOID VALVE 444-111-000-1	

Pos	Part No	SP	UN	Qty	Description	Page No

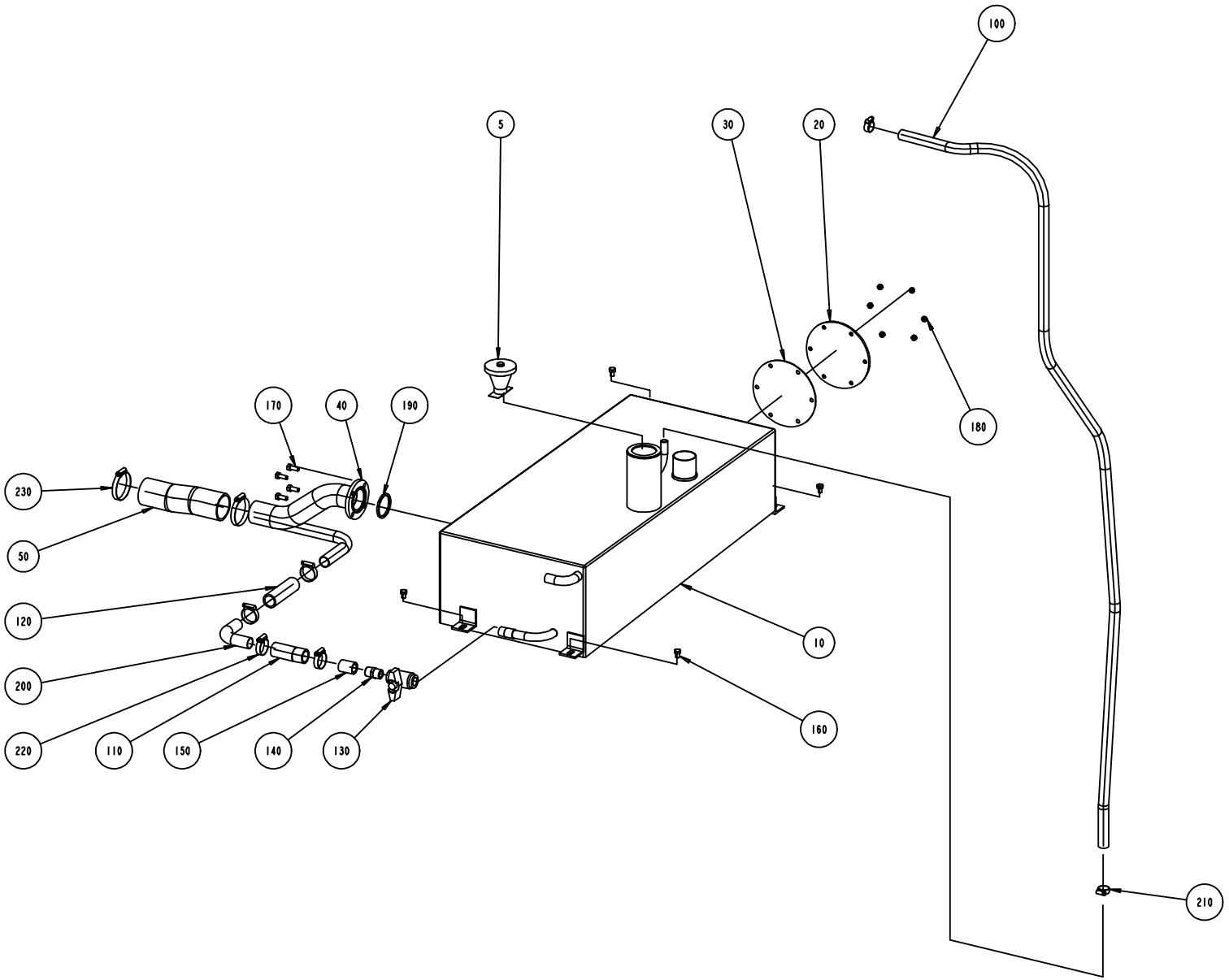
100
5
30
20
180
170
40
190
230
50
120
200
220
110
150
140
130
10
160
210

ECM: 71742 - 19980903
Group number: 1282896-0100
Assembly Drawing: 1282896-1_1_AA

Issue: 20011217

Pos	Part No	SP	UN	Qty	Description	Page No
Common Parts						
005	A566196-0100	-		1	LID WITH WEIGHT	**411**
010	1282892-0000	-		1	TANK	
020	1040807-0000	-		1	LID	
030	1040808-0000	C		1	GASKET	
040	1282893-0000	-		1	PIPE	
050	1282898-0000	C		1	HOSE	
100	90166-0087	C	MM	2500	HOSE 15/23 REINF.PVC TRANSP.	
110	90166-0158	C	MM	85	HOSE	
120	90166-0158	C	MM	105	HOSE	
130	90187-0059	-		1	BALL VALVE FOR HYDR.PER. G1/2 3MM HOLE	
140	90330-0021	-		1	NIPPLES, EXT. THREAD. R-207R1/2	
150	90330-0054	-		1	SLEEVE, INT. THREAD, NO. R-201R1/2	
160	312105-0447	-		4	SCREW M6S M8X12 A280	
170	312105-0451	-		4	SCREW M6S 8X20 A280	
180	312605-0316	-		6	HEXAGON NUT, M6M M6 A280	
190	315229-0105	C		1	GASKETS, 48,5X55,5X3,7 MM 2" FDA	
200	342844-0303	-		1	PIPE ELBOW 90 DEGR. D=25,4 MM PCS 3-A	
210	342991-0103	-		2	HOSE CLIP,WORM DRIVE TYPE (19)-23	
220	342991-0106	-		4	HOSE CLIP,WORM DRIVE TYPE (30)-36	
230	342991-0110	-		2	HOSE CLIP,WORM DRIVE TYPE (54)-63	

Pos	Part No	SP	UN	Qty	Description	Page No

Machine Type | Group Description | Used-In | Group Number | Page No

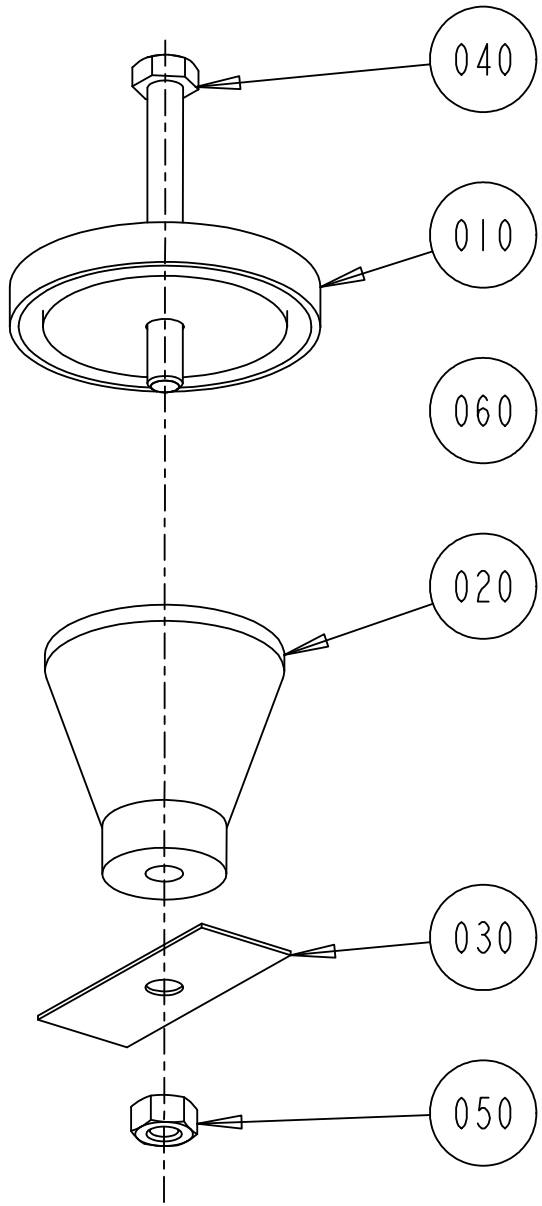
040
010
060
020
030
050

ECM: 72091 - 19981216
Group number: 566196-0100
Assembly Drawing: 566196-1_1_AA

Issue: 20011217

Pos	Part No	SP	UN	Qty	Description	Page No
Common Parts						
010	566195-0000	-		1	LID	
020	566194-0000	-		1	WEIGHT	
030	566171-0000	-		1	CUP SPRING	
040	312105-0466	-		1	SCREW M6S M8X75 A280	
050	312605-0318	-		1	HEXAGON NUT, M6M M8 A280	
060	90143-0020	-	MM	190	STRIP	
070	90153-0023	-		1	ADHESIVE	

Pos	Part No	SP	UN	Qty	Description	Page No

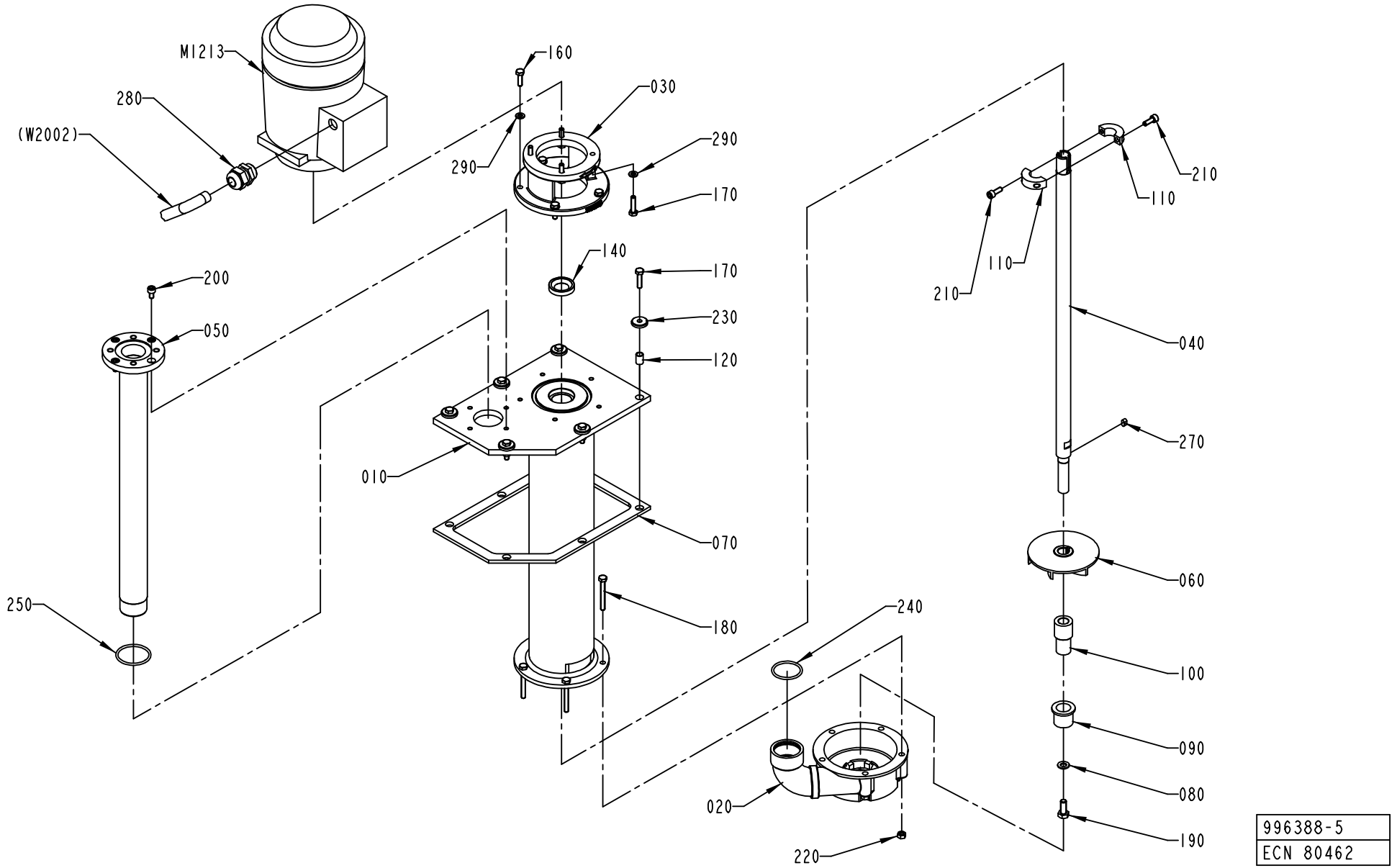

996388-5
ECN 80462

ECM: 81844 - 20000812
Group number: 996388-0400
Assembly Drawing: 996388-5_1_AA

Issue: 20011217

Pos	Part No	SP	UN	Qty	Description	Page No
Common Parts						
010	1255558-0000	-		1	EXTENSION PIPE	
020	1036755-0000	C		1	PUMP HOUSING	
030	751395-0000	-		1	FLANGE	
040	1040797-0000	C		1	SHAFT	
050	1040796-0000	-		1	PIPE	
060	491929-0000	C		1	IMPELLER WHEEL	
070	1255557-0000	C		1	GASKET	
080	315105-0165	-		1	WASHER PLAIN, BRB, 8,4/16,H=1,5	
090	1478171-0000	C		1	BUSHING	
100	1478048-0000	C		1	SLEEVE	
110	1282905-0000	D		2	CLAMP	
120	1041980-0000	C		6	SPACER	
140	90091-0412	C		1	VARILIP 20X35X7 MM	
160	312105-0370	-		5	SCREW M6S M6X20 A280	
170	312105-0372	-		10	SCREW M6S M6X25 A280	
180	312109-0380	-		5	SCREW M6S M6X50H A280	
190	312105-0451	-		1	SCREW M6S 8X20 A280	
200	312115-0364	-		4	SCREW HEX.SOCK.HD.MC6S-TT 6X10 A480	
210	312115-0368	-		2	SCREW MC6S M6X16 A280	
220	312605-0316	-		5	HEXAGON NUT, M6M M6 A280	
230	315125-0153	-		6	WASHER PLAIN ROUND,CHAMF. 6,4/22, H=4	
240	927422-0005	-		1	O-RING 36.2X3 SILICON	
250	927422-0006	-		1	O-RING 42.2X3 SILICON	
270	315705-0196	-		1	PARALLEL KEY W. ROUND ENDS 5X5X10 MM	
280	352103-0110	-		1	CABLE GLAND STR 16	
290	315105-0153	-		9	WASHER PLAIN, BRB, 6,4/12,H=1,5	
M 1213	90045-0087	D		1	MOTOR 3GAA 071002-CSA M2AA 71B	
W 2002	351150-0418	-	M	4	CABLE OLFLEX 4X2,5 MM2 LIGHT/GREY	

Pos	Part No	SP	UN	Qty	Description	Page No

Machine Type | Group Description | Used-In | Group Number | Page No

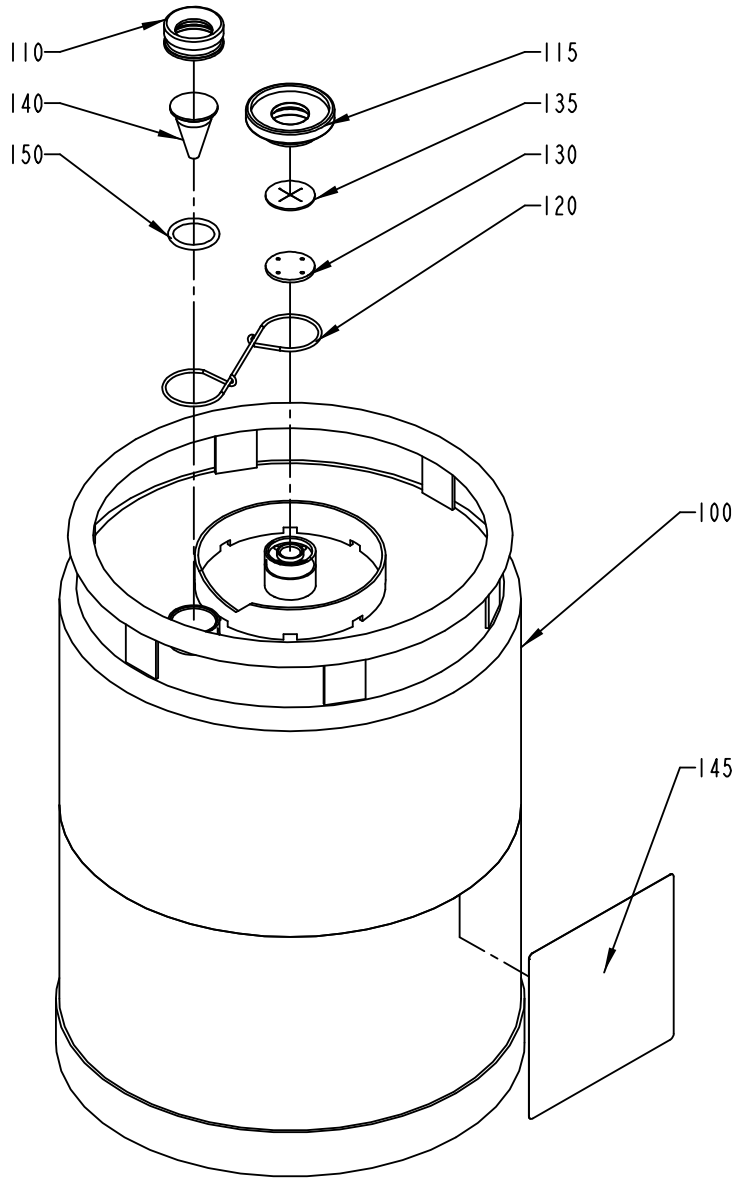

S-527898-I
ECN 72802

ECM: 82106 - 20000814
Group number: 527898-0100
Assembly Drawing: 527898-1_1_AB

Issue: 20011217

Pos	Part No	SP	UN	Qty	Description	Page No
Common Parts						
100	561427-0000	A		1	CONTAINER	
110	273977-0000	A		1	NUT	
115	273996-0000	A		1	NUT	
120	273980-0000	A		1	SPRING	
130	565250-0000	A		1	WASHER	
135	565251-0000	A		1	VALVE	
140	273978-0000	A		1	LEVEL GLASS	
145	532655-0000	B		1	CAUTION SIGN	
150	927422-0003	A		1	O.RING 24.2X3 SILICON	

Pos	Part No	SP	UN	Qty	Description	Page No

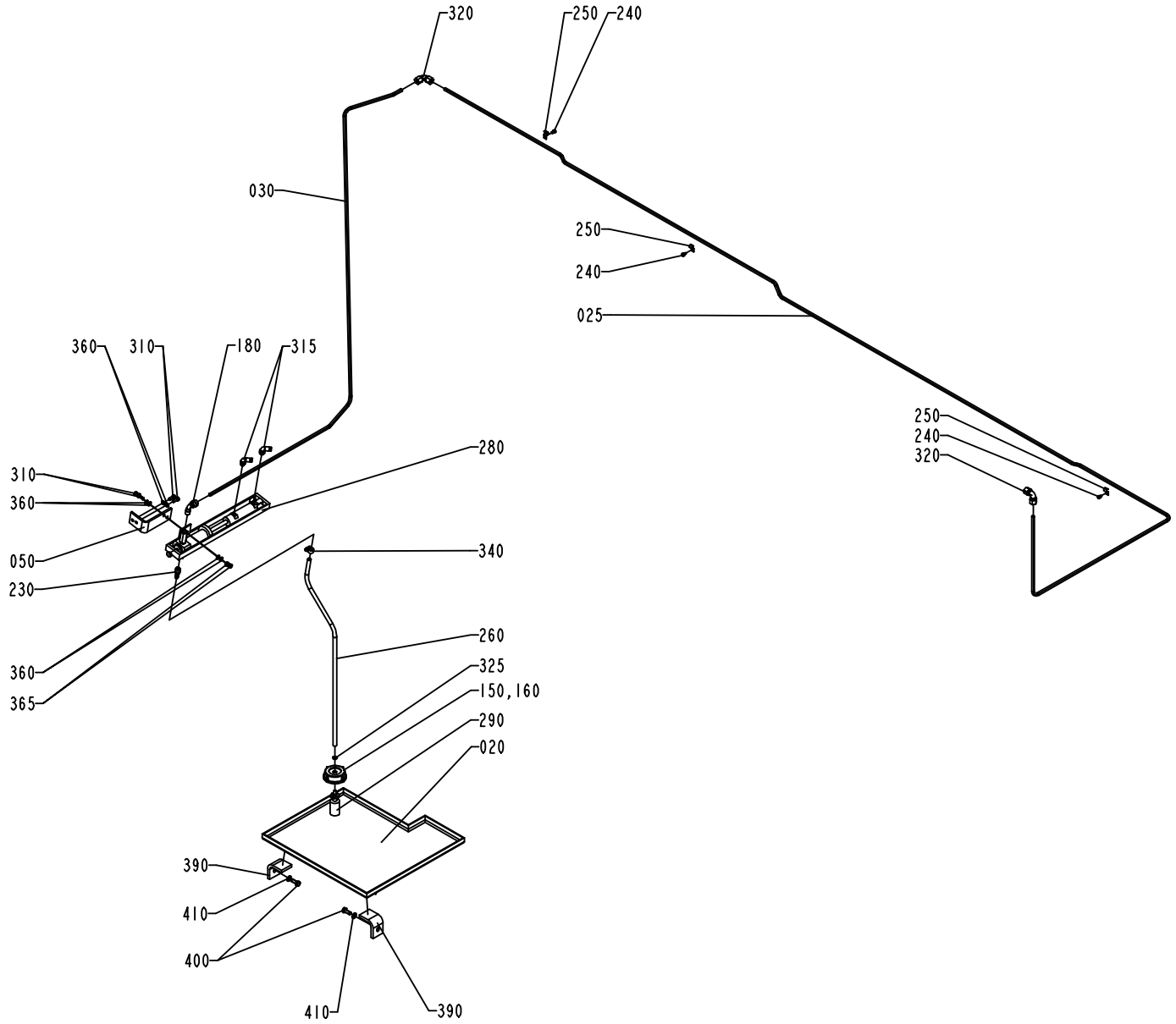
320
250
240
030
250
240
025
250
240
320
360
310
180
315
310
360
280
050
230
340
260
325
150,160
290
020
360
365
390
410
400
410
390

ECM: 70932 - 19971127
Group number: 1095794-0200
Assembly Drawing: 1095794-3_1_AB

Issue: 20011217

Pos	Part No	SP	UN	Qty	Description	Page No
Common Parts						
020	1038295-0000	-		1	SPLASH PLATE	
025	1140639-0000	-		1	PIPE	
030	1255432-0000	-		1	PIPE	
050	1334064-0000	-		1	BRACKET	
150	1129432-0000	-		1	LID	
160	1129433-0000	-		1	LID	
180	90030-0071	-		1	CONN. ELBOW WA 8-R1/4	
230	90055-0132	-		1	HOSE NIPPLE, EXT.THR. G1/4X7,8 MM	
240	312125-0323	-		3	SCREW PAN HEAD MCS M5X8 SS	
250	316810-0106	-		3	PIPE CLIP FOR TUBE D=8 MM	
260	90166-0008	-	MM	1000	HOSE 7/10 PVC TRANSP.	
280	90321-0128	-		1	CHEM. PUMP 081778	
290	90321-0396	C		1	FILTER	
310	312105-0368	-		4	SCREW M6S M6X16 A280	
315	342732-0102	-		2	ELBOW PIPE JOINT	
320	342737-0208	-		2	CONN. ELBOW W-8 LRFR	
325	315204-0207	-		1	O-RING 8,3X2,4 MM	
340	342991-0100	-		1	HOSE CLIP,WORM DRIVE TYPE 10-13	
360	315105-0153	-		6	WASHER PLAIN, BRB, 6,4/12,H=1,5	
365	312605-0316	-		2	HEXAGON NUT, M6M M6 A280	
390	1037539-0000	-		2	BRACKET	
400	312105-0451	-		2	SCREW M6S 8X20 A280	
410	315105-0165	-		2	WASHER PLAIN, BRB, 8,4/16,H=1,5	

Pos	Part No	SP	UN	Qty	Description	Page No

Machine Type | Group Description | Used-In | Group Number | Page No

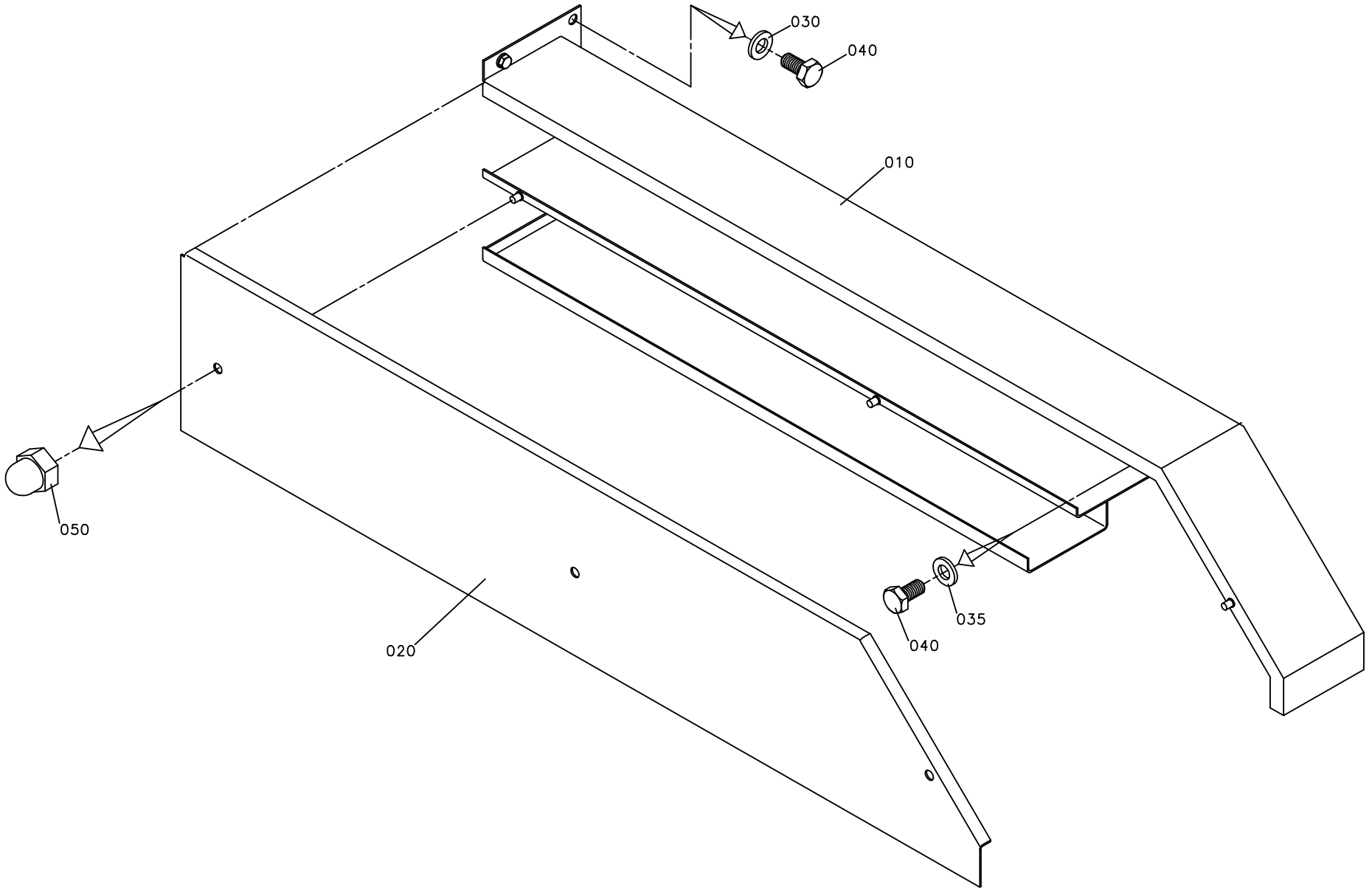
030
040
010
050
020
035
040

ECM: - -
Group number: 1095876-0100
Assembly Drawing: 1095876-1_1_AA

Issue: 20011217

Pos	Part No	SP	UN	Qty	Description	Page No
Common Parts						
010	1129443-0000	-		1	CABLE DUCT	
020	1129444-0000	-		1	LID	
030	315105-0153	-		4	WASHER PLAIN, BRB, 6,4/12,H=1,5	
035	315125-0153	-		1	WASHER PLAIN ROUND,CHAMF. 6,4/22, H=4	
040	312105-0366	-		5	SCREW M6S M6X12 A280	
050	312705-0316	-		3	NUT HEX. DOMED CAP MHM-6 M6 A280	

Pos	Part No	SP	UN	Qty	Description	Page No

Tetra Pak

SPC
Spare Parts Catalogue

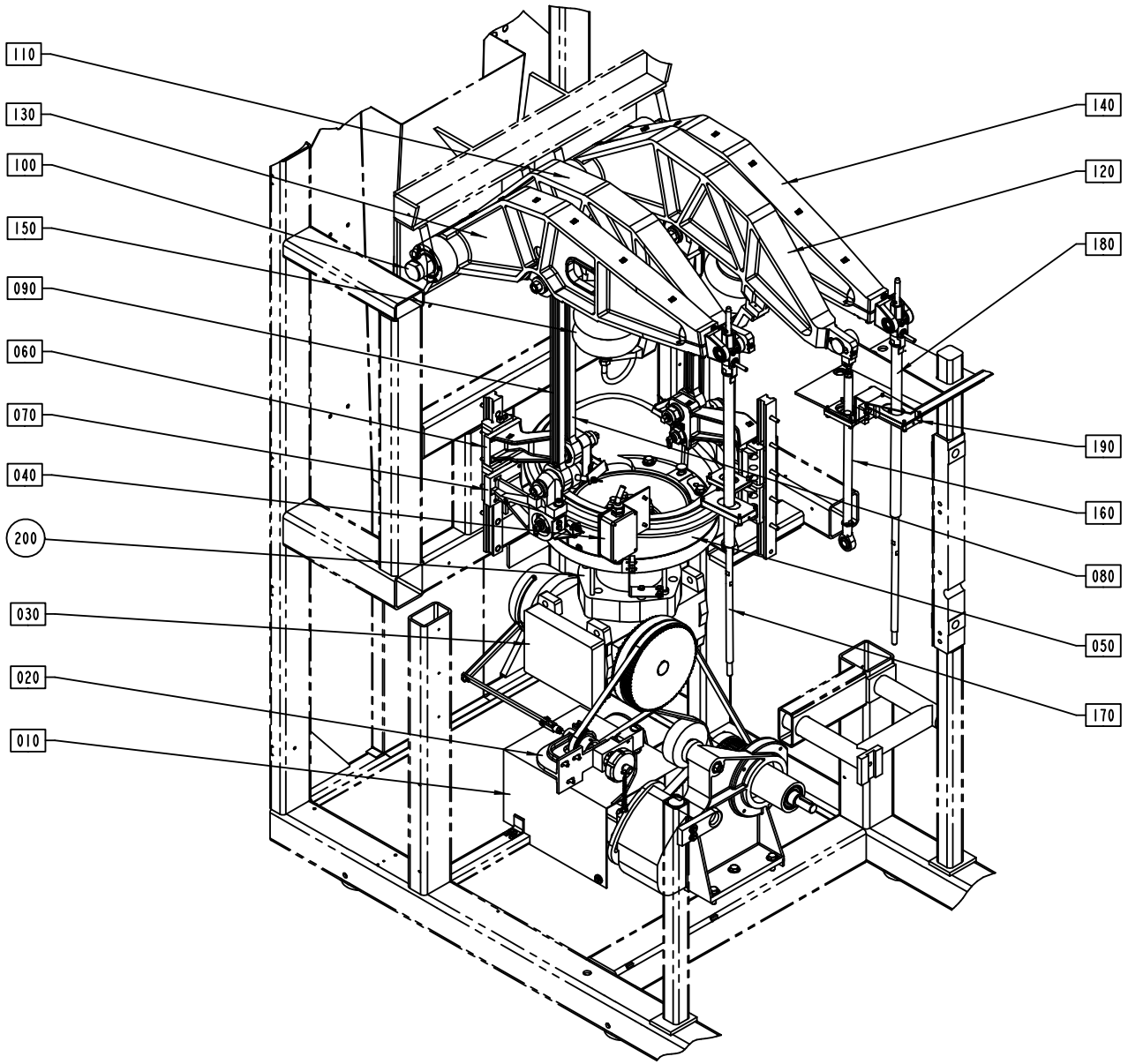

S-648503-5
ECN 72656

ECM: 73498 - 20001027
Group number: 648503-0500
Assembly Drawing: 648503-5_1_AA

Issue: 20011217

Pos	Part No	SP	UN	Qty	Description	Page No
Common Parts						
010	A1095684-0300	-		1	DRIVE UNIT	**425**
020	A1095700-0200	-		1	CRANK UNIT	**431**
030	A1095701-0300	-		1	WORM GEAR	**433**
040	A1095702-0100	-		1	CONNECTION BOX	**435**
050	A1095758-0300	-		1	CURVE	**437**
060	A1487187-0100	-		2	YOKE CARRIAGE	**439**
070	A1487188-0100	-		2	JAW CARRIAGE	**441**
080	A1487189-0200	-		2	YOKE CONNECTION ROD	**443**
090	A1487190-0200	-		2	JAW CONNECTION ROD	**445**
100	A1487191-0100	-		1	MAIN ARMS SHAFT	**447**
110	A1255569-0300	-		1	YOKE ARM LEFT	**449**
120	A996360-0500	-		1	YOKE ARM RIGHT	**451**
130	A1255570-0200	-		1	JAW ARM LEFT	**453**
140	A996361-0500	-		1	JAW ARM RIGHT	**455**
150	A1487192-0200	-		2	BELLOWS	**457**
160	A1035221-0300	-		2	YOKE LINK	**459**
170	A1035220-0400	-		1	JAW LINK LEFT	**461**
180	A1255561-0200	-		1	JAW LINK RIGHT	**463**
190	A1487301-0100	-		1	LINK SYSTEM GASKET	**465**
200	90298-0012	-		1	INHIBITOR	

Pos	Part No	SP	UN	Qty	Description	Page No

Machine Type	Group Description	Used-In	Group Number	Page No

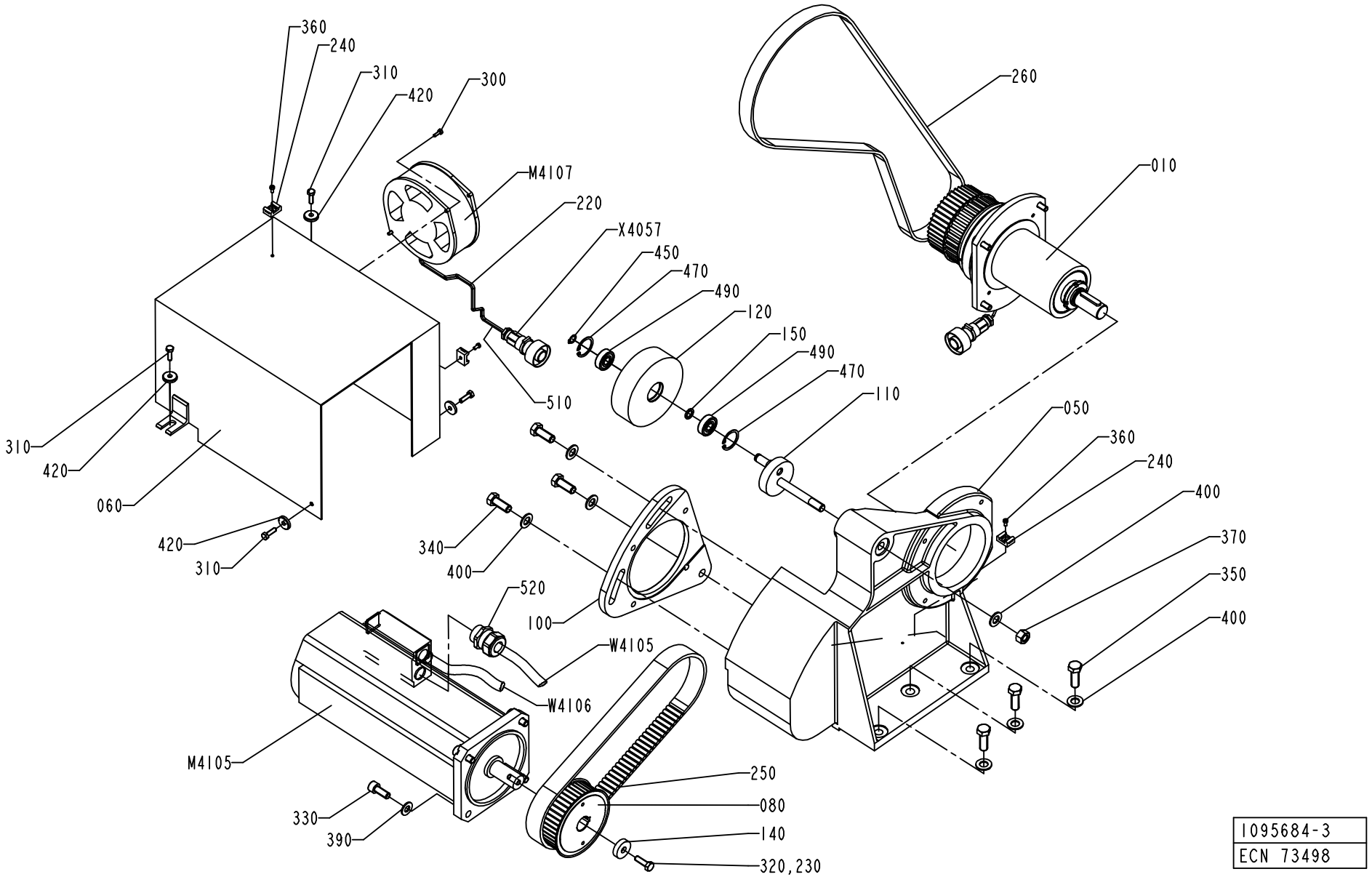

1095684-3
ECN 73498

ECM: 73498 - 20001027
Group number: 1095684-0300
Assembly Drawing: 1095684-3_1_AA

Issue: 20011217

Pos	Part No	SP	UN	Qty	Description	Page No
Common Parts						
010	A1095683-0400	-		1	CONNECTION	**427, 429**
050	1041804-0000	-		1	CANTILEVER	
060	1129085-0000	-		1	FAN CASING	
080	1523072-0000	A		1	TOOTHED PULLY	
100	1523071-0000	-		1	MOTOR PLATE	
110	1041975-0000	A		1	SHAFT	
120	1041976-0000	A		1	TENSION SPROCKET	
140	1523073-0000	-		1	SPACER	
150	1036014-0000	-		1	SPACER	
220	90166-0171	-	MM	300	SHRINKABLE HOSE BLACK	
230	90157-0016	-		1	LOCKING FLUID	
240	352113-0203	-		3	ANCHOR TM3S8-M0	
250	90457-0163	A		1	TIMING BELT GT2 880 8MR 30	
260	90417-0366	A		1	TIMING BELT AT10 1640X25 MM	
300	312101-0291	-		2	SCREW M6S M4X12 FZB	
310	312101-0370	-		4	SCREW M6S M6X20 FZB	
320	312101-0453	-		1	SCREW M6S M8X25 FZB	
330	312115-0493	-		4	SCREW MC6S M10X25 A280	
340	312101-0536	-		3	SCREW M6S M12X30 FZB	
350	312101-0538	-		3	SCREW M6S M12X35 FZB	
360	312125-0287	-		3	SCREW PAN HEAD MCS M4X8 SS	
370	312601-0322	-		1	NUT M6M 12-8 FZB	
390	315101-0173	-		4	WASHER PLAIN, BRB, 10,5/22 H=2	
400	315101-0178	-		7	WASHER PLAIN, BRB, 13/24 H=2	
420	315121-0153	-		4	WASHER PLAIN, TBRSB 6,4/22 H=4	
450	315750-0109	-		1	RETAIN. RING, 12	
470	315752-0123	-		2	RETAIN. RING, 32	
490	321313-0101	-		2	BALL BEARING, 2 SEALS, 12X32X10 MM	
510	351175-0102	-	M	1	CABLE AWM 1X 075 MM2 YELLOW-GREEN	
520	353245-0006	-		1	GLAND,EMC,EXTENDED W. INSERT PG21/PR28,3	
M 4105	90045-0195	A		1	SERVO MOTOR EP165180-66T3B	
M 4107	90264-0055	A		1	FAN / W25 130-AA 03-01	
X 4057	90110-0235	A		1	CABLE CONTACT, PX0739/S	

Pos	Part No	SP	UN	Qty	Description	Page No

Machine Type | Group Description | Used-In | Group Number | Page No

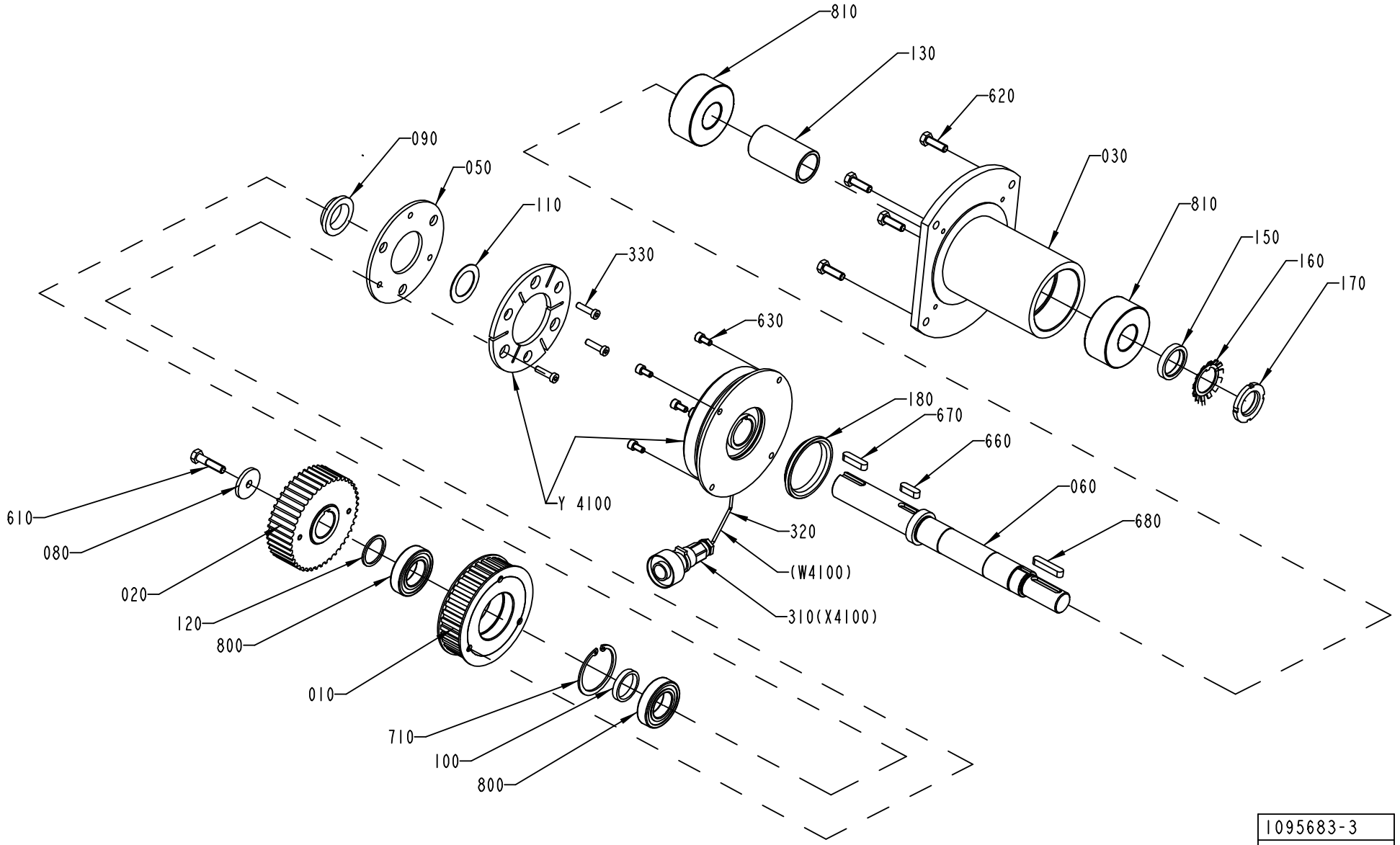

1095683-3
ECN 73498

Pos	Part No	SP	UN	Qty	Description	Page No
Common Parts						
010	1523074-0000	A		1	TOOTHED PULLY	
020	1519106-0000	A		1	TOOTHED PULLY	
030	1519103-0000	-		1	FASTENING PLATE	
050	1035921-0000	-		1	WASHER	
060	1519105-0000	A		1	SHAFT	
080	1035922-0000	-		1	WASHER	
090	1512125-0000	-		1	SPACER RING	
100	1035925-0000	-		1	SPACER RING	
110	1511690-0000	B		1	LACE	
120	1041956-0000	-		1	SPACER	
130	1523088-0000	-		1	SLEEVE	
150	1519104-0000	-		1	SPACER	
160	315410-0106	-		1	LOCK WASHER MB 6 D=30 H=1,25	
170	312805-0106	-		1	NUT ROUND WITH SLOTS M30X1,5 FE	
180	1519107-0000	-		1	SPACER RING	
310	90110-0235	A		1	CABLE CONTACT, PX0739/S	
320	90166-0171	-	MM	200	SHRINKABLE HOSE BLACK	
330	90287-0070	-		3	SCREW MLC6S M6X23	
610	312101-0457	-		1	SCREW M6S M8X35 FZB	
620	312101-0453	-		4	SCREW M6S M8X25 FZB	
630	312111-0366	-		4	SCREW HEX.SOCK.HD.MC6S-TT 6X12 88 FZB	
660	315701-0265	-		1	PARALLEL KEY W. ROUND ENDS 8X7X25 MM	
670	315701-0268	-		1	PARALLEL KEY W. ROUND ENDS 8X7X32 MM	
680	315701-0270	-		1	PARALLEL KEY W. ROUND ENDS 8X7X40 MM	
710	315752-0133	-		1	RETAINING RING FOR HOLE, 55X2 MM	
800	321308-0206	A		2	BALL BEARING, 2 SEALS, 30X55X13 MM	
810	90457-0165	A		2	ANG. BALL BEAR, 2 SEALS, 30X72X30,2 MM	
Y 4100	90355-0149	A		1	ELECTROMAGNETIC CLUTCH, 30 MM/24 VDC	

Pos	Part No	SP	UN	Qty	Description	Page No

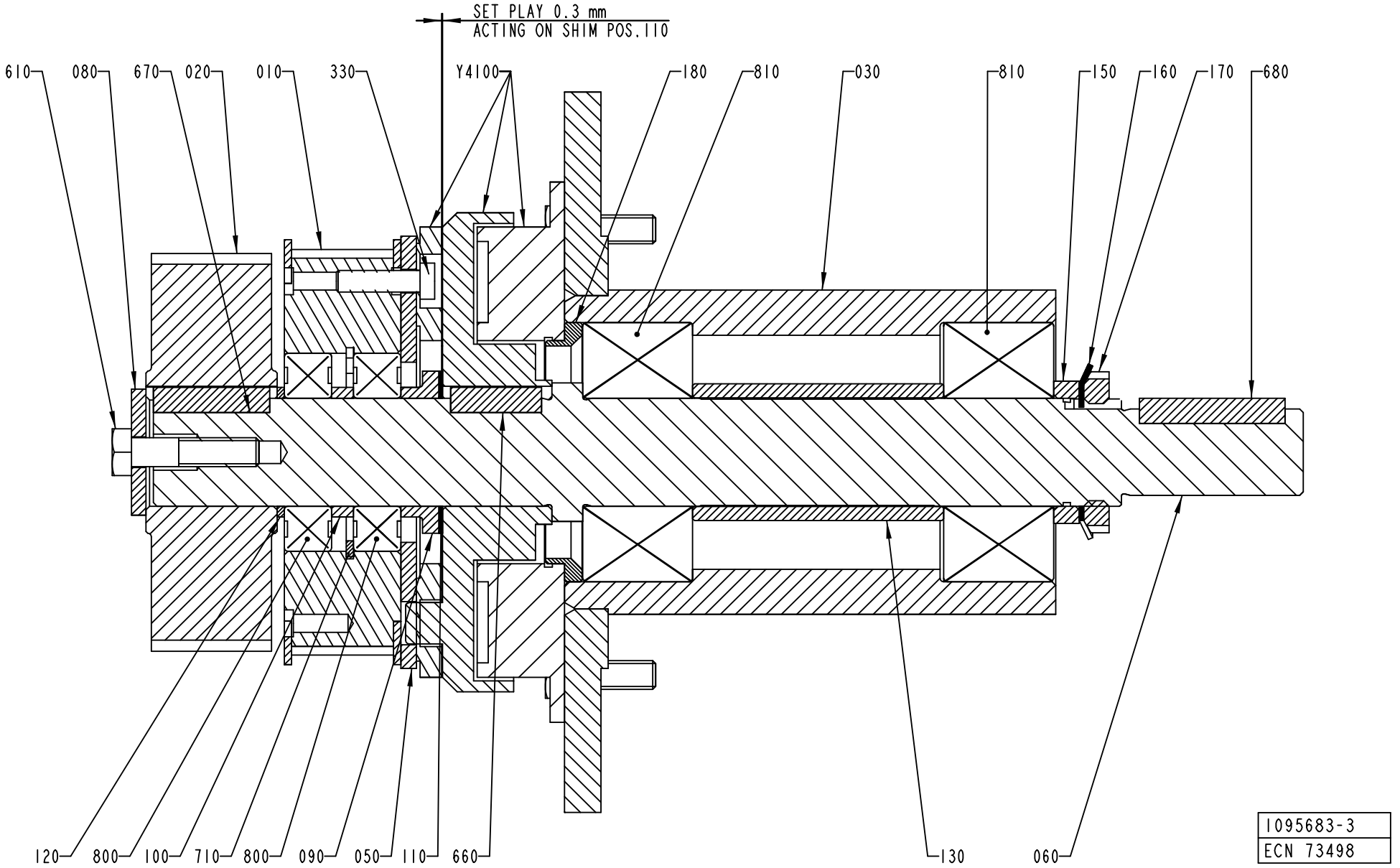
SET PLAY 0.3 mm
ACTING ON SHIM POS.110
610
080
670
020
010
330
Y4100
180
810
030
810
150
160
170
680
120
800
100
710
800
090
050
110
660
130
060
1095683-3
ECN 73498

Pos	Part No	SP	UN	Qty	Description	Page No
Common Parts						
010	1523074-0000	A		1	TOOTHED PULLY	
020	1519106-0000	A		1	TOOTHED PULLY	
030	1519103-0000	-		1	FASTENING PLATE	
050	1035921-0000	-		1	WASHER	
060	1519105-0000	A		1	SHAFT	
080	1035922-0000	-		1	WASHER	
090	1512125-0000	-		1	SPACER RING	
100	1035925-0000	-		1	SPACER RING	
110	1511690-0000	B		1	LACE	
120	1041956-0000	-		1	SPACER	
130	1523088-0000	-		1	SLEEVE	
150	1519104-0000	-		1	SPACER	
160	315410-0106	-		1	LOCK WASHER MB 6 D=30 H=1,25	
170	312805-0106	-		1	NUT ROUND WITH SLOTS M30X1,5 FE	
180	1519107-0000	-		1	SPACER RING	
310	90110-0235	A		1	CABLE CONTACT, PX0739/S	
320	90166-0171	-	MM	200	SHRINKABLE HOSE BLACK	
330	90287-0070	-		3	SCREW MLC6S M6X23	
610	312101-0457	-		1	SCREW M6S M8X35 FZB	
620	312101-0453	-		4	SCREW M6S M8X25 FZB	
630	312111-0366	-		4	SCREW HEX.SOCK.HD.MC6S-TT 6X12 88 FZB	
660	315701-0265	-		1	PARALLEL KEY W. ROUND ENDS 8X7X25 MM	
670	315701-0268	-		1	PARALLEL KEY W. ROUND ENDS 8X7X32 MM	
680	315701-0270	-		1	PARALLEL KEY W. ROUND ENDS 8X7X40 MM	
710	315752-0133	-		1	RETAINING RING FOR HOLE, 55X2 MM	
800	321308-0206	A		2	BALL BEARING, 2 SEALS, 30X55X13 MM	
810	90457-0165	A		2	ANG. BALL BEAR, 2 SEALS, 30X72X30,2 MM	
Y 4100	90355-0149	A		1	ELECTROMAGNETIC CLUTCH, 30 MM/24 VDC	

Pos	Part No	SP	UN	Qty	Description	Page No

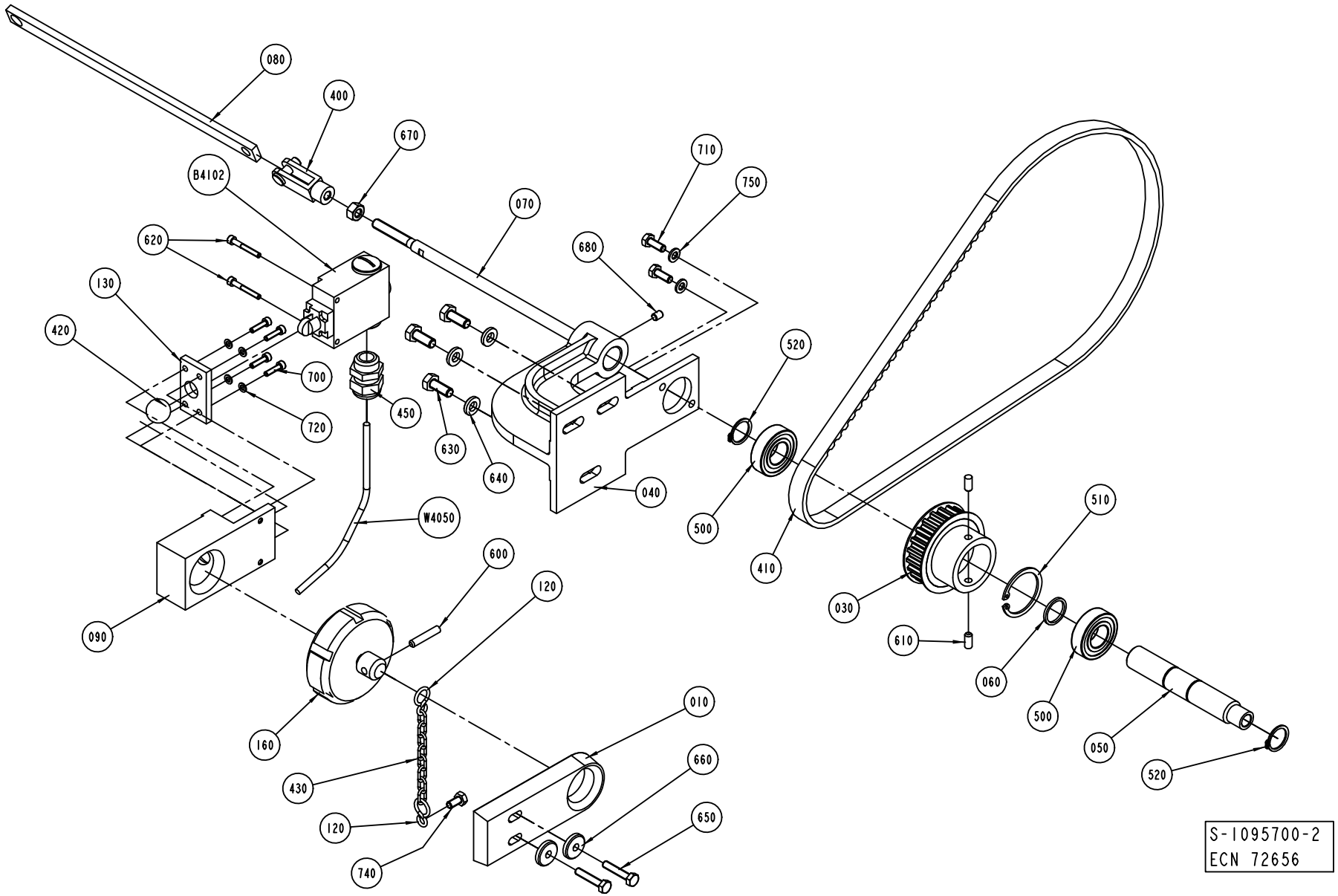
080
400
670
B4102
070
710
750
620
680
130
420
700
720
450
630
640
040
520
500
410
W4050
600
120
090
160
430
120
740
010
660
650
030
610
510
060
500
050
520
S-1095700-2
ECN 72656

ECM: 73031 - 20000211
Group number: 1095700-0200
Assembly Drawing: 1095700-2_1_AC

Issue: 20011217

Pos	Part No	SP	UN	Qty	Description	Page No
Common Parts						
010	1129010-0000	-		1	HOLDER	
030	1129018-0000	D		1	TOOTHED PULLY	
040	1255428-0000	-		1	BRACKET	
050	1129017-0000	-		1	SHAFT	
060	1129015-0000	-		1	SPACER RING	
070	1129012-0000	-		1	PIN	
080	1140083-0000	-		1	ADAPTER	
090	1255429-0000	-		1	HOLDER	
120	209183-0000	-		2	RING	
130	1129258-0000	-		1	HOLDER	
160	1255507-0000	-		1	LID	
400	90254-0010	-		1	LINK	
410	90417-0367	C		1	TIMING BELT AT10 1050X16 MM	
420	90090-0012	D		1	BALL, D=12 MM	
430	90155-0008	-	MM	130	HANGER CHAIN, 18	
450	352103-0108	-		1	CABLE GLAND ST 13	
500	321308-0204	-		2	BALL BEARING, 2 SEALS, 20X42X12 MM	
510	90141-0020	-		1	RETAIN. RING, 42	
520	315751-0116	-		2	RETAIN. RING, 20	
600	311103-0358	-		1	PIN,STRIGHT M6 6X32 RFR	
610	311103-0350	-		2	PARALLELL PIN, CP, M6, 6X14 MM	
620	312115-0299	-		2	SCREW MC6S M4X30 A280	
630	312105-0451	-		3	SCREW M6S 8X20 A280	
640	315115-0165	-		3	WASHER PLAIN, TBRB 8,4/16 H=3	
650	312109-0374	-		2	SCREW M6S M6X30 A280	
660	315125-0153	-		2	WASHER PLAIN ROUND,CHAMF. 6,4/22, H=4	
670	312605-0318	-		1	HEXAGON NUT, M6M M8 A280	
680	312318-0362	-		1	SCREW SOCK.SET CUP P MSK6SS M6X8 A4	
700	312115-0293	-		4	SCREW MC6S M4X16 A280	
710	312105-0368	-		2	SCREW M6S M6X16 A280	
720	315105-0136	-		4	WASHER PLAIN, BRB, 4,3/8,H=0,8	
740	312105-0366	-		1	SCREW M6S M6X12 A280	
750	315105-0153	-		2	WASHER PLAIN, BRB, 6,4/12,H=1,5	
B 4102	90044-0170	C		1	LIMIT SW. GLEB01C	
W 4050	351150-0405	-	M	3	CABLE OLFLEX 5X0,75 MM2 LIGHT/GREY	

Pos	Part No	SP	UN	Qty	Description	Page No

Machine Type | Group Description | Used-In | Group Number | Page No

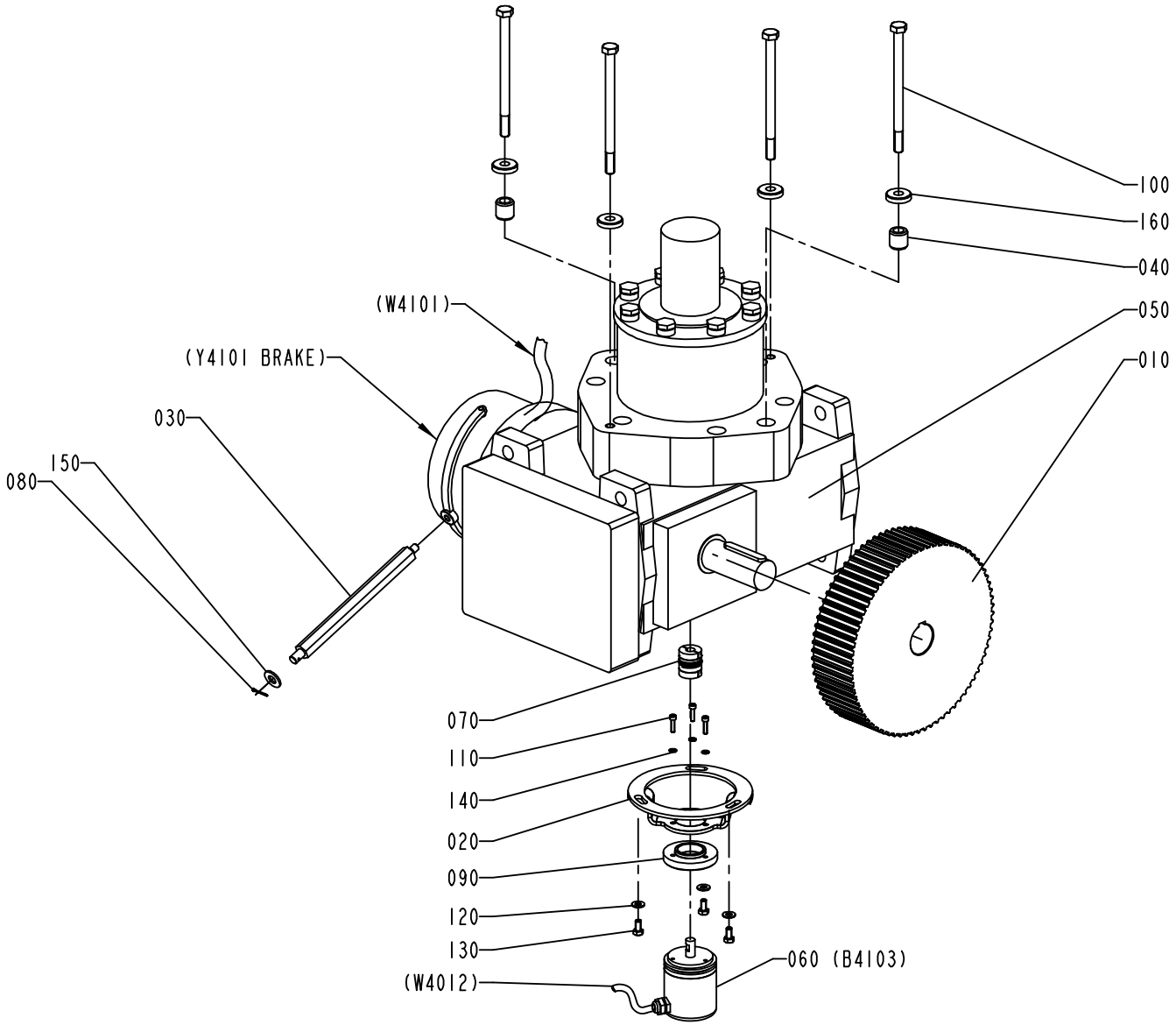

1095701-3
ECN 73498

Pos	Part No	SP	UN	Qty	Description	Page No
Common Parts						
010	1129170-0000	A		1	TOOTHED PULLY	
020	1519099-0000	-		1	BRACKET	
030	1140090-0000	-		1	PIN	
040	1129183-0000	-		2	SLEEVE	
050	B90056-0136	A		1	WORM GEAR BS 112	
	90056-0520	*-*		*1*	*DUST COVER*	
	90432-0021	*-*		*1*	*SPRING LOADED BRAKE, 24 VDC*	
060	90061-0018	A		1	ANGLE ENC 8BIT GRAY (REPL BY 90061-27)	
070	90457-0173	A		1	TORQUE RIGID COUPLING, 10X10 MM	
080	311401-0166	-		1	SPLIT PIN SP2,5X18FZB	
090	1523085-0000	-		1	SPACER	
100	312105-0519	-		4	SCREW M6S M10X150 A280	
110	312115-0293	-		3	SCREW MC6S M4X16 A280	
120	315125-0153	-		3	WASHER PLAIN ROUND,CHAMF. 6,4/22, H=4	
130	312105-0366	-		3	SCREW M6S M6X12 A280	
140	315105-0136	-		3	WASHER PLAIN, BRB, 4,3/8,H=0,8	
150	315105-0173	-		1	WASHER PLAIN, BRB, 10,5/22,H=2	
160	315125-0173	-		4	WASHER PLAIN ROUND,CHAMF. 10,5/28,H=6	

Pos	Part No	SP	UN	Qty	Description	Page No

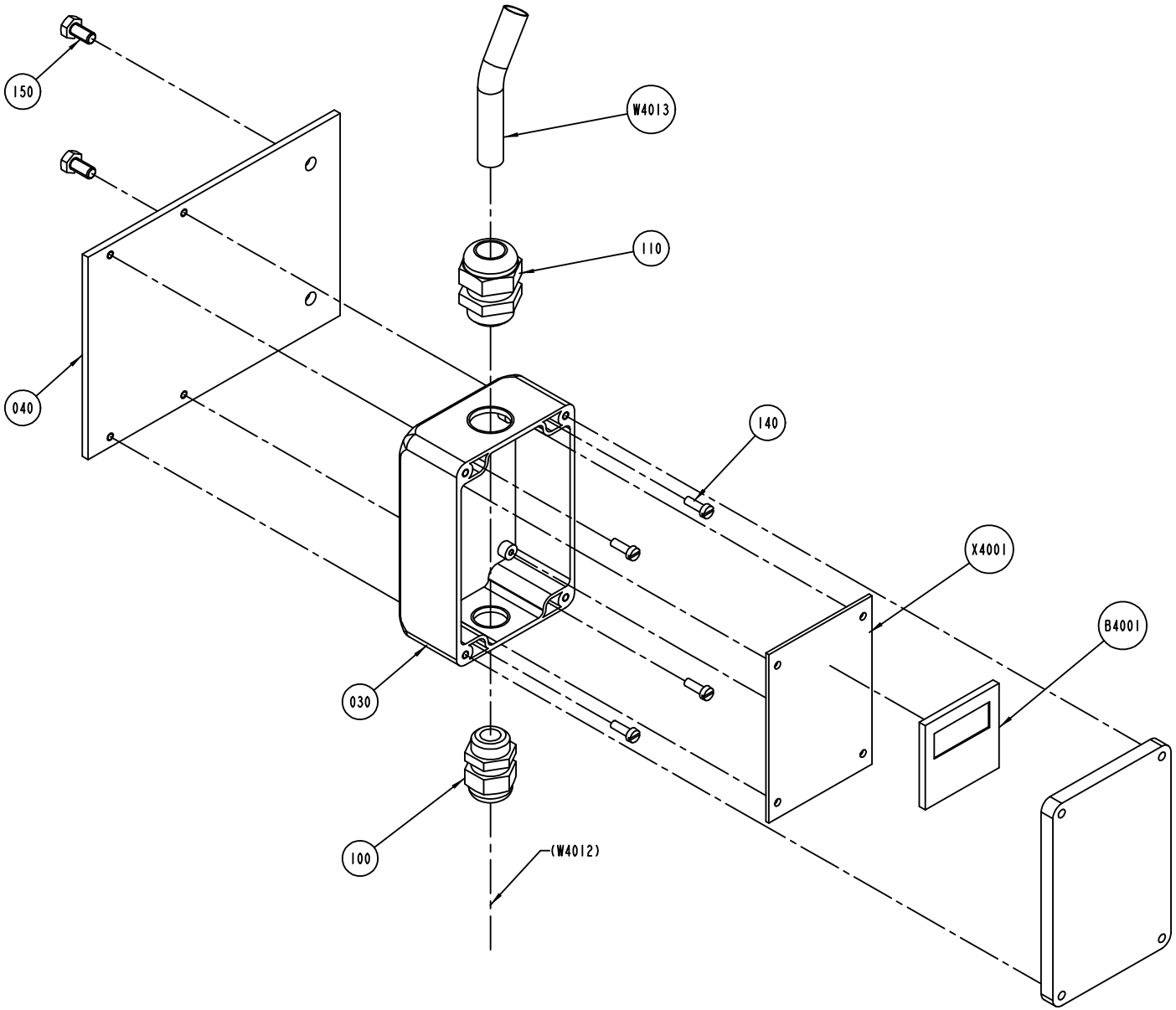

S-1095702-I
ECN 72656

ECM: 73031 - 20000211
Group number: 1095702-0100
Assembly Drawing: 1095702-1_1_AC

Issue: 20011217

Pos	Part No	SP	UN	Qty	Description	Page No
Common Parts						
030	751631-0000	-		1	CONNECTION BOX	
040	1129219-0000	-		1	BRACKET	
100	352103-0106	-		1	CABLE GLAND ST 11	
110	352103-0111	-		1	CABLE GLAND ST 16	
140	312125-0291	-		4	SCREW PAN HEAD MCS M4X12 SS	
150	312105-0366	-		2	SCREW M6S M6X12 A280	
B4001	B1347050-0101	D		1	ANGLE ENCODER DISPLAY	
100	*1347049-0000*	*-*		*1*	*PRINTED CIRCUIT BOARD*	
W 4013	351150-0407	-	MM	2500	CABLE OLFLEX 12X0,75 MM2 LIGHT/GREY	
X 4001	451423-0000	C		1	CIRCUIT BOARD	

Pos	Part No	SP	UN	Qty	Description	Page No

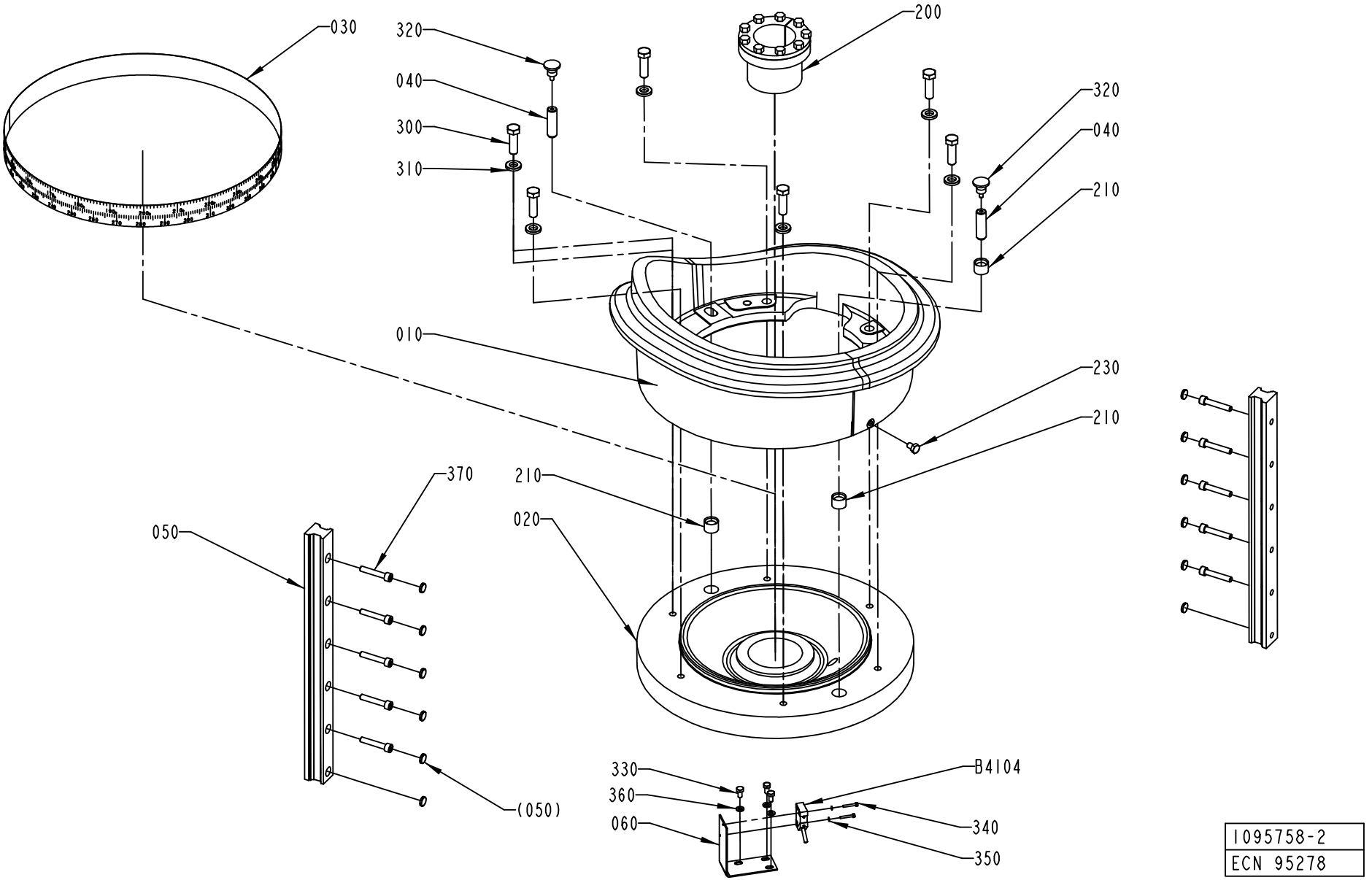

1095758-2
ECN 95278

ECM: 95364 - 50001231
Group number: 1095758-0300
Assembly Drawing: 1095758-2_1_AB

Issue: 20011217

Pos	Part No	SP	UN	Qty	Description	Page No
TBA 0200B						
010	1349965-0000	A		1	CURVE	
TBA 0200S						
010	1349963-0000	A		1	CURVE	
TBA 0250B						
010	1519991-0000	A		1	CURVE	
TBA 0500B						
010	1539866-0000	A		1	CURVE	
TBA 0500S						
010	1511068-0000	A		1	CURVE	
TBA 1000B						
010	1255175-0000	A		1	CURVE	
TBA 1000S						
010	1260689-0000	A		1	CURVE	
TBA 1000SQ						
010	1487620-0000	A		1	CURVE	
TBA 1500S						
010	1348092-0000	A		1	CURVE	
TPA 0330SQ						
010	1538646-0000	A		1	CURVE	
TPA 1000S						
010	1519091-0000	A		1	MAIN CAM	
Common Parts						
020	1041907-0000	-		1	PLATE (CIRCULAR)	
030	1346392-0000	-		1	DIAL	
040	1036062-0000	-		2	GUIDE PIN	
050	1041928-0000	-		2	RAIL	
060	1129261-0000	-		1	BRACKET	
200	90208-0114	A		1	CONE CLAMP. ELEMENT 65/84, L=55	
210	90240-0282	A		3	BUSHING 15X22X16 MM	
230	312105-0447	-		1	SCREW M6S M8X12 A280	
300	312101-0540	-		6	SCREW M6S M12X40 FZB	
310	315111-0178	-		6	WASHER PLAIN, TBRB 13/24 H=4	
320	318871-0104	-		2	KNOB CIRCULAR, EXT THREAD, NO. 8302-6118	
330	312105-0366	-		3	SCREW M6S M6X12 A280	
340	312115-0230	-		2	SCREW MC6S M3X20 A280	
350	315105-0124	-		2	WASHER PLAIN, BRB, 3,2/6,H=0,5	
360	315105-0153	-		3	WASHER PLAIN, BRB, 6,4/12,H=1,5	
370	312115-0460	-		10	SCREW MC6S M8X45 A280	
400	92296-0002	-		1	LUBRICANT	
B4104	90044-0194	A		1	PROX.SW. IN5329/IN3002-BPKG	

Machine Type | Group Description | Used-In | Group Number | Page No

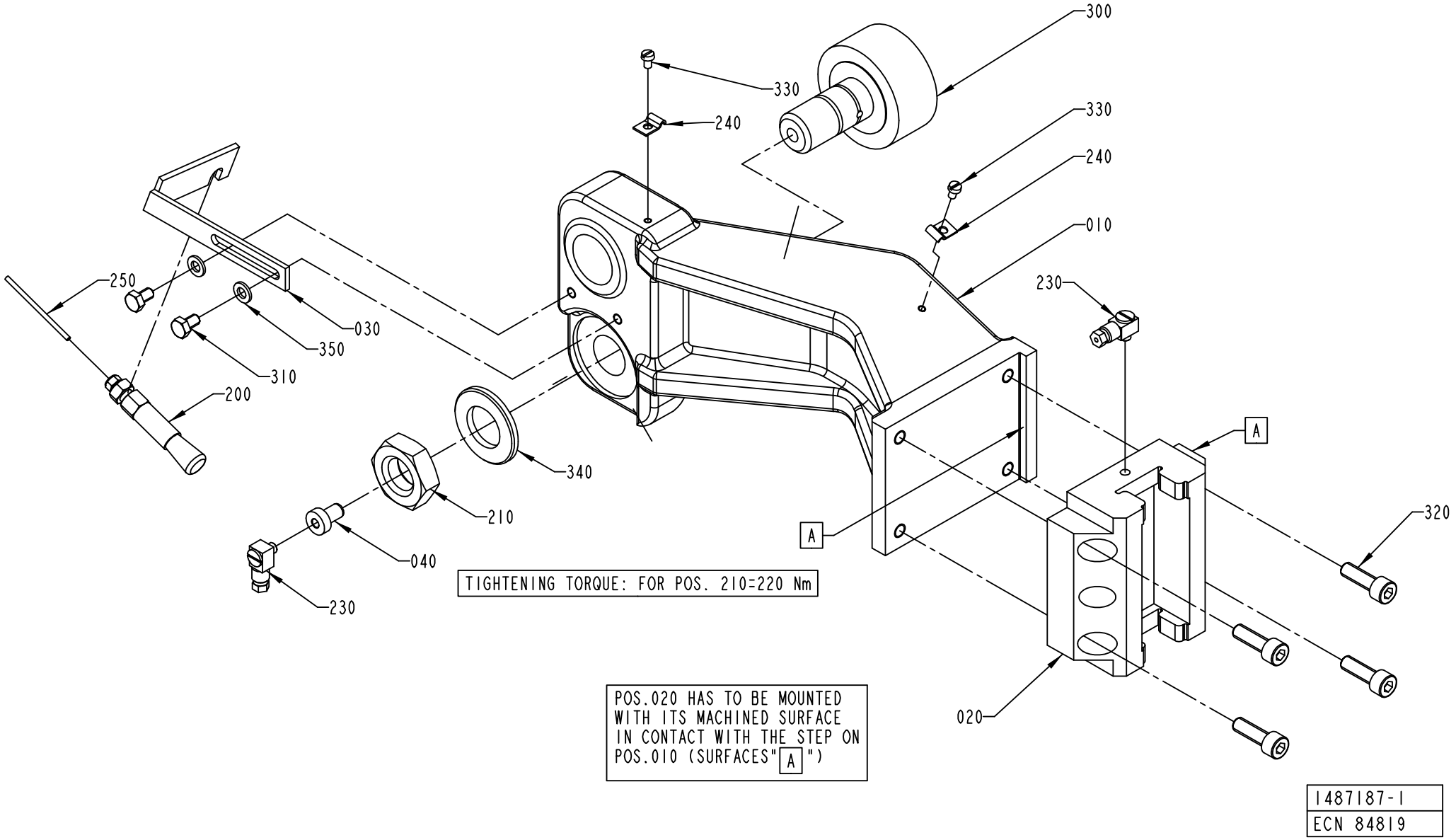
300
330
240
330
240
010
230
250
030
350
310
200
340
210
040
230
A
A
320
020
TIGHTENING TORQUE: FOR POS. 210=220 Nm
POS.020 HAS TO BE MOUNTED WITH ITS MACHINED SURFACE IN CONTACT WITH THE STEP ON POS.010 (SURFACES"A")
1487187-1
ECN 84819

ECM: 84825 - 20010718
Group number: 1487187-0100
Assembly Drawing: 1487187-1_1_AB

Issue: 20011217

Pos	Part No	SP	UN	Qty	Description	Page No
Common Parts						
010	1539987-0000	A		1	YOKE	
020	90363-0051	C		1	CARRIAGE, 1651-314-10	
030	1036944-0000	-		1	HOLDER	
040	1349157-0000	-		1	CONNECTION	
200	90092-0082	C		1	OIL BRUSH FOR D=2,5 MM TUBE & D=10 BRUSH	
210	90099-0076	-		1	NUT HEX. M24X1,5, FE	
230	90134-0058	-		2	CONNECTION	
240	90165-0058	-		2	PIPE CLIP FOR TUBE D=25 MM	
250	90166-0143	-	MM	1500	TUBE 2,5 MM PA,TRANSP.	
300	321582-0290	C		1	CAM ROLLER, 2 SEALS, 24X62X80 MM	
310	312105-0364	-		2	SCREW M6S M6X10 A280	
320	312115-0453	-		4	SCREW MC6S M8X25 A280	
330	312125-0285	-		2	SCREW SLOT.PAN HD. MCS 4X6 A480	
340	315102-0198	-		1	WASHER PLAIN, BRFB 25/45 H=4	
350	315105-0153	-		2	WASHER PLAIN, BRB, 6,4/12,H=1,5	

Pos	Part No	SP	UN	Qty	Description	Page No

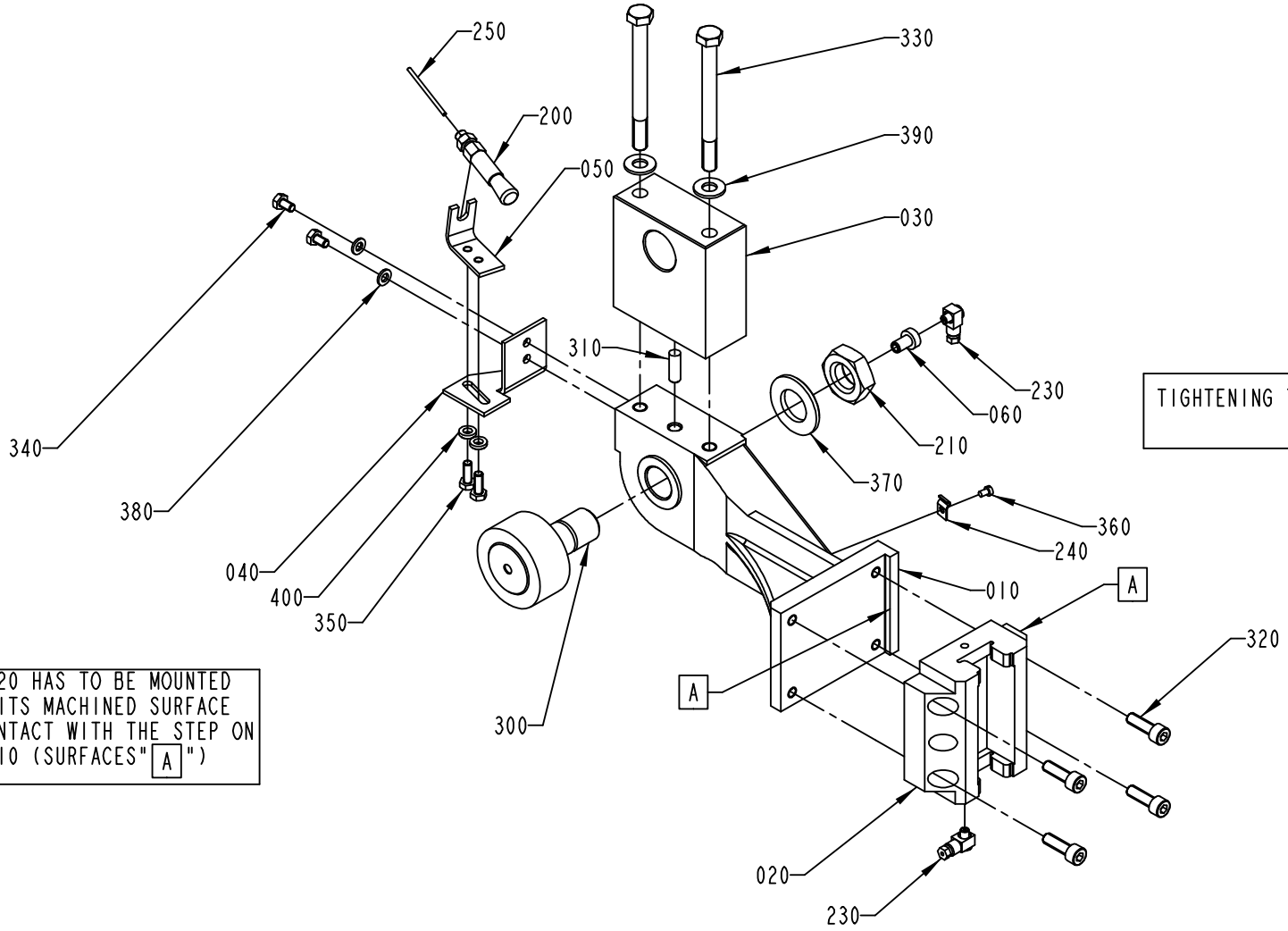

TIGHTENING TORQUE: FOR POS. 210=220 Nm
FOR POS. 330= 40 Nm

POS.020 HAS TO BE MOUNTED WITH ITS MACHINED SURFACE IN CONTACT WITH THE STEP ON POS.010 (SURFACES"A")

1487188-1
ECN 84819

ECM: 84826 - 20010718
Group number: 1487188-0100
Assembly Drawing: 1487188-1_1_AB

Issue: 20011217

Pos	Part No	SP	UN	Qty	Description	Page No
Common Parts						
010	1548157-0000	A		1	CARRIAGE	
020	90363-0051	C		1	CARRIAGE, 1651-314-10	
030	1539767-0000	A		1	YOKE	
040	1487225-0000	-		1	BRACKET	
050	1036686-0000	-		1	HOLDER	
060	1349157-0000	-		1	CONNECTION	
200	90092-0082	C		1	OIL BRUSH FOR D=2,5 MM TUBE & D=10 BRUSH	
210	90099-0076	-		1	NUT HEX. M24X1,5, FE	
230	90134-0058	-		2	CONNECTION	
240	90165-0058	-		1	PIPE CLIP FOR TUBE D=25 MM	
250	90166-0143	-	MM	1500	TUBE 2,5 MM PA,TRANSP.	
300	321582-0290	C		1	CAM ROLLER, 2 SEALS, 24X62X80 MM	
310	311103-0403	-		1	PARALLELL PIN, M6, 8X25 MM	
320	312115-0453	-		4	SCREW MC6S M8X25 A280	
330	312105-0513	-		2	SCREW M6S M10X110 A280	
340	312105-0364	-		2	SCREW M6S M6X10 A280	
350	312105-0368	-		2	SCREW M6S M6X16 A280	
360	312125-0285	-		1	SCREW SLOT.PAN HD. MCS 4X6 A480	
370	315102-0198	-		1	WASHER PLAIN, BRFB 25/45 H=4	
380	315105-0153	-		2	WASHER PLAIN, BRB, 6,4/12,H=1,5	
390	315105-0173	-		2	WASHER PLAIN, BRB, 10,5/22,H=2	
400	315115-0153	-		2	WASHER PLAIN, TBRB 6,4/12 H=3	

Pos	Part No	SP	UN	Qty	Description	Page No

YOKE CONNECTION ROD

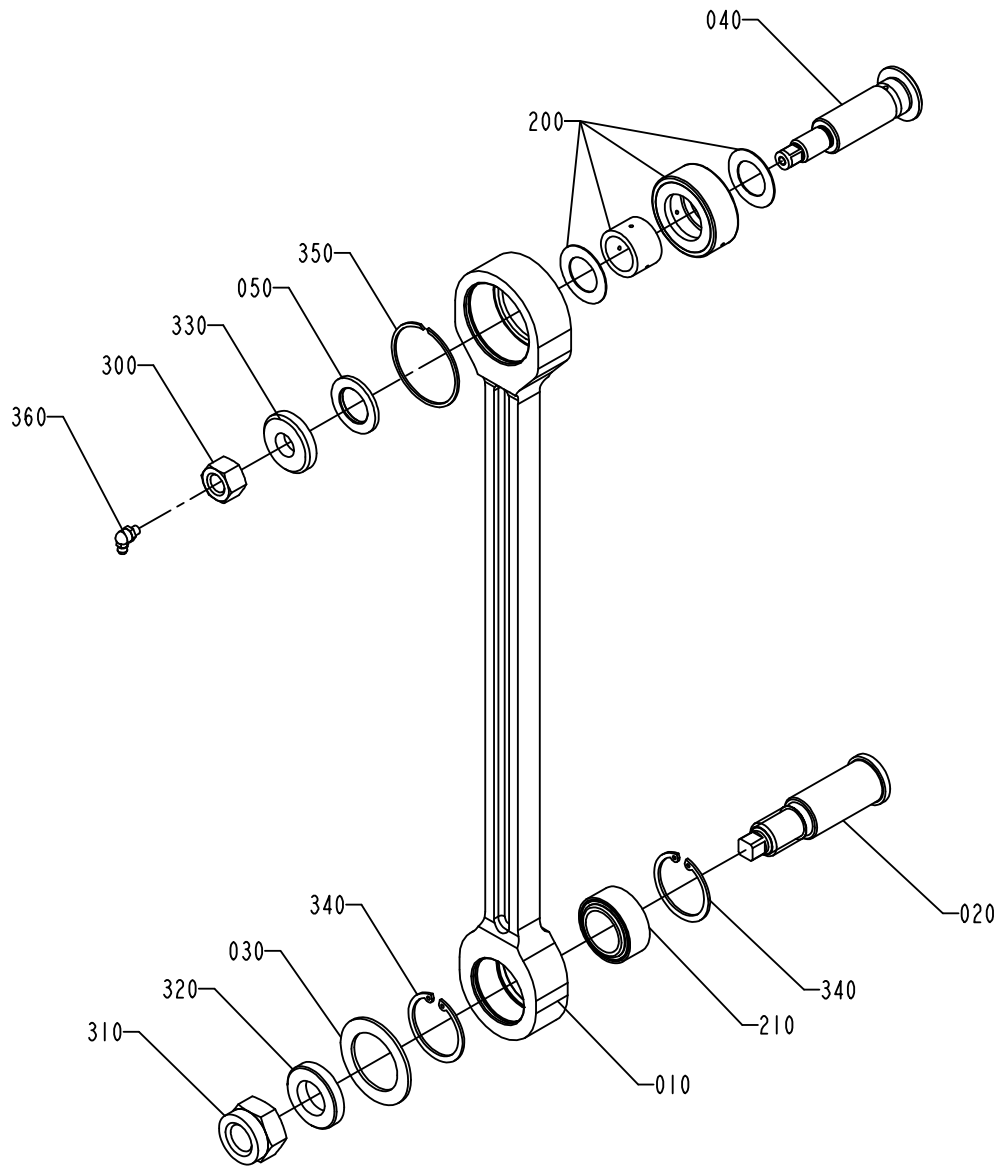

1487189-2
ECN 73498

ECM: 99173 - 50001231
Group number: 1487189-0200
Assembly Drawing: 1487189-2_1_AA

Issue: 20011217

Pos	Part No	SP	UN	Qty	Description	Page No
Common Parts						
010	1523070-0000	A		1	LINK	
020	1035967-0000	A		1	SHAFT	
030	1035982-0000	B		1	WASHER	
040	1519109-0000	A		1	SHAFT	
050	1519108-0000	-		1	RING	
200	90457-0164	A		1	SPHER. ROLLER BEARING 25X58X22 MM	
210	90240-0280	A		1	PLAIN BEAR,SELF ADJ.SPHER. 30X47X22 MM	
300	312601-0324	-		1	NUT M6M 16-8 FZB	
310	312812-0328	-		1	HEXAGON NUT, NY-LOCK M24 SS	
320	315111-0198	-		1	WASHER PLAIN, TBRB 25/45 H=8	
330	315121-0186	-		1	WASHER PLAIN, TBRSB 17/42 H=8	
340	315753-0130	-		2	RETAINING RING FOR HOLE, 47X1,75 MM	
350	315760-0158	-		1	LOCKING CIBR58	
360	344502-0061	-		1	GREASE NIPPLE 90 DEG ANGLE M6	

Pos	Part No	SP	UN	Qty	Description	Page No

JAW CONNECTION ROD

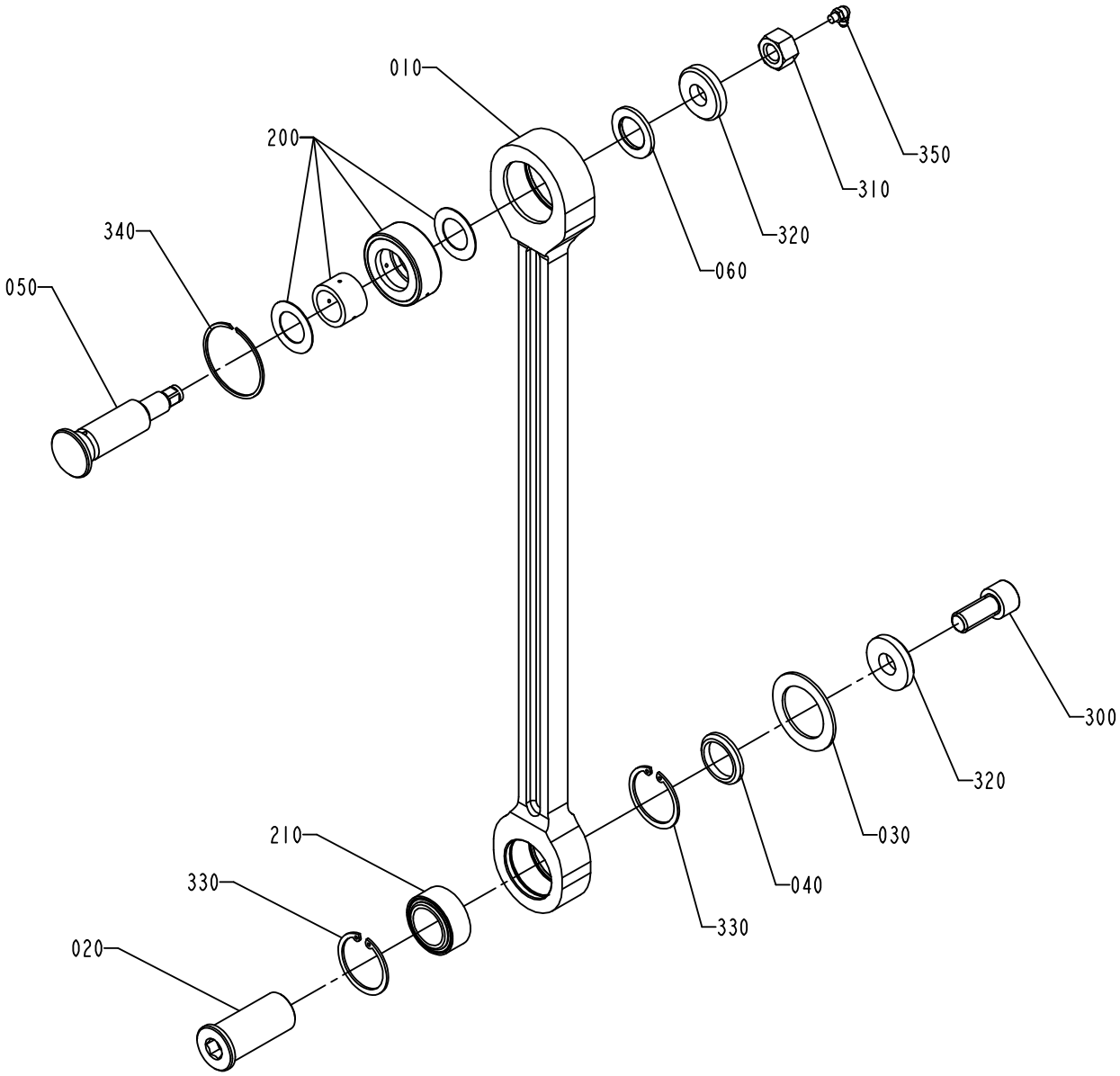

1487190-2
ECN 73498

ECM: 99175 - 50001231
Group number: 1487190-0200
Assembly Drawing: 1487190-2_1_AA

Issue: 20011217

Pos	Part No	SP	UN	Qty	Description	Page No
Common Parts						
010	1519110-0000	A		1	LINK	
020	1037845-0000	A		1	SHAFT	
030	1035982-0000	B		1	WASHER	
040	1037843-0000	A		1	RING	
050	1519109-0000	A		1	SHAFT	
060	1519108-0000	-		1	RING	
200	90457-0164	A		1	SPHER. ROLLER BEARING 25X58X22 MM	
210	90240-0280	A		1	PLAIN BEAR,SELF ADJ.SPHER. 30X47X22 MM	
300	312115-0626	-		1	SCREW MC6S M16X35 A280	
310	312601-0324	-		1	NUT M6M 16-8 FZB	
320	315121-0186	-		2	WASHER PLAIN, TBRSB 17/42 H=8	
330	315753-0130	-		2	RETAINING RING FOR HOLE, 47X1,75 MM	
340	315760-0158	-		1	LOCKING CIBR58	
350	344502-0061	-		1	GREASE NIPPLE 90 DEG ANGLE M6	

Pos	Part No	SP	UN	Qty	Description	Page No

MAIN ARMS SHAFT

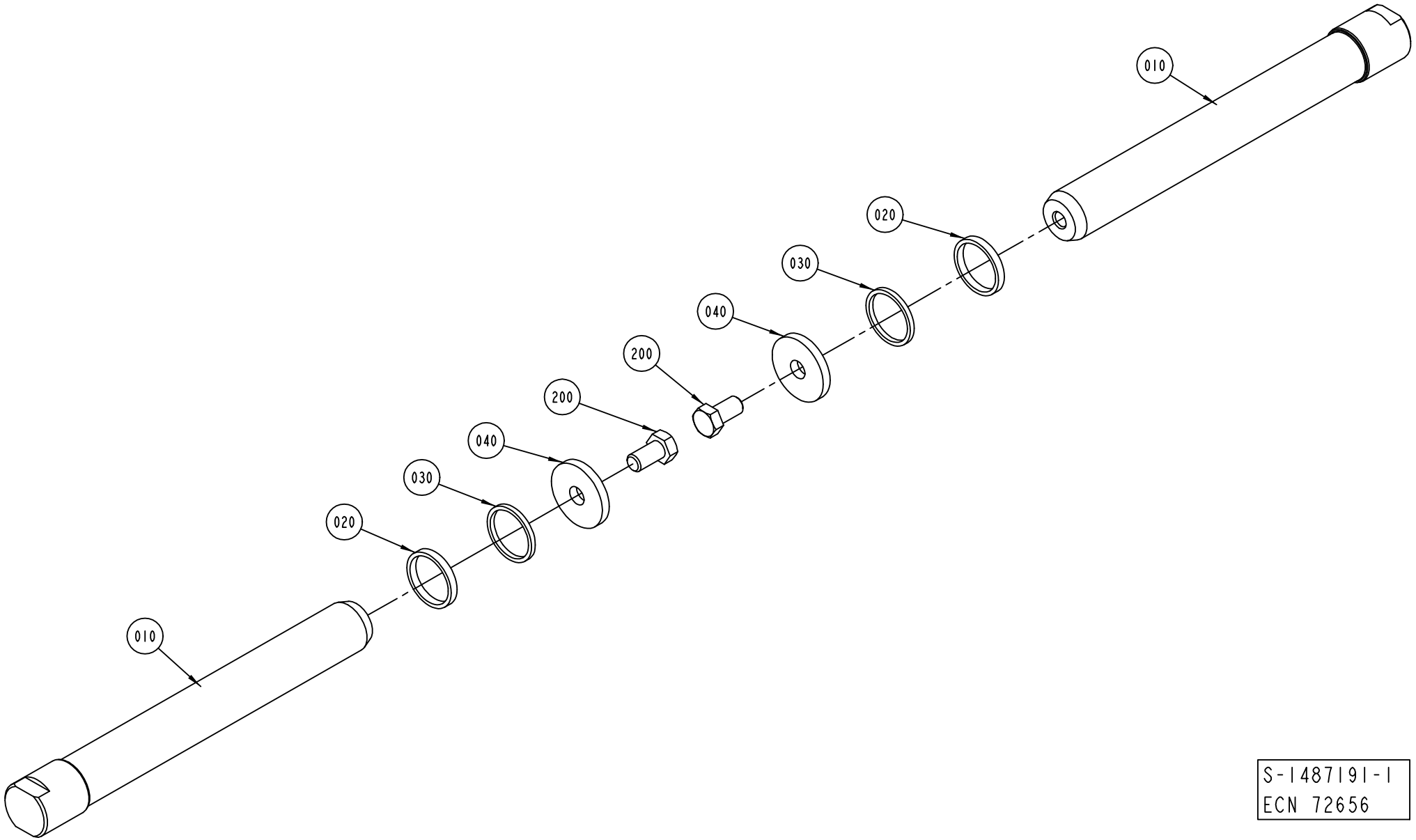

S-1487191-1
ECN 72656

ECM: 72124 - 19990322
Group number: 1487191-0100
Assembly Drawing: 1487191-1_1_AA

Issue: 20011217

Pos	Part No	SP	UN	Qty	Description	Page No
Common Parts						
010	1038441-0000	-		2	SHAFT	
020	1037893-0000	-		2	SPACER	
030	1038436-0000	-		2	SPACER	
040	1035990-0000	-		2	WASHER	
200	312101-0624	-		2	SCREW M6S M16X30 FZB	

Pos	Part No	SP	UN	Qty	Description	Page No

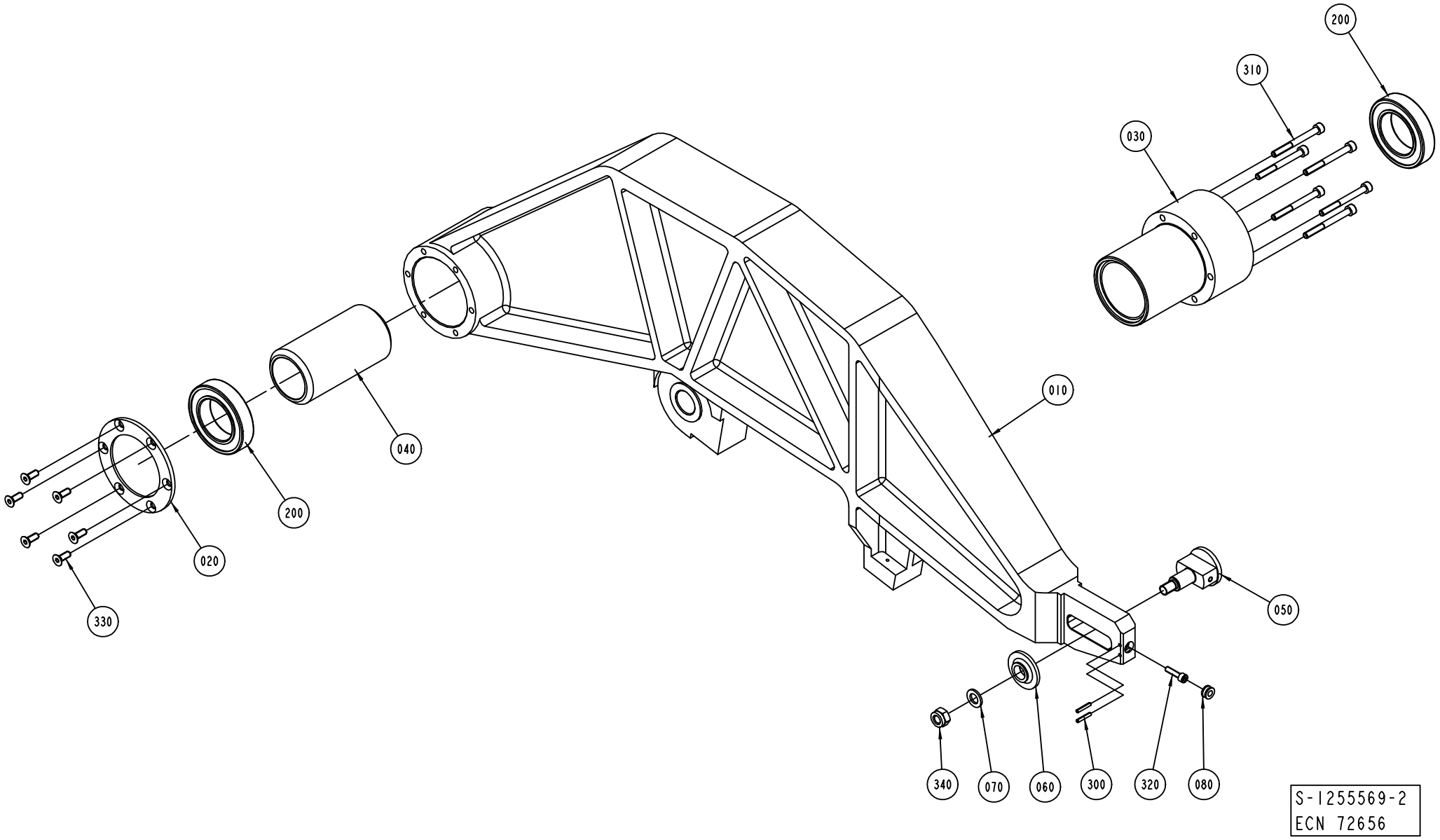
200
310
030
010
040
200
020
330
050
340
070
060
300
320
080
S-1255569-2
ECN 72656

ECM: 72124 - 19990322
Group number: 1255569-0300
Assembly Drawing: 1255569-2_1_AA

Issue: 20011217

Pos	Part No	SP	UN	Qty	Description	Page No
Common Parts						
010	1041915-0000	D		1	ARM	
020	1038439-0000	-		1	LID	
030	1041942-0000	-		1	SPACER	
040	1038467-0000	-		1	SPACER	
050	1038493-0000	-		1	AXLE PIN	
060	1038496-0000	-		1	WASHER	
070	1038495-0000	-		1	WASHER	
080	1038494-0000	D		1	PLUG	
200	90214-0192	C		2	BALL BEARING SOLID OIL 45X75X16 MM	
300	311112-0209	-		2	PIN, STRAIGHT SLOTTED SPRING FRP 3X18	
310	312111-0382	-		6	SCREW HEX.SOCK.HD.MC6S-TT 6X60 88 FZB	
320	312115-0331	-		1	SCREW MC6S M5X20 A280	
330	312151-0368	-		6	SCREW HEX.SOCK.COUNT.MF6S 6X16 FZB	
340	312812-0320	-		1	HEXAGON NUT, NY-LOCK M10 A480	

Pos	Part No	SP	UN	Qty	Description	Page No

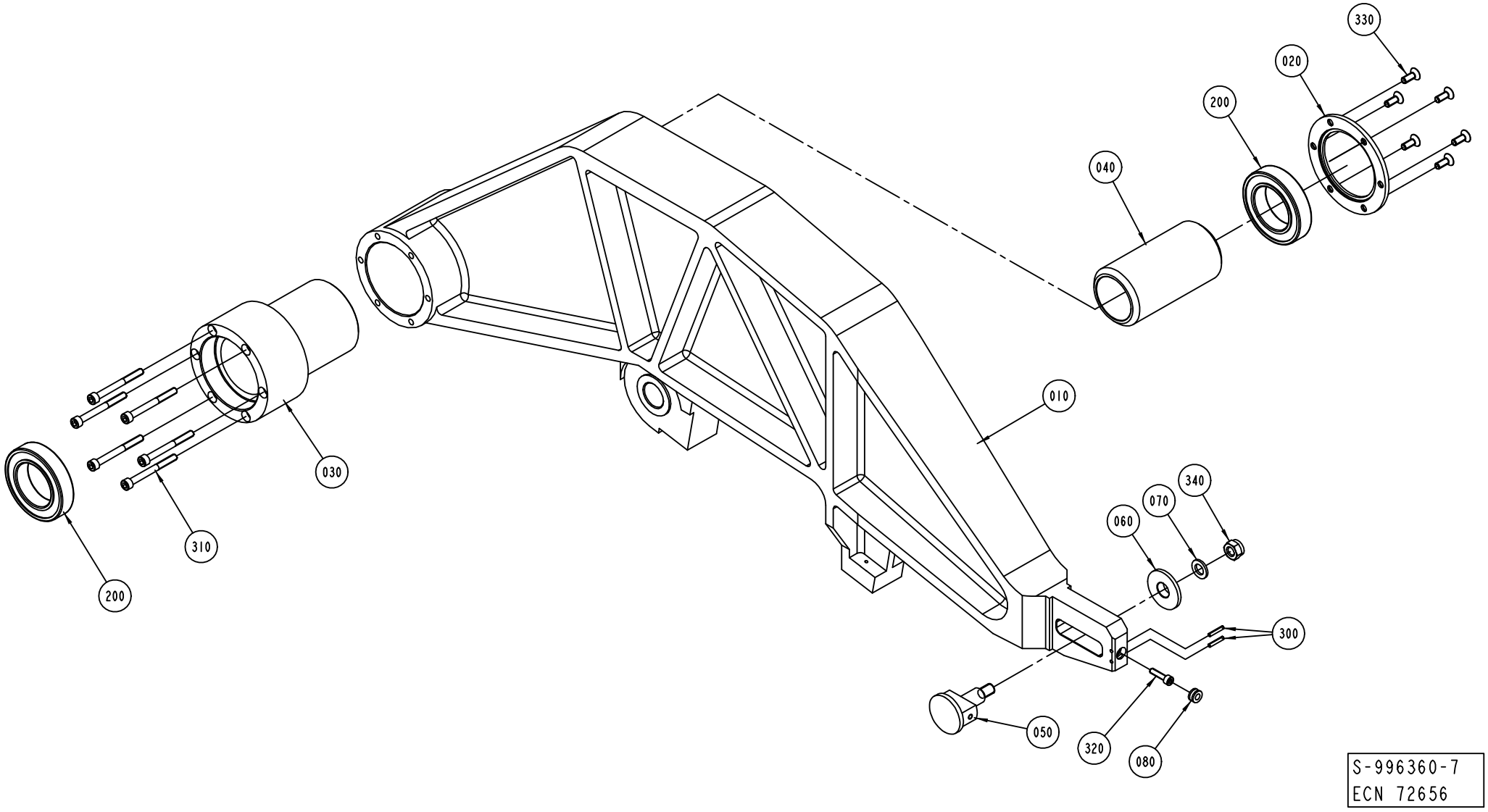
330
020
200
040
010
030
310
200
340
070
060
300
050
320
080
S-996360-7
ECN 72656

ECM: 72124 - 19990322
Group number: 996360-0500
Assembly Drawing: 996360-7_1_AA

Issue: 20011217

Pos	Part No	SP	UN	Qty	Description	Page No
Common Parts						
010	1041915-0000	D		1	ARM	
020	1038439-0000	-		1	LID	
030	1041942-0000	-		1	SPACER	
040	1038467-0000	-		1	SPACER	
050	1038493-0000	D		1	AXLE PIN	
060	1038496-0000	-		1	WASHER	
070	1038495-0000	-		1	WASHER	
080	1038494-0000	D		1	PLUG	
200	90214-0192	C		2	BALL BEARING SOLID OIL 45X75X16 MM	
300	311112-0209	-		2	PIN, STRAIGHT SLOTTED SPRING FRP 3X18	
310	312111-0382	-		6	SCREW HEX.SOCK.HD.MC6S-TT 6X60 88 FZB	
320	312115-0331	-		1	SCREW MC6S M5X20 A280	
330	312151-0368	-		6	SCREW HEX.SOCK.COUNT.MF6S 6X16 FZB	
340	312812-0320	-		1	HEXAGON NUT, NY-LOCK M10 A480	

Pos	Part No	SP	UN	Qty	Description	Page No

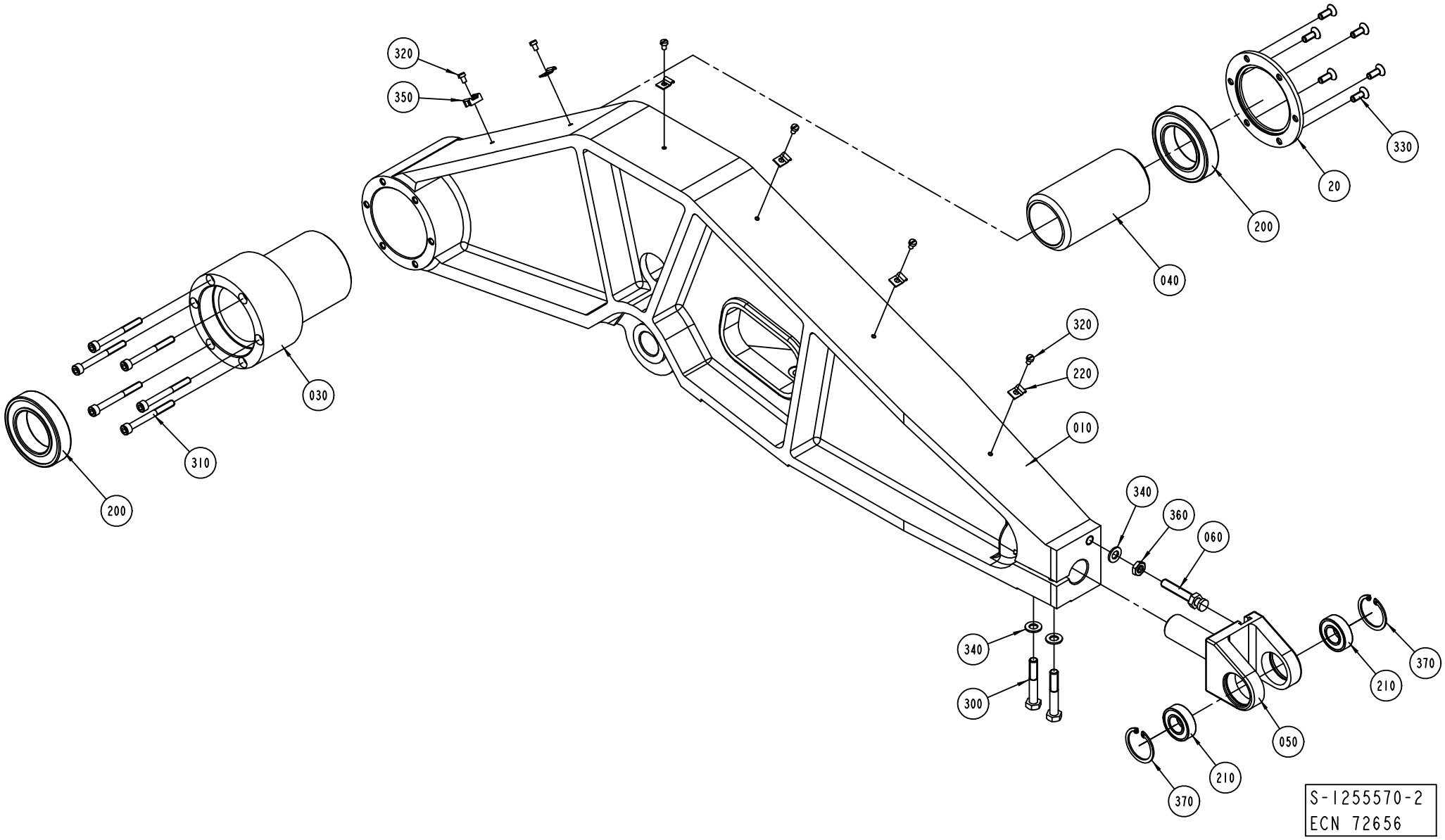
320
350
330
20
200
040
320
220
010
030
310
200
340
360
060
340
300
370
210
050
210
370
S-1255570-2
ECN 72656

ECM: 90982 - 20001216
Group number: 1255570-0200
Assembly Drawing: 1255570-2_1_AA

Issue: 20011217

Pos	Part No	SP	UN	Qty	Description	Page No
Common Parts						
010	1349088-0000	A		1	MAINARM LEFT	
020	1038439-0000	-		1	LID	
030	1041942-0000	-		1	SPACER	
040	1038467-0000	-		1	SPACER	
050	1038497-0000	-		1	FORK HEAD	
060	1038491-0000	A		1	SCREW	
200	90214-0192	A		2	BALL BEARING SOLID OIL 45X75X16 MM	
210	90214-0191	A		2	BALL BEARING, 2 SEALS, 17X35X10 MM	
220	90165-0056	-		5	PIPE CLIP FOR TUBE D=4 MM	
300	312101-0461	-		2	SCREW M6S M8X50 FZB	
310	312111-0382	-		6	SCREW HEX.SOCK.HD.MC6S-TT 6X60 88 FZB	
320	312125-0285	-		6	SCREW SLOT.PAN HD. MCS 4X6 A480	
330	312151-0368	-		6	SCREW HEX.SOCK.COUNT.MF6S 6X16 FZB	
340	315101-0165	-		3	WASHER PLAIN, BRB, 8,4/16 H=1,5	
350	352113-0205	-		1	ANCHOR TM2S8-C100	
360	312625-0318	-		1	NUT HEX. M8 SS	
370	315753-0124	-		2	RETAIN. RING, 35	

Pos	Part No	SP	UN	Qty	Description	Page No

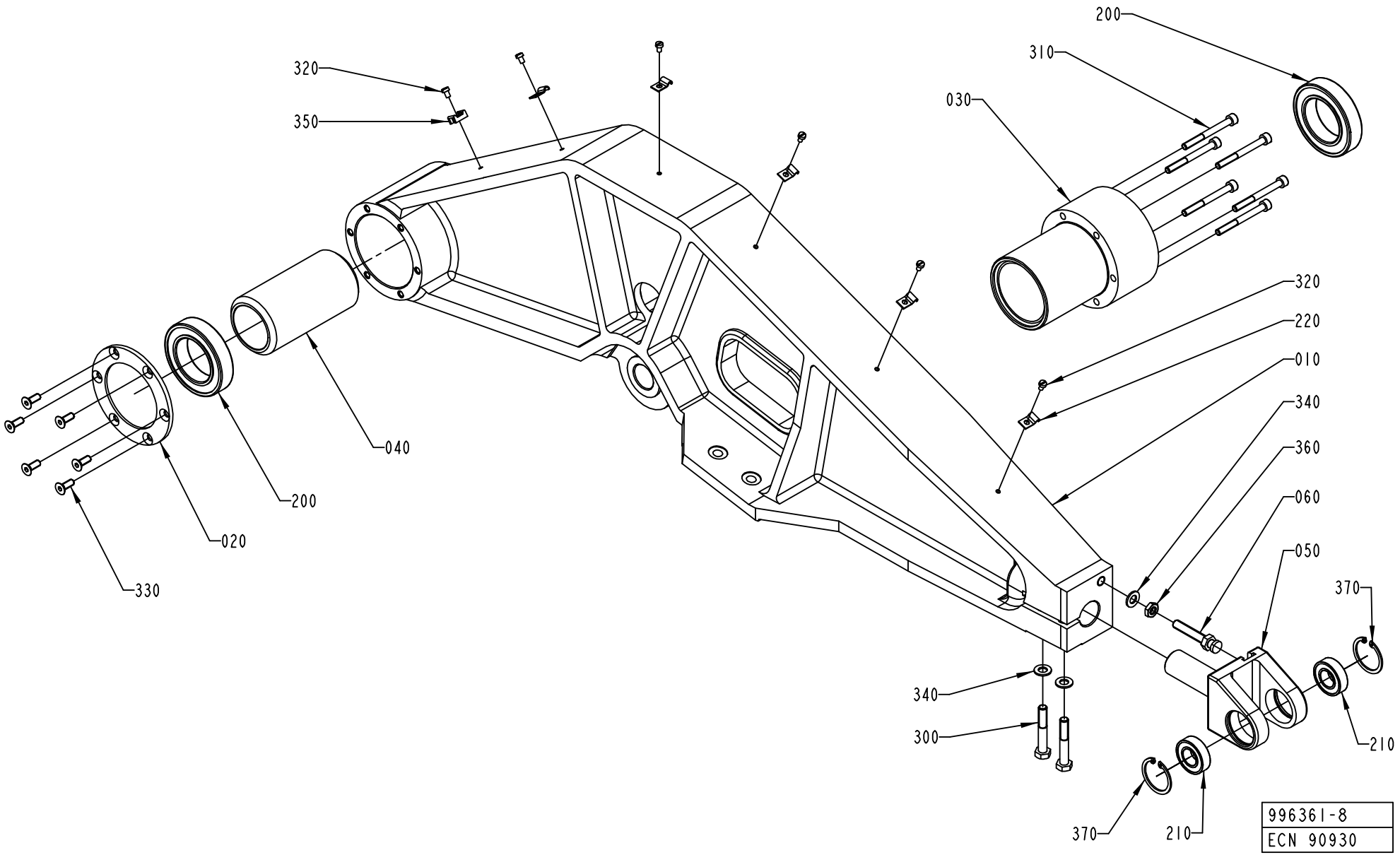
200
310
030
320
350
320
220
010
340
360
060
050
370
040
200
020
330
340
300
210
370
210
996361-8
ECN 90930

ECM: 90981 - 20001216
Group number: 996361-0500
Assembly Drawing: 996361-8_1_AB

Issue: 20011217

Pos	Part No	SP	UN	Qty	Description	Page No
Common Parts						
010	1349089-0000	A		1	MAINARM RIGHT	
020	1038439-0000	-		1	LID	
030	1041942-0000	-		1	SPACER	
040	1038467-0000	-		1	SPACER	
050	1038497-0000	-		1	FORK HEAD	
060	1038491-0000	A		1	SCREW	
200	90214-0192	A		2	BALL BEARING SOLID OIL 45X75X16 MM	
210	90214-0191	A		2	BALL BEARING, 2 SEALS, 17X35X10 MM	
220	90165-0056	-		5	PIPE CLIP FOR TUBE D=4 MM	
300	312101-0461	-		2	SCREW M6S M8X50 FZB	
310	312111-0382	-		6	SCREW HEX.SOCK.HD.MC6S-TT 6X60 88 FZB	
320	312125-0285	-		6	SCREW SLOT.PAN HD. MCS 4X6 A480	
330	312151-0368	-		6	SCREW HEX.SOCK.COUNT.MF6S 6X16 FZB	
340	315101-0165	-		3	WASHER PLAIN, BRB, 8,4/16 H=1,5	
350	352113-0205	-		1	ANCHOR TM2S8-C100	
360	312625-0318	-		1	NUT HEX. M8 SS	
370	315753-0124	-		2	RETAIN. RING, 35	

Pos	Part No	SP	UN	Qty	Description	Page No

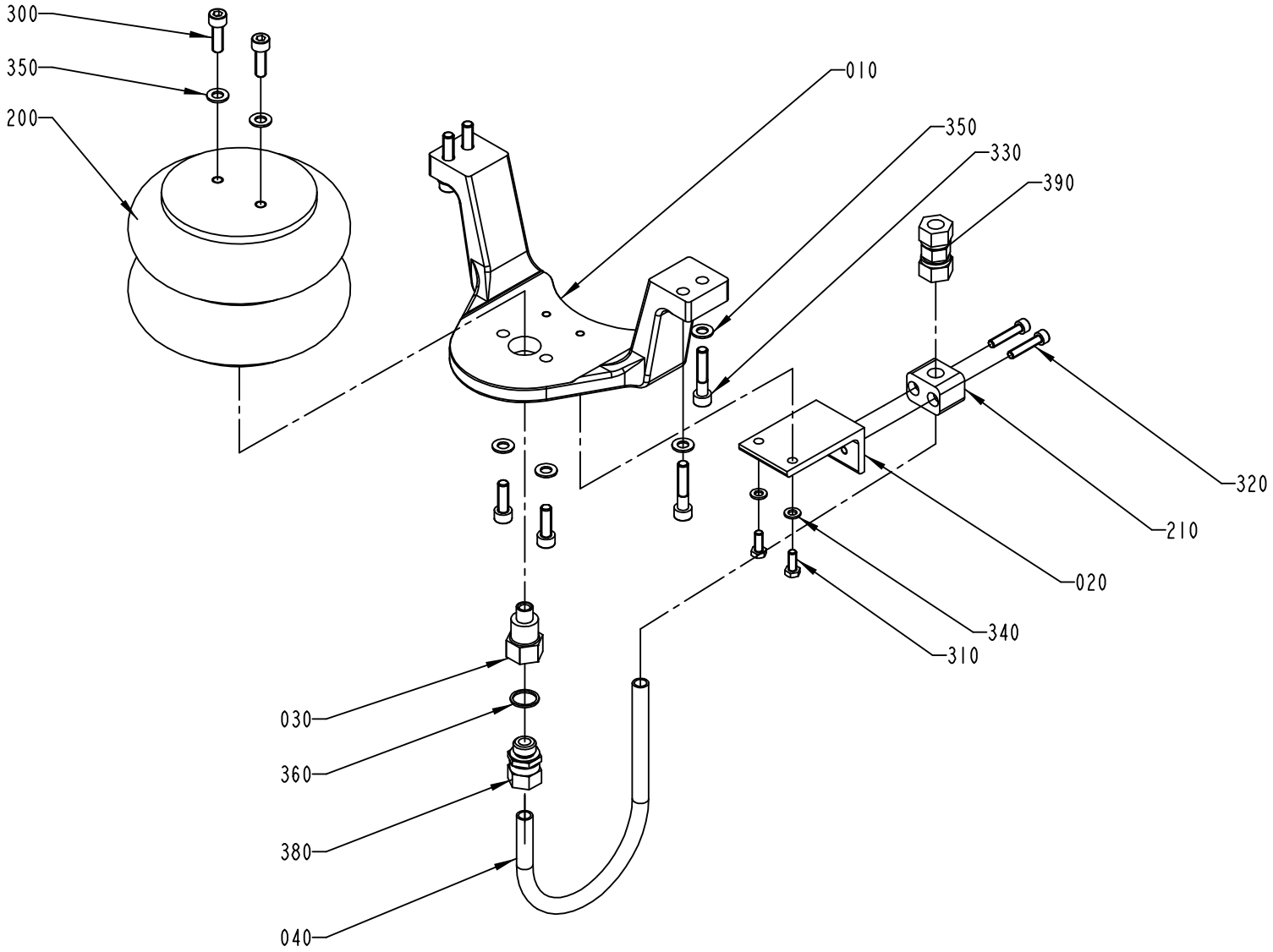

1487192-2
ECN 84819

ECM: 99080 - 50001231
Group number: 1487192-0200
Assembly Drawing: 1487192-2_1_AB

Issue: 20011217

Pos	Part No	SP	UN	Qty	Description	Page No
Common Parts						
010	1539986-0000	A		1	SUPPORT	
020	1538752-0000	-		1	BRACKET	
030	1036935-0000	-		1	ADAPTER	
040	1538751-0000	-		1	PIPE	
200	90239-0288	A		1	CYLINDER	
210	90165-0051	-		1	CLIP	
300	312115-0453	-		4	SCREW MC6S M8X25 A280	
310	312105-0368	-		2	SCREW M6S M6X16 A280	
320	312115-0374	-		2	SCREW MC6S M6X30 A280	
330	312115-0457	-		4	SCREW MC6S M8X35 A280	
340	315105-0153	-		2	WASHER PLAIN, BRB, 6,4/12,H=1,5	
350	315105-0165	-		8	WASHER PLAIN, BRB, 8,4/16,H=1,5	
360	315234-0111	-		1	WASHER,PL.RND.CU.17,5//21 H=1,5	
380	342720-0109	-		1	CONN. STR. GA-12-G3/8	
390	342726-0109	-		1	CONN. PIPE G-12	

Pos	Part No	SP	UN	Qty	Description	Page No

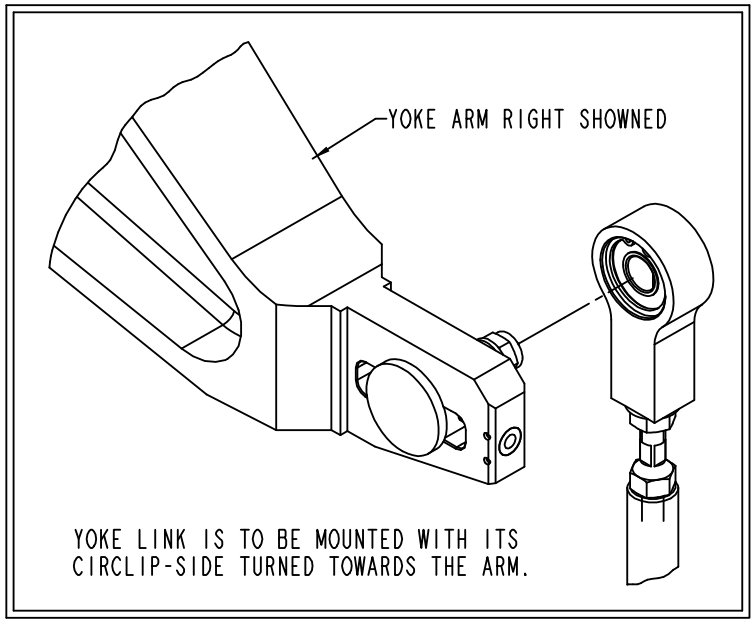

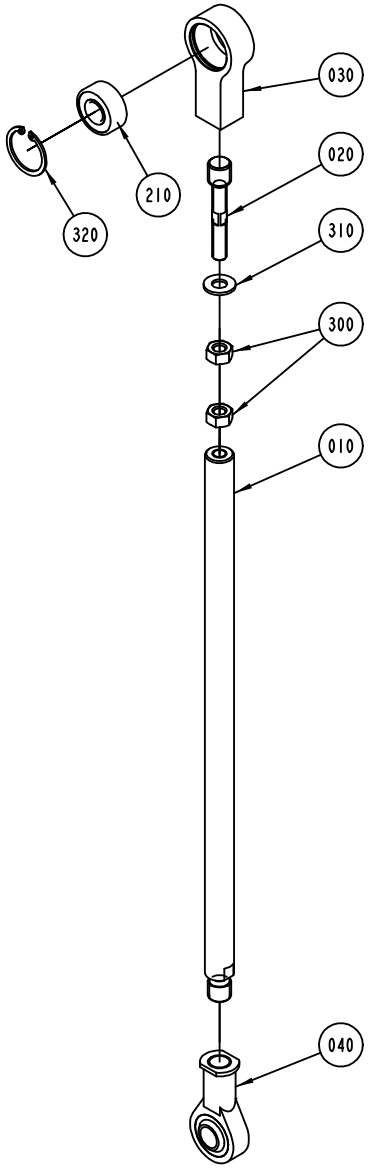

S-1035221-5
ECN 73031

ECM: 73031 - 20000211
Group number: 1035221-0300
Assembly Drawing: 1035221-5_1_AB

Issue: 20011217

Pos	Part No	SP	UN	Qty	Description	Page No
Common Parts						
010	1348507-0000	-		1	LINK	
020	1036515-0000	D		1	SCREW	
030	1038492-0000	D		1	LINK HEAD	
040	1349028-0000	C		1	LINK HEAD	
210	90214-0194	C		1	SPHERICAL BALL BEARING, 2 SEALS, 15X35X1	
300	312635-0320	-		2	NUT M6M 10X1 STAINLESS A2 80	
310	315105-0173	-		1	WASHER PLAIN, BRB, 10,5/22,H=2	
320	315753-0124	-		1	RETAIN. RING, 35	

Pos	Part No	SP	UN	Qty	Description	Page No

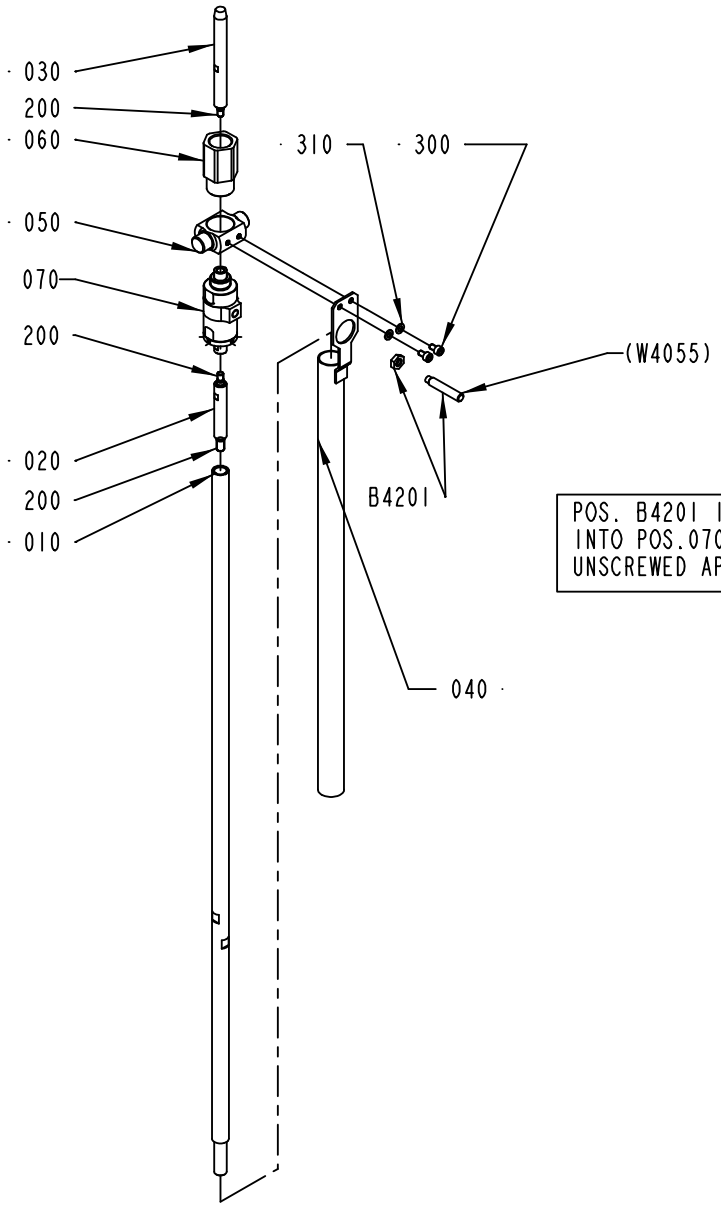

POS. B4201 IS TO BE SCREWED INTO POS.070 UNTIL IT STOPS AND THEN UNSCREWED APROX. 1/4 OF A REVOLUTION.

1035220-5
ECN 84819

ECM: 85433 - 20010718
Group number: 1035220-0400
Assembly Drawing: 1035220-5_1_AC

Issue: 20011217

Pos	Part No	SP	UN	Qty	Description	Page No
Common Parts						
010	1037983-0000	A		1	LINK	
020	1349173-0000	A		1	AXLE	
030	1349172-0000	A		1	AXLE	
040	1349174-0000	-		1	SLEEVE	
050	1038449-0000	A		1	SHAFT	
060	1349171-0000	A		1	NUT	
070	1548313-0000	A		1	FORCE LIMITING DEVICE	
200	90157-0016	-		1	LOCKING FLUID	
300	312115-0323	-		2	SCREW MC6S M5X8 A280	
310	315105-0146	-		2	WASHER PLAIN, BRB, 5,3/10,H=1	
B4201	90458-0138	-		1	PROXIMITY SWITCH E2EG-X1R5B1-5M	

Pos	Part No	SP	UN	Qty	Description	Page No

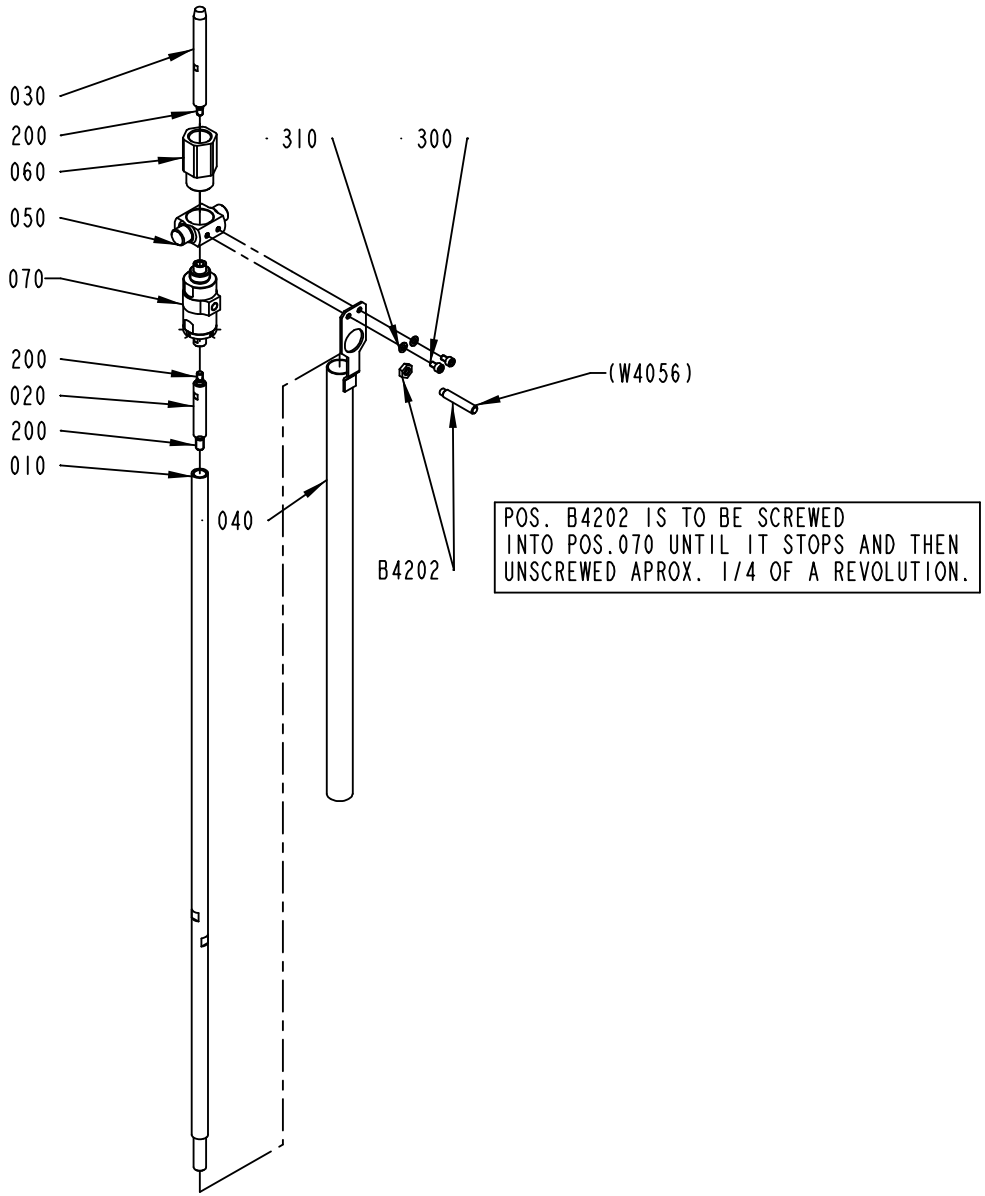

1255561-2
ECN 84819

ECM: 85432 - 20010718
Group number: 1255561-0200
Assembly Drawing: 1255561-2_1_AC

Issue: 20011217

Pos	Part No	SP	UN	Qty	Description	Page No
Common Parts						
010	1037983-0000	A		1	LINK	
020	1349173-0000	A		1	AXLE	
030	1349172-0000	A		1	AXLE	
040	1349174-0000	-		1	SLEEVE	
050	1038449-0000	A		1	SHAFT	
060	1349171-0000	A		1	NUT	
070	1548313-0000	A		1	FORCE LIMITING DEVICE	
200	90157-0016	-		1	LOCKING FLUID	
300	312115-0323	-		2	SCREW MC6S M5X8 A280	
310	315105-0146	-		2	WASHER PLAIN, BRB, 5,3/10,H=1	
B4202	90458-0138	-		1	PROXIMITY SWITCH E2EG-X1R5B1-5M	

Pos	Part No	SP	UN	Qty	Description	Page No

LINK SYSTEM GASKET

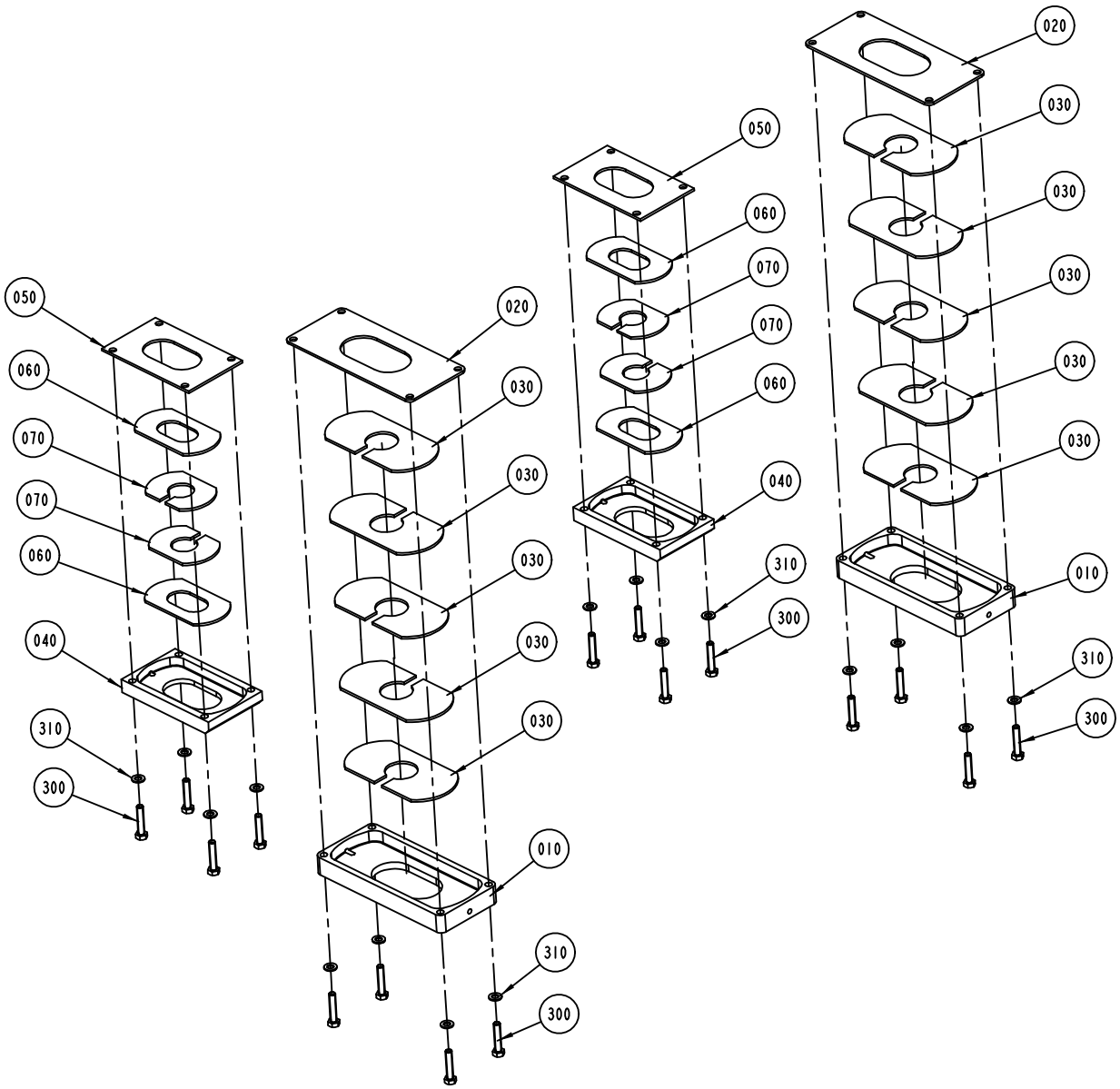

S-1487301-1
ECN 72656

ECM: 72124 - 19990322
Group number: 1487301-0100
Assembly Drawing: 1487301-1_1_AA

Issue: 20011217

Pos	Part No	SP	UN	Qty	Description	Page No
Common Parts						
010	1036383-0000	-		2	LID	
020	1036481-0000	-		2	LACE	
030	1036384-0000	C		10	SLIDE	
040	1038845-0000	-		2	LID	
050	1038846-0000	-		2	LACE	
060	1038847-0000	C		4	SLIDE	
070	1038848-0000	C		4	SLIDE	
300	312105-0333	-		16	SCREW M6S M5X25 A280	
310	315105-0146	-		16	WASHER PLAIN, BRB, 5,3/10,H=1	

Pos	Part No	SP	UN	Qty	Description	Page No

Tetra Pak

SPC
Spare Parts Catalogue

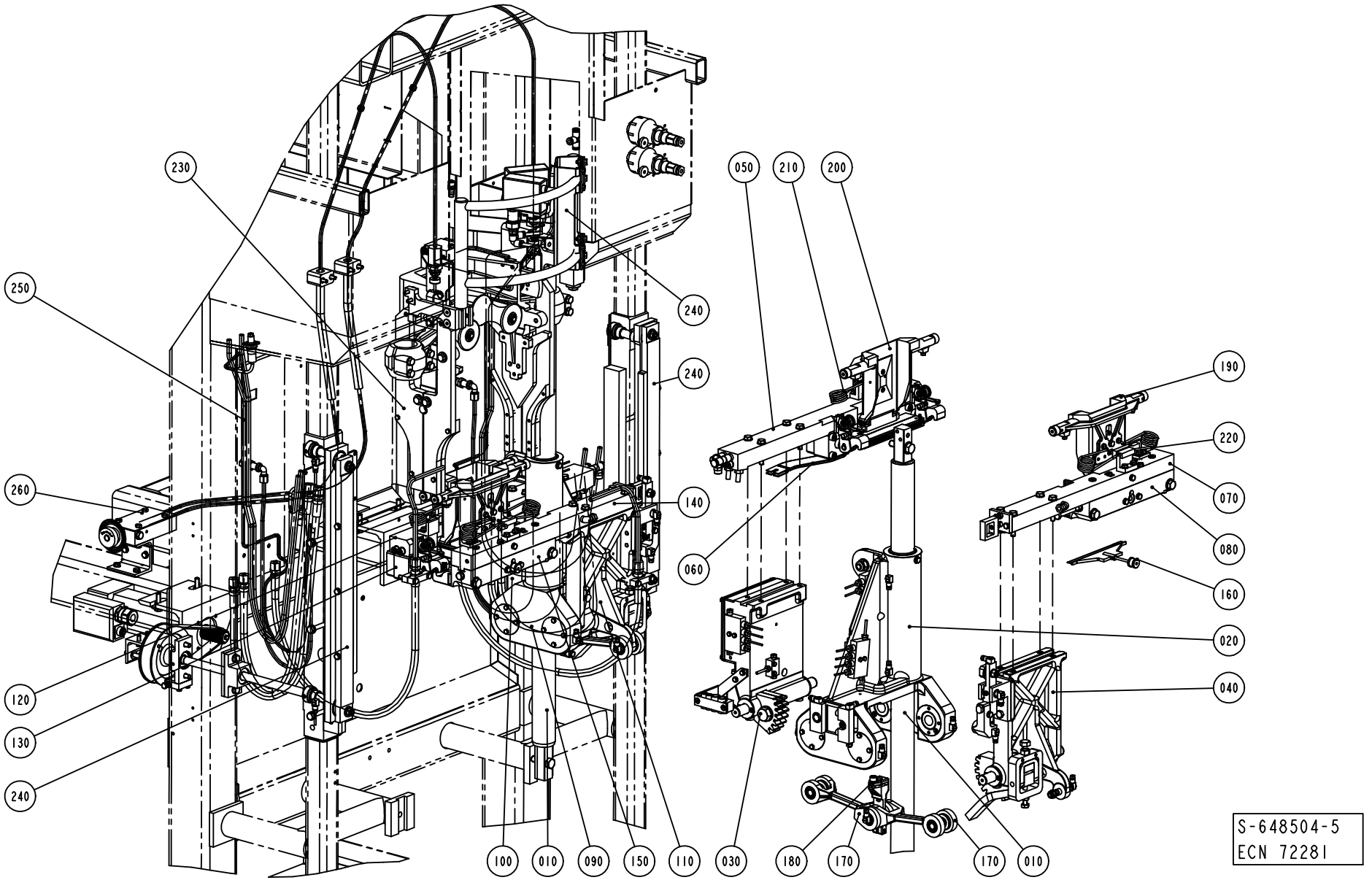
230
250
240
240
260
140
060
120
130
240
100
010
090
150
110
030
180
170
170
010
050
210
200
190
220
070
080
160
020
040
S-648504-5
ECN 72281

Pos	Part No	SP	UN	Qty	Description	Page No
Common Parts						
010	A1348465-0200	-		1	GUIDE	**471**
020	A1348455-0100	-		1	YOKE LEFT	**473**
030	A1348456-0100	-		1	PRESSURE ARM LEFT	**475**
040	A1348457-0100	-		1	CUTTING ARM LEFT	**479**
050	A1478651-0100	-		1	CARRIER PRESSURE LEFT	**481**
060	A1348458-0100	-		1	PRESSURE JAW LEFT	**483, 485**
070	A1478649-0200	-		1	CARRIER CUTTING LEFT	**487**
080	A1348459-0200	-		1	CUTTING JAW LEFT	**489, 491, 493**
090	A1348460-0100	-		1	YOKE RIGHT	**495**
100	A1348461-0100	-		1	PRESSURE ARM RIGHT	**497**
110	A1348462-0100	-		1	CUTTING ARM RIGHT	**499**
120	A1478652-0100	-		1	CARRIER PRESSURE RIGHT	**501**
130	A1348463-0100	-		1	PRESSURE JAW RIGHT	**503, 505**
140	A1478650-0200	-		1	CARRIER CUTTING RIGHT	**507**
150	A1348464-0200	-		1	CUTTING JAW	**509, 511, 513**
160	A1478768-0100	-		2	KNIFE	**515**
170	A1348466-0100	-		4	SCISSOR ARM LINK	**517**
180	A1348467-0100	-		2	SCISSOR ARM FULCRUM	**519**
190	A1334633-0200	-		2	VOLUME FLAP CUTTING	**521, 523, 525**
200	A1334634-0200	-		2	VOLUME FLAP PRESSURE	**527, 529, 531**
210	A1334635-0200	-		2	SHOCK ABSORBER	**533, 535, 537**
220	A1334636-0200	-		2	SHOCK ABSORBER	**539, 541, 543**
230	A1035134-0400	-		1	VOLUME ADJUSTER	**545, 547**
240	A1317966-0300	-		1	DESIGN CORRECTION	**563**
250	A1035138-0300	-		1	CABLE-AND HOSE TRANSFER	**579**
260	A1035489-0200	-		1	CONTROL MECHANISM	**581**

Pos	Part No	SP	UN	Qty	Description	Page No

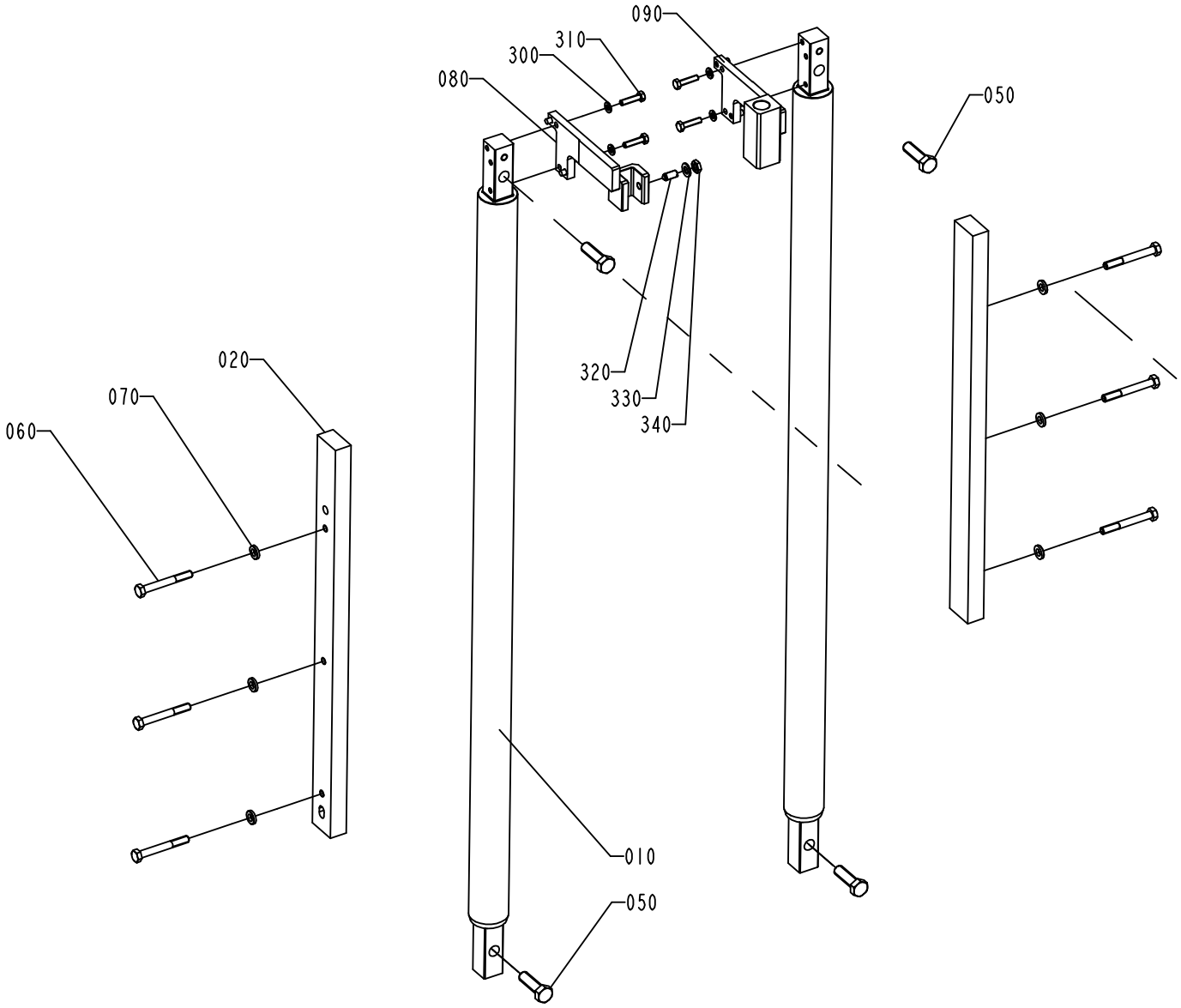

1348465-2
ECN 73538

ECM: 73538 - 20000620
Group number: 1348465-0200
Assembly Drawing: 1348465-2_1_AA

Issue: 20011217

Pos	Part No	SP	UN	Qty	Description	Page No
Common Parts						
010	1349438-0000	A		2	GUIDE	
020	1349781-0000	A		2	RULER	
050	312105-0540	-		4	SCREW M6S M12X40 A280	
060	312105-0464	-		6	SCREW M6S M8X65 A280	
070	315115-0165	-		6	WASHER PLAIN, TBRB 8,4/16 H=3	
080	1523099-0000	-		1	BRACKET	
090	1532467-0000	-		1	BRACKET	
300	315105-0153	-		4	WASHER PLAIN, BRB, 6,4/12,H=1,5	
310	312105-0372	-		4	SCREW M6S M6X25 A280	
320	90287-0112	-		1	SCREW SPRINGLOAD. SLOTTED HEAD M8X16	
330	315105-0165	-		1	WASHER PLAIN, BRB, 8,4/16,H=1,5	
340	312625-0318	-		1	NUT HEX. M8 SS	

Pos	Part No	SP	UN	Qty	Description	Page No

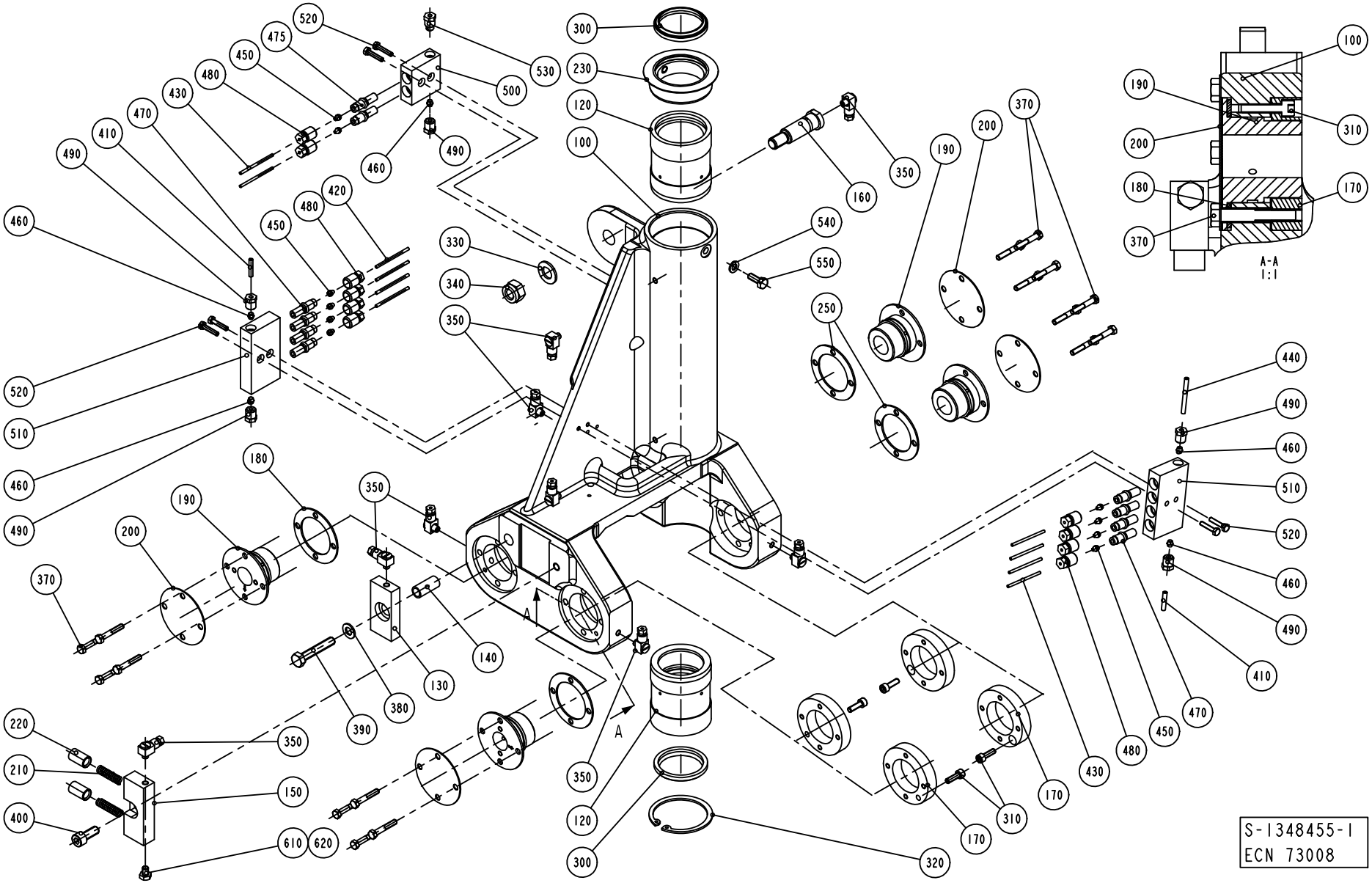
A-A
1:1
S-1348455-1
ECN 73008

ECM: 73008 - 19991119
Group number: 1348455-0100
Assembly Drawing: 1348455-1_1_AB

Issue: 20011217

Pos	Part No	SP	UN	Qty	Description	Page No
Common Parts						
100	1195360-0000	D		1	YOKE LEFT	
120	1035954-0000	C		2	BUSHING	
130	1037104-0000	C		1	LOCATING PIECE	
140	1037106-0000	-		1	SLEEVE	
150	1349972-0000	-		1	SPRING HOUSING	
160	1036144-0000	D		1	SHAFT	
170	36753-0000	-		4	RING	
180	29886-0000	C		2	LACE	
190	246513-0000	C		4	BEARING	
200	239874-0000	-		4	WASHER	
210	20494-0000	C		2	COMPRESSION SPRING	
220	31838-0000	C		2	PLUNGER	
230	1349780-0000	D		1	LID	
250	1038509-0000	-		2	WASHER	
300	90091-0358	C		2	SCRAPER, ASOB 45X53X7 MM	
310	312115-0329	-		4	SCREW MC6S M5X16 A280	
320	315753-0135	-		1	RETAINING RING FOR HOLE, 60X2 MM	
330	315105-0178	-		1	WASHER PLAIN, BRB, 13/24,H=2	
340	312812-0322	-		1	HEXAGON NUT, NY-LOCK M12 A480	
350	90134-0058	-		9	CONNECTION	
370	312105-0335	-		16	SCREW M6S M5X30 A280	
380	315105-0165	-		1	WASHER PLAIN, BRB, 8,4/16,H=1,5	
390	312109-0460	-		1	SCREW M6S M8X45 A280	
400	312115-0451	-		1	SCREW MC6S M8X20 A280	
410	90166-0109	-	MM	500	TUBE 4 MM PA,TRANSP.	
420	90166-0143	-	MM	500	TUBE 2,5 MM PA,TRANSP.	
430	90266-0019	-	MM	300	PIPE	
440	90266-0165	-	MM	500	BRASS PIPE	
450	90028-0020	-		10	CONE TUBE 2,5MM	
460	90028-0021	-		5	CONE TUBE 4 MM	
470	90092-0052	-		8	METERING VALVE 10 MM3	
475	90092-0054	-		2	METERING VALVE 50 MM3	
480	90134-0039	-		10	BUSHING VALVE CONNECTION 2,5 MM	
490	90134-0038	-		5	BUSHING/NUT INLET/OUTLET 4 MM	
500	90032-0038	-		1	BLOCK 2 WAYS	
510	90032-0039	-		2	BLOCK 4 WAYS	
520	312105-0295	-		6	SCREW M6S M4X20 A280	
530	90087-0019	-		1	PLUG M10X1 STAINLESS	
540	315105-0153	-		1	WASHER PLAIN, BRB, 6,4/12,H=1,5	
550	312105-0366	-		1	SCREW M6S M6X12 A280	
610	312105-0362	-		1	SCREW M6S M6X8 A280	
620	90157-0021	-		1	LOCKING FLUID	

Machine Type	Group Description	Used-In	Group Number	Page No

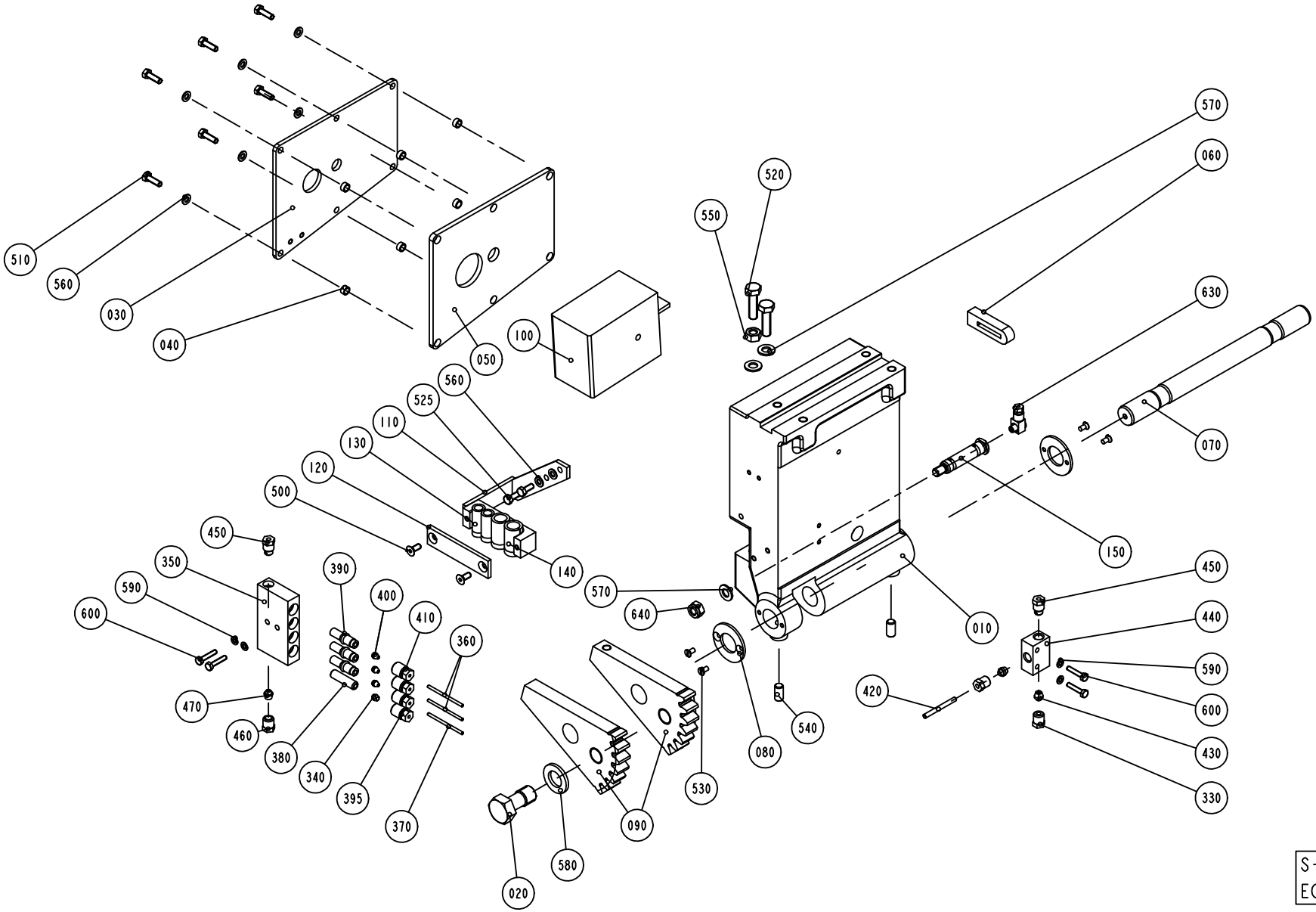
510
560
030
040
050
100
570
060
520
550
630
070
150
560
525
110
130
120
500
140
450
350
590
600
470
460
390
400
410
360
380
340
395
370
020
580
090
530
080
540
420
570
640
010
450
440
590
600
430
330
S-1348456-1
ECN 71517

ECM: 73008 - 19991119
Group number: 1348456-0100
Assembly Drawing: 1348456-1_1_AA

Issue: 20011217

Pos	Part No	SP	UN	Qty	Description	Page No
Common Parts						
010	1035877-0000	D		1	ARM LEFT	
020	1037069-0000	D		1	SCREW	
030	1036485-0000	-		1	COVERING PLATE	
040	1036501-0000	C		6	SPACER	
050	1036484-0000	C		1	GASKET	
060	1036483-0000	C		1	SEAL	
070	1035788-0000	C		1	SHAFT	
080	536704-0000	C		2	WASHER	
090	1036156-0000	C		2	TOOTH PART	
100	A1035448-0100	-		1	ADAPTION TRANSFORMER	**477**
110	1349867-0000	-		1	FASTENING PLATE	
120	1349868-0000	-		1	FASTENING PLATE	
130	1478000-0000	-		2	HOSE	
140	1478001-0000	-		2	HOSE	
150	1037853-0000	-		1	SHAFT	
330	90134-0038	-		2	BUSHING/NUT INLET/OUTLET 4 MM	
340	90028-0021	-		1	CONE TUBE 4 MM	
350	90032-0039	-		1	BLOCK 4 WAYS	
360	90166-0143	-	MM	1500	TUBE 2,5 MM PA,TRANSP.	
370	90266-0019	-	MM	500	PIPE	
380	90134-0051	-		1	SPACING COLLAR DOSING BLOCK	
390	90092-0052	-		3	METERING VALVE 10 MM3	
395	90134-0040	-		1	BUSHING VALVE CONNECTION 4 MM	
400	90028-0020	-		3	CONE TUBE 2,5MM	
410	90134-0039	-		3	BUSHING VALVE CONNECTION 2,5 MM	
420	90266-0165	-	MM	200	BRASS PIPE	
430	90028-0024	-		2	CONE TUBE 4 MM	
440	90032-0043	-		1	DISTRIBUTION BLOCK 3 WAYS	
450	90087-0019	-		2	PLUG M10X1 STAINLESS	
460	90134-0055	-		1	BUSHING/NUT INLET/OUTLET 6 MM	
470	90028-0025	-		1	CONE TUBE 6 MM	
500	312155-0327	-		2	SCREW HEX.SOCK.COUNT.MF6S M5X12 A280	
510	312105-0329	-		6	SCREW M6S M5X16 A280	
520	312105-0455	-		2	SCREW M6S M8X30 A280	
525	312105-0327	-		2	SCREW M6S M5X12 A280	
530	312145-0287	-		4	SCREW COUNTERS.SLOT.HD. MFS 4X8 SS	
540	312318-0449	-		2	SCREW SOCK.SET CUP P MSK6SS M8X16 A4	
550	312605-0318	-		1	HEXAGON NUT, M6M M8 A280	
560	315105-0146	-		8	WASHER PLAIN, BRB, 5,3/10,H=1	
570	315105-0165	-		1	WASHER PLAIN, BRB, 8,4/16,H=1,5	
580	315105-0186	-		1	WASHER PLAIN, BRB, 17/30,H=3	
590	315105-0136	-		4	WASHER PLAIN, BRB, 4,3/8,H=0,8	
600	312105-0295	-		4	SCREW M6S M4X20 A280	
630	90134-0058	-		1	CONNECTION	
640	312812-0318	-		1	HEXAGON NUT, NY-LOCK M8 A480	

Machine Type | Group Description | Used-In | Group Number | Page No

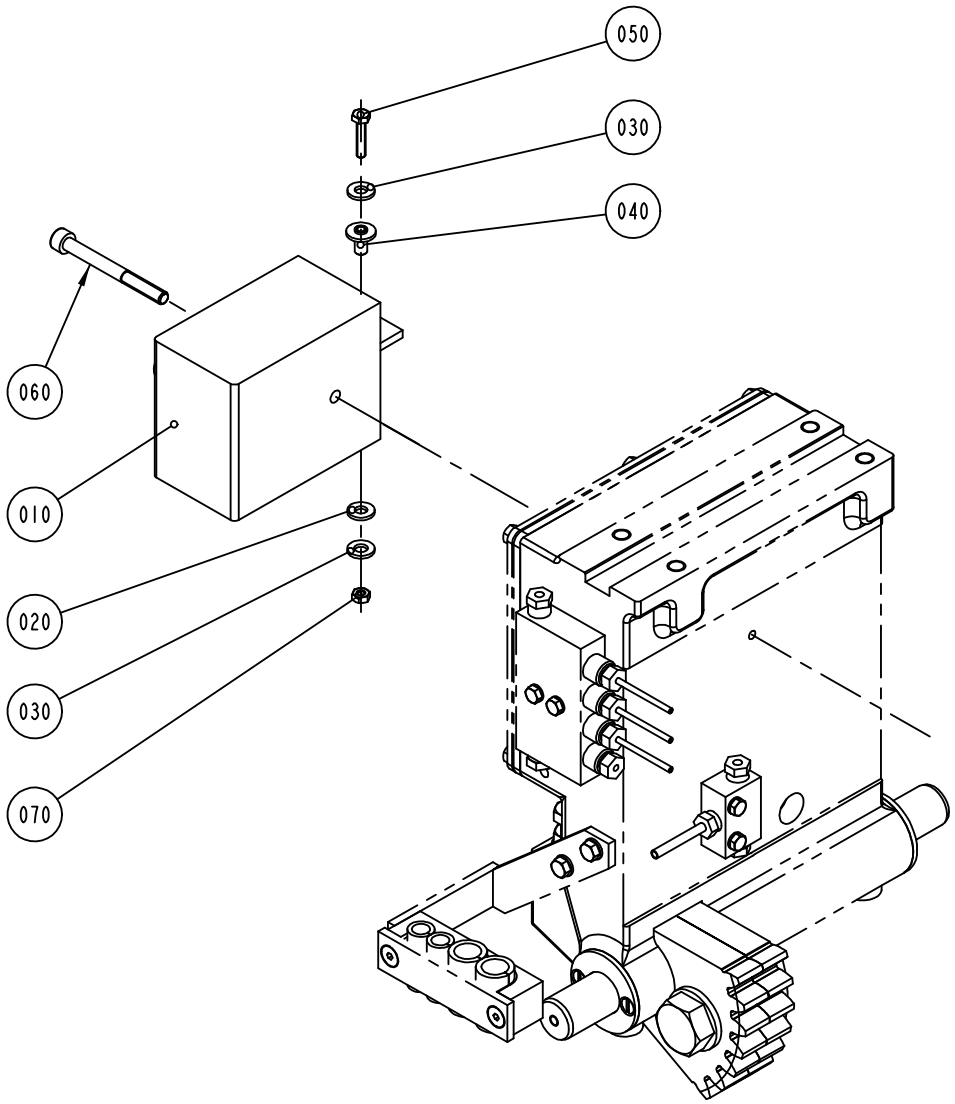

S-1035448-1
ECN 73008

Pos	Part No	SP	UN	Qty	Description	Page No
TBA 0200B OR TBA 0250B						
010	67379-0114	A		1	IMPEDANCE TRANSFORMER	
TBA 0200S						
010	67379-0105	A		1	IMPEDANCE TRANSFORMER	
TBA 0500B OR TBA 1000S OR TBA 1000SQ OR TBA 1000B OR TPA 1000S OR TBA 1500S						
010	67379-0202	A		1	IMPEDANCE TRANSFORMER	
TBA 0500S						
010	67379-0246	A		1	IMPEDANCE TRANSFORMER	
TPA 0330SQ						
010	67379-0245	A		1	IMPEDANCE TRANSFORMER	
Common Parts						
020	32079-0000	A		1	WASHER	
030	28509-0000	A		2	WASHER	
040	32544-0000	A		1	INSULATION NUT	
050	312105-0295	-		1	SCREW M6S M4X20 A280	
060	312115-0382	-		1	SCREW MC6S M6X60 A280	
070	312605-0312	-		1	HEXAGON NUT, M6M M4 A280	

Pos	Part No	SP	UN	Qty	Description	Page No

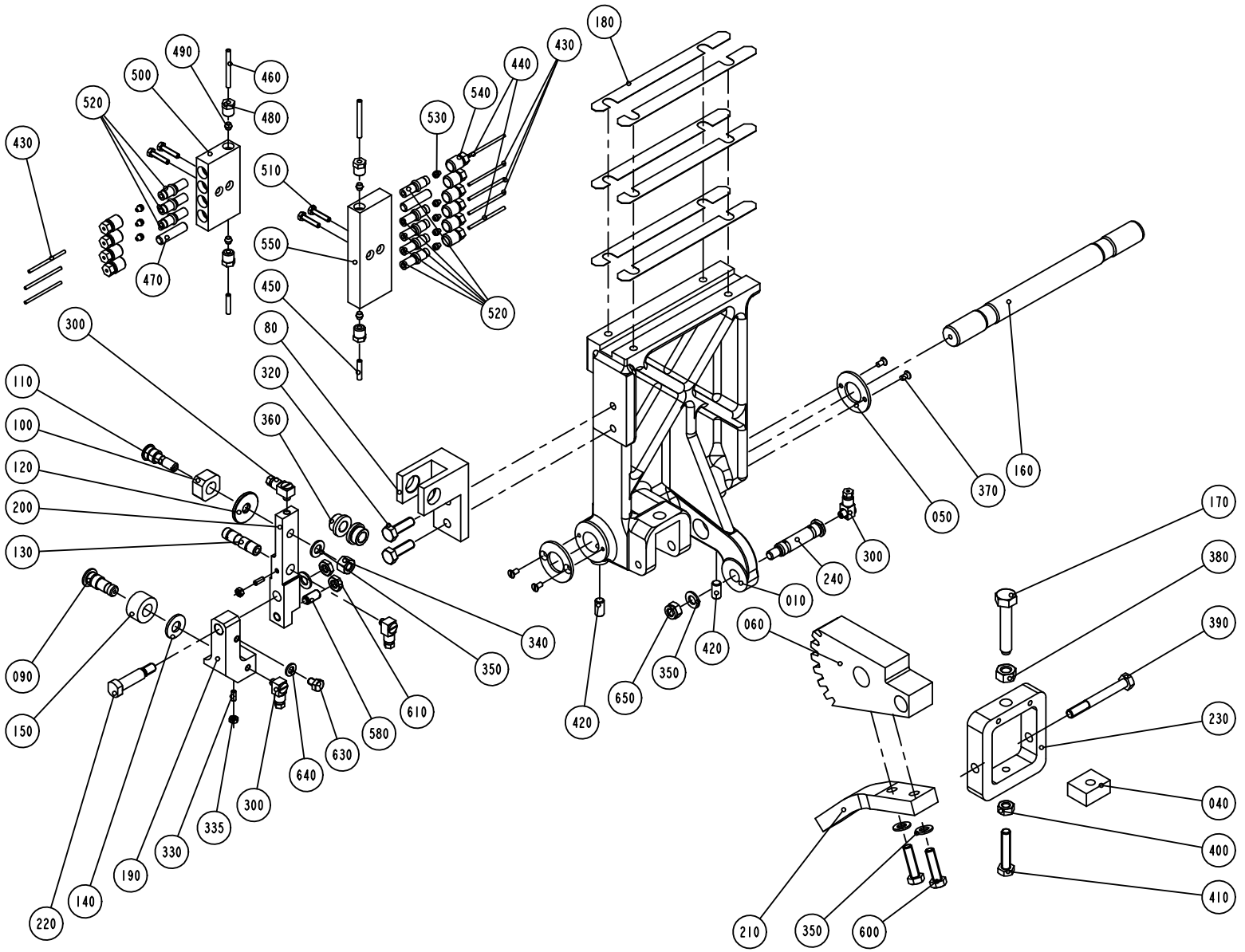

S-1348457-1
ECN 72956

ECM: 73538 - 20000620
Group number: 1348457-0100
Assembly Drawing: 1348457-1_1_AB

Issue: 20011217

Pos	Part No	SP	UN	Qty	Description	Page No
Common Parts						
010	1035879-0000	D		1	ARM LEFT	
040	14729-0000	-		1	NUT	
050	536704-0000	C		2	WASHER	
060	1036155-0000	C		1	TOOTH PART	
080	1036617-0000	D		1	BRACKET	
090	1036620-0000	C		1	SHAFT	
100	256628-0000	C		1	PIECE	
110	256629-0001	C		1	AXLE PIN	
120	441706-0000	-		1	WASHER	
130	1036615-0000	C		1	SHAFT	
140	1036616-0000	-		1	WASHER	
150	1036618-0000	C		1	ROLL	
160	1035788-0000	C		1	SHAFT	
170	32957-0000	D		1	SCREW	
180	1037254-0000	C		6	SHIM	
190	1348671-0000	D		1	JOINT LEFT	
200	1512316-0000	D		1	ARM LEFT	
210	1484320-0000	-		1	ROD	
220	1348669-0000	D		1	SCREW	
230	1038867-0000	-		1	BOW CLAMP	
240	1037853-0000	-		1	SHAFT	
300	90134-0058	-		4	CONNECTION	
320	312105-0453	-		2	SCREW M6S M8X25 A280	
330	312318-0289	-		2	SCREW SOCK.SET CUP P MSK6SS M4X10 A4	
335	312605-0312	-		2	HEXAGON NUT, M6M M4 A280	
340	312811-0318	-		1	NUT HEX.LOCK HELI COIL MID GRIP M8 SS	
350	315105-0165	-		5	WASHER PLAIN, BRB, 8,4/16,H=1,5	
360	321101-0163	-		2	FLANGE BUS 10F7X10	
370	312145-0287	-		4	SCREW COUNTERS.SLOT.HD. MFS 4X8 SS	
380	312635-0320	-		1	NUT M6M 10X1 STAINLESS A2 80	
390	312105-0465	-		1	SCREW M6S M8X70 A280	
400	312605-0318	-		1	HEXAGON NUT, M6M M8 A280	
410	312109-0459	-		1	SCREW M6S M8X40 A280	
420	312318-0449	-		2	SCREW SOCK.SET CUP P MSK6SS M8X16 A4	
430	90166-0143	-	M	3	TUBE 2,5 MM PA,TRANSP.	
440	90266-0019	-	MM	200	PIPE	
450	90166-0109	-	MM	500	TUBE 4 MM PA,TRANSP.	
460	90266-0165	-	MM	100	BRASS PIPE	
470	90134-0052	-		2	PLUG DOSING BLOCK	
480	90134-0038	-		4	BUSHING/NUT INLET/OUTLET 4 MM	
490	90028-0021	-		4	CONE TUBE 4 MM	
500	90032-0039	-		1	BLOCK 4 WAYS	
510	312105-0295	-		4	SCREW M6S M4X20 A280	
520	90092-0052	-		8	METERING VALVE 10 MM3	
530	90028-0020	-		8	CONE TUBE 2,5MM	
540	90134-0039	-		10	BUSHING VALVE CONNECTION 2,5 MM	
550	90032-0040	-		1	BLOCK 6 WAYS	
580	90287-0112	D		1	SCREW SPRINGLOAD. SLOTTED HEAD M8X16	
600	312105-0455	-		2	SCREW M6S M8X30 A280	
610	312625-0318	-		2	NUT HEX. M8 SS	
630	312105-0362	-		1	SCREW M6S M6X8 A280	
640	315105-0153	-		1	WASHER PLAIN, BRB, 6,4/12,H=1,5	
650	312812-0318	-		1	HEXAGON NUT, NY-LOCK M8 A480	

Machine Type | Group Description | Used-In | Group Number | Page No

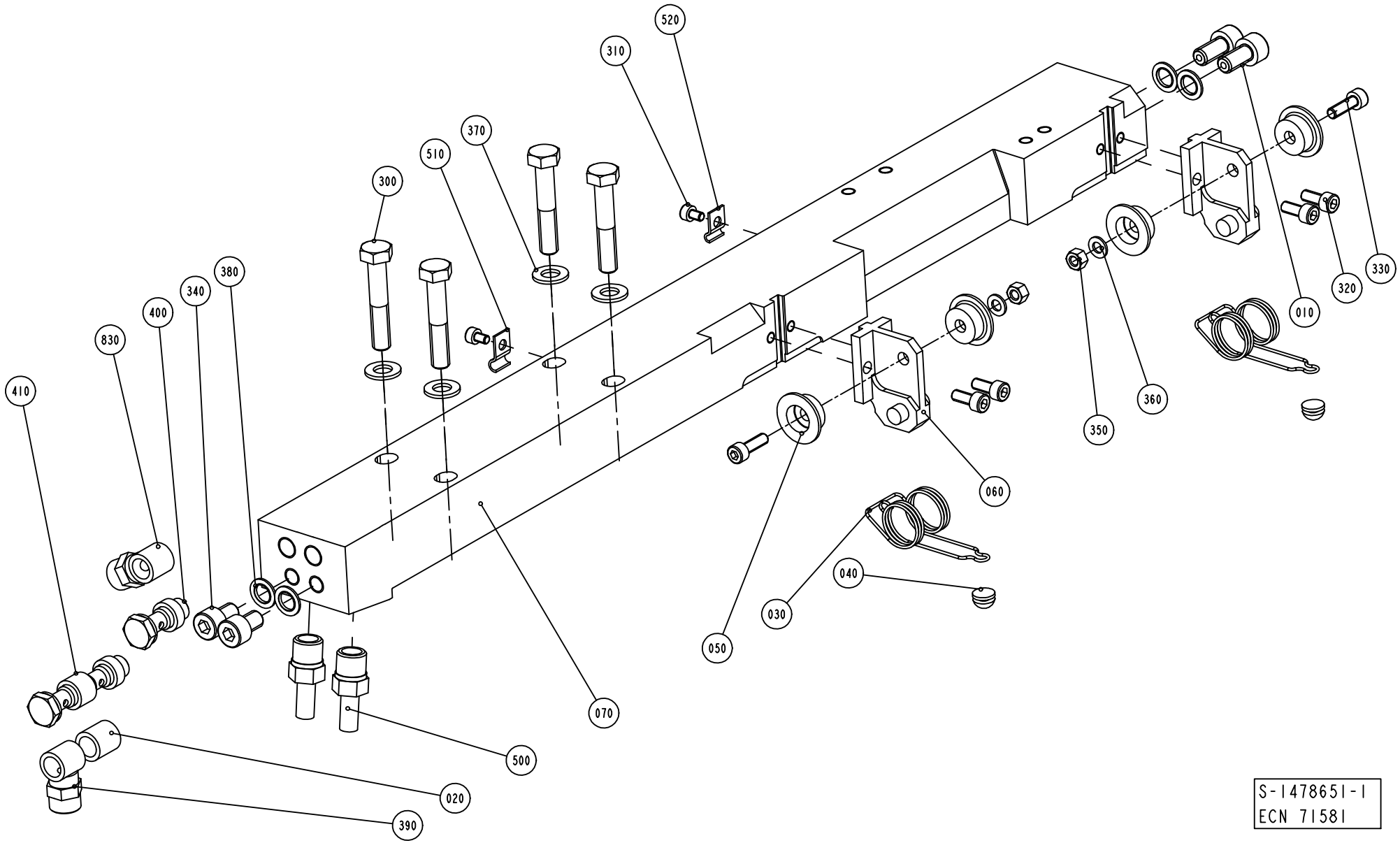
520
310
370
510
300
380
340
400
830
410
330
320
010
360
350
060
040
030
050
070
500
020
390
S-1478651-1
ECN 71581

ECM: 89452 - 50001231
Group number: 1478651-0100
Assembly Drawing: 1478651-1_1_AA

Issue: 20011217

Pos	Part No	SP	UN	Qty	Description	Page No
Common Parts						
010	1036343-0000	D		2	SCREW	
020	1038405-0000	-		1	SPACER	
030	1549378-0000	C		2	SPRING	
040	1129552-0000	C		2	KNOB	
050	1129833-0000	-		4	GUIDE ROLLER	
060	1129834-0000	D		2	BRACKET	
070	1348856-0000	A		1	CARRIER	
300	312105-0460	-		4	SCREW M6S M8X45 A280	
310	312115-0285	-		2	SCREW HEX.SOCK.HD.MC6S-TTS 4X6 A480	
320	312115-0327	-		4	SCREW MC6S M5X12 A280	
330	312115-0329	-		2	SCREW MC6S M5X16 A280	
340	312115-0447	-		2	SCREW MC6S M8X12 A280	
350	312605-0314	-		2	HEXAGON NUT, M6M M5 A280	
360	315105-0146	-		2	WASHER PLAIN, BRB, 5,3/10,H=1	
370	315105-0165	-		4	WASHER PLAIN, BRB, 8,4/16,H=1,5	
380	315211-0104	C		4	GASKET BOLT HEAD 8,7X14X1 MM M8	
390	342980-0121	-		2	BANJO-CONNECTION,RING 8/6-G1/8"	
400	342980-0303	-		1	BANJO-HOLLOW BOLT COUPL,EXT.THR.01-G1/8"	
410	342980-0313	-		1	BANJO-HOLLOW BOLT COUPL,EXT.THR.02-G1/8"	
500	90030-0065	-		2	PIPE CONNECTION	
510	90165-0056	-		1	PIPE CLIP FOR TUBE D=4 MM	
520	90165-0058	-		1	PIPE CLIP FOR TUBE D=25 MM	

Pos	Part No	SP	UN	Qty	Description	Page No

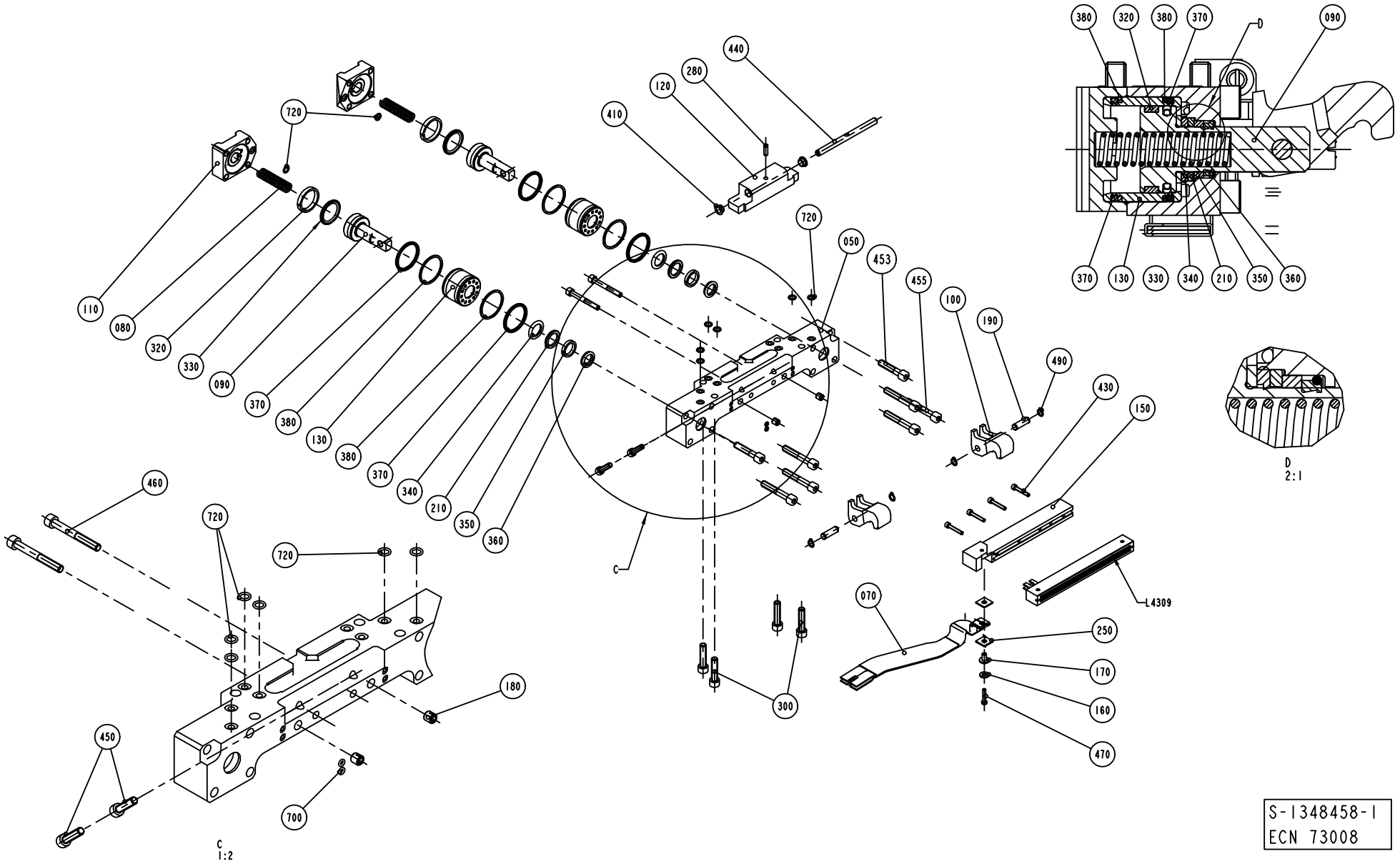
380
320
380
370
D
090
370
130
330
340
210
350
360
D
2:1
440
280
120
410
720
720
050
453
455
100
190
490
430
150
110
080
320
330
090
370
380
130
380
370
340
210
350
360
C
460
720
720
180
450
700
C
1:2
300
070
250
170
160
470
L4309
S-1348458-1
ECN 73008

Pos	Part No	SP	UN	Qty	Description	Page No
TBA 0200B OR TBA 0250B						
090	929372-0000	A		2	PISTON	
120	1349599-0000	A		1	HOLDER	
130	1349595-0000	A		2	SLEEVE	
150	1348545-0000	A		1	RAIL	
320	90091-0391	A		2	SEAL SLYDRING	
330	90091-0398	A		2	PISTON SEAL, GLID RING T 20,5X28X3,2 MM	
430	312115-0297	-		3	SCREW MC6S M4X25 A280	
440	1349980-0000	A		1	SHAFT	
L4309	1110932-0000	A		1	INDUCTOR	
TBA 0200S						
090	929372-0000	A		2	PISTON	
120	1349600-0000	A		1	HOLDER	
130	1349595-0000	A		2	SLEEVE	
150	1348545-0000	A		1	RAIL	
320	90091-0391	A		2	SEAL SLYDRING	
330	90091-0398	A		2	PISTON SEAL, GLID RING T 20,5X28X3,2 MM	
430	312115-0297	-		3	SCREW MC6S M4X25 A280	
440	1349863-0000	A		1	SHAFT	
L4309	1110930-0000	A		1	INDUCTOR	
TBA 0500B						
090	1349612-0000	A		2	PISTON	
120	1348544-0000	A		1	HOLDER	
130	1348504-0000	A		2	SLEEVE	
150	1558819-0000	A		1	RAIL	
320	90091-0368	A		2	WEAR RING 30X45X5,3 MM	
430	312115-0297	-		4	SCREW MC6S M4X25 A280	
440	1347562-0000	A		1	SHAFT	
500	1558734-0000	A		1	VOLUME BULGE	
510	312155-0287	-		2	SCREW HEX.SOCK.COUNT.MF6S M4X8 A270	
L4309	1110938-0000	A		1	INDUCTOR	
TBA 0500S						
090	1349612-0000	A		2	PISTON	
120	1511064-0000	A		1	HOLDER	
130	1348504-0000	A		2	SLEEVE	
150	1348545-0000	A		1	RAIL	
320	90091-0368	A		2	WEAR RING 30X45X5,3 MM	
330	90091-0428	A		2	PISTON SEAL, GLID RING T 27,5X34,5X3,2 M	
430	312115-0297	-		4	SCREW MC6S M4X25 A280	
440	1349980-0000	A		1	SHAFT	
L4309	1110934-0000	A		1	INDUCTOR	
TBA 1000B						
090	1349612-0000	A		2	PISTON	
120	1348544-0000	A		1	HOLDER	
130	1348504-0000	A		2	SLEEVE	
150	1348545-0000	A		1	RAIL	
320	90091-0368	A		2	WEAR RING 30X45X5,3 MM	
330	90091-0428	A		2	PISTON SEAL, GLID RING T 27,5X34,5X3,2 M	
430	312115-0297	-		4	SCREW MC6S M4X25 A280	
440	1347562-0000	A		1	SHAFT	
L4309	1110938-0000	A		1	INDUCTOR	
TBA 1000S						
090	1349612-0000	A		2	PISTON	
120	1349582-0000	A		1	HOLDER	
130	1348504-0000	A		2	SLEEVE	
150	1348545-0000	A		1	RAIL	
320	90091-0368	A		2	WEAR RING 30X45X5,3 MM	
330	90091-0428	A		2	PISTON SEAL, GLID RING T 27,5X34,5X3,2 M	
430	312115-0297	-		4	SCREW MC6S M4X25 A280	
440	1347562-0000	A		1	SHAFT	
L4309	1110937-0000	A		1	INDUCTOR	
TBA 1000SQ						
090	1349612-0000	A		2	PISTON	
120	1487622-0000	A		1	HOLDER	
130	1348504-0000	A		2	SLEEVE	
150	1348545-0000	A		1	RAIL	
320	90091-0368	A		2	WEAR RING 30X45X5,3 MM	
330	90091-0428	A		2	PISTON SEAL, GLID RING T 27,5X34,5X3,2 M	
430	312115-0297	-		4	SCREW MC6S M4X25 A280	
440	1347562-0000	A		1	SHAFT	
L4309	1110936-0000	A		1	INDUCTOR	
TBA 1500S						
090	1349612-0000	A		2	PISTON	
120	1349206-0000	A		1	HOLDER	
130	1348504-0000	A		2	SLEEVE	
150	1348545-0000	A		1	RAIL	
320	90091-0368	A		2	WEAR RING 30X45X5,3 MM	

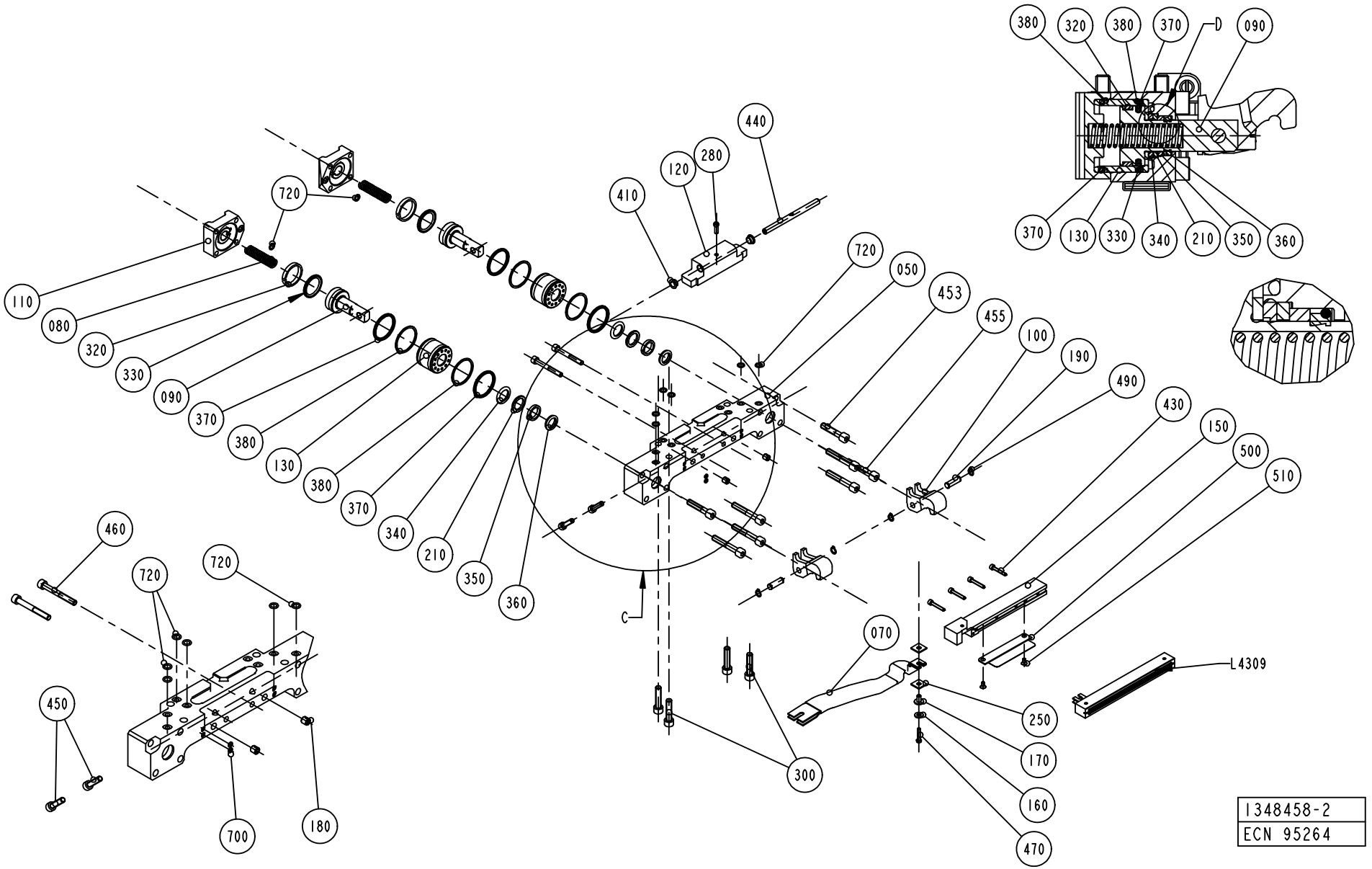
380
320
380
370
D
090
370
130
330
340
210
350
360
440
280
120
410
720
110
080
320
330
090
370
380
130
380
370
340
210
350
360
720
050
453
455
100
190
490
430
150
500
510
C
460
720
720
450
700
180
070
300
250
170
160
470
L4309
1348458-2
ECN 95264

ECM: 92188 - 20010709
Group number: 1348458-0100
Assembly Drawing: 1348458-2_1_AA

Issue: 20011217

Pos	Part No	SP	UN	Qty	Description	Page No
TBA 1500S (Cont'd)						
330	90091-0428	A		2	PISTON SEAL, GLID RING T 27,5X34,5X3,2 M	
430	312115-0297	-		4	SCREW MC6S M4X25 A280	
440	1347562-0000	A		1	SHAFT	
L4309	1110938-0000	A		1	INDUCTOR	
TPA 0330SQ						
090	929372-0000	A		2	PISTON	
120	1538250-0000	A		1	HOLDER	
130	1349595-0000	A		2	SLEEVE	
320	90091-0391	A		2	SEAL SLYDRING	
330	90091-0398	A		2	PISTON SEAL, GLID RING T 20,5X28X3,2 MM	
430	312115-0297	-		3	SCREW MC6S M4X25 A280	
440	1349863-0000	A		1	SHAFT	
L4309	1520167-0000	A		1	INDUCTOR	
TPA 1000S						
090	1349612-0000	A		2	PISTON	
120	1349583-0000	A		1	HOLDER	
130	1348504-0000	A		2	SLEEVE	
150	1348545-0000	A		1	RAIL	
320	90091-0368	A		2	WEAR RING 30X45X5,3 MM	
330	90091-0428	A		2	PISTON SEAL, GLID RING T 27,5X34,5X3,2 M	
430	312115-0297	-		4	SCREW MC6S M4X25 A280	
440	1347562-0000	A		1	SHAFT	
L4309	1110935-0000	A		1	INDUCTOR	
Common Parts						
050	1348502-0000	A		1	BEARING HOUSING	
070	1523092-0000	A		1	BUSBAR	
080	1260328-0000	A		2	SPRING	
100	1349614-0000	A		2	CATCH	
110	1348503-0000	A		2	LID	
160	28509-0000	A		1	WASHER	
170	32544-0000	A		1	INSULATION NUT	
180	107426-0000	A		2	GUIDE SLEEVE	
190	950351-0000	A		2	SHAFT	
210	1038240-0000	-		2	SPACER	
250	1036584-0000	A		2	WASHER	
280	312318-0329	A		1	SCREW SOCK.SET CUP P MSK6SS M5X16 A4	
300	312115-0457	-		4	SCREW MC6S M8X35 A280	
340	90091-0364	A		2	ROD SEAL, STEPSEAL 18X25,3X3,2 MM	
350	90091-0366	A		2	WEAR RING 18X23X3,9 MM	
360	90091-0362	A		2	SCRAPER, EXCLUDER2 18X22,8X3,7 MM	
370	90091-0359	A		4	X-SEAL 36,17X2,62 MM	
380	90091-0360	A		4	BACK-UP RING 37,5X1,4 MM	
410	1349584-0000	A		2	BUSHING	
450	312115-0372	-		2	SCREW MC6S M6X25 A280	
453	312115-0459	-		2	SCREW MC6S M8X40 A280	
455	312115-0461	-		6	SCREW MC6S M8X50 A280	
460	312115-0380	-		2	SCREW MC6S M6X50 A280	
470	312125-0295	-		1	SCREW PAN HEAD MCS M4X20 SS	
490	90141-0015	A		4	RETAIN. RING, 8	
700	315202-0101	A		2	O-RING 3,1X1,6 MM	
720	315202-0105	A		8	O-RING 7,1X1,6 MM	

Machine Type | Group Description | Used-In | Group Number | Page No

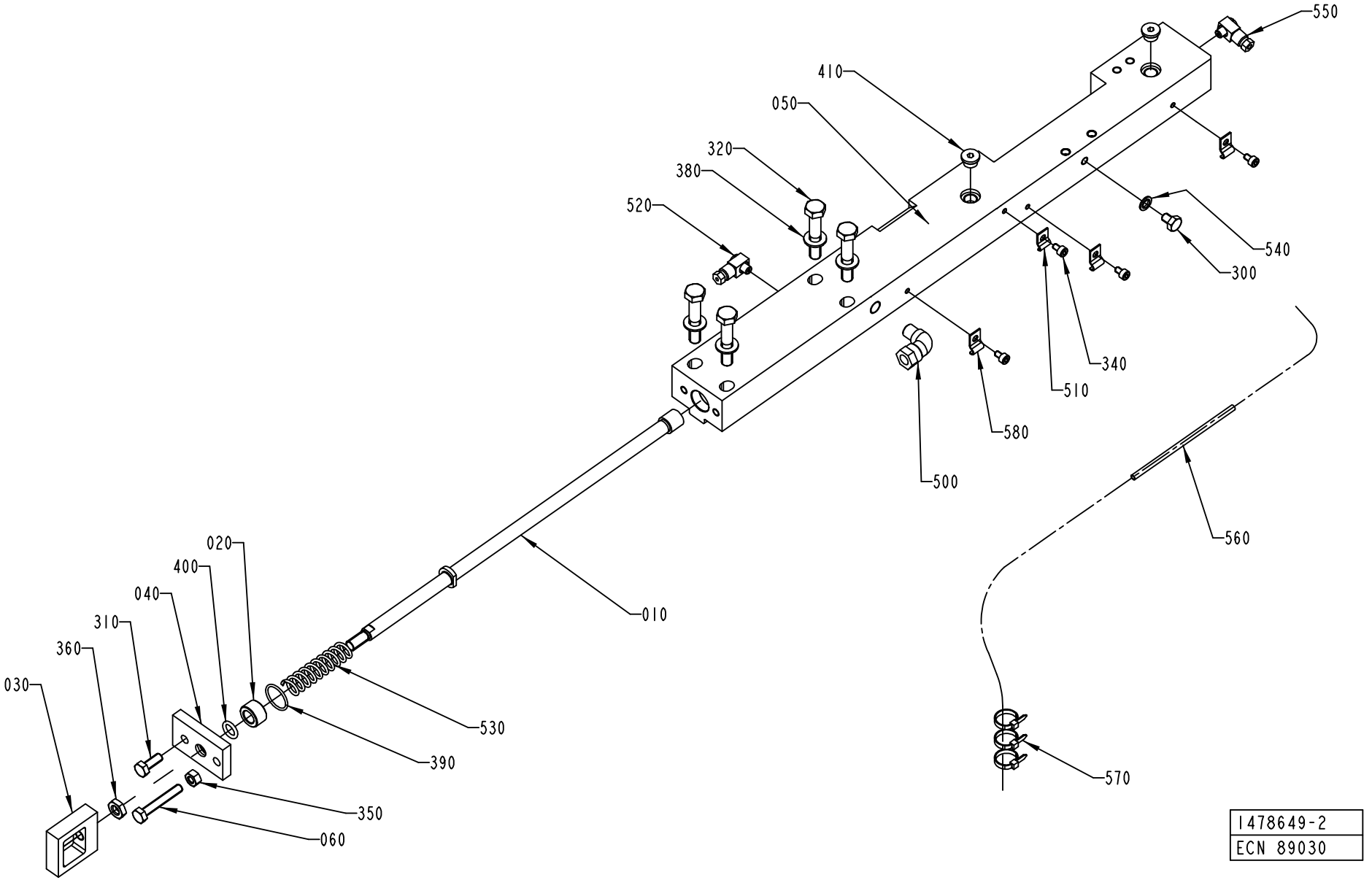
550
410
050
320
380
520
540
300
340
510
580
500
560
570
020
400
040
310
360
030
010
530
390
350
060
1478649-2
ECN 89030

Pos	Part No	SP	UN	Qty	Description	Page No
TBA 0500B OR TBA 1000S OR TBA 1000SQ OR TBA 1000B OR TPA 1000S OR TBA 1500S						
010	1036276-0000	A		1	TIE ROD	
TBA 0500S OR TBA 0200B OR TBA 0200S OR TBA 0250B OR TPA 0330SQ						
010	1037525-0000	A		1	TIE ROD	
Common Parts						
020	1036495-0000	A		1	BUSHING	
030	1036585-0000	A		1	EAR	
040	1036664-0000	-		1	LID	
050	1549619-0000	A		1	CARRIER	
060	1523162-0000	-		1	SCREW	
300	312105-0362	-		1	SCREW M6S M6X8 A280	
310	312105-0368	-		1	SCREW M6S M6X16 A280	
320	312105-0460	-		4	SCREW M6S M8X45 A280	
340	312115-0285	-		4	SCREW HEX.SOCK.HD.MC6S-TTS 4X6 A480	
350	312605-0316	-		1	HEXAGON NUT, M6M M6 A280	
360	312625-0318	-		1	NUT HEX. M8 SS	
380	315105-0165	-		4	WASHER PLAIN, BRB, 8,4/16,H=1,5	
390	315202-0116	A		1	O-RING 18,1X1,6 MM	
400	315202-0208	A		1	O-RING 9,3X2,4 MM	
410	342713-0209	A		2	PLUG, EXT THREAD HEX SOCKET 8638-00-180	
500	90030-0257	-		1	CONN. ELBOW, 8-R1/8, EXT.THREAD	
510	90165-0058	-		1	PIPE CLIP FOR TUBE D=25 MM	
520	90134-0058	-		1	CONNECTION	
530	1548940-0000	A		1	SPRING	
540	315211-0103	A		1	GASKET BOLT HEAD 6,7X11X1 MM M6	
550	90134-0068	-		1	CONNECTION	
560	90266-0165	-	MM	800	BRASS PIPE	
570	352113-0101	-		4	CLIP STRIP BLACK 92X2,5MM	
580	90165-0056	-		3	PIPE CLIP FOR TUBE D=4 MM	

Pos	Part No	SP	UN	Qty	Description	Page No

CUTTING JAW LEFT

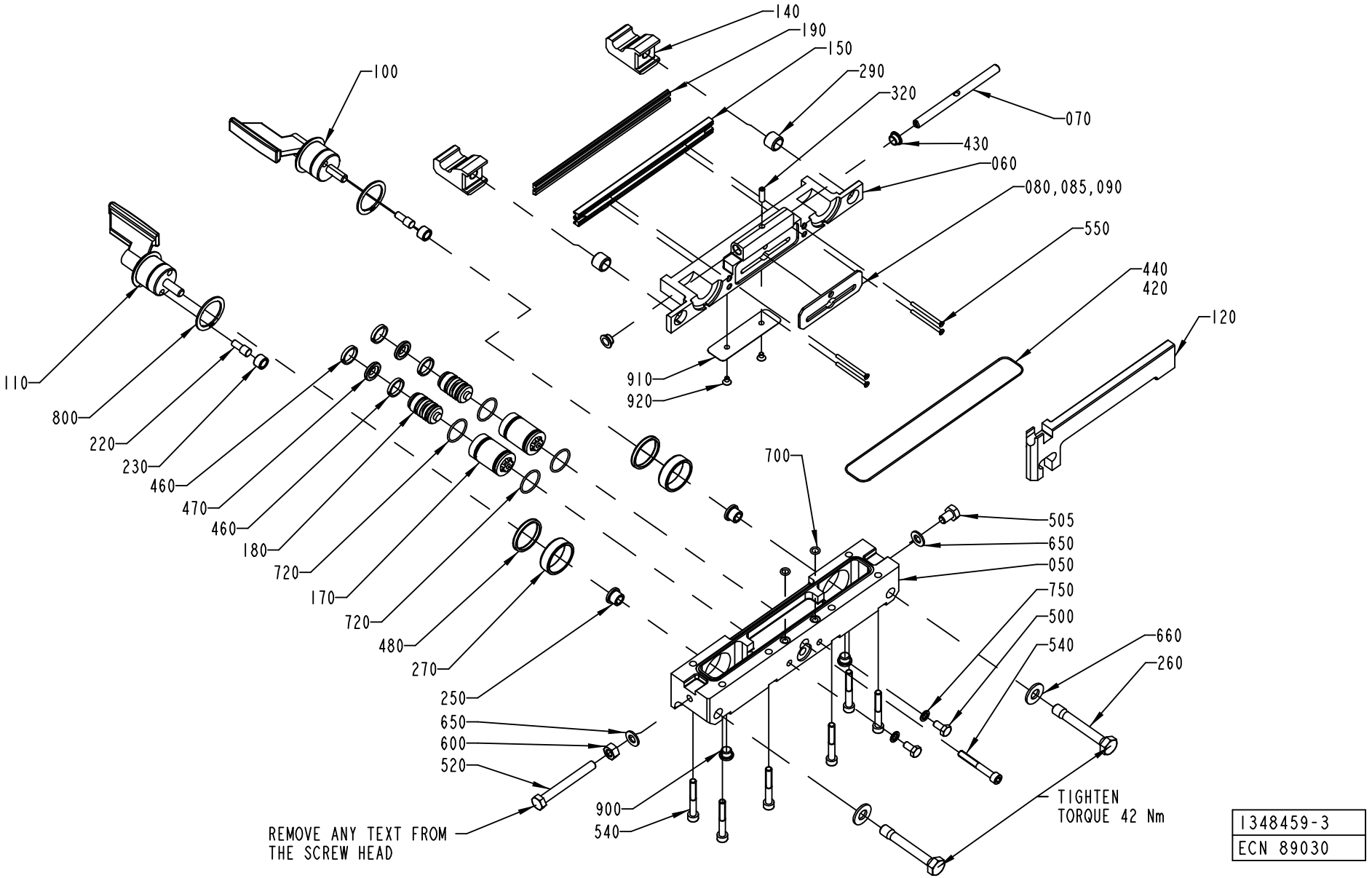

1348459-3
ECN 89030

ECM: 98484 - 50001231
Group number: 1348459-0200
Assembly Drawing: 1348459-3_1_AA

Issue: 20011217

Pos	Part No	SP	UN	Qty	Description	Page No
TBA 0200B OR TBA 0250B						
050	1549806-0000	A		1	BEARING HOUSING	
060	1349596-0000	A		1	CUTTING JAW	
070	1349980-0000	A		1	SHAFT	
080	1484002-0000	A		1	PLATE	
085	1484003-0000	A		1	PLATE	
100	2507078-0000	A		1	FOLDING FLAP	
110	2507079-0000	A		1	FOLDING FLAP	
120	1255459-0000	A		1	CARRIER RULER	
150	1110220-0000	A		2	CUTTING RAIL	
170	752288-0000	A		2	SLEEVE	
180	752115-0000	A		2	PLUNGER	
190	1110375-0002	A		2	DOLLY	
460	90091-0169	A		4	WEAR RING 12X15X3,2 MM	
470	90091-0216	A		2	PISTON SEAL, GLIDORING 7,1X12X2,2 MM	
550	312145-0234	-		4	SCREW COUNTERS.SLOT.HD. MFS 3X30 SS	
720	315202-0110	A		2	O-RING 12,1X1,6 MM	
TBA 0200S						
050	1549807-0000	A		1	BEARING HOUSING	
060	1349597-0000	A		1	CUTTING JAW	
070	1349863-0000	A		1	SHAFT	
080	1484002-0000	A		1	PLATE	
085	1484003-0000	A		1	PLATE	
100	2507090-0000	A		1	FOLDING FLAP	
110	2507091-0000	A		1	FOLDING FLAP	
120	1255458-0000	A		1	CARRIER RULER	
150	1110220-0000	A		2	CUTTING RAIL	
170	752288-0000	A		2	SLEEVE	
180	752115-0000	A		2	PLUNGER	
190	1110375-0002	A		2	DOLLY	
460	90091-0169	A		4	WEAR RING 12X15X3,2 MM	
470	90091-0216	A		2	PISTON SEAL, GLIDORING 7,1X12X2,2 MM	
550	312145-0234	-		4	SCREW COUNTERS.SLOT.HD. MFS 3X30 SS	
720	315202-0110	A		2	O-RING 12,1X1,6 MM	
TBA 0500B						
050	1549803-0000	A		1	BEARING HOUSING	
060	1348543-0000	A		1	CUTTING JAW	
070	1347562-0000	A		1	SHAFT	
090	1349925-0000	A		1	PLATE	
100	1511697-0000	A		1	FOLDING FLAP	
110	1511698-0000	A		1	FOLDING FLAP	
120	1255457-0000	A		1	CARRIER RULER	
150	1110214-0000	A		2	CUTTING RAIL	
170	1036278-0000	A		2	SLEEVE	
180	1036279-0000	A		2	PLUNGER	
190	1110390-0000	A		2	DOLLY	
460	90091-0367	A		4	WEAR RING 16X18X3,1 MM	
470	90091-0365	A		2	PISTON SEAL, GLIDORING 11,55X19,05X3,2 M	
550	312145-0238	-		4	SCREW COUNTERS.SLOT.HD. MFS 3X40 SS	
720	315202-0118	A		4	O-RING 22,1X1,6 MM	
910	1558733-0000	A		1	VOLUME BULGE	
920	312155-0285	-		2	SCREW HEX.SOCK.COUNT.MF6S M4X6 A480	
TBA 0500S						
050	1549809-0000	A		1	BEARING HOUSING	
060	1511063-0000	A		1	CUTTING JAW	
070	1349980-0000	A		1	SHAFT	
090	1487619-0000	A		1	PLATE	
100	2507085-0000	A		1	FOLDING FLAP	
110	2507086-0000	A		1	FOLDING FLAP	
120	1511067-0000	A		1	CARRIER RULER	
150	1110224-0000	A		2	CUTTING RAIL	
170	1036278-0000	A		2	SLEEVE	
180	1036279-0000	A		2	PLUNGER	
190	1110390-0000	A		2	DOLLY	
460	90091-0367	A		4	WEAR RING 16X18X3,1 MM	
470	90091-0365	A		2	PISTON SEAL, GLIDORING 11,55X19,05X3,2 M	
550	312145-0234	-		4	SCREW COUNTERS.SLOT.HD. MFS 3X30 SS	
720	315202-0118	A		4	O-RING 22,1X1,6 MM	
TBA 1000B						
050	1549803-0000	A		1	BEARING HOUSING	
060	1348543-0000	A		1	CUTTING JAW	
070	1347562-0000	A		1	SHAFT	
090	1349925-0000	A		1	PLATE	
100	1511697-0000	A		1	FOLDING FLAP	
110	1511698-0000	A		1	FOLDING FLAP	
120	1255457-0000	A		1	CARRIER RULER	
150	1349606-0000	A		2	CUTTING RAIL	
170	1036278-0000	A		2	SLEEVE	
180	1036279-0000	A		2	PLUNGER	
190	1038128-0009	A		2	DOLLY	

Machine Type | Group Description | Used-In | Group Number | Page No

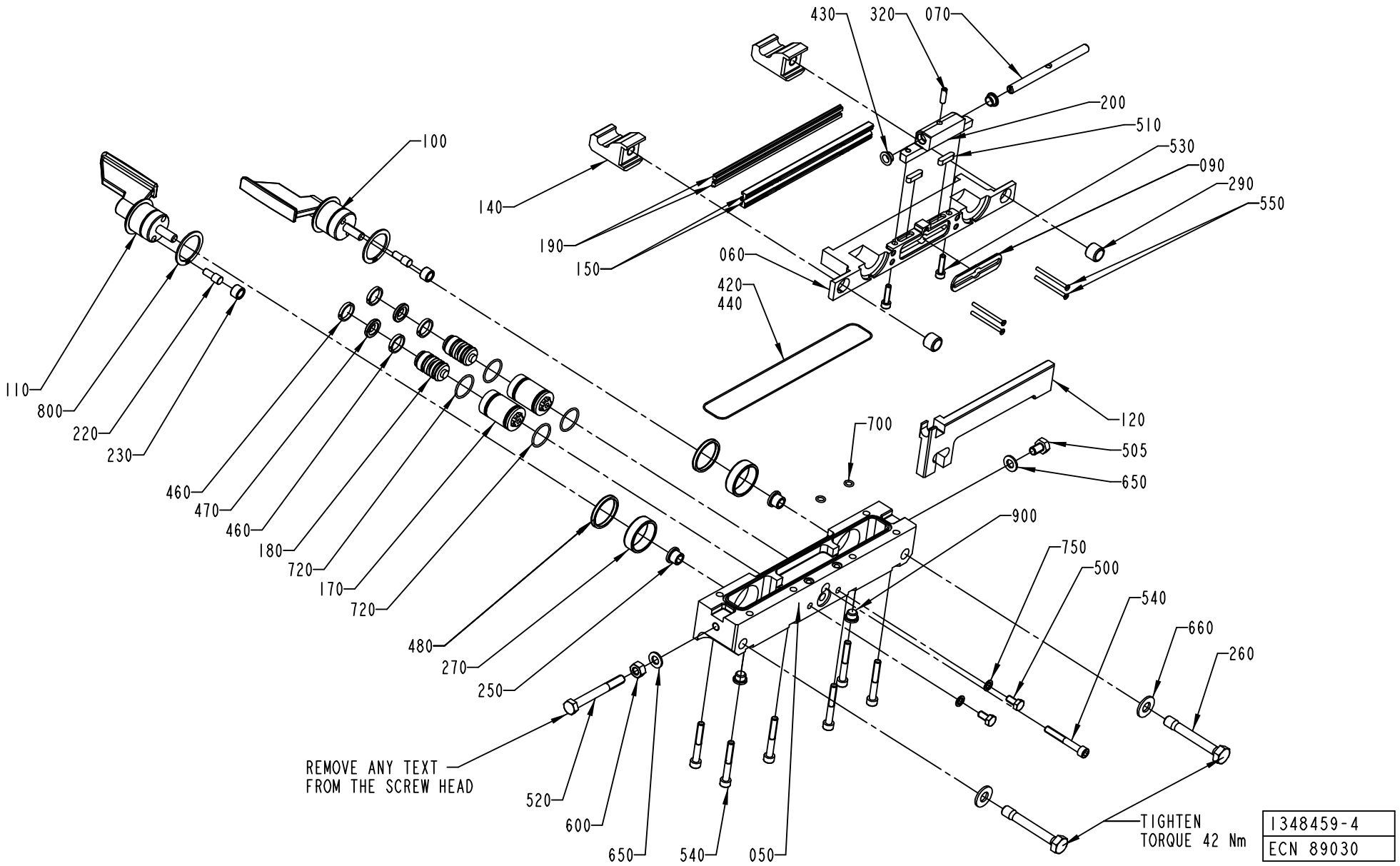
430
320
070
200
510
530
090
290
550
100
140
190
150
060
420
440
110
800
220
230
460
470
460
180
720
170
720
480
270
250
700
120
505
650
900
750
500
540
660
260
REMOVE ANY TEXT
FROM THE SCREW HEAD
520
600
650
540
050
TIGHTEN
TORQUE 42 Nm
1348459-4
ECN 89030

Pos	Part No	SP	UN	Qty	Description	Page No
TBA 1000B (Cont'd)						
460	90091-0367	A		4	WEAR RING 16X18X3,1 MM	
470	90091-0365	A		2	PISTON SEAL, GLIDORING 11,55X19,05X3,2 M	
550	312145-0238	-		4	SCREW COUNTERS.SLOT.HD. MFS 3X40 SS	
720	315202-0118	A		4	O-RING 22,1X1,6 MM	
TBA 1000S						
050	1549804-0000	A		1	BEARING HOUSING	
060	1349578-0000	A		1	CUTTING JAW	
070	1347562-0000	A		1	SHAFT	
090	1349925-0000	A		1	PLATE	
100	1511699-0000	A		1	FOLDING FLAP	
110	1511700-0000	A		1	FOLDING FLAP	
120	1255460-0000	A		1	CARRIER RULER	
150	1349606-0000	A		2	CUTTING RAIL	
170	1036278-0000	A		2	SLEEVE	
180	1036279-0000	A		2	PLUNGER	
190	1038128-0009	A		2	DOLLY	
460	90091-0367	A		4	WEAR RING 16X18X3,1 MM	
470	90091-0365	A		2	PISTON SEAL, GLIDORING 11,55X19,05X3,2 M	
550	312145-0238	-		4	SCREW COUNTERS.SLOT.HD. MFS 3X40 SS	
720	315202-0118	A		4	O-RING 22,1X1,6 MM	
TBA 1000SQ						
050	1549808-0000	A		1	BEARING HOUSING	
060	1487618-0000	A		1	CUTTING JAW	
070	1347562-0000	A		1	SHAFT	
090	1487619-0000	A		1	PLATE	
100	2507076-0000	A		1	FOLDING FLAP	
110	2507077-0000	A		1	FOLDING FLAP	
120	1360318-0000	A		1	CARRIER RULER	
150	1110224-0000	A		2	CUTTING RAIL	
170	1036278-0000	A		2	SLEEVE	
180	1036279-0000	A		2	PLUNGER	
190	1110390-0000	A		2	DOLLY	
200	1487639-0000	A		1	HOLDER	
460	90091-0367	A		4	WEAR RING 16X18X3,1 MM	
470	90091-0365	A		2	PISTON SEAL, GLIDORING 11,55X19,05X3,2 M	
510	315701-0201	-		2	PARALLEL KEY W. ROUND ENDS 5X5X20 MM	
530	312115-0331	-		2	SCREW MC6S M5X20 A280	
550	312145-0238	-		4	SCREW COUNTERS.SLOT.HD. MFS 3X40 SS	
720	315202-0118	A		4	O-RING 22,1X1,6 MM	
TBA 1500S						
050	1549803-0000	A		1	BEARING HOUSING	
060	1349203-0000	A		1	CUTTING JAW	
070	1347562-0000	A		1	SHAFT	
090	1349925-0000	A		1	PLATE	
100	2507092-0000	A		1	FOLDING FLAP	
110	2507093-0000	A		1	FOLDING FLAP	
120	1255457-0000	A		1	CARRIER RULER	
150	1349606-0000	A		2	CUTTING RAIL	
170	1036278-0000	A		2	SLEEVE	
180	1036279-0000	A		2	PLUNGER	
190	1038128-0009	A		2	DOLLY	
460	90091-0367	A		4	WEAR RING 16X18X3,1 MM	
470	90091-0365	A		2	PISTON SEAL, GLIDORING 11,55X19,05X3,2 M	
550	312145-0238	-		4	SCREW COUNTERS.SLOT.HD. MFS 3X40 SS	
720	315202-0118	A		4	O-RING 22,1X1,6 MM	
TPA 0330SQ						
050	2505277-0000	A		1	BEARING HOUSING	
060	1538253-0000	A		1	CUTTING JAW	
070	1349863-0000	A		1	SHAFT	
080	1484002-0000	A		1	PLATE	
085	1484003-0000	A		1	PLATE	
100	2507096-0000	A		1	FOLDING FLAP	
110	2507097-0000	A		1	FOLDING FLAP	
120	1538256-0000	A		1	CARRIER RULER	
150	1110220-0000	A		2	CUTTING RAIL	
170	752288-0000	A		2	SLEEVE	
180	752115-0000	A		2	PLUNGER	
190	1110390-0000	A		2	DOLLY	
460	90091-0169	A		4	WEAR RING 12X15X3,2 MM	
470	90091-0216	A		2	PISTON SEAL, GLIDORING 7,1X12X2,2 MM	
550	312145-0234	-		4	SCREW COUNTERS.SLOT.HD. MFS 3X30 SS	
720	315202-0110	A		2	O-RING 12,1X1,6 MM	
TPA 1000S						
050	1549805-0000	A		1	BEARING HOUSING	
060	1349579-0000	A		1	CUTTING JAW	
070	1347562-0000	A		1	SHAFT	
090	1349925-0000	A		1	PLATE	
100	2507083-0000	A		1	FOLDING FLAP	

Machine Type | Group Description | Used-In | Group Number | Page No

See previous drawings pages: 488, 490.

Pos	Part No	SP	UN	Qty	Description	Page No
TPA 1000S (Cont'd)						
110	2507084-0000	A		1	FOLDING FLAP	
120	1254225-0000	A		1	CARRIER RULER	
150	1349981-0000	A		2	CUTTING RAIL	
170	1036278-0000	A		2	SLEEVE	
180	1036279-0000	A		2	PLUNGER	
190	1038128-0009	A		2	DOLLY	
460	90091-0367	A		4	WEAR RING 16X18X3,1 MM	
470	90091-0365	A		2	PISTON SEAL, GLIDORING 11,55X19,05X3,2 M	
550	312145-0238	-		4	SCREW COUNTERS.SLOT.HD. MFS 3X40 SS	
720	315202-0118	A		4	O-RING 22,1X1,6 MM	
Common Parts						
140	1349613-0000	A		2	CATCH	
220	22462-0000	A		2	SHAFT	
230	22463-0000	A		2	ROLL	
250	1255390-0000	A		2	BUSHING	
260	1035871-0000	-		2	SCREW	
270	1255389-0000	A		2	BUSHING	
290	1036494-0000	A		2	GUIDE BUSHING	
320	312318-0329	A		1	SCREW SOCK.SET CUP P MSK6SS M5X16 A4	
420	90153-0015	-		1	ADHESIVE LOCTITE IS 496/CYANOLIT 303	
430	1349584-0000	A		2	BUSHING	
440	90242-0093	A	MM	550	O-RING	
480	90091-0361	A		2	SCRAPER, EXCLUDER2 30X34,8X3,7 MM	
500	312105-0366	-		2	SCREW M6S M6X12 A280	
505	312105-0447	-		1	SCREW M6S M8X12 A280	
520	312105-0465	-		1	SCREW M6S M8X70 A280	
540	312115-0379	-		7	SCREW MC6S M6X45 A280	
600	312605-0318	-		1	HEXAGON NUT, M6M M8 A280	
650	315105-0165	-		2	WASHER PLAIN, BRB, 8,4/16,H=1,5	
660	315105-0173	-		2	WASHER PLAIN, BRB, 10,5/22,H=2	
700	315202-0104	A		2	O-RING 6,1X1,6 MM	
750	315211-0103	A		2	GASKET BOLT HEAD 6,7X11X1 MM M6	
800	90141-0029	-		2	CIRCLIP	
900	342713-0209	A		2	PLUG, EXT THREAD HEX SOCKET 8638-00-180	

Pos	Part No	SP	UN	Qty	Description	Page No

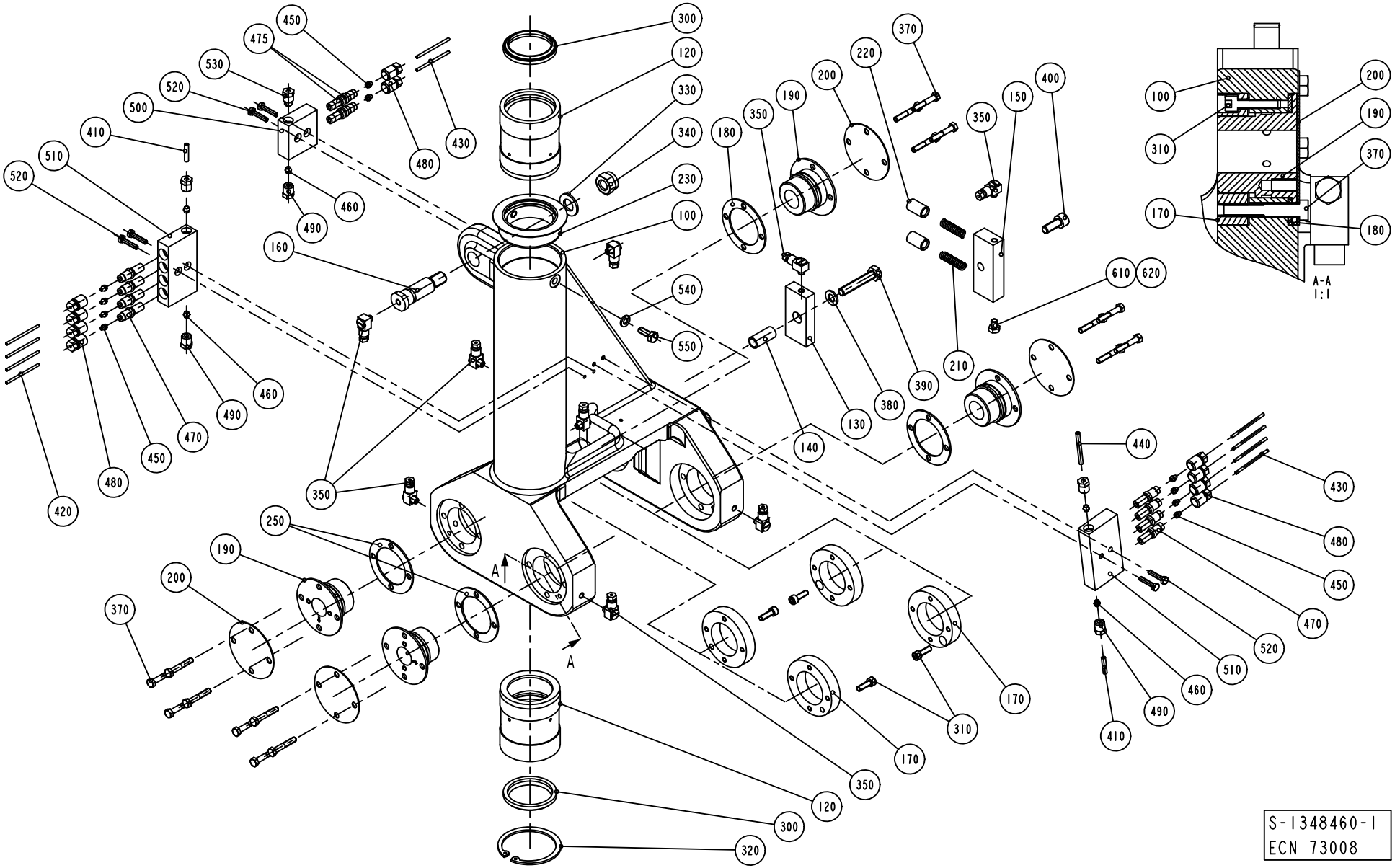
A-A
1:1
S-1348460-1
ECN 73008

ECM: 73008 - 19991119
Group number: 1348460-0100
Assembly Drawing: 1348460-1_1_AB

Issue: 20011217

Pos	Part No	SP	UN	Qty	Description	Page No
Common Parts						
100	1195361-0000	D		1	YOKE RIGHT	
120	1035954-0000	C		2	BUSHING	
130	1037104-0000	C		1	LOCATING PIECE	
140	1037106-0000	-		1	SLEEVE	
150	1349972-0000	-		1	SPRING HOUSING	
160	1036144-0000	D		1	SHAFT	
170	36753-0000	-		4	RING	
180	29886-0000	C		2	LACE	
190	246513-0000	C		4	BEARING	
200	239874-0000	-		4	WASHER	
210	20494-0000	C		2	COMPRESSION SPRING	
220	31838-0000	C		2	PLUNGER	
230	1349780-0000	D		1	LID	
250	1038509-0000	-		2	WASHER	
300	90091-0358	C		2	SCRAPER, ASOB 45X53X7 MM	
310	312115-0329	-		4	SCREW MC6S M5X16 A280	
320	315753-0135	-		1	RETAINING RING FOR HOLE, 60X2 MM	
330	315105-0178	-		1	WASHER PLAIN, BRB, 13/24,H=2	
340	312812-0322	-		1	HEXAGON NUT, NY-LOCK M12 A480	
350	90134-0058	-		9	CONNECTION	
370	312105-0335	-		16	SCREW M6S M5X30 A280	
380	315105-0165	-		1	WASHER PLAIN, BRB, 8,4/16,H=1,5	
390	312109-0460	-		1	SCREW M6S M8X45 A280	
400	312115-0451	-		1	SCREW MC6S M8X20 A280	
410	90166-0109	-	MM	500	TUBE 4 MM PA,TRANSP.	
420	90166-0143	-	MM	500	TUBE 2,5 MM PA,TRANSP.	
430	90266-0019	-	MM	300	PIPE	
440	90266-0165	-	MM	500	BRASS PIPE	
450	90028-0020	-		10	CONE TUBE 2,5MM	
460	90028-0021	-		5	CONE TUBE 4 MM	
470	90092-0052	-		8	METERING VALVE 10 MM3	
475	90092-0054	-		2	METERING VALVE 50 MM3	
480	90134-0039	-		10	BUSHING VALVE CONNECTION 2,5 MM	
490	90134-0038	-		5	BUSHING/NUT INLET/OUTLET 4 MM	
500	90032-0038	-		1	BLOCK 2 WAYS	
510	90032-0039	-		2	BLOCK 4 WAYS	
520	312105-0295	-		6	SCREW M6S M4X20 A280	
530	90087-0019	-		1	PLUG M10X1 STAINLESS	
540	315105-0153	-		1	WASHER PLAIN, BRB, 6,4/12,H=1,5	
550	312105-0366	-		1	SCREW M6S M6X12 A280	
610	312105-0362	-		1	SCREW M6S M6X8 A280	
620	90157-0021	-		1	LOCKING FLUID	

Machine Type	Group Description	Used-In	Group Number	Page No

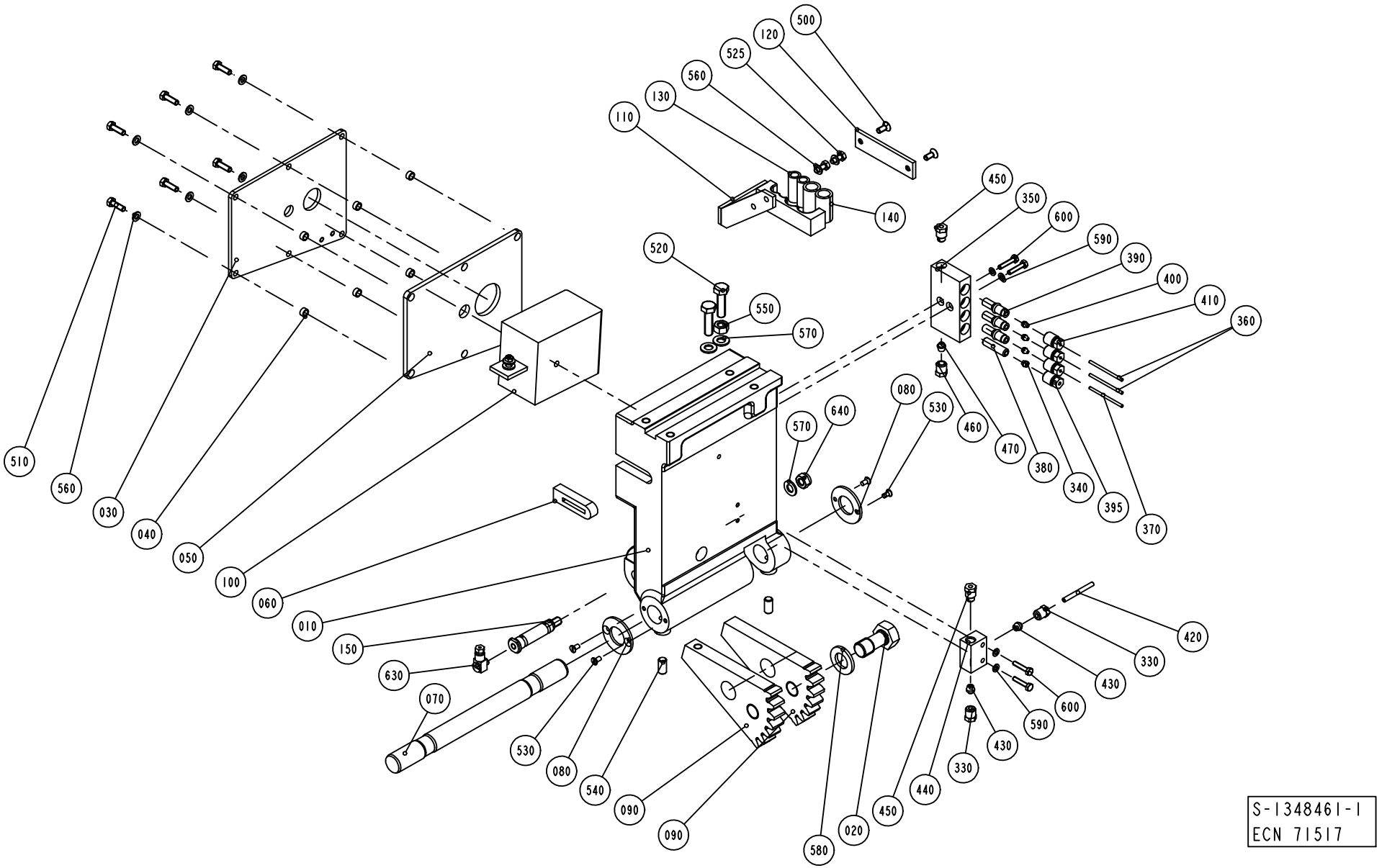

S-1348461-1
ECN 71517

ECM: 73008 - 19991119
Group number: 1348461-0100
Assembly Drawing: 1348461-1_1_AA

Issue: 20011217

Pos	Part No	SP	UN	Qty	Description	Page No
Common Parts						
010	1035878-0000	D		1	ARM RIGHT	
020	1037069-0000	D		1	SCREW	
030	1036485-0000	-		1	COVERING PLATE	
040	1036501-0000	C		6	SPACER	
050	1036484-0000	C		1	GASKET	
060	1036483-0000	C		1	SEAL	
070	1035788-0000	C		1	SHAFT	
080	536704-0000	C		2	WASHER	
090	1036156-0000	C		2	TOOTH PART	
100	A1035448-0100	-		1	ADAPTION TRANSFORMER	**477**
110	1348196-0000	-		1	FASTENING PLATE	
120	1349868-0000	-		1	FASTENING PLATE	
130	1478000-0000	-		2	HOSE	
140	1478001-0000	-		2	HOSE	
150	1037853-0000	-		1	SHAFT	
330	90134-0038	-		2	BUSHING/NUT INLET/OUTLET 4 MM	
340	90028-0021	-		1	CONE TUBE 4 MM	
350	90032-0039	-		1	BLOCK 4 WAYS	
360	90166-0143	-	MM	1500	TUBE 2,5 MM PA,TRANSP.	
370	90266-0019	-	MM	500	PIPE	
380	90134-0051	-		1	SPACING COLLAR DOSING BLOCK	
390	90092-0052	-		3	METERING VALVE 10 MM3	
395	90134-0040	-		1	BUSHING VALVE CONNECTION 4 MM	
400	90028-0020	-		3	CONE TUBE 2,5MM	
410	90134-0039	-		3	BUSHING VALVE CONNECTION 2,5 MM	
420	90266-0165	-	MM	200	BRASS PIPE	
430	90028-0024	-		2	CONE TUBE 4 MM	
440	90032-0043	-		1	DISTRIBUTION BLOCK 3 WAYS	
450	90087-0019	-		2	PLUG M10X1 STAINLESS	
460	90134-0055	-		1	BUSHING/NUT INLET/OUTLET 6 MM	
470	90028-0025	-		1	CONE TUBE 6 MM	
500	312155-0327	-		2	SCREW HEX.SOCK.COUNT.MF6S M5X12 A280	
510	312105-0329	-		6	SCREW M6S M5X16 A280	
520	312105-0455	-		2	SCREW M6S M8X30 A280	
525	312105-0327	-		2	SCREW M6S M5X12 A280	
530	312145-0287	-		4	SCREW COUNTERS.SLOT.HD. MFS 4X8 SS	
540	312318-0449	-		2	SCREW SOCK.SET CUP P MSK6SS M8X16 A4	
550	312605-0318	-		1	HEXAGON NUT, M6M M8 A280	
560	315105-0146	-		8	WASHER PLAIN, BRB, 5,3/10,H=1	
570	315105-0165	-		1	WASHER PLAIN, BRB, 8,4/16,H=1,5	
580	315105-0186	-		1	WASHER PLAIN, BRB, 17/30,H=3	
590	315105-0136	-		4	WASHER PLAIN, BRB, 4,3/8,H=0,8	
600	312105-0295	-		4	SCREW M6S M4X20 A280	
630	90134-0058	-		1	CONNECTION	
640	312812-0318	-		1	HEXAGON NUT, NY-LOCK M8 A480	

Machine Type | Group Description | Used-In | Group Number | Page No

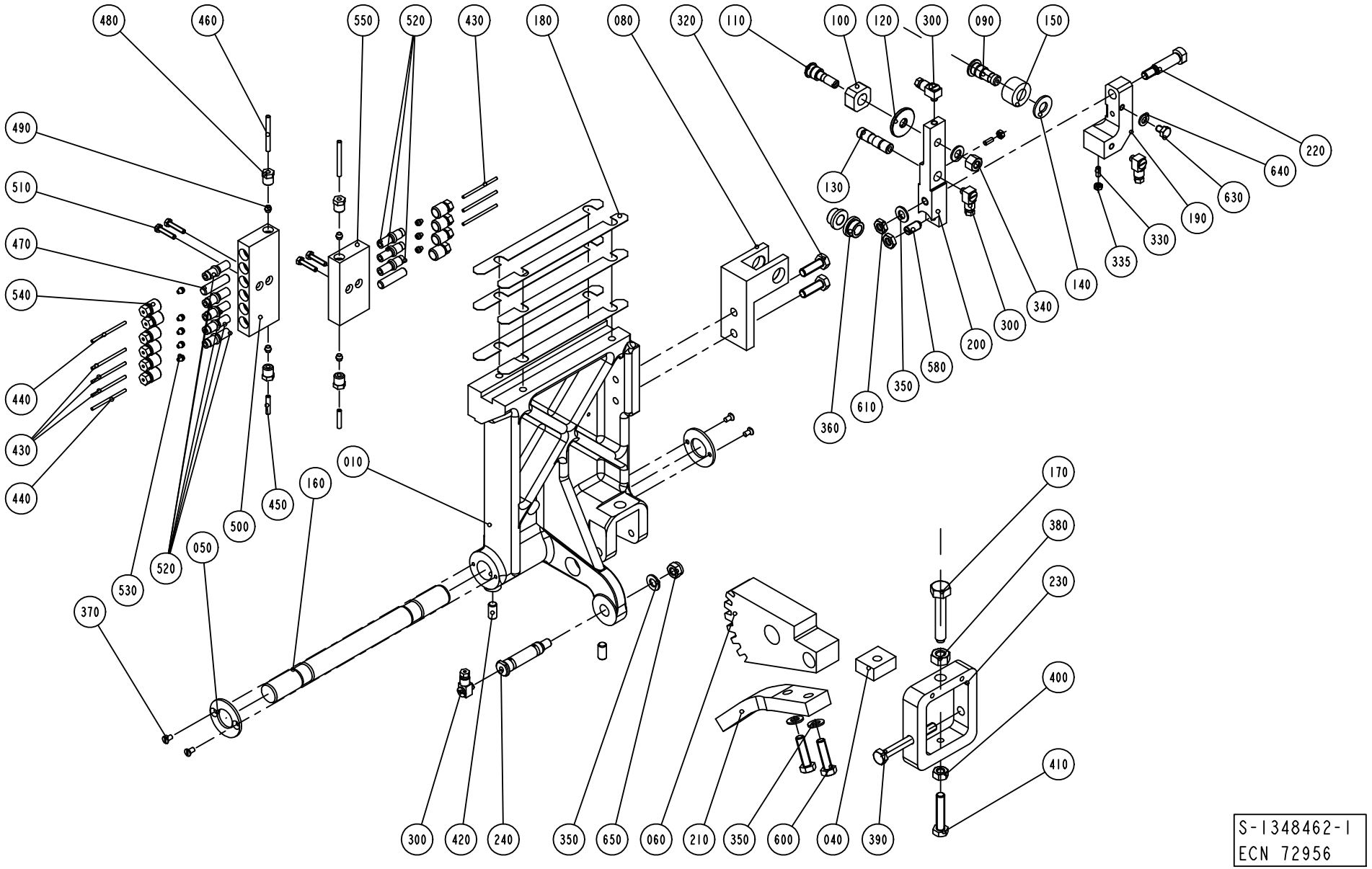

S-1348462-1
ECN 72956

ECM: 73538 - 20000620
Group number: 1348462-0100
Assembly Drawing: 1348462-1_1_AB

Issue: 20011217

Pos	Part No	SP	UN	Qty	Description	Page No
Common Parts						
010	1036031-0000	D		1	ARM RIGHT	
040	14729-0000	-		1	NUT	
050	536704-0000	C		2	WASHER	
060	1036155-0000	C		1	TOOTH PART	
080	1036617-0000	D		1	BRACKET	
090	1036620-0000	C		1	SHAFT	
100	256628-0000	C		1	PIECE	
110	256629-0001	C		1	AXLE PIN	
120	441706-0000	-		1	WASHER	
130	1036615-0000	C		1	SHAFT	
140	1036616-0000	-		1	WASHER	
150	1036618-0000	C		1	ROLL	
160	1035788-0000	C		1	SHAFT	
170	32957-0000	D		1	SCREW	
180	1037254-0000	C		6	SHIM	
190	1348672-0000	D		1	JOINT RIGHT	
200	1512315-0000	D		1	ARM RIGHT	
210	1484320-0000	-		1	ROD	
220	1348669-0000	D		1	SCREW	
230	1038867-0000	-		1	BOW CLAMP	
240	1037853-0000	-		1	SHAFT	
300	90134-0058	-		4	CONNECTION	
320	312105-0453	-		2	SCREW M6S M8X25 A280	
330	312318-0289	-		2	SCREW SOCK.SET CUP P MSK6SS M4X10 A4	
335	312605-0312	-		2	HEXAGON NUT, M6M M4 A280	
340	312811-0318	-		1	NUT HEX.LOCK HELI COIL MID GRIP M8 SS	
350	315105-0165	-		5	WASHER PLAIN, BRB, 8,4/16,H=1,5	
360	321101-0163	-		2	FLANGE BUS 10F7X10	
370	312145-0287	-		4	SCREW COUNTERS.SLOT.HD. MFS 4X8 SS	
380	312635-0320	-		1	NUT M6M 10X1 STAINLESS A2 80	
390	312105-0465	-		1	SCREW M6S M8X70 A280	
400	312605-0318	-		1	HEXAGON NUT, M6M M8 A280	
410	312109-0459	-		1	SCREW M6S M8X40 A280	
420	312318-0449	-		2	SCREW SOCK.SET CUP P MSK6SS M8X16 A4	
430	90166-0143	-	M	3	TUBE 2,5 MM PA,TRANSP.	
440	90266-0019	-	MM	200	PIPE	
450	90166-0109	-	MM	500	TUBE 4 MM PA,TRANSP.	
460	90266-0165	-	MM	100	BRASS PIPE	
470	90134-0052	-		2	PLUG DOSING BLOCK	
480	90134-0038	-		4	BUSHING/NUT INLET/OUTLET 4 MM	
490	90028-0021	-		4	CONE TUBE 4 MM	
500	90032-0039	-		1	BLOCK 4 WAYS	
510	312105-0295	-		4	SCREW M6S M4X20 A280	
520	90092-0052	-		8	METERING VALVE 10 MM3	
530	90028-0020	-		8	CONE TUBE 2,5MM	
540	90134-0039	-		10	BUSHING VALVE CONNECTION 2,5 MM	
550	90032-0040	-		1	BLOCK 6 WAYS	
580	90287-0112	D		1	SCREW SPRINGLOAD. SLOTTED HEAD M8X16	
600	312105-0455	-		2	SCREW M6S M8X30 A280	
610	312625-0318	-		2	NUT HEX. M8 SS	
630	312105-0362	-		1	SCREW M6S M6X8 A280	
640	315105-0153	-		1	WASHER PLAIN, BRB, 6,4/12,H=1,5	
650	312812-0318	-		1	HEXAGON NUT, NY-LOCK M8 A480	

Machine Type | Group Description | Used-In | Group Number | Page No

CARRIER PRESSURE RIGHT

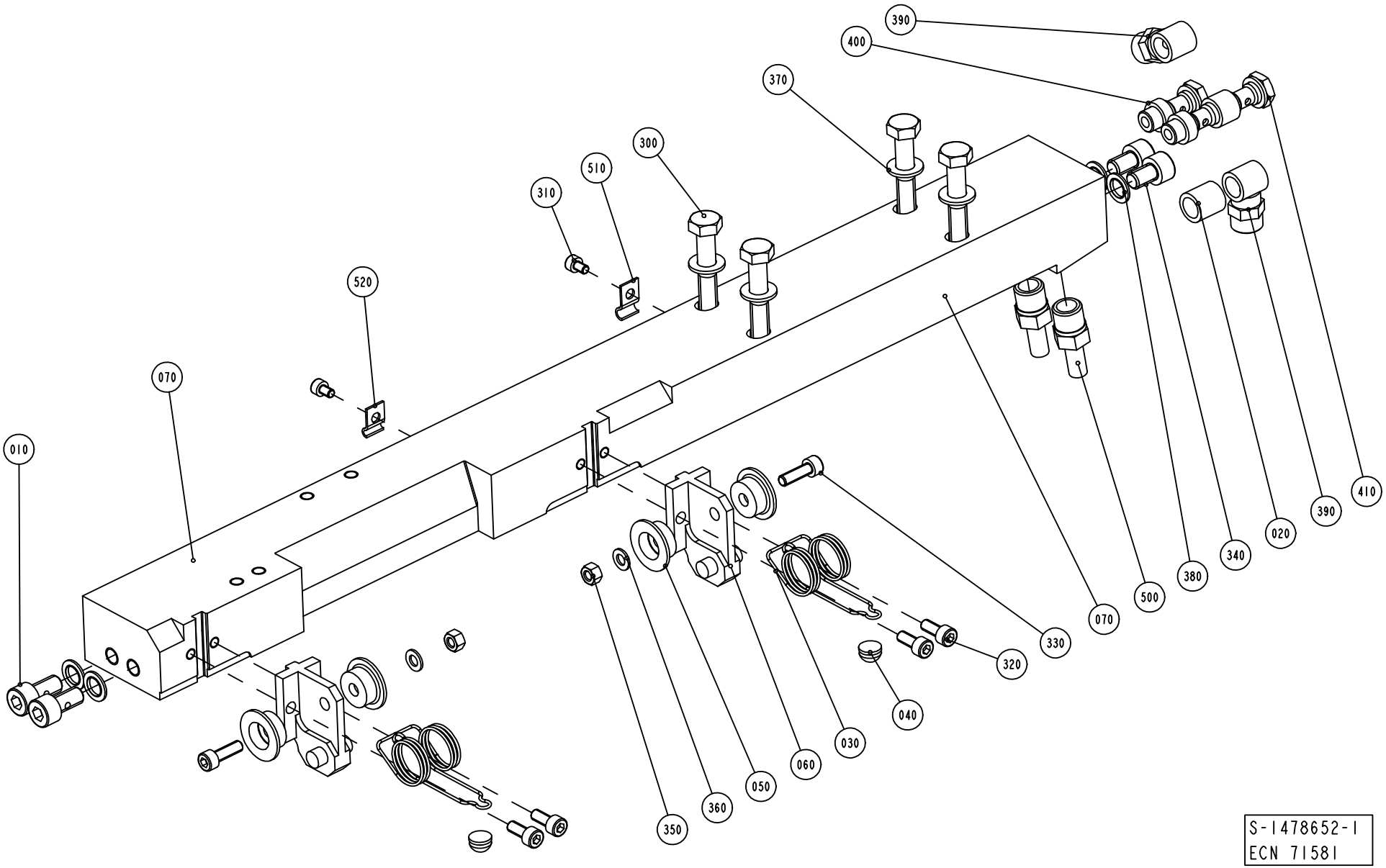

S-1478652-1
ECN 71581

ECM: 89453 - 50001231
Group number: 1478652-0100
Assembly Drawing: 1478652-1_1_AA

Issue: 20011217

Pos	Part No	SP	UN	Qty	Description	Page No
Common Parts						
010	1036343-0000	D		2	SCREW	
020	1038405-0000	-		1	SPACER	
030	1549378-0000	C		2	SPRING	
040	1129552-0000	C		2	KNOB	
050	1129833-0000	-		4	GUIDE ROLLER	
060	1129834-0000	D		2	BRACKET	
070	1348857-0000	A		1	CARRIER	
300	312105-0460	-		4	SCREW M6S M8X45 A280	
310	312115-0285	-		2	SCREW HEX.SOCK.HD.MC6S-TTS 4X6 A480	
320	312115-0327	-		4	SCREW MC6S M5X12 A280	
330	312115-0329	-		2	SCREW MC6S M5X16 A280	
340	312115-0447	-		2	SCREW MC6S M8X12 A280	
350	312605-0314	-		2	HEXAGON NUT, M6M M5 A280	
360	315105-0146	-		2	WASHER PLAIN, BRB, 5,3/10,H=1	
370	315105-0165	-		4	WASHER PLAIN, BRB, 8,4/16,H=1,5	
380	315211-0104	C		4	GASKET BOLT HEAD 8,7X14X1 MM M8	
390	342980-0121	-		2	BANJO-CONNECTION,RING 8/6-G1/8"	
400	342980-0303	-		1	BANJO-HOLLOW BOLT COUPL,EXT.THR.01-G1/8"	
410	342980-0313	-		1	BANJO-HOLLOW BOLT COUPL,EXT.THR.02-G1/8"	
500	90030-0065	-		2	PIPE CONNECTION	
510	90165-0056	-		1	PIPE CLIP FOR TUBE D=4 MM	
520	90165-0058	-		1	PIPE CLIP FOR TUBE D=25 MM	

Pos	Part No	SP	UN	Qty	Description	Page No

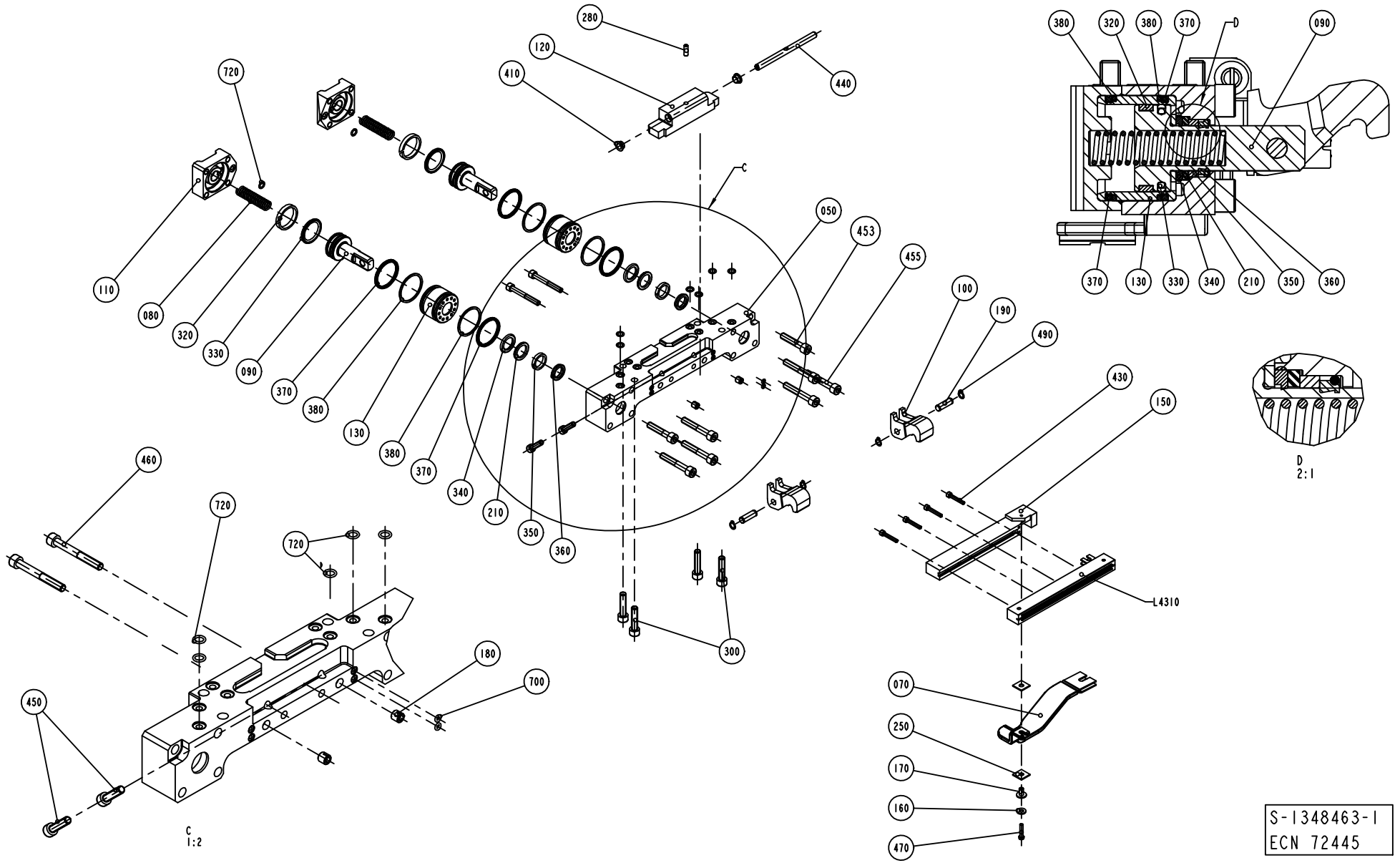
280
120
410
440
720
110
080
320
330
090
370
380
130
380
370
340
210
350
360
050
453
455
C
460
720
720
180
700
450
300
C
1:2
380
320
380
370
D
090
370
130
330
340
210
350
360
100
190
490
430
150
L4310
D
2:1
070
250
170
160
470
S-1348463-1
ECN 72445

ECM: 92191 - 20010709
Group number: 1348463-0100
Assembly Drawing: 1348463-1_1_AB

Issue: 20011217

Pos	Part No	SP	UN	Qty	Description	Page No
TBA 0200B OR TBA 0250B						
090	929372-0000	A		2	PISTON	
120	1349599-0000	A		1	HOLDER	
130	1349595-0000	A		2	SLEEVE	
150	1348546-0000	A		1	RAIL	
320	90091-0391	A		2	SEAL SLYDRING	
330	90091-0398	A		2	PISTON SEAL, GLID RING T 20,5X28X3,2 MM	
430	312115-0297	-		3	SCREW MC6S M4X25 A280	
440	1349980-0000	A		1	SHAFT	
L4310	1110932-0000	A		1	INDUCTOR	
TBA 0200S						
090	929372-0000	A		2	PISTON	
120	1349600-0000	A		1	HOLDER	
130	1349595-0000	A		2	SLEEVE	
150	1348546-0000	A		1	RAIL	
320	90091-0391	A		2	SEAL SLYDRING	
330	90091-0398	A		2	PISTON SEAL, GLID RING T 20,5X28X3,2 MM	
430	312115-0297	-		3	SCREW MC6S M4X25 A280	
440	1349863-0000	A		1	SHAFT	
L4310	1110930-0000	A		1	INDUCTOR	
TBA 0500B						
090	1349612-0000	A		2	PISTON	
120	1348544-0000	A		1	HOLDER	
130	1348504-0000	A		2	SLEEVE	
150	1558820-0000	A		1	RAIL	
320	90091-0368	A		2	WEAR RING 30X45X5,3 MM	
330	90091-0428	A		2	PISTON SEAL, GLID RING T 27,5X34,5X3,2 M	
430	312115-0297	-		4	SCREW MC6S M4X25 A280	
440	1347562-0000	A		1	SHAFT	
500	1558734-0000	A		1	VOLUME BULGE	
510	312155-0287	-		2	SCREW HEX.SOCK.COUNT.MF6S M4X8 A270	
L4310	1110938-0000	A		1	INDUCTOR	
TBA 0500S						
090	1349612-0000	A		2	PISTON	
120	1511064-0000	A		1	HOLDER	
130	1348504-0000	A		2	SLEEVE	
150	1348546-0000	A		1	RAIL	
320	90091-0368	A		2	WEAR RING 30X45X5,3 MM	
330	90091-0428	A		2	PISTON SEAL, GLID RING T 27,5X34,5X3,2 M	
430	312115-0297	-		4	SCREW MC6S M4X25 A280	
440	1349980-0000	A		1	SHAFT	
L4310	1110934-0000	A		1	INDUCTOR	
TBA 1000B						
090	1349612-0000	A		2	PISTON	
120	1348544-0000	A		1	HOLDER	
130	1348504-0000	A		2	SLEEVE	
150	1348546-0000	A		1	RAIL	
320	90091-0368	A		2	WEAR RING 30X45X5,3 MM	
330	90091-0428	A		2	PISTON SEAL, GLID RING T 27,5X34,5X3,2 M	
430	312115-0297	-		4	SCREW MC6S M4X25 A280	
440	1347562-0000	A		1	SHAFT	
L4310	1110938-0000	A		1	INDUCTOR	
TBA 1000S						
090	1349612-0000	A		2	PISTON	
120	1349582-0000	A		1	HOLDER	
130	1348504-0000	A		2	SLEEVE	
150	1348546-0000	A		1	RAIL	
320	90091-0368	A		2	WEAR RING 30X45X5,3 MM	
330	90091-0428	A		2	PISTON SEAL, GLID RING T 27,5X34,5X3,2 M	
430	312115-0297	-		4	SCREW MC6S M4X25 A280	
440	1347562-0000	A		1	SHAFT	
L4310	1110937-0000	A		1	INDUCTOR	
TBA 1000SQ						
090	1349612-0000	A		2	PISTON	
120	1487622-0000	A		1	HOLDER	
130	1348504-0000	A		2	SLEEVE	
150	1348546-0000	A		1	RAIL	
320	90091-0368	A		2	WEAR RING 30X45X5,3 MM	
330	90091-0428	A		2	PISTON SEAL, GLID RING T 27,5X34,5X3,2 M	
430	312115-0297	-		4	SCREW MC6S M4X25 A280	
440	1347562-0000	A		1	SHAFT	
L4310	1110936-0000	A		1	INDUCTOR	
TBA 1500S						
090	1349612-0000	A		2	PISTON	
120	1349206-0000	A		1	HOLDER	
130	1348504-0000	A		2	SLEEVE	
150	1348546-0000	A		1	RAIL	

Machine Type | Group Description | Used-In | Group Number | Page No

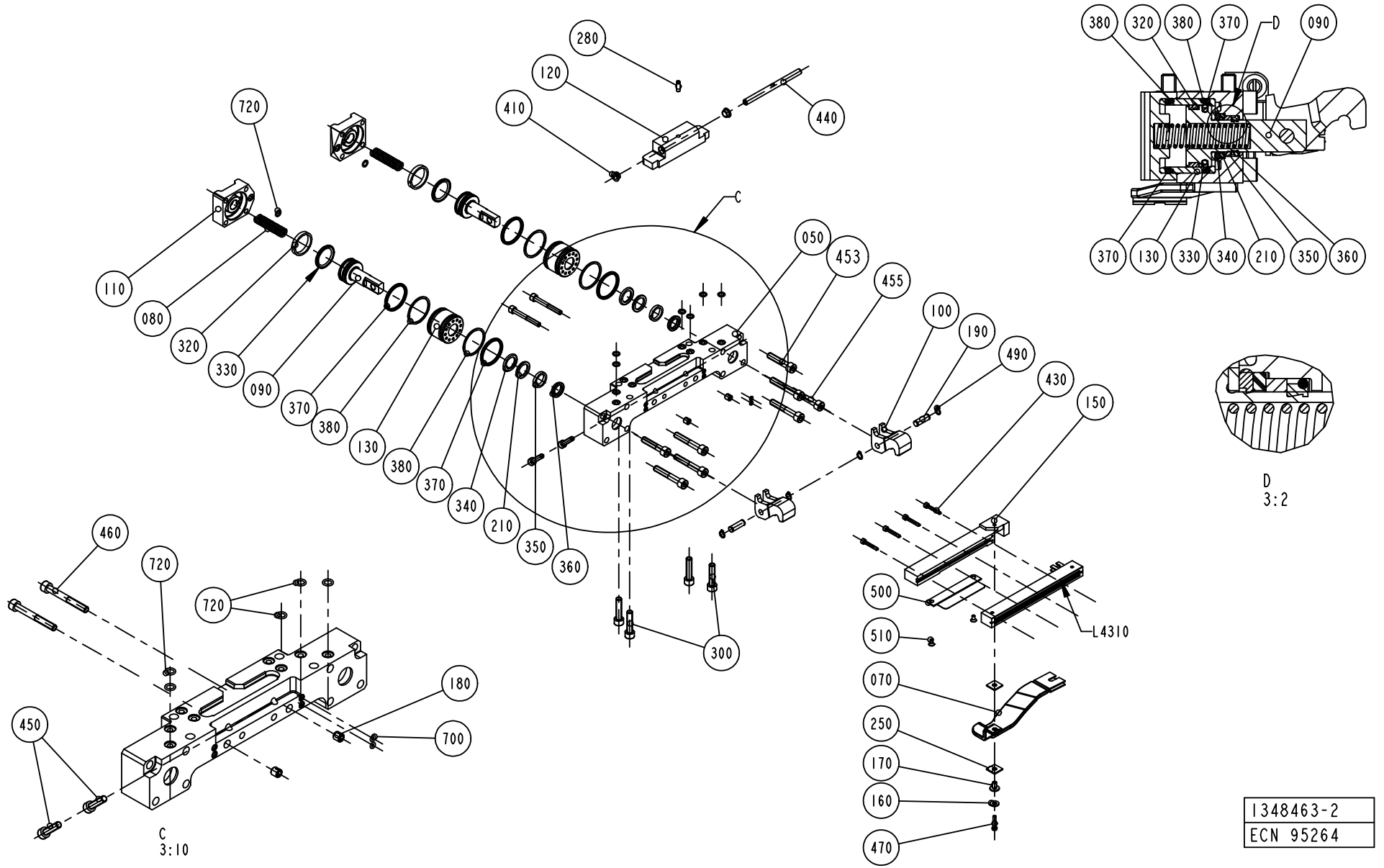

1348463-2
ECN 95264

ECM: 92191 - 20010709
Group number: 1348463-0100
Assembly Drawing: 1348463-2_1_AA

Issue: 20011217

Pos	Part No	SP	UN	Qty	Description	Page No
TBA 1500S (Cont'd)						
320	90091-0368	A		2	WEAR RING 30X45X5,3 MM	
330	90091-0428	A		2	PISTON SEAL, GLID RING T 27,5X34,5X3,2 M	
430	312115-0297	-		4	SCREW MC6S M4X25 A280	
440	1347562-0000	A		1	SHAFT	
L4310	1110938-0000	A		1	INDUCTOR	
TPA 0330SQ						
090	929372-0000	A		2	PISTON	
120	1538250-0000	A		1	HOLDER	
130	1349595-0000	A		2	SLEEVE	
320	90091-0391	A		2	SEAL SLYDRING	
330	90091-0398	A		2	PISTON SEAL, GLID RING T 20,5X28X3,2 MM	
430	312115-0297	-		3	SCREW MC6S M4X25 A280	
440	1349863-0000	A		1	SHAFT	
L4310	1520167-0000	A		1	INDUCTOR	
TPA 1000S						
090	1349612-0000	A		2	PISTON	
120	1349583-0000	A		1	HOLDER	
130	1348504-0000	A		2	SLEEVE	
150	1348546-0000	A		1	RAIL	
320	90091-0368	A		2	WEAR RING 30X45X5,3 MM	
330	90091-0428	A		2	PISTON SEAL, GLID RING T 27,5X34,5X3,2 M	
430	312115-0297	-		4	SCREW MC6S M4X25 A280	
440	1347562-0000	A		1	SHAFT	
L4310	1110935-0000	A		1	INDUCTOR	
Common Parts						
050	1348502-0000	A		1	BEARING HOUSING	
070	1523093-0000	A		1	BUSBAR	
080	1260328-0000	A		2	SPRING	
100	1349614-0000	A		2	CATCH	
110	1348503-0000	A		2	LID	
160	28509-0000	A		1	WASHER	
170	32544-0000	A		1	INSULATION NUT	
180	107426-0000	A		2	GUIDE SLEEVE	
190	950351-0000	A		2	SHAFT	
210	1038240-0000	-		2	SPACER	
250	1036584-0000	A		2	WASHER	
280	312318-0329	A		1	SCREW SOCK.SET CUP P MSK6SS M5X16 A4	
300	312115-0457	-		4	SCREW MC6S M8X35 A280	
340	90091-0364	A		2	ROD SEAL, STEPSEAL 18X25,3X3,2 MM	
350	90091-0366	A		2	WEAR RING 18X23X3,9 MM	
360	90091-0362	A		2	SCRAPER, EXCLUDER2 18X22,8X3,7 MM	
370	90091-0359	A		4	X-SEAL 36,17X2,62 MM	
380	90091-0360	A		4	BACK-UP RING 37,5X1,4 MM	
410	1349584-0000	A		2	BUSHING	
450	312115-0372	-		2	SCREW MC6S M6X25 A280	
453	312115-0459	-		2	SCREW MC6S M8X40 A280	
455	312115-0461	-		6	SCREW MC6S M8X50 A280	
460	312115-0380	-		2	SCREW MC6S M6X50 A280	
470	312125-0295	-		1	SCREW PAN HEAD MCS M4X20 SS	
490	90141-0015	A		4	RETAIN. RING, 8	
700	315202-0101	A		2	O-RING 3,1X1,6 MM	
720	315202-0105	A		8	O-RING 7,1X1,6 MM	

Machine Type | Group Description | Used-In | Group Number | Page No

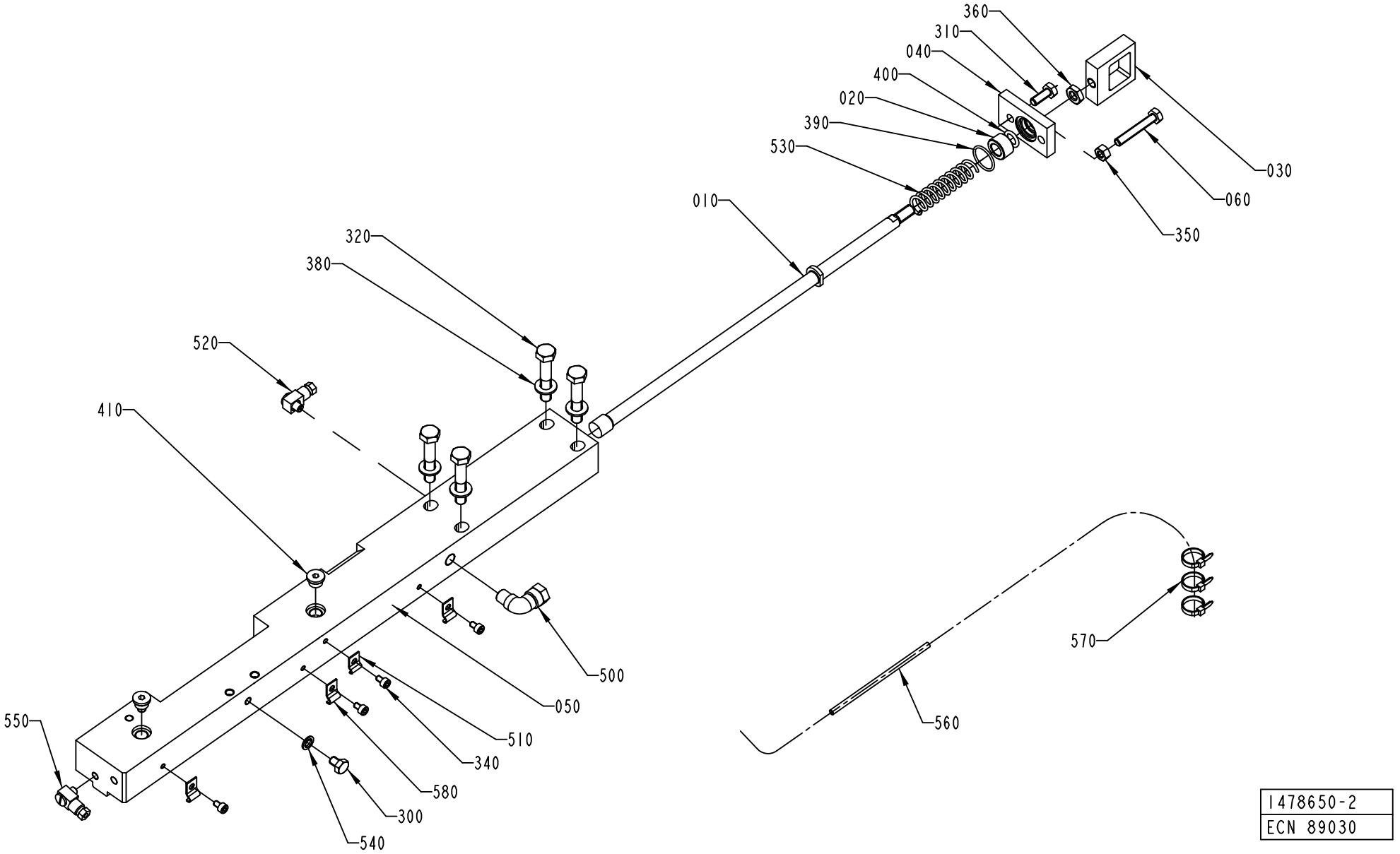

1478650-2
ECN 89030

ECM: 89040 - 50001231
Group number: 1478650-0200
Assembly Drawing: 1478650-2_1_AA

Issue: 20011217

Pos	Part No	SP	UN	Qty	Description	Page No
TBA 0500B OR TBA 1000S OR TBA 1000SQ OR TBA 1000B OR TPA 1000S OR TBA 1500S						
010	1036276-0000	A		1	TIE ROD	
TBA 0500S OR TBA 0200B OR TBA 0200S OR TBA 0250B OR TPA 0330SQ						
010	1037525-0000	A		1	TIE ROD	
Common Parts						
020	1036495-0000	A		1	BUSHING	
030	1036585-0000	A		1	EAR	
040	1036389-0000	-		1	LID	
050	1549802-0000	A		1	CARRIER	
060	1523162-0000	-		1	SCREW	
300	312105-0362	-		1	SCREW M6S M6X8 A280	
310	312105-0368	-		1	SCREW M6S M6X16 A280	
320	312105-0460	-		4	SCREW M6S M8X45 A280	
340	312115-0285	-		4	SCREW HEX.SOCK.HD.MC6S-TTS 4X6 A480	
350	312605-0316	-		1	HEXAGON NUT, M6M M6 A280	
360	312625-0318	-		1	NUT HEX. M8 SS	
380	315105-0165	-		4	WASHER PLAIN, BRB, 8,4/16,H=1,5	
390	315202-0116	A		1	O-RING 18,1X1,6 MM	
400	315202-0208	A		1	O-RING 9,3X2,4 MM	
410	342713-0209	A		2	PLUG, EXT THREAD HEX SOCKET 8638-00-180	
500	90030-0257	-		1	CONN. ELBOW, 8-R1/8, EXT.THREAD	
510	90165-0058	-		1	PIPE CLIP FOR TUBE D=25 MM	
520	90134-0058	-		1	CONNECTION	
530	1548940-0000	A		1	SPRING	
540	315211-0103	A		1	GASKET BOLT HEAD 6,7X11X1 MM M6	
550	90134-0068	-		1	CONNECTION	
560	90266-0165	-	MM	800	BRASS PIPE	
570	352113-0101	-		3	CLIP STRIP BLACK 92X2,5MM	
580	90165-0056	-		4	PIPE CLIP FOR TUBE D=4 MM	

Pos	Part No	SP	UN	Qty	Description	Page No

Machine Type | Group Description | Used-In | Group Number | Page No

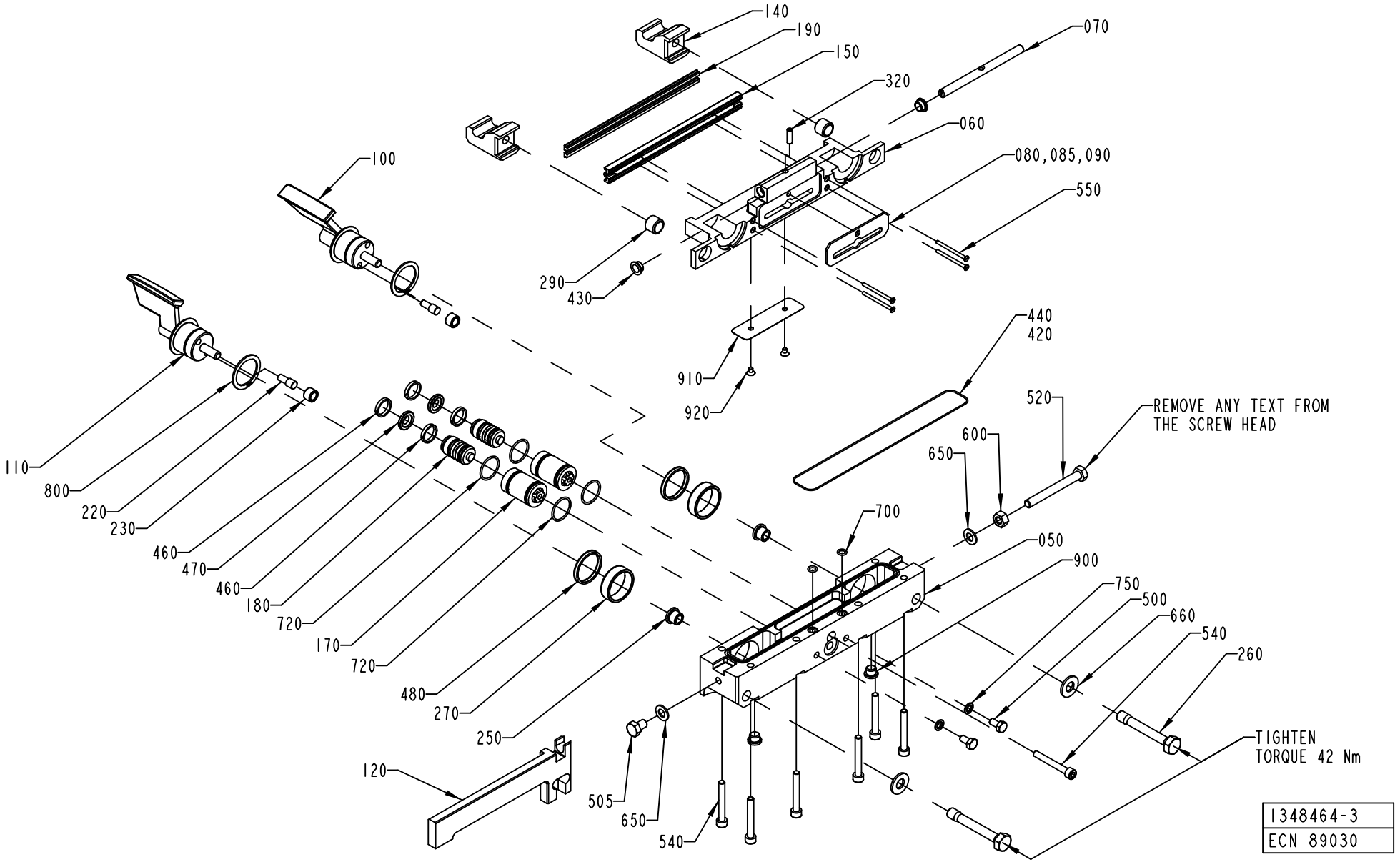
140
190
150
320
070
060
080,085,090
550
100
290
430
910
920
440
420
520
REMOVE ANY TEXT FROM THE SCREW HEAD
600
650
110
800
220
230
460
470
460
180
720
170
720
480
270
250
700
050
900
750
500
660
540
260
120
505
650
540
TIGHTEN TORQUE 42 Nm
1348464-3
ECN 89030

ECM: 98485 - 50001231
Group number: 1348464-0200
Assembly Drawing: 1348464-3_1_AA

Issue: 20011217

Pos	Part No	SP	UN	Qty	Description	Page No
TBA 0200B OR TBA 0250B						
050	1549806-0000	A		1	BEARING HOUSING	
060	1349596-0000	A		1	CUTTING JAW	
070	1349980-0000	A		1	SHAFT	
080	1484002-0000	A		1	PLATE	
085	1484003-0000	A		1	PLATE	
100	2507078-0000	A		1	FOLDING FLAP	
110	2507079-0000	A		1	FOLDING FLAP	
120	1255463-0000	A		1	CARRIER RULER	
150	1110220-0000	A		2	CUTTING RAIL	
170	752288-0000	A		2	SLEEVE	
180	752115-0000	A		2	PLUNGER	
190	1110375-0002	A		2	DOLLY	
460	90091-0169	A		4	WEAR RING 12X15X3,2 MM	
470	90091-0216	A		2	PISTON SEAL, GLIDORING 7,1X12X2,2 MM	
550	312145-0234	-		4	SCREW COUNTERS.SLOT.HD. MFS 3X30 SS	
720	315202-0110	A		2	O-RING 12,1X1,6 MM	
TBA 0200S						
050	1549807-0000	A		1	BEARING HOUSING	
060	1349597-0000	A		1	CUTTING JAW	
070	1349863-0000	A		1	SHAFT	
080	1484002-0000	A		1	PLATE	
085	1484003-0000	A		1	PLATE	
100	2507090-0000	A		1	FOLDING FLAP	
110	2507091-0000	A		1	FOLDING FLAP	
120	1255462-0000	A		1	CARRIER RULER	
150	1110220-0000	A		2	CUTTING RAIL	
170	752288-0000	A		2	SLEEVE	
180	752115-0000	A		2	PLUNGER	
190	1110375-0002	A		2	DOLLY	
460	90091-0169	A		4	WEAR RING 12X15X3,2 MM	
470	90091-0216	A		2	PISTON SEAL, GLIDORING 7,1X12X2,2 MM	
550	312145-0234	-		4	SCREW COUNTERS.SLOT.HD. MFS 3X30 SS	
720	315202-0110	A		2	O-RING 12,1X1,6 MM	
TBA 0500B						
050	1549803-0000	A		1	BEARING HOUSING	
060	1348543-0000	A		1	CUTTING JAW	
070	1347562-0000	A		1	SHAFT	
090	1349925-0000	A		1	PLATE	
100	1511697-0000	A		1	FOLDING FLAP	
110	1511698-0000	A		1	FOLDING FLAP	
120	1255461-0000	A		1	CARRIER RULER	
150	1110214-0000	A		2	CUTTING RAIL	
170	1036278-0000	A		2	SLEEVE	
180	1036279-0000	A		2	PLUNGER	
190	1110390-0000	A		2	DOLLY	
460	90091-0367	A		4	WEAR RING 16X18X3,1 MM	
470	90091-0365	A		2	PISTON SEAL, GLIDORING 11,55X19,05X3,2 M	
550	312145-0238	-		4	SCREW COUNTERS.SLOT.HD. MFS 3X40 SS	
720	315202-0118	A		4	O-RING 22,1X1,6 MM	
910	1558733-0000	A		1	VOLUME BULGE	
920	312155-0285	-		2	SCREW HEX.SOCK.COUNT.MF6S M4X6 A480	
TBA 0500S						
050	1549809-0000	A		1	BEARING HOUSING	
060	1511063-0000	A		1	CUTTING JAW	
070	1349980-0000	A		1	SHAFT	
090	1487619-0000	A		1	PLATE	
100	2507085-0000	A		1	FOLDING FLAP	
110	2507086-0000	A		1	FOLDING FLAP	
120	1511188-0000	A		1	CARRIER RULER	
150	1110224-0000	A		2	CUTTING RAIL	
170	1036278-0000	A		2	SLEEVE	
180	1036279-0000	A		2	PLUNGER	
190	1110390-0000	A		2	DOLLY	
460	90091-0367	A		4	WEAR RING 16X18X3,1 MM	
470	90091-0365	A		2	PISTON SEAL, GLIDORING 11,55X19,05X3,2 M	
550	312145-0234	-		4	SCREW COUNTERS.SLOT.HD. MFS 3X30 SS	
720	315202-0118	A		4	O-RING 22,1X1,6 MM	
TBA 1000B						
050	1549803-0000	A		1	BEARING HOUSING	
060	1348543-0000	A		1	CUTTING JAW	
070	1347562-0000	A		1	SHAFT	
090	1349925-0000	A		1	PLATE	
100	1511697-0000	A		1	FOLDING FLAP	
110	1511698-0000	A		1	FOLDING FLAP	
120	1255461-0000	A		1	CARRIER RULER	
150	1349606-0000	A		2	CUTTING RAIL	
170	1036278-0000	A		2	SLEEVE	
180	1036279-0000	A		2	PLUNGER	
190	1038128-0009	A		2	DOLLY	

Machine Type | Group Description | Used-In | Group Number | Page No

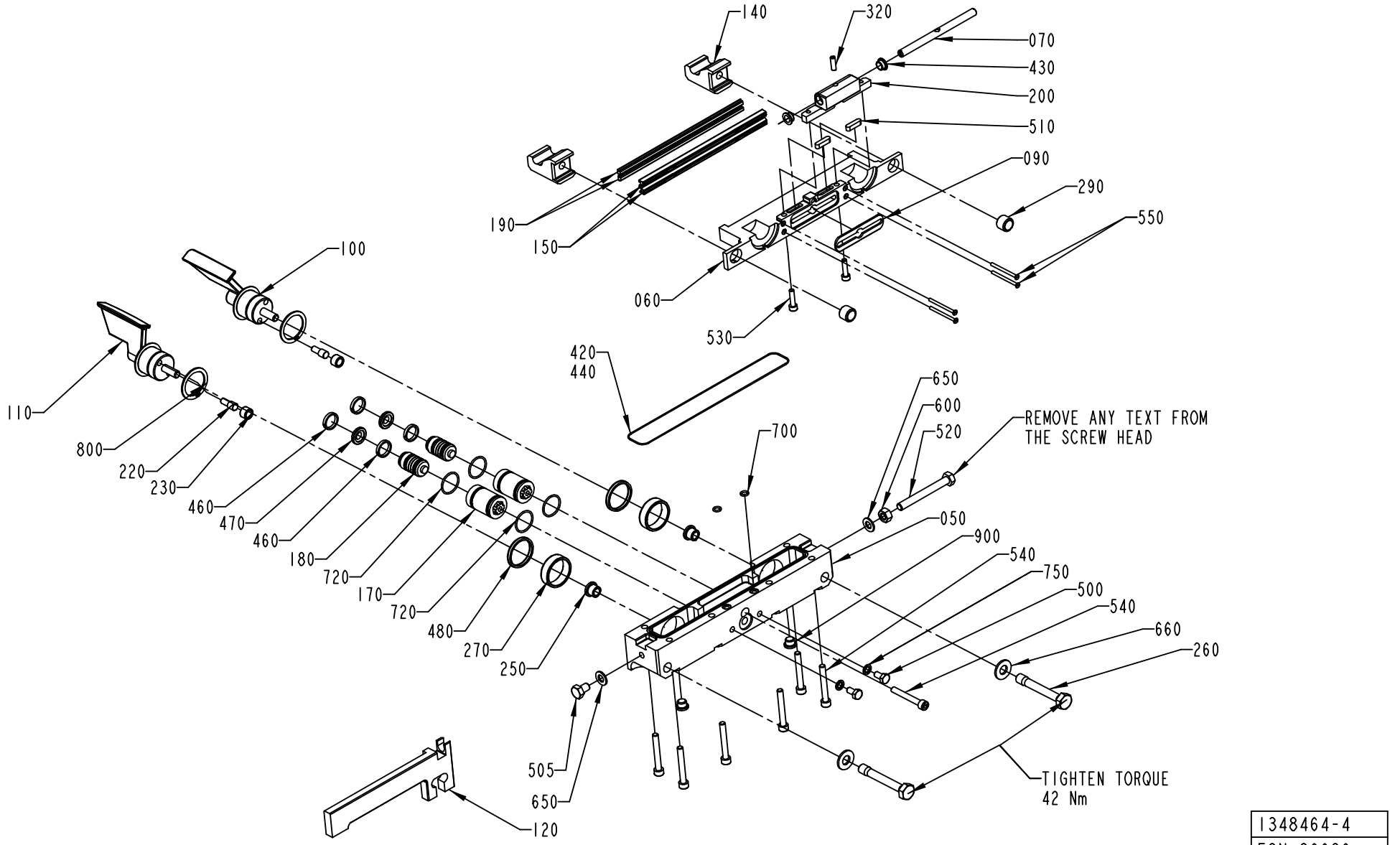

1348464-4
ECN 89030

Pos	Part No	SP	UN	Qty	Description	Page No
TBA 1000B (Cont'd)						
460	90091-0367	A		4	WEAR RING 16X18X3,1 MM	
470	90091-0365	A		2	PISTON SEAL, GLIDORING 11,55X19,05X3,2 M	
550	312145-0238	-		4	SCREW COUNTERS.SLOT.HD. MFS 3X40 SS	
720	315202-0118	A		4	O-RING 22,1X1,6 MM	
TBA 1000S						
050	1549804-0000	A		1	BEARING HOUSING	
060	1349578-0000	A		1	CUTTING JAW	
070	1347562-0000	A		1	SHAFT	
090	1349925-0000	A		1	PLATE	
100	1511699-0000	A		1	FOLDING FLAP	
110	1511700-0000	A		1	FOLDING FLAP	
120	1255464-0000	A		1	CARRIER RULER	
150	1349606-0000	A		2	CUTTING RAIL	
170	1036278-0000	A		2	SLEEVE	
180	1036279-0000	A		2	PLUNGER	
190	1038128-0009	A		2	DOLLY	
460	90091-0367	A		4	WEAR RING 16X18X3,1 MM	
470	90091-0365	A		2	PISTON SEAL, GLIDORING 11,55X19,05X3,2 M	
550	312145-0238	-		4	SCREW COUNTERS.SLOT.HD. MFS 3X40 SS	
720	315202-0118	A		4	O-RING 22,1X1,6 MM	
TBA 1000SQ						
050	1549808-0000	A		1	BEARING HOUSING	
060	1487618-0000	A		1	CUTTING JAW	
070	1347562-0000	A		1	SHAFT	
090	1487619-0000	A		1	PLATE	
100	2507076-0000	A		1	FOLDING FLAP	
110	2507077-0000	A		1	FOLDING FLAP	
120	1360319-0000	A		1	CARRIER RULER	
150	1110224-0000	A		2	CUTTING RAIL	
170	1036278-0000	A		2	SLEEVE	
180	1036279-0000	A		2	PLUNGER	
190	1110390-0000	A		2	DOLLY	
200	1487639-0000	A		1	HOLDER	
460	90091-0367	A		4	WEAR RING 16X18X3,1 MM	
470	90091-0365	A		2	PISTON SEAL, GLIDORING 11,55X19,05X3,2 M	
510	315701-0201	-		2	PARALLEL KEY W. ROUND ENDS 5X5X20 MM	
530	312115-0331	-		2	SCREW MC6S M5X20 A280	
550	312145-0238	-		4	SCREW COUNTERS.SLOT.HD. MFS 3X40 SS	
720	315202-0118	A		4	O-RING 22,1X1,6 MM	
TBA 1500S						
050	1549803-0000	A		1	BEARING HOUSING	
060	1349203-0000	A		1	CUTTING JAW	
070	1347562-0000	A		1	SHAFT	
090	1349925-0000	A		1	PLATE	
100	2507092-0000	A		1	FOLDING FLAP	
110	2507093-0000	A		1	FOLDING FLAP	
120	1255461-0000	A		1	CARRIER RULER	
150	1349606-0000	A		2	CUTTING RAIL	
170	1036278-0000	A		2	SLEEVE	
180	1036279-0000	A		2	PLUNGER	
190	1038128-0009	A		2	DOLLY	
460	90091-0367	A		4	WEAR RING 16X18X3,1 MM	
470	90091-0365	A		2	PISTON SEAL, GLIDORING 11,55X19,05X3,2 M	
550	312145-0238	-		4	SCREW COUNTERS.SLOT.HD. MFS 3X40 SS	
720	315202-0118	A		4	O-RING 22,1X1,6 MM	
TPA 0330SQ						
050	2505277-0000	A		1	BEARING HOUSING	
060	1538253-0000	A		1	CUTTING JAW	
070	1349863-0000	A		1	SHAFT	
080	1484002-0000	A		1	PLATE	
085	1484003-0000	A		1	PLATE	
100	2507096-0000	A		1	FOLDING FLAP	
110	2507097-0000	A		1	FOLDING FLAP	
120	1538769-0000	A		1	CARRIER RULER	
150	1110220-0000	A		2	CUTTING RAIL	
170	752288-0000	A		2	SLEEVE	
180	752115-0000	A		2	PLUNGER	
190	1110390-0000	A		2	DOLLY	
460	90091-0169	A		4	WEAR RING 12X15X3,2 MM	
470	90091-0216	A		2	PISTON SEAL, GLIDORING 7,1X12X2,2 MM	
550	312145-0234	-		4	SCREW COUNTERS.SLOT.HD. MFS 3X30 SS	
720	315202-0110	A		2	O-RING 12,1X1,6 MM	
TPA 1000S						
050	1549805-0000	A		1	BEARING HOUSING	
060	1349579-0000	A		1	CUTTING JAW	
070	1347562-0000	A		1	SHAFT	
090	1349925-0000	A		1	PLATE	
100	2507083-0000	A		1	FOLDING FLAP	

Machine Type | Group Description | Used-In | Group Number | Page No

See previous drawings pages: 508, 510.

Pos	Part No	SP	UN	Qty	Description	Page No
TPA 1000S (Cont'd)						
110	2507084-0000	A		1	FOLDING FLAP	
120	1254226-0000	A		1	CARRIER RULER	
150	1349981-0000	A		2	CUTTING RAIL	
170	1036278-0000	A		2	SLEEVE	
180	1036279-0000	A		2	PLUNGER	
190	1038128-0009	A		2	DOLLY	
460	90091-0367	A		4	WEAR RING 16X18X3,1 MM	
470	90091-0365	A		2	PISTON SEAL, GLIDORING 11,55X19,05X3,2 M	
550	312145-0238	-		4	SCREW COUNTERS.SLOT.HD. MFS 3X40 SS	
720	315202-0118	A		4	O-RING 22,1X1,6 MM	
Common Parts						
140	1349613-0000	A		2	CATCH	
220	22462-0000	A		2	SHAFT	
230	22463-0000	A		2	ROLL	
250	1255390-0000	A		2	BUSHING	
260	1035871-0000	-		2	SCREW	
270	1255389-0000	A		2	BUSHING	
290	1036494-0000	A		2	GUIDE BUSHING	
320	312318-0329	A		1	SCREW SOCK.SET CUP P MSK6SS M5X16 A4	
420	90153-0015	-		1	ADHESIVE LOCTITE IS 496/CYANOLIT 303	
430	1349584-0000	A		2	BUSHING	
440	90242-0093	A	MM	550	O-RING	
480	90091-0361	A		2	SCRAPER, EXCLUDER2 30X34,8X3,7 MM	
500	312105-0366	-		2	SCREW M6S M6X12 A280	
505	312105-0447	-		1	SCREW M6S M8X12 A280	
520	312105-0465	-		1	SCREW M6S M8X70 A280	
540	312115-0379	-		7	SCREW MC6S M6X45 A280	
600	312605-0318	-		1	HEXAGON NUT, M6M M8 A280	
650	315105-0165	-		2	WASHER PLAIN, BRB, 8,4/16,H=1,5	
660	315105-0173	-		2	WASHER PLAIN, BRB, 10,5/22,H=2	
700	315202-0104	A		2	O-RING 6,1X1,6 MM	
750	315211-0103	A		2	GASKET BOLT HEAD 6,7X11X1 MM M6	
800	90141-0029	-		2	CIRCLIP	
900	342713-0209	A		2	PLUG, EXT THREAD HEX SOCKET 8638-00-180	

Pos	Part No	SP	UN	Qty	Description	Page No

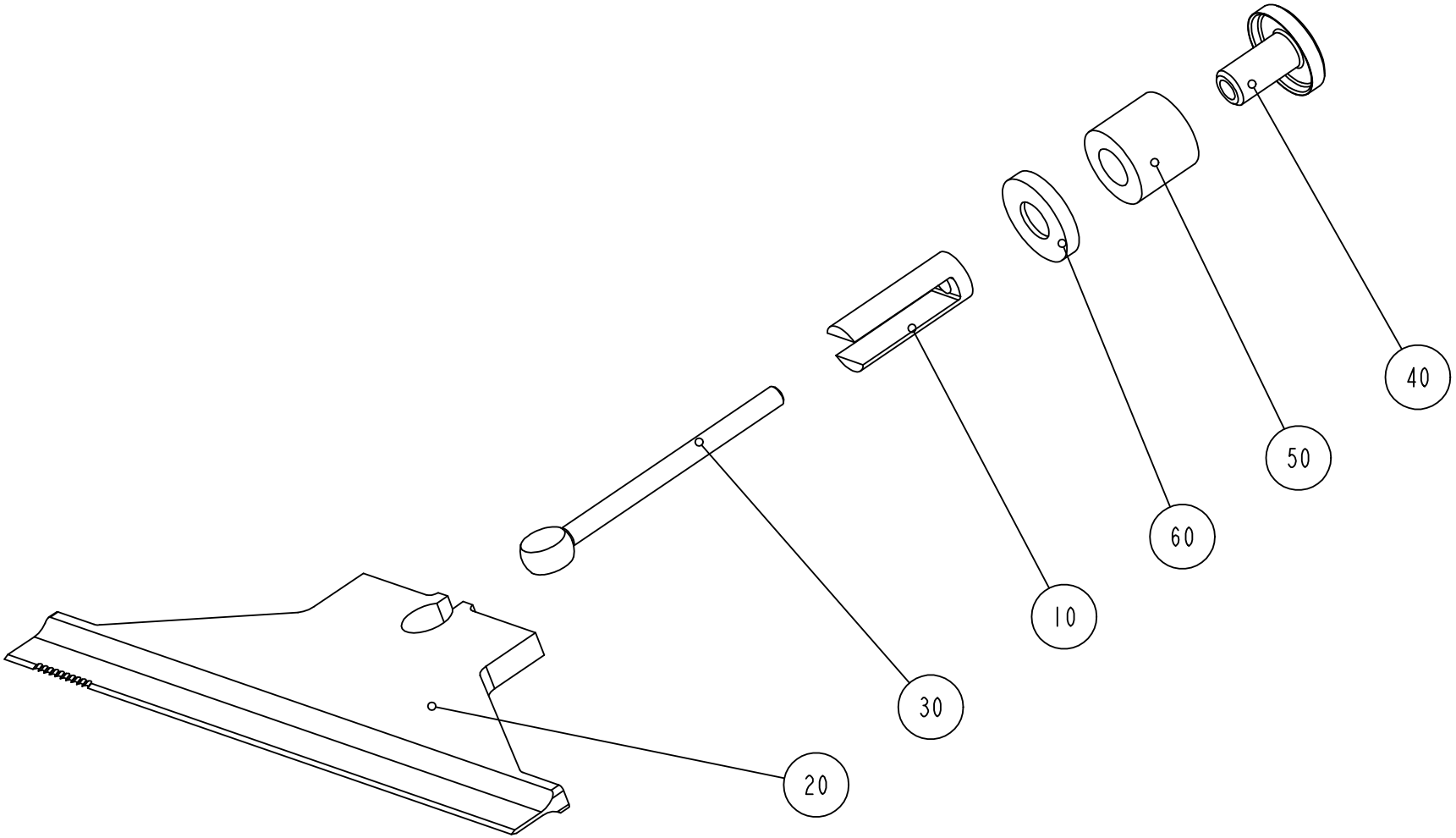

S-1478768-1
ECN 71517

ECM: 92194 - 20010709
Group number: 1478768-0100
Assembly Drawing: 1478768-1_1_AA

Issue: 20011217

Pos	Part No	SP	UN	Qty	Description	Page No
TBA 0200B OR TBA 0200S OR TBA 0250B OR TPA 0330SQ						
020	1348966-0000	A		1	KNIFE	
030	1478966-0000	A		1	LINK	
060	1484211-0000	A		1	WASHER	
TBA 0500B OR TBA 1000S OR TBA 1000SQ OR TBA 1000B OR TBA 1500S						
020	1348955-0000	A		1	KNIFE	
030	1478968-0000	A		1	LINK	
060	1255540-0000	A		1	WASHER	
TBA 0500S OR TPA 1000S						
020	1348956-0000	A		1	KNIFE	
030	1478968-0000	A		1	LINK	
060	1255540-0000	A		1	WASHER	
Common Parts						
010	927323-0000	A		1	SPACER	
040	1478967-0000	A		1	WASHER	
050	1260659-0000	A		1	SPRING	

Pos	Part No	SP	UN	Qty	Description	Page No

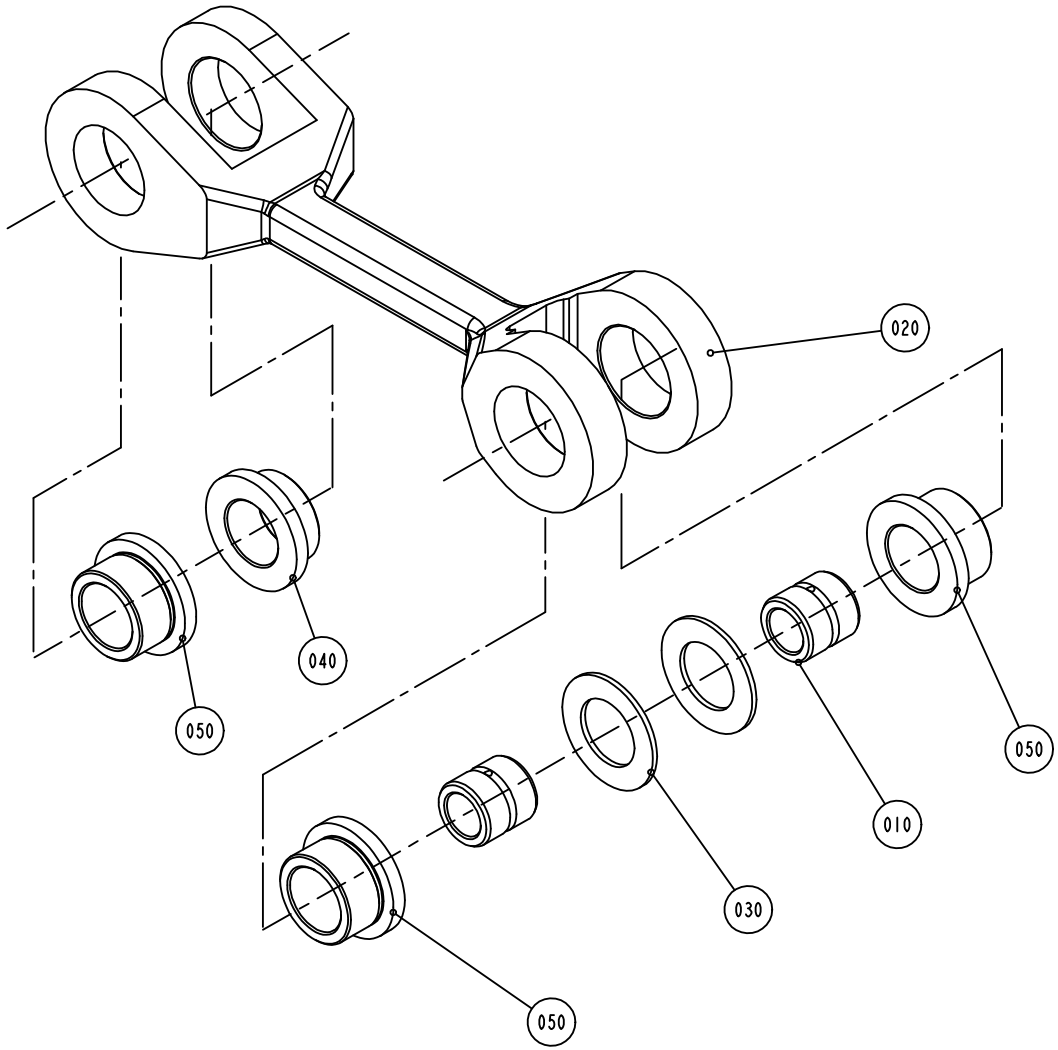

S-1348466-1
ECN 71517

ECM: 99081 - 50001231
Group number: 1348466-0100
Assembly Drawing: 1348466-1_1_AA

Issue: 20011217

Pos	Part No	SP	UN	Qty	Description	Page No
Common Parts						
010	1037849-0000	A		2	SLEEVE	
020	1037851-0000	A		1	LINK	
030	1038021-0000	A		2	WASHER	
040	321101-0222	A		1	BEAR.BUSHING WITH FLANGE, 18/25X12 MM	
050	321101-0223	A		3	BEAR.BUSHING WITH FLANGE, 18/25X16 MM	

Pos	Part No	SP	UN	Qty	Description	Page No

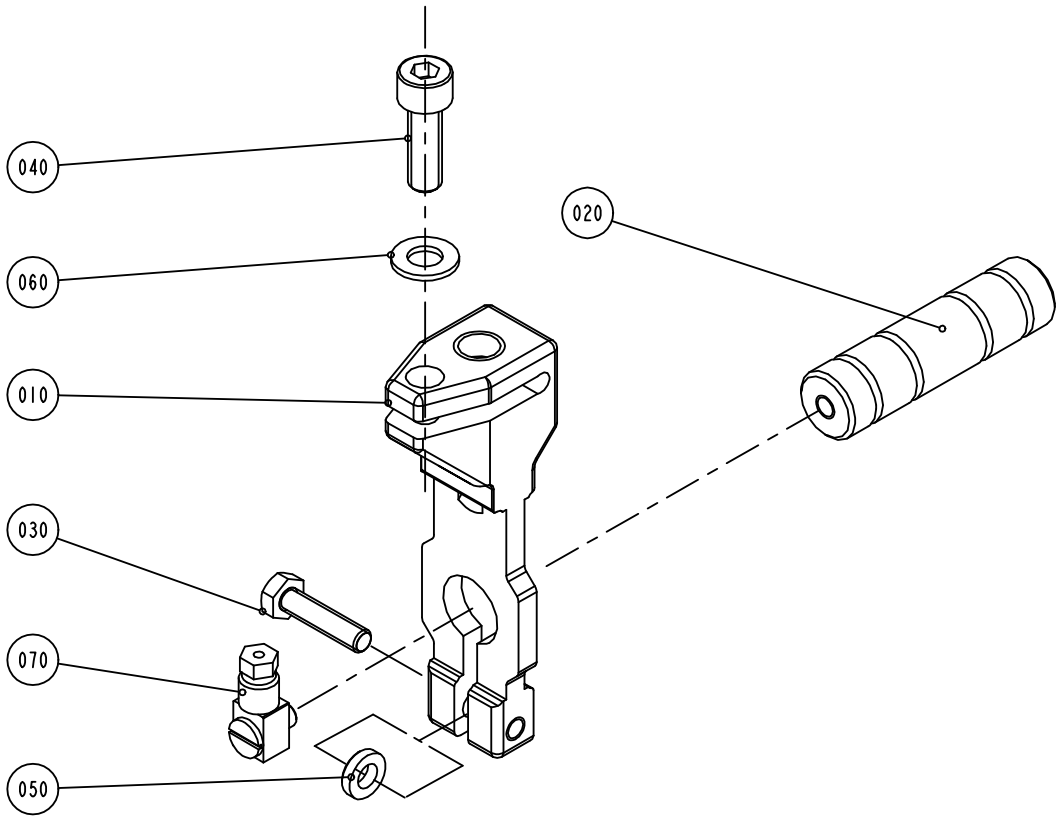

S-1348467-1
ECN 71517

ECM: 72281 - 19990607
Group number: 1348467-0100
Assembly Drawing: 1348467-1_1_AA

Issue: 20011217

Pos	Part No	SP	UN	Qty	Description	Page No
Common Parts						
010	1037850-0000	C		1	ADJUSTMENT BRACKET	
020	1037852-0000	C		1	SHAFT	
030	312105-0372	-		1	SCREW M6S M6X25 A280	
040	312115-0453	-		1	SCREW MC6S M8X25 A280	
050	315115-0153	-		1	WASHER PLAIN, TBRB 6,4/12 H=3	
060	315105-0165	-		1	WASHER PLAIN, BRB, 8,4/16,H=1,5	
070	90134-0058	-		1	CONNECTION	

Pos	Part No	SP	UN	Qty	Description	Page No

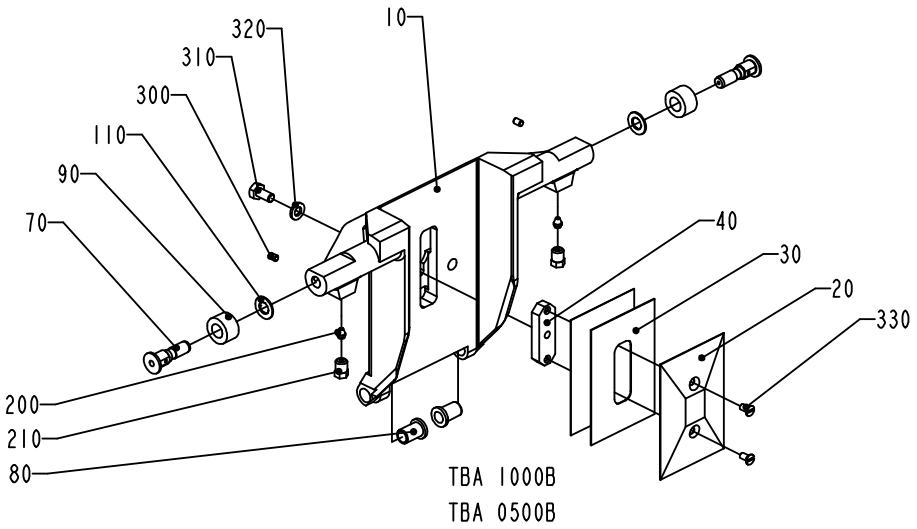

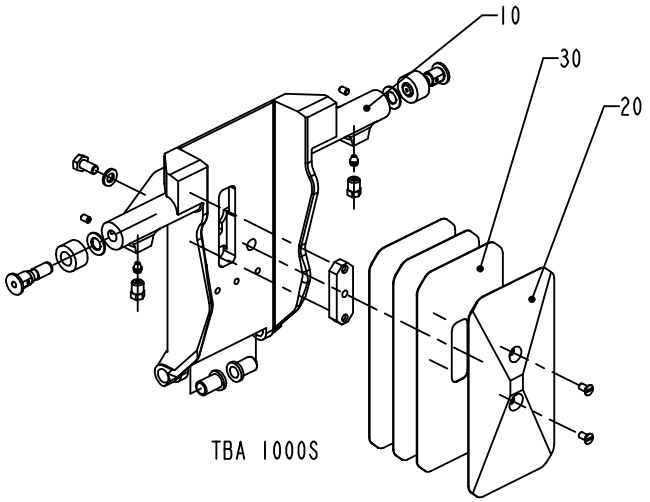

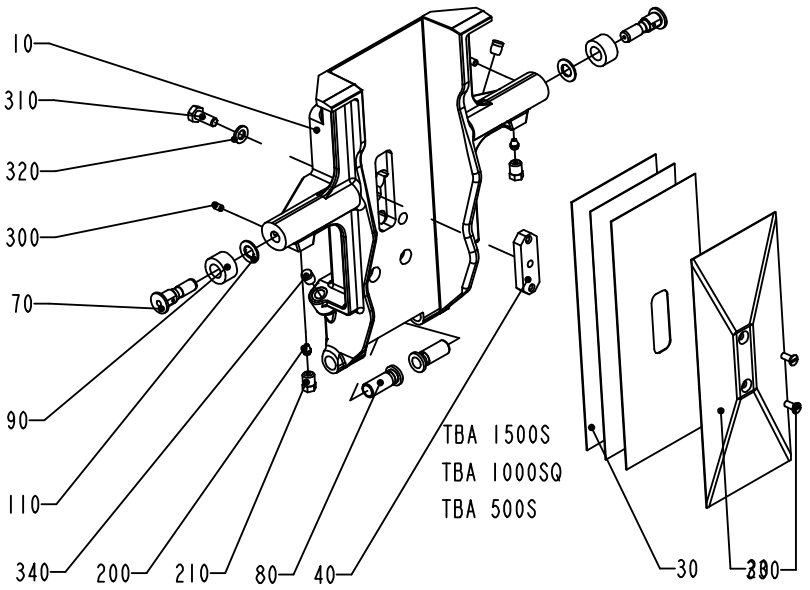

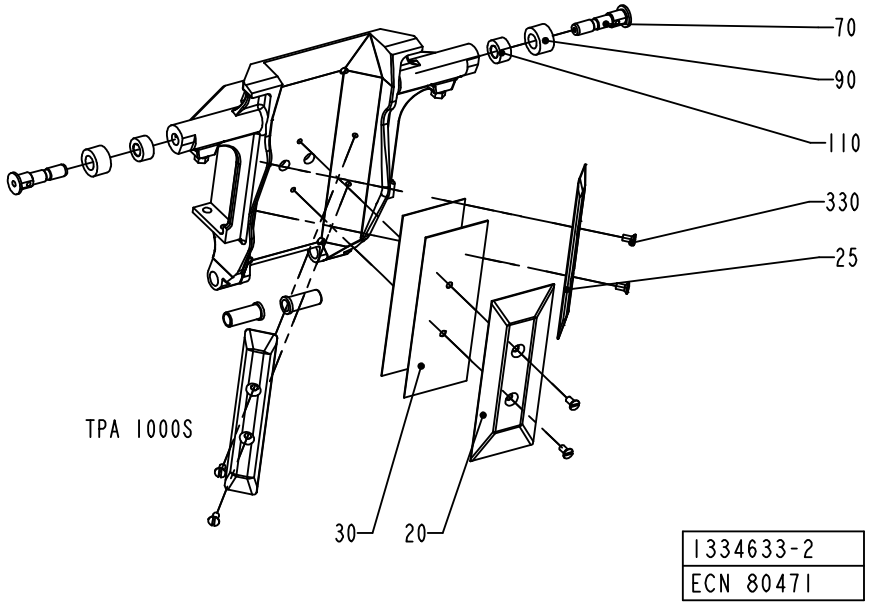

1334633-2
ECN 80471

ECM: 90644 - 50001231
Group number: 1334633-0200
Assembly Drawing: 1334633-2_1_AD

Issue: 20011217

Pos	Part No	SP	UN	Qty	Description	Page No
TBA 0200B						
010	1499901-0000	A		1	VOLUME FLAP	
020	1038638-0000	A		1	VOLUME BULGE	
030	1038639-0000	A		2	VOLUME SHIM	
040	1038637-0000	A		1	WEDGE	
070	434320-0000	A		2	AXLE PIN	
080	1255541-0000	A		2	BUSHING	
090	436556-0000	A		2	CURVE ROLLER	
110	19972-0000	A		2	WASHER	
310	312105-0327	-		1	SCREW M6S M5X12 A280	
320	315105-0146	-		1	WASHER PLAIN, BRB, 5,3/10,H=1	
330	312145-0287	-		2	SCREW COUNTERS.SLOT.HD. MFS 4X8 SS	
TBA 0200S						
010	1484866-0000	A		1	VOLUME FLAP	
020	1037733-0000	A		1	VOLUME BULGE	
030	1037735-0000	A		2	VOLUME SHIM	
040	1037734-0000	A		1	WEDGE	
070	434320-0000	A		2	AXLE PIN	
080	1255541-0000	A		2	BUSHING	
090	436556-0000	A		2	CURVE ROLLER	
110	19972-0000	A		2	WASHER	
310	312105-0327	-		1	SCREW M6S M5X12 A280	
320	315105-0146	-		1	WASHER PLAIN, BRB, 5,3/10,H=1	
330	312145-0287	-		2	SCREW COUNTERS.SLOT.HD. MFS 4X8 SS	
TBA 0250B						
010	1484867-0000	A		1	VOLUME FLAP	
020	1346157-0000	A		1	VOLUME BULGE	
030	1346158-0000	A		2	VOLUME SHIM	
040	1037734-0000	A		1	WEDGE	
070	434320-0000	A		2	AXLE PIN	
080	1255541-0000	A		2	BUSHING	
090	436556-0000	A		2	CURVE ROLLER	
110	19972-0000	A		2	WASHER	
310	312105-0327	-		1	SCREW M6S M5X12 A280	
320	315105-0146	-		1	WASHER PLAIN, BRB, 5,3/10,H=1	
330	312145-0287	-		2	SCREW COUNTERS.SLOT.HD. MFS 4X8 SS	
TBA 0500B						
010	1532287-0000	A		1	VOLUME FLAP	
020	1558817-0000	A		1	VOLUME BULGE	
030	1532293-0000	A		2	VOLUME SHIM	
070	434320-0000	A		2	AXLE PIN	
080	1255541-0000	A		2	BUSHING	
090	436556-0000	A		2	CURVE ROLLER	
110	19972-0000	A		2	WASHER	
310	312105-0366	-		1	SCREW M6S M6X12 A280	
320	315105-0153	-		1	WASHER PLAIN, BRB, 6,4/12,H=1,5	
330	312145-0287	-		2	SCREW COUNTERS.SLOT.HD. MFS 4X8 SS	
TBA 0500S						
010	1511250-0000	A		1	VOLUME FLAP	
020	1524035-0000	A		1	VOLUME BULGE	
030	1511253-0000	A		3	VOLUME SHIM	
040	1487628-0000	A		1	WEDGE	
070	434320-0000	A		2	AXLE PIN	
080	1511254-0000	A		2	BUSHING	
090	434321-0000	A		2	CURVE ROLLER	
110	19972-0000	A		2	WASHER	
310	312105-0368	-		1	SCREW M6S M6X16 A280	
320	315105-0153	-		1	WASHER PLAIN, BRB, 6,4/12,H=1,5	
330	312145-0289	-		2	SCREW COUNTERS.SLOT.HD. MFS 4X10 SS	
340	90261-0016	-		2	PLUG, BLIND, PLASTIC GPN300V2	
TBA 1000B						
010	1478358-0000	A		1	VOLUME FLAP	
020	1035828-0000	A		1	VOLUME BULGE	
030	1035831-0000	A		2	VOLUME SHIM	
040	1040756-0000	A		1	WEDGE	
070	434320-0000	A		2	AXLE PIN	
080	1255541-0000	A		2	BUSHING	
090	434321-0000	A		2	CURVE ROLLER	
110	19972-0000	A		2	WASHER	
310	312105-0366	-		1	SCREW M6S M6X12 A280	
320	315105-0153	-		1	WASHER PLAIN, BRB, 6,4/12,H=1,5	
330	312145-0287	-		2	SCREW COUNTERS.SLOT.HD. MFS 4X8 SS	
TBA 1000S						
010	1040753-0000	A		1	VOLUME FLAP	
020	1040754-0000	A		1	VOLUME BULGE	
030	1040755-0000	A		3	VOLUME SHIM	
040	1040756-0000	A		1	WEDGE	
070	434320-0000	A		2	AXLE PIN	

Machine Type | Group Description | Used-In | Group Number | Page No

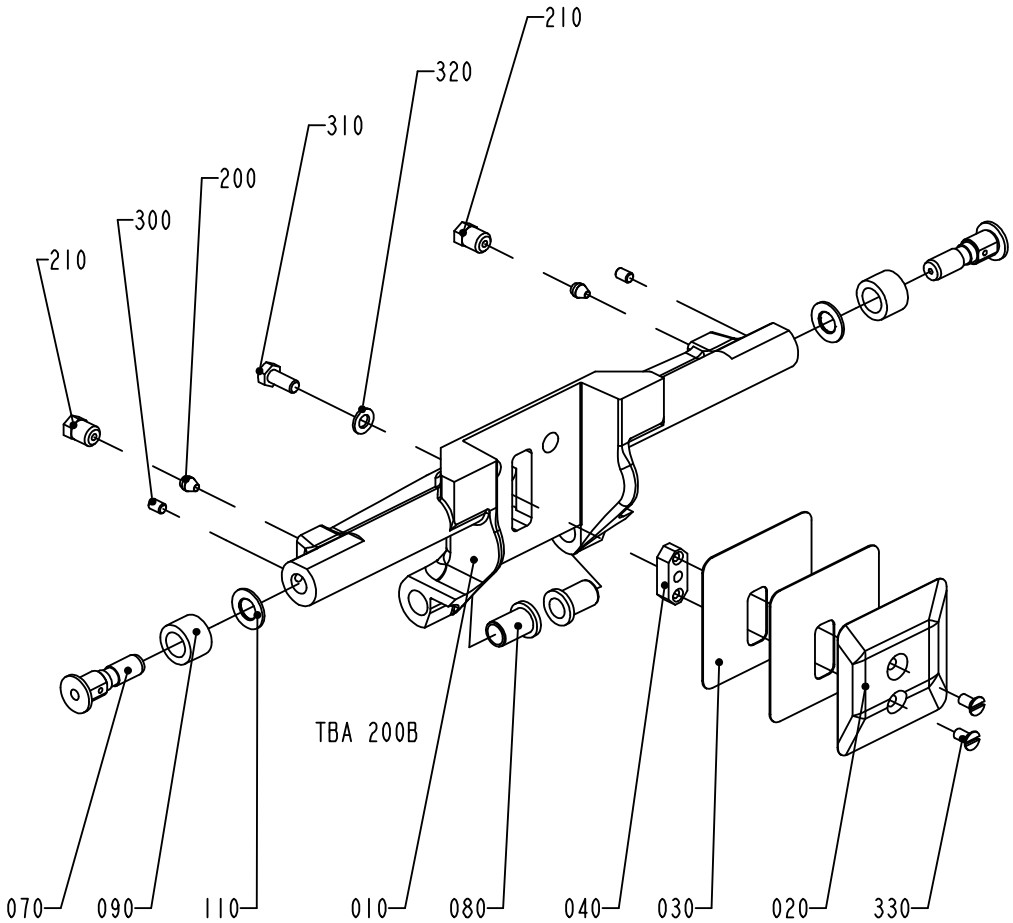

TBA 200B

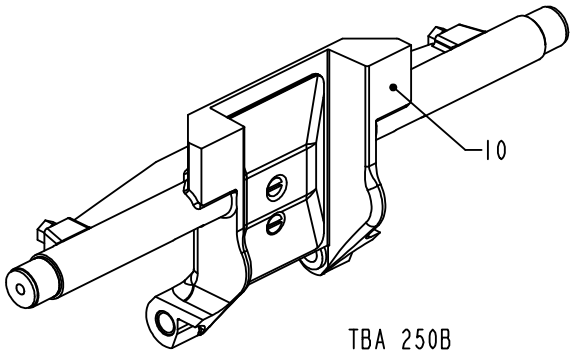

TBA 250B

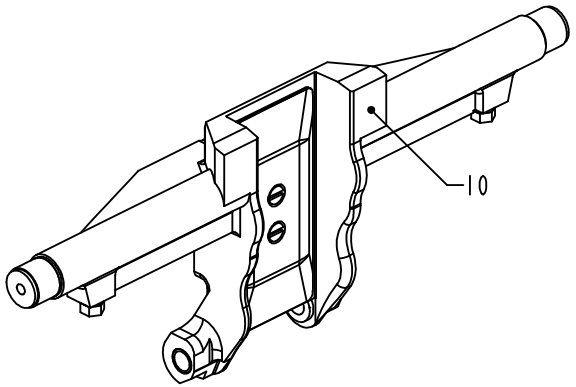

TBA 200S

1334633-3
ECN 72770

Pos	Part No	SP	UN	Qty	Description	Page No
TBA 1000S (Cont'd)						
080	1255541-0000	A		2	BUSHING	
090	434321-0000	A		2	CURVE ROLLER	
110	19972-0000	A		2	WASHER	
310	312105-0366	-		1	SCREW M6S M6X12 A280	
320	315105-0153	-		1	WASHER PLAIN, BRB, 6,4/12,H=1,5	
330	312145-0287	-		2	SCREW COUNTERS.SLOT.HD. MFS 4X8 SS	
TBA 1000SQ						
010	1487624-0000	A		1	VOLUME FLAP	
020	1487626-0000	A		1	VOLUME BULGE	
030	1487627-0000	A		3	VOLUME SHIM	
040	1040756-0000	A		1	WEDGE	
070	434320-0000	A		2	AXLE PIN	
080	1558701-0000	A		2	BUSHING	
090	434321-0000	A		2	CURVE ROLLER	
110	19972-0000	A		2	WASHER	
310	312115-0366	-		2	SCREW MC6S M6X12 A280	
320	315105-0153	-		1	WASHER PLAIN, BRB, 6,4/12,H=1,5	
330	312145-0291	-		2	SCREW COUNTERS.SLOT.HD. MFS 4X12 A4	
340	90261-0016	-		2	PLUG, BLIND, PLASTIC GPN300V2	
TBA 1500S						
010	1349169-0002	A		1	VOLUME FLAP	
020	1499675-0000	A		1	VOLUME BULGE	
030	1349208-0000	A		3	VOLUME SHIM	
040	1040756-0000	A		1	WEDGE	
070	434320-0000	A		2	AXLE PIN	
080	1558701-0000	A		2	BUSHING	
090	434321-0000	A		2	CURVE ROLLER	
110	19972-0000	A		2	WASHER	
310	312105-0368	-		1	SCREW M6S M6X16 A280	
320	315105-0153	-		1	WASHER PLAIN, BRB, 6,4/12,H=1,5	
330	312145-0289	-		2	SCREW COUNTERS.SLOT.HD. MFS 4X10 SS	
340	90261-0016	-		2	PLUG, BLIND, PLASTIC GPN300V2	
TPA 0330SQ						
010	1539904-0000	A		1	VOLUME FLAP	
020	1539903-0000	A		2	VOLUME BULGE	
030	1539902-0000	A		6	VOLUME SHIM	
070	434320-0000	A		2	AXLE PIN	
080	1255541-0000	A		2	BUSHING	
090	436556-0000	A		2	CURVE ROLLER	
110	19972-0000	A		2	WASHER	
320	315105-0146	-		2	WASHER PLAIN, BRB, 5,3/10,H=1	
325	312105-0327	-		2	SCREW M6S M5X12 A280	
TPA 1000S						
010	1144583-0000	A		1	VOLUME FLAP	
020	1144584-0000	A		1	VOLUME BULGE	
025	1144585-0000	A		2	VOLUME BULGE	
030	1144586-0000	A		2	VOLUME SHIM	
070	1255915-0000	A		2	AXLE PIN	
080	1255916-0000	A		2	BUSHING	
090	434321-0000	A		2	CURVE ROLLER	
110	1255917-0000	A		2	SPACER	
330	312145-0287	-		6	SCREW COUNTERS.SLOT.HD. MFS 4X8 SS	
Common Parts						
200	90028-0020	-		2	CONE TUBE 2,5MM	
210	90134-0063	-		2	BUSHING/NUT M8X1, D=2,5 MM	
300	312318-0285	-		2	SCREW SOCK.SET CUP P MSK6SS M4X6 A4	

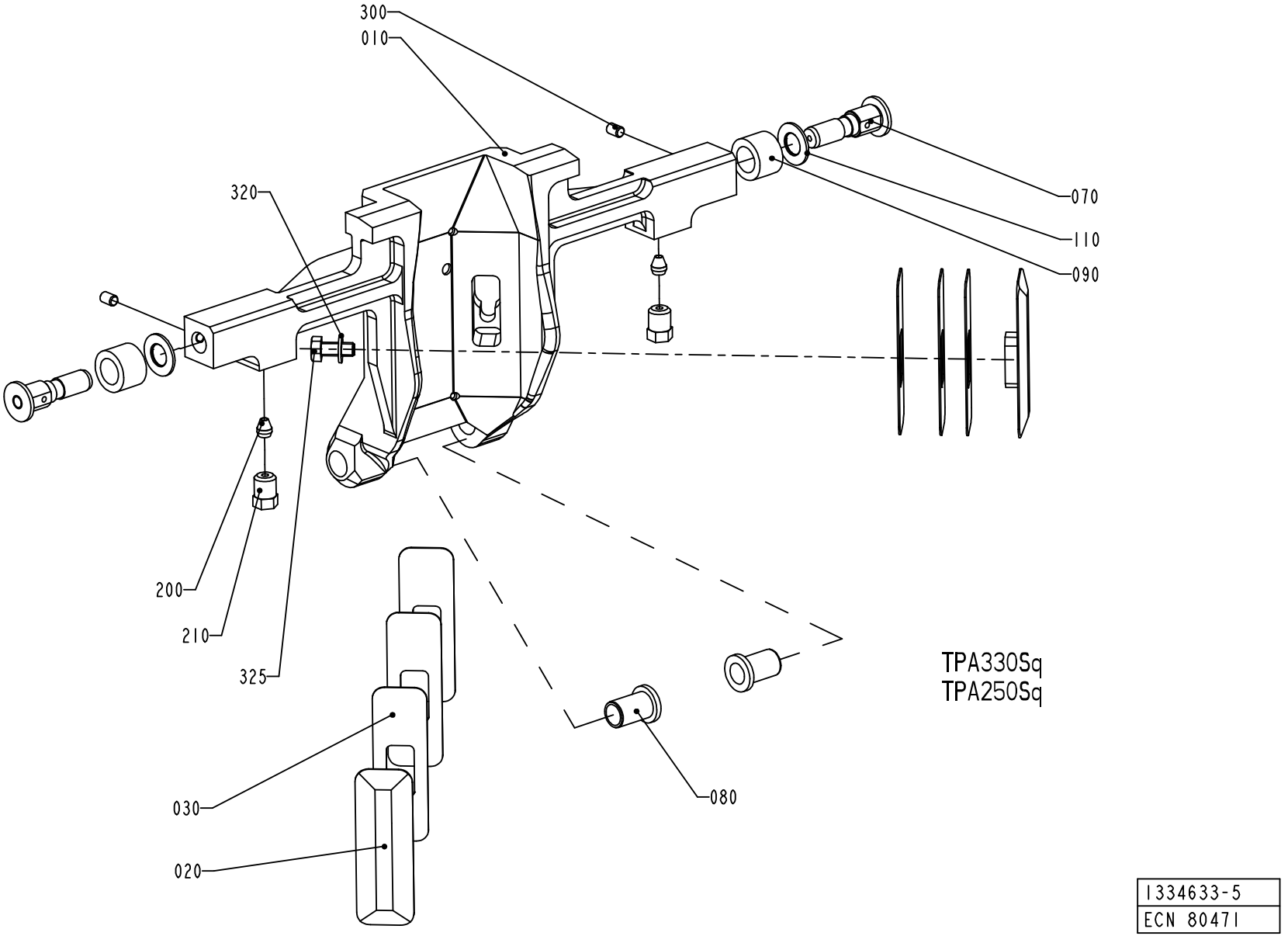

1334633-5
ECN 80471

Pos	Part No	SP	UN	Qty	Description	Page No
SEE PREVIOUS LISTS PAGES: 521, 523.						

Pos	Part No	SP	UN	Qty	Description	Page No

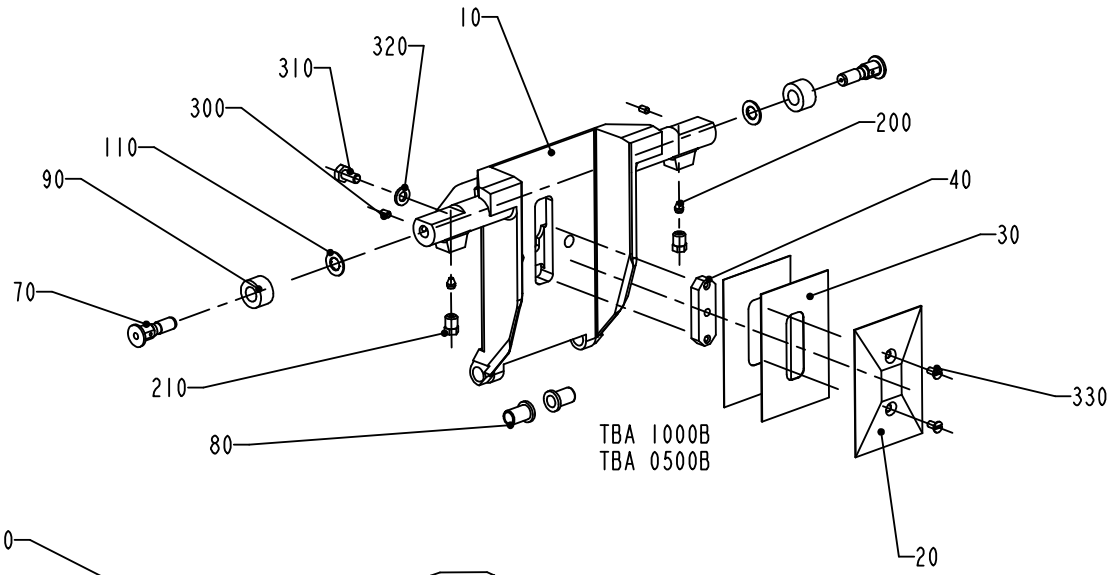

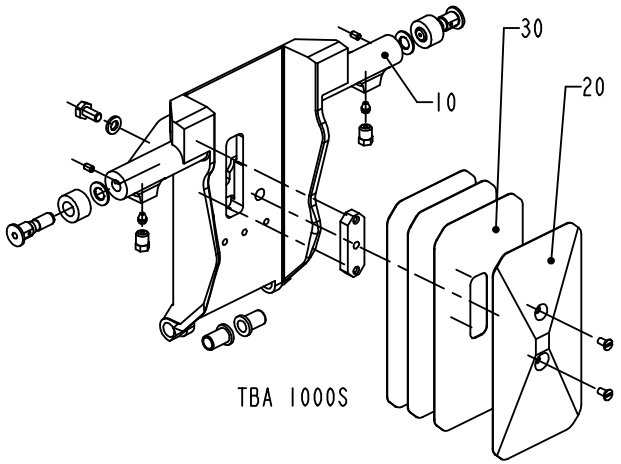

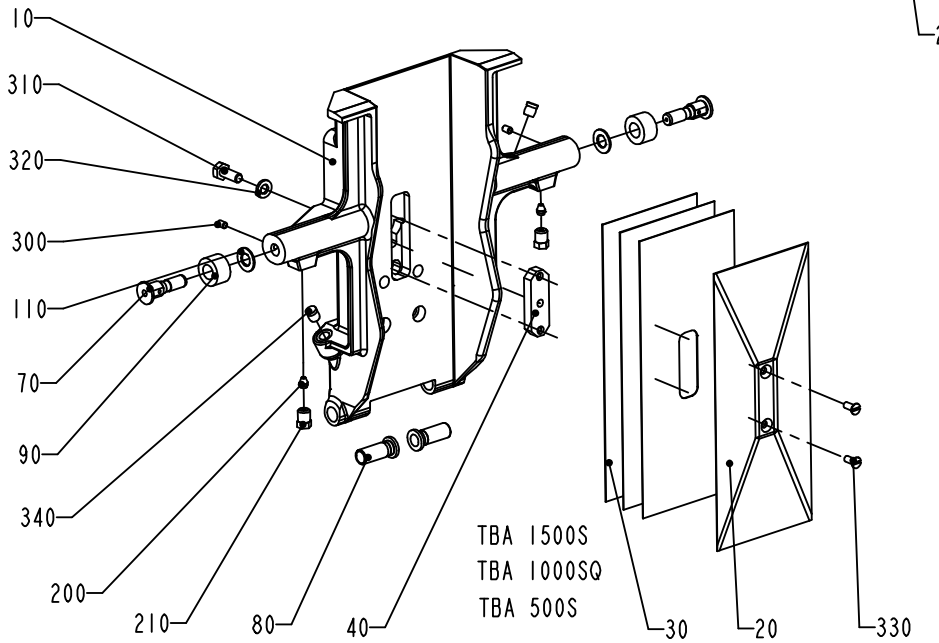

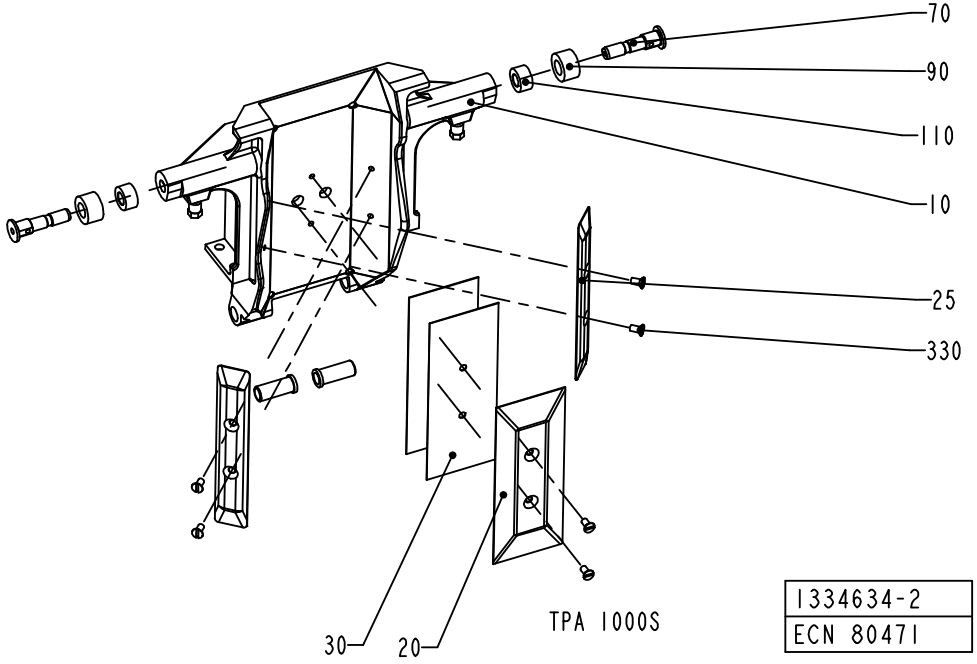

1334634-2
ECN 80471

ECM: 90645 - 50001231
Group number: 1334634-0200
Assembly Drawing: 1334634-2_1_AD

Issue: 20011217

Pos	Part No	SP	UN	Qty	Description	Page No
TBA 0200B						
010	1499902-0000	A		1	VOLUME FLAP	
020	1038638-0000	A		1	VOLUME BULGE	
030	1038639-0000	A		2	VOLUME SHIM	
040	1038637-0000	A		1	WEDGE	
070	434320-0000	A		2	AXLE PIN	
080	1255541-0000	A		2	BUSHING	
090	436556-0000	A		2	CURVE ROLLER	
110	19972-0000	A		2	WASHER	
310	312105-0327	-		1	SCREW M6S M5X12 A280	
320	315105-0146	-		1	WASHER PLAIN, BRB, 5,3/10,H=1	
330	312145-0287	-		2	SCREW COUNTERS.SLOT.HD. MFS 4X8 SS	
TBA 0200S						
010	1484865-0000	A		1	VOLUME FLAP	
020	1037733-0000	A		1	VOLUME BULGE	
030	1037735-0000	A		2	VOLUME SHIM	
040	1037734-0000	A		1	WEDGE	
070	434320-0000	A		2	AXLE PIN	
080	1255541-0000	A		2	BUSHING	
090	436556-0000	A		2	CURVE ROLLER	
110	19972-0000	A		2	WASHER	
310	312105-0327	-		1	SCREW M6S M5X12 A280	
320	315105-0146	-		1	WASHER PLAIN, BRB, 5,3/10,H=1	
330	312145-0287	-		2	SCREW COUNTERS.SLOT.HD. MFS 4X8 SS	
TBA 0250B						
010	1484868-0000	A		1	VOLUME FLAP	
020	1346157-0000	A		1	VOLUME BULGE	
030	1346158-0000	A		2	VOLUME SHIM	
040	1037734-0000	A		1	WEDGE	
070	434320-0000	A		2	AXLE PIN	
080	1255541-0000	A		2	BUSHING	
090	436556-0000	A		2	CURVE ROLLER	
110	19972-0000	A		2	WASHER	
310	312105-0327	-		1	SCREW M6S M5X12 A280	
320	315105-0146	-		1	WASHER PLAIN, BRB, 5,3/10,H=1	
330	312145-0287	-		2	SCREW COUNTERS.SLOT.HD. MFS 4X8 SS	
TBA 0500B						
010	1532287-0000	A		1	VOLUME FLAP	
020	1558817-0000	A		1	VOLUME BULGE	
030	1532293-0000	A		2	VOLUME SHIM	
070	434320-0000	A		2	AXLE PIN	
080	1255541-0000	A		2	BUSHING	
090	436556-0000	A		2	CURVE ROLLER	
110	19972-0000	A		2	WASHER	
310	312105-0366	-		1	SCREW M6S M6X12 A280	
320	315105-0153	-		1	WASHER PLAIN, BRB, 6,4/12,H=1,5	
330	312145-0287	-		2	SCREW COUNTERS.SLOT.HD. MFS 4X8 SS	
TBA 0500S						
010	1511251-0000	A		1	VOLUME FLAP	
020	1524035-0000	A		1	VOLUME BULGE	
030	1511253-0000	A		3	VOLUME SHIM	
040	1487628-0000	A		1	WEDGE	
070	434320-0000	A		2	AXLE PIN	
080	1511254-0000	A		2	BUSHING	
090	434321-0000	A		2	CURVE ROLLER	
110	19972-0000	A		2	WASHER	
310	312105-0368	-		1	SCREW M6S M6X16 A280	
320	315105-0153	-		1	WASHER PLAIN, BRB, 6,4/12,H=1,5	
330	312145-0291	-		2	SCREW COUNTERS.SLOT.HD. MFS 4X12 A4	
340	90261-0016	-		2	PLUG, BLIND, PLASTIC GPN300V2	
TBA 1000B						
010	1478358-0000	A		1	VOLUME FLAP	
020	1035828-0000	A		1	VOLUME BULGE	
030	1035831-0000	A		2	VOLUME SHIM	
040	1040756-0000	A		1	WEDGE	
070	434320-0000	A		2	AXLE PIN	
080	1255541-0000	A		2	BUSHING	
090	434321-0000	A		2	CURVE ROLLER	
110	19972-0000	A		2	WASHER	
310	312105-0366	-		1	SCREW M6S M6X12 A280	
320	315105-0153	-		1	WASHER PLAIN, BRB, 6,4/12,H=1,5	
330	312145-0287	-		2	SCREW COUNTERS.SLOT.HD. MFS 4X8 SS	
TBA 1000S						
010	1040753-0000	A		1	VOLUME FLAP	
020	1040754-0000	A		1	VOLUME BULGE	
030	1040755-0000	A		3	VOLUME SHIM	
040	1040756-0000	A		1	WEDGE	
070	434320-0000	A		2	AXLE PIN	

Machine Type | Group Description | Used-In | Group Number | Page No

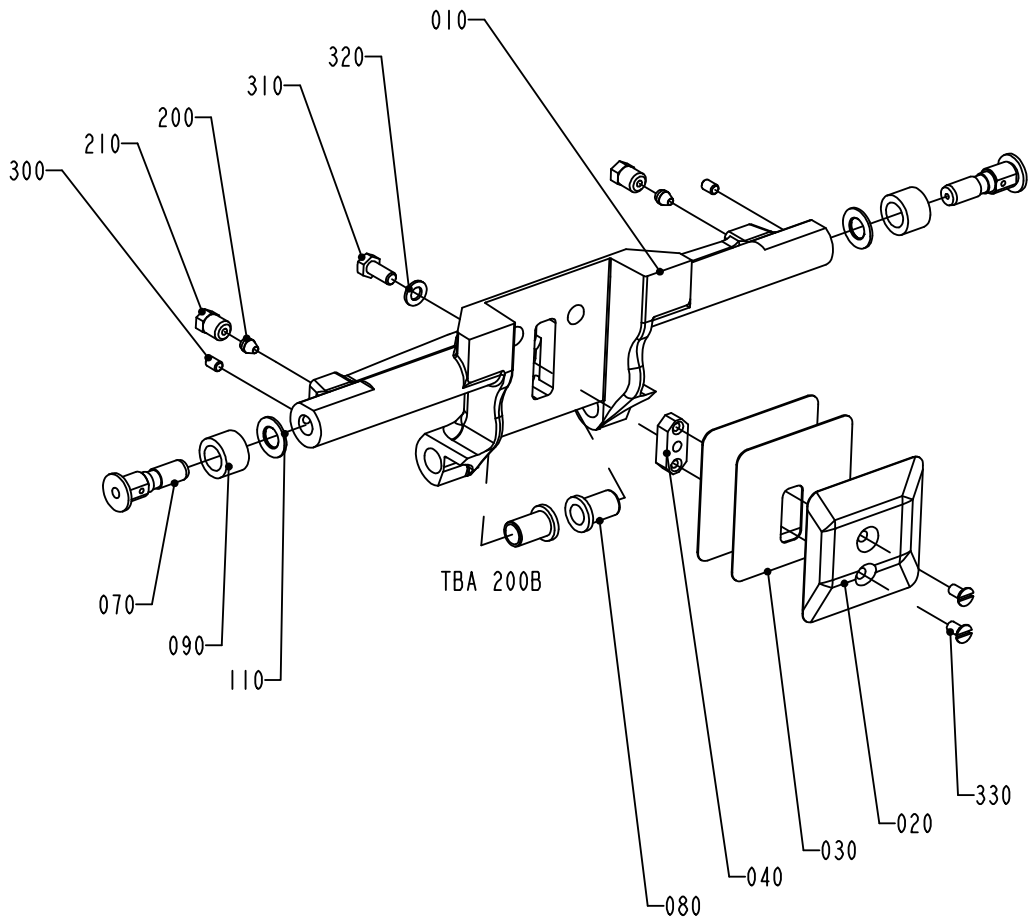

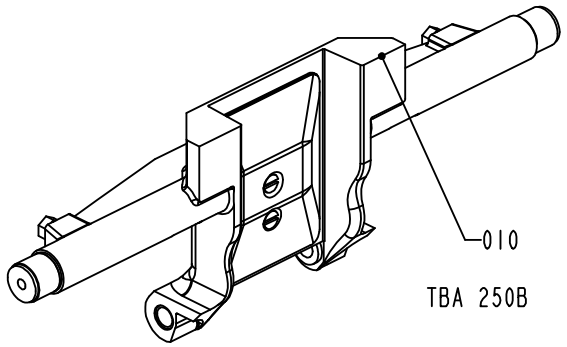

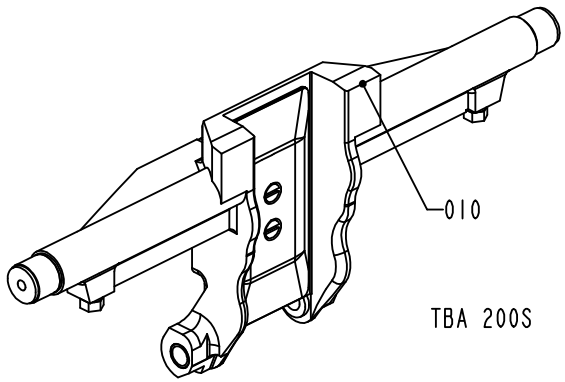

1334634-3
ECN 72770

Pos	Part No	SP	UN	Qty	Description	Page No
TBA 1000S (Cont'd)						
080	1255541-0000	A		2	BUSHING	
090	434321-0000	A		2	CURVE ROLLER	
110	19972-0000	A		2	WASHER	
310	312105-0366	-		1	SCREW M6S M6X12 A280	
320	315105-0153	-		1	WASHER PLAIN, BRB, 6,4/12,H=1,5	
330	312145-0287	-		2	SCREW COUNTERS.SLOT.HD. MFS 4X8 SS	
TBA 1000SQ						
010	1487625-0000	A		1	VOLUME FLAP	
020	1487626-0000	A		1	VOLUME BULGE	
030	1487627-0000	A		3	VOLUME SHIM	
040	1040756-0000	A		1	WEDGE	
070	434320-0000	A		2	AXLE PIN	
080	1558701-0000	A		2	BUSHING	
090	434321-0000	A		2	CURVE ROLLER	
110	19972-0000	A		2	WASHER	
310	312115-0366	-		2	SCREW MC6S M6X12 A280	
320	315105-0153	-		1	WASHER PLAIN, BRB, 6,4/12,H=1,5	
330	312145-0291	-		2	SCREW COUNTERS.SLOT.HD. MFS 4X12 A4	
340	90261-0016	-		2	PLUG, BLIND, PLASTIC GPN300V2	
TBA 1500S						
010	1349169-0001	A		1	VOLUME FLAP	
020	1499675-0000	A		1	VOLUME BULGE	
030	1349208-0000	A		3	VOLUME SHIM	
040	1040756-0000	A		1	WEDGE	
070	434320-0000	A		2	AXLE PIN	
080	1558701-0000	A		2	BUSHING	
090	434321-0000	A		2	CURVE ROLLER	
110	19972-0000	A		2	WASHER	
310	312105-0368	-		1	SCREW M6S M6X16 A280	
320	315105-0153	-		1	WASHER PLAIN, BRB, 6,4/12,H=1,5	
330	312145-0289	-		2	SCREW COUNTERS.SLOT.HD. MFS 4X10 SS	
340	90261-0016	-		2	PLUG, BLIND, PLASTIC GPN300V2	
TPA 0330SQ						
010	1558123-0000	A		1	VOLUME FLAP	
020	1539903-0000	A		2	VOLUME BULGE	
030	1539902-0000	A		6	VOLUME SHIM	
070	434320-0000	A		2	AXLE PIN	
080	1255541-0000	A		2	BUSHING	
090	436556-0000	A		2	CURVE ROLLER	
110	19972-0000	A		2	WASHER	
320	315105-0146	-		2	WASHER PLAIN, BRB, 5,3/10,H=1	
325	312105-0327	-		2	SCREW M6S M5X12 A280	
TPA 1000S						
010	1144583-0000	A		1	VOLUME FLAP	
020	1144584-0000	A		1	VOLUME BULGE	
025	1144585-0000	A		2	VOLUME BULGE	
030	1144586-0000	A		2	VOLUME SHIM	
070	1255915-0000	A		2	AXLE PIN	
080	1255916-0000	A		2	BUSHING	
090	434321-0000	A		2	CURVE ROLLER	
110	1255917-0000	A		2	SPACER	
330	312145-0287	-		6	SCREW COUNTERS.SLOT.HD. MFS 4X8 SS	
Common Parts						
200	90028-0020	-		2	CONE TUBE 2,5MM	
210	90134-0063	-		2	BUSHING/NUT M8X1, D=2,5 MM	
300	312318-0285	-		2	SCREW SOCK.SET CUP P MSK6SS M4X6 A4	

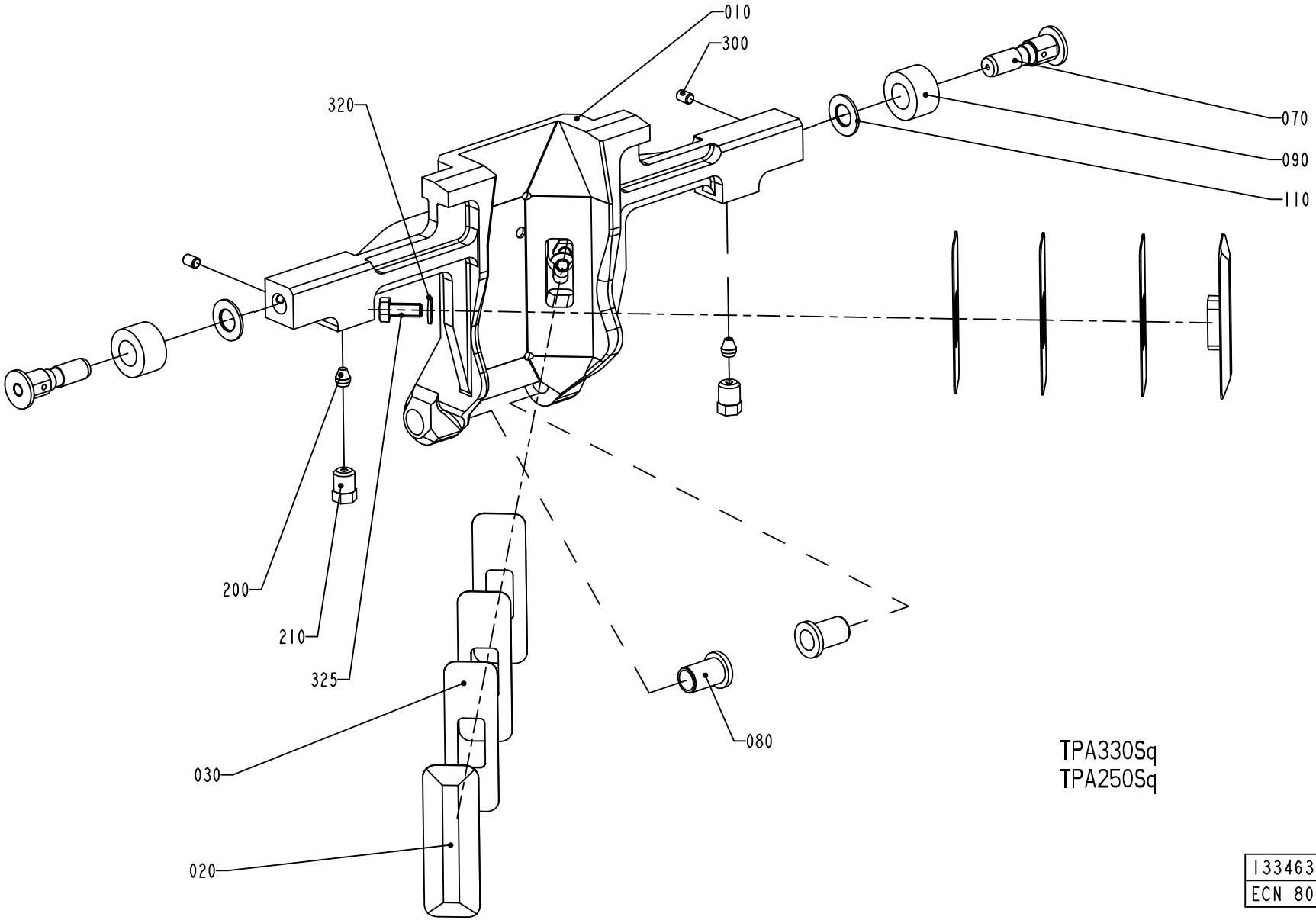
010
300
320
070
090
110
200
210
325
080
030
020
TPA330Sq
TPA250Sq
1334634-5
ECN 80471

Pos	Part No	SP	UN	Qty	Description	Page No
SEE PREVIOUS LISTS PAGES: 527, 529.						

Pos	Part No	SP	UN	Qty	Description	Page No

Machine Type	Group Description	Used-In	Group Number	Page No

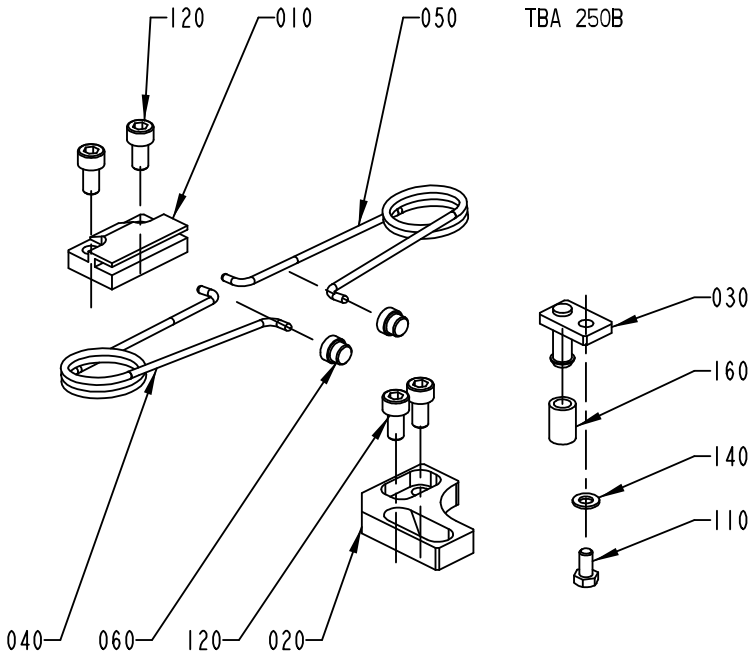

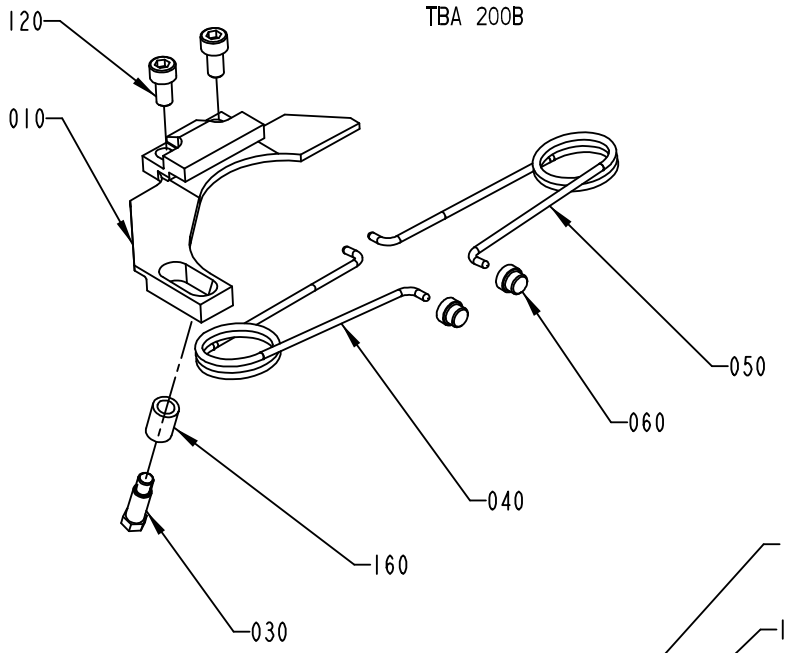

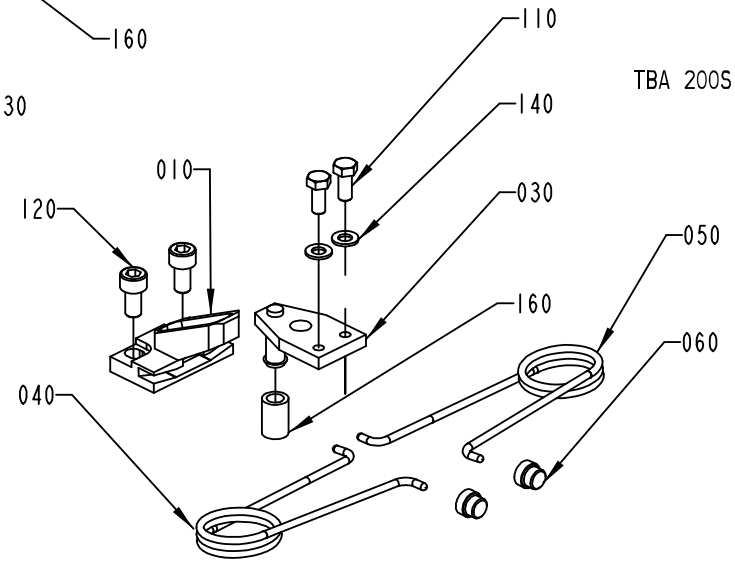

1334635-1
ECN 73647

Pos	Part No	SP	UN	Qty	Description	Page No
TBA 0200B						
010	1512579-0000	A		1	BRACKET	
030	1346153-0000	A		1	STOP PIN	
040	1350263-0000	A		1	SPRING RIGHT	
050	1350264-0000	A		1	SPRING LEFT	
120	312115-0366	-		2	SCREW MC6S M6X12 A280	
160	1317740-0000	A		1	RUBBER SLEEVE	
TBA 0200S						
010	1317823-0000	A		1	CANTILEVER	
030	1317824-0000	A		1	CATCH	
040	1350263-0000	A		1	SPRING RIGHT	
050	1350264-0000	A		1	SPRING LEFT	
110	312105-0327	-		2	SCREW M6S M5X12 A280	
120	312115-0366	-		2	SCREW MC6S M6X12 A280	
140	315105-0146	-		2	WASHER PLAIN, BRB, 5,3/10,H=1	
160	1317740-0000	A		1	RUBBER SLEEVE	
TBA 0250B						
010	1317742-0000	A		1	CANTILEVER	
020	1317741-0000	A		1	CATCH	
030	1317440-0000	A		1	STOP PIN	
040	1350263-0000	A		1	SPRING RIGHT	
050	1350264-0000	A		1	SPRING LEFT	
110	312105-0325	-		1	SCREW M6S M5X10 A280	
120	312115-0366	-		4	SCREW MC6S M6X12 A280	
140	315105-0146	-		1	WASHER PLAIN, BRB, 5,3/10,H=1	
160	1317740-0000	A		1	RUBBER SLEEVE	
TBA 0500B						
010	1539886-0000	A		1	CANTILEVER	
030	1539887-0000	A		1	CATCH	
040	1350263-0000	A		1	SPRING RIGHT	
050	1350264-0000	A		1	SPRING LEFT	
110	312105-0327	-		2	SCREW M6S M5X12 A280	
120	312115-0366	-		2	SCREW MC6S M6X12 A280	
TBA 0500S						
010	1349319-0000	A		1	CANTILEVER	
030	1349320-0000	A		1	CATCH	
040	1143216-0000	A		1	SPRING	
050	1143215-0000	A		1	SPRING	
110	312115-0372	-		2	SCREW MC6S M6X25 A280	
120	312115-0378	-		2	SCREW MC6S M6X40 A280	
170	1511556-0000	A		1	SET SCREW	
180	312605-0318	-		1	HEXAGON NUT, M6M M8 A280	
TBA 1000B						
010	1347526-0000	A		1	BRACKET	
020	1478396-0000	A		1	STOP	
030	1478393-0000	A		1	CATCH	
040	1348483-0000	A		1	SPRING RIGHT	
050	1348484-0000	A		1	SPRING LEFT	
100	312105-0368	-		4	SCREW M6S M6X16 A280	
110	312115-0329	-		2	SCREW MC6S M5X16 A280	
130	315105-0153	-		4	WASHER PLAIN, BRB, 6,4/12,H=1,5	
TBA 1000S						
010	1347526-0000	A		1	BRACKET	
020	1478396-0000	A		1	STOP	
030	1478395-0000	A		1	CATCH	
040	1348483-0000	A		1	SPRING RIGHT	
050	1348484-0000	A		1	SPRING LEFT	
100	312105-0368	-		4	SCREW M6S M6X16 A280	
110	312115-0329	-		2	SCREW MC6S M5X16 A280	
130	315105-0153	-		4	WASHER PLAIN, BRB, 6,4/12,H=1,5	
TBA 1000SQ						
010	1349319-0000	A		1	CANTILEVER	
030	1349320-0000	A		1	CATCH	
040	1143216-0000	A		1	SPRING	
050	1143215-0000	A		1	SPRING	
110	312105-0366	-		2	SCREW M6S M6X12 A280	
120	312115-0378	-		2	SCREW MC6S M6X40 A280	
170	1511556-0000	A		1	SET SCREW	
180	312605-0318	-		1	HEXAGON NUT, M6M M8 A280	
TBA 1500S						
010	1349319-0000	A		1	CANTILEVER	
030	1349320-0000	A		1	CATCH	
040	1143216-0000	A		1	SPRING	
050	1143215-0000	A		1	SPRING	
110	312115-0368	-		2	SCREW MC6S M6X16 A280	
120	312115-0378	-		2	SCREW MC6S M6X40 A280	

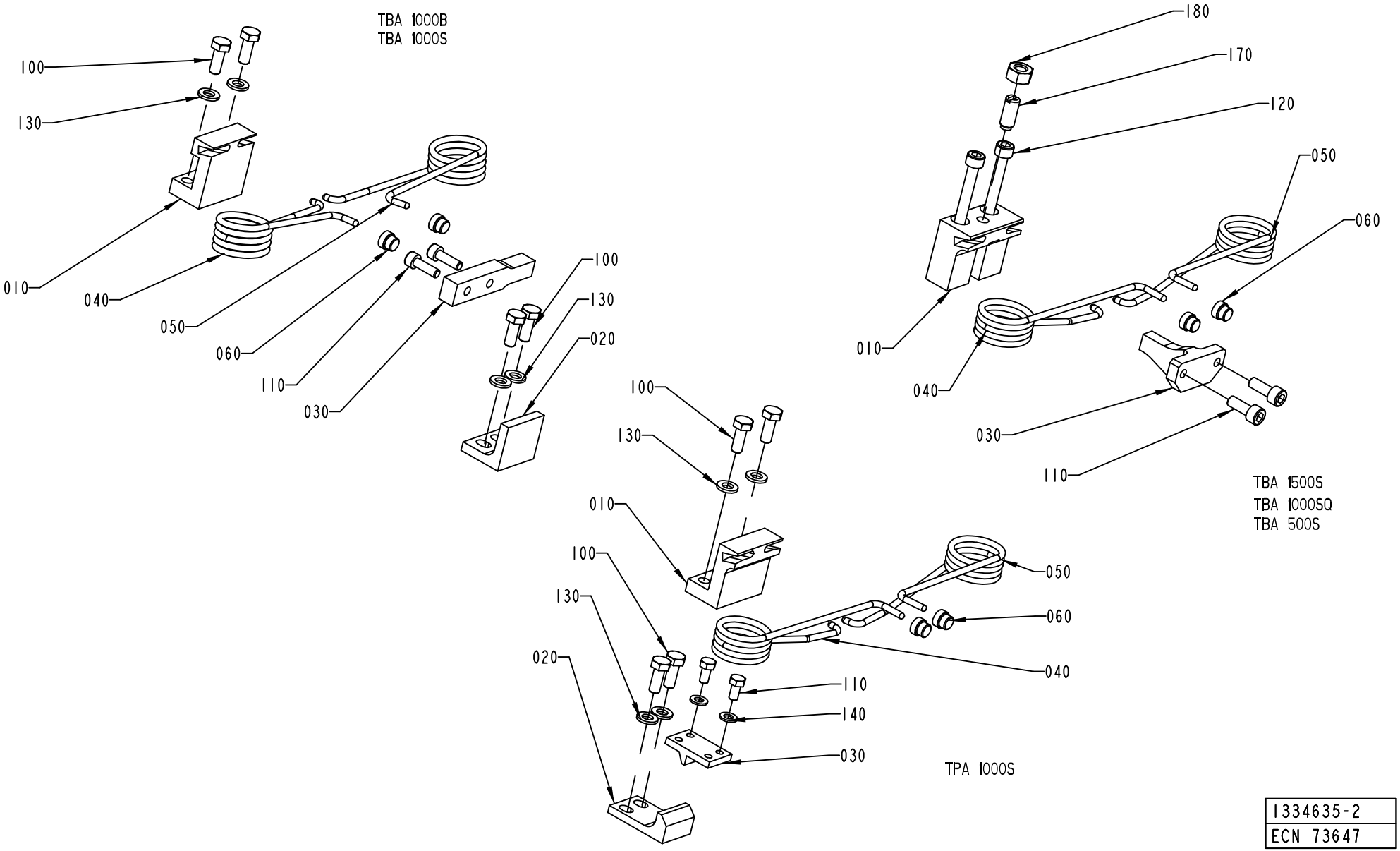

1334635-2
ECN 73647

Pos	Part No	SP	UN	Qty	Description	Page No
TBA 1500S (Cont'd)						
170	1511556-0000	A		1	SET SCREW	
180	312605-0318	-		1	HEXAGON NUT, M6M M8 A280	
TPA 0330SQ						
010	1539172-0000	A		1	CANTILEVER	
030	1539887-0000	A		1	CATCH	
040	1350263-0000	A		1	SPRING RIGHT	
050	1350264-0000	A		1	SPRING LEFT	
110	312105-0325	-		2	SCREW M6S M5X10 A280	
120	312115-0368	-		2	SCREW MC6S M6X16 A280	
TPA 1000S						
010	1334533-0000	A		1	CANTILEVER	
020	1255912-0000	A		1	STOP	
030	1255913-0000	A		1	CATCH	
040	1143216-0000	A		1	SPRING	
050	1143215-0000	A		1	SPRING	
100	312105-0368	-		4	SCREW M6S M6X16 A280	
110	312105-0325	-		2	SCREW M6S M5X10 A280	
130	315105-0153	-		2	WASHER PLAIN, BRB, 6,4/12,H=1,5	
140	315105-0146	-		2	WASHER PLAIN, BRB, 5,3/10,H=1	
Common Parts						
060	1144601-0000	A		2	GUIDE STUD	

Pos	Part No	SP	UN	Qty	Description	Page No

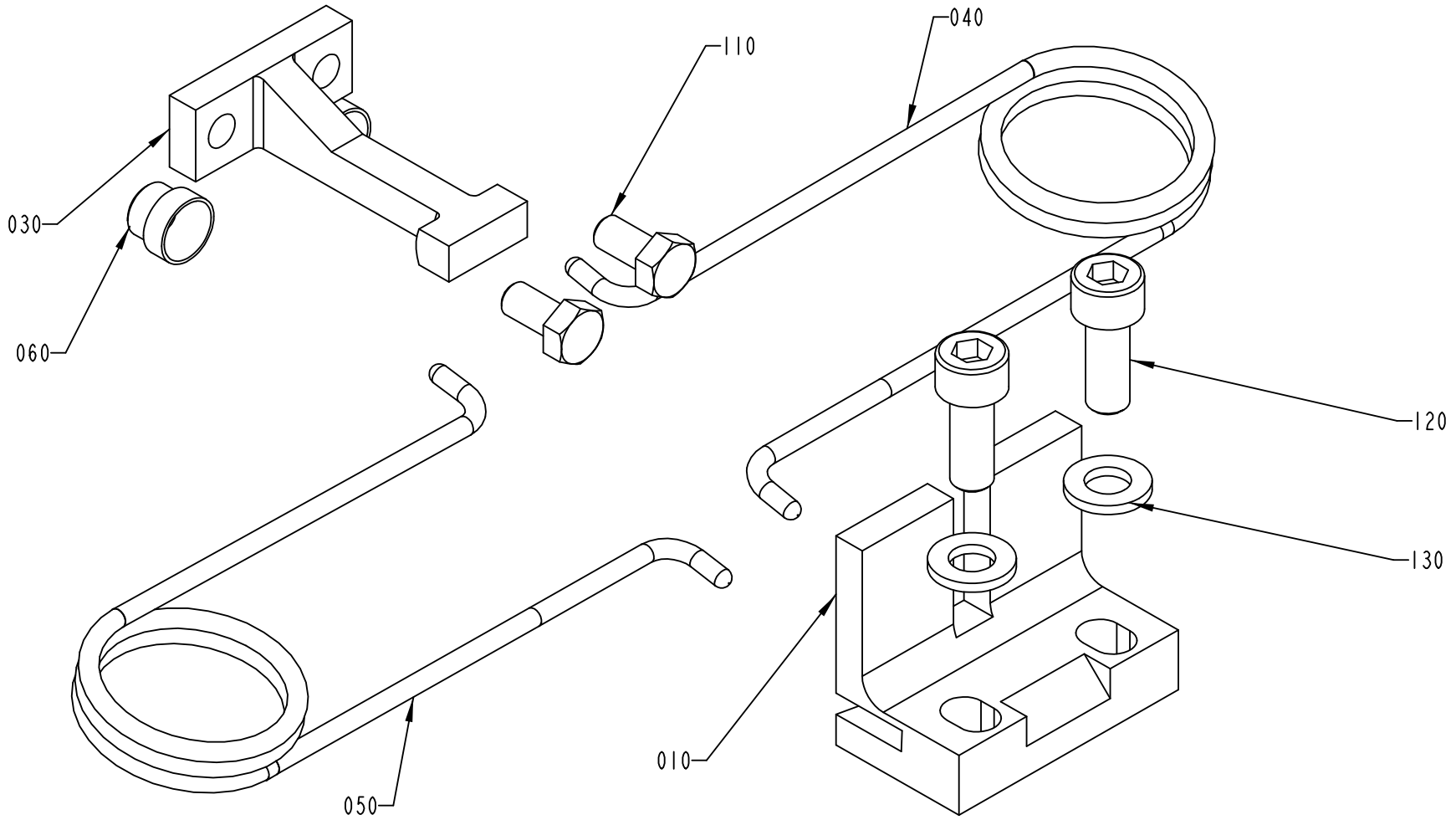

TPA 330SQ
TBA 500B
TPA 250SQ

1334635-3
ECN 80471

Pos	Part No	SP	UN	Qty	Description	Page No
SEE PREVIOUS LISTS PAGES: 533, 535.						

Pos	Part No	SP	UN	Qty	Description	Page No

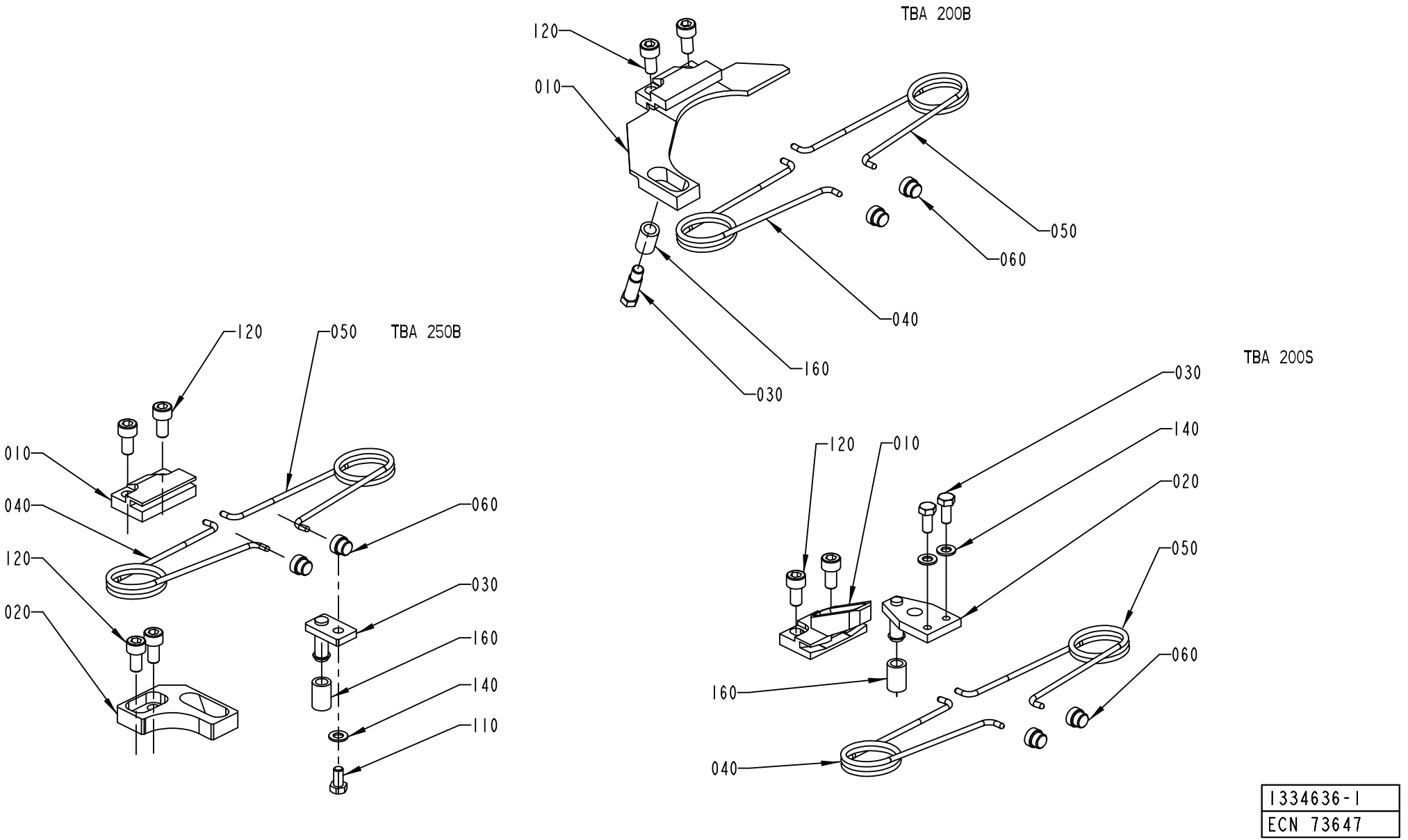

1334636-1
ECN 73647

ECM: 92198 - 20010709
Group number: 1334636-0200
Assembly Drawing: 1334636-1_1_AF

Issue: 20011217

Pos	Part No	SP	UN	Qty	Description	Page No
TBA 0200B						
010	1512579-0000	A		1	BRACKET	
030	1346153-0000	A		1	STOP PIN	
040	1350263-0000	A		1	SPRING RIGHT	
050	1350264-0000	A		1	SPRING LEFT	
050	1348484-0000	A		1	SPRING LEFT	
120	312115-0366	-		2	SCREW MC6S M6X12 A280	
160	1317740-0000	A		1	RUBBER SLEEVE	
TBA 0200S						
010	1317823-0000	A		1	CANTILEVER	
030	1317824-0000	A		1	CATCH	
040	1350263-0000	A		1	SPRING RIGHT	
050	1350264-0000	A		1	SPRING LEFT	
110	312105-0327	-		2	SCREW M6S M5X12 A280	
120	312115-0366	-		2	SCREW MC6S M6X12 A280	
140	315105-0146	-		2	WASHER PLAIN, BRB, 5,3/10,H=1	
160	1317740-0000	A		1	RUBBER SLEEVE	
TBA 0250B						
010	1317742-0000	A		1	CANTILEVER	
020	1317439-0000	A		1	CATCH	
030	1317440-0000	A		1	STOP PIN	
040	1350263-0000	A		1	SPRING RIGHT	
050	1350264-0000	A		1	SPRING LEFT	
110	312105-0325	-		1	SCREW M6S M5X10 A280	
120	312115-0366	-		4	SCREW MC6S M6X12 A280	
140	315105-0146	-		1	WASHER PLAIN, BRB, 5,3/10,H=1	
160	1317740-0000	A		1	RUBBER SLEEVE	
TBA 0500B						
010	1539886-0000	A		1	CANTILEVER	
030	1539887-0000	A		1	CATCH	
040	1350263-0000	A		1	SPRING RIGHT	
050	1350264-0000	A		1	SPRING LEFT	
110	312105-0327	-		2	SCREW M6S M5X12 A280	
120	312115-0366	-		2	SCREW MC6S M6X12 A280	
TBA 0500S						
010	1349319-0000	A		1	CANTILEVER	
030	1349320-0000	A		1	CATCH	
040	1143216-0000	A		1	SPRING	
050	1143215-0000	A		1	SPRING	
110	312115-0372	-		2	SCREW MC6S M6X25 A280	
120	312115-0378	-		2	SCREW MC6S M6X40 A280	
170	1511556-0000	A		1	SET SCREW	
180	312605-0318	-		1	HEXAGON NUT, M6M M8 A280	
TBA 1000B						
010	1347526-0000	A		1	BRACKET	
020	1478396-0000	A		1	STOP	
030	1478393-0000	A		1	CATCH	
040	1348483-0000	A		1	SPRING RIGHT	
050	1348484-0000	A		1	SPRING LEFT	
100	312105-0368	-		4	SCREW M6S M6X16 A280	
110	312115-0329	-		2	SCREW MC6S M5X16 A280	
130	315105-0153	-		4	WASHER PLAIN, BRB, 6,4/12,H=1,5	
TBA 1000S						
010	1347526-0000	A		1	BRACKET	
020	1478396-0000	A		1	STOP	
030	1478395-0000	A		1	CATCH	
040	1348483-0000	A		1	SPRING RIGHT	
050	1348484-0000	A		1	SPRING LEFT	
100	312105-0368	-		4	SCREW M6S M6X16 A280	
110	312115-0329	-		2	SCREW MC6S M5X16 A280	
130	315105-0153	-		4	WASHER PLAIN, BRB, 6,4/12,H=1,5	
TBA 1000SQ						
010	1349319-0000	A		1	CANTILEVER	
030	1349320-0000	A		1	CATCH	
040	1143216-0000	A		1	SPRING	
050	1143215-0000	A		1	SPRING	
110	312115-0366	-		2	SCREW MC6S M6X12 A280	
120	312115-0378	-		2	SCREW MC6S M6X40 A280	
170	1511556-0000	A		1	SET SCREW	
180	312605-0318	-		1	HEXAGON NUT, M6M M8 A280	
TBA 1500S						
010	1349319-0000	A		1	CANTILEVER	
030	1349320-0000	A		1	CATCH	
040	1143216-0000	A		1	SPRING	
050	1143215-0000	A		1	SPRING	
110	312115-0368	-		2	SCREW MC6S M6X16 A280	

Machine Type | Group Description | Used-In | Group Number | Page No

TBA 1000B
TBA 1000S

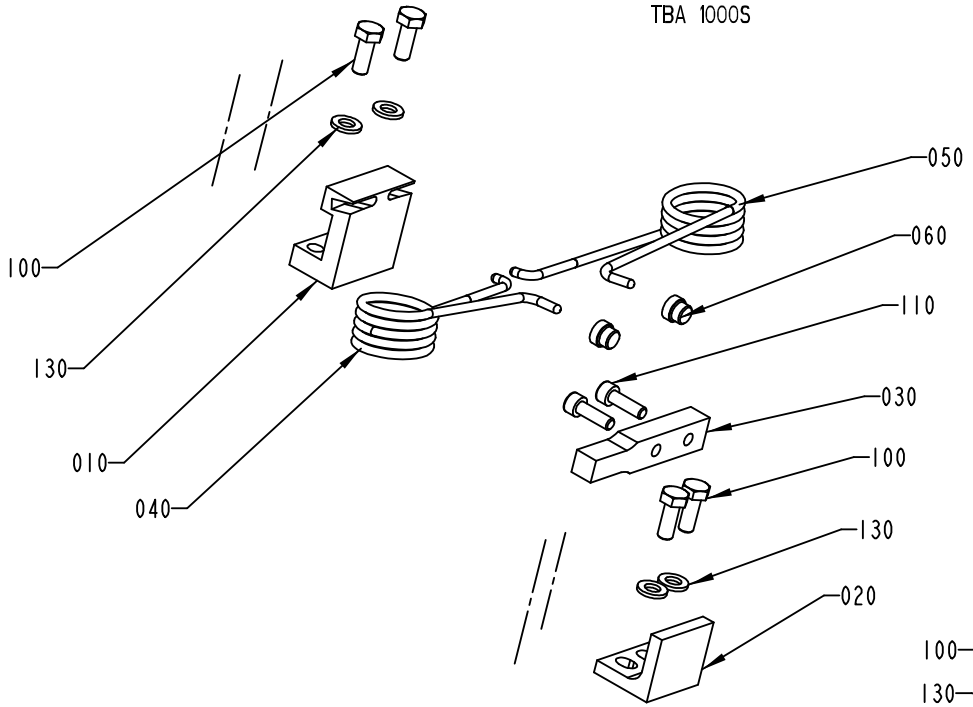

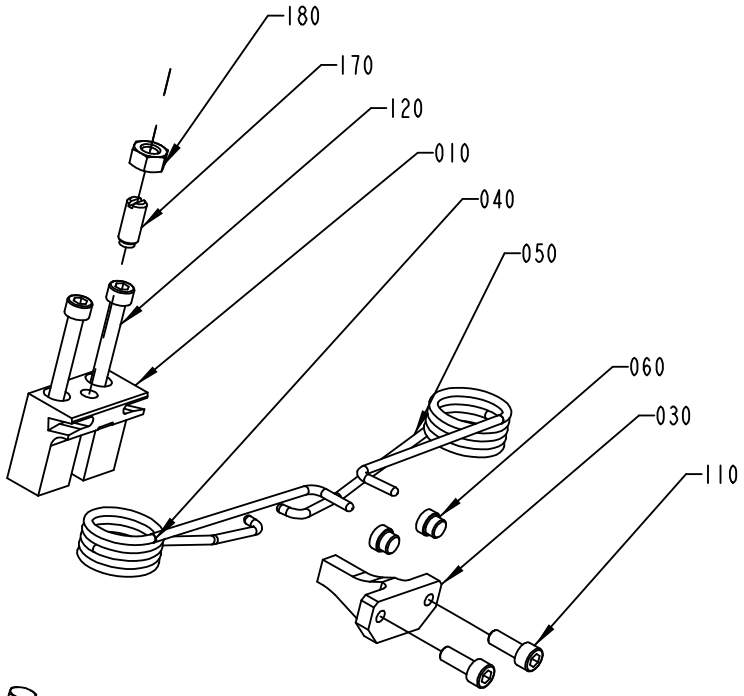

TBA 1500S
TBA 1000SQ
TBA 500S

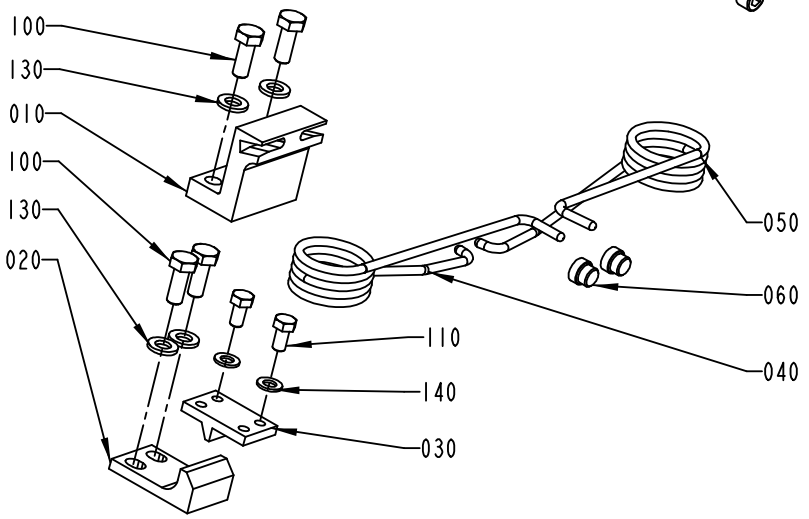

TPA 1000S

1334636-2
ECN 73647

Pos	Part No	SP	UN	Qty	Description	Page No
TBA 1500S (Cont'd)						
120	312115-0378	-		2	SCREW MC6S M6X40 A280	
170	1511556-0000	A		1	SET SCREW	
180	312605-0318	-		1	HEXAGON NUT, M6M M8 A280	
TPA 0330SQ						
010	1539172-0000	A		1	CANTILEVER	
030	1539887-0000	A		1	CATCH	
040	1350263-0000	A		1	SPRING RIGHT	
050	1350264-0000	A		1	SPRING LEFT	
110	312105-0325	-		2	SCREW M6S M5X10 A280	
120	312115-0368	-		2	SCREW MC6S M6X16 A280	
TPA 1000S						
010	1334533-0000	A		1	CANTILEVER	
020	1255912-0000	A		1	STOP	
030	1255913-0000	A		1	CATCH	
040	1143216-0000	A		1	SPRING	
050	1143215-0000	A		1	SPRING	
100	312105-0368	-		4	SCREW M6S M6X16 A280	
110	312105-0325	-		2	SCREW M6S M5X10 A280	
130	315105-0153	-		2	WASHER PLAIN, BRB, 6,4/12,H=1,5	
140	315105-0146	-		2	WASHER PLAIN, BRB, 5,3/10,H=1	
Common Parts						
060	1144601-0000	A		2	GUIDE STUD	

Pos	Part No	SP	UN	Qty	Description	Page No

SHOCK ABSORBER

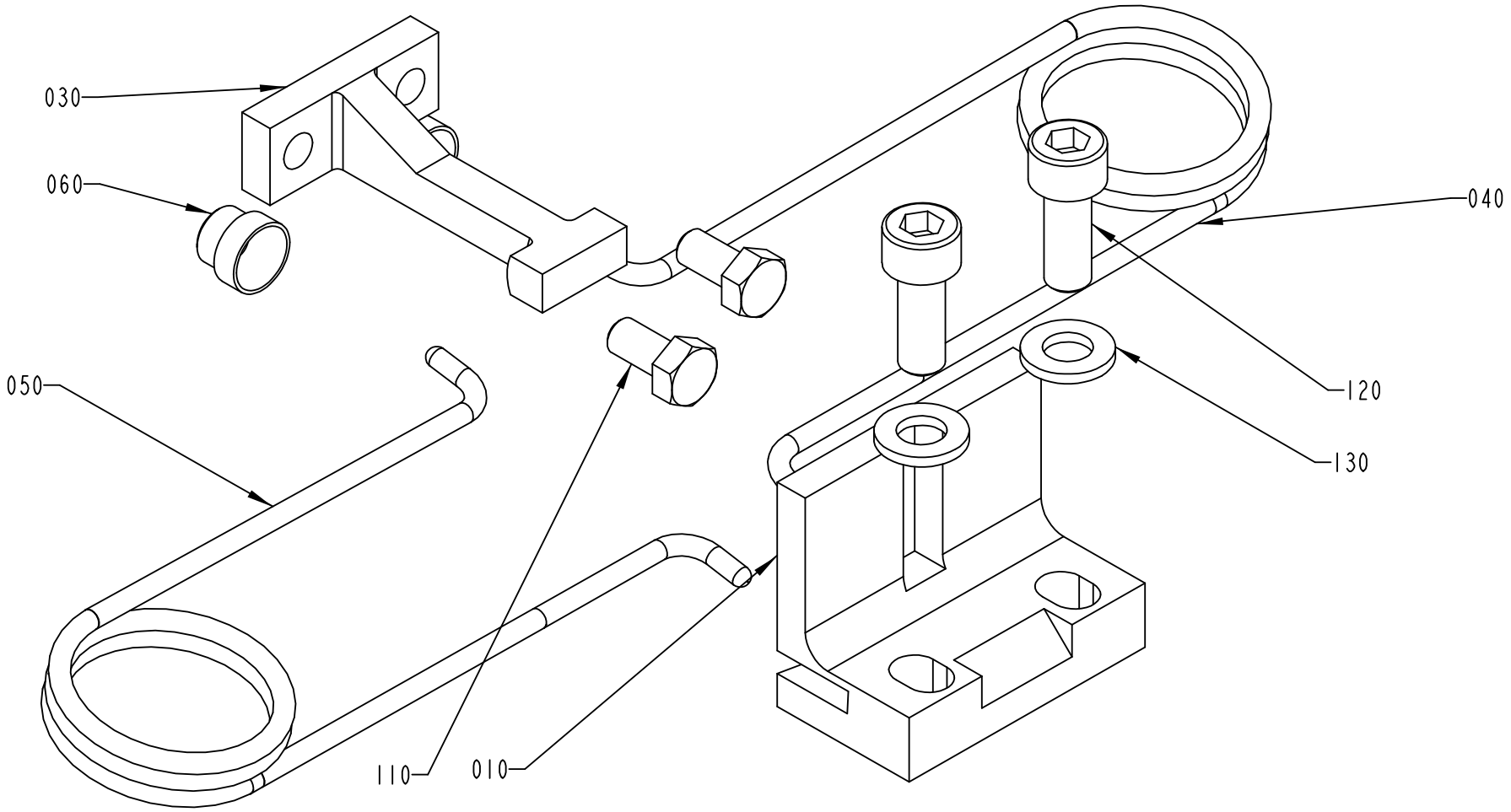

TPA 330SQ
TBA 500B
TPA 250SQ

1334636-3
ECN 80471

Pos	Part No	SP	UN	Qty	Description	Page No
SEE PREVIOUS LISTS PAGES: 539, 541.						

Pos	Part No	SP	UN	Qty	Description	Page No

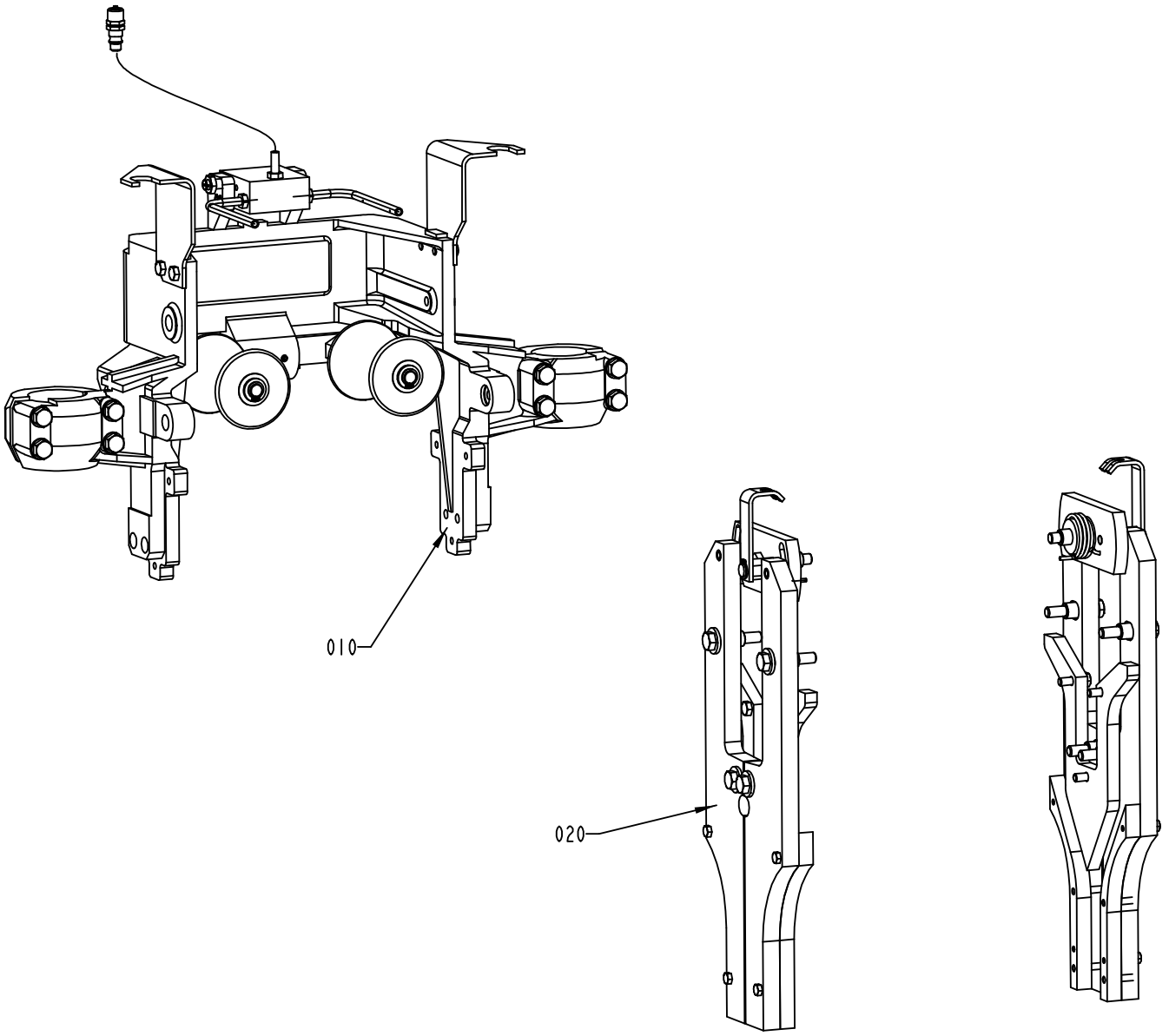

S-1035134-3
ECN 72956

Pos	Part No	SP	UN	Qty	Description	Page No
TBA 0200B						
010	A1035120-0300	-		1	CANTILEVER	**549, 551, 553**
TBA 0200S						
010	A1035120-0300	-		1	CANTILEVER	**549, 551, 553**
TBA 0250B						
010	A1035120-0300	-		1	CANTILEVER	**549, 551, 553**
TBA 0500B						
010	A1035120-0300	-		1	CANTILEVER	**549, 551, 553**
TBA 0500S						
010	A1035120-0300	-		1	CANTILEVER	**549, 551, 553**
TBA 1000B						
010	A1035120-0300	-		1	CANTILEVER	**549, 551, 553**
TBA 1000S						
010	A1035120-0300	-		1	CANTILEVER	**549, 551, 553**
TBA 1000SQ						
010	A1035120-0300	-		1	CANTILEVER	**549, 551, 553**
TBA 1500S						
010	A1484127-0100	-		1	CANTILEVER	**555**
030	A1487345-0100	-		1	SAFETY CAM	**557**
TPA 0330SQ						
010	A1035120-0300	-		1	CANTILEVER	**549, 551, 553**
TPA 1000S						
010	A1035120-0300	-		1	CANTILEVER	**549, 551, 553**
Common Parts						
020	A1035121-0300	-		1	CURVE UNIT	**559, 561**

Pos	Part No	SP	UN	Qty	Description	Page No

VOLUME ADJUSTER

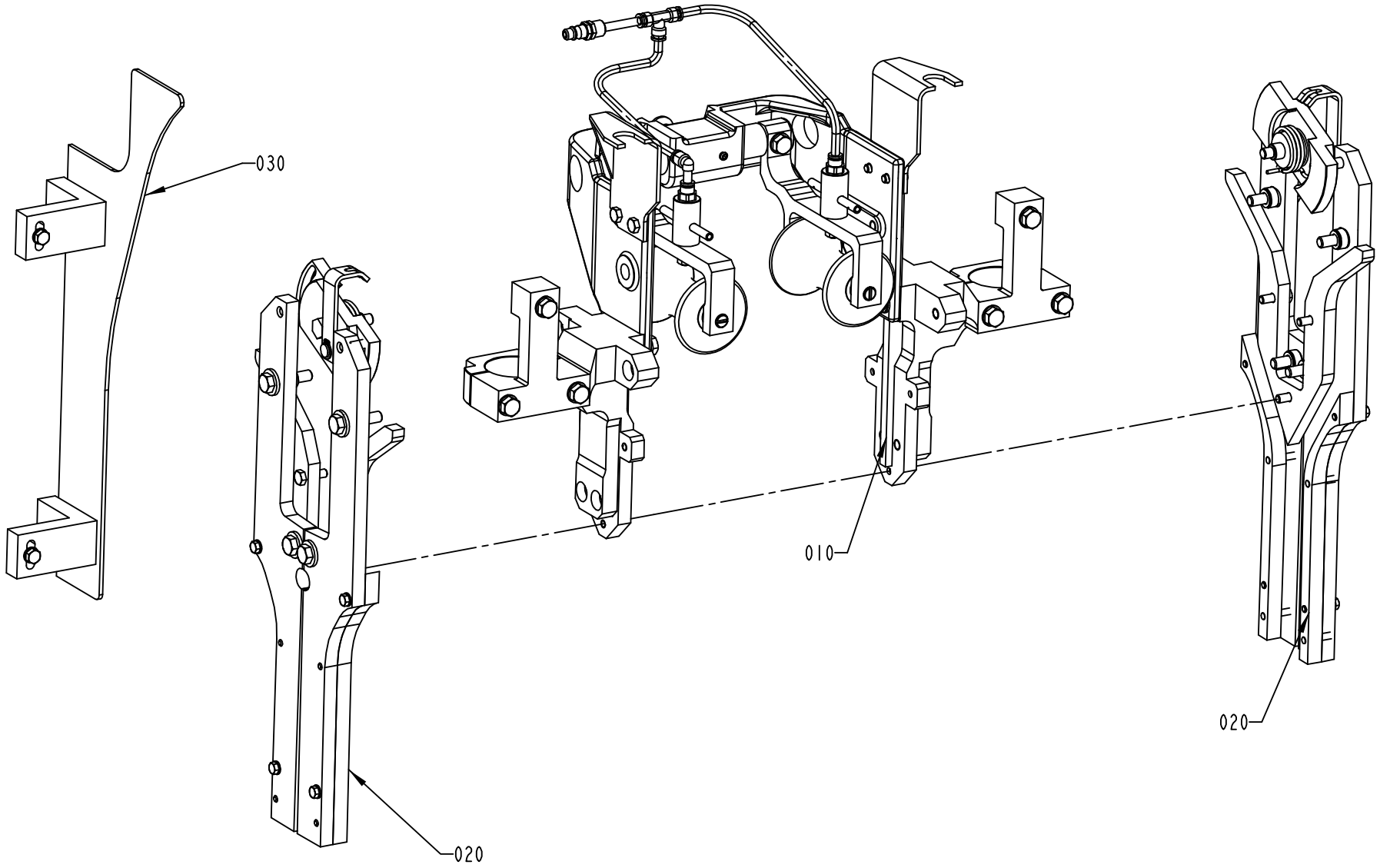

1035134-4
ECN 73538

Pos	Part No	SP	UN	Qty	Description	Page No
TBA 0200B						
010	A1035120-0300	-		1	CANTILEVER	**549, 551, 553**
TBA 0200S						
010	A1035120-0300	-		1	CANTILEVER	**549, 551, 553**
TBA 0250B						
010	A1035120-0300	-		1	CANTILEVER	**549, 551, 553**
TBA 0500B						
010	A1035120-0300	-		1	CANTILEVER	**549, 551, 553**
TBA 0500S						
010	A1035120-0300	-		1	CANTILEVER	**549, 551, 553**
TBA 1000B						
010	A1035120-0300	-		1	CANTILEVER	**549, 551, 553**
TBA 1000S						
010	A1035120-0300	-		1	CANTILEVER	**549, 551, 553**
TBA 1000SQ						
010	A1035120-0300	-		1	CANTILEVER	**549, 551, 553**
TBA 1500S						
010	A1484127-0100	-		1	CANTILEVER	**555**
030	A1487345-0100	-		1	SAFETY CAM	**557**
TPA 0330SQ						
010	A1035120-0300	-		1	CANTILEVER	**549, 551, 553**
TPA 1000S						
010	A1035120-0300	-		1	CANTILEVER	**549, 551, 553**
Common Parts						
020	A1035121-0300	-		1	CURVE UNIT	**559, 561**

Pos	Part No	SP	UN	Qty	Description	Page No

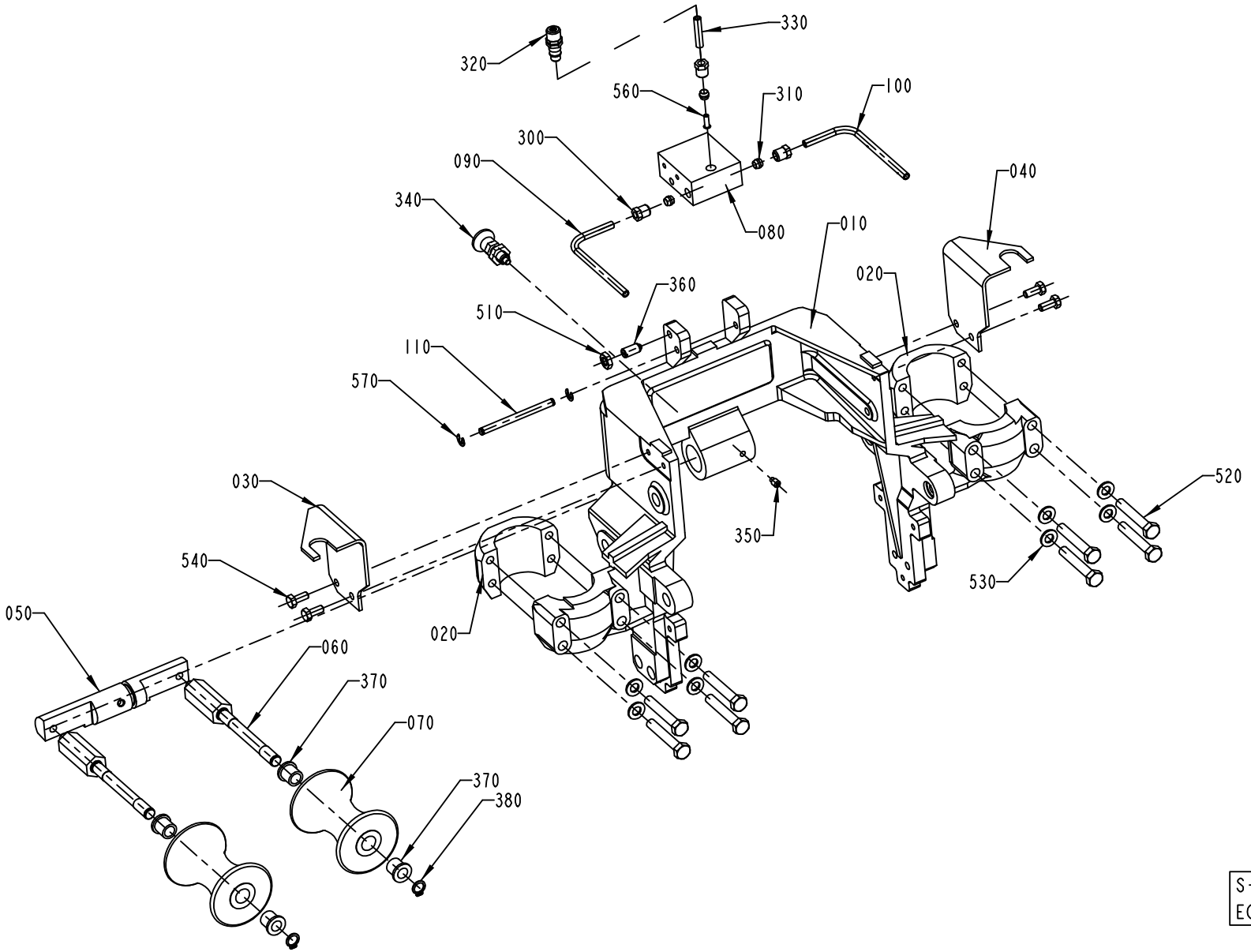

S-1035120-3
ECN 72956

ECM: 86708 - 20010903
Group number: 1035120-0300
Assembly Drawing: 1035120-3_1_AB

Issue: 20011217

Pos	Part No	SP	UN	Qty	Description	Page No
TBA 0200B						
010	1255027-0000	A		1	CANTILEVER	
020	1038142-0000	A		2	CAP	
030	1038712-0000	-		1	FASTENING BRACKET	
040	1038713-0000	-		1	FASTENING BRACKET	
050	1255021-0000	-		1	SHAFT	
060	1255033-0000	A		2	SHAFT	
070	978757-0000	A		2	ROLLER 180-284ML	
090	1255026-0000	B		1	TUBE FLUSHING DEVICE	
100	1255025-0000	B		1	TUBE FLUSHING DEVICE	
120	1523090-0000	-		1	PLATE	
340	90051-0112	A		1	LOCK KNOB, NO. GN 617 NIK5	
350	90287-0154	-		1	SCREW, SOCK.SET DOGPOINT M6X10	
360	90287-0112	B		1	SCREW SPRINGLOAD. SLOTTED HEAD M8X16	
380	90141-0016	-		2	RETAIN. RING, 10	
530	315105-0165	-		12	WASHER PLAIN, BRB, 8,4/16,H=1,5	
550	312105-0451	-		2	SCREW M6S 8X20 A280	
580	312605-0318	-		2	HEXAGON NUT, M6M M8 A280	
TBA 0200S						
010	1255027-0000	A		1	CANTILEVER	
020	1038142-0000	A		2	CAP	
030	1038712-0000	-		1	FASTENING BRACKET	
040	1038713-0000	-		1	FASTENING BRACKET	
050	1255021-0000	-		1	SHAFT	
060	1255033-0000	A		2	SHAFT	
070	978760-0000	A		2	ROLLER TBA200SL	
090	1255026-0000	B		1	TUBE FLUSHING DEVICE	
100	1255025-0000	B		1	TUBE FLUSHING DEVICE	
120	1523089-0000	-		1	PLATE	
340	90051-0112	A		1	LOCK KNOB, NO. GN 617 NIK5	
350	90287-0154	-		1	SCREW, SOCK.SET DOGPOINT M6X10	
360	90287-0112	B		1	SCREW SPRINGLOAD. SLOTTED HEAD M8X16	
380	90141-0016	-		2	RETAIN. RING, 10	
530	315105-0165	-		12	WASHER PLAIN, BRB, 8,4/16,H=1,5	
550	312105-0451	-		2	SCREW M6S 8X20 A280	
580	312605-0318	-		2	HEXAGON NUT, M6M M8 A280	
TBA 0250B						
010	1255027-0000	A		1	CANTILEVER	
020	1038142-0000	A		2	CAP	
030	1038712-0000	-		1	FASTENING BRACKET	
040	1038713-0000	-		1	FASTENING BRACKET	
050	1255021-0000	-		1	SHAFT	
060	1255033-0000	A		2	SHAFT	
070	978757-0000	A		2	ROLLER 180-284ML	
090	1255026-0000	B		1	TUBE FLUSHING DEVICE	
100	1255025-0000	B		1	TUBE FLUSHING DEVICE	
120	1523089-0000	-		1	PLATE	
340	90051-0112	A		1	LOCK KNOB, NO. GN 617 NIK5	
350	90287-0154	-		1	SCREW, SOCK.SET DOGPOINT M6X10	
360	90287-0112	B		1	SCREW SPRINGLOAD. SLOTTED HEAD M8X16	
380	90141-0016	-		2	RETAIN. RING, 10	
530	315105-0165	-		12	WASHER PLAIN, BRB, 8,4/16,H=1,5	
550	312105-0451	-		2	SCREW M6S 8X20 A280	
580	312605-0318	-		2	HEXAGON NUT, M6M M8 A280	
TBA 0500B						
010	1539116-0000	A		1	CANTILEVER	
020	1038142-0000	A		2	CAP	
030	1038712-0000	-		1	FASTENING BRACKET	
040	1038713-0000	-		1	FASTENING BRACKET	
050	1255021-0000	-		1	SHAFT	
060	1040914-0000	A		2	SHAFT	
070	560122-0000	A		2	SUPPORT ROLLER	
090	1255024-0000	B		1	TUBE FLUSHING DEVICE	
100	1255023-0000	B		1	TUBE FLUSHING DEVICE	
340	90051-0112	A		1	LOCK KNOB, NO. GN 617 NIK5	
350	90287-0154	-		1	SCREW, SOCK.SET DOGPOINT M6X10	
360	90287-0112	B		1	SCREW SPRINGLOAD. SLOTTED HEAD M8X16	
380	90141-0016	-		2	RETAIN. RING, 10	
530	315105-0165	-		8	WASHER PLAIN, BRB, 8,4/16,H=1,5	
TBA 0500S						
010	1490417-0000	A		1	CANTILEVER	
020	1490418-0000	A		2	CLAMP	
030	1038712-0000	-		1	FASTENING BRACKET	
040	1038713-0000	-		1	FASTENING BRACKET	
050	1512485-0000	-		1	SHAFT	
060	1040914-0000	A		2	SHAFT	
070	1512484-0000	A		2	ROLLER	
090	1255026-0000	B		1	TUBE FLUSHING DEVICE	
100	1255025-0000	B		1	TUBE FLUSHING DEVICE	
340	90051-0112	A		1	LOCK KNOB, NO. GN 617 NIK5	

Machine Type Group Description Used-In Group Number Page No

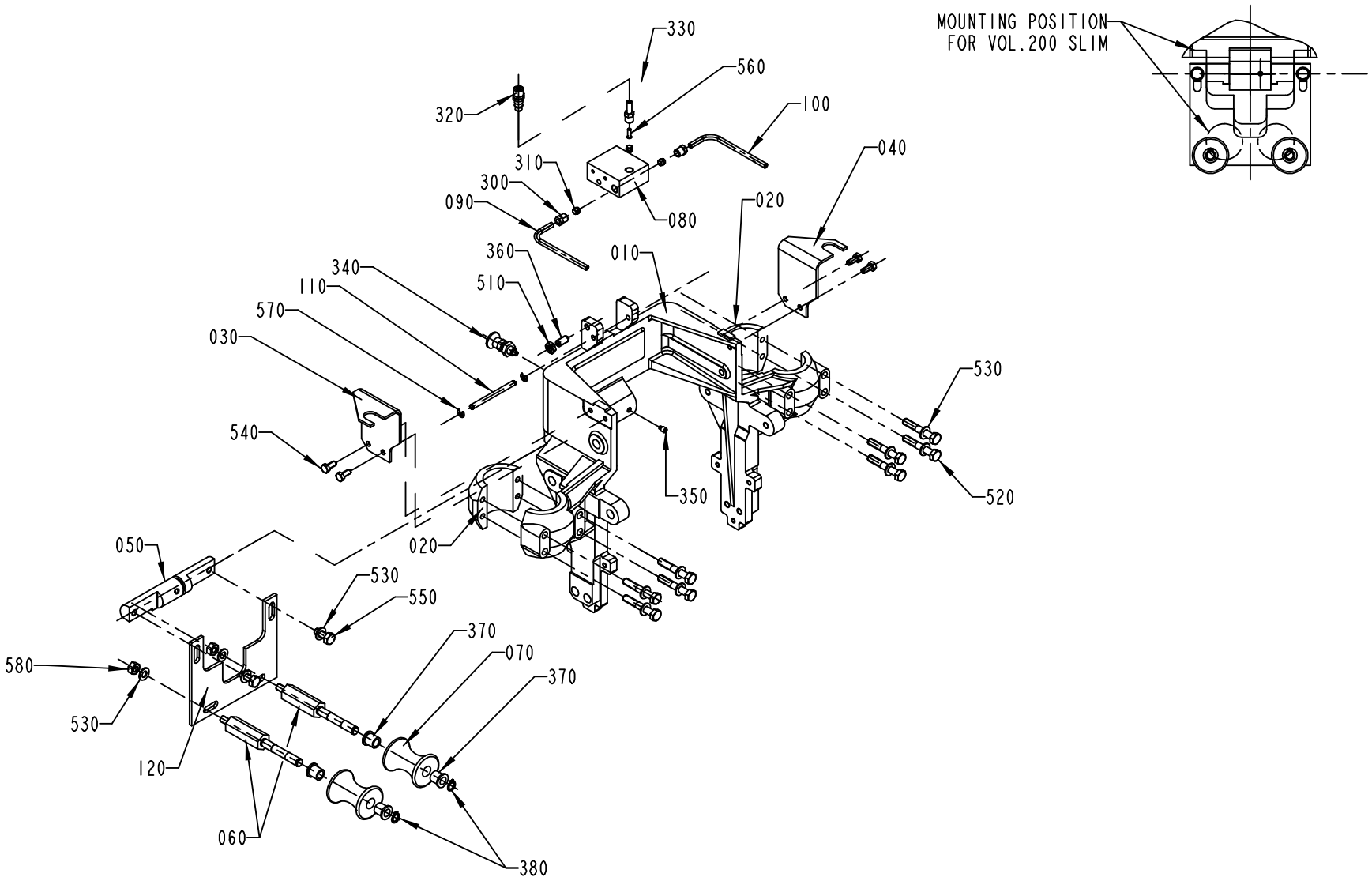

S-1035120-4
ECN 72956

Pos	Part No	SP	UN	Qty	Description	Page No
TBA 0500S (Cont'd)						
350	90287-0154	-		1	SCREW, SOCK.SET DOGPOINT M6X10	
360	90287-0112	B		1	SCREW SPRINGLOAD. SLOTTED HEAD M8X16	
380	90141-0016	-		2	RETAIN. RING, 10	
530	315105-0165	-		8	WASHER PLAIN, BRB, 8,4/16,H=1,5	
TBA 1000B						
010	1255028-0000	A		1	CANTILEVER	
020	1041360-0000	A		2	CLAMP	
030	1038712-0000	-		1	FASTENING BRACKET	
040	1038713-0000	-		1	FASTENING BRACKET	
050	1255021-0000	-		1	SHAFT	
060	1040914-0000	A		2	SHAFT	
070	560122-0000	A		2	SUPPORT ROLLER	
090	1255024-0000	B		1	TUBE FLUSHING DEVICE	
100	1255023-0000	B		1	TUBE FLUSHING DEVICE	
340	90051-0112	A		1	LOCK KNOB, NO. GN 617 NIK5	
350	90287-0154	-		1	SCREW, SOCK.SET DOGPOINT M6X10	
360	90287-0112	B		1	SCREW SPRINGLOAD. SLOTTED HEAD M8X16	
380	90141-0016	-		2	RETAIN. RING, 10	
530	315105-0165	-		8	WASHER PLAIN, BRB, 8,4/16,H=1,5	
TBA 1000S						
010	1255028-0000	A		1	CANTILEVER	
020	1041360-0000	A		2	CLAMP	
030	1038712-0000	-		1	FASTENING BRACKET	
040	1038713-0000	-		1	FASTENING BRACKET	
050	1255021-0000	-		1	SHAFT	
060	1040914-0000	A		2	SHAFT	
070	569058-0000	A		2	SUPPORT ROLLER	
090	1255024-0000	B		1	TUBE FLUSHING DEVICE	
100	1255023-0000	B		1	TUBE FLUSHING DEVICE	
340	90051-0112	A		1	LOCK KNOB, NO. GN 617 NIK5	
350	90287-0154	-		1	SCREW, SOCK.SET DOGPOINT M6X10	
360	90287-0112	B		1	SCREW SPRINGLOAD. SLOTTED HEAD M8X16	
380	90141-0016	-		2	RETAIN. RING, 10	
530	315105-0165	-		8	WASHER PLAIN, BRB, 8,4/16,H=1,5	
TBA 1000SQ						
010	1490417-0000	A		1	CANTILEVER	
020	1490418-0000	A		2	CLAMP	
030	1349749-0000	-		1	FASTENING BRACKET	
040	1349750-0000	-		1	FASTENING BRACKET	
050	1255021-0000	-		1	SHAFT	
060	1040914-0000	A		2	SHAFT	
070	1499678-0000	A		2	ROLLER	
090	1255024-0000	B		1	TUBE FLUSHING DEVICE	
100	1255023-0000	B		1	TUBE FLUSHING DEVICE	
340	90051-0112	A		1	LOCK KNOB, NO. GN 617 NIK5	
350	90287-0154	-		1	SCREW, SOCK.SET DOGPOINT M6X10	
360	90287-0112	B		1	SCREW SPRINGLOAD. SLOTTED HEAD M8X16	
380	90141-0016	-		2	RETAIN. RING, 10	
530	315105-0165	-		8	WASHER PLAIN, BRB, 8,4/16,H=1,5	
TPA 0330SQ						
010	1539116-0000	A		1	CANTILEVER	
020	1038142-0000	A		2	CAP	
030	1038712-0000	-		1	FASTENING BRACKET	
040	1038713-0000	-		1	FASTENING BRACKET	
050	1255021-0000	-		1	SHAFT	
060	1255033-0000	A		2	SHAFT	
070	929355-0000	A		2	ROLLER TPA 330	
090	1255026-0000	B		1	TUBE FLUSHING DEVICE	
100	1255025-0000	B		1	TUBE FLUSHING DEVICE	
120	1539117-0000	-		1	PLATE	
340	90051-0112	A		1	LOCK KNOB, NO. GN 617 NIK5	
350	90287-0154	-		1	SCREW, SOCK.SET DOGPOINT M6X10	
360	90287-0112	B		1	SCREW SPRINGLOAD. SLOTTED HEAD M8X16	
380	90141-0016	-		2	RETAIN. RING, 10	
530	315105-0165	-		12	WASHER PLAIN, BRB, 8,4/16,H=1,5	
550	312105-0451	-		2	SCREW M6S 8X20 A280	
580	312605-0318	-		2	HEXAGON NUT, M6M M8 A280	
TPA 1000S						
010	1255028-0000	A		1	CANTILEVER	
020	1041360-0000	A		2	CLAMP	
030	1038712-0000	-		1	FASTENING BRACKET	
040	1038713-0000	-		1	FASTENING BRACKET	
050	1498987-0000	-		2	BRACKET	
060	1498986-0000	A		2	SHAFT	
070	1549600-0000	A		2	SUPPORT ROLLER	
090	1255024-0000	B		1	TUBE FLUSHING DEVICE	
100	1255023-0000	B		1	TUBE FLUSHING DEVICE	
360	90287-0112	B		5	SCREW SPRINGLOAD. SLOTTED HEAD M8X16	

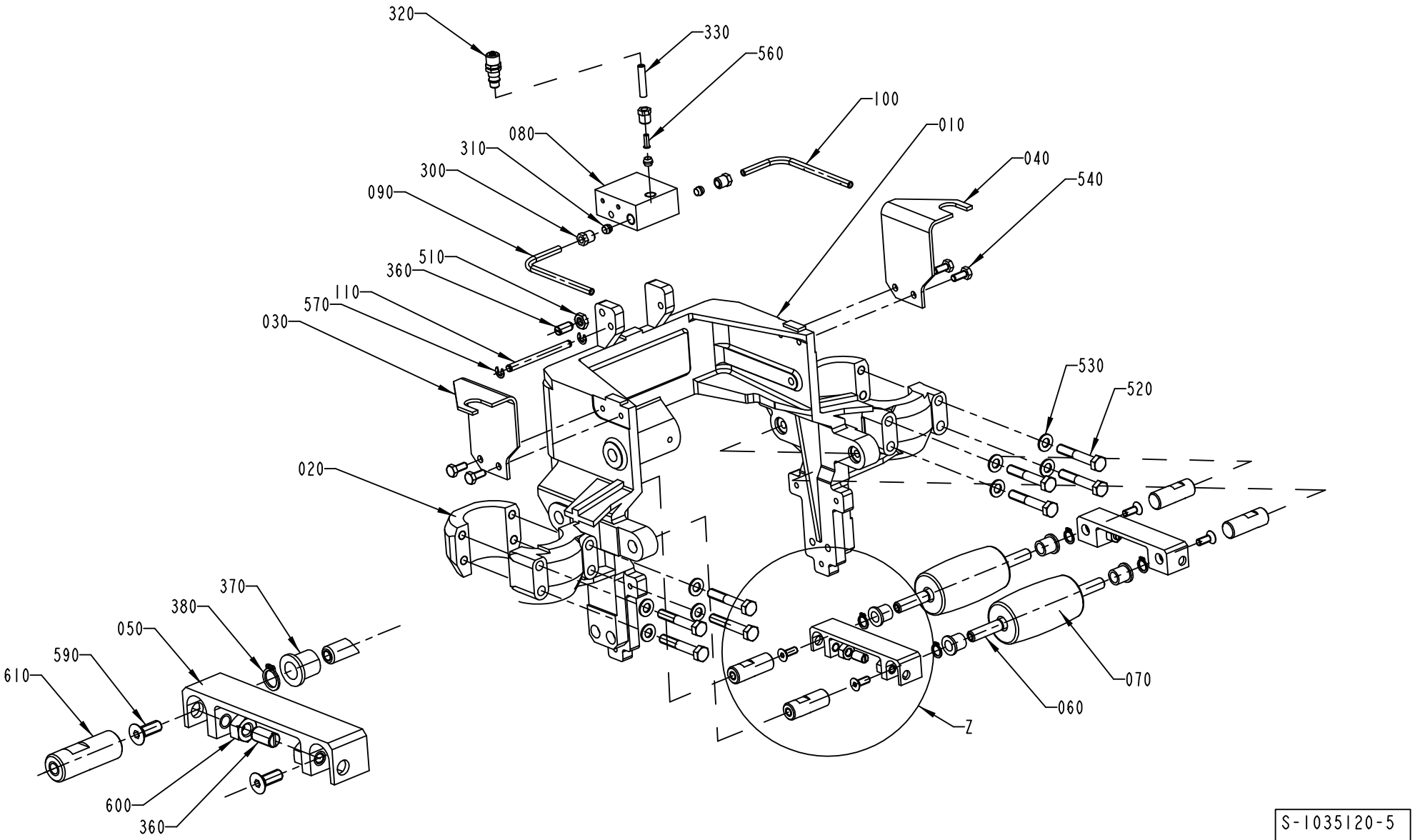

S-1035120-5
ECN 72956

Pos	Part No	SP	UN	Qty	Description	Page No
TPA 1000S (Cont'd)						
380	90141-0016	-		4	RETAIN. RING, 10	
530	315105-0165	-		8	WASHER PLAIN, BRB, 8,4/16,H=1,5	
590	312155-0368	-		4	SCREW HEX.SOCK.COUNT.MF6S M6X16 A280	
600	312605-0318	-		4	HEXAGON NUT, M6M M8 A280	
610	1498988-0000	-		4	COLUMN	
Common Parts						
080	1255020-0000	B		1	PIPE CONNECTION	
110	1255022-0000	B		1	SHAFT	
300	90134-0055	-		3	BUSHING/NUT INLET/OUTLET 6 MM	
310	90028-0022	-		3	CONE TUBE 6 MM	
320	90163-0063	-		1	QUICK COUPLING, (M) 5450-6/4	
330	90166-0132	-	MM	500	TUBE 6 MM PA,TRANSP.	
370	90240-0180	B		4	FLANGE BUSHING,10X14X15 MM NFB	
510	312625-0318	-		1	NUT HEX. M8 SS	
520	312105-0461	-		8	SCREW M6S M8X50 A280	
540	312105-0367	-		4	SCREW M6S M6X14 A280	
560	342706-0130	-		1	ACCESSORIES, INSERT SLEEVE 6 MM	
570	315755-0107	-		2	LOCKING WASHER 5	

Pos	Part No	SP	UN	Qty	Description	Page No

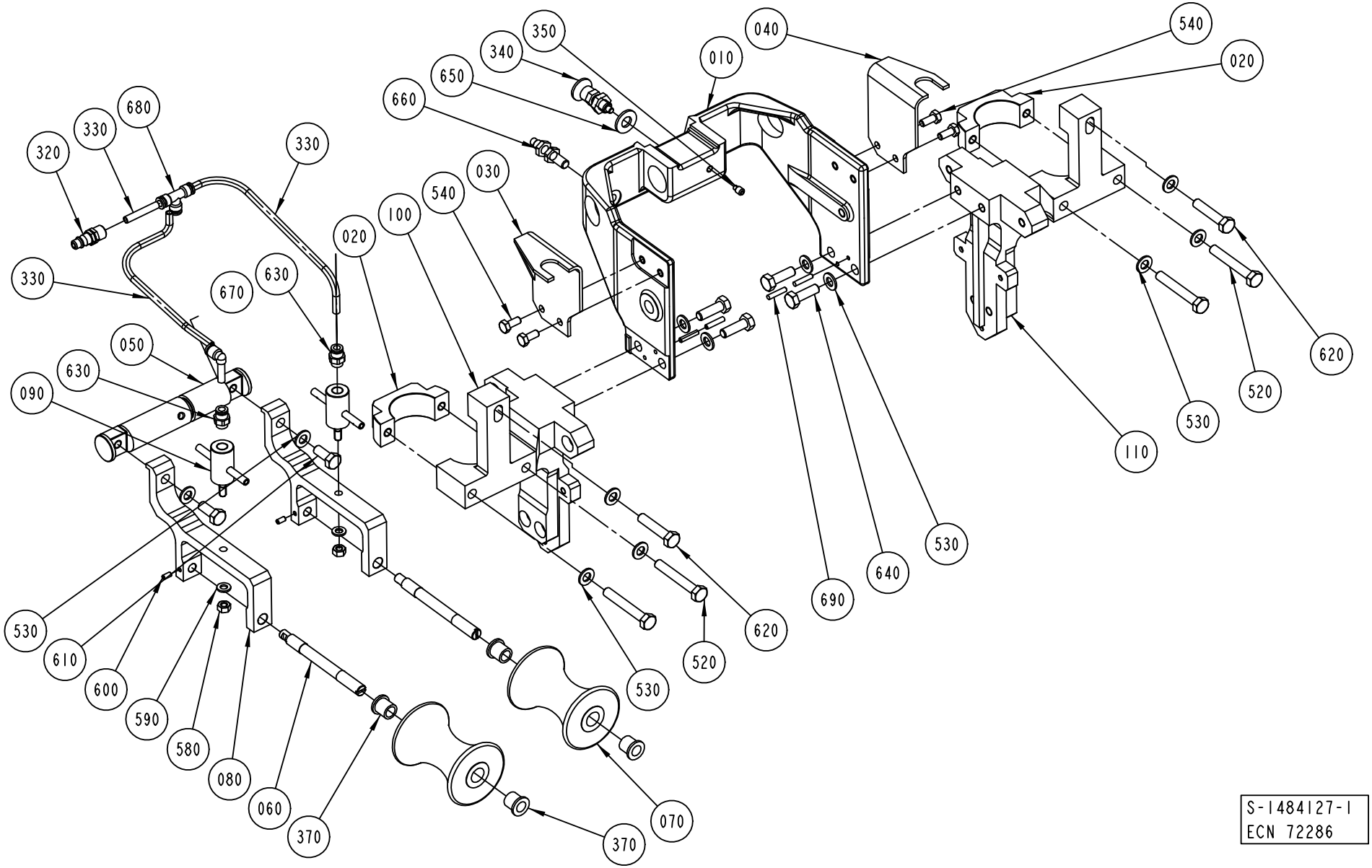

S-1484127-1
ECN 72286

ECM: 72286 - 19991108
Group number: 1484127-0100
Assembly Drawing: 1484127-1_1_AA

Issue: 20011217

Pos	Part No	SP	UN	Qty	Description	Page No
Common Parts						
010	1349747-0000	D		1	CANTILEVER	
020	1349748-0000	D		2	CONNECTION CLAMP	
030	1349749-0000	D		1	FASTENING BRACKET	
040	1349750-0000	D		1	FASTENING BRACKET	
050	1349751-0000	D		1	SHAFT	
060	1349752-0000	C		2	SHAFT	
070	560122-0000	C		2	SUPPORT ROLLER	
080	1349757-0000	D		2	HOLDER	
090	1484849-0000	C		2	TUBE FLUSHING DEVICE	
100	1349758-0000	C		1	BRACKET	
110	1349759-0000	D		1	BRACKET	
320	90163-0063	-		1	QUICK COUPLING, (M) 5450-6/4	
330	90166-0132	-	MM	1500	TUBE 6 MM PA,TRANSP.	
340	90051-0112	C		1	LOCK KNOB, NO. GN 617 NIK5	
350	90287-0154	-		1	SCREW, SOCK.SET DOGPOINT M6X10	
370	90240-0180	C		4	FLANGE BUSHING,10X14X15 MM NFB	
520	312105-0462	-		4	SCREW M6S M8X55 A280	
530	315105-0165	-		12	WASHER PLAIN, BRB, 8,4/16,H=1,5	
540	312105-0367	-		4	SCREW M6S M6X14 A280	
580	312605-0316	-		2	HEXAGON NUT, M6M M6 A280	
590	315105-0153	-		2	WASHER PLAIN, BRB, 6,4/12,H=1,5	
600	312318-0287	-		2	SCREW SOCK.SET CUP P MSK6SS M4X8 A4	
610	312105-0451	-		2	SCREW M6S 8X20 A280	
620	312105-0459	-		2	SCREW M6S M8X40 A280	
630	342722-0202	-		2	PIPE COUPLING 1/8" D=6MM	
640	312105-0453	-		4	SCREW M6S M8X25 A280	
650	315105-0173	-		1	WASHER PLAIN, BRB, 10,5/22,H=2	
660	90044-0145	-		1	PROX.SW. 922 AAIY-A9P-050-LZ876	
670	90055-0217	-		1	ELBOW PIPE JOINT	
680	342748-0102	-		1	T-CONNECTION	
690	311103-0272	-		4	PARALLELL PIN, M6, 4X20 MM	

Pos	Part No	SP	UN	Qty	Description	Page No

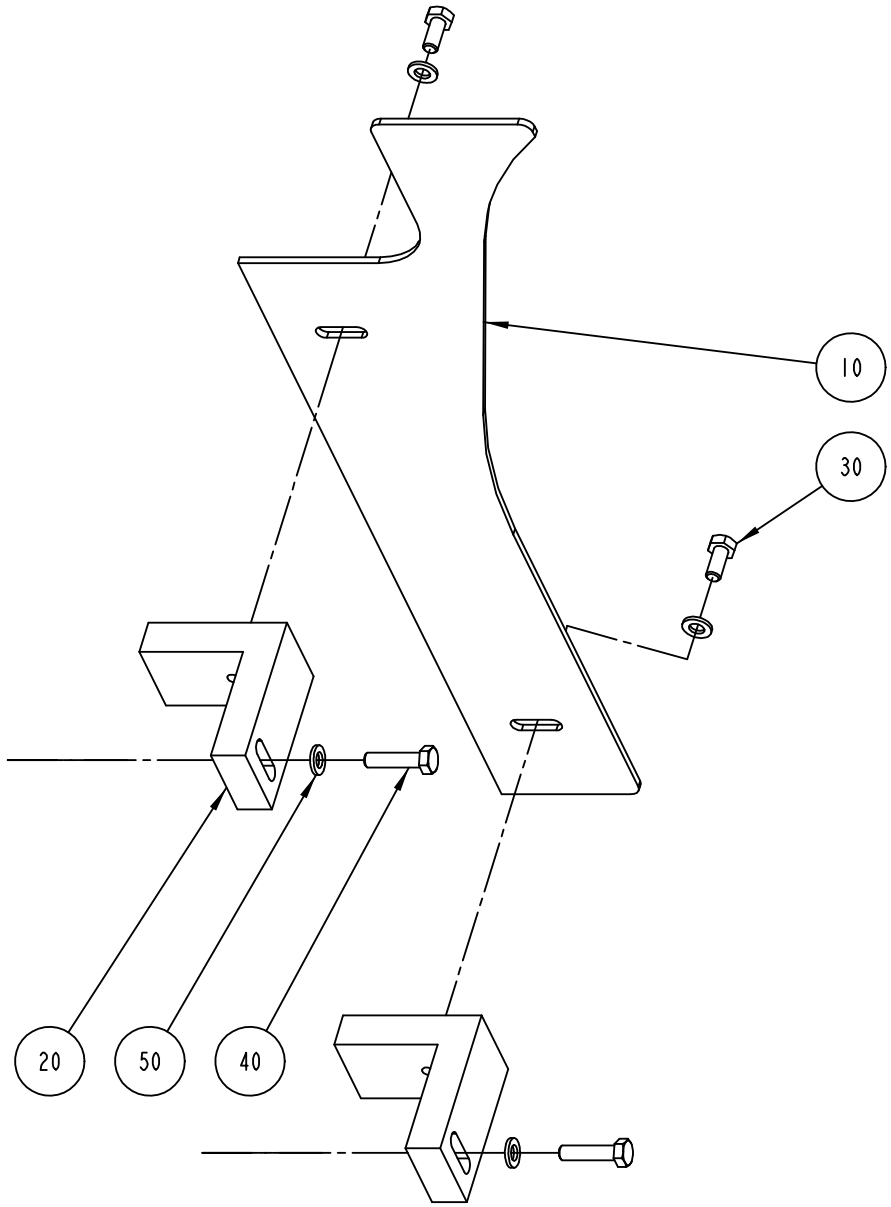

S-1487345-1
ECN 72286

ECM: 72286 - 19991108
Group number: 1487345-0100
Assembly Drawing: 1487345-1_1_AA

Issue: 20011217

Pos	Part No	SP	UN	Qty	Description	Page No
Common Parts						
010	1349746-0000	-		1	CAM	
020	1349760-0000	-		2	BLOCK	
030	312105-0367	-		2	SCREW M6S M6X14 A280	
040	312105-0372	-		2	SCREW M6S M6X25 A280	
050	315105-0153	-		4	WASHER PLAIN, BRB, 6,4/12,H=1,5	

Pos	Part No	SP	UN	Qty	Description	Page No

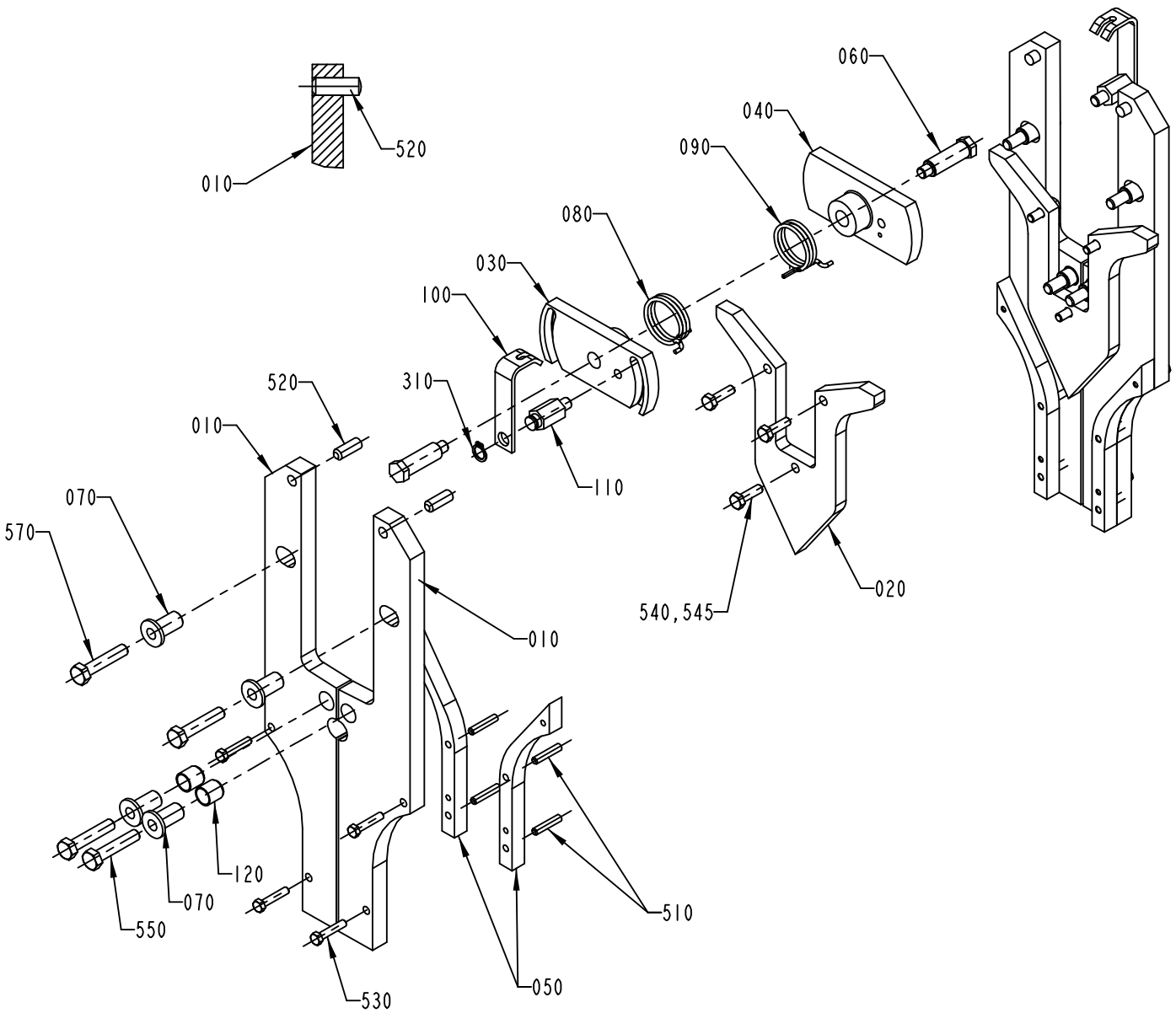

S-1035121-2
ECN 72956

Pos	Part No	SP	UN	Qty	Description	Page No
TBA 0200B						
010	1478460-0000	A		4	RAIL BRACKET	
020	1478357-0000	A		2	CURVE	
030	1037879-0000	A		1	ECCENTRIC	
040	1037880-0000	A		1	ECCENTRIC	
050	1478243-0000	A		4	VOLUME CAM	
070	1038162-0000	A		8	SLEEVE	
110	1038743-0000	A		2	SHAFT	
120	1036649-0000	A		4	BUSHING	
520	311103-0402	-		4	PIN,STRAIGHT M6 8X22 RFR	
570	312109-0457	-		4	SCREW M6S M8X35 A280	
TBA 0200S						
010	1478495-0000	A		4	RAIL BRACKET	
020	1334081-0000	A		2	CURVE	
030	1037879-0000	A		1	ECCENTRIC	
040	1037880-0000	A		1	ECCENTRIC	
050	1478497-0000	A		4	VOLUME CAM	
070	1038162-0000	A		8	SLEEVE	
110	1038743-0000	A		2	SHAFT	
120	1036649-0000	A		4	BUSHING	
520	311103-0402	-		4	PIN,STRAIGHT M6 8X22 RFR	
570	312109-0457	-		4	SCREW M6S M8X35 A280	
TBA 0250B						
010	1478459-0000	A		4	RAIL BRACKET	
020	1478461-0000	A		2	CURVE	
030	1037879-0000	A		1	ECCENTRIC	
040	1037880-0000	A		1	ECCENTRIC	
050	1478242-0000	A		4	VOLUME CAM	
070	1038162-0000	A		8	SLEEVE	
110	1038743-0000	A		2	SHAFT	
120	1036649-0000	A		4	BUSHING	
520	311103-0402	-		4	PIN,STRAIGHT M6 8X22 RFR	
570	312109-0457	-		4	SCREW M6S M8X35 A280	
TBA 0500B						
010	1532279-0000	A		4	RAIL BRACKET	
020	1532282-0000	A		2	CURVE	
030	1037879-0000	A		1	ECCENTRIC	
040	1037880-0000	A		1	ECCENTRIC	
050	1532283-0000	A		4	VOLUME CAM	
070	1487621-0000	A		8	SLEEVE	
110	1038743-0000	A		2	SHAFT	
120	1036649-0000	A		4	BUSHING	
130	1487504-0000	-		8	WASHER	
140	1487505-0001	-		32	WASHER	
150	1487505-0002	-		32	WASHER	
520	311103-0402	-		4	PIN,STRAIGHT M6 8X22 RFR	
570	312109-0457	-		4	SCREW M6S M8X35 A280	
TBA 0500S						
010	1512323-0000	A		4	RAIL BRACKET	
020	1512324-0000	A		2	CURVE	
030	1036537-0000	A		1	ECCENTRIC	
040	1036538-0000	A		1	ECCENTRIC	
050	1512325-0000	A		4	VOLUME CAM	
070	1487621-0000	A		8	SLEEVE	
110	1038743-0000	A		2	SHAFT	
120	1036649-0000	A		4	BUSHING	
130	1487504-0000	-		8	WASHER	
140	1487505-0001	-		32	WASHER	
150	1487505-0002	-		32	WASHER	
520	311103-0402	-		4	PIN,STRAIGHT M6 8X22 RFR	
570	312109-0457	-		4	SCREW M6S M8X35 A280	
TBA 1000B						
010	1484236-0000	A		4	RAIL BRACKET	
020	1348808-0000	A		2	CURVE	
030	1036537-0000	A		1	ECCENTRIC	
040	1036538-0000	A		1	ECCENTRIC	
050	1484250-0000	A		4	VOLUME CAM	
070	1038162-0000	A		8	SLEEVE	
110	1038743-0000	A		2	SHAFT	
120	1036649-0000	A		4	BUSHING	
520	311103-0402	-		4	PIN,STRAIGHT M6 8X22 RFR	
570	312109-0457	-		4	SCREW M6S M8X35 A280	
TBA 1000S						
010	1484237-0000	A		4	RAIL BRACKET	
020	1348809-0000	A		2	CURVE	
030	1036537-0000	A		1	ECCENTRIC	
040	1036538-0000	A		1	ECCENTRIC	
050	1484251-0000	A		4	VOLUME CAM	

Machine Type | Group Description | Used-In | Group Number | Page No

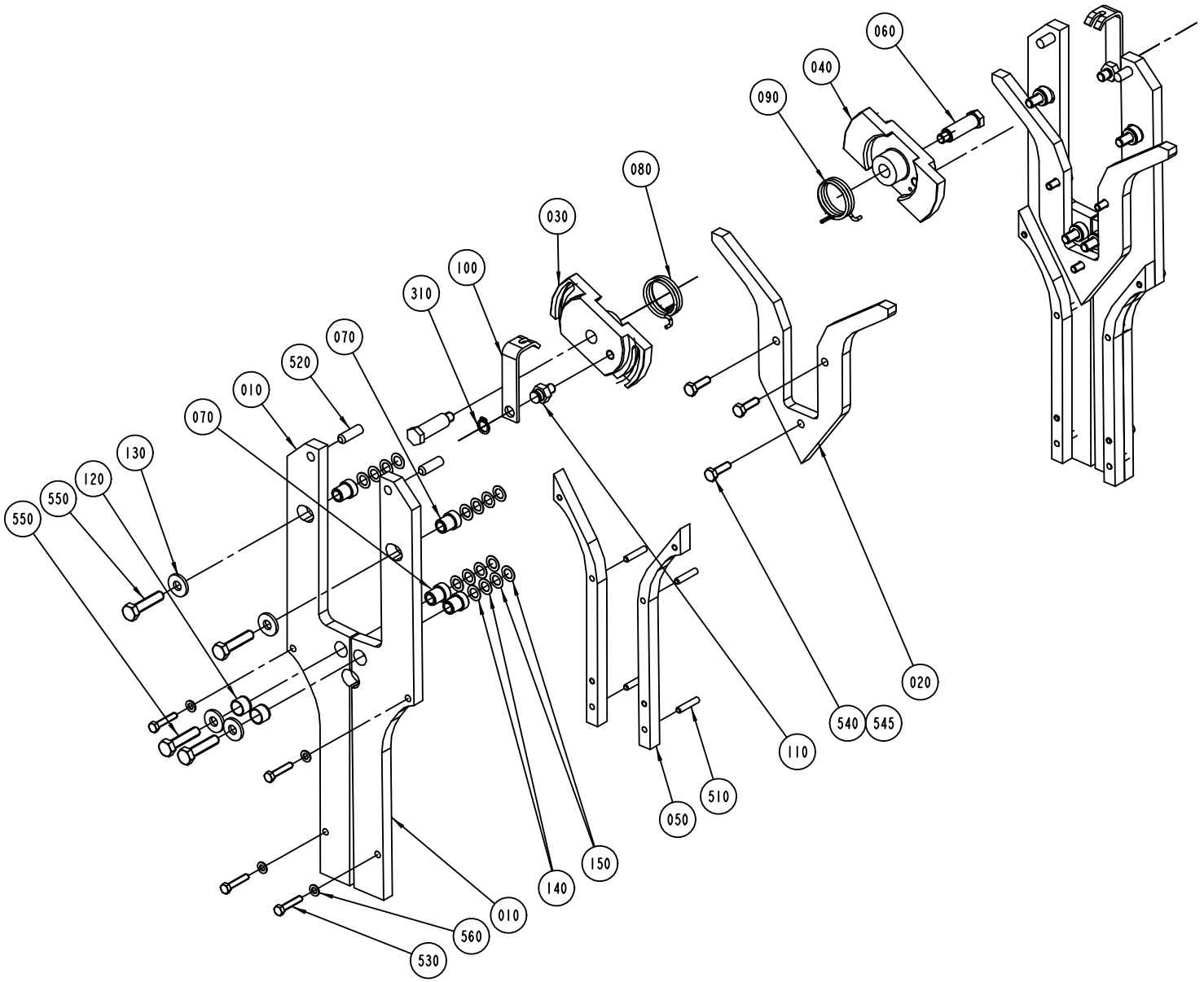

S-1035121-3
ECN 72655

Pos	Part No	SP	UN	Qty	Description	Page No
TBA 1000S (Cont'd)						
070	1038162-0000	A		8	SLEEVE	
110	1038743-0000	A		2	SHAFT	
120	1036649-0000	A		4	BUSHING	
520	311103-0402	-		4	PIN,STRAIGHT M6 8X22 RFR	
570	312109-0457	-		4	SCREW M6S M8X35 A280	
TBA 1000SQ						
010	1490420-0000	A		4	RAIL BRACKET	
020	2501851-0000	A		2	CURVE	
030	1349742-0000	A		1	ECCENTRIC	
040	1349743-0000	A		1	ECCENTRIC	
050	1499594-0000	A		4	VOLUME CAM	
070	1487621-0000	A		8	SLEEVE	
110	1349745-0000	A		2	AXLE BOLT	
120	1036649-0000	A		4	BUSHING	
130	1487504-0000	-		8	WASHER	
140	1487505-0001	-		32	WASHER	
150	1487505-0002	-		32	WASHER	
520	311103-0405	-		4	PARALLELL PIN, M6, 8X30 MM	
TBA 1500S						
010	1349740-0000	A		4	RAIL BRACKET	
020	1349741-0000	A		2	CURVE	
030	1349742-0000	A		1	ECCENTRIC	
040	1349743-0000	A		1	ECCENTRIC	
050	1349744-0000	A		4	VOLUME CAM	
070	1487594-0000	A		8	SLEEVE	
110	1349745-0000	A		2	AXLE BOLT	
120	321120-0109	A		4	BEARING BUSHING WITHOUT FLANGE,12/14X10	
130	1487504-0000	-		8	WASHER	
140	1487505-0001	-		32	WASHER	
150	1487505-0002	-		32	WASHER	
520	311103-0403	-		4	PARALLELL PIN, M6, 8X25 MM	
560	315105-0146	-		8	WASHER PLAIN, BRB, 5,3/10,H=1	
570	312109-0457	-		4	SCREW M6S M8X35 A280	
TPA 0330SQ						
010	1538263-0000	A		4	RAIL BRACKET	
020	1538264-0000	A		2	CURVE	
030	1037879-0000	A		1	ECCENTRIC	
040	1037880-0000	A		1	ECCENTRIC	
050	1538265-0000	A		4	VOLUME CAM	
070	1487621-0000	A		8	SLEEVE	
110	1038743-0000	A		2	SHAFT	
120	1036649-0000	A		4	BUSHING	
130	1487504-0000	-		8	WASHER	
140	1487505-0001	-		32	WASHER	
150	1487505-0002	-		32	WASHER	
520	311103-0402	-		4	PIN,STRAIGHT M6 8X22 RFR	
570	312109-0457	-		4	SCREW M6S M8X35 A280	
TPA 1000S						
010	1484238-0000	A		4	RAIL BRACKET	
020	1334082-0000	A		2	CURVE	
030	1036537-0000	A		1	ECCENTRIC	
040	1036538-0000	A		1	ECCENTRIC	
050	1484252-0000	A		4	VOLUME CAM	
070	1038162-0000	A		8	SLEEVE	
110	1038743-0000	A		2	SHAFT	
120	1036649-0000	A		4	BUSHING	
520	311103-0402	-		4	PIN,STRAIGHT M6 8X22 RFR	
570	312109-0459	-		4	SCREW M6S M8X40 A280	
Common Parts						
060	1036539-0000	A		2	SHAFT	
080	1036541-0000	A		1	TORSION SPRING LEFT	
090	1036542-0000	A		1	TORSION SPRING RIGHT	
100	1038640-0000	A		2	FASTENING BRACKET	
310	90141-0016	A		2	RETAIN. RING, 10	
510	311103-0312	-		8	PARALLELL PIN, M6, 5X25 MM	
530	312105-0333	-		8	SCREW M6S M5X25 A280	
540	312105-0370	-		6	SCREW M6S M6X20 A280	
545	90157-0021	-	KG	1	LOCKING FLUID	
550	312109-0457	-		4	SCREW M6S M8X35 A280	

Machine Type | Group Description | Used-In | Group Number | Page No

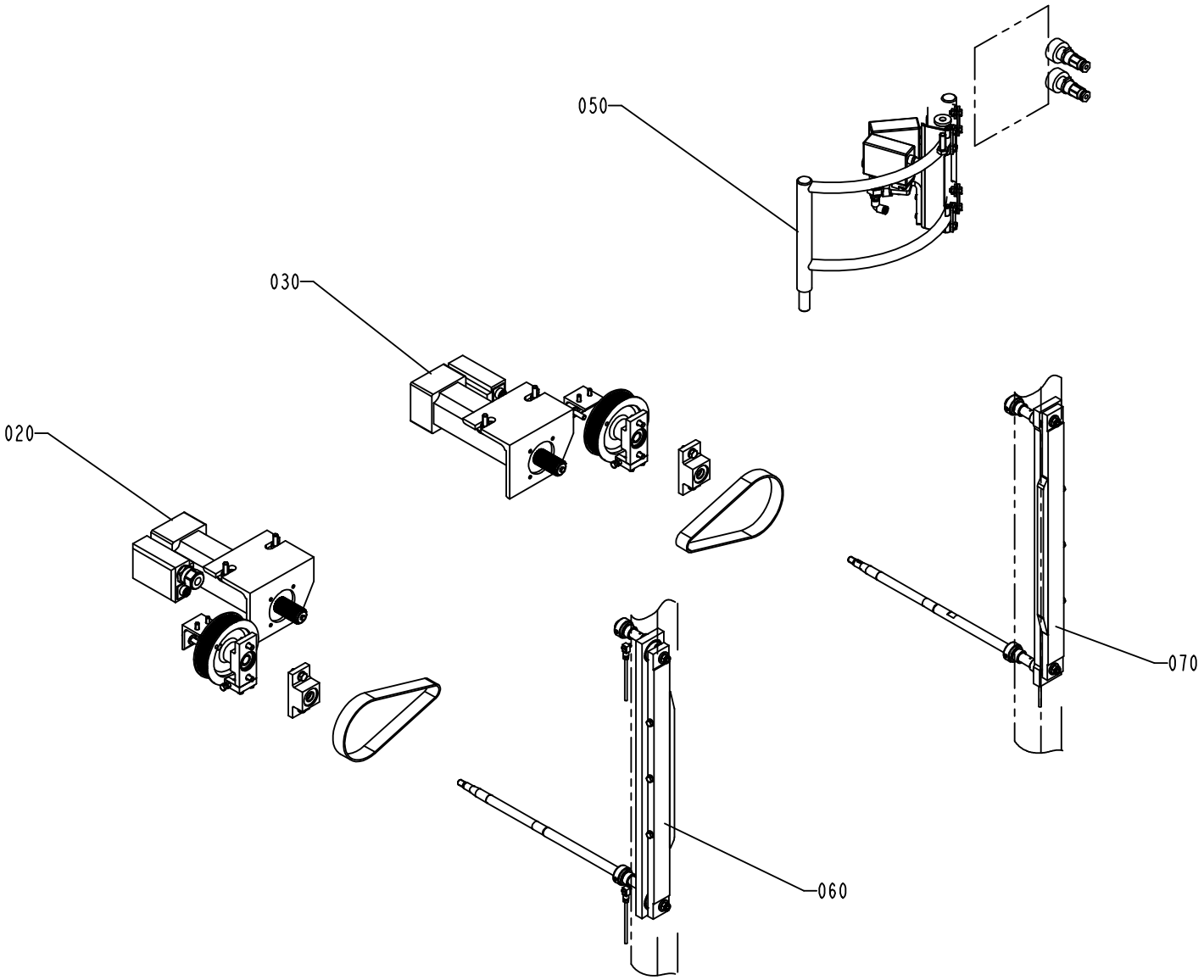

1317966-2
ECN 73538

ECM: 73538 - 20000620
Group number: 1317966-0300
Assembly Drawing: 1317966-2_1_AA

Issue: 20011217

Pos	Part No	SP	UN	Qty	Description	Page No
Common Parts						
020	A1317967-0100	-		1	DRIVE UNIT LEFT	**565**
030	A1317968-0100	-		1	DRIVE UNIT RIGHT	**567**
050	A1361925-0100	-		1	PHOTOCELL UNIT	**569**
060	A1317969-0300	-		1	DESIGN CORRECTION DEVICE LEFT	**571, 573**
070	A1317970-0300	-		1	DESIGN CORRECTION DEVICE RIGHT	**575, 577**

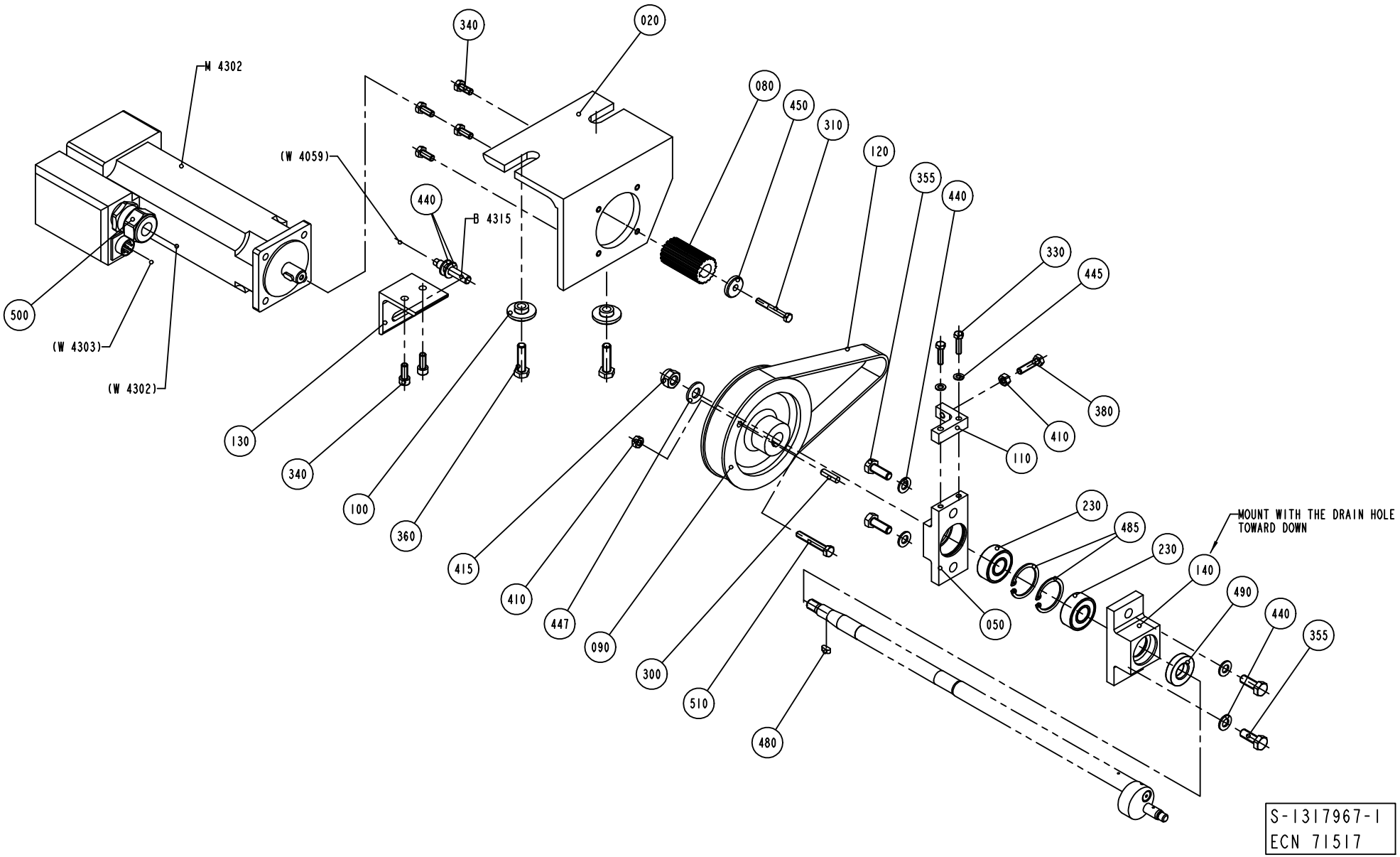
M 4302
(W 4059)
B 4315
(W 4303)
(W 4302)
MOUNT WITH THE DRAIN HOLE TOWARD DOWN
S-1317967-1
ECN 71517

Pos	Part No	SP	UN	Qty	Description	Page No
Common Parts						
020	1036638-0000	A		1	CANTILEVER	
050	1038696-0000	A		1	BEARING HOUSING	
080	1036630-0000	A		1	TOOTHED PULLY	
090	1038732-0000	A		1	TOOTHED PULLY	
100	1036639-0000	-		2	WASHER	
110	1038707-0000	A		1	BRACKET	
120	90417-0350	A		1	TIMING BELT AT5 545X25 MM	
130	1285383-0000	-		1	BRACKET	
140	1038697-0000	A		1	BEARING HOUSING	
230	90214-0194	A		2	SPHERICAL BALL BEARING, 2 SEALS, 15X35X1	
300	311103-0354	-		1	PIN,STRIGHT M6 6X22 RFR	
310	312105-0339	-		1	SCREW M6S M5X40 A280	
330	312105-0331	-		2	SCREW M6S M5X20 A280	
340	312115-0368	-		6	SCREW MC6S M6X16 A280	
355	312105-0452	-		4	SCREW M6S M8X22 A280	
360	312105-0455	-		2	SCREW M6S M8X30 A280	
380	312105-0372	-		1	SCREW M6S M6X25 A280	
410	312605-0316	-		2	HEXAGON NUT, M6M M6 A280	
415	312812-0320	-		1	HEXAGON NUT, NY-LOCK M10 A480	
440	315105-0165	-		6	WASHER PLAIN, BRB, 8,4/16,H=1,5	
445	315105-0146	-		2	WASHER PLAIN, BRB, 5,3/10,H=1	
447	315115-0173	-		1	WASHER PLAIN, TBRB 10,5/22 H=4	
450	315125-0153	-		1	WASHER PLAIN ROUND,CHAMF. 6,4/22, H=4	
480	315701-0165	-		1	PARALLEL KEY W. ROUND ENDS 4X4X10 MM	
485	315753-0124	-		2	RETAIN. RING, 35	
490	90091-0370	A		1	RADIAL SEAL 16X32X7 MM DUST LIP	
500	353245-0004	A		1	GLAND,EMC,EXTENDED W.INSERT PG16/PR 22,5	
510	312109-0378	-		1	SCREW M6S M6X40 A280	
B 4315	90458-0138	A		1	PROXIMITY SWITCH E2EG-X1R5B1-5M	
M 4302	90045-0164	A		1	SERVO MOTOR EP075112-44T3B	

Pos	Part No	SP	UN	Qty	Description	Page No

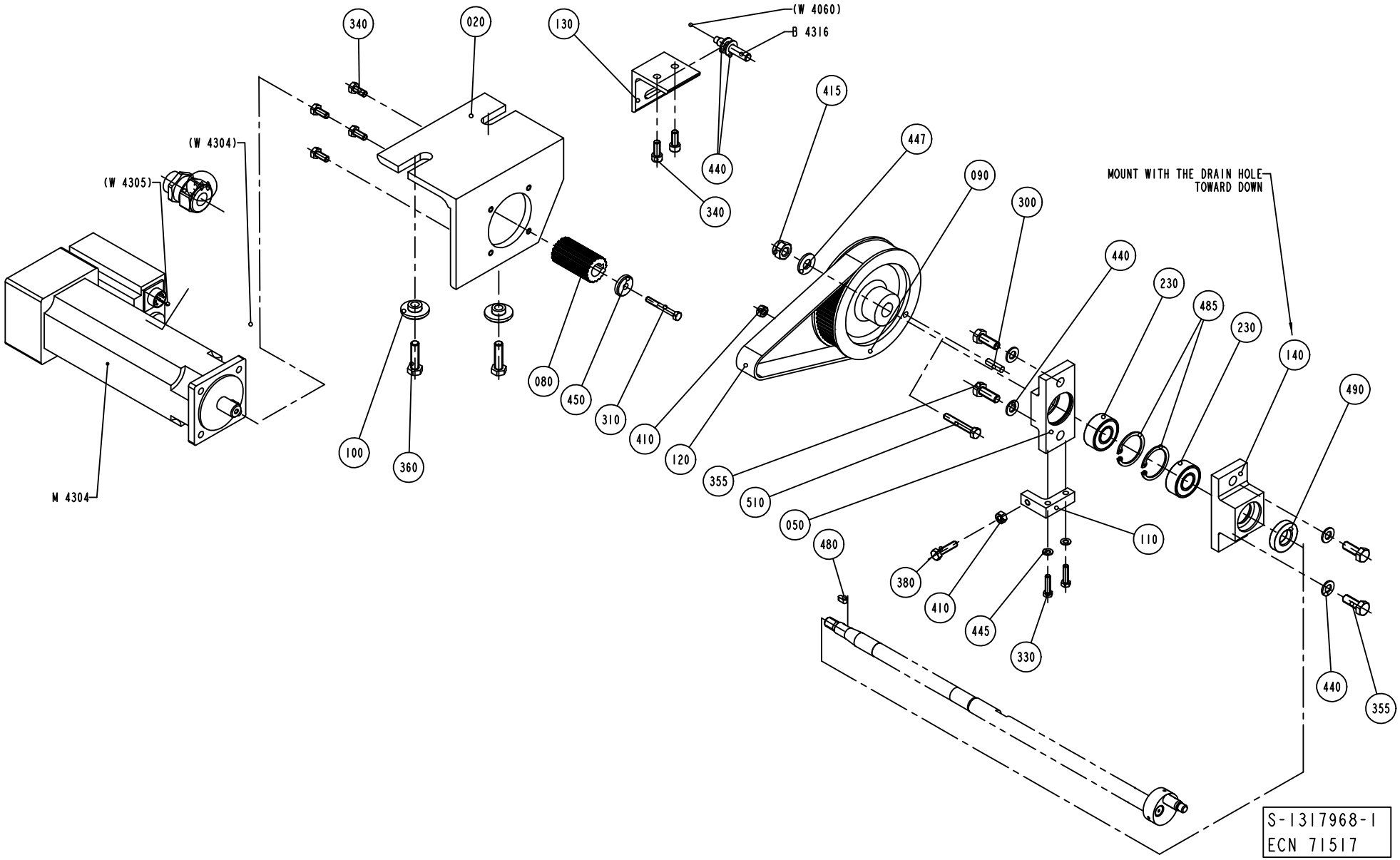
340
020
130
(W 4060)
B 4316
415
447
090
300
MOUNT WITH THE DRAIN HOLE TOWARD DOWN
(W 4304)
(W 4305)
440
230
485
230
140
490
080
450
310
410
120
355
510
050
480
100
360
M 4304
110
380
410
445
330
440
355
S-1317968-1
ECN 71517

Pos	Part No	SP	UN	Qty	Description	Page No
Common Parts						
020	1036638-0000	A		1	CANTILEVER	
050	1038696-0000	A		1	BEARING HOUSING	
080	1036630-0000	A		1	TOOTHED PULLY	
090	1038732-0000	A		1	TOOTHED PULLY	
100	1036639-0000	-		2	WASHER	
110	1038707-0000	A		1	BRACKET	
120	90417-0350	A		1	TIMING BELT AT5 545X25 MM	
130	1285383-0000	-		1	BRACKET	
140	1038697-0000	A		1	BEARING HOUSING	
230	90214-0194	A		2	SPHERICAL BALL BEARING, 2 SEALS, 15X35X1	
300	311103-0354	-		1	PIN,STRIGHT M6 6X22 RFR	
310	312105-0339	-		1	SCREW M6S M5X40 A280	
330	312105-0331	-		2	SCREW M6S M5X20 A280	
340	312115-0368	-		6	SCREW MC6S M6X16 A280	
355	312105-0452	-		4	SCREW M6S M8X22 A280	
360	312105-0455	-		2	SCREW M6S M8X30 A280	
380	312105-0372	-		1	SCREW M6S M6X25 A280	
410	312605-0316	-		2	HEXAGON NUT, M6M M6 A280	
415	312812-0320	-		1	HEXAGON NUT, NY-LOCK M10 A480	
440	315105-0165	-		6	WASHER PLAIN, BRB, 8,4/16,H=1,5	
445	315105-0146	-		2	WASHER PLAIN, BRB, 5,3/10,H=1	
447	315115-0173	-		1	WASHER PLAIN, TBRB 10,5/22 H=4	
450	315125-0153	-		1	WASHER PLAIN ROUND,CHAMF. 6,4/22, H=4	
480	315701-0165	-		1	PARALLEL KEY W. ROUND ENDS 4X4X10 MM	
485	315753-0124	-		2	RETAIN. RING, 35	
490	90091-0370	A		1	RADIAL SEAL 16X32X7 MM DUST LIP	
500	353245-0004	A		1	GLAND,EMC,EXTENDED W.INSERT PG16/PR 22,5	
510	312109-0378	-		1	SCREW M6S M6X40 A280	
B 4316	90458-0138	A		1	PROXIMITY SWITCH E2EG-X1R5B1-5M	
M 4304	90045-0164	A		1	SERVO MOTOR EP075112-44T3B	

Pos	Part No	SP	UN	Qty	Description	Page No

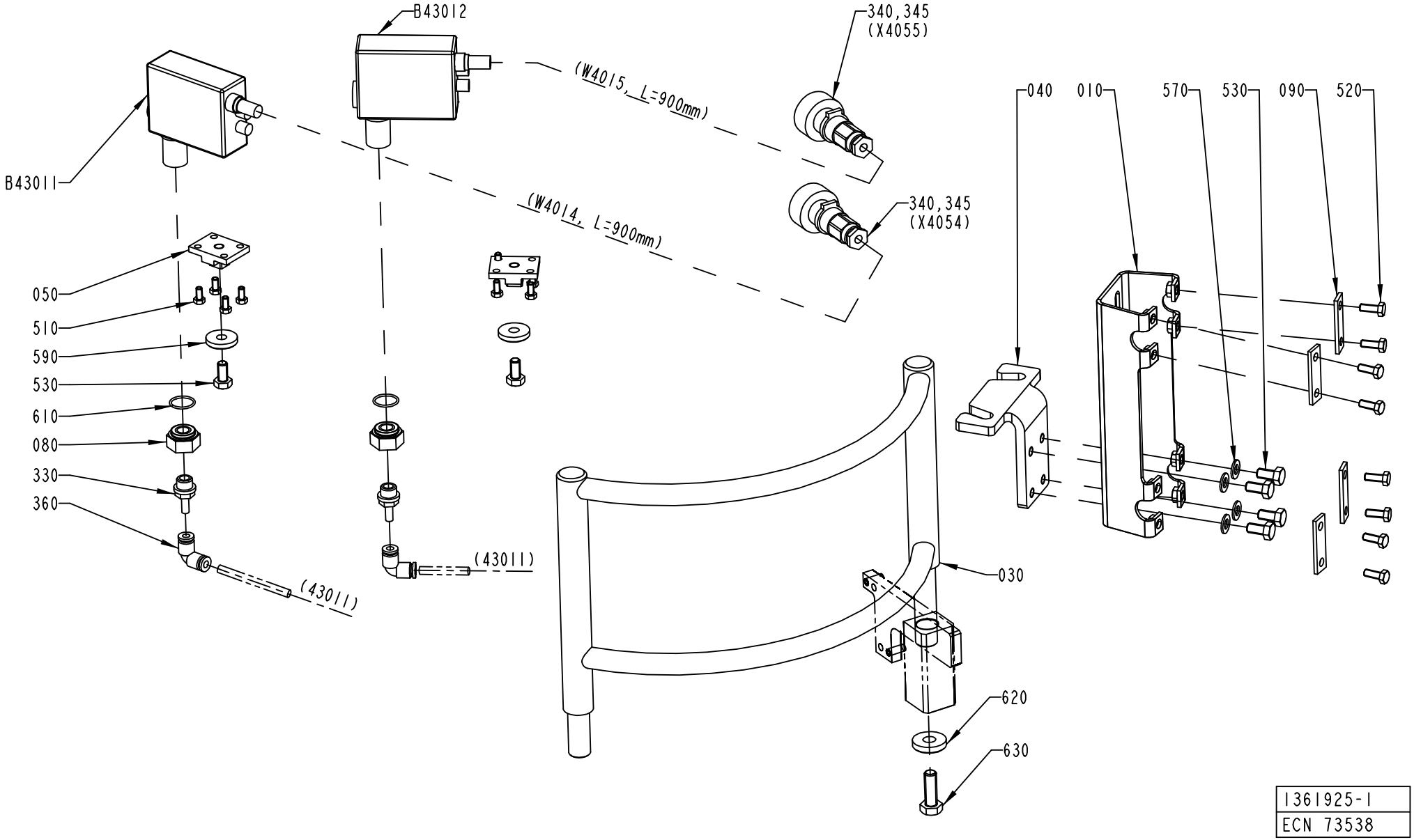

1361925-1
ECN 73538

Pos	Part No	SP	UN	Qty	Description	Page No
TBA 0200B OR TBA 0250B OR TPA 0330SQ						
040	1254111-0000	A		1	BRACKET	
TBA 0200S						
040	1254110-0000	A		1	BRACKET	
TBA 0500B OR TBA 1000S OR TBA 1000SQ OR TBA 1000B OR TBA 1500S						
040	1254109-0000	A		1	BRACKET	
TBA 0500S OR TPA 1000S						
040	1334910-0000	A		1	BRACKET	
Common Parts						
010	1036685-0000	-		1	BRACKET	
030	1038557-0000	-		1	BOW CLAMP	
050	1036674-0000	-		2	FASTENING PLATE	
080	548337-0000	A		2	BUSHING	
090	1036673-0000	-		4	WASHER	
330	90055-0162	-		2	NIPPLE-6 MM G1/4"	
340	90110-0235	A		2	CABLE CONTACT, PX0739/S	
345	90110-0348	A		2	CABLE SEALING, 12033/I, ELFA. 44-625-78	
360	90055-0113	-		2	ELBOW PIPE JOINT 6X6 MM	
510	312105-0325	-		8	SCREW M6S M5X10 A280	
520	312105-0368	-		8	SCREW M6S M6X16 A280	
530	312105-0449	-		6	SCREW M6S M8X16 A280	
570	315105-0165	-		4	WASHER PLAIN, BRB, 8,4/16,H=1,5	
590	315125-0165	-		2	WASHER PLAIN ROUND,CHAMF. 8,4/26, H=5	
610	315204-0116	A		2	O-RING 18,1X1,6 MM	
620	315125-0173	-		1	WASHER PLAIN ROUND,CHAMF. 10,5/28,H=6	
630	312105-0495	-		1	SCREW M6S M10X30 A280	
B43011	90232-0075	A		1	PH.CELL NT6-14900S12	
B43012	90232-0075	A		1	PH.CELL NT6-14900S12	

Pos	Part No	SP	UN	Qty	Description	Page No

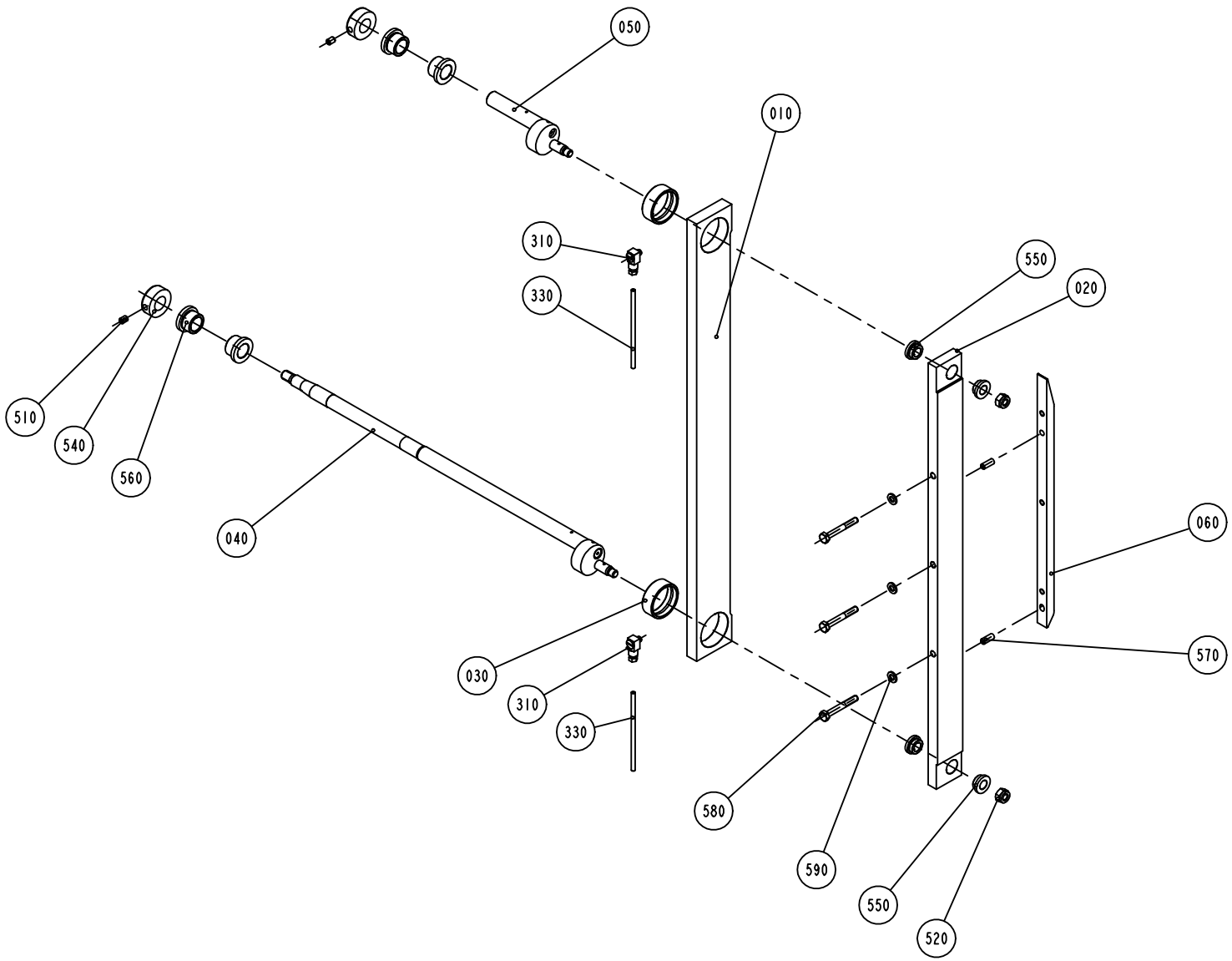

S-1317969-2
ECN 73008

Pos	Part No	SP	UN	Qty	Description	Page No
TBA 0500S OR TBA 0500B OR TBA 1000S OR TBA 1000SQ OR TBA 1000B OR TBA 0200B OR TBA 0200S OR TBA 0250B OR TPA 1000S OR TPA 0330SQ						
060	1499048-0000	A		1	FOLDING FLAP CAM	
TBA 1500S						
060	1523097-0000	A		1	FOLDING FLAP CAM	
Common Parts						
010	1349973-0000	A		1	STRUT	
020	1499053-0000	A		1	FOLDING FLAP BAR	
030	1255117-0000	A		2	PLAIN BEARING	
040	1255112-0000	A		1	ECCENTRIC SHAFT	
050	1255113-0000	A		1	ECCENTRIC SHAFT	
310	90134-0068	-		2	CONNECTION	
330	90266-0165	-	MM	1050	BRASS PIPE	
510	312318-0362	-		2	SCREW SOCK.SET CUP P MSK6SS M6X8 A4	
520	312812-0318	-		2	HEXAGON NUT, NY-LOCK M8 A480	
540	315742-0112	-		2	COLLAR, 16/32, H=12	
550	321101-0162	A		4	FLANGE BUS 10F7X8	
560	321101-0203	A		4	FLANGE BUS 16F7X16	
570	311103-0351	-		2	PARALLELL PIN, M6, 6X16 MM	
580	312105-0379	-		3	SCREW M6S M6X45 A280	
590	315105-0153	-		3	WASHER PLAIN, BRB, 6,4/12,H=1,5	

Pos	Part No	SP	UN	Qty	Description	Page No

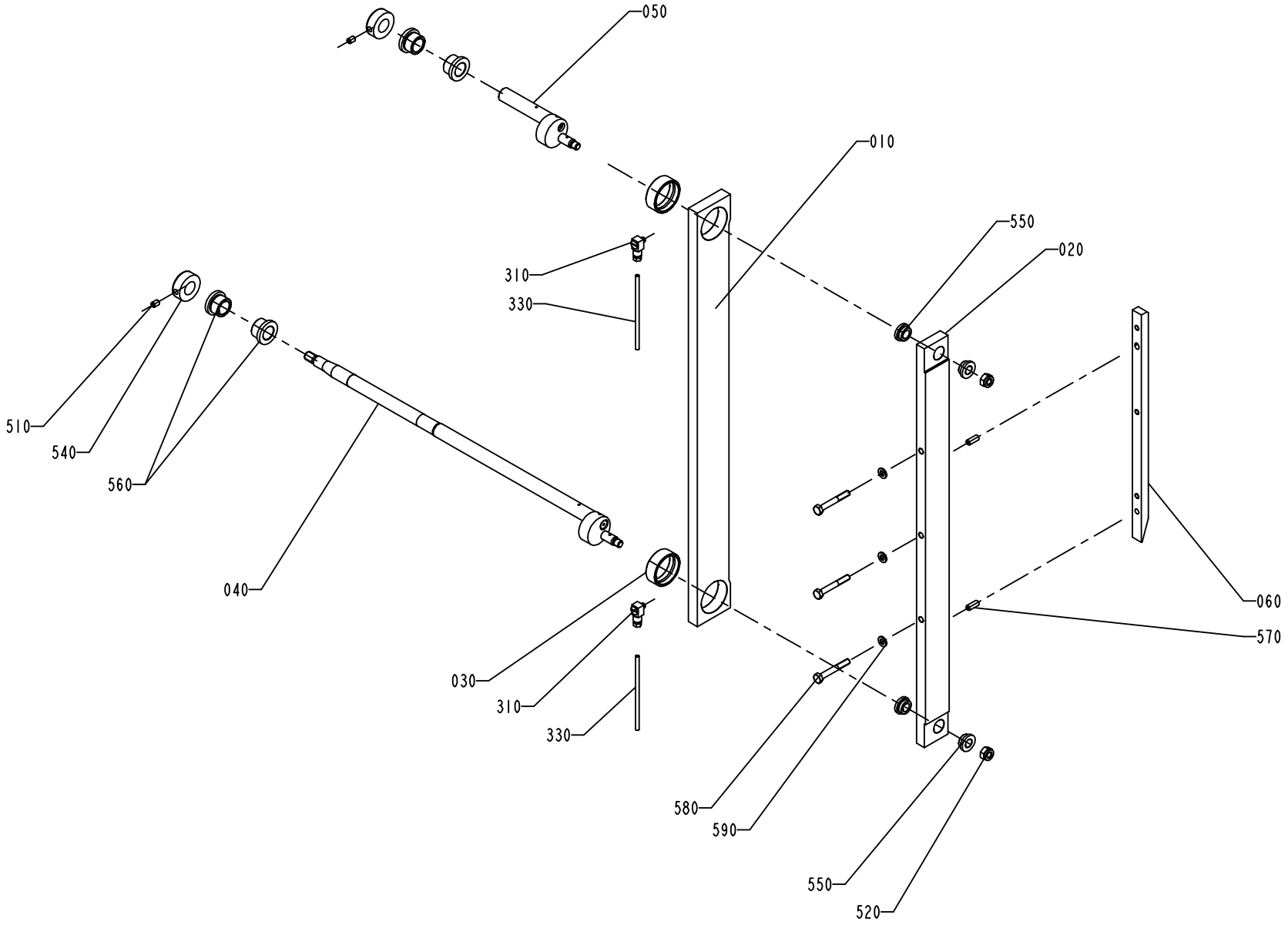

1317969-3
ECN 73538

Pos	Part No	SP	UN	Qty	Description	Page No
TBA 0500S OR TBA 0500B OR TBA 1000S OR TBA 1000SQ OR TBA 1000B OR TBA 0200B OR TBA 0200S OR TBA 0250B OR TPA 1000S OR TPA 0330SQ						
060	1499048-0000	A		1	FOLDING FLAP CAM	
TBA 1500S						
060	1523097-0000	A		1	FOLDING FLAP CAM	
Common Parts						
010	1349973-0000	A		1	STRUT	
020	1499053-0000	A		1	FOLDING FLAP BAR	
030	1255117-0000	A		2	PLAIN BEARING	
040	1255112-0000	A		1	ECCENTRIC SHAFT	
050	1255113-0000	A		1	ECCENTRIC SHAFT	
310	90134-0068	-		2	CONNECTION	
330	90266-0165	-	MM	1050	BRASS PIPE	
510	312318-0362	-		2	SCREW SOCK.SET CUP P MSK6SS M6X8 A4	
520	312812-0318	-		2	HEXAGON NUT, NY-LOCK M8 A480	
540	315742-0112	-		2	COLLAR, 16/32, H=12	
550	321101-0162	A		4	FLANGE BUS 10F7X8	
560	321101-0203	A		4	FLANGE BUS 16F7X16	
570	311103-0351	-		2	PARALLELL PIN, M6, 6X16 MM	
580	312105-0379	-		3	SCREW M6S M6X45 A280	
590	315105-0153	-		3	WASHER PLAIN, BRB, 6,4/12,H=1,5	

Pos	Part No	SP	UN	Qty	Description	Page No

DESIGN CORRECTION DEVICE RIGHT

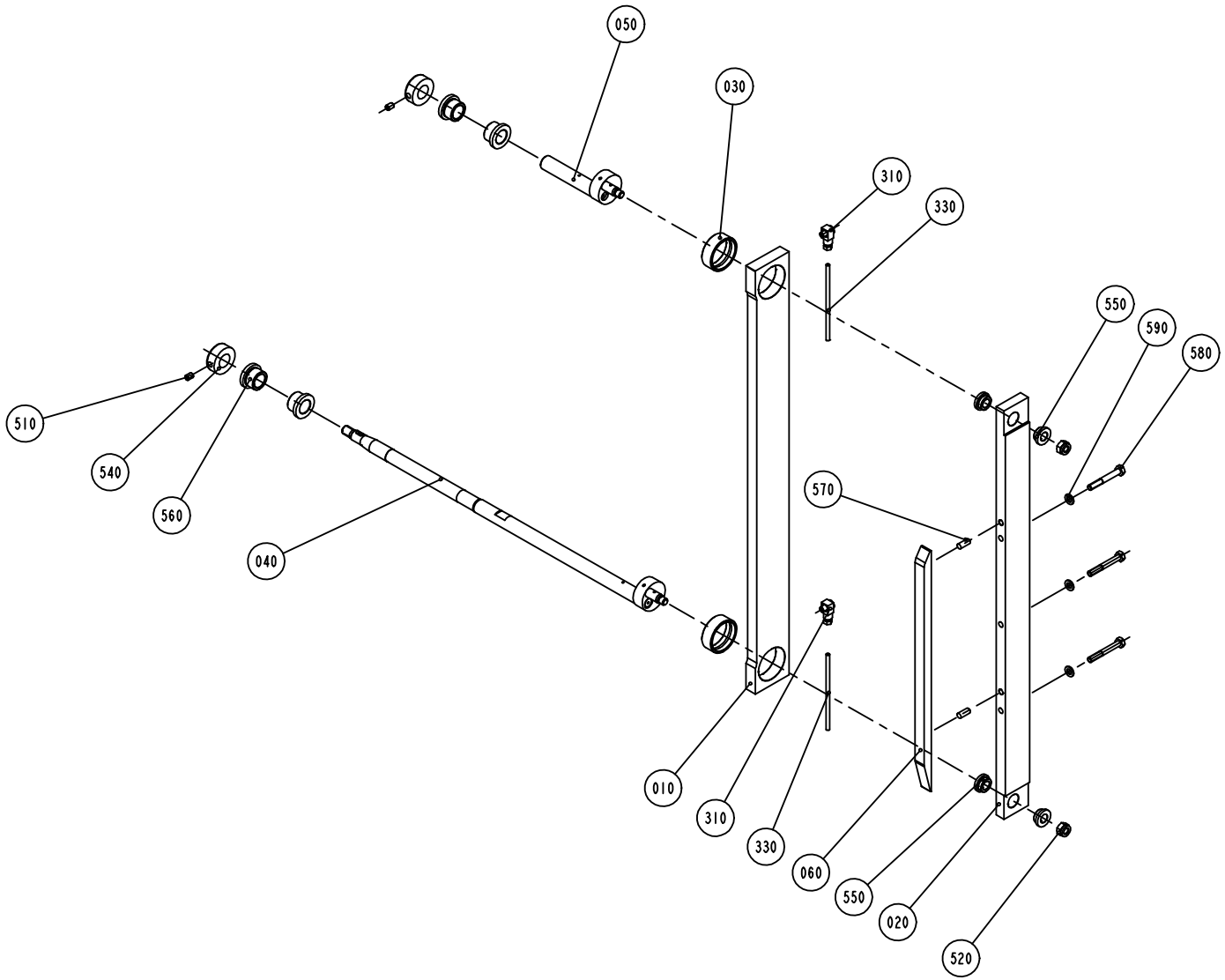

S-1317970-2
ECN 73008

Pos	Part No	SP	UN	Qty	Description	Page No
TBA 0500S OR TBA 0500B OR TBA 1000S OR TBA 1000SQ OR TBA 1000B OR TBA 0200B OR TBA 0200S OR TBA 0250B OR TPA 1000S OR TPA 0330SQ						
060	1499048-0000	A		1	FOLDING FLAP CAM	
TBA 1500S						
060	1523098-0000	A		1	FOLDING FLAP CAM	
Common Parts						
010	1349973-0000	A		1	STRUT	
020	1499053-0000	A		1	FOLDING FLAP BAR	
030	1255117-0000	A		2	PLAIN BEARING	
040	1255112-0000	A		1	ECCENTRIC SHAFT	
050	1255113-0000	A		1	ECCENTRIC SHAFT	
310	90134-0068	-		2	CONNECTION	
330	90266-0165	-	MM	1050	BRASS PIPE	
510	312318-0362	-		2	SCREW SOCK.SET CUP P MSK6SS M6X8 A4	
520	312812-0318	-		2	HEXAGON NUT, NY-LOCK M8 A480	
540	315742-0112	-		2	COLLAR, 16/32, H=12	
550	321101-0162	A		4	FLANGE BUS 10F7X8	
560	321101-0203	A		4	FLANGE BUS 16F7X16	
570	311103-0351	-		2	PARALLELL PIN, M6, 6X16 MM	
580	312105-0379	-		3	SCREW M6S M6X45 A280	
590	315105-0153	-		3	WASHER PLAIN, BRB, 6,4/12,H=1,5	

Pos	Part No	SP	UN	Qty	Description	Page No

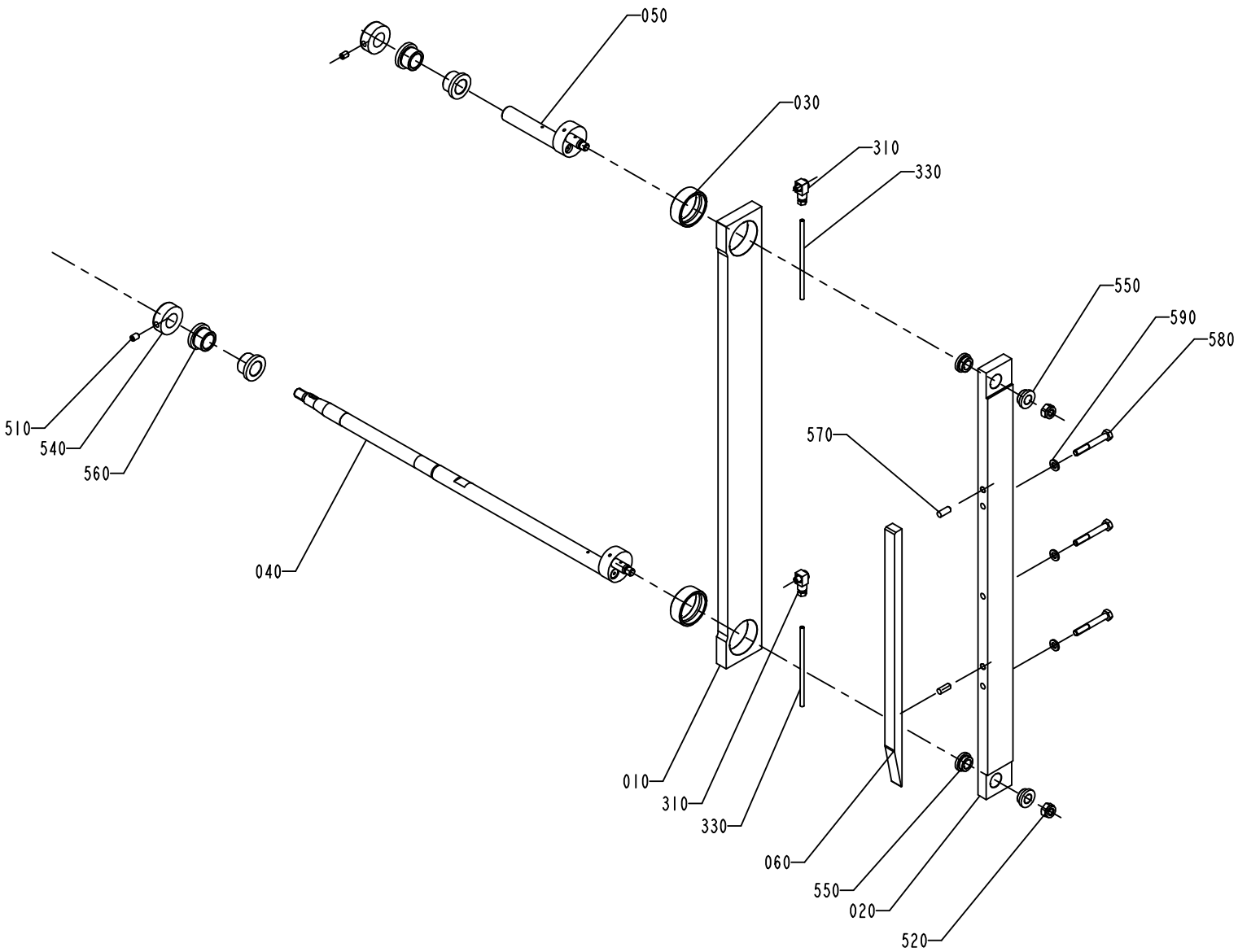

1317970-3
ECN 73538

Pos	Part No	SP	UN	Qty	Description	Page No
TBA 0500S OR TBA 0500B OR TBA 1000S OR TBA 1000SQ OR TBA 1000B OR TBA 0200B OR TBA 0200S OR TBA 0250B OR TPA 1000S OR TPA 0330SQ						
060	1499048-0000	A		1	FOLDING FLAP CAM	
TBA 1500S						
060	1523098-0000	A		1	FOLDING FLAP CAM	
Common Parts						
010	1349973-0000	A		1	STRUT	
020	1499053-0000	A		1	FOLDING FLAP BAR	
030	1255117-0000	A		2	PLAIN BEARING	
040	1255112-0000	A		1	ECCENTRIC SHAFT	
050	1255113-0000	A		1	ECCENTRIC SHAFT	
310	90134-0068	-		2	CONNECTION	
330	90266-0165	-	MM	1050	BRASS PIPE	
510	312318-0362	-		2	SCREW SOCK.SET CUP P MSK6SS M6X8 A4	
520	312812-0318	-		2	HEXAGON NUT, NY-LOCK M8 A480	
540	315742-0112	-		2	COLLAR, 16/32, H=12	
550	321101-0162	A		4	FLANGE BUS 10F7X8	
560	321101-0203	A		4	FLANGE BUS 16F7X16	
570	311103-0351	-		2	PARALLELL PIN, M6, 6X16 MM	
580	312105-0379	-		3	SCREW M6S M6X45 A280	
590	315105-0153	-		3	WASHER PLAIN, BRB, 6,4/12,H=1,5	

Pos	Part No	SP	UN	Qty	Description	Page No

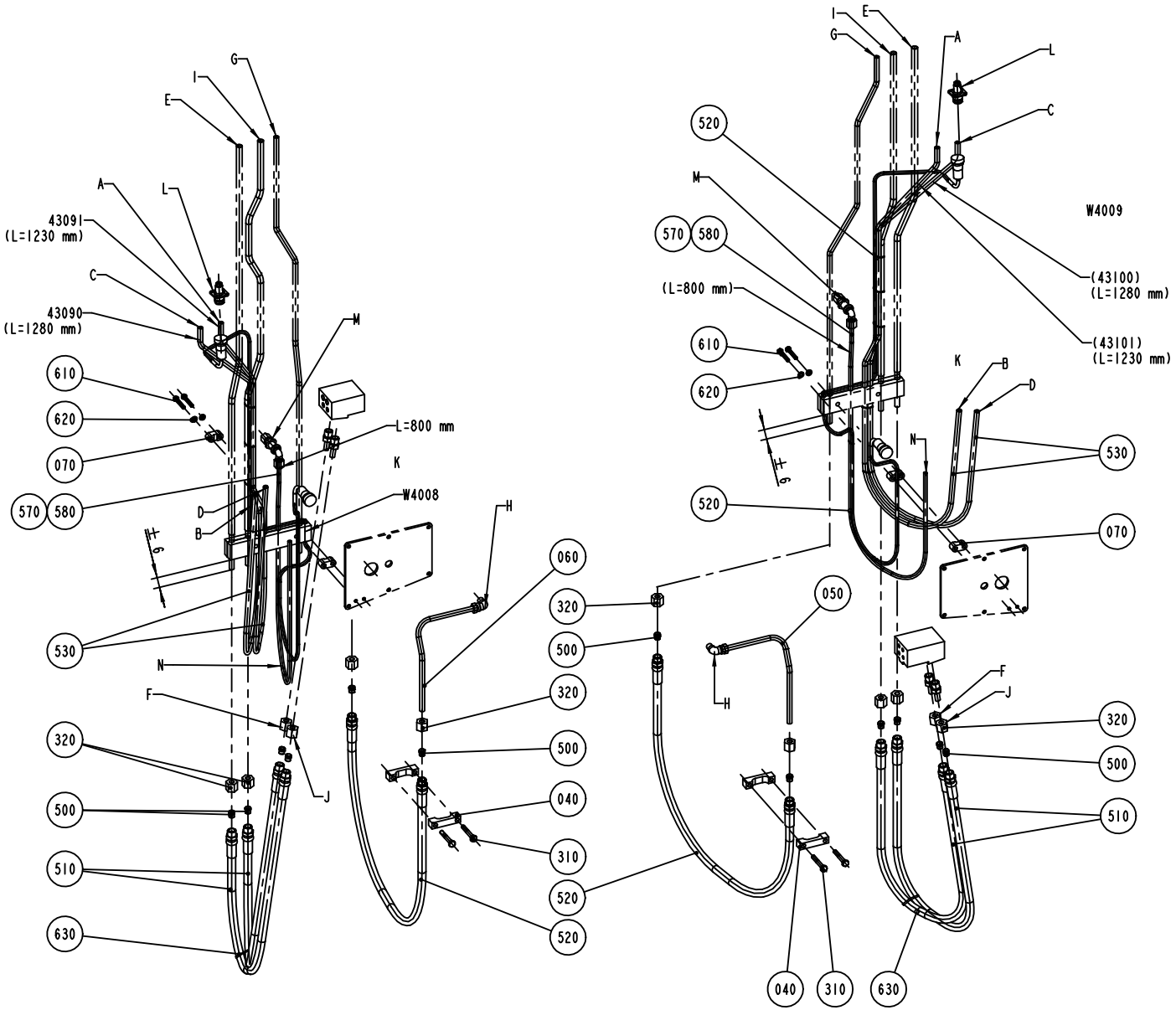

S-1035138-5
ECN 71517

ECM: 71517 - 19990212
Group number: 1035138-0300
Assembly Drawing: 1035138-5_1_AD

Issue: 20011217

Pos	Part No	SP	UN	Qty	Description	Page No
Common Parts						
040	1129599-0000	D		4	CRAMP	
050	1038828-0000	D		1	PIPE	
060	1038829-0000	D		1	PIPE	
070	464368-0000	D		4	CRAMP	
310	312105-0378	-		4	SCREW M6S M6X40 A280	
320	342703-0208	-		12	NUT, PIPES & CONNECTORS,NUT M-8 SS	
500	90030-0098	-		12	ACCESSORIES, FERRULE 8	
510	90148-0037	C		4	HOSE	
520	90148-0038	C		2	HOSE	
530	90166-0123	C	MM	4600	HOSE	
570	90166-0108	C	MM	1600	TUBE 6 MM PA,TRANSP.	
580	90134-0030	C		4	SLEEVE FOR PLASTIC TUBE	
590	352113-0101	-		12	CLIP STRIP BLACK 92X2,5MM	
610	312109-0335	-		4	SCREW M6S M5X30 A280	
620	315105-0146	-		4	WASHER PLAIN, BRB, 5,3/10,H=1	
W 4008	548770-0006	C		1	COAXIAL CABLE L=1200 MM	
W 4009	548770-0006	C		1	COAXIAL CABLE L=1200 MM	

Pos	Part No	SP	UN	Qty	Description	Page No

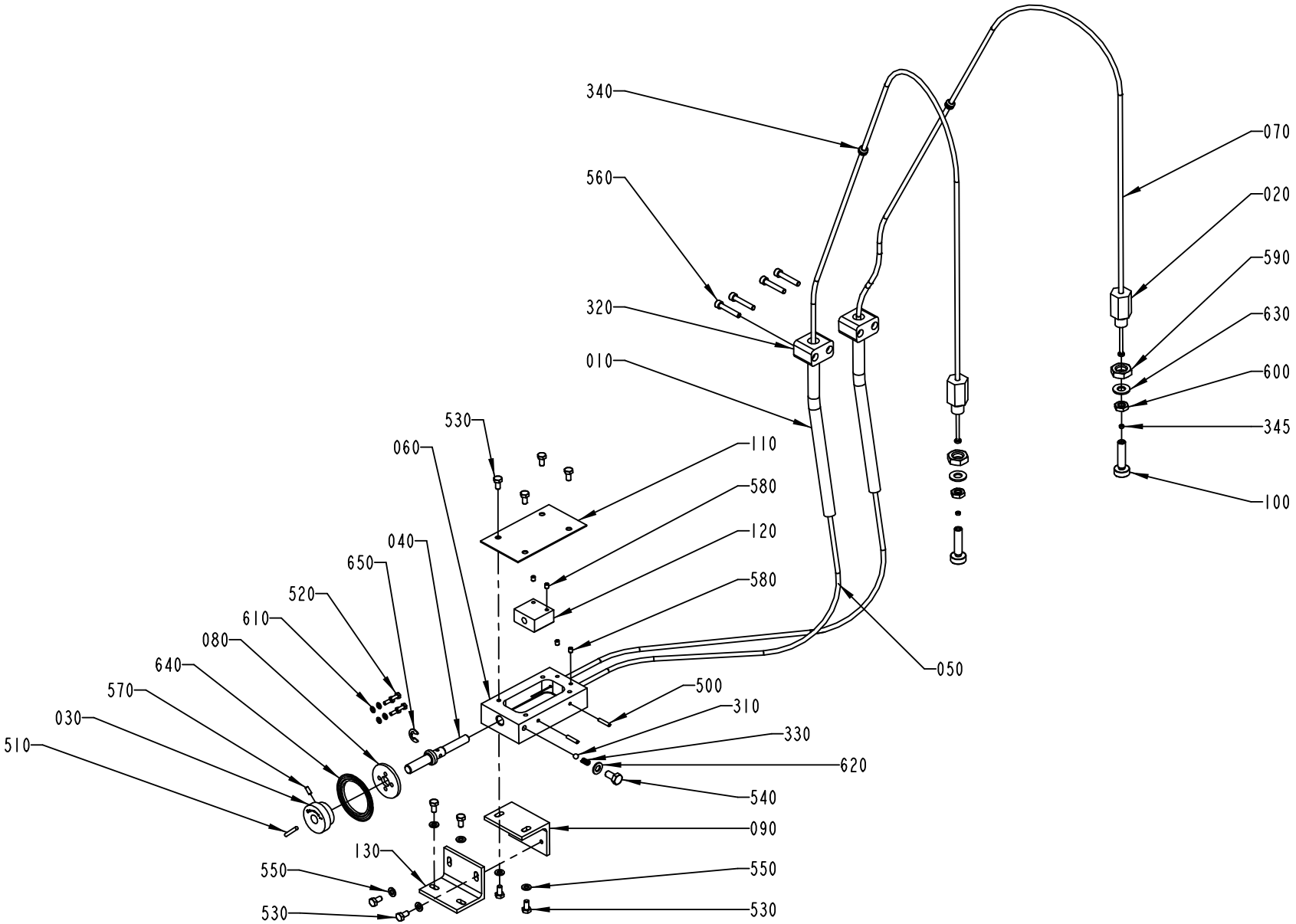

1035489-2
ECN 91165

ECM: 90700 - 20010903
Group number: 1035489-0200
Assembly Drawing: 1035489-2_1_AD

Issue: 20011217

Pos	Part No	SP	UN	Qty	Description	Page No
Common Parts						
010	1038751-0000	-		2	PIPE	
020	1038742-0000	A		2	SLEEVE	
030	293606-0000	-		1	SHIFTER HANDLE	
040	1035739-0000	A		1	SHAFT	
050	1036731-0000	A		1	WIRE LEFT	
060	1105431-0000	-		1	HOUSE	
070	1036802-0000	A		1	WIRE RIGHT	
080	294042-0000	-		1	SEALING WASHER	
090	1105734-0000	-		1	ANGLE	
100	1036733-0000	A		2	ADJUSTING SCREW	
110	1105432-0000	-		1	LID	
120	1038750-0000	A		1	DISTRIBUTOR	
130	1105735-0000	-		1	ANGLE	
310	90090-0015	-		1	BALL, D=6,5 MM	
320	90165-0047	-		2	CLIP	
330	90335-0177	A		1	SPRING	
340	90015-0027	A		2	RUBBER BUSHING DI=6MM	
345	1317229-0000	A		2	SPACER	
500	311103-0272	-		2	PARALLELL PIN, M6, 4X20 MM	
510	311103-0276	-		1	PARALLELL PIN, M6, 4X30 MM	
520	312105-0291	-		4	SCREW M6S M4X12 A280	
530	312105-0366	-		10	SCREW M6S M6X12 A280	
540	312105-0449	-		1	SCREW M6S M8X16 A280	
550	315105-0153	-		6	WASHER PLAIN, BRB, 6,4/12,H=1,5	
560	312115-0376	-		4	SCREW MC6S M6X35 A280	
570	312318-0289	-		1	SCREW SOCK.SET CUP P MSK6SS M4X10 A4	
580	312318-0321	-		4	SCREW HEX.SOCK.SET CUP P.MSK6SS 5X6 SS	
590	90099-0131	-		2	NUT HEX. M16X2 SS	
600	312625-0320	-		2	NUT HEX. M10 SS	
610	315105-0136	-		4	WASHER PLAIN, BRB, 4,3/8,H=0,8	
620	315105-0165	-		1	WASHER PLAIN, BRB, 8,4/16,H=1,5	
630	315105-0173	-		2	WASHER PLAIN, BRB, 10,5/22,H=2	
640	315226-0196	-		1	AXIAL SEAL WITH STEEL COVER 48X65X4,5 MM	
650	315755-0110	-		1	LOCKING WASHER 9	

Pos	Part No	SP	UN	Qty	Description	Page No

Machine Type | Group Description | Used-In | Group Number | Page No

Tetra Pak

SPC
Spare Parts Catalogue

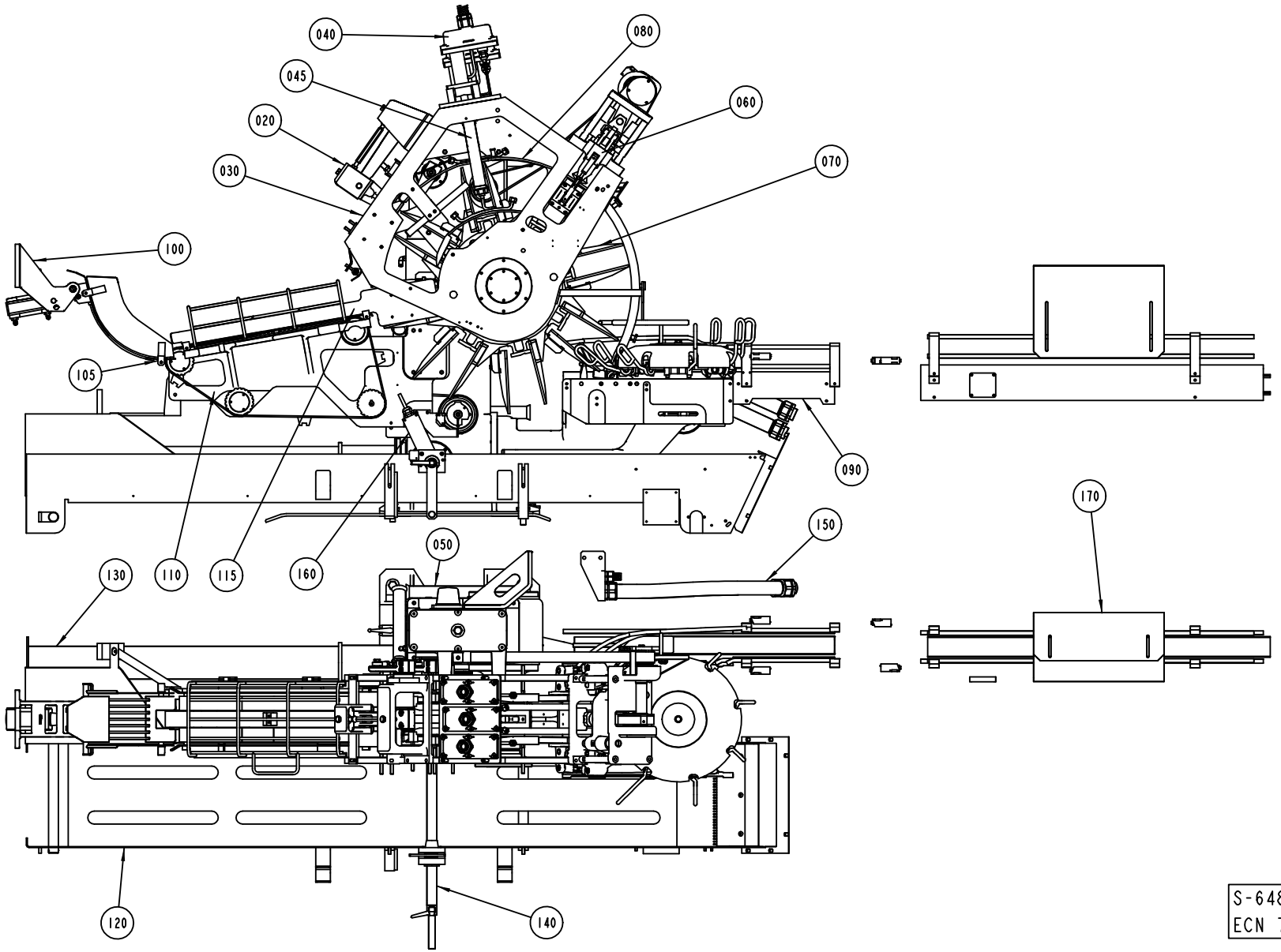
040
080
045
060
020
070
030
100
105
090
170
150
050
130
110
115
160
120
140
S-648515-2
ECN 73415

Pos	Part No	SP	UN	Qty	Description	Page No
Common Parts						
020	A1144329-0200	-		1	PULL DOWN DEVICE	**587, 589**
030	A1144324-0200	-		1	FRAMEWORK	**593**
040	A1487927-0200	-		1	FLAP HEATER BODY	**595**
045	A1487158-0100	-		1	FLAP HEATER VARIANT	**597, 599, 601**
050	A1144320-0300	-		1	INDEXING UNIT	**603**
060	A1144331-0200	-		1	PRESSURE DEVICE	**607, 609, 611**
070	A1361918-0200	-		1	WHEEL	**613, 615**
080	A1285012-0200	-		1	FOLDING PART	**617**
090	A1285260-0200	-		1	OUT FEED	**639**
100	A1517321-0100	-		1	DROP CHUTE CRADLE	**679**
105	A1361922-0200	-		1	DROP CHUTE VARIANT	**681**
110	A1517298-0100	-		1	INFEED CONVEYOR	**683**
115	A1361923-0200	-		1	INFEED CONVEYOR VARIANT	**695, 697, 699**
120	A1350182-0200	-		1	WASTE CONVEYOR	**701**
130	A1260884-0100	-		1	DRIVE	**703**
140	A1260883-0200	-		1	CRANK	**705**
150	A1260881-0100	-		1	ELECTRICAL CONNECTION	**707**
160	A1279677-0100	-		1	CRANK GUARD	**709**
170	A1484198-0100	-		1	LAST POINT DE	**711**

Pos	Part No	SP	UN	Qty	Description	Page No

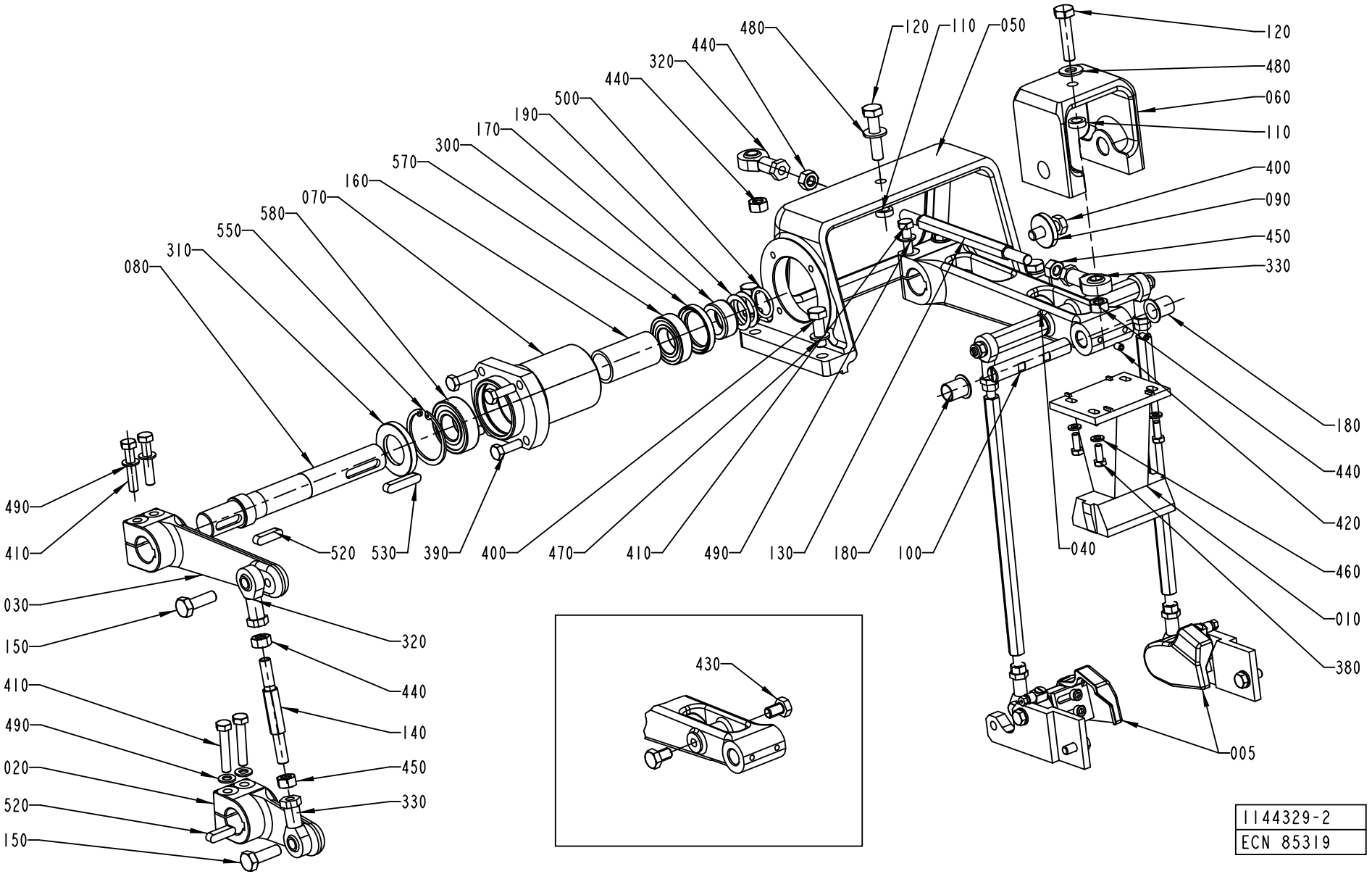
480
120
110
050
440
320
440
500
190
170
300
570
160
070
580
550
310
080
120
480
060
110
400
090
450
330
180
440
420
460
010
380
005
040
100
180
130
490
410
470
400
390
530
520
490
410
030
150
320
440
140
450
330
410
490
020
520
150
430
1144329-2
ECN 85319

Pos	Part No	SP	UN	Qty	Description	Page No
TBA 0200B OR TBA 0250B						
010	1350808-0000	A		1	BLOCK	
430	312105-0489	-		2	SCREW M6S M10X16 A280	
TBA 0200S						
010	1260887-0000	A		1	BLOCK	
430	312105-0489	-		2	SCREW M6S M10X16 A280	
TBA 0500B OR TBA 1000B						
010	1260700-0000	A		1	BLOCK	
430	312105-0489	-		2	SCREW M6S M10X16 A280	
TBA 0500S						
010	1499139-0000	A		1	BLOCK	
430	312105-0489	-		2	SCREW M6S M10X16 A280	
TBA 1000S						
010	1144933-0000	A		1	BLOCK	
430	312105-0489	-		2	SCREW M6S M10X16 A280	
TBA 1000SQ						
005	A1348056-0200	-		1	FOLDING PART	**591**
010	1558008-0000	A		1	BLOCK	
200	1558020-0000	A		2	ROD	
590	312125-0234	-		4	SCREW PAN HEAD MCS M3X30 SS	
600	315105-0124	-		4	WASHER PLAIN, BRB, 3,2/6,H=0,5	
TBA 1500S						
010	1317789-0000	A		1	BLOCK	
430	312105-0489	-		2	SCREW M6S M10X16 A280	
TPA 0330SQ						
005	A1348056-0200	-		1	FOLDING PART	**591**
010	1532266-0000	A		1	BLOCK	
TPA 1000S						
005	A1348056-0200	-		1	FOLDING PART	**591**
010	1144776-0000	A		1	BLOCK	
Common Parts						
020	1144472-0000	A		1	LEVER	
030	1144473-0000	A		1	LEVER	
040	1499635-0000	A		1	LEVER	
050	1144475-0000	-		1	BRACKET	
060	1144476-0000	-		1	BRACKET	
070	1144566-0000	-		1	FLANGE	
080	1144678-0000	B		1	SHAFT	
090	1144681-0000	-		1	WASHER	
100	1144683-0000	B		1	AXLE PIN	
110	1144684-0000	-		2	SPACER	
120	1144685-0000	-		2	SCREW	
130	1144686-0000	-		1	TIE ROD	
140	1144687-0000	-		1	TIE ROD	
150	1144688-0000	-		2	SCREW	
160	1260824-0000	-		1	SPACER RING	
170	1334328-0000	-		1	SPACER	
180	1260944-0000	B		2	BUSHING	
190	1334018-0000	B		4	SHIM	
300	90091-0297	B		1	RADIAL SEAL 35X47X7 MM DUST LIP	
310	90091-0299	B		1	RADIAL SEAL 30X52X7 MM DUST LIP	
320	90115-0181	B		2	ROD END, ID=10 MM, M10X1,5	
330	90115-0182	B		2	ROD END, ID=10 MM, M10X1,5 LH	
380	312105-0368	-		4	SCREW M6S M6X16 A280	
390	312105-0453	-		4	SCREW M6S M8X25 A280	
400	312105-0495	-		5	SCREW M6S M10X30 A280	
410	312109-0460	-		6	SCREW M6S M8X45 A280	
420	312318-0362	-		2	SCREW SOCK.SET CUP P MSK6SS M6X8 A4	
440	312605-0320	-		4	HEXAGON NUT, M6M M10 A280	
450	312902-0320	-		2	NUT HEX. LEFT THREAD, M10 A280	
460	315105-0153	-		4	WASHER PLAIN, BRB, 6,4/12,H=1,5	
470	315105-0171	-		4	WASHER PLAIN, BRB, 10/18,H=2	
480	315105-0173	-		2	WASHER PLAIN, BRB, 10,5/22,H=2	
490	315105-0165	-		6	WASHER PLAIN, BRB, 8,4/16,H=1,5	
500	315202-0217	B		1	O-RING 24,2X3 MM	
520	315705-0267	A		1	PARALLEL KEY W. ROUND ENDS 8X7X30 MM	
530	315705-0270	A		1	PARALLEL KEY W. ROUND ENDS 8X7X40 MM	
550	315753-0132	-		1	RETAINING RING FOR HOLE, 52X2 MM	
570	321308-0205	B		1	BALL BEARING, 2 SEALS, 25X47X12 MM	
580	321313-0105	B		1	BALL BEARING, 2 SEALS, 25X52X15 MM	

Machine Type | Group Description | Used-In | Group Number | Page No

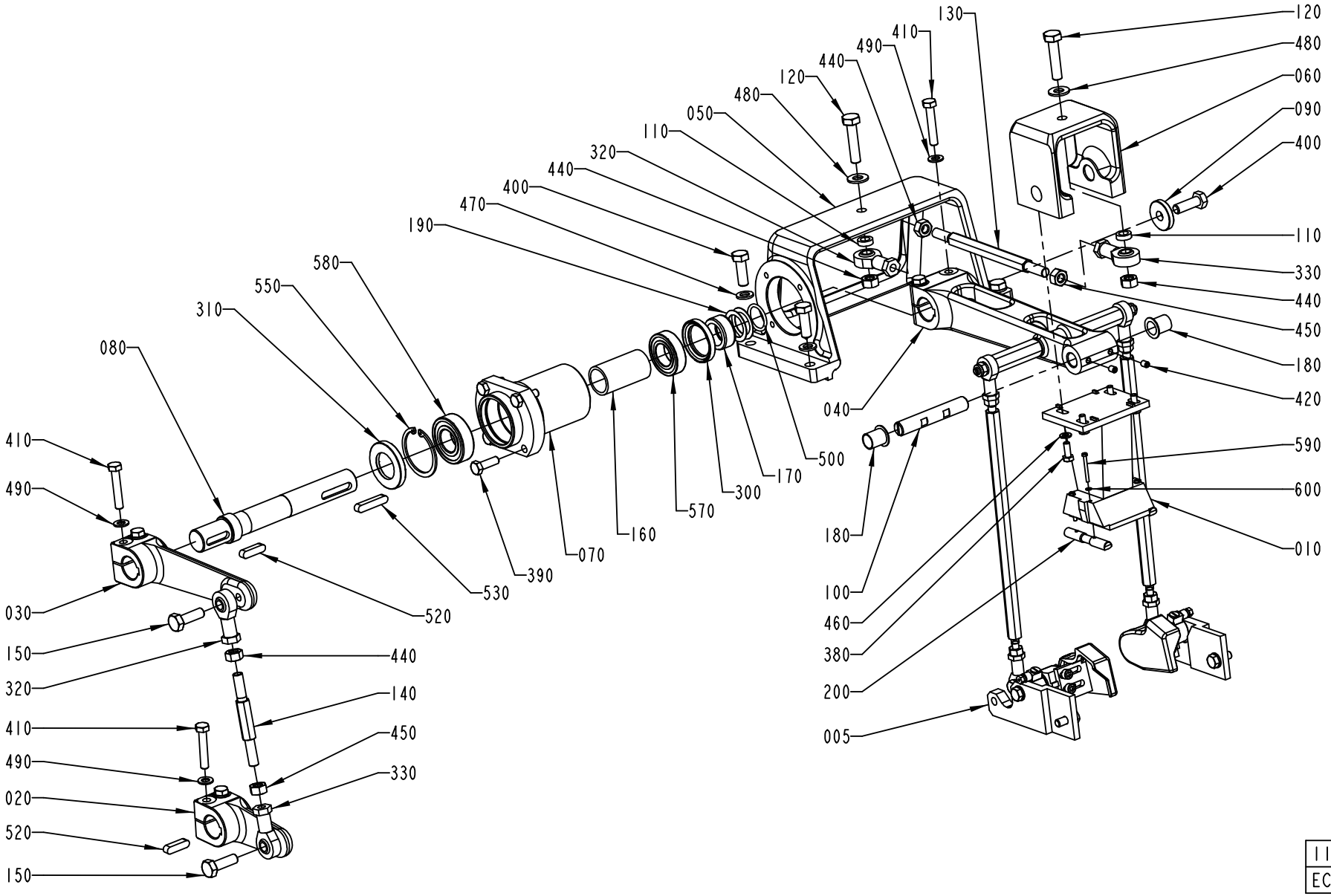

1144329-3
ECN 86559

ECM: 92336 - 20010709
Group number: 1144329-0200
Assembly Drawing: 1144329-3_1_AA

Issue: 20011217

Pos	Part No	SP	UN	Qty	Description	Page No
TBA 0200B OR TBA 0250B						
010	1350808-0000	A		1	BLOCK	
430	312105-0489	-		2	SCREW M6S M10X16 A280	
TBA 0200S						
010	1260887-0000	A		1	BLOCK	
430	312105-0489	-		2	SCREW M6S M10X16 A280	
TBA 0500B OR TBA 1000B						
010	1260700-0000	A		1	BLOCK	
430	312105-0489	-		2	SCREW M6S M10X16 A280	
TBA 0500S						
010	1499139-0000	A		1	BLOCK	
430	312105-0489	-		2	SCREW M6S M10X16 A280	
TBA 1000S						
010	1144933-0000	A		1	BLOCK	
430	312105-0489	-		2	SCREW M6S M10X16 A280	
TBA 1000SQ						
005	A1348056-0200	-		1	FOLDING PART	**591**
010	1558008-0000	A		1	BLOCK	
200	1558020-0000	A		2	ROD	
590	312125-0234	-		4	SCREW PAN HEAD MCS M3X30 SS	
600	315105-0124	-		4	WASHER PLAIN, BRB, 3,2/6,H=0,5	
TBA 1500S						
010	1317789-0000	A		1	BLOCK	
430	312105-0489	-		2	SCREW M6S M10X16 A280	
TPA 0330SQ						
005	A1348056-0200	-		1	FOLDING PART	**591**
010	1532266-0000	A		1	BLOCK	
TPA 1000S						
005	A1348056-0200	-		1	FOLDING PART	**591**
010	1144776-0000	A		1	BLOCK	
Common Parts						
020	1144472-0000	A		1	LEVER	
030	1144473-0000	A		1	LEVER	
040	1499635-0000	A		1	LEVER	
050	1144475-0000	-		1	BRACKET	
060	1144476-0000	-		1	BRACKET	
070	1144566-0000	-		1	FLANGE	
080	1144678-0000	B		1	SHAFT	
090	1144681-0000	-		1	WASHER	
100	1144683-0000	B		1	AXLE PIN	
110	1144684-0000	-		2	SPACER	
120	1144685-0000	-		2	SCREW	
130	1144686-0000	-		1	TIE ROD	
140	1144687-0000	-		1	TIE ROD	
150	1144688-0000	-		2	SCREW	
160	1260824-0000	-		1	SPACER RING	
170	1334328-0000	-		1	SPACER	
180	1260944-0000	B		2	BUSHING	
190	1334018-0000	B		4	SHIM	
300	90091-0297	B		1	RADIAL SEAL 35X47X7 MM DUST LIP	
310	90091-0299	B		1	RADIAL SEAL 30X52X7 MM DUST LIP	
320	90115-0181	B		2	ROD END, ID=10 MM, M10X1,5	
330	90115-0182	B		2	ROD END, ID=10 MM, M10X1,5 LH	
380	312105-0368	-		4	SCREW M6S M6X16 A280	
390	312105-0453	-		4	SCREW M6S M8X25 A280	
400	312105-0495	-		5	SCREW M6S M10X30 A280	
410	312109-0460	-		6	SCREW M6S M8X45 A280	
420	312318-0362	-		2	SCREW SOCK.SET CUP P MSK6SS M6X8 A4	
440	312605-0320	-		4	HEXAGON NUT, M6M M10 A280	
450	312902-0320	-		2	NUT HEX. LEFT THREAD, M10 A280	
460	315105-0153	-		4	WASHER PLAIN, BRB, 6,4/12,H=1,5	
470	315105-0171	-		4	WASHER PLAIN, BRB, 10/18,H=2	
480	315105-0173	-		2	WASHER PLAIN, BRB, 10,5/22,H=2	
490	315105-0165	-		6	WASHER PLAIN, BRB, 8,4/16,H=1,5	
500	315202-0217	B		1	O-RING 24,2X3 MM	
520	315705-0267	A		1	PARALLEL KEY W. ROUND ENDS 8X7X30 MM	
530	315705-0270	A		1	PARALLEL KEY W. ROUND ENDS 8X7X40 MM	
550	315753-0132	-		1	RETAINING RING FOR HOLE, 52X2 MM	
570	321308-0205	B		1	BALL BEARING, 2 SEALS, 25X47X12 MM	
580	321313-0105	B		1	BALL BEARING, 2 SEALS, 25X52X15 MM	

Machine Type | Group Description | Used-In | Group Number | Page No

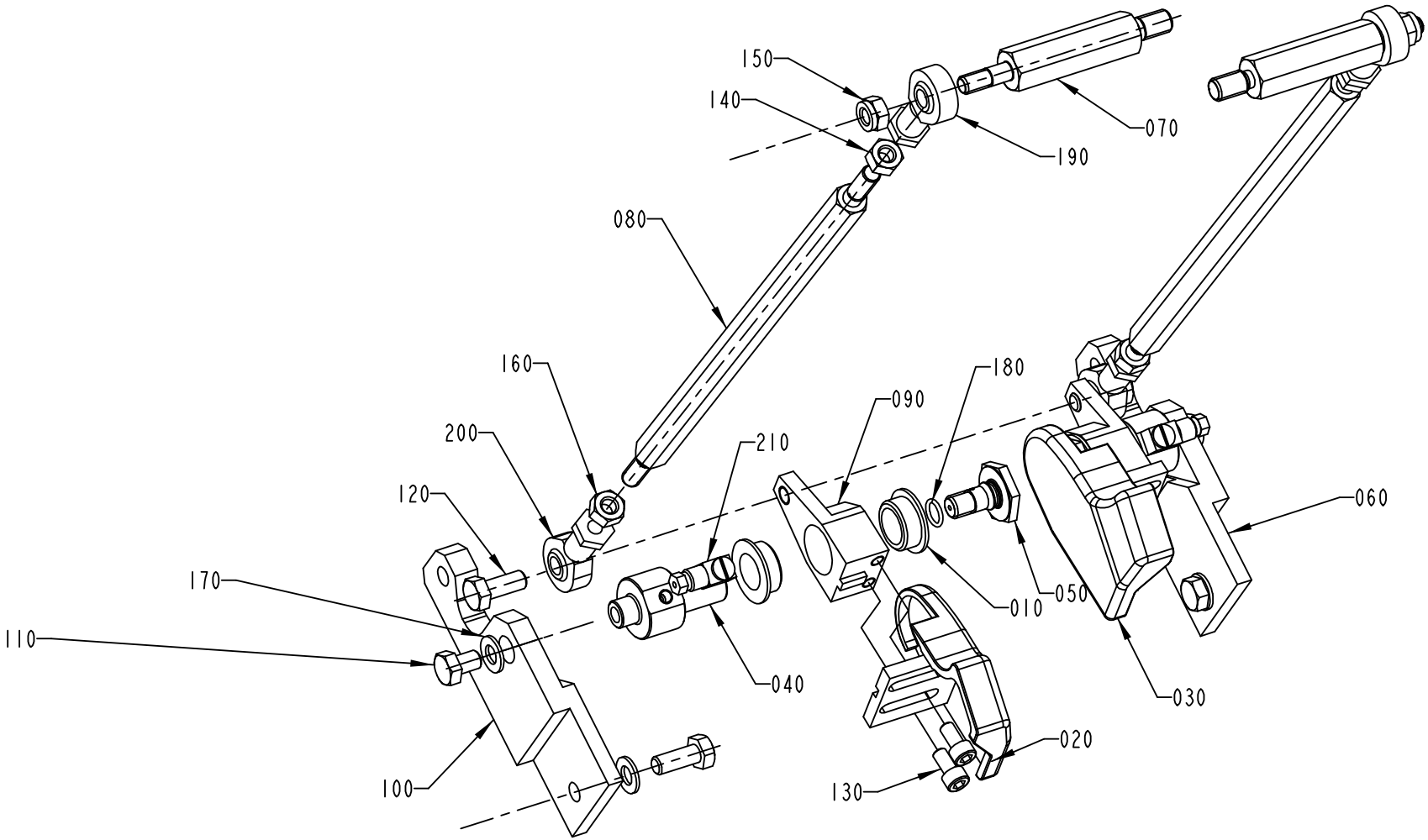

S-1348056-2
ECN 72862

ECM: 92238 - 20010709
Group number: 1348056-0200
Assembly Drawing: 1348056-2_1_AA

Issue: 20011217

Pos	Part No	SP	UN	Qty	Description	Page No
TBA 1000SQ						
020	1487922-0000	-		1	FOLDING DEVICE	
030	1487923-0000	-		1	FOLDING DEVICE	
060	1347600-0000	-		1	SUPPORT	
070	1499765-0000	-		2	AXLE LINK	
080	1499103-0000	-		2	TIE ROD	
100	1350441-0000	-		1	SUPPORT	
TPA 0330SQ						
020	1296180-0000	-		1	FOLDING DEVICE	
030	1296181-0000	-		1	FOLDING DEVICE	
060	1532267-0000	-		1	SUPPORT	
070	1532268-0000	-		2	AXLE LINK	
080	1532269-0000	-		2	TIE ROD	
100	1532270-0000	-		1	SUPPORT	
TPA 1000S						
020	1296180-0000	-		1	FOLDING DEVICE	
030	1296181-0000	-		1	FOLDING DEVICE	
060	1347600-0000	-		1	SUPPORT	
070	1499765-0000	-		2	AXLE LINK	
080	1499103-0000	-		2	TIE ROD	
100	1350441-0000	-		1	SUPPORT	
Common Parts						
010	1282708-0000	-		4	BUSHING	
040	1347495-0000	-		2	AXLE PIN	
050	1347496-0000	A		2	SCREW	
090	1350440-0000	A		2	LEVER	
110	312105-0447	-		2	SCREW M6S M8X12 A280	
120	312105-0451	-		4	SCREW M6S 8X20 A280	
130	312115-0366	-		4	SCREW MC6S M6X12 A280	
140	312605-0318	-		2	HEXAGON NUT, M6M M8 A280	
150	312812-0318	-		2	HEXAGON NUT, NY-LOCK M8 A480	
160	312902-0318	-		2	NUT HEX. LEFT THREAD, M8 A280	
170	315105-0165	-		4	WASHER PLAIN, BRB, 8,4/16,H=1,5	
180	315202-0107	A		2	O-RING 9,1X1,6 MM	
190	90115-0139	B		2	ROD END, ID=8 MM, M8X1,25	
200	90115-0180	B		2	ROD END, ID=8 MM, M8X1,25 LH	
210	90134-0058	-		2	CONNECTION	

Pos	Part No	SP	UN	Qty	Description	Page No

Machine Type | Group Description | Used-In | Group Number | Page No

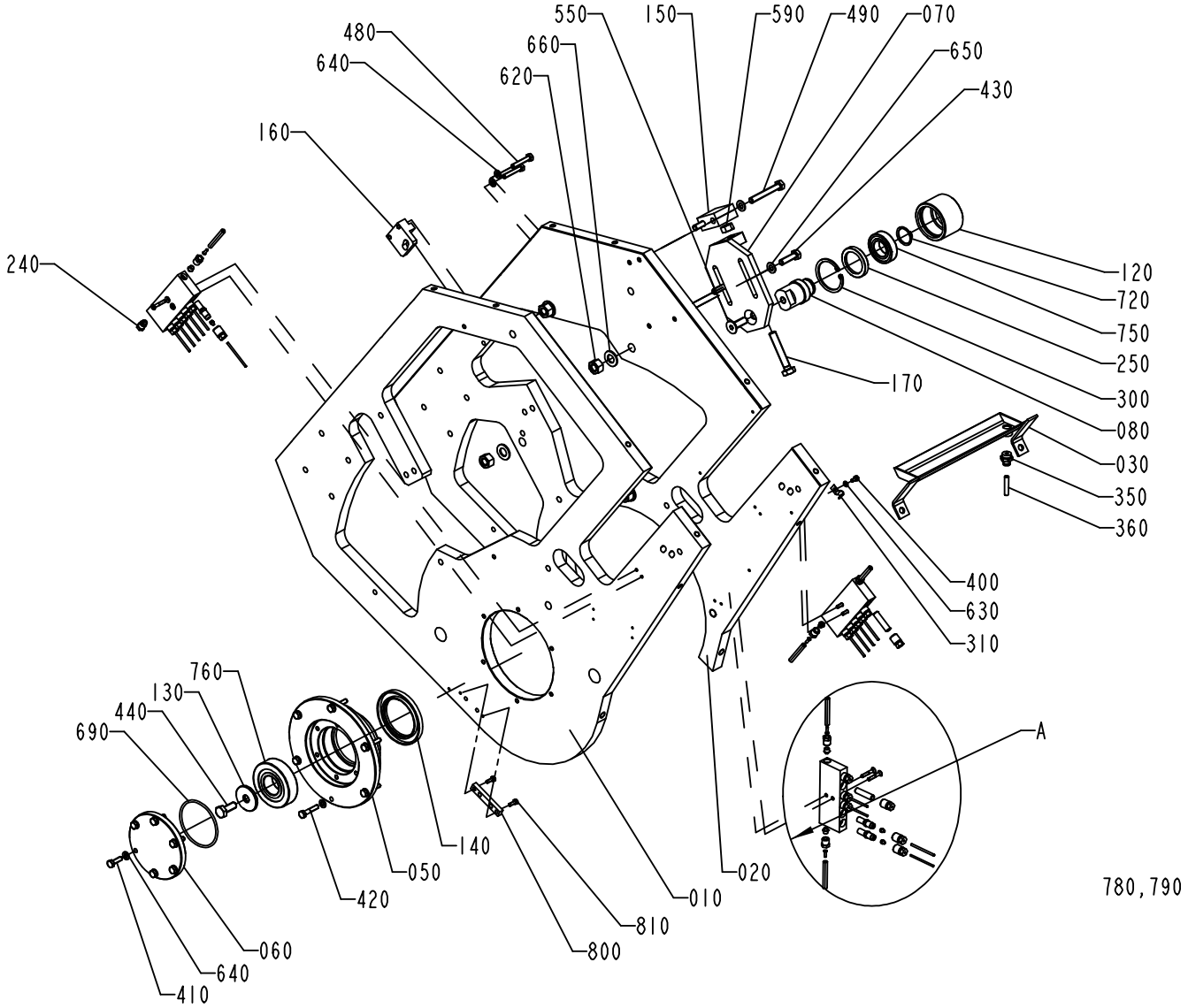

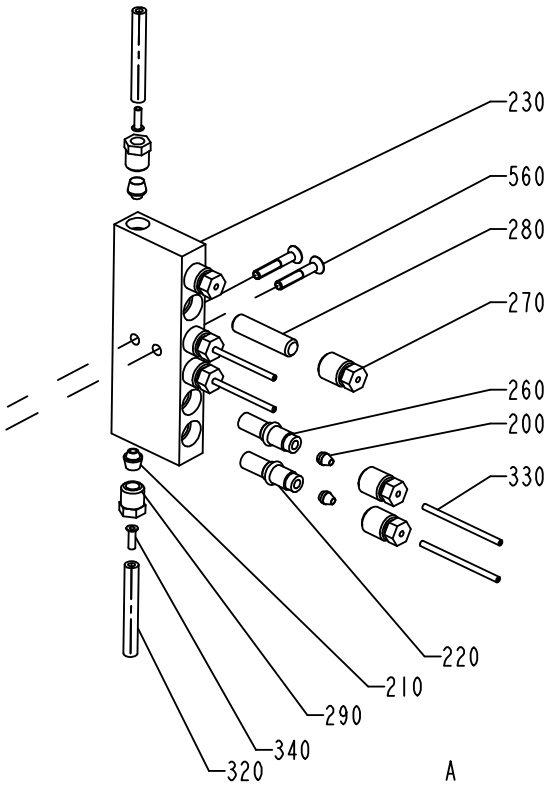

S-1144324-2
ECN 73332

ECM: 97255 - 20011015
Group number: 1144324-0200
Assembly Drawing: 1144324-2_1_AC

Issue: 20011217

Pos	Part No	SP	UN	Qty	Description	Page No
TBA/21 TBA 0200B OR TBA/21 TBA 0200S OR TBA/21 TBA 0250B OR TBA/21 TBA 1000B OR TBA/21 TBA 1000S OR TBA/21 TBA 1500S						
030	1478127-0000	-		1	DRIP PLATE	
160	1144900-0000	-		1	SUPPORT	
TBA/21 TBA 1000SQ OR TBA/21 TPA 1000S						
030	1478127-0000	-		1	DRIP PLATE	
160	1282844-0000	-		1	SUPPORT	
260	90092-0052	-		15	METERING VALVE 10 MM3	
280	90134-0052	-		1	PLUG DOSING BLOCK	
TBA/21 TBA 0500S OR TBA/21 TBA 0500B						
030	1478127-0000	-		1	DRIP PLATE	
160	1282844-0000	-		1	SUPPORT	
TBA/21 TPA 0330SQ						
030	1478127-0000	-		1	DRIP PLATE	
160	1282844-0000	-		1	SUPPORT	
260	90092-0052	-		15	METERING VALVE 10 MM3	
280	90134-0052	-		1	PLUG DOSING BLOCK	
Common Parts						
010	1347109-0000	-		1	PLATE	
020	1347108-0000	-		1	PLATE	
050	598101-0000	B		1	BEARING HOUSING	
060	1144618-0000	-		1	FLANGE	
070	1144797-0000	-		1	SUPPORT	
080	1478418-0000	A		1	AXLE BOLT	
120	1478417-0000	A		1	ROLLER	
130	1144620-0000	-		1	WASHER	
140	1144665-0000	A		1	SEAL RING	
150	1144839-0000	-		1	BLOCK	
170	1260931-0000	-		1	SCREW	
200	90028-0020	-		14	CONE TUBE 2,5MM	
210	90028-0025	-		5	CONE TUBE 6 MM	
220	90092-0053	A		1	METERING VALVE 30 MM3	
230	90032-0040	-		3	BLOCK 6 WAYS	
240	90087-0019	-		1	PLUG M10X1 STAINLESS	
250	90091-0297	A		1	RADIAL SEAL 35X47X7 MM DUST LIP	
260	90092-0052	-		13	METERING VALVE 10 MM3	
270	90134-0039	-		18	BUSHING VALVE CONNECTION 2,5 MM	
280	90134-0052	-		3	PLUG DOSING BLOCK	
290	90134-0055	-		5	BUSHING/NUT INLET/OUTLET 6 MM	
300	90141-0019	-		1	RETAIN. RING, 50	
310	316810-0106	-		5	PIPE CLIP FOR TUBE D=8 MM	
320	90166-0108	-	M	4	TUBE 6 MM PA,TRANSP.	
330	90166-0143	-	M	4	TUBE 2,5 MM PA,TRANSP.	
340	90134-0030	-		5	SLEEVE FOR PLASTIC TUBE	
350	342722-0203	-		1	STRAIGHT COUPLING	
360	90166-0124	-	MM	2000	TUBE 6 MM PA,TRANSP.	
400	312105-0287	-		5	SCREW M6S M4X8 A280	
410	312105-0370	-		6	SCREW M6S M6X20 A280	
420	312105-0374	-		6	SCREW M6S M6X30 A280	
430	312105-0455	-		2	SCREW M6S M8X30 A280	
440	312105-0493	-		1	SCREW M6S M10X25 A280	
480	312109-0376	-		2	SCREW M6S M6X35 A280	
490	312109-0463	-		2	SCREW M6S M8X60H A4 80	
550	312155-0495	-		1	SCREW HEX.SOCK.COUNT.MF6S M10X30 A280	
560	312155-0297	-		6	SCREW HEX.SOCK.COUNT.MF6S M4X25 A480	
590	312605-0320	-		1	HEXAGON NUT, M6M M10 A280	
620	312605-0322	-		4	HEXAGON NUT, M6M M12 A280	
630	315105-0136	-		5	WASHER PLAIN, BRB, 4,3/8,H=0,8	
640	315105-0153	-		14	WASHER PLAIN, BRB, 6,4/12,H=1,5	
650	315105-0165	-		4	WASHER PLAIN, BRB, 8,4/16,H=1,5	
660	315105-0178	-		4	WASHER PLAIN, BRB, 13/24,H=2	
690	315202-0305	A		1	O-RING 69,5X3 MM	
720	315751-0119	-		1	RETAIN. RING, 25	
750	321308-0205	A		1	BALL BEARING, 2 SEALS, 25X47X12 MM	
760	321316-0206	A		1	BALL BEARING, 2 SEALS, 30X72X19 MM	
780	352113-0102	-		3	CLIP-STRIP, BLACK 188X4,8 MM	
790	352113-0101	-		7	CLIP STRIP BLACK 92X2,5MM	
800	1487821-0000	-		1	SPACER	
810	312105-0291	-		2	SCREW M6S M4X12 A280	

Machine Type | Group Description | Used-In | Group Number | Page No

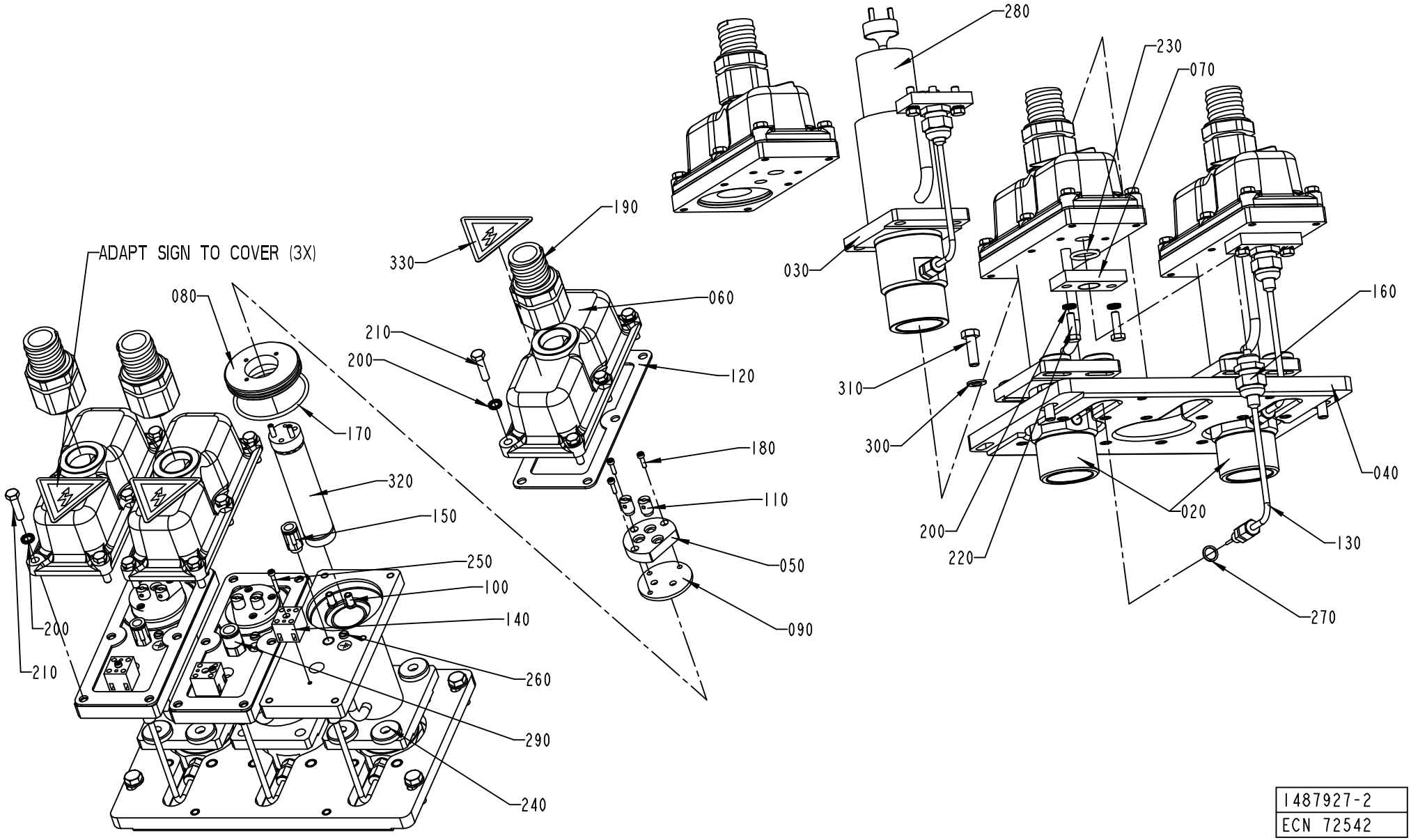

1487927-2
ECN 72542

ECM: 83623 - 20001023
Group number: 1487927-0200
Assembly Drawing: 1487927-2_1_AA

Issue: 20011217

Pos	Part No	SP	UN	Qty	Description	Page No
Common Parts						
020	1296070-0000	-		2	HEATING PIPE	
030	1285293-0000	-		1	HEATING PIPE	
040	1285291-0000	-		1	PLATE	
050	294464-0000	A		3	BASE PLATE	
060	1285309-0000	-		3	COVER	
070	1285311-0000	-		3	PLATE	
080	1285307-0000	-		3	SPACER	
090	1285308-0000	A		3	GASKET	
100	270927-0000	A		6	SCREW	
110	266739-0000	A		6	CABLE GLAND	
120	1285312-0000	A		3	GASKET	
130	90326-0081	A		3	THERMOCOUPLE, ISA TYPE K.	
140	90195-0020	-		3	TERMINAL BLOCK, 1977.2	
150	342722-0204	-		2	PIPE COUPLING	
160	352103-0106	A		3	CABLE GLAND ST 11	
170	315204-0303	A		3	O-RING 59,5X3 MM	
180	312115-0226	-		9	SCREW MC6S M3X12 A280	
190	353247-0005	-		3	GLANDS,EMC,HOSE,EXTEND,WITH INSERT PG21	
200	90062-0015	-		24	LOCK WASHER SERRAT.EXT.GEAR,6,4/11 H=0,7	
210	312105-0372	-		18	SCREW M6S M6X25 A280	
220	312105-0370	-		6	SCREW M6S M6X20 A280	
230	315204-0215	A		3	O-RING 19,2X3 MM	
240	315125-0165	-		8	WASHER PLAIN ROUND,CHAMF. 8,4/26, H=5	
250	312115-0230	-		3	SCREW MC6S M3X20 A280	
260	312132-0284	-		3	SCREW SLOT. PAN HEAD MSCS M4X5	
270	315234-0109	-		3	WASHER,PL.RND.CU.10,3/13,5 H=1,0	
280	90206-0030	A		1	HEATING ELEMENT, 3000W, 220V	
290	342722-0211	-		1	STRAIGHT COUPLING D=10-G1/4"	
300	315105-0165	-		4	WASHER PLAIN, BRB, 8,4/16,H=1,5	
310	312105-0453	-		4	SCREW M6S M8X25 A280	
320	90206-0125	A		2	HEATING ELEMENT 1000W 220 V	
330	359705-0015	-		3	WARNING SIGN ISO, RISK OF ELECTRIC SHOCK	

Pos	Part No	SP	UN	Qty	Description	Page No

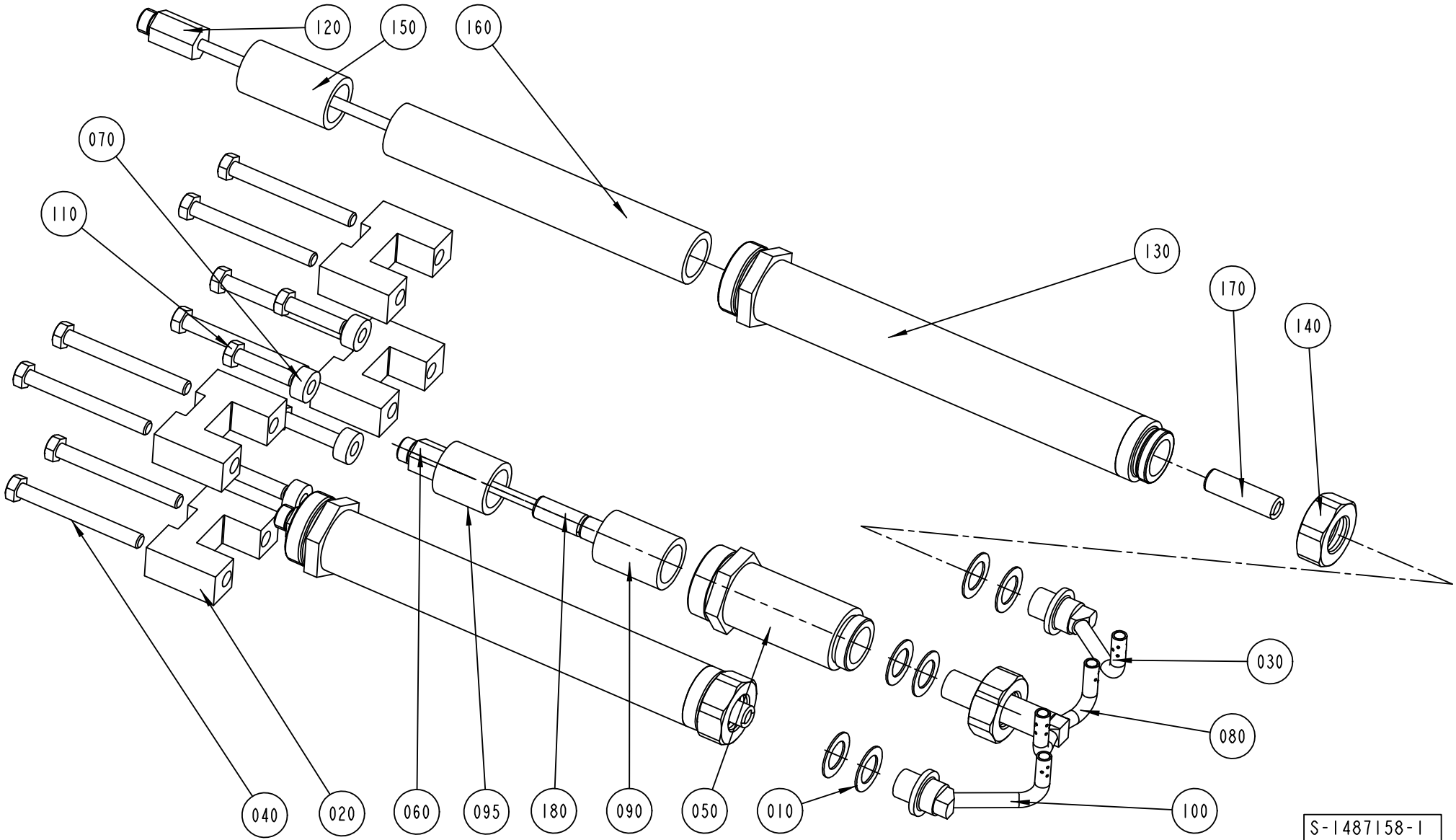
120
150
160
070
110
130
170
140
030
080
100
040
020
060
095
180
090
050
010
S-1487158-1
ECN 71979

ECM: 96238 - 20011015
Group number: 1487158-0100
Assembly Drawing: 1487158-1_1_AA

Issue: 20011217

Pos	Part No	SP	UN	Qty	Description	Page No
TBA 0200B						
010	263673-0000	-		6	GASKET	
020	1346642-0000	-		4	SPACER	
030	1346644-0000	A		1	NOZZLE	
040	312105-0471	-		8	SCREW M6S M8X100 A280	
050	1285873-0000	-		1	SPACER	
060	1296072-0000	-		1	EXTENSION	
070	1285874-0000	-		4	SPACER	
080	1346581-0000	A		1	NOZZLE	
090	23765-0005	A		1	INSULATING PIPE	
095	23765-0004	A		1	INSULATING PIPE	
100	1346643-0000	A		1	NOZZLE	
110	312109-0457	-		4	SCREW M6S M8X35 A280	
120	1346646-0000	-		2	EXTENSION	
130	1346645-0000	-		2	SPACER	
160	23765-0002	A		2	INSULATING PIPE	
170	252766-0001	A		2	INSULATING PIPE	
TBA 0200S						
010	263673-0000	-		6	GASKET	
020	1285874-0000	-		8	SPACER	
030	1346679-0000	A		1	NOZZLE	
040	312109-0457	-		8	SCREW M6S M8X35 A280	
050	1285873-0000	-		1	SPACER	
060	1296072-0000	-		1	EXTENSION	
070	1285874-0000	-		4	SPACER	
080	1346580-0000	A		1	NOZZLE	
090	23765-0005	A		1	INSULATING PIPE	
095	23765-0004	A		1	INSULATING PIPE	
100	1346678-0000	A		1	NOZZLE	
110	312109-0457	-		4	SCREW M6S M8X35 A280	
120	1346646-0000	-		2	EXTENSION	
130	1346645-0000	-		2	SPACER	
160	23765-0002	A		2	INSULATING PIPE	
170	252766-0001	A		2	INSULATING PIPE	
TBA 0250B						
010	263673-0000	-		6	GASKET	
020	1346641-0000	-		4	SPACER	
030	1346644-0000	A		1	NOZZLE	
040	312105-0466	-		8	SCREW M6S M8X75 A280	
050	1285873-0000	-		1	SPACER	
060	1296072-0000	-		1	EXTENSION	
070	1285874-0000	-		4	SPACER	
080	1346581-0000	A		1	NOZZLE	
090	23765-0005	A		1	INSULATING PIPE	
095	23765-0004	A		1	INSULATING PIPE	
100	1346643-0000	A		1	NOZZLE	
110	312109-0457	-		4	SCREW M6S M8X35 A280	
120	1346646-0000	-		2	EXTENSION	
130	1346645-0000	-		2	SPACER	
160	23765-0002	A		2	INSULATING PIPE	
170	252766-0001	A		2	INSULATING PIPE	
TBA 0500B						
010	263673-0000	-		6	GASKET	
020	1296153-0000	-		4	GUIDE	
030	1350422-0000	A		1	NOZZLE	
040	312105-0466	-		8	SCREW M6S M8X75 A280	
050	1285873-0000	-		1	SPACER	
060	1296072-0000	-		1	EXTENSION	
070	1498163-0000	-		4	SPACER	
080	1296387-0000	A		1	NOZZLE	
090	23765-0004	A		1	INSULATING PIPE	
095	23765-0005	A		1	INSULATING PIPE	
100	1350421-0000	A		1	NOZZLE	
110	312109-0457	-		4	SCREW M6S M8X35 A280	
120	1346646-0000	-		2	EXTENSION	
130	1346645-0000	-		2	SPACER	
160	23765-0002	A		2	INSULATING PIPE	
170	252766-0001	A		2	INSULATING PIPE	
TBA 0500S						
010	263673-0000	-		6	GASKET	
020	1511692-0000	-		8	SPACER	
030	1499446-0000	A		1	NOZZLE	
040	312105-0464	-		8	SCREW M6S M8X65 A280	
050	1285873-0000	-		1	SPACER	
060	1296072-0000	-		1	EXTENSION	
070	1523497-0000	-		4	SPACER	
080	1499445-0000	A		1	NOZZLE	
090	23765-0004	A		1	INSULATING PIPE	
095	23765-0005	A		1	INSULATING PIPE	
100	1499444-0000	A		1	NOZZLE	

Machine Type Group Description Used-In Group Number Page No

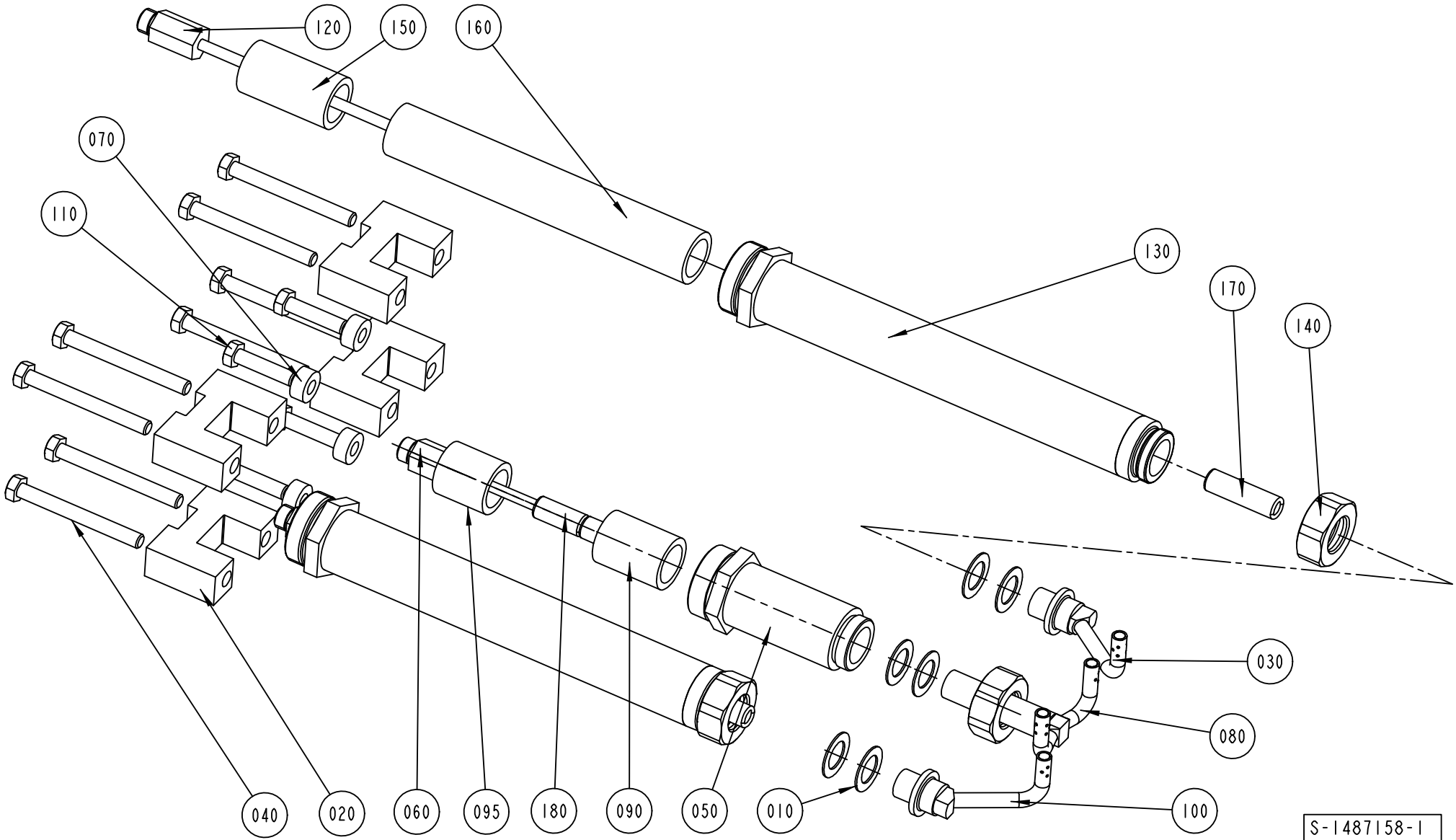
120
150
160
070
110
130
170
140
030
080
100
040
020
060
095
180
090
050
010
S-1487158-1
ECN 71979

Pos	Part No	SP	UN	Qty	Description	Page No
TBA 0500S (Cont'd)						
110	312109-0457	-		4	SCREW M6S M8X35 A280	
120	1285310-0000	-		2	EXTENSION	
130	1285288-0000	-		2	SPACER	
160	23765-0001	A		2	INSULATING PIPE	
170	252766-0002	A		2	INSULATING PIPE	
TBA 1000B						
010	263673-0000	-		6	GASKET	
020	1296153-0000	-		4	GUIDE	
030	1350422-0000	A		1	NOZZLE	
040	312105-0466	-		8	SCREW M6S M8X75 A280	
050	1285873-0000	-		1	SPACER	
060	1296072-0000	-		1	EXTENSION	
070	1498163-0000	-		4	SPACER	
080	1296387-0000	A		1	NOZZLE	
090	23765-0004	A		1	INSULATING PIPE	
095	23765-0005	A		1	INSULATING PIPE	
100	1350421-0000	A		1	NOZZLE	
110	312109-0457	-		4	SCREW M6S M8X35 A280	
120	1285310-0000	-		2	EXTENSION	
130	1285288-0000	-		2	SPACER	
160	23765-0001	A		2	INSULATING PIPE	
170	252766-0002	A		2	INSULATING PIPE	
TBA 1000S						
010	263673-0000	-		6	GASKET	
020	1348043-0000	-		8	SPACER	
030	1296068-0000	A		1	NOZZLE	
040	312109-0460	-		8	SCREW M6S M8X45 A280	
050	1285873-0000	-		1	SPACER	
060	1296072-0000	-		1	EXTENSION	
070	1498163-0000	-		4	SPACER	
080	1296066-0000	A		1	NOZZLE	
090	23765-0004	A		1	INSULATING PIPE	
095	23765-0005	A		1	INSULATING PIPE	
100	1296067-0000	A		1	NOZZLE	
110	312109-0457	-		4	SCREW M6S M8X35 A280	
120	1285310-0000	-		2	EXTENSION	
130	1285288-0000	-		2	SPACER	
160	23765-0001	A		2	INSULATING PIPE	
170	252766-0002	A		2	INSULATING PIPE	

Pos	Part No	SP	UN	Qty	Description	Page No
TBA 1000SQ						
010	263673-0000	-		6	GASKET	
020	1285874-0000	-		8	SPACER	
030	1498147-0000	A		1	NOZZLE	
040	312109-0457	-		8	SCREW M6S M8X35 A280	
050	1285873-0000	-		1	SPACER	
060	1296072-0000	-		1	EXTENSION	
070	1285874-0000	-		4	SPACER	
080	1490039-0000	A		1	NOZZLE	
090	23765-0004	A		1	INSULATING PIPE	
095	23765-0005	A		1	INSULATING PIPE	
100	1498146-0000	A		1	NOZZLE	
110	312109-0457	-		4	SCREW M6S M8X35 A280	
120	1285310-0000	-		2	EXTENSION	
130	1285288-0000	-		2	SPACER	
160	23765-0001	A		2	INSULATING PIPE	
170	252766-0002	A		2	INSULATING PIPE	
TBA 1500S						
020	1317804-0000	-		8	SPACER	
030	1317802-0000	A		1	NOZZLE	
050	1285869-0000	-		1	SPACER	
060	1285870-0000	-		1	EXTENSION	
070	1334632-0000	-		4	SPACER	
080	1317801-0000	A		1	NOZZLE	
095	23765-0005	A		1	INSULATING PIPE	
100	1317803-0000	A		1	NOZZLE	
120	1285310-0000	-		2	EXTENSION	
130	1285288-0000	-		2	SPACER	
160	23765-0001	A		2	INSULATING PIPE	
170	252766-0002	A		2	INSULATING PIPE	
TPA TPA 0330SQ						
010	263673-0000	-		6	GASKET	
020	1498163-0000	-		8	SPACER	
030	1532284-0000	A		1	NOZZLE	
040	312109-0460	-		8	SCREW M6S M8X45 A280	
050	1285873-0000	-		1	SPACER	
060	1296072-0000	-		1	EXTENSION	
070	1285874-0000	-		4	SPACER	
080	1532285-0000	A		1	NOZZLE	

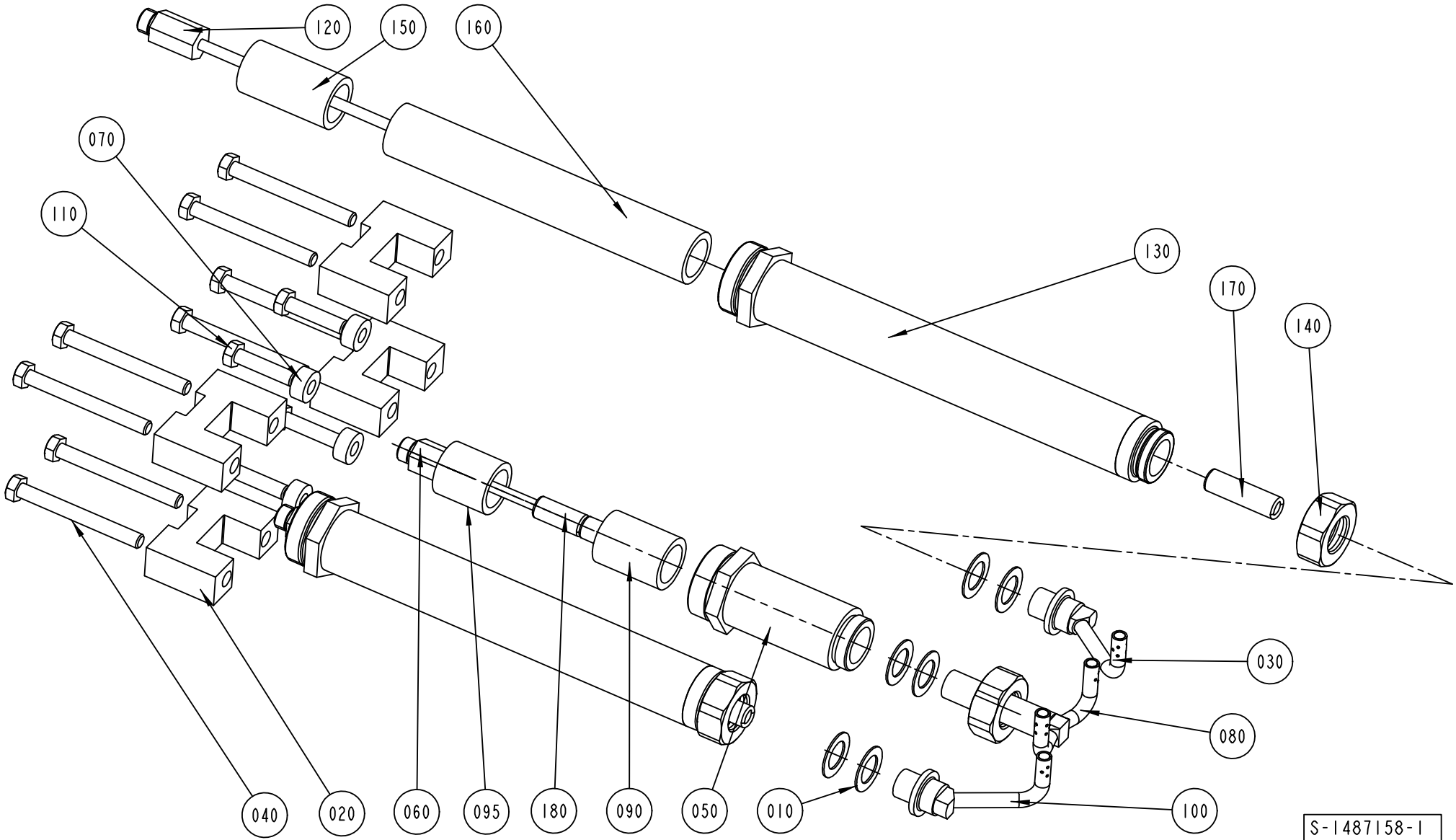
120
150
160
070
110
130
170
140
030
080
100
040
020
060
095
180
090
050
010
S-1487158-1
ECN 71979

Pos	Part No	SP	UN	Qty	Description	Page No
TPA 0330SQ (Cont'd)						
090	23765-0005	A		1	INSULATING PIPE	
095	23765-0004	A		1	INSULATING PIPE	
100	1532286-0000	A		1	NOZZLE	
110	312109-0457	-		4	SCREW M6S M8X35 A280	
120	1346646-0000	-		2	EXTENSION	
130	1346645-0000	-		2	SPACER	
160	23765-0002	A		2	INSULATING PIPE	
170	252766-0001	A		2	INSULATING PIPE	
TPA 1000S						
010	263673-0000	-		6	GASKET	
020	1285874-0000	-		8	SPACER	
030	1296068-0000	A		1	NOZZLE	
040	312109-0460	-		8	SCREW M6S M8X45 A280	
050	1285873-0000	-		1	SPACER	
060	1296072-0000	-		1	EXTENSION	
070	1498163-0000	-		4	SPACER	
080	1296066-0000	A		1	NOZZLE	
090	23765-0004	A		1	INSULATING PIPE	
095	23765-0005	A		1	INSULATING PIPE	
100	1296067-0000	A		1	NOZZLE	
110	312109-0457	-		4	SCREW M6S M8X35 A280	
120	1285310-0000	-		2	EXTENSION	
130	1285288-0000	-		2	SPACER	
160	23765-0001	A		2	INSULATING PIPE	
170	252766-0002	A		2	INSULATING PIPE	
Common Parts						
010	263673-0000	-		9	GASKET	
040	312109-0460	-		12	SCREW M6S M8X45 A280	
140	1317085-0000	-		2	NUT	
150	23765-0003	A		2	INSULATING PIPE	
180	252766-0001	A		2	INSULATING PIPE	

Pos	Part No	SP	UN	Qty	Description	Page No

Machine Type | Group Description | Used-In | Group Number | Page No

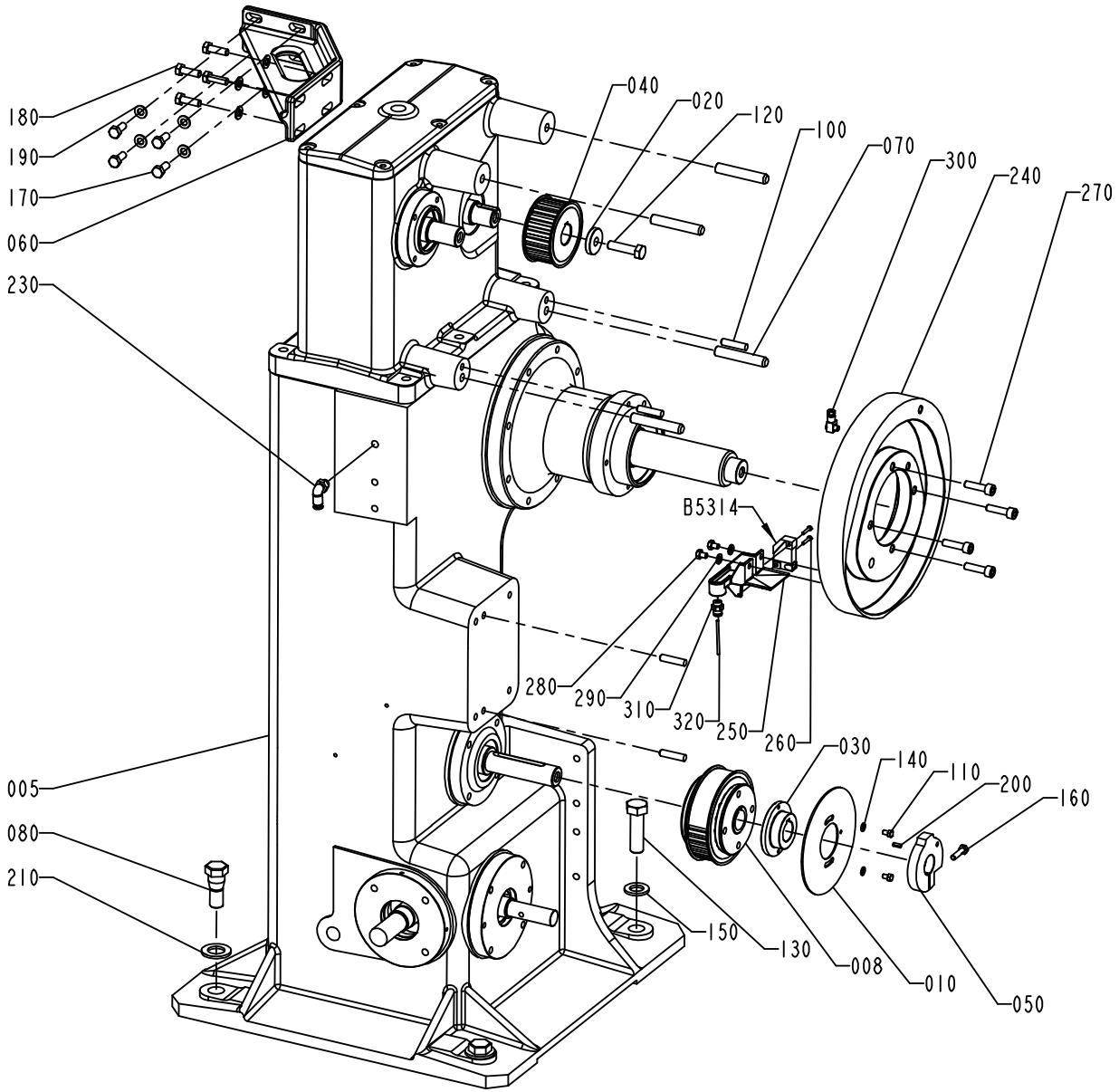

S-1144320-3
ECN 73415

ECM: 73415 - 20000512
Group number: 1144320-0300
Assembly Drawing: 1144320-3_1_AA

Issue: 20011217

Pos	Part No	SP	UN	Qty	Description	Page No
Common Parts						
005	A1285861-0100	-		1	INDEXING GEAR	
008	A1285862-0100	-		1	FRICTION WHEEL	**605**
010	1144657-0000	D		1	PROTRACTOR	
020	1144681-0000	-		1	WASHER	
030	1144718-0000	-		1	FLANGE	
040	1347017-0000	D		1	PULLEY	
050	1144849-0000	C		1	SWITCH	
060	1317384-0000	-		1	BRACKET	
070	1348303-0000	-		4	STUD SCREW	
080	598549-0000	-		2	SCREW	
100	311103-0407	-		4	PARALLELL PIN, M6, 8X35 MM	
110	312105-0323	-		2	SCREW M6S M5X8 A280	
120	312105-0499	-		1	SCREW M6S M10X40 A280	
130	312105-0631	-		2	SCREW M6S M16X55 A280	
140	315105-0146	-		2	WASHER PLAIN, BRB, 5,3/10,H=1	
150	315105-0186	-		2	WASHER PLAIN, BRB, 17/30,H=3	
160	312105-0372	-		1	SCREW M6S M6X25 A280	
170	312105-0451	-		4	SCREW M6S 8X20 A280	
180	312105-0453	-		4	SCREW M6S M8X25 A280	
190	315105-0165	-		8	WASHER PLAIN, BRB, 8,4/16,H=1,5	
200	311112-0251	-		1	PIN, STRAIGHT SLOTTED SPRING FRP 4X10	
210	315105-0192	-		2	WASHER PLAIN, BRB, 21/36,H=3	
230	342732-0102	-		1	ELBOW PIPE JOINT	
240	1296150-0000	-		1	CAM	
250	1348072-0000	-		1	DRIP PLATE	
260	312125-0228	-		2	SCREW PAN HEAD MCS M3X16 A480	
270	312115-0455	-		4	SCREW MC6S M8X30 A280	
280	312105-0362	-		2	SCREW M6S M6X8 A280	
290	315105-0153	-		2	WASHER PLAIN, BRB, 6,4/12,H=1,5	
300	90134-0058	-		1	CONNECTION	
310	342722-0202	-		1	PIPE COUPLING 1/8" D=6MM	
320	90266-0166	-	MM	1500	PIPE	
B5314	90044-0104	-		1	PROX.SWITCH IFM IN 3002	

Pos	Part No	SP	UN	Qty	Description	Page No

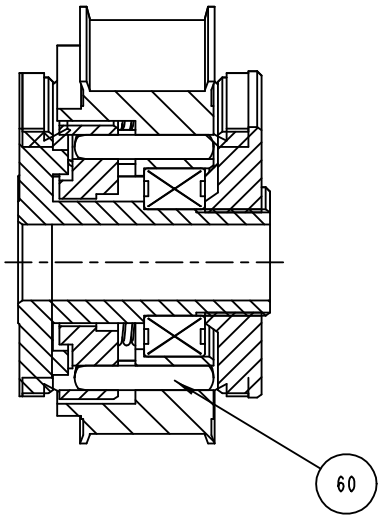
B-B
60

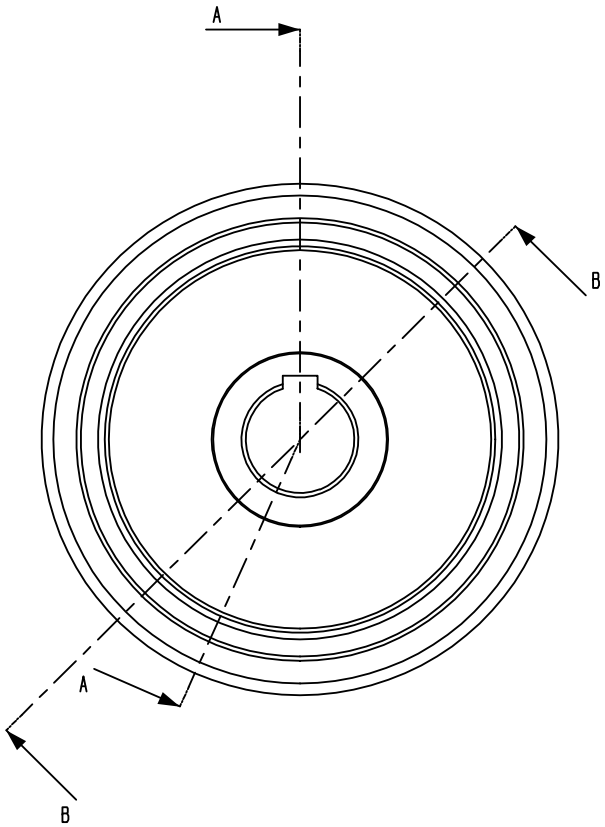
A
B
A
B

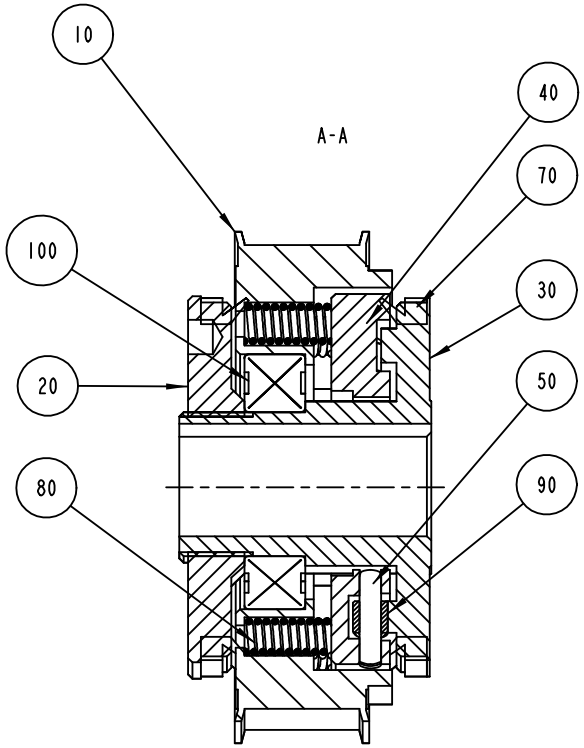
A-A
10
40
70
100
30
20
50
80
90

ECM: 71809 - 19980807
Group number: 1285862-0100
Assembly Drawing: 1285862-1_1_AA

Issue: 20011217

Pos	Part No	SP	UN	Qty	Description	Page No
Common Parts						
010	1144571-0000	D		1	PULLEY	
020	1144694-0000	D		1	NUT	
030	1282325-0000	D		1	HUB	
040	1282326-0000	D		1	RING	
050	1285888-0000	D		6	AXLE PIN	
060	1285889-0000	D		4	AXLE PIN	
070	1285890-0000	C		2	SEAL RING	
080	1285891-0000	D		12	SPRING	
090	1285892-0000	D		6	SPACER RING	
100	321306-0107	C		1	BALL BEARING, 35X62X14 MM	

Pos	Part No	SP	UN	Qty	Description	Page No

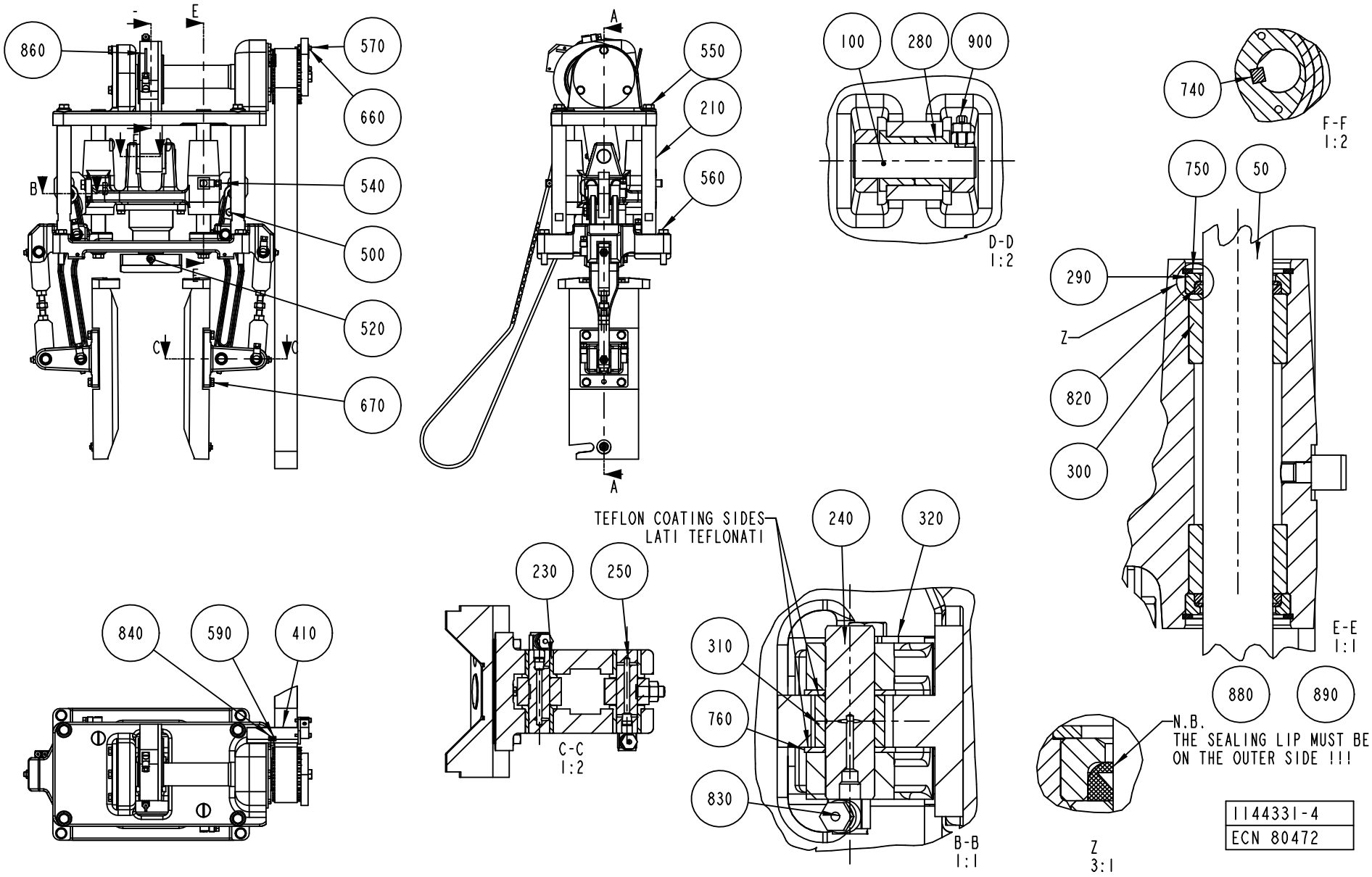
860
570
660
540
500
520
670
550
210
560
100
280
900
D-D
1:2
740
F-F
1:2
750
50
290
Z
820
300
E-E
1:1
880
890
840
590
410
230
250
C-C
1:2
TEFLON COATING SIDES
LATI TEFLONATI
240
320
310
760
830
B-B
1:1
N.B.
THE SEALING LIP MUST BE
ON THE OUTER SIDE !!!
Z
3:1
1144331-4
ECN 80472

ECM: 97314 - 20011015
Group number: 1144331-0200
Assembly Drawing: 1144331-4_1_AD

Issue: 20011217

Pos	Part No	SP	UN	Qty	Description	Page No
TBA 0200B						
080	1260895-0000	A		1	SPRING	
450	1144978-0000	B		2	CAM	
470	1334999-0000	A		1	PUSHER	
475	1334999-0000	A		1	PUSHER	
480	1350809-0000	A		1	BLOCK	
650	315103-0153	-		3	WASHER PLAIN, BRB, 6,4/12,H=1,5 NIPL BR	
TBA 0200S						
080	1260895-0000	A		1	SPRING	
450	1144978-0000	B		2	CAM	
470	1260889-0000	A		1	PUSHER	
475	1260889-0000	A		1	PUSHER	
480	1260888-0000	A		1	BLOCK	
650	315103-0153	-		3	WASHER PLAIN, BRB, 6,4/12,H=1,5 NIPL BR	
TBA 0250B						
080	1260895-0000	A		1	SPRING	
450	1144978-0000	B		2	CAM	
470	1350810-0000	A		1	PUSHER	
475	1350810-0000	A		1	PUSHER	
480	1350809-0000	A		1	BLOCK	
650	315103-0153	-		3	WASHER PLAIN, BRB, 6,4/12,H=1,5 NIPL BR	
TBA 0500B						
080	1144492-0000	A		1	SPRING	
450	1144978-0000	B		2	CAM	
470	1539872-0000	A		1	PUSHER	
475	1539872-0000	A		1	PUSHER	
480	1260702-0000	A		1	PLATE	
650	315103-0153	-		3	WASHER PLAIN, BRB, 6,4/12,H=1,5 NIPL BR	
TBA 0500S						
080	1144492-0000	A		1	SPRING	
450	1144978-0000	B		2	CAM	
470	1499144-0000	A		2	PUSHER	
475	1499144-0000	A		1	PUSHER	
480	1499143-0000	A		1	PLATE	
650	315103-0153	-		3	WASHER PLAIN, BRB, 6,4/12,H=1,5 NIPL BR	
TBA 1000B						
080	1144492-0000	A		1	SPRING	
450	1144978-0000	B		2	CAM	
470	1260701-0000	A		1	PUSHER	
475	1260701-0000	A		1	PUSHER	
480	1260702-0000	A		1	PLATE	
650	315103-0153	-		3	WASHER PLAIN, BRB, 6,4/12,H=1,5 NIPL BR	
TBA 1000S						
080	1144492-0000	A		1	SPRING	
450	1144978-0000	B		2	CAM	
470	1144928-0000	A		1	PUSHER	
475	1144928-0000	A		1	PUSHER	
480	1144932-0000	A		1	PLATE	
650	315103-0153	-		3	WASHER PLAIN, BRB, 6,4/12,H=1,5 NIPL BR	
TBA 1000SQ						
080	1144492-0000	A		1	SPRING	
450	1144978-0000	B		2	CAM	
470	1490032-0000	A		2	PUSHER	
475	1490032-0000	A		1	PUSHER	
480	1549940-0000	A		1	PUSHER	
480	1490031-0000	A		1	PLATE	
520	312105-0370	-		14	SCREW M6S M6X20 A280	
650	315103-0153	-		3	WASHER PLAIN, BRB, 6,4/12,H=1,5 NIPL BR	
TBA 1500S						
080	1144492-0000	A		1	SPRING	
450	1144978-0000	B		2	CAM	
470	1317654-0000	A		1	PUSHER	
475	1317654-0000	A		1	PUSHER	
480	1317655-0000	A		1	PLATE	
650	315103-0153	-		3	WASHER PLAIN, BRB, 6,4/12,H=1,5 NIPL BR	
655	1317787-0000	-		2	CATCH	
TPA 0330SQ						
080	1260895-0000	A		1	SPRING	
450	1144486-0000	B		2	CAM	
470	1532289-0000	A		1	PUSHER	
475	1532290-0000	A		1	PUSHER	
480	1532291-0000	A		1	PLATE	
650	315103-0153	-		3	WASHER PLAIN, BRB, 6,4/12,H=1,5 NIPL BR	
910	1558821-0000	-		2	VOLUME BULGE	
920	312105-0293	-		2	SCREW M6S M4X16 A280	

Machine Type | Group Description | Used-In | Group Number | Page No

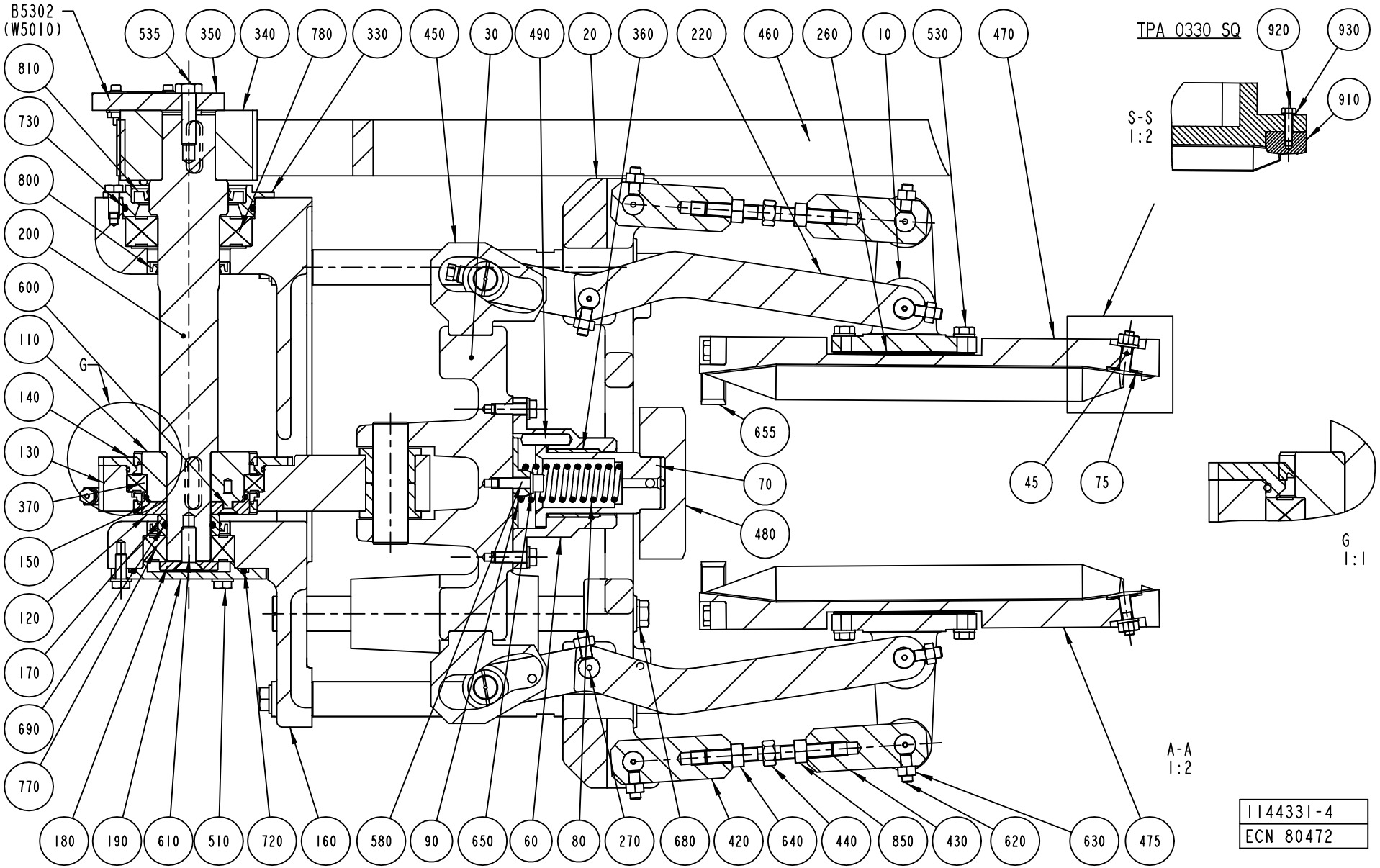
B5302
(W5010)
535
350
340
780
330
450
30
490
20
360
220
460
260
10
530
470
810
730
800
200
600
110
G
140
130
370
150
120
170
690
770
180
190
610
510
720
160
580
90
650
60
80
270
680
420
640
440
850
430
620
630
475
655
70
480
45
75
TPA 0330 SQ
920
930
910
S-S
1:2
G
1:1
A-A
1:2
1144331-4
ECN 80472

Pos	Part No	SP	UN	Qty	Description	Page No
TPA 0330SQ (Cont'd)						
930	315105-0136	-		2	WASHER PLAIN, BRB, 4,3/8,H=0,8	
TPA 1000S						
045	1350428-0000	A		2	NAIL	
075	1350429-0000	B		4	WASHER	
080	1144492-0000	A		1	SPRING	
450	1144486-0000	B		2	CAM	
470	1144936-0000	A		1	PUSHER	
475	1144996-0000	A		1	PUSHER	
480	1144484-0000	A		1	PLATE	
630	312605-0316	-		11	HEXAGON NUT, M6M M6 A280	
Common Parts						
010	1144482-0000	A		2	SUPPORT	
020	1144483-0000	A		1	PLATE	
030	1144485-0000	A		1	SUPPORT	
050	1144488-0000	A		2	COLUMN	
060	1144489-0000	A		1	FLANGE	
070	1478189-0000	A		1	SUPPORT	
090	1144493-0000	-		1	WASHER	
100	1144494-0000	A		1	AXLE PIN	
110	1144495-0000	A		1	ECCENTRIC	
120	1144496-0000	A		1	ECCENTRIC	
130	1346539-0000	A		1	CONNECTING ROD	
140	1144498-0000	-		1	FLANGE	
150	90091-0408	A		2	BEARING SEAL 70X78X5 MM	
160	1144500-0000	-		1	SUPPORT	
170	1144501-0000	-		1	SPACER	
180	1144502-0000	-		1	WASHER	
190	1144503-0000	-		1	FLANGE	
200	1349516-0000	B		1	SHAFT	
210	1144505-0000	-		4	COLUMN	
220	1144506-0000	A		2	LEVER	
230	1144507-0000	B		16	BUSHING	
240	1144508-0000	B		2	AXLE PIN	
250	1317362-0000	B		6	SHAFT	
260	1144511-0000	B		6	SHIM	
270	1317363-0000	-		2	SHAFT	
280	1144514-0000	B		2	BUSHING	
290	1144515-0000	-		4	INSERT	
300	1144517-0000	B		4	BUSHING	
310	1144520-0000	B		2	ROLLER	
320	1144521-0000	-		2	CLAMP	
330	1347018-0000	-		1	PLUG	
340	1349517-0000	A		1	TOOTHED PULLEY	
350	1349519-0000	-		1	ACTIVATOR	
360	90240-0317	A		1	BUSHING	
370	90214-0229	B		1	BALL BEARING, 65X85X10 MM	
380	90242-0271	B		1	O-RING 63,22X1,78 MM	
390	90242-0270	B		1	O-RING 82,27X1,78 MM	
410	1349518-0000	-		1	SUPPORT	
420	1144914-0000	-		2	LEVER	
430	1144915-0000	A		2	LEVER	
440	1144916-0000	B		2	ADJUSTING SCREW	
460	1348537-0000	A		1	TIMING BELT	
490	1498029-0000	-		1	PIN	
500	312105-0366	-		8	SCREW M6S M6X12 A280	
510	312105-0368	-		3	SCREW M6S M6X16 A280	
520	312105-0370	-		11	SCREW M6S M6X20 A280	
530	312105-0372	-		8	SCREW M6S M6X25 A280	
535	312105-0455	-		1	SCREW M6S M8X30 A280	
540	312105-0451	-		4	SCREW M6S 8X20 A280	
550	312105-0457	-		6	SCREW M6S M8X35 A280	
560	312109-0460	-		4	SCREW M6S M8X45 A280	
570	312115-0230	-		2	SCREW MC6S M3X20 A280	
580	312115-0370	-		1	SCREW MC6S M6X20 A280	
590	312125-0287	-		1	SCREW PAN HEAD MCS M4X8 SS	
600	312155-0327	-		6	SCREW HEX.SOCK.COUNT.MF6S M5X12 A280	
610	312155-0453	-		1	SCREW HEX.SOCK.COUNT.MF6S M8X25 A280	
620	312318-0368	-		8	SCREW SOCK.SET CUP P MSK6SS M6X16 A4	
630	312605-0316	-		9	HEXAGON NUT, M6M M6 A280	
640	312605-0318	-		2	HEXAGON NUT, M6M M8 A280	
650	315103-0153	-		5	WASHER PLAIN, BRB, 6,4/12,H=1,5 NIPL BR	
660	315105-0124	-		2	WASHER PLAIN, BRB, 3,2/6,H=0,5	
670	315105-0153	-		15	WASHER PLAIN, BRB, 6,4/12,H=1,5	
680	315105-0165	-		14	WASHER PLAIN, BRB, 8,4/16,H=1,5	
690	315202-0217	B		1	O-RING 24,2X3 MM	
720	315202-0303	B		1	O-RING 59,5X3 MM	
730	315202-0305	B		1	O-RING 69,5X3 MM	
740	315705-0267	-		2	PARALLEL KEY W. ROUND ENDS 8X7X30 MM	
750	315753-0122	-		4	RETAIN. RING, 30	
760	321129-0110	B		4	THRUST WASHER, 14/26X1,5	
770	321313-0105	B		1	BALL BEARING, 2 SEALS, 25X52X15 MM	

Machine Type Group Description Used-In Group Number Page No

See previous drawings pages: 606, 608.

Pos	Part No	SP	UN	Qty	Description	Page No
Common Parts (Cont'd)						
810	90091-0298	B		1	RADIAL SEAL 45X65X8 MM DUST LIP	
820	90091-0380	B		4	SCRAPER, EXCLUDER 20X24,8X3,7 MM	
830	90134-0058	-		14	CONNECTION	
840	90165-0056	-		1	PIPE CLIP FOR TUBE D=4 MM	
850	312902-0318	-		2	NUT HEX. LEFT THREAD, M8 A280	
880	352113-0102	-		5	CLIP-STRIP, BLACK 188X4,8 MM	
890	352113-0101	-		8	CLIP STRIP BLACK 92X2,5MM	
900	312311-0370	-		1	SCREW, SOCK.SET DOGPOINT M6X20	
B5302	90044-0194	A		1	PROX.SW. IN5329/IN3002-BPKG	

Pos	Part No	SP	UN	Qty	Description	Page No

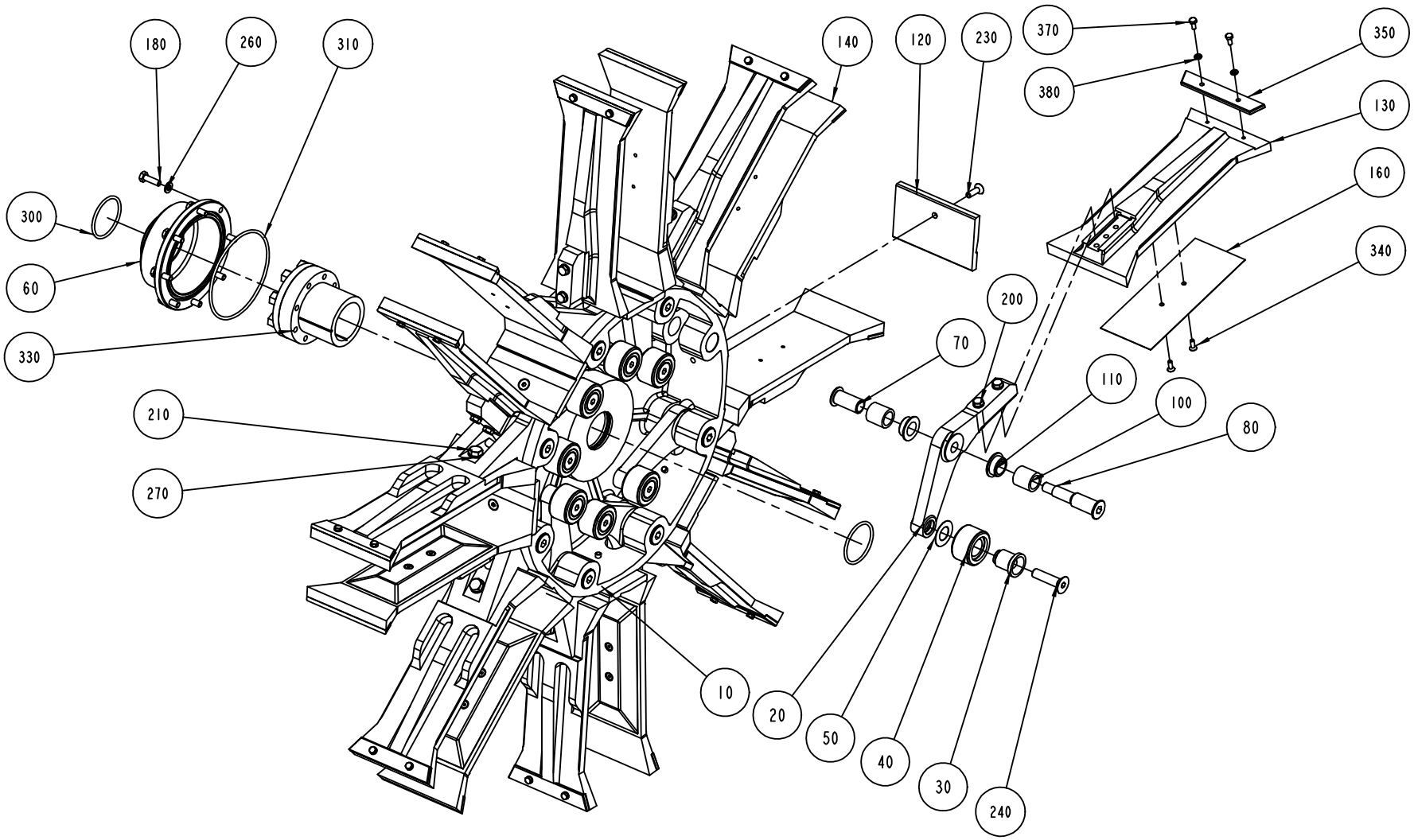

S-1361918-2
ECN 73332

Pos	Part No	SP	UN	Qty	Description	Page No
TBA 0500B						
340	312155-0287	-		16	SCREW HEX.SOCK.COUNT.MF6S M4X8 A270	
TBA/21 TBA 0200B						
130	1523094-0000	A		8	FLAP	
140	1523095-0000	A		8	FLAP	
210	312105-0453	-		8	SCREW M6S M8X25 A280	
TBA/21 TBA 0200S						
130	1260885-0000	A		8	FLAP	
140	1260886-0000	A		8	FLAP	
210	312105-0453	-		8	SCREW M6S M8X25 A280	
TBA/21 TBA 0250B						
130	1523094-0000	A		8	FLAP	
140	1523096-0000	A		8	FLAP	
210	312105-0453	-		8	SCREW M6S M8X25 A280	
TBA/21 TBA 0500B						
130	1260704-0000	A		8	FLAP	
140	1532255-0000	A		8	FLAP	
160	1558728-0000	A		8	VOLUME BULGE	
210	312105-0453	-		8	SCREW M6S M8X25 A280	
TBA/21 TBA 0500S						
130	1499141-0000	A		8	FLAP	
140	1499142-0000	A		8	FLAP	
160	1524035-0000	A		8	VOLUME BULGE	
210	312105-0453	-		8	SCREW M6S M8X25 A280	
340	312155-0289	-		16	SCREW HEX.SOCK.COUNT.MF6S M4X10 A480	
TBA/21 TBA 1000B						
120	1260703-0000	A		8	BOTTOM	
130	1260704-0000	A		8	FLAP	
140	1260705-0000	A		8	FLAP	
210	312105-0453	-		8	SCREW M6S M8X25 A280	
230	312155-0380	-		8	SCREW HEX.SOCK.COUNT.MF6S M6X50 A280	
TBA/21 TBA 1000S						
120	1144924-0000	A		8	BOTTOM	
130	1144926-0000	A		8	FLAP	
140	1144927-0000	A		8	FLAP	
210	312105-0453	-		8	SCREW M6S M8X25 A280	
230	312155-0370	-		8	SCREW HEX.SOCK.COUNT.MF6S M6X20 A280	
TBA/21 TBA 1000SQ						
120	1511558-0000	A		8	BOTTOM	
130	1487739-0000	A		8	FLAP	
140	1487738-0000	A		8	FLAP	
210	312105-0453	-		8	SCREW M6S M8X25 A280	
230	312155-0370	-		8	SCREW HEX.SOCK.COUNT.MF6S M6X20 A280	
TBA/21 TBA 1500S						
120	1317556-0000	A		8	BOTTOM	
130	1317554-0000	A		8	FLAP	
140	1317555-0000	A		8	FLAP	
210	312105-0453	-		8	SCREW M6S M8X25 A280	
230	312155-0376	-		8	SCREW HEX.SOCK.COUNT.MF6S M6X35 A280	
350	1317656-0000	B		16	INSERT	
370	312105-0289	-		32	SCREW M6S M4X10 A280	
380	315105-0136	-		32	WASHER PLAIN, BRB, 4,3/8,H=0,8	
TBA/21 TPA 0330SQ						
130	1532297-0000	A		8	FLAP	
140	1532298-0000	A		8	FLAP	
210	312105-0453	-		8	SCREW M6S M8X25 A280	
TBA/21 TPA 1000S						
120	1348623-0000	A		8	BOTTOM	
130	1282375-0000	A		8	FLAP	
140	1282376-0000	A		8	FLAP	
160	1144584-0000	A		8	VOLUME BULGE	
210	312105-0453	-		8	SCREW M6S M8X25 A280	
230	312155-0370	-		8	SCREW HEX.SOCK.COUNT.MF6S M6X20 A280	
340	312155-0289	-		16	SCREW HEX.SOCK.COUNT.MF6S M4X10 A480	
Common Parts						
010	1144264-0000	A		1	HUB	
020	1279559-0000	A		8	ARM	
030	1144312-0000	A		8	AXLE PIN	
040	1144335-0000	A		8	ROLLER	
050	1144354-0000	A		8	WASHER	
060	1144356-0000	-		1	COVER	
070	1296970-0000	A		8	SCREW BUSHING	

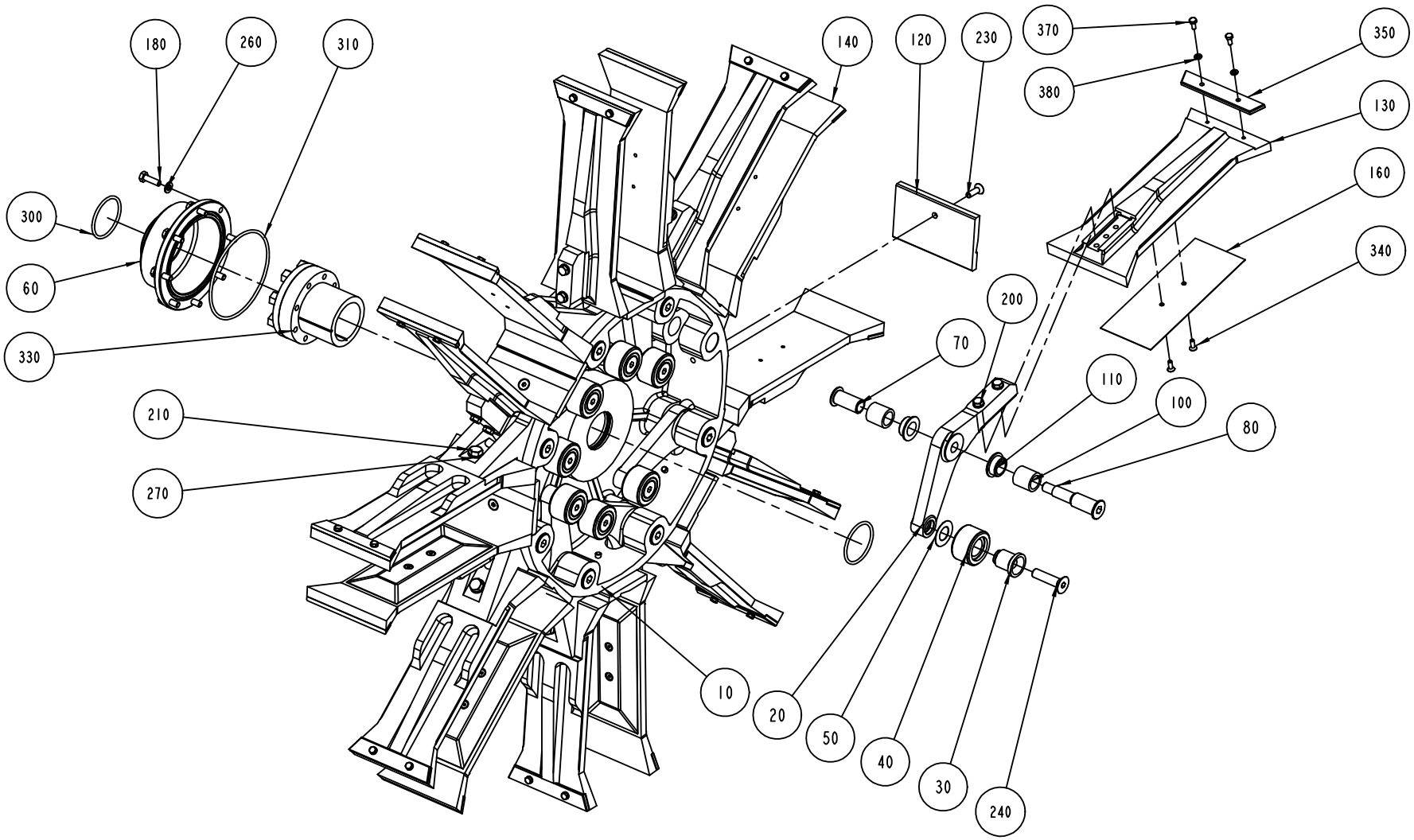

S-1361918-2
ECN 73332

Pos	Part No	SP	UN	Qty	Description	Page No
Common Parts (Cont'd)						
080	1296969-0000	A		8	SCREW HOLDER	
100	1144417-0000	A		16	BUSHING	
110	1282708-0000	A		16	BUSHING	
180	312105-0370	-		8	SCREW M6S M6X20 A280	
200	312105-0376	-		16	SCREW M6S M6S M6X35 A280	
240	312155-0499	-		8	SCREW HEX.SOCK.COUNT.MF6S M10X40 A280	
260	315105-0153	-		24	WASHER PLAIN, BRB, 6,4/12,H=1,5	
270	315105-0165	-		8	WASHER PLAIN, BRB, 8,4/16,H=1,5	
300	315202-0225	A		2	O-RING 44,2X3 MM	
310	315202-0311	A		1	O-RING 99,5X3 MM	
330	90208-0087	A		1	CLAMPING ELEMENT WITH SLEEVE, 45X59 MM	

Pos	Part No	SP	UN	Qty	Description	Page No

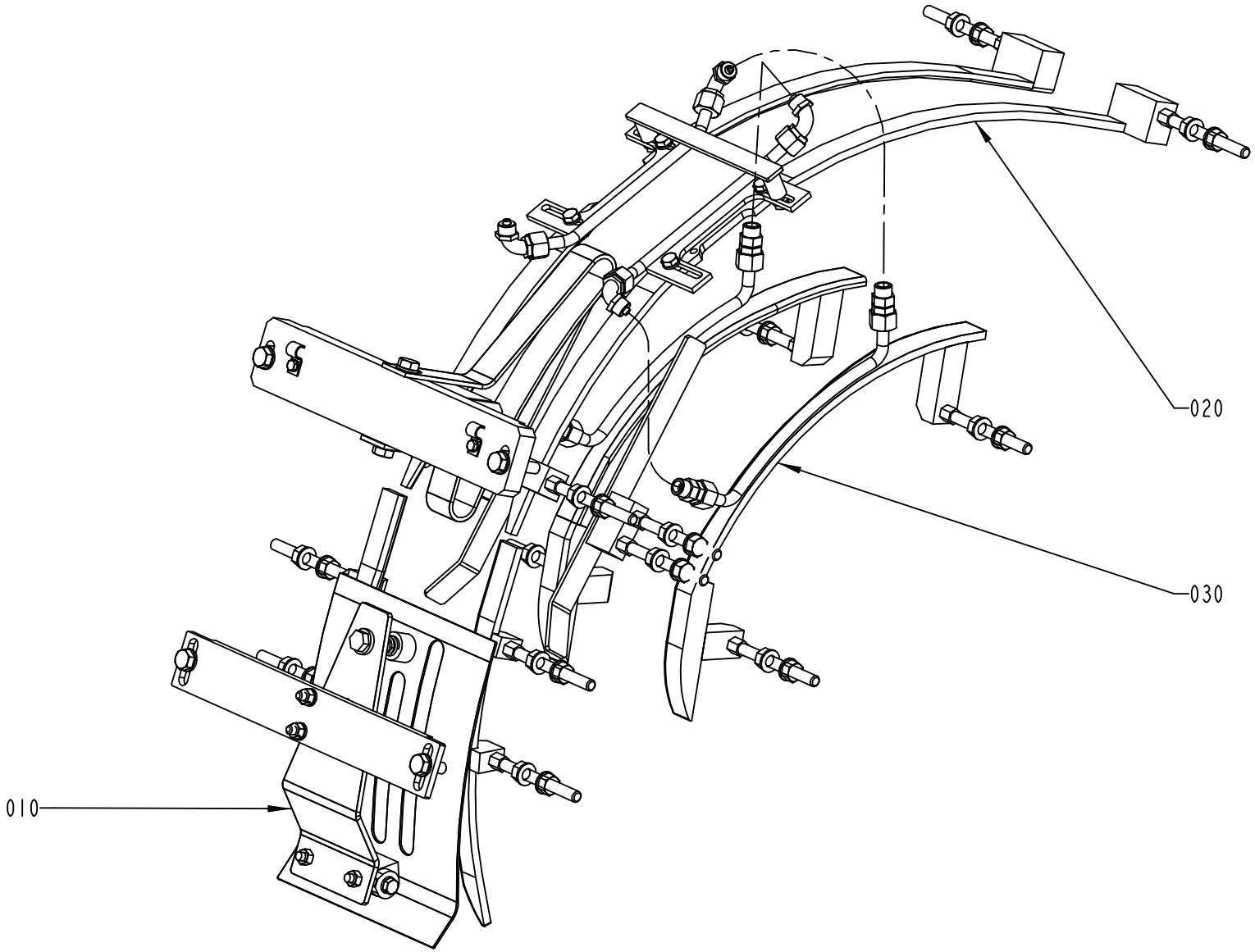

1285012-11
ECN 95038

Pos	Part No	SP	UN	Qty	Description	Page No
Common Parts						
010	A1558932-0100	-		1	TOP SECTION	**619, 621**
020	A1558935-0100	-		1	TOP RAIL	**623, 625, 627, 629**
030	A1558940-0100	-		1	FLAP GUIDE	**631, 633, 635, 637**

Pos	Part No	SP	UN	Qty	Description	Page No

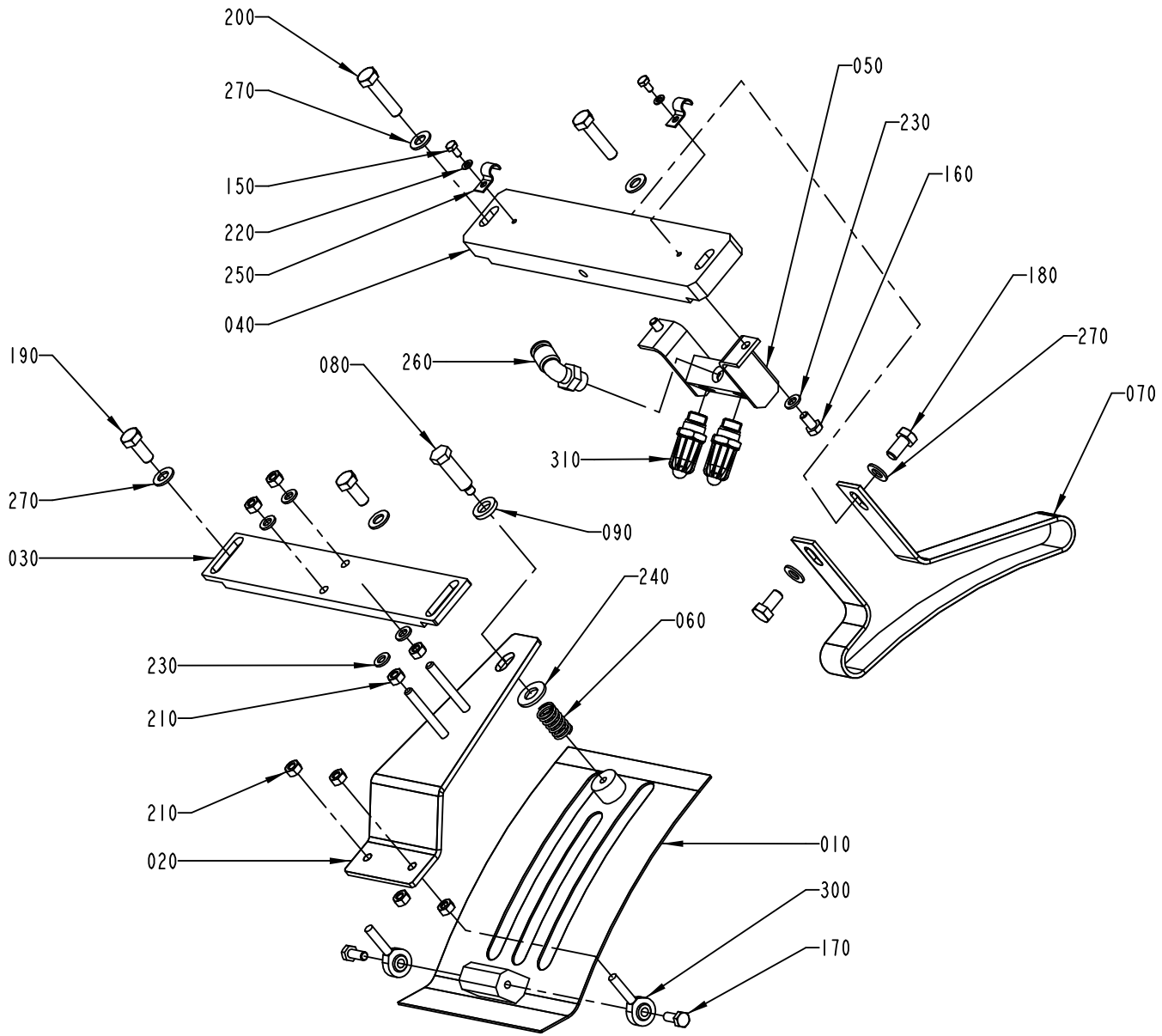

1558932-1
ECN 95038

ECM: 97536 - 20011015
Group number: 1558932-0100
Assembly Drawing: 1558932-1_1_AA

Issue: 20011217

Pos	Part No	SP	UN	Qty	Description	Page No
TBA 0200B OR TBA 0250B						
010	1317211-0000	A		1	COVERING PLATE	
020	1317213-0000	-		1	ADJUSTING PLATE	
030	1144975-0000	-		1	ATTACHMENT PLATE	
040	1144902-0000	-		1	SUPPORT	
060	1317633-0000	A		1	SPRING	
150	312105-0287	-		2	SCREW M6S M4X8 A280	
190	312105-0451	-		2	SCREW M6S 8X20 A280	
220	315105-0136	-		2	WASHER PLAIN, BRB, 4,3/8,H=0,8	
230	315105-0153	-		4	WASHER PLAIN, BRB, 6,4/12,H=1,5	
250	316810-0106	-		2	PIPE CLIP FOR TUBE D=8 MM	
270	315105-0165	-		4	WASHER PLAIN, BRB, 8,4/16,H=1,5	
TBA 0200S						
010	1317211-0000	A		1	COVERING PLATE	
020	1317213-0000	-		1	ADJUSTING PLATE	
030	1144975-0000	-		1	ATTACHMENT PLATE	
040	1144902-0000	-		1	SUPPORT	
060	1317633-0000	A		1	SPRING	
070	1144901-0000	A		1	GUIDE	
150	312105-0287	-		2	SCREW M6S M4X8 A280	
180	312105-0449	-		2	SCREW M6S M8X16 A280	
190	312105-0451	-		2	SCREW M6S 8X20 A280	
220	315105-0136	-		2	WASHER PLAIN, BRB, 4,3/8,H=0,8	
230	315105-0153	-		4	WASHER PLAIN, BRB, 6,4/12,H=1,5	
250	316810-0106	-		2	PIPE CLIP FOR TUBE D=8 MM	
270	315105-0165	-		6	WASHER PLAIN, BRB, 8,4/16,H=1,5	
TBA 0500S OR TBA 0500B OR TBA 1000S OR TBA 1000B OR TPA 1000S						
010	1144941-0000	A		1	COVERING PLATE	
020	1144974-0000	-		1	ADJUSTING PLATE	
030	1144975-0000	-		1	ATTACHMENT PLATE	
040	1144902-0000	-		1	SUPPORT	
050	1285014-0000	-		1	DISTRIBUTOR	
060	90335-0036	A		1	SPRING	
070	1144901-0000	A		1	GUIDE	
150	312105-0287	-		2	SCREW M6S M4X8 A280	
160	312105-0366	-		2	SCREW M6S M6X12 A280	
180	312105-0449	-		2	SCREW M6S M8X16 A280	
190	312105-0451	-		2	SCREW M6S 8X20 A280	
220	315105-0136	-		2	WASHER PLAIN, BRB, 4,3/8,H=0,8	
230	315105-0153	-		6	WASHER PLAIN, BRB, 6,4/12,H=1,5	
250	316810-0106	-		2	PIPE CLIP FOR TUBE D=8 MM	
260	342732-0104	-		1	ELBOW PIPE JOINT	
270	315105-0165	-		6	WASHER PLAIN, BRB, 8,4/16,H=1,5	
310	90424-0068	A		2	AIR NOZZLE, G1/4, MOD. 216 BSP	
TBA 1000SQ						
010	1144941-0000	A		1	COVERING PLATE	
020	1144974-0000	-		1	ADJUSTING PLATE	
030	1144975-0000	-		1	ATTACHMENT PLATE	
040	1144902-0000	-		1	SUPPORT	
050	1349087-0000	-		1	DISTRIBUTOR	
060	90335-0036	A		1	SPRING	
150	312105-0287	-		2	SCREW M6S M4X8 A280	
160	312105-0366	-		2	SCREW M6S M6X12 A280	
190	312105-0451	-		2	SCREW M6S 8X20 A280	
220	315105-0136	-		2	WASHER PLAIN, BRB, 4,3/8,H=0,8	
230	315105-0153	-		6	WASHER PLAIN, BRB, 6,4/12,H=1,5	
250	316810-0106	-		2	PIPE CLIP FOR TUBE D=8 MM	
260	342732-0104	-		1	ELBOW PIPE JOINT	
270	315105-0165	-		4	WASHER PLAIN, BRB, 8,4/16,H=1,5	
310	90424-0068	A		1	AIR NOZZLE, G1/4, MOD. 216 BSP	
TPA 0330SQ						
010	1317211-0000	A		1	COVERING PLATE	
020	1317213-0000	-		1	ADJUSTING PLATE	
030	1144975-0000	-		1	ATTACHMENT PLATE	
040	1144902-0000	-		1	SUPPORT	
050	1349087-0000	-		1	DISTRIBUTOR	
060	90335-0036	A		1	SPRING	
070	1558934-0000	A		1	GUIDE	
150	312105-0287	-		2	SCREW M6S M4X8 A280	
160	312105-0366	-		2	SCREW M6S M6X12 A280	
180	312105-0449	-		1	SCREW M6S M8X16 A280	
190	312105-0451	-		2	SCREW M6S 8X20 A280	
220	315105-0136	-		2	WASHER PLAIN, BRB, 4,3/8,H=0,8	
230	315105-0153	-		6	WASHER PLAIN, BRB, 6,4/12,H=1,5	
250	316810-0106	-		2	PIPE CLIP FOR TUBE D=8 MM	
260	342732-0104	-		1	ELBOW PIPE JOINT	
270	315105-0165	-		5	WASHER PLAIN, BRB, 8,4/16,H=1,5	
310	90424-0068	A		1	AIR NOZZLE, G1/4, MOD. 216 BSP	
TBA 1500S						

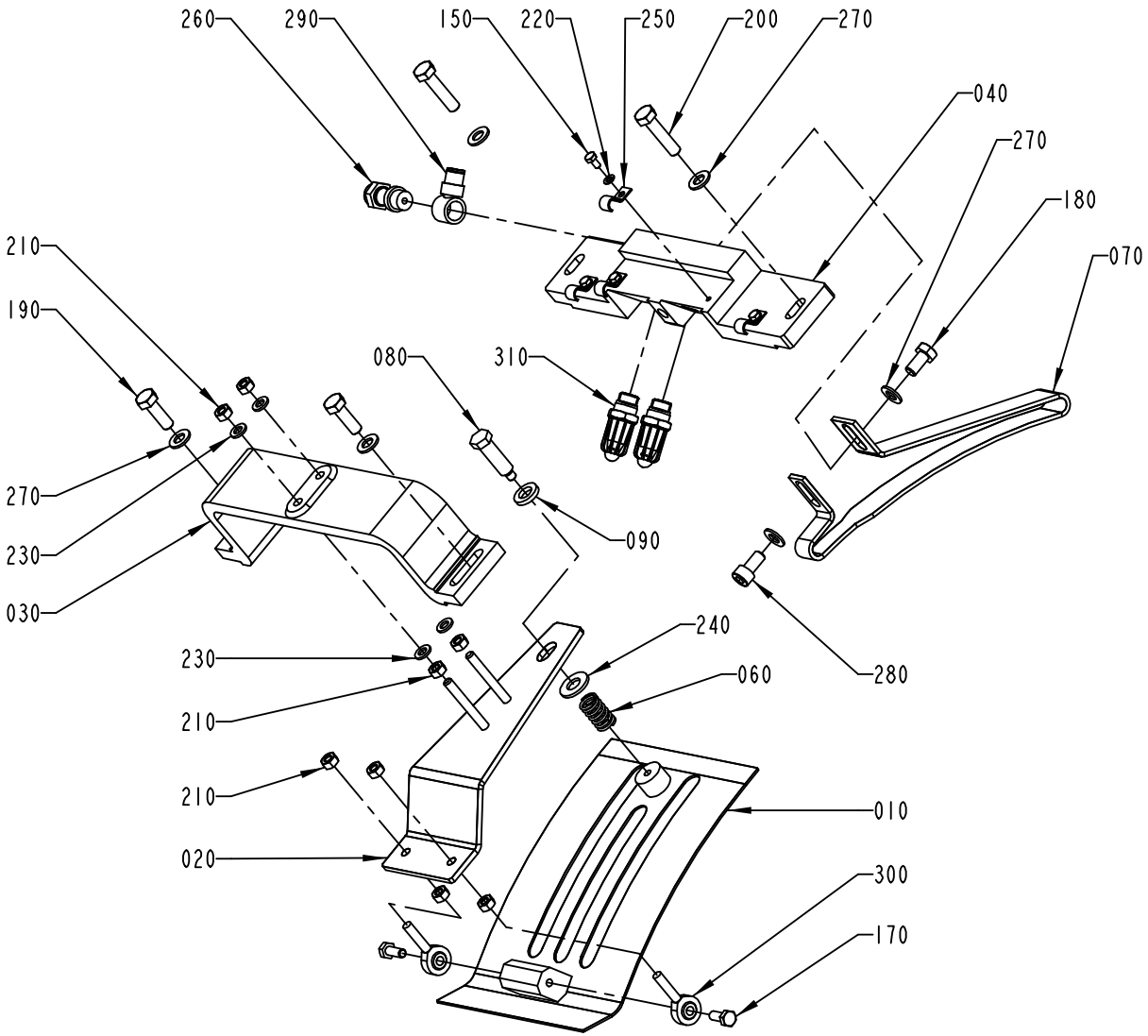

1558932-2
ECN 95038

Pos	Part No	SP	UN	Qty	Description	Page No
TBA 1500S (Cont'd)						
010	1144941-0000	A		1	COVERING PLATE	
020	1144974-0000	-		1	ADJUSTING PLATE	
030	1285299-0000	-		1	BRACKET	
040	1334480-0000	-		1	SUPPORT	
060	90335-0036	A		1	SPRING	
070	1347057-0000	A		1	GUIDE	
150	312105-0287	-		4	SCREW M6S M4X8 A280	
180	312105-0449	-		1	SCREW M6S M8X16 A280	
190	312105-0453	-		2	SCREW M6S M8X25 A280	
220	315105-0136	-		4	WASHER PLAIN, BRB, 4,3/8,H=0,8	
230	315105-0153	-		4	WASHER PLAIN, BRB, 6,4/12,H=1,5	
250	316810-0106	-		4	PIPE CLIP FOR TUBE D=8 MM	
260	90235-0731	-		1	THROTTLE CHECK VALVES,G1/4"	
270	315105-0165	-		6	WASHER PLAIN, BRB, 8,4/16,H=1,5	
280	312115-0449	-		1	SCREW MC6S M8X16 A280	
290	342981-0122	-		1	BANJO CONNEC,RING,FOR PLAST.TUBE 8-G1/4"	
310	90424-0068	A		2	AIR NOZZLE, G1/4, MOD. 216 BSP	
Common Parts						
080	1144976-0000	-		1	STOP SCREW	
090	1144979-0000	-		1	WASHER	
170	312105-0368	-		2	SCREW M6S M6X16 A280	
200	312105-0457	-		2	SCREW M6S M8X35 A280	
210	312605-0316	-		8	HEXAGON NUT, M6M M6 A280	
240	315105-0173	-		1	WASHER PLAIN, BRB, 10,5/22,H=2	
300	90115-0137	A		2	ROD END, ID=6 MM, M6X1	

Pos	Part No	SP	UN	Qty	Description	Page No

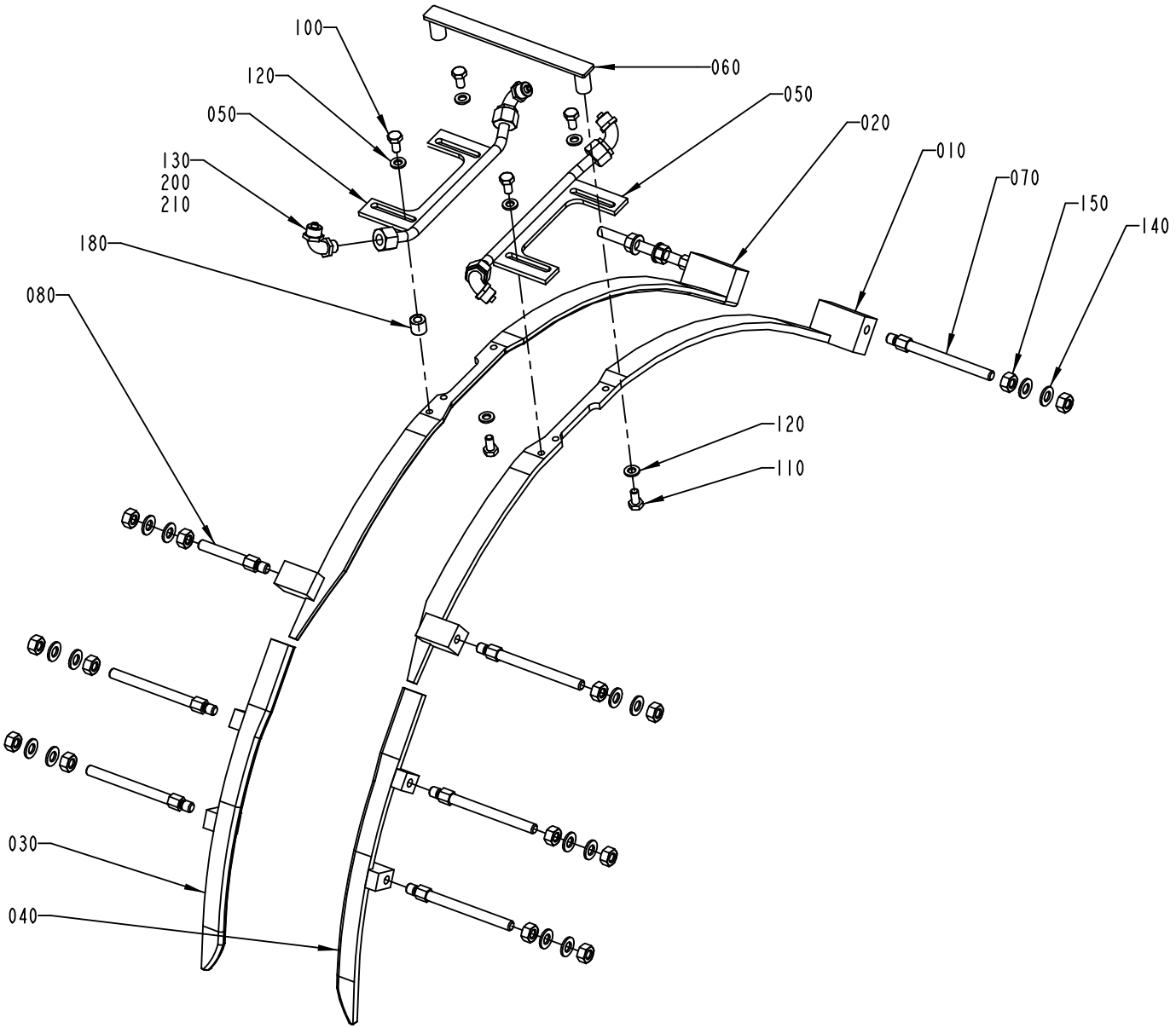

1558935-1
ECN 95038

ECM: 97537 - 20011015
Group number: 1558935-0100
Assembly Drawing: 1558935-1_1_AA

Issue: 20011217

Pos	Part No	SP	UN	Qty	Description	Page No
TBA 0200B OR TBA 0200S OR TBA 0250B						
010	1478926-0000	A		1	GUIDE RIGHT	
020	1478927-0000	A		1	GUIDE LEFT	
030	1334013-0000	A		1	GUIDE UPPER R	
040	1334012-0000	A		1	GUIDE UPPER L	
060	1346340-0000	-		1	BRACKET	
070	1144555-0000	-		7	STUD SCREW	
080	1334523-0000	-		1	SUPPORT	
100	312105-0366	-		4	SCREW M6S M6X12 A280	
140	315105-0165	-		16	WASHER PLAIN, BRB, 8,4/16,H=1,5	
150	312605-0318	-		16	HEXAGON NUT, M6M M8 A280	
TBA 0500B						
010	1144892-0000	A		1	GUIDE RIGHT	
020	1144893-0000	A		1	GUIDE LEFT	
030	1539900-0000	A		1	RIGHT UPPER GUIDE	
040	1549614-0000	A		1	LEFT UPPER GUIDE	
060	1144905-0000	-		1	SUPPORT	
090	1539871-0000	-		4	SPACER	
095	1334447-0000	-		4	SPACER	
140	315105-0165	-		8	WASHER PLAIN, BRB, 8,4/16,H=1,5	
160	312105-0465	-		8	SCREW M6S M8X70 A280	
TBA 0500S						
010	1144892-0000	A		1	GUIDE RIGHT	
020	1144893-0000	A		1	GUIDE LEFT	
030	1260709-0000	A		1	GUIDE UPPER R	
040	1260710-0000	A		1	GUIDE UPPER L	
060	1144905-0000	-		1	SUPPORT	
090	1499071-0000	-		4	SPACER	
095	1523498-0000	-		4	SPACER	
100	312105-0366	-		4	SCREW M6S M6X12 A280	
140	315105-0165	-		8	WASHER PLAIN, BRB, 8,4/16,H=1,5	
160	312105-0466	-		8	SCREW M6S M8X75 A280	
TBA 1000S OR TBA 1000B						
010	1144892-0000	A		1	GUIDE RIGHT	
020	1144893-0000	A		1	GUIDE LEFT	
030	1260709-0000	A		1	GUIDE UPPER R	
040	1260710-0000	A		1	GUIDE UPPER L	
060	1144905-0000	-		1	SUPPORT	
070	1144555-0000	-		7	STUD SCREW	
080	1350721-0000	-		1	STUD SCREW	
100	312105-0366	-		4	SCREW M6S M6X12 A280	
140	315105-0165	-		16	WASHER PLAIN, BRB, 8,4/16,H=1,5	
150	312605-0318	-		16	HEXAGON NUT, M6M M8 A280	
TBA 1000SQ						
010	1144892-0000	A		1	GUIDE RIGHT	
020	1144893-0000	A		1	GUIDE LEFT	
030	1549411-0000	A		1	PACKAGE GUIDE	
040	1549406-0000	A		1	PACKAGE GUIDE	
060	1498161-0000	-		1	SUPPORT	
090	1499071-0000	-		8	SPACER	
100	312105-0366	-		4	SCREW M6S M6X12 A280	
140	315105-0165	-		8	WASHER PLAIN, BRB, 8,4/16,H=1,5	
160	312105-0466	-		8	SCREW M6S M8X75 A280	
TBA 1500S						
010	1350424-0000	A		1	GUIDE RIGHT	
020	1350425-0000	A		1	GUIDE LEFT	
030	1334559-0000	A		1	GUIDE UPPER R	
040	1334560-0000	A		1	GUIDE UPPER L	
060	1285267-0000	-		1	SUPPORT	
090	1317088-0000	-		4	SPACER	
095	1348041-0000	-		2	SPACER	
098	1317088-0000	-		2	SPACER	
100	312105-0368	-		4	SCREW M6S M6X16 A280	
140	315105-0165	-		8	WASHER PLAIN, BRB, 8,4/16,H=1,5	
160	312105-0465	-		4	SCREW M6S M8X70 A280	
165	312105-0465	-		2	SCREW M6S M8X70 A280	
170	312105-0467	-		2	SCREW M6S M8X80 A280	
180	1282705-0000	-		4	SUPPORT	
TPA TPA 0330SQ						
010	1144892-0000	A		1	GUIDE RIGHT	
020	1144893-0000	A		1	GUIDE LEFT	
030	1539900-0000	A		1	RIGHT UPPER GUIDE	
040	1549614-0000	A		1	LEFT UPPER GUIDE	
060	1346340-0000	-		1	BRACKET	
090	1558735-0000	-		4	SPACER	
095	1558736-0000	-		2	SPACER	
098	1558910-0000	-		2	SPACER	
100	312105-0366	-		4	SCREW M6S M6X12 A280	

Machine Type Group Description Used-In Group Number Page No

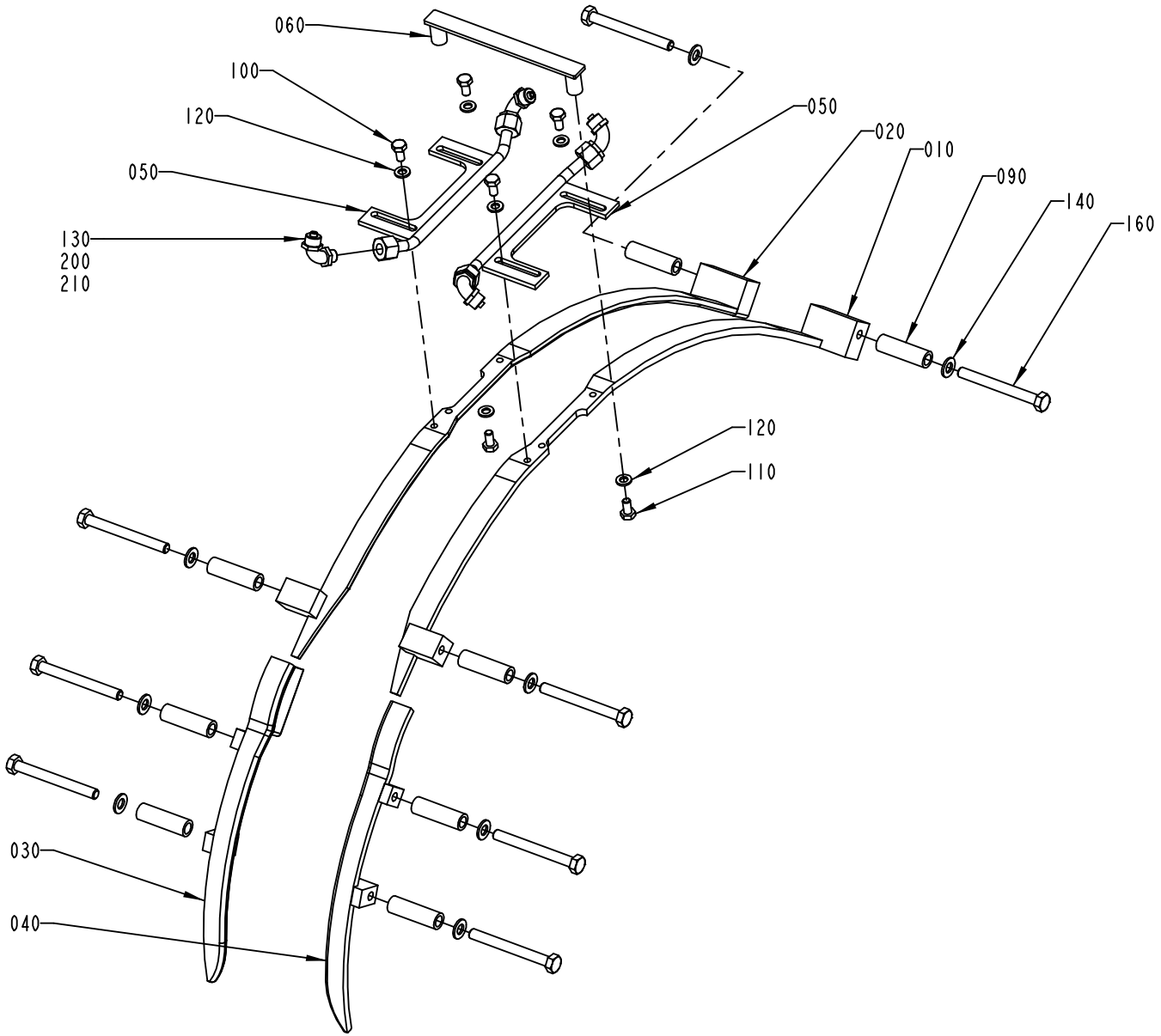

1558935-2
ECN 95038

Pos	Part No	SP	UN	Qty	Description	Page No
TPA 0330SQ (Cont'd)						
140	315105-0165	-		8	WASHER PLAIN, BRB, 8,4/16,H=1,5	
160	312105-0469	-		4	SCREW M6S M8X90 A280	
165	312105-0467	-		2	SCREW M6S M8X80 A280	
170	312105-0469	-		2	SCREW M6S M8X90 A280	
TPA 1000S						
010	1144892-0000	A		1	GUIDE RIGHT	
020	1144893-0000	A		1	GUIDE LEFT	
030	1260709-0000	A		1	GUIDE UPPER R	
040	1260710-0000	A		1	GUIDE UPPER L	
060	1144905-0000	-		1	SUPPORT	
090	1317088-0000	-		8	SPACER	
100	312105-0366	-		4	SCREW M6S M6X12 A280	
140	315105-0165	-		8	WASHER PLAIN, BRB, 8,4/16,H=1,5	
160	312105-0465	-		8	SCREW M6S M8X70 A280	
Common Parts						
050	1350423-0000	-		2	FOLDING BAR	
110	312105-0366	-		2	SCREW M6S M6X12 A280	
120	315105-0153	-		6	WASHER PLAIN, BRB, 6,4/12,H=1,5	
130	342931-0121	-		4	ELBOW 90 COUPL.,EXT.THREAD 8/6-G1/8"	
200	90166-0118	-	MM	1500	TUBE 8 MM PA BLACK	
210	352113-0102	-		10	CLIP-STRIP, BLACK 188X4,8 MM	

Pos	Part No	SP	UN	Qty	Description	Page No

Machine Type | Group Description | Used-In | Group Number | Page No

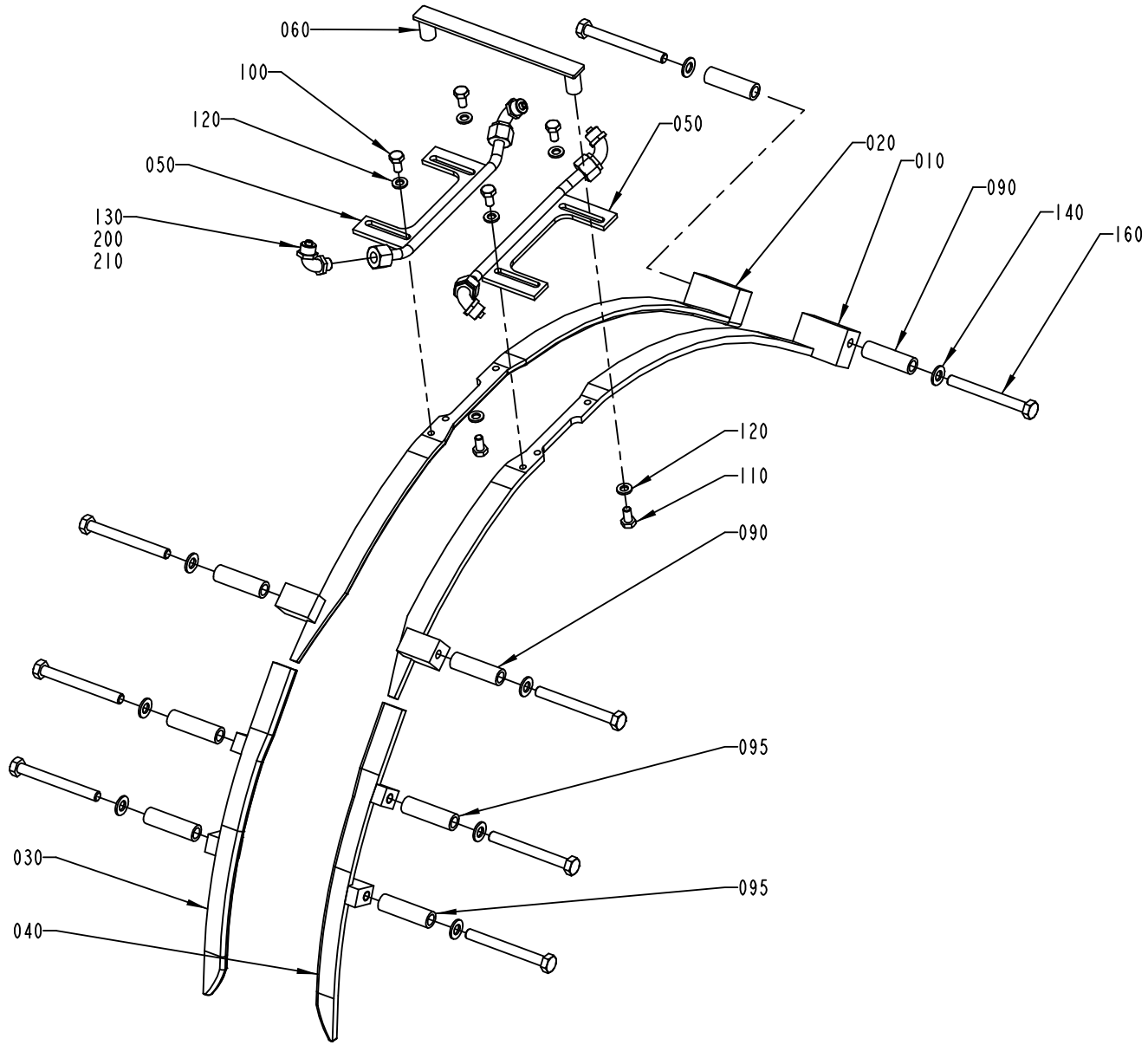

1558935-3
ECN 95038

Pos	Part No	SP	UN	Qty	Description	Page No

SEE PREVIOUS LISTS PAGES: 623, 625.

Pos	Part No	SP	UN	Qty	Description	Page No

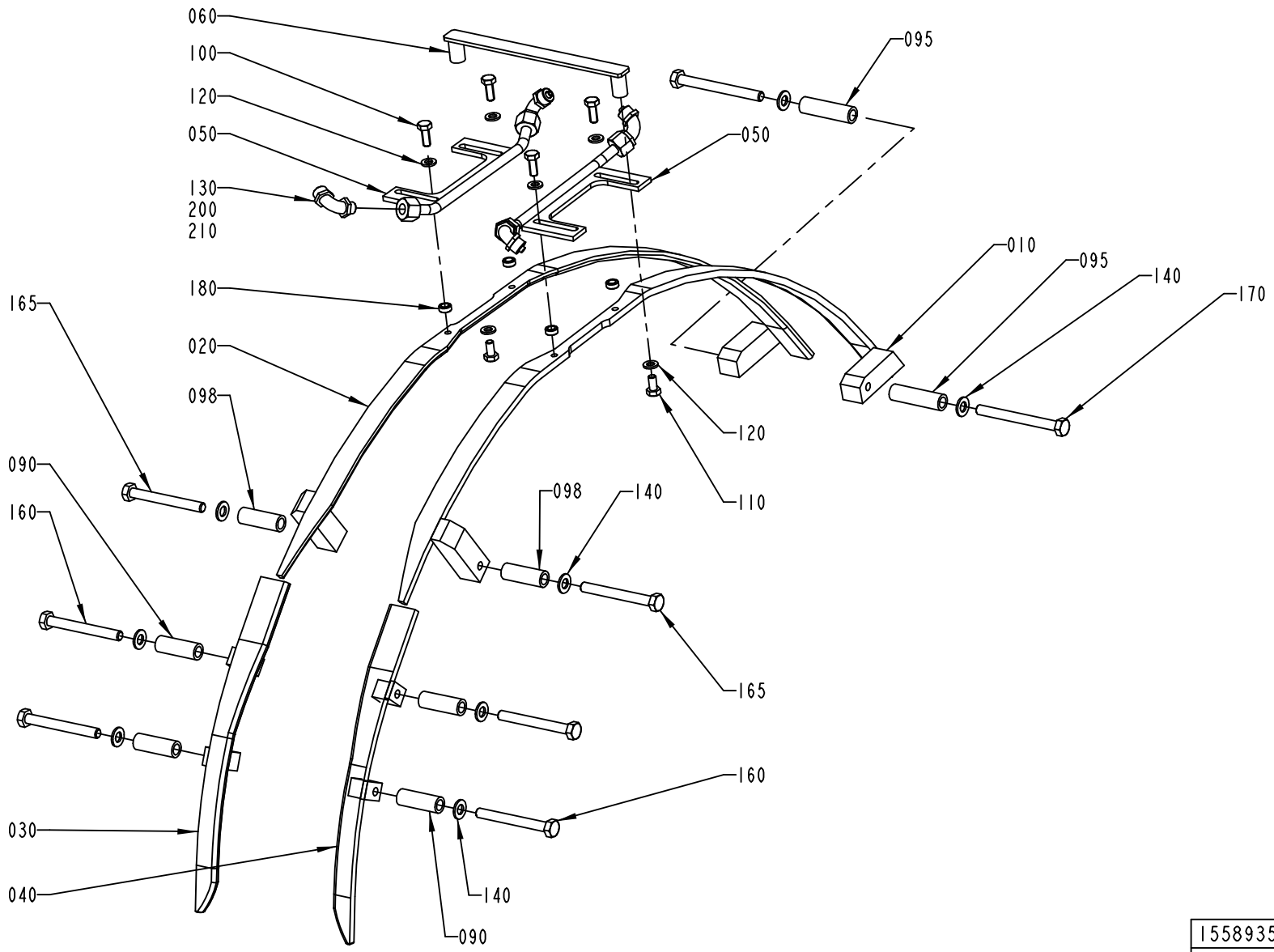

1558935-4
ECN 95038

Pos	Part No	SP	UN	Qty	Description	Page No	Pos	Part No	SP	UN	Qty	Description	Page No

SEE PREVIOUS LISTS PAGES: 623, 625.

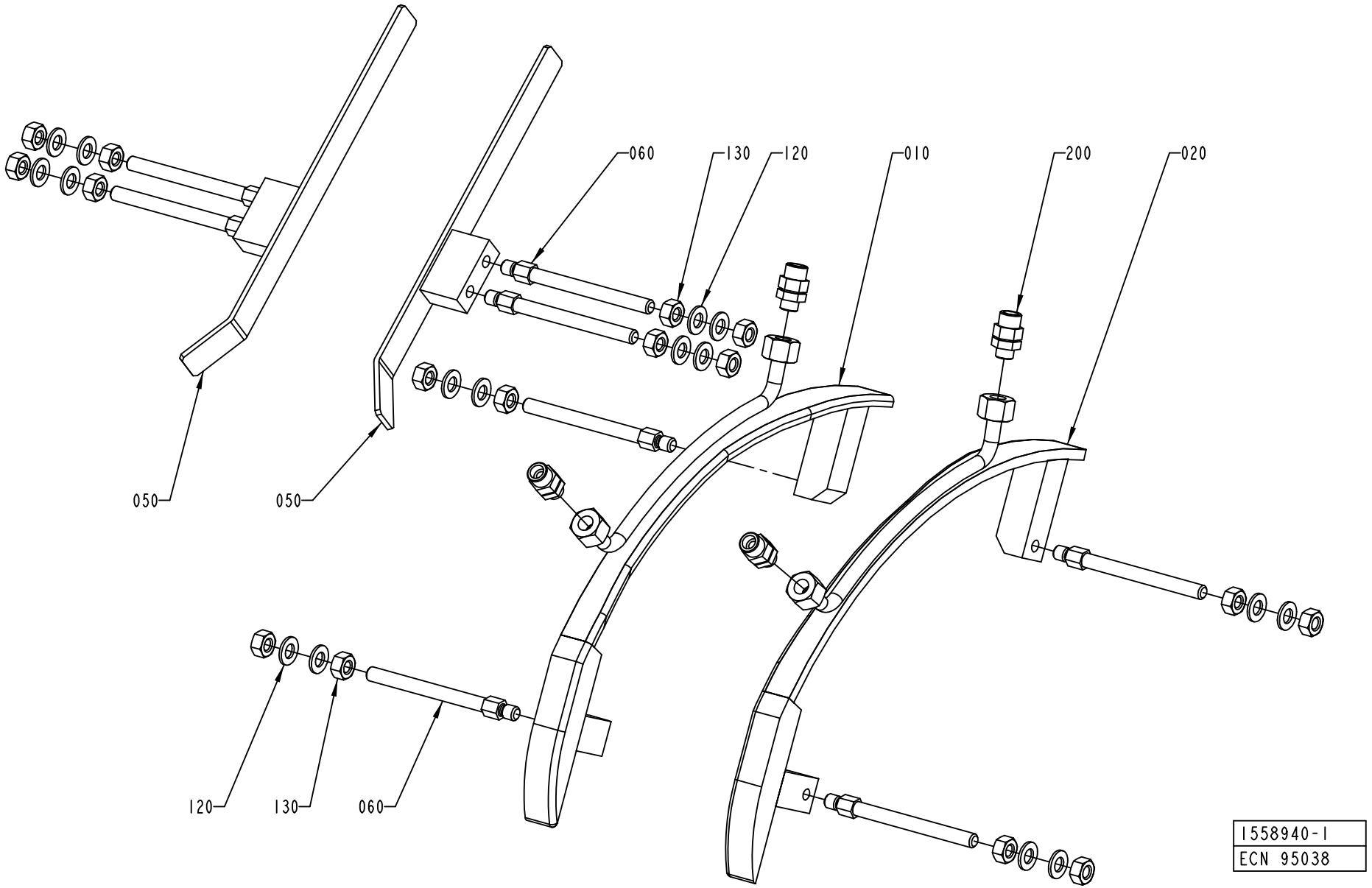
060
130
120
010
200
020
050
050
120
130
060
1558940-1
ECN 95038

ECM: 97538 - 20011015
Group number: 1558940-0100
Assembly Drawing: 1558940-1_1_AA

Issue: 20011217

Pos	Part No	SP	UN	Qty	Description	Page No
TBA 0200B						
010	1346149-0000	A		1	FOLDING BAR	
020	1346150-0000	A		1	FOLDING BAR	
040	1346343-0000	-		1	RAIL	
050	1346344-0000	-		1	RAIL	
060	1144555-0000	-		7	STUD SCREW	
065	1350721-0000	-		1	STUD SCREW	
070	1144990-0000	-		2	FOLDING BAR	
120	315105-0165	-		16	WASHER PLAIN, BRB, 8,4/16,H=1,5	
130	312605-0318	-		16	HEXAGON NUT, M6M M8 A280	
140	315105-0153	-		4	WASHER PLAIN, BRB, 6,4/12,H=1,5	
150	312105-0364	-		4	SCREW M6S M6X10 A280	
200	342931-0121	-		4	ELBOW 90 COUPL.,EXT.THREAD 8/6-G1/8"	
TBA 0200S						
010	1282294-0000	A		1	FOLDING BAR	
020	1282295-0000	A		1	FOLDING BAR	
040	1346343-0000	-		1	RAIL	
050	1346344-0000	-		1	RAIL	
060	1144555-0000	-		7	STUD SCREW	
065	1350721-0000	-		1	STUD SCREW	
070	1144990-0000	-		2	FOLDING BAR	
120	315105-0165	-		16	WASHER PLAIN, BRB, 8,4/16,H=1,5	
130	312605-0318	-		16	HEXAGON NUT, M6M M8 A280	
140	315105-0153	-		4	WASHER PLAIN, BRB, 6,4/12,H=1,5	
150	312105-0364	-		4	SCREW M6S M6X10 A280	
200	342931-0121	-		4	ELBOW 90 COUPL.,EXT.THREAD 8/6-G1/8"	
TBA 0250B						
010	1317217-0000	A		1	FOLDING BAR	
020	1317216-0000	A		1	FOLDING BAR	
040	1346343-0000	-		1	RAIL	
050	1346344-0000	-		1	RAIL	
060	1144555-0000	-		7	STUD SCREW	
065	1350721-0000	-		1	STUD SCREW	
070	1144990-0000	-		2	FOLDING BAR	
120	315105-0165	-		16	WASHER PLAIN, BRB, 8,4/16,H=1,5	
130	312605-0318	-		16	HEXAGON NUT, M6M M8 A280	
140	315105-0153	-		4	WASHER PLAIN, BRB, 6,4/12,H=1,5	
150	312105-0364	-		4	SCREW M6S M6X10 A280	
200	342931-0121	-		4	ELBOW 90 COUPL.,EXT.THREAD 8/6-G1/8"	
TBA 0500B						
010	1539881-0000	A		1	FOLDING BAR	
020	1539882-0000	A		1	FOLDING BAR	
040	1346343-0000	-		1	RAIL	
050	1346344-0000	-		1	RAIL	
060	1558713-0000	-		2	SPACER SCREW	
080	1539873-0000	-		4	SPACER	
090	1539871-0000	-		2	SPACER	
110	312109-0461	-		4	SCREW M6S M8X50 A280	
120	315105-0165	-		8	WASHER PLAIN, BRB, 8,4/16,H=1,5	
130	312605-0318	-		2	HEXAGON NUT, M6M M8 A280	
180	312105-0464	-		2	SCREW M6S M8X65 A280	
200	342921-0121	-		4	STRAIGHT COUPLING,EXT.THREADED 8/6-G1/8"	
TBA 0500S						
010	1519770-0000	A		1	FOLDING BAR	
020	1519769-0000	A		1	FOLDING BAR	
030	1317043-0000	-		2	SUPPORT	
040	1499150-0000	-		1	RAIL	
050	1499151-0000	-		1	RAIL	
060	1499402-0000	-		2	SPACER	
080	1499072-0000	-		4	SPACER	
090	1499071-0000	-		2	SPACER	
100	312109-0457	-		4	SCREW M6S M8X35 A280	
110	312105-0463	-		4	SCREW M6S M8X60 A280	
120	315105-0165	-		12	WASHER PLAIN, BRB, 8,4/16,H=1,5	
130	312605-0318	-		2	HEXAGON NUT, M6M M8 A280	
180	312105-0466	-		2	SCREW M6S M8X75 A280	
200	342921-0121	-		4	STRAIGHT COUPLING,EXT.THREADED 8/6-G1/8"	
TBA 1000B						
010	1260707-0000	A		1	FOLDING BAR	
020	1260708-0000	A		1	FOLDING BAR	
050	1144719-0000	-		2	RAIL	
060	1144555-0000	-		8	STUD SCREW	
120	315105-0165	-		16	WASHER PLAIN, BRB, 8,4/16,H=1,5	
130	312605-0318	-		16	HEXAGON NUT, M6M M8 A280	
200	342921-0121	-		4	STRAIGHT COUPLING,EXT.THREADED 8/6-G1/8"	
TBA 1000S						
010	1144897-0000	A		1	FOLDING BAR	
020	1144898-0000	A		1	FOLDING BAR	

Machine Type | Group Description | Used-In | Group Number | Page No

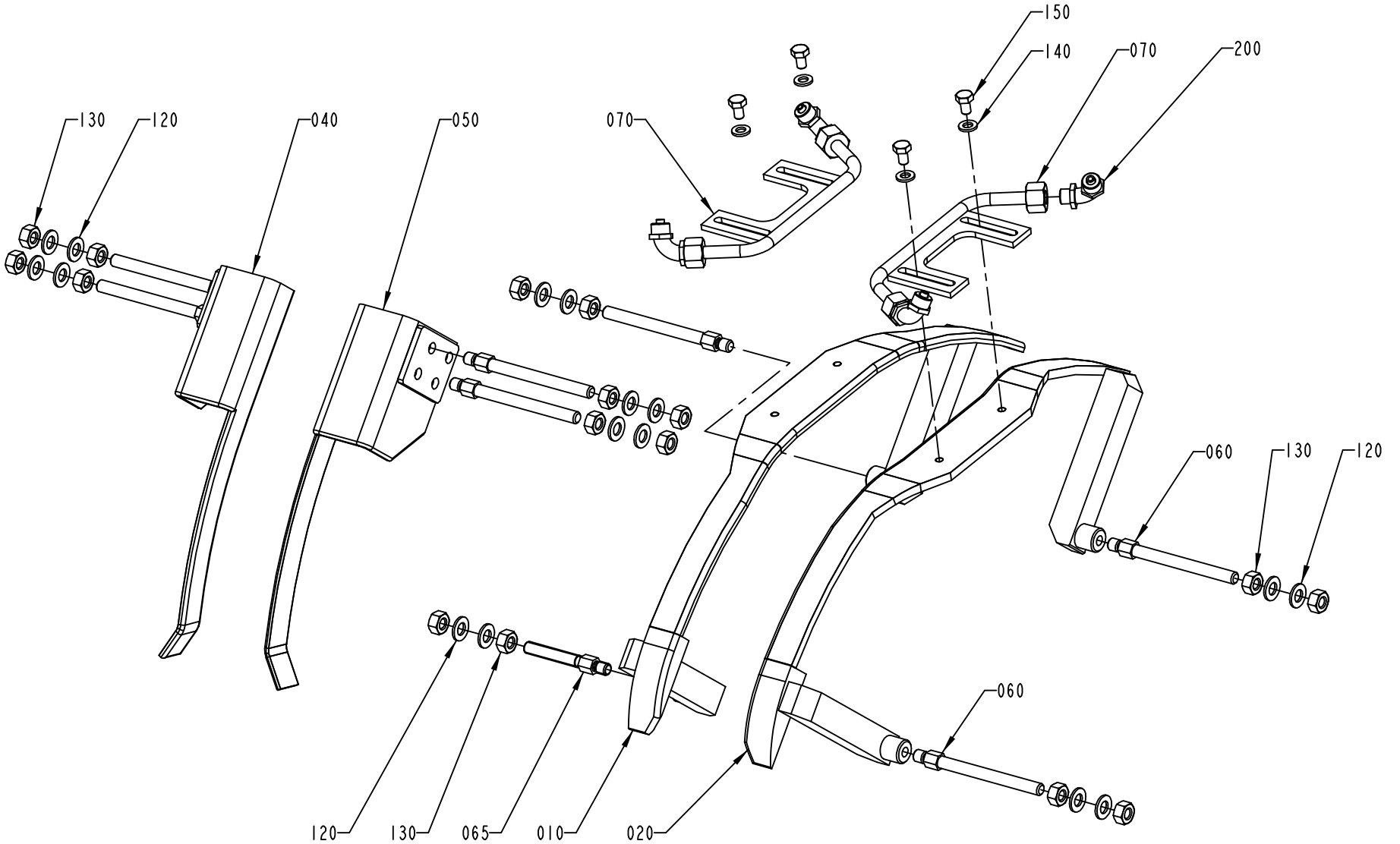

1558940-3
ECN 95038

Pos	Part No	SP	UN	Qty	Description	Page No
TBA 1000S (Cont'd)						
050	1144719-0000	-		2	RAIL	
060	1144555-0000	-		8	STUD SCREW	
120	315105-0165	-		16	WASHER PLAIN, BRB, 8,4/16,H=1,5	
130	312605-0318	-		16	HEXAGON NUT, M6M M8 A280	
200	342921-0121	-		4	STRAIGHT COUPLING,EXT.THREADED 8/6-G1/8"	
TBA 1000SQ						
010	1498827-0000	A		1	FOLDING BAR	
020	1498828-0000	A		1	FOLDING BAR	
030	1317043-0000	-		2	SUPPORT	
040	1317042-0000	-		1	RAIL	
050	1317047-0000	-		1	RAIL	
060	1499094-0000	-		2	SPACER SCREW	
080	1499072-0000	-		4	SPACER	
090	1499071-0000	-		2	SPACER	
100	312109-0457	-		4	SCREW M6S M8X35 A280	
110	312105-0463	-		4	SCREW M6S M8X60 A280	
120	315105-0165	-		14	WASHER PLAIN, BRB, 8,4/16,H=1,5	
130	312605-0318	-		2	HEXAGON NUT, M6M M8 A280	
160	312155-0459	-		2	SCREW HEX.SOCK.COUNT.MF6S M8X40 A280	
170	312105-0451	-		2	SCREW M6S 8X20 A280	
180	312105-0466	-		2	SCREW M6S M8X75 A280	
200	342931-0121	-		4	ELBOW 90 COUPL.,EXT.THREAD 8/6-G1/8"	
TBA 1500S						
010	1317653-0000	A		1	FOLDING BAR	
020	1317652-0000	A		1	FOLDING BAR	
030	1317043-0000	-		2	SUPPORT	
040	1317042-0000	-		1	RAIL	
050	1317047-0000	-		1	RAIL	
060	1348042-0000	-		2	SPACER	
080	1334718-0000	-		4	SPACER	
090	1317088-0000	-		2	SPACER	
100	312109-0457	-		4	SCREW M6S M8X35 A280	
110	312109-0461	-		4	SCREW M6S M8X50 A280	
120	315105-0165	-		12	WASHER PLAIN, BRB, 8,4/16,H=1,5	
130	312605-0318	-		2	HEXAGON NUT, M6M M8 A280	
180	312105-0465	-		2	SCREW M6S M8X70 A280	
200	342931-0121	-		4	ELBOW 90 COUPL.,EXT.THREAD 8/6-G1/8"	
TPA 0330SQ						
010	1532275-0000	A		1	FOLDING BAR	
020	1532276-0000	A		1	FOLDING BAR	
030	1317043-0000	-		2	SUPPORT	
040	1532281-0000	-		1	RAIL	
050	1532280-0000	-		1	RAIL	
060	1499094-0000	-		2	SPACER SCREW	
080	1499072-0000	-		4	SPACER	
090	1558735-0000	-		2	SPACER	
100	312109-0457	-		4	SCREW M6S M8X35 A280	
110	312105-0463	-		4	SCREW M6S M8X60 A280	
120	315105-0165	-		14	WASHER PLAIN, BRB, 8,4/16,H=1,5	
130	312605-0318	-		2	HEXAGON NUT, M6M M8 A280	
160	312155-0459	-		2	SCREW HEX.SOCK.COUNT.MF6S M8X40 A280	
170	312105-0453	-		2	SCREW M6S M8X25 A280	
180	312105-0469	-		2	SCREW M6S M8X90 A280	
200	342921-0121	-		4	STRAIGHT COUPLING,EXT.THREADED 8/6-G1/8"	
TPA 1000S						
010	1296965-0000	A		1	FOLDING BAR	
020	1347637-0000	A		1	FOLDING BAR	
030	1317043-0000	-		2	SUPPORT	
040	1317042-0000	-		1	RAIL	
050	1317047-0000	-		1	RAIL	
060	1511527-0000	-		2	SPACER SCREW	
080	1334438-0000	-		4	SPACER	
090	1317088-0000	-		2	SPACER	
110	312109-0461	-		4	SCREW M6S M8X50 A280	
120	315105-0165	-		14	WASHER PLAIN, BRB, 8,4/16,H=1,5	
130	312605-0318	-		2	HEXAGON NUT, M6M M8 A280	
160	312155-0459	-		2	SCREW HEX.SOCK.COUNT.MF6S M8X40 A280	
170	312105-0451	-		2	SCREW M6S 8X20 A280	
180	312105-0465	-		2	SCREW M6S M8X70 A280	
200	342921-0121	-		4	STRAIGHT COUPLING,EXT.THREADED 8/6-G1/8"	

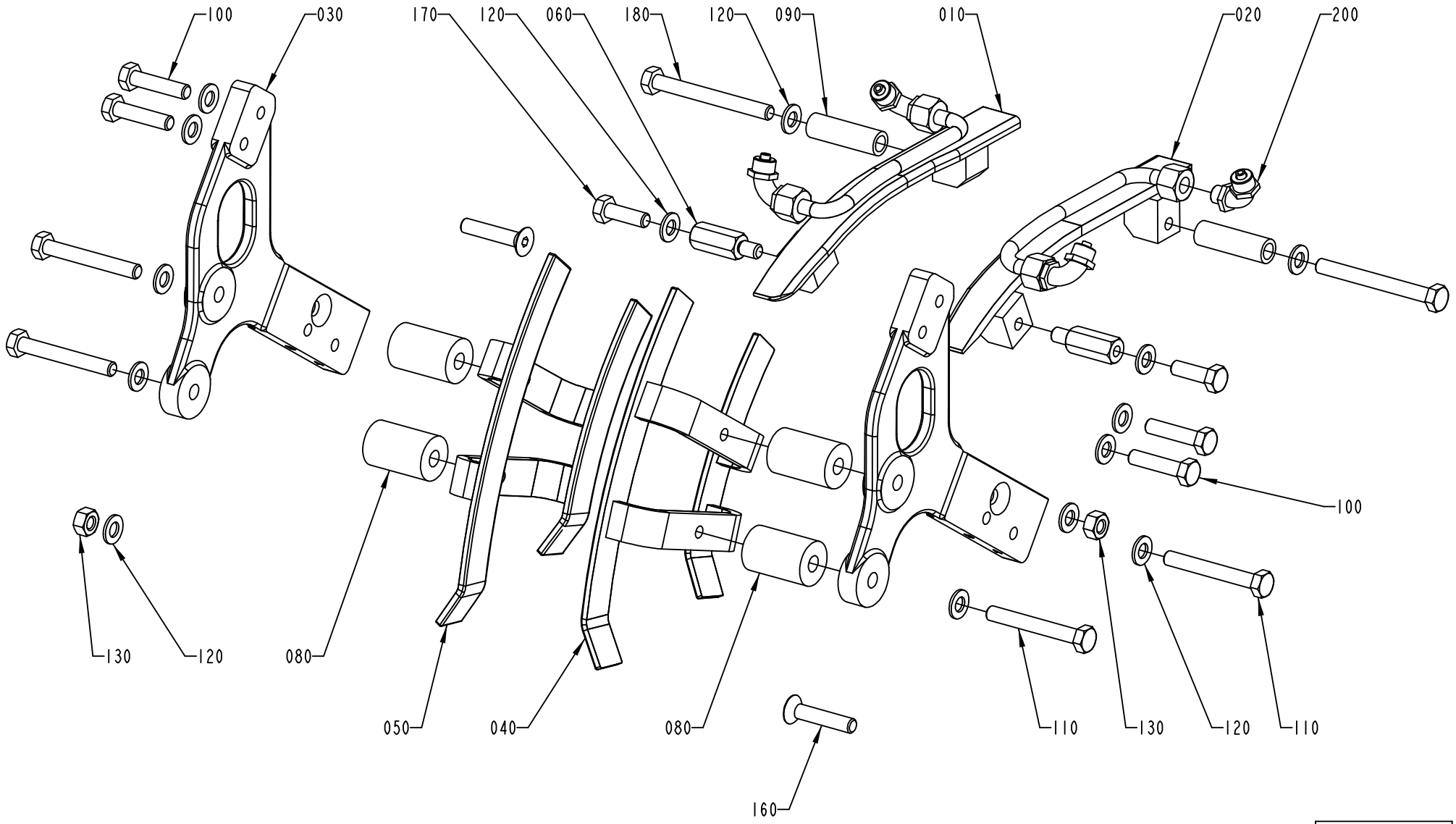

1558940-4
ECN 95038

Pos	Part No	SP	UN	Qty	Description	Page No

SEE PREVIOUS LISTS PAGES: 631, 633.

Pos	Part No	SP	UN	Qty	Description	Page No

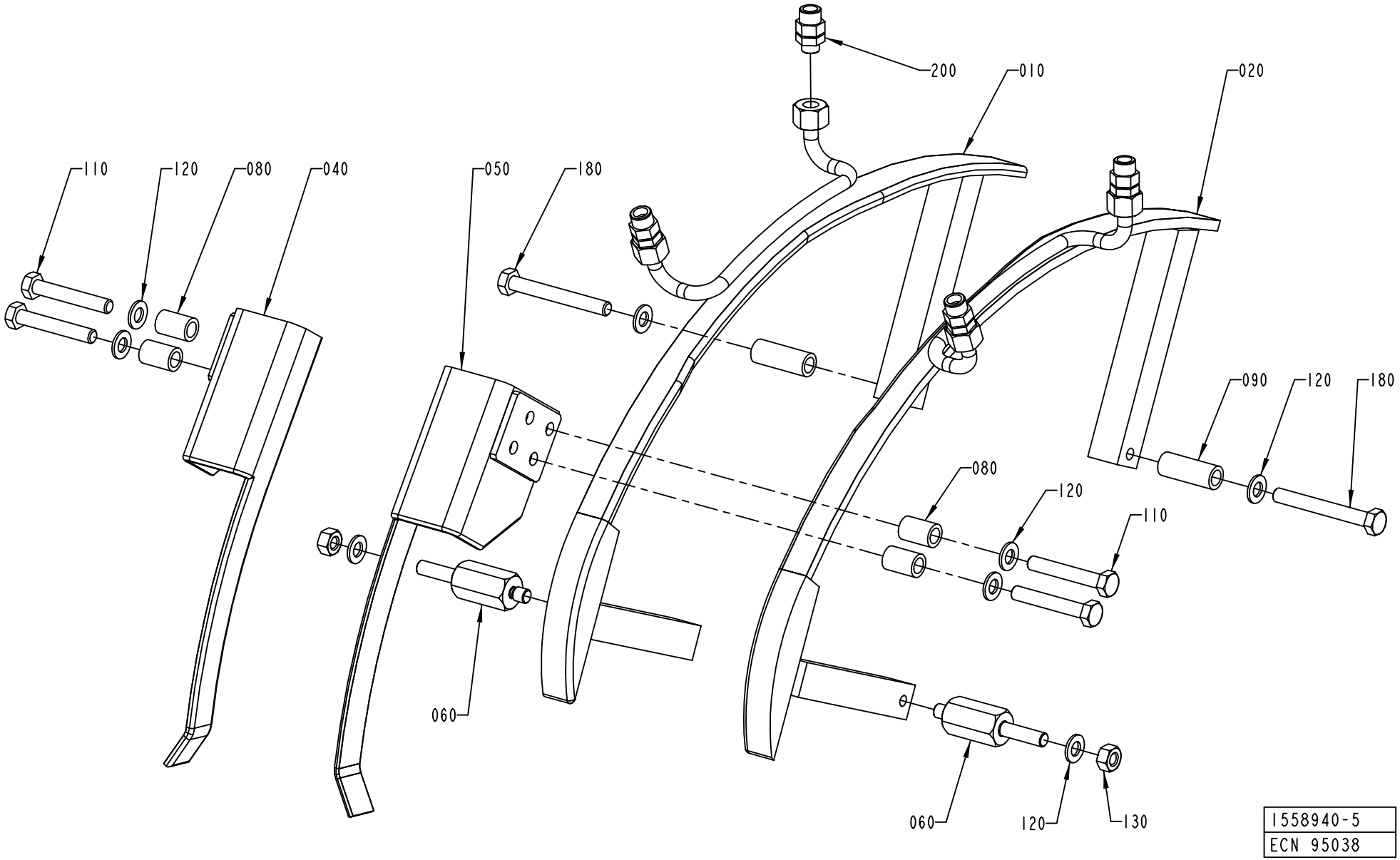
200
010
020
110
120
080
040
050
180
090
120
180
080
120
110
060
060
120
130
1558940-5
ECN 95038

Pos	Part No	SP	UN	Qty	Description	Page No

SEE PREVIOUS LISTS PAGES: 631, 633.

Pos	Part No	SP	UN	Qty	Description	Page No

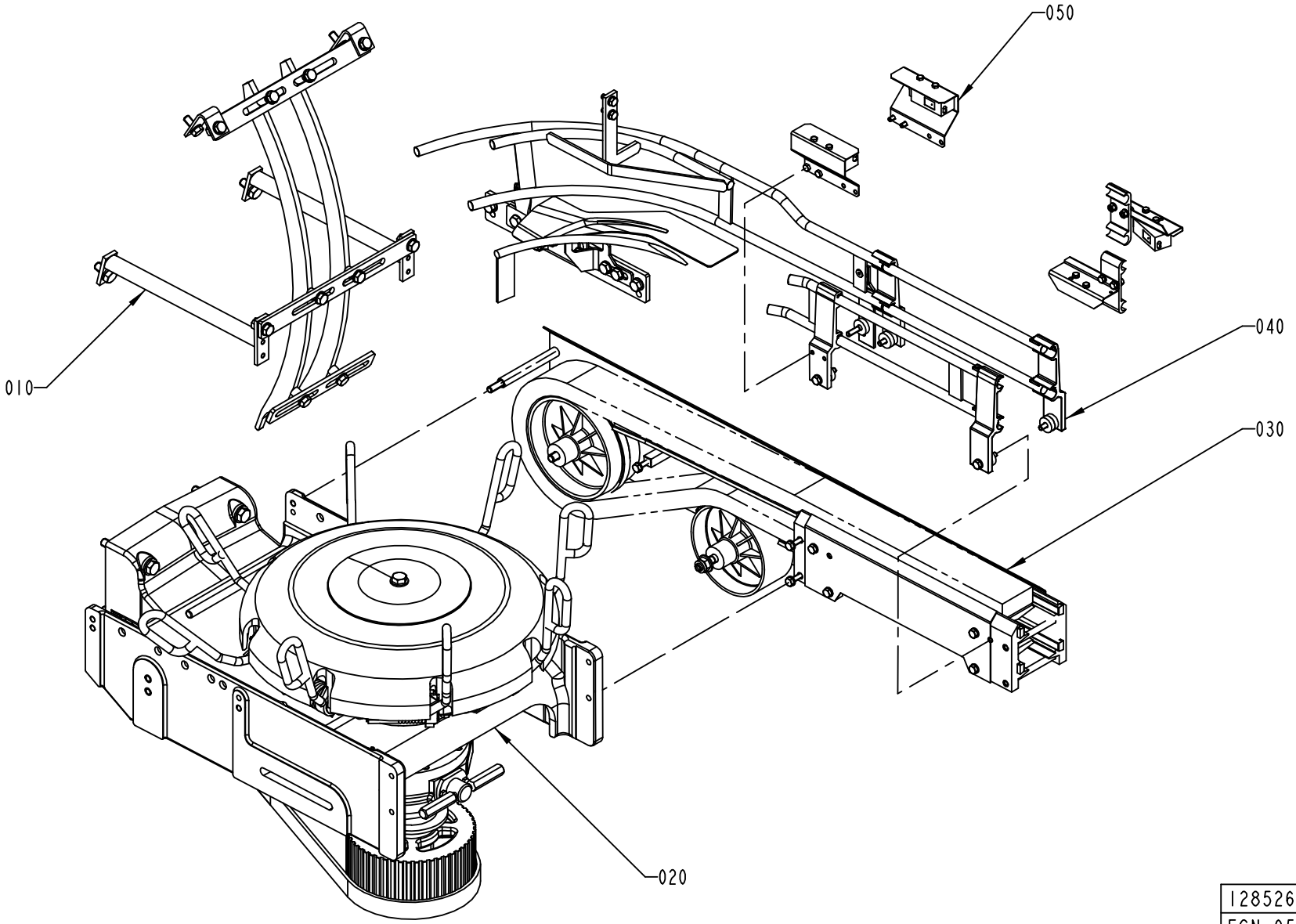

1285260-6
ECN 95038

Pos	Part No	SP	UN	Qty	Description	Page No
TBA 0200B OR TBA 0250B						
020	A1282379-0200	-		1	OUT FEED DRIVE	**641, 643, 645, 647**
030	A1490112-0100	-		1	OUTFEED CONVEYOR	**651, 653**
040	A1512318-0100	-		1	RAIL OUTFEED	**655**
050	A1512339-0100	-		1	PHOTOCELL OUTFEED	**657**
TBA 0200S						
020	A1282379-0200	-		1	OUT FEED DRIVE	**641, 643, 645, 647**
030	A1490112-0100	-		1	OUTFEED CONVEYOR	**651, 653**
040	A1512318-0100	-		1	RAIL OUTFEED	**655**
050	A1512339-0100	-		1	PHOTOCELL OUTFEED	**657**
TBA 0500S OR TBA 0500B OR TBA 1000SQ OR TPA 1000S OR TBA 1500S OR TPA 0330SQ						
020	A1296160-0200	-		1	OUT FEED	**659**
TBA 1000S OR TBA 1000B						
020	A1282379-0200	-		1	OUT FEED DRIVE	**641, 643, 645, 647**
030	A1490112-0100	-		1	OUTFEED CONVEYOR	**651, 653**
040	A1512318-0100	-		1	RAIL OUTFEED	**655**
050	A1512339-0100	-		1	PHOTOCELL OUTFEED	**657**
Common Parts						
010	A1487825-0100	-		1	RAIL WHEEL	**675, 677**

Pos	Part No	SP	UN	Qty	Description	Page No

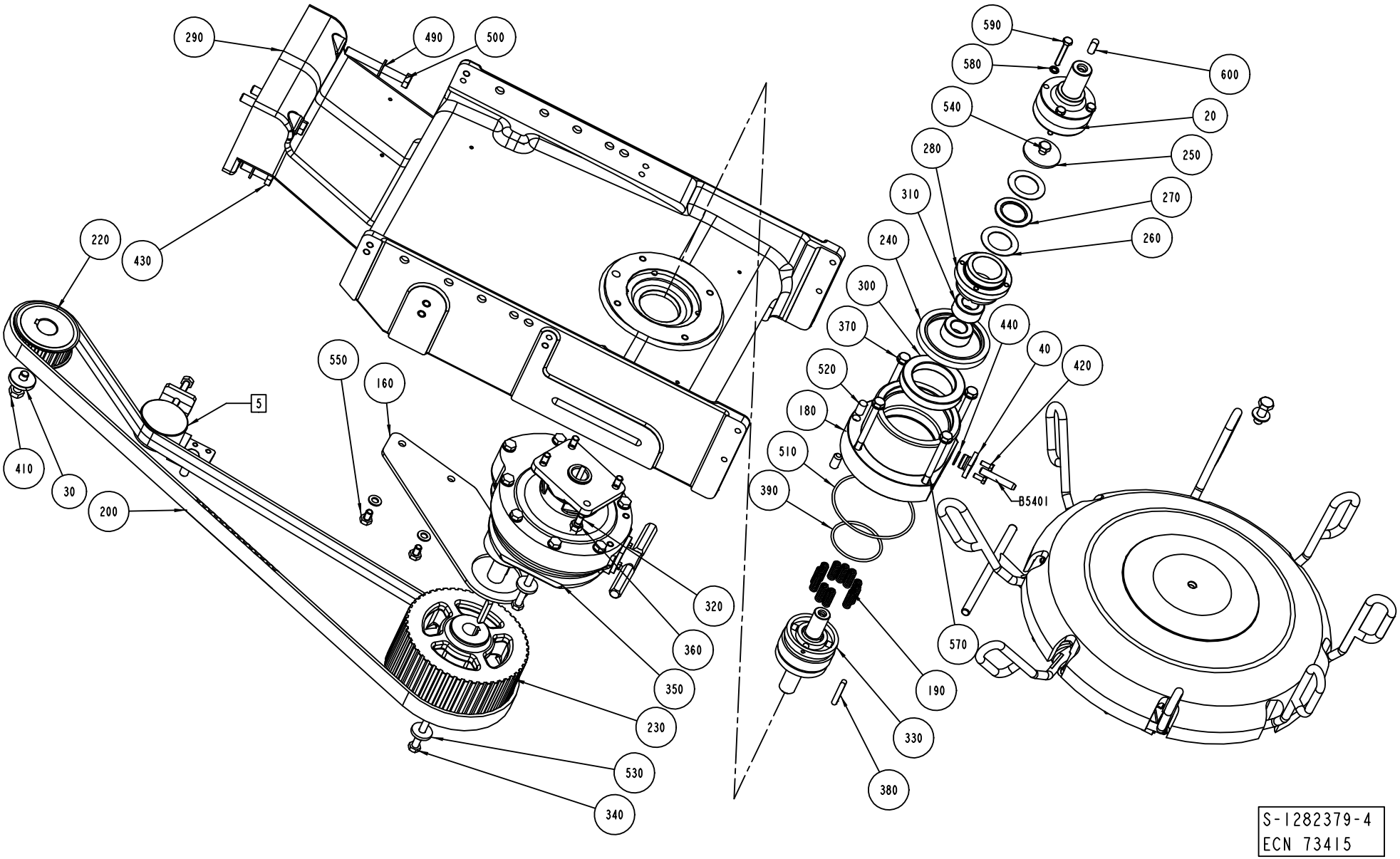
290
490
500
590
580
600
540
20
280
250
310
270
240
260
300
220
430
370
440
40
420
520
550
160
180
5
510
410
30
390
200
B5401
320
360
570
350
190
230
330
530
380
340
S-1282379-4
ECN 73415

ECM: 73415 - 20000512
Group number: 1282379-0200
Assembly Drawing: 1282379-4_1_AB

Issue: 20011217

Pos	Part No	SP	UN	Qty	Description	Page No
TBA 0200B OR TBA 0250B						
010	1478557-0000	-		1	HATCH	
070	1260852-0000	C		18	WASHER	
080	1285254-0000	-		8	WASHER	
090	1144662-0000	C		16	BUSHING	
100	1260853-0000	D		8	RING	
110	1260851-0000	C		8	AXLE PIN	
120	1349155-0000	D		1	HOLDER	
140	90240-0263	D		34	FLANGE BUSHING, 15X17X12 MM	
200	1498529-0000	C		1	TIMING BELT	
210	1348631-0000	-		8	PLATE	
230	1498620-0000	D		1	PULLEY	
560	312155-0289	-		8	SCREW HEX.SOCK.COUNT.MF6S M4X10 A480	
610	312105-0370	-		2	SCREW M6S M6X20 A280	
630	312155-0378	-		8	SCREW HEX.SOCK.COUNT.MF6S M6X40 A280	
640	1348540-0000	C		8	PIVOT AXLE	
650	312105-0368	-		16	SCREW M6S M6X16 A280	
660	1348538-0000	D		8	LEVER	
670	1282864-0000	D		8	SPRING	
680	1349998-0000	D		8	LEVER	
710	344502-0021	-		8	GREASE NIPPLE STRAIGHT M6	
TBA 0200S						
010	1478925-0000	-		1	HATCH	
070	1260852-0000	C		26	WASHER	
080	1285254-0000	-		12	WASHER	
090	1144662-0000	C		24	BUSHING	
100	1260853-0000	D		12	RING	
110	1260851-0000	C		12	AXLE PIN	
120	1296175-0000	D		1	STOP ARM	
140	90240-0263	D		50	FLANGE BUSHING, 15X17X12 MM	
200	1499059-0000	C		1	TIMING BELT	
210	1348631-0000	-		12	PLATE	
230	1499064-0000	D		1	PULLEY	
560	312155-0289	-		12	SCREW HEX.SOCK.COUNT.MF6S M4X10 A480	
610	312105-0370	-		14	SCREW M6S M6X20 A280	
630	312155-0378	-		12	SCREW HEX.SOCK.COUNT.MF6S M6X40 A280	
640	1350543-0000	C		12	AXLE PIN	
660	1349983-0000	D		12	LEVER	
670	1349985-0000	D		12	SPRING	
680	1349984-0000	D		12	LEVER	
710	344502-0021	-		12	GREASE NIPPLE STRAIGHT M6	

Pos	Part No	SP	UN	Qty	Description	Page No
TBA 1000S OR TBA 1000B OR TPA 1000S						
010	1478557-0000	-		1	HATCH	
070	1260852-0000	C		18	WASHER	
080	1285254-0000	-		8	WASHER	
090	1144662-0000	C		16	BUSHING	
100	1260853-0000	D		8	RING	
110	1260851-0000	C		8	AXLE PIN	
120	1349155-0000	D		1	HOLDER	
140	90240-0263	D		34	FLANGE BUSHING, 15X17X12 MM	
200	1498529-0000	C		1	TIMING BELT	
210	1348631-0000	-		8	PLATE	
230	1498620-0000	D		1	PULLEY	
560	312155-0289	-		8	SCREW HEX.SOCK.COUNT.MF6S M4X10 A480	
610	312105-0370	-		2	SCREW M6S M6X20 A280	
630	312155-0378	-		8	SCREW HEX.SOCK.COUNT.MF6S M6X40 A280	
640	1348540-0000	C		8	PIVOT AXLE	
650	312105-0368	-		16	SCREW M6S M6X16 A280	
660	1348538-0000	D		8	LEVER	
670	1282864-0000	D		8	SPRING	
680	1349997-0000	D		8	CARRIER	
710	344502-0021	-		8	GREASE NIPPLE STRAIGHT M6	
Common Parts						
005	A1285875-0200	-		1	BELT TENSIONER	**649**
020	1478753-0000	-		1	SHAFT	
030	1144681-0000	-		1	WASHER	
040	1282335-0000	D		1	FLANGE	
050	1296331-0000	-		1	FLAT WEDGE	
060	1260854-0000	D		1	AXLE PIN	
130	1260849-0000	D		1	SPRING	
150	1144991-0000	D		1	CAM	
160	1499043-0000	-		1	BRACKET	
180	1478905-0000	D		1	FLANGE	
190	1282345-0000	D		11	SPRING	
220	1144802-0000	D		1	PULLEY	
240	90091-0416	C		1	RADIAL SEAL 70X90X10 MM DUST LIP	
250	1260832-0000	-		1	WASHER	
260	90083-0053	C		2	PLATE FOR 90083-0052	
270	90083-0052	C		1	THRUST NEEDLE BEARING, 30X47X2 MM	
280	1350564-0000	-		1	CLAMP HUB	
290	1478908-0000	-		1	SUPPORT	

Machine Type | Group Description | Used-In | Group Number | Page No

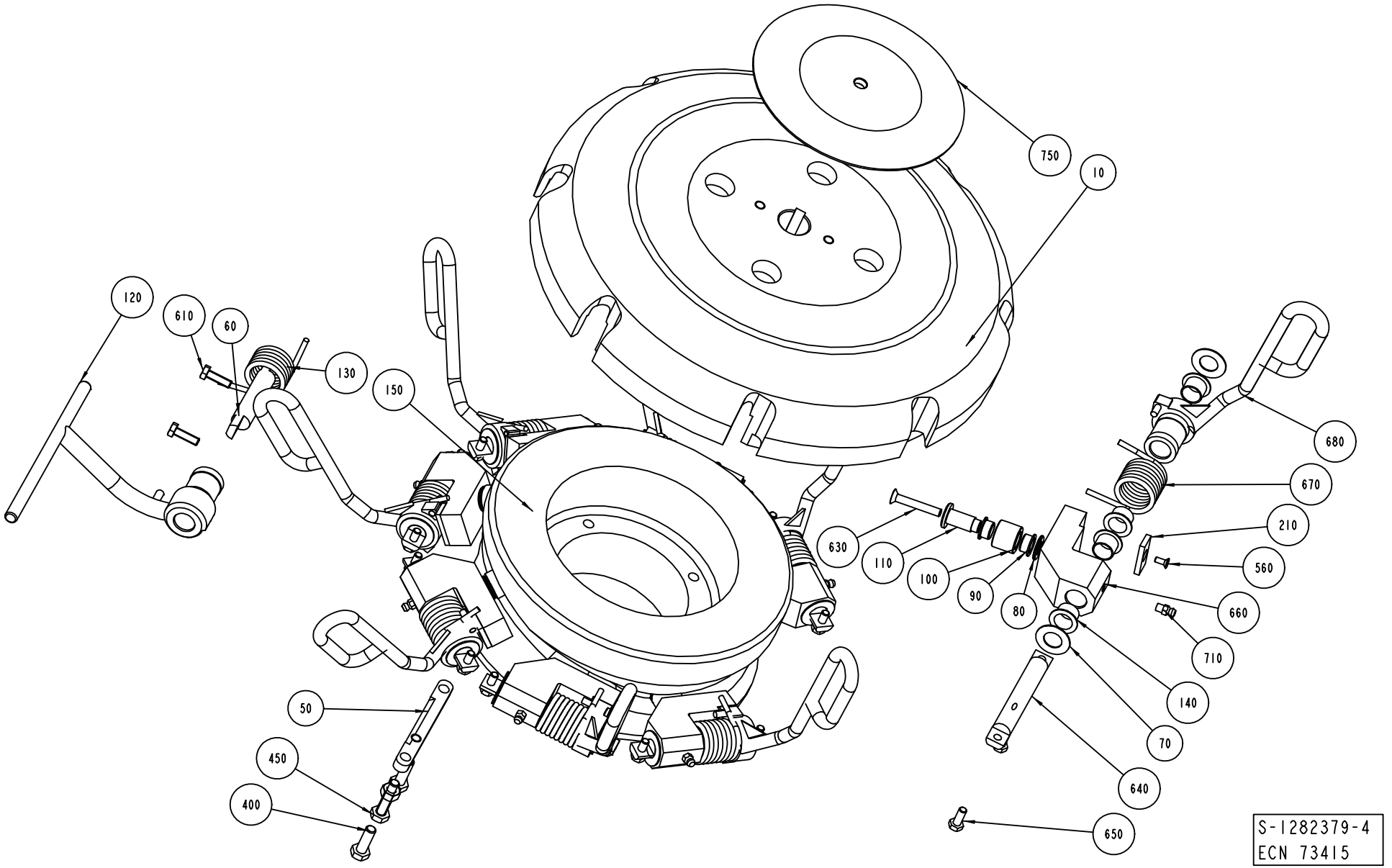
750
10
120
610
60
130
150
680
670
210
560
660
710
140
70
640
650
630
110
100
90
80
50
450
400
S-1282379-4
ECN 73415

Pos	Part No	SP	UN	Qty	Description	Page No
Common Parts (Cont'd)						
300	1484447-0000	C		1	BALL BEARING	
310	1484448-0000	C		2	BEARING ROLLER	
320	1490442-0000	-		4	STUD SCREW 8X20	
330	1282343-0000	-		1	BLOCK	
340	312105-0475	-		2	SCREW M6S M8X120 A280	
350	1490085-0000	C		1	GEAR BOX	
360	312605-0318	-		8	HEXAGON NUT, M6M M8 A280	
370	315105-0165	-		10	WASHER PLAIN, BRB, 8,4/16,H=1,5	
380	315705-0239	-		2	PARALLEL KEY W. ROUND ENDS 6X6X40 MM	
390	315202-0303	C		1	O-RING 59,5X3 MM	
400	312105-0453	-		2	SCREW M6S M8X25 A280	
410	312105-0495	-		2	SCREW M6S M10X30 A280	
420	312105-0327	-		2	SCREW M6S M5X12 A280	
430	312105-0497	-		2	SCREW M6S M10X35 A280	
440	315202-0113	C		1	O-RING 15,1X1,6 MM	
450	312109-0457	-		1	SCREW M6S M8X35 A280	
490	315105-0173	-		5	WASHER PLAIN, BRB, 10,5/22,H=2	
500	312105-0507	-		2	SCREW M6S M10X80 A280	
510	315202-0311	C		1	O-RING 99,5X3 MM	
520	311103-0454	-		2	PARALLELL PIN, M6, 10X20 MM	
530	315125-0165	-		2	WASHER PLAIN ROUND,CHAMF. 8,4/26, H=5	
540	312105-0451	-		1	SCREW M6S 8X20 A280	
550	312105-0447	-		2	SCREW M6S M8X12 A280	
570	312105-0469	-		4	SCREW M6S M8X90 A280	
580	315211-0103	-		4	GASKET BOLT HEAD 6,7X11X1 MM M6	
590	312109-0378	-		4	SCREW M6S M6X40 A280	
600	315705-0263	-		1	PARALLEL KEY W. ROUND ENDS 8X7X20 MM	
750	1478558-0000	-		1	WASHER	
B5401	90044-0117	C		1	PROX.SW. IX 0208	

Pos	Part No	SP	UN	Qty	Description	Page No

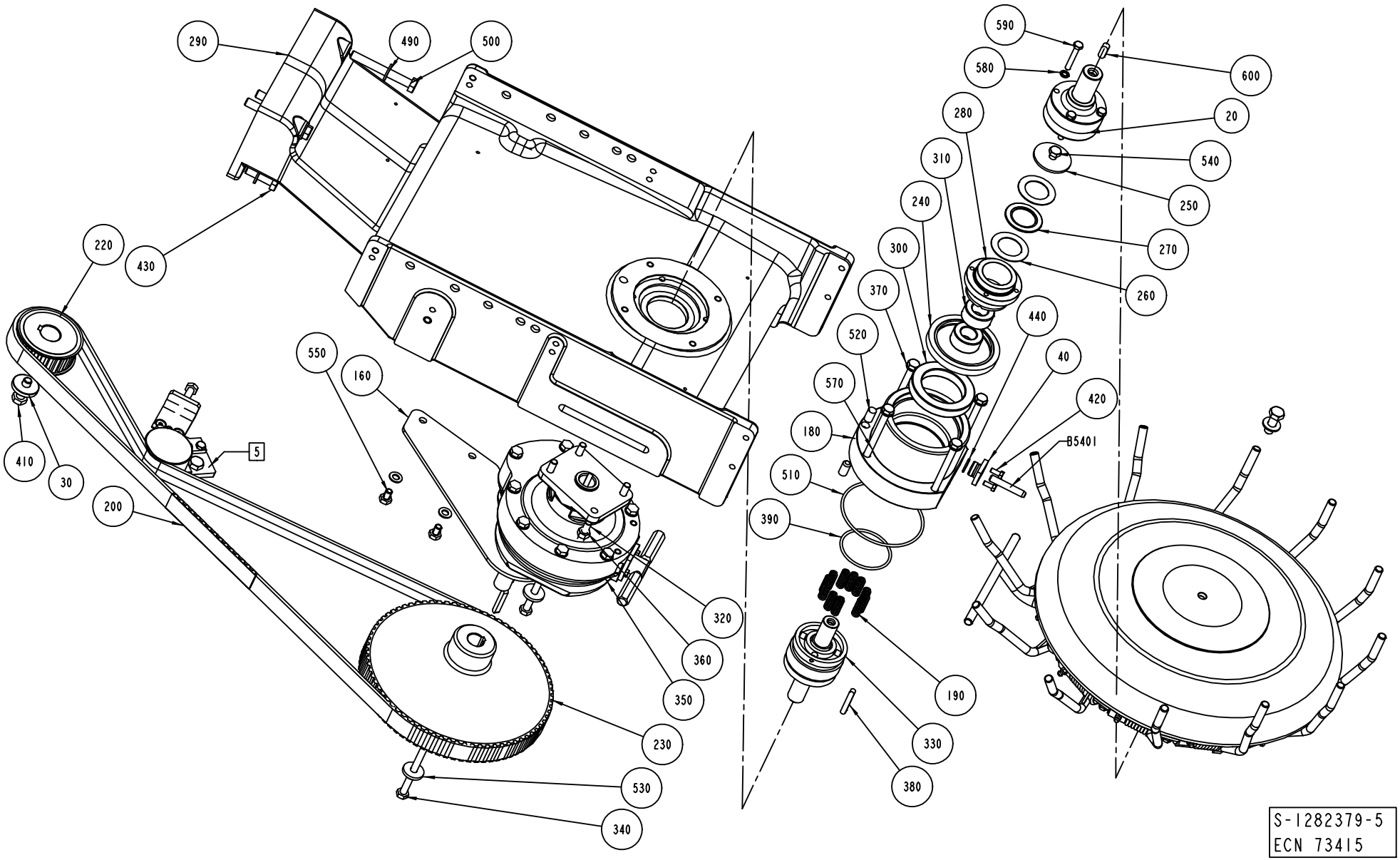
290
490
500
220
430
550
160
5
410
30
200
320
360
350
230
530
340
590
580
600
280
20
310
540
240
250
300
270
370
260
520
440
40
570
420
180
B5401
510
390
190
330
380
S-1282379-5
ECN 73415

Pos	Part No	SP	UN	Qty	Description	Page No
SEE PREVIOUS LISTS PAGES: 641, 643.						

Pos	Part No	SP	UN	Qty	Description	Page No

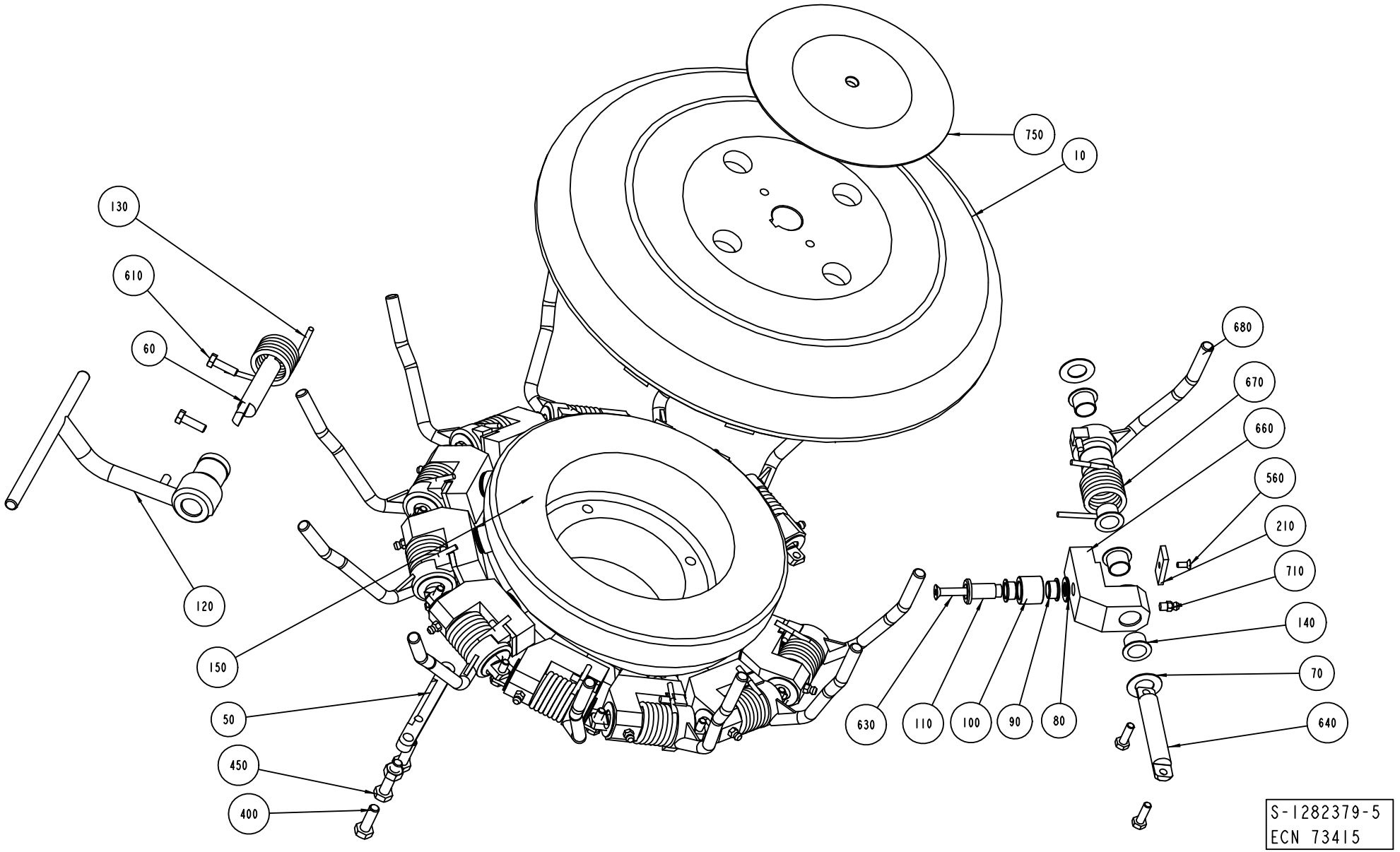
750
10
130
610
60
120
150
50
450
400
680
670
660
560
210
710
140
70
640
630
110
100
90
80
S-1282379-5
ECN 73415

Pos	Part No	SP	UN	Qty	Description	Page No
SEE PREVIOUS LISTS PAGES: 641, 643.						

Pos	Part No	SP	UN	Qty	Description	Page No

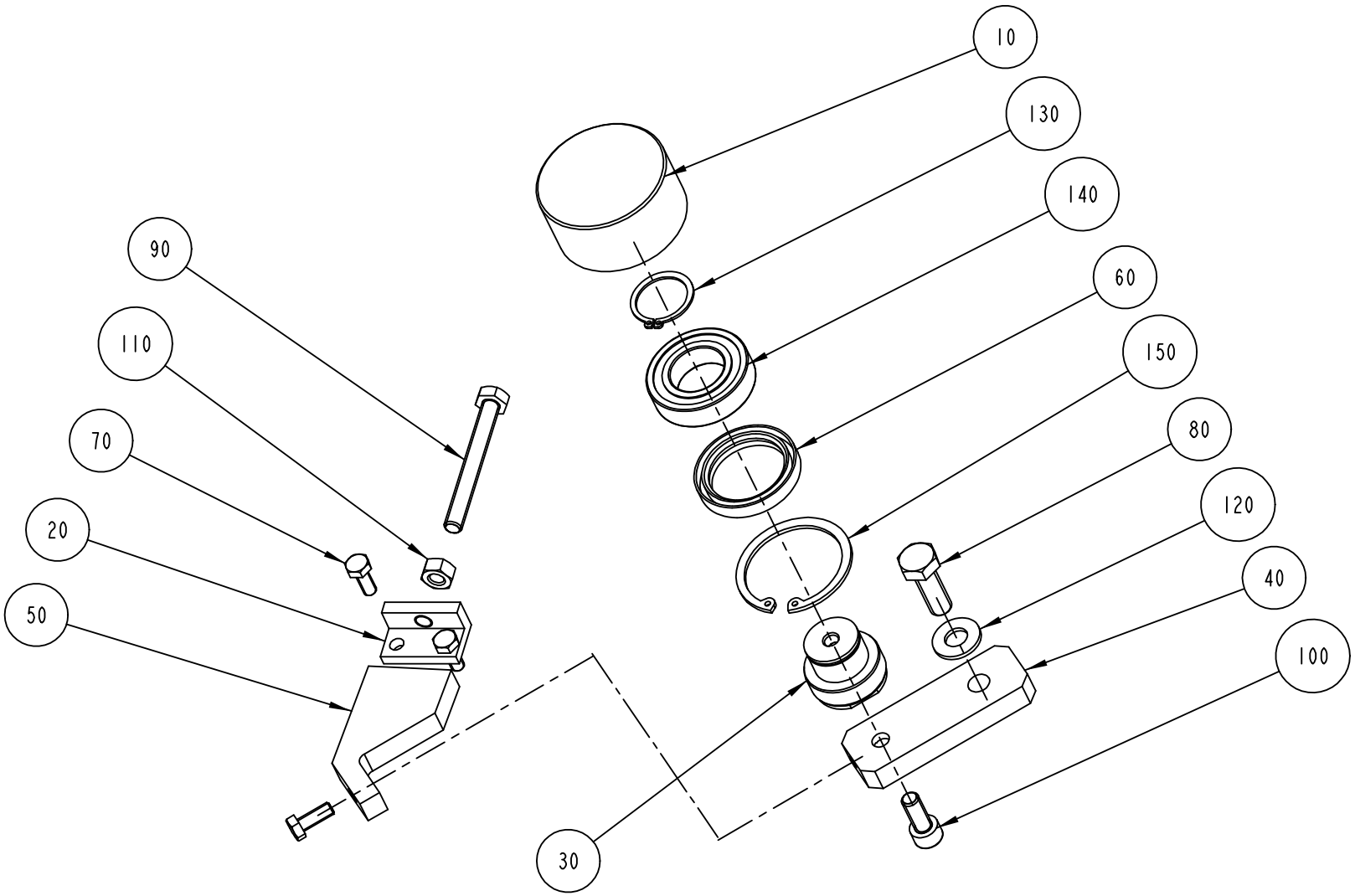

S-1285875-2
ECN 71653

Pos	Part No	SP	UN	Qty	Description	Page No
TBA/21 TBA 0200S						
050	1498036-0000	-		1	PLATE	
120	312105-0362	-		2	SCREW M6S M6X8 A280	
Common Parts						
010	1144581-0000	D		1	ROLLER	
020	1498064-0000	-		1	BLOCK	
030	1478302-0000	-		1	AXLE BOLT	
040	1498067-0000	-		1	PLATE	
060	1350305-0000	C		1	SEALING RING	
070	312155-0366	-		2	SCREW HEX.SOCK.COUNT.MF6S M6X12 A280	
080	312105-0495	-		1	SCREW M6S M10X30 A280	
090	1498066-0000	-		1	SCREW	
100	312155-0453	-		1	SCREW HEX.SOCK.COUNT.MF6S M8X25 A280	
110	312605-0318	-		1	HEXAGON NUT, M6M M8 A280	
130	315751-0119	-		1	RETAIN. RING, 25	
140	321308-0205	C		1	BALL BEARING, 2 SEALS, 25X47X12 MM	
150	90141-0019	-		1	RETAIN. RING, 50	

Pos	Part No	SP	UN	Qty	Description	Page No

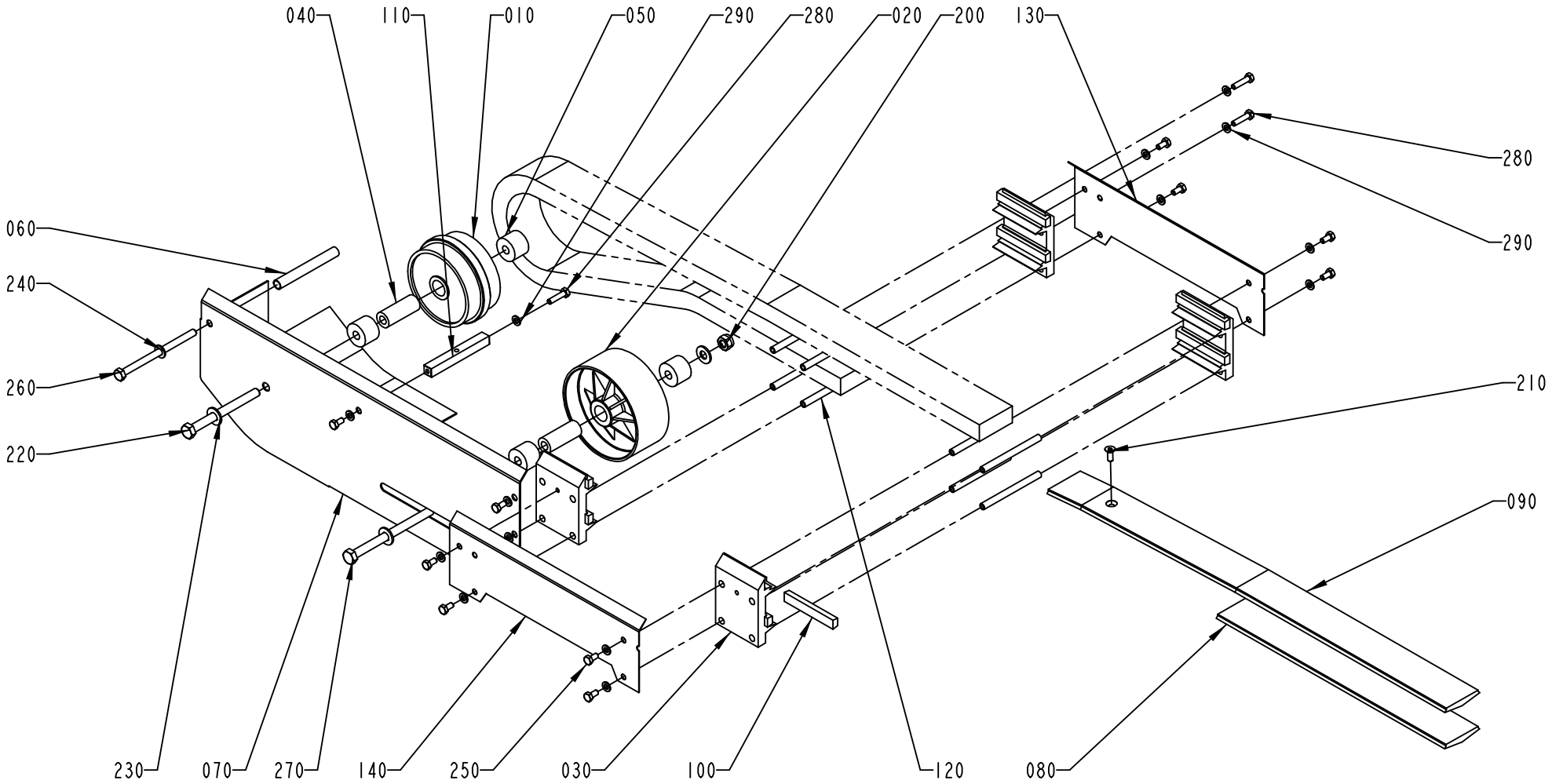

S-1490112-1
ECN 72862

Pos	Part No	SP	UN	Qty	Description	Page No
TBA 0500S OR TBA 0500B OR TBA 1000S OR TBA 1000B OR TBA 0200B OR TBA 0200S OR TBA 0250B OR TBA 1500S						
010	245039-0000	-		1	GUIDE WHEEL	
070	1285265-0000	-		1	PLATE	
TBA 1000SQ OR TPA 1000S OR TPA 0330SQ						
010	1348118-0000	A		1	WHEEL	
070	1296081-0000	-		1	PLATE	
Common Parts						
020	476975-0000	A		1	WHEEL	
030	457696-0001	-		4	JOINT PIECE	
040	229207-0000	A		2	BEARING SLEEVE	
050	1144943-0000	-		4	SPACER	
060	1285306-0000	-		1	SPACER	
080	1279587-0000	-		1	SLIDE RAIL U	
090	1279573-0000	-		1	SLIDE RAIL U	
100	466074-0002	-		8	SLIDER	
110	1285266-0000	-		1	SPACER	
120	476220-0000	-		8	SPACER	
130	1279585-0000	-		1	SUPPORT	
140	1279586-0000	-		1	SUPPORT	
150	90165-0056	-		3	PIPE CLIP FOR TUBE D=4 MM	
200	312812-0320	-		1	HEXAGON NUT, NY-LOCK M10 A480	
210	312155-0368	-		1	SCREW HEX.SOCK.COUNT.MF6S M6X16 A280	
220	312105-0513	-		1	SCREW M6S M10X110 A280	
230	315105-0173	-		3	WASHER PLAIN, BRB, 10,5/22,H=2	
240	315105-0165	-		1	WASHER PLAIN, BRB, 8,4/16,H=1,5	
250	312105-0366	-		11	SCREW M6S M6X12 A280	
260	312105-0475	-		1	SCREW M6S M8X120 A280	
270	312105-0517	-		1	SCREW M6S M10X130 A280	
280	312105-0372	-		3	SCREW M6S M6X25 A280	
285	312105-0323	-		3	SCREW M6S M5X8 A280	
290	315105-0153	-		14	WASHER PLAIN, BRB, 6,4/12,H=1,5	
300	315105-0146	-		3	WASHER PLAIN, BRB, 5,3/10,H=1	
310	312605-0314	-		3	HEXAGON NUT, M6M M5 A280	

Pos	Part No	SP	UN	Qty	Description	Page No

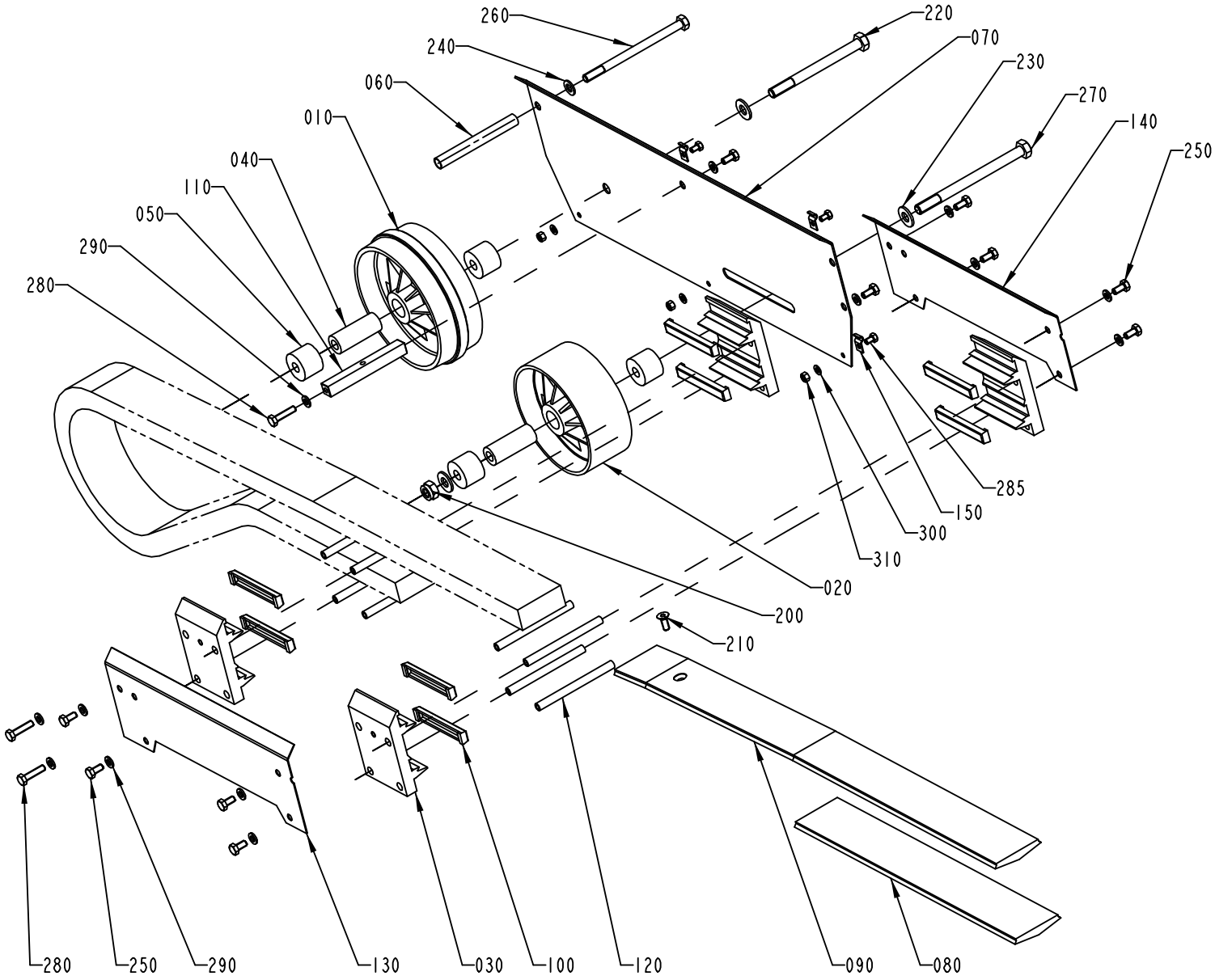

1490112-2
ECN 85319

Pos	Part No	SP	UN	Qty	Description	Page No
TBA 0500S OR TBA 0500B OR TBA 1000S OR TBA 1000B OR TBA 0200B OR TBA 0200S OR TBA 0250B OR TBA 1500S						
010	245039-0000	-		1	GUIDE WHEEL	
070	1285265-0000	-		1	PLATE	
TBA 1000SQ OR TPA 1000S OR TPA 0330SQ						
010	1348118-0000	A		1	WHEEL	
070	1296081-0000	-		1	PLATE	
Common Parts						
020	476975-0000	A		1	WHEEL	
030	457696-0001	-		4	JOINT PIECE	
040	229207-0000	A		2	BEARING SLEEVE	
050	1144943-0000	-		4	SPACER	
060	1285306-0000	-		1	SPACER	
080	1279587-0000	-		1	SLIDE RAIL U	
090	1279573-0000	-		1	SLIDE RAIL U	
100	466074-0002	-		8	SLIDER	
110	1285266-0000	-		1	SPACER	
120	476220-0000	-		8	SPACER	
130	1279585-0000	-		1	SUPPORT	
140	1279586-0000	-		1	SUPPORT	
150	90165-0056	-		3	PIPE CLIP FOR TUBE D=4 MM	
200	312812-0320	-		1	HEXAGON NUT, NY-LOCK M10 A480	
210	312155-0368	-		1	SCREW HEX.SOCK.COUNT.MF6S M6X16 A280	
220	312105-0513	-		1	SCREW M6S M10X110 A280	
230	315105-0173	-		3	WASHER PLAIN, BRB, 10,5/22,H=2	
240	315105-0165	-		1	WASHER PLAIN, BRB, 8,4/16,H=1,5	
250	312105-0366	-		11	SCREW M6S M6X12 A280	
260	312105-0475	-		1	SCREW M6S M8X120 A280	
270	312105-0517	-		1	SCREW M6S M10X130 A280	
280	312105-0372	-		3	SCREW M6S M6X25 A280	
285	312105-0323	-		3	SCREW M6S M5X8 A280	
290	315105-0153	-		14	WASHER PLAIN, BRB, 6,4/12,H=1,5	
300	315105-0146	-		3	WASHER PLAIN, BRB, 5,3/10,H=1	
310	312605-0314	-		3	HEXAGON NUT, M6M M5 A280	

Pos	Part No	SP	UN	Qty	Description	Page No

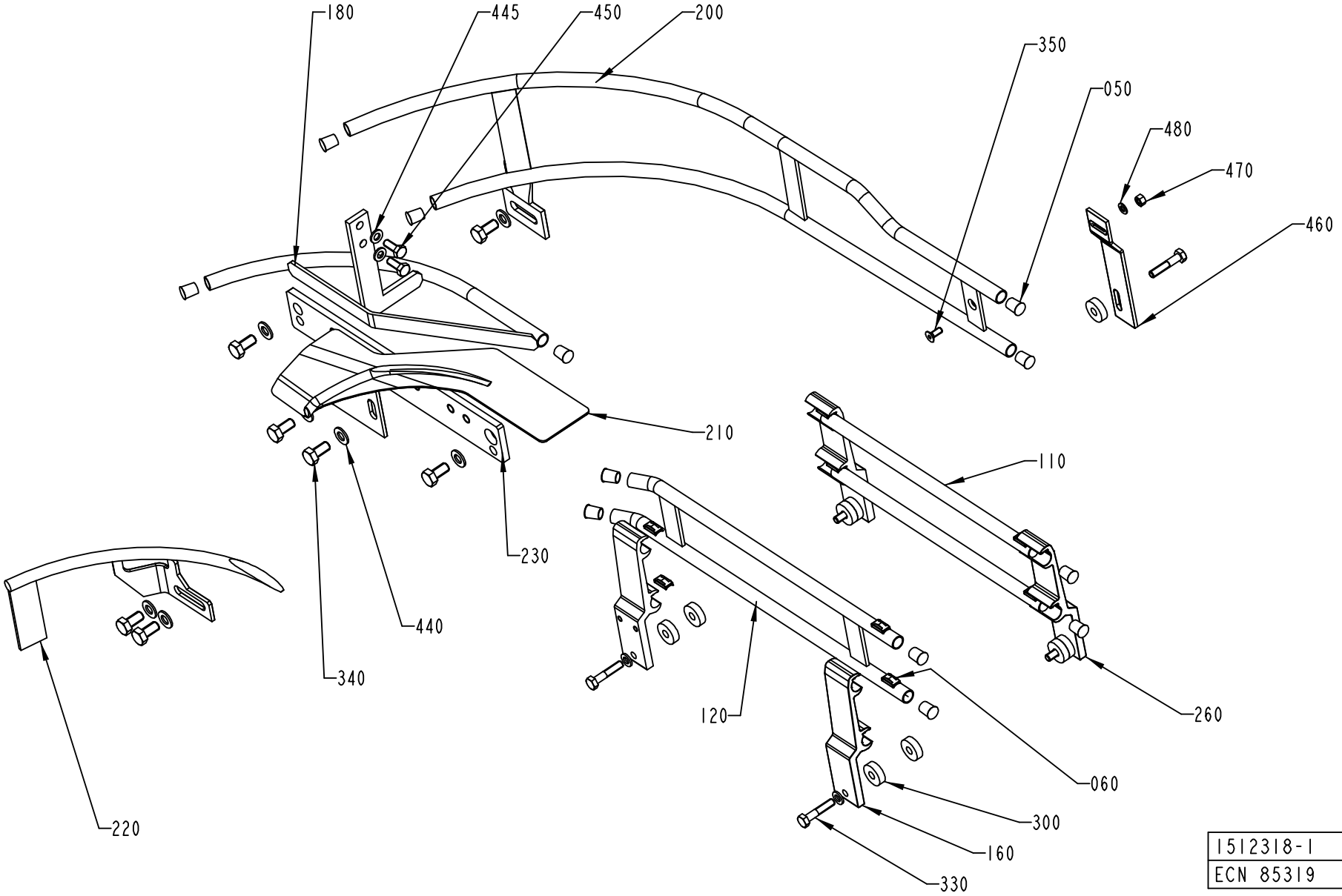
180
445
450
200
350
050
480
470
460
210
110
230
440
340
220
120
260
060
300
160
330
1512318-1
ECN 85319

Pos	Part No	SP	UN	Qty	Description	Page No
TBA 0200B OR TBA 0250B						
050	484701-0000	-		13	SHUTTER	
120	1317436-0000	-		1	RAIL	
180	1346339-0000	-		1	RAIL	
200	1346739-0000	-		1	GUIDE	
210	1296057-0000	-		1	GUIDE	
330	312105-0372	-		4	SCREW M6S M6X25 A280	
440	315105-0165	-		6	WASHER PLAIN, BRB, 8,4/16,H=1,5	
TBA 0200S						
050	484701-0000	-		13	SHUTTER	
120	1317436-0000	-		1	RAIL	
180	1296135-0000	-		1	RAIL	
200	1348233-0000	-		1	GUIDE	
210	1296057-0000	-		1	GUIDE	
330	312105-0372	-		4	SCREW M6S M6X25 A280	
440	315105-0165	-		6	WASHER PLAIN, BRB, 8,4/16,H=1,5	
TBA 1000B						
050	484701-0000	-		14	SHUTTER	
120	1279584-0000	-		1	RAIL	
180	1285240-0000	-		1	RAIL	
200	1285258-0000	-		1	RAIL	
210	1285259-0000	-		1	GUIDE	
220	1285261-0000	-		1	RAIL	
300	1285253-0000	-		8	SPACER	
330	312105-0374	-		5	SCREW M6S M6X30 A280	
440	315105-0165	-		8	WASHER PLAIN, BRB, 8,4/16,H=1,5	
460	1499413-0000	-		1	HOLDER	
TBA 1000S						
050	484701-0000	-		14	SHUTTER	
120	1279584-0000	-		1	RAIL	
180	1285240-0000	-		1	RAIL	
200	1285258-0000	-		1	RAIL	
210	1285259-0000	-		1	GUIDE	
220	1285261-0000	-		1	RAIL	
300	1285253-0000	-		8	SPACER	
330	312105-0374	-		5	SCREW M6S M6X30 A280	
440	315105-0165	-		8	WASHER PLAIN, BRB, 8,4/16,H=1,5	
Common Parts						
060	1020146-0000	-		8	LOCKING BLOCK REPL BY 1020290-101	
110	1279582-0000	-		2	RAIL	
160	1285009-0000	-		2	HOLDER	
230	1478235-0000	-		1	PLATE	
260	1020142-0002	-		2	RAIL HOLDER, B55 WIDTH 30 MM	
340	312105-0449	-		7	SCREW M6S M8X16 A280	
350	312155-0327	-		1	SCREW HEX.SOCK.COUNT.MF6S M5X12 A280	
445	315105-0153	-		7	WASHER PLAIN, BRB, 6,4/12,H=1,5	
450	312105-0368	-		2	SCREW M6S M6X16 A280	
470	312605-0314	-		1	HEXAGON NUT, M6M M5 A280	
480	315105-0146	-		1	WASHER PLAIN, BRB, 5,3/10,H=1	

Machine Type	Group Description	Used-In	Group Number	Page No

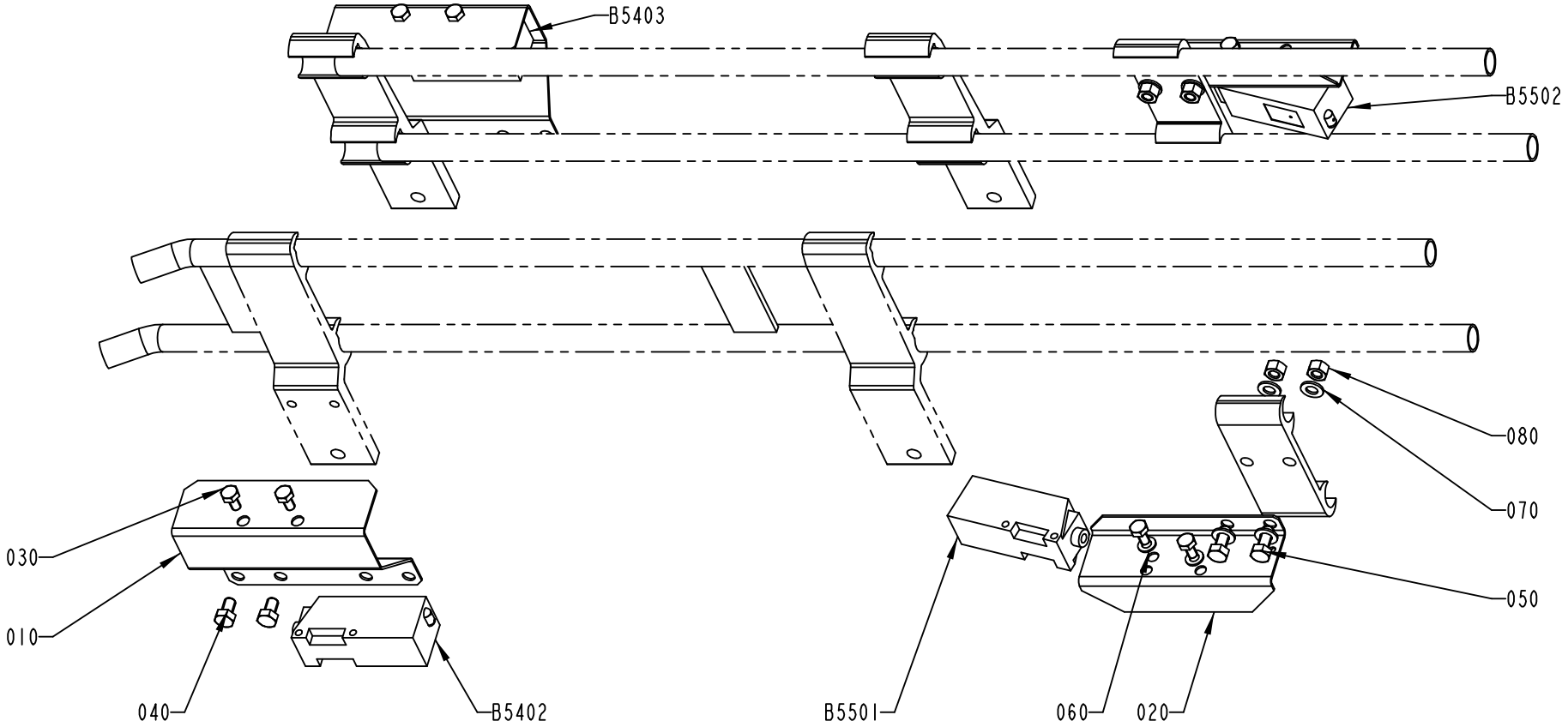

S-1512339-1
ECN 72862

ECM: 72862 - 20000310
Group number: 1512339-0100
Assembly Drawing: 1512339-1_1_AA

Issue: 20011217

Pos	Part No	SP	UN	Qty	Description	Page No
Common Parts						
010	1285010-0000	-		2	HOLDER	
020	1086889-0000	-		2	COVER	
025	1020637-0000	-		2	HOLDER	
030	312105-0287	-		8	SCREW M6S M4X8 A280	
040	312105-0323	-		4	SCREW M6S M5X8 A280	
050	312105-0327	-		4	SCREW M6S M5X12 A280	
060	315105-0136	-		4	WASHER PLAIN, BRB, 4,3/8,H=0,8	
070	315105-0146	-		8	WASHER PLAIN, BRB, 5,3/10,H=1	
080	312605-0314	-		4	HEXAGON NUT, M6M M5 A280	
B5402	90232-0104	-		1	PH.CELL E3S-CT61-D-5M	
B5403	90232-0103	-		1	PH.CELL E3S-CT61-L-5M	
B5501	90232-0104	-		1	PH.CELL E3S-CT61-D-5M	
B5502	90232-0103	-		1	PH.CELL E3S-CT61-L-5M	

Pos	Part No	SP	UN	Qty	Description	Page No

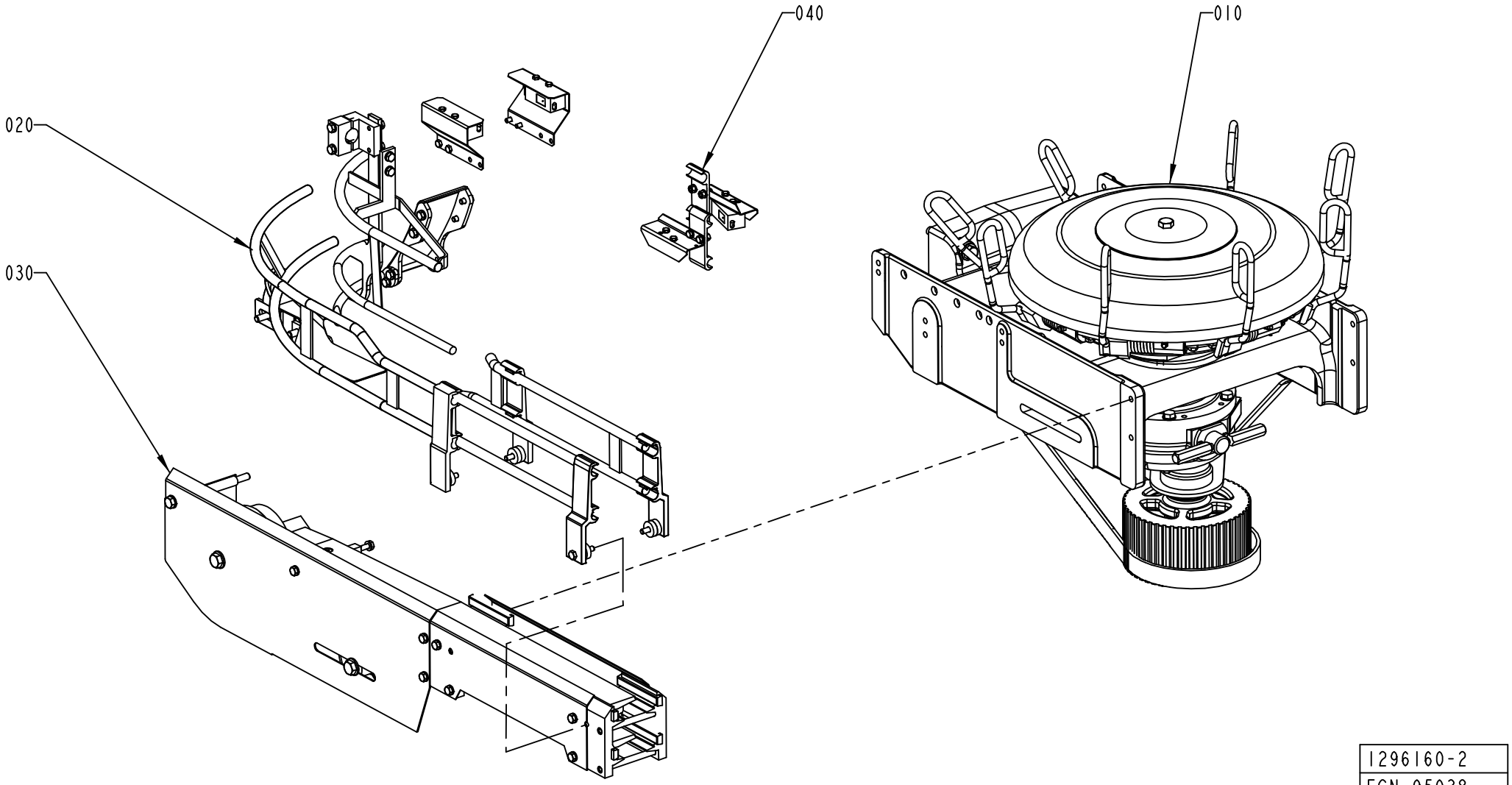

1296160-2
ECN 95038

Pos	Part No	SP	UN	Qty	Description	Page No
Common Parts						
010	A1484210-0200	-		1	OUT FEED DRIVING SYSTEM	**661**
020	A1361920-0200	-		1	RAIL OUTFEED	**669, 671, 673**
030	A1490112-0100	-		1	OUTFEED CONVEYOR	**651, 653**
040	A1512339-0100	-		1	PHOTOCELL OUTFEED	**657**

Pos	Part No	SP	UN	Qty	Description	Page No

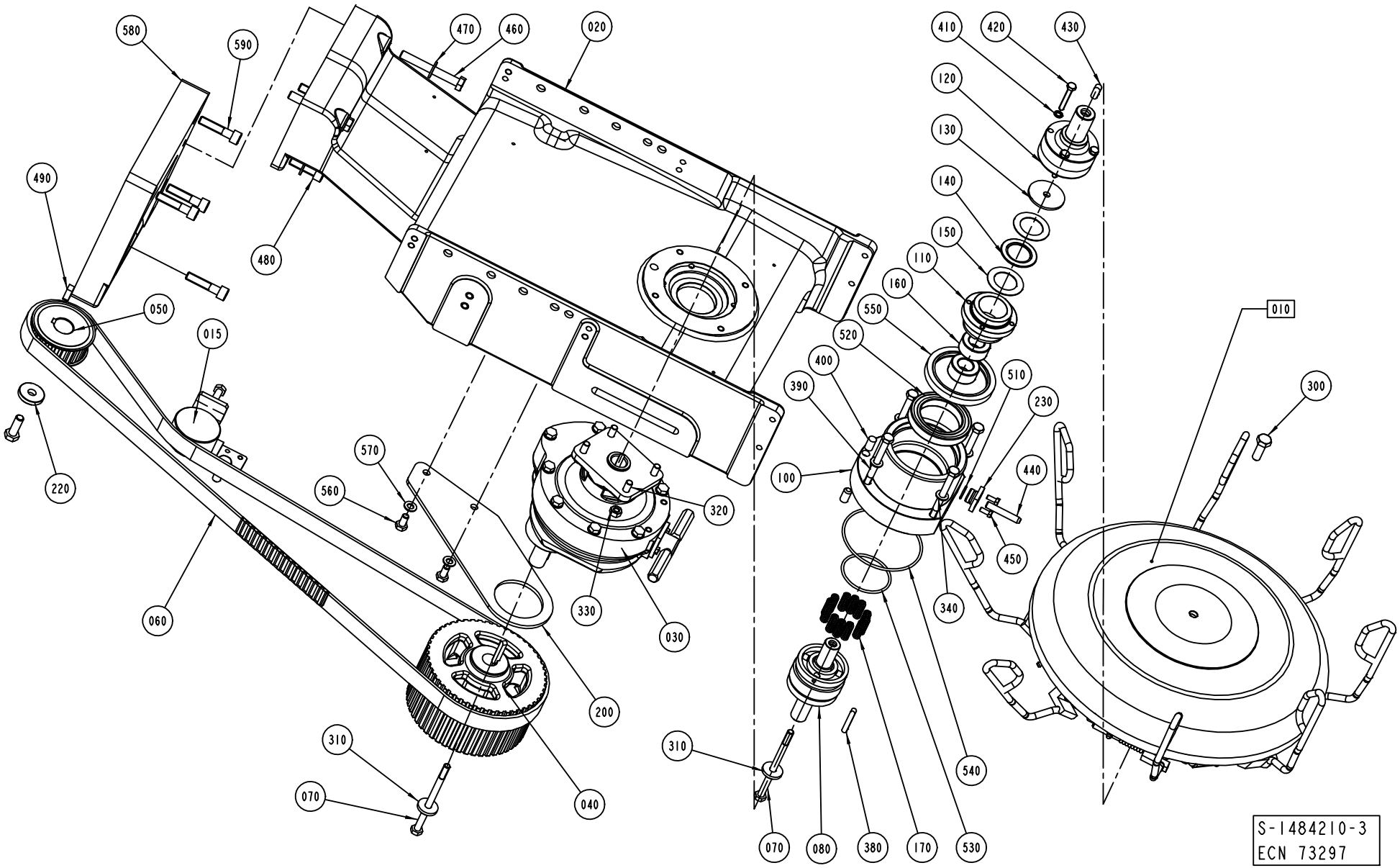
580
590
470
460
020
410
420
430
120
130
140
150
110
160
550
520
400
390
510
230
300
010
490
480
050
015
220
570
560
320
100
440
450
340
330
030
060
200
310
070
040
310
070
080
380
170
530
540
S-1484210-3
ECN 73297

ECM: 93809 - 20010709
Group number: 1484210-0200
Assembly Drawing: 1484210-3_1_AC

Issue: 20011217

Pos	Part No	SP	UN	Qty	Description	Page No
TBA 0500S OR TBA 0500B OR TBA 1000SQ OR TPA 1000S						
040	1498620-0000	A		1	PULLEY	
060	1498529-0000	A		1	TIMING BELT	
TBA 1500S						
040	1498620-0000	A		1	PULLEY	
060	1498528-0000	A		1	TIMING BELT	
580	1349160-0000	-		1	SPACER	
590	312115-0500	-		4	SCREW MC6S M10X45 A280	
TPA 0330SQ						
040	1499064-0000	A		1	PULLEY	
060	1499059-0000	A		1	TIMING BELT	
Common Parts						
010	A1487038-0100	-		1	OUTFEED WHEEL	**663, 665, 667**
015	A1285875-0200	-		1	BELT TENSIONER	**649**
020	1478908-0000	-		1	SUPPORT	
030	1490085-0000	A		1	GEAR BOX	
050	1144802-0000	A		1	PULLEY	
070	312105-0475	-		1	SCREW M6S M8X120 A280	
080	1282343-0000	-		1	BLOCK	
100	1478905-0000	-		1	FLANGE	
110	1350564-0000	-		1	CLAMP HUB	
120	1478753-0000	-		1	SHAFT	
130	1260832-0000	-		1	WASHER	
140	1350255-0000	B		1	BEARING ROLLER	
150	1350256-0000	B		2	PLAIN BEARING	
160	1484448-0000	-		2	BEARING ROLLER	
170	1282345-0000	B		12	SPRING	
200	1499043-0000	-		1	BRACKET	
220	1144681-0000	-		1	WASHER	
230	1282335-0000	-		1	FLANGE	
300	312105-0495	-		2	SCREW M6S M10X30 A280	
310	315125-0165	-		2	WASHER PLAIN ROUND,CHAMF. 8,4/26, H=5	
320	1490442-0000	-		4	STUD SCREW 8X20	
330	312605-0318	-		5	HEXAGON NUT, M6M M8 A280	
380	315705-0239	-		2	PARALLEL KEY W. ROUND ENDS 6X6X40 MM	
390	312105-0469	-		4	SCREW M6S M8X90 A280	
400	311103-0454	-		2	PARALLELL PIN, M6, 10X20 MM	
410	315211-0103	-		4	GASKET BOLT HEAD 6,7X11X1 MM M6	
420	312109-0378	-		4	SCREW M6S M6X40 A280	
430	315705-0263	-		1	PARALLEL KEY W. ROUND ENDS 8X7X20 MM	
440	90044-0117	A		1	PROX.SW. IX 0208	
450	312105-0327	-		2	SCREW M6S M5X12 A280	
460	312105-0507	-		2	SCREW M6S M10X80 A280	
470	315105-0173	-		4	WASHER PLAIN, BRB, 10,5/22,H=2	
480	312115-0497	-		2	SCREW MC6S M10X35 A280	
490	315705-0265	-		1	PARALLEL KEY W. ROUND ENDS 8X7X25 MM	
510	315202-0113	B		1	O-RING 15,1X1,6 MM	
520	1484447-0000	-		1	BALL BEARING	
530	315202-0303	B		1	O-RING 59,5X3 MM	
540	315202-0311	B		1	O-RING 99,5X3 MM	
550	90091-0416	B		1	RADIAL SEAL 70X90X10 MM DUST LIP	
560	312105-0449	-		2	SCREW M6S M8X16 A280	
570	315105-0165	-		2	WASHER PLAIN, BRB, 8,4/16,H=1,5	

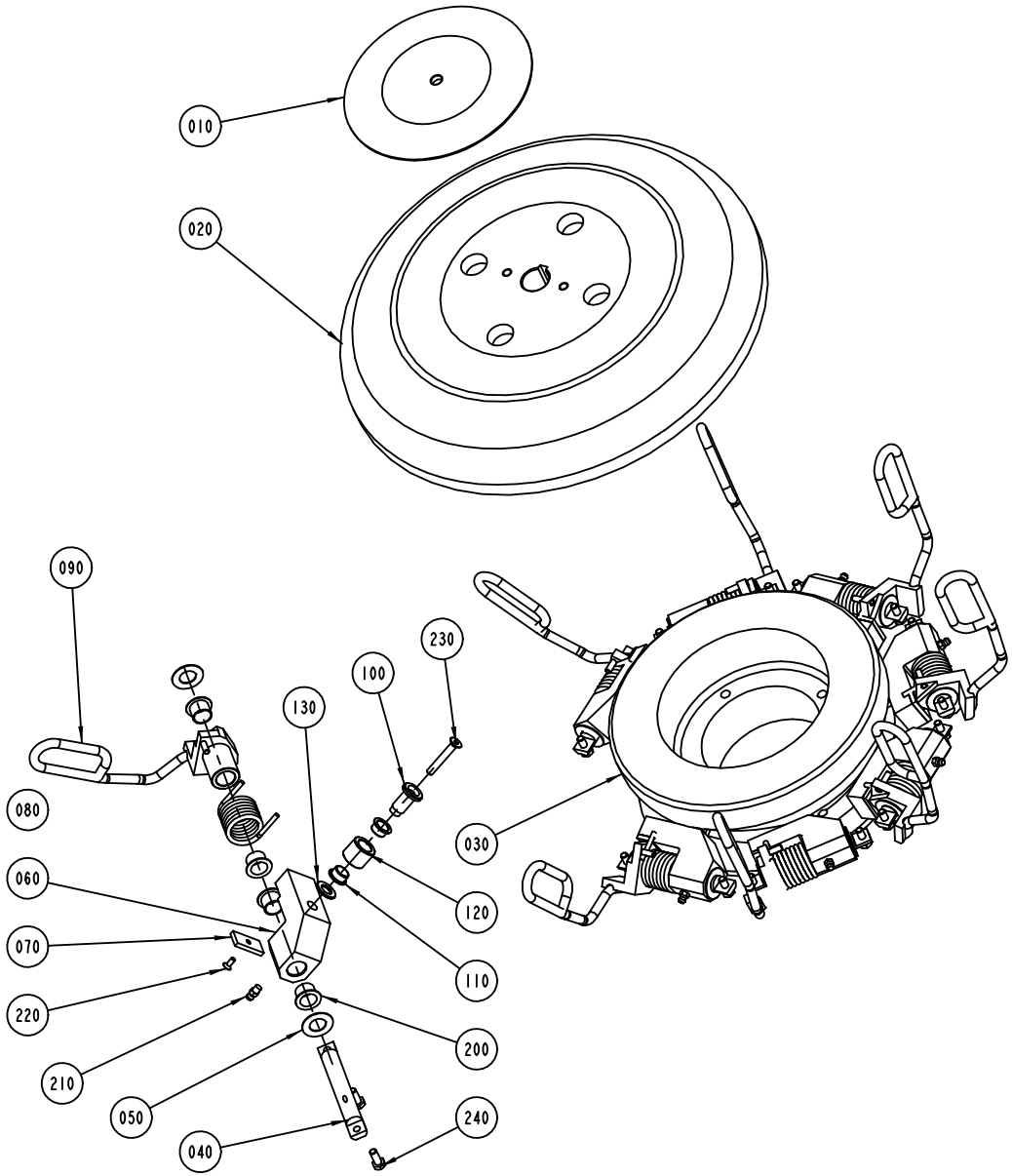

S-1487038-1
ECN 72095

ECM: 92295 - 20010709
Group number: 1487038-0100
Assembly Drawing: 1487038-1_1_AA

Issue: 20011217

Pos	Part No	SP	UN	Qty	Description	Page No
TBA 0500S OR TBA 0500B						
020	1484289-0000	-		1	HATCH	
040	1348540-0000	B		8	PIVOT AXLE	
050	1260852-0000	-		16	WASHER	
060	1348538-0000	B		8	LEVER	
070	1348631-0000	B		8	PLATE	
080	1282864-0000	A		8	SPRING	
090	1511225-0000	B		8	CARRIER	
100	1260851-0000	B		8	AXLE PIN	
110	1144662-0000	A		16	BUSHING	
120	1260853-0000	B		8	RING	
130	1285254-0000	B		8	WASHER	
200	90240-0263	A		32	FLANGE BUSHING, 15X17X12 MM	
210	344502-0021	-		8	GREASE NIPPLE STRAIGHT M6	
220	312155-0289	-		8	SCREW HEX.SOCK.COUNT.MF6S M4X10 A480	
230	312155-0378	-		8	SCREW HEX.SOCK.COUNT.MF6S M6X40 A280	
240	312105-0368	-		16	SCREW M6S M6X16 A280	
TBA 1000SQ OR TPA 1000S						
020	1484289-0000	-		1	HATCH	
040	1348540-0000	B		8	PIVOT AXLE	
050	1260852-0000	-		16	WASHER	
060	1348538-0000	B		8	LEVER	
070	1348631-0000	B		8	PLATE	
080	1296176-0000	A		8	SPRING	
090	1478227-0000	B		8	CARRIER	
100	1260851-0000	B		8	AXLE PIN	
110	1144662-0000	A		16	BUSHING	
120	1260853-0000	B		8	RING	
130	1285254-0000	B		8	WASHER	
200	90240-0263	A		32	FLANGE BUSHING, 15X17X12 MM	
210	344502-0021	-		8	GREASE NIPPLE STRAIGHT M6	
220	312155-0289	-		8	SCREW HEX.SOCK.COUNT.MF6S M4X10 A480	
230	312155-0378	-		8	SCREW HEX.SOCK.COUNT.MF6S M6X40 A280	
240	312105-0368	-		16	SCREW M6S M6X16 A280	
TBA 1500S						
020	1484289-0000	-		1	HATCH	
040	1348540-0000	B		8	PIVOT AXLE	
050	1260852-0000	-		16	WASHER	
060	1348538-0000	B		8	LEVER	
070	1348631-0000	B		8	PLATE	
080	1282864-0000	A		8	SPRING	
090	1487159-0000	B		8	CARRIER	
100	1260851-0000	B		8	AXLE PIN	
110	1144662-0000	A		16	BUSHING	
120	1260853-0000	B		8	RING	
130	1285254-0000	B		8	WASHER	
200	90240-0263	A		32	FLANGE BUSHING, 15X17X12 MM	
210	344502-0021	-		8	GREASE NIPPLE STRAIGHT M6	
220	312155-0289	-		8	SCREW HEX.SOCK.COUNT.MF6S M4X10 A480	
230	312155-0378	-		8	SCREW HEX.SOCK.COUNT.MF6S M6X40 A280	
240	312105-0368	-		16	SCREW M6S M6X16 A280	
TPA 0330SQ						
020	1478925-0000	-		1	HATCH	
040	1350543-0000	B		12	AXLE PIN	
050	1260852-0000	-		24	WASHER	
060	1349983-0000	B		12	LEVER	
070	1348631-0000	B		12	PLATE	
080	1549615-0000	A		12	SPRING	
090	1549616-0000	B		12	CARRIER	
100	1260851-0000	B		12	AXLE PIN	
110	1144662-0000	A		24	BUSHING	
120	1260853-0000	B		12	RING	
130	1285254-0000	B		12	WASHER	
200	90240-0263	A		48	FLANGE BUSHING, 15X17X12 MM	
210	344502-0021	-		12	GREASE NIPPLE STRAIGHT M6	
220	312155-0289	-		12	SCREW HEX.SOCK.COUNT.MF6S M4X10 A480	
230	312155-0378	-		12	SCREW HEX.SOCK.COUNT.MF6S M6X40 A280	
240	312105-0368	-		12	SCREW M6S M6X16 A280	
Common Parts						
010	1478558-0000	-		1	WASHER	
030	1478228-0000	A		1	CAM	

Machine Type | Group Description | Used-In | Group Number | Page No

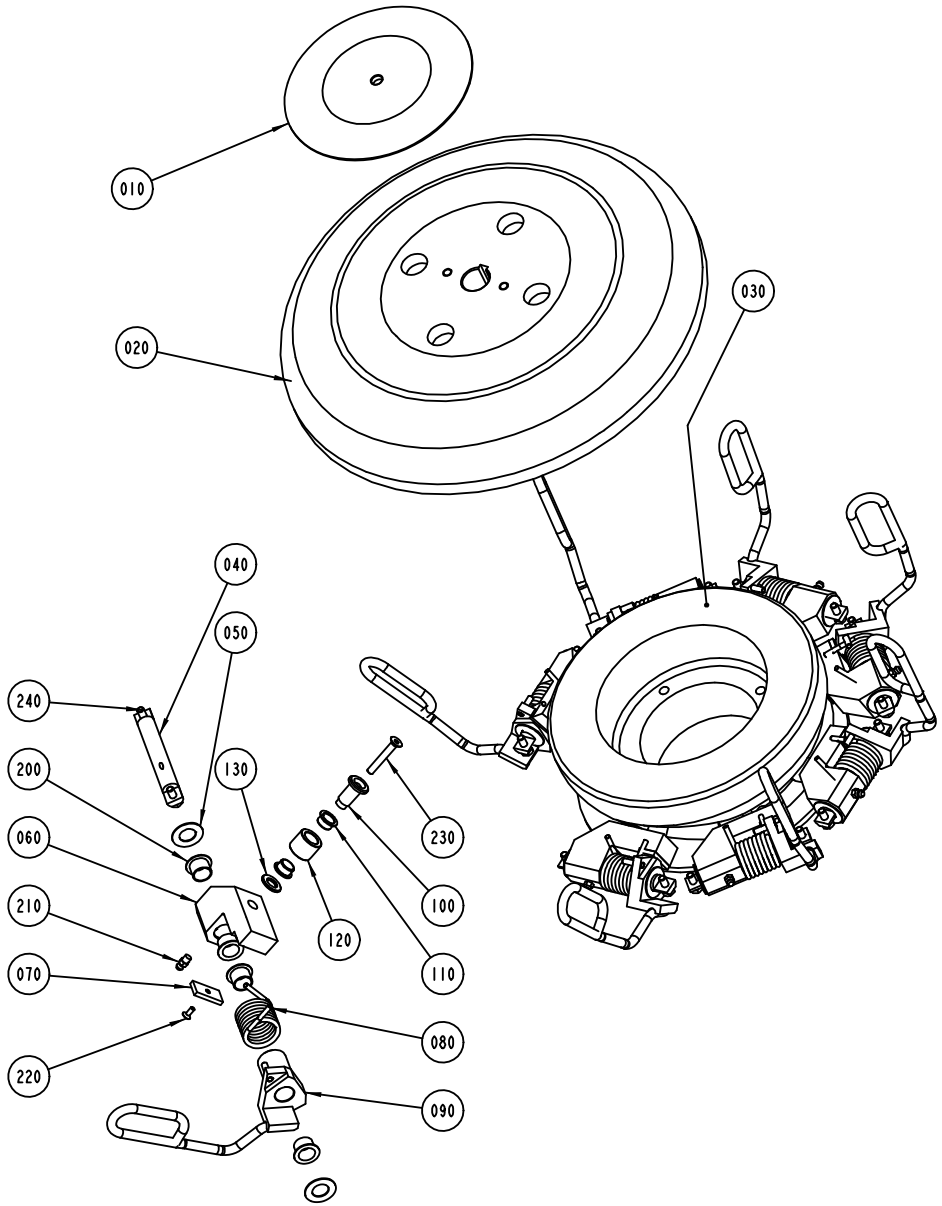

S-1487038-2
ECN 72095

ECM: 92295 - 20010709
Group number: 1487038-0100
Assembly Drawing: 1487038-2_1_AA

Issue: 20011217

Pos	Part No	SP	UN	Qty	Description	Page No
TBA 0500S OR TBA 0500B						
020	1484289-0000	-		1	HATCH	
040	1348540-0000	B		8	PIVOT AXLE	
050	1260852-0000	-		16	WASHER	
060	1348538-0000	B		8	LEVER	
070	1348631-0000	B		8	PLATE	
080	1282864-0000	A		8	SPRING	
090	1511225-0000	B		8	CARRIER	
100	1260851-0000	B		8	AXLE PIN	
110	1144662-0000	A		16	BUSHING	
120	1260853-0000	B		8	RING	
130	1285254-0000	B		8	WASHER	
200	90240-0263	A		32	FLANGE BUSHING, 15X17X12 MM	
210	344502-0021	-		8	GREASE NIPPLE STRAIGHT M6	
220	312155-0289	-		8	SCREW HEX.SOCK.COUNT.MF6S M4X10 A480	
230	312155-0378	-		8	SCREW HEX.SOCK.COUNT.MF6S M6X40 A280	
240	312105-0368	-		16	SCREW M6S M6X16 A280	
TBA 1000SQ OR TPA 1000S						
020	1484289-0000	-		1	HATCH	
040	1348540-0000	B		8	PIVOT AXLE	
050	1260852-0000	-		16	WASHER	
060	1348538-0000	B		8	LEVER	
070	1348631-0000	B		8	PLATE	
080	1296176-0000	A		8	SPRING	
090	1478227-0000	B		8	CARRIER	
100	1260851-0000	B		8	AXLE PIN	
110	1144662-0000	A		16	BUSHING	
120	1260853-0000	B		8	RING	
130	1285254-0000	B		8	WASHER	
200	90240-0263	A		32	FLANGE BUSHING, 15X17X12 MM	
210	344502-0021	-		8	GREASE NIPPLE STRAIGHT M6	
220	312155-0289	-		8	SCREW HEX.SOCK.COUNT.MF6S M4X10 A480	
230	312155-0378	-		8	SCREW HEX.SOCK.COUNT.MF6S M6X40 A280	
240	312105-0368	-		16	SCREW M6S M6X16 A280	
TBA 1500S						
020	1484289-0000	-		1	HATCH	
040	1348540-0000	B		8	PIVOT AXLE	
050	1260852-0000	-		16	WASHER	
060	1348538-0000	B		8	LEVER	
070	1348631-0000	B		8	PLATE	
080	1282864-0000	A		8	SPRING	
090	1487159-0000	B		8	CARRIER	
100	1260851-0000	B		8	AXLE PIN	
110	1144662-0000	A		16	BUSHING	
120	1260853-0000	B		8	RING	
130	1285254-0000	B		8	WASHER	
200	90240-0263	A		32	FLANGE BUSHING, 15X17X12 MM	
210	344502-0021	-		8	GREASE NIPPLE STRAIGHT M6	
220	312155-0289	-		8	SCREW HEX.SOCK.COUNT.MF6S M4X10 A480	
230	312155-0378	-		8	SCREW HEX.SOCK.COUNT.MF6S M6X40 A280	
240	312105-0368	-		16	SCREW M6S M6X16 A280	
TPA 0330SQ						
020	1478925-0000	-		1	HATCH	
040	1350543-0000	B		12	AXLE PIN	
050	1260852-0000	-		24	WASHER	
060	1349983-0000	B		12	LEVER	
070	1348631-0000	B		12	PLATE	
080	1549615-0000	A		12	SPRING	
090	1549616-0000	B		12	CARRIER	
100	1260851-0000	B		12	AXLE PIN	
110	1144662-0000	A		24	BUSHING	
120	1260853-0000	B		12	RING	
130	1285254-0000	B		12	WASHER	
200	90240-0263	A		48	FLANGE BUSHING, 15X17X12 MM	
210	344502-0021	-		12	GREASE NIPPLE STRAIGHT M6	
220	312155-0289	-		12	SCREW HEX.SOCK.COUNT.MF6S M4X10 A480	
230	312155-0378	-		12	SCREW HEX.SOCK.COUNT.MF6S M6X40 A280	
240	312105-0368	-		12	SCREW M6S M6X16 A280	
Common Parts						
010	1478558-0000	-		1	WASHER	
030	1478228-0000	A		1	CAM	

Machine Type | Group Description | Used-In | Group Number | Page No

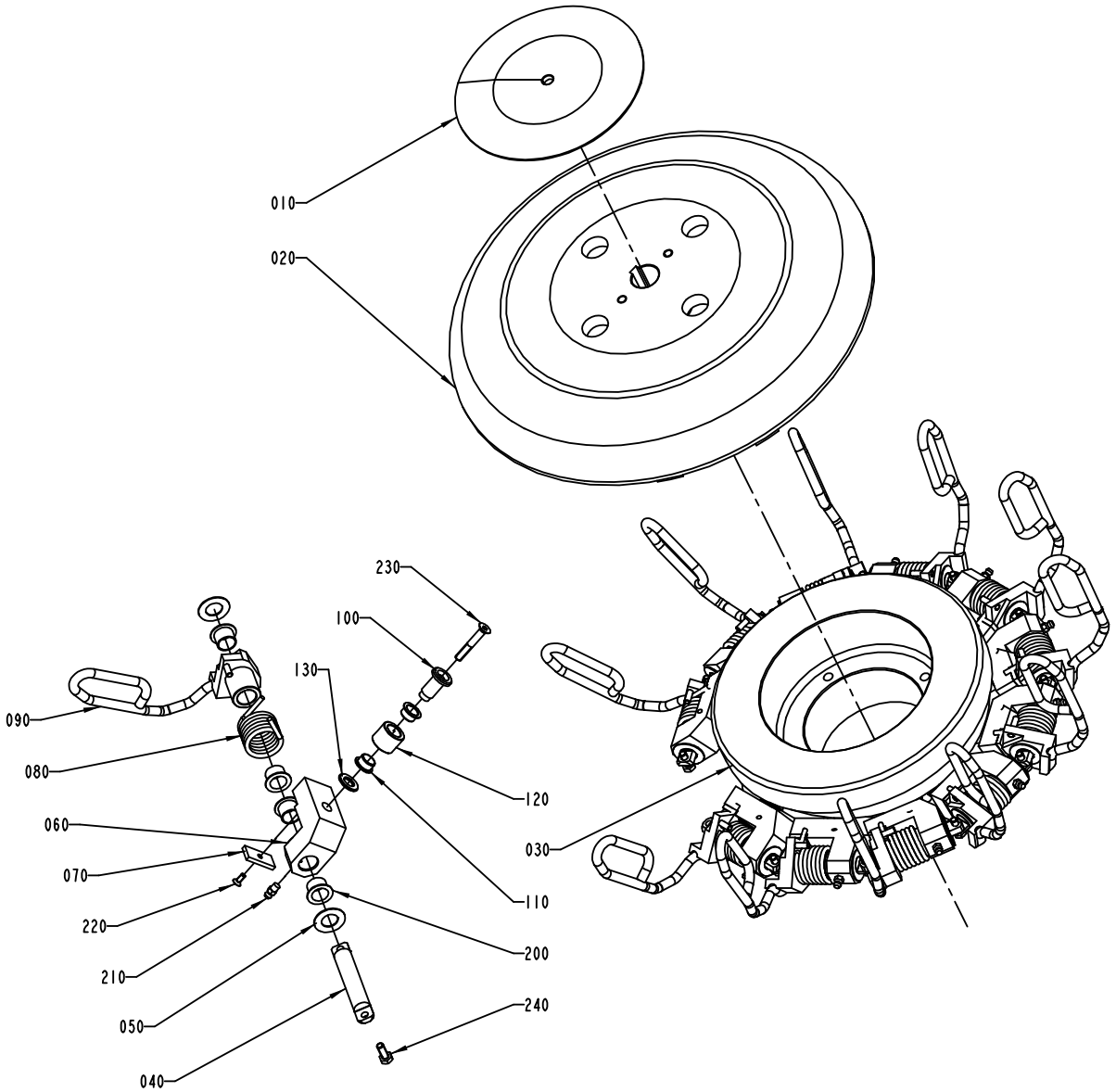

1487038-3
ECN 80472

ECM: 92295 - 20010709
Group number: 1487038-0100
Assembly Drawing: 1487038-3_1_AA

Issue: 20011217

Pos	Part No	SP	UN	Qty	Description	Page No
TBA 0500S OR TBA 0500B						
020	1484289-0000	-		1	HATCH	
040	1348540-0000	B		8	PIVOT AXLE	
050	1260852-0000	-		16	WASHER	
060	1348538-0000	B		8	LEVER	
070	1348631-0000	B		8	PLATE	
080	1282864-0000	A		8	SPRING	
090	1511225-0000	B		8	CARRIER	
100	1260851-0000	B		8	AXLE PIN	
110	1144662-0000	A		16	BUSHING	
120	1260853-0000	B		8	RING	
130	1285254-0000	B		8	WASHER	
200	90240-0263	A		32	FLANGE BUSHING, 15X17X12 MM	
210	344502-0021	-		8	GREASE NIPPLE STRAIGHT M6	
220	312155-0289	-		8	SCREW HEX.SOCK.COUNT.MF6S M4X10 A480	
230	312155-0378	-		8	SCREW HEX.SOCK.COUNT.MF6S M6X40 A280	
240	312105-0368	-		16	SCREW M6S M6X16 A280	
TBA 1000SQ OR TPA 1000S						
020	1484289-0000	-		1	HATCH	
040	1348540-0000	B		8	PIVOT AXLE	
050	1260852-0000	-		16	WASHER	
060	1348538-0000	B		8	LEVER	
070	1348631-0000	B		8	PLATE	
080	1296176-0000	A		8	SPRING	
090	1478227-0000	B		8	CARRIER	
100	1260851-0000	B		8	AXLE PIN	
110	1144662-0000	A		16	BUSHING	
120	1260853-0000	B		8	RING	
130	1285254-0000	B		8	WASHER	
200	90240-0263	A		32	FLANGE BUSHING, 15X17X12 MM	
210	344502-0021	-		8	GREASE NIPPLE STRAIGHT M6	
220	312155-0289	-		8	SCREW HEX.SOCK.COUNT.MF6S M4X10 A480	
230	312155-0378	-		8	SCREW HEX.SOCK.COUNT.MF6S M6X40 A280	
240	312105-0368	-		16	SCREW M6S M6X16 A280	
TBA 1500S						
020	1484289-0000	-		1	HATCH	
040	1348540-0000	B		8	PIVOT AXLE	
050	1260852-0000	-		16	WASHER	
060	1348538-0000	B		8	LEVER	
070	1348631-0000	B		8	PLATE	
080	1282864-0000	A		8	SPRING	
090	1487159-0000	B		8	CARRIER	
100	1260851-0000	B		8	AXLE PIN	
110	1144662-0000	A		16	BUSHING	
120	1260853-0000	B		8	RING	
130	1285254-0000	B		8	WASHER	
200	90240-0263	A		32	FLANGE BUSHING, 15X17X12 MM	
210	344502-0021	-		8	GREASE NIPPLE STRAIGHT M6	
220	312155-0289	-		8	SCREW HEX.SOCK.COUNT.MF6S M4X10 A480	
230	312155-0378	-		8	SCREW HEX.SOCK.COUNT.MF6S M6X40 A280	
240	312105-0368	-		16	SCREW M6S M6X16 A280	
TPA 0330SQ						
020	1478925-0000	-		1	HATCH	
040	1350543-0000	B		12	AXLE PIN	
050	1260852-0000	-		24	WASHER	
060	1349983-0000	B		12	LEVER	
070	1348631-0000	B		12	PLATE	
080	1549615-0000	A		12	SPRING	
090	1549616-0000	B		12	CARRIER	
100	1260851-0000	B		12	AXLE PIN	
110	1144662-0000	A		24	BUSHING	
120	1260853-0000	B		12	RING	
130	1285254-0000	B		12	WASHER	
200	90240-0263	A		48	FLANGE BUSHING, 15X17X12 MM	
210	344502-0021	-		12	GREASE NIPPLE STRAIGHT M6	
220	312155-0289	-		12	SCREW HEX.SOCK.COUNT.MF6S M4X10 A480	
230	312155-0378	-		12	SCREW HEX.SOCK.COUNT.MF6S M6X40 A280	
240	312105-0368	-		12	SCREW M6S M6X16 A280	
Common Parts						
010	1478558-0000	-		1	WASHER	
030	1478228-0000	A		1	CAM	

Machine Type | Group Description | Used-In | Group Number | Page No

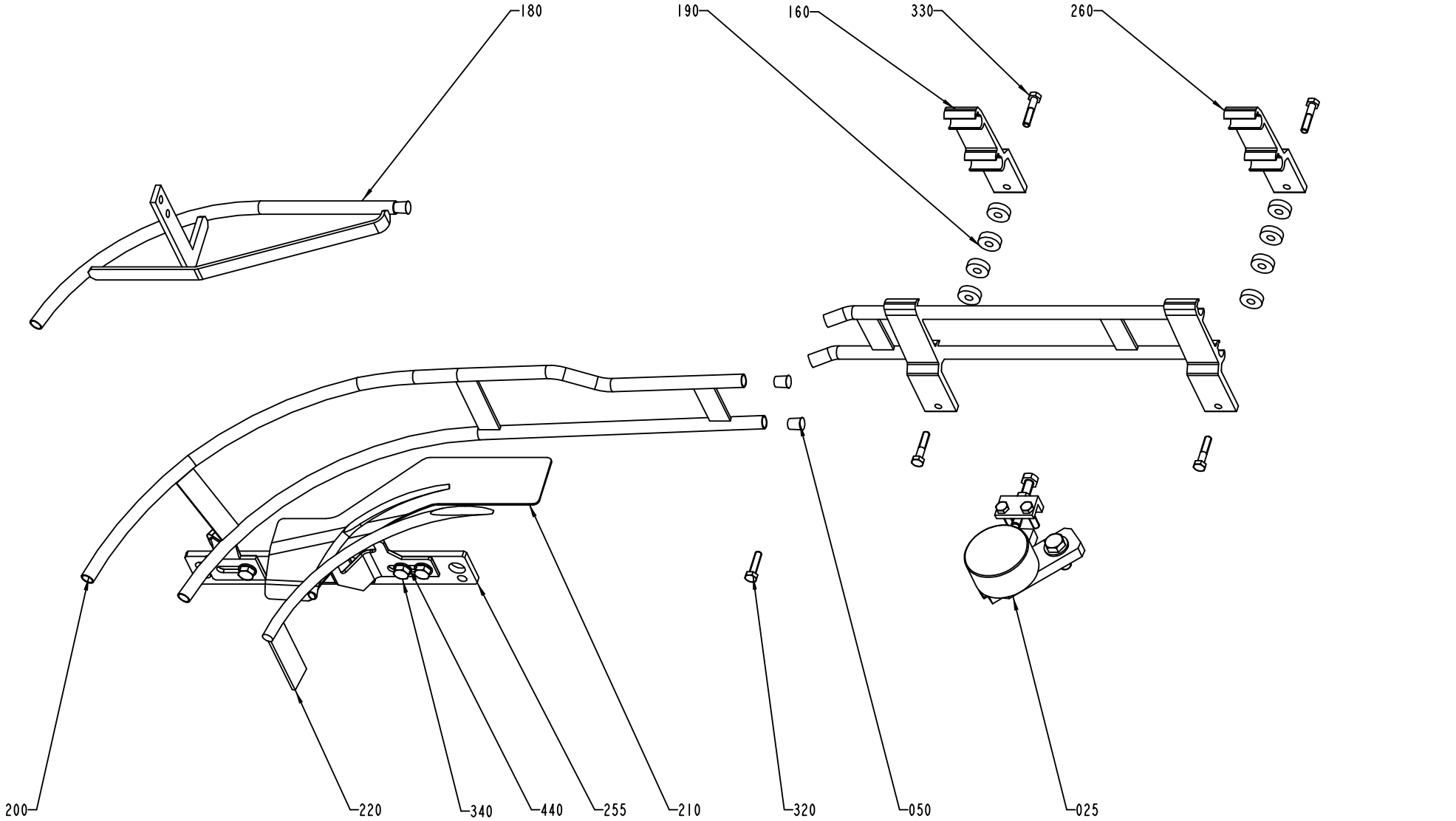

S-1361920-2
ECN 72710

Pos	Part No	SP	UN	Qty	Description	Page No
TBA 0200B OR TBA 0250B						
050	484701-0000	-		13	SHUTTER	
120	1317436-0000	-		1	RAIL	
160	1285009-0000	-		2	HOLDER	
180	1346339-0000	-		1	RAIL	
200	1346739-0000	-		1	GUIDE	
210	1296057-0000	-		1	GUIDE	
260	1020142-0002	-		2	RAIL HOLDER, B55 WIDTH 30 MM	
320	312105-0372	-		7	SCREW M6S M6X25 A280	
340	312105-0452	-		3	SCREW M6S M8X22 A280	
440	315105-0165	-		5	WASHER PLAIN, BRB, 8,4/16,H=1,5	
TBA 0200S						
050	484701-0000	-		13	SHUTTER	
120	1317436-0000	-		1	RAIL	
160	1285009-0000	-		2	HOLDER	
180	1296135-0000	-		1	RAIL	
200	1348233-0000	-		1	GUIDE	
210	1296057-0000	-		1	GUIDE	
260	1020142-0002	-		2	RAIL HOLDER, B55 WIDTH 30 MM	
320	312105-0372	-		7	SCREW M6S M6X25 A280	
340	312105-0452	-		3	SCREW M6S M8X22 A280	
440	315105-0165	-		5	WASHER PLAIN, BRB, 8,4/16,H=1,5	
TBA 0500B						
050	484701-0000	-		12	SHUTTER	
120	1487684-0000	-		1	RAIL	
160	1285009-0000	-		2	HOLDER	
190	1285253-0000	-		8	SPACER	
200	1539869-0000	-		1	RAIL	
210	1487177-0000	-		1	GUIDE	
220	1539870-0000	-		1	RAIL	
260	1020142-0002	-		2	RAIL HOLDER, B55 WIDTH 30 MM	
270	1487419-0000	-		1	SLIDE	
280	1487485-0000	-		1	BRACKET	
290	1349974-0000	-		1	CONNECTION CLAMP	
330	312105-0374	-		4	SCREW M6S M6X30 A280	
340	312105-0452	-		3	SCREW M6S M8X22 A280	
350	312105-0368	-		4	SCREW M6S M6X16 A280	
440	315105-0165	-		3	WASHER PLAIN, BRB, 8,4/16,H=1,5	
445	315105-0153	-		10	WASHER PLAIN, BRB, 6,4/12,H=1,5	
450	312105-0368	-		4	SCREW M6S M6X16 A280	
460	312105-0376	-		2	SCREW M6S M6S M6X35 A280	
TBA 0500S						
050	484701-0000	-		10	SHUTTER	
120	1487684-0000	-		1	RAIL	
160	1285009-0000	-		2	HOLDER	
200	1524349-0000	-		1	GUIDE	
210	1487177-0000	-		1	GUIDE	
220	1523882-0000	-		1	RAIL	
270	1487419-0000	-		1	SLIDE	
280	1487485-0000	-		1	BRACKET	
290	1349974-0000	-		1	CONNECTION CLAMP	
330	312105-0374	-		4	SCREW M6S M6X30 A280	
340	312105-0452	-		3	SCREW M6S M8X22 A280	
350	312105-0368	-		4	SCREW M6S M6X16 A280	
440	315105-0165	-		3	WASHER PLAIN, BRB, 8,4/16,H=1,5	
445	315105-0153	-		12	WASHER PLAIN, BRB, 6,4/12,H=1,5	
460	312105-0376	-		2	SCREW M6S M6S M6X35 A280	
TBA 1000S OR TBA 1000B						
050	484701-0000	-		14	SHUTTER	
120	1279584-0000	-		1	RAIL	
160	1285009-0000	-		2	HOLDER	
180	1285240-0000	-		1	RAIL	
190	1285253-0000	-		8	SPACER	
200	1285258-0000	-		1	RAIL	
210	1285259-0000	-		1	GUIDE	
220	1285261-0000	-		1	RAIL	
260	1020142-0002	-		2	RAIL HOLDER, B55 WIDTH 30 MM	
320	312105-0372	-		3	SCREW M6S M6X25 A280	
330	312105-0374	-		4	SCREW M6S M6X30 A280	
340	312105-0452	-		5	SCREW M6S M8X22 A280	
440	315105-0165	-		5	WASHER PLAIN, BRB, 8,4/16,H=1,5	
TBA 1000SQ						
050	484701-0000	-		14	SHUTTER	
120	1296079-0000	-		1	RAIL	
150	1499413-0000	-		1	HOLDER	
160	1285009-0000	-		2	HOLDER	
180	1296078-0000	-		1	RAIL	
190	1285253-0000	-		8	SPACER	
200	1519540-0000	-		1	RAIL	

Machine Type Group Description Used-In Group Number Page No

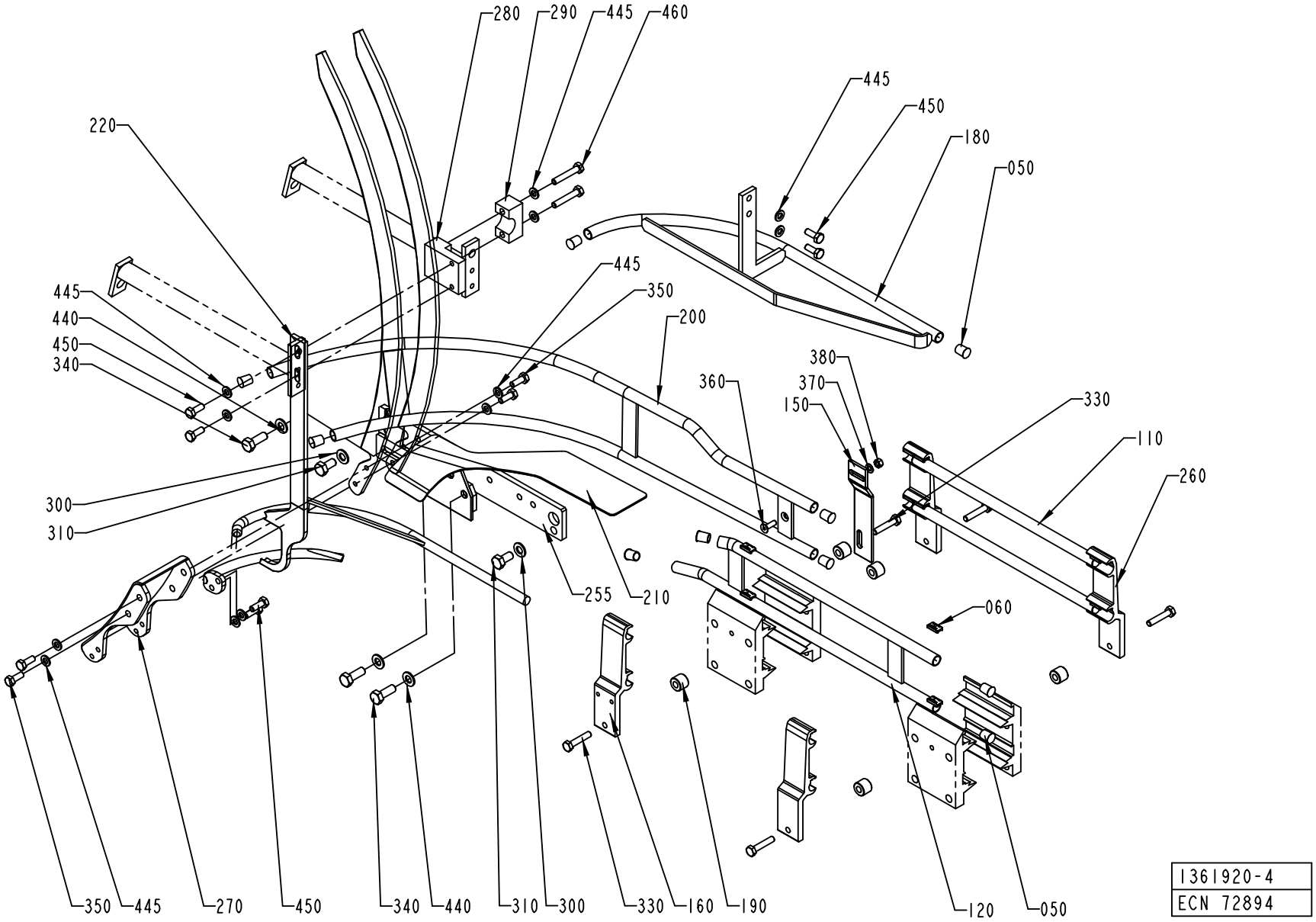

1361920-4
ECN 72894

Pos	Part No	SP	UN	Qty	Description	Page No
TBA 1000SQ (Cont'd)						
210	1349806-0000	-		1	GUIDE	
220	1487727-0000	-		1	RAIL	
260	1020142-0002	-		2	RAIL HOLDER, B55 WIDTH 30 MM	
270	1487419-0000	-		1	SLIDE	
280	1487485-0000	-		1	BRACKET	
290	1349974-0000	-		1	CONNECTION CLAMP	
330	312105-0374	-		5	SCREW M6S M6X30 A280	
340	312105-0452	-		3	SCREW M6S M8X22 A280	
350	312105-0368	-		4	SCREW M6S M6X16 A280	
360	312155-0329	-		1	SCREW HEX.SOCK.COUNT.MF6S M5X16 A280	
370	315103-0146	-		1	WASHER PLAIN, BRB, 5,3/10,H=1 NI PL BR	
380	312602-0314	-		1	HEXAGON NUT, M6M M5 BR NI.PL.	
440	315105-0165	-		3	WASHER PLAIN, BRB, 8,4/16,H=1,5	
445	315105-0153	-		12	WASHER PLAIN, BRB, 6,4/12,H=1,5	
450	312105-0368	-		6	SCREW M6S M6X16 A280	
460	312105-0376	-		2	SCREW M6S M6S M6X35 A280	
TBA 1500S						
050	484701-0000	-		14	SHUTTER	
120	1487684-0000	-		1	RAIL	
150	1499413-0000	-		1	HOLDER	
160	1285009-0000	-		2	HOLDER	
180	1487490-0000	-		1	RAIL	
190	1317218-0000	-		5	SPACER	
200	1285258-0000	-		1	RAIL	
210	1487177-0000	-		1	GUIDE	
220	1487484-0000	-		1	RAIL	
260	1020142-0002	-		2	RAIL HOLDER, B55 WIDTH 30 MM	
270	1487419-0000	-		1	SLIDE	
280	1487485-0000	-		1	BRACKET	
290	1349974-0000	-		1	CONNECTION CLAMP	
330	312105-0374	-		5	SCREW M6S M6X30 A280	
340	312105-0452	-		3	SCREW M6S M8X22 A280	
350	312105-0368	-		4	SCREW M6S M6X16 A280	
360	312155-0329	-		1	SCREW HEX.SOCK.COUNT.MF6S M5X16 A280	
370	315103-0146	-		1	WASHER PLAIN, BRB, 5,3/10,H=1 NI PL BR	
380	312602-0314	-		1	HEXAGON NUT, M6M M5 BR NI.PL.	
440	315105-0165	-		3	WASHER PLAIN, BRB, 8,4/16,H=1,5	
445	315105-0153	-		12	WASHER PLAIN, BRB, 6,4/12,H=1,5	
450	312105-0368	-		6	SCREW M6S M6X16 A280	
460	312105-0376	-		2	SCREW M6S M6S M6X35 A280	

Pos	Part No	SP	UN	Qty	Description	Page No
TPA 0330SQ						
050	484701-0000	-		10	SHUTTER	
120	1296079-0000	-		1	RAIL	
160	1285009-0000	-		2	HOLDER	
190	1285253-0000	-		2	SPACER	
200	1532294-0000	-		1	RAIL	
220	1532296-0000	-		1	RAIL	
260	B1366777-0101	-		2	RAIL HOLDER TPC21	
100	*1366726-0000*	-		*1*	*HOLDER*	
110	*1359085-0000*	-		*1*	*T-HOLDER*	
120	*1366727-0000*	-		*1*	*CLAMP*	
130	*1359565-0000*	-		*1*	*NUT*	
300	*312105-0366*	-		*1*	*SCREW M6S M6X12 A280*	
310	*312105-0368*	-		*1*	*SCREW M6S M6X16 A280*	
350	*315105-0153*	-		*1*	*WASHER PLAIN, BRB, 6,4/12,H=1,5*	
270	1532292-0000	-		1	SLIDE	
280	1487485-0000	-		1	BRACKET	
290	1349974-0000	-		1	CONNECTION CLAMP	
330	312105-0370	-		4	SCREW M6S M6X20 A280	
340	312105-0452	-		1	SCREW M6S M8X22 A280	
350	312105-0368	-		4	SCREW M6S M6X16 A280	
440	315105-0165	-		1	WASHER PLAIN, BRB, 8,4/16,H=1,5	
445	315105-0153	-		10	WASHER PLAIN, BRB, 6,4/12,H=1,5	
450	312105-0368	-		4	SCREW M6S M6X16 A280	
460	312105-0376	-		2	SCREW M6S M6S M6X35 A280	
TPA 1000S						
050	484701-0000	-		14	SHUTTER	
120	1296079-0000	-		1	RAIL	
150	1499413-0000	-		1	HOLDER	
160	1334113-0000	-		2	HOLDER	
180	1296078-0000	-		1	RAIL	
200	1519540-0000	-		1	RAIL	
210	1349806-0000	-		1	GUIDE	
220	1487727-0000	-		1	RAIL	
260	1020816-0002	-		2	RAIL HOLDER, B68/R68 WIDTH 30 MM	
270	1487419-0000	-		1	SLIDE	
280	1487485-0000	-		1	BRACKET	
290	1349974-0000	-		1	CONNECTION CLAMP	
330	312105-0370	-		5	SCREW M6S M6X20 A280	
340	312105-0452	-		3	SCREW M6S M8X22 A280	

Machine Type	Group Description	Used-In	Group Number	Page No

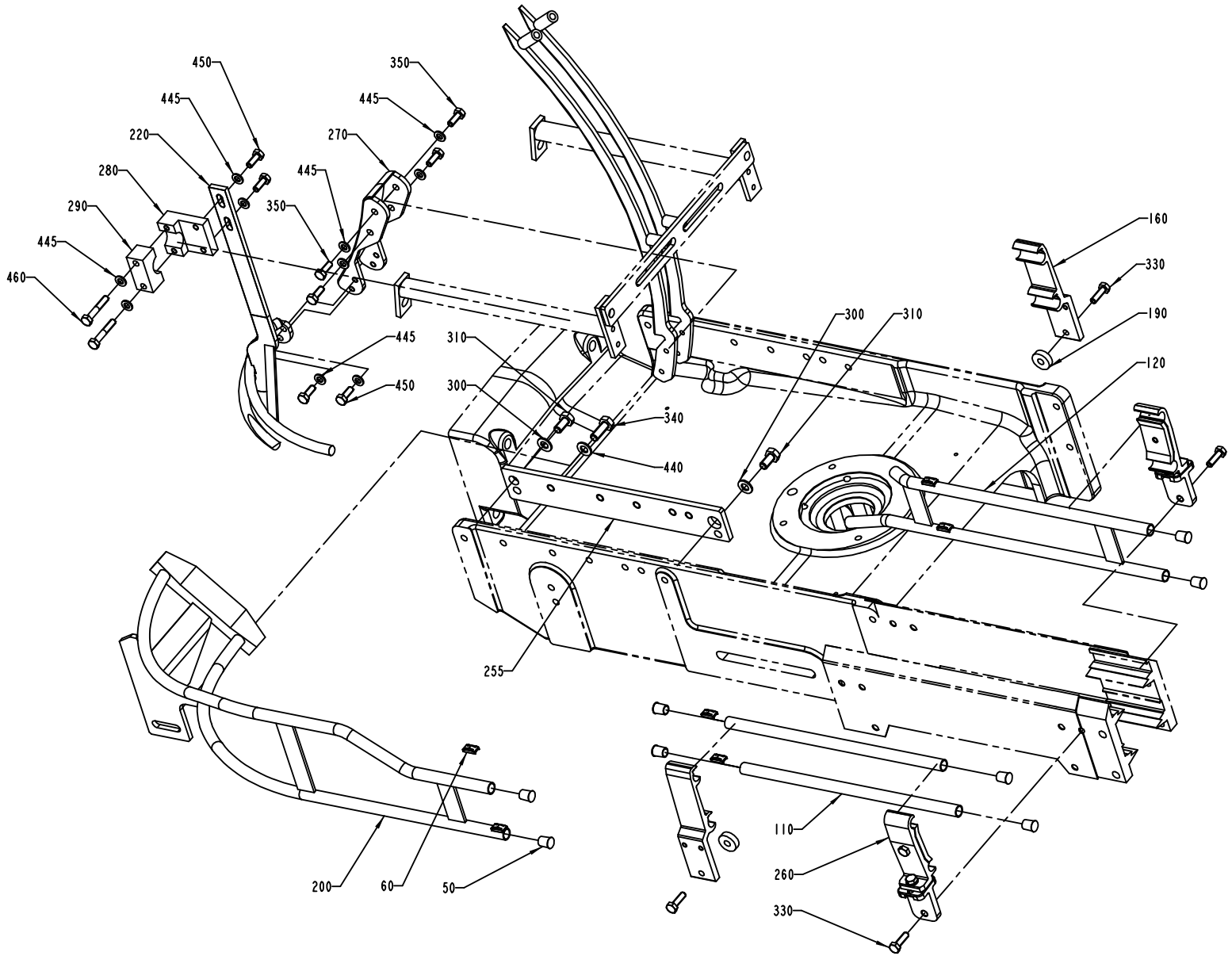

1361920-6
ECN 80472

Pos	Part No	SP	UN	Qty	Description	Page No
TPA 1000S (Cont'd)						
350	312105-0368	-		4	SCREW M6S M6X16 A280	
360	312155-0329	-		1	SCREW HEX.SOCK.COUNT.MF6S M5X16 A280	
370	315103-0146	-		1	WASHER PLAIN, BRB, 5,3/10,H=1 NI PL BR	
380	312602-0314	-		1	HEXAGON NUT, M6M M5 BR NI.PL.	
440	315105-0165	-		3	WASHER PLAIN, BRB, 8,4/16,H=1,5	
445	315105-0153	-		12	WASHER PLAIN, BRB, 6,4/12,H=1,5	
450	312105-0368	-		6	SCREW M6S M6X16 A280	
460	312105-0376	-		2	SCREW M6S M6S M6X35 A280	
Common Parts						
060	1020146-0000	-		10	LOCKING BLOCK REPL BY 1020290-101	
110	1279582-0000	-		2	RAIL	
255	1478235-0000	-		1	PLATE	
300	315105-0165	-		2	WASHER PLAIN, BRB, 8,4/16,H=1,5	
310	312105-0449	-		2	SCREW M6S M8X16 A280	

Pos	Part No	SP	UN	Qty	Description	Page No

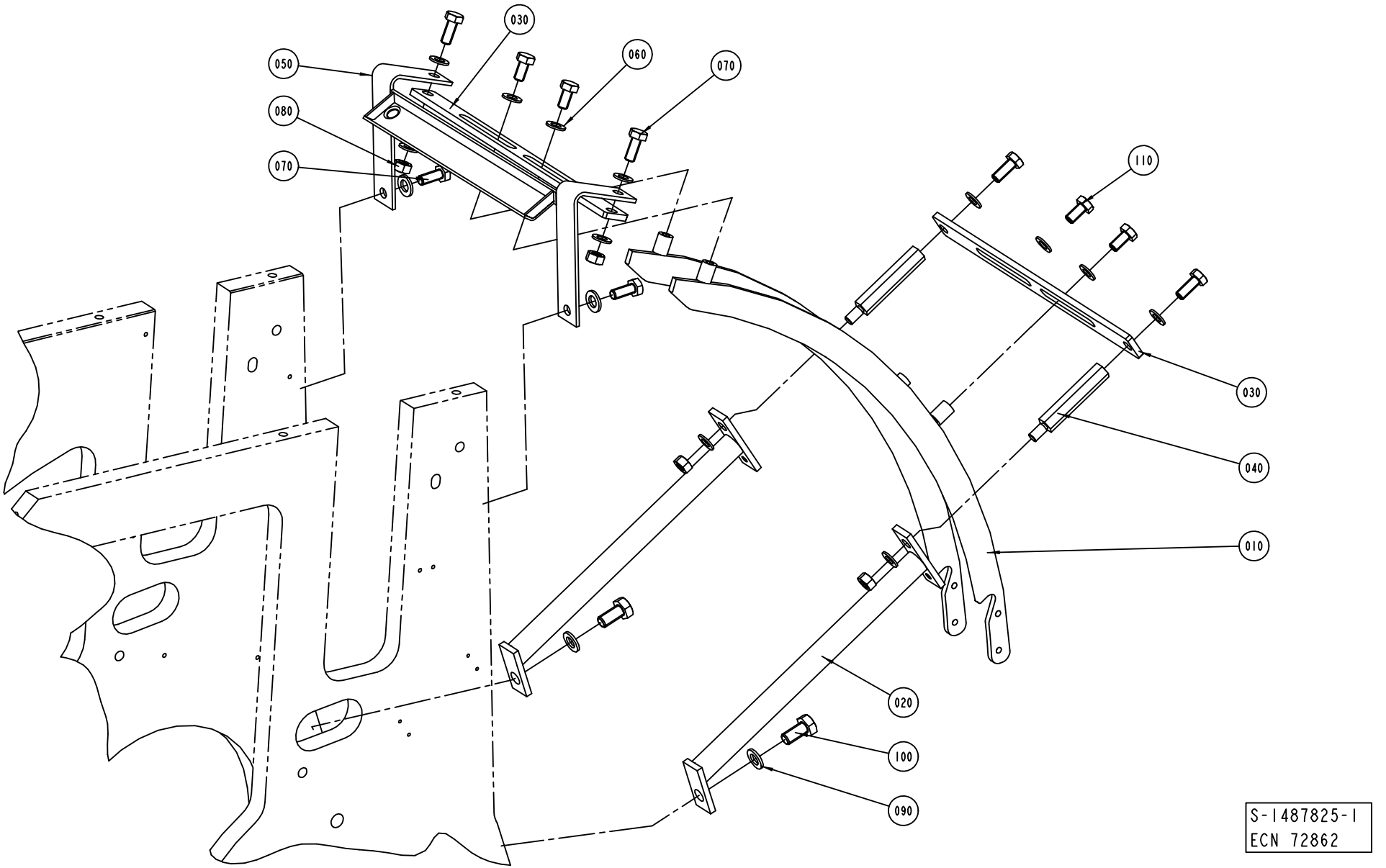
030
060
070
050
080
070
110
030
040
010
020
100
090
S-1487825-1
ECN 72862

Pos	Part No	SP	UN	Qty	Description	Page No
TBA 0200B OR TBA 0200S OR TBA 0250B						
010	1334808-0000	-		2	RAIL	
035	1348848-0000	-		1	PLATE	
050	1144899-0000	-		2	SUPPORT	
060	315105-0165	-		16	WASHER PLAIN, BRB, 8,4/16,H=1,5	
TBA 0500S OR TBA 0500B OR TBA 1000SQ OR TPA 1000S						
010	1478009-0000	-		2	RAIL	
050	1144899-0000	-		2	SUPPORT	
070	312105-0451	-		6	SCREW M6S 8X20 A280	
TBA 1000S OR TBA 1000B						
010	1348659-0000	-		2	RAIL	
035	1348848-0000	-		1	PLATE	
050	1144899-0000	-		2	SUPPORT	
060	315105-0165	-		16	WASHER PLAIN, BRB, 8,4/16,H=1,5	
TBA 1500S						
010	1487418-0000	-		2	RAIL	
040	1487486-0000	-		2	SPACER	
050	1346588-0000	-		1	DRIP PLATE	
070	312105-0451	-		6	SCREW M6S 8X20 A280	
TPA 0330SQ						
010	1478009-0000	-		2	RAIL	
050	1144899-0000	-		2	SUPPORT	
070	312105-0451	-		6	SCREW M6S 8X20 A280	
Common Parts						
020	1279577-0000	-		2	SUPPORT	
030	1144552-0000	-		2	PLATE	
060	315105-0165	-		14	WASHER PLAIN, BRB, 8,4/16,H=1,5	
070	312105-0451	-		8	SCREW M6S 8X20 A280	
080	312605-0318	-		4	HEXAGON NUT, M6M M8 A280	
090	315105-0171	-		2	WASHER PLAIN, BRB, 10/18,H=2	
100	312105-0491	-		2	SCREW M6S M10X20 A280	
110	312105-0449	-		4	SCREW M6S M8X16 A280	

Pos	Part No	SP	UN	Qty	Description	Page No

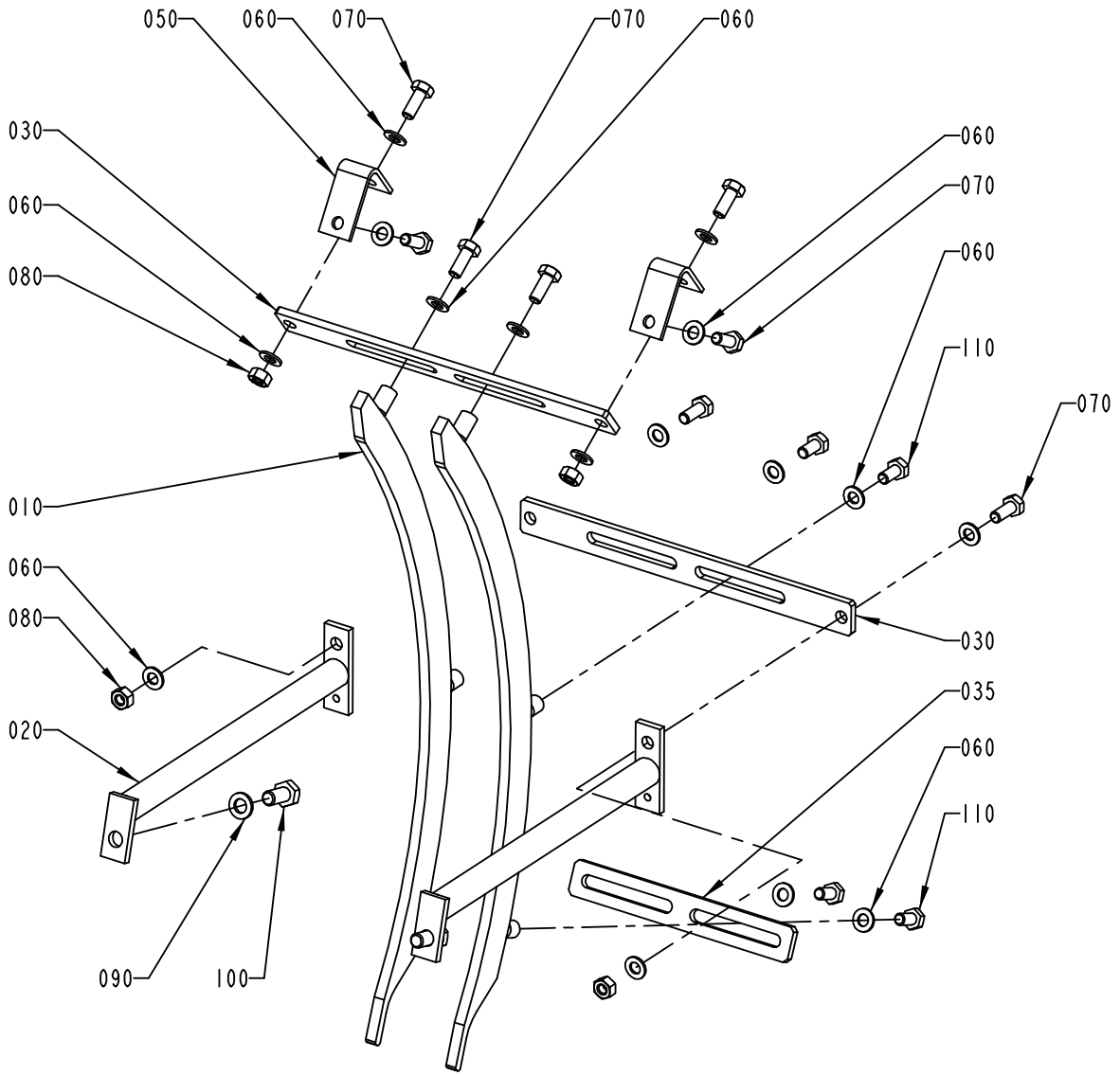

1487825-2
ECN 95038

Pos	Part No	SP	UN	Qty	Description	Page No
TBA 0200B OR TBA 0200S OR TBA 0250B						
010	1334808-0000	-		2	RAIL	
035	1348848-0000	-		1	PLATE	
050	1144899-0000	-		2	SUPPORT	
060	315105-0165	-		16	WASHER PLAIN, BRB, 8,4/16,H=1,5	
TBA 0500S OR TBA 0500B OR TBA 1000SQ OR TPA 1000S						
010	1478009-0000	-		2	RAIL	
050	1144899-0000	-		2	SUPPORT	
070	312105-0451	-		6	SCREW M6S 8X20 A280	
TBA 1000S OR TBA 1000B						
010	1348659-0000	-		2	RAIL	
035	1348848-0000	-		1	PLATE	
050	1144899-0000	-		2	SUPPORT	
060	315105-0165	-		16	WASHER PLAIN, BRB, 8,4/16,H=1,5	
TBA 1500S						
010	1487418-0000	-		2	RAIL	
040	1487486-0000	-		2	SPACER	
050	1346588-0000	-		1	DRIP PLATE	
070	312105-0451	-		6	SCREW M6S 8X20 A280	
TPA 0330SQ						
010	1478009-0000	-		2	RAIL	
050	1144899-0000	-		2	SUPPORT	
070	312105-0451	-		6	SCREW M6S 8X20 A280	
Common Parts						
020	1279577-0000	-		2	SUPPORT	
030	1144552-0000	-		2	PLATE	
060	315105-0165	-		14	WASHER PLAIN, BRB, 8,4/16,H=1,5	
070	312105-0451	-		8	SCREW M6S 8X20 A280	
080	312605-0318	-		4	HEXAGON NUT, M6M M8 A280	
090	315105-0171	-		2	WASHER PLAIN, BRB, 10/18,H=2	
100	312105-0491	-		2	SCREW M6S M10X20 A280	
110	312105-0449	-		4	SCREW M6S M8X16 A280	

Pos	Part No	SP	UN	Qty	Description	Page No

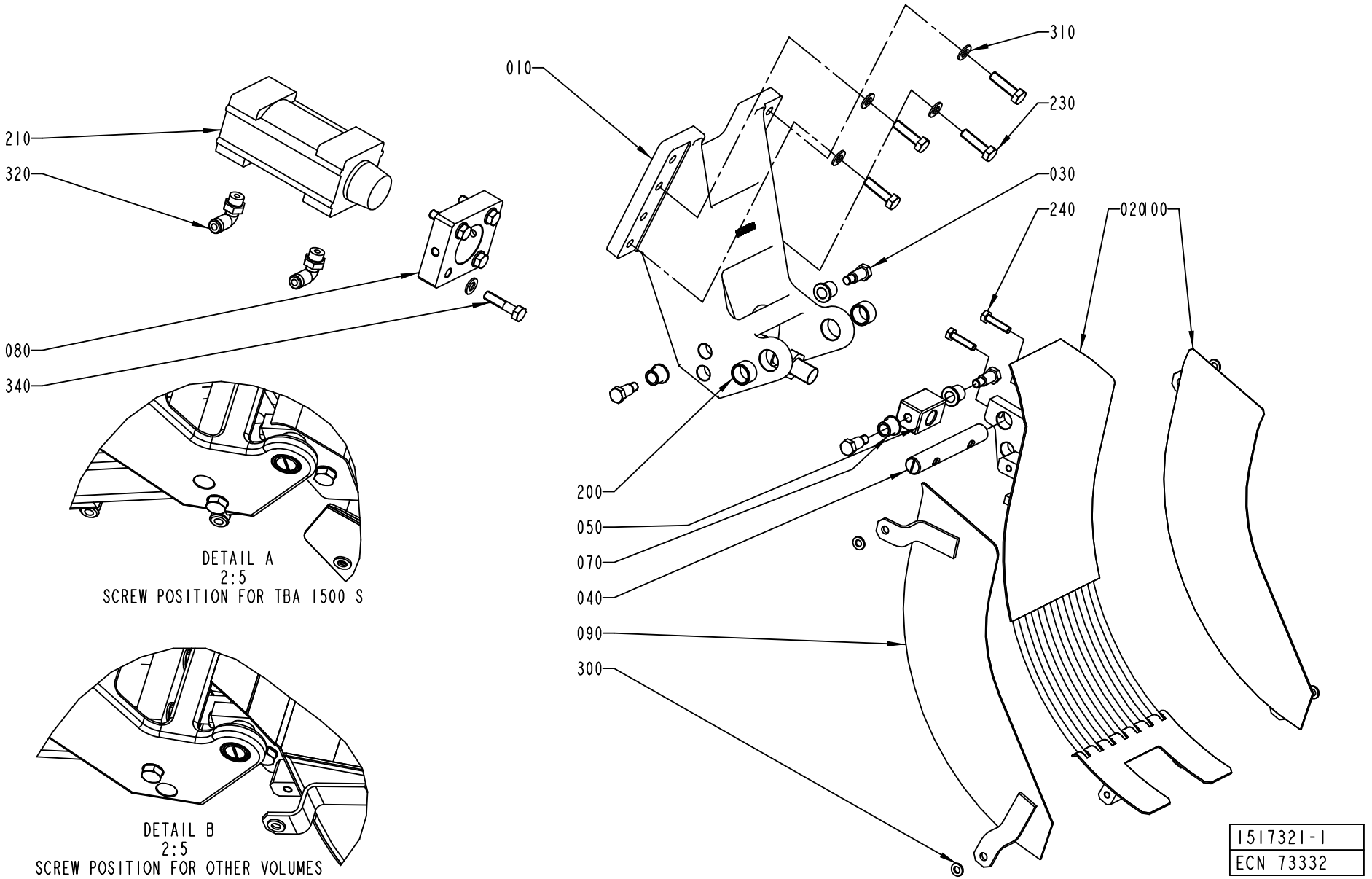
210
320
080
340
010
310
230
030
240
020
100
200
050
070
040
090
300
DETAIL A
2:5
SCREW POSITION FOR TBA 1500 S
DETAIL B
2:5
SCREW POSITION FOR OTHER VOLUMES
1517321-1
ECN 73332

Pos	Part No	SP	UN	Qty	Description	Page No
TBA 0500S OR TBA 0500B OR TBA 1000S OR TBA 1000SQ OR TBA 1000B OR TBA 0200B OR TBA 0200S OR TBA 0250B OR TPA 1000S OR TPA 0330SQ						
020	1484258-0000	B		1	CRADLE	
090	1285023-0000	-		1	SIDE PLATE	
100	1285022-0000	-		1	SIDE PLATE	
TBA 1500S						
020	1348920-0000	B		1	CRADLE	
090	1348854-0000	-		1	PLATE	
100	1349017-0000	-		1	PLATE	
Common Parts						
010	1478534-0000	-		1	BRACKET	
030	449190-0000	A		4	SHAFT	
040	1144579-0000	A		1	AXLE	
050	1144577-0000	-		1	BLOCK	
070	1478928-0000	A		4	BUSHING	
080	1144535-0000	-		1	PLATE	
200	321116-0234	A		2	BEAR. BUSH. WITHOUT FL, 16X20X12	
210	90450-0504	A		1	PNEUMATIC CYLINDER	
230	312105-0455	-		4	SCREW M6S M8X30 A280	
240	312105-0372	-		2	SCREW M6S M6X25 A280	
300	315105-0153	-		4	WASHER PLAIN, BRB, 6,4/12,H=1,5	
310	315105-0165	-		8	WASHER PLAIN, BRB, 8,4/16,H=1,5	
320	342732-0103	-		2	ELBOW PIPE JOINT	
340	312105-0457	-		4	SCREW M6S M8X35 A280	

Pos	Part No	SP	UN	Qty	Description	Page No

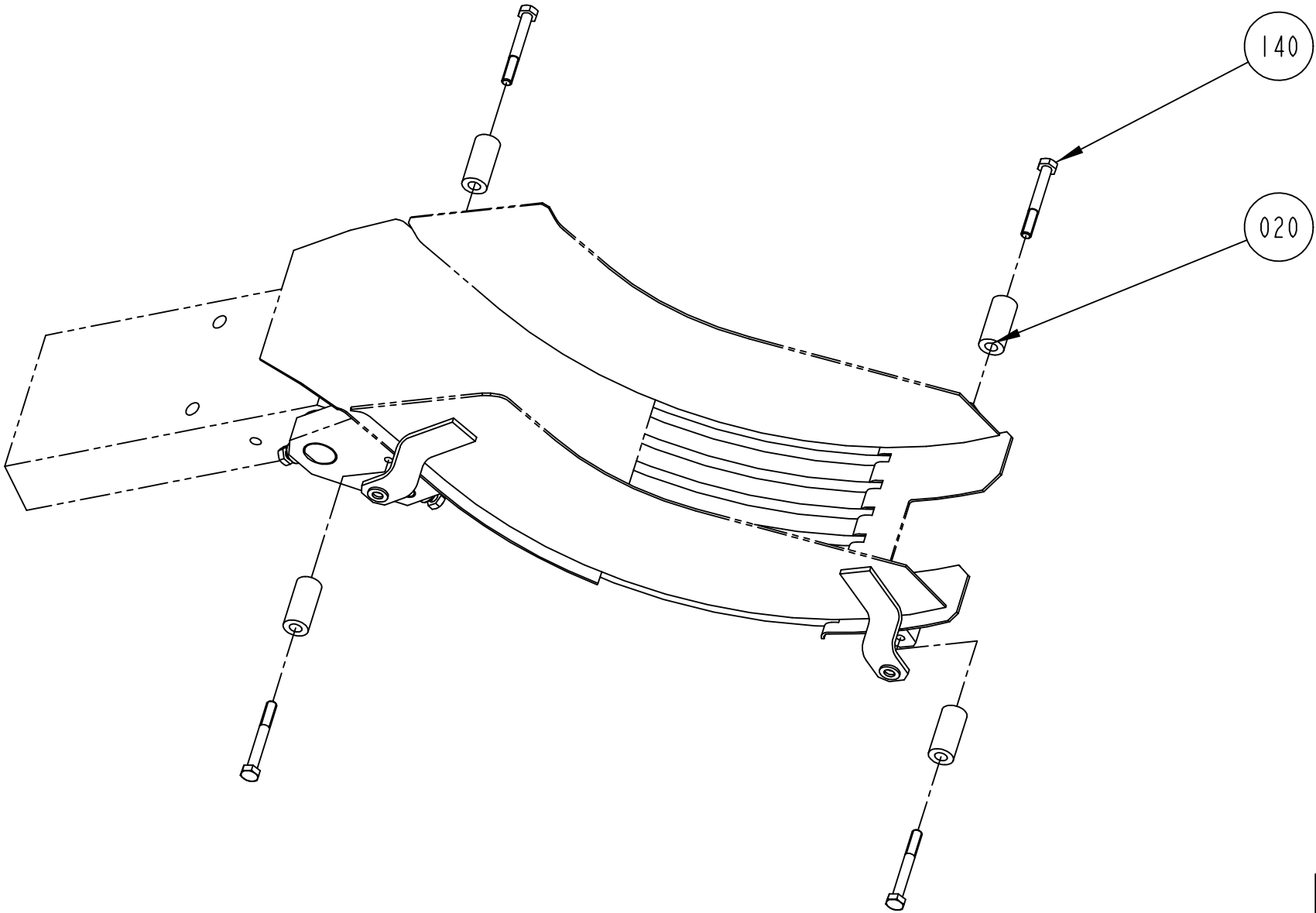

S-1361922-1
ECN 71984

Pos	Part No	SP	UN	Qty	Description	Page No
TBA 0200B OR TBA 0250B						
020	1317218-0000	-		4	SPACER	
140	312105-0374	-		4	SCREW M6S M6X30 A280	
TBA 0200S						
020	315115-0153	-		4	WASHER PLAIN, TBRB 6,4/12 H=3	
140	312105-0370	-		4	SCREW M6S M6X20 A280	
TBA 0500B OR TBA 1000B						
020	1260714-0000	-		4	SPACER	
140	312105-0382	-		4	SCREW M6S M6X60 A280	
TBA 0500S						
020	1499140-0000	-		4	SPACER	
140	312105-0379	-		4	SCREW M6S M6X45 A280	
TBA 1000S						
020	1279670-0000	-		4	SPACER	
140	312105-0382	-		4	SCREW M6S M6X60 A280	
TBA 1000SQ						
020	1487929-0000	-		4	SPACER	
140	312105-0379	-		4	SCREW M6S M6X45 A280	
TBA 1500S						
140	312105-0366	-		4	SCREW M6S M6X12 A280	
TPA 0330SQ						
020	1532254-0000	-		4	SPACER	
140	312105-0374	-		4	SCREW M6S M6X30 A280	
TPA 1000S						
020	1350431-0000	-		4	SPACER	
140	312105-0379	-		4	SCREW M6S M6X45 A280	

Pos	Part No	SP	UN	Qty	Description	Page No

This page is intentionally left blank.

ECM: 97246 - 20011015
Group number: 1517298-0100
Assembly Drawing:

Issue: 20011217

Pos	Part No	SP	UN	Qty	Description	Page No
TBA 0500S OR TBA 0500B OR TBA 1000S OR TBA 1000SQ OR TBA 1000B OR TBA 0200B OR TBA 0200S OR TBA 0250B OR TPA 1000S OR TPA TPA 0330SQ						
010	A1517299-0100	-		1	INFEED CONVEYOR LONG	**685, 687**
TBA 1500S						
020	A1517300-0100	-		1	INFEED CONVEYOR SHORT	**691**

Pos	Part No	SP	UN	Qty	Description	Page No

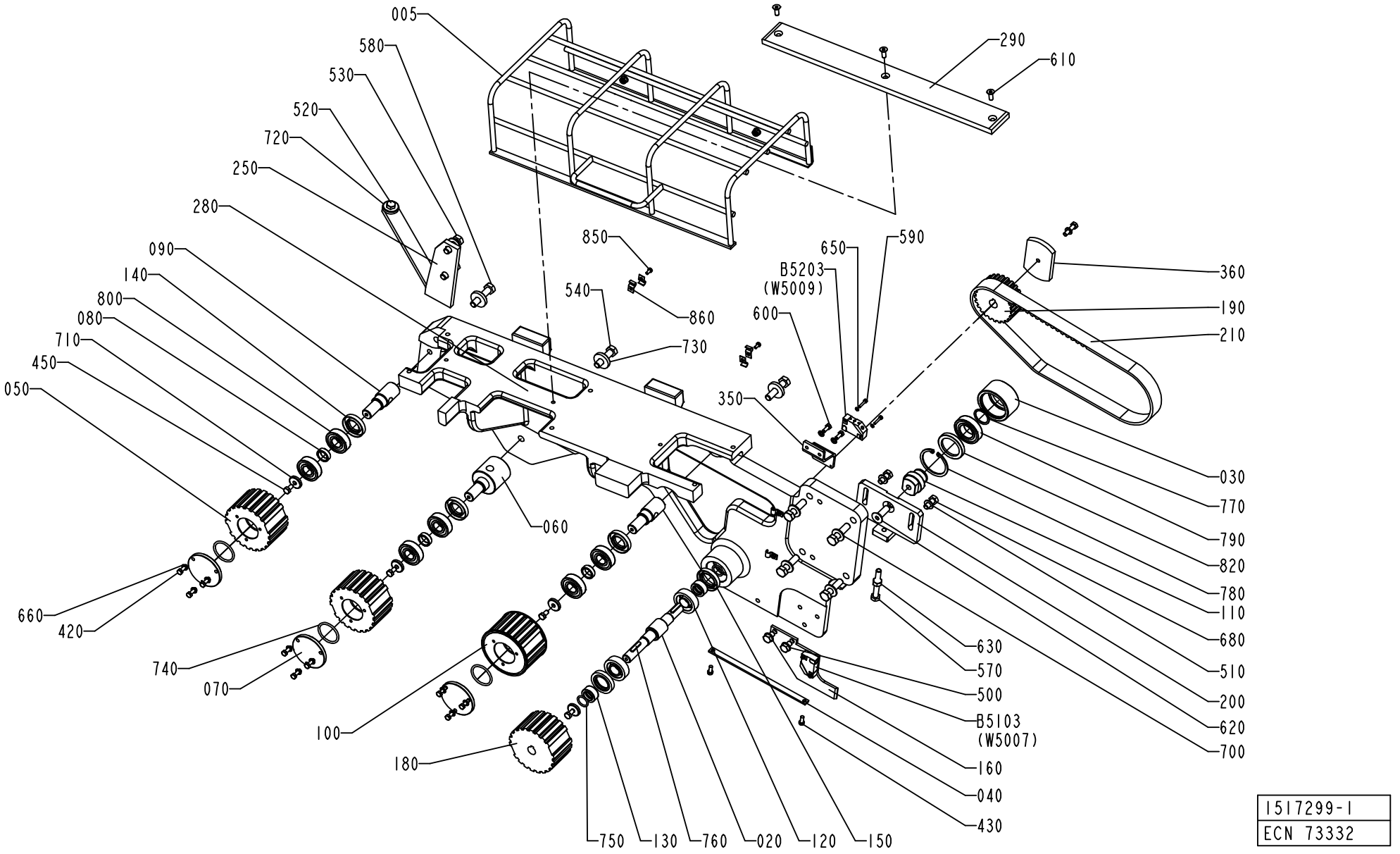
005
580
530
520
720
250
280
090
140
800
080
710
450
050
660
420
740
070
100
180
850
540
860
730
060
290
610
650
590
B5203
(W5009)
600
350
360
190
210
030
770
790
820
780
110
680
510
200
620
700
630
570
500
B5103
(W5007)
160
040
430
750
130
760
020
120
150
1517299-1
ECN 73332

ECM: 73332 - 20000411
Group number: 1517299-0100
Assembly Drawing: 1517299-1_1_AA

Issue: 20011217

Pos	Part No	SP	UN	Qty	Description	Page No
Common Parts						
005	A1144645-0200	-		1	PROTECTIVE COVER	**689**
020	1144470-0000	C		1	SHAFT	
030	1144581-0000	-		1	ROLLER	
040	1144593-0000	-		1	PLATE	
050	1348921-0000	D		2	TOOTHED PULLEY	
060	1144595-0000	C		1	ECCENTRIC SHAFT	
070	1144596-0000	-		3	PLUG	
080	1144597-0000	-		3	SPACER	
090	1484620-0000	C		2	SHAFT	
100	1348922-0000	D		1	TOOTHED PULLEY	
110	1144619-0000	C		1	SHAFT	
120	90214-0219	C		2	CYL.ROLLER BEARING, 17X40X12 MM	
130	1144625-0000	C		2	SPACER	
140	90091-0440	C		3	RADIAL SEAL 22X40X7 MM DUST LIP	
150	1498068-0000	C		2	SEAL RING	
160	1144760-0000	-		1	PLATE	
180	1144784-0000	D		1	TOOTHED PULLEY	
190	1144788-0000	D		1	TOOTHED PULLEY	
200	1144794-0000	-		1	SUPPORT	
210	1144841-0000	C		1	TIMING BELT	
250	1144965-0000	-		1	SUPPORT	
280	1347699-0000	-		1	PLATE	
290	1260941-0000	D		1	SLIDE	
350	1279688-0000	-		1	SUPPORT	
360	1347410-0000	-		1	ACTIVATOR	
420	312105-0329	-		9	SCREW M6S M5X16 A280	
430	312105-0327	-		2	SCREW M6S M5X12 A280	
450	312105-0366	-		4	SCREW M6S M6X12 A280	
500	312105-0447	-		2	SCREW M6S M8X12 A280	
510	312105-0451	-		2	SCREW M6S 8X20 A280	
520	312105-0453	-		1	SCREW M6S M8X25 A280	
530	312105-0495	-		2	SCREW M6S M10X30 A280	
540	312109-0499	-		5	SCREW M6S M10X40 A280	
570	312109-0463	-		1	SCREW M6S M8X60H A4 80	
580	312109-0500	-		2	SCREW M6S M10X45 A280	
590	312115-0228	-		4	SCREW MC6S M3X16 A280	
600	312125-0327	-		2	SCREW PAN HEAD MCS M5X12 SS	
610	312151-0368	-		3	SCREW HEX.SOCK.COUNT.MF6S 6X16 FZB	
620	312155-0495	-		1	SCREW HEX.SOCK.COUNT.MF6S M10X30 A280	
630	312605-0318	-		1	HEXAGON NUT, M6M M8 A280	
650	315105-0124	-		4	WASHER PLAIN, BRB, 3,2/6,H=0,5	
660	315105-0146	-		11	WASHER PLAIN, BRB, 5,3/10,H=1	
680	315105-0165	-		4	WASHER PLAIN, BRB, 8,4/16,H=1,5	
700	315105-0173	-		6	WASHER PLAIN, BRB, 10,5/22,H=2	
710	315125-0153	-		4	WASHER PLAIN ROUND,CHAMF. 6,4/22, H=4	
720	315125-0165	-		1	WASHER PLAIN ROUND,CHAMF. 8,4/26, H=5	
730	315125-0173	-		3	WASHER PLAIN ROUND,CHAMF. 10,5/28,H=6	
740	315202-0221	C		3	O-RING 34,2X3 MM	
750	315202-0267	C		2	O-RING 16,3X2,4 MM	
760	315705-0202	-		2	PARALLEL KEY W. ROUND ENDS 5X5X25 MM	
770	315751-0119	-		1	RETAIN. RING, 25	
780	90141-0019	-		1	RETAIN. RING, 50	
790	321308-0205	C		1	BALL BEARING, 2 SEALS, 25X47X12 MM	
800	321313-0103	C		6	BALL BEARING, 2 SEALS, 17X40X12 MM	
820	90091-0297	C		1	RADIAL SEAL 35X47X7 MM DUST LIP	
850	312125-0287	-		4	SCREW PAN HEAD MCS M4X8 SS	
860	90165-0057	-		6	PIPE CLIP FOR TUBE D=6 MM	
B5103	90044-0104	C		1	PROX.SWITCH IFM IN 3002	
B5203	90044-0104	C		1	PROX.SWITCH IFM IN 3002	

Machine Type | Group Description | Used-In | Group Number | Page No

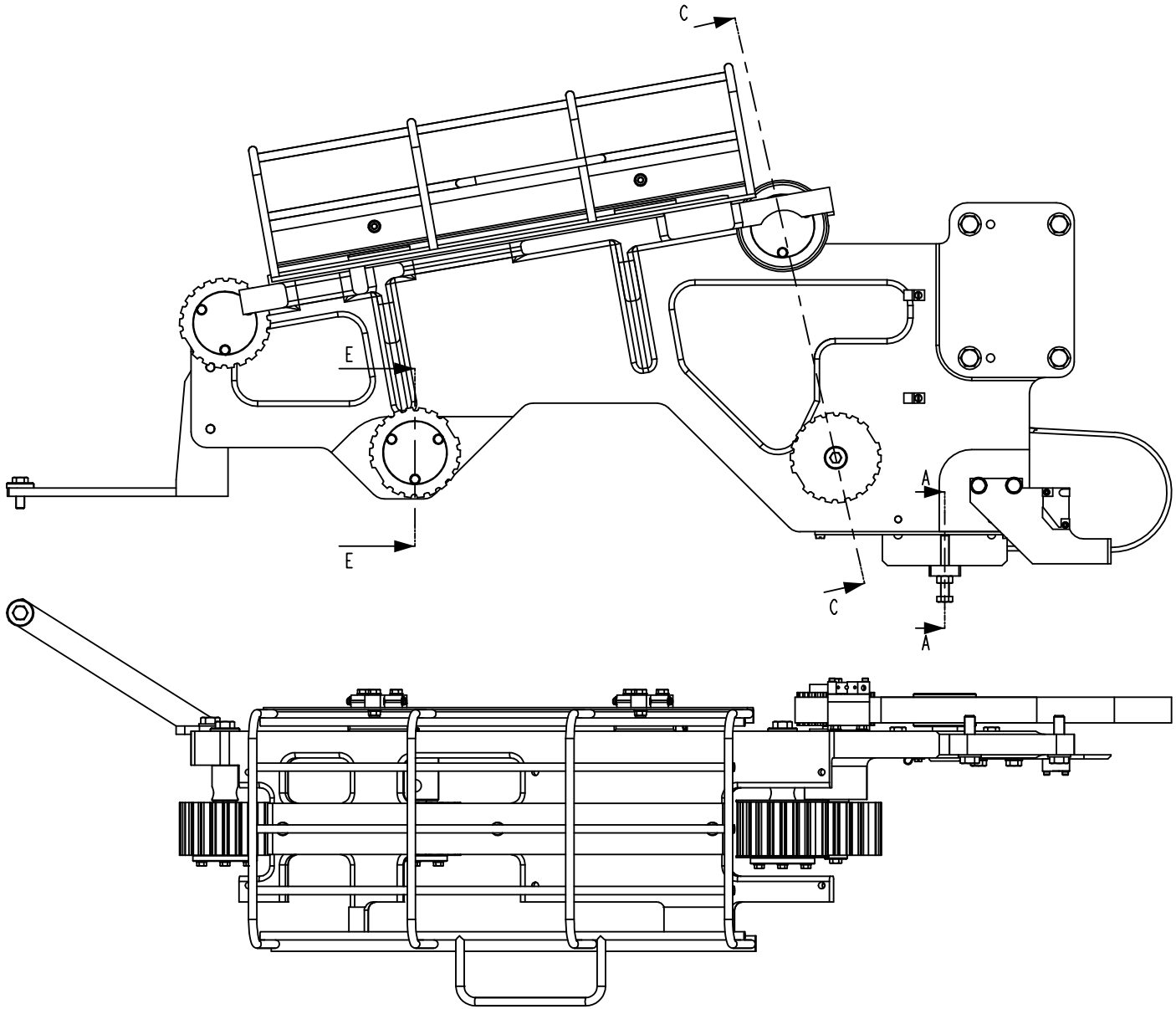

1517299-1
ECN 73332

ECM: 73332 - 20000411
Group number: 1517299-0100
Assembly Drawing: 1517299-1_2_AA

Issue: 20011217

Pos	Part No	SP	UN	Qty	Description	Page No
Common Parts						
005	A1144645-0200	-		1	PROTECTIVE COVER	**689**
020	1144470-0000	C		1	SHAFT	
030	1144581-0000	-		1	ROLLER	
040	1144593-0000	-		1	PLATE	
050	1348921-0000	D		2	TOOTHED PULLEY	
060	1144595-0000	C		1	ECCENTRIC SHAFT	
070	1144596-0000	-		3	PLUG	
080	1144597-0000	-		3	SPACER	
090	1484620-0000	C		2	SHAFT	
100	1348922-0000	D		1	TOOTHED PULLEY	
110	1144619-0000	C		1	SHAFT	
120	90214-0219	C		2	CYL.ROLLER BEARING, 17X40X12 MM	
130	1144625-0000	C		2	SPACER	
140	90091-0440	C		3	RADIAL SEAL 22X40X7 MM DUST LIP	
150	1498068-0000	C		2	SEAL RING	
160	1144760-0000	-		1	PLATE	
180	1144784-0000	D		1	TOOTHED PULLEY	
190	1144788-0000	D		1	TOOTHED PULLEY	
200	1144794-0000	-		1	SUPPORT	
210	1144841-0000	C		1	TIMING BELT	
250	1144965-0000	-		1	SUPPORT	
280	1347699-0000	-		1	PLATE	
290	1260941-0000	D		1	SLIDE	
350	1279688-0000	-		1	SUPPORT	
360	1347410-0000	-		1	ACTIVATOR	
420	312105-0329	-		9	SCREW M6S M5X16 A280	
430	312105-0327	-		2	SCREW M6S M5X12 A280	
450	312105-0366	-		4	SCREW M6S M6X12 A280	
500	312105-0447	-		2	SCREW M6S M8X12 A280	
510	312105-0451	-		2	SCREW M6S 8X20 A280	
520	312105-0453	-		1	SCREW M6S M8X25 A280	
530	312105-0495	-		2	SCREW M6S M10X30 A280	
540	312109-0499	-		5	SCREW M6S M10X40 A280	
570	312109-0463	-		1	SCREW M6S M8X60H A4 80	
580	312109-0500	-		2	SCREW M6S M10X45 A280	
590	312115-0228	-		4	SCREW MC6S M3X16 A280	
600	312125-0327	-		2	SCREW PAN HEAD MCS M5X12 SS	
610	312151-0368	-		3	SCREW HEX.SOCK.COUNT.MF6S 6X16 FZB	
620	312155-0495	-		1	SCREW HEX.SOCK.COUNT.MF6S M10X30 A280	
630	312605-0318	-		1	HEXAGON NUT, M6M M8 A280	
650	315105-0124	-		4	WASHER PLAIN, BRB, 3,2/6,H=0,5	
660	315105-0146	-		11	WASHER PLAIN, BRB, 5,3/10,H=1	
680	315105-0165	-		4	WASHER PLAIN, BRB, 8,4/16,H=1,5	
700	315105-0173	-		6	WASHER PLAIN, BRB, 10,5/22,H=2	
710	315125-0153	-		4	WASHER PLAIN ROUND,CHAMF. 6,4/22, H=4	
720	315125-0165	-		1	WASHER PLAIN ROUND,CHAMF. 8,4/26, H=5	
730	315125-0173	-		3	WASHER PLAIN ROUND,CHAMF. 10,5/28,H=6	
740	315202-0221	C		3	O-RING 34,2X3 MM	
750	315202-0267	C		2	O-RING 16,3X2,4 MM	
760	315705-0202	-		2	PARALLEL KEY W. ROUND ENDS 5X5X25 MM	
770	315751-0119	-		1	RETAIN. RING, 25	
780	90141-0019	-		1	RETAIN. RING, 50	
790	321308-0205	C		1	BALL BEARING, 2 SEALS, 25X47X12 MM	
800	321313-0103	C		6	BALL BEARING, 2 SEALS, 17X40X12 MM	
820	90091-0297	C		1	RADIAL SEAL 35X47X7 MM DUST LIP	
850	312125-0287	-		4	SCREW PAN HEAD MCS M4X8 SS	
860	90165-0057	-		6	PIPE CLIP FOR TUBE D=6 MM	
B5103	90044-0104	C		1	PROX.SWITCH IFM IN 3002	
B5203	90044-0104	C		1	PROX.SWITCH IFM IN 3002	

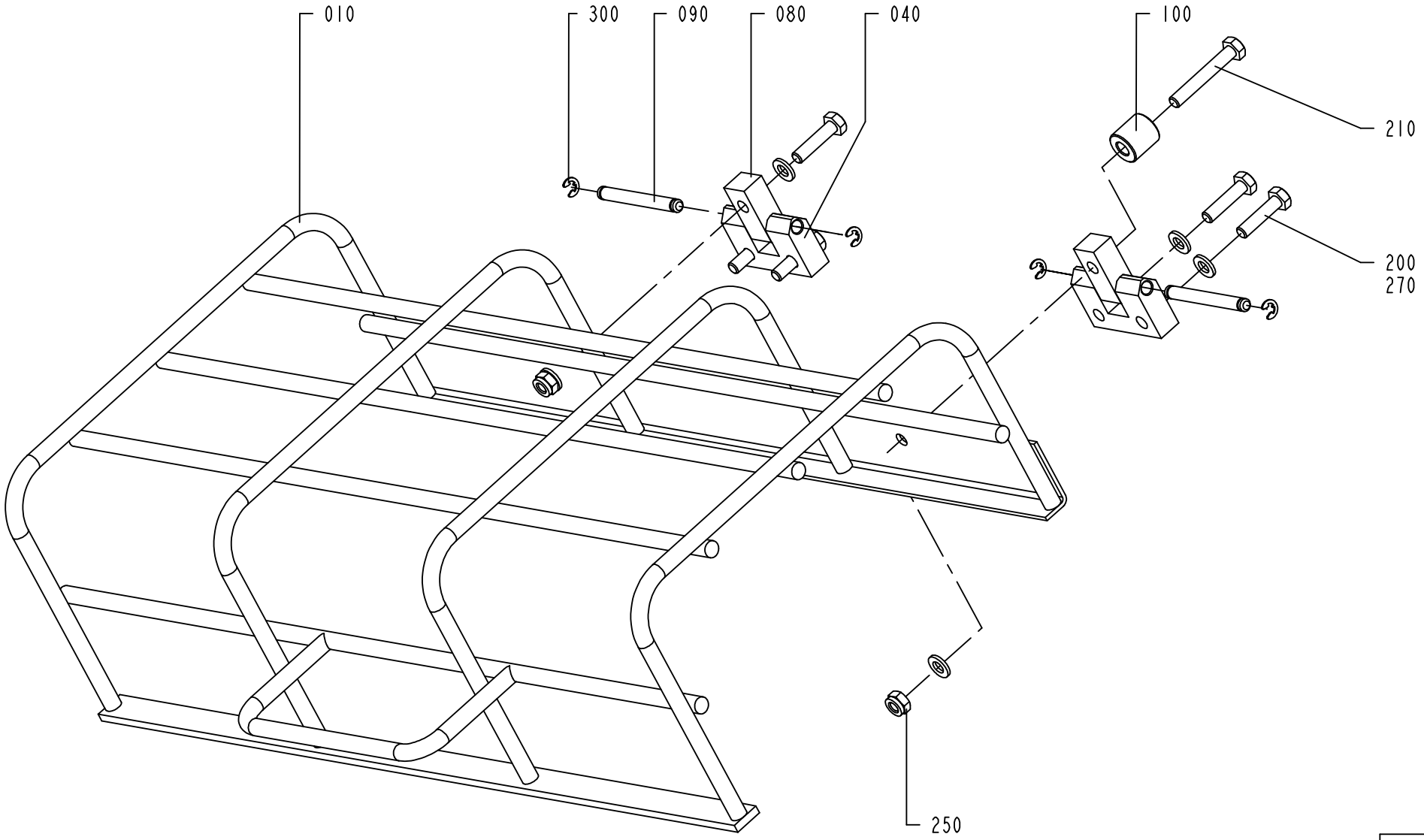

1144645-3
ECN 94717

ECM: 98270 - 20011015
Group number: 1144645-0200
Assembly Drawing: 1144645-3_1_AB

Issue: 20011217

Pos	Part No	SP	UN	Qty	Description	Page No
Common Parts						
010	1260894-0000	-		1	PROTECTION	
040	1144667-0000	-		2	HINGE	
080	1144668-0000	-		2	HINGE	
090	1144669-0000	-		2	PIN	
100	1360149-0000	-		1	SPACER	
200	312105-0372	-		5	SCREW M6S M6X25 A280	
210	312105-0378	-		1	SCREW M6S M6X40 A280	
250	312812-0316	-		2	HEXAGON NUT, NY-LOCK M6 A480	
270	315105-0153	-		7	WASHER PLAIN, BRB, 6,4/12,H=1,5	
300	315755-0106	-		4	LOCKING WASHER 4	

Pos	Part No	SP	UN	Qty	Description	Page No

Machine Type | Group Description | Used-In | Group Number | Page No

INFEED CONVEYOR SHORT

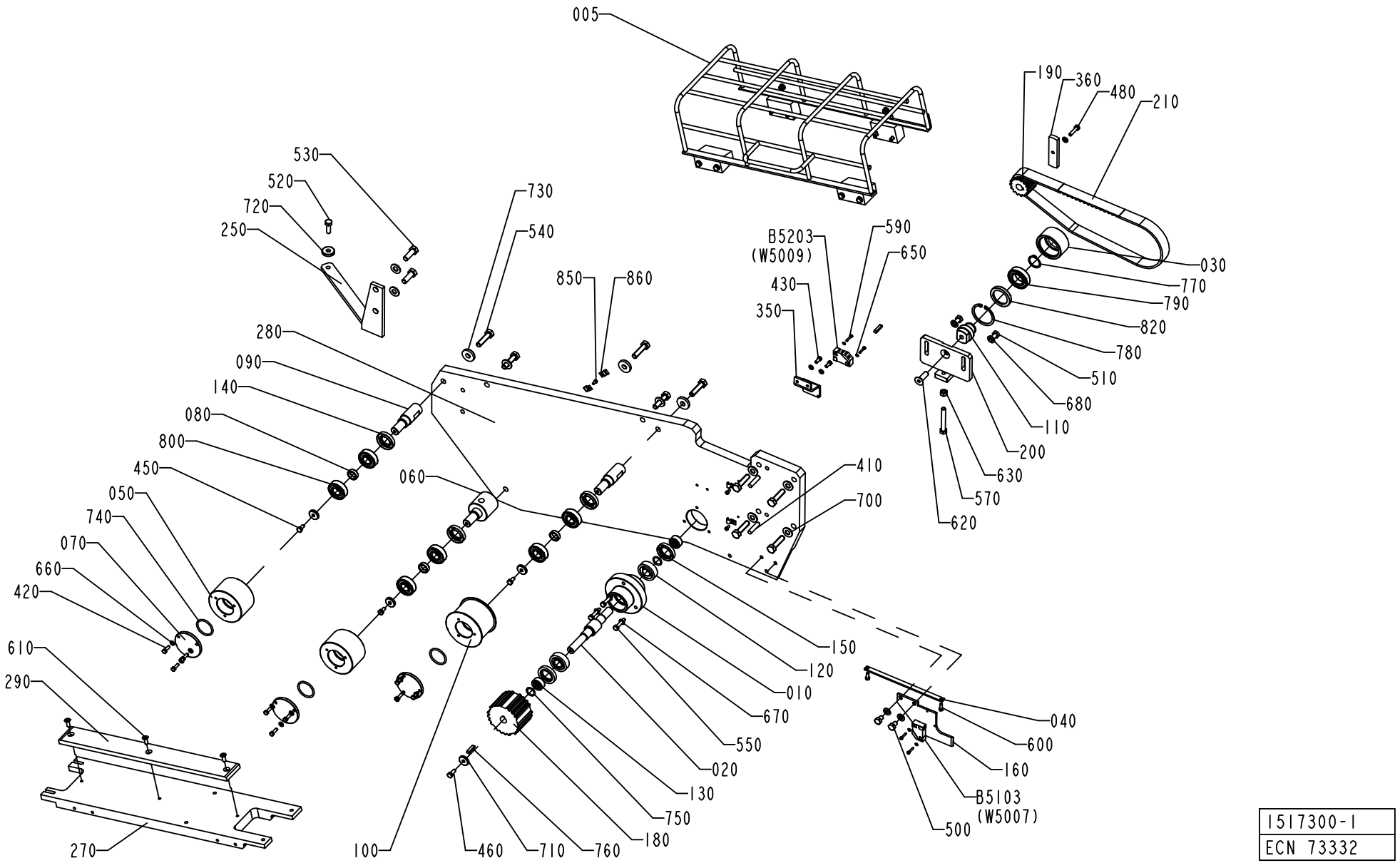

1517300-1
ECN 73332

ECM: 73332 - 20000411
Group number: 1517300-0100
Assembly Drawing: 1517300-1_1_AA

Issue: 20011217

Pos	Part No	SP	UN	Qty	Description	Page No
Common Parts						
005	A1144645-0100	-		1	PROTECTION COVER	**693**
010	1144468-0000	D		1	BEARING HOUSING	
020	1144470-0000	C		1	SHAFT	
030	1144581-0000	-		1	ROLLER	
040	1144593-0000	-		1	PLATE	
050	1144594-0000	D		2	ROLLER	
060	1144595-0000	C		1	ECCENTRIC SHAFT	
070	1144596-0000	-		3	PLUG	
080	1144597-0000	-		3	SPACER	
090	1144598-0000	C		2	SHAFT	
100	1144614-0000	-		1	ROLLER	
110	1144619-0000	C		1	SHAFT	
120	90214-0219	C		2	CYL.ROLLER BEARING, 17X40X12 MM	
130	1144625-0000	C		2	SPACER	
140	90091-0404	C		3	RADIAL SEAL 22X40X7 MM DUST LIP	
150	90091-0406	C		2	RADIAL SEAL 25X40X7 MM DUST LIP	
160	1144760-0000	-		1	PLATE	
180	927859-0000	D		1	TOOTHED PULLY	
190	1282681-0000	D		1	TOOTHED PULLEY	
200	1144794-0000	-		1	SUPPORT	
210	1144841-0000	C		1	TIMING BELT	
250	1349329-0000	-		1	SUPPORT	
270	1348957-0000	-		1	BRACKET	
280	1348878-0000	-		1	PLATE	
290	1348963-0000	D		1	SLIDE	
350	1279688-0000	-		1	SUPPORT	
360	1279689-0000	-		1	ACTIVATOR	
410	311103-0407	-		2	PARALLELL PIN, M6, 8X35 MM	
420	312105-0329	-		9	SCREW M6S M5X16 A280	
430	312105-0327	-		2	SCREW M6S M5X12 A280	
450	312105-0366	-		3	SCREW M6S M6X12 A280	
460	312105-0368	-		1	SCREW M6S M6X16 A280	
480	312105-0372	-		2	SCREW M6S M6X25 A280	
500	312105-0447	-		2	SCREW M6S M8X12 A280	
510	312105-0451	-		2	SCREW M6S 8X20 A280	
520	312105-0453	-		1	SCREW M6S M8X25 A280	
530	312105-0495	-		2	SCREW M6S M10X30 A280	
540	312109-0499	-		9	SCREW M6S M10X40 A280	
550	312109-0374	-		3	SCREW M6S M6X30 A280	
570	312109-0463	-		1	SCREW M6S M8X60H A4 80	
590	312115-0228	-		4	SCREW MC6S M3X16 A280	
600	312125-0327	-		2	SCREW PAN HEAD MCS M5X12 SS	
610	312151-0368	-		3	SCREW HEX.SOCK.COUNT.MF6S 6X16 FZB	
620	312155-0495	-		1	SCREW HEX.SOCK.COUNT.MF6S M10X30 A280	
630	312605-0318	-		1	HEXAGON NUT, M6M M8 A280	
650	315105-0124	-		4	WASHER PLAIN, BRB, 3,2/6,H=0,5	
660	315105-0146	-		11	WASHER PLAIN, BRB, 5,3/10,H=1	
670	315105-0153	-		4	WASHER PLAIN, BRB, 6,4/12,H=1,5	
680	315105-0165	-		4	WASHER PLAIN, BRB, 8,4/16,H=1,5	
700	315105-0173	-		8	WASHER PLAIN, BRB, 10,5/22,H=2	
710	315125-0153	-		4	WASHER PLAIN ROUND,CHAMF. 6,4/22, H=4	
720	315125-0165	-		1	WASHER PLAIN ROUND,CHAMF. 8,4/26, H=5	
730	315125-0173	-		3	WASHER PLAIN ROUND,CHAMF. 10,5/28,H=6	
740	315202-0221	C		3	O-RING 34,2X3 MM	
750	315202-0267	C		2	O-RING 16,3X2,4 MM	
760	315705-0202	-		2	PARALLEL KEY W. ROUND ENDS 5X5X25 MM	
770	315751-0119	-		1	RETAIN. RING, 25	
780	90141-0019	-		1	RETAIN. RING, 50	
790	321308-0205	C		1	BALL BEARING, 2 SEALS, 25X47X12 MM	
800	321313-0103	C		6	BALL BEARING, 2 SEALS, 17X40X12 MM	
820	90091-0297	C		1	RADIAL SEAL 35X47X7 MM DUST LIP	
850	312125-0287	-		4	SCREW PAN HEAD MCS M4X8 SS	
860	90165-0057	-		6	PIPE CLIP FOR TUBE D=6 MM	
B5103	90044-0104	C		1	PROX.SWITCH IFM IN 3002	
B5203	90044-0104	C		1	PROX.SWITCH IFM IN 3002	

Machine Type	Group Description	Used-In	Group Number	Page No

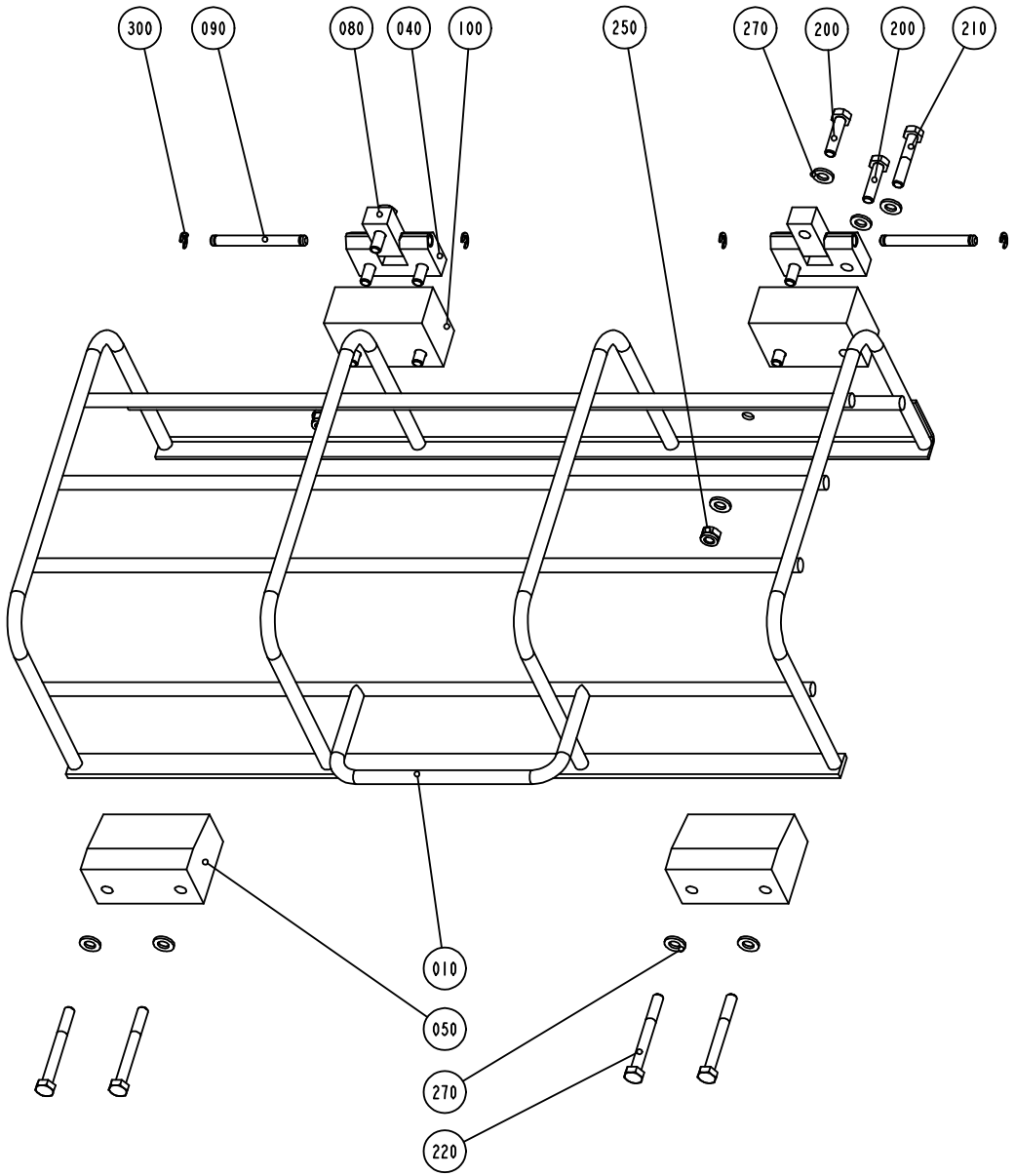
300
090
080
040
100
250
270
200
200
210
010
050
270
220

ECM: 70503 - 19970718
Group number: 1144645-0100
Assembly Drawing: 1144645-2_1_AA

Issue: 20011217

Pos	Part No	SP	UN	Qty	Description	Page No
Common Parts						
010	1260894-0000	-		1	PROTECTION	
040	1144667-0000	-		2	HINGE	
050	1285956-0000	-		2	BLOCK	
080	1144668-0000	-		2	HINGE	
090	1144669-0000	-		2	PIN	
100	1285955-0000	-		2	PLATE	
200	312105-0372	-		6	SCREW M6S M6X25 A280	
210	312105-0376	-		4	SCREW M6S M6S M6X35 A280	
220	312105-0381	-		4	SCREW M6S M6X55 A280	
250	312812-0316	-		2	HEXAGON NUT, NY-LOCK M6 A480	
270	315105-0153	-		16	WASHER PLAIN, BRB, 6,4/12,H=1,5	
300	315755-0106	-		4	LOCKING WASHER 4	

Pos	Part No	SP	UN	Qty	Description	Page No

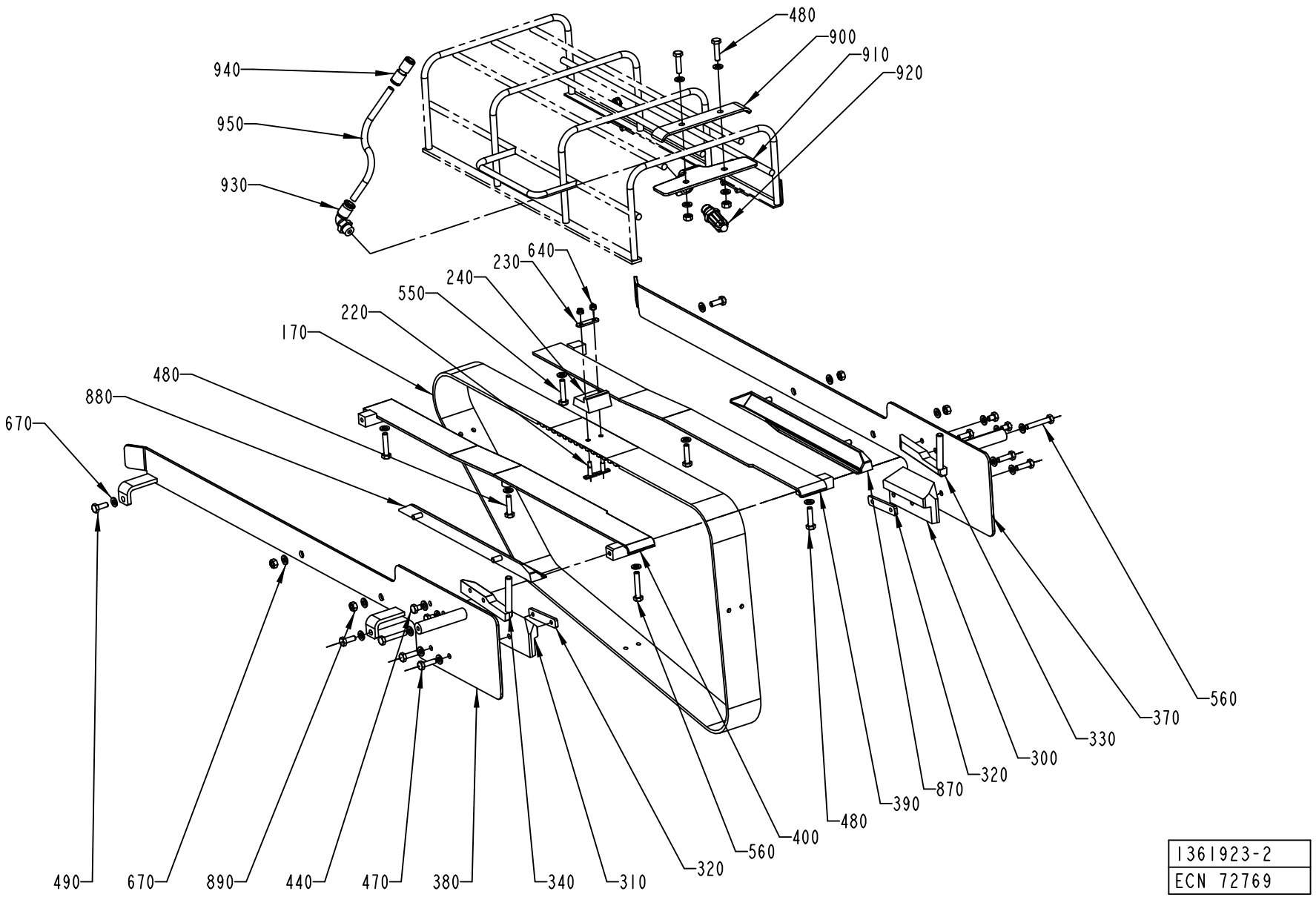
480
900
910
920
940
950
930
640
230
240
550
220
170
480
880
670
560
370
330
300
320
870
390
480
400
560
320
340
310
380
470
440
890
670
490
1361923-2
ECN 72769

ECM: 97270 - 20011015
Group number: 1361923-0200
Assembly Drawing: 1361923-2_1_AC

Issue: 20011217

Pos	Part No	SP	UN	Qty	Description	Page No
TBA 0200B						
170	1144783-0000	A		1	TIMING BELT	
220	1346736-0000	A		8	WEDGE	
230	1144918-0000	B		4	PLATE	
240	1282287-0000	A		4	CARRIER	
300	1348136-0000	A		1	SLIDE	
310	1348142-0000	A		1	SLIDE	
320	1348169-0000	-		2	PLATE	
330	1348148-0000	-		1	BAR	
340	1348154-0000	-		1	BAR	
370	1499427-0000	-		1	GUIDE	
380	1499426-0000	-		1	GUIDE	
390	1282290-0000	-		1	GUIDE	
400	1282291-0000	-		1	GUIDE	
440	312105-0362	-		4	SCREW M6S M6X8 A280	
480	312105-0372	-		5	SCREW M6S M6X25 A280	
870	1517526-0000	-		1	GUIDE	
880	1517527-0000	-		1	GUIDE	
890	312605-0316	-		6	HEXAGON NUT, M6M M6 A280	
900	1499476-0000	-		1	HOLDER	
910	1499475-0000	-		1	HOLDER	
920	90424-0068	A		1	AIR NOZZLE, G1/4, MOD. 216 BSP	
930	342732-0104	-		1	ELBOW PIPE JOINT	
940	342728-0103	-		1	PIPE COUPLING 8 MM	
950	90166-0013	-	MM	700	TUBE 8 MM PA BLUE	
TBA 0200S						
170	1144783-0000	A		1	TIMING BELT	
220	1346736-0000	A		8	WEDGE	
230	1144918-0000	B		4	PLATE	
240	1282287-0000	A		4	CARRIER	
300	1348134-0000	A		1	SLIDE	
310	1348140-0000	A		1	SLIDE	
320	1348169-0000	-		2	PLATE	
330	1348146-0000	-		1	BAR	
340	1348152-0000	-		1	BAR	
370	1499136-0000	-		1	GUIDE	
380	1499135-0000	-		1	GUIDE	
390	1282290-0000	-		1	GUIDE	
400	1282291-0000	-		1	GUIDE	
440	312105-0362	-		4	SCREW M6S M6X8 A280	
480	312105-0372	-		5	SCREW M6S M6X25 A280	
870	1517524-0000	-		1	GUIDE	
880	1517525-0000	-		1	GUIDE	
890	312605-0316	-		6	HEXAGON NUT, M6M M6 A280	
900	1499476-0000	-		1	HOLDER	
910	1499475-0000	-		1	HOLDER	
920	90424-0068	A		1	AIR NOZZLE, G1/4, MOD. 216 BSP	
930	342732-0104	-		1	ELBOW PIPE JOINT	
940	342728-0103	-		1	PIPE COUPLING 8 MM	
950	90166-0013	-	MM	700	TUBE 8 MM PA BLUE	
TBA 0250B						
170	1144783-0000	A		1	TIMING BELT	
220	1346736-0000	A		8	WEDGE	
230	1144918-0000	B		4	PLATE	
240	1282287-0000	A		4	CARRIER	
300	1348135-0000	A		1	SLIDE	
310	1348141-0000	A		1	SLIDE	
320	1348169-0000	-		2	PLATE	
330	1348147-0000	-		1	BAR	
340	1348153-0000	-		1	BAR	
370	1499427-0000	-		1	GUIDE	
380	1499426-0000	-		1	GUIDE	
390	1282290-0000	-		1	GUIDE	
400	1282291-0000	-		1	GUIDE	
440	312105-0362	-		4	SCREW M6S M6X8 A280	
480	312105-0372	-		5	SCREW M6S M6X25 A280	
870	1517526-0000	-		1	GUIDE	
880	1517527-0000	-		1	GUIDE	
890	312605-0316	-		6	HEXAGON NUT, M6M M6 A280	
900	1499476-0000	-		1	HOLDER	
910	1499475-0000	-		1	HOLDER	
920	90424-0068	A		1	AIR NOZZLE, G1/4, MOD. 216 BSP	
930	342732-0104	-		1	ELBOW PIPE JOINT	
940	342728-0103	-		1	PIPE COUPLING 8 MM	
950	90166-0013	-	MM	700	TUBE 8 MM PA BLUE	
TBA 0500B						
170	1144783-0000	A		1	TIMING BELT	
220	1346471-0000	A		8	WEDGE	
230	1144918-0000	B		4	PLATE	
240	1558700-0000	A		4	CARRIER	
300	1539874-0000	A		1	SLIDE	

Machine Type Group Description Used-In Group Number Page No

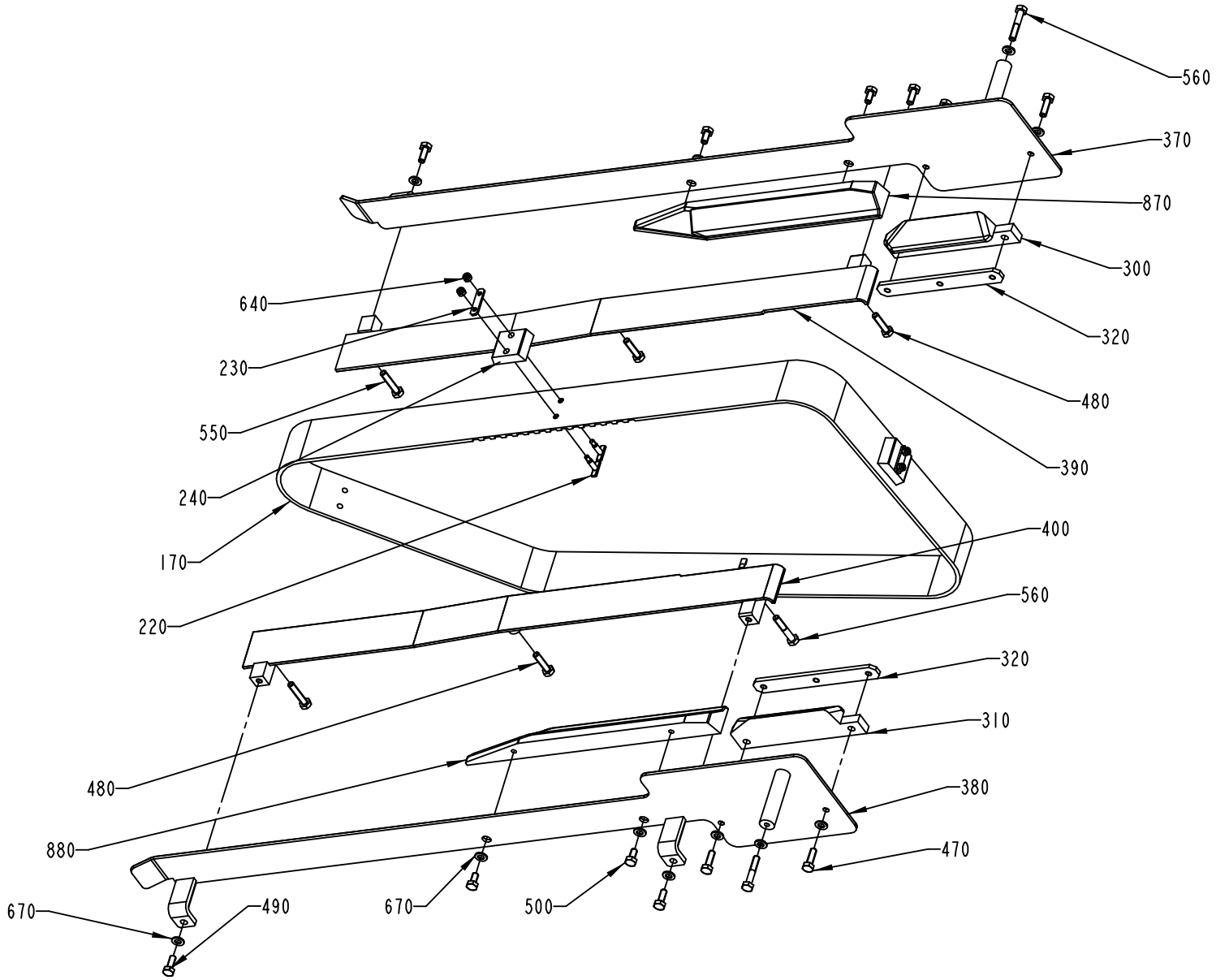

1361923-3
ECN 80472

Pos	Part No	SP	UN	Qty	Description	Page No
TBA 0500B (Cont'd)						
310	1539875-0000	A		1	SLIDE	
320	1539876-0000	-		2	PLATE	
330	1539877-0000	-		1	BAR	
340	1539878-0000	-		1	BAR	
370	1539879-0000	-		1	GUIDE	
380	1539880-0000	-		1	GUIDE	
390	1317651-0000	-		1	GUIDE	
400	1317650-0000	-		1	GUIDE	
670	315105-0153	-		20	WASHER PLAIN, BRB, 6,4/12,H=1,5	
TBA 0500S						
170	1144783-0000	A		1	TIMING BELT	
220	1346736-0000	A		8	WEDGE	
230	1144918-0000	B		4	PLATE	
240	1282287-0000	A		4	CARRIER	
300	1499418-0000	A		1	SLIDE	
310	1499422-0000	A		1	SLIDE	
320	1144621-0000	-		2	PLATE	
330	1499417-0000	-		1	BAR	
340	1499423-0000	-		1	BAR	
370	1499401-0000	-		1	GUIDE	
380	1499400-0000	-		1	GUIDE	
390	1317651-0000	-		1	GUIDE	
400	1317650-0000	-		1	GUIDE	
440	312105-0362	-		4	SCREW M6S M6X8 A280	
670	315105-0153	-		20	WASHER PLAIN, BRB, 6,4/12,H=1,5	
TBA 1000B						
170	1144783-0000	A		1	TIMING BELT	
220	1346471-0000	A		8	WEDGE	
230	1144918-0000	B		4	PLATE	
240	1144919-0000	A		4	CARRIER	
300	1348133-0000	A		1	SLIDE	
310	1348139-0000	A		1	SLIDE	
320	1279409-0000	-		2	PLATE	
330	1348144-0000	-		1	BAR	
340	1348150-0000	-		1	BAR	
370	1519089-0000	-		1	GUIDE	
380	1519090-0000	-		1	GUIDE	
390	1282290-0000	-		1	GUIDE	
400	1282291-0000	-		1	GUIDE	
440	312105-0362	-		4	SCREW M6S M6X8 A280	
670	315105-0153	-		20	WASHER PLAIN, BRB, 6,4/12,H=1,5	
TBA 1000S						
170	1144783-0000	A		1	TIMING BELT	
220	1346471-0000	A		8	WEDGE	
230	1144918-0000	B		4	PLATE	
240	1144919-0000	A		4	CARRIER	
300	1348132-0000	A		1	SLIDE	
310	1348138-0000	A		1	SLIDE	
320	1279409-0000	-		2	PLATE	
330	1348145-0000	-		1	BAR	
340	1348151-0000	-		1	BAR	
370	1517242-0000	-		1	GUIDE	
380	1517243-0000	-		1	GUIDE	
390	1282290-0000	-		1	GUIDE	
400	1282291-0000	-		1	GUIDE	
440	312105-0362	-		4	SCREW M6S M6X8 A280	
670	315105-0153	-		20	WASHER PLAIN, BRB, 6,4/12,H=1,5	
TBA 1000SQ						
170	1144783-0000	A		1	TIMING BELT	
220	1346471-0000	A		8	WEDGE	
230	1144918-0000	B		4	PLATE	
300	1490033-0000	A		1	SLIDE	
310	1490034-0000	A		1	SLIDE	
320	1144621-0000	-		2	PLATE	
330	1490035-0000	-		1	BAR	
340	1490036-0000	-		1	BAR	
370	1512308-0000	-		1	GUIDE	
380	1512307-0000	-		1	GUIDE	
390	1317651-0000	-		1	GUIDE	
400	1317650-0000	-		1	GUIDE	
440	312105-0362	-		4	SCREW M6S M6X8 A280	
670	315105-0153	-		20	WASHER PLAIN, BRB, 6,4/12,H=1,5	
TBA 1500S						
170	1349152-0000	A		1	TIMING BELT	
240	1282848-0000	A		3	CARRIER	
300	1334561-0000	A		1	SLIDE	
310	1334562-0000	A		1	SLIDE	
320	1144621-0000	-		2	PLATE	

See previous drawings pages: 694, 696.

Pos	Part No	SP	UN	Qty	Description	Page No
TBA 1500S (Cont'd)						
330	1317805-0000	-		1	BAR	
340	1334271-0000	-		1	BAR	
370	1519093-0000	-		1	GUIDE	
380	1519094-0000	-		1	GUIDE	
390	1478215-0000	-		1	SLIDE	
400	1478214-0000	-		1	SLIDE	
440	312105-0362	-		4	SCREW M6S M6X8 A280	
640	312812-0312	-		6	HEXAGON NUT, NY-LOCK M4 A480	
670	315105-0153	-		20	WASHER PLAIN, BRB, 6,4/12,H=1,5	
TPA TPA 0330SQ						
170	1144783-0000	A		1	TIMING BELT	
220	1346736-0000	A		8	WEDGE	
230	1144918-0000	B		4	PLATE	
240	1558864-0000	A		4	CARRIER	
300	1532257-0000	A		1	SLIDE	
310	1532258-0000	A		1	SLIDE	
320	1144621-0000	-		2	PLATE	
370	1532261-0000	-		1	GUIDE	
380	1532262-0000	-		1	GUIDE	
390	1317651-0000	-		1	GUIDE	
400	1317650-0000	-		1	GUIDE	
500	312105-0366	-		4	SCREW M6S M6X12 A280	
670	315105-0153	-		20	WASHER PLAIN, BRB, 6,4/12,H=1,5	
870	1532263-0000	-		1	GUIDE	
880	1532264-0000	-		1	GUIDE	
TPA 1000S						
170	1144783-0000	A		1	TIMING BELT	
220	1346471-0000	A		8	WEDGE	
230	1144918-0000	B		4	PLATE	
240	1144919-0000	A		4	CARRIER	
300	1348137-0000	A		1	SLIDE	
310	1348143-0000	A		1	SLIDE	
320	1279409-0000	-		2	PLATE	
330	1348149-0000	-		1	BAR	
340	1348155-0000	-		1	BAR	
370	1517244-0000	-		1	GUIDE	
380	1517245-0000	-		1	GUIDE	
390	1317651-0000	-		1	GUIDE	
400	1317650-0000	-		1	GUIDE	
440	312105-0362	-		4	SCREW M6S M6X8 A280	
670	315105-0153	-		20	WASHER PLAIN, BRB, 6,4/12,H=1,5	
Common Parts						
220	1346471-0000	A		6	WEDGE	
230	1144918-0000	B		3	PLATE	
240	1282848-0000	A		4	CARRIER	
470	312105-0370	-		4	SCREW M6S M6X20 A280	
480	312105-0372	-		3	SCREW M6S M6X25 A280	
490	312105-0368	-		4	SCREW M6S M6X16 A280	
550	312109-0374	-		2	SCREW M6S M6X30 A280	
560	312105-0376	-		3	SCREW M6S M6S M6X35 A280	
640	312812-0312	-		8	HEXAGON NUT, NY-LOCK M4 A480	
670	315105-0153	-		28	WASHER PLAIN, BRB, 6,4/12,H=1,5	

Machine Type | Group Description | Used-In | Group Number | Page No

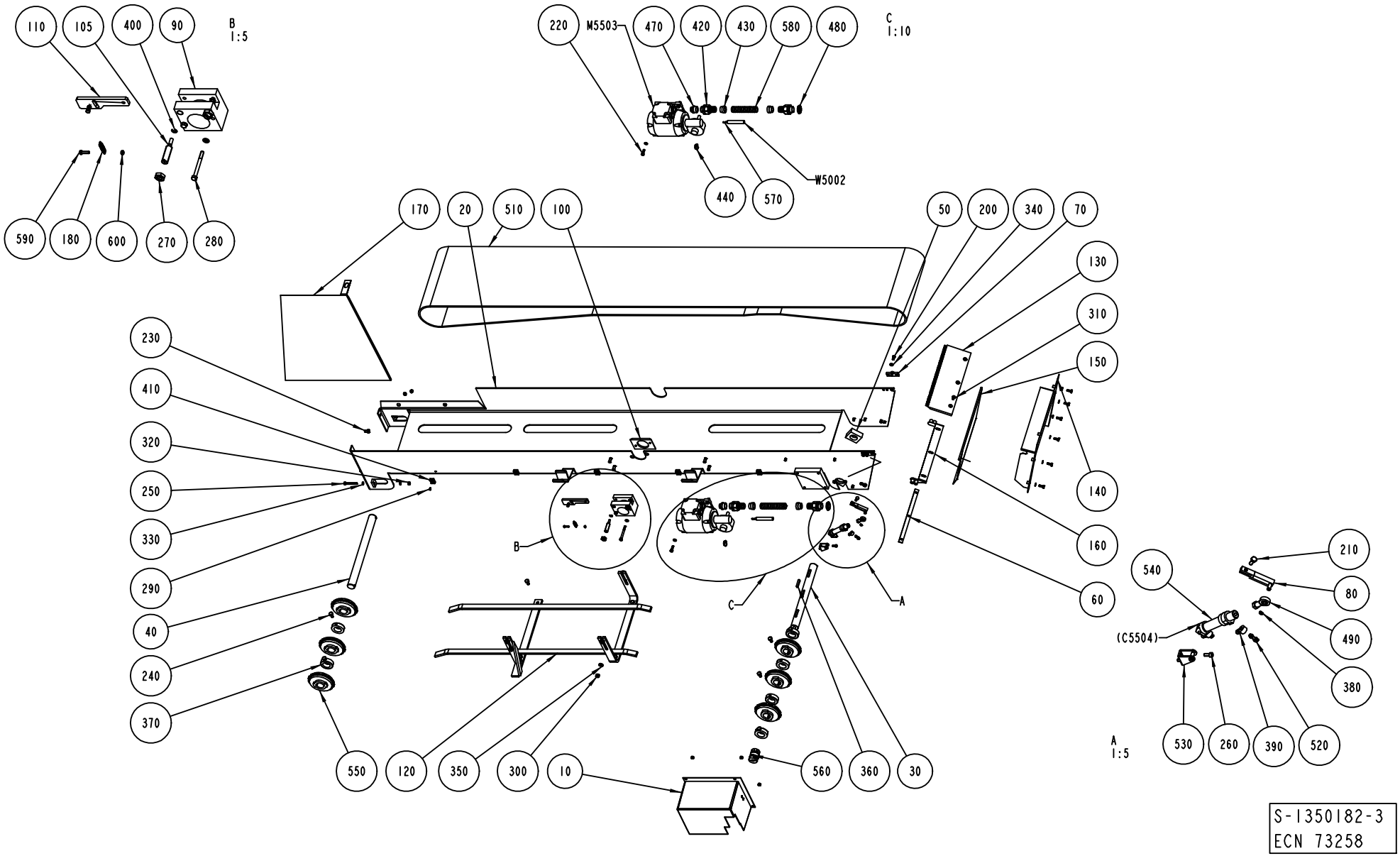

S-1350182-3
ECN 73258

ECM: 73258 - 20000414
Group number: 1350182-0200
Assembly Drawing: 1350182-3_1_AB

Issue: 20011217

Pos	Part No	SP	UN	Qty	Description	Page No
Common Parts						
010	1517055-0000	-		1	MOTOR COVER	
020	1478739-0000	-		1	CHUTE	
030	1517056-0000	-		1	DRIVE SHAFT	
040	1037562-0000	-		1	SHAFT	
050	1037565-0000	C		2	BEARING UNIT	
060	1129253-0000	-		1	FASTENING PLATE	
070	1140208-0000	-		2	BRACKET	
080	1140641-0000	-		1	ARM	
090	1346311-0000	-		1	HOLDER	
100	1282348-0000	-		1	FASTENING PLATE	
105	1346312-0000	-		2	SCREW	
110	1346313-0000	-		1	PLATE	
120	1478740-0000	-		1	BRACKET	
130	1296842-0000	-		1	GUARD PLATE	
140	1296843-0000	-		1	FRAME	
150	1296844-0000	-		1	HATCH	
160	1296845-0000	-		1	BRACKET	
170	1296846-0000	-		1	SPLASH PLATE	
180	1349187-0000	-		1	SPRING	
200	312105-0366	-		12	SCREW M6S M6X12 A280	
210	312105-0368	-		7	SCREW M6S M6X16 A280	
220	312105-0370	-		4	SCREW M6S M6X20 A280	
230	312105-0447	-		2	SCREW M6S M8X12 A280	
240	312105-0449	-		10	SCREW M6S M8X16 A280	
250	312109-0380	-		2	SCREW M6S M6X50H A280	
260	312115-0327	-		2	SCREW MC6S M5X12 A280	
270	312625-0322	-		2	NUT HEX. M12 SS	
280	312105-0383	-		2	SCREW M6S M6X65 A280	
290	312125-0285	-		5	SCREW SLOT.PAN HD. MCS 4X6 A480	
300	312605-0318	-		6	HEXAGON NUT, M6M M8 A280	
310	312155-0368	-		3	SCREW HEX.SOCK.COUNT.MF6S M6X16 A280	
320	312605-0316	-		7	HEXAGON NUT, M6M M6 A280	
330	315105-0153	-		18	WASHER PLAIN, BRB, 6,4/12,H=1,5	
340	315115-0153	-		6	WASHER PLAIN, TBRB 6,4/12 H=3	
350	315115-0165	-		6	WASHER PLAIN, TBRB 8,4/16 H=3	
360	315705-0238	-		3	PARALLEL KEY W. ROUND ENDS 6X6X36 MM	
370	315742-0122	-		6	COLLAR, 30/55, H=15	
380	315751-0103	-		1	RETAIN. RING, 6	
390	342980-0112	-		2	BANJO-CONNECTION,RING 6/4-M6	
400	315755-0107	-		2	LOCKING WASHER 5	
410	352113-0203	-		5	ANCHOR TM3S8-M0	
420	353243-0005	-		2	GLANDS,HOSE,EXTENDED WITHOUT INSERT	PG16
430	353249-0014	-		2	GLAND,INSERT,SINGLE HOLE,EXTE.11,5-15,5	
440	90002-0009	-		1	BLANK-OFF PLUG 18.6	
470	90089-0017	-		1	TRANSITION SLEEVE PR18,6/PR22,5;PG11/16	
480	90099-0110	-		1	NUT PR 22,5 (PG16)	
490	90115-0173	C		1	ROD END, ID=6 MM, M6X1	
510	90155-0028	D		1	CONVEYOR CHAIN, INTRALOX900	
520	90235-0290	-		2	THROTTLE CHECK VALVES M5	
530	90239-0486	-		1	REAR,CLEVIS,MINI-ISO 16	
540	90239-0842	C		1	DOUBLE ACTING, MINI-ISO, CYL.16-50	
550	90344-0073	D		6	TOOTHED WHEEL	
560	90457-0090	C		1	FLEXIBLE COUPLING, 10X10 MM	
570	353101-0130	-		5	CABLE SHOE 1,5-2,5MM2 BLUE	
580	90152-0051	-	MM	2200	GLANDS,HOSE 25X18	
590	312105-0293	-		2	SCREW M6S M4X16 A280	
600	312605-0312	-		2	HEXAGON NUT, M6M M4 A280	
M5503	90069-0257	D		1	GEARS, WORM MOTOR WKM/DM90-60WE2A	
W5002	351150-0418	-	M	5	CABLE OLFLEX 4X2,5 MM2 LIGHT/GREY	

Machine Type | Group Description | Used-In | Group Number | Page No

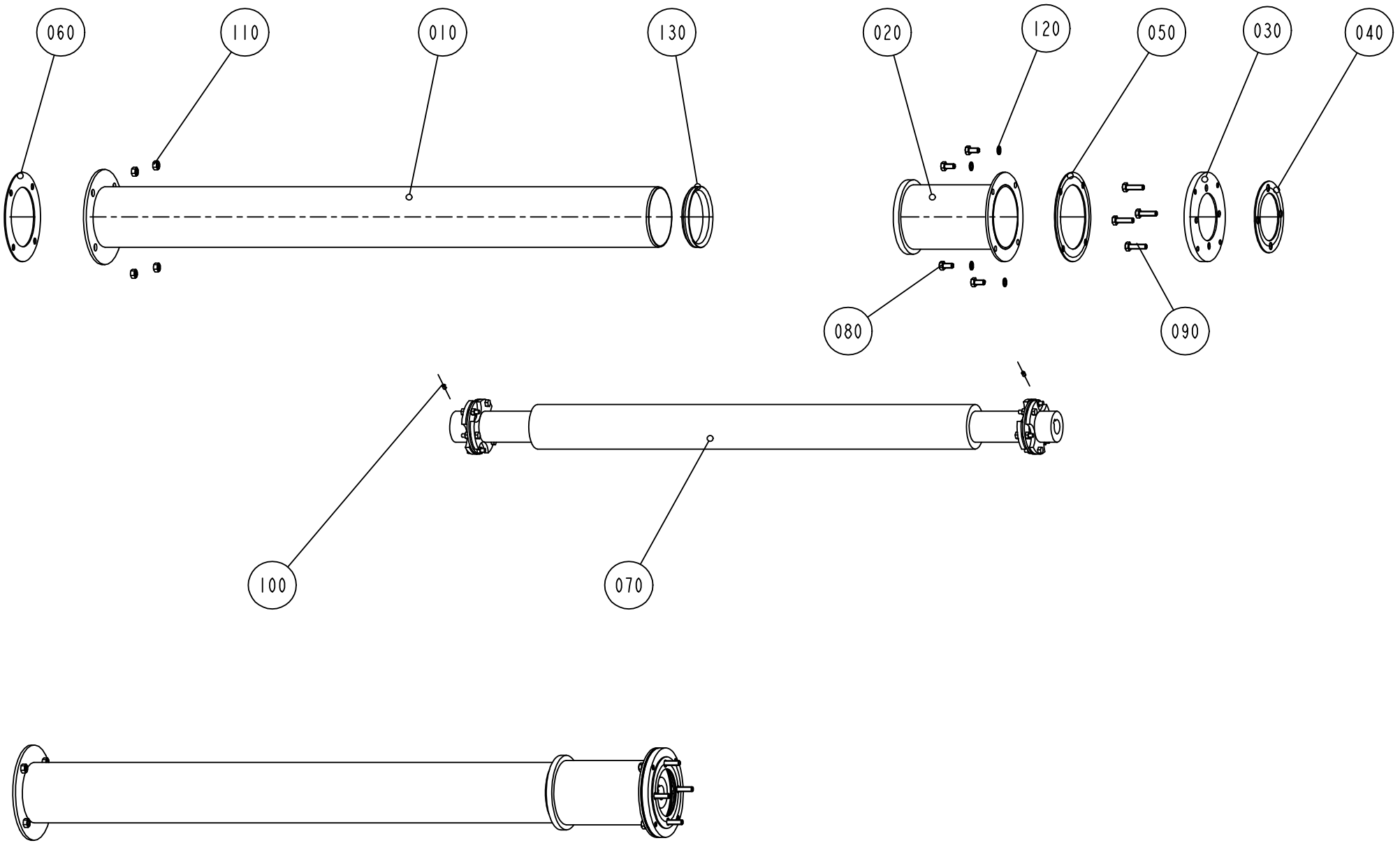
060
110
010
130
020
120
050
030
040
080
090
100
070

ECM: 71809 - 19980807
Group number: 1260884-0100
Assembly Drawing: 1260884-1_1_AA

Issue: 20011217

Pos	Part No	SP	UN	Qty	Description	Page No
Common Parts						
010	1129052-0000	-		1	PROTECTION	
020	1140559-0000	-		1	MUFF	
030	1140560-0000	-		1	ADAPTER	
040	1140561-0000	-		1	GASKET	
050	1140562-0000	-		1	GASKET	
060	1282244-0000	-		1	GASKET	
070	90356-0015	D		1	UNIVERSAL JOINT SHAFT	
080	312105-0449	-		4	SCREW M6S M8X16 A280	
090	312105-0455	-		4	SCREW M6S M8X30 A280	
100	312318-0323	-		2	SCREW SOCK.SET CUP P MSK6SS M5X8 A4	
110	312605-0318	-		4	HEXAGON NUT, M6M M8 A280	
120	315211-0104	-		4	GASKET BOLT HEAD 8,7X14X1 MM M8	
130	315220-0241	-		1	V-RINGS 99X113X18 MM V-110S	

Pos	Part No	SP	UN	Qty	Description	Page No

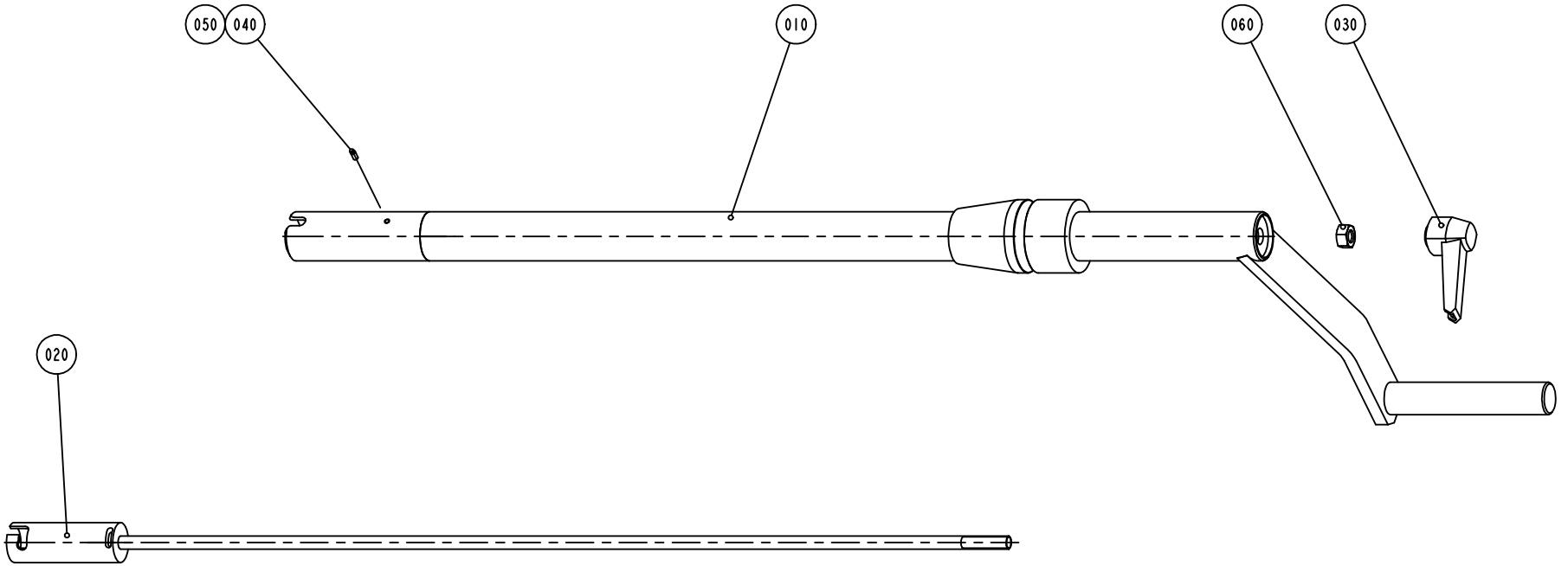

S-1260883-2
ECN 72704

ECM: 72704 - 19991007
Group number: 1260883-0200
Assembly Drawing: 1260883-2_1_AA

Issue: 20011217

Pos	Part No	SP	UN	Qty	Description	Page No
Common Parts						
010	1260712-0000	D		1	CRANK	
020	1140082-0000	D		1	LOCK SHAFT	
030	90117-0030	-		1	LOCKING HANDLE, M8/F	
040	90157-0016	-		1	LOCKING FLUID	
050	312318-0220	-		1	SCREW SOCK.SET CUP P MSK6SS M3X6 A4	
060	312605-0318	-		1	HEXAGON NUT, M6M M8 A280	

Pos	Part No	SP	UN	Qty	Description	Page No

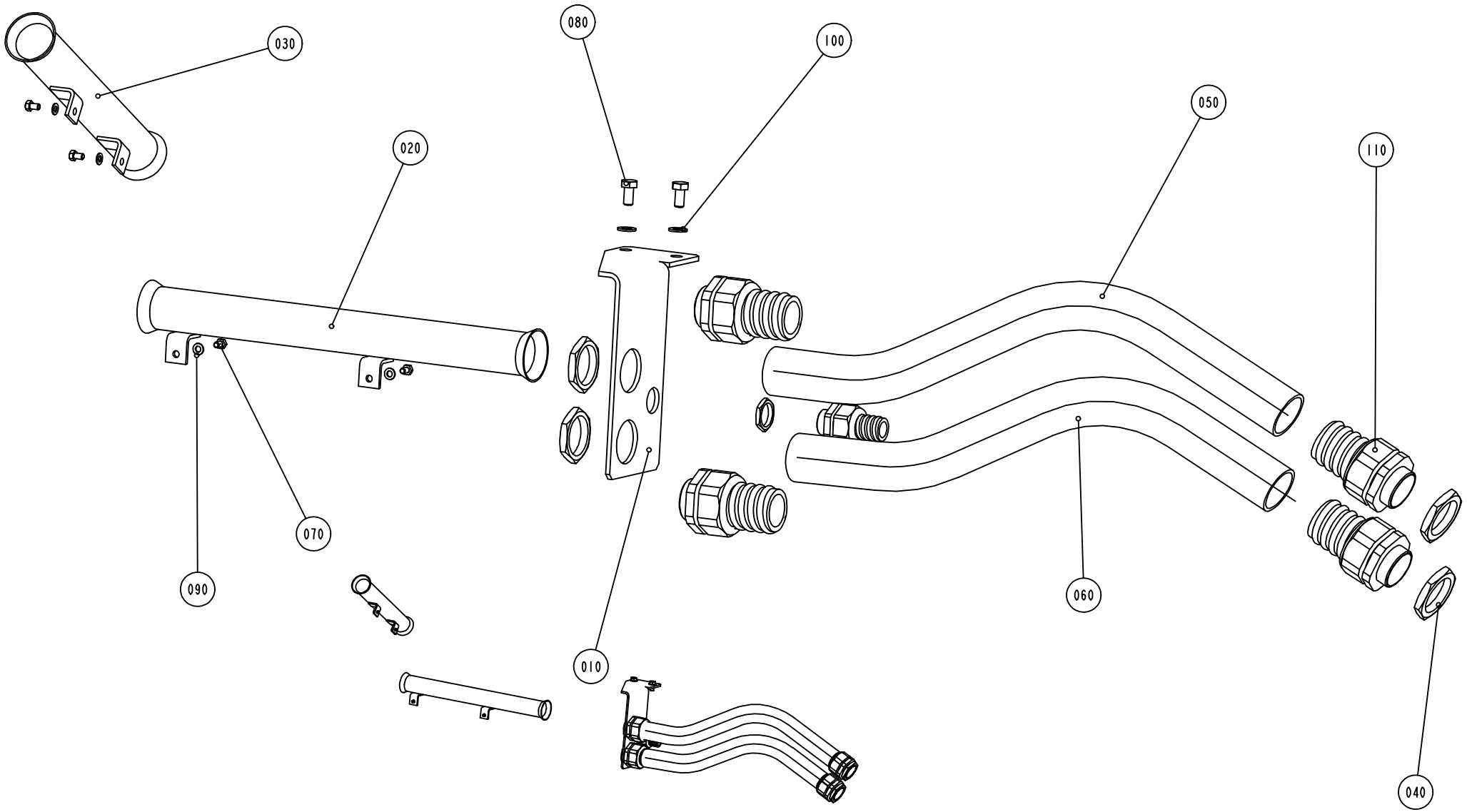
030
080
100
050
110
020
070
090
060
010
040

ECM: 70503 - 19970718
Group number: 1260881-0100
Assembly Drawing: 1260881-1_1_AA

Issue: 20011217

Pos	Part No	SP	UN	Qty	Description	Page No
Common Parts						
010	1279472-0000	-		1	BRACKET	
020	1279473-0000	-		1	PIPE	
030	1279680-0000	-		1	PIPE	
040	90099-0120	-		4	NUT PR 37 (PG29)	
050	90152-0060	-	MM	500	GLANDS,HOSE 42X35	
060	90152-0060	-	MM	500	GLANDS,HOSE 42X35	
070	312105-0323	-		4	SCREW M6S M5X8 A280	
080	312105-0449	-		2	SCREW M6S M8X16 A280	
090	315103-0146	-		4	WASHER PLAIN, BRB, 5,3/10,H=1 NI PL BR	
100	315103-0165	-		2	WASHER PLAIN, BRB, 8,4/16,H=1,5 NIPL BR	
110	353243-0008	-		4	GLAND,HOSE,EXTENDED WITHOUT INSERT PG29	

Pos	Part No	SP	UN	Qty	Description	Page No

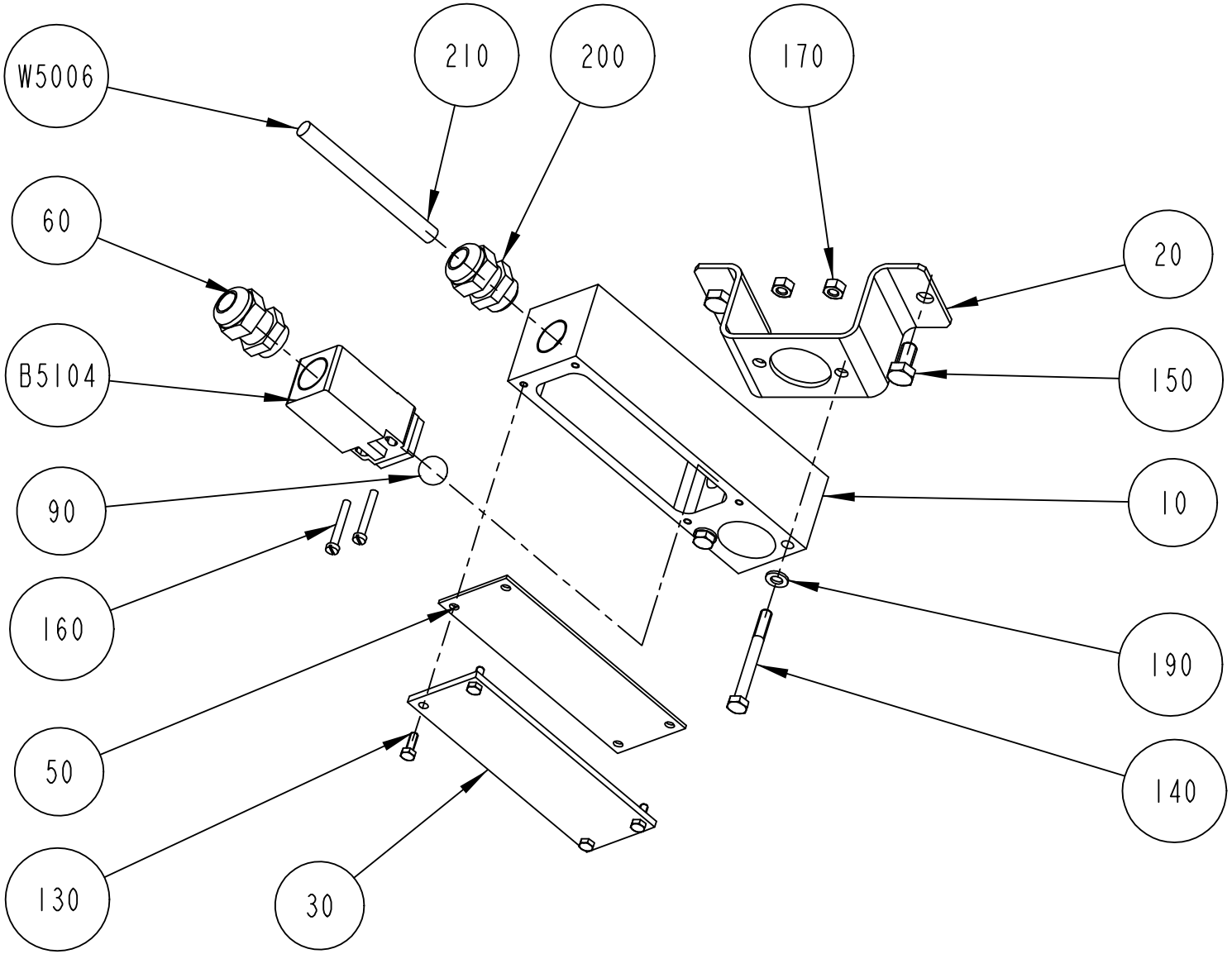

S-1279677-2
ECN 72003

ECM: 72003 - 19981216
Group number: 1279677-0100
Assembly Drawing: 1279677-2_1_AB

Issue: 20011217

Pos	Part No	SP	UN	Qty	Description	Page No
Common Parts						
010	1346307-0000	-		1	HOLDER	
020	1348990-0000	-		1	SUPPORT	
030	1348663-0000	-		1	PLATE	
050	1348635-0000	-		1	RUBBER SEAL	
060	1349020-0000	-		1	GLAND FITTING	
090	90090-0016	-		1	BALL, D=15 MM	
130	312105-0291	-		4	SCREW M6S M4X12 A280	
140	312105-0382	-		2	SCREW M6S M6X60 A280	
150	312105-0449	-		2	SCREW M6S M8X16 A280	
160	312125-0299	-		2	SCREW PAN HEAD MCS M4X30 SS	
170	312605-0316	-		2	HEXAGON NUT, M6M M6 A280	
190	315105-0153	-		2	WASHER PLAIN, BRB, 6,4/12,H=1,5	
200	352103-0108	-		1	CABLE GLAND ST 13	
210	353001-0103	-		4	END SLEEVE 0,75MM2	
B 5104	1144653-0000	C		1	SWITCH	
W 5006	351150-0405	-	MM	5000	CABLE OLFLEX 5X0,75 MM2 LIGHT/GREY	

Pos	Part No	SP	UN	Qty	Description	Page No

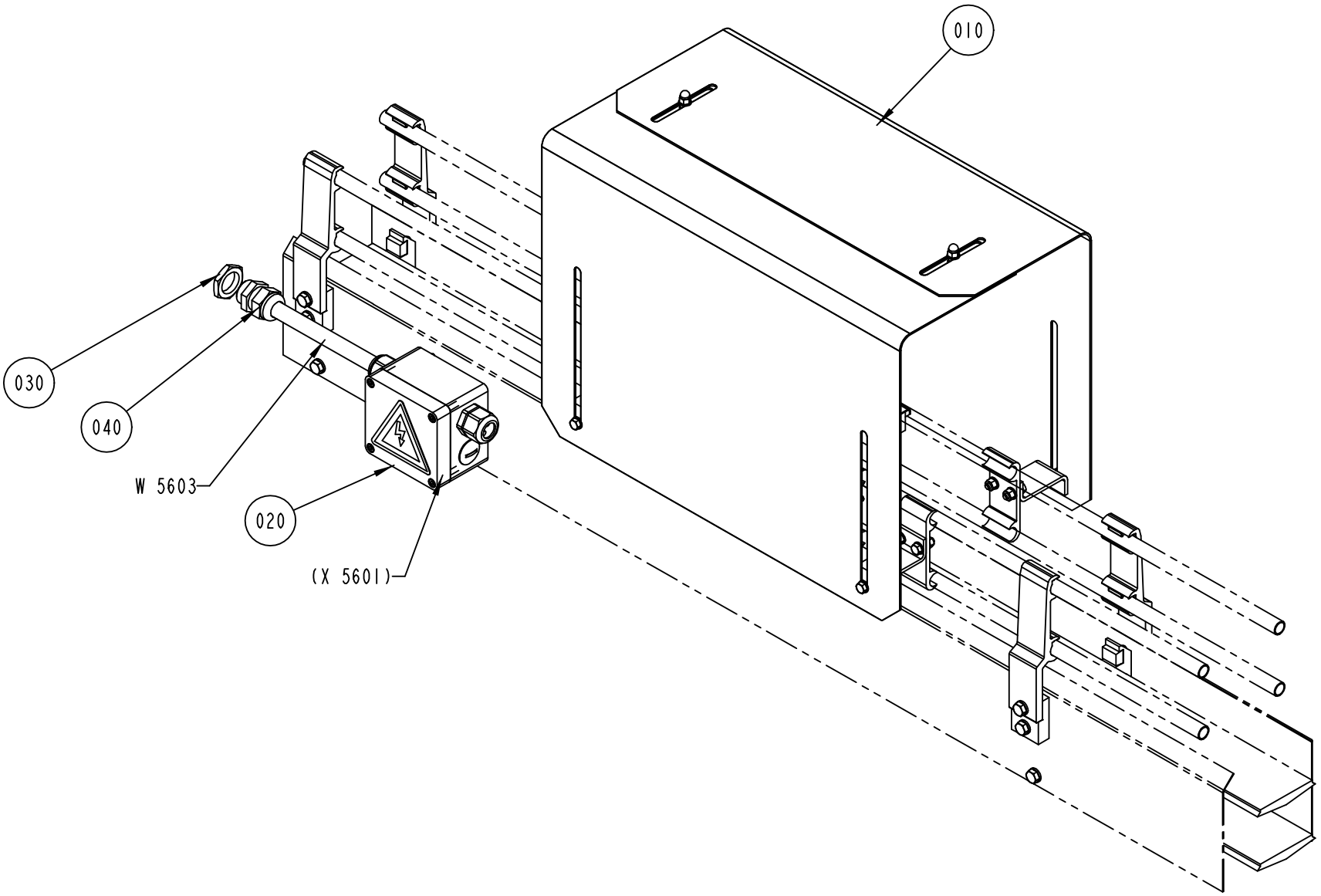

S-1484198-1
ECN 72704

ECM: 72704 - 19991007
Group number: 1484198-0100
Assembly Drawing: 1484198-1_1_AA

Issue: 20011217

Pos	Part No	SP	UN	Qty	Description	Page No
Common Parts						
010	A1484196-0100	-		1	PACK COUNTER	**713**
020	A1484197-0100	-		1	CONNECTION BOX	**715**
030	90099-0118	-		1	NUT PR 20,4 (PG13,5)	
040	352103-0108	-		1	CABLE GLAND ST 13	
W5603	351150-0405	-	M	100	CABLE OLFLEX 5X0,75 MM2 LIGHT/GREY	

Pos	Part No	SP	UN	Qty	Description	Page No

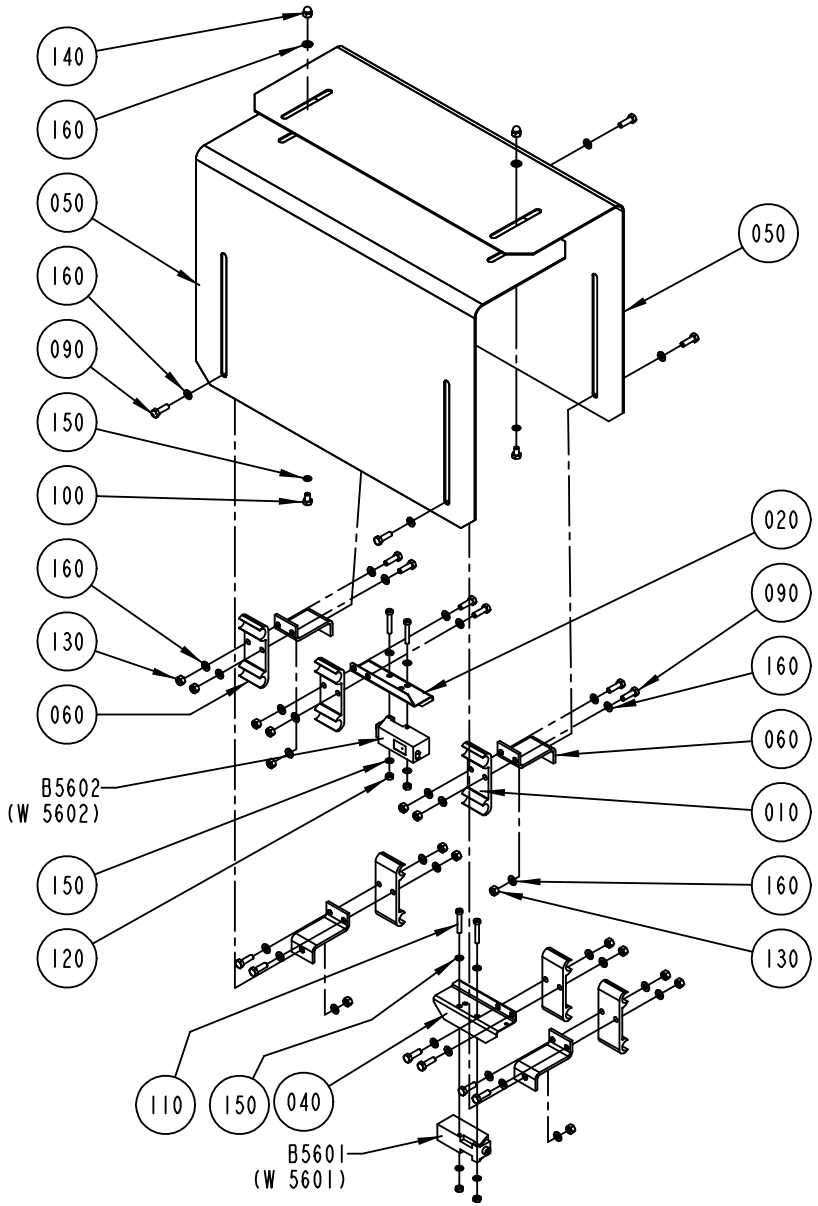

S-1484196-1
ECN 72704

Pos	Part No	SP	UN	Qty	Description	Page No
Common Parts						
010	1020637-0000	-		6	HOLDER	
020	1086889-0000	-		1	COVER	
030	1020638-0000	-		6	HOLDER	
040	1086888-0000	-		1	COVER	
050	1349566-0000	-		2	COVER	
060	1478659-0000	-		4	BRACKET	
090	312105-0329	-		16	SCREW M6S M5X16 A280	
100	312105-0323	-		2	SCREW M6S M5X8 A280	
110	312125-0297	-		4	SCREW PAN HEAD MCS M4X25 SS	
120	312605-0312	-		4	HEXAGON NUT, M6M M4 A280	
130	312605-0314	-		16	HEXAGON NUT, M6M M5 A280	
140	312705-0314	-		2	NUT HEX. DOMED CAP MHM-6 M5 A280	
150	315105-0136	-		8	WASHER PLAIN, BRB, 4,3/8,H=0,8	
160	315105-0146	-		42	WASHER PLAIN, BRB, 5,3/10,H=1	
B5601	90232-0103	-		1	PH.CELL E3S-CT61-L-5M	
B5602	90232-0104	-		1	PH.CELL E3S-CT61-D-5M	

Pos	Part No	SP	UN	Qty	Description	Page No

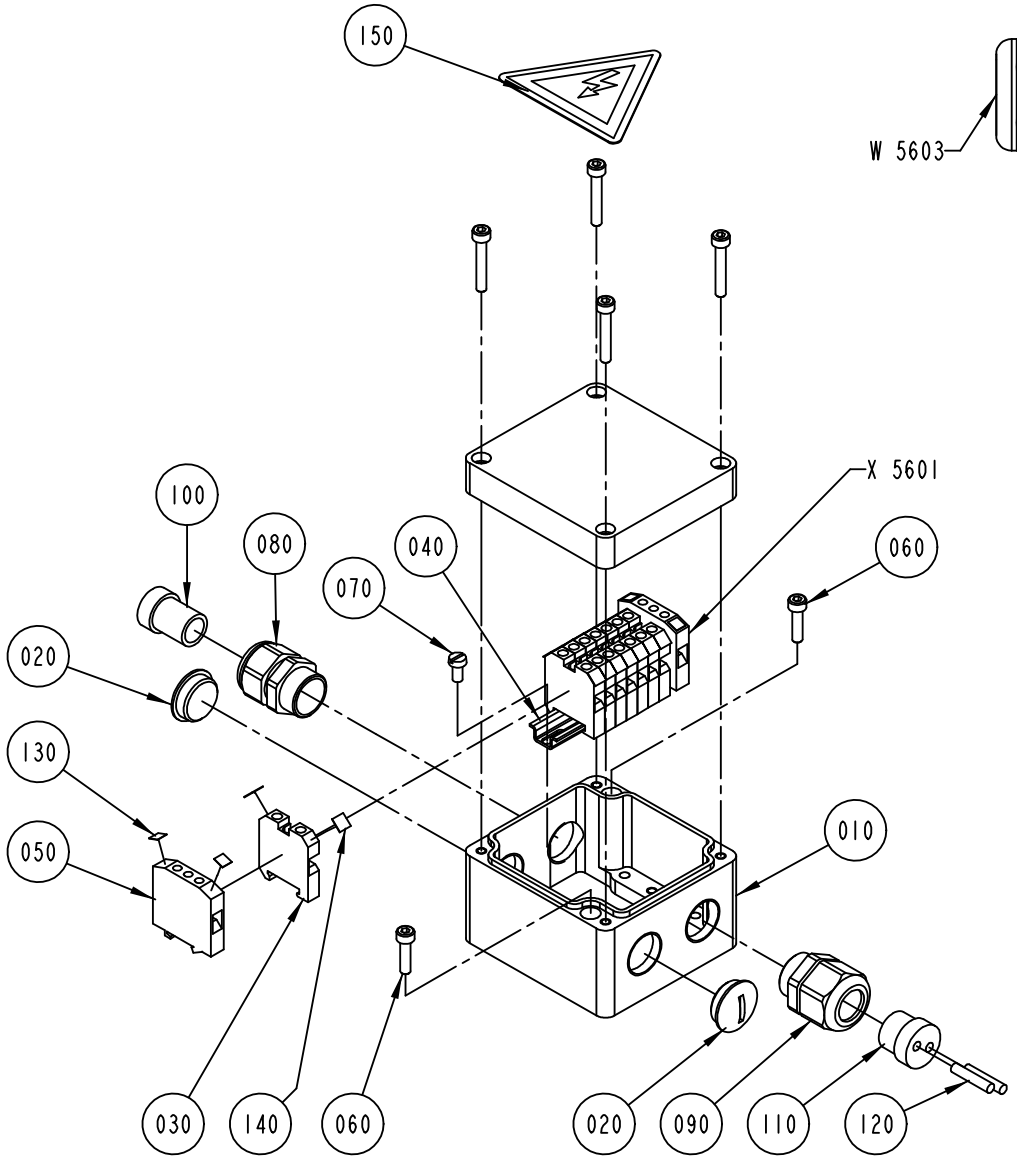

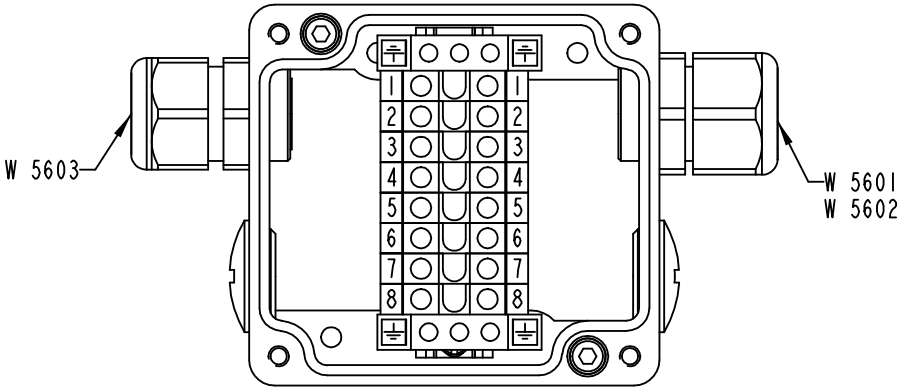

S-1484197-1
ECN 72704

ECM: 72704 - 19991007
Group number: 1484197-0100
Assembly Drawing: 1484197-1_1_AA

Issue: 20011217

Pos	Part No	SP	UN	Qty	Description	Page No
Common Parts						
010	1349568-0000	-		1	CONNECTION BOX	
020	90002-0009	-		2	BLANK-OFF PLUG 18.6	
030	90077-0079	-		8	FEED THROUGH TERMINAL, 02943.6	
040	90077-0328	-	MM	65	RAIL TS15/5	
050	90135-0026	-		2	EARTH TERMINAL, 3802.6	
060	312115-0293	-		2	SCREW MC6S M4X16 A280	
070	312125-0287	-		2	SCREW PAN HEAD MCS M4X8 SS	
080	353240-0002	-		1	GLANDS,NORMAL WITHOUT INSERT PG 11	
090	353241-0002	-		1	GLANDS,EXTENDED WITHOUT INSERT PG 11	
100	353249-0003	-		1	GLAND,INSERT,SINGLE HOLE,NORMAL 7-10,5	
110	353249-0036	-		1	GLAND,INSERT,MULTI HOLE,EXTENDED 2X4	
120	353249-0301	-		2	GLANDS,SEALING PIN 4X20	
130	359011-0819	-		4	MARKING PLATES 5-GW (EARTH)	
140	359011-0821	-		2	SET OF SIGNS 6-FW 1-50	
150	359705-0015	-		1	WARNING SIGN ISO, RISK OF ELECTRIC SHOCK	

Pos	Part No	SP	UN	Qty	Description	Page No

Machine Type | Group Description | Used-In | Group Number | Page No

Tetra Pak

SPC
Spare Parts Catalogue

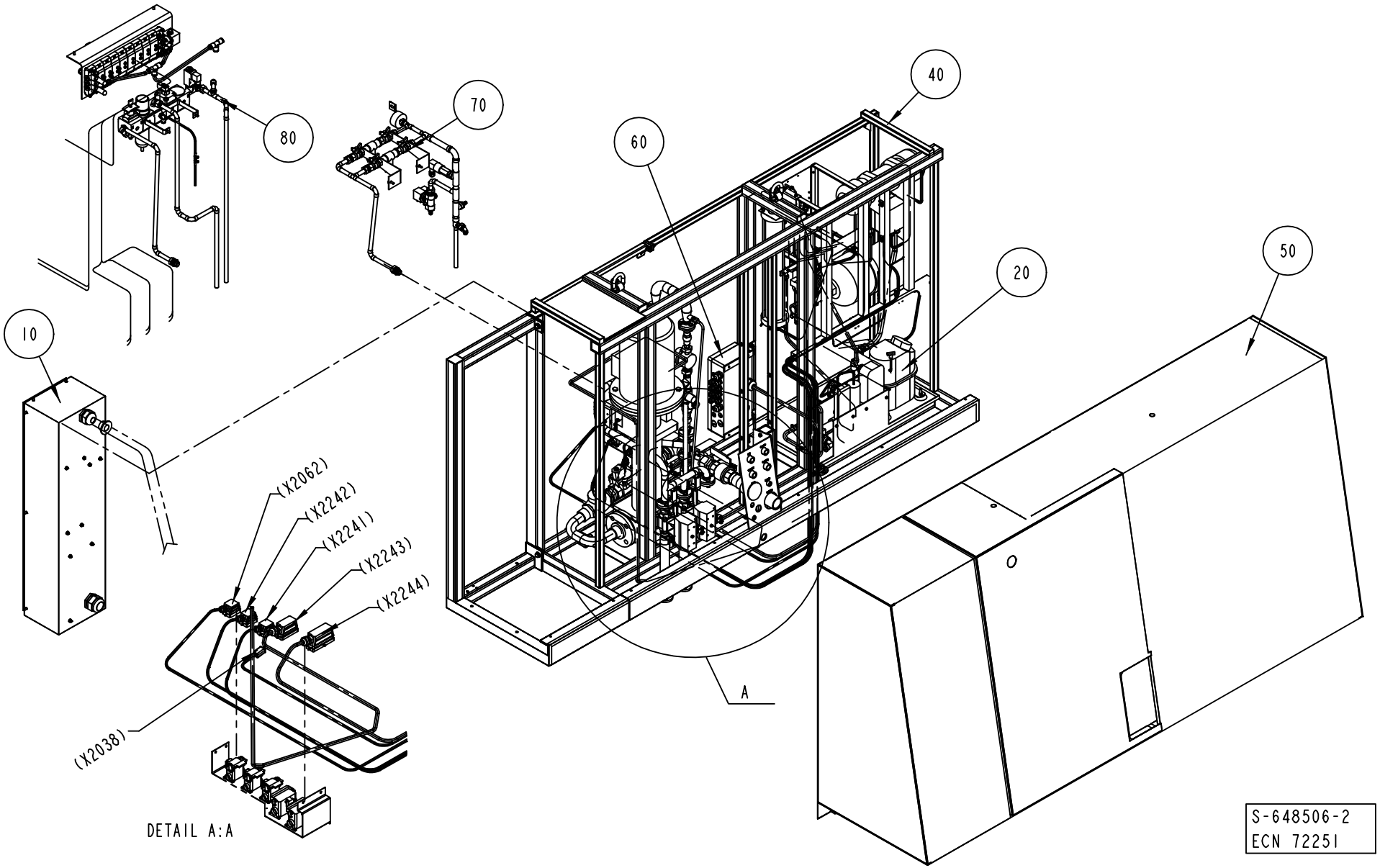
10
20
40
50
60
70
80
(X2062)
(X2242)
(X2241)
(X2243)
(X2244)
(X2038)
A
DETAIL A:A
S-648506-2
ECN 72251

ECM: 72251 - 19990419
Group number: 648506-0400
Assembly Drawing: 648506-2_1_AA

Issue: 20011217

Pos	Part No	SP	UN	Qty	Description	Page No
Common Parts						
010	A1095610-0300	-		1	MAIN SWITCH	**721**
020	A1095612-0300	-		1	COOLING WATER SYSTEM	**723, 725**
030	A1095627-0300	-		1	FOAM CLEANING UNIT	**739**
040	A1095606-0200	-		1	MACHINE BODY	**753**
050	A1095607-0200	-		1	COVERING PANEL	**757**
060	A1095630-0200	-		1	CONNECTION BOX	**773**
070	A1095608-0100	-		1	WATER PANEL	**775, 777**
080	A1095714-0300	-		1	SUPPLY SYSTEM	**781**

Pos	Part No	SP	UN	Qty	Description	Page No

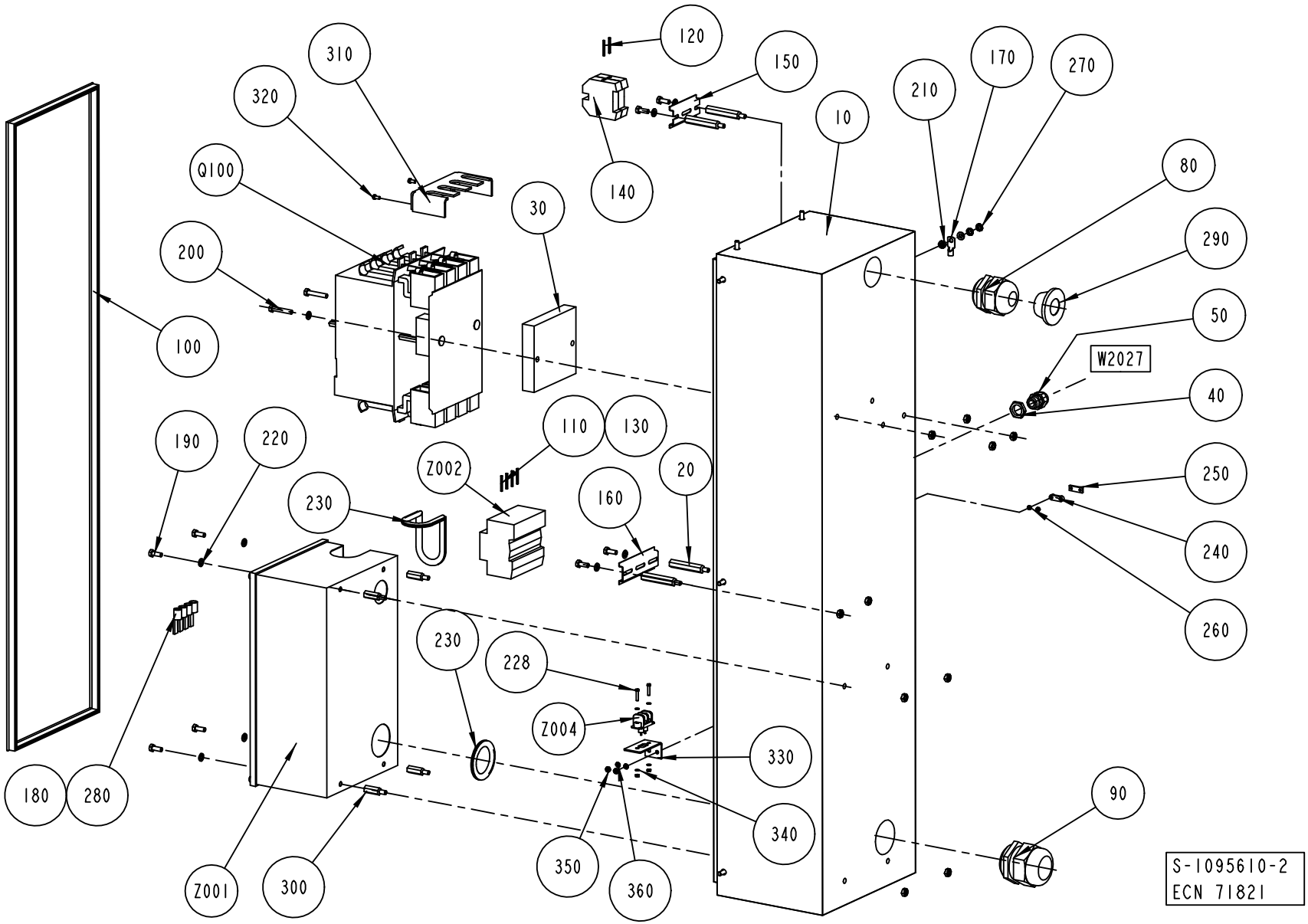
120
150
310
320
170
270
210
10
Q100
140
80
30
290
200
50
100
W2027
40
190
220
110
130
Z002
20
250
230
160
240
260
230
228
Z004
330
180
280
90
340
Z001
300
350
360
S-1095610-2
ECN 71821

ECM: 89407 - 20010203
Group number: 1095610-0300
Assembly Drawing: 1095610-2_1_AB

Issue: 20011217

Pos	Part No	SP	UN	Qty	Description	Page No
Common Parts						
010	1041893-0000	-		1	CABINET	
020	1037184-0000	-		4	SPACER SCREW	
030	1037531-0000	-		1	SPACER PLATE	
040	90099-0117	-		1	NUT PR 18,6 (PG11)	
050	352103-0106	-		1	CABLE GLAND ST 11	
060	90099-0085	-		1	NUT	
070	90099-0096	-		1	NUT	
080	352103-0122	-		1	CABLE GLAND ST 36	
090	352103-0123	-		1	CABLE GLAND ST 42	
100	90143-0057	-	MM	2600	STRIP EMKA 1011-05 21X11MM	
110	351173-0110	-	MM	2400	CABLE AWM 1X25 MM2 LIGHT-BLUE	
120	351175-0109	-	MM	850	CABLE AWM 1X16 MM2 YELLOW-GREEN	
130	351179-0110	-	MM	6000	CABLE AWM 1X25 MM2 BLACK	
140	353024-0209	-		2	EARTH TERMINAL, 1010.5	
150	353042-0005	-	MM	75	RAIL TS 35/7.5	
160	353042-0005	-	MM	100	RAIL TS 35/7.5	
170	353104-0168	-		1	CABLE SHO YAV 16 M6*	
180	353105-0200	-		9	PIN CABLE SKO A4630SR	
190	312105-0368	-		13	SCREW M6S M6X16 A280	
200	312105-0376	-		2	SCREW M6S M6S M6X35 A280	
210	312605-0316	-		1	HEXAGON NUT, M6M M6 A280	
220	315105-0153	-		16	WASHER PLAIN, BRB, 6,4/12,H=1,5	
230	90143-0060	-	MM	600	EDGE STRIP 9,5X6,3MM BLACK PVC	
240	90220-0303	-		1	CLAMP FOR SCR.CABLE 10MM	
250	90220-0305	-		1	CLAMP FOR SCR.CABLE 16MM	
260	312605-0310	-		2	HEXAGON NUT, M6M M3 A280	
270	90062-0015	-		2	LOCK WASHER SERRAT.EXT.GEAR,6,4/11 H=0,7	
280	90166-0232	-	MM	500	SHRINKABLE HOSE	
290	90015-0025	-		1	GLANDS,LEAD-IN,IP67	
300	1129402-0000	-		4	SPACER SCREW	
310	1255866-0000	-		1	PROTECTION	
320	312125-0287	-		2	SCREW PAN HEAD MCS M4X8 SS	
330	1349864-0000	-		1	BRACKET	
340	315105-0124	-		4	WASHER PLAIN, BRB, 3,2/6,H=0,5	
350	312601-0312	-		2	NUT M6M 4-8 FZB	
360	315101-0136	-		2	WASHER PLAIN, BRB, 4,3/8 H=0,8	
Q100	90111-0173	A		1	MAIN SWITCH	
W2027	90220-0095	-	MM	3000	SCR. CABLE 3X0,75MM2	
Z001	B1129088-0000	A		1	FILTER	
	90024-0031	-		*1*	*POWER LINE FILTER, 75 A 230/400 VAC*	
Z002	B90082-0013	A		1	OVERVOLTAGE PROTECTOR	
	90082-0301	-		*1*	*OVERVOLTOLTAGE PROTECTOR*	
Z004	90024-0036	A		1	FILTERED TERMINAL BLOCK	

Machine Type	Group Description	Used-In	Group Number	Page No

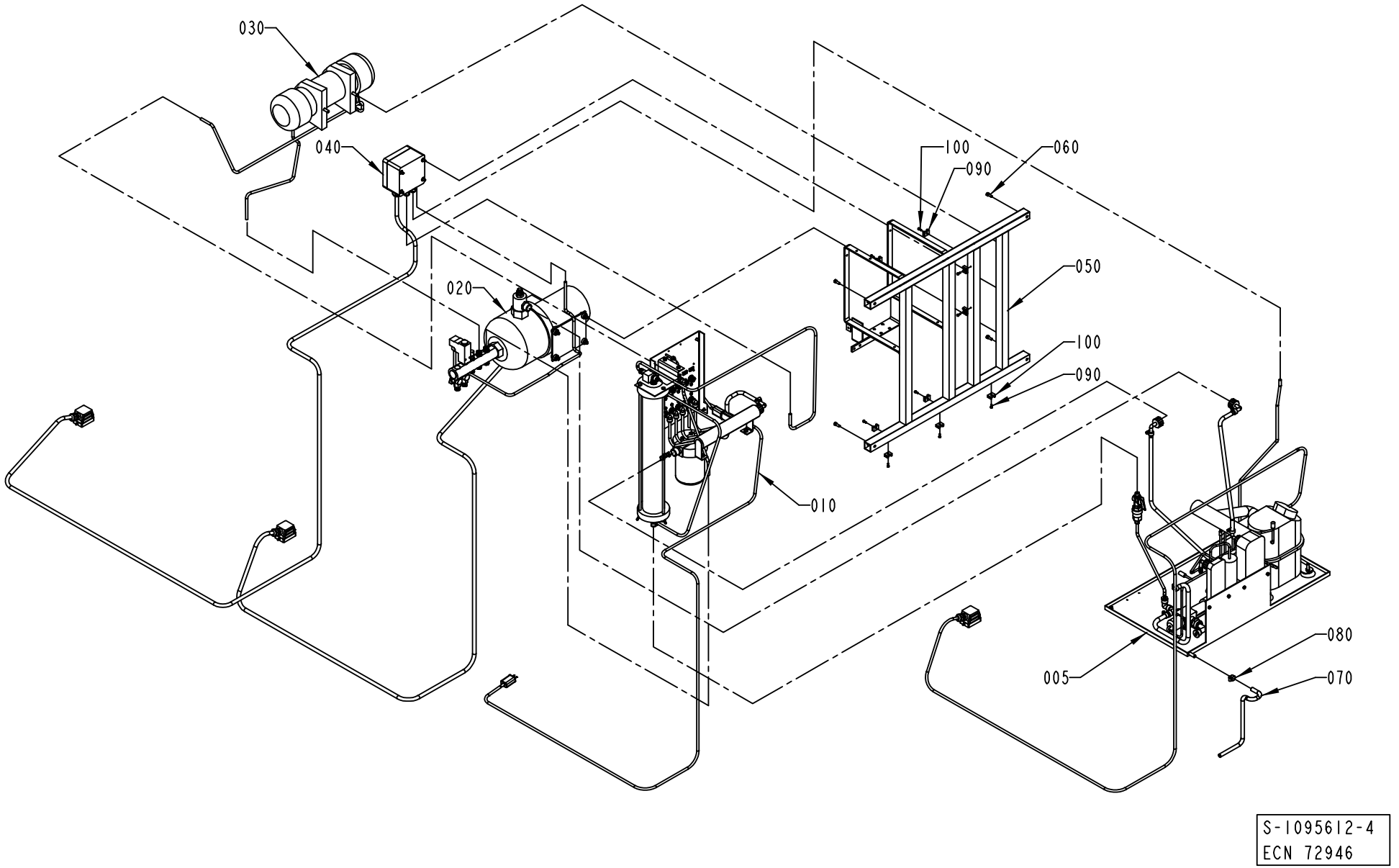
030
040
020
100
090
060
050
100
090
010
080
005
070
S-1095612-4
ECN 72946

Pos	Part No	SP	UN	Qty	Description	Page No
COMPRESSOR						
005	A1095710-0300	A		1	COMPRESSOR UNIT	**727**
ICE-WATER						
007	A1260547-0100	-		1	ICE WATER UNIT	**729**
Common Parts						
010	A1095705-0300	-		1	FLOW METER	**731**
020	A1095706-0300	-		1	COOLING WATER PUMP	**733**
030	A1095708-0200	-		1	EXPANSION VESSEL	**735**
040	A1095709-0200	-		1	CONNECTION BOX	**737**
050	1129141-0000	-		1	MACHINE BODY	
060	312115-0368	-		4	SCREW MC6S M6X16 A280	
070	90166-0121	-	MM	1000	HOSE	
080	342991-0101	-		1	HOSE CLIP,WORM DRIVE TYPE (13)-16	
090	352113-0203	-		9	ANCHOR TM3S8-M0	
100	312125-0289	-		9	SCREW SLOT.PAN HD. MCS 4X10 A480	

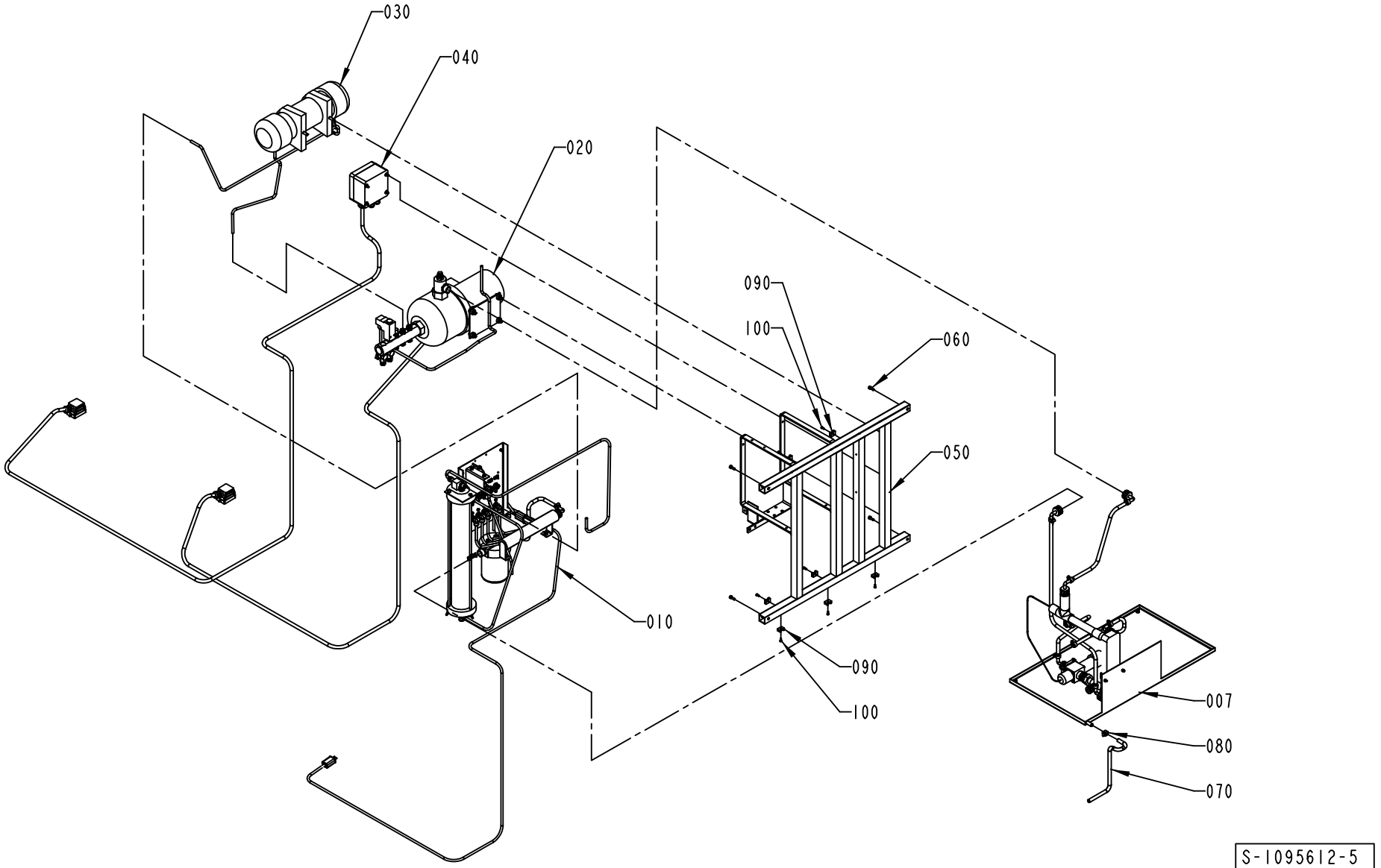
030
040
020
090
100
060
050
010
090
100
007
080
070
S-1095612-5
ECN 72946

Pos	Part No	SP	UN	Qty	Description	Page No
COMPRESSOR						
005	A1095710-0300	A		1	COMPRESSOR UNIT	**727**
ICE-WATER						
007	A1260547-0100	-		1	ICE WATER UNIT	**729**
Common Parts						
010	A1095705-0300	-		1	FLOW METER	**731**
020	A1095706-0300	-		1	COOLING WATER PUMP	**733**
030	A1095708-0200	-		1	EXPANSION VESSEL	**735**
040	A1095709-0200	-		1	CONNECTION BOX	**737**
050	1129141-0000	-		1	MACHINE BODY	
060	312115-0368	-		4	SCREW MC6S M6X16 A280	
070	90166-0121	-	MM	1000	HOSE	
080	342991-0101	-		1	HOSE CLIP,WORM DRIVE TYPE (13)-16	
090	352113-0203	-		9	ANCHOR TM3S8-M0	
100	312125-0289	-		9	SCREW SLOT.PAN HD. MCS 4X10 A480	

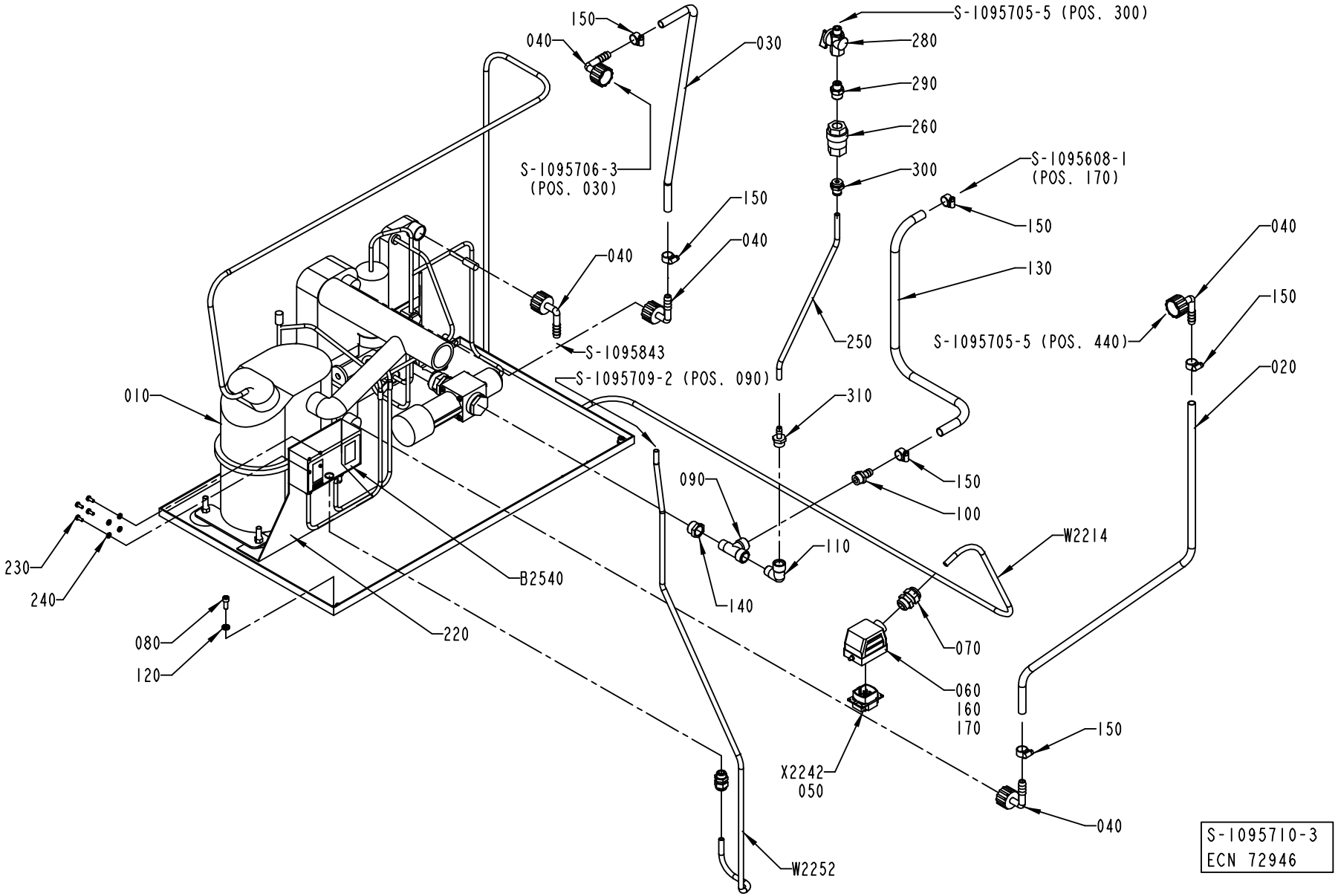
150
040
030
S-1095705-5 (POS. 300)
280
290
260
300
S-1095706-3
(POS. 030)
S-1095608-1
(POS. 170)
150
040
150
040
130
040
S-1095705-5 (POS. 440)
150
020
S-1095843
250
S-1095709-2 (POS. 090)
310
010
090
150
100
W2214
110
230
240
B2540
140
070
080
120
220
060
160
170
150
X2242
050
040
W2252
S-1095710-3
ECN 72946

ECM: 89409 - 20010203
Group number: 1095710-0300
Assembly Drawing: 1095710-3_1_AB

Issue: 20011217

Pos	Part No	SP	UN	Qty	Description	Page No
Common Parts						
010	1140603-0000	A		1	COMPRESSOR UNIT	
020	90166-0121	-	MM	930	HOSE	
030	90166-0121	-	MM	840	HOSE	
040	B90358-0090	B		5	ELBOW PIPE JOINT	
	90005-0155	*C*		*1*	*WASHER PL.RND.NYL.17/23,5, H=2*	
050	90110-0159	A		1	MALE INSERT 70.310.0640.0	
060	90110-0226	A		1	CABLE HOOD 6-POL 70.352.0628.0	
070	352103-0108	-		1	CABLE GLAND ST 13	
080	312115-0368	-		2	SCREW MC6S M6X16 A280	
090	90140-0023	-		1	T-PIPE, INT. THREAD, NO. 2070-3/8-3/8	
100	90163-0041	-		1	HOSE NIPPLE, EXT.THR. 3/8-12 MM	
110	90140-0020	-		1	ELBOW, 90, INT/EXT. THREAD, NO. 2020-3/8	
120	315115-0153	-		2	WASHER PLAIN, TBRB 6,4/12 H=3	
130	90166-0121	-	MM	705	HOSE	
140	342701-0206	-		1	BUSHING,INT./EXT.G-THREAD G1/2"-G3/8"	
150	342991-0101	-		6	HOSE CLIP,WORM DRIVE TYPE (13)-16	
160	359005-0050	-		1	MARKING LABEL KIT X, 04.841.4550.0	
170	359005-0010	-		1	MARKING LABEL KIT 0 - 9, 04.841.2150.0	
220	1361560-0000	-		1	PLATE	
230	312132-0289	-		4	SCREW SLOT. PAN HEAD MSCS M4X10	
240	90062-0029	-		4	WASHER LOCK 5,1X 8,6, T= 1,5 DIN 7980	
250	90166-0139	-	MM	500	TUBE PA BLACK	
260	90230-0028	A		1	NON-RETURN VALVE H 151 R 3/8"	
280	90187-0197	B		1	BALL VALVE G1/4	
290	90358-0125	-		1	NIPPLES, EXT. THREAD, HEX, NO. 1100604	
300	342722-0206	-		1	STRAIGHT COUPLING D=8-G3/8"	
310	342901-0104	-		1	HOSE NIPPLE, EXT.THR. G3/8-9 MM	
B2540	90274-0108	A		1	PRESSURE GUARD	
W 2214	351150-0418	-	MM	3500	CABLE OLFLEX 4X2,5 MM2 LIGHT/GREY	
W2252	351150-0431	-	MM	1000	CABLE OLFLEX 2X0,75 MM2 LIGHT/GREY	

Pos	Part No	SP	UN	Qty	Description	Page No

Machine Type | Group Description | Used-In | Group Number | Page No

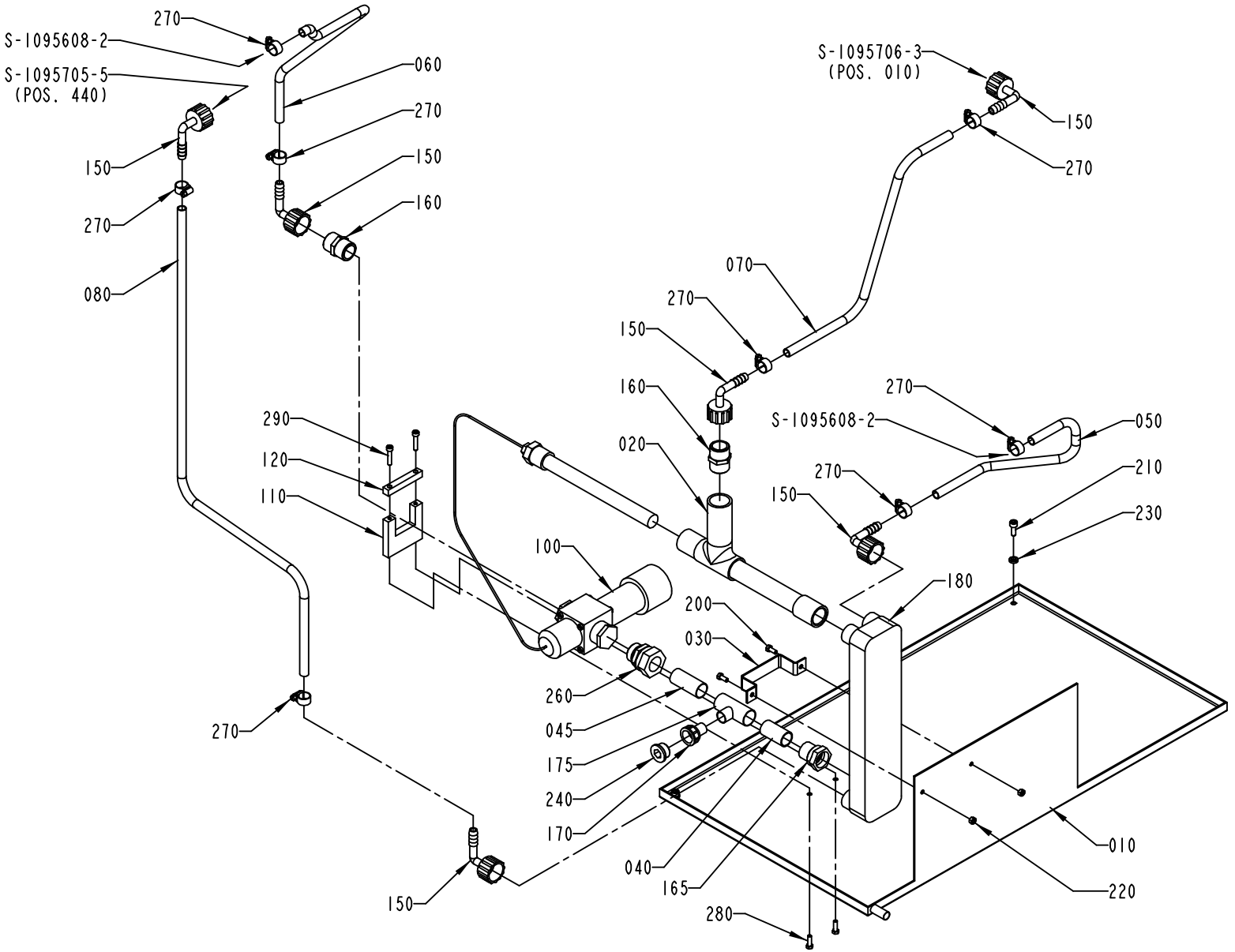

S-1260547-1
ECN 72946

Pos	Part No	SP	UN	Qty	Description	Page No
Common Parts						
010	1255365-0000	-		1	MOUNTING PLATE	
020	1511680-0000	-		1	TUBE	
030	1260247-0000	-		1	CLIP	
040	1260327-0000	-		1	TUBE	
045	1285363-0000	-		1	TUBE	
050	90166-0121	-	MM	400	HOSE	
060	90166-0121	-	MM	550	HOSE	
070	90166-0121	-	MM	600	HOSE	
080	90166-0121	-	MM	850	HOSE	
100	90187-0130	A		1	TEMP. CONTR. VALVE, R3/4 0-30øC	
110	1511615-0000	-		1	BRACKET	
120	1511616-0000	-		1	BRACKET	
150	B90358-0090	B		6	ELBOW PIPE JOINT	
	90005-0155	*C*		*1*	*WASHER PL.RND.NYL.17/23,5, H=2*	
160	90358-0092	-		2	DOUBLE NIPPLE	
165	90418-0045	B		1	ADAPTER, INT. CONN. NO. 7272CU/22-G3/4	
170	90418-0057	-		1	ADAPTER, EXT. CONN. NO. 7276CU / 15-G1/2	
175	90418-0062	-		1	T-PIPE, REDUCTION, INT, NO. 7130-22X15X2	
180	90422-0037	A		1	HEAT EXCHANGER	
200	312105-0327	-		2	SCREW M6S M5X12 A280	
210	312105-0368	-		2	SCREW M6S M6X16 A280	
220	312605-0314	-		2	HEXAGON NUT, M6M M5 A280	
230	315115-0153	-		2	WASHER PLAIN, TBRB 6,4/12 H=3	
240	342713-0213	-		1	PLUG, EXT THREAD HEX SOCKET 8638-00-120	
260	342720-0119	-		1	CONN. STR., GA-22-G3/4	
270	342991-0101	-		8	HOSE CLIP,WORM DRIVE TYPE (13)-16	
280	312105-0329	-		2	SCREW M6S M5X16 A280	
290	312115-0333	-		2	SCREW MC6S M5X25 A280	

Pos	Part No	SP	UN	Qty	Description	Page No

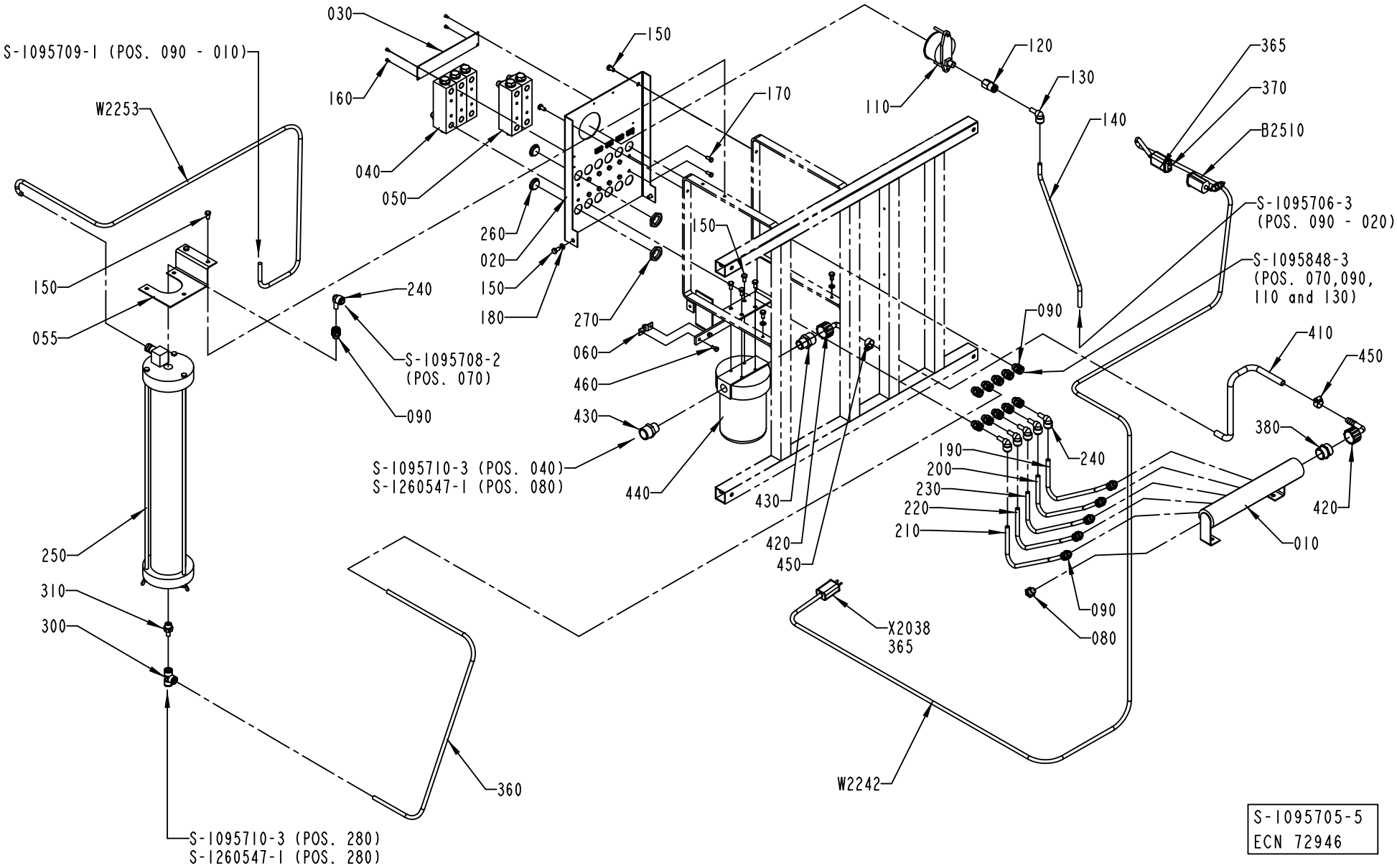
S-1095709-1 (POS. 090 - 010)
W2253
030
160
040
050
150
170
260
020
150
180
270
060
460
430
440
S-1095710-3 (POS. 040)
S-1260547-1 (POS. 080)
240
S-1095708-2
(POS. 070)
090
150
055
250
310
300
S-1095710-3 (POS. 280)
S-1260547-1 (POS. 280)
360
110
120
130
140
365
370
B2510
S-1095706-3
(POS. 090 - 020)
S-1095848-3
(POS. 070,090,
110 and 130)
090
410
450
380
420
010
190
200
230
220
210
240
430
420
450
X2038
365
090
080
W2242
S-1095705-5
ECN 72946

ECM: 89411 - 20010203
Group number: 1095705-0300
Assembly Drawing: 1095705-5_1_AB

Issue: 20011217

Pos	Part No	SP	UN	Qty	Description	Page No
Common Parts						
010	1041984-0000	-		1	ATTACHMENT PIPE	
020	1041959-0000	-		1	PIVOT BRACKET	
030	1511004-0000	-		1	SIGN LANGUAGEINDEPENDENT	
040	B1041046-0000	A		3	FLOW METER	
	90243-0113	*-*		*1*	*FLOW METER*	
050	B1129079-0000	A		2	FLOW METER	
	90243-0134	*-*		*1*	*FLOW METER*	
055	1041944-0000	-		1	BRACKET	
060	1260248-0000	-		1	CLAMP	
080	90330-0026	-		1	PLUG, EXT. G-THREAD, G1/4	
090	90055-0274	-		16	STRAIGHT COUPLING, D=8 MM - G1/4"	
110	90043-0100	B		1	PRESSURE GAUGE, 2948 D=63 MM	
120	90055-0266	-		1	STRAIGHT CONNECTION	
140	90166-0139	-	MM	490	TUBE PA BLACK	
150	312105-0366	-		12	SCREW M6S M6X12 A280	
160	312125-0220	-		4	SCREW SLOT.PAN HD. MCS 3X6 A480	
170	312105-0327	-		12	SCREW M6S M5X12 A280	
180	315105-0153	-		4	WASHER PLAIN, BRB, 6,4/12,H=1,5	
190	90166-0139	-	MM	255	TUBE PA BLACK	
200	90166-0139	-	MM	255	TUBE PA BLACK	
210	90166-0139	-	MM	255	TUBE PA BLACK	
220	90166-0139	-	MM	255	TUBE PA BLACK	
230	90166-0139	-	MM	255	TUBE PA BLACK	
240	90055-0250	-		7	ELBOW WITH TAILPIECE 8/8 MM	
250	B90415-0060	A		1	FILTERS, OTHER TYPES PART NO 3-9503-500	
	90415-0354	*C*		*1*	*DEIONIZER CARTRIDGE / ART.NO. 190055*	
260	90002-0004	-		1	BLANK-OFF PLUG 22,5	
270	90099-0110	-		1	NUT PR 22,5 (PG16)	
300	90055-0276	-		1	T-CONNECTION 8 MM	
310	90055-0260	-		1	NIPPLE-8 MM G1/4"	
320	342722-0206	-		1	STRAIGHT COUPLING D=8-G3/8"	
360	90166-0139	-	MM	800	TUBE PA BLACK	
365	90326-0012	-		2	PROTECTIVE COVER	
370	90326-0020	-		1	PLUG,FEMALE YELLOW CR-AL	
380	342700-0115	-		1	NIPPLES,HEXAGON,EXT.G-THREAD G3/4"-G3/4"	
410	90166-0121	-	MM	400	HOSE	
420	B90358-0090	-		2	ELBOW PIPE JOINT	
	90005-0155	*C*		*1*	*WASHER PL.RND.NYL.17/23,5, H=2*	
430	90358-0091	-		2	REDUCING NIPPLE	
440	B90415-0065	A		1	FILTER	
010	*90415-0357*	*-*		*1*	*FILTER INSERT*	
450	342991-0101	-		2	HOSE CLIP,WORM DRIVE TYPE (13)-16	
B 2510	90326-0057	A		1	THERMOCOUPLE CR-AL	
B 2520	90326-0020	A		1	PLUG,FEMALE YELLOW CR-AL	
W 2242	90220-0034	A	MM	3000	THERMOCOUPLE CABLE K/ 2X0,5MM2	
W 2253	351150-0431	-	MM	1400	CABLE OLFLEX 2X0,75 MM2 LIGHT/GREY	
X 2038	90326-0022	A		1	PLUG,MALE YELLOW CR-AL	

Machine Type | Group Description | Used-In | Group Number | Page No

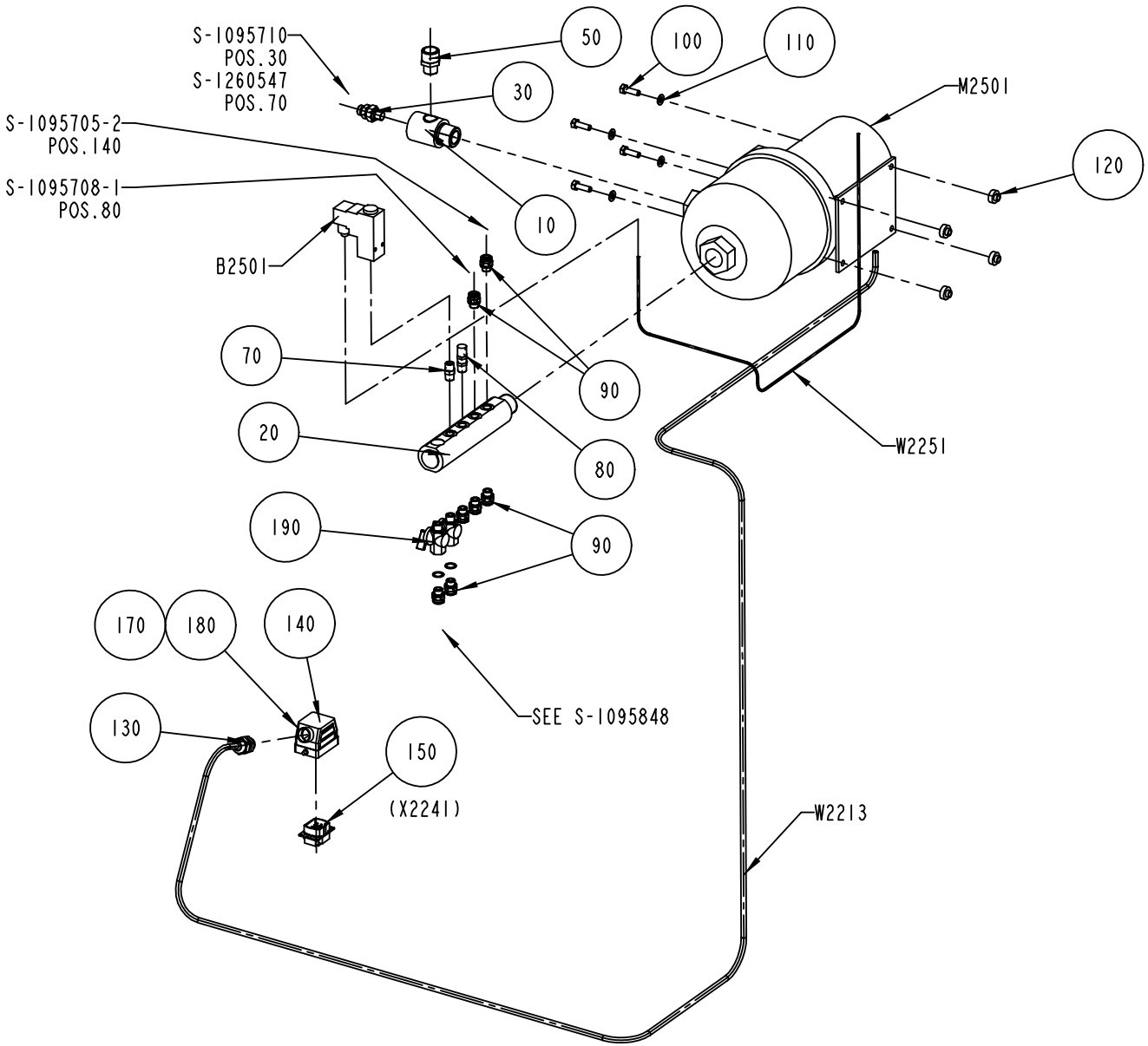

S-1095706-3
ECN 72251

ECM: 89412 - 20010203
Group number: 1095706-0300
Assembly Drawing: 1095706-3_1_AA

Issue: 20011217

Pos	Part No	SP	UN	Qty	Description	Page No
Common Parts						
010	1129046-0000	B		1	ATTACHMENT PIPE	
020	1129066-0000	-		1	RETURN PIPE	
030	90358-0091	-		1	REDUCING NIPPLE	
050	90187-0157	B		1	VENTILATING VALVE, 1/4" ISO	
070	90330-0043	-		1	NIPPLES, EXT. THREAD. R-207R1/4	
080	90230-0041	A		1	OVERPRESSURE VALVE SS-4 CPA2-RTDG-3	
090	90055-0274	-		7	STRAIGHT COUPLING, D=8 MM - G1/4"	
100	312105-0453	-		4	SCREW M6S M8X25 A280	
110	315105-0165	-		4	WASHER PLAIN, BRB, 8,4/16,H=1,5	
120	90015-0037	B		4	RUBBER BUSHING	
130	352103-0108	-		1	CABLE GLAND ST 13	
140	90110-0226	A		1	CABLE HOOD 6-POL 70.352.0628.0	
150	90110-0159	A		1	MALE INSERT 70.310.0640.0	
170	359005-0050	-		1	MARKING LABEL KIT X, 04.841.4550.0	
180	359005-0010	-		1	MARKING LABEL KIT 0 - 9, 04.841.2150.0	
190	90187-0197	B		2	BALL VALVE G1/4	
200	352103-0110	-		1	CABLE GLAND STR 16	
B 2501	90274-0056	A		1	PRESSURE SWITCH	
M 2501	B90321-0116	A		1	PUMP GRUNDFOSS CHI 2-60	
	90321-0618	-		*1*	*SEAL KIT FOR REPAIR OF PUMP*	
W 2213	351150-0418	-	MM	3000	CABLE OLFLEX 4X2,5 MM2 LIGHT/GREY	
W 2251	351150-0122	-	MM	1000	CABLE " REPL.BY 351150-431"	

Pos	Part No	SP	UN	Qty	Description	Page No

Machine Type	Group Description	Used-In	Group Number	Page No

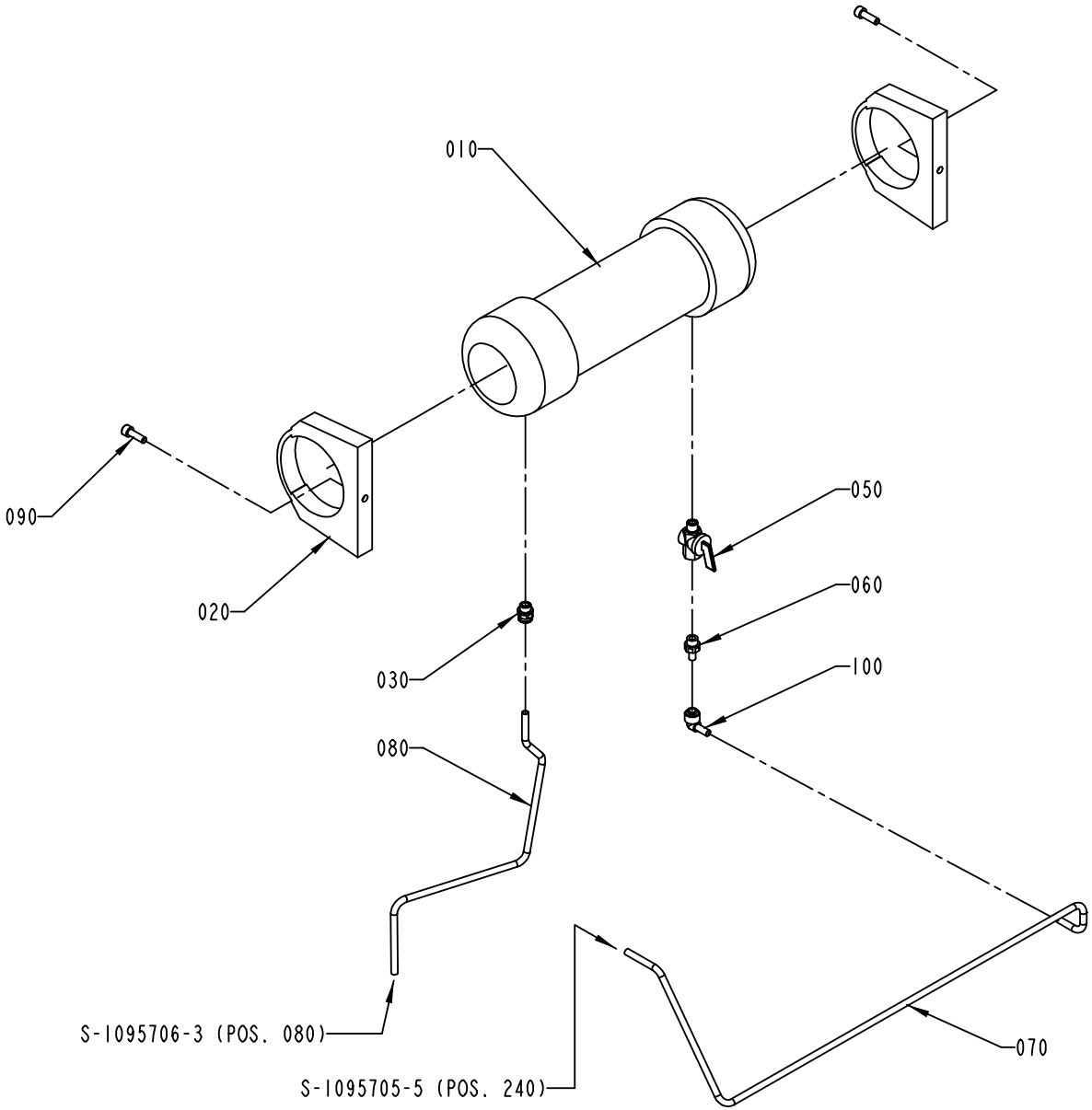

S-1095708-2
ECN 72946

ECM: 89427 - 20010203
Group number: 1095708-0200
Assembly Drawing: 1095708-2_1_AB

Issue: 20011217

Pos	Part No	SP	UN	Qty	Description	Page No
Common Parts						
010	90304-0030	A		1	EXPANSION TANK	
020	90165-0118	-		2	BRACKET, ZIE110, FOR ROUND MAT. D=110 MM	
030	90055-0274	-		1	STRAIGHT COUPLING, D=8 MM - G1/4"	
050	90187-0197	B		1	BALL VALVE G1/4	
060	90055-0260	-		1	NIPPLE-8 MM G1/4"	
070	90166-0139	-	MM	800	TUBE PA BLACK	
080	90166-0139	-	MM	450	TUBE PA BLACK	
090	312115-0453	-		2	SCREW MC6S M8X25 A280	
100	90055-0250	-		1	ELBOW WITH TAILPIECE 8/8 MM	

Pos	Part No	SP	UN	Qty	Description	Page No

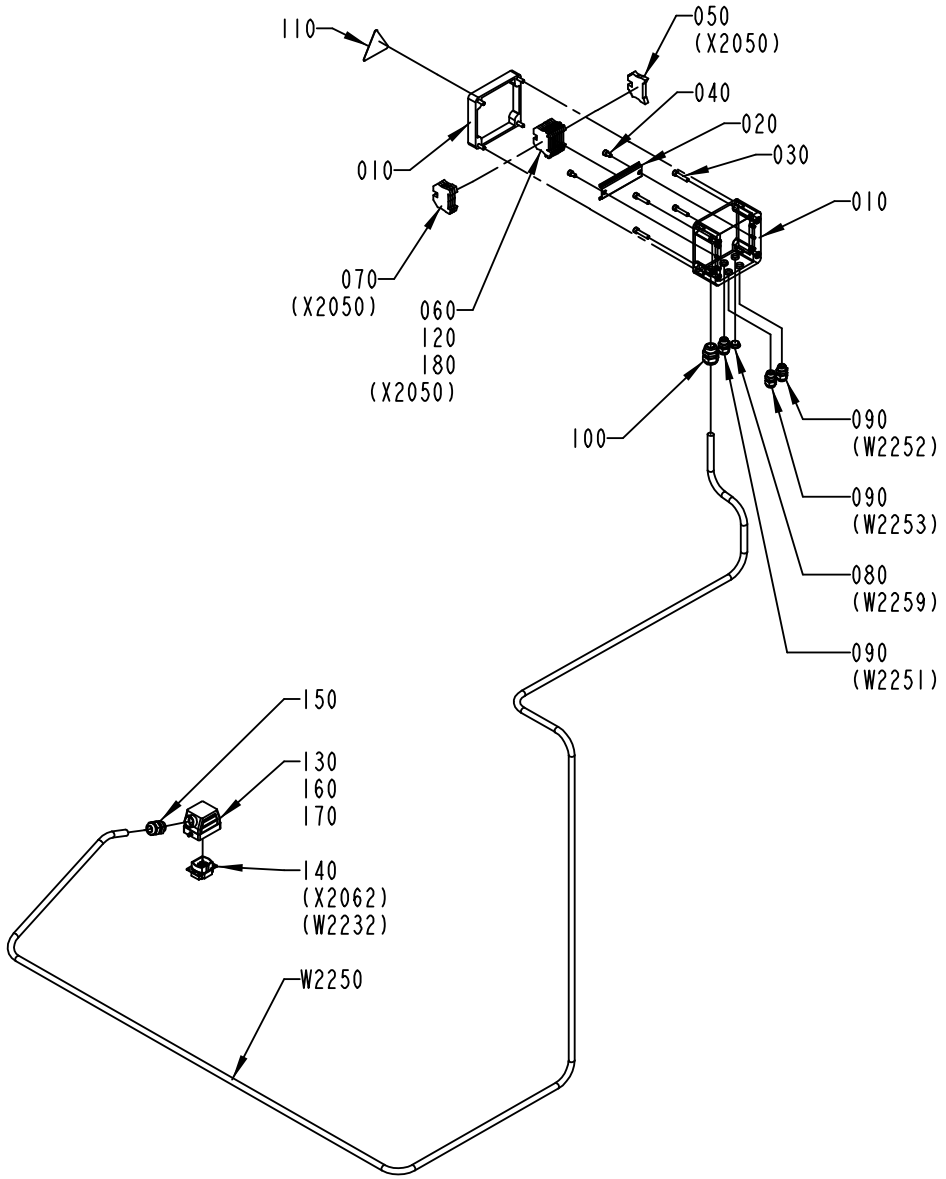

S-1095709-2
ECN 72946

ECM: 89428 - 20010203
Group number: 1095709-0200
Assembly Drawing: 1095709-2_1_AB

Issue: 20011217

Pos	Part No	SP	UN	Qty	Description	Page No
Common Parts						
010	1041943-0000	-		1	CONNECTION BOX	
020	1129210-0000	-		1	MOUNTING RAIL	
030	312115-0374	-		4	SCREW MC6S M6X30 A280	
040	312115-0364	-		2	SCREW HEX.SOCK.HD.MC6S-TT 6X10 A480	
050	353031-0203	-		1	END PLATE, 10612.0	
060	353021-0216	-		8	FEED THROUGH TERMINAL, 10200.8	
070	353024-0205	-		3	EARTH TERMINAL, 1010.1	
080	90002-0013	-		1	BLANK-OFF PLUG 15,2	
090	352103-0101	-		3	CABLE GLAND ST 9;PR15,2/PG9	
100	352103-0110	-		1	CABLE GLAND STR 16	
110	90194-0016	-		1	SIGN, FLASH, ELECTRIC EQUIPMENT SYMBOL	
120	359011-0809	-		1	MARKING PLATES 5-FW 101-150	
130	90110-0226	A		1	CABLE HOOD 6-POL 70.352.0628.0	
140	90110-0159	A		1	MALE INSERT 70.310.0640.0	
150	352103-0108	-		1	CABLE GLAND ST 13	
160	359005-0050	-		1	MARKING LABEL KIT X, 04.841.4550.0	
170	359005-0010	-		1	MARKING LABEL KIT 0 - 9, 04.841.2150.0	
180	353034-0030	-		1	BRIDGE CONNECTOR WQV 2,5/10, 10544.6	
W2250	351150-0406	-	MM	3500	CABLE OLFLEX 7X0,75 MM2 LIGHT/GREY	

Pos	Part No	SP	UN	Qty	Description	Page No

Machine Type | Group Description | Used-In | Group Number | Page No

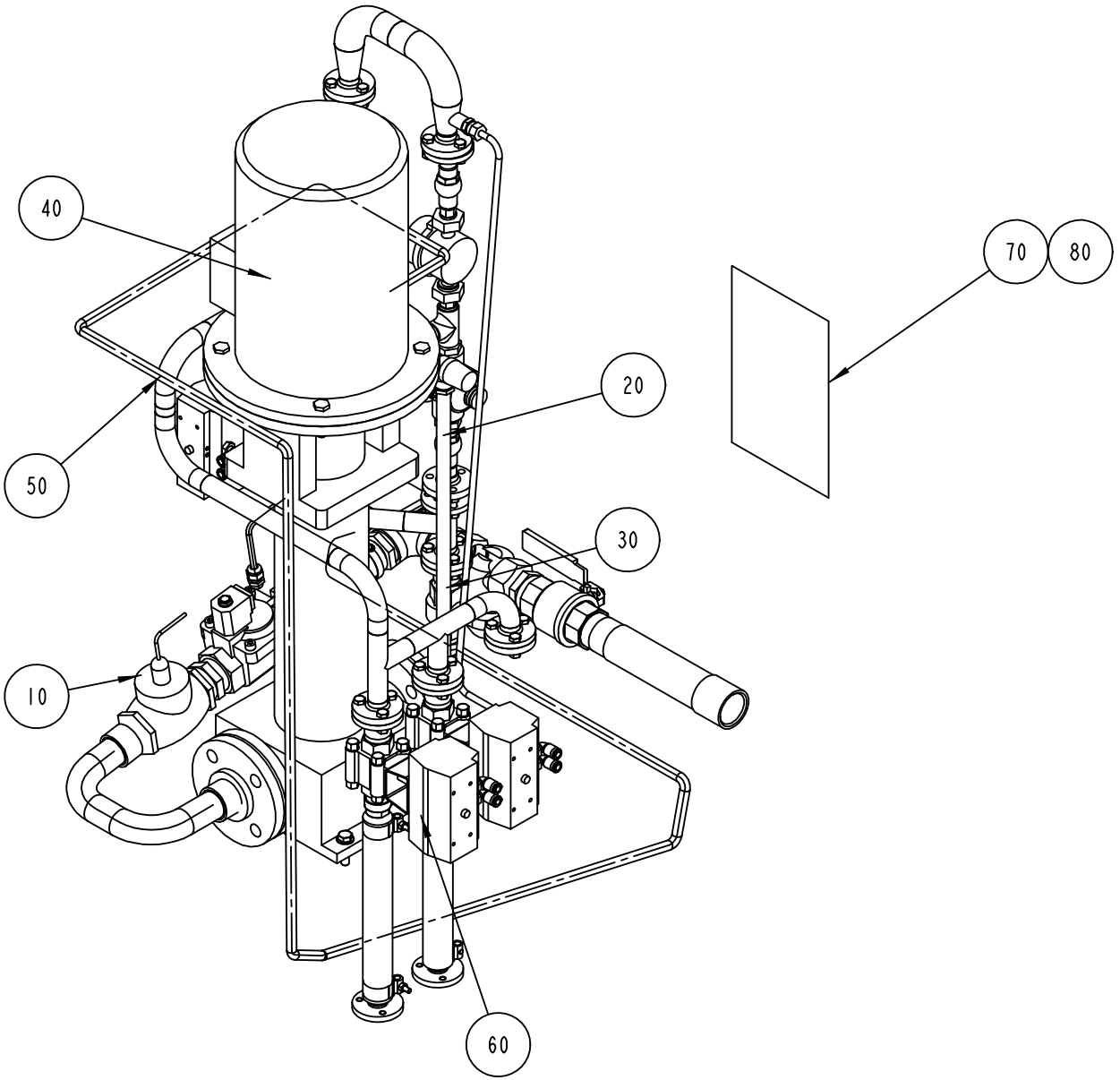

S-1095627-2
ECN 72251

ECM: 72251 - 19990419
Group number: 1095627-0300
Assembly Drawing: 1095627-2_1_AA

Issue: 20011217

Pos	Part No	SP	UN	Qty	Description	Page No
Common Parts						
010	A1095672-0100	-		1	PIPE	**741**
020	A1095673-0100	-		1	SIDE	**743**
030	A1095675-0100	-		1	PIPE	**745**
040	A1095676-0100	-		1	PUMP	**747**
050	A1095677-0100	-		1	BRANCHING PIPE	**749**
060	A1095678-0300	-		1	BALL VALVE	**751**
080	1129456-0000	-		1	EXTERNAL CLEANING DIAGRAM	

Pos	Part No	SP	UN	Qty	Description	Page No

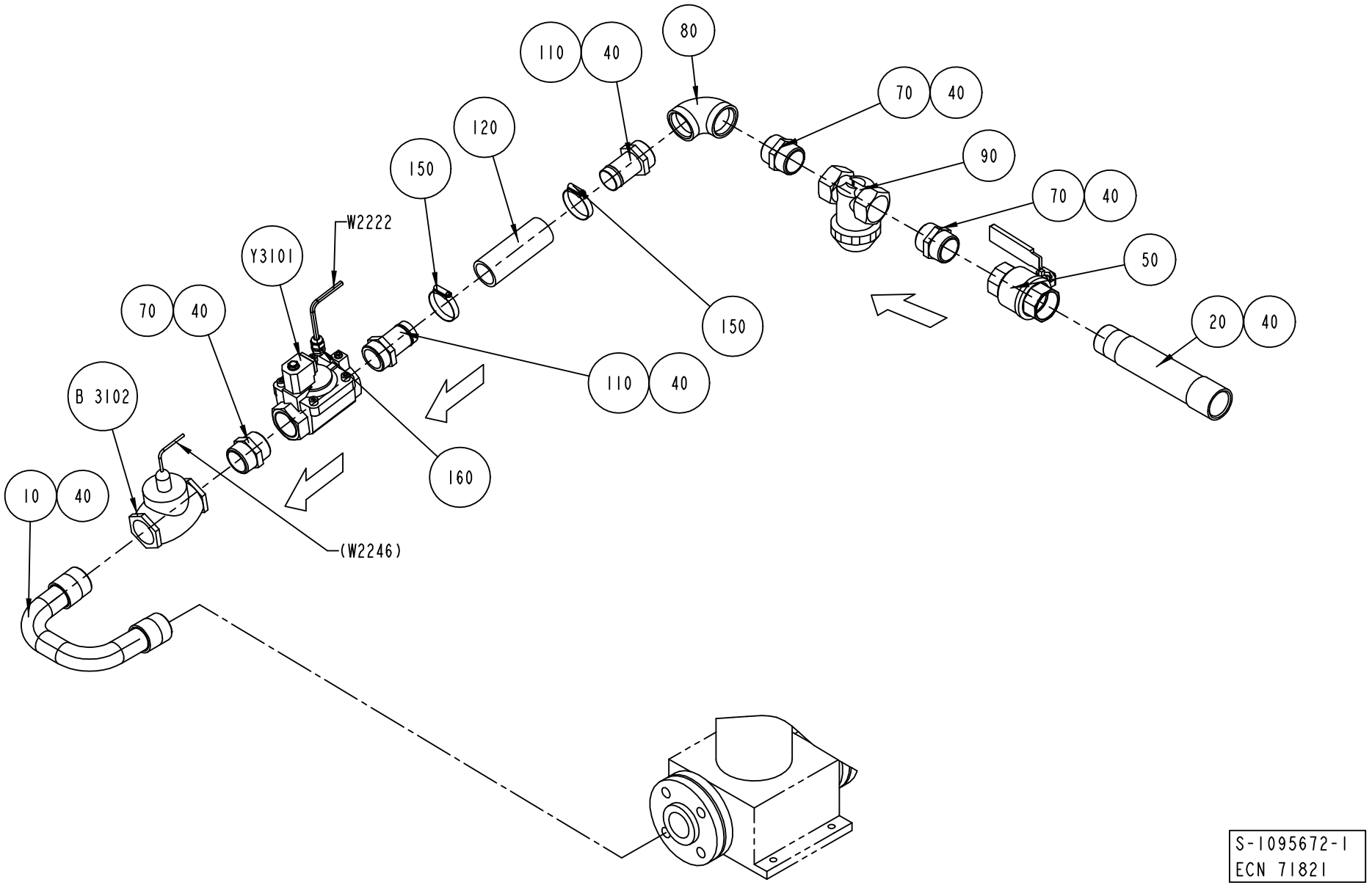
110
40
80
70
40
120
150
90
70
40
W2222
Y3101
50
70
40
150
20
40
B 3102
110
40
160
10
40
(W2246)
S-1095672-1
ECN 71821

ECM: 89429 - 20010203
Group number: 1095672-0100
Assembly Drawing: 1095672-1_1_AC

Issue: 20011217

Pos	Part No	SP	UN	Qty	Description	Page No
Common Parts						
010	1041925-0000	-		1	PIPE	
020	1041926-0000	-		1	PIPE	
040	90144-0007	-	MM	1	TAPE	
050	90187-0147	B		1	BALL VALVE G11/2	
070	90330-0056	-		3	NIPPLES, EXT. THREAD. R-207 KR11/2	
080	90330-0057	-		1	ELBOW, 90 INT. THREAD, R-222R11/2	
090	B90415-0032	A		1	FILTER / 3-02-00-1 1/2"	
	90415-0328	*C*		*1*	*FILTER INSERT*	
110	90055-0166	-		2	HOSE NIPPLE, EXT.THR. R11/2X38 MM	
120	90166-0236	-	MM	150	HOSE, 38/51 REINFORCED RUBBER	
150	342991-0108	-		2	HOSE CLIP 38-50MMRFR	
160	352103-0101	-		1	CABLE GLAND ST 9;PR15,2/PG9	
B3102	B90274-0082	A		1	FLOW SWITCH	
	90274-0322	*C*		*1*	*SPARE PART KIT*	
W2222	351150-0403	-	M	2	CABLE OLFLEX 3X0,75 MM2 LIGHT/GREY	
Y3101	B90042-0254	A		1	SOLENOID VALVE ODE(VENTIM)	
	90042-0557	*-*		*1*	*COIL V24DC-N3*	

Pos	Part No	SP	UN	Qty	Description	Page No

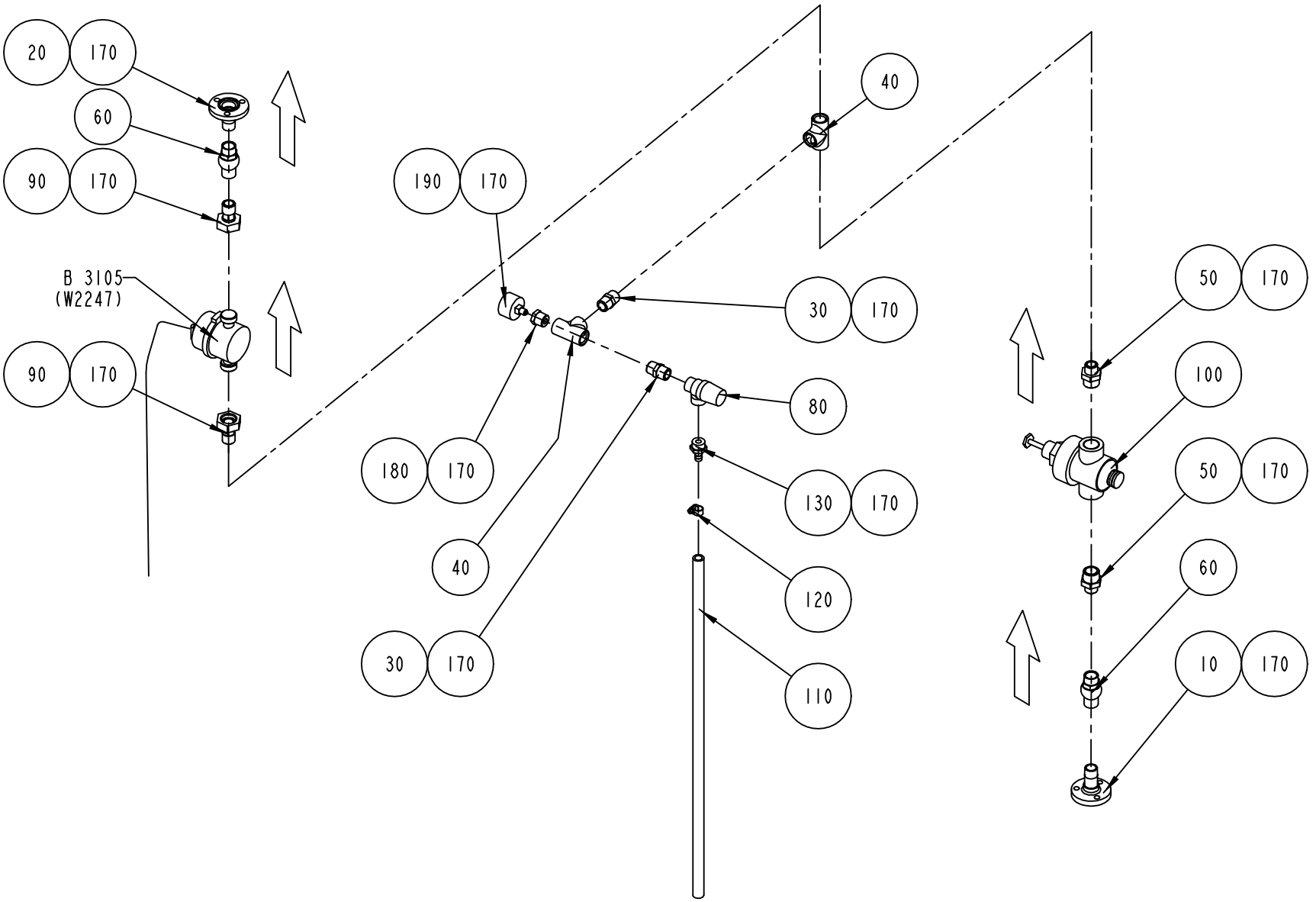

S-1095673-1
ECN 71821

ECM: 89430 - 20010203
Group number: 1095673-0100
Assembly Drawing: 1095673-1_1_AD

Issue: 20011217

Pos	Part No	SP	UN	Qty	Description	Page No
Common Parts						
010	1036826-0000	-		1	PIPE	
020	1036827-0000	-		1	PIPE	
030	90330-0021	-		2	NIPPLES, EXT. THREAD. R-207R1/2	
040	90330-0049	-		2	T-PIPE, INT. THREAD, R-221R1/2	
050	90330-0080	-		2	NIPPLES, EXT. THREAD. R3/4-R1/2	
060	90230-0042	-		2	NON-RETURN VALVE 1/2"	
080	90187-0133	-		1	SAFETY VALVE, 10 BARS, R1/2, R1/2	
090	B90030-0465	-		2	STRAIGHT CONNECTION, MAD DN 15	
	90005-0156	*C*		*1*	*WASHER PLAIN ROUND 16/24, H=1,5*	
100	90113-0098	A		1	PRESSURE REGULATOR	
110	90166-0121	-	MM	700	HOSE	
120	342991-0100	-		1	HOSE CLIP,WORM DRIVE TYPE 10-13	
130	342901-0105	-		1	HOSE NIPPLE, EXT.THR. G1/2-12 MM	
170	90144-0007	-	MM	1	TAPE	
180	90330-0036	-		1	BUSHING, INT/EXT. THR. RP1/8-RP1/2	
190	90043-0043	B		1	PRESSURE GAUGE WIEGAND 0-10 BAR 1/8"	
B3105	90243-0245	A		1	MEASURING INSTRUMENT	

Pos	Part No	SP	UN	Qty	Description	Page No

Machine Type | Group Description | Used-In | Group Number | Page No

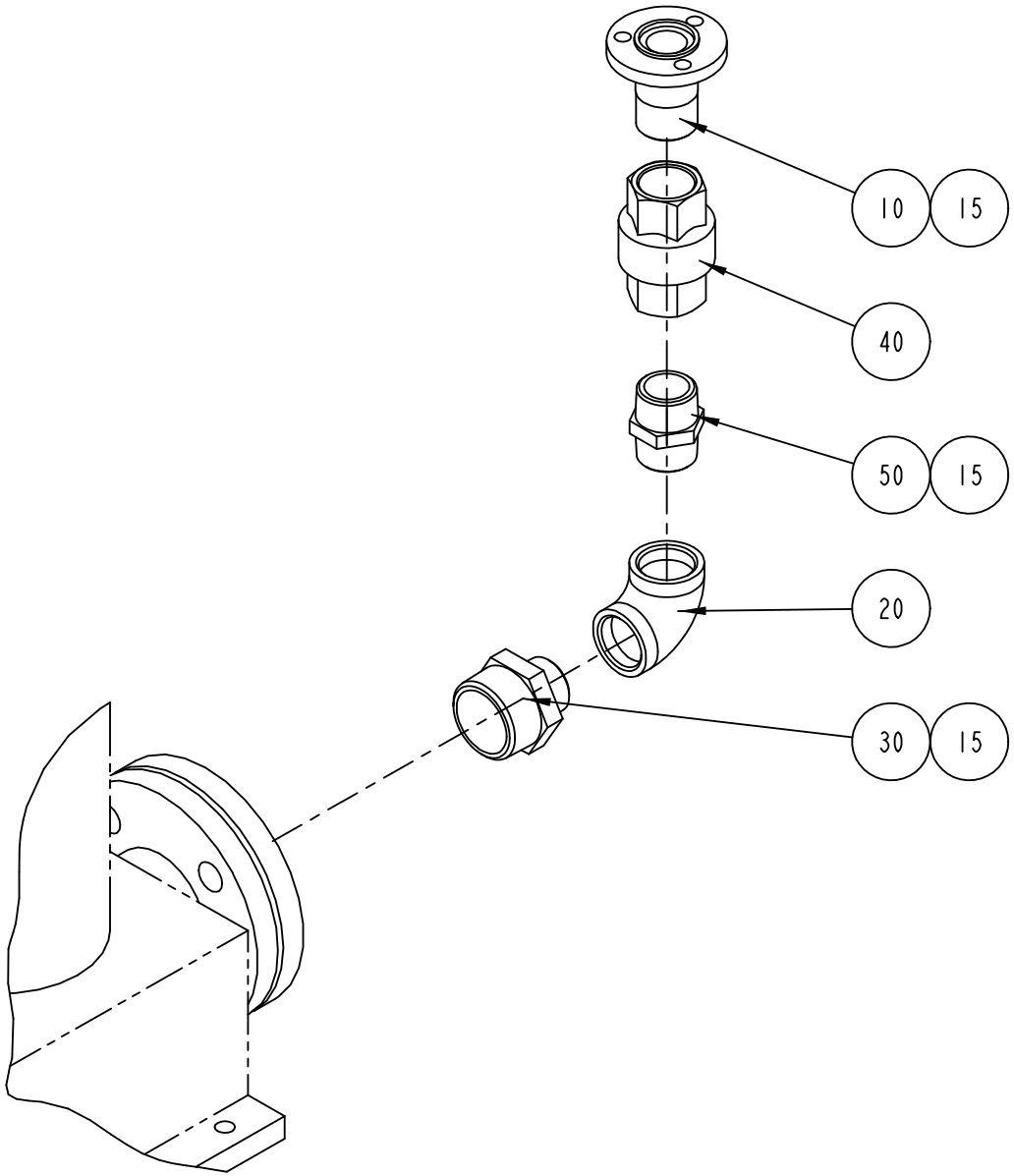

S-1095675-1
ECN 71821

ECM: 89431 - 20010203
Group number: 1095675-0100
Assembly Drawing: 1095675-1_1_AB

Issue: 20011217

Pos	Part No	SP	UN	Qty	Description	Page No
Common Parts						
010	1036794-0000	-		1	PIPE	
015	90144-0007	-	MM	1	TAPE	
020	90330-0014	-		1	ELBOW, 90 INT. THREAD, R-222R1	
030	90330-0045	-		1	NIPPLES, EXT. THREAD. R-209 KR11/2- KR1	
040	B90230-0044	A		1	NON-RETURN VALVE 1"	
	90230-0308	*C*		*1*	*GASKET KIT*	
050	342203-0120	-		1	NIPPLES, EXT. THREAD, HEXAGON,ÿNO. 209	

Pos	Part No	SP	UN	Qty	Description	Page No

Machine Type | Group Description | Used-In | Group Number | Page No

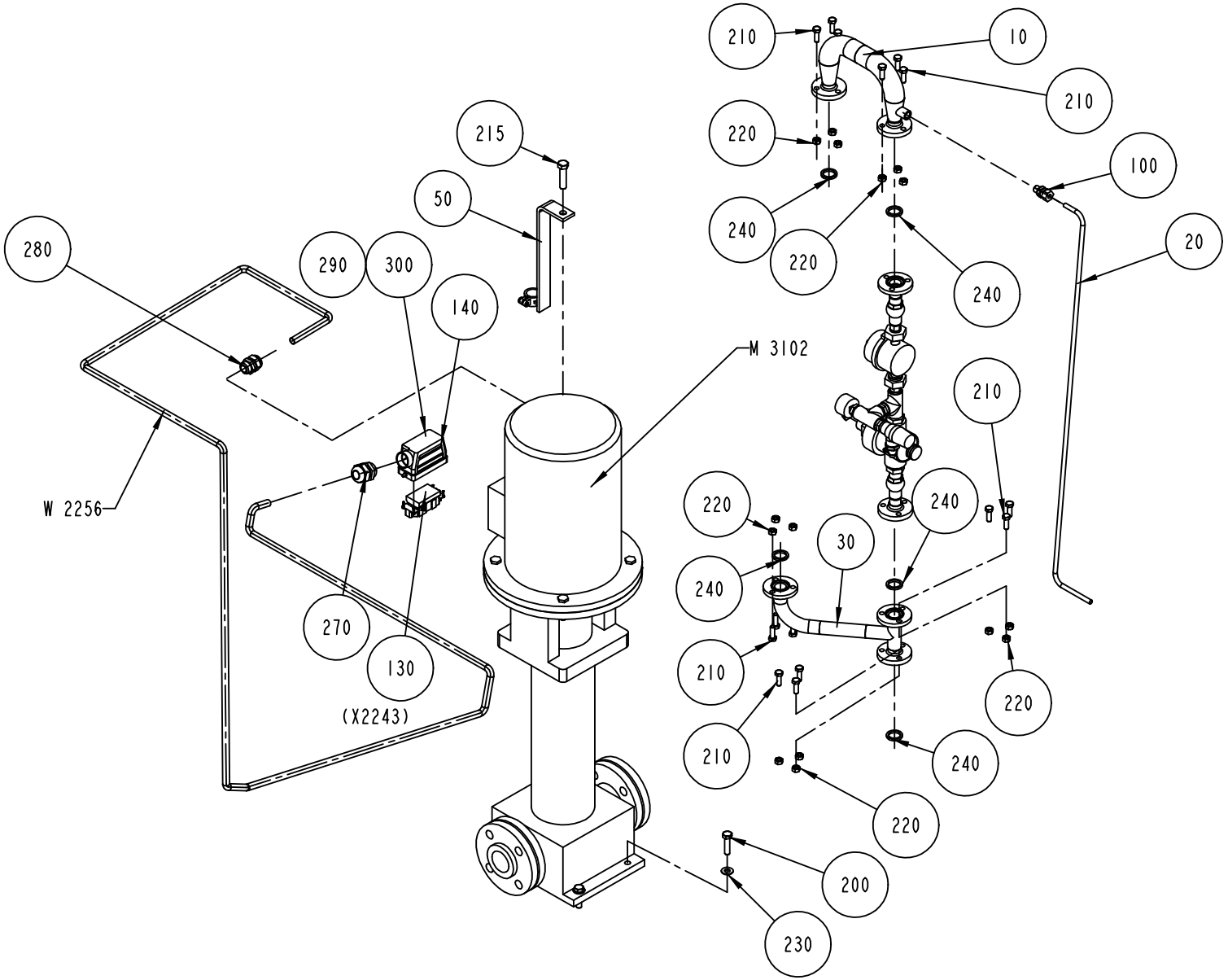

S-1095676-1
ECN 71821

ECM: 89432 - 20010203
Group number: 1095676-0100
Assembly Drawing: 1095676-1_1_AB

Issue: 20011217

Pos	Part No	SP	UN	Qty	Description	Page No
TBA/21 50HZ						
020	1140642-0000	-		1	PIPE	
030	1041946-0000	-		1	PIPE	
050	1140670-0000	-		1	BRACKET	
M3102	B90321-0117	A		1	PUMP LOWARA SV8-14 F75T	
	90321-0593	*-*		*1*	*SEAL*	
TBA/21 60HZ						
020	1140642-0000	-		1	PIPE	
030	1041946-0000	-		1	PIPE	
050	1499786-0000	-		1	BRACKET	
M3102	B90321-0120	A		1	PUMP SV8-09 F756T, 380V60HZ	
	90321-0593	*-*		*1*	*SEAL*	
Common Parts						
010	1036828-0000	B		1	TANK	
100	90030-0185	-		1	CONN. STR. GA-8-G1/4	
130	90110-0156	A		1	MALE INSERT 70.210.0653.0	
140	90110-0227	A		1	CABLE HOOD 6-16-POL 71.350.1628.0	
200	312105-0499	-		4	SCREW M6S M10X40 A280	
210	312105-0453	-		15	SCREW M6S M8X25 A280	
215	312105-0542	-		1	SCREW M6S M12X50 A280	
220	312605-0318	-		15	HEXAGON NUT, M6M M8 A280	
230	315105-0173	-		4	WASHER PLAIN, BRB, 10,5/22,H=2	
240	315229-0103	A		5	GASKETS, 23,1X30,1X3,7 MM 1" FDA	
270	352103-0115	-		1	CABLE GLAND STR 21	
280	352103-0111	-		1	CABLE GLAND ST 16	
290	359005-0010	-		2	MARKING LABEL KIT 0 - 9, 04.841.2150.0	
300	359005-0050	-		1	MARKING LABEL KIT X, 04.841.4550.0	
W2256	351150-0166	-	MM	3300	CABLE OLFLEX 4X4 MM2 LIGHT/GREY	

Pos	Part No	SP	UN	Qty	Description	Page No

Machine Type | Group Description | Used-In | Group Number | Page No

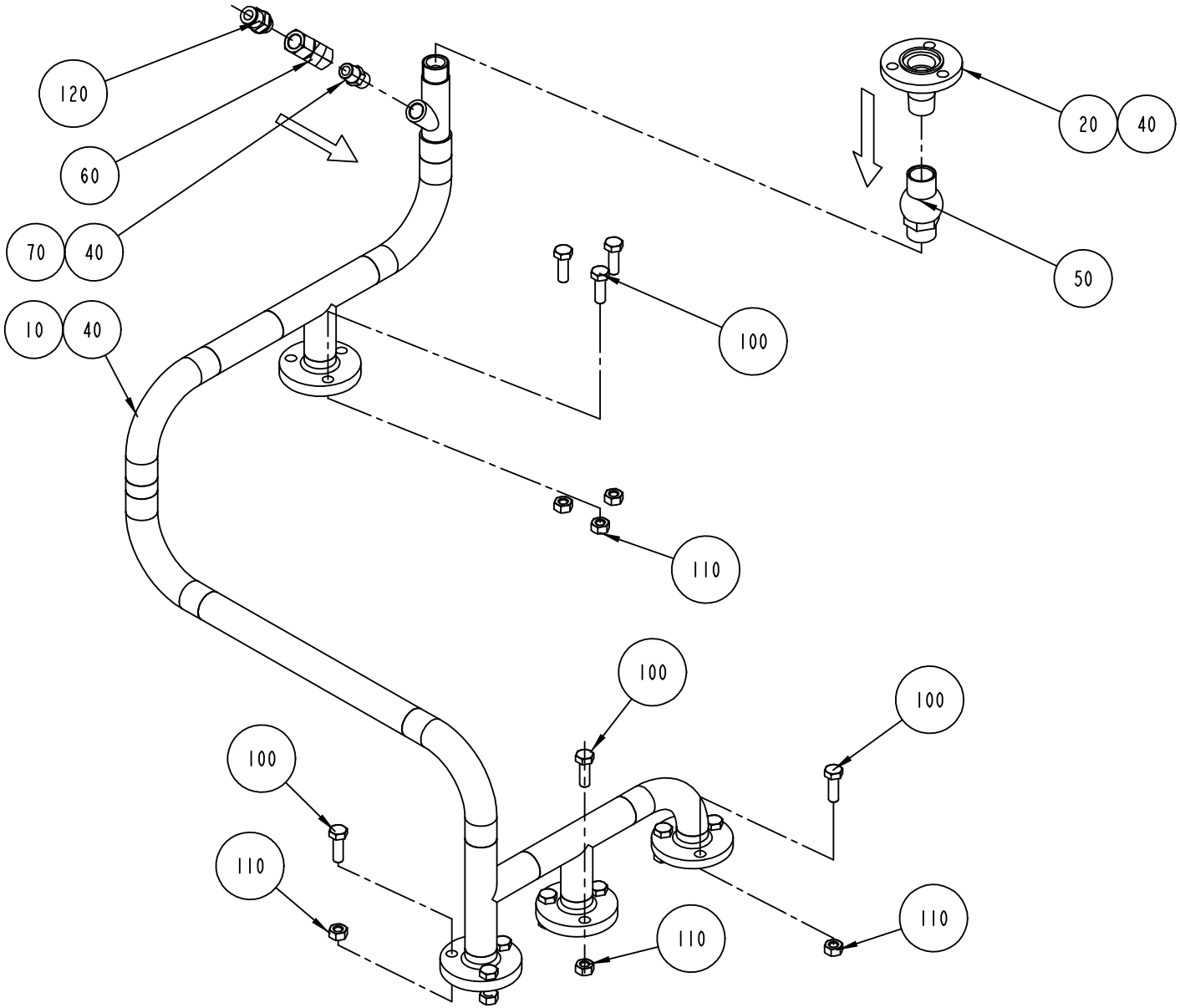

S-1095677-1
ECN 71821

ECM: 89433 - 20010203
Group number: 1095677-0100
Assembly Drawing: 1095677-1_1_AB

Issue: 20011217

Pos	Part No	SP	UN	Qty	Description	Page No
Common Parts						
010	1041934-0000	-		1	PIPE	
020	1036827-0000	-		1	PIPE	
040	90144-0007	-	MM	1	TAPE	
050	90230-0042	A		1	NON-RETURN VALVE 1/2"	
060	90235-0151	A		1	NON-RETURN VALVE	
070	90330-0043	-		1	NIPPLES, EXT. THREAD. R-207R1/4	
100	312115-0453	-		12	SCREW MC6S M8X25 A280	
110	312605-0318	-		12	HEXAGON NUT, M6M M8 A280	
120	342722-0205	-		1	STRAIGHT COUPLING D=8-G1/4"	

Pos	Part No	SP	UN	Qty	Description	Page No

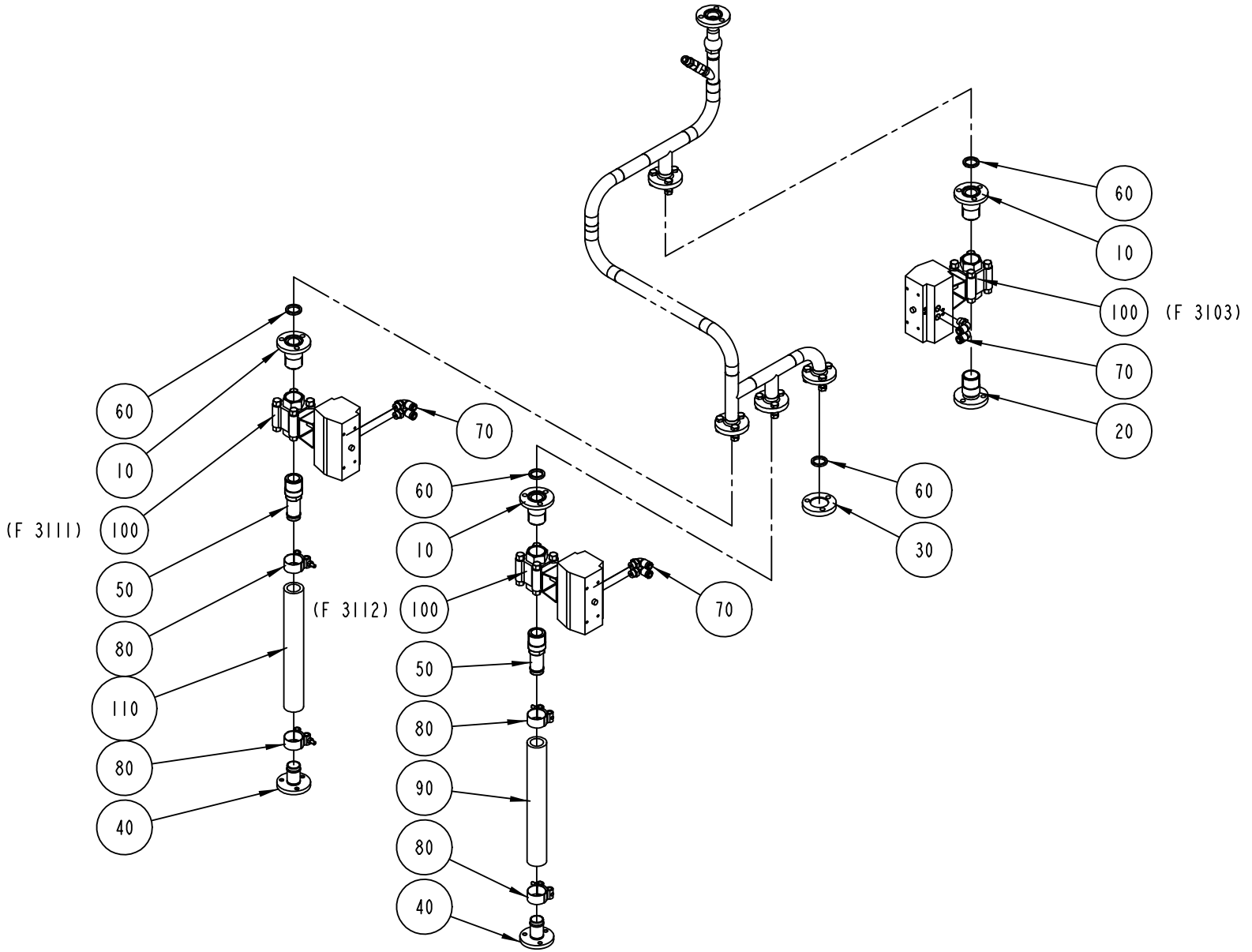

S-1095678-5
ECN 72251

ECM: 89434 - 20010203
Group number: 1095678-0300
Assembly Drawing: 1095678-5_1_AA

Issue: 20011217

Pos	Part No	SP	UN	Qty	Description	Page No
Common Parts						
010	1036794-0000	-		3	PIPE	
020	1036871-0000	-		1	PIPE	
030	1037129-0000	-		1	LID	
040	1195466-0000	-		2	PIPE	
050	1487023-0000	-		2	PIPE	
060	315229-0103	A		4	GASKETS, 23,1X30,1X3,7 MM 1" FDA	
070	342732-0801	-		6	ELBOW PIPE JOINT	
080	90165-0147	-		4	HOSE CLIP	
090	90166-0233	-	MM	300	HOSE	
100	B90187-0148	A		3	BALL VALVE G1	
	90187-0319	*-*		*1*	*GASKET UNIT*	
110	90166-0233	-	MM	300	HOSE	

Pos	Part No	SP	UN	Qty	Description	Page No

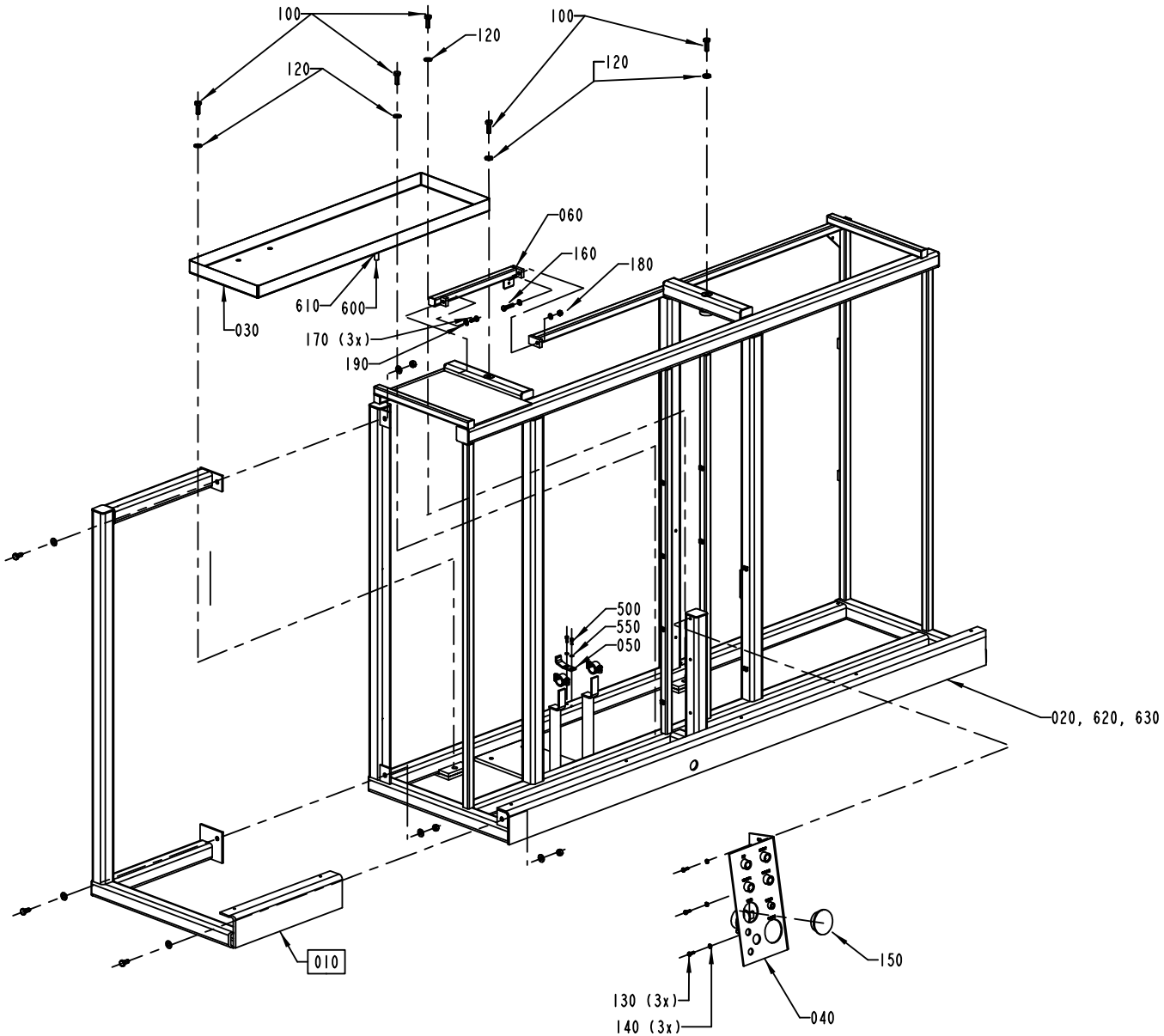
100
120
100
120
120
060
160
180
610
600
030
170 (3x)
190
500
550
050
020, 620, 630
010
150
130 (3x)
140 (3x)
040

ECM: 73440 - 20000420
Group number: 1095606-0200
Assembly Drawing: 1095606-2_1_AB

Issue: 20011217

Pos	Part No	SP	UN	Qty	Description	Page No
Common Parts						
010	A1095882-0200	-		1	FRAME SECTION	**755**
020	1255295-0000	-		1	MACHINE BODY	
030	1041963-0000	-		1	WASTE BOX	
040	1129387-0000	-		1	CONNECTION TABLE	
050	1036227-0000	-		1	BRACKET	
060	1255293-0000	-		1	CROSS BAR	
100	312105-0495	-		5	SCREW M6S M10X30 A280	
120	315105-0173	-		5	WASHER PLAIN, BRB, 10,5/22,H=2	
130	312105-0368	-		3	SCREW M6S M6X16 A280	
140	315105-0153	-		3	WASHER PLAIN, BRB, 6,4/12,H=1,5	
150	90261-0069	-		1	PLUG, BLIND, PLASTIC, NO. 055-0615	
160	312109-0457	-		1	SCREW M6S M8X35 A280	
170	315105-0165	-		3	WASHER PLAIN, BRB, 8,4/16,H=1,5	
180	312605-0318	-		1	HEXAGON NUT, M6M M8 A280	
190	312105-0451	-		1	SCREW M6S 8X20 A280	
500	312115-0327	-		2	SCREW MC6S M5X12 A280	
550	315105-0146	-		2	WASHER PLAIN, BRB, 5,3/10,H=1	
600	90166-0121	-	MM	500	HOSE	
610	342991-0102	-		1	HOSE CLIP,WORM DRIVE TYPE (16)-19	
620	352113-0205	-		15	ANCHOR TM2S8-C100	
630	312125-0287	-		15	SCREW PAN HEAD MCS M4X8 SS	

Pos	Part No	SP	UN	Qty	Description	Page No

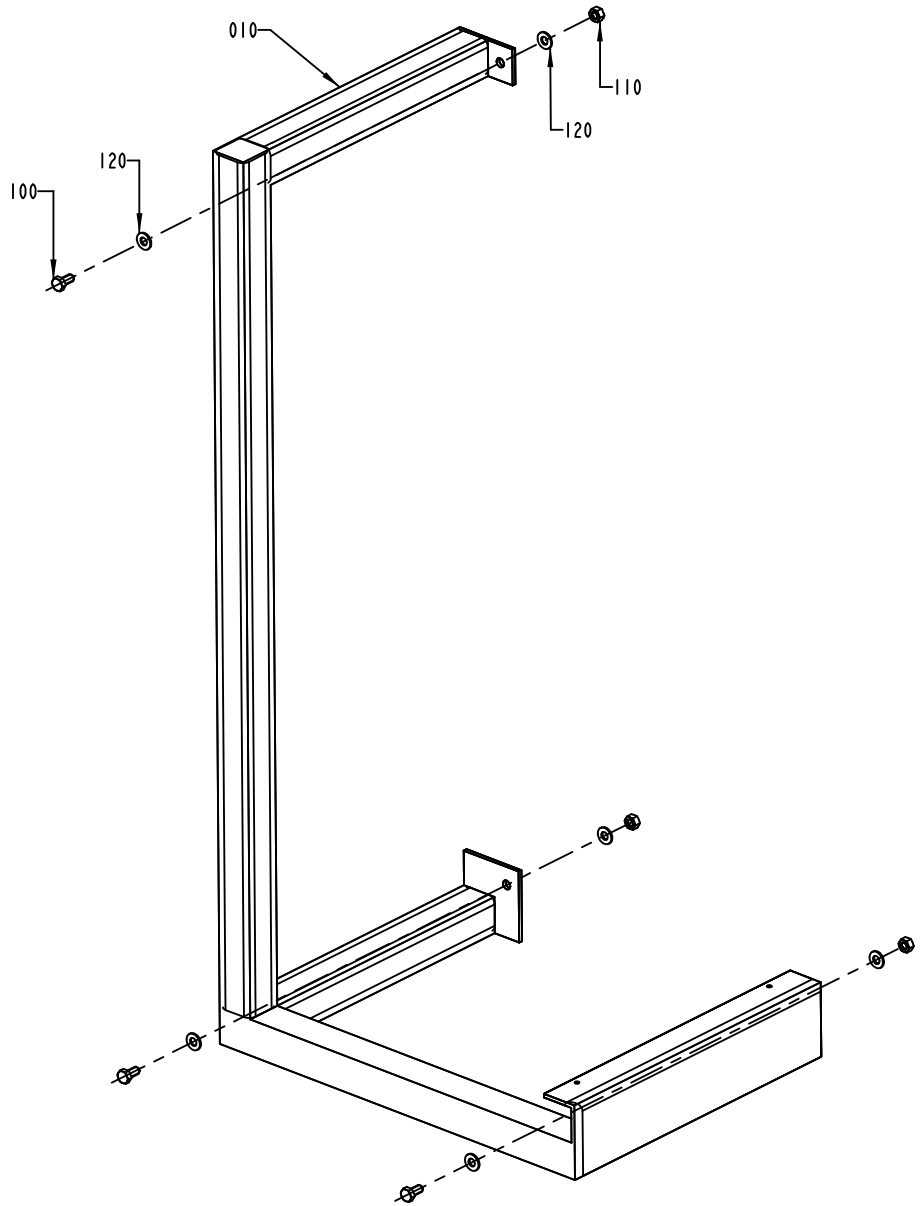
010
110
120
120
100

ECM: 70357 - 19970613
Group number: 1095882-0200
Assembly Drawing: 1095882-2_1_AB

Issue: 20011217

Pos	Part No	SP	UN	Qty	Description	Page No
Common Parts						
010	1255294-0000	-		1	FRAME SECTION	
100	312105-0491	-		3	SCREW M6S M10X20 A280	
110	312605-0320	-		3	HEXAGON NUT, M6M M10 A280	
120	315105-0173	-		6	WASHER PLAIN, BRB, 10,5/22,H=2	

Pos	Part No	SP	UN	Qty	Description	Page No

COVERING PANEL

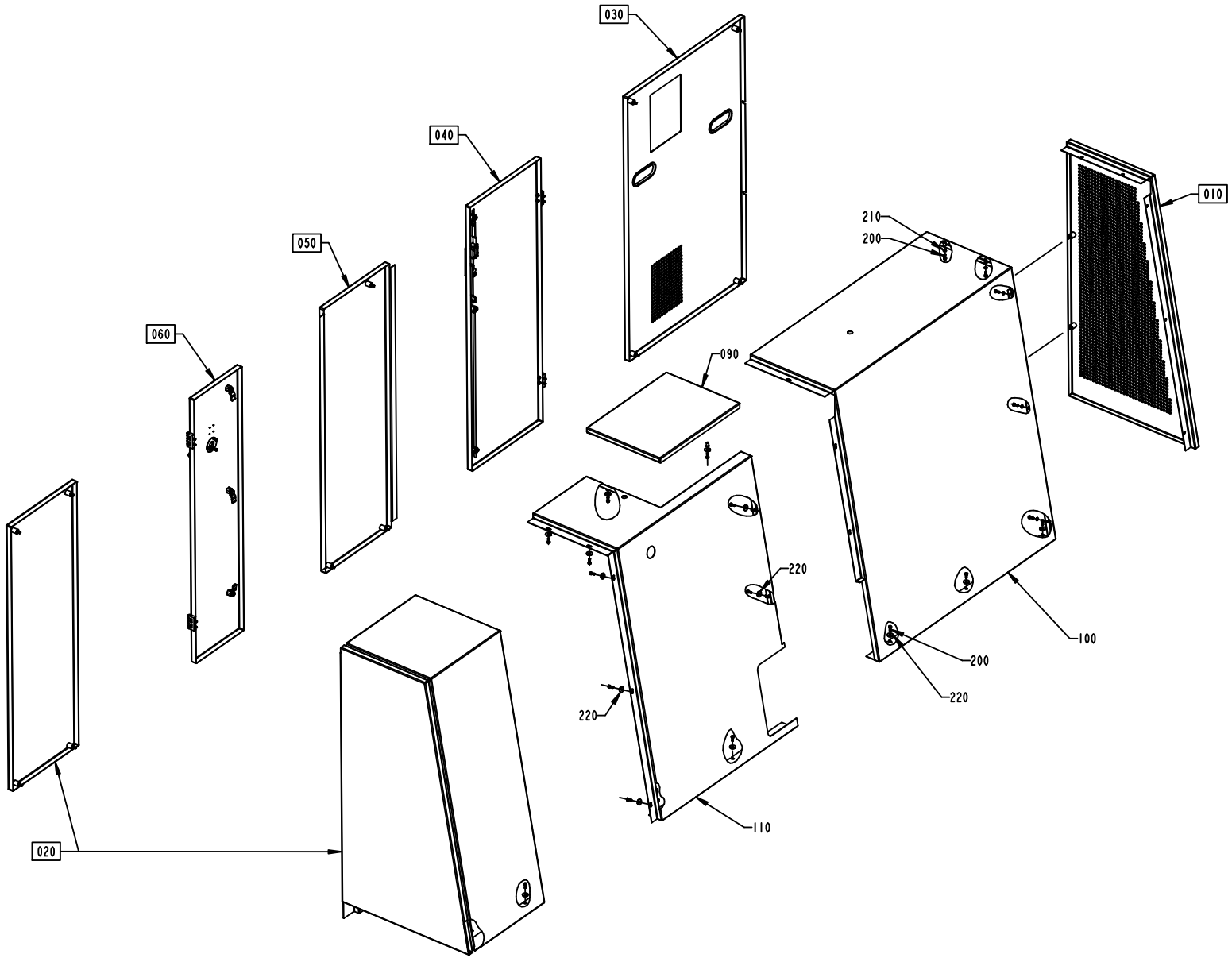

ECM: 73440 - 20000420
Group number: 1095607-0200
Assembly Drawing: 1095607-2_1_AB

Issue: 20011217

Pos	Part No	SP	UN	Qty	Description	Page No
Common Parts						
010	A1095883-0200	-		1	GABLE PLATE	**759**
020	A1095886-0200	-		1	COVERING PANEL	**761**
030	A1095888-0200	-		1	HATCH	**765**
040	A1095889-0100	-		1	DOOR	**767**
050	A1095890-0200	-		1	HATCH	**769**
060	A1095891-0200	-		1	DOOR	**771**
090	1255637-0000	-		1	COVER	
100	1255636-0000	-		1	COVERING PANEL	
110	1255638-0000	-		1	COVERING PANEL	
200	312105-0368	-		19	SCREW M6S M6X16 A280	
210	315105-0153	-		5	WASHER PLAIN, BRB, 6,4/12,H=1,5	
220	315125-0153	-		14	WASHER PLAIN ROUND,CHAMF. 6,4/22, H=4	

Pos	Part No	SP	UN	Qty	Description	Page No

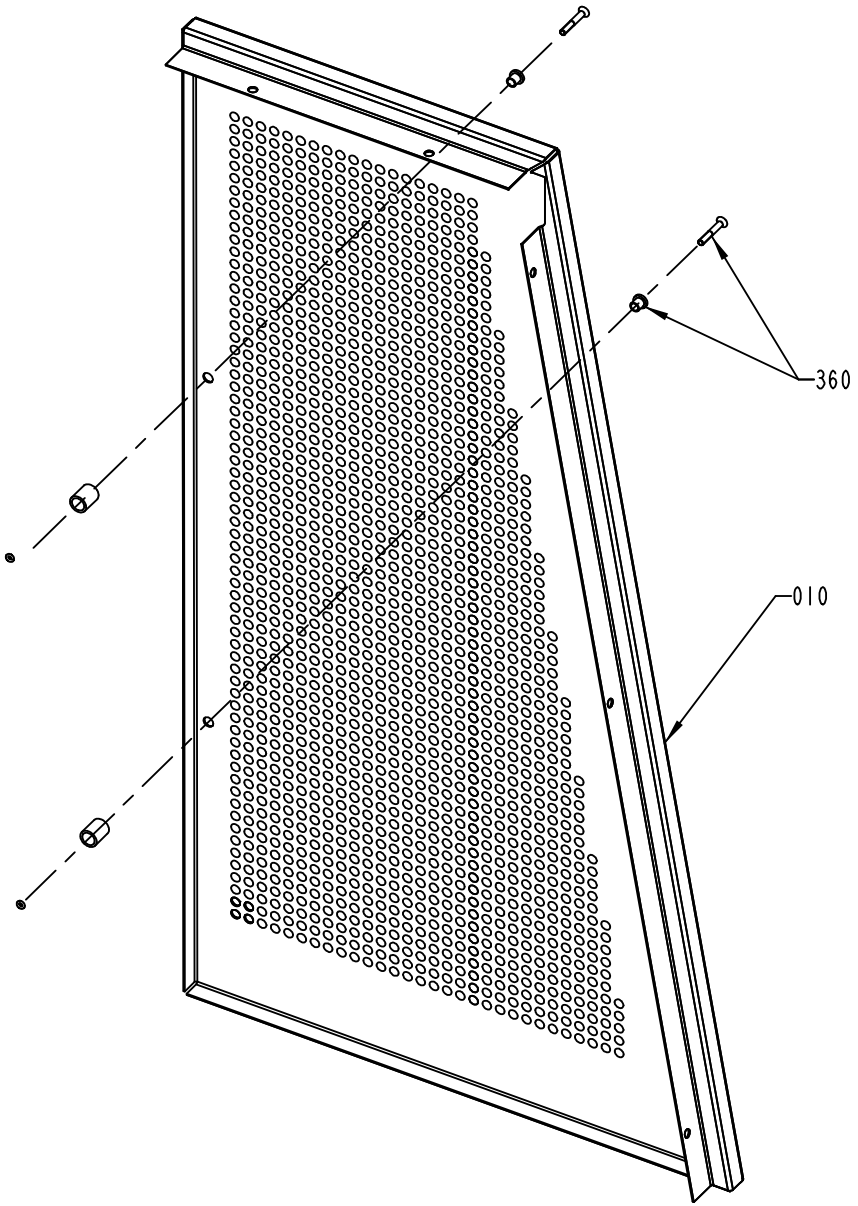
360
010

ECM: 70233 - 19960523
Group number: 1095883-0200
Assembly Drawing: 1095883-2_1_AA

Issue: 20011217

Pos	Part No	SP	UN	Qty	Description	Page No
Common Parts						
010	1255671-0000	-		1	GABLE PLATE	
360	90226-0458	-		2	MOUNTING SCREW	

Pos	Part No	SP	UN	Qty	Description	Page No

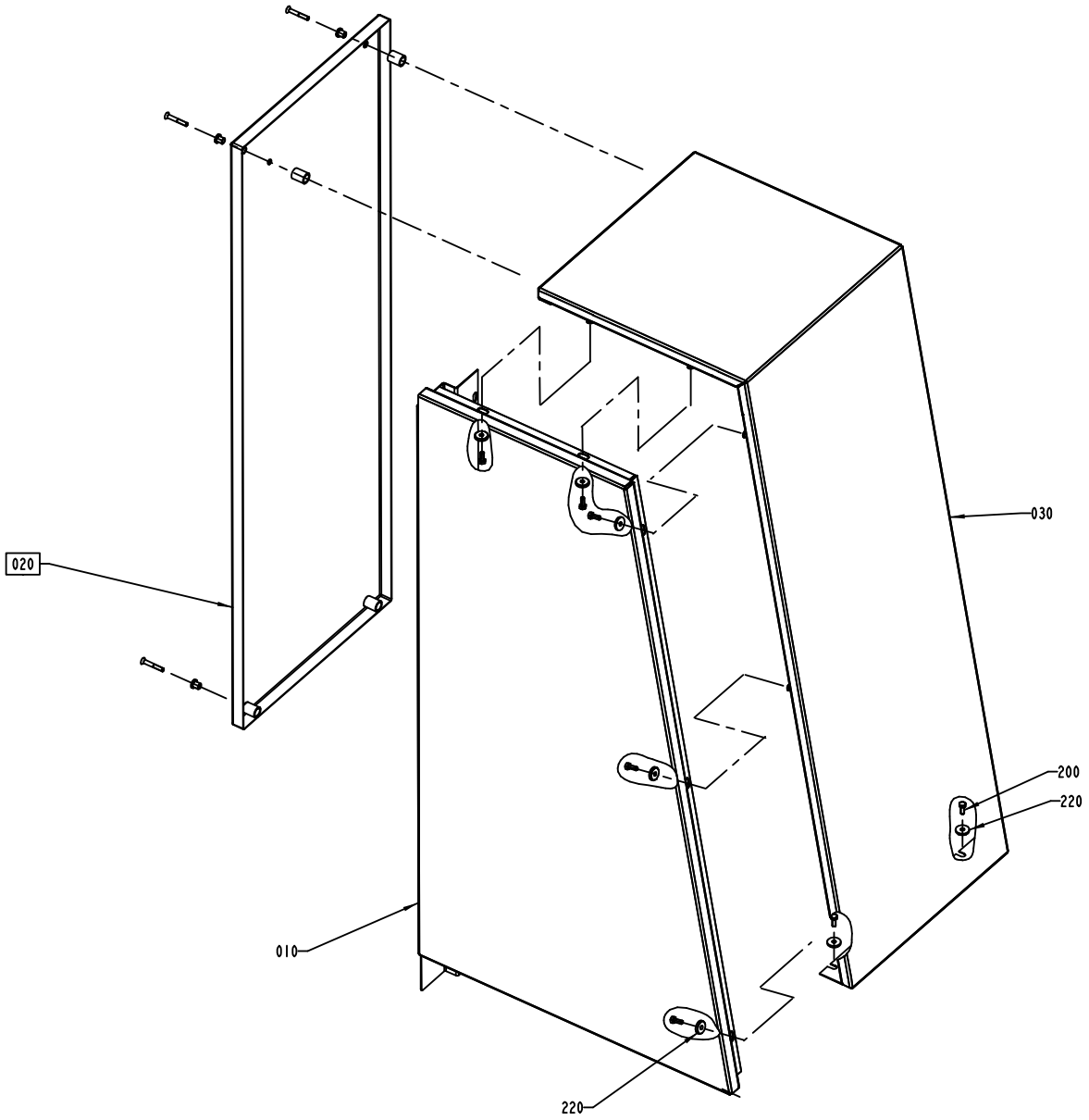
020
030
200
220
010
220

Pos	Part No	SP	UN	Qty	Description	Page No
TBA/21						
020	A1095892-0200	-		1	HATCH	**763**
Common Parts						
010	1255670-0000	-		1	GABLE PLATE	
030	1041967-0000	-		1	COVERING PANEL	
200	312105-0368	-		7	SCREW M6S M6X16 A280	
220	315125-0153	-		7	WASHER PLAIN ROUND,CHAMF. 6,4/22, H=4	

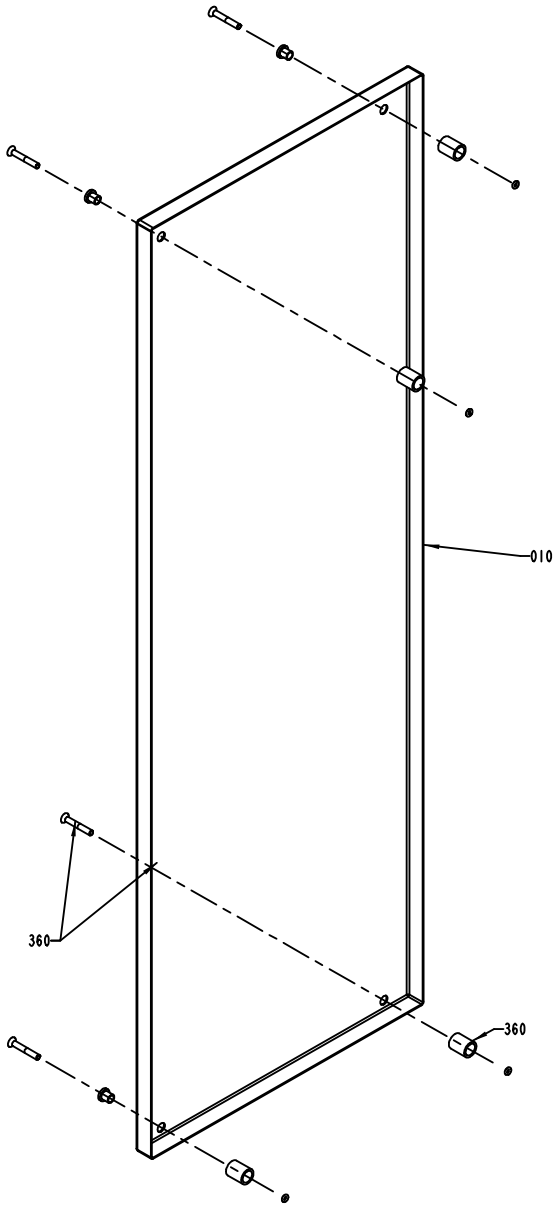
010
360
360

ECM: 70357 - 19970613
Group number: 1095892-0200
Assembly Drawing: 1095892-2_1_AA

Issue: 20011217

Pos	Part No	SP	UN	Qty	Description	Page No
Common Parts						
010	1255634-0000	-		1	HATCH	
360	90226-0458	-		4	MOUNTING SCREW	

Pos	Part No	SP	UN	Qty	Description	Page No

Machine Type | Group Description | Used-In | Group Number | Page No

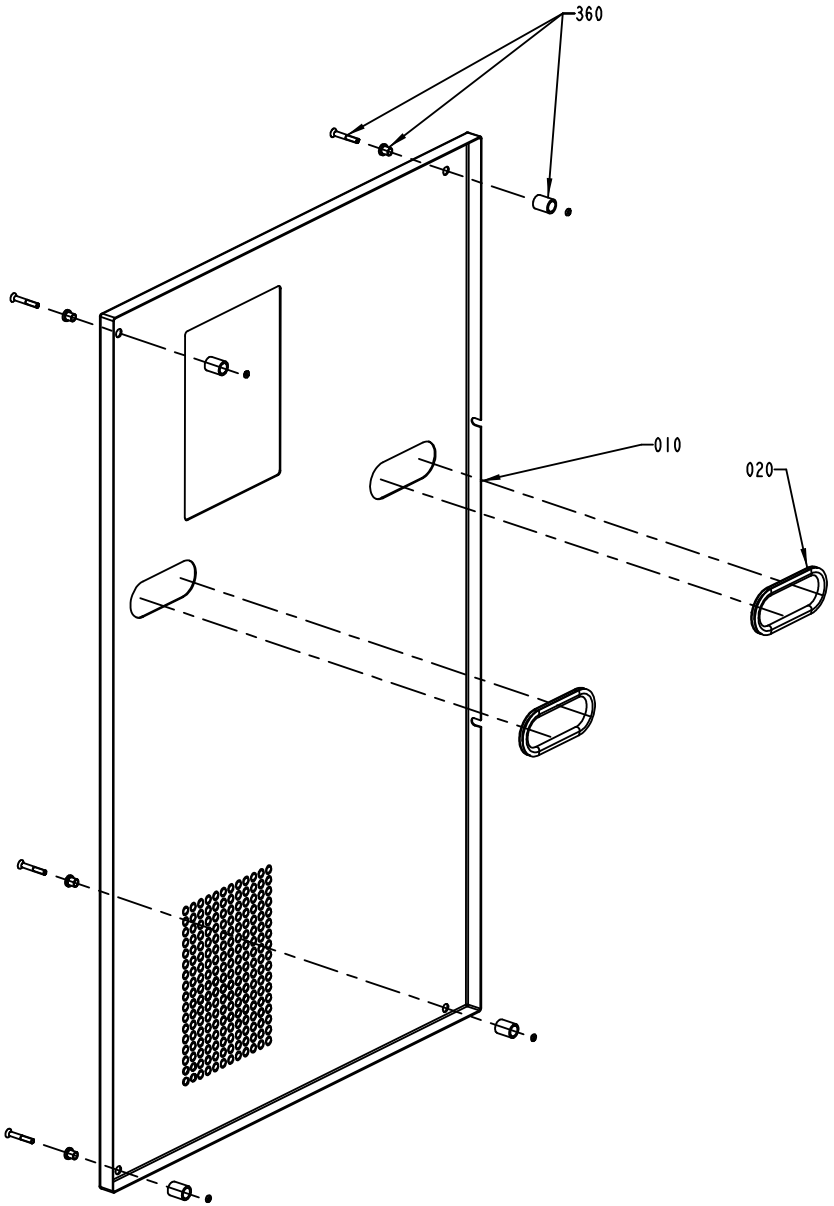
360
010
020

ECM: 70357 - 19970613
Group number: 1095888-0200
Assembly Drawing: 1095888-2_1_AB

Issue: 20011217

Pos	Part No	SP	UN	Qty	Description	Page No
Common Parts						
010	1255633-0000	-		1	HATCH	
020	90143-0060	-	M	1	EDGE STRIP 9,5X6,3MM BLACK PVC	
360	90226-0458	-		4	MOUNTING SCREW	

Pos	Part No	SP	UN	Qty	Description	Page No

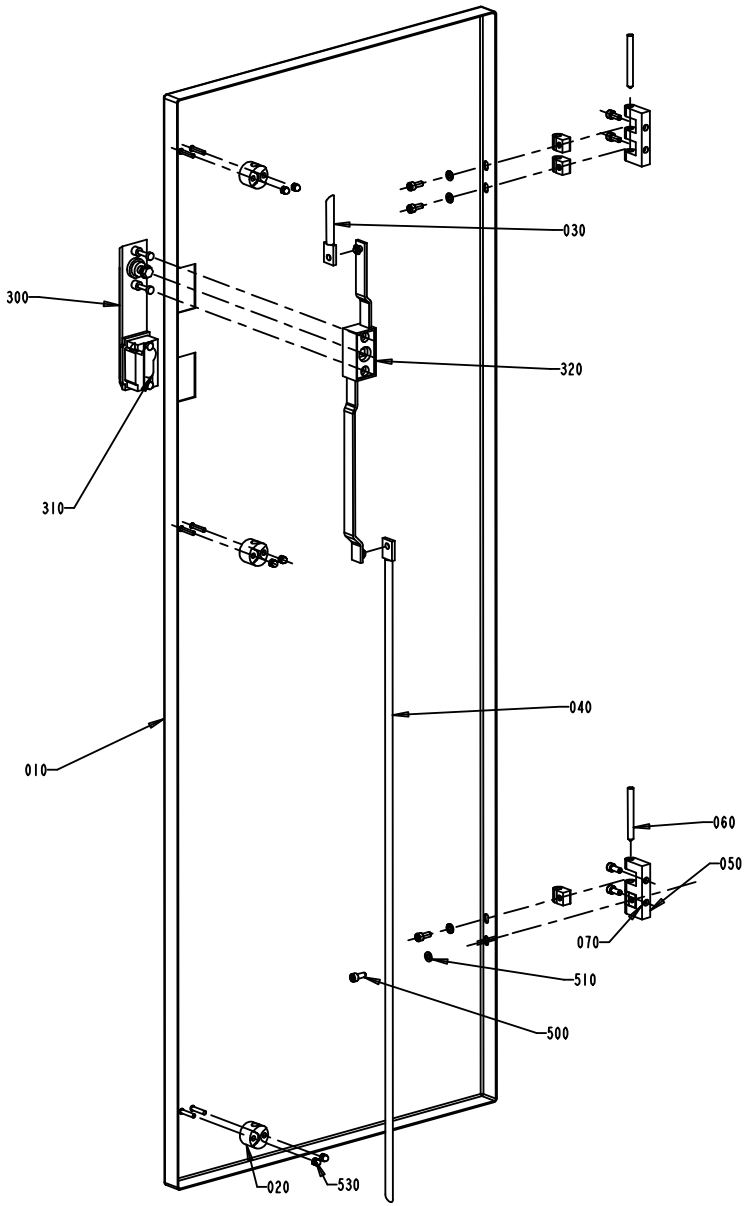
030
300
320
310
040
010
060
050
070
510
500
020
530

ECM: 89436 - 20010203
Group number: 1095889-0100
Assembly Drawing: 1095889-1_1_AA

Issue: 20011217

Pos	Part No	SP	UN	Qty	Description	Page No
Common Parts						
010	1041970-0000	-		1	DOOR	
020	1129274-0000	-		1	GUIDE LUG	
030	1036304-0001	-		1	LOCKING ARM	
040	1036304-0014	-		1	LOCKING ARM	
050	1035792-0000	-		2	E-HINGE	
060	988685-0000	-		2	PIN	
070	1035794-0000	-		4	BLOCKING PIECE	
300	90237-0126	B		1	TURNING HANDLE "REPBY 90237-175"	
310	90237-0128	-		1	LOCK CYLINDER, 1109-U3	
320	90237-0153	-		1	LOCK HOUSING, 1121-U26-0B	
500	312115-0327	-		8	SCREW MC6S M5X12 A280	
510	315105-0146	-		4	WASHER PLAIN, BRB, 5,3/10,H=1	
530	312705-0312	-		6	NUT HEX. DOMED CAP MHM-6 M4 A280	

Pos	Part No	SP	UN	Qty	Description	Page No

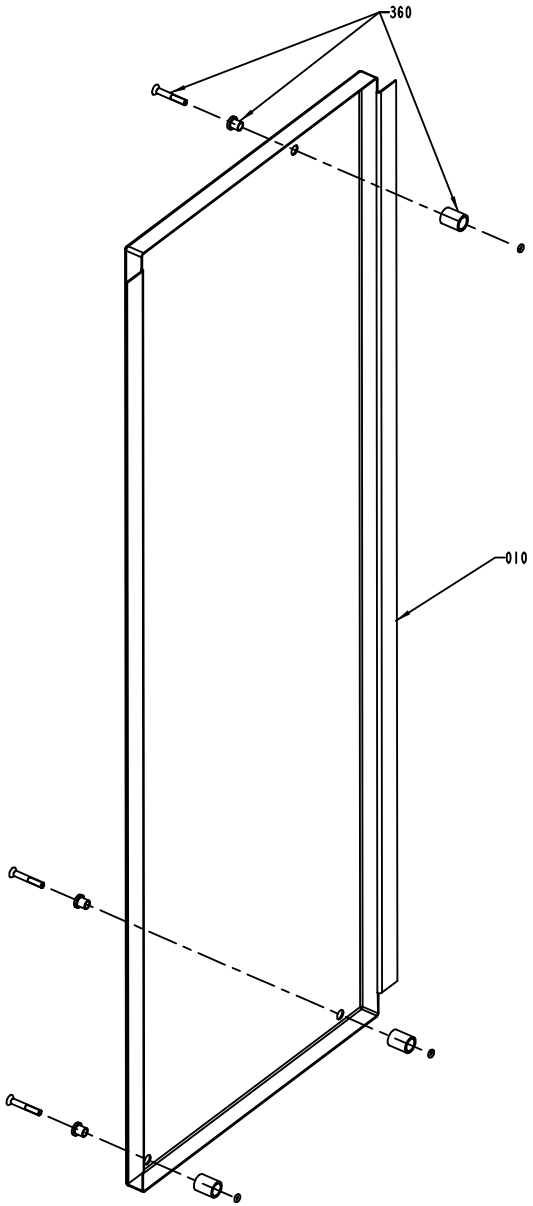
360
010

ECM: 70233 - 19960523
Group number: 1095890-0200
Assembly Drawing: 1095890-2_1_AA

Issue: 20011217

Pos	Part No	SP	UN	Qty	Description	Page No
Common Parts						
010	1255635-0000	-		1	HATCH	
360	90226-0458	-		3	MOUNTING SCREW	

Pos	Part No	SP	UN	Qty	Description	Page No

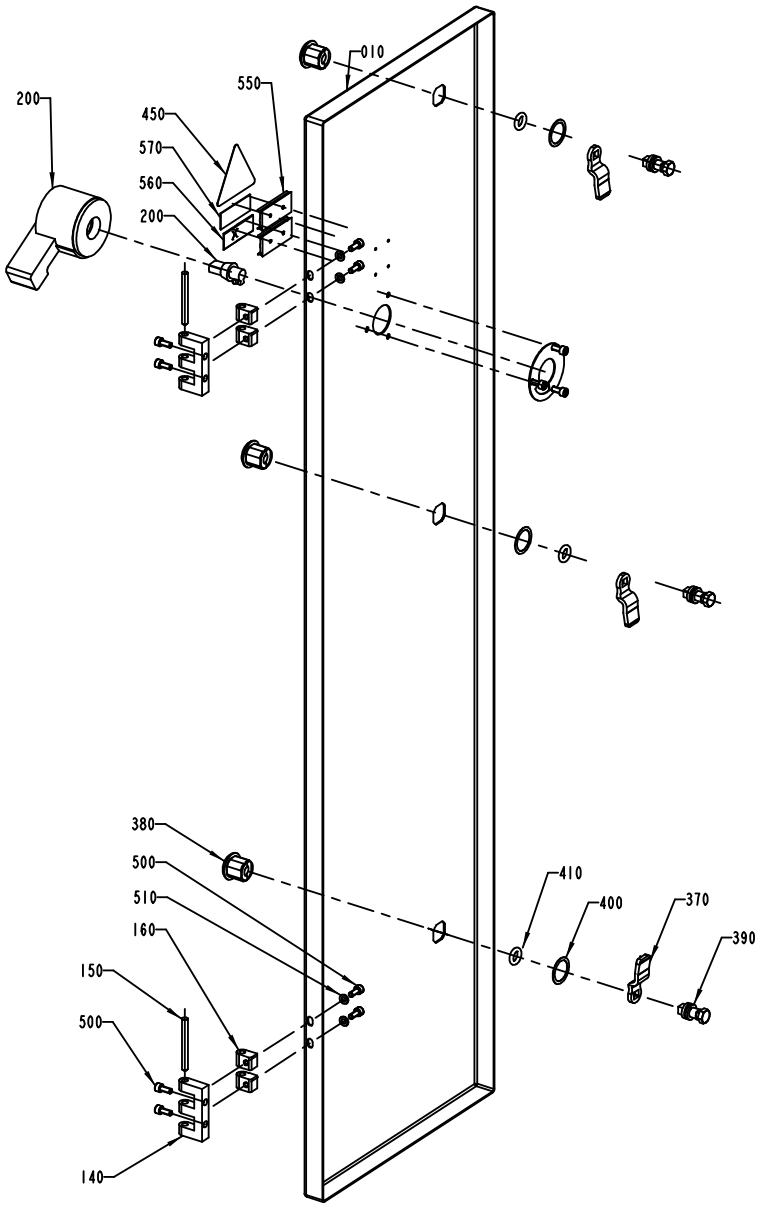
010
550
200
450
570
560
200
380
500
510
160
150
500
140
410
400
370
390

Pos	Part No	SP	UN	Qty	Description	Page No
50HZ						
570	359243-0917	-		1	SIGN"400V, 50HZ, 100A"	
60HZ						
570	359243-0918	-		1	SIGN"400V, 60HZ, 100A"	
Common Parts						
010	1041972-0000	-		1	DOOR	
140	1035792-0000	-		2	E-HINGE	
150	988685-0000	-		2	PIN	
160	1035794-0000	-		4	BLOCKING PIECE	
200	90051-0106	B		1	COCK HANDLE, NO. H6	
370	90237-0157	-		3	LOCK BOLT, 1000-230	
380	90237-0319	-		3	LOCK HOUSING, 1000-U134	
390	90237-0320	-		3	LOCK HOUSING, 1000-U136	
400	90237-0322	-		3	LOCK GASKET, 1000-U137	
410	90237-0323	A		3	LOCK O-RINGT, 1000-24	
450	90194-0016	-		1	SIGN, FLASH, ELECTRIC EQUIPMENT SYMBOL	
490	311520-0329	-		4	RIVET, BLANK 2,4X8	
500	312115-0327	-		8	SCREW MC6S M5X12 A280	
510	315105-0146	-		4	WASHER PLAIN, BRB, 5,3/10,H=1	
550	359240-0100	-		2	SIGN HOLDER FOR 359240-0001	
560	359241-0431	-		1	SIGN "MAIN SWITCH"	

Pos	Part No	SP	UN	Qty	Description	Page No

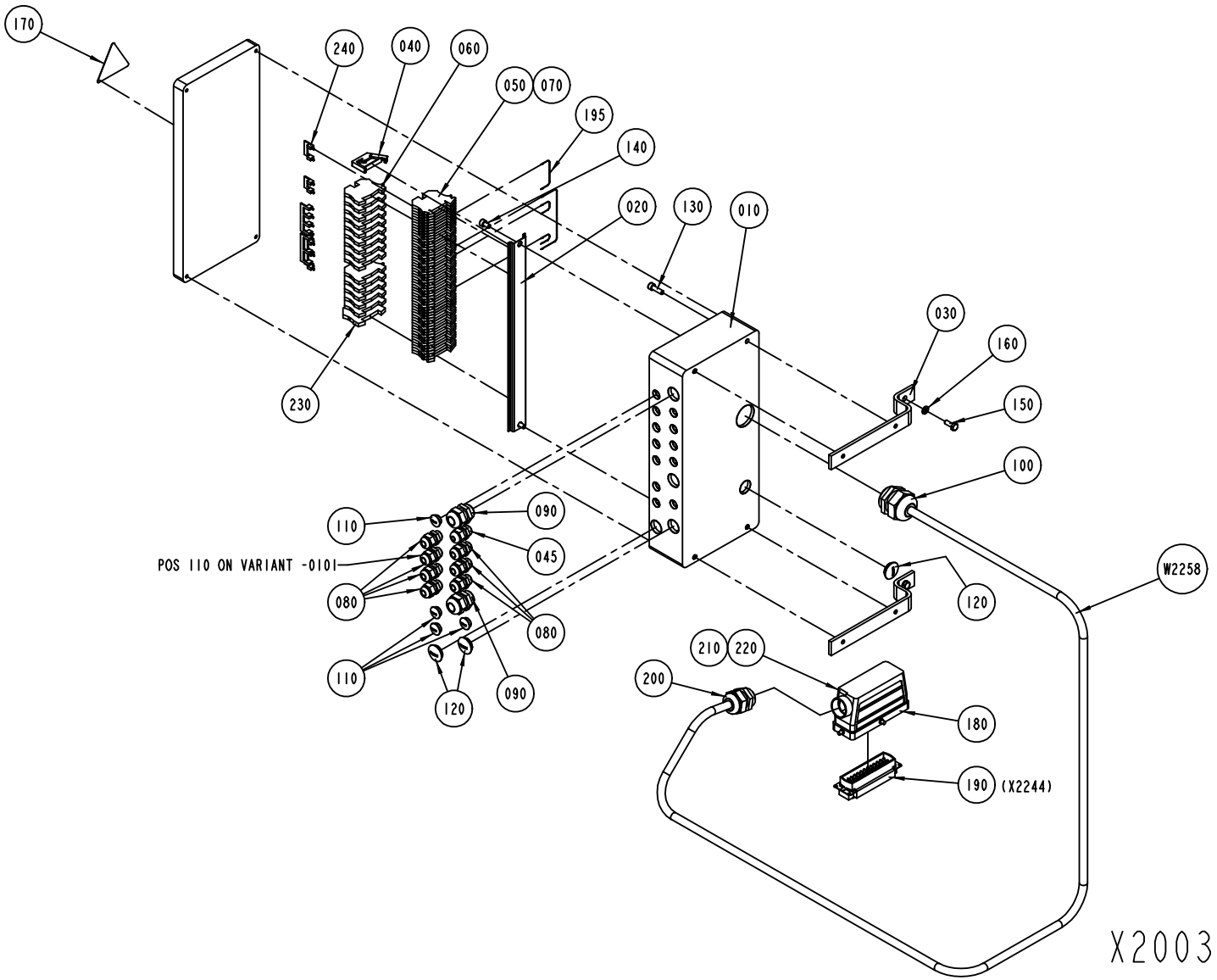

S-1095630-2
ECN 71821

ECM: 89439 - 20010203
Group number: 1095630-0200
Assembly Drawing: 1095630-2_1_AC

Issue: 20011217

Pos	Part No	SP	UN	Qty	Description	Page No
Common Parts						
010	1129202-0000	-		1	CONNECTION BOX	
020	1129209-0000	-		1	MOUNTING RAIL	
030	1129182-0000	-		2	BRACKET	
040	353031-0201	-		1	END BRACKET EW35	
045	352103-0100	-		1	CABLE GLAND STR 9;PR15,2	
050	353021-0216	-		40	FEED THROUGH TERMINAL, 10200.8	
060	353024-0204	-		14	EARTH TERMINAL WPE 2,5	
070	359011-0809	-		2	MARKING PLATES 5-FW 101-150	
080	352103-0101	-		6	CABLE GLAND ST 9;PR15,2/PG9	
090	352103-0110	-		2	CABLE GLAND STR 16	
100	352103-0120	-		1	CABLE GLAND STR 29	
110	90002-0013	-		5	BLANK-OFF PLUG 15,2	
120	90002-0004	-		3	BLANK-OFF PLUG 22,5	
130	312115-0370	-		4	SCREW MC6S M6X20 A280	
140	312115-0364	-		2	SCREW HEX.SOCK.HD.MC6S-TT 6X10 A480	
150	312105-0368	-		2	SCREW M6S M6X16 A280	
160	315105-0153	-		2	WASHER PLAIN, BRB, 6,4/12,H=1,5	
170	90194-0016	-		1	SIGN, FLASH, ELECTRIC EQUIPMENT SYMBOL	
180	90110-0228	A		1	CABLE HOOD 24-POL 71.350.2428.0	
190	90110-0150	A		1	MALE INSERT 121110 0000	
195	351172-0102	-	M	1	CABLE AWM 1X 0,75 MM2 DARK-BLUE	
200	352103-0116	-		1	CABLE GLAND ST 21	
210	359005-0050	-		1	MARKING LABEL KIT X, 04.841.4550.0	
220	359005-0010	-		1	MARKING LABEL KIT 0 - 9, 04.841.2150.0	
230	353024-0205	-		1	EARTH TERMINAL, 1010.1	
240	353034-0030	-		4	BRIDGE CONNECTOR WQV 2,5/10, 10544.6	
W2258	351150-0425	-	MM	2300	CABLE OLFLEX 25X0,75 MM2 LIGHT/GREY	

Pos	Part No	SP	UN	Qty	Description	Page No

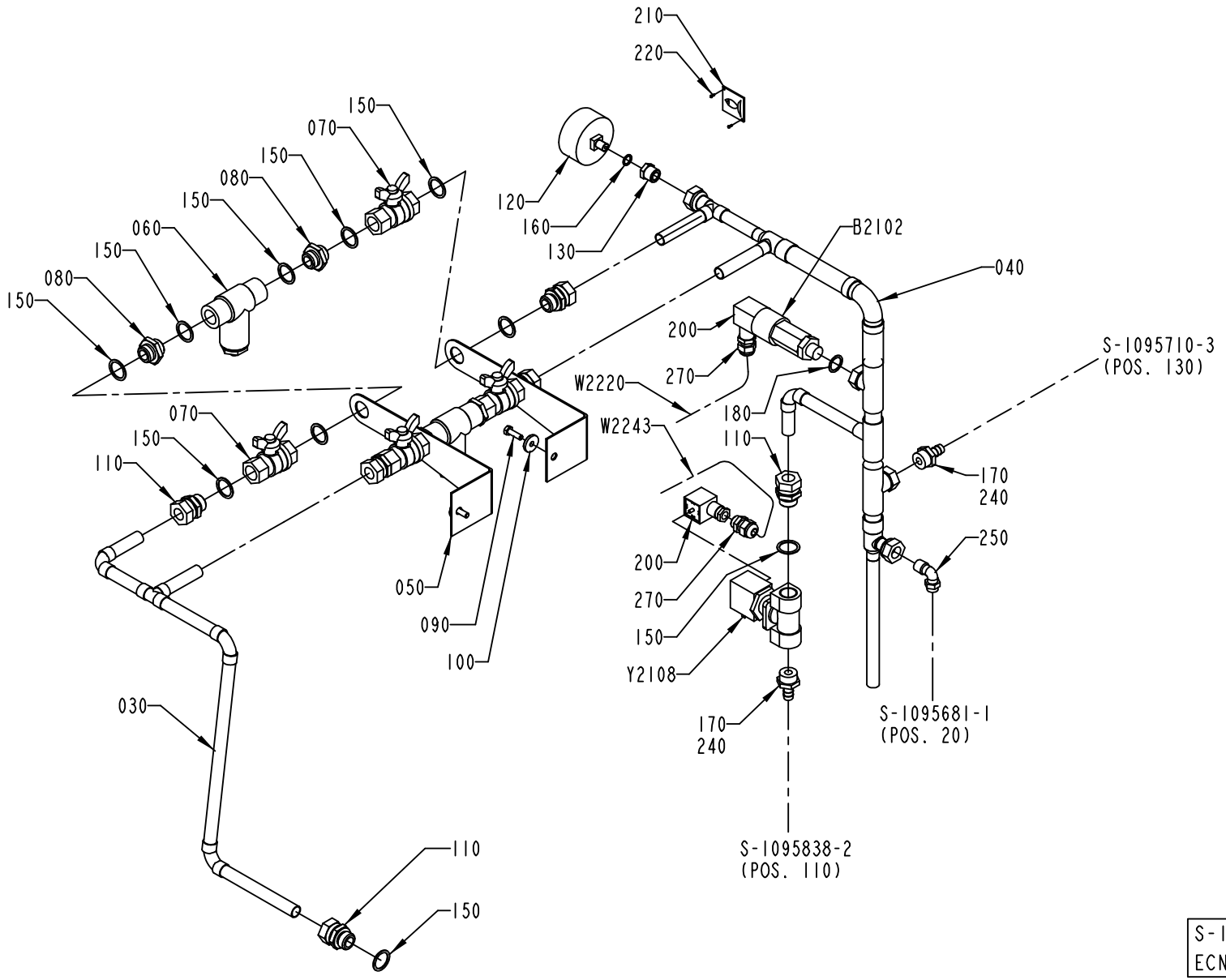

S-1095608-1
ECN 72946

Pos	Part No	SP	UN	Qty	Description	Page No
COMPRESSOR						
170	342901-0105	-		2	HOSE NIPPLE, EXT.THR. G1/2-12 MM	
330	1499776-0000	-		1	WATER DIAGRAM	
ICE-WATER						
170	342901-0105	-		1	HOSE NIPPLE, EXT.THR. G1/2-12 MM	
230	342722-0206	-		1	STRAIGHT COUPLING D=8-G3/8"	
235	342701-0206	-		1	BUSHING,INT./EXT.G-THREAD G1/2"-G3/8"	
280	90187-0197	B		1	BALL VALVE G1/4	
290	90358-0125	-		1	NIPPLES, EXT. THREAD, HEX, NO. 1100604	
300	A1095715-0100	-		1	ICE WATER	**779**
310	90230-0028	A		1	NON-RETURN VALVE H 151 R 3/8"	
320	90166-0139	-	MM	900	TUBE PA BLACK	
340	1255364-0000	-		1	WATER DIAGRAM	
Common Parts						
030	1041932-0000	-		1	PIPE	
040	1041933-0000	-		1	PIPE	
050	1037583-0000	-		2	HOLDER	
060	B271823-0000	A		2	FILTER	
	90415-0314	*C*		*1*	*FILTER INSERT / 5594-36*	
	90415-0325	*C*		*1*	*GASKET*	
070	90187-0029	B		4	BALL VALVE G1/2, NPBR	
080	479261-0000	-		4	NIPPLE	
090	312105-0370	-		2	SCREW M6S M6X20 A280	
100	315125-0153	-		2	WASHER PLAIN ROUND,CHAMF. 6,4/22, H=4	
110	342720-0114	-		6	CONN. STR. GA-15-G1/2	
120	90043-0006	B		1	PRESSURE GAUGE, 2041 D=63 MM	
130	342701-0202	-		1	BUSHING,INT./EXT.G-THREAD G3/8"-G1/8"	
150	315233-0113	-		18	WASHER PL.RND.NYL.21,4/27,H=1,2	
160	315233-0109	-		1	WASHER PL.RND.NYL.10,3/14,H=1	
180	315233-0111	-		1	WASHER PL.RND.NYL.17/22,H=1	
200	90110-0095	A		1	CONNECTOR 3 POLE + EARTH	
210	273455-0000	-		1	LABEL (COLD WATER)	
220	312502-0120	-		2	DRIVE SCREW ROUND HEAD KDS 0X5	
240	90157-0016	-		1	LOCKING FLUID	
250	342930-0133	-		1	ELBOW 90 COUPL.,EXT.THREAD 10/8-R3/8"	
270	352103-0101	-		2	CABLE GLAND ST 9;PR15,2/PG9	
B 2102	90274-0042	A		1	PRESSURE SWITCH 2BAR NACOV	
W 2220	351150-0403	-	MM	2000	CABLE OLFLEX 3X0,75 MM2 LIGHT/GREY	
W 2243	351150-0403	-	MM	2000	CABLE OLFLEX 3X0,75 MM2 LIGHT/GREY	
Y 2108	90042-0249	A		1	SOLENOID VALVE OFFICINE DI ENSINO	

Machine Type | Group Description | Used-In | Group Number | Page No

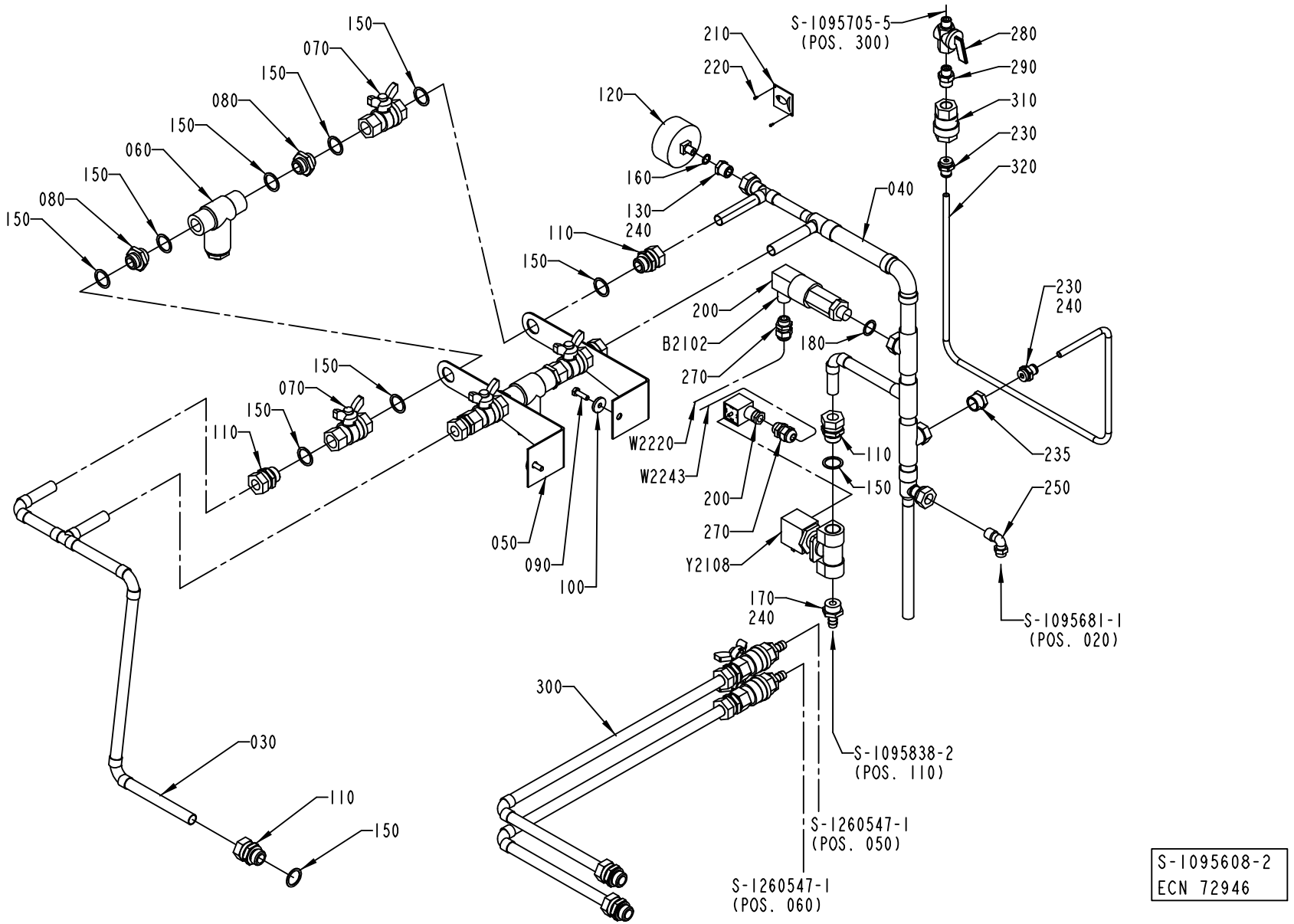
150
070
150
080
150
060
150
080
150
150
070
150
110
050
090
100
120
160
130
240
110
150
210
220
S-1095705-5
(POS. 300)
280
290
310
230
320
040
230
240
200
B2102
270
180
W2220
W2243
200
270
Y2108
110
150
235
250
170
240
S-1095681-1
(POS. 020)
300
030
110
150
S-1095838-2
(POS. 110)
S-1260547-1
(POS. 050)
S-1260547-1
(POS. 060)
S-1095608-2
ECN 72946

Pos	Part No	SP	UN	Qty	Description	Page No
COMPRESSOR						
170	342901-0105	-		2	HOSE NIPPLE, EXT.THR. G1/2-12 MM	
330	1499776-0000	-		1	WATER DIAGRAM	
ICE-WATER						
170	342901-0105	-		1	HOSE NIPPLE, EXT.THR. G1/2-12 MM	
230	342722-0206	-		1	STRAIGHT COUPLING D=8-G3/8"	
235	342701-0206	-		1	BUSHING,INT./EXT.G-THREAD G1/2"-G3/8"	
280	90187-0197	B		1	BALL VALVE G1/4	
290	90358-0125	-		1	NIPPLES, EXT. THREAD, HEX, NO. 1100604	
300	A1095715-0100	-		1	ICE WATER	**779**
310	90230-0028	A		1	NON-RETURN VALVE H 151 R 3/8"	
320	90166-0139	-	MM	900	TUBE PA BLACK	
340	1255364-0000	-		1	WATER DIAGRAM	
Common Parts						
030	1041932-0000	-		1	PIPE	
040	1041933-0000	-		1	PIPE	
050	1037583-0000	-		2	HOLDER	
060	B271823-0000	A		2	FILTER	
	90415-0314	*C*		*1*	*FILTER INSERT / 5594-36*	
	90415-0325	*C*		*1*	*GASKET*	
070	90187-0029	B		4	BALL VALVE G1/2, NPBR	
080	479261-0000	-		4	NIPPLE	
090	312105-0370	-		2	SCREW M6S M6X20 A280	
100	315125-0153	-		2	WASHER PLAIN ROUND,CHAMF. 6,4/22, H=4	
110	342720-0114	-		6	CONN. STR. GA-15-G1/2	
120	90043-0006	B		1	PRESSURE GAUGE, 2041 D=63 MM	
130	342701-0202	-		1	BUSHING,INT./EXT.G-THREAD G3/8"-G1/8"	
150	315233-0113	-		18	WASHER PL.RND.NYL.21,4/27,H=1,2	
160	315233-0109	-		1	WASHER PL.RND.NYL.10,3/14,H=1	
180	315233-0111	-		1	WASHER PL.RND.NYL.17/22,H=1	
200	90110-0095	A		1	CONNECTOR 3 POLE + EARTH	
210	273455-0000	-		1	LABEL (COLD WATER)	
220	312502-0120	-		2	DRIVE SCREW ROUND HEAD KDS 0X5	
240	90157-0016	-		1	LOCKING FLUID	
250	342930-0133	-		1	ELBOW 90 COUPL.,EXT.THREAD 10/8-R3/8"	
270	352103-0101	-		2	CABLE GLAND ST 9;PR15,2/PG9	
B 2102	90274-0042	A		1	PRESSURE SWITCH 2BAR NACOV	
W 2220	351150-0403	-	MM	2000	CABLE OLFLEX 3X0,75 MM2 LIGHT/GREY	
W 2243	351150-0403	-	MM	2000	CABLE OLFLEX 3X0,75 MM2 LIGHT/GREY	
Y 2108	90042-0249	A		1	SOLENOID VALVE OFFICINE DI ENSINO	

Machine Type	Group Description	Used-In	Group Number	Page No

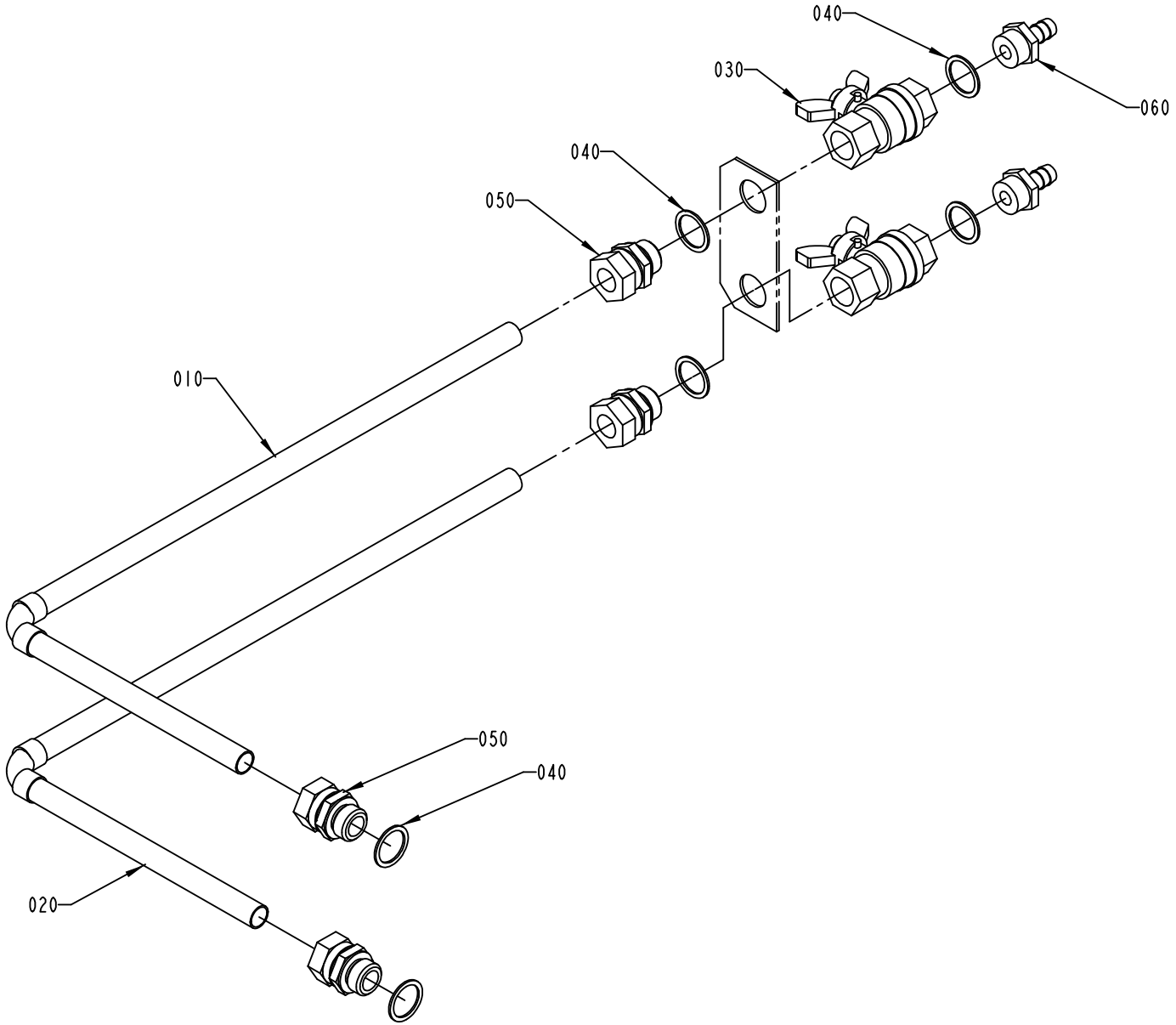

S-1095715-1
ECN 72946

ECM: 89441 - 20010203
Group number: 1095715-0100
Assembly Drawing: 1095715-1_1_AC

Issue: 20011217

Pos	Part No	SP	UN	Qty	Description	Page No
Common Parts						
010	1041930-0000	-		1	PIPE	
020	1041931-0000	-		1	PIPE	
030	90187-0029	B		2	BALL VALVE G1/2, NPBR	
040	315233-0113	-		6	WASHER PL.RND.NYL.21,4/27,H=1,2	
050	342720-0114	-		4	CONN. STR. GA-15-G1/2	
060	342901-0105	-		2	HOSE NIPPLE, EXT.THR. G1/2-12 MM	

Pos	Part No	SP	UN	Qty	Description	Page No

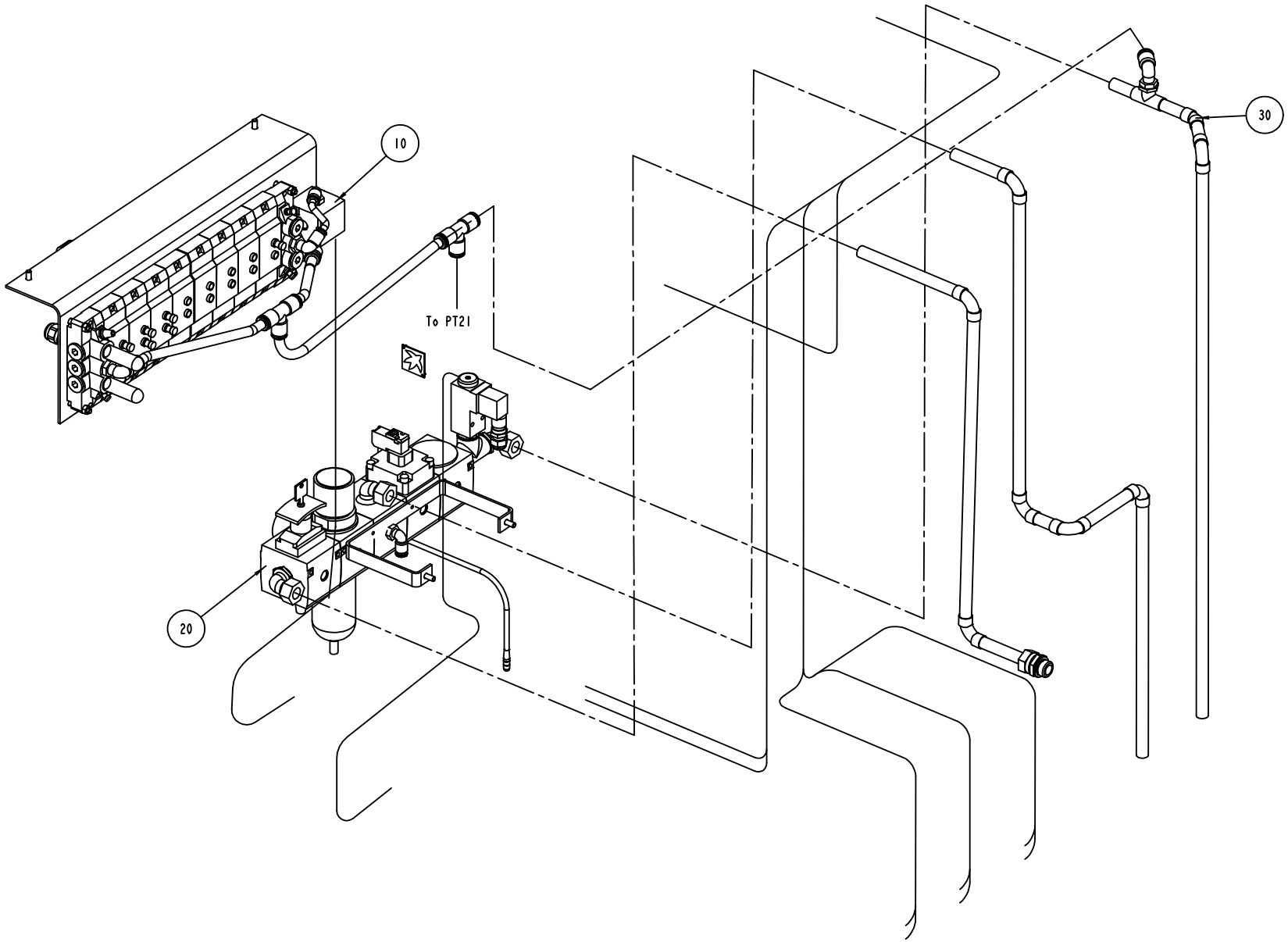
10
To PT21
20
30
S-1095714-2
ECN 71821

ECM: 73339 - 20000307
Group number: 1095714-0300
Assembly Drawing: 1095714-2_1_AB

Issue: 20011217

Pos	Part No	SP	UN	Qty	Description	Page No
Common Parts						
010	A1095611-0300	-		1	VALVE PANEL	**783**
020	A1095609-0200	-		1	PNEUMATIC UNIT	**785**
030	A1095716-0100	-		1	PIPE WORK-AIR	**787**

Pos	Part No	SP	UN	Qty	Description	Page No

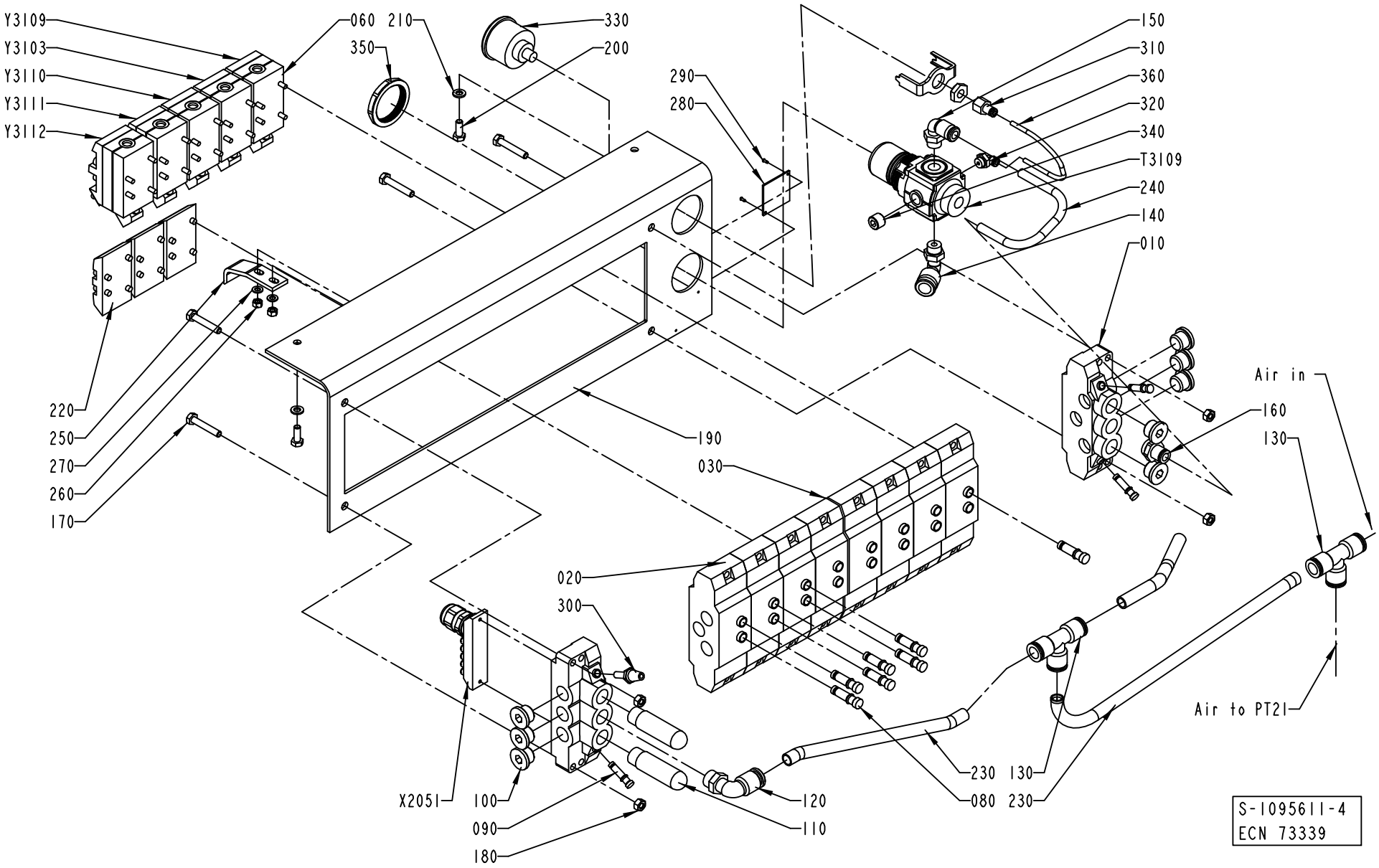
Y3109
Y3103
Y3110
Y3111
Y3112
060 210
350
330
200
290
280
150
310
360
320
340
T3109
240
140
010
220
250
270
260
170
190
030
020
300
Air in
160
130
X2051
100
090
180
120
110
230 130
080 230
Air to PT21
S-1095611-4
ECN 73339

Pos	Part No	SP	UN	Qty	Description	Page No
Common Parts						
005	1334229-0000	-		1	PNEUMATIC DIAGRAM	
010	90042-0522	A		2	PORTED END PIECE ISO SIZE 1	
020	90042-0532	A		8	BASE PLATE ISO SIZE 1	
030	90042-0528	A		1	BLANKING KIT SEALS ISO SIZE 1	
050	90042-0526	-		5	PROTECTIVE SLEEVE MECMAN	
060	90042-0215	-		5	VALVE BODY 5/2 UNISTABLE	
070	90113-0470	A		1	MANIFOLD REGULATOR 10 BAR	
080	342715-0103	-		9	BLIND PLUG 8 MM	
090	342715-0102	-		3	BLIND PLUG 6 MM	
100	342713-0211	-		8	PLUG, EXT THREAD HEX SOCKET 8638-00-380	
110	90328-0024	B		2	SILENCER G3/8	
120	342732-0110	-		1	ELBOW PIPE JOINT	
130	342748-0109	-		2	T-CONNECTION	
140	342732-0109	-		1	ELBOW PIPE JOINT	
150	342732-0104	-		1	ELBOW PIPE JOINT	
160	342722-0206	-		1	STRAIGHT COUPLING D=8-G3/8"	
170	312105-0376	-		4	SCREW M6S M6S M6X35 A280	
180	312605-0316	-		4	HEXAGON NUT, M6M M6 A280	
190	1517295-0000	-		1	SHEET	
200	312105-0368	-		2	SCREW M6S M6X16 A280	
210	315105-0153	-		2	WASHER PLAIN, BRB, 6,4/12,H=1,5	
220	90042-0519	B		4	BLANK PLATE ISO SIZE 1	
230	90166-0068	-	MM	1000	TUBE 12 MM PA BLUE	
240	90166-0194	-	MM	400	TUBE 8 MM PUR BLUE	
250	1036227-0000	-		1	BRACKET	
260	312605-0314	-		2	HEXAGON NUT, M6M M5 A280	
270	315105-0146	-		2	WASHER PLAIN, BRB, 5,3/10,H=1	
280	1041938-0000	-		1	SIGN	
290	312502-0120	-		2	DRIVE SCREW ROUND HEAD KDS 0X5	
300	90328-0017	-		1	SILENCER, D=6 MM	
310	342770-0101	-		1	STRAIGHT COUPLING INT, D=4 MM - G1/8	
320	342732-0100	-		1	ELBOW PIPE JOINT	
330	90043-0065	B		1	PRESSURE GAUGE, 2048 D=40 MM	
340	90087-0036	-		1	PLUG	
350	90457-0078	-		1	PANEL NUT	
360	90166-0095	-	MM	200	TUBE 4 MM PA BLUE	
X2051	90042-0535	-		1	TERMINAL BOARD 19 CORDS	
Y3103	90042-0538	A		1	PILOT VALVE L=500MM	
Y3109	90042-0538	A		1	PILOT VALVE L=500MM	
Y3111	90042-0538	A		1	PILOT VALVE L=500MM	
Y3112	90042-0538	A		1	PILOT VALVE L=500MM	

Pos	Part No	SP	UN	Qty	Description	Page No

Machine Type	Group Description	Used-In	Group Number	Page No

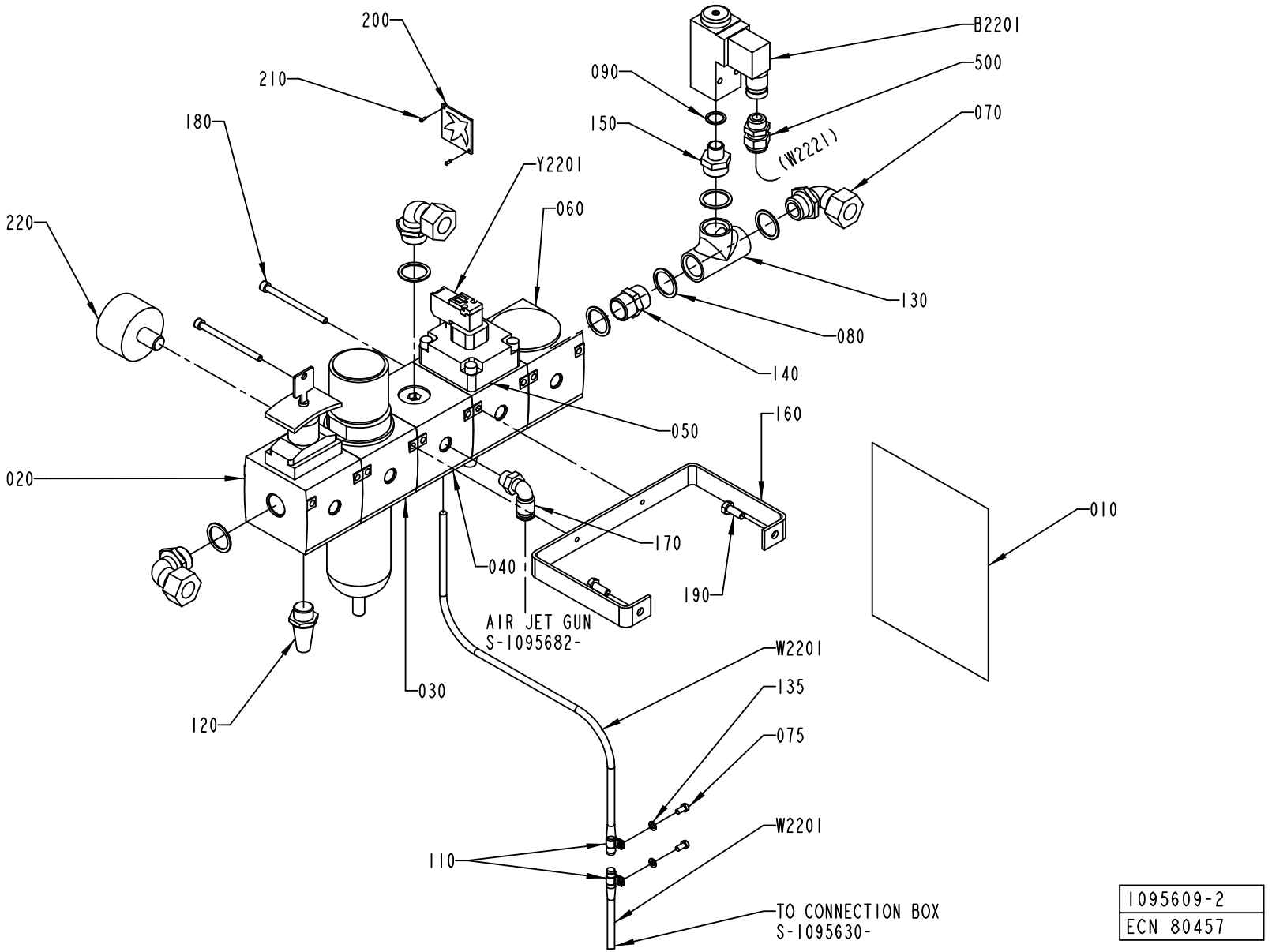

1095609-2
ECN 80457

ECM: 89443 - 20010203
Group number: 1095609-0200
Assembly Drawing: 1095609-2_1_AD

Issue: 20011217

Pos	Part No	SP	UN	Qty	Description	Page No
Common Parts						
010	1129150-0000	-		1	PNEUMATIC DIAGRAM	
020	90113-0377	A		1	SHUT-OFF VALVE	
030	B90113-0072	A		1	PRESSURE REGULATOR	
	90113-0459	*A*		*1*	*O-RING*	
	90113-0387	*A*		*1*	*FILTER ELEMENT 40æM FOR 90113-0094*	
040	90113-0375	A		1	PRESSURE DISTRIBUTION	
050	90113-0423	A		1	HIGH SPEED VENTING VALVE	
060	90113-0374	A		1	SLOW STARTING VALVE	
070	342730-0114	-		3	CONN. ELBOW WA-15-1/2	
075	312125-0287	-		2	SCREW PAN HEAD MCS M4X8 SS	
080	315233-0113	-		6	WASHER PL.RND.NYL.21,4/27,H=1,2	
090	315233-0110	-		1	WASHER PL.RND.NYL.13,3/17,H=1	
110	90074-0025	-		2	CLIPS, CABLE CLIPS DI=8 MM	
120	90328-0007	B		1	SILENCER	
130	90330-0049	-		1	T-PIPE, INT. THREAD, R-221R1/2	
135	315105-0136	-		2	WASHER PLAIN, BRB, 4,3/8,H=0,8	
140	342700-0113	-		1	NIPPLES,HEXAGON,EXT.G-THREAD G1/2"-G1/2"	
150	342700-0205	-		1	NIPPLES,HEXAGON,EXT.G-THREAD G1/2"-G1/4"	
160	1041921-0000	-		1	HOLDER	
170	342732-0104	-		1	ELBOW PIPE JOINT	
180	90287-0073	-		2	SCREW MC6S M5X70 129	
190	312105-0368	-		2	SCREW M6S M6X16 A280	
200	273458-0000	-		1	LABEL (AIR)	
210	312502-0120	-		2	DRIVE SCREW ROUND HEAD KDS 0X5	
220	90043-0107	B		1	PRESSURE GAUGE	
500	352103-0101	-		1	CABLE GLAND ST 9;PR15,2/PG9	
B2201	90274-0074	A		1	PRESSURE SWITCH	
W2201	90042-0583	A		1	CABLE MECMAN 440-827 000-1	
Y2201	90042-0585	A		1	PILOT VALVE L=5M	

Pos	Part No	SP	UN	Qty	Description	Page No

Machine Type | Group Description | Used-In | Group Number | Page No

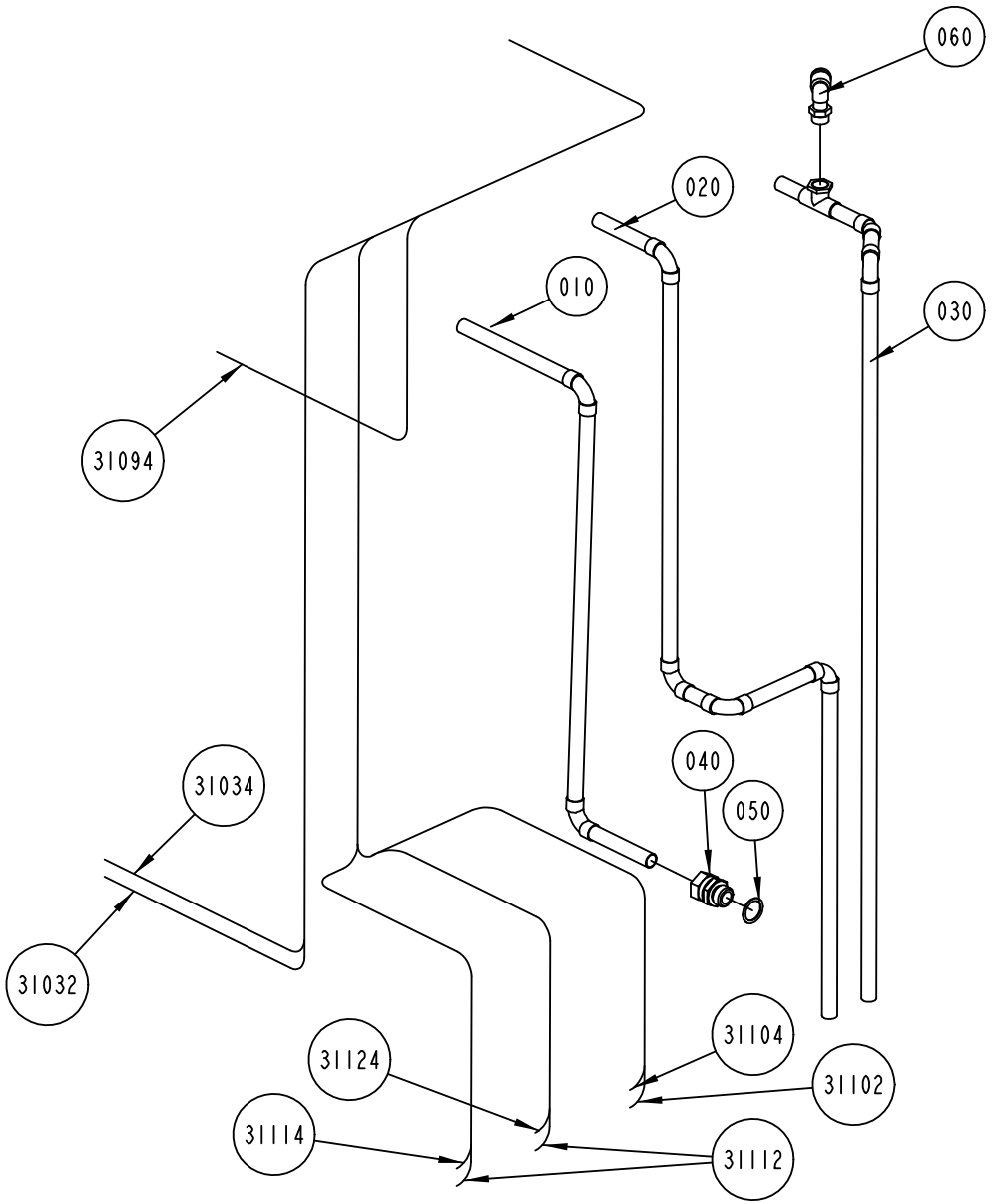

S-1095716-1
ECN 71821

Pos	Part No	SP	UN	Qty	Description	Page No
Common Parts						
010	1041922-0000	-		1	PIPE	
020	1041923-0000	-		1	PIPE	
030	1041924-0000	-		1	PIPE	
040	342720-0114	-		1	CONN. STR. GA-15-G1/2	
050	315233-0113	-		1	WASHER PL.RND.NYL.21,4/27,H=1,2	
060	342732-0110	-		1	ELBOW PIPE JOINT	
31032	90166-0013	-	MM	1400	TUBE 8 MM PA BLUE	
31034	90166-0013	-	MM	1400	TUBE 8 MM PA BLUE	
31094	90166-0013	-	MM	1400	TUBE 8 MM PA BLUE	
31102	90166-0013	-	MM	1500	TUBE 8 MM PA BLUE	
31104	90166-0013	-	MM	1500	TUBE 8 MM PA BLUE	
31112	90166-0013	-	MM	1500	TUBE 8 MM PA BLUE	
31114	90166-0013	-	MM	1500	TUBE 8 MM PA BLUE	
31122	90166-0013	-	MM	1500	TUBE 8 MM PA BLUE	
31124	90166-0013	-	MM	1500	TUBE 8 MM PA BLUE	

Pos	Part No	SP	UN	Qty	Description	Page No

Tetra Pak

SPC
Spare Parts Catalogue

STRIP APPLICATOR

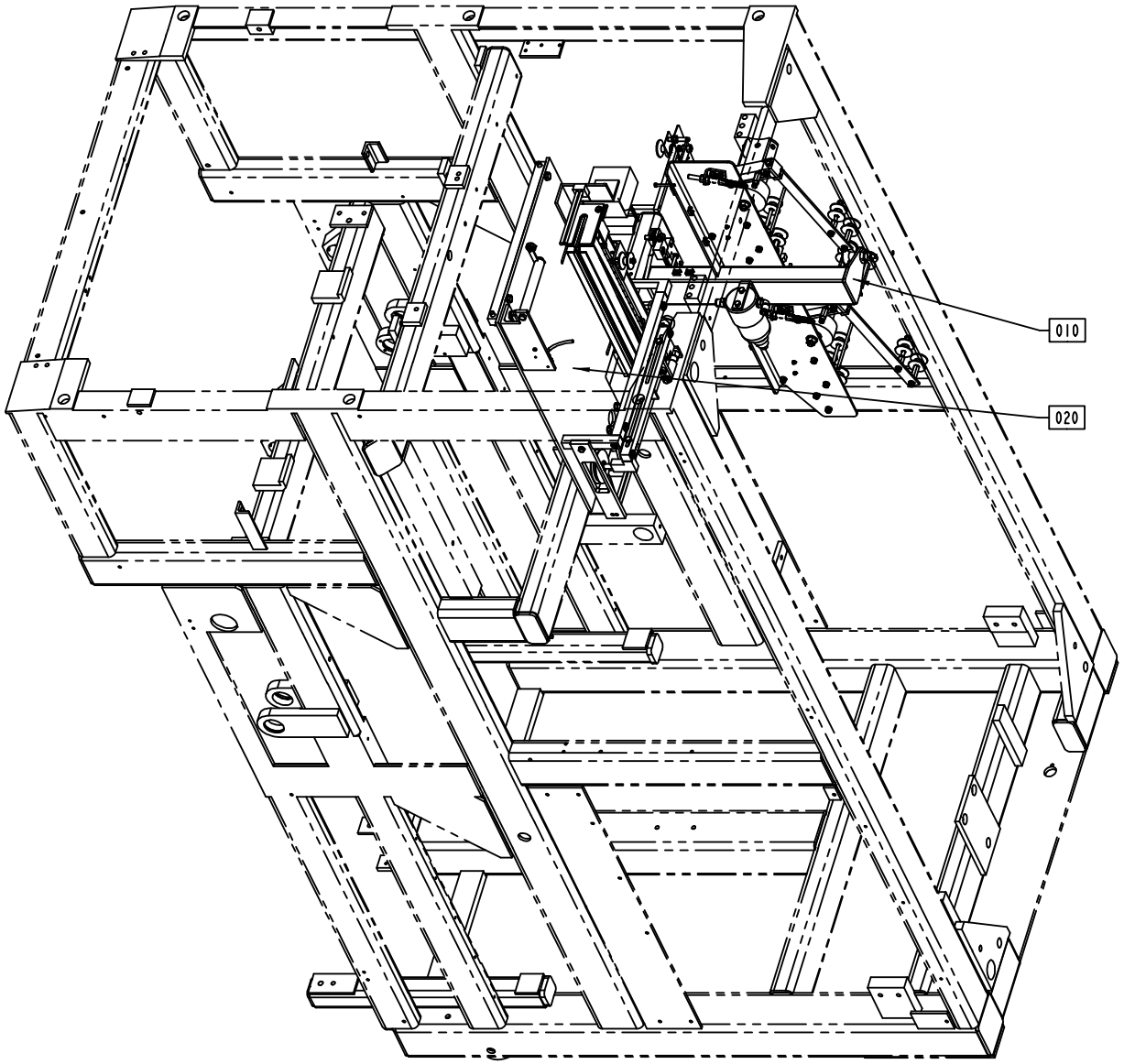

S-648507-3
ECN 71873

Pos	Part No	SP	UN	Qty	Description	Page No
Common Parts						
010	A1195500-0200	-		1	STRIP MAGAZINE	**793**
020	A1195505-0200	-		1	STRIP APPLICATOR	**811**

Pos	Part No	SP	UN	Qty	Description	Page No

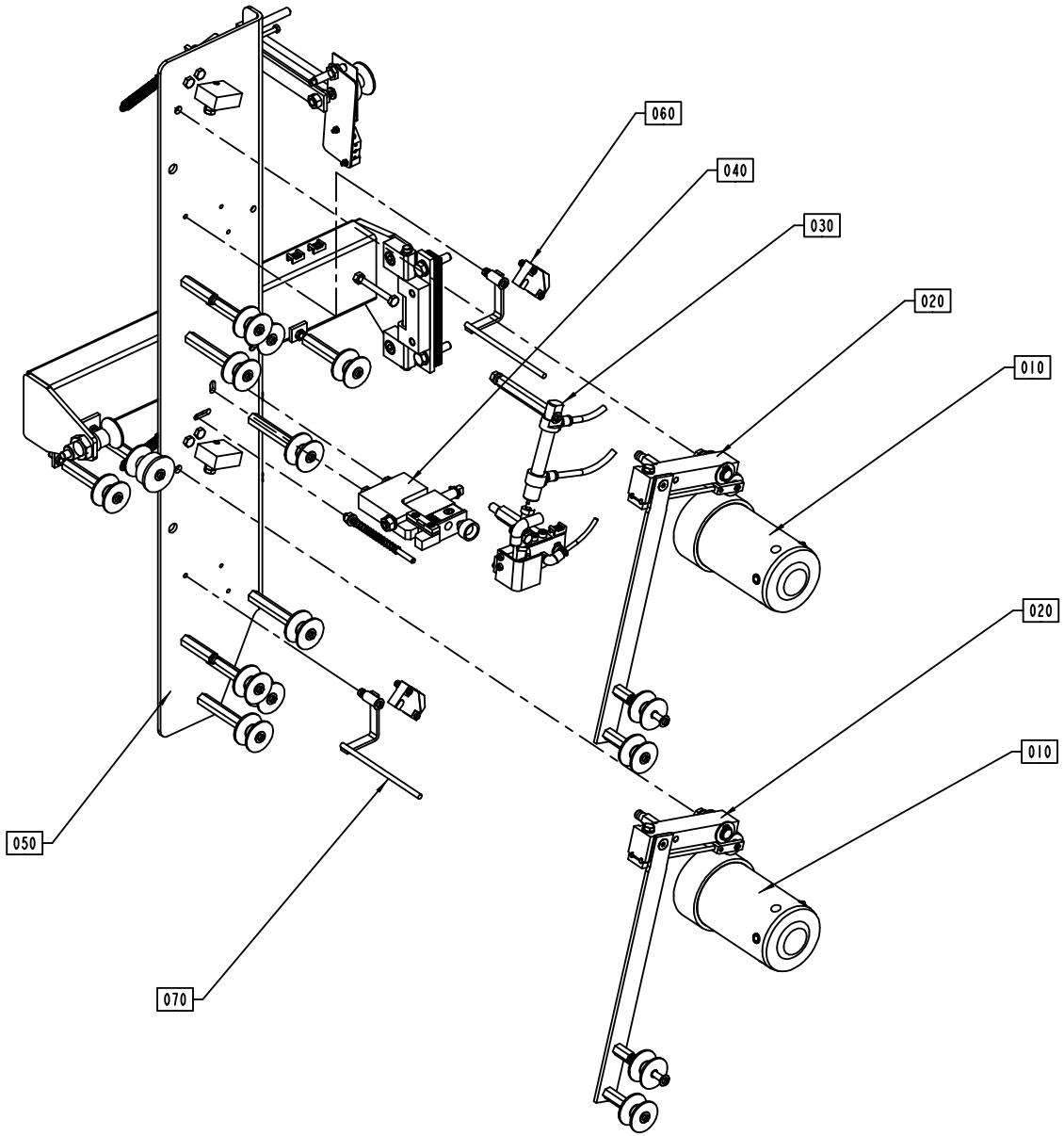

1195500-2
ECN 81093

ECM: 81226 - 20000921
Group number: 1195500-0200
Assembly Drawing: 1195500-2_1_AC

Issue: 20011217

Pos	Part No	SP	UN	Qty	Description	Page No
Common Parts						
010	A1095815-0100	-		2	HUB	**795**
020	A1095816-0100	-		2	BRAKE ARM	**797**
030	A1490806-0100	-		1	HEATING DEVICE	**799**
040	A1347260-0100	-		1	CUTTING TABLE	**801**
050	A1195501-0200	-		1	MOUNTING SHEET	**803**
060	A1195502-0200	-		1	ROCKER ARM	**807**
070	A1195503-0200	-		1	ROCKER ARM	**809**

Pos	Part No	SP	UN	Qty	Description	Page No

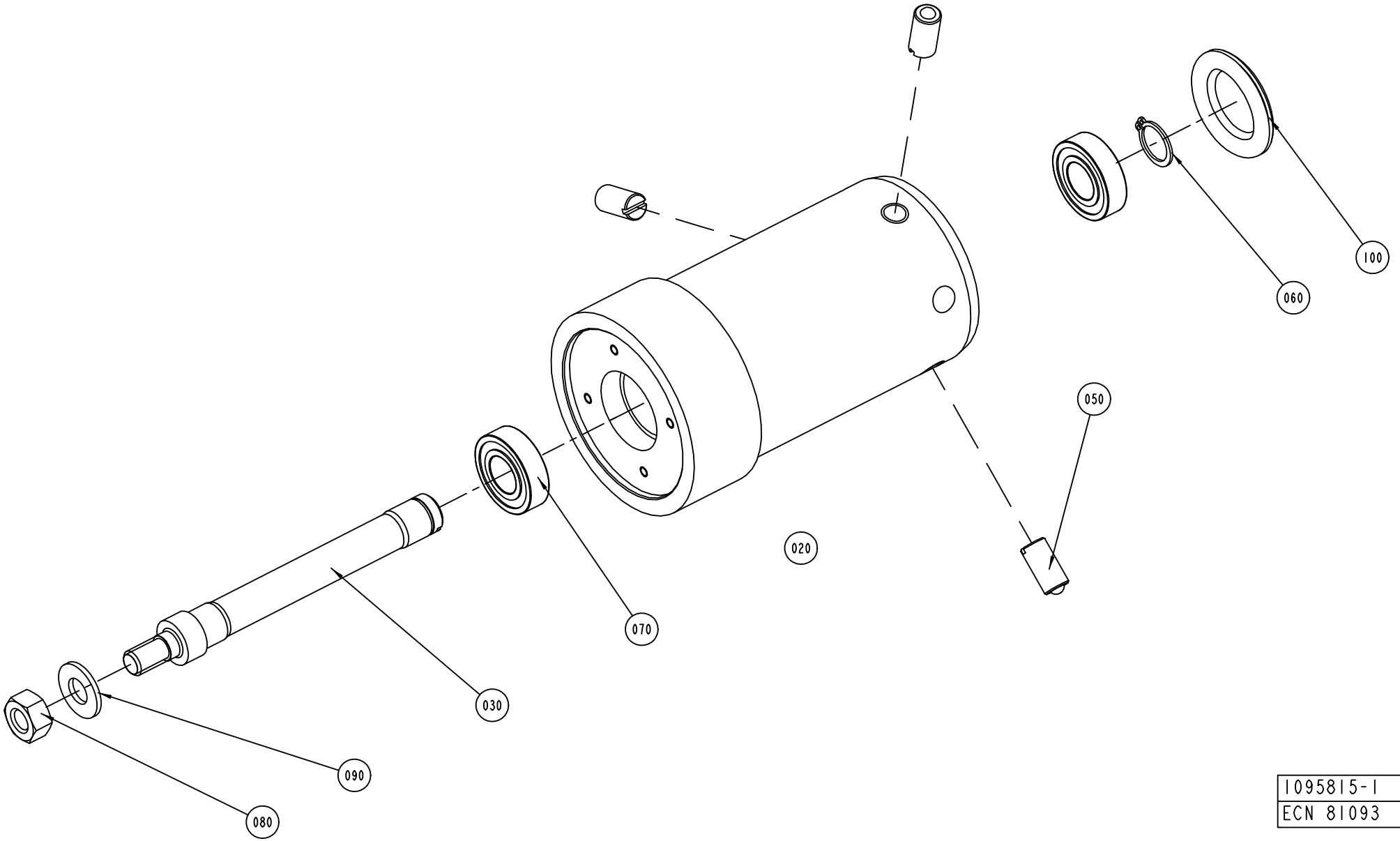

1095815-1
ECN 81093

ECM: 89464 - 20010201
Group number: 1095815-0100
Assembly Drawing: 1095815-1_1_AD

Issue: 20011217

Pos	Part No	SP	UN	Qty	Description	Page No
Common Parts						
010	541751-0000	-		1	CONICAL BOBBIN	
020	1484724-0000	A		1	HUB	
030	537327-0000	A		1	SHAFT	
040	90157-0016	-		1	LOCKING FLUID	
050	90287-0106	B		3	SCREW SPRINGLOAD. SLOTTED HEAD M10X21	
060	315751-0112	-		1	RETAIN. RING, 15	
070	90214-0207	A		2	BALL BEARING, 15X32X9 MM	
080	312605-0320	-		1	HEXAGON NUT, M6M M10 A280	
090	315105-0173	-		1	WASHER PLAIN, BRB, 10,5/22,H=2	
100	90261-0049	-		1	PLUG, BLIND, PLASTIC, NO. SR1750	

Pos	Part No	SP	UN	Qty	Description	Page No

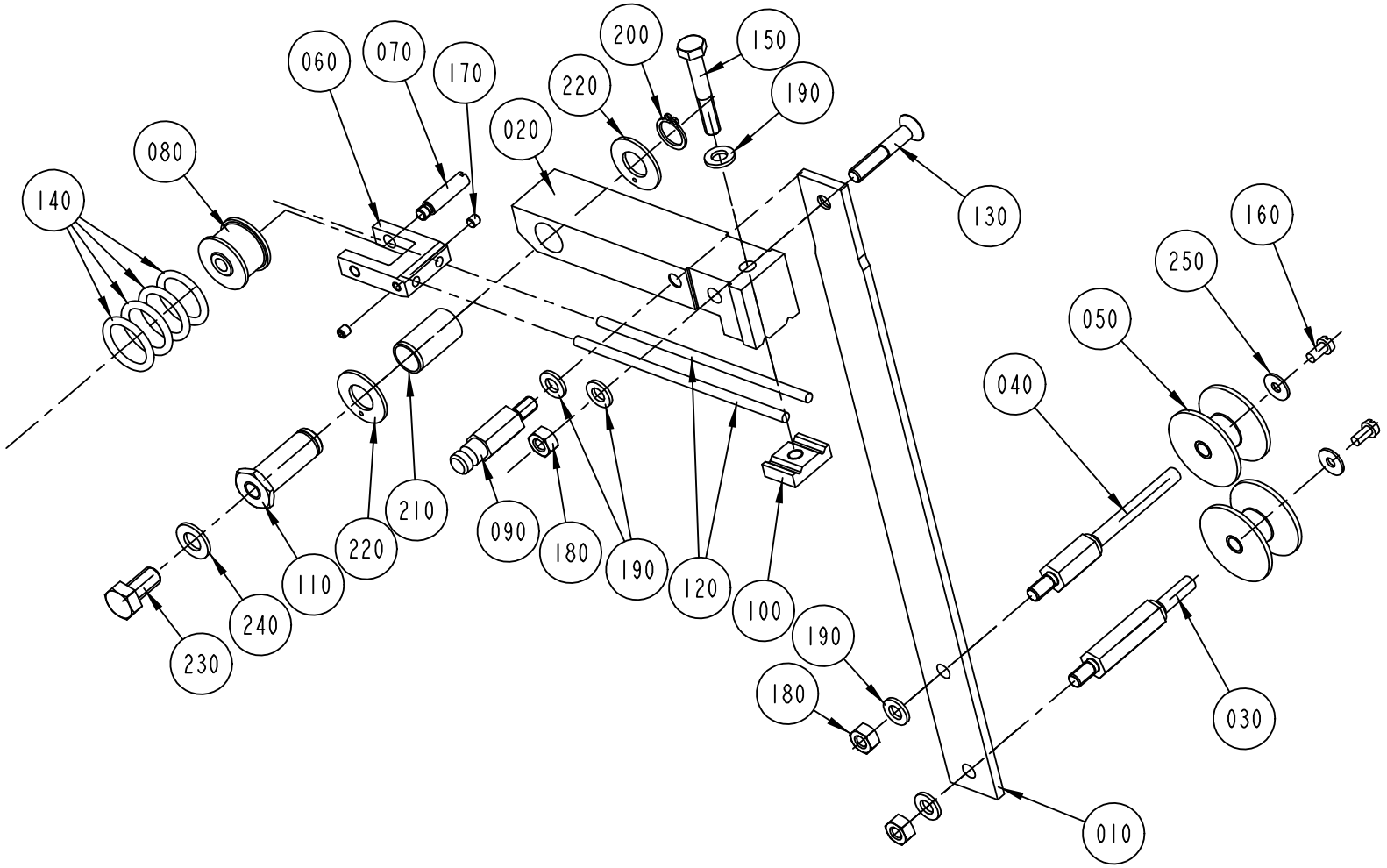

1095816-3
ECN 91036

ECM: 92249 - 50001231
Group number: 1095816-0100
Assembly Drawing: 1095816-3_1_AB

Issue: 20011217

Pos	Part No	SP	UN	Qty	Description	Page No
Common Parts						
010	1036124-0000	-		1	ARM	
020	541057-0000	-		1	ARM	
030	536917-0000	A		1	AXLE PIN	
040	544726-0000	A		1	AXLE PIN	
050	B544730-0000	A		2	ROLL	
	321120-0101	*-*		*2*	*BEARING BUSHING WITHOUT FLANGE,6/8X6*	
060	541064-0000	A		1	FORK	
070	541065-0000	A		1	SHAFT	
080	541066-0000	A		1	ROLL	
090	541067-0000	A		1	SPRING BRACKET	
100	541069-0000	-		1	SPRING BRACKET	
110	541070-0000	A		1	SHAFT	
120	543820-0000	B		2	SPRING	
130	312155-0376	-		1	SCREW HEX.SOCK.COUNT.MF6S M6X35 A280	
140	90242-0148	A		4	O-RING 19,2X3 MM	
150	312105-0378	-		1	SCREW M6S M6X40 A280	
160	312125-0287	-		2	SCREW PAN HEAD MCS M4X8 SS	
170	312318-0283	-		2	SCREW SOCK.SET CUP P MSK6SS M4X4 A4	
180	312605-0316	-		3	HEXAGON NUT, M6M M6 A280	
190	315105-0153	-		5	WASHER PLAIN, BRB, 6,4/12,H=1,5	
200	315751-0109	-		1	RETAIN. RING, 12	
210	321120-0113	A		1	BEARING BUSHING WITHOUT FLANGE,12/14X25	
220	321129-0104	-		2	THRUST WASHER, 12/24X1,5	
230	312105-0449	-		1	SCREW M6S M8X16 A280	
240	315105-0165	-		1	WASHER PLAIN, BRB, 8,4/16,H=1,5	
250	90005-0082	-		2	WASHER PLAIN ROUND 4,3(M4)/12,H=1	

Pos	Part No	SP	UN	Qty	Description	Page No

Machine Type | Group Description | Used-In | Group Number | Page No

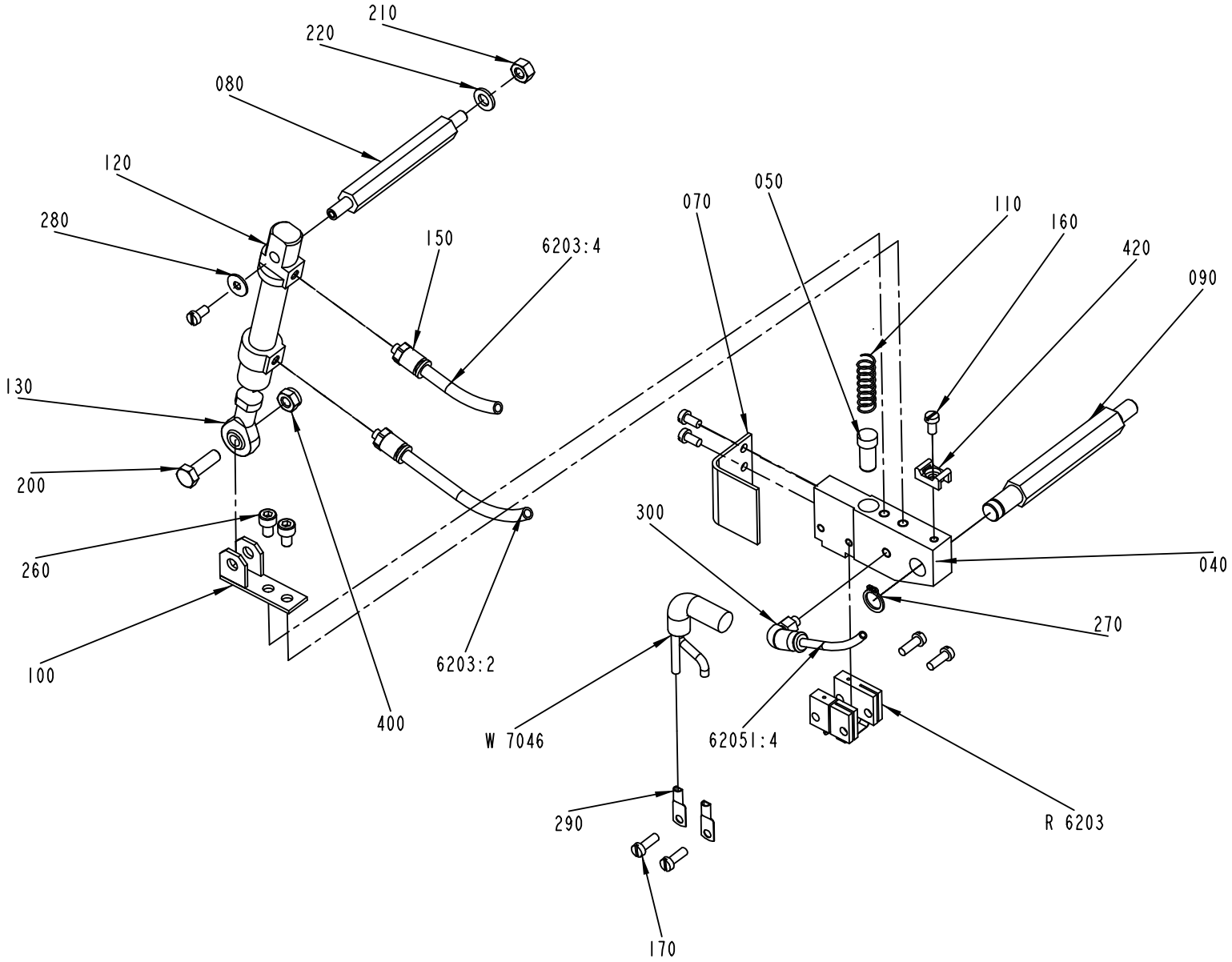

S-1490806-1
ECN 72489

Pos	Part No	SP	UN	Qty	Description	Page No
TBA/21						
R6203	1498047-0000	A		1	SEALING BLOCK	
Common Parts						
040	1490804-0000	A		1	HOLDER	
050	400833-0000	A		1	PLUNGER	
070	1349181-0000	B		1	TOUCH GUARD	
080	1037121-0000	A		1	SHAFT	
090	1037120-0000	A		1	SHAFT	
100	1037124-0000	B		1	HOLDER	
110	400828-0000	A		1	SPRING	
120	90450-0306	A		1	DOUBLE ACTING, MINI-ISO, CYL. 12-25	
130	90239-0491	A		1	ROD END,BALL JOINT EYE,MINI-ISO M6	
150	342722-0197	-		2	STRAIGHT COUPLING	
160	312125-0287	-		4	SCREW PAN HEAD MCS M4X8 SS	
170	312125-0291	-		4	SCREW PAN HEAD MCS M4X12 SS	
200	312105-0370	-		1	SCREW M6S M6X20 A280	
210	312605-0316	-		1	HEXAGON NUT, M6M M6 A280	
220	315105-0153	-		1	WASHER PLAIN, BRB, 6,4/12,H=1,5	
260	312115-0323	-		2	SCREW MC6S M5X8 A280	
270	90141-0016	-		1	RETAIN. RING, 10	
280	90005-0082	-		1	WASHER PLAIN ROUND 4,3(M4)/12,H=1	
290	353104-0140	-		2	CABLE SHOEYAV 06 M 4*	
300	342732-0099	-		1	ELBOW PIPE JOINT	
400	312812-0316	-		1	HEXAGON NUT, NY-LOCK M6 A480	
420	352113-0205	-		1	ANCHOR TM2S8-C100	
6203:2	90166-0193	-	MM	4800	TUBE 6 MM PUR BLUE	
6203:4	90166-0193	-	MM	4800	TUBE 6 MM PUR BLUE	
62051:4	90166-0095	-	MM	500	TUBE 4 MM PA BLUE	
W7046	351120-0126	-	MM	2800	CABLE SIHF 2X4MM2 GREEN/YELLOW	

Pos	Part No	SP	UN	Qty	Description	Page No

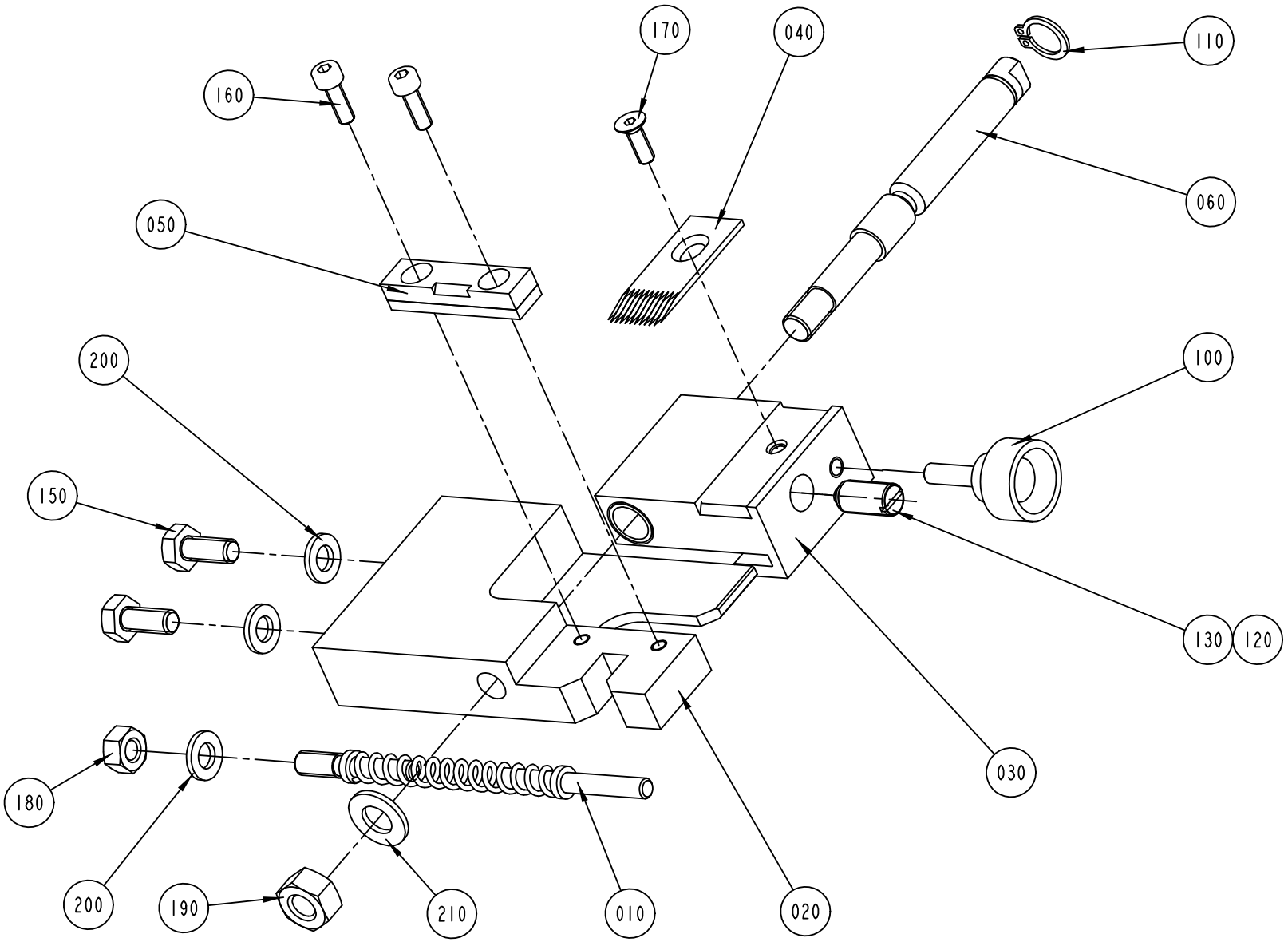

S-1347260-1
ECN 73375

ECM: 89466 - 20010201
Group number: 1347260-0100
Assembly Drawing: 1347260-1_1_AB

Issue: 20011217

Pos	Part No	SP	UN	Qty	Description	Page No
Common Parts						
010	1349179-0000	A		1	FINGER	
020	1349926-0000	A		1	SPLICING TABLE	
030	B1349927-0000	A		1	SLIDE	
010	*321120-0104*	*C*		*2*	*BEARING BUSHING WITHOUT FLANGE,10/12X10*	
040	1347258-0000	A		1	KNIFE	
050	1349014-0000	A		1	PAD	
060	1349928-0000	A		1	SHAFT	
100	90051-0035	B		1	KNOB, EXTERNAL THREAD. NO. 8308-1135	
110	90141-0016	-		1	RETAIN. RING, 10	
120	90157-0016	-		1	LOCKING FLUID	
130	90287-0112	A		1	SCREW SPRINGLOAD. SLOTTED HEAD M8X16	
150	312105-0367	-		2	SCREW M6S M6X14 A280	
160	312115-0291	-		2	SCREW MC6S M4X12 A280	
170	312155-0291	-		1	SCREW HEX.SOCK.COUNT.MF6S M4X12 A480	
180	312605-0316	-		1	HEXAGON NUT, M6M M6 A280	
190	312605-0318	-		1	HEXAGON NUT, M6M M8 A280	
200	315105-0153	-		3	WASHER PLAIN, BRB, 6,4/12,H=1,5	
210	315105-0165	-		1	WASHER PLAIN, BRB, 8,4/16,H=1,5	

Pos	Part No	SP	UN	Qty	Description	Page No

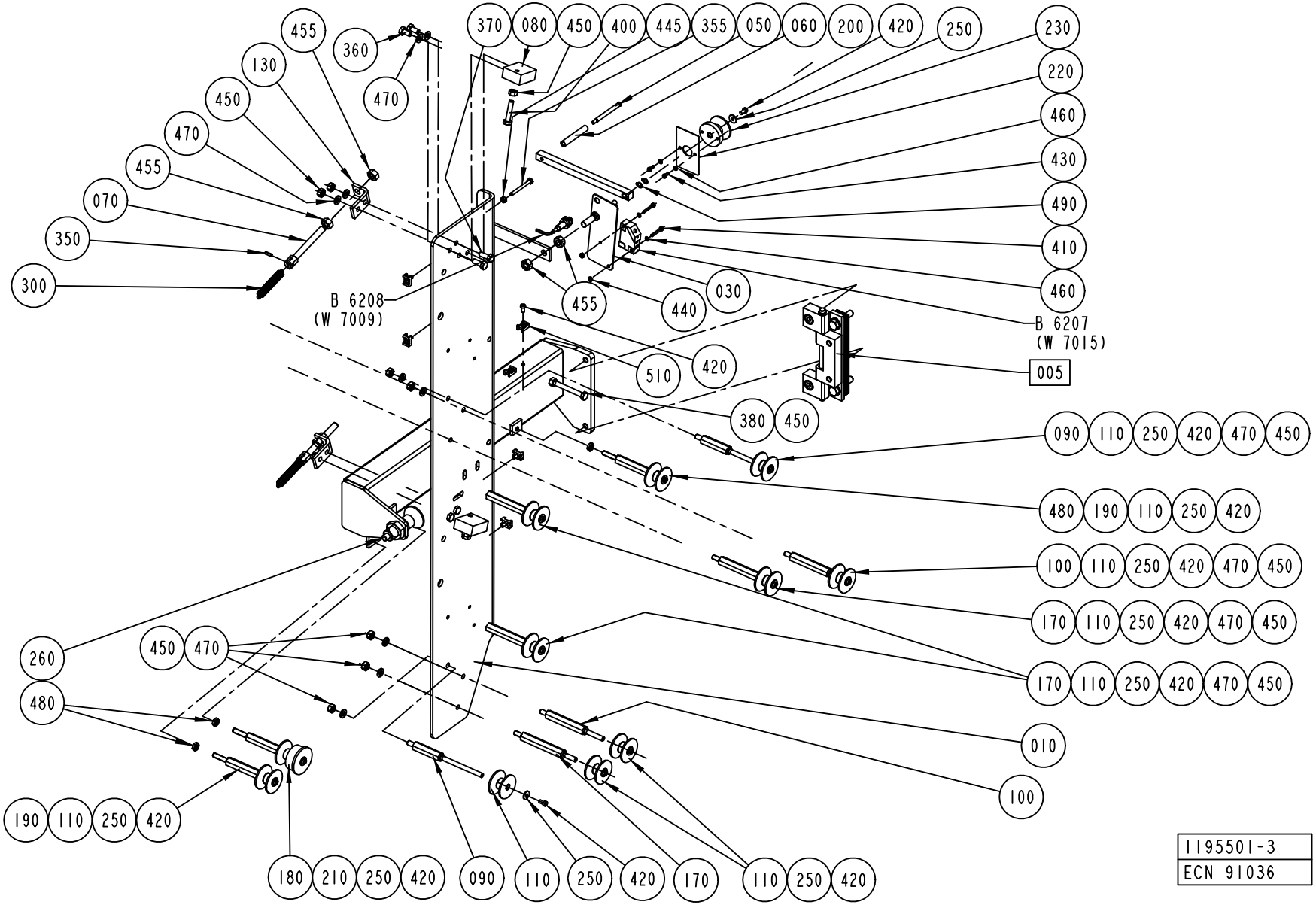
455
360
130
450
470
455
070
350
300
470
B 6208
(W 7009)
370
080
450
400
445
355
050
060
200
420
250
230
220
460
430
490
410
460
B 6207
(W 7015)
005
030
440
455
510
420
380
450
090
110
250
420
470
450
480
190
110
250
420
100
110
250
420
470
450
170
110
250
420
470
450
170
110
250
420
470
450
010
100
260
480
450
470
190
110
250
420
180
210
250
420
090
110
250
420
170
110
250
420
1195501-3
ECN 91036

Pos	Part No	SP	UN	Qty	Description	Page No
TBA/21						
080	541173-0000	-		2	STOP	
300	90335-0063	A		2	SPRING	
400	312109-0374	-		2	SCREW M6S M6X30 A280	
450	312605-0316	-		14	HEXAGON NUT, M6M M6 A280	
Common Parts						
005	A1346640-0100	-		1	HINGE	**805**
010	1347261-0000	-		1	MOUNTING PLATE	
030	1347885-0000	A		1	AXLE PIN	
050	1347882-0000	A		1	SHAFT	
060	1347883-0000	A		1	ROLLER	
070	541068-0000	-		2	SPRING HOLDER	
090	544725-0000	A		2	AXLE PIN	
100	544727-0000	A		2	AXLE PIN	
110	B544730-0000	A		10	ROLL	
	321120-0101	*-*		*2*	*BEARING BUSHING WITHOUT FLANGE,6/8X6*	
130	1037284-0000	-		2	HOLDER	
170	1195488-0000	A		4	AXLE PIN	
180	1349178-0000	A		1	AXLE PIN	
190	1349177-0000	A		2	AXLE PIN	
200	1347737-0000	A		1	ARM	
210	B1285545-0000	A		1	ROLL	
010	*321120-0101*	*C*		*2*	*BEARING BUSHING WITHOUT FLANGE,6/8X6*	
220	1349581-0000	-		1	FLAG	
230	B1349986-0000	A		1	ROLLER	
010	*321120-0101*	*C*		*2*	*BEARING BUSHING WITHOUT FLANGE,6/8X6*	
250	90005-0082	-		12	WASHER PLAIN ROUND 4,3(M4)/12,H=1	
260	90051-0088	B		1	ADJUSTMENT SCREW	
350	311112-0205	-		2	PIN, STRAIGHT SLOTTED SPRING FRP 3X10	
355	312105-0303	-		1	SCREW M6S M4X40 A280	
380	312105-0383	-		1	SCREW M6S M6X65 A280	
410	312125-0230	-		2	SCREW PAN HEAD MCS M3X20 SS	
420	312125-0287	-		18	SCREW PAN HEAD MCS M4X8 SS	
430	312125-0222	-		2	SCREW PAN HEAD MCS M3X8 SS	
440	312605-0310	-		2	HEXAGON NUT, M6M M3 A280	
445	312605-0312	-		1	HEXAGON NUT, M6M M4 A280	
455	312605-0318	-		6	HEXAGON NUT, M6M M8 A280	
460	315105-0124	-		4	WASHER PLAIN, BRB, 3,2/6,H=0,5	
470	315105-0153	-		14	WASHER PLAIN, BRB, 6,4/12,H=1,5	
480	312625-0316	-		3	NUT HEX. M6 SS	
490	315751-0103	-		2	RETAIN. RING, 6	
510	352113-0205	-		6	ANCHOR TM2S8-C100	
B 6207	90044-0104	A		1	PROX.SWITCH IFM IN 3002	
B 6208	90458-0138	-		1	PROXIMITY SWITCH E2EG-X1R5B1-5M	

Machine Type | Group Description | Used-In | Group Number | Page No

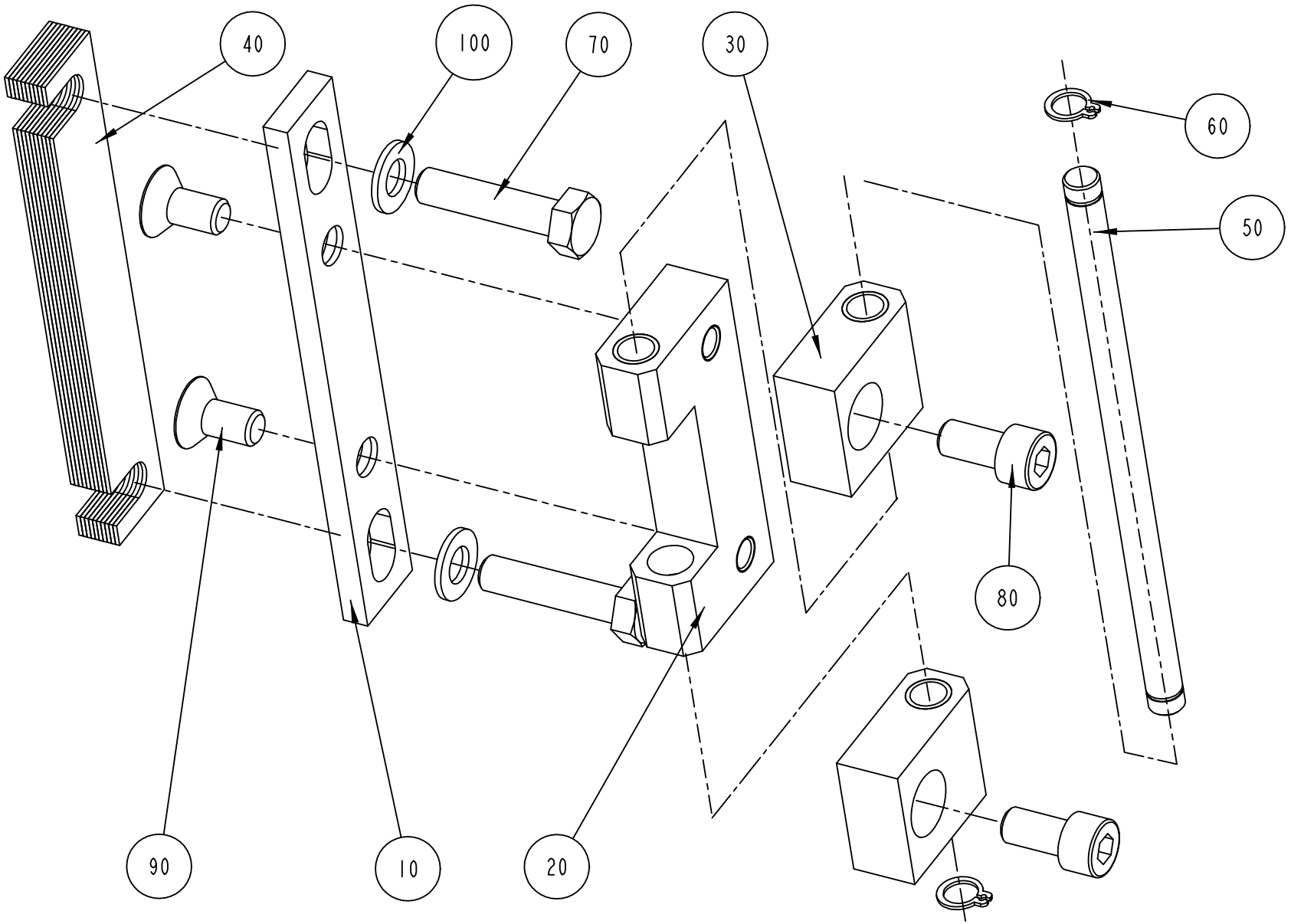
40
100
70
30
60
50
80
90
10
20

ECM: 89469 - 20010201
Group number: 1346640-0100
Assembly Drawing: 1346640-1_1_AA

Issue: 20011217

Pos	Part No	SP	UN	Qty	Description	Page No
Common Parts						
010	1334187-0000	-		1	PLATE	
020	1334189-0000	B		1	BLOCK	
030	1334190-0000	B		2	BLOCK	
040	1334191-0000	-		10	SHIM	
050	1334188-0000	B		1	AXLE PIN	
060	90141-0015	-		2	RETAIN. RING, 8	
070	312109-0457	-		2	SCREW M6S M8X35 A280	
080	312115-0449	-		2	SCREW MC6S M8X16 A280	
090	312155-0449	-		2	SCREW HEX.SOCK.COUNT.MF6S M8X16 A280	
100	315105-0165	-		2	WASHER PLAIN, BRB, 8,4/16,H=1,5	

Pos	Part No	SP	UN	Qty	Description	Page No

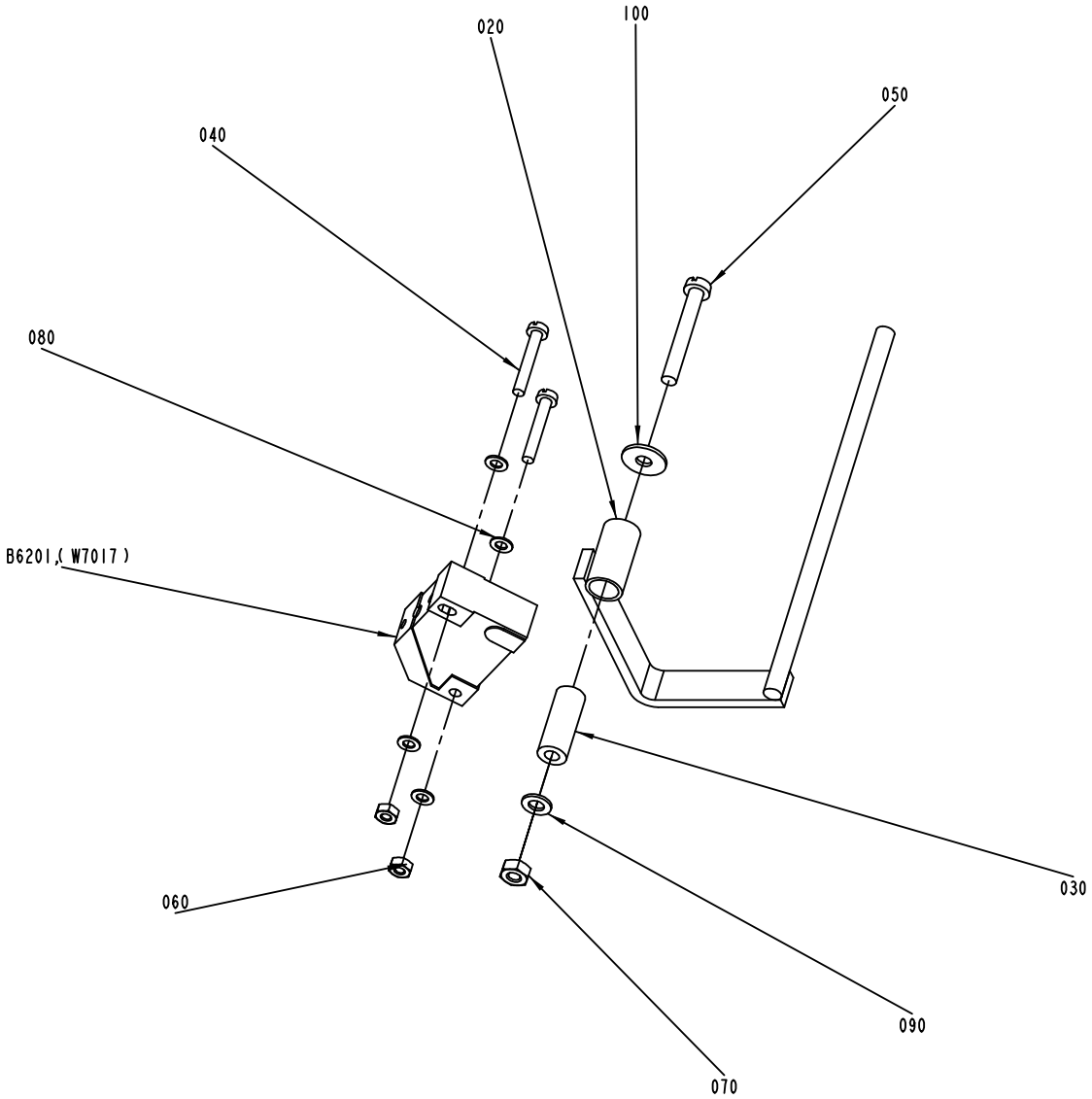

S-1195502-2
ECN 72489

ECM: 101522 - 50001231
Group number: 1195502-0200
Assembly Drawing: 1195502-2_1_AA

Issue: 20011217

Pos	Part No	SP	UN	Qty	Description	Page No
Common Parts						
020	1490187-0000	A		1	ROCKER ARM	
030	1490185-0000	A		1	SPACER	
040	312125-0230	-		2	SCREW PAN HEAD MCS M3X20 SS	
050	312125-0303	-		1	SCREW PAN HEAD MCS M4X40 SS	
060	312605-0310	-		2	HEXAGON NUT, M6M M3 A280	
070	312812-0312	-		1	HEXAGON NUT, NY-LOCK M4 A480	
080	315105-0124	-		4	WASHER PLAIN, BRB, 3,2/6,H=0,5	
090	315105-0136	-		1	WASHER PLAIN, BRB, 4,3/8,H=0,8	
100	90005-0082	-		1	WASHER PLAIN ROUND 4,3(M4)/12,H=1	
B6201	90044-0104	A		1	PROX.SWITCH IFM IN 3002	

Pos	Part No	SP	UN	Qty	Description	Page No

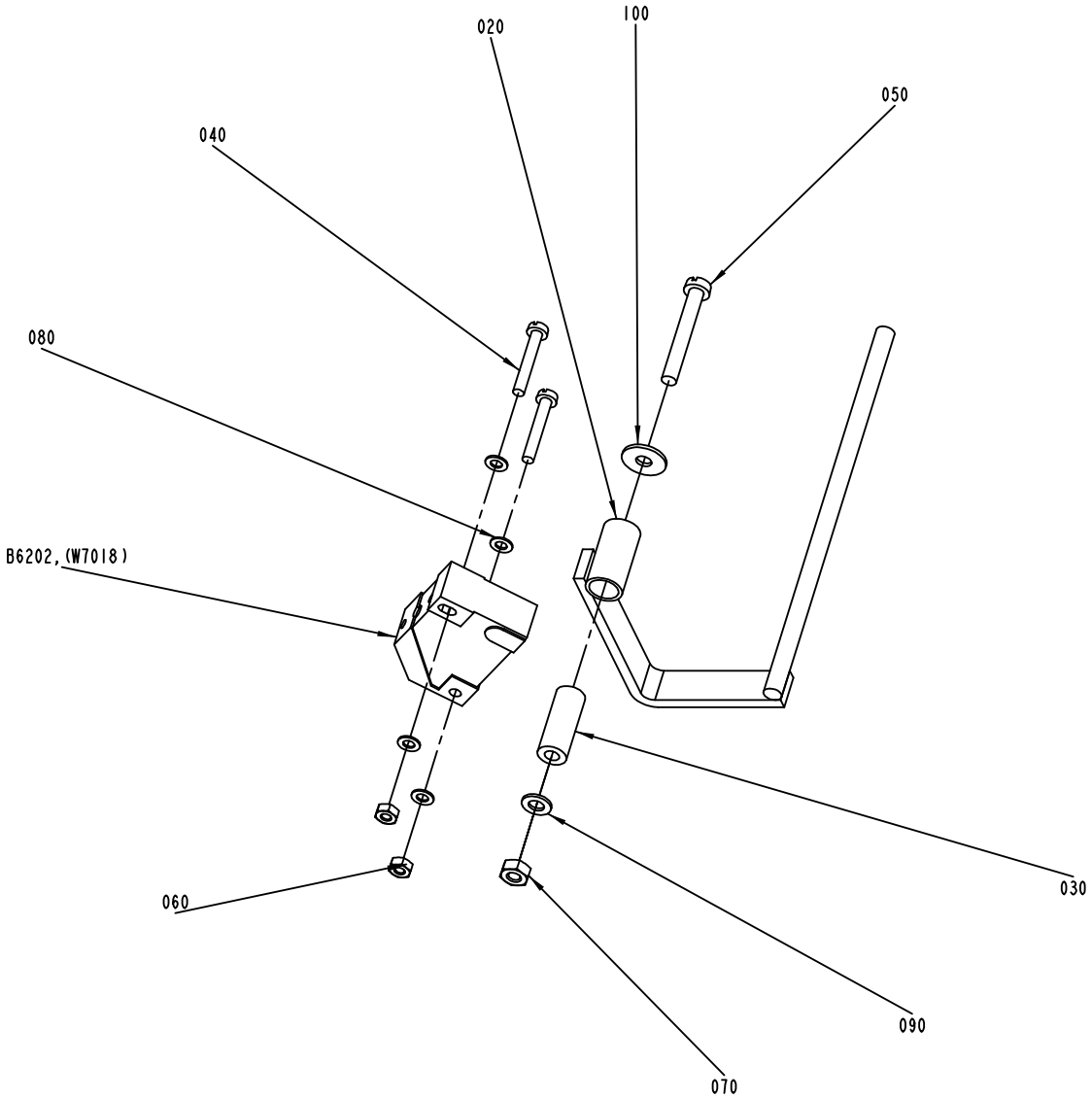

S-1195503-2
ECN 72489

ECM: 101523 - 50001231
Group number: 1195503-0200
Assembly Drawing: 1195503-2_1_AA

Issue: 20011217

Pos	Part No	SP	UN	Qty	Description	Page No
Common Parts						
020	1490187-0000	A		1	ROCKER ARM	
030	1490185-0000	A		1	SPACER	
040	312125-0230	-		2	SCREW PAN HEAD MCS M3X20 SS	
050	312125-0303	-		1	SCREW PAN HEAD MCS M4X40 SS	
060	312605-0310	-		2	HEXAGON NUT, M6M M3 A280	
070	312812-0312	-		1	HEXAGON NUT, NY-LOCK M4 A480	
080	315105-0124	-		4	WASHER PLAIN, BRB, 3,2/6,H=0,5	
090	315105-0136	-		1	WASHER PLAIN, BRB, 4,3/8,H=0,8	
100	90005-0082	-		1	WASHER PLAIN ROUND 4,3(M4)/12,H=1	
B 6202	90044-0104	A		1	PROX.SWITCH IFM IN 3002	

Pos	Part No	SP	UN	Qty	Description	Page No

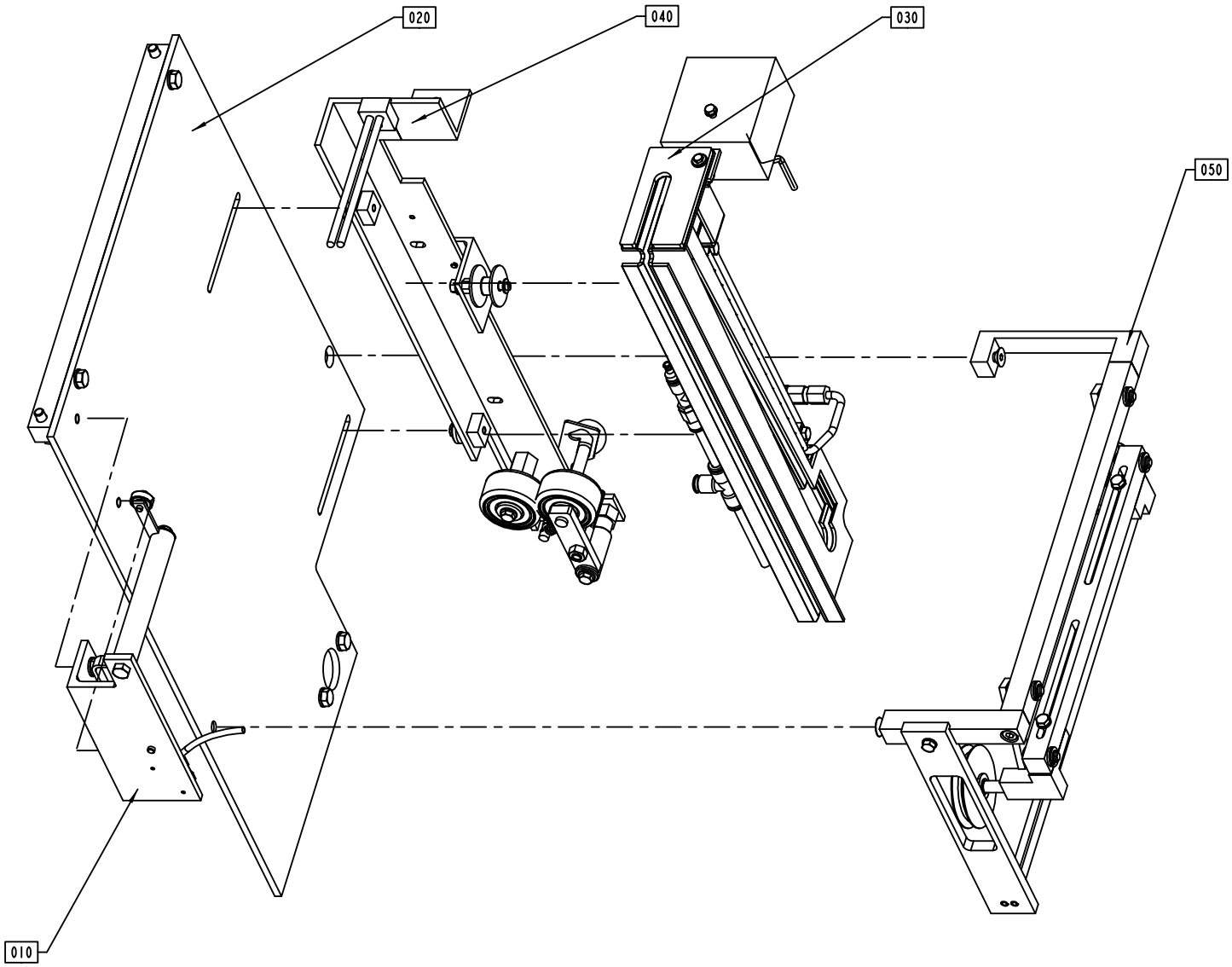

S-1195505-2
ECN 71873

ECM: 81225 - 20000921
Group number: 1195505-0200
Assembly Drawing: 1195505-2_1_AA

Issue: 20011217

Pos	Part No	SP	UN	Qty	Description	Page No
TBA/21						
010	A1095798-0100	-		1	SPLICE DETECTOR	**813**
030	A1195506-0200	-		1	INDUCTOR	**815**
040	A1255305-0200	-		1	PRESSURE ROLLER	**817**
Common Parts						
020	A1195504-0100	-		1	BOTTOM PANEL	**819**
050	A1334220-0200	-		1	STRIP GUIDE	**821**

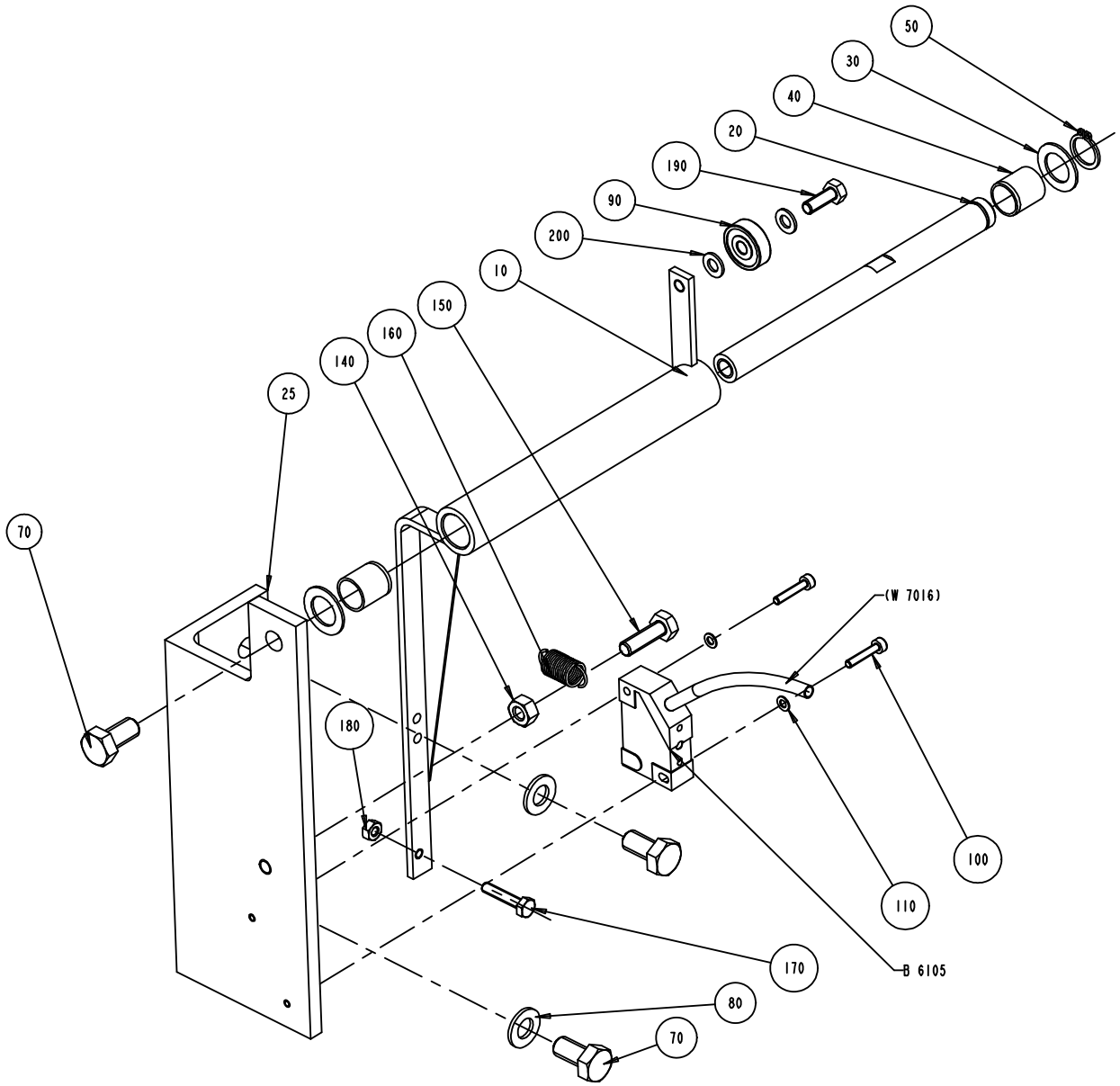
50
30
40
20
190
90
200
10
150
160
140
25
70
(W 7016)
180
100
110
170
B 6105
80
70

ECM: 89473 - 20010201
Group number: 1095798-0100
Assembly Drawing: 1095798-1_1_AC

Issue: 20011217

Pos	Part No	SP	UN	Qty	Description	Page No
Common Parts						
010	1035898-0000	-		1	BRACKET	
020	1035897-0000	-		1	SHAFT	
025	1036186-0000	-		1	HOLDER	
030	266737-0000	-		2	WASHER	
040	321120-0111	A		2	BEARING BUSHING WITHOUT FLANGE,12/14X15	
050	315751-0109	-		1	RETAIN. RING, 12	
070	312105-0449	-		3	SCREW M6S M8X16 A280	
080	315105-0165	-		2	WASHER PLAIN, BRB, 8,4/16,H=1,5	
090	90214-0138	A		1	BALL BEARING, 5X19X6 MM	
100	312115-0228	-		2	SCREW MC6S M3X16 A280	
110	315105-0124	-		2	WASHER PLAIN, BRB, 3,2/6,H=0,5	
140	312605-0316	-		1	HEXAGON NUT, M6M M6 A280	
150	312105-0370	-		1	SCREW M6S M6X20 A280	
160	90335-0089	A		1	SPRING	
170	312105-0295	-		1	SCREW M6S M4X20 A280	
180	312605-0312	-		1	HEXAGON NUT, M6M M4 A280	
190	312105-0328	-		1	SCREW M6S M5X14 A280	
200	315105-0146	-		2	WASHER PLAIN, BRB, 5,3/10,H=1	
B 6105	90044-0104	A		1	PROX.SWITCH IFM IN 3002	

Pos	Part No	SP	UN	Qty	Description	Page No

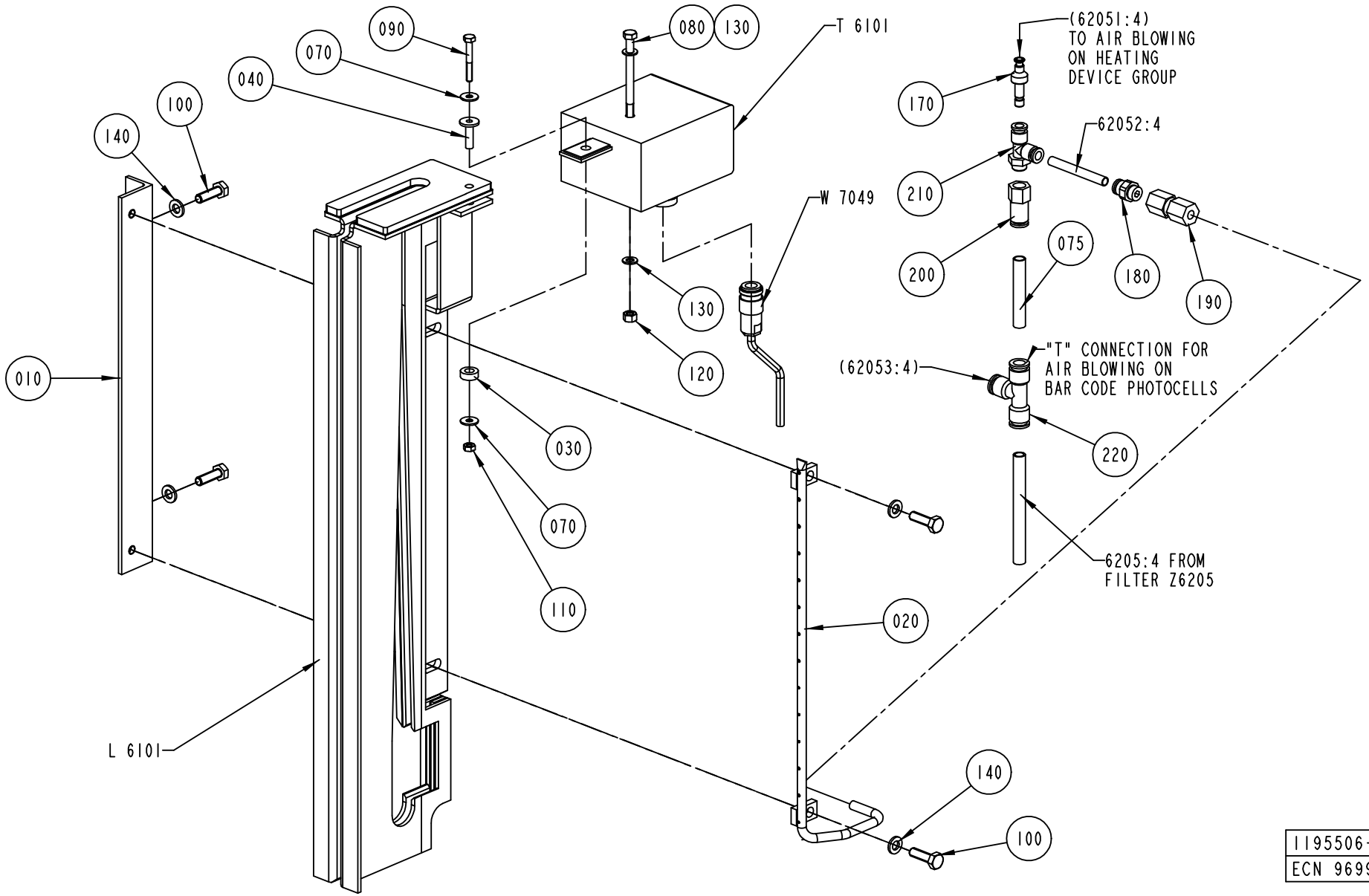

1195506-3
ECN 96997

Pos	Part No	SP	UN	Qty	Description	Page No
TBA 0200B OR TBA 0200S OR TBA 0250B OR TPA 0330SQ						
T 6101	67380-0101	A		1	IMPEDANCE TRANSFORMER	
TBA 0500S OR TBA 0500B OR TBA 1000S OR TBA 1000SQ OR TBA 1000B OR TPA 1000S OR TBA 1500S						
T 6101	67380-0203	A		1	IMPEDANCE TRANSFORMER	
Common Parts						
010	1036588-0000	-		1	BRACKET	
020	1255308-0000	B		1	FAN NOZLE	
030	1260680-0000	A		1	WASHER	
040	1478304-0000	A		1	SPACER BUSHING	
070	90005-0082	-		2	WASHER PLAIN ROUND 4,3(M4)/12,H=1	
075	90166-0194	-	MM	50	TUBE 8 MM PUR BLUE	
080	312101-0344	-		1	SCREW M6S M5X65 FZB	
090	312105-0299	-		1	SCREW M6S M4X30 A280	
100	312105-0370	-		4	SCREW M6S M6X20 A280	
110	312605-0312	-		1	HEXAGON NUT, M6M M4 A280	
120	312605-0314	-		1	HEXAGON NUT, M6M M5 A280	
130	315105-0146	-		2	WASHER PLAIN, BRB, 5,3/10,H=1	
140	315105-0153	-		4	WASHER PLAIN, BRB, 6,4/12,H=1,5	
170	342716-0202	-		1	REDUCER 4-6	
180	342722-0202	-		1	PIPE COUPLING 1/8" D=6MM	
190	342725-0102	-		1	CONN. STR. PIPE GI-6-G1/8	
200	342770-0107	-		1	STRAIGHT COUPLING INT, D=8 MM - G1/8	
210	342772-0113	-		1	ELBOW FITTING	
220	342748-0103	-		1	T-CONNECTION	
6205:4	90166-0194	-	MM	800	TUBE 8 MM PUR BLUE	
62052:4	90166-0193	-	MM	250	TUBE 6 MM PUR BLUE	
L 6101	1103749-0000	A		1	INDUCTOR	
W 7049	1036962-0000	A		1	CABLE	

Pos	Part No	SP	UN	Qty	Description	Page No

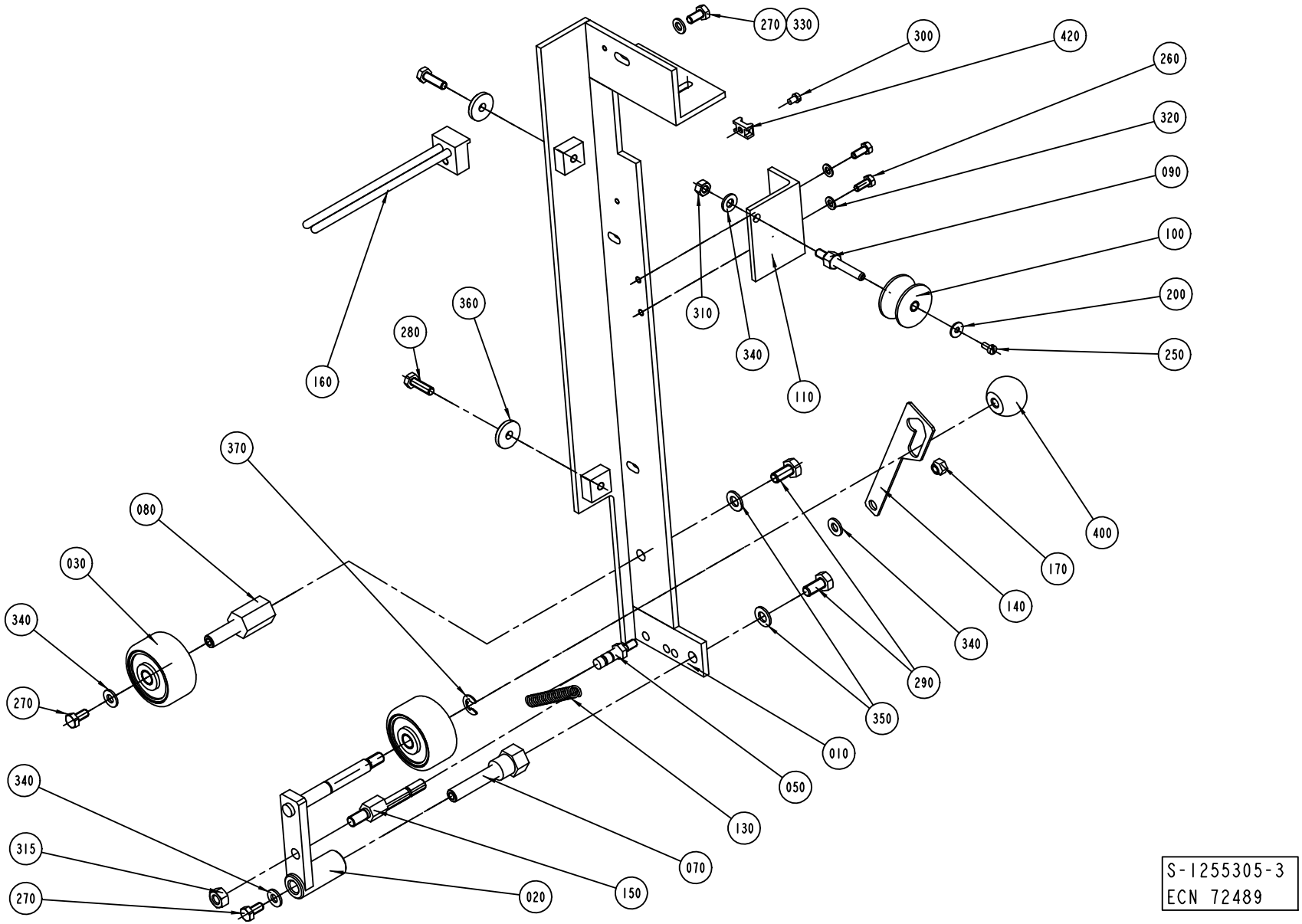

S-1255305-3
ECN 72489

ECM: 89475 - 20010201
Group number: 1255305-0200
Assembly Drawing: 1255305-3_1_AB

Issue: 20011217

Pos	Part No	SP	UN	Qty	Description	Page No
Common Parts						
010	1255306-0000	-		1	FASTENING BRACKET	
020	1346751-0000	A		1	HOLDER	
030	B1346988-0000	A		2	ROLL	
010	*90166-0056*	*-*	*MM*	*40*	*SHRINKABLE HOSE*	
020	*321120-0104*	*-*		*2*	*BEARING BUSHING WITHOUT FLANGE,10/12X10*	
050	1035890-0000	A		1	HOLDER	
070	1035894-0000	A		1	SHAFT	
080	1035895-0000	A		1	SHAFT	
090	1478607-0000	A		1	SHAFT	
100	B544730-0000	A		1	ROLL	
	321120-0101	*-*		*2*	*BEARING BUSHING WITHOUT FLANGE,6/8X6*	
110	1350777-0000	-		1	BRACKET	
130	1478303-0000	A		1	TENSION SPRING	
140	1349432-0000	B		1	CATCH	
150	1346752-0000	A		1	AXLE PIN	
160	1349672-0000	B		1	GUIDE	
170	1349994-0000	-		1	NUT	
200	90005-0082	-		1	WASHER PLAIN ROUND 4,3(M4)/12,H=1	
250	312125-0287	-		1	SCREW PAN HEAD MCS M4X8 SS	
260	312105-0327	-		2	SCREW M6S M5X12 A280	
270	312105-0366	-		3	SCREW M6S M6X12 A280	
280	312105-0370	-		2	SCREW M6S M6X20 A280	
290	312105-0449	-		2	SCREW M6S M8X16 A280	
300	312125-0285	-		1	SCREW SLOT.PAN HD. MCS 4X6 A480	
310	312605-0316	-		1	HEXAGON NUT, M6M M6 A280	
315	312605-0318	-		1	HEXAGON NUT, M6M M8 A280	
320	315105-0146	-		2	WASHER PLAIN, BRB, 5,3/10,H=1	
330	315105-0153	-		1	WASHER PLAIN, BRB, 6,4/12,H=1,5	
340	315105-0156	-		4	WASHER PLAIN, BRB, 6,7/14,H=1,5	
350	315105-0165	-		2	WASHER PLAIN, BRB, 8,4/16,H=1,5	
360	315125-0153	-		2	WASHER PLAIN ROUND,CHAMF. 6,4/22, H=4	
370	315755-0801	-		1	LOCKING WASHER 8	
400	318800-0104	B		1	HANDLE,SPHERICAL KNOB,INT.THRE.,D.30-M8	
420	352113-0205	-		1	ANCHOR TM2S8-C100	

Pos	Part No	SP	UN	Qty	Description	Page No

Machine Type | Group Description | Used-In | Group Number | Page No

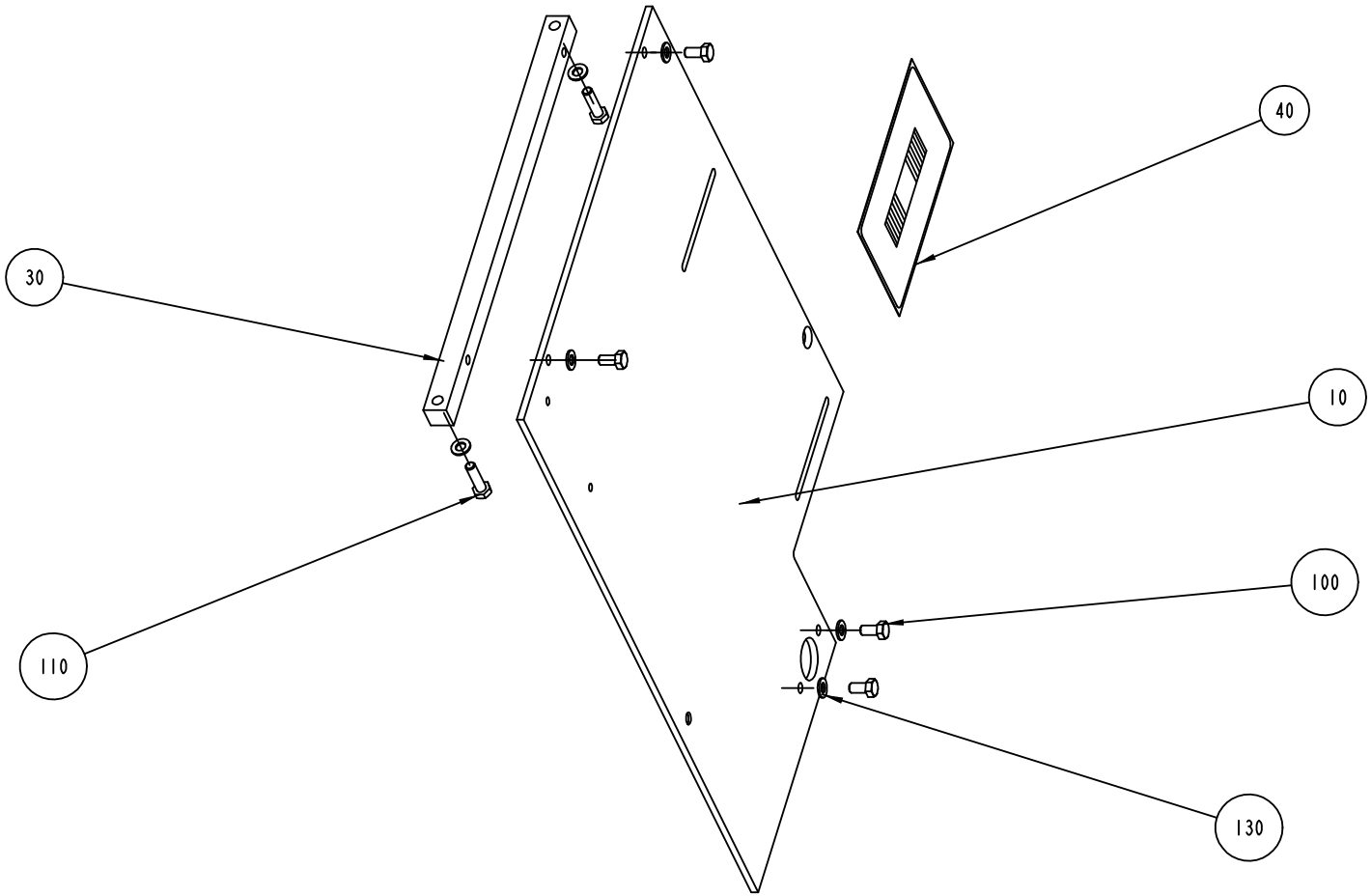

S-1195504-1
ECN 72489

ECM: 72489 - 19991012
Group number: 1195504-0100
Assembly Drawing: 1195504-1_1_AD

Issue: 20011217

Pos	Part No	SP	UN	Qty	Description	Page No
Common Parts						
010	1116028-0000	-		1	SHEET	
030	1255136-0000	-		1	ROD	
040	599809-0000	-		1	SIGN	
100	312105-0449	-		4	SCREW M6S M8X16 A280	
110	312105-0455	-		2	SCREW M6S M8X30 A280	
130	315105-0165	-		6	WASHER PLAIN, BRB, 8,4/16,H=1,5	

Pos	Part No	SP	UN	Qty	Description	Page No

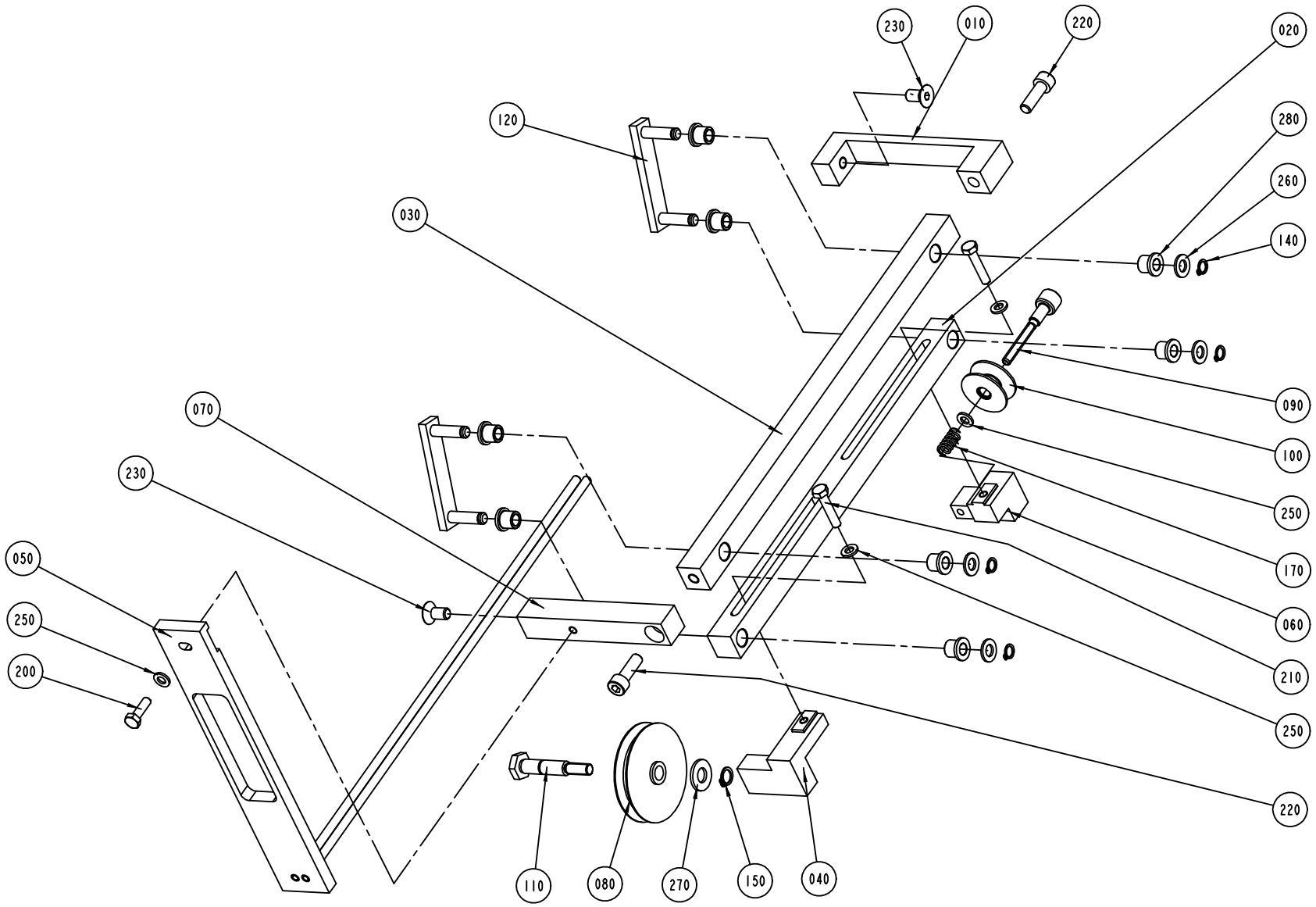

S-1334220-2
ECN 71873

ECM: 89477 - 20010201
Group number: 1334220-0200
Assembly Drawing: 1334220-2_1_AA

Issue: 20011217

Pos	Part No	SP	UN	Qty	Description	Page No
Common Parts						
010	1478587-0000	-		1	BRACKET	
020	1334085-0000	-		1	ROD	
030	1347252-0000	-		1	ROD	
040	1478590-0000	-		1	BRACKET	
050	1349509-0000	-		1	GUIDE	
060	1478589-0000	-		1	BRACKET	
070	1478588-0000	-		1	BRACKET	
080	282635-0000	A		1	GUIDE WHEEL	
090	1035893-0000	A		1	ADJUSTING SCREW	
100	B1285546-0000	A		1	ROLL	
010	*321120-0100*	*C*		*1*	*BEARING BUSHING WITHOUT FLANGE,8/10X12*	
110	1334197-0000	A		1	AXLE PIN	
120	1346746-0000	-		2	LEVER	
140	90141-0015	-		4	RETAIN. RING, 8	
150	90141-0016	-		1	RETAIN. RING, 10	
170	90335-0027	A		1	SPRING	
200	312105-0370	-		1	SCREW M6S M6X20 A280	
210	312105-0374	-		2	SCREW M6S M6X30 A280	
220	312115-0453	-		2	SCREW MC6S M8X25 A280	
230	312155-0449	-		2	SCREW HEX.SOCK.COUNT.MF6S M8X16 A280	
250	315105-0153	-		4	WASHER PLAIN, BRB, 6,4/12,H=1,5	
260	315105-0165	-		4	WASHER PLAIN, BRB, 8,4/16,H=1,5	
270	315105-0173	-		1	WASHER PLAIN, BRB, 10,5/22,H=2	
280	321111-0097	A		8	BEAR.BUSHING WITH FLANGE, 8/12X12 MM	

Pos	Part No	SP	UN	Qty	Description	Page No

Tetra Pak

SPC
Spare Parts Catalogue

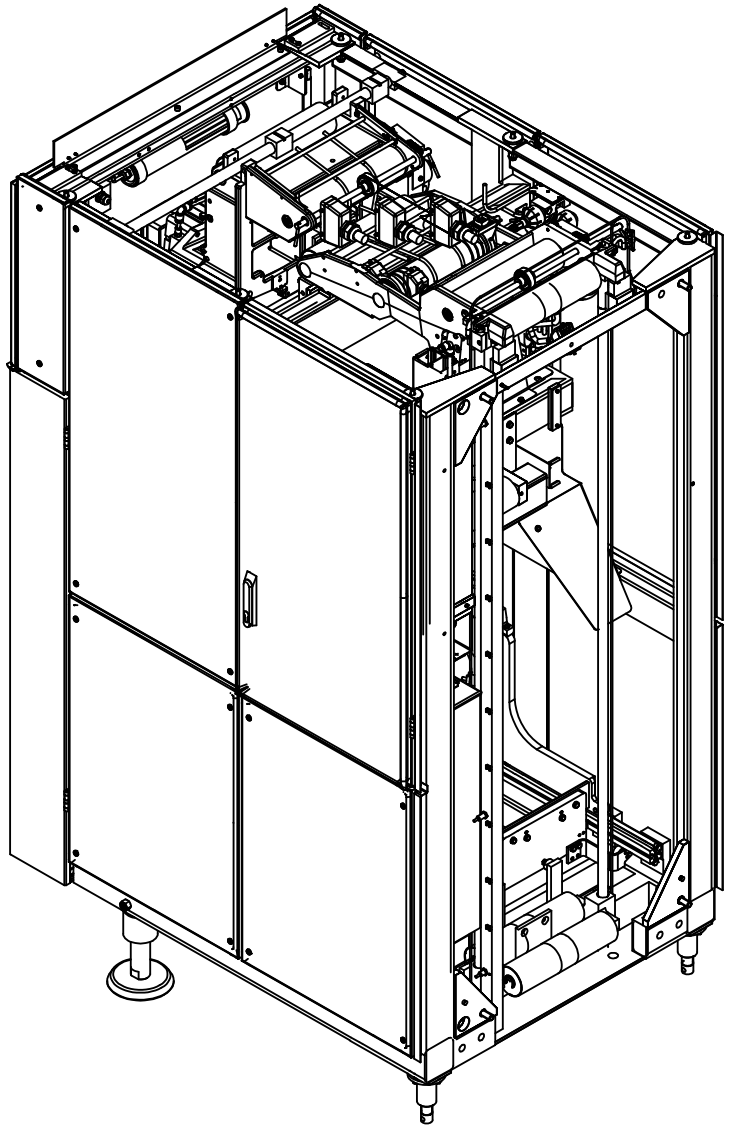

S-648513-5
ECN 71911

Pos	Part No	SP	UN	Qty	Description	Page No
TBA ASU						
010	A590490-0200	-		1	MACHINE BODY	**839, 841, 843, 845, 847, 849**
020	A1348436-0100	-		1	SPLICING DEVICE	**881**
030	A1255867-0100	-		1	MATERIAL HOLDER LINE 2	**895**
040	A1255868-0100	-		1	CYLINDER LINE 2	**897**
050	A1255869-0100	-		1	MATERIAL HOLDER LINE 1	**899**
060	A1255870-0100	-		1	CYLINDER LINE 1	**901**
070	A1095768-0100	-		1	GENERATOR CABINET	**903, 905**
080	A1095775-0100	-		1	ELECTRICAL CABINET	**907, 909**
090	A1035082-0300	-		1	CABLE HARNESS	**911, 913, 915**
100	A1260235-0200	-		1	VALVE PANEL	**917**
120	A1035088-0400	-		1	COVERING PANEL	**919, 921**
130	A1255304-0100	-		1	PROTECTIVE COVER	**961**
140	A1035076-0200	-		2	LEG	**301, 963**
150	A1035471-0100	-		2	LEG	**965**
TBA ASUSEPROOM						
010	A590490-0200	-		1	MACHINE BODY	**839, 841, 843, 845, 847, 849**
020	A1348436-0100	-		1	SPLICING DEVICE	**881**
030	A1255867-0100	-		1	MATERIAL HOLDER LINE 2	**895**
040	A1255868-0100	-		1	CYLINDER LINE 2	**897**
050	A1255869-0100	-		1	MATERIAL HOLDER LINE 1	**899**
060	A1255870-0100	-		1	CYLINDER LINE 1	**901**
070	A1095768-0100	-		1	GENERATOR CABINET	**903, 905**
080	A1095775-0200	-		1	ELECTRICAL CABINET	**967**
090	A1035082-0300	-		1	CABLE HARNESS	**911, 913, 915**
100	A1260235-0200	-		1	VALVE PANEL	**917**
120	A1035088-0400	-		1	COVERING PANEL	**919, 921**
130	A1255304-0100	-		1	PROTECTIVE COVER	**961**
140	A1035076-0200	-		2	LEG	**301, 963**
150	A1035471-0100	-		2	LEG	**965**
160	A1346431-0100	-		1	HOLDER	**969**
170	A1346430-0100	-		1	SUPPORT	**971**
180	A1346432-0100	-		1	BRACKET	**973**
190	A1346901-0100	-		1	PAPER COVER	**975**
200	A1346902-0100	-		1	LEG	**977**
210	1346397-0000	-		4	SCREW	
220	312605-0324	-		4	HEXAGON NUT, M6M M16 A280	
230	315105-0186	-		4	WASHER PLAIN, BRB, 17/30,H=3	
240	90347-0080	-		2	DAMPER TFE 1201	

Pos	Part No	SP	UN	Qty	Description	Page No

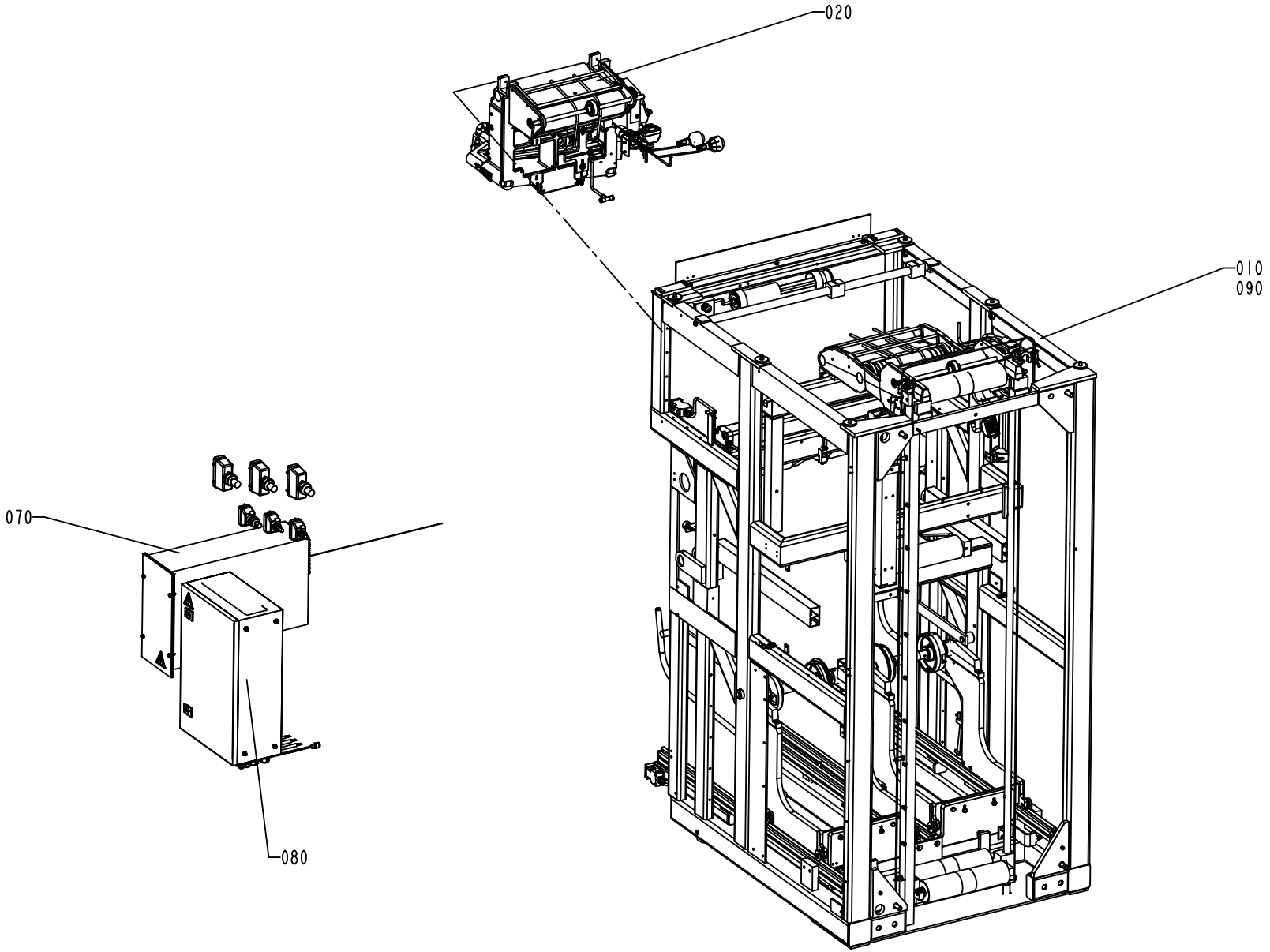
020
010
090
070
080

Pos	Part No	SP	UN	Qty	Description	Page No
TBA ASU						
010	A590490-0200	-		1	MACHINE BODY	**839, 841, 843, 845, 847, 849**
020	A1348436-0100	-		1	SPLICING DEVICE	**881**
030	A1255867-0100	-		1	MATERIAL HOLDER LINE 2	**895**
040	A1255868-0100	-		1	CYLINDER LINE 2	**897**
050	A1255869-0100	-		1	MATERIAL HOLDER LINE 1	**899**
060	A1255870-0100	-		1	CYLINDER LINE 1	**901**
070	A1095768-0100	-		1	GENERATOR CABINET	**903, 905**
080	A1095775-0100	-		1	ELECTRICAL CABINET	**907, 909**
090	A1035082-0300	-		1	CABLE HARNESS	**911, 913, 915**
100	A1260235-0200	-		1	VALVE PANEL	**917**
120	A1035088-0400	-		1	COVERING PANEL	**919, 921**
130	A1255304-0100	-		1	PROTECTIVE COVER	**961**
140	A1035076-0200	-		2	LEG	**301, 963**
150	A1035471-0100	-		2	LEG	**965**
TBA ASUSEPROOM						
010	A590490-0200	-		1	MACHINE BODY	**839, 841, 843, 845, 847, 849**
020	A1348436-0100	-		1	SPLICING DEVICE	**881**
030	A1255867-0100	-		1	MATERIAL HOLDER LINE 2	**895**
040	A1255868-0100	-		1	CYLINDER LINE 2	**897**
050	A1255869-0100	-		1	MATERIAL HOLDER LINE 1	**899**
060	A1255870-0100	-		1	CYLINDER LINE 1	**901**
070	A1095768-0100	-		1	GENERATOR CABINET	**903, 905**
080	A1095775-0200	-		1	ELECTRICAL CABINET	**967**
090	A1035082-0300	-		1	CABLE HARNESS	**911, 913, 915**
100	A1260235-0200	-		1	VALVE PANEL	**917**
120	A1035088-0400	-		1	COVERING PANEL	**919, 921**
130	A1255304-0100	-		1	PROTECTIVE COVER	**961**
140	A1035076-0200	-		2	LEG	**301, 963**
150	A1035471-0100	-		2	LEG	**965**
160	A1346431-0100	-		1	HOLDER	**969**
170	A1346430-0100	-		1	SUPPORT	**971**
180	A1346432-0100	-		1	BRACKET	**973**
190	A1346901-0100	-		1	PAPER COVER	**975**
200	A1346902-0100	-		1	LEG	**977**
210	1346397-0000	-		4	SCREW	
220	312605-0324	-		4	HEXAGON NUT, M6M M16 A280	
230	315105-0186	-		4	WASHER PLAIN, BRB, 17/30,H=3	
240	90347-0080	-		2	DAMPER TFE 1201	

Pos	Part No	SP	UN	Qty	Description	Page No

Machine Type | Group Description | Used-In | Group Number | Page No

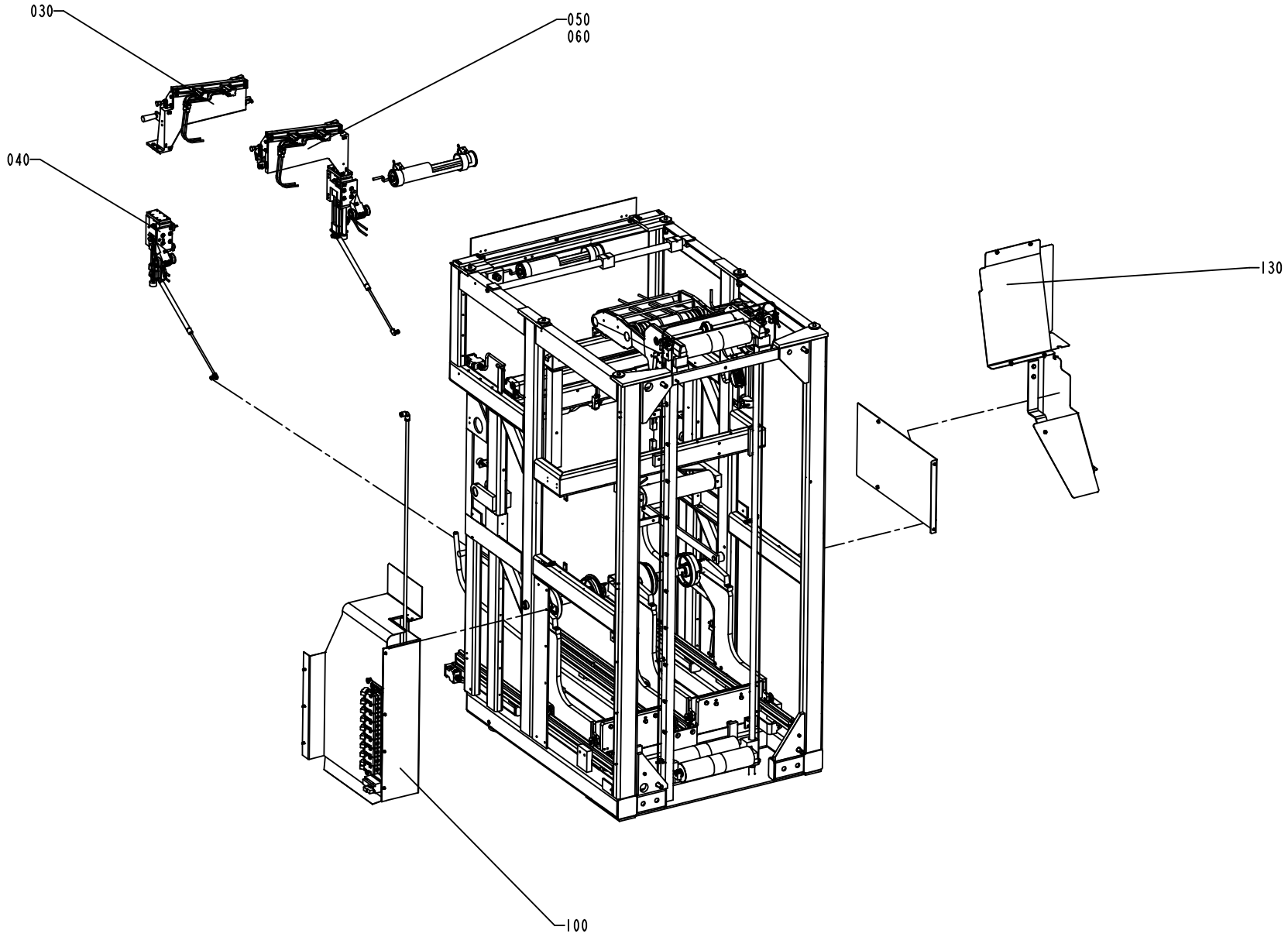
030
050
060
040
130
100

Pos	Part No	SP	UN	Qty	Description	Page No
TBA ASU						
010	A590490-0200	-		1	MACHINE BODY	**839, 841, 843, 845, 847, 849**
020	A1348436-0100	-		1	SPLICING DEVICE	**881**
030	A1255867-0100	-		1	MATERIAL HOLDER LINE 2	**895**
040	A1255868-0100	-		1	CYLINDER LINE 2	**897**
050	A1255869-0100	-		1	MATERIAL HOLDER LINE 1	**899**
060	A1255870-0100	-		1	CYLINDER LINE 1	**901**
070	A1095768-0100	-		1	GENERATOR CABINET	**903, 905**
080	A1095775-0100	-		1	ELECTRICAL CABINET	**907, 909**
090	A1035082-0300	-		1	CABLE HARNESS	**911, 913, 915**
100	A1260235-0200	-		1	VALVE PANEL	**917**
120	A1035088-0400	-		1	COVERING PANEL	**919, 921**
130	A1255304-0100	-		1	PROTECTIVE COVER	**961**
140	A1035076-0200	-		2	LEG	**301, 963**
150	A1035471-0100	-		2	LEG	**965**
TBA ASUSEPROOM						
010	A590490-0200	-		1	MACHINE BODY	**839, 841, 843, 845, 847, 849**
020	A1348436-0100	-		1	SPLICING DEVICE	**881**
030	A1255867-0100	-		1	MATERIAL HOLDER LINE 2	**895**
040	A1255868-0100	-		1	CYLINDER LINE 2	**897**
050	A1255869-0100	-		1	MATERIAL HOLDER LINE 1	**899**
060	A1255870-0100	-		1	CYLINDER LINE 1	**901**
070	A1095768-0100	-		1	GENERATOR CABINET	**903, 905**
080	A1095775-0200	-		1	ELECTRICAL CABINET	**967**
090	A1035082-0300	-		1	CABLE HARNESS	**911, 913, 915**
100	A1260235-0200	-		1	VALVE PANEL	**917**
120	A1035088-0400	-		1	COVERING PANEL	**919, 921**
130	A1255304-0100	-		1	PROTECTIVE COVER	**961**
140	A1035076-0200	-		2	LEG	**301, 963**
150	A1035471-0100	-		2	LEG	**965**
160	A1346431-0100	-		1	HOLDER	**969**
170	A1346430-0100	-		1	SUPPORT	**971**
180	A1346432-0100	-		1	BRACKET	**973**
190	A1346901-0100	-		1	PAPER COVER	**975**
200	A1346902-0100	-		1	LEG	**977**
210	1346397-0000	-		4	SCREW	
220	312605-0324	-		4	HEXAGON NUT, M6M M16 A280	
230	315105-0186	-		4	WASHER PLAIN, BRB, 17/30,H=3	
240	90347-0080	-		2	DAMPER TFE 1201	

Pos	Part No	SP	UN	Qty	Description	Page No

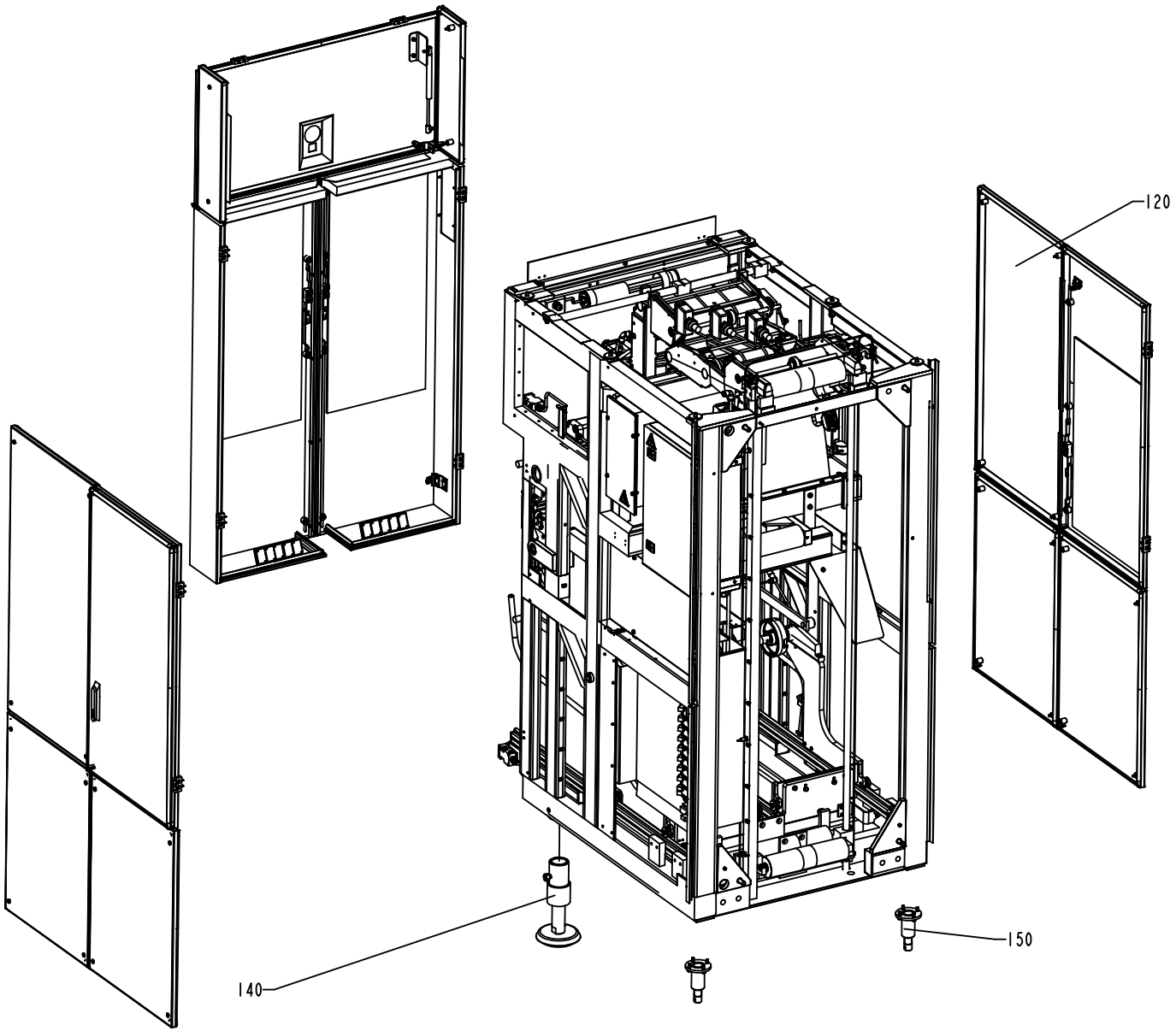
120
140
150

Pos	Part No	SP	UN	Qty	Description	Page No
TBA ASU						
010	A590490-0200	-		1	MACHINE BODY	**839, 841, 843, 845, 847, 849**
020	A1348436-0100	-		1	SPLICING DEVICE	**881**
030	A1255867-0100	-		1	MATERIAL HOLDER LINE 2	**895**
040	A1255868-0100	-		1	CYLINDER LINE 2	**897**
050	A1255869-0100	-		1	MATERIAL HOLDER LINE 1	**899**
060	A1255870-0100	-		1	CYLINDER LINE 1	**901**
070	A1095768-0100	-		1	GENERATOR CABINET	**903, 905**
080	A1095775-0100	-		1	ELECTRICAL CABINET	**907, 909**
090	A1035082-0300	-		1	CABLE HARNESS	**911, 913, 915**
100	A1260235-0200	-		1	VALVE PANEL	**917**
120	A1035088-0400	-		1	COVERING PANEL	**919, 921**
130	A1255304-0100	-		1	PROTECTIVE COVER	**961**
140	A1035076-0200	-		2	LEG	**301, 963**
150	A1035471-0100	-		2	LEG	**965**
TBA ASUSEPROOM						
010	A590490-0200	-		1	MACHINE BODY	**839, 841, 843, 845, 847, 849**
020	A1348436-0100	-		1	SPLICING DEVICE	**881**
030	A1255867-0100	-		1	MATERIAL HOLDER LINE 2	**895**
040	A1255868-0100	-		1	CYLINDER LINE 2	**897**
050	A1255869-0100	-		1	MATERIAL HOLDER LINE 1	**899**
060	A1255870-0100	-		1	CYLINDER LINE 1	**901**
070	A1095768-0100	-		1	GENERATOR CABINET	**903, 905**
080	A1095775-0200	-		1	ELECTRICAL CABINET	**967**
090	A1035082-0300	-		1	CABLE HARNESS	**911, 913, 915**
100	A1260235-0200	-		1	VALVE PANEL	**917**
120	A1035088-0400	-		1	COVERING PANEL	**919, 921**
130	A1255304-0100	-		1	PROTECTIVE COVER	**961**
140	A1035076-0200	-		2	LEG	**301, 963**
150	A1035471-0100	-		2	LEG	**965**
160	A1346431-0100	-		1	HOLDER	**969**
170	A1346430-0100	-		1	SUPPORT	**971**
180	A1346432-0100	-		1	BRACKET	**973**
190	A1346901-0100	-		1	PAPER COVER	**975**
200	A1346902-0100	-		1	LEG	**977**
210	1346397-0000	-		4	SCREW	
220	312605-0324	-		4	HEXAGON NUT, M6M M16 A280	
230	315105-0186	-		4	WASHER PLAIN, BRB, 17/30,H=3	
240	90347-0080	-		2	DAMPER TFE 1201	

Pos	Part No	SP	UN	Qty	Description	Page No

AUTOMATIC SPLICING UNIT

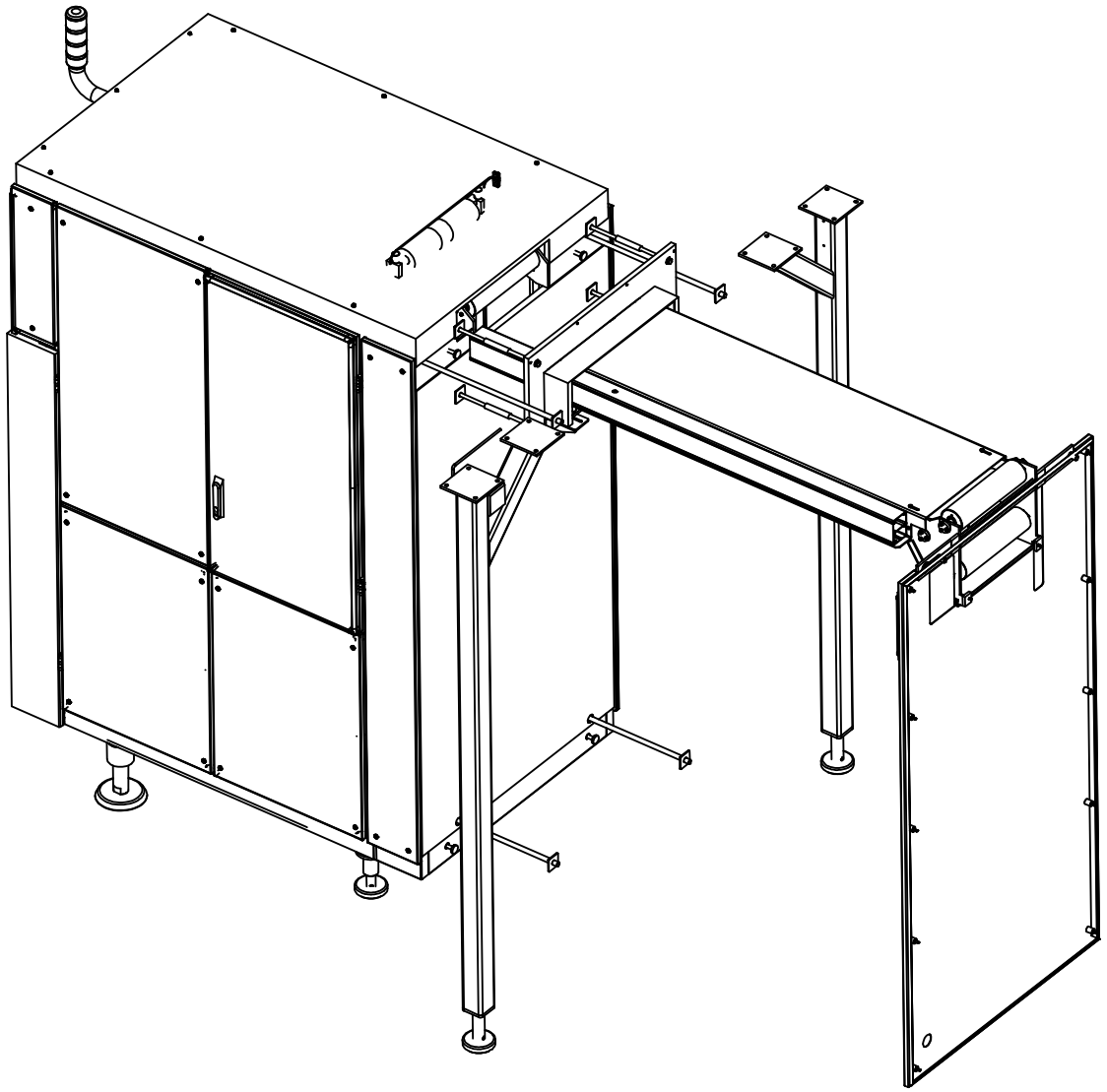

648513-6
ECN 84465

Pos	Part No	SP	UN	Qty	Description	Page No
TBA ASU						
010	A590490-0200	-		1	MACHINE BODY	**839, 841, 843, 845, 847, 849**
020	A1348436-0100	-		1	SPLICING DEVICE	**881**
030	A1255867-0100	-		1	MATERIAL HOLDER LINE 2	**895**
040	A1255868-0100	-		1	CYLINDER LINE 2	**897**
050	A1255869-0100	-		1	MATERIAL HOLDER LINE 1	**899**
060	A1255870-0100	-		1	CYLINDER LINE 1	**901**
070	A1095768-0100	-		1	GENERATOR CABINET	**903, 905**
080	A1095775-0100	-		1	ELECTRICAL CABINET	**907, 909**
090	A1035082-0300	-		1	CABLE HARNESS	**911, 913, 915**
100	A1260235-0200	-		1	VALVE PANEL	**917**
120	A1035088-0400	-		1	COVERING PANEL	**919, 921**
130	A1255304-0100	-		1	PROTECTIVE COVER	**961**
140	A1035076-0200	-		2	LEG	**301, 963**
150	A1035471-0100	-		2	LEG	**965**
TBA ASUSEPROOM						
010	A590490-0200	-		1	MACHINE BODY	**839, 841, 843, 845, 847, 849**
020	A1348436-0100	-		1	SPLICING DEVICE	**881**
030	A1255867-0100	-		1	MATERIAL HOLDER LINE 2	**895**
040	A1255868-0100	-		1	CYLINDER LINE 2	**897**
050	A1255869-0100	-		1	MATERIAL HOLDER LINE 1	**899**
060	A1255870-0100	-		1	CYLINDER LINE 1	**901**
070	A1095768-0100	-		1	GENERATOR CABINET	**903, 905**
080	A1095775-0200	-		1	ELECTRICAL CABINET	**967**
090	A1035082-0300	-		1	CABLE HARNESS	**911, 913, 915**
100	A1260235-0200	-		1	VALVE PANEL	**917**
120	A1035088-0400	-		1	COVERING PANEL	**919, 921**
130	A1255304-0100	-		1	PROTECTIVE COVER	**961**
140	A1035076-0200	-		2	LEG	**301, 963**
150	A1035471-0100	-		2	LEG	**965**
160	A1346431-0100	-		1	HOLDER	**969**
170	A1346430-0100	-		1	SUPPORT	**971**
180	A1346432-0100	-		1	BRACKET	**973**
190	A1346901-0100	-		1	PAPER COVER	**975**
200	A1346902-0100	-		1	LEG	**977**
210	1346397-0000	-		4	SCREW	
220	312605-0324	-		4	HEXAGON NUT, M6M M16 A280	
230	315105-0186	-		4	WASHER PLAIN, BRB, 17/30,H=3	
240	90347-0080	-		2	DAMPER TFE 1201	

Pos	Part No	SP	UN	Qty	Description	Page No

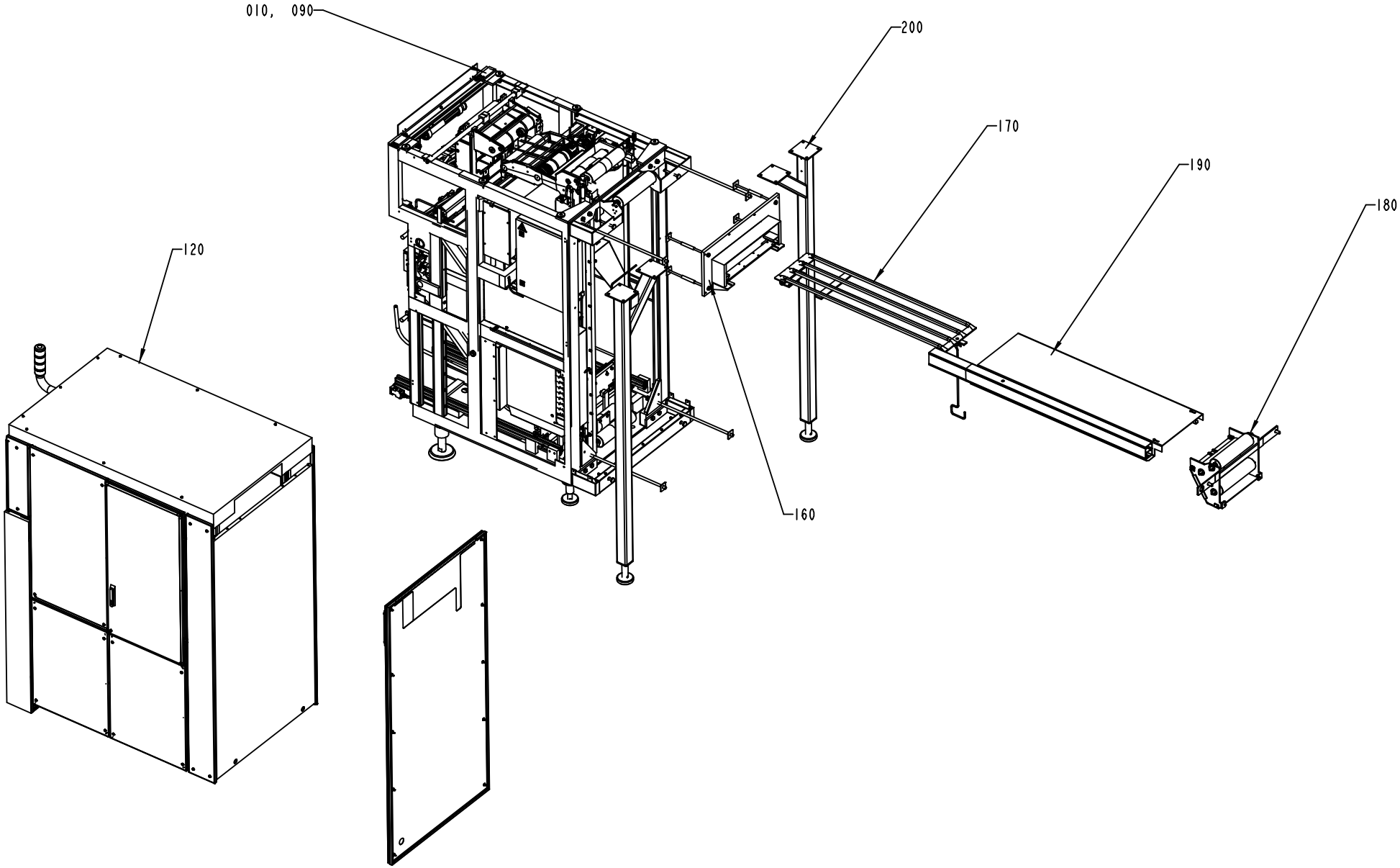
010, 090
200
170
190
180
120
160

Pos	Part No	SP	UN	Qty	Description	Page No
TBA ASU						
010	A590490-0200	-		1	MACHINE BODY	**839, 841, 843, 845, 847, 849**
020	A1348436-0100	-		1	SPLICING DEVICE	**881**
030	A1255867-0100	-		1	MATERIAL HOLDER LINE 2	**895**
040	A1255868-0100	-		1	CYLINDER LINE 2	**897**
050	A1255869-0100	-		1	MATERIAL HOLDER LINE 1	**899**
060	A1255870-0100	-		1	CYLINDER LINE 1	**901**
070	A1095768-0100	-		1	GENERATOR CABINET	**903, 905**
080	A1095775-0100	-		1	ELECTRICAL CABINET	**907, 909**
090	A1035082-0300	-		1	CABLE HARNESS	**911, 913, 915**
100	A1260235-0200	-		1	VALVE PANEL	**917**
120	A1035088-0400	-		1	COVERING PANEL	**919, 921**
130	A1255304-0100	-		1	PROTECTIVE COVER	**961**
140	A1035076-0200	-		2	LEG	**301, 963**
150	A1035471-0100	-		2	LEG	**965**
TBA ASUSEPROOM						
010	A590490-0200	-		1	MACHINE BODY	**839, 841, 843, 845, 847, 849**
020	A1348436-0100	-		1	SPLICING DEVICE	**881**
030	A1255867-0100	-		1	MATERIAL HOLDER LINE 2	**895**
040	A1255868-0100	-		1	CYLINDER LINE 2	**897**
050	A1255869-0100	-		1	MATERIAL HOLDER LINE 1	**899**
060	A1255870-0100	-		1	CYLINDER LINE 1	**901**
070	A1095768-0100	-		1	GENERATOR CABINET	**903, 905**
080	A1095775-0200	-		1	ELECTRICAL CABINET	**967**
090	A1035082-0300	-		1	CABLE HARNESS	**911, 913, 915**
100	A1260235-0200	-		1	VALVE PANEL	**917**
120	A1035088-0400	-		1	COVERING PANEL	**919, 921**
130	A1255304-0100	-		1	PROTECTIVE COVER	**961**
140	A1035076-0200	-		2	LEG	**301, 963**
150	A1035471-0100	-		2	LEG	**965**
160	A1346431-0100	-		1	HOLDER	**969**
170	A1346430-0100	-		1	SUPPORT	**971**
180	A1346432-0100	-		1	BRACKET	**973**
190	A1346901-0100	-		1	PAPER COVER	**975**
200	A1346902-0100	-		1	LEG	**977**
210	1346397-0000	-		4	SCREW	
220	312605-0324	-		4	HEXAGON NUT, M6M M16 A280	
230	315105-0186	-		4	WASHER PLAIN, BRB, 17/30,H=3	
240	90347-0080	-		2	DAMPER TFE 1201	

Pos	Part No	SP	UN	Qty	Description	Page No

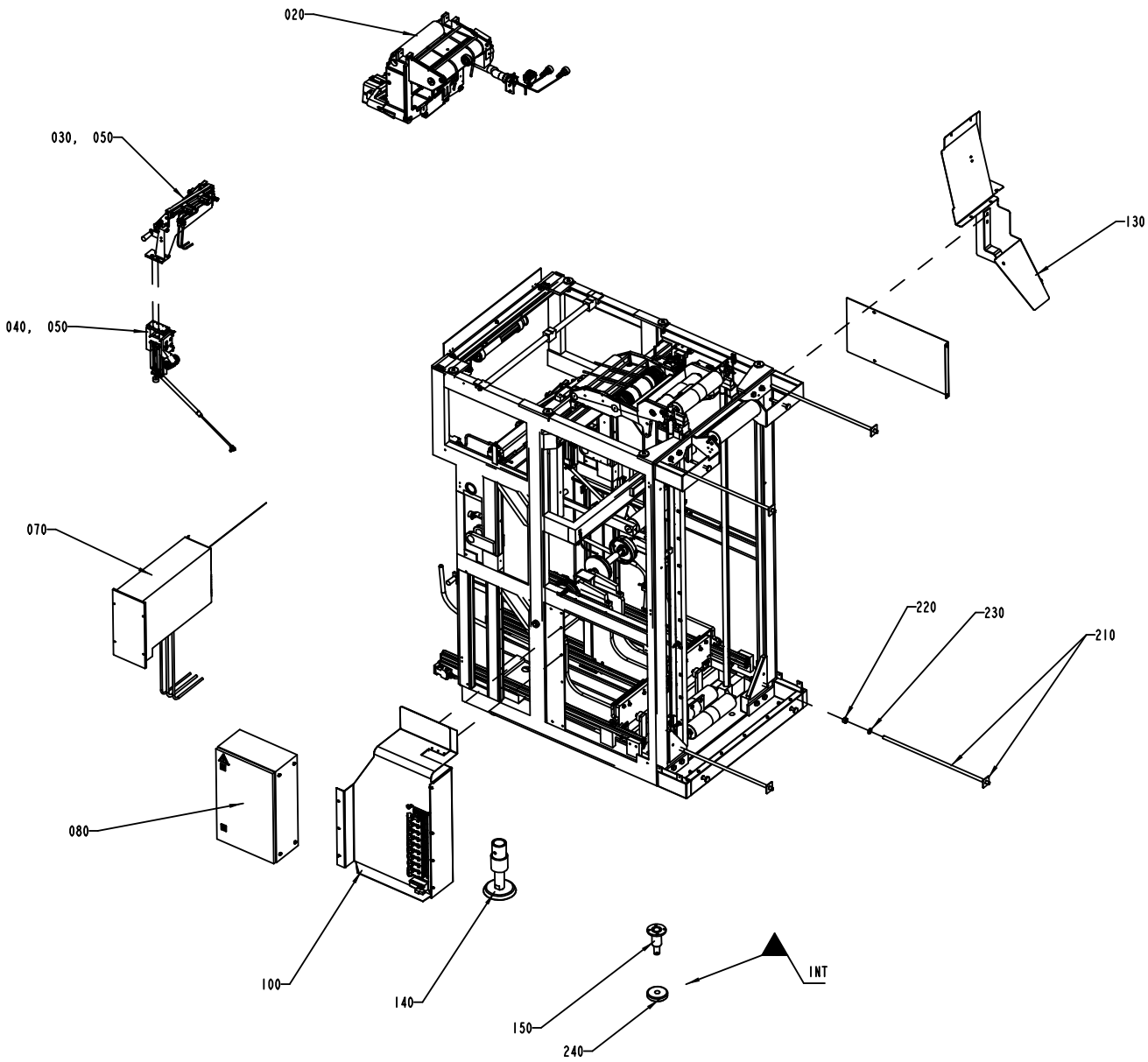
020
030, 050
040, 050
130
070
220
230
210
080
100
140
150
240
INT

Pos	Part No	SP	UN	Qty	Description	Page No
TBA ASU						
010	A590490-0200	-		1	MACHINE BODY	**839, 841, 843, 845, 847, 849**
020	A1348436-0100	-		1	SPLICING DEVICE	**881**
030	A1255867-0100	-		1	MATERIAL HOLDER LINE 2	**895**
040	A1255868-0100	-		1	CYLINDER LINE 2	**897**
050	A1255869-0100	-		1	MATERIAL HOLDER LINE 1	**899**
060	A1255870-0100	-		1	CYLINDER LINE 1	**901**
070	A1095768-0100	-		1	GENERATOR CABINET	**903, 905**
080	A1095775-0100	-		1	ELECTRICAL CABINET	**907, 909**
090	A1035082-0300	-		1	CABLE HARNESS	**911, 913, 915**
100	A1260235-0200	-		1	VALVE PANEL	**917**
120	A1035088-0400	-		1	COVERING PANEL	**919, 921**
130	A1255304-0100	-		1	PROTECTIVE COVER	**961**
140	A1035076-0200	-		2	LEG	**301, 963**
150	A1035471-0100	-		2	LEG	**965**
TBA ASUSEPROOM						
010	A590490-0200	-		1	MACHINE BODY	**839, 841, 843, 845, 847, 849**
020	A1348436-0100	-		1	SPLICING DEVICE	**881**
030	A1255867-0100	-		1	MATERIAL HOLDER LINE 2	**895**
040	A1255868-0100	-		1	CYLINDER LINE 2	**897**
050	A1255869-0100	-		1	MATERIAL HOLDER LINE 1	**899**
060	A1255870-0100	-		1	CYLINDER LINE 1	**901**
070	A1095768-0100	-		1	GENERATOR CABINET	**903, 905**
080	A1095775-0200	-		1	ELECTRICAL CABINET	**967**
090	A1035082-0300	-		1	CABLE HARNESS	**911, 913, 915**
100	A1260235-0200	-		1	VALVE PANEL	**917**
120	A1035088-0400	-		1	COVERING PANEL	**919, 921**
130	A1255304-0100	-		1	PROTECTIVE COVER	**961**
140	A1035076-0200	-		2	LEG	**301, 963**
150	A1035471-0100	-		2	LEG	**965**
160	A1346431-0100	-		1	HOLDER	**969**
170	A1346430-0100	-		1	SUPPORT	**971**
180	A1346432-0100	-		1	BRACKET	**973**
190	A1346901-0100	-		1	PAPER COVER	**975**
200	A1346902-0100	-		1	LEG	**977**
210	1346397-0000	-		4	SCREW	
220	312605-0324	-		4	HEXAGON NUT, M6M M16 A280	
230	315105-0186	-		4	WASHER PLAIN, BRB, 17/30,H=3	
240	90347-0080	-		2	DAMPER TFE 1201	

Pos	Part No	SP	UN	Qty	Description	Page No

Machine Type | Group Description | Used-In | Group Number | Page No

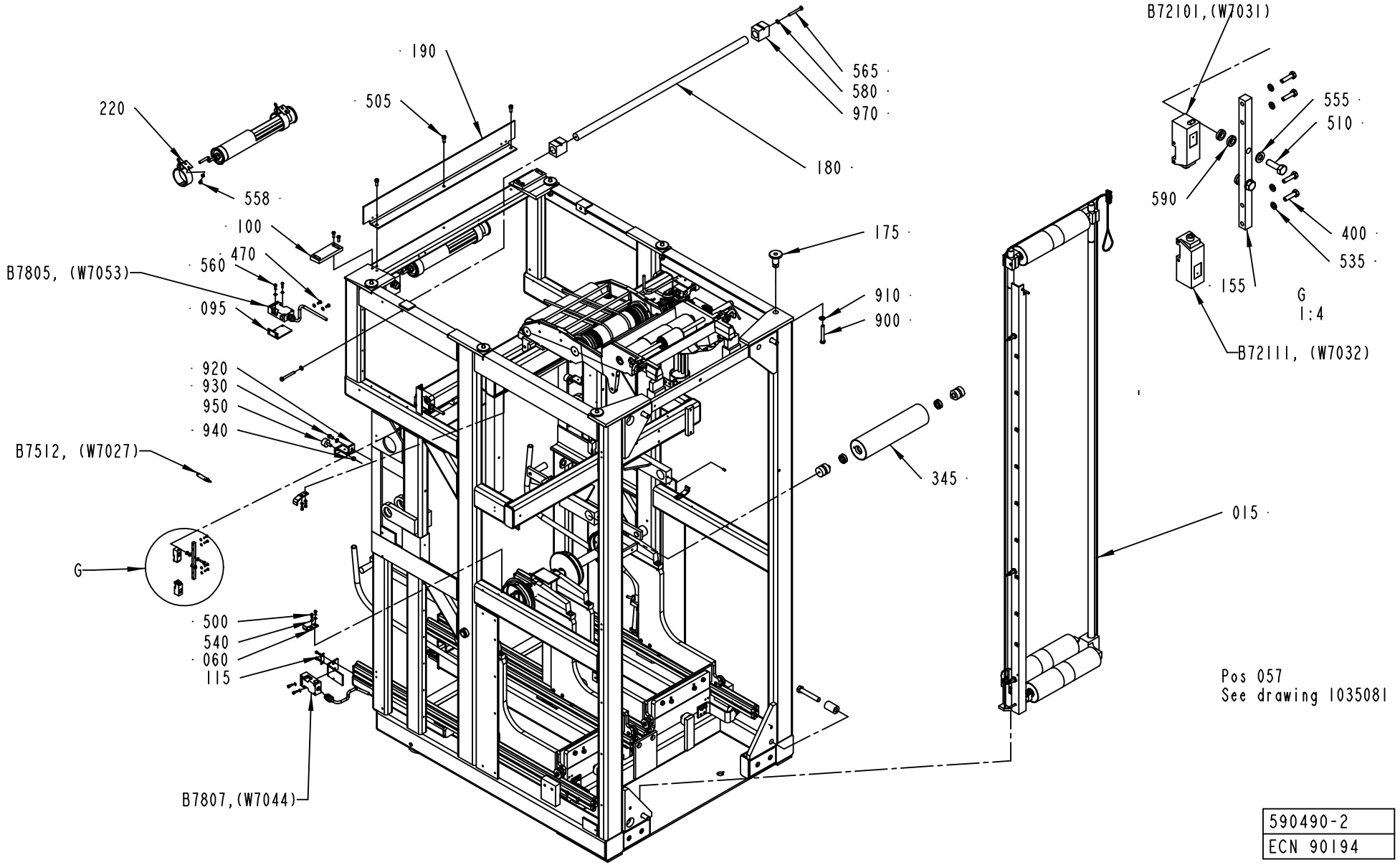
B72101,(W7031)
555
510
590
400
535
155
G
1:4
B72111, (W7032)
190
505
565
580
970
180
220
558
100
175
470
560
B7805, (W7053)
095
910
900
920
930
950
940
B7512, (W7027)
345
015
G
500
540
060
115
B7807,(W7044)
Pos 057
See drawing 1035081
590490-2
ECN 90194

ECM: 93136 - 20010807
Group number: 590490-0200
Assembly Drawing: 590490-2_1_AF

Issue: 20011217

Pos	Part No	SP	UN	Qty	Description	Page No
NOPT ASU						
190	1558471-0000	-		1	BRACKET	
220	90164-0303	-		6	BRACKET SK2202 WALDMANN	
555	315105-0153	-		16	WASHER PLAIN, BRB, 6,4/12,H=1,5	
558	312105-0364	-		7	SCREW M6S M6X10 A280	
E7704	B90164-0015	-		1	LIGHT FIXTURE TYPE:DWDV 206	
	90297-0007	*C*		*1*	*FLUORESCENT TUBE 11W*	
W7052	351150-0412	-	MM	4500	CABLE OLFLEX 3X1,5 MM2 LIGHT/GREY	
NOPT ASUSEPROOM						
200	A1346429-0100	-		1	BRACKET	**851**
205	A1348919-0100	-		1	ELECTRICAL CONNECTION	**853**
220	90164-0303	-		6	BRACKET SK2202 WALDMANN	
555	315105-0153	-		16	WASHER PLAIN, BRB, 6,4/12,H=1,5	
558	312105-0364	-		7	SCREW M6S M6X10 A280	
W7052	351150-0412	-	MM	4500	CABLE OLFLEX 3X1,5 MM2 LIGHT/GREY	
PT21 ASU						
190	590483-0000	-		1	HOLDER	
220	90164-0303	-		4	BRACKET SK2202 WALDMANN	
555	315105-0153	-		13	WASHER PLAIN, BRB, 6,4/12,H=1,5	
558	312105-0364	-		4	SCREW M6S M6X10 A280	
PT21 ASUSEPROOM						
200	A1346429-0100	-		1	BRACKET	**851**
205	A1348919-0100	-		1	ELECTRICAL CONNECTION	**853**
220	90164-0303	-		4	BRACKET SK2202 WALDMANN	
555	315105-0153	-		13	WASHER PLAIN, BRB, 6,4/12,H=1,5	
558	312105-0364	-		4	SCREW M6S M6X10 A280	
Common Parts						
010	A1347753-0100	-		1	DRIVE UNIT FRONT	**855**
015	A1347738-0100	-		1	DOUBLE WEB MAGAZINE	**857**
020	A1347751-0100	-		1	RAIL	**859**
025	A1347740-0100	-		1	CARRIAGE	**861**
027	A1347749-0100	-		1	CARRIAGE	**863**
030	A1348428-0100	-		1	LOCKING ARM	**865**
035	A1095835-0100	-		2	PAPER REEL HOLDER	**867**
045	A1095770-0200	-		1	SIDE FEEDER	**869**
050	A1348437-0100	-		1	BRACKET	**871**
051	A1517090-0100	-		1	WEB GUIDE	**873**
055	1348987-0000	-		1	FRAME	
057	A1035081-0100	-		1	PIPE WORK-PNEUMATIC	**877**
058	A1478826-0100	-		1	GUIDE	**879**
060	1036227-0000	-		4	BRACKET	
070	1038903-0000	-		2	BRACKET	
085	1038904-0000	-		2	WASHER	
095	590489-0000	-		1	BRACKET	
100	985756-0000	-		2	KEY	
115	1140518-0000	-		2	WASHER	
125	985712-0000	-		1	HOLDER	
155	591319-0000	-		1	HOLDER	
160	579802-0000	-		1	SPACER	
170	579803-0000	-		1	SPACER	
175	1116048-0000	-		6	SPACER	
180	1116049-0000	-		1	SHAFT	
210	90002-0010	-		2	BLANK-OFF PLUG 37	
310	1040994-0000	-		2	FASTENING BRACKET	
320	1038865-0000	-		4	SPACER DISC	
330	1041170-0000	A		2	DANCER ROLLER	
340	1036758-0000	-		6	AXLE PIN	
345	1350925-0000	A		1	BENDING ROLLER	
350	311103-0401	-		1	PARALLELL PIN, M6, 8X20 MM	
355	311103-0454	-		4	PARALLELL PIN, M6, 10X20 MM	
360	311103-0466	-		1	PARALLELL PIN, M6, 10X50 MM	
400	312105-0293	-		12	SCREW M6S M4X16 A280	
450	312105-0331	-		4	SCREW M6S M5X20 A280	
470	312105-0366	-		4	SCREW M6S M6X12 A280	
500	312115-0327	-		8	SCREW MC6S M5X12 A280	
507	312115-0380	-		2	SCREW MC6S M6X50 A280	
510	312105-0370	-		6	SCREW M6S M6X20 A280	
530	312105-0640	-		4	SCREW M6S M16X100 A280	
535	315105-0136	-		12	WASHER PLAIN, BRB, 4,3/8,H=0,8	
540	315105-0146	-		18	WASHER PLAIN, BRB, 5,3/10,H=1	
560	312115-0329	-		14	SCREW MC6S M5X16 A280	
565	312105-0464	-		2	SCREW M6S M8X65 A280	
567	312605-0316	-		2	HEXAGON NUT, M6M M6 A280	
580	315105-0165	-		4	WASHER PLAIN, BRB, 8,4/16,H=1,5	
590	315111-0153	-		4	WASHER PLAIN, TBRB 6,4/12 H=3	
600	352103-0106	-		4	CABLE GLAND ST 11	
610	90012-0049	-		1	CABLE GLAND STR13	
620	90099-0118	-		1	NUT PR 20,4 (PG13,5)	
640	321313-0102	A		6	BALL BEARING, 2 SEALS, 15X35X11 MM	
900	312105-0506	-		6	SCREW M6S M10X75 A280	

Machine Type | Group Description | Used-In | Group Number | Page No

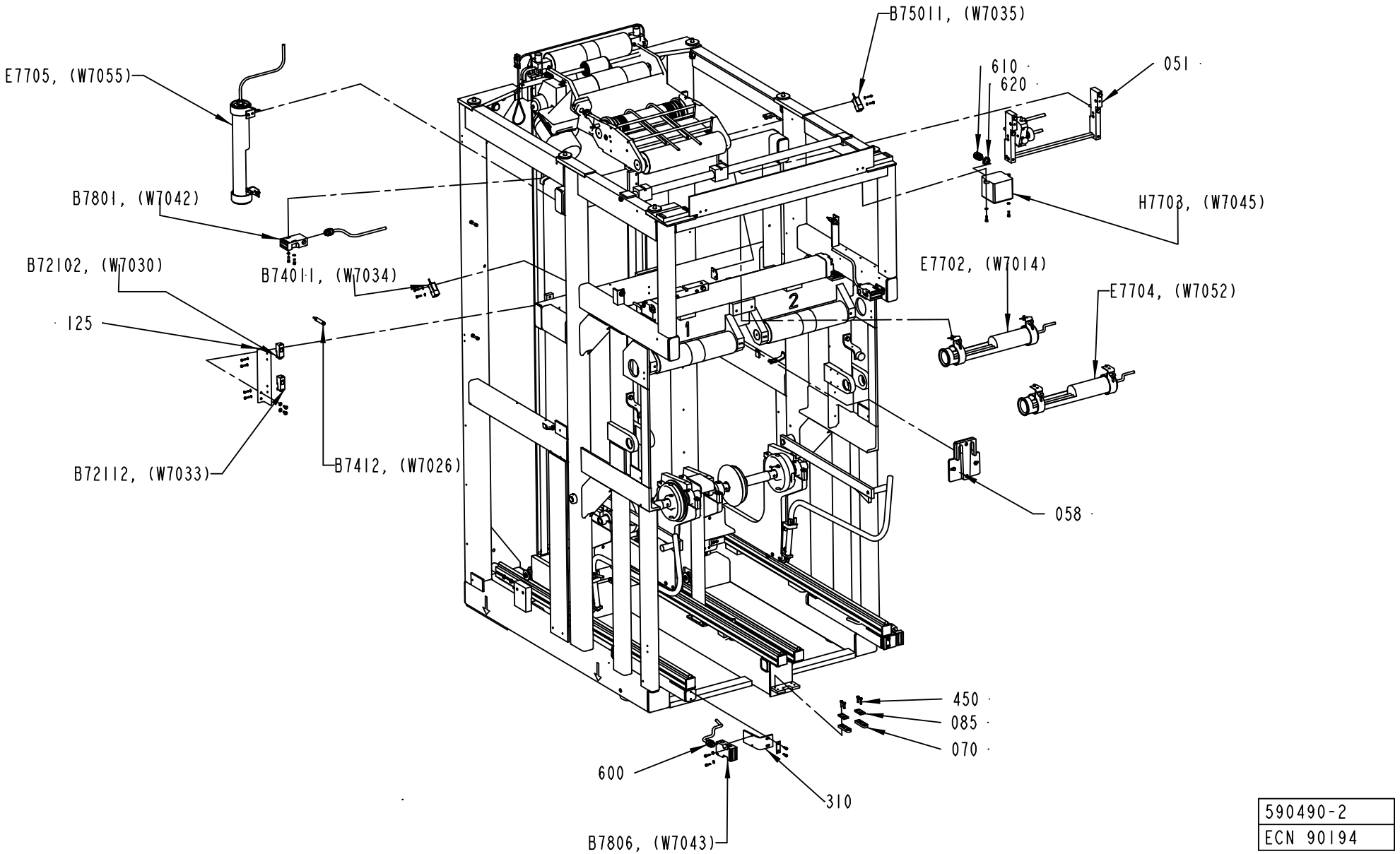

590490-2
ECN 90194

Pos	Part No	SP	UN	Qty	Description	Page No
Common Parts (Cont'd)						
910	315105-0173	-		6	WASHER PLAIN, BRB, 10,5/22,H=2	
920	1254055-0000	-		2	HOLDER	
930	312105-0449	-		2	SCREW M6S M8X16 A280	
940	312605-0318	-		2	HEXAGON NUT, M6M M8 A280	
950	90347-0004	-		2	VIBRATION DAMPER D=30 TH=M8 H=17 H2=21MM	
960	312318-0366	-		6	SCREW SOCK.SET CUP P MSK6SS M6X12 A4	
970	1036559-0000	-		2	BEARING BLOCK	
B72101	90232-0103	A		1	PH.CELL E3S-CT61-L-5M	
B72102	90232-0104	A		1	PH.CELL E3S-CT61-D-5M	
B72111	90232-0103	A		1	PH.CELL E3S-CT61-L-5M	
B72112	90232-0104	A		1	PH.CELL E3S-CT61-D-5M	
B74011	90232-0106	A		1	PH.CELL E3S-CR11-5M	
B7412	90458-0672	A		1	PROXIMITY SENSOR E2E2-X5MB1-5M	
B75011	90232-0106	A		1	PH.CELL E3S-CR11-5M	
B7512	90458-0672	A		1	PROXIMITY SENSOR E2E2-X5MB1-5M	
B7801	90044-0139	A		1	KEY SAF.SW. AZ16-02 ZVR K-2254	
B7805	90044-0139	A		1	KEY SAF.SW. AZ16-02 ZVR K-2254	
B7806	90044-0139	A		1	KEY SAF.SW. AZ16-02 ZVR K-2254	
B7807	90044-0139	A		1	KEY SAF.SW. AZ16-02 ZVR K-2254	
E7702	B90164-0015	-		1	LIGHT FIXTURE TYPE:DWDV 206	
	90297-0007	*C*		*1*	*FLUORESCENT TUBE 11W*	
E7705	B90164-0015	-		1	LIGHT FIXTURE TYPE:DWDV 206	
	90297-0007	*C*		*1*	*FLUORESCENT TUBE 11W*	
H7703	90052-0011	-		1	HORN	
W7014	351150-0412	-	MM	3500	CABLE OLFLEX 3X1,5 MM2 LIGHT/GREY	
W7042	351150-0405	-	M	4	CABLE OLFLEX 5X0,75 MM2 LIGHT/GREY	
W7043	351150-0405	-	M	5	CABLE OLFLEX 5X0,75 MM2 LIGHT/GREY	
W7044	351150-0405	-	M	4	CABLE OLFLEX 5X0,75 MM2 LIGHT/GREY	
W7045	351150-0122	-	M	4	CABLE " REPL.BY 351150-431"	
W7053	351150-0405	-	MM	2800	CABLE OLFLEX 5X0,75 MM2 LIGHT/GREY	
W7054	351150-0406	-	M	8	CABLE OLFLEX 7X0,75 MM2 LIGHT/GREY	
W7055	351150-0412	-	M	2	CABLE OLFLEX 3X1,5 MM2 LIGHT/GREY	

Pos	Part No	SP	UN	Qty	Description	Page No

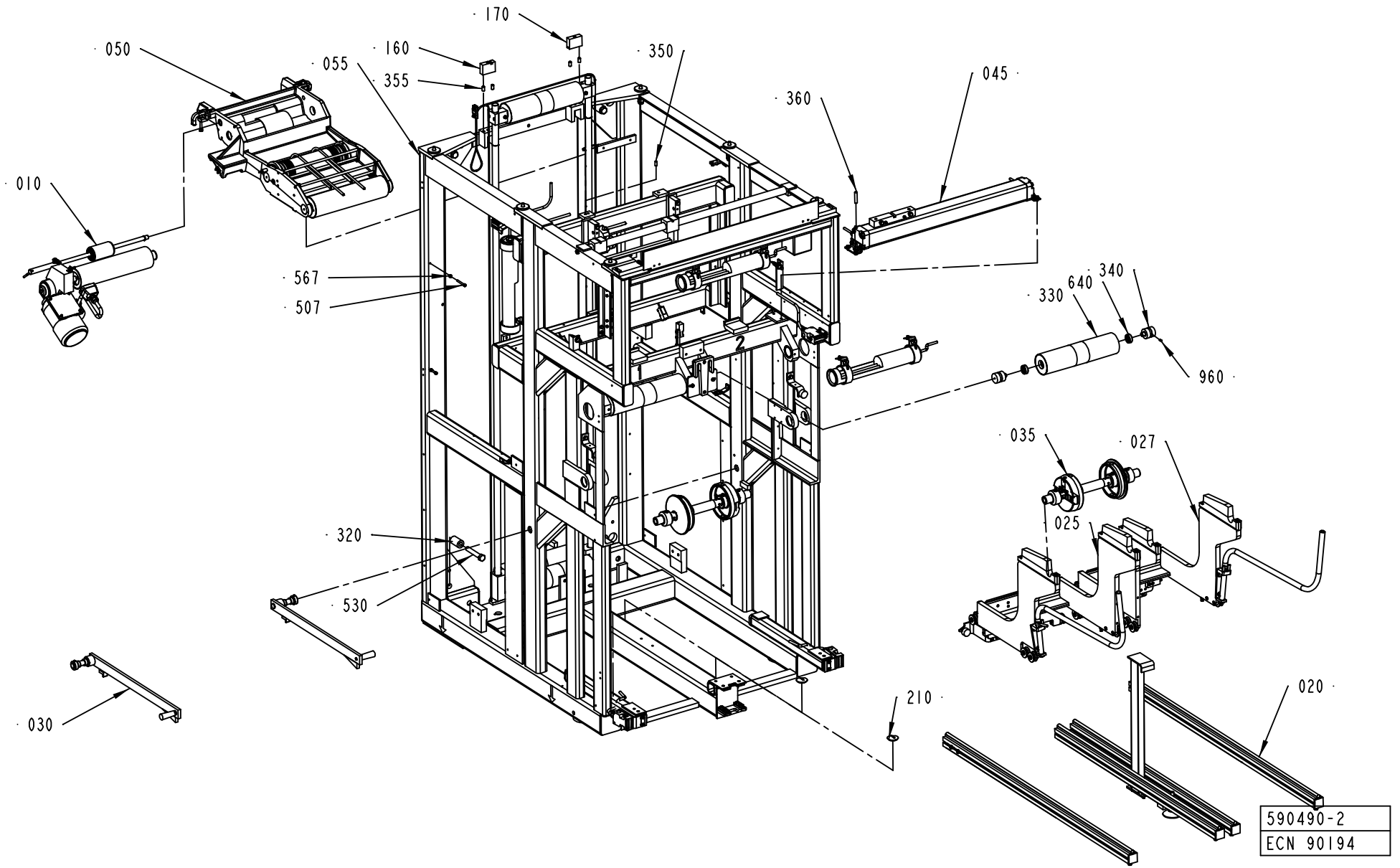
170
050
160
055
355
350
045
360
010
567
507
330
640
340
960
035
027
025
320
530
030
210
020
590490-2
ECN 90194

Pos	Part No	SP	UN	Qty	Description	Page No	Pos	Part No	SP	UN	Qty	Description	Page No

SEE PREVIOUS LISTS PAGES: 839, 841.

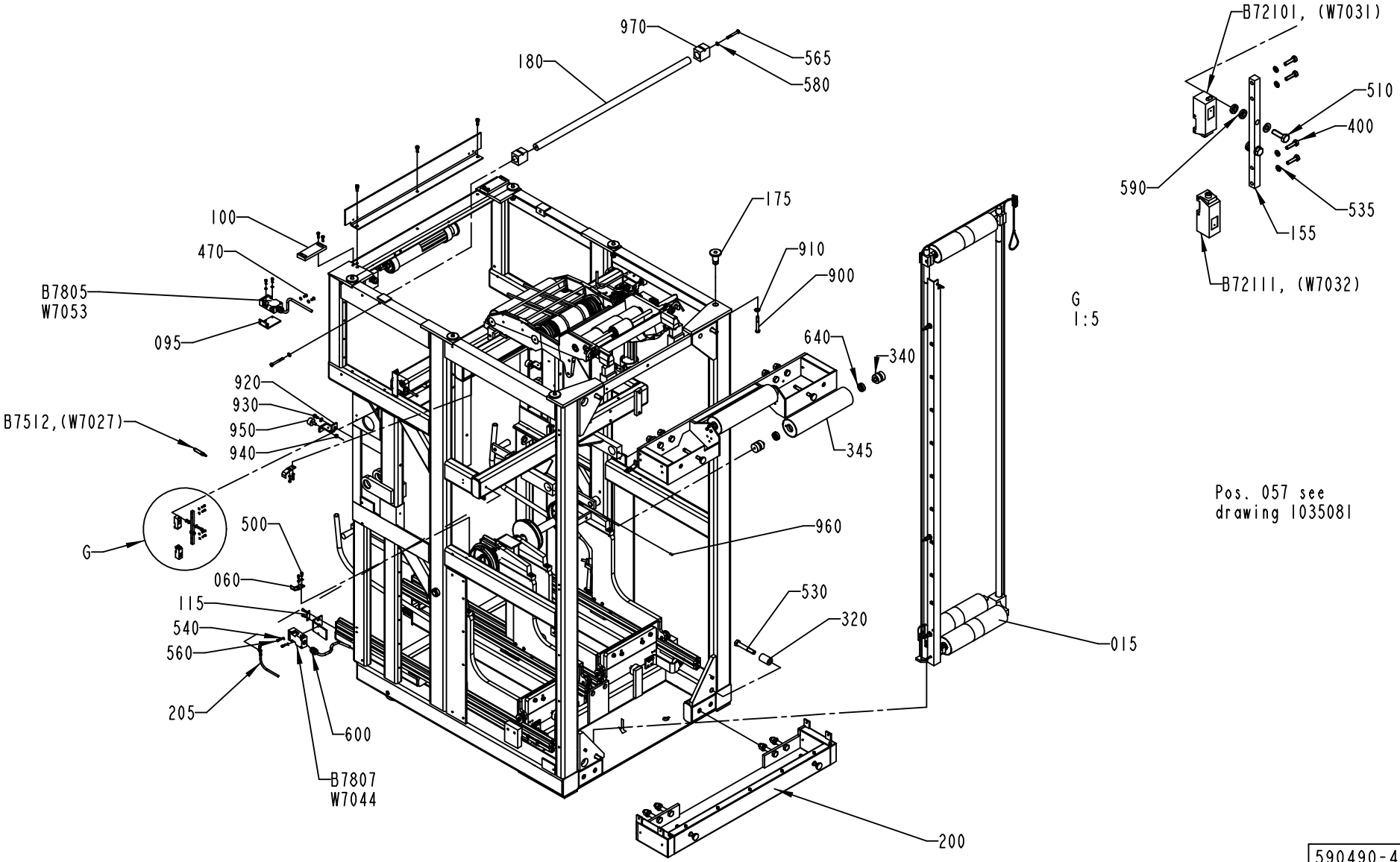

590490-4
ECN 90194

Pos	Part No	SP	UN	Qty	Description	Page No
SEE PREVIOUS LISTS PAGES: 839, 841.						

Pos	Part No	SP	UN	Qty	Description	Page No

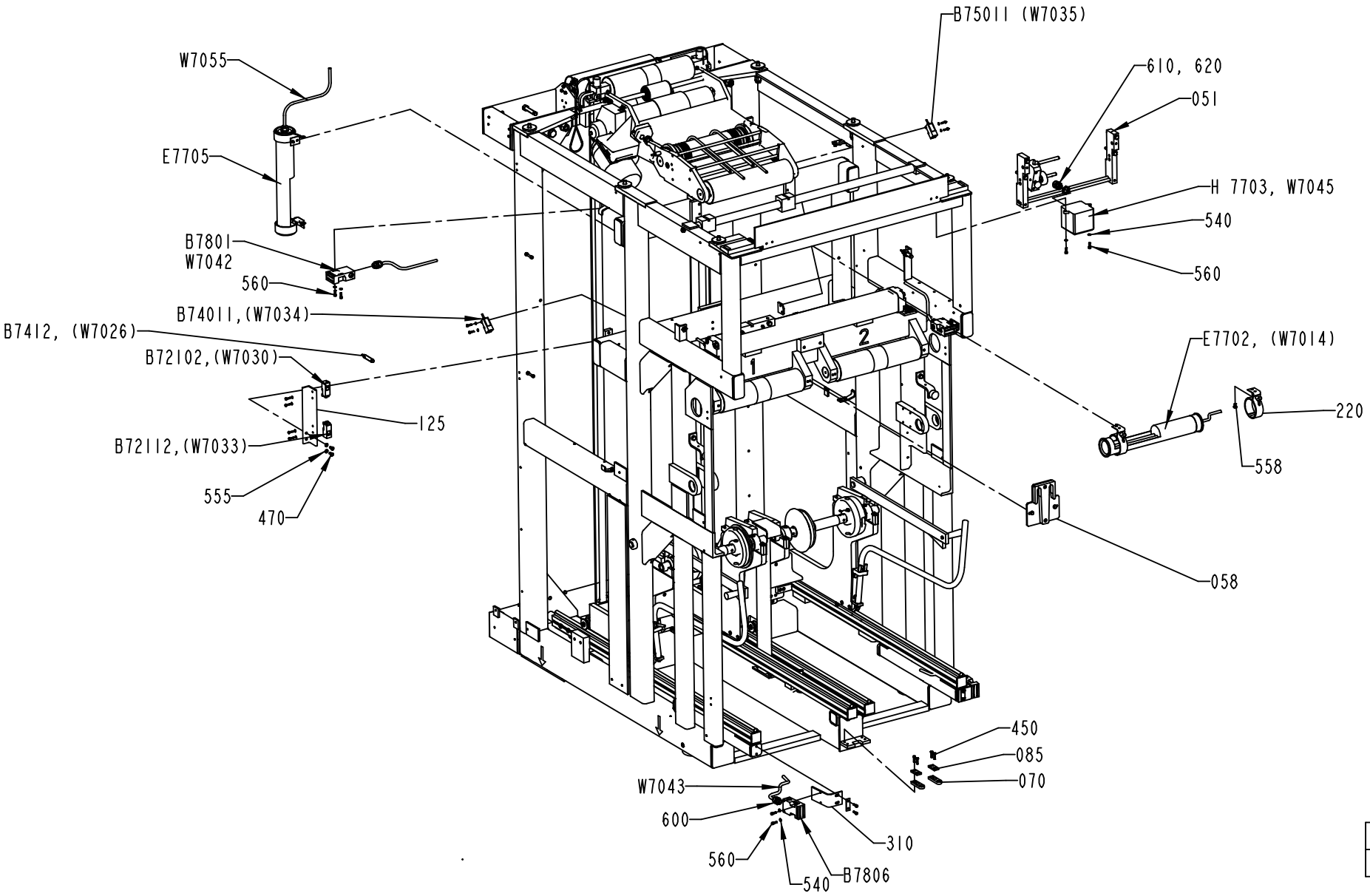

590490-4
ECN 90194

Pos	Part No	SP	UN	Qty	Description	Page No	Pos	Part No	SP	UN	Qty	Description	Page No

SEE PREVIOUS LISTS PAGES: 839, 841.

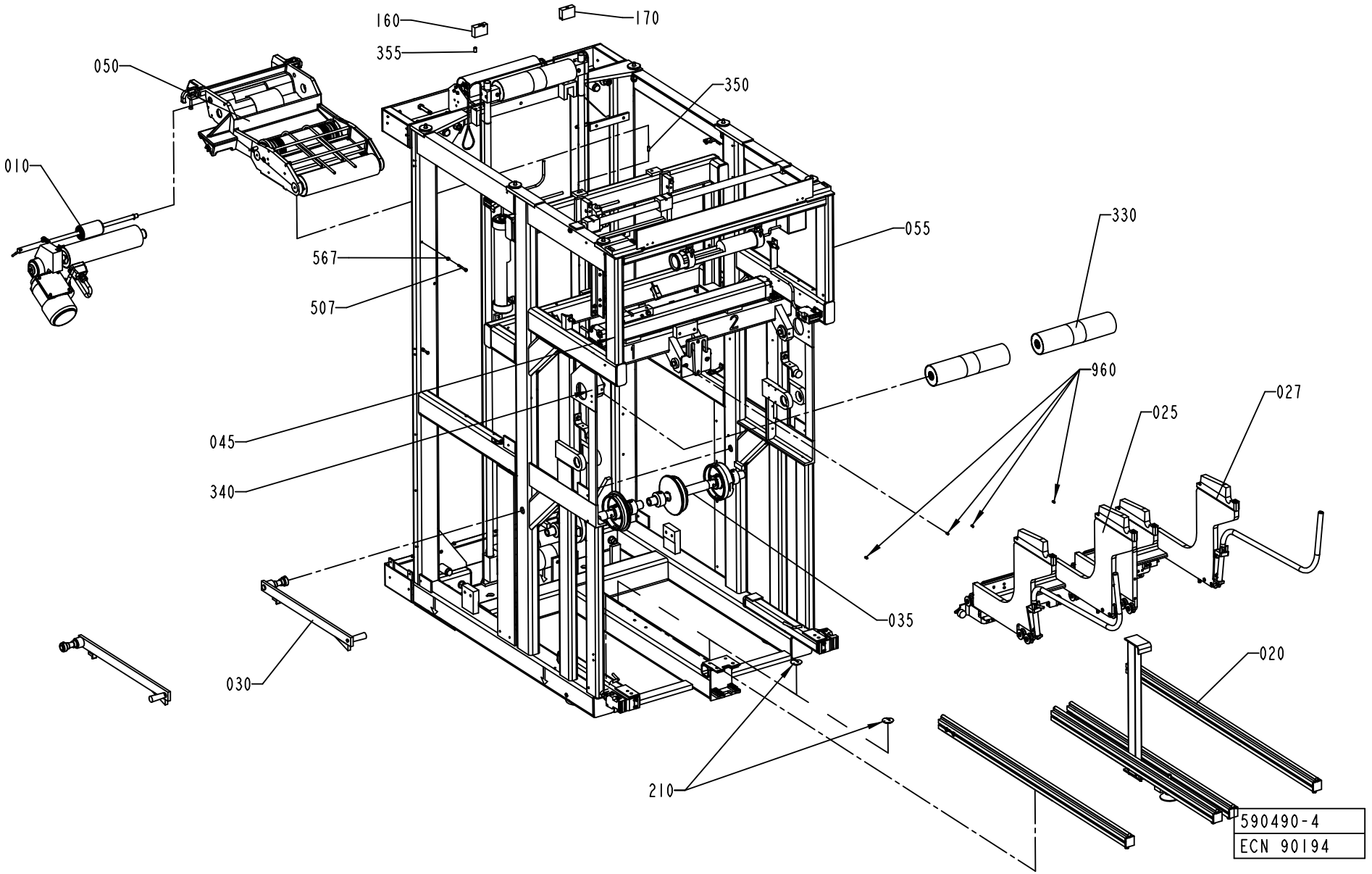
160
170
355
050
350
010
055
330
567
507
960
027
025
045
340
035
020
030
210
590490-4
ECN 90194

Pos	Part No	SP	UN	Qty	Description	Page No
SEE PREVIOUS LISTS PAGES: 839, 841.						

Pos	Part No	SP	UN	Qty	Description	Page No

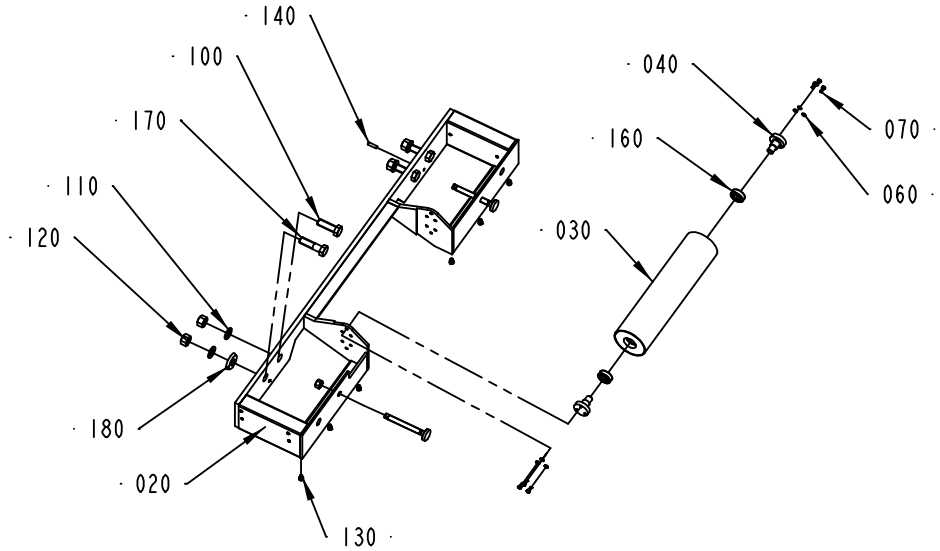

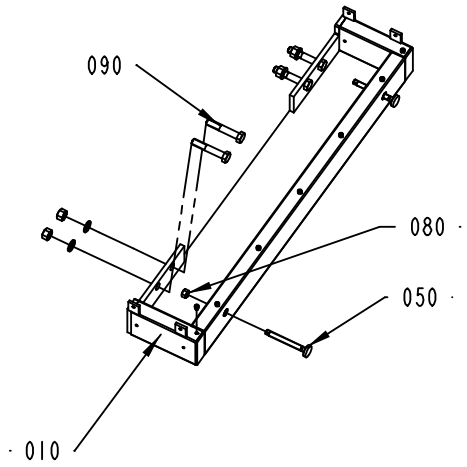

1346429-1
ECN 84465

ECM: 89764 - 20010924
Group number: 1346429-0100
Assembly Drawing: 1346429-1_1_AB

Issue: 20011217

Pos	Part No	SP	UN	Qty	Description	Page No
Common Parts						
010	1346421-0000	-		1	FRAME	
020	1346418-0000	-		1	FRAME	
030	1035882-0000	A		1	BENDING ROLLER	
040	1346401-0000	-		2	HOLDER	
050	1346399-0000	-		4	DISTANCE	
060	315105-0146	-		6	WASHER PLAIN, BRB, 5,3/10,H=1	
070	312105-0327	-		6	SCREW M6S M5X12 A280	
080	312605-0322	-		4	HEXAGON NUT, M6M M12 A280	
090	312105-0638	-		4	SCREW M6S M16X90 A280	
100	312105-0630	-		3	SCREW M6S M16X50 A280	
110	315105-0186	-		8	WASHER PLAIN, BRB, 17/30,H=3	
120	312605-0324	-		8	HEXAGON NUT, M6M M16 A280	
130	312115-0362	-		13	SCREW MC6S M6X8 A280	
140	311103-0355	-		2	PARALLELL PIN, M6, 6X25 MM	
160	321313-0102	A		2	BALL BEARING, 2 SEALS, 15X35X11 MM	
170	312105-0632	-		1	SCREW M6S M16X60 A280	
180	1548199-0000	-		1	WASHER	

Pos	Part No	SP	UN	Qty	Description	Page No

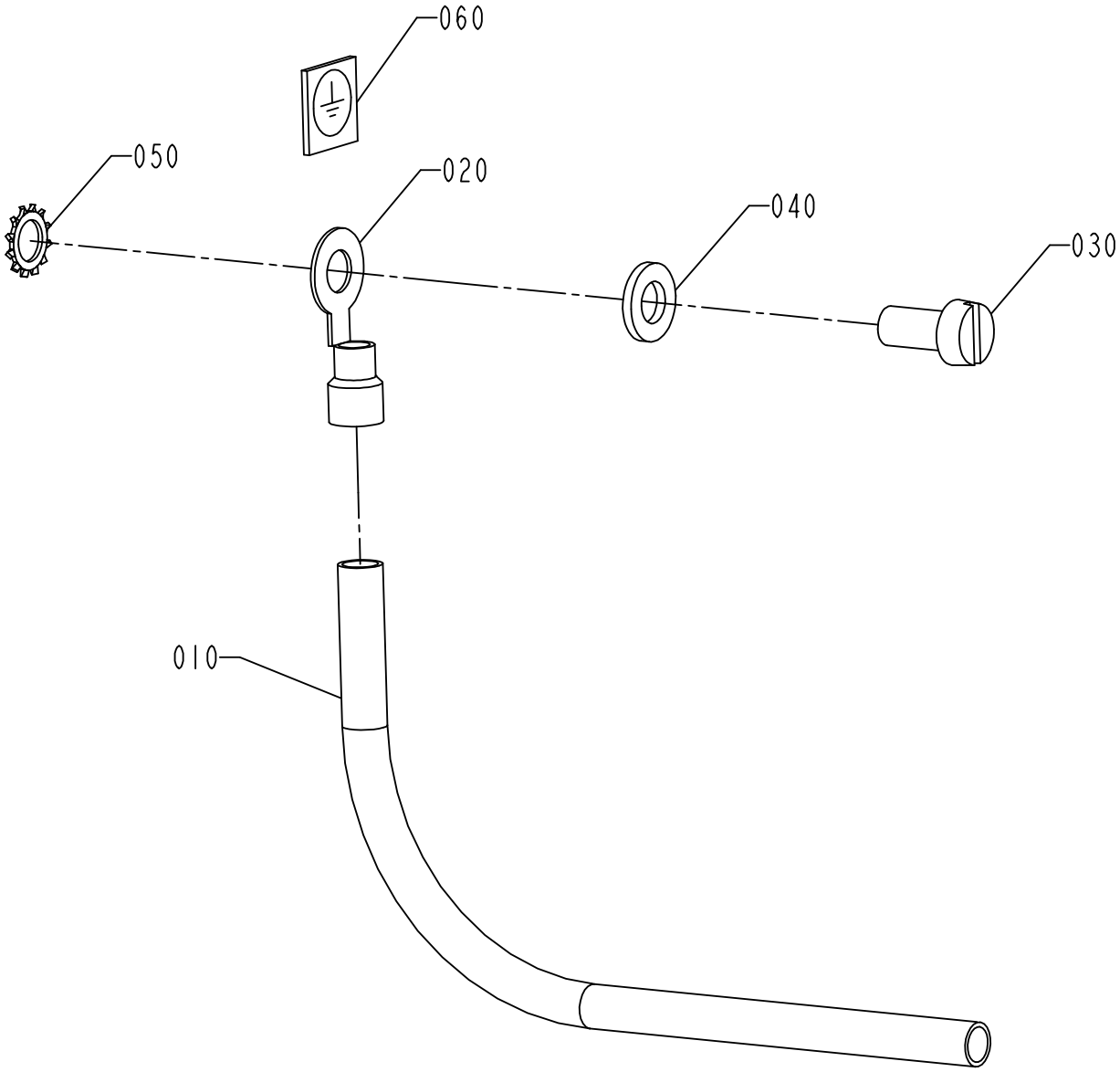

S-1348919-1
ECN 71634

ECM: 71634 - 19990112
Group number: 1348919-0100
Assembly Drawing: 1348919-1_1_AA

Issue: 20011217

Pos	Part No	SP	UN	Qty	Description	Page No
Common Parts						
010	351175-0107	-	M	5	CABLE AWM 1X6 MM2 YELLOW-GREEN	
020	353101-0153	-		2	CABLE SHOE 4-6MM2 YELLOW	
030	312125-0366	-		2	SCREW PAN HEAD MCS M6X12 SS	
040	315105-0153	-		2	WASHER PLAIN, BRB, 6,4/12,H=1,5	
050	90062-0022	-		2	LOCKING WASHER D=6,4/11	
060	90194-0152	-		2	SIGN, EARTH	

Pos	Part No	SP	UN	Qty	Description	Page No

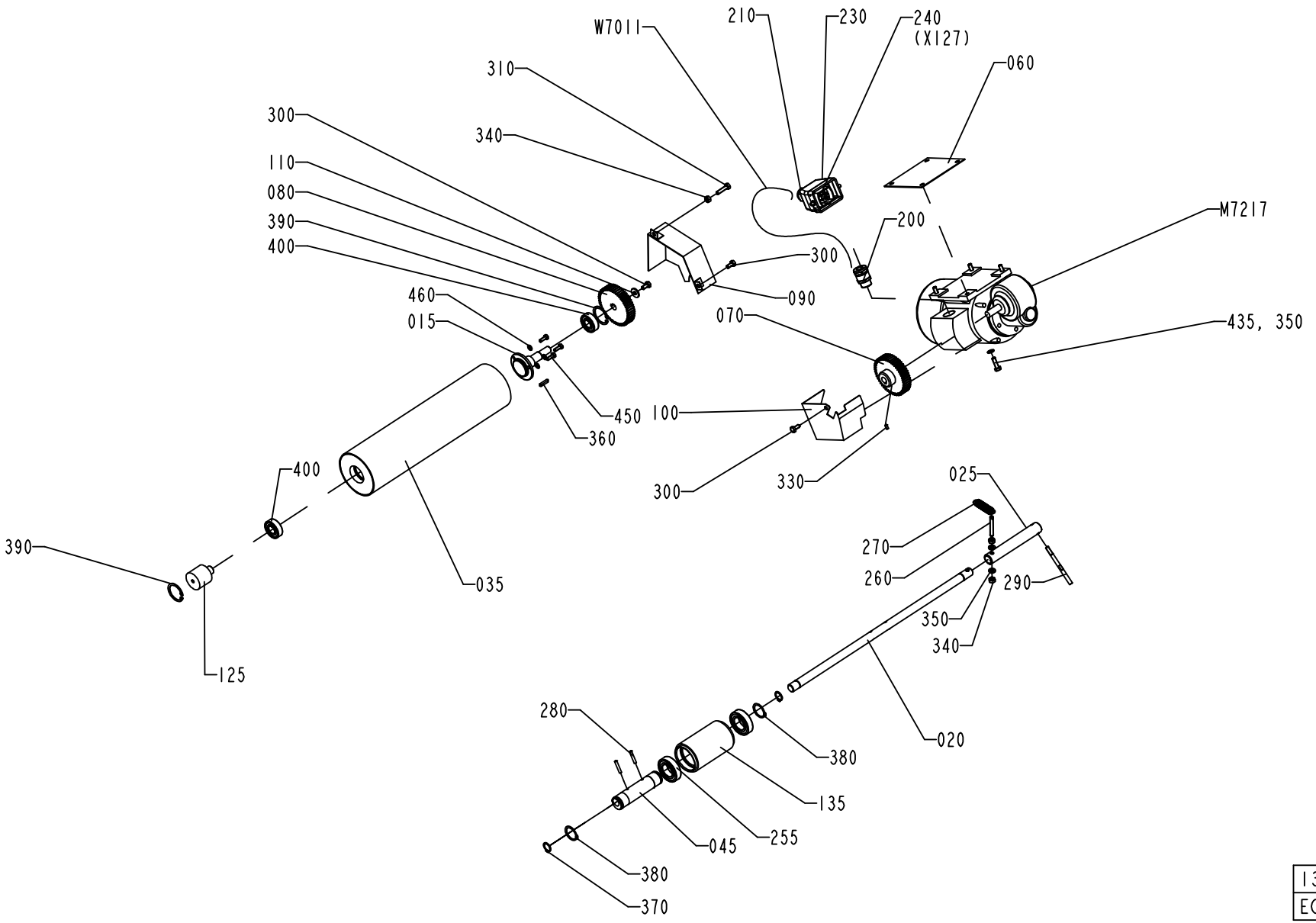

1347753-1
ECN 80787

ECM: 82818 - 20001107
Group number: 1347753-0100
Assembly Drawing: 1347753-1_1_AE

Issue: 20011217

Pos	Part No	SP	UN	Qty	Description	Page No
ASU						
W7011	90220-0104	-	M	7	SCR. CABLE 4X1,5MM2	
ASUSEPROOM						
W7011	90220-0104	-	M	12	SCR. CABLE 4X1,5MM2	
Common Parts						
015	1519767-0000	D		1	SHAFT	
020	1523042-0000	D		1	SHAFT	
025	1523043-0000	-		1	SHAFT	
035	1519766-0000	C		1	BENDING ROLLER	
045	1512267-0000	-		1	ECCENTRIC BUSHING	
060	1036390-0000	C		1	SHIM	
070	1037052-0000	C		1	GEAR WHEEL	
080	1037053-0000	C		1	GEAR WHEEL	
090	1255513-0000	-		1	COVER	
100	1347755-0000	-		1	COVER	
110	6278-0000	C		1	WASHER	
125	1487766-0000	-		1	AXLE PIN	
135	906254-0000	C		1	ROLLER	
200	90012-0137	-		1	GLAND,EMC,EXTENDED WITH INSERT	
210	352103-0108	-		1	CABLE GLAND ST 13	
230	90110-0157	C		1	CABLE HOOD 6-POL 70.352.0628.1	
240	90110-0159	C		1	MALE INSERT 70.310.0640.0	
255	321308-0205	-		2	BALL BEARING, 2 SEALS, 25X47X12 MM	
260	1523149-0000	D		1	SPRING BRACKET	
270	90335-0091	C		1	SPRING	
280	311112-0258	-		2	PIN, STRAIGHT SLOTTED SPRING FRP 4X24	
290	1317021-0000	-		1	PIN	
300	312105-0366	-		3	SCREW M6S M6X12 A280	
310	312105-0372	-		1	SCREW M6S M6X25 A280	
330	312318-0287	-		1	SCREW SOCK.SET CUP P MSK6SS M4X8 A4	
340	312605-0316	-		3	HEXAGON NUT, M6M M6 A280	
350	315105-0153	-		6	WASHER PLAIN, BRB, 6,4/12,H=1,5	
360	315701-0170	-		1	PARALLEL KEY W. ROUND ENDS 4X4X20 MM	
370	315751-0112	-		2	RETAIN. RING, 15	
380	315751-0119	-		2	RETAIN. RING, 25	
390	315753-0124	-		2	RETAIN. RING, 35	
400	321313-0102	C		2	BALL BEARING, 2 SEALS, 15X35X11 MM	
420	359005-0010	-		1	MARKING LABEL KIT 0 - 9, 04.841.2150.0	
430	359005-0050	-		1	MARKING LABEL KIT X, 04.841.4550.0	
435	312105-0370	-		4	SCREW M6S M6X20 A280	
450	312105-0328	-		3	SCREW M6S M5X14 A280	
460	315105-0146	-		3	WASHER PLAIN, BRB, 5,3/10,H=1	
M7217	90069-0606	C		1	GEARS, WORM MOTOR ODM90-60KE3	

Machine Type	Group Description	Used-In	Group Number	Page No

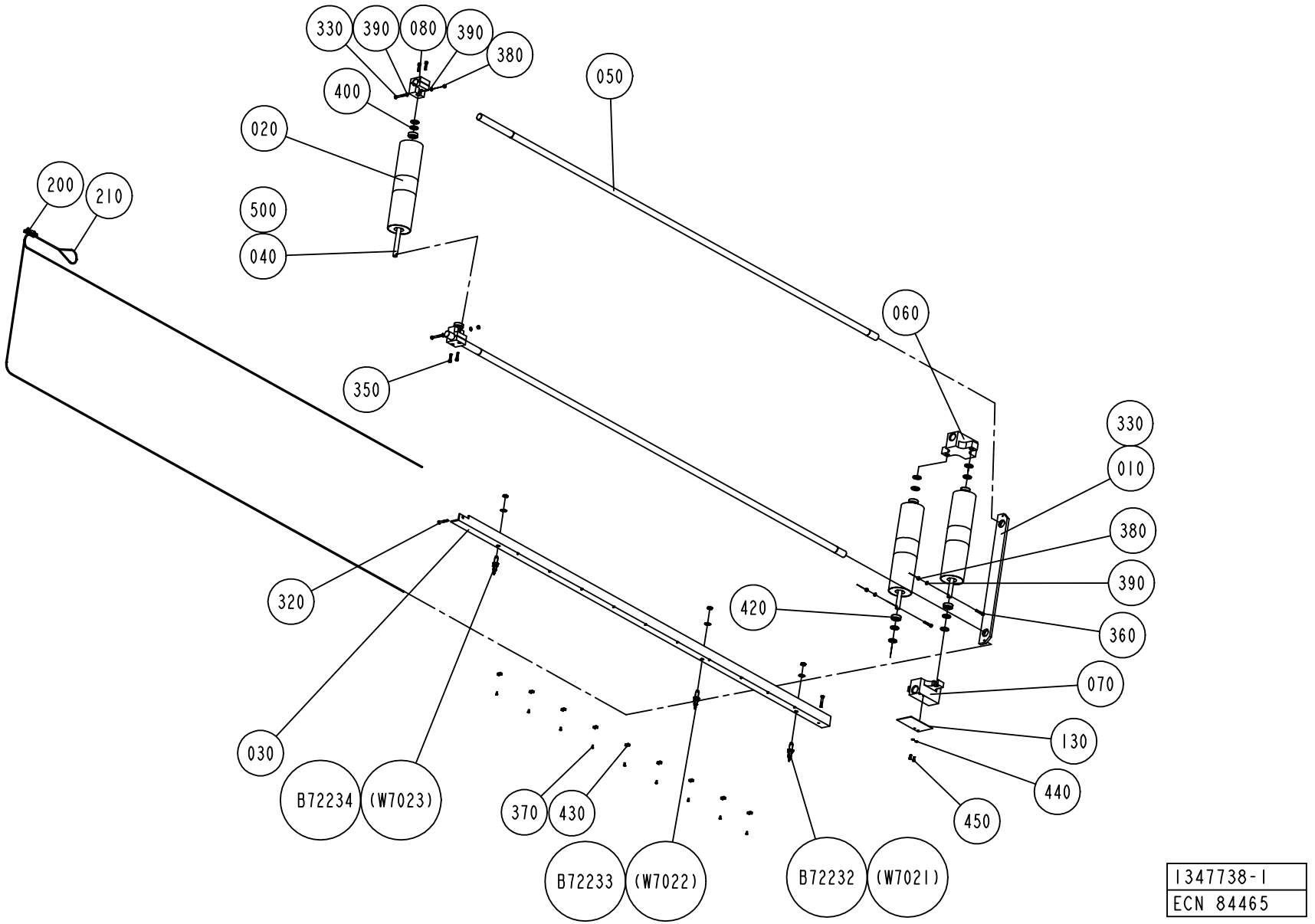
330
390
080
390
380
400
050
020
200
210
500
040
060
350
330
010
380
390
320
420
360
070
130
030
440
B72234
(W7023)
370
430
450
B72233
(W7022)
B72232
(W7021)
1347738-1
ECN 84465

ECM: 90448 - 20010924
Group number: 1347738-0100
Assembly Drawing: 1347738-1_1_AC

Issue: 20011217

Pos	Part No	SP	UN	Qty	Description	Page No
Common Parts						
010	1036300-0000	-		1	PLATE	
020	1041170-0000	A		3	DANCER ROLLER	
030	1105673-0000	-		1	ANGLE BRACKET	
040	1285221-0000	-		3	SHAFT	
050	1346633-0000	-		2	GUIDE ROD	
060	1347743-0000	-		1	SLIDER	
070	1347744-0000	-		1	SLIDER	
080	1347754-0000	-		2	SLIDER	
130	1499595-0000	-		1	PLATE	
200	90211-0002	-		1	WIRE LOCK, 5 MM	
210	90319-0013	-	MM	6200	ROPE 4MM BLUE 3700N	
220	90335-0013	-		1	SPRING	
330	312105-0379	-		2	SCREW M6S M6X45 A280	
350	312115-0372	-		4	SCREW MC6S M6X25 A280	
360	312115-0376	-		2	SCREW MC6S M6X35 A280	
370	312125-0287	-		9	SCREW PAN HEAD MCS M4X8 SS	
380	312601-0316	-		2	NUT M6M 6-8 FZB	
390	315105-0153	-		6	WASHER PLAIN, BRB, 6,4/12,H=1,5	
400	315105-0186	-		12	WASHER PLAIN, BRB, 17/30,H=3	
420	321313-0102	A		6	BALL BEARING, 2 SEALS, 15X35X11 MM	
430	352113-0205	-		430	ANCHOR TM2S8-C100	
440	315105-0146	-		2	WASHER PLAIN, BRB, 5,3/10,H=1	
450	312105-0327	-		2	SCREW M6S M5X12 A280	
B72232	90458-0672	A		1	PROXIMITY SENSOR E2E2-X5MB1-5M	
B72233	90458-0672	A		1	PROXIMITY SENSOR E2E2-X5MB1-5M	
B72234	90458-0672	A		1	PROXIMITY SENSOR E2E2-X5MB1-5M	

Pos	Part No	SP	UN	Qty	Description	Page No

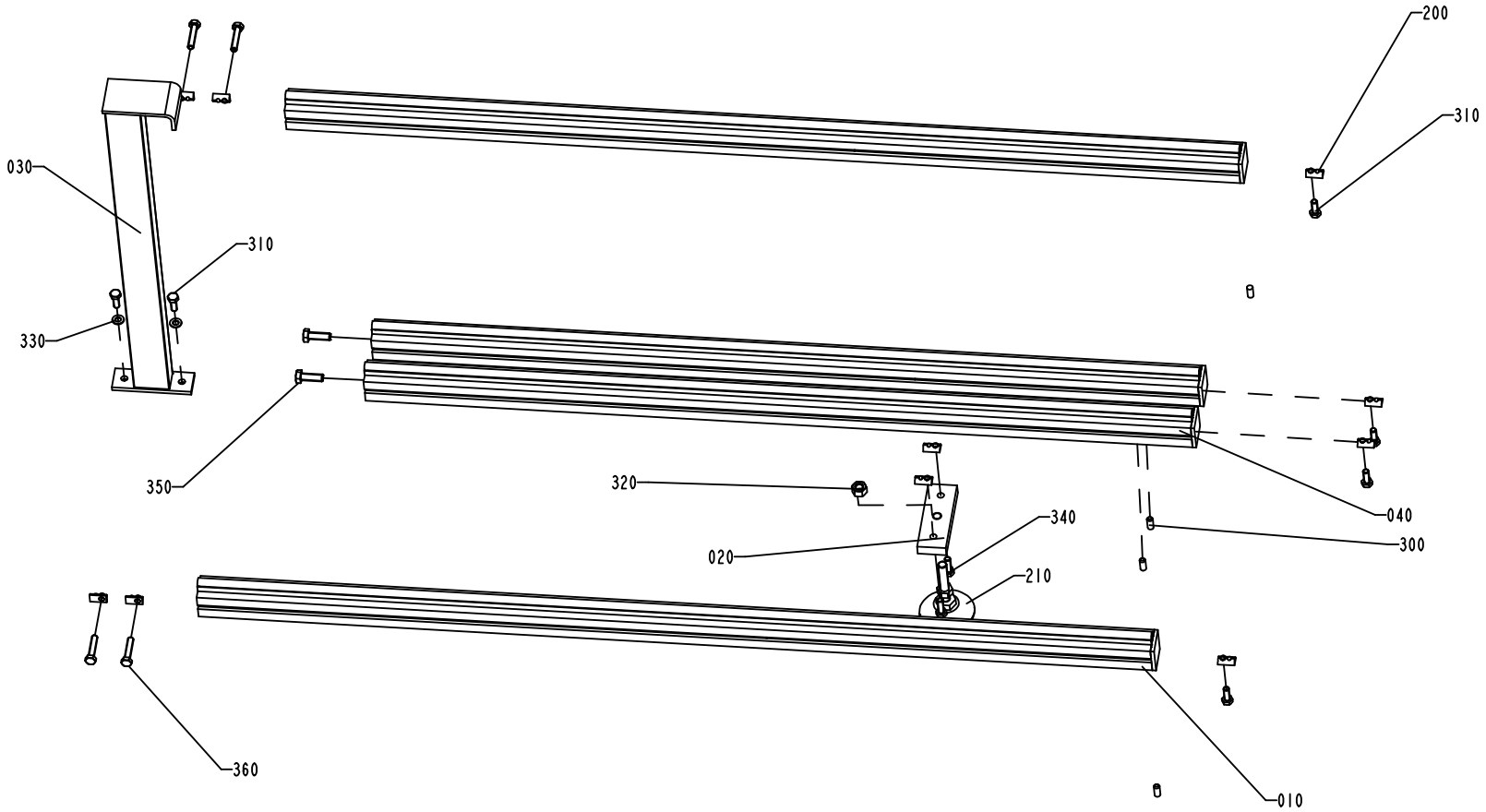

S-1347751-1
ECN 72500

ECM: 72500 - 19991021
Group number: 1347751-0100
Assembly Drawing: 1347751-1_1_AB

Issue: 20011217

Pos	Part No	SP	UN	Qty	Description	Page No
Common Parts						
010	1036134-0000	-		2	GUIDE	
020	1129423-0000	-		1	HOLDER	
030	1129768-0000	-		1	POST	
040	1347739-0000	-		2	GUIDE	
200	90099-0130	-		10	NUT GROOVE, WITH LOCK BALL, M8 FE	
210	90347-0152	-		1	FLOOR PLATE, NO. 265.67	
300	311103-0401	-		4	PARALLELL PIN, M6, 8X20 MM	
310	312105-0452	-		14	SCREW M6S M8X22 A280	
320	312605-0322	-		1	HEXAGON NUT, M6M M12 A280	
330	315105-0165	-		2	WASHER PLAIN, BRB, 8,4/16,H=1,5	
340	312105-0453	-		2	SCREW M6S M8X25 A280	
350	312105-0495	-		2	SCREW M6S M10X30 A280	
360	312109-0459	-		4	SCREW M6S M8X40 A280	

Pos	Part No	SP	UN	Qty	Description	Page No

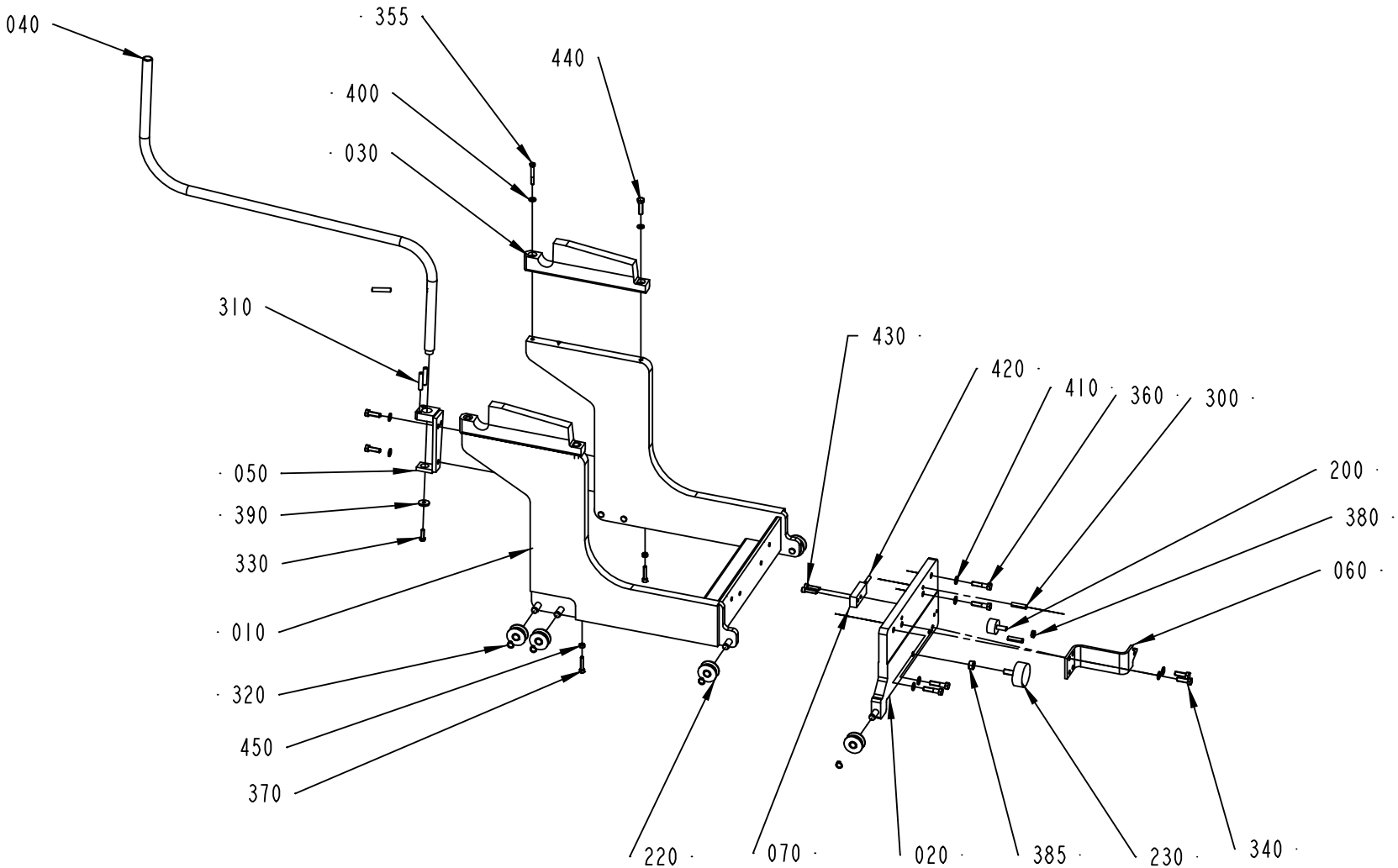

1347740-1
ECN 84465

ECM: 90538 - 20010924
Group number: 1347740-0100
Assembly Drawing: 1347740-1_1_AD

Issue: 20011217

Pos	Part No	SP	UN	Qty	Description	Page No
Common Parts						
010	1347741-0000	-		1	FRAME	
020	1347748-0000	-		1	FRAME LOWER	
030	1040885-0000	-		2	BEARING BLOCK	
040	1347742-0000	-		1	HANDLE	
050	1140027-0000	-		1	HANDLE BRACKET	
060	1478719-0000	-		1	BRACKET	
070	1478738-0000	-		1	BLOCK	
200	90347-0004	A		1	VIBRATION DAMPER D=30 TH=M8 H=17 H2=21MM	
220	90191-0074	A		7	IDLER ROLLER, NO. 294.52	
230	90458-0377	A		1	VIBRATION DAMPER, NO. 781093	
300	311112-0381	-		2	PIN, STRAIGHT SLOTTED SPRING FRP 8X32	
310	311103-0409	-		3	PARALLELL PIN, M6, 8X40 MM	
320	315751-0108	-		7	RETAIN. RING, 11	
330	312105-0370	-		1	SCREW M6S M6X20 A280	
340	312105-0453	-		4	SCREW M6S M8X25 A280	
355	312105-0379	-		2	SCREW M6S M6X45 A280	
360	312105-0457	-		4	SCREW M6S M8X35 A280	
370	312115-0374	-		2	SCREW MC6S M6X30 A280	
380	312625-0318	-		1	NUT HEX. M8 SS	
385	312605-0320	-		1	HEXAGON NUT, M6M M10 A280	
390	315125-0153	-		1	WASHER PLAIN ROUND,CHAMF. 6,4/22, H=4	
400	315105-0156	-		4	WASHER PLAIN, BRB, 6,7/14,H=1,5	
410	315105-0165	-		8	WASHER PLAIN, BRB, 8,4/16,H=1,5	
420	311103-0355	-		1	PARALLELL PIN, M6, 6X25 MM	
430	312115-0372	-		2	SCREW MC6S M6X25 A280	
440	312105-0455	-		2	SCREW M6S M8X30 A280	
450	312605-0316	-		2	HEXAGON NUT, M6M M6 A280	

Pos	Part No	SP	UN	Qty	Description	Page No

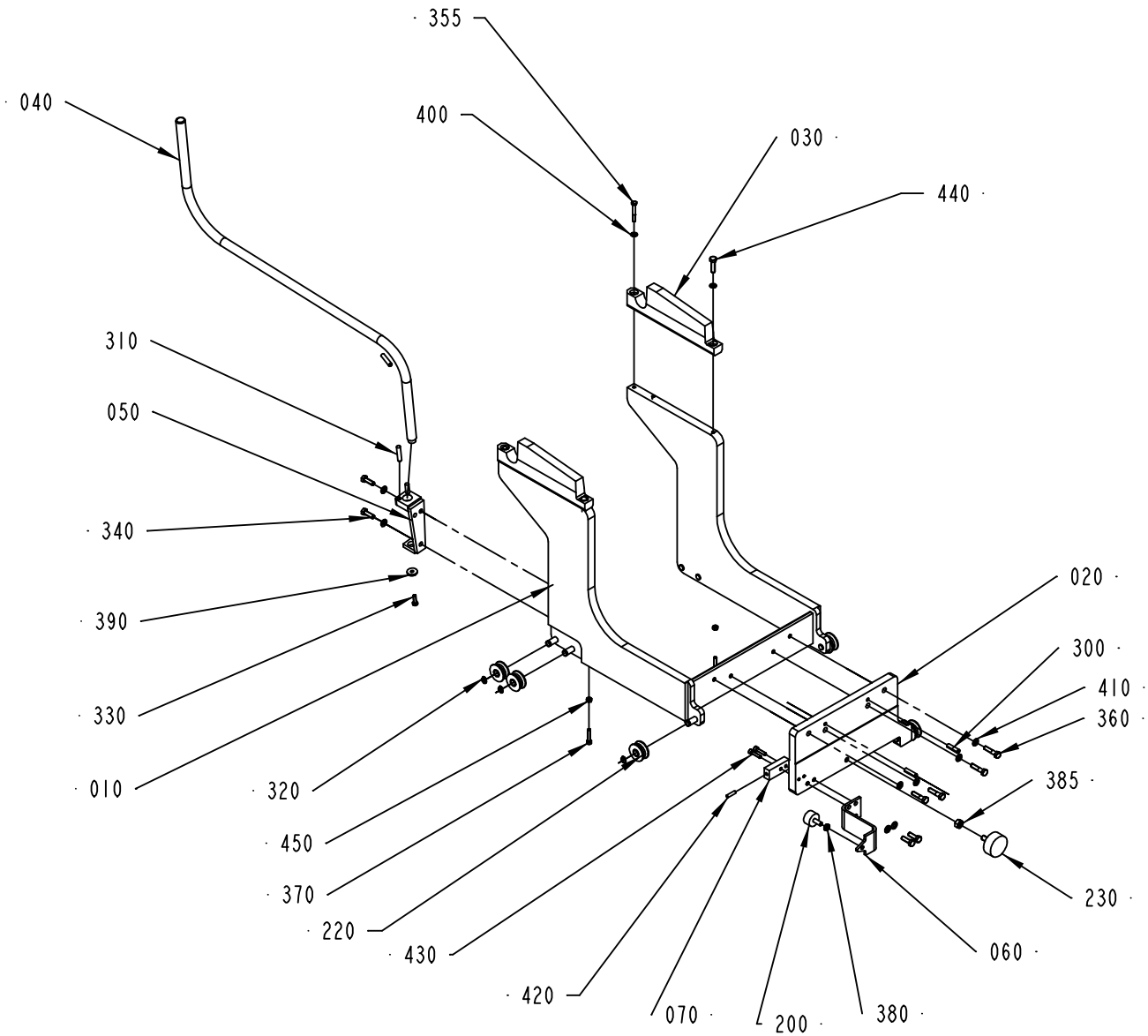

1347749-1
ECN 84465

ECM: 90539 - 20010924
Group number: 1347749-0100
Assembly Drawing: 1347749-1_1_AD

Issue: 20011217

Pos	Part No	SP	UN	Qty	Description	Page No
Common Parts						
010	1347741-0000	-		1	FRAME	
020	1347748-0000	-		1	FRAME LOWER	
030	1040885-0000	-		2	BEARING BLOCK	
040	1347742-0000	-		1	HANDLE	
050	1140027-0000	-		1	HANDLE BRACKET	
060	1478719-0000	-		1	BRACKET	
070	1478738-0000	-		1	BLOCK	
200	90347-0004	A		1	VIBRATION DAMPER D=30 TH=M8 H=17 H2=21MM	
220	90191-0074	A		7	IDLER ROLLER, NO. 294.52	
230	90458-0377	A		1	VIBRATION DAMPER, NO. 781093	
300	311112-0381	-		2	PIN, STRAIGHT SLOTTED SPRING FRP 8X32	
310	311103-0409	-		3	PARALLELL PIN, M6, 8X40 MM	
320	315751-0108	-		7	RETAIN. RING, 11	
330	312105-0370	-		1	SCREW M6S M6X20 A280	
340	312105-0453	-		4	SCREW M6S M8X25 A280	
355	312105-0379	-		2	SCREW M6S M6X45 A280	
360	312105-0455	-		4	SCREW M6S M8X30 A280	
370	312115-0374	-		2	SCREW MC6S M6X30 A280	
380	312625-0318	-		1	NUT HEX. M8 SS	
385	312605-0320	-		1	HEXAGON NUT, M6M M10 A280	
390	315125-0153	-		1	WASHER PLAIN ROUND,CHAMF. 6,4/22, H=4	
400	315105-0156	-		6	WASHER PLAIN, BRB, 6,7/14,H=1,5	
410	315105-0165	-		8	WASHER PLAIN, BRB, 8,4/16,H=1,5	
420	311103-0355	-		1	PARALLELL PIN, M6, 6X25 MM	
430	312115-0372	-		2	SCREW MC6S M6X25 A280	
440	312105-0455	-		2	SCREW M6S M8X30 A280	
450	312605-0316	-		2	HEXAGON NUT, M6M M6 A280	

Pos	Part No	SP	UN	Qty	Description	Page No

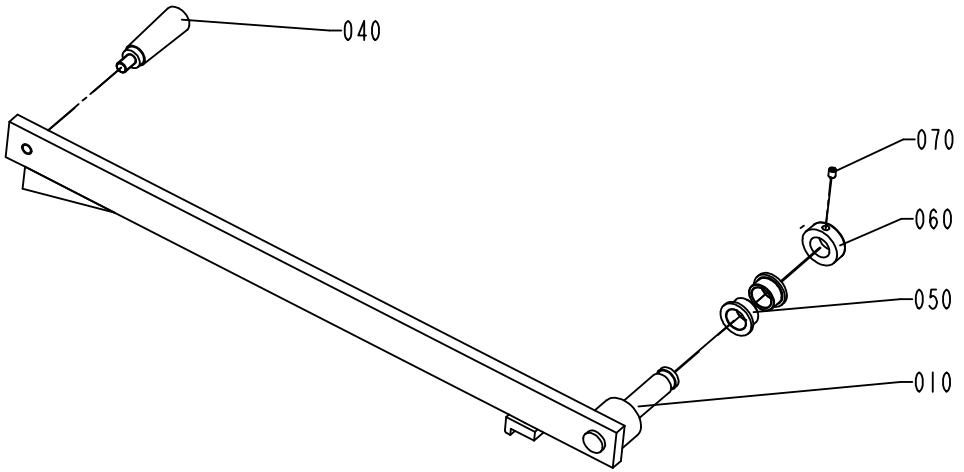

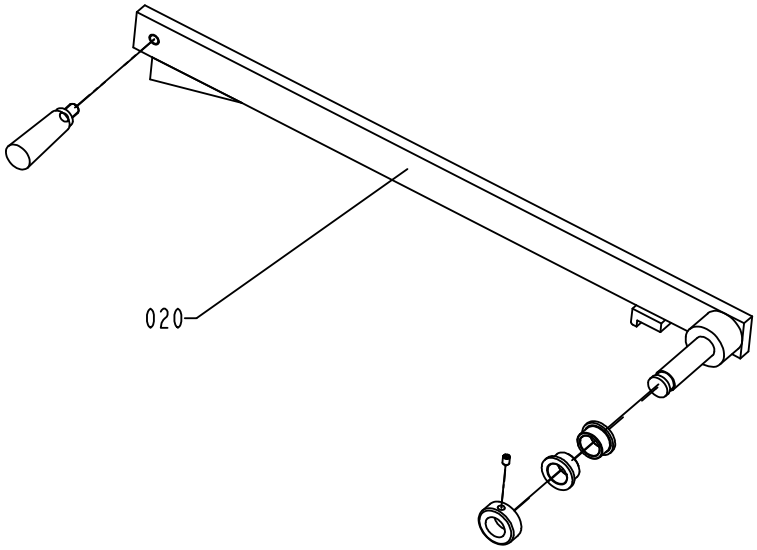

S-1348428-1
ECN 71680

ECM: 71680 - 19990504
Group number: 1348428-0100
Assembly Drawing: 1348428-1_1_AA

Issue: 20011217

Pos	Part No	SP	UN	Qty	Description	Page No
Common Parts						
010	1348430-0000	-		1	LOCKING ARM	
020	1348429-0000	-		1	LOCKING ARM	
040	90051-0065	-		2	HANDLE, THREADED TAP. NO. 8305-2151	
050	321111-0302	-		4	BEAR.BUSHING WITH FLANGE, 20/26X15 MM	
060	315742-0116	-		2	COLLAR, 20/36, H=13	
070	312318-0362	-		4	SCREW SOCK.SET CUP P MSK6SS M6X8 A4	

Pos	Part No	SP	UN	Qty	Description	Page No

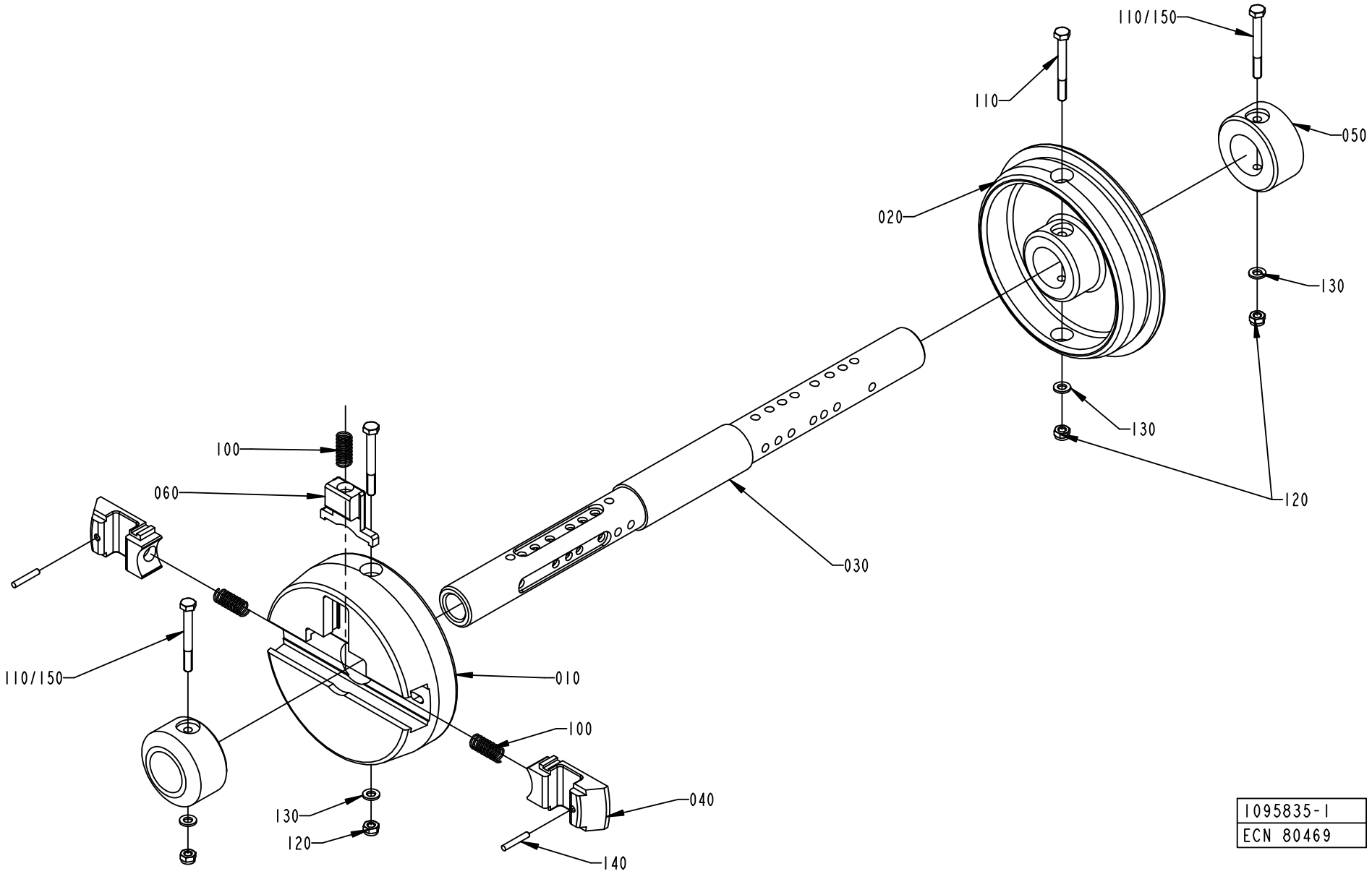
110/150
110
050
020
130
130
120
100
060
030
110/150
010
100
040
130
120
140
1095835-1
ECN 80469

Pos	Part No	SP	UN	Qty	Description	Page No
TBA 0500B OR TBA 1000B OR TBA 1500S						
010	272814-0000	A		1	SLEEVE	
020	272815-0001	A		1	SLEEVE	
040	575002-0000	A		2	PLUNGER	
110	312101-0381	-		2	SCREW M6S M6X55 FZB	
120	312812-0316	-		2	HEXAGON NUT, NY-LOCK M6 A480	
130	315101-0153	-		2	WASHER PLAIN, BRB, 6,4/12 H=1,5	
TBA 0500S OR TBA 0200B OR TBA 0200S OR TBA 0250B OR TPA 0330SQ						
010	272814-0000	A		1	SLEEVE	
020	272815-0001	A		1	SLEEVE	
040	575002-0000	A		2	PLUNGER	
050	440259-0000	-		2	RETAINING RING	
110	312101-0381	-		4	SCREW M6S M6X55 FZB	
120	312812-0316	-		4	HEXAGON NUT, NY-LOCK M6 A480	
130	315101-0153	-		4	WASHER PLAIN, BRB, 6,4/12 H=1,5	
TPA 1000S						
010	272814-0000	A		1	SLEEVE	
020	272815-0001	A		1	SLEEVE	
040	575002-0000	A		2	PLUNGER	
050	544277-0000	-		2	RETAINING RING	
110	312101-0381	-		2	SCREW M6S M6X55 FZB	
120	312812-0316	-		2	HEXAGON NUT, NY-LOCK M6 A480	
130	315101-0153	-		2	WASHER PLAIN, BRB, 6,4/12 H=1,5	
150	311112-0350	-		2	PIN, STRAIGHT SLOTTED SPRING FRP 6X55	
TBA 1000S						
010	569944-0000	A		1	SLEEVE	
020	569945-0000	A		1	SLEEVE	
040	575003-0000	A		2	PLUNGER	
110	312101-0381	-		2	SCREW M6S M6X55 FZB	
120	312812-0316	-		2	HEXAGON NUT, NY-LOCK M6 A480	
130	315101-0153	-		2	WASHER PLAIN, BRB, 6,4/12 H=1,5	
TBA 1000SQ						
010	272814-0000	A		1	SLEEVE	
020	272815-0001	A		1	SLEEVE	
040	575002-0000	A		2	PLUNGER	
050	574051-0000	-		2	RETAINING RING	
110	312101-0381	-		2	SCREW M6S M6X55 FZB	
120	312812-0316	-		2	HEXAGON NUT, NY-LOCK M6 A480	
130	315101-0153	-		2	WASHER PLAIN, BRB, 6,4/12 H=1,5	
150	311112-0350	-		2	PIN, STRAIGHT SLOTTED SPRING FRP 6X55	
Common Parts						
030	1538597-0000	-		1	SHAFT	
060	272728-0000	-		1	BARRIER	
100	90335-0025	A		3	SPRING BARNES 22010	
140	311103-0274	-		2	PARALLELL PIN, M6, 4X25 MM	

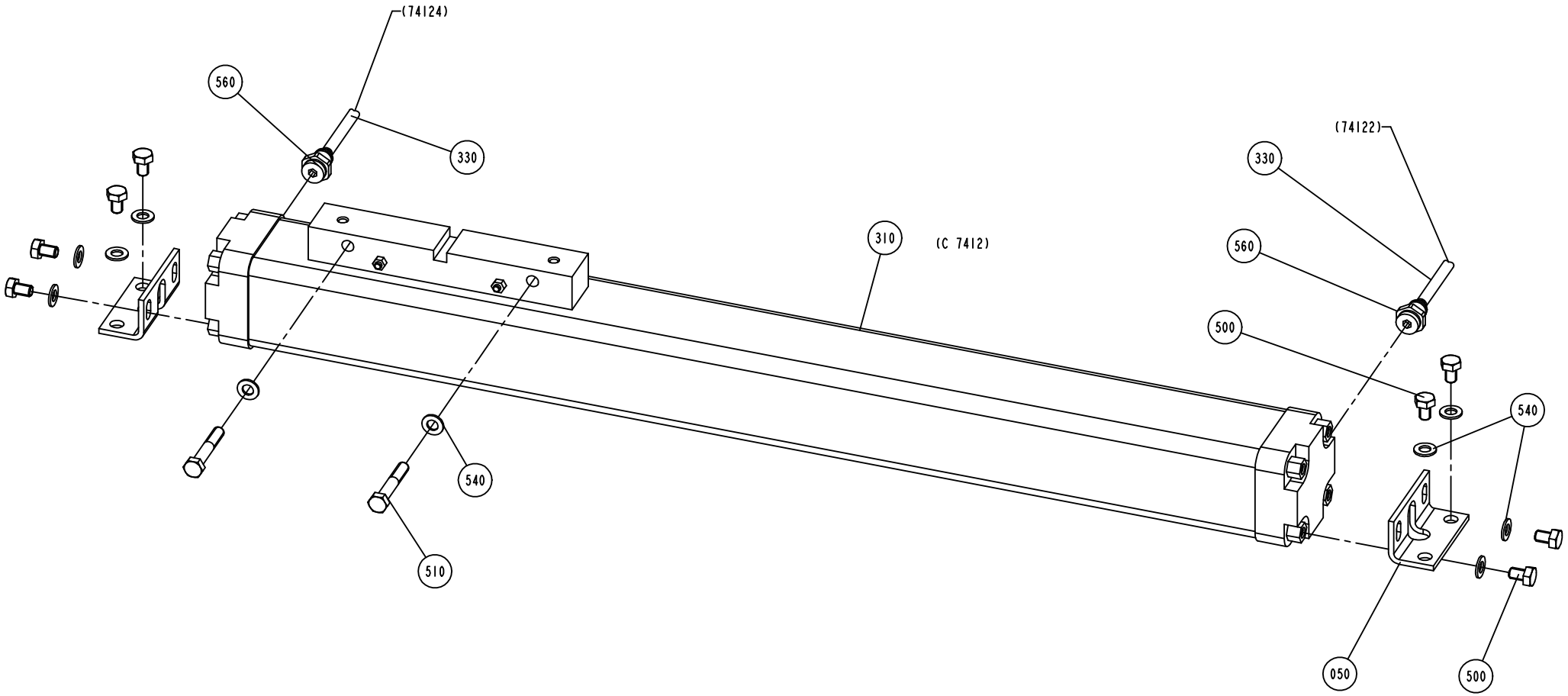

S-1095770-2
ECN 71019

ECM: 72500 - 19991021
Group number: 1095770-0200
Assembly Drawing: 1095770-2_1_AD

Issue: 20011217

Pos	Part No	SP	UN	Qty	Description	Page No
Common Parts						
050	1116017-0000	-		2	BRACKET	
310	90450-0222	C		1	DOUBLE ACTING,SHUTTLE,CYL 50-488	
330	90166-0194	-	M	6	TUBE 8 MM PUR BLUE	
500	312105-0447	-		8	SCREW M6S M8X12 A280	
510	312105-0461	-		2	SCREW M6S M8X50 A280	
540	315105-0165	-		10	WASHER PLAIN, BRB, 8,4/16,H=1,5	
560	342722-0206	-		2	STRAIGHT COUPLING D=8-G3/8"	

Pos	Part No	SP	UN	Qty	Description	Page No

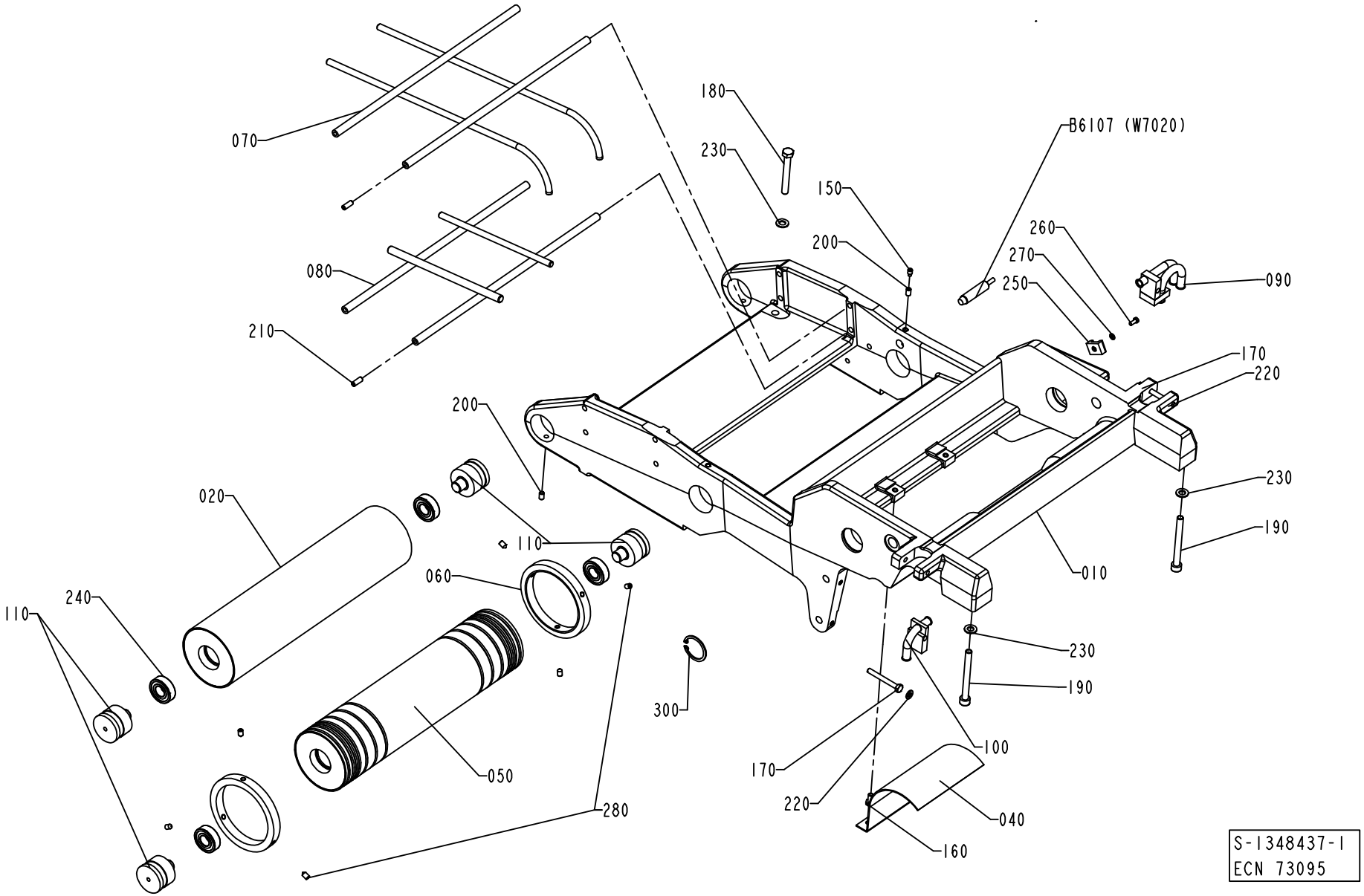
070
080
210
180
230
150
200
B6107 (W7020)
260
270
250
090
170
220
200
230
190
010
020
110
060
240
110
300
230
190
100
170
220
040
160
050
280
S-1348437-1
ECN 73095

ECM: 73095 - 20000307
Group number: 1348437-0100
Assembly Drawing: 1348437-1_1_AC

Issue: 20011217

Pos	Part No	SP	UN	Qty	Description	Page No
Common Parts						
010	1347752-0000	-		1	BRACKET	
020	1035882-0000	C		1	BENDING ROLLER	
040	1041237-0000	-		1	LEAD PLATE	
050	1348897-0000	C		1	BENDING ROLLER	
060	1499567-0000	-		2	FLANGE	
070	1255508-0000	-		1	GUIDE	
080	1255509-0000	-		1	GUIDE	
090	1255511-0000	-		1	ROPE BRACKET	
100	1255512-0000	-		1	ROPE BRACKET	
110	1036429-0000	C		4	AXLE PIN	
150	90287-0154	-		1	SCREW, SOCK.SET DOGPOINT M6X10	
160	312105-0366	-		2	SCREW M6S M6X12 A280	
170	312105-0380	-		2	SCREW M6S M6X50 A280	
180	312105-0464	-		2	SCREW M6S M8X65 A280	
190	312115-0467	-		2	SCREW MC6S M8X80 A280	
200	312318-0364	-		4	SCREW HEX.SOCK.SET CUP P.MSK6SS6X10 SS	
210	312318-0368	-		8	SCREW SOCK.SET CUP P MSK6SS M6X16 A4	
220	315105-0153	-		2	WASHER PLAIN, BRB, 6,4/12,H=1,5	
230	315105-0165	-		4	WASHER PLAIN, BRB, 8,4/16,H=1,5	
240	321313-0102	C		4	BALL BEARING, 2 SEALS, 15X35X11 MM	
250	352113-0204	-		1	ANCHOR TM3S25-M	
260	312125-0289	-		1	SCREW SLOT.PAN HD. MCS 4X10 A480	
270	315105-0136	-		1	WASHER PLAIN, BRB, 4,3/8,H=0,8	
280	90287-0348	-		6	STOP SCREW	
300	315753-0124	-		1	RETAIN. RING, 35	
B6107	90044-0124	C		1	PROX.SW. 922AB2XM-A9P-050-LZ-876	

Pos	Part No	SP	UN	Qty	Description	Page No

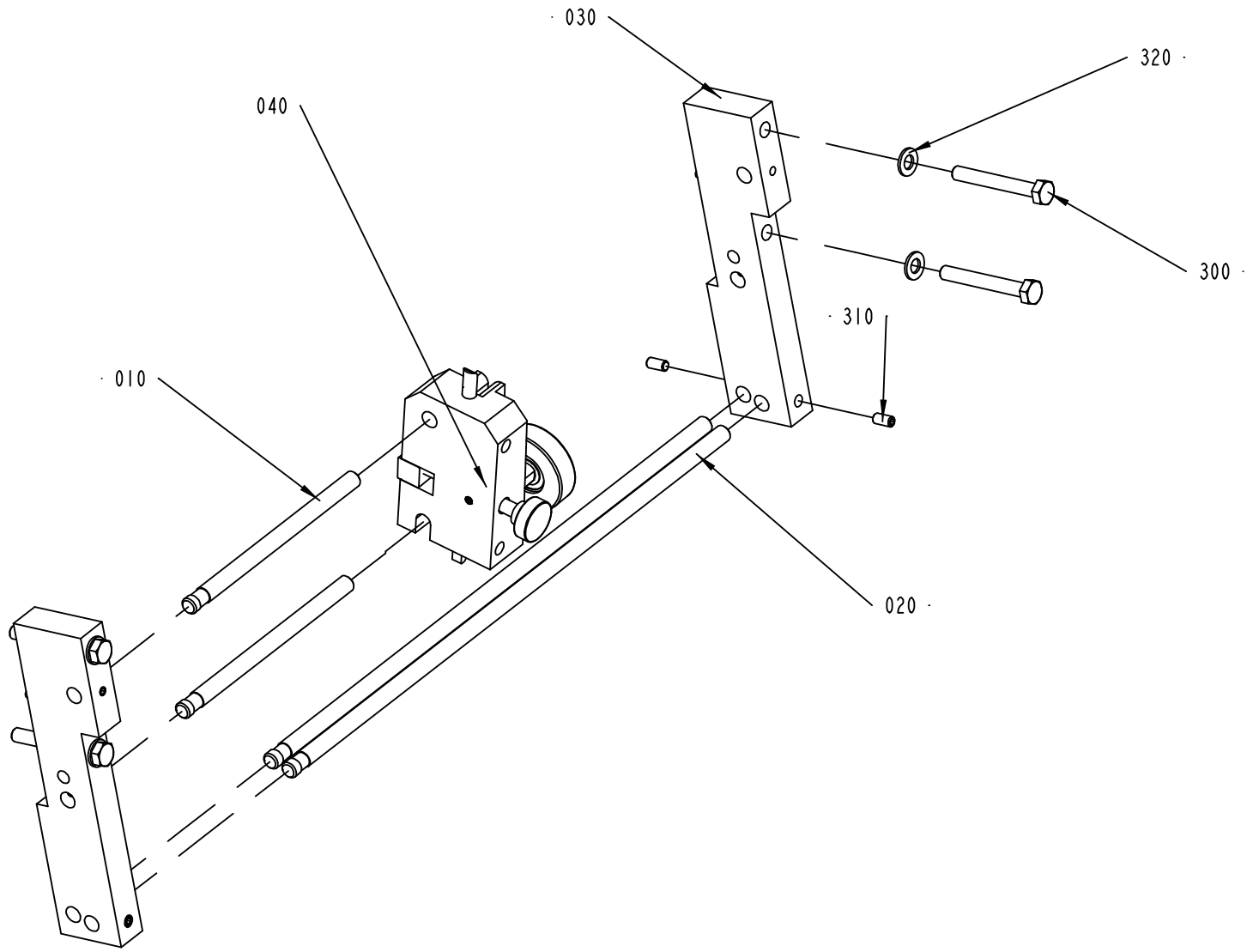

1517090-1
ECN 73314

ECM: 73314 - 20000307
Group number: 1517090-0100
Assembly Drawing: 1517090-1_1_AA

Issue: 20011217

Pos	Part No	SP	UN	Qty	Description	Page No
TBA/21						
040	A1484745-0100	-		1	WEB GUIDE	**875**
Common Parts						
010	1037546-0000	-		2	SHAFT	
020	1038470-0000	-		2	SHAFT	
030	1499047-0000	-		2	BRACKET	
300	312105-0463	-		4	SCREW M6S M8X60 A280	
310	312318-0366	-		6	SCREW SOCK.SET CUP P MSK6SS M6X12 A4	
320	315105-0165	-		4	WASHER PLAIN, BRB, 8,4/16,H=1,5	

Pos	Part No	SP	UN	Qty	Description	Page No

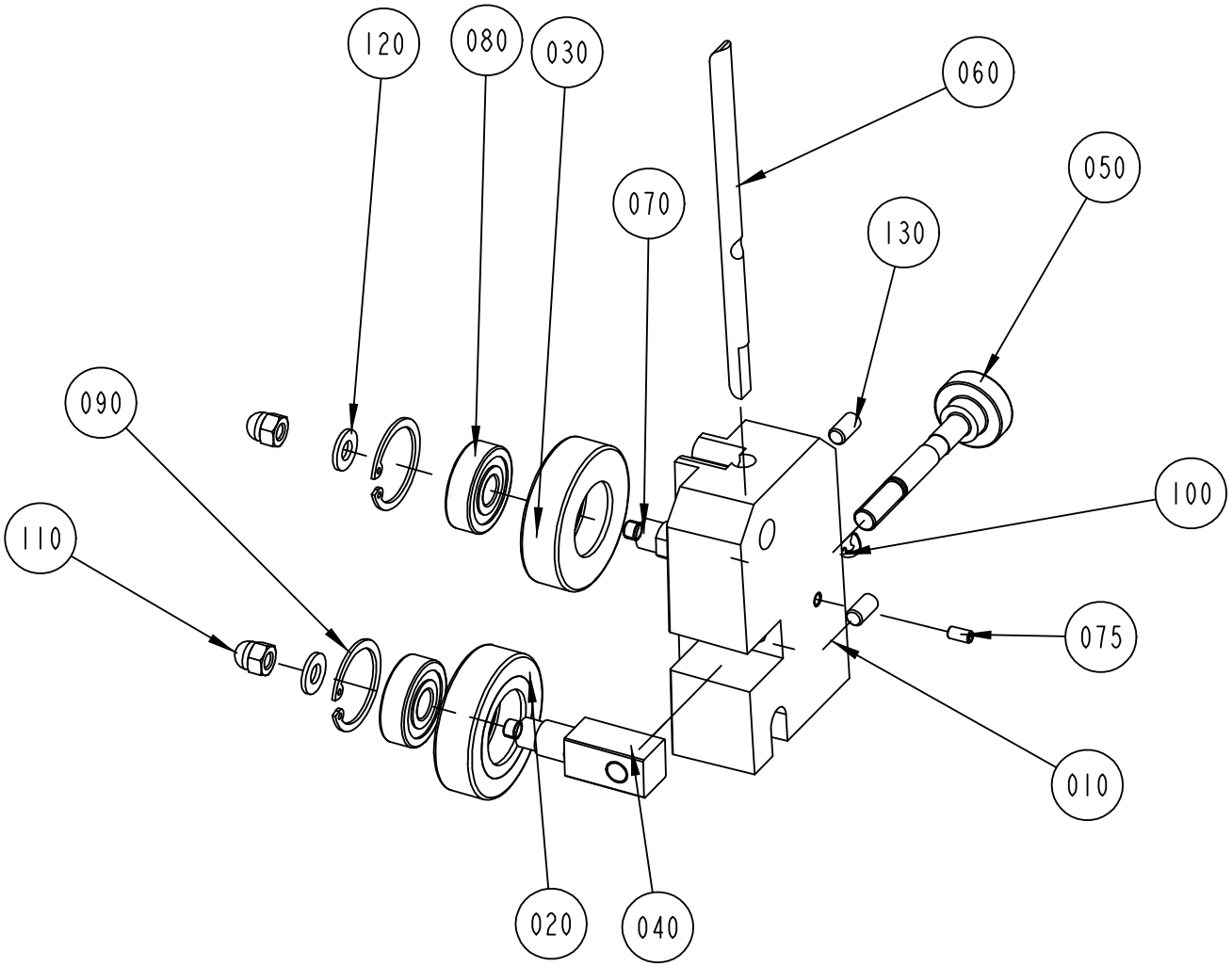

1484745-1
ECN 84465

ECM: 90447 - 20010924
Group number: 1484745-0100
Assembly Drawing: 1484745-1_1_AC

Issue: 20011217

Pos	Part No	SP	UN	Qty	Description	Page No
Common Parts						
010	1484750-0000	-		1	BRACKET	
020	1036623-0000	A		1	GUIDE ROLLER	
030	1036622-0000	A		1	GUIDE ROLLER	
040	1317711-0000	-		1	SHAFT	
050	1317712-0000	-		1	SHAFT	
060	1512526-0000	-		1	STEERING	
070	583727-0000	-		1	SHAFT	
075	312318-0287	-		1	SCREW SOCK.SET CUP P MSK6SS M4X8 A4	
080	321313-0100	A		2	BALL BEARING, 2 SEALS, 10X30X9 MM	
090	315753-0122	-		2	RETAIN. RING, 30	
100	315755-0108	-		1	LOCKING WASHER 6	
110	312705-0316	-		2	NUT HEX. DOMED CAP MHM-6 M6 A280	
120	315105-0156	-		2	WASHER PLAIN, BRB, 6,7/14,H=1,5	
130	312318-0366	-		2	SCREW SOCK.SET CUP P MSK6SS M6X12 A4	

Pos	Part No	SP	UN	Qty	Description	Page No

1334260 (SEE VIEW 030)

INSIDE PIPES:

62034 (C 6203)
62032 (C 6203)
62054 (SEE SHEET 2)
74104 (C7410)
74084 (C 74081, C 74082)
74074 (C 74071, C 74072)
ALL PIPES INSIDE CABLE DUCT 1103374

SIDE 1 (RIGHT)

1103374 (SEE VIEW 020)

INSIDE PIPES:

73034 (C 73031, C 73032)
73032 (C 73031, C 73032)
74112 (C 7411)
74114 (C 7411)
74124 (C 7412)
620534

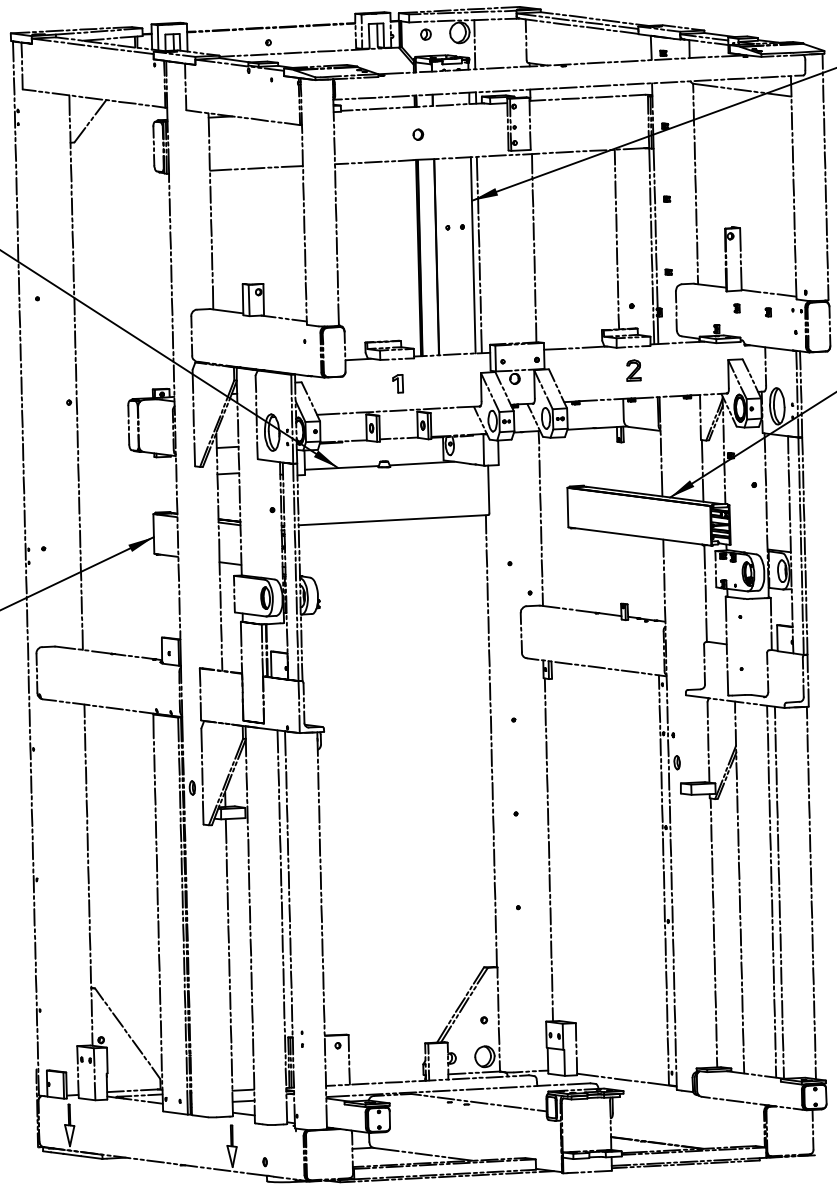

1334261 (SEE VIEW 040)
P1

1103373 (SEE VIEW 010)

INSIDE PIPES:

74122 (C 7412)
73154 (C 73152, C 73151)
73152 (C 73152, C 73151)
74142 (C 7414)
74144 (C 7414)

SIDE 2 (LEFT)

1035081-3
ECN 84465

Pos	Part No	SP	UN	Qty	Description	Page No	Pos	Part No	SP	UN	Qty	Description	Page No

THIS GROUP HAS NO LIST.

Machine Type	Group Description	Used-In	Group Number	Page No

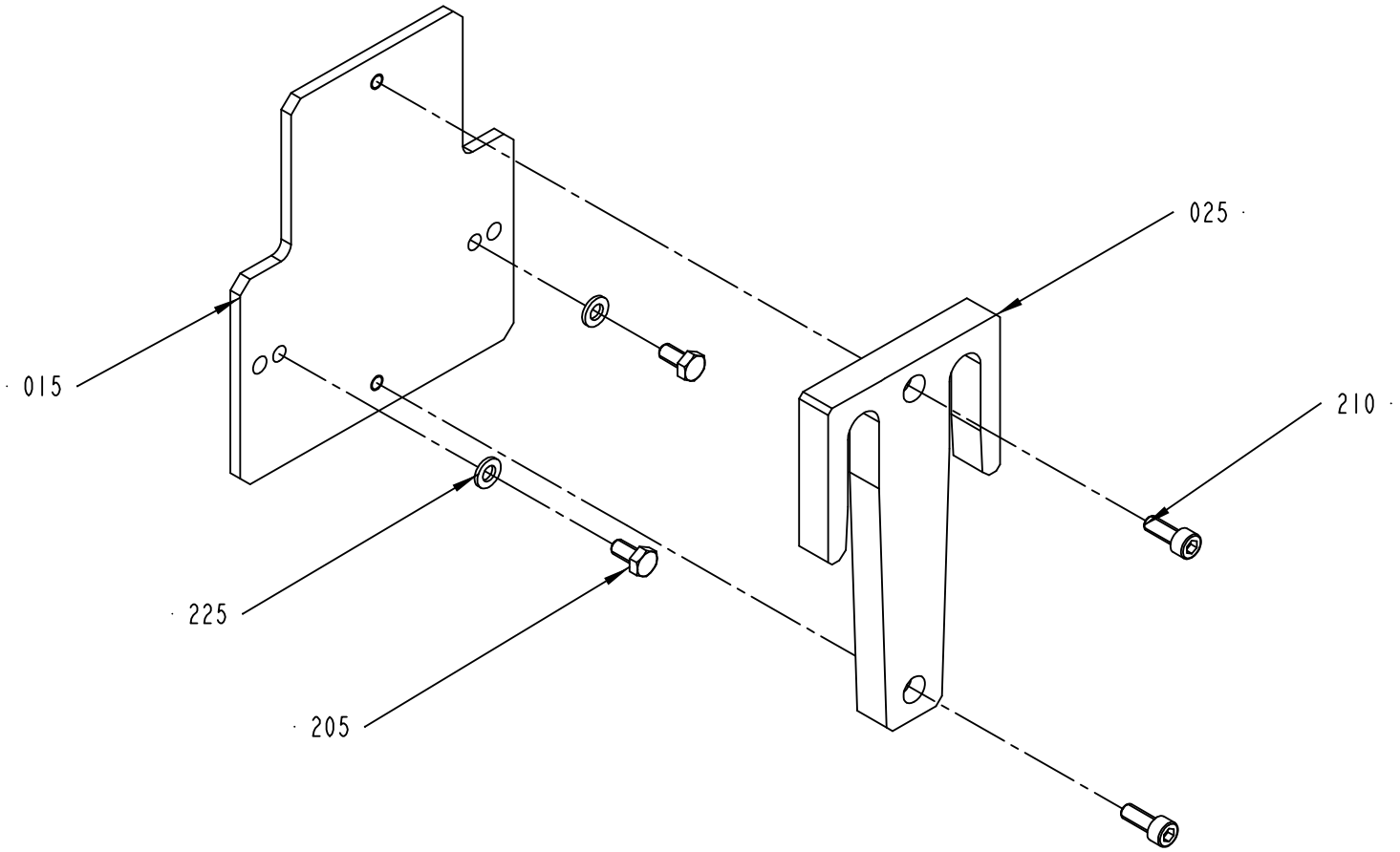

1478826-1
ECN 90194

ECM: 93128 - 20010807
Group number: 1478826-0100
Assembly Drawing: 1478826-1_1_AB

Issue: 20011217

Pos	Part No	SP	UN	Qty	Description	Page No
Common Parts						
015	1548522-0000	-		1	PLATE	
025	1548519-0000	-		1	GUIDE	
205	312105-0366	-		2	SCREW M6S M6X12 A280	
210	312115-0368	-		4	SCREW MC6S M6X16 A280	
225	315105-0153	-		2	WASHER PLAIN, BRB, 6,4/12,H=1,5	

Pos	Part No	SP	UN	Qty	Description	Page No

SPLICING DEVICE

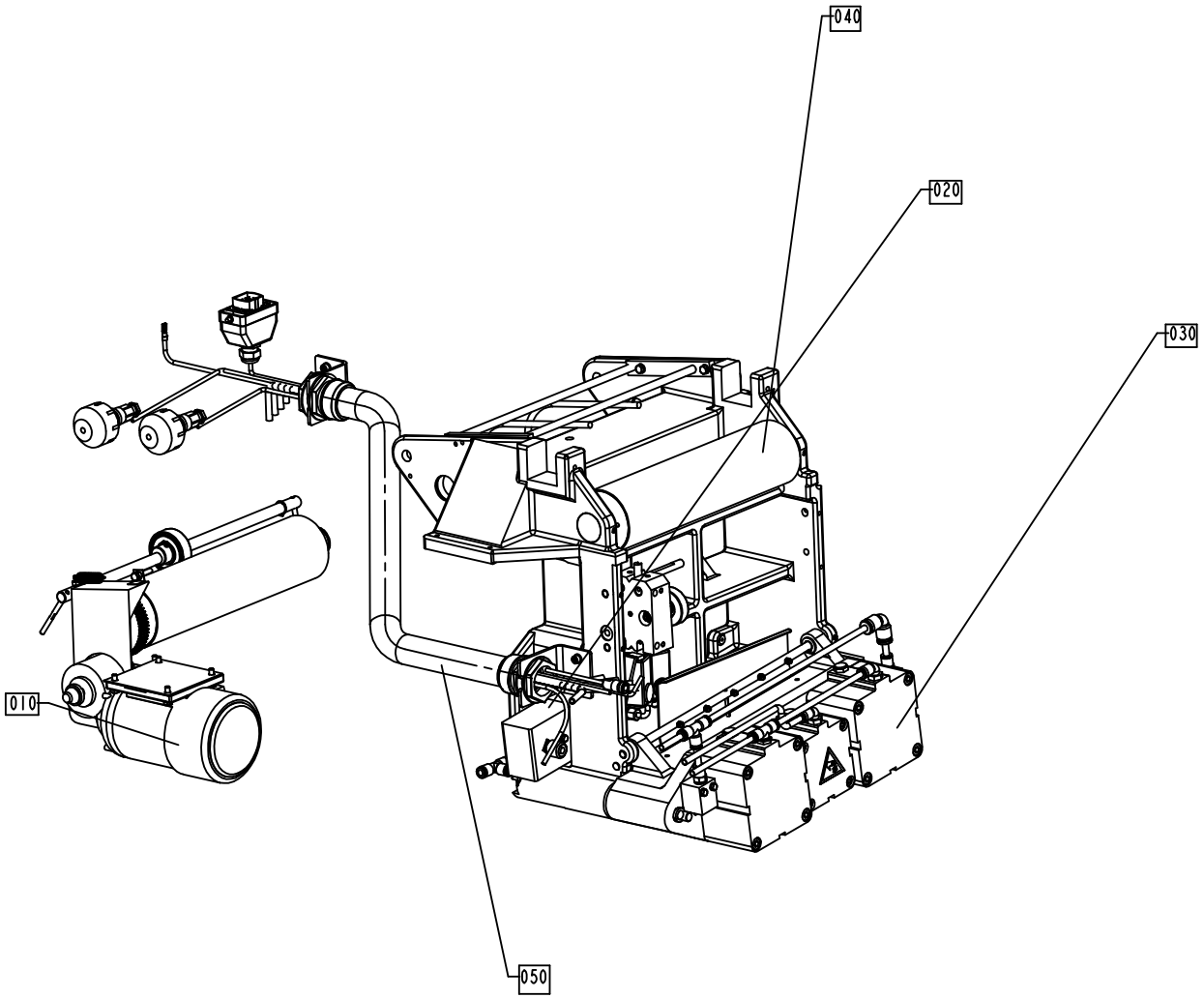

S-1348436-1
ECN 71680

ECM: 101873 - 50001231
Group number: 1348436-0100
Assembly Drawing: 1348436-1_1_AA

Issue: 20011217

Pos	Part No	SP	UN	Qty	Description	Page No
Common Parts						
010	A1348431-0100	-		1	DRIVE UNIT REAR	**883**
020	A1095763-0100	-		1	SEALING UNIT	**885**
030	A1095761-0100	-		1	PRESSURE JAW	**887**
040	A1095765-0200	-		1	BRACKET	**889, 891**
050	A1095766-0300	-		1	CABLE CONDUIT	**893**

Pos	Part No	SP	UN	Qty	Description	Page No

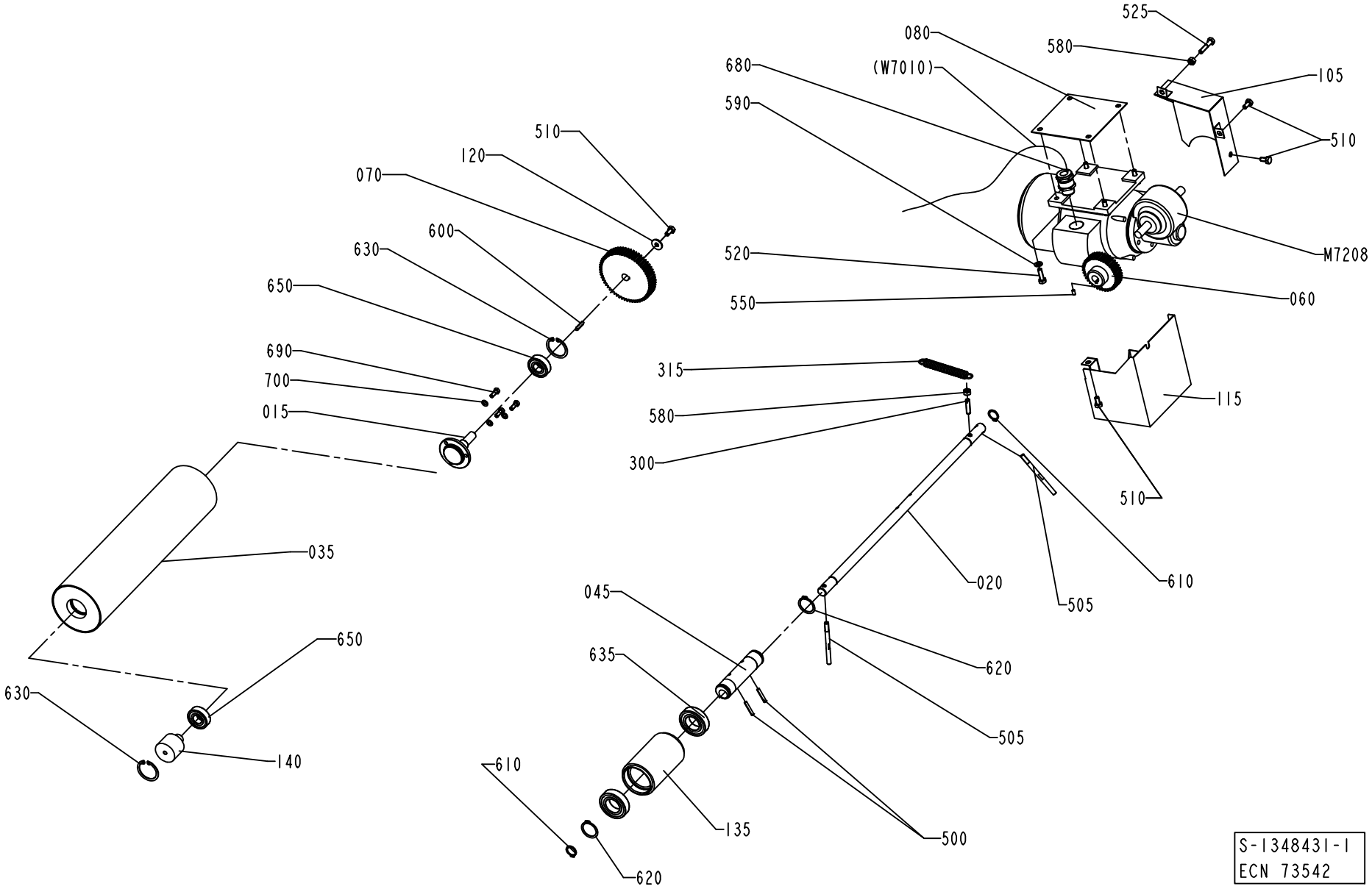
525
080
580
680
(W7010)
105
590
510
510
120
070
600
630
650
690
700
015
520
M7208
550
060
315
580
300
115
510
035
650
630
140
020
610
505
045
635
620
505
610
135
500
620
S-1348431-1
ECN 73542

ECM: 81242 - 20001107
Group number: 1348431-0100
Assembly Drawing: 1348431-1_1_AD

Issue: 20011217

Pos	Part No	SP	UN	Qty	Description	Page No
Common Parts						
015	1524372-0000	D		1	SHAFT	
020	1317020-0000	-		1	SHAFT	
035	1519766-0000	C		1	BENDING ROLLER	
045	1512267-0000	-		1	ECCENTRIC BUSHING	
060	985581-0000	C		1	GEAR WHEEL	
070	985582-0000	C		1	GEAR WHEEL	
080	1036390-0000	C		1	SHIM	
105	1517605-0000	-		1	COVER TOP	
115	1517606-0000	-		1	COVER BOTTOM	
120	6278-0000	C		1	WASHER	
135	906254-0000	C		1	ROLLER	
140	1519772-0000	-		1	AXLE PIN	
300	578684-0000	D		1	SPRING BRACKET	
315	1499611-0000	C		1	SPRING	
500	311112-0258	-		2	PIN, STRAIGHT SLOTTED SPRING FRP 4X24	
505	1317021-0000	-		2	PIN	
510	312105-0366	-		4	SCREW M6S M6X12 A280	
520	312105-0370	-		4	SCREW M6S M6X20 A280	
525	312105-0374	-		1	SCREW M6S M6X30 A280	
550	312318-0287	-		1	SCREW SOCK.SET CUP P MSK6SS M4X8 A4	
580	312605-0316	-		2	HEXAGON NUT, M6M M6 A280	
590	315105-0153	-		4	WASHER PLAIN, BRB, 6,4/12,H=1,5	
600	315701-0170	-		1	PARALLEL KEY W. ROUND ENDS 4X4X20 MM	
610	315751-0112	-		2	RETAIN. RING, 15	
620	315751-0119	-		2	RETAIN. RING, 25	
630	315753-0124	-		2	RETAIN. RING, 35	
635	321308-0205	-		2	BALL BEARING, 2 SEALS, 25X47X12 MM	
650	321313-0102	-		2	BALL BEARING, 2 SEALS, 15X35X11 MM	
680	90012-0137	-		1	GLAND,EMC,EXTENDED WITH INSERT	
690	312105-0328	-		3	SCREW M6S M5X14 A280	
700	315105-0146	-		3	WASHER PLAIN, BRB, 5,3/10,H=1	
M7208	90069-0606	C		1	GEARS, WORM MOTOR ODM90-60KE3	

Pos	Part No	SP	UN	Qty	Description	Page No

Machine Type | Group Description | Used-In | Group Number | Page No

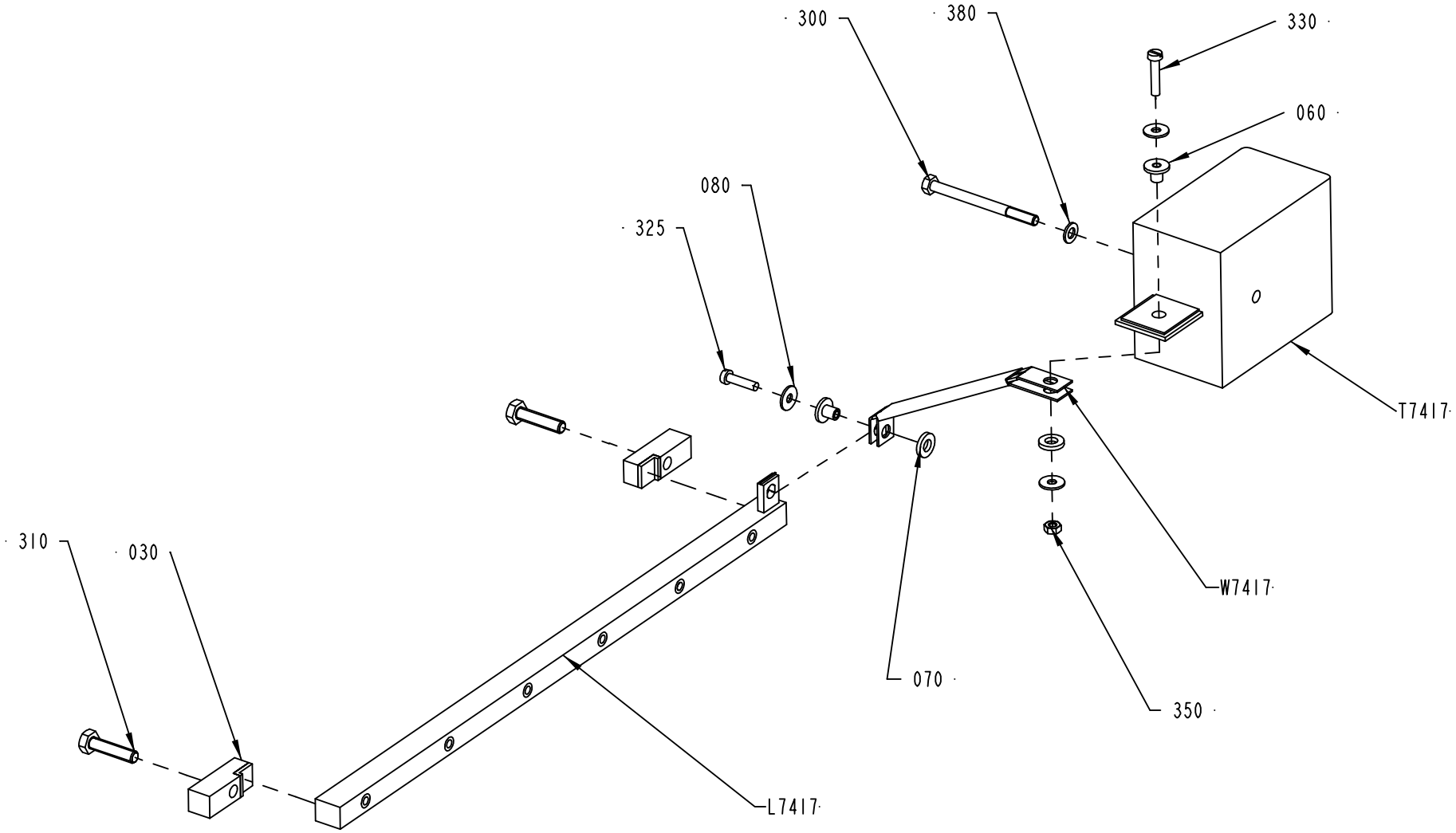

1095763-1
ECN 80787

ECM: 80790 - 20001107
Group number: 1095763-0100
Assembly Drawing: 1095763-1_1_AF

Issue: 20011217

Pos	Part No	SP	UN	Qty	Description	Page No
Common Parts						
030	1036487-0000	D		2	BRACKET	
060	1036488-0000	C		2	INSULATING BUSHING	
070	1036489-0000	C		2	WASHER	
080	90005-0082	C		3	WASHER PLAIN ROUND 4,3(M4)/12,H=1	
300	312105-0343	-		1	SCREW M6S M5X60 A280	
310	312105-0372	-		2	SCREW M6S M6X25 A280	
325	312125-0293	-		1	SCREW PAN HEAD MCS M4X16 SS	
330	312125-0295	-		1	SCREW PAN HEAD MCS M4X20 SS	
350	312605-0312	-		1	HEXAGON NUT, M6M M4 A280	
380	315105-0146	-		1	WASHER PLAIN, BRB, 5,3/10,H=1	
L7417	B1041706-0000	C		1	INDUCTOR	
010	*1110544-0000*	*-*		*1*	*KäRNA*	
020	*1110545-0000*	*-*		*1*	*STRöMSKENA*	
030	*1110500-0005*	*-*		*6*	*NIPPEL 7,0*	
T7417	67379-0106	C		1	IMPEDANCE TRANSFORMER	
W7417	1036486-0000	C		1	BUSBAR	

Pos	Part No	SP	UN	Qty	Description	Page No

Machine Type | Group Description | Used-In | Group Number | Page No

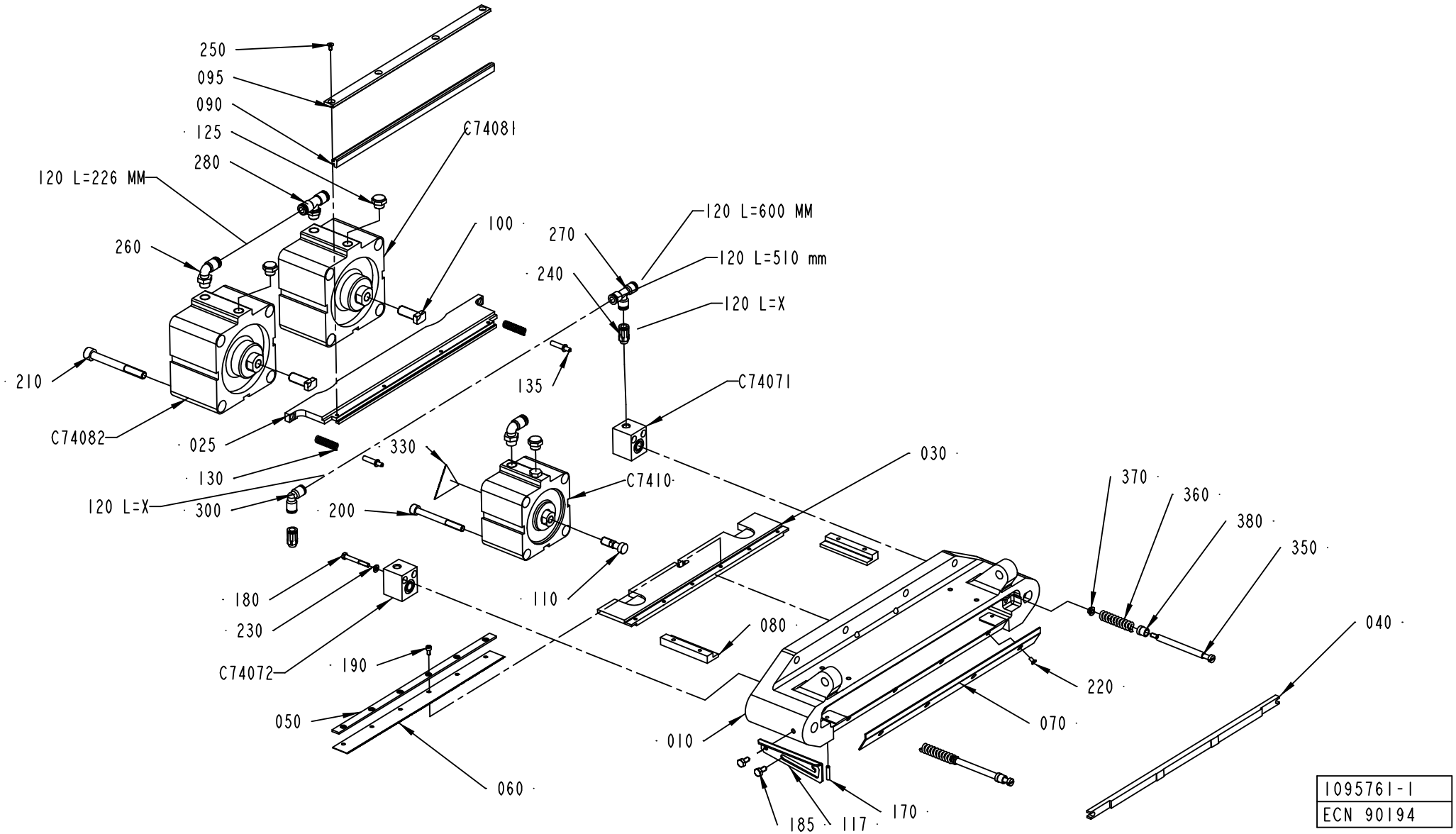
250
095
090
125
280
120 L=226 MM
260
210
C74082
025
130
120 L=X
300
C74081
100
270
240
120 L=600 MM
120 L=510 mm
120 L=X
135
C74071
330
200
C7410
110
030
370
360
380
350
040
180
230
C74072
190
050
060
080
010
220
070
185
117
170
1095761-1
ECN 90194

ECM: 83768 - 20010807
Group number: 1095761-0100
Assembly Drawing: 1095761-1_1_AH

Issue: 20011217

Pos	Part No	SP	UN	Qty	Description	Page No
Common Parts						
010	1036182-0000	-		1	PRESSURE JAW	
025	1539778-0000	A		1	PRESSURE RAIL	
030	1036671-0000	A		1	KNIFE HOLDER	
040	1346327-0000	A		1	RAIL	
050	1036675-0000	A		1	CLAMP	
060	1036676-0000	A		1	KNIFE	
070	1036677-0000	A		1	HEAD PLATE	
080	1036678-0000	A		2	SLIDE RAIL	
090	1538062-0000	A		1	DOLLY	
095	1539775-0000	A		1	RAIL	
100	1036680-0000	A		2	SCREW	
110	1036681-0000	A		1	COUPLING BOLT	
117	1040974-0000	-		1	CATCH	
120	90166-0194	-	MM	740	TUBE 8 MM PUR BLUE	
125	90257-0001	-		3	FILTER PLUG PARTNO 8145-00-140 TYP F14	
130	90335-0149	A		2	COMPRESSION SPRING	
135	1350172-0000	-		2	PIN	
170	311112-0256	-		4	PIN, STRAIGHT SLOTTED SPRING FRP 4X20	
180	312105-0339	-		4	SCREW M6S M5X40 A280	
185	312105-0366	-		2	SCREW M6S M6X12 A280	
190	312115-0287	-		6	SCREW MC6S M4X8 A280	
200	312115-0467	-		4	SCREW MC6S M8X80 A280	
210	312115-0509	-		8	SCREW MC6S M10X90 A280	
220	312145-0287	-		4	SCREW COUNTERS.SLOT.HD. MFS 4X8 SS	
230	315105-0146	-		4	WASHER PLAIN, BRB, 5,3/10,H=1	
240	342722-0204	-		2	PIPE COUPLING	
250	312155-0287	-		4	SCREW HEX.SOCK.COUNT.MF6S M4X8 A270	
260	342732-0104	-		2	ELBOW PIPE JOINT	
270	342748-0103	-		1	T-CONNECTION	
280	342742-0104	-		1	T-COUPLING,ADJUST,F.PLASTIC TUBE 8-G1/4"	
300	342735-0103	-		1	ELBOW PIPE JOINT	
330	359705-0009	-		1	WARNING SIGN ISO, SHARP PART	
350	1147087-0000	A		2	COMPRESSION ROD	
360	1147089-0000	A		2	SPRING	
370	1147091-0000	A		2	NUT	
380	1147094-0000	A		2	SLEEVE	
C74071	90450-0207	A		1	CYLINDER	
C74072	90450-0207	A		1	CYLINDER	
C74081	90450-0156	A		1	CYLINDER	
C74082	90450-0156	A		1	CYLINDER	
C7410	90450-0221	A		1	CYLINDER	

Pos	Part No	SP	UN	Qty	Description	Page No

Machine Type	Group Description	Used-In	Group Number	Page No

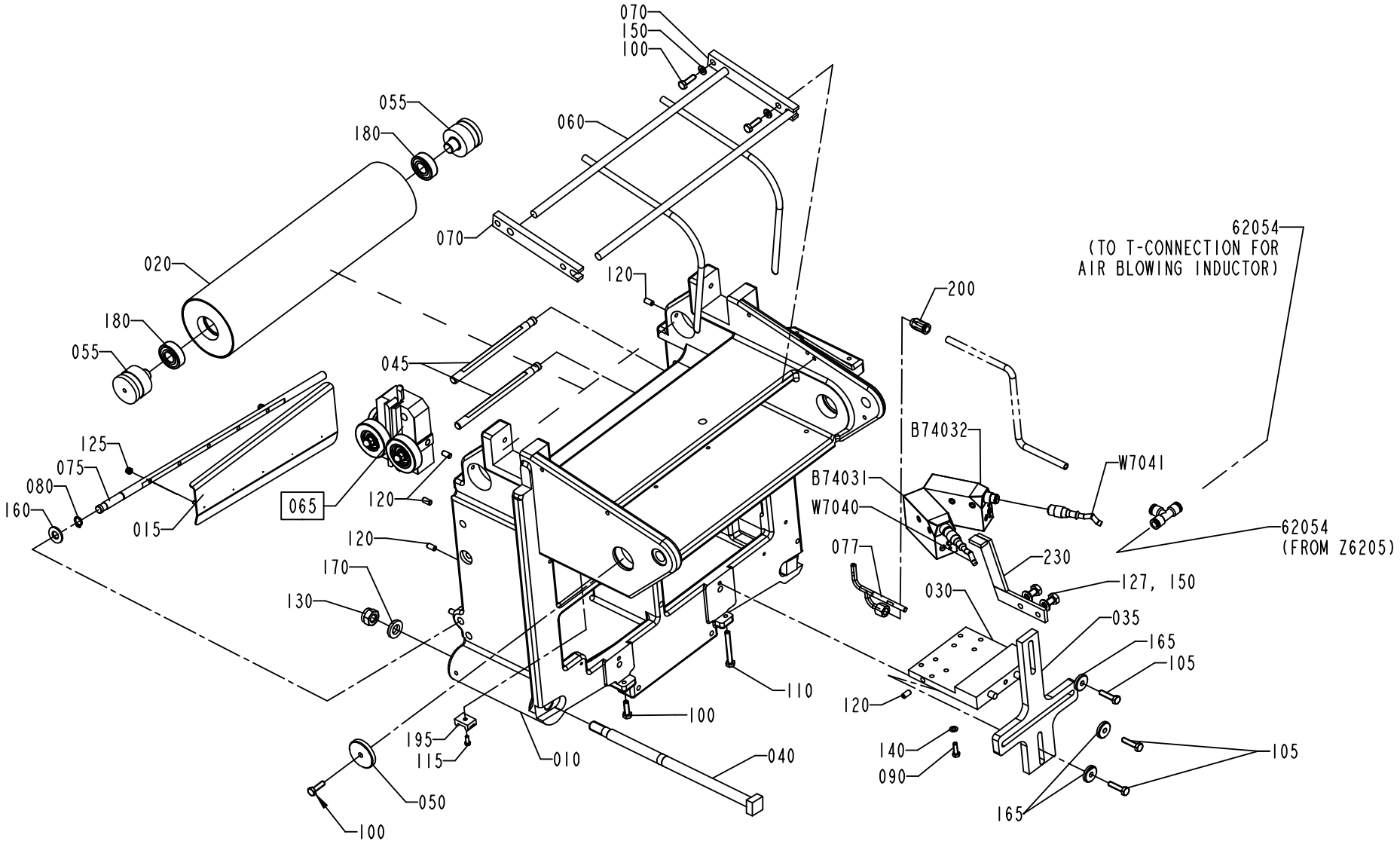

1095765-3
ECM 100990

ECM: 101849 - 50001231
Group number: 1095765-0200
Assembly Drawing: 1095765-3_1_AE

Issue: 20011217

Pos	Part No	SP	UN	Qty	Description	Page No
TBA 0200S						
230	1334084-0000	-		1	LINK FORK	
TBA 0500B OR TBA 1000B						
230	1346084-0000	-		1	LINK FORK	
TBA 0500S						
230	1499580-0000	-		1	LINK FORK	
TBA 1000S						
230	1349330-0000	-		1	LINK FORK	
TBA 1000SQ						
230	1498926-0000	-		1	LINK FORK	
TBA 1500S						
128	312155-0449	-		2	SCREW HEX.SOCK.COUNT.MF6S M8X16 A280	
230	1490186-0000	-		1	LINK FORK	
TPA 0330SQ						
230	1538645-0000	-		1	LINK FORK	
TPA 1000S						
230	1349331-0000	-		1	LINK FORK	
Common Parts						
010	1036183-0000	-		1	BRACKET	
015	1317798-0000	-		1	GUIDING PLATE	
020	1035882-0000	A		1	BENDING ROLLER	
030	1346083-0000	-		1	PHOTOCELL BRACKET	
035	1498167-0000	-		1	BRACKET	
040	1036818-0000	A		2	TIE ROD	
045	1037546-0000	A		2	SHAFT	
050	1548580-0000	-		1	WASHER	
055	1036429-0000	-		2	AXLE PIN	
060	1348435-0000	-		1	GUIDE	
065	A1484745-0100	-		1	WEB GUIDE	**875**
070	1041020-0000	-		2	HOLDER	
075	1317799-0000	-		1	ROD	
077	1317800-0000	-		1	GUIDE FINGER	
080	90141-0016	-		1	RETAIN. RING, 10	
090	312105-0329	-		8	SCREW M6S M5X16 A280	
100	312105-0370	-		6	SCREW M6S M6X20 A280	
105	312105-0372	-		3	SCREW M6S M6X25 A280	
110	312109-0380	-		1	SCREW M6S M6X50H A280	
115	312125-0289	-		3	SCREW SLOT.PAN HD. MCS 4X10 A480	
120	312318-0366	-		7	SCREW SOCK.SET CUP P MSK6SS M6X12 A4	
125	312812-0312	-		5	HEXAGON NUT, NY-LOCK M4 A480	
127	312105-0366	-		2	SCREW M6S M6X12 A280	
130	312812-0322	-		2	HEXAGON NUT, NY-LOCK M12 A480	
140	315105-0146	-		8	WASHER PLAIN, BRB, 5,3/10,H=1	
150	315105-0153	-		6	WASHER PLAIN, BRB, 6,4/12,H=1,5	
160	315105-0173	-		1	WASHER PLAIN, BRB, 10,5/22,H=2	
165	315125-0153	-		3	WASHER PLAIN ROUND,CHAMF. 6,4/22, H=4	
170	315115-0178	-		2	WASHER PLAIN, TBRB 13/24 H=4	
180	321313-0102	A		2	BALL BEARING, 2 SEALS, 15X35X11 MM	
195	352113-0203	-		3	ANCHOR TM3S8-M0	
200	342722-0204	-		1	PIPE COUPLING	
B74031	90458-0602	A		1	PHOTOCELL, SICK 90458-0602	
B74032	90458-0602	A		1	PHOTOCELL, SICK 90458-0602	
W7040	90458-0603	-		1	CONNECTOR FEMALE 5 PINS	
W7041	90458-0603	-		1	CONNECTOR FEMALE 5 PINS	

Machine Type	Group Description	Used-In	Group Number	Page No

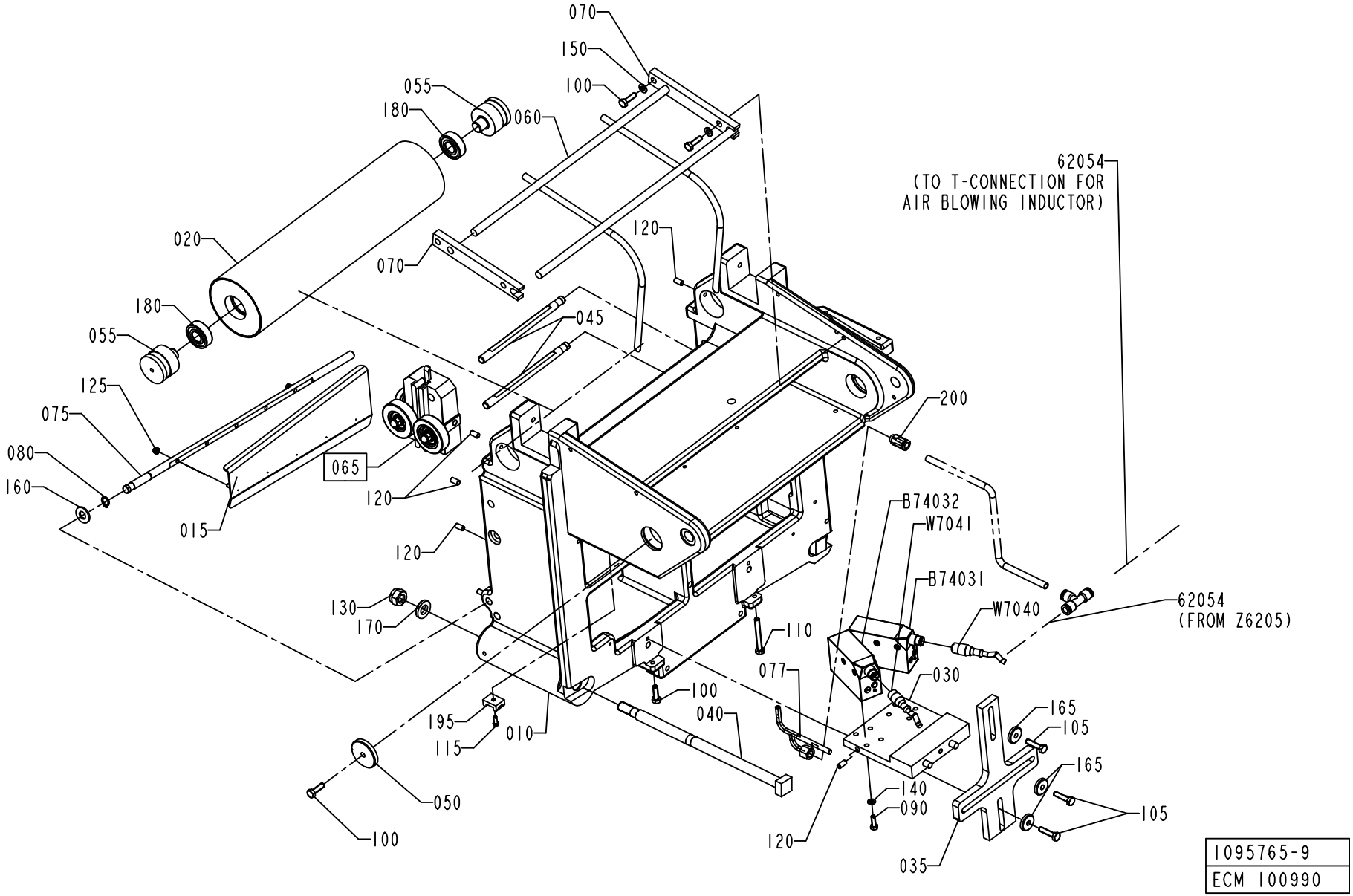
070
150
100
055
180
060
020
070
180
055
125
075
080
160
065
120
015
120
130
170
045
120
200
62054
(TO T-CONNECTION FOR
AIR BLOWING INDUCTOR)
B74032
W7041
B74031
W7040
62054
(FROM Z6205)
110
077
030
100
040
195
115
010
050
100
165
105
165
105
140
090
120
035
1095765-9
ECM 100990

ECM: 101849 - 50001231
Group number: 1095765-0200
Assembly Drawing: 1095765-9_1_AC

Issue: 20011217

Pos	Part No	SP	UN	Qty	Description	Page No
TBA 0200S						
230	1334084-0000	-		1	LINK FORK	
TBA 0500B OR TBA 1000B						
230	1346084-0000	-		1	LINK FORK	
TBA 0500S						
230	1499580-0000	-		1	LINK FORK	
TBA 1000S						
230	1349330-0000	-		1	LINK FORK	
TBA 1000SQ						
230	1498926-0000	-		1	LINK FORK	
TBA 1500S						
128	312155-0449	-		2	SCREW HEX.SOCK.COUNT.MF6S M8X16 A280	
230	1490186-0000	-		1	LINK FORK	
TPA 0330SQ						
230	1538645-0000	-		1	LINK FORK	
TPA 1000S						
230	1349331-0000	-		1	LINK FORK	
Common Parts						
010	1036183-0000	-		1	BRACKET	
015	1317798-0000	-		1	GUIDING PLATE	
020	1035882-0000	A		1	BENDING ROLLER	
030	1346083-0000	-		1	PHOTOCELL BRACKET	
035	1498167-0000	-		1	BRACKET	
040	1036818-0000	A		2	TIE ROD	
045	1037546-0000	A		2	SHAFT	
050	1548580-0000	-		1	WASHER	
055	1036429-0000	-		2	AXLE PIN	
060	1348435-0000	-		1	GUIDE	
065	A1484745-0100	-		1	WEB GUIDE	**875**
070	1041020-0000	-		2	HOLDER	
075	1317799-0000	-		1	ROD	
077	1317800-0000	-		1	GUIDE FINGER	
080	90141-0016	-		1	RETAIN. RING, 10	
090	312105-0329	-		8	SCREW M6S M5X16 A280	
100	312105-0370	-		6	SCREW M6S M6X20 A280	
105	312105-0372	-		3	SCREW M6S M6X25 A280	
110	312109-0380	-		1	SCREW M6S M6X50H A280	
115	312125-0289	-		3	SCREW SLOT.PAN HD. MCS 4X10 A480	
120	312318-0366	-		7	SCREW SOCK.SET CUP P MSK6SS M6X12 A4	
125	312812-0312	-		5	HEXAGON NUT, NY-LOCK M4 A480	
127	312105-0366	-		2	SCREW M6S M6X12 A280	
130	312812-0322	-		2	HEXAGON NUT, NY-LOCK M12 A480	
140	315105-0146	-		8	WASHER PLAIN, BRB, 5,3/10,H=1	
150	315105-0153	-		6	WASHER PLAIN, BRB, 6,4/12,H=1,5	
160	315105-0173	-		1	WASHER PLAIN, BRB, 10,5/22,H=2	
165	315125-0153	-		3	WASHER PLAIN ROUND,CHAMF. 6,4/22, H=4	
170	315115-0178	-		2	WASHER PLAIN, TBRB 13/24 H=4	
180	321313-0102	A		2	BALL BEARING, 2 SEALS, 15X35X11 MM	
195	352113-0203	-		3	ANCHOR TM3S8-M0	
200	342722-0204	-		1	PIPE COUPLING	
B74031	90458-0602	A		1	PHOTOCELL, SICK 90458-0602	
B74032	90458-0602	A		1	PHOTOCELL, SICK 90458-0602	
W7040	90458-0603	-		1	CONNECTOR FEMALE 5 PINS	
W7041	90458-0603	-		1	CONNECTOR FEMALE 5 PINS	

Machine Type | Group Description | Used-In | Group Number | Page No

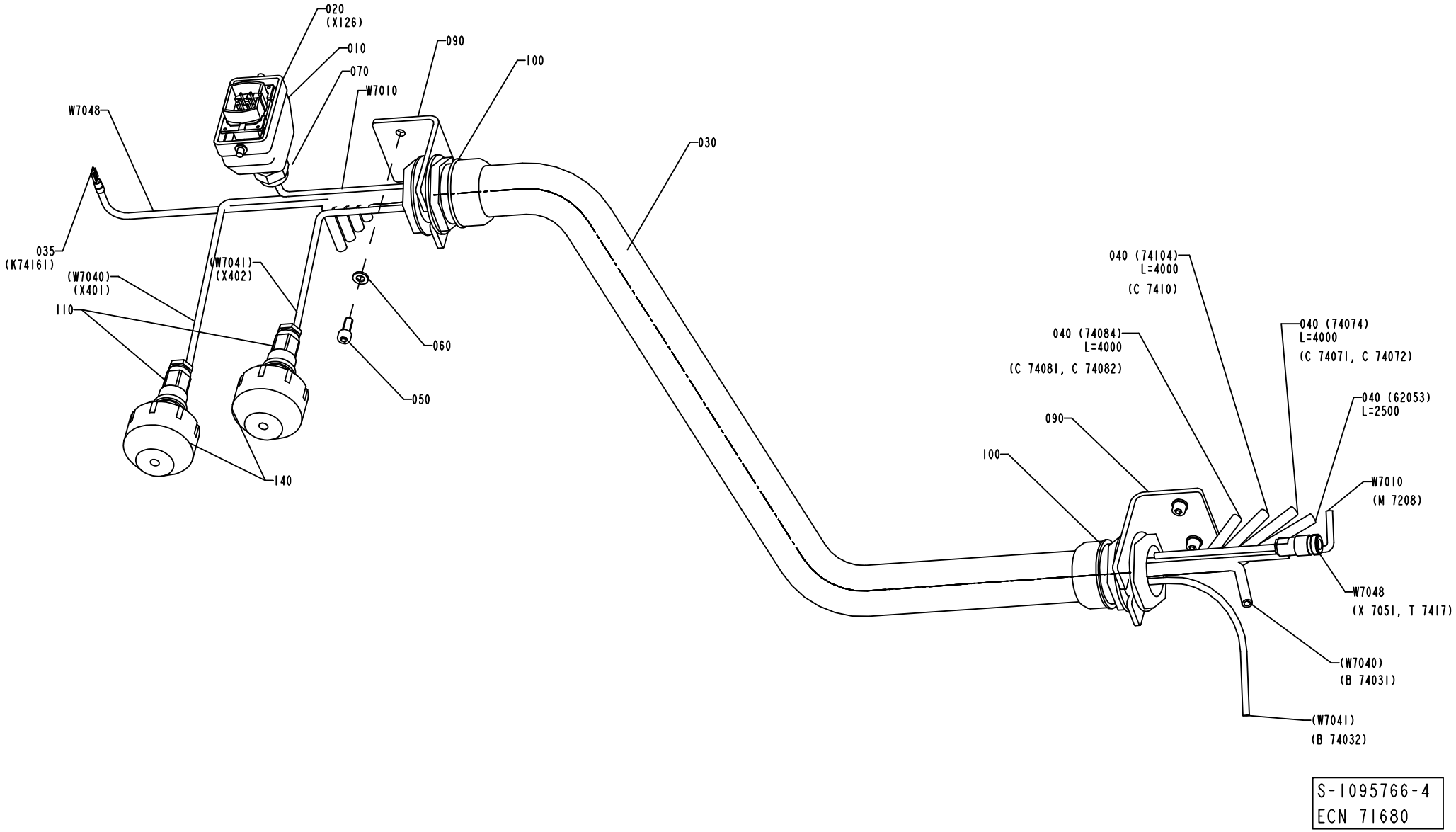
020
(X126)
010
070
W7010
090
100
W7048
030
035
(K74161)
(W7040)
(X401)
(W7041)
(X402)
110
060
050
140
040 (74104)
L=4000
(C 7410)
040 (74084)
L=4000
(C 74081, C 74082)
040 (74074)
L=4000
(C 74071, C 74072)
040 (62053)
L=2500
090
100
W7010
(M 7208)
W7048
(X 7051, T 7417)
(W7040)
(B 74031)
(W7041)
(B 74032)
S-1095766-4
ECN 71680

ECM: 72500 - 19991021
Group number: 1095766-0300
Assembly Drawing: 1095766-4_1_AA

Issue: 20011217

Pos	Part No	SP	UN	Qty	Description	Page No
Common Parts						
010	90110-0157	-		1	CABLE HOOD 6-POL 70.352.0628.1	
020	90110-0159	-		1	MALE INSERT 70.310.0640.0	
030	90152-0029	-	MM	745	HOSE 35/41	
035	92097-0009	-		1	SLEEVE	
040	90166-0194	-	M	14	TUBE 8 MM PUR BLUE	
050	312115-0368	-		4	SCREW MC6S M6X16 A280	
060	315105-0153	-		4	WASHER PLAIN, BRB, 6,4/12,H=1,5	
070	352103-0108	-		1	CABLE GLAND ST 13	
090	1334248-0000	-		2	BRACKET	
100	352136-0167	-		2	GLAND FITTING	
110	90110-0235	-		2	CABLE CONTACT, PX0739/S	
120	359005-0010	-		1	MARKING LABEL KIT 0 - 9, 04.841.2150.0	
130	359005-0050	-		1	MARKING LABEL KIT X, 04.841.4550.0	
140	90110-0348	-		2	CABLE SEALING, 12033/I, ELFA. 44-625-78	
W7010	90220-0104	-	MM	8500	SCR. CABLE 4X1,5MM2	
W7048	1037055-0000	C		1	COAXIAL CABLE	

Pos	Part No	SP	UN	Qty	Description	Page No

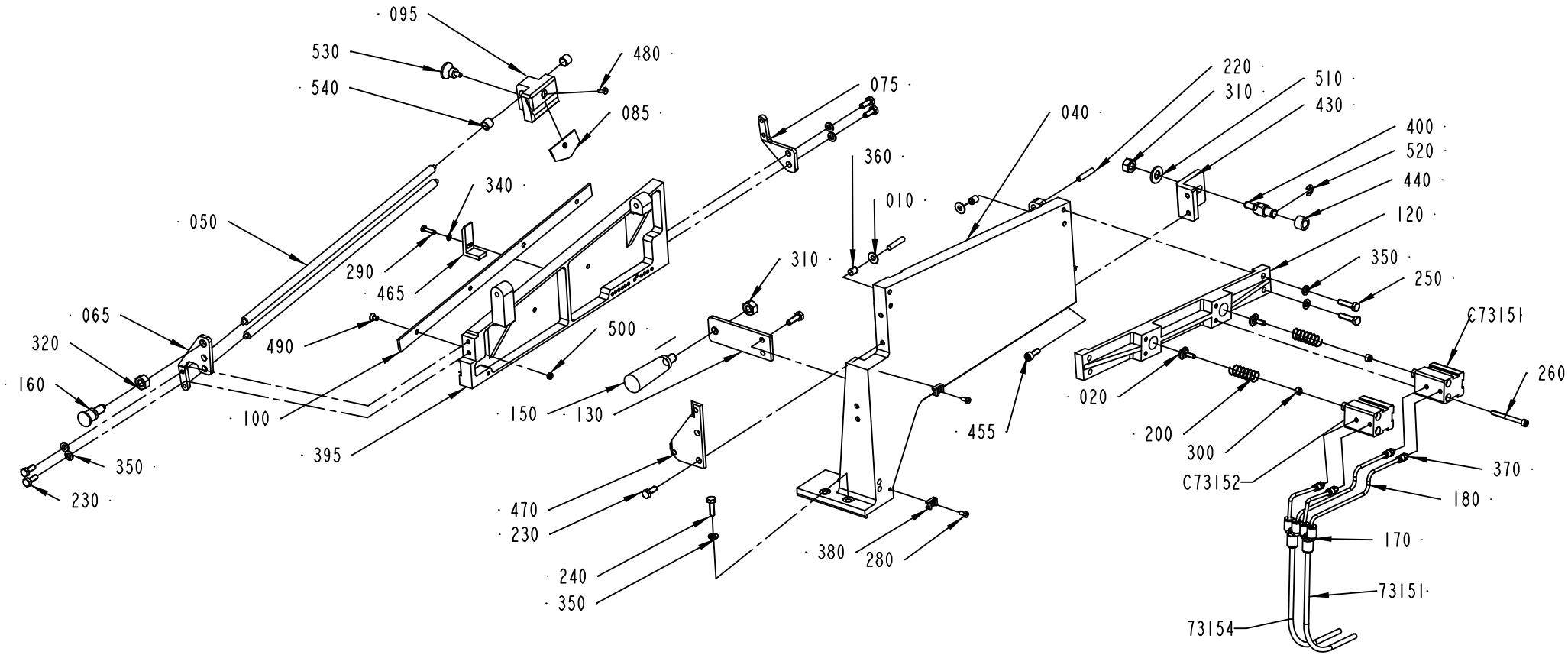

1255867-1
ECN 90194

ECM: 83767 - 20010807
Group number: 1255867-0100
Assembly Drawing: 1255867-1_1_AE

Issue: 20011217

Pos	Part No	SP	UN	Qty	Description	Page No
Common Parts						
010	271011-0000	-		2	WASHER	
020	1036695-0000	A		2	LOCK STUD	
040	1041158-0000	-		1	MATERIAL HOLDER	
050	1041159-0000	-		2	SHAFT	
065	1538033-0000	-		1	BRACKET	
075	1539330-0000	-		1	BRACKET	
085	1538038-0000	A		1	KNIFE	
095	1538035-0000	A		1	KNIFE HOLDER	
100	1538034-0000	-		1	RULER	
120	1041526-0000	-		1	MATERIAL PRESSURE	
130	1041753-0000	-		1	BRACKET	
150	90051-0065	-		1	HANDLE, THREADED TAP. NO. 8305-2151	
160	90051-0087	-		1	LOCK KNOB, NO. GN 617 A5	
170	90055-0154	-		2	HOSE COUPLING	
180	90166-0095	-	MM	1600	TUBE 4 MM PA BLUE	
200	90335-0183	A		2	SPRING	
220	311103-0357	-		2	PARALLELL PIN, M6, 6X30 MM	
230	312105-0368	-		6	SCREW M6S M6X16 A280	
240	312105-0370	-		6	SCREW M6S M6X20 A280	
250	312105-0372	-		4	SCREW M6S M6X25 A280	
260	312111-0341	-		4	SCREW HEX.SOCK.HD.MC6S-TT 5X50 88 FZB	
280	312125-0287	-		2	SCREW PAN HEAD MCS M4X8 SS	
290	312105-0291	-		1	SCREW M6S M4X12 A280	
300	312605-0314	-		2	HEXAGON NUT, M6M M5 A280	
310	312605-0320	-		2	HEXAGON NUT, M6M M10 A280	
320	312630-0320	-		1	NUT HEX. M10X1 FE FZB	
340	315105-0136	-		1	WASHER PLAIN, BRB, 4,3/8,H=0,8	
350	315105-0153	-		12	WASHER PLAIN, BRB, 6,4/12,H=1,5	
360	321120-0102	-		2	BEARING BUSHING WITHOUT FLANGE,6/8X10	
370	342722-0198	-		4	STRAIGHT COUPLING	
380	352113-0205	-		2	ANCHOR TM2S8-C100	
395	1538032-0000	-		1	CUTTING TABLE	
400	1549402-0000	-		1	SHAFT	
430	1548520-0000	-		1	BRACKET	
440	436556-0000	-		1	CURVE ROLLER	
455	312115-0368	-		2	SCREW MC6S M6X16 A280	
465	1539329-0000	-		1	ANGLE	
470	1478907-0000	-		1	SECURING PLATE	
480	312155-0291	-		1	SCREW HEX.SOCK.COUNT.MF6S M4X12 A480	
490	312155-0323	-		4	SCREW HEX.SOCK.COUNT.MF6S M5X8 A280	
500	312605-0312	-		4	HEXAGON NUT, M6M M4 A280	
510	315101-0173	-		1	WASHER PLAIN, BRB, 10,5/22 H=2	
520	315755-0109	-		1	LOCKING WASHER 7	
530	318871-0102	-		1	KNOB CIRCULAR, EXT THREAD, NO. 8302-6037	
540	90240-0287	-		2	BUSHING, 10X12X10 MM	
73152	90166-0193	-	MM	6000	TUBE 6 MM PUR BLUE	
73154	90166-0193	-	MM	6000	TUBE 6 MM PUR BLUE	
C73151	90450-0310	A		1	CYLINDER ADV-20-15 A	
C73152	90450-0310	A		1	CYLINDER ADV-20-15 A	

Machine Type | Group Description | Used-In | Group Number | Page No

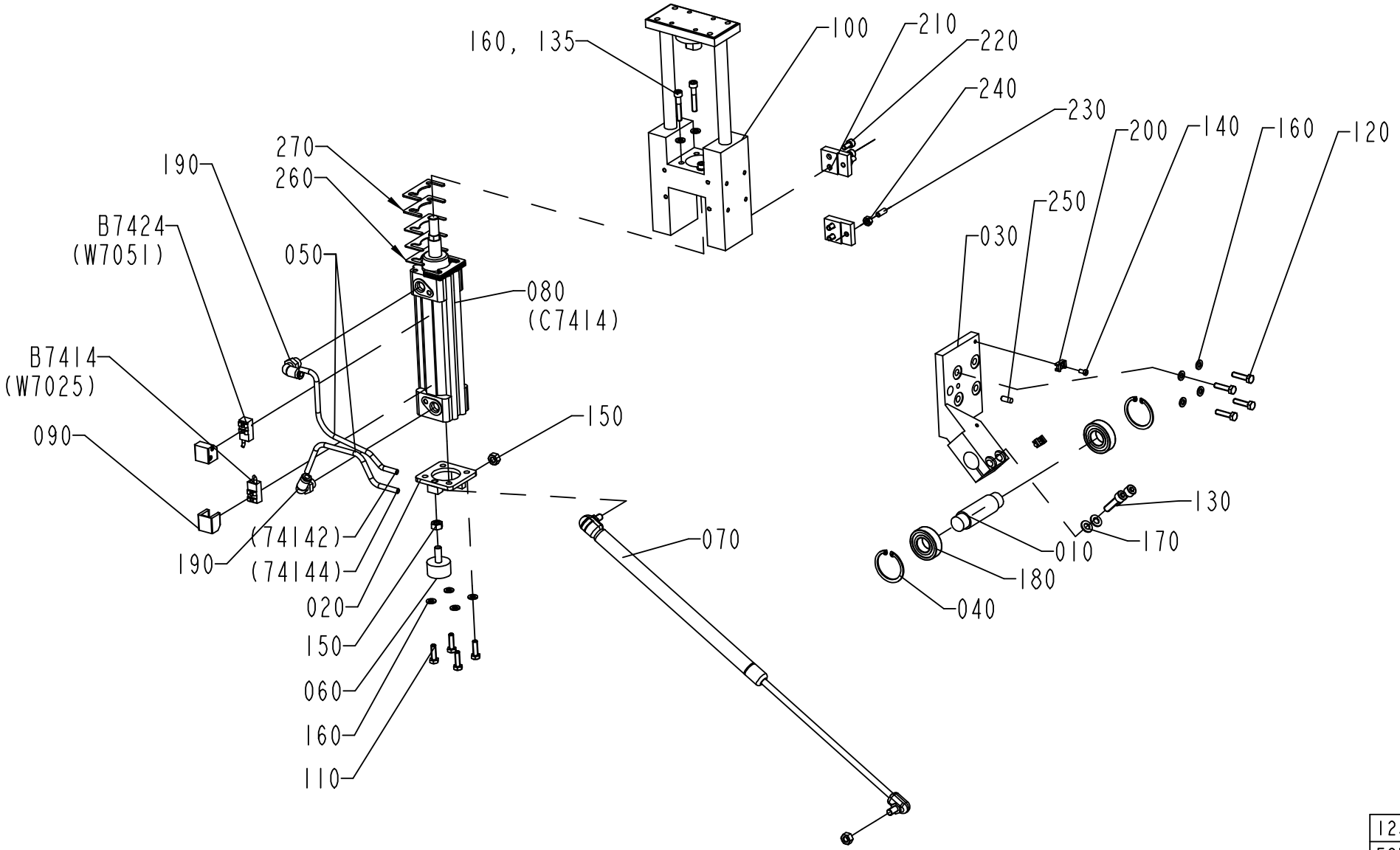

1255868-1
ECN 90194

ECM: 93130 - 20010807
Group number: 1255868-0100
Assembly Drawing: 1255868-1_1_AF

Issue: 20011217

Pos	Part No	SP	UN	Qty	Description	Page No
Common Parts						
010	1037132-0000	A		1	SHAFT	
020	1037133-0000	A		1	BRACKET	
030	1129041-0000	-		1	ARM	
040	90141-0020	-		2	RETAIN. RING, 42	
050	90166-0193	-	M	9	TUBE 6 MM PUR BLUE	
060	90347-0004	A		1	VIBRATION DAMPER D=30 TH=M8 H=17 H2=21MM	
070	90347-0163	A		1	GAS-DAMPER	
080	90450-0272	A		1	DOUBLE ACTING,PROFILE,CYL 40-100	
090	90450-0669	-		2	SENSOR,BRACKET,SERIES 168	
100	1478735-0000	-		1	STEERING	
110	312105-0370	-		4	SCREW M6S M6X20 A280	
120	312105-0372	-		4	SCREW M6S M6X25 A280	
130	312115-0455	-		2	SCREW MC6S M8X30 A280	
135	312115-0376	-		4	SCREW MC6S M6X35 A280	
140	312125-0287	-		2	SCREW PAN HEAD MCS M4X8 SS	
150	312605-0318	-		3	HEXAGON NUT, M6M M8 A280	
160	315105-0153	-		12	WASHER PLAIN, BRB, 6,4/12,H=1,5	
170	315105-0165	-		2	WASHER PLAIN, BRB, 8,4/16,H=1,5	
180	321308-0204	A		2	BALL BEARING, 2 SEALS, 20X42X12 MM	
190	342732-0103	-		2	ELBOW PIPE JOINT	
200	352113-0205	-		2	ANCHOR TM2S8-C100	
210	1478736-0000	-		2	BLOCK	
220	312115-0366	-		4	SCREW MC6S M6X12 A280	
230	312318-0368	-		2	SCREW SOCK.SET CUP P MSK6SS M6X16 A4	
240	312605-0316	-		2	HEXAGON NUT, M6M M6 A280	
250	311103-0351	-		1	PARALLELL PIN, M6, 6X16 MM	
260	2508257-0000	-		6	SPACER	
270	2508258-0000	-		4	SPACER	
B7414	90044-0116	A		1	CYLINDER,SENSOR	
B7424	90044-0116	A		1	CYLINDER,SENSOR	

Pos	Part No	SP	UN	Qty	Description	Page No

Machine Type	Group Description	Used-In	Group Number	Page No

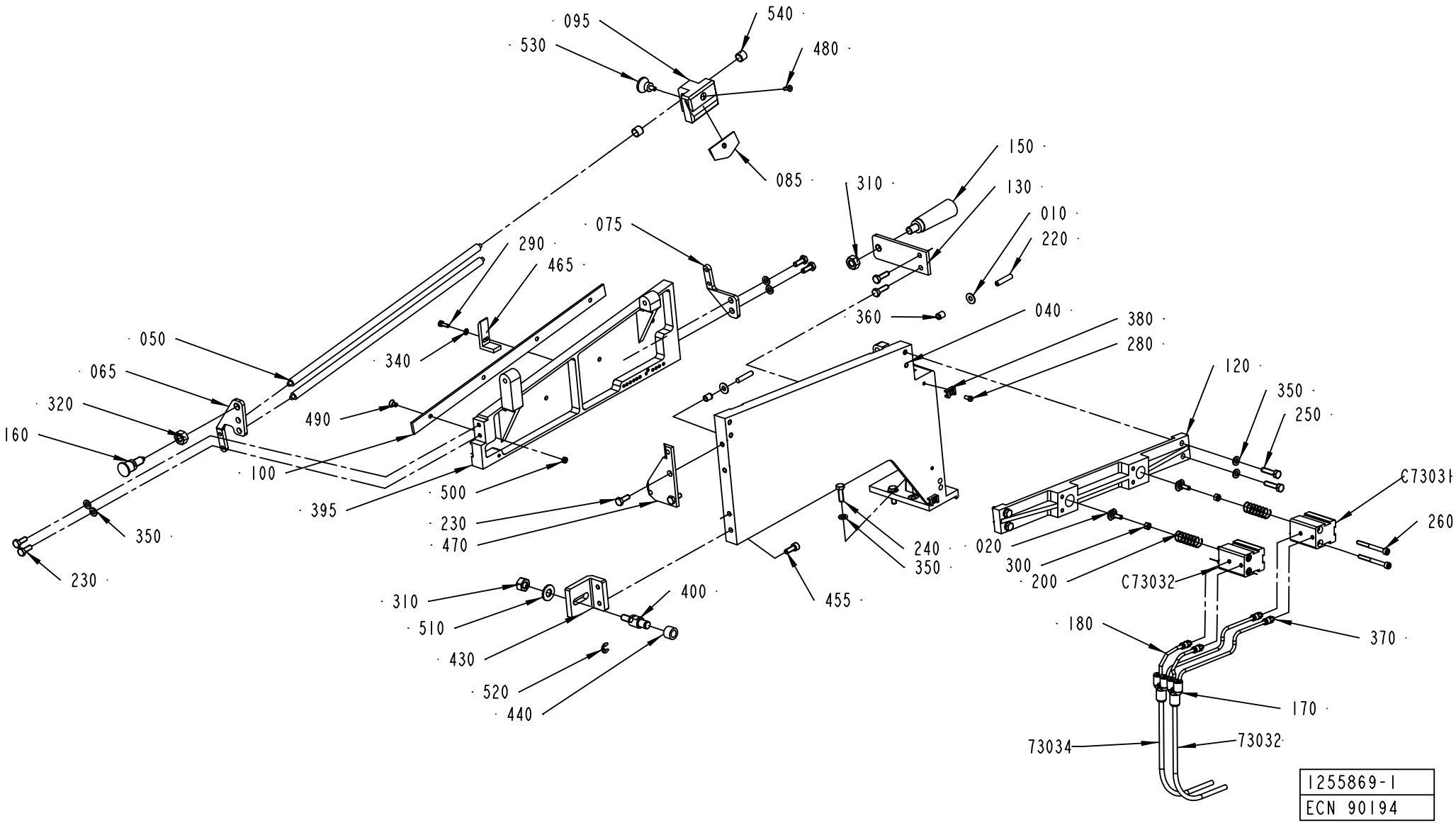
095
530
540
480
085
310
150
130
010
220
075
290
465
340
360
040
380
280
050
065
320
160
490
100
395
500
230
470
350
230
120
350
250
C73031
260
020
300
200
C73032
240
350
455
310
510
430
520
440
400
180
370
170
73034
73032
1255869-1
ECN 90194

ECM: 83766 - 20010807
Group number: 1255869-0100
Assembly Drawing: 1255869-1_1_AF

Issue: 20011217

Pos	Part No	SP	UN	Qty	Description	Page No
Common Parts						
010	271011-0000	-		2	WASHER	
020	1036695-0000	A		2	LOCK STUD	
040	1041157-0000	-		1	MATERIAL HOLDER	
050	1041159-0000	-		2	SHAFT	
065	1538033-0000	-		1	BRACKET	
075	1539330-0000	-		1	BRACKET	
085	1538038-0000	A		1	KNIFE	
095	1538035-0000	A		1	KNIFE HOLDER	
100	1538034-0000	-		1	RULER	
120	1041526-0000	-		1	MATERIAL PRESSURE	
130	1041753-0000	-		1	BRACKET	
150	90051-0065	-		1	HANDLE, THREADED TAP. NO. 8305-2151	
160	90051-0087	-		1	LOCK KNOB, NO. GN 617 A5	
170	90055-0154	-		2	HOSE COUPLING	
180	90166-0095	-	MM	1600	TUBE 4 MM PA BLUE	
200	90335-0183	A		2	SPRING	
220	311103-0357	-		2	PARALLELL PIN, M6, 6X30 MM	
230	312105-0368	-		6	SCREW M6S M6X16 A280	
240	312105-0370	-		6	SCREW M6S M6X20 A280	
250	312105-0372	-		4	SCREW M6S M6X25 A280	
260	312111-0341	-		4	SCREW HEX.SOCK.HD.MC6S-TT 5X50 88 FZB	
280	312125-0287	-		2	SCREW PAN HEAD MCS M4X8 SS	
290	312105-0291	-		1	SCREW M6S M4X12 A280	
300	312605-0314	-		2	HEXAGON NUT, M6M M5 A280	
310	312605-0320	-		2	HEXAGON NUT, M6M M10 A280	
320	312630-0320	-		1	NUT HEX. M10X1 FE FZB	
340	315105-0136	-		1	WASHER PLAIN, BRB, 4,3/8,H=0,8	
350	315105-0153	-		12	WASHER PLAIN, BRB, 6,4/12,H=1,5	
360	321120-0102	-		2	BEARING BUSHING WITHOUT FLANGE,6/8X10	
370	342722-0198	-		4	STRAIGHT COUPLING	
380	352113-0205	-		2	ANCHOR TM2S8-C100	
395	1538032-0000	-		1	CUTTING TABLE	
400	1549402-0000	-		1	SHAFT	
430	1548520-0000	-		1	BRACKET	
440	436556-0000	-		1	CURVE ROLLER	
455	312115-0368	-		2	SCREW MC6S M6X16 A280	
465	1539329-0000	-		1	ANGLE	
470	1478907-0000	-		1	SECURING PLATE	
480	312155-0291	-		1	SCREW HEX.SOCK.COUNT.MF6S M4X12 A480	
490	312155-0323	-		4	SCREW HEX.SOCK.COUNT.MF6S M5X8 A280	
500	312605-0312	-		4	HEXAGON NUT, M6M M4 A280	
510	315101-0173	-		1	WASHER PLAIN, BRB, 10,5/22 H=2	
520	315755-0109	-		1	LOCKING WASHER 7	
530	318871-0102	-		1	KNOB CIRCULAR, EXT THREAD, NO. 8302-6037	
540	90240-0287	-		2	BUSHING, 10X12X10 MM	
73032	90166-0193	-	MM	6000	TUBE 6 MM PUR BLUE	
73034	90166-0193	-	MM	6000	TUBE 6 MM PUR BLUE	
C73031	90450-0310	A		1	CYLINDER ADV-20-15 A	
C73032	90450-0310	A		1	CYLINDER ADV-20-15 A	

Machine Type | Group Description | Used-In | Group Number | Page No

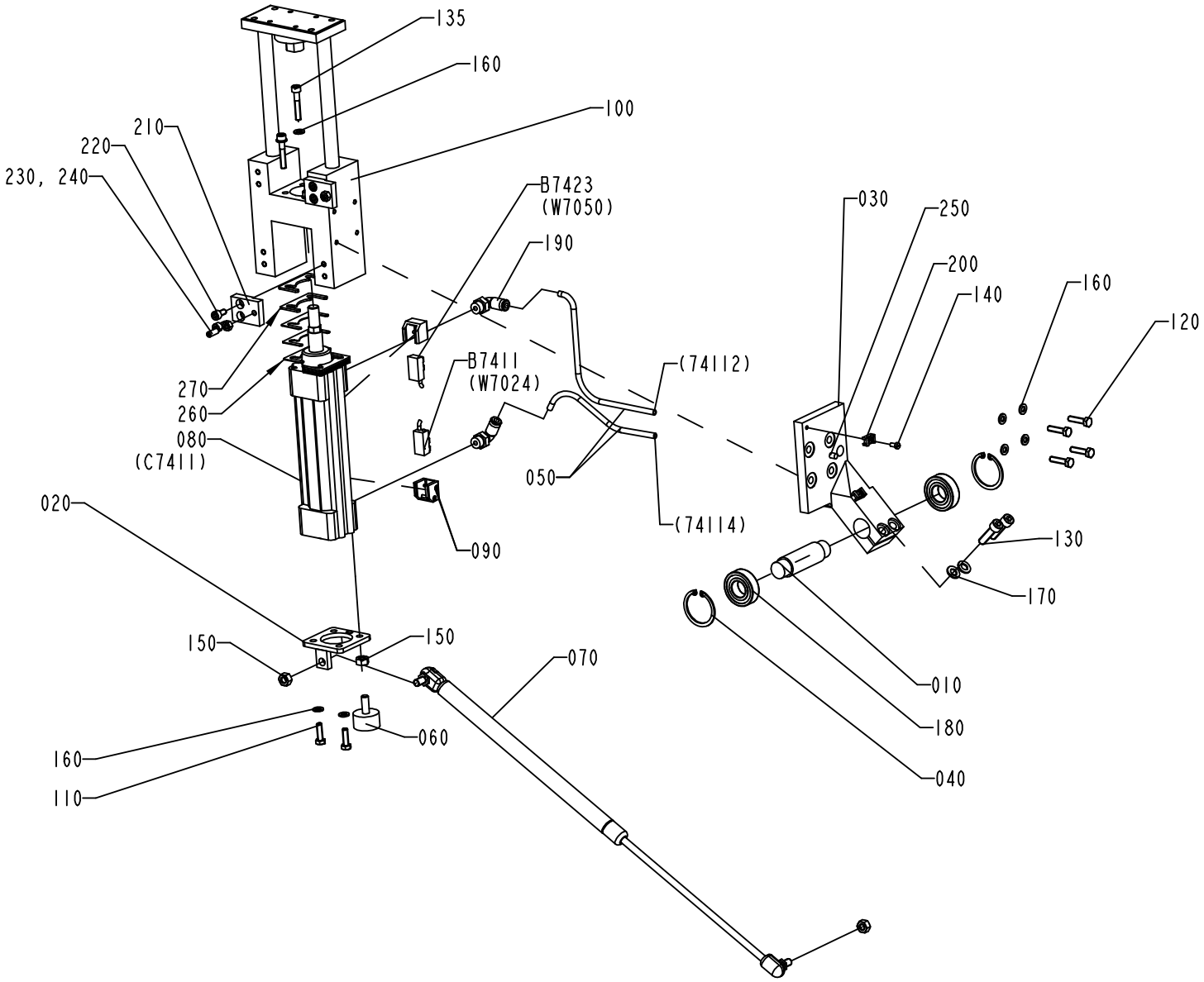

1255870-1
ECN 90194

ECM: 93129 - 20010807
Group number: 1255870-0100
Assembly Drawing: 1255870-1_1_AF

Issue: 20011217

Pos	Part No	SP	UN	Qty	Description	Page No
Common Parts						
010	1037132-0000	A		1	SHAFT	
020	1037133-0000	A		1	BRACKET	
030	1129040-0000	-		1	ARM	
040	90141-0020	-		2	RETAIN. RING, 42	
050	90166-0193	-	M	9	TUBE 6 MM PUR BLUE	
060	90347-0004	A		1	VIBRATION DAMPER D=30 TH=M8 H=17 H2=21MM	
070	90347-0163	A		1	GAS-DAMPER	
080	90450-0272	A		1	DOUBLE ACTING,PROFILE,CYL 40-100	
090	90450-0669	-		2	SENSOR,BRACKET,SERIES 168	
100	1478735-0000	-		1	STEERING	
110	312105-0370	-		4	SCREW M6S M6X20 A280	
120	312105-0372	-		4	SCREW M6S M6X25 A280	
130	312115-0455	-		2	SCREW MC6S M8X30 A280	
135	312115-0376	-		4	SCREW MC6S M6X35 A280	
140	312125-0287	-		2	SCREW PAN HEAD MCS M4X8 SS	
150	312605-0318	-		3	HEXAGON NUT, M6M M8 A280	
160	315105-0153	-		12	WASHER PLAIN, BRB, 6,4/12,H=1,5	
170	315105-0165	-		2	WASHER PLAIN, BRB, 8,4/16,H=1,5	
180	321308-0204	A		2	BALL BEARING, 2 SEALS, 20X42X12 MM	
190	342732-0103	-		2	ELBOW PIPE JOINT	
200	352113-0205	-		2	ANCHOR TM2S8-C100	
210	1478736-0000	-		2	BLOCK	
220	312115-0366	-		4	SCREW MC6S M6X12 A280	
230	312318-0368	-		2	SCREW SOCK.SET CUP P MSK6SS M6X16 A4	
240	312605-0316	-		2	HEXAGON NUT, M6M M6 A280	
250	311103-0351	-		1	PARALLELL PIN, M6, 6X16 MM	
260	2508257-0000	-		6	SPACER	
270	2508258-0000	-		4	SPACER	
B7411	90044-0116	A		1	CYLINDER,SENSOR	
B7423	90044-0116	A		1	CYLINDER,SENSOR	

Pos	Part No	SP	UN	Qty	Description	Page No

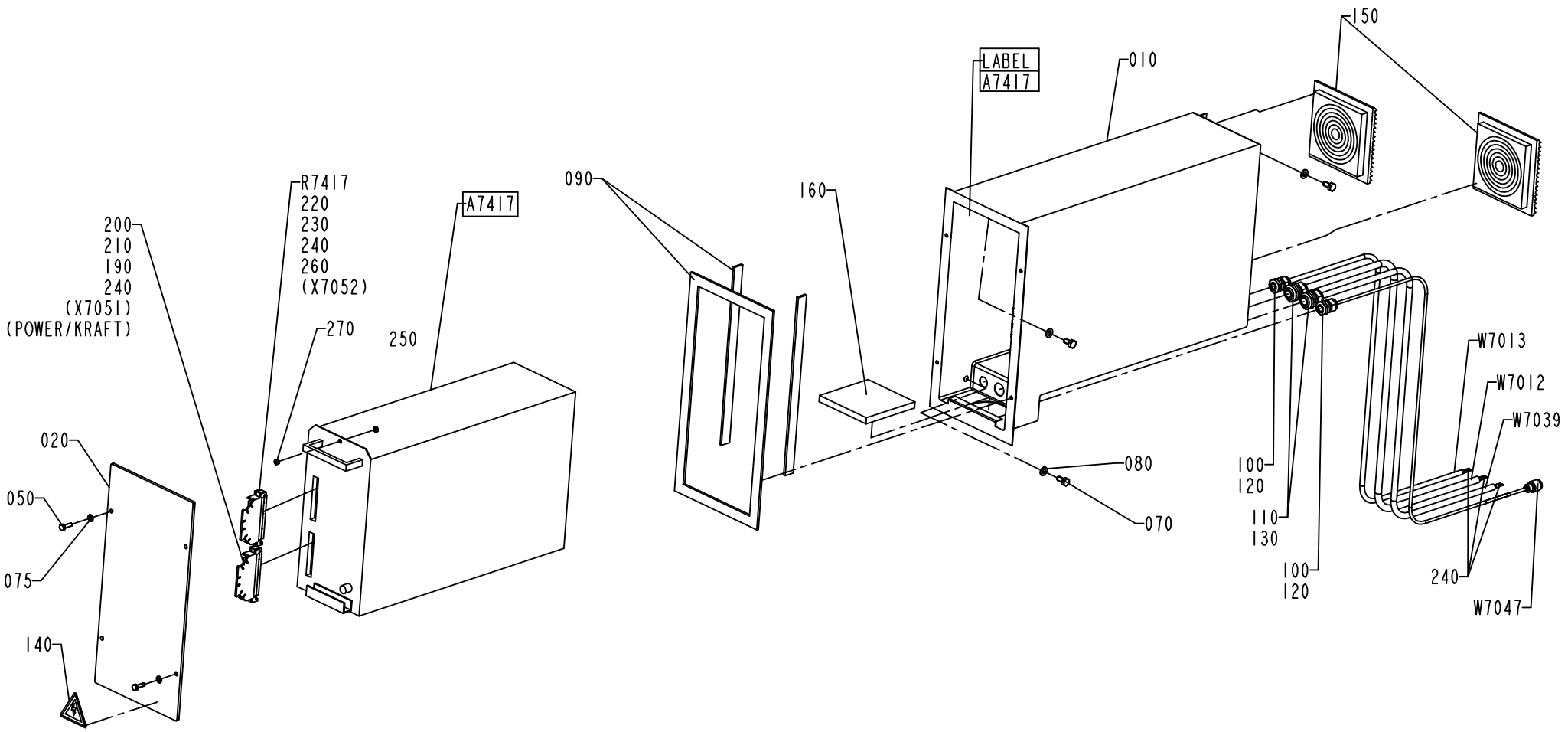

S-1095768-1
ECN 72500

ECM: 72500 - 19991021
Group number: 1095768-0100
Assembly Drawing: 1095768-1_1_AE

Issue: 20011217

Pos	Part No	SP	UN	Qty	Description	Page No
Common Parts						
010	1036814-0000	-		1	APPLIANCE BOX	
020	1036815-0000	-		1	LID	
050	312105-0370	-		4	SCREW M6S M6X20 A280	
070	312105-0449	-		3	SCREW M6S M8X16 A280	
075	315105-0153	-		4	WASHER PLAIN, BRB, 6,4/12,H=1,5	
080	315105-0165	-		3	WASHER PLAIN, BRB, 8,4/16,H=1,5	
090	90143-0071	-	MM	2200	RUBBER STRIP 4X20MM	
100	352103-0106	-		2	CABLE GLAND ST 11	
110	352103-0110	-		2	CABLE GLAND STR 16	
120	90099-0117	-		2	NUT PR 18,6 (PG11)	
130	90099-0110	-		2	NUT PR 22,5 (PG16)	
140	90194-0016	-		1	SIGN, FLASH, ELECTRIC EQUIPMENT SYMBOL	
150	90277-0129	-		2	EXHAUST FILTER / SK 3322.200	
160	90277-0393	-		1	FILTER INSERT RITTAL SK 3170100	
190	90097-0017	-		5	FLAT PIN PLUG 6,3MM	
200	90110-0121	-		1	FEMALE INSERT GDS A-H 09 06 215 2811	
210	90110-0122	-		1	COVER, 09 06 000 9957	
220	90110-0121	-		1	FEMALE INSERT GDS A-H 09 06 215 2811	
230	90110-0122	-		1	COVER, 09 06 000 9957	
240	92097-0009	-		16	SLEEVE	
250	90062-0060	-		1	LOCK WASHER SERRAT.EXT.GEAR,5,3/10 H=0,6	
260	90166-0214	-		1	SHRINKABLE HOSE 1,2 MM	
270	312605-0314	-		1	HEXAGON NUT, M6M M5 A280	
A7417	B67600-0501	D		1	TPIH GENERATOR	
10	*542036-0000*	-			*TP SIGN BOARD "PART NO" 84X140MM*	
500	*565140-0001*	-			*COMPONENTS WITHOUT TP-NO*	
510	*565144-0000*	-			*LABEL LED*	
520	*565145-0000*	-			*LABEL X1/X2*	
530	*565146-0000*	-			*INSULATION SPACER*	
540	*565147-0000*	-			*GUIDE RAIL LEFT*	
550	*565148-0000*	-			*GUIDE RAIL RIGHT*	
560	*565149-0000*	-			*GUIDE RAIL BACK*	
570	*565150-0000*	-			*FRONT HANDLE*	
580	*565151-0000*	-			*BOX BOTTOM*	
590	*565152-0000*	-			*FRAME*	
600	*565153-0000*	-			*COMPLETE BOX*	
610	*565154-0000*	-			*BOX UPPER PART*	
F100	*B67577-0501*	-			*POWER CARD*	
130	*573137-0001*	-			*COMPONENTS WITHOUT TP-NO*	
140	*565299-0000*	-			*SORTING INSTRUCTION*	
150	*543112-0000*	-			*MODIFYING EUROPECONNECTOR*	
160	*573138-0000*	-		*3*	*HEAT SINK L*	
180	*565301-0000*	-			*CAPACITOR CABLE RED*	
190	*565300-0000*	-			*CAPACITOR CABLE BLACK*	
200	*575980-0000*	-			*CIRCUIT DIAGRAM*	
F101	*B67564-0101*	-			*THIH TOROID COIL 1*	
100	*564253-0001*	-			*COMPONENTS WITHOUT TP-NO*	
110	*532687-0000*	-			*TOROID COIL 1*	
F102	*B67565-0101*	-			*TPIH TOROID COIL 2*	
100	*564254-0001*	-			*COMPONENTS WITHOUT TP-NO*	
110	*532688-0000*	-			*TOROID COIL 2*	
F103	*B67566-0101*	-			*TPIH TOROID COIL 3*	
100	*564255-0001*	-			*COMPONENTS WITHOUT TP-NO*	
110	*532689-0000*	-			*TOROID COIL 3*	
F104	*B67567-0101*	-			*TPIH THERMOSTAT CABLE*	
100	*564256-0001*	-			*COMPONENTS WITHOUT TP-NO*	
110	*532690-0000*	-			*THERMOSTAT CABLE*	
F105	*B67568-0101*	-			*TPIH COIL SINGLE LAYER*	
100	*564257-0001*	-			*COMPONENTS WITHOUT TP-NO*	
110	*532692-0000*	-			*COIL SINGLE LAYER*	
120	*532691-0000*	-			*COIL FORMER*	
F106	*B67569-0101*	-			*TPIH TANK COIL*	
100	*564260-0001*	-			*COMPONENTS WITHOUT TP-NO*	
110	*532693-0000*	-			*BOTTOM GABLE*	
120	*532695-0000*	-			*GABLE*	
130	*532696-0000*	-			*RING SPRING*	
140	*532697-0000*	-			*WINDING HOLDER*	
150	*565286-0000*	-			*WINDING HOLDER*	
160	*565287-0000*	-			*SPACER*	
170	*532694-0000*	-			*TANK COIL*	
F107	*B67570-0101*	-			*TPIH CAPACITOR CARD*	
100	*564261-0001*	-			*COMPONENTS WITHOUT TP-NO*	
120	*484995-0000*	-			*PRINTED CIRCUIT BOARD*	
130	*565289-0000*	-			*COMPONENT REFERENCE*	
F108	*B67582-0101*	-			*TPIH HEATSINK PREREGULATO*	
100	*573134-0001*	-			*COMPONENTS WITHOUT TP-NO*	
110	*565290-0000*	-			*HEAT SINK V1*	
120	*532703-0000*	-			*HEAT SINK V2*	
130	*565291-0000*	-			*HEAT SINK V3*	
140	*573135-0000*	-			*HEAT SINK PREREGULATOR*	
F110	*B67573-0101*	-			*TPIH TRANSISTOR PACKAGE R*	
100	*564264-0001*	-			*COMPONENTS WITHOUT TP-NO*	
110	*565295-0000*	-			*GABLE LEFT*	

Machine Type | Group Description | Used-In | Group Number | Page No

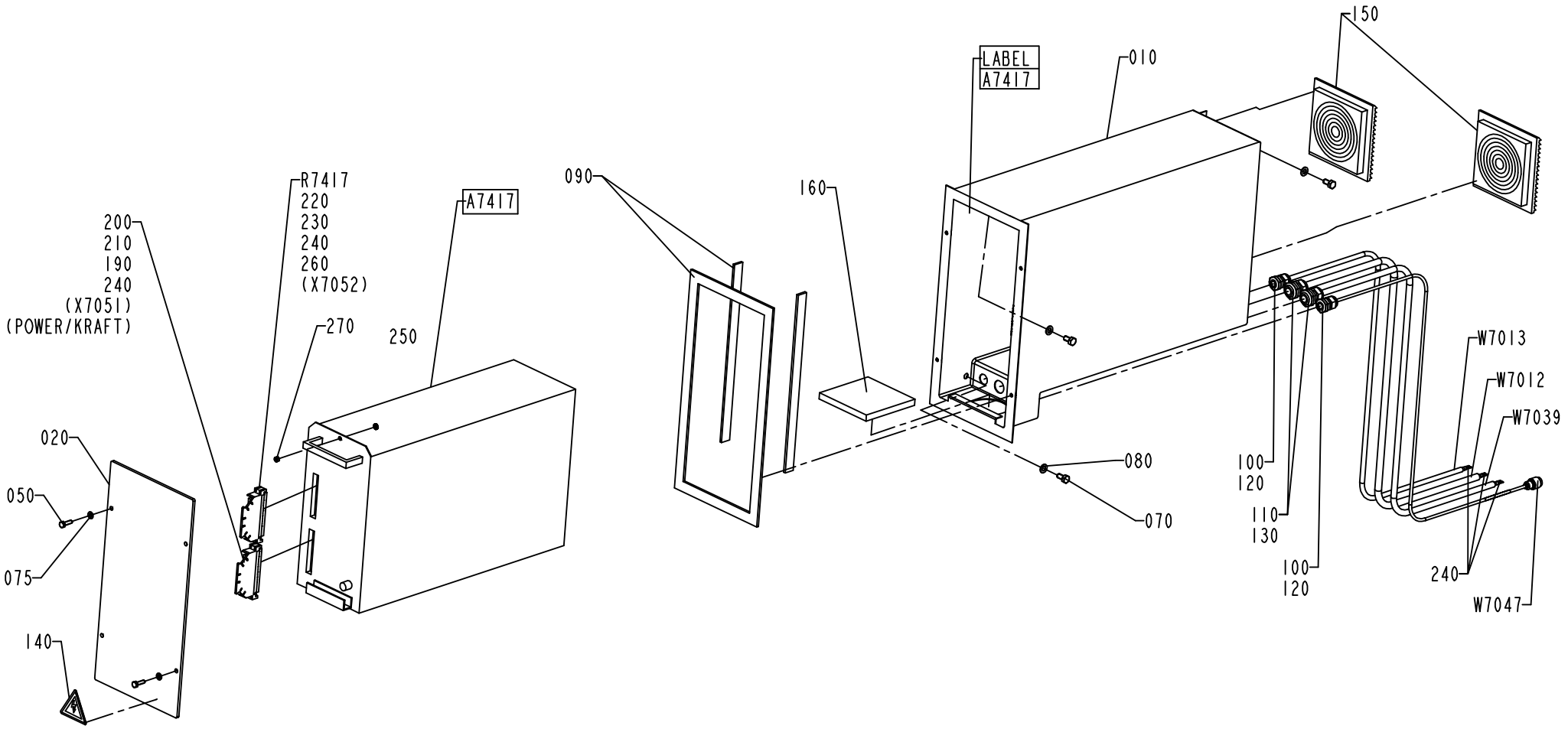

S-1095768-1
ECN 72500

Pos	Part No	SP	UN	Qty	Description	Page No
Common Parts (Cont'd)						
R7417	90121-0090	D		1	RESISTANCE FIXED, 10 KOHM, 0,5 W	
W7012	351150-0419	-	M	2	CABLE OLFLEX 5X2,5 MM2 LIGHT/GREY	
W7013	351150-0412	-	M	2	CABLE OLFLEX 3X1,5 MM2 LIGHT/GREY	
W7039	351150-0406	-	M	2	CABLE OLFLEX 7X0,75 MM2 LIGHT/GREY	
W7047	1037056-0000	C		1	COAXIAL CABLE	

Pos	Part No	SP	UN	Qty	Description	Page No

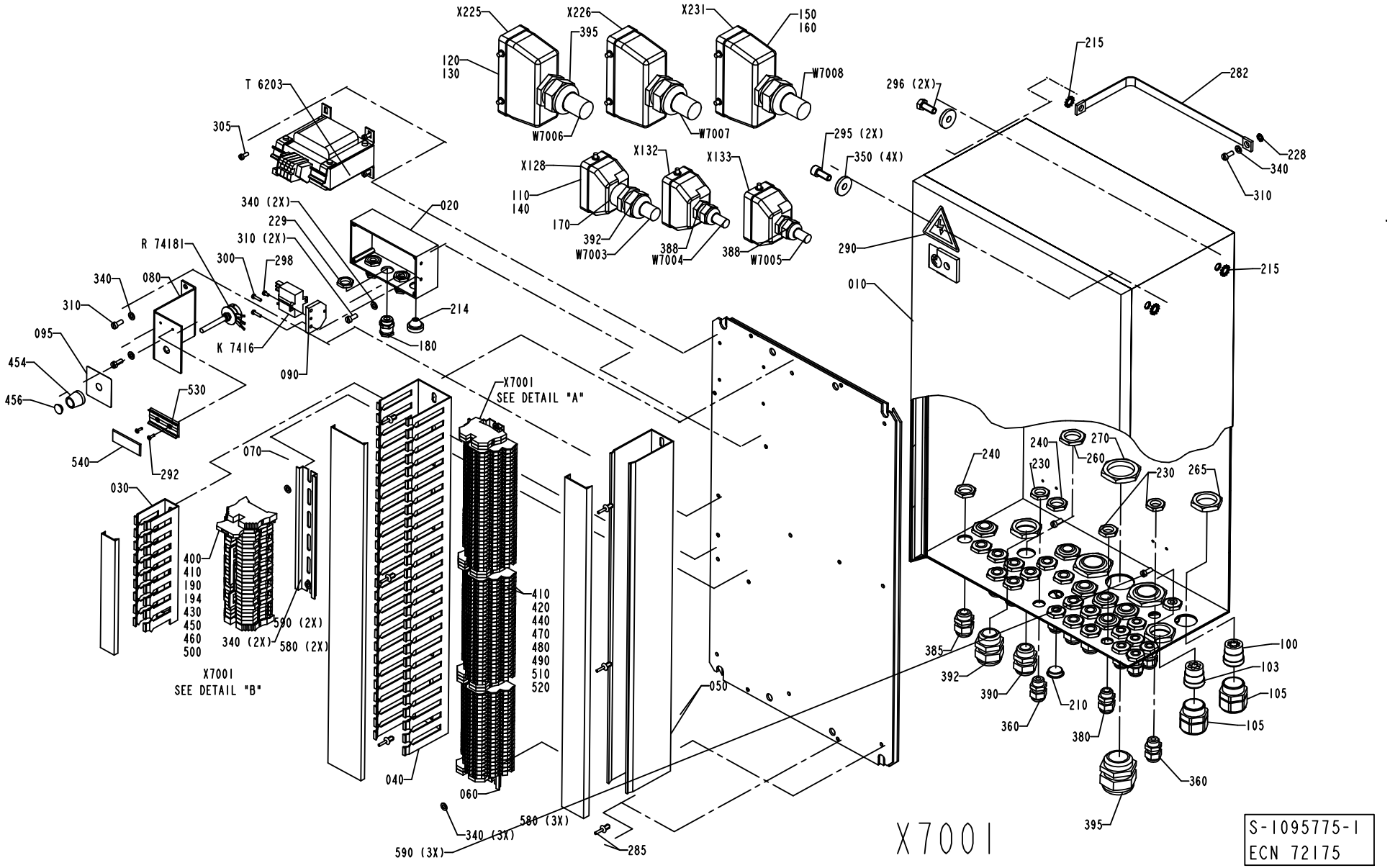
X225
X226
X231
150
160
395
120
130
W7008
W7006
W7007
T 6203
305
215
282
296 (2X)
295 (2X)
350 (4X)
228
340
310
X128
X132
X133
110
140
170
392
W7003
388
W7004
388
W7005
290
215
010
340 (2X)
229
310 (2X)
020
R 74181
300
298
214
340
080
310
180
095
K 7416
090
454
456
530
540
292
070
X7001
SEE DETAIL "A"
240
270
240
230
260
230
265
030
400
410
190
194
430
450
460
500
590 (2X)
340 (2X)
580 (2X)
X7001
SEE DETAIL "B"
410
420
440
470
480
490
510
520
385
392
390
360
210
380
100
103
105
105
360
395
040
060
340 (3X)
590 (3X)
580 (3X)
050
285
X7001
S-1095775-1
ECN 72175

ECM: 72175 - 19990427
Group number: 1095775-0100
Assembly Drawing: 1095775-1_1_AI

Issue: 20011217

Pos	Part No	SP	UN	Qty	Description	Page No
NOPT						
390	352103-0110	-		7	CABLE GLAND STR 16	
PT21						
390	352103-0110	-		6	CABLE GLAND STR 16	
550	90002-0004	-		1	BLANK-OFF PLUG 22,5	
Common Parts						
010	1036909-0000	-		1	ELECTRICAL CABINET	
020	1038907-0000	-		1	CONNECTION BOX	
030	1036922-0000	-		1	CABLE DUCT	
040	1036923-0000	-		1	CABLE DUCT	
050	1036924-0000	-		1	CABLE DUCT	
060	1036925-0000	-		1	TERMINAL RAIL	
070	1036926-0000	-		1	TERMINAL RAIL	
080	1038403-0000	-		1	BRACKET	
090	1041264-0000	-		1	BRACKET	
095	551922-0000	-		1	LABEL,POTENTIOMETER DESIGN CORR.	
100	90012-0127	-		1	PLUG	
103	90012-0125	-		1	GLAND FITTING	
105	353240-0005	-		2	GLANDS,NORMAL WITHOUT INSERT PG 21	
110	90110-0159	-		3	MALE INSERT 70.310.0640.0	
120	90110-0150	-		3	MALE INSERT 121110 0000	
130	90110-0152	-		3	CABLE HOOD 24-POL 70.352.2428.1	
140	90110-0157	-		3	CABLE HOOD 6-POL 70.352.0628.1	
150	359005-0010	-		7	MARKING LABEL KIT 0 - 9, 04.841.2150.0	
160	359005-0050	-		1	MARKING LABEL KIT X, 04.841.4550.0	
170	90089-0028	-		1	MUFF	
180	90012-0124	-		3	GLAND FITTING	
190	353034-0039	-		1	BRIDGE CONN. WQV 4/4	
194	353034-0031	-		2	BRIDGE CONNECTOR, WQV 4/10, 10520.6	
210	90002-0009	-		1	BLANK-OFF PLUG 18.6	
214	90015-0020	-		1	GLANDS,LEAD-IN,IP67	
215	90062-0016	-		5	LOCK WASHER SERRAT.EXT.GEAR,8,4/15 H=0,8	
228	90062-0060	-		1	LOCK WASHER SERRAT.EXT.GEAR,5,3/10 H=0,6	
229	90099-0001	-		3	NUT PR 15,2 BRASS	
230	90099-0104	-		11	NUT PR 15,2 (PG9)	
240	90099-0117	-		14	NUT PR 18,6 (PG11)	
260	90099-0110	-		7	NUT PR 22,5 (PG16)	
265	90099-0119	-		3	NUT PR 28,3 (PG21)	
270	90099-0120	-		3	NUT PR 37 (PG29)	
282	90135-0035	-		1	EARTH WIRE, L=250 MM 16 MM2	
285	90181-0088	-		8	PLASTIC RIVET, PR 52314	
290	90194-0016	-		1	SIGN, FLASH, ELECTRIC EQUIPMENT SYMBOL	
292	311520-0329	-		2	RIVET, BLANK 2,4X8	
295	312115-0451	-		2	SCREW MC6S M8X20 A280	
296	312105-0451	-		2	SCREW M6S 8X20 A280	
298	312121-0220	-		2	SCREW SLOT.PAN HD. MCS 3X6 FZB	
300	312121-0226	-		2	SCREW SLOT.PAN HD. MCS 3X12 FZB	
305	312121-0289	-		4	SCREW SLOT.PAN HD. MCS 4X10 FZB	
310	312121-0327	-		5	SCREW SLOT.PAN HD. MCS 5X12 FZB	
340	315105-0146	-		10	WASHER PLAIN, BRB, 5,3/10,H=1	
350	315125-0165	-		4	WASHER PLAIN ROUND,CHAMF. 8,4/26, H=5	
360	352103-0100	-		3	CABLE GLAND STR 9;PR15,2	
380	352103-0101	-		8	CABLE GLAND ST 9;PR15,2/PG9	
385	352103-0106	-		13	CABLE GLAND ST 11	
388	352103-0108	-		2	CABLE GLAND ST 13	
392	352103-0116	-		2	CABLE GLAND ST 21	
395	352103-0121	-		6	CABLE GLAND ST 29	
400	353021-0122	-		1	TERMINAL DISCONNECTBLE, WTR 2,5 D	
410	353031-0203	-		2	END PLATE, 10612.0	
420	353021-0302	-		80	TERMINALS,TRIPLE-LEVEL, DLD 2,5/35 PA	
430	353021-0213	-		16	FEED THROUGH TERMINAL, 10201.0	
440	353024-0204	-		10	EARTH TERMINAL WPE 2,5	
450	353024-0205	-		8	EARTH TERMINAL, 1010.1	
454	90130-0303	-		1	SHIFTER HANDLE	
456	90130-0304	-		1	PLATE	
460	353032-0004	-		1	END PLATE WAP 2,5-10 BEIGE	
470	353032-0302	-		3	END PLATE WAP	
480	353034-0401	-		16	BRIDGE CONNECTOR Q2, 13125.0	
490	353034-0404	-		17	BRIDGE CONNECTOR Q10, 13131.0	
500	359011-0821	-		2	SET OF SIGNS 6-FW 1-50	
510	359011-0823	-		2	SET OF SIGNS 6-FW 101-150	
520	359011-0824	-		2	SET OF SIGNS 6-FW 151-200	
530	359240-0100	-		1	SIGN HOLDER FOR 359240-0001	
540	359241-0186	-		1	SIGN "LS"	
560	359011-0817	-		4	SYMBOL 5-GW (+) 50PC	
570	359011-0818	-		4	SYMBOL 5-GW (-) 50PC	
580	495118-0014	-		5	DISTANCE PIPE L=14 MM	
590	312125-0333	-		5	SCREW PAN HEAD MCS M5X25 SS	
K 7416	90119-0078	C		1	TPIH-RELAY	
R74181	90130-0021	C		1	POTENTIOMETER " REPBY 90130-28"	
R74182	90121-0119	C		1	RESISTANCE FIXED, 8,2 KOHM, 1 W	
T 6203	563461-0000	C		1	TRANSFORMER	

ELECTRICAL CABINET

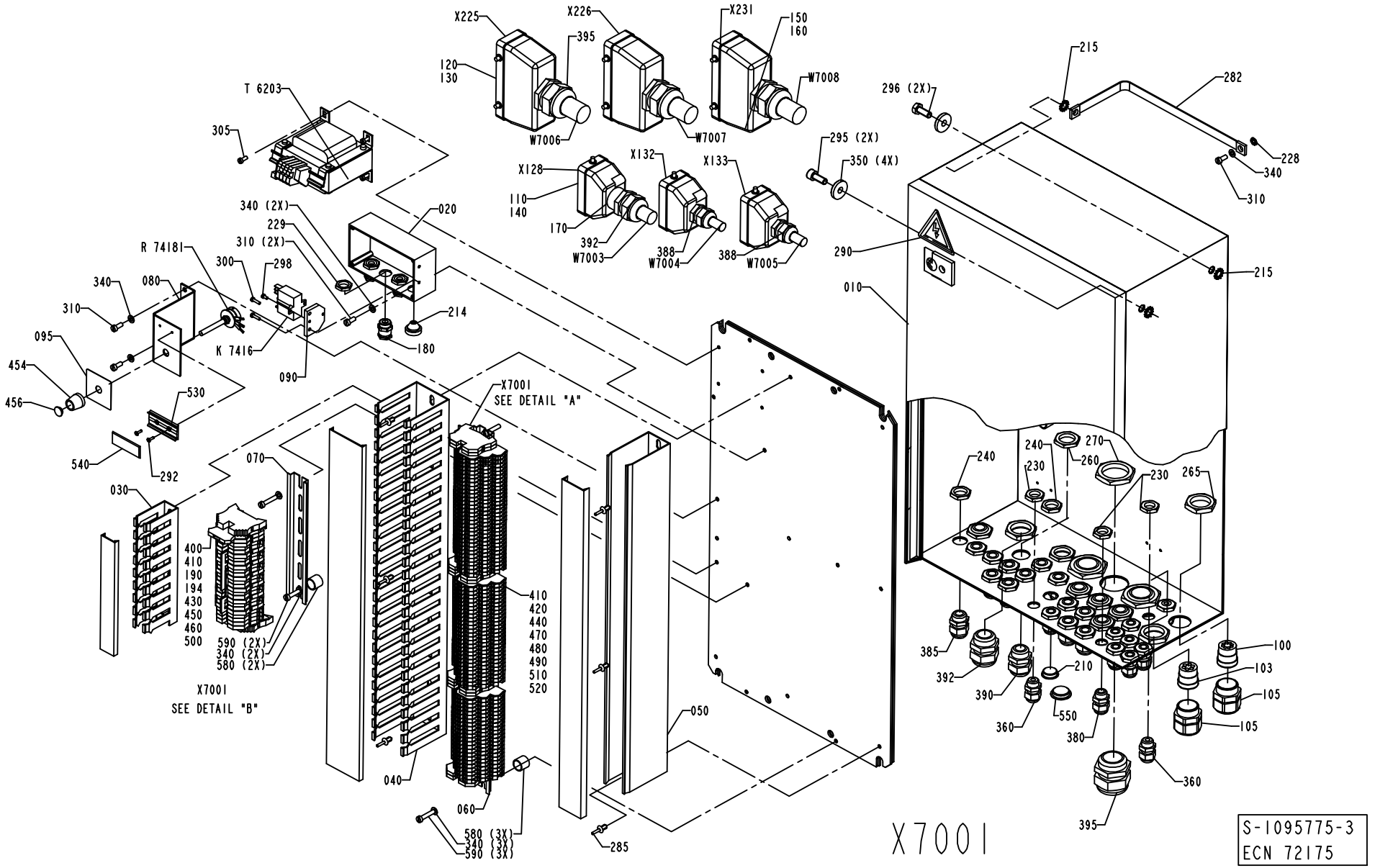

Pos	Part No	SP	UN	Qty	Description	Page No
Common Parts (Cont'd)						
W 7003	351150-0420	-	MM	4800	CABLE OLFLEX 7X2,5 MM2 LIGHT/GREY	
W 7004	351150-0413	-	MM	4700	CABLE OLFLEX 4X1,5 MM2 LIGHT/GREY	
W 7005	351150-0412	-	MM	4500	CABLE OLFLEX 3X1,5 MM2 LIGHT/GREY	
W 7006	351150-0425	-	MM	4900	CABLE OLFLEX 25X0,75 MM2 LIGHT/GREY	
W 7007	351150-0425	-	MM	4900	CABLE OLFLEX 25X0,75 MM2 LIGHT/GREY	
W 7008	351150-0425	-	MM	5100	CABLE OLFLEX 25X0,75 MM2 LIGHT/GREY	

Pos	Part No	SP	UN	Qty	Description	Page No

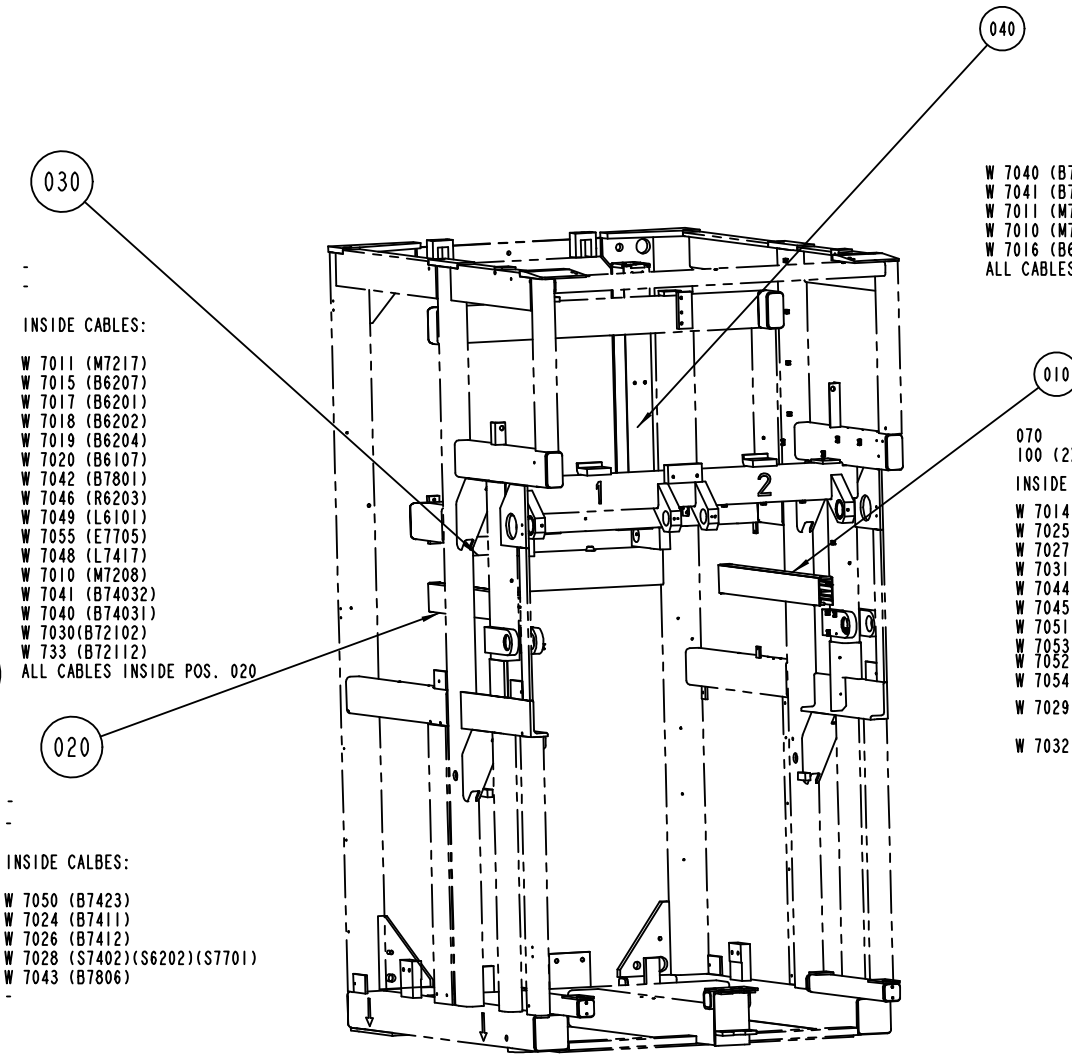

W 7040 (B74031)
W 7041 (B74032)
W 7011 (M7217)
W 7010 (M7208)
W 7016 (B6105)
ALL CABLES FROM ASU TO MAIN TBA/21 EL. CAB.

SIDE 2 (LEFT)

070
100 (2X)

INSIDE CABLES:

W 7014 (E7702)
W 7025 (B7414)
W 7027 (B7512)
W 7031 (B72101
W 7044 (B7807)
W 7045 (H7703)
W 7051 (B7424)
W 7053 (B7805)
W 7052 (E7704) VERSION NO PT
W 7054 (H2802) VERSION NO PT
W 7029 (S7813)
(S7303)
W 7032 (B 72111)

SIDE 1 (RIGHT)

-
-

INSIDE CABLES:

W 7011 (M7217)
W 7015 (B6207)
W 7017 (B6201)
W 7018 (B6202)
W 7019 (B6204)
W 7020 (B6107)
W 7042 (B7801)
W 7046 (R6203)
W 7049 (L6101)
W 7055 (E7705)
W 7048 (L7417)
W 7010 (M7208)
W 7041 (B74032)
W 7040 (B74031)
W 7030(B72102)
W 733 (B72112)
ALL CABLES INSIDE POS. 020

-
-

INSIDE CALBES:

W 7050 (B7423)
W 7024 (B7411)
W 7026 (B7412)
W 7028 (S7402)(S6202)(S7701)
W 7043 (B7806)
-

S-1035082-6
ECN 71911

ECM: 91665 - 20010924
Group number: 1035082-0300
Assembly Drawing: 1035082-6_1_AA

Issue: 20011217

Pos	Part No	SP	UN	Qty	Description	Page No
TBA/21						
060	90099-0104	-		1	NUT PR 15,2 (PG9)	
Common Parts						
010	1103373-0000	-		1	CABLE DUCT	
020	1103374-0000	-		1	CABLE DUCT	
030	1334260-0000	-		1	CABLE DUCT	
040	1334261-0000	-		1	CABLE DUCT	
050	90015-0021	-		1	GLANDS,LEAD-IN,IP67	
070	90143-0060	-	MM	750	EDGE STRIP 9,5X6,3MM BLACK PVC	
100	312115-0366	-		6	SCREW MC6S M6X12 A280	
110	312125-0287	-		39	SCREW PAN HEAD MCS M4X8 SS	
120	312503-0275	-		4	SCREW CROSS RECES.RND.HD.TAPP. B6X6.5	
130	352103-0101	-		1	CABLE GLAND ST 9;PR15,2/PG9	
140	352113-0102	-		60	CLIP-STRIP, BLACK 188X4,8 MM	
150	352113-0205	-		39	ANCHOR TM2S8-C100	

Pos	Part No	SP	UN	Qty	Description	Page No

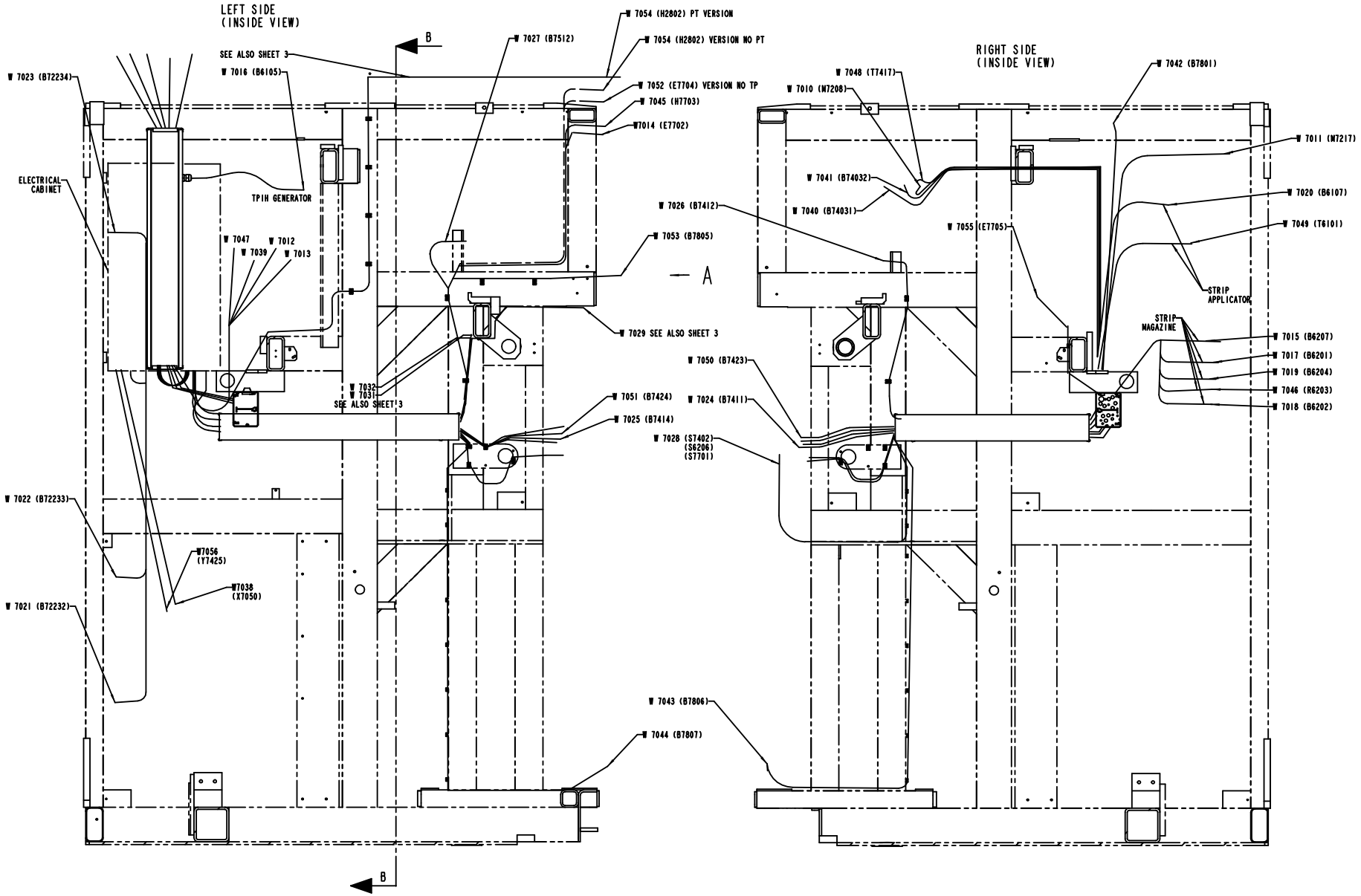
LEFT SIDE
(INSIDE VIEW)
RIGHT SIDE
(INSIDE VIEW)
B
A
W 7054 (H2802) PT VERSION
W 7054 (H2802) VERSION NO PT
W 7027 (B7512)
SEE ALSO SHEET 3
W 7016 (B6105)
W 7023 (B72234)
W 7052 (E7704) VERSION NO TP
W 7045 (H7703)
W7014 (E7702)
ELECTRICAL CABINET
TPIH GENERATOR
W 7047
W 7012
W 7039
W 7013
W 7053 (B7805)
W 7029 SEE ALSO SHEET 3
W 7032
W 7031
SEE ALSO SHEET 3
W 7051 (B7424)
W 7025 (B7414)
W 7022 (B72233)
W7056 (Y7425)
W7038 (X7050)
W 7021 (B72232)
W 7043 (B7806)
W 7044 (B7807)
W 7048 (T7417)
W 7010 (M7208)
W 7042 (B7801)
W 7011 (M7217)
W 7041 (B74032)
W 7040 (B74031)
W 7020 (B6107)
W 7026 (B7412)
W 7055 (E7705)
W 7049 (T6101)
STRIP APPLICATOR
STRIP MAGAZINE
W 7015 (B6207)
W 7017 (B6201)
W 7019 (B6204)
W 7046 (R6203)
W 7018 (B6202)
W 7050 (B7423)
W 7024 (B7411)
W 7028 (S7402) (S6206) (S7701)

Pos	Part No	SP	UN	Qty	Description	Page No
TBA/21						
060	90099-0104	-		1	NUT PR 15,2 (PG9)	
Common Parts						
010	1103373-0000	-		1	CABLE DUCT	
020	1103374-0000	-		1	CABLE DUCT	
030	1334260-0000	-		1	CABLE DUCT	
040	1334261-0000	-		1	CABLE DUCT	
050	90015-0021	-		1	GLANDS,LEAD-IN,IP67	
070	90143-0060	-	MM	750	EDGE STRIP 9,5X6,3MM BLACK PVC	
100	312115-0366	-		6	SCREW MC6S M6X12 A280	
110	312125-0287	-		39	SCREW PAN HEAD MCS M4X8 SS	
120	312503-0275	-		4	SCREW CROSS RECES.RND.HD.TAPP. B6X6.5	
130	352103-0101	-		1	CABLE GLAND ST 9;PR15,2/PG9	
140	352113-0102	-		60	CLIP-STRIP, BLACK 188X4,8 MM	
150	352113-0205	-		39	ANCHOR TM2S8-C100	

Pos	Part No	SP	UN	Qty	Description	Page No

VIEW A.

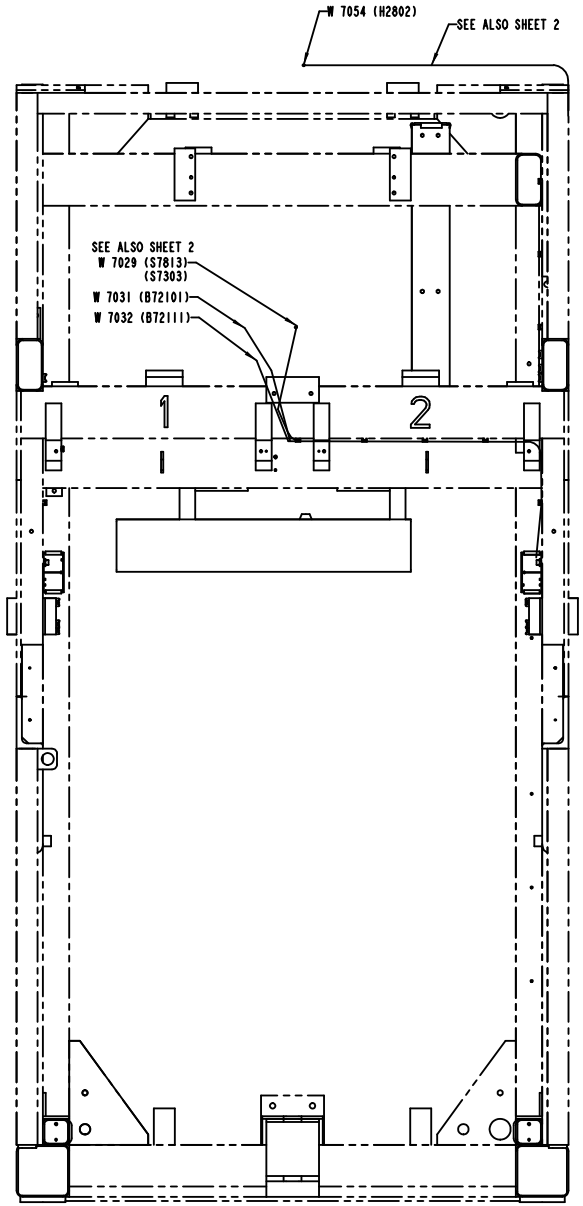
W 7054 (H2802)
SEE ALSO SHEET 2
SEE ALSO SHEET 2
W 7029 (S7813)
(S7303)
W 7031 (B72101)
W 7032 (B72111)
1
2

SEC. B-B

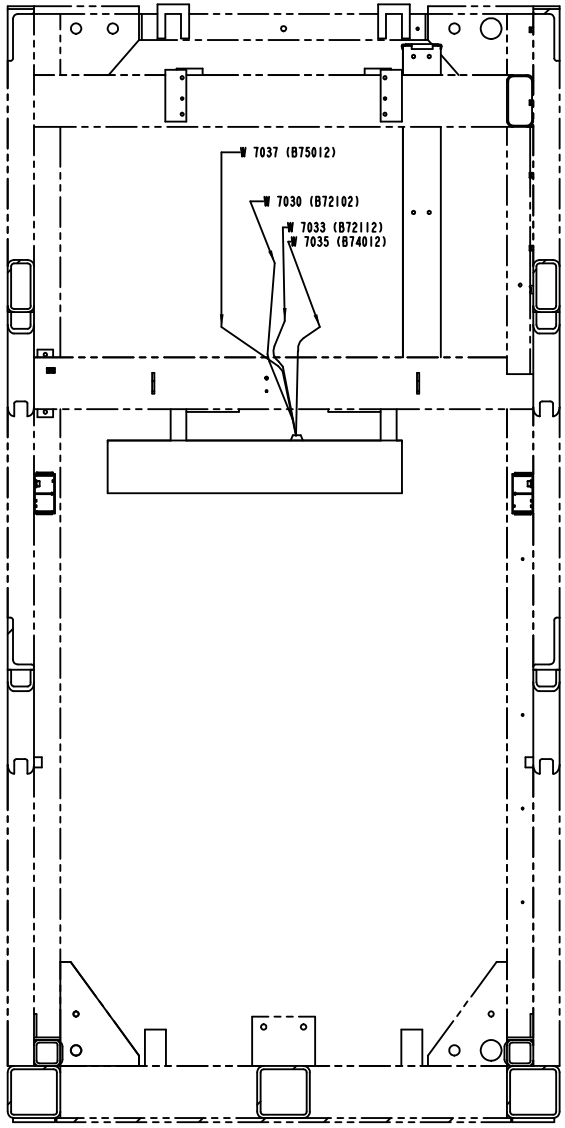
W 7037 (B75012)
W 7030 (B72102)
W 7033 (B72112)
W 7035 (B74012)

ECM: 91665 - 20010924
Group number: 1035082-0300
Assembly Drawing: 1035082-6_3_AA

Issue: 20011217

Pos	Part No	SP	UN	Qty	Description	Page No
TBA/21						
060	90099-0104	-		1	NUT PR 15,2 (PG9)	
Common Parts						
010	1103373-0000	-		1	CABLE DUCT	
020	1103374-0000	-		1	CABLE DUCT	
030	1334260-0000	-		1	CABLE DUCT	
040	1334261-0000	-		1	CABLE DUCT	
050	90015-0021	-		1	GLANDS,LEAD-IN,IP67	
070	90143-0060	-	MM	750	EDGE STRIP 9,5X6,3MM BLACK PVC	
100	312115-0366	-		6	SCREW MC6S M6X12 A280	
110	312125-0287	-		39	SCREW PAN HEAD MCS M4X8 SS	
120	312503-0275	-		4	SCREW CROSS RECES.RND.HD.TAPP. B6X6.5	
130	352103-0101	-		1	CABLE GLAND ST 9;PR15,2/PG9	
140	352113-0102	-		60	CLIP-STRIP, BLACK 188X4,8 MM	
150	352113-0205	-		39	ANCHOR TM2S8-C100	

Pos	Part No	SP	UN	Qty	Description	Page No

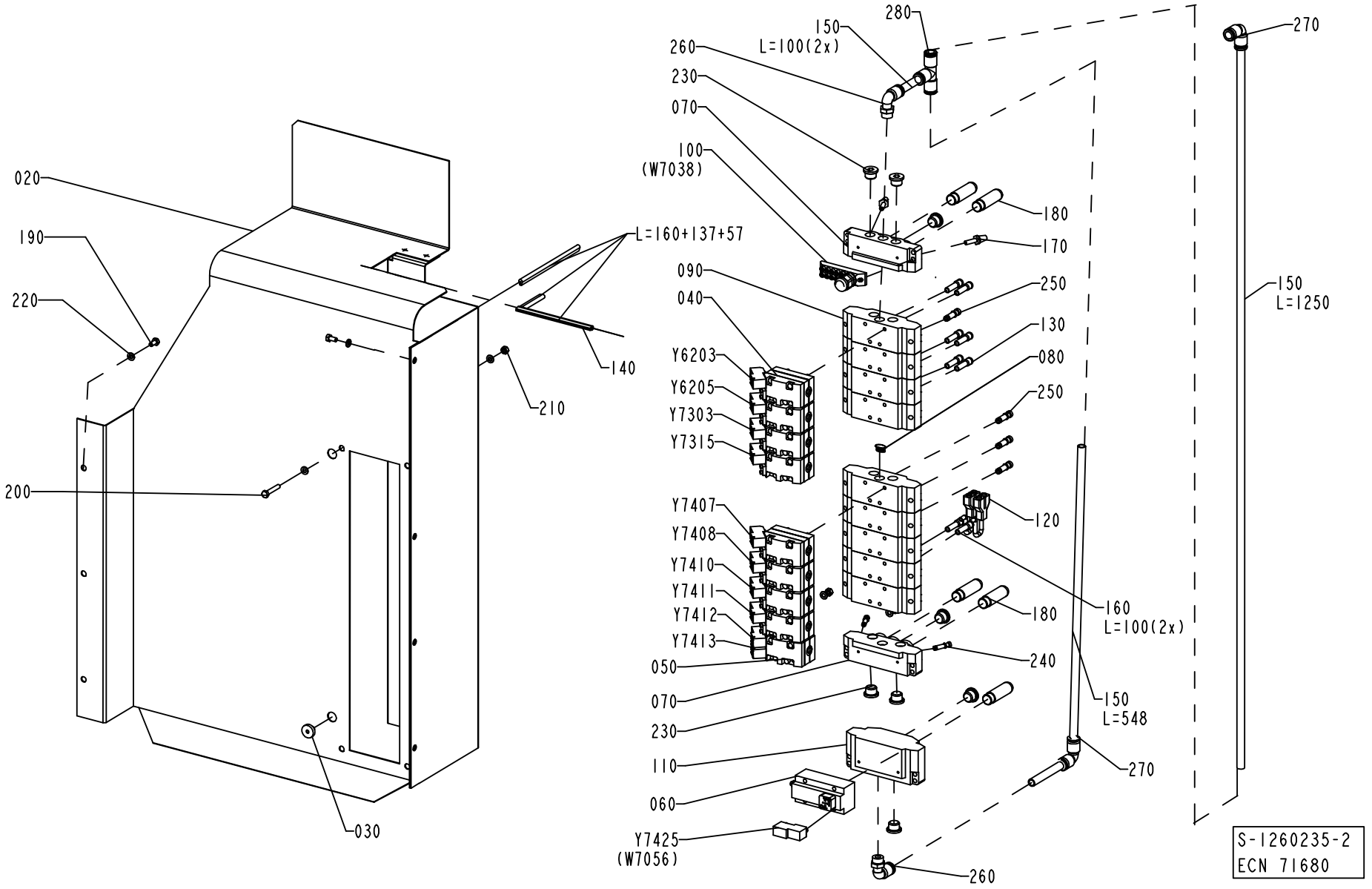
020
190
220
200
030
140
210
L=160+137+57
280
150
L=100(2x)
260
230
070
100
(W7038)
180
170
090
250
040
130
080
Y6203
Y6205
Y7303
Y7315
Y7407
Y7408
Y7410
Y7411
Y7412
Y7413
050
070
230
110
060
Y7425
(W7056)
120
160
L=100(2x)
180
240
150
L=548
270
260
270
150
L=1250
S-1260235-2
ECN 71680

ECM: 71680 - 19990504
Group number: 1260235-0200
Assembly Drawing: 1260235-2_1_AA

Issue: 20011217

Pos	Part No	SP	UN	Qty	Description	Page No
Common Parts						
010	1129998-0000	-		1	PNEUMATIC DIAGRAM	
020	1348438-0000	-		1	MOUNTING PLATE	
030	90015-0020	-		2	GLANDS,LEAD-IN,IP67	
040	90042-0215	C		8	VALVE BODY 5/2 UNISTABLE	
050	90042-0221	C		1	VALVE BODY 5/2 BISTABLE	
060	90042-0265	D		1	HIGH SPEED VENTING VALVE 583-590-000-1	
070	90042-0522	C		2	PORTED END PIECE ISO SIZE 1	
080	90042-0528	C		1	BLANKING KIT SEALS ISO SIZE 1	
090	90042-0532	C		9	BASE PLATE ISO SIZE 1	
100	90042-0535	C		1	TERMINAL BOARD 19 CORDS	
110	90042-0545	D		1	SUB-BASE SOFT START ISO 1 AND VDMA 01	
120	90055-0100	C		2	Y-CONNECTION	
130	90055-0171	-		8	REDUCER-8/6	
140	90143-0060	-	MM	194	EDGE STRIP 9,5X6,3MM BLACK PVC	
150	90166-0068	-	MM	2000	TUBE 12 MM PA BLUE	
160	90166-0081	-	MM	200	TUBE 6 MM PA BLUE	
170	90328-0017	C		2	SILENCER, D=6 MM	
180	90328-0024	C		5	SILENCER G3/8	
190	312105-0366	-		7	SCREW M6S M6X12 A280	
200	312109-0376	-		4	SCREW M6S M6X35 A280	
210	312605-0316	-		4	HEXAGON NUT, M6M M6 A280	
220	315105-0153	-		15	WASHER PLAIN, BRB, 6,4/12,H=1,5	
230	342713-0211	-		8	PLUG, EXT THREAD HEX SOCKET 8638-00-380	
240	342715-0102	-		2	BLIND PLUG 6 MM	
250	342715-0103	-		4	BLIND PLUG 8 MM	
260	342732-0110	-		2	ELBOW PIPE JOINT	
270	342735-0109	-		2	ELBOW PIPE JOINT	
280	342748-0109	-		1	T-CONNECTION	
Y6203	90042-0538	C		1	PILOT VALVE L=500MM	
Y6205	90042-0538	C		1	PILOT VALVE L=500MM	
Y7303	90042-0538	C		1	PILOT VALVE L=500MM	
Y7315	90042-0538	C		1	PILOT VALVE L=500MM	
Y7407	90042-0538	C		1	PILOT VALVE L=500MM	
Y7408	90042-0538	C		1	PILOT VALVE L=500MM	
Y7410	90042-0538	C		1	PILOT VALVE L=500MM	
Y7411	90042-0538	C		1	PILOT VALVE L=500MM	
Y7412	90042-0538	C		1	PILOT VALVE L=500MM	
Y7413	90042-0538	C		1	PILOT VALVE L=500MM	
Y7425	90042-0585	D		1	PILOT VALVE L=5M	

Pos	Part No	SP	UN	Qty	Description	Page No

Machine Type | Group Description | Used-In | Group Number | Page No

Tetra Pak

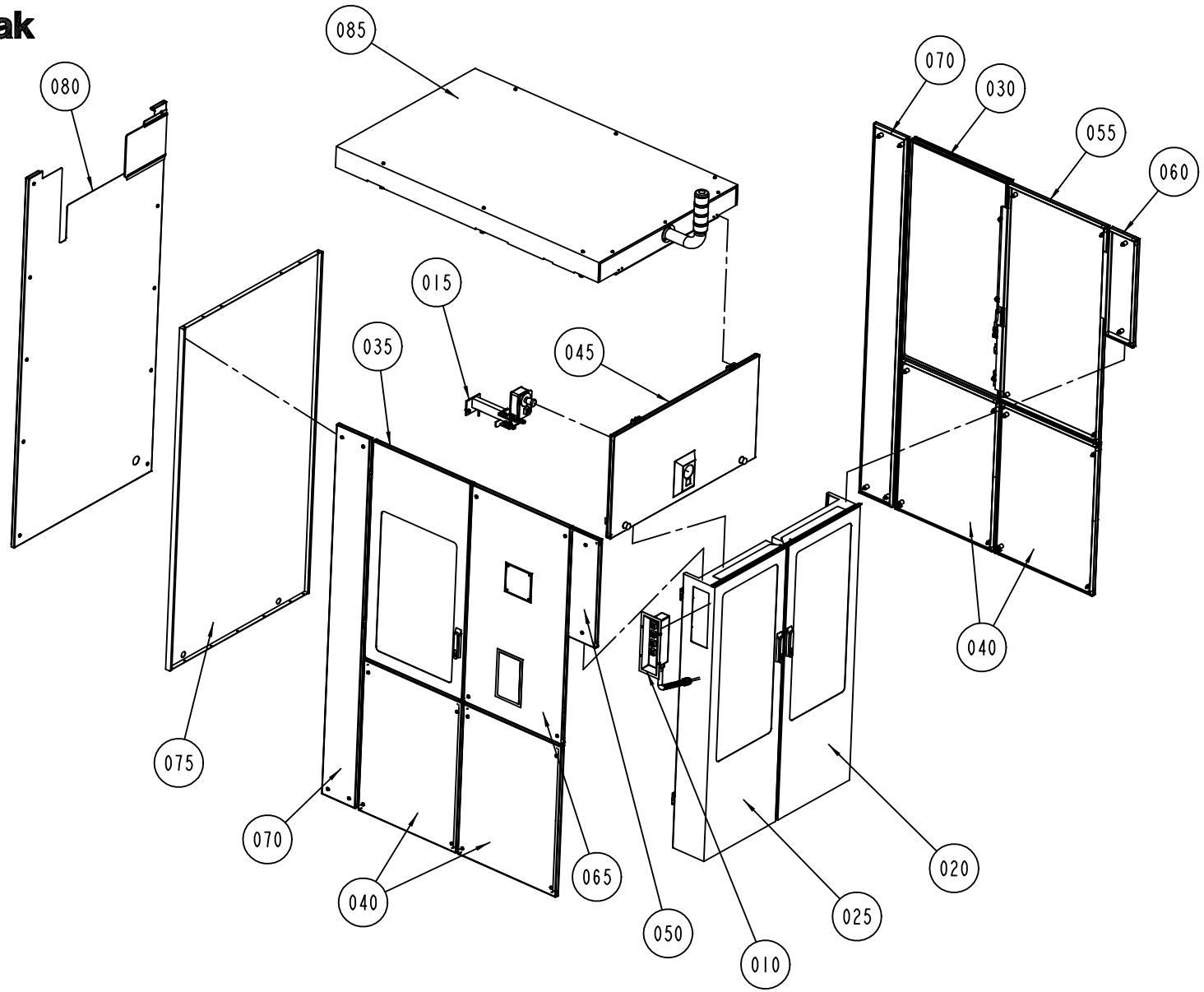

S-1035088-5
ECN 71634

ECM: 93135 - 20010807
Group number: 1035088-0400
Assembly Drawing: 1035088-5_1_AA

Issue: 20011217

Pos	Part No	SP	UN	Qty	Description	Page No
TBA ASU						
010	A1095793-0400	-		1	CONTROL PANEL	**923**
065	A1035323-0200	-		1	COVER	**925**
TBA ASUSEPROOM						
010	A1095793-0300	-		1	CONTROL PANEL	**927**
065	A1035323-0300	-		1	COVER	**929**
070	A1346904-0100	-		2	COVER	**933**
075	1346422-0000	-		1	COVER PLATE	
080	A1346903-0100	-		1	COVER	**935**
085	A1346433-0100	-		1	COVER	**937**
Common Parts						
015	A1035313-0300	-		1	EMERGENCY STOP	**941**
020	A1035314-0200	-		1	DOOR	**943**
025	A1035315-0200	-		1	DOOR	**945**
030	A1035316-0200	-		1	DOOR	**947**
035	A1035317-0200	-		1	DOOR	**949**
040	A1035318-0200	-		4	COVER	**951**
045	A1035319-0300	-		1	DOOR	**953**
050	A591321-0100	-		1	COVER	**955**
055	A1035321-0200	-		1	COVER	**957**
060	A591322-0100	-		1	COVER	**959**
115	1037828-0000	-		1	COVER SLIP	
120	1037829-0000	-		1	COVER SLIP	
125	1037830-0000	-		1	COVER SLIP	
135	1140009-0000	-		1	COVER SLIP	
160	1129767-0000	-		4	SCREW	
500	312115-0327	-		6	SCREW MC6S M5X12 A280	
550	315105-0146	-		6	WASHER PLAIN, BRB, 5,3/10,H=1	

Pos	Part No	SP	UN	Qty	Description	Page No

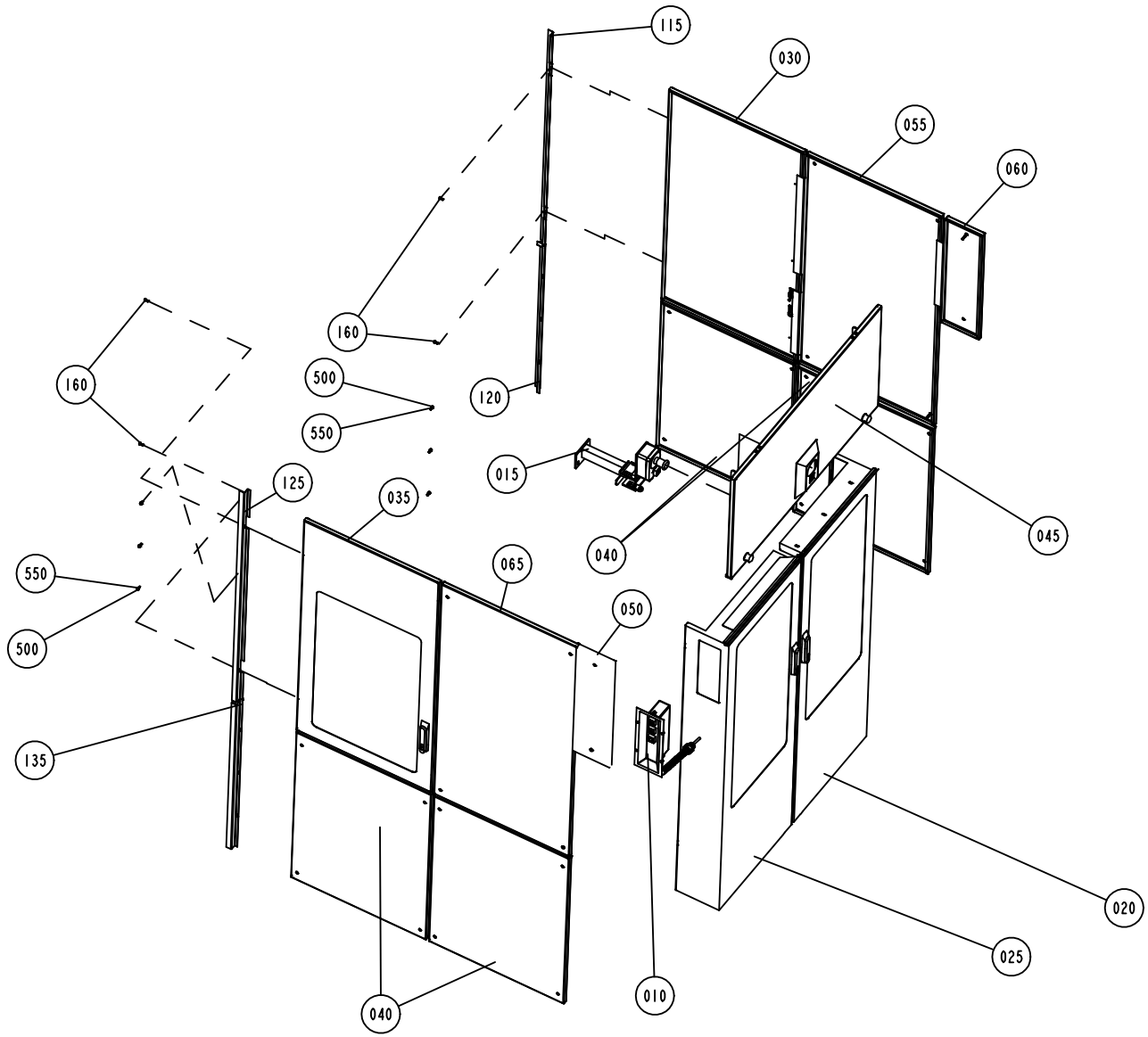

S-1035088-6
ECN 71977

ECM: 93135 - 20010807
Group number: 1035088-0400
Assembly Drawing: 1035088-6_1_AA

Issue: 20011217

Pos	Part No	SP	UN	Qty	Description	Page No
TBA ASU						
010	A1095793-0400	-		1	CONTROL PANEL	**923**
065	A1035323-0200	-		1	COVER	**925**
TBA ASUSEPROOM						
010	A1095793-0300	-		1	CONTROL PANEL	**927**
065	A1035323-0300	-		1	COVER	**929**
070	A1346904-0100	-		2	COVER	**933**
075	1346422-0000	-		1	COVER PLATE	
080	A1346903-0100	-		1	COVER	**935**
085	A1346433-0100	-		1	COVER	**937**
Common Parts						
015	A1035313-0300	-		1	EMERGENCY STOP	**941**
020	A1035314-0200	-		1	DOOR	**943**
025	A1035315-0200	-		1	DOOR	**945**
030	A1035316-0200	-		1	DOOR	**947**
035	A1035317-0200	-		1	DOOR	**949**
040	A1035318-0200	-		4	COVER	**951**
045	A1035319-0300	-		1	DOOR	**953**
050	A591321-0100	-		1	COVER	**955**
055	A1035321-0200	-		1	COVER	**957**
060	A591322-0100	-		1	COVER	**959**
115	1037828-0000	-		1	COVER SLIP	
120	1037829-0000	-		1	COVER SLIP	
125	1037830-0000	-		1	COVER SLIP	
135	1140009-0000	-		1	COVER SLIP	
160	1129767-0000	-		4	SCREW	
500	312115-0327	-		6	SCREW MC6S M5X12 A280	
550	315105-0146	-		6	WASHER PLAIN, BRB, 5,3/10,H=1	

Pos	Part No	SP	UN	Qty	Description	Page No

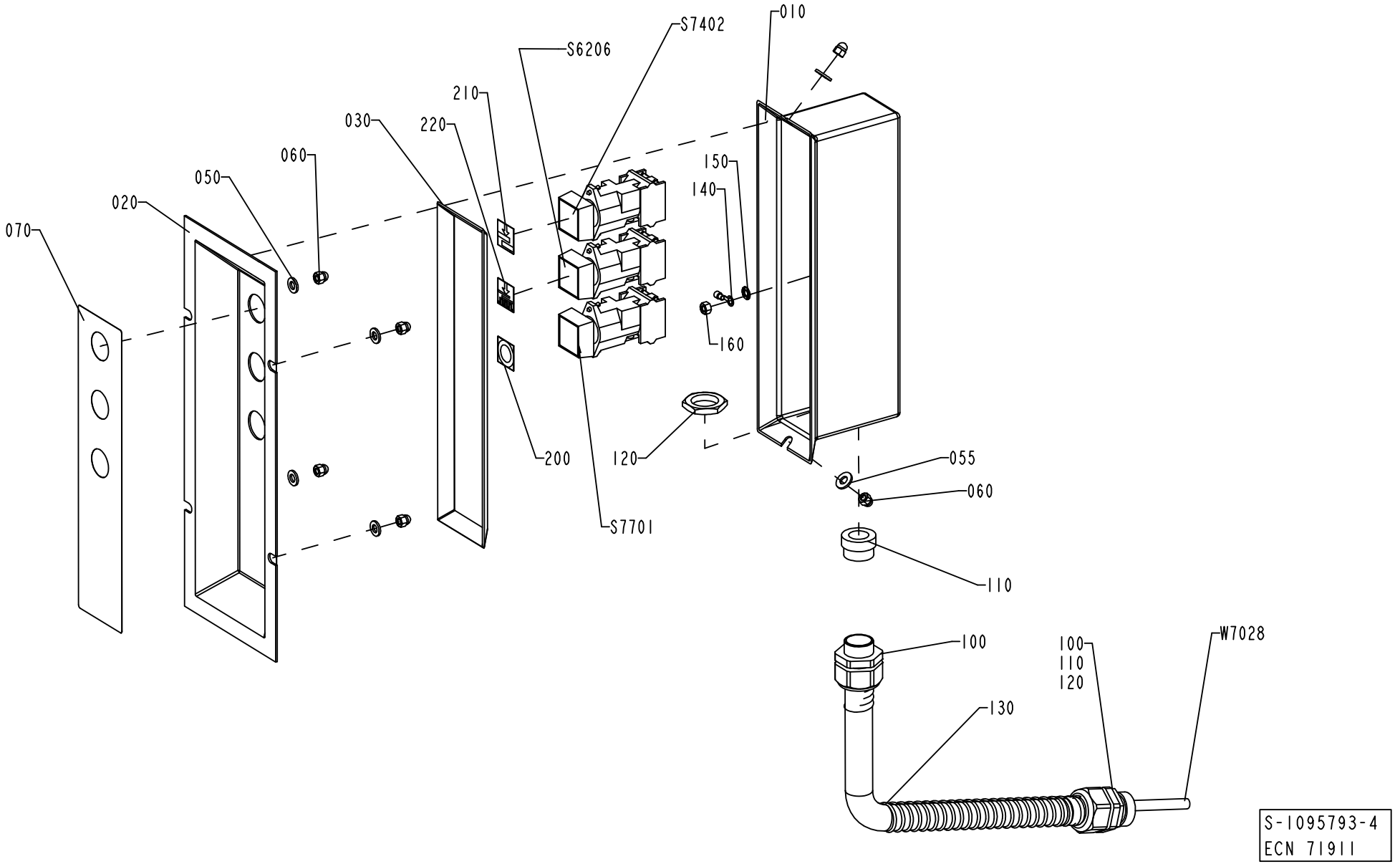
010
S7402
S6206
210
220
030
060
050
020
070
150
140
160
120
200
S7701
055
060
110
100
100
110
120
130
W7028
S-1095793-4
ECN 71911

Pos	Part No	SP	UN	Qty	Description	Page No
TBA/21						
200	359301-0110	-		1	SIGN "SHORT STOP"	
Common Parts						
010	1037097-0000	-		1	PUSH BUTTON BOX	
020	1037098-0000	-		1	LID	
030	90143-0069	-	MM	800	RUBBER STRIP	
050	315105-0153	-		4	WASHER PLAIN, BRB, 6,4/12,H=1,5	
055	315105-0156	-		2	WASHER PLAIN, BRB, 6,7/14,H=1,5	
060	312705-0314	-		6	NUT HEX. DOMED CAP MHM-6 M5 A280	
070	1037142-0000	-		1	FOIL	
100	353243-0005	-		2	GLANDS,HOSE,EXTENDED WITHOUT INSERT PG16	
110	353249-0014	-		2	GLAND,INSERT,SINGLE HOLE,EXTE.11,5-15,5	
120	90099-0110	-		2	NUT PR 22,5 (PG16)	
130	90152-0051	-	MM	480	GLANDS,HOSE 25X18	
140	353101-0122	-		1	CABLE SHOE	
150	90062-0040	-		1	LOCK WASHER SERRAT.INT.GEAR,5,3/10 H=0,6	
160	312605-0314	-		1	HEXAGON NUT, M6M M5 A280	
210	359301-0100	-		1	SIGN "SPLICING"	
220	359301-0101	-		1	SIGN	
S6206	B90064-0082	A		1	PUSH BUTTON WHITE	
	90036-0057	*B*		*1*	*LIGHT BULB BA9S 28V*	
S7402	B90064-0082	A		1	PUSH BUTTON WHITE	
	90036-0057	*B*		*1*	*LIGHT BULB BA9S 28V*	
S7701	90064-0084	A		1	PUSH BUTTON YELLOW	
W7028	351150-0406	-	MM	5000	CABLE OLFLEX 7X0,75 MM2 LIGHT/GREY	

Pos	Part No	SP	UN	Qty	Description	Page No

Machine Type | Group Description | Used-In | Group Number | Page No

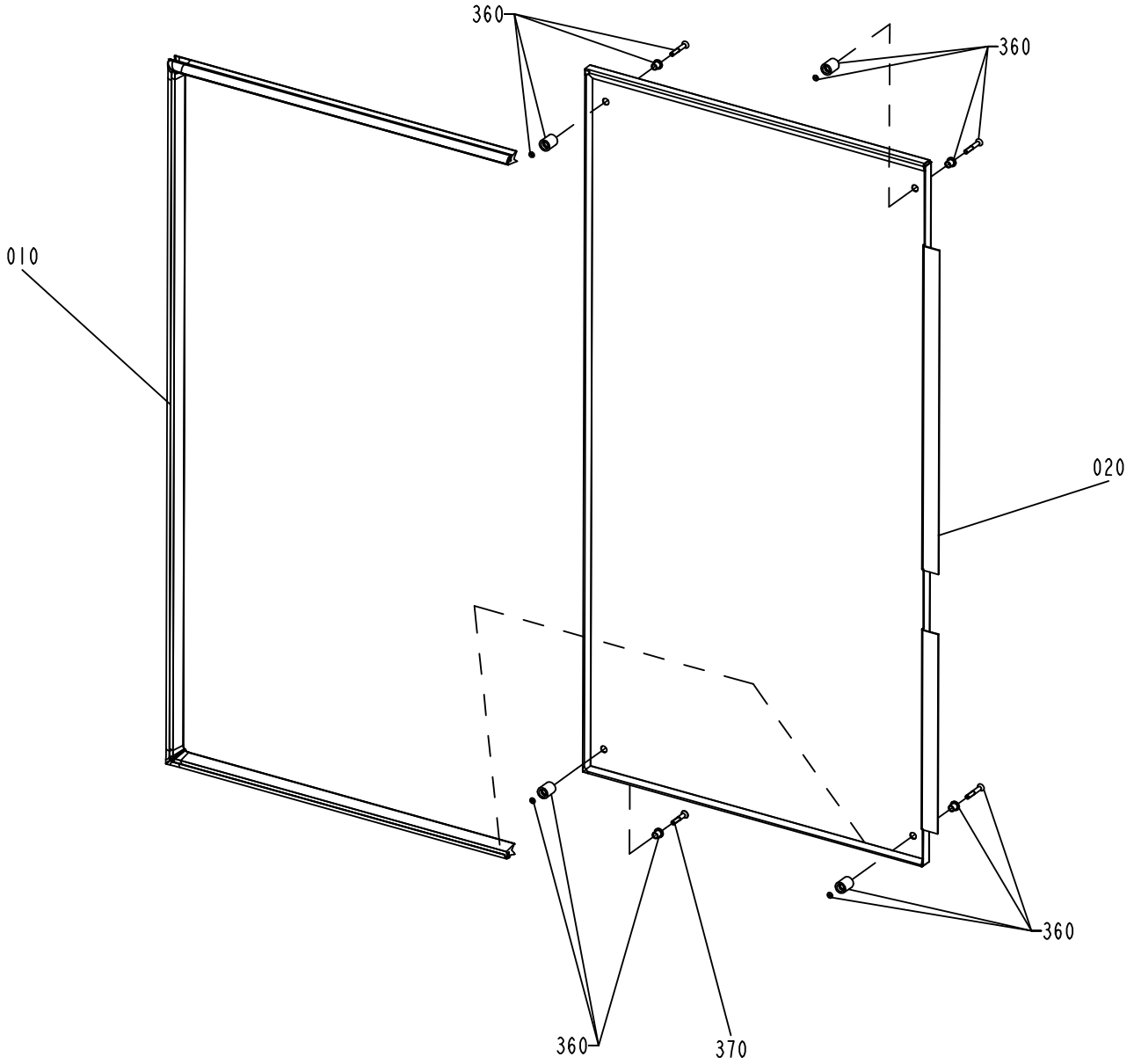
360
360
010
020
360
360
370

ECM: 72175 - 19990427
Group number: 1035323-0200
Assembly Drawing: 1035323-2_1_AC

Issue: 20011217

Pos	Part No	SP	UN	Qty	Description	Page No
Common Parts						
010	1296105-0000	-		1	SEALING STRIP	
020	1116047-0000	-		1	HATCH	
360	90226-0458	-		4	MOUNTING SCREW	
370	312155-0376	-		1	SCREW HEX.SOCK.COUNT.MF6S M6X35 A280	

Pos	Part No	SP	UN	Qty	Description	Page No

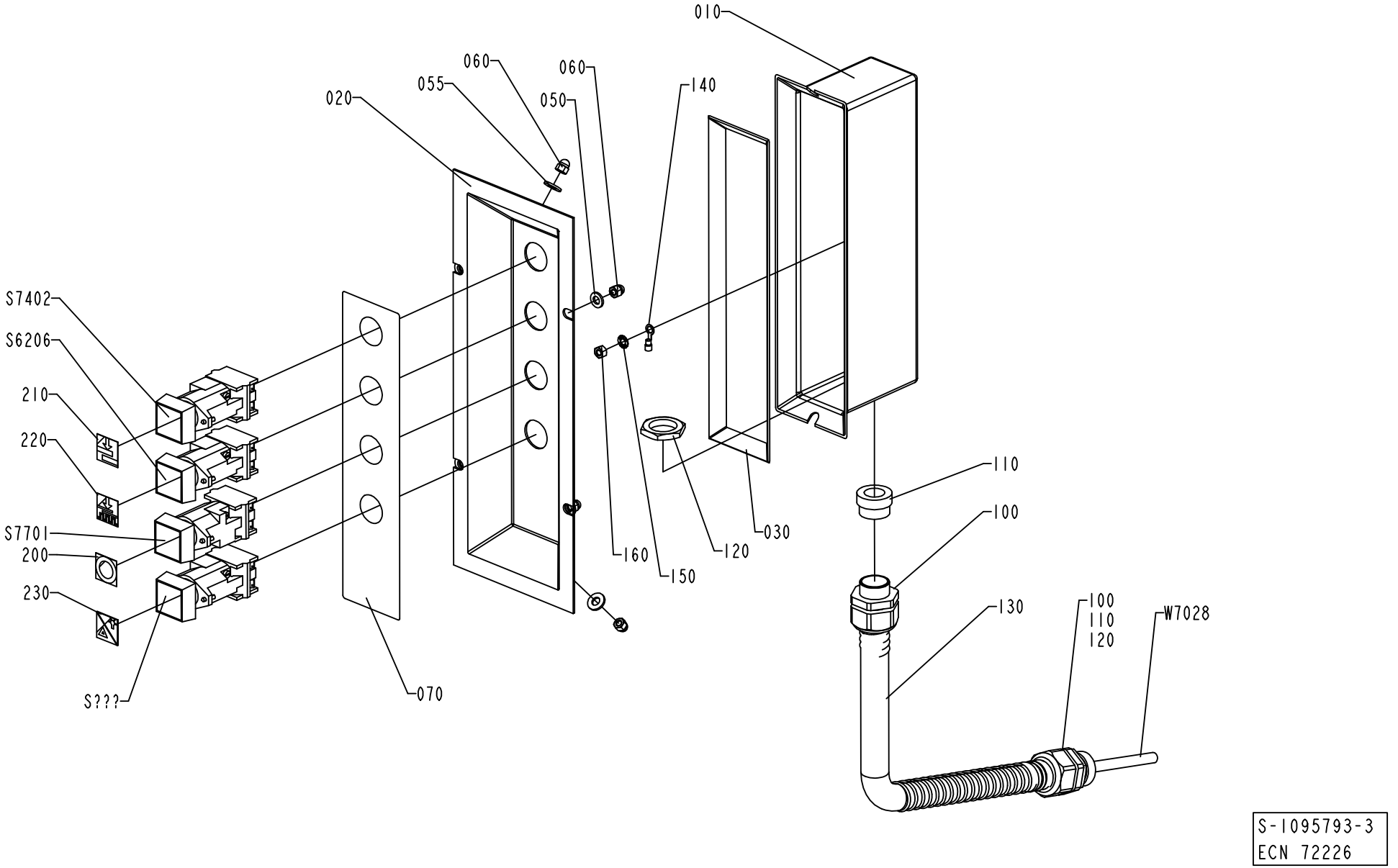
010
060
060
055
050
020
140
S7402
S6206
210
220
S7701
200
230
S???
070
160
150
120
030
110
100
130
100
110
120
W7028
S-1095793-3
ECN 72226

ECM: 72889 - 20000111
Group number: 1095793-0300
Assembly Drawing: 1095793-3_1_AB

Issue: 20011217

Pos	Part No	SP	UN	Qty	Description	Page No
Common Parts						
010	1037097-0000	-		1	PUSH BUTTON BOX	
020	1346905-0000	-		1	LID	
030	90143-0069	-	MM	800	RUBBER STRIP	
050	315105-0153	-		4	WASHER PLAIN, BRB, 6,4/12,H=1,5	
055	315105-0156	-		2	WASHER PLAIN, BRB, 6,7/14,H=1,5	
060	312705-0314	-		6	NUT HEX. DOMED CAP MHM-6 M5 A280	
070	1348912-0000	-		1	FOIL	
100	353243-0005	-		2	GLANDS,HOSE,EXTENDED WITHOUT INSERT PG16	
110	353249-0014	-		2	GLAND,INSERT,SINGLE HOLE,EXTE.11,5-15,5	
120	90099-0110	-		2	NUT PR 22,5 (PG16)	
130	90152-0051	-	MM	580	GLANDS,HOSE 25X18	
140	353101-0122	-		1	CABLE SHOE	
150	90062-0040	-		1	LOCK WASHER SERRAT.INT.GEAR,5,3/10 H=0,6	
160	312605-0314	-		1	HEXAGON NUT, M6M M5 A280	
200	359301-0110	-		1	SIGN "SHORT STOP"	
210	359301-0100	-		1	SIGN "SPLICING"	
220	359301-0101	-		1	SIGN	
230	359301-0131	-		1	BUTTON SIGN, LAMP TEST / ALARM RES.	
S6206	B90064-0082	C		1	PUSH BUTTON WHITE	
	90036-0057	*B*		*1*	*LIGHT BULB BA9S 28V*	
S7402	B90064-0082	C		1	PUSH BUTTON WHITE	
	90036-0057	*B*		*1*	*LIGHT BULB BA9S 28V*	
S7701	90064-0084	C		1	PUSH BUTTON YELLOW	
S7901	B90064-0082	C		1	PUSH BUTTON WHITE	
	90036-0057	*B*		*1*	*LIGHT BULB BA9S 28V*	
W7028	351150-0407	-	MM	5000	CABLE OLFLEX 12X0,75 MM2 LIGHT/GREY	

Pos	Part No	SP	UN	Qty	Description	Page No

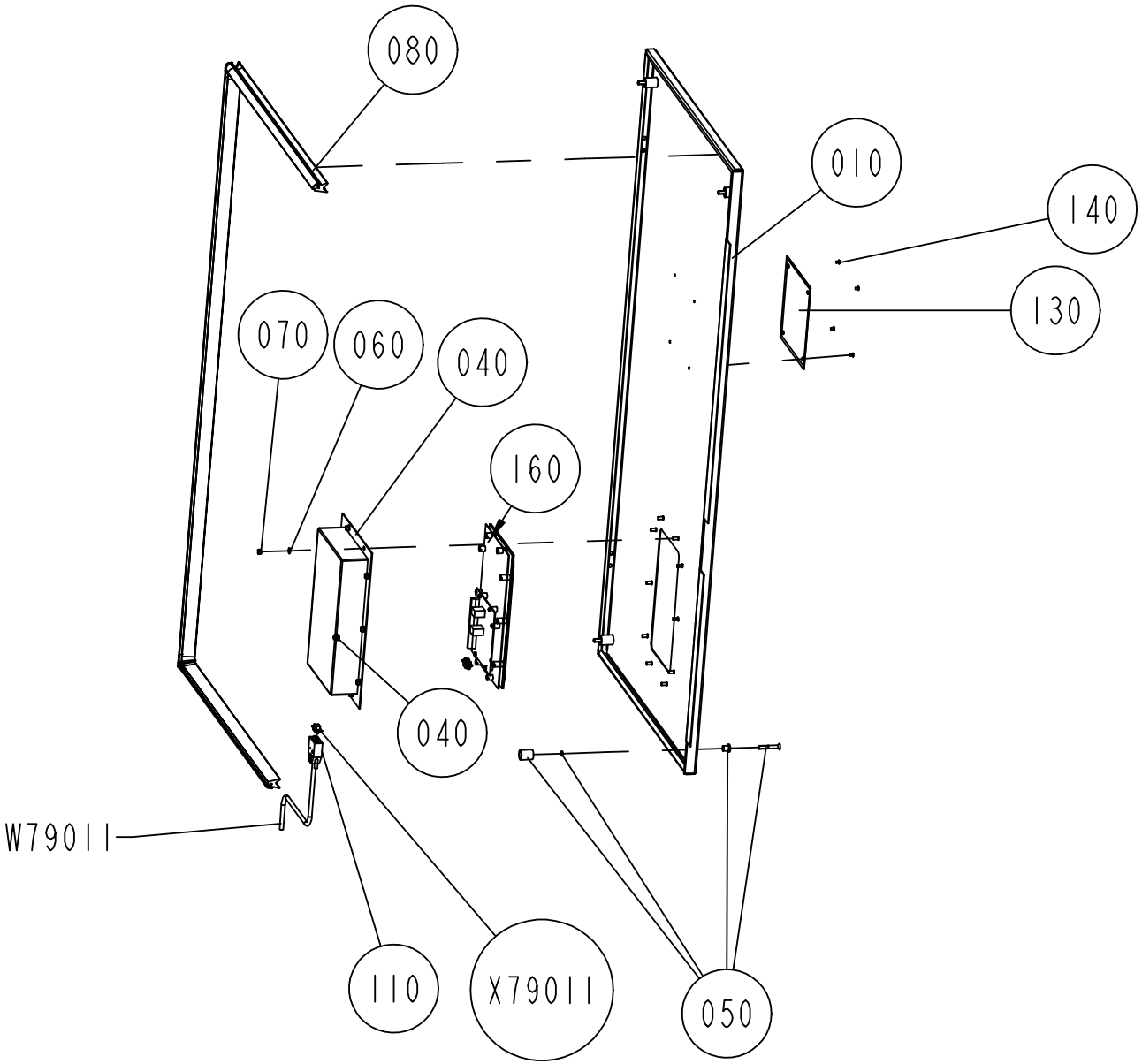

1035323-3
ECN 80787

ECM: 81386 - 20001107
Group number: 1035323-0300
Assembly Drawing: 1035323-3_1_AC

Issue: 20011217

Pos	Part No	SP	UN	Qty	Description	Page No
Common Parts						
010	1346420-0000	-		1	COVER	
040	1346423-0000	-		1	COVER	
050	90226-0458	-		4	MOUNTING SCREW	
060	315105-0146	-		10	WASHER PLAIN, BRB, 5,3/10,H=1	
070	312605-0314	-		10	HEXAGON NUT, M6M M5 A280	
080	1296105-0000	-		1	SEALING STRIP	
100	90110-0147	-		1	CONTACT UNIT	
110	90110-0144	-		1	COVER	
130	574658-0000	-		1	LOGOTYPE TP	
140	311521-0142	-		4	BLANK RIVET 3,2X6	
160	A1488009-0100	-		1	PANEL	**931**
W7901	90220-0092	-	M	5	PAIR TWISTED CABLE 3X2X0,25MM2	
X79011	90110-0141	-		1	CONTACT UNIT, DE09P064TX	

Pos	Part No	SP	UN	Qty	Description	Page No

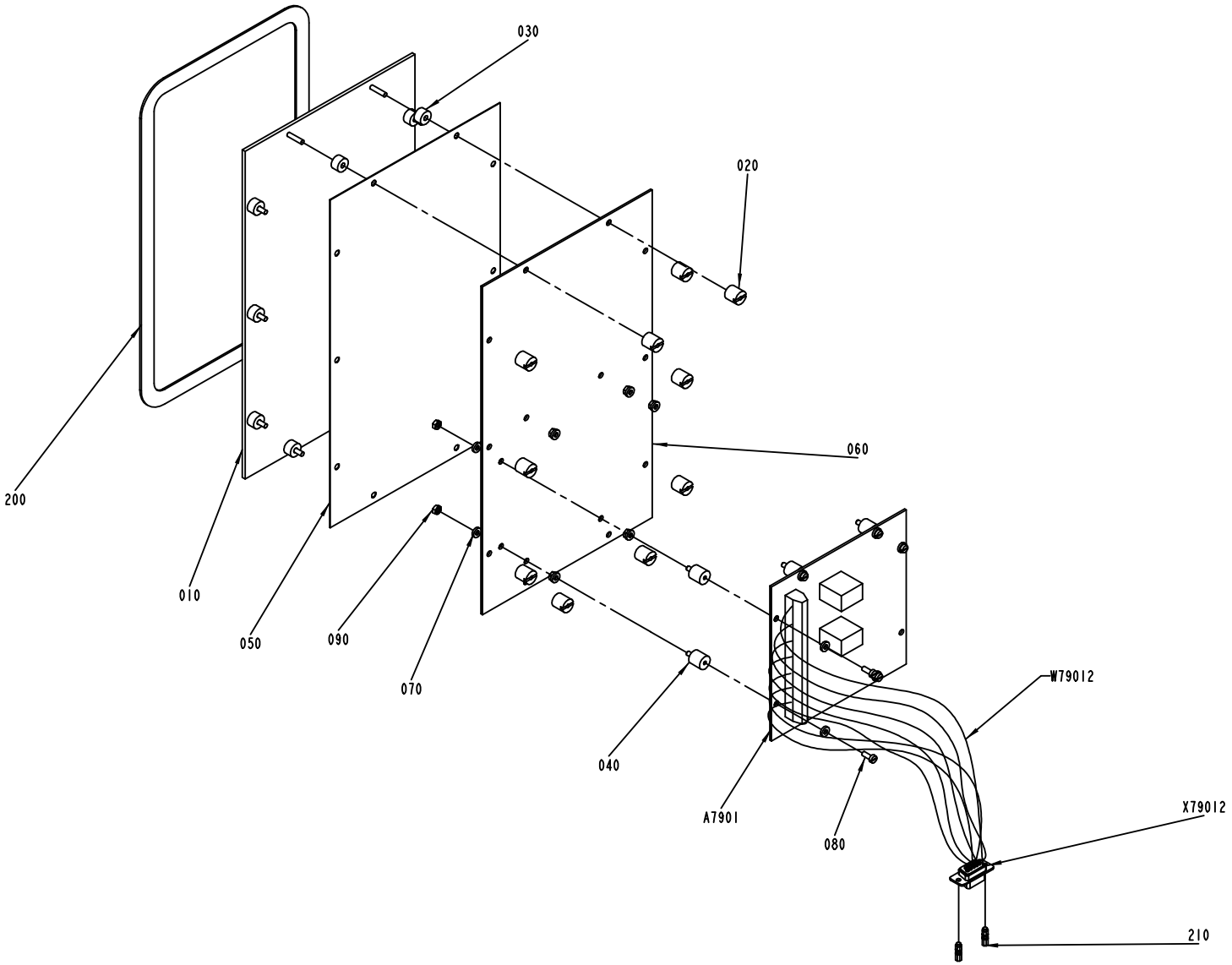

S-1488009-I
ECN 73542

ECM: 73542 - 20000414
Group number: 1488009-0100
Assembly Drawing: 1488009-1_1_AB

Issue: 20011217

Pos	Part No	SP	UN	Qty	Description	Page No
TBA/21-0500						
050	1366779-0000	-		1	DISPLAY	
060	1366780-0000	-		1	CIRCUIT BOARD	
Common Parts						
010	599556-0000	-		1	WINDOW	
020	970261-0000	-		10	SPACER SCREW 10,2X10MM	
030	971286-0000	-		10	SPACER H=6MM	
040	970262-0000	-		8	SPACER NUT	
070	1488007-0000	-		16	WASHER	
080	312125-0222	-		8	SCREW PAN HEAD MCS M3X8 SS	
090	312605-0310	-		81	HEXAGON NUT, M6M M3 A280	
200	90144-0044	-		1	TAPE SCOTCH VHB 4945;12,7MM	
210	90110-0382	-		2	FASTENING NUT	
A7901	B68699-0101	-		1	MULTIPLEXER CARD 56LED	
010	*578860-0000*	-		*1*	*CIRCUIT BOARD*	
020	*578861-0001*	-			*COMPONENTS WITHOUT TP-NO*	
W79012	351179-0102	-	MM	1000	CABLE AWM 1X075 MM2 BLACK	
X79012	90110-0141	-		1	CONTACT UNIT, DE09P064TX	

Pos	Part No	SP	UN	Qty	Description	Page No

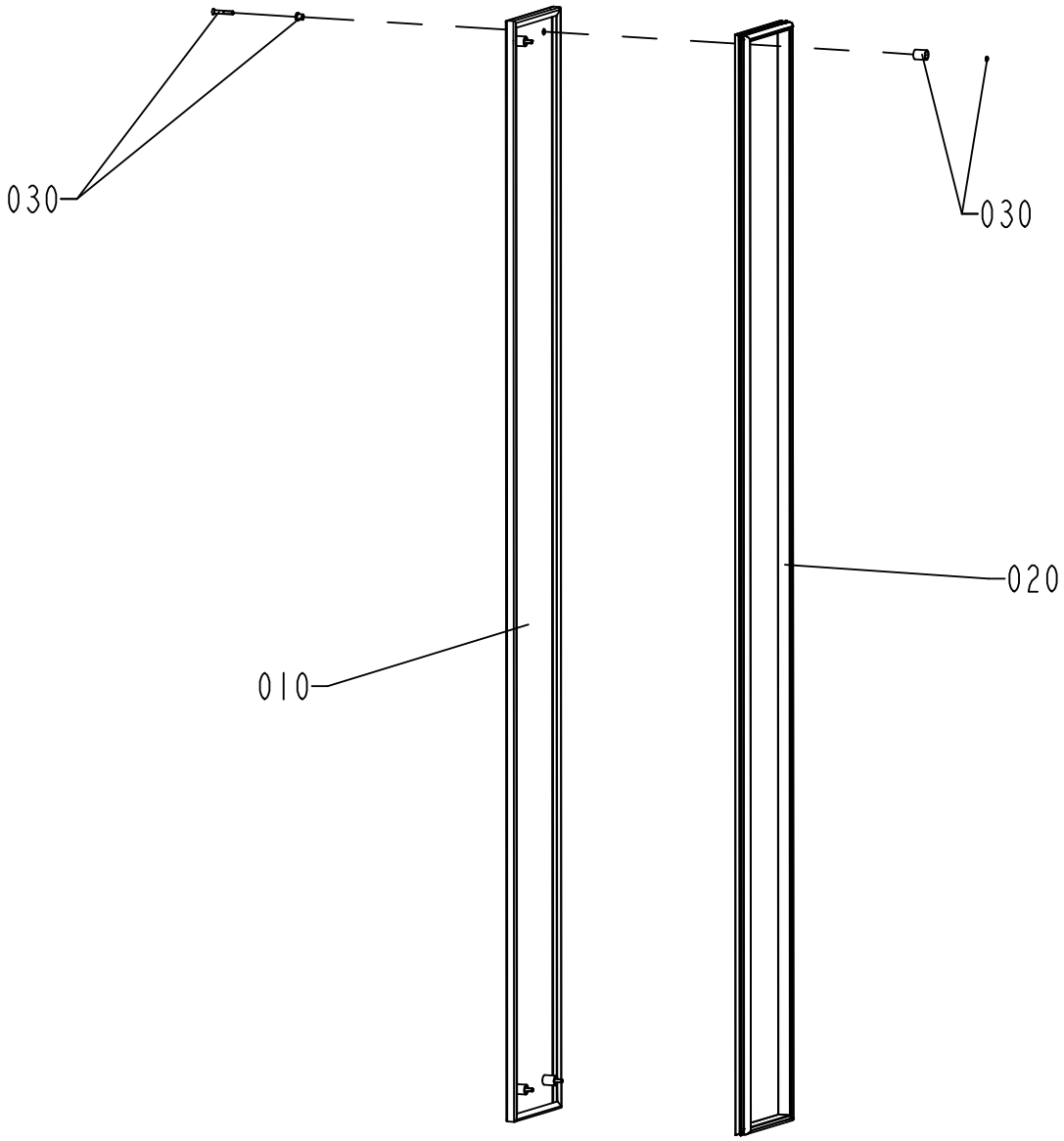

S-1346904-1
ECN 71634

ECM: 71634 - 19990112
Group number: 1346904-0100
Assembly Drawing: 1346904-1_1_AA

Issue: 20011217

Pos	Part No	SP	UN	Qty	Description	Page No
Common Parts						
010	1346414-0000	-		1	COVER PLATE	
020	1346428-0000	-		1	RUBBER STRIP	
030	90226-0458	-		4	MOUNTING SCREW	

Pos	Part No	SP	UN	Qty	Description	Page No

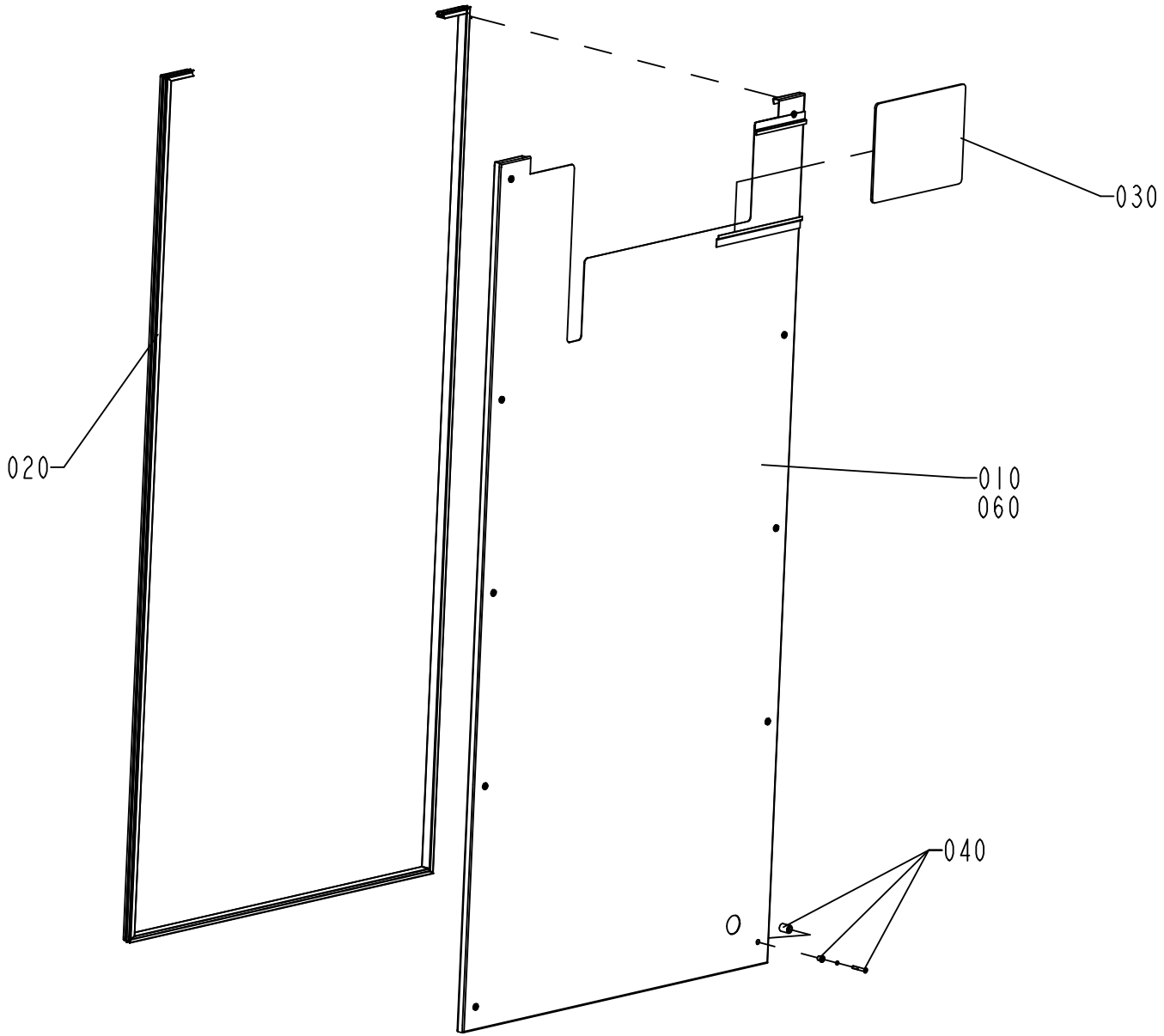

S-1346903-I
ECN 71634

ECM: 71634 - 19990112
Group number: 1346903-0100
Assembly Drawing: 1346903-1_1_AA

Issue: 20011217

Pos	Part No	SP	UN	Qty	Description	Page No
Common Parts						
010	1346425-0000	-		1	COVER PLATE	
020	1346907-0000	-		1	RUBBER STRIP	
030	1348898-0000	-		1	GLASS	
040	90226-0458	-		10	MOUNTING SCREW	
060	90143-0060	-	M	1	EDGE STRIP 9,5X6,3MM BLACK PVC	

Pos	Part No	SP	UN	Qty	Description	Page No

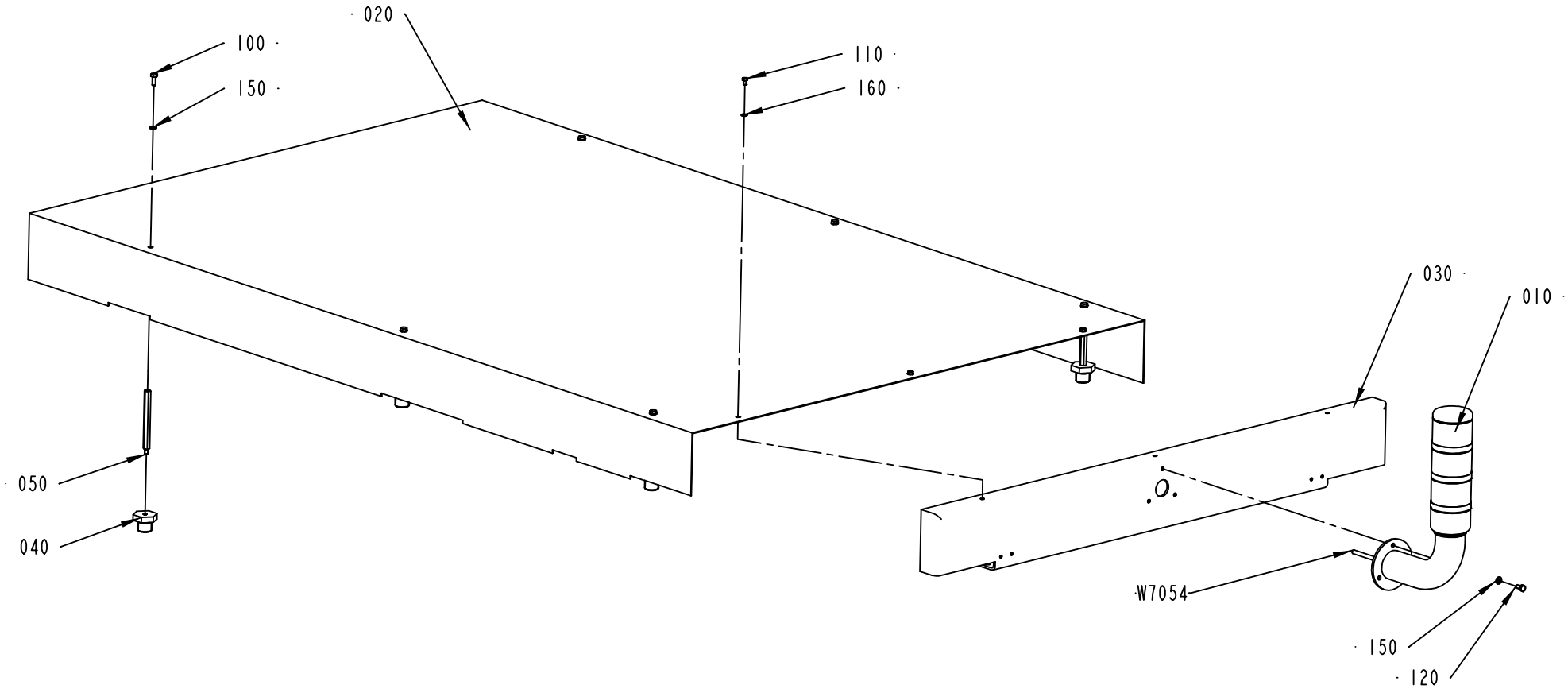

1346433-1
ECN 84465

ECM: 91446 - 20010924
Group number: 1346433-0100
Assembly Drawing: 1346433-1_1_AB

Issue: 20011217

Pos	Part No	SP	UN	Qty	Description	Page No
Common Parts						
010	A1317983-0100	-		1	ALARM BEACON	**391, 939**
020	1346415-0000	-		1	COVER PLATE	
030	1346416-0000	-		1	HOLDER	
040	1346427-0000	-		6	DISTANCE	
050	1348918-0000	-		6	DISTANCE	
100	312105-0368	-		6	SCREW M6S M6X16 A280	
110	312105-0323	-		3	SCREW M6S M5X8 A280	
120	312105-0366	-		3	SCREW M6S M6X12 A280	
150	315105-0153	-		9	WASHER PLAIN, BRB, 6,4/12,H=1,5	
160	315105-0146	-		3	WASHER PLAIN, BRB, 5,3/10,H=1	
W 7054	351150-0406	-	M	8	CABLE OLFLEX 7X0,75 MM2 LIGHT/GREY	

Pos	Part No	SP	UN	Qty	Description	Page No

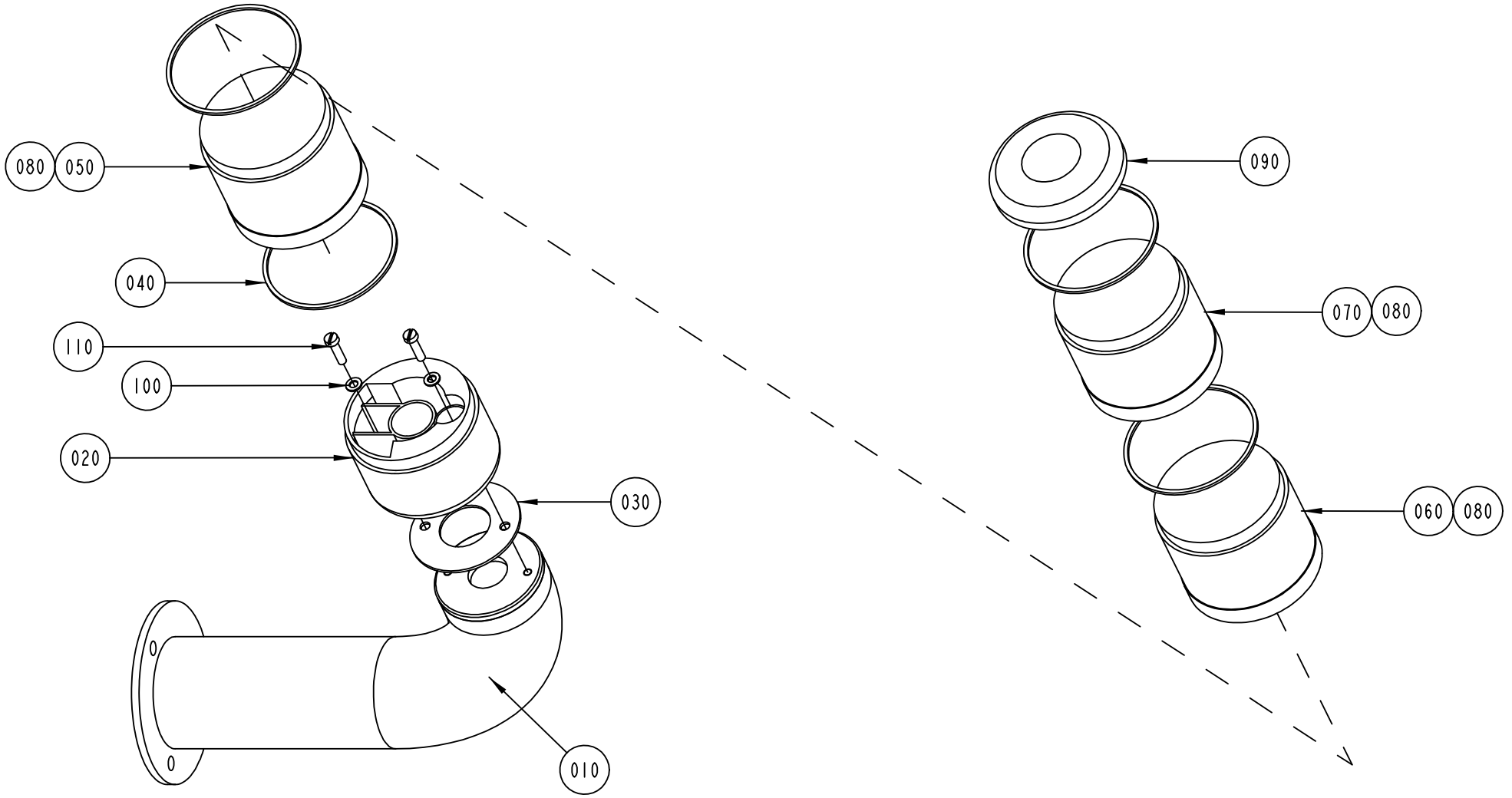

S-1317983-1
ECN 71634

ECM: 90290 - 20010302
Group number: 1317983-0100
Assembly Drawing: 1317983-1_1_AA

Issue: 20011217

Pos	Part No	SP	UN	Qty	Description	Page No
Common Parts						
010	1317793-0000	B		1	BASE	
020	1317794-0000	-		1	BASE	
030	90419-0310	A		1	GASKET	
040	90419-0307	A		4	GASKET	
050	90419-0013	B		1	LIGHT ELEMENT, BLUE	
060	90419-0014	B		1	LIGHT ELEMENT, YELLOW	
070	90419-0012	B		1	LIGHT ELEMENT, RED	
080	90036-0068	A		3	BULB 6.5W 24V	
090	90419-0017	-		1	BASE	
100	315105-0136	-		2	WASHER PLAIN, BRB, 4,3/8,H=0,8	
110	312125-0293	-		2	SCREW PAN HEAD MCS M4X16 SS	

Pos	Part No	SP	UN	Qty	Description	Page No

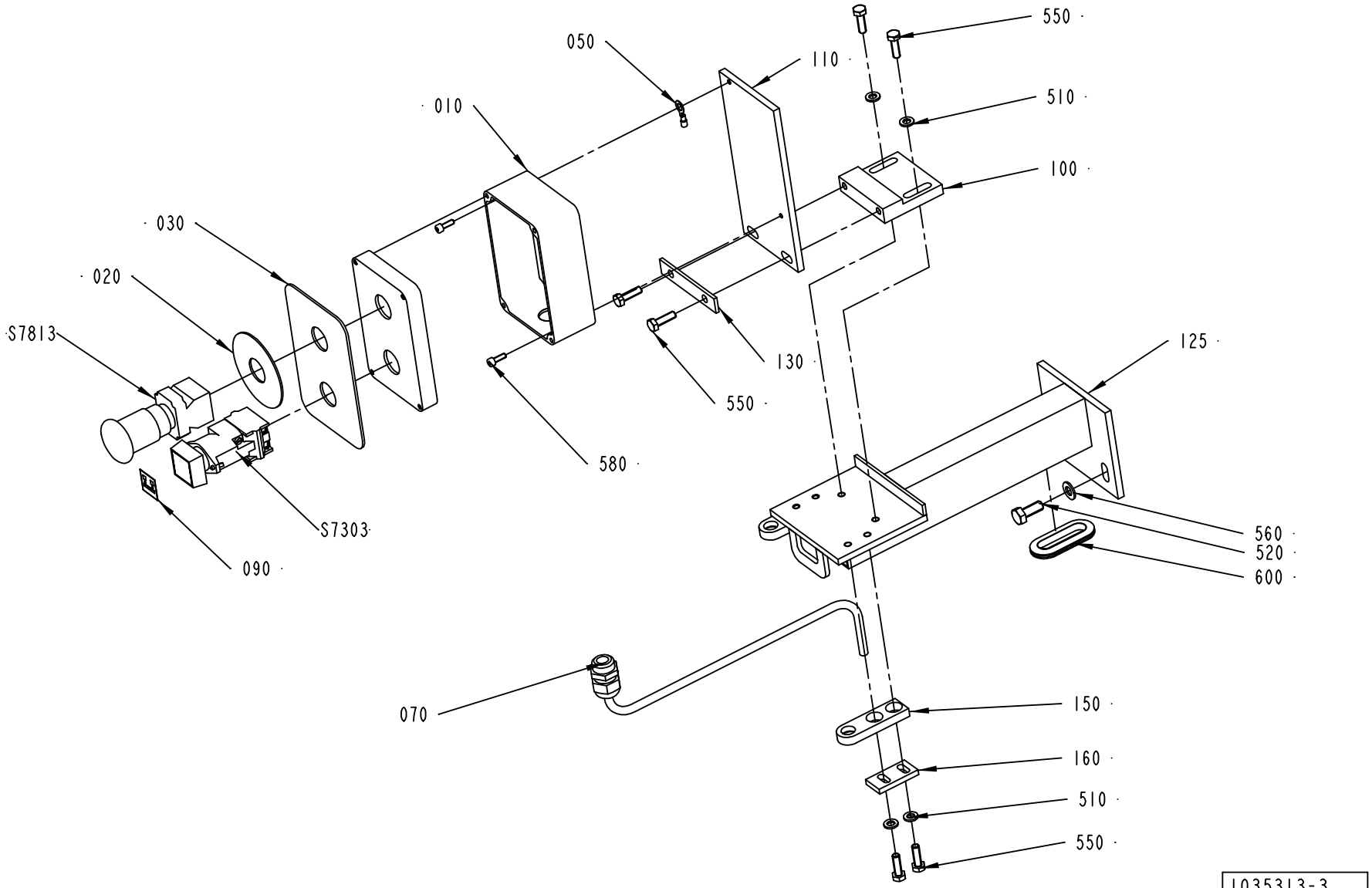

1035313-3
ECN 90194

ECM: 93137 - 20010807
Group number: 1035313-0300
Assembly Drawing: 1035313-3_1_AA

Issue: 20011217

Pos	Part No	SP	UN	Qty	Description	Page No
Common Parts						
010	1254022-0000	-		1	PUSH BUTTON BOX	
020	486826-0001	-		1	SIGN "EMERGENCY STOP"	
030	1040990-0000	-		1	RUBBER PLATE	
050	353101-0123	-		1	CABLE SHOE 0,5-1,5MM2 RED	
070	352103-0106	-		1	CABLE GLAND ST 11	
090	359301-0488	-		1	BUTTON SIGN, MATERIAL LOCKING	
100	591324-0000	-		1	HOLDER	
110	1254003-0000	-		1	BRACKET	
120	1558276-0000	-		1	BRACKET	
130	591325-0000	-		1	WASHER	
150	1038903-0000	-		2	BRACKET	
160	1038904-0000	-		2	WASHER	
510	315105-0153	-		6	WASHER PLAIN, BRB, 6,4/12,H=1,5	
520	312105-0451	-		2	SCREW M6S 8X20 A280	
550	312105-0370	-		8	SCREW M6S M6X20 A280	
560	315105-0165	-		2	WASHER PLAIN, BRB, 8,4/16,H=1,5	
580	312115-0291	-		2	SCREW MC6S M4X12 A280	
600	90143-0060	-	MM	120	EDGE STRIP 9,5X6,3MM BLACK PVC	
S7303	B90064-0082	A		1	PUSH BUTTON WHITE	
	90036-0057	*B*		*1*	*LIGHT BULB BA9S 28V*	
S7813	90064-0124	A		1	SWITCH,EMERGENCY STOP	
W7029	351150-0406	-	M	5	CABLE OLFLEX 7X0,75 MM2 LIGHT/GREY	

Pos	Part No	SP	UN	Qty	Description	Page No

Machine Type | Group Description | Used-In | Group Number | Page No

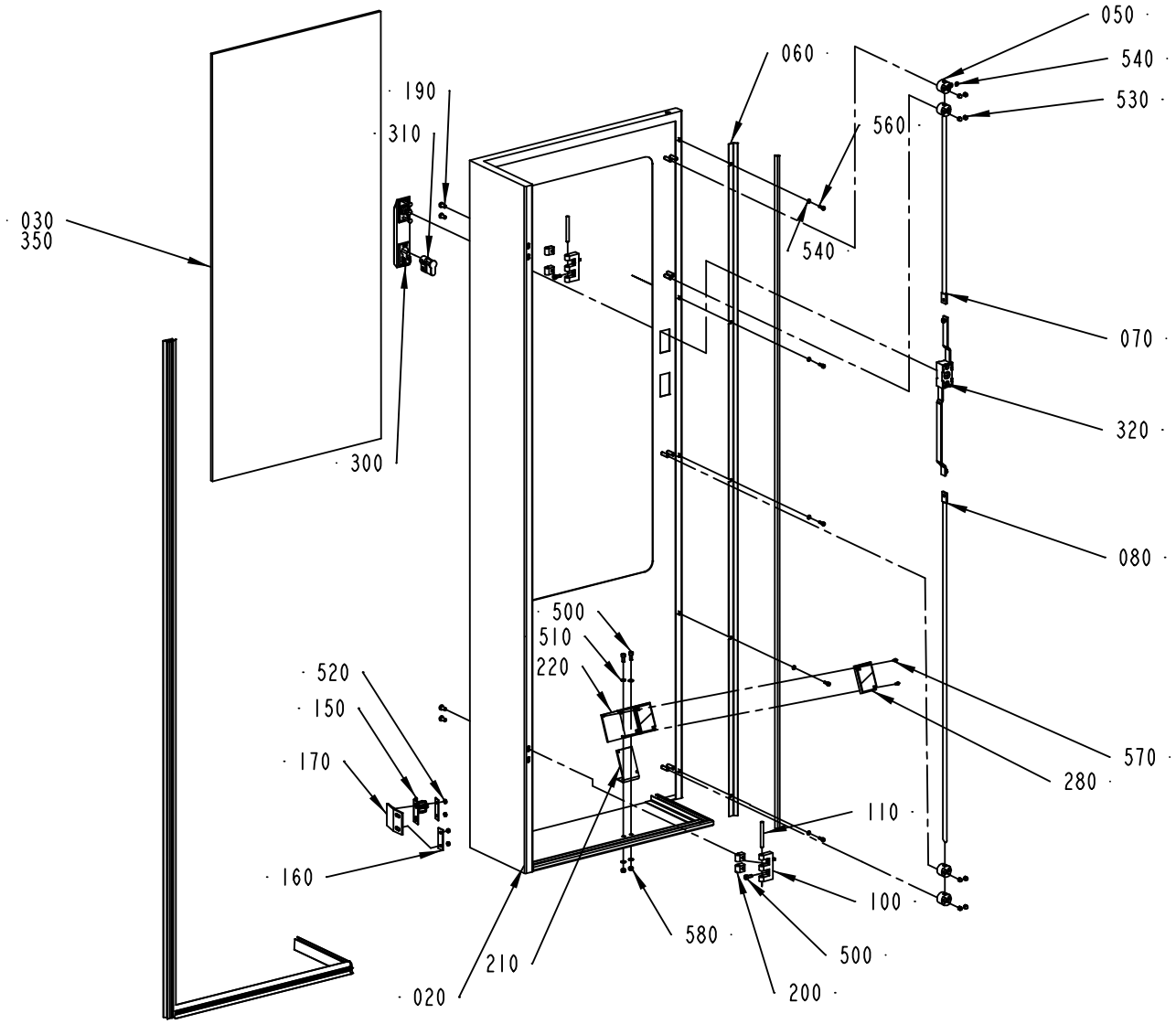

1035314-2
ECN 90194

Pos	Part No	SP	UN	Qty	Description	Page No
Common Parts						
020	1558272-0000	-		1	DOOR	
030	1037201-0000	-		1	GLASS PANE	
050	1129274-0000	-		4	GUIDE LUG	
060	1038901-0000	-		1	RIM	
070	1036304-0009	-		1	LOCKING ARM	
080	1036304-0010	-		1	LOCKING ARM	
100	1035792-0000	-		2	E-HINGE	
110	988685-0000	-		2	PIN	
150	975917-0000	-		1	KEY FOR SAFETY SWITCH 90044-103	
160	1036563-0000	-		2	WASHER	
170	1040993-0000	-		1	MOUNTING SHEET	
190	1129767-0000	-		4	SCREW	
200	1129770-0000	-		4	BLOCKING PIECE	
210	1348902-0000	-		1	BRACKET	
220	1484717-0000	-		1	PLATE	
280	90232-0333	-		3	REFLECTOR E39-R1	
290	90143-0059	-	MM	1575	SEAL STRIP 4610069	
300	90237-0175	-		1	TURNING HANDLE	
310	90237-0128	-		1	LOCK CYLINDER, 1109-U3	
320	90237-0153	-		1	LOCK HOUSING, 1121-U26-0B	
330	90143-0089	-	MM	2280	RUBBER STRIP	
350	90157-0041	-	L	1	SEALING COMPOUND	
500	312115-0327	-		6	SCREW MC6S M5X12 A280	
510	315105-0146	-		4	WASHER PLAIN, BRB, 5,3/10,H=1	
520	312605-0312	-		4	HEXAGON NUT, M6M M4 A280	
530	312705-0312	-		8	NUT HEX. DOMED CAP MHM-6 M4 A280	
540	315105-0136	-		13	WASHER PLAIN, BRB, 4,3/8,H=0,8	
560	312115-0291	-		5	SCREW MC6S M4X12 A280	
570	312125-0222	-		6	SCREW PAN HEAD MCS M3X8 SS	
580	312605-0314	-		2	HEXAGON NUT, M6M M5 A280	

Pos	Part No	SP	UN	Qty	Description	Page No

Machine Type | Group Description | Used-In | Group Number | Page No

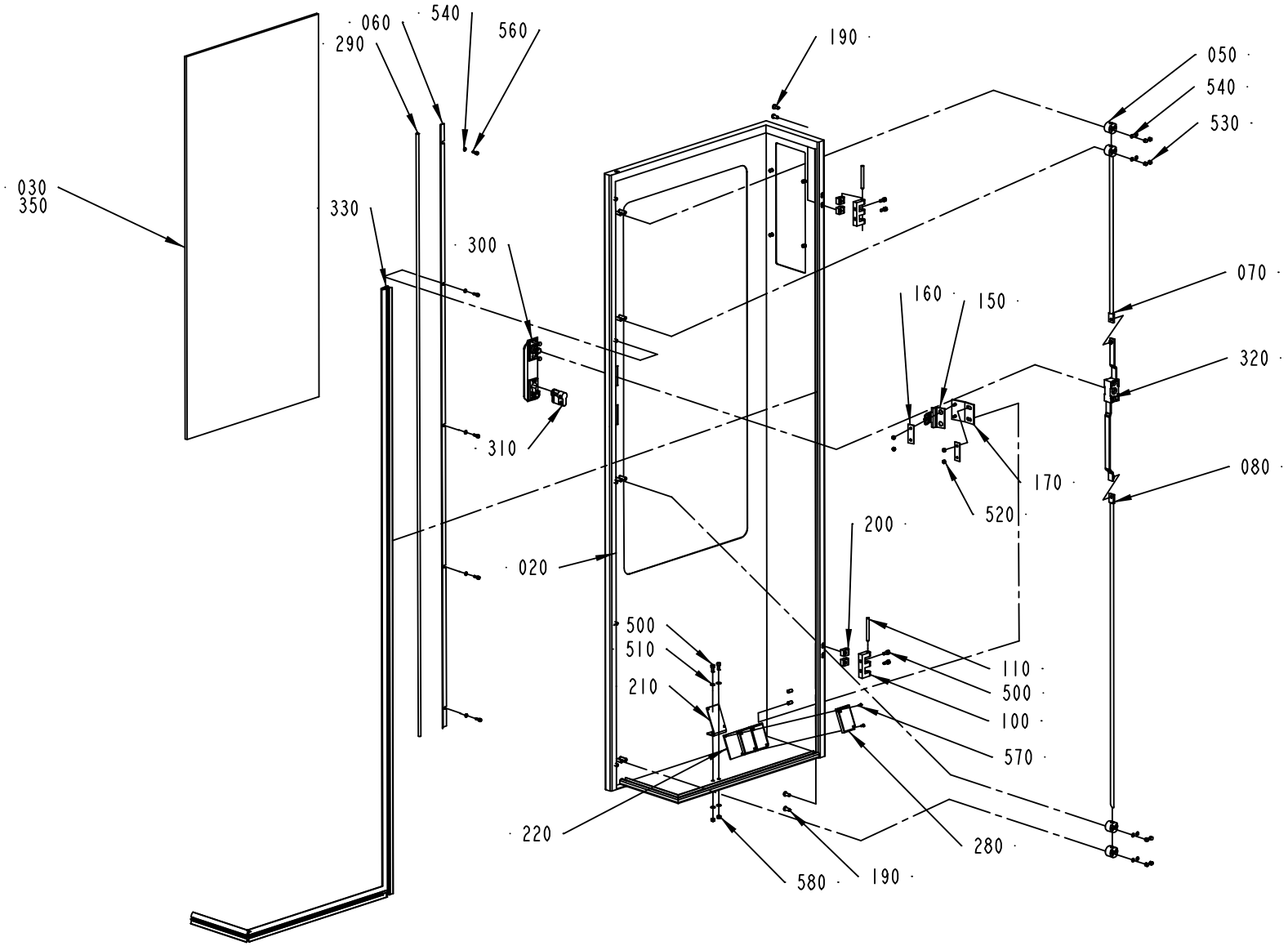

1035315-2
ECN 90194

Pos	Part No	SP	UN	Qty	Description	Page No
Common Parts						
020	1558273-0000	-		1	DOOR	
030	1037201-0000	-		1	GLASS PANE	
050	1129274-0000	-		4	GUIDE LUG	
060	1038901-0000	-		1	RIM	
070	1036304-0009	-		1	LOCKING ARM	
080	1036304-0010	-		1	LOCKING ARM	
100	1035792-0000	-		2	E-HINGE	
110	988685-0000	-		2	PIN	
150	975917-0000	-		1	KEY FOR SAFETY SWITCH 90044-103	
160	1036563-0000	-		2	WASHER	
170	1040993-0000	-		1	MOUNTING SHEET	
190	1129767-0000	-		4	SCREW	
200	1129770-0000	-		4	BLOCKING PIECE	
210	1348902-0000	-		1	BRACKET	
220	1484717-0000	-		1	PLATE	
280	90232-0333	-		3	REFLECTOR E39-R1	
290	90143-0059	-	MM	1575	SEAL STRIP 4610069	
300	90237-0175	-		1	TURNING HANDLE	
310	90237-0128	-		1	LOCK CYLINDER, 1109-U3	
320	90237-0153	-		1	LOCK HOUSING, 1121-U26-0B	
330	90143-0089	-	MM	2280	RUBBER STRIP	
350	90157-0041	-	L	1	SEALING COMPOUND	
500	312115-0327	-		4	SCREW MC6S M5X12 A280	
510	315105-0146	-		6	WASHER PLAIN, BRB, 5,3/10,H=1	
520	312605-0312	-		4	HEXAGON NUT, M6M M4 A280	
530	312705-0312	-		8	NUT HEX. DOMED CAP MHM-6 M4 A280	
540	315105-0136	-		13	WASHER PLAIN, BRB, 4,3/8,H=0,8	
560	312115-0291	-		5	SCREW MC6S M4X12 A280	
570	312125-0222	-		6	SCREW PAN HEAD MCS M3X8 SS	
580	312605-0314	-		2	HEXAGON NUT, M6M M5 A280	

Pos	Part No	SP	UN	Qty	Description	Page No

Machine Type | Group Description | Used-In | Group Number | Page No

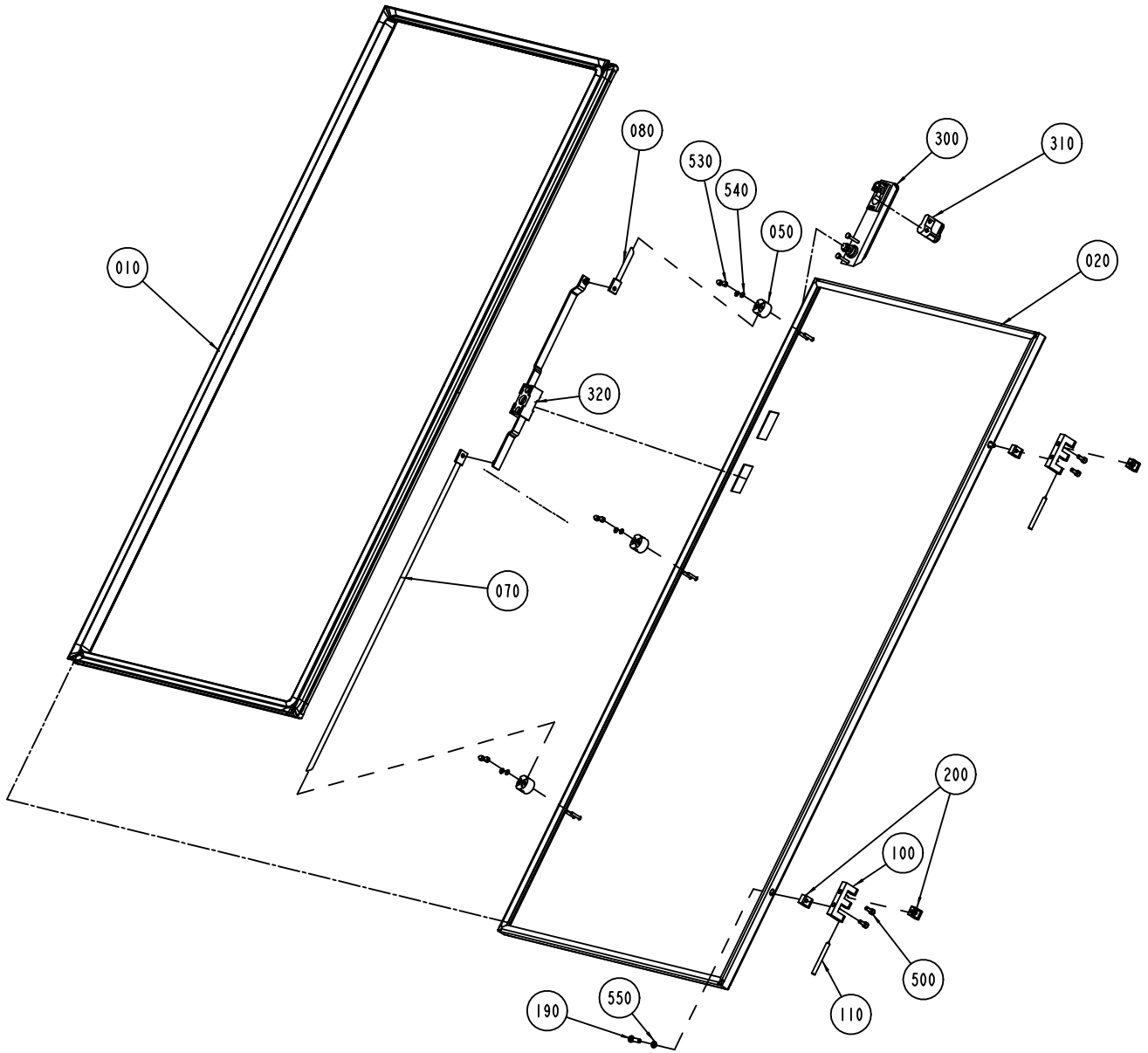
080
530
540
050
300
310
020
010
320
070
200
100
500
110
190
550

Pos	Part No	SP	UN	Qty	Description	Page No
Common Parts						
010	1279083-0000	-		1	SEALING STRIP	
020	590484-0000	-		1	DOOR	
050	1129274-0000	-		3	GUIDE LUG	
070	1036304-0015	-		1	LOCKING ARM	
080	1036304-0016	-		1	LOCKING ARM	
100	1035792-0000	-		2	E-HINGE	
110	988685-0000	-		2	PIN	
190	1129767-0000	-		2	SCREW	
200	1129770-0000	-		4	BLOCKING PIECE	
300	90237-0126	-		1	TURNING HANDLE "REPBY 90237-175"	
310	90237-0128	-		1	LOCK CYLINDER, 1109-U3	
320	90237-0153	-		1	LOCK HOUSING, 1121-U26-0B	
500	312115-0327	-		4	SCREW MC6S M5X12 A280	
530	312705-0312	-		6	NUT HEX. DOMED CAP MHM-6 M4 A280	
540	315105-0136	-		6	WASHER PLAIN, BRB, 4,3/8,H=0,8	
550	315105-0146	-		2	WASHER PLAIN, BRB, 5,3/10,H=1	

Pos	Part No	SP	UN	Qty	Description	Page No

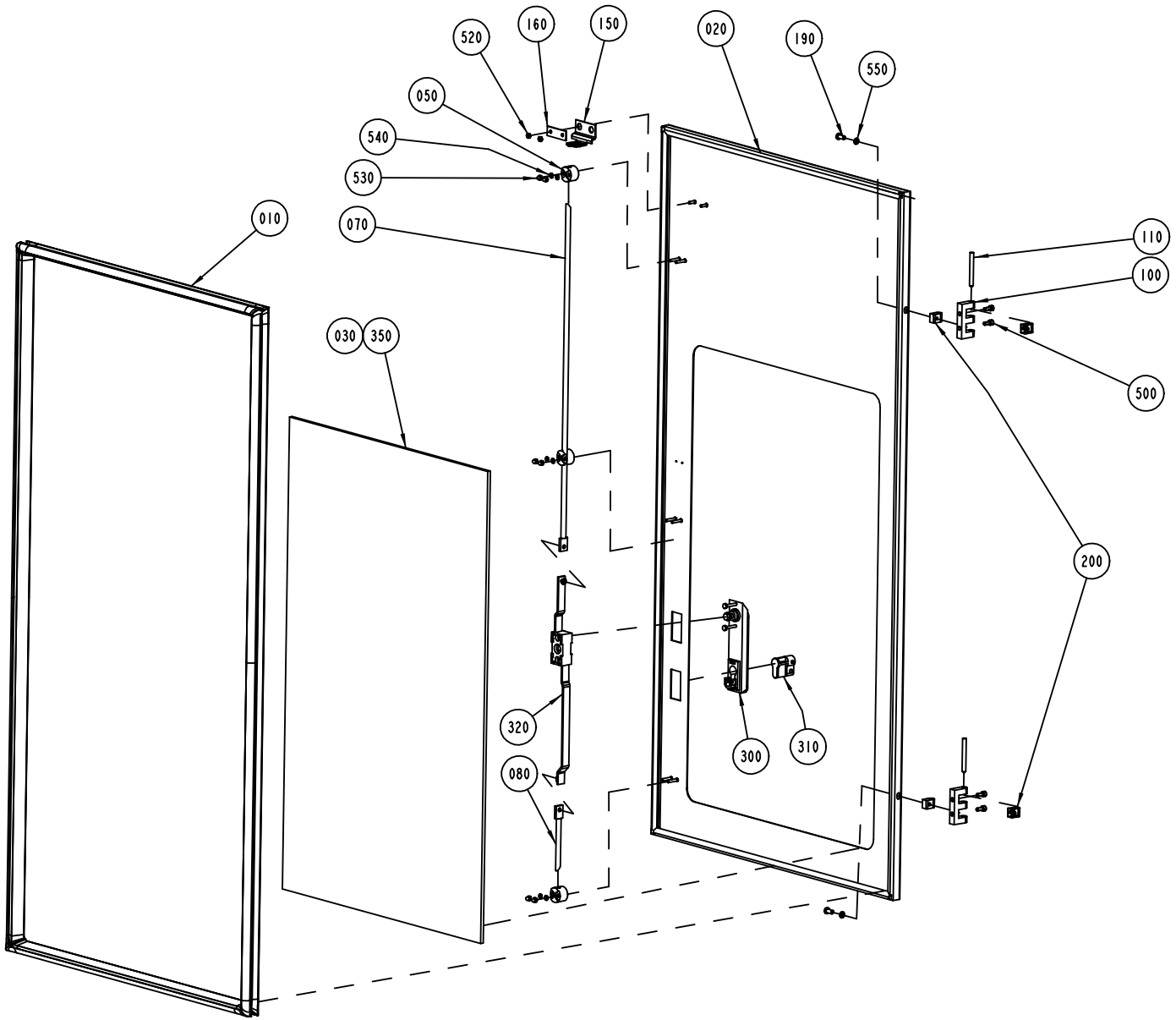
520
160
150
020
190
550
050
540
530
070
010
110
100
030
350
500
200
320
300
310
080

ECM: 71870 - 19981029
Group number: 1035317-0200
Assembly Drawing: 1035317-2_1_AB

Issue: 20011217

Pos	Part No	SP	UN	Qty	Description	Page No
Common Parts						
010	1279083-0000	-		1	SEALING STRIP	
020	590485-0000	-		1	DOOR	
030	1037202-0000	-		1	GLASS PANE	
050	1129274-0000	-		3	GUIDE LUG	
070	1036304-0015	-		1	LOCKING ARM	
080	1036304-0012	-		1	LOCKING ARM	
100	1035792-0000	-		2	E-HINGE	
110	988685-0000	-		2	PIN	
150	975917-0000	-		1	KEY FOR SAFETY SWITCH 90044-103	
160	1036563-0000	-		1	WASHER	
190	1129767-0000	-		2	SCREW	
200	1129770-0000	-		4	BLOCKING PIECE	
300	90237-0126	-		1	TURNING HANDLE "REPBY 90237-175"	
310	90237-0128	-		1	LOCK CYLINDER, 1109-U3	
320	90237-0153	-		1	LOCK HOUSING, 1121-U26-0B	
350	90157-0041	-		1	SEALING COMPOUND	
500	312115-0327	-		4	SCREW MC6S M5X12 A280	
520	312605-0312	-		2	HEXAGON NUT, M6M M4 A280	
530	312705-0312	-		6	NUT HEX. DOMED CAP MHM-6 M4 A280	
540	315105-0136	-		6	WASHER PLAIN, BRB, 4,3/8,H=0,8	
550	315105-0146	-		2	WASHER PLAIN, BRB, 5,3/10,H=1	

Pos	Part No	SP	UN	Qty	Description	Page No

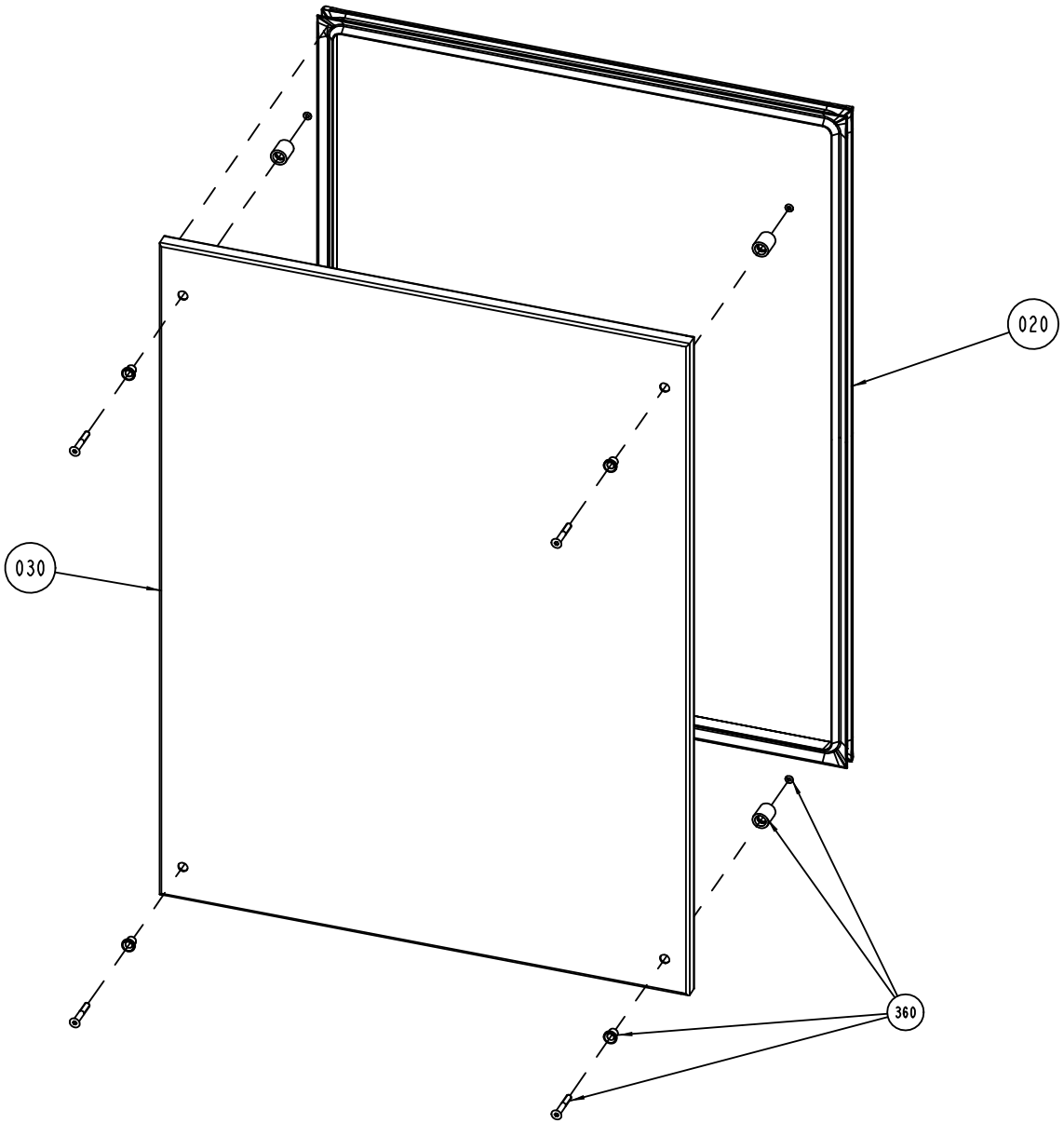
020
030
360

ECM: 71870 - 19981029
Group number: 1035318-0200
Assembly Drawing: 1035318-2_1_AB

Issue: 20011217

Pos	Part No	SP	UN	Qty	Description	Page No
Common Parts						
020	1279084-0000	-		1	SEALING STRIP	
030	590487-0000	-		1	DOOR	
360	90226-0458	-		4	MOUNTING SCREW	

Pos	Part No	SP	UN	Qty	Description	Page No

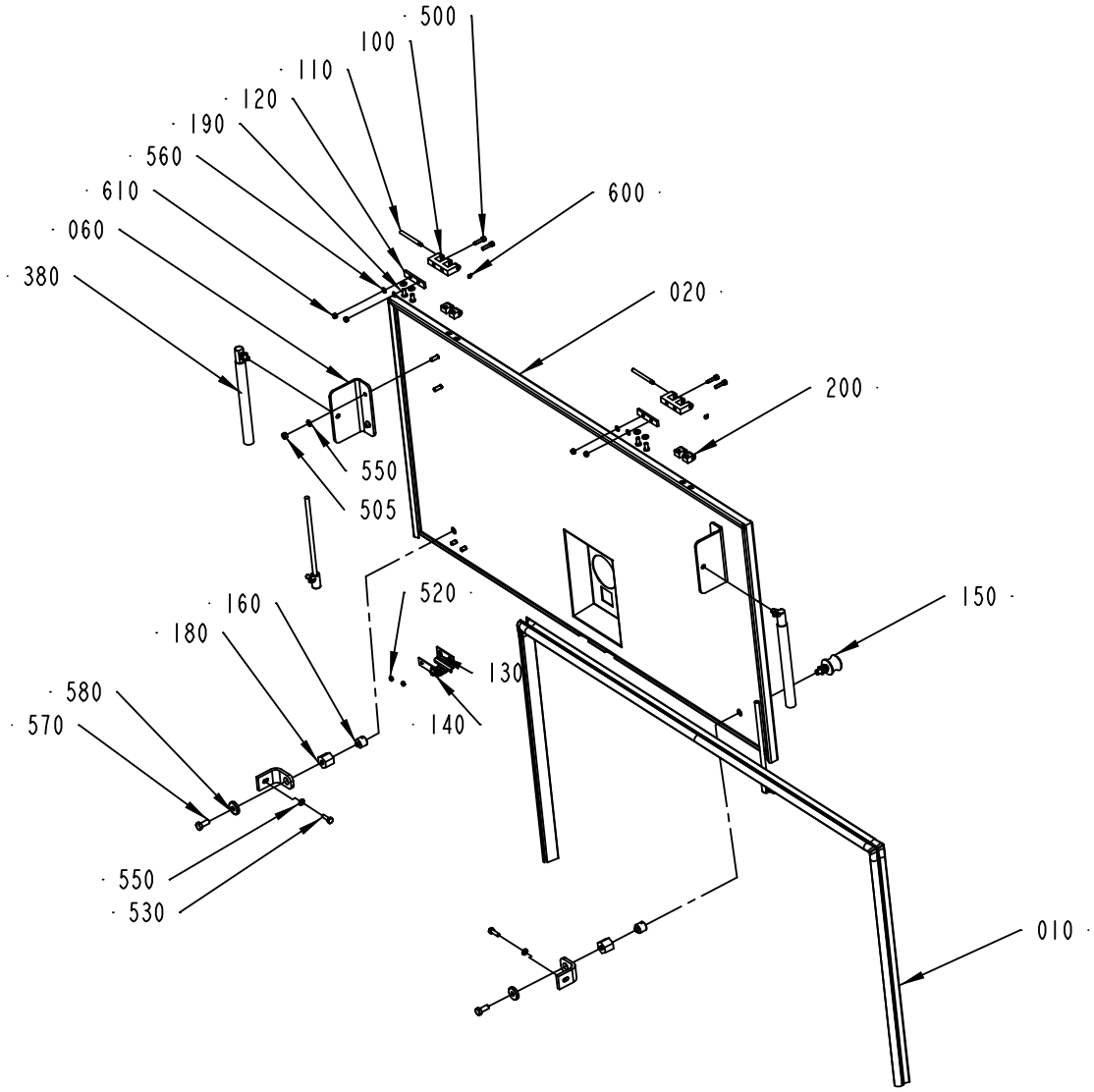

1035319-3
ECN 90194

ECM: 93140 - 20010807
Group number: 1035319-0300
Assembly Drawing: 1035319-3_1_AA

Issue: 20011217

Pos	Part No	SP	UN	Qty	Description	Page No
Common Parts						
010	1296102-0000	-		1	SEALING STRIP	
020	1558274-0000	-		1	HATCH	
060	591323-0000	-		2	HOLDER	
100	1035792-0000	-		2	E-HINGE	
110	1036329-0000	-		2	PIN	
120	1558275-0000	-		2	FASTENING PLATE	
130	975917-0000	-		1	KEY FOR SAFETY SWITCH 90044-103	
140	1036563-0000	-		1	WASHER	
150	90237-0079	-		2	FAST LOCKING BOLT, FSQ -M8	
160	90237-0178	-		2	FAST LOCKING SOCKET,4-28599, M8	
170	1040991-0000	-		2	ANGLE	
180	1040992-0000	-		2	SPACER NUT	
190	1129767-0000	-		4	SCREW	
200	1129770-0000	-		4	BLOCKING PIECE	
380	90347-0106	A		2	GAS SPRING LIFT-O-MAT 095621 0308 160	
500	312115-0331	-		4	SCREW MC6S M5X20 A280	
505	312605-0316	-		4	HEXAGON NUT, M6M M6 A280	
520	312605-0312	-		2	HEXAGON NUT, M6M M4 A280	
530	312105-0370	-		2	SCREW M6S M6X20 A280	
550	315105-0153	-		10	WASHER PLAIN, BRB, 6,4/12,H=1,5	
560	315105-0146	-		4	WASHER PLAIN, BRB, 5,3/10,H=1	
570	312105-0451	-		2	SCREW M6S 8X20 A280	
580	315125-0165	-		2	WASHER PLAIN ROUND,CHAMF. 8,4/26, H=5	
600	315755-0106	-		2	LOCKING WASHER 4	
610	312812-0314	-		4	HEXAGON NUT, NY-LOCK M5 A480	

Pos	Part No	SP	UN	Qty	Description	Page No

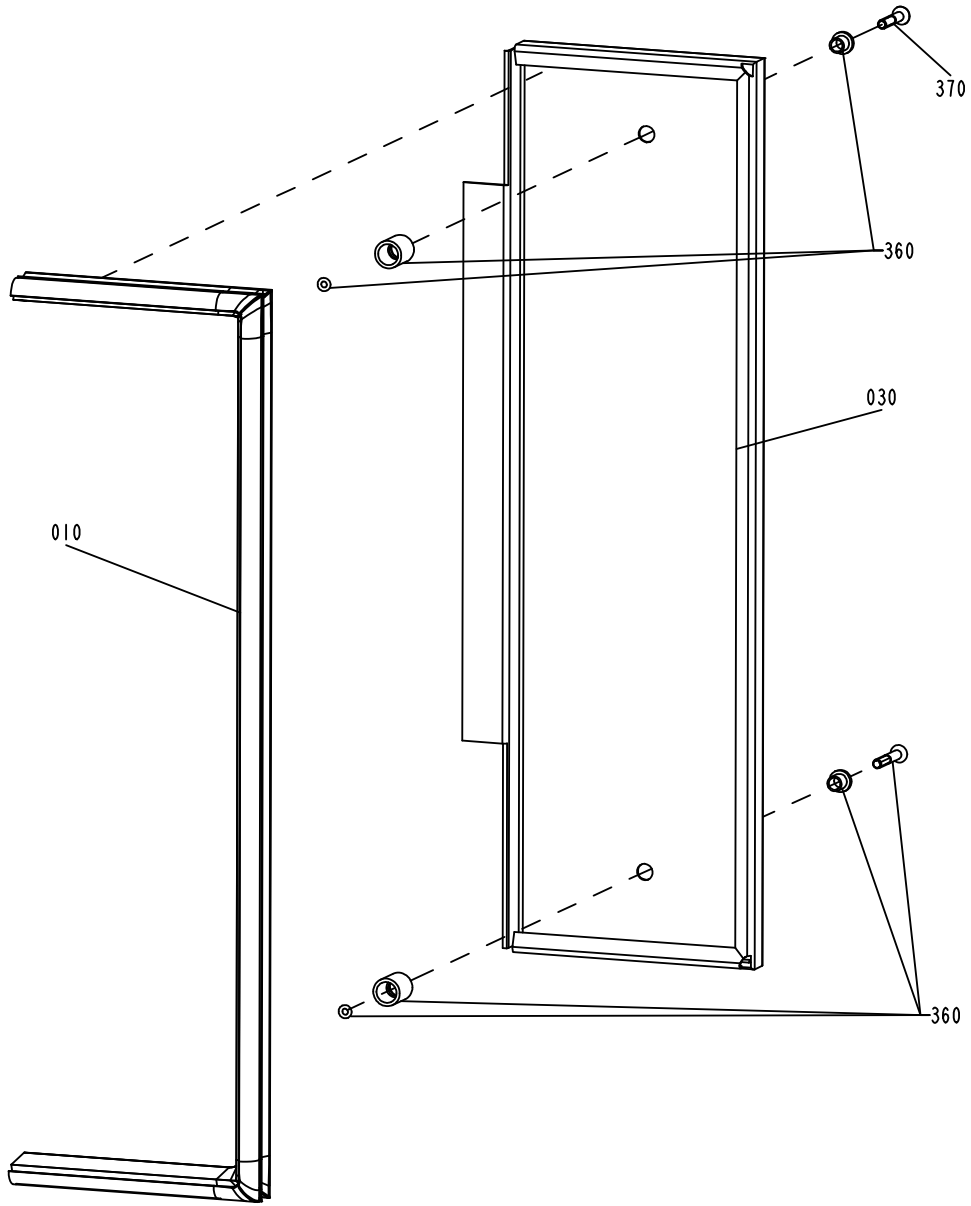
370
360
030
010
360

ECM: 72175 - 19990427
Group number: 591321-0100
Assembly Drawing: 591321-1_1_AC

Issue: 20011217

Pos	Part No	SP	UN	Qty	Description	Page No
Common Parts						
010	1296103-0000	-		1	SEALING STRIP	
030	1116123-0000	-		1	HATCH	
360	90226-0458	-		2	MOUNTING SCREW	
370	312155-0376	-		1	SCREW HEX.SOCK.COUNT.MF6S M6X35 A280	

Pos	Part No	SP	UN	Qty	Description	Page No

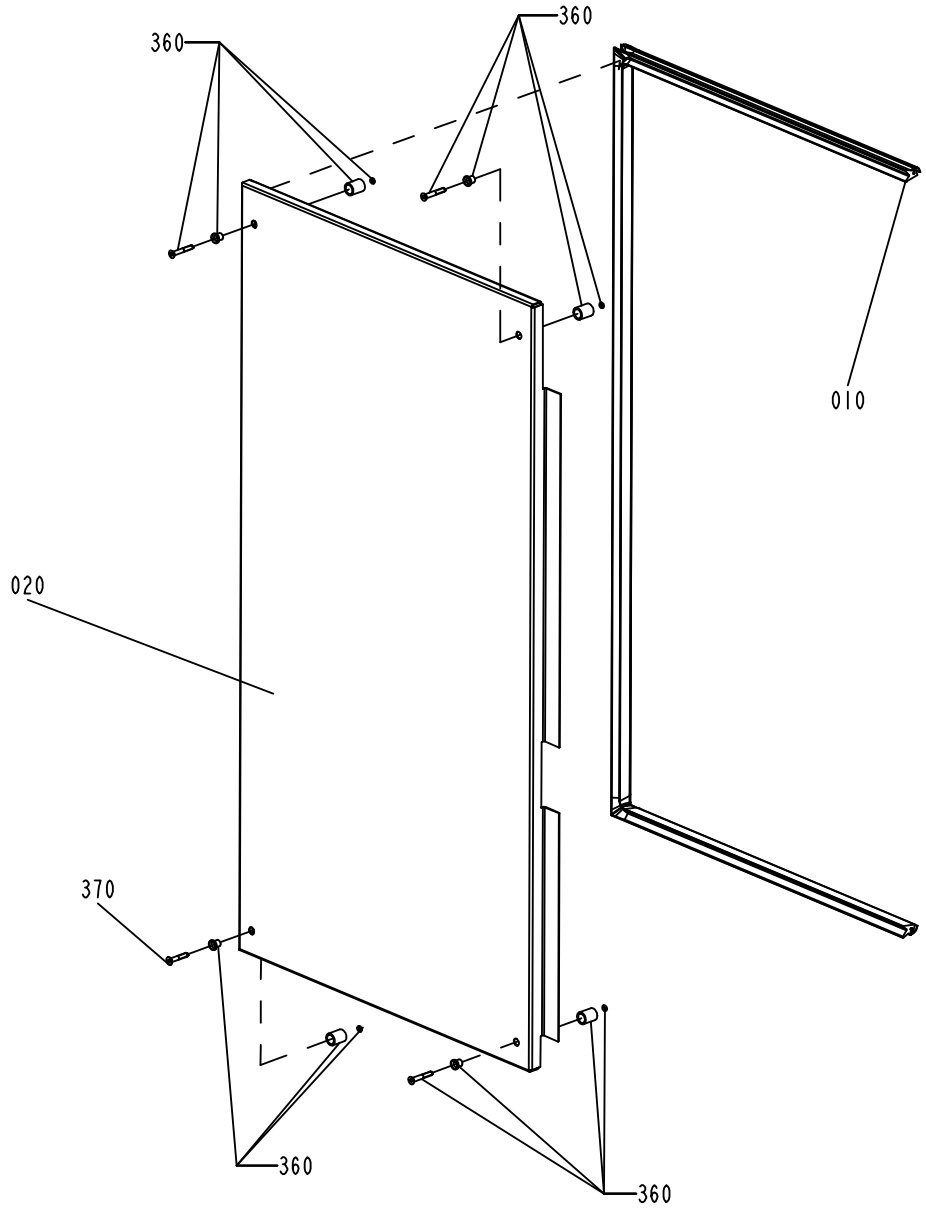
360
360
010
020
370
360
360

ECM: 72175 - 19990427
Group number: 1035321-0200
Assembly Drawing: 1035321-2_1_AC

Issue: 20011217

Pos	Part No	SP	UN	Qty	Description	Page No
Common Parts						
010	1296105-0000	-		1	SEALING STRIP	
020	1116046-0000	-		1	HATCH	
360	90226-0458	-		4	MOUNTING SCREW	
370	312155-0376	-		1	SCREW HEX.SOCK.COUNT.MF6S M6X35 A280	

Pos	Part No	SP	UN	Qty	Description	Page No

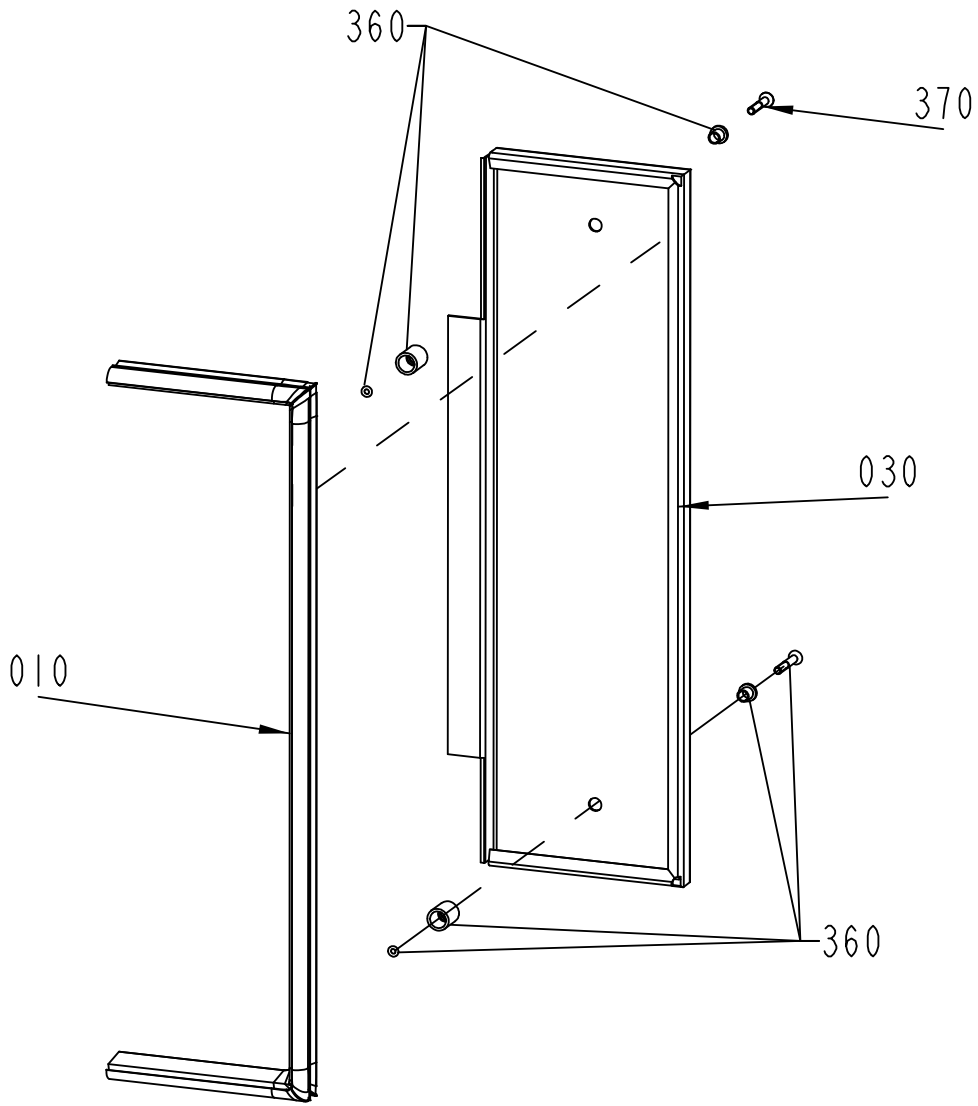

S-591322-I
ECN 72175

ECM: 72175 - 19990427
Group number: 591322-0100
Assembly Drawing: 591322-1_1_AC

Issue: 20011217

Pos	Part No	SP	UN	Qty	Description	Page No
Common Parts						
010	1296103-0000	-		1	SEALING STRIP	
030	1116126-0000	-		1	HATCH	
360	90226-0458	-		2	MOUNTING SCREW	
370	312155-0376	-		1	SCREW HEX.SOCK.COUNT.MF6S M6X35 A280	

Pos	Part No	SP	UN	Qty	Description	Page No

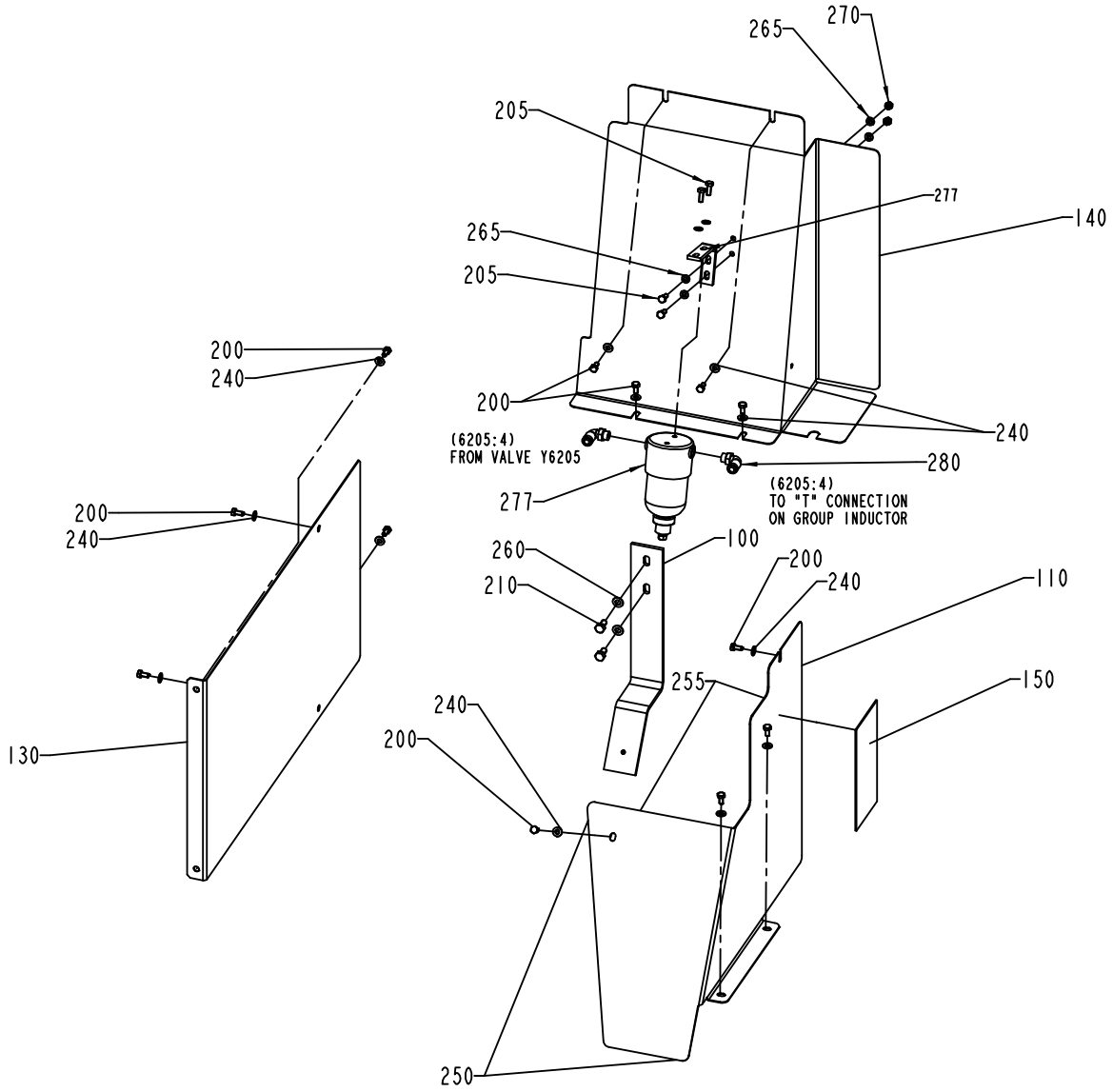

S-1255304-1
ECN 725000

ECM: 72500 - 19991021
Group number: 1255304-0100
Assembly Drawing: 1255304-1_1_AG

Issue: 20011217

Pos	Part No	SP	UN	Qty	Description	Page No
Common Parts						
100	1254053-0000	-		1	BRACKET	
110	1254054-0000	-		1	PROTECTION PLATE	
130	1260237-0000	-		1	PLATE	
140	1143599-0000	-		1	PROTECTION PLATE	
150	1349246-0000	-		1	SIGN	
200	312105-0366	-		12	SCREW M6S M6X12 A280	
205	312105-0368	-		4	SCREW M6S M6X16 A280	
210	312105-0449	-		2	SCREW M6S M8X16 A280	
240	315105-0156	-		12	WASHER PLAIN, BRB, 6,7/14,H=1,5	
250	90143-0060	-	MM	480	EDGE STRIP 9,5X6,3MM BLACK PVC	
255	90143-0060	-	MM	450	EDGE STRIP 9,5X6,3MM BLACK PVC	
260	315105-0165	-		2	WASHER PLAIN, BRB, 8,4/16,H=1,5	
265	315105-0153	-		6	WASHER PLAIN, BRB, 6,4/12,H=1,5	
270	312605-0316	-		2	HEXAGON NUT, M6M M6 A280	
277	B90277-0116	-		1	FILTER HOUSING / ART.NO FILTER 58P	
	90277-0406	-		*1*	*CARTRIDGE 100-12-BX*	
280	342732-0104	-		2	ELBOW PIPE JOINT	

Pos	Part No	SP	UN	Qty	Description	Page No

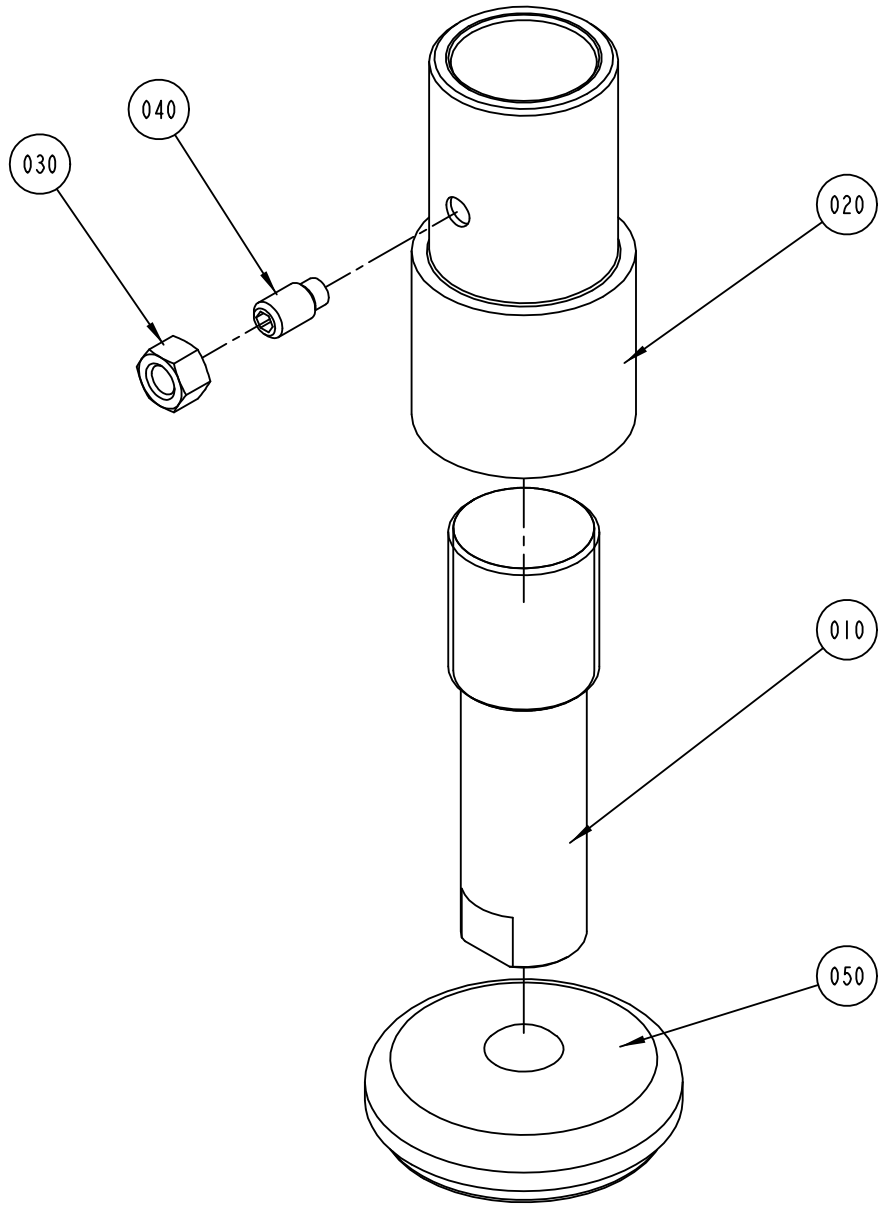

S-1035076-2
ECN 71457

ECM: 71457 - 20000215
Group number: 1035076-0200
Assembly Drawing: 1035076-2_1_AB

Issue: 20011217

Pos	Part No	SP	UN	Qty	Description	Page No
Common Parts						
010	1487712-0000	-		1	LEG	
020	1036120-0000	-		1	SLEEVE	
030	312605-0324	-		1	HEXAGON NUT, M6M M16 A280	
040	312311-0624	-		1	SCREW HEX.SOCK.SET DOG P.MT6SS 16X30 FZB	
050	90347-0175	-		1	MACHINE SHOE BRIK T 125	

Pos	Part No	SP	UN	Qty	Description	Page No

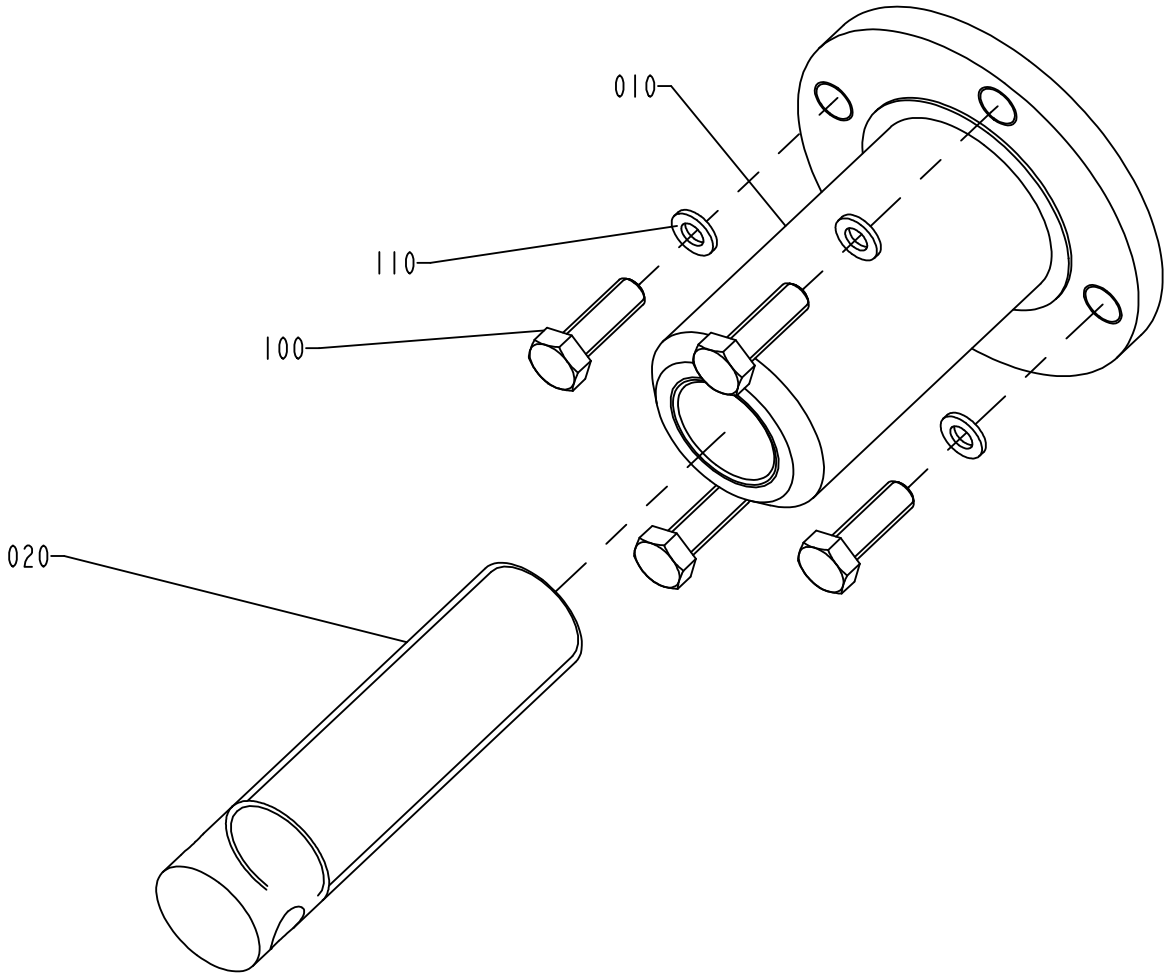

S-1035471-1
ECN 71019

ECM: 71870 - 19981029
Group number: 1035471-0100
Assembly Drawing: 1035471-1_1_AB

Issue: 20011217

Pos	Part No	SP	UN	Qty	Description	Page No
Common Parts						
010	469095-0000	-		1	HOLDER	
020	469096-0000	-		1	LEG	
100	312105-0453	-		4	SCREW M6S M8X25 A280	
110	315125-0165	-		4	WASHER PLAIN ROUND,CHAMF. 8,4/26, H=5	

Pos	Part No	SP	UN	Qty	Description	Page No

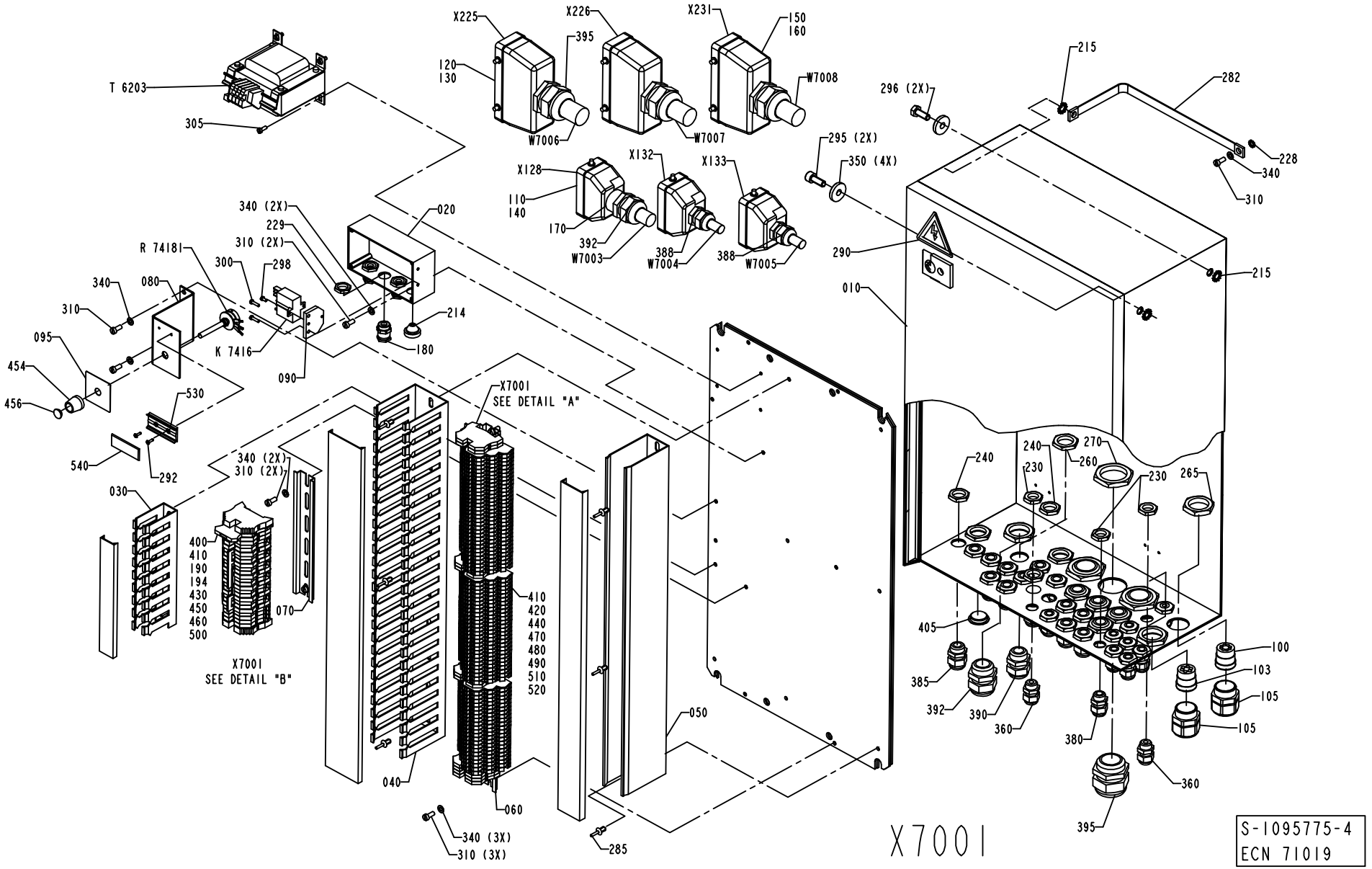
T 6203
305
X225
X226
X231
120
130
395
150
160
W7008
W7006
W7007
X128
X132
X133
110
140
170
392
W7003
388
W7004
388
W7005
295 (2X)
350 (4X)
296 (2X)
215
282
228
340
310
290
215
010
340 (2X)
229
310 (2X)
020
R 7418I
300
298
340
080
310
095
454
456
530
540
292
K 7416
090
214
180
030
400
410
190
194
430
450
460
500
070
X7001
SEE DETAIL "B"
340 (2X)
310 (2X)
X7001
SEE DETAIL "A"
410
420
440
470
480
490
510
520
040
060
050
340 (3X)
310 (3X)
285
240
270
260
230
240
230
265
405
385
392
390
360
380
100
103
105
105
360
395
X7001
S-1095775-4
ECN 71019

ECM: 71634 - 19990112
Group number: 1095775-0200
Assembly Drawing: 1095775-4_1_AA

Issue: 20011217

Pos	Part No	SP	UN	Qty	Description	Page No
Common Parts						
010	1346899-0000	-		1	ELECTRICAL CABINET	
020	1038907-0000	-		1	CONNECTION BOX	
030	1036922-0000	-		1	CABLE DUCT	
040	1036923-0000	-		1	CABLE DUCT	
050	1036924-0000	-		1	CABLE DUCT	
060	1036925-0000	-		1	TERMINAL RAIL	
070	1036926-0000	-		1	TERMINAL RAIL	
080	1038403-0000	-		1	BRACKET	
090	1041264-0000	-		1	BRACKET	
095	551922-0000	-		1	LABEL,POTENTIOMETER DESIGN CORR.	
100	90012-0127	-		1	PLUG	
103	90012-0125	-		1	GLAND FITTING	
105	353240-0005	-		2	GLANDS,NORMAL WITHOUT INSERT PG 21	
110	90110-0159	C		3	MALE INSERT 70.310.0640.0	
120	90110-0150	C		3	MALE INSERT 121110 0000	
130	90110-0152	C		3	CABLE HOOD 24-POL 70.352.2428.1	
140	90110-0157	C		3	CABLE HOOD 6-POL 70.352.0628.1	
150	359005-0010	-		7	MARKING LABEL KIT 0 - 9, 04.841.2150.0	
160	359005-0050	-		1	MARKING LABEL KIT X, 04.841.4550.0	
170	90089-0028	-		1	MUFF	
180	90012-0124	-		3	GLAND FITTING	
190	353034-0039	-		1	BRIDGE CONN. WQV 4/4	
194	353034-0031	-		2	BRIDGE CONNECTOR, WQV 4/10, 10520.6	
214	90015-0020	-		1	GLANDS,LEAD-IN,IP67	
215	90062-0016	-		5	LOCK WASHER SERRAT.EXT.GEAR,8,4/15 H=0,8	
228	90062-0060	-		1	LOCK WASHER SERRAT.EXT.GEAR,5,3/10 H=0,6	
229	90099-0001	-		3	NUT PR 15,2 BRASS	
230	90099-0104	-		11	NUT PR 15,2 (PG9)	
240	90099-0117	-		14	NUT PR 18,6 (PG11)	
260	90099-0110	-		7	NUT PR 22,5 (PG16)	
265	90099-0119	-		3	NUT PR 28,3 (PG21)	
270	90099-0120	-		3	NUT PR 37 (PG29)	
282	90135-0035	C		1	EARTH WIRE, L=250 MM 16 MM2	
285	90181-0088	-		8	PLASTIC RIVET, PR 52314	
290	90194-0016	-		1	SIGN, FLASH, ELECTRIC EQUIPMENT SYMBOL	
292	311520-0329	-		2	RIVET, BLANK 2,4X8	
295	312115-0451	-		2	SCREW MC6S M8X20 A280	
296	312105-0451	-		2	SCREW M6S 8X20 A280	
298	312121-0220	-		2	SCREW SLOT.PAN HD. MCS 3X6 FZB	
300	312121-0226	-		2	SCREW SLOT.PAN HD. MCS 3X12 FZB	
305	312121-0289	-		4	SCREW SLOT.PAN HD. MCS 4X10 FZB	
310	312121-0327	-		10	SCREW SLOT.PAN HD. MCS 5X12 FZB	
340	315105-0146	-		10	WASHER PLAIN, BRB, 5,3/10,H=1	
350	315125-0165	-		4	WASHER PLAIN ROUND,CHAMF. 8,4/26, H=5	
360	352103-0100	-		3	CABLE GLAND STR 9;PR15,2	
380	352103-0101	-		8	CABLE GLAND ST 9;PR15,2/PG9	
385	352103-0106	-		14	CABLE GLAND ST 11	
388	352103-0108	-		2	CABLE GLAND ST 13	
390	352103-0110	-		6	CABLE GLAND STR 16	
392	352103-0116	-		2	CABLE GLAND ST 21	
395	352103-0121	-		6	CABLE GLAND ST 29	
400	353021-0122	-		1	TERMINAL DISCONNECTBLE, WTR 2,5 D	
405	90002-0004	-		1	BLANK-OFF PLUG 22,5	
410	353031-0201	-		2	END BRACKET EW35	
420	353021-0302	-		84	TERMINALS,TRIPLE-LEVEL, DLD 2,5/35 PA	
430	353021-0213	-		16	FEED THROUGH TERMINAL, 10201.0	
440	353024-0204	-		10	EARTH TERMINAL WPE 2,5	
450	353024-0205	-		8	EARTH TERMINAL, 1010.1	
454	90130-0303	-		1	SHIFTER HANDLE	
456	90130-0304	-		1	PLATE	
460	353032-0004	-		1	END PLATE WAP 2,5-10 BEIGE	
470	353032-0302	-		3	END PLATE WAP	
480	353034-0401	-		16	BRIDGE CONNECTOR Q2, 13125.0	
490	353034-0404	-		17	BRIDGE CONNECTOR Q10, 13131.0	
500	359011-0821	-		2	SET OF SIGNS 6-FW 1-50	
510	359011-0823	-		2	SET OF SIGNS 6-FW 101-150	
520	359011-0824	-		2	SET OF SIGNS 6-FW 151-200	
530	359240-0100	-		1	SIGN HOLDER FOR 359240-0001	
540	359241-0186	-		1	SIGN "LS"	
K 7416	90119-0078	D		1	TPIH-RELAY	
R74181	90130-0021	C		1	POTENTIOMETER " REPBY 90130-28"	
R74182	90121-0119	C		1	RESISTANCE FIXED, 8,2 KOHM, 1 W	
T 6203	563461-0000	D		1	TRANSFORMER	
W 7003	351150-0420	-	MM	7800	CABLE OLFLEX 7X2,5 MM2 LIGHT/GREY	
W 7004	351150-0413	-	MM	7700	CABLE OLFLEX 4X1,5 MM2 LIGHT/GREY	
W 7005	351150-0412	-	MM	7500	CABLE OLFLEX 3X1,5 MM2 LIGHT/GREY	
W 7006	351150-0425	-	MM	7900	CABLE OLFLEX 25X0,75 MM2 LIGHT/GREY	
W 7007	351150-0425	-	MM	7900	CABLE OLFLEX 25X0,75 MM2 LIGHT/GREY	
W 7008	351150-0425	-	MM	8100	CABLE OLFLEX 25X0,75 MM2 LIGHT/GREY	

Machine Type	Group Description	Used-In	Group Number	Page No

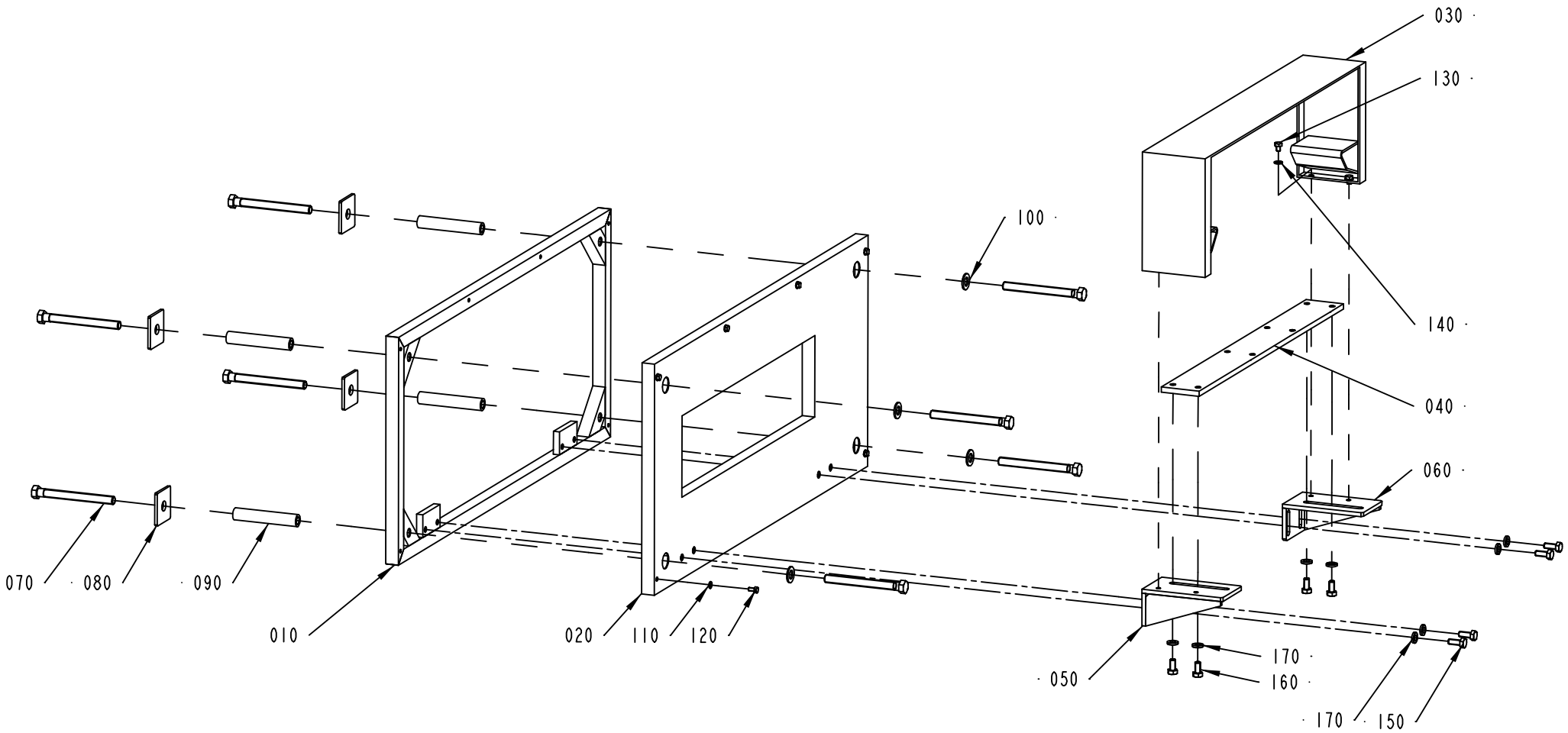

1346431-1
ECN 84465

ECM: 89768 - 20010924
Group number: 1346431-0100
Assembly Drawing: 1346431-1_1_AB

Issue: 20011217

Pos	Part No	SP	UN	Qty	Description	Page No
Common Parts						
010	1346417-0000	-		1	FRAME	
020	1346406-0000	-		1	COVER PLATE	
030	1346407-0000	-		1	COVER	
040	1346402-0000	-		1	PLATE	
050	1346410-0000	-		1	BRACKET	
060	1346411-0000	-		1	BRACKET	
070	476202-0000	-		8	SCREW	
080	1346405-0000	-		4	WASHER	
090	476201-0000	-		4	SLEEVE	
100	315105-0178	-		4	WASHER PLAIN, BRB, 13/24,H=2	
110	315105-0146	-		6	WASHER PLAIN, BRB, 5,3/10,H=1	
120	312105-0325	-		6	SCREW M6S M5X10 A280	
130	312105-0362	-		4	SCREW M6S M6X8 A280	
140	315105-0153	-		4	WASHER PLAIN, BRB, 6,4/12,H=1,5	
150	312105-0451	-		4	SCREW M6S 8X20 A280	
160	312105-0449	-		4	SCREW M6S M8X16 A280	
170	315115-0165	-		8	WASHER PLAIN, TBRB 8,4/16 H=3	

Pos	Part No	SP	UN	Qty	Description	Page No

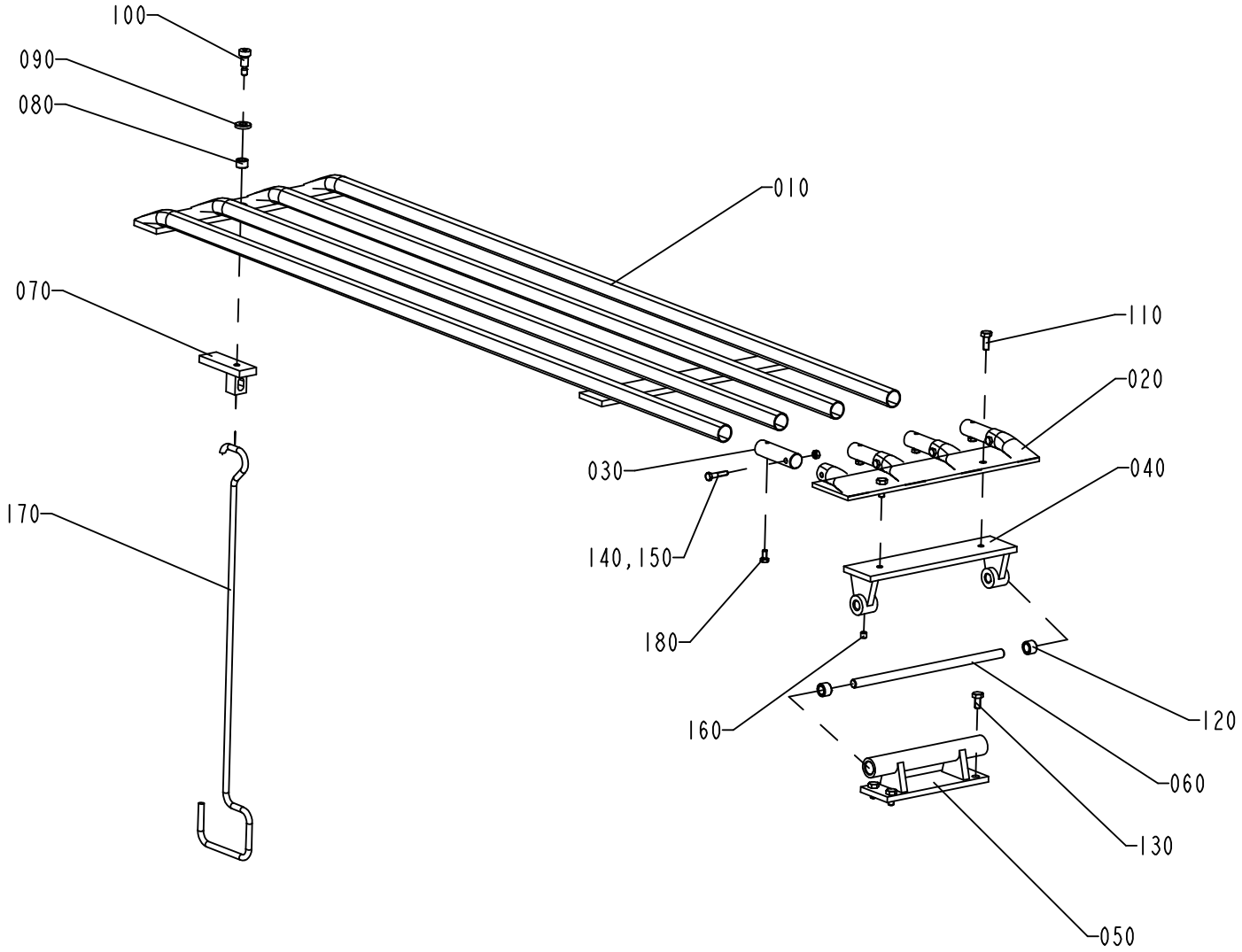

S-1346430-1
ECN 71634

ECM: 71634 - 19990112
Group number: 1346430-0100
Assembly Drawing: 1346430-1_1_AA

Issue: 20011217

Pos	Part No	SP	UN	Qty	Description	Page No
Common Parts						
010	1346408-0000	-		1	SUPPORT	
020	530775-0000	-		1	END PIECE	
030	1346409-0000	-		4	SHAFT	
040	1346404-0000	-		1	BRACKET	
050	1346403-0000	-		1	BRACKET	
060	236634-0000	-		1	SHAFT	
070	1346395-0000	-		1	LOCKING ARM	
080	321105-0163	-		1	BUSHING 10F7X16X10	
090	315111-0173	-		1	WASHER PLAIN, TBRB 10,5/22 H=4	
100	312180-0489	-		1	SCREW, HEX.SOCK.HEAD SHOULD. M8X16	
110	312105-0449	-		2	SCREW M6S M8X16 A280	
120	321105-0173	-		2	BUSHING 12F7X18X12	
130	312105-0449	-		4	SCREW M6S M8X16 A280	
140	312605-0316	-		4	HEXAGON NUT, M6M M6 A280	
150	312105-0374	-		4	SCREW M6S M6X30 A280	
160	312318-0443	-		1	SCREW SOCK.SET CUP P MSK6SS M8X8 A4	
170	236631-0000	-		1	HANDLE	
180	312105-0366	-		4	SCREW M6S M6X12 A280	

Pos	Part No	SP	UN	Qty	Description	Page No

BRACKET

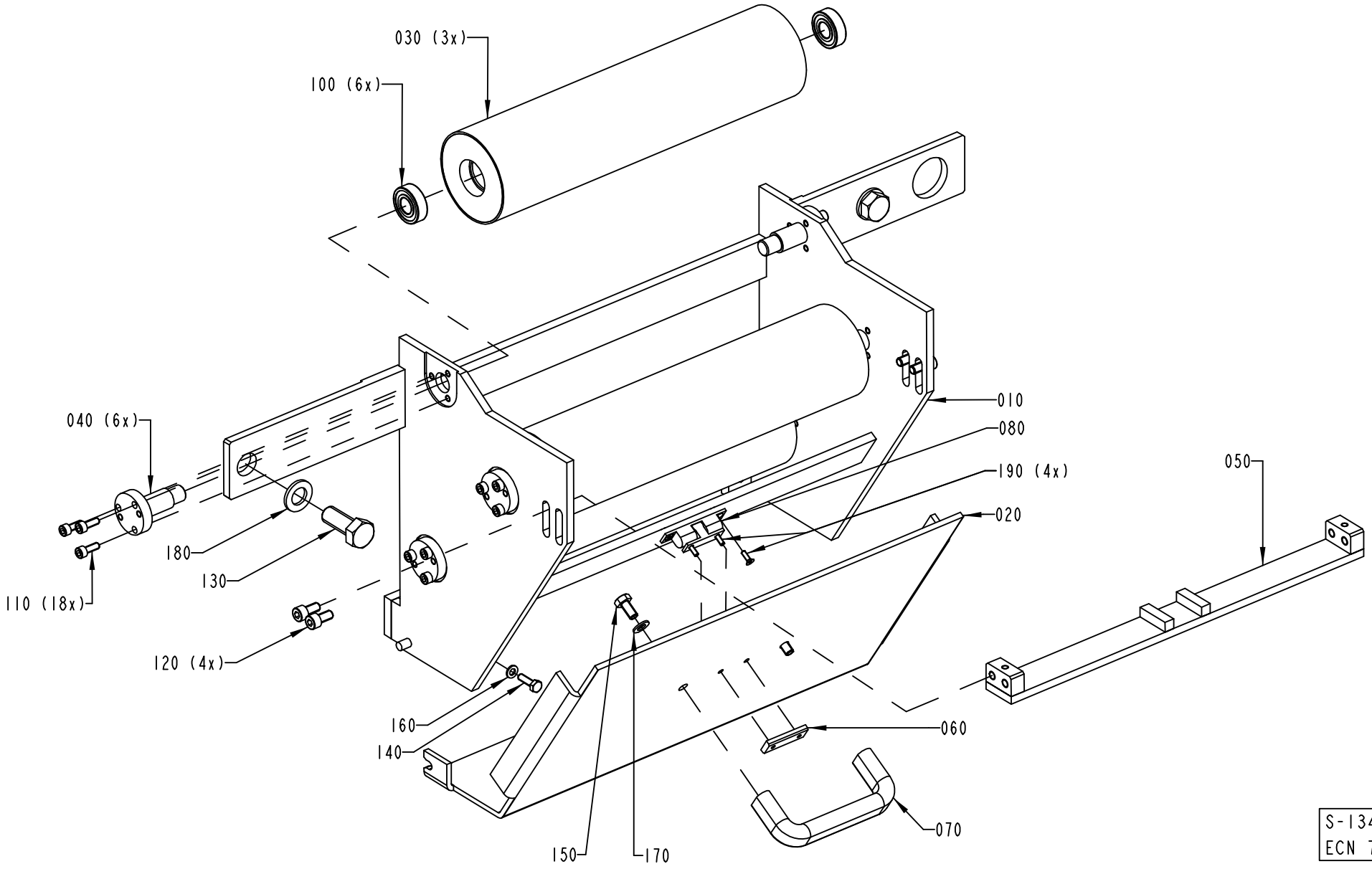

S-1346432-1
ECN 71634

ECM: 89767 - 20010924
Group number: 1346432-0100
Assembly Drawing: 1346432-1_1_AA

Issue: 20011217

Pos	Part No	SP	UN	Qty	Description	Page No
Common Parts						
010	1346419-0000	-		1	BRACKET	
020	1346426-0000	-		1	COVER	
030	1035882-0000	A		3	BENDING ROLLER	
040	1348917-0000	-		6	HOLDER	
050	1348914-0000	-		1	BAR	
060	1348916-0000	-		1	PLATE	
070	90017-0022	-		1	HANDLE, NO. EL-037311	
080	90237-0070	-		1	SNAP-IN BALL LOCK, 69X19 MM	
100	321313-0102	A		6	BALL BEARING, 2 SEALS, 15X35X11 MM	
110	312115-0368	-		18	SCREW MC6S M6X16 A280	
120	312115-0451	-		4	SCREW MC6S M8X20 A280	
130	312105-0628	-		2	SCREW M6S M16X40 A280	
140	312105-0370	-		2	SCREW M6S M6X20 A280	
150	312105-0449	-		2	SCREW M6S M8X16 A280	
160	315105-0153	-		2	WASHER PLAIN, BRB, 6,4/12,H=1,5	
170	315115-0165	-		2	WASHER PLAIN, TBRB 8,4/16 H=3	
180	315105-0186	-		2	WASHER PLAIN, BRB, 17/30,H=3	
190	312155-0291	-		4	SCREW HEX.SOCK.COUNT.MF6S M4X12 A480	

Pos	Part No	SP	UN	Qty	Description	Page No

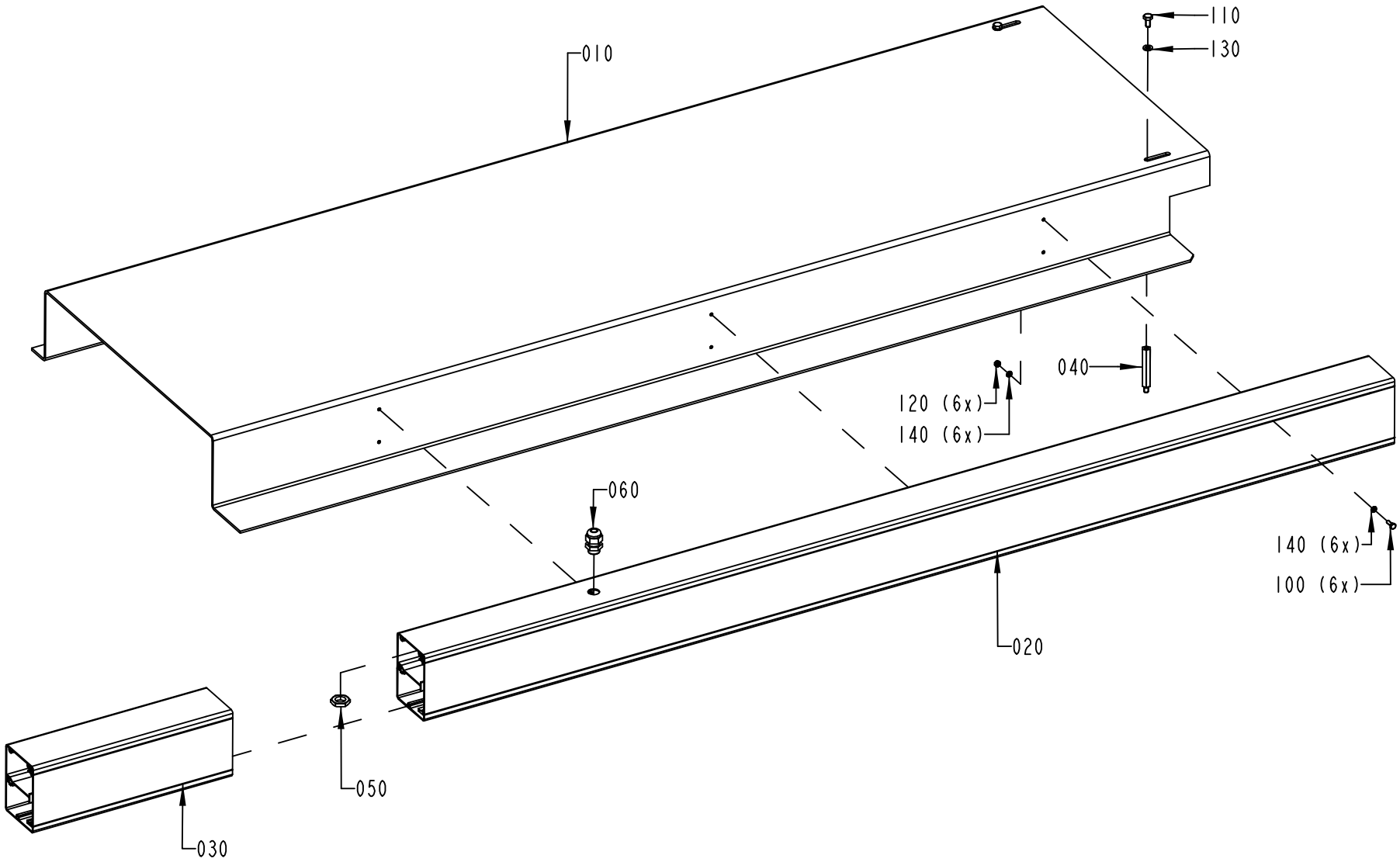

S-1346901-1
ECN 71634

ECM: 89765 - 20010924
Group number: 1346901-0100
Assembly Drawing: 1346901-1_1_AA

Issue: 20011217

Pos	Part No	SP	UN	Qty	Description	Page No
Common Parts						
010	1346412-0000	-		1	PAPPER COVER	
020	1346424-0000	-		1	CABLE DUCT	
030	1346400-0000	-		1	CABLE DUCT	
040	1348915-0000	-		2	SPACER	
050	90099-0104	-		1	NUT PR 15,2 (PG9)	
060	352103-0101	-		1	CABLE GLAND ST 9;PR15,2/PG9	
100	312105-0293	-		6	SCREW M6S M4X16 A280	
110	312105-0366	-		2	SCREW M6S M6X12 A280	
120	312605-0312	-		6	HEXAGON NUT, M6M M4 A280	
130	315115-0153	-		2	WASHER PLAIN, TBRB 6,4/12 H=3	
140	315105-0136	-		12	WASHER PLAIN, BRB, 4,3/8,H=0,8	

Pos	Part No	SP	UN	Qty	Description	Page No

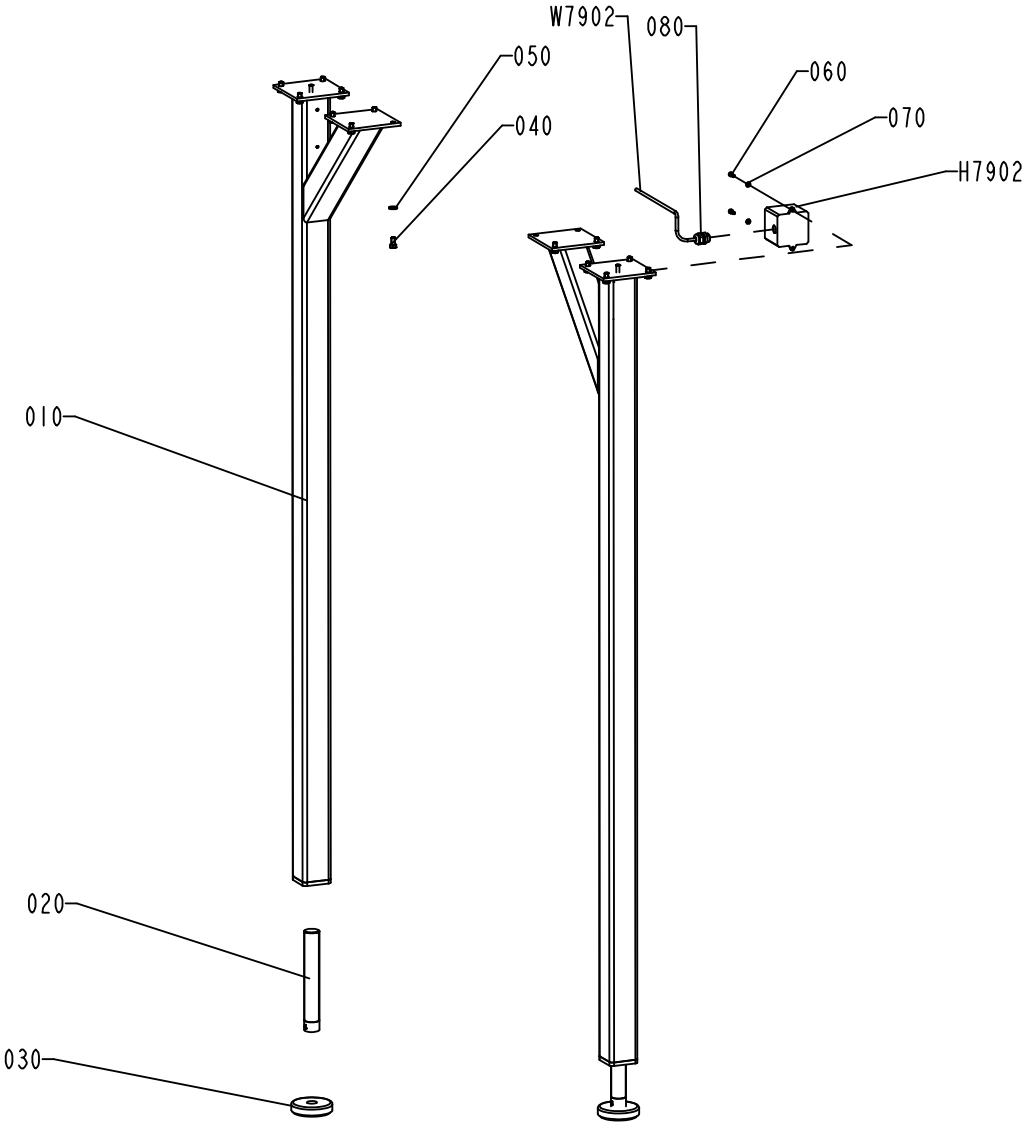

S-1346902-I
ECN 72226

ECM: 89766 - 20010924
Group number: 1346902-0100
Assembly Drawing: 1346902-1_1_AB

Issue: 20011217

Pos	Part No	SP	UN	Qty	Description	Page No
Common Parts						
010	1346394-0000	-		2	LEG	
020	905373-0000	-		2	SCREW - LEG	
030	90347-0080	-		2	DAMPER TFE 1201	
040	312105-0491	-		16	SCREW M6S M10X20 A280	
050	315105-0173	-		16	WASHER PLAIN, BRB, 10,5/22,H=2	
060	315105-0153	-		2	WASHER PLAIN, BRB, 6,4/12,H=1,5	
070	312115-0368	-		2	SCREW MC6S M6X16 A280	
080	352103-0108	-		1	CABLE GLAND ST 13	
H7902	90052-0011	A		1	HORN	
W7902	351150-0403	-	M	10	CABLE OLFLEX 3X0,75 MM2 LIGHT/GREY	

Pos	Part No	SP	UN	Qty	Description	Page No

Tetra Pak

SPC
Spare Parts Catalogue

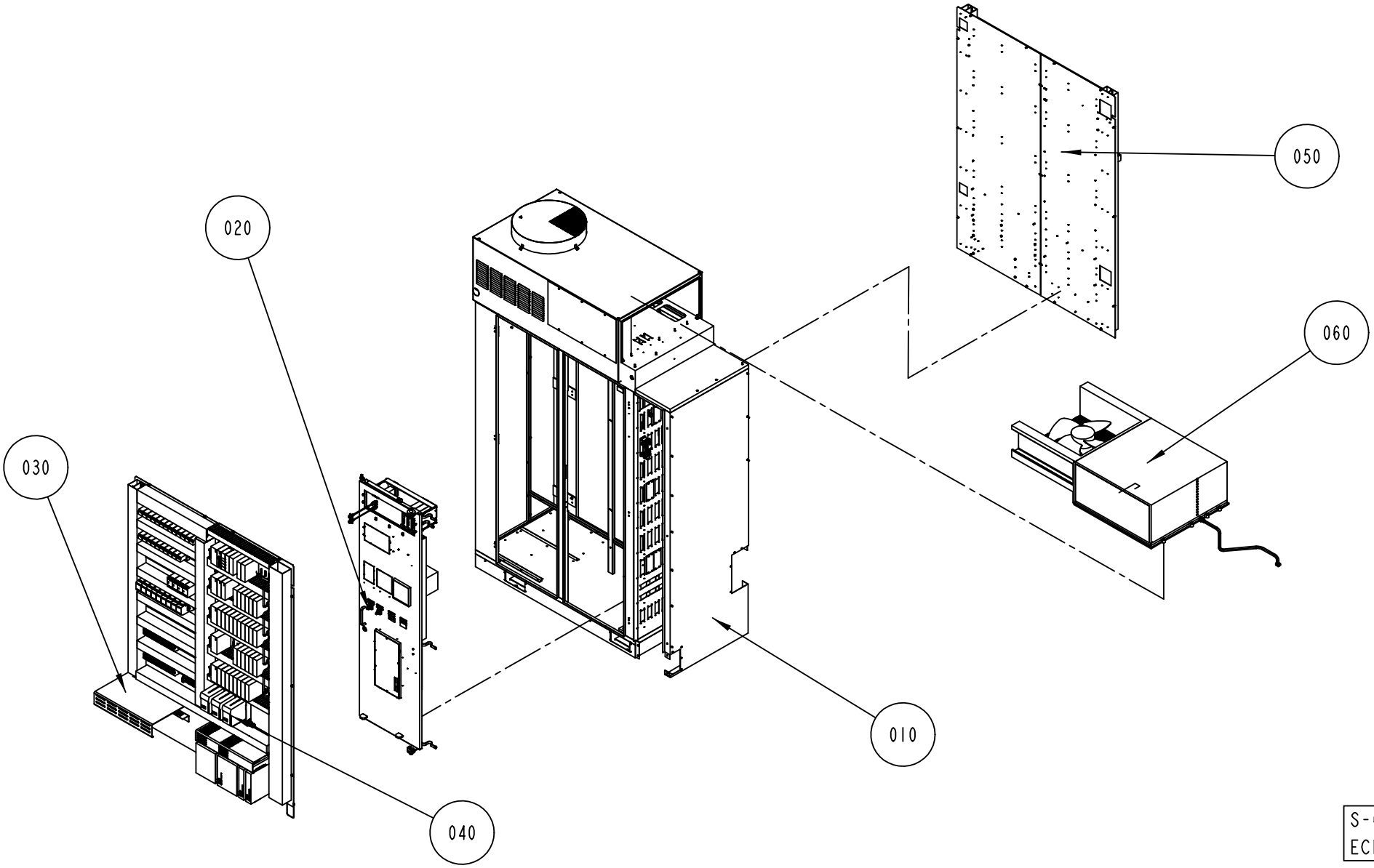
020
050
060
030
010
040
S-648517-5
ECN 72786

ECM: 72786 - 19991125
Group number: 648517-0500
Assembly Drawing: 648517-5_1_AB

Issue: 20011217

Pos	Part No	SP	UN	Qty	Description	Page No
Common Parts						
	A1346218-0200	-		1	CABLE CABINET	**983**
010	A1317247-0200	-		1	CABINET	**985, 987, 989**
020	A1350702-0200	-		1	COMPONENT DOOR	**1013, 1015**
030	A1095641-0400	-		1	CONTROL LEFT	**1031**
040	A1350699-0200	-		1	CONTROL RIGHT	**1037, 1039**
050	A1095643-0400	-		1	POWER SUPPLY UNIT	**1041**
060	A1095954-0200	-		1	COOLING SYSTEM	**1053**
070	A1317248-0200	-		1	TPOP DATA COLLECTION	**1059**

Pos	Part No	SP	UN	Qty	Description	Page No

This page is intentionally left blank.

Pos	Part No	SP	UN	Qty	Description	Page No
Common Parts						
	351179-0102	-	M	43	CABLE AWM 1X075 MM2 BLACK	
	351175-0109	-	M	3	CABLE AWM 1X16 MM2 YELLOW-GREEN	
	351175-0107	-	M	2	CABLE AWM 1X6 MM2 YELLOW-GREEN	
	351175-0106	-	M	1	CABLE AWM 1X4 MM2 YELLOW-GREEN	
	351175-0105	-	M	18	CABLE AWM 1X25 MM2 YELLOW-GREEN	
	351179-0110	-	M	9	CABLE AWM 1X25 MM2 BLACK	
	351179-0107	-	M	36	CABLE AWM 1X6 MM2 BLACK	
	351179-0106	-	M	4	CABLE AWM 1X4 MM2 BLACK	
	351179-0105	-	M	58	CABLE AWM 1X25 MM2 BLACK	
	351179-0104	-	M	105	CABLE AWM 1X15 MM2 BLACK	
	351173-0102	-	M	24	CABLE AWM 1X0,75 MM2 LIGHT-BLUE	
	351172-0106	-	M	6	CABLE AWM 1X4 MM2 DARK-BLUE	
	351172-0105	-	M	4	CABLE AWM 1X25 MM2 DARK-BLUE	
	351172-0104	-	M	2	CABLE AWM 1X15 MM2 DARK-BLUE	
	351172-0102	-	M	1477	CABLE AWM 1X 0,75 MM2 DARK-BLUE	
	351175-0104	-	M	68	CABLE AWM 1X15 MM2 YELLOW-GREEN	
	351175-0102	-	M	34	CABLE AWM 1X 075 MM2 YELLOW-GREEN	
	351173-0110	-	M	2	CABLE AWM 1X25 MM2 LIGHT-BLUE	
	351173-0105	-	M	4	CABLE AWM 1X25 MM2 LIGHT-BLUE	
	351173-0104	-	M	56	CABLE AWM 1X15 MM2 LIGHT-BLUE	

Pos	Part No	SP	UN	Qty	Description	Page No

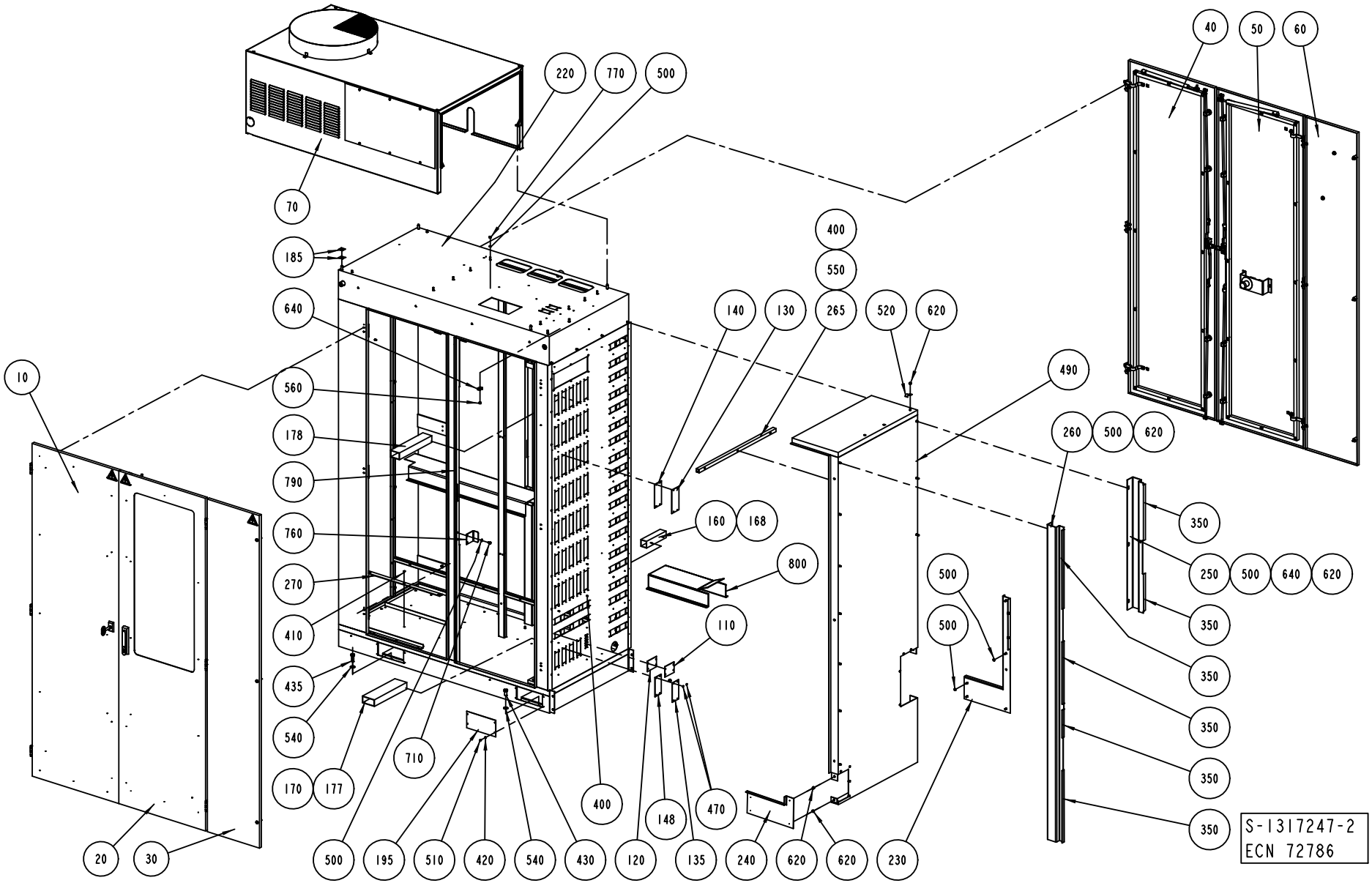
40
50
60
220
770
500
70
185
640
400
550
140
130
265
520
620
490
10
560
178
790
760
270
410
435
540
170
177
710
160
168
800
110
260
500
620
350
250
500
640
620
500
500
400
148
470
500
195
510
420
540
430
120
135
240
620
620
230
20
30
S-1317247-2
ECN 72786

ECM: 72786 - 19991125
Group number: 1317247-0200
Assembly Drawing: 1317247-2_1_AC

Issue: 20011217

Pos	Part No	SP	UN	Qty	Description	Page No
Common Parts						
010	A1350698-0100	-		1	DOOR	**991**
020	A1317250-0100	-		1	DOOR	**993**
030	A1095634-0100	-		1	DOOR	**995**
040	A1317828-0100	-		1	DOOR	**997**
050	A1317829-0100	-		1	DOOR	**999**
060	A1095637-0100	-		1	DOOR	**1001**
070	A1282032-0300	-		1	HOOD	**1003**
080	A1095778-0100	-		1	PLINTH	**1005**
085	A1035438-0400	-		1	IH EQUIPMENT	**1007, 1009, 1011**
110	1037572-0000	-		18	COVER PLATE	
120	1037573-0000	-		16	GASKET	
130	1037574-0000	-		8	COVER PLATE	
135	1129481-0000	-		1	COVERING PLATE	
140	1037575-0000	-		11	GASKET	
145	1129478-0000	-		1	GASKET	
150	1037576-0000	-		1	GASKET	
160	90181-0038	-	MM	170	CABLE DUCT 40X40MM	
161	90181-0038	-	MM	170	CABLE DUCT 40X40MM	
162	90181-0038	-	MM	170	CABLE DUCT 40X40MM	
163	90181-0038	-	MM	170	CABLE DUCT 40X40MM	
164	90181-0038	-	MM	170	CABLE DUCT 40X40MM	
165	90181-0038	-	MM	170	CABLE DUCT 40X40MM	
166	90181-0038	-	MM	170	CABLE DUCT 40X40MM	
167	90181-0038	-	MM	170	CABLE DUCT 40X40MM	
168	90181-0038	-	MM	170	CABLE DUCT 40X40MM	
170	90181-0053	-	MM	285	CABLE DUCT 40X80MM	
171	90181-0053	-	MM	285	CABLE DUCT 40X80MM	
172	90181-0053	-	MM	285	CABLE DUCT 40X80MM	
173	90181-0053	-	MM	285	CABLE DUCT 40X80MM	
174	90181-0053	-	MM	285	CABLE DUCT 40X80MM	
175	90181-0053	-	MM	285	CABLE DUCT 40X80MM	
176	90181-0053	-	MM	285	CABLE DUCT 40X80MM	
177	90181-0053	-	MM	285	CABLE DUCT 40X80MM	
178	90181-0045	-	MM	285	CABLE DUCT 40X60MM	
180	1140519-0000	-		1	PROTECTION	
185	1129276-0000	-		12	GASKET	
195	1038408-0000	-		4	COVERING PLATE	
205	1038519-0000	-		1	GASKET	
210	985842-0000	-		1	BRACKET	
215	1350704-0000	-		1	BRACKET	
220	1487686-0000	-		1	WELDED CABINET	
230	1129155-0000	-		1	COVERING PLATE	
240	1129156-0000	-		1	COVERING PLATE	
250	1129157-0000	-		1	PROFILE	
260	1129158-0000	-		1	PROFILE	
265	1129159-0000	-		6	BRACKET	
270	1129264-0000	-		3	SLIDING STRIP	
280	1129280-0000	-		1	PLATE	
290	1129322-0000	-		1	BRACKET	
295	1129318-0000	-		1	BRACKET	
300	90110-0166	-		30	CHASSIS HOUSING 310144-33	
310	90110-0167	-		3	CHASSIS HOUSING 310133-33	
320	90110-0153	-		21	CHASSIS HOUSING 24-P CHI 24, 121240 0000	
340	352103-0123	-		1	CABLE GLAND ST 42	
350	90143-0057	D	M	30	STRIP EMKA 1011-05 21X11MM	
360	90246-0326	-		1	CONTACT WITH CONNECTIONS	
390	1105595-0000	-		2	PLATE	
400	90287-0124	-		36	SCREW PAN HEAD MSCS M4X12 NYLON	
410	312145-0287	-		9	SCREW COUNTERS.SLOT.HD. MFS 4X8 SS	
420	312105-0287	-		16	SCREW M6S M4X8 A280	
430	312105-0534	-		2	SCREW M6S M12X25 A280	
435	312105-0538	-		2	SCREW M6S M12X35 A280	
440	312125-0222	-		14	SCREW PAN HEAD MCS M3X8 SS	
445	315105-0124	-		6	WASHER PLAIN, BRB, 3,2/6,H=0,5	
450	312105-0323	-		20	SCREW M6S M5X8 A280	
460	312125-0289	-		370	SCREW SLOT.PAN HD. MCS 4X10 A480	
470	315105-0136	-		348	WASHER PLAIN, BRB, 4,3/8,H=0,8	
480	90330-0034	-		1	NUT, HEXAGON, G1/4	
490	1129973-0000	-		1	COVERING PANEL	
500	315105-0153	-		77	WASHER PLAIN, BRB, 6,4/12,H=1,5	
510	315105-0136	-		16	WASHER PLAIN, BRB, 4,3/8,H=0,8	
520	90074-0011	-		1	CLIPS, CABLE CLIPS DI=14 MM	
540	315105-0178	-		4	WASHER PLAIN, BRB, 13/24,H=2	
550	352113-0203	-		33	ANCHOR TM3S8-M0	
560	312605-0312	-		15	HEXAGON NUT, M6M M4 A280	
570	90182-0005	-		15	CLIP STRIP 79X2,3MM REPL.BY 352113-101	
610	90099-0096	-		1	NUT	
620	312605-0316	-		60	HEXAGON NUT, M6M M6 A280	
640	352113-0204	-		2	ANCHOR TM3S25-M	
650	315105-0146	-		24	WASHER PLAIN, BRB, 5,3/10,H=1	
660	1129550-0000	-		5	GASKET	
670	1129549-0000	-		1	SHEET	
700	90062-0022	-		1	LOCKING WASHER D=6,4/11	

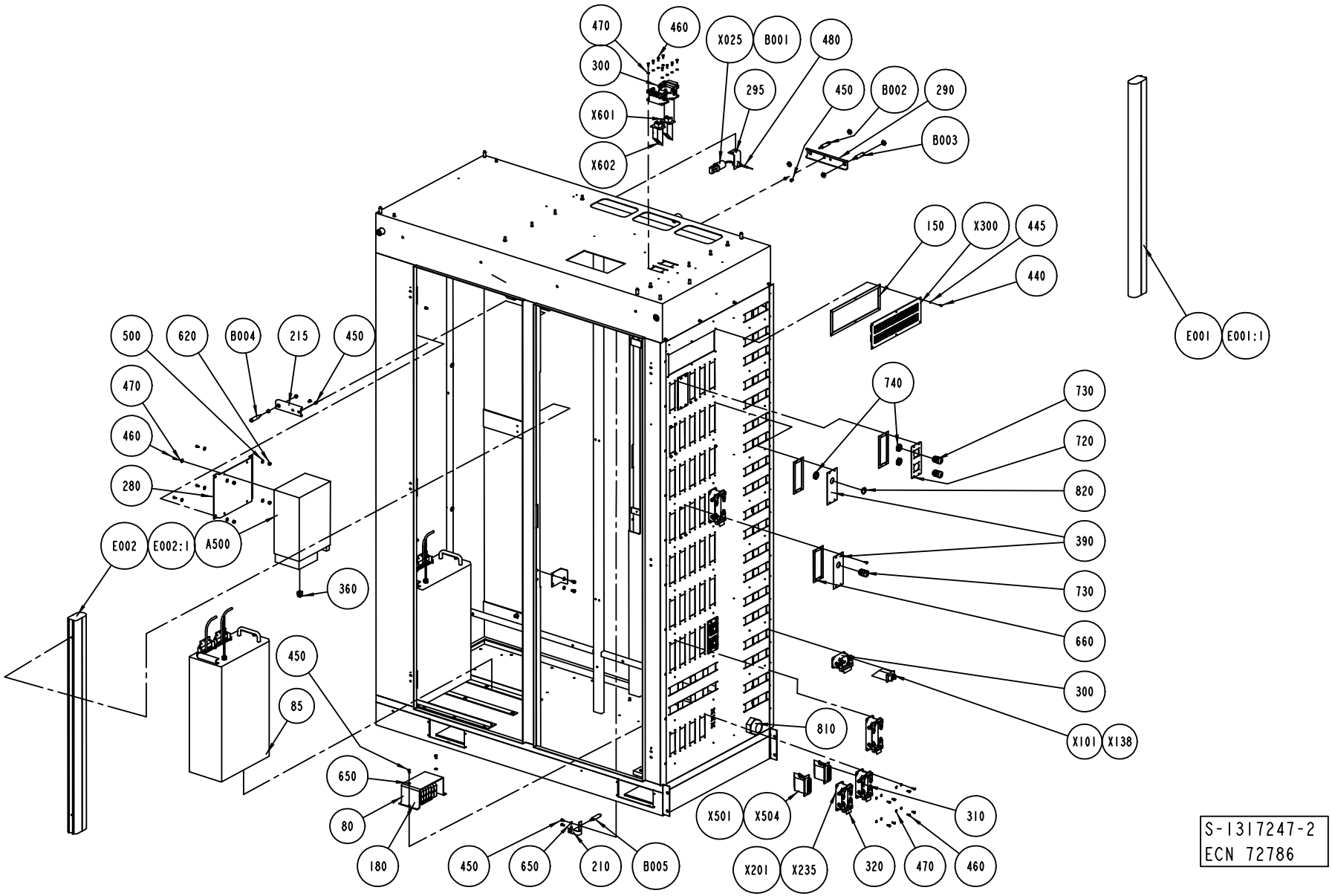
470
460
300
X601
X602
X025
B001
480
295
450
B002
290
B003
150
X300
445
440
E001
E001:1
500
620
B004
215
450
470
460
280
E002
E002:1
A500
360
740
730
720
820
390
730
660
300
X101
X138
810
450
85
650
80
180
450
650
210
B005
X501
X504
X201
X235
320
470
460
310
S-1317247-2
ECN 72786

Pos	Part No	SP	UN	Qty	Description	Page No
Common Parts (Cont'd)						
710	312105-0364	-		4	SCREW M6S M6X10 A280	
720	1038820-0000	-		1	COVER PLATE	
730	352103-0108	-		2	CABLE GLAND ST 13	
740	90099-0118	-		4	NUT PR 20,4 (PG13,5)	
750	312115-0329	-		4	SCREW MC6S M5X16 A280	
760	1140769-0000	-		2	DOOR STOPPER	
770	312812-0316	-		4	HEXAGON NUT, NY-LOCK M6 A480	
790	1035951-0000	-		1	PROTECTION PLATE	
800	1254092-0000	-		1	PROTECTION PLATE	
810	352103-0123	-		2	CABLE GLAND ST 42	
820	90002-0016	-		1	BLANK-OFF PLUG 20.4	
A500	90246-0021	C		1	POWER SUPPLY UNIT	
B001	90326-0053	C		1	THERMO ELEMENT	
B002	90044-0124	-		1	PROX.SW. 922AB2XM-A9P-050-LZ-876	
B003	90044-0124	-		1	PROX.SW. 922AB2XM-A9P-050-LZ-876	
B004	90044-0124	-		1	PROX.SW. 922AB2XM-A9P-050-LZ-876	
B005	90044-0124	-		1	PROX.SW. 922AB2XM-A9P-050-LZ-876	
E001	90164-0013	-		1	FLUORESCENT LAMP 30W	
E001:1	90297-0011	-		1	FLUORESCENT TUBE 30W	
E002	90164-0013	-		1	FLUORESCENT LAMP 30W	
E002:1	90297-0011	-		1	FLUORESCENT TUBE 30W	
X025	90326-0020	-		1	PLUG,FEMALE YELLOW CR-AL	
X101	90110-0161	-		1	FEMALE INSERT 70 105 0653 0	
X102	90110-0161	-		1	FEMALE INSERT 70 105 0653 0	
X103	90110-0161	-		1	FEMALE INSERT 70 105 0653 0	
X104	90110-0161	-		1	FEMALE INSERT 70 105 0653 0	
X105	90110-0161	-		1	FEMALE INSERT 70 105 0653 0	
X106	90110-0161	-		1	FEMALE INSERT 70 105 0653 0	
X107	90110-0161	-		1	FEMALE INSERT 70 105 0653 0	
X108	90110-0161	-		1	FEMALE INSERT 70 105 0653 0	
X110	90110-0161	-		1	FEMALE INSERT 70 105 0653 0	
X111	90110-0161	-		1	FEMALE INSERT 70 105 0653 0	
X112	90110-0161	-		1	FEMALE INSERT 70 105 0653 0	
X113	90110-0161	-		1	FEMALE INSERT 70 105 0653 0	
X115	90110-0161	-		1	FEMALE INSERT 70 105 0653 0	
X116	90110-0161	-		1	FEMALE INSERT 70 105 0653 0	
X117	90110-0161	-		1	FEMALE INSERT 70 105 0653 0	
X119	90110-0161	-		1	FEMALE INSERT 70 105 0653 0	
X121	90110-0161	-		1	FEMALE INSERT 70 105 0653 0	
X122	1037572-0000	-		1	COVER PLATE	
X126	90110-0161	-		1	FEMALE INSERT 70 105 0653 0	
X127	90110-0161	-		1	FEMALE INSERT 70 105 0653 0	
X128	90110-0161	-		1	FEMALE INSERT 70 105 0653 0	
X129	90110-0161	-		1	FEMALE INSERT 70 105 0653 0	
X130	90110-0161	-		1	FEMALE INSERT 70 105 0653 0	
X132	90110-0161	-		1	FEMALE INSERT 70 105 0653 0	
X133	90110-0161	-		1	FEMALE INSERT 70 105 0653 0	
X135	90110-0161	-		1	FEMALE INSERT 70 105 0653 0	
X136	90110-0161	-		1	FEMALE INSERT 70 105 0653 0	
X137	90110-0161	-		1	FEMALE INSERT 70 105 0653 0	
X138	90110-0161	-		1	FEMALE INSERT 70 105 0653 0	
X206	90110-0164	-		1	FEMALE INSERT 70 105 2453 3	
X209	90110-0164	-		1	FEMALE INSERT 70 105 2453 3	
X213	90110-0164	-		1	FEMALE INSERT 70 105 2453 3	
X214	90110-0164	-		1	FEMALE INSERT 70 105 2453 3	
X215	90110-0164	-		1	FEMALE INSERT 70 105 2453 3	
X216	90110-0164	-		1	FEMALE INSERT 70 105 2453 3	
X218	90110-0164	-		1	FEMALE INSERT 70 105 2453 3	
X219	90110-0164	-		1	FEMALE INSERT 70 105 2453 3	
X220	90110-0164	-		1	FEMALE INSERT 70 105 2453 3	
X221	90110-0164	-		1	FEMALE INSERT 70 105 2453 3	
X222	90110-0164	-		1	FEMALE INSERT 70 105 2453 3	
X223	90110-0164	-		1	FEMALE INSERT 70 105 2453 3	
X224	90110-0164	-		1	FEMALE INSERT 70 105 2453 3	
X225	90110-0164	-		1	FEMALE INSERT 70 105 2453 3	
X226	90110-0164	-		1	FEMALE INSERT 70 105 2453 3	
X227	90110-0164	-		1	FEMALE INSERT 70 105 2453 3	
X229	90110-0164	-		1	FEMALE INSERT 70 105 2453 3	
X230	90110-0164	-		1	FEMALE INSERT 70 105 2453 3	
X231	90110-0164	-		1	FEMALE INSERT 70 105 2453 3	
X234	90110-0164	-		1	FEMALE INSERT 70 105 2453 3	
X300	90326-0316	-		1	THERMO CONTACT PANEL	
X401	90110-0236	-		1	CHASSIS CONTACT PX0767/S	
X402	90110-0236	-		1	CHASSIS CONTACT PX0767/S	
X501	90110-0165	-		1	FEMALE INSERT 70.005.0653.0	
X502	90110-0165	-		1	FEMALE INSERT 70.005.0653.0	
X503	90110-0165	-		1	FEMALE INSERT 70.005.0653.0	
X601	90110-0161	-		1	FEMALE INSERT 70 105 0653 0	
X602	90110-0161	-		1	FEMALE INSERT 70 105 0653 0	

Machine Type	Group Description	Used-In	Group Number	Page No

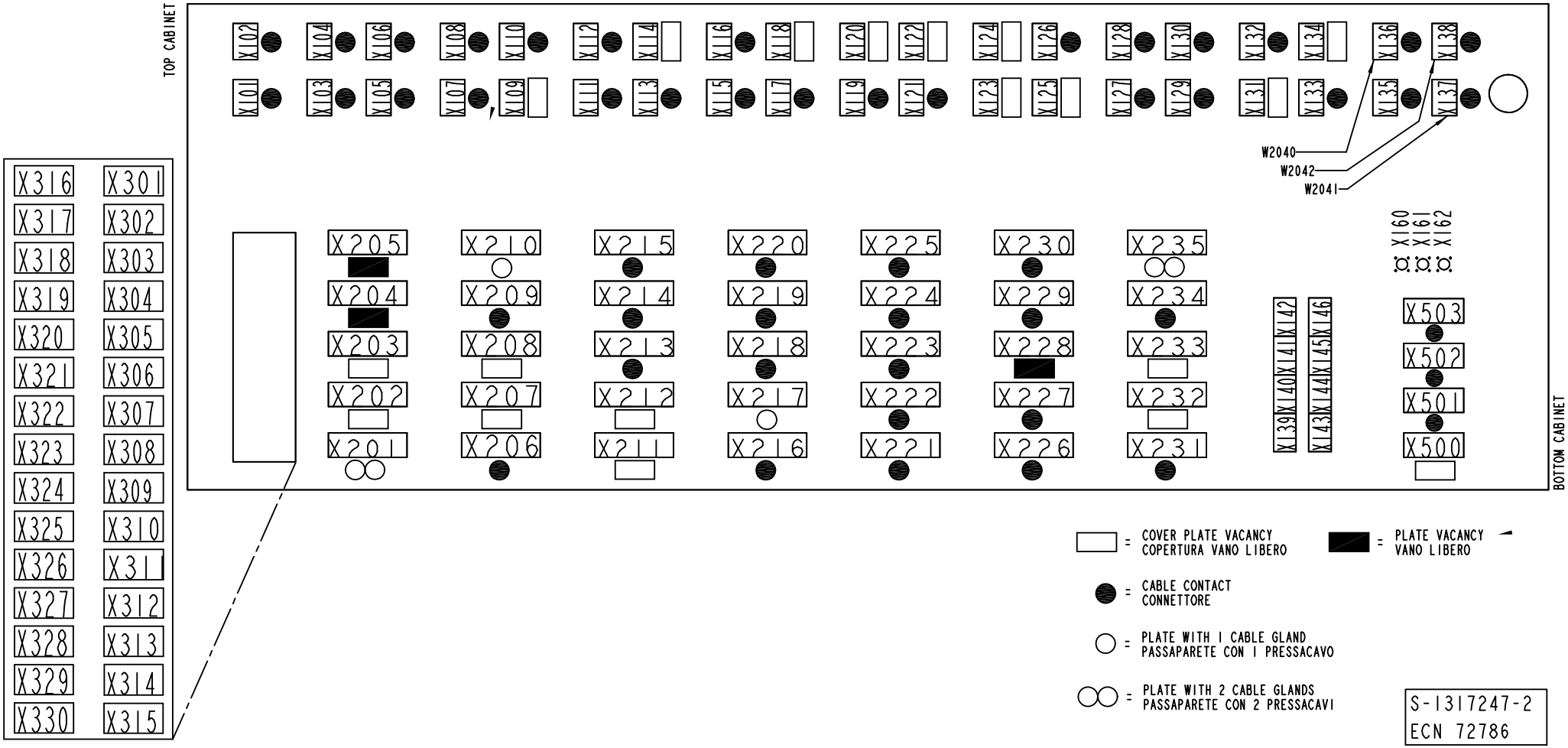
TOP CABINET
X101 X102 X103 X104 X105 X106 X107 X108 X109 X110 X111 X112 X113 X114 X115 X116 X117 X118 X119 X120 X121 X122 X123 X124 X125 X126 X127 X128 X129 X130 X131 X132 X133 X134 X135 X136 X137 X138
W2040
W2042
W2041
X316 X317 X318 X319 X320 X321 X322 X323 X324 X325 X326 X327 X328 X329 X330
X301 X302 X303 X304 X305 X306 X307 X308 X309 X310 X311 X312 X313 X314 X315
X201 X202 X203 X204 X205 X206 X207 X208 X209 X210 X211 X212 X213 X214 X215 X216 X217 X218 X219 X220 X221 X222 X223 X224 X225 X226 X227 X228 X229 X230 X231 X232 X233 X234 X235
X139 X140 X141 X142 X143 X144 X145 X146
X160 X161 X162
X500 X501 X502 X503
BOTTOM CABINET
= COVER PLATE VACANCY COPERTURA VANO LIBERO
= PLATE VACANCY VANO LIBERO
= CABLE CONTACT CONNETTORE
= PLATE WITH 1 CABLE GLAND PASSAPARETE CON 1 PRESSACAVO
= PLATE WITH 2 CABLE GLANDS PASSAPARETE CON 2 PRESSACAVI
S-1317247-2
ECN 72786

Pos	Part No	SP	UN	Qty	Description	Page No
SEE PREVIOUS LISTS PAGES: 985, 987.						

Pos	Part No	SP	UN	Qty	Description	Page No

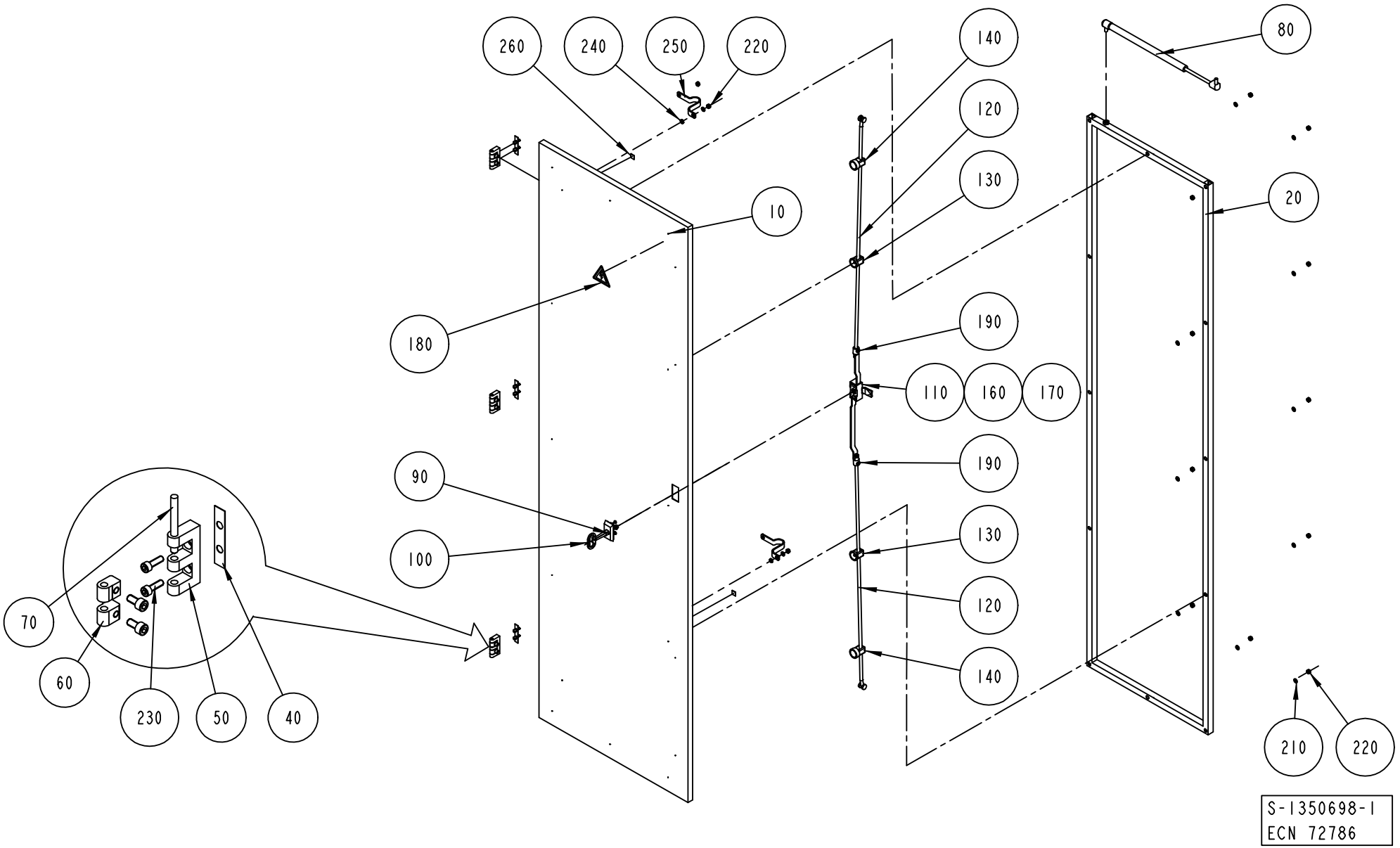
260
240
250
220
140
120
130
80
20
10
180
190
110
160
170
90
190
100
130
120
140
70
60
230
50
40
210
220
S-1350698-1
ECN 72786

ECM: 72786 - 19991125
Group number: 1350698-0100
Assembly Drawing: 1350698-1_1_AC

Issue: 20011217

Pos	Part No	SP	UN	Qty	Description	Page No
Common Parts						
010	1350703-0000	-		1	DOOR	
020	1348913-0000	-		1	FRAME	
040	988666-0000	-		3	GASKET	
050	1035792-0000	-		3	E-HINGE	
060	1129770-0000	-		6	BLOCKING PIECE	
070	988685-0000	-		3	PIN	
080	90347-0163	-		1	GAS-DAMPER	
090	90237-0160	-		1	ESCUTCHEON WITH SQUARE, 1121-U23/U13	
110	90237-0153	-		1	LOCK HOUSING, 1121-U26-0B	
120	90237-0168	-		1	ROUND BAR WITH END WHEEL, 1049-U5	
130	90237-0151	-		2	GUIDE, 1001-U11	
140	90237-0152	-		2	GUIDE, 1001-U12	
150	1348846-0000	-		1	ROD	
160	90237-0156	-		1	LOCK BOLT, 1000-16	
170	90237-0155	-		1	LOCK ADAPTER, 1121-U40	
180	90194-0016	-		1	SIGN, FLASH, ELECTRIC EQUIPMENT SYMBOL	
190	90237-0169	-		2	LOCK ADAPTER, 1000-U49	
200	985851-0000	-		1	BRACKET	
210	970215-0000	-		1	STOP BLOCK	
240	90062-0015	-		2	LOCK WASHER SERRAT.EXT.GEAR,6,4/11 H=0,7	
250	90135-0035	-		2	EARTH WIRE, L=250 MM 16 MM2	
260	90194-0152	-		2	SIGN, EARTH	
300	312115-0366	-		6	SCREW MC6S M6X12 A280	
310	315105-0153	-		15	WASHER PLAIN, BRB, 6,4/12,H=1,5	
320	312605-0316	-		14	HEXAGON NUT, M6M M6 A280	
330	312115-0329	-		6	SCREW MC6S M5X16 A280	
340???	312125-0327	-		5	SCREW PAN HEAD MCS M5X12 SS	
350???	315105-0146	-		5	WASHER PLAIN, BRB, 5,3/10,H=1	

Pos	Part No	SP	UN	Qty	Description	Page No

Machine Type | Group Description | Used-In | Group Number | Page No

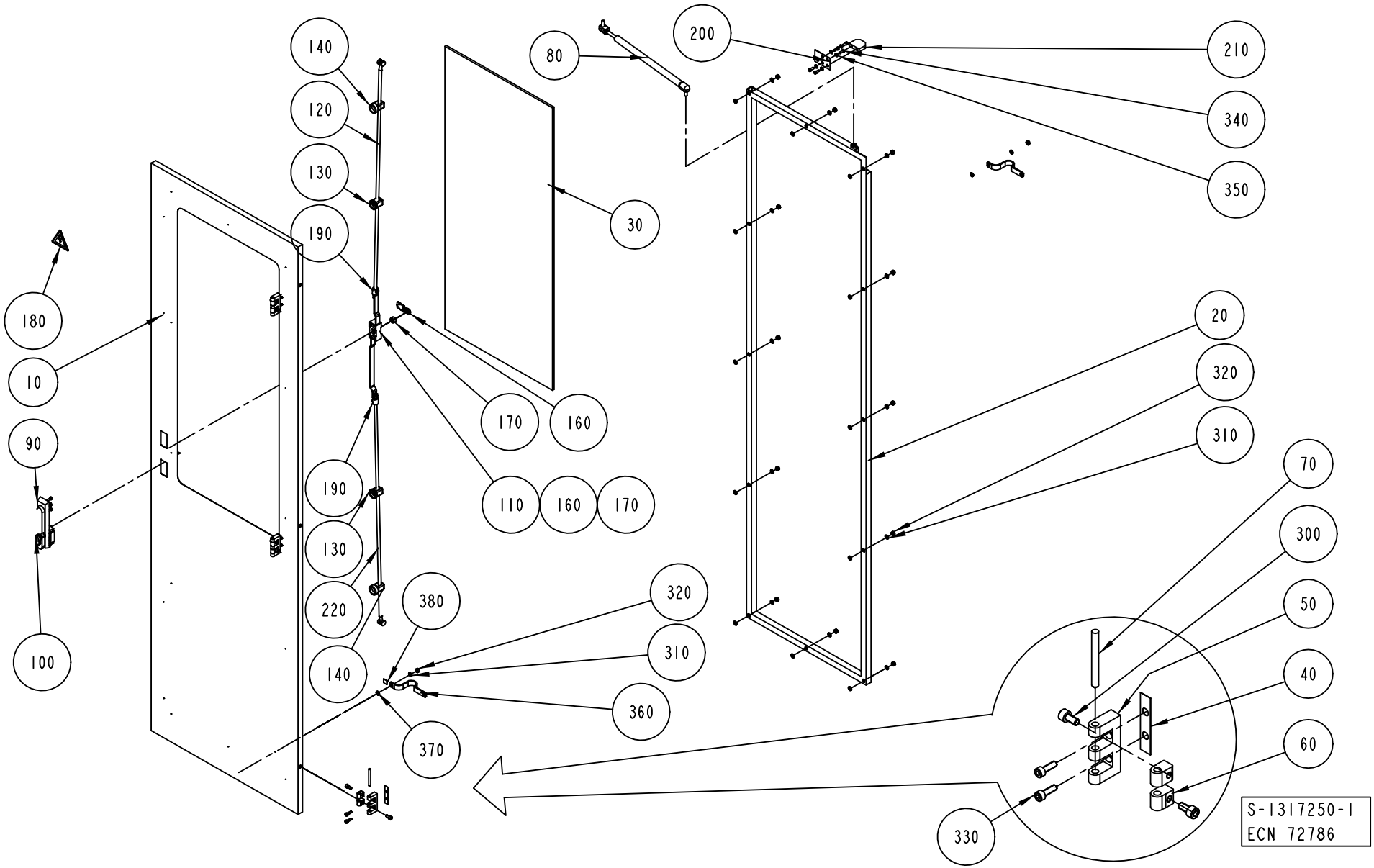
140
120
130
190
180
10
90
100
80
200
210
340
350
30
20
320
310
70
300
50
40
60
330
170
160
110
160
170
190
130
220
140
380
320
310
360
370
S-1317250-I
ECN 72786

ECM: 72786 - 19991125
Group number: 1317250-0100
Assembly Drawing: 1317250-1_1_AC

Issue: 20011217

Pos	Part No	SP	UN	Qty	Description	Page No
Common Parts						
010	1140748-0000	-		1	DOOR	
020	1140715-0000	-		1	FRAME	
030	1129047-0000	-		1	GLASS PANE	
040	988666-0000	-		3	GASKET	
050	1035792-0000	-		3	E-HINGE	
060	1129770-0000	-		6	BLOCKING PIECE	
070	988685-0000	-		3	PIN	
080	90347-0163	-		1	GAS-DAMPER	
090	90237-0176	-		1	TURNING HANDLE	
100	90237-0128	-		1	LOCK CYLINDER, 1109-U3	
110	90237-0153	-		1	LOCK HOUSING, 1121-U26-0B	
120	90237-0168	-		1	ROUND BAR WITH END WHEEL, 1049-U5	
130	90237-0151	-		2	GUIDE, 1001-U11	
140	90237-0152	-		2	GUIDE, 1001-U12	
150	90157-0041	-		1	SEALING COMPOUND	
160	90237-0156	-		1	LOCK BOLT, 1000-16	
170	90237-0155	-		1	LOCK ADAPTER, 1121-U40	
180	90194-0016	-		1	SIGN, FLASH, ELECTRIC EQUIPMENT SYMBOL	
190	90237-0169	-		2	LOCK ADAPTER, 1000-U49	
200	985851-0000	-		1	BRACKET	
210	970215-0000	-		1	STOP BLOCK	
220	90237-0168	-		1	ROUND BAR WITH END WHEEL, 1049-U5	
300	312115-0366	-		6	SCREW MC6S M6X12 A280	
310	315105-0153	-		26	WASHER PLAIN, BRB, 6,4/12,H=1,5	
320	312605-0316	-		12	HEXAGON NUT, M6M M6 A280	
330	312115-0329	-		6	SCREW MC6S M5X16 A280	
340	312125-0327	-		5	SCREW PAN HEAD MCS M5X12 SS	
350	315105-0146	-		5	WASHER PLAIN, BRB, 5,3/10,H=1	
360	90135-0035	-		2	EARTH WIRE, L=250 MM 16 MM2	
370	90062-0015	-		2	LOCK WASHER SERRAT.EXT.GEAR,6,4/11 H=0,7	
380	90194-0152	-		2	SIGN, EARTH	

Pos	Part No	SP	UN	Qty	Description	Page No

Machine Type | Group Description | Used-In | Group Number | Page No

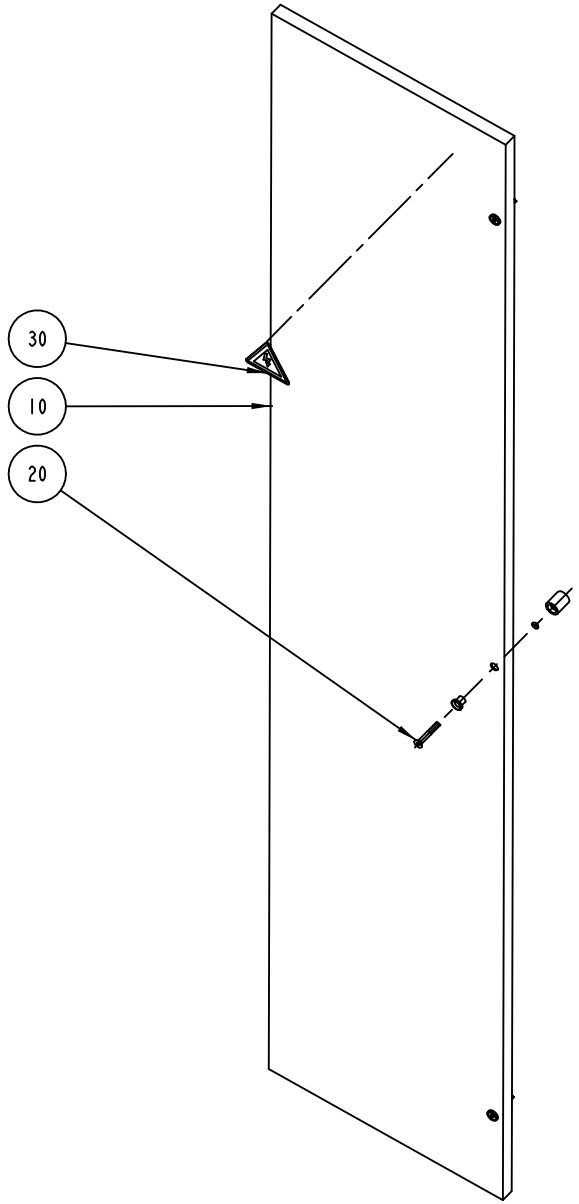
30
10
20

ECM: - -
Group number: 1095634-0100
Assembly Drawing: 1095634-1_1_AA

Issue: 20011217

Pos	Part No	SP	UN	Qty	Description	Page No
Common Parts						
010	1041939-0000	-		1	DOOR	
020	90226-0458	-		3	MOUNTING SCREW	
030	90194-0016	-		1	SIGN, FLASH, ELECTRIC EQUIPMENT SYMBOL	

Pos	Part No	SP	UN	Qty	Description	Page No

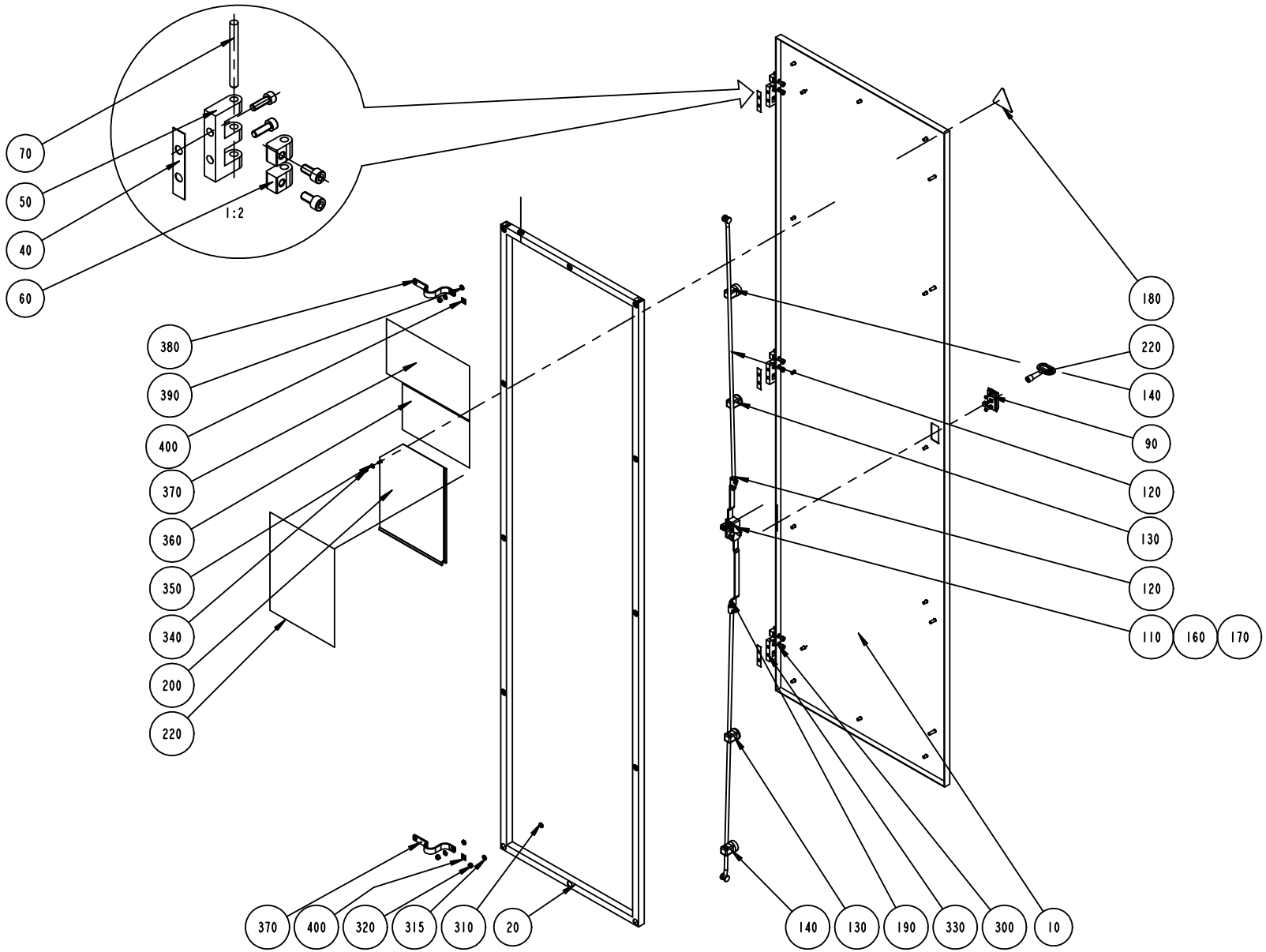
70
50
40
60
1:2
380
390
400
370
360
350
340
200
220
180
220
140
90
120
130
120
110
160
170
370
400
320
315
310
20
140
130
190
330
300
10

ECM: 71787 - 19980929
Group number: 1317828-0100
Assembly Drawing: 1317828-1_1_AA

Issue: 20011217

Pos	Part No	SP	UN	Qty	Description	Page No
Common Parts						
010	1140787-0000	-		1	DOOR	
020	1140786-0000	-		1	FRAME	
040	988666-0000	-		3	GASKET	
050	1035792-0000	-		3	E-HINGE	
060	1129770-0000	-		6	BLOCKING PIECE	
070	988685-0000	-		3	PIN	
080	90347-0163	-		1	GAS-DAMPER	
090	90237-0160	-		1	ESCUTCHEON WITH SQUARE, 1121-U23/U13	
100	90237-0324	-		1	KEY, 1104-02 FOR SQUARE 8 MM	
110	90237-0153	-		1	LOCK HOUSING, 1121-U26-0B	
120	90237-0168	-		2	ROUND BAR WITH END WHEEL, 1049-U5	
130	90237-0151	-		2	GUIDE, 1001-U11	
140	90237-0152	-		2	GUIDE, 1001-U12	
160	90237-0156	-		1	LOCK BOLT, 1000-16	
170	90237-0155	-		1	LOCK ADAPTER, 1121-U40	
180	90194-0016	-		1	SIGN, FLASH, ELECTRIC EQUIPMENT SYMBOL	
190	90237-0169	-		2	LOCK ADAPTER, 1000-U49	
200	1036977-0000	-		1	HOLDER	
220	1348847-0000	-		1	FUSE BOARD	
300	312115-0366	-		6	SCREW MC6S M6X12 A280	
310	315105-0153	-		26	WASHER PLAIN, BRB, 6,4/12,H=1,5	
320	312605-0316	-		14	HEXAGON NUT, M6M M6 A280	
330	312115-0329	-		6	SCREW MC6S M5X16 A280	
340	312605-0314	-		1	HEXAGON NUT, M6M M5 A280	
350	315105-0146	-		1	WASHER PLAIN, BRB, 5,3/10,H=1	
360	90194-0080	-		1	SIGN, IDENTIFICATION OF WIRING	
370	90194-0133	-		1	SIGN "DELIVERED DESIGN"	
380	90135-0035	-		2	EARTH WIRE, L=250 MM 16 MM2	
390	90062-0015	-		2	LOCK WASHER SERRAT.EXT.GEAR,6,4/11 H=0,7	
400	90194-0152	-		2	SIGN, EARTH	

Pos	Part No	SP	UN	Qty	Description	Page No

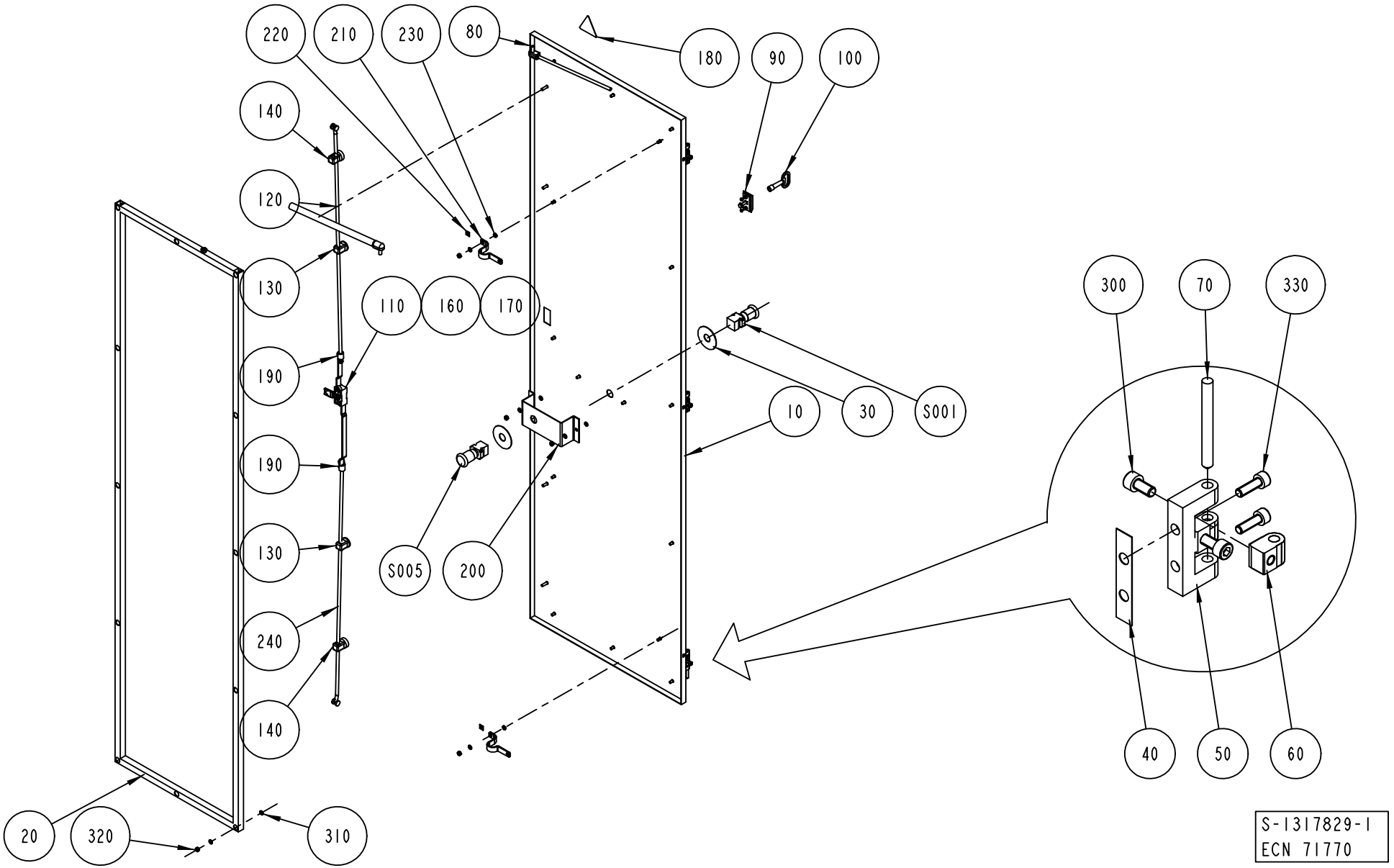
220
210
230
80
180
90
100
140
120
130
110
160
170
190
190
130
240
140
S005
200
10
30
S001
300
70
330
40
50
60
20
320
310
S-1317829-1
ECN 71770

ECM: 71770 - 19990604
Group number: 1317829-0100
Assembly Drawing: 1317829-1_1_AB

Issue: 20011217

Pos	Part No	SP	UN	Qty	Description	Page No
Common Parts						
010	1140672-0000	-		1	DOOR	
020	1140671-0000	-		1	FRAME	
030	486826-0001	-		2	SIGN "EMERGENCY STOP"	
040	988666-0000	-		3	GASKET	
050	1035792-0000	-		3	E-HINGE	
060	1129770-0000	-		6	BLOCKING PIECE	
070	988685-0000	-		3	PIN	
080	90347-0163	-		1	GAS-DAMPER	
090	90237-0160	-		1	ESCUTCHEON WITH SQUARE, 1121-U23/U13	
100	90237-0324	-		1	KEY, 1104-02 FOR SQUARE 8 MM	
110	90237-0153	-		1	LOCK HOUSING, 1121-U26-0B	
120	90237-0168	-		1	ROUND BAR WITH END WHEEL, 1049-U5	
130	90237-0151	-		2	GUIDE, 1001-U11	
140	90237-0152	-		2	GUIDE, 1001-U12	
160	90237-0156	-		1	LOCK BOLT, 1000-16	
170	90237-0155	-		1	LOCK ADAPTER, 1121-U40	
180	90194-0016	-		1	SIGN, FLASH, ELECTRIC EQUIPMENT SYMBOL	
190	90237-0169	-		2	LOCK ADAPTER, 1000-U49	
200	1038699-0000	-		1	BRACKET	
210	90135-0035	-		2	EARTH WIRE, L=250 MM 16 MM2	
220	90194-0152	-		2	SIGN, EARTH	
230	90062-0015	-		2	LOCK WASHER SERRAT.EXT.GEAR,6,4/11 H=0,7	
240	90237-0168	-		1	ROUND BAR WITH END WHEEL, 1049-U5	
300	312115-0366	-		6	SCREW MC6S M6X12 A280	
310	315105-0153	-		30	WASHER PLAIN, BRB, 6,4/12,H=1,5	
320	312605-0316	-		16	HEXAGON NUT, M6M M6 A280	
330	312115-0329	-		6	SCREW MC6S M5X16 A280	
S001	90064-0124	-		1	SWITCH,EMERGENCY STOP	
S005	90064-0124	-		1	SWITCH,EMERGENCY STOP	

Pos	Part No	SP	UN	Qty	Description	Page No

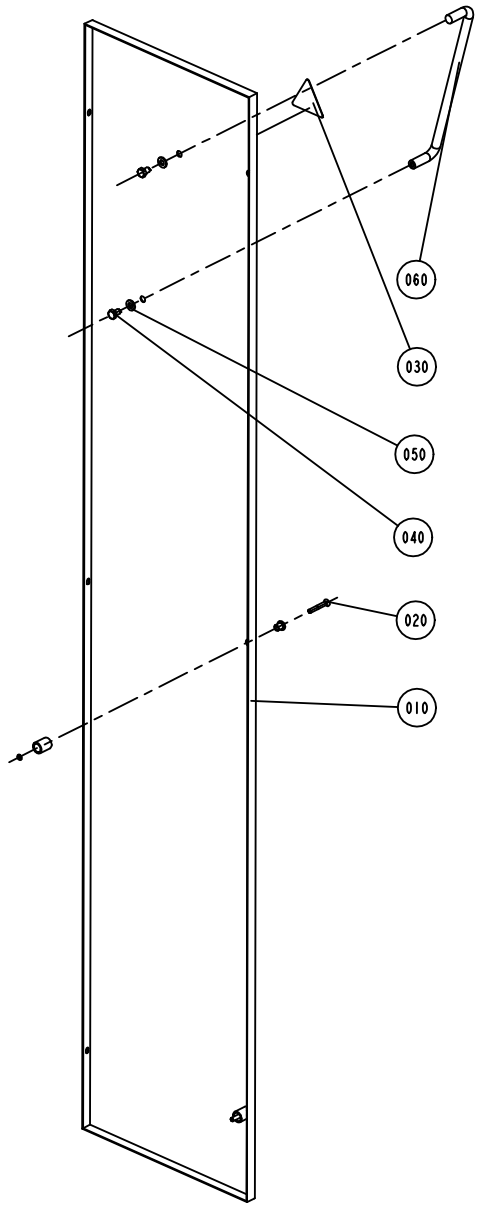
060
030
050
040
020
010

ECM: - -
Group number: 1095637-0100
Assembly Drawing: 1095637-1_1_AA

Issue: 20011217

Pos	Part No	SP	UN	Qty	Description	Page No
Common Parts						
010	1041948-0000	-		1	DOOR	
020	90226-0458	-		3	MOUNTING SCREW	
030	90194-0016	-		1	SIGN, FLASH, ELECTRIC EQUIPMENT SYMBOL	
040	312105-0447	-		2	SCREW M6S M8X12 A280	
050	90005-0077	-		2	WASHER PL.RND.NYL.8,4/7, H=2	
060	90017-0015	-		1	HANDLE, NO. 14.4012.02.308	

Pos	Part No	SP	UN	Qty	Description	Page No

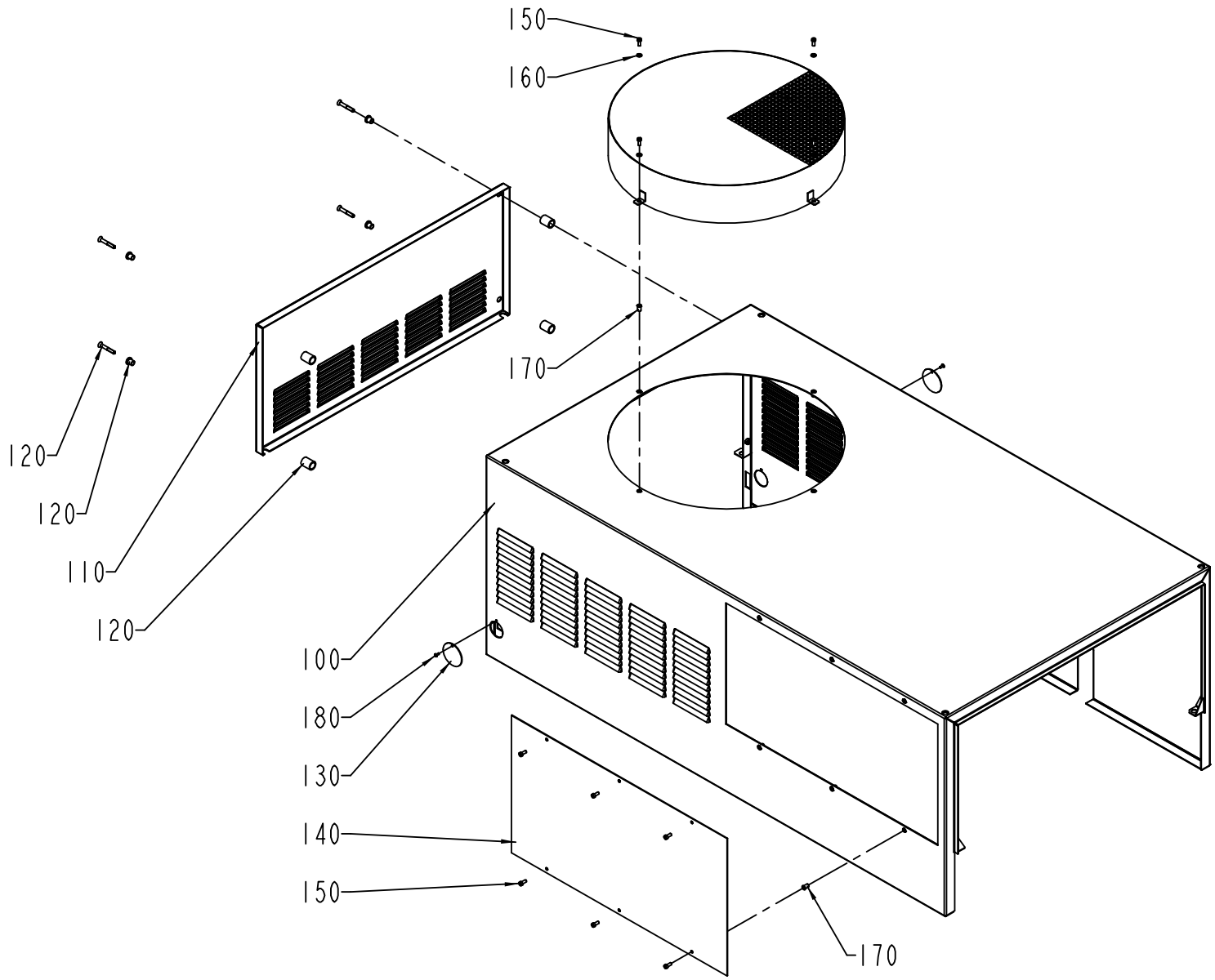

S-1282032-3
ECN 70798

ECM: 70798 - 19981211
Group number: 1282032-0300
Assembly Drawing: 1282032-3_1_AA

Issue: 20011217

Pos	Part No	SP	UN	Qty	Description	Page No
Common Parts						
100	1285622-0000	-		1	HOOD	
110	1478610-0000	-		1	COVER	
120	90226-0458	-		4	MOUNTING SCREW	
130	1478611-0000	-		2	COVER	
140	1478612-0000	-		1	COVER	
150	312125-0327	-		10	SCREW PAN HEAD MCS M5X12 SS	
160	315105-0146	-		4	WASHER PLAIN, BRB, 5,3/10,H=1	
170	312923-0122	-		10	NUT BLIND RIVET PO M5X12,6 SS	
180	311521-0143	-		2	BLANK RIVET 3,2X8	

Pos	Part No	SP	UN	Qty	Description	Page No

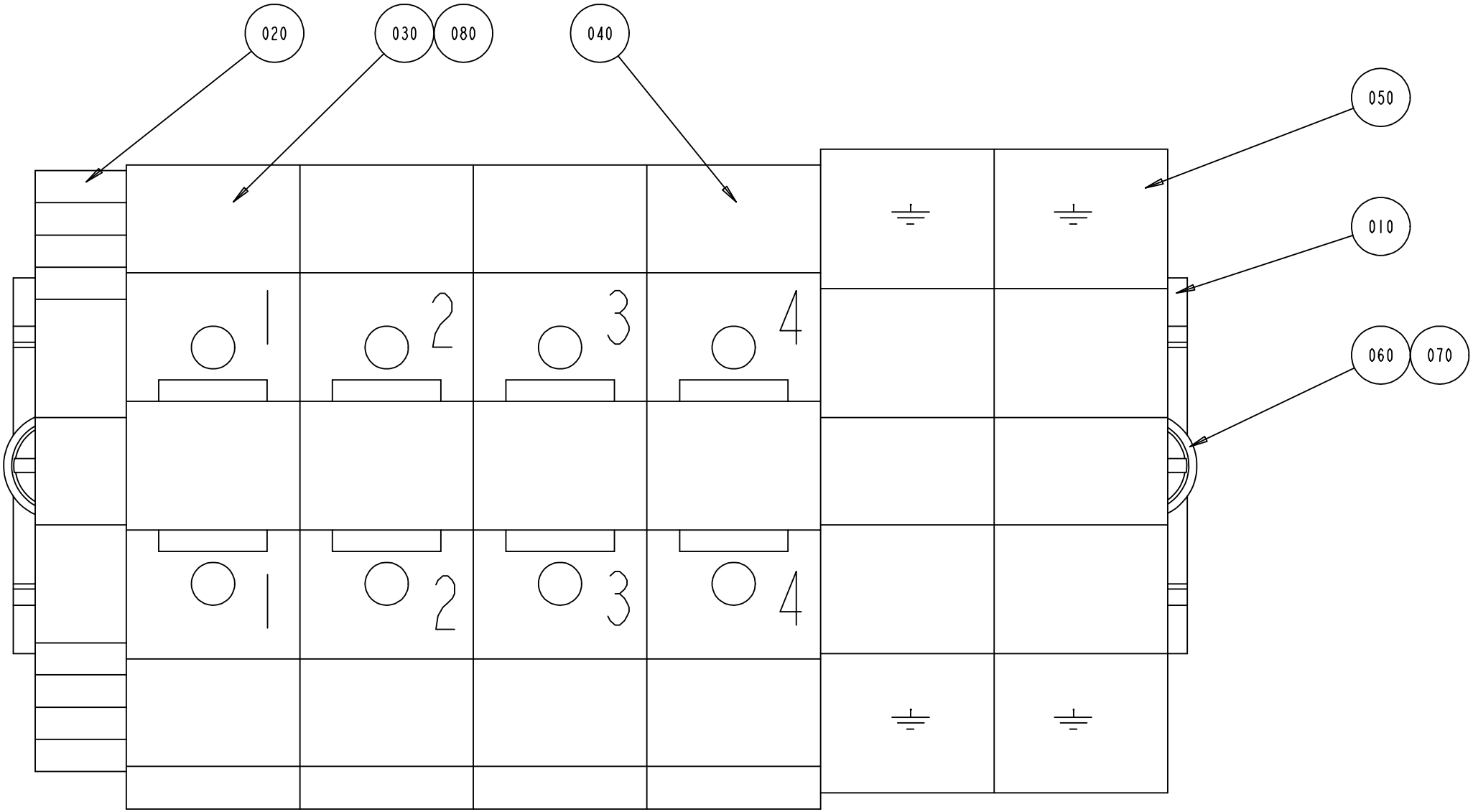
020
030
080
040
050
010
060
070
1
2
3
4
1
2
3
4

ECM: - -
Group number: 1095778-0100
Assembly Drawing: 1095778-1_1_AA

Issue: 20011217

Pos	Part No	SP	UN	Qty	Description	Page No
Common Parts						
010	353042-0005	-	MM	130	RAIL TS 35/7.5	
020	353031-0203	-		1	END PLATE, 10612.0	
030	353021-0219	-		3	FEED THROUGH TERMINAL, 10205.0	
040	353021-0226	-		1	BY-PASS TERMINAL WDU 35	
050	353024-0209	-		2	EARTH TERMINAL, 1010.5	
060	312125-0327	-		2	SCREW PAN HEAD MCS M5X12 SS	
070	315105-0146	-		2	WASHER PLAIN, BRB, 5,3/10,H=1	
080	359011-0807	-		2	MARKING PLATES 5-FW 1-50	

Pos	Part No	SP	UN	Qty	Description	Page No

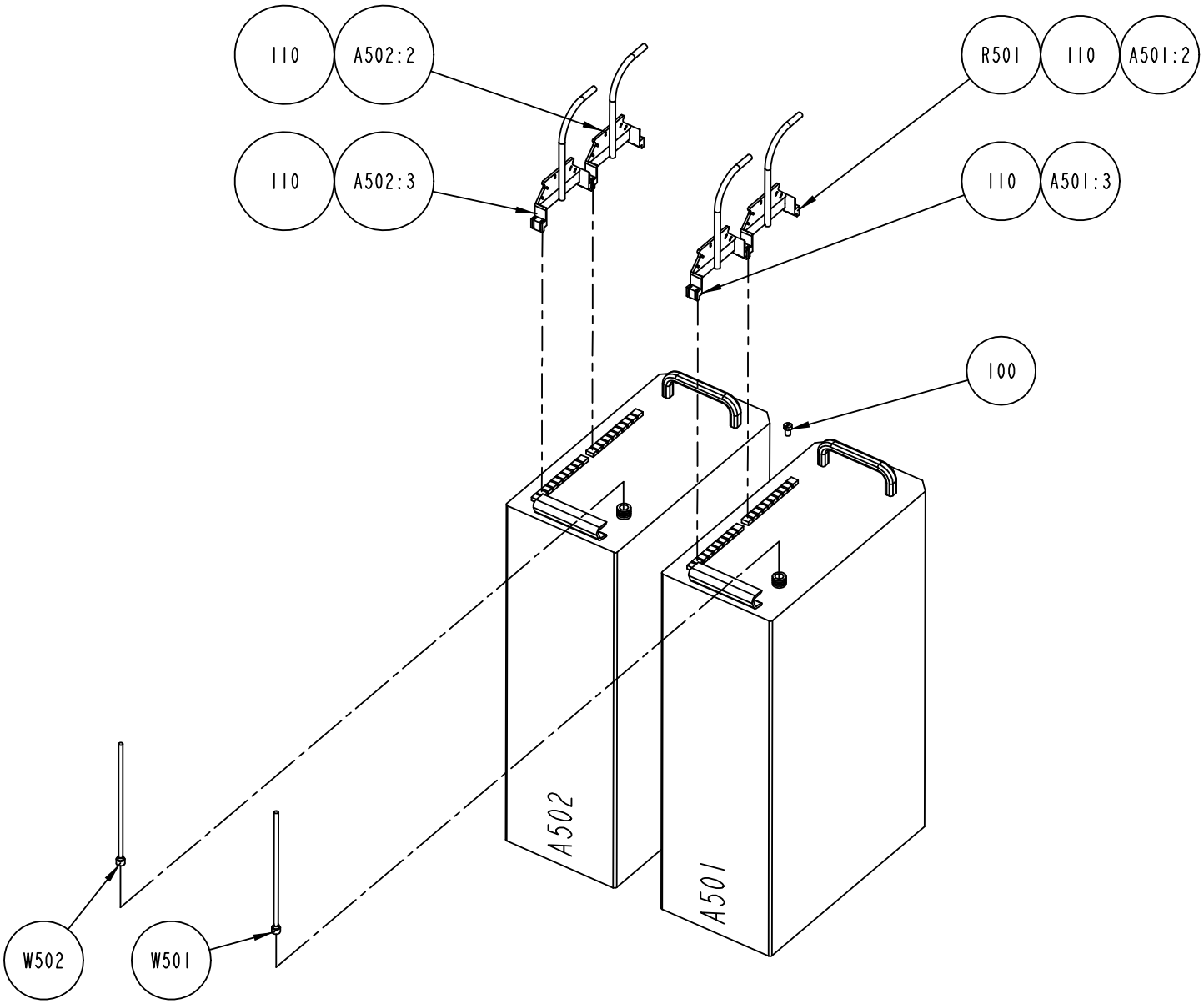

S-1035438-4
ECN 72786

ECM: 72786 - 19991125
Group number: 1035438-0400
Assembly Drawing: 1035438-4_1_AB

Issue: 20011217

Pos	Part No	SP	UN	Qty	Description	Page No
Common Parts						
100	312105-0323	-		2	SCREW M6S M5X8 A280	
110	90110-0122	-		4	COVER, 09 06 000 9957	
A501	B67600-0501	D		1	TPIH GENERATOR	
10	*542036-0000*	-			*TP SIGN BOARD "PART NO" 84X140MM*	
500	*565140-0001*	-			*COMPONENTS WITHOUT TP-NO*	
510	*565144-0000*	-			*LABEL LED*	
520	*565145-0000*	-			*LABEL X1/X2*	
530	*565146-0000*	-			*INSULATION SPACER*	
540	*565147-0000*	-			*GUIDE RAIL LEFT*	
550	*565148-0000*	-			*GUIDE RAIL RIGHT*	
560	*565149-0000*	-			*GUIDE RAIL BACK*	
570	*565150-0000*	-			*FRONT HANDLE*	
580	*565151-0000*	-			*BOX BOTTOM*	
590	*565152-0000*	-			*FRAME*	
600	*565153-0000*	-			*COMPLETE BOX*	
610	*565154-0000*	-			*BOX UPPER PART*	
F100	*B67577-0501*	-			*POWER CARD*	
130	*573137-0001*	-			*COMPONENTS WITHOUT TP-NO*	
140	*565299-0000*	-			*SORTING INSTRUCTION*	
150	*543112-0000*	-			*MODIFYING EUROPECONNECTOR*	
160	*573138-0000*	-		*3*	*HEAT SINK L*	
180	*565301-0000*	-			*CAPACITOR CABLE RED*	
190	*565300-0000*	-			*CAPACITOR CABLE BLACK*	
200	*575980-0000*	-			*CIRCUIT DIAGRAM*	
F101	*B67564-0101*	-			*THIH TOROID COIL 1*	
100	*564253-0001*	-			*COMPONENTS WITHOUT TP-NO*	
110	*532687-0000*	-			*TOROID COIL 1*	
F102	*B67565-0101*	-			*TPIH TOROID COIL 2*	
100	*564254-0001*	-			*COMPONENTS WITHOUT TP-NO*	
110	*532688-0000*	-			*TOROID COIL 2*	
F103	*B67566-0101*	-			*TPIH TOROID COIL 3*	
100	*564255-0001*	-			*COMPONENTS WITHOUT TP-NO*	
110	*532689-0000*	-			*TOROID COIL 3*	
F104	*B67567-0101*	-			*TPIH THERMOSTAT CABLE*	
100	*564256-0001*	-			*COMPONENTS WITHOUT TP-NO*	
110	*532690-0000*	-			*THERMOSTAT CABLE*	
F105	*B67568-0101*	-			*TPIH COIL SINGLE LAYER*	
100	*564257-0001*	-			*COMPONENTS WITHOUT TP-NO*	
110	*532692-0000*	-			*COIL SINGLE LAYER*	
120	*532691-0000*	-			*COIL FORMER*	
F106	*B67569-0101*	-			*TPIH TANK COIL*	
100	*564260-0001*	-			*COMPONENTS WITHOUT TP-NO*	
110	*532693-0000*	-			*BOTTOM GABLE*	
120	*532695-0000*	-			*GABLE*	
130	*532696-0000*	-			*RING SPRING*	
140	*532697-0000*	-			*WINDING HOLDER*	
150	*565286-0000*	-			*WINDING HOLDER*	
160	*565287-0000*	-			*SPACER*	
170	*532694-0000*	-			*TANK COIL*	
F107	*B67570-0101*	-			*TPIH CAPACITOR CARD*	
100	*564261-0001*	-			*COMPONENTS WITHOUT TP-NO*	
120	*484995-0000*	-			*PRINTED CIRCUIT BOARD*	
130	*565289-0000*	-			*COMPONENT REFERENCE*	
F108	*B67582-0101*	-			*TPIH HEATSINK PREREGULATO*	
100	*573134-0001*	-			*COMPONENTS WITHOUT TP-NO*	
110	*565290-0000*	-			*HEAT SINK V1*	
120	*532703-0000*	-			*HEAT SINK V2*	
130	*565291-0000*	-			*HEAT SINK V3*	
140	*573135-0000*	-			*HEAT SINK PREREGULATOR*	
F110	*B67573-0101*	-			*TPIH TRANSISTOR PACKAGE R*	
100	*564264-0001*	-			*COMPONENTS WITHOUT TP-NO*	
110	*565295-0000*	-			*GABLE LEFT*	
120	*532709-0000*	-			*GABLE RIGHT*	
130	*532710-0000*	-			*STUDSCREW*	
140	*532711-0000*	-			*HEAT SINK PLATE PLANE*	
150	*532712-0000*	-			*DISTANCE PLATE*	
160	*565296-0000*	-			*WASHER*	
170	*565297-0000*	-			*TRANSISTOR PACKAGE R*	
F111	*B67581-0101*	-			*TPIH TRANSISTOR PACKAGE L*	
100	*565312-0001*	-			*COMPONENTS WITHOUT TP-NO*	
110	*565295-0000*	-			*GABLE LEFT*	
120	*532709-0000*	-			*GABLE RIGHT*	
130	*532710-0000*	-			*STUDSCREW*	
140	*532711-0000*	-			*HEAT SINK PLATE PLANE*	
150	*532712-0000*	-			*DISTANCE PLATE*	
160	*565296-0000*	-			*WASHER*	
180	*565298-0000*	-			*TRANSISTOR PACKAGE L*	
F112	*B67574-0401*	-			*OUTPUT TRANSFORMER*	
100	*565134-0001*	-			*COMPONENTS WITHOUT TP-NO*	
110	*532716-0000*	-			*OUTPUT TRANSFORMER*	
F200	*B67578-0101*	-			*TPIH FAN HOLDER*	
202	*565136-0001*	-			*COMPONENTS WITHOUT TP-NO*	
203	*543120-0000*	-			*PARTITION WALL*	

Machine Type | Group Description | Used-In | Group Number | Page No

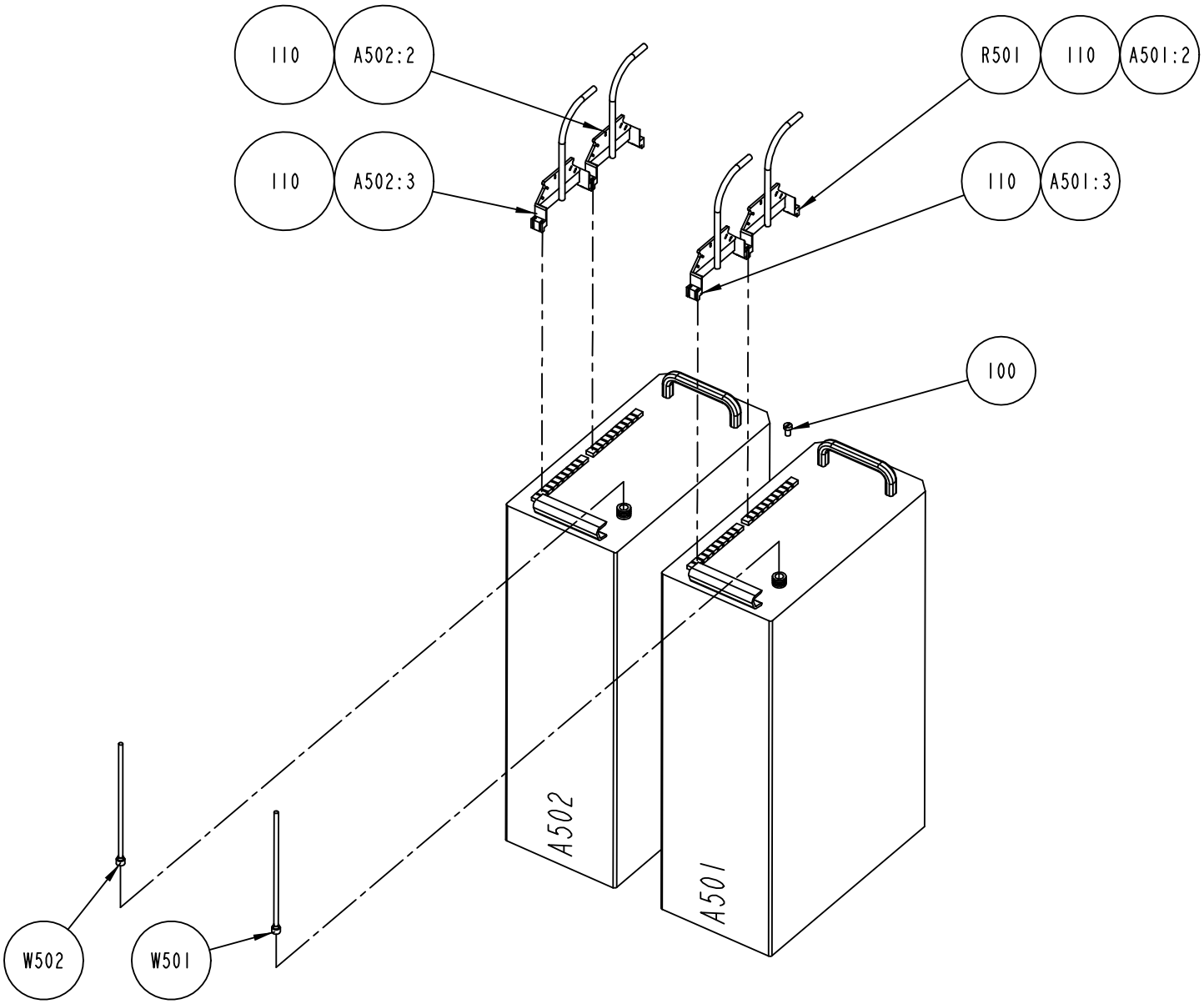

S-1035438-4
ECN 72786

Pos	Part No	SP	UN	Qty	Description	Page No
Common Parts (Cont'd)						
A501:2	90110-0121	-		1	FEMALE INSERT GDS A-H 09 06 215 2811	
A501:3	90110-0121	-		1	FEMALE INSERT GDS A-H 09 06 215 2811	
A502	B67600-0501	D		1	TPIH GENERATOR	
10	*542036-0000*	-			*TP SIGN BOARD "PART NO" 84X140MM*	
500	*565140-0001*	-			*COMPONENTS WITHOUT TP-NO*	
510	*565144-0000*	-			*LABEL LED*	
520	*565145-0000*	-			*LABEL X1/X2*	
530	*565146-0000*	-			*INSULATION SPACER*	
540	*565147-0000*	-			*GUIDE RAIL LEFT*	
550	*565148-0000*	-			*GUIDE RAIL RIGHT*	
560	*565149-0000*	-			*GUIDE RAIL BACK*	
570	*565150-0000*	-			*FRONT HANDLE*	
580	*565151-0000*	-			*BOX BOTTOM*	
590	*565152-0000*	-			*FRAME*	
600	*565153-0000*	-			*COMPLETE BOX*	
610	*565154-0000*	-			*BOX UPPER PART*	
F100	*B67577-0501*	-			*POWER CARD*	
130	*573137-0001*	-			*COMPONENTS WITHOUT TP-NO*	
140	*565299-0000*	-			*SORTING INSTRUCTION*	
150	*543112-0000*	-			*MODIFYING EUROPECONNECTOR*	
160	*573138-0000*	-		*3*	*HEAT SINK L*	
180	*565301-0000*	-			*CAPACITOR CABLE RED*	
190	*565300-0000*	-			*CAPACITOR CABLE BLACK*	
200	*575980-0000*	-			*CIRCUIT DIAGRAM*	
F101	*B67564-0101*	-			*THIH TOROID COIL 1*	
100	*564253-0001*	-			*COMPONENTS WITHOUT TP-NO*	
110	*532687-0000*	-			*TOROID COIL 1*	
F102	*B67565-0101*	-			*TPIH TOROID COIL 2*	
100	*564254-0001*	-			*COMPONENTS WITHOUT TP-NO*	
110	*532688-0000*	-			*TOROID COIL 2*	
F103	*B67566-0101*	-			*TPIH TOROID COIL 3*	
100	*564255-0001*	-			*COMPONENTS WITHOUT TP-NO*	
110	*532689-0000*	-			*TOROID COIL 3*	
F104	*B67567-0101*	-			*TPIH THERMOSTAT CABLE*	
100	*564256-0001*	-			*COMPONENTS WITHOUT TP-NO*	
110	*532690-0000*	-			*THERMOSTAT CABLE*	
F105	*B67568-0101*	-			*TPIH COIL SINGLE LAYER*	
100	*564257-0001*	-			*COMPONENTS WITHOUT TP-NO*	
110	*532692-0000*	-			*COIL SINGLE LAYER*	
120	*532691-0000*	-			*COIL FORMER*	
F106	*B67569-0101*	-			*TPIH TANK COIL*	
100	*564260-0001*	-			*COMPONENTS WITHOUT TP-NO*	
110	*532693-0000*	-			*BOTTOM GABLE*	
120	*532695-0000*	-			*GABLE*	
130	*532696-0000*	-			*RING SPRING*	
140	*532697-0000*	-			*WINDING HOLDER*	
150	*565286-0000*	-			*WINDING HOLDER*	
160	*565287-0000*	-			*SPACER*	
170	*532694-0000*	-			*TANK COIL*	
F107	*B67570-0101*	-			*TPIH CAPACITOR CARD*	
100	*564261-0001*	-			*COMPONENTS WITHOUT TP-NO*	
120	*484995-0000*	-			*PRINTED CIRCUIT BOARD*	
130	*565289-0000*	-			*COMPONENT REFERENCE*	
F108	*B67582-0101*	-			*TPIH HEATSINK PREREGULATO*	
100	*573134-0001*	-			*COMPONENTS WITHOUT TP-NO*	
110	*565290-0000*	-			*HEAT SINK V1*	
120	*532703-0000*	-			*HEAT SINK V2*	
130	*565291-0000*	-			*HEAT SINK V3*	
140	*573135-0000*	-			*HEAT SINK PREREGULATOR*	
F110	*B67573-0101*	-			*TPIH TRANSISTOR PACKAGE R*	
100	*564264-0001*	-			*COMPONENTS WITHOUT TP-NO*	
110	*565295-0000*	-			*GABLE LEFT*	
120	*532709-0000*	-			*GABLE RIGHT*	
130	*532710-0000*	-			*STUDSCREW*	
140	*532711-0000*	-			*HEAT SINK PLATE PLANE*	
150	*532712-0000*	-			*DISTANCE PLATE*	
160	*565296-0000*	-			*WASHER*	
170	*565297-0000*	-			*TRANSISTOR PACKAGE R*	
F111	*B67581-0101*	-			*TPIH TRANSISTOR PACKAGE L*	
100	*565312-0001*	-			*COMPONENTS WITHOUT TP-NO*	
110	*565295-0000*	-			*GABLE LEFT*	
120	*532709-0000*	-			*GABLE RIGHT*	
130	*532710-0000*	-			*STUDSCREW*	
140	*532711-0000*	-			*HEAT SINK PLATE PLANE*	
150	*532712-0000*	-			*DISTANCE PLATE*	
160	*565296-0000*	-			*WASHER*	
180	*565298-0000*	-			*TRANSISTOR PACKAGE L*	
F112	*B67574-0401*	-			*OUTPUT TRANSFORMER*	
100	*565134-0001*	-			*COMPONENTS WITHOUT TP-NO*	
110	*532716-0000*	-			*OUTPUT TRANSFORMER*	
F200	*B67578-0101*	-			*TPIH FAN HOLDER*	
202	*565136-0001*	-			*COMPONENTS WITHOUT TP-NO*	
203	*543120-0000*	-			*PARTITION WALL*	

Machine Type | Group Description | Used-In | Group Number | Page No

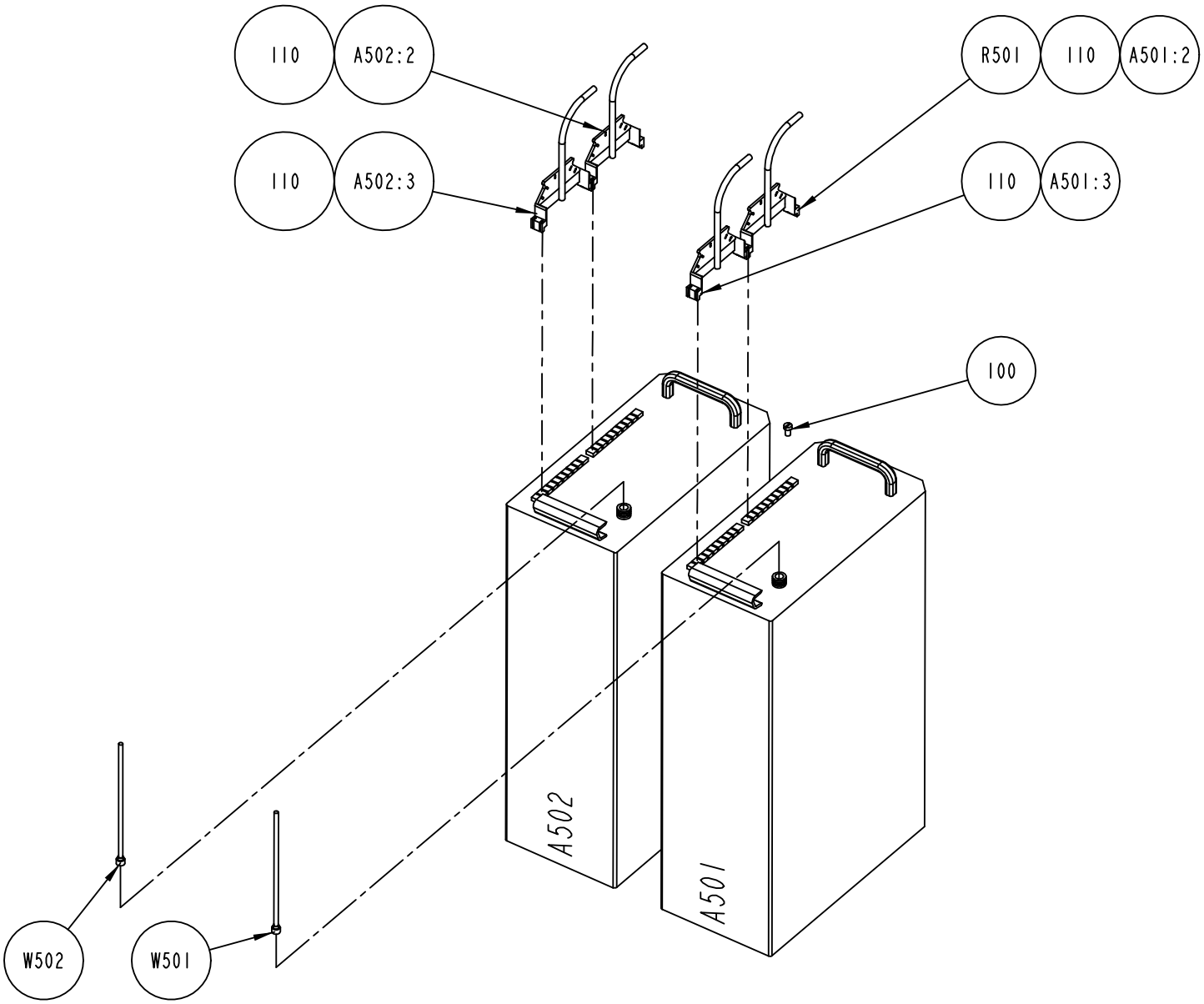

S-1035438-4
ECN 72786

Pos	Part No	SP	UN	Qty	Description	Page No
Common Parts (Cont'd)						
A502	B67600-0501	D		1	TPIH GENERATOR	
10	542036-0000	-			TP SIGN BOARD "PART NO" 84X140MM	
500	565140-0001	-			COMPONENTS WITHOUT TP-NO	
510	565144-0000	-			LABEL LED	
520	565145-0000	-			LABEL X1/X2	
530	565146-0000	-			INSULATION SPACER	
540	565147-0000	-			GUIDE RAIL LEFT	
550	565148-0000	-			GUIDE RAIL RIGHT	
560	565149-0000	-			GUIDE RAIL BACK	
570	565150-0000	-			FRONT HANDLE	
580	565151-0000	-			BOX BOTTOM	
590	565152-0000	-			FRAME	
600	565153-0000	-			COMPLETE BOX	
610	565154-0000	-			BOX UPPER PART	
F100	B67577-0501	-			POWER CARD	
130	573137-0001	-			COMPONENTS WITHOUT TP-NO	
140	565299-0000	-			SORTING INSTRUCTION	
150	543112-0000	-			MODIFYING EUROPECONNECTOR	
160	573138-0000	-		3	HEAT SINK L	
180	565301-0000	-			CAPACITOR CABLE RED	
190	565300-0000	-			CAPACITOR CABLE BLACK	
200	575980-0000	-			CIRCUIT DIAGRAM	
F101	B67564-0101	-			THIH TOROID COIL 1	
100	564253-0001	-			COMPONENTS WITHOUT TP-NO	
110	532687-0000	-			TOROID COIL 1	
F102	B67565-0101	-			TPIH TOROID COIL 2	
100	564254-0001	-			COMPONENTS WITHOUT TP-NO	
110	532688-0000	-			TOROID COIL 2	
F103	B67566-0101	-			TPIH TOROID COIL 3	
100	564255-0001	-			COMPONENTS WITHOUT TP-NO	
110	532689-0000	-			TOROID COIL 3	
F104	B67567-0101	-			TPIH THERMOSTAT CABLE	
100	564256-0001	-			COMPONENTS WITHOUT TP-NO	
110	532690-0000	-			THERMOSTAT CABLE	
F105	B67568-0101	-			TPIH COIL SINGLE LAYER	
100	564257-0001	-			COMPONENTS WITHOUT TP-NO	
110	532692-0000	-			COIL SINGLE LAYER	
120	532691-0000	-			COIL FORMER	
F106	B67569-0101	-			TPIH TANK COIL	
100	564260-0001	-			COMPONENTS WITHOUT TP-NO	
110	532693-0000	-			BOTTOM GABLE	
120	532695-0000	-			GABLE	
130	532696-0000	-			RING SPRING	
140	532697-0000	-			WINDING HOLDER	
150	565286-0000	-			WINDING HOLDER	
160	565287-0000	-			SPACER	
170	532694-0000	-			TANK COIL	
F107	B67570-0101	-			TPIH CAPACITOR CARD	
100	564261-0001	-			COMPONENTS WITHOUT TP-NO	
120	484995-0000	-			PRINTED CIRCUIT BOARD	
130	565289-0000	-			COMPONENT REFERENCE	
F108	B67582-0101	-			TPIH HEATSINK PREREGULATO	
100	573134-0001	-			COMPONENTS WITHOUT TP-NO	
110	565290-0000	-			HEAT SINK V1	
120	532703-0000	-			HEAT SINK V2	
130	565291-0000	-			HEAT SINK V3	
140	573135-0000	-			HEAT SINK PREREGULATOR	
F110	B67573-0101	-			TPIH TRANSISTOR PACKAGE R	
100	564264-0001	-			COMPONENTS WITHOUT TP-NO	
110	565295-0000	-			GABLE LEFT	
120	532709-0000	-			GABLE RIGHT	
130	532710-0000	-			STUDSCREW	
140	532711-0000	-			HEAT SINK PLATE PLANE	
150	532712-0000	-			DISTANCE PLATE	
160	565296-0000	-			WASHER	
170	565297-0000	-			TRANSISTOR PACKAGE R	
F111	B67581-0101	-			TPIH TRANSISTOR PACKAGE L	
100	565312-0001	-			COMPONENTS WITHOUT TP-NO	
110	565295-0000	-			GABLE LEFT	
120	532709-0000	-			GABLE RIGHT	
130	532710-0000	-			STUDSCREW	
140	532711-0000	-			HEAT SINK PLATE PLANE	
150	532712-0000	-			DISTANCE PLATE	
160	565296-0000	-			WASHER	
180	565298-0000	-			TRANSISTOR PACKAGE L	
F112	B67574-0401	-			OUTPUT TRANSFORMER	
100	565134-0001	-			COMPONENTS WITHOUT TP-NO	
110	532716-0000	-			OUTPUT TRANSFORMER	
F200	B67578-0101	-			TPIH FAN HOLDER	
202	565136-0001	-			COMPONENTS WITHOUT TP-NO	
203	543120-0000	-			PARTITION WALL	
204	533839-0000	-			FILTER	
205	533840-0000	-			GASKET	

Machine Type | Group Description | Used-In | Group Number | Page No

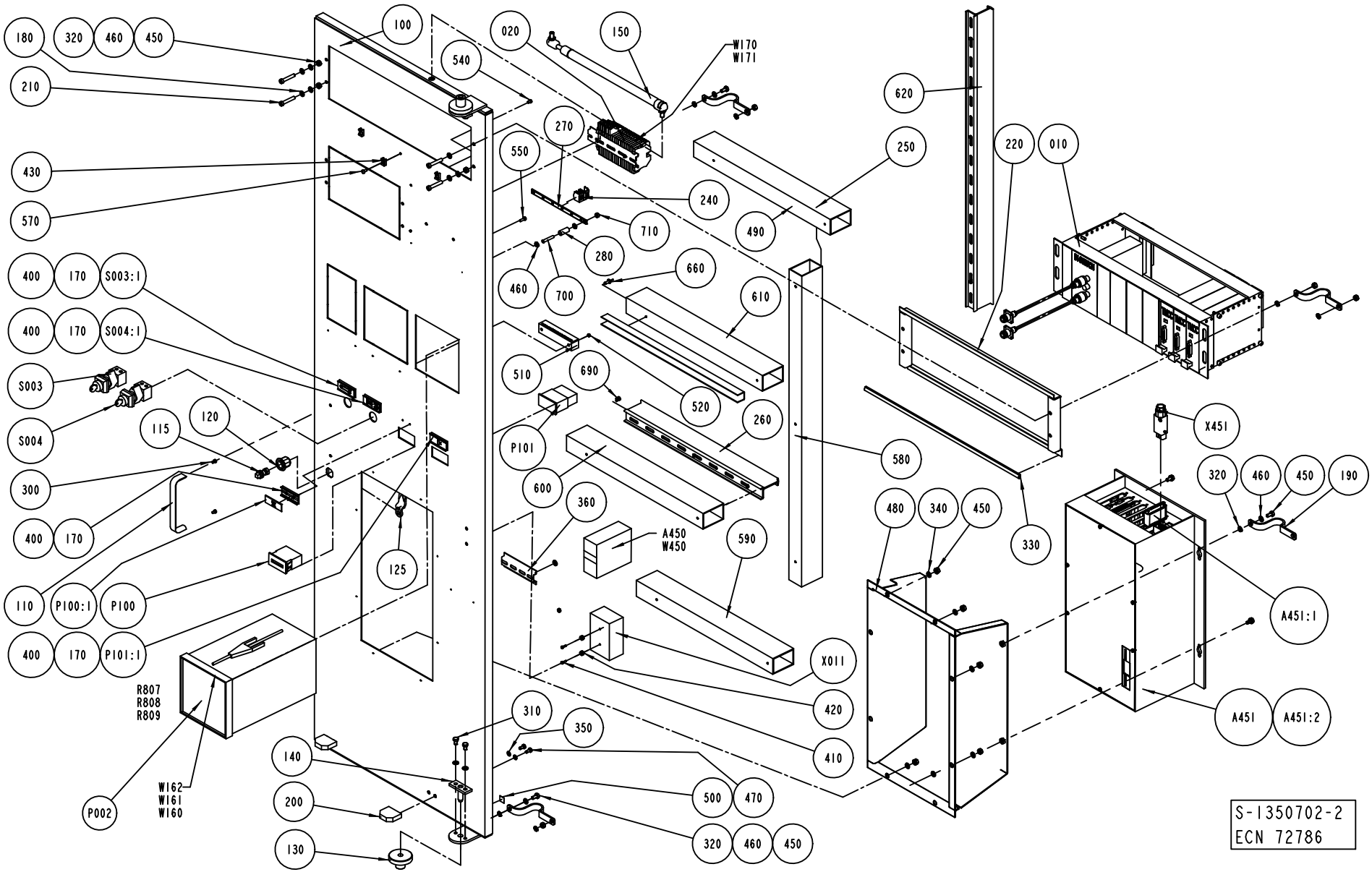
180
320
460
450
210
430
570
400
170
S003:1
400
170
S004:1
S003
S004
300
400
170
110
P100:1
P100
400
170
P101:1
115
120
125
R807
R808
R809
P002
W162
W161
W160
100
540
020
150
W170
W171
270
550
240
710
280
460
700
660
610
510
690
520
260
P101
600
360
A450
W450
590
X011
420
410
310
350
140
200
130
500
470
320
460
450
620
250
220
010
490
580
330
480
340
450
X451
320
460
450
190
A451:1
A451
A451:2
S-1350702-2
ECN 72786

ECM: 72786 - 19991125
Group number: 1350702-0200
Assembly Drawing: 1350702-2_1_AC

Issue: 20011217

Pos	Part No	SP	UN	Qty	Description	Page No
CIPSUPERV						
A414	90243-0214	D		1	CONDUCTIVITY METER	
A451	A1363288-0100	D		1	FLEXBOX	**1017**
P003	B90332-0020	D		1	RECORDER HONEYWELL	
	90332-0328	*-*		*1*	*RECORDER*	
	90332-0326	*-*		*1*	*INTERFACE PC KIT*	
	90332-0325	*-*		*1*	*RECORDER CHARTS*	
	90332-0324	*-*		*1*	*INK WHEEL*	
NOCIPSUPERV						
A451	A1363288-0100	D		1	FLEXBOX	**1017**
Common Parts						
010	A1317249-0200	-		1	RACK	**1019**
020	A1478384-0100	-		1	PLINTH	**1021**
100	1478383-0000	-		1	SWING FRAME	
110	90017-0017	-		1	HANDLE, NO. 547-128	
115	90237-0320	-		1	LOCK HOUSING, 1000-U136	
120	90237-0319	-		1	LOCK HOUSING, 1000-U134	
125	90237-0157	-		1	LOCK BOLT, 1000-230	
130	495377-0000	-		2	BUSH	
140	971346-0000	-		2	GUIDE PIN	
150	90347-0163	-		1	GAS-DAMPER	
160	1116536-0000	-		2	BRACKET	
170	359240-0100	-		5	SIGN HOLDER FOR 359240-0001	
180	315105-0153	-		14	WASHER PLAIN, BRB, 6,4/12,H=1,5	
190	90135-0035	-		5	EARTH WIRE, L=250 MM 16 MM2	
200	970215-0000	-		2	STOP BLOCK	
210	312125-0376	-		8	SCREW PAN HEAD MCS M6X35 SS	
220	1038355-0000	-		2	FRAME	
240	90135-0039	-		4	SHIELD CLIP KLBU 4-13.5	
250	90181-0045	-	MM	470	CABLE DUCT 40X60MM	
260	90181-0066	-	MM	430	DIVIDING PLATE SEP60	
270	1478385-0000	-		1	EARTH BAR	
280	1478386-0000	-		2	SPACER	
300	312121-0285	-		2	SCREW SLOT.PAN HD. MCS 4X6 FZB	
310	312101-0364	-		4	SCREW M6S M6X10 FZB	
320	312101-0366	-		6	SCREW M6S M6X12 FZB	
330	90143-0060	-	MM	2700	EDGE STRIP 9,5X6,3MM BLACK PVC	
340	315101-0153	-		26	WASHER PLAIN, BRB, 6,4/12 H=1,5	
350	315101-0146	-		4	WASHER PLAIN, BRB, 5,3/10 H=1	
360	353042-0005	-	MM	100	RAIL TS 35/7.5	
370	353031-0203	-		2	END PLATE, 10612.0	
380	353021-0216	-		2	FEED THROUGH TERMINAL, 10200.8	
400	311520-0329	-		10	RIVET, BLANK 2,4X8	
410	312121-0224	-		2	SCREW SLOT.PAN HD. MCS 3X10 FZB	
420	312601-0314	-		2	NUT M6M5FZB	
430	352113-0205	-		3	ANCHOR TM2S8-C100	
440	312601-0312	-		10	NUT M6M 4-8 FZB	
450	312601-0316	-		19	NUT M6M 6-8 FZB	
455	312625-0316	-		2	NUT HEX. M6 SS	
460	90062-0022	-		10	LOCKING WASHER D=6,4/11	
470	312101-0325	-		4	SCREW M6S M5X10 FZB	
480	1347145-0000	-		1	FRAME	
490	312125-0335	-		2	SCREW PAN HEAD MCS M5X30 SS	
500	90194-0152	-		2	SIGN, EARTH	
510	90077-0106	-		2	TERMINAL STRIP, MK4/16 KRG 10-00024422-1	
520	312601-0310	-		6	NUT M6M3FZB	
540	90287-0300	-		17	SCREW SLOT.PAN HD. MCS M4X6 PL	
550	312122-0291	-		17	SCREW PAN HEAD MCS M4X12 NL. PL.	
560	90062-0058	-		22	LOCK WASHER SERRAT.EXT.GEAR,3,2/6 H=0,4	
570	312132-0287	-		3	SCREW SLOT. PAN HEAD MSCS M4X8	
580	90181-0045	-	MM	750	CABLE DUCT 40X60MM	
590	90181-0045	-	MM	470	CABLE DUCT 40X60MM	
600	90181-0045	-	MM	430	CABLE DUCT 40X60MM	
610	90181-0045	-	MM	430	CABLE DUCT 40X60MM	
620	90181-0066	-	MM	430	DIVIDING PLATE SEP60	
660	90181-0313	-		11	RIVET DUCTAFIX R4	
690	90181-0064	-		11	LOCK ZP1 FOR CHANNEL T1	
700	312421-0123	-		2	WELDING BUM5X30	
710	312605-0314	-		2	HEXAGON NUT, M6M M5 A280	
A450	90453-0002	-		1	MODEM MD-12 DC	
A451:1	90456-0001	-		1	INTOUCH OEM 2000 V.5.6B/6.0B HW KEY	
A451:2	A1095912-0500	-		1	SOFTWARE TPOP	**1023**
P002	B90332-0020	D		1	RECORDER HONEYWELL	
	90332-0328	*-*		*1*	*RECORDER*	
	90332-0326	*-*		*1*	*INTERFACE PC KIT*	
	90332-0325	*-*		*1*	*RECORDER CHARTS*	
	90332-0324	*-*		*1*	*INK WHEEL*	
P100	90053-0031	D		1	HOUR COUNTER BOWER B906.10	
P100:1	359241-0201	-		1	SIGN "HOUR GLASS"	
P101	90053-0029	D		1	PACK COUNTER 8 DIGITS IVO	
P101:1	359241-0482	-		1	SIGN "PACKAGE COUNTER"	
R807	90121-0120	-		1	RESISTANCE FIXED, 0,25 KOHM, 0,125 W	

Machine Type | Group Description | Used-In | Group Number | Page No

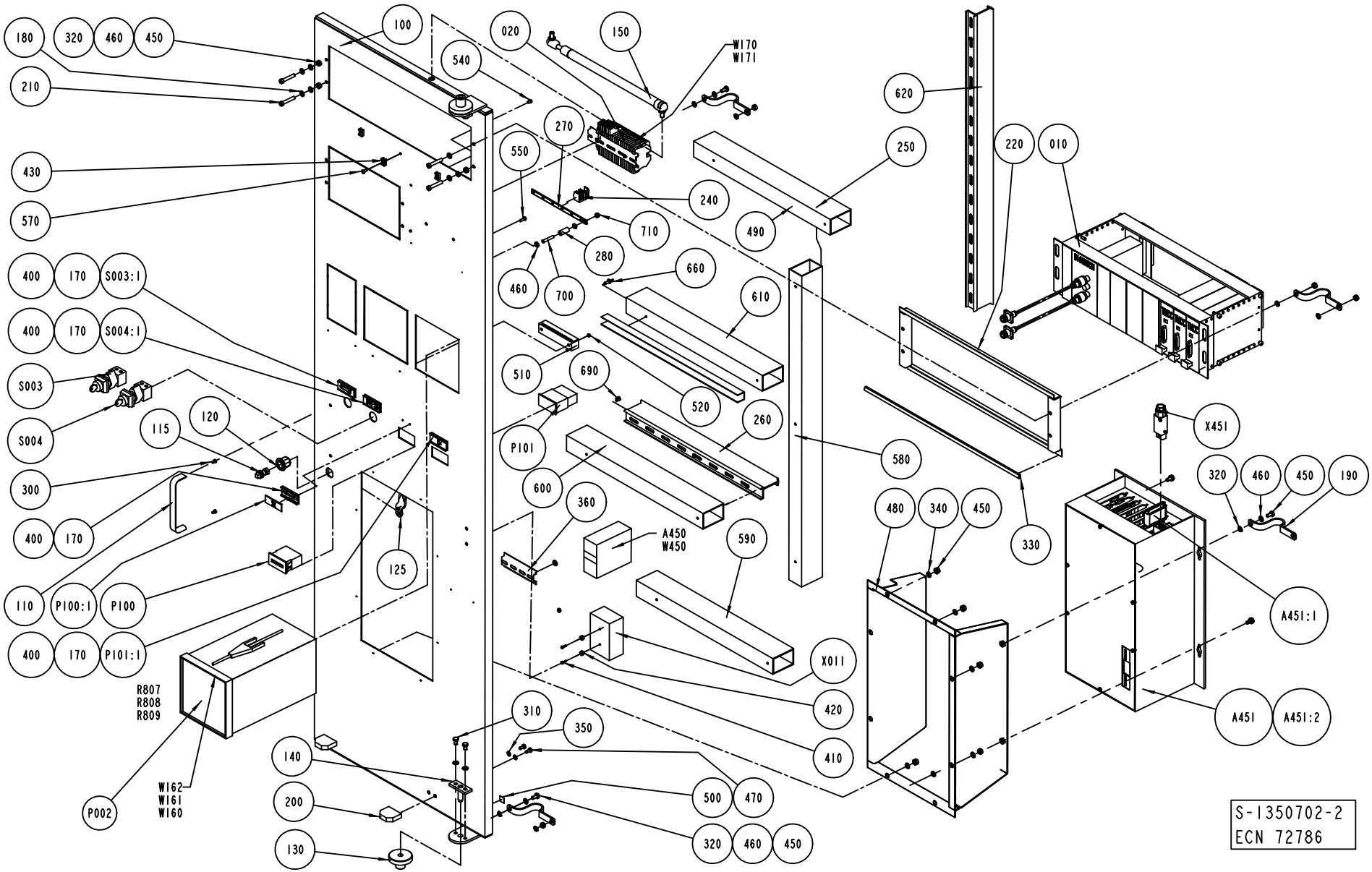
180
320
460
450
210
100
540
020
150
W170
W171
620
250
220
010
430
570
270
550
240
490
710
280
660
460
700
610
400
170
S003:1
400
170
S004:1
S003
S004
510
690
520
260
P101
580
115
120
300
600
360
400
170
A450
W450
590
125
110
P100:1
P100
400
170
P101:1
X011
420
410
R807
R808
R809
310
350
140
200
130
P002
W162
W161
W160
500
470
320
460
450
X451
320
460
450
190
480
340
450
330
A451:1
A451
A451:2
S-1350702-2
ECN 72786

Pos	Part No	SP	UN	Qty	Description	Page No
Common Parts (Cont'd)						
R808	90121-0120	-		1	RESISTANCE FIXED, 0,25 KOHM, 0,125 W	
R809	90121-0120	-		1	RESISTANCE FIXED, 0,25 KOHM, 0,125 W	
S003	90111-0122	D		1	KEY SWITCH 2 NO CONTACTS	
S003:1	359241-0133	-		1	SIGN, SERVICE SWITCH	
S004	90111-0124	D		1	KEY SWITCH 1NO,1NC CONTACT	
S004:1	359241-0122	-		1	SIGN, CIP OF STEAM BARRIER SPACE	
W160	90220-0059	-	MM	2	THERMOCOUPLE CABLE K/ 2X0,81MM2	
W161	90220-0059	-	MM	2	THERMOCOUPLE CABLE K/ 2X0,81MM2	
W162	90220-0059	-	MM	2	THERMOCOUPLE CABLE K/ 2X0,81MM2	
W170	90220-0165	-	MM	2	SCR. CABLE 5X0,34MM2	
W171	90220-0165	-	MM	2	SCR. CABLE 5X0,34MM2	
W450	1254442-0000	-		1	CABLE SERIAL	
X011	90001-0033	-		1	WALL SOCKET OUTLET	
X451	90110-0028	-		1	CONTACT UNIT 4-POLE	

Pos	Part No	SP	UN	Qty	Description	Page No

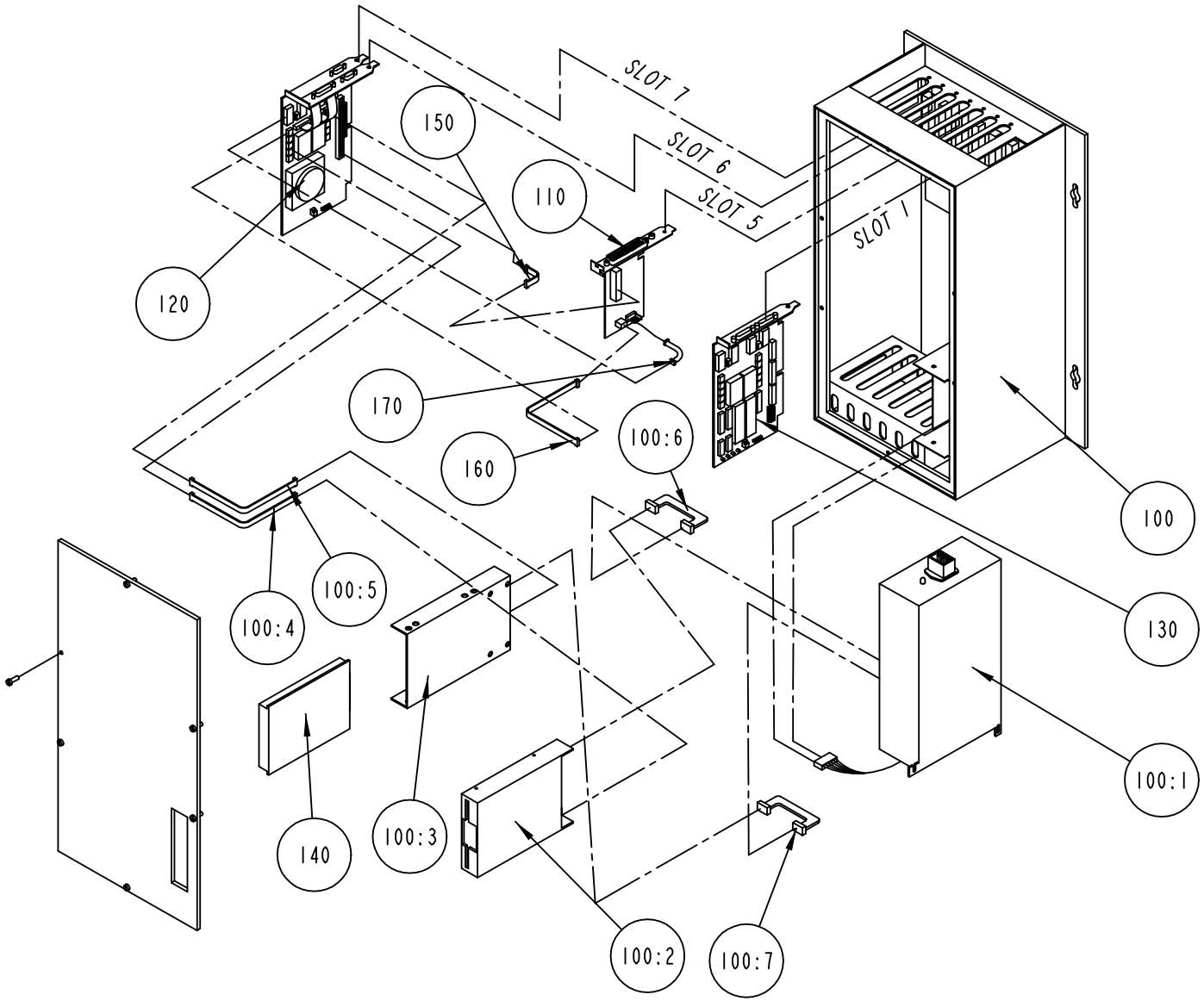

S-1363288-1
ECN 72188

ECM: 72188 - 19990304
Group number: 1363288-0100
Assembly Drawing: 1363288-1_1_AA

Issue: 20011217

Pos	Part No	SP	UN	Qty	Description	Page No
Common Parts						
100	B90041-0092	D		1	FLEX BOX INNOSCAN E100006A	
	90458-0266	*A*		*1*	*POWER SUPPLY UNIT, U036407A*	
	90264-0064	*A*		*1*	*FAN / FL 12G308*	
	90041-0091	*A*		*1*	*PC 2,5" HD BAY*	
	90041-0029	*A*		*1*	*FLOPPY DISC UNIT FD-235HF 1,4MB*	
	90041-0027	*A*		*1*	*BACK PLANE CARD 7-SLOT´S*	
110	90041-0083	D		1	HOST COMMUNICATION LINK BOARD LVDS	
120	90041-0102	D		1	PROCESSOR BOARD REPBY 90458-0259	
130	90041-0087	D		1	SERIAL CARD 2 CHANNEL RS486/422 BOARD	
140	90041-0090	D		1	HARD DISC 2,5" INNO SCAN	
150	90041-0080	-		1	CABLE CPU-LVDSCARD+DISPLAY-LVDSCARD	
160	90041-0086	-		1	CABLE COM 2 INNOSCAN	
170	90041-0085	-		1	CABLE KEYBOARD	

Pos	Part No	SP	UN	Qty	Description	Page No

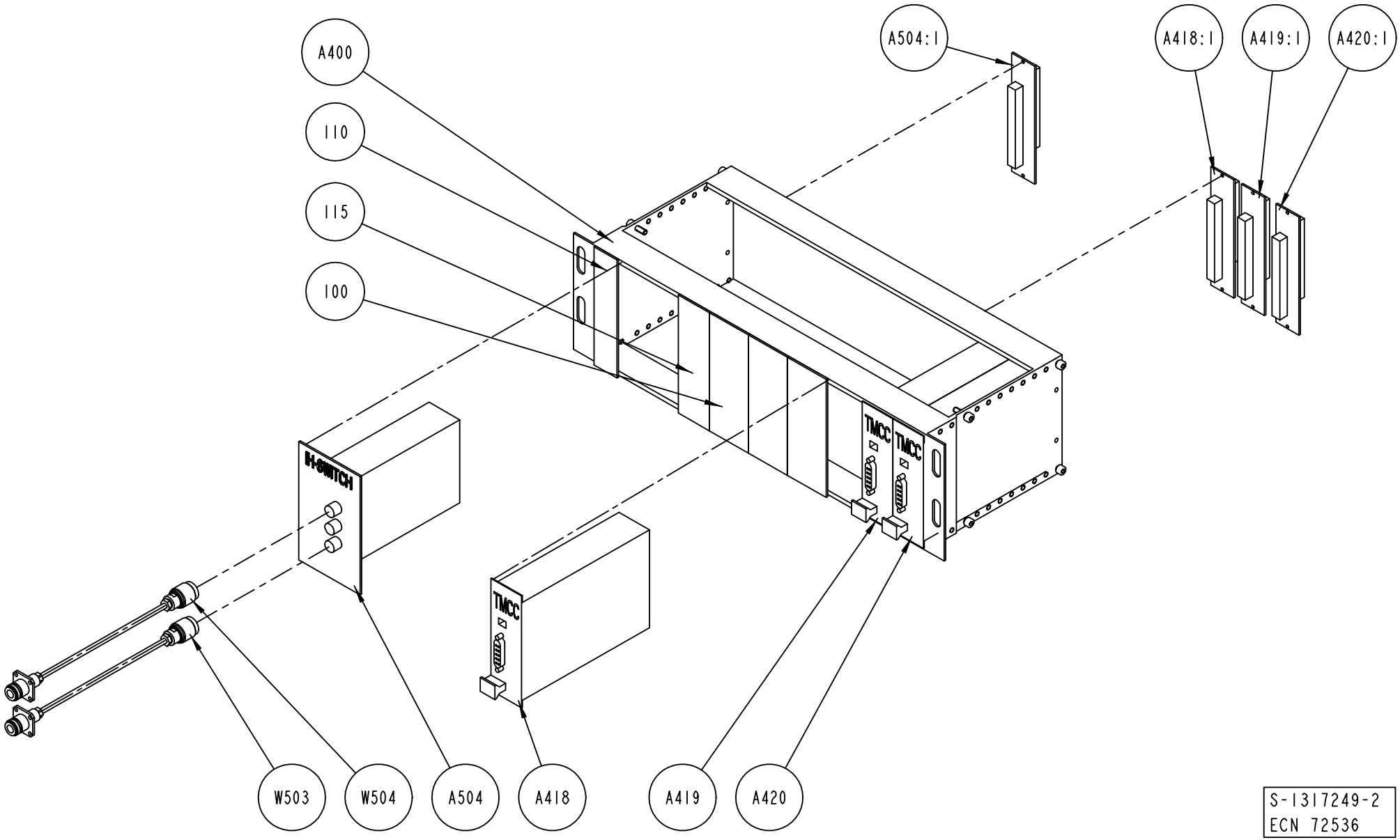

S-1317249-2
ECN 72536

ECM: 72786 - 19991125
Group number: 1317249-0200
Assembly Drawing: 1317249-2_1_AB

Issue: 20011217

Pos	Part No	SP	UN	Qty	Description	Page No
Common Parts						
100	B68445-0105	-		3	FRONT PLATE 10TE	
010 5	*543921-0005*	-		*1*	*COMPONENTS WITHOUT TP-NO*	
110	B68445-0103	-		1	FRONT PLATE 6TE	
010 3	*543921-0003*	-		*1*	*COMPONENTS WITHOUT TP-NO*	
115	B68445-0104	-		1	FRONT PLATE 8 TE	
010 4	*543921-0004*	-		*1*	*COMPONENTS WITHOUT TP-NO*	
A400	B67388-0102	D		1	RACK FRONTMOUNTED 84TE	
020 2	*542038-0002*	-		*1*	*COMPONENTS WITHOUT TP-NO*	
A418	B558230-0301	D		1	TMCC CONTROLLER	
100	*B558370-0301*	-		*1*	*TMCC, MAIN PCB*	
110	*596751-0000*	-		*1*	*PRINTED CIRCUIT BOARD*	
A418:1	B68262-0101	D		1	BACKPLANE FRONT RACK 8TE	
100	*543371-0000*	-		*1*	*CIRCUIT BOARD 8TE*	
110	*551927-0001*	-		*1*	*COMPONENTS WITHOUT TP-NO*	
120	*551928-0000*	-		*1*	*TERMINAL LABELS 8TE*	
A419	B558230-0301	D		1	TMCC CONTROLLER	
100	*B558370-0301*	-		*1*	*TMCC, MAIN PCB*	
110	*596751-0000*	-		*1*	*PRINTED CIRCUIT BOARD*	
A419:1	B68262-0101	D		1	BACKPLANE FRONT RACK 8TE	
100	*543371-0000*	-		*1*	*CIRCUIT BOARD 8TE*	
110	*551927-0001*	-		*1*	*COMPONENTS WITHOUT TP-NO*	
120	*551928-0000*	-		*1*	*TERMINAL LABELS 8TE*	
A420	B558230-0301	D		1	TMCC CONTROLLER	
100	*B558370-0301*	-		*1*	*TMCC, MAIN PCB*	
110	*596751-0000*	-		*1*	*PRINTED CIRCUIT BOARD*	
A420:1	B68262-0101	D		1	BACKPLANE FRONT RACK 8TE	
100	*543371-0000*	-		*1*	*CIRCUIT BOARD 8TE*	
110	*551927-0001*	-		*1*	*COMPONENTS WITHOUT TP-NO*	
120	*551928-0000*	-		*1*	*TERMINAL LABELS 8TE*	
A504	558321-0101	D		1	TPIH-SWITCH	
A504:1	B68262-0101	D		1	BACKPLANE FRONT RACK 8TE	
100	*543371-0000*	-		*1*	*CIRCUIT BOARD 8TE*	
110	*551927-0001*	-		*1*	*COMPONENTS WITHOUT TP-NO*	
120	*551928-0000*	-		*1*	*TERMINAL LABELS 8TE*	
W503	1140285-0007	D		1	COAXIAL CABLE L= 4000 MM	
W504	1140285-0007	D		1	COAXIAL CABLE L= 4000 MM	

Pos	Part No	SP	UN	Qty	Description	Page No

Machine Type	Group Description	Used-In	Group Number	Page No

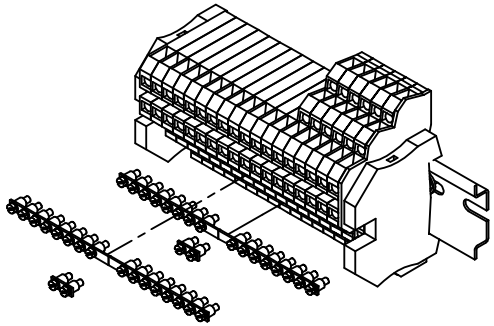

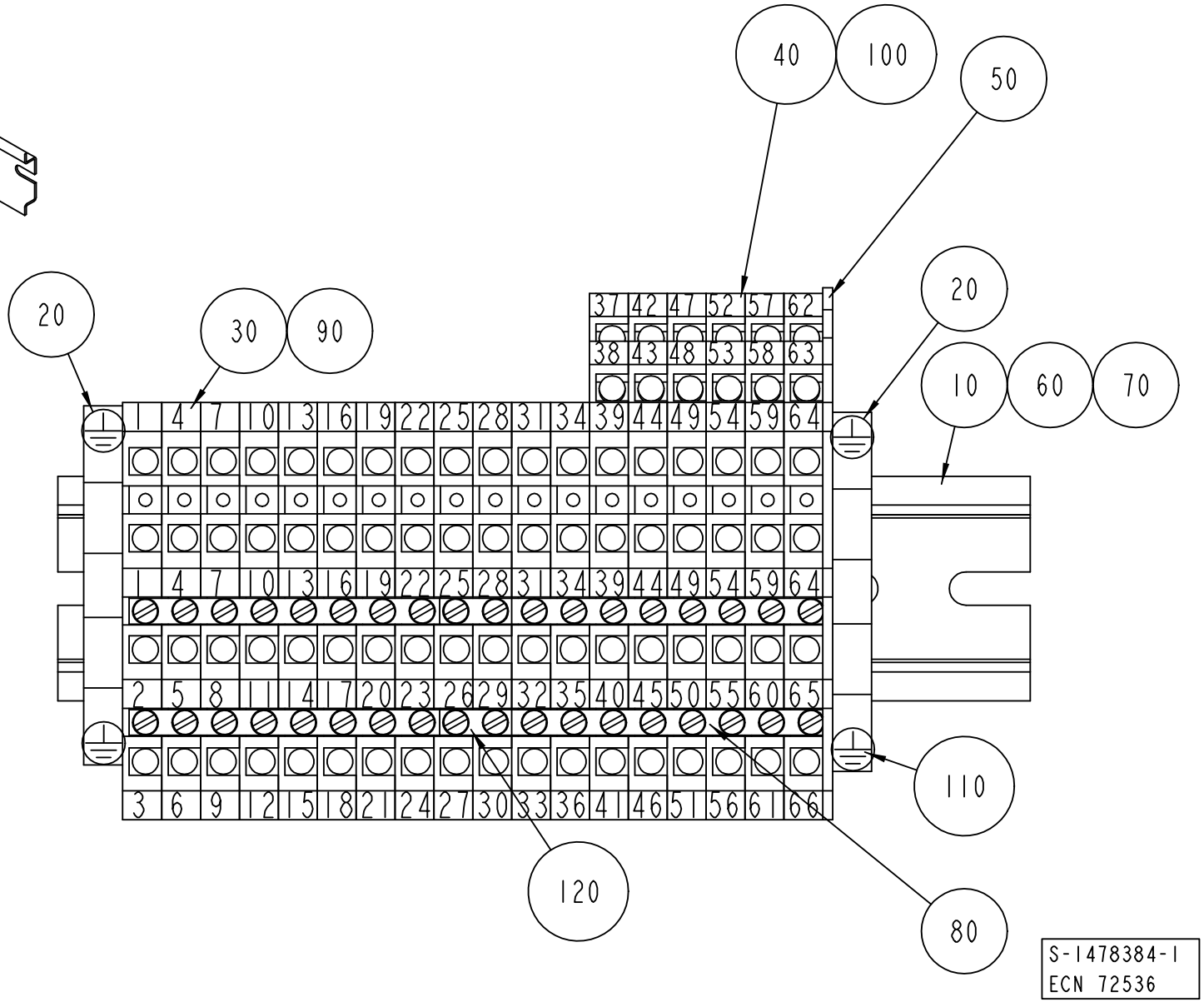
40
100
50
20
30
90
20
10
60
70
110
120
80
S-1478384-1
ECN 72536

ECM: 72536 - 19990721
Group number: 1478384-0100
Assembly Drawing: 1478384-1_1_AB

Issue: 20011217

Pos	Part No	SP	UN	Qty	Description	Page No
Common Parts						
010	353042-0004	-	MM	150	RAIL TS 35/7,5	
020	353024-0205	-		2	EARTH TERMINAL, 1010.1	
030	353021-0301	-		12	TERMINALS,TRIPLE-LEVEL, DLI 2,5/35 PA	
040	353021-0302	-		6	TERMINALS,TRIPLE-LEVEL, DLD 2,5/35 PA	
050	353032-0302	-		1	END PLATE WAP	
060	90287-0199	-		2	SCREW M6S M5X6 A480	
070	315103-0146	-		2	WASHER PLAIN, BRB, 5,3/10,H=1 NI PL BR	
080	1490738-0000	-		4	BRIDGE CONLECK Q10	
090	359011-0821	-		2	SET OF SIGNS 6-FW 1-50	
100	359011-0822	-		2	SET OF SIGNS 6-FW 51-100	
110	359011-0834	-		1	SET OF SIGNS 6-GW(EARTH)	
120	353034-0401	-		2	BRIDGE CONNECTOR Q2, 13125.0	

Pos	Part No	SP	UN	Qty	Description	Page No

This page is intentionally left blank.

ECM: 96164 - 20010719
Group number: 1095912-0500
Assembly Drawing:

Issue: 20011217

Pos	Part No	SP	UN	Qty	Description	Page No
Common Parts						
0010	A47932-0600	-		1	TPOP BASIC PROGRAM	**1025**
0030	B48621-0300	-		1	PLMS DDE SOFTWARE	
0020	*58699-0000*	-		*1*	*DOCUMENTATION DISKETT*	
0030	*1369429-0000*	-		*1*	*LABELS, DISKETT*	
0040	*1369430-0000*	-		*1*	*LABELS, FLEXBOX*	
0050	*58698-0000*	-		*1*	*SHORT FORM INSTRUCTIONS*	
0060	*58696-0000*	-		*1*	*MASTER DISKETT*	
0050	A47962-0400	-		1	TPOP DOS WINDOWS	**1027**
0060	A47936-0200	-		1	TPOP INTOUCH RUNTIME PROGRAM	**1029**
0070	B1190006-0300	-		1	PLMS DATA SEND	
0020	*58793-0000*	-		*1*	*DOCUMENTATION DISKETT*	
0030	*1369434-0000*	-		*1*	*LABELS, DISKETT*	
0040	*1369435-0000*	-		*1*	*LABELS, FLEXBOX*	
0050	*58791-0000*	-		*1*	*SHORT FORM INSTRUCTIONS*	
0060	*58792-0000*	-		*1*	*MASTER DISKETT*	
0080	B48421-0501	-		1	TBA/21 TPOP HMI PROGRAM	
0050	*1363203-0000*	-		*1*	*LABLES FLEXBOX*	
0060	*58622-0000*	-		*1*	*SHORT FORM INSTRUCTION*	
0090	B48422-0501	-		1	TBA/21 TPOP PLMS DC21	
0050	*1363205-0000*	-		*1*	*LABLES FLEXBOX*	
0060	*58626-0000*	-		*1*	*SHORT FORM INSTRUCTION*	

Pos	Part No	SP	UN	Qty	Description	Page No

Machine Type | Group Description | Used-In | Group Number | Page No

This page is intentionally left blank.

ECM: 72180 - 19990318
Group number: 47932-0600
Assembly Drawing:

Issue: 20011217

Pos	Part No	SP	UN	Qty	Description	Page No
Common Parts						
0020	58283-0000	-		1	DOCUMENTATION DISKETT	
0030	1363455-0000	-		1	LABELS DISKETT	
0040	1363456-0000	-		1	LABELS FLEXBOX	
0050	58282-0000	-		1	SHORT FORM INSTRUCTION	
0060	58280-0000	-		1	MASTER DISKETT	

Pos	Part No	SP	UN	Qty	Description	Page No

This page is intentionally left blank.

ECM: 72180 - 19990318
Group number: 47962-0400
Assembly Drawing:

Issue: 20011217

Pos	Part No	SP	UN	Qty	Description	Page No
Common Parts						
0020	58291-0000	-		1	DOCUMENTATION DISKETT	
0030	1363460-0000	-		1	LABELS FLEXBOX	
0040	58290-0000	-		1	SHORT FORM INSTRUCTION	

Pos	Part No	SP	UN	Qty	Description	Page No

This page is intentionally left blank.

ECM: 71553 - 19980615
Group number: 47936-0200
Assembly Drawing:

Issue: 20011217

Pos	Part No	SP	UN	Qty	Description	Page No
Common Parts						
0020	57587-0000	-		1	DOCUMENTATION DISKETT	
0030	597779-0000	-		1	LABELS FLEXBOX	
0040	57588-0000	-		1	SHORT FORM INSTRUCTION	

Pos	Part No	SP	UN	Qty	Description	Page No

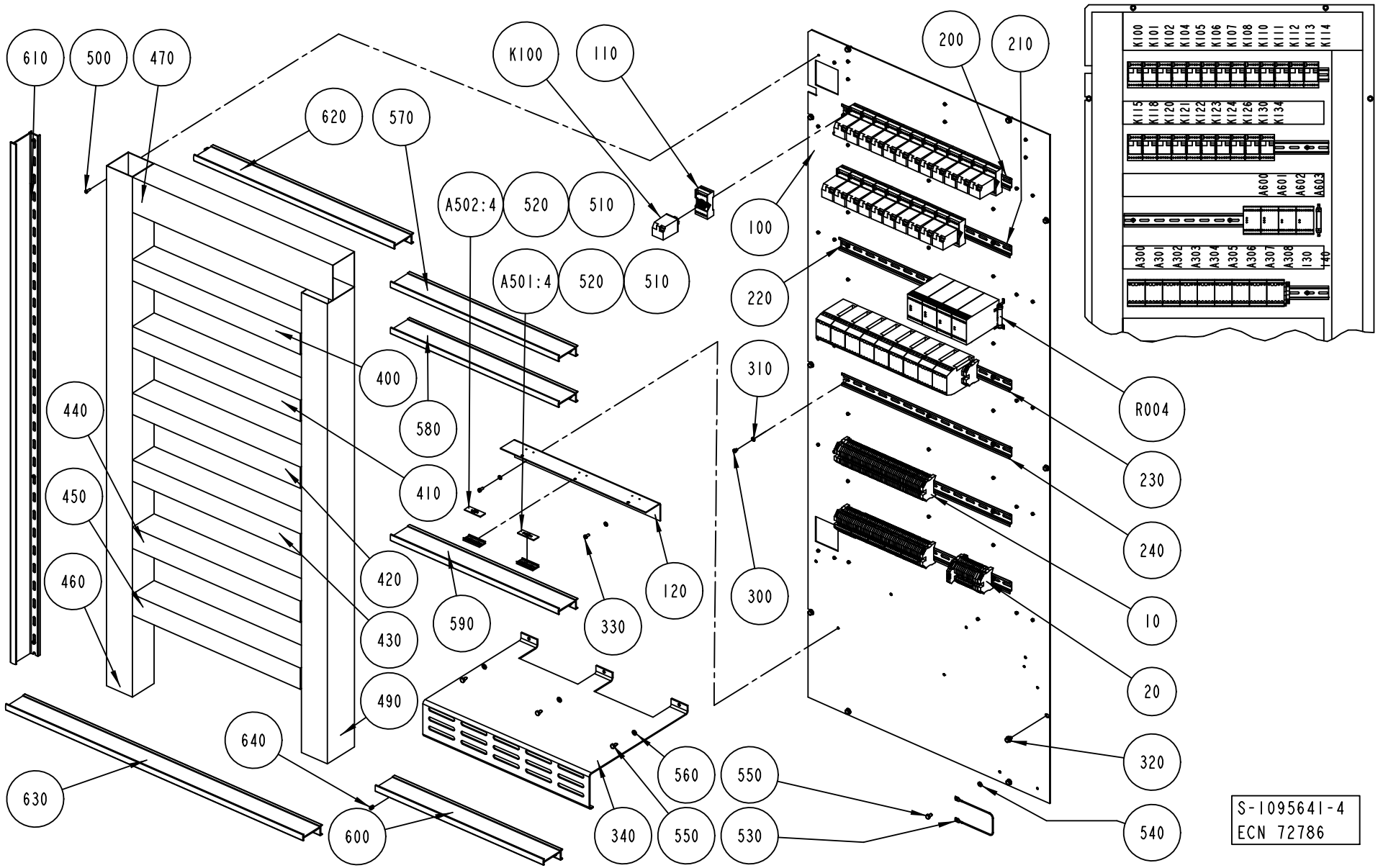
610
500
470
620
570
K100
110
200
210
A502:4
520
510
100
A501:4
520
510
220
310
400
580
440
410
450
420
460
430
590
330
120
300
490
640
630
600
340
550
560
550
530
R004
230
240
10
20
320
540
S-1095641-4
ECN 72786
K100 K101 K102 K104 K105 K106 K107 K108 K110 K111 K112 K113 K114
K115 K118 K120 K121 K122 K123 K124 K126 K130 K134
A600 A601 A602 A603
A300 A301 A302 A303 A304 A305 A306 A307 A308 130 140

ECM: 72786 - 19991125
Group number: 1095641-0400
Assembly Drawing: 1095641-4_1_AB

Issue: 20011217

Pos	Part No	SP	UN	Qty	Description	Page No
Common Parts						
010	A1095698-0100	-		1	DISTRIBUTION TERMINAL	**1033**
020	A1095699-0400	-		1	DISTRIBUTION TERMINAL	**1035**
100	1129106-0000	-		1	ASSEMBLY PLATE	
110	90129-0006	-		23	BASE 11 POLE	
120	1129335-0000	-		1	BRACKET	
130	353021-0216	-		7	FEED THROUGH TERMINAL, 10200.8	
140	353031-0203	-		2	END PLATE, 10612.0	
200	353042-0005	-	MM	520	RAIL TS 35/7.5	
210	353042-0005	-	MM	520	RAIL TS 35/7.5	
220	353042-0005	-	MM	490	RAIL TS 35/7.5	
230	353042-0005	-	MM	520	RAIL TS 35/7.5	
240	353042-0005	-	MM	520	RAIL TS 35/7.5	
300	312121-0321	-		15	SCREW SLOT.PAN HD. MCS 5X6 FZB	
310	315101-0146	-		17	WASHER PLAIN, BRB, 5,3/10 H=1	
320	90287-0157	-		10	SCREW M6SF FLAT HEAD M6X10 88	
330	312121-0325	-		2	SCREW SLOT.PAN HD. MCS 5X10 FZB	
340	1140259-0000	-		1	PROTECTION	
400	90181-0054	-	MM	520	CABLE DUCT 60X80MM	
410	90181-0054	-	MM	520	CABLE DUCT 60X80MM	
420	90181-0054	-	MM	520	CABLE DUCT 60X80MM	
430	90181-0054	-	MM	520	CABLE DUCT 60X80MM	
440	90181-0054	-	MM	520	CABLE DUCT 60X80MM	
450	90181-0054	-	MM	520	CABLE DUCT 60X80MM	
460	90181-0055	-	MM	1470	CABLE DUCT 80X80MM	
470	90181-0056	-	MM	645	CABLE DUCT 100X80MM	
480	90181-0054	-	MM	540	CABLE DUCT 60X80MM	
490	90181-0056	-	MM	1310	CABLE DUCT 100X80MM	
500	90287-0124	-		52	SCREW PAN HEAD MSCS M4X12 NYLON	
510	311520-0320	-		4	RIVET, BLANK 2,4X6	
520	359240-0100	-		2	SIGN HOLDER FOR 359240-0001	
530	B1038714-0000	-		1	CABLE	
	353104-0168	-		*2*	*CABLE SHO YAV 16 M6**	
	351175-0109	-	*MM*	*275*	*CABLE AWM 1X16 MM2 YELLOW-GREEN*	
540	90062-0022	-		2	LOCKING WASHER D=6,4/11	
550	312101-0364	-		7	SCREW M6S M6X10 FZB	
560	315105-0153	-		3	WASHER PLAIN, BRB, 6,4/12,H=1,5	
570	90181-0067	-	MM	520	DIVIDING PLATE SEP80	
580	90181-0067	-	MM	520	DIVIDING PLATE SEP80	
590	90181-0067	-	MM	520	DIVIDING PLATE SEP80	
600	90181-0067	-	MM	520	DIVIDING PLATE SEP80	
610	90181-0067	-	MM	1570	DIVIDING PLATE SEP80	
620	90181-0067	-	MM	1120	DIVIDING PLATE SEP80	
630	90181-0067	-	MM	540	DIVIDING PLATE SEP80	
640	90181-0064	-		26	LOCK ZP1 FOR CHANNEL T1	
A300	90314-0038	D		1	LEVEL CONTROL RELAY RM3	
A301	90314-0038	D		1	LEVEL CONTROL RELAY RM3	
A302	90314-0038	D		1	LEVEL CONTROL RELAY RM3	
A303	90314-0038	D		1	LEVEL CONTROL RELAY RM3	
A304	90314-0038	D		1	LEVEL CONTROL RELAY RM3	
A305	90314-0038	D		1	LEVEL CONTROL RELAY RM3	
A306	90314-0038	D		1	LEVEL CONTROL RELAY RM3	
A307	90314-0038	D		1	LEVEL CONTROL RELAY RM3	
A308	90314-0038	D		1	LEVEL CONTROL RELAY RM3	
A501:4	359241-0131	-		1	SIGN, TEMP. LS HEATER	
A502:4	359241-0135	-		1	SIGN, TRANSVERSAL SEALING	
A600	90119-0072	D		1	SAFETY RELAY JSBR4	
A601	90119-0072	D		1	SAFETY RELAY JSBR4	
A602	90119-0089	D		1	SAFETY RELAY JSBT4 24VDC	
A603	90119-0084	D		1	EXPANSION RELAY JSR1T-500MS	
K100	90119-0056	D		1	PLUG-IN RELAY 24VDC	
K101	90119-0056	D		1	PLUG-IN RELAY 24VDC	
K102	90119-0056	D		1	PLUG-IN RELAY 24VDC	
K104	90119-0056	D		1	PLUG-IN RELAY 24VDC	
K105	90119-0056	D		1	PLUG-IN RELAY 24VDC	
K106	90119-0056	D		1	PLUG-IN RELAY 24VDC	
K107	90119-0056	D		1	PLUG-IN RELAY 24VDC	
K108	90119-0056	D		1	PLUG-IN RELAY 24VDC	
K110	90119-0056	D		1	PLUG-IN RELAY 24VDC	
K111	90119-0056	D		1	PLUG-IN RELAY 24VDC	
K112	90119-0056	D		1	PLUG-IN RELAY 24VDC	
K113	90119-0056	D		1	PLUG-IN RELAY 24VDC	
K114	90119-0056	D		1	PLUG-IN RELAY 24VDC	
K115	90119-0056	D		1	PLUG-IN RELAY 24VDC	
K118	90119-0056	D		1	PLUG-IN RELAY 24VDC	
K120	90119-0056	D		1	PLUG-IN RELAY 24VDC	
K121	90119-0056	D		1	PLUG-IN RELAY 24VDC	
K122	90119-0056	D		1	PLUG-IN RELAY 24VDC	
K123	90119-0056	D		1	PLUG-IN RELAY 24VDC	
K124	90119-0056	D		1	PLUG-IN RELAY 24VDC	
K126	90119-0056	D		1	PLUG-IN RELAY 24VDC	
K130	90119-0056	D		1	PLUG-IN RELAY 24VDC	
K134	90119-0056	-		1	PLUG-IN RELAY 24VDC	
R004	90121-0114	D		1	RESISTANCE FIXED, 0,22 KOHM, 25 W	

Machine Type | Group Description | Used-In | Group Number | Page No

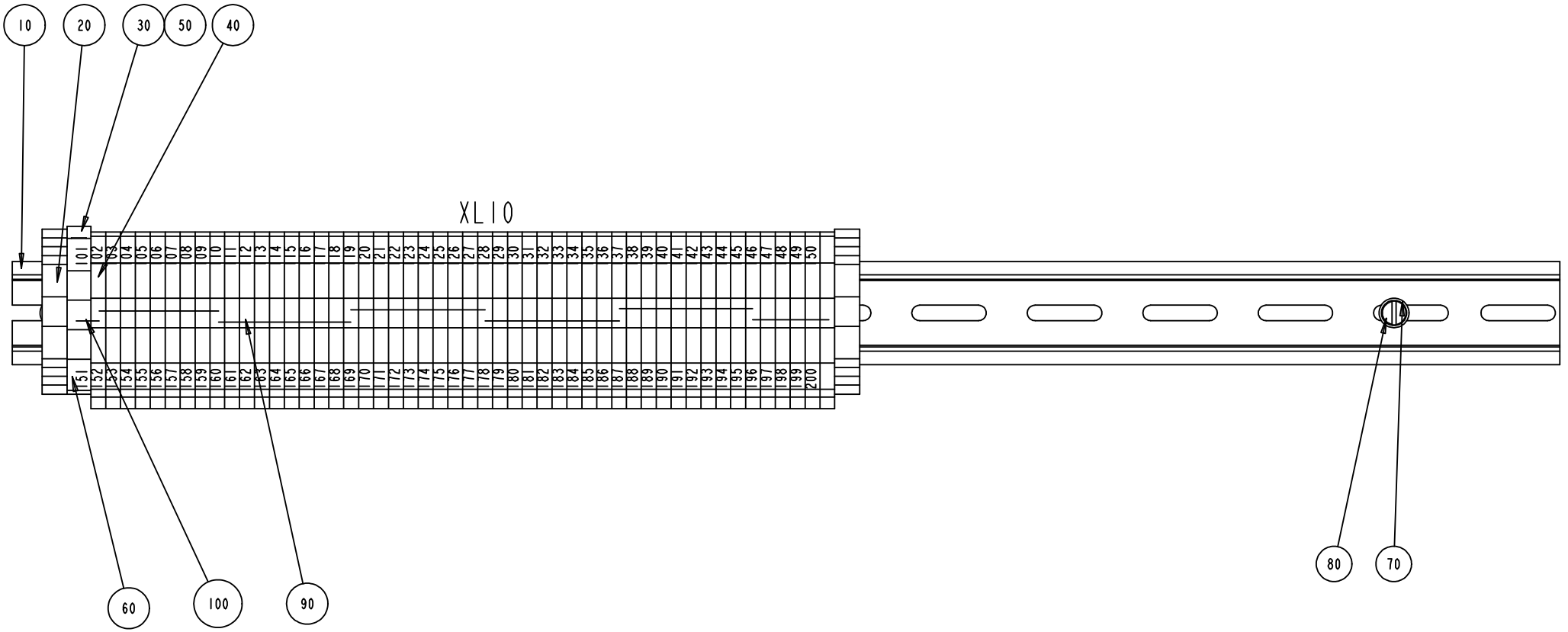
10
20
30
50
40
XL10
60
100
90
80
70

ECM: - -
Group number: 1095698-0100
Assembly Drawing: 1095698-1_1_AA

Issue: 20011217

Pos	Part No	SP	UN	Qty	Description	Page No
Common Parts						
010	353042-0005	-	MM	520	RAIL TS 35/7.5	
020	353031-0203	-		2	END PLATE, 10612.0	
030	353021-0223	-		1	FEED THROUGH TERMINAL, 10202.8	
040	353021-0216	-		50	FEED THROUGH TERMINAL, 10200.8	
050	359011-0809	-		1	MARKING PLATES 5-FW 101-150	
060	359011-0810	-		1	MARKING PLATES 5-FW 151-200	
070	312121-0323	-		3	SCREW SLOT.PAN HD. MCS 5X8 FZB	
080	315101-0146	-		3	WASHER PLAIN, BRB, 5,3/10 H=1	
090	353034-0013	-		6	BRIDGE CONNECTOR QL2(SAK 35)	
100	353034-0014	-		1	BRIDGE CONN.Q10(SAK 2,5)	

Pos	Part No	SP	UN	Qty	Description	Page No

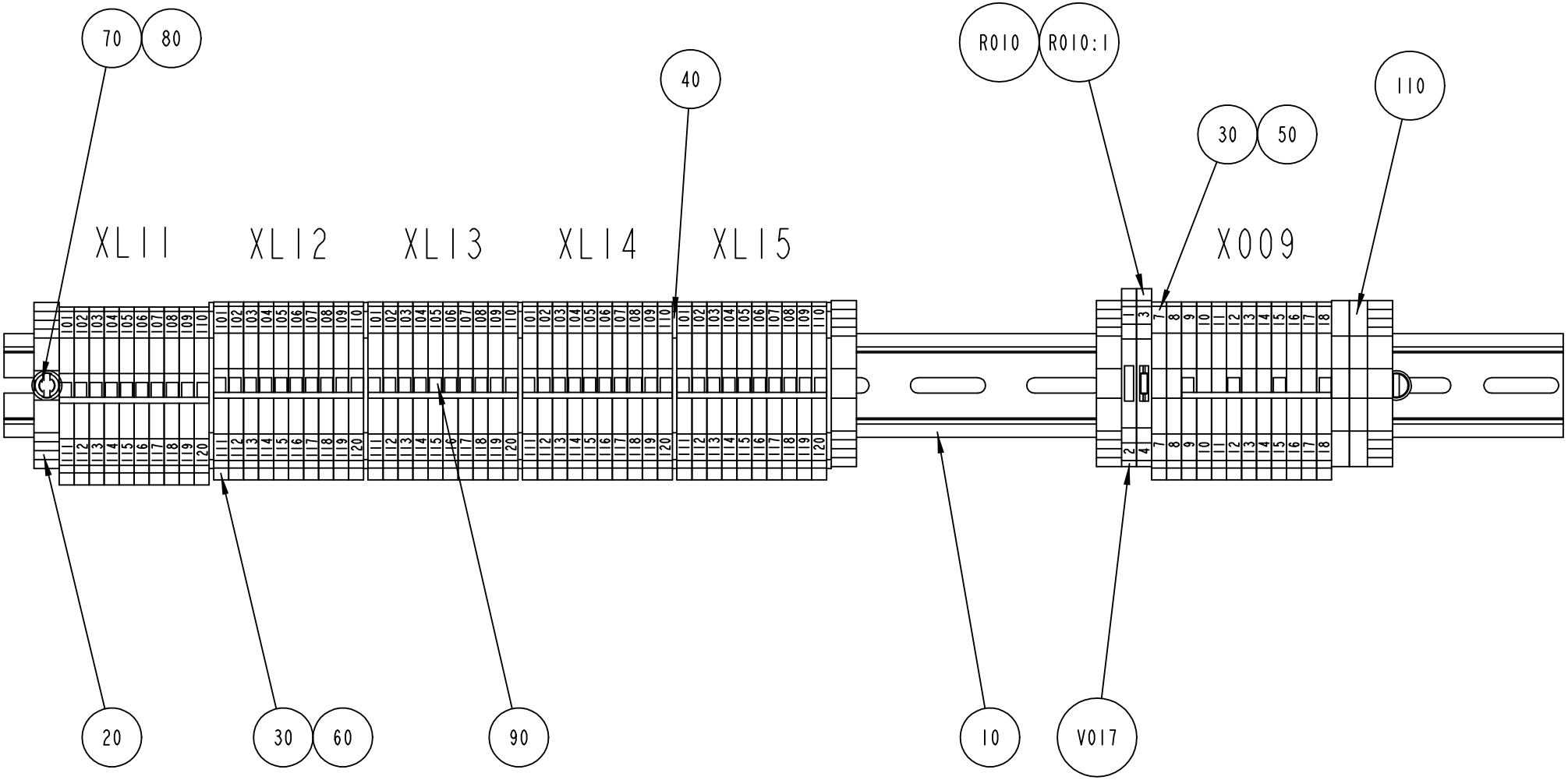

S-1095699-4
ECN 71770

ECM: 71770 - 19990604
Group number: 1095699-0400
Assembly Drawing: 1095699-4_1_AA

Issue: 20011217

Pos	Part No	SP	UN	Qty	Description	Page No
Common Parts						
010	353042-0005	-	MM	520	RAIL TS 35/7.5	
020	353031-0203	-		4	END PLATE, 10612.0	
030	353021-0216	-		62	FEED THROUGH TERMINAL, 10200.8	
040	353032-0005	-		5	END PLATE WAP 2,5-10 BLUE	
050	359011-0807	-		2	MARKING PLATES 5-FW 1-50	
060	359011-0809	-		5	MARKING PLATES 5-FW 101-150	
070	312121-0323	-		3	SCREW SLOT.PAN HD. MCS 5X8 FZB	
080	315101-0146	-		3	WASHER PLAIN, BRB, 5,3/10 H=1	
090	353034-0030	-		5	BRIDGE CONNECTOR WQV 2,5/10, 10544.6	
110	353024-0205	-		2	EARTH TERMINAL, 1010.1	
R010	90121-0132	-		1	RESISTANCE FIXED, 0,51 KOHM, 0,25 W	
R010:1	353021-0122	-		1	TERMINAL DISCONNECTBLE, WTR 2,5 D	
V017	353021-0122	-		1	TERMINAL DISCONNECTBLE, WTR 2,5 D	

Pos	Part No	SP	UN	Qty	Description	Page No

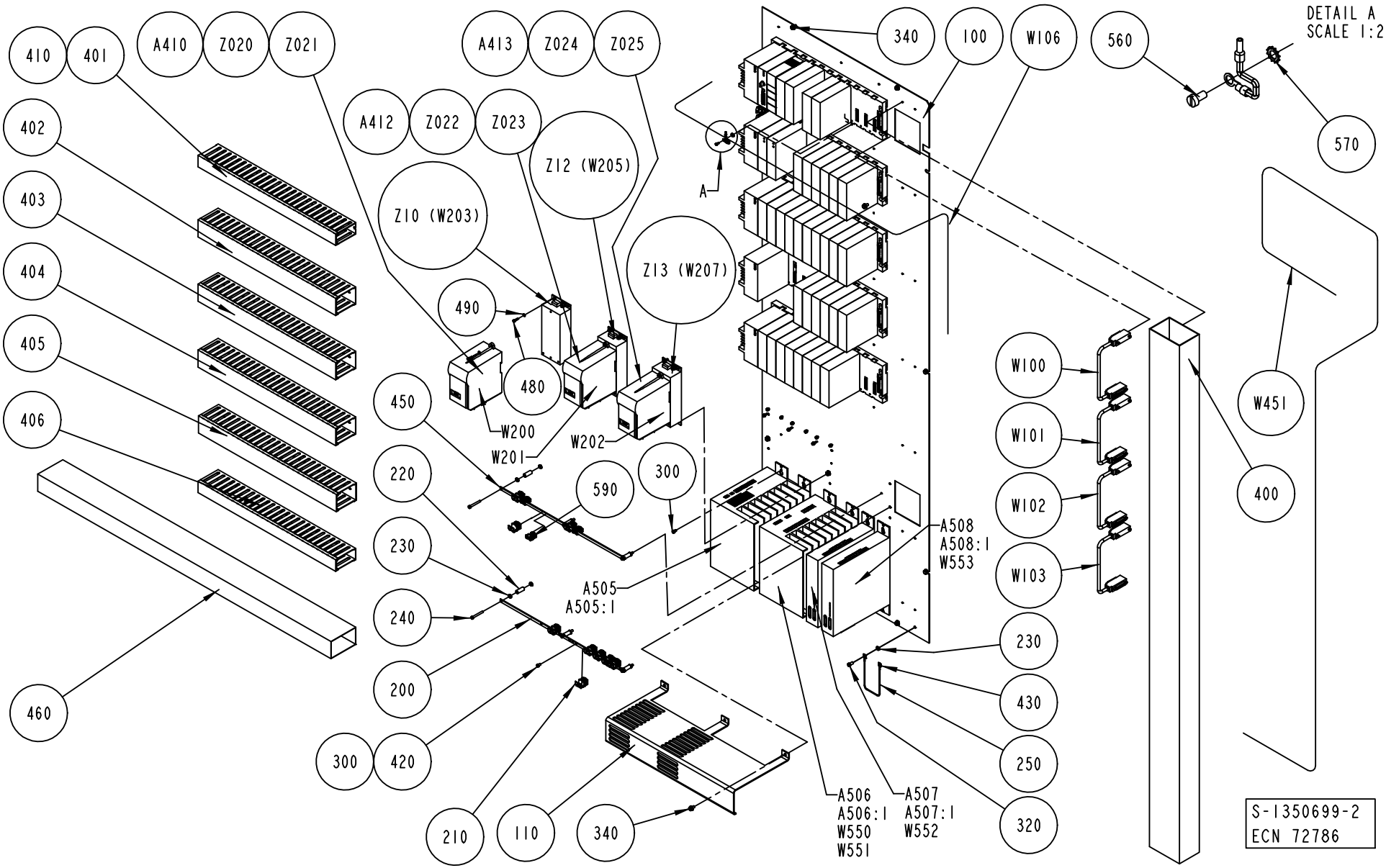
410
401
A410
Z020
Z021
A413
Z024
Z025
A412
Z022
Z023
Z12 (W205)
Z10 (W203)
Z13 (W207)
340
100
W106
560
DETAIL A
SCALE 1:2
570
A
402
403
404
405
406
490
480
W200
W201
W202
450
220
230
240
200
300
420
590
300
W100
W101
W102
W103
W451
400
A508
A508:1
W553
A505
A505:1
230
430
250
320
460
210
110
340
A506
A506:1
W550
W551
A507
A507:1
W552
S-1350699-2
ECN 72786

ECM: 72786 - 19991125
Group number: 1350699-0200
Assembly Drawing: 1350699-2_1_AC

Issue: 20011217

Pos	Part No	SP	UN	Qty	Description	Page No
Common Parts						
100	1348845-0000	-		1	MOUNTING PLATE	
110	1348844-0000	-		1	PROTECTION	
200	1348843-0000	-		1	EARTH BAR	
210	90135-0039	-		14	SHIELD CLIP KLBU 4-13.5	
220	1140053-0000	-		8	SPACER	
230	90062-0022	-		17	LOCKING WASHER D=6,4/11	
240	312121-0339	-		8	SCREW SLOT.PAN HD. MCS 5X40 FZB	
250	B1038714-0000	D		1	CABLE	
	353104-0168	*-*		*2*	*CABLE SHO YAV 16 M6**	
	351175-0109	*-*	*MM*	*275*	*CABLE AWM 1X16 MM2 YELLOW-GREEN*	
300	312121-0323	-		43	SCREW SLOT.PAN HD. MCS 5X8 FZB	
320	312121-0366	-		1	SCREW SLOT.PAN HD. MCS 6X12 FZB	
340	90287-0157	-		13	SCREW M6SF FLAT HEAD M6X10 88	
400	90181-0057	-	MM	1810	CABLE DUCT 120X80MM	
401	90181-0053	-	MM	550	CABLE DUCT 40X80MM	
402	90181-0054	-	MM	550	CABLE DUCT 60X80MM	
403	90181-0054	-	MM	550	CABLE DUCT 60X80MM	
404	90181-0054	-	MM	550	CABLE DUCT 60X80MM	
405	90181-0054	-	MM	550	CABLE DUCT 60X80MM	
406	90181-0053	-	MM	550	CABLE DUCT 40X80MM	
410	90287-0124	-		35	SCREW PAN HEAD MSCS M4X12 NYLON	
420	90062-0060	-		11	LOCK WASHER SERRAT.EXT.GEAR,5,3/10 H=0,6	
430	353104-0133	-		2	CABLE SHOEYAV 025 M6	
450	1348841-0000	-		1	EARTH BAR	
460	90181-0061	-	MM	1170	CABLE DUCT 60X100MM	
480	312115-0291	-		18	SCREW MC6S M4X12 A280	
490	315105-0136	-		18	WASHER PLAIN, BRB, 4,3/8,H=0,8	
520	312122-0291	-		5	SCREW PAN HEAD MCS M4X12 NL. PL.	
550	1490742-0000	-		1	EARTH BAR	
560	312122-0287	-		2	SCREW PAN HEAD MCS M4X8 NL. PL.	
570	90062-0021	-		2	LOCKING WASHER A 5,3	
590	90135-0034	-		3	SHIELD CLAMP KLBU 3-8	
A102	90031-0058	D		1	PLC, DIGITAL INPUT MODULE	
A103	90031-0059	D		1	PLC, DIGITAL OUTPUT MODULE	
A105	90031-0065	D		1	PLC,TEMPERATUR CONTROL,INPUT MODULE 8 PT	
A106	90031-0065	D		1	PLC,TEMPERATUR CONTROL,INPUT MODULE 8 PT	
A110	90031-0063	D		1	PLC,ANALOG COMBO MODULE,IN-4PT/OUT-2PT	
A111	90031-0062	D		1	PLC, ANALOG OUTPUT MODULE 8PT/CURR/VOLT	
A114	90031-0057	D		1	PLC, DIGITAL INPUT MODULE	
A115	90031-0057	D		1	PLC, DIGITAL INPUT MODULE	
A116	90031-0057	D		1	PLC, DIGITAL INPUT MODULE	
A117	90031-0057	D		1	PLC, DIGITAL INPUT MODULE	
A118	90031-0057	D		1	PLC, DIGITAL INPUT MODULE	
A119	90031-0057	D		1	PLC, DIGITAL INPUT MODULE	
A120	90031-0057	D		1	PLC, DIGITAL INPUT MODULE	
A121	90031-0057	D		1	PLC, DIGITAL INPUT MODULE	
A122	90031-0057	D		1	PLC, DIGITAL INPUT MODULE	
A123	90031-0057	D		1	PLC, DIGITAL INPUT MODULE	
A124	90031-0057	D		1	PLC, DIGITAL INPUT MODULE	
A125	90031-0057	D		1	PLC, DIGITAL INPUT MODULE	
A126	90031-0057	D		1	PLC, DIGITAL INPUT MODULE	
A127	90031-0057	D		1	PLC, DIGITAL INPUT MODULE	
A128	90031-0057	D		1	PLC, DIGITAL INPUT MODULE	
A129	90031-0057	D		1	PLC, DIGITAL INPUT MODULE	
A134	90031-0059	D		1	PLC, DIGITAL OUTPUT MODULE	
A135	90031-0059	D		1	PLC, DIGITAL OUTPUT MODULE	
A136	90031-0059	D		1	PLC, DIGITAL OUTPUT MODULE	
A137	90031-0059	D		1	PLC, DIGITAL OUTPUT MODULE	
A138	90031-0059	D		1	PLC, DIGITAL OUTPUT MODULE	
A139	90031-0059	D		1	PLC, DIGITAL OUTPUT MODULE	
A140	90031-0059	D		1	PLC, DIGITAL OUTPUT MODULE	
A141	90031-0059	D		1	PLC, DIGITAL OUTPUT MODULE	
A142	90031-0059	D		1	PLC, DIGITAL OUTPUT MODULE	
A143	90031-0059	D		1	PLC, DIGITAL OUTPUT MODULE	
A144	90031-0059	D		1	PLC, DIGITAL OUTPUT MODULE	
A145	90031-0059	D		1	PLC, DIGITAL OUTPUT MODULE	
A146	90031-0059	D		1	PLC, DIGITAL OUTPUT MODULE	
A147	90031-0059	D		1	PLC, DIGITAL OUTPUT MODULE	
A160	90031-0051	D		1	BASEPLATE, 10-SLOT	
A161	B90031-0053	D		1	BASEPLATE,10-SLOT	
	90031-0302	*-*		*1*	*I/O BUS TERMINATION PLUG*	
A162	B90031-0053	D		1	BASEPLATE,10-SLOT	
	90031-0302	*-*		*1*	*I/O BUS TERMINATION PLUG*	
A163	B90031-0053	D		1	BASEPLATE,10-SLOT	
	90031-0302	*-*		*1*	*I/O BUS TERMINATION PLUG*	
A164	B90031-0053	-		1	BASEPLATE,10-SLOT	
	90031-0302	*-*		*1*	*I/O BUS TERMINATION PLUG*	
A410	90430-0070	-		1	FREQ.CONV. 6SE3213-6CA40	
A412	90430-0070	-		1	FREQ.CONV. 6SE3213-6CA40	
A413	90430-0070	-		1	FREQ.CONV. 6SE3213-6CA40	
A505	90045-0397	D		1	POWER SUPPLY 80 A	
A505:1	90045-0378	-		1	CONN.KIT 19N117P	
A506	90045-0396	D		1	SERVO DRIVE 21A/DC DMC	

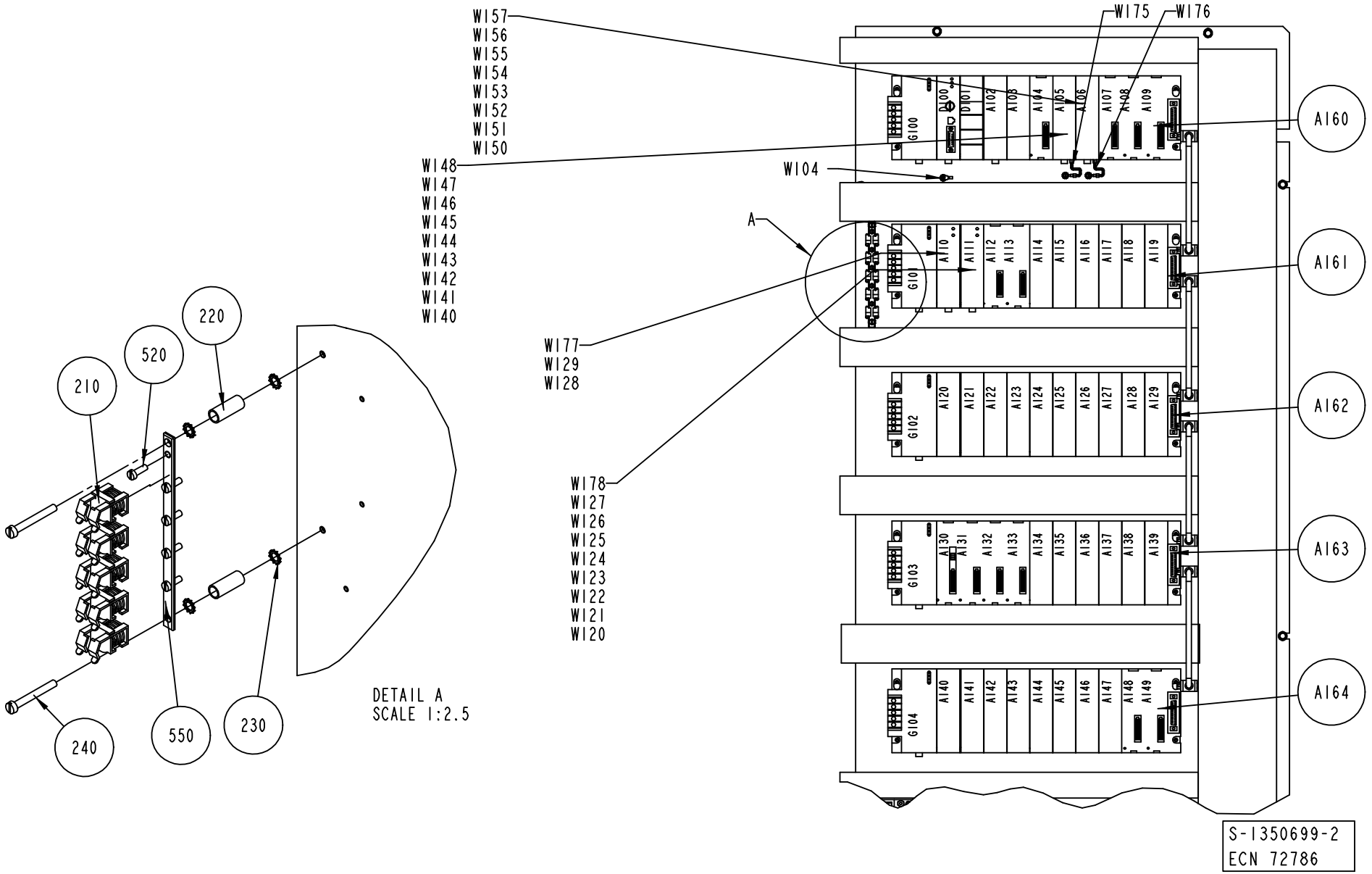
W157
W156
W155
W154
W153
W152
W151
W150
W148
W147
W146
W145
W144
W143
W142
W141
W140
W177
W129
W128
W178
W127
W126
W125
W124
W123
W122
W121
W120
W104
W175
W176
A160
A161
A162
A163
A164
A
G100
G101
G102
G103
G104
220
520
210
240
550
230
DETAIL A
SCALE 1:2.5
S-1350699-2
ECN 72786

Pos	Part No	SP	UN	Qty	Description	Page No
Common Parts (Cont'd)						
A506:1	90045-0377	-		1	CONN.KIT 19N117H	
A507	90045-0394	D		1	SERVO DRIVE 5A/DC DMC	
A507:1	90045-0375	-		1	PLINTH ATLAS COPCO	
A508	90045-0394	D		1	SERVO DRIVE 5A/DC DMC	
A508:1	90045-0375	-		1	PLINTH ATLAS COPCO	
D100	90031-0075	-		1	CPU363, SERIAL COMMUNICATION	
D101	90031-0031	D		1	ENHANCED GENIUS MODULE	
G100	B90031-0068	D		1	PLC, POWER SUPPLY	
	90031-0301	*A*		*1*	*SPARE BATTERY CPU,PCM,2PCS*	
	352551-0134	*A*		*1*	*FINE-WIRE FUSE 2 A SLOW;5X20MM*	
G101	B90031-0068	D		1	PLC, POWER SUPPLY	
	90031-0301	*A*		*1*	*SPARE BATTERY CPU,PCM,2PCS*	
	352551-0134	*A*		*1*	*FINE-WIRE FUSE 2 A SLOW;5X20MM*	
G102	B90031-0068	D		1	PLC, POWER SUPPLY	
	90031-0301	*A*		*1*	*SPARE BATTERY CPU,PCM,2PCS*	
	352551-0134	*A*		*1*	*FINE-WIRE FUSE 2 A SLOW;5X20MM*	
G103	B90031-0068	D		1	PLC, POWER SUPPLY	
	90031-0301	*A*		*1*	*SPARE BATTERY CPU,PCM,2PCS*	
	352551-0134	*A*		*1*	*FINE-WIRE FUSE 2 A SLOW;5X20MM*	
G104	B90031-0068	D		1	PLC, POWER SUPPLY	
	90031-0301	*A*		*1*	*SPARE BATTERY CPU,PCM,2PCS*	
	352551-0134	*A*		*1*	*FINE-WIRE FUSE 2 A SLOW;5X20MM*	
W100	90031-0305	D		1	I/O EXPANSION CABLE	
W101	90031-0305	D		1	I/O EXPANSION CABLE	
W102	90031-0305	D		1	I/O EXPANSION CABLE	
W103	90031-0305	D		1	I/O EXPANSION CABLE	
W104	1143884-0000	-		1	COPPER BRAID	
W106	90220-0183	-	M	3	SCR. CABLE 2X0,34MM2	
W120	90220-0183	-	MM	2	SCR. CABLE 2X0,34MM2	
W121	90220-0183	-	MM	2	SCR. CABLE 2X0,34MM2	
W122	90220-0183	-	MM	2	SCR. CABLE 2X0,34MM2	
W123	90220-0183	-	MM	2	SCR. CABLE 2X0,34MM2	
W124	90220-0183	-	MM	2	SCR. CABLE 2X0,34MM2	
W125	90220-0183	-	MM	2	SCR. CABLE 2X0,34MM2	
W126	90220-0183	-	MM	2	SCR. CABLE 2X0,34MM2	
W127	90220-0183	-	MM	2	SCR. CABLE 2X0,34MM2	
W128	90220-0183	-	MM	2	SCR. CABLE 2X0,34MM2	
W129	90220-0183	-	MM	2	SCR. CABLE 2X0,34MM2	
W140	90220-0034	-	MM	1	THERMOCOUPLE CABLE K/ 2X0,5MM2	
W141	90220-0034	-	MM	1	THERMOCOUPLE CABLE K/ 2X0,5MM2	
W142	90220-0034	-	MM	1	THERMOCOUPLE CABLE K/ 2X0,5MM2	
W143	90220-0034	-	MM	1	THERMOCOUPLE CABLE K/ 2X0,5MM2	
W144	90220-0034	-	MM	1	THERMOCOUPLE CABLE K/ 2X0,5MM2	
W145	90220-0034	-	MM	1	THERMOCOUPLE CABLE K/ 2X0,5MM2	
W146	90220-0034	-	MM	1	THERMOCOUPLE CABLE K/ 2X0,5MM2	
W147	90220-0034	-	MM	1	THERMOCOUPLE CABLE K/ 2X0,5MM2	
W148	90220-0034	-	MM	1	THERMOCOUPLE CABLE K/ 2X0,5MM2	
W150	90220-0034	-	MM	1	THERMOCOUPLE CABLE K/ 2X0,5MM2	
W151	90220-0034	-	MM	1	THERMOCOUPLE CABLE K/ 2X0,5MM2	
W152	90220-0034	-	MM	1	THERMOCOUPLE CABLE K/ 2X0,5MM2	
W153	90220-0034	-	MM	1	THERMOCOUPLE CABLE K/ 2X0,5MM2	
W154	90220-0034	-	MM	1	THERMOCOUPLE CABLE K/ 2X0,5MM2	
W155	90220-0034	-	MM	1	THERMOCOUPLE CABLE K/ 2X0,5MM2	
W156	90220-0034	-	MM	1	THERMOCOUPLE CABLE K/ 2X0,5MM2	
W175	1512322-0000	-		1	COPPER BRAID	
W176	1512322-0000	-		1	COPPER BRAID	
W177	351179-0106	-	MM	50	CABLE AWM 1X4 MM2 BLACK	
W178	351179-0106	-	MM	50	CABLE AWM 1X4 MM2 BLACK	
W200	90220-0104	-	MM	2	SCR. CABLE 4X1,5MM2	
W201	90220-0104	-	MM	2	SCR. CABLE 4X1,5MM2	
W202	90220-0104	-	MM	2	SCR. CABLE 4X1,5MM2	
W451	1317252-0000	D		1	CABLE SERIAL	
W550	1254094-0000	-		1	CABLE	
W551	90220-0125	-	MM	2000	MOTORCABLE(4X4,0)+(2X1,0)+(2X0,75)+SHIEL	
W552	1254095-0000	-		1	CABLE	
W553	1254095-0000	-		1	CABLE	
Z010	90430-0326	-		1	FILTER 6SE3290-0BA87-0FB2	
Z012	90430-0326	-		1	FILTER 6SE3290-0BA87-0FB2	
Z013	90430-0326	-		1	FILTER 6SE3290-0BA87-0FB2	
Z020	90024-0047	-		1	EMI SUPPRESSION FERRITE	
Z021	90024-0047	-		1	EMI SUPPRESSION FERRITE	
Z022	90024-0047	-		1	EMI SUPPRESSION FERRITE	
Z023	90024-0047	-		1	EMI SUPPRESSION FERRITE	
Z024	90024-0047	-		1	EMI SUPPRESSION FERRITE	
Z025	90024-0047	-		1	EMI SUPPRESSION FERRITE	

Machine Type Group Description Used-In Group Number Page No

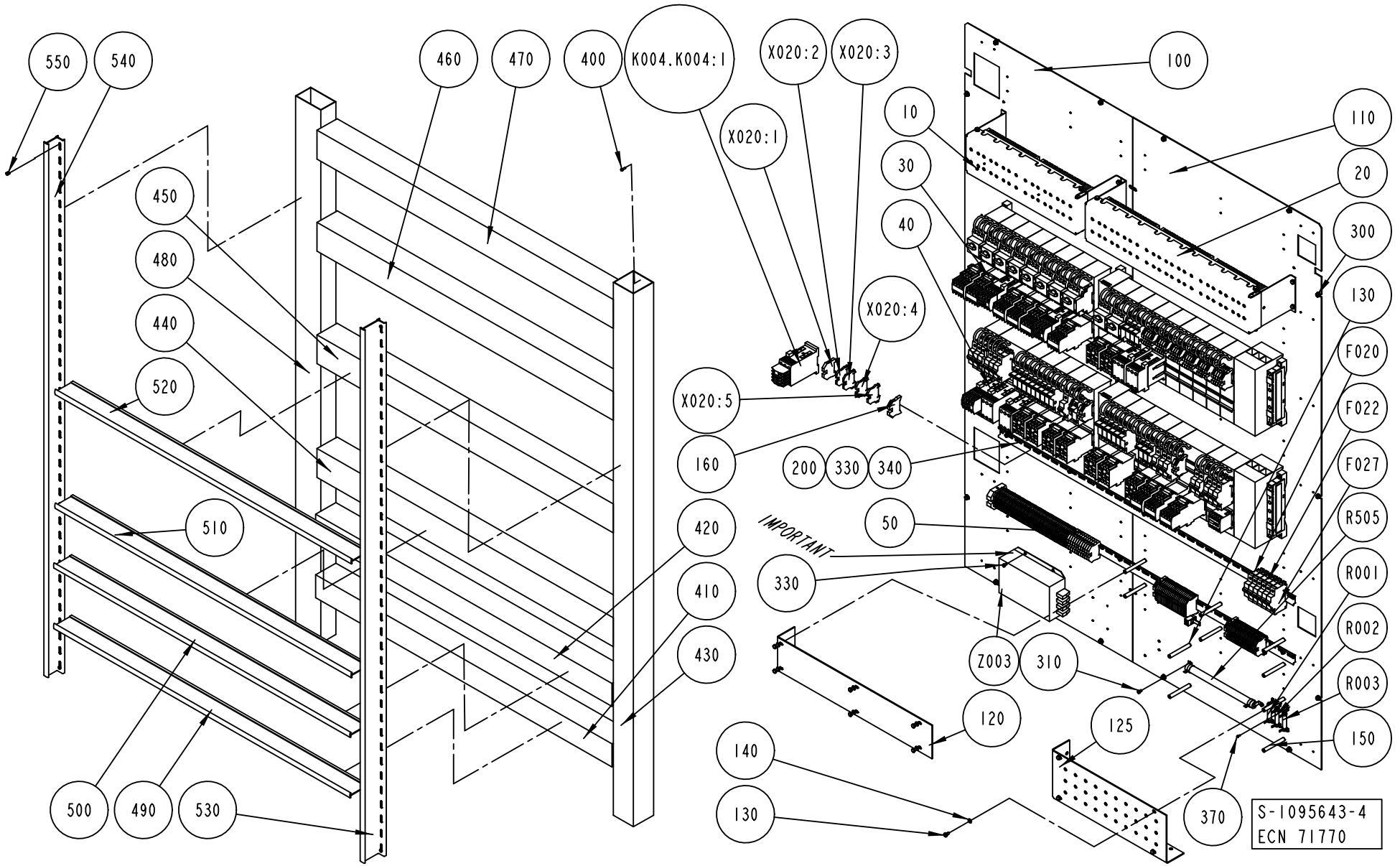
550
540
460
470
400
K004.K004:1
X020:2
X020:3
100
X020:1
10
110
30
20
40
300
450
480
X020:4
130
440
F020
520
X020:5
F022
160
200
330
340
F027
420
50
R505
510
IMPORTANT
330
R001
410
R002
Z003
310
430
R003
120
125
140
150
130
370
500
490
530
S-1095643-4
ECN 71770

ECM: 71770 - 19990604
Group number: 1095643-0400
Assembly Drawing: 1095643-4_1_AA

Issue: 20011217

Pos	Part No	SP	UN	Qty	Description	Page No
Common Parts						
010	A1095644-0200	-		1	RELAY UNIT 1	**1043**
020	A1095648-0200	-		1	RELAY UINT 2	**1045**
030	A1095777-0300	-		1	FUSE BOARD 1	**1047**
040	A1095780-0400	-		1	FUSE BOARD 2	**1049**
050	A1095776-0100	-		1	PLINTH	**1051**
100	1254089-0000	-		1	ASSEMBLY PLATE	
110	1254093-0000	-		1	ASSEMBLY PLATE	
120	1129341-0000	-		1	PROTECTION	
125	1254091-0000	-		1	PROTECTION	
130	312101-0364	-		20	SCREW M6S M6X10 FZB	
140	315101-0153	-		6	WASHER PLAIN, BRB, 6,4/12 H=1,5	
150	1038275-0012	-		10	SPACER	
160	353031-0203	-		1	END PLATE, 10612.0	
200	353042-0005	-	MM	1170	RAIL TS 35/7.5	
300	90287-0157	-		28	SCREW M6SF FLAT HEAD M6X10 88	
310	312111-0370	-		10	SCREW HEX.SOCK.HD.MC6S-TT 6X20 88 FZB	
320	312111-0329	-		12	SCREW HEX.SOCK.HD.MC6S-TT 5X16 88 FZB	
330	312121-0323	-		13	SCREW SLOT.PAN HD. MCS 5X8 FZB	
340	315101-0146	-		7	WASHER PLAIN, BRB, 5,3/10 H=1	
370	312121-0222	-		6	SCREW SLOT.PAN HD. MCS 3X8 FZB	
400	90287-0124	-		100	SCREW PAN HEAD MSCS M4X12 NYLON	
410	90181-0055	-	MM	1175	CABLE DUCT 80X80MM	
420	90181-0055	-	MM	1175	CABLE DUCT 80X80MM	
430	90181-0055	-	MM	2040	CABLE DUCT 80X80MM	
440	90181-0056	-	MM	1175	CABLE DUCT 100X80MM	
450	90181-0056	-	MM	1175	CABLE DUCT 100X80MM	
460	90181-0056	-	MM	1175	CABLE DUCT 100X80MM	
470	90181-0056	-	MM	1175	CABLE DUCT 100X80MM	
480	90181-0048	-	MM	1840	CABLE DUCT 100X60MM	
490	90181-0067	-	MM	1175	DIVIDING PLATE SEP80	
500	90181-0067	-	MM	1175	DIVIDING PLATE SEP80	
510	90181-0067	-	MM	1175	DIVIDING PLATE SEP80	
520	90181-0067	-	MM	1175	DIVIDING PLATE SEP80	
530	90181-0067	-	MM	1850	DIVIDING PLATE SEP80	
540	90181-0066	-	MM	1850	DIVIDING PLATE SEP60	
550	90181-0064	-		29	LOCK ZP1 FOR CHANNEL T1	
F020	90007-0138	-		1	FUSE 2P 10A K	
F022	90007-0147	-		1	FUSE 3P 10A K	
F027	90007-0131	-		1	FUSE 1P 16A K	
K004	90075-0128	D		1	CONTACTOR 7,5KW COIL 24VDC	
K004:1	90075-0313	-		1	AUXILIARY CONTACT K&M 22 DILM.2NO;2NC	
R001	90121-0114	D		1	RESISTANCE FIXED, 0,22 KOHM, 25 W	
R002	90121-0114	D		1	RESISTANCE FIXED, 0,22 KOHM, 25 W	
R003	90121-0114	D		1	RESISTANCE FIXED, 0,22 KOHM, 25 W	
R505	90121-0115	D		1	RESISTANCE FIXED, 0,047 KOHM, 200 W	
X020:1	353024-0206	-		1	EARTH TERMINAL, 1010.2	
X020:2	353021-0216	-		1	FEED THROUGH TERMINAL, 10200.8	
X020:3	353021-0216	-		1	FEED THROUGH TERMINAL, 10200.8	
X020:4	353021-0216	-		1	FEED THROUGH TERMINAL, 10200.8	
X020:5	353021-0216	-		1	FEED THROUGH TERMINAL, 10200.8	
Z003	90024-0039	D		1	INPUT FILTER, 50 A	

Machine Type | Group Description | Used-In | Group Number | Page No

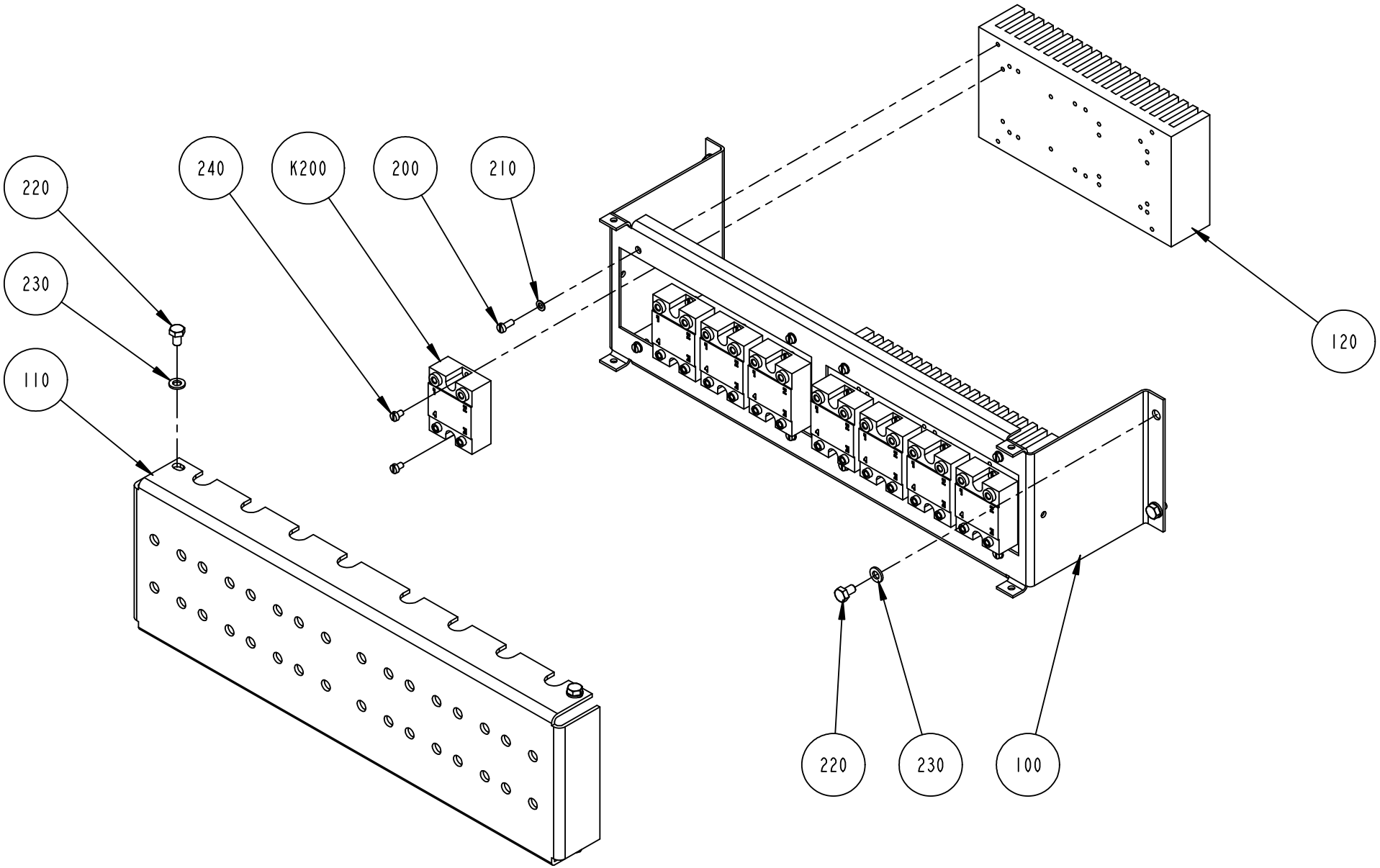
220
230
110
240
K200
200
210
120
220
230
100

ECM: 71787 - 19980929
Group number: 1095644-0200
Assembly Drawing: 1095644-2_1_AA

Issue: 20011217

Pos	Part No	SP	UN	Qty	Description	Page No
Common Parts						
100	1347673-0000	-		1	BRACKET	
110	1129342-0000	-		1	PROTECTION	
120	495495-0000	-		2	COOLING ELEMENT SSR	
200	312121-0289	-		8	SCREW SLOT.PAN HD. MCS 4X10 FZB	
210	315101-0136	-		8	WASHER PLAIN, BRB, 4,3/8 H=0,8	
220	312101-0364	-		4	SCREW M6S M6X10 FZB	
230	315101-0153	-		4	WASHER PLAIN, BRB, 6,4/12 H=1,5	
240	312121-0285	-		16	SCREW SLOT.PAN HD. MCS 4X6 FZB	
K200	90119-0067	D		1	SOLID-STATE RELAY H12WD	
K201	90119-0067	D		1	SOLID-STATE RELAY H12WD	
K202	90119-0067	D		1	SOLID-STATE RELAY H12WD	
K203	90119-0067	D		1	SOLID-STATE RELAY H12WD	
K204	90119-0067	D		1	SOLID-STATE RELAY H12WD	
K205	90119-0067	D		1	SOLID-STATE RELAY H12WD	
K206	90119-0067	-		1	SOLID-STATE RELAY H12WD	
K207	90119-0067	-		1	SOLID-STATE RELAY H12WD	

Pos	Part No	SP	UN	Qty	Description	Page No

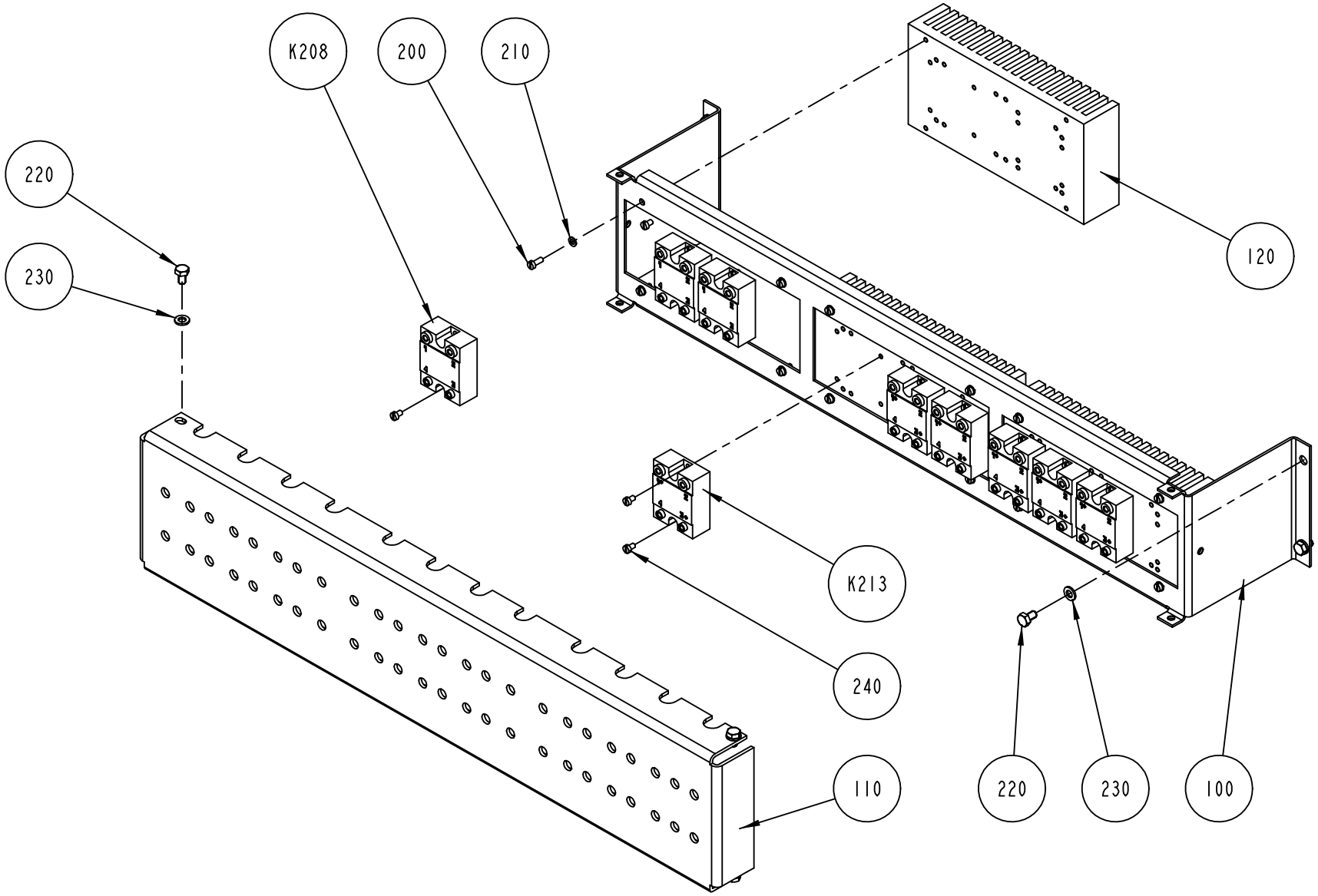

S-1095648-2
ECN 71770

ECM: 71770 - 19990604
Group number: 1095648-0200
Assembly Drawing: 1095648-2_1_AA

Issue: 20011217

Pos	Part No	SP	UN	Qty	Description	Page No
Common Parts						
100	1129338-0000	-		1	BRACKET	
110	1129343-0000	-		1	PROTECTION	
120	495495-0000	-		3	COOLING ELEMENT SSR	
200	312121-0289	-		12	SCREW SLOT.PAN HD. MCS 4X10 FZB	
210	315101-0136	-		12	WASHER PLAIN, BRB, 4,3/8 H=0,8	
220	312101-0364	-		4	SCREW M6S M6X10 FZB	
230	315101-0153	-		4	WASHER PLAIN, BRB, 6,4/12 H=1,5	
240	312121-0285	-		18	SCREW SLOT.PAN HD. MCS 4X6 FZB	
K208	90119-0067	D		1	SOLID-STATE RELAY H12WD	
K209	90119-0067	D		1	SOLID-STATE RELAY H12WD	
K210	90119-0067	D		1	SOLID-STATE RELAY H12WD	
K213	90119-0043	D		1	OPTO RELAY 22DC 60S-3	
K214	90119-0043	D		1	OPTO RELAY 22DC 60S-3	
K215	90119-0043	D		1	OPTO RELAY 22DC 60S-3	
K216	90119-0043	D		1	OPTO RELAY 22DC 60S-3	
K217	90119-0043	-		1	OPTO RELAY 22DC 60S-3	
K218	90119-0043	-		1	OPTO RELAY 22DC 60S-3	

Pos	Part No	SP	UN	Qty	Description	Page No

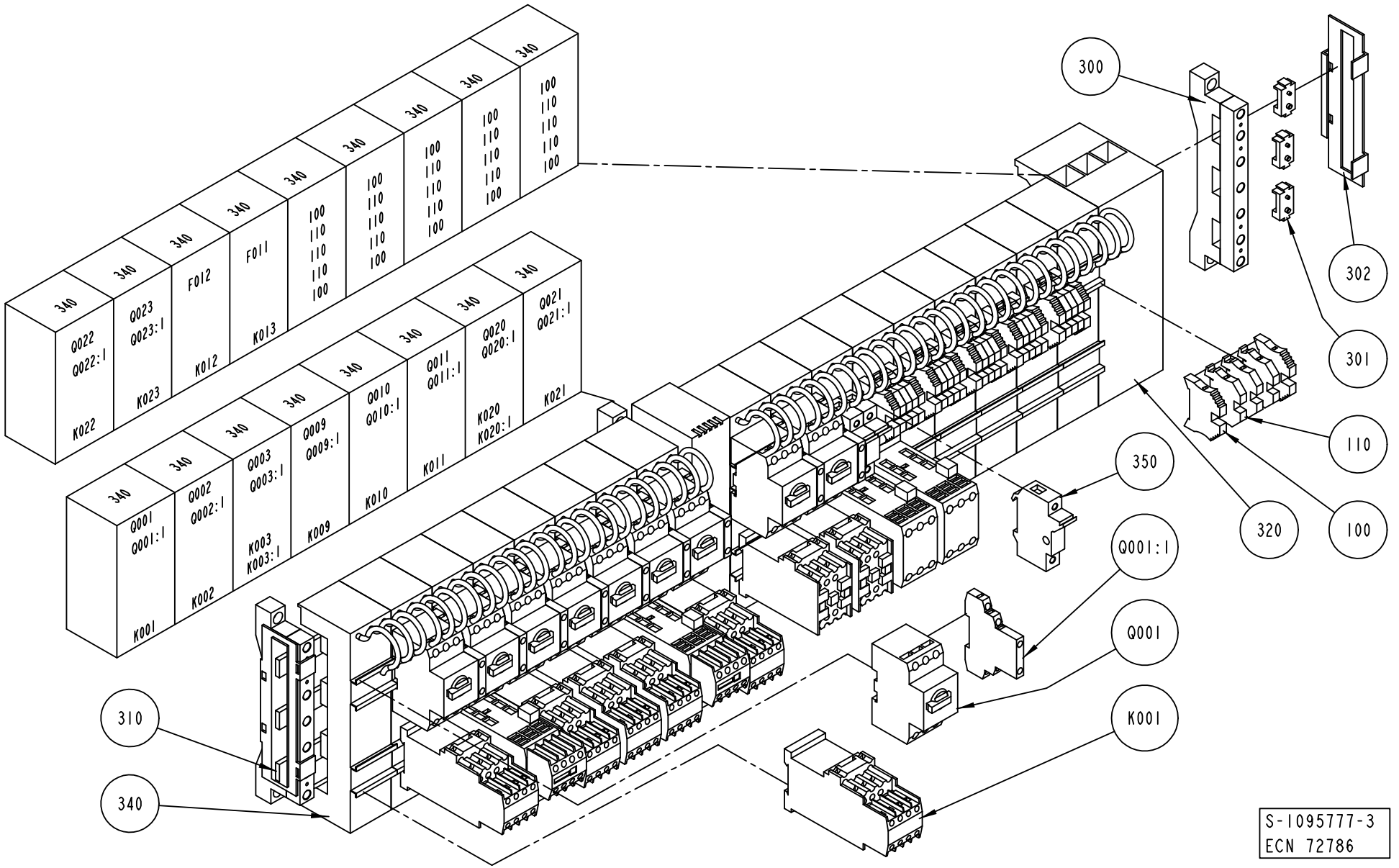
300
302
301
110
350
320
100
Q001:1
Q001
K001
310
340
S-1095777-3
ECN 72786

ECM: 72786 - 19991125
Group number: 1095777-0300
Assembly Drawing: 1095777-3_1_AB

Issue: 20011217

Pos	Part No	SP	UN	Qty	Description	Page No
Common Parts						
100	353031-0203	-		10	END PLATE, 10612.0	
110	353021-0214	-		15	FEED THROUGH TERMINAL, 10202.0	
300	353042-0010	-		3	BUSBAR HÅLLARE	
301	353042-0012	-		9	ADJUSTMENTPLATTA	
302	353042-0019	-		2	SIDE GUARD	
310	1129925-0000	-		3	BUSBAR	
320	353042-0016	-		1	CONNECTIONSADAPTER	
330	353042-0013	-		1	PROTECTIVE CASING	
340	353042-0014	-		17	BUSBAR ADA ADAPTER	
350	90233-0303	-		3	FUSEHOLDER FERRAZ ST10	
F011	90233-0028	-		3	FUSE 10A FERRAZ	
F012	90233-0028	-		3	FUSE 10A FERRAZ	
K001	B90075-0124	D		1	CONTACTOR 4KW COIL 24VDC	
	90075-0313	*C*		*1*	*AUXILIARY CONTACT K&M 22 DILM.2NO;2NC*	
K002	B90075-0124	D		1	CONTACTOR 4KW COIL 24VDC	
	90075-0313	*C*		*1*	*AUXILIARY CONTACT K&M 22 DILM.2NO;2NC*	
K003	90075-0128	D		1	CONTACTOR 7,5KW COIL 24VDC	
K003:1	90075-0313	D		1	AUXILIARY CONTACT K&M 22 DILM.2NO;2NC	
K009	B90075-0124	D		1	CONTACTOR 4KW COIL 24VDC	
	90075-0313	*C*		*1*	*AUXILIARY CONTACT K&M 22 DILM.2NO;2NC*	
K010	B90075-0124	D		1	CONTACTOR 4KW COIL 24VDC	
	90075-0313	*C*		*1*	*AUXILIARY CONTACT K&M 22 DILM.2NO;2NC*	
K011	B90075-0124	D		1	CONTACTOR 4KW COIL 24VDC	
	90075-0313	*C*		*1*	*AUXILIARY CONTACT K&M 22 DILM.2NO;2NC*	
K012	90075-0128	-		1	CONTACTOR 7,5KW COIL 24VDC	
K013	90075-0128	-		1	CONTACTOR 7,5KW COIL 24VDC	
K020	90075-0128	D		1	CONTACTOR 7,5KW COIL 24VDC	
K020:1	90075-0313	D		1	AUXILIARY CONTACT K&M 22 DILM.2NO;2NC	
K021	B90075-0124	D		1	CONTACTOR 4KW COIL 24VDC	
	90075-0313	*C*		*1*	*AUXILIARY CONTACT K&M 22 DILM.2NO;2NC*	
K022	90075-0127	D		1	CONTACTOR 4KW COIL 24VDC	
K023	90075-0127	D		1	CONTACTOR 4KW COIL 24VDC	
Q001	90095-0072	D		1	OVERLOAD PROTECTION PKZM 1,0A	
Q001:1	90259-0313	D		1	AUX. CONTACT K&M NHI21-PKZM0	
Q002	90095-0073	D		1	OVERLOAD PROTECTION PKZM 1,6A	
Q002:1	90259-0313	D		1	AUX. CONTACT K&M NHI21-PKZM0	
Q003	90095-0078	D		1	OVERLOAD PROTECTION PKZM0-16	
Q003:1	90259-0313	D		1	AUX. CONTACT K&M NHI21-PKZM0	
Q009	90095-0070	D		1	OVERLOAD PROTECTION PKZM 0,4A	
Q009:1	90259-0313	D		1	AUX. CONTACT K&M NHI21-PKZM0	
Q010	90095-0073	D		1	OVERLOAD PROTECTION PKZM 1,6A	
Q010:1	90259-0313	D		1	AUX. CONTACT K&M NHI21-PKZM0	
Q011	90095-0074	D		1	OVERLOAD PROTECTION PKZM 2,5A	
Q011:1	90259-0313	D		1	AUX. CONTACT K&M NHI21-PKZM0	
Q020	90095-0077	D		1	OVERLOAD PROTECTION PKZM 6-10A	
Q020:1	90259-0313	D		1	AUX. CONTACT K&M NHI21-PKZM0	
Q021	90095-0075	D		1	OVERLOAD PROTECTION PKZM 4A	
Q021:1	90259-0313	D		1	AUX. CONTACT K&M NHI21-PKZM0	
Q022	90095-0074	D		1	OVERLOAD PROTECTION PKZM 2,5A	
Q022:1	90259-0313	D		1	AUX. CONTACT K&M NHI21-PKZM0	
Q023	90095-0074	D		1	OVERLOAD PROTECTION PKZM 2,5A	
Q023:1	90259-0313	D		1	AUX. CONTACT K&M NHI21-PKZM0	

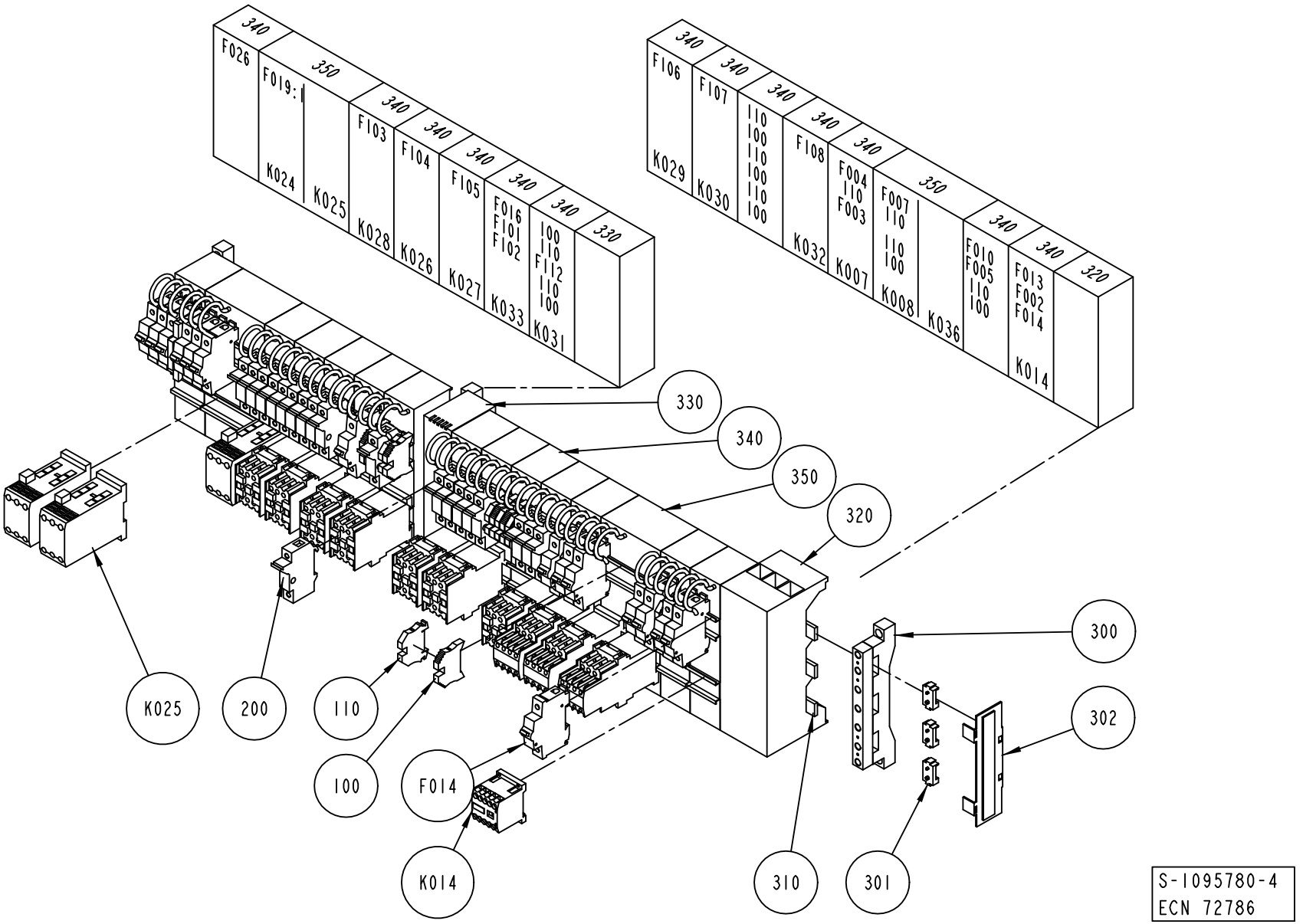
340
F026
350
F019:
K024
K025
340
F103
K028
340
F104
K026
340
F105
K027
340
F016
F101
F102
K033
340
100
110
F112
110
100
K031
330
F106
K029
340
F107
K030
340
110
100
110
100
110
100
K032
340
F108
K036
340
F004
110
F003
K007
350
F007
110
110
100
K008
340
F010
F005
110
100
340
F013
F002
F014
K014
320
330
340
350
320
300
302
K025
200
110
100
F014
K014
310
301
S-1095780-4
ECN 72786

ECM: 72786 - 19991125
Group number: 1095780-0400
Assembly Drawing: 1095780-4_1_AB

Issue: 20011217

Pos	Part No	SP	UN	Qty	Description	Page No
Common Parts						
100	353031-0203	-		7	END PLATE, 10612.0	
110	353021-0214	-		9	FEED THROUGH TERMINAL, 10202.0	
200	90233-0303	-		24	FUSEHOLDER FERRAZ ST10	
300	353042-0010	-		3	BUSBAR HÅLLARE	
301	353042-0012	-		9	ADJUSTMENTPLATTA	
302	353042-0019	-		2	SIDE GUARD	
310	1129925-0000	-		3	BUSBAR	
320	353042-0016	-		1	CONNECTIONSADAPTER	
330	353042-0013	-		1	PROTECTIVE CASING	
340	353042-0014	-		13	BUSBAR ADA ADAPTER	
350	353042-0015	-		2	BUSBAR ADAPTER	
F002	90007-0128	-		1	FUSE 1P 6A K	
F003	90007-0129	-		1	FUSE 1P 10A K	
F004	90007-0129	-		1	FUSE 1P 10A K	
F005	90007-0129	-		1	FUSE 1P 10A K	
F007	90007-0129	-		1	FUSE 1P 10A K	
F010	90007-0129	-		1	FUSE 1P 10A K	
F013	90007-0129	-		1	FUSE 1P 10A K	
F014	90007-0128	-		1	FUSE 1P 6A K	
F016	90007-0128	-		1	FUSE 1P 6A K	
F019	90007-0150	-		1	FUSE 3P 25A K	
F019:1	90007-0312	D		1	AUXILIARY CONTACT	
F026	90007-0148	-		1	FUSE 3P 16A K	
F101	90233-0028	-		1	FUSE 10A FERRAZ	
F102	B90233-0027	-		1	FUSE 16A FERRAZ10,3X38,2	
	90233-0305	*C*		*1*	*INDICATOR*	
F103	90233-0029	-		3	FUSE 25A FERRAZ	
F104	90233-0028	-		3	FUSE 10A FERRAZ	
F105	90233-0028	-		3	FUSE 10A FERRAZ	
F106	90233-0028	-		3	FUSE 10A FERRAZ	
F107	90233-0028	-		3	FUSE 10A FERRAZ	
F108	90233-0028	-		3	FUSE 10A FERRAZ	
F112	90233-0028	-		1	FUSE 10A FERRAZ	
K007	B90075-0124	D		1	CONTACTOR 4KW COIL 24VDC	
	90075-0313	*C*		*1*	*AUXILIARY CONTACT K&M 22 DILM.2NO;2NC*	
K008	B90075-0124	D		1	CONTACTOR 4KW COIL 24VDC	
	90075-0313	*C*		*1*	*AUXILIARY CONTACT K&M 22 DILM.2NO;2NC*	
K014	90075-0127	-		1	CONTACTOR 4KW COIL 24VDC	
K024	90075-0128	D		1	CONTACTOR 7,5KW COIL 24VDC	
K025	90075-0128	D		1	CONTACTOR 7,5KW COIL 24VDC	
K026	90075-0127	D		1	CONTACTOR 4KW COIL 24VDC	
K027	90075-0127	D		1	CONTACTOR 4KW COIL 24VDC	
K028	90075-0128	D		1	CONTACTOR 7,5KW COIL 24VDC	
K029	90075-0127	D		1	CONTACTOR 4KW COIL 24VDC	
K030	90075-0127	D		1	CONTACTOR 4KW COIL 24VDC	
K031	90075-0127	D		1	CONTACTOR 4KW COIL 24VDC	
K032	90075-0127	D		1	CONTACTOR 4KW COIL 24VDC	
K033	90075-0127	D		1	CONTACTOR 4KW COIL 24VDC	
K036	B90075-0124	D		1	CONTACTOR 4KW COIL 24VDC	
	90075-0313	*C*		*1*	*AUXILIARY CONTACT K&M 22 DILM.2NO;2NC*	

Machine Type | Group Description | Used-In | Group Number | Page No

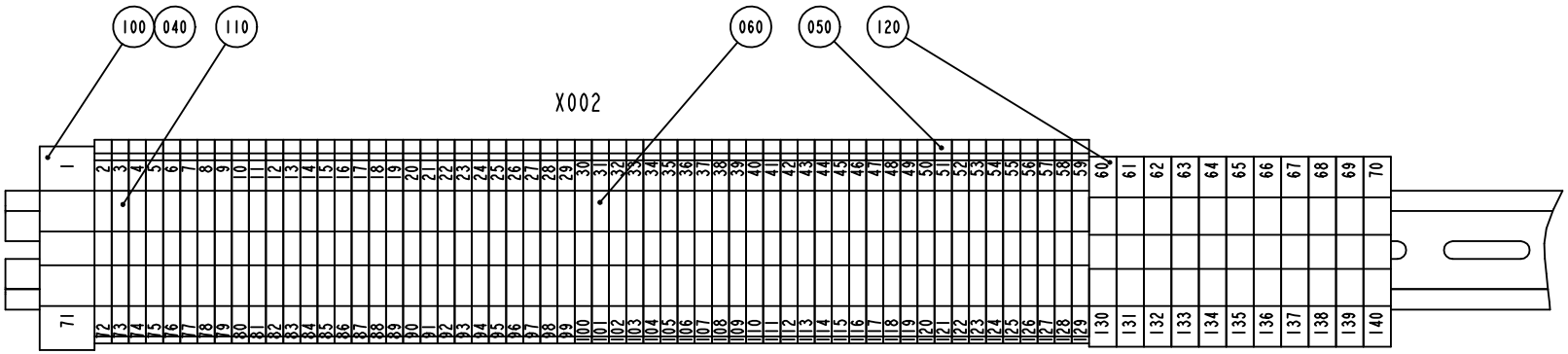

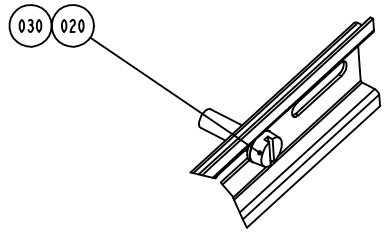

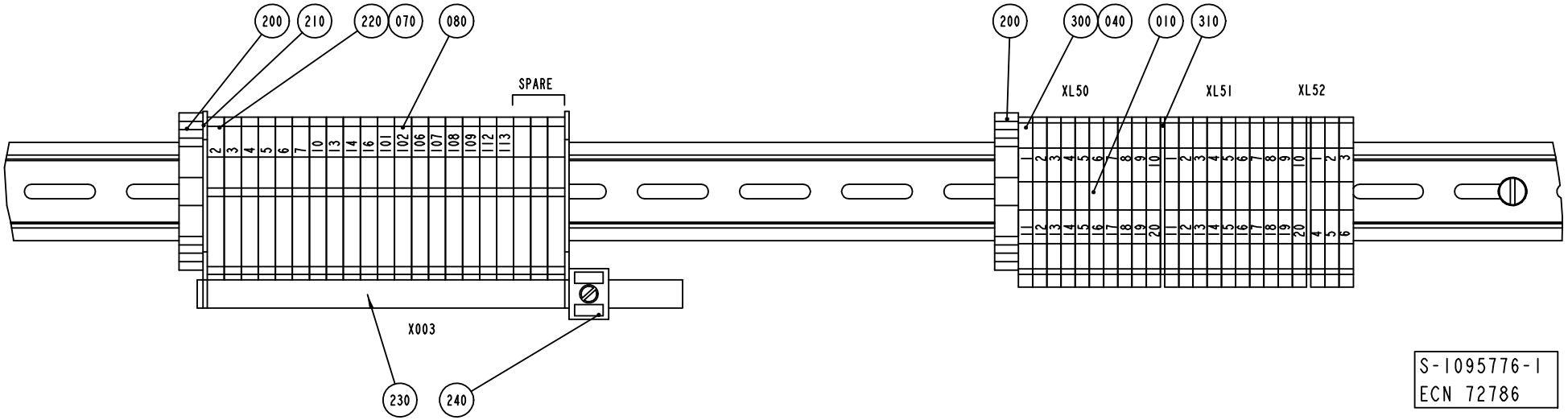

S-1095776-1
ECN 72786

ECM: 72786 - 19991125
Group number: 1095776-0100
Assembly Drawing: 1095776-1_1_AC

Issue: 20011217

Pos	Part No	SP	UN	Qty	Description	Page No
Common Parts						
010	353042-0005	-	MM	1170	RAIL TS 35/7.5	
020	312121-0323	-		5	SCREW SLOT.PAN HD. MCS 5X8 FZB	
030	315101-0146	-		5	WASHER PLAIN, BRB, 5,3/10 H=1	
040	359011-0807	-		4	MARKING PLATES 5-FW 1-50	
050	359011-0808	-		1	MARKING PLATES 5-FW 51-100	
060	359011-0809	-		1	MARKING PLATES 5-FW 101-150	
070	359011-0821	-		1	SET OF SIGNS 6-FW 1-50	
080	359011-0823	-		1	SET OF SIGNS 6-FW 101-150	
100	353024-0209	-		1	EARTH TERMINAL, 1010.5	
110	353024-0204	-		58	EARTH TERMINAL WPE 2,5	
120	353024-0206	-		11	EARTH TERMINAL, 1010.2	
200	353031-0203	-		4	END PLATE, 10612.0	
210	353033-0104	-		2	END PLATE, 10502.8	
220	353022-0002	-		22	NEUTRAL TERMINAL, 10107.8	
230	353041-0001	-	MM	171	RAIL 10X3MM SSCH	
240	353041-0106	-		1	HOLDER ZB35 K 5026.8	
300	353021-0212	-		23	FEED THROUGH TERMINAL, 10200.0	
310	353032-0004	-		2	END PLATE WAP 2,5-10 BEIGE	
320	353034-0013	-		3	BRIDGE CONNECTOR QL2(SAK 35)	

Pos	Part No	SP	UN	Qty	Description	Page No

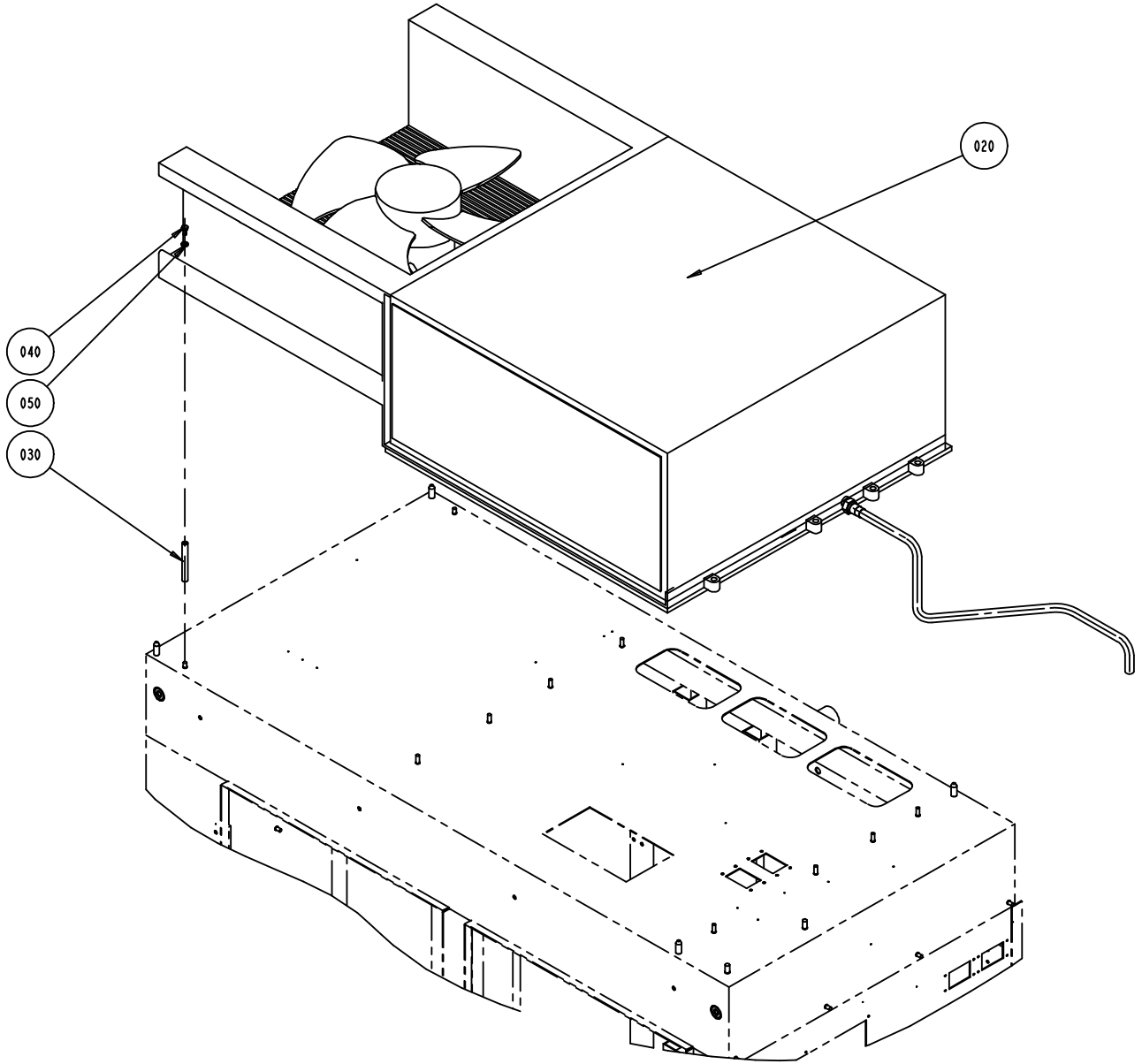
020
040
050
030

ECM: 71770 - 19990604
Group number: 1095954-0200
Assembly Drawing: 1095954-2_1_AA

Issue: 20011217

Pos	Part No	SP	UN	Qty	Description	Page No
Common Parts						
020	A1095722-0300	-		1	COOLER	**1055**
030	1038275-0021	-		8	SPACER	
040	312105-0366	-		8	SCREW M6S M6X12 A280	
050	315105-0153	-		8	WASHER PLAIN, BRB, 6,4/12,H=1,5	

Pos	Part No	SP	UN	Qty	Description	Page No

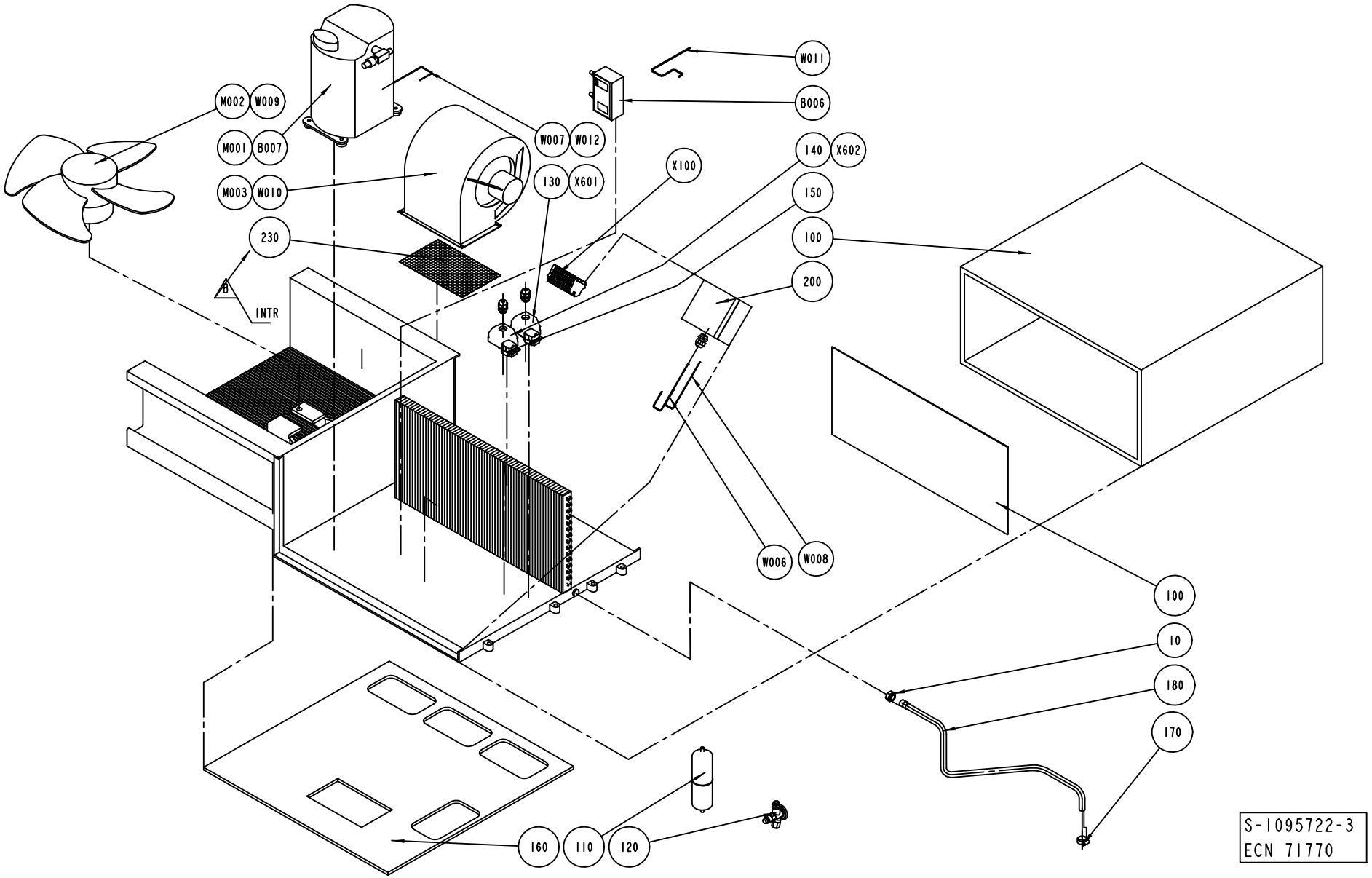
M002
W009
M001
B007
M003
W010
230
B
INTR
W007
W012
130
X601
X100
W011
B006
140
X602
150
100
200
W006
W008
100
10
180
170
160
110
120
S-1095722-3
ECN 71770

ECM: 71770 - 19990604
Group number: 1095722-0300
Assembly Drawing: 1095722-3_1_AD

Issue: 20011217

Pos	Part No	SP	UN	Qty	Description	Page No
Common Parts						
100	90422-0038	-		1	COOLER	
110	90415-0062	D		1	FILTER DRYING / ART NO CN 023U4055	
120	90187-0162	D		1	EXPANSION VALVE FOR COOLING SYS.	
130	90110-0157	-		2	CABLE HOOD 6-POL 70.352.0628.1	
140	352103-0108	-		2	CABLE GLAND ST 13	
150	352103-0106	-		7	CABLE GLAND ST 11	
160	1254272-0000	-		1	GASKET	
170	342991-0103	-		1	HOSE CLIP,WORM DRIVE TYPE (19)-23	
180	1254448-0000	-		1	PIPE	
190	90099-0190	-		1	NUT AJ3085-15-R15, G1/2"	
200	90265-0051	-		1	ACCESSORY BOX 1 1212 08	
210	1140514-0000	-		4	LIFTING CYLINDER	
220	312105-0493	-		2	SCREW M6S M10X25 A280	
230	1254469-0000	-		1	GRILL	
B006	90274-0108	D		1	PRESSURE GUARD	
M001	90270-0016	D		1	COMPRESSOR TAJ 4511 Y	
M002	90264-0059	D		1	FAN / K 48614/MO 1166 220V	
M003	90264-0058	D		1	FAN / DD 185/176 4 POL	
W006	351150-0413	-	MM	500	CABLE OLFLEX 4X1,5 MM2 LIGHT/GREY	
W007	351150-0413	-	MM	500	CABLE OLFLEX 4X1,5 MM2 LIGHT/GREY	
W008	351150-0415	-	MM	500	CABLE OLFLEX 7X1,5 MM2 LIGHT/GREY	
W010	351150-0403	-	MM	500	CABLE OLFLEX 3X0,75 MM2 LIGHT/GREY	
W011	351150-0403	-	MM	500	CABLE OLFLEX 3X0,75 MM2 LIGHT/GREY	
W012	351150-0122	-	MM	500	CABLE " REPL.BY 351150-431"	
X100	A1185023-0100	-		1	PLINTH	**1057**
X601	90110-0159	D		1	MALE INSERT 70.310.0640.0	
X602	90110-0159	D		1	MALE INSERT 70.310.0640.0	

Pos	Part No	SP	UN	Qty	Description	Page No

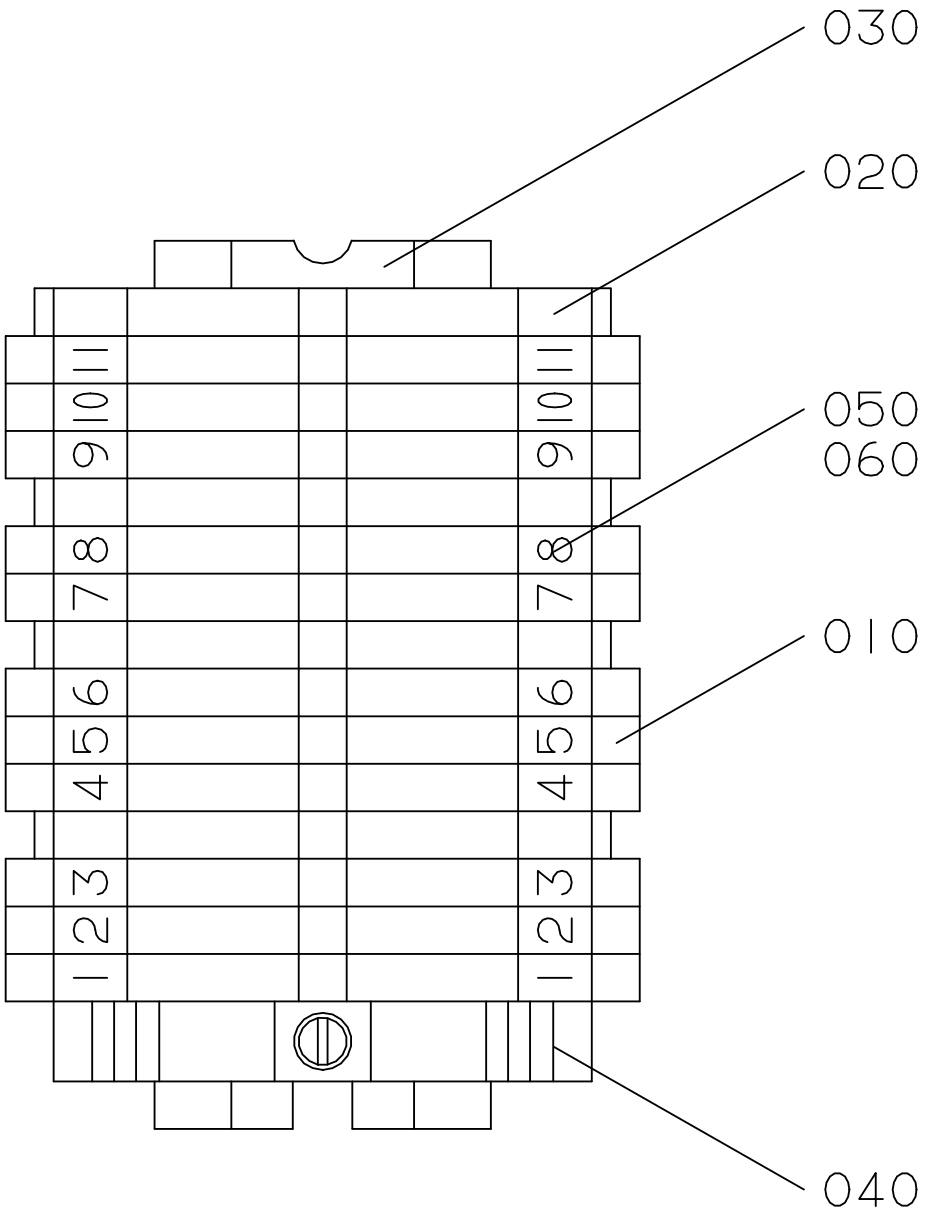
030
020
050
060
010
040
1
2
3
4
5
6
7
8
9
10
11

ECM: 71770 - 19990604
Group number: 1185023-0100
Assembly Drawing: 1185023-1_1_AB

Issue: 20011217

Pos	Part No	SP	UN	Qty	Description	Page No
Common Parts						
010	353021-0212	-		11	FEED THROUGH TERMINAL, 10200.0	
020	353024-0204	-		4	EARTH TERMINAL WPE 2,5	
030	353042-0005	-	MM	100	RAIL TS 35/7.5	
040	353031-0203	-		1	END PLATE, 10612.0	
050	359011-0807	-		2	MARKING PLATES 5-FW 1-50	

Pos	Part No	SP	UN	Qty	Description	Page No

This page is intentionally left blank.

ECM: 72786 - 19991125
Group number: 1317248-0200
Assembly Drawing:

Issue: 20011217

Pos	Part No	SP	UN	Qty	Description	Page No
Common Parts						
010	90453-0001	-		1	MODEM MA-12	
020	90041-0068	-		1	DATACABLE MODEM PC	
030	90220-0091	-	M	200	PAIR TWISTED CABLE 2X2X0,25MM2	
040	A1190007-0202	-		1	PLMS DATA RECEIVE	**1061**
050	82197-0102	-		1	UM DOCUMENT SERIAL COMUNICATION ONLY EN	
060	A47937-0202	-		1	PLMS OFF-LINE ANALYSIS PROGRAM	**1063**
070	82351-0102	-		1	UM DOCUMENT OFF LINE ANALYSIS EN	

Pos	Part No	SP	UN	Qty	Description	Page No

This page is intentionally left blank.

ECM: 72887 - 19991004
Group number: 1190007-0202
Assembly Drawing:

Issue: 20011217

Pos	Part No	SP	UN	Qty	Description	Page No
Common Parts						
0020	58317-0000	-		1	DOCUMENTATION DISKET	
0030	581884-0000	-		1	LABLES DISKET	
0040	58157-0000	-		1	SHORT FORM INSTRUCTION	
0050	58158-0000	-		1	MASTER DISKET	

Pos	Part No	SP	UN	Qty	Description	Page No

Machine Type | Group Description | Used-In | Group Number | Page No

This page is intentionally left blank.

ECM: 72884 - 19991004
Group number: 47937-0202
Assembly Drawing:

Issue: 20011217

Pos	Part No	SP	UN	Qty	Description	Page No
Common Parts						
0020	58155-0000	-		1	DOCUMENTATION DISKETT	
0030	581261-0000	-		1	LABELS DISKETT	
0040	58153-0000	-		1	SHORT FORM INSTRUCTION	
0050	58154-0000	-		1	MASTER DISKETT	

Pos	Part No	SP	UN	Qty	Description	Page No

Machine Type | Group Description | Used-In | Group Number | Page No

Tetra Pak

SPC
Spare Parts Catalogue

This page is intentionally left blank.

ECM: 95995 - 20010801
Group number: 648509-0600
Assembly Drawing:

Issue: 20011218

Pos	Part No	SP	UN	Qty	Description	Page No
ASUSEPROOM						
050	1558933-0000	-		1	FRAME	
070	2511400-0000	-		2	SCREW	
100	312605-0322	-		4	HEXAGON NUT, M6M M12 A280	
110	315105-0178	-		4	WASHER PLAIN, BRB, 13/24,H=2	
NOPT						
050	1558933-0000	-		1	FRAME	
070	2511400-0000	-		2	SCREW	
100	312605-0322	-		4	HEXAGON NUT, M6M M12 A280	
110	315105-0178	-		4	WASHER PLAIN, BRB, 13/24,H=2	
PT21						
030	A1317441-0200	-		1	START UP KIT PT21	**1069**
050	1558933-0000	-		2	FRAME	
070	2511400-0000	-		4	SCREW	
100	312605-0322	-		8	HEXAGON NUT, M6M M12 A280	
110	315105-0178	-		8	WASHER PLAIN, BRB, 13/24,H=2	
Common Parts						
010	A1255596-0300	-		1	START-UP KIT	**1071**
020	A531345-0200	-		1	PERSONAL PROTECT. EQ H2O2	**1083**
040	A1254449-0100	-		1	TOOL TO SET THE LEVEL PROBE	**1085**
060	1558942-0000	-		1	BRACKET	
120	312105-0502	-		2	SCREW M6S M10X55 A280	
130	315105-0173	-		2	WASHER PLAIN, BRB, 10,5/22,H=2	
200	598878-0000	-		1	MACHINE SIGN 2 ADR. EEA	
220	311521-0142	-		4	BLANK RIVET 3,2X6	

Pos	Part No	SP	UN	Qty	Description	Page No

This page is intentionally left blank.

Pos	Part No	SP	UN	Qty	Description	Page No
HOLE45 OR HOLE85						
040	1260651-0000	-		1	INDUCTOR	
HOLE50 OR HOLE71						
040	1140667-0000	-		1	INDUCTOR	
Common Parts						
030	1140387-0000	-		1	SHIM	
050	1140889-0000	-		1	CABLE	
060	1145332-0000	-		1	KNIFE-FLAT	
070	1145333-0000	-		1	KNIFE-WINDOW	
100	1260679-0000	-		1	INSULATION NUT	
110	1260680-0000	-		1	WASHER	
120	1279484-0000	-		1	SHIM	
340	90144-0030	-		1	TAPE	

Pos	Part No	SP	UN	Qty	Description	Page No

This page is intentionally left blank.

ECM: 81802 - 20010205
Group number: 1255596-0300
Assembly Drawing:

Issue: 20011218

Pos	Part No	SP	UN	Qty	Description	Page No
Common Parts						
0100	A1361929-0200	-		1	START-UP KIT VOLUME CONVERSION	**1073, 1075**
0200	90163-0064	-		1	QUICK COUPLING, (M) LP-006-2-WR517	
0205	90163-0076	-		1	QUICK COUPLING, (F) LP-006-0-WR021	
0210	315229-0105	-		5	GASKETS, 48,5X55,5X3,7 MM 2" FDA	
0220	315229-0104	-		2	GASKETS, 35,8X42,8X3,7 MM 1"1/2 FD	
0420	28509-0000	-		2	WASHER	
0425	32544-0000	-		2	INSULATION NUT	
0430	107426-0000	-		4	GUIDE SLEEVE	
0435	1036584-0000	-		2	WASHER	
0440	1037254-0000	-		4	SHIM	
0450	315211-0104	-		4	GASKET BOLT HEAD 8,7X14X1 MM M8	
0455	312115-0297	-		2	SCREW MC6S M4X25 A280	
0460	312125-0295	-		2	SCREW PAN HEAD MCS M4X20 SS	
0465	315211-0103	-		4	GASKET BOLT HEAD 6,7X11X1 MM M6	
0475	315202-0101	-		8	O-RING 3,1X1,6 MM	
1115	90217-0346	-		2	GASKET 38X27,6X4 MM	
1120	A1296877-0100	-		1	SEAL KIT	**1077**
1130	A1296878-0100	-		1	SEAL KIT	**1079**
1135	342850-0304	-		5	GASKET 35,4X49,1X5,2 MM 1"1/2 FDA	
1140	A1296879-0100	-		1	SEAL KIT	**1081**
1140	925998-0000	-		2	DIAPHRAGM	
1145	1347511-0000	-		1	FITTING	
1155	1349913-0000	-		1	BUSHING	
1165	1348639-0000	-		1	SEALING GASKET	
1170	1348555-0000	-		1	SEALING RING	
1700	90036-0057	-		3	LIGHT BULB BA9S 28V	
1705	90233-0028	-		7	FUSE 10A FERRAZ	
1710	90233-0029	-		3	FUSE 25A FERRAZ	
2000	90296-0009	-		1	SILICONE GREASE TUBE 100 GR.	

Pos	Part No	SP	UN	Qty	Description	Page No

Machine Type | Group Description | Used-In | Group Number | Page No

This page is intentionally left blank.

ECM: 92149 - 20010709
Group number: 1361929-0200
Assembly Drawing:
Issue: 20011218

Pos	Part No	SP	UN	Qty	Description	Page No
TBA 0200B						
0400	1110375-0002	-		14	DOLLY	
0405	1110932-0000	-		2	INDUCTOR	
0410	1038639-0000	-		8	VOLUME SHIM	
0415	1348966-0000	-		2	KNIFE	
1100	257330-0000	-		1	PRESSURE ROLLER	
1110	1348475-0000	-		1	GASKET	
1115	315229-0105	-		1	GASKETS, 48,5X55,5X3,7 MM 2" FDA	
1160	927421-0006	-		1	O-RING 17.3X2.4 SILICON	
1170	1334051-0000	-		1	SHAFT	
1180	315229-0104	-		1	GASKETS, 35,8X42,8X3,7 MM 1"1/2 FD	
TBA 0200S						
0400	1110375-0002	-		14	DOLLY	
0405	1110930-0000	-		2	INDUCTOR	
0410	1037735-0000	-		8	VOLUME SHIM	
0415	1348966-0000	-		2	KNIFE	
1100	272479-0000	-		1	PRESSURE ROLLER	
1110	1348475-0000	-		1	GASKET	
1115	315229-0105	-		1	GASKETS, 48,5X55,5X3,7 MM 2" FDA	
1160	927421-0006	-		1	O-RING 17.3X2.4 SILICON	
1170	255977-0000	-		1	SHAFT	
1180	315229-0104	-		1	GASKETS, 35,8X42,8X3,7 MM 1"1/2 FD	
TBA 0250B						
0400	1110375-0002	-		14	DOLLY	
0405	1110932-0000	-		2	INDUCTOR	
0410	1346158-0000	-		8	VOLUME SHIM	
0415	1348966-0000	-		2	KNIFE	
1100	257330-0000	-		1	PRESSURE ROLLER	
1110	1348475-0000	-		1	GASKET	
1115	315229-0105	-		1	GASKETS, 48,5X55,5X3,7 MM 2" FDA	
1160	927421-0006	-		1	O-RING 17.3X2.4 SILICON	
1170	1334051-0000	-		1	SHAFT	
1180	315229-0104	-		1	GASKETS, 35,8X42,8X3,7 MM 1"1/2 FD	
TBA 0500B						
0400	1110390-0000	-		14	DOLLY	
0405	1110938-0000	-		2	INDUCTOR	
0410	1532293-0000	-		2	VOLUME SHIM	
0415	1348955-0000	-		2	KNIFE	
1100	232979-0000	-		1	PRESSURE ROLLER	
1170	1348051-0000	-		1	SHAFT	
1180	1348501-0000	-		1	GASKET	
TBA 0500S						
0400	1110390-0000	-		14	DOLLY	
0405	1110934-0000	-		2	INDUCTOR	
0410	1511253-0000	-		8	VOLUME SHIM	
0415	1348956-0000	-		2	KNIFE	
1100	499387-0000	-		1	PRESSURE ROLLER	
1110	1512670-0000	-		1	GASKET	
1115	315229-0107	-		1	GASKETS, 61,2X68,2X3,7 MM 2"1/2 FD	
1160	315204-0218	-		1	O-RING 26,2X3 MM	
1170	1348052-0000	-		1	SHAFT	
1180	1348501-0000	-		1	GASKET	
TBA 1000B						
0400	1038128-0009	-		14	DOLLY	
0405	1110938-0000	-		2	INDUCTOR	
0410	1035831-0000	-		8	VOLUME SHIM	
0415	1348955-0000	-		2	KNIFE	
1100	232979-0000	-		1	PRESSURE ROLLER	
1110	1348474-0000	-		1	GASKET	
1115	315229-0107	-		1	GASKETS, 61,2X68,2X3,7 MM 2"1/2 FD	
1160	315204-0218	-		1	O-RING 26,2X3 MM	
1170	1348051-0000	-		1	SHAFT	
1180	1348501-0000	-		1	GASKET	
TBA 1000S						
0400	1038128-0009	-		14	DOLLY	
0405	1110937-0000	-		2	INDUCTOR	
0410	1040755-0000	-		8	VOLUME SHIM	
0415	1348955-0000	-		2	KNIFE	
1100	499387-0000	-		1	PRESSURE ROLLER	
1110	1348474-0000	-		1	GASKET	
1115	315229-0107	-		1	GASKETS, 61,2X68,2X3,7 MM 2"1/2 FD	
1160	315204-0218	-		1	O-RING 26,2X3 MM	
1170	1348050-0000	-		1	SHAFT	
1180	1348501-0000	-		1	GASKET	
TBA 1000SQ						
0400	1110390-0000	-		14	DOLLY	
0405	1110936-0000	-		2	INDUCTOR	

Machine Type | Group Description | Used-In | Group Number | Page No

This page is intentionally left blank.

Pos	Part No	SP	UN	Qty	Description	Page No
TBA 1000SQ (Cont'd)						
0410	1487627-0000	-		8	VOLUME SHIM	
0415	1348955-0000	-		2	KNIFE	
1100	257330-0000	-		1	PRESSURE ROLLER	
1110	1348474-0000	-		1	GASKET	
1115	315229-0107	-		1	GASKETS, 61,2X68,2X3,7 MM 2"1/2 FD	
1160	315204-0218	-		1	O-RING 26,2X3 MM	
1170	1348052-0000	-		1	SHAFT	
1180	1348501-0000	-		1	GASKET	
TBA 1500S						
0400	1038128-0009	-		14	DOLLY	
0405	1110938-0000	-		2	INDUCTOR	
0410	1349208-0000	-		8	VOLUME SHIM	
0415	1348955-0000	-		2	KNIFE	
1100	232979-0000	-		1	PRESSURE ROLLER	
1110	1348474-0000	-		1	GASKET	
1115	315229-0107	-		1	GASKETS, 61,2X68,2X3,7 MM 2"1/2 FD	
1160	315204-0218	-		1	O-RING 26,2X3 MM	
1170	1348051-0000	-		1	SHAFT	
1180	1348501-0000	-		1	GASKET	
TPA 0330SQ						
0400	1110390-0000	-		14	DOLLY	
0405	1520167-0000	-		2	INDUCTOR	
0410	1539902-0000	-		8	VOLUME SHIM	
0415	1348966-0000	-		2	KNIFE	
1100	257330-0000	-		1	PRESSURE ROLLER	
1170	295376-0000	-		1	SHAFT	
1180	315229-0104	-		1	GASKETS, 35,8X42,8X3,7 MM 1"1/2 FD	
TPA 1000S						
0400	1038128-0009	-		14	DOLLY	
0405	1110935-0000	-		2	INDUCTOR	
0410	1144586-0000	-		8	VOLUME SHIM	
0415	1348956-0000	-		2	KNIFE	
1100	499387-0000	-		1	PRESSURE ROLLER	
1110	1348474-0000	-		1	GASKET	
1115	315229-0107	-		1	GASKETS, 61,2X68,2X3,7 MM 2"1/2 FD	
1160	315204-0218	-		1	O-RING 26,2X3 MM	
1170	1348052-0000	-		1	SHAFT	
1180	1348501-0000	-		1	GASKET	

Pos	Part No	SP	UN	Qty	Description	Page No
Common Parts						
0420	1037254-0000	-		12	SHIM	

Machine Type	Group Description	Used-In	Group Number	Page No

This page is intentionally left blank.

ECM: 70850 - 19970729
Group number: 1296877-0100
Assembly Drawing:

Issue: 20011218

Pos	Part No	SP	UN	Qty	Description	Page No
Common Parts						
010	530589-0000	-		4	SEAL RING	
020	530588-0000	-		1	SEAL RING	
030	533169-0000	-		1	DIAPHRAGM	
040	539212-0000	-		1	GASKET	
050	90091-0266	-		2	SEAL RING 10,4X16,3X2,5 MM	
060	90207-0363	-		1	GASKET	
070	90207-0365	-		1	GASKET	
100	315204-0215	-		1	O-RING 19,2X3 MM	
110	315204-0301	-		1	O-RING 49,5X3 MM	

Pos	Part No	SP	UN	Qty	Description	Page No

This page is intentionally left blank.

ECM: 70850 - 19970729
Group number: 1296878-0100
Assembly Drawing:

Issue: 20011218

Pos	Part No	SP	UN	Qty	Description	Page No
Common Parts						
080	90030-0336	-		2	CONN. STRAIGHT, 316L-12M-BVCO-3	
090	90091-0237	-		5	ROD SEAL, GLIDORING 20X27,5X3 MM	
100	315204-0215	-		2	O-RING 19,2X3 MM	
120	90091-0238	-		4	WEAR RING 20X22X10 MM	
140	315204-0308	-		2	O-RING 84,5X3 MM	

Pos	Part No	SP	UN	Qty	Description	Page No

This page is intentionally left blank.

ECM: 70850 - 19970729
Group number: 1296879-0100
Assembly Drawing:

Issue: 20011218

Pos	Part No	SP	UN	Qty	Description	Page No
Common Parts						
090	90091-0237	-		3	ROD SEAL, GLIDORING 20X27,5X3 MM	
100	315204-0215	-		1	O-RING 19,2X3 MM	
120	90091-0238	-		2	WEAR RING 20X22X10 MM	
130	90091-0335	-		1	PISTON SEAL,GLIDORING 62,5X70X3 MM	
150	90091-0304	-		1	RADIAL SEAL 45X65X8 MM DUST LIP	

Pos	Part No	SP	UN	Qty	Description	Page No

This page is intentionally left blank.

ECM: 72190 - 19990628
Group number: 531345-0200
Assembly Drawing:

Issue: 20011218

Pos	Part No	SP	UN	Qty	Description	Page No
Common Parts						
	90303-0011	-		1	PROTECTIVE GOGGLES	
	90303-0012	-		1	PROTECTIVE GLOVES	
	90303-0013	-		1	APRON	

Pos	Part No	SP	UN	Qty	Description	Page No

Machine Type | Group Description | Used-In | Group Number | Page No

TOOL TO SET THE LEVEL PROBE

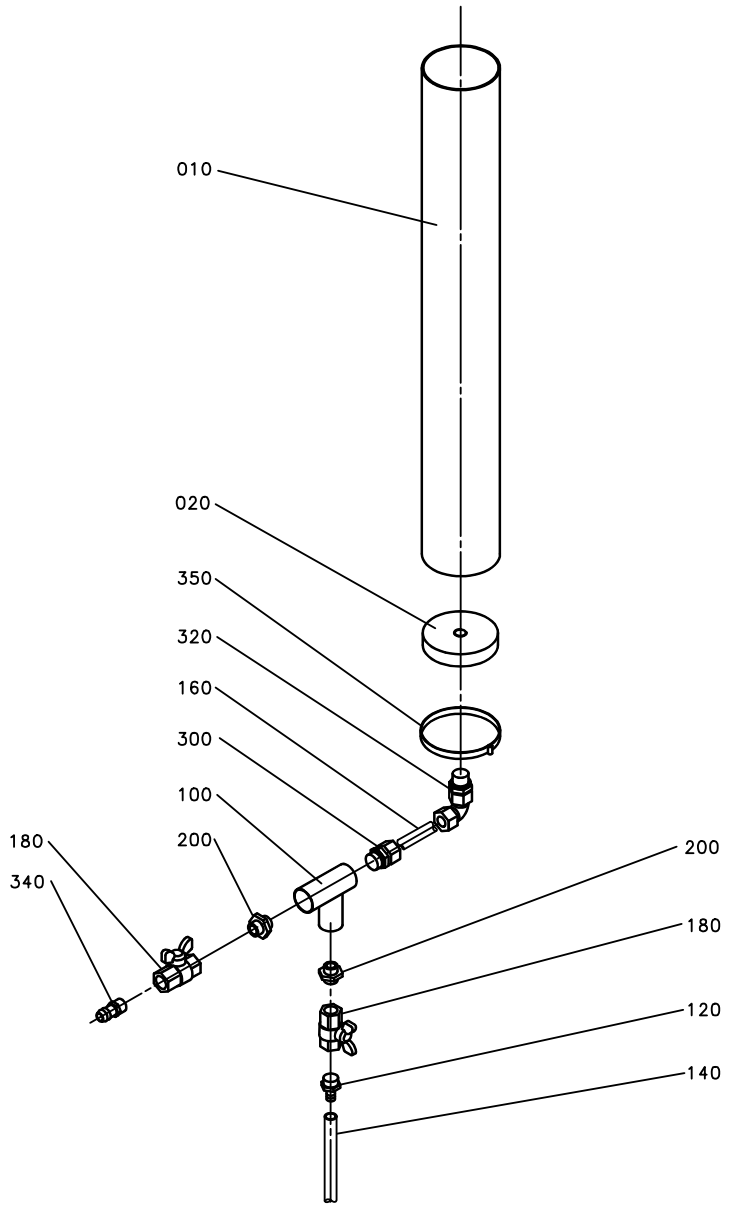

ECM: 70530 - 19970926
Group number: 1254449-0100
Assembly Drawing: 1254449-1_1_AA

Issue: 20011218

Pos	Part No	SP	UN	Qty	Description	Page No
Common Parts						
010	1254450-0000	-		1	HOSE	
020	1254451-0000	-		1	BOTTOM	
100	90140-0016	-		1	T-PIPE, INT. THREAD, 2003-3/8	
120	90163-0041	-		1	HOSE NIPPLE, EXT.THR. 3/8-12 MM	
140	90166-0007	-	MM	1400	HOSE PVC 10/14 TRANSP.	
160	90166-0068	-	MM	600	TUBE 12 MM PA BLUE	
180	90187-0089	-		2	BALL VALVE G3/8, NPBR	
200	90330-0028	-		2	NIPPLES, EXT. THREAD. R-207R3/8	
300	342722-0210	-		1	STRAIGHT COUPLING D=12-G3/8"	
320	342732-0110	-		1	ELBOW PIPE JOINT	
340	342901-0106	-		1	HOSE NIPPLE, EXT.THR. G3/8-17 MM	
350	342991-0114	-		1	HOSE CLIP,WORM DRIVE TYPE (93)-110	

Pos	Part No	SP	UN	Qty	Description	Page No

Tetra Pak

SPC
Spare Parts Catalogue

This page is intentionally left blank.

ECM: 72992 - 19991102
Group number: 649418-0500
Assembly Drawing:

Issue: 20011218

Pos	Part No	SP	UN	Qty	Description	Page No
Common Parts						
0010	A42350-0500	-		1	ELECTRICAL DOCUMENT	
0020	A42945-0500	-		1	STANDARD EQUIPMENT	

Pos	Part No	SP	UN	Qty	Description	Page No

Tetra Pak

SPC
Spare Parts Catalogue

This page is intentionally left blank.

ECM: 72778 - 19990715
Group number: 648519-0500
Assembly Drawing:

Issue: 20011218

Pos	Part No	SP	UN	Qty	Description	Page No
Common Parts						
0100	A575182-0500	-		1	TOOLS / TEMPLATES	**1095**
0200	A575183-0500	-		1	ACCESSORIES	**1141**

Pos	Part No	SP	UN	Qty	Description	Page No

Machine Type | Group Description | Used-In | Group Number | Page No

This page is intentionally left blank.

ECM: 88777 - 20010206
Group number: 575182-0500
Assembly Drawing:
Issue: 20011218

Pos	Part No	SP	UN	Qty	Description	Page No
110V						
2010	B90243-0446	-		1	LASER EQUIPMENT	
90243-0450		-		*1*	*RIDGE BED*	
90243-0449		-		*1*	*ANGLE PLATE*	
90243-0448		-		*1*	*ANGLE PLATE*	
90243-0328		-		*1*	*PAPER ROLL*	
90243-0329		-		*1*	*CABLE*	
90243-0330		-		*1*	*CABLE*	
230V						
2015	B90243-0447	-		1	LASER EQUIPMENT	
90243-0450		-		*1*	*RIDGE BED*	
90243-0449		-		*1*	*ANGLE PLATE*	
90243-0448		-		*1*	*ANGLE PLATE*	
90243-0330		-		*1*	*CABLE*	
90243-0329		-		*1*	*CABLE*	
90243-0328		-		*1*	*PAPER ROLL*	
Common Parts						
0200	90321-0537	-		1	GAUGE GROUP	
0210	90321-0538	-		1	HOSE	
0220	A1317468-0200	-		1	LEG STAND	**1097**
0300	A1254023-0100	-		1	ASSEMBLY TOOL	**1099**
0400	A1035362-0100	-		1	MEASURING DEVICE	**1101**
0410	A1095956-0200	-		1	SETTING TOOL	**1103**
0420	B72846-0101	-		1	COMPRESSION SPRING	
110	*72887-0000*	-		*1*	*COMPRESSION SPRING*	
113	*72888-0001*	-		*1*	*SPRING BRACKET*	
114	*72888-0002*	-		*1*	*SPRING BRACKET*	
0430	A1095884-0100	-		1	ASSEMBLY TOOL	**1105**
0440	90243-0146	-		1	TOOL	
0600	A1254452-0100	-		1	TOOL TO EMPTY THE COOLING SYSTEM	**1107**
0710	1346749-0000	-		1	SETTING TOOL	
0720	312105-0291	-		1	SCREW M6S M4X12 A280	
0800	A1498400-0100	-		1	TEMPLATES	**1109**
1110	A1349914-0100	-		1	TEMPLATE FILLING PIPE	**1111**
1115	A74305-0100	-		1	PULLER	**1113**
1120	A74767-0100	-		1	DYNAMOMETER	**1115**
1125	90206-0330	-		1	SOCKET WRENCH 2"9	
1130	A449969-0100	-		1	TOOL DISMOUNTING	**1117**
1140	90243-0137	-		1	MEASURING INSTRUMENT	
1150	1037370-0000	-		1	ASSEMBLY JIG	
1160	A533014-0100	-		1	LEAK FINDING EQUIPMENT (SUPERSTRUCTURE)	**1119**
						1121
1170	A1512327-0100	-		1	TEMPLATE TUBE FORMING	**1125**
1180	A1349738-0100	-		1	PRESSURE TEST EQUIPMENT	**1133**
1190	1539765-0000	-		1	TEMPLATE	
1190	1539761-0000	-		1	TEMPLATE	
1190	1539722-0000	-		1	TEMPLATE	
1190	1539721-0000	-		1	TEMPLATE	
1190	1334986-0000	-		1	TEMPLATE	
1195	1334987-0000	-		1	TEMPLATE	
1300	1038734-0000	-		1	SETTING AXLE	
1310	1260622-0000	-		1	TEMPLATE	
1320	1346518-0000	-		1	TEMPLATE	
1330	A1348492-0100	-		1	TEMPLATE	**1135**
1340	1484191-0000	-		1	TEMPLATE	
1510	1350497-0000	-		1	ASSEMBLY TOOL	
1520	1350498-0000	-		1	ASSEMBLY TOOL	
1530	1350520-0000	-		1	ASSEMBLING TOOL	
1710	A567732-0100	-		1	CALIBRATION EQUIPMENT	**1137**
2020	90243-0328	-		1	PAPER ROLL	
2030	90243-0329	-		1	CABLE	
2040	90243-0330	-		1	CABLE	
2050	90243-0448	-		1	ANGLE PLATE	
2060	90243-0449	-		1	ANGLE PLATE	

Machine Type | Group Description | Used-In | Group Number | Page No

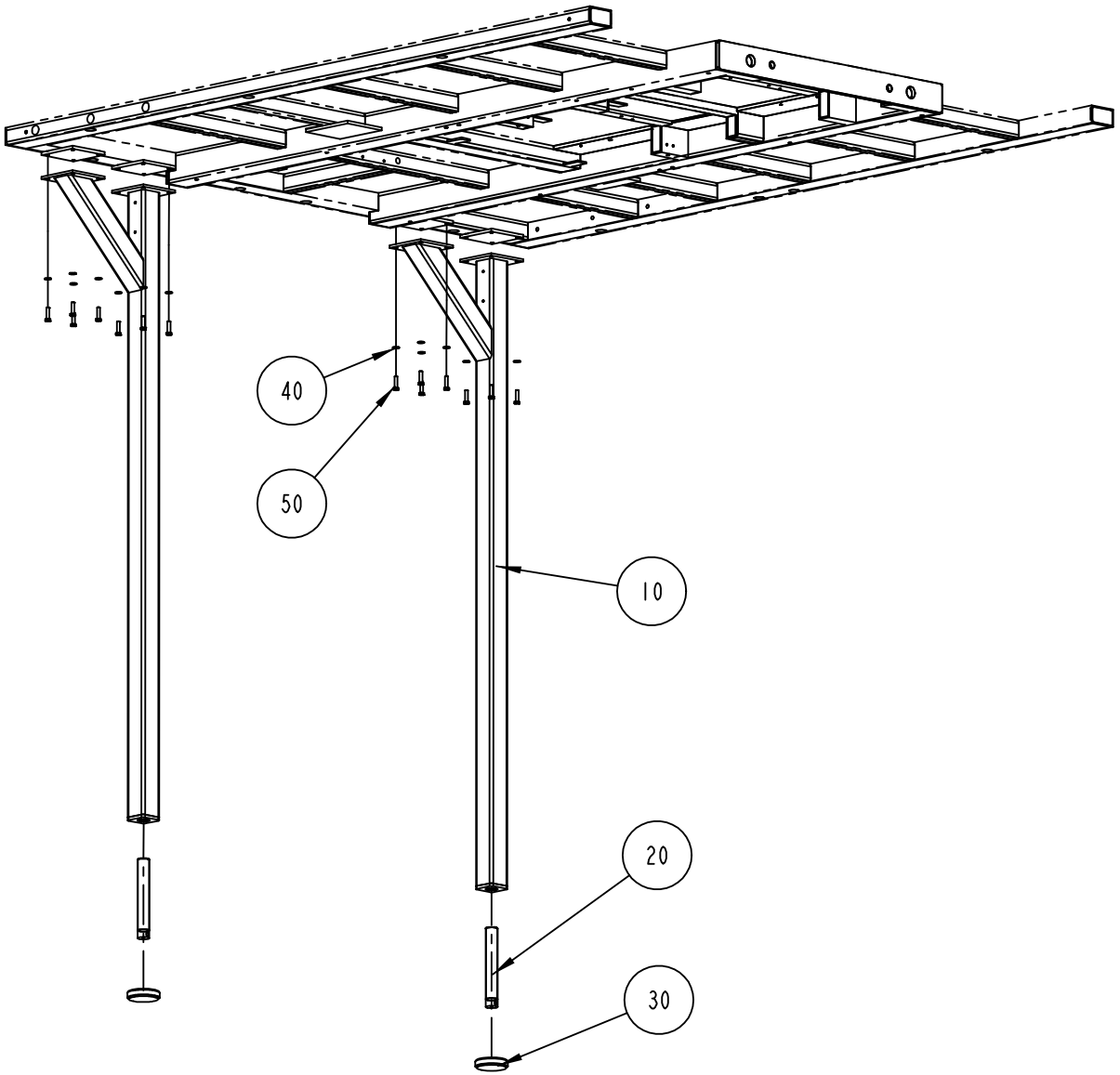

S-1317468-2
ECN 72494

ECM: 72494 - 19990524
Group number: 1317468-0200
Assembly Drawing: 1317468-2_1_AA

Issue: 20011218

Pos	Part No	SP	UN	Qty	Description	Page No
Common Parts						
010	1346394-0000	-		2	LEG	
020	905373-0000	C		2	SCREW - LEG	
030	90347-0080	C		2	DAMPER TFE 1201	
040	315105-0173	-		16	WASHER PLAIN, BRB, 10,5/22,H=2	
050	312109-0499	-		16	SCREW M6S M10X40 A280	

Pos	Part No	SP	UN	Qty	Description	Page No

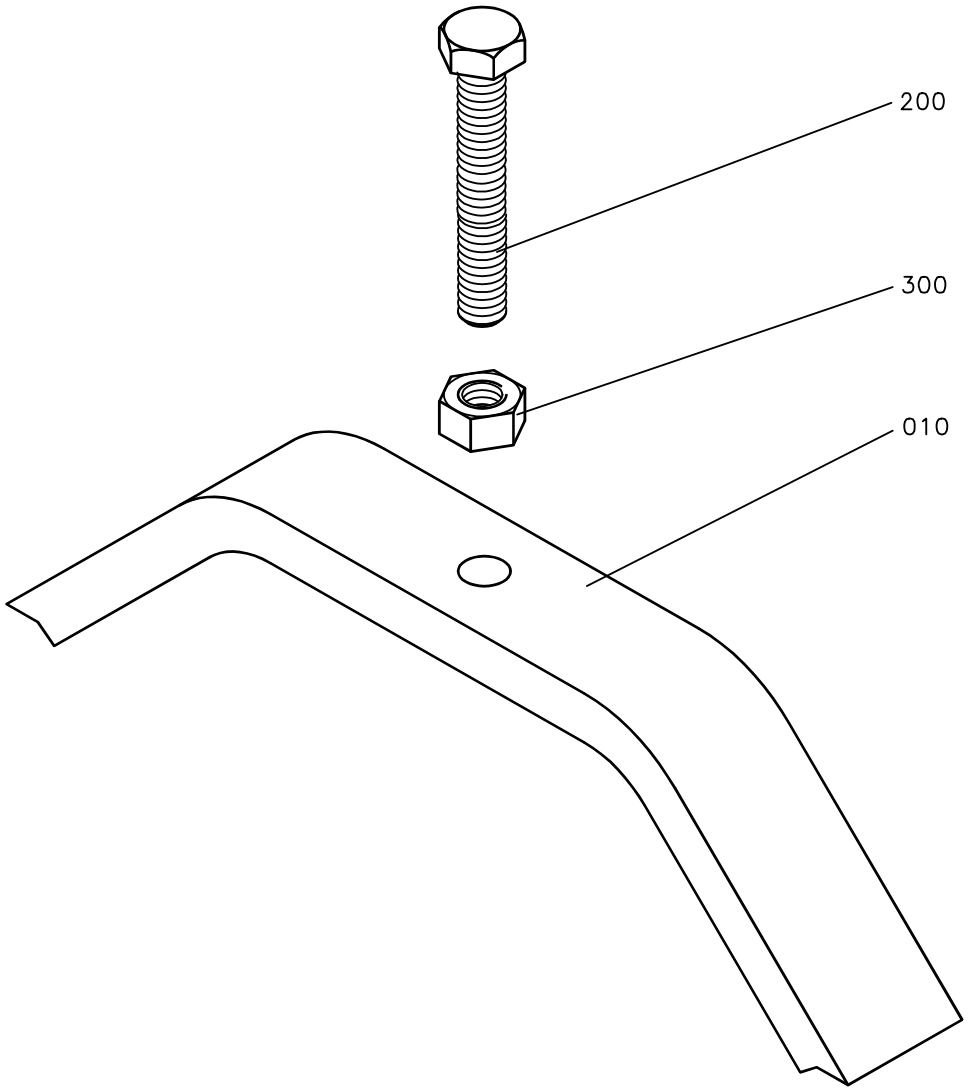
200
300
010

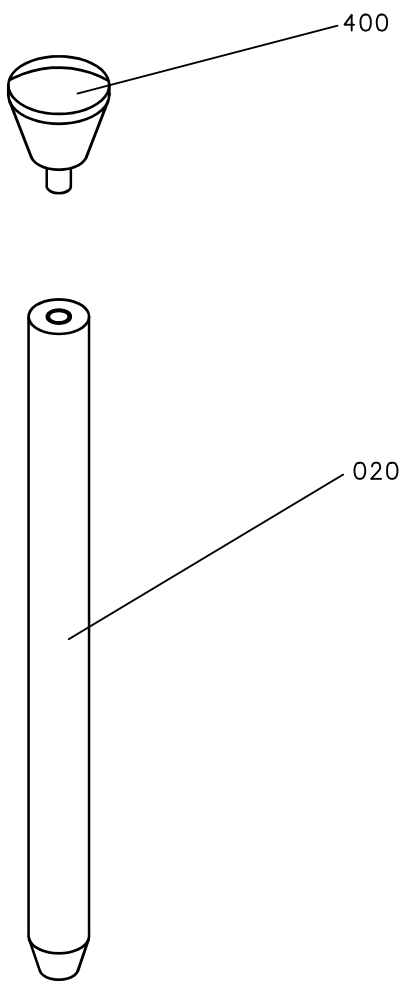
400
020

ECM: 70073 - 19960313
Group number: 1254023-0100
Assembly Drawing: 1254023-1_1_AA

Issue: 20011218

Pos	Part No	SP	UN	Qty	Description	Page No
Common Parts						
010	1036123-0000	-		1	BOW CLAMP	
020	1036061-0000	-		1	GUIDE PIN	
200	312104-0552	-		1	SCREW M6S M12X100H FZB	
300	312601-0322	-		1	NUT M6M 12-8 FZB	
400	318871-0104	-		1	KNOB CIRCULAR, EXT THREAD, NO. 8302-6118	

Pos	Part No	SP	UN	Qty	Description	Page No

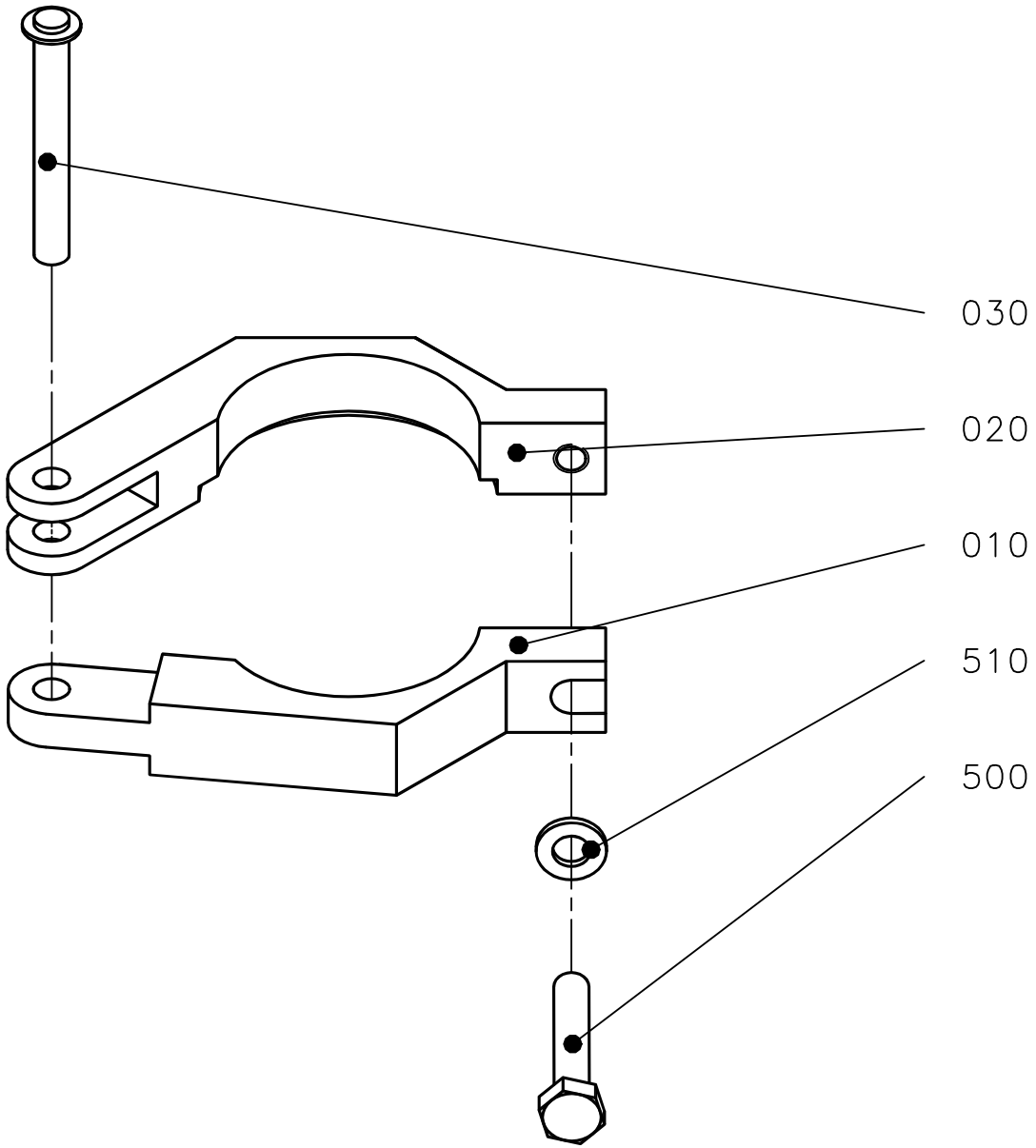
030
020
010
510
500

ECM: 70060 - 19960315
Group number: 1035362-0100
Assembly Drawing: 1035362-1_1_AA

Issue: 20011218

Pos	Part No	SP	UN	Qty	Description	Page No
Common Parts						
010	1037696-0000	-		1	CLAMPING PIECE	
020	1037697-0000	-		1	CLAMPING PIECE	
030	74655-0000	-		1	SHAFT	
500	312105-0374	-		1	SCREW M6S M6X30 A280	
510	315105-0153	-		1	WASHER PLAIN, BRB, 6,4/12,H=1,5	

Pos	Part No	SP	UN	Qty	Description	Page No

Machine Type | Group Description | Used-In | Group Number | Page No

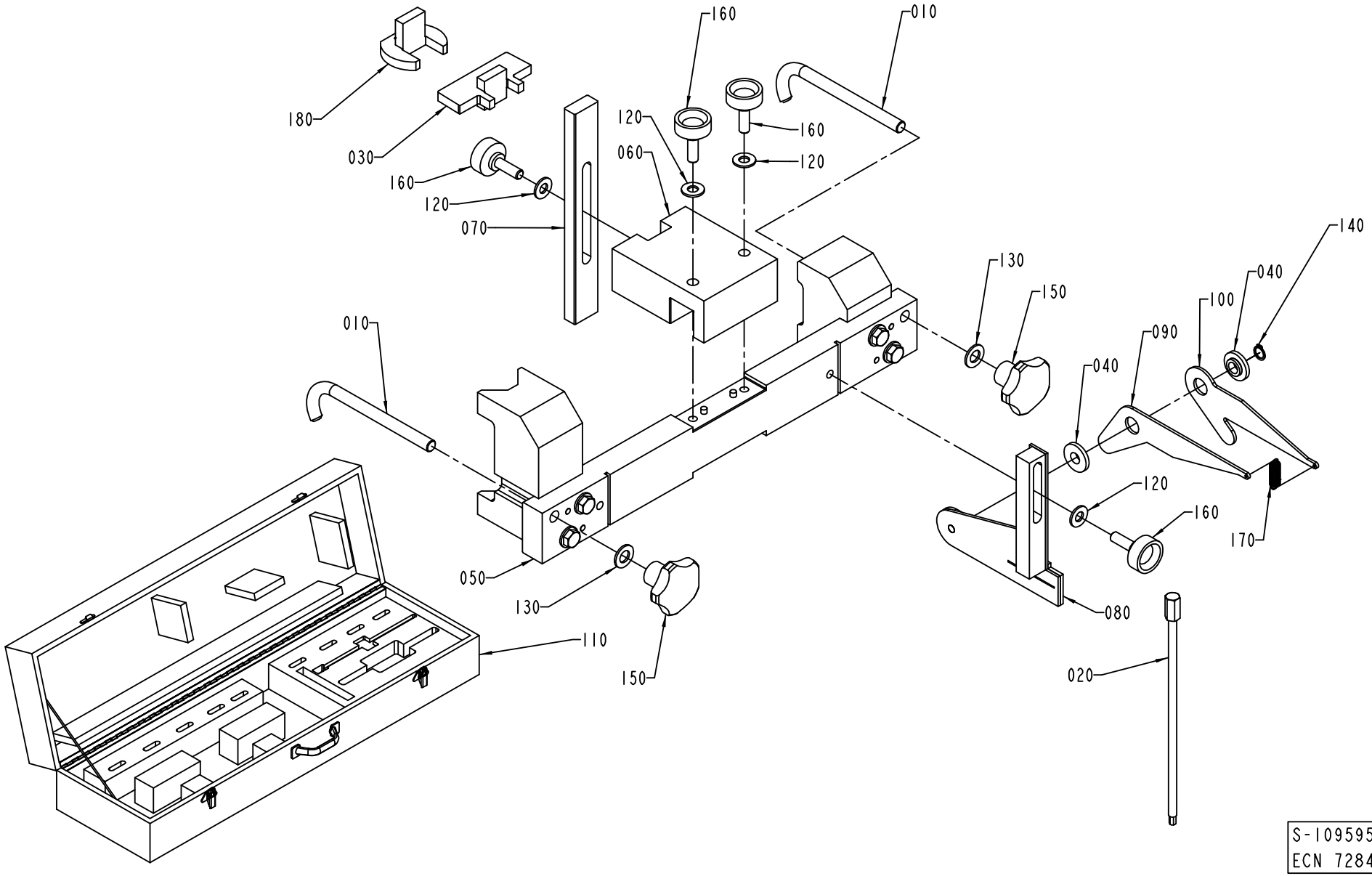
160
010
180
030
160
120
070
120
060
160
120
130
150
140
040
100
090
040
010
120
160
170
050
130
150
110
080
020
S-1095956-2
ECN 72849

Pos	Part No	SP	UN	Qty	Description	Page No
TBA 0200B OR TBA 0250B						
030	1523091-0000	-		1	TEMPLATE	
180	75936-0000	-		1	TEMPLATE	
TBA 0200S						
030	1140283-0000	-		1	TEMPLATE	
180	76176-0000	-		1	TEMPLATE	
TBA 0500B OR TBA 1000B						
030	1140268-0000	-		1	TEMPLATE	
TBA 0500S						
030	1532998-0000	-		1	TEMPLATE	
TBA 1000S						
030	1140320-0000	-		1	TEMPLATE	
TBA 1000SQ						
030	1498117-0000	-		1	TEMPLATE	
TBA 1500S						
030	1478190-0000	-		1	TEMPLATE	
TPA 0330SQ						
030	1539892-0000	-		1	TEMPLATE	
TPA 1000S						
030	1317230-0000	-		1	TEMPLATE	
Common Parts						
010	1037691-0000	-		2	HOOK	
020	1129776-0000	-		1	KEY	
040	1140414-0000	-		2	BEARING	
050	1140417-0000	-		1	BRACKET	
060	1140430-0000	-		1	BRACKET	
070	1140431-0000	-		1	RULER	
080	1140432-0000	-		1	BRACKET	
090	1140433-0000	-		1	SHEET	
100	1140434-0000	-		1	SHEET	
110	1254453-0000	-		1	WOODENBOX	
120	315105-0173	-		4	WASHER PLAIN, BRB, 10,5/22,H=2	
130	315105-0178	-		2	WASHER PLAIN, BRB, 13/24,H=2	
140	315751-0109	-		1	RETAIN. RING, 12	
150	318850-0113	-		2	STELLAR KNOB, INT. THREAD, NO. 8306-0367	
160	318856-0109	-		4	KNOB, EXTERNAL THREAD. NO. 8308-1658	
170	90335-0089	-		1	SPRING	

This page is intentionally left blank.

ECM: 73681 - 20000421
Group number: 1095884-0100
Assembly Drawing:

Issue: 20011218

Pos	Part No	SP	UN	Qty	Description	Page No
TBA 0200B OR TBA 0200S OR TBA 0250B						
010	76131-0000	-		1	ASSEMBLY CONE	
011	76132-0000	-		1	ASSEMBLY TOOL	
012	78801-0000	-		1	CALIBRATION TOOL	
030	90091-0387	-		1	ASSEMBLY TOOL	
TBA 0500S OR TBA 1000S OR TBA 1000SQ OR TBA 1000B OR TPA 1000S OR TBA 1500S						
020	90091-0377	-		1	ASSEMBLY TOOL SLEEVE GLYD RING	
040	90091-0378	-		1	ASSEMBLY TOOL SLEEVE AQ-SEAL	

Pos	Part No	SP	UN	Qty	Description	Page No

TOOL TO EMPTY THE COOLING SYSTEM

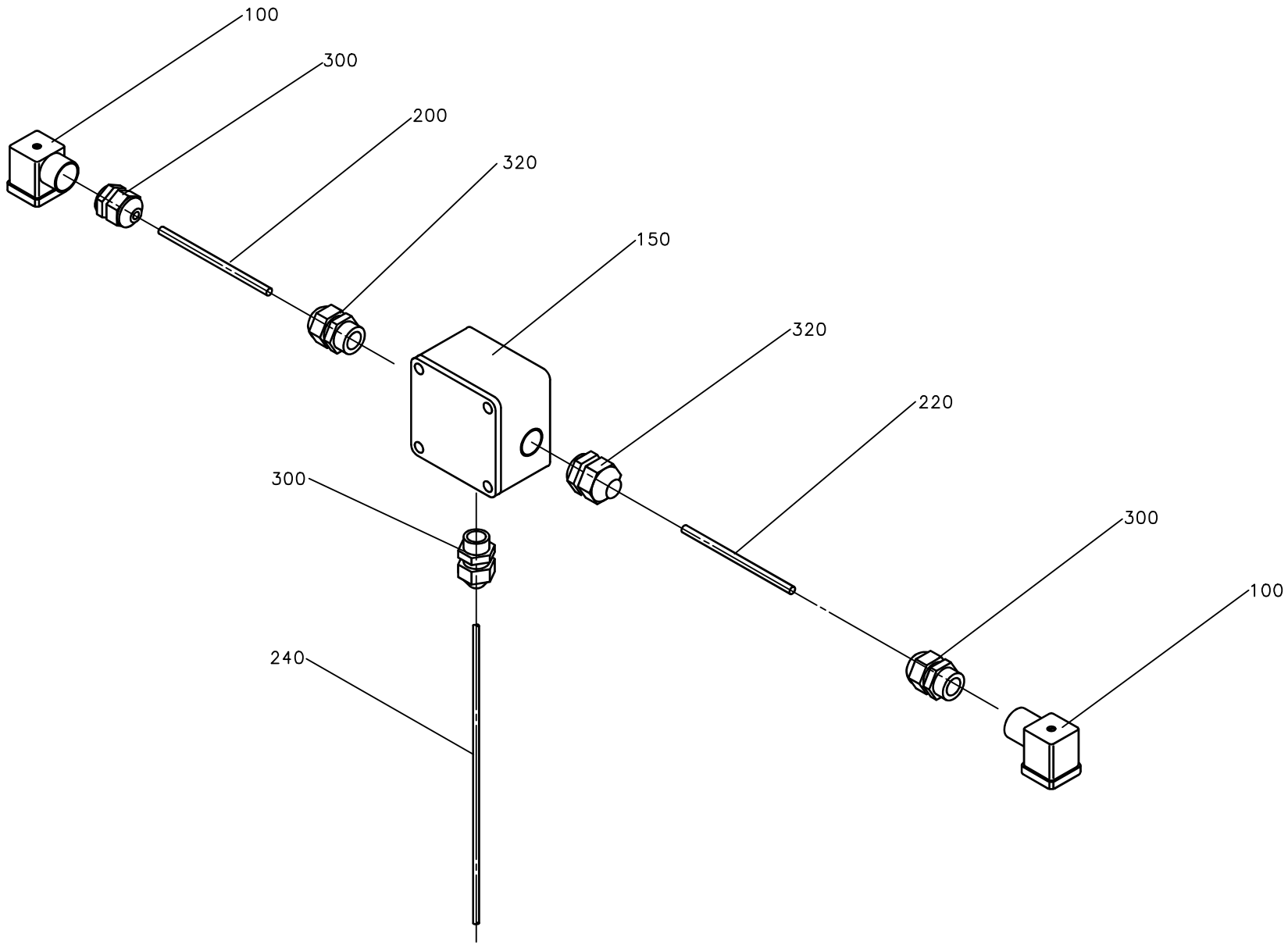

ECM: 70530 - 19970926
Group number: 1254452-0100
Assembly Drawing: 1254452-1_1_AA

Issue: 20011218

Pos	Part No	SP	UN	Qty	Description	Page No
Common Parts						
100	90042-0398	-		2	CONTACT 3 POLE+EARTH	
150	90195-0037	-		1	CONNECTION BOX 1 0606 03 & BK4 TERMINAL	
200	351150-0122	-	M	1	CABLE " REPL.BY 351150-431"	
220	351150-0122	-	M	1	CABLE " REPL.BY 351150-431"	
240	351150-0122	-	M	6	CABLE " REPL.BY 351150-431"	
300	352103-0101	-		3	CABLE GLAND ST 9;PR15,2/PG9	
320	352103-0105	-		2	CABLE GLAND STR 11;PR 18,6;PG11	

Pos	Part No	SP	UN	Qty	Description	Page No

Machine Type | Group Description | Used-In | Group Number | Page No

This page is intentionally left blank.

Pos	Part No	SP	UN	Qty	Description	Page No
TBA 1000B HOLE85						
010	1487236-0000	-		1	TEMPLATE	
TBA 1000S HOLE85						
010	1487235-0000	-		1	TEMPLATE	
TBA 1000SQ HOLE85						
010	1499183-0000	-		1	TEMPLATE	
TBA 1500S HOLE85						
010	1499181-0000	-		1	TEMPLATE	
TPA 1000S HOLE60						
010	1484509-0000	-		1	TEMPLATE	

Pos	Part No	SP	UN	Qty	Description	Page No

TEMPLATE FILLING PIPE

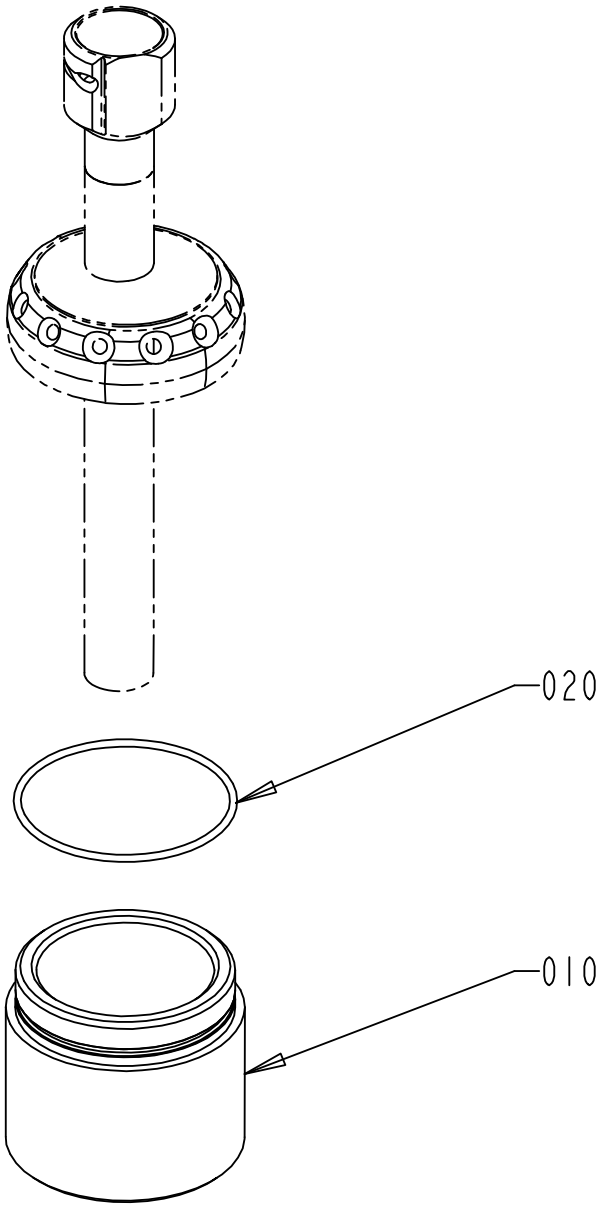

Pos	Part No	SP	UN	Qty	Description	Page No
TBA 0200B OR TBA 0250B						
010	1498149-0000	-		1	TEMPLATE	
020	315202-0217	-		1	O-RING 24,2X3 MM	
TBA 0200S						
010	1558304-0000	-		1	TEMPLATE	
020	315202-0214	-		1	O-RING 17,3X2,4 MM	
TBA 0500B OR TBA 1000B OR TBA 1500S						
010	1498150-0000	-		1	TEMPLATE	
020	315202-0308	-		1	O-RING 84,5X3 MM	
TBA 0500S						
010	1524840-0000	-		1	TEMPLATE	
020	315202-0303	-		1	O-RING 59,5X3 MM	
TBA 1000S						
010	1498151-0000	-		1	TEMPLATE	
020	315202-0307	-		1	O-RING 79,5X3 MM	
TBA 1000SQ						
010	1517987-0000	-		1	TEMPLATE	
020	315202-0305	-		1	O-RING 69,5X3 MM	
TPA 0330SQ						
010	1532299-0000	-		1	TEMPLATE	
020	315202-0217	-		1	O-RING 24,2X3 MM	
TPA 1000S						
010	1558732-0000	-		1	TEMPLATE	
020	315202-0722	-		1	O-RING 28,24X2,62 MM	

Pos	Part No	SP	UN	Qty	Description	Page No

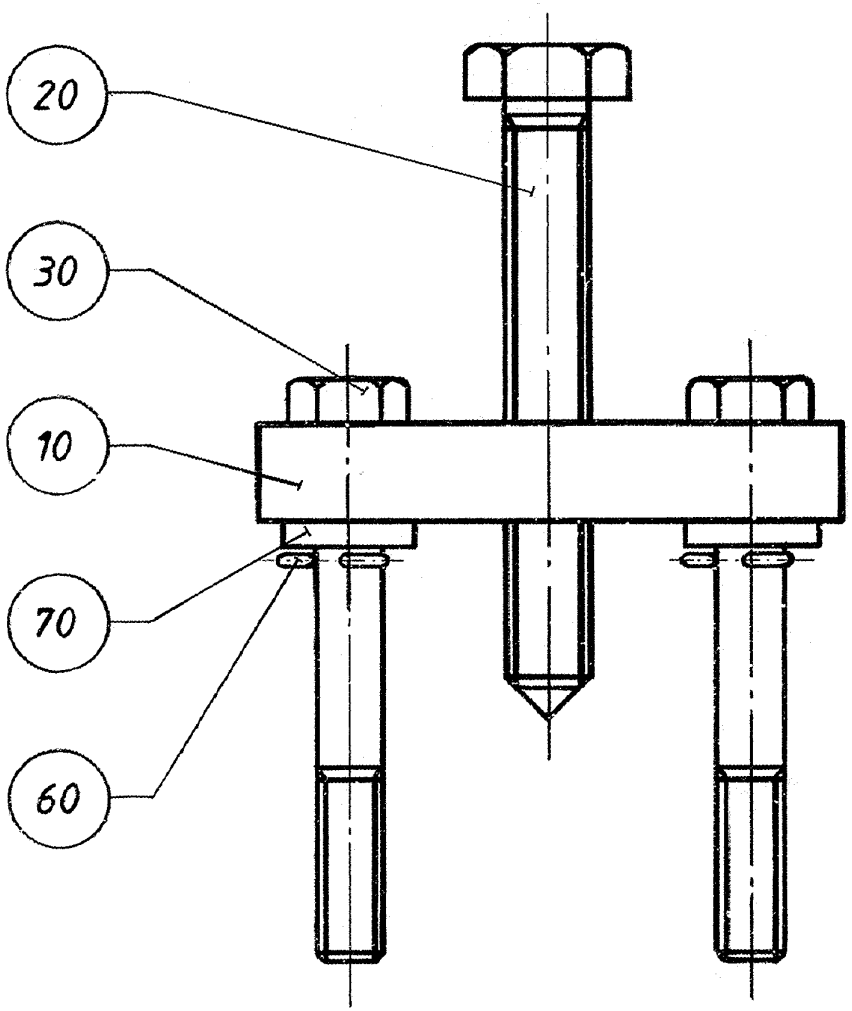
20
30
10
70
60

ECM: - -
Group number: 74305-0100
Assembly Drawing: 74305-1_1_AA

Issue: 20011218

Pos	Part No	SP	UN	Qty	Description	Page No
Common Parts						
010	74363-0000	-		1	FASTENING PLATE	
020	74364-0000	-		1	EXTRACTOR BOLT	
030	74365-0000	-		2	SCREW	
060	311411-0152	-		2	SPLIT PIN SP2X16RFR	
070	315115-0165	-		2	WASHER PLAIN, TBRB 8,4/16 H=3	

Pos	Part No	SP	UN	Qty	Description	Page No

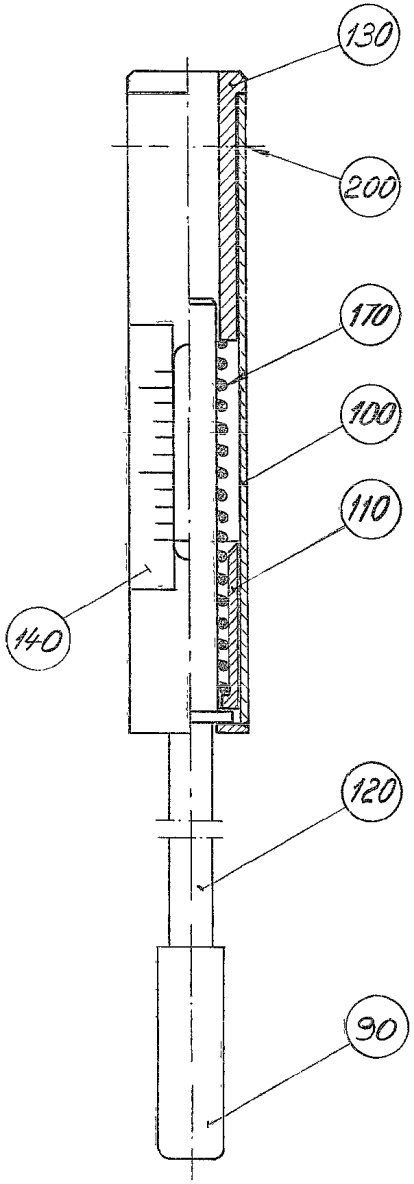
130
200
170
100
110
140
120
90

ECM: - -
Group number: 74767-0100
Assembly Drawing: 74767-1_1_AA

Issue: 20011218

Pos	Part No	SP	UN	Qty	Description	Page No
Common Parts						
090	74912-0000	-		1	DOWEL	
100	74768-0000	-		1	SLEEVE	
110	74769-0000	-		1	SLEEVE	
120	74770-0000	-		1	ROD	
130	74771-0000	-		1	STEERING	
140	74772-0000	-		1	DIAL	
170	107000-0000	-		1	SPRING	
200	312125-0285	-		2	SCREW SLOT.PAN HD. MCS 4X6 A480	

Pos	Part No	SP	UN	Qty	Description	Page No

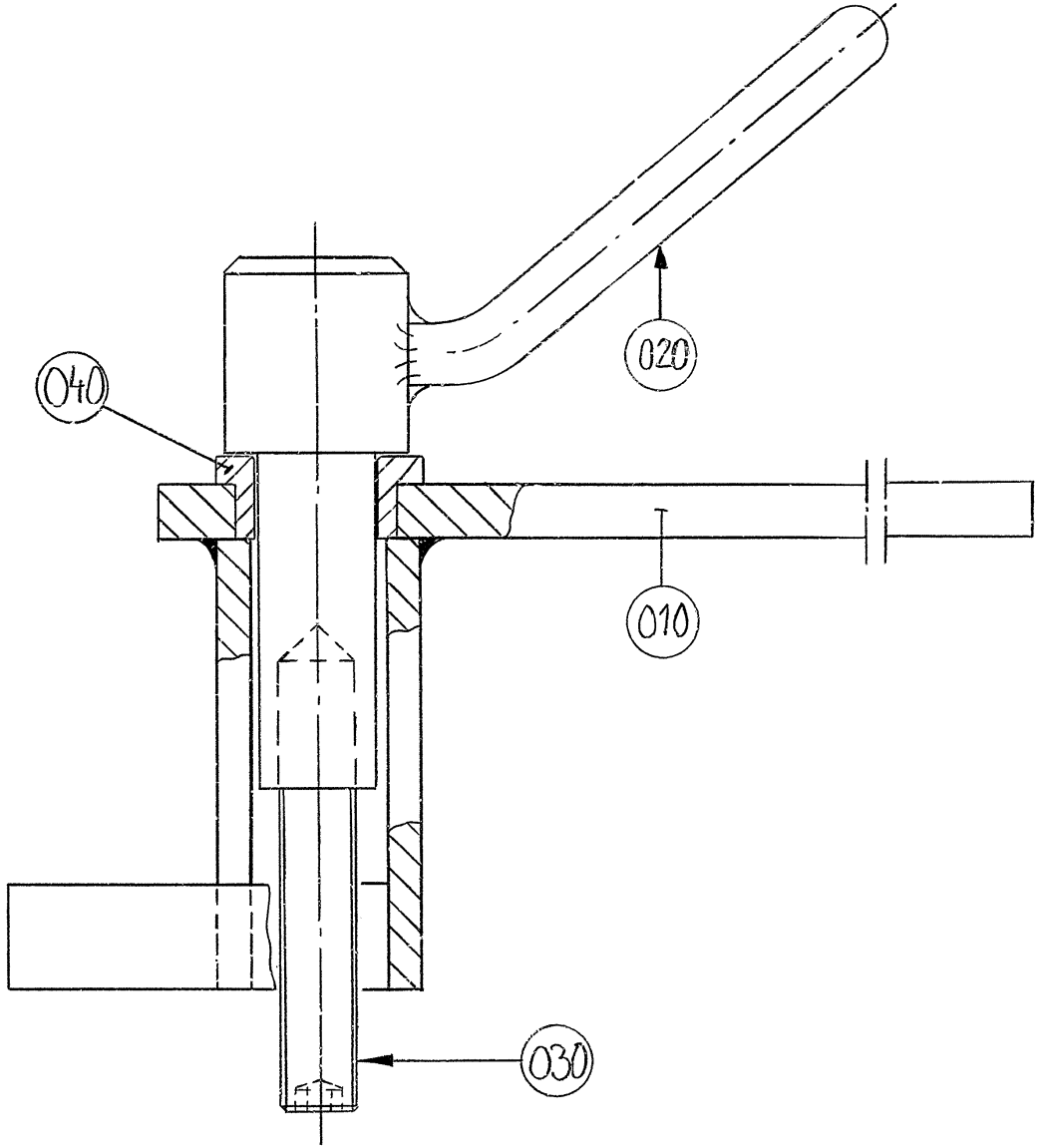
040
020
010
030

ECM: - -
Group number: 449969-0100
Assembly Drawing: 449969-1_1_AA

Issue: 20011218

Pos	Part No	SP	UN	Qty	Description	Page No
Common Parts						
010	449970-0000	-		1	HOLDER	
020	449971-0000	-		1	SPINDLE	
030	312306-0546	-		1	SCREW HEX.SOCK.SET FLAT P.MP6SS 12X70FZB	
040	321101-0222	-		1	BEAR.BUSHING WITH FLANGE, 18/25X12 MM	

Pos	Part No	SP	UN	Qty	Description	Page No

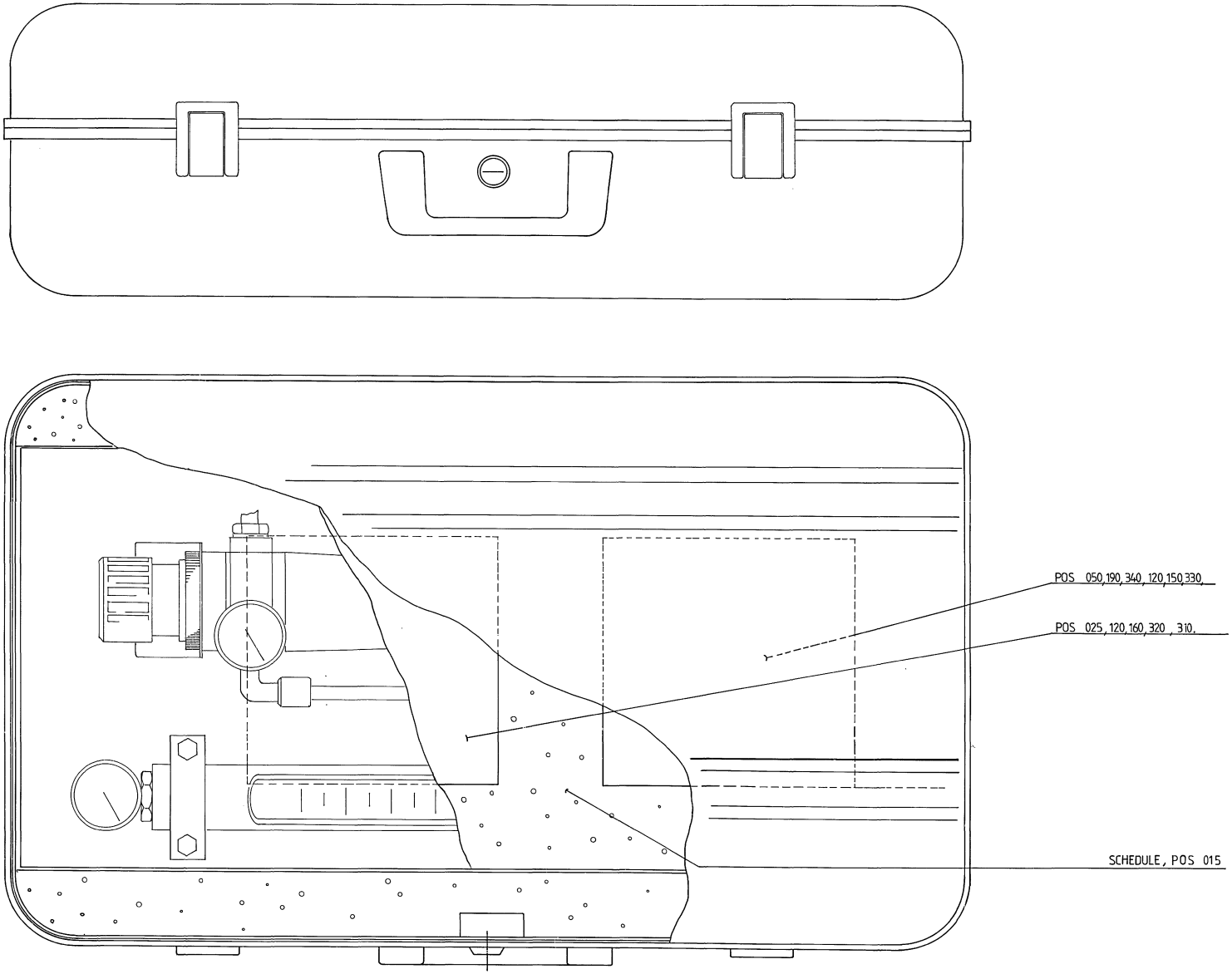
POS 050,190,340,120,150,330,
POS 025,120,160,320 ,310,
SCHEDULE, POS 015

ECM: 71889 - 19980924
Group number: 533014-0100
Assembly Drawing: 533014-1_1_AA

Issue: 20011218

Pos	Part No	SP	UN	Qty	Description	Page No
Common Parts						
010	A533905-0100	-		1	PONCH	**1123**
010	532676-0000	-		1	SHEET	
015	533015-0000	-		1	WIRING DIAGRAM	
020	1360399-0000	-		4	PIPE HOLDER	
025	493735-0000	-		1	NIPPLE	
030	532677-0000	-		1	PIPE	
040	532678-0000	-		1	DOWEL	
050	532679-0000	-		1	PLATE	
060	90030-0223	-		1	BUSHING, INT/EXT. G-THREAD NO. 2531	
070	90030-0224	-		1	NIPPLES, EXT. THREAD, HEXAGON, NO. 2511	
075	90030-0225	-		2	REDUCTION NIPPEL 2531-3/8X1/4	
080	90043-0021	-		1	PRESSURE GAUGE WIEGAND 0-1 BAR 1/8"	
090	90043-0043	-		1	PRESSURE GAUGE WIEGAND 0-10 BAR 1/8"	
100	90113-0059	-		1	FILTER REG. 50UM	
110	90140-0015	-		1	T-PIPE, INT. THREAD, 2003-1/8	
120	90163-0056	-		2	QUICK COUPLING, (F) 5054-6/4	
130	90163-0057	-		1	NIPPLE 1/8" BRASS	
140	90163-0087	-		1	QUICK COUPLING, (M) 5150-1/4	
150	90166-0124	-	MM	1250	TUBE 6 MM PA,TRANSP.	
160	90166-0124	-	MM	1250	TUBE 6 MM PA,TRANSP.	
170	90224-0303	-		2	CONNECTION	
172	90113-0384	-		1	CANTILEVER	
175	90243-0137	-		1	MEASURING INSTRUMENT	
180	90243-0147	-		1	FLOW METER	
190	90330-0029	-		1	PLUG, EXT. G-THREAD, R-236R3/8	
200	312105-0325	-		2	SCREW M6S M5X10 A280	
210	312105-0383	-		4	SCREW M6S M6X65 A280	
220	312602-0312	-		1	HEXAGON NUT, M6M M4 BR	
230	312605-0314	-		2	HEXAGON NUT, M6M M5 A280	
240	312605-0316	-		4	HEXAGON NUT, M6M M6 A280	
250	315103-0136	-		1	WASHER PLAIN, BRB, 4,3/8,H=0,8 NI PL BR	
260	315105-0146	-		4	WASHER PLAIN, BRB, 5,3/10,H=1	
270	315105-0153	-		8	WASHER PLAIN, BRB, 6,4/12,H=1,5	
280	315233-0109	-		2	WASHER PL.RND.NYL.10,3/14,H=1	
290	315233-0110	-		1	WASHER PL.RND.NYL.13,3/17,H=1	
295	315233-0111	-		2	WASHER PL.RND.NYL.17/22,H=1	
300	315233-0113	-		2	WASHER PL.RND.NYL.21,4/27,H=1,2	
310	342921-0113	-		1	STRAIGHT COUPLING,EXT.THREADED 6/4-G1/8"	
320	342921-0114	-		1	STRAIGHT COUPLING,EXT.THREADED 6/4-G1/4"	
330	342980-0114	-		1	BANJO-CONNECTION,RING 6/4-G1/4"	
340	342980-0314	-		1	BANJO-HOLLOW BOLT COUPL,EXT.THR.02-G1/4"	
350	342701-0201	-		1	BUSHING,INT./EXT.G-THREAD G1/4"-G1/8"	

Machine Type | Group Description | Used-In | Group Number | Page No

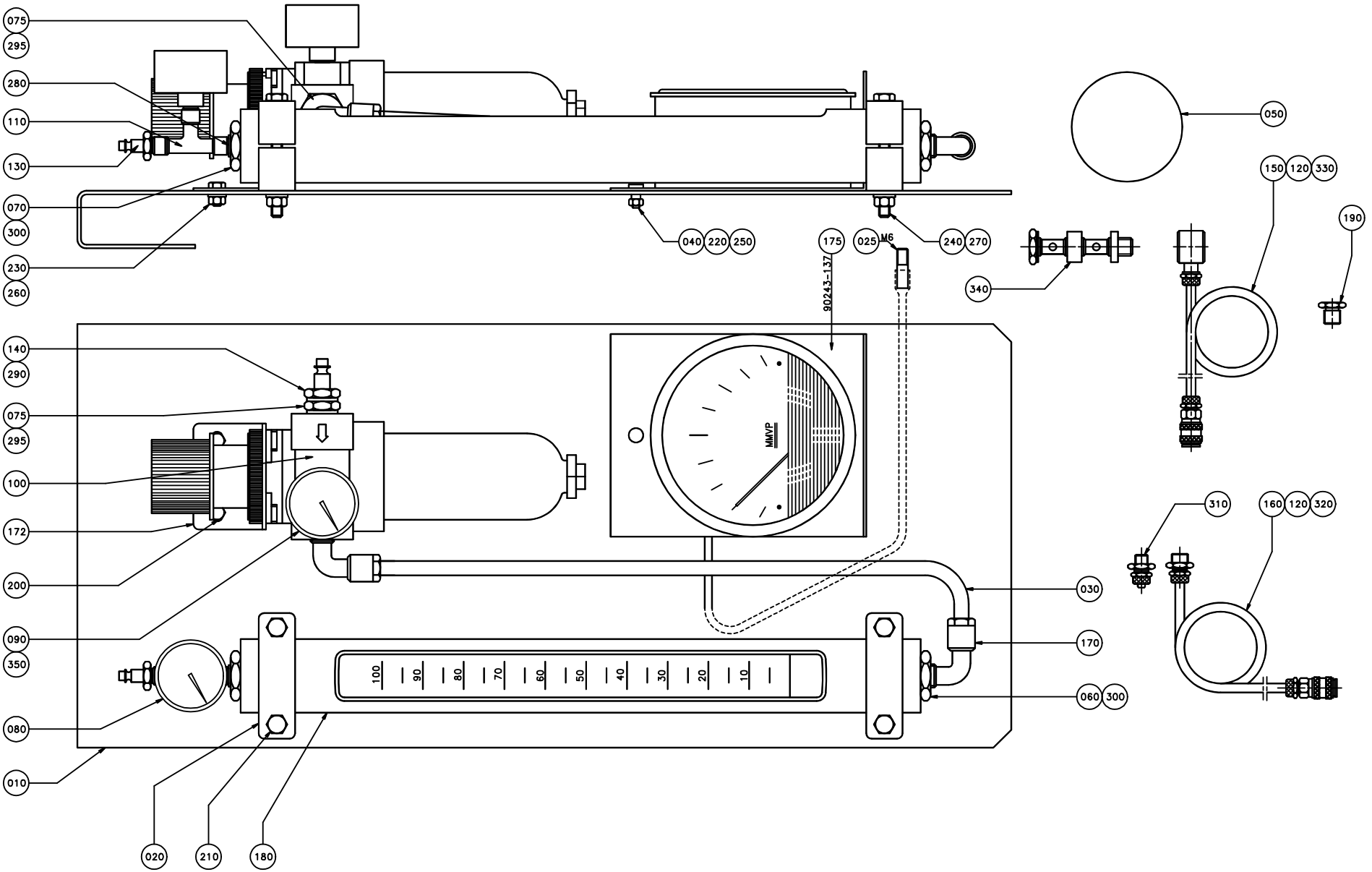
075
295
280
110
130
070
300
230
260
040
220
250
175
025
M6
240
270
90243-137
050
150
120
330
190
340
140
290
075
295
100
172
200
090
350
080
010
020
210
180
MMVP
100
90
80
70
60
50
40
30
20
10
030
170
060
300
310
160
120
320

ECM: 71889 - 19980924
Group number: 533014-0100
Assembly Drawing: 533014-2_1_AB

Issue: 20011218

Pos	Part No	SP	UN	Qty	Description	Page No
Common Parts						
010	A533905-0100	-		1	PONCH	**1123**
010	532676-0000	-		1	SHEET	
015	533015-0000	-		1	WIRING DIAGRAM	
020	1360399-0000	-		4	PIPE HOLDER	
025	493735-0000	-		1	NIPPLE	
030	532677-0000	-		1	PIPE	
040	532678-0000	-		1	DOWEL	
050	532679-0000	-		1	PLATE	
060	90030-0223	-		1	BUSHING, INT/EXT. G-THREAD NO. 2531	
070	90030-0224	-		1	NIPPLES, EXT. THREAD, HEXAGON, NO. 2511	
075	90030-0225	-		2	REDUCTION NIPPEL 2531-3/8X1/4	
080	90043-0021	-		1	PRESSURE GAUGE WIEGAND 0-1 BAR 1/8"	
090	90043-0043	-		1	PRESSURE GAUGE WIEGAND 0-10 BAR 1/8"	
100	90113-0059	-		1	FILTER REG. 50UM	
110	90140-0015	-		1	T-PIPE, INT. THREAD, 2003-1/8	
120	90163-0056	-		2	QUICK COUPLING, (F) 5054-6/4	
130	90163-0057	-		1	NIPPLE 1/8" BRASS	
140	90163-0087	-		1	QUICK COUPLING, (M) 5150-1/4	
150	90166-0124	-	MM	1250	TUBE 6 MM PA,TRANSP.	
160	90166-0124	-	MM	1250	TUBE 6 MM PA,TRANSP.	
170	90224-0303	-		2	CONNECTION	
172	90113-0384	-		1	CANTILEVER	
175	90243-0137	-		1	MEASURING INSTRUMENT	
180	90243-0147	-		1	FLOW METER	
190	90330-0029	-		1	PLUG, EXT. G-THREAD, R-236R3/8	
200	312105-0325	-		2	SCREW M6S M5X10 A280	
210	312105-0383	-		4	SCREW M6S M6X65 A280	
220	312602-0312	-		1	HEXAGON NUT, M6M M4 BR	
230	312605-0314	-		2	HEXAGON NUT, M6M M5 A280	
240	312605-0316	-		4	HEXAGON NUT, M6M M6 A280	
250	315103-0136	-		1	WASHER PLAIN, BRB, 4,3/8,H=0,8 NI PL BR	
260	315105-0146	-		4	WASHER PLAIN, BRB, 5,3/10,H=1	
270	315105-0153	-		8	WASHER PLAIN, BRB, 6,4/12,H=1,5	
280	315233-0109	-		2	WASHER PL.RND.NYL.10,3/14,H=1	
290	315233-0110	-		1	WASHER PL.RND.NYL.13,3/17,H=1	
295	315233-0111	-		2	WASHER PL.RND.NYL.17/22,H=1	
300	315233-0113	-		2	WASHER PL.RND.NYL.21,4/27,H=1,2	
310	342921-0113	-		1	STRAIGHT COUPLING,EXT.THREADED 6/4-G1/8"	
320	342921-0114	-		1	STRAIGHT COUPLING,EXT.THREADED 6/4-G1/4"	
330	342980-0114	-		1	BANJO-CONNECTION,RING 6/4-G1/4"	
340	342980-0314	-		1	BANJO-HOLLOW BOLT COUPL,EXT.THR.02-G1/4"	
350	342701-0201	-		1	BUSHING,INT./EXT.G-THREAD G1/4"-G1/8"	

Machine Type	Group Description	Used-In	Group Number	Page No

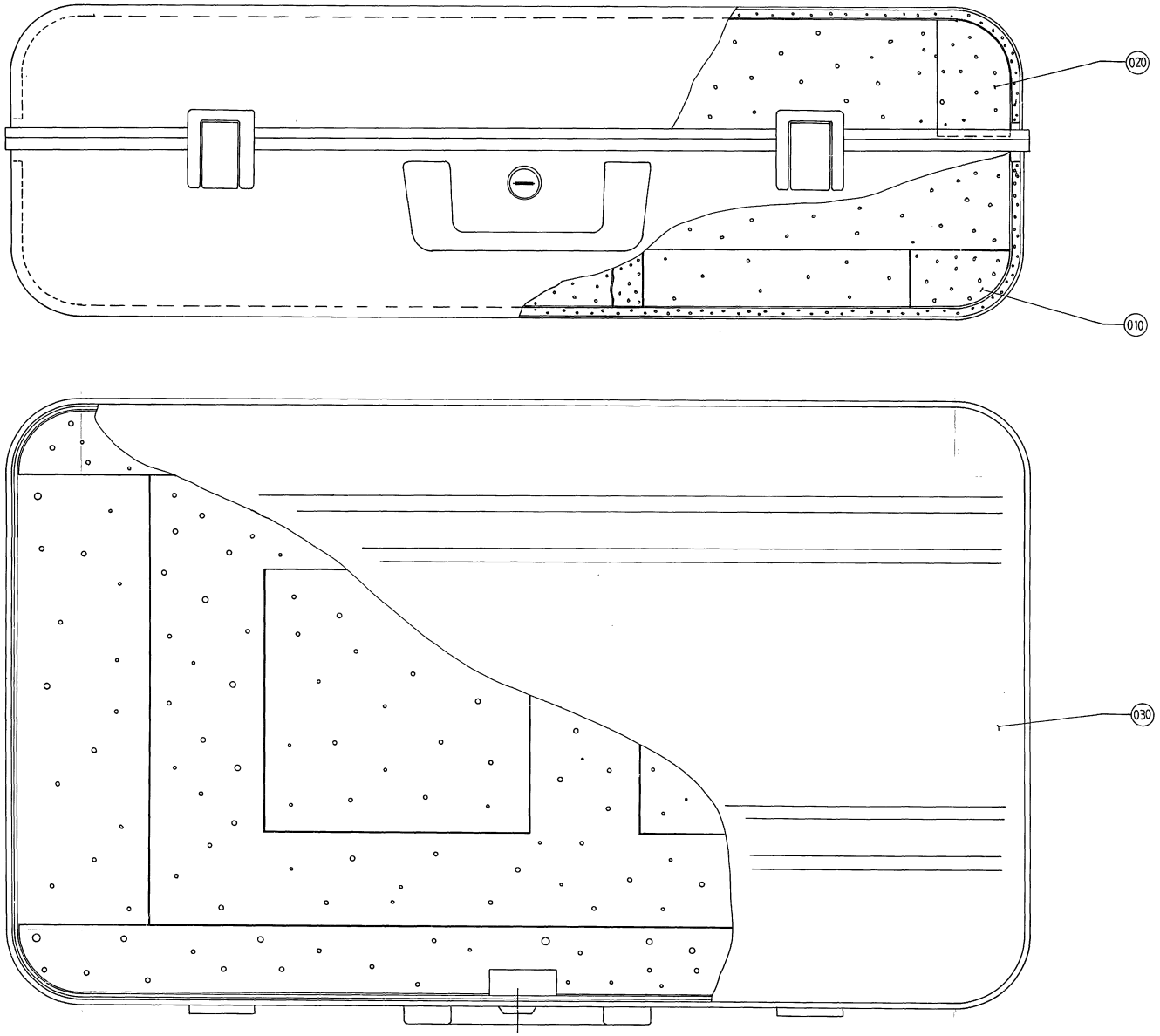
020
010
030

ECM: - -
Group number: 533905-0100
Assembly Drawing: 533905-1_1_AA

Issue: 20011218

Pos	Part No	SP	UN	Qty	Description	Page No
Common Parts						
010	533374-0000	-		1	FITMENT BOTTOM	
020	533906-0000	-		1	FITMENT COVER	
030	90243-0118	-		1	TOOL BOX, NO. ZERO 105X-SI	

Pos	Part No	SP	UN	Qty	Description	Page No

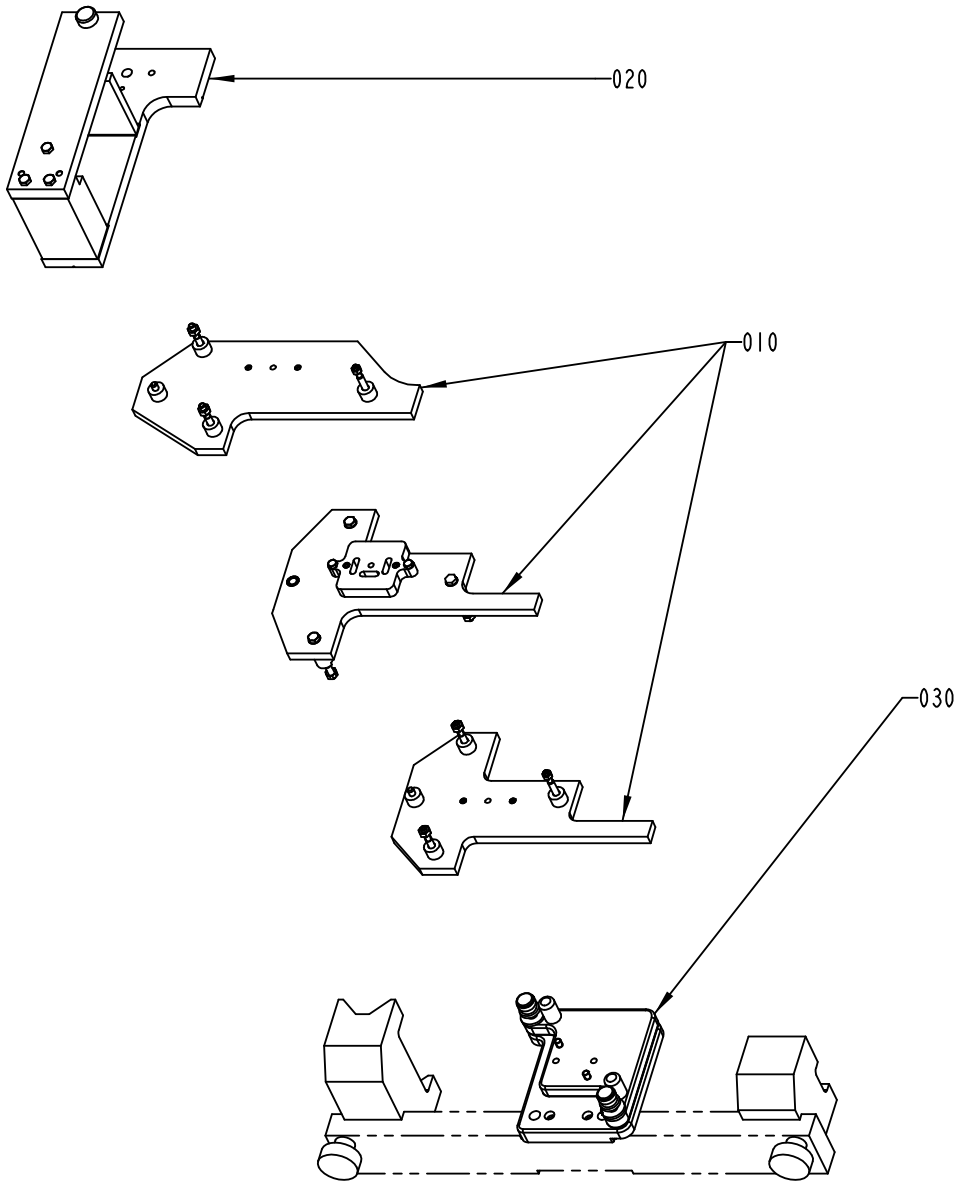

S-1512327-1
ECN 72849

ECM: 72849 - 19991129
Group number: 1512327-0100
Assembly Drawing: 1512327-1_1_AA

Issue: 20011218

Pos	Part No	SP	UN	Qty	Description	Page No
Common Parts						
010	A1095519-0100	-		1	TEMPLATE TUBE FORMING	**1127, 1129**
020	A1254457-0100	-		1	TEMPLATE LASER-UPPER	**1131**
030	90243-0450	-		1	RIDGE BED	

Pos	Part No	SP	UN	Qty	Description	Page No

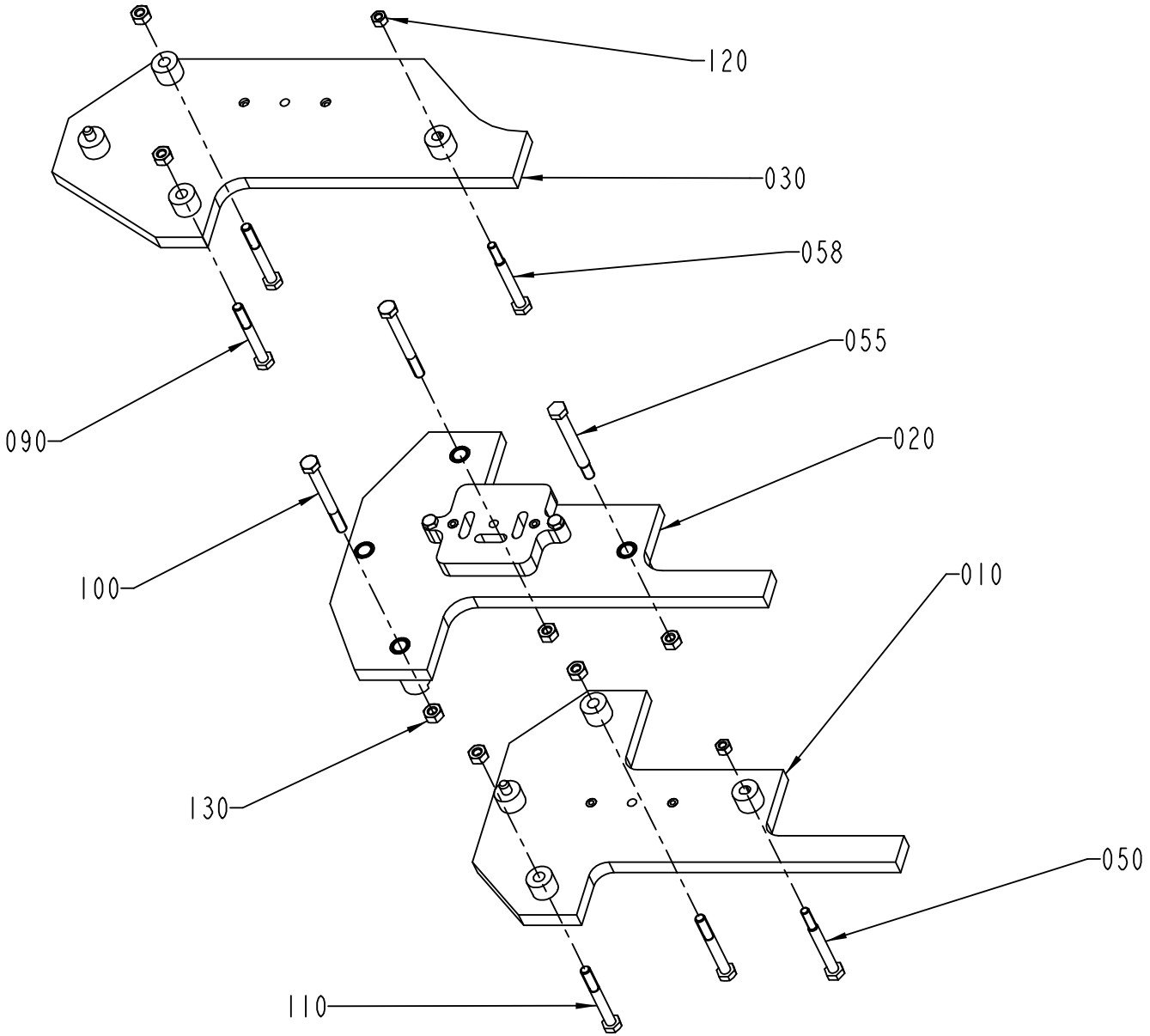

S-1095519-1
ECN 72849

ECM: 93850 - 20010709
Group number: 1095519-0100
Assembly Drawing: 1095519-1_1_AD

Issue: 20011218

Pos	Part No	SP	UN	Qty	Description	Page No
TBA 0200B OR TBA 0250B						
010	1549379-0000	A		1	TEMPLATE	
020	1346919-0000	A		1	TEMPLATE TUBE FORMING	
030	1347267-0000	A		1	TEMPLATE TUBE FORMING	
050	1037504-0000	A		1	SCREW	
055	1346082-0000	A		1	SCREW	
058	1478592-0000	A		1	SCREW	
110	312105-0380	-		2	SCREW M6S M6X50 A280	
120	312605-0314	-		1	HEXAGON NUT, M6M M5 A280	
130	312605-0316	-		8	HEXAGON NUT, M6M M6 A280	
TBA 0200S						
010	1334817-0000	A		1	TEMPLATE TUBE FORMING	
020	1334818-0000	A		1	TEMPLATE TUBE FORMING	
030	1334819-0000	A		1	TEMPLATE	
050	1478592-0000	A		1	SCREW	
055	1478581-0000	A		1	SCREW	
058	1037504-0000	A		1	SCREW	
110	312105-0380	-		2	SCREW M6S M6X50 A280	
120	312605-0314	-		4	HEXAGON NUT, M6M M5 A280	
130	312605-0316	-		5	HEXAGON NUT, M6M M6 A280	
TBA 0500B OR TBA 1000B OR TBA 1500S						
010	1129851-0000	A		1	TEMPLATE TUBE FORMING	
020	1037469-0000	A		1	TEMPLATE TUBE FORMING	
030	1037470-0000	A		1	TEMPLATE TUBE FORMING	
050	1037504-0000	A		1	SCREW	
055	1478581-0000	A		1	SCREW	
058	1037504-0000	A		1	SCREW	
110	312105-0380	-		2	SCREW M6S M6X50 A280	
120	312605-0314	-		3	HEXAGON NUT, M6M M5 A280	
130	312605-0316	-		6	HEXAGON NUT, M6M M6 A280	
TBA 0500S						
010	1517608-0000	A		1	TEMPLATE TUBE FORMING	
020	1517607-0000	A		1	TEMPLATE TUBE FORMING	
030	1512124-0000	A		1	TEMPLATE	
050	1037504-0000	A		1	SCREW	
055	1478581-0000	A		1	SCREW	
058	1037504-0000	A		1	SCREW	
110	312105-0380	-		2	SCREW M6S M6X50 A280	
120	312605-0314	-		3	HEXAGON NUT, M6M M5 A280	
130	312605-0316	-		6	HEXAGON NUT, M6M M6 A280	
TBA 1000S OR TBA 1000SQ						
010	1129854-0000	A		1	TEMPLATE TUBE FORMING	
020	1040961-0000	A		1	TEMPLATE	
030	1040960-0000	A		1	TEMPLATE	
050	1037504-0000	A		1	SCREW	
055	1346082-0000	A		1	SCREW	
058	1037504-0000	A		1	SCREW	
110	312105-0380	-		2	SCREW M6S M6X50 A280	
120	312605-0314	-		4	HEXAGON NUT, M6M M5 A280	
130	312605-0316	-		7	HEXAGON NUT, M6M M6 A280	
TPA 0330SQ						
010	1549379-0000	A		1	TEMPLATE	
020	1532993-0000	A		1	TEMPLATE TUBE FORMING	
030	1347267-0000	A		1	TEMPLATE TUBE FORMING	
050	1037504-0000	A		1	SCREW	
055	1478581-0000	A		1	SCREW	
058	1478592-0000	A		1	SCREW	
110	312105-0380	-		2	SCREW M6S M6X50 A280	
120	312605-0314	-		1	HEXAGON NUT, M6M M5 A280	
130	312605-0316	-		8	HEXAGON NUT, M6M M6 A280	
TPA 1000S						
010	1347203-0000	A		1	TEMPLATE	
020	1347204-0000	A		1	TEMPLATE	
030	1347205-0000	A		1	TEMPLATE	
040	1348969-0000	A		1	TEMPLATE	
050	1037504-0000	A		1	SCREW	
055	1346082-0000	A		1	SCREW	
058	1037504-0000	A		1	SCREW	
070	1348971-0000	A		3	SCREW	
110	312105-0341	-		2	SCREW M6S M5X50 A280	
130	312605-0316	-		5	HEXAGON NUT, M6M M6 A280	
140	312605-0318	-		3	HEXAGON NUT, M6M M8 A280	
Common Parts						
090	312105-0380	-		2	SCREW M6S M6X50 A280	
100	312105-0382	-		2	SCREW M6S M6X60 A280	
130	312605-0316	-		6	HEXAGON NUT, M6M M6 A280	

Machine Type | Group Description | Used-In | Group Number | Page No

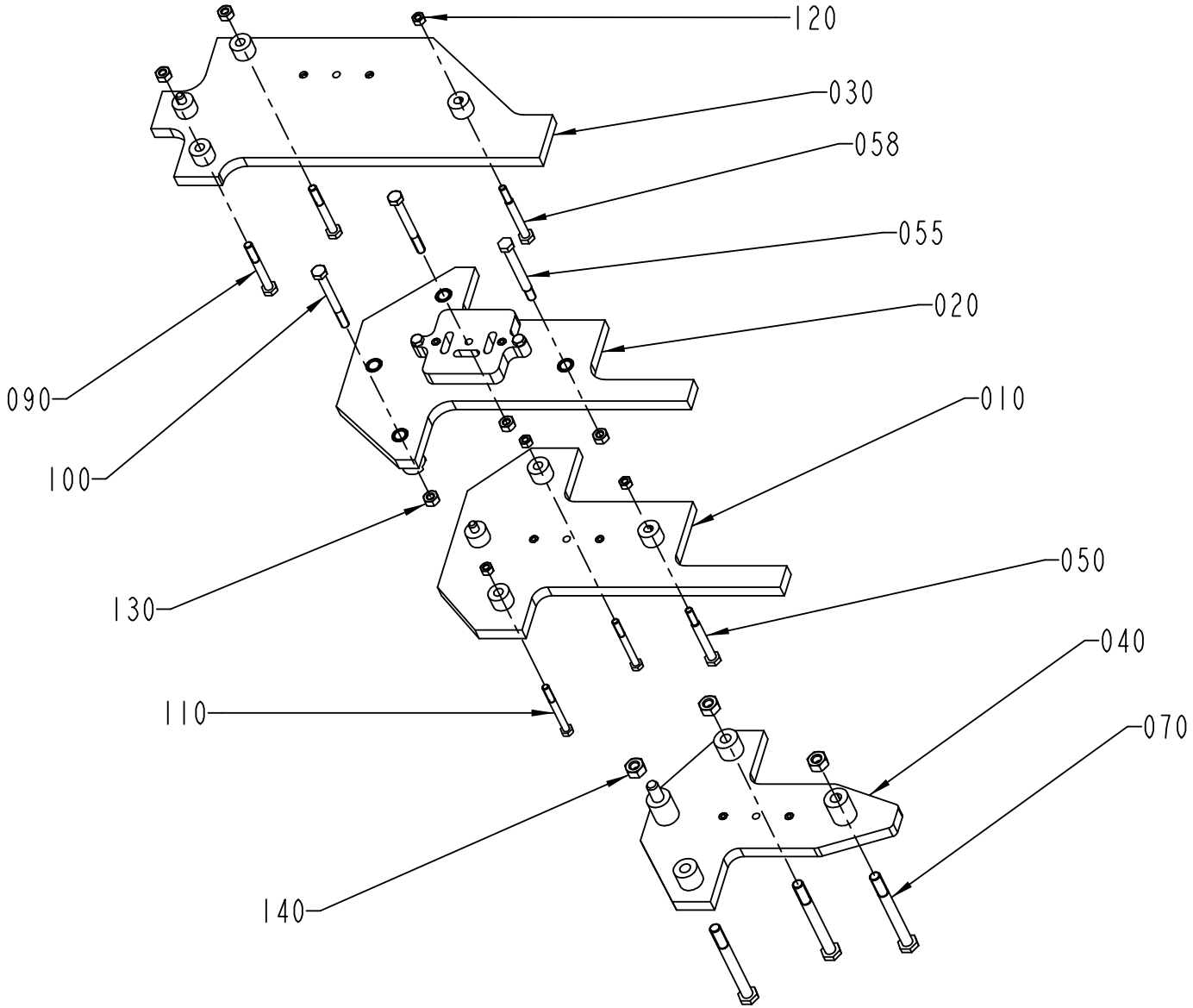

S-1095519-2
ECN 72849

ECM: 93850 - 20010709
Group number: 1095519-0100
Assembly Drawing: 1095519-2_1_AB

Issue: 20011218

Pos	Part No	SP	UN	Qty	Description	Page No
TBA 0200B OR TBA 0250B						
010	1549379-0000	A		1	TEMPLATE	
020	1346919-0000	A		1	TEMPLATE TUBE FORMING	
030	1347267-0000	A		1	TEMPLATE TUBE FORMING	
050	1037504-0000	A		1	SCREW	
055	1346082-0000	A		1	SCREW	
058	1478592-0000	A		1	SCREW	
110	312105-0380	-		2	SCREW M6S M6X50 A280	
120	312605-0314	-		1	HEXAGON NUT, M6M M5 A280	
130	312605-0316	-		8	HEXAGON NUT, M6M M6 A280	
TBA 0200S						
010	1334817-0000	A		1	TEMPLATE TUBE FORMING	
020	1334818-0000	A		1	TEMPLATE TUBE FORMING	
030	1334819-0000	A		1	TEMPLATE	
050	1478592-0000	A		1	SCREW	
055	1478581-0000	A		1	SCREW	
058	1037504-0000	A		1	SCREW	
110	312105-0380	-		2	SCREW M6S M6X50 A280	
120	312605-0314	-		4	HEXAGON NUT, M6M M5 A280	
130	312605-0316	-		5	HEXAGON NUT, M6M M6 A280	
TBA 0500B OR TBA 1000B OR TBA 1500S						
010	1129851-0000	A		1	TEMPLATE TUBE FORMING	
020	1037469-0000	A		1	TEMPLATE TUBE FORMING	
030	1037470-0000	A		1	TEMPLATE TUBE FORMING	
050	1037504-0000	A		1	SCREW	
055	1478581-0000	A		1	SCREW	
058	1037504-0000	A		1	SCREW	
110	312105-0380	-		2	SCREW M6S M6X50 A280	
120	312605-0314	-		3	HEXAGON NUT, M6M M5 A280	
130	312605-0316	-		6	HEXAGON NUT, M6M M6 A280	
TBA 0500S						
010	1517608-0000	A		1	TEMPLATE TUBE FORMING	
020	1517607-0000	A		1	TEMPLATE TUBE FORMING	
030	1512124-0000	A		1	TEMPLATE	
050	1037504-0000	A		1	SCREW	
055	1478581-0000	A		1	SCREW	
058	1037504-0000	A		1	SCREW	
110	312105-0380	-		2	SCREW M6S M6X50 A280	
120	312605-0314	-		3	HEXAGON NUT, M6M M5 A280	
130	312605-0316	-		6	HEXAGON NUT, M6M M6 A280	
TBA 1000S OR TBA 1000SQ						
010	1129854-0000	A		1	TEMPLATE TUBE FORMING	
020	1040961-0000	A		1	TEMPLATE	
030	1040960-0000	A		1	TEMPLATE	
050	1037504-0000	A		1	SCREW	
055	1346082-0000	A		1	SCREW	
058	1037504-0000	A		1	SCREW	
110	312105-0380	-		2	SCREW M6S M6X50 A280	
120	312605-0314	-		4	HEXAGON NUT, M6M M5 A280	
130	312605-0316	-		7	HEXAGON NUT, M6M M6 A280	
TPA 0330SQ						
010	1549379-0000	A		1	TEMPLATE	
020	1532993-0000	A		1	TEMPLATE TUBE FORMING	
030	1347267-0000	A		1	TEMPLATE TUBE FORMING	
050	1037504-0000	A		1	SCREW	
055	1478581-0000	A		1	SCREW	
058	1478592-0000	A		1	SCREW	
110	312105-0380	-		2	SCREW M6S M6X50 A280	
120	312605-0314	-		1	HEXAGON NUT, M6M M5 A280	
130	312605-0316	-		8	HEXAGON NUT, M6M M6 A280	
TPA 1000S						
010	1347203-0000	A		1	TEMPLATE	
020	1347204-0000	A		1	TEMPLATE	
030	1347205-0000	A		1	TEMPLATE	
040	1348969-0000	A		1	TEMPLATE	
050	1037504-0000	A		1	SCREW	
055	1346082-0000	A		1	SCREW	
058	1037504-0000	A		1	SCREW	
070	1348971-0000	A		3	SCREW	
110	312105-0341	-		2	SCREW M6S M5X50 A280	
130	312605-0316	-		5	HEXAGON NUT, M6M M6 A280	
140	312605-0318	-		3	HEXAGON NUT, M6M M8 A280	
Common Parts						
090	312105-0380	-		2	SCREW M6S M6X50 A280	
100	312105-0382	-		2	SCREW M6S M6X60 A280	
130	312605-0316	-		6	HEXAGON NUT, M6M M6 A280	

Machine Type | Group Description | Used-In | Group Number | Page No

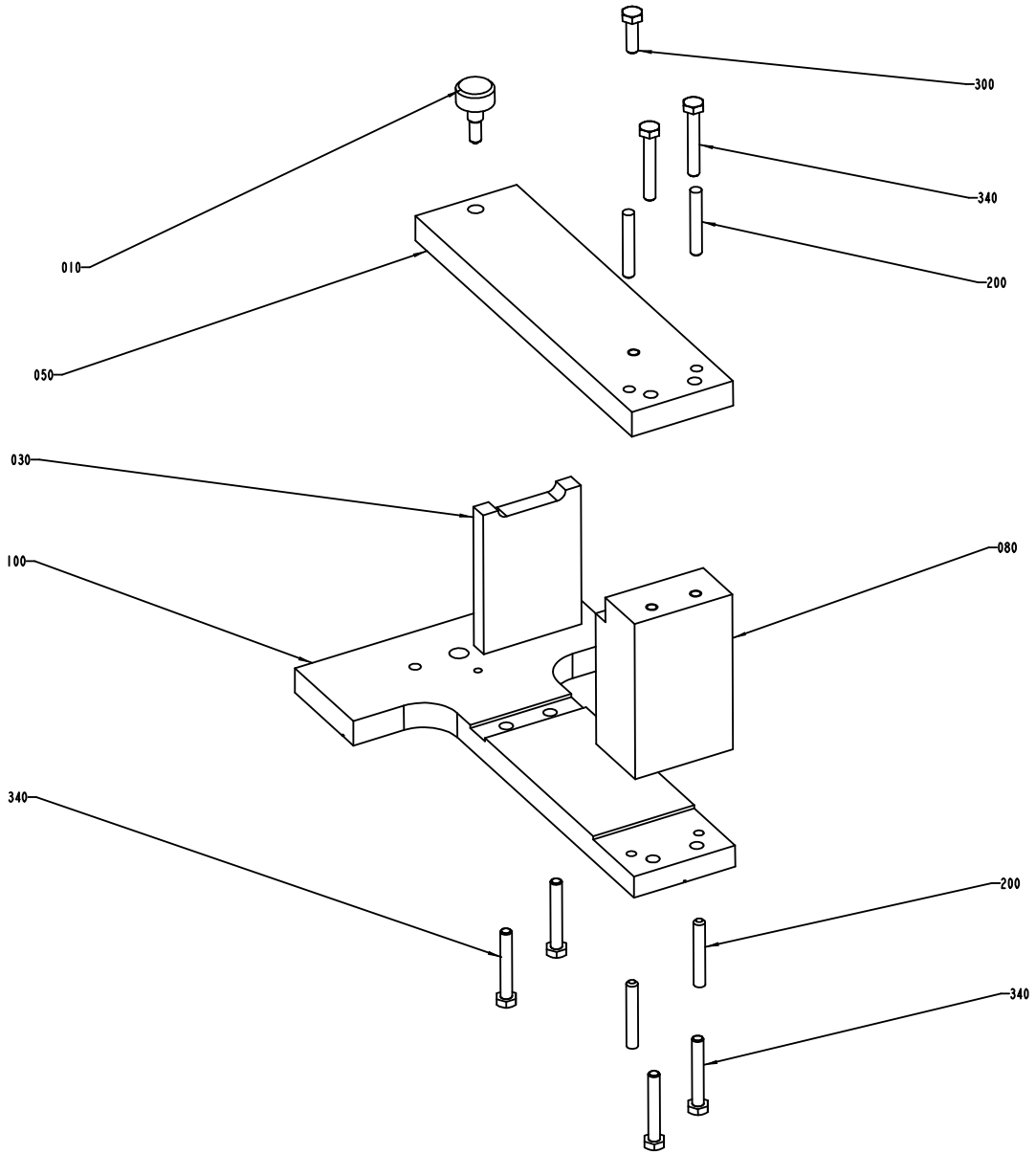
300
340
200
010
050
030
100
080
340
200
340

ECM: 71036 - 19970926
Group number: 1254457-0100
Assembly Drawing: 1254457-1_1_AA

Issue: 20011218

Pos	Part No	SP	UN	Qty	Description	Page No
Common Parts						
010	1037835-0000	C		1	SCREW	
030	1254461-0000	C		1	BRACKET	
050	1254459-0000	C		1	BRACKET	
080	1254460-0000	C		1	BRACKET	
100	1254458-0000	C		1	BRACKET	
200	311103-0361	-		4	PARALLELL PIN, M6, 6X40 MM	
300	312105-0370	-		1	SCREW M6S M6X20 A280	
340	312109-0378	-		6	SCREW M6S M6X40 A280	

Pos	Part No	SP	UN	Qty	Description	Page No

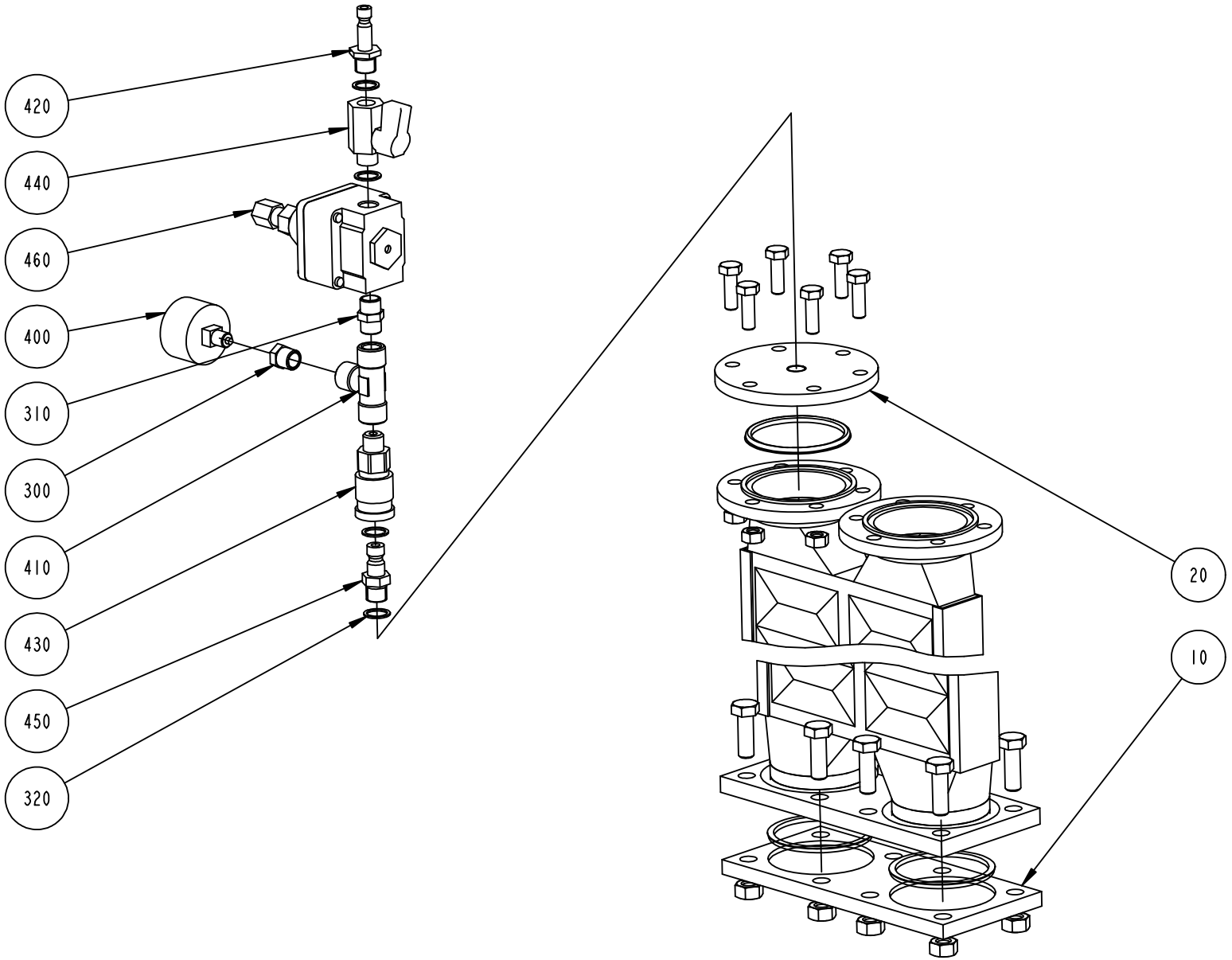
420
440
460
400
310
300
410
430
450
320
20
10

ECM: 71511 - 19981102
Group number: 1349738-0100
Assembly Drawing: 1349738-1_1_AA

Issue: 20011218

Pos	Part No	SP	UN	Qty	Description	Page No
Common Parts						
010	1348263-0000	-		1	FLANGE	
020	979951-0000	-		1	FLANGE	
300	342701-0201	-		1	BUSHING,INT./EXT.G-THREAD G1/4"-G1/8"	
310	342700-0110	-		1	NIPPLES,HEXAGON,EXT.G-THREAD G1/4"-G1/4"	
320	315233-0110	-		4	WASHER PL.RND.NYL.13,3/17,H=1	
400	90043-0021	-		1	PRESSURE GAUGE WIEGAND 0-1 BAR 1/8"	
410	90140-0018	-		1	T-PIPE, INT. THREAD, 2003-1/4	
420	90163-0007	-		1	CONNECTION	
430	90163-0016	-		1	QUICK COUPLING, (F) LP 006-0-WR013	
440	90187-0045	-		1	BALL VALVE G1/4 CR PL	
450	90163-0113	-		1	QUICK COUPLING, (M) LP-006-1-WR013-22	
460	90113-0056	-		1	REGULATOR	
500	567372-0000	-		1	INSTRUCTION FOR USE	

Pos	Part No	SP	UN	Qty	Description	Page No

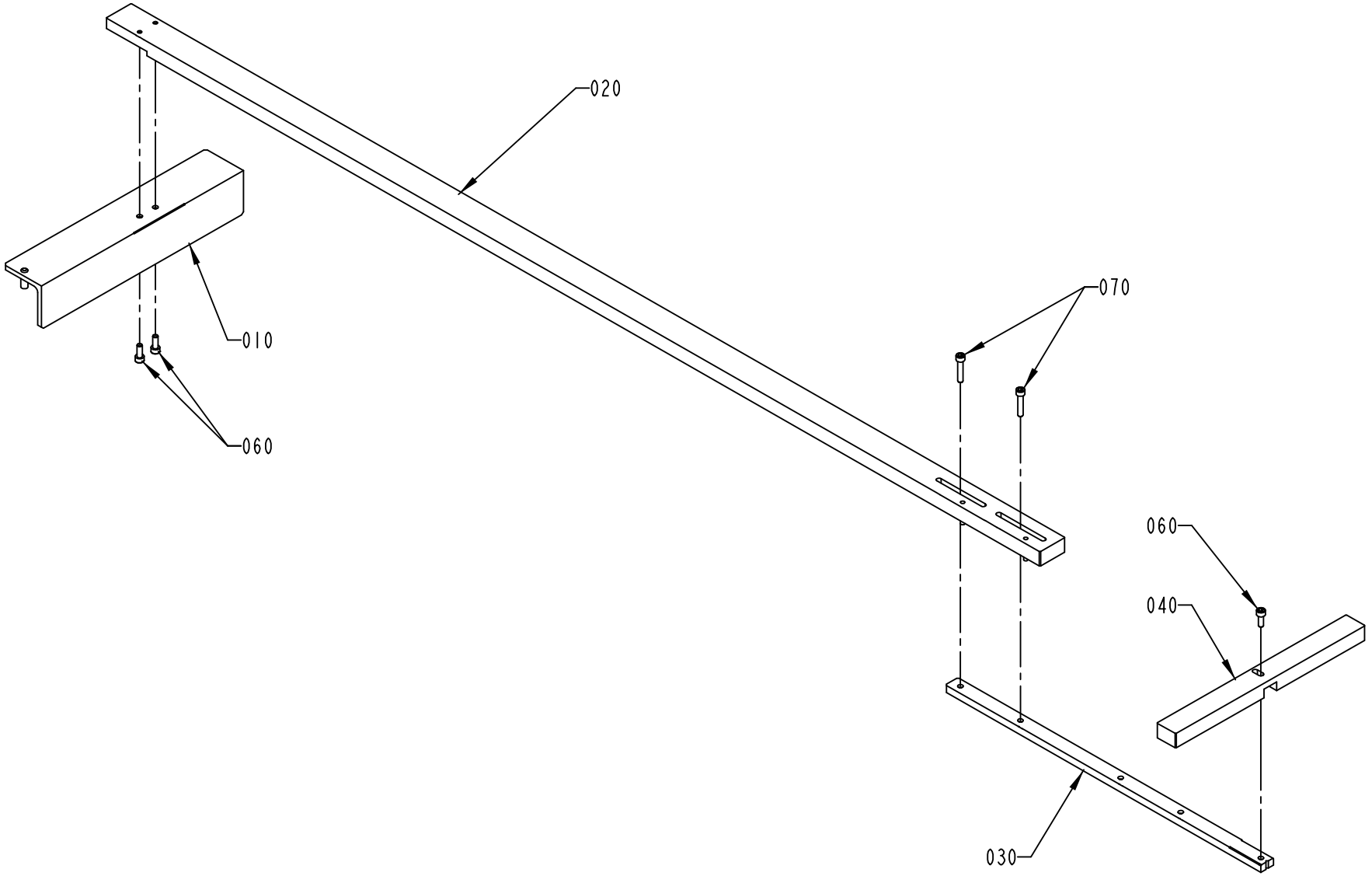

S-1348492-1
ECN 73139

ECM: 72849 - 19991129
Group number: 1348492-0100
Assembly Drawing: 1348492-1_1_AA

Issue: 20011218

Pos	Part No	SP	UN	Qty	Description	Page No
Common Parts						
010	1348493-0000	-		1	TEMPLATE	
020	1348494-0000	-		1	TEMPLATE	
030	1348908-0000	-		1	GUIDE	
040	1348910-0000	-		1	PARALLEL PIN	
060	312115-0368	-		3	SCREW MC6S M6X16 A280	
070	312115-0374	-		2	SCREW MC6S M6X30 A280	

Pos	Part No	SP	UN	Qty	Description	Page No

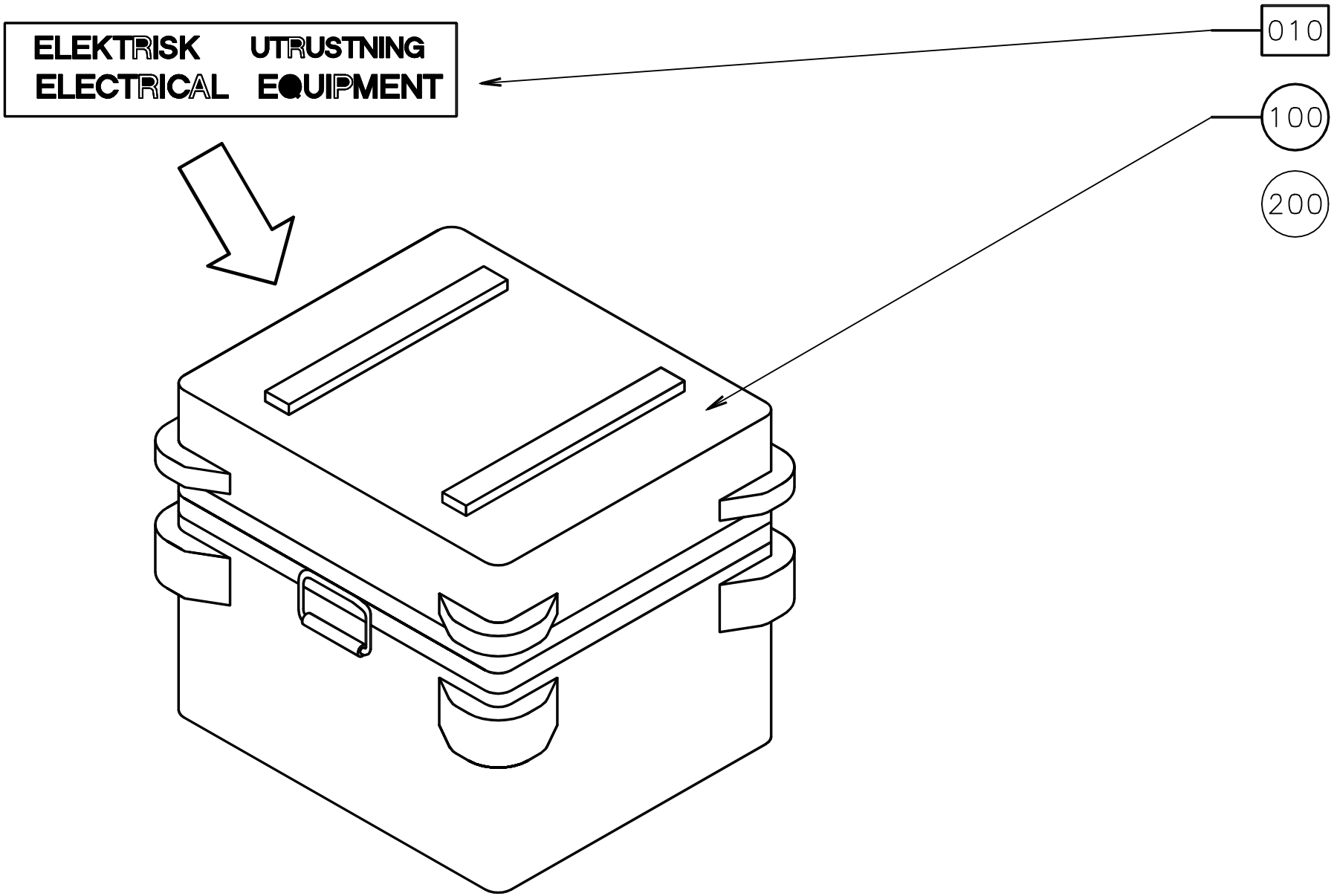
ELEKTRISK UTRUSTNING
ELECTRICAL EQUIPMENT
010
100
200

ECM: 71120 - 19971013
Group number: 567732-0100
Assembly Drawing: 567732-1_1_AA

Issue: 20011218

Pos	Part No	SP	UN	Qty	Description	Page No
Common Parts						
010	A557793-0100	-		1	CALIBRATION EQUIPMENT	**1139**
100	555568-0000	-		1	PONCH	
200	567745-0000	-		1	PACKING DESCRIPTION	

Pos	Part No	SP	UN	Qty	Description	Page No

This page is intentionally left blank.

ECM: 71120 - 19971013
Group number: 557793-0100
Assembly Drawing:

Issue: 20011218

Pos	Part No	SP	UN	Qty	Description	Page No
Common Parts						
0001	90326-0308	D		1	THERMOCOUPLE CABLE FOR CE-557793	
0002	90326-0309	D		1	THERMOCOUPLE CABLE FOR CE-557793	
0003	90194-0113	D		1	ADHESIVE LABEL, CALIBRATED & DATE	
0004	90194-0109	D		1	SIGN, TRANSP. OH-FOLIE, BLANC	
0005	90243-0208	-		1	SCREWDRIVER	
0006	90220-0077	D		1	CABLE, POWER SUPPLY, RKK 3X0,75 2M	
A001	90410-0337	D		1	CALIBRATION INSTRUMENT 5100071-001	
A001:1	90326-0312	D		3	HOUSE	
A001:2	90326-0311	D		1	HOUSE	
A002	90410-0338	D		1	PORTABLE INDICATOR MICROMITE II	
A002:1	90410-0340	D		1	AC-ADAPTER 5100072-002	
A003	90243-0099	D		1	MEASURING INSTRUMENT,MULTIMETER 175	
A003:1	90220-0080	D		1	CONNECTOR WITH GRAB HOOK,4 MM BLACK	
A003:2	90220-0081	D		1	CONNECTOR WITH GRAB HOOK,4 MM RED	
A003:3	90220-0078	D		1	CABLE, LABORATORY FLEX, 1X1,5 1M RED	
A003:4	90220-0079	D		1	CABLE, LABORATORY FLEX, 1X1,5 1M BLACK	
A004	90410-0339	D		1	ADAPTER FOR E.THERM TEMP.REG.-101	
A005	B567733-0101	D		1	ADAPTER	
010	*567731-0000*	-		*1*	*ADAPTER*	
070	*351179-0102*	-	*M*	*2*	*CABLE AWM 1X075 MM2 BLACK*	
080	*353012-0010*	-		*1*	*MALE PLUG*	
090	*353012-0011*	-		*1*	*SOCKET*	
150	*90194-0016*	-		*2*	*SIGN, FLASH, ELECTRIC EQUIPMENT SYMBOL*	
A006	B557826-0101	D		1	TEMPERATURE REG. ADAPTER	
110	*90129-0014*	-		*1*	*HOLDER SCHROFF 20800-213*	
120	*570127-0000*	-		*1*	*PROTECTION*	
130	*570128-0000*	-		*1*	*PROTECTION*	
140	*90287-0221*	-		*6*	*SCREW PAN HEAD MCS M2,5X16*	
150	*90099-0050*	-		*6*	*HEXAGON NUT, M2, 5*	
160	*90316-0002*	-		*12*	*SPACER, 2,65/5X4*	
170	*A557063-0100*	-		*1*	*TEMP.REG.ADAPT: MAIN CARD*	
A007	90326-0310	D		1	TEMPERATURE TRANSMITTER	
A008	90326-0310	D		1	TEMPERATURE TRANSMITTER	

Pos	Part No	SP	UN	Qty	Description	Page No

Machine Type | Group Description | Used-In | Group Number | Page No

This page is intentionally left blank.

Pos	Part No	SP	UN	Qty	Description	Page No
Common Parts						
0210	A527898-0100	-		1	CONTAINER H2O2	**415, 1143**
0220	A529345-0100	-		1	FILLING STATION H2O2	**1145**
0230	A532210-0100	-		1	PEROXIDE CONTAINER TROLLEY	**1147**
0240	A2514392-0100	-		1	MACHINE CARRIAGE	**1149**
0250	B90048-0022	-		1	MANUAL PUMP INCL. BARROW 50-60 L	
	90048-0448	-		*1*	*REPAIR KIT*	
0260	1110378-0002	-		1	DOLLY	
1300	A1035201-0100	-		2	PAPER REEL HOLDER	**1153**
1310	A1282762-0100	-		1	TROLLEY	**1155**
1710	90226-0004	-		1	CABINET	
1720	90245-0024	-		1	MATCHING TRANSF. 65 KVA	
2100	A1185025-0100	-		1	LIFTING EQUIPMENT	**1161**
2110	A1190009-0200	-		1	TPOP OFF-LINE ANALYSIS	**1163**
2120	90427-0014	-		1	INK JET PRINTER A300 STD	

Pos	Part No	SP	UN	Qty	Description	Page No

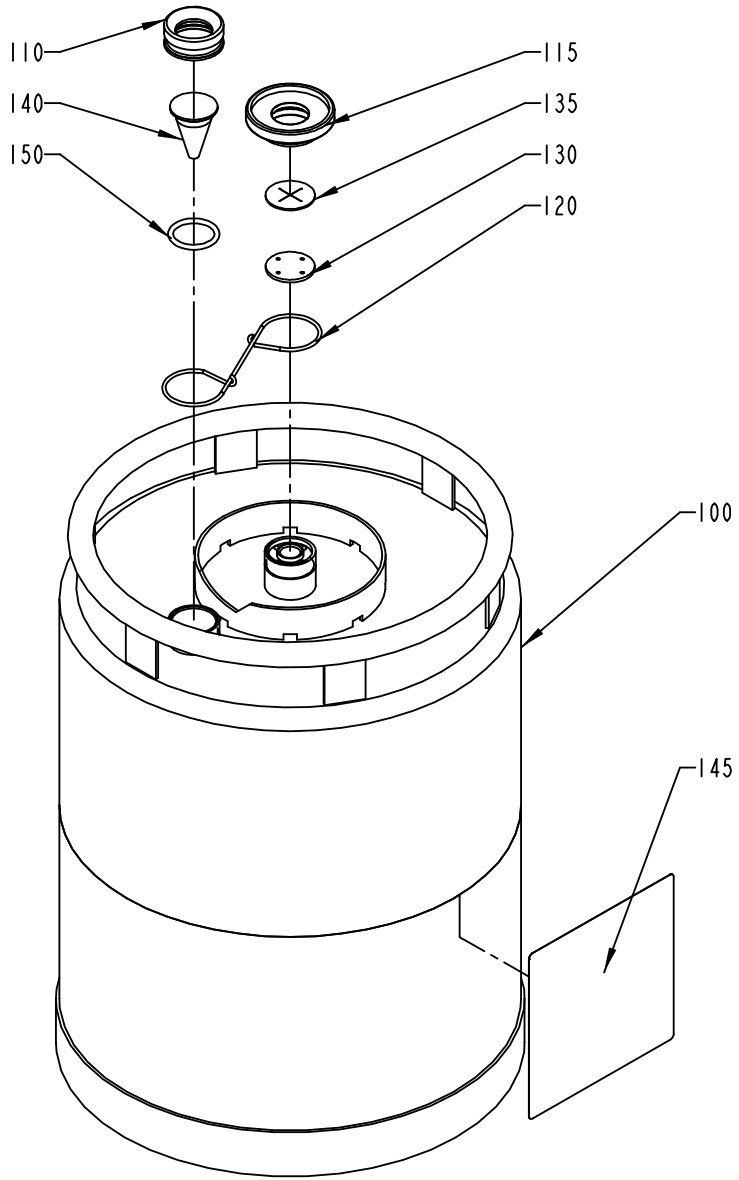

S-527898-I
ECN 72802

ECM: 82106 - 20000814
Group number: 527898-0100
Assembly Drawing: 527898-1_1_AB

Issue: 20011218

Pos	Part No	SP	UN	Qty	Description	Page No
Common Parts						
100	561427-0000	A		1	CONTAINER	
110	273977-0000	A		1	NUT	
115	273996-0000	A		1	NUT	
120	273980-0000	A		1	SPRING	
130	565250-0000	A		1	WASHER	
135	565251-0000	A		1	VALVE	
140	273978-0000	A		1	LEVEL GLASS	
145	532655-0000	B		1	CAUTION SIGN	
150	927422-0003	A		1	O.RING 24.2X3 SILICON	

Pos	Part No	SP	UN	Qty	Description	Page No

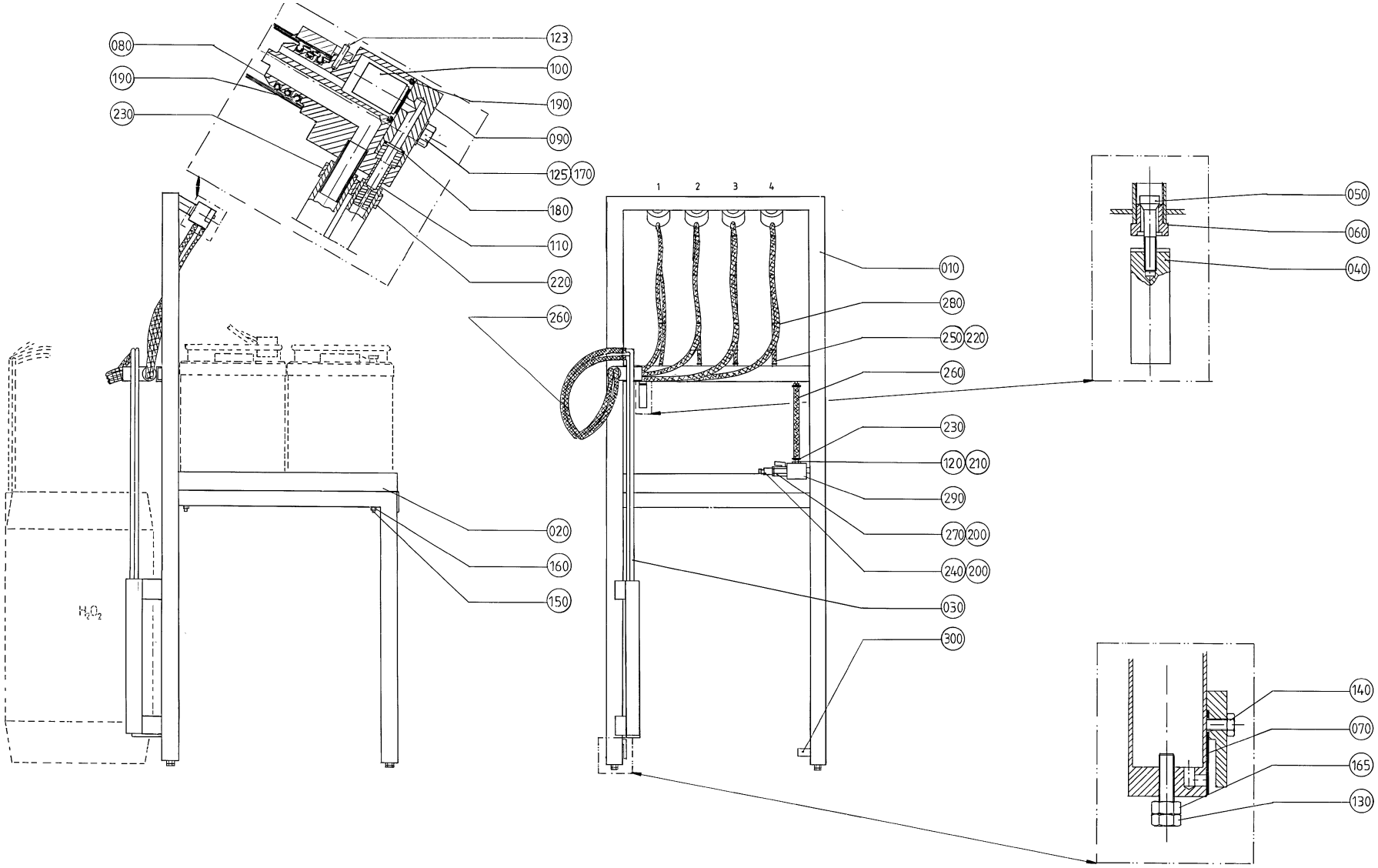
080
190
230
123
100
190
090
125
170
180
110
220
260
1
2
3
4
010
280
250
220
260
230
120
210
290
270
200
240
200
030
300
020
160
150
H_2O_2
050
060
040
140
070
165
130

ECM: - -
Group number: 529345-0100
Assembly Drawing: 529345-1_1_AA

Issue: 20011218

Pos	Part No	SP	UN	Qty	Description	Page No
Common Parts						
010	534692-0000	-		1	FRAME SECTION	
020	534693-0000	-		1	PLATE	
030	534694-0000	-		1	SUCTIONPIPE	
040	534695-0000	-		1	WEIGHT	
050	534696-0000	-		1	VALVE	
060	534697-0000	-		1	VALVE HOUSING	
070	534691-0000	-		1	DIAPHRAGM	
080	534637-0000	-		4	ATTACHMENT	
090	534636-0000	-		4	LEVEL GLASS	
100	534635-0000	-		4	VALVE	
110	534634-0000	-		4	PIPE	
120	534698-0000	-		1	NIPPLE	
123	311103-0235	-		1	PARALLELL PIN, CP, M6, 3X14 MM	
125	312105-0374	-		8	SCREW M6S M6X30 A280	
130	312105-0455	-		4	SCREW M6S M8X30 A280	
140	312125-0327	-		1	SCREW PAN HEAD MCS M5X12 SS	
150	312145-0380	-		4	SCREW COUNTERS.SLOT.HD. MFS 6X50 SS	
160	312812-0316	-		4	HEXAGON NUT, NY-LOCK M6 A480	
165	312605-0318	-		4	HEXAGON NUT, M6M M8 A280	
170	315105-0153	-		8	WASHER PLAIN, BRB, 6,4/12,H=1,5	
180	927421-0005	-		4	O-RING 7.3X2.4 SILICON	
190	927422-0001	-		16	O-RING 19.2X3 SILICON	
200	315233-0110	-		2	WASHER PL.RND.NYL.13,3/17,H=1	
210	315233-0113	-		2	WASHER PL.RND.NYL.21,4/27,H=1,2	
220	342991-0100	-		8	HOSE CLIP,WORM DRIVE TYPE 10-13	
230	342991-0101	-		10	HOSE CLIP,WORM DRIVE TYPE (13)-16	
240	90163-0007	-		1	CONNECTION	
250	90166-0045	-	MM	3500	HOSE PVC TRANSP. 6/12	
260	90166-0113	-	MM	7500	HOSE	
270	90187-0045	-		1	BALL VALVE G1/4 CR PL	
280	352113-0102	-		30	CLIP-STRIP, BLACK 188X4,8 MM	
290	90425-0016	-		1	MECMAN TYPE E120 735-120-000	
300	90328-0025	-		1	SILENCER G1/2	

Pos	Part No	SP	UN	Qty	Description	Page No

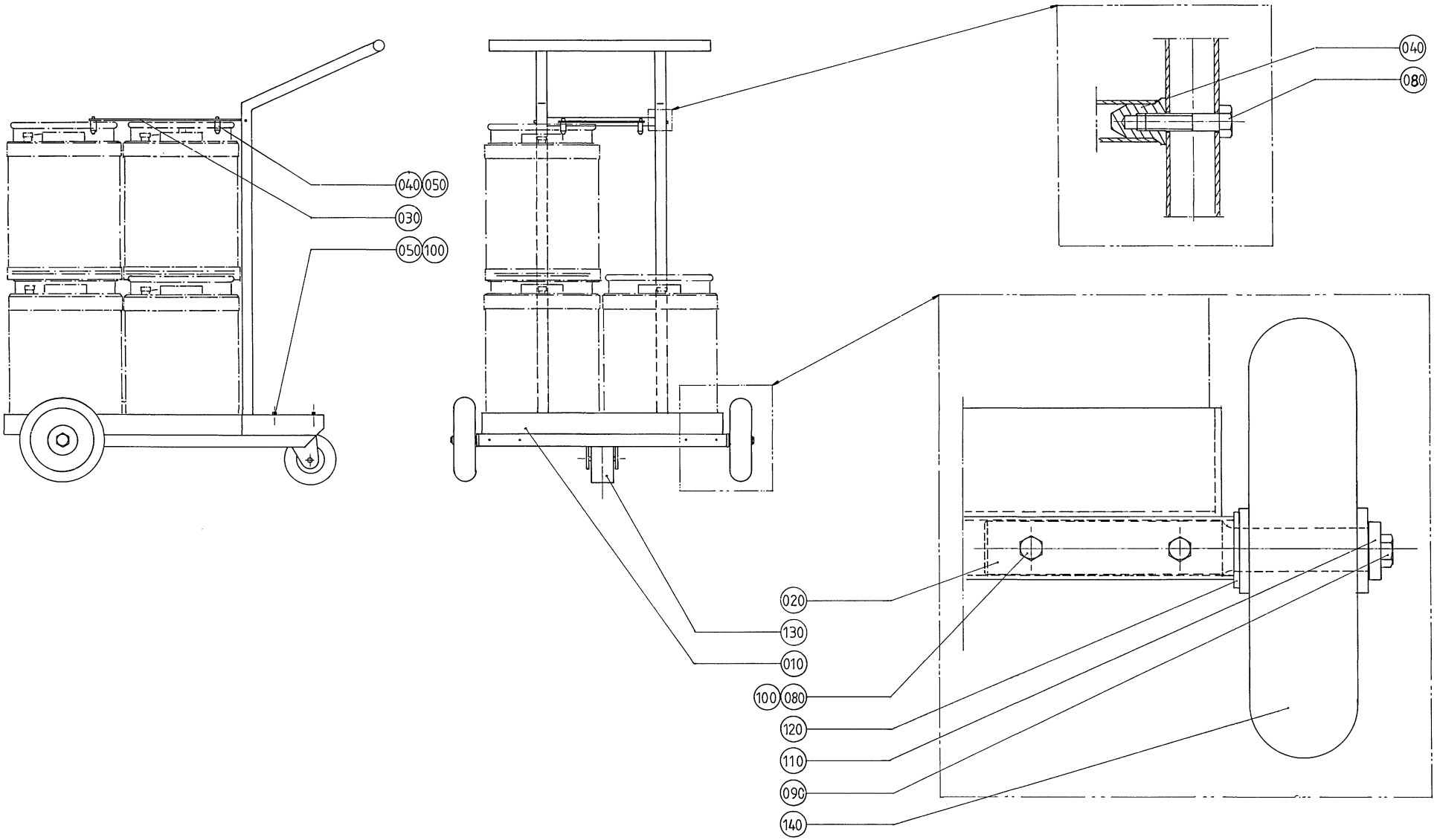
040
050
030
050
100
040
080
020
130
010
100
080
120
110
090
140

ECM: - -
Group number: 532210-0100
Assembly Drawing: 532210-1_1_AA

Issue: 20011218

Pos	Part No	SP	UN	Qty	Description	Page No
Common Parts						
010	273985-0000	-		1	CARRIAGE	
020	532208-0000	-		2	SHAFT	
030	532209-0000	-		1	SHEET	
040	532211-0000	-		6	DOWEL	
050	312105-0449	-		8	SCREW M6S M8X16 A280	
080	312105-0459	-		6	SCREW M6S M8X40 A280	
090	312105-0491	-		2	SCREW M6S M10X20 A280	
100	312605-0318	-		4	HEXAGON NUT, M6M M8 A280	
110	315115-0173	-		2	WASHER PLAIN, TBRB 10,5/22 H=4	
120	315105-0192	-		2	WASHER PLAIN, BRB, 21/36,H=3	
130	90191-0060	-		1	CASTOR WHEEL, NO. 1599PRT	
140	90191-0047	-		2	WHEEL, NO. 442-200-113	

Pos	Part No	SP	UN	Qty	Description	Page No

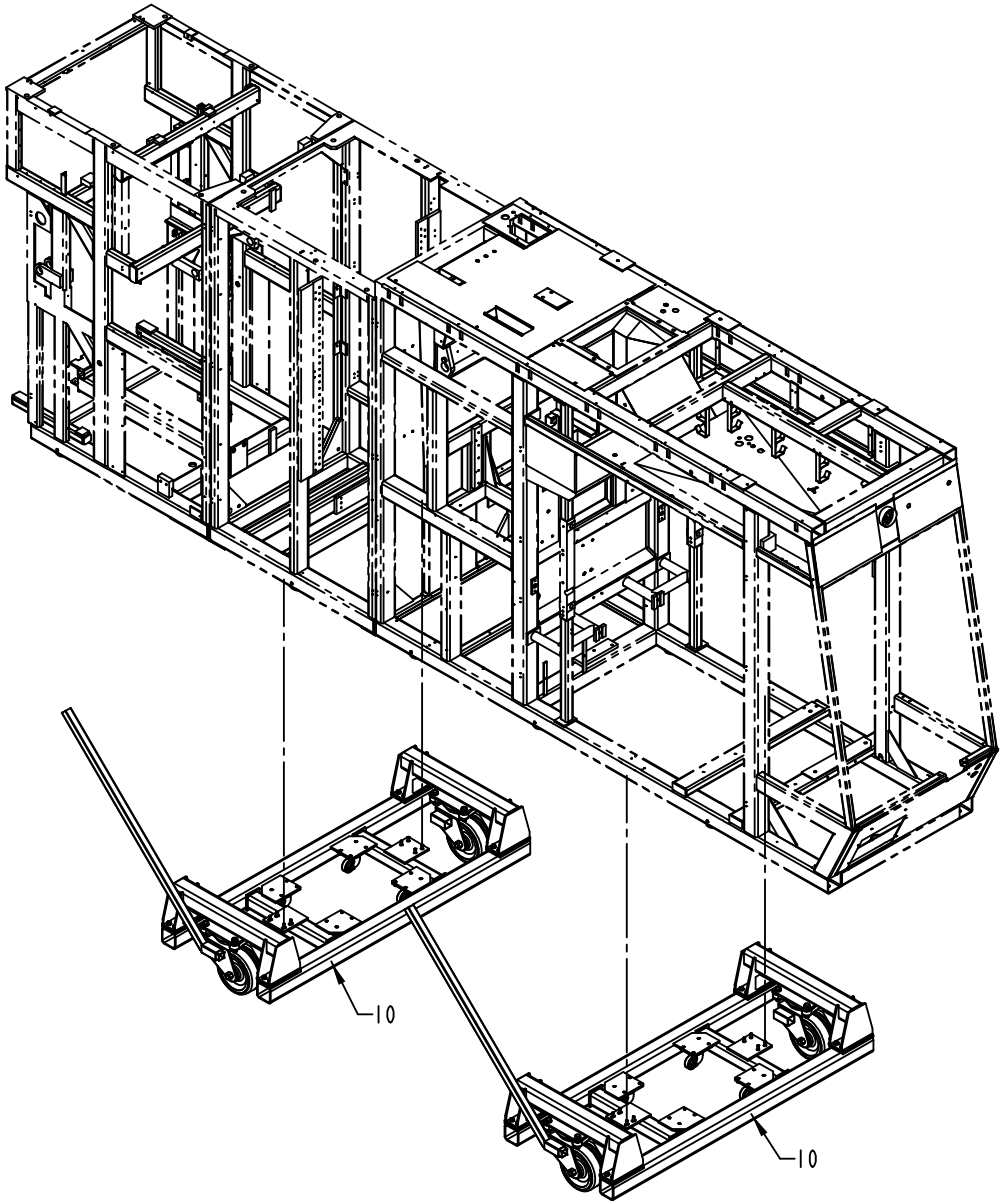

2514392-1
ECN 96858

ECM: 96863 - 20010830
Group number: 2514392-0100
Assembly Drawing: 2514392-1_1_AA

Issue: 20011218

Pos	Part No	SP	UN	Qty	Description	Page No
Common Parts						
0010	A582526-0100	-		2	CARRIAGE	**1151**

Pos	Part No	SP	UN	Qty	Description	Page No

Machine Type | Group Description | Used-In | Group Number | Page No

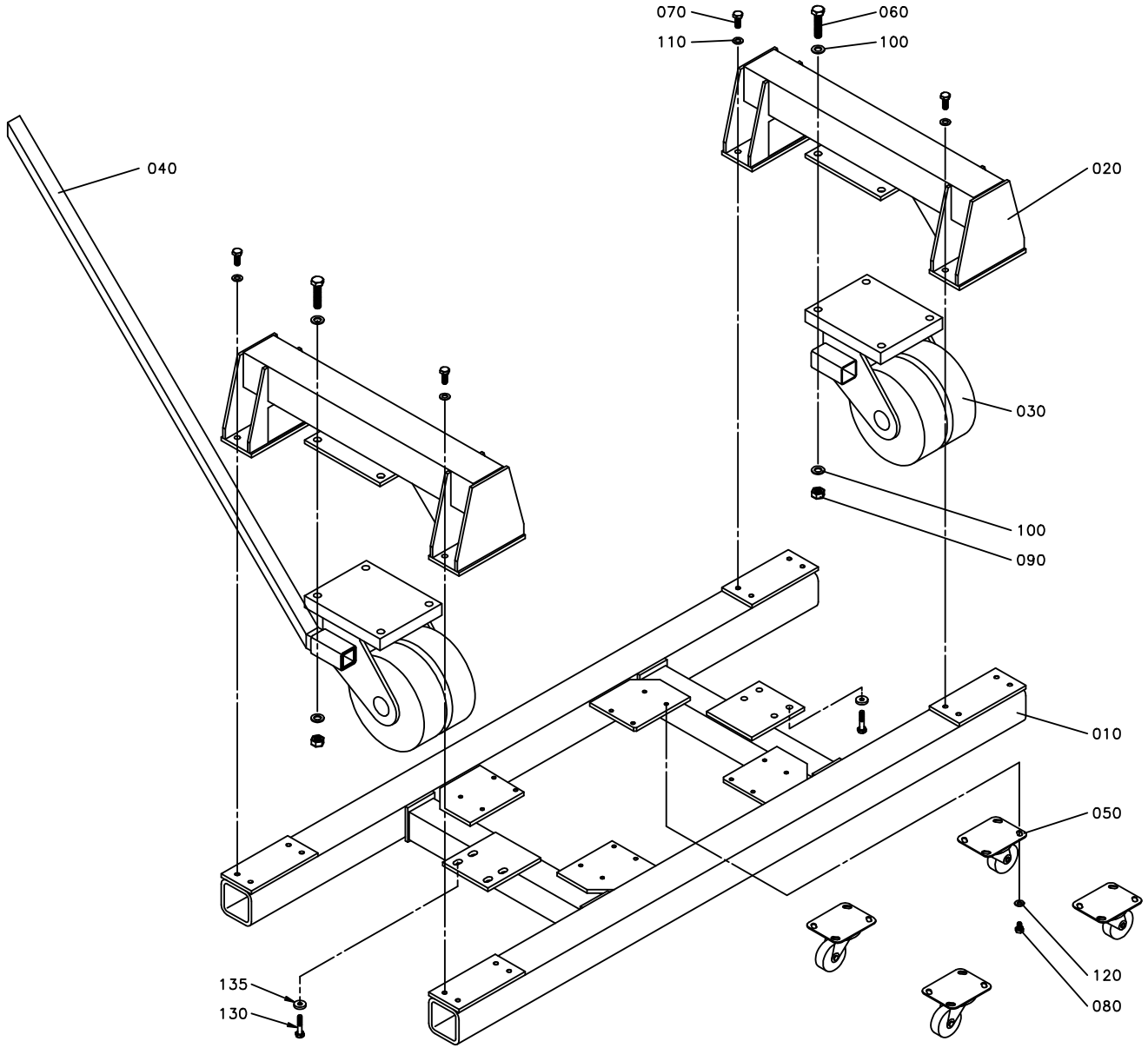
070
060
110
100
040
020
030
100
090
010
050
120
080
135
130

ECM: 96864 - 20010830
Group number: 582526-0100
Assembly Drawing: 582526-1_1_AA

Issue: 20011218

Pos	Part No	SP	UN	Qty	Description	Page No
Common Parts						
0010	1140039-0000	-		1	CONVEYOR FRAME	
0020	1140040-0000	-		2	BRACKET	
0030	1140840-0000	-		2	WHEEL	
0040	582527-0000	-		1	ROD	
0050	90191-0077	-		4	WHEEL	
0060	312105-0634	-		8	SCREW M6S M16X70 A280	
0070	312105-0538	-		16	SCREW M6S M12X35 A280	
0080	312105-0489	-		16	SCREW M6S M10X16 A280	
0090	312605-0324	-		8	HEXAGON NUT, M6M M16 A280	
0100	315105-0186	-		16	WASHER PLAIN, BRB, 17/30,H=3	
0110	315105-0178	-		16	WASHER PLAIN, BRB, 13/24,H=2	
0120	315105-0173	-		16	WASHER PLAIN, BRB, 10,5/22,H=2	
0130	312109-0499	-		8	SCREW M6S M10X40 A280	
0135	315125-0173	-		8	WASHER PLAIN ROUND,CHAMF. 10,5/28,H=6	

Pos	Part No	SP	UN	Qty	Description	Page No

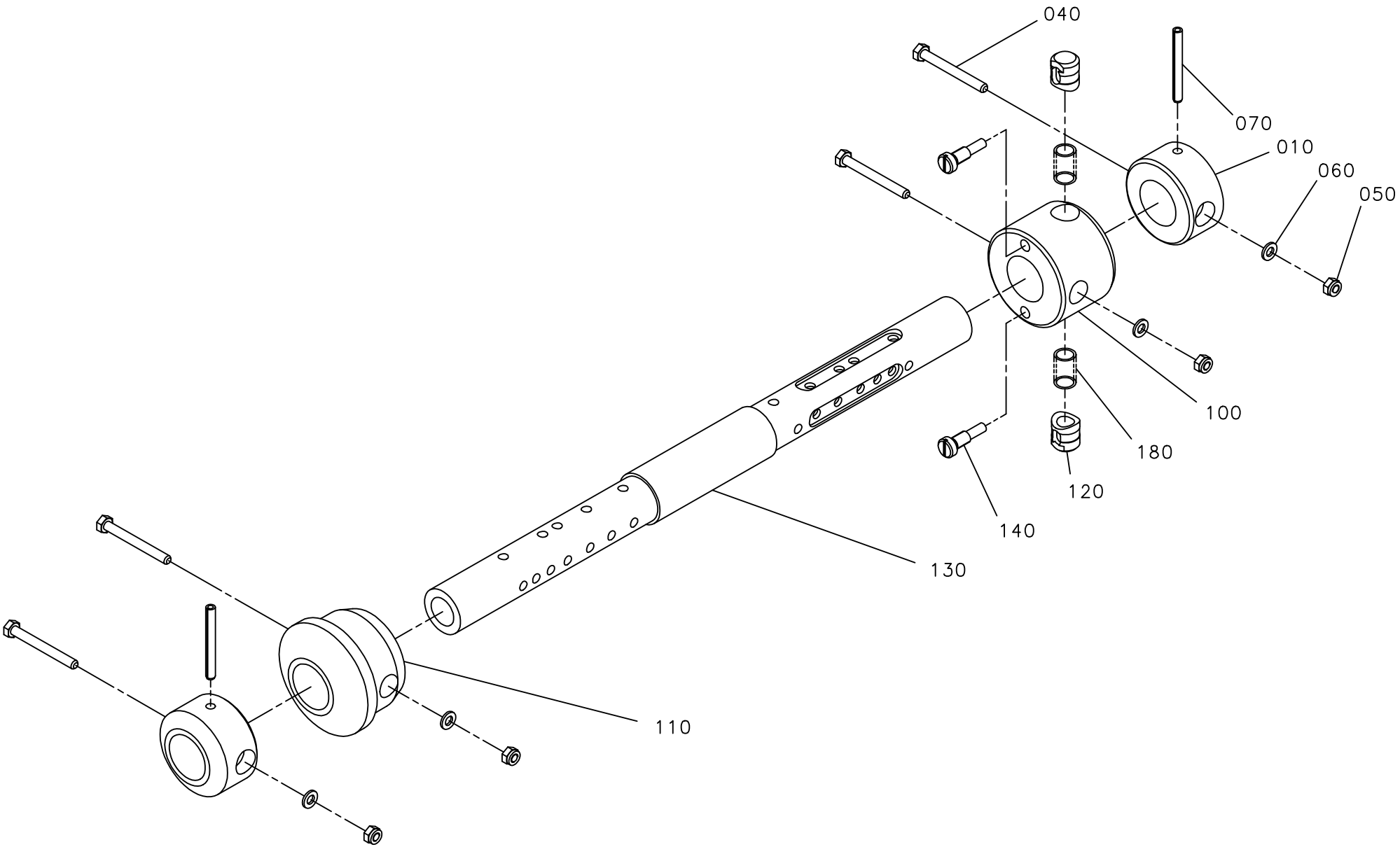
040
070
010
060
050
100
180
120
140
130
110

ECM: 93834 - 20010709
Group number: 1035201-0100
Assembly Drawing: 1035201-1_1_AA

Issue: 20011218

Pos	Part No	SP	UN	Qty	Description	Page No
0200S OR 0200B OR 0500S OR 0250B						
010	440259-0000	-		2	RETAINING RING	
040	312101-0381	-		4	SCREW M6S M6X55 FZB	
050	312812-0316	-		4	HEXAGON NUT, NY-LOCK M6 A480	
060	315101-0153	-		4	WASHER PLAIN, BRB, 6,4/12 H=1,5	
100	271239-0000	-		1	SLEEVE	
110	272810-0001	-		1	SLEEVE	
0500B OR 1000B						
040	312101-0381	-		2	SCREW M6S M6X55 FZB	
050	312812-0316	-		2	HEXAGON NUT, NY-LOCK M6 A480	
060	315101-0153	-		2	WASHER PLAIN, BRB, 6,4/12 H=1,5	
100	271239-0000	-		1	SLEEVE	
110	272810-0001	-		1	SLEEVE	
1000S						
040	312101-0381	-		2	SCREW M6S M6X55 FZB	
050	312812-0316	-		2	HEXAGON NUT, NY-LOCK M6 A480	
060	315101-0153	-		2	WASHER PLAIN, BRB, 6,4/12 H=1,5	
100	569942-0000	-		1	SLEEVE	
110	569943-0000	-		1	SLEEVE	
1000SQ						
010	574051-0000	-		2	RETAINING RING	
040	312101-0381	-		2	SCREW M6S M6X55 FZB	
050	312812-0316	-		2	HEXAGON NUT, NY-LOCK M6 A480	
060	315101-0153	-		2	WASHER PLAIN, BRB, 6,4/12 H=1,5	
070	311112-0350	-		2	PIN, STRAIGHT SLOTTED SPRING FRP 6X55	
100	271239-0000	-		1	SLEEVE	
110	272810-0001	-		1	SLEEVE	
Common Parts						
120	272813-0000	-		2	PLUNGER	
130	1538597-0000	-		1	SHAFT	
140	271241-0000	-		2	SCREW	
180	90335-0025	-		2	SPRING BARNES 22010	

Pos	Part No	SP	UN	Qty	Description	Page No

Machine Type | Group Description | Used-In | Group Number | Page No

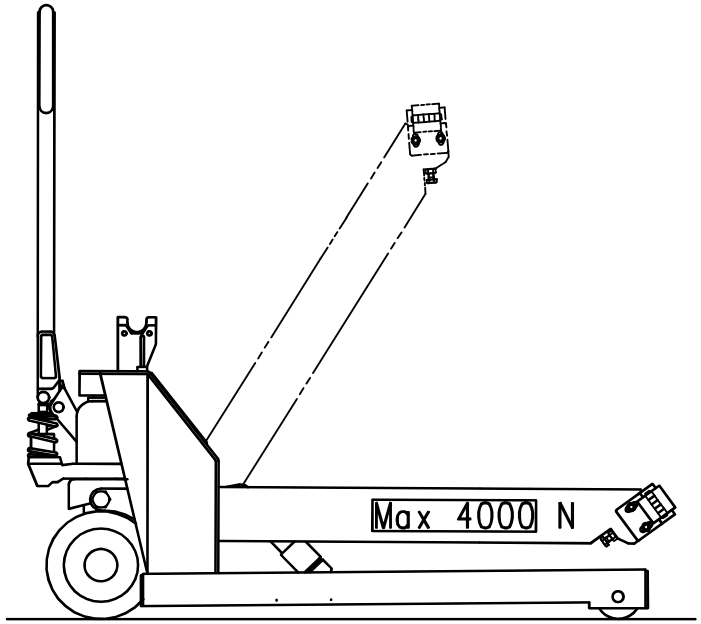
Max 4000 N

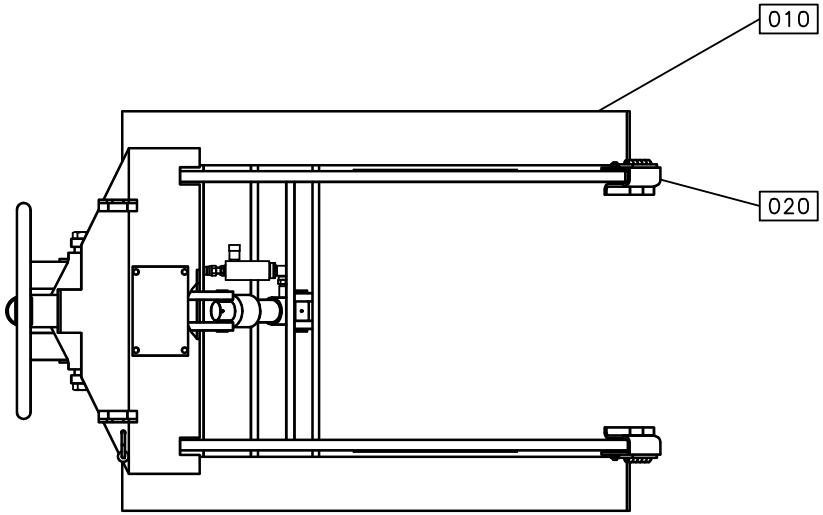
010
020

ECM: 71120 - 19971013
Group number: 1282762-0100
Assembly Drawing: 1282762-1_1_AA

Issue: 20011218

Pos	Part No	SP	UN	Qty	Description	Page No
Common Parts						
010	A576739-0200	-		1	(PAPER)REEL TROLLEY	**1157**
020	A1282763-0100	-		2	AXLE SUPPORT	**1159**

Pos	Part No	SP	UN	Qty	Description	Page No

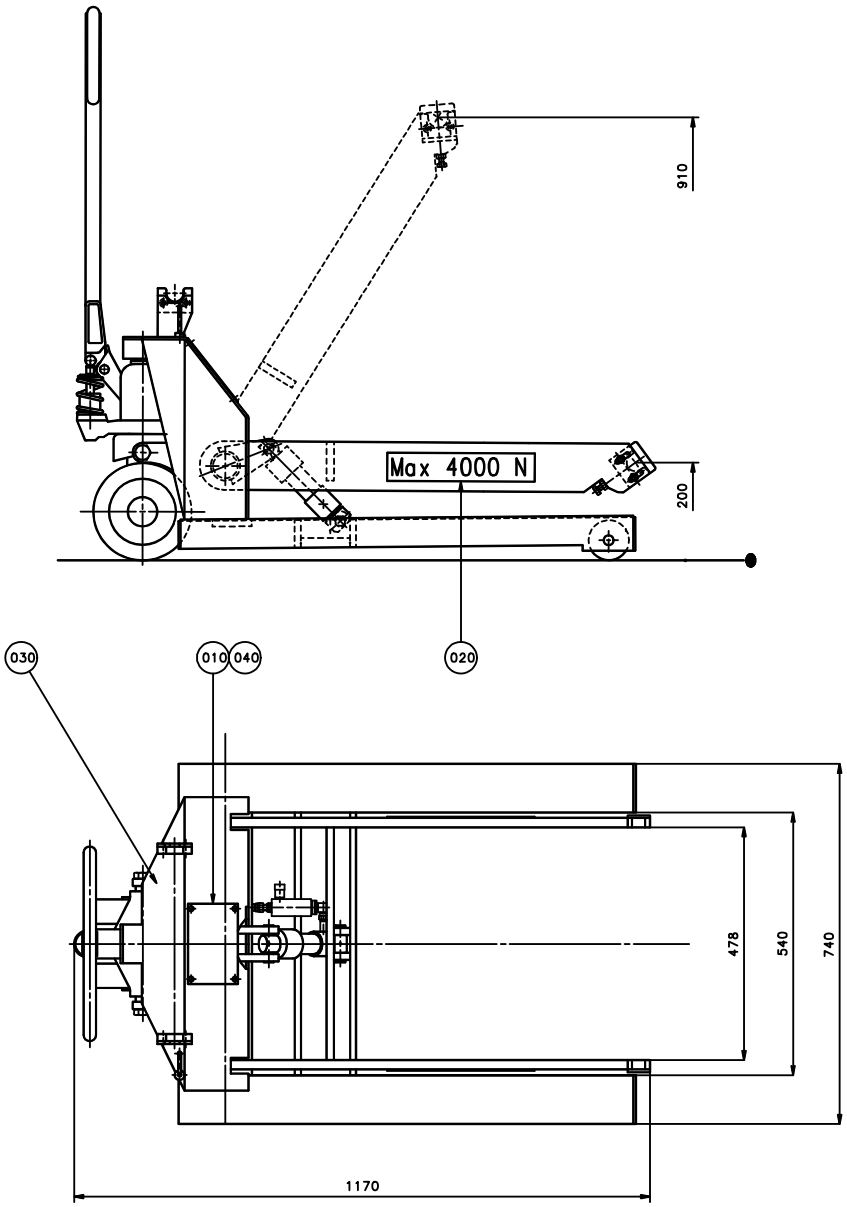
910
Max 4000 N
200
030
010
040
020
478
540
740
1170

ECM: 72192 - 19990218
Group number: 576739-0200
Assembly Drawing: 576739-4_1_AA

Issue: 20011218

Pos	Part No	SP	UN	Qty	Description	Page No
Common Parts						
010	574658-0000	-		1	LOGOTYPE TP	
020	522308-0000	-		2	SIGN	
030	B90067-0021	D		1	CARRIAGE 32 04 129 5	
100	*90067-0301*	*C*		*1*	*BRAKE WIRE*	
110	*90067-0302*	*D*		*2*	*TORSION SPRING*	
120	*90067-0317*	*D*		*2*	*BRAKE LINING*	
130	*90067-0320*	*C*		*1*	*COTTER FOR 90067-301*	
140	*90067-0334*	*D*		*1*	*AXIAL BEARING KIT*	
150	*90067-0336*	*D*		*1*	*GUIDE SHAFT UNIT*	
160	*90067-0337*	*D*		*2*	*BRAKE DRUM*	
170	*90067-0338*	*C*		*2*	*GUIDE ROLLER 32 44 117 2*	
180	*90067-0370*	*C*		*2*	*WHEEL*	
190	*90067-0371*	*D*		*4*	*WASHER PLAIN, BRB, 21/29 H=2,5*	
200	*90067-0372*	*D*		*2*	*SHAFT*	
210	*90067-0342*	*D*		*4*	*TENSION SPRING*	
220	*90067-0346*	*C*		*1*	*PISTON ROD*	
230	*90067-0347*	*C*		*1*	*CYLINDER SHELL*	
240	*90067-0348*	*C*		*1*	*REPAIR KIT*	
250	*90067-0349*	*C*		*1*	*ROLL*	
260	*90067-0350*	*D*		*1*	*AXLE PIN*	
270	*90067-0351*	*C*		*1*	*SEAL KIT*	
280	*90067-0352*	*C*		*1*	*SINK VALVE COMPL.*	
290	*90067-0353*	*C*		*1*	*PUMP CYLINDER*	
300	*90067-0354*	*C*		*1*	*PUMP PISTON*	
310	*90067-0355*	*D*		*1*	*COMPRESSION SPRING*	
320	*90067-0356*	*D*		*1*	*TOP WASHER*	
330	*90067-0357*	*C*		*1*	*REPAIR KIT*	
340	*90067-0358*	*D*		*1*	*SINK HANDLE*	
350	*90067-0359*	*D*		*1*	*SINK ROD*	
360	*90067-0360*	*C*		*1*	*POSITIONING DEVICE*	
370	*90067-0361*	*D*		*1*	*TIE ROD*	
380	*90067-0362*	*-*		*1*	*CIRCLIP*	
390	*90067-0363*	*C*		*4*	*SLIDER*	
400	*90067-0364*	*D*		*1*	*BRAKE HANDLE*	
410	*90067-0365*	*C*		*1*	*HYDRAULIC HOSE*	
420	*90067-0366*	*C*		*1*	*INDICATOR L=278MM;D=6MM*	
430	*90067-0367*	*D*		*1*	*INDICATOR L=83MM;D=6MM*	
440	*90067-0368*	*D*		*1*	*YOKE*	
450	*90067-0369*	*D*		*1*	*VALVE ARM*	
500	*90055-0042*	*C*		*1*	*NIPPLES, EXT. THREAD, HEXAGON, NO. 6835-*	
510	*90055-0145*	*C*		*1*	*ELBOW ADAPTOR-R1/4*	
550	*90091-0106*	*-*		*1*	*SCRAPER 30X40X10 MM*	
570	*90201-0098*	*C*		*1*	*ADJ. FLOW CON. VALVE, NO. 32 04 149 4*	
600	*311111-0251*	*-*		*1*	*PIN, STRAIGHT SLOTTED SPRING FRP 4X10*	
610	*311111-0345*	*-*		*1*	*PIN, STRAIGHT SLOTTED SPRING FRP 6X32*	
620	*311103-0271*	*-*		*2*	*PIN,STRAIGHT CP M6 4X18 RFR*	
650	*312101-0678*	*-*		*2*	*SCREW M6S M20X70 FZB*	
670	*312104-0501*	*-*		*2*	*SCREW M6S M10X50H FZB*	
680	*312151-0451*	*-*		*4*	*SCREW HEX.SOCK.COUNT.MF6S 8X20 FZB*	
690	*312151-0455*	*-*		*4*	*SCREW HEX.SOCK.COUNT.MF6S 8X30 FZB*	
750	*312601-0318*	*-*		*4*	*NUT M6M8FZB*	
760	*312601-0320*	*-*		*2*	*NUT M6M 10-8 FZB*	
800	*315101-0165*	*-*		*4*	*WASHER PLAIN, BRB, 8,4/16 H=1,5*	
840	*315234-0110*	*C*		*2*	*WASHER,PL.RND.CU.13,5/18 H=1,5*	
850	*315750-0119*	*C*		*4*	*RETAIN. RING, 25*	
860	*315750-0131*	*C*		*1*	*RETAIN. RING, 50*	
900	*321120-0137*	*D*		*2*	*BEARING BUSHING WITHOUT FLANGE,20/23X15*	
040	311521-0143	-		4	BLANK RIVET 3,2X8	

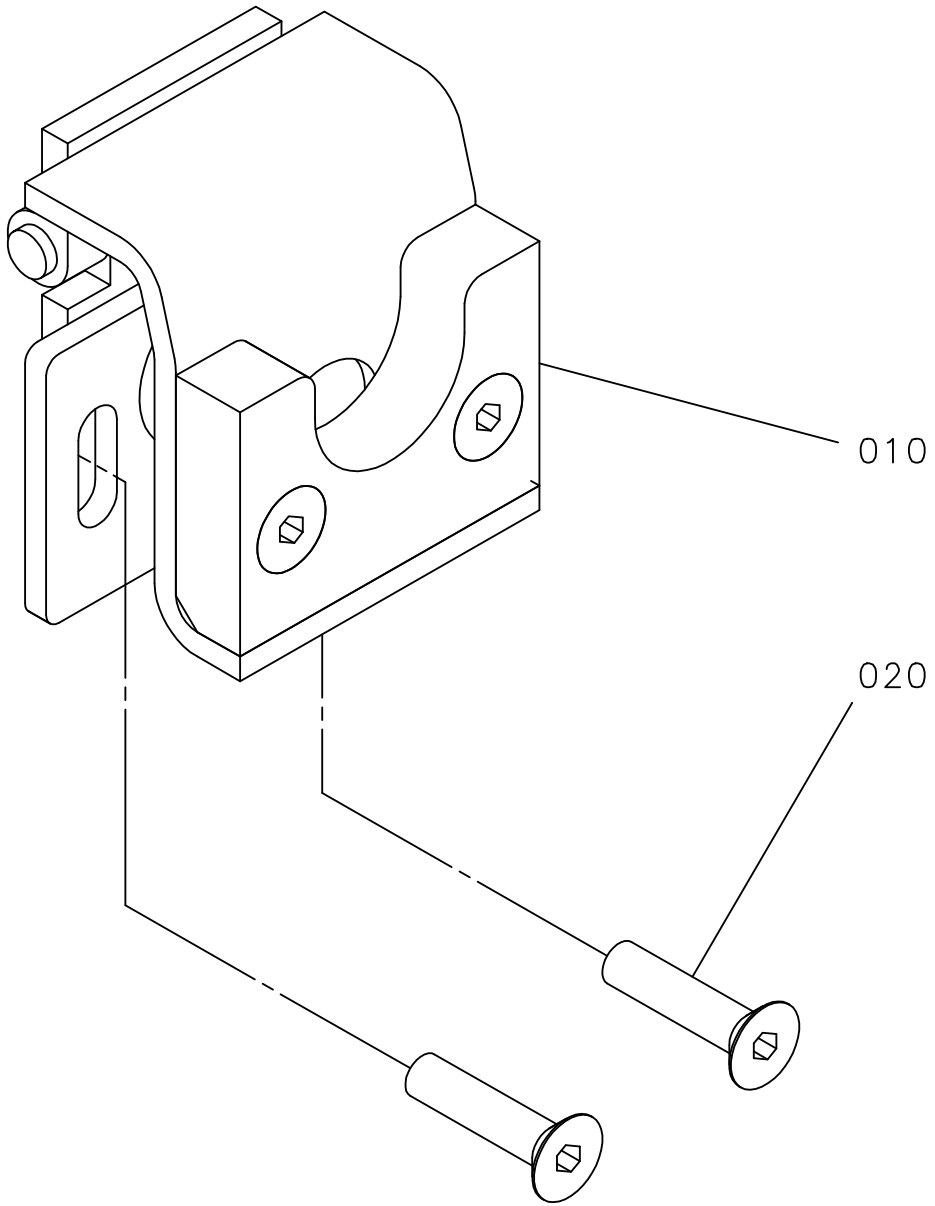
010
020

ECM: 70699 - 19970826
Group number: 1282763-0100
Assembly Drawing: 1282763-1_1_AA

Issue: 20011218

Pos	Part No	SP	UN	Qty	Description	Page No
Common Parts						
010	1282764-0000	-		1	AXLE SUPPORT	
020	312155-0457	-		2	SCREW HEX.SOCK.COUNT.MF6S M8X35 A280	

Pos	Part No	SP	UN	Qty	Description	Page No

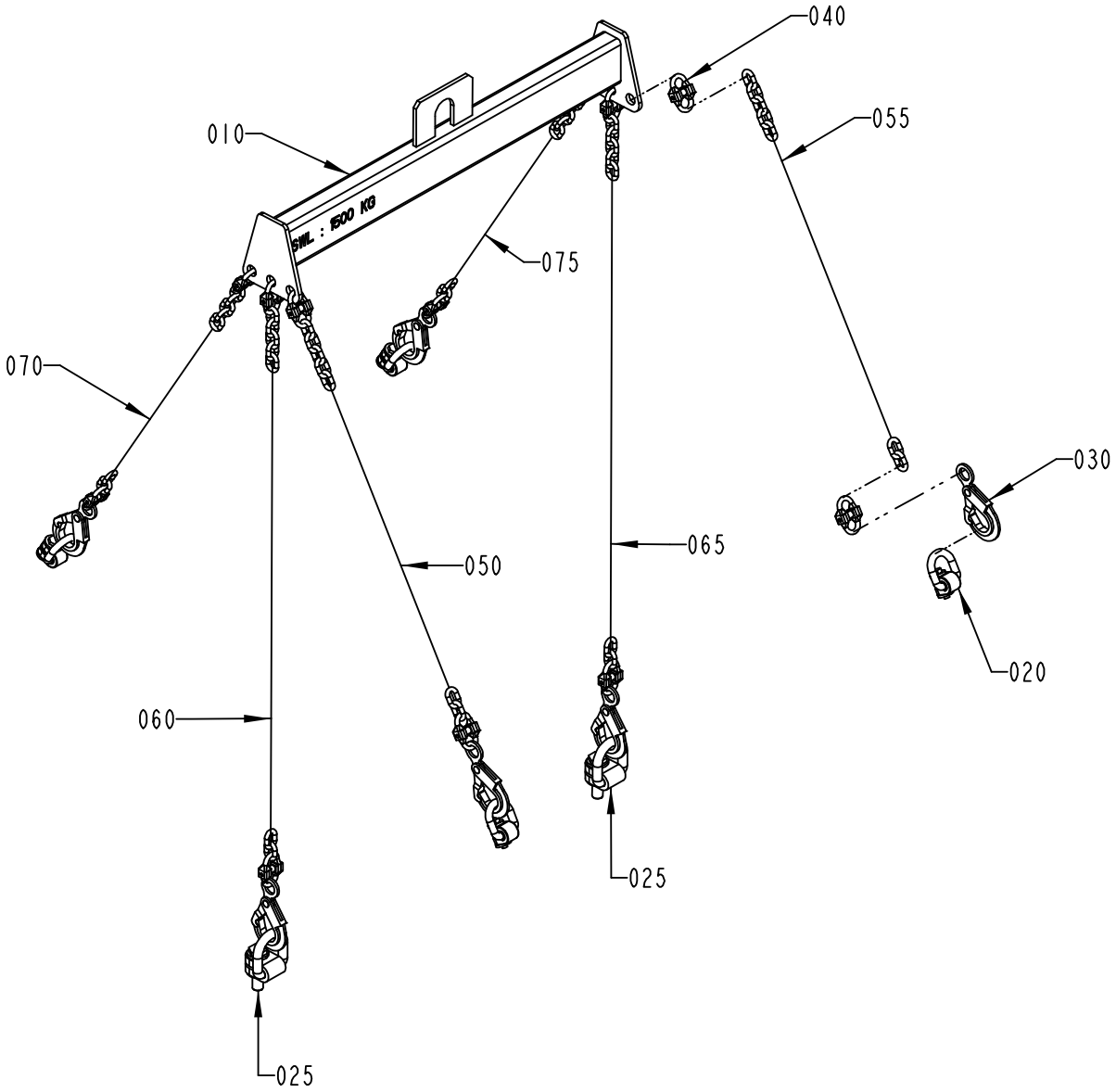

1185025-1
ECN 80359

ECM: 80363 - 20000718
Group number: 1185025-0100
Assembly Drawing: 1185025-1_1_AB

Issue: 20011218

Pos	Part No	SP	UN	Qty	Description	Page No
Common Parts						
010	985818-0000	-		1	LIFTING UNIT	
020	90040-0010	-		4	LIFTING EYE BOLT, NO. R 58 698	
025	90040-0011	-		2	LIFTING EYEBOLT R 56 473	
030	90155-0309	-		6	SECURITY HOOK	
040	90155-0308	-		12	CONNECTION LINK	
050	90155-0033	-	MM	780	CHAIN	
055	90155-0033	-	MM	780	CHAIN	
060	90155-0033	-	MM	1200	CHAIN	
065	90155-0033	-	MM	1200	CHAIN	
070	90155-0033	-	MM	680	CHAIN	
075	90155-0033	-	MM	680	CHAIN	

Pos	Part No	SP	UN	Qty	Description	Page No

This page is intentionally left blank.

ECM: 72849 - 19991129
Group number: 1190009-0200
Assembly Drawing:

Issue: 20011218

Pos	Part No	SP	UN	Qty	Description	Page No
Common Parts						
010	82351-0102	-		1	UM DOCUMENT OFF LINE ANALYSIS EN	
020	B47937-0201	-		1	PLMS OFF-LINE ANALYSIS PROGRAM	
0020	*58323-0000*	-		*1*	*DOCUMENTATION DISKETT*	
0030	*1363475-0000*	-		*1*	*LABELS DISKETT*	
0040	*58321-0000*	-		*1*	*SHORT FORM INSTRUCTION*	
0050	*58322-0000*	-		*1*	*MASTER DISKETT*	

Pos	Part No	SP	UN	Qty	Description	Page No

Machine Type | Group Description | Used-In | Group Number | Page No

Tetra Pak

SPC
Spare Parts Catalogue

Part No	Description	Page No
1881-0001	COMPRESSION SPRING	45, 47, 49
2033-0007	WASHER	45, 47, 49
2033-0008	WASHER	35, 37, 45, 47, 49, 55, 57
2033-0011	WASHER	35, 37, 41, 43, 45, 47, 49, 55, 57
6278-0000	WASHER	265, 855, 883
12242-0001	GASKET	85, 135, 137
14600-0000	HOOD	139, 141
14729-0000	NUT	479, 499
19972-0000	WASHER	521, 523, 527, 529
20494-0000	COMPRESSION SPRING	473, 495
22462-0000	SHAFT	489, 491, 493, 509, 511, 513
22463-0000	ROLL	489, 491, 493, 509, 511, 513
23765-0001	INSULATING PIPE	597, 599, 601
23765-0002	INSULATING PIPE	597, 599, 601
23765-0003	INSULATING PIPE	597, 599, 601
23765-0004	INSULATING PIPE	597, 599, 601
23765-0005	INSULATING PIPE	597, 599, 601
28037-0000	WASHER	45, 47, 49, 63, 65
28509-0000	WASHER	477, 483, 485, 503, 505, 1071
29876-0000	COVER	95, 97
29886-0000	LACE	473, 495
30298-0000	INSULATION	95, 97
31838-0000	PLUNGER	473, 495
32079-0000	WASHER	477
32544-0000	INSULATION NUT	477, 483, 485, 503, 505, 1071
32957-0000	SCREW	479, 499
36753-0000	RING	473, 495
42063-0100	LEVEL DETECTOR	275
42067-0100	SENSOR BOARD	277
42068-0100	CONVERTER BOARD	277
42350-0500	ELECTRICAL DOCUMENT	1089
42945-0500	STANDARD EQUIPMENT	1089
47932-0600	TPOP BASIC PROGRAM	1023
47936-0200	TPOP INTOUCH RUNTIME PROGRAM	1023
47937-0201	PLMS OFF-LINE ANALYSIS PROGRAM	1163
47937-0202	PLMS OFF-LINE ANALYSIS PROGRAM	1059
47962-0400	TPOP DOS WINDOWS	1023
48421-0501	TBA/21 TPOP HMI PROGRAM	1023
48422-0501	TBA/21 TPOP PLMS DC21	1023
48621-0300	PLMS DDE SOFTWARE	1023
57587-0000	DOCUMENTATION DISKETT	1029
57588-0000	SHORT FORM INSTRUCTION	1029
58153-0000	SHORT FORM INSTRUCTION	1063
58154-0000	MASTER DISKETT	1063
58155-0000	DOCUMENTATION DISKETT	1063
58157-0000	SHORT FORM INSTRUCTION	1061
58158-0000	MASTER DISKET	1061
58280-0000	MASTER DISKETT	1025
58282-0000	SHORT FORM INSTRUCTION	1025
58283-0000	DOCUMENTATION DISKETT	1025
58290-0000	SHORT FORM INSTRUCTION	1027
58291-0000	DOCUMENTATION DISKETT	1027
58317-0000	DOCUMENTATION DISKET	1061
67379-0105	IMPEDANCE TRANSFORMER	477
67379-0106	IMPEDANCE TRANSFORMER	885
67379-0108	IMPEDANCE TRANSFORMER	69
67379-0109	IMPEDANCE TRANSFORMER	69
67379-0114	IMPEDANCE TRANSFORMER	477
67379-0115	IMPEDANCE TRANSFORMER	69
67379-0202	IMPEDANCE TRANSFORMER	477
67379-0211	IMPEDANCE TRANSFORMER	69
67379-0229	IMPEDANCE TRANSFORMER	69
67379-0245	IMPEDANCE TRANSFORMER	69, 477
67379-0246	IMPEDANCE TRANSFORMER	477
67379-0247	IMPEDANCE TRANSFORMER	69
67380-0101	IMPEDANCE TRANSFORMER	815
67380-0203	IMPEDANCE TRANSFORMER	815
67388-0102	RACK FRONTMOUNTED 84TE	1019
67600-0501	TPIH GENERATOR	903, 905, 1007, 1009, 1011
68262-0101	BACKPLANE FRONT RACK 8TE	1019
68445-0103	FRONT PLATE 6TE	1019
68445-0104	FRONT PLATE 8 TE	1019
68445-0105	FRONT PLATE 10TE	1019
68699-0101	MULTIPLEXER CARD 56LED	931
72846-0101	COMPRESSION SPRING	1095
74305-0100	PULLER	1095
74363-0000	FASTENING PLATE	1113
74364-0000	EXTRACTOR BOLT	1113
74365-0000	SCREW	1113
74655-0000	SHAFT	1101
74767-0100	DYNAMOMETER	1095
74768-0000	SLEEVE	1115
74769-0000	SLEEVE	1115
74770-0000	ROD	1115

Part No	Description	Page No
74771-0000	STEERING	1115
74772-0000	DIAL	1115
74912-0000	DOWEL	1115
75936-0000	TEMPLATE	1103
76131-0000	ASSEMBLY CONE	1105
76132-0000	ASSEMBLY TOOL	1105
76176-0000	TEMPLATE	1103
78801-0000	CALIBRATION TOOL	1105
82197-0102	UM DOCUMENT SERIAL COMUNICATION ONLY EN	1059
82351-0102	UM DOCUMENT OFF LINE ANALYSIS EN	1059, 1163
90001-0033	WALL SOCKET OUTLET	1013, 1015
90002-0004	BLANK-OFF PLUG 22,5	215, 217, 219, 223, 225, 279, 281, 289, 293, 731, 773, 907, 909, 967
90002-0009	BLANK-OFF PLUG 18.6	221, 223, 225, 287, 291, 293, 701, 715, 907, 909
90002-0010	BLANK-OFF PLUG 37	839, 841
90002-0013	BLANK-OFF PLUG 15,2	215, 217, 219, 223, 225, 241, 289, 293, 737, 773
90002-0016	BLANK-OFF PLUG 20.4	217, 219, 223, 225, 985, 987
90005-0056	WASHER PL.RND.NYL.6/8,5,H=1	407
90005-0077	WASHER PL.RND.NYL.8,4/7, H=2	311, 1001
90005-0082	WASHER PLAIN ROUND 4,3(M4)/12,H=1	797, 799, 803, 807, 809, 815, 817, 885
90005-0116	WASHER PLAIN ROUND 8,4(M8)/24, H=2	195
90005-0143	SPACER 3,3/7, H=3	277
90007-0128	FUSE 1P 6A K	1049
90007-0129	FUSE 1P 10A K	1049
90007-0131	FUSE 1P 16A K	1041
90007-0138	FUSE 2P 10A K	1041
90007-0147	FUSE 3P 10A K	1041
90007-0148	FUSE 3P 16A K	1049
90007-0150	FUSE 3P 25A K	1049
90007-0312	AUXILIARY CONTACT	1049
90012-0049	CABLE GLAND STR13	223, 225, 839, 841
90012-0071	GLAND FITTING	81
90012-0107	GLAND FITTING	111
90012-0117	GLAND,EMC,EXTENDED WITH INSERT	279, 281
90012-0119	GLAND,EMC,EXTENDED WITH INSERT	275
90012-0123	GLAND FITTING	25, 99, 135, 137, 217, 219
90012-0124	GLAND FITTING	907, 909, 967
90012-0125	GLAND FITTING	907, 909, 967
90012-0126	GLANDS,HOSE,NORMAL,WITHOUT INSERT PG29	95, 97
90012-0127	PLUG	907, 909, 967
90012-0134	GLAND FITTING	283, 285
90012-0137	GLAND,EMC,EXTENDED WITH INSERT	21, 855, 883
90015-0020	GLANDS,LEAD-IN,IP67	111, 333, 907, 909, 917, 967
90015-0021	GLANDS,LEAD-IN,IP67	253, 295, 297, 299, 323, 325, 327, 329, 911, 913, 915
90015-0022	GLANDS,LEAD-IN,IP67	295, 297, 299
90015-0023	GLANDS,LEAD-IN,IP67	253, 287, 319, 333, 367, 377
90015-0024	GLANDS,LEAD-IN,IP67	295, 297, 299
90015-0025	GLANDS,LEAD-IN,IP67	721
90015-0027	RUBBER BUSHING DI=6MM	581
90015-0037	RUBBER BUSHING	733
90017-0015	HANDLE, NO. 14.4012.02.308	1001
90017-0016	HANDLE, NO. 14.4012.02.120	229, 311
90017-0017	HANDLE, NO. 547-128	1013, 1015
90017-0022	HANDLE, NO. EL-037311	973
90024-0036	FILTERED TERMINAL BLOCK	721
90024-0039	INPUT FILTER, 50 A	1041
90024-0047	EMI SUPPRESSION FERRITE	1037, 1039
90028-0020	CONE TUBE 2,5MM	249, 473, 475, 479, 495, 497, 499, 521, 523, 527, 529, 593
90028-0021	CONE TUBE 4 MM	249, 473, 475, 479, 495, 497, 499
90028-0022	CONE TUBE 6 MM	247, 249, 549, 551, 553
90028-0024	CONE TUBE 4 MM	475, 497
90028-0025	CONE TUBE 6 MM	249, 475, 497, 593
90030-0030	CONN. BULKHEAD SV 12-L/SY	155
90030-0062	CONN. STR. GE 6-1/4-18 NPTF	85
90030-0065	PIPE CONNECTION	481, 501
90030-0071	CONN. ELBOW WA 8-R1/4	417
90030-0075	PIPE CONNECTION G-6	127, 129, 165, 167
90030-0096	CONN. ELBOW W-12	155
90030-0098	ACCESSORIES, FERRULE 8	579
90030-0106	CONN. PIPE G-12	163
90030-0121	CONN. ELBOW ADJ.,INT 10	261
90030-0136	ADJUSTABLE ELBOW CONNECTION,EXT 12-G3/8	163
90030-0137	CONN. ELBOW WA 6-R1/8	127, 129
90030-0180	CONN. STR. GE 12-1/2-14 NPTF	155
90030-0184	CONN. STR. GA-6-G1/8	77, 79, 91, 217, 219, 407
90030-0185	CONN. STR. GA-8-G1/4	747
90030-0187	CONN. STR. GA-12-G3/8	155, 163
90030-0188	CONN. STR. GA-15-G1/2	107
90030-0212	NIPPLES, REDUSING, INT. THR. NO. 2521	127, 129
90030-0219	CONN. ELBOW BULKHEAD WSV 6	249
90030-0223	BUSHING, INT/EXT. G-THREAD NO. 2531	1119, 1121
90030-0224	NIPPLES, EXT. THREAD, HEXAGON, NO. 2511	1119, 1121
90030-0225	REDUCTION NIPPEL 2531-3/8X1/4	1119, 1121
90030-0239	PIPE SOCKET RS-12	163
90030-0257	CONN. ELBOW, 8-R1/8, EXT.THREAD	487, 507

Part No	Description	Page No
90030-0321	NUT,PIPE & CONNECTORS, SS-4-VCO-4	95, 97
90030-0336	CONN. STRAIGHT, 316L-12M-BVCO-3	113, 125, 1079
90030-0338	NUT, PIPE & CONNECTORS, SS-8-BVCO-4	113, 125
90030-0339	CONN. STR., 12-G3/8, EXT. THREAD	261
90030-0340	NIPPLES, EXT. THREAD, HEXAGON, RA-G1/2A3	263
90030-0465	STRAIGHT CONNECTION, MAD DN 15	743
90030-0549	CONN. STRAIGHT, BULKHEAD, SS-4-VCO-61	135, 137
90030-0597	REDUCTION, M6 TUR M8-316	95, 97
90030-0598	CONN. BULKHEAD SV 8-	95, 97
90030-0599	CONN. CROSS, 12	163
90030-0628	ELBOW 90ø FITTING, NO. VB 15-L	259, 263
90031-0031	ENHANCED GENIUS MODULE	1037, 1039
90031-0051	BASEPLATE, 10-SLOT	1037, 1039
90031-0053	BASEPLATE,10-SLOT	1037, 1039
90031-0057	PLC, DIGITAL INPUT MODULE	1037, 1039
90031-0058	PLC, DIGITAL INPUT MODULE	1037, 1039
90031-0059	PLC, DIGITAL OUTPUT MODULE	1037, 1039
90031-0062	PLC, ANALOG OUTPUT MODULE 8PT/CURR/VOLT	1037, 1039
90031-0063	PLC,ANALOG COMBO MODULE,IN-4PT/OUT-2PT	1037, 1039
90031-0065	PLC,TEMPERATUR CONTROL,INPUT MODULE 8 PT	1037, 1039
90031-0068	PLC, POWER SUPPLY	1037, 1039
90031-0075	CPU363, SERIAL COMMUNICATION	1037, 1039
90031-0305	I/O EXPANSION CABLE	1037, 1039
90032-0038	BLOCK 2 WAYS	249, 473, 495
90032-0039	BLOCK 4 WAYS	473, 475, 479, 495, 497, 499
90032-0040	BLOCK 6 WAYS	249, 479, 499, 593
90032-0043	DISTRIBUTION BLOCK 3 WAYS	249, 475, 497
90032-0044	DISTRIBUTION BLOCK 4 WAYS	249
90036-0057	LIGHT BULB BA9S 28V	1071
90036-0068	BULB 6.5W 24V	391, 939
90038-0049	DIODE	217, 219
90040-0010	LIFTING EYE BOLT, NO. R 58 698	1161
90040-0011	LIFTING EYEBOLT R 56 473	1161
90041-0068	DATACABLE MODEM PC	1059
90041-0078	REMOTE COMMUNICATION LINK BOARD	315
90041-0079	ADAPTER BACKLIGHT	315
90041-0080	CABLE CPU-LVDSCARD+DISPLAY-LVDSCARD	1017
90041-0082	CABLE DISPLAY POWER	315
90041-0083	HOST COMMUNICATION LINK BOARD LVDS	1017
90041-0085	CABLE KEYBOARD	1017
90041-0086	CABLE COM 2 INNOSCAN	1017
90041-0087	SERIAL CARD 2 CHANNEL RS486/422 BOARD	1017
90041-0090	HARD DISC 2,5" INNO SCAN	1017
90041-0092	FLEX BOX INNOSCAN E100006A	1017
90041-0093	DISPLAY TOSHIBA 12,1"	315
90041-0095	FRAME 12"	311
90041-0099	IR TOUCH PCB, 12.1"	315
90041-0102	PROCESSOR BOARD REPBY 90458-0259	1017
90041-0103	DATACABLE DISPLAY L=150MM	315
90041-0104	CHASSIS FOR TOUCH 12,1"	315
90042-0171	SOLENOID VALVE BUERKERT	237, 239
90042-0172	SOLENOID VALVE 4023/1005/1032 24VDC	107
90042-0203	SOLENOID VALVE BURKERT	77, 79
90042-0206	SOLENOID VALVE 444-111-000-1	407
90042-0215	VALVE BODY 5/2 UNISTABLE	205, 207, 209, 211, 213, 321, 783, 917
90042-0221	VALVE BODY 5/2 BISTABLE	917
90042-0248	SOLENOID VALVE OFFICIENE DI ENSINO	375
90042-0249	SOLENOID VALVE OFFICINE DI ENSINO	775, 777
90042-0254	SOLENOID VALVE ODE(VENTIM)	741
90042-0265	HIGH SPEED VENTING VALVE 583-590-000-1	917
90042-0398	CONTACT 3 POLE+EARTH	407, 1107
90042-0487	COIL 24 VDC MECMAN	407
90042-0519	BLANK PLATE ISO SIZE 1	205, 207, 209, 211, 213, 321, 783
90042-0520	BASE PLATE ISO SIZE 1	205, 207, 209, 211, 321
90042-0522	PORTED END PIECE ISO SIZE 1	205, 207, 209, 211, 213, 321, 783, 917
90042-0526	PROTECTIVE SLEEVE MECMAN	321, 783
90042-0528	BLANKING KIT SEALS ISO SIZE 1	205, 207, 209, 211, 321, 783, 917
90042-0532	BASE PLATE ISO SIZE 1	205, 207, 209, 211, 213, 321, 783, 917
90042-0535	TERMINAL BOARD 19 CORDS	205, 207, 209, 211, 213, 321, 783, 917
90042-0538	PILOT VALVE L=500MM	205, 207, 209, 211, 213, 321, 783, 917
90042-0545	SUB-BASE SOFT START ISO 1 AND VDMA 01	917
90042-0550	PROTECTION PLUG FOR UNUSED CONNECTION	205, 207, 209, 211, 213
90042-0583	CABLE MECMAN 440-827 000-1	785
90042-0585	PILOT VALVE L=5M	785, 917
90043-0002	PRESSURE GAUGE, 2040 D=63 MM	163
90043-0006	PRESSURE GAUGE, 2041 D=63 MM	237, 239, 775, 777
90043-0021	PRESSURE GAUGE WIEGAND 0-1 BAR 1/8"	127, 129, 407, 1119, 1121, 1133
90043-0043	PRESSURE GAUGE WIEGAND 0-10 BAR 1/8"	743, 1119, 1121
90043-0064	PRESSURE GAUGE, 2048 D=40 MM	203, 319
90043-0065	PRESSURE GAUGE, 2048 D=40 MM	203, 783
90043-0090	PRESSURE GAUGE, 2048 D=40 MM	203, 319
90043-0095	PRESSURE GAUGE, 2740, D=63 MM, GLYC.	91
90043-0100	PRESSURE GAUGE, 2948 D=63 MM	731
90043-0107	PRESSURE GAUGE	785

Part No	Description	Page No
90043-0132	PRESSURE GAUGE, 2757 D=63 MM	259
90044-0084	LIMIT SW. 14 CE1-4	169
90044-0104	PROX.SWITCH IFM IN 3002	111, 195, 603, 685, 687, 691, 803, 807, 809, 813
90044-0116	CYLINDER,SENSOR	53, 897, 901
90044-0117	PROX.SW. IX 0208	641, 643, 661
90044-0124	PROX.SW. 922AB2XM-A9P-050-LZ-876	135, 137, 193, 373, 871, 985, 987
90044-0139	KEY SAF.SW. AZ16-02 ZVR K-2254	71, 73, 75, 367, 839, 841
90044-0145	PROX.SW. 922 AAIY-A9P-050-LZ876	131, 133, 555
90044-0170	LIMIT SW. GLEB01C	431
90044-0194	PROX.SW. IN5329/IN3002-BPKG	25, 437, 607, 609, 611
90044-0310	KEY FOR SAFETY SWITCH, AZ 15/16 B1	71, 73, 75
90045-0087	MOTOR 3GAA 071002-CSA M2AA 71B	413
90045-0164	SERVO MOTOR EP075112-44T3B	565, 567
90045-0195	SERVO MOTOR EP165180-66T3B	425
90045-0375	PLINTH ATLAS COPCO	1037, 1039
90045-0377	CONN.KIT 19N117H	1037, 1039
90045-0378	CONN.KIT 19N117P	1037, 1039
90045-0394	SERVO DRIVE 5A/DC DMC	1037, 1039
90045-0396	SERVO DRIVE 21A/DC DMC	1037, 1039
90045-0397	POWER SUPPLY 80 A	1037, 1039
90048-0022	MANUAL PUMP INCL. BARROW 50-60 L	1141
90048-0037	OIL PUMP INCL. CONTAINER 1,5 L	247
90051-0035	KNOB, EXTERNAL THREAD. NO. 8308-1135	801
90051-0045	STELLAR KNOB, NO. 8323-2575	15, 17
90051-0065	HANDLE, THREADED TAP. NO. 8305-2151	865, 895, 899
90051-0087	LOCK KNOB, NO. GN 617 A5	895, 899
90051-0088	ADJUSTMENT SCREW	803
90051-0106	COCK HANDLE, NO. H6	771
90051-0112	LOCK KNOB, NO. GN 617 NIK5	549, 551, 553, 555
90052-0011	HORN	839, 841, 977
90053-0029	PACK COUNTER 8 DIGITS IVO	1013, 1015
90053-0031	HOUR COUNTER BOWER B906.10	1013, 1015
90055-0051	HOSE NIPPLE, EXT.THR. R3/8X13 MM	403
90055-0071	HOSE NIPPLE, EXT.THR. R1/2X13 MM	143
90055-0100	Y-CONNECTION	319, 917
90055-0101	Y-CONNECTION	319
90055-0112	HOSE,T-JUNCTION COUPL.,FPT, 13X6MM	333
90055-0113	ELBOW PIPE JOINT 6X6 MM	569
90055-0118	ELBOW PIPE JOINT -8MM	203, 319
90055-0132	HOSE NIPPLE, EXT.THR. G1/4X7,8 MM	417
90055-0154	HOSE COUPLING	895, 899
90055-0162	NIPPLE-6 MM G1/4"	569
90055-0166	HOSE NIPPLE, EXT.THR. R11/2X38 MM	741
90055-0171	REDUCER-8/6	917
90055-0172	ELBOW PIPE JOINT	321
90055-0173	ELBOW WITH TAILPIECE 8/6 MM	205, 207, 209, 211, 213
90055-0217	ELBOW PIPE JOINT	555
90055-0224	CAP NUT	145, 147
90055-0228	Y-CONNECTION, 8-10	319
90055-0232	NIPPLE-8 MM G1/4"	319
90055-0250	ELBOW WITH TAILPIECE 8/8 MM	731, 735
90055-0260	NIPPLE-8 MM G1/4"	731, 735
90055-0266	STRAIGHT CONNECTION	731
90055-0274	STRAIGHT COUPLING, D=8 MM - G1/4"	731, 733, 735
90055-0276	T-CONNECTION 8 MM	731
90056-0136	WORM GEAR BS 112	433
90061-0018	ANGLE ENC 8BIT GRAY (REPL BY 90061-27)	433
90062-0015	LOCK WASHER SERRAT.EXT.GEAR,6,4/11 H=0,7	595, 721, 991, 993, 997, 999
90062-0016	LOCK WASHER SERRAT.EXT.GEAR,8,4/15 H=0,8	907, 909, 967
90062-0021	LOCKING WASHER A 5,3	1037, 1039
90062-0022	LOCKING WASHER D=6,4/11	853, 985, 987, 1013, 1015, 1031, 1037, 1039
90062-0029	WASHER LOCK 5,1X 8,6, T= 1,5 DIN 7980	261, 727
90062-0032	WASHER LOCK 10,2X 16,1, T= 2,5 DIN 798	235
90062-0040	LOCK WASHER SERRAT.INT.GEAR,5,3/10 H=0,6	923, 927
90062-0058	LOCK WASHER SERRAT.EXT.GEAR,3,2/6 H=0,4	1013, 1015
90062-0060	LOCK WASHER SERRAT.EXT.GEAR,5,3/10 H=0,6	903, 905, 907, 909, 967, 1037, 1039
90064-0082	PUSH BUTTON WHITE	311, 923, 927, 941
90064-0084	PUSH BUTTON YELLOW	217, 219, 311, 923, 927
90064-0093	PUSH BUTTON GREEN	311
90064-0098	PUSH BUTTON CLEAR	311
90064-0124	SWITCH,EMERGENCY STOP	81, 217, 219, 311, 369, 941, 999
90066-0021	PUSH BUTTON BOX XAP-M1501 TELEMECANIQUE	81
90067-0021	CARRIAGE 32 04 129 5	1157
90069-0257	GEARS, WORM MOTOR WKM/DM90-60WE2A	701
90069-0606	GEARS, WORM MOTOR ODM90-60KE3	855, 883
90069-0613	GEARS, WORM MOTOR ODM120-80BE3	21
90074-0001	CLIPS, CABLE CLIPS DI=10 MM	237, 239
90074-0011	CLIPS, CABLE CLIPS DI=14 MM	985, 987
90074-0025	CLIPS, CABLE CLIPS DI=8 MM	785
90075-0124	CONTACTOR 4KW COIL 24VDC	1047, 1049
90075-0127	CONTACTOR 4KW COIL 24VDC	1047, 1049
90075-0128	CONTACTOR 7,5KW COIL 24VDC	1041, 1047, 1049
90075-0313	AUXILIARY CONTACT K&M 22 DILM.2NO;2NC	1041, 1047
90077-0079	FEED THROUGH TERMINAL, 02943.6	313, 715

Machine Type Group Description Page No

Part No	Description	Page No
90077-0106	TERMINAL STRIP, MK4/16 KRG 10-00024422-1	1013, 1015
90077-0328	RAIL TS15/5	313, 715
90082-0013	OVERVOLTAGE PROTECTOR	721
90083-0052	THRUST NEEDLE BEARING, 30X47X2 MM	641, 643
90083-0053	PLATE FOR 90083-0052	641, 643
90087-0019	PLUG M10X1 STAINLESS	249, 473, 475, 495, 497, 593
90087-0036	PLUG	319, 783
90089-0015	SLEEVE PR28,3/37:PG21/29	223, 225
90089-0017	TRANSITION SLEEVE PR18,6/PR22,5;PG11/16	701
90089-0021	REDUCTION SLEEVE,PLASTIC GREY	81
90089-0028	MUFF	279, 281, 907, 909, 967
90090-0012	BALL, D=12 MM	431
90090-0015	BALL, D=6,5 MM	581
90090-0016	BALL, D=15 MM	709
90091-0169	WEAR RING 12X15X3,2 MM	489, 491, 493, 509, 511, 513
90091-0216	PISTON SEAL, GLIDORING 7,1X12X2,2 MM	489, 491, 493, 509, 511, 513
90091-0237	ROD SEAL, GLIDORING 20X27,5X3 MM	115, 117, 119, 1079, 1081
90091-0238	WEAR RING 20X22X10 MM	115, 117, 119, 1079, 1081
90091-0266	SEAL RING 10,4X16,3X2,5 MM	113, 125, 155, 1077
90091-0297	RADIAL SEAL 35X47X7 MM DUST LIP	587, 589, 593, 607, 609, 611, 685, 687, 691
90091-0298	RADIAL SEAL 45X65X8 MM DUST LIP	607, 609, 611
90091-0299	RADIAL SEAL 30X52X7 MM DUST LIP	587, 589
90091-0304	RADIAL SEAL 45X65X8 MM DUST LIP	1081
90091-0335	PISTON SEAL,GLIDORING 62,5X70X3 MM	117, 1081
90091-0336	PISTON SEAL, GLIDORING 79X90X4 MM	115, 119
90091-0355	VARISEAL ROTO 12X20X3,6 MM	29
90091-0357	VARISEAL ROTO 15X23X4 MM	25, 27
90091-0358	SCRAPER, ASOB 45X53X7 MM	473, 495
90091-0359	X-SEAL 36,17X2,62 MM	483, 485, 503, 505
90091-0360	BACK-UP RING 37,5X1,4 MM	483, 485, 503, 505
90091-0361	SCRAPER, EXCLUDER2 30X34,8X3,7 MM	489, 491, 493, 509, 511, 513
90091-0362	SCRAPER, EXCLUDER2 18X22,8X3,7 MM	483, 485, 503, 505
90091-0364	ROD SEAL, STEPSEAL 18X25,3X3,2 MM	483, 485, 503, 505
90091-0365	PISTON SEAL, GLIDORING 11,55X19,05X3,2 M	489, 491, 493, 509, 511, 513
90091-0366	WEAR RING 18X23X3,9 MM	483, 485, 503, 505
90091-0367	WEAR RING 16X18X3,1 MM	489, 491, 493, 509, 511, 513
90091-0368	WEAR RING 30X45X5,3 MM	483, 485, 503, 505
90091-0370	RADIAL SEAL 16X32X7 MM DUST LIP	565, 567
90091-0377	ASSEMBLY TOOL SLEEVE GLYD RING	1105
90091-0378	ASSEMBLY TOOL SLEEVE AQ-SEAL	1105
90091-0380	SCRAPER, EXCLUDER 20X24,8X3,7 MM	607, 609, 611
90091-0387	ASSEMBLY TOOL	1105
90091-0391	SEAL SLYDRING	483, 485, 503, 505
90091-0398	PISTON SEAL, GLID RING T 20,5X28X3,2 MM	483, 485, 503, 505
90091-0404	RADIAL SEAL 22X40X7 MM DUST LIP	691
90091-0406	RADIAL SEAL 25X40X7 MM DUST LIP	691
90091-0408	BEARING SEAL 70X78X5 MM	607, 609, 611
90091-0412	VARILIP 20X35X7 MM	413
90091-0416	RADIAL SEAL 70X90X10 MM DUST LIP	641, 643, 661
90091-0428	PISTON SEAL, GLID RING T 27,5X34,5X3,2 M	483, 485, 503, 505
90091-0429	VARILIP 15X26X7 MM	21, 25
90091-0440	RADIAL SEAL 22X40X7 MM DUST LIP	685, 687
90092-0052	METERING VALVE 10 MM3	249, 473, 475, 479, 495, 497, 499, 593
90092-0053	METERING VALVE 30 MM3	249, 593
90092-0054	METERING VALVE 50 MM3	473, 495
90092-0082	OIL BRUSH FOR D=2,5 MM TUBE & D=10 BRUSH	439, 441
90095-0070	OVERLOAD PROTECTION PKZM 0,4A	1047
90095-0072	OVERLOAD PROTECTION PKZM 1,0A	1047
90095-0073	OVERLOAD PROTECTION PKZM 1,6A	1047
90095-0074	OVERLOAD PROTECTION PKZM 2,5A	1047
90095-0075	OVERLOAD PROTECTION PKZM 4A	1047
90095-0077	OVERLOAD PROTECTION PKZM 6-10A	1047
90095-0078	OVERLOAD PROTECTION PKZM0-16	1047
90097-0017	FLAT PIN PLUG 6,3MM	217, 219, 903, 905
90099-0001	NUT PR 15,2 BRASS	907, 909, 967
90099-0004	NUT	283, 285
90099-0076	NUT HEX. M24X1,5, FE	439, 441
90099-0085	NUT	721
90099-0096	NUT	721, 985, 987
90099-0104	NUT PR 15,2 (PG9)	15, 17, 25, 27, 77, 79, 85, 91, 95, 97, 99, 111, 127, 129, 135, 137, 153, 161, 169, 173, 195, 223, 225, 249, 279, 281, 283, 285, 907, 909, 911, 913, 915, 967, 975
90099-0110	NUT PR 22,5 (PG16)	21, 89, 135, 137, 223, 225, 279, 281, 701, 731, 903, 905, 907, 909, 923, 927, 967
90099-0117	NUT PR 18,6 (PG11)	87, 149, 151, 161, 203, 223, 225, 279, 281, 721, 903, 905, 907, 909, 967
90099-0118	NUT PR 20,4 (PG13,5)	223, 225, 279, 281, 711, 839, 841, 985, 987
90099-0119	NUT PR 28,3 (PG21)	223, 225, 279, 281, 907, 909, 967
90099-0120	NUT PR 37 (PG29)	111, 707, 907, 909, 967
90099-0130	NUT GROOVE, WITH LOCK BALL, M8 FE	859
90099-0131	NUT HEX. M16X2 SS	581
90099-0190	NUT AJ3085-15-R15, G1/2"	1055
90110-0028	CONTACT UNIT 4-POLE	1013, 1015
90110-0095	CONNECTOR 3 POLE + EARTH	263, 775, 777
90110-0121	FEMALE INSERT GDS A-H 09 06 215 2811	903, 905, 1007, 1009, 1011
90110-0122	COVER, 09 06 000 9957	903, 905, 1007, 1009, 1011

Part No	Description	Page No
90110-0141	CONTACT UNIT, DE09P064TX	929, 931
90110-0142	PLUG DA15P064TX	279, 281
90110-0144	COVER	929
90110-0145	COVER 8630-5169014-15-01	279, 281
90110-0147	CONTACT UNIT	929
90110-0150	MALE INSERT 121110 0000	223, 225, 241, 279, 281, 283, 285, 773, 907, 909, 967
90110-0151	FEMALE INSERT 24-POL 121130 0000	283, 285
90110-0152	CABLE HOOD 24-POL 70.352.2428.1	223, 225, 241, 279, 281, 283, 285, 907, 909, 967
90110-0153	CHASSIS HOUSING 24-P CHI 24, 121240 0000	985, 987
90110-0156	MALE INSERT 70.210.0653.0	223, 225, 279, 281, 283, 285, 747
90110-0157	CABLE HOOD 6-POL 70.352.0628.1	223, 225, 279, 281, 283, 285, 855, 893, 907, 909, 967, 1055
90110-0159	MALE INSERT 70.310.0640.0	223, 225, 279, 281, 283, 285, 727, 733, 737, 855, 893, 907, 909, 967, 1055
90110-0160	CABLE HOOD 6-16-POL 70.352.1628.1	223, 225, 279, 281, 283, 285
90110-0161	FEMALE INSERT 70 105 0653 0	985, 987
90110-0163	FEMALE INSERT 70 300 0640 0	283, 285
90110-0164	FEMALE INSERT 70 105 2453 3	985, 987
90110-0165	FEMALE INSERT 70.005.0653.0	985, 987
90110-0166	CHASSIS HOUSING 310144-33	985, 987
90110-0167	CHASSIS HOUSING 310133-33	985, 987
90110-0208	CABLE CONTACT	279, 281
90110-0209	CONTACT PIN, RC20M13K	279, 281
90110-0221	CHASSIS HOUSING 310162-33	283, 285
90110-0224	CHASSIS HOUSING 310166-33	283, 285
90110-0225	CHASSIS HOUSING 310168-33	283, 285
90110-0226	CABLE HOOD 6-POL 70.352.0628.0	727, 733, 737
90110-0227	CABLE HOOD 6-16-POL 71.350.1628.0	747
90110-0228	CABLE HOOD 24-POL 71.350.2428.0	773
90110-0229	CABLE CONTACT, PX0740/S	279, 281
90110-0235	CABLE CONTACT, PX0739/S	425, 427, 429, 569, 893
90110-0236	CHASSIS CONTACT PX0767/S	279, 281, 985, 987
90110-0247	FEMALE INSERT 70.200.0653.0	283, 285
90110-0348	CABLE SEALING, 12033/I, ELFA. 44-625-78	569, 893
90110-0349	COOVER/TOOL PX 0733	279, 281
90110-0382	FASTENING NUT	931
90110-0385	HOLDER	223, 225
90111-0120	SWITCH 2 POS. EA OLTEN	311
90111-0122	KEY SWITCH 2 NO CONTACTS	1013, 1015
90111-0124	KEY SWITCH 1NO,1NC CONTACT	1013, 1015
90111-0173	MAIN SWITCH	721
90113-0054	REGULATOR	237, 239
90113-0056	REGULATOR	407, 1133
90113-0058	REDUCTION VALVE	237, 239
90113-0059	FILTER REG. 50UM	1119, 1121
90113-0072	PRESSURE REGULATOR	785
90113-0098	PRESSURE REGULATOR	743
90113-0140	QUICK CLAMP	203, 319
90113-0374	SLOW STARTING VALVE	785
90113-0375	PRESSURE DISTRIBUTION	785
90113-0377	SHUT-OFF VALVE	785
90113-0384	CANTILEVER	1119, 1121
90113-0423	HIGH SPEED VENTING VALVE	785
90113-0469	MANIFOLD REGULATOR 4 BAR	203, 319
90113-0470	MANIFOLD REGULATOR 10 BAR	203, 783
90115-0137	ROD END, ID=6 MM, M6X1	619, 621
90115-0139	ROD END, ID=8 MM, M8X1,25	591
90115-0173	ROD END, ID=6 MM, M6X1	701
90115-0180	ROD END, ID=8 MM, M8X1,25 LH	591
90115-0181	ROD END, ID=10 MM, M10X1,5	587, 589
90115-0182	ROD END, ID=10 MM, M10X1,5 LH	587, 589
90117-0030	LOCKING HANDLE, M8/F	705
90119-0043	OPTO RELAY 22DC 60S-3	1045
90119-0056	PLUG-IN RELAY 24VDC	1031
90119-0063	OPTO-RELAY DC/DC AMMS-10-1	215, 289
90119-0067	SOLID-STATE RELAY H12WD	1043, 1045
90119-0072	SAFETY RELAY JSBR4	1031
90119-0078	TPIH-RELAY	907, 909, 967
90119-0084	EXPANSION RELAY JSR1T-500MS	1031
90119-0089	SAFETY RELAY JSBT4 24VDC	1031
90121-0090	RESISTANCE FIXED, 10 KOHM, 0,5 W	903, 905, 1007, 1009, 1011
90121-0114	RESISTANCE FIXED, 0,22 KOHM, 25 W	1031, 1041
90121-0115	RESISTANCE FIXED, 0,047 KOHM, 200 W	1041
90121-0119	RESISTANCE FIXED, 8,2 KOHM, 1 W	907, 909, 967
90121-0120	RESISTANCE FIXED, 0,25 KOHM, 0,125 W	1013, 1015
90121-0127	RESISTANCE FIXED, 1,5 KOHM, 0,25 W	217, 219
90121-0132	RESISTANCE FIXED, 0,51 KOHM, 0,25 W	1035
90129-0006	BASE 11 POLE	1031
90130-0021	POTENTIOMETER " REPBY 90130-28"	907, 909, 967
90130-0025	POTENTIOMETER, 5 KOHM	27
90130-0303	SHIFTER HANDLE	907, 909, 967
90130-0304	PLATE	907, 909, 967
90132-0021	HOSE CLIP 6-10MM	407
90132-0030	HOLDER MV 87177 KS 580T	91, 107
90134-0030	SLEEVE FOR PLASTIC TUBE	247, 249, 579, 593

Part No	Description	Page No
90134-0038	BUSHING/NUT INLET/OUTLET 4 MM	473, 475, 479, 495, 497, 499
90134-0039	BUSHING VALVE CONNECTION 2,5 MM	249, 473, 475, 479, 495, 497, 499, 593
90134-0040	BUSHING VALVE CONNECTION 4 MM	249, 475, 497
90134-0051	SPACING COLLAR DOSING BLOCK	475, 497
90134-0052	PLUG DOSING BLOCK	479, 499, 593
90134-0054	BLOCK CONNECTION M10X1	249
90134-0055	BUSHING/NUT INLET/OUTLET 6 MM	247, 249, 475, 497, 549, 551, 553, 593
90134-0058	CONNECTION	439, 441, 473, 475, 479, 487, 495, 497, 499, 507, 519, 591, 603, 607, 609, 611
90134-0063	BUSHING/NUT M8X1, D=2,5 MM	521, 523, 527, 529
90134-0068	CONNECTION	487, 507, 571, 573, 575, 577
90134-0081	REDUCTION SLEEVE M10X1/R 1/8"	247
90135-0026	EARTH TERMINAL, 3802.6	313, 715
90135-0034	SHIELD CLAMP KLBU 3-8	1037, 1039
90135-0035	EARTH WIRE, L=250 MM 16 MM2	907, 909, 967, 991, 993, 997, 999, 1013, 1015
90135-0039	SHIELD CLIP KLBU 4-13.5	1013, 1015, 1037, 1039
90140-0015	T-PIPE, INT. THREAD, 2003-1/8	1119, 1121
90140-0016	T-PIPE, INT. THREAD, 2003-3/8	265, 1085
90140-0018	T-PIPE, INT. THREAD, 2003-1/4	1133
90140-0019	ELBOW, 90, INT. THREAD, NO. 2013-1/4	375
90140-0020	ELBOW, 90, INT/EXT. THREAD, NO. 2020-3/8	727
90140-0023	T-PIPE, INT. THREAD, NO. 2070-3/8-3/8	727
90141-0015	RETAIN. RING, 8	25, 87, 483, 485, 503, 505, 805, 821
90141-0016	RETAIN. RING, 10	53, 101, 549, 551, 553, 559, 561, 799, 801, 821, 889, 891
90141-0017	RETAIN. RING, 17	135, 137
90141-0019	RETAIN. RING, 50	593, 649, 685, 687, 691
90141-0020	RETAIN. RING, 42	431, 897, 901
90141-0022	SNAP RING B 16	93, 99
90141-0029	CIRCLIP	489, 491, 493, 509, 511, 513
90143-0020	STRIP	411
90143-0057	STRIP EMKA 1011-05 21X11MM	311, 721, 985, 987
90143-0059	SEAL STRIP 4610069	199, 201, 943, 945
90143-0060	EDGE STRIP 9,5X6,3MM BLACK PVC	157, 407, 721, 765, 911, 913, 915, 917, 935, 941, 961, 1013, 1015
90143-0069	RUBBER STRIP	923, 927
90143-0071	RUBBER STRIP 4X20MM	903, 905
90143-0089	RUBBER STRIP	943, 945
90144-0007	TAPE	85, 741, 743, 745, 749
90144-0030	TAPE	1069
90144-0043	TEJP TYGAFLOR	203
90144-0044	TAPE SCOTCH VHB 4945;12,7MM	931
90144-0073	TREBOFLON-TAPE W=13MM	107, 127, 129, 163
90144-0074	SHIELDING SEAL STRIP EMC, 3,17X3,17 MM	315
90144-0075	SHIELDING SEAL STRIP EMC, 1,02X3,18 MM	311
90148-0021	HOSE	143
90148-0037	HOSE	579
90148-0038	HOSE	579
90148-0101	HOSE	259
90152-0016	HOSE	331
90152-0017	HOSE	379
90152-0029	HOSE 35/41	893
90152-0050	GLANDS,HOSE 20X13	161, 217, 219, 221, 223, 225
90152-0051	GLANDS,HOSE 25X18	135, 137, 161, 223, 225, 701, 923, 927
90152-0058	GLANDS,HOSE 15X9	217, 219, 279, 281
90152-0059	HOSE 18X12	135, 137, 217, 219
90152-0060	GLANDS,HOSE 42X35	707
90152-0070	GLANDS,HOSE 32,5X26	223, 225, 283, 285
90153-0002	ADHESIVE	15, 17
90153-0015	ADHESIVE LOCTITE IS 496/CYANOLIT 303	489, 491, 493, 509, 511, 513
90153-0016	ADHESIVE TUBE 100G RHODORSIL CAF 3	35, 37, 41, 43, 45, 47, 49, 135, 137
90153-0020	ADHESIVE BOSTIK 1782 125ML	95, 97
90153-0023	ADHESIVE	411
90153-0049	ADHESIVE	237, 239, 339, 341, 349, 351, 353
90155-0008	HANGER CHAIN, 18	135, 137, 431
90155-0028	CONVEYOR CHAIN, INTRALOX900	701
90155-0033	CHAIN	1161
90155-0308	CONNECTION LINK	1161
90155-0309	SECURITY HOOK	1161
90157-0016	LOCKING FLUID	425, 461, 463, 705, 775, 777, 795, 801
90157-0021	LOCKING FLUID	399, 473, 495, 559, 561
90157-0034	SEALING COMPOUND LOCTITE 572 50 ML	161, 169, 247, 255, 323, 325, 327, 329
90157-0037	SEALING COMPOUND	91
90157-0041	SEALING COMPOUND	295, 297, 299, 305, 339, 341, 343, 345, 349, 351, 353, 361, 943, 945, 949, 993
90163-0007	CONNECTION	1133, 1145
90163-0013	QUICK COUPLING, (F) LP 006-0-WR013-01-2	255
90163-0014	QUICK COUPLING, (M) LP-006-1-WR013	247
90163-0016	QUICK COUPLING, (F) LP 006-0-WR013	1133
90163-0041	HOSE NIPPLE, EXT.THR. 3/8-12 MM	247, 255, 265, 727, 1085
90163-0052	HOSE NIPPLE, EXT.THR. 1/4-12 MM	107, 259
90163-0056	QUICK COUPLING, (F) 5054-6/4	1119, 1121
90163-0057	NIPPLE 1/8" BRASS	199, 201, 1119, 1121
90163-0062	QUICK COUPLING, (F) 5053-1/8	199, 201
90163-0063	QUICK COUPLING, (M) 5450-6/4	549, 551, 553, 555
90163-0064	QUICK COUPLING, (M) LP-006-2-WR517	247, 1071

Part No	Description	Page No
90163-0069	QUICK COUPLING, (F) 5051-1/4	375
90163-0076	QUICK COUPLING, (F) LP-006-0-WR021	1071
90163-0087	QUICK COUPLING, (M) 5150-1/4	1119, 1121
90163-0113	QUICK COUPLING, (M) LP-006-1-WR013-22	1133
90163-0304	QUICK COUPLING, LP-006-5-74-KU (DUST CAP	247
90164-0013	FLUORESCENT LAMP 30W	985, 987
90164-0015	LIGHT FIXTURE TYPE:DWDV 206	839, 841
90164-0303	BRACKET SK2202 WALDMANN	839, 841
90165-0019	TOOL CLIP, 81/3, OPEN, 20 - 30 MM	319
90165-0039	PIPE CLAMP, RSGU 1.15/12, D=15 MM	107
90165-0047	CLIP	581
90165-0051	CLIP	457
90165-0056	PIPE CLIP FOR TUBE D=4 MM	453, 455, 481, 487, 501, 507, 607, 609, 611, 651, 653
90165-0057	PIPE CLIP FOR TUBE D=6 MM	199, 201, 685, 687, 691
90165-0058	PIPE CLIP FOR TUBE D=25 MM	439, 441, 481, 487, 501, 507
90165-0065	PIPE CLAMP, RSGU 1.8/9, D=8 MM	279, 281, 339, 341
90165-0118	BRACKET, ZIE110, FOR ROUND MAT. D=110 MM	735
90165-0147	HOSE CLIP	171, 373, 383, 751
90165-0148	T-CLIP T15 FOR TUBE D=15 -17 MM	323, 325, 327, 329, 373
90165-0149	HOSE HOLDER	253
90165-0303	SPACER F. T-CLIP, 818 716 000 TYPE D15	323, 325, 327, 329, 373
90166-0007	HOSE PVC 10/14 TRANSP.	1085
90166-0008	HOSE 7/10 PVC TRANSP.	311, 417
90166-0009	TUBE 5 MM PA BLUE	335
90166-0013	TUBE 8 MM PA BLUE	95, 97, 203, 237, 239, 243, 319, 323, 325, 327, 329, 331, 333, 695, 697, 699, 787
90166-0045	HOSE PVC TRANSP. 6/12	1145
90166-0059	HOSE PVC 12/16MM TRANSP.	295, 297, 299, 307
90166-0068	TUBE 12 MM PA BLUE	199, 201, 203, 319, 323, 325, 327, 329, 783, 917, 1085
90166-0081	TUBE 6 MM PA BLUE	203, 295, 297, 299, 319, 333, 375, 407, 917
90166-0087	HOSE 15/23 REINF.PVC TRANSP.	171, 409
90166-0095	TUBE 4 MM PA BLUE	203, 319, 783, 799, 895, 899
90166-0101	HOSE, SILICONE, 60 SHORE, 6/10 MM	407
90166-0108	TUBE 6 MM PA,TRANSP.	249, 579, 593
90166-0109	TUBE 4 MM PA,TRANSP.	473, 479, 495, 499
90166-0113	HOSE	247, 255, 265, 1145
90166-0118	TUBE 8 MM PA BLACK	623, 625
90166-0121	HOSE	107, 295, 297, 299, 383, 723, 725, 727, 729, 731, 743, 753
90166-0123	HOSE	579
90166-0124	TUBE 6 MM PA,TRANSP.	375, 593, 1119, 1121
90166-0126	TUBE 12 MM PA,TRANSP.	247
90166-0132	TUBE 6 MM PA,TRANSP.	549, 551, 553, 555
90166-0135	TUBE 10 MM PA BLACK	379
90166-0138	HOSE	403
90166-0139	TUBE PA BLACK	69, 377, 727, 731, 735, 775, 777
90166-0140	HOSE	319
90166-0143	TUBE 2,5 MM PA,TRANSP.	439, 441, 473, 475, 479, 495, 497, 499, 593
90166-0151	HOSE	403
90166-0158	HOSE	409
90166-0160	TUBE 10 MM PA BLUE	333
90166-0161	HOSE	407
90166-0171	SHRINKABLE HOSE BLACK	425, 427, 429
90166-0176	RUBBER HOSE	217, 219
90166-0193	TUBE 6 MM PUR BLUE	199, 201, 799, 815, 895, 897, 899, 901
90166-0194	TUBE 8 MM PUR BLUE	783, 815, 869, 887, 893
90166-0199	RUBBER HOSE	89
90166-0214	SHRINKABLE HOSE 1,2 MM	903, 905
90166-0232	SHRINKABLE HOSE	721
90166-0233	HOSE	171, 373, 383, 751
90166-0236	HOSE, 38/51 REINFORCED RUBBER	741
90166-0260	HOSE	295, 297, 299
90181-0038	CABLE DUCT 40X40MM	985, 987
90181-0045	CABLE DUCT 40X60MM	985, 987, 1013, 1015
90181-0048	CABLE DUCT 100X60MM	1041
90181-0053	CABLE DUCT 40X80MM	985, 987, 1037, 1039
90181-0054	CABLE DUCT 60X80MM	1031, 1037, 1039
90181-0055	CABLE DUCT 80X80MM	1031, 1041
90181-0056	CABLE DUCT 100X80MM	1031, 1041
90181-0057	CABLE DUCT 120X80MM	1037, 1039
90181-0061	CABLE DUCT 60X100MM	1037, 1039
90181-0064	LOCK ZP1 FOR CHANNEL T1	1013, 1015, 1031, 1041
90181-0066	DIVIDING PLATE SEP60	1013, 1015, 1041
90181-0067	DIVIDING PLATE SEP80	1031, 1041
90181-0088	PLASTIC RIVET, PR 52314	907, 909, 967
90181-0313	RIVET DUCTAFIX R4	1013, 1015
90182-0005	CLIP STRIP 79X2,3MM REPL.BY 352113-101	249, 311, 985, 987
90187-0029	BALL VALVE G1/2, NPBR	775, 777, 779
90187-0045	BALL VALVE G1/4 CR PL	1133, 1145
90187-0054	BALL VALVE G3/8	255
90187-0058	BALL VALVE R3/8, CRBR	255
90187-0059	BALL VALVE FOR HYDR.PER. G1/2 3MM HOLE	403, 409
90187-0062	BALL VALVE G1/2, NPBR	163
90187-0072	VALVE	319
90187-0082	BALL VALVE G1/2	143, 155

Part No	Description	Page No
90187-0089	BALL VALVE G3/8, NPBR	1085
90187-0105	PURGING VALVE, G3/8 FOR WATER	161
90187-0130	TEMP. CONTR. VALVE, R3/4 0-30øC	729
90187-0133	SAFETY VALVE, 10 BARS, R1/2, R1/2	743
90187-0147	BALL VALVE G11/2	741
90187-0148	BALL VALVE G1	751
90187-0149	THROTTLE VALVE, G1/4, G1/4, MALE	375
90187-0157	VENTILATING VALVE, 1/4" ISO	733
90187-0158	THROTTLE BALL VALVE G1/4, R1/4	161, 377
90187-0162	EXPANSION VALVE FOR COOLING SYS.	1055
90187-0176	ACTUATOR ECC 008 FOR DIAPHR. VALVE	135, 137
90187-0197	BALL VALVE G1/4	727, 733, 735, 775, 777
90187-0325	DIAPHRAGM, 214/300 AO08 4-B -20-150§C	135, 137
90191-0047	WHEEL, NO. 442-200-113	1147
90191-0060	CASTOR WHEEL, NO. 1599PRT	1147
90191-0074	IDLER ROLLER, NO. 294.52	861, 863
90191-0077	WHEEL	1151
90194-0016	SIGN, FLASH, ELECTRIC EQUIPMENT SYMBOL	95, 97, 215, 217, 219, 241, 289, 291, 293, 311, 737, 771, 773, 903, 905, 907, 909, 967, 991, 993, 995, 997, 999, 1001
90194-0080	SIGN, IDENTIFICATION OF WIRING	997
90194-0109	SIGN, TRANSP. OH-FOLIE, BLANC	1139
90194-0113	ADHESIVE LABEL, CALIBRATED & DATE	1139
90194-0133	SIGN "DELIVERED DESIGN"	311, 997
90194-0152	SIGN, EARTH	853, 991, 993, 997, 999, 1013, 1015
90195-0020	TERMINAL BLOCK, 1977.2	595
90195-0028	TERM.BLOCK 6-POLE STEATIT	95, 97
90195-0029	CONN. LINK NO324 FOR -28	95, 97
90195-0037	CONNECTION BOX 1 0606 03 & BK4 TERMINAL	1107
90201-0130	CHECK VALVE, NO. RZ10-RL/WD	263
90201-0131	VALVE	263
90201-0132	VALVE	263
90201-0133	VALVE	263
90201-0134	CHECK VALVE, G 3/8	263
90201-0135	PRESSURE REDUCING VALVE	263
90201-0136	DIRECT CHECK VALVE, NO. DGMDC-3-Y-PK-41	263
90201-0448	PLUG	263
90201-0449	PLUG	263
90201-0450	PLUG	263
90201-0452	WASHER, SEALING, 10(1/8)/15, H=1 CU	263
90201-0453	WASHER, SEALING, 17(3/8)/23, H=1,5 CU	263
90201-0456	BOLT KIT, NO. BK 464125M	263
90201-0457	VALVE CONNECTION, NO. A15-L/R 3/8"/WD	263
90201-0458	WATER HYDR. MANIFOLD BLOCK, NO AI-15382	263
90206-0030	HEATING ELEMENT, 3000W, 220V	595
90206-0070	HEATING ELEMENT 6000W 380/220V	161, 169
90206-0125	HEATING ELEMENT 1000W 220 V	595
90206-0326	CONNECTION BOX	161, 169
90206-0330	SOCKET WRENCH 2"9	1095
90207-0363	GASKET	113, 125, 1077
90207-0365	GASKET	113, 125, 1077
90208-0087	CLAMPING ELEMENT WITH SLEEVE, 45X59 MM	613, 615
90208-0114	CONE CLAMP. ELEMENT 65/84, L=55	437
90211-0002	WIRE LOCK, 5 MM	857
90214-0098	BALL BEARING, 15X35X11 MM	21, 25
90214-0138	BALL BEARING, 5X19X6 MM	195, 813
90214-0191	BALL BEARING, 2 SEALS, 17X35X10 MM	453, 455
90214-0192	BALL BEARING SOLID OIL 45X75X16 MM	449, 451, 453, 455
90214-0194	SPHERICAL BALL BEARING, 2 SEALS, 15X35X1	459, 565, 567
90214-0207	BALL BEARING, 15X32X9 MM	795
90214-0219	CYL.ROLLER BEARING, 17X40X12 MM	685, 687, 691
90214-0229	BALL BEARING, 65X85X10 MM	607, 609, 611
90214-0303	SEALING RING, 18,6X35X2 MM	15, 17, 25
90217-0332	SOLID END CAP ISO2852, FOR TUBE 38,1 MM	153
90217-0346	GASKET 38X27,6X4 MM	127, 129, 1071
90220-0034	THERMOCOUPLE CABLE K/ 2X0,5MM2	135, 137, 161, 223, 225, 279, 281, 283, 285, 731, 1037, 1039
90220-0059	THERMOCOUPLE CABLE K/ 2X0,81MM2	1013, 1015
90220-0077	CABLE, POWER SUPPLY, RKK 3X0,75 2M	1139
90220-0078	CABLE, LABORATORY FLEX, 1X1,5 1M RED	1139
90220-0079	CABLE, LABORATORY FLEX, 1X1,5 1M BLACK	1139
90220-0080	CONNECTOR WITH GRAB HOOK,4 MM BLACK	1139
90220-0081	CONNECTOR WITH GRAB HOOK,4 MM RED	1139
90220-0085	CABLES, MULTI-CONDUCTOR SCREENED	275
90220-0091	PAIR TWISTED CABLE 2X2X0,25MM2	283, 285, 1059
90220-0092	PAIR TWISTED CABLE 3X2X0,25MM2	929
90220-0095	SCR. CABLE 3X0,75MM2	721
90220-0104	SCR. CABLE 4X1,5MM2	223, 225, 855, 893, 1037, 1039
90220-0116	MOTOR CABLE 4X1,0+2(2X0,5)+SHIELD	279, 281
90220-0125	MOTORCABLE(4X4,0)+(2X1,0)+(2X0,75)+SHIEL	279, 281, 1037, 1039
90220-0131	PAIR TWISTED CABLE 3X2X0,25MM2	279, 281
90220-0162	SCR. CABLE 10X0,25MM2	217, 219
90220-0165	SCR. CABLE 5X0,34MM2	279, 281, 1013, 1015
90220-0183	SCR. CABLE 2X0,34MM2	1037, 1039
90220-0302	CLAMP FOR SCR.CABLE 16MM	315

Part No	Description	Page No
90220-0303	CLAMP FOR SCR.CABLE 10MM	721
90220-0304	CLAMP FOR SCR.CABLE 24MM	315
90220-0305	CLAMP FOR SCR.CABLE 16MM	721
90224-0303	CONNECTION	1119, 1121
90224-0307	STRAIGHT FITTING, 6MM, 1/8",	199, 201
90224-0308	CONN. BANJO, ART. NO. 2023-1/8-1/8	199, 201
90224-0349	BULKHEAD LEAD-IN	199, 201
90226-0004	CABINET	1141
90226-0458	MOUNTING SCREW	145, 147, 227, 229, 341, 343, 347, 353, 359, 759, 763, 765, 769, 925, 929, 933, 935, 951, 955, 957, 959, 995, 1001, 1003
90230-0028	NON-RETURN VALVE H 151 R 3/8"	375, 727, 775, 777
90230-0041	OVERPRESSURE VALVE SS-4 CPA2-RTDG-3	733
90230-0042	NON-RETURN VALVE 1/2"	383, 743, 749
90230-0044	NON-RETURN VALVE 1"	383, 745
90230-0064	CHECK VALVE, 6 MM HIGH TEMP.	95, 97
90230-0068	NON-RETURN VALVE 1/4"	319
90232-0075	PH.CELL NT6-14900S12	569
90232-0103	PH.CELL E3S-CT61-L-5M	657, 713, 839, 841
90232-0104	PH.CELL E3S-CT61-D-5M	657, 713, 839, 841
90232-0106	PH.CELL E3S-CR11-5M	839, 841
90232-0333	REFLECTOR E39-R1	943, 945
90233-0027	FUSE 16A FERRAZ10,3X38,2	1049
90233-0028	FUSE 10A FERRAZ	1047, 1049, 1071
90233-0029	FUSE 25A FERRAZ	1049, 1071
90233-0303	FUSEHOLDER FERRAZ ST10	1047, 1049
90235-0151	NON-RETURN VALVE	749
90235-0274	THROTTLE CHECK VALVES,G1/8"	199, 201
90235-0282	THROTTLE CHECK VALVES,G1/8	127, 129
90235-0288	VALVE	53
90235-0290	THROTTLE CHECK VALVES M5	701
90235-0731	THROTTLE CHECK VALVES,G1/4"	619, 621
90236-0012	BRACKET	237, 239
90237-0070	SNAP-IN BALL LOCK, 69X19 MM	973
90237-0079	FAST LOCKING BOLT, FSQ -M8	953
90237-0126	TURNING HANDLE "REPBY 90237-175"	349, 767, 947, 949
90237-0128	LOCK CYLINDER, 1109-U3	229, 339, 349, 351, 355, 357, 361, 767, 943, 945, 947, 949, 993
90237-0151	GUIDE, 1001-U11	991, 993, 997, 999
90237-0152	GUIDE, 1001-U12	991, 993, 997, 999
90237-0153	LOCK HOUSING, 1121-U26-0B	339, 349, 351, 355, 357, 361, 767, 943, 945, 947, 949, 991, 993, 997, 999
90237-0154	LOCK HOUSING, 1121-U60-0C	229
90237-0155	LOCK ADAPTER, 1121-U40	991, 993, 997, 999
90237-0156	LOCK BOLT, 1000-16	991, 993, 997, 999
90237-0157	LOCK BOLT, 1000-230	311, 771, 1013, 1015
90237-0160	ESCUTCHEON WITH SQUARE, 1121-U23/U13	991, 997, 999
90237-0165	LATCH	229, 351, 355, 357
90237-0168	ROUND BAR WITH END WHEEL, 1049-U5	991, 993, 997, 999
90237-0169	LOCK ADAPTER, 1000-U49	991, 993, 997, 999
90237-0175	TURNING HANDLE	229, 339, 355, 357, 361, 943, 945
90237-0176	TURNING HANDLE	351, 993
90237-0178	FAST LOCKING SOCKET,4-28599, M8	953
90237-0319	LOCK HOUSING, 1000-U134	311, 771, 1013, 1015
90237-0320	LOCK HOUSING, 1000-U136	311, 771, 1013, 1015
90237-0322	LOCK GASKET, 1000-U137	771
90237-0323	LOCK O-RINGT, 1000-24	771
90237-0324	KEY, 1104-02 FOR SQUARE 8 MM	997, 999
90239-0288	CYLINDER	457
90239-0486	REAR,CLEVIS,MINI-ISO 16	701
90239-0489	ROD END,CLEVIS WITH AXLE M6	27
90239-0491	ROD END,BALL JOINT EYE,MINI-ISO M6	799
90239-0516	ROD END,CLEVIS WITH AXLE M10X1,25	53, 101
90239-0532	ROD END,CLEVIS WITH AXLE M8	25, 87
90239-0817	DOUBLE ACTING, MINI-ISO, CYL.16-50	27
90239-0822	DOUBLE ACTING, MINI-ISO, CYL.20-50	87
90239-0824	DOUBLE ACTING, MINI-ISO, CYL.20-100	25
90239-0842	DOUBLE ACTING, MINI-ISO, CYL.16-50	701
90240-0146	FLANGE BUSHING,15X21X20 MM	169
90240-0172	FLANGE BUSHING,8X12X10 MM NFB	31, 33, 35, 37, 41, 43, 45, 47, 49, 55, 57
90240-0180	FLANGE BUSHING,10X14X15 MM NFB	549, 551, 553, 555
90240-0258	BUSHING, 15X17X15 MM	25
90240-0261	FLANGE BUSHING, 12X14X9 MM	29
90240-0262	FLANGE BUSHING, 12X14X12 MM	53
90240-0263	FLANGE BUSHING, 15X17X12 MM	27, 641, 643, 663, 665, 667
90240-0264	FLANGE BUSHING, 15X17X17 MM	23, 29, 53
90240-0265	FLANGE BUSHING, 20X23X21 MM	27
90240-0280	PLAIN BEAR,SELF ADJ.SPHER. 30X47X22 MM	443, 445
90240-0282	BUSHING 15X22X16 MM	437
90240-0287	BUSHING, 10X12X10 MM	895, 899
90240-0302	BUSHING	87
90240-0317	BUSHING	607, 609, 611
90242-0093	O-RING	489, 491, 493, 509, 511, 513
90242-0148	O-RING 19,2X3 MM	797
90242-0162	O-RING 6,07X1,78 MM	135, 137, 145, 147
90242-0227	O-RING 66X2,5 MM	15, 17

Part No	Description	Page No
90242-0264	O-RING 16,1X1,6 MM	169
90242-0265	O-RING 32,2X3 MM	169
90242-0270	O-RING 82,27X1,78 MM	607, 609, 611
90242-0271	O-RING 63,22X1,78 MM	607, 609, 611
90243-0061	FAN NOZZLE	331
90243-0099	MEASURING INSTRUMENT,MULTIMETER 175	1139
90243-0118	TOOL BOX, NO. ZERO 105X-SI	1123
90243-0137	MEASURING INSTRUMENT	1095, 1119, 1121
90243-0146	TOOL	1095
90243-0147	FLOW METER	1119, 1121
90243-0152	FLOW METER	237, 239
90243-0208	SCREWDRIVER	1139
90243-0214	CONDUCTIVITY METER	1013, 1015
90243-0245	MEASURING INSTRUMENT	743
90243-0321	CONDUCTIVITY CELL	149, 151
90243-0328	PAPER ROLL	1095
90243-0329	CABLE	1095
90243-0330	CABLE	1095
90243-0430	FLOW METER, MAG 1100 FOOD PFA	149, 151
90243-0446	LASER EQUIPMENT	1095
90243-0447	LASER EQUIPMENT	1095
90243-0448	ANGLE PLATE	1095
90243-0449	ANGLE PLATE	1095
90243-0450	RIDGE BED	1125
90245-0024	MATCHING TRANSF. 65 KVA	1141
90246-0021	POWER SUPPLY UNIT	985, 987
90246-0326	CONTACT WITH CONNECTIONS	985, 987
90248-0047	HINGE, 1150-U50	311
90254-0010	LINK	431
90257-0001	FILTER PLUG PARTNO 8145-00-140 TYP F14	887
90258-0031	PIN, STRAIGHT SLOTTED SPRING FRP 3X20	15, 17
90259-0313	AUX. CONTACT K&M NHI21-PKZM0	1047
90261-0016	PLUG, BLIND, PLASTIC GPN300V2	521, 523, 527, 529
90261-0033	PLUG, BLIND, PLASTIC GPN300F182	393, 395
90261-0049	PLUG, BLIND, PLASTIC, NO. SR1750	795
90261-0057	PLUG, BLIND, PLASTIC	295, 297, 299
90261-0068	PLUG, BLIND, PLASTIC, NO. 55-10100-1	173
90261-0069	PLUG, BLIND, PLASTIC, NO. 055-0615	753
90261-0070	PLASTIC PLUG SS 0082.31	295, 297, 299, 353
90264-0055	FAN / W25 130-AA 03-01	425
90264-0058	FAN / DD 185/176 4 POL	1055
90264-0059	FAN / K 48614/MO 1166 220V	1055
90265-0051	ACCESSORY BOX 1 1212 08	1055
90266-0019	PIPE	473, 475, 479, 495, 497, 499
90266-0165	BRASS PIPE	473, 475, 479, 487, 495, 497, 499, 507, 571, 573, 575, 577
90266-0166	PIPE	603
90269-0308	GASKET 59X68X3 MM	161, 169
90270-0016	COMPRESSOR TAJ 4511 Y	1055
90270-0017	COMPRESSOR NASH/ELMO 112 MB/4-2083	89
90270-0349	FLOW VALVE DOLE 2GALL/MIN	107
90274-0042	PRESSURE SWITCH 2BAR NACOV	775, 777
90274-0045	GUARD	91
90274-0056	PRESSURE SWITCH	733
90274-0074	PRESSURE SWITCH	785
90274-0082	FLOW SWITCH	741
90274-0084	PRESSURE SWITCH	247
90274-0088	PRESSURE SWITCH	217, 219
90274-0089	PRESSURE SWITCH FESTO PEN-M5	335
90274-0099	IP-TRANSDUCER	127, 129
90274-0108	PRESSURE GUARD	727, 1055
90274-0110	PRESSURE SWITCH	237, 239
90274-0124	PRESSURE SWITCH	263
90277-0035	FILTER / DFU 9933-05-A	203
90277-0039	FILTER TYP LF -1/4-S-5M-B	407
90277-0040	FILTER	237, 239
90277-0045	FILTER / 9900-05-BK	203, 319
90277-0046	FILTER / 9933-05-101	203, 319
90277-0086	AIR FILTER / ART NO BK 464125 (70)	259
90277-0116	FILTER HOUSING / ART.NO FILTER 58P	961
90277-0129	EXHAUST FILTER / SK 3322.200	903, 905
90277-0323	FILTER HOUSING / 95S6-1/4 NPT / 122B-40K	237, 239
90277-0324	FILTER CARTRIDGE / 050-11-A	237, 239
90277-0347	FILTER	95, 97
90277-0393	FILTER INSERT RITTAL SK 3170100	903, 905
90287-0070	SCREW MLC6S M6X23	427, 429
90287-0073	SCREW MC6S M5X70 129	785
90287-0106	SCREW SPRINGLOAD. SLOTTED HEAD M10X21	29, 795
90287-0112	SCREW SPRINGLOAD. SLOTTED HEAD M8X16	143, 471, 479, 499, 549, 551, 553, 801
90287-0124	SCREW PAN HEAD MSCS M4X12 NYLON	985, 987, 1031, 1037, 1039, 1041
90287-0154	SCREW, SOCK.SET DOGPOINT M6X10	549, 551, 553, 555, 871
90287-0157	SCREW M6SF FLAT HEAD M6X10 88	1031, 1037, 1039, 1041
90287-0169	SCREW	237, 239
90287-0199	SCREW M6S M5X6 A480	1021
90287-0300	SCREW SLOT.PAN HD. MCS M4X6 PL	1013, 1015

Part No	Description	Page No
90287-0348	STOP SCREW	871
90296-0009	SILICONE GREASE TUBE 100 GR.	1071
90296-0091	LUBRICATION GREASE	21, 25
90297-0011	FLUORESCENT TUBE 30W	985, 987
90298-0012	INHIBITOR	423
90303-0011	PROTECTIVE GOGGLES	1083
90303-0012	PROTECTIVE GLOVES	1083
90303-0013	APRON	1083
90304-0020	LIQUID CONTAINER	163
90304-0030	EXPANSION TANK	735
90304-0307	ATTACHMENT PIPE	163
90314-0038	LEVEL CONTROL RELAY RM3	1031
90316-0022	SPACER NUT DSNF M3060X20	315
90316-0023	SPACER NUT DSM M3055X8	315
90316-0029	SPACER NUT M3X16	315
90316-0030	ELASTIC SCREW INNOSCAN 15060002	315
90319-0013	ROPE 4MM BLUE 3700N	857
90321-0100	PUMP PBK 16/A 220/380V 50 HZ 3 PH.	171
90321-0116	PUMP GRUNDFOSS CHI 2-60	733
90321-0117	PUMP LOWARA SV8-14 F75T	747
90321-0120	PUMP SV8-09 F756T, 380V60HZ	747
90321-0127	CENTRIFUGAL PUMP LOWARA	171
90321-0128	CHEM. PUMP 081778	417
90321-0134	CIRC. PUMP TMB 40/2 230V50HZ	161
90321-0135	CIRC. PUMP TMB 40/2 230V60HZ	161
90321-0381	HYDR.ACCUMULATOR, SBO-210-0.75E1/112-0/1	263
90321-0396	FILTER	417
90321-0537	GAUGE GROUP	1095
90321-0538	HOSE	1095
90321-0574	PUMP BRACKET LSE-201	261
90321-0575	SHAFT COUPLING	261
90326-0012	PROTECTIVE COVER	15, 17, 85, 161, 169, 731
90326-0020	PLUG,FEMALE YELLOW CR-AL	15, 17, 85, 95, 97, 135, 137, 155, 161, 169, 279, 281, 283, 285, 731, 985, 987
90326-0022	PLUG,MALE YELLOW CR-AL	135, 137, 223, 225, 279, 281, 283, 285, 731
90326-0038	THERMOELEMENT CR-AL	169
90326-0051	THERMO COUPLE	85, 95, 97
90326-0053	THERMO ELEMENT	169, 985, 987
90326-0057	THERMOCOUPLE CR-AL	161, 731
90326-0060	THERMOCOUPLE CR-AL	135, 137
90326-0081	THERMOCOUPLE, ISA TYPE K.	595
90326-0089	THERMOCOUPLE	155
90326-0306	GLAND FITTING 9041-45-KS-KR.1/8"D=4,5MM	169
90326-0308	THERMOCOUPLE CABLE FOR CE-557793	1139
90326-0309	THERMOCOUPLE CABLE FOR CE-557793	1139
90326-0310	TEMPERATURE TRANSMITTER	1139
90326-0311	HOUSE	1139
90326-0312	HOUSE	1139
90326-0316	THERMO CONTACT PANEL	985, 987
90328-0003	SILENCER	135, 137
90328-0007	SILENCER	785
90328-0017	SILENCER, D=6 MM	205, 207, 209, 211, 213, 321, 783, 917
90328-0024	SILENCER G3/8	205, 207, 209, 211, 213, 321, 783, 917
90328-0025	SILENCER G1/2	1145
90328-0026	SILENCER G1/4	131, 133
90330-0012	SLEEVE, REDUCTION, INT, R-2021/4X1/8	91
90330-0014	ELBOW, 90 INT. THREAD, R-222R1	745
90330-0021	NIPPLES, EXT. THREAD. R-207R1/2	107, 155, 409, 743
90330-0025	BUSHING, INT/EXT. THR. R1/4-RP1/8	127, 129
90330-0026	PLUG, EXT. G-THREAD, G1/4	731
90330-0028	NIPPLES, EXT. THREAD. R-207R3/8	1085
90330-0029	PLUG, EXT. G-THREAD, R-236R3/8	85, 263, 1119, 1121
90330-0034	NUT, HEXAGON, G1/4	985, 987
90330-0036	BUSHING, INT/EXT. THR. RP1/8-RP1/2	743
90330-0043	NIPPLES, EXT. THREAD. R-207R1/4	161, 733, 749
90330-0045	NIPPLES, EXT. THREAD. R-209 KR11/2- KR1	745
90330-0048	BUSHING, INT/EXT. THR. R1/2-RP3/8	163
90330-0049	T-PIPE, INT. THREAD, R-221R1/2	107, 743, 785
90330-0054	SLEEVE, INT. THREAD, NO. R-201R1/2	409
90330-0056	NIPPLES, EXT. THREAD. R-207 KR11/2	741
90330-0057	ELBOW, 90 INT. THREAD, R-222R11/2	741
90330-0066	PLUG, EXT. G-THREAD, G1/8	85, 263, 405
90330-0080	NIPPLES, EXT. THREAD. R3/4-R1/2	743
90330-0093	NUT, HEXAGON, G1/2	377
90332-0020	RECORDER HONEYWELL	1013, 1015
90335-0013	SPRING	857
90335-0025	SPRING BARNES 22010	867, 1153
90335-0027	SPRING	821
90335-0036	SPRING	619, 621
90335-0063	SPRING	803
90335-0089	SPRING	195, 813, 1103
90335-0091	SPRING	855
90335-0149	COMPRESSION SPRING	887
90335-0177	SPRING	581

Part No	Description	Page No
90335-0183	SPRING	895, 899
90337-0315	FILTERINSERT / MCS 4463	155
90342-0022	BELLOWS	93
90342-0024	RUBBER BELLOWS, 100X100 MM	399
90344-0073	TOOTHED WHEEL	701
90347-0004	VIBRATION DAMPER D=30 TH=M8 H=17 H2=21MM	171, 175, 839, 841, 861, 863, 897, 901
90347-0007	VIBRATION DAMPER	303
90347-0009	FLOOR PLATE, NO 1256730	395, 397
90347-0034	VIBRATION DAMPER	229
90347-0039	DAMPER	75
90347-0080	DAMPER TFE 1201	825, 827, 829, 831, 833, 835, 837, 977, 1097
90347-0106	GAS SPRING LIFT-O-MAT 095621 0308 160	953
90347-0127	DAMPER	229
90347-0144	VIBRATION DAMPER, NO. RA 40EM-A	89
90347-0152	FLOOR PLATE, NO. 265.67	859
90347-0160	DAMPER	295, 297, 299
90347-0163	GAS-DAMPER	897, 901, 991, 993, 997, 999, 1013, 1015
90347-0175	MACHINE SHOE BRIK T 125	301, 963
90355-0149	ELECTROMAGNETIC CLUTCH, 30 MM/24 VDC	427, 429
90356-0015	UNIVERSAL JOINT SHAFT	703
90358-0090	ELBOW PIPE JOINT	727, 729, 731
90358-0091	REDUCING NIPPLE	731, 733
90358-0092	DOUBLE NIPPLE	729
90358-0125	NIPPLES, EXT. THREAD, HEX, NO. 1100604	727, 775, 777
90360-0020	STEAM TRAP / MK36/51 3/8"	155
90360-0305	FLOAT	91
90363-0051	CARRIAGE, 1651-314-10	439, 441
90410-0337	CALIBRATION INSTRUMENT 5100071-001	1139
90410-0338	PORTABLE INDICATOR MICROMITE II	1139
90410-0339	ADAPTER FOR E.THERM TEMP.REG.-101	1139
90410-0340	AC-ADAPTER 5100072-002	1139
90411-0005	INSULATOR	95, 97
90411-0020	INSULATING TUBE	295, 297, 299
90415-0032	FILTER / 3-02-00-1 1/2"	741
90415-0033	OIL FILTER REFILLING UC-HP-1229-25	247
90415-0057	FULL PR. FILTER MDFBNHC 30G-10-C-1.0/-B6	261
90415-0060	FILTERS, OTHER TYPES PART NO 3-9503-500	731
90415-0062	FILTER DRYING / ART NO CN 023U4055	1055
90415-0065	FILTER	731
90417-0350	TIMING BELT AT5 545X25 MM	565, 567
90417-0366	TIMING BELT AT10 1640X25 MM	425
90417-0367	TIMING BELT AT10 1050X16 MM	431
90418-0045	ADAPTER, INT. CONN. NO. 7272CU/22-G3/4	729
90418-0057	ADAPTER, EXT. CONN. NO. 7276CU / 15-G1/2	729
90418-0062	T-PIPE, REDUCTION, INT, NO. 7130-22X15X2	729
90419-0012	LIGHT ELEMENT, RED	391, 939
90419-0013	LIGHT ELEMENT, BLUE	391, 939
90419-0014	LIGHT ELEMENT, YELLOW	391, 939
90419-0017	BASE	391, 939
90419-0307	GASKET	391, 939
90419-0310	GASKET	391, 939
90422-0037	HEAT EXCHANGER	729
90422-0038	COOLER	1055
90424-0054	SPRAY NOZZLE 120 DEG	107
90424-0066	ROT.SPRAY NOZZLE, D26984-R3/8-PVDF 4.5	383, 385
90424-0068	AIR NOZZLE, G1/4, MOD. 216 BSP	619, 621, 695, 697, 699
90424-0071	ROT.SPRAY NOZZLE, D40140-R3/8-PVDF 4.5	383
90425-0016	MECMAN TYPE E120 735-120-000	1145
90426-0003	HAND SHOWER	379
90427-0014	INK JET PRINTER A300 STD	1141
90430-0070	FREQ.CONV. 6SE3213-6CA40	1037, 1039
90430-0326	FILTER 6SE3290-0BA87-0FB2	1037, 1039
90450-0156	CYLINDER	887
90450-0207	CYLINDER	887
90450-0221	CYLINDER	887
90450-0222	DOUBLE ACTING,SHUTTLE,CYL 50-488	869
90450-0272	DOUBLE ACTING,PROFILE,CYL 40-100	897, 901
90450-0281	DOUBLE ACTING,PROFILE,CYL 32-80	99, 101
90450-0282	DOUBLE ACTING,PROFILE,CYL 32-100	53
90450-0305	CYLINDER	93
90450-0306	DOUBLE ACTING, MINI-ISO, CYL. 12-25	799
90450-0310	CYLINDER ADV-20-15 A	895, 899
90450-0504	PNEUMATIC CYLINDER	679
90450-0654	BRACKET,REAR,EYE WITH AXLE 32	101
90450-0669	SENSOR,BRACKET,SERIES 168	53, 99, 897, 901
90450-0756	BRACKET, REAR EYE 32	53
90453-0001	MODEM MA-12	1059
90453-0002	MODEM MD-12 DC	1013, 1015
90456-0001	INTOUCH OEM 2000 V.5.6B/6.0B HW KEY	1013, 1015
90457-0019	LEVEL PROBE, HMFB-S=45-0=80-0=90-T70	259
90457-0032	PIPE	259
90457-0033	PIPE	259
90457-0034	REDUCING UNIUN	259
90457-0035	REDUCING UNIUN	259

Part No	Description	Page No
90457-0036	3-PHASE MOTOR,FOOT MOUNT.1,1KW,1410 RPM	261
90457-0037	HYDR. PUMP TFP100 3/8-S-C001	261
90457-0038	PIPE	261
90457-0039	PUMP CONN. ELBOW FLANGE T-26/12-3/8	261
90457-0040	CONN. ELBOW, 12 MM - R3/8K, B12-RL	261
90457-0041	NIPPLES, REDUCING, INT.THREAD, G1/2-G3/8	261
90457-0042	FILTER 10 M 0030-D-010-BN3HC	261
90457-0043	BUSHING, INT/EXT. G-THREAD NO. 1/2-1/4	261
90457-0044	CONN.STRAIGHT G1/4-10 MM, A 10-RL/WD	261
90457-0045	CONN.STRAIGHT G3/8-12 MM, A 12-RL/WD	261
90457-0046	WASHER PLAIN ROUND 25,4/67,5, H=2	261
90457-0047	SENSOR,2750-1-5111-1 INCL. ADAPTER, PNP	99
90457-0064	TANK AND LID, AI-15346 + AI-15345	259
90457-0078	PANEL NUT	203, 319, 783
90457-0090	FLEXIBLE COUPLING, 10X10 MM	701
90457-0134	O-RING	263
90457-0144	REGULATOR 0,3-2 BAR	203, 319
90457-0149	LIGHT FIXTURE	287
90457-0163	TIMING BELT GT2 880 8MR 30	425
90457-0164	SPHER. ROLLER BEARING 25X58X22 MM	443, 445
90457-0165	ANG. BALL BEAR, 2 SEALS, 30X72X30,2 MM	427, 429
90457-0170	DIRECTION VALVE, NO. 0 810 091 212	263
90457-0173	TORQUE RIGID COUPLING, 10X10 MM	433
90457-0177	FLOW-RESTRICTOR, 2,0 MM, M6	263
90457-0185	FLOW RESTRICTOR 1810120020, D=1,5 MM	263
90457-0922	ELBOW PIPE JOINT, EXT.THREAD,D=6MM M5	187
90458-0072	SCREW, HEX.SOCK.BUTTON HEAD M6X12	395
90458-0138	PROXIMITY SWITCH E2EG-X1R5B1-5M	461, 463, 565, 567, 803
90458-0200	PEROX. SAFETY VALVE, NO. 527-430 1/2X3/4	163
90458-0201	FLUID AUT. FEEDER, ALINOX 1/2 46.04.00	163
90458-0341	THERMOCOUPLE 5130050-001	15, 17
90458-0377	VIBRATION DAMPER, NO. 781093	861, 863
90458-0572	BALL BEARING, 15X35X11 MM	15, 17
90458-0602	PHOTOCELL, SICK 90458-0602	889, 891
90458-0603	CONNECTOR FEMALE 5 PINS	889, 891
90458-0672	PROXIMITY SENSOR E2E2-X5MB1-5M	87, 295, 297, 299, 839, 841, 857
90458-0676	PROXIMITY SWITCH,E2EG-X5B1-6M	153
90458-0751	BUSHING,INT./EXT.G-THREAD G3/4"-G1/2"	163
90458-1111	TUBE 6 MM TEFLON	127, 129
90458-2845	SCREW	389, 393
92097-0009	SLEEVE	893, 903, 905
92296-0002	LUBRICANT	437

Part No	Description	Page No
107000-0000 ..	SPRING	1115
107426-0000 ..	GUIDE SLEEVE	483, 485, 503, 505, 1071
118298-0000 ..	WASHER	173
209183-0000 ..	RING	135, 137, 431
229207-0000 ..	BEARING SLEEVE	651, 653
230551-0000 ..	GASKET	89
232979-0000 ..	PRESSURE ROLLER	139, 141, 1073, 1075
236631-0000 ..	HANDLE	971
236634-0000 ..	SHAFT	971
239874-0000 ..	WASHER	473, 495
245039-0000 ..	GUIDE WHEEL	651, 653
246513-0000 ..	BEARING	473, 495
247355-0000 ..	LOCK WASHER	19
247358-0000 ..	SHIFTER HANDLE	19
252766-0001 ..	INSULATING PIPE	597, 599, 601
252766-0002 ..	INSULATING PIPE	597, 599, 601
255977-0000 ..	SHAFT	139, 141, 1073, 1075
255978-0000 ..	FORK	139, 141
256628-0000 ..	PIECE	479, 499
256629-0001 ..	AXLE PIN	479, 499
257090-0000 ..	SHIFTER HANDLE	45, 47, 49
257330-0000 ..	PRESSURE ROLLER	139, 141, 1073, 1075
263655-0002 ..	SHAFT	35, 37
263655-0006 ..	SHAFT	59, 61
263655-0007 ..	SHAFT	59, 61
263655-0008 ..	SHAFT	59, 61
263655-0009 ..	SHAFT	45, 47, 49, 59, 61
263655-0012 ..	SHAFT	35, 37
263655-0021 ..	SHAFT	35, 37
263655-0022 ..	SHAFT	55, 57
263655-0023 ..	SHAFT	35, 37
263655-0024 ..	SHAFT	35, 37
263673-0000 ..	GASKET	597, 599, 601
265566-0001 ..	SHAFT	193
265567-0000 ..	BEARING UNIT	193
265569-0001 ..	STRUT	193
266737-0000 ..	WASHER	195, 813
266739-0000 ..	CABLE GLAND	595
269859-0000 ..	BRACKET	89
270927-0000 ..	SCREW	595
271011-0000 ..	WASHER	895, 899
271239-0000 ..	SLEEVE	1153

Part No	Description	Page No
271241-0000 ..	SCREW	1153
271823-0000 ..	FILTER	775, 777
271860-0000 ..	CLAMP BLOCK	71, 73, 75
272479-0000 ..	PRESSURE ROLLER	139, 141, 1073, 1075
272728-0000 ..	BARRIER	867
272810-0001 ..	SLEEVE	1153
272813-0000 ..	PLUNGER	1153
272814-0000 ..	SLEEVE	867
272815-0001 ..	SLEEVE	867
273429-0000 ..	WASHER	85, 95, 97
273450-0000 ..	SIGN	203
273452-0000 ..	SIGN	203
273455-0000 ..	LABEL (COLD WATER)	775, 777
273458-0000 ..	LABEL (AIR)	785
273953-0000 ..	SEAL	59, 61
273961-0000 ..	SEAL	15, 17
273977-0000 ..	NUT	415, 1143
273978-0000 ..	LEVEL GLASS	415, 1143
273980-0000 ..	SPRING	415, 1143
273981-0000 ..	GASKET	407
273985-0000 ..	CARRIAGE	1147
273996-0000 ..	NUT	415, 1143
276398-0000 ..	HEXAGON NIPPLE	377
282635-0000 ..	GUIDE WHEEL	821
293606-0000 ..	SHIFTER HANDLE	581
294042-0000 ..	SEALING WASHER	581
294464-0000 ..	BASE PLATE	595
295376-0000 ..	SHAFT	139, 141, 1073, 1075
295377-0001 ..	HOOD	139, 141
295377-0003 ..	HOOD	139, 141
311103-0235 ..	PARALLELL PIN, CP, M6, 3X14 MM	1145
311103-0238 ..	PARALLELL PIN, M6, 3X20 MM	45, 47, 49
311103-0272 ..	PARALLELL PIN, M6, 4X20 MM	555, 581
311103-0274 ..	PARALLELL PIN, M6, 4X25 MM	867
311103-0276 ..	PARALLELL PIN, M6, 4X30 MM	581
311103-0308 ..	PARALLELL PIN, M6, 5X16 MM	295, 297, 299
311103-0312 ..	PARALLELL PIN, M6, 5X25 MM	559, 561
311103-0350 ..	PARALLELL PIN, CP, M6, 6X14 MM	173, 431
311103-0351 ..	PARALLELL PIN, M6, 6X16 MM	571, 573, 575, 577, 897, 901
311103-0354 ..	PIN,STRIGHT M6 6X22 RFR	565, 567
311103-0355 ..	PARALLELL PIN, M6, 6X25 MM	851, 861, 863
311103-0357 ..	PARALLELL PIN, M6, 6X30 MM	895, 899
311103-0358 ..	PIN,STRIGHT M6 6X32 RFR	431
311103-0361 ..	PARALLELL PIN, M6, 6X40 MM	1131
311103-0399 ..	PARALLELL PIN, CP, M6, 8X16 MM	63, 65
311103-0401 ..	PARALLELL PIN, M6, 8X20 MM	169, 177, 839, 841, 859
311103-0402 ..	PIN,STRAIGHT M6 8X22 RFR	559, 561
311103-0403 ..	PARALLELL PIN, M6, 8X25 MM	441, 559, 561
311103-0405 ..	PARALLELL PIN, M6, 8X30 MM	559, 561
311103-0407 ..	PARALLELL PIN, M6, 8X35 MM	603, 691
311103-0409 ..	PARALLELL PIN, M6, 8X40 MM	861, 863
311103-0413 ..	PARALLELL PIN, M6, 8X50 MM	71, 73, 75
311103-0454 ..	PARALLELL PIN, M6, 10X20 MM	641, 643, 661, 839, 841
311103-0456 ..	PARALLELL PIN, M6, 10X25 MM	295, 297, 299
311103-0466 ..	PARALLELL PIN, M6, 10X50 MM	179, 183, 185, 839, 841
311111-0209 ..	PIN, STRAIGHT SLOTTED SPRING FRP 3X18	275
311112-0167 ..	PIN, STRAIGHT SLOTTED SPRING FRP 2X14	29
311112-0205 ..	PIN, STRAIGHT SLOTTED SPRING FRP 3X10	803
311112-0209 ..	PIN, STRAIGHT SLOTTED SPRING FRP 3X18	449, 451
311112-0251 ..	PIN, STRAIGHT SLOTTED SPRING FRP 4X10	603
311112-0256 ..	PIN, STRAIGHT SLOTTED SPRING FRP 4X20	887
311112-0258 ..	PIN, STRAIGHT SLOTTED SPRING FRP 4X24	855, 883
311112-0262 ..	PIN, STRAIGHT SLOTTED SPRING FRP 4X32	19
311112-0350 ..	PIN, STRAIGHT SLOTTED SPRING FRP 6X55	867, 1153
311112-0381 ..	PIN, STRAIGHT SLOTTED SPRING FRP 8X32	861, 863
311305-0308 ..	SLOTTED PIRPC5X16FZB	193
311401-0166 ..	SPLIT PIN SP2,5X18FZB	433
311411-0152 ..	SPLIT PIN SP2X16RFR	1113
311520-0320 ..	RIVET, BLANK 2,4X6	1031
311520-0329 ..	RIVET, BLANK 2,4X8	771, 907, 909, 967, 1013, 1015
311521-0142 ..	BLANK RIVET 3,2X6	929, 1067
311521-0143 ..	BLANK RIVET 3,2X8	177, 1003, 1157
312101-0291 ..	SCREW M6S M4X12 FZB	425
312101-0325 ..	SCREW M6S M5X10 FZB	1013, 1015
312101-0344 ..	SCREW M6S M5X65 FZB	815
312101-0364 ..	SCREW M6S M6X10 FZB	1013, 1015, 1031, 1041, 1043, 1045
312101-0366 ..	SCREW M6S M6X12 FZB	1013, 1015
312101-0370 ..	SCREW M6S M6X20 FZB	425
312101-0381 ..	SCREW M6S M6X55 FZB	867, 1153
312101-0453 ..	SCREW M6S M8X25 FZB	425, 427, 429
312101-0457 ..	SCREW M6S M8X35 FZB	427, 429
312101-0461 ..	SCREW M6S M8X50 FZB	453, 455
312101-0493 ..	SCREW M6S M10X25 FZB	335
312101-0536 ..	SCREW M6S M12X30 FZB	425

Part No	Description	Page No
312101-0538 ..	SCREW M6S M12X35 FZB	425
312101-0540 ..	SCREW M6S M12X40 FZB	437
312101-0624 ..	SCREW M6S M16X30 FZB	447
312101-0630 ..	SCREW M6S M16X50 FZB	395
312104-0461 ..	SCREW M6S M8X50H FZB	175, 397
312104-0552 ..	SCREW M6S M12X100H FZB	1099
312105-0287 ..	SCREW M6S M4X8 A280	95, 97, 99, 111, 131, 133, 199, 201, 375, 593, 619, 621, 657, 985, 987
312105-0289 ..	SCREW M6S M4X10 A280	613, 615
312105-0291 ..	SCREW M6S M4X12 A280	581, 593, 709, 895, 899, 1095
312105-0293 ..	SCREW M6S M4X16 A280	191, 237, 239, 607, 609, 611, 701, 839, 841, 975
312105-0295 ..	SCREW M6S M4X20 A280	101, 195, 249, 473, 475, 477, 479, 495, 497, 499, 813
312105-0297 ..	SCREW M6S M4X25 A280	69
312105-0299 ..	SCREW M6S M4X30 A280	815
312105-0301 ..	SCREW M6S M4X35 A280	335
312105-0303 ..	SCREW M6S M4X40 A280	237, 239, 803
312105-0323 ..	SCREW M6S M5X8 A280	15, 17, 63, 65, 127, 129, 603, 651, 653, 657, 707, 713, 937, 985, 987 1007, 1009, 1011
312105-0325 ..	SCREW M6S M5X10 A280	19, 533, 535, 539, 541, 569, 969, 1119, 1121
312105-0327 ..	SCREW M6S M5X12 A280	63, 65, 237, 239, 475, 497, 521, 523, 527, 529, 533, 535, 539, 541 641, 643, 657, 661, 685, 687, 691, 729, 731, 817, 851, 857
312105-0328 ..	SCREW M6S M5X14 A280	195, 813, 855, 883
312105-0329 ..	SCREW M6S M5X16 A280	21, 25, 63, 65, 183, 185, 475, 497, 685, 687, 691, 713, 729, 889, 891
312105-0331 ..	SCREW M6S M5X20 A280	87, 183, 185, 565, 567, 839, 841
312105-0333 ..	SCREW M6S M5X25 A280	15, 17, 35, 37, 41, 43, 45, 47, 49, 55, 57, 135, 137, 399, 465, 559, 561
312105-0335 ..	SCREW M6S M5X30 A280	473, 495
312105-0339 ..	SCREW M6S M5X40 A280	565, 567, 887
312105-0340 ..	SCREW M6S M5X45 A280	77, 79, 237, 239
312105-0341 ..	SCREW M6S M5X50 A280	1127, 1129
312105-0343 ..	SCREW M6S M5X60 A280	29, 885
312105-0362 ..	SCREW M6S M6X8 A280	15, 17, 63, 65, 69, 89, 157, 173, 199, 201, 237, 239, 311, 473, 479 487, 495, 499, 507, 603, 649, 695, 697, 699, 969
312105-0364 ..	SCREW M6S M6X10 A280	15, 17, 223, 225, 365, 439, 441, 631, 633, 839, 841, 985, 987
312105-0366 ..	SCREW M6S M6X12 A280	27, 31, 33, 89, 95, 97, 131, 133, 135, 137, 157, 165, 167, 199, 201 203, 215, 227, 253, 255, 265, 283, 285, 287, 295, 297, 299, 319, 375, 393, 419, 431, 433, 435, 437 473, 489, 491, 493, 495, 509, 511, 513, 521, 523, 527, 529, 533, 535, 581, 607, 609, 611, 619, 621 623, 625, 651, 653, 681, 685, 687, 691, 695, 697, 699, 701, 731, 817, 839, 841, 855, 871, 879, 883 887, 889, 891, 917, 937, 961, 971, 975, 1053
312105-0367 ..	SCREW M6S M6X14 A280	71, 73, 75, 223, 225, 549, 551, 553, 555, 557, 801
312105-0368 ..	SCREW M6S M6X16 A280	15, 17, 25, 29, 45, 47, 49, 77, 79, 89, 135, 137, 145, 147, 163, 165 167, 169, 183, 185, 187, 199, 201, 203, 231, 237, 239, 271, 273, 287, 295, 297, 299, 319, 343, 373 383, 385, 407, 417, 431, 441, 457, 487, 507, 521, 523, 527, 529, 533, 535, 539, 541, 569, 587, 589 607, 609, 611, 619, 621, 623, 625, 641, 643, 655, 663, 665, 667, 669, 671, 673, 691, 695, 697, 699
312105-0370 ..	SCREW M6S M6X20 A280	701, 721, 729, 753, 757, 761, 773, 783, 785, 895, 899, 937, 961 15, 17, 23, 25, 27, 29, 45, 47, 49, 59, 61, 63, 65, 93, 99, 131, 133 195, 237, 239, 413, 559, 561, 593, 595, 607, 609, 611, 613, 615, 641, 643, 669, 671, 673, 681, 695 697, 699, 701, 775, 777, 799, 813, 815, 817, 821, 839, 841, 855, 861, 863, 883, 889, 891, 895, 897 899, 901, 903, 905, 941, 953, 973, 1131
312105-0371 ..	SCREW M6S M6X22 A280	169, 187
312105-0372 ..	SCREW M6S M6X25 A280	21, 27, 31, 33, 35, 37, 45, 47, 49, 55, 57, 63, 65, 145, 147, 165, 167 169, 193, 217, 219, 227, 271, 273, 413, 471, 519, 557, 565, 567, 595, 603, 607, 609, 611, 651, 653 655, 669, 671, 673, 679, 689, 691, 693, 695, 697, 699, 855, 885, 889, 891, 895, 897, 899, 901
312105-0374 ..	SCREW M6S M6X30 A280	593, 655, 669, 671, 673, 681, 821, 883, 971, 1101, 1145
312105-0376 ..	SCREW M6S M6S M6X35 A280	157, 373, 613, 615, 669, 671, 673, 693, 695, 697, 699, 721, 783
312105-0378 ..	SCREW M6S M6X40 A280	45, 47, 49, 407, 579, 689, 797
312105-0379 ..	SCREW M6S M6X45 A280	187, 253, 571, 573, 575, 577, 681, 857, 861, 863
312105-0380 ..	SCREW M6S M6X50 A280	871, 1127, 1129
312105-0381 ..	SCREW M6S M6X55 A280	91, 107, 163, 693
312105-0382 ..	SCREW M6S M6X60 A280	157, 681, 709, 1127, 1129
312105-0383 ..	SCREW M6S M6X65 A280	247, 701, 803, 1119, 1121
312105-0447 ..	SCREW M6S M8X12 A280	15, 17, 87, 161, 311, 395, 409, 437, 489, 491, 493, 509, 511, 513 591, 641, 643, 685, 687, 691, 701, 869, 1001
312105-0449 ..	SCREW M6S M8X16 A280	75, 89, 135, 137, 169, 177, 229, 247, 253, 259, 295, 297, 299, 397 403, 405, 569, 581, 619, 621, 655, 661, 669, 671, 673, 675, 677, 701, 703, 707, 709, 797, 813, 817 819, 839, 841, 903, 905, 961, 969, 971, 973, 1147
312105-0451 ..	SCREW M6S 8X20 A280	25, 27, 59, 61, 71, 73, 75, 89, 95, 97, 111, 135, 137, 155, 161, 165 167, 169, 173, 175, 193, 195, 293, 383, 385, 397, 405, 409, 413, 417, 431, 549, 551, 553, 555, 591 603, 607, 609, 611, 619, 621, 631, 633, 641, 643, 675, 677, 685, 687, 691, 753, 907, 909, 941, 953 967, 969
312105-0452 ..	SCREW M6S M8X22 A280	101, 271, 273, 565, 567, 669, 671, 673, 859
312105-0453 ..	SCREW M6S M8X25 A280	15, 17, 63, 65, 69, 85, 91, 93, 95, 97, 99, 103, 105, 107, 165, 167 171, 183, 185, 403, 405, 479, 499, 555, 587, 589, 595, 603, 613, 615, 619, 621, 631, 633, 641, 643 685, 687, 691, 733, 747, 859, 861, 863, 965
312105-0455 ..	SCREW M6S M8X30 A280	19, 63, 65, 161, 165, 167, 169, 383, 385, 475, 479, 497, 499, 565 567, 593, 607, 609, 611, 679, 703, 819, 861, 863, 1145
312105-0457 ..	SCREW M6S M8X35 A280	63, 65, 607, 609, 611, 619, 621, 679, 861
312105-0459 ..	SCREW M6S M8X40 A280	35, 37, 69, 555, 1147
312105-0460 ..	SCREW M6S M8X45 A280	35, 37, 481, 487, 501, 507
312105-0461 ..	SCREW M6S M8X50 A280	549, 551, 553, 869
312105-0462 ..	SCREW M6S M8X55 A280	45, 47, 49, 59, 61, 63, 65, 161, 555
312105-0463 ..	SCREW M6S M8X60 A280	631, 633, 873
312105-0464 ..	SCREW M6S M8X65 A280	471, 597, 599, 601, 631, 633, 839, 841, 871
312105-0465 ..	SCREW M6S M8X70 A280	479, 489, 491, 493, 499, 509, 511, 513, 623, 625, 631, 633
312105-0466 ..	SCREW M6S M8X75 A280	411, 597, 599, 601, 623, 625, 631, 633
312105-0467 ..	SCREW M6S M8X80 A280	623, 625

Part No	Description	Page No
312105-0469 ..	SCREW M6S M8X90 A280	623, 625, 631, 633, 641, 643, 661
312105-0471 ..	SCREW M6S M8X100 A280	597, 599, 601
312105-0475 ..	SCREW M6S M8X120 A280	641, 643, 651, 653, 661
312105-0489 ..	SCREW M6S M10X16 A280	587, 589, 1151
312105-0491 ..	SCREW M6S M10X20 A280	89, 261, 393, 675, 677, 755, 977, 1147
312105-0493 ..	SCREW M6S M10X25 A280	89, 177, 593, 1055
312105-0495 ..	SCREW M6S M10X30 A280	53, 59, 61, 89, 95, 97, 395, 397, 569, 587, 589, 641, 643, 649, 661, 685, 687, 691, 753, 859
312105-0497 ..	SCREW M6S M10X35 A280	15, 17, 135, 137, 641, 643
312105-0499 ..	SCREW M6S M10X40 A280	603, 747
312105-0502 ..	SCREW M6S M10X55 A280	1067
312105-0505 ..	SCREW M6S M10X70 A280	393
312105-0506 ..	SCREW M6S M10X75 A280	839, 841
312105-0507 ..	SCREW M6S M10X80 A280	641, 643, 661
312105-0513 ..	SCREW M6S M10X110 A280	173, 441, 651, 653
312105-0517 ..	SCREW M6S M10X130 A280	173, 651, 653
312105-0519 ..	SCREW M6S M10X150 A280	433
312105-0534 ..	SCREW M6S M12X25 A280	985, 987
312105-0536 ..	SCREW M6S M12X30 A280	395
312105-0538 ..	SCREW M6S M12X35 A280	985, 987, 1151
312105-0540 ..	SCREW M6S M12X40 A280	471
312105-0542 ..	SCREW M6S M12X50 A280	747
312105-0622 ..	SCREW M6S M16X25 A280	395
312105-0628 ..	SCREW M6S M16X40 A280	973
312105-0630 ..	SCREW M6S M16X50 A280	851
312105-0631 ..	SCREW M6S M16X55 A280	603
312105-0632 ..	SCREW M6S M16X60 A280	851
312105-0634 ..	SCREW M6S M16X70 A280	1151
312105-0638 ..	SCREW M6S M16X90 A280	851
312105-0640 ..	SCREW M6S M16X100 A280	839, 841
312109-0335 ..	SCREW M6S M5X30 A280	71, 73, 75, 579
312109-0374 ..	SCREW M6S M6X30 A280	15, 17, 53, 63, 65, 77, 79, 295, 297, 299, 403, 431, 691, 695, 697, 699, 803
312109-0376 ..	SCREW M6S M6X35 A280	25, 53, 63, 65, 145, 147, 203, 319, 593, 917
312109-0378 ..	SCREW M6S M6X40 A280	15, 17, 21, 59, 61, 393, 565, 567, 641, 643, 661, 1131
312109-0380 ..	SCREW M6S M6X50H A280	413, 701, 889, 891
312109-0457 ..	SCREW M6S M8X35 A280	53, 85, 87, 135, 137, 179, 183, 185, 559, 561, 597, 599, 601, 631, 633, 641, 643, 753, 805
312109-0459 ..	SCREW M6S M8X40 A280	35, 37, 41, 43, 45, 47, 49, 59, 61, 87, 479, 499, 559, 561, 859
312109-0460 ..	SCREW M6S M8X45 A280	59, 61, 473, 495, 587, 589, 597, 599, 601, 607, 609, 611
312109-0461 ..	SCREW M6S M8X50 A280	55, 57, 59, 61, 631, 633
312109-0463 ..	SCREW M6S M8X60H A4 80	593, 685, 687, 691
312109-0499 ..	SCREW M6S M10X40 A280	685, 687, 691, 1097, 1151
312109-0500 ..	SCREW M6S M10X45 A280	685, 687
312109-0501 ..	SCREW M6S M10X50 A280	235
312109-0544 ..	SCREW M6S M12X60 H A280	403
312111-0329 ..	SCREW HEX.SOCK.HD.MC6S-TT 5X16 88 FZB	1041
312111-0341 ..	SCREW HEX.SOCK.HD.MC6S-TT 5X50 88 FZB	895, 899
312111-0366 ..	SCREW HEX.SOCK.HD.MC6S-TT 6X12 88 FZB	427, 429
312111-0370 ..	SCREW HEX.SOCK.HD.MC6S-TT 6X20 88 FZB	1041
312111-0382 ..	SCREW HEX.SOCK.HD.MC6S-TT 6X60 88 FZB	449, 451, 453, 455
312115-0226 ..	SCREW MC6S M3X12 A280	595
312115-0228 ..	SCREW MC6S M3X16 A280	195, 685, 687, 691, 813
312115-0230 ..	SCREW MC6S M3X20 A280	437, 595, 607, 609, 611
312115-0285 ..	SCREW HEX.SOCK.HD.MC6S-TTS 4X6 A480	481, 487, 501, 507
312115-0287 ..	SCREW MC6S M4X8 A280	131, 133, 887
312115-0291 ..	SCREW MC6S M4X12 A280	119, 801, 941, 943, 945, 1037, 1039
312115-0293 ..	SCREW MC6S M4X16 A280	431, 433, 715
312115-0295 ..	SCREW MC6S M4X20 A280	135, 137
312115-0297 ..	SCREW MC6S M4X25 A280	483, 485, 503, 505, 1071
312115-0299 ..	SCREW MC6S M4X30 A280	431
312115-0323 ..	SCREW MC6S M5X8 A280	461, 463, 799
312115-0327 ..	SCREW MC6S M5X12 A280	183, 185, 203, 229, 319, 339, 349, 351, 355, 357, 359, 361, 397, 481, 501, 701, 753, 767, 771, 839, 841, 919, 921, 943, 945, 947, 949
312115-0329 ..	SCREW MC6S M5X16 A280	169, 191, 367, 389, 393, 473, 481, 495, 501, 533, 535, 539, 541, 839, 841, 985, 987, 991, 993, 997, 999
312115-0331 ..	SCREW MC6S M5X20 A280	237, 239, 261, 367, 449, 451, 489, 491, 493, 509, 511, 513, 953
312115-0333 ..	SCREW MC6S M5X25 A280	81, 191, 729
312115-0362 ..	SCREW MC6S M6X8 A280	27, 851
312115-0364 ..	SCREW HEX.SOCK.HD.MC6S-TT 6X10 A480	413, 737, 773
312115-0366 ..	SCREW MC6S M6X12 A280	169, 189, 521, 523, 527, 529, 533, 535, 539, 541, 591, 897, 901, 911, 913, 915, 991, 993, 997, 999
312115-0368 ..	SCREW MC6S M6X16 A280	413, 533, 535, 539, 541, 565, 567, 723, 725, 727, 879, 893, 895, 899, 973, 977, 1135
312115-0370 ..	SCREW MC6S M6X20 A280	607, 609, 611, 773
312115-0372 ..	SCREW MC6S M6X25 A280	215, 261, 289, 291, 293, 483, 485, 503, 505, 533, 535, 539, 541, 857, 861, 863
312115-0374 ..	SCREW MC6S M6X30 A280	217, 219, 457, 737, 861, 863, 1135
312115-0376 ..	SCREW MC6S M6X35 A280	581, 857, 897, 901
312115-0378 ..	SCREW MC6S M6X40 A280	533, 535, 539, 541
312115-0379 ..	SCREW MC6S M6X45 A280	489, 491, 493, 509, 511, 513
312115-0380 ..	SCREW MC6S M6X50 A280	483, 485, 503, 505, 839, 841
312115-0382 ..	SCREW MC6S M6X60 A280	477
312115-0447 ..	SCREW MC6S M8X12 A280	481, 501

Part No	Description	Page No
312115-0449 ..	SCREW MC6S M8X16 A280	619, 621, 805
312115-0451 ..	SCREW MC6S M8X20 A280	473, 495, 907, 909, 967, 973
312115-0453 ..	SCREW MC6S M8X25 A280	439, 441, 457, 519, 735, 749, 821
312115-0455 ..	SCREW MC6S M8X30 A280	603, 897, 901
312115-0457 ..	SCREW MC6S M8X35 A280	457, 483, 485, 503, 505
312115-0459 ..	SCREW MC6S M8X40 A280	483, 485, 503, 505
312115-0460 ..	SCREW MC6S M8X45 A280	437
312115-0461 ..	SCREW MC6S M8X50 A280	483, 485, 503, 505
312115-0467 ..	SCREW MC6S M8X80 A280	871, 887
312115-0493 ..	SCREW MC6S M10X25 A280	425
312115-0497 ..	SCREW MC6S M10X35 A280	173, 661
312115-0499 ..	SCREW MC6S M10X40 A280	399
312115-0500 ..	SCREW MC6S M10X45 A280	661
312115-0501 ..	SCREW MC6S M10X50 A280	295, 297, 299
312115-0509 ..	SCREW MC6S M10X90 A280	887
312115-0626 ..	SCREW MC6S M16X35 A280	445
312115-0630 ..	SCREW MC6S M16X50 A280	173, 389, 393
312115-0634 ..	SCREW MC6S M16X70 A280	393
312121-0220 ..	SCREW SLOT.PAN HD. MCS 3X6 FZB	907, 909, 967
312121-0222 ..	SCREW SLOT.PAN HD. MCS 3X8 FZB	1041
312121-0224 ..	SCREW SLOT.PAN HD. MCS 3X10 FZB	1013, 1015
312121-0226 ..	SCREW SLOT.PAN HD. MCS 3X12 FZB	907, 909, 967
312121-0285 ..	SCREW SLOT.PAN HD. MCS 4X6 FZB	1013, 1015, 1043, 1045
312121-0289 ..	SCREW SLOT.PAN HD. MCS 4X10 FZB	907, 909, 967, 1043, 1045
312121-0321 ..	SCREW SLOT.PAN HD. MCS 5X6 FZB	1031
312121-0323 ..	SCREW SLOT.PAN HD. MCS 5X8 FZB	1033, 1035, 1037, 1039, 1041, 1051
312121-0325 ..	SCREW SLOT.PAN HD. MCS 5X10 FZB	1031
312121-0327 ..	SCREW SLOT.PAN HD. MCS 5X12 FZB	907, 909, 967
312121-0339 ..	SCREW SLOT.PAN HD. MCS 5X40 FZB	1037, 1039
312121-0366 ..	SCREW SLOT.PAN HD. MCS 6X12 FZB	1037, 1039
312122-0287 ..	SCREW PAN HEAD MCS M4X8 NL. PL.	1037, 1039
312122-0291 ..	SCREW PAN HEAD MCS M4X12 NL. PL.	1013, 1015, 1037, 1039
312125-0220 ..	SCREW SLOT.PAN HD. MCS 3X6 A480	315, 319, 731
312125-0222 ..	SCREW PAN HEAD MCS M3X8 SS	803, 931, 943, 945, 985, 987
312125-0226 ..	SCREW PAN HEAD MCS M3X12 SS	279, 281
312125-0228 ..	SCREW PAN HEAD MCS M3X16 A480	25, 259, 277, 603
312125-0230 ..	SCREW PAN HEAD MCS M3X20 SS	111, 803, 807, 809
312125-0234 ..	SCREW PAN HEAD MCS M3X30 SS	587, 589
312125-0285 ..	SCREW SLOT.PAN HD. MCS 4X6 A480	77, 79, 91, 135, 137, 249, 403, 439, 441, 453, 455, 701, 817, 1115
312125-0287 ..	SCREW PAN HEAD MCS M4X8 SS	111, 283, 285, 425, 607, 609, 611, 685, 687, 691, 715, 721, 753, 785, 797, 799, 803, 817, 857, 895, 897, 899, 901, 911, 913, 915
312125-0289 ..	SCREW SLOT.PAN HD. MCS 4X10 A480	279, 281, 723, 725, 871, 889, 891, 985, 987
312125-0291 ..	SCREW PAN HEAD MCS M4X12 SS	157, 435, 799
312125-0293 ..	SCREW PAN HEAD MCS M4X16 SS	391, 885, 939
312125-0295 ..	SCREW PAN HEAD MCS M4X20 SS	483, 485, 503, 505, 885, 1071
312125-0297 ..	SCREW PAN HEAD MCS M4X25 SS	713
312125-0299 ..	SCREW PAN HEAD MCS M4X30 SS	217, 219, 247, 315, 709
312125-0303 ..	SCREW PAN HEAD MCS M4X40 SS	807, 809
312125-0323 ..	SCREW PAN HEAD MCS M5X8 SS	95, 97, 107, 115, 117, 119, 237, 239, 417
312125-0325 ..	SCREW SLOT.PAN HD. MCS 5X10 A480	153, 215, 217, 219
312125-0327 ..	SCREW PAN HEAD MCS M5X12 SS	685, 687, 691, 991, 993, 1003, 1005, 1145
312125-0331 ..	SCREW PAN HEAD MCS M5X20 SS	95, 97
312125-0333 ..	SCREW PAN HEAD MCS M5X25 SS	907, 909
312125-0335 ..	SCREW PAN HEAD MCS M5X30 SS	1013, 1015
312125-0341 ..	SCREW SLOT.PAN HD. MCS 5X50 A480	407
312125-0364 ..	SCREW SLOT.PAN HD. MCS 6X10 A480	173, 217, 219, 279, 281, 283, 285, 289, 291, 293, 333
312125-0366 ..	SCREW PAN HEAD MCS M6X12 SS	15, 17, 177, 383, 393, 853
312125-0370 ..	SCREW PAN HEAD MCS M6X20 SS	407
312125-0374 ..	SCREW PAN HEAD MCS M6X30 SS	241
312125-0376 ..	SCREW PAN HEAD MCS M6X35 SS	1013, 1015
312132-0284 ..	SCREW SLOT. PAN HEAD MSCS M4X5	169, 595
312132-0287 ..	SCREW SLOT. PAN HEAD MSCS M4X8	1013, 1015
312132-0289 ..	SCREW SLOT. PAN HEAD MSCS M4X10	259, 727
312145-0228 ..	SCREW COUNTERS.SLOT.HD. MFS 3X16 SS	135, 137
312145-0230 ..	SCREW COUNTERS.SLOT.HD. MFS 3X20 SS	283, 285
312145-0234 ..	SCREW COUNTERS.SLOT.HD. MFS 3X30 SS	489, 491, 493, 509, 511, 513
312145-0238 ..	SCREW COUNTERS.SLOT.HD. MFS 3X40 SS	489, 491, 493, 509, 511, 513
312145-0287 ..	SCREW COUNTERS.SLOT.HD. MFS 4X8 SS	475, 479, 497, 499, 521, 523, 527, 529, 887, 985, 987
312145-0289 ..	SCREW COUNTERS.SLOT.HD. MFS 4X10 SS	521, 523, 527, 529
312145-0291 ..	SCREW COUNTERS.SLOT.HD. MFS 4X12 A4	521, 523, 527, 529
312145-0380 ..	SCREW COUNTERS.SLOT.HD. MFS 6X50 SS	1145
312151-0335 ..	SCREW HEX.SOCK.COUNT.MF6S 5X30 FZB	323, 325, 327, 329
312151-0368 ..	SCREW HEX.SOCK.COUNT.MF6S 6X16 FZB	449, 451, 453, 455, 685, 687, 691
312155-0285 ..	SCREW HEX.SOCK.COUNT.MF6S M4X6 A480	489, 491, 493, 509, 511, 513
312155-0287 ..	SCREW HEX.SOCK.COUNT.MF6S M4X8 A270	483, 485, 503, 505, 613, 615, 887
312155-0289 ..	SCREW HEX.SOCK.COUNT.MF6S M4X10 A480	237, 239, 613, 615, 641, 643, 663, 665, 667
312155-0291 ..	SCREW HEX.SOCK.COUNT.MF6S M4X12 A480	801, 895, 899, 973
312155-0293 ..	SCREW HEX.SOCK.COUNT.MF6S M4X16 A480	191
312155-0295 ..	SCREW HEX.SOCK.COUNT.MF6S M4X20 A480	191
312155-0297 ..	SCREW HEX.SOCK.COUNT.MF6S M4X25 A480	593
312155-0323 ..	SCREW HEX.SOCK.COUNT.MF6S M5X8 A280	241, 895, 899
312155-0327 ..	SCREW HEX.SOCK.COUNT.MF6S M5X12 A280	475, 497, 607, 609, 611, 655
312155-0329 ..	SCREW HEX.SOCK.COUNT.MF6S M5X16 A280	71, 73, 75, 669, 671, 673

Part No	Description	Page No
312155-0337 ..	SCREW HEX.SOCK.COUNT.MF6S 5X35 SS	373
312155-0364 ..	SCREW HEX.SOCK.COUNT.MF6S M6X10 A280	189
312155-0366 ..	SCREW HEX.SOCK.COUNT.MF6S M6X12 A280	389, 393, 649
312155-0368 ..	SCREW HEX.SOCK.COUNT.MF6S M6X16 A280	295, 297, 299, 549, 551, 553, 651, 653, 701
312155-0370 ..	SCREW HEX.SOCK.COUNT.MF6S M6X20 A280	173, 395, 613, 615
312155-0374 ..	SCREW HEX.SOCK.COUNT.MF6S M6X30 A280	347
312155-0376 ..	SCREW HEX.SOCK.COUNT.MF6S M6X35 A280	253, 613, 615, 797, 925, 955, 957, 959
312155-0378 ..	SCREW HEX.SOCK.COUNT.MF6S M6X40 A280	641, 643, 663, 665, 667
312155-0380 ..	SCREW HEX.SOCK.COUNT.MF6S M6X50 A280	613, 615
312155-0449 ..	SCREW HEX.SOCK.COUNT.MF6S M8X16 A280	805, 821, 889, 891
312155-0453 ..	SCREW HEX.SOCK.COUNT.MF6S M8X25 A280	303, 607, 609, 611, 649
312155-0457 ..	SCREW HEX.SOCK.COUNT.MF6S M8X35 A280	1159
312155-0459 ..	SCREW HEX.SOCK.COUNT.MF6S M8X40 A280	631, 633
312155-0495 ..	SCREW HEX.SOCK.COUNT.MF6S M10X30 A280	393, 593, 685, 687, 691
312155-0499 ..	SCREW HEX.SOCK.COUNT.MF6S M10X40 A280	613, 615
312180-0489 ..	SCREW, HEX.SOCK.HEAD SHOULD. M8X16	971
312180-0534 ..	SCREW, HEX.SOCK.HEAD SHOULD. M10/12X25	173
312230-0148 ..	SCREW HEX.HEAD WOOD T6S 10X120 SS	231
312230-0150 ..	SCREW HEX.HEAD WOOD T6S 10X160 SS	231
312306-0546 ..	SCREW HEX.SOCK.SET FLAT P.MP6SS 12X70FZB	1117
312311-0327 ..	SCREW, SOCK.SET DOGPOINT M5X12	399
312311-0370 ..	SCREW, SOCK.SET DOGPOINT M6X20	607, 609, 611
312311-0624 ..	SCREW HEX.SOCK.SET DOG P.MT6SS 16X30 FZB	301, 963
312318-0220 ..	SCREW SOCK.SET CUP P MSK6SS M3X6 A4	705
312318-0283 ..	SCREW SOCK.SET CUP P MSK6SS M4X4 A4	797
312318-0285 ..	SCREW SOCK.SET CUP P MSK6SS M4X6 A4	183, 185, 521, 523, 527, 529
312318-0287 ..	SCREW SOCK.SET CUP P MSK6SS M4X8 A4	181, 555, 855, 875, 883
312318-0289 ..	SCREW SOCK.SET CUP P MSK6SS M4X10 A4	479, 499, 581
312318-0321 ..	SCREW HEX.SOCK.SET CUP P.MSK6SS 5X6 SS	581
312318-0323 ..	SCREW SOCK.SET CUP P MSK6SS M5X8 A4	21, 703
312318-0325 ..	SCREW HEX.SOCK.SET CUP P.MSK6SS5X10 SS	29
312318-0329 ..	SCREW SOCK.SET CUP P MSK6SS M5X16 A4	483, 485, 489, 491, 493, 503, 505, 509, 511, 513
312318-0362 ..	SCREW SOCK.SET CUP P MSK6SS M6X8 A4	19, 431, 571, 573, 575, 577, 587, 589, 865
312318-0364 ..	SCREW HEX.SOCK.SET CUP P.MSK6SS6X10 SS	29, 193, 303, 871
312318-0366 ..	SCREW SOCK.SET CUP P MSK6SS M6X12 A4	179, 183, 185, 839, 841, 873, 875, 889, 891
312318-0368 ..	SCREW SOCK.SET CUP P MSK6SS M6X16 A4	607, 609, 611, 871, 897, 901
312318-0378 ..	SCREW HEX.SOCK.SET CUP P.MSK6SS6X40 SS	295, 297, 299
312318-0443 ..	SCREW SOCK.SET CUP P MSK6SS M8X8 A4	971
312318-0449 ..	SCREW SOCK.SET CUP P MSK6SS M8X16 A4	173, 475, 479, 497, 499
312318-0453 ..	SCREW SOCK.SET CUP P MSK6SS M8X25 A4	389, 393, 395
312318-0459 ..	SCREW SOCK.SET CUP P MSK6SS M8X40 A4	99
312421-0123 ..	WELDING BUM5X30	1013, 1015
312502-0120 ..	DRIVE SCREW ROUND HEAD KDS 0X5	203, 255, 319, 775, 777, 783, 785
312503-0275 ..	SCREW CROSS RECES.RND.HD.TAPP. B6X6.5	911, 913, 915
312601-0310 ..	NUT M6M3FZB	1013, 1015
312601-0312 ..	NUT M6M 4-8 FZB	721, 1013, 1015
312601-0314 ..	NUT M6M5FZB	1013, 1015
312601-0316 ..	NUT M6M 6-8 FZB	857, 1013, 1015
312601-0322 ..	NUT M6M 12-8 FZB	425, 1099
312601-0324 ..	NUT M6M 16-8 FZB	443, 445
312602-0312 ..	HEXAGON NUT, M6M M4 BR	1119, 1121
312602-0314 ..	HEXAGON NUT, M6M M5 BR NI.PL.	669, 671, 673
312605-0310 ..	HEXAGON NUT, M6M M3 A280	111, 315, 721, 803, 807, 809, 931
312605-0312 ..	HEXAGON NUT, M6M M4 A280	63, 65, 69, 77, 79, 91, 169, 191, 195, 237, 239, 247, 315, 403 477, 479, 499, 701, 713, 803, 813, 815, 885, 895, 899, 943, 945, 949, 953, 975, 985, 987
312605-0314 ..	HEXAGON NUT, M6M M5 A280	29, 69, 71, 73, 75, 77, 79, 107, 153, 191, 237, 239, 361, 481 501, 651, 653, 655, 657, 713, 729, 783, 815, 895, 899, 903, 905, 923, 927, 929, 943, 945, 997 1013, 1015, 1119, 1121, 1127, 1129
312605-0316 ..	HEXAGON NUT, M6M M6 A280	15, 17, 21, 23, 25, 27, 29, 31, 33, 89, 157, 165, 167, 169, 195 203, 223, 225, 231, 237, 239, 241, 247, 253, 279, 281, 287, 295, 297, 299, 303, 311, 319, 333, 343 383, 389, 407, 409, 413, 417, 487, 507, 555, 565, 567, 607, 609, 611, 619, 621, 695, 697, 699, 701 709, 721, 783, 797, 799, 801, 803, 813, 817, 839, 841, 855, 861, 863, 883, 897, 901, 917, 953, 961 971, 985, 987, 991, 993, 997, 999, 1119, 1121, 1127, 1129
312605-0318 ..	HEXAGON NUT, M6M M8 A280	15, 17, 19, 53, 69, 85, 87, 91, 93, 95, 97, 99, 103, 105, 107, 135 137, 155, 161, 165, 167, 169, 171, 173, 175, 179, 183, 185, 229, 253, 295, 297, 299, 383, 385, 397 405, 411, 431, 475, 479, 489, 491, 493, 497, 499, 509, 511, 513, 533, 535, 539, 541, 549, 551, 553 591, 607, 609, 611, 623, 625, 631, 633, 641, 643, 649, 661, 675, 677, 685, 687, 691, 701, 703, 705 747, 749, 753, 801, 803, 817, 839, 841, 897, 901, 1127, 1129, 1145, 1147
312605-0320 ..	HEXAGON NUT, M6M M10 A280	95, 97, 135, 137, 261, 587, 589, 593, 755, 795, 861, 863, 895, 899
312605-0322 ..	HEXAGON NUT, M6M M12 A280	403, 593, 851, 859, 1067
312605-0324 ..	HEXAGON NUT, M6M M16 A280	301, 395, 397, 825, 827, 829, 831, 833, 835, 837, 851, 963, 1151
312625-0316 ..	NUT HEX. M6 SS	803, 1013, 1015
312625-0318 ..	NUT HEX. M8 SS	143, 175, 453, 455, 471, 479, 487, 499, 507, 549, 551, 553, 861, 863
312625-0320 ..	NUT HEX. M10 SS	581
312625-0322 ..	NUT HEX. M12 SS	701
312630-0320 ..	NUT HEX. M10X1 FE FZB	895, 899
312635-0320 ..	NUT M6M 10X1 STAINLESS A2 80	459, 479, 499
312705-0312 ..	NUT HEX. DOMED CAP MHM-6 M4 A280	339, 341, 349, 351, 353, 355, 357, 361, 767, 943, 945 947, 949
312705-0314 ..	NUT HEX. DOMED CAP MHM-6 M5 A280	35, 37, 41, 43, 45, 47, 49, 55, 57, 713, 923, 927
312705-0316 ..	NUT HEX. DOMED CAP MHM-6 M6 A280	31, 33, 35, 37, 45, 47, 49, 55, 57, 63, 65, 181, 343 419, 875
312705-0318 ..	NUT HEX. DOMED CAP MHM-6 M8 A280	35, 37, 41, 43, 45, 47, 49, 63, 65
312705-0322 ..	NUT HEX. DOMED CAP MHM-6 M12 A2	35, 37, 41, 43, 45, 47, 49

Part No	Description	Page No
312805-0106 ..	NUT ROUND WITH SLOTS M30X1,5 FE	427, 429
312811-0318 ..	NUT HEX.LOCK HELI COIL MID GRIP M8 SS	479, 499
312812-0310 ..	HEXAGON NUT, NY-LOCK M3 A480	277
312812-0312 ..	HEXAGON NUT, NY-LOCK M4 A480	237, 239, 279, 281, 339, 341, 349, 351, 353, 695, 697, 699, 807, 809, 889, 891
312812-0314 ..	HEXAGON NUT, NY-LOCK M5 A480	71, 73, 75, 135, 137, 953
312812-0316 ..	HEXAGON NUT, NY-LOCK M6 A480	15, 17, 163, 229, 689, 693, 799, 867, 985, 987, 1145, 1153
312812-0318 ..	HEXAGON NUT, NY-LOCK M8 A480	183, 185, 389, 393, 475, 479, 497, 499, 571, 573, 575, 577, 591
312812-0320 ..	HEXAGON NUT, NY-LOCK M10 A480	399, 449, 451, 565, 567, 651, 653
312812-0322 ..	HEXAGON NUT, NY-LOCK M12 A480	473, 495, 889, 891
312812-0328 ..	HEXAGON NUT, NY-LOCK M24 SS	443
312902-0318 ..	NUT HEX. LEFT THREAD, M8 A280	591, 607, 609, 611
312902-0320 ..	NUT HEX. LEFT THREAD, M10 A280	587, 589
312923-0122 ..	NUT BLIND RIVET PO M5X12,6 SS	1003
315101-0136 ..	WASHER PLAIN, BRB, 4,3/8 H=0,8	721, 1043, 1045
315101-0146 ..	WASHER PLAIN, BRB, 5,3/10 H=1	1013, 1015, 1031, 1033, 1035, 1041, 1051
315101-0153 ..	WASHER PLAIN, BRB, 6,4/12 H=1,5	867, 1013, 1015, 1041, 1043, 1045, 1153
315101-0165 ..	WASHER PLAIN, BRB, 8,4/16 H=1,5	175, 453, 455
315101-0173 ..	WASHER PLAIN, BRB, 10,5/22 H=2	335, 425, 895, 899
315101-0178 ..	WASHER PLAIN, BRB, 13/24 H=2	425
315102-0198 ..	WASHER PLAIN, BRFB 25/45 H=4	439, 441
315103-0136 ..	WASHER PLAIN, BRB, 4,3/8,H=0,8 NI PL BR	1119, 1121
315103-0146 ..	WASHER PLAIN, BRB, 5,3/10,H=1 NI PL BR	669, 671, 673, 707, 1021
315103-0153 ..	WASHER PLAIN, BRB, 6,4/12,H=1,5 NIPL BR	607, 609, 611
315103-0165 ..	WASHER PLAIN, BRB, 8,4/16,H=1,5 NIPL BR	707
315105-0124 ..	WASHER PLAIN, BRB, 3,2/6,H=0,5	25, 111, 195, 277, 279, 281, 315, 437, 587, 589, 607, 609, 611, 685, 687, 691, 721, 803, 807, 809, 813, 985, 987
315105-0136 ..	WASHER PLAIN, BRB, 4,3/8,H=0,8	77, 79, 91, 111, 131, 133, 169, 191, 199, 201, 247, 249, 279, 281, 315, 339, 341, 349, 351, 353, 355, 357, 361, 391, 403, 431, 433, 475, 497, 581, 593, 607, 609, 611, 613, 615, 619, 621, 657, 713, 785, 807, 809, 839, 841, 871, 895, 899, 939, 943, 945, 947, 949, 975, 985, 987, 1037, 1039
315105-0146 ..	WASHER PLAIN, BRB, 5,3/10,H=1	15, 17, 19, 21, 25, 29, 63, 65, 69, 71, 73, 75, 77, 79, 95, 97, 107, 135, 137, 153, 183, 185, 191, 195, 217, 219, 237, 239, 339, 349, 351, 355, 357, 359, 361, 367, 389, 393, 397, 461, 463, 465, 475, 481, 497, 501, 521, 523, 527, 529, 533, 535, 539, 541, 559, 561, 565, 567, 579, 603, 651, 653, 655, 657, 685, 687, 691, 713, 753, 767, 771, 783, 813, 815, 817, 839, 841, 851, 855, 857, 883, 885, 887, 889, 891, 907, 909, 919, 921, 929, 937, 943, 945, 947, 949, 953, 967, 969, 985, 987, 991, 993, 997, 1003, 1005, 1119, 1121
315105-0153 ..	WASHER PLAIN, BRB, 6,4/12,H=1,5	15, 17, 29, 31, 33, 59, 61, 63, 65, 77, 79, 131, 133, 135, 137, 145, 147, 155, 157, 183, 185, 187, 189, 193, 227, 229, 237, 239, 253, 279, 281, 283, 285, 287, 289, 291, 293, 295, 297, 299, 343, 365, 373, 383, 385, 393, 395, 413, 417, 419, 431, 437, 439, 441, 457, 471, 473, 479, 495, 499, 521, 523, 527, 529, 533, 535, 539, 541, 555, 557, 571, 573, 575, 577, 581, 587, 589, 593, 603, 607, 609, 611, 613, 615, 619, 621, 623, 625, 631, 633, 651, 653, 655, 669, 671, 673, 679, 689, 691, 693, 695, 697, 699, 701, 709, 721, 731, 753, 757, 773, 783, 797, 799, 801, 803, 815, 817, 821, 839, 841, 853, 855, 857, 871, 879, 883, 889, 891, 893, 895, 897, 899, 901, 903, 905, 917, 923, 927, 937, 941, 953, 961, 969, 973, 977, 985, 987, 991, 993, 997, 999, 1013, 1015, 1031, 1053, 1101, 1119, 1121, 1145
315105-0156 ..	WASHER PLAIN, BRB, 6,7/14,H=1,5	181, 817, 861, 863, 875, 923, 927, 961
315105-0165 ..	WASHER PLAIN, BRB, 8,4/16,H=1,5	25, 45, 47, 49, 59, 61, 63, 65, 69, 111, 161, 169, 177, 179, 183, 185, 229, 271, 273, 393, 395, 397, 403, 413, 417, 457, 471, 473, 475, 479, 481, 487, 489, 491, 493, 495, 497, 499, 501, 507, 509, 511, 513, 519, 549, 551, 553, 555, 565, 567, 569, 581, 587, 589, 591, 593, 595, 603, 607, 609, 611, 613, 615, 619, 621, 623, 625, 631, 633, 641, 643, 651, 653, 655, 661, 669, 671, 673, 675, 677, 679, 685, 687, 691, 733, 753, 797, 801, 805, 813, 817, 819, 821, 839, 841, 859, 861, 863, 869, 871, 873, 897, 901, 903, 905, 941, 961
315105-0171 ..	WASHER PLAIN, BRB, 10/18,H=2	275, 587, 589, 675, 677
315105-0173 ..	WASHER PLAIN, BRB, 10,5/22,H=2	135, 137, 389, 393, 395, 397, 433, 441, 459, 489, 491, 493, 509, 511, 513, 555, 581, 587, 589, 619, 621, 641, 643, 651, 653, 661, 685, 687, 691, 747, 753, 755, 795, 821, 839, 841, 889, 891, 977, 1067, 1097, 1103, 1151
315105-0176 ..	WASHER PLAIN, BRB, 12/22 H=2	249
315105-0178 ..	WASHER PLAIN, BRB, 13/24,H=2	395, 403, 407, 473, 495, 593, 969, 985, 987, 1067, 1103, 1151
315105-0186 ..	WASHER PLAIN, BRB, 17/30,H=3	395, 475, 497, 603, 825, 827, 829, 831, 833, 835, 837, 851, 857, 973, 1151
315105-0192 ..	WASHER PLAIN, BRB, 21/36,H=3	603, 1147
315111-0153 ..	WASHER PLAIN, TBRB 6,4/12 H=3	839, 841
315111-0173 ..	WASHER PLAIN, TBRB 10,5/22 H=4	971
315111-0178 ..	WASHER PLAIN, TBRB 13/24 H=4	437
315111-0186 ..	WASHER PLAIN, TBRB 17/30 H=6	389, 393, 395
315111-0198 ..	WASHER PLAIN, TBRB 25/45 H=8	443
315115-0153 ..	WASHER PLAIN, TBRB 6,4/12 H=3	31, 33, 247, 441, 519, 681, 701, 727, 729, 975
315115-0165 ..	WASHER PLAIN, TBRB 8,4/16 H=3	15, 17, 19, 135, 137, 169, 173, 431, 471, 701, 969, 973, 1113
315115-0173 ..	WASHER PLAIN, TBRB 10,5/22 H=4	15, 17, 173, 399, 565, 567, 1147
315115-0178 ..	WASHER PLAIN, TBRB 13/24 H=4	889, 891
315121-0153 ..	WASHER PLAIN, TBRSB 6,4/22 H=4	319, 425
315121-0186 ..	WASHER PLAIN, TBRSB 17/42 H=8	443, 445
315125-0153 ..	WASHER PLAIN ROUND,CHAMF. 6,4/22, H=4	21, 59, 61, 63, 65, 135, 137, 165, 167, 203, 223, 225, 237, 239, 271, 273, 323, 325, 327, 329, 383, 389, 413, 419, 431, 433, 565, 567, 685, 687, 691, 757, 761, 775, 777, 817, 861, 863, 889, 891
315125-0165 ..	WASHER PLAIN ROUND,CHAMF. 8,4/26, H=5	41, 43, 45, 47, 49, 55, 57, 403, 569, 595, 641, 643, 661, 685, 687, 691, 907, 909, 953, 965, 967
315125-0173 ..	WASHER PLAIN ROUND,CHAMF. 10,5/28,H=6	53, 59, 61, 433, 569, 685, 687, 691, 1151
315202-0101 ..	O-RING 3,1X1,6 MM	483, 485, 503, 505, 1071
315202-0104 ..	O-RING 6,1X1,6 MM	489, 491, 493, 509, 511, 513
315202-0105 ..	O-RING 7,1X1,6 MM	483, 485, 503, 505
315202-0107 ..	O-RING 9,1X1,6 MM	591
315202-0110 ..	O-RING 12,1X1,6 MM	489, 491, 493, 509, 511, 513

Part No	Description	Page No
315202-0113 ..	O-RING 15,1X1,6 MM	641, 643, 661
315202-0116 ..	O-RING 18,1X1,6 MM	487, 507
315202-0118 ..	O-RING 22,1X1,6 MM	489, 491, 493, 509, 511, 513
315202-0119 ..	O-RING 25,1X1,6 MM	103, 105, 369
315202-0120 ..	O-RING 27,1X1,6 MM	275
315202-0208 ..	O-RING 9,3X2,4 MM	487, 507
315202-0211 ..	O-RING 13,3X2,4 MM	279, 281
315202-0214 ..	O-RING 17,3X2,4 MM	1111
315202-0217 ..	O-RING 24,2X3 MM	587, 589, 607, 609, 611, 1111
315202-0221 ..	O-RING 34,2X3 MM	685, 687, 691
315202-0225 ..	O-RING 44,2X3 MM	613, 615
315202-0267 ..	O-RING 16,3X2,4 MM	685, 687, 691
315202-0303 ..	O-RING 59,5X3 MM	607, 609, 611, 641, 643, 661, 1111
315202-0304 ..	O-RING 64,5X3 MM	117
315202-0305 ..	O-RING 69,5X3 MM	593, 607, 609, 611, 1111
315202-0307 ..	O-RING 79,5X3 MM	1111
315202-0308 ..	O-RING 84,5X3 MM	115, 119, 1111
315202-0311 ..	O-RING 99,5X3 MM	613, 615, 641, 643, 661
315202-0312 ..	O-RING 104,5X3 MM	399
315202-0722 ..	O-RING 28,24X2,62 MM	1111
315204-0103 ..	O-RING 5,1X1,6 MM	407
315204-0109 ..	O-RING 11,1X1,6 MM	19
315204-0116 ..	O-RING 18,1X1,6 MM	569
315204-0122 ..	O-RING 32,1X1,6 MM	15, 17
315204-0206 ..	O-RING 7,3X2,4 MM	77, 79
315204-0207 ..	O-RING 8,3X2,4 MM	417
315204-0208 ..	O-RING 9,3X2,4 MM	135, 137
315204-0213 ..	O-RING 15,2X2,4 MM	91
315204-0215 ..	O-RING 19,2X3 MM	115, 117, 119, 139, 141, 595, 1077, 1079, 1081
315204-0218 ..	O-RING 26,2X3 MM	1073, 1075
315204-0219 ..	O-RING 29,2X3 MM	139, 141
315204-0221 ..	O-RING 34,2X3 MM	19
315204-0301 ..	O-RING 49,5X3 MM	117, 1077
315204-0303 ..	O-RING 59,5X3 MM	595
315204-0305 ..	O-RING 69,5X3 MM	15, 17
315204-0308 ..	O-RING 84,5X3 MM	1079
315204-0317 ..	O-RING 129,5X3 MM	91, 107
315204-0324 ..	O-RING 164,3X5,7 MM	59, 61
315211-0103 ..	GASKET BOLT HEAD 6,7X11X1 MM M6	487, 489, 491, 493, 507, 509, 511, 513, 641, 643, 661, 1071
315211-0104 ..	GASKET BOLT HEAD 8,7X14X1 MM M8	481, 501, 703, 1071
315211-0111 ..	GASKET BOLT HEAD 21,5X28,6X2,5 MM G1/2	263
315220-0180 ..	V-RINGS 34X42X10,5 MM V-38S	295, 297, 299, 373
315220-0198 ..	V-RINGS 45X55X13 MM V-50S	295, 297, 299
315220-0241 ..	V-RINGS 99X113X18 MM V-110S	703
315226-0196 ..	AXIAL SEAL WITH STEEL COVER 48X65X4,5 MM	581
315229-0101 ..	GASKETS, 10,4X17,4X3,7 MM 1/2" FDA	165, 167
315229-0103 ..	GASKETS, 23,1X30,1X3,7 MM 1" FDA	161, 165, 167, 171, 383, 385, 405, 747, 751
315229-0104 ..	GASKETS, 35,8X42,8X3,7 MM 1"1/2 FD	143, 161, 405, 1071, 1073, 1075
315229-0105 ..	GASKETS, 48,5X55,5X3,7 MM 2" FDA	165, 167, 405, 409, 1071, 1073, 1075
315229-0107 ..	GASKETS, 61,2X68,2X3,7 MM 2"1/2 FD	405, 1073, 1075
315229-0203 ..	GASKET 34,8X42,8X3,7 MM 1"1/2	91, 103, 105
315229-0204 ..	GASKET 34,8X42,8X3,7 MM 1"1/2	85, 87, 107
315229-0205 ..	GASKET 47,5X55,5X3,7 MM 2"	87, 93, 99, 101, 107
315229-0206 ..	GASKET 60,2X68,2X3,7 MM 2"1/2	85, 93, 95, 97, 99
315233-0101 ..	WASHER PL.RND.NYL.5,2/8,H=1	115, 117, 119, 237, 239
315233-0109 ..	WASHER PL.RND.NYL.10,3/14,H=1	247, 775, 777, 1119, 1121
315233-0110 ..	WASHER PL.RND.NYL.13,3/17,H=1	247, 373, 377, 785, 1119, 1121, 1133, 1145
315233-0111 ..	WASHER PL.RND.NYL.17/22,H=1	247, 775, 777, 1119, 1121
315233-0113 ..	WASHER PL.RND.NYL.21,4/27,H=1,2	143, 377, 383, 775, 777, 779, 785, 787, 1119, 1121, 1145
315234-0109 ..	WASHER,PL.RND.CU.10,3/13,5 H=1,0	169, 595
315234-0110 ..	WASHER,PL.RND.CU.13,5/18 H=1,5	259
315234-0111 ..	WASHER,PL.RND.CU.17,5//21 H=1,5	335, 457
315234-0113 ..	WASHER PL.RND.CU.21,3//26 H=1,5	89
315237-0109 ..	WASHER,PL.RND.AL.10/14,H=1,5	199, 201
315237-0110 ..	WASHER,PL.RND.AL.13,5/18,H=1,5	15, 17, 169
315402-0136 ..	LOCK WASHER FBB 4,1	119
315402-0173 ..	LOCK WASHER FBB 10,2	399
315410-0106 ..	LOCK WASHER MB 6 D=30 H=1,25	427, 429
315701-0165 ..	PARALLEL KEY W. ROUND ENDS 4X4X10 MM	565, 567
315701-0167 ..	PARALLEL KEY W. ROUND ENDS 4X4X16 MM	21
315701-0170 ..	PARALLEL KEY W. ROUND ENDS 4X4X20 MM	855, 883
315701-0201 ..	PARALLEL KEY W. ROUND ENDS 5X5X20 MM	489, 491, 493, 509, 511, 513
315701-0265 ..	PARALLEL KEY W. ROUND ENDS 8X7X25 MM	427, 429
315701-0268 ..	PARALLEL KEY W. ROUND ENDS 8X7X32 MM	427, 429
315701-0270 ..	PARALLEL KEY W. ROUND ENDS 8X7X40 MM	427, 429
315705-0196 ..	PARALLEL KEY W. ROUND ENDS 5X5X10 MM	413
315705-0202 ..	PARALLEL KEY W. ROUND ENDS 5X5X25 MM	685, 687, 691
315705-0238 ..	PARALLEL KEY W. ROUND ENDS 6X6X36 MM	701
315705-0239 ..	PARALLEL KEY W. ROUND ENDS 6X6X40 MM	641, 643, 661
315705-0263 ..	PARALLEL KEY W. ROUND ENDS 8X7X20 MM	641, 643, 661
315705-0265 ..	PARALLEL KEY W. ROUND ENDS 8X7X25 MM	661
315705-0267 ..	PARALLEL KEY W. ROUND ENDS 8X7X30 MM	587, 589, 607, 609, 611
315705-0270 ..	PARALLEL KEY W. ROUND ENDS 8X7X40 MM	587, 589
315742-0112 ..	COLLAR, 16/32, H=12	571, 573, 575, 577

Part No	Description	Page No
315742-0116 ..	COLLAR, 20/36, H=13	865
315742-0122 ..	COLLAR, 30/55, H=15	701
315750-0109 ..	RETAIN. RING, 12	425
315751-0103 ..	RETAIN. RING, 6	27, 349, 701, 803
315751-0108 ..	RETAIN. RING, 11	861, 863
315751-0109 ..	RETAIN. RING, 12	195, 797, 813, 1103
315751-0112 ..	RETAIN. RING, 15	15, 17, 21, 795, 855, 883
315751-0116 ..	RETAIN. RING, 20	431
315751-0119 ..	RETAIN. RING, 25	593, 649, 685, 687, 691, 855, 883
315752-0123 ..	RETAIN. RING, 32	425
315752-0133 ..	RETAINING RING FOR HOLE, 55X2 MM	427, 429
315753-0122 ..	RETAIN. RING, 30	181, 607, 609, 611, 875
315753-0124 ..	RETAIN. RING, 35	453, 455, 459, 565, 567, 855, 871, 883
315753-0130 ..	RETAINING RING FOR HOLE, 47X1,75 MM	443, 445
315753-0132 ..	RETAINING RING FOR HOLE, 52X2 MM	587, 589
315753-0135 ..	RETAINING RING FOR HOLE, 60X2 MM	473, 495
315754-0113 ..	LOCKING WAE 15	115, 117, 119
315755-0106 ..	LOCKING WASHER 4	229, 689, 693, 953
315755-0107 ..	LOCKING WASHER 5	549, 551, 553, 701
315755-0108 ..	LOCKING WASHER 6	179, 181, 183, 185, 875
315755-0109 ..	LOCKING WASHER 7	895, 899
315755-0110 ..	LOCKING WASHER 9	35, 37, 41, 43, 45, 47, 49, 581
315755-0801 ..	LOCKING WASHER 8	303, 817
315760-0158 ..	LOCKING CIBR58	443, 445
316810-0106 ..	PIPE CLIP FOR TUBE D=8 MM	417, 593, 619, 621
318800-0104 ..	HANDLE,SPHERICAL KNOB,INT.THRE.,D.30-M8	817
318850-0113 ..	STELLAR KNOB, INT. THREAD, NO. 8306-0367	1103
318856-0109 ..	KNOB, EXTERNAL THREAD. NO. 8308-1658	1103
318860-0106 ..	KNOB, ADJUST.HI.EXT.THREAD, NO 8324-3674	399
318871-0102 ..	KNOB CIRCULAR, EXT THREAD, NO. 8302-6037	895, 899
318871-0104 ..	KNOB CIRCULAR, EXT THREAD, NO. 8302-6118	437, 1099
321101-0162 ..	FLANGE BUS 10F7X8	571, 573, 575, 577
321101-0163 ..	FLANGE BUS 10F7X10	479, 499
321101-0203 ..	FLANGE BUS 16F7X16	571, 573, 575, 577
321101-0222 ..	BEAR.BUSHING WITH FLANGE, 18/25X12 MM	517, 1117
321101-0223 ..	BEAR.BUSHING WITH FLANGE, 18/25X16 MM	517
321105-0163 ..	BUSHING 10F7X16X10	971
321105-0173 ..	BUSHING 12F7X18X12	971
321105-0204 ..	BUSHING 16F7X22X20	183, 185
321111-0097 ..	BEAR.BUSHING WITH FLANGE, 8/12X12 MM	821
321111-0302 ..	BEAR.BUSHING WITH FLANGE, 20/26X15 MM	865
321116-0234 ..	BEAR. BUSH. WITHOUT FL, 16X20X12	679
321120-0102 ..	BEARING BUSHING WITHOUT FLANGE,6/8X10	895, 899
321120-0109 ..	BEARING BUSHING WITHOUT FLANGE,12/14X10	559, 561
321120-0111 ..	BEARING BUSHING WITHOUT FLANGE,12/14X15	195, 813
321120-0113 ..	BEARING BUSHING WITHOUT FLANGE,12/14X25	797
321129-0104 ..	THRUST WASHER, 12/24X1,5	797
321129-0110 ..	THRUST WASHER, 14/26X1,5	607, 609, 611
321306-0107 ..	BALL BEARING, 35X62X14 MM	605
321308-0204 ..	BALL BEARING, 2 SEALS, 20X42X12 MM	431, 897, 901
321308-0205 ..	BALL BEARING, 2 SEALS, 25X47X12 MM	587, 589, 593, 649, 685, 687, 691, 855, 883
321308-0206 ..	BALL BEARING, 2 SEALS, 30X55X13 MM	427, 429
321313-0100 ..	BALL BEARING, 2 SEALS, 10X30X9 MM	181, 875
321313-0101 ..	BALL BEARING, 2 SEALS, 12X32X10 MM	425
321313-0102 ..	BALL BEARING, 2 SEALS, 15X35X11 MM	193, 303, 839, 841, 851, 855, 857, 871, 883, 889, 891, 973
321313-0103 ..	BALL BEARING, 2 SEALS, 17X40X12 MM	685, 687, 691
321313-0105 ..	BALL BEARING, 2 SEALS, 25X52X15 MM	587, 589, 607, 609, 611
321313-0107 ..	BALL BEARING, 2 SEALS, 35X72X17 MM	607, 609, 611
321316-0206 ..	BALL BEARING, 2 SEALS, 30X72X19 MM	593
321582-0290 ..	CAM ROLLER, 2 SEALS, 24X62X80 MM	439, 441
342203-0120 ..	NIPPLES, EXT. THREAD, HEXAGON,ÿNO. 209	745
342206-0109 ..	BUSHING, TAPERED, INT/EXT. THRÿNO. R211	91
342245-0102 ..	T-PIPE, INT. THREAD, R1/4XKR1/4	375, 407
342700-0110 ..	NIPPLES,HEXAGON,EXT.G-THREAD G1/4"-G1/4"	1133
342700-0113 ..	NIPPLES,HEXAGON,EXT.G-THREAD G1/2"-G1/2"	163, 785
342700-0115 ..	NIPPLES,HEXAGON,EXT.G-THREAD G3/4"-G3/4"	731
342700-0203 ..	NIPPLES,HEXAGON,EXT.G-THREAD G3/8"-G1/4"	247, 375
342700-0205 ..	NIPPLES,HEXAGON,EXT.G-THREAD G1/2"-G1/4"	785
342701-0201 ..	BUSHING,INT./EXT.G-THREAD G1/4"-G1/8"	407, 1119, 1121, 1133
342701-0202 ..	BUSHING,INT./EXT.G-THREAD G3/8"-G1/8"	775, 777
342701-0203 ..	BUSHING, INT/EXT. G-THREAD NO. 3/8-1/4	163
342701-0205 ..	BUSHING,INT./EXT.G-THREAD G1/2"-G1/4"	379
342701-0206 ..	BUSHING,INT./EXT.G-THREAD G1/2"-G3/8"	727, 775, 777
342701-0209 ..	BUSHING,INT./EXT.G-THREAD G3/4"-G3/8"	163
342703-0208 ..	NUT, PIPES & CONNECTORS,NUT M-8 SS	579
342704-0109 ..	ACCESSORIES, FERRULE 12-MSG	335
342706-0130 ..	ACCESSORIES, INSERT SLEEVE 6 MM	199, 201, 549, 551, 553
342706-0148 ..	ACCESSORIES, INSERT SLEEVE 8 MM	95, 97
342707-0109 ..	SLEEVE, INT. THREAD, NO. 2543-1/8	127, 129
342707-0111 ..	SLEEVE, INT. THREAD, NO. 2543-3/8	323, 325, 327, 329
342713-0209 ..	PLUG, EXT THREAD HEX SOCKET 8638-00-180	169, 171, 487, 489, 491, 493, 507, 509, 511, 513
342713-0210 ..	PLUG, EXT THREAD HEX SOCKET 8638-00-140	237, 239, 259, 335
342713-0211 ..	PLUG, EXT THREAD HEX SOCKET 8638-00-380	163, 205, 207, 209, 211, 213, 321, 783, 917
342713-0213 ..	PLUG, EXT THREAD HEX SOCKET 8638-00-120	89, 295, 297, 299, 729

Part No	Description	Page No
342715-0100 ..	BLIND PLUG 4 MM	205, 207, 209, 211
342715-0102 ..	BLIND PLUG 6 MM	205, 207, 209, 211, 213, 321, 783, 917
342715-0103 ..	BLIND PLUG 8 MM	205, 207, 209, 211, 213, 321, 783, 917
342716-0202 ..	REDUCER 4-6	815
342716-0203 ..	REDUCER 6-8	203, 319, 321
342716-0209 ..	REDUCER 8-12	323, 325, 327, 329
342716-0210 ..	REDUCER 6-12	319, 321
342720-0109 ..	CONN. STR. GA-12-G3/8	335, 457
342720-0114 ..	CONN. STR. GA-15-G1/2	775, 777, 779, 787
342720-0119 ..	CONN. STR., GA-22-G3/4	729
342722-0195 ..	PIPE COUPL-M5	335
342722-0197 ..	STRAIGHT COUPLING	27, 191, 799
342722-0198 ..	STRAIGHT COUPLING	895, 899
342722-0202 ..	PIPE COUPLING 1/8" D=6MM	93, 99, 247, 555, 603, 815
342722-0203 ..	STRAIGHT COUPLING	375, 405, 407, 593
342722-0204 ..	PIPE COUPLING	595, 887, 889, 891
342722-0205 ..	STRAIGHT COUPLING D=8-G1/4"	319, 377, 749
342722-0206 ..	STRAIGHT COUPLING D=8-G3/8"	323, 325, 327, 329, 727, 731, 775, 777, 783, 869
342722-0209 ..	STRAIGHT COUPLING D=12-G1/4"	203
342722-0210 ..	STRAIGHT COUPLING D=12-G3/8"	323, 325, 327, 329, 1085
342722-0211 ..	STRAIGHT COUPLING D=10-G1/4"	595
342723-0114 ..	CONN. STR. PIPE GI-15-G1/2	373
342724-0102 ..	CONN. STR. PIPE GI 6-G1/8	199, 201
342724-0108 ..	CONN. STR. PIPE GI-10-G1/4	255
342725-0102 ..	CONN. STR. PIPE GI-6-G1/8	815
342726-0109 ..	CONN. PIPE G-12	457
342726-0114 ..	CONN. PIPE G-15	323, 325, 327, 329, 373
342727-0102 ..	CONN. PIPE G-6-LFZB	199, 201
342727-0103 ..	CONN. PIPE G-8-LFZB	253
342727-0108 ..	CONN. PIPE G-10-LFZB	253
342728-0103 ..	PIPE COUPLING 8 MM	319, 321, 695, 697, 699
342730-0114 ..	CONN. ELBOW WA-15-1/2	785
342731-0221 ..	CONN. ELBOW WA 15-R1/2	373
342732-0099 ..	ELBOW PIPE JOINT	799
342732-0100 ..	ELBOW PIPE JOINT	203, 319, 783
342732-0102 ..	ELBOW PIPE JOINT	25, 87, 101, 135, 137, 407, 417, 603
342732-0103 ..	ELBOW PIPE JOINT	203, 319, 375, 407, 679, 897, 901
342732-0104 ..	ELBOW PIPE JOINT	203, 263, 319, 335, 619, 621, 695, 697, 699, 783, 785, 887, 961
342732-0105 ..	ELBOW PIPE D8-R3/8"	205, 207, 209, 211, 321
342732-0109 ..	ELBOW PIPE JOINT	127, 129, 783
342732-0110 ..	ELBOW PIPE JOINT	205, 207, 209, 211, 213, 321, 323, 325, 327, 329, 783, 787, 917, 1085
342732-0112 ..	ELBOW PIPE 5-1/4	335
342732-0113 ..	ELBOW PIPE JOINT	319
342732-0801 ..	ELBOW PIPE JOINT	751
342735-0103 ..	ELBOW PIPE JOINT	887
342735-0109 ..	ELBOW PIPE JOINT	917
342737-0204 ..	CONN. ELBOW W-6 LRFR	165, 167
342737-0208 ..	CONN. ELBOW W-8 LRFR	417
342737-0221 ..	CONN. ELBOW W-15 LRFR	107, 171
342738-0221 ..	ADJUSTABLE ELBOW CONNECTION,EXT 15-G1/2	91
342741-0202 ..	CONN. T-PIPE TE-6-R1/8	127, 129
342742-0104 ..	T-COUPLING,ADJUST,F.PLASTIC TUBE 8-G1/4"	319, 887
342747-0102 ..	CONN. T-PIPE T-6	199, 201
342748-0102 ..	T-CONNECTION	555
342748-0103 ..	T-CONNECTION	815, 887
342748-0109 ..	T-CONNECTION	203, 319, 321, 323, 325, 327, 329, 783, 917
342751-0215 ..	CONN. L-PIPE, EXT. LE-12-R3/8	163
342752-0103 ..	CONN. STR. GA-8-G1/4	263
342752-0104 ..	CONN. STR. GA-10-G1/4	263
342767-0100 ..	CONN. BULKHEAD G1/8	217, 219
342767-0104 ..	CONN. BULKHEAD G1/4	331, 379
342768-0102 ..	BULKHEAD CONNECTOR, 6 MM	295, 297, 299
342768-0103 ..	BULKHEAD CONNECTOR, 8 MM	203
342768-0109 ..	BULKHEAD CONNECTOR, 12 MM	323, 325, 327, 329
342770-0101 ..	STRAIGHT COUPLING INT, D=4 MM - G1/8	203, 319, 783
342770-0107 ..	STRAIGHT COUPLING INT, D=8 MM - G1/8	815
342770-0108 ..	HOSE COUPLING	377
342772-0113 ..	ELBOW FITTING	815
342772-0122 ..	ELBOW FITTING, 8 - G1/4	319
342797-0121 ..	CONN. BANJO, RINGPIECE 6-1/8	77, 79, 127, 129, 199, 201
342797-0122 ..	CONN. BANJO, RINGPIECE 6-1/4	91
342840-0103 ..	CLAMPING PIECE	127, 129, 135, 137, 145, 147, 149, 151, 153, 373
342840-0105 ..	CLAMPING PIECE	91, 107, 111
342840-0107 ..	CLAMPING PIECE	111
342840-0108 ..	CLAMP, 101,6 MM 3-A PCS+PMCS	91
342844-0303 ..	PIPE ELBOW 90 DEGR. D=25,4 MM PCS 3-A	409
342850-0304 ..	GASKET 35,4X49,1X5,2 MM 1"1/2 FDA	127, 129, 135, 137, 145, 147, 149, 151, 153, 373, 1071
342850-0305 ..	GASKET 47,8X62,6X5,2 MM 2" FDA	111
342850-0307 ..	GASKET 72,9X89,6X5,2 MM 3" FDA	111
342850-0405 ..	GASKET 47,8X62,6X5,2 MM 2" FDA	91, 107
342850-0408 ..	GASKET 97X117,7X5,2 MM 4" FDA	91
342901-0104 ..	HOSE NIPPLE, EXT.THR. G3/8-9 MM	727
342901-0105 ..	HOSE NIPPLE, EXT.THR. G1/2-12 MM	107, 295, 297, 299, 383, 743, 775, 777, 779
342901-0106 ..	HOSE NIPPLE, EXT.THR. G3/8-17 MM	1085

Part No	Description	Page No
342920-0122 ..	STRAIGHT COUPLING,EXT.THREADED 8/6-R1/4"	331
342920-0123 ..	STRAIGHT COUPLING,EXT.THREADED 8/6-R3/8"	237, 239
342920-0132 ..	STRAIGHT COUPL.,EXT.THREADED 10/8-R1/4"	379
342921-0113 ..	STRAIGHT COUPLING,EXT.THREADED 6/4-G1/8"	217, 219, 1119, 1121
342921-0114 ..	STRAIGHT COUPLING,EXT.THREADED 6/4-G1/4"	1119, 1121
342921-0115 ..	STRAIGHT COUPLING,EXT.THREADED 6/4-G3/8"	375
342921-0121 ..	STRAIGHT COUPLING,EXT.THREADED 8/6-G1/8"	69, 631, 633
342921-0122 ..	STRAIGHT COUPLING,EXT.THREADED 8/6-G1/4"	237, 239, 243, 377
342930-0115 ..	ELBOW 90 COUPL.,EXT.THREAD 6/4-R3/8"	373
342930-0122 ..	ELBOW 90 COUPL.,EXT.THREAD 8/6-R1/4"	237, 239
342930-0133 ..	ELBOW 90 COUPL.,EXT.THREAD 10/8-R3/8"	775, 777
342931-0121 ..	ELBOW 90 COUPL.,EXT.THREAD 8/6-G1/8"	69, 623, 625, 631, 633
342936-0122 ..	ELBOW 90 COUPL.,UNION 8/6	377
342940-0114 ..	T-COUPLING,EXT.THREAD 6/4-R1/4"	237, 239
342940-0122 ..	T-COUPLING,EXT.THREAD 8/6-R1/4"	237, 239
342960-0122 ..	BULKHEAD COUPLING 8/6	237, 239
342980-0112 ..	BANJO-CONNECTION,RING 6/4-M6	701
342980-0114 ..	BANJO-CONNECTION,RING 6/4-G1/4"	1119, 1121
342980-0121 ..	BANJO-CONNECTION,RING 8/6-G1/8"	481, 501
342980-0122 ..	BANJO-CONNECTION,RING 8/6-G1/4"	263
342980-0303 ..	BANJO-HOLLOW BOLT COUPL,EXT.THR.01-G1/8"	77, 79, 199, 201, 481, 501
342980-0304 ..	BANJO-HOLLOW BOLT COUPL,EXT.THR.01-G1/4"	91, 263
342980-0313 ..	BANJO-HOLLOW BOLT COUPL,EXT.THR.02-G1/8"	481, 501
342980-0314 ..	BANJO-HOLLOW BOLT COUPL,EXT.THR.02-G1/4"	91, 1119, 1121
342981-0122 ..	BANJO CONNEC,RING,FOR PLAST.TUBE 8-G1/4"	619, 621
342991-0100 ..	HOSE CLIP,WORM DRIVE TYPE 10-13	417, 743, 1145
342991-0101 ..	HOSE CLIP,WORM DRIVE TYPE (13)-16	107, 247, 295, 297, 299, 307, 403, 407, 723, 725, 727, 729, 731, 1145
342991-0102 ..	HOSE CLIP,WORM DRIVE TYPE (16)-19	255, 265, 383, 753
342991-0103 ..	HOSE CLIP,WORM DRIVE TYPE (19)-23	171, 409, 1055
342991-0104 ..	HOSE CLIP,WORM DRIVE TYPE (23)-27	143, 295, 297, 299, 403
342991-0106 ..	HOSE CLIP,WORM DRIVE TYPE (30)-36	409
342991-0108 ..	HOSE CLIP 38-50MMRFR	741
342991-0109 ..	HOSE CLIP,WORM DRIVE TYPE (48)-50	93
342991-0110 ..	HOSE CLIP,WORM DRIVE TYPE (54)-63	403, 409
342991-0111 ..	HOSE CLIP,WORM DRIVE TYPE (63)-73	89
342991-0114 ..	HOSE CLIP,WORM DRIVE TYPE (93)-110	399, 1085
344502-0021 ..	GREASE NIPPLE STRAIGHT M6	641, 643, 663, 665, 667
344502-0061 ..	GREASE NIPPLE 90 DEG ANGLE M6	443, 445
346800-0109 ..	SILENCER FILTER R1/8"	247
346800-0110 ..	SILENCER FILTER R1/4"	127, 129
351120-0126 ..	CABLE SIHF 2X4MM2 GREEN/YELLOW	799
351120-0164 ..	CABLE SIHF 4X15MM2 GREEN/YELLOW	161, 223, 225
351120-0168 ..	CABLE SIHF 4X10MM2 GREEN/YELLOW	223, 225
351150-0122 ..	CABLE " REPL.BY 351150-431"	279, 281, 733, 839, 841, 1055, 1107
351150-0166 ..	CABLE OLFLEX 4X4 MM2 LIGHT/GREY	747
351150-0403 ..	CABLE OLFLEX 3X0,75 MM2 LIGHT/GREY	77, 79, 215, 217, 219, 221, 241, 247, 261, 263, 375, 407, 741, 775, 777, 977, 1055
351150-0404 ..	CABLE OLFLEX 4X0,75 MM2 LIGHT/GREY	217, 219, 247
351150-0405 ..	CABLE OLFLEX 5X0,75 MM2 LIGHT/GREY	217, 219, 279, 281, 367, 431, 709, 711, 839, 841
351150-0406 ..	CABLE OLFLEX 7X0,75 MM2 LIGHT/GREY	241, 259, 279, 281, 283, 285, 737, 839, 841, 903, 905, 923, 937, 941
351150-0407 ..	CABLE OLFLEX 12X0,75 MM2 LIGHT/GREY	215, 217, 219, 435, 927
351150-0412 ..	CABLE OLFLEX 3X1,5 MM2 LIGHT/GREY	161, 217, 219, 221, 279, 281, 283, 285, 287, 839, 841, 903, 905, 907, 909, 967
351150-0413 ..	CABLE OLFLEX 4X1,5 MM2 LIGHT/GREY	283, 285, 907, 909, 967, 1055
351150-0415 ..	CABLE OLFLEX 7X1,5 MM2 LIGHT/GREY	1055
351150-0417 ..	CABLE OLFLEX 3X2,5 MM2 LIGHT/GREY	283, 285
351150-0418 ..	CABLE OLFLEX 4X2,5 MM2 LIGHT/GREY	223, 225, 279, 281, 283, 285, 413, 701, 727, 733
351150-0419 ..	CABLE OLFLEX 5X2,5 MM2 LIGHT/GREY	903, 905
351150-0420 ..	CABLE OLFLEX 7X2,5 MM2 LIGHT/GREY	907, 909, 967
351150-0425 ..	CABLE OLFLEX 25X0,75 MM2 LIGHT/GREY	215, 217, 219, 279, 281, 283, 285, 773, 907, 909, 967
351150-0426 ..	CABLE OLFLEX 5X25 MM2 LIGHT/GREY	283, 285
351150-0431 ..	CABLE OLFLEX 2X0,75 MM2 LIGHT/GREY	727, 731
351172-0102 ..	CABLE AWM 1X 0,75 MM2 DARK-BLUE	217, 219, 773, 983
351172-0104 ..	CABLE AWM 1X15 MM2 DARK-BLUE	983
351172-0105 ..	CABLE AWM 1X25 MM2 DARK-BLUE	983
351172-0106 ..	CABLE AWM 1X4 MM2 DARK-BLUE	983
351173-0102 ..	CABLE AWM 1X0,75 MM2 LIGHT-BLUE	983
351173-0104 ..	CABLE AWM 1X15 MM2 LIGHT-BLUE	983
351173-0105 ..	CABLE AWM 1X25 MM2 LIGHT-BLUE	983
351173-0110 ..	CABLE AWM 1X25 MM2 LIGHT-BLUE	721, 983
351175-0102 ..	CABLE AWM 1X 075 MM2 YELLOW-GREEN	425, 983
351175-0104 ..	CABLE AWM 1X15 MM2 YELLOW-GREEN	983
351175-0105 ..	CABLE AWM 1X25 MM2 YELLOW-GREEN	983
351175-0106 ..	CABLE AWM 1X4 MM2 YELLOW-GREEN	983
351175-0107 ..	CABLE AWM 1X6 MM2 YELLOW-GREEN	853, 983
351175-0109 ..	CABLE AWM 1X16 MM2 YELLOW-GREEN	721, 983
351179-0102 ..	CABLE AWM 1X075 MM2 BLACK	931, 983
351179-0104 ..	CABLE AWM 1X15 MM2 BLACK	983
351179-0105 ..	CABLE AWM 1X25 MM2 BLACK	983
351179-0106 ..	CABLE AWM 1X4 MM2 BLACK	983, 1037, 1039
351179-0107 ..	CABLE AWM 1X6 MM2 BLACK	983

Part No	Description	Page No
351179-0110 ..	CABLE AWM 1X25 MM2 BLACK	721, 983
352103-0100 ..	CABLE GLAND STR 9;PR15,2	291, 293, 773, 907, 909, 967
352103-0101 ..	CABLE GLAND ST 9;PR15,2/PG9	77, 79, 91, 107, 111, 169, 215, 217, 219, 223, 225, 237, 239 241, 247, 249, 261, 263, 279, 281, 283, 285, 289, 291, 293, 375, 407, 737, 741, 773, 775, 777, 785 907, 909, 911, 913, 915, 967, 975, 1107
352103-0105 ..	CABLE GLAND STR 11;PR 18,6;PG11	1107
352103-0106 ..	CABLE GLAND ST 11	73, 237, 239, 275, 279, 281, 287, 291, 293, 367, 435, 595, 721, 839, 841 903, 905, 907, 909, 941, 967, 1055
352103-0108 ..	CABLE GLAND ST 13	217, 219, 223, 225, 279, 281, 283, 285, 293, 431, 709, 711, 727, 733, 737 855, 893, 907, 909, 967, 977, 985, 987, 1055
352103-0110 ..	CABLE GLAND STR 16	217, 219, 223, 225, 283, 285, 369, 413, 733, 737, 773, 903, 905, 907 909, 967
352103-0111 ..	CABLE GLAND ST 16	89, 215, 217, 219, 223, 225, 241, 279, 281, 289, 293, 435, 747
352103-0115 ..	CABLE GLAND STR 21	283, 285, 311, 747
352103-0116 ..	CABLE GLAND ST 21	215, 217, 219, 223, 225, 279, 281, 283, 285, 293, 773, 907, 909, 967
352103-0120 ..	CABLE GLAND STR 29	223, 225, 241, 279, 281, 283, 285, 289, 291, 773
352103-0121 ..	CABLE GLAND ST 29	223, 225, 907, 909, 967
352103-0122 ..	CABLE GLAND ST 36	721
352103-0123 ..	CABLE GLAND ST 42	721, 985, 987
352113-0101 ..	CLIP STRIP BLACK 92X2,5MM	487, 507, 579, 593, 607, 609, 611
352113-0102 ..	CLIP-STRIP, BLACK 188X4,8 MM	249, 255, 593, 607, 609, 611, 623, 625, 911, 913, 915, 1145
352113-0104 ..	CLIP-STRIP,BLACK 300X4,8MM	295, 297, 299
352113-0203 ..	ANCHOR TM3S8-M0	425, 701, 723, 725, 889, 891, 985, 987
352113-0204 ..	ANCHOR TM3S25-M	15, 17, 173, 177, 279, 281, 283, 285, 333, 383, 393, 871, 985, 987
352113-0205 ..	ANCHOR TM2S8-C100	111, 453, 455, 753, 799, 803, 817, 857, 895, 897, 899, 901, 911, 913 915, 1013, 1015
352113-0206 ..	ANCHOR 25,4X25,4MM ABM100-AT-CO	311
352136-0167 ..	GLAND FITTING	893
353001-0103 ..	END SLEEVE 0,75MM2	709
353021-0120 ..	FEED THROUGH TERMINAL, 10215.8	289, 291
353021-0122 ..	TERMINAL DISCONNECTBLE, WTR 2,5 D	907, 909, 967, 1035
353021-0127 ..	TERMINAL DISCONNECTBLE, WTR 2,5+WSD 2,5	217, 219
353021-0212 ..	FEED THROUGH TERMINAL, 10200.0	217, 219, 1051, 1057
353021-0213 ..	FEED THROUGH TERMINAL, 10201.0	289, 291, 907, 909, 967
353021-0214 ..	FEED THROUGH TERMINAL, 10202.0	1047, 1049
353021-0216 ..	FEED THROUGH TERMINAL, 10200.8	217, 219, 241, 737, 773, 1013, 1015, 1031, 1033, 1035 1041
353021-0219 ..	FEED THROUGH TERMINAL, 10205.0	1005
353021-0223 ..	FEED THROUGH TERMINAL, 10202.8	1033
353021-0226 ..	BY-PASS TERMINAL WDU 35	1005
353021-0301 ..	TERMINALS,TRIPLE-LEVEL, DLI 2,5/35 PA	1021
353021-0302 ..	TERMINALS,TRIPLE-LEVEL, DLD 2,5/35 PA	215, 217, 219, 289, 293, 907, 909, 967, 1021
353022-0002 ..	NEUTRAL TERMINAL, 10107.8	1051
353024-0204 ..	EARTH TERMINAL WPE 2,5	241, 289, 291, 293, 773, 907, 909, 967, 1051, 1057
353024-0205 ..	EARTH TERMINAL, 1010.1	215, 217, 219, 289, 291, 293, 737, 773, 907, 909, 967, 1021, 1035
353024-0206 ..	EARTH TERMINAL, 1010.2	1041, 1051
353024-0209 ..	EARTH TERMINAL, 1010.5	721, 1005, 1051
353031-0201 ..	END BRACKET EW35	241, 291, 773, 967
353031-0203 ..	END PLATE, 10612.0	289, 737, 907, 909, 1005, 1013, 1015, 1031, 1033, 1035, 1041, 1047 1049, 1051, 1057
353032-0004 ..	END PLATE WAP 2,5-10 BEIGE	217, 219, 907, 909, 967, 1051
353032-0005 ..	END PLATE WAP 2,5-10 BLUE	241, 1035
353032-0010 ..	END PLATE WAP	289, 291
353032-0302 ..	END PLATE WAP	215, 217, 219, 289, 293, 907, 909, 967, 1021
353033-0104 ..	END PLATE, 10502.8	1051
353033-0105 ..	PARTITITION, 10501.0	217, 219
353033-0106 ..	PARTITITION, 10501.8	217, 219
353034-0013 ..	BRIDGE CONNECTOR QL2(SAK 35)	1033, 1051
353034-0014 ..	BRIDGE CONN.Q10(SAK 2,5)	1033
353034-0030 ..	BRIDGE CONNECTOR WQV 2,5/10, 10544.6	241, 291, 737, 773, 1035
353034-0031 ..	BRIDGE CONNECTOR, WQV 4/10, 10520.6	291, 907, 909, 967
353034-0039 ..	BRIDGE CONN. WQV 4/4	291, 907, 909, 967
353034-0042 ..	JUMPER BAR 3 P	291
353034-0401 ..	BRIDGE CONNECTOR Q2, 13125.0	215, 217, 219, 289, 293, 907, 909, 967, 1021
353034-0403 ..	BRIDGE CONNECTOR Q4, 13127,0	293
353034-0404 ..	BRIDGE CONNECTOR Q10, 13131.0	215, 217, 219, 289, 293, 907, 909, 967
353041-0001 ..	RAIL 10X3MM SSCH	1051
353041-0106 ..	HOLDER ZB35 K 5026.8	1051
353042-0004 ..	RAIL TS 35/7,5	1021
353042-0005 ..	RAIL TS 35/7.5	721, 1005, 1013, 1015, 1031, 1033, 1035, 1041, 1051, 1057
353042-0010 ..	BUSBAR HÅLLARE	1047, 1049
353042-0012 ..	ADJUSTMENTPLATTA	1047, 1049
353042-0013 ..	PROTECTIVE CASING	1047, 1049
353042-0014 ..	BUSBAR ADA ADAPTER	1047, 1049
353042-0015 ..	BUSBAR ADAPTER	1049
353042-0016 ..	CONNECTIONSADAPTER	1047, 1049
353042-0019 ..	SIDE GUARD	1047, 1049
353101-0122 ..	CABLE SHOE	923, 927
353101-0123 ..	CABLE SHOE 0,5-1,5MM2 RED	941
353101-0130 ..	CABLE SHOE 1,5-2,5MM2 BLUE	701
353101-0153 ..	CABLE SHOE 4-6MM2 YELLOW	853
353104-0133 ..	CABLE SHOEYAV 025 M6	1037, 1039
353104-0140 ..	CABLE SHOEYAV 06 M 4*	799
353104-0168 ..	CABLE SHO YAV 16 M6*	721

Part No	Description	Page No
353105-0200 ..	PIN CABLE SKO A4630SR	721
353240-0002 ..	GLANDS,NORMAL WITHOUT INSERT PG 11	715
353240-0005 ..	GLANDS,NORMAL WITHOUT INSERT PG 21	907, 909, 967
353240-0006 ..	GLANDS,NORMAL WITHOUT INSERT PG 29	223, 225
353241-0002 ..	GLANDS,EXTENDED WITHOUT INSERT PG 11	715
353241-0003 ..	GLANDS,EXTENDED WITHOUT INSERT PG 21	283, 285
353243-0001 ..	GLAND,HOSE,EXTENDED,WITHOUT INSERT PG9	15, 17, 27, 85, 95, 97, 127, 129, 135, 137, 153, 161, 169, 173, 195, 217, 219, 223, 225
353243-0002 ..	GLAND,HOSE,EXTENDED,WITHOUT INSERT PG11	87, 217, 219
353243-0003 ..	GLAND,HOSE,EXTENDED WITHOUT INSERT PG11	71, 75, 149, 151, 161, 203, 217, 219, 221, 223, 225
353243-0004 ..	GLANDS,HOSE,EXTEND.WITHOUT INSERT PG13,5	223, 225
353243-0005 ..	GLANDS,HOSE,EXTENDED WITHOUT INSERT PG16	21, 135, 137, 701, 923, 927
353243-0007 ..	GLAND,HOSE,EXTENDED,WITHOUT INSERT PG21	161, 169, 223, 225
353243-0008 ..	GLAND,HOSE,EXTENDED WITHOUT INSERT PG29	707
353243-0009 ..	GLANDS,HOSE,EXTEN.WHOUT.INSERT PG13,5/16	223, 225
353244-0002 ..	GLANDS,HOSE,EXT.W.OUT INS.F.HI.TE.PG13,5	149, 151
353245-0004 ..	GLAND,EMC,EXTENDED W.INSERT PG16/PR 22,5	565, 567
353245-0006 ..	GLAND,EMC,EXTENDED W. INSERT PG21/PR28,3	425
353247-0005 ..	GLANDS,EMC,HOSE,EXTEND,WITH INSERT PG21	283, 285, 595
353249-0003 ..	GLAND,INSERT,SINGLE HOLE,NORMAL 7-10,5	715
353249-0008 ..	GLAND,INSERT,SINGLE HOLE,EXTEND.4-6,5	15, 17, 27, 85, 95, 97, 153, 161, 169, 173, 195, 217, 219, 223, 225
353249-0009 ..	GLAND,INSERT,SINGLE HOLE,EXTEND.6,5-9,5	127, 129, 135, 137, 217, 219
353249-0011 ..	GLAND,INSERT,SINGLE HOLE,EXTEND.7-10,5	71, 75, 149, 151, 161, 203, 217, 219, 221, 223, 225
353249-0013 ..	GLAND,INSERT,SINGLE HOLE,EXTEND.9-13	161, 169
353249-0014 ..	GLAND,INSERT,SINGLE HOLE,EXTE.11,5-15,5	21, 223, 225, 701, 923, 927
353249-0018 ..	INSERT,SINGLE HOLE,EXTEN,HI TEMP.6,5-9,5	149, 151
353249-0036 ..	GLAND,INSERT,MULTI HOLE,EXTENDED 2X4	87, 217, 219, 715
353249-0060 ..	GLAND,INSERT,MULTI HOLE,NORMAL 2X13	223, 225
353249-0061 ..	GLAND,INSERT,SINGLE HOLE,EXTEND.17-20,5	223, 225
353249-0301 ..	GLANDS,SEALING PIN 4X20	715
353249-0303 ..	GLANDS,SEALING PIN 5,3X25	111
359000-0400 ..	MARKING CO2/4"0"	95, 97, 135, 137, 237, 239, 243, 323, 325, 327, 329
359000-0401 ..	MARKING COLLAR 2/4 "1" YELLOW	95, 97, 135, 137, 237, 239, 243, 323, 325, 327, 329
359000-0402 ..	MARKING COLLAR 2/4 "2" YELLOW	237, 239
359000-0403 ..	MARKING COLLAR PA2/4 "3" YELLOW	95, 97, 237, 239
359000-0404 ..	MARKING COLLAR PA2/4 "4" YELLOW	135, 137
359000-0405 ..	MARKING CO2/4"5"	135, 137
359000-0409 ..	MARKING COLLAR PA2/4 "9" YELLOW	95, 97, 135, 137, 237, 239, 243, 323, 325, 327, 329
359000-0750 ..	MARKING CO2/4"A"	95, 97, 237, 239
359000-0765 ..	MARKING CO2/4"P"	237, 239, 323, 325, 327, 329
359000-0767 ..	MARKING CO2/4"R"	237, 239, 243
359005-0010 ..	MARKING LABEL KIT 0 - 9, 04.841.2150.0	223, 225, 241, 279, 281, 283, 285, 727, 733, 737, 747, 773, 855, 893, 907, 909, 967
359005-0050 ..	MARKING LABEL KIT X, 04.841.4550.0	223, 225, 241, 279, 281, 283, 285, 727, 733, 737, 747, 773, 855, 893, 907, 909, 967
359011-0807 ..	MARKING PLATES 5-FW 1-50	217, 219, 1005, 1035, 1051, 1057
359011-0808 ..	MARKING PLATES 5-FW 51-100	1051
359011-0809 ..	MARKING PLATES 5-FW 101-150	241, 289, 291, 737, 773, 1033, 1035, 1051
359011-0810 ..	MARKING PLATES 5-FW 151-200	217, 219, 289, 291, 1033
359011-0817 ..	SYMBOL 5-GW (+) 50PC	907, 909
359011-0818 ..	SYMBOL 5-GW (-) 50PC	907, 909
359011-0819 ..	MARKING PLATES 5-GW (EARTH)	241, 289, 291, 293, 313, 715
359011-0821 ..	SET OF SIGNS 6-FW 1-50	289, 291, 313, 715, 907, 909, 967, 1021, 1051
359011-0822 ..	SET OF SIGNS 6-FW 51-100	1021
359011-0823 ..	SET OF SIGNS 6-FW 101-150	215, 217, 219, 289, 293, 907, 909, 967, 1051
359011-0824 ..	SET OF SIGNS 6-FW 151-200	217, 219, 293, 907, 909, 967
359011-0832 ..	SET OF SIGNS 6-GW (+)	215, 217, 219, 289, 293
359011-0833 ..	SET OF SIGNS 6-GW (-)	215, 217, 219, 289, 293
359011-0834 ..	SET OF SIGNS 6-GW(EARTH)	215, 217, 219, 289, 291, 293, 1021
359240-0100 ..	SIGN HOLDER FOR 359240-0001	771, 907, 909, 967, 1013, 1015, 1031
359241-0122 ..	SIGN, CIP OF STEAM BARRIER SPACE	1013, 1015
359241-0131 ..	SIGN, TEMP. LS HEATER	1031
359241-0133 ..	SIGN, SERVICE SWITCH	1013, 1015
359241-0135 ..	SIGN, TRANSVERSAL SEALING	1031
359241-0186 ..	SIGN "LS"	907, 909, 967
359241-0201 ..	SIGN "HOUR GLASS"	1013, 1015
359241-0431 ..	SIGN "MAIN SWITCH"	771
359241-0482 ..	SIGN "PACKAGE COUNTER"	1013, 1015
359243-0917 ..	SIGN"400V, 50HZ, 100A"	771
359243-0918 ..	SIGN"400V, 60HZ, 100A"	771
359301-0001 ..	SIGN "UP"	311
359301-0005 ..	SIGN "DOWN"	311
359301-0050 ..	SIGN "DROP CHUTE"	311
359301-0090 ..	SIGN "INCHING"	311
359301-0091 ..	SIGN "INCHING FFU"	311
359301-0100 ..	SIGN "SPLICING"	923, 927
359301-0101 ..	SIGN	923, 927
359301-0110 ..	SIGN "SHORT STOP"	217, 219, 311, 923, 927
359301-0130 ..	SIGN "LAMPTEST"	311
359301-0131 ..	BUTTON SIGN, LAMP TEST / ALARM RES.	927
359301-0170 ..	SIGN "MANUAL FLUSHING FFU"	311
359301-0488 ..	BUTTON SIGN, MATERIAL LOCKING	941

Part No	Description	Page No
359301-0519 ..	SIGN "TPOP RESET"	311
359307-0007 ..	SYMBOL SKYLT "TAB FOLDING"	203
359705-0004 ..	WARNING SIGN ISO, DANGEROUS CHEMICALS	169, 403
359705-0009 ..	WARNING SIGN ISO, SHARP PART	887
359705-0015 ..	WARNING SIGN ISO, RISK OF ELECTRIC SHOCK	161, 169, 595, 715
400828-0000 ..	SPRING	799
400833-0000 ..	PLUNGER	799
434320-0000 ..	AXLE PIN	521, 523, 527, 529
434321-0000 ..	CURVE ROLLER	521, 523, 527, 529
434665-0000 ..	HOOD	139, 141
436302-0000 ..	ROLLER	45, 47, 49
436355-0000 ..	REAMED BOLT	45, 47, 49
436356-0000 ..	BUSHING	45, 47, 49
436357-0000 ..	NUT	45, 47, 49
436403-0000 ..	WASHER	45, 47, 49
436556-0000 ..	CURVE ROLLER	521, 523, 527, 529, 895, 899
440259-0000 ..	RETAINING RING	867, 1153
440650-0000 ..	WASHER	119
440655-0000 ..	RING	115
440659-0000 ..	CYLINDRICAL PIN	119
440660-0000 ..	COMPRESSION SPRING	119
440661-0000 ..	COMPRESSION SPRING	119
440662-0000 ..	COMPRESSION SPRING	117
440663-0000 ..	COMPRESSION SPRING	115, 119
441706-0000 ..	WASHER	479, 499
441737-0000 ..	WASHER	71, 73, 75
441739-0000 ..	WASHER	71, 73, 75
441871-0000 ..	PENDULUM SUSPENSION	93, 99
442237-0000 ..	NUT	103, 105
449190-0000 ..	SHAFT	679
449939-0001 ..	HEATING ELEMENT 15KW	95, 97
449969-0100 ..	TOOL DISMOUNTING	1095
449970-0000 ..	HOLDER	1117
449971-0000 ..	SPINDLE	1117
450833-0000 ..	FILTER	77, 79
451423-0000 ..	CIRCUIT BOARD	435
451430-0000 ..	CONNECTION HOUS.(MINOR)	95, 97
456123-0000 ..	SUPPORT	95, 97
456183-0000 ..	LOCKING PLATE	45, 47, 49
456184-0000 ..	LOCKING PLATE	45, 47, 49
456796-0000 ..	ROLLER	59, 61
456869-0000 ..	LOCKING PLATE	45, 47, 49
456996-0000 ..	ROLLER	59, 61
457696-0001 ..	JOINT PIECE	651, 653
458791-0000 ..	SHAFT	31, 33
464368-0000 ..	CRAMP	579
466042-0000 ..	SEAL	59, 61
466046-0000 ..	ROLLER	59, 61
466074-0002 ..	SLIDER	651, 653
466089-0000 ..	SEAL	59, 61
466092-0000 ..	ROLL	59, 61
469044-0000 ..	LOCK PLATE	35, 37
469081-0000 ..	LOCK PLATE	35, 37
469095-0000 ..	HOLDER	965
469096-0000 ..	LEG	965
469463-0000 ..	SHAFT	63, 65
469464-0000 ..	ROLL	63, 65
476087-0000 ..	LID	15, 17
476185-0000 ..	VALVE CONE	117
476201-0000 ..	SLEEVE	969
476202-0000 ..	SCREW	969
476220-0000 ..	SPACER	651, 653
476975-0000 ..	WHEEL	651, 653
479234-0000 ..	WASHER	91
479261-0000 ..	NIPPLE	107, 775, 777
479964-0000 ..	SIGN	319
484701-0000 ..	SHUTTER	655, 669, 671, 673
486826-0001 ..	SIGN "EMERGENCY STOP"	81, 217, 219, 369, 941, 999
490538-0000 ..	LOCKING PLATE	35, 37, 45, 47, 49, 55, 57
490901-0000 ..	SEAL	59, 61
490902-0000 ..	AXLE SUPPORT	59, 61
490903-0000 ..	SHAFT	59, 61
490998-0000 ..	THROTTLE SCREW	103, 105
491305-0000 ..	CONN.DIAGRAM AIR SUPERH.	95, 97
491929-0000 ..	IMPELLER WHEEL	413
493735-0000 ..	NIPPLE	1119, 1121
495118-0014 ..	DISTANCE PIPE L=14 MM	907, 909
495377-0000 ..	BUSH	1013, 1015
495495-0000 ..	COOLING ELEMENT SSR	1043, 1045
497748-0000 ..	PIN	121, 123
499387-0000 ..	PRESSURE ROLLER	139, 141, 1073, 1075
522308-0000 ..	SIGN	1157
527898-0100 ..	CONTAINER H2O2	401, 1141
527912-0000 ..	NON-RETURN VALVE	407

Part No	Description	Page No
529147-0000 ..	SPRING BRACKET	189
529148-0000 ..	STEERING	189
529149-0000 ..	DOLLY WASHER	189
529345-0100 ..	FILLING STATION H2O2	1141
530551-0000 ..	WASHER	407
530587-0000 ..	WASHER	117
530588-0000 ..	SEAL RING	117, 1077
530589-0000 ..	SEAL RING	93, 99, 115, 119, 1077
530590-0000 ..	VALVE CONE	93, 99, 115, 119
530591-0000 ..	HOLDER	119
530592-0000 ..	SEAL RING HOLDER	115
530595-0000 ..	SEAL RING HOLDER	115
530597-0000 ..	WASHER	119
530598-0000 ..	WASHER	119
530599-0000 ..	RING	93, 99, 119
530600-0200 ..	GUIDING PULLTAB TBA/8	183, 185
530775-0000 ..	END PIECE	971
531191-0000 ..	BUSHING	19
531345-0200 ..	PERSONAL PROTECT. EQ H2O2	1067
531616-0000 ..	HOLDER	343
531731-0000 ..	GASKET	95, 97
532117-0000 ..	CLAMP RING	121
532118-0000 ..	CLAMP RING	123
532208-0000 ..	SHAFT	1147
532209-0000 ..	SHEET	1147
532210-0100 ..	PEROXIDE CONTAINER TROLLEY	1141
532211-0000 ..	DOWEL	1147
532349-0000 ..	PLAIN BEARING	93, 99
532655-0000 ..	CAUTION SIGN	415, 1143
532676-0000 ..	SHEET	1119, 1121
532677-0000 ..	PIPE	1119, 1121
532678-0000 ..	DOWEL	1119, 1121
532679-0000 ..	PLATE	1119, 1121
533014-0100 ..	LEAK FINDING EQUIPMENT (SUPERSTRUCTURE)	1095
533015-0000 ..	WIRING DIAGRAM	1119, 1121
533169-0000 ..	DIAPHRAGM	115, 1077
533374-0000 ..	FITMENT BOTTOM	1123
533905-0100 ..	PONCH	1119, 1121
533906-0000 ..	FITMENT COVER	1123
534634-0000 ..	PIPE	1145
534635-0000 ..	VALVE	1145
534636-0000 ..	LEVEL GLASS	1145
534637-0000 ..	ATTACHMENT	1145
534691-0000 ..	DIAPHRAGM	1145
534692-0000 ..	FRAME SECTION	1145
534693-0000 ..	PLATE	1145
534694-0000 ..	SUCTIONPIPE	1145
534695-0000 ..	WEIGHT	1145
534696-0000 ..	VALVE	1145
534697-0000 ..	VALVE HOUSING	1145
534698-0000 ..	NIPPLE	1145
536704-0000 ..	WASHER	475, 479, 497, 499
536917-0000 ..	AXLE PIN	797
537327-0000 ..	SHAFT	795
539212-0000 ..	GASKET	113, 125, 1077
541057-0000 ..	ARM	797
541064-0000 ..	FORK	797
541065-0000 ..	SHAFT	797
541066-0000 ..	ROLL	797
541067-0000 ..	SPRING BRACKET	797
541068-0000 ..	SPRING HOLDER	803
541069-0000 ..	SPRING BRACKET	797
541070-0000 ..	SHAFT	797
541163-0200 ..	CLAMP RING	113, 125
541164-0200 ..	CLAMP RING	113, 125
541165-0000 ..	WASHER	121, 123
541166-0000 ..	WASHER	115
541173-0000 ..	STOP	803
541177-0000 ..	BENDING ROLLER	169
541751-0000 ..	CONICAL BOBBIN	795
543820-0000 ..	SPRING	797
544012-0000 ..	ROLLER	59, 61
544015-0000 ..	SEAL	59, 61
544277-0000 ..	RETAINING RING	867
544725-0000 ..	AXLE PIN	803
544726-0000 ..	AXLE PIN	797
544727-0000 ..	AXLE PIN	803
544730-0000 ..	ROLL	797, 803, 817
544894-0000 ..	SPRING	139, 141
546116-0000 ..	CANTILEVER	193
546929-0000 ..	FILTER	91, 107
548337-0000 ..	BUSHING	569
548770-0001 ..	COAXIAL CABLE L=5000 MM	223, 225
548770-0006 ..	COAXIAL CABLE L=1200 MM	579

Part No	Description	Page No
549267-0000 ..	LID	77, 79
551922-0000 ..	LABEL,POTENTIOMETER DESIGN CORR.	907, 909, 967
553607-0000 ..	SLEEVE	115, 117, 119
554141-0000 ..	FILTER	77, 79
554142-0000 ..	FILTER HOUSING	77, 79
554162-0000 ..	SCREW	121, 123
554585-0000 ..	STUD SCREW	77, 79
555458-0000 ..	SEALING WASHER	119
555568-0000 ..	PONCH	1137
556133-0000 ..	SEALING WASHER	117
556702-0000 ..	AP-VALVE-BODY (51-38)	113
556703-0000 ..	AP-VALVE-BODY (76-38)	125
557793-0100 ..	CALIBRATION EQUIPMENT	1137
557826-0101 ..	TEMPERATURE REG. ADAPTER	1139
558230-0301 ..	TMCC CONTROLLER	1019
558321-0101 ..	TPIH-SWITCH	1019
560122-0000 ..	SUPPORT ROLLER	549, 551, 553, 555
560931-0000 ..	BRACKET	77, 79, 91
561427-0000 ..	CONTAINER	415, 1143
563285-0000 ..	BLIND PLUG	407
563461-0000 ..	TRANSFORMER	907, 909, 967
565250-0000 ..	WASHER	415, 1143
565251-0000 ..	VALVE	415, 1143
566171-0000 ..	CUP SPRING	411
566194-0000 ..	WEIGHT	411
566195-0000 ..	LID	411
566196-0100 ..	LID WITH WEIGHT	409
567018-0000 ..	STEAM HOUSE	113, 125
567070-0011 ..	ELECTRODE	169
567070-0013 ..	ELECTRODE	77, 79
567070-0019 ..	ELECTRODE	77, 79
567372-0000 ..	INSTRUCTION FOR USE	1133
567732-0100 ..	CALIBRATION EQUIPMENT	1095
567733-0101 ..	ADAPTER	1139
567743-0000 ..	SEAL	59, 61
567745-0000 ..	PACKING DESCRIPTION	1137
567746-0001 ..	ROLLER, (STD.SIZE)	55, 57
568583-0000 ..	FORK	139, 141
569058-0000 ..	SUPPORT ROLLER	549, 551, 553
569094-0000 ..	ROLLER	35, 37
569095-0000 ..	ROLLER	35, 37
569100-0000 ..	SHAFT	45, 47, 49, 55, 57
569942-0000 ..	SLEEVE	1153
569943-0000 ..	SLEEVE	1153
569944-0000 ..	SLEEVE	867
569945-0000 ..	SLEEVE	867
573504-0000 ..	ROLLER	59, 61
574051-0000 ..	RETAINING RING	867, 1153
574658-0000 ..	LOGOTYPE TP	929, 1157
575002-0000 ..	PLUNGER	867
575003-0000 ..	PLUNGER	867
575182-0500 ..	TOOLS / TEMPLATES	1093
575183-0500 ..	ACCESSORIES	1093
576434-0100 ..	AP-VALVE 51-38	111
576435-0100 ..	AP-VALVE 76-38	111
576436-0100 ..	A-CYLINDER	113, 125
576437-0100 ..	C-CYLINDER	113, 125
576438-0100 ..	B-CYLINDER	113, 125
576439-0000 ..	CYLINDER HOUSING	115, 119
576440-0000 ..	END SECTION	115, 119
576441-0000 ..	PISTON	115, 119
576442-0000 ..	PISTON ROD	119
576443-0000 ..	CYLINDER HOUSING	117
576444-0000 ..	END SECTION	117
576445-0000 ..	PISTON	117
576446-0000 ..	PISTON ROD	115
576447-0000 ..	PISTON ROD	117
576448-0000 ..	SPACER	115
576449-0000 ..	SPACER	115
576450-0000 ..	SPACER	119
576451-0000 ..	SPACER	117
576739-0200 ..	(PAPER)REEL TROLLEY	1155
577099-0200 ..	BENDING ROLLER	13
578640-0000 ..	CLAMPING RING	173
578684-0000 ..	SPRING BRACKET	883
579318-0000 ..	SEAL	59, 61
579802-0000 ..	SPACER	839, 841
579803-0000 ..	SPACER	839, 841
581261-0000 ..	LABELS DISKETT	1063
581884-0000 ..	LABLES DISKET	1061
582526-0100 ..	CARRIAGE	1149
582527-0000 ..	ROD	1151
583727-0000 ..	SHAFT	181, 875
583859-0000 ..	WASHER	69

Part No	Description	Page No
583860-0000 ..	WASHER	69
583861-0000 ..	SLEEVE	69
590202-0000 ..	BRACKET	359
590203-0000 ..	BRACKET	359
590227-0000 ..	PLATE	295, 297, 299
590483-0000 ..	HOLDER	839, 841
590484-0000 ..	DOOR	947
590485-0000 ..	DOOR	949
590487-0000 ..	DOOR	951
590489-0000 ..	BRACKET	839, 841
590490-0200 ..	MACHINE BODY	825, 827, 829, 831, 833, 835, 837
591319-0000 ..	HOLDER	839, 841
591321-0100 ..	COVER	919, 921
591322-0100 ..	COVER	919, 921
591323-0000 ..	HOLDER	953
591324-0000 ..	HOLDER	941
591325-0000 ..	WASHER	941
591341-0000 ..	PIN	295, 297, 299
597779-0000 ..	LABELS FLEXBOX	1029
598092-0000 ..	BRACKET	231
598093-0000 ..	BRACKET	235
598101-0000 ..	BEARING HOUSING	593
598549-0000 ..	SCREW	603
598878-0000 ..	MACHINE SIGN 2 ADR. EEA	1067
599556-0000 ..	WINDOW	931
599809-0000 ..	SIGN	819
735041-0000 ..	CONNECTION CLAMP	157
736514-0000 ..	SHOCK ABSORBER	131, 133, 275
751009-0000 ..	INSULATION	95, 97
751230-0000 ..	PLAIN BEARING	59, 61
751395-0000 ..	FLANGE	413
751485-0000 ..	SCREW	173
751502-0000 ..	ROLLER	55, 57
751503-0000 ..	COUNTER ROLLER	55, 57
751604-0000 ..	SPRING	139, 141
751631-0000 ..	CONNECTION BOX	435
752115-0000 ..	PLUNGER	489, 491, 493, 509, 511, 513
752140-0000 ..	COUNTER ROLLER	55, 57
752186-0002 ..	SHAFT	41, 43, 45, 47, 49
752186-0003 ..	SHAFT	35, 37, 45, 47, 49, 55, 57
752186-0004 ..	SHAFT	35, 37, 45, 47, 49
752186-0005 ..	SHAFT	45, 47, 49, 55, 57
752186-0006 ..	SHAFT	35, 37, 45, 47, 49, 55, 57
752186-0007 ..	SHAFT	45, 47, 49
752186-0012 ..	SHAFT	35, 37
752186-0014 ..	SHAFT	55, 57
752186-0015 ..	SHAFT	45, 47, 49
752186-0016 ..	SHAFT	35, 37
752186-0017 ..	SHAFT	35, 37
752186-0018 ..	SHAFT	35, 37
752186-0019 ..	SHAFT	45, 47, 49
752288-0000 ..	SLEEVE	489, 491, 493, 509, 511, 513
752583-0000 ..	ROLLER	35, 37
752584-0000 ..	ROLLER	35, 37
905373-0000 ..	SCREW - LEG	977, 1097
906254-0000 ..	ROLLER	855, 883
907938-0001 ..	BRACKET	187
907938-0002 ..	BRACKET	187
907940-0000 ..	RAIL	187
907983-0000 ..	PLATE	183, 185
908170-0000 ..	GUIDE PLATE	187
908171-0000 ..	GUIDE PLATE	187
908174-0001 ..	SHIM	187
908174-0002 ..	SHIM	187
925877-0000 ..	SUPPORT	275
925998-0000 ..	DIAPHRAGM	131, 133, 1071
925999-0000 ..	PROTECTION PIPE	275
926011-0000 ..	REDUCTION	237, 239
926820-0000 ..	PLUG	275
926906-0000 ..	SPACER	131, 133
926907-0000 ..	SCREW	131, 133
926909-0000 ..	COMPRESSION SPRING	131, 133
926934-0000 ..	SUPPORT	131, 133
927007-0000 ..	SHUTTER	131, 133
927044-0000 ..	SPACER	131, 133
927194-0000 ..	BODY	131, 133
927203-0000 ..	COVER	131, 133
927323-0000 ..	SPACER	515
927411-0000 ..	HEATING PIPE	95, 97
927413-0000 ..	PIPE	95, 97
927415-0000 ..	COIL	95, 97
927420-0001 ..	O-RING 5.1X1.6 SILICON	77, 79
927421-0002 ..	O-RING 12.3X2.4 SILICON	77, 79
927421-0003 ..	O-RING 13.3X2.4 SILICON	165, 167

Part No	Description	Page No
927421-0004 ..	O-RING 15.3X2.4 SILICON	77, 79, 169
927421-0005 ..	O-RING 7.3X2.4 SILICON	1145
927421-0006 ..	O-RING 17.3X2.4 SILICON	1073, 1075
927422-0001 ..	O-RING 19.2X3 SILICON	77, 79, 1145
927422-0003 ..	O.RING 24.2X3 SILICON	415, 1143
927422-0005 ..	O-RING 36.2X3 SILICON	413
927422-0006 ..	O-RING 42.2X3 SILICON	413
927422-0007 ..	O-RING 44.2X3 SILICON	77, 79
927422-0009 ..	O-RING 54.5X3 SILICON	77, 79
927422-0016 ..	O-RING 79.5X3 SILICON	403
927454-0000 ..	GASKET	95, 97
927852-0000 ..	SPACER	193
927859-0000 ..	TOOTHED PULLY	691
929276-0000 ..	FLOAT	139, 141
929279-0000 ..	ROLLER	55, 57
929280-0000 ..	COUNTER ROLLER	55, 57
929284-0000 ..	ROLLER	59, 61
929286-0000 ..	SEAL	59, 61
929355-0000 ..	ROLLER TPA 330	549, 551, 553
929372-0000 ..	PISTON	483, 485, 503, 505
929821-0000 ..	PLATE	191
929823-0000 ..	PAPER GUIDE	191
929824-0000 ..	PLATE	191
929825-0000 ..	PAPER GUIDE	191
929831-0000 ..	PLATE	191
950351-0000 ..	SHAFT	483, 485, 503, 505
970215-0000 ..	STOP BLOCK	991, 993, 1013, 1015
970261-0000 ..	SPACER SCREW 10,2X10MM	931
970262-0000 ..	SPACER NUT	931
971286-0000 ..	SPACER H=6MM	931
971346-0000 ..	GUIDE PIN	1013, 1015
975917-0000 ..	KEY FOR SAFETY SWITCH 90044-103	237, 239, 341, 353, 943, 945, 949, 953
978380-0000 ..	BLIND PLUG	135, 137
978381-0000 ..	WASHER 56X2MM	135, 137
978440-0000 ..	CRAMP	135, 137
978603-0000 ..	SIGN	319
978757-0000 ..	ROLLER 180-284ML	549, 551, 553
978760-0000 ..	ROLLER TBA200SL	549, 551, 553
978999-0000 ..	VALVE	405
979256-0000 ..	CLEANING PIPE	145, 147
979326-0000 ..	FLOAT	139, 141
979330-0000 ..	FLOATER	139, 141
979434-0000 ..	FERRULE	131, 133
979500-0003 ..	ELECTRODE	91
979548-0000 ..	MACHINE PLATE	177
979813-0000 ..	PLUG	135, 137
979951-0000 ..	FLANGE	1133
985328-0000 ..	CONNECTION	389, 393, 395
985581-0000 ..	GEAR WHEEL	883
985582-0000 ..	GEAR WHEEL	883
985712-0000 ..	HOLDER	839, 841
985756-0000 ..	KEY	839, 841
985818-0000 ..	LIFTING UNIT	1161
985842-0000 ..	BRACKET	985, 987
985851-0000 ..	BRACKET	991, 993
988666-0000 ..	GASKET	991, 993, 997, 999
988685-0000 ..	PIN	203, 229, 319, 351, 355, 357, 359, 361, 767, 771, 943, 945, 947, 949, 991, 993, 997, 999
996352-0300 ..	WATER CIRCULATION	159
996353-0400 ..	PRESSURISING UNIT	159
996360-0500 ..	YOKE ARM RIGHT	423
996361-0500 ..	JAW ARM RIGHT	423
996388-0400 ..	PEROXIDE PUMP	401
996392-0200 ..	UPPER TUBE SUPPORT	13
996425-0300 ..	PENDULUM ROLLER	13
996427-0200 ..	DRIVE UNIT	13
996428-0300 ..	PAPER GUIDE	13
996449-0100 ..	EDGE ROLLER	13
996451-0100 ..	CRANK	13
996456-0200 ..	SEAL	13
996475-0200 ..	COMPRESSOR UNIT	83
996477-0100 ..	VALVE HEAT EXCHANGER	83
996478-0200 ..	AIR SUPER-HEATER	83
996479-0200 ..	AIR VALVE	83
996481-0300 ..	VALVE REF.POINT	83
996482-0100 ..	PRESSURE REGULATOR	83
996483-0300 ..	SCRUBBER	83
1010822-0000 .	RAILING	173, 393, 395
1020142-0002 .	RAIL HOLDER, B55 WIDTH 30 MM	655, 669, 671, 673
1020146-0000 .	LOCKING BLOCK REPL BY 1020290-101	655, 669, 671, 673
1020637-0000 .	HOLDER	657, 713
1020638-0000 .	HOLDER	713
1020816-0002 .	RAIL HOLDER, B68/R68 WIDTH 30 MM	669, 671, 673
1035001-0400 .	PILLAR	13
1035008-0400 .	BATH	159

Part No	Description	Page No
1035016-0300	.PRODUCT VALVE GROUP	109
1035076-0200	.LEG	295, 297, 299, 825, 827, 829, 831, 833, 835, 837
1035081-0100	.PIPE WORK-PNEUMATIC	839, 841
1035082-0300	.CABLE HARNESS	825, 827, 829, 831, 833, 835, 837
1035088-0400	.COVERING PANEL	825, 827, 829, 831, 833, 835, 837
1035107-0300	.CIP SWITCH	109
1035113-0100	.UPPER TUBE SUPPORT	13
1035120-0300	.CANTILEVER	545, 547
1035121-0300	.CURVE UNIT	545, 547
1035134-0400	.VOLUME ADJUSTER	469
1035138-0300	.CABLE-AND HOSE TRANSFER	469
1035201-0100	.PAPER REEL HOLDER	1141
1035220-0400	.JAW LINK LEFT	423
1035221-0300	.YOKE LINK	423
1035259-0200	.INTERMEDIATE PART	109
1035298-0100	.CONNECTION BOX	237, 239
1035305-0100	.N2 PANEL SUPPLY	237, 239
1035313-0300	.EMERGENCY STOP	919, 921
1035314-0200	.DOOR	919, 921
1035315-0200	.DOOR	919, 921
1035316-0200	.DOOR	919, 921
1035317-0200	.DOOR	919, 921
1035318-0200	.COVER	919, 921
1035319-0300	.DOOR	919, 921
1035321-0200	.COVER	919, 921
1035323-0200	.COVER	919, 921
1035323-0300	.COVER	919, 921
1035362-0100	.MEASURING DEVICE	1095
1035382-0100	.EMERGENCY STOP	13
1035438-0400	.IH EQUIPMENT	985, 987
1035448-0100	.ADAPTION TRANSFORMER	475, 497
1035471-0100	.LEG	825, 827, 829, 831, 833, 835, 837
1035488-0100	.CONTROL PANEL	235
1035489-0200	.CONTROL MECHANISM	469
1035654-0000	.CONNECTION	173
1035739-0000	.SHAFT	581
1035788-0000	.SHAFT	475, 479, 497, 499
1035792-0000	.E-HINGE	203, 229, 319, 351, 355, 357, 359, 361, 767, 771, 943, 945, 947, 949, 953, 991, 993, 997, 999
1035794-0000	.BLOCKING PIECE	767, 771
1035828-0000	.VOLUME BULGE	521, 523, 527, 529
1035831-0000	.VOLUME SHIM	521, 523, 527, 529, 1073, 1075
1035871-0000	.SCREW	489, 491, 493, 509, 511, 513
1035877-0000	.ARM LEFT	475
1035878-0000	.ARM RIGHT	497
1035879-0000	.ARM LEFT	479
1035882-0000	.BENDING ROLLER	303, 851, 871, 889, 891, 973
1035890-0000	.HOLDER	817
1035893-0000	.ADJUSTING SCREW	821
1035894-0000	.SHAFT	817
1035895-0000	.SHAFT	817
1035897-0000	.SHAFT	195, 813
1035898-0000	.BRACKET	195, 813
1035921-0000	.WASHER	427, 429
1035922-0000	.WASHER	427, 429
1035925-0000	.SPACER RING	427, 429
1035943-0000	.HEAT EXCHANGER	95, 97
1035951-0000	.PROTECTION PLATE	985, 987
1035954-0000	.BUSHING	473, 495
1035967-0000	.SHAFT	443
1035982-0000	.WASHER	443, 445
1035990-0000	.WASHER	447
1036014-0000	.SPACER	425
1036031-0000	.ARM RIGHT	499
1036061-0000	.GUIDE PIN	1099
1036062-0000	.GUIDE PIN	437
1036120-0000	.SLEEVE	301, 963
1036123-0000	.BOW CLAMP	1099
1036124-0000	.ARM	797
1036134-0000	.GUIDE	859
1036144-0000	.SHAFT	473, 495
1036155-0000	.TOOTH PART	479, 499
1036156-0000	.TOOTH PART	475, 497
1036174-0000	.BEARING COVER	27
1036178-0000	.SHAFT	27
1036182-0000	.PRESSURE JAW	887
1036183-0000	.BRACKET	889, 891
1036186-0000	.HOLDER	813
1036187-0000	.T-PIPE	93, 99
1036188-0000	.SHAFT	93, 99
1036189-0000	.SPINDLE GUIDE	93, 99
1036191-0000	.SEAL HOLDER	93, 99
1036192-0000	.SPACER ROD	99
1036193-0000	.CYLINDER BRACKET	93, 99

Part No	Description	Page No
1036194-0000	.T-PIPE	93
1036227-0000	.BRACKET	349, 351, 355, 357, 361, 753, 783, 839, 841
1036241-0000	.WASHER	173, 389, 393, 395
1036242-0000	.BEARING COVER	29
1036243-0000	.WASHER	29
1036244-0000	.GASKET	29
1036247-0000	.SLIDER	29
1036248-0000	.SCREW	29
1036249-0000	.ROLL	29
1036251-0000	.GUIDE	29
1036252-0000	.SCREW	29
1036257-0000	.GUIDE	29
1036276-0000	.TIE ROD	487, 507
1036278-0000	.SLEEVE	489, 491, 493, 509, 511, 513
1036279-0000	.PLUNGER	489, 491, 493, 509, 511, 513
1036286-0000	.ANGLE BRACKET	35, 37, 41, 43, 45, 47, 49
1036293-0000	.HOLDER	85, 99
1036294-0000	.GASKET	85, 87
1036300-0000	.PLATE	857
1036304-0001	.LOCKING ARM	339, 355, 357, 361, 767
1036304-0002	.LOCKING ARM	355, 357
1036304-0005	.LOCKING ARM	339, 361
1036304-0006	.LOCKING ARM	351
1036304-0009	.LOCKING ARM	943, 945
1036304-0010	.LOCKING ARM	943, 945
1036304-0012	.LOCKING ARM	949
1036304-0013	.LOCKING ARM	351
1036304-0014	.LOCKING ARM	767
1036304-0015	.LOCKING ARM	947, 949
1036304-0016	.LOCKING ARM	947
1036304-0018	.LOCKING ARM	349
1036314-0000	.BOTTOM PANEL	89
1036315-0000	.FRONT PLATE	89
1036318-0000	.PIPE	89
1036319-0000	.BRACKET	89
1036325-0000	.LID	41, 43
1036327-0000	.GASKET	41, 43
1036328-0000	.LID	27
1036329-0000	.PIN	229, 953
1036343-0000	.SCREW	481, 501
1036344-0000	.SHEET	15, 17
1036352-0000	.GASKET	35, 37, 41, 43, 45, 47, 49
1036353-0000	.WASHER	35, 37
1036354-0000	.SCREW	35, 37, 41, 43, 45, 47, 49
1036359-0000	.LOCK PLATE	35, 37
1036370-0000	.LID	27
1036371-0000	.SPACER SLEEVE	21
1036372-0000	.PIPE	95, 97
1036373-0000	.HOLDER	15, 17, 95, 97
1036383-0000	.LID	465
1036384-0000	.SLIDE	465
1036389-0000	.LID	507
1036390-0000	.SHIM	855, 883
1036419-0000	.TUNNEL	15, 17
1036429-0000	.AXLE PIN	871, 889, 891
1036465-0000	.LID	15, 17
1036475-0000	.PIN	15, 17
1036478-0000	.GASKET	15, 17
1036481-0000	.LACE	465
1036483-0000	.SEAL	475, 497
1036484-0000	.GASKET	475, 497
1036485-0000	.COVERING PLATE	475, 497
1036486-0000	.BUSBAR	885
1036487-0000	.BRACKET	885
1036488-0000	.INSULATING BUSHING	885
1036489-0000	.WASHER	885
1036494-0000	.GUIDE BUSHING	489, 491, 493, 509, 511, 513
1036495-0000	.BUSHING	487, 507
1036501-0000	.SPACER	475, 497
1036515-0000	.SCREW	459
1036516-0000	.CANTILEVER	303
1036537-0000	.ECCENTRIC	559, 561
1036538-0000	.ECCENTRIC	559, 561
1036539-0000	.SHAFT	559, 561
1036541-0000	.TORSION SPRING LEFT	559, 561
1036542-0000	.TORSION SPRING RIGHT	559, 561
1036553-0000	.WHEEL	169
1036559-0000	.BEARING BLOCK	839, 841
1036563-0000	.WASHER	237, 239, 341, 349, 351, 353, 943, 945, 949, 953
1036584-0000	.WASHER	483, 485, 503, 505, 1071
1036585-0000	.EAR	487, 507
1036586-0000	.PIPE	93
1036587-0000	.PIPE	93
1036588-0000	.BRACKET	815

Part No	Description	Page No
1036604-0000	.SPACER ROD	93
1036609-0000	.LEVER	25
1036610-0000	.BRACKET	25, 195
1036611-0000	.LID	25
1036612-0000	.SHAFT	25
1036615-0000	.SHAFT	479, 499
1036616-0000	.WASHER	479, 499
1036617-0000	.BRACKET	479, 499
1036618-0000	.ROLL	479, 499
1036620-0000	.SHAFT	479, 499
1036622-0000	.GUIDE ROLLER	181, 875
1036623-0000	.GUIDE ROLLER	181, 875
1036630-0000	.TOOTHED PULLY	565, 567
1036638-0000	.CANTILEVER	565, 567
1036639-0000	.WASHER	565, 567
1036649-0000	.BUSHING	559, 561
1036664-0000	.LID	487
1036671-0000	.KNIFE HOLDER	887
1036673-0000	.WASHER	271, 273, 569
1036674-0000	.FASTENING PLATE	569
1036675-0000	.CLAMP	887
1036676-0000	.KNIFE	887
1036677-0000	.HEAD PLATE	887
1036678-0000	.SLIDE RAIL	887
1036680-0000	.SCREW	887
1036681-0000	.COUPLING BOLT	887
1036685-0000	.BRACKET	569
1036686-0000	.HOLDER	441
1036694-0000	.GASKET	15, 17, 31, 33
1036695-0000	.LOCK STUD	895, 899
1036731-0000	.WIRE LEFT	581
1036733-0000	.ADJUSTING SCREW	581
1036753-0000	.UPPER SECTION	91
1036754-0000	.FRAME	71
1036755-0000	.PUMP HOUSING	413
1036758-0000	.AXLE PIN	839, 841
1036760-0000	.PIPE	91
1036777-0000	.GASKET	135, 137
1036778-0000	.GASKET	135, 137
1036794-0000	.PIPE	745, 751
1036802-0000	.WIRE RIGHT	581
1036810-0000	.HOLDER	91
1036811-0000	.CLAMP	91, 107
1036814-0000	.APPLIANCE BOX	903, 905
1036815-0000	.LID	903, 905
1036818-0000	.TIE ROD	889, 891
1036826-0000	.PIPE	743
1036827-0000	.PIPE	743, 749
1036828-0000	.TANK	747
1036832-0000	.WHEEL	19
1036833-0000	.SCREW	19
1036841-0000	.SHAFT	19
1036853-0000	.BRACKET	127, 129
1036868-0000	.CHAIN	19
1036871-0000	.PIPE	751
1036909-0000	.ELECTRICAL CABINET	907, 909
1036910-0000	.UPPER SECTION	107
1036911-0000	.CONTAINER	107
1036922-0000	.CABLE DUCT	907, 909, 967
1036923-0000	.CABLE DUCT	907, 909, 967
1036924-0000	.CABLE DUCT	907, 909, 967
1036925-0000	.TERMINAL RAIL	907, 909, 967
1036926-0000	.TERMINAL RAIL	907, 909, 967
1036935-0000	.ADAPTER	457
1036939-0000	.SIDE PIECE	175
1036940-0000	.SIDE PIECE	175
1036944-0000	.HOLDER	439
1036948-0000	.SCREW	63, 65
1036954-0000	.AXLE SUPPORT	59, 61
1036955-0000	.AXLE SUPPORT	59, 61
1036962-0000	.CABLE	815
1036963-0000	.HOOK HOLDER	175
1036965-0000	.HOOK HOLDER	175
1036977-0000	.HOLDER	997
1036980-0000	.COVERING PLATE	359, 361
1037005-0000	.SLEEVE	69
1037008-0000	.PIPE	107
1037011-0000	.PIPE	107
1037012-0000	.AXLE PIN	303
1037014-0000	.RAILING	173
1037041-0000	.HOLDER	107
1037042-0000	.GLASS PANE	71
1037043-0000	.GASKET	71
1037044-0000	.RAILING	173

Part No	Description	Page No
1037048-0000	.PLATE	71, 73, 75
1037049-0000	.GASKET	73
1037050-0000	.GLASS PANE	73
1037051-0000	.FRAME	73
1037052-0000	.GEAR WHEEL	855
1037053-0000	.GEAR WHEEL	855
1037054-0000	.WASHER	173
1037055-0000	.COAXIAL CABLE	893
1037056-0000	.COAXIAL CABLE	903, 905
1037069-0000	.SCREW	475, 497
1037076-0000	.BRACKET	367
1037079-0000	.FRAME	75
1037080-0000	.GLASS PANE	75
1037081-0000	.GASKET	75
1037089-0000	.SPACER	75
1037093-0000	.SENSOR BRACKET	111
1037097-0000	.PUSH BUTTON BOX	923, 927
1037098-0000	.LID	923
1037102-0000	.SPACER PIPE	403
1037104-0000	.LOCATING PIECE	473, 495
1037106-0000	.SLEEVE	473, 495
1037120-0000	.SHAFT	799
1037121-0000	.SHAFT	799
1037124-0000	.HOLDER	799
1037128-0000	.BRACKET	101
1037129-0000	.LID	103, 105, 751
1037130-0000	.CONNECTION BOX	369
1037132-0000	.SHAFT	897, 901
1037133-0000	.BRACKET	897, 901
1037142-0000	.FOIL	923
1037184-0000	.SPACER SCREW	721
1037201-0000	.GLASS PANE	943, 945
1037202-0000	.GLASS PANE	949
1037254-0000	.SHIM	479, 499, 1071, 1073, 1075
1037266-0000	.PIPE	103, 105
1037267-0000	.PIPE	103, 105
1037268-0000	.LID	103, 105
1037284-0000	.HOLDER	803
1037313-0000	.PIPE	171
1037314-0000	.PIPE CONNECTION	171
1037370-0000	.ASSEMBLY JIG	1095
1037391-0000	.CANTILEVER	397
1037395-0000	.HINGE	237, 239
1037443-0000	.GASKET	383, 385
1037456-0000	.BRACKET	15, 17
1037461-0000	.CONDUCTIVITY PIPE	149, 151
1037469-0000	.TEMPLATE TUBE FORMING	1127, 1129
1037470-0000	.TEMPLATE TUBE FORMING	1127, 1129
1037497-0000	.DOOR	229
1037502-0000	.COVERING PLATE	227
1037504-0000	.SCREW	1127, 1129
1037508-0000	.COVERING PLATE	227
1037525-0000	.TIE ROD	487, 507
1037528-0000	.COVERING PLATE	227
1037531-0000	.SPACER PLATE	721
1037535-0000	.COVERING PLATE	227
1037539-0000	.BRACKET	417
1037546-0000	.SHAFT	873, 889, 891
1037548-0000	.COVERING PLATE	227
1037552-0000	.SPACER	227
1037562-0000	.SHAFT	701
1037565-0000	.BEARING UNIT	701
1037571-0000	.GUIDE BUSHING	393
1037572-0000	.COVER PLATE	985, 987
1037573-0000	.GASKET	985, 987
1037574-0000	.COVER PLATE	985, 987
1037575-0000	.GASKET	985, 987
1037576-0000	.GASKET	985, 987
1037583-0000	.HOLDER	775, 777
1037592-0000	.HATCH	295, 297, 299
1037615-0000	.RAIL	217, 219
1037673-0000	.SLEEVE	279, 281
1037691-0000	.HOOK	1103
1037696-0000	.CLAMPING PIECE	1101
1037697-0000	.CLAMPING PIECE	1101
1037711-0000	.SUPPORT	237, 239
1037714-0000	.ARM	237, 239
1037733-0000	.VOLUME BULGE	521, 523, 527, 529
1037734-0000	.WEDGE	521, 523, 527, 529
1037735-0000	.VOLUME SHIM	521, 523, 527, 529, 1073, 1075
1037761-0000	.PIN	295, 297, 299
1037762-0000	.PIN	295, 297, 299
1037828-0000	.COVER SLIP	919, 921
1037829-0000	.COVER SLIP	919, 921

Part No	Description	Page No
1037830-0000	.COVER SLIP	919, 921
1037832-0000	.BEAM	295, 297, 299
1037835-0000	.SCREW	1131
1037842-0000	.LOCKING PLATE	45, 47, 49
1037843-0000	.RING	445
1037845-0000	.SHAFT	445
1037849-0000	.SLEEVE	517
1037850-0000	.ADJUSTMENT BRACKET	519
1037851-0000	.LINK	517
1037852-0000	.SHAFT	519
1037853-0000	.SHAFT	475, 479, 497, 499
1037879-0000	.ECCENTRIC	559, 561
1037880-0000	.ECCENTRIC	559, 561
1037885-0000	.REAMED BOLT	59, 61
1037893-0000	.SPACER	447
1037983-0000	.LINK	461, 463
1038021-0000	.WASHER	517
1038095-0000	.HOLDER	195
1038128-0009	.DOLLY	489, 491, 493, 509, 511, 513, 1073, 1075
1038142-0000	.CAP	549, 551, 553
1038162-0000	.SLEEVE	559, 561
1038240-0000	.SPACER	483, 485, 503, 505
1038273-0000	.LOCK PLATE	35, 37
1038275-0012	.SPACER	1041
1038275-0021	.SPACER	1053
1038295-0000	.SPLASH PLATE	417
1038334-0000	.PIPE	149, 151
1038340-0000	.SCREW	101
1038349-0000	.BRACKET	15, 17
1038355-0000	.FRAME	1013, 1015
1038356-0000	.PIPE	91
1038358-0000	.PIPE	217, 219
1038362-0000	.BRACKET	27
1038363-0000	.SCREW	27
1038377-0000	.FLANGE	29
1038379-0000	.ROD	29
1038393-0000	.ROD	29
1038403-0000	.BRACKET	907, 909, 967
1038405-0000	.SPACER	481, 501
1038408-0000	.COVERING PLATE	985, 987
1038411-0000	.LOCKING PLATE	45, 47, 49
1038412-0000	.LOCKING PLATE	45, 47, 49
1038429-0000	.LID	15, 17
1038436-0000	.SPACER	447
1038439-0000	.LID	449, 451, 453, 455
1038441-0000	.SHAFT	447
1038449-0000	.SHAFT	461, 463
1038464-0000	.SPROCKET	19
1038467-0000	.SPACER	449, 451, 453, 455
1038470-0000	.SHAFT	873
1038491-0000	.SCREW	453, 455
1038492-0000	.LINK HEAD	459
1038493-0000	.AXLE PIN	449, 451
1038494-0000	.PLUG	449, 451
1038495-0000	.WASHER	449, 451
1038496-0000	.WASHER	449, 451
1038497-0000	.FORK HEAD	453, 455
1038509-0000	.WASHER	473, 495
1038519-0000	.GASKET	985, 987
1038540-0000	.PIPE	407
1038541-0000	.WEIGHT	407
1038557-0000	.BOW CLAMP	569
1038576-0000	.AXLE SUPPORT	59, 61
1038634-0000	.DRAINING	91
1038637-0000	.WEDGE	521, 523, 527, 529
1038638-0000	.VOLUME BULGE	521, 523, 527, 529
1038639-0000	.VOLUME SHIM	521, 523, 527, 529, 1073, 1075
1038640-0000	.FASTENING BRACKET	559, 561
1038659-0000	.STRAIGHT PIPE UNION	107
1038688-0000	.HOLDER	165, 167
1038696-0000	.BEARING HOUSING	565, 567
1038697-0000	.BEARING HOUSING	565, 567
1038698-0000	.LID	15, 17
1038699-0000	.BRACKET	999
1038707-0000	.BRACKET	565, 567
1038712-0000	.FASTENING BRACKET	549, 551, 553
1038713-0000	.FASTENING BRACKET	549, 551, 553
1038714-0000	.CABLE	1031, 1037, 1039
1038732-0000	.TOOTHED PULLY	565, 567
1038734-0000	.SETTING AXLE	1095
1038742-0000	.SLEEVE	581
1038743-0000	.SHAFT	559, 561
1038750-0000	.DISTRIBUTOR	581
1038751-0000	.PIPE	581

Part No	Description	Page No
1038820-0000	.COVER PLATE	985, 987
1038828-0000	.PIPE	579
1038829-0000	.PIPE	579
1038837-0000	.CHECKER PLATE	173
1038838-0000	.CHECKER PLATE	173
1038842-0000	.COVERING PLATE	229
1038845-0000	.LID	465
1038846-0000	.LACE	465
1038847-0000	.SLIDE	465
1038848-0000	.SLIDE	465
1038850-0000	.ANGLE BRACKET	173
1038857-0000	.FLANGE	169
1038858-0000	.FLANGE	169
1038860-0000	.BRACKET	169
1038861-0000	.BRACKET	169
1038865-0000	.SPACER DISC	839, 841
1038866-0000	.INTERMEDIARY SECTION	91
1038867-0000	.BOW CLAMP	479, 499
1038876-0000	.COVERING PLATE	283, 285
1038901-0000	.RIM	943, 945
1038903-0000	.BRACKET	839, 841, 941
1038904-0000	.WASHER	839, 841, 941
1038907-0000	.CONNECTION BOX	907, 909, 967
1038964-0000	.INTERMEDIATE PART	145, 147
1038965-0000	.HOLDER	145, 147
1040753-0000	.VOLUME FLAP	521, 523, 527, 529
1040754-0000	.VOLUME BULGE	521, 523, 527, 529
1040755-0000	.VOLUME SHIM	521, 523, 527, 529, 1073, 1075
1040756-0000	.WEDGE	521, 523, 527, 529
1040777-0000	.CARRIER	19
1040796-0000	.PIPE	413
1040797-0000	.SHAFT	413
1040807-0000	.LID	409
1040808-0000	.GASKET	409
1040813-0000	.SLEEVE	23, 29
1040840-0000	.FLANGE	403
1040841-0000	.FLANGE	403
1040852-0000	.SEALING RING	403
1040853-0000	.SEALING RING	403
1040856-0000	.SPACER	173
1040859-0000	.COVER	89
1040874-0000	.COVER	89
1040875-0000	.COVER	89
1040876-0000	.COVER	89
1040877-0000	.PLATE	89
1040878-0000	.PLATE	89
1040885-0000	.BEARING BLOCK	861, 863
1040914-0000	.SHAFT	549, 551, 553
1040960-0000	.TEMPLATE	1127, 1129
1040961-0000	.TEMPLATE	1127, 1129
1040970-0000	.BRACKET	77, 79, 161, 169
1040974-0000	.CATCH	887
1040977-0000	.TANK	335
1040990-0000	.RUBBER PLATE	941
1040991-0000	.ANGLE	953
1040992-0000	.SPACER NUT	953
1040993-0000	.MOUNTING SHEET	943, 945
1040994-0000	.FASTENING BRACKET	839, 841
1041020-0000	.HOLDER	889, 891
1041046-0000	.FLOW METER	731
1041157-0000	.MATERIAL HOLDER	899
1041158-0000	.MATERIAL HOLDER	895
1041159-0000	.SHAFT	895, 899
1041169-0000	.COVERING PLATE	339, 341
1041170-0000	.DANCER ROLLER	839, 841, 857
1041171-0000	.FOIL	339, 341
1041237-0000	.LEAD PLATE	871
1041264-0000	.BRACKET	907, 909, 967
1041312-0000	.ROLLER	35, 37
1041360-0000	.CLAMP	549, 551, 553
1041526-0000	.MATERIAL PRESSURE	895, 899
1041597-0000	.PLATE	399
1041598-0000	.FITTING BOLT	399
1041603-0000	.BRACKET	303
1041606-0000	.SHAFT	303
1041609-0000	.NUT	311
1041687-0000	.LEVER	27
1041688-0000	.FITTING BOLT	27
1041706-0000	.INDUCTOR	885
1041753-0000	.BRACKET	895, 899
1041781-0000	.HOLDER	135, 137
1041804-0000	.CANTILEVER	425
1041893-0000	.CABINET	721
1041907-0000	.PLATE (CIRCULAR)	437

Part No	Description	Page No
1041915-0000	.ARM	449, 451
1041921-0000	.HOLDER	785
1041922-0000	.PIPE	787
1041923-0000	.PIPE	787
1041924-0000	.PIPE	787
1041925-0000	.PIPE	741
1041926-0000	.PIPE	741
1041928-0000	.RAIL	437
1041930-0000	.PIPE	779
1041931-0000	.PIPE	779
1041932-0000	.PIPE	775, 777
1041933-0000	.PIPE	775, 777
1041934-0000	.PIPE	749
1041936-0000	.SIGN	319
1041937-0000	.SIGN	203
1041938-0000	.SIGN	783
1041939-0000	.DOOR	995
1041942-0000	.SPACER	449, 451, 453, 455
1041943-0000	.CONNECTION BOX	737
1041944-0000	.BRACKET	731
1041946-0000	.PIPE	747
1041948-0000	.DOOR	1001
1041949-0000	.CHECKER PLATE	389
1041956-0000	.SPACER	427, 429
1041959-0000	.PIVOT BRACKET	731
1041963-0000	.WASTE BOX	753
1041967-0000	.COVERING PANEL	761
1041970-0000	.DOOR	767
1041972-0000	.DOOR	771
1041975-0000	.SHAFT	425
1041976-0000	.TENSION SPROCKET	425
1041978-0000	.HINGE FLANGE	71, 73, 75
1041979-0000	.HINGE FLANGE	71, 73, 75
1041980-0000	.SPACER	413
1041984-0000	.ATTACHMENT PIPE	731
1041987-0000	.PIPE	373
1041988-0000	.CLAMP	157
1041989-0000	.PROTECTION	157
1086888-0000	.COVER	713
1086889-0000	.COVER	657, 713
1095519-0100	.TEMPLATE TUBE FORMING	1125
1095597-0100	.TERMINAL	311
1095606-0200	.MACHINE BODY	719
1095607-0200	.COVERING PANEL	719
1095608-0100	.WATER PANEL	719
1095609-0200	.PNEUMATIC UNIT	781
1095610-0300	.MAIN SWITCH	719
1095611-0300	.VALVE PANEL	781
1095612-0300	.COOLING WATER SYSTEM	719
1095627-0300	.FOAM CLEANING UNIT	719
1095630-0200	.CONNECTION BOX	719
1095634-0100	.DOOR	985, 987
1095637-0100	.DOOR	985, 987
1095641-0400	.CONTROL LEFT	981
1095643-0400	.POWER SUPPLY UNIT	981
1095644-0200	.RELAY UNIT 1	1041
1095645-0200	.COVERS	337
1095648-0200	.RELAY UINT 2	1041
1095672-0100	.PIPE	739
1095673-0100	.SIDE	739
1095675-0100	.PIPE	739
1095676-0100	.PUMP	739
1095677-0100	.BRANCHING PIPE	739
1095678-0300	.BALL VALVE	739
1095681-0100	.SPRAY GUN	371
1095682-0100	.AIR JET GUN	317
1095683-0400	.CONNECTION	425
1095684-0300	.DRIVE UNIT	423
1095685-0200	.PROTECTION	109
1095686-0300	.PNEUMATIC SYSTEM	11
1095687-0400	.VALVE PANEL SUPERSTRUCT.	197
1095691-0300	.PNEUMATIC SYSTEM	235
1095692-0400	.VALVE PANEL	317
1095693-0400	.VALVE RAMP	319
1095695-0300	.HOSE INSTALLATION	317
1095698-0100	.DISTRIBUTION TERMINAL	1031
1095699-0400	.DISTRIBUTION TERMINAL	1031
1095700-0200	.CRANK UNIT	423
1095701-0300	.WORM GEAR	423
1095702-0100	.CONNECTION BOX	423
1095705-0300	.FLOW METER	723, 725
1095706-0300	.COOLING WATER PUMP	723, 725
1095708-0200	.EXPANSION VESSEL	723, 725
1095709-0200	.CONNECTION BOX	723, 725

Machine Type Group Description Page No

Part No	Description	Page No
1095710-0300	.COMPRESSOR UNIT	723, 725
1095714-0300	.SUPPLY SYSTEM	719
1095715-0100	.ICE WATER	775, 777
1095716-0100	.PIPE WORK-AIR	781
1095722-0300	.COOLER	1053
1095729-0400	.DOORS AND COVERS	235
1095730-0200	.DOOR	337
1095732-0200	.DOORS	337
1095734-0200	.DOORS	337
1095735-0200	.DOOR	337
1095736-0200	.DOOR	337
1095737-0200	.COVER	337
1095738-0300	.PROTECTIVE COVER	337
1095739-0200	.DOOR SAFETY SWITCH	337
1095740-0200	.COVERING PANEL	11
1095743-0200	.EMERGENCY STOP	337
1095746-0100	.LONGITUDINAL SEALING	13
1095748-0300	.CABLE HARNESS	267
1095749-0100	.IH EQUIPMENT	13
1095750-0200	.CONNECTION BOX	267
1095752-0400	.CABLE HARNESS	267
1095754-0100	.SEPARATOR	83
1095755-0200	.STERILE AIR SYSTEM	11
1095758-0300	.CURVE	423
1095761-0100	.PRESSURE JAW	881
1095763-0100	.SEALING UNIT	881
1095765-0200	.BRACKET	881
1095766-0300	.CABLE CONDUIT	881
1095768-0100	.GENERATOR CABINET	825, 827, 829, 831, 833, 835, 837
1095770-0200	.SIDE FEEDER	839, 841
1095772-0200	.REGULATING VALVE	127, 129
1095774-0300	.FLOW REGULATOR	109
1095775-0100	.ELECTRICAL CABINET	825, 827, 829, 831, 833, 835, 837
1095775-0200	.ELECTRICAL CABINET	825, 827, 829, 831, 833, 835, 837
1095776-0100	.PLINTH	1041
1095777-0300	.FUSE BOARD 1	1041
1095778-0100	.PLINTH	985, 987
1095780-0400	.FUSE BOARD 2	1041
1095781-0200	.CLEANING PIPE	109
1095782-0300	.FILLING SYSTEM	11
1095791-0400	.FRAME SECTION,UPPER	11
1095793-0300	.CONTROL PANEL	919, 921
1095793-0400	.CONTROL PANEL	919, 921
1095794-0200	.CHEMICALS UNIT	235
1095798-0100	.SPLICE DETECTOR	811
1095803-0100	.BENDING ROLLER	295, 297, 299
1095806-0200	.SPLICE DETECTOR	193
1095815-0100	.HUB	793
1095816-0100	.BRAKE ARM	793
1095822-0300	.CABLE TRENCH	11
1095823-0100	.CONNECTION BOX	11
1095824-0300	.CONNECTION BOX	11
1095825-0100	.CABINET	401
1095826-0300	.HOSE INSTALLATION PNEUM	197
1095830-0300	.PIPE-LINE	83
1095831-0300	.HYDROGEN PEROXIDE	235
1095833-0400	.HYDROGEN PEROXIDE	11
1095835-0100	.PAPER REEL HOLDER	839, 841
1095837-0300	.EXT. CLEANING PIPEWORK	235
1095838-0300	.CLEANING PIPEWORK	381
1095839-0300	.CLEANING SYSTEM	381
1095840-0300	.PIPE WORK	371
1095843-0300	.MACHINE BODY	235
1095846-0400	.PIPE WORK	235
1095847-0100	.TUBE FLUSHING	371
1095848-0300	.COOLING HOSES	371
1095856-0400	.ELECTRICAL SUPPLY	235
1095857-0200	.PIPE WORK-AIR	317
1095861-0100	.LIGHT FIXTURE	267
1095862-0100	.LADDER	173
1095863-0100	.PIVOT ARM	235
1095864-0300	.SPRAY SYSTEM	13
1095876-0100	.CABLE DUCT	235
1095878-0300	.CLEANING EQUIPMENT	217, 219
1095880-0100	.DRAINING	295, 297, 299
1095881-0300	.ASEPTIC CHAMBER	11
1095882-0200	.FRAME SECTION	753
1095883-0200	.GABLE PLATE	757
1095884-0100	.ASSEMBLY TOOL	1095
1095886-0200	.COVERING PANEL	757
1095888-0200	.HATCH	757
1095889-0100	.DOOR	757
1095890-0200	.HATCH	757
1095891-0200	.DOOR	757

Part No	Description	Page No
1095892-0200	.HATCH	761
1095907-0300	.LOWER FORMING RING	13
1095908-0300	.FORMING RING	53
1095911-0100	.CENTRAL LUBRICATION	245
1095912-0500	.SOFTWARE TPOP	1013, 1015
1095918-0200	.COVERING PANEL	11
1095954-0200	.COOLING SYSTEM	981
1095956-0200	.SETTING TOOL	1095
1103298-0000	.NON-SKID	295, 297, 299
1103299-0000	.NON-SKID	295, 297, 299
1103300-0000	.NON-SKID	295, 297, 299
1103342-0000	.BRACKET	157
1103373-0000	.CABLE DUCT	911, 913, 915
1103374-0000	.CABLE DUCT	911, 913, 915
1103391-0000	.PIPE	171
1103393-0000	.PIPE	107
1103394-0000	.PIPE	171
1103749-0000	.INDUCTOR	815
1105431-0000	.HOUSE	581
1105432-0000	.LID	581
1105521-0000	.DOOR	351
1105595-0000	.PLATE	985, 987
1105673-0000	.ANGLE BRACKET	857
1105688-0000	.DOOR	351
1105712-0000	.HATCH	347
1105713-0000	.HATCH	347
1105714-0000	.HATCH	347
1105715-0000	.HATCH	341
1105716-0000	.DOOR	339
1105718-0000	.DOOR	355
1105729-0000	.DOOR	355
1105730-0000	.DOOR	357
1105734-0000	.ANGLE	581
1105735-0000	.ANGLE	581
1110214-0000	.CUTTING RAIL	489, 491, 493, 509, 511, 513
1110220-0000	.CUTTING RAIL	489, 491, 493, 509, 511, 513
1110224-0000	.CUTTING RAIL	489, 491, 493, 509, 511, 513
1110375-0002	.DOLLY	489, 491, 493, 509, 511, 513, 1073, 1075
1110378-0002	.DOLLY	1141
1110390-0000	.DOLLY	489, 491, 493, 509, 511, 513, 1073, 1075
1110930-0000	.INDUCTOR	483, 485, 503, 505, 1073, 1075
1110932-0000	.INDUCTOR	483, 485, 503, 505, 1073, 1075
1110934-0000	.INDUCTOR	483, 485, 503, 505, 1073, 1075
1110935-0000	.INDUCTOR	483, 485, 503, 505, 1073, 1075
1110936-0000	.INDUCTOR	483, 485, 503, 505, 1073, 1075
1110937-0000	.INDUCTOR	483, 485, 503, 505, 1073, 1075
1110938-0000	.INDUCTOR	483, 485, 503, 505, 1073, 1075
1116017-0000	.BRACKET	869
1116028-0000	.SHEET	819
1116029-0000	.DOOR	357
1116030-0000	.DOOR	359
1116031-0000	.DOOR	361
1116039-0000	.ARM	53
1116046-0000	.HATCH	957
1116047-0000	.HATCH	925
1116048-0000	.SPACER	393, 839, 841
1116049-0000	.SHAFT	839, 841
1116123-0000	.HATCH	955
1116126-0000	.HATCH	959
1116536-0000	.BRACKET	1013, 1015
1129005-0000	.DIAGRAM FILLING STANDARD	363
1129010-0000	.HOLDER	431
1129012-0000	.PIN	431
1129015-0000	.SPACER RING	431
1129017-0000	.SHAFT	431
1129018-0000	.TOOTHED PULLY	431
1129024-0000	.PROTECTION	157
1129037-0000	.COVERING PLATE	229
1129038-0000	.COVERING PLATE	355
1129039-0000	.COVERING PLATE	357
1129040-0000	.ARM	901
1129041-0000	.ARM	897
1129042-0000	.KEY	349, 351
1129046-0000	.ATTACHMENT PIPE	733
1129047-0000	.GLASS PANE	993
1129050-0000	.FASTENING BRACKET	293
1129051-0000	.SPACER PLATE	293
1129052-0000	.PROTECTION	703
1129058-0000	.CLAMP	157
1129064-0000	.GLASS PANE	351
1129066-0000	.RETURN PIPE	733
1129073-0000	.ECCENTRIC	29
1129075-0000	.BLOCKING PIECE	29
1129076-0000	.BRACKET	29

Part No	Description	Page No
1129078-0000	.GASKET	145, 147
1129079-0000	.FLOW METER	731
1129085-0000	.FAN CASING	425
1129086-0000	.BRACKET	21
1129088-0000	.FILTER	721
1129089-0000	.PIPE	127, 129
1129100-0000	.PIPE	163
1129101-0000	.BRACKET	163
1129106-0000	.ASSEMBLY PLATE	1031
1129137-0000	.HOUSE	155
1129141-0000	.MACHINE BODY	723, 725
1129150-0000	.PNEUMATIC DIAGRAM	363, 785
1129155-0000	.COVERING PLATE	985, 987
1129156-0000	.COVERING PLATE	985, 987
1129157-0000	.PROFILE	985, 987
1129158-0000	.PROFILE	985, 987
1129159-0000	.BRACKET	985, 987
1129170-0000	.TOOTHED PULLY	433
1129173-0000	.PIPE	107
1129176-0000	.COVER PLATE	145, 147
1129182-0000	.BRACKET	773
1129183-0000	.SLEEVE	433
1129194-0000	.FRAME	229
1129195-0000	.OPENING	229
1129196-0000	.FRAME	229
1129197-0000	.OPENING	229
1129198-0000	.DOOR	229
1129199-0000	.DOOR	229
1129202-0000	.CONNECTION BOX	773
1129204-0000	.PIPE	91
1129209-0000	.MOUNTING RAIL	773
1129210-0000	.MOUNTING RAIL	737
1129219-0000	.BRACKET	435
1129253-0000	.FASTENING PLATE	701
1129258-0000	.HOLDER	431
1129261-0000	.BRACKET	437
1129264-0000	.SLIDING STRIP	985, 987
1129274-0000	.GUIDE LUG	339, 349, 351, 355, 357, 361, 767, 943, 945, 947, 949
1129275-0000	.BOX FOR DIAGRAM	361
1129276-0000	.GASKET	985, 987
1129277-0000	.VALVE BRACKET	111
1129280-0000	.PLATE	985, 987
1129298-0000	.SHAFT COUPLING	21
1129314-0000	.PIPE	199, 201
1129315-0000	.PIPE	199, 201
1129316-0000	.BRACKET	407
1129318-0000	.BRACKET	985, 987
1129321-0000	.SHUTTER	131, 133
1129322-0000	.BRACKET	985, 987
1129324-0000	.WASHER	351
1129325-0000	.SEALING FLANGE	351
1129328-0000	.ATTACHMENT	407
1129329-0000	.CABINET	407
1129335-0000	.BRACKET	1031
1129336-0000	.PIPE	85
1129338-0000	.BRACKET	1045
1129341-0000	.PROTECTION	1041
1129342-0000	.PROTECTION	1043
1129343-0000	.PROTECTION	1045
1129344-0000	.PIPE	85
1129354-0000	.BRACKET	253
1129366-0000	.PIPE	373
1129367-0000	.CABLE DUCT	223, 225
1129368-0000	.LID	223, 225
1129370-0000	.SIGN	319
1129372-0000	.LID	223, 225
1129373-0000	.LID	223, 225
1129378-0000	.BRACKET	383
1129383-0000	.PIPE	383
1129387-0000	.CONNECTION TABLE	753
1129389-0000	.PIPE	323, 325, 327, 329
1129390-0000	.PIPE	323, 325, 327, 329
1129402-0000	.SPACER SCREW	721
1129404-0000	.HYDRAULIC HOSE	253
1129405-0000	.HYDRAULIC HOSE	253
1129406-0000	.HYDRAULIC HOSE	253
1129407-0000	.HYDRAULIC HOSE	253
1129408-0000	.CANTILEVER	375
1129419-0000	.HOLDER	215
1129420-0000	.HOLDER	215
1129421-0000	.CONNECTION BOX	215
1129422-0000	.RAIL	215
1129423-0000	.HOLDER	859
1129431-0000	.WASHER	59, 61

Part No	Description	Page No
1129432-0000	.LID	417
1129433-0000	.LID	417
1129441-0001	.ELECTRODE	403
1129441-0002	.ELECTRODE	403
1129441-0003	.ELECTRODE	403
1129441-0004	.ELECTRODE	403
1129443-0000	.CABLE DUCT	419
1129444-0000	.LID	419
1129456-0000	.EXTERNAL CLEANING DIAGRAM	363, 739
1129459-0000	.BRACKET	385
1129463-0000	.SIGN	255
1129464-0000	.SIGN	255
1129475-0000	.HOLDER	217, 219
1129478-0000	.GASKET	985, 987
1129479-0000	.RAIL	217, 219
1129480-0000	.CABLE DUCT	217, 219
1129481-0000	.COVERING PLATE	985, 987
1129493-0000	.PIPE BRACKET	399
1129494-0000	.BLOCKING PIECE	399
1129504-0000	.MOUNTING RAIL	289, 291, 293
1129517-0000	.SCREW	53
1129527-0000	.GLASS PANE	295, 297, 299
1129529-0000	.LOWER FORMING RING	55, 57
1129535-0000	.LOWER FORMING RING	55, 57
1129536-0000	.BOW	295, 297, 299
1129539-0000	.LOWER FORMING RING	55, 57
1129540-0000	.LOWER FORMING RING	55, 57
1129544-0000	.MOUNTING SHEET	247
1129549-0000	.SHEET	985, 987
1129550-0000	.GASKET	279, 281, 283, 285, 985, 987
1129552-0000	.KNOB	481, 501
1129569-0000	.SLEEVE	295, 297, 299
1129570-0000	.LDS, LVDS TERMINAL 1	315
1129599-0000	.CRAMP	579
1129600-0000	.BRAID	283, 285
1129633-0000	.RING	399
1129638-0000	.WASHER	63, 65, 173
1129641-0000	.SILICON RUBBER PROFILE	173
1129643-0000	.STAIR	175
1129644-0000	.BRACKET	175
1129649-0000	.PLATE	15, 17
1129710-0000	.CANTILEVER	283, 285
1129741-0000	.RAILING	173
1129742-0000	.RAILING	173
1129767-0000	.SCREW	229, 339, 341, 349, 351, 353, 355, 357, 359, 361, 919, 921, 943, 945, 947, 949, 953
1129768-0000	.POST	859
1129770-0000	.BLOCKING PIECE	203, 229, 319, 339, 341, 349, 351, 353, 355, 357, 359, 361, 943, 945, 947, 949, 953, 991, 993, 997, 999
1129776-0000	.KEY	1103
1129801-0000	.PIPE	111
1129802-0000	.PIPE	111
1129825-0000	.GLASS PANE	339
1129833-0000	.GUIDE ROLLER	481, 501
1129834-0000	.BRACKET	481, 501
1129839-0000	.COOLING PLATE	69
1129851-0000	.TEMPLATE TUBE FORMING	1127, 1129
1129854-0000	.TEMPLATE TUBE FORMING	1127, 1129
1129869-0000	.COOLING PLATE	69
1129925-0000	.BUSBAR	1047, 1049
1129946-0000	.CONNECTION BOX	241
1129947-0000	.HOLDER	237, 239
1129948-0000	.HOLDER	237, 239
1129970-0000	.FASTENING PLATE	237, 239
1129973-0000	.COVERING PANEL	985, 987
1129998-0000	.PNEUMATIC DIAGRAM	363, 917
1140009-0000	.COVER SLIP	919, 921
1140025-0000	.PIPE	145, 147
1140027-0000	.HANDLE BRACKET	861, 863
1140039-0000	.CONVEYOR FRAME	1151
1140040-0000	.BRACKET	1151
1140053-0000	.SPACER	1037, 1039
1140077-0000	.RING	69
1140082-0000	.LOCK SHAFT	705
1140083-0000	.ADAPTER	431
1140090-0000	.PIN	433
1140129-0000	.HOLDER	287
1140208-0000	.BRACKET	701
1140215-0000	.BLOCK FITTING	77, 79
1140216-0000	.SPRAY TANK	77, 79
1140221-0000	.STUD	77, 79
1140259-0000	.PROTECTION	1031
1140265-0000	.PNEUMATIC DIAGRAM	237, 239, 363
1140268-0000	.TEMPLATE	1103
1140278-0000	.DIAGRAM FOR HI TBA/21	237, 239, 363

Part No	Description	Page No
1140283-0000	.TEMPLATE	1103
1140284-0001	.COAXIAL CABLE L= 5000 MM	1007, 1009, 1011
1140285-0007	.COAXIAL CABLE L= 4000 MM	1007, 1009, 1011, 1019
1140285-0009	.COAXIAL CABLE L= 5100 MM	279, 281
1140311-0000	.RAIL	241
1140320-0000	.TEMPLATE	1103
1140380-0000	.BRACKET	203
1140387-0000	.SHIM	1069
1140414-0000	.BEARING	1103
1140417-0000	.BRACKET	1103
1140430-0000	.BRACKET	1103
1140431-0000	.RULER	1103
1140432-0000	.BRACKET	1103
1140433-0000	.SHEET	1103
1140434-0000	.SHEET	1103
1140478-0000	.PROTECTION	157
1140480-0000	.CLAMP	157
1140508-0000	.CANTILEVER	69
1140514-0000	.LIFTING CYLINDER	1055
1140515-0000	.SCREW	69
1140516-0000	.PROTECTION	157
1140518-0000	.WASHER	839, 841
1140519-0000	.PROTECTION	985, 987
1140524-0000	.PROTECTION	157
1140559-0000	.MUFF	703
1140560-0000	.ADAPTER	703
1140561-0000	.GASKET	703
1140562-0000	.GASKET	703
1140603-0000	.COMPRESSOR UNIT	727
1140639-0000	.PIPE	417
1140641-0000	.ARM	701
1140642-0000	.PIPE	747
1140645-0000	.BRACKET	163
1140667-0000	.INDUCTOR	1069
1140670-0000	.BRACKET	747
1140671-0000	.FRAME	999
1140672-0000	.DOOR	999
1140684-0000	.BEAM	231
1140685-0000	.BEAM	231
1140715-0000	.FRAME	993
1140741-0000	.BEAM	231
1140748-0000	.DOOR	993
1140769-0000	.DOOR STOPPER	985, 987
1140786-0000	.FRAME	997
1140787-0000	.DOOR	997
1140840-0000	.WHEEL	1151
1140889-0000	.CABLE	1069
1143204-0000	.PLATE	187
1143205-0000	.AIR NOZZLE	187
1143215-0000	.SPRING	533, 535, 539, 541
1143216-0000	.SPRING	533, 535, 539, 541
1143599-0000	.PROTECTION PLATE	961
1143884-0000	.COPPER BRAID	1037, 1039
1144264-0000	.HUB	613, 615
1144312-0000	.AXLE PIN	613, 615
1144320-0300	.INDEXING UNIT	585
1144324-0200	.FRAMEWORK	585
1144329-0200	.PULL DOWN DEVICE	585
1144331-0200	.PRESSURE DEVICE	585
1144335-0000	.ROLLER	613, 615
1144354-0000	.WASHER	613, 615
1144356-0000	.COVER	613, 615
1144417-0000	.BUSHING	613, 615
1144468-0000	.BEARING HOUSING	691
1144470-0000	.SHAFT	685, 687, 691
1144472-0000	.LEVER	587, 589
1144473-0000	.LEVER	587, 589
1144475-0000	.BRACKET	587, 589
1144476-0000	.BRACKET	587, 589
1144482-0000	.SUPPORT	607, 609, 611
1144483-0000	.PLATE	607, 609, 611
1144484-0000	.PLATE	607, 609, 611
1144485-0000	.SUPPORT	607, 609, 611
1144486-0000	.CAM	607, 609, 611
1144488-0000	.COLUMN	607, 609, 611
1144489-0000	.FLANGE	607, 609, 611
1144492-0000	.SPRING	607, 609, 611
1144493-0000	.WASHER	607, 609, 611
1144494-0000	.AXLE PIN	607, 609, 611
1144495-0000	.ECCENTRIC	607, 609, 611
1144496-0000	.ECCENTRIC	607, 609, 611
1144498-0000	.FLANGE	607, 609, 611
1144500-0000	.SUPPORT	607, 609, 611
1144501-0000	.SPACER	607, 609, 611

Part No	Description	Page No
1144502-0000	.WASHER	607, 609, 611
1144503-0000	.FLANGE	607, 609, 611
1144505-0000	.COLUMN	607, 609, 611
1144506-0000	.LEVER	607, 609, 611
1144507-0000	.BUSHING	607, 609, 611
1144508-0000	.AXLE PIN	607, 609, 611
1144511-0000	.SHIM	607, 609, 611
1144514-0000	.BUSHING	607, 609, 611
1144515-0000	.INSERT	607, 609, 611
1144517-0000	.BUSHING	607, 609, 611
1144520-0000	.ROLLER	607, 609, 611
1144521-0000	.CLAMP	607, 609, 611
1144535-0000	.PLATE	679
1144552-0000	.PLATE	675, 677
1144555-0000	.STUD SCREW	623, 625, 631, 633
1144566-0000	.FLANGE	587, 589
1144571-0000	.PULLEY	605
1144577-0000	.BLOCK	679
1144579-0000	.AXLE	679
1144581-0000	.ROLLER	649, 685, 687, 691
1144583-0000	.VOLUME FLAP	521, 523, 527, 529
1144584-0000	.VOLUME BULGE	521, 523, 527, 529, 613, 615
1144585-0000	.VOLUME BULGE	521, 523, 527, 529
1144586-0000	.VOLUME SHIM	521, 523, 527, 529, 1073, 1075
1144593-0000	.PLATE	685, 687, 691
1144594-0000	.ROLLER	691
1144595-0000	.ECCENTRIC SHAFT	685, 687, 691
1144596-0000	.PLUG	685, 687, 691
1144597-0000	.SPACER	685, 687, 691
1144598-0000	.SHAFT	691
1144601-0000	.GUIDE STUD	533, 535, 539, 541
1144606-0000	.SIGN	319
1144607-0000	.SIGN	319
1144614-0000	.ROLLER	691
1144618-0000	.FLANGE	593
1144619-0000	.SHAFT	685, 687, 691
1144620-0000	.WASHER	593
1144621-0000	.PLATE	695, 697, 699
1144625-0000	.SPACER	685, 687, 691
1144645-0100	.PROTECTION COVER	691
1144645-0200	.PROTECTIVE COVER	685, 687
1144653-0000	.SWITCH	709
1144657-0000	.PROTRACTOR	603
1144662-0000	.BUSHING	641, 643, 663, 665, 667
1144665-0000	.SEAL RING	593
1144667-0000	.HINGE	689, 693
1144668-0000	.HINGE	689, 693
1144669-0000	.PIN	689, 693
1144678-0000	.SHAFT	587, 589
1144681-0000	.WASHER	587, 589, 603, 641, 643, 661
1144683-0000	.AXLE PIN	587, 589
1144684-0000	.SPACER	587, 589
1144685-0000	.SCREW	587, 589
1144686-0000	.TIE ROD	587, 589
1144687-0000	.TIE ROD	587, 589
1144688-0000	.SCREW	587, 589
1144694-0000	.NUT	605
1144718-0000	.FLANGE	603
1144719-0000	.RAIL	631, 633
1144760-0000	.PLATE	685, 687, 691
1144776-0000	.BLOCK	587, 589
1144783-0000	.TIMING BELT	695, 697, 699
1144784-0000	.TOOTHED PULLEY	685, 687
1144788-0000	.TOOTHED PULLEY	685, 687
1144794-0000	.SUPPORT	685, 687, 691
1144797-0000	.SUPPORT	593
1144802-0000	.PULLEY	641, 643, 661
1144839-0000	.BLOCK	593
1144841-0000	.TIMING BELT	685, 687, 691
1144849-0000	.SWITCH	603
1144892-0000	.GUIDE RIGHT	623, 625
1144893-0000	.GUIDE LEFT	623, 625
1144897-0000	.FOLDING BAR	631, 633
1144898-0000	.FOLDING BAR	631, 633
1144899-0000	.SUPPORT	675, 677
1144900-0000	.SUPPORT	593
1144901-0000	.GUIDE	619, 621
1144902-0000	.SUPPORT	619, 621
1144905-0000	.SUPPORT	623, 625
1144914-0000	.LEVER	607, 609, 611
1144915-0000	.LEVER	607, 609, 611
1144916-0000	.ADJUSTING SCREW	607, 609, 611
1144918-0000	.PLATE	695, 697, 699
1144919-0000	.CARRIER	695, 697, 699

Part No	Description	Page No
1144924-0000	.BOTTOM	613, 615
1144926-0000	.FLAP	613, 615
1144927-0000	.FLAP	613, 615
1144928-0000	.PUSHER	607, 609, 611
1144932-0000	.PLATE	607, 609, 611
1144933-0000	.BLOCK	587, 589
1144936-0000	.PUSHER	607, 609, 611
1144941-0000	.COVERING PLATE	619, 621
1144943-0000	.SPACER	651, 653
1144965-0000	.SUPPORT	685, 687
1144974-0000	.ADJUSTING PLATE	619, 621
1144975-0000	.ATTACHMENT PLATE	619, 621
1144976-0000	.STOP SCREW	619, 621
1144978-0000	.CAM	607, 609, 611
1144979-0000	.WASHER	619, 621
1144990-0000	.FOLDING BAR	631, 633
1144991-0000	.CAM	641, 643
1144996-0000	.PUSHER	607, 609, 611
1145139-0000	.NUT	183, 185
1145332-0000	.KNIFE-FLAT	1069
1145333-0000	.KNIFE-WINDOW	1069
1147084-0000	.SPACER SCREW	45, 47, 49
1147087-0000	.COMPRESSION ROD	887
1147089-0000	.SPRING	887
1147091-0000	.NUT	887
1147094-0000	.SLEEVE	887
1185023-0100	.PLINTH	1055
1185025-0100	.LIFTING EQUIPMENT	1141
1185038-0100	.TRANSPORT UNIT	11
1190006-0300	.PLMS DATA SEND	1023
1190007-0202	.PLMS DATA RECEIVE	1059
1190009-0200	.TPOP OFF-LINE ANALYSIS	1141
1195082-0000	.RING	45, 47, 49
1195083-0000	.GUIDE PIN	45, 47, 49
1195084-0000	.ROD	45, 47, 49
1195331-0000	.GUIDE PIN	45, 47, 49
1195338-0000	.UPPER FORMING RING	45, 47, 49
1195339-0000	.ROD	45, 47, 49
1195340-0000	.RING	45, 47, 49
1195343-0300	.UPPER FORMING RING	13
1195350-0000	.ROLLER	45, 47, 49
1195351-0000	.ROLLER	45, 47, 49
1195360-0000	.YOKE LEFT	473
1195361-0000	.YOKE RIGHT	495
1195460-0000	.BRACKET	169
1195466-0000	.PIPE	751
1195476-0000	.SCREW	135, 137
1195488-0000	.AXLE PIN	803
1195500-0200	.STRIP MAGAZINE	791
1195501-0200	.MOUNTING SHEET	793
1195502-0200	.ROCKER ARM	793
1195503-0200	.ROCKER ARM	793
1195504-0100	.BOTTOM PANEL	811
1195505-0200	.STRIP APPLICATOR	791
1195506-0200	.INDUCTOR	811
1254003-0000	.BRACKET	941
1254022-0000	.PUSH BUTTON BOX	941
1254023-0100	.ASSEMBLY TOOL	1095
1254025-0000	.STRIP	389
1254027-0000	.CORNER STRIP	389
1254028-0000	.FASTENING PLATE	389
1254030-0000	.CHECKER PLATE	389
1254053-0000	.BRACKET	961
1254054-0000	.PROTECTION PLATE	961
1254055-0000	.HOLDER	839, 841
1254057-0000	.LID	29
1254058-0000	.HOUSE	29
1254059-0000	.SHAFT	29
1254060-0000	.WHEEL	29
1254083-0000	.FORMING RING	35, 37
1254084-0000	.ROLLER	35, 37
1254085-0000	.ROLLER	35, 37
1254086-0000	.LOCK PLATE	35, 37
1254087-0000	.LOCK PLATE	35, 37
1254089-0000	.ASSEMBLY PLATE	1041
1254091-0000	.PROTECTION	1041
1254092-0000	.PROTECTION PLATE	985, 987
1254093-0000	.ASSEMBLY PLATE	1041
1254094-0000	.CABLE	1037, 1039
1254095-0000	.CABLE	1037, 1039
1254106-0000	.COVER PLATE	173
1254109-0000	.BRACKET	569
1254110-0000	.BRACKET	569
1254111-0000	.BRACKET	569

Part No	Description	Page No
1254118-0000	.CHECKER PLATE	389
1254141-0000	.PIPE	383
1254225-0000	.CARRIER RULER	489, 491, 493
1254226-0000	.CARRIER RULER	509, 511, 513
1254272-0000	.GASKET	1055
1254275-0100	.LID	295, 297, 299
1254410-0000	.WASHER	173
1254442-0000	.CABLE SERIAL	1013, 1015
1254448-0000	.PIPE	1055
1254449-0100	.TOOL TO SET THE LEVEL PROBE	1067
1254450-0000	.HOSE	1085
1254451-0000	.BOTTOM	1085
1254452-0100	.TOOL TO EMPTY THE COOLING SYSTEM	1095
1254453-0000	.WOODENBOX	1103
1254457-0100	.TEMPLATE LASER-UPPER	1125
1254458-0000	.BRACKET	1131
1254459-0000	.BRACKET	1131
1254460-0000	.BRACKET	1131
1254461-0000	.BRACKET	1131
1254469-0000	.GRILL	1055
1254475-0000	.VALVE BODY	135, 137
1254478-0000	.PIPE	95, 97
1254481-0000	.HOLDER	237, 239
1254484-0000	.FILTER	95, 97
1254494-0000	.SPACER	399
1255003-0000	.HOLDER	63, 65
1255010-0000	.UPPER FORMING RING	45, 47, 49
1255011-0000	.RING	45, 47, 49
1255012-0000	.GUIDE PIN	45, 47, 49
1255016-0000	.LOCKING PLATE	45, 47, 49
1255017-0000	.LOCKING PLATE	45, 47, 49
1255020-0000	.PIPE CONNECTION	549, 551, 553
1255021-0000	.SHAFT	549, 551, 553
1255022-0000	.SHAFT	549, 551, 553
1255023-0000	.TUBE FLUSHING DEVICE	549, 551, 553
1255024-0000	.TUBE FLUSHING DEVICE	549, 551, 553
1255025-0000	.TUBE FLUSHING DEVICE	549, 551, 553
1255026-0000	.TUBE FLUSHING DEVICE	549, 551, 553
1255027-0000	.CANTILEVER	549, 551, 553
1255028-0000	.CANTILEVER	549, 551, 553
1255033-0000	.SHAFT	549, 551, 553
1255103-0000	.FORMING RING	35, 37
1255110-0000	.ROLLER	35, 37
1255112-0000	.ECCENTRIC SHAFT	571, 573, 575, 577
1255113-0000	.ECCENTRIC SHAFT	571, 573, 575, 577
1255117-0000	.PLAIN BEARING	571, 573, 575, 577
1255133-0300	.HYDRAULIC SYSTEM	235
1255134-0200	.DRAINING	251
1255136-0000	.ROD	819
1255175-0000	.CURVE	437
1255179-0000	.ROLLER	35, 37
1255180-0000	.ROLLER	35, 37
1255184-0000	.BRACKET	27
1255185-0000	.BRACKET	27
1255186-0000	.ROLL	27
1255187-0000	.SHAFT	27
1255188-0000	.SHAFT	27
1255189-0000	.BRACKET	27
1255190-0000	.PLATE	59, 61
1255191-0000	.PLATE	59, 61
1255192-0000	.RING	59, 61
1255194-0000	.RING	59, 61
1255273-0200	.LUBRICATING SYSTEM	235
1255274-0200	.CENTR. LUBRIC. HOSE INST.	245
1255275-0000	.LUBRICATION DIAGRAM	245, 363
1255293-0000	.CROSS BAR	753
1255294-0000	.FRAME SECTION	755
1255295-0000	.MACHINE BODY	753
1255304-0100	.PROTECTIVE COVER	825, 827, 829, 831, 833, 835, 837
1255305-0200	.PRESSURE ROLLER	811
1255306-0000	.FASTENING BRACKET	817
1255308-0000	.FAN NOZZLE	815
1255316-0000	.PLATE	59, 61
1255318-0000	.RING	59, 61
1255320-0000	.PILLAR	15, 17
1255362-0000	.HYDRAULIC HOSE	255
1255364-0000	.WATER DIAGRAM	363, 775, 777
1255365-0000	.MOUNTING PLATE	729
1255389-0000	.BUSHING	489, 491, 493, 509, 511, 513
1255390-0000	.BUSHING	489, 491, 493, 509, 511, 513
1255428-0000	.BRACKET	431
1255429-0000	.HOLDER	431
1255432-0000	.PIPE	417
1255457-0000	.CARRIER RULER	489, 491, 493

Part No	Description	Page No
1255458-0000	.CARRIER RULER	489, 491, 493
1255459-0000	.CARRIER RULER	489, 491, 493
1255460-0000	.CARRIER RULER	489, 491, 493
1255461-0000	.CARRIER RULER	509, 511, 513
1255462-0000	.CARRIER RULER	509, 511, 513
1255463-0000	.CARRIER RULER	509, 511, 513
1255464-0000	.CARRIER RULER	509, 511, 513
1255492-0000	.BRACKET	383
1255493-0000	.PIPE	383
1255505-0000	.PIPE	145, 147
1255507-0000	.LID	431
1255508-0000	.GUIDE	871
1255509-0000	.GUIDE	871
1255511-0000	.ROPE BRACKET	871
1255512-0000	.ROPE BRACKET	871
1255513-0000	.COVER	855
1255520-0000	.ROLLER	23
1255522-0000	.FLANGE	23
1255540-0000	.WASHER	515
1255541-0000	.BUSHING	521, 523, 527, 529
1255551-0000	.SEAL CLOTH	165, 167
1255557-0000	.GASKET	413
1255558-0000	.EXTENSION PIPE	413
1255559-0000	.PEROXIDE TANK	403
1255561-0200	.JAW LINK RIGHT	423
1255569-0300	.YOKE ARM LEFT	423
1255570-0200	.JAW ARM LEFT	423
1255571-0000	.WASHER	63, 65
1255580-0000	.PIPE	145, 147
1255582-0000	.SPACER	145, 147
1255585-0000	.SPACER	145, 147
1255596-0300	.START-UP KIT	1067
1255619-0200	.DIAGRAM	361
1255633-0000	.HATCH	765
1255634-0000	.HATCH	763
1255635-0000	.HATCH	769
1255636-0000	.COVERING PANEL	757
1255637-0000	.COVER	757
1255638-0000	.COVERING PANEL	757
1255670-0000	.GABLE PLATE	761
1255671-0000	.GABLE PLATE	759
1255793-0000	.UPPER FORMING RING	45, 47, 49
1255794-0000	.LOWER FORMING RING	55, 57
1255795-0000	.FORMING RING	35, 37
1255838-0000	.CONNECTION BOX	293
1255839-0000	.SHAFT	169
1255864-0000	.COVER PLATE	279, 281
1255865-0000	.MOUNTING PLATE	279, 281
1255866-0000	.PROTECTION	721
1255867-0100	.MATERIAL HOLDER LINE 2	825, 827, 829, 831, 833, 835, 837
1255868-0100	.CYLINDER LINE 2	825, 827, 829, 831, 833, 835, 837
1255869-0100	.MATERIAL HOLDER LINE 1	825, 827, 829, 831, 833, 835, 837
1255870-0100	.CYLINDER LINE 1	825, 827, 829, 831, 833, 835, 837
1255881-0000	.LOCKING PLATE	45, 47, 49, 55, 57
1255882-0000	.GUIDE PIN	45, 47, 49
1255885-0000	.LOCK PLATE	35, 37
1255887-0000	.CABLE DUCT	223, 225
1255912-0000	.STOP	533, 535, 539, 541
1255913-0000	.CATCH	533, 535, 539, 541
1255915-0000	.AXLE PIN	521, 523, 527, 529
1255916-0000	.BUSHING	521, 523, 527, 529
1255917-0000	.SPACER	521, 523, 527, 529
1255920-0000	.ROD	45, 47, 49
1255957-0000	.PIPE	87
1260235-0200	.VALVE PANEL	825, 827, 829, 831, 833, 835, 837
1260237-0000	.PLATE	961
1260247-0000	.CLIP	729
1260248-0000	.CLAMP	731
1260303-0000	.WASHER	227
1260327-0000	.TUBE	729
1260328-0000	.SPRING	483, 485, 503, 505
1260433-0000	.LID	305
1260434-0000	.GASKET	305
1260435-0000	.BRACKET	295, 297, 299
1260525-0000	.UPPER FORMING RING	45, 47, 49
1260547-0100	.ICE WATER UNIT	723, 725
1260622-0000	.TEMPLATE	1095
1260651-0000	.INDUCTOR	1069
1260659-0000	.SPRING	515
1260679-0000	.INSULATION NUT	1069
1260680-0000	.WASHER	815, 1069
1260689-0000	.CURVE	437
1260700-0000	.BLOCK	587, 589
1260701-0000	.PUSHER	607, 609, 611

Part No	Description	Page No
1260702-0000	.PLATE	607, 609, 611
1260703-0000	.BOTTOM	613, 615
1260704-0000	.FLAP	613, 615
1260705-0000	.FLAP	613, 615
1260707-0000	.FOLDING BAR	631, 633
1260708-0000	.FOLDING BAR	631, 633
1260709-0000	.GUIDE UPPER R	623, 625
1260710-0000	.GUIDE UPPER L	623, 625
1260712-0000	.CRANK	705
1260714-0000	.SPACER	681
1260795-0000	.HYDRAULIC PIPE	253
1260796-0000	.HYDRAULIC PIPE	253
1260797-0000	.HYDRAULIC PIPE	253
1260798-0000	.HYDRAULIC PIPE	253
1260799-0000	.HYDRAULIC PIPE	253
1260800-0100	.PIPE WORK-HYDRAULIC	251
1260801-0000	.HYDRAULIC PIPE	253
1260802-0000	.BRACKET	253
1260803-0000	.CLAMP	253
1260804-0000	.PIPE CLAMP	253
1260805-0000	.PIPE CLAMP	253
1260806-0000	.COVER PLATE	253
1260808-0000	.UPPER FORMING RING	45, 47, 49
1260809-0000	.HOLDER	45, 47, 49
1260810-0000	.BRACKET	45, 47, 49
1260824-0000	.SPACER RING	587, 589
1260832-0000	.WASHER	641, 643, 661
1260849-0000	.SPRING	641, 643
1260851-0000	.AXLE PIN	641, 643, 663, 665, 667
1260852-0000	.WASHER	641, 643, 663, 665, 667
1260853-0000	.RING	641, 643, 663, 665, 667
1260854-0000	.AXLE PIN	641, 643
1260881-0100	.ELECTRICAL CONNECTION	585
1260883-0200	.CRANK	585
1260884-0100	.DRIVE	585
1260885-0000	.FLAP	613, 615
1260886-0000	.FLAP	613, 615
1260887-0000	.BLOCK	587, 589
1260888-0000	.BLOCK	607, 609, 611
1260889-0000	.PUSHER	607, 609, 611
1260894-0000	.PROTECTION	689, 693
1260895-0000	.SPRING	607, 609, 611
1260931-0000	.SCREW	593
1260941-0000	.SLIDE	685, 687
1260944-0000	.BUSHING	587, 589
1279072-0000	.SEALING STRIP	347
1279073-0000	.SEALING STRIP	347
1279074-0000	.SEALING STRIP	347
1279075-0000	.SEALING STRIP	349
1279076-0000	.SEALING STRIP	349
1279077-0000	.SEALING STRIP	351
1279078-0000	.SEALING STRIP	351
1279079-0000	.SEALING STRIP	339, 341, 353
1279080-0000	.SEALING STRIP	355, 357
1279081-0000	.SEALING STRIP	355, 357
1279082-0000	.SEALING STRIP	359, 361
1279083-0000	.SEALING STRIP	947, 949
1279084-0000	.SEALING STRIP	951
1279092-0000	.LOCKING PLATE	55, 57
1279099-0000	.CLEANING PIPE	385
1279400-0000	.BRACKET	385
1279409-0000	.PLATE	695, 697, 699
1279472-0000	.BRACKET	707
1279473-0000	.PIPE	707
1279484-0000	.SHIM	1069
1279559-0000	.ARM	613, 615
1279573-0000	.SLIDE RAIL U	651, 653
1279577-0000	.SUPPORT	675, 677
1279582-0000	.RAIL	655, 669, 671, 673
1279584-0000	.RAIL	655, 669, 671, 673
1279585-0000	.SUPPORT	651, 653
1279586-0000	.SUPPORT	651, 653
1279587-0000	.SLIDE RAIL U	651, 653
1279670-0000	.SPACER	681
1279677-0100	.CRANK GUARD	585
1279680-0000	.PIPE	707
1279688-0000	.SUPPORT	685, 687, 691
1279689-0000	.ACTIVATOR	691
1279797-0000	.PIPE	295, 297, 299
1279798-0000	.PIPE	295, 297, 299
1282032-0300	.HOOD	985, 987
1282244-0000	.GASKET	703
1282287-0000	.CARRIER	695, 697, 699
1282290-0000	.GUIDE	695, 697, 699

Part No	Description	Page No
1282291-0000	.GUIDE	695, 697, 699
1282294-0000	.FOLDING BAR	631, 633
1282295-0000	.FOLDING BAR	631, 633
1282325-0000	.HUB	605
1282326-0000	.RING	605
1282335-0000	.FLANGE	641, 643, 661
1282343-0000	.BLOCK	641, 643, 661
1282345-0000	.SPRING	641, 643, 661
1282348-0000	.FASTENING PLATE	701
1282375-0000	.FLAP	613, 615
1282376-0000	.FLAP	613, 615
1282379-0200	.OUT FEED DRIVE	639
1282649-0000	.FORMING RING	35, 37
1282650-0000	.GUIDE ROLLER	45, 47, 49
1282653-0000	.SHAFT	45, 47, 49
1282654-0000	.SCREW	45, 47, 49
1282655-0000	.SCREW	45, 47, 49
1282681-0000	.TOOTHED PULLEY	691
1282705-0000	.SUPPORT	623, 625
1282708-0000	.BUSHING	591, 613, 615
1282762-0100	.TROLLEY	1141
1282763-0100	.AXLE SUPPORT	1155
1282764-0000	.AXLE SUPPORT	1159
1282765-0200	.CONNECTION BOX	267
1282766-0100	.CONNECTION BOX	267
1282767-0000	.CONNECTION BOX	289
1282768-0000	.CONNECTION BOX	291
1282844-0000	.SUPPORT	593
1282848-0000	.CARRIER	695, 697, 699
1282864-0000	.SPRING	641, 643, 663, 665, 667
1282874-0000	.PIPE	405
1282876-0000	.PIPE	405
1282877-0000	.PIPE	405
1282879-0000	.CONNECTING PIPE	405
1282884-0200	.CALENDER ROLLER	13
1282885-0000	.BEARING COVER	25
1282889-0000	.PIPE	165, 167
1282891-0000	.PIPE	403
1282892-0000	.TANK	409
1282893-0000	.PIPE	409
1282894-0100	.PEROXIDE TANK	401
1282895-0100	.PEROXIDE PIPE	401
1282896-0100	.TANK	401
1282898-0000	.HOSE	409
1282899-0000	.HOSE	403
1282901-0000	.PIPE	405
1282902-0000	.HEAT EXCHANGER	171
1282903-0000	.FLANGE	403
1282904-0000	.LID	403
1282905-0000	.CLAMP	413
1282906-0000	.NIPPLE	403
1285009-0000	.HOLDER	655, 669, 671, 673
1285010-0000	.HOLDER	657
1285012-0200	.FOLDING PART	585
1285014-0000	.DISTRIBUTOR	619, 621
1285022-0000	.SIDE PLATE	679
1285023-0000	.SIDE PLATE	679
1285221-0000	.SHAFT	857
1285240-0000	.RAIL	655, 669, 671, 673
1285253-0000	.SPACER	655, 669, 671, 673
1285254-0000	.WASHER	641, 643, 663, 665, 667
1285258-0000	.RAIL	655, 669, 671, 673
1285259-0000	.GUIDE	655, 669, 671, 673
1285260-0200	.OUT FEED	585
1285261-0000	.RAIL	655, 669, 671, 673
1285265-0000	.PLATE	651, 653
1285266-0000	.SPACER	651, 653
1285267-0000	.SUPPORT	623, 625
1285288-0000	.SPACER	597, 599, 601
1285291-0000	.PLATE	595
1285293-0000	.HEATING PIPE	595
1285299-0000	.BRACKET	619, 621
1285306-0000	.SPACER	651, 653
1285307-0000	.SPACER	595
1285308-0000	.GASKET	595
1285309-0000	.COVER	595
1285310-0000	.EXTENSION	597, 599, 601
1285311-0000	.PLATE	595
1285312-0000	.GASKET	595
1285363-0000	.TUBE	729
1285383-0000	.BRACKET	565, 567
1285426-0000	.PIPE	405
1285507-0000	.SPACER BUSHING	63, 65
1285512-0000	.FASTENING PLATE	63, 65

Part No	Description	Page No
1285514-0000	.POST	63, 65
1285515-0000	.HOLDER	63, 65
1285545-0000	.ROLL	803
1285546-0000	.ROLL	821
1285622-0000	.HOOD	1003
1285690-0200	.FRONT COVER	337
1285842-0000	.DOOR	349
1285843-0000	.DOOR	349
1285844-0000	.LOCKING ARM	349
1285845-0000	.BRACKET	349
1285846-0000	.LINK	349
1285847-0000	.SHAFT	349
1285848-0000	.SHAFT	349
1285861-0100	.INDEXING GEAR	603
1285862-0100	.FRICTION WHEEL	603
1285865-0000	.NUT	283, 285
1285869-0000	.SPACER	597, 599, 601
1285870-0000	.EXTENSION	597, 599, 601
1285873-0000	.SPACER	597, 599, 601
1285874-0000	.SPACER	597, 599, 601
1285875-0200	.BELT TENSIONER	641, 643, 661
1285888-0000	.AXLE PIN	605
1285889-0000	.AXLE PIN	605
1285890-0000	.SEAL RING	605
1285891-0000	.SPRING	605
1285892-0000	.SPACER RING	605
1285955-0000	.PLATE	693
1285956-0000	.BLOCK	693
1285958-0100	.DOOR	337
1296039-0000	.ROLLER	45, 47, 49
1296040-0000	.ROLLER	45, 47, 49
1296041-0000	.GUIDE ROLLER	45, 47, 49
1296050-0000	.LOCKING PLATE	45, 47, 49
1296051-0000	.LOCKING PLATE	45, 47, 49
1296052-0000	.LOCKING PLATE	45, 47, 49
1296053-0000	.LOCKING PLATE	45, 47, 49
1296057-0000	.GUIDE	655, 669, 671, 673
1296066-0000	.NOZZLE	597, 599, 601
1296067-0000	.NOZZLE	597, 599, 601
1296068-0000	.NOZZLE	597, 599, 601
1296070-0000	.HEATING PIPE	595
1296072-0000	.EXTENSION	597, 599, 601
1296078-0000	.RAIL	669, 671, 673
1296079-0000	.RAIL	669, 671, 673
1296081-0000	.PLATE	651, 653
1296102-0000	.SEALING STRIP	953
1296103-0000	.SEALING STRIP	955, 959
1296105-0000	.SEALING STRIP	925, 929, 957
1296135-0000	.RAIL	655, 669, 671, 673
1296150-0000	.CAM	603
1296153-0000	.GUIDE	597, 599, 601
1296160-0200	.OUT FEED	639
1296175-0000	.STOP ARM	641, 643
1296176-0000	.SPRING	663, 665, 667
1296180-0000	.FOLDING DEVICE	591
1296181-0000	.FOLDING DEVICE	591
1296203-0000	.GLASS PANE	343
1296204-0001	.GLASS PANE	349
1296204-0002	.GLASS PANE	349
1296218-0200	.LID	343
1296272-0000	.UPPER TUBE SUPPORT	41, 43
1296273-0000	.LOCKING PLATE	41, 43
1296274-0000	.SHAFT	41, 43
1296275-0000	.LOCKING PLATE	41, 43
1296276-0000	.LOCKING PLATE	41, 43
1296277-0000	.LOCKING PLATE	41, 43
1296278-0000	.LOCKING PLATE	41, 43
1296279-0000	.ROLLER	41, 43
1296280-0000	.ROLLER	41, 43
1296281-0000	.ROLLER	41, 43
1296289-0000	.TUNNEL	365
1296290-0000	.GASKET	365
1296331-0000	.FLAT WEDGE	641, 643
1296387-0000	.NOZZLE	597, 599, 601
1296820-0000	.WHEEL	15, 17
1296833-0000	.NON-SKID	295, 297, 299
1296842-0000	.GUARD PLATE	701
1296843-0000	.FRAME	701
1296844-0000	.HATCH	701
1296845-0000	.BRACKET	701
1296846-0000	.SPLASH PLATE	701
1296877-0100	.SEAL KIT	1071
1296878-0100	.SEAL KIT	1071
1296879-0100	.SEAL KIT	1071

Part No	Description	Page No
1296965-0000	.FOLDING BAR	631, 633
1296969-0000	.SCREW HOLDER	613, 615
1296970-0000	.SCREW BUSHING	613, 615
1317010-0000	.FLOATER	139, 141
1317020-0000	.SHAFT	883
1317021-0000	.PIN	855, 883
1317042-0000	.RAIL	631, 633
1317043-0000	.SUPPORT	631, 633
1317047-0000	.RAIL	631, 633
1317085-0000	.NUT	597, 599, 601
1317088-0000	.SPACER	623, 625, 631, 633
1317211-0000	.COVERING PLATE	619, 621
1317213-0000	.ADJUSTING PLATE	619, 621
1317216-0000	.FOLDING BAR	631, 633
1317217-0000	.FOLDING BAR	631, 633
1317218-0000	.SPACER	669, 671, 673, 681
1317225-0000	.LS-INDUCTOR	63, 65
1317229-0000	.SPACER	581
1317230-0000	.TEMPLATE	1103
1317247-0200	.CABINET	981
1317248-0200	.TPOP DATA COLLECTION	981
1317249-0200	.RACK	1013, 1015
1317250-0100	.DOOR	985, 987
1317252-0000	.CABLE SERIAL	1037, 1039
1317362-0000	.SHAFT	607, 609, 611
1317363-0000	.SHAFT	607, 609, 611
1317384-0000	.BRACKET	603
1317402-0100	.COVER	337
1317405-0000	.COVER	353
1317406-0000	.COVERING PLATE	353
1317407-0000	.FOIL	353
1317436-0000	.RAIL	655, 669, 671, 673
1317438-0000	.FORK	139, 141
1317439-0000	.CATCH	539, 541
1317440-0000	.STOP PIN	533, 535, 539, 541
1317441-0200	.START UP KIT PT21	1067
1317468-0200	.LEG STAND	1095
1317475-0000	.BRACKET	271, 273
1317476-0000	.BRACKET	271, 273
1317478-0000	.PLATE	59, 61
1317479-0000	.RING	59, 61
1317554-0000	.FLAP	613, 615
1317555-0000	.FLAP	613, 615
1317556-0000	.BOTTOM	613, 615
1317562-0200	.VALVE RAMP SUPERSTRUCT.	203
1317563-0300	.VALVE RAMP SUPERSTRUCT.	203
1317633-0000	.SPRING	619, 621
1317650-0000	.GUIDE	695, 697, 699
1317651-0000	.GUIDE	695, 697, 699
1317652-0000	.FOLDING BAR	631, 633
1317653-0000	.FOLDING BAR	631, 633
1317654-0000	.PUSHER	607, 609, 611
1317655-0000	.PLATE	607, 609, 611
1317656-0000	.INSERT	613, 615
1317711-0000	.SHAFT	181, 875
1317712-0000	.SHAFT	181, 875
1317713-0000	.SHAFT	179, 183, 185
1317714-0000	.STEERING	181
1317716-0000	.BRACKET	181
1317740-0000	.RUBBER SLEEVE	533, 535, 539, 541
1317741-0000	.CATCH	533, 535
1317742-0000	.CANTILEVER	533, 535, 539, 541
1317787-0000	.CATCH	607, 609, 611
1317789-0000	.BLOCK	587, 589
1317793-0000	.BASE	391, 939
1317794-0000	.BASE	391, 939
1317798-0000	.GUIDING PLATE	889, 891
1317799-0000	.ROD	889, 891
1317800-0000	.GUIDE FINGER	889, 891
1317801-0000	.NOZZLE	597, 599, 601
1317802-0000	.NOZZLE	597, 599, 601
1317803-0000	.NOZZLE	597, 599, 601
1317804-0000	.SPACER	597, 599, 601
1317805-0000	.BAR	695, 697, 699
1317823-0000	.CANTILEVER	533, 535, 539, 541
1317824-0000	.CATCH	533, 535, 539, 541
1317828-0100	.DOOR	985, 987
1317829-0100	.DOOR	985, 987
1317930-0000	.ROLLER	45, 47, 49
1317933-0000	.ROLLER	55, 57
1317936-0000	.ROLLER	45, 47, 49
1317938-0000	.GUIDE ROLLER	45, 47, 49
1317940-0000	.ROLLER	45, 47, 49
1317942-0000	.ROLLER	45, 47, 49

Part No	Description	Page No
1317950-0000	.ROLLER	35, 37
1317966-0300	.DESIGN CORRECTION	469
1317967-0100	.DRIVE UNIT LEFT	563
1317968-0100	.DRIVE UNIT RIGHT	563
1317969-0300	.DESIGN CORRECTION DEVICE LEFT	563
1317970-0300	.DESIGN CORRECTION DEVICE RIGHT	563
1317976-0100	.DOOR	13
1317977-0100	.DOOR	13
1317978-0100	.DOOR	13
1317983-0100	.ALARM BEACON	389, 393, 937
1334012-0000	.GUIDE UPPER L	623, 625
1334013-0000	.GUIDE UPPER R	623, 625
1334018-0000	.SHIM	587, 589
1334049-0000	.GUIDE ROLLER	45, 47, 49
1334050-0000	.GUIDE ROLLER	45, 47, 49
1334051-0000	.SHAFT	139, 141, 1073, 1075
1334064-0000	.BRACKET	417
1334081-0000	.CURVE	559, 561
1334082-0000	.CURVE	559, 561
1334084-0000	.LINK FORK	889, 891
1334085-0000	.ROD	821
1334113-0000	.HOLDER	669, 671, 673
1334187-0000	.PLATE	805
1334188-0000	.AXLE PIN	805
1334189-0000	.BLOCK	805
1334190-0000	.BLOCK	805
1334191-0000	.SHIM	805
1334197-0000	.AXLE PIN	821
1334220-0200	.STRIP GUIDE	811
1334229-0000	.PNEUMATIC DIAGRAM	363, 783
1334248-0000	.BRACKET	893
1334260-0000	.CABLE DUCT	911, 913, 915
1334261-0000	.CABLE DUCT	911, 913, 915
1334271-0000	.BAR	695, 697, 699
1334328-0000	.SPACER	587, 589
1334438-0000	.SPACER	631, 633
1334447-0000	.SPACER	623, 625
1334480-0000	.SUPPORT	619, 621
1334496-0000	.BRACKET	31, 33
1334506-0200	.HEATING UNIT	159
1334507-0000	.TUBE	161
1334510-0000	.PIPE	165, 167
1334511-0000	.PIPE	165, 167
1334512-0000	.PIPE	165, 167
1334514-0000	.PIPE	165, 167
1334515-0200	.PEROXIDE PIPE	159
1334516-0000	.PIPE	161
1334523-0000	.SUPPORT	623, 625
1334533-0000	.CANTILEVER	533, 535, 539, 541
1334559-0000	.GUIDE UPPER R	623, 625
1334560-0000	.GUIDE UPPER L	623, 625
1334561-0000	.SLIDE	695, 697, 699
1334562-0000	.SLIDE	695, 697, 699
1334620-0100	.PAPER GUIDE	179, 183, 185
1334632-0000	.SPACER	597, 599, 601
1334633-0200	.VOLUME FLAP CUTTING	469
1334634-0200	.VOLUME FLAP PRESSURE	469
1334635-0200	.SHOCK ABSORBER	469
1334636-0200	.SHOCK ABSORBER	469
1334718-0000	.SPACER	631, 633
1334791-0000	.LS-INDUCTOR	63, 65
1334808-0000	.RAIL	675, 677
1334817-0000	.TEMPLATE TUBE FORMING	1127, 1129
1334818-0000	.TEMPLATE TUBE FORMING	1127, 1129
1334819-0000	.TEMPLATE	1127, 1129
1334857-0000	.LS-INDUCTOR	63, 65
1334910-0000	.BRACKET	569
1334986-0000	.TEMPLATE	1095
1334987-0000	.TEMPLATE	1095
1334989-0100	.LEVEL PROBE	269
1334990-0100	.CLEANING CUP	109
1334991-0100	.FILLING PIPE	109
1334992-0100	.FASTENING PLATE	109
1334999-0000	.PUSHER	607, 609, 611
1346071-0000	.HYDRAULIC DIAGRAM	363
1346082-0000	.SCREW	1127, 1129
1346083-0000	.PHOTOCELL BRACKET	889, 891
1346084-0000	.LINK FORK	889, 891
1346149-0000	.FOLDING BAR	631, 633
1346150-0000	.FOLDING BAR	631, 633
1346153-0000	.STOP PIN	533, 535, 539, 541
1346157-0000	.VOLUME BULGE	521, 523, 527, 529
1346158-0000	.VOLUME SHIM	521, 523, 527, 529, 1073, 1075
1346218-0200	.CABLE CABINET	981

Part No	Description	Page No
1346307-0000	.HOLDER	709
1346311-0000	.HOLDER	701
1346312-0000	.SCREW	701
1346313-0000	.PLATE	701
1346325-0000	.ROLLER	45, 47, 49
1346326-0000	.PLATE	59, 61
1346327-0000	.RAIL	887
1346339-0000	.RAIL	655, 669, 671, 673
1346340-0000	.BRACKET	623, 625
1346343-0000	.RAIL	631, 633
1346344-0000	.RAIL	631, 633
1346354-0000	.BRACKET	31, 33
1346355-0000	.BRACKET	31, 33
1346392-0000	.DIAL	437
1346394-0000	.LEG	977, 1097
1346395-0000	.LOCKING ARM	971
1346397-0000	.SCREW	825, 827, 829, 831, 833, 835, 837
1346399-0000	.DISTANCE	851
1346400-0000	.CABLE DUCT	975
1346401-0000	.HOLDER	851
1346402-0000	.PLATE	969
1346403-0000	.BRACKET	971
1346404-0000	.BRACKET	971
1346405-0000	.WASHER	969
1346406-0000	.COVER PLATE	969
1346407-0000	.COVER	969
1346408-0000	.SUPPORT	971
1346409-0000	.SHAFT	971
1346410-0000	.BRACKET	969
1346411-0000	.BRACKET	969
1346412-0000	.PAPPER COVER	975
1346414-0000	.COVER PLATE	933
1346415-0000	.COVER PLATE	937
1346416-0000	.HOLDER	937
1346417-0000	.FRAME	969
1346418-0000	.FRAME	851
1346419-0000	.BRACKET	973
1346420-0000	.COVER	929
1346421-0000	.FRAME	851
1346422-0000	.COVER PLATE	919, 921
1346423-0000	.COVER	929
1346424-0000	.CABLE DUCT	975
1346425-0000	.COVER PLATE	935
1346426-0000	.COVER	973
1346427-0000	.DISTANCE	937
1346428-0000	.RUBBER STRIP	933
1346429-0100	.BRACKET	839, 841
1346430-0100	.SUPPORT	825, 827, 829, 831, 833, 835, 837
1346431-0100	.HOLDER	825, 827, 829, 831, 833, 835, 837
1346432-0100	.BRACKET	825, 827, 829, 831, 833, 835, 837
1346433-0100	.COVER	919, 921
1346471-0000	.WEDGE	695, 697, 699
1346518-0000	.TEMPLATE	1095
1346539-0000	.CONNECTING ROD	607, 609, 611
1346547-0000	.PIPE	155
1346548-0000	.PIPE	155
1346549-0200	.STEAM SYSTEM	109
1346550-0000	.PIPE	155
1346554-0000	.ATTACHMENT PIPE	155
1346557-0000	.GASKET	169
1346558-0000	.COVER	169
1346565-0000	.VALVE	405
1346568-0000	.HEAT EXCHANGER	161
1346571-0000	.BATH	169
1346574-0000	.PROTECTION	161
1346575-0000	.PIPE	163
1346580-0000	.NOZZLE	597, 599, 601
1346581-0000	.NOZZLE	597, 599, 601
1346588-0000	.DRIP PLATE	675, 677
1346633-0000	.GUIDE ROD	857
1346640-0100	.HINGE	803
1346641-0000	.SPACER	597, 599, 601
1346642-0000	.SPACER	597, 599, 601
1346643-0000	.NOZZLE	597, 599, 601
1346644-0000	.NOZZLE	597, 599, 601
1346645-0000	.SPACER	597, 599, 601
1346646-0000	.EXTENSION	597, 599, 601
1346678-0000	.NOZZLE	597, 599, 601
1346679-0000	.NOZZLE	597, 599, 601
1346736-0000	.WEDGE	695, 697, 699
1346739-0000	.GUIDE	655, 669, 671, 673
1346746-0000	.LEVER	821
1346749-0000	.SETTING TOOL	1095
1346751-0000	.HOLDER	817

Part No	Description	Page No
1346752-0000	.AXLE PIN	817
1346899-0000	.ELECTRICAL CABINET	967
1346901-0100	.PAPER COVER	825, 827, 829, 831, 833, 835, 837
1346902-0100	.LEG	825, 827, 829, 831, 833, 835, 837
1346903-0100	.COVER	919, 921
1346904-0100	.COVER	919, 921
1346905-0000	.LID	927
1346907-0000	.RUBBER STRIP	935
1346919-0000	.TEMPLATE TUBE FORMING	1127, 1129
1346983-0000	.BEARING BUSHING	53
1346988-0000	.ROLL	817
1346992-0000	.PNEUMATIC DIAGRAM	205, 207, 209, 211
1346993-0000	.PNEUMATIC DIAGRAM	205, 207, 209, 211
1347017-0000	.PULLEY	603
1347018-0000	.PLUG	607, 609, 611
1347050-0101	.ANGLE ENCODER DISPLAY	435
1347057-0000	.GUIDE	619, 621
1347108-0000	.PLATE	593
1347109-0000	.PLATE	593
1347111-0000	.SPRING	139, 141
1347145-0000	.FRAME	1013, 1015
1347203-0000	.TEMPLATE	1127, 1129
1347204-0000	.TEMPLATE	1127, 1129
1347205-0000	.TEMPLATE	1127, 1129
1347252-0000	.ROD	821
1347258-0000	.KNIFE	801
1347260-0100	.CUTTING TABLE	793
1347261-0000	.MOUNTING PLATE	803
1347267-0000	.TEMPLATE TUBE FORMING	1127, 1129
1347410-0000	.ACTIVATOR	685, 687
1347414-0000	.ADAPTER	95, 97
1347465-0000	.PIPE	145, 147
1347495-0000	.AXLE PIN	591
1347496-0000	.SCREW	591
1347511-0000	.FITTING	1071
1347526-0000	.BRACKET	533, 535, 539, 541
1347546-0000	.SHAFT	21
1347562-0000	.SHAFT	483, 485, 489, 491, 493, 503, 505, 509, 511, 513
1347600-0000	.SUPPORT	591
1347634-0000	.INSULATING PLATE	63, 65
1347635-0000	.INSULATING PLATE	63, 65
1347636-0000	.INSULATING PLATE	63, 65
1347637-0000	.FOLDING BAR	631, 633
1347665-0000	.BRACKET	155
1347671-0000	.GASKET	169
1347673-0000	.BRACKET	1043
1347681-0000	.PIPE	165, 167
1347691-0000	.CABLE DUCT	237, 239
1347699-0000	.PLATE	685, 687
1347703-0000	.SIGN BOARD	237, 239
1347704-0000	.THERMOCOUPLE	403
1347737-0000	.ARM	803
1347738-0100	.DOUBLE WEB MAGAZINE	839, 841
1347739-0000	.GUIDE	859
1347740-0100	.CARRIAGE	839, 841
1347741-0000	.FRAME	861, 863
1347742-0000	.HANDLE	861, 863
1347743-0000	.SLIDER	857
1347744-0000	.SLIDER	857
1347748-0000	.FRAME LOWER	861, 863
1347749-0100	.CARRIAGE	839, 841
1347751-0100	.RAIL	839, 841
1347752-0000	.BRACKET	871
1347753-0100	.DRIVE UNIT FRONT	839, 841
1347754-0000	.SLIDER	857
1347755-0000	.COVER	855
1347758-0000	.COVER	111
1347812-0000	.LID	35, 37
1347882-0000	.SHAFT	803
1347883-0000	.ROLLER	803
1347885-0000	.AXLE PIN	803
1347911-0000	.PIPE	145, 147
1347932-0000	.PIPE	95, 97
1347933-0000	.ANGLE BRACKET	189
1347934-0000	.HOLDER	63, 65
1347935-0000	.HOLDER	63, 65
1347936-0000	.PIPE	165, 167
1347937-0000	.PIPE	95, 97
1347943-0000	.PIPE	165, 167
1348041-0000	.SPACER	623, 625
1348042-0000	.SPACER	631, 633
1348043-0000	.SPACER	597, 599, 601
1348045-0000	.BRACKET	339
1348046-0000	.HOLDER	135, 137

Part No	Description	Page No
1348047-0000	.FORK	139, 141
1348048-0000	.FORK	139, 141
1348049-0000	.FORK	139, 141
1348050-0000	.SHAFT	139, 141, 1073, 1075
1348051-0000	.SHAFT	139, 141, 1073, 1075
1348052-0000	.SHAFT	139, 141, 1073, 1075
1348056-0200	.FOLDING PART	587, 589
1348060-0000	.PIPE	145, 147
1348072-0000	.DRIP PLATE	603
1348073-0000	.GASKET	35, 37
1348092-0000	.CURVE	437
1348118-0000	.WHEEL	651, 653
1348132-0000	.SLIDE	695, 697, 699
1348133-0000	.SLIDE	695, 697, 699
1348134-0000	.SLIDE	695, 697, 699
1348135-0000	.SLIDE	695, 697, 699
1348136-0000	.SLIDE	695, 697, 699
1348137-0000	.SLIDE	695, 697, 699
1348138-0000	.SLIDE	695, 697, 699
1348139-0000	.SLIDE	695, 697, 699
1348140-0000	.SLIDE	695, 697, 699
1348141-0000	.SLIDE	695, 697, 699
1348142-0000	.SLIDE	695, 697, 699
1348143-0000	.SLIDE	695, 697, 699
1348144-0000	.BAR	695, 697, 699
1348145-0000	.BAR	695, 697, 699
1348146-0000	.BAR	695, 697, 699
1348147-0000	.BAR	695, 697, 699
1348148-0000	.BAR	695, 697, 699
1348149-0000	.BAR	695, 697, 699
1348150-0000	.BAR	695, 697, 699
1348151-0000	.BAR	695, 697, 699
1348152-0000	.BAR	695, 697, 699
1348153-0000	.BAR	695, 697, 699
1348154-0000	.BAR	695, 697, 699
1348155-0000	.BAR	695, 697, 699
1348169-0000	.PLATE	695, 697, 699
1348182-0000	.LEVER	53
1348183-0000	.ARM	53
1348186-0000	.CLEANING PIPE	383
1348196-0000	.FASTENING PLATE	497
1348206-0000	.LOCK PIN	143
1348233-0000	.GUIDE	655, 669, 671, 673
1348263-0000	.FLANGE	1133
1348294-0000	.CLEANING CUP	143
1348295-0000	.CLAMP	143
1348303-0000	.STUD SCREW	603
1348359-0000	.BRACKET	271, 273
1348381-0000	.CLEANING CUP	143
1348417-0000	.SHAFT	25
1348428-0100	.LOCKING ARM	839, 841
1348429-0000	.LOCKING ARM	865
1348430-0000	.LOCKING ARM	865
1348431-0100	.DRIVE UNIT REAR	881
1348435-0000	.GUIDE	889, 891
1348436-0100	.SPLICING DEVICE	825, 827, 829, 831, 833, 835, 837
1348437-0100	.BRACKET	839, 841
1348438-0000	.MOUNTING PLATE	917
1348455-0100	.YOKE LEFT	469
1348456-0100	.PRESSURE ARM LEFT	469
1348457-0100	.CUTTING ARM LEFT	469
1348458-0100	.PRESSURE JAW LEFT	469
1348459-0200	.CUTTING JAW LEFT	469
1348460-0100	.YOKE RIGHT	469
1348461-0100	.PRESSURE ARM RIGHT	469
1348462-0100	.CUTTING ARM RIGHT	469
1348463-0100	.PRESSURE JAW RIGHT	469
1348464-0200	.CUTTING JAW	469
1348465-0200	.GUIDE	469
1348466-0100	.SCISSOR ARM LINK	469
1348467-0100	.SCISSOR ARM FULCRUM	469
1348468-0000	.FASTENING PLATE	63, 65
1348474-0000	.GASKET	1073, 1075
1348475-0000	.GASKET	1073, 1075
1348483-0000	.SPRING RIGHT	533, 535, 539, 541
1348484-0000	.SPRING LEFT	533, 535, 539, 541
1348492-0100	.TEMPLATE	1095
1348493-0000	.TEMPLATE	1135
1348494-0000	.TEMPLATE	1135
1348501-0000	.GASKET	143, 1073, 1075
1348502-0000	.BEARING HOUSING	483, 485, 503, 505
1348503-0000	.LID	483, 485, 503, 505
1348504-0000	.SLEEVE	483, 485, 503, 505
1348507-0000	.LINK	459

Part No	Description	Page No
1348529-0000	.STRAINER	405
1348530-0000	.LID	405
1348537-0000	.TIMING BELT	607, 609, 611
1348538-0000	.LEVER	641, 643, 663, 665, 667
1348540-0000	.PIVOT AXLE	641, 643, 663, 665, 667
1348543-0000	.CUTTING JAW	489, 491, 493, 509, 511, 513
1348544-0000	.HOLDER	483, 485, 503, 505
1348545-0000	.RAIL	483, 485
1348546-0000	.RAIL	503, 505
1348555-0000	.SEALING RING	1071
1348623-0000	.BOTTOM	613, 615
1348631-0000	.PLATE	641, 643, 663, 665, 667
1348634-0000	.BRACKET	339
1348635-0000	.RUBBER SEAL	709
1348639-0000	.SEALING GASKET	1071
1348645-0000	.ECCENTRIC SHAFT	25
1348646-0000	.ECCENTRIC SHAFT	25
1348647-0000	.FLANGE	25
1348659-0000	.RAIL	675, 677
1348663-0000	.PLATE	709
1348669-0000	.SCREW	479, 499
1348671-0000	.JOINT LEFT	479
1348672-0000	.JOINT RIGHT	499
1348707-0100	.DISPLAY UNIT 12"	309
1348708-0000	.COVER PLATE	315
1348709-0000	.COVER PLATE	315
1348787-0000	.PROTECTION PLATE	237, 239
1348808-0000	.CURVE	559, 561
1348809-0000	.CURVE	559, 561
1348841-0000	.EARTH BAR	1037, 1039
1348843-0000	.EARTH BAR	1037, 1039
1348844-0000	.PROTECTION	1037, 1039
1348845-0000	.MOUNTING PLATE	1037, 1039
1348846-0000	.ROD	991
1348847-0000	.FUSE BOARD	997
1348848-0000	.PLATE	675, 677
1348854-0000	.PLATE	679
1348856-0000	.CARRIER	481
1348857-0000	.CARRIER	501
1348878-0000	.PLATE	691
1348897-0000	.BENDING ROLLER	871
1348898-0000	.GLASS	935
1348902-0000	.BRACKET	943, 945
1348908-0000	.GUIDE	1135
1348910-0000	.PARALLEL PIN	1135
1348912-0000	.FOIL	927
1348913-0000	.FRAME	991
1348914-0000	.BAR	973
1348915-0000	.SPACER	975
1348916-0000	.PLATE	973
1348917-0000	.HOLDER	973
1348918-0000	.DISTANCE	937
1348919-0100	.ELECTRICAL CONNECTION	839, 841
1348920-0000	.CRADLE	679
1348921-0000	.TOOTHED PULLEY	685, 687
1348922-0000	.TOOTHED PULLEY	685, 687
1348953-0000	.FLANGE	95, 97
1348954-0000	.SHAFT	21
1348955-0000	.KNIFE	515, 1073, 1075
1348956-0000	.KNIFE	515, 1073, 1075
1348957-0000	.BRACKET	691
1348958-0000	.COVER PLATE	15, 17
1348963-0000	.SLIDE	691
1348966-0000	.KNIFE	515, 1073, 1075
1348969-0000	.TEMPLATE	1127, 1129
1348971-0000	.SCREW	1127, 1129
1348983-0000	.SPACER	25
1348984-0000	.BRACKET	25
1348985-0000	.PIPE	163
1348986-0000	.PIPE	163
1348987-0000	.FRAME	839, 841
1348990-0000	.SUPPORT	709
1349014-0000	.PAD	801
1349016-0000	.MACHINE BODY	295, 297, 299
1349017-0000	.PLATE	679
1349020-0000	.GLAND FITTING	709
1349028-0000	.LINK HEAD	459
1349087-0000	.DISTRIBUTOR	619, 621
1349088-0000	.MAINARM LEFT	453
1349089-0000	.MAINARM RIGHT	455
1349152-0000	.TIMING BELT	695, 697, 699
1349155-0000	.HOLDER	641, 643
1349157-0000	.CONNECTION	439, 441
1349160-0000	.SPACER	661

Part No	Description	Page No
1349164-0000	.COVER PLATE	265
1349169-0001	.VOLUME FLAP	527, 529
1349169-0002	.VOLUME FLAP	521, 523
1349171-0000	.NUT	461, 463
1349172-0000	.AXLE	461, 463
1349173-0000	.AXLE	461, 463
1349174-0000	.SLEEVE	461, 463
1349177-0000	.AXLE PIN	803
1349178-0000	.AXLE PIN	803
1349179-0000	.FINGER	801
1349181-0000	.TOUCH GUARD	799
1349187-0000	.SPRING	701
1349203-0000	.CUTTING JAW	489, 491, 493, 509, 511, 513
1349206-0000	.HOLDER	483, 485, 503, 505
1349208-0000	.VOLUME SHIM	521, 523, 527, 529, 1073, 1075
1349224-0000	.COVER PLATE	265
1349246-0000	.SIGN	961
1349319-0000	.CANTILEVER	533, 535, 539, 541
1349320-0000	.CATCH	533, 535, 539, 541
1349329-0000	.SUPPORT	691
1349330-0000	.LINK FORK	889, 891
1349331-0000	.LINK FORK	889, 891
1349432-0000	.CATCH	817
1349435-0000	.GUIDE ROD	53
1349438-0000	.GUIDE	471
1349505-0000	.FRAME	161
1349509-0000	.GUIDE	821
1349516-0000	.SHAFT	607, 609, 611
1349517-0000	.TOOTHED PULLEY	607, 609, 611
1349518-0000	.SUPPORT	607, 609, 611
1349519-0000	.ACTIVATOR	607, 609, 611
1349566-0000	.COVER	713
1349568-0000	.CONNECTION BOX	715
1349578-0000	.CUTTING JAW	489, 491, 493, 509, 511, 513
1349579-0000	.CUTTING JAW	489, 491, 493, 509, 511, 513
1349581-0000	.FLAG	803
1349582-0000	.HOLDER	483, 485, 503, 505
1349583-0000	.HOLDER	483, 485, 503, 505
1349584-0000	.BUSHING	483, 485, 489, 491, 493, 503, 505, 509, 511, 513
1349595-0000	.SLEEVE	483, 485, 503, 505
1349596-0000	.CUTTING JAW	489, 491, 493, 509, 511, 513
1349597-0000	.CUTTING JAW	489, 491, 493, 509, 511, 513
1349599-0000	.HOLDER	483, 485, 503, 505
1349600-0000	.HOLDER	483, 485, 503, 505
1349606-0000	.CUTTING RAIL	489, 491, 493, 509, 511, 513
1349608-0000	.HOLDER	161
1349612-0000	.PISTON	483, 485, 503, 505
1349613-0000	.CATCH	489, 491, 493, 509, 511, 513
1349614-0000	.CATCH	483, 485, 503, 505
1349672-0000	.GUIDE	817
1349738-0100	.PRESSURE TEST EQUIPMENT	1095
1349740-0000	.RAIL BRACKET	559, 561
1349741-0000	.CURVE	559, 561
1349742-0000	.ECCENTRIC	559, 561
1349743-0000	.ECCENTRIC	559, 561
1349744-0000	.VOLUME CAM	559, 561
1349745-0000	.AXLE BOLT	559, 561
1349746-0000	.CAM	557
1349747-0000	.CANTILEVER	555
1349748-0000	.CONNECTION CLAMP	555
1349749-0000	.FASTENING BRACKET	549, 551, 553, 555
1349750-0000	.FASTENING BRACKET	549, 551, 553, 555
1349751-0000	.SHAFT	555
1349752-0000	.SHAFT	555
1349757-0000	.HOLDER	555
1349758-0000	.BRACKET	555
1349759-0000	.BRACKET	555
1349760-0000	.BLOCK	557
1349761-0000	.PIPE	87
1349762-0000	.SHAFT	87
1349772-0100	.TPOP PANEL 12"	235
1349773-0000	.PANEL	311
1349774-0100	.PANEL UNIT 12"	309
1349777-0000	.DOOR	311
1349778-0000	.FOIL	311
1349780-0000	.LID	473, 495
1349781-0000	.RULER	471
1349795-0000	.FLOATER	139, 141
1349797-0000	.PRESSURE FLANGE	139, 141
1349806-0000	.GUIDE	669, 671, 673
1349851-0000	.ROLL	55, 57
1349863-0000	.SHAFT	483, 485, 489, 491, 493, 503, 505, 509, 511, 513
1349864-0000	.BRACKET	721
1349867-0000	.FASTENING PLATE	475

Part No	Description	Page No
1349868-0000	.FASTENING PLATE	475, 497
1349869-0000	.LOWER FILLING PIPE	139, 141
1349871-0000	.PRESSURE FLANGE	139, 141
1349872-0000	.MOUNTING PLATE	217, 219
1349912-0000	.PANEL	255
1349913-0000	.BUSHING	1071
1349914-0100	.TEMPLATE FILLING PIPE	1095
1349925-0000	.PLATE	489, 491, 493, 509, 511, 513
1349926-0000	.SPLICING TABLE	801
1349927-0000	.SLIDE	801
1349928-0000	.SHAFT	801
1349963-0000	.CURVE	437
1349965-0000	.CURVE	437
1349972-0000	.SPRING HOUSING	473, 495
1349973-0000	.STRUT	571, 573, 575, 577
1349974-0000	.CONNECTION CLAMP	669, 671, 673
1349980-0000	.SHAFT	483, 485, 489, 491, 493, 503, 505, 509, 511, 513
1349981-0000	.CUTTING RAIL	489, 491, 493, 509, 511, 513
1349983-0000	.LEVER	641, 643, 663, 665, 667
1349984-0000	.LEVER	641, 643
1349985-0000	.SPRING	641, 643
1349986-0000	.ROLLER	803
1349994-0000	.NUT	817
1349997-0000	.CARRIER	641, 643
1349998-0000	.LEVER	641, 643
1350172-0000	.PIN	887
1350182-0200	.WASTE CONVEYOR	585
1350255-0000	.BEARING ROLLER	661
1350256-0000	.PLAIN BEARING	661
1350263-0000	.SPRING RIGHT	533, 535, 539, 541
1350264-0000	.SPRING LEFT	533, 535, 539, 541
1350277-0000	.ROLLER	45, 47, 49
1350279-0000	.ROLLER	45, 47, 49
1350283-0000	.GUIDE ROLLER	45, 47, 49
1350305-0000	.SEALING RING	649
1350421-0000	.NOZZLE	597, 599, 601
1350422-0000	.NOZZLE	597, 599, 601
1350423-0000	.FOLDING BAR	623, 625
1350424-0000	.GUIDE RIGHT	623, 625
1350425-0000	.GUIDE LEFT	623, 625
1350428-0000	.NAIL	607, 609, 611
1350429-0000	.WASHER	607, 609, 611
1350431-0000	.SPACER	681
1350440-0000	.LEVER	591
1350441-0000	.SUPPORT	591
1350497-0000	.ASSEMBLY TOOL	1095
1350498-0000	.ASSEMBLY TOOL	1095
1350520-0000	.ASSEMBLING TOOL	1095
1350543-0000	.AXLE PIN	641, 643, 663, 665, 667
1350564-0000	.CLAMP HUB	641, 643, 661
1350698-0100	.DOOR	985, 987
1350699-0200	.CONTROL RIGHT	981
1350702-0200	.COMPONENT DOOR	981
1350703-0000	.DOOR	991
1350704-0000	.BRACKET	985, 987
1350705-0000	.PIPE	171
1350706-0000	.PIPE	171
1350708-0000	.LOCKING ARM	349
1350721-0000	.STUD SCREW	623, 625, 631, 633
1350774-0000	.PIPE BEND	101
1350777-0000	.BRACKET	817
1350808-0000	.BLOCK	587, 589
1350809-0000	.BLOCK	607, 609, 611
1350810-0000	.PUSHER	607, 609, 611
1350876-0000	.PLATE	15, 17, 31, 33
1350883-0000	.LOCK PLATE	35, 37
1350884-0000	.LOCK PLATE	35, 37
1350885-0000	.CLAMP	143
1350925-0000	.BENDING ROLLER	839, 841
1350954-0000	.MOUNTING PLATE	135, 137
1360149-0000	.SPACER	689
1360318-0000	.CARRIER RULER	489, 491, 493
1360319-0000	.CARRIER RULER	509, 511, 513
1360399-0000	.PIPE HOLDER	1119, 1121
1361560-0000	.PLATE	727
1361918-0200	.WHEEL	585
1361920-0200	.RAIL OUTFEED	659
1361922-0200	.DROP CHUTE VARIANT	585
1361923-0200	.INFEED CONVEYOR VARIANT	585
1361925-0100	.PHOTOCELL UNIT	563
1361929-0200	.START-UP KIT VOLUME CONVERSION	1071
1363288-0100	.FLEXBOX	1013, 1015
1363297-0000	.CABLE LVDS 10M	283, 285
1363455-0000	.LABELS DISKETT	1025

Part No	Description	Page No
1363456-0000	.LABELS FLEXBOX	1025
1363460-0000	.LABELS FLEXBOX	1027
1366777-0101	.RAIL HOLDER TPC21	669, 671, 673
1366779-0000	.DISPLAY	931
1366780-0000	.CIRCUIT BOARD	931
1478000-0000	.HOSE	475, 497
1478001-0000	.HOSE	475, 497
1478005-0000	.LOCKING ARM	349
1478009-0000	.RAIL	675, 677
1478014-0000	.SUPPORT	145, 147
1478015-0000	.SUPPORT	145, 147
1478038-0000	.SUPPORT	191
1478043-0000	.AXLE PIN	179, 183, 185
1478044-0000	.BRACKET	183, 185
1478045-0000	.BRACKET	179, 183, 185
1478046-0000	.SUPPORT	183, 185
1478048-0000	.SLEEVE	413
1478127-0000	.DRIP PLATE	593
1478169-0100	.COVER	337
1478170-0000	.CONTAINER	77, 79
1478171-0000	.BUSHING	413
1478174-0000	.DIAGRAM PEROXIDE SYSTEM	363
1478189-0000	.SUPPORT	607, 609, 611
1478190-0000	.TEMPLATE	1103
1478214-0000	.SLIDE	695, 697, 699
1478215-0000	.SLIDE	695, 697, 699
1478227-0000	.CARRIER	663, 665, 667
1478228-0000	.CAM	663, 665, 667
1478235-0000	.PLATE	655, 669, 671, 673
1478242-0000	.VOLUME CAM	559, 561
1478243-0000	.VOLUME CAM	559, 561
1478279-0000	.BALL BEARING HOUSING	21
1478280-0000	.LID	21
1478302-0000	.AXLE BOLT	649
1478303-0000	.TENSION SPRING	817
1478304-0000	.SPACER BUSHING	815
1478357-0000	.CURVE	559, 561
1478358-0000	.VOLUME FLAP	521, 523, 527, 529
1478359-0000	.ROLLER	31, 33
1478360-0000	.ROLLER	35, 37
1478383-0000	.SWING FRAME	1013, 1015
1478384-0100	.PLINTH	1013, 1015
1478385-0000	.EARTH BAR	1013, 1015
1478386-0000	.SPACER	1013, 1015
1478388-0000	.FRONT GUARD	343
1478389-0000	.COVERING PLATE	345
1478390-0000	.SEALING STRIP	343
1478391-0000	.GASKET	345
1478393-0000	.CATCH	533, 535, 539, 541
1478395-0000	.CATCH	533, 535, 539, 541
1478396-0000	.STOP	533, 535, 539, 541
1478417-0000	.ROLLER	593
1478418-0000	.AXLE BOLT	593
1478419-0000	.DISTANCE PIECE LOCK	53
1478438-0000	.DISTANCE PIECE LOCK	55, 57
1478459-0000	.RAIL BRACKET	559, 561
1478460-0000	.RAIL BRACKET	559, 561
1478461-0000	.CURVE	559, 561
1478474-0000	.PIPE	373
1478475-0000	.CLAMP	373
1478477-0000	.GASKET	373
1478495-0000	.RAIL BRACKET	559, 561
1478497-0000	.VOLUME CAM	559, 561
1478534-0000	.BRACKET	679
1478557-0000	.HATCH	641, 643
1478558-0000	.WASHER	641, 643, 663, 665, 667
1478575-0000	.LEVER BAR	53
1478581-0000	.SCREW	1127, 1129
1478587-0000	.BRACKET	821
1478588-0000	.BRACKET	821
1478589-0000	.BRACKET	821
1478590-0000	.BRACKET	821
1478592-0000	.SCREW	1127, 1129
1478601-0000	.AXLE PIN	183, 185
1478602-0000	.HOUSING	183, 185
1478607-0000	.SHAFT	817
1478610-0000	.COVER	1003
1478611-0000	.COVER	1003
1478612-0000	.COVER	1003
1478649-0200	.CARRIER CUTTING LEFT	469
1478650-0200	.CARRIER CUTTING RIGHT	469
1478651-0100	.CARRIER PRESSURE LEFT	469
1478652-0100	.CARRIER PRESSURE RIGHT	469
1478659-0000	.BRACKET	713

Part No	Description	Page No
1478719-0000	.BRACKET	861, 863
1478724-0000	.ROLLER	53
1478725-0000	.DOWEL	53
1478726-0000	.DOWEL	53
1478727-0000	.DOWEL	53
1478728-0000	.DOWEL	53
1478729-0000	.ECCENTRIC BUSHING	53
1478735-0000	.STEERING	897, 901
1478736-0000	.BLOCK	897, 901
1478738-0000	.BLOCK	861, 863
1478739-0000	.CHUTE	701
1478740-0000	.BRACKET	701
1478753-0000	.SHAFT	641, 643, 661
1478768-0100	.KNIFE	469
1478813-0000	.SPACER	131, 133
1478814-0000	.SENSOR	131, 133
1478819-0000	.SCREW	53
1478826-0100	.GUIDE	839, 841
1478837-0000	.CLEANING PIPE	385
1478841-0000	.ROLLER	35, 37
1478842-0000	.ROLLER	35, 37
1478905-0000	.FLANGE	641, 643, 661
1478907-0000	.SECURING PLATE	895, 899
1478908-0000	.SUPPORT	641, 643, 661
1478925-0000	.HATCH	641, 643, 663, 665, 667
1478926-0000	.GUIDE RIGHT	623, 625
1478927-0000	.GUIDE LEFT	623, 625
1478928-0000	.BUSHING	679
1478966-0000	.LINK	515
1478967-0000	.WASHER	515
1478968-0000	.LINK	515
1484002-0000	.PLATE	489, 491, 493, 509, 511, 513
1484003-0000	.PLATE	489, 491, 493, 509, 511, 513
1484127-0100	.CANTILEVER	545, 547
1484131-0000	.LID	21
1484191-0000	.TEMPLATE	1095
1484196-0100	.PACK COUNTER	711
1484197-0100	.CONNECTION BOX	711
1484198-0100	.LAST POINT DE	585
1484204-0000	.ROLLER	45, 47, 49
1484206-0000	.ROLLER	45, 47, 49
1484210-0200	.OUT FEED DRIVING SYSTEM	659
1484211-0000	.WASHER	515
1484236-0000	.RAIL BRACKET	559, 561
1484237-0000	.RAIL BRACKET	559, 561
1484238-0000	.RAIL BRACKET	559, 561
1484250-0000	.VOLUME CAM	559, 561
1484251-0000	.VOLUME CAM	559, 561
1484252-0000	.VOLUME CAM	559, 561
1484258-0000	.CRADLE	679
1484289-0000	.HATCH	663, 665, 667
1484320-0000	.ROD	479, 499
1484405-0000	.PIPE	199, 201
1484406-0000	.PIPE	199, 201
1484407-0000	.PIPE	199, 201
1484408-0000	.PIPE	199, 201
1484409-0000	.PIPE	199, 201
1484410-0000	.PIPE	199, 201
1484411-0000	.PIPE	199, 201
1484412-0000	.FRAME SECTION,UPPER	173
1484413-0000	.BRACKET	77, 79
1484414-0000	.PLATE	199, 201
1484415-0000	.PLATE	199, 201
1484416-0000	.BRACKET	199, 201
1484417-0000	.PNEUMATIC DIAGRAM	205, 207, 209, 211, 363
1484418-0000	.PLATE	199, 201
1484419-0000	.PIPE	199, 201
1484420-0000	.PIPE	199, 201
1484422-0000	.PIPE	199, 201
1484423-0000	.PIPE	199, 201
1484424-0000	.PIPE	199, 201
1484425-0000	.PIPE	199, 201
1484426-0000	.PIPE	199, 201
1484428-0000	.PLASTIC PLUG	169
1484447-0000	.BALL BEARING	641, 643, 661
1484448-0000	.BEARING ROLLER	641, 643, 661
1484509-0000	.TEMPLATE	1109
1484620-0000	.SHAFT	685, 687
1484636-0000	.HOLDER	63, 65
1484637-0000	.INSULATING PLATE	63, 65
1484717-0000	.PLATE	943, 945
1484724-0000	.HUB	795
1484745-0100	.WEB GUIDE	873, 889, 891
1484750-0000	.BRACKET	875

Part No	Description	Page No
1484823-0000	.PLATE	19
1484849-0000	.TUBE FLUSHING DEVICE	555
1484865-0000	.VOLUME FLAP	527, 529
1484866-0000	.VOLUME FLAP	521, 523
1484867-0000	.VOLUME FLAP	521, 523
1484868-0000	.VOLUME FLAP	527, 529
1484877-0000	.CLEANING PIPE	385
1484884-0000	.PLATE	183, 185
1487023-0000	.PIPE	751
1487029-0000	.REGULATOR BODY	131, 133
1487030-0000	.REGULATOR BODY	131, 133
1487038-0100	.OUTFEED WHEEL	661
1487114-0000	.BLOCK	77, 79
1487158-0100	.FLAP HEATER VARIANT	585
1487159-0000	.CARRIER	663, 665, 667
1487169-0000	.PNEUMATIC DIAGRAM	205, 207, 209, 211, 363
1487177-0000	.GUIDE	669, 671, 673
1487187-0100	.YOKE CARRIAGE	423
1487188-0100	.JAW CARRIAGE	423
1487189-0200	.YOKE CONNECTION ROD	423
1487190-0200	.JAW CONNECTION ROD	423
1487191-0100	.MAIN ARMS SHAFT	423
1487192-0200	.BELLOWS	423
1487224-0000	.PIPE	101
1487225-0000	.BRACKET	441
1487235-0000	.TEMPLATE	1109
1487236-0000	.TEMPLATE	1109
1487239-0000	.PIPE	385
1487240-0000	.PIPE	383
1487246-0000	.BRACKET	385
1487261-0000	.SEAL RING	87
1487263-0000	.BRACKET	87
1487301-0100	.LINK SYSTEM GASKET	423
1487338-0100	.SUPPORT LEVEL DETECTOR	269
1487345-0100	.SAFETY CAM	545, 547
1487348-0000	.PROTECTION PLATE	295, 297, 299
1487374-0000	.FILLING PIPE	139, 141
1487376-0000	.LOWER FILLING PIPE	139, 141
1487379-0000	.LOWER FILLING PIPE	139, 141
1487418-0000	.RAIL	675, 677
1487419-0000	.SLIDE	669, 671, 673
1487428-0000	.INDUCTOR	63, 65
1487484-0000	.RAIL	669, 671, 673
1487485-0000	.BRACKET	669, 671, 673
1487486-0000	.SPACER	675, 677
1487490-0000	.RAIL	669, 671, 673
1487491-0000	.HOLDER	135, 137
1487493-0100	.DRAINING	251
1487501-0000	.BRACKET	385
1487502-0100	.AIR TANK	333
1487504-0000	.WASHER	559, 561
1487505-0001	.WASHER	559, 561
1487505-0002	.WASHER	559, 561
1487564-0000	.PNEUMATIC DIAGRAM	319, 363
1487577-0000	.PNEUMATIC DIAGRAM	319, 363
1487594-0000	.SLEEVE	559, 561
1487601-0000	.FRAME	177
1487612-0000	.PIPE	127, 129
1487618-0000	.CUTTING JAW	489, 491, 493, 509, 511, 513
1487619-0000	.PLATE	489, 491, 493, 509, 511, 513
1487620-0000	.CURVE	437
1487621-0000	.SLEEVE	559, 561
1487622-0000	.HOLDER	483, 485, 503, 505
1487624-0000	.VOLUME FLAP	521, 523
1487625-0000	.VOLUME FLAP	527, 529
1487626-0000	.VOLUME BULGE	521, 523, 527, 529
1487627-0000	.VOLUME SHIM	521, 523, 527, 529, 1073, 1075
1487628-0000	.WEDGE	521, 523, 527, 529
1487639-0000	.HOLDER	489, 491, 493, 509, 511, 513
1487684-0000	.RAIL	669, 671, 673
1487686-0000	.WELDED CABINET	985, 987
1487701-0000	.HOLDER	135, 137
1487702-0000	.PIPE	135, 137
1487703-0000	.PIPE	135, 137
1487706-0000	.LOCKING PIN LOWER	139, 141
1487712-0000	.LEG	301, 963
1487727-0000	.RAIL	669, 671, 673
1487738-0000	.FLAP	613, 615
1487739-0000	.FLAP	613, 615
1487743-0100	.BENDING ROLLER BRACKET	173
1487748-0100	.BENDING ROLLER	177
1487759-0000	.RULER	15, 17
1487760-0000	.PAPER GUIDE	177
1487761-0000	.CABLE SERIAL	283, 285

Part No	Description	Page No
1487766-0000	.AXLE PIN	855
1487813-0000	.PNEUMATIC DIAGRAM	363
1487814-0000	.PNEUMATIC DIAGRAM	363
1487821-0000	.SPACER	593
1487825-0100	.RAIL WHEEL	639
1487826-0000	.CONNECTION BOX	217, 219
1487850-0000	.COVER PLATE	283, 285
1487852-0100	.PAPER GUIDE	177
1487854-0000	.INSERT	283, 285
1487922-0000	.FOLDING DEVICE	591
1487923-0000	.FOLDING DEVICE	591
1487924-0000	.PLATE	179, 183, 185
1487925-0000	.PLATE	179, 183, 185
1487926-0000	.INSERT	283, 285
1487927-0200	.FLAP HEATER BODY	585
1487929-0000	.SPACER	681
1488007-0000	.WASHER	931
1488009-0100	.PANEL	929
1490031-0000	.PLATE	607, 609, 611
1490032-0000	.PUSHER	607, 609, 611
1490033-0000	.SLIDE	695, 697, 699
1490034-0000	.SLIDE	695, 697, 699
1490035-0000	.BAR	695, 697, 699
1490036-0000	.BAR	695, 697, 699
1490039-0000	.NOZZLE	597, 599, 601
1490043-0100	.BUTTERFLY VALVE	85
1490074-0000	.PNEUMATIC DIAGRAM	363
1490085-0000	.GEAR BOX	641, 643, 661
1490112-0100	.OUTFEED CONVEYOR	639, 659
1490177-0000	.LOWER FILLING PIPE	139, 141
1490185-0000	.SPACER	807, 809
1490186-0000	.LINK FORK	889, 891
1490187-0000	.ROCKER ARM	807, 809
1490246-0000	.ROLLER	193
1490291-0000	.PLATE	193
1490417-0000	.CANTILEVER	549, 551, 553
1490418-0000	.CLAMP	549, 551, 553
1490420-0000	.RAIL BRACKET	559, 561
1490438-0000	.ROLLER	35, 37
1490439-0000	.ROLLER	35, 37
1490440-0000	.ROLLER	35, 37
1490441-0000	.ROLLER	35, 37
1490442-0000	.STUD SCREW 8X20	641, 643, 661
1490733-0000	.BRACKET	143
1490738-0000	.BRIDGE CONLECK Q10	1021
1490742-0000	.EARTH BAR	1037, 1039
1490762-0000	.ROLLER	59, 61
1490764-0000	.ROLLER	55, 57
1490765-0000	.ROLLER	55, 57
1490768-0000	.ROLLER	55, 57
1490804-0000	.HOLDER	799
1490806-0100	.HEATING DEVICE	793
1490933-0000	.COUNTER ROLLER	55, 57
1490964-0000	.COVER	229
1498029-0000	.PIN	607, 609, 611
1498036-0000	.PLATE	649
1498041-0000	.FORMING RING	35, 37
1498047-0000	.SEALING BLOCK	799
1498050-0000	.BRACKET	295, 297, 299
1498057-0000	.INDUCTOR	63, 65
1498058-0000	.INSULATING PLATE	63, 65
1498064-0000	.BLOCK	649
1498066-0000	.SCREW	649
1498067-0000	.PLATE	649
1498068-0000	.SEAL RING	685, 687
1498107-0100	.TAB FOLDER	183, 185
1498117-0000	.TEMPLATE	1103
1498143-0000	.LOCKING RING	139, 141
1498146-0000	.NOZZLE	597, 599, 601
1498147-0000	.NOZZLE	597, 599, 601
1498149-0000	.TEMPLATE	1111
1498150-0000	.TEMPLATE	1111
1498151-0000	.TEMPLATE	1111
1498161-0000	.SUPPORT	623, 625
1498163-0000	.SPACER	597, 599, 601
1498167-0000	.BRACKET	889, 891
1498171-0000	.PIPE	85
1498184-0000	.RULER	15, 17
1498185-0000	.BRACKET	15, 17
1498276-0100	.TAB FOLDING AND PAPER GUIDE	177
1498281-0000	.REGULATOR BODY	131, 133
1498282-0003	.NOZZLE	135, 137
1498282-0004	.NOZZLE	135, 137
1498282-0005	.NOZZLE	135, 137

Part No	Description	Page No
1498282-0006	.NOZZLE	135, 137
1498391-0100	.TAB FOLDER	183, 185
1498400-0100	.TEMPLATES	1095
1498528-0000	.TIMING BELT	661
1498529-0000	.TIMING BELT	641, 643, 661
1498531-0000	.PLATE	183, 185
1498620-0000	.PULLEY	641, 643, 661
1498621-0000	.SPRING	139, 141
1498746-0000	.PLUG	107
1498827-0000	.FOLDING BAR	631, 633
1498828-0000	.FOLDING BAR	631, 633
1498926-0000	.LINK FORK	889, 891
1498986-0000	.SHAFT	549, 551, 553
1498987-0000	.BRACKET	549, 551, 553
1498988-0000	.COLUMN	549, 551, 553
1499043-0000	.BRACKET	641, 643, 661
1499047-0000	.BRACKET	873
1499048-0000	.FOLDING FLAP CAM	571, 573, 575, 577
1499052-0000	.REGULATOR BODY	131, 133
1499053-0000	.FOLDING FLAP BAR	571, 573, 575, 577
1499059-0000	.TIMING BELT	641, 643, 661
1499064-0000	.PULLEY	641, 643, 661
1499071-0000	.SPACER	623, 625, 631, 633
1499072-0000	.SPACER	631, 633
1499094-0000	.SPACER SCREW	631, 633
1499103-0000	.TIE ROD	591
1499114-0000	.LOCKING RING	139, 141
1499135-0000	.GUIDE	695, 697, 699
1499136-0000	.GUIDE	695, 697, 699
1499139-0000	.BLOCK	587, 589
1499140-0000	.SPACER	681
1499141-0000	.FLAP	613, 615
1499142-0000	.FLAP	613, 615
1499143-0000	.PLATE	607, 609, 611
1499144-0000	.PUSHER	607, 609, 611
1499150-0000	.RAIL	631, 633
1499151-0000	.RAIL	631, 633
1499181-0000	.TEMPLATE	1109
1499183-0000	.TEMPLATE	1109
1499208-0000	.BRACKET	187
1499400-0000	.GUIDE	695, 697, 699
1499401-0000	.GUIDE	695, 697, 699
1499402-0000	.SPACER	631, 633
1499405-0000	.DIAGRAM	363
1499411-0000	.COUNTER ROLLER	55, 57
1499413-0000	.HOLDER	655, 669, 671, 673
1499417-0000	.BAR	695, 697, 699
1499418-0000	.SLIDE	695, 697, 699
1499422-0000	.SLIDE	695, 697, 699
1499423-0000	.BAR	695, 697, 699
1499426-0000	.GUIDE	695, 697, 699
1499427-0000	.GUIDE	695, 697, 699
1499444-0000	.NOZZLE	597, 599, 601
1499445-0000	.NOZZLE	597, 599, 601
1499446-0000	.NOZZLE	597, 599, 601
1499454-0000	.LOWER FILLING PIPE	139, 141
1499455-0000	.PRESSURE FLANGE	139, 141
1499475-0000	.HOLDER	695, 697, 699
1499476-0000	.HOLDER	695, 697, 699
1499567-0000	.FLANGE	871
1499580-0000	.LINK FORK	889, 891
1499594-0000	.VOLUME CAM	559, 561
1499595-0000	.PLATE	857
1499599-0000	.PLATE	183, 185
1499611-0000	.SPRING	883
1499634-0000	.INTERNAL PIPE	85
1499635-0000	.LEVER	587, 589
1499636-0000	.ROLLER	55, 57
1499675-0000	.VOLUME BULGE	521, 523, 527, 529
1499678-0000	.ROLLER	549, 551, 553
1499679-0000	.LOWER FORMING RING	55, 57
1499765-0000	.AXLE LINK	591
1499776-0000	.WATER DIAGRAM	775, 777
1499786-0000	.BRACKET	747
1499883-0000	.FILLING PIPE	139, 141
1499901-0000	.VOLUME FLAP	521, 523
1499902-0000	.VOLUME FLAP	527, 529
1499944-0000	.RING	59, 61
1511004-0000	.SIGN LANGUAGEINDEPENDENT	731
1511005-0000	.ROLLER	45, 47, 49
1511031-0000	.ROLLER	45, 47, 49
1511032-0000	.ROLLER	45, 47, 49
1511033-0000	.ROLLER	45, 47, 49
1511034-0000	.UPPER FORMING RING	45, 47, 49

Part No	Description	Page No
1511063-0000	.CUTTING JAW	489, 491, 493, 509, 511, 513
1511064-0000	.HOLDER	483, 485, 503, 505
1511067-0000	.CARRIER RULER	489, 491, 493
1511068-0000	.CURVE	437
1511188-0000	.CARRIER RULER	509, 511, 513
1511225-0000	.CARRIER	663, 665, 667
1511244-0000	.COVER	295, 297, 299
1511245-0000	.WASHER	295, 297, 299
1511250-0000	.VOLUME FLAP	521, 523
1511251-0000	.VOLUME FLAP	527, 529
1511253-0000	.VOLUME SHIM	521, 523, 527, 529, 1073, 1075
1511254-0000	.BUSHING	521, 523, 527, 529
1511331-0000	.TOUCH GUARD	237, 239
1511332-0000	.GLAND,INSERT, NORMAL E154G 4X5	135, 137
1511488-0000	.INDUCTOR	63, 65
1511489-0000	.INSULATING PLATE	63, 65
1511503-0000	.PIPE	99
1511524-0000	.HOLDER	63, 65
1511527-0000	.SPACER SCREW	631, 633
1511529-0000	.REGULATOR BODY	131, 133
1511530-0000	.SHUTTER	131, 133
1511531-0000	.REGULATOR BODY	131, 133
1511556-0000	.SET SCREW	533, 535, 539, 541
1511558-0000	.BOTTOM	613, 615
1511600-0000	.SPACER	131, 133
1511615-0000	.BRACKET	729
1511616-0000	.BRACKET	729
1511629-0000	.WATER DIAGRAM	363
1511680-0000	.TUBE	729
1511690-0000	.LACE	427, 429
1511692-0000	.SPACER	597, 599, 601
1511697-0000	.FOLDING FLAP	489, 491, 493, 509, 511, 513
1511698-0000	.FOLDING FLAP	489, 491, 493, 509, 511, 513
1511699-0000	.FOLDING FLAP	489, 491, 493, 509, 511, 513
1511700-0000	.FOLDING FLAP	489, 491, 493, 509, 511, 513
1511703-0000	.BENDING ROLLER	15, 17
1511704-0000	.LID	15, 17
1511705-0000	.FLANGE	15, 17
1511706-0000	.FLANGE	15, 17
1511718-0000	.FORMING RING	35, 37
1511853-0000	.ROLLER	35, 37
1511854-0000	.ROLLER	35, 37
1511855-0000	.ROLLER	35, 37
1511856-0000	.ROLLER	35, 37
1512111-0000	.LOCK PLATE	35, 37
1512124-0000	.TEMPLATE	1127, 1129
1512125-0000	.SPACER RING	427, 429
1512173-0000	.PLATE	203
1512267-0000	.ECCENTRIC BUSHING	855, 883
1512299-0000	.SPRAY NOZZLE DOME	85
1512300-0000	.SPRAY NOZZLE NUT	85
1512301-0000	.SPACER	85
1512302-0000	.SPRAY NOZZLE GASKET	85
1512307-0000	.GUIDE	695, 697, 699
1512308-0000	.GUIDE	695, 697, 699
1512315-0000	.ARM RIGHT	499
1512316-0000	.ARM LEFT	479
1512318-0100	.RAIL OUTFEED	639
1512319-0000	.SPRAY NOZZLE BODY	85
1512320-0000	.PIPE	85
1512322-0000	.COPPER BRAID	1037, 1039
1512323-0000	.RAIL BRACKET	559, 561
1512324-0000	.CURVE	559, 561
1512325-0000	.VOLUME CAM	559, 561
1512327-0100	.TEMPLATE TUBE FORMING	1095
1512335-0000	.PIPE	165, 167
1512336-0000	.PIPE	165, 167
1512337-0000	.PIPE	165, 167
1512339-0100	.PHOTOCELL OUTFEED	639, 659
1512405-0000	.NUT	85
1512409-0000	.SPRAY NOZZLE INJECTOR	85
1512410-0000	.SPRAY NOZZLE PLUG	85
1512484-0000	.ROLLER	549, 551, 553
1512485-0000	.SHAFT	549, 551, 553
1512526-0000	.STEERING	875
1512579-0000	.BRACKET	533, 535, 539, 541
1512670-0000	.GASKET	1073, 1075
1512835-0000	.EXTERNAL PIPE	85
1512836-0000	.LID	85
1517053-0000	.SPRING	139, 141
1517055-0000	.MOTOR COVER	701
1517056-0000	.DRIVE SHAFT	701
1517090-0100	.WEB GUIDE	839, 841
1517178-0000	.PRESSURE FLANGE	139, 141

Part No	Description	Page No
1517179-0000	.PRESSURE FLANGE	139, 141
1517180-0000	.FLOAT	139, 141
1517229-0000	.PLATE	319
1517242-0000	.GUIDE	695, 697, 699
1517243-0000	.GUIDE	695, 697, 699
1517244-0000	.GUIDE	695, 697, 699
1517245-0000	.GUIDE	695, 697, 699
1517254-0000	.LOWER FILLING PIPE	139, 141
1517295-0000	.SHEET	783
1517298-0100	.INFEED CONVEYOR	585
1517299-0100	.INFEED CONVEYOR LONG	683
1517300-0100	.INFEED CONVEYOR SHORT	683
1517304-0000	.PROTECTION	157
1517305-0000	.PROTECTION	157
1517321-0100	.DROP CHUTE CRADLE	585
1517482-0000	.TUBE	99
1517483-0000	.NET	99
1517503-0000	.HYDRAULIC DIAGRAM	251, 363
1517524-0000	.GUIDE	695, 697, 699
1517525-0000	.GUIDE	695, 697, 699
1517526-0000	.GUIDE	695, 697, 699
1517527-0000	.GUIDE	695, 697, 699
1517557-0000	.RING	59, 61
1517605-0000	.COVER TOP	883
1517606-0000	.COVER BOTTOM	883
1517607-0000	.TEMPLATE TUBE FORMING	1127, 1129
1517608-0000	.TEMPLATE TUBE FORMING	1127, 1129
1517707-0000	.BRACKET	161
1517987-0000	.TEMPLATE	1111
1519089-0000	.GUIDE	695, 697, 699
1519090-0000	.GUIDE	695, 697, 699
1519091-0000	.MAIN CAM	437
1519093-0000	.GUIDE	695, 697, 699
1519094-0000	.GUIDE	695, 697, 699
1519099-0000	.BRACKET	433
1519103-0000	.FASTENING PLATE	427, 429
1519104-0000	.SPACER	427, 429
1519105-0000	.SHAFT	427, 429
1519106-0000	.TOOTHED PULLY	427, 429
1519107-0000	.SPACER RING	427, 429
1519108-0000	.RING	443, 445
1519109-0000	.SHAFT	443, 445
1519110-0000	.LINK	445
1519486-0000	.FILTER HOUSE	77, 79
1519540-0000	.RAIL	669, 671, 673
1519766-0000	.BENDING ROLLER	855, 883
1519767-0000	.SHAFT	855
1519769-0000	.FOLDING BAR	631, 633
1519770-0000	.FOLDING BAR	631, 633
1519772-0000	.AXLE PIN	883
1519773-0000	.ROLLER	21, 25
1519991-0000	.CURVE	437
1520167-0000	.INDUCTOR	483, 485, 503, 505, 1073, 1075
1523042-0000	.SHAFT	855
1523043-0000	.SHAFT	855
1523070-0000	.LINK	443
1523071-0000	.MOTOR PLATE	425
1523072-0000	.TOOTHED PULLY	425
1523073-0000	.SPACER	425
1523074-0000	.TOOTHED PULLY	427, 429
1523080-0000	.HOSE	335
1523085-0000	.SPACER	433
1523088-0000	.SLEEVE	427, 429
1523089-0000	.PLATE	549, 551, 553
1523090-0000	.PLATE	549, 551, 553
1523091-0000	.TEMPLATE	1103
1523092-0000	.BUSBAR	483, 485
1523093-0000	.BUSBAR	503, 505
1523094-0000	.FLAP	613, 615
1523095-0000	.FLAP	613, 615
1523096-0000	.FLAP	613, 615
1523097-0000	.FOLDING FLAP CAM	571, 573
1523098-0000	.FOLDING FLAP CAM	575, 577
1523099-0000	.BRACKET	471
1523149-0000	.SPRING BRACKET	855
1523162-0000	.SCREW	487, 507
1523216-0100	.LEVEL CONTROL DEVICE	267
1523497-0000	.SPACER	597, 599, 601
1523498-0000	.SPACER	623, 625
1523777-0100	.STAIR CASE	387
1523780-0000	.SHAFT	389, 393
1523781-0000	.CHECKER PLATE	389
1523782-0000	.CHECKER PLATE	389
1523783-0000	.TOE PLATE	389

Part No	Description	Page No
1523784-0000	.TOE PLATE	389
1523793-0000	.TOE PLATE	393
1523882-0000	.RAIL	669, 671, 673
1524035-0000	.VOLUME BULGE	521, 523, 527, 529, 613, 615
1524167-0000	.CORNER STRIP	393, 395
1524168-0000	.CORNER STRIP	393
1524171-0000	.FRAME	395
1524172-0000	.CHECKER PLATE	395
1524173-0000	.CHECKER PLATE	395
1524174-0000	.HOOK	395
1524175-0000	.LEG	395
1524176-0000	.CLAMP	395
1524177-0000	.TOE PLATE	395
1524178-0000	.TOE PLATE	395
1524179-0000	.TOE PLATE	395
1524181-0000	.PIN	395
1524182-0000	.RAILING	395
1524185-0000	.EXTENSION PIECE	395, 397
1524186-0000	.PROFILE	397
1524187-0000	.PROFILE	397
1524188-0000	.STAIR	397
1524190-0000	.BRACKET	397
1524191-0000	.RIM	397
1524192-0000	.RAILING	397
1524193-0000	.RAILING	397
1524224-0000	.INDUCTOR	63, 65
1524225-0000	.INSULATING PLATE	63, 65
1524273-0000	.THERMOCOUPLE PROTECTION	15, 17
1524308-0000	.COUNTER ROLLER	55, 57
1524348-0000	.PIPE	199, 201
1524349-0000	.GUIDE	669, 671, 673
1524372-0000	.SHAFT	883
1524840-0000	.TEMPLATE	1111
1524845-0100	.BACK PLATFORM	387
1524847-0000	.PLATFORM	393
1524848-0000	.PLATFORM	393
1524850-0000	.CHECKER PLATE	393
1524851-0000	.CHECKER PLATE	393
1524854-0000	.BEAM	393
1524855-0000	.TOE PLATE	393
1524856-0000	.TOE PLATE	393
1524857-0000	.TOE PLATE	393
1524859-0000	.RAILING	393
1524860-0000	.RAILING	393
1524861-0000	.RAILING	393
1524864-0000	.RAILING	395
1524866-0100	.FRONT PLATFORM	387
1524867-0000	.PLATFORM	389
1524868-0000	.PLATFORM	389
1524869-0000	.TOE PLATE	389
1524870-0000	.RAILING	389
1524871-0100	.PLATFORM	235
1524873-0000	.PIPE	163
1532254-0000	.SPACER	681
1532255-0000	.FLAP	613, 615
1532257-0000	.SLIDE	695, 697, 699
1532258-0000	.SLIDE	695, 697, 699
1532261-0000	.GUIDE	695, 697, 699
1532262-0000	.GUIDE	695, 697, 699
1532263-0000	.GUIDE	695, 697, 699
1532264-0000	.GUIDE	695, 697, 699
1532266-0000	.BLOCK	587, 589
1532267-0000	.SUPPORT	591
1532268-0000	.AXLE LINK	591
1532269-0000	.TIE ROD	591
1532270-0000	.SUPPORT	591
1532275-0000	.FOLDING BAR	631, 633
1532276-0000	.FOLDING BAR	631, 633
1532279-0000	.RAIL BRACKET	559, 561
1532280-0000	.RAIL	631, 633
1532281-0000	.RAIL	631, 633
1532282-0000	.CURVE	559, 561
1532283-0000	.VOLUME CAM	559, 561
1532284-0000	.NOZZLE	597, 599, 601
1532285-0000	.NOZZLE	597, 599, 601
1532286-0000	.NOZZLE	597, 599, 601
1532287-0000	.VOLUME FLAP	521, 523, 527, 529
1532289-0000	.PUSHER	607, 609, 611
1532290-0000	.PUSHER	607, 609, 611
1532291-0000	.PLATE	607, 609, 611
1532292-0000	.SLIDE	669, 671, 673
1532293-0000	.VOLUME SHIM	521, 523, 527, 529, 1073, 1075
1532294-0000	.RAIL	669, 671, 673
1532296-0000	.RAIL	669, 671, 673

Part No	Description	Page No
1532297-0000	.FLAP	613, 615
1532298-0000	.FLAP	613, 615
1532299-0000	.TEMPLATE	1111
1532467-0000	.BRACKET	471
1532503-0000	.LOCKING DEVICE	127, 129
1532582-0000	.COUNTER ROLLER	55, 57
1532982-0000	.ROLLER	35, 37
1532983-0000	.ROLLER	35, 37
1532984-0000	.ROLLER	45, 47, 49
1532985-0000	.ROLLER	45, 47, 49
1532986-0000	.ROLLER	45, 47, 49
1532987-0000	.ROLLER	45, 47, 49
1532988-0000	.ROLLER	45, 47, 49
1532989-0000	.ROLLER	45, 47, 49
1532990-0000	.GUIDE ROLLER	45, 47, 49
1532991-0000	.INSULATING PLATE	63, 65
1532992-0000	.LS-INDUCTOR	63, 65
1532993-0000	.TEMPLATE TUBE FORMING	1127, 1129
1532995-0000	.PRESSURE FLANGE	139, 141
1532996-0000	.LOWER FILLING PIPE	139, 141
1532998-0000	.TEMPLATE	1103
1535006-0000	.CABLE	15, 17
1535009-0000	.SUPPORT BLOCK	15, 17
1535010-0000	.SUPPORT BLOCK	15, 17
1535024-0000	.HOLDER	63, 65
1535036-0000	.PLATE	393
1535038-0000	.CHECKER PLATE	393
1535042-0000	.WASHER	393
1535043-0000	.PLATFORM	393
1538031-0000	.FILLING PIPE	139, 141
1538032-0000	.CUTTING TABLE	895, 899
1538033-0000	.BRACKET	895, 899
1538034-0000	.RULER	895, 899
1538035-0000	.KNIFE HOLDER	895, 899
1538038-0000	.KNIFE	895, 899
1538048-0000	.PIPE	161
1538049-0000	.PIPE	161
1538062-0000	.DOLLY	887
1538064-0000	.SWITCH OVER PIPE	153
1538066-0000	.PROTECTION	157
1538083-0000	.HOLDER	153
1538088-0000	.LOWER FILLING PIPE	139, 141
1538250-0000	.HOLDER	483, 485, 503, 505
1538251-0000	.UPPER FORMING RING	45, 47, 49
1538253-0000	.CUTTING JAW	489, 491, 493, 509, 511, 513
1538256-0000	.CARRIER RULER	489, 491, 493
1538263-0000	.RAIL BRACKET	559, 561
1538264-0000	.CURVE	559, 561
1538265-0000	.VOLUME CAM	559, 561
1538266-0000	.LOCKING PLATE	45, 47, 49
1538327-0000	.PRESSURE FLANGE	139, 141
1538510-0000	.FILLING PIPE LOWER	139, 141
1538597-0000	.SHAFT	867, 1153
1538645-0000	.LINK FORK	889, 891
1538646-0000	.CURVE	437
1538751-0000	.PIPE	457
1538752-0000	.BRACKET	457
1538769-0000	.CARRIER RULER	509, 511, 513
1538870-0100	.PLATFORM	387
1539116-0000	.CANTILEVER	549, 551, 553
1539117-0000	.PLATE	549, 551, 553
1539172-0000	.CANTILEVER	533, 535, 539, 541
1539329-0000	.ANGLE	895, 899
1539330-0000	.BRACKET	895, 899
1539721-0000	.TEMPLATE	1095
1539722-0000	.TEMPLATE	1095
1539761-0000	.TEMPLATE	1095
1539765-0000	.TEMPLATE	1095
1539767-0000	.YOKE	441
1539775-0000	.RAIL	887
1539778-0000	.PRESSURE RAIL	887
1539866-0000	.CURVE	437
1539869-0000	.RAIL	669, 671, 673
1539870-0000	.RAIL	669, 671, 673
1539871-0000	.SPACER	623, 625, 631, 633
1539872-0000	.PUSHER	607, 609, 611
1539873-0000	.SPACER	631, 633
1539874-0000	.SLIDE	695, 697, 699
1539875-0000	.SLIDE	695, 697, 699
1539876-0000	.PLATE	695, 697, 699
1539877-0000	.BAR	695, 697, 699
1539878-0000	.BAR	695, 697, 699
1539879-0000	.GUIDE	695, 697, 699
1539880-0000	.GUIDE	695, 697, 699

Part No	Description	Page No
1539881-0000	.FOLDING BAR	631, 633
1539882-0000	.FOLDING BAR	631, 633
1539886-0000	.CANTILEVER	533, 535, 539, 541
1539887-0000	.CATCH	533, 535, 539, 541
1539892-0000	.TEMPLATE	1103
1539900-0000	.RIGHT UPPER GUIDE	623, 625
1539902-0000	.VOLUME SHIM	521, 523, 527, 529, 1073, 1075
1539903-0000	.VOLUME BULGE	521, 523, 527, 529
1539904-0000	.VOLUME FLAP	521, 523
1539986-0000	.SUPPORT	457
1539987-0000	.YOKE	439
1548001-0000	.SIGN	203
1548157-0000	.CARRIAGE	441
1548199-0000	.WASHER	851
1548211-0000	.RAILING	393
1548312-0000	.PRESSURE FLANGE	139, 141
1548313-0000	.FORCE LIMITING DEVICE	461, 463
1548321-0000	.PRESSURE FLANGE	139, 141
1548337-0000	.AIR PIPE	127, 129
1548364-0000	.LOCKING PIN	139, 141
1548519-0000	.GUIDE	879
1548520-0000	.BRACKET	895, 899
1548522-0000	.PLATE	879
1548531-0000	.ROLLER	45, 47, 49
1548540-0000	.ROLLER	45, 47, 49
1548541-0000	.ROLLER	45, 47, 49
1548542-0000	.ROLLER	45, 47, 49
1548580-0000	.WASHER	889, 891
1548940-0000	.SPRING	487, 507
1549109-0000	.ROLLER	45, 47, 49
1549110-0000	.ROLLER	45, 47, 49
1549111-0000	.ROLLER	45, 47, 49
1549112-0000	.ROLLER	45, 47, 49
1549113-0000	.ROLLER	45, 47, 49
1549114-0000	.ROLLER	45, 47, 49
1549115-0000	.ROLLER	45, 47, 49
1549208-0100	.HYDRAULIC VALVE	257
1549209-0100	.TANK	257
1549210-0100	.PUMP	257
1549211-0100	.HYDRAULIC UNIT	251
1549378-0000	.SPRING	481, 501
1549379-0000	.TEMPLATE	1127, 1129
1549402-0000	.SHAFT	895, 899
1549406-0000	.PACKAGE GUIDE	623, 625
1549411-0000	.PACKAGE GUIDE	623, 625
1549526-0000	.CONTAINER	85
1549600-0000	.SUPPORT ROLLER	549, 551, 553
1549614-0000	.LEFT UPPER GUIDE	623, 625
1549615-0000	.SPRING	663, 665, 667
1549616-0000	.CARRIER	663, 665, 667
1549619-0000	.CARRIER	487
1549802-0000	.CARRIER	507
1549803-0000	.BEARING HOUSING	489, 491, 493, 509, 511, 513
1549804-0000	.BEARING HOUSING	489, 491, 493, 509, 511, 513
1549805-0000	.BEARING HOUSING	489, 491, 493, 509, 511, 513
1549806-0000	.BEARING HOUSING	489, 491, 493, 509, 511, 513
1549807-0000	.BEARING HOUSING	489, 491, 493, 509, 511, 513
1549808-0000	.BEARING HOUSING	489, 491, 493, 509, 511, 513
1549809-0000	.BEARING HOUSING	489, 491, 493, 509, 511, 513
1549940-0000	.PUSHER	607, 609, 611
1558008-0000	.BLOCK	587, 589
1558020-0000	.ROD	587, 589
1558123-0000	.VOLUME FLAP	527, 529
1558272-0000	.DOOR	943
1558273-0000	.DOOR	945
1558274-0000	.HATCH	953
1558275-0000	.FASTENING PLATE	953
1558276-0000	.BRACKET	941
1558304-0000	.TEMPLATE	1111
1558396-0000	.SWITCH BRACKET	87
1558471-0000	.BRACKET	839, 841
1558700-0000	.CARRIER	695, 697, 699
1558701-0000	.BUSHING	521, 523, 527, 529
1558713-0000	.SPACER SCREW	631, 633
1558728-0000	.VOLUME BULGE	613, 615
1558732-0000	.TEMPLATE	1111
1558733-0000	.VOLUME BULGE	489, 491, 493, 509, 511, 513
1558734-0000	.VOLUME BULGE	483, 485, 503, 505
1558735-0000	.SPACER	623, 625, 631, 633
1558736-0000	.SPACER	623, 625
1558795-0000	.RAILING	393
1558817-0000	.VOLUME BULGE	521, 523, 527, 529
1558819-0000	.RAIL	483, 485
1558820-0000	.RAIL	503, 505

Part No	Description	Page No
1558821-0000	.VOLUME BULGE	607, 609, 611
1558864-0000	.CARRIER	695, 697, 699
1558891-0000	.PIPE	153
1558909-0000	.HOOK	15, 17
1558910-0000	.SPACER	623, 625
1558932-0100	.TOP SECTION	617
1558933-0000	.FRAME	1067
1558934-0000	.GUIDE	619, 621
1558935-0100	.TOP RAIL	617
1558940-0100	.FLAP GUIDE	617
1558942-0000	.BRACKET	1067
1558946-0000	.PLUG	397
1558947-0000	.STRIP	393
2501851-0000	.CURVE	559, 561
2503593-0000	.LEVER	87
2504627-0000	.GASKET	15, 17
2505277-0000	.BEARING HOUSING	489, 491, 493, 509, 511, 513
2506816-0000	.PROTECTION	157
2506817-0000	.PIPE	127, 129
2507076-0000	.FOLDING FLAP	489, 491, 493, 509, 511, 513
2507077-0000	.FOLDING FLAP	489, 491, 493, 509, 511, 513
2507078-0000	.FOLDING FLAP	489, 491, 493, 509, 511, 513
2507079-0000	.FOLDING FLAP	489, 491, 493, 509, 511, 513
2507083-0000	.FOLDING FLAP	489, 491, 493, 509, 511, 513
2507084-0000	.FOLDING FLAP	489, 491, 493, 509, 511, 513
2507085-0000	.FOLDING FLAP	489, 491, 493, 509, 511, 513
2507086-0000	.FOLDING FLAP	489, 491, 493, 509, 511, 513
2507090-0000	.FOLDING FLAP	489, 491, 493, 509, 511, 513
2507091-0000	.FOLDING FLAP	489, 491, 493, 509, 511, 513
2507092-0000	.FOLDING FLAP	489, 491, 493, 509, 511, 513
2507093-0000	.FOLDING FLAP	489, 491, 493, 509, 511, 513
2507096-0000	.FOLDING FLAP	489, 491, 493, 509, 511, 513
2507097-0000	.FOLDING FLAP	489, 491, 493, 509, 511, 513
2508257-0000	.SPACER	897, 901
2508258-0000	.SPACER	897, 901
2511400-0000	.SCREW	1067
2514392-0100	.MACHINE CARRIAGE	1141

Part No	Description	Page No

Part No	Description	Page No

Part No	Description	Page No

Machine Type	Group Description	Page No

Tetra Pak

SPC binder labels. 40 mm Full width *Note! This page is generated* **automatically.**
using the **variable definitions** *made in the* **front page** *file!!*

TBA/21 050V
648570-0500
Issue: 2001-12 Doc No: SPC-81545-0107

TBA/21 050V
648570-0500
Issue: 2001-12 Doc No: SPC-81545-0107

TBA/21 050V
648570-0500
Issue: 2001-12 Doc No: SPC-81545-0107

TBA/21 050V
648570-0500
Issue: 2001-12 Doc No: SPC-81545-0107

TBA/21 050V
648570-0500
Issue: 2001-12 Doc No: SPC-81545-0107

TBA/21 050V
648570-0500
Issue: 2001-12 Doc No: SPC-81545-0107

TBA/21 050V
648570-0500
Issue: 2001-12 Doc No: SPC-81545-0107

TBA/21 050V
648570-0500
Issue: 2001-12 Doc No: SPC-81545-0107

TBA/21 050V
648570-0500
Issue: 2001-12 Doc No: SPC-81545-0107

TBA/21 050V
648570-0500
Issue: 2001-12 Doc No: SPC-81545-0107

TBA/21 050V
648570-0500
Issue: 2001-12 Doc No: SPC-81545-0107

SPC binder labels. 30 mm Full width *Note! This page is generated* **automatically.**
using the **variable definitions** *made in the* **front page** *file!!*

TBA/21 050V
648570-0500
Issue: 2001-12 Doc No: SPC-81545-0107

TBA/21 050V
648570-0500
Issue: 2001-12 Doc No: SPC-81545-0107

TBA/21 050V
648570-0500
Issue: 2001-12 Doc No: SPC-81545-0107

TBA/21 050V
648570-0500
Issue: 2001-12 Doc No: SPC-81545-0107

TBA/21 050V
648570-0500
Issue: 2001-12 Doc No: SPC-81545-0107

TBA/21 050V
648570-0500
Issue: 2001-12 Doc No: SPC-81545-0107

TBA/21 050V
648570-0500
Issue: 2001-12 Doc No: SPC-81545-0107

TBA/21 050V
648570-0500
Issue: 2001-12 Doc No: SPC-81545-0107

TBA/21 050V
648570-0500
Issue: 2001-12 Doc No: SPC-81545-0107

TBA/21 050V
648570-0500
Issue: 2001-12 Doc No: SPC-81545-0107

TBA/21 050V
648570-0500
Issue: 2001-12 Doc No: SPC-81545-0107

TBA/21 050V
648570-0500
Issue: 2001-12 Doc No: SPC-81545-0107

TBA/21 050V
648570-0500
Issue: 2001-12 Doc No: SPC-81545-0107