Tetra Classic TC/300

630329-030-060V

Issue 9109 Doc No. MS-87046-1

Tetra Classic TC/300

630329-030-060V

Issue 9109 Doc No. MS-87046-1

Tetra Classic TC/300

630329-030-060V

Issue 9109 Doc No. MS-87046-1

Tetra Classic TC/300

630329-030-060V

Issue 9109 Doc No. MS-87046-1

Tetra Classic TC/300

630329-030-060V

Issue 9109 Doc No. MS-87046-1

Tetra Classic TC/300

630329-030-060V

Issue 9109 Doc No. MS-87046-1

Tetra Classic TC/300

630329-030-060V

Issue 9109 Doc No. MS-87046-1

Tetra Classic TC/300

630329-030-060V

Issue 9109 Doc No. MS-87046-1

Tetra Classic TC/300

630329-030-060V

Issue 9109 Doc No. MS-87046-1

Tetra Classic TC/300

630329-030-060V

Issue 9109 Doc No. MS-87046-1

Tetra Classic TC/300

630329-030-060V

Issue 9109 Doc No. MS-87046-1

Tetra Classic TC/300

630329-030-060V

Issue 9109 Doc No. MS-87046-1

Tetra Classic TC/300

630329-030-060V

Issue 9109 Doc No. MS-87046-1

Tetra Classic TC/300

630329-030-060V

Issue 9109 Doc No. MS-87046-1

Tetra Classic TC/300

630329-030-060V

Issue 9109 Doc No. MS-87046-1

Tetra Classic TC/300

630329-030-060V

Issue 9109 Doc No. MS-87046-1

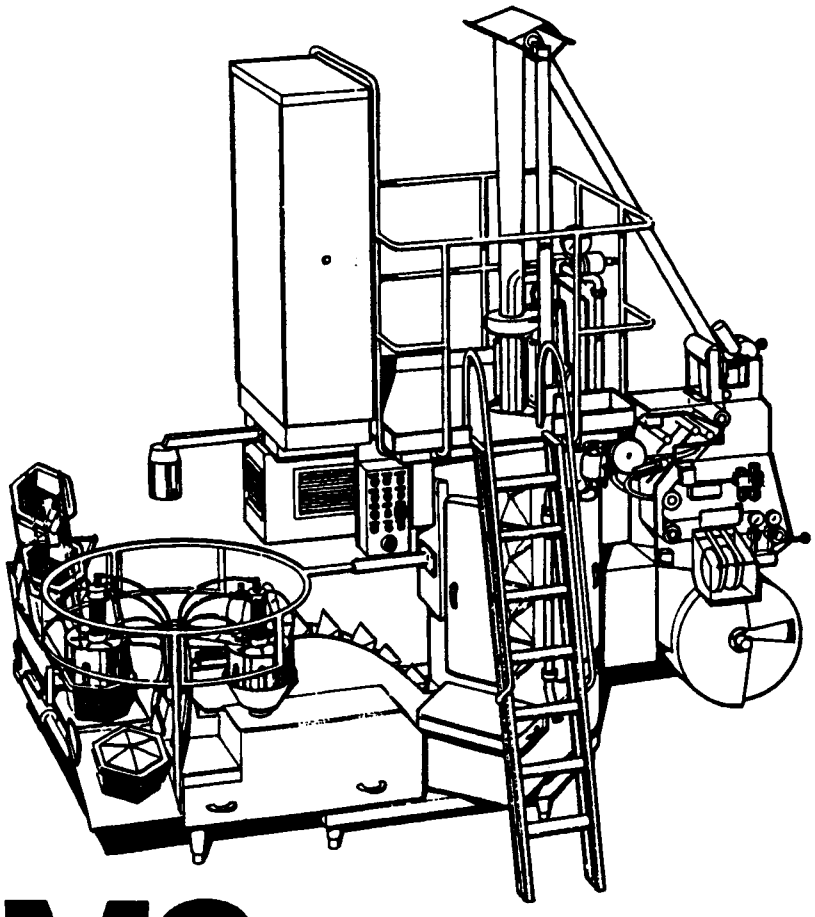

MS
Maintenance System

Tetra Classic TC/300
630329–030V–060V

Issue 9109

Tetra Pak
Technical Publications
Lund Sweden

87046-1

Magazine	100
Superstructure	200
Sides	300
Machine Body	400
Cutting machine	500
Elevator	600
Packer A	700
Packer B	800
Strip applicator SA 4	900
Hole punch device HS 227	1000
	1100
Templates Tools	1200
	1300
Synchronization and settings Lubricants	1400
	1500

PAGE NUMBERING

101 - 11

MAIN GROUP (e g Magazine)

MACHINE FUNCTION (e g SA, Rollers and Bearings)

ACTION CODE

1 Checking/lubrication
2 Removal
3 Overhaul/cleaning
4 Fitting
5 Setting
6 Adjustment during operation
7 Miscellaneous

CONSECUTIVE No. (depending on Development Step)

SHEET No. (if more than one sheet with same page No)

MACHINE SERIES No.
On the machine body there is a plate with the Series No., the first digit omitted: 12303 becomes 2303.

MACHINE DEVELOPMENT STEP
Each one of the seven main groups of the machine carries a plate stating development step. Any machine function modified to a new development step is noted as model deviation.

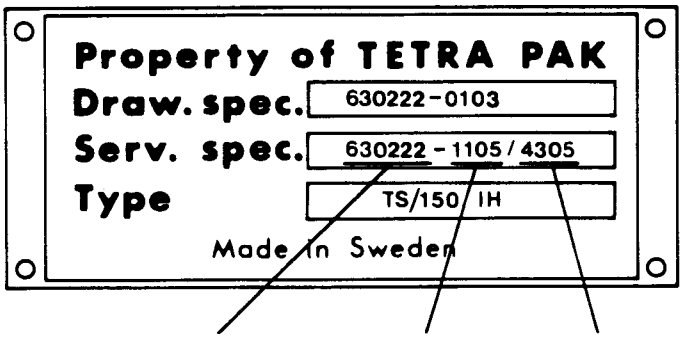

Machine Type Series No Machine No

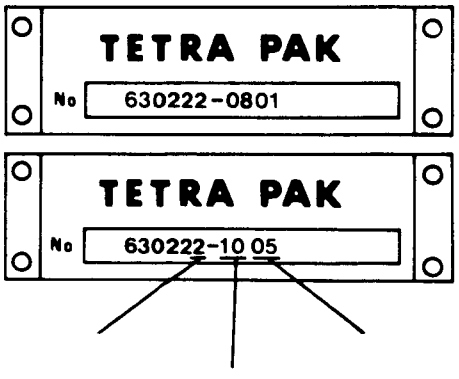

Group No Variant
Development Step

DESCRIPTION	PAGE
Paper reel holder - checking	101-11
Magazine bearings - checking	102-11
Paper supply monitor - checking	105-11

CHECKING

Check that the paper reel is held firmly on the holder and that the thread does not bind.

Check that the shaft is straight and that the parts which are rotating in the magazine bearings, are not worn or damaged.

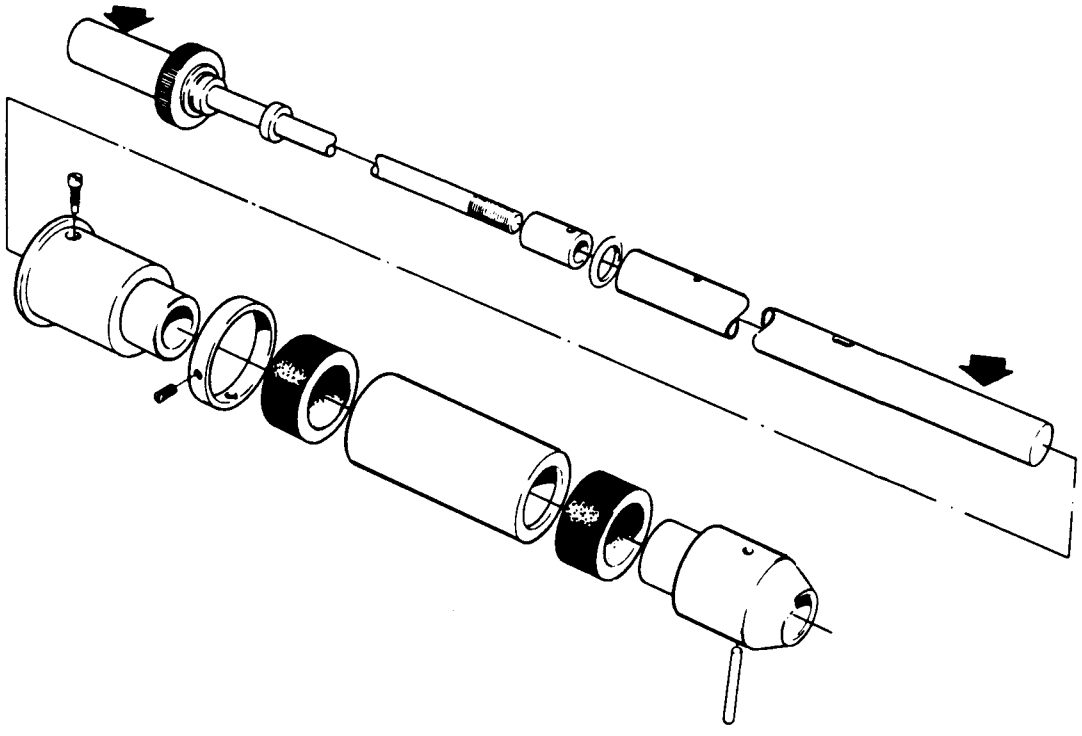

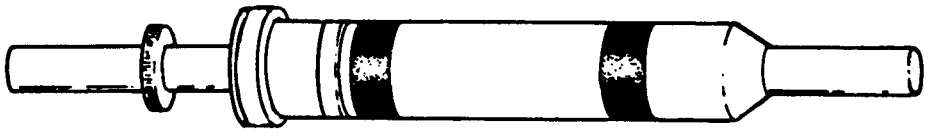

CHECKING

Check the bearings (1) and replace them if worn or damaged (measurement A = min. 14 mm).

REMOVAL

Loosen the screws (2) and press out the bearings (1).

1 Bearing
2 Screw
3 Holder

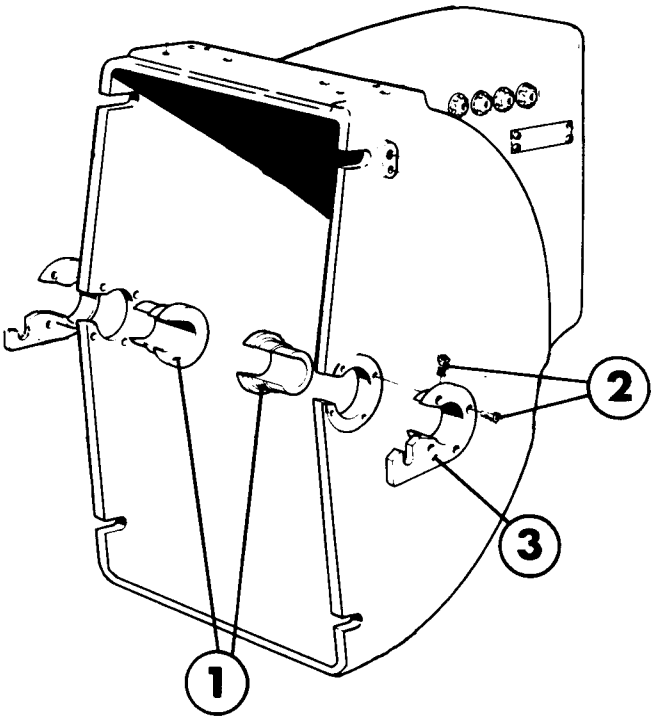

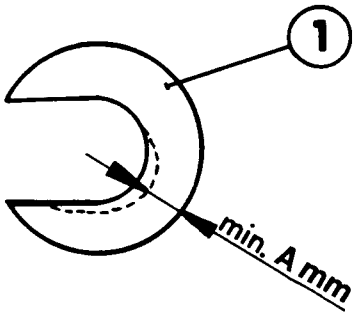

CHECKING

Check that the window (1) of the paper reel cover is clean and intact.

Check and clean the lenses of the photocells (2).

Check the alarm function when the diameter of the paper reel is less than 150 mm.

Adjust with the screws (3).

1 Window
2 Photocell
3 Screw

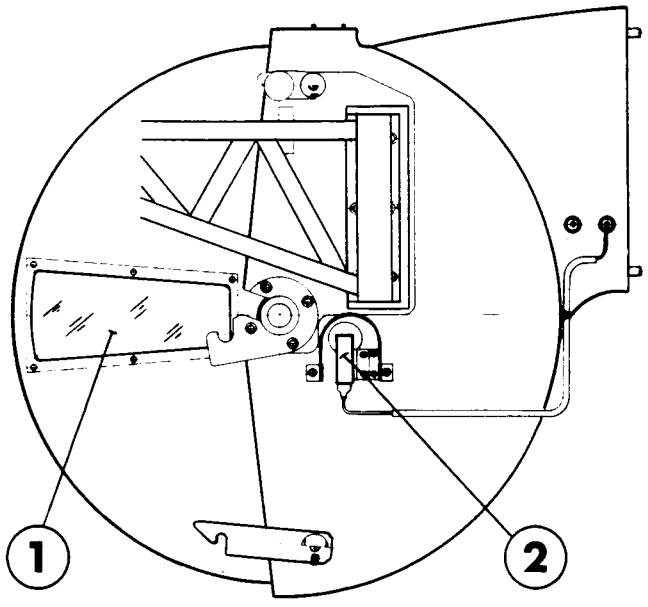

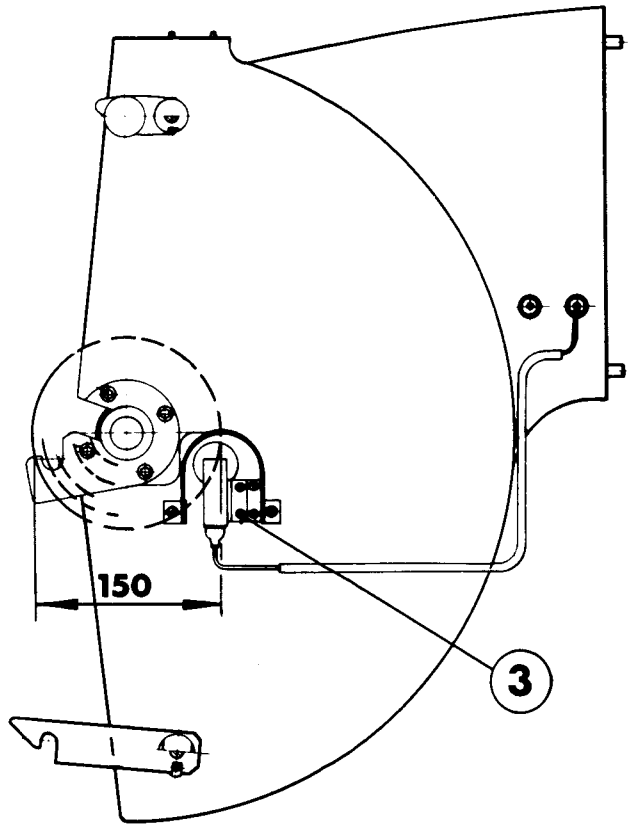

DESCRIPTION	PAGE
Filling pipe - checking	203-11
Filling pipe - setting	203-51
Pressure roller - checking	204-11
Float - checking	205-11
Float - assembly	205-31
Product valve - checking	206-11
Product valve - overhaul	206-31
Product pressure gauge - checking	207-11
LS-element - removal	209-21
LS-element - overhaul	209-31
Longitudinal sealing element (LS-element) - setting	209-51
Heater cartridge - overhaul	210-31
LS-air pressure - checking/setting	211-11
Forming rings, upper and lower - checking	212-11
LS overlap - checking	213-11
Bearing, upper bending roller - checking	214-11
Tube forming - checking	216-11
Upper paper guard - checking	217-11
Longitudinal seal, location - checking	218-11
Weight of package - checking	219-11

CHECKING

Dismantle and check all parts and, if required, replace the seal-ring and the O-ring.

Check that:

- the fork (4) and pressure roller (7) move freely. If required replace the pressure roller and lock rubber (5),
- the filling pipe. If required, replace or adjust it.

1 Seal-ring
2 Filling pipe
3 Spring
4 Fork
5 Lock rubber
6 Axle
7 Pressure roller
8 O-ring

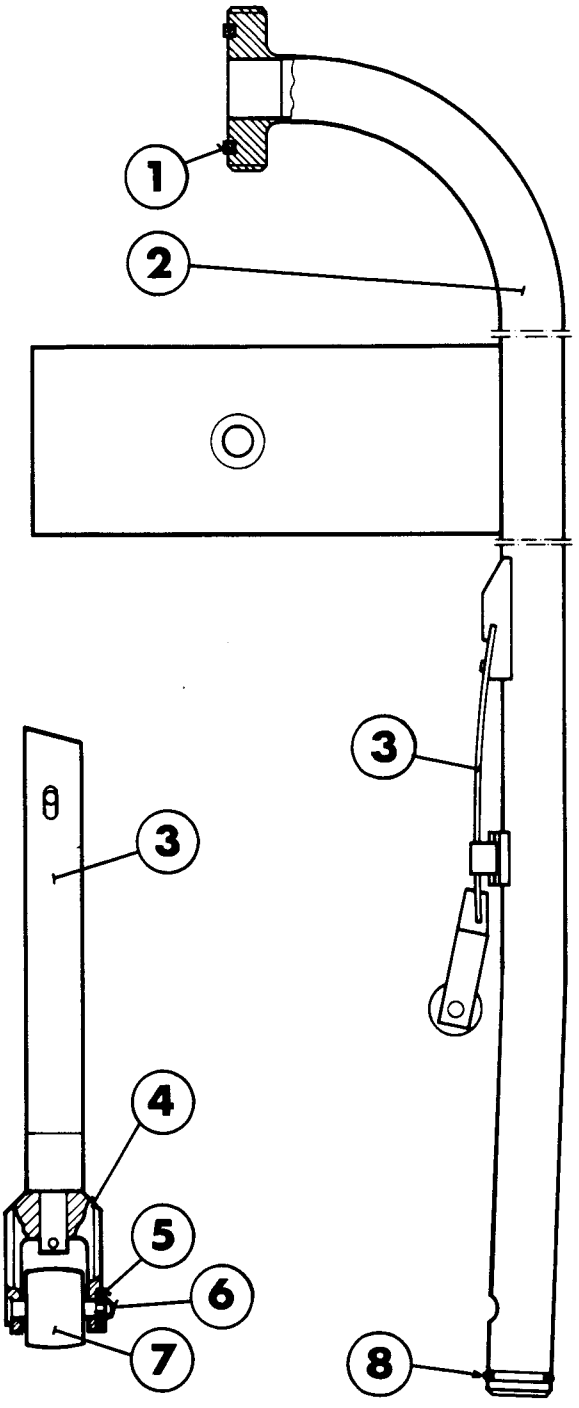

SETTING

Check that the filling pipe is centered relative the jaws and that the pressure roller is positioned exactly opposite the counter roller in the lower forming ring.

Adjust as required.

Footnote: If lateral setting of the pipe is required, this should not be done a parallel movement but by swinging the pipe.

1 Filling pipe centering screw

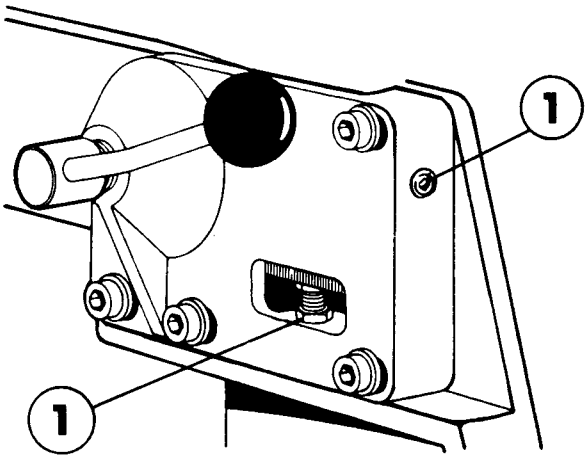

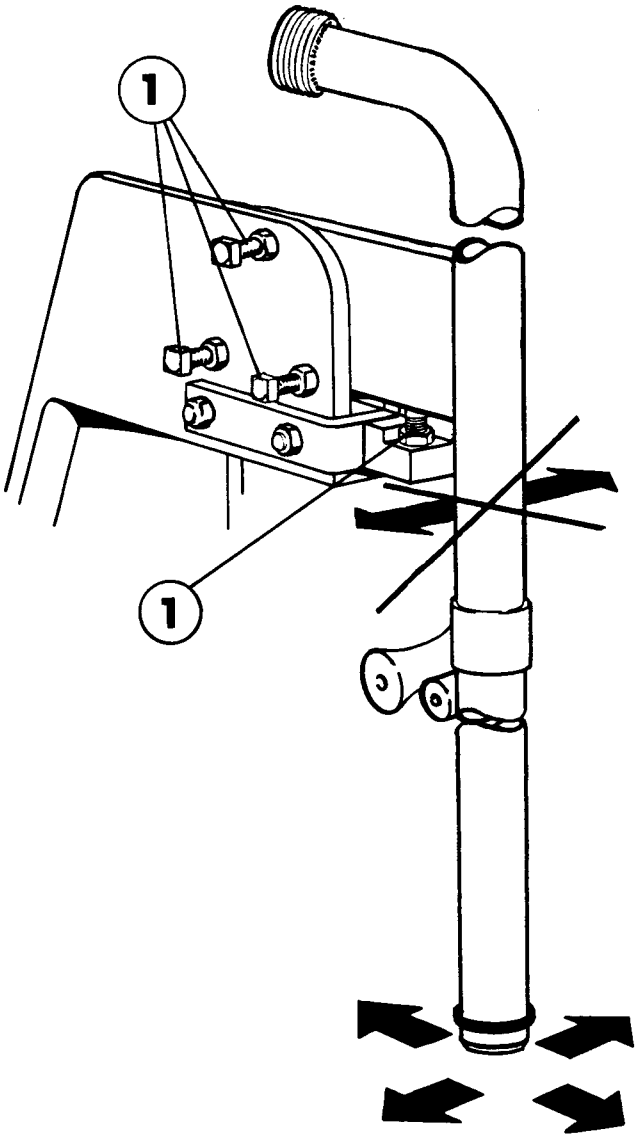

CHECKING

Check that the pressure roller (2) runs smoothly, that the bearing play does not exceed 0.5 mm, and that the surface is not worn. Replace the roller, if required.

Check distance A (2 mm). If required, adjust by raising or lowering the lower forming ring.

Check the force of the pressure roller with the dynamometer (4).

Measure without packaging material. Measure the pressure force (20-30 N) by pressing the dynamometer against the forked holder until the roller disengages the counter roller.

Replace the spring (1), if required.

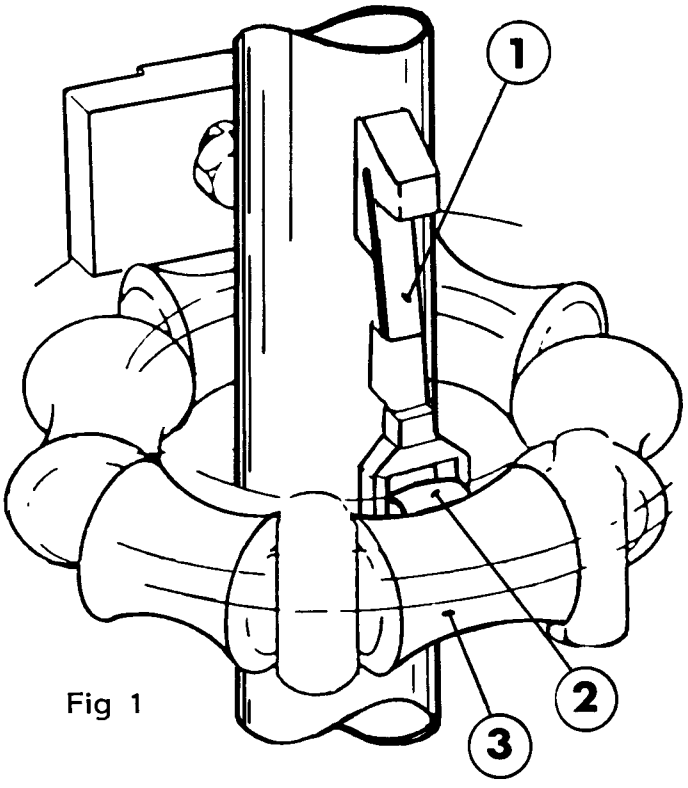

Fig 1

1 Spring
2 Pressure roller
3 Counter roller
4 Dynamometer 74767-102

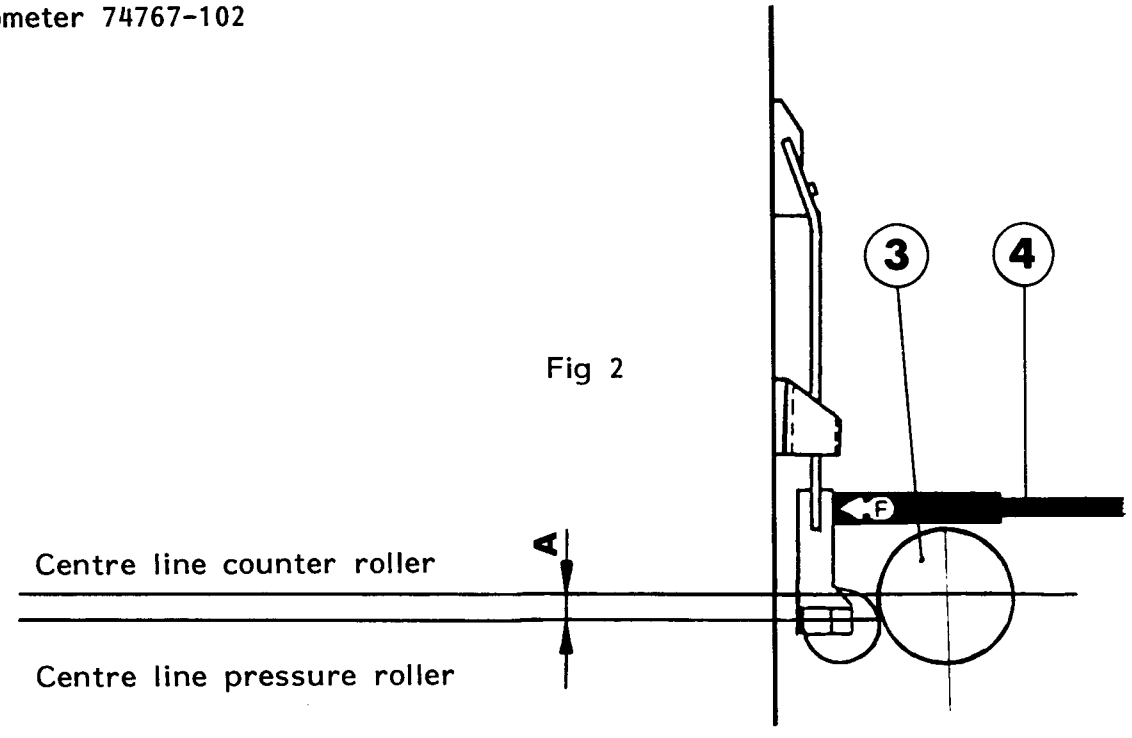

Fig 2

CHECKING

Check that the mechanism does not bind and that the axle pins and links are not worn.

Check that the valve (2) is fully closed when the float (1) is in its upper position and fully open when the float is in its lower position.

Shake the float to check that the liquid has not leaked into it.

Check that there is no visible damage to the float.

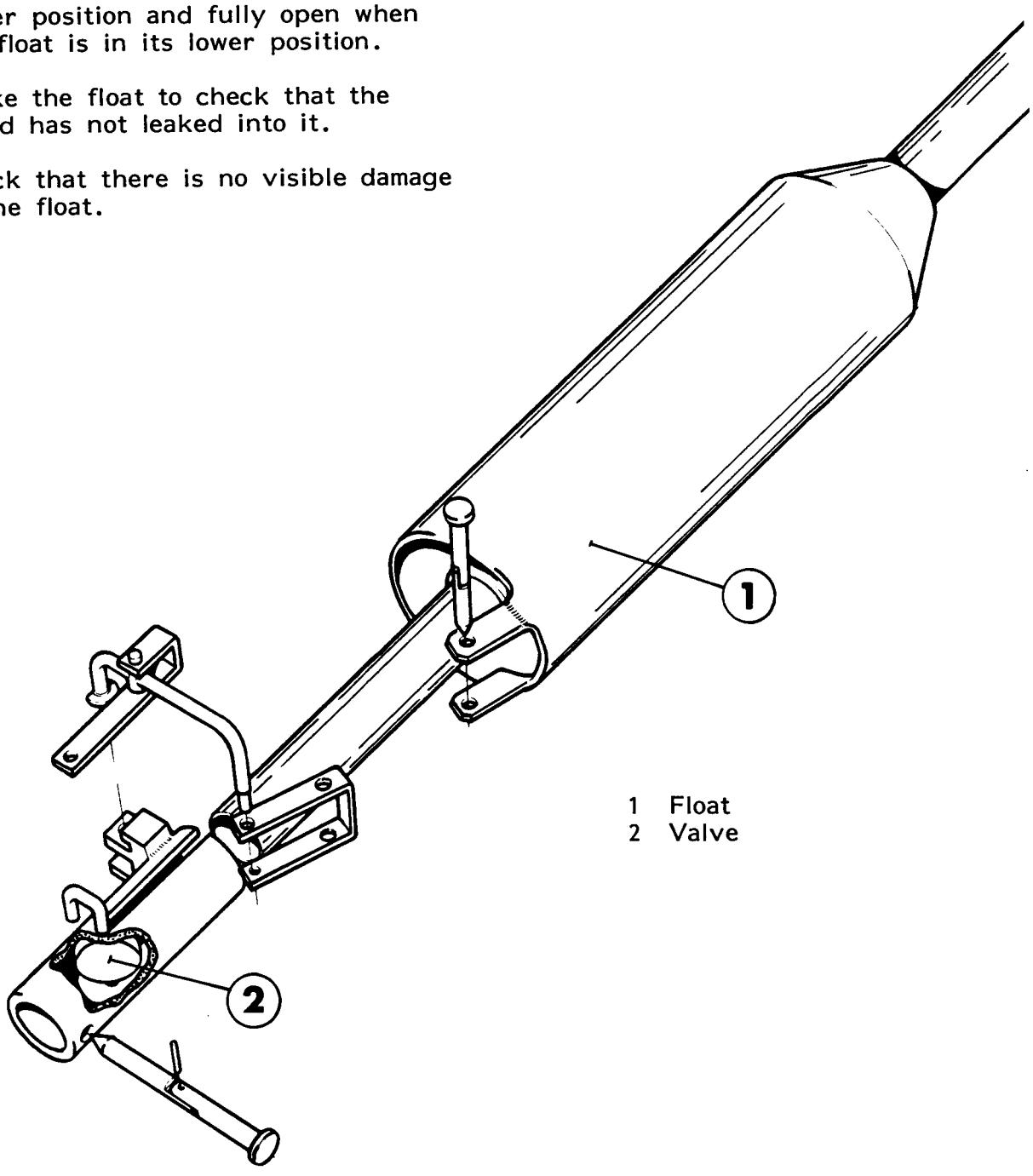

1 Float
2 Valve

ASSEMBLY

a) Assemble the link (3), arm (7), and clasp (8) to the sleeve (6). Fig. 1.

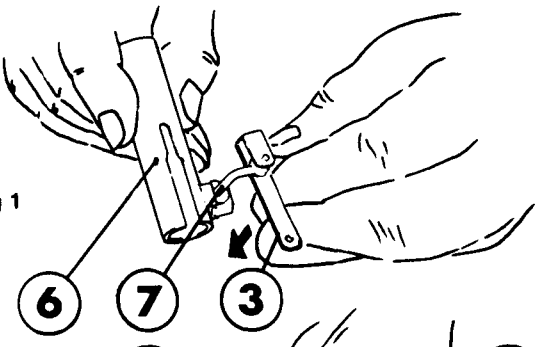

Fig 1

b) Slide the sleeve (6) with link system on to the filling pipe (5) so that the wide slot in the sleeve (6) coincides with the wide slot in the filling pipe (5). Fig. 2.

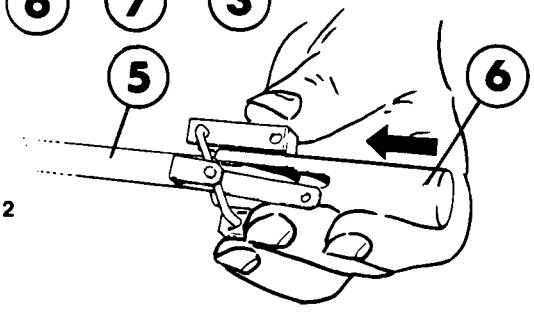

Fig 2

c) Place the valve (2) in the wide slot so that the stud comes out on the opposite side, at the same time push the bent stud into the hole in the link (3). Fig. 3.

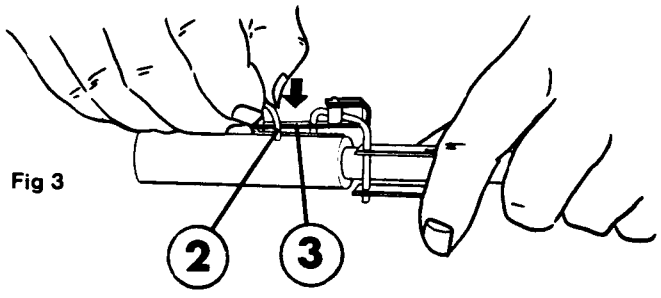

Fig 3

d) Push up the sleeve (6) so that the bottom of the slot reaches the pivots of the valve (2). Fig. 4.

e) Assemble the lower axle link (4) and connect the clasp (8) to the float (1) by means of the top axle link (4). Fig. 5.

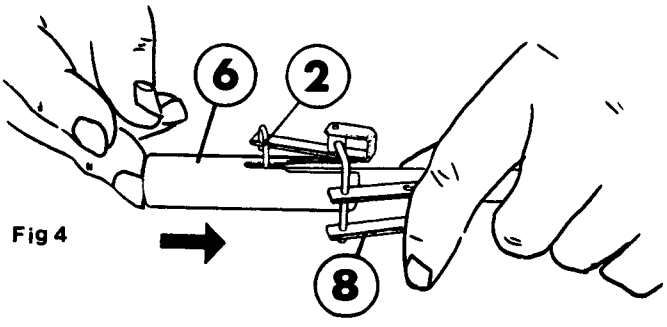

Fig 4

1 Float
2 Valve
3 Link
4 Axle link
5 Filling pipe
6 Sleeve
7 Arm
8 Clasp

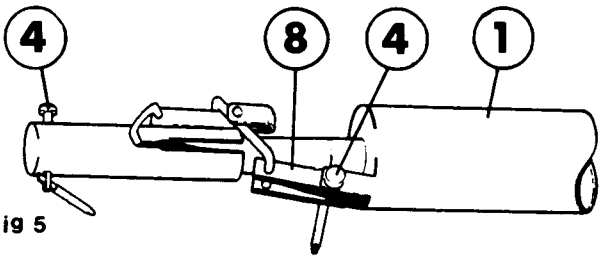

Fig 5

CHECKING

Check that there is no leakage.
If required, replace the O-rings.
Carefully inspect the teflon seal ring (arrow in the picture).

Check that the compressed air connections are tight.

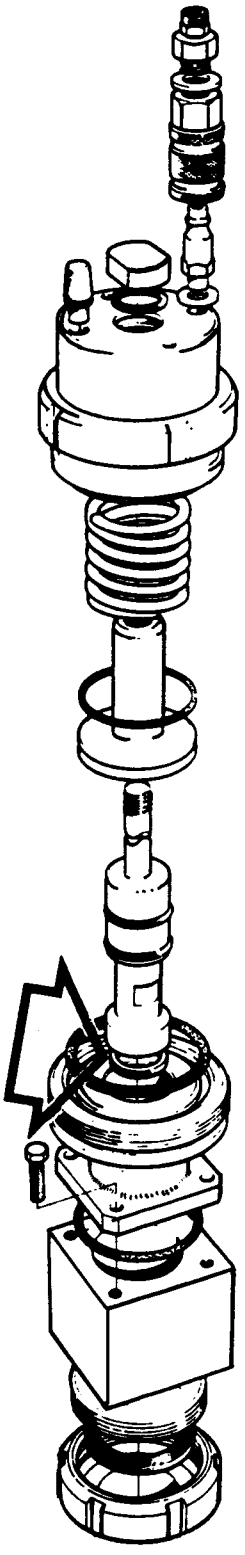

OVERHAUL

a) Disconnect the compressed air pipe.

b) Unscrew the large nut with a hook spanner and carefully pull out the valve spindle.

c) Examine the O-rings (3) and the teflon seal ring (2), replace as required.

d) Detach the teflon seal ring at the bottom end of the outer spindle by pressing out the edge with a knife (do not use a screwdriver) at several places. Take care not to damage the seat of the seal ring.

e) Before replacing the teflon seal ring put the spindle and the new teflon seal ring in hot water. Fix the new seal ring in its seat. Tap it home with tool No 36489 (1).

f) Lubricate all the O-rings with silicone grease.

g) Assemble. Connect the compressed air pipe.

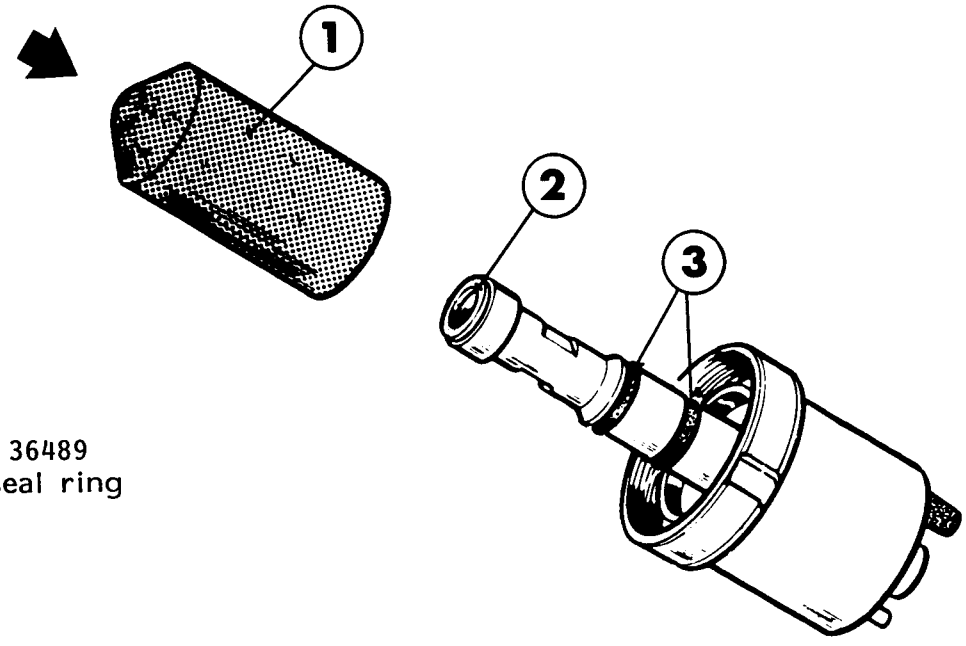

1 Tool No 36489
2 Teflon seal ring
3 O-ring

CHECKING

Check that the gauge indicates zero when there is no pressure in the system. Adjust zero with the calibration screw at the back. Check that the diaphragm is intact.

Replace the pipe union seal ring gasket.

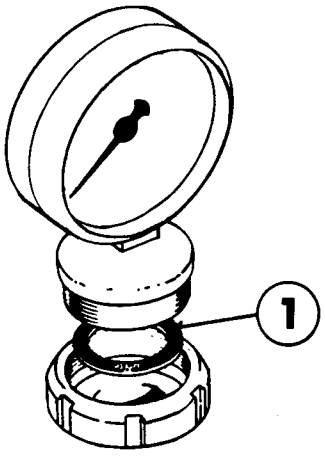

1 Seal ring

REMOVAL

Undo the screws (2) and remove the heater cartridge (1).

Disconnect the air pipe (3), the thermocouple plug (4) and the air hoses (5) to the cylinder.

Undo the screws (6) and remove the element.

Assemble in reverse order.

Check that air does not leak at the cable connection of the heater (7).

1 Heater cartridge
2 Screw
3 Air pipe
4 Thermocouple plug
5 Air hoses
6 Screws
7 Cable connection

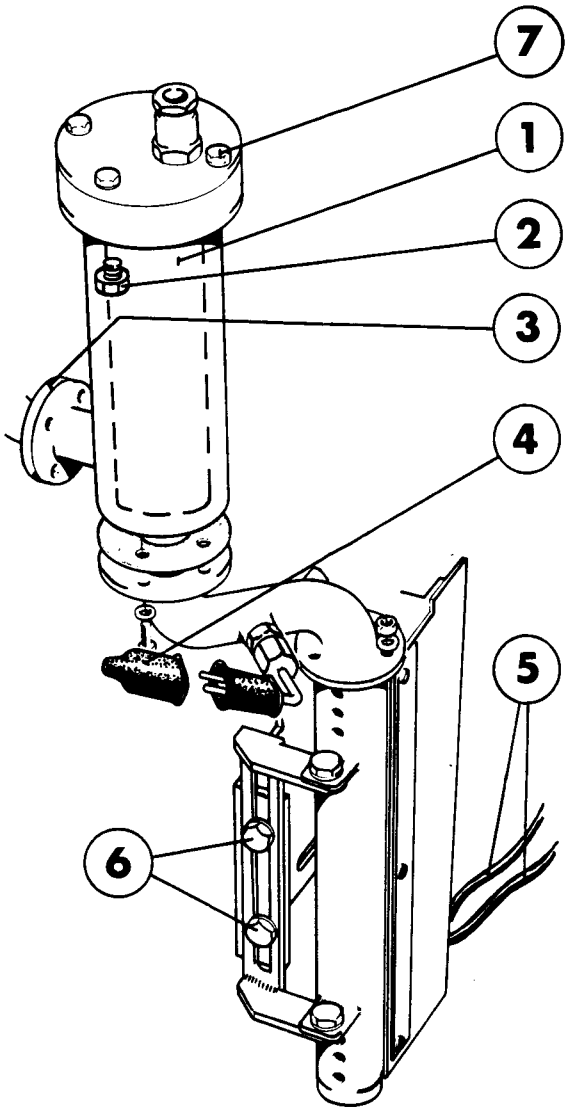

OVERHAUL

Remove plastic deposits from the air distributor (5) and check that all air holes are open.

Replace the slide rails (2) and (3) and the cylinder (4).

Check the setting and function of the air distributor (5) and its operation.

1 Nozzle
2 Front slide rail
3 Rear slide rail
4 Cylinder
5 Air distributor
6 Screw
7 Screw

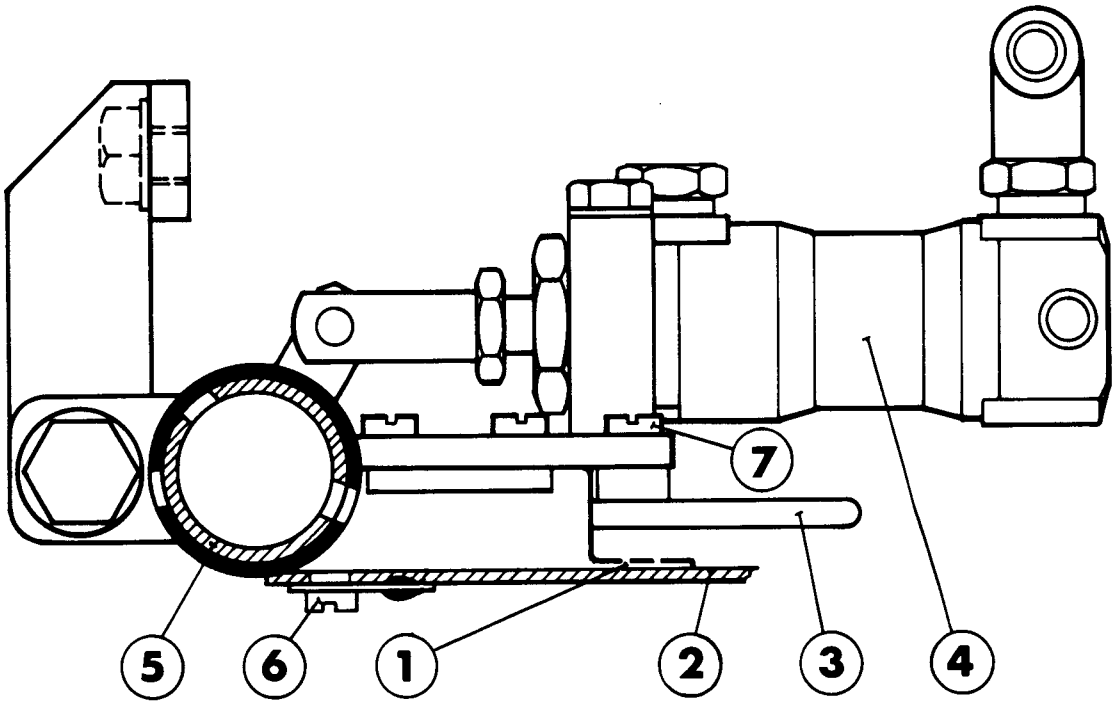

SETTING

a) Adjust the LS-element so that it forms an angle of approx. 90° with the holder (2).

b) Adjust the distance between the nozzle of the LS-element (1) and the forming ring (4) to about 20 mm. (Fig. 2)

c) Put paper in the machine and run it to form a tube (6).

d) Adjust the LS-element in relation to the tube as shown on fig. 1. Adjust forwards with the screw (8) and laterally with the nut (7).

e) Turn the LS-element until the paper edge (9) rests lightly against the rear slide rail (10) and tighten the screw (3). (Fig. 3)

f) Check, with the aid of the location of the heating zone (11), shown in fig. 4, that the LS-element is correctly adjusted. (The check should be made at normal settings of air and electric power.

1 Nozzle
2 Holder
3 Screw
4 Forming ring
5 Screw
6 Paper tube
7 Tube
8 Screw
9 Paper edge
10 Rear slide rail
11 Heating zone

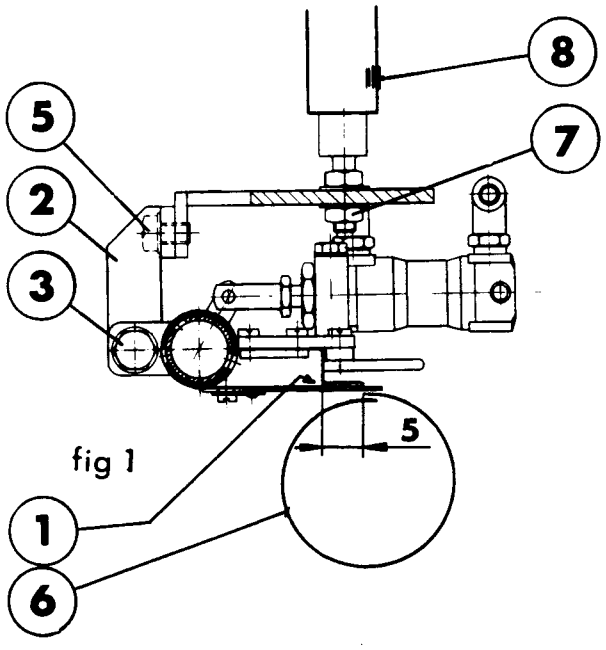

fig 1

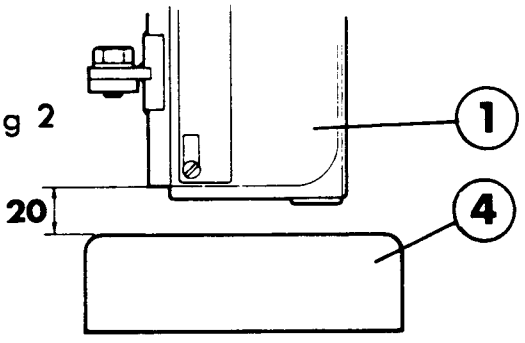

fig 2

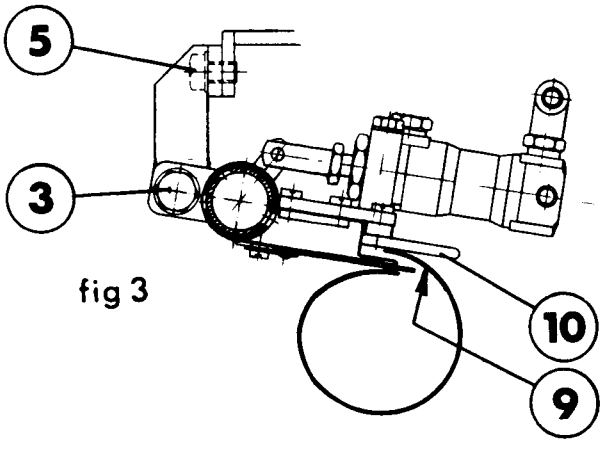

fig 3

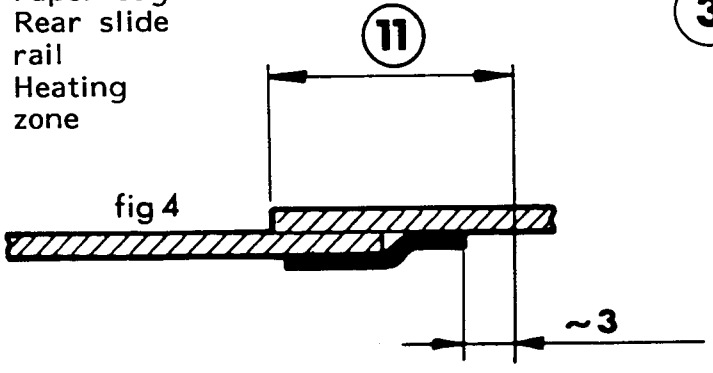

fig 4

OVERHAUL

Remove the screws (8) and lift off the clutch piece (9) together with the connection piece (2) and the heater cartridge (1).

Pull off the heater cartridge.

Check that the heater cartridge (1) and the connection piece (2) are intact. Replace if required.

Remove the lid (3) and check that the cables (4) and the cable clips (5) are intact.

Check the rubber seal (7) in the cable gland (6). Replace the seal if required.

Reassemble the cover, the connection piece, and the lid. Check the cable gland to make sure that no air leaks out.

1 Heater cartridge
2 Connection piece
3 Lid
4 Cable
5 Cable clip
6 Cable gland
7 Rubber seal
8 Screw
9 Clutch piece

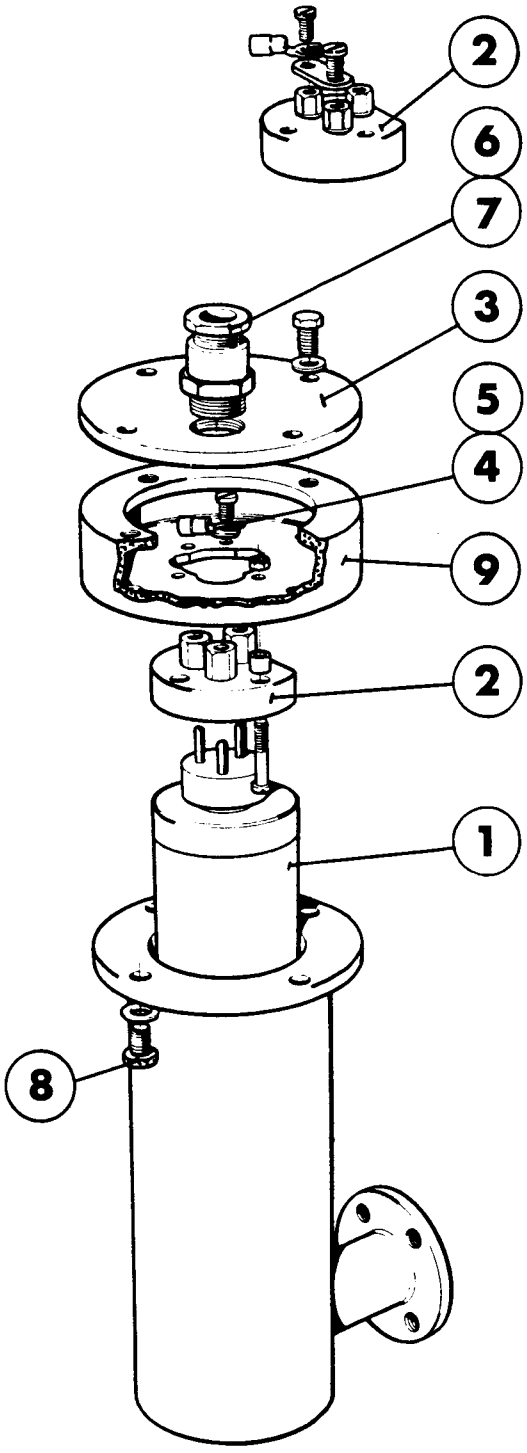

CHECK/SETTING

a) Check that the setting knob (5) of the control valve (5) moves smoothly and that the air pressure during production is 1.5 kPa (150 mm WC).

b) Check operation of the pressure switch (3) and its setting by reducing the pressure by means of control valve (5).

   Cut-out value = 0.5 kPa (50 mm WC)

   If required, adjust the switch cut-out setting with the adjustment screw (1).

c) Check and clean the filter (6) in the cover.

1 Adjustment screw
2 Cover
3 Pressure switch
4 Pressure gauge
5 Control valve
6 Filter
7 Pneumatic valve panel

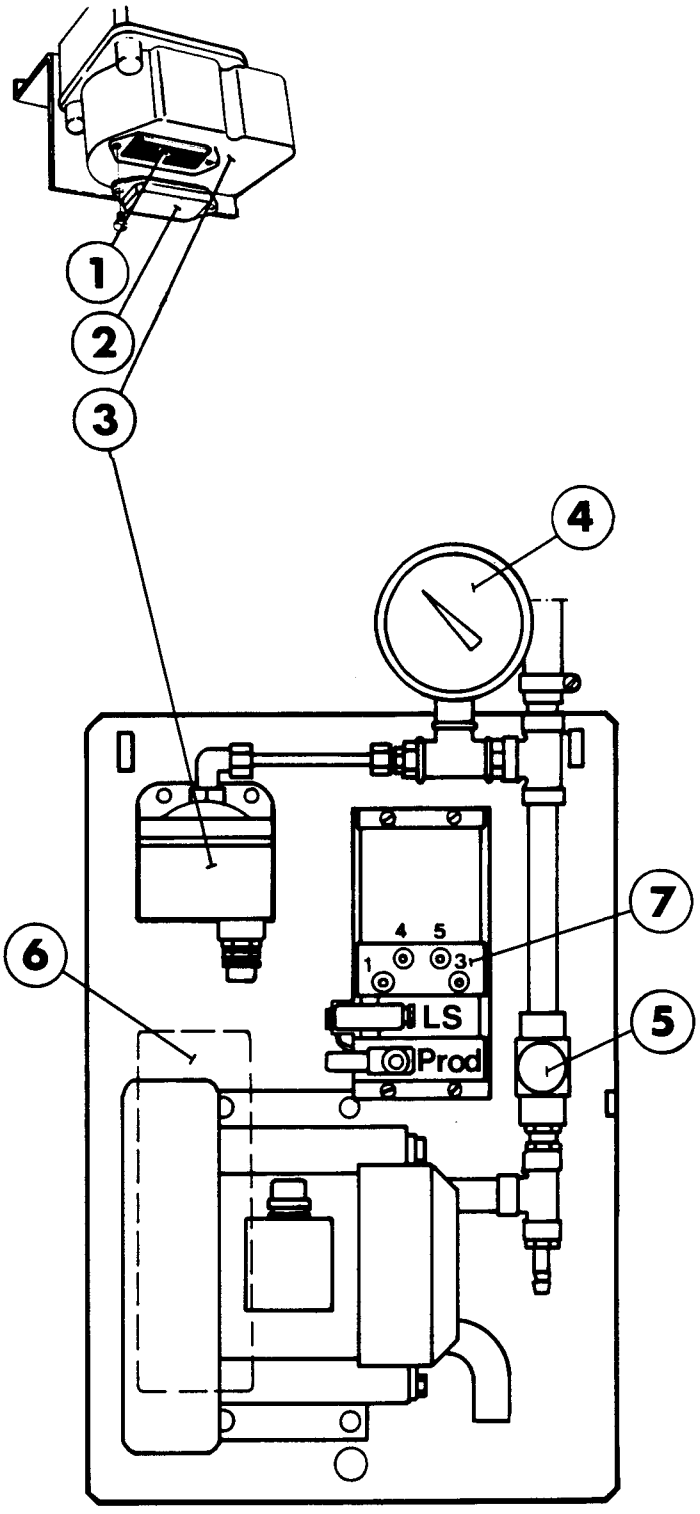

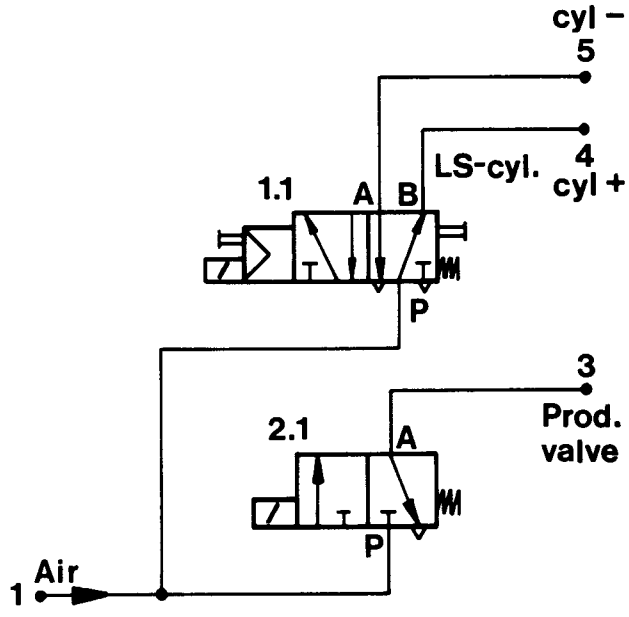

CHECKING

Check that all rollers rotate freely and that the surfaces in contact with the paper web and plastic strip are not damaged.

Check that the play between the rollers in both form rings does not exceed A mm (see fig.).

If required clean or replace such rollers as are worn or deformed.

Roller removal:

a) Undo the screw (5) with its washer (4).

b) Remove the roller (1) and axle (2).

c) On reassembly distribute the play between the rollers (1) evenly with adjustment washers (3), part No 2033-2 and 2033-3.

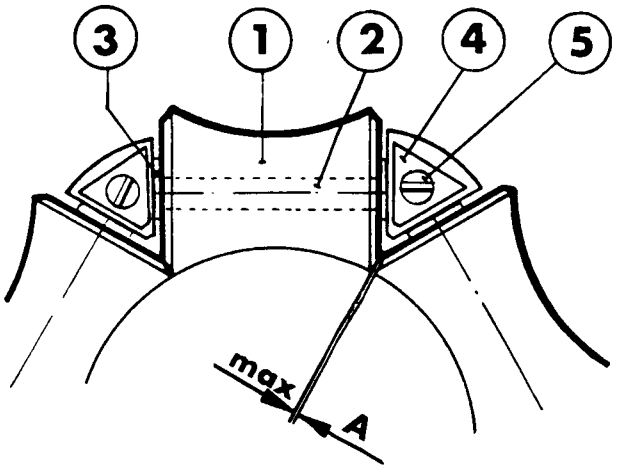

	A mm
Upper forming ring	1.0
Lower forming ring	0.5

1 Roller
2 Axle
3 Adjustment washer
4 Washer
5 Screw

CHECKING

Check that the width of the LS overlap B is correct. (See fig. 3). The LS overlap width listed below should be regarded as a guide value only. A primary consideration is that the package keeps holds the correct volume.

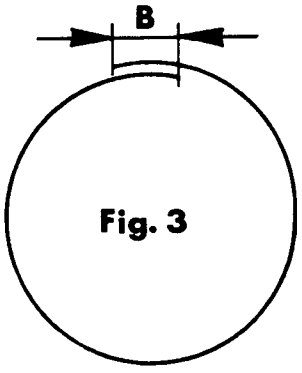

Fig. 3

If the overlap is too small or the play between the rollers is too big, replace the worn rollers and, if required, the axles in the lower forming ring.

The volume of the packages may be adjusted by fitting + or - rollers in the forming rings.

Volume ml	B mm
62.5	6
65	6
150 (500)	6
250	7
300	7
200-125	8
(236)	10
(284)	10
500	10
(568)	10

CHECKING

Check that the material thickness shown in the picture is not less than the value stated. The difference of wear between the righthand and lefthand bearings must not exceed 1 mm.

Replace the bearings blocks if these requirements are not met.

Check that the shaft ends of the bending roller are smooth and do not cause excessive bearing wear.

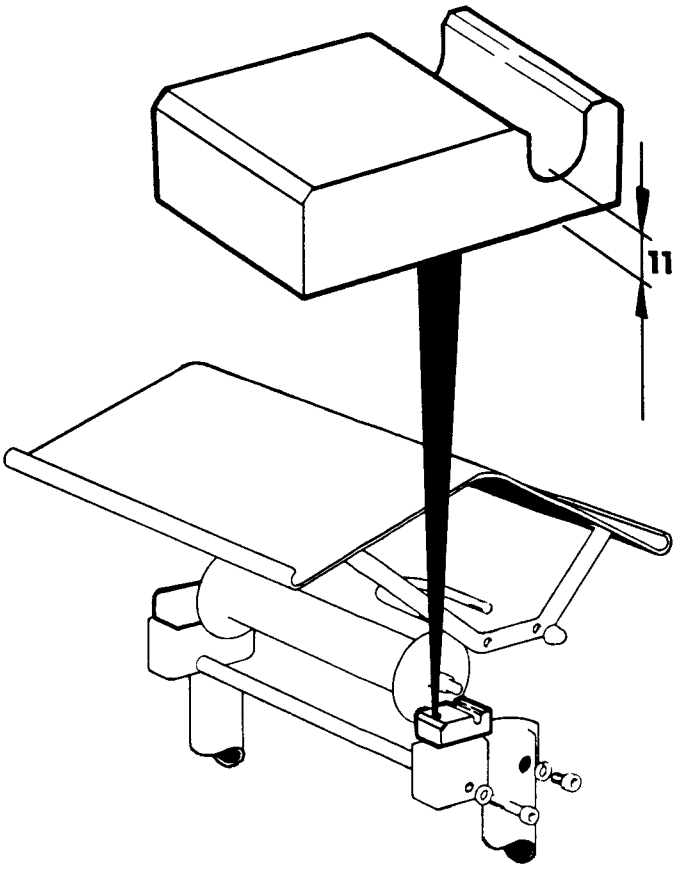

CHECKING

The tube forming is a combined result of settings of the guide bars, forming rings, and longitudinal sealing element. Basic setting of the guide bars begins with setting distances A, B, C and D, shown in fig 1 and 2 and the table.

After this setting, make a final adjustment so that the packaging material fills the two forming rings.

The purpose of the tube setting is to obtain good paper forming, satisfactorily and a correctly located longitudinal seal.

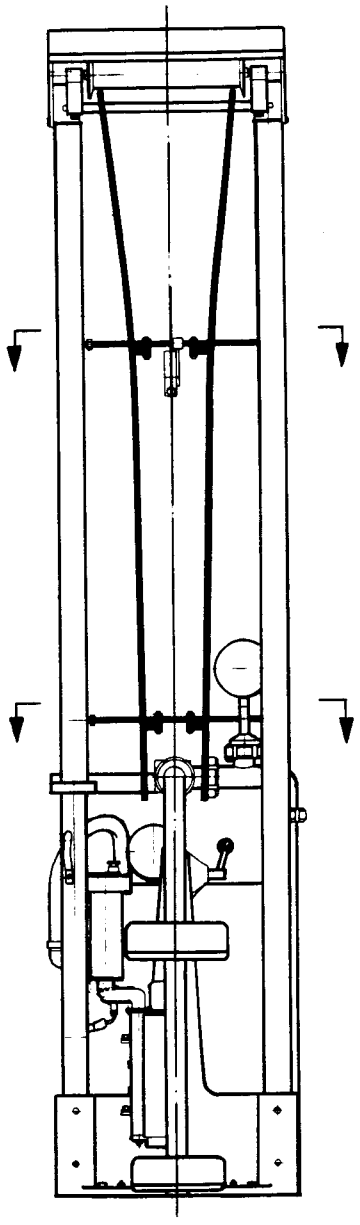

Fig 1.

The upper attachment of the guide bars.

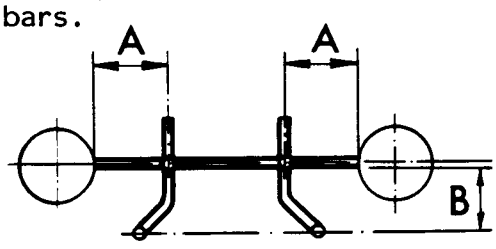

Fig 2.

The lower attachment of the guide bars.

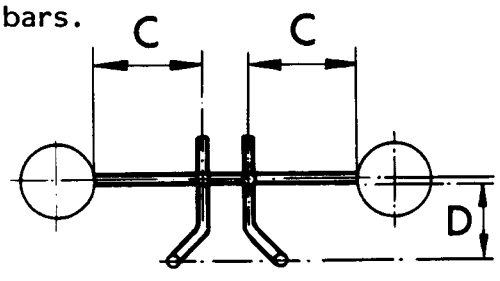

Machine	Volume	A	B	C	D
6302	62,5	142	70	158	90
	125	132	70	156	89
	150	126	70	152	88
	180	119	51	148	82
	189	116	66	146	81
	200	114	66	145	80
6303	250	113	83	145	97
	300	105	83	140	97
6305	500	90	77	133	83

CHECKING

Check that the light beam of the photocell (3) hits the paper web (1) about 10 mm outside the guide bars, and that the signal LED (2) lights up when the paper web is removed.

1 Paper web
2 Control lamp
3 Photocell

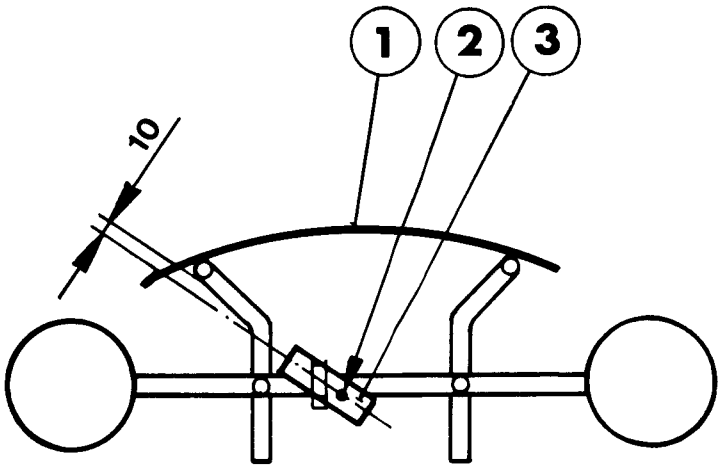

CHECKING

The location of the longitudinal seal may be checked by comparing two consecutive packages.

In case of deviation, adjust the upper forming ring and the guide bars.

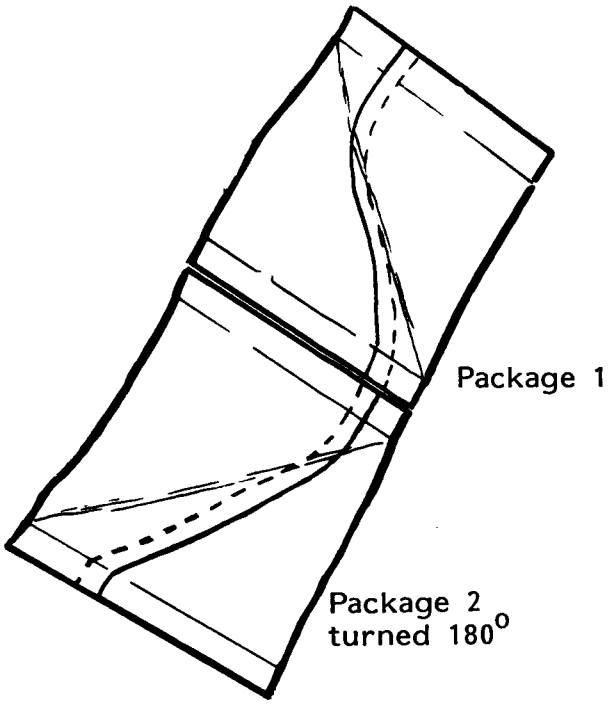

CHECKING

Remove and check 16 consecutive packages.

If the weight of all the packages exceeds the prescribed value fit -rollers, or if they are below this value, fit +rollers in the lower forming ring.

Should the weight still be too high put spacer discs under the flaps of the jaws (flaps without adjustment screws).

Should the individual weight of some of the packages differ from the correct value, adjust with the adjustment screws of the volume flaps (flaps with adjustment screws).

If the weight of half of the packages deviate from the other half, check the setting of the jaws acc to pages 301-11 and 307-11.

DESCRIPTION	PAGE
Jaws height position - checking	301-11
Jaws - removal	301-21
Sides - removal	302-21
Sides-check-measuring	302-51
Chain tensioner, twin chains	305-21
Chain tensioner, twin chains	305-31
Frame sides, package length - adjustment - checking	307-11
Twin chain - checking	308-11
Twin chain - removal	308-21
Twin chain - fitting	308-41
Chain rails - removal/checking	309-21
Chain rails, heating sides - setting	310-51
Chain rails, pressure side - setting	313-51
Finger cam - checking	314-11
Lower sprocket assembly - overhaul	317-11
Upper sprocket assembly - overhaul	320-11
Pressure chains - checking	323-11
Pressure roller holders - removal	323-21
Pressure roller holders - overhaul	323-31
Pressure roller holder - fitting	323-41
Slide plate - checking	326-11
Pressure chain, pressure side - overhaul	329-31
Pressure jaw - checking	332-11

DESCRIPTION	PAGE
Pressure jaw - overhaul	332-31
Jaws - calibration	335-51
Pressure chain, heating side removal/fitting	340-21
Pressure chain, heating side - overhaul	340-31
Pressure chains - setting (2 pages)	341-51
Contact rail unit, TPC (sealing and release pulses) - checking	343-11
Contact rail unit, TPC (sealing-removal)	343-21
Contact rail unit, TPC (sealing) - overhaul	343-31
Contact rail unit, TPC (release pulse) - removal	346-21
Contact rail unit TPC (release pulse) - overhaul	346-31
Heating jaw TPC - checking	349-11
Heating jaw, TPC heating - overhaul	349-31

CHECKING

To check that the heating and pressure jaws are positioned right opposite each other, attach a piece of adhesive tape over the pressure rubber on one jaw.

Run the machine until the marked jaw comes back and check if the impression of the heating ribbons is symmetric on the pressure rubber.

Adjust as required with the adjustment screws of the yoke.

Caution! Adjustment may cause every other package from the 16 jaw pairs lighter than the others, although all the packages within each group of eight weigh the same. Adjust the weight acc to page 307-11.

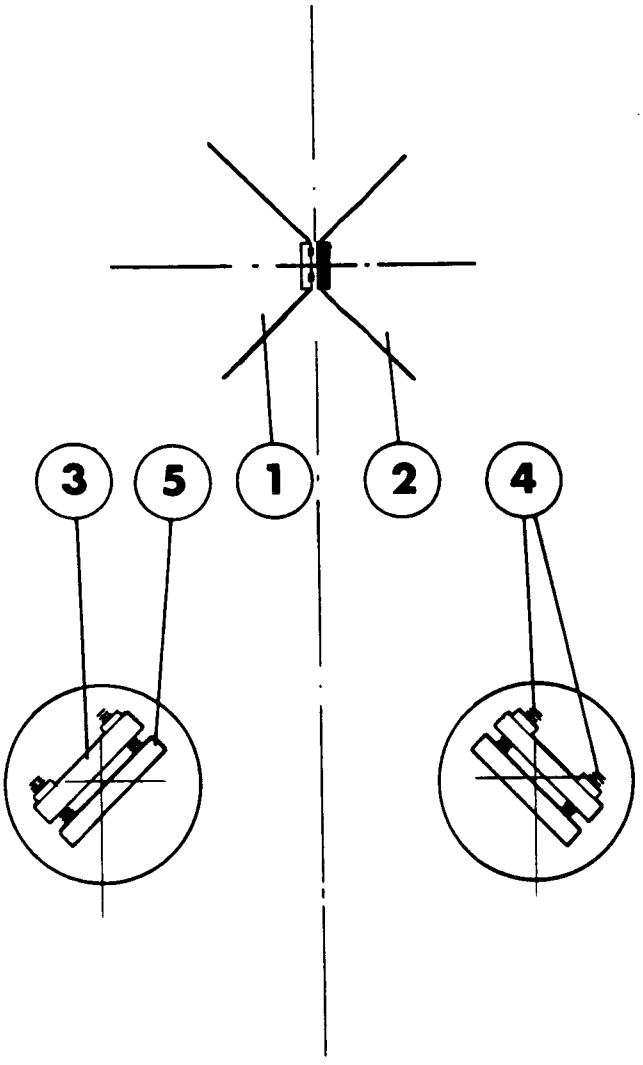

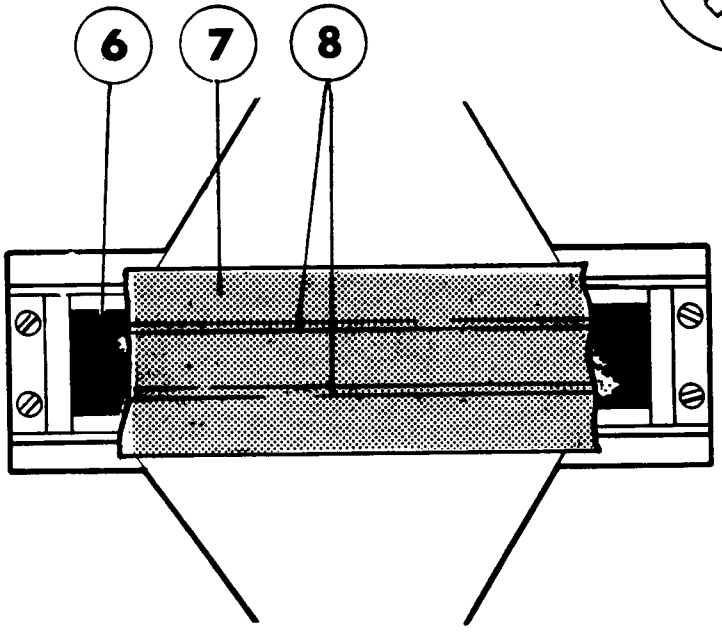

1 Heating jaw
2 Pressure jaw
3 Yoke
4 Adjustment screw
5 Bevel gear wheel
6 Pressure rubber
7 Tape
8 Heating ribbon impression

REMOVAL

Undo the mounting screws (1) and remove the jaw. Remove the pin (3).

Tilt the jaw upwards and release the spring (2) from the jaw.

1 Screw
2 Spring
3 Pin

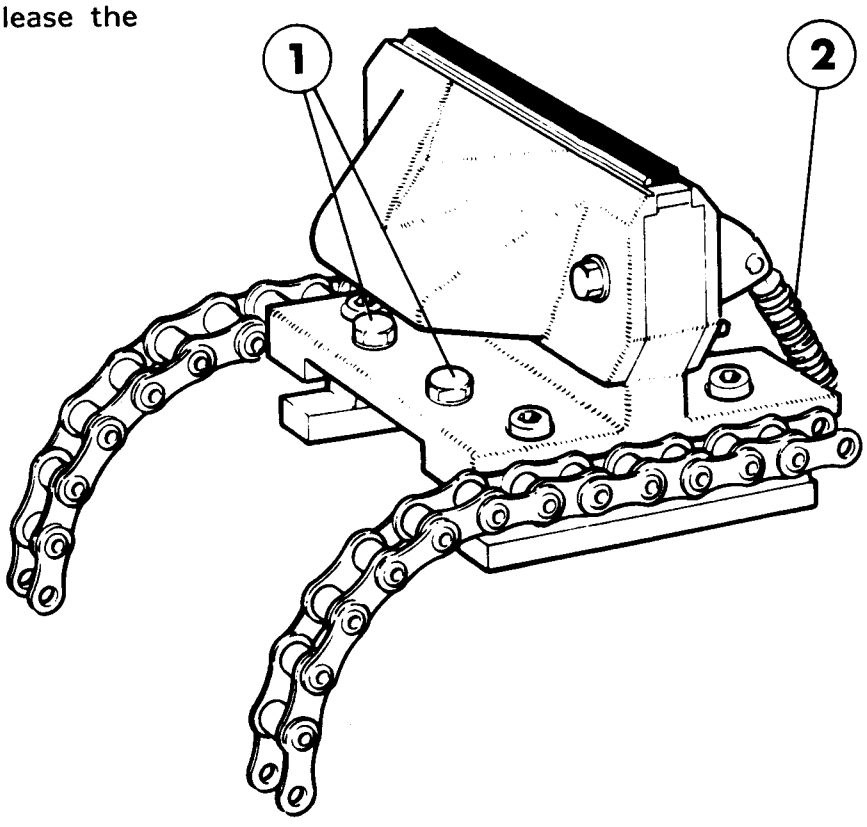

REMOVAL

Remove the tie rods (model 150 machine).
Undo the mounting screws (1).

Caution! Leave the last screw in place to prevent the side from dropping out.

Loosen the clamp (2) for the electrical connection (3) by loosening the nut (4) at the rear, before the heating side is lowered (IH machines).
Undo the last screw and lower the side on to the trolley (7).

Disconnect the quick-coupling (5) for lubrication oil and the hydraulic oil pipe (6) for the pressure side.

Disconnect the electrical cable (8) (TPC machines).

1 Mounting screw
2 Clamp
3 Electrical connection
4 Nut
5 Quick-coupling
6 Hydraulic oil pipe
7 Trolley
8 Electrical cable (TPC)
9 Lifting tackle (model 500-machines)

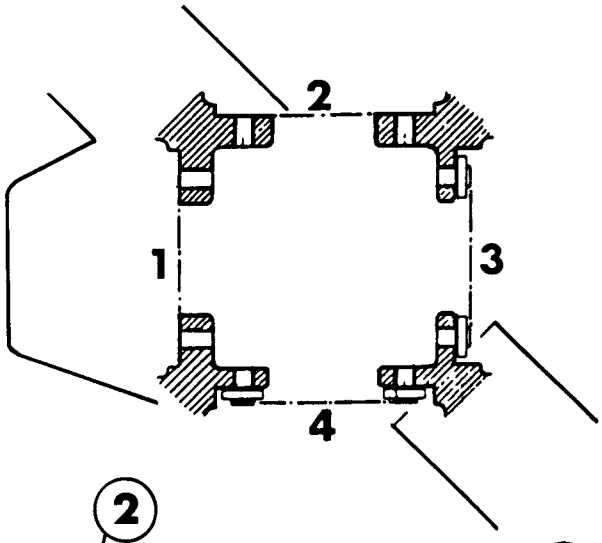

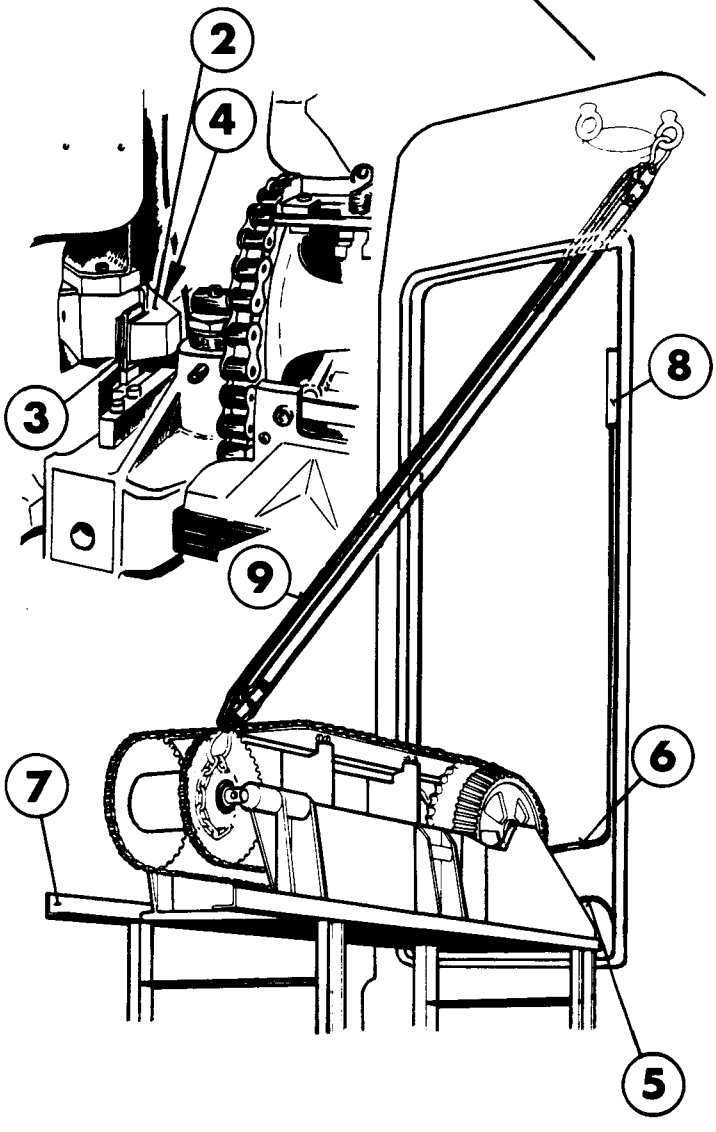

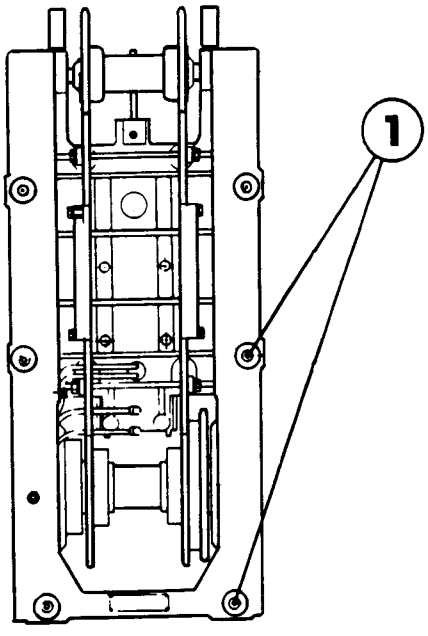

2/MS 302-21
31

CHECK-MEASURING

Fit the heating side (1), without twin chains, in the frame.

Check distances A and B between the lugs (5) and the pressure chains (6) of the heating side acc to page 341-51.

Adjust as required with shims (7) under the pressure chain beds of the heating side. Lower the other side (2).

Fit the fixture, and check the side in the same way.

Footnote. Although measurement A has a tolerance of 0.2 mm the height of the pressure chains should be as similar as possible.

Check the height of the chain rails (8) acc to page 310-51 and 313-51.

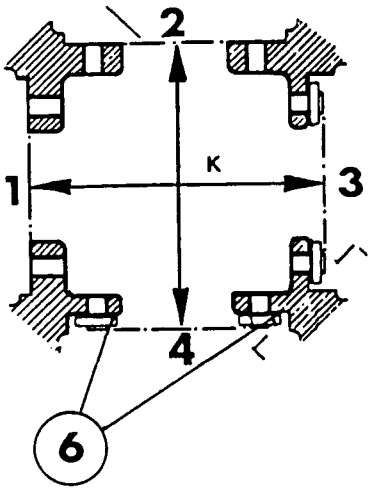

Measure-ment	TC/300 TCA/300
$A^{+0}_{-0.2}$	430.3
B	A -(0.1-0,2)
C	17
$D^{+0}_{-0.1}$	18
$E^{+0}_{-0.2}$	219.4
F	E -1
G +0.5	190.0
H	65
K +0.1	631.5

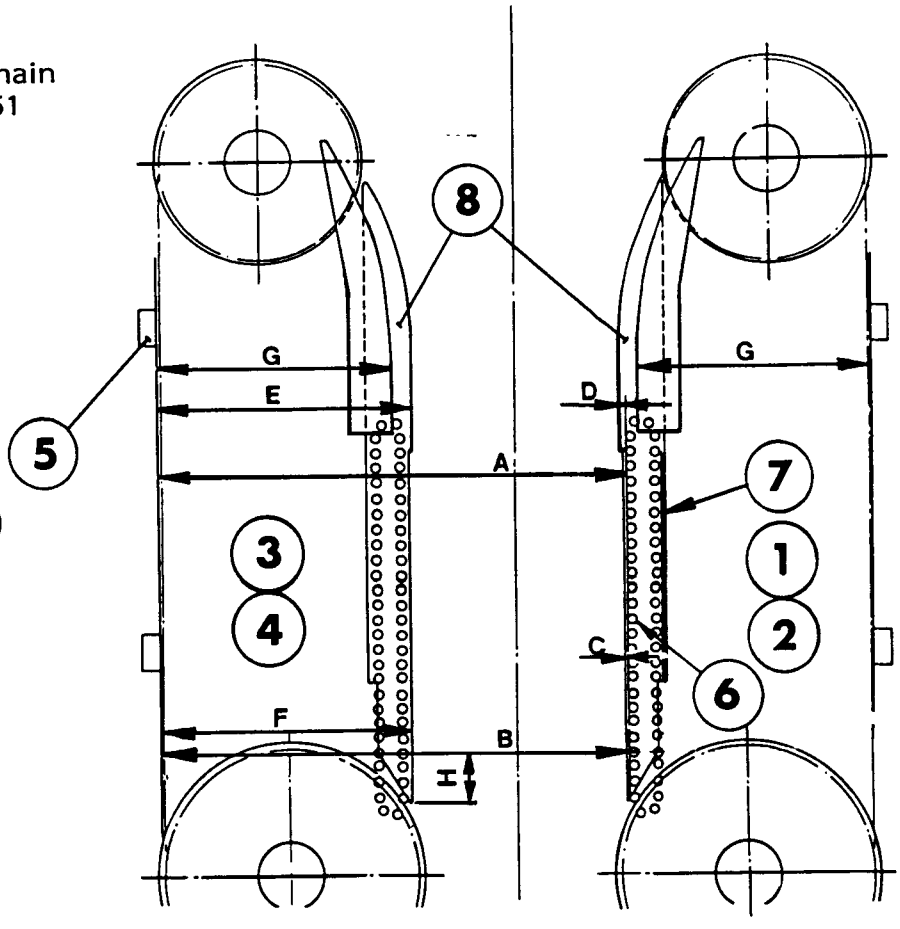

1 Heating side
2 Heating side
3 Pressure side
4 Pressure side
5 Mounting lug
6 Pressure chain on heating side
7 Shim 268076-1 (0.1 mm)
-2 (0.2 mm)
-3 (0.3 mm)
8 Chain rail

REMOVAL

Remove the chain tensioner (1) with the aid of a spanner.

When assembling the reconditioned chain tensioner, check it for free movement.

1 Chain tensioner

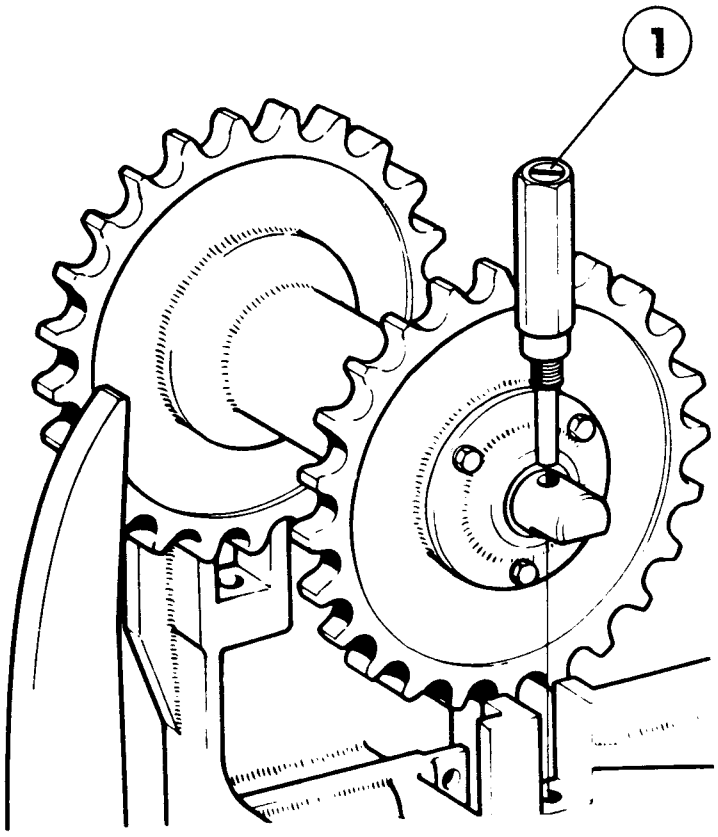

OVERHAUL

Overhaul and clean all components.

Replace the cup springs (5) and lubricate all components generously with grease (code F, Lubricant Recommencations) on assembly.

Screw in the setting plug (2) so that the guide pin (3) reaches the bottom of the spring cartridge (1) and then unscrew it one revolution.

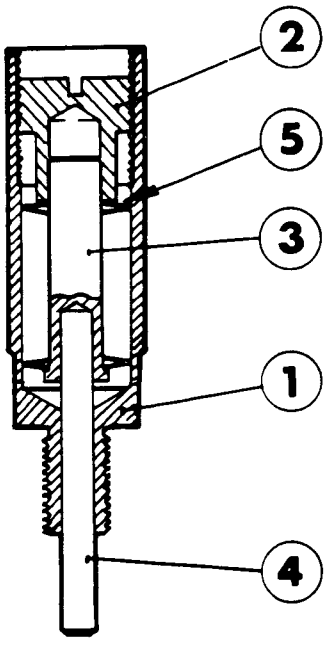

1 Spring cartridge
2 Setting plug
3 Guide pin
4 Pin
5 Cup spring 90016-5 (26 off)

CHECKING

After overhauling the frame sides, it may happen that every other package from the 16 jaw pairs is shorter than the others, although the packages in each one of the two series of eight weigh the same.

Adjustment

Adjustment is done on sides 2 and 4.

a) Package (1) is to short:

Loosen the upper setting screw (7) on the yokes (6) and tighten the lower setting screws (8).

b) Package (2) is too short:

Loosen the lower setting screw (8) on the yoke (6) and tighen the upper setting screws (7).

1 Package, upper seal made by sides 1 and 3.
2 Package, upper seal made by sides 2 and 4.
3 Seal made by sides 1 and 3.
4 Seal made by sides 2 and 4.
5 Longitudinal seal, (out of sight behind)
6 Yoke on lower sprocket
7 Upper setting screw
8 Lower setting screw

Check that the heating ribbons are symmetrically opposed to the pressure rubbers, acc to page 301-11.

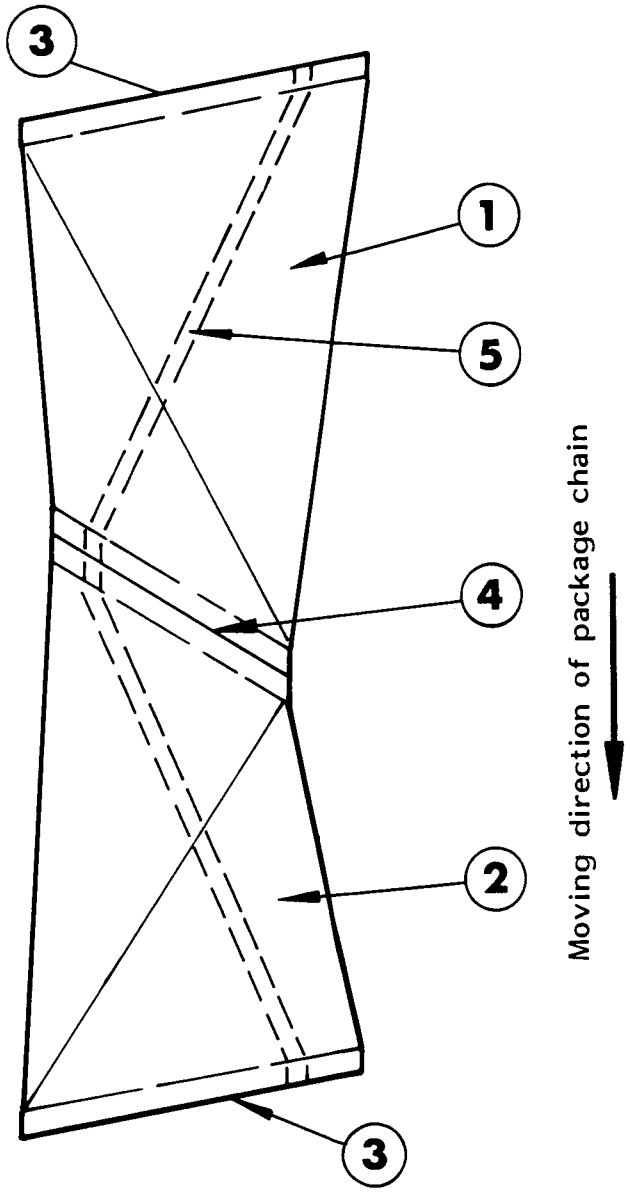

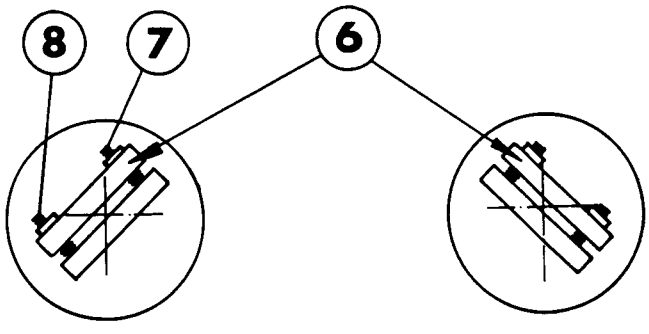

Side 2 **Side 4**

CHECKING

Check the holes in the round shafts (1) and in the flat (2) with the gauge (5). If the gauge enters the holes, the holes are bigger than A mm, and the chain should be replaced.

Check the pivots (3) with the gauge (6). If the the pivots enter the gauge the pivots are smaller than B mm, and the chain should be replaced.

Check the centre-to-centre distance between two flat axles. If it exceeds C mm the chain should be replaced.

Layout the chain on the floor and measure the length between the centres of the outer chain rollers (the jointing link not included). If the length exceeds D mm, the chain should be replaced.

Footnote: All four twin chains must be replaced simultaneously as a set.

Machine type	A	B	C	D
6302-6332	5.2	4.7	210.5	1660
6303-6335	5.2	4.7	229.6	1813
6305-6335	8.2	7.7	290.0	2305

1 Round shaft
2 Flat shaft
3 Pivot
4 Twin chain
5 Gauge
6 Gauge

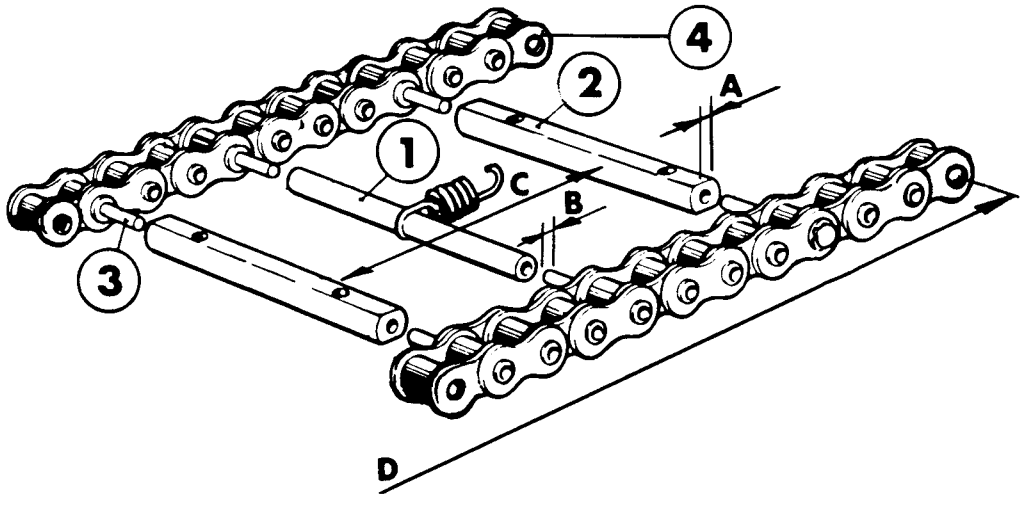

REMOVAL

Slacken the chain tensioners (1).

Remove the chain locks and pull out the chains.

1 Chain tensioner

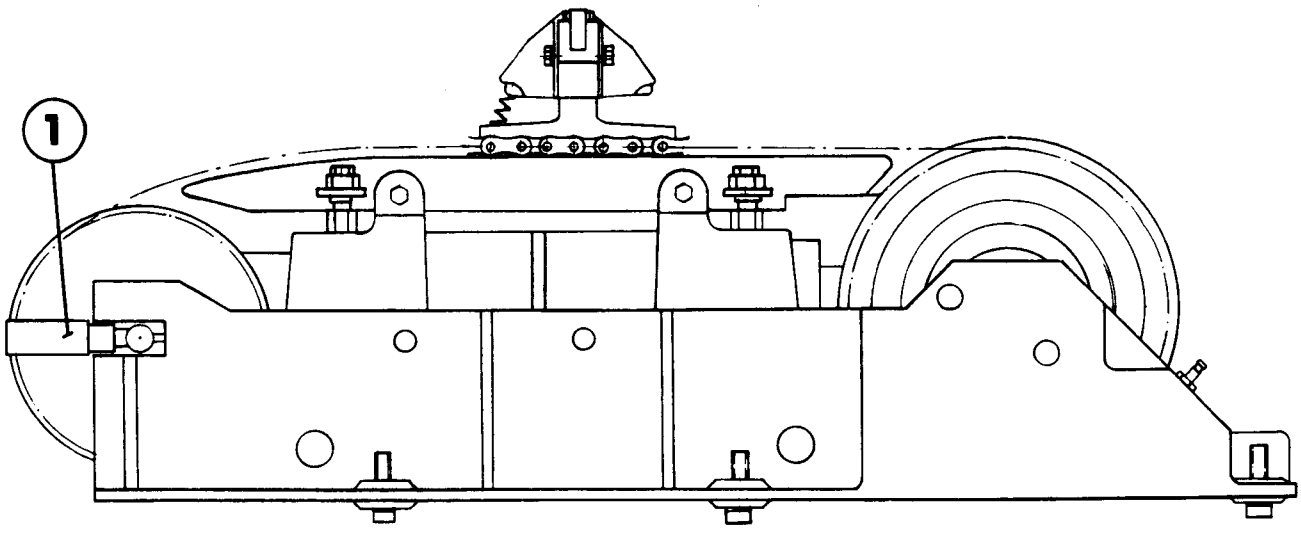

FITTING

Make sure that a flat axle (1) is aligned with the indication hole (2) in the sprocket. Tighten the chain tensioners (3).

1 Flat axle
2 Indication hole
3 Chain tensioner

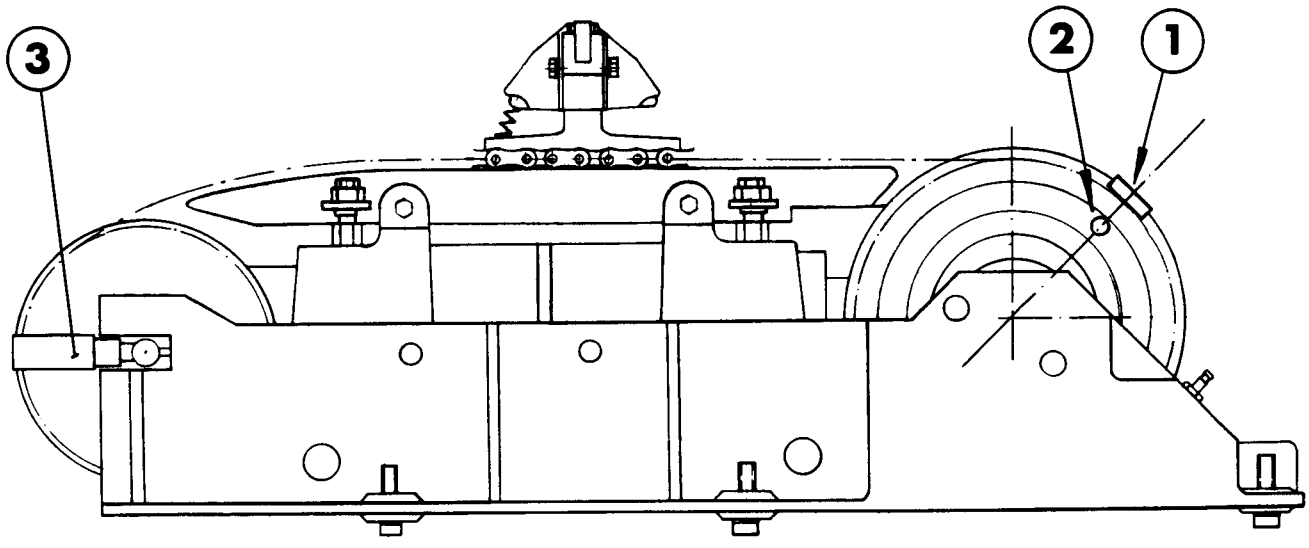

REMOVAL/CHECKING

Remove the rails by undoing the screws (2).

Check the recess of the rails by means of a feeler gauge (5). The recess must not be smaller than 0.7 mm. If it is, replace the rails.

Check and, if required, clean the plungers (1).

On fitting the rails, push them down so that the adjustment nuts (3) enter in the slots. Fit and tighten the screws (2).

Check that the rails move against the plungers (1) when the rail are pressed down with force.

1 Plunger
2 Screw
3 Adjustment nut
4 Locking screw
5 Feeler gauge 782301-101

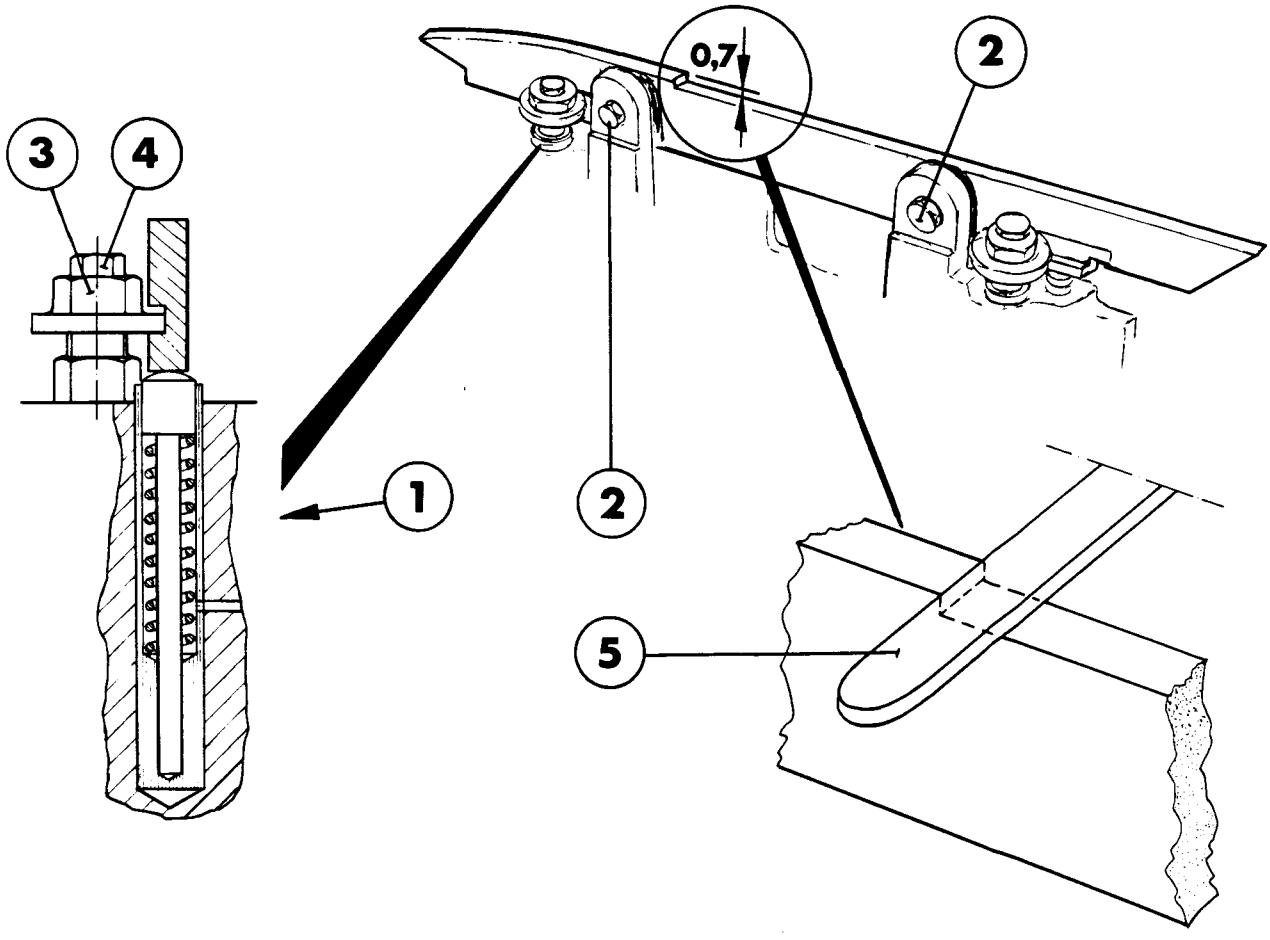

SETTING

Measure, by means of the template (5) and a feeler gauge (6), the gap C between the pressure chains (1) and the chain rails (2).

Place the template (5) on the pressure chains (1). Adjust the chain rails by loosening the screw (3) and turning the nut (4). Correct gap D between the chain rails and the template is 0.2 mm.
Tighten the screw (3) when correct height has been set.

Measurements according to page
304-51 (TC, TCA/150)
302-51 (TC, TCA/300)
303-51 (TC, TCA/500)

1 Pressure chain
2 Chain rail
3 Locking screw
4 Adjusting nut
5 Template 77076 (TC, TCA/150)
77077 (TC, TCA/300)
77078 (TC, TCA/500)
6 Feeler gauge 782301-101

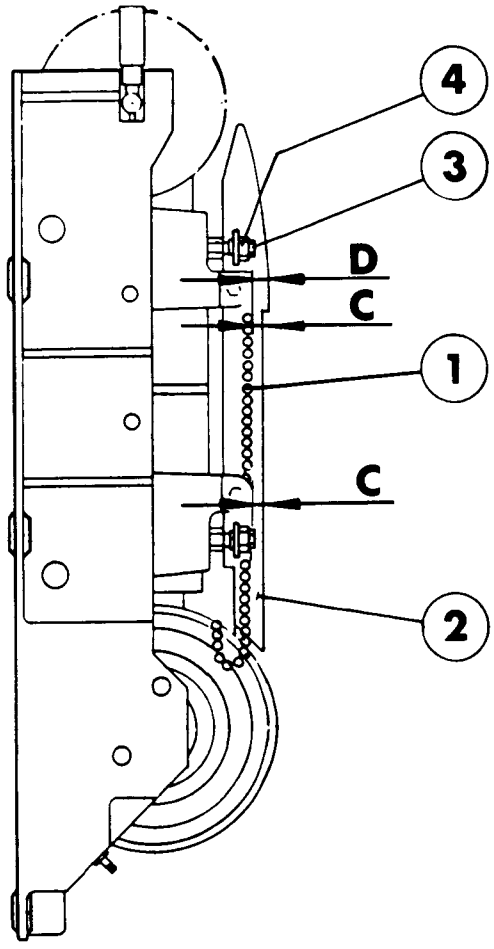

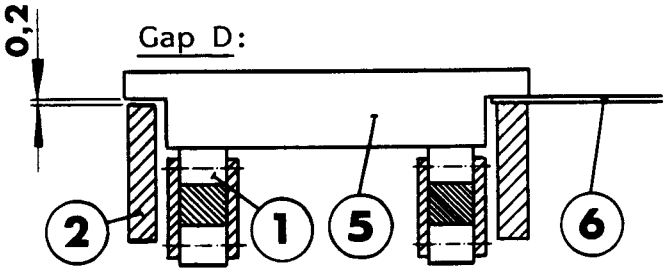

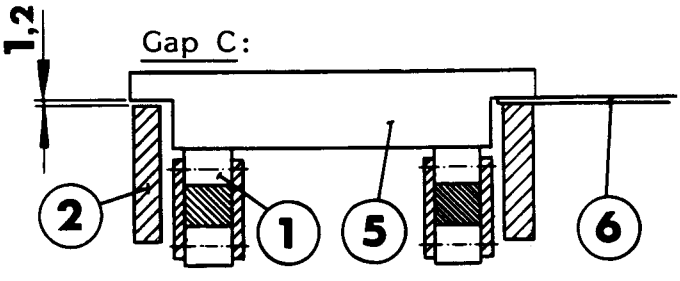

SETTING

Position the setting tool (2) into the mounting hole on the frame side.

Hold a set-square firmly close to the tool and check the height at the recessed part on the nearest rail.

To adjust the height, start adjustment at the lower fixing point.

Adjust the chain rails by loosening the screw (4) and turning the screw/nut (5).

Make sure that the setting is maintained after tightening the screw (4).

The set-square should barely touch the rail. Move the tool to the other side and repeat the checking and adjustment procedure.

1 Chain rail
2 Setting Tool 75642 (TC, TCA/150)
2 Setting Tool 75641 (TC, TCA/300)
2 Setting Tool 75615 (TC, TCA/500)
3 Setting Tool 786230-104
4 Locking screw
5 Adjustment screw/nut

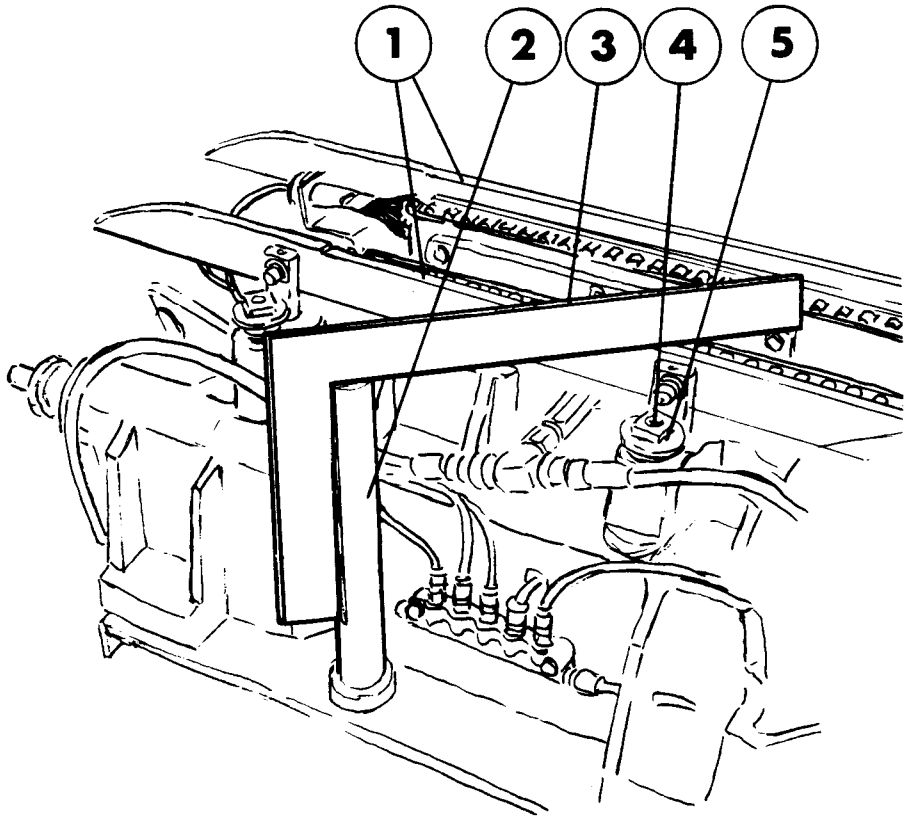

CHECKING

Check the wear of the cam (1).
If it is scored deeper than 0.5 mm, replace the cam.

1 Finger cam

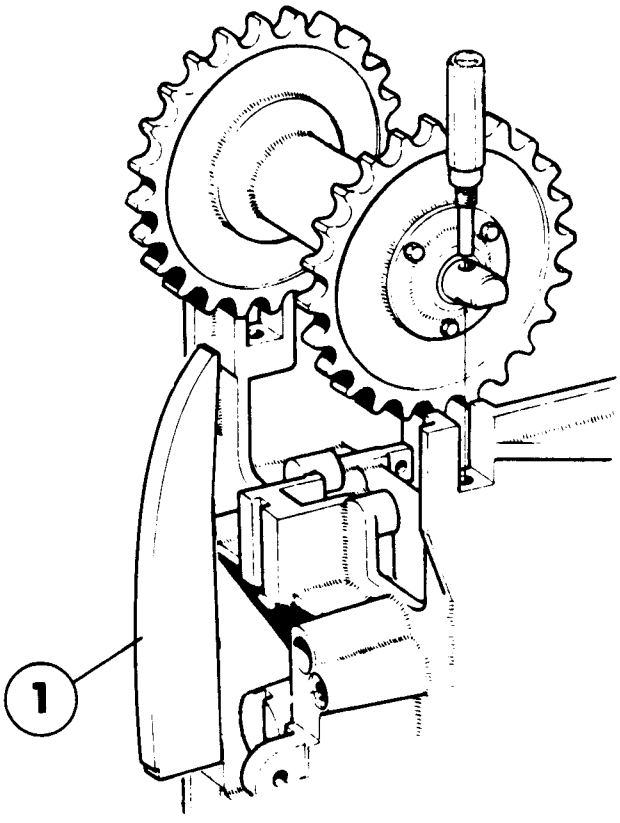

The figure shows TC,TCA/300

OVERHAUL

Remove the lubrication tube (1) with its nipple and undo the mounting screws (2) for the bearing housings (3). Remove the gear group from the frame side.
Remove the circlips (4), and pull off the bearings (5) with the aid of a puller. Replace the ball bearings and O-rings (6).

Replace the gears (8) and the sprockets (9) and (10), if they are worn or damaged.

Check that the grease nipples (7) let through grease. If not, replace them. Reassemble in reverse order. Grease with a grease gun after assembly.

1 Lubricating pipe
2 Mounting screw
3 Bearing housing
4 Circlip
5 Ball bearing
6 O-ring
7 Grease nipple
8 Gear
9 Sprocket
10 Sprocket

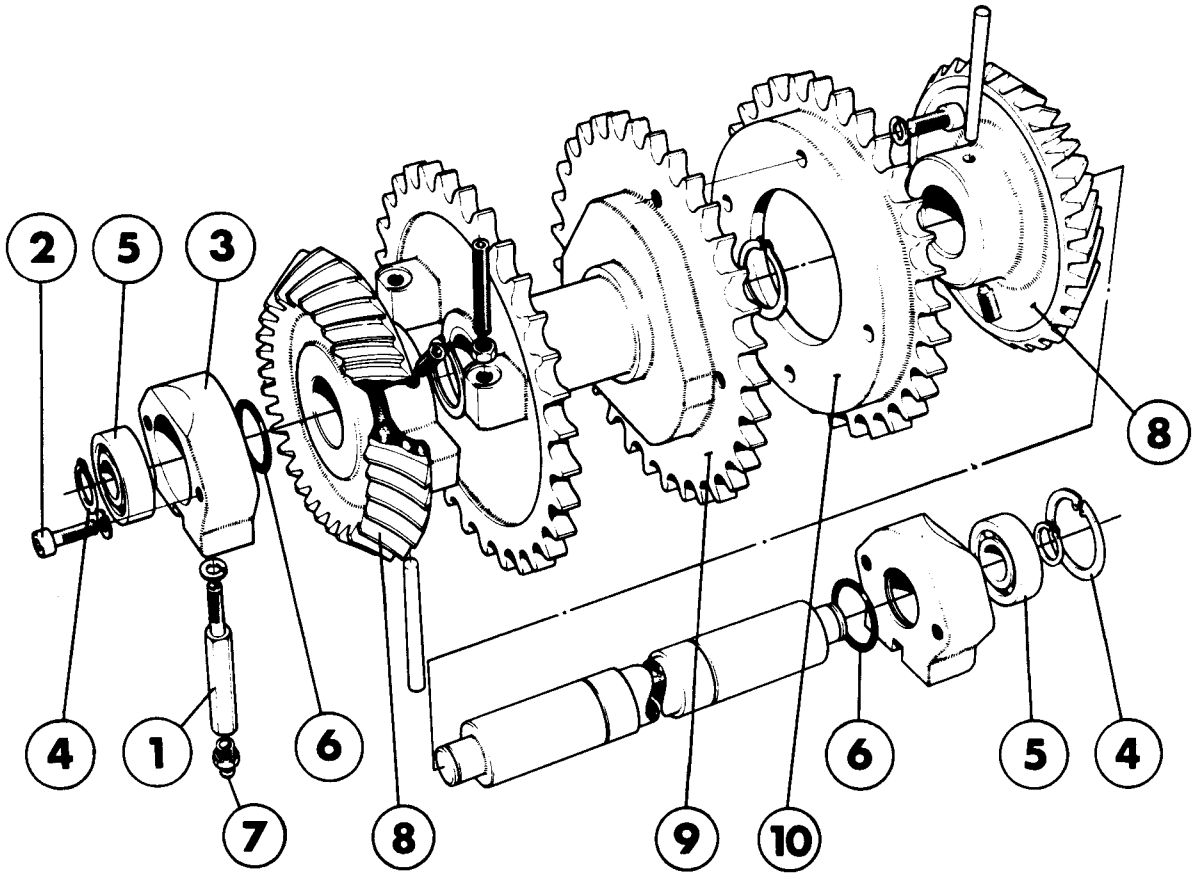

OVERHAUL

Remove the bearing covers (1) and the circlip (2). Push out the shaft (5). Replace the ball bearings (3) and bearing covers.

Fill with grease and reassemble in reverse order.

Grease with a grease gun after assembly.

Check that the grease nipple (4) lets through grease. If not, replace it.

1 Bearing cover
2 Circlip
3 Ball bearing
4 Grease nipple
5 Shaft

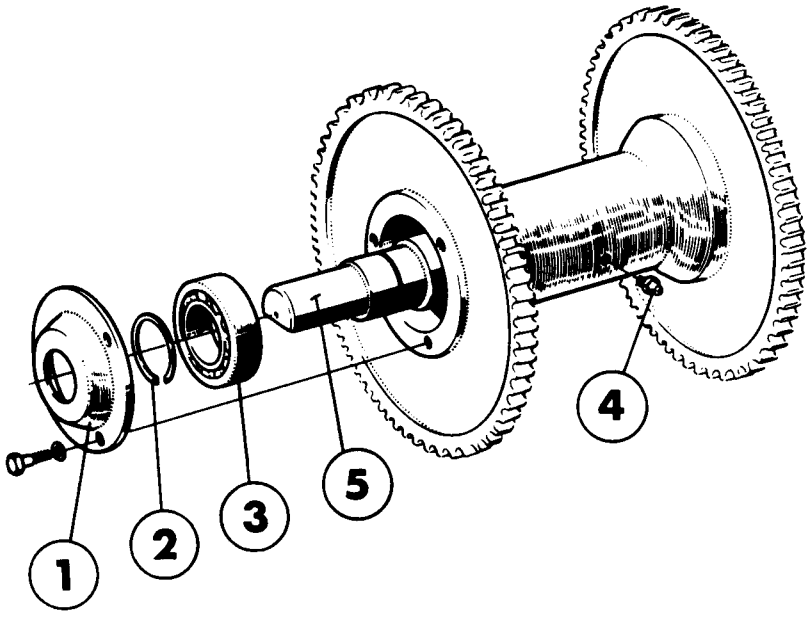

CHECKING

Check that the chains (3) are intact and run smoothly.

1 Pressure side
2 Heating side
3 Chain

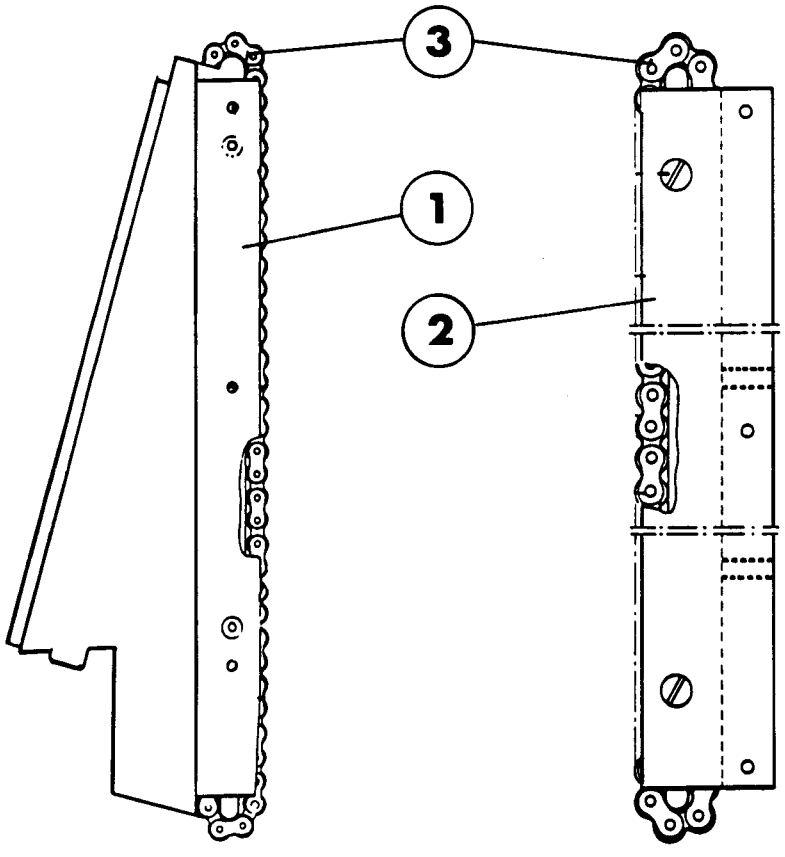

REMOVAL

Remove the connection for hydraulic oil (1). Undo the mounting screws (2) for the yoke (5). Disconnect the lubrication oil hoses (3).

Lift out the two pressure roller holders (4) together with the yoke.

1 Hydraulic oil connection
2 Mounting screw
3 Lubrication oil hose
4 Pressure roller holder
5 Yoke

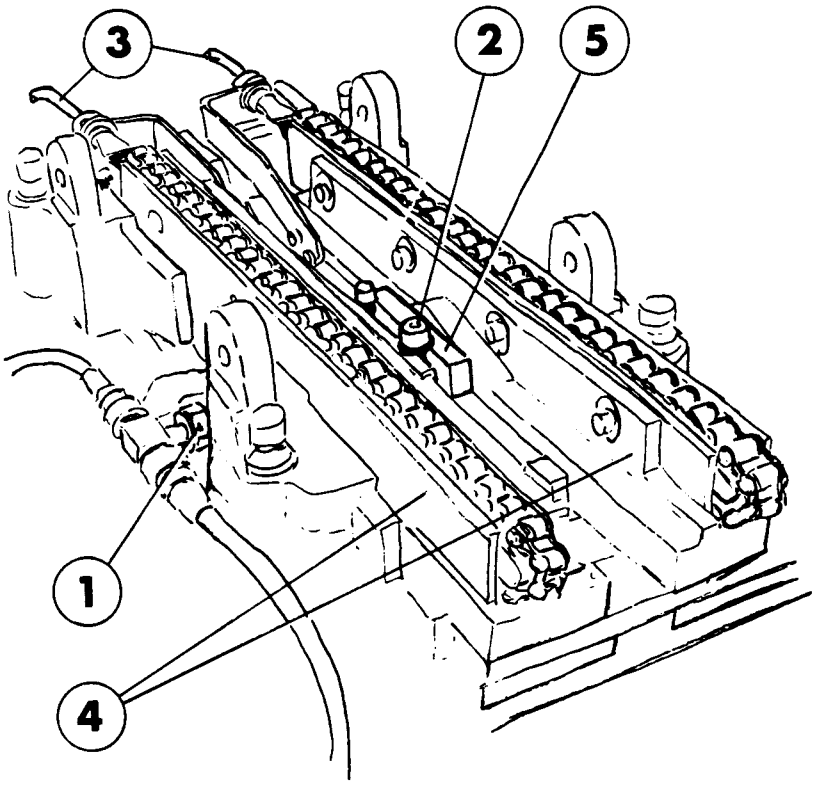

OVERHAUL

Undo the screws (1) and remove the pressure chain (2).

Remove the circlip (3) and pull out the piston (4).

Clean all parts.

Replace the piston seal (5). Check the piston and the cylinder lining (6).

Replace the roller plate (7).

Check the slide plate (8) and replace it in case of corrosion or wear.

Fit an overhauled exchange pressure chain.

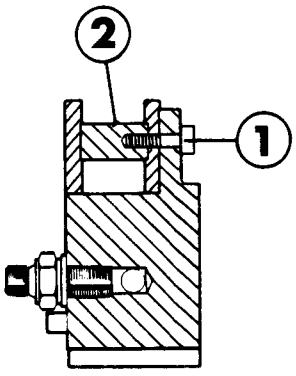

1 Mounting screw
2 Pressure chain
3 Circlip
4 Piston
5 Piston seal
6 Cylinder lining
7 Roller plate
8 Slide plate

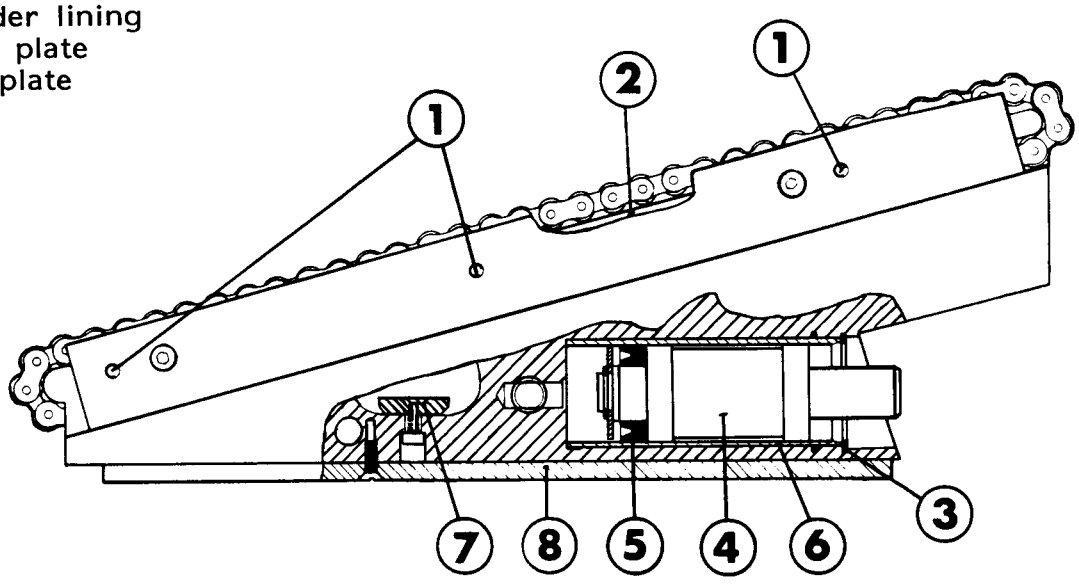

FITTING

Put the two pressure roller holders together, held by the yoke (5), and place the whole assembly in position in the frame side.

Secure the eccentric axle (6) with the screw (1). Adjust the yoke (5) so that the pressure roller holder, held down by the roller (7) on the concentric end of the eccentric axle, has a play of appr 0.5 mm at its upper end. Tighten the screw (2). Loosen the screw (1). Turn the eccentric axle so the other pressure roller holder also gets a play of appr 0.5 mm at its upper end. Tighten the screw (1).

Check the play of the pressure roller holders and that they move freely.

Connect the hydraulic oil (3) and lubrication hoses (4).

Check the position and function of the lubrication brushes (8).

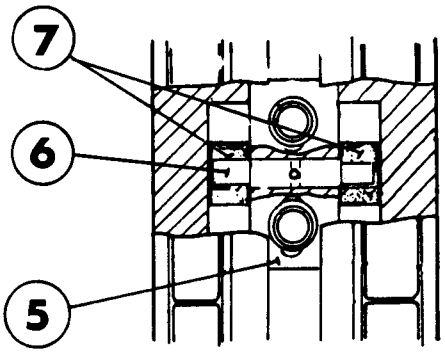

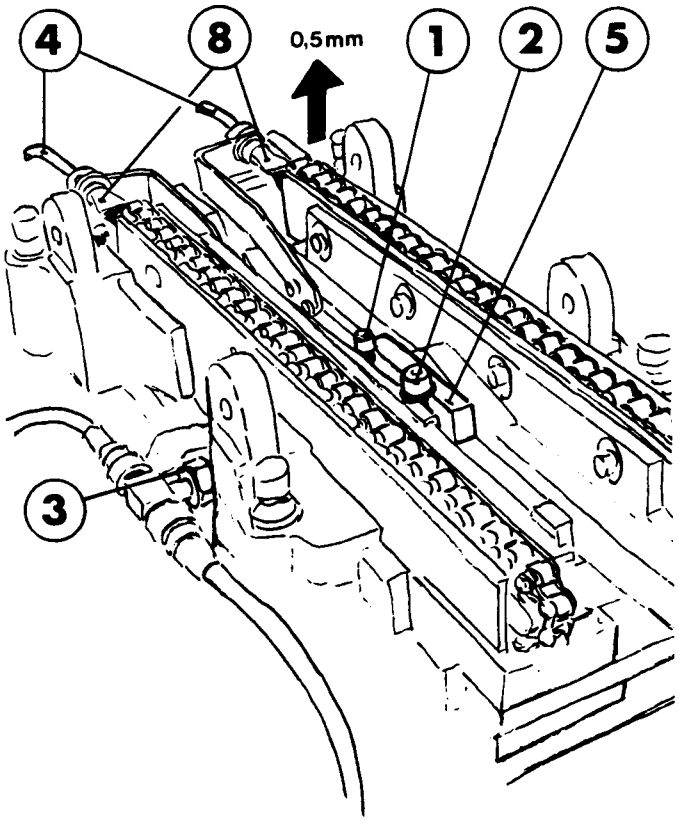

1 Locking screw
2 Mounting screw
3 Hydraulic oil pipe
4 Lubrication oil hose
5 Yoke
6 Eccentric axle
7 Roller
8 Lubricaton brush

CHECKING

Clean the oil inlet (1) and grooves (2) and check for wear and corrosion.

1 Oil inlet
2 Oil groove

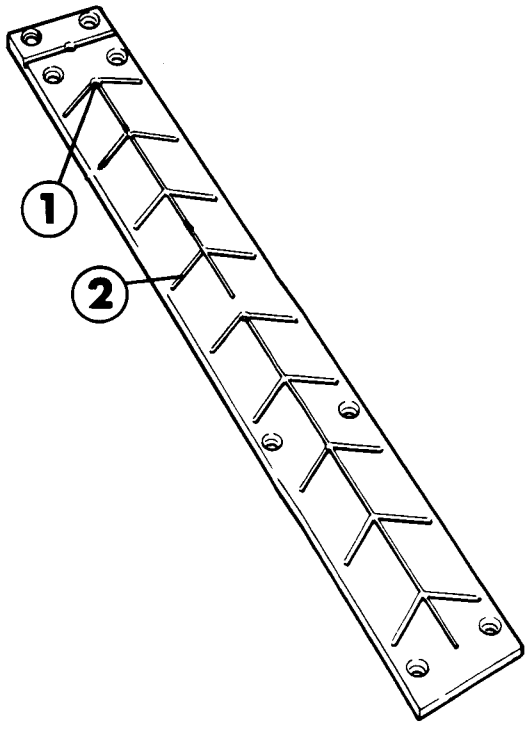

OVERHAUL

Undo the screws (1) and remove the side piece (2).
Remove the chain bed (4) and the chain (3).

If there are grooves or scoring deeper than 0.2 mm in the chain bed, turn the chain bed around, or if this has already been done, replace the chain bed.

Check that the diameter of the chain rollers is not less than 11.8 mm and that the chain in other respects does not appear worn.

Footnote! When fitting the chain bed, observe that its ends of the chain bed are differently chamfered. The shorter entry chamfer should be closest to the lubrication brush.

1 Mounting screw
2 Side piece
3 Pressure chain
4 Chain bed

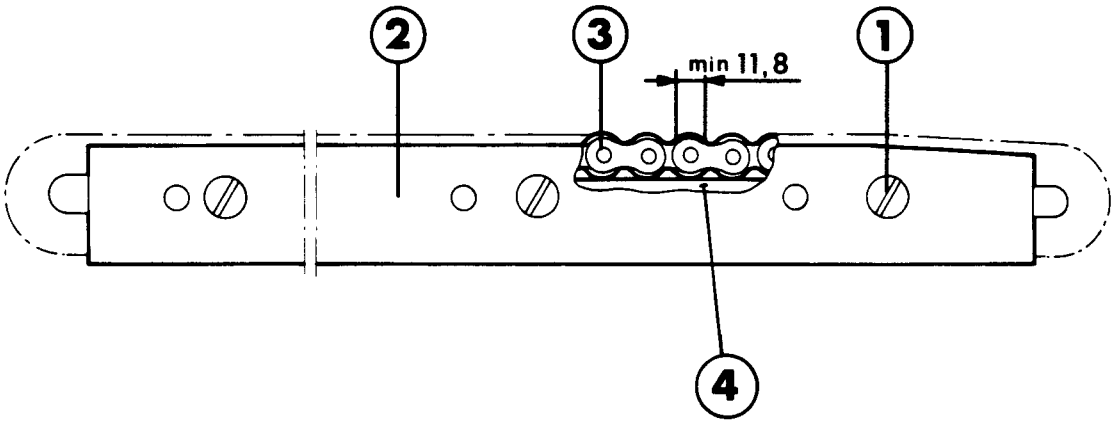

CHECKING

Check that the pressure rubber is intact and that it has not moved laterally.

Check that the end supports are intact.

Check that the roller has not been worn flat and that it rotates freely.

Check that the recess of the rubber holder is located to the left of the pressure jaw on side 3 and to the right on side 4.

1 Pressure rubber
2 End support
3 Roller
4 Rubber holder
5 Recess

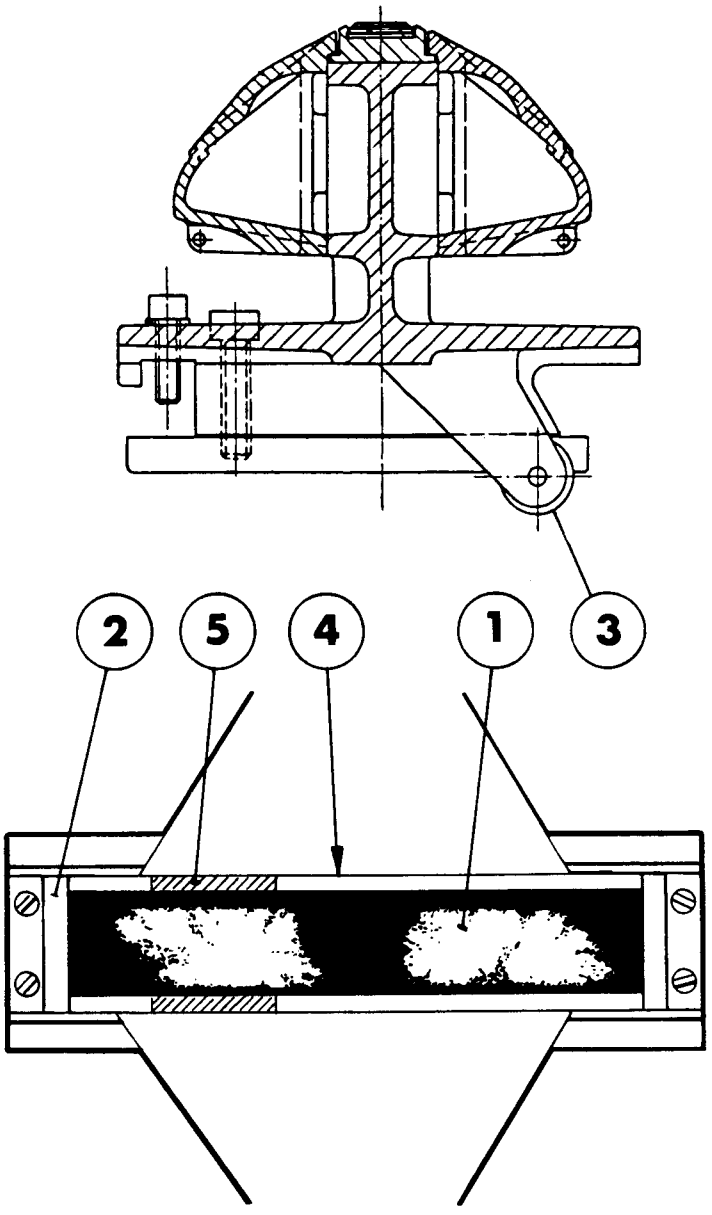

OVERHAUL

Remove the pressure rubber (1), clean the rubber holder (2), and fit a new pressure rubber.

Replace the end supports (5) if they are damaged. Check the jaw rails (3) and replace them in case of visible wear.
Footnote! Always replace the rails in pairs.

Replace the roller (4) if it is worn flat or the diameter is less than A mm.

Clean all components and tighten all screws.

Footnote! Recheck of jaw height, see page 335-51.

1 Pressure rubber
2 Rubber holder
3 Jaw rail
4 Roller
5 End support

Roller	Ø A mm
TC/150, TCA/150	15
TC/300, TCA 300	18
TC/500, TCA 500	21

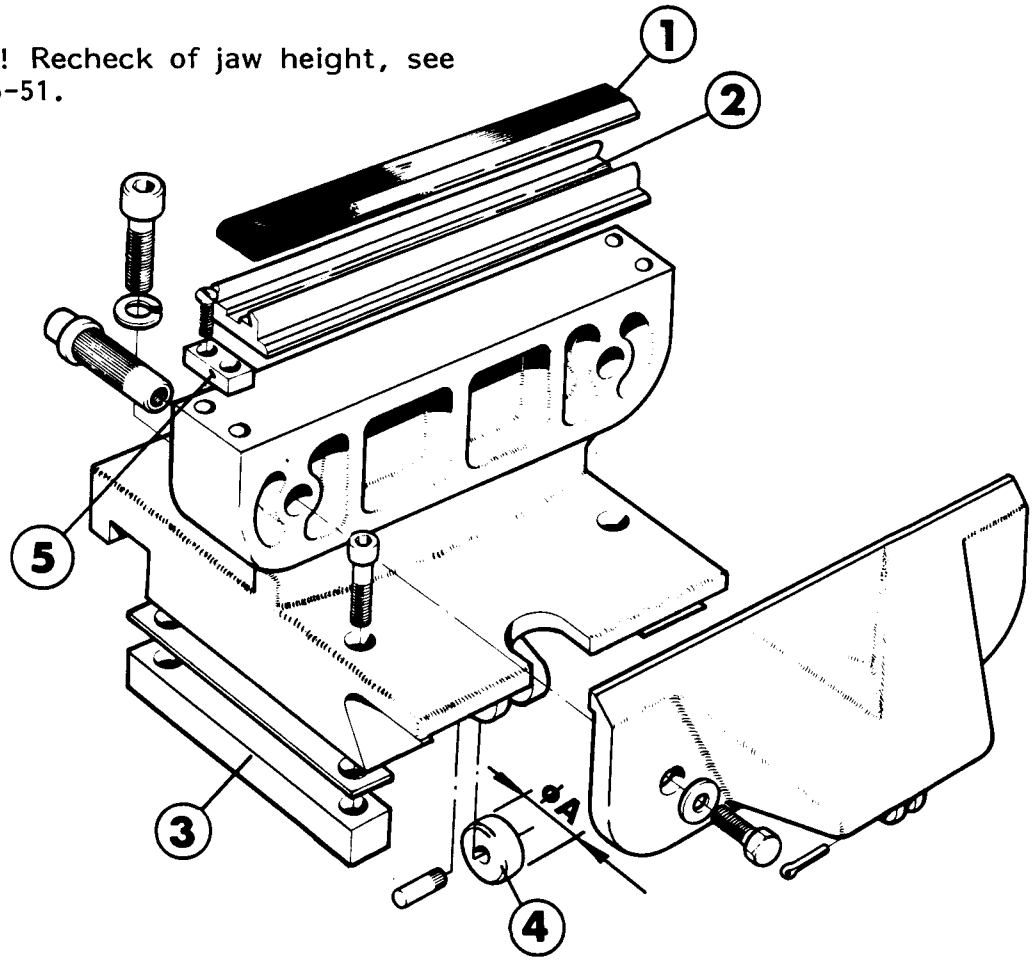

CALIBRATION

a) Adjust the checking fixture (2) by means of the gauge (1) to match the type of jaw.
b) Zero the dial indicator (3).
c) Position a jaw on the steel rails (4) and move the dial indicator along the jaw.
d) If the deflection of the dial indicator deviates by more than ± 0.05 mm from the set value, adjust the jaw height by putting a spacer (7) between the jaw (5) and the roller bar (6). Try to maintain best possible parallelity.

1 Gauge
2 Checking fixture V70027-2
3 Dial indicator
4 Rail
5 Jaw
6 Roller bar
7 Spacer 493071 TC/150, TCA/150
8028 TC/300, TCA/300
8023 TC/500, TCA/500

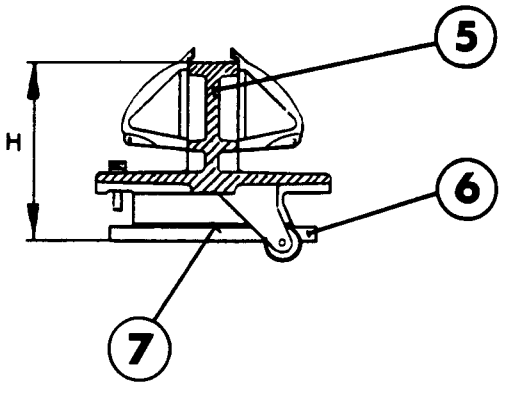

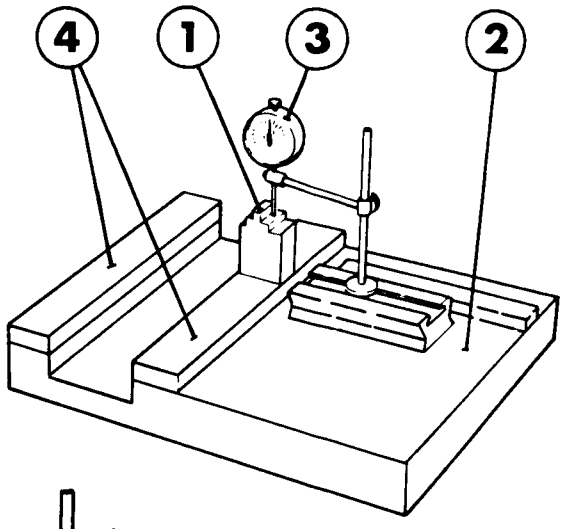

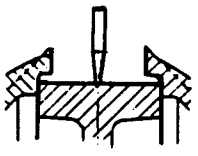

Heating jaw H $^{+0.1}_{-0}$
TPC-heating

TC/150, TCA/150	74.45
TC/300, TCA/300	104.3
TC/500, TCA/500	104.7

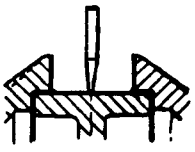

Heating jaw H $^{+0.1}_{-0}$
Inductive heating

TC/150, TCA/150	65.65
TC/300, TCA/300	95.5
TC/500, TCA/500	95.9

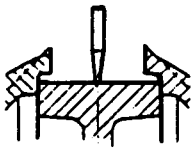

Pressure jaw H $^{+0.1}_{-0}$

TC/150, TCA/150	75.0
TC/300, TCA/300	104.0
TC/500, TCA/500	105.0

REMOVAL/FITTING

Undo the screws (1) and disconnect the lubrication oil pipe (2).

Remove the pressure chain.

Caution: Do not change the number of shims (3) under the chain bed!

When fitting the pressure chain holder, make sure the support screw (4) is not in contact with the rail.

After tightening the screws (1) adjust the support screw so that it is just touching the rail.

Lock with the nut (5).

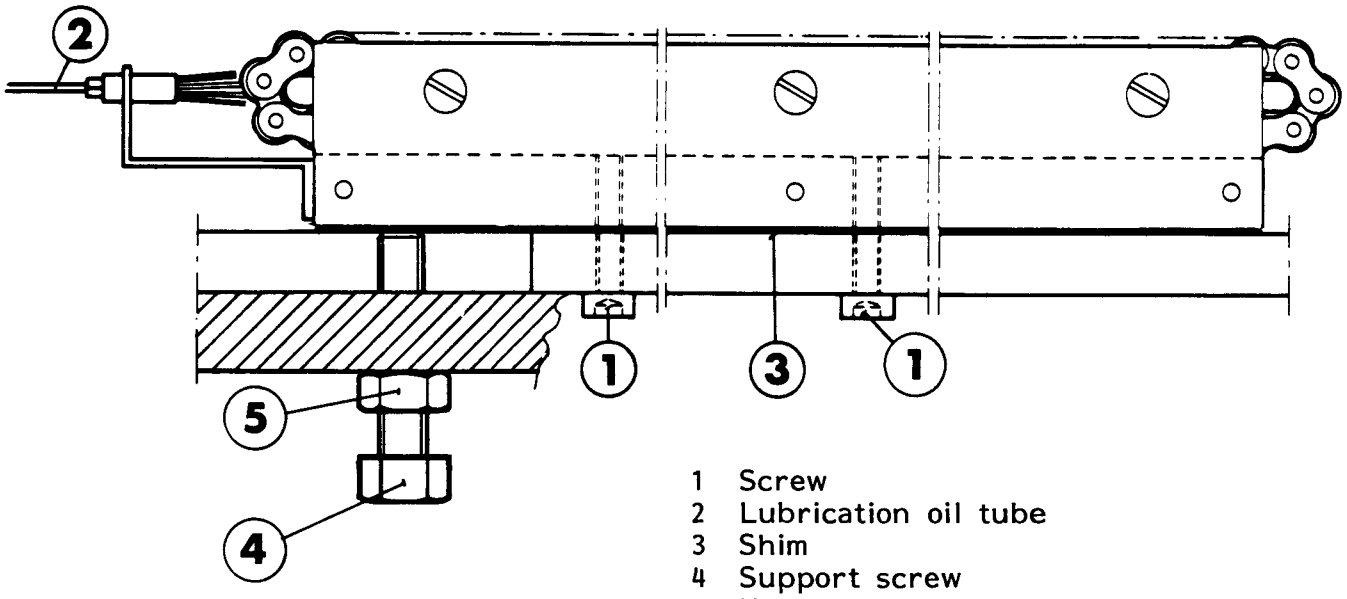

1 Screw
2 Lubrication oil tube
3 Shim
4 Support screw
5 Nut

2/MS 340-21

OVERHAUL

Undo the screws (1) and remove the side piece (2).
Remove the chain bed (4) and the chain (3).

If there are grooves or scoring deeper than 0.2 mm in the chain bed turn the chain bed around or, if this has already been done, replace the chain bed.

Check that the diameter of the chain rollers is not less than 11.8 mm or that the chain in other respects does not appear worn.

N.B. When fitting the chain bed observe that its ends are differently chamfered. The shorter entry chamfer should be closest to the lubrication brush.

1 Mounting screw
2 Side piece
3 Roller chain
4 Chain bed

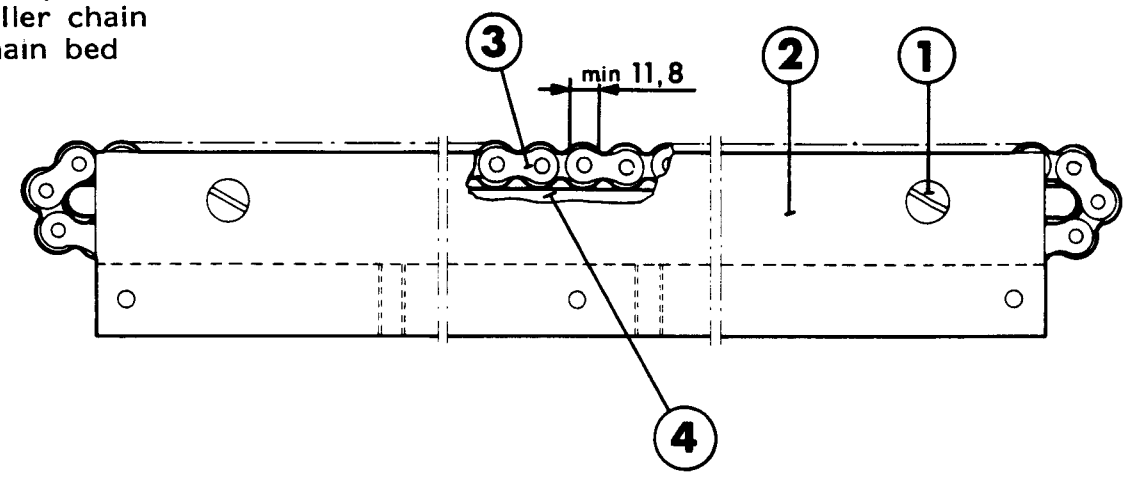

SETTING

Attach the rulers (1) to the stays (2). Attach the fixture to the mounting lugs of the machine body (fig 1).

Set the rulers in a position where the depth measuring gauge (4) coincides with the centre line of the rollers (fig 2).

Thereafter, secure the rulers with the four grub screws (3) at the back of the rulers.

Cont'd overleaf.

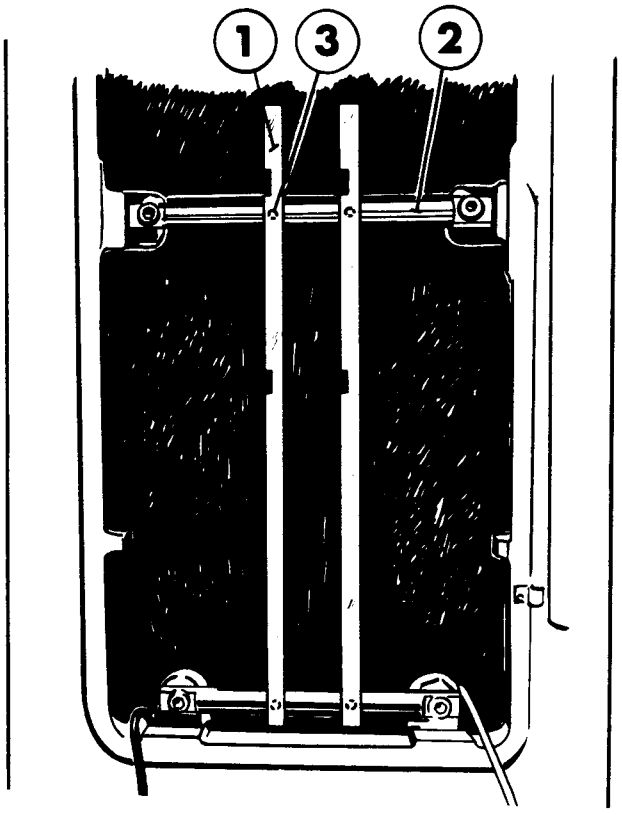

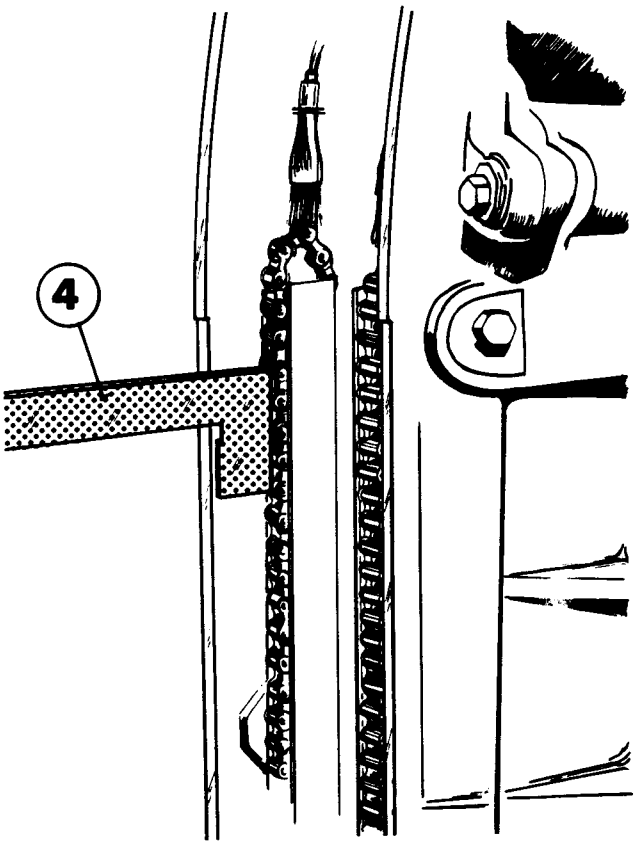

1	Ruler	V-75551-101 TC, TCA/150
2	Stay Fixture	V-75551-102 TC, TCA/300
3	Grub screw	V-75551-103 TC, TCA/500
4	Depth measuring gauge	V3-76568

2/MS 341-51:1
56

Cont'd from previous page.

Measure the setting at points A and B (fig 3).

The prescribed setting figures are listed on page MS 304-51 (TC/150)
MS 302-51 (TC/300)
MS 303-51 (TC/500)

4 Depth measuring gauge

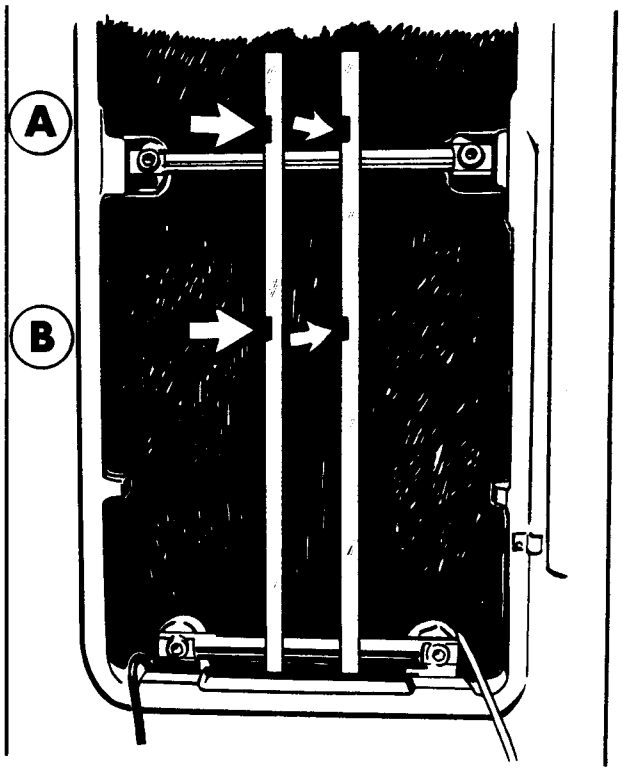

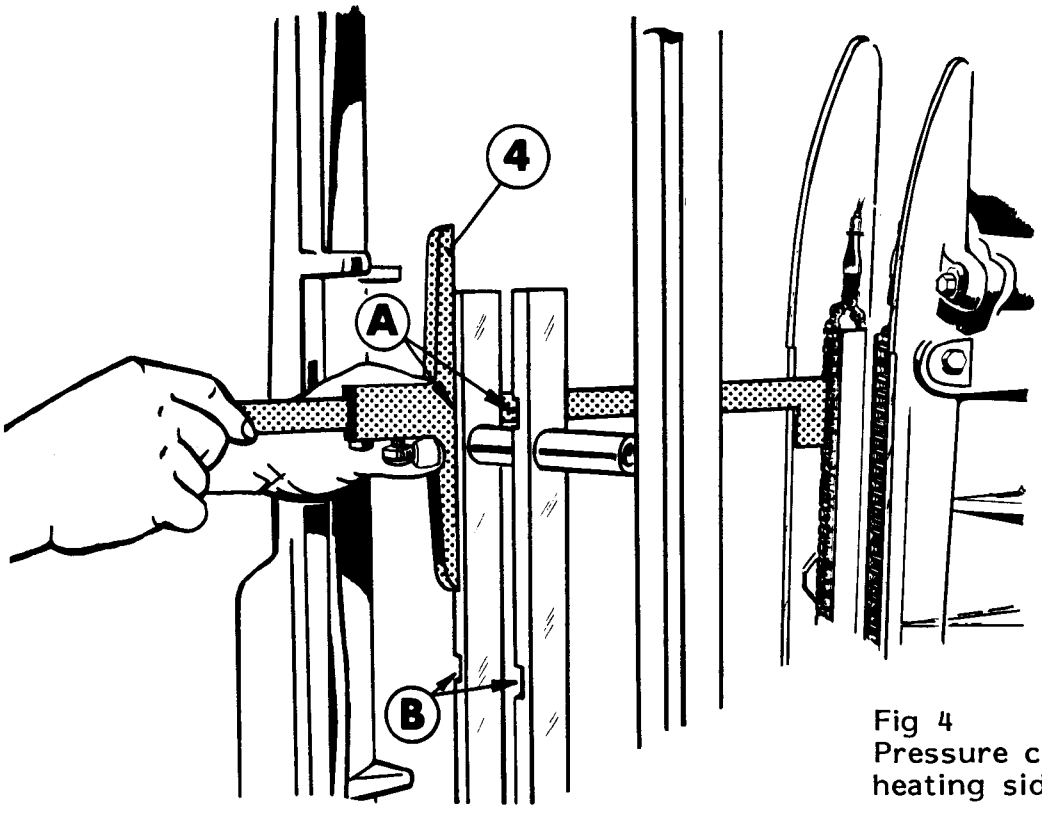

Fig 4
Pressure chain heating side

2/MS 341-51:2
57

CHECKING

Check that the rails (1) are parallel. Check the gap between the rails with the gauge (3). If it enters, the gap is too wide. Replace the contact rails. Normal gap between the rails should be 7.5 - 8 mm.

Also check that copper braid cables (2) are intact.

1 Contact rail
2 Copper braid cable
3 Gauge

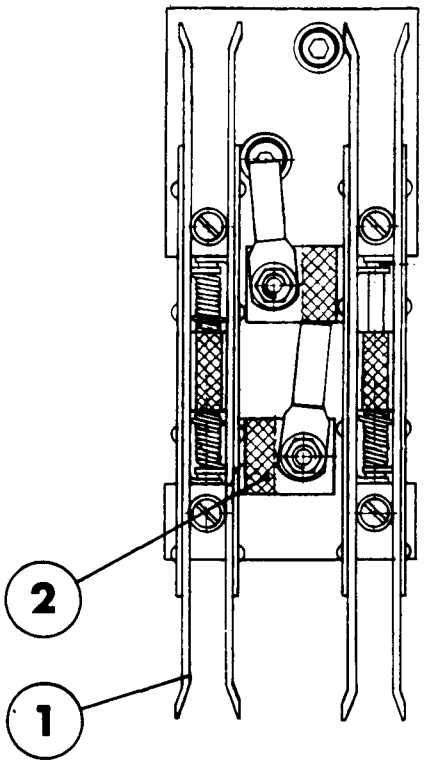

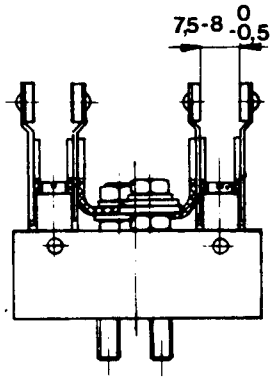

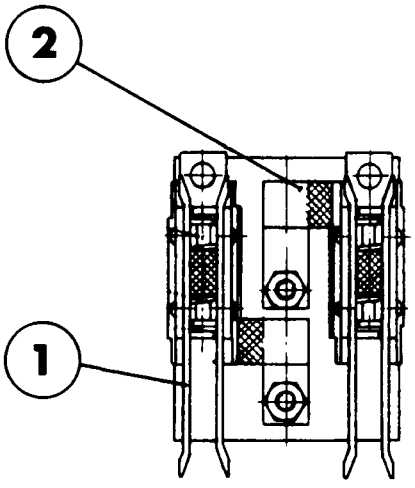

REMOVAL

Disconnect the cables (1) and undo the screws (2).

Remove the contact rail unit.

1 Cable
2 Screw

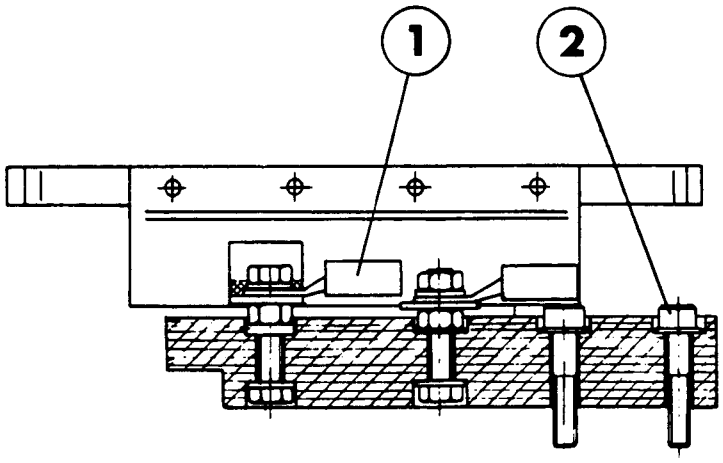

OVERHAUL

Loosen the screw (1) and pull out the axle (2).

Knock out the rivets (3) and remove the contact rails (4).
When rivetting the new rails, make sure that the rivet heads are flush with the rail.

Check the copper braid cables (5) and (6) and replace as required.

Footnote! Use a large soldering iron to avoid cold soldering.

Clean all components.

On assembly sure that the rails are parallel with a gap of 7.5-8.0 mm and that the spring force is sufficient.

1 Screw
2 Axle
3 Rivet
4 Contact rail
5 Copper braid cable
6 Copper braid cable
7 Spring
8 Washer

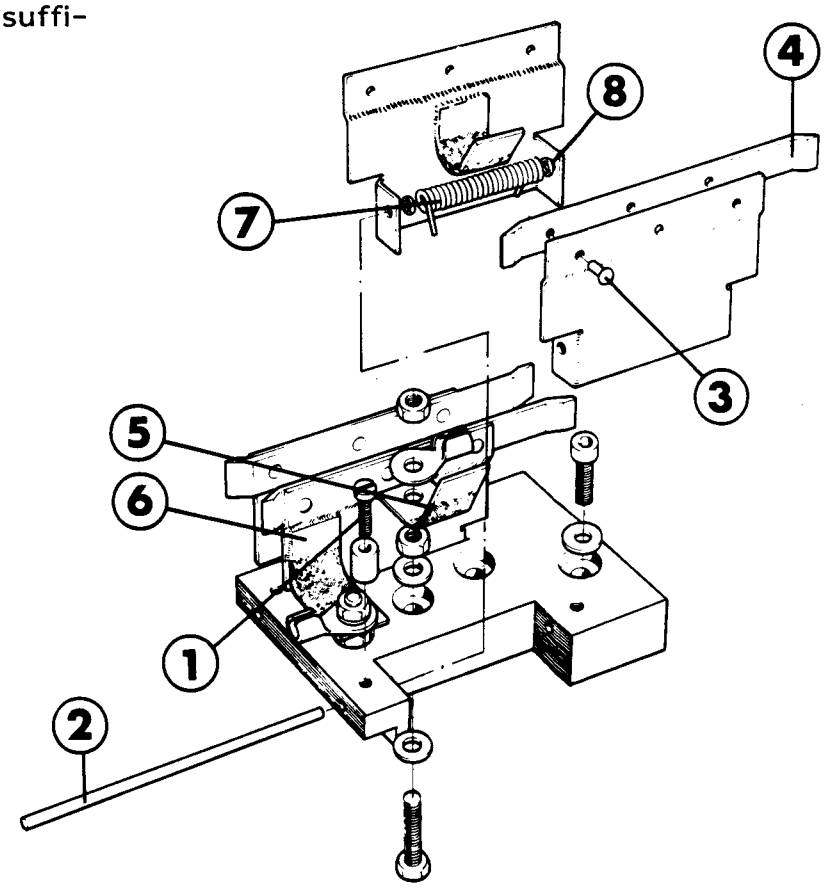

REMOVAL

Disconnect the cables (1).

Unscrew the nuts (2) and remove the washer (3) and the insulators (4) and (5).

Remove the contact rail unit.

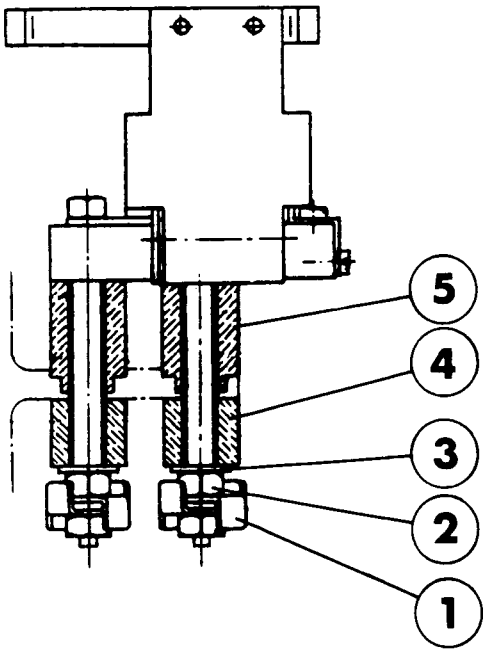

1 Cable connection
2 Nut
3 Washer
4 Insulator
5 Insulator

OVERHAUL

Remove the lock plate (1), pull out the axle (2), and unscrew the nut (3).

Knock out the rivets (4) and remove the contact rails (5). When rivetting the new rails make sure that the rivet heads are flush with the rail.

Check the copper braid cables (6), (7) and replace as required.
Footnote! Use a large soldering iron to avoid cold-soldering.

Clean all components.

Make sure when fitting that the rails are parallel with a gap of 7.5 - 8 mm and that tne spring force is sufficient.

1 Locking plate
2 Axle
3 Nut
4 Rivet
5 Contact rail
6 Copper braid cable
7 Copper braid cable
8 Spring

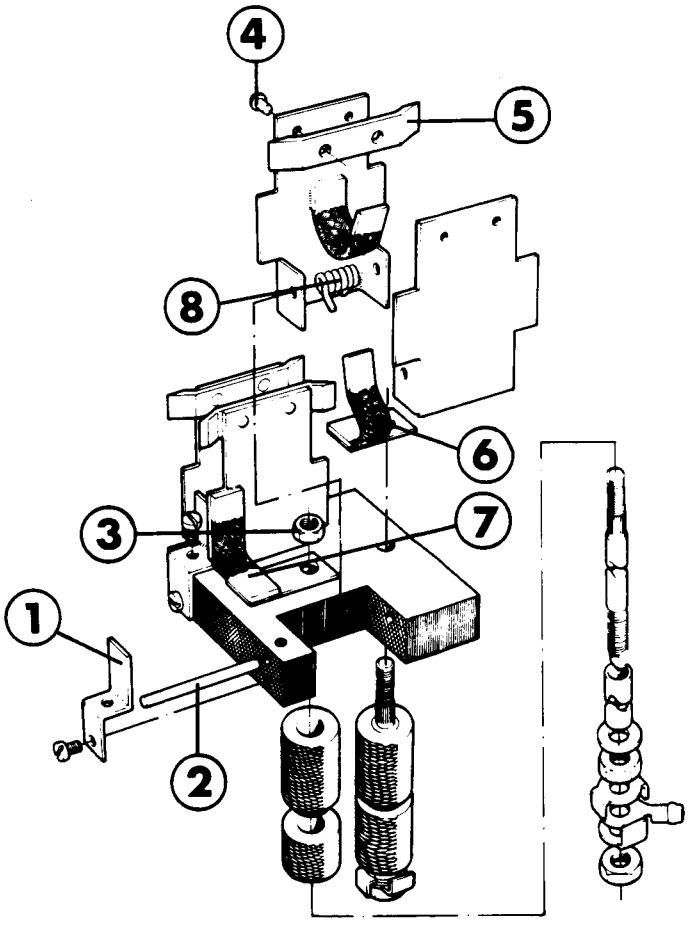

CHECKING

Check the heating ribbon rivets (1) and terminal tabs (2). In case of damage, replace the TPC bar (3). If required, clean the TPC bar.

Check that the roller (5) has not been worn flat and that it rotates freely and smoothly.

TC/300,/500, TCA/300,/500

Check the width of the carbon brushes (4). Replace any worn-down carbon brushes.

TC/150, TCA/150

Check the height of the carbon brushes (6) by means of a vernier callipers.
The minimum height is 9 mm. If the carbon brushes are not worn out, make sure that they are parallel with the chain rails, by measuring the gap.
Replace any worn down out carbon brushes.

1 Rivet
2 Terminal tab
3 TPC bar
4 Carbon brush
5 Roller
6 Carbon brush
7 Jaw rail

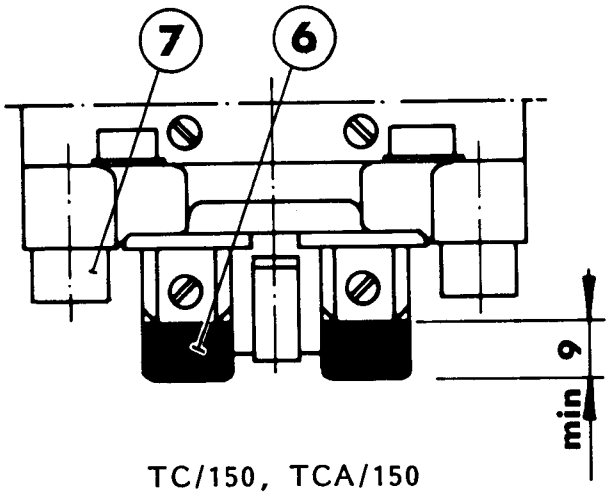

TC/150, TCA/150

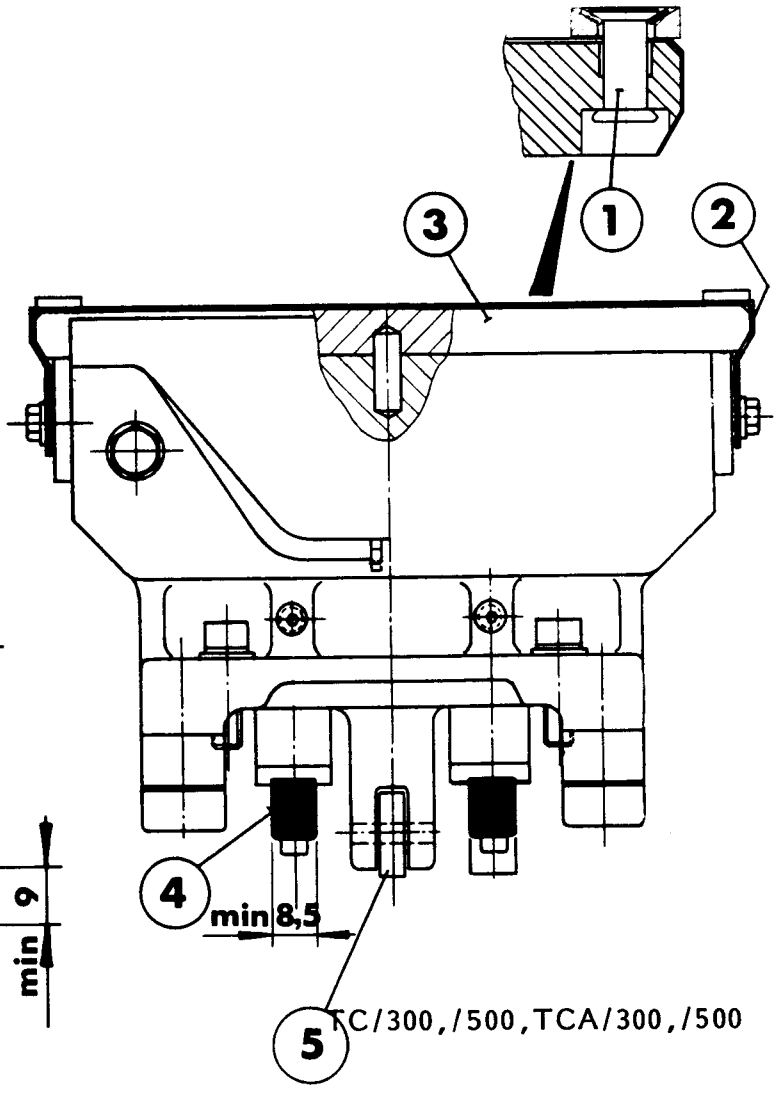

TC/300,/500,TCA/300,/500

2/MS 349-11
63

OVERHAUL

Remove and clean the connectors (1). Replace the TPC bar (2) and the screws (3).

Remove the flaps (4) and replace the gaskets (5) and (6).

(CAUTION! If the mounting holes of the flaps are drilled but the flaps are not pinned, DRILL pinning holes before removal. (Pin on reassembly.)

Replace the carbon brushes (7). Replace the roller (8) if it is worn flat or its diameter is smaller than A mm.

Roller	A mm
TC/150, TCA/150	15
TC/300, TCA/300	18
TC/500, TCA/500	21

Check the jaw rails (9) and replace them in case of visible wear. Footnote! Always replace them in by pairs.
Recheck the jaw height, see page 335-51.

1 Connector
2 TPC bar
3 Screw
4 Flap
5 Gasket
6 Gasket
7 Carbon brush
8 Roller
9 Jaw rail

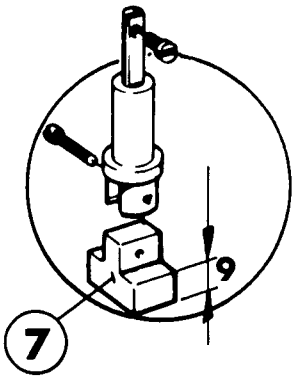

TC/150, TCA/150

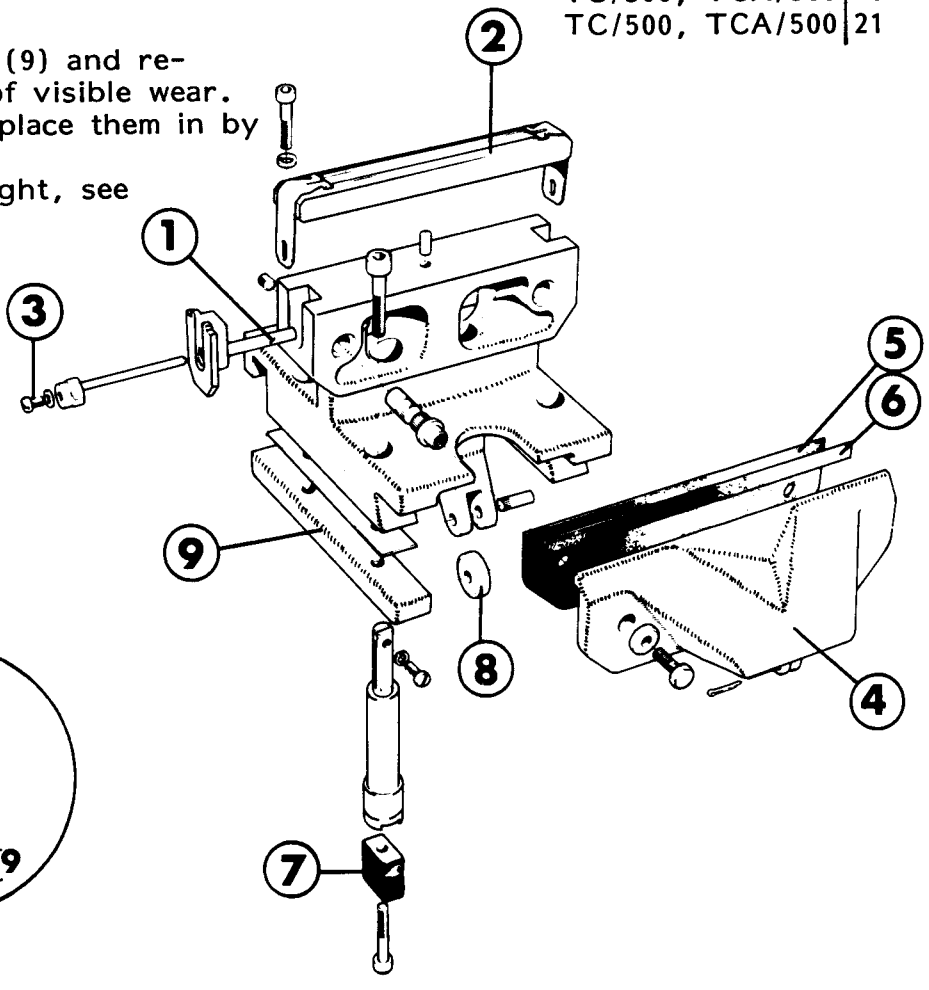

TC,TCA/300
TC,TCA/500

DESCRIPTION	PAGE
Hydraulic system - oil change	401-11
Hydraulic system - bleeding/checking	403-11
Compressed air system - checking	441-11

OIL CHANGE

Remove the plug (1) and drain the tank (2).

Put the plug (1) back and fill with fresh oil type C, until the level reaches the middle of the inspection glass (3).

Bleed the hydraulic system according to page 403-11.

Adjust the oil pressure by turning the knob (4).

Read the value on the pressure gauge (5).

Set the pressure according to the "Basic synchronization and settings" section.

Check that there is no leakage.

1 Plug
2 Tank
3 Inspection glass
4 Knob
5 Pressure gauge

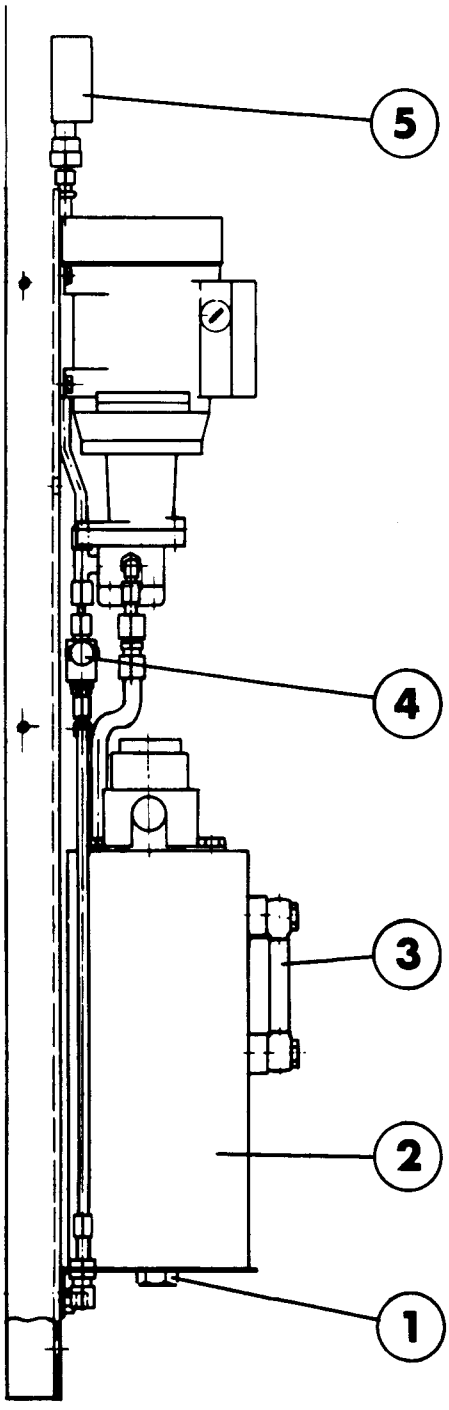

BLEEDING/CHECKING

a) Start the hydraulic pump by turning the selector switch for the hydraulic system to position 1 TEST (selector switch in electrical cabinet).

b) Connect the return pipe (1) to each bleed point (2) succession. Bleed for about 10 sec. at each point.

c) Check that there is no leakage.

d) Turn the selector switch back to position 2 PRODUCTION.

1 Return pipe
2 Bleeding point

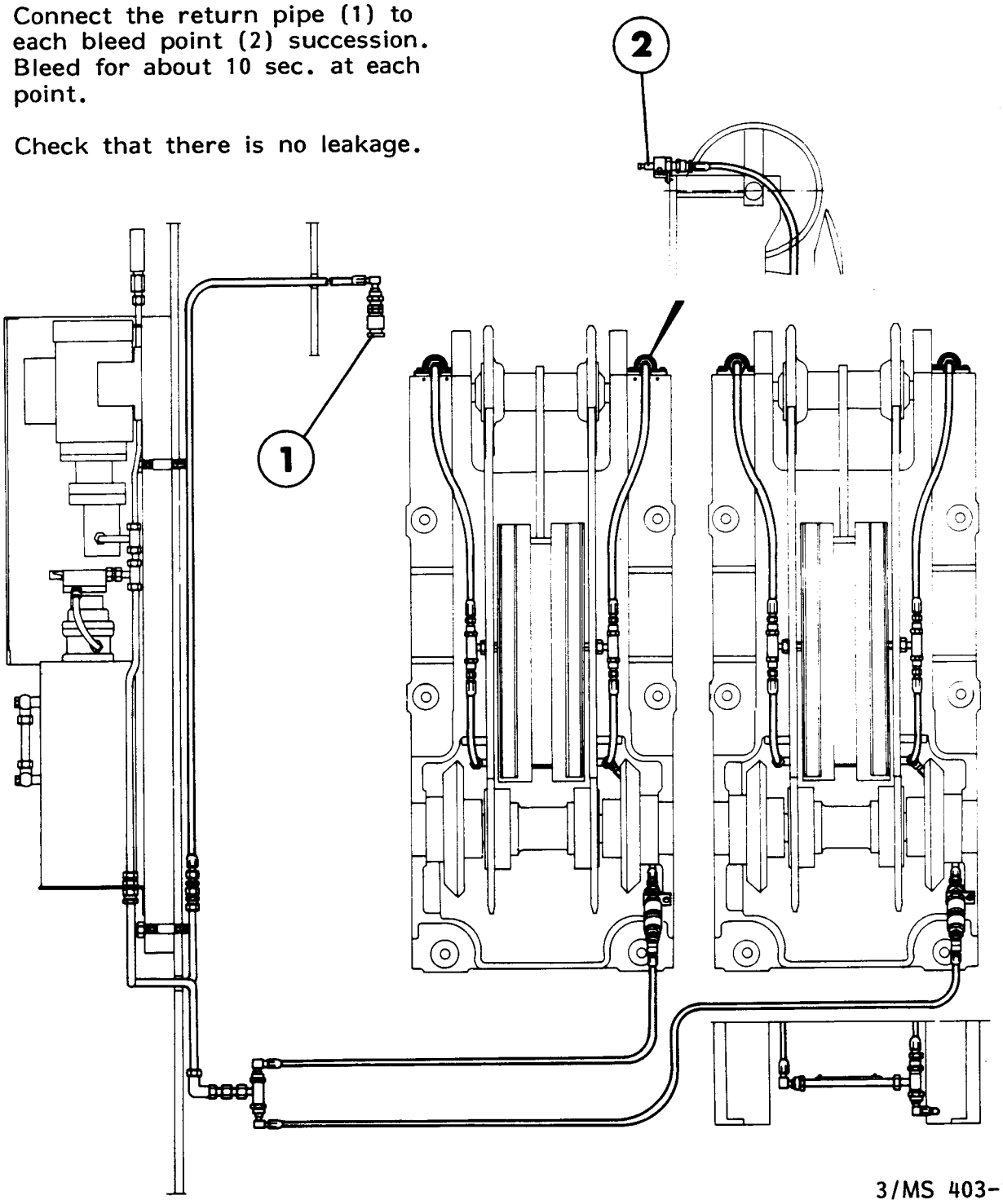

3/MS 403-11
67

CHECKING

Check that the hoses and connections are tight.

Check the pressure regulator (1) and the pressure gauge (2).

Remove and clean the plastic reservoir (3) and the sintered filter (4). Wash the reservoir and filter with white spirit (TP No 90298-2). Blow the filter clean from the inside with compressed air.

1 Pressure regulator
2 Pressure gauge
3 Plastic reservoir
4 Sintered filter

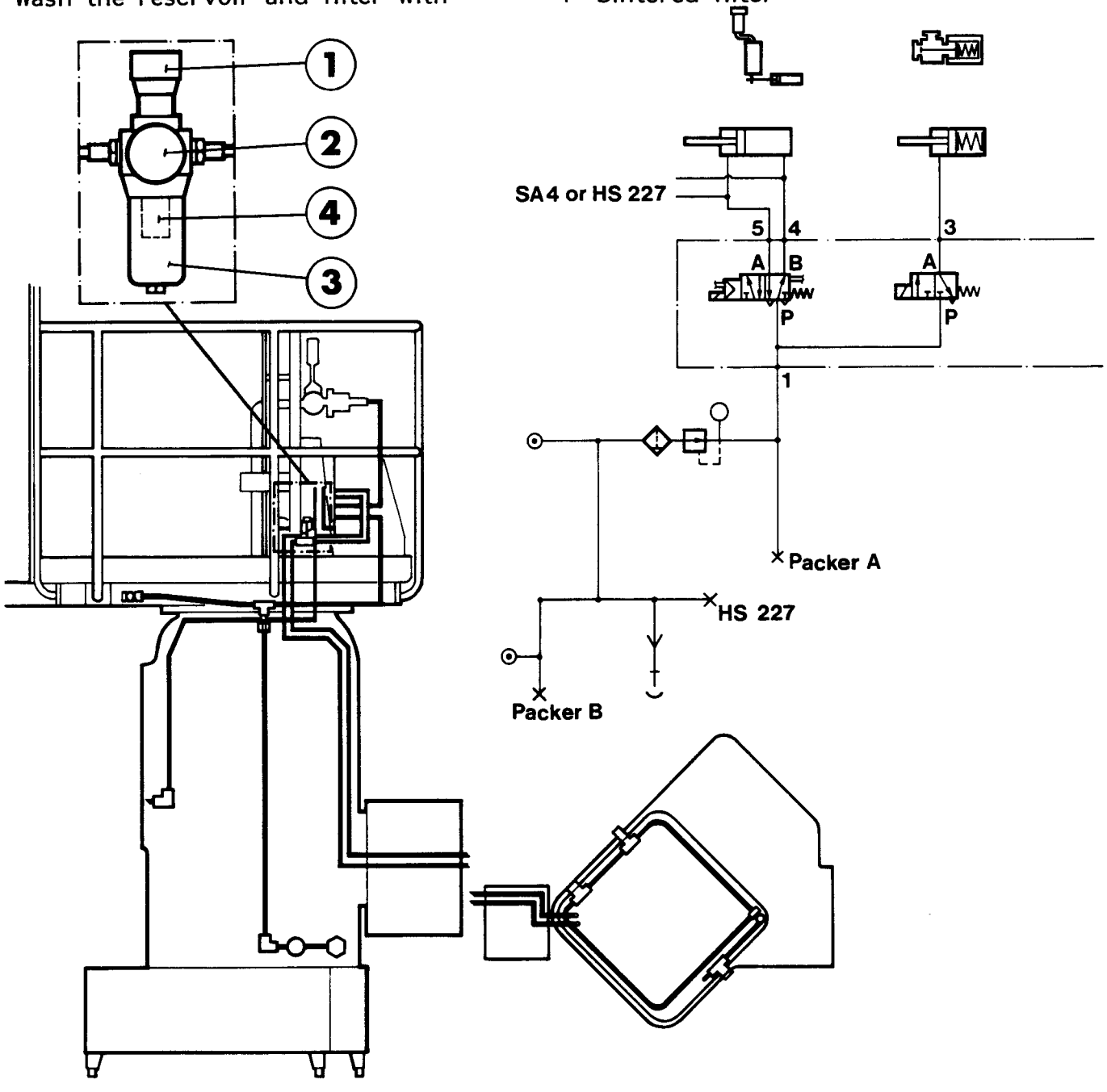

DESCRIPTION	PAGE
Lubrication oil pump and container - removal	502-21
Lubrication oil pump and tank - cleaning	502-31
Accumulator with filter - removal	505-21
Accumulator - setting	505-51
Pressure switch - checking/setting	506-11
Pressure switch - checking	506-12
Central lubrication - checking (6 pages)	508-11
Central lubrication - overhaul	508-31
Central lubrication - setting of pressure (2 pages)	508-51
Drive chains, side and cutting - removal	511-21
Drive chains, side and cutting chains-removal	511-22
Chain tensioner, sides - removal	514-21
Chain tensioner, sides - overhaul	514-31
Chain tensioner, cutting chain - removal	517-21
Chain tensioner, adjusting - cutting chain - removal	517-22
Chain tensioner, cutting chain - overhaul	517-31
Chain tensioner, cutting - overhaul	517-32
Intermediate shaft assembly - removal/ fitting	523-21
Intermediate shaft assembly - overhaul	523-31
Worm gear - removal/fitting	524-21
Worm gear - overhaul	524-31

DESCRIPTION	PAGE
Slip disc - overhaul	525-31
Drive shaft - checking	527-11
Drive shaft - overhaul	527-31
Impulse emitter, TPC heating - checking	532-11
Impulse emitter, TPC heating - overhaul	532-31
Drive motor with suspension - checking	534-11
Drive motor - overhaul	535-31
Cutting unit - checking	538-11
Cutting unit - checking	538-12
Cutting unit - removal/fitting	538-21
Cutting wheel - overhaul	538-31
Cutting unit - setting of cutting length	541-51
Cutting unit - setting of cutting length	541-52
Cutting unit - gear play adjustment (2 pages)	546-51

REMOVAL

Check that the main switch is in position 0.

Disconnect the cable (1) and oil pipe (2).

Undo the screws (3).

Remove the lubrication oil pump and tank.

Fit the overhauled unit in reverse order.

Footnote: Check the setting according to page 508-51.

1 Cable
2 Oil pipe
3 Screw

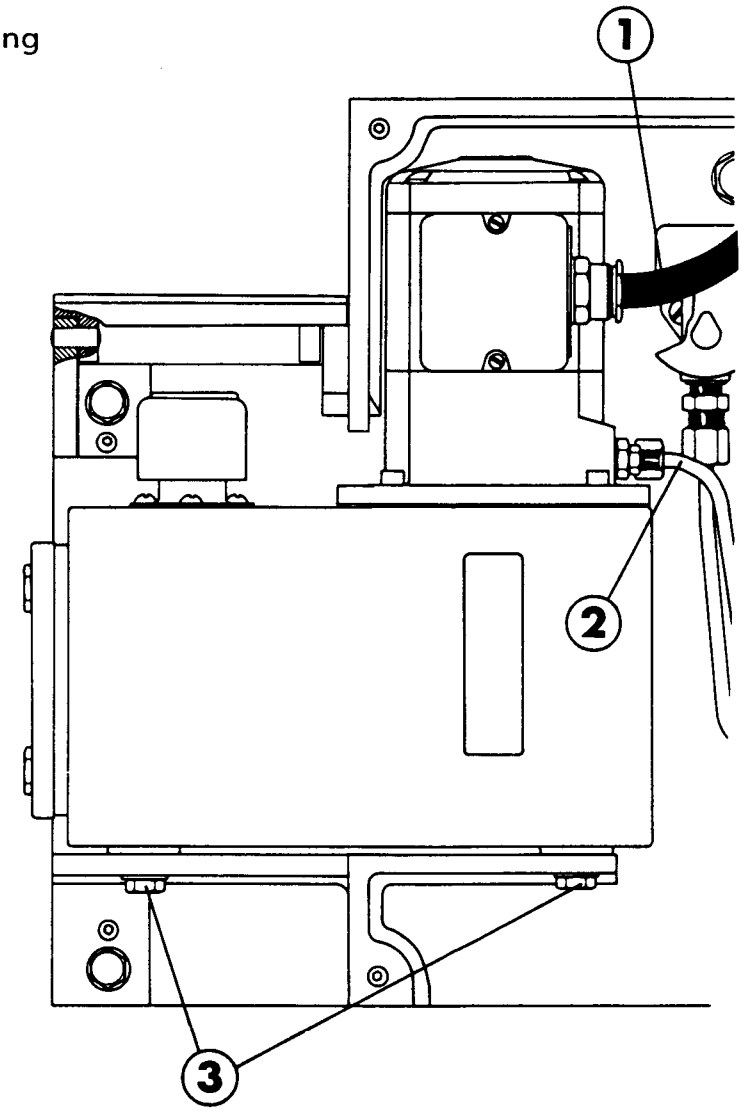

CLEANING

Remove the pump motor from the oil tank (3) (4 screws).

Disconnect the suction pipe (1) from the pump. Clean the strainer (2) on the suction pipe.

Connect the suction pipe.

Clean the oil tank (3).

Fill oil, code B, in the lubricant recommendations.

Fit the tank and the pump.

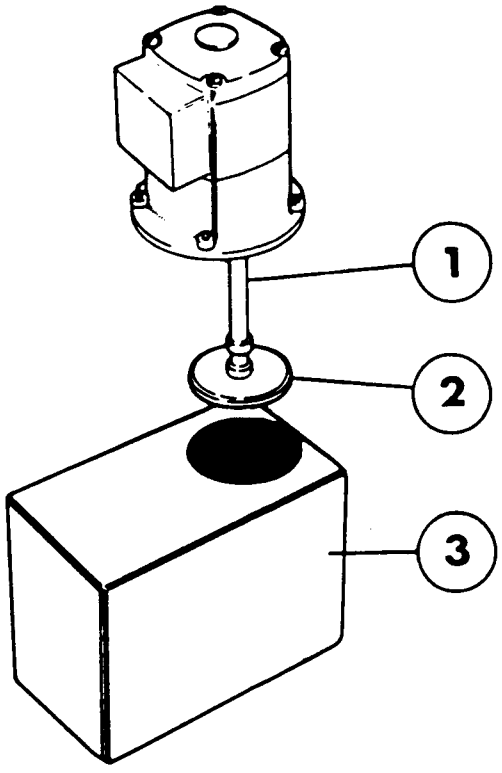

1 Suction pipe
2 Strainer
3 Oil container

REMOVAL

Disconnect the oil pipes (1) and (6).

Remove the clamp (2) and the bracket (4).

Remove the accumulator (3) together with the filter (5).

Fit in reverse order.

1 Oil pipe
2 Clamp
3 Accumulator
4 Bracket
5 Filter
6 Oil pipe

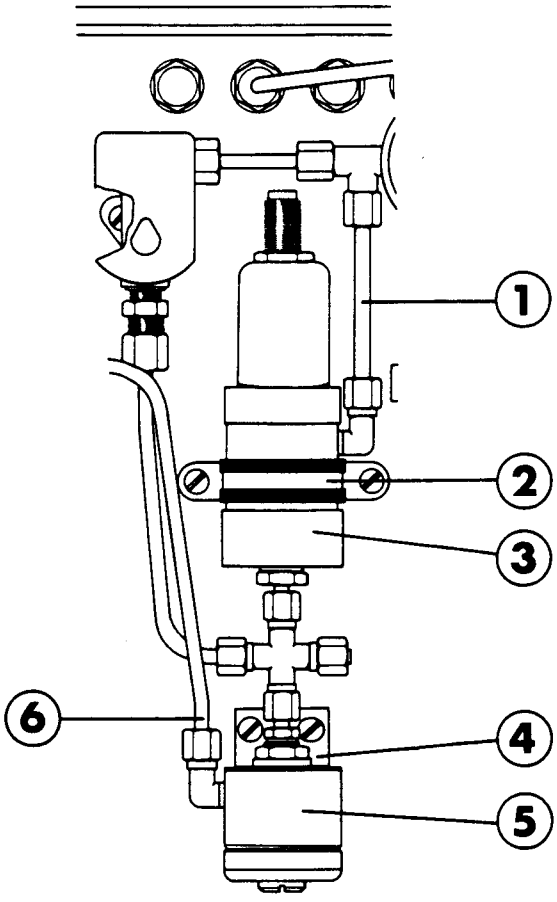

SETTING

The piston (3) movement is limited by the adjustment screw (1).

Each revolution on the adjustment screw corresponds to 1 ml of oil.

The accumulator should normally be adjusted to give 5 ml of oil.

Loosen the lock nut (2) and turn the adjustment screw (1) fully home and then. Undo it five turns.
Tighten the lock nut.

The adjustment range is 1-16 ml per stroke.

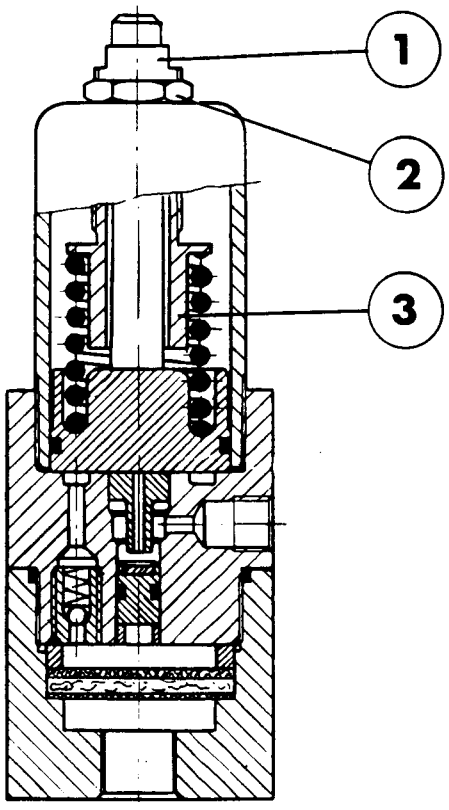

1 Adjustment screw
2 Lock nut
3 Piston

CHECKING/SETTING

The pressure switch ensures that the preset oil pressure is maintained in the system.

The pressure is measured in one of the most peripherical blocks.
If the pressure drops below setpoint an alarm is triggered on the monitor panel. The current production may be completed, but if the machine for any reason is stopped, it can not be restarted until the cause of pressure loss has been eliminated.

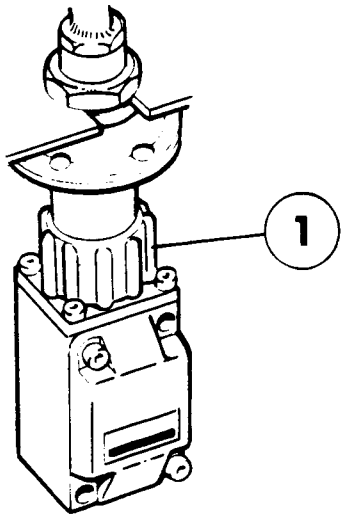

Possible pressure loss causes:

a) Oil tank empty
b) Clogged filters
c) Incorrect setting of pressure switch
d) Leaking pipes
e) Missing metering valve

SETTING

Turn the adjustment sleeve (1) so that its edge lines up with 1.5 bar on the scale.

1 Adjustment sleeve

CHECKING

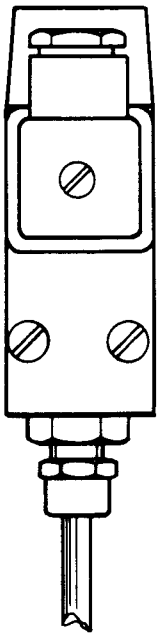

The pressure switch ensures that the preset oil pressure is maintained in the system.

The pressure is measured in one of the most peripherical blocks.

If the pressure drops below setpoint an alarm is triggered on the monitor panel. The running production may be completed, but if the machine for any reason is stopped, it can not be restarted until the cause of pressure loss is cleared.

Possible has been eliminated pressure loss causes:

a) oil tank empty
b) clogged filters
c) incorrect setting of pressure switch (factory preset)
d) leaking pipes
e) missing metering-valve

CHECKING

Check that an alarm is triggered when the oil tank is empty or a hose has come off the metering valve.

Check that there is no leakage.

Check the condition of the lubrication brushes and their adjustment. Replace as required. NB! The brushes should protrude over the chains by 4-5 mm.

1 Bevel gear, cutting wheels and counter wheels
2 Chain, frame sides
3 Chain, impulse emitter
4 Gear, intermediate shaft
5 Chain, cutting unit
6 Bevel gear, drive shaft
7 Pressure chain, heating side
8 Twin chain, heating side
9 Bevel gear, frame sides
10 Pressure chain, pressure side
11 Slide plate, pressure side
12 Twin chain, pressure side
13 Bevel gear, pressure side
14 Snap coupling, side frame (male)
15 Snap coupling, side frame (female)
16 Bevel gear
17 Elevator chain
18 Drive chain
19 Maltese drive

Packer A

Illustrations, see page 508-11:2:3:4

CUTTING UNIT

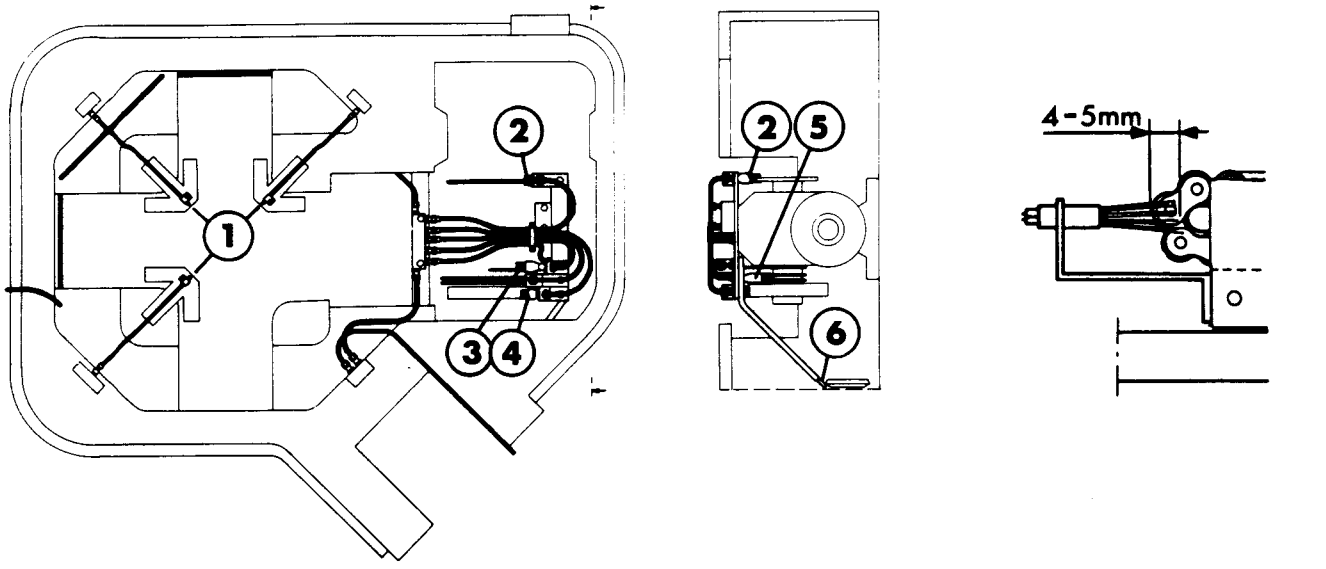

MACHINE BODY

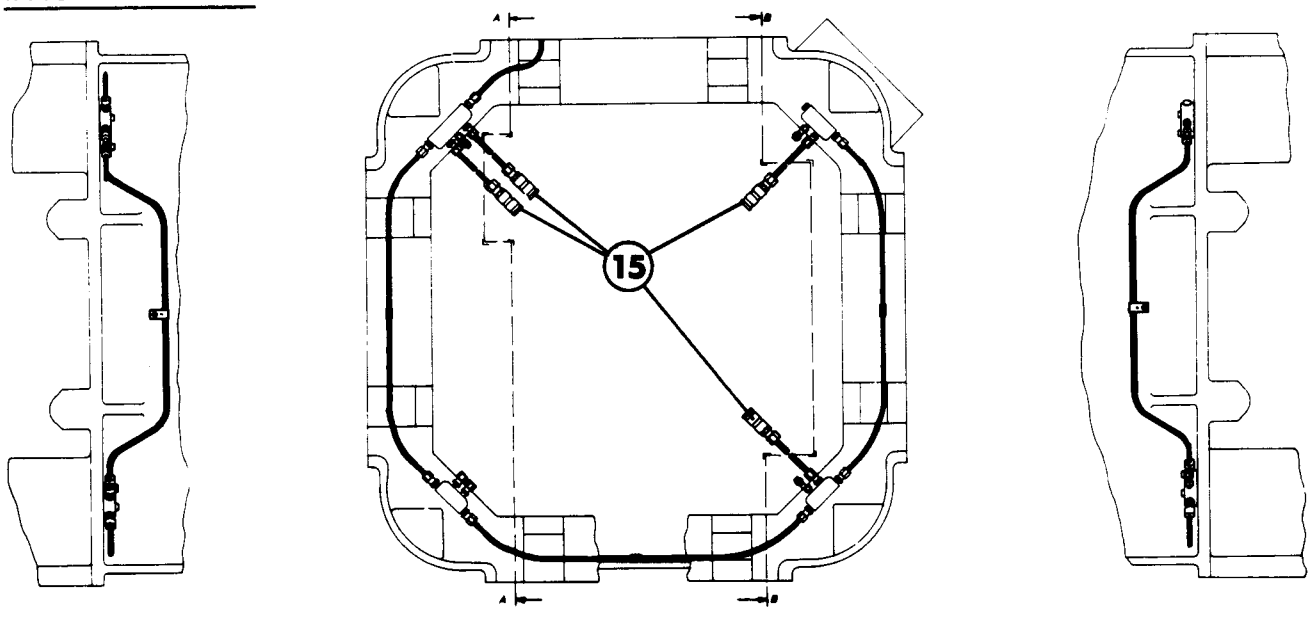

HEATING SIDE

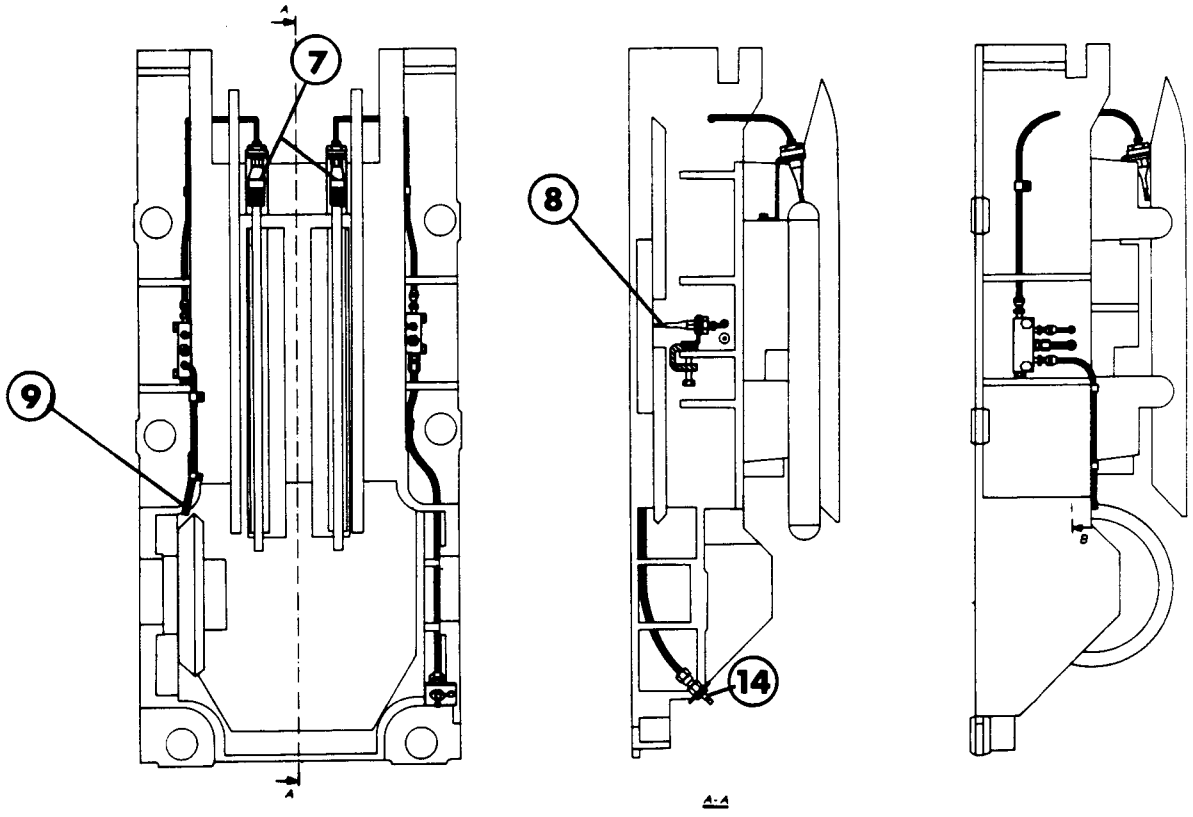

PRESSURE SIDE

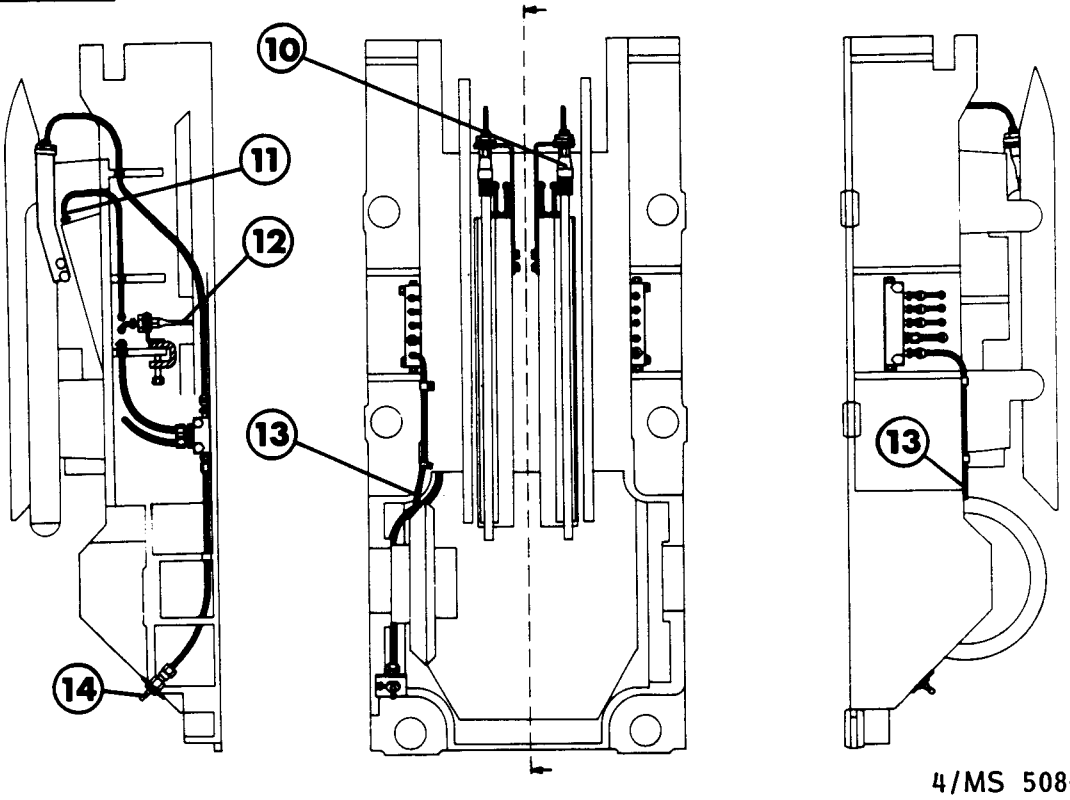

4/MS 508-11:3
79

PACKER A

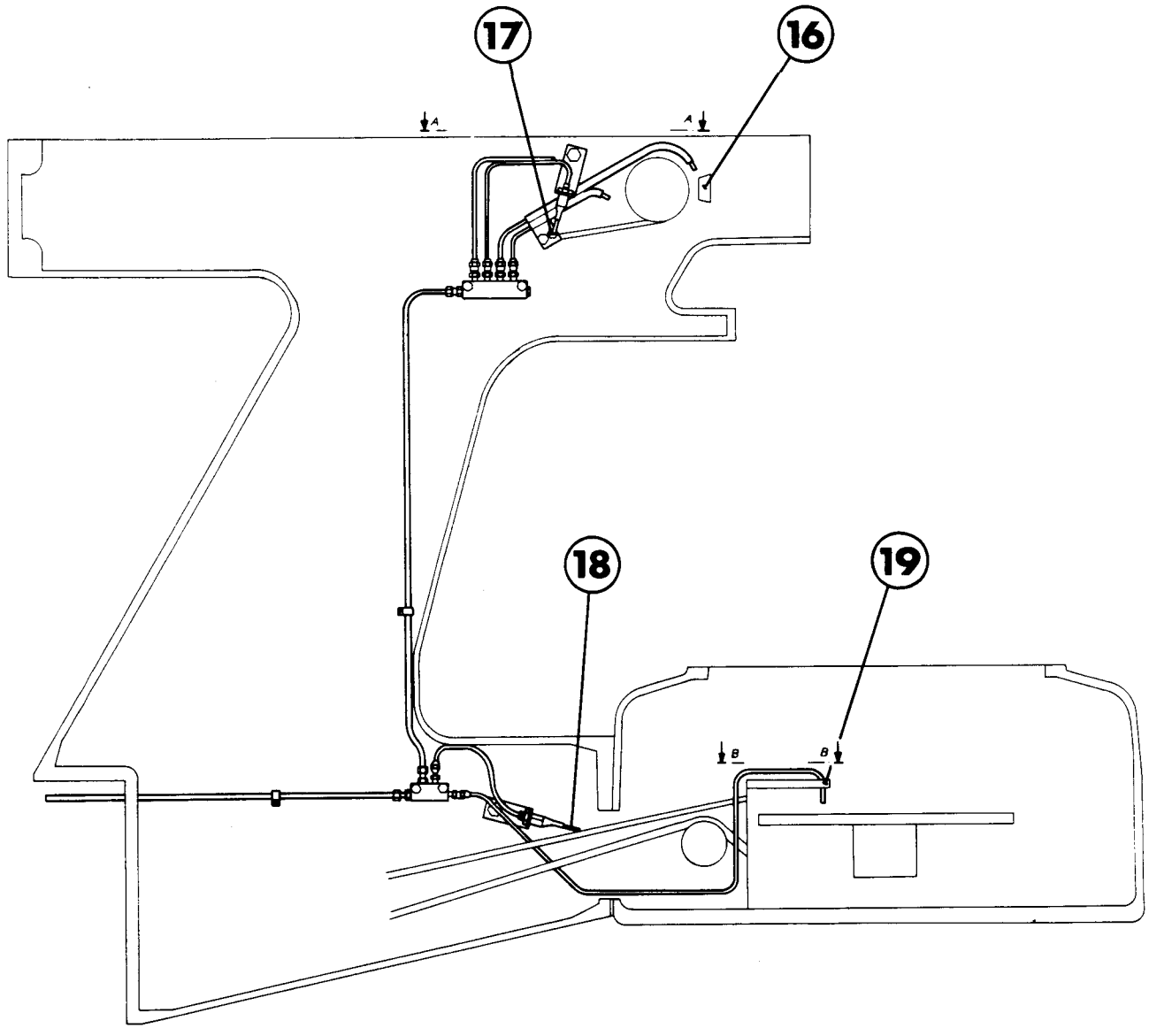

PACKER B

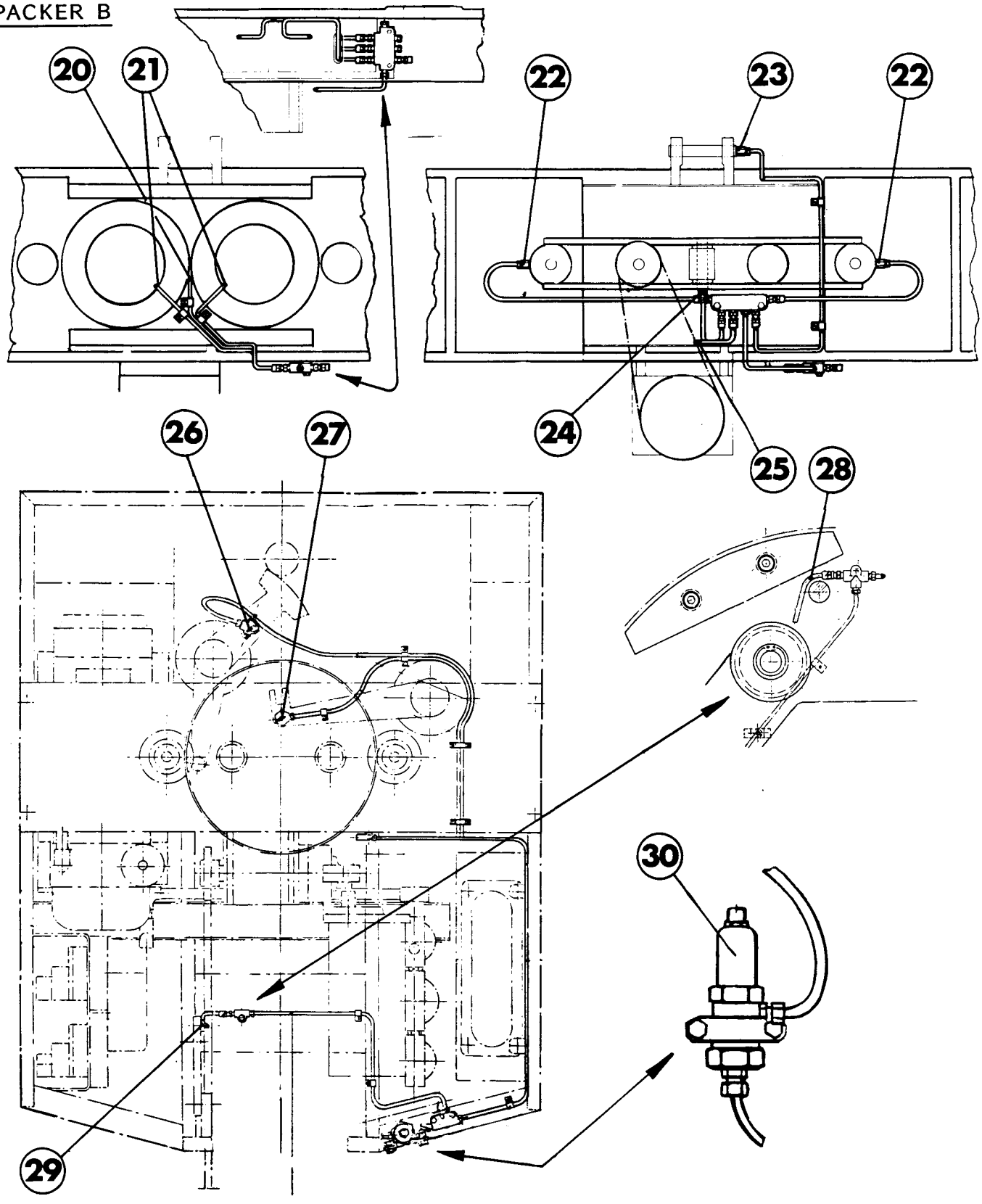

2/MS 508-11:5
81

ELEVATOR

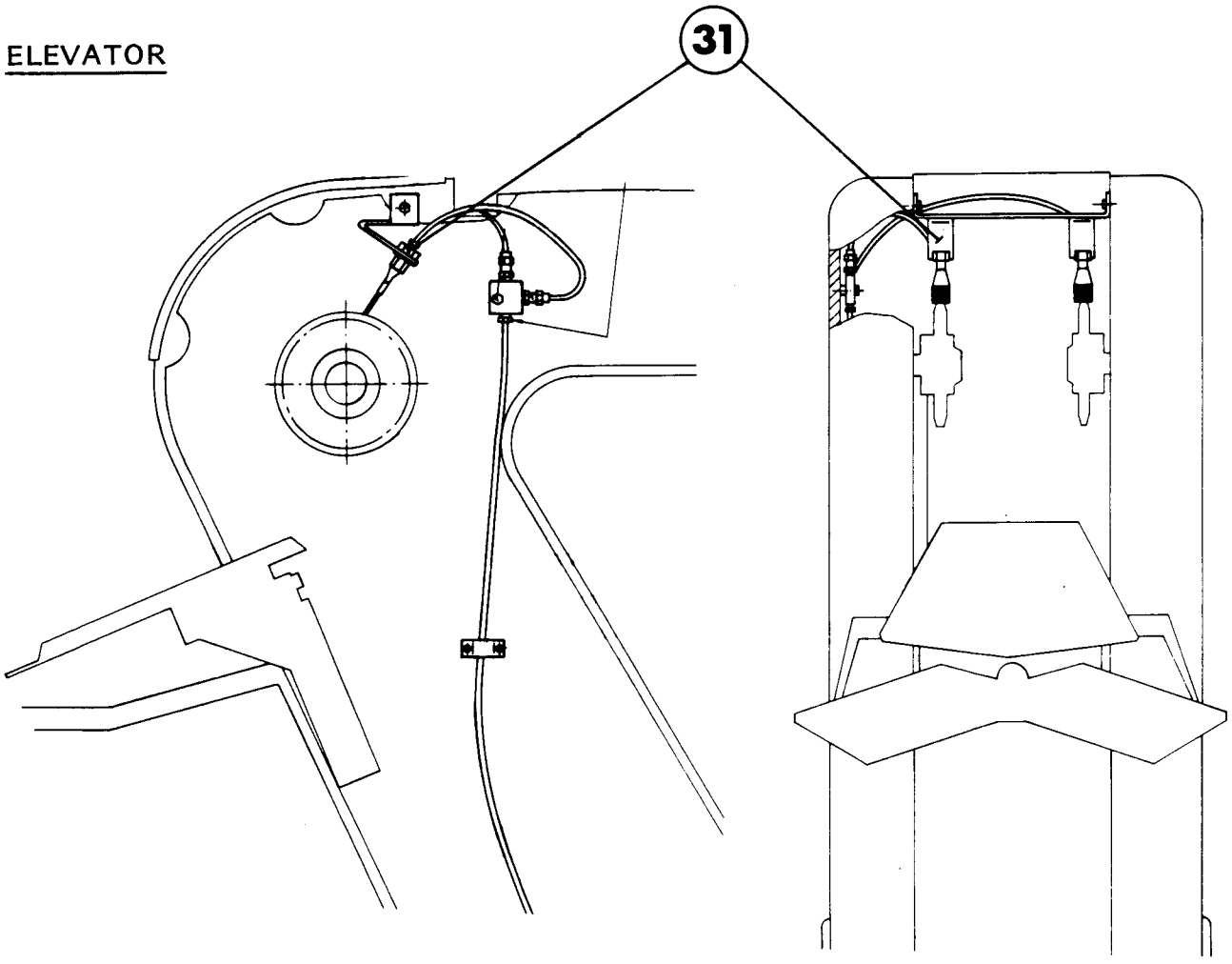

OVERHAUL

Unscrew the cap (3) and the nut (4) and remove the filter insert (2)

Clean the filter insert and replace it, if required.

Check the seal (5) and replace it, if required. Assemble filter insert, nut, and cap.

1 Lubrication oil filter
2 Filter insert TP No. 90415-4
3 Cap
4 Nut
5 Seal

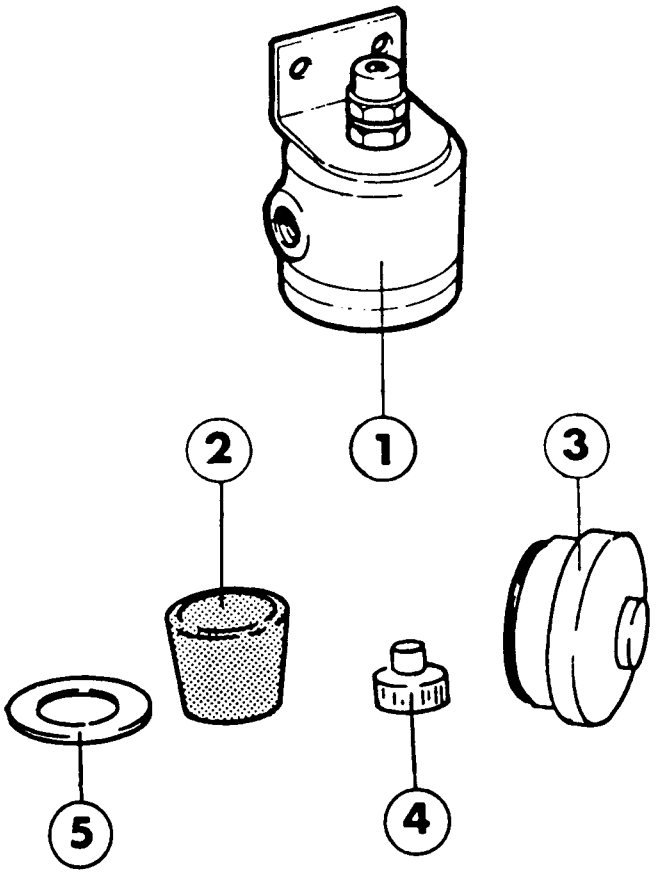

SETTING OF PRESSURE

Press the OPERATING POWER ON button.

Check that the pressure in the lubrication system rises to 1.5 MPa (15 kP/cm^2) when the motor is running.

If required, adjust with the screw (2).
Turn the screw clockwise to increase pressure, and vice versa. After adjustment lock the screw with the lock nut.

When the motor has stopped, check that the accumulator gives 300-400 kPa during appr 10s.

1 Level glass
2 Adjustment screw (overflow valve)
3 Suction pipe
4 Pressure gauge

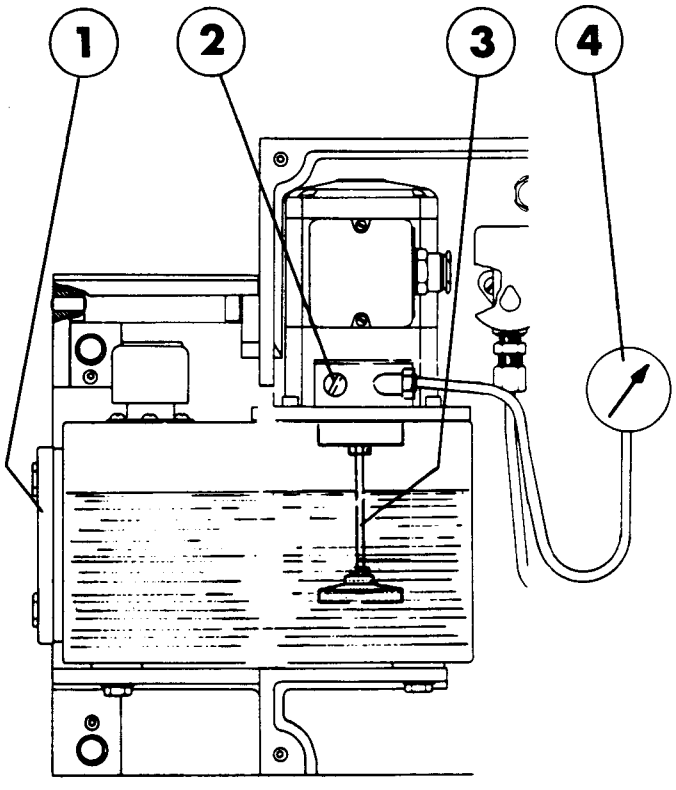

FAULT FINDING

If there is no pressure in the lubrication system when OPERATING POWER ON is pushed:

a) Check through the level glass (1) whether there is oil in the tank.

b) Check that all hoses and the connections are tight.

c) Check that the fuse has not blown.

d) Check that the motor protection has not cut out.

PROGRAMME UNIT, CHECKING OF SETTING

The programme unit rotates counter-clockwise with one revolution every 12 minutes (10 min at 60 Hz)

The inner cam (1) controls the start and stop of the oil pump and the outer cam (2) the alarm function.

The length of the inner cam low sector should be set at appr. 5 mm, to keep the pump motor running until the accumulator is filled up.

The outer cam low must be located after the inner cam high. Adjust the cams as illustrated.

Inner cam low length - 5 mm
Both cams high length - 5 mm
Outer cam low length - 5 mm

It is important that the two switches are not in cam low at the same time.

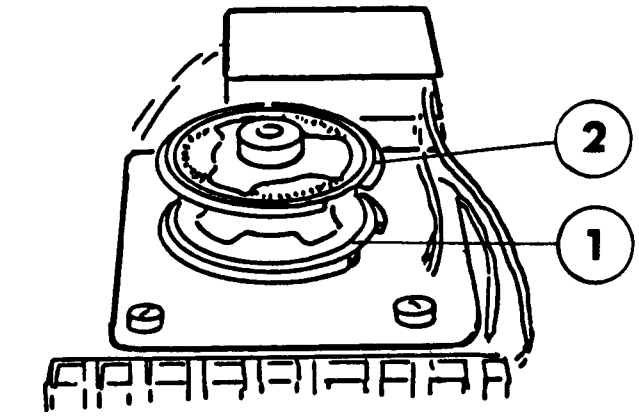

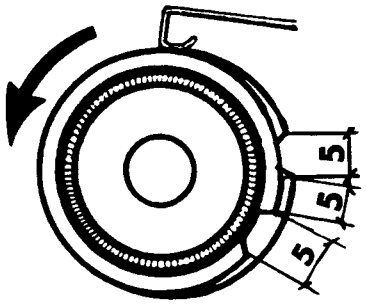

Manual lubrication

Push OPERATING POWER ON. Check that the lubrication pump starts and runs for the time preset on the timer.

REMOVAL

Inch the machine until the chain lock (3) is accessible between the sprockets.

Slacken the chain tensioner.

Remove the chain lock (4) and pull out the chain.

Check the chains, and replace them if they are worn out.

Synchronization between the cutting unit and the sides is made according to the "Basic synchronization and settings" section.

1 Drive chain, sides
2 Drive chain, cutting
3 Chain lock
4 Chain tensioner

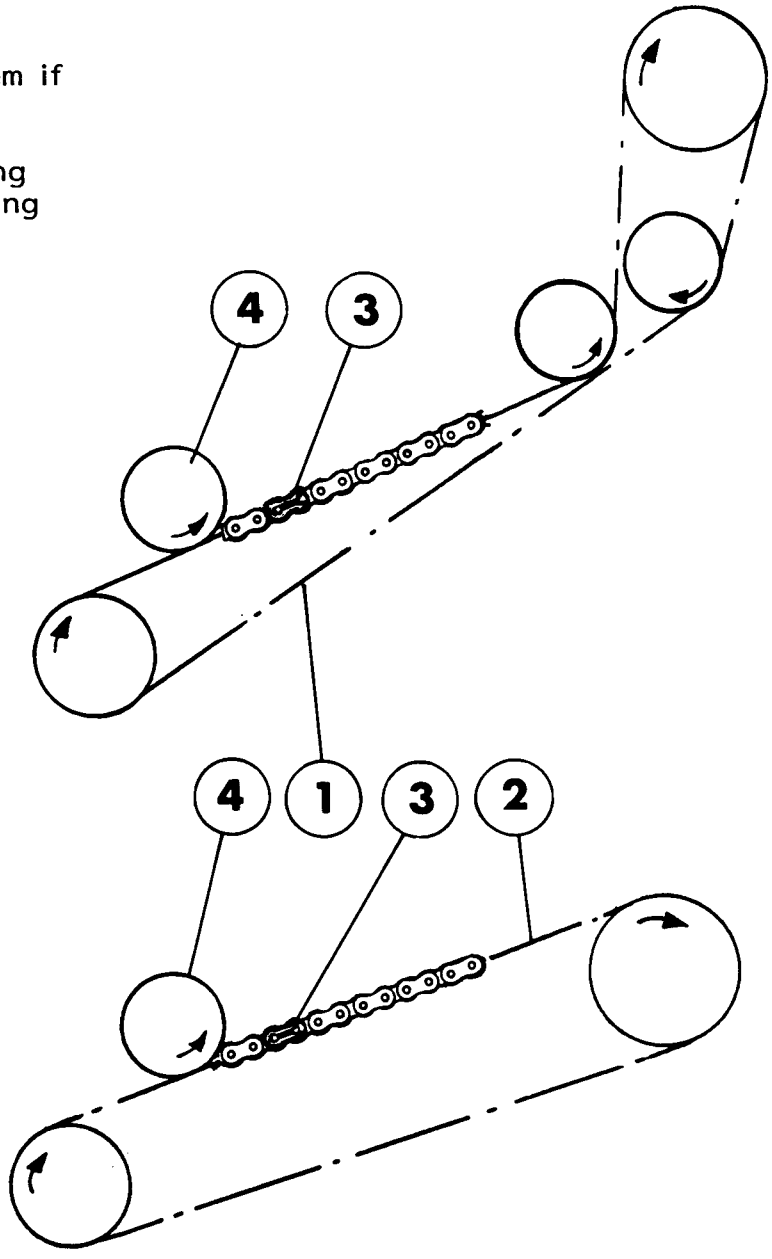

REMOVAL

Inch the machine until the chain locks (3) are accessible.

Slacken the chain tensioner (4) for the sides and the chain tensoner (5) for the cutting unit.

Remove the chain locks and pull out the chains.

Check the chains and replace them if they are worn.

Synchronization between the cutting unit and the side is done according ti the "Basic synchronization and settings" section.

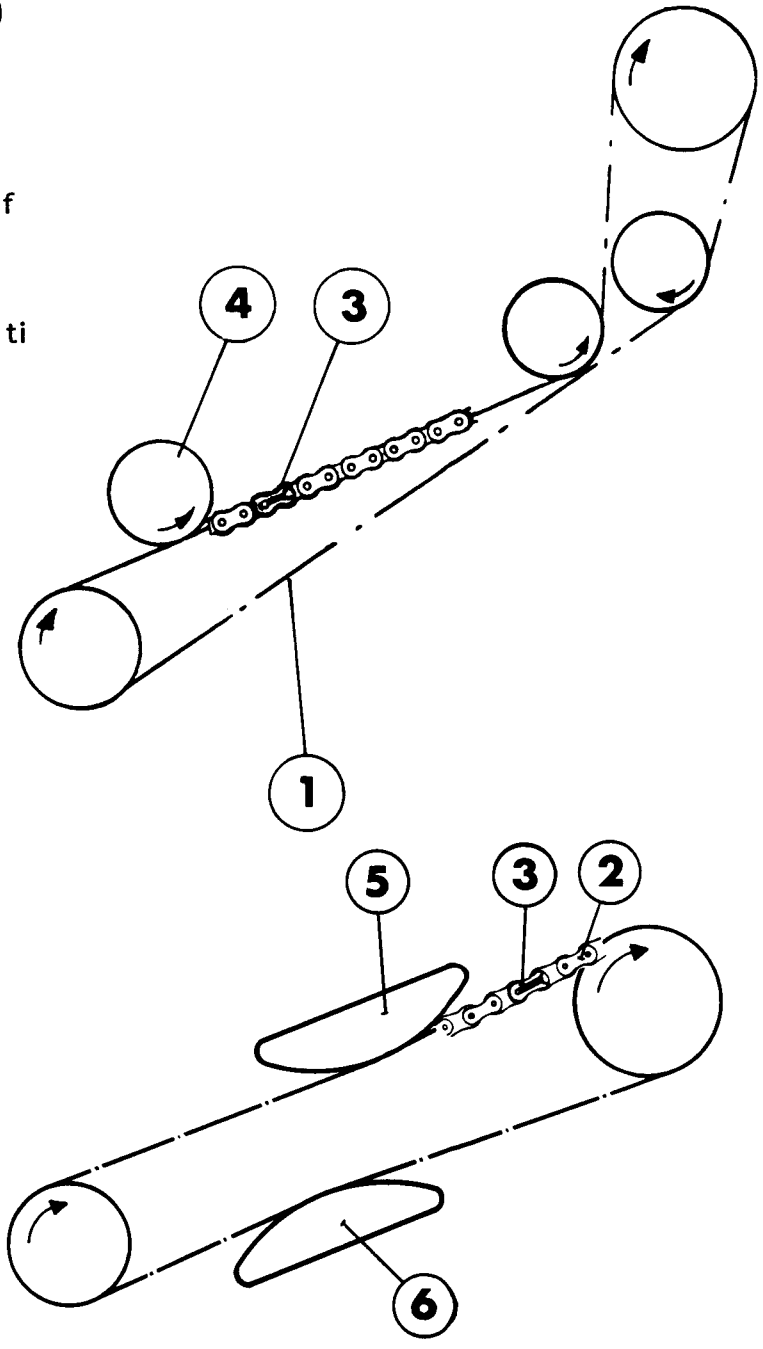

1 Drive chain, sides
2 Drive chain, cutting
3 Chain lock
4 Chain tensioner
5 Upper cam, chain tensioner
6 Lower cam, chain tensioner

Cutting unit

REMOVAL

Undo the screws (1) and replace the idler sprockets (2).

Undo the bolt (3) and replace the tension wheel (4).

1 Screw
2 Idler sprocket
3 Bolt
4 Tensioner sprocket

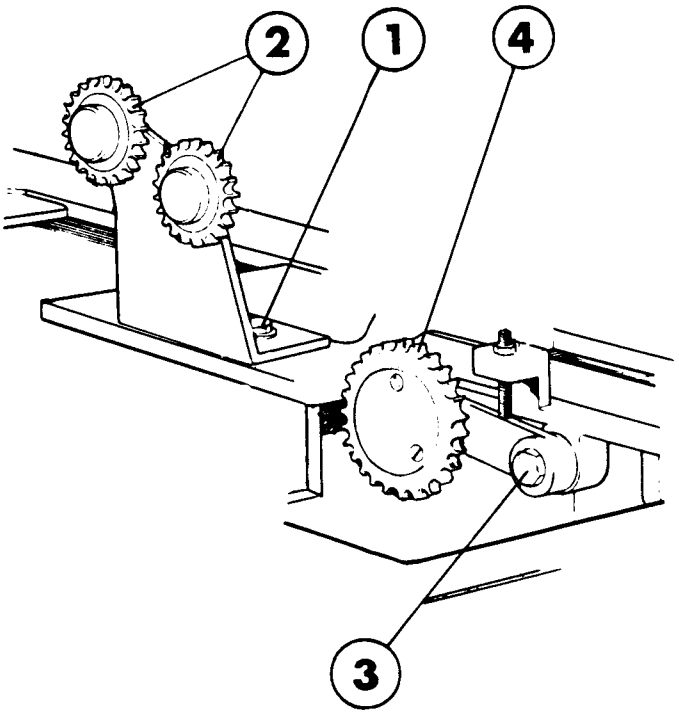

OVERHAUL

The upper axle pin grub screw (9) must be loosened.

Undo the screws (1) and bearing cover (2). Undo the axle pin (3).

Replace the ball bearings (4) and O-rings (5).

Check the sprockets (6) and axle pin (3). Replace as required.

Check that the grease nipples (7) let through grease. If not, replace them.

Reassemble in reverse order.

Grease by mean of a grease gun after assembly.

1 Screw
2 Bearing cover
3 Axle pin
4 Ball bearing
5 O-ring
6 Sprocket
7 Grease nipple
8 Spacer ring
9 Grub screw

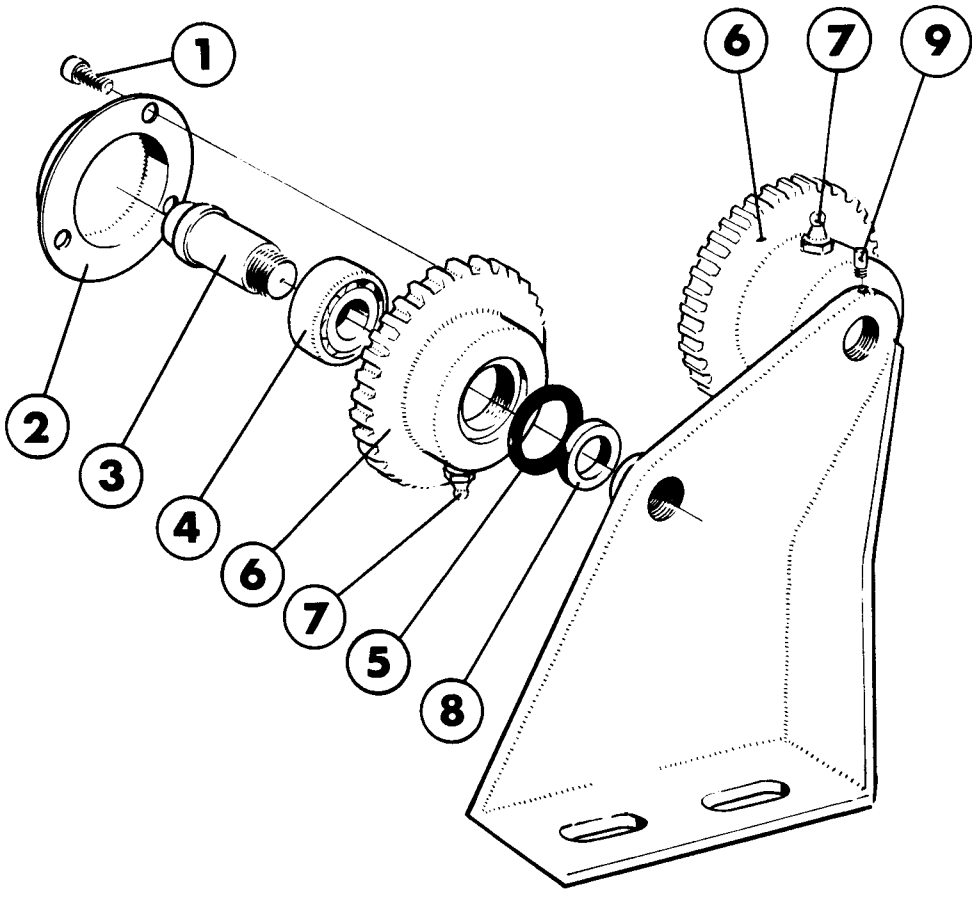

REMOVAL

Undo the screws (1) and remove the unit.

1 Screw

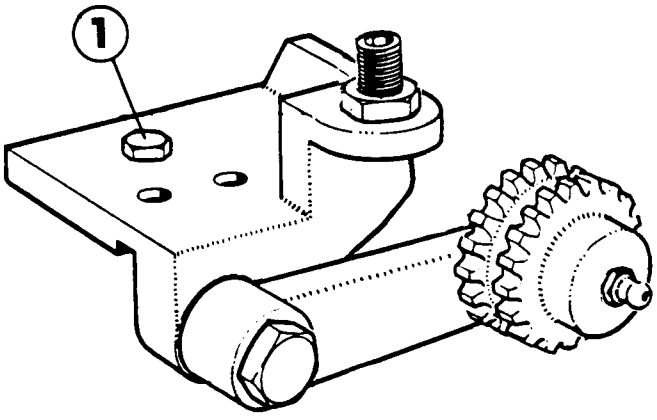

REMOVAL

Undo the screw (1). Loosen the screw (4) to the chain tensioner (3). Turn the chain tensioner and slacken the chain.
Undo the screw (6) and remove the cam (5). Undo the screws (7) and lift out the adjuster.

Assemble in the reverse order.

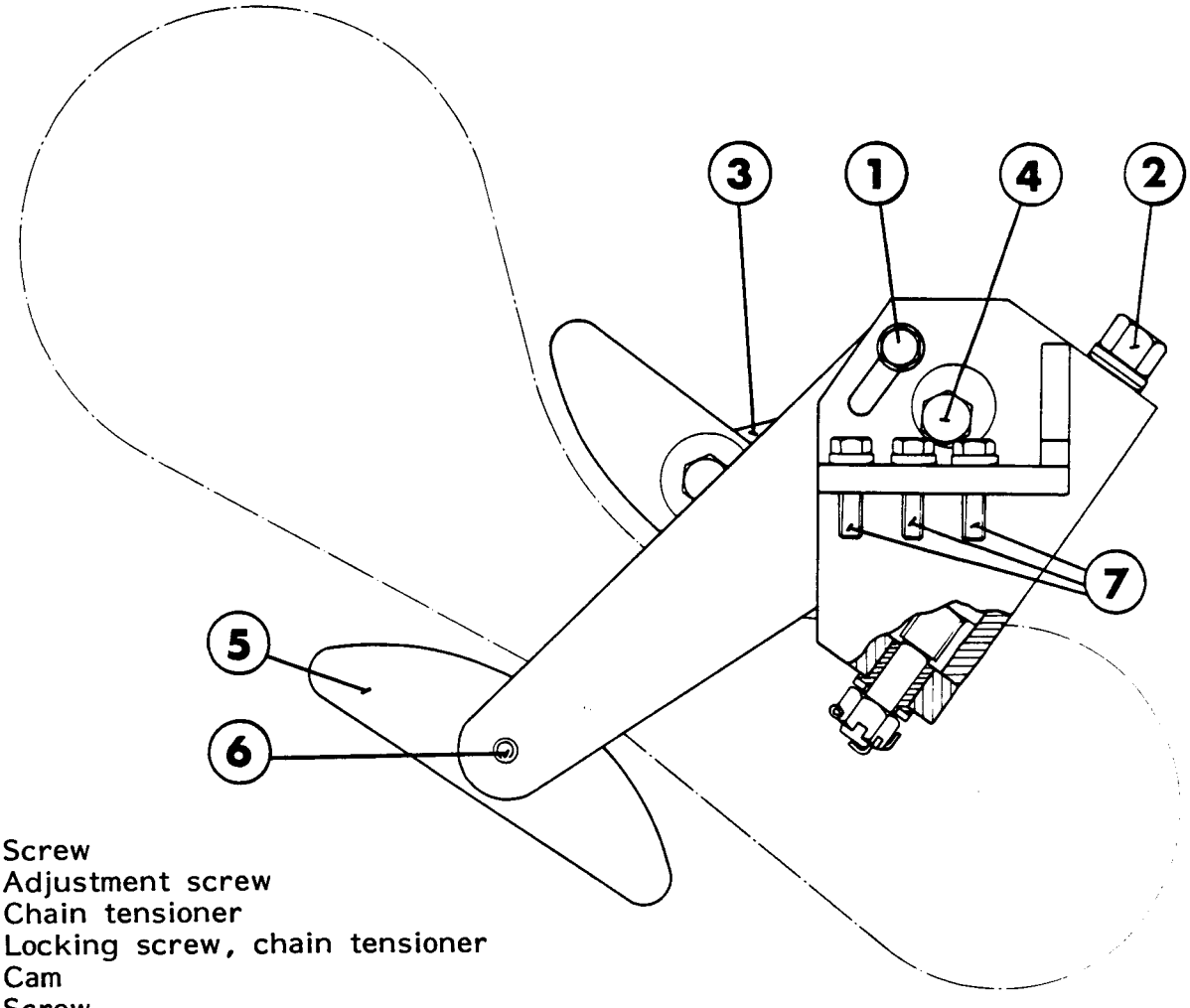

1 Screw
2 Adjustment screw
3 Chain tensioner
4 Locking screw, chain tensioner
5 Cam
6 Screw
7 Mounting screws, adjuster

OVERHAUL

Dismantle the chain tensioner. Replace the ball bearing (3). Check the bolts (2) and (9) and replace as required.

Check the bearing cover (4). Replace the O-ring (6).

Check the sprocket (1). Replace as required.

Check that the grease nipple (10) lets through grease. If not, replace it.

Grease by means of a grease gun after assembly.

1 Sprocket
2 Bolt
3 Ball bearing
4 Bearing cover
5 Screw
6 O-ring
7 Spacer ring
8 Spring washer
9 Bolt
10 Grease nipple

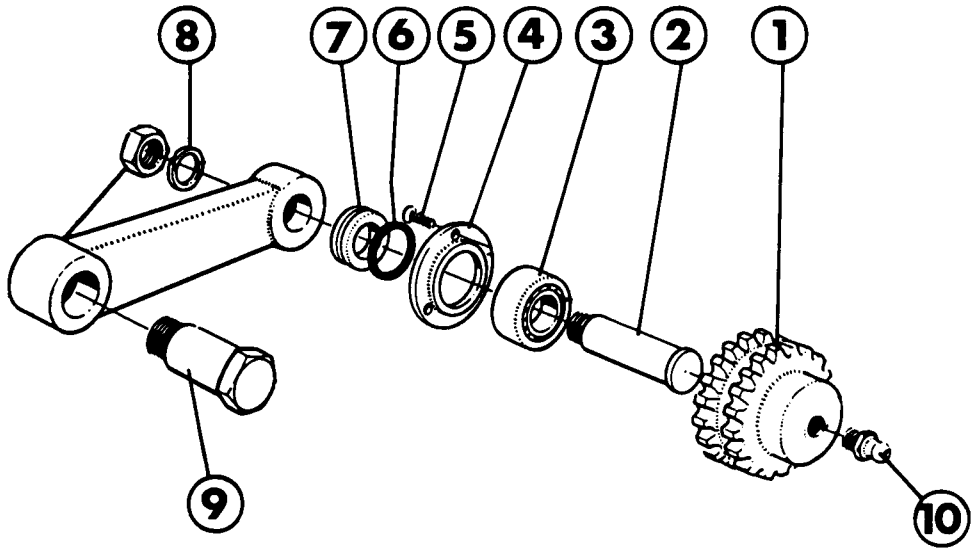

OVERHAUL

Remove the chain tensioner, (3) and dismantle the cams (5, 6) and the tensioner with rubber blocks.

Check the bushings (9) for wear. Replace as required.

Check that the adjustment screw (2) turns freely.

Check the chain tensioner rubber blocks for wear. Replace the tensioner if required.

Reassemble the chain tensioner and fit it in the machine. Do not fit the lower cam (6) until the chain tensioner has been fitted.

Fit the chain lock and the lower cam. Adjust the tensioner by moving it. Lock with the nut.

1 Screw
2 Adjustment screw
3 Chain tensioner
4 Locking screw
5 Upper cam
6 Lower cam
7 Screw
8 Fastening screw
9 Bushing

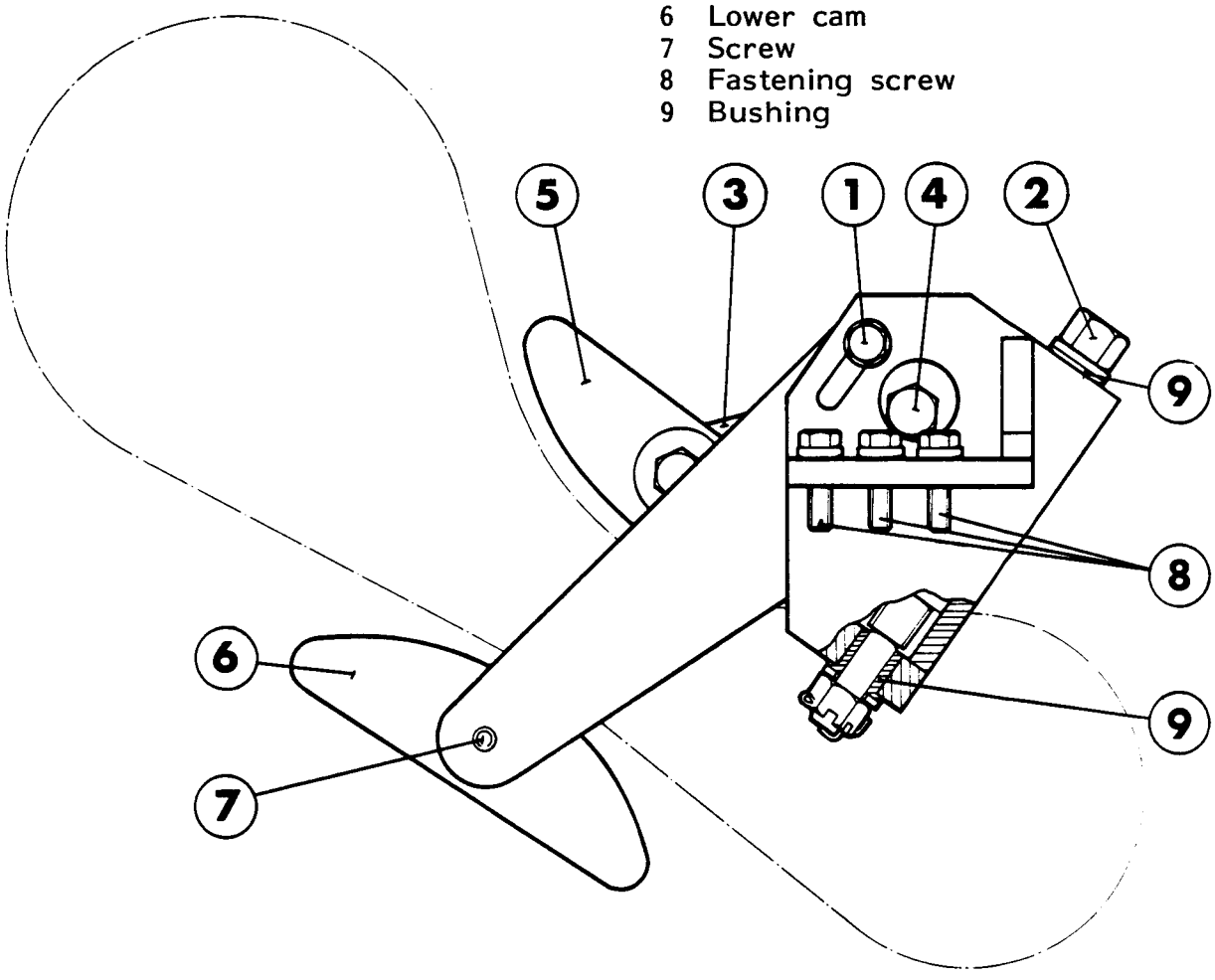

REMOVAL/FITTING

Remove the pins (3) and undo the mounting screws (2).

Lift out the intermediate shaft (4).

Footnote: Keep the shims (5), if any, for use on reassembly.

Make sure on reassembly that the bevel gear (6) on the drive shaft (1) meshes correctly with the bevel gear (7) on the intermediate shaft/assembly (4).

1 Drive shaft
2 Mounting screw
3 Pin
4 Intermediate shaft assembly
5 Shim
6 Bevel gear
7 Bevel gear

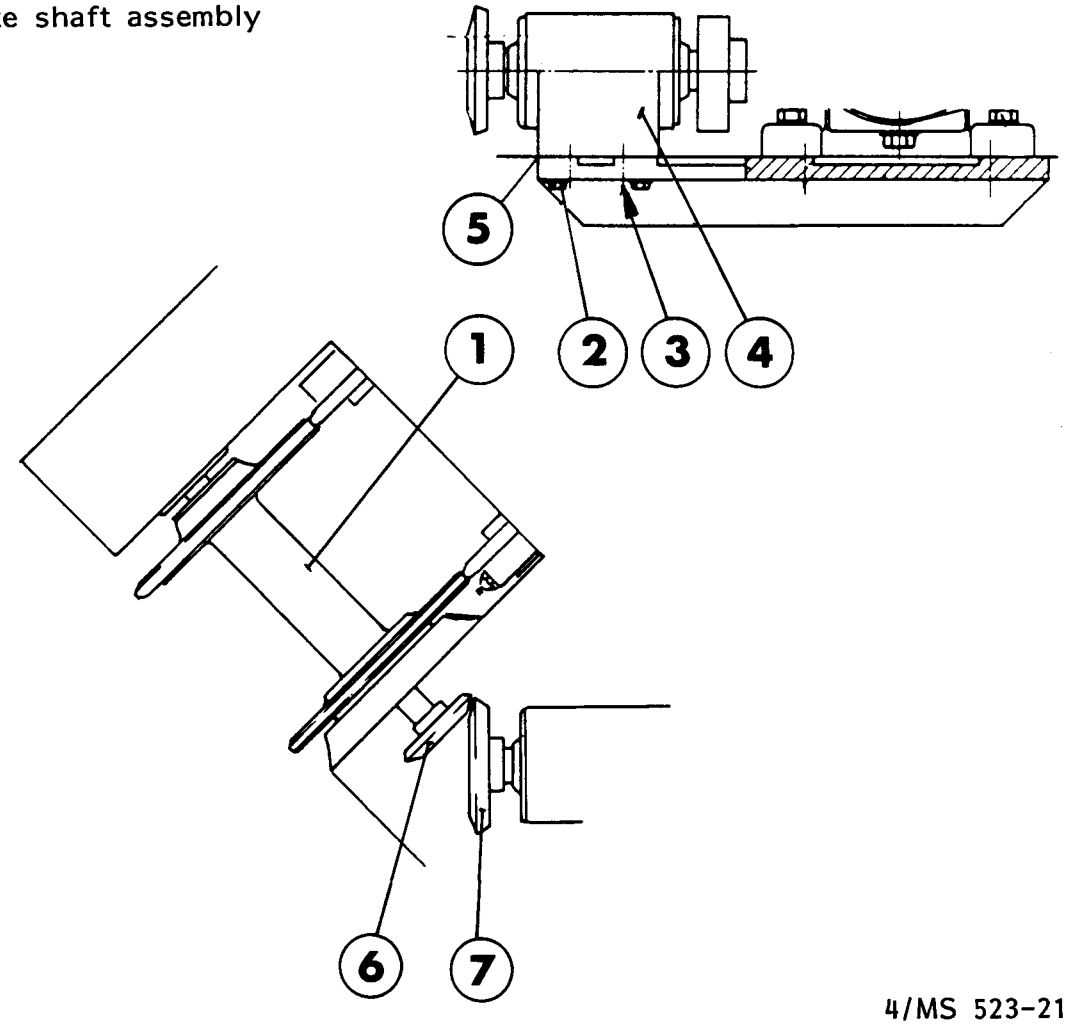

4/MS 523-21
94

OVERHAUL

Loosen the grub screw (3) and pull off the bevel gear (4). Remove the cover (5).
Loosen the grub screw (6), force out the shear pin (7), and pull off the gear (8). Remove the bearing cover (5). Pull out the shaft (9) and the ball bearings (10).

Replace the ball bearings and bearing covers.

Check the gears for wear and replace as required.

Check that the grease nipple (12) lets through grease. If not, replace it.

Assemble in reverse order and fill the housing with grease, code F. Grease by means of a grease gun after assembly.

1 Pin (5x40 mm)
2 Screw
3 Grub screw
4 Bevel gear
5 Bearing cover
6 Grub screw
7 Shear pin
8 Gear
9 Shaft
10 Ball bearing
11 Bearing housing
12 Grease nipple

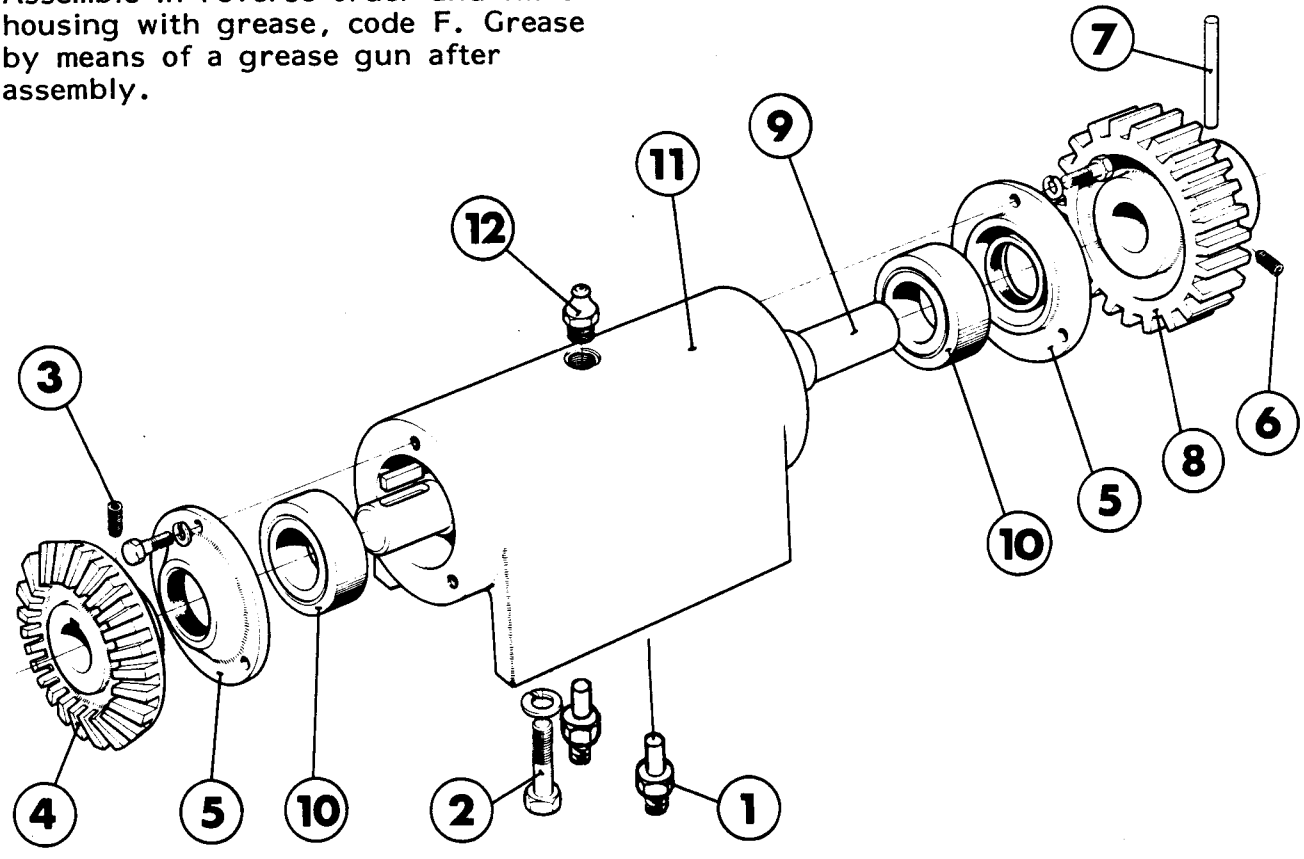

REMOVAL/FITTING

Remove the Vee-belt, (5). Detach and remove the motor suspension (2).

Undo the mounting screws (4) and remove the impulse emitter (1).

Remove the pins (6) and undo the screws (3). Lift out the worm gear (7).

1 Impulse emitter
2 Motor suspension
3 Screw
4 Mounting screw
5 Vee-belt
6 Pin
7 Worm gear

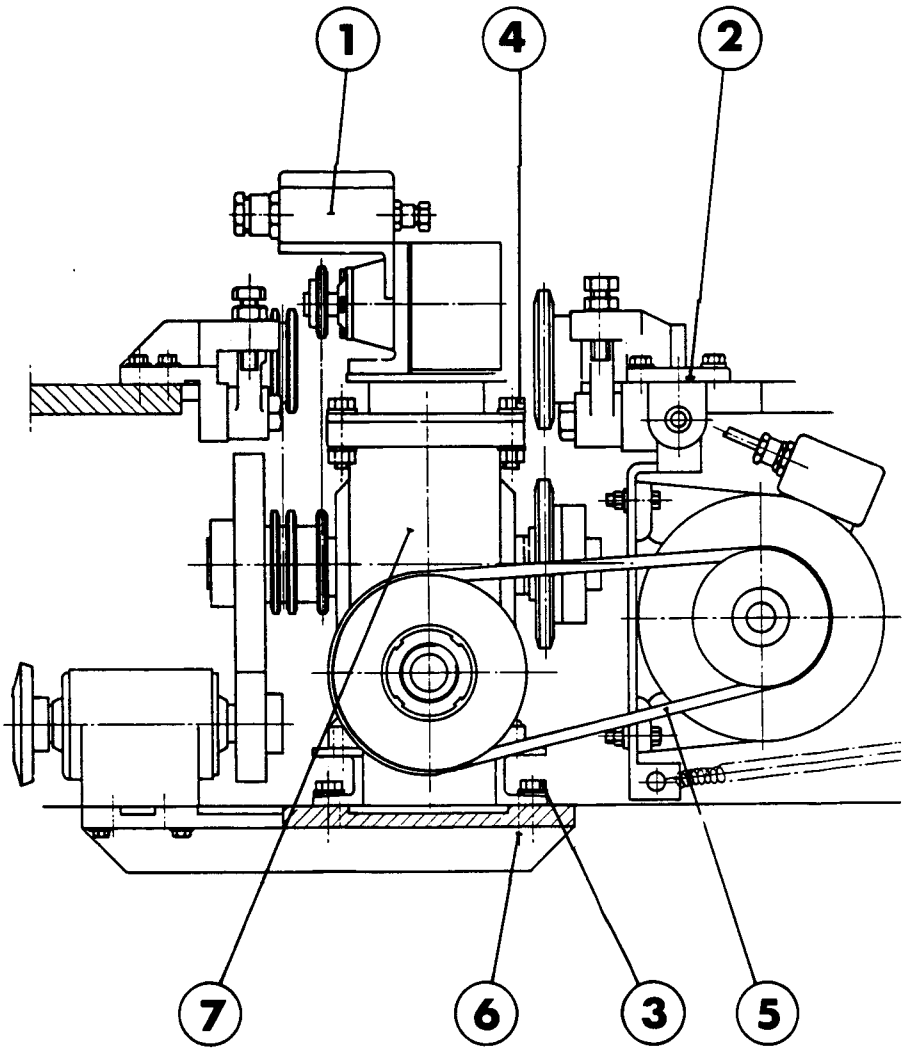

OVERHAUL

Loosen the grub screws and pull off the gear (1), sprockets (2) and (3), and the slip disc (4). Remove the circlips (5) and (6) and pull out the shafts (7) and (8). Replace the ball bearings (9), (10) and (11). Replace the seals (12) and (13), and the O-ring (14). Replace the gear (1) and the sprockets (2) and (3), as required.

Overhaul the slip disc (4) according to page 525-31.

Adjust the yoke (15) so the adjustment margin is the same in both directions. Unscrew the plug (16) and fill the gear housing with fresh oil.

Caution!
The worm gear is to be filled with synthetic oil. Refill with Shell Tivela Oil WA or similar type. Mineral oil, code E, may also be used.

Synthetic oil must not be mixed with mineral oil.

1 Gear
2 Sprocket
3 Sprocket
4 Slip disc
5 Circlip
6 Circlip
7 Shaft
8 Shaft
9 Ball bearing
10 Ball bearing
11 Ball bearing
12 Seal
13 Seal
14 O-ring
15 Yoke
16 Plug

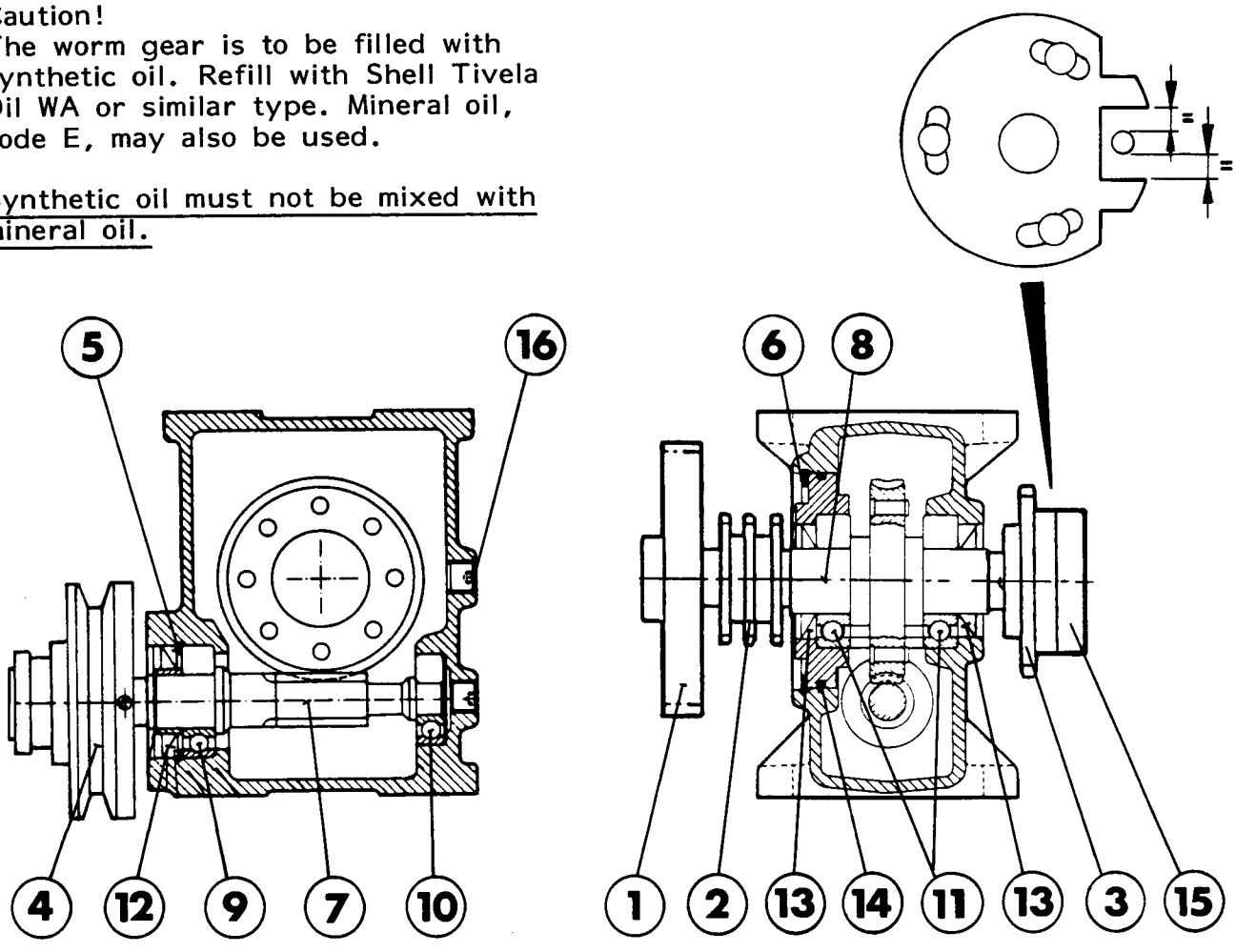

2/MS 524-31
97

OVERHAUL

Remove the nut (1), lock plate (2), coil spring (3), stud (4), flange (5) and Vee-belt pulley (6). Clean all the components and polish off any rust on the surfaces of the flange and hub (7) that bear against the pulley.

Replace the needle bearing (8). Replace the Vee-belt pulley if it is defective or if its thickness A is less than 21 mm.

On reassembly, replace the stud. Make sure that the flange, pulley, and hub are free from grease. Tighten the nut until gap B between the flange and the inside of the nut is 13 mm. Secure the nut with the lock plate.

1 Nut
2 Lock plate
3 Coil spring
4 Stud
5 Flange
6 Vee-belt pulley
7 Hub
8 Needle bearing

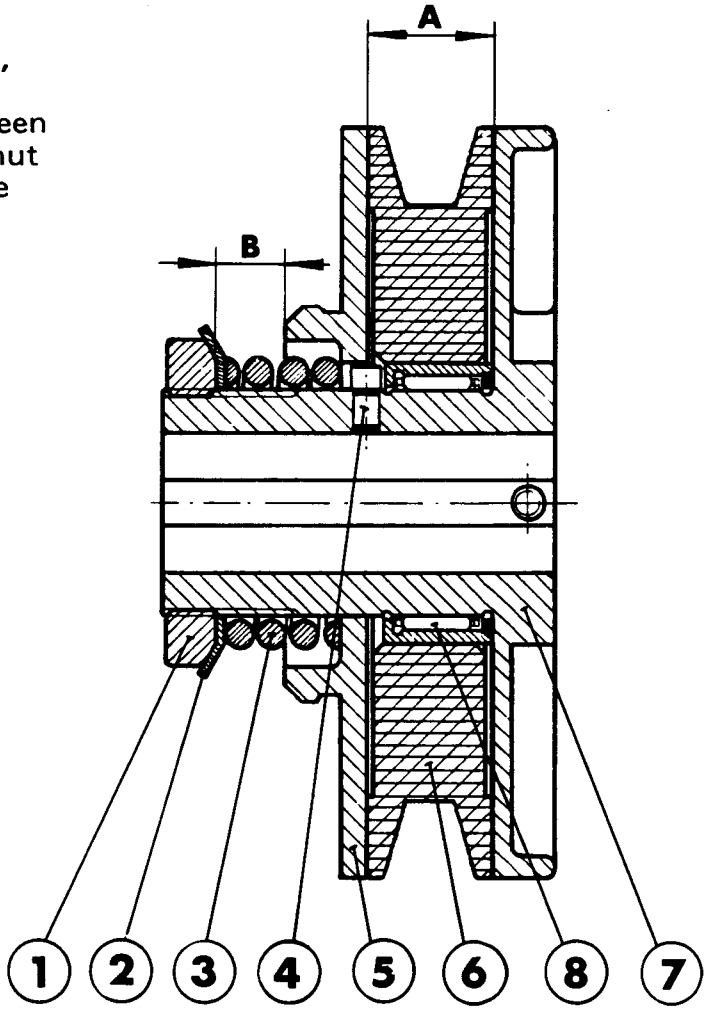

CHECKING

Check that the shaft (1) runs smoothly and that there is no play in the bearings.

If required overhaul acc to page 527-31.

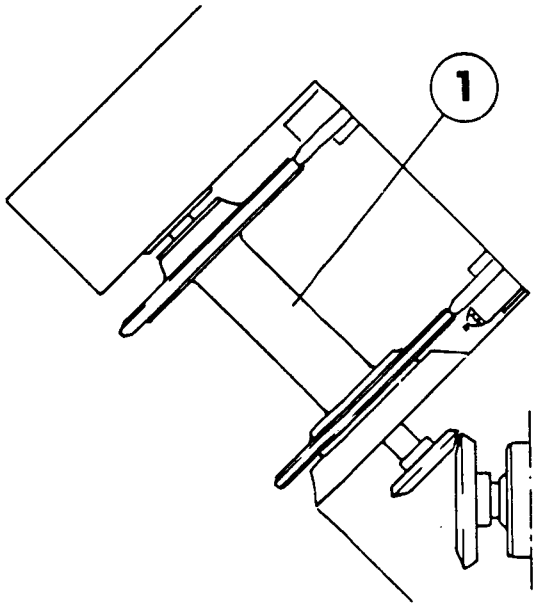

OVERHAUL

Undo the screws (1) and (2). Remove the shaft support (3) by means of puller screws in the threaded holes (4). Undo the screws (5) and pull out the shaft (6).
Lift out the sprocket (7).
Undo the grub screws (8) and pull out the gear unit (9).

Undo the screws (10) and (11), and replace the bearings (12) and (13).

Replace the sprockets (7) and (16) and the gear (17), as required.

Check that the grease nipple (18) lets through grease. If not, replace it.

Fill the sprocket (7) and the bearing (12) with grease on assembly.

On reassembly replace the O-rings (14) and (15).

After reassembly, grease by means of a grease gun.

1 Screw
2 Screw
3 Shaft support
4 Threaded hole
5 Screw
6 Shaft
7 Sprocket
8 Grub screw
9 Gear unit
10 Screw
11 Screw
12 Bearing
13 Bearing
14 O-ring
15 O-ring
16 Sprocket
17 Gear
18 Grease nipple

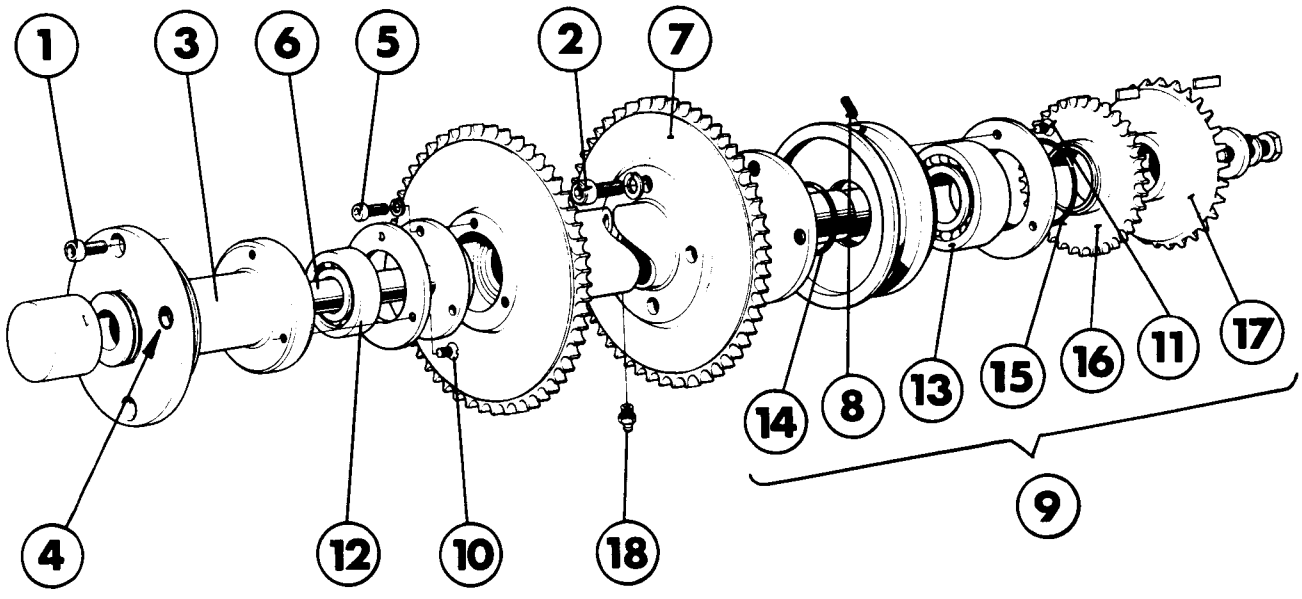

CHECKING

Check the tension of the drive chain.

Check that the cam unit (2) is firmly fitted on the shaft. Check the mounting screws (6).

Check that the gaps between the proximity switches (3) and their cams are 1 mm, by means of gauge TP No 75622.

Check that there is no condensate in the connection box (5).

1 Cover
2 Cam unit
3 Proximity switch
4 Sprocket
5 Connection box
6 Mounting screw

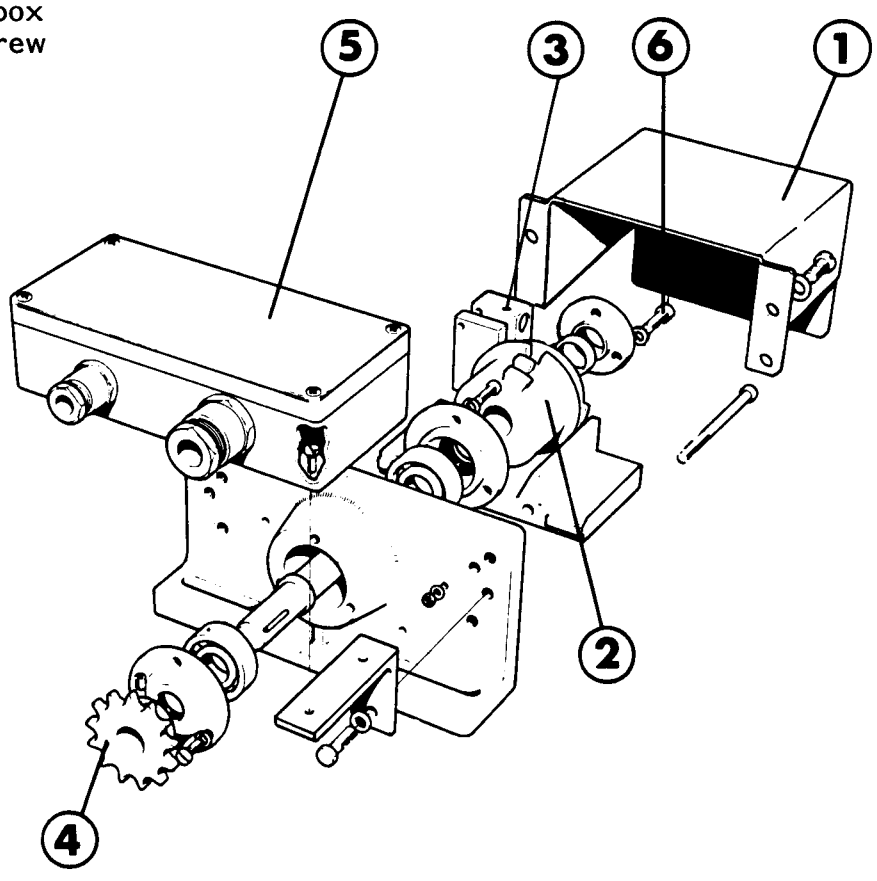

OVERHAUL

Remove the sprocket (1), key (2), and cam (3). Remove the bearing covers (4) and (5). Pull out the shaft (6). Replace the bearings (7) and (8), and the bearing covers (4) and (5).

Check the proximity switches (9) and their cables. Replace as required.

Replace the sprocket and the drive chain if required.

Fill the bearings with grease on reassembly. On reassembly, synchronize the impulse emitter with the heating sides acc to the "Basic synchronization and settings" section.

1 Sprocket
2 Key
3 Cam
4 Bearing cover
5 Bearing cover
6 Shaft
7 Ball bearing
8 Ball bearing
9 Proximity switch

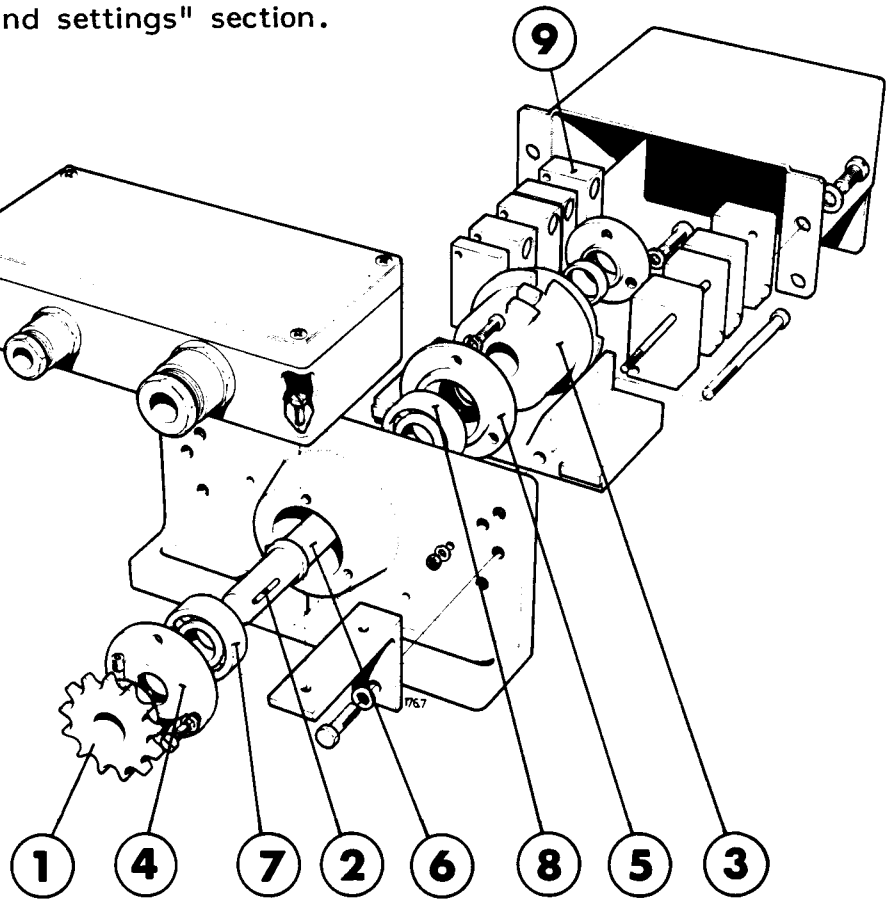

CHECKING

Check the Vee-belt (1) to make sure that there is no slippage or wear. Replace as required.

Check that the spring (2) is not deformed, and that it tensions the Vee-belt well.

Check the bearings of the motor (3) to make sure that there is no play.

Whenever required, remove the motor and overhaul it according to page 535-31.

1 Vee-belt
2 Spring
3 Motor

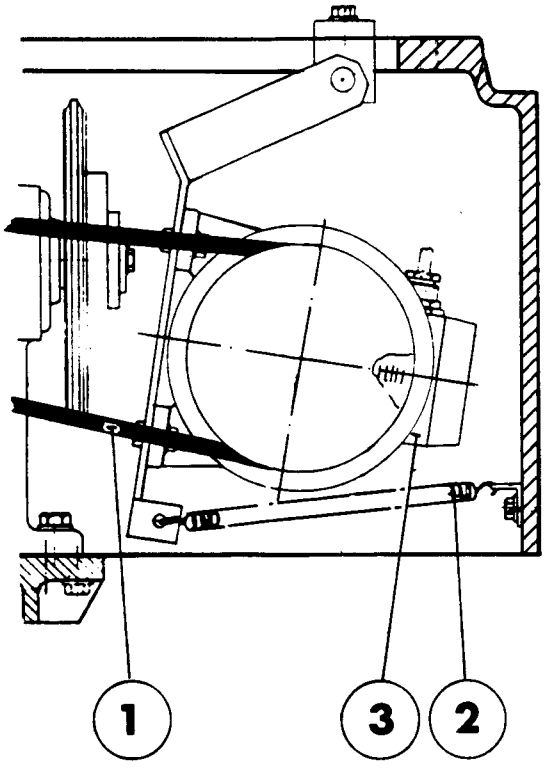

OVERHAUL

Motor TP No 90045-49

Remove the fan cover (1) and the motor shields (2) and (3). Remove the key (4). Pull off the front ball bearing (5) and the rear ball bearing (6).

Fit the new ball bearings.

Footnote.
Make sure that the drain holes in the motor shields face downwards.

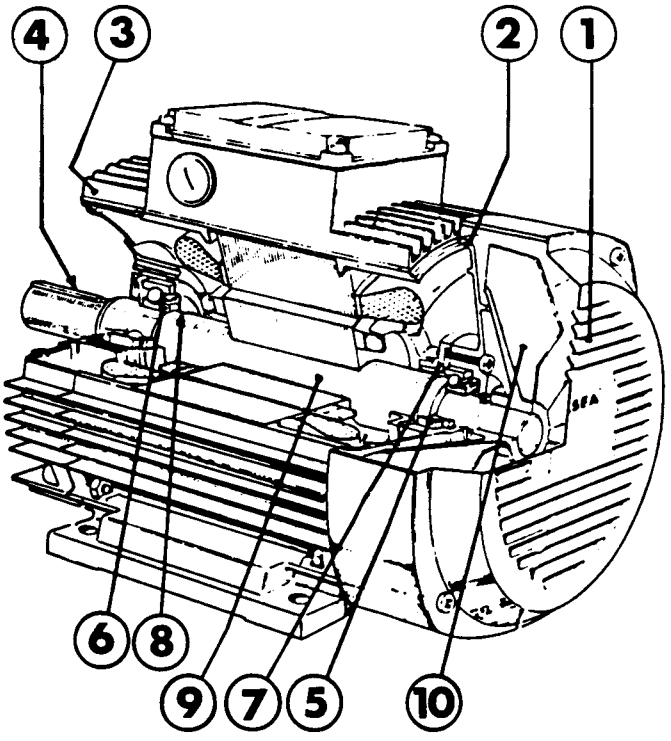

1 Fan cover
2 Front motor shield
3 Rear motor shield
4 Key
5 Front ball bearing (321312-103)
6 Rear ball bearing (321312-104)
7 Front inner bearing cover
8 Rear inner bearing cover
9 Shaft
10 Fan

CHECKING

Check that the edges of the knives (1) are not damaged.

Check that there are no pits in the counter rails (2) and that the rubber bonding (3) of the counter rails is intact.

1 Knife
2 Counter rail
3 Rubber bonding

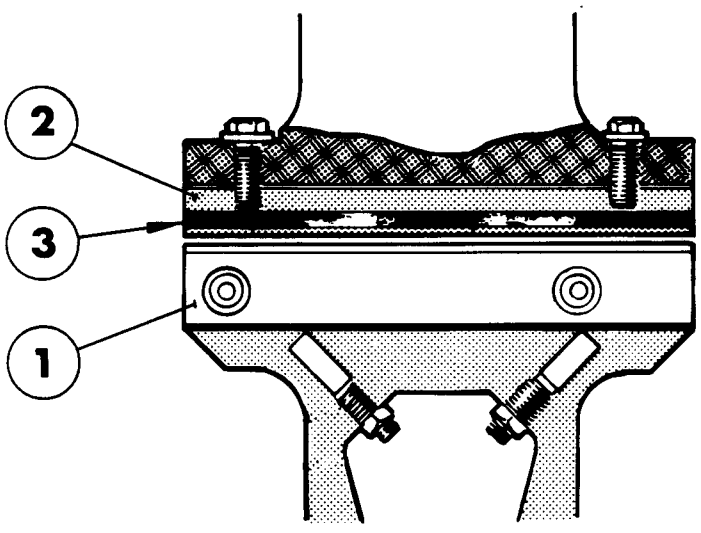

CHECKING

Check that the edges of the knives (1) are not damaged.

Check that there are no pits in the counter rails (2) and that the rubber bonding (3) of in the counter rails is intact.

1 Knife
2 Counter rail
3 Rubber bonding

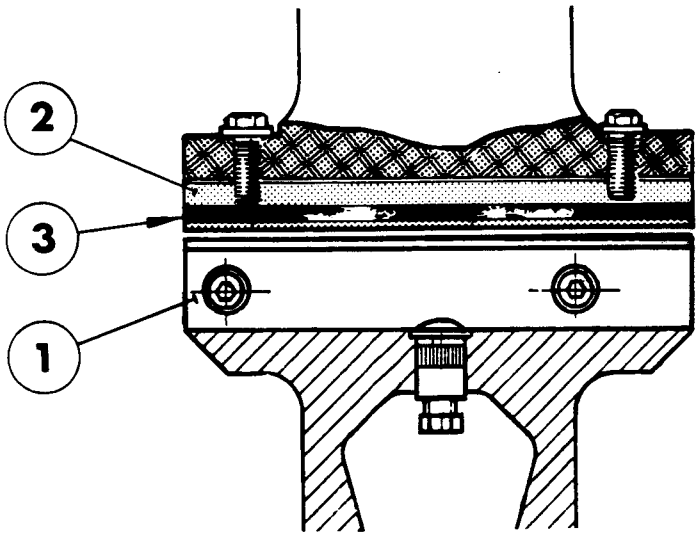

REMOVAL/FITTING

Remove the drive chain (1) of the cutting unit. Make sure that the gear wheels (2) are marked. If not, mark the cogs that are in engagement.

Loosen the screws (3) at the shaft ends. Remove the clamps (4) for the shaft mounts. Make a note of the number of spacer washers (5) at each shaft end. Remember that the washers may have different thicknesses.

Lift out the cutting wheels (6) and the counter wheels (7).

On reassembly, check that the cutting wheels and the counter wheels end up in their original, correct, places, and that the marked cogs are in engagement.

For adjustment and settings, see page 541-51.

1 Drive chain
2 Gear wheel
3 Screw
4 Clamp
5 Spacer washer
6 Cutting wheel
7 Counter wheel

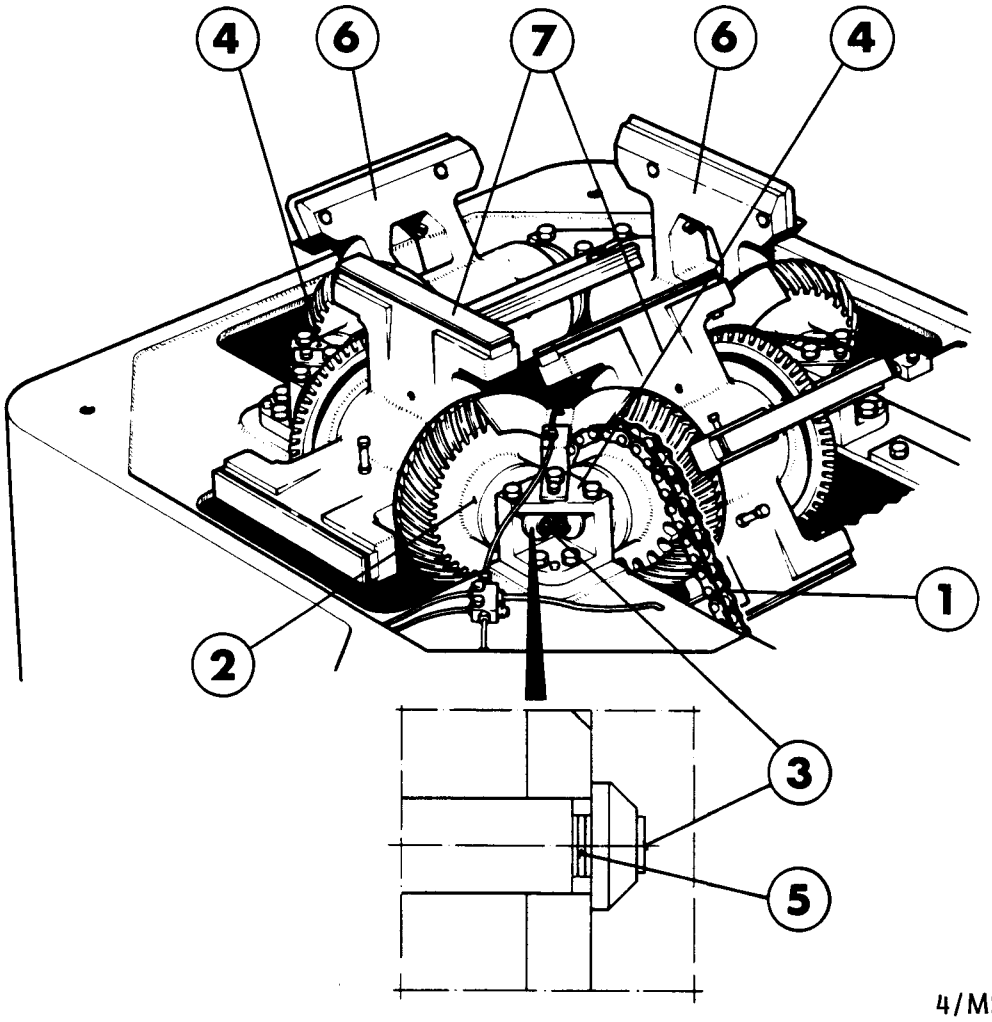

4/MS 538-21

OVERHAUL

Replace the knives (1) and the counter rails (2).

Remove the shims (3) under the counter rails.

Remove the bearing covers (4) and pull out the shaft (5). Replace the ball bearings (6).

Make sure that the ball bearings are fitted with the seal side facing the cutting wheel.

Replace the bearing covers.

Make sure that the bearing covers are fitted with the slot facing the outlet hole (7) of the grease nipple (10).

Check the gears (8) and sprocket (9) for wear. Replace as required.

Check that the grease nipples (10) let through grease. If not, replace them.

Grease by means of a grease gun after assembly.

1 Knife
2 Counter rail
3 Shim
4 Bearing cover
5 Shaft
6 Ball bearing
7 Outlet hole
8 Gear
9 Sprocket
10 Grease nipple

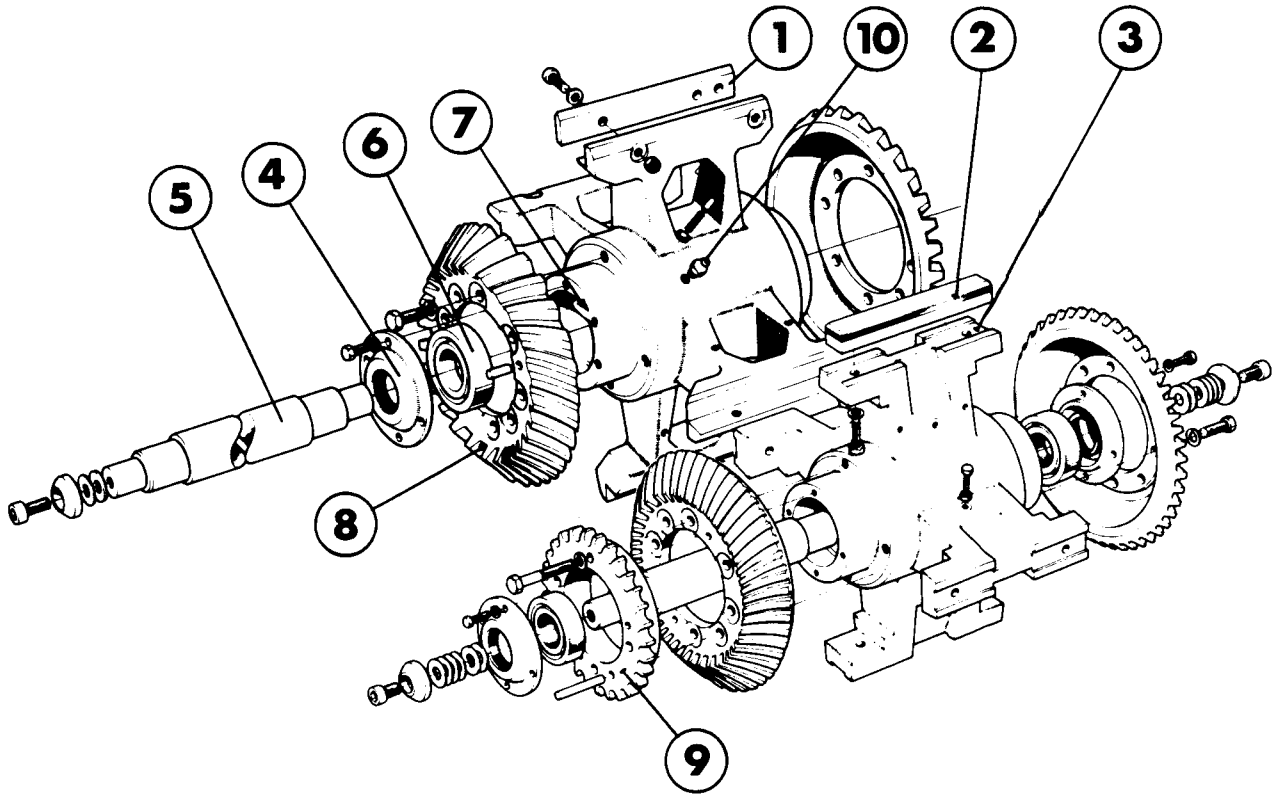

4/MS 538-31

SETTING OF CUTTING LENGTH

The cutting length equals the difference between distances A and B in fig 1, i.e. the difference between the arms of the cutting and counter wheels at the beginning and end, of the knife (1)/counter rail (2) contact points. These two points are very distinct.

a) Remove the drive chain for the cutting unit.
b) Turn the cutting wheels by hand to the points of first and last knife/counter rail contact. Measure the distance in acc with fig 1.
c) Before adjusting the cutting length, check the pins (3); if there is any sign of deformation of the conical surface, replace the pins. Adjust the cutting length with the screws (4).
d) Check that the knife and counter rail are parallel by holding a lamp underneath the wheels. The gap should show up equally wide all along the rail.
CAUTION! When adjusting parallellity, make sure that the cutting length remains correct.
e) Adjust all four knives on both cutting wheels.

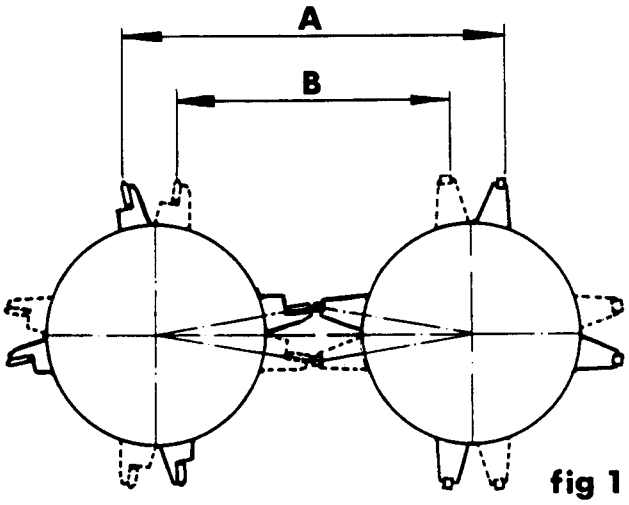

fig 1

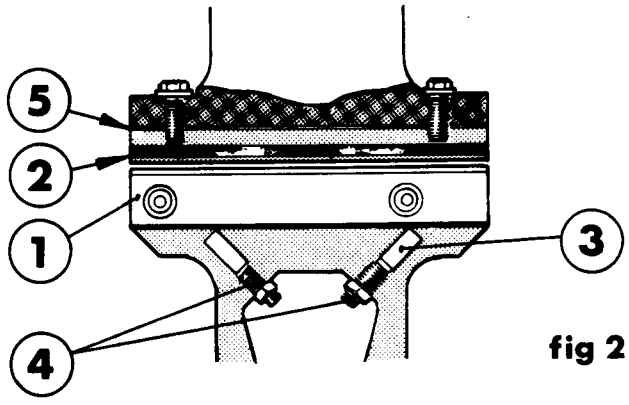

fig 2

Shims (5) with a maximum thickness of 0.2 mm may be placed underneath the counter rail to compensate for inadequate cutting function due to normal wear of the counter rail. When the wear of the counter rail can no longer be compensated by means of shimming, additional shims must not be fitted. Remove all the shims fitted, and replace all the counter rails. Unless the knives are being replaced as well, there is normally no need to carry out new setting of the cutting unit.

1 Knife
2 Counter rail
3 Pin
4 Adjustment screw
5 Shim

Cutting Length (A - B) mm		
6302-6332	22^{+2}_{0}	17^{+2}_{0}
6303-6333	23^{+2}_{0}	17^{+2}_{0}
6305-6335	25^{+2}_{0}	20^{+2}_{0}
Knife edge	90°	60°

SETTING OF CUTTING LENGTH

The cutting length equals the difference between distances A and B in fig 1, i.e. the difference between the arms of the cutting and counter wheels at the beginning and end, of the knife (1)/counter rail (2) contact points. These two points are very distinct.

a) Remove the drive chain for the cutting unit.
b) Turn the cutting wheels by hand to the points of first and last knife/counter rail contact. Measure the distance in acc with fig 1.
c) Check that the knife and counter rail are parallel by holding a lamp underneath the wheels. The gap should show up equally wide all along the rail.
d) Adjust all four knives on both cutting wheels.

Shims (5) with a maximum thickness of 0.2 mm may be placed underneath the counter rail to compensate for inadequate cutting function due to normal wear of the counter rail. When the wear of the counter rail can no longer be compensated by means of shimming, additional shims must not be fitted. Remove all the shims fitted, and replace all the counter rails. Unless the knives are being replaced as well, there is normally no need to carry out new setting of the cutting unit.

1 Knife
2 Counter rail
3 Adjustment screw
4 Shim

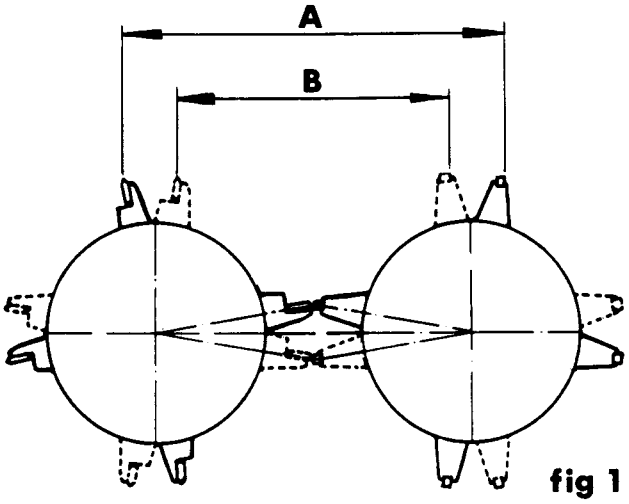

fig 1

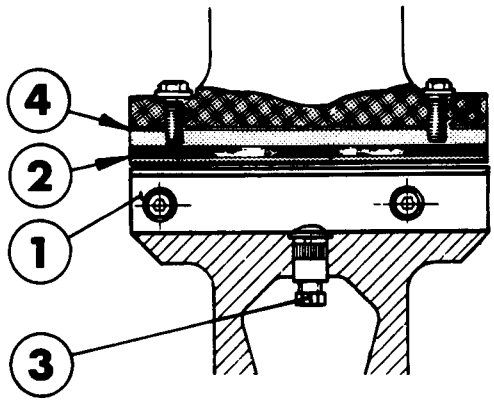

fig 2

Cutting Length (A - B) mm		
6302-6332	22 $^{+2}_{0}$	17 $^{+2}_{0}$
6303-6333	23 $^{+2}_{0}$	17 $^{+2}_{0}$
6305-6335	25 $^{+2}_{0}$	20 $^{+2}_{0}$
Knife edge	90°	60°

GEAR PLAY ADJUSTMENT

Adjust the gear play before the shaft mount clamps (1) are fitted.

TC/150, TCA/150, TC/300, TCA/300 Begin adjustment of the gear play between the cutting wheels (3).

TC/500, TCA/500 Begin the adjustment of the gear play between the counter wheels (2).

1 Adjust the gear play between the counter wheels or, as the case may be, the cutting wheels by shifting them axially relative one another, acc to fig 1.
2 Measure the gap between the shaft end (4) and the shaft collar (5) by means of the feeler gauge (6) acc to fig 2. Measure at both end of the shaft.
3 Fit spacer washers (7) with a total thickness equal to the measured gaps between the shaft ends and the shaft collars, acc to fig 3.
4 Adjust the gear play of the other cutting and counter wheels related to the already adjusted wheels in a similar manner.
5 Fit the clamps (1) and tighten their screws (8). Thereafter loosen the screws slightly.
6 Tighten the screws (9) in the shaft ends.
7 Tighten the clamp screws.
8 Check the gear play everywhere.

1 Clamp
2 Counter wheel
3 Cutting wheel
4 Shaft end
5 Shaft collar
6 Feeler gauge 782301-101
7 Spacer washer*
8 Screw
9 Screw

* TC, TCA/150 1755-5,-6,-7
TC, TCA/300 1755-2,-3
TC, TCA/500 1755-1,-2,-3

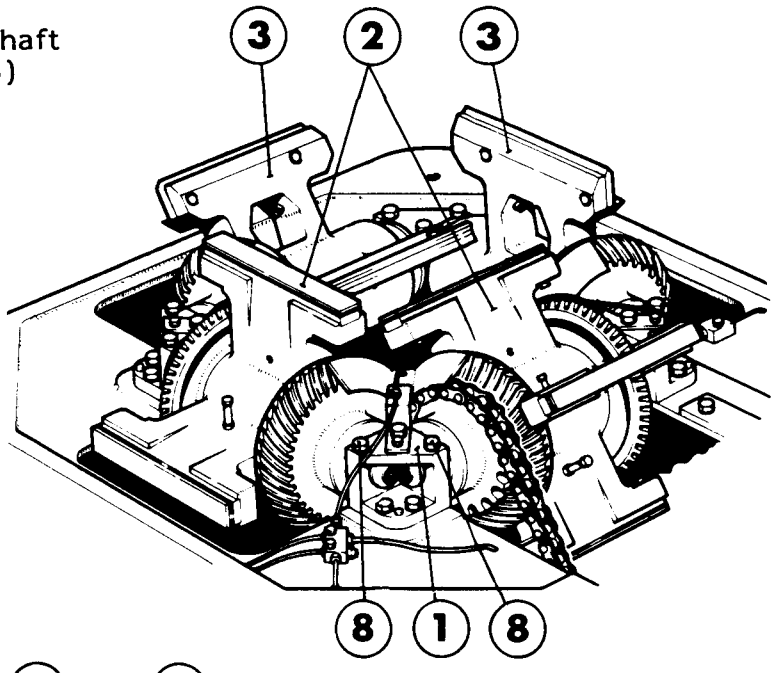

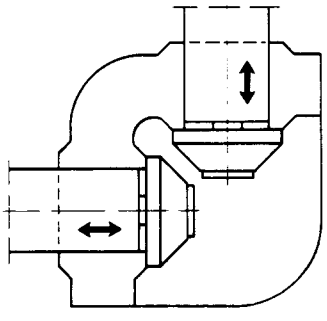

fig 1

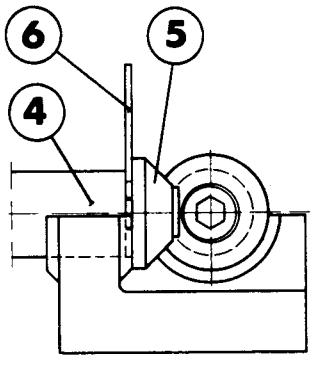

fig 2

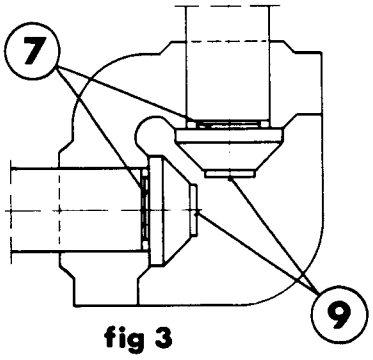

fig 3

2/MS 546-51:1
111

CHECKING AND SETTING OF PACKAGE SUPPORT

TC/150, TCA/150, TC/300, TCA/300

With the aid of a package (1), check that the supports (2) are set for the required package size and that they are centered relative the cutting unit. If required, adjust.
Carry out final adjustment of the package supports during test-running.

1 Package
2 Package support

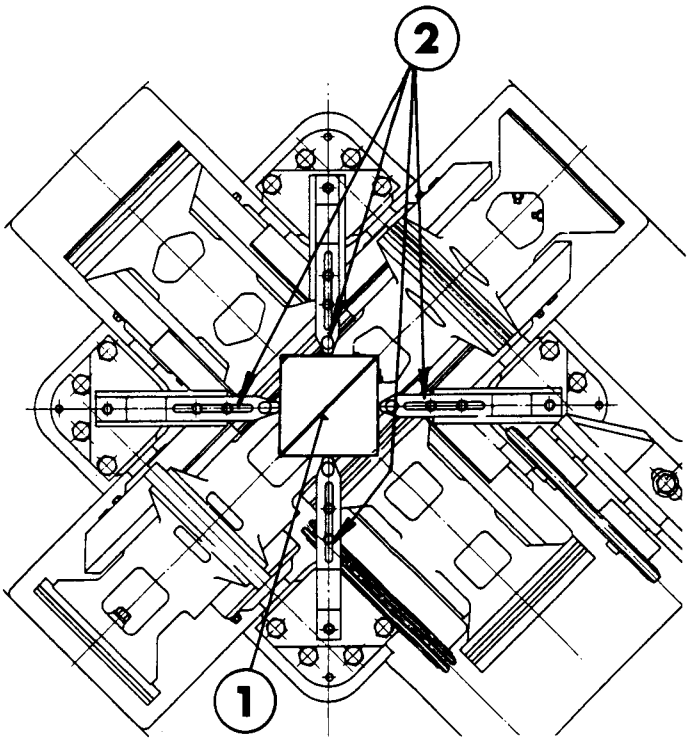

TC/500, TCA/500

Check that the support screws (3) in the counter wheels (4) protrude by appr 35 mm. Carry out final adjustment during test-running.

3 Setting screw
4 Counter wheel

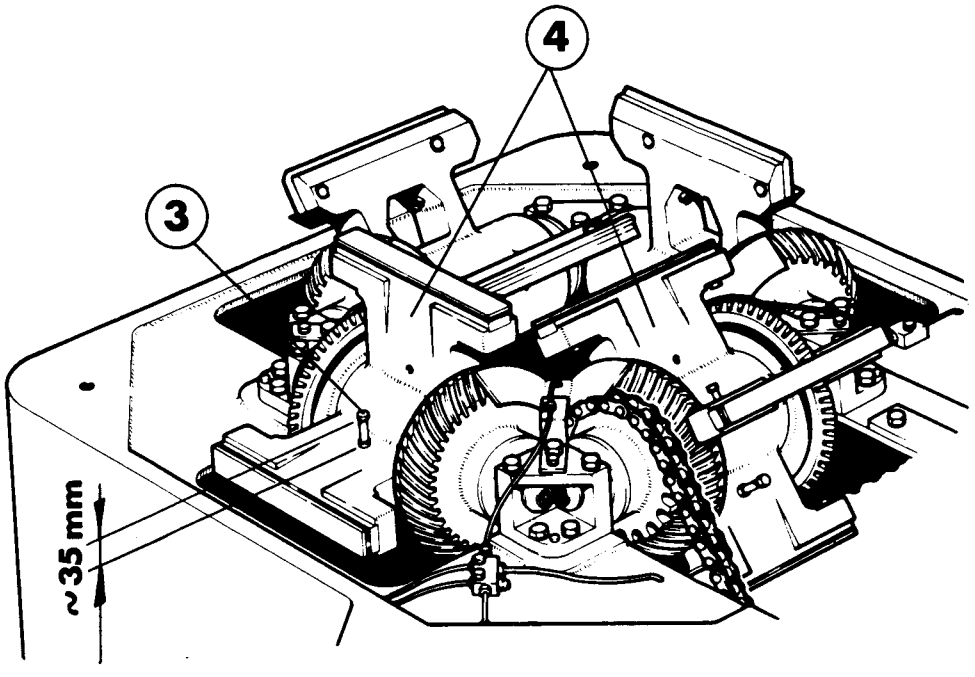

DESCRIPTION	PAGE
Elevator chain, guide wheels elevator for packer B - overhaul	601-31
Package switch, elevator for packer B - checking	606-31
Counter unit, mechanical - overhaul (2 pages)	611-31
Elevator	616-11
Elevator chain - checking	618-11
Elevator chain, elevator for packer B	618-12
Elevator chain - removal	618-21
Elevator chain, elevator for packer B - removal	618-22
Sprockets, upper - overhaul	620-31
Sprockets, lower - removal	622-21
Sprockets, lower - overhaul	622-31
Elevator scoops - removal	624-21
Elevator scoops - overhaul	624-31
Chain tensioner (double) - removal	626-21
Chain tensioner (double) - overhaul	626-31
Chain tensioner (double), elevator for packer B - overhaul	626-32
Chain support - overhaul	628-31
Counter unit, electronic - checking	630-11

OVERHAUL

Check the wear of the chain. The axles (1) should be at 90° angle to the end plate (2). The chain tensioner (5) should have an adjustment margin of 40 mm left. If not, replace the chain. Dismantle the chain and check the segments (3). Replace if the segments are worn or damaged. Dismantle and clean the guide wheels (10). Check the bearing (14) and seals (13). Replace in case of wear and damage. Dismantle and check the chain tensioner (5). Check the bearings (12) of the scoops (11) and if the play is larger than 0.5 mm, replace the bearing.

1	Shaft	8	Chain
2	End Plate	9	Driving wheel
3	Segment	10	Guide wheel
4	Chain guide	11	Scoop
5	Chain tensioner	12	Bearing
6	Bolt	13	Seal
7	Nut	14	Bearing

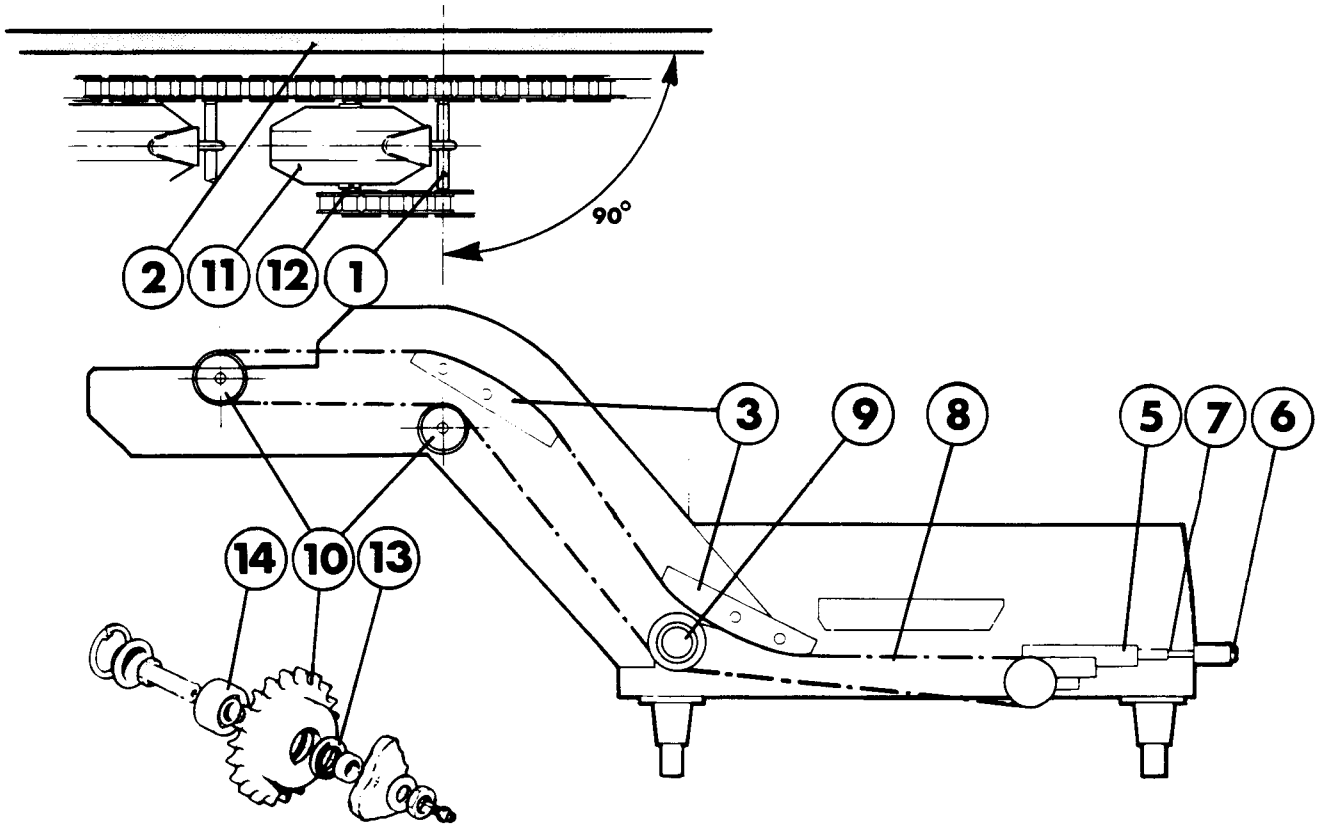

CHECKING

Shut off the air.

Check if the switch moves smoothly in all hinged points by moving the guide arm (10).

REMOVAL

Release the screws (2) and (3) and put the cylinder (1) aside.

Dismantle the screw (4) and remove link arm (7).

Undo the nut (9) and screw (8).

Check the bushings (6) in the guide arm (10) and bushings (5) in the link arm (7).

Check all the screws (2), (3), (4), and (8) to make sure that they are not worn.

Replace all worn or damaged parts and assemble in reverse order.

1 Cylinder
2 Screw
3 Screw
4 Screw
5 Bushing
6 Bushing
7 Link arm
8 Screw
9 Nut
10 Guide arm

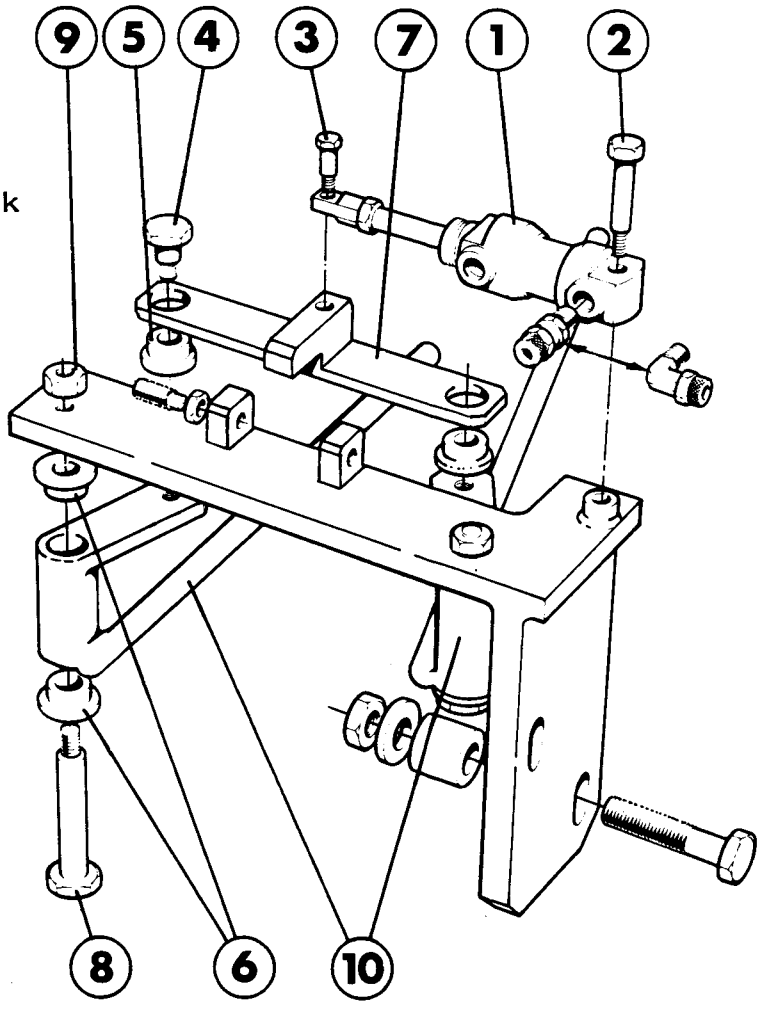

OVERHAUL

Undo the screw (1) and take off the cover (2).
Undo the screw (3) and loosen the grub screw (4). Pull out the axle (5) and remove the rocker plate (6).
Undo the screw (7) and remove the hand wheel (8).
Remove the oil seal (9).
Undo the screw (10) and pull out the gear unit (11).
Dismantle the gear unit. Check the ball bearings (12) and oil seals (9) for wear and play; replace as required.

1	Screw	15	Screw
2	Cover	16	Screw
3	Screw	17	Flange
4	Stop screw	18	Sprocket
5	Axle	19	Gear wheel
6	Rocker plate	20	Gear wheel
7	Screw	21	Shaft
8	Hand wheel	22	Shaft
9	Oil seal	23	Oil seal
10	Screw	24	Oil seal
11	Gear unit	25	Ball bearing
12	Ball bearing	26	Screw
13	Screw	27	Roller
14	Screw	28	Spring

Cont'd on next page.

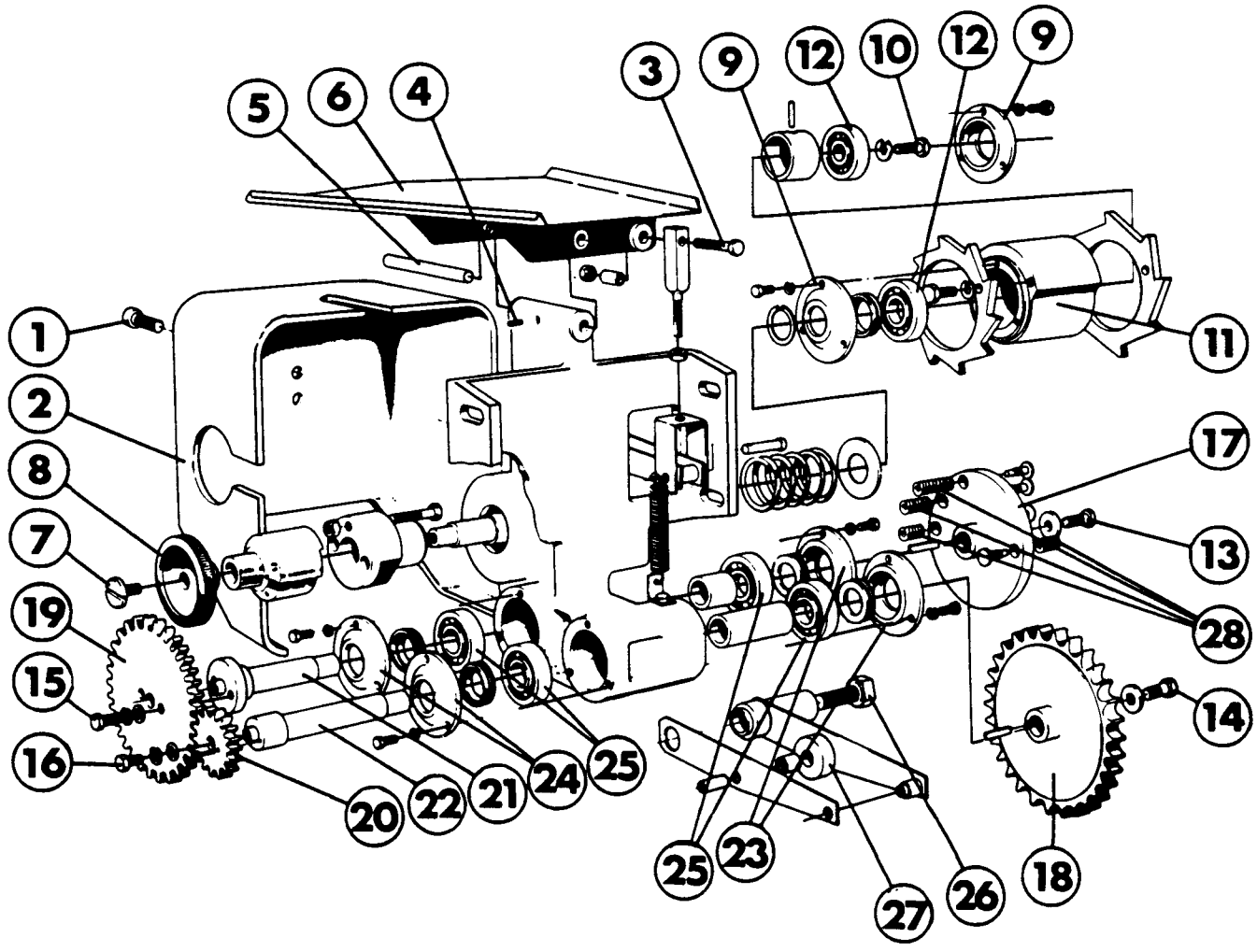

3/MS 611-31:1
116

Cont'd from previous page.

Undo the screw (13) and remove the flange (17). Undo the screw (14) and remove the sprocket (18). Undo the screw (15) and remove the gear wheel (19). Undo the screw (16) and remove the gear wheel (20).
Pull out the shafts (21) and (22). Remove the oil seals (23) and (24) and the ball bearings (25) and check them for wear and play; replace as required.
Undo the screw (26) and remove the roller (27). Check it for wear; replace it, if required.
Replace any deformed or broken springs (28).
Reassemble in reverse order.

1	Screw	15	Screw
2	Cover	16	Screw
3	Screw	17	Flange
4	Stop screw	18	Sprocket
5	Axle	19	Gear wheel
6	Rocker plate	20	Gear wheel
7	Screw	21	Shaft
8	Hand wheel	22	Shaft
9	Oil seal	23	Oil seal
10	Screw	24	Oil seal
11	Gear unit	25	Ball bearing
12	Ball bearing	26	Screw
13	Screw	27	Roller
14	Screw	28	Spring

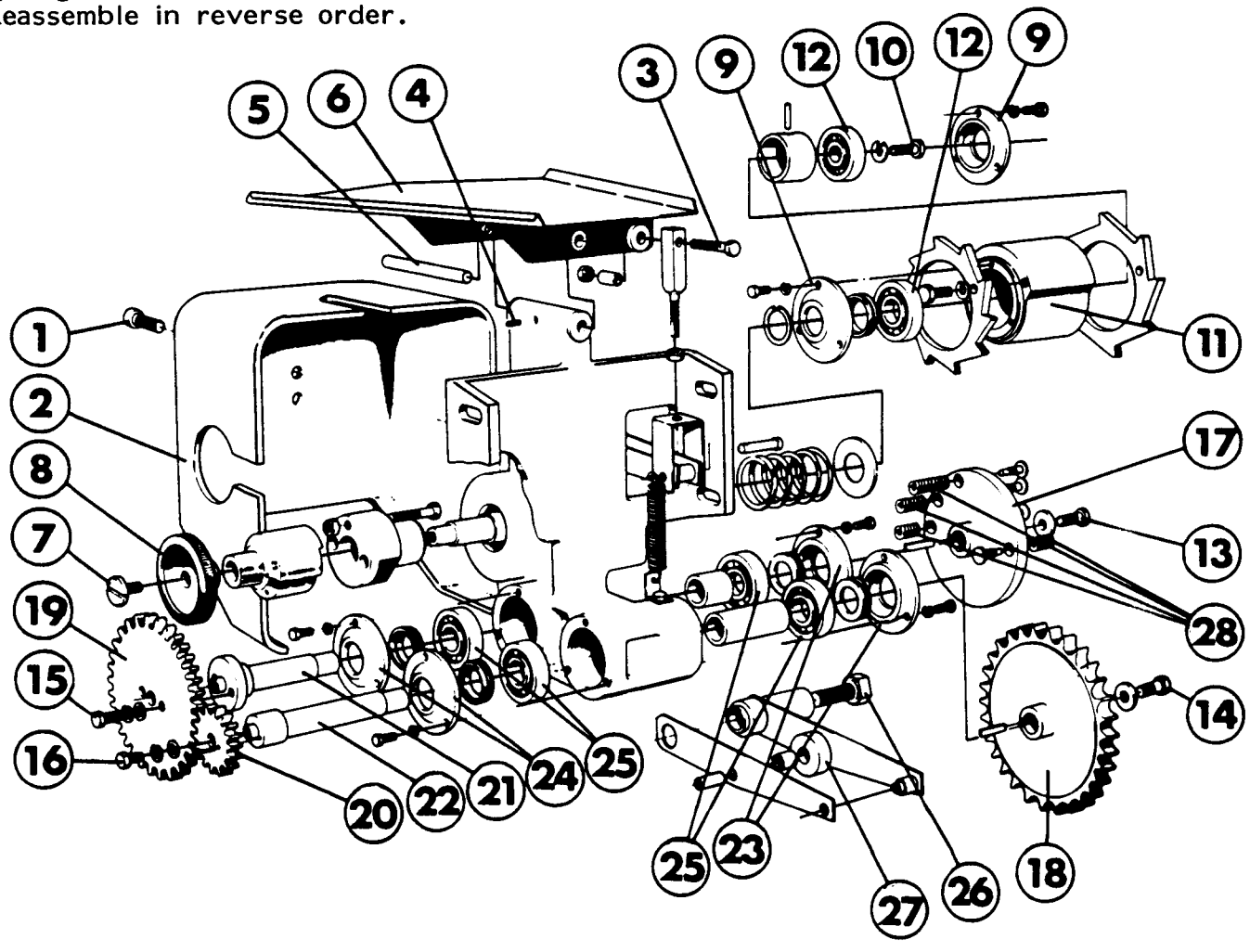

3/MS 611-31:2
117

ELEVATOR TYPES

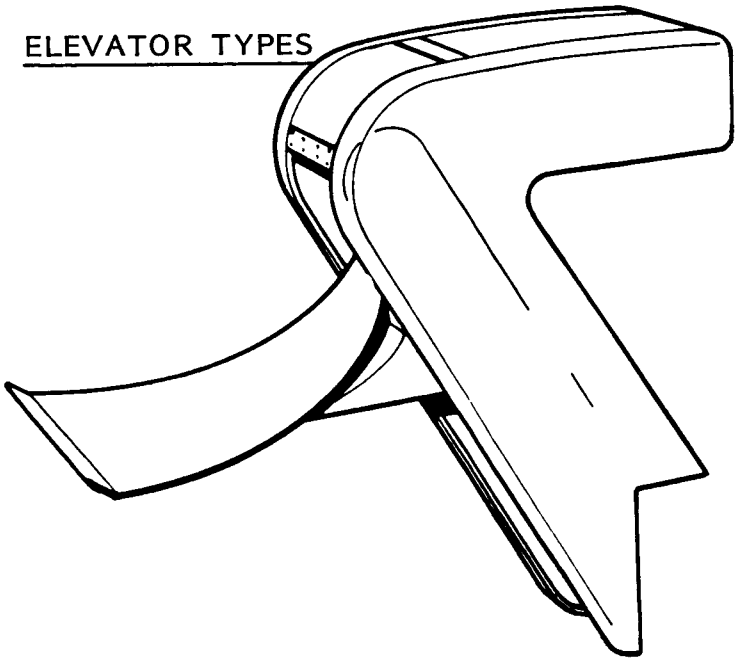

Table for hand packing

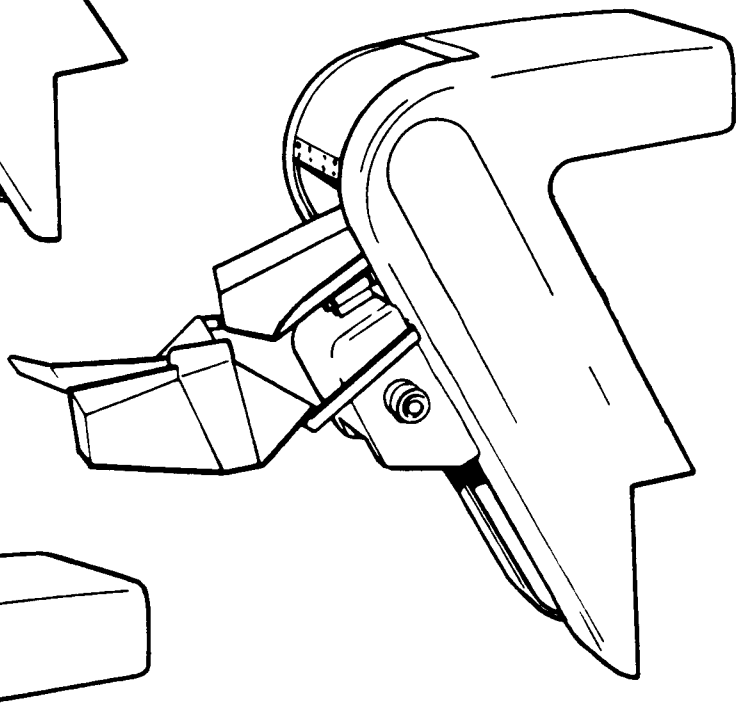

Mechanical counter unit for tumble packing

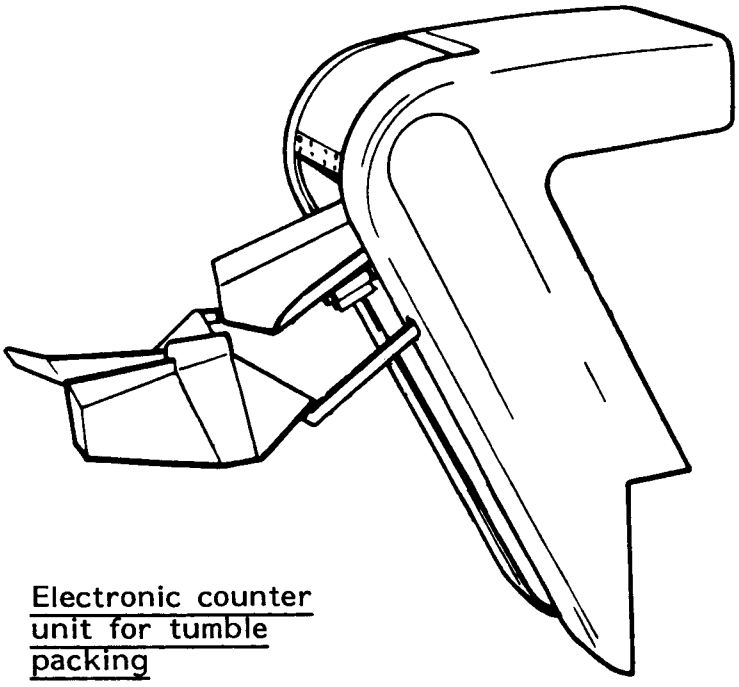

Electronic counter unit for tumble packing

CHECKING

Check elevator chain tension.

Adjust tension by means of the chain tensioner (1), if required.

Replace any missing springs (4).

If it is not possible to adjust the chain tensioner fully, or the tension of the two chains (2) and (3) is not equal, replace the elevator chains.

Check the bearings (5) of the scoops (6). Replace the bearings if play in the bearings exceeds 0.5 mm.

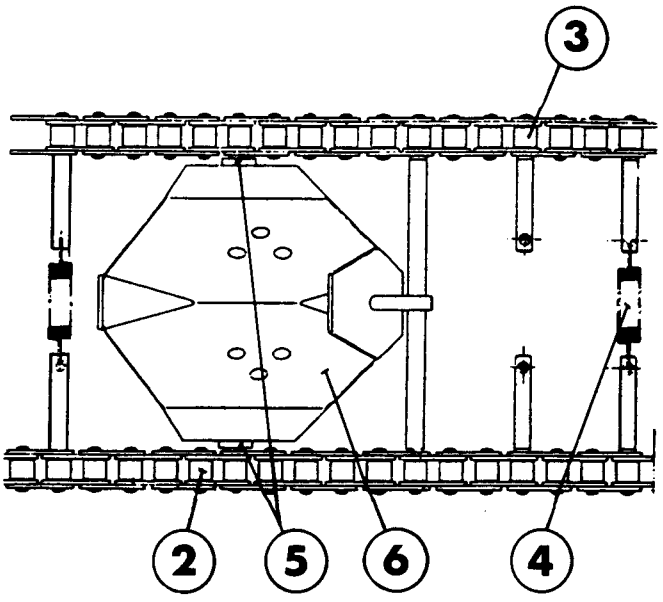

1 Chain tensioner
2 Chain
3 Chain
4 Spring
5 Bearing
6 Scoop

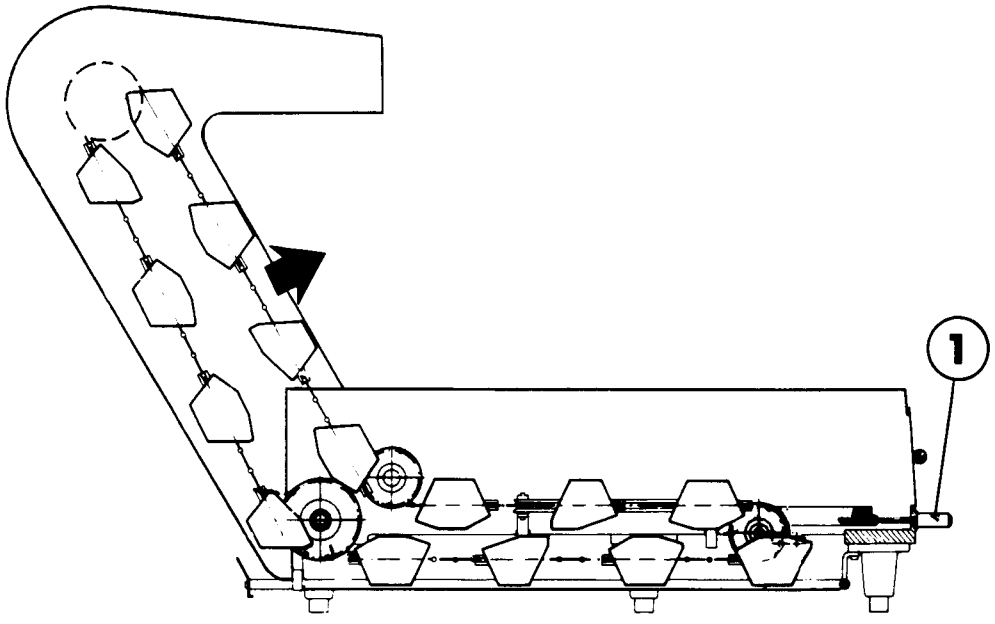

CHECKING

Check that the round axles of the chain are parallel with the bending wheel center line.

Check and adjust the chain tension.

If the correct chain tension cannot be achieved or if the axles are not parallel, replace the chain.

1 Bending wheel
2 Round axle

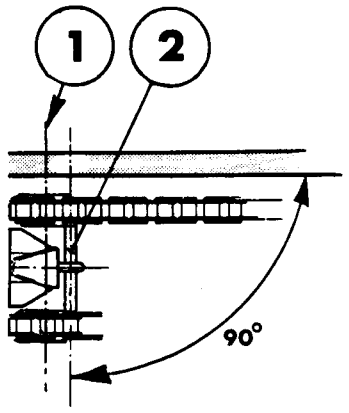

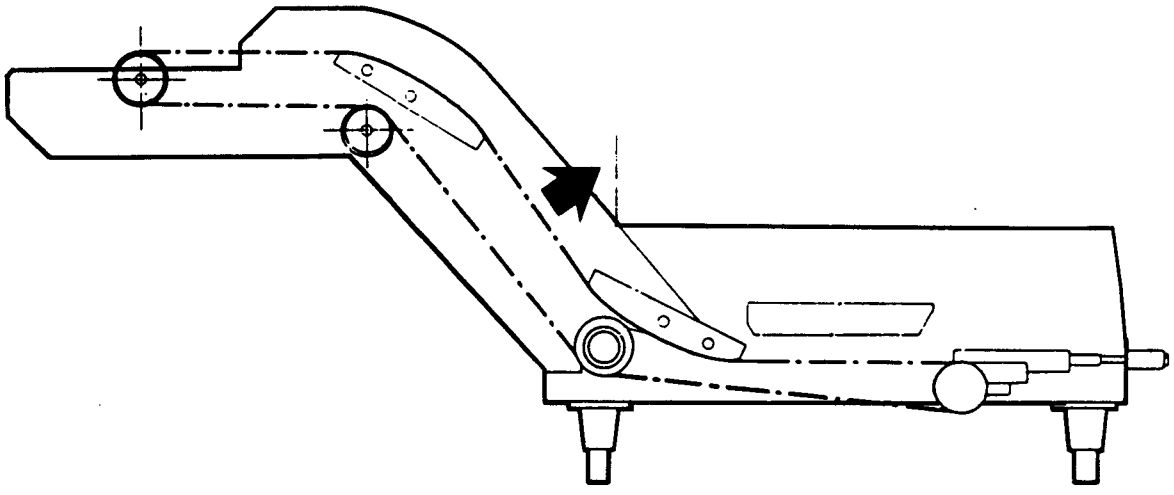

REMOVAL

Inch the machine until the chain lock (2) is located as illustrated.

Slacken the chain tensioner (1).

Remove the chain lock and pull out the chain.

Carry out synchronization acc to the "Basic synchronization and settings" section.

1 Chain tensioner
2 Chain lock

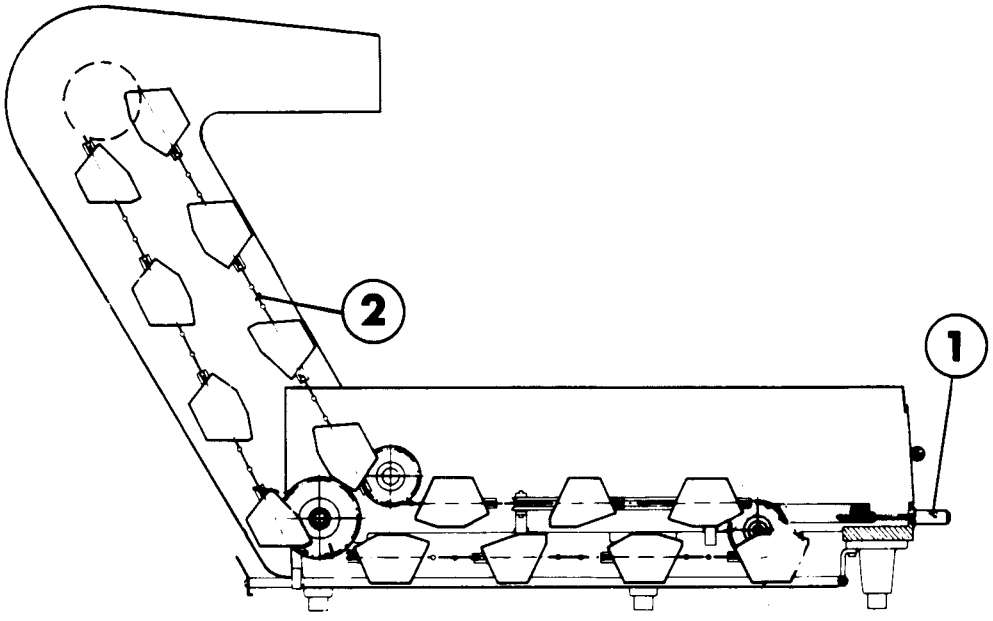

REMOVAL

Pull the chain (3) so that the chain lock (2) is located as shown in fig.

Loosen the chain tensioner (1).

Remove the chain lock and pull out the chain.

1 Chain tensioner
2 Chain lock
3 Chain

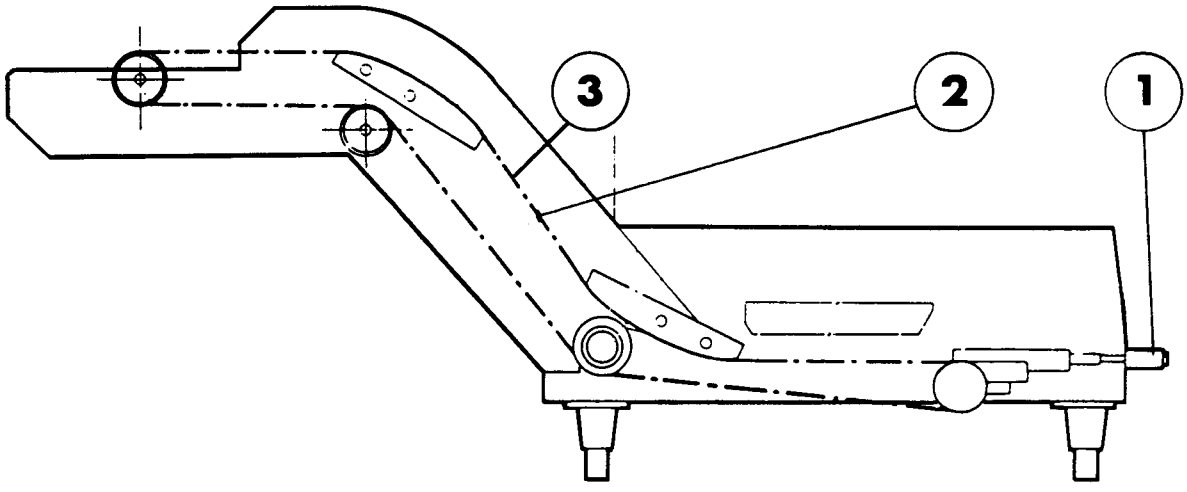

OVERHAUL

Remove the cover (1). Undo the nut (2) and remove the guide sprocket. Push out the shaft (3) with the ball bearing (4). Replace the ball bearing.

Replace the sprocket (5) if it is worn or damaged. Check that the grease nipple (6) lets through grease. If not, replace it. On reassembly, replace the O-ring (7).

Grease by means of a grease gun after assembly.

1 Cover
2 Nut
3 Shaft
4 Ball bearing
5 Sprocket
6 Grease nipple
7 O-ring

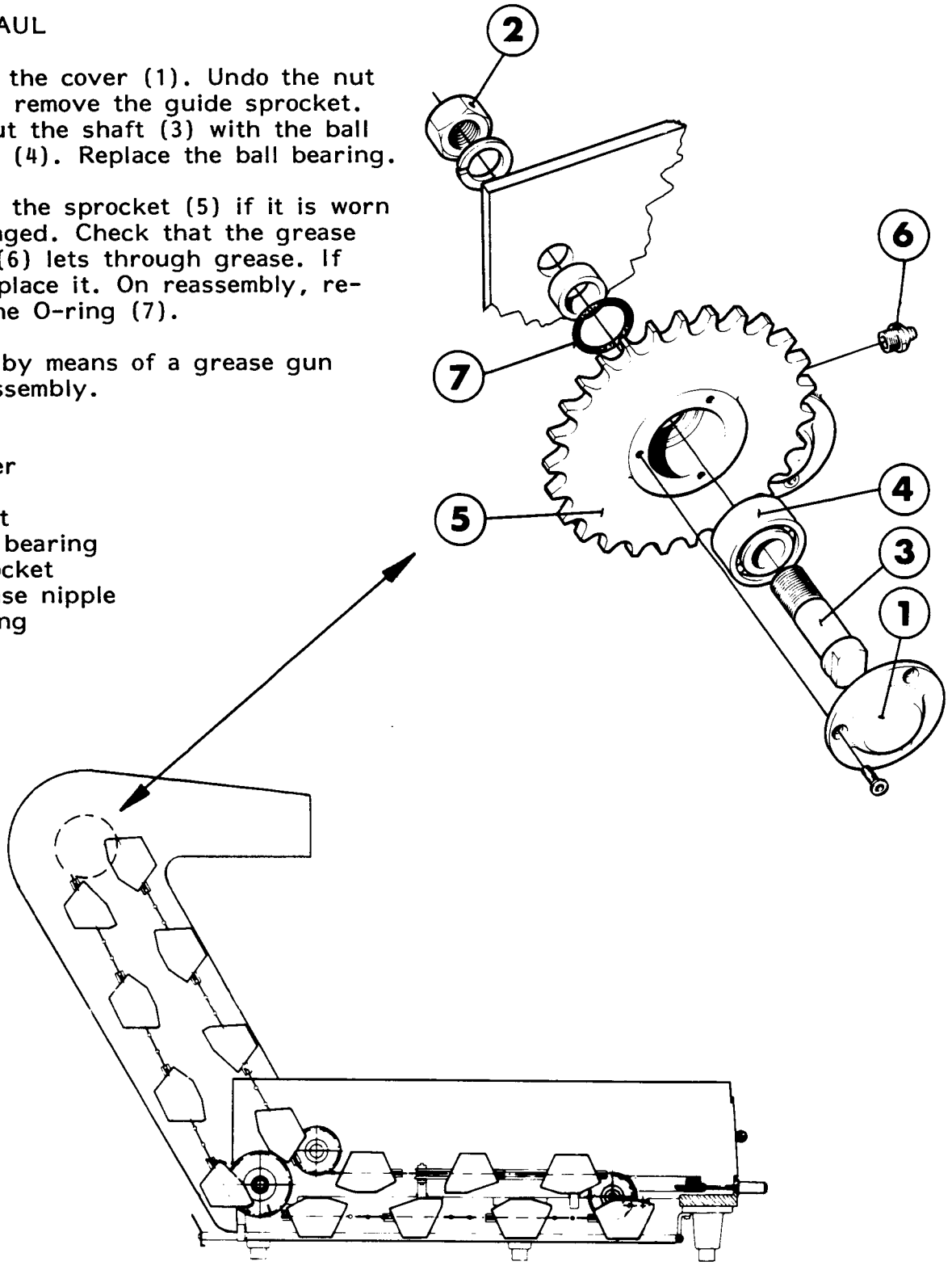

REMOVAL

Remove the bearing covers (1).
Unscrew the bolt (2). Undo the screw (4) and unscrew the expansion bolt (5).
Remove the sprockets and fit overhauled exchange sprockets.

1 Bearing cover
2 Bolt
3 Sprocket
4 Screw
5 Expansion bolt

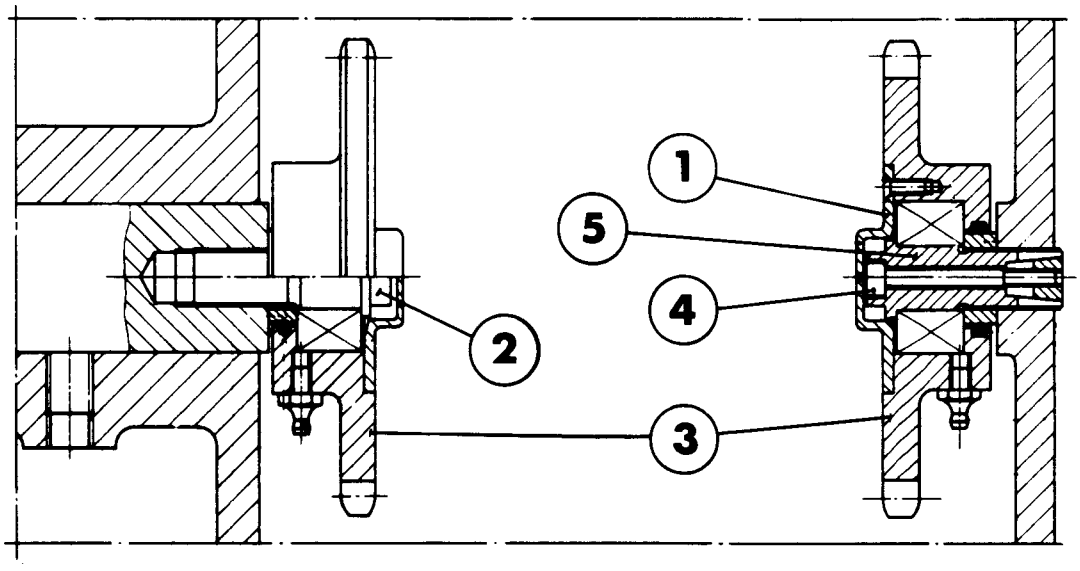

OVERHAUL

Undo the screws (1) and remove the bearing cover (2). Pull out the bolt (3).

Replace the ball bearing (4) and the O-ring (5).

Replace the bolt and the sprocket (6), if required.

Check that the grease nipple (8) lets through grease. If not, replace it. Grease by means of a grease gun after assembly.

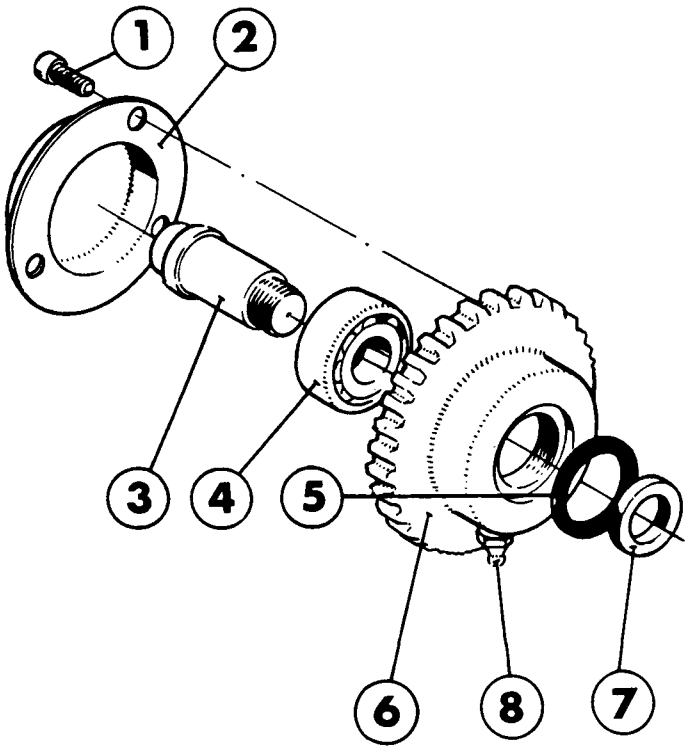

1 Screw
2 Bearing cover
3 Bolt
4 Ball bearing
5 O-ring
6 Sprocket
7 Spacer ring
8 Grease nipple
9 Expander nut
10 Bolt

Turn the bolt (10) counter-clockwise to release the expander nut (9); otherwise overhaul as above.

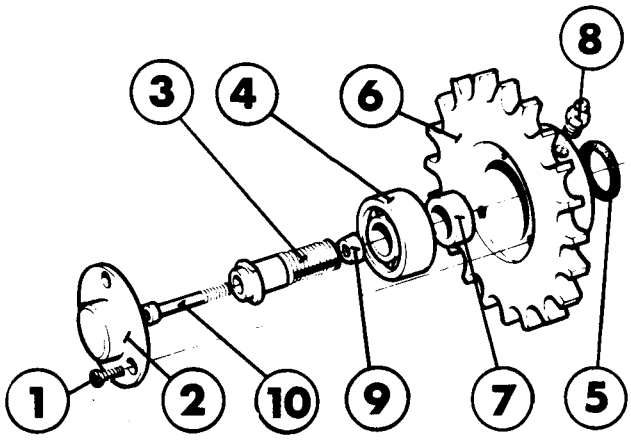

REMOVAL

Remove the circlips (1) and pull out the axle pins from the scoop bearings (2).

If required, fit the overhauled scoops on new chains.

1 Circlip
2 Scoop bearing

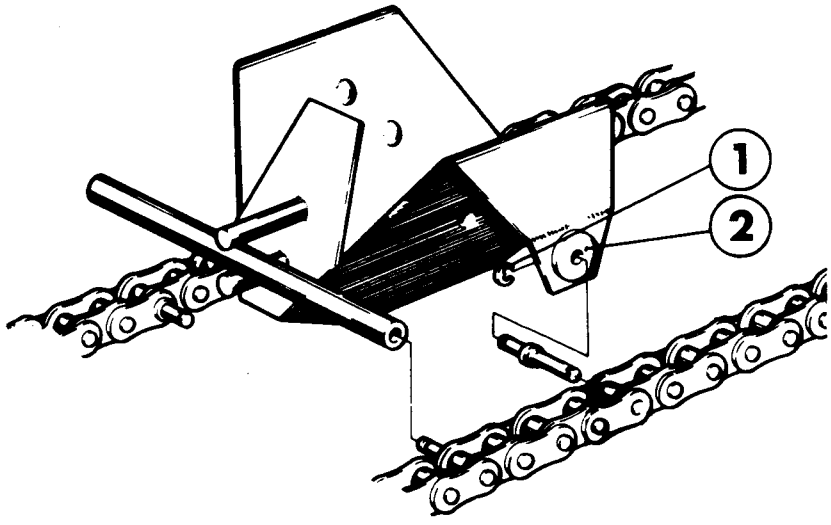

OVERHAUL

Position each scoop bearing (2) in the anvil (3) and knock it out with the mandrel (4), fig.1.

Put the guide pin (5) in the die (6). Locate the scoop wing (1) with the new bearing on the guide pin and position the mandrel pin (7) in the bearing.

Make sure all components are correctly aligned, and that the bearing flange is close against the scoop wing, fig 2.

1 Scoop wing
2 Scoop bearing
3 Anvil
4 Mandrel
5 Guide pin V2-70267
6 Die
7 Mandrel pin

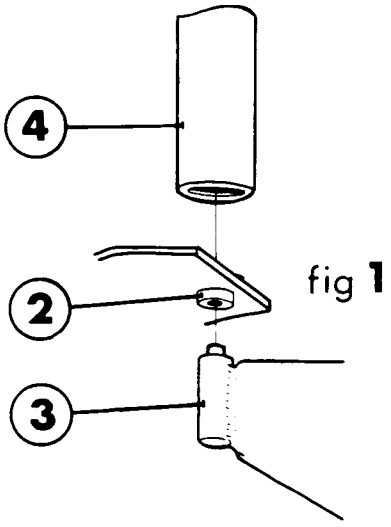

fig 1

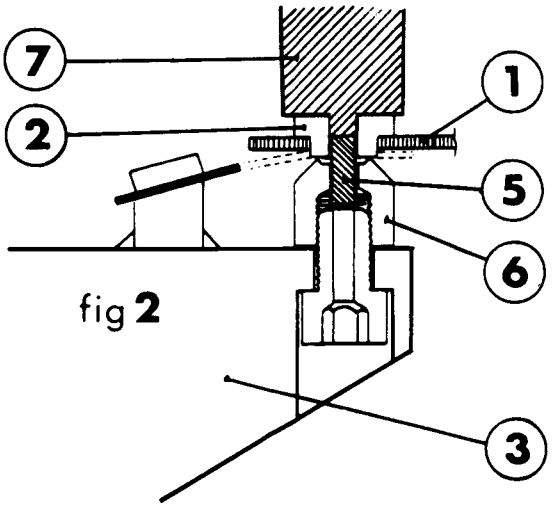

fig 2

REMOVAL

Unscrew the nut (2), then undo the screws (3) and (1). Turn the guide plate (4) 90° and remove the chain tensioner.

1 Screw
2 Nut
3 Screw
4 Guide plate

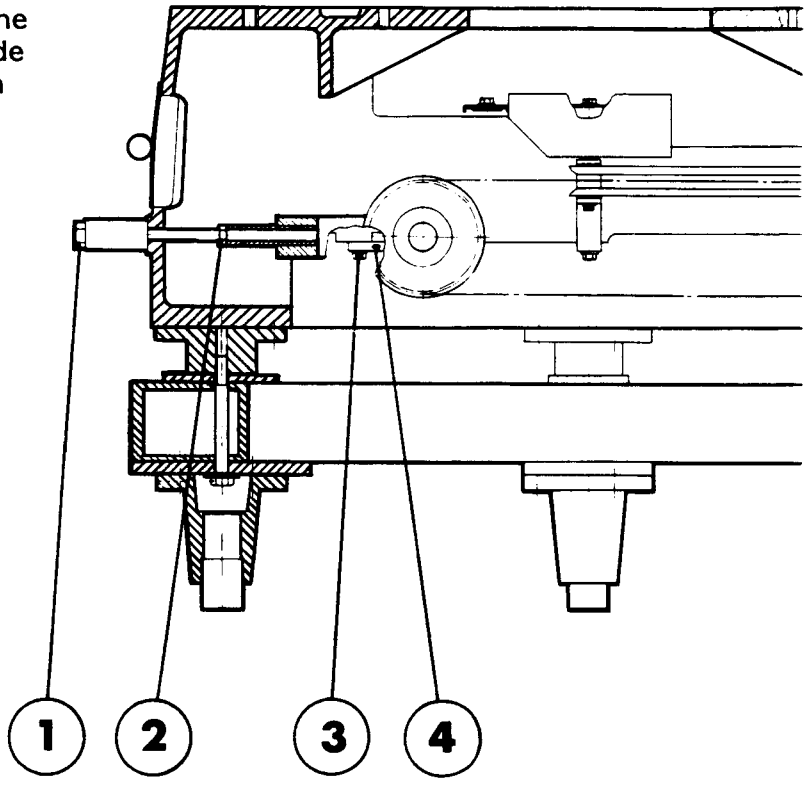

OVERHAUL

Dismantle the chain tensioner and replace the ball bearings (1) and O-rings (3).

Replace the sprockets (2) if they are worn or damaged.

Replace the coil spring (4), if required.

Check that the grease nipples (5) let through grease. If not, replace it. Grease by means of a grease gun after assembly.

1 Ball bearing
2 Sprocket
3 O-ring
4 Coil spring
5 Grease nipple

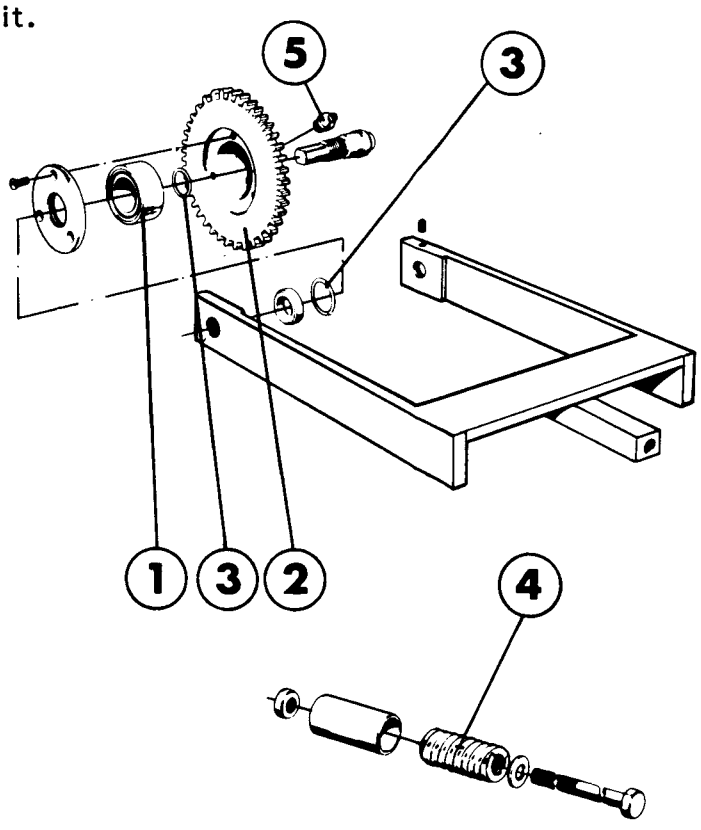

OVERHAUL

Remove the screws (4) and (11) and remove the shaft (3). Pull off spacer ring (5), and seal (6). Tap the sprocket (9) to loosen it.
Pull off the seal (13), locking ring (7), and washer (10), and tap the bearing (8) to loosen it. Replace damaged parts and assemble in reverse order.

On assembly, check that the seals (6) and (13) fit closely against sprocket (9) and washer (10).

1 Screw
2 Nut
3 Shaft
4 Screw
5 Spacer ring
6 Seal
7 Locking ring
8 Bearing
9 Sprocket
10 Washer
11 Screw
12 Guide plate
13 Seal

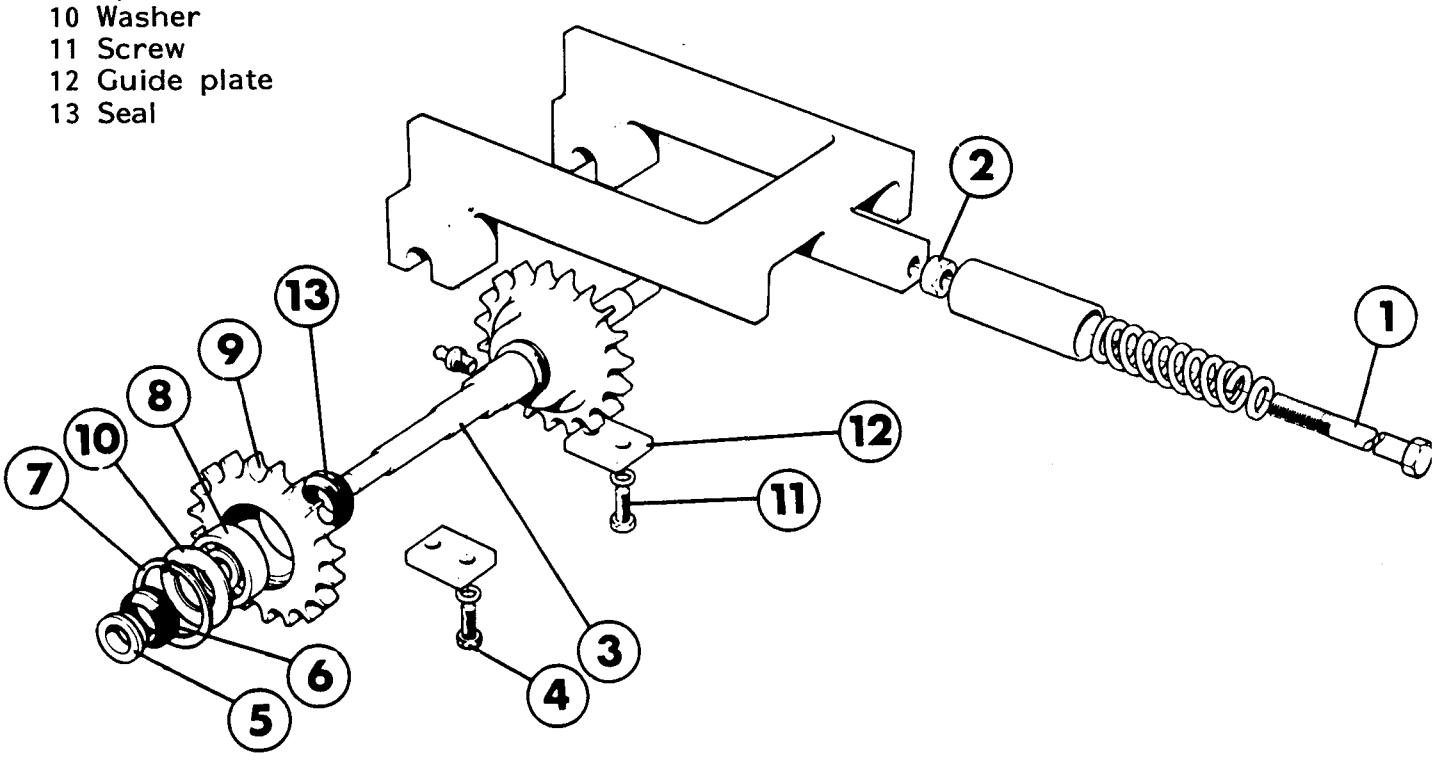

OVERHAUL

Undo the screw (1) and remove the chain support. Undo the nut (2) and push out the shaft (3) with the support roller (4). Remove the circlip (5) and pull off the support roller. Replace the ball bearings (6). Replace the support roller if it is worn or damaged.

Check that the grease nipple (7) lets through grease. If not, replace it.

On reassembly, replace the O-ring (8).

Grease by means of a grease gun after assembly.

1 Screw
2 Nut
3 Shaft
4 Support roller
5 Circlip
6 Ball bearing
7 Grease nipple
8 O-ring

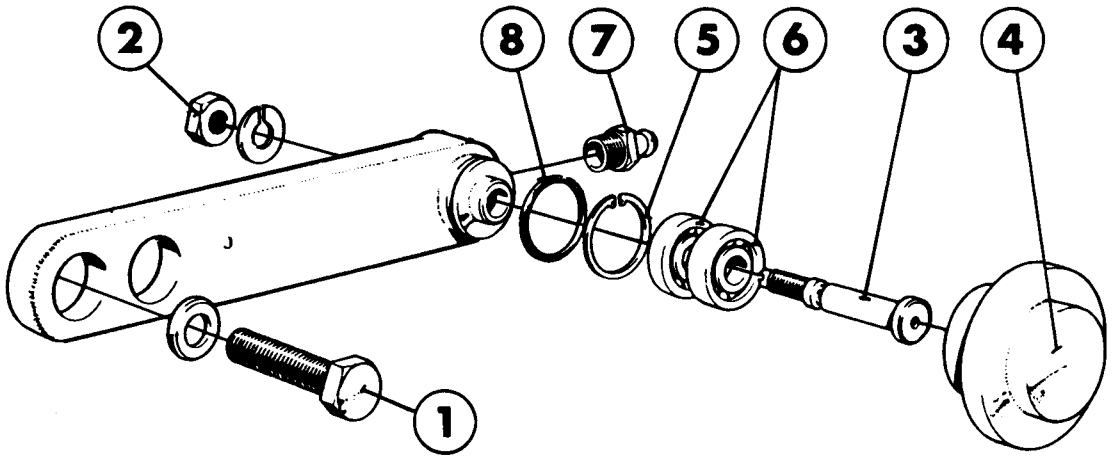

CHECKING

Check that the tilting tray (2) changes over when the counter (located in the electrical cabinet) has counted the preset number of packages.

Check that there are no air leakages in the pneumatic panel (3), that the air hoses (4) are intact, and that the hose connections (5) on the cylinder (6) are tight. Check the cylinder and its piston rod (7) and head. Replace as required.

1 Elevator scoop
2 Tilting tray
3 Pneumatic panel
4 Air hose
5 Hose connection
6 Cylinder
7 Piston rod

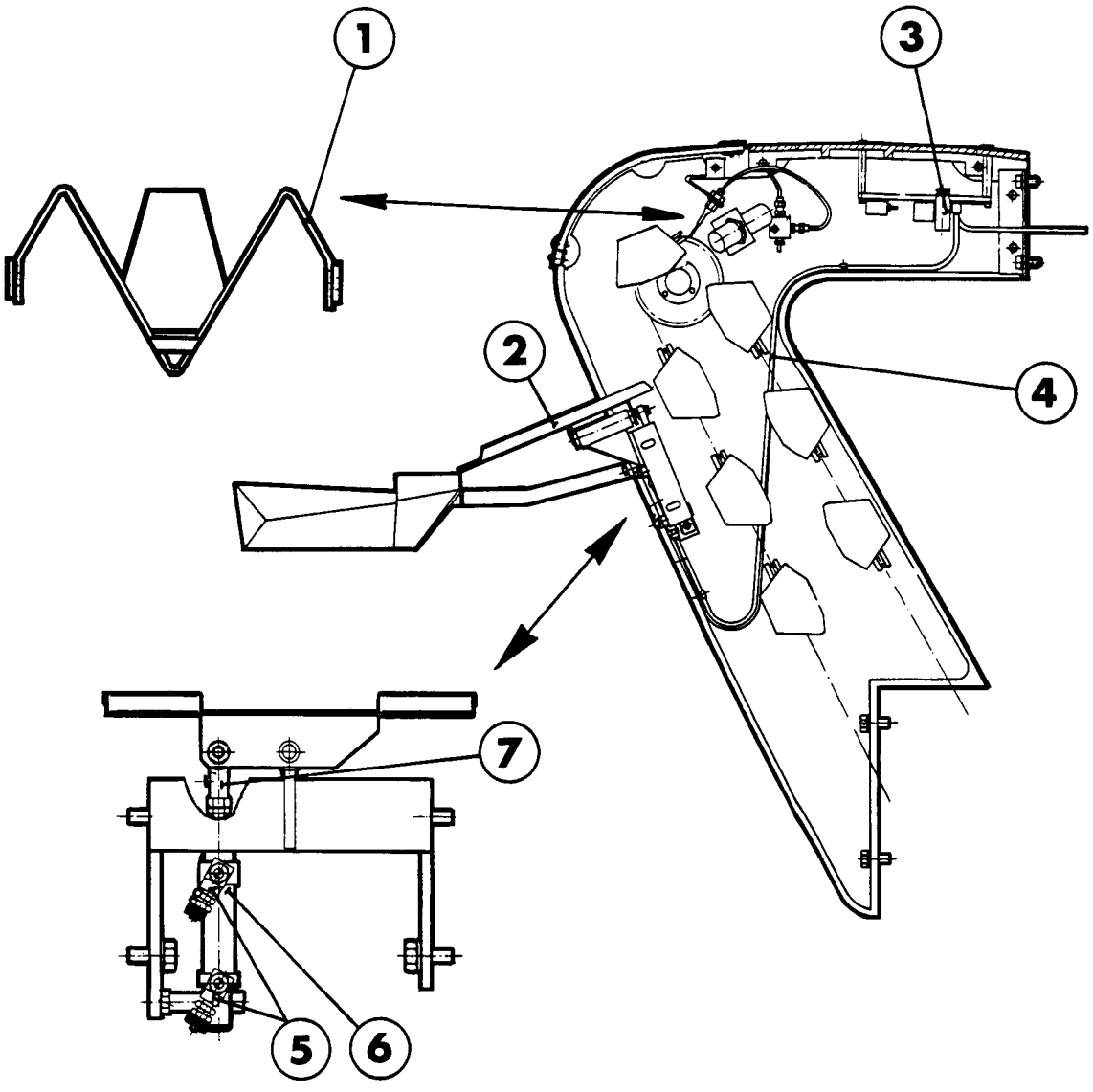

DESCRIPTION	PAGE
Distributor chain - overhaul/checking	702-11
Sprocket assembly, left and right sides dismantling	704-21
Guide sprocket - overhaul	704-31
Drive unit - overhaul (3 pages)	705-31
Tensioning sprocket removal/fitting	706-21
Tensioning sprocket - overhaul	706-31
Tube and rod assembly - removal	708-21
Tube and rod assembly - overhaul	708-31
Table plates - overhaul	710-31
Table - removal	712-21
Table - overhaul	712-31
Clutch assembly - overhaul	714-31
Cam wheel - checking	716-11
Cam wheel - overhaul	716-31
Drive chain, table - checking	718-11
Chain tensioner, table - removal	720-21
Chain tensioner, table - overhaul	720-31
Maltese cross drive - overhaul	722-31
Empty-package blower - checking	723-11
Idling sprockets - removal	725-21
Sprocket - overhaul	727-31
Elevator chain - checking	729-11
Elevator chain - removal	729-21
Elevator scoops - removal	733-21

DESCRIPTION	PAGE
Elevator scoops - overhaul	733-31
Chain tensioner (double) - removal	735-21
Chain tensioner, double - overhaul	735-31
Flap for layer I - overhaul	739-31
Catch - checking	740-11
Guide star assembly - overhaul	741-31
Distributor - overhaul	742-31
Tilting chute - checking	743-11
Packer, function adjustments Layer I	745-11
Packaging adjustments Layer II	746-11
Packer adjustments Layer III	747-11
Packer function - checking	748-11

OVERHAUL/CHECKING

Remove the protection plate (3) and make a note of the position of the distributor (8) in relation to the bevel gear sprocket (7).

Loosen the adjustment screw (2) for the tensioning sprocket (1).

Remove the stop plate (5) and the chain lock (4).

Check the ball bearing (6) and the chain (9) for wear. Replace as required.

On assembly, check that the distributor is in the position it had before dismantling.

Carry out synchronization according to the section "Basic synchronization and settings".

1 Tensioning sprocket
2 Adjustment screw
3 Protection plate
4 Chain lock
5 Stop plate
6 Ball bearing
7 Bevel gear sprocket
8 Distributor
9 Chain

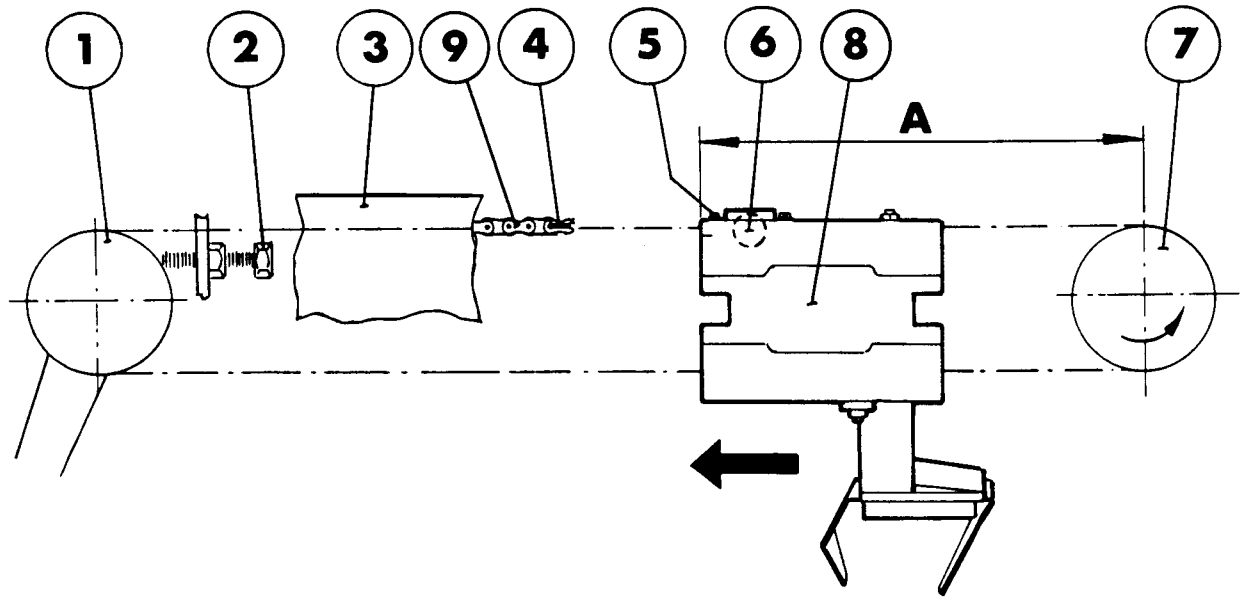

DISMANTLING

Remove the axle pin (1). Undo the screws (2) and lift out the gear units (3) and (4).

Overhaul the guide sprockets (5), cam unit (6), drive unit (7) and drive shafts (8) acc to page 704-31:1,2,3, and 4.

1 Axle pin (only TC,TCA/150, TC,TCA/300)
2 Screw
3 Gear unit
4 Gear unit
5 Guide sprocket (5 off)
6 Cam unit (only TC,TCA/150, TC,TCA/300)
7 Drive unit
8 Drive shaft

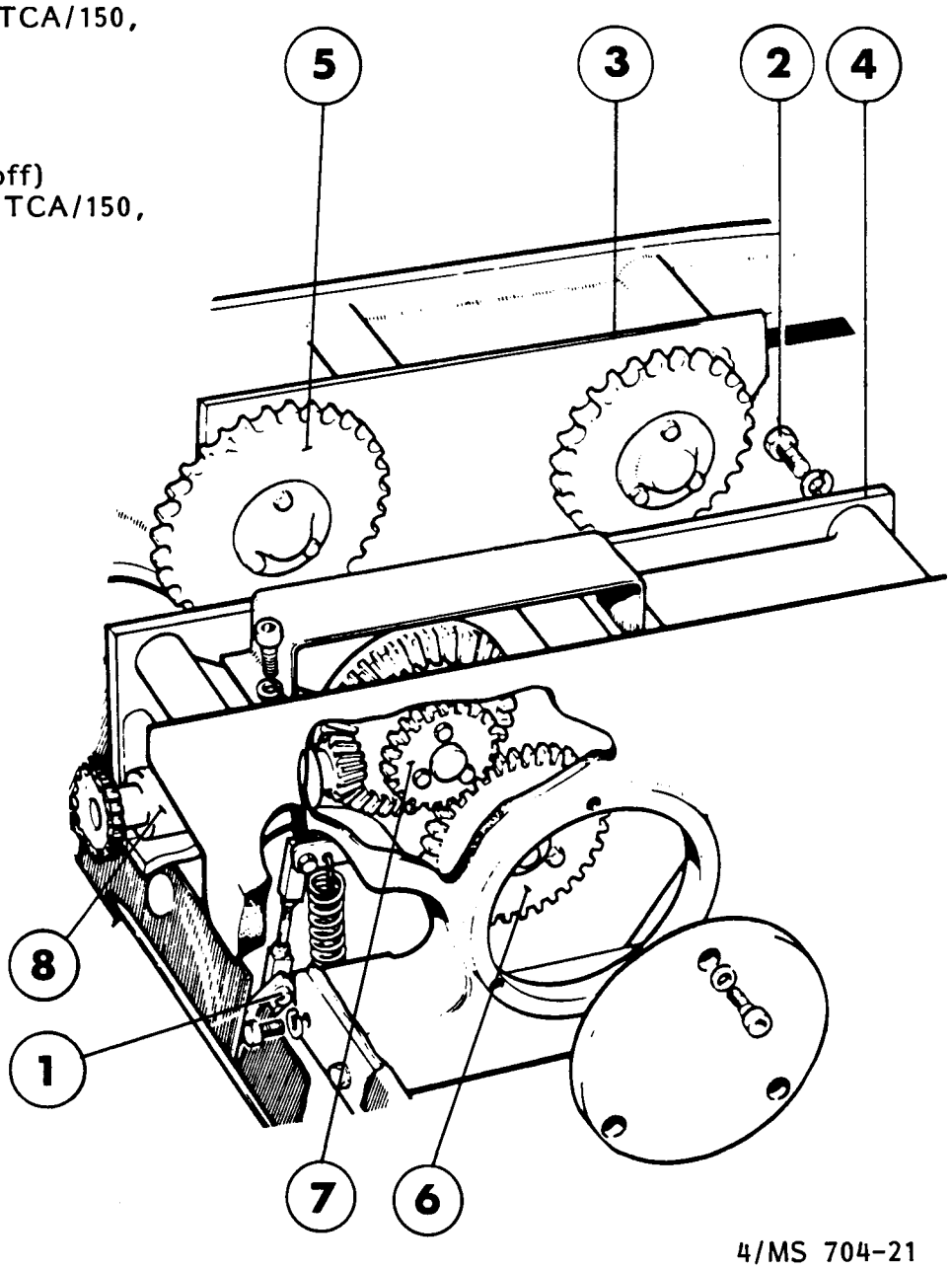

OVERHAUL

Remove the cover (1). Undo the nut (2) and remove the guide sprocket. Push out the axle pin bolt (3) with the ball bearing (4). Replace the ball bearing.

Replace the sprocket (5) if it is worn or damaged. Check that the grease nipple (6) lets through grease. If not, replace it. In reassembly, replace the O-ring (7).

Grease by means of a grease gun after assembly.

1 Cover
2 Nut
3 Axle pin bolt
4 Ball bearing
5 Sprocket
6 Grease nipple
7 O-ring

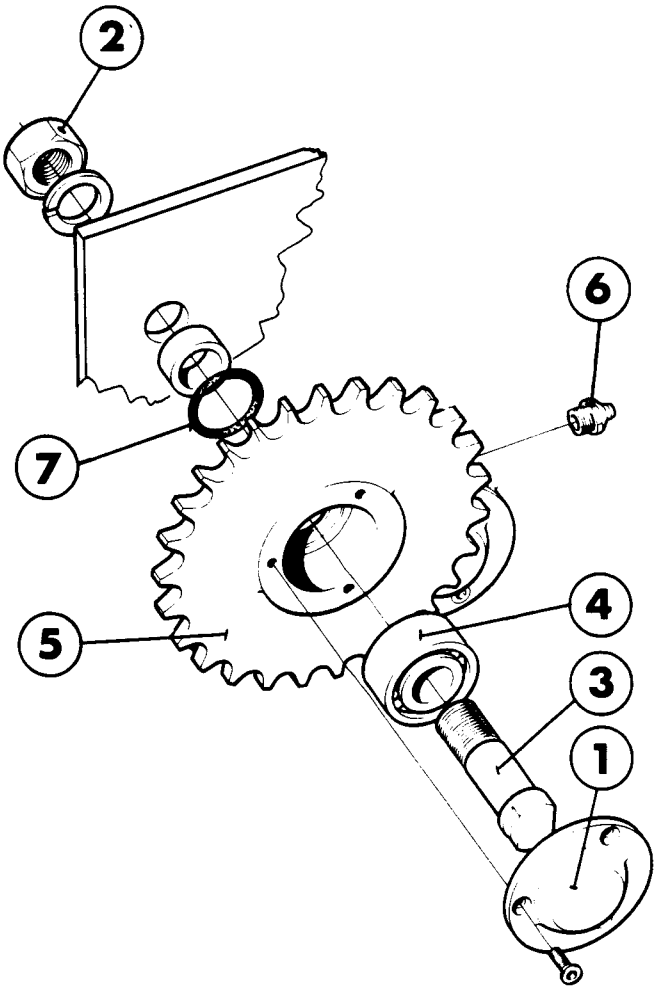

OVERHAUL

Undo the nut (1) and remove the cam unit. Undo the screws (2) and remove the gear wheel (3). Push the shaft (4) with the ball bearing (5) out of the cam (6). Replace the ball bearing.

Replace the gear wheel if it is worn or damaged.

Check that the grease nipple (7) lets through grease. If not, replace it.

Check that the cam roller (8) rotates easily on the axle pin (9), and that the link heads (10) move easily on the threaded axle pins (11). Replace as required.

Replace the O-ring (12) and the seal ring (13) on assembly. Grease by means of a grease gun after assembly. Carry out synchronization acc to the "Basic synchronization and settings" section.

1 Nut
2 Screw
3 Gear wheel
4 Shaft
5 Ball bearing
6 Cam
7 Grease nipple
8 Cam roller
9 Axle pin
10 Link head
11 Threaded axle pin
12 O-ring
13 Seal-ring

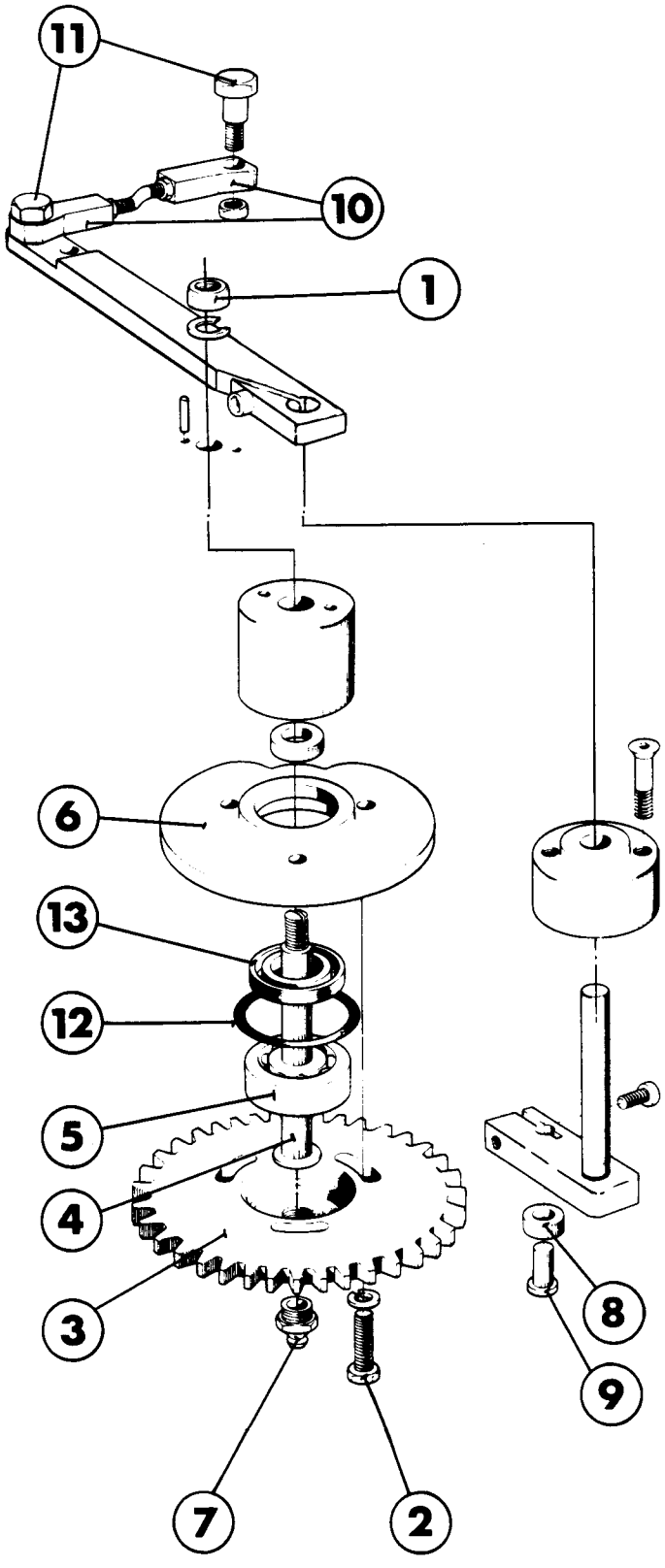

2/MS 705-31:1
138

OVERHAUL

Tap out the pin (1) and remove the sprocket (2). Push out the shaft (3) together with the gear wheels (4) and (5). Make a note of the number of spacer washers (6) and their total thickness.

Replace the ball bearings (7).

Replace the sprocket and gear wheels if they are worn or damaged.

Check that the grease nipple (8) lets through grease. If not, replace it.

Replace the O-ring (9) on assembly. Make sure that the correct number and thickness of spacer washers are fitted on assembly.

Grease by means of a grease gun after assembly.

1 Pin
2 Sprocket
3 Shaft
4 Gear wheel
5 Gear wheel (only TC,TCA/150, TC,TCA/300)
6 Spacer washer
7 Ball bearing
8 Grease nipple
9 O-ring

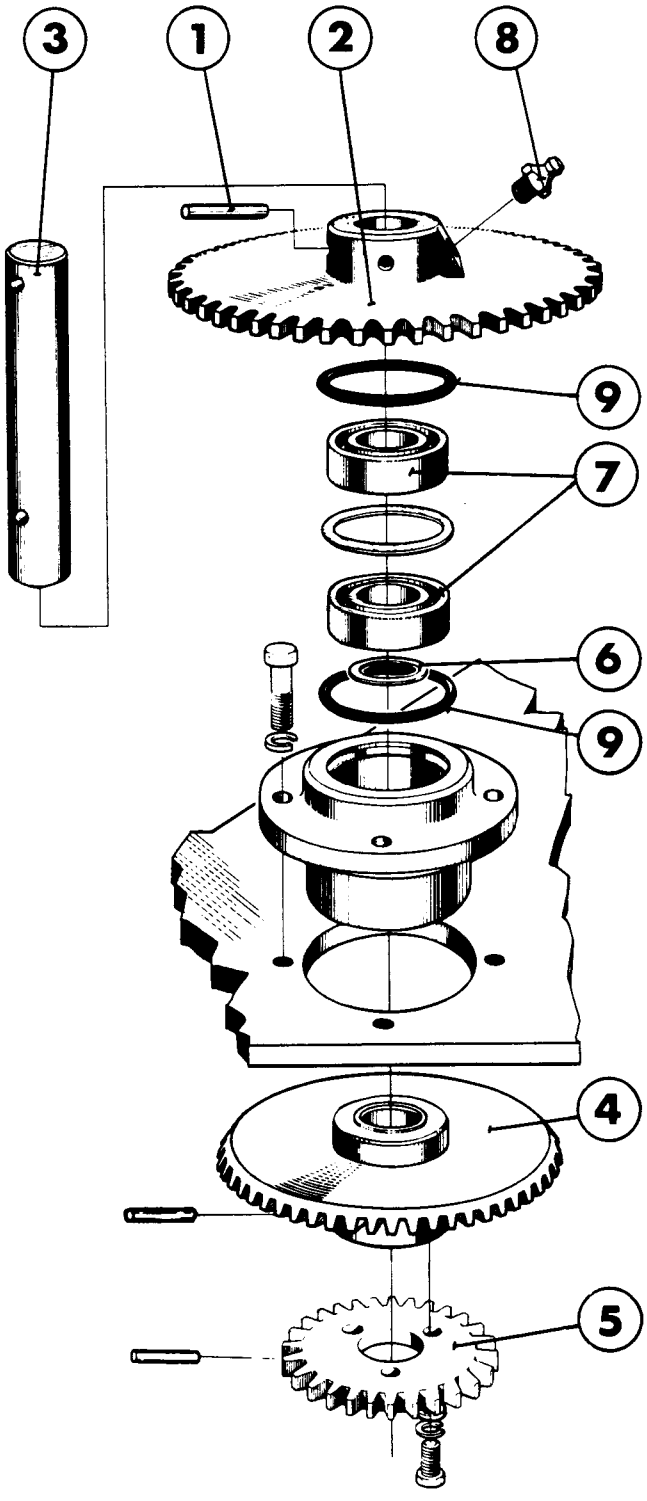

OVERHAUL

Tap out the pin (1) and remove the bevel gear wheel (2). Push out the shaft (3) together with the sprocket (4). Replace the ball bearings (5).

Replace the gear wheel and sprocket if they are worn or damaged.

Check that the grease nipple (6) lets through grease. If not, replace it.

Replace the O-rings (7) on assembly. Grease by means of a grease gun after assembly.

1 Pin
2 Bevel gear wheel
3 Shaft
4 Sprocket
5 Ball bearing
6 Grease nipple
7 O-ring

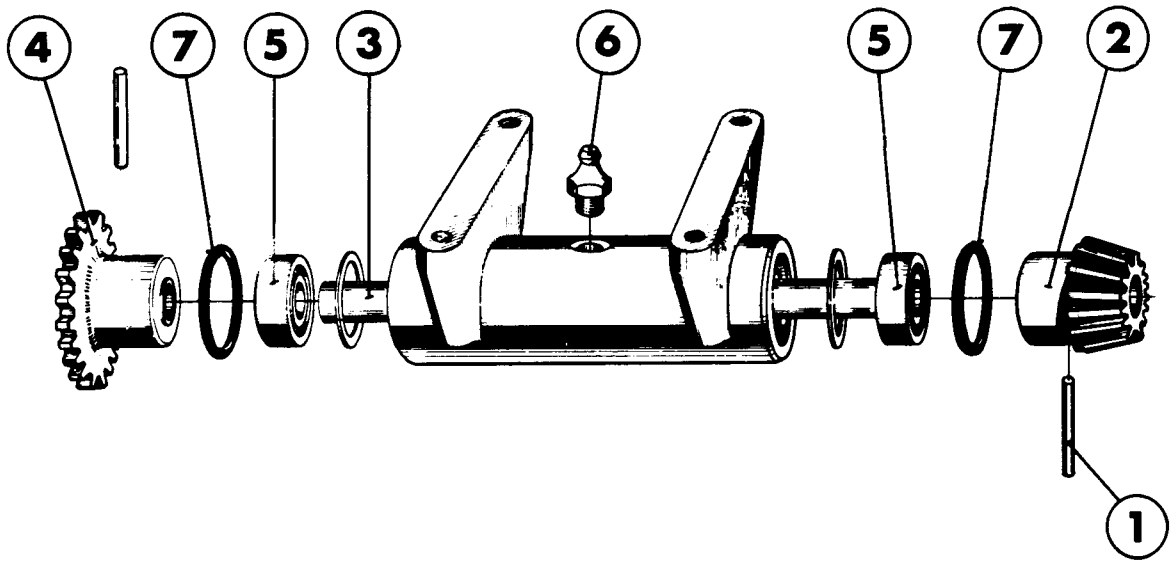

REMOVAL/FITTING

Undo the mounting screw (1).

When fitting the overhauled tensioner, do not tighten the screw (1) too hard. The arm must move freely to allow adjustment.

1 Mounting screw

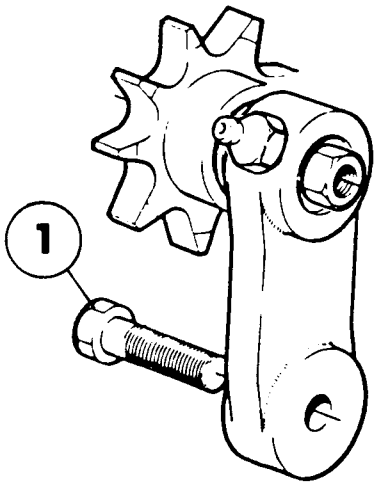

OVERHAUL

Remove the nut (5) and push out the axle pin bolt (2). Remove the circlip (3) and pull the sprocket (1) off the axle pin bolt.

Replace the ball bearings (7).

Check the sprocket and, replace if worn or damaged.

Fit a new O-ring (4) on assembly.

Check that the grease nipple (8) lets through grease. If not, replace it. Grease by means of a grease gun after assembly.

1 Sprocket
2 Axle pin bolt
3 Circlip
4 O-ring
5 Nut
6 Mounting screw
7 Ball bearing
8 Grease nipple

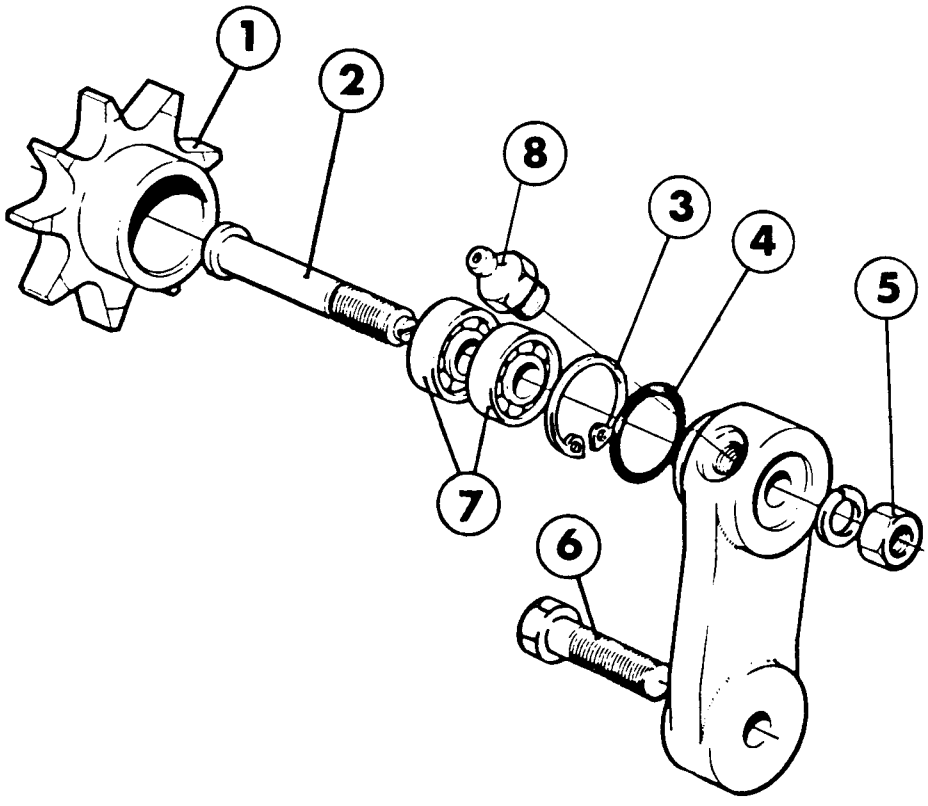

REMOVAL

Remove the lift arm (1) for the guide star.

Loosen the grub screws (3) and turn the arm (4) against the guide star in order to loosen the tension of the chain (5).

Release the chain off the sprocket (2).

Pull out the arm together with the tubular rod (6).

Check the chain for wear. Replace it if required.

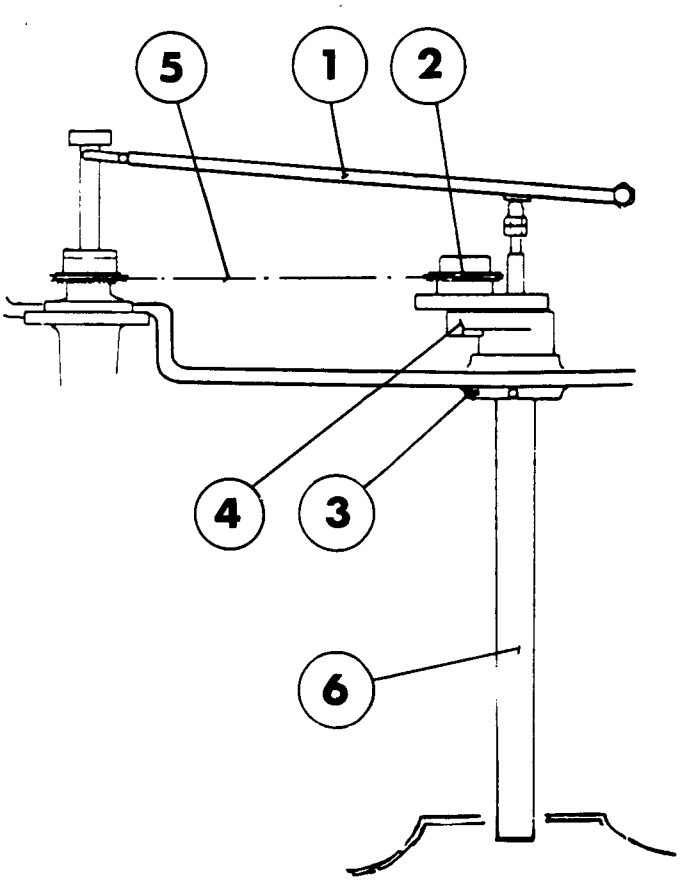

1 Lifting arm
2 Sprocket
3 Grub screw
4 Arm
5 Chain
6 Tubular rod

OVERHAUL

Centre arm

Undo the nut (1) and push out the axle pin (2).

Replace the ball bearing (3) and seal ring (7).

Check the sprocket (16) and gear wheel (17) for wear and damage. Replace as required.

Check that the grease nipple (4) lets through grease. If not, replace it. Grease by means of a grease gun after assembly.

Tubular rod

Undo the nuts (8) and (9), pull out the bar (10), undo the screws (11), and remove the gear wheel (12). Replace the bearings (13) and (14), and the rubber bellows (15).

Check the gear wheel (12) for wear and damage. Replace it, if required.

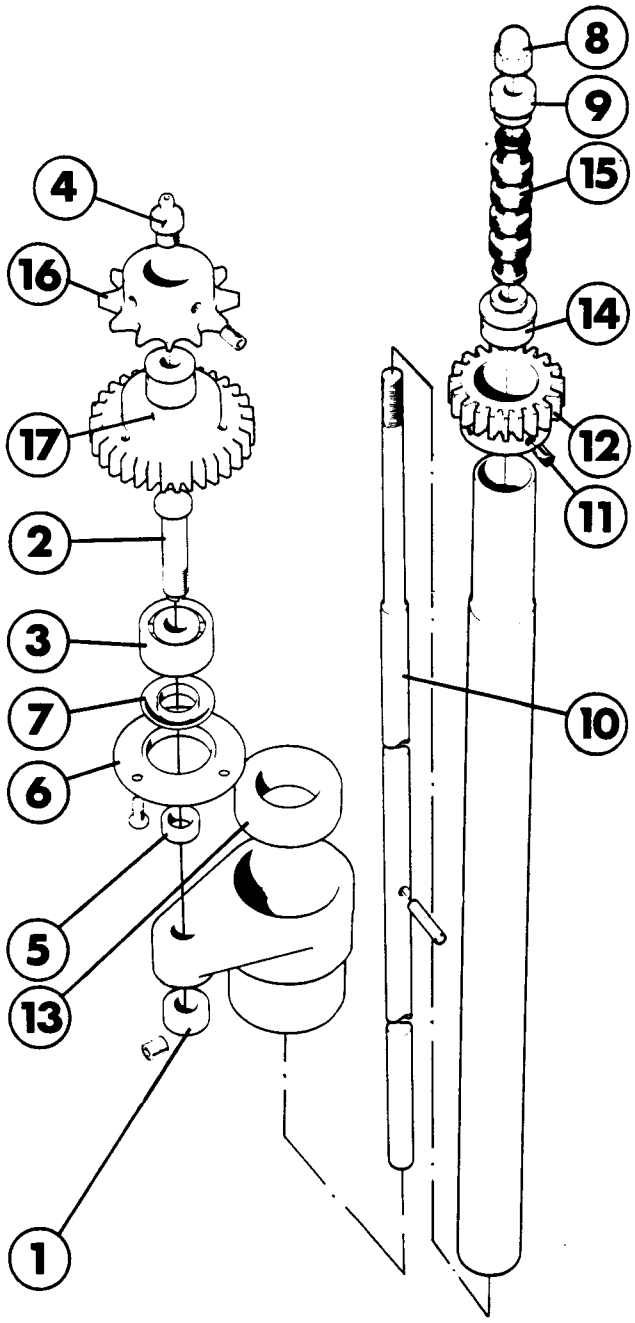

1 Nut
2 Axle pin
3 Ball bearing
4 Grease nipple
5 Spacer ring
6 Cover
7 Seal-ring
8 Nut
9 Nut
10 Bar
11 Screw
12 Gear
13 Bearing
14 Bearing
15 Rubber bellows
16 Sprocket
17 Gear

OVERHAUL

Undo the screw (1) and pull the table plate (2) straight up.

Pull off the spacer ring (3) and the O-ring (4).

Remove the circlip (5) and pull out the shaft (6).

Replace the ball bearings (7).

Check the lugs (8) and replace them if they are worn or damaged.

Replace the O-ring on assembly.

Check that the grease nipple (9) lets through grease. If not, replace it. Grease by means of a grease gun after assembly.

Carry out synchronization acc to the "Basic synchronization and settings" section.

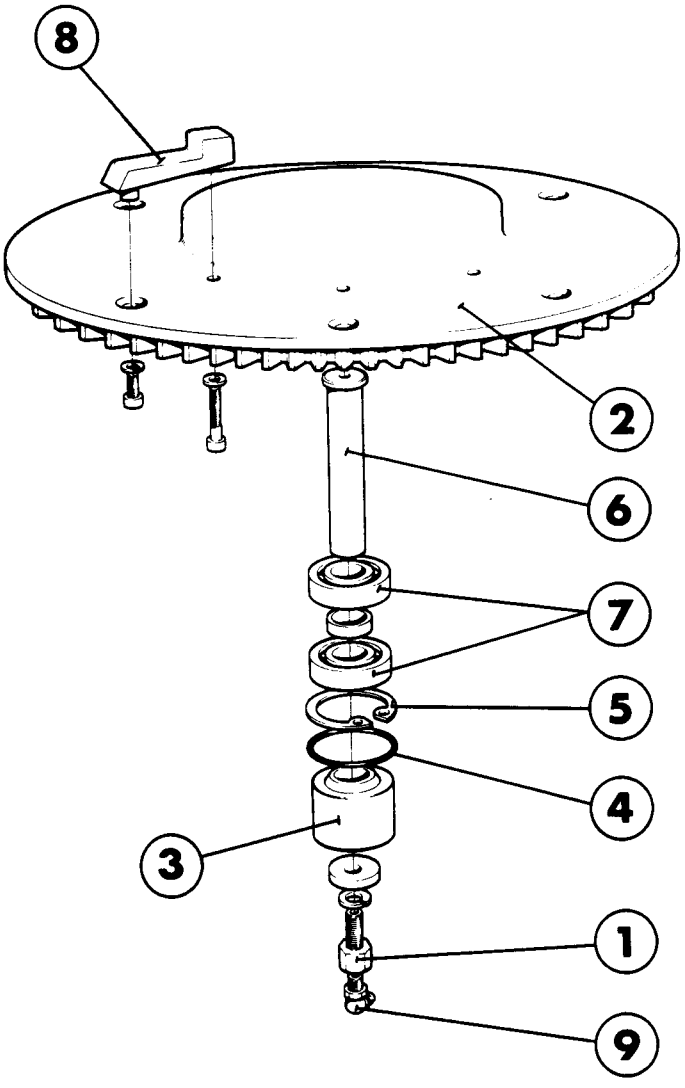

1 Screw
2 Table plate
3 Spacer ring
4 O-ring
5 Circlip
6 Shaft
7 Ball bearing
8 Lug
9 Grease nipple

REMOVAL

Undo the screws (1) and lift up the table.

FITTING

Position the overhauled unit so that the pin (2) in the cover (3) matches the hole in the packer base.

Carry out synchronization acc to the "Basic synchronization and settings" section.

1 Screw
2 Pin
3 Cover

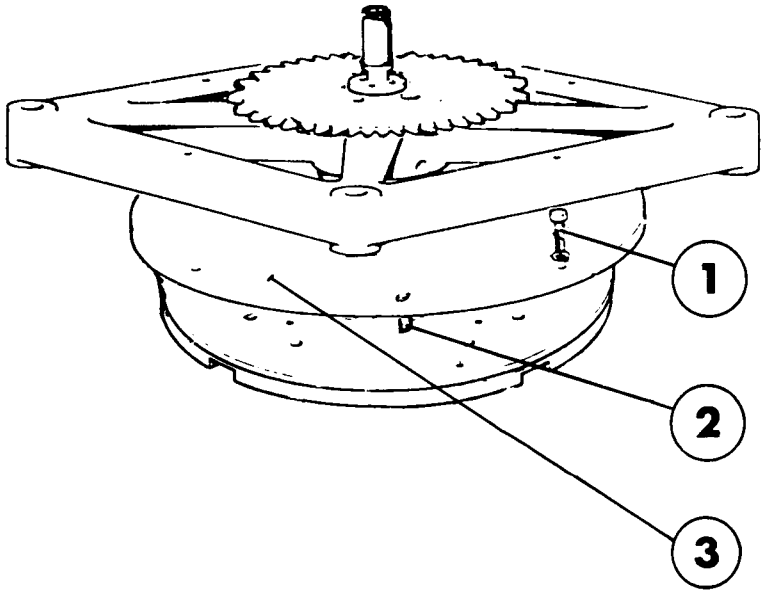

OVERHAUL

Undo the screws (1) and remove the carrier (2). Lift up the gear (3) with the hub (4). Replace the gear, if it is worn or damaged. Loosen the grub screw (5) and remove the table (6). Undo the screws (7) and remove the seal ring (8). Undo the screws (9) and. By means of a piece of pipe, press the remaining components out of the cover (10). Replace the ball bearings (11) and (12). Replace the springs (13), steel balls (14), spacer sleeves (15), clutch pins (16), bearing (17), and sleeve (18) in case of wear or damage. Check the maltese cross (19) and replace it in case of wear. Replace the five O-rings (20) and set the screws (21) for the clutch pins acc to the measurement in the picture. Check the gasket (22).

Check that the grease nipple (23) lets through grease. If not, replace it. Grease by means of grease gun after assembly.

1 Screw
2 Carrier
3 Gear
4 Hub
5 Grub screw
6 Table
7 Screw
8 Seal-ring
9 Screw
10 Cover
11 Ball bearing
12 Ball bearing
13 Spring
14 Steel ball
15 Spacer sleeve
16 Clutch pin
17 Bearing
18 Sleeve
19 Maltese cross
20 O-ring
21 Screw
22 Gasket
23 Grease nipple

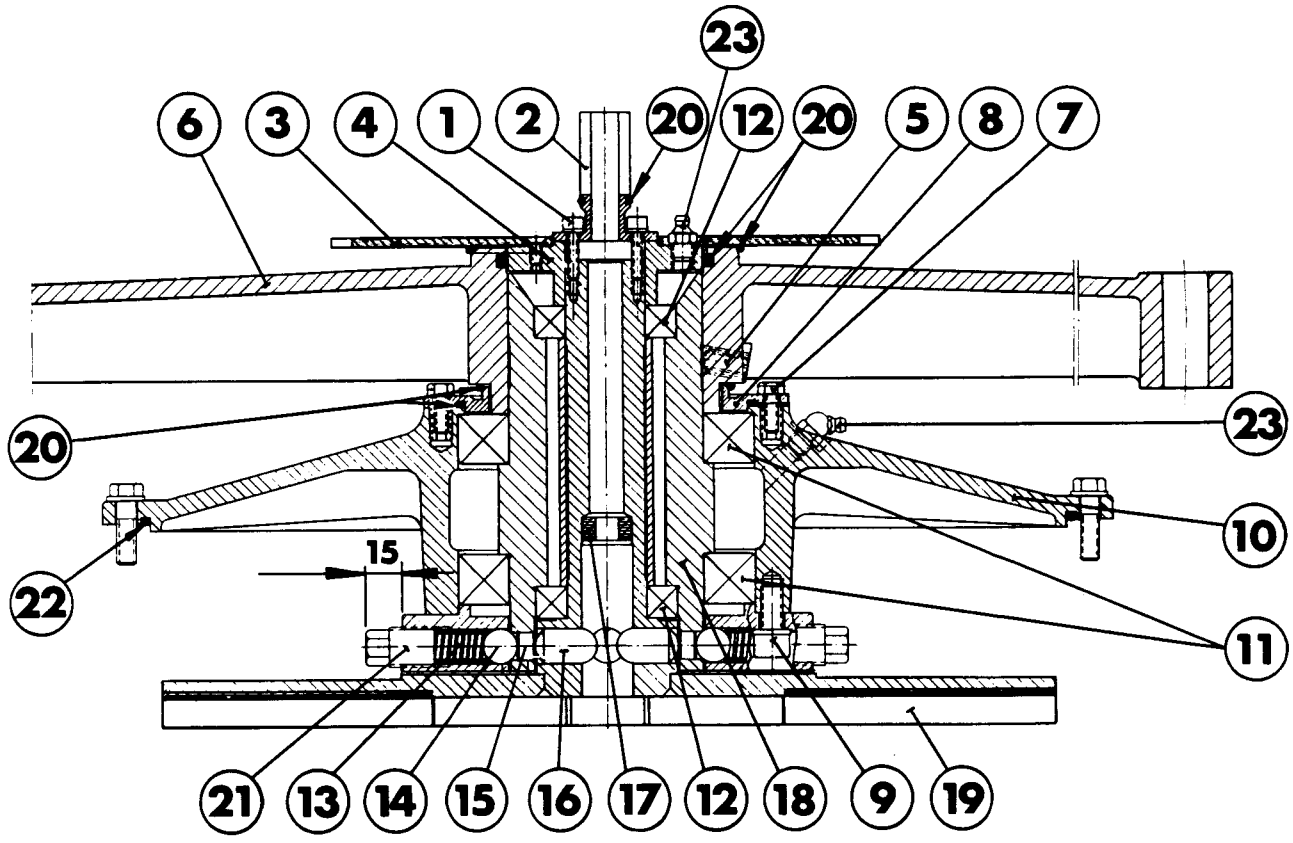

OVERHAUL

Undo the screws (1) and lift out the clutch assembly.

Undo the screw (2) and pull out the arm (3). Check the bearings (4) and replace them, if required. Remove the shaft (5) and check it for wear and also check for play in the roller (6). Replace in case of wear or damage.

Check the shaft (7) and the bearing (8). Replace in case of play.

Check the 92.5 mm measurement. In case of deviation, unscrew the nuts (9), and remove the spacer collar (10) and cone (11).

Replace any damaged or deformed cup springs (12), there are 46 cup springs.

FOOTNOTE! The cup springs should be well greased before assembly. (ESSO Beacon 2 or corresponding grease quality.)

1 Screw
2 Screw
3 Arm
4 Bearing
5 Shaft
6 Roller
7 Shaft
8 Bearing
9 Nut
10 Space tube
11 Cone
12 Disc spring

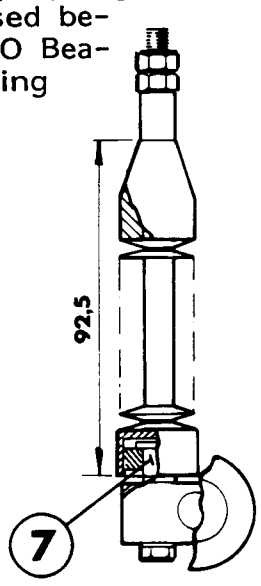

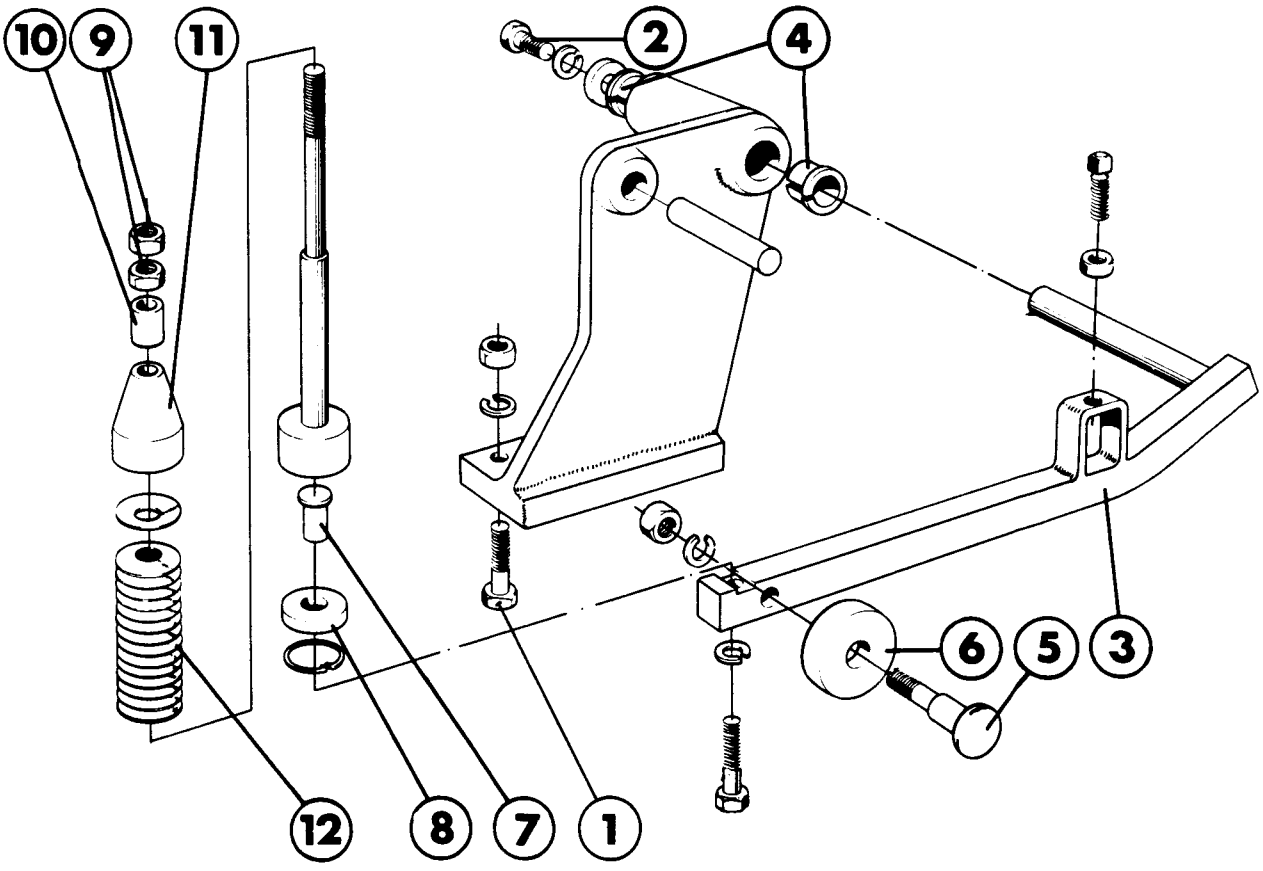

CHECKING

Check that the cam (1), gear wheel (2) and sprocket (3) are not worn or damaged. Replace as required.

Check for bearing play by rocking the sprocket (3).

Synchronization according to the "Basic synchronization and settings" section.

1 Cam
2 Cam wheel
3 Sprocket

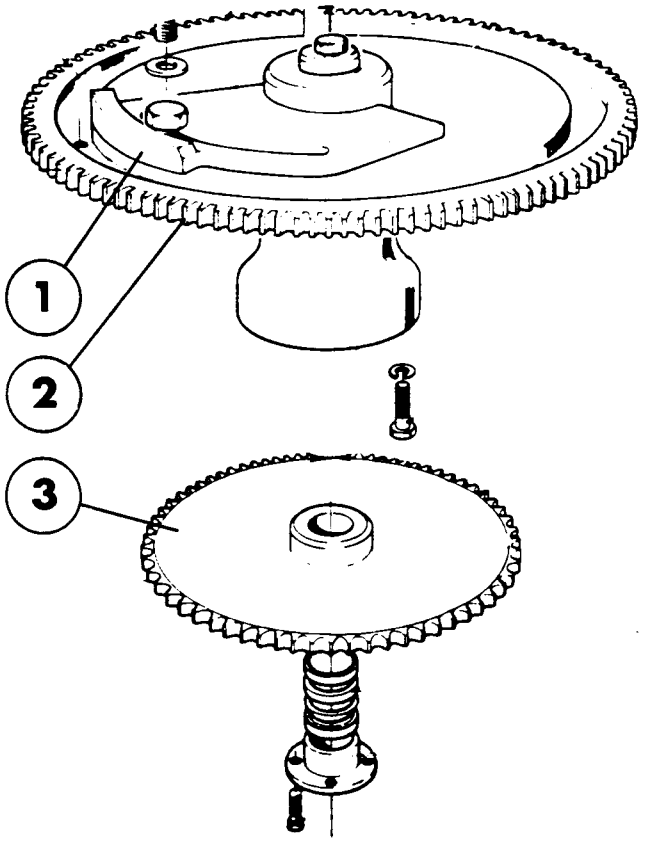

OVERHAUL

Undo the screws (1); pull off the sleeve (2), locking element (3), and sprocket (4).

Undo the screws (5) and lift out the cam wheel assembly.
Undo the screw (6) and pull off the gear wheel (7).

Remove the key (8) and push the shaft (9) out of the bearing housing (10).

Remove the circlip (11) and pull off the spacer ring (12), seal ring (13), and ball bearing (15).

Replace the ball bearings (15).

Replace the seals on assembly.
On assembly, make sure that the gear wheel (7) and cam (14) are correctly positioned.

Check that the grease nipple (16) lets through grease. If not, replace it. Grease by means of a grease gun after assembly.

Carry out synchronization acc to the "Basic synchronization and settings" section.

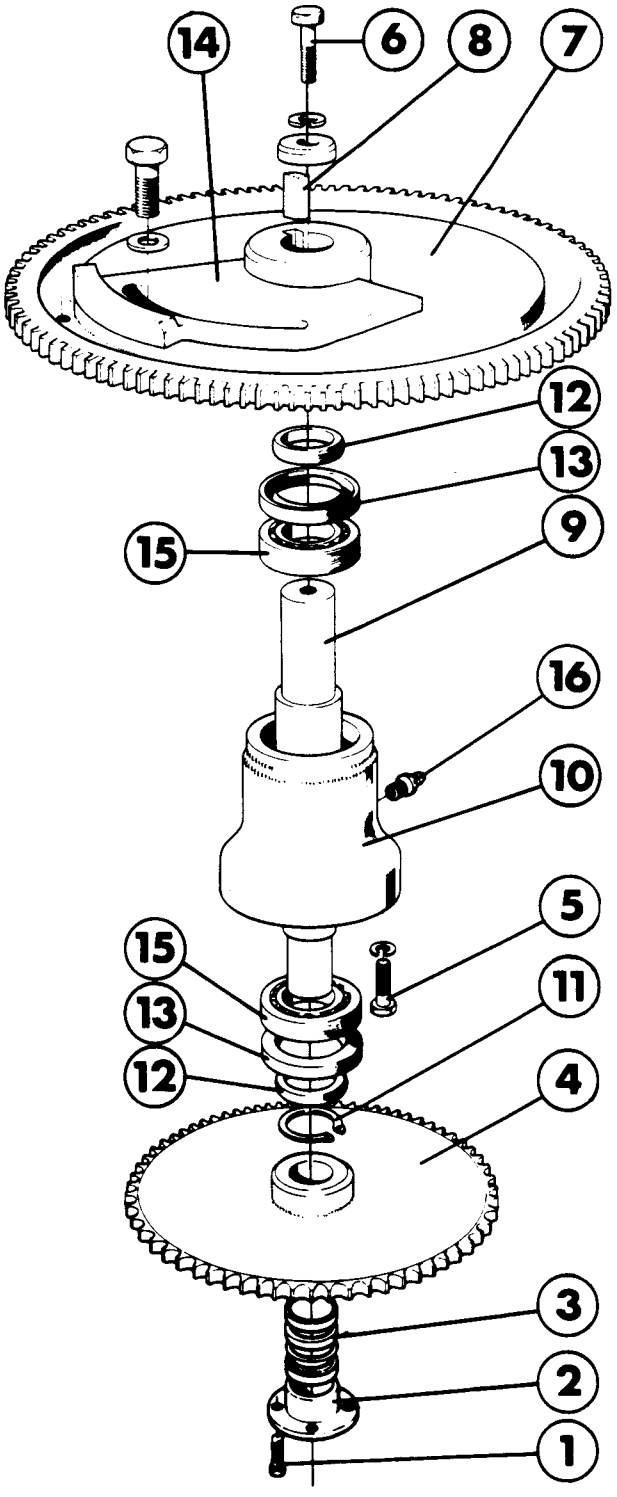

1 Screw
2 Sleeve
3 Locking element
4 Sprocket
5 Screw
6 Screw
7 Gear
8 Key
9 Shaft
10 Bearing housing
11 Circlip
12 Spacer ring
13 Sealring
14 Cam
15 Ball bearing
16 Grease nipple

CHECKING

Check the position of tensioner sprocket (1). If it already is in its upmost position, the chain has to be replaced.

OVERHAUL

Inch the machine until the chain lock is positioned at the maltese drive sprocket (2).

Slacken the chain tensioner.

Open the chain and attach the new chain to the old one.

Observe the moving direction of chain movement. Inch carefully the new chain forward into the machine.

Remove the old chain and fit the chain lock.

Synchronization according to the section "Basic synchronization and settings" section.

1 Tensioner sprocket
2 Maltese drive sprocket
3 Chain lock

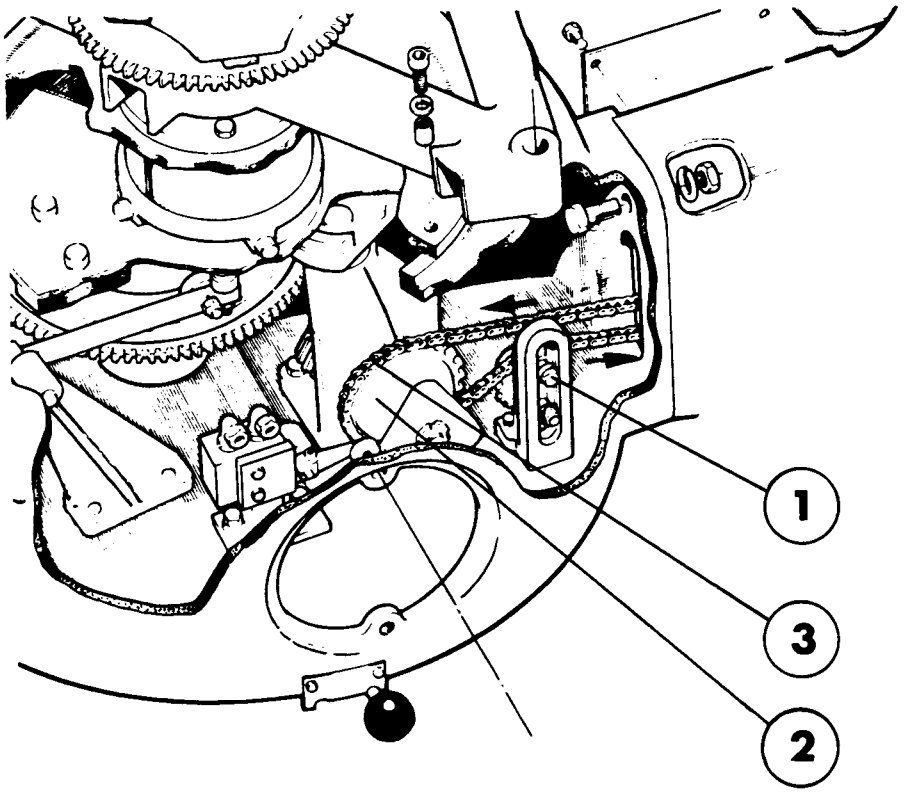

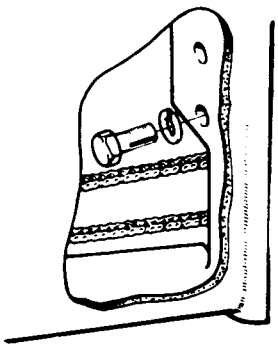

REMOVAL

Undo the screw (1) and the nut (2).

Remove the tensioning sprocket.

1 Screw
2 Nut

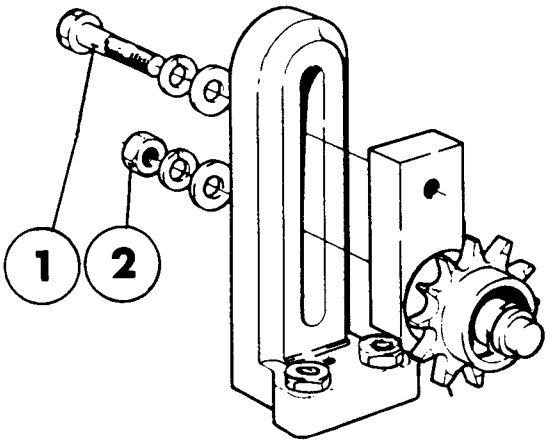

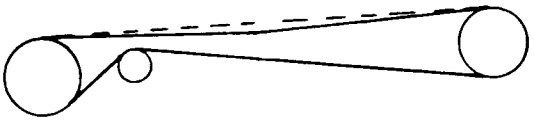

OVERHAUL

Remove the axle pin (4) from the bracket (3).

Push the shaft out of the sprocket (2) and remove the circlips (5).

Push out the seals (6) and the ball bearings (1).

Replace the ball bearings.
Replace the sprocket if it is worn or damaged.

Replace the seals and fill the sprocket with grease on assembly.

1 Ball bearing
2 Sprocket
3 Bracket
4 Axle pin bolt
5 Circlip
6 Seal

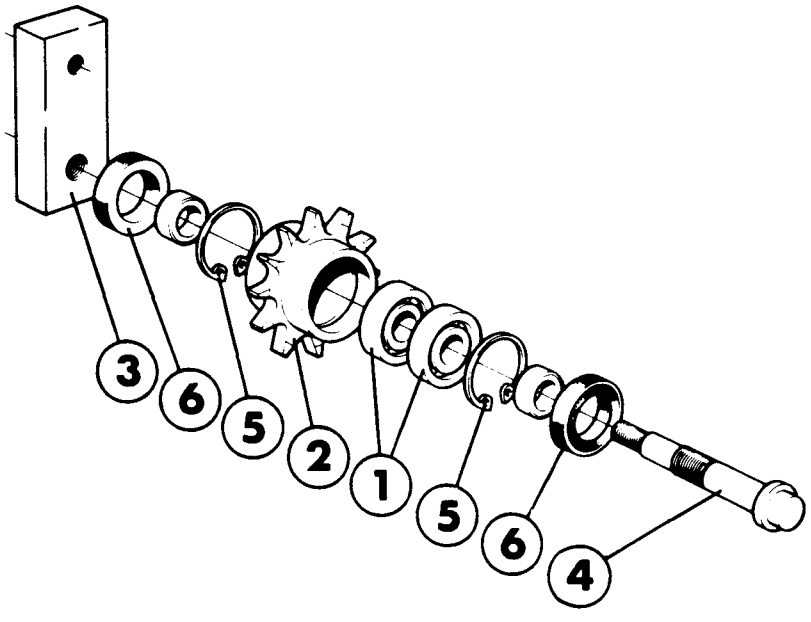

OVERHAUL

Undo the nuts (1) and remove the screws (2). Lift out the maltese drive unit. Force out the pins (3) and (4), remove the plug (5), and push out the shaft (6).

Force out the pin (7) and push out the shaft (8) with the sprocket (9).

Replace the ball bearings (10) and seal rings (11).

Replace the roller (12).

Replace the sprocket (9) and the gears (13), (14), and (15) if they are worn or damaged.

Adjust the play between the gears (14) and (15) by means of the spacer ring (16).

Fill the bearings with grease on assembly.

Carry out synchronization acc to the section "Basic synchronization and settings" section.

1 Nut
2 Screw
3 Pin
4 Pin
5 Plug
6 Shaft
7 Pin
8 Shaft
9 Sprocket
10 Ball bearing
11 Seal ring
12 Roller
13 Gear
14 Gear
15 Gear
16 Spacer ring*

* 2612-5,6,7,8

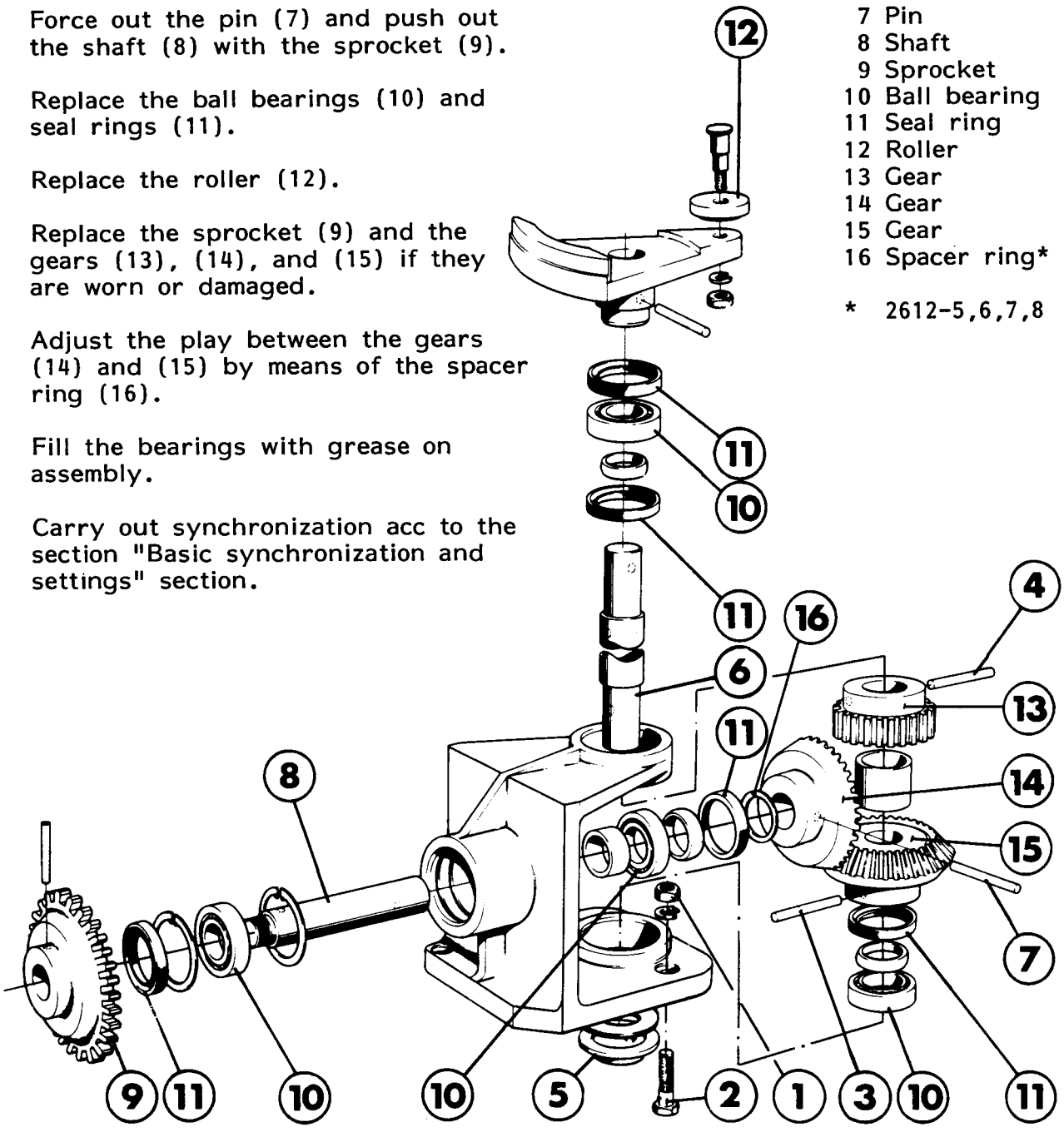

CHECKING

Check that the roller (1) and cam (2) are in line with one another when the control lever (3) is in "Blow" position (4).

Check that the control lever is held securely in both "Blow" position (4) and "Production" position (5). If required, adjust by bending the control lever.

1 Roller
2 Cam
3 Control lever
4 "Blow" position
5 "Production" position

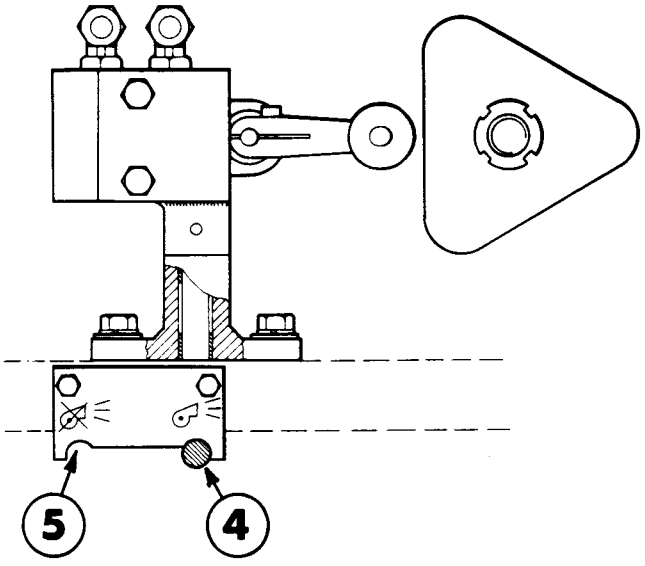

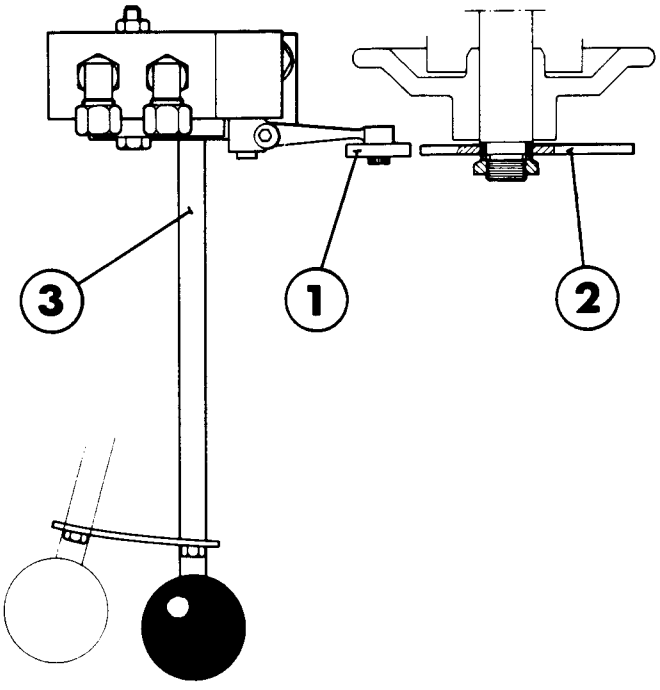

REMOVAL

Remove bearing covers (1) and unscrew the axle pin bolt (2).

Fit the overhauled idler sprockets (3).

1 Bearing cover
2 Axle pin bolt
3 Idler sprocket
4 Screw
5 Expansion bolt

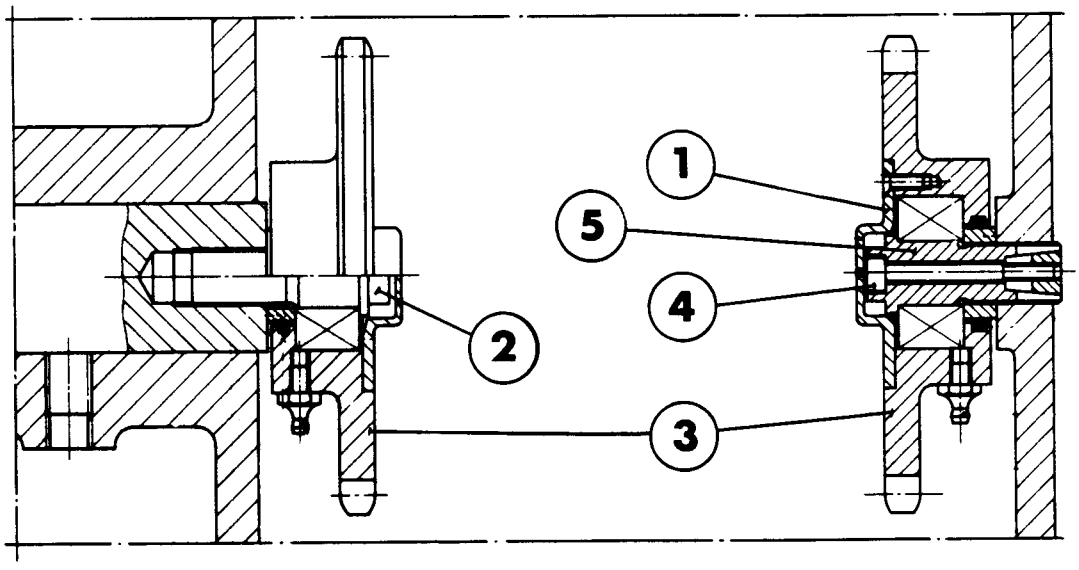

OVERHAUL

Undo the screws (1) and remove the bearing cover (2). Pull out the axle pin bolt (3).

Replace the ball bearing (4) and the O-ring (5).

Replace the axle pin bolt and the sprocket (6), if required.

Check that the grease nipple (8) lets through. If not, replace it.
Grease by means of a grease gun after assembly.

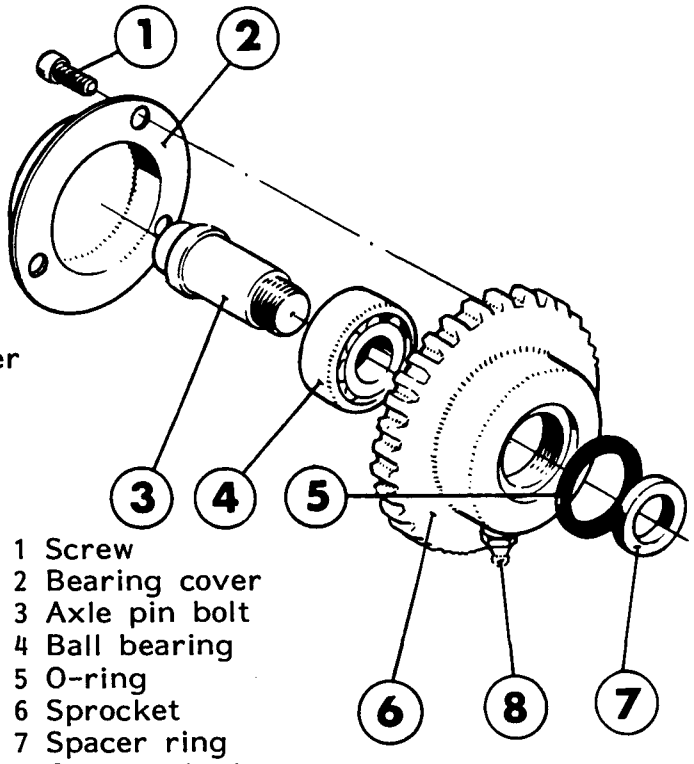

1 Screw
2 Bearing cover
3 Axle pin bolt
4 Ball bearing
5 O-ring
6 Sprocket
7 Spacer ring
8 Grease nipple
9 Expander nut
10 Bolt

Turn the bolt (10) counter-clockwise to loosen the expander nut (9); otherwise overhaul as above.

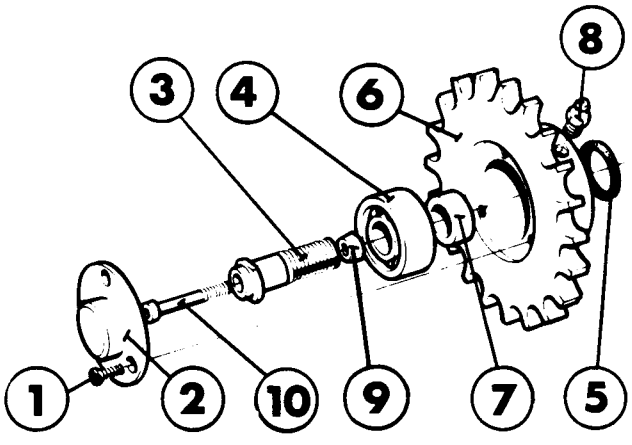

CHECKING

Check the tension of the elevator chain and, if required, adjust it by means of the chain tensioner (1).

Replace any missing springs (4).

If it is not possible to adjust the chain tensioner further, or the tension of the two chains (2) and (3) is not equal, replace both elevator chains.

Check the bearings (5) of the scoops (6). Replace the scoops if the play in the bearings exceeds 0.5 mm.

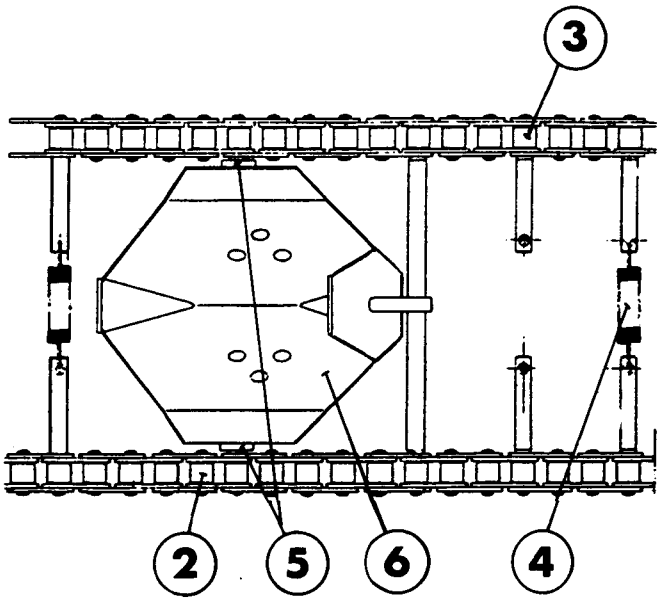

1 Chain tensioner
2 Chain
3 Chain
4 Spring
5 Bearing
6 Scoop

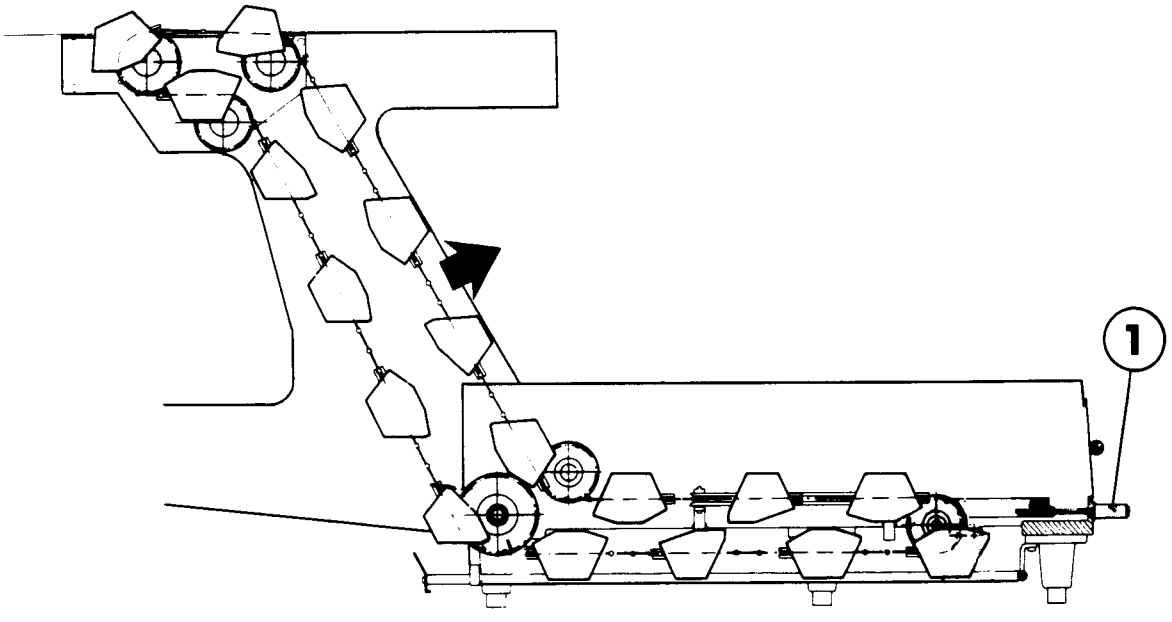

REMOVAL

Inch the machine until the chain lock (2) is located as illustrated.

Slacken the chain tensioner (1).

Remove the chain lock and pull out the chain.

Carry out synchronization acc to the section "Basic synchronization and settings" section.

1 Chain tensioner
2 Chain lock

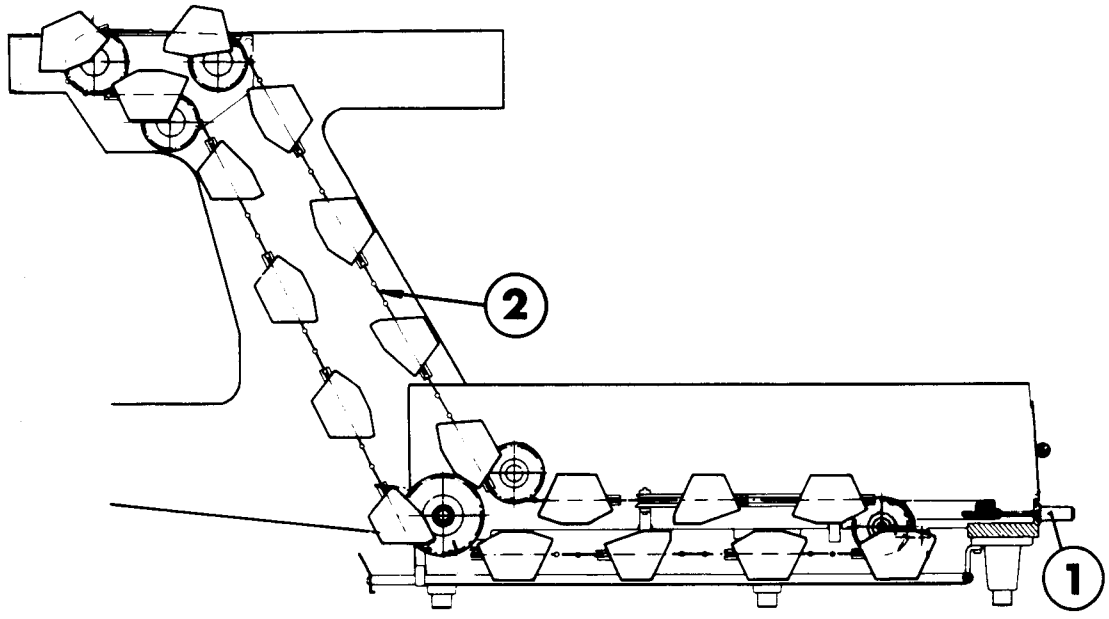

REMOVAL

Remove the circlips (1) and pull out the axle pins from the scoop bearings (2) by separating the chains.

NB! Check that scoop No 2 is placed in the correct place in the order of scoops. (Only TC,TCA/500 with packer A).

1 Circlip
2 Scoop bearing

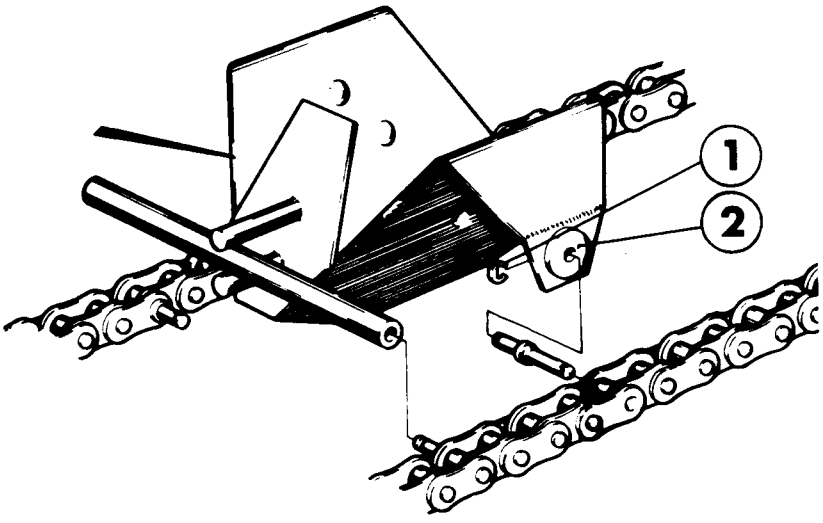

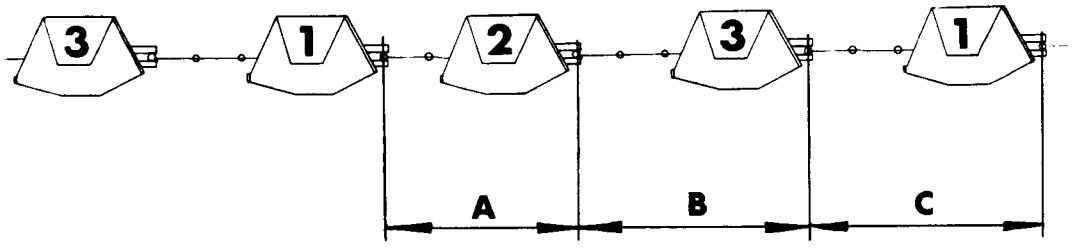

Machine	Chain links A	B	C
TC/150, TCA/150	15	15	15
TC/300, TCA/300	13	16	16
TC/500, TCA/500	17	17	17

OVERHAUL

Position the scoop bearing (2) in the anvil (3) and knock it out with the mandrel (4). Fig. 1.

Put the guide pin (5) in the die (6). Locate the scoop wing (1) with the new bearing on the guide pin and position the mandrel pin (7) in the bearing.

Check carefully that all components have correct fit-up and that the flange of the bearing close tightly to the scoop. Fig. 2.

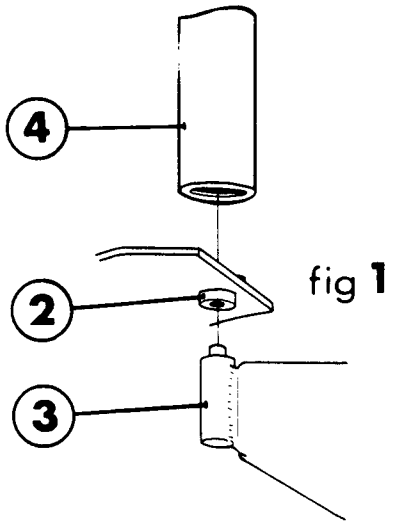

fig 1

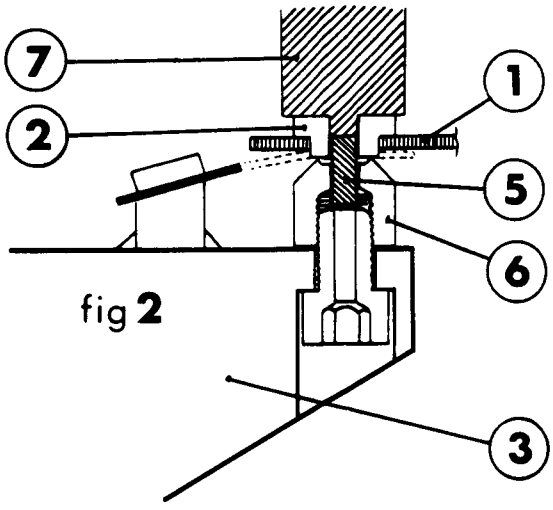

fig 2

1 Scoop wing
2 Scoop bearing
3 Anvil
4 Mandrel
5 Guide pin V2-70267
6 Die
7 Mandrel pin

REMOVAL

Dismantle the chain tensioner by releasing nut (2), then remove the screws (3) and (1). Turn the guide plate (4) 90^{0} and remove the chain tensioner.

1 Screw
2 Nut
3 Screw
4 Guide plate

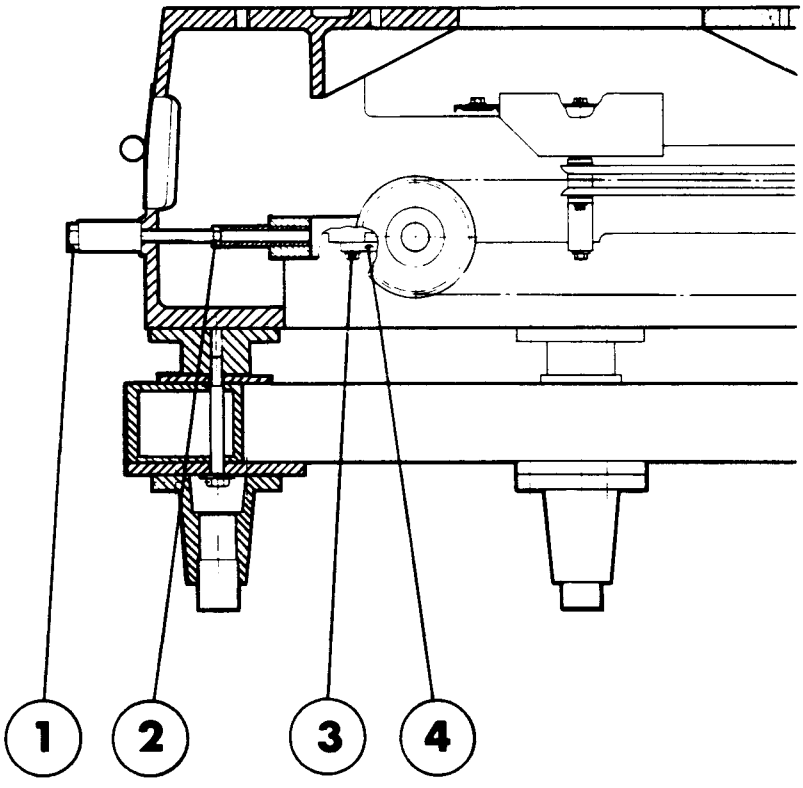

OVERHAUL

Dismantle the chain tensioner and replace the ball bearings (1) and O-rings (3).

Replace the sprocket (2) if they are worn or damaged.

Replace the coil spring (4) if required.

Check that the grease nipple (5) let through grease. If not, replace them. Grease by means of a grease gun after assembly.

1 Ball bearing
2 Sprocket
3 O-ring
4 Coil spring
5 Grease nipple

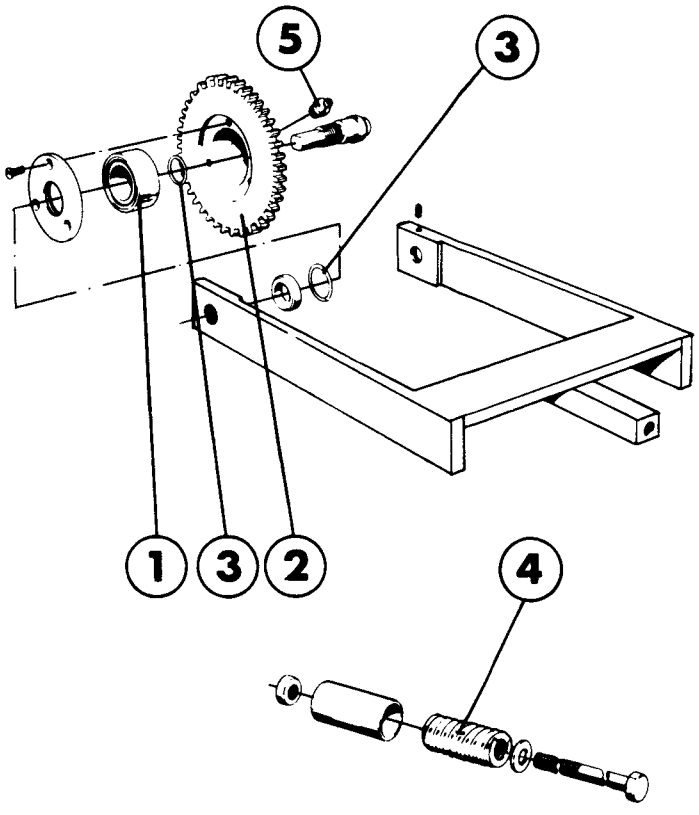

OVERHAUL

Check that the bearings (1) and (2) and the catch (3) are not worn. Replace as required.

In case of play or wear, remove the flaps (4) and (5) by undoing the screws (6) and (8) and forcing out the pin (7).

Undo the screws and force out the pins in the cams (10) and (14) and in the catch (3). Pull out the shaft (9).

1 Bearing
2 Bearing
3 Catch
4 Flap
5 Flap
6 Screw
7 Pin
8 Screw
9 Shaft
10 Cam
11 Spring
12 Spring
13 Cam (only TC,TCA/150 and TC,TCA/300)

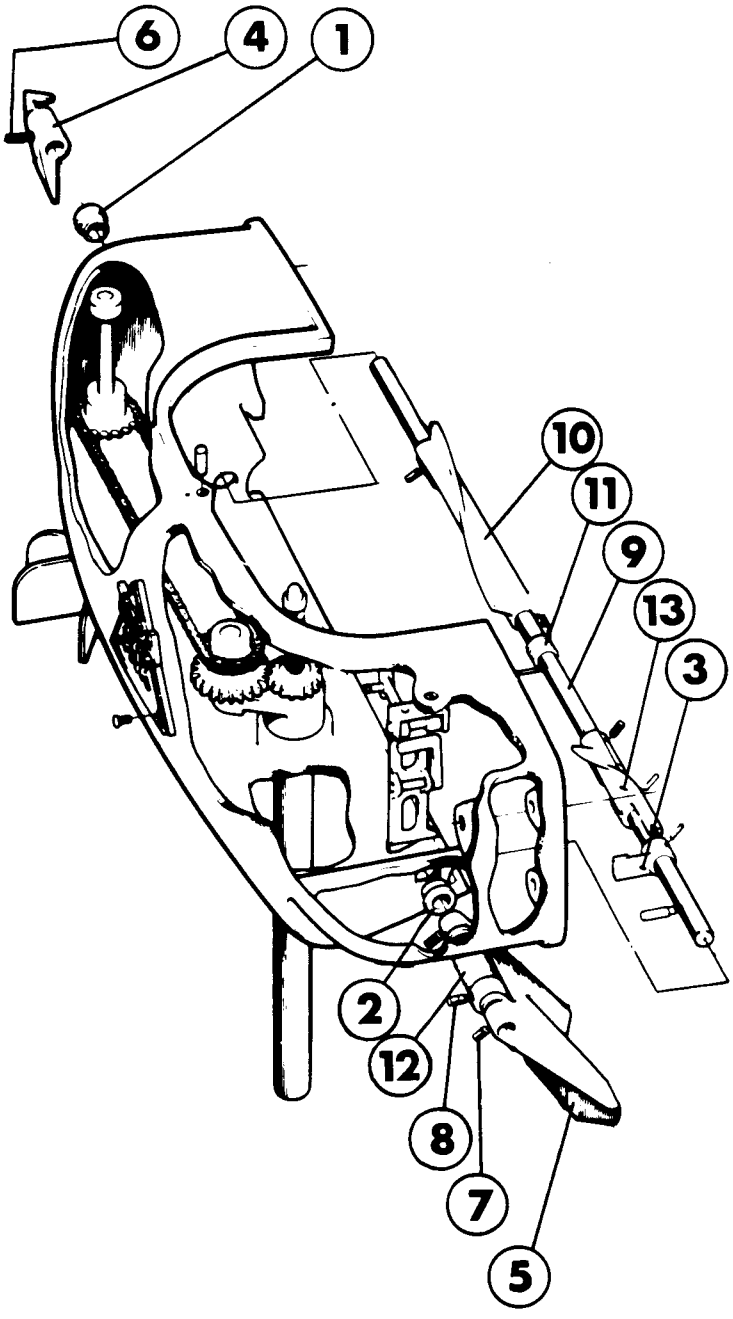

CHECKING

When the distributor carriage moves in the direction of the arrow in the picture, check that the roller (1) raises the hook (2) so that the catch (3) is moved out of the way, and the arm (4) is free to move upwards. (The flap for package layer I opens to drop a package into the crate.)

When the arm (4) has been mechanically returned to its lower position, it is to be locked again by the catch (3).

If required, replace the springs (5) and (6).

1 Roller
2 Hook
3 Catch
4 Arm
5 Spring
6 Spring

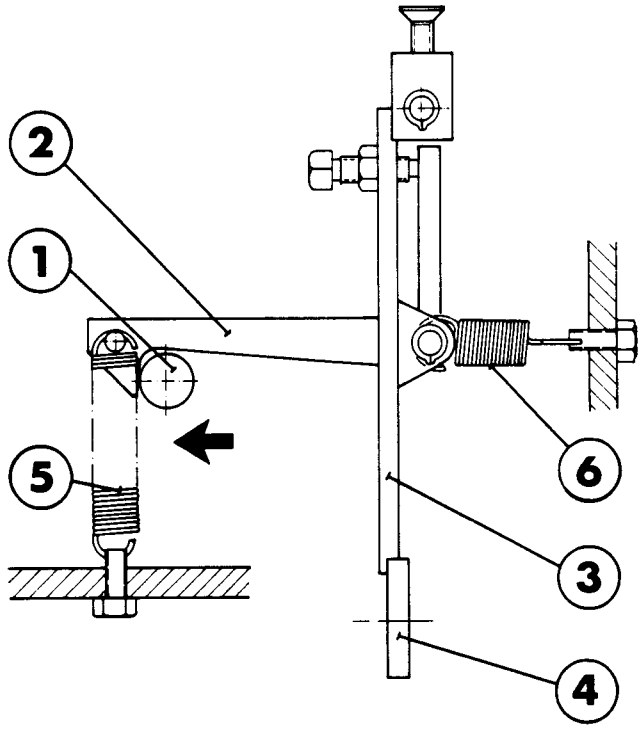

OVERHAUL

Check that the shaft (4) and the bearing (9) move freely and that the star (11) is intact.

Undo the screws (2) and push down the bearing housing (3).

Knock out the pin (5) and pull off the retaining ring (6). Turn the shaft (4) until the pin (7) is in line with the hole drilled in the bearing housing (3). Force out the pin and pull off the shaft (4) with the star (11).

Remove the circlip (8), push out the bearing (9) and check wear and condition of the slots. Replace when required.

Replace the sprocket (1) if it is worn or has any damaged.

FOOTNOTE! There should normally be a certain play in the bearing (9). Make sure on reassembly that the pin (10) is correctly fitted in the sprocket (1).

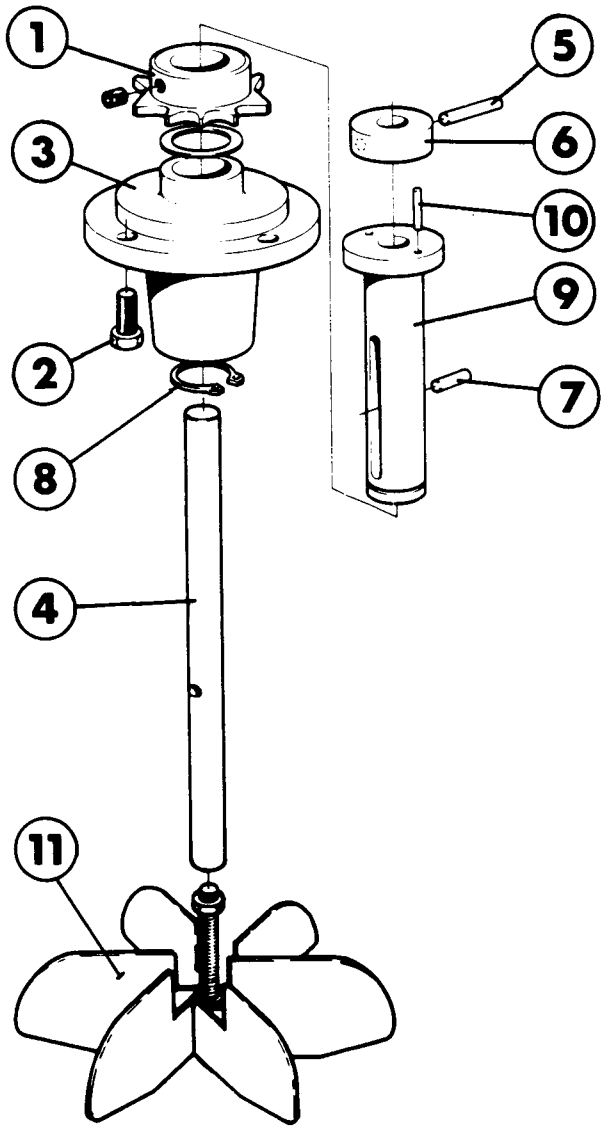

1 Sprocket
2 Screw
3 Bearing housing
4 Shaft
5 Pin
6 Retaining ring
7 Pin
8 Circlip
9 Bearing
10 Pin
11 Star

OVERHAUL

Undo the screws (1) and lift off the distributor arm (7).

Undo the screws (3), and loosen screws (4). Push out the upper slide (5). Lift out the carrier (6).

Check wear of the two slides (5) and replace as required.

Remove the circlip (8) and pull off the roller (9).
Loosen the screw (10), pull out the shaft (11), and remove the roller (12).
Replace the rollers.

Assemble in reverse order.

WARNING! Do not overtighten the adjustment screws (4) as there must be some play in the slides (5).

Carry out synchronization acc to the "Basic synchronization and settings" section.

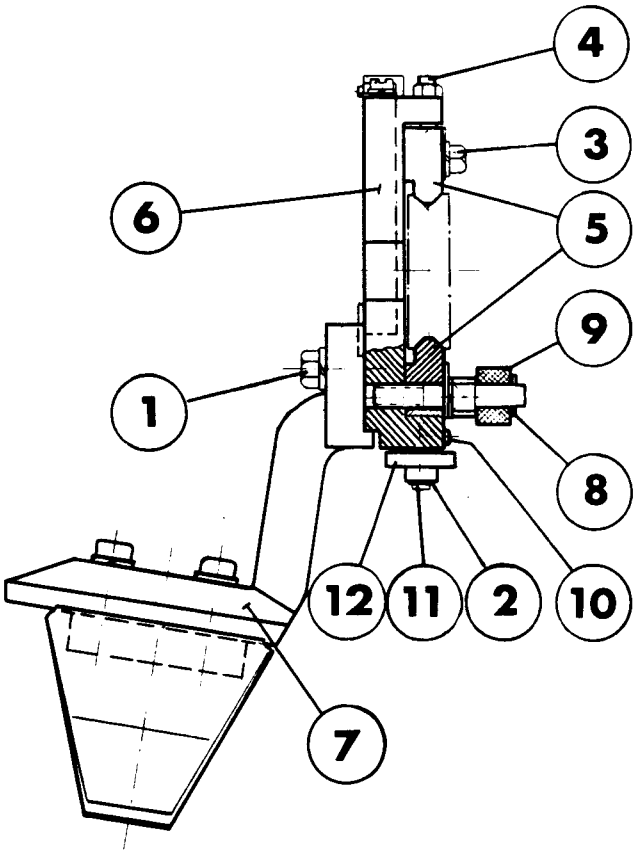

1 Screw
2 Circlip
3 Screw
4 Adjustment screw
5 Slide
6 Carrier
7 Distributor arm
8 Circlip
9 Roller
10 Screw
11 Shaft
12 Roller

CHECKING

Check that the tilting chute (1) and the hoop (2) move easily, and that the tilting chute in closed position is flat against the delivery chute (3).

If required, remove the tilting chute and hoop. Check the play in the bearings (4) and link (5).

Replace the bearings and link if the play is big enough to affect the function of the tilting chute.

1 Tilting chute
2 Hoop
3 Chute
4 Bearing
5 Link

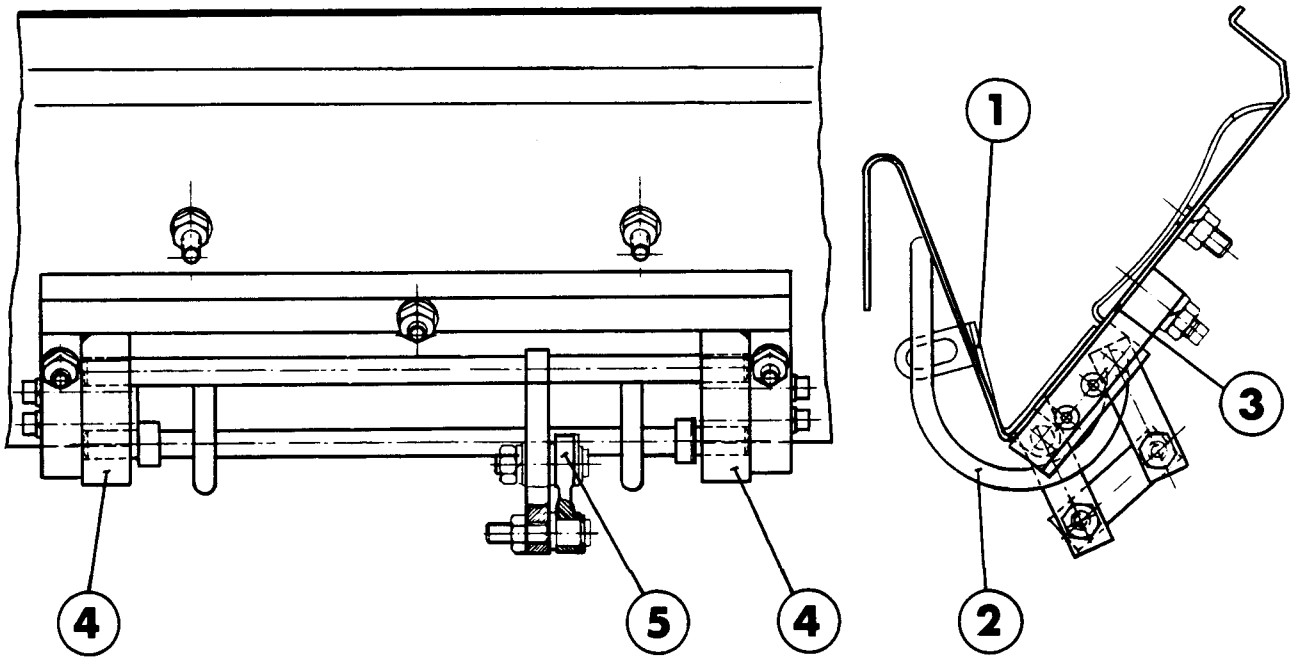

LAYER I

The position in which the package rests just before it drops into the crate is important. The package should be upright and steady.

Adjust with the plate on the distributor arm (1), so that the package is pushed out to a correct position on the flap (2).

Adjust the guide plate (3) to eliminate lateral swing or tipping over of the package (valid only for TC/150, TCA/150, TC/300 and TCA/300.

1 Distributor arm
2 Flap
3 Guide plate

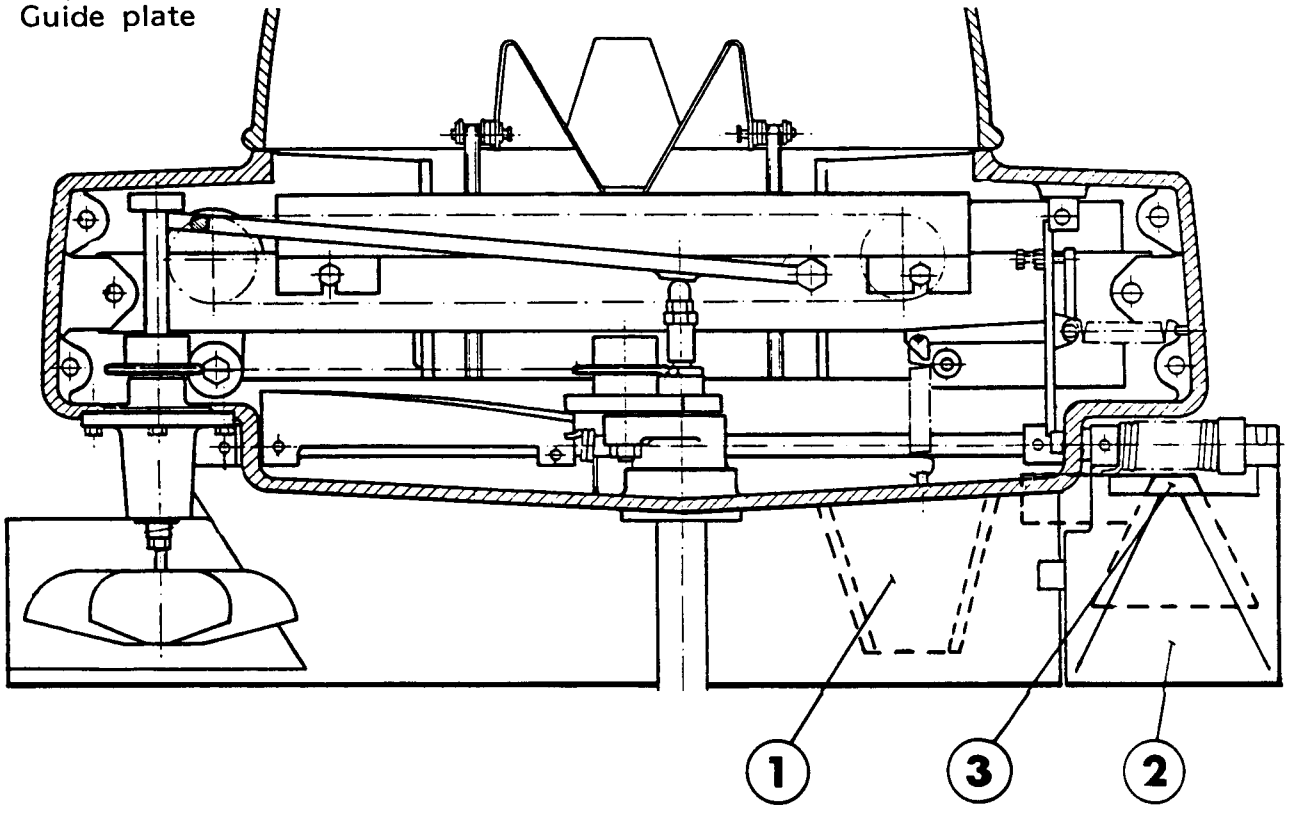

LAYER II

TC/150, TCA/150
TC/300, TCA/300

The link movement of the tilting chute should be adjusted so that the tilting chute in closed position rests against the delivery chute without pressure or play.

To adjust, stop the machine in a position where the tilting chute (1) is about to be closed. The roller (2) is on the highest point of the cam (3).

Undo the mechanical joint (4). Press the tilting chute against the delivery chute (5) and the roller against the cam. Tighten.

The basic setting of the total length of the link system (6) is 97 mm.

By adjusting the length of the link system (6), it is possible to increase or decrease the tilting of the chute. After every adjustment of the link system, check that the tilting chute in closed position rests against the delivery chute.

1 Tilting chute
2 Roller
3 Cam
4 Mechanical joint
5 Delivery chute
6 Link system length

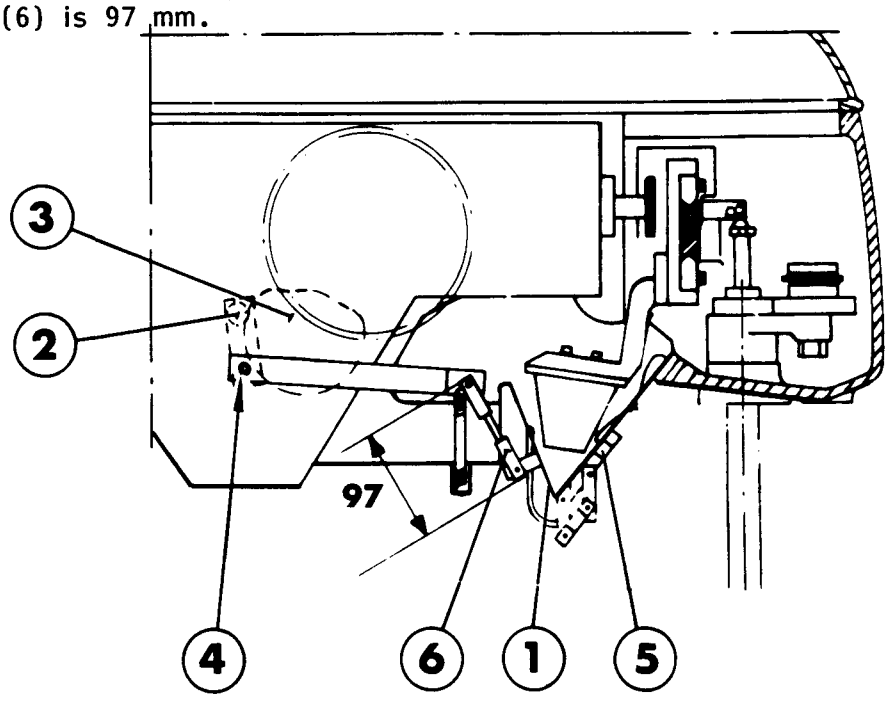

LAYER III

The package should be pushed forward by the distributor arm and stop right in front of the star.

Adjust the plate on the distributor arm (1).

Adjust the catch (2) so that it is right in front of the corner of the package and also so that, in closed position, the package is held in the chute and dropping into the crate when the catch opens.

The star (3) should be adjusted to give sufficient support to the package when it drops into the crate.

Adjust by loosening the nut (4) and turning the star.

The lifting of the star to clear the filled crate is adjusted with the adjustment nut (5) on the lifting rod.

1 Distributor arm
2 Catch
3 Star
4 Nut
5 Adjustment nut

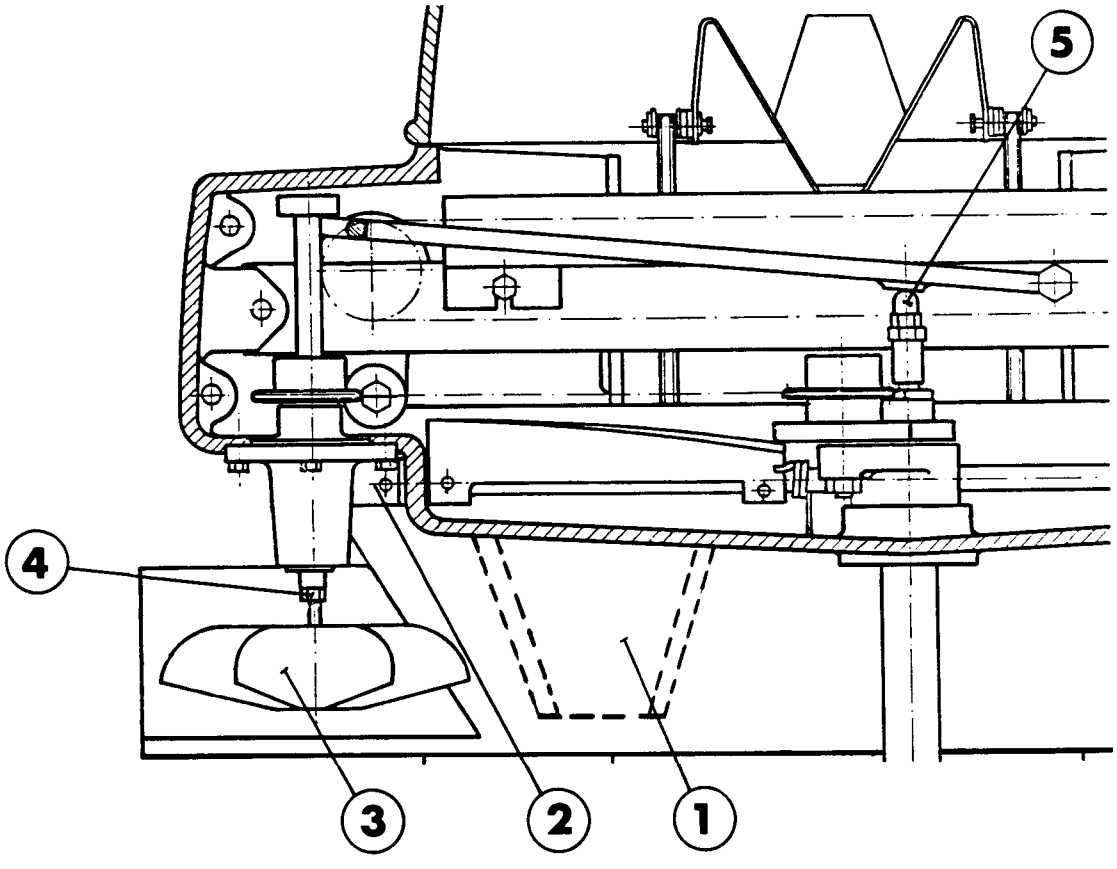

CHECKING

Check that the packages are falling correctly into;

elevator scoops
layer I
layer II
layer III

If necessary, check packer synchronization according to the section "Basic synchronization and settings" section.

DESCRIPTION	PAGE
Protection ring and slide plates - removal	851-21
Collecting bowl - removal	852-21
Collecting bowl - fitting	852-41
Swing arm - removal	853-21
Swing arm - fitting	853-41
Lifting device - checking	854-11
Upper bearing assembly, swing arm - checking	855-11
Upper bearing assembly, swing arm - removal	855-21
Upper bearing assembly, swing arm - overhaul	855-31
Lower bearing assembly, swing arm - checking	856-11
Lower bearing assembly, swing arm - removal	856-21
Lower bearing assembly, swing arm - overhaul	856-31
Carrier - checking	857-11
Carrier - removal	857-21
Carrier - overhaul	857-31
Carrier - fitting	857-41
Cam roller, carrier - replacement	858-21
Carrier, gear segment - checking	859-11
Carrier, gear segment - removal	859-21
Carrier, gear segment - overhaul	859-31
Cam roller, gear segment - replacement	860-21

DESCRIPTION	PAGE
Lifting fork - checking	861-11
Lifting fork - removal	861-21
Lifting fork - adjustment	861-51
Link arm, lifting fork - replacement	862-21
Cam assembly - checking	863-11
Cam assembly - overhaul	863-31
Cam wheel unit - adjustment	863-51
Drive unit - removal	864-21
Drive unit - overhaul (2 pages)	864-31
Drive unit - setting	864-51
Cam rollers, disengagement arm - checking	865-11
Maltese cross - overhaul	866-31
Maltese drive - overhaul	867-31
Cam rollers, maltese drive - replacement	868-21
Chain tensioner - checking	869-11
Impulse emitter - checking/lubrication	870-11
Impulse emitter - setting	870-51
Vacuum pump - checking	871-11
Vacuum pump - removal	871-21
Vacuum pump - overhaul	871-31
Vacuum lubricator - cleaning	872-11
Outlet filter, vacuum pump - replacement	873-21
Vacuum filter, filter element - cleaning/replacement	874-11

DESCRIPTION	PAGE
Air filter - cleaning	875-12
Holding table, boxes - checking	876-11
Holding table, boxes - dismantling	876-31
Holding table, crate - checking	877-11
Holding table, crate - dismantle	877-31
Lifting arm - checking	878-11
Crate shifter - checking (2 pages)	879-11
Crate shifter carriage - checking	880-11
Pneumatic panel - removal	881-21
Vacuum valve group - removal	882-21
Pneumatic diagram	883-11

REMOVAL

Remove:

- the protection ring (1)
- the slide plates (2)

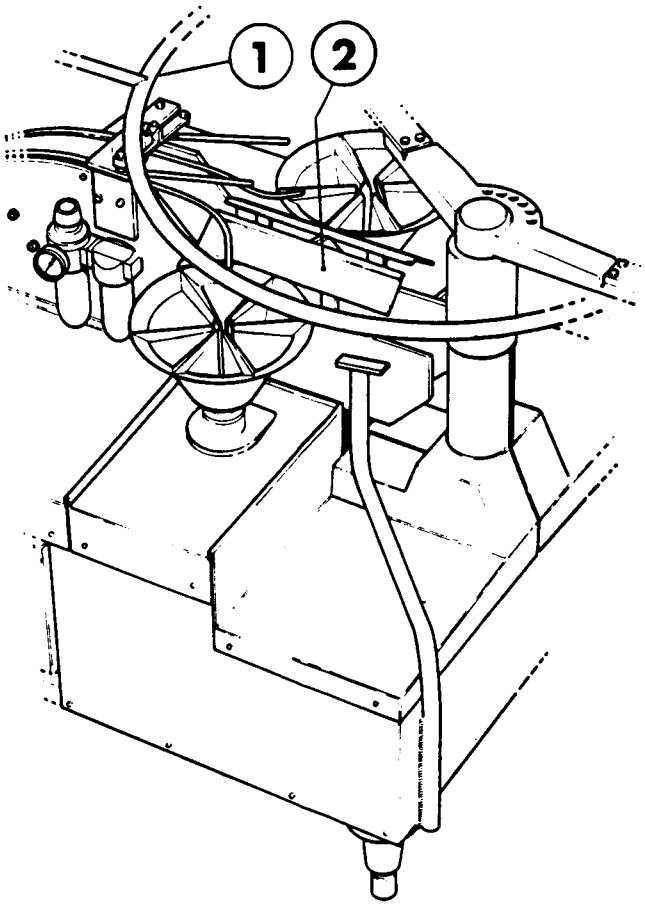

REMOVAL

Unscrew the screws (2) and lift the collecting bowl off the shaft.

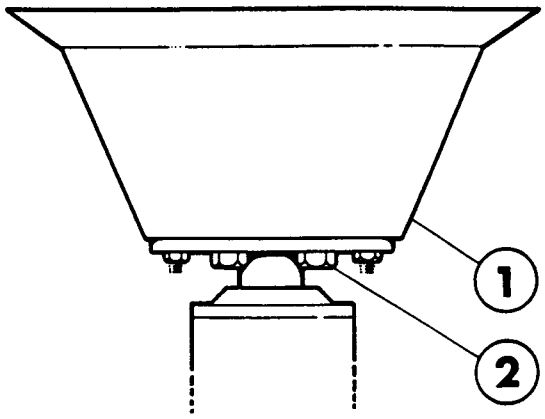

1 Collecting bowl
2 Screw

FITTING

Inch the machine and check which one of the shafts (1) and (2) is not indexing.

Fit the first collecting bowl on this shaft.

Inch the machine until the other shaft stops indexing. Fit the other collecting bowl to it.

FOOTNOTE! The vertical position of collecting bowl is to be set after fitting the swing arm.

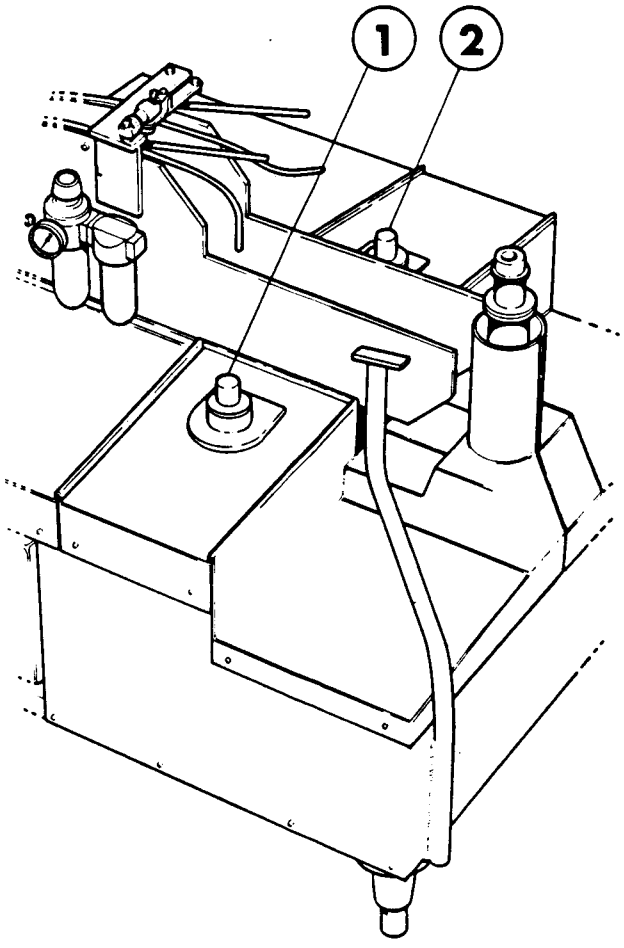

1 Shaft
2 Shaft

REMOVAL

Disconnect the hoses (4) from the machine frame.

Loosen the screws (1), and tap the hub (2) until the clamp rings come off.

Undo the screws (1) and lift off the swing arm (3).

1 Screw
2 Hub
3 Swing arm
4 Hose

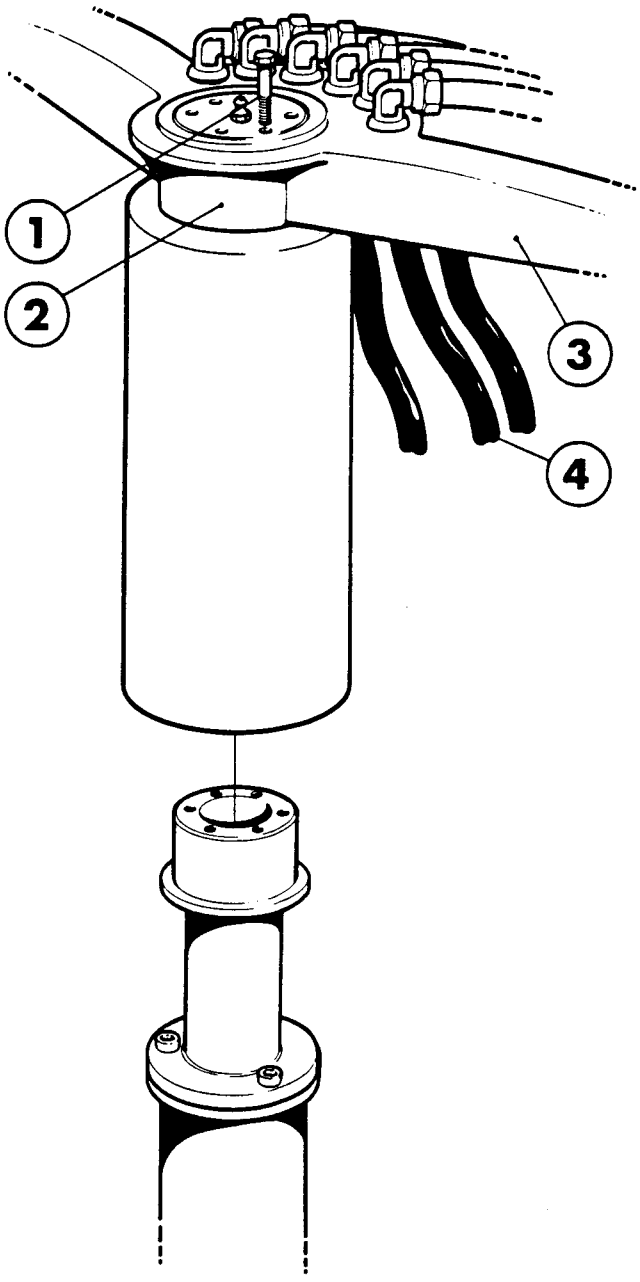

FITTING

Inch the machine until the impulse emitter shows 0°.

Fit the swing arm so that the measurement A 80 mm is obtained, fig 1. Tighten the screws (1) lightly.

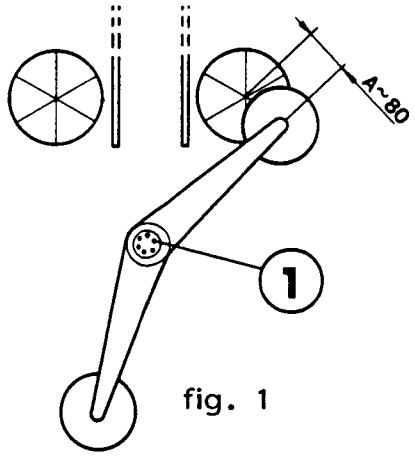

fig. 1

Inch the machine until the lifting device reaches the collecting bowl. Adjust the swing arm so that the lifting device is centered over the collecting bowl, fig 2.

Tighten the screws (1).

Connect the hoses (2). Check that they do not touch the elevator when the arm swings, fig 3.

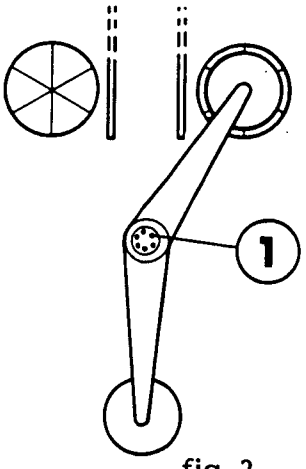

fig 2.

1 Screw
2 Hose
3 Elevator

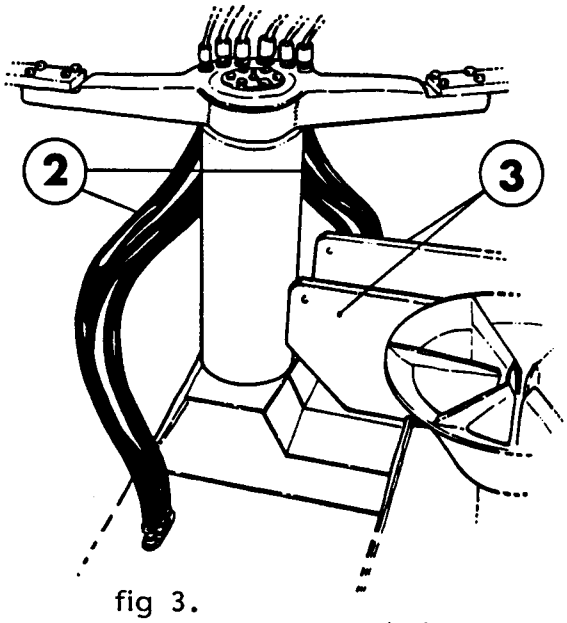

fig 3.

2/MS 853-41
180

CHECKING

Check:

- the suction cups (4)
- the rollers (3)
- the axle pins (1)

In case of wear or damage, fit new parts.

Replace worn or damaged parts.

1 Axle pin
2 Pin
3 Roller
4 Suction cup

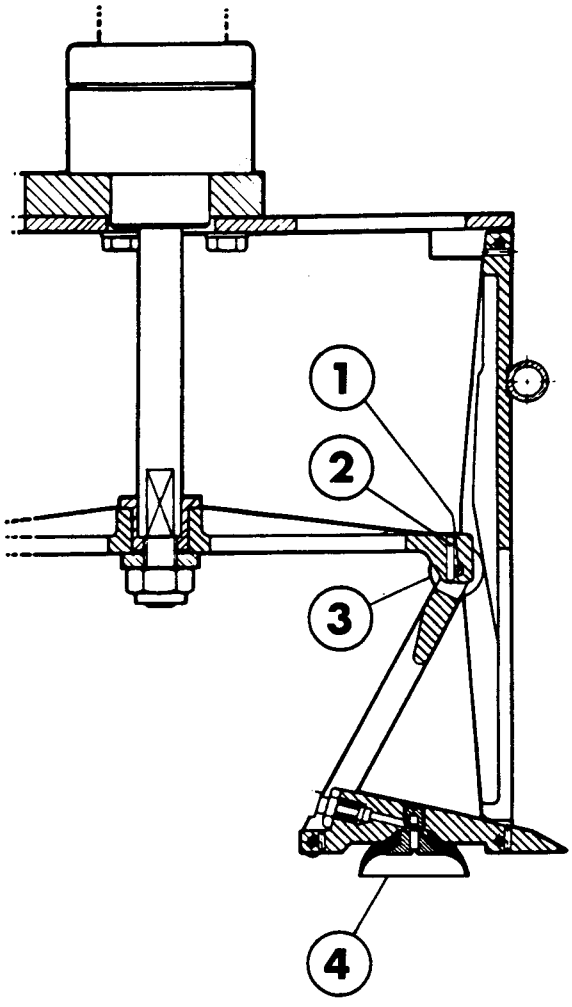

CHECKING

Remove the circlip (4) and pull off the guide block (2).

Check:

- the support rollers (5) for play. In case of play, replace them according to page 855-31.

- the sliding surfaces of the bushings (1) and (3) for wear. If worn, replace them according to page 855-31.

Fit the guide block.

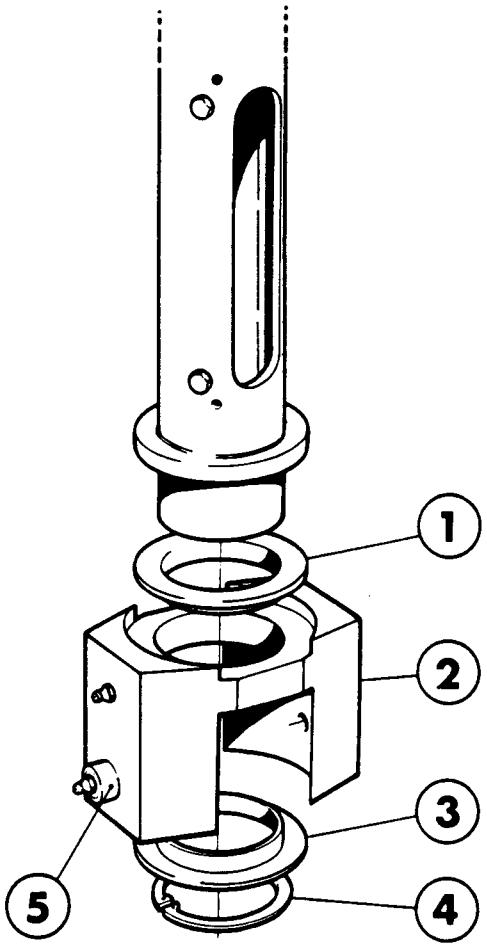

1 Bushing
2 Guide block
3 Bushing
4 Circlip
5 Support roller.

REMOVAL

Remove:

- the cover (2)
- support roller (3)
- straps (4)

Lift up the upper journal (1).

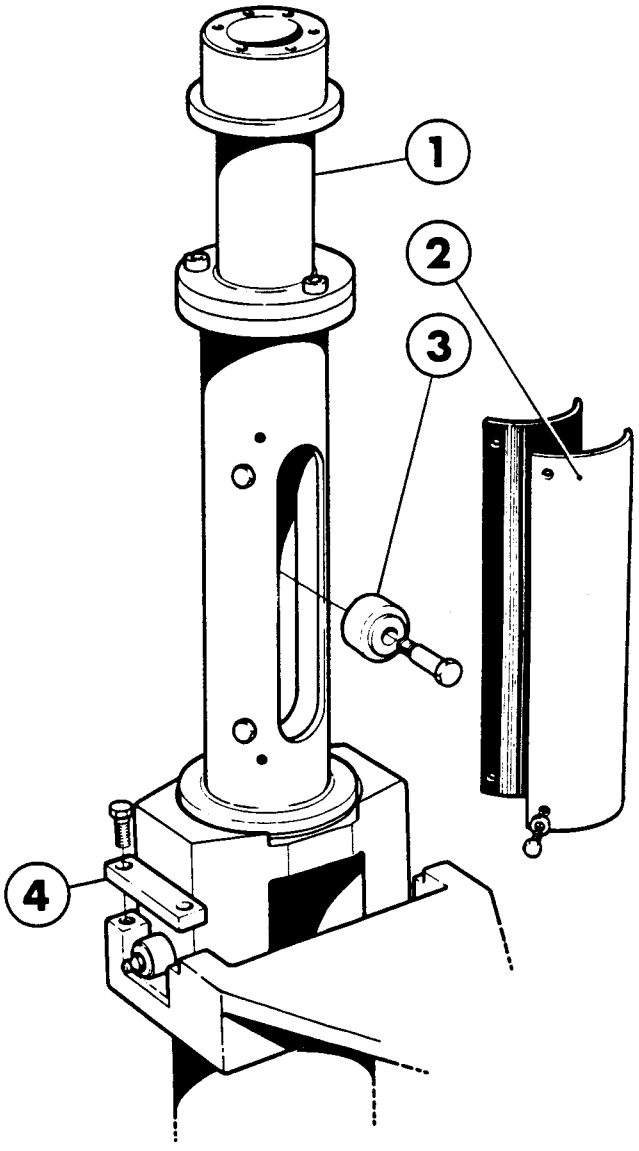

1 Upper bearing assembly, swing arm
2 Cover
3 Support roller
4 Strap

OVERHAUL

Replacement of ball bushings (3) and (5)

Remove:

- the circlip (14) and pull off the guide block (12).
- the screws (2) and holder (1)
- the circlip (10)
- the screws (7).

Force the ball bushings (3) and (5), carrier (4), ring (9), and seal (8) out of the pipe (6).

Replacement of bushings (11) and (13)

Remove the circlip (14) and pull off the guide block (12).

Force out the bushings (11) and (13).

Replacement of support rollers (16)

Remove the circlip (15) and pull off the support rollers (16).
When fitting the new rollers, check that distance A is obtained. If necessary, loosen the grub screw (17) and adjust the distance.

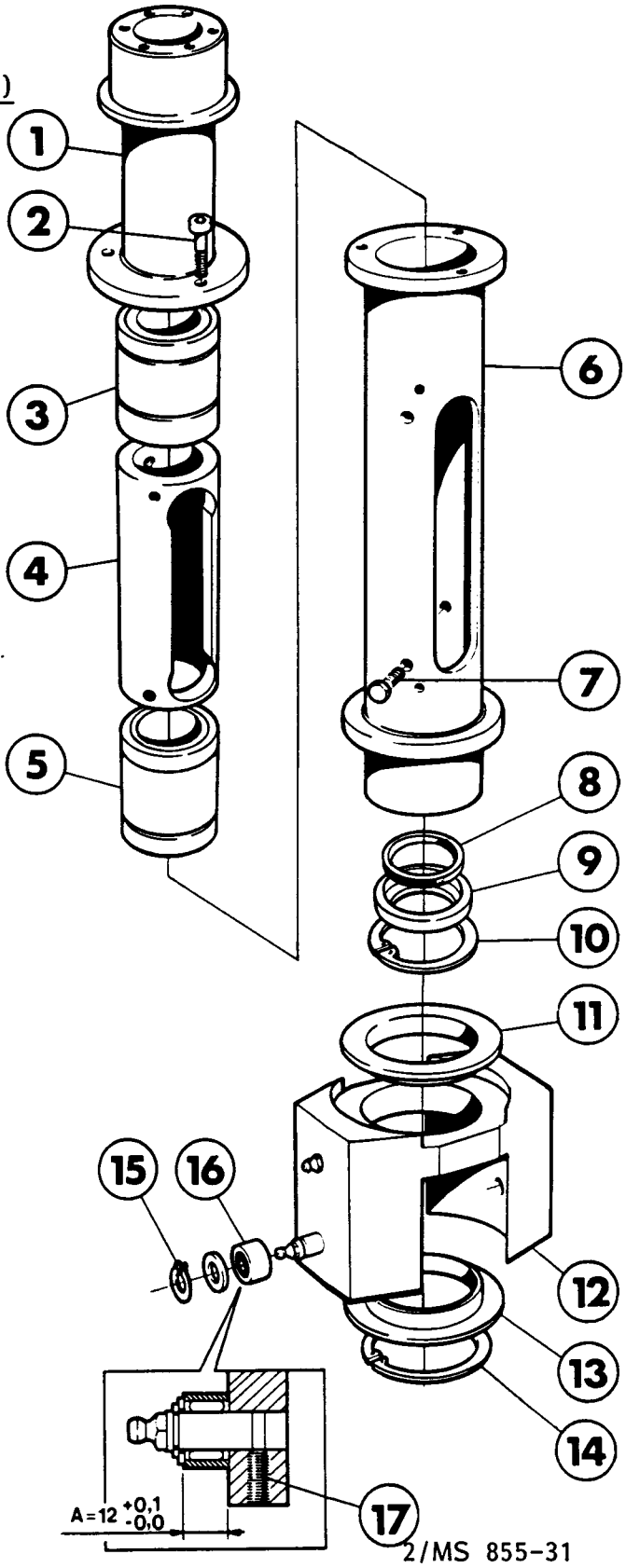

1	Holder	10	Circlip
2	Screw	11	Bushing
3	Ball bushing	12	Guide block
4	Carrier	13	Bushing
5	Ball bushing	14	Circlip
6	Pipe	15	Circlip
7	Screw	16	Support roller
8	Seal	17	Grub screw
9	Ring		

2/MS 855-31
184

CHECKING

Check:

- that there is no play in the ball bearings (2) and (3)
- that the ball bushings have not worn depressions in the shaft (1).

In case of wear or play, overhaul according to page 856-31.

1 Shaft
2 Ball bearing
3 Ball bearing

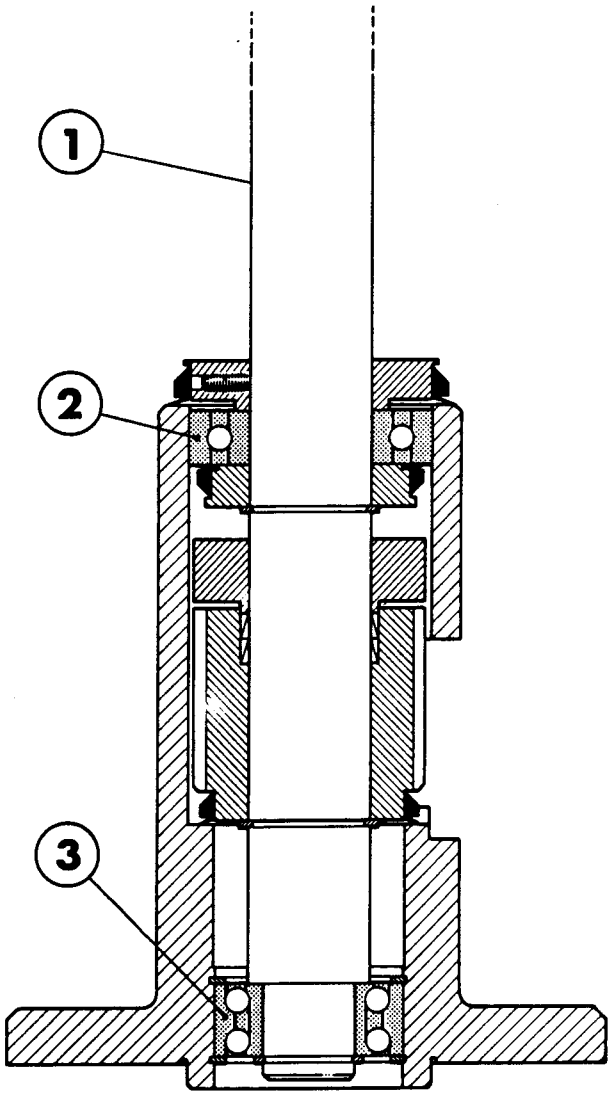

REMOVAL

Undo the screws (2) and lift up the bearing assembly (1).

1 Lower bearing assembly
2 Screw

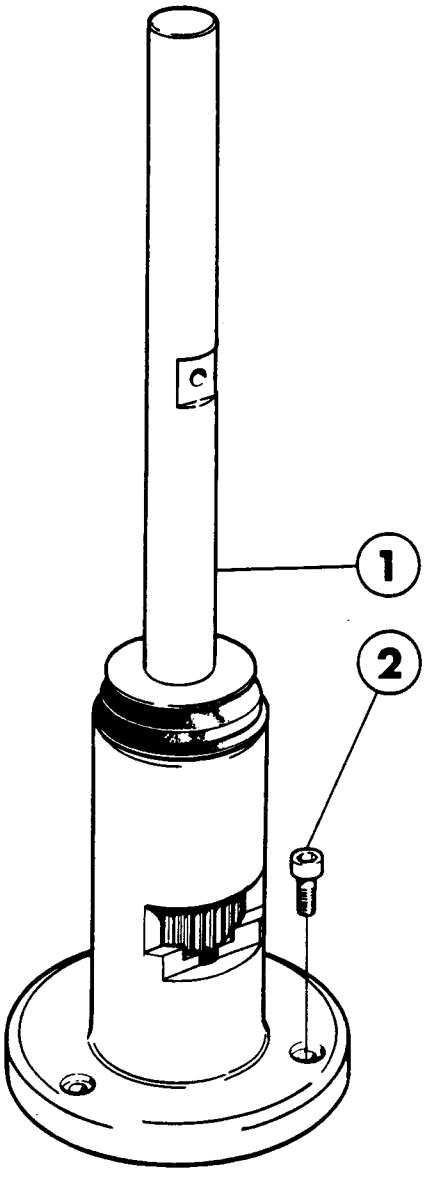

OVERHAUL

Remove:

- the circlip (17) and pull off the bearing housing (15)
- the seal rings (5) and (14)
- the circlip (13).

Loosen the grub screw (4). Tap the ring (8) to move it appr. 20 mm towards the long shaft end.
Move the circlip (9) up to the ring.
Loosen the screws (10) about three turns and pull off the gear wheel (12).

Remove:

- clamp ring (11)
- circlip (9), ring (8), seal ring (7), ball bearing (6), and ring (3)
- circlip (18) and force out the ball bearing (16)

Replace worn or damaged parts.
If the shaft (1) has to be replaced, also fit new ball bushings (see page 855-31).

Fit the parts and fill the bearing housing with grease.

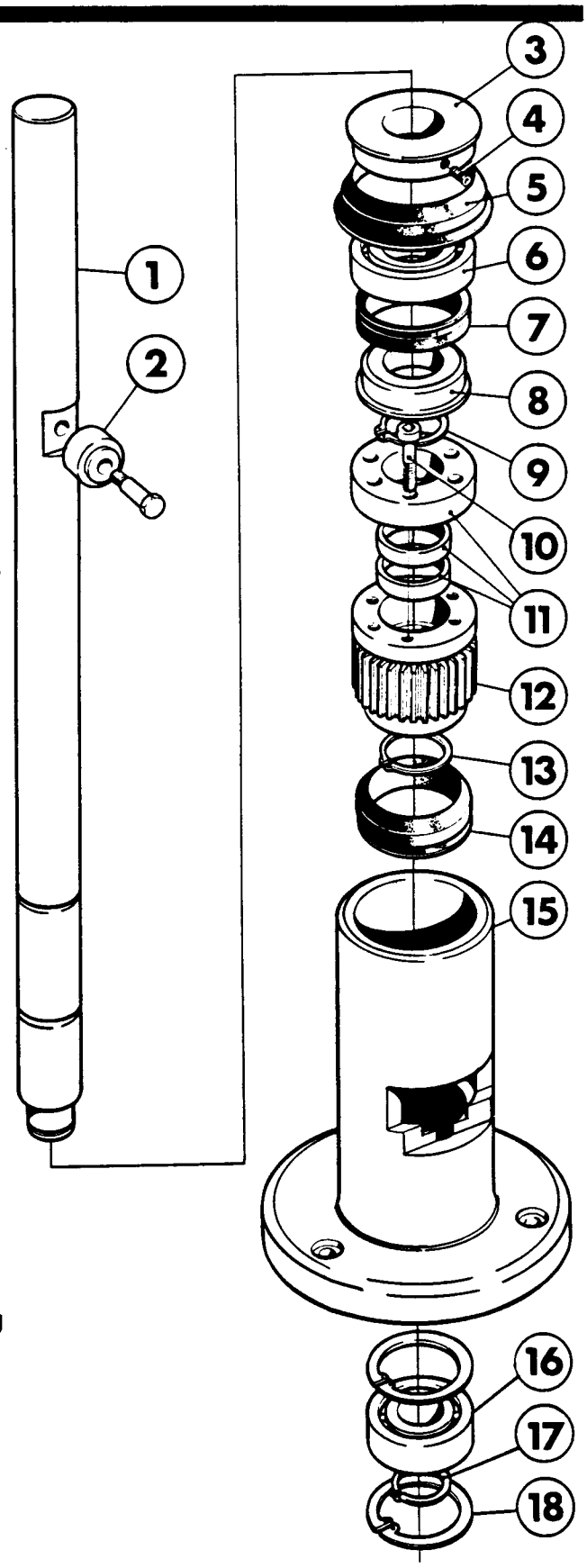

1	Shaft	10	Screw
2	Support roller	11	Clamp rings
3	Ring	12	Gear wheel
4	Grub screw	13	Circlip
5	Seal ring	14	Seal ring
6	Ball bearing	15	Bearing housing
7	Seal ring	16	Ball bearing
8	Ring	17	Circlip
9	Circlip	18	Circlip

CHECKING

Check:

- that there is no play in the bearings (2) and (3).

- that the seal ring (4) is intact. The seal is to drain excess grease.

If required, overhaul the carrier.

Remove the cover (1) and check that no water has entered the housing. The housing must be filled with grease.

1 Cover
2 Ball bearing
3 Ball bearing
4 Seal ring

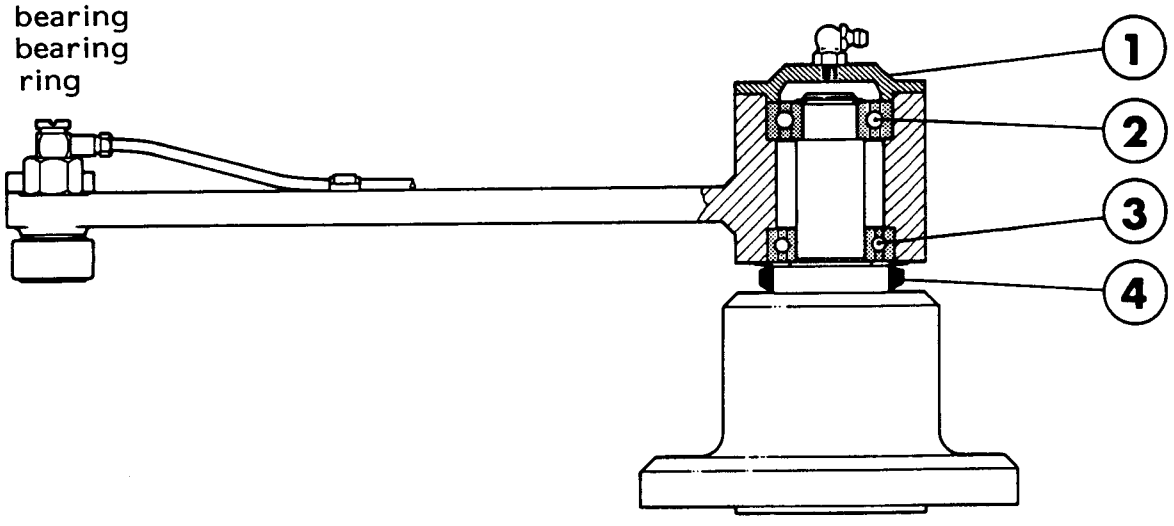

REMOVAL

Unscrew:

- the oil pipe (1)
- the screws (3)

Lift up the carrier.

1 Oil pipe
2 Carrier
3 Screw

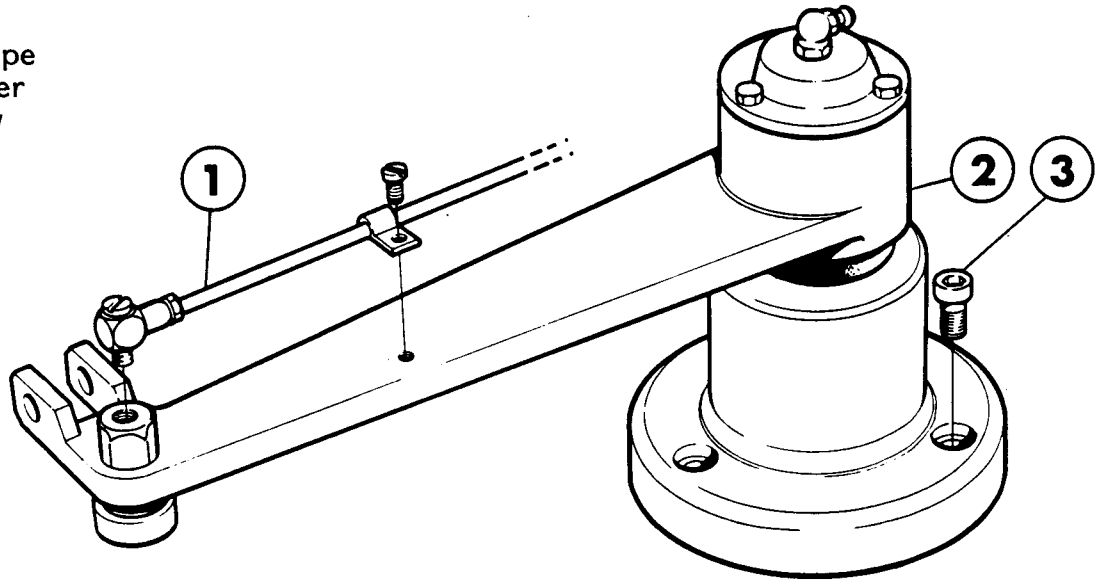

OVERHAUL

Remove:

- the cover (1)
- the circlip (2)

Tap the column (6) to loosen it and remove the bearings (3) and (4).

Replace worn or damaged parts.

Assemble the overhauled carrier.

Lubricate through the nipple until grease comes out of the seal ring (5).

1 Cover
2 Locking ring
3 Ball bearing
4 Ball bearing
5 Seal ring
6 Column

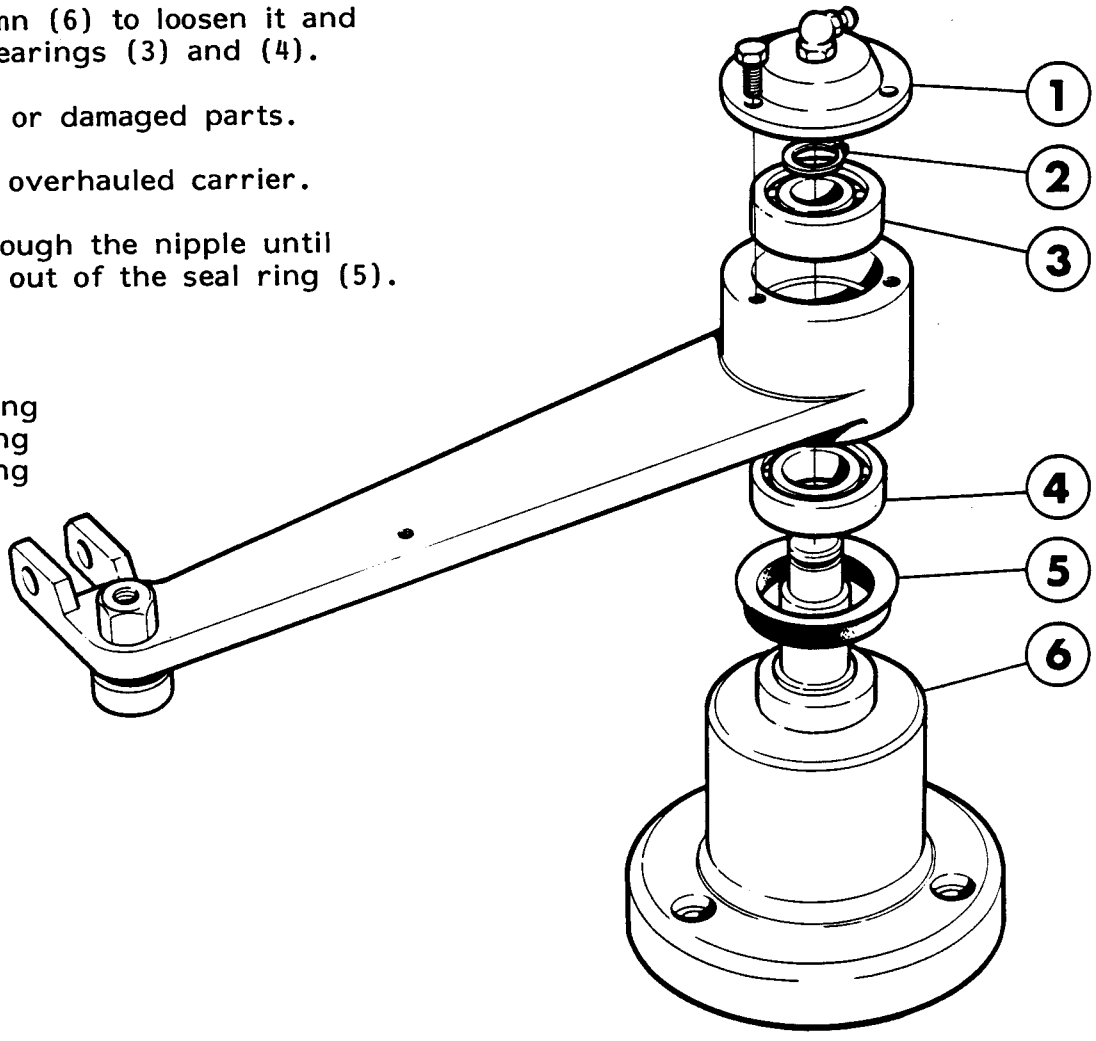

FITTING

Fit the carrier in the machine frame.

Check the 25 mm measurement when the impulse emitter scale shows 0°.

If not, skip cogs on the cam wheel unit until the measurement is correct. After adjustment, check the 15 mm measurement on the disengagement cam, see page 863-51.

1 Carrier
2 Lifting cam
3 Cam roller (disengagement cam)
4 Disengagement cam

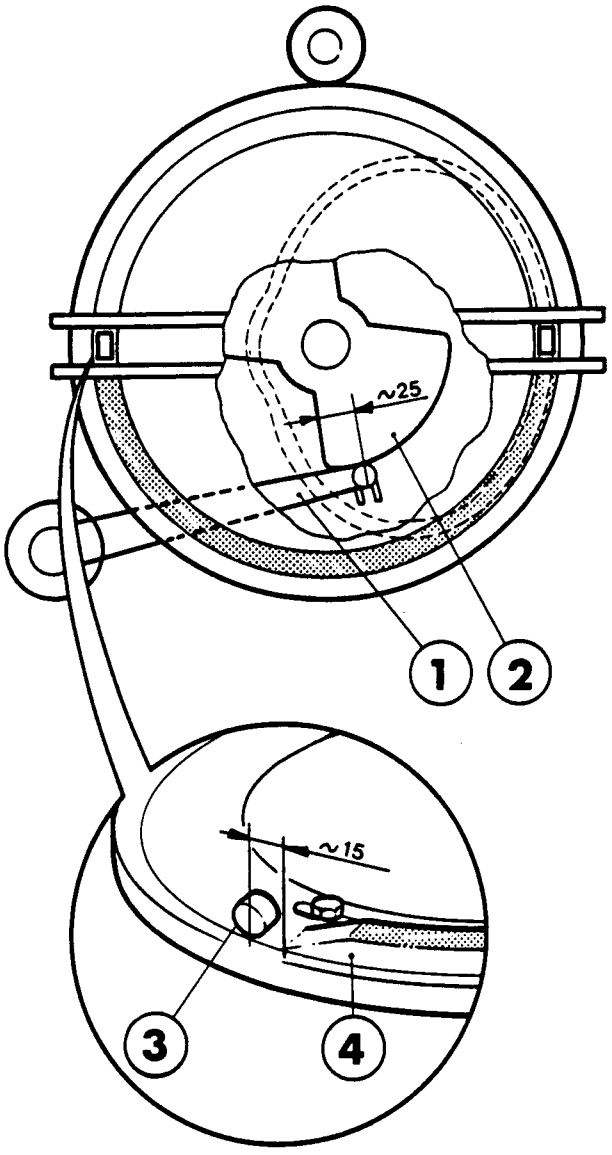

REPLACEMENT

Unscrew the cam roller (1).

Fit a new roller and plug the outer hole of the roller.

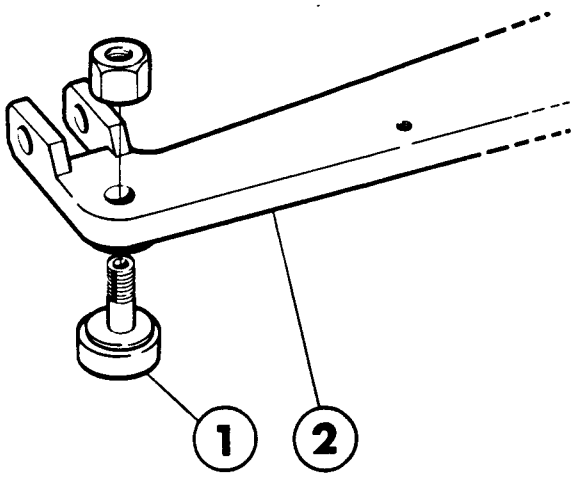

1 Cam roller
2 Carrier

CHECKING

Check:

- that there is no play in the bearings (3) and (4)
- that the seal ring (5) is intact. The seal is to drain excessive grease.)
- that an adjustment range remains for possibility on the screws (1).

If required, overhaul the carrier.

Remove the cover (2) and check that no water has entered the housing.

The housing must be filled with grease.

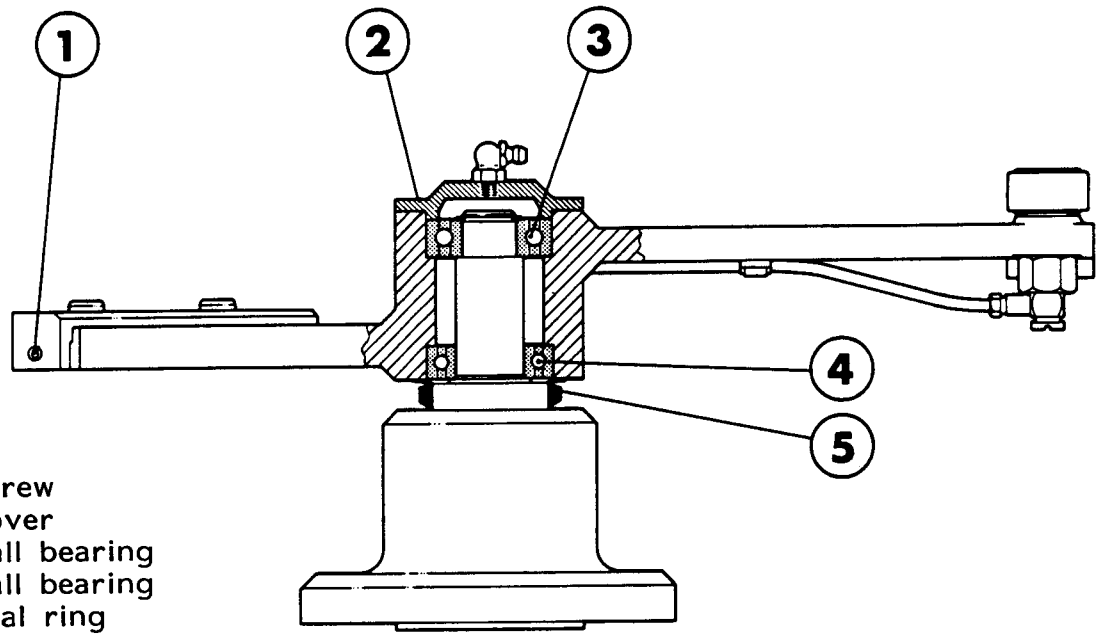

1 Screw
2 Cover
3 Ball bearing
4 Ball bearing
5 Seal ring

REMOVAL

Unscrew:

- the oil pipe (1)
- the screws (3)

Remove the carrier (2).

1 Oil pipe
2 Carrier
3 Screw

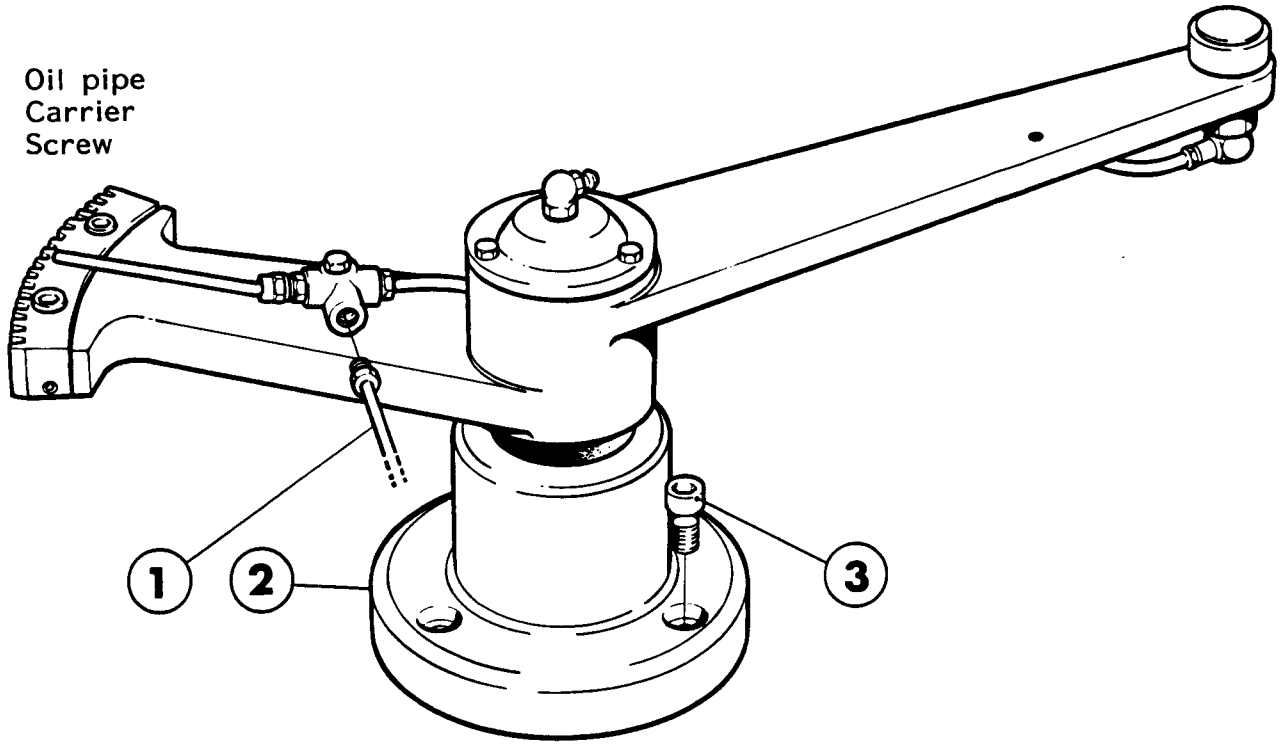

OVERHAUL

Remove:

- the cover (3)
- the circlip (4)

Tap the column (8) to loose it and remove it.
Pull out the bearings (5) and (6).
Replace worn or damaged parts.
When fitting a new gear segment (1) fit so that the teeth line up with the teeth on the arm.
Assemble the overhauled carrier.
Lubricate through the nipple until grease comes out through the seal (7).

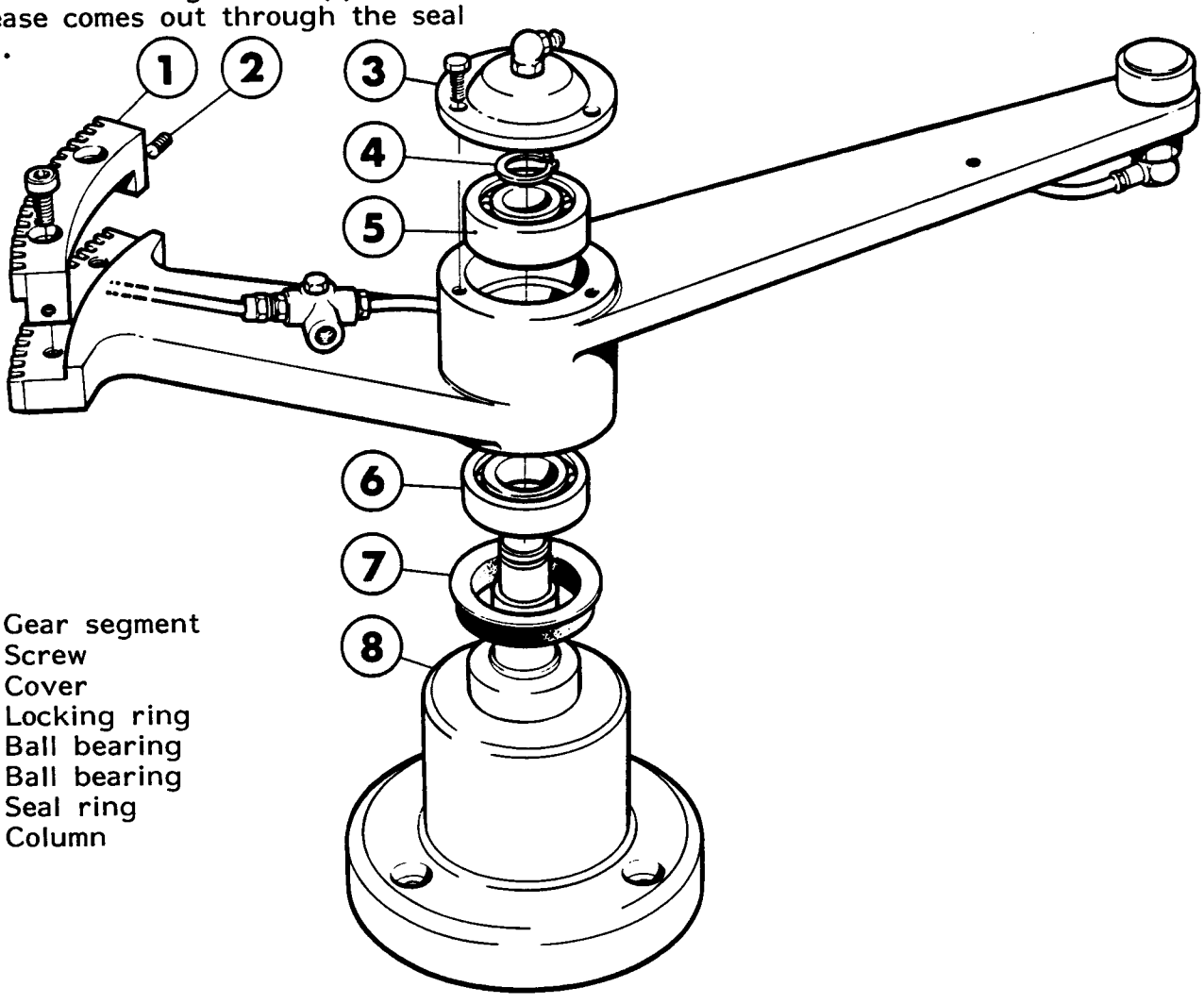

1 Gear segment
2 Screw
3 Cover
4 Locking ring
5 Ball bearing
6 Ball bearing
7 Seal ring
8 Column

REPLACEMENT

Unscrew the cam roller (2).

Fit a new roller and plug the outer hole of the roller.

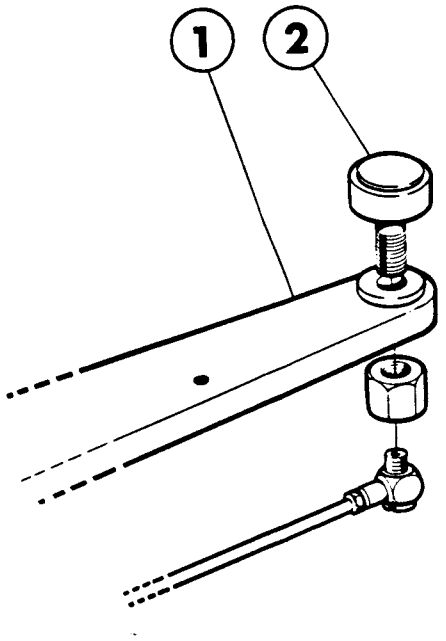

1 Carrier
2 Cam roller

CHECKING

Check that there is no play between the axle pin (3) and the bushings (2).

If there is, replace the bushings.

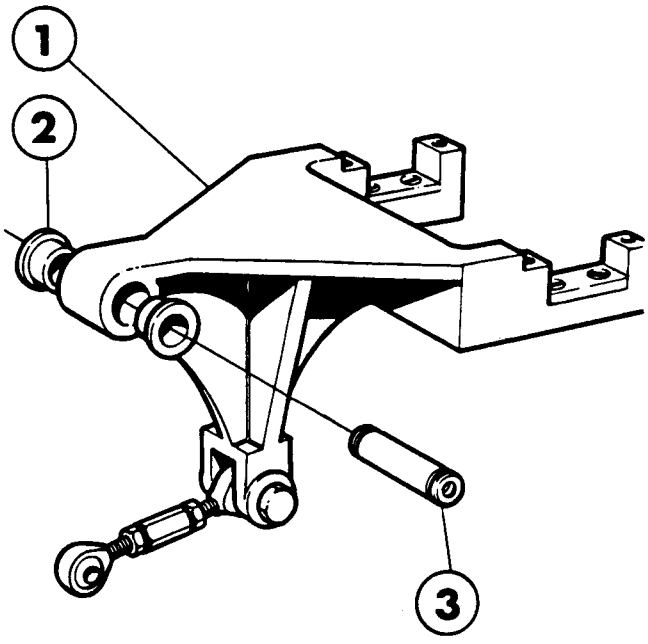

1 Lifting fork
2 Bushing
3 Axle pin

REMOVAL

Remove:

- the oil pipe (5)
- the circlip (4)
- the grub screw (1)
- the axle pin (3)

Detach the link arm (6) from the carrier.

Remove the lifting fork.

1 Grub screw
2 Lifting fork
3 Axle pin
4 Circlip
5 Oil pipe
6 Link arm

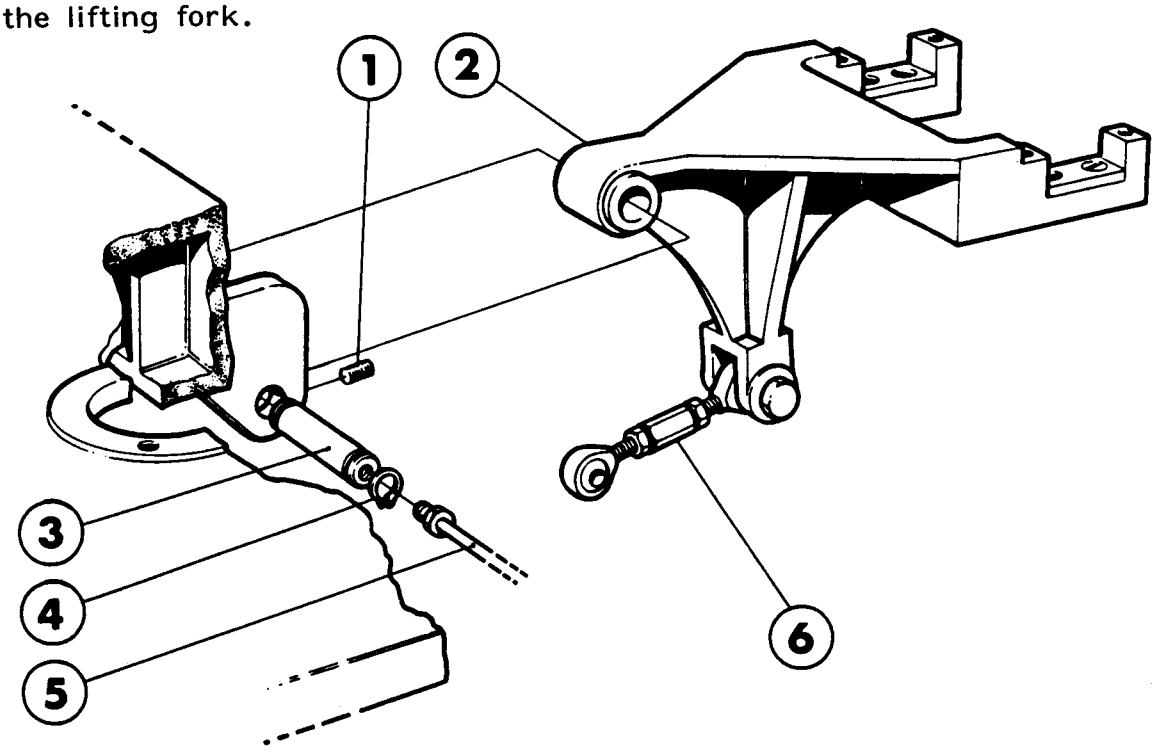

ADJUSTMENT

Inch the machine and check that the support roller (1) is positioned symmetrically in the cut-out.

If required, adjust the link arm (2).

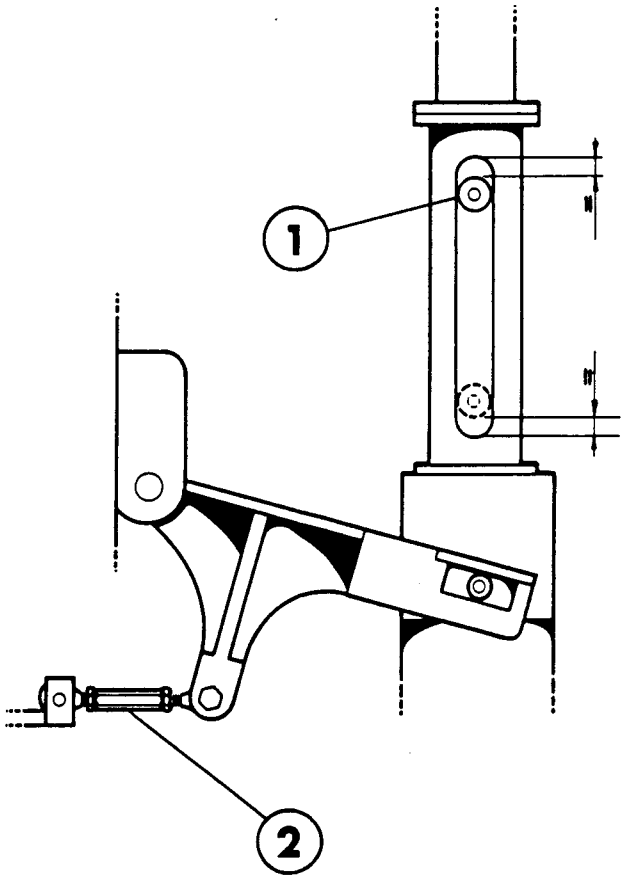

1 Support roller
2 Link arm

REPLACEMENT

Measure and note the old link arm length (A).
Change the link arm with a basic length set at A mm.

Fit the link arm on the fork (1).
Check the support roller position acc to page 861-51.

1 Lifting fork
2 Link head

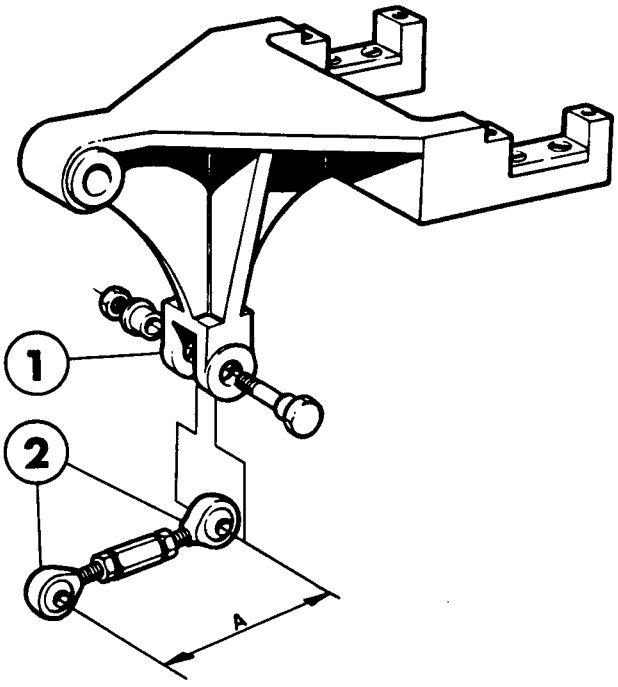

CHECKING

Check:

- that there is no play in the bearings (3) and (5),
- that the seal (6) is intact. The seal is to drain excessive grease
- that the disengagement cam (1), rotary cam (2), and lifting cam (4) are not worn or damaged.

If required, overhaul the cam assembly.

1 Disengagement cam
2 Rotary cam
3 Ball bearing
4 Lifting cam
5 Ball bearing
6 Seal ring

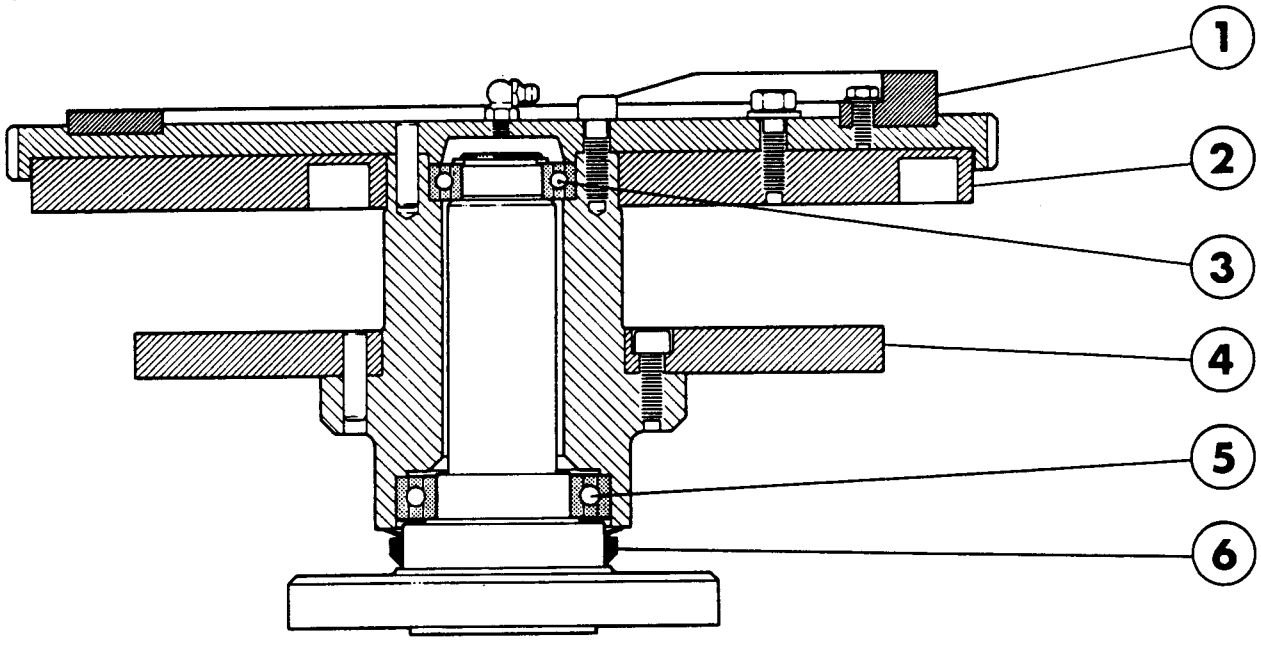

OVERHAUL

Remove the cam assembly from the machine frame. The drive unit may have to be loosened to allow removal of the assembly.

Mark the pinning (3) of the cam wheel.
Undo the screws (4). Use two of the screws in the holes (5) to pull off the rotary cam.

Remove the circlip (9) and pull off the lifting cam 8 with hub from the column (13).

Replace worn or damaged parts. In replacing the lifting cam (8) or gear wheel (1), the holes for the guide pins must be re-reamed.

Assemble the unit.

Lubricate through the nipple until grease comes out through the seal (12).

Fit the cam assembly unit in the machine, see page 863-51.

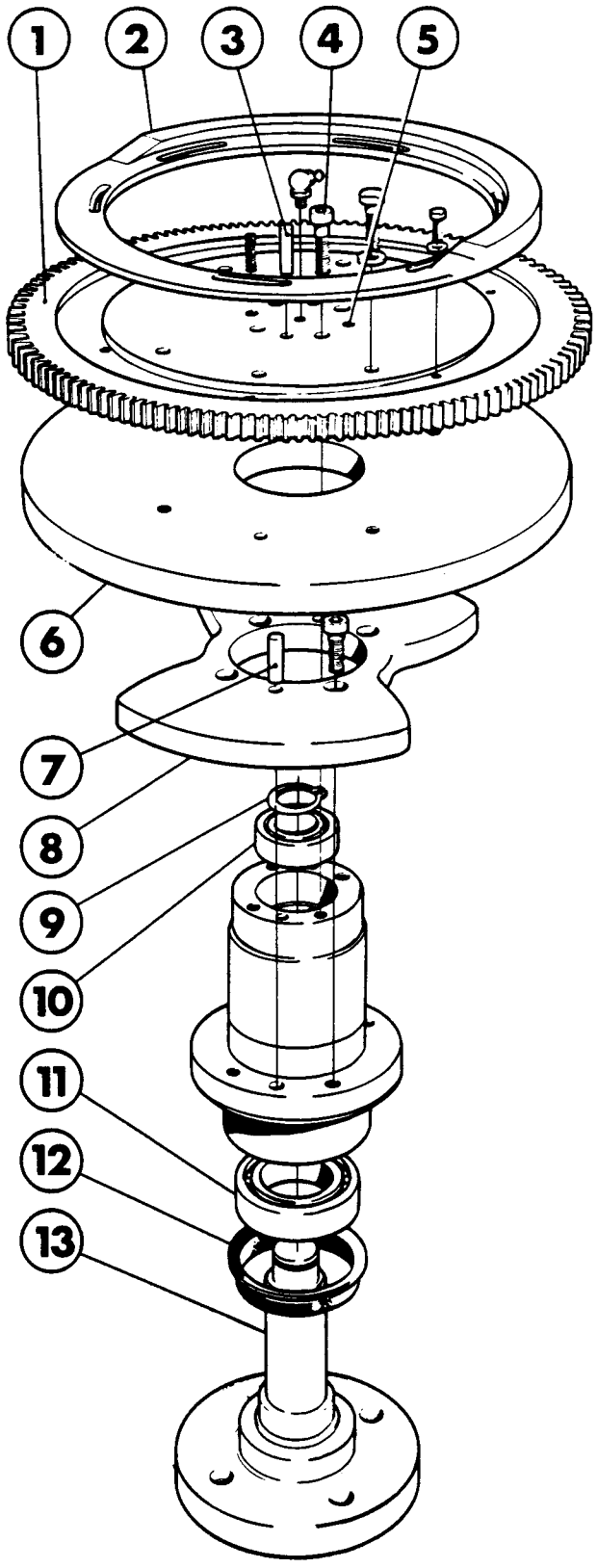

1 Gear wheel
2 Disengagement cam
3 Guide pin
4 Screw
5 Threaded hole
6 Rotary cam
7 Guide pin
8 Lifting cam
9 Circlip
10 Ball bearing
11 Ball bearing
12 Seal ring
13 Column

ADJUSTMENT

Inch the impulse emitter scale to 0°.

Check that the track in the rotary cam (2) is positioned as illustrated. If not, skip teeth on the gear wheel (1) to get to the correct position.

Loosen the screws (5) and set the 15 mm measurement.

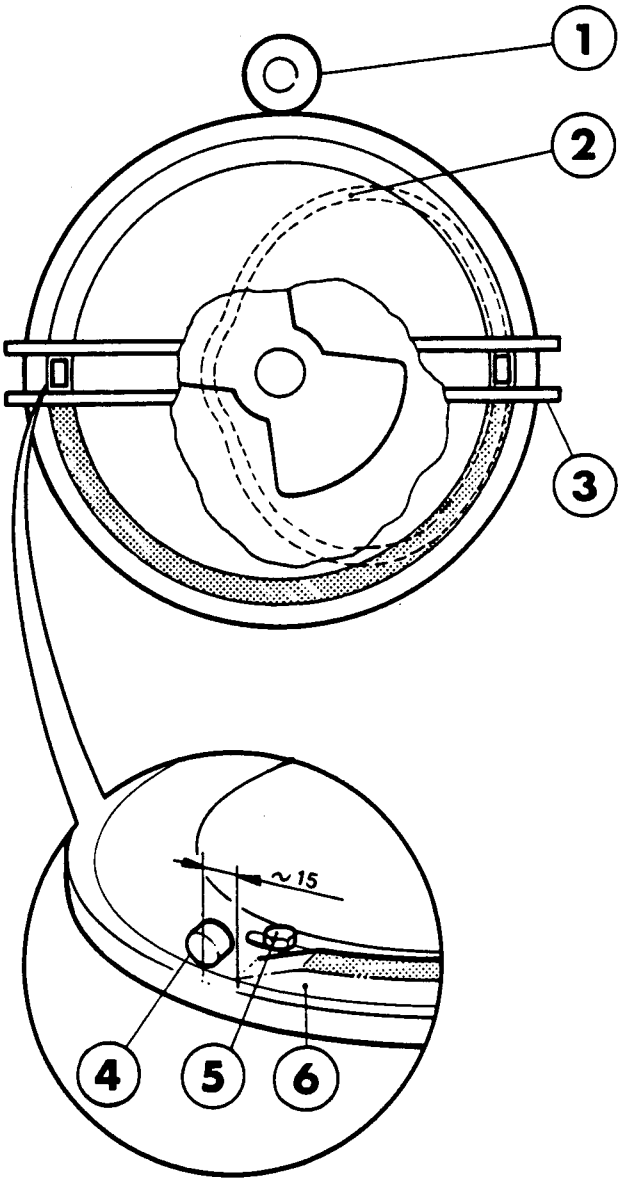

1 Gear wheel
2 Rotary cam track
3 Disengagement arm
4 Cam roller (disengagement arm)
5 Screw
6 Disengagement cam

REMOVAL

Inch the machine until the programme unit scale shows 0°.

Remove:

- the protection ring and slide plates, page 851-21,
- the collecting units, page 852-21
- the swing arm, page 853-21
- the cover plates,
- the lifting fork, page 861-21
- the elevator
- the program the unit by undoing the screws (2)
- the drive chain (4) (from the bevel gear)
- the lubrication oil hoses.

Undo the screws (5) between the vacuum valve group and drive unit.

Undo the screws (6).

Lift out the drive unit.

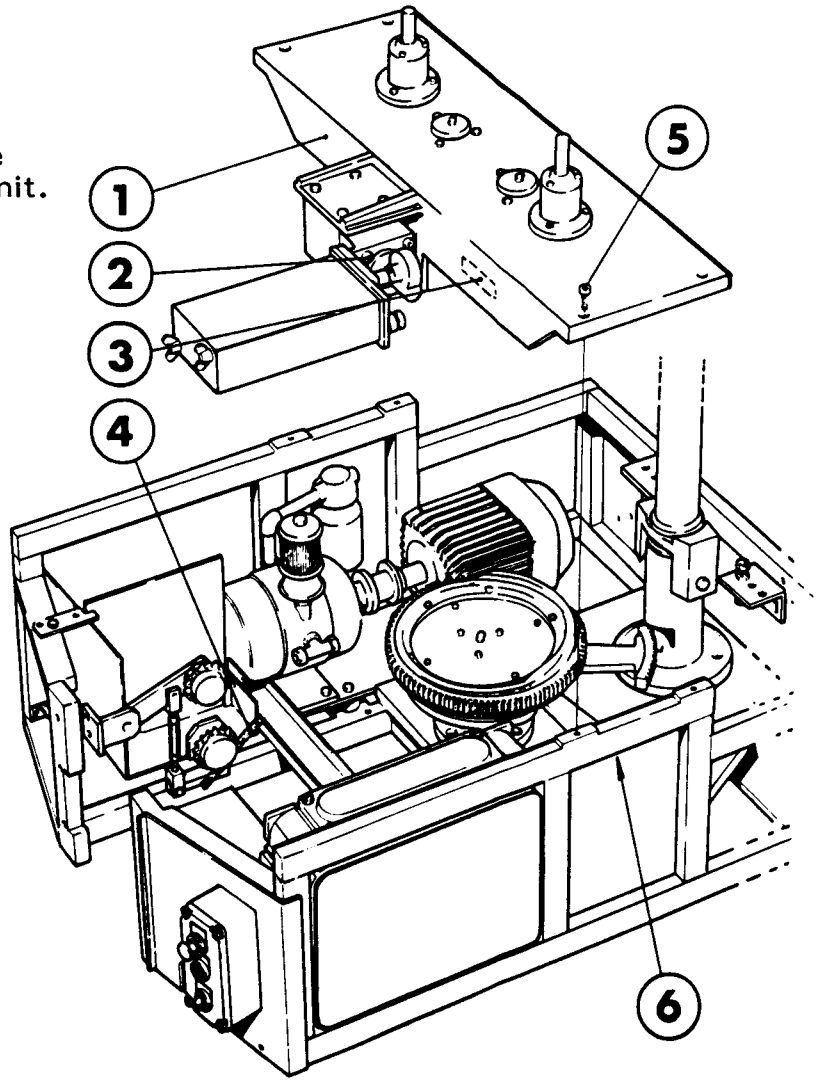

1 Drive unit
2 Screw
3 Lubrication oil hose
4 Drive chain
5 Screw
6 Screw

OVERHAUL

Remove:

- the chain (4)
- the chain wheel (3)
- the axle pin (8)

Mark the position of the bearing housings (11) and (16).
Undo the screws (10) and detach the bearing housings from the maltese crosses (9) and (15).
Remove the disengagement arm (6).
Undo the screws (5) and (1) and lift off the mounting plate (2).
Mark the gear wheels against each other, for correct reassembly.
Lift up the maltese drives (12) and (14).
Overhaul the maltese crosses, page 866-31, and the maltese drives, page 867-31.
Check for wear and damage; replace as required.
For assembly of the overhauled unit, see overleaf.

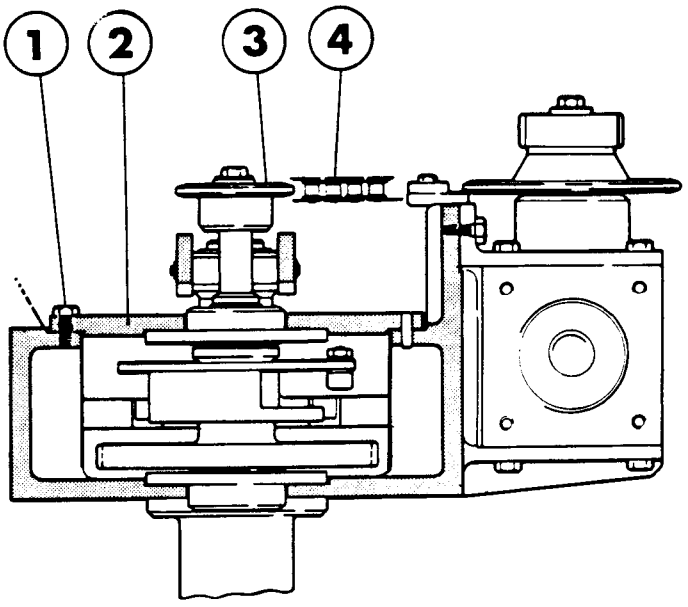

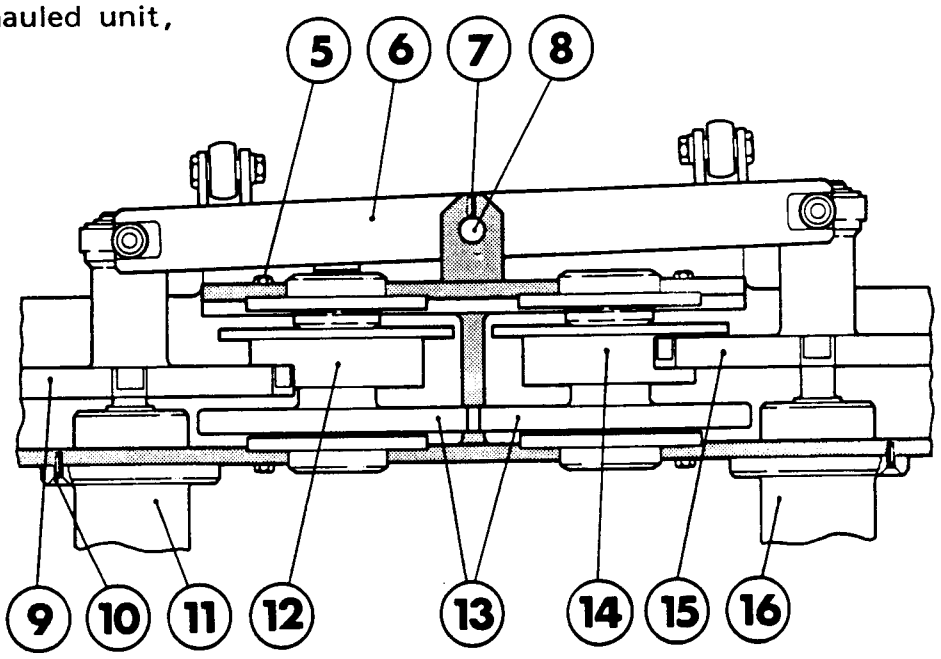

1 Screw
2 Mounting plate
3 Chain wheel
4 Chain
5 Screw
6 Disengagement arm
7 Grub screw
8 Axle pin
9 Maltese cross
10 Screw
11 Bearing housing
12 Maltese drive
13 Gear wheel
14 Maltese drive
15 Maltese cross
16 Bearing housing

ASSEMBLY

a) Fit the maltese drives (12) (14) in the drive unit. Use the marks on the gear wheels to find the right position.

   Rotate the gear wheels and check that the cam rollers (17) line up exactly opposite each other, fig 1.

b) Fit the maltese crosses and disengagement arm.

c) Turn the maltese crosses to the position shown in fig 2.

d) Fit the other parts.

Place the drive unit on the machine frame and set it according to page 864-51.

12 Maltese drive
14 Maltese drive
17 Cam roller

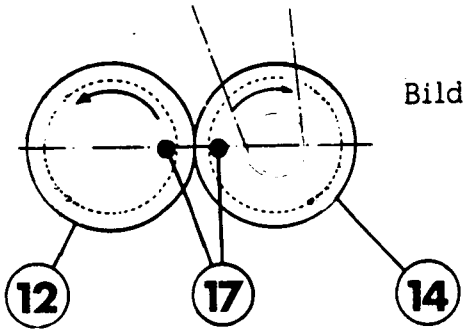

Bild 1

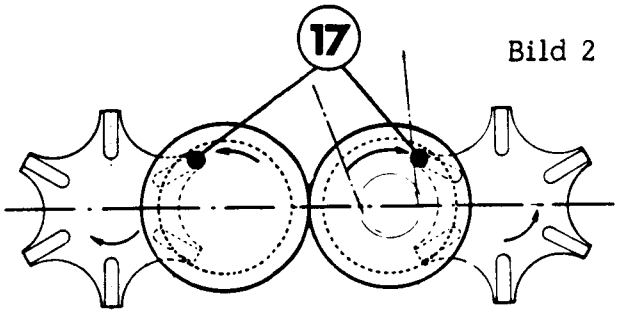

Bild 2

SETTING

Position the drive unit in the machine frame without meshing the gear wheels of the bevel gear and the cam assembly.

Check that the maltese crosses are positioned as shown in fig. 1.

Check that the programme unit scale shows 0°. Fit the programme unit on the bevel gear.

Turn the cam assembly to the position shown in fig. 2 (the 15 mm measurement).

Push the drive unit in place and tighten the mounting screws.

Fit the drive chain with the machine in zero-position (0°).

Fit the remaining parts.

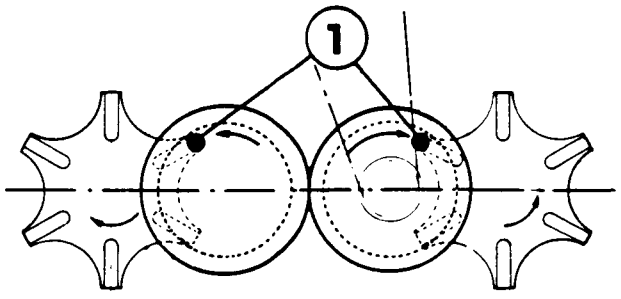

Fig 1

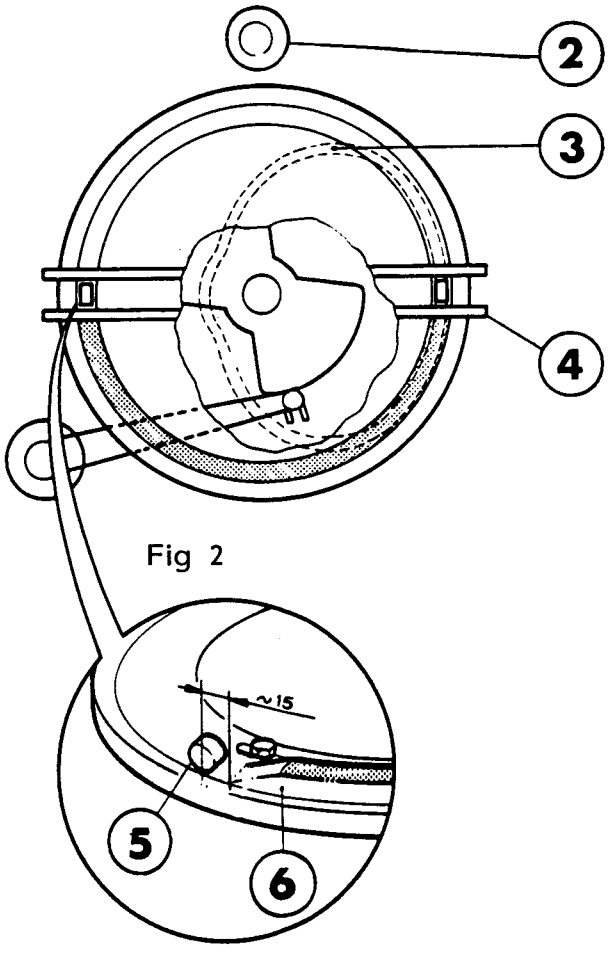

Fig 2

1 Cam roller (maltese drive)
2 Gear wheel (bevel gear)
3 Track in rotation cam
4 Disengagement arm
5 Cam roller (disengagement arm)
6 Disengagement cam

CHECKING

Check that there is no play in the cam rollers (1).
If required, replace the bearing (2).

1 Cam roller
2 Bearing

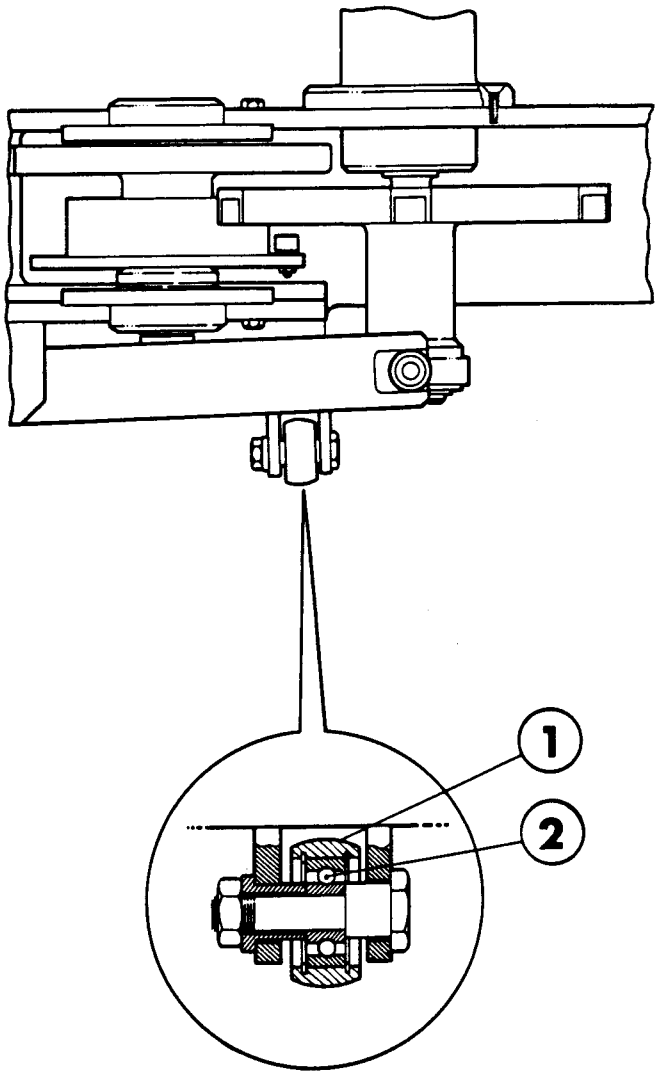

OVERHAUL

Remove:

- the bearing cover (1)
- the circlip (2) and tap out the shaft (7)
- the circlip (6) and tap out the bearings (4) and (3) and the seal ring (5)
- the circlip (11) and pull off the washer (10) and carrier (9).
- the bearing (12)

FOOTNOTE! By exchange of shaft (7) or maltese cross (8), these two parts must be changed together.

1 Bearing cover
2 Circlip
3 Bearing
4 Bearing
5 Seal ring
6 Circlip
7 Shaft (in pairs please)
8 Maltese cross
9 Carrier
10 Washer
11 Circlip
12 Bearing

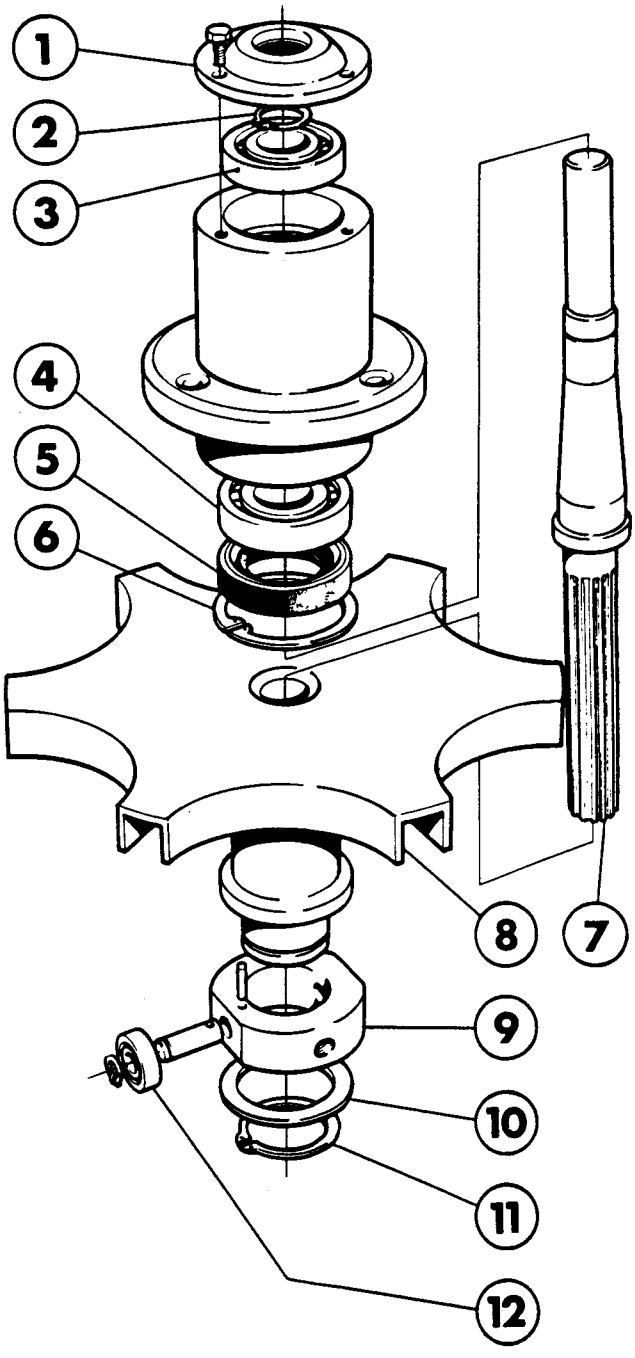

OVERHAUL

Remove:

- the bearing covers (1) and cup springs (2)
- the bearings (3)
- the seal rings (5) and (6).

Loosen the grub screw (8) and tap out the shaft (4).

Replace worn or damaged parts.

On assembly the cup springs are to be positioned as shown in fig.

1 Bearing cover
2 Cup spring
3 Bearing
4 Shaft
5 Seal ring
6 Gear wheel
7 Cam roller
8 Grub screw
9 Seal ring

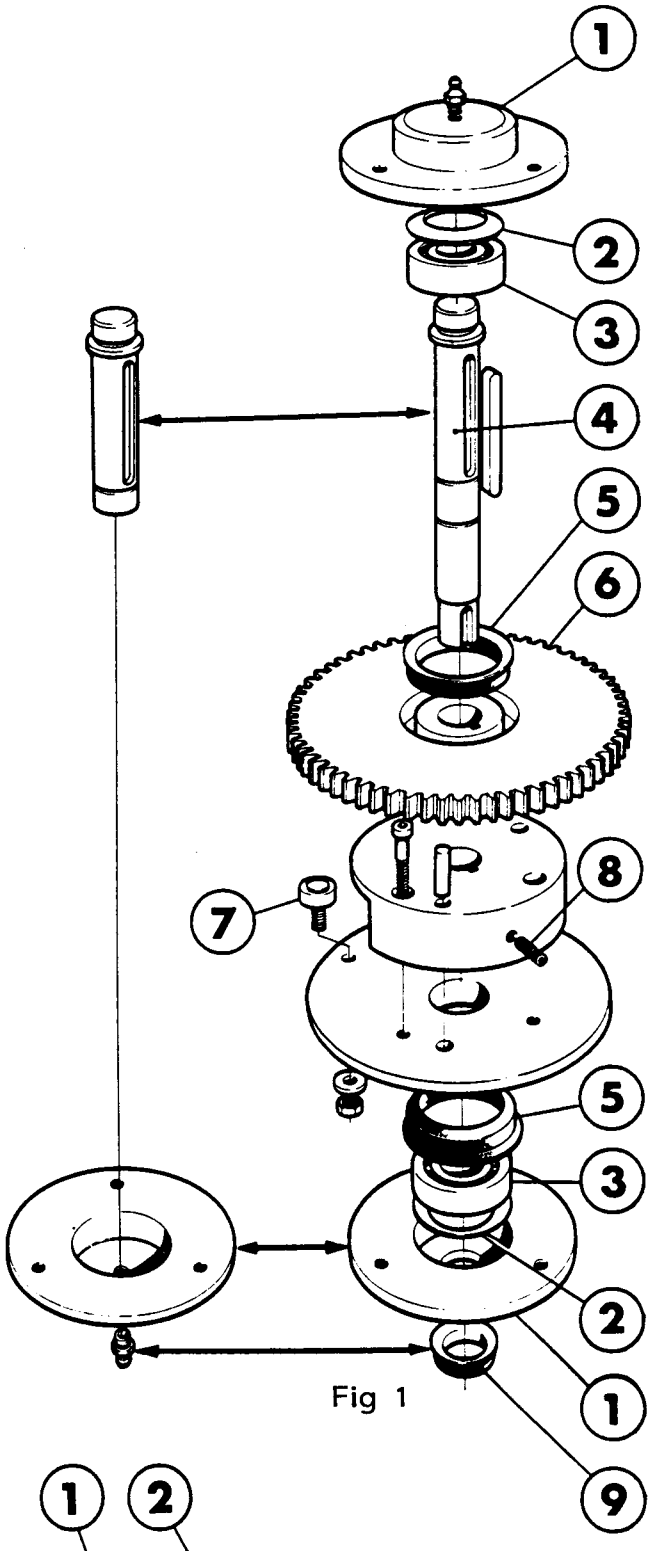

Fig 1

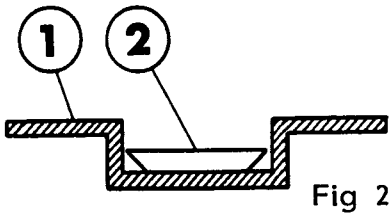

Fig 2

2/MS 867-31
210

REPLACEMENT

Undo the screws (3) and pull the bearing housing (2) off the axle pin shaft.

Remove the maltese cross (4) from disengagement arm.

Replace the cam roller (1).

Reassemble in reverse order

1 Cam roller
2 Bearing housing
3 Screw
4 Maltese cross
5 Disengagement arm

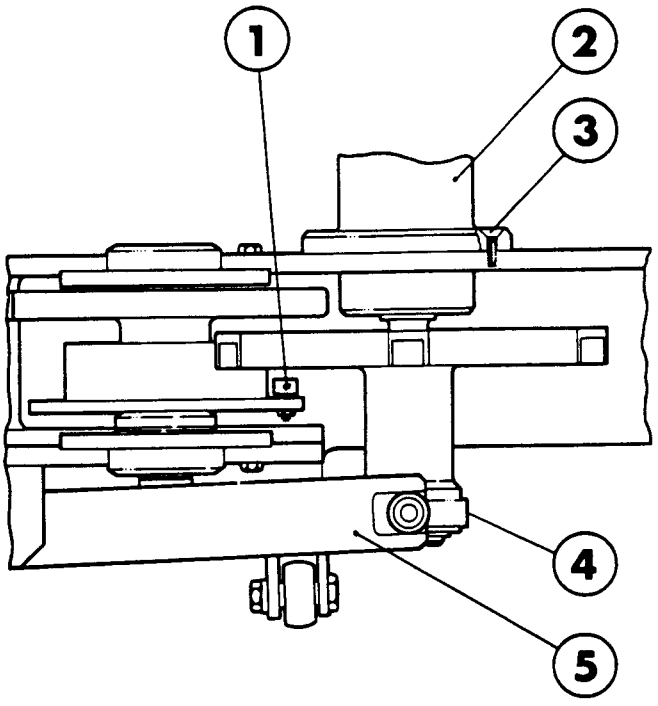

CHECKING

Slacken the chain tensioner (1).

Check that there is no play in the sprockets (2) and (3).

If there is play, replace the bearings.

Tension the chain.

1 Chain tensioner
2 Sprocket
3 Sprocket

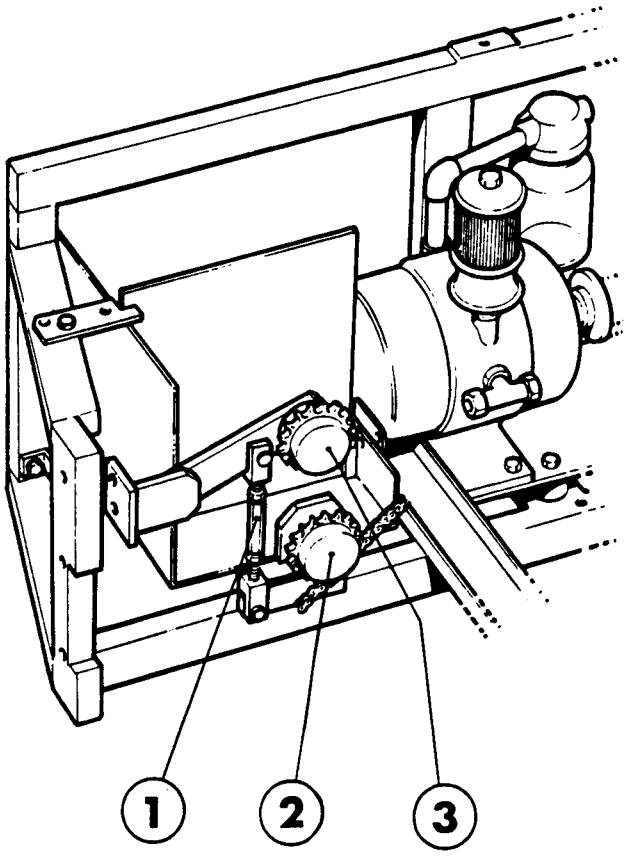

CHECKING/LUBRICATION

Remove the cover (1).

Check that the bushings are not worn. If required, replace the bushings.

Apply a couple of oil drops to the bushings (2).

Fit the cover.

1 Cover
2 Bushing

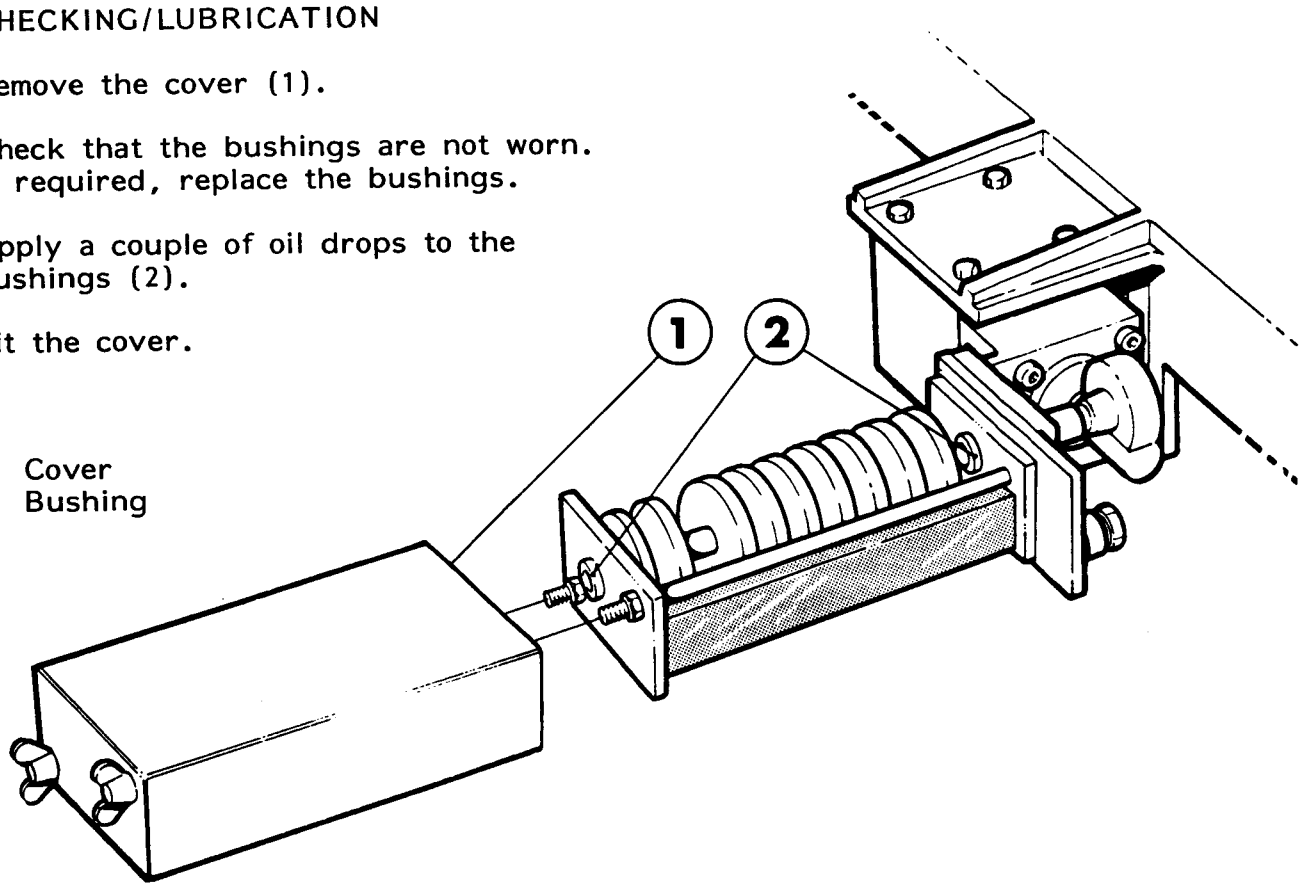

SETTING

The degree figures indicate when the microswitches engage or disengage (a click is heard).

Micro switch	Function	Disengages cam at:	Engages cam at:
V1	Suction cup head, LH suction	72°	
V2	" " " , RH suction	11°	
V3	" " " , LH release	43°	
V4	" " " , RH release	102°	
V5	Suction unit, LH	*227°	* 37°
V6	" " , RH	* 50°	107°
V7	Package switch point	55°	113°
V8	Pneumatic synchronization	19°	
V12	Synchronization conveyor belt	13°	
V14	Synchronization	155°	

*The long cam

CHECKING

Check:

- that there is no play in the coupling (4).
  If there is a play, loosen the grub screws (3) and tighten the coupling halves.

- that the oil level in the reservoir drops appr. 9 mm after 10 h production.
  If less or more oil is consumed, dismantle and overhaul the lubricator, see page 872-11.

- that the pump during production does not make a clattering or scraping noise.
  If that is so, dismantle the pump for cleaning and checking, see page 871-31.

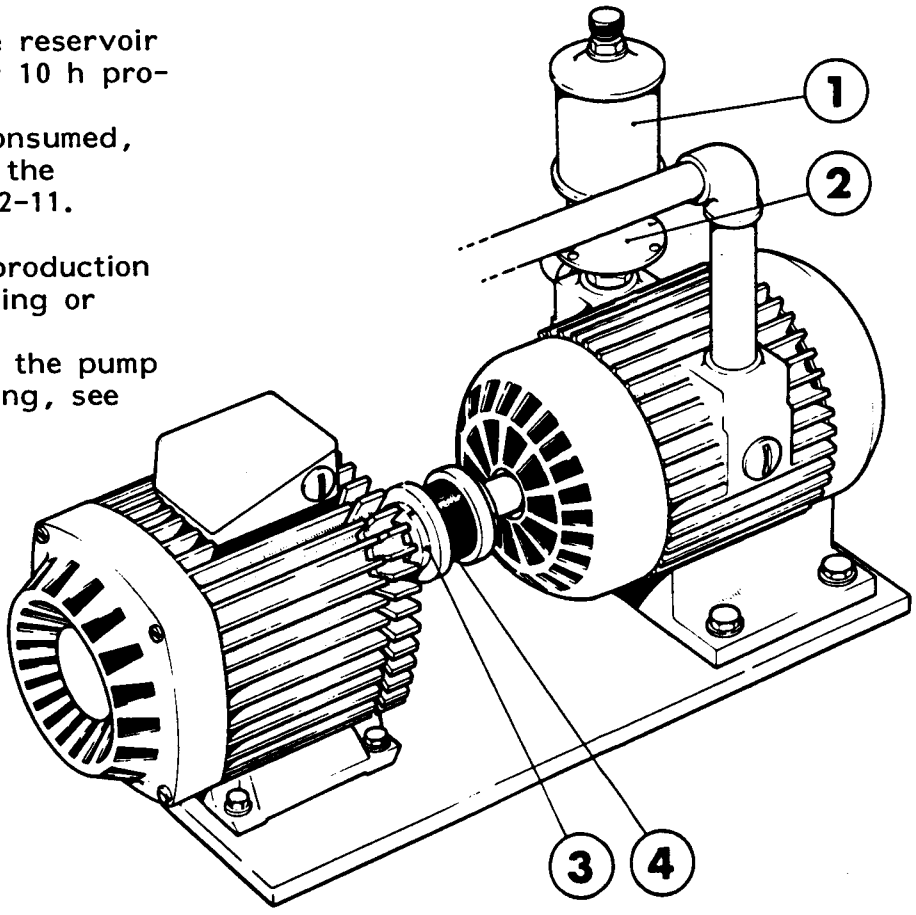

1 Oil reservoir
2 Lubricator
3 Grub screw
4 Coupling

REMOVAL

Remove:

- the glass container (4)
- the outlet filter (5)
- the vacuum hose (3)
- the oil reservoir (2)
- the four screws (6)

Remove the vacuum pump.

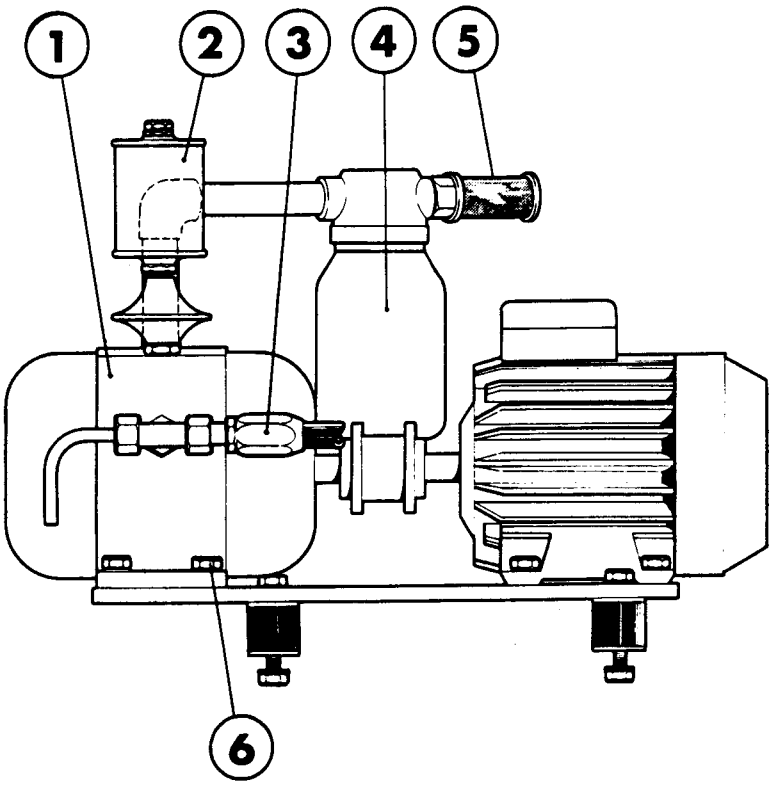

1 Vacuum pump
2 Oil reservoir
3 Vacuum hose
4 Glass reservoir
5 Outlet filter
6 Screw

OVERHAUL

Remove:

- the fan cover (7) and fan (6)
- the lubrication pipe (3)
- the bearing cover (5)
- the end plate (4), using a puller

Check that there is oil on the rotor and rotor vanes.
If not, dismantle and clean the vacuum lubricator, see page 872-11.

Remove and clean the rotor vanes (2), check that the vanes are not worn or damaged. If required, replace all the vanes.

Oil the rotor vanes and fit the profile as shown in fig. 1.

Assemble the remaining parts.

If, after assembly the pump does not move it may help to tap the shaft end with a hammer.

1 Rotor
2 Rotor vane
3 Lubrication pipe
4 End plate
5 Bearing cover
6 Fan
7 Fan cover

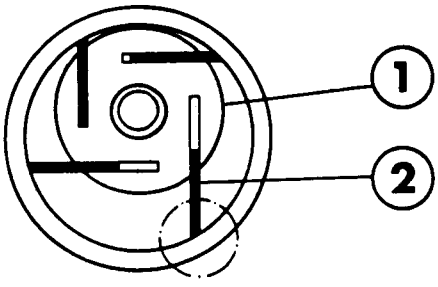

Fig 1

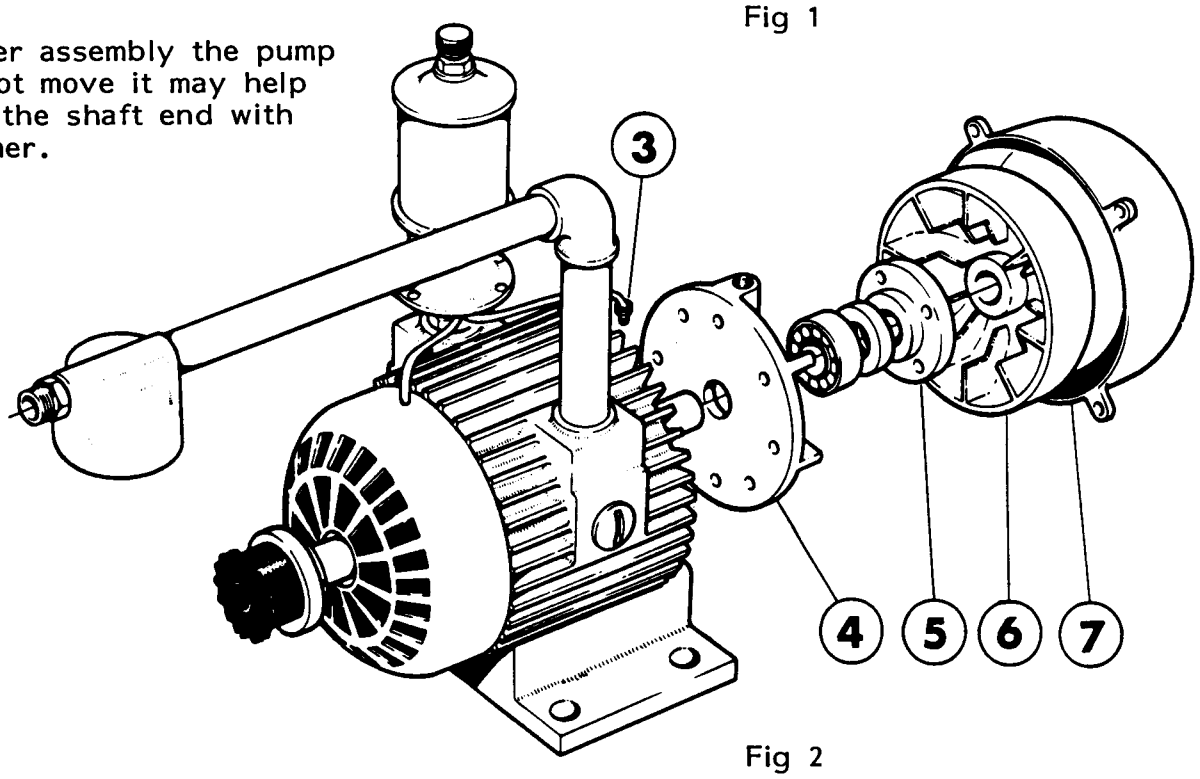

Fig 2

CLEANING

Remove the lubricator from the pump.

Dismantle the reservoir (1), clean the filter (2) and wipe off the components.

Dismantle the lubricator (3), and clean its components with solvent.

Check that no components are damaged; if required, replace the lubricator.

Check that the oil duct in the lubricator is open.

Assemble and fill with fresh oil, type C.

1 Reservoir
2 Filter
3 Lubricator

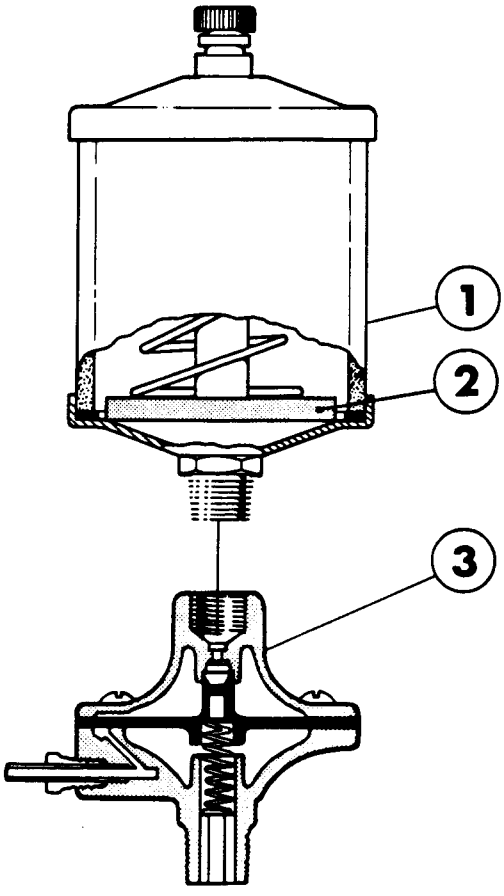

REPLACEMENT

Replace the outlet filter (2).

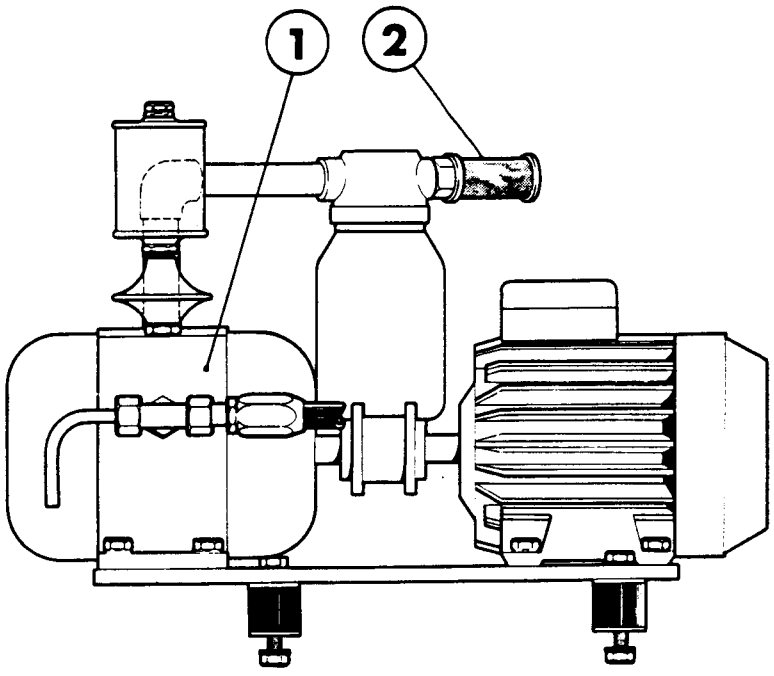

1 Vacuum pump
2 Outlet filter

CLEANING/REPLACEMENT

Unscrew:

- the glass reservoir (4)
- the filter support (3)

Clean the parts, rinse them with warm water and blow clean.

190 and 1000h-service	Clean the filt erelement (2) in Kerosene: blow it clean.
3000h-service	Replace the filter element (2).

Lubricate the seal ring (1) with silicon grease and assemble.

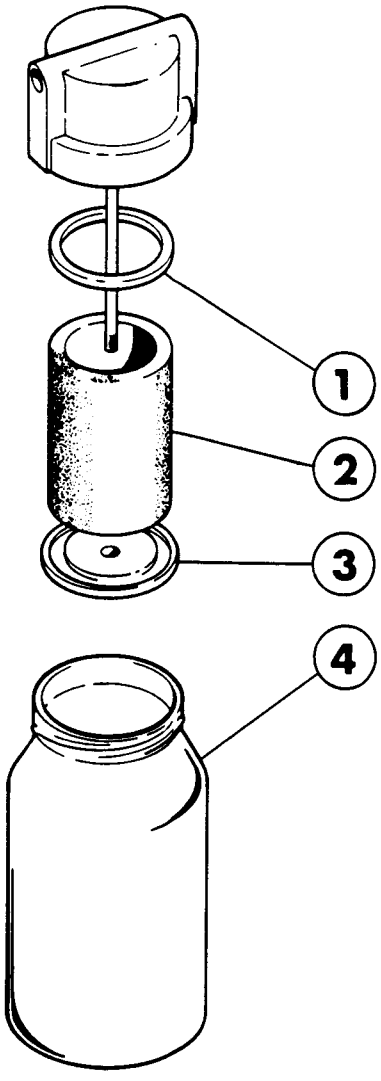

1 Seal ring
2 Filter element
3 Filter guide
4 Glass reservoir

CLEANING

Bleed the air system.

Dismantle the air filter.

Clean the reservoir (2) in hand washing up liquid.

WARNING! STRONGER AGENTS MAY DESTROY THE RESERVOIR.

Clean the filter element (1) and the other parts. Rinse with warm water and blow the filter element clear from inside.

Check that the O-rings and seals are not damaged.

On reassembly, lubricate the O-rings and seal with silicon grease.

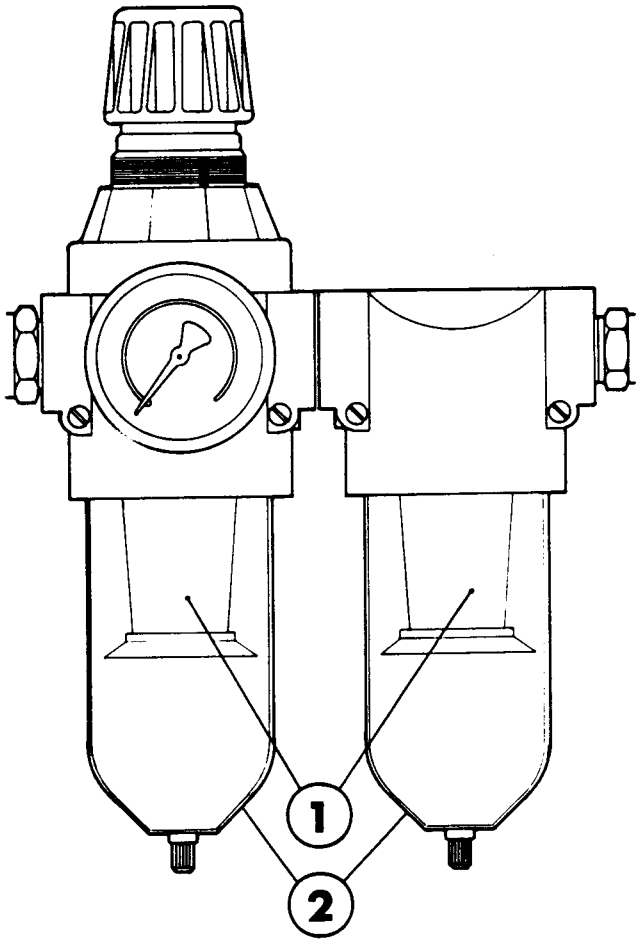

1 Filter element
2 Reservoir

CHECKING

Remove the hoses (1), (2), (3) and (4) from the connections at the holding table.

Unscrew the nut (5) and shoulder bolt (6) and lift the unit of the crate shifter.

Check all bushings in the unit to make sure that there is no excessive play and that the rollers (7) rotate freely.

On assembly remember the bearing on the bolt (6).

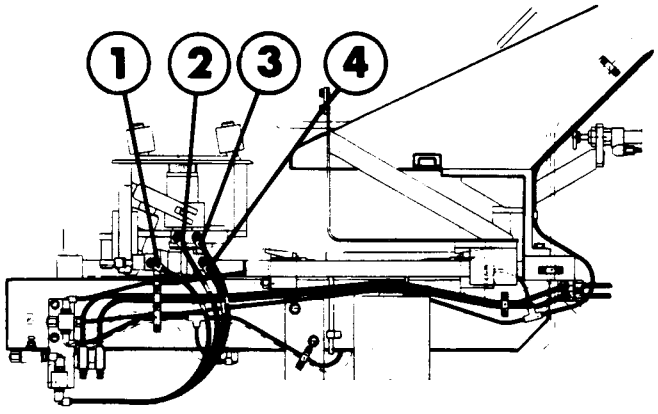

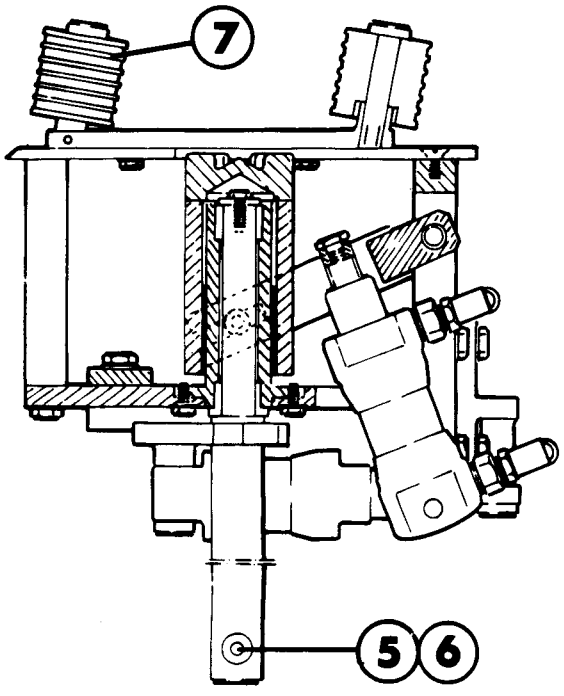

1 Hose
2 Hose
3 Hose
4 Hose
5 Nut
6 Bolt
7 Roller
8 Axle bearing
9 Nut
10 Shoulder bolt
11 Bushing
12 Ball bearing

DISMANTLING

Undo the screws (2) and remove the table (1).

Loosen, the grub screws (11), pull out the axle pins (16) and remove the cylinder (15).

Undo the screws (3). Remove the star (4), screw (17), and washer (18).

Pull out the shaft (12).

Loosen the grub screws (14) and pull out the axle (13).

Undo the screw (19) and remove the cylinder (8).

Undo the screws (10) and remove the sleeve (7).

Check and, if required, replace the bushings (5), (6), and (9).

Overhaul the cylinders (8) and (15).

1	Table	10	Screw
2	Screw	11	Grub Screw
3	Screw	12	Shaft
4	Star	13	Axle
5	Bushing	14	Grub Screw
6	Bushing	15	Cylinder
7	Sleeve	16	Axle pin (2 off)
8	Cylinder	17	Screw
9	Bushing	18	Washer
		19	Screw

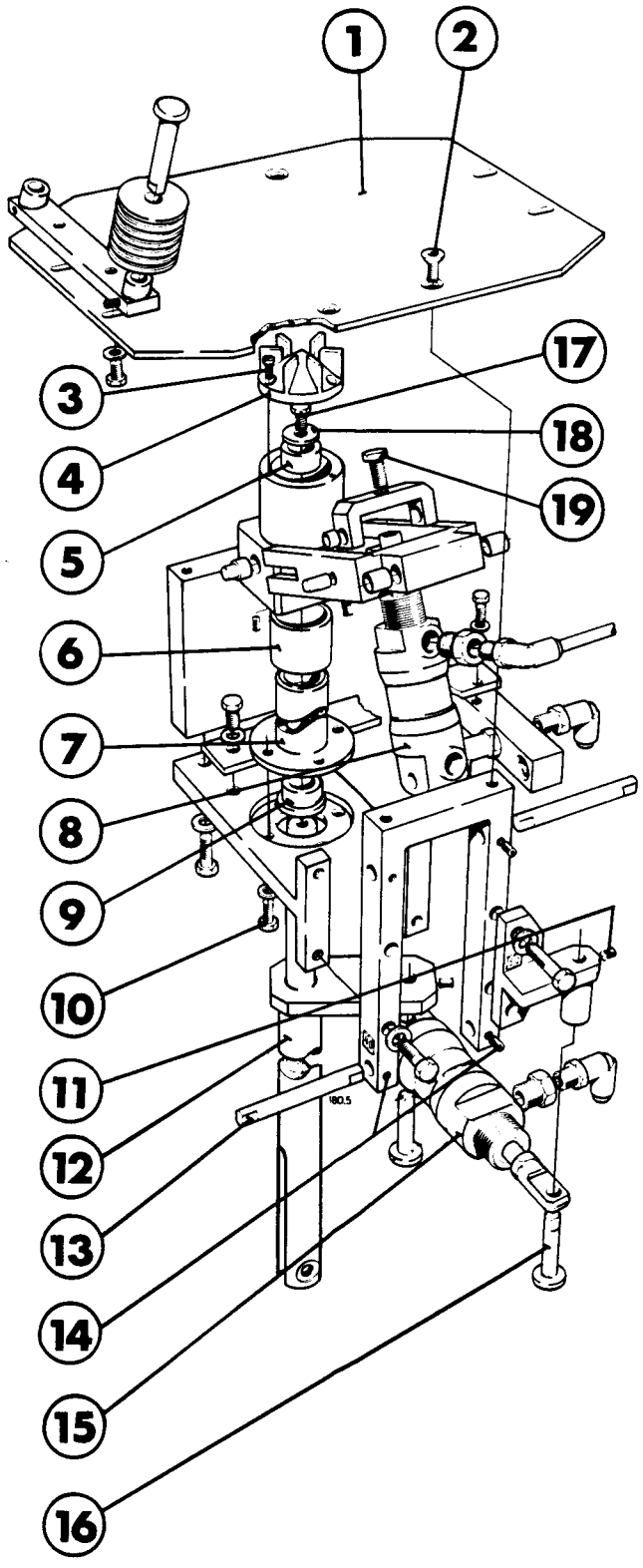

CHECKING

Remove the hoses (1), (2), and (3) from
the connections at the holding table.

Unscrew the nut (4) and bolt (5) and lift the unit off the crate shifter.

Check all bushings in the unit to make sure that there is no excessive play.

On assembly, remember and that the rollers (7) rotate freely the bearing on the bolt (5).

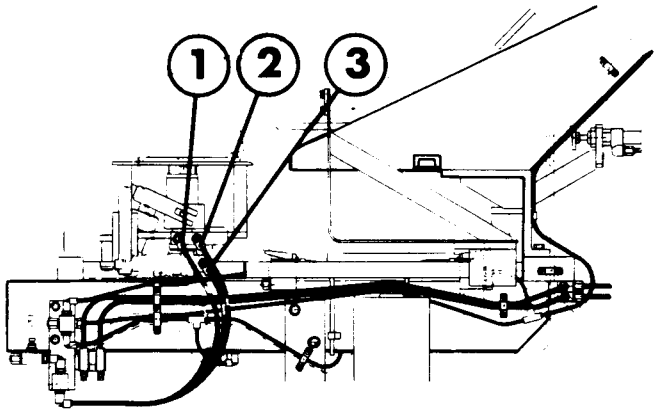

1 Hose
2 Hose
3 Hose
4 Nut
5 Bolt

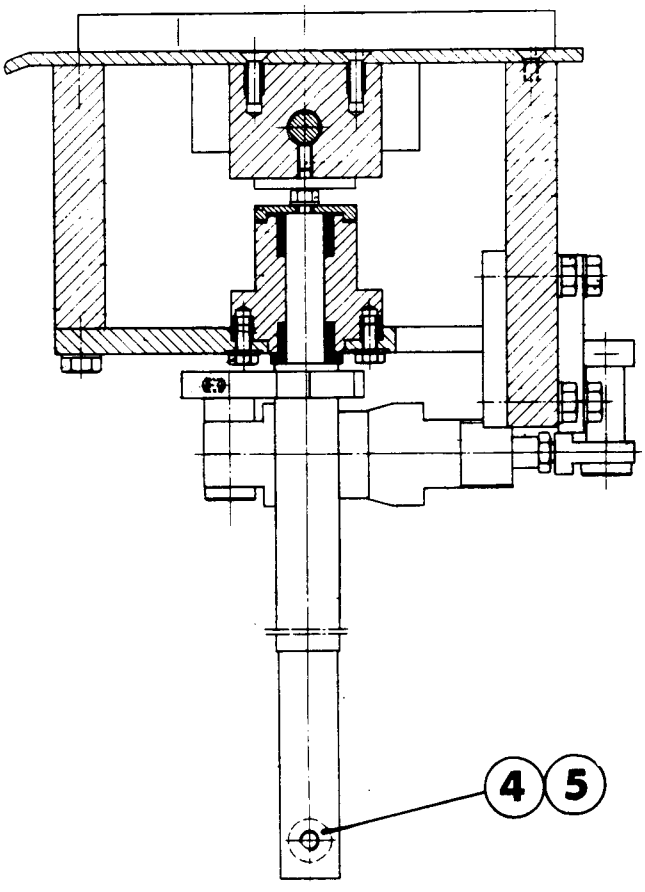

DISMANTLE

Undo the four screws (2), and lift off the table (1).

Loosen the grub screws (6) and pull out the axle pins (12). Remove the cylinder (11).

Undo the screw (3) and pull out the shaft (10).

Undo the screws (9) and remove the sleeve (7).

Check and, if required, replace the bushings (5) and (8).

Overhaul the cylinder (11).

1 Table
2 Screw
3 Screw
4 Washer
5 Bushing
6 Grub screw
7 Sleeve
8 Bushing
9 Screw
10 Shaft
11 Cylinder
12 Axle pin

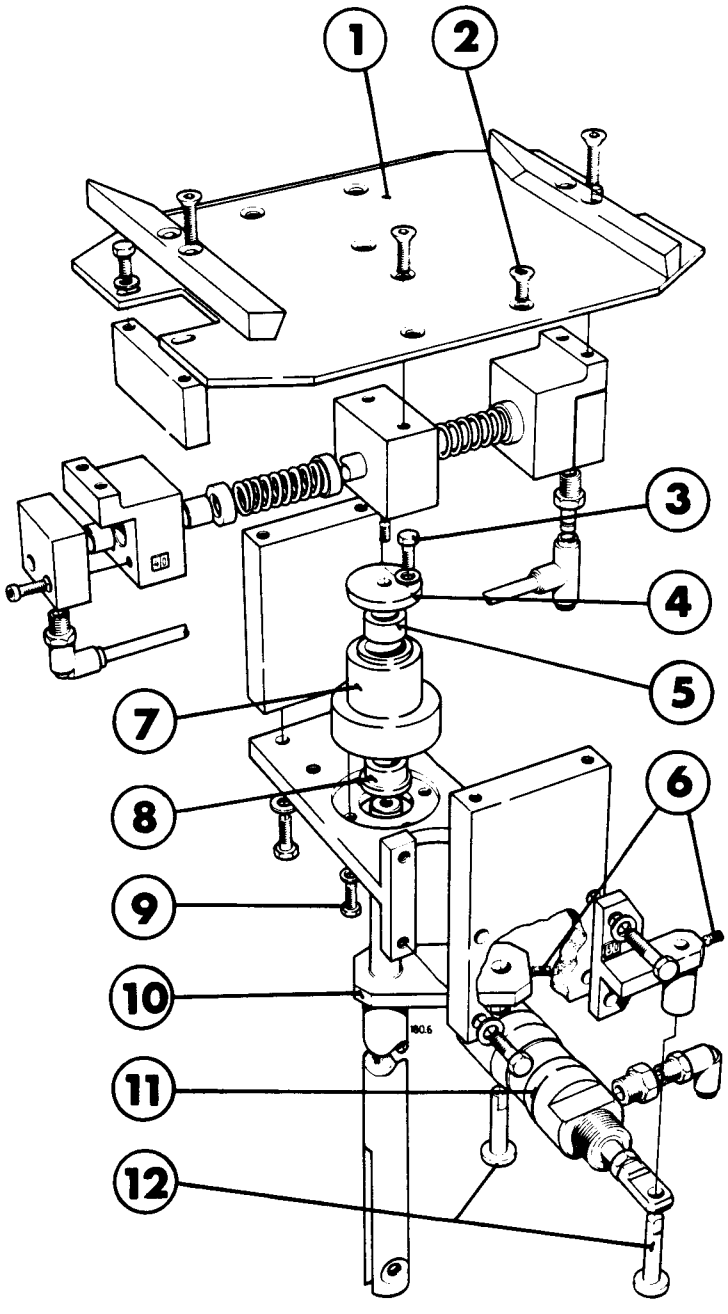

CHECKING

Remove the axle pin (1), nut (2), and bolt (3).

Check the bushing (4) and bolts (3) and (6) for excessive wear.

Check and, if required, replace the ball bearing (5).

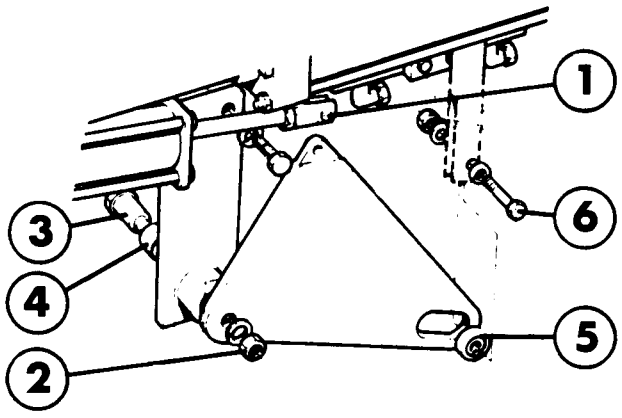

1 Axle pin
2 Nut
3 Bolt
4 Bushing
5 Ball bearing
6 Bolt

CHECKING

Check the position of the holding table to the magazine. The table should be about 2 mm below the packer base. If not adjust, the piston rod end on cylinder "3.0".
Put cylinder "1.0" in its minus position and place a package in the centre of the holding table. Adjust the support (1) to stop the package.
Put cylinder "1.01" in its plus position and adjust the cylinder holder (2) so that the package is held between the holder (2) and support (1).
Check the limit switches (4),(5),(6), and (7) to make sure that they are activated by the respective machine elements in their end positions. If not, loosen the mounting screws of the switches and positions.

Cont'd overleaf

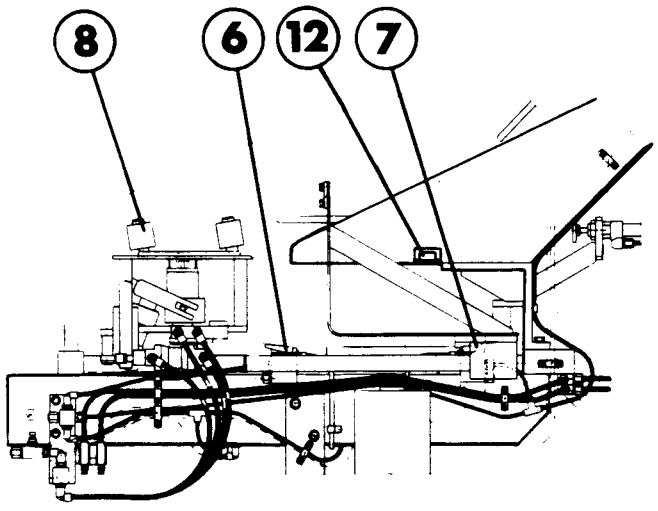

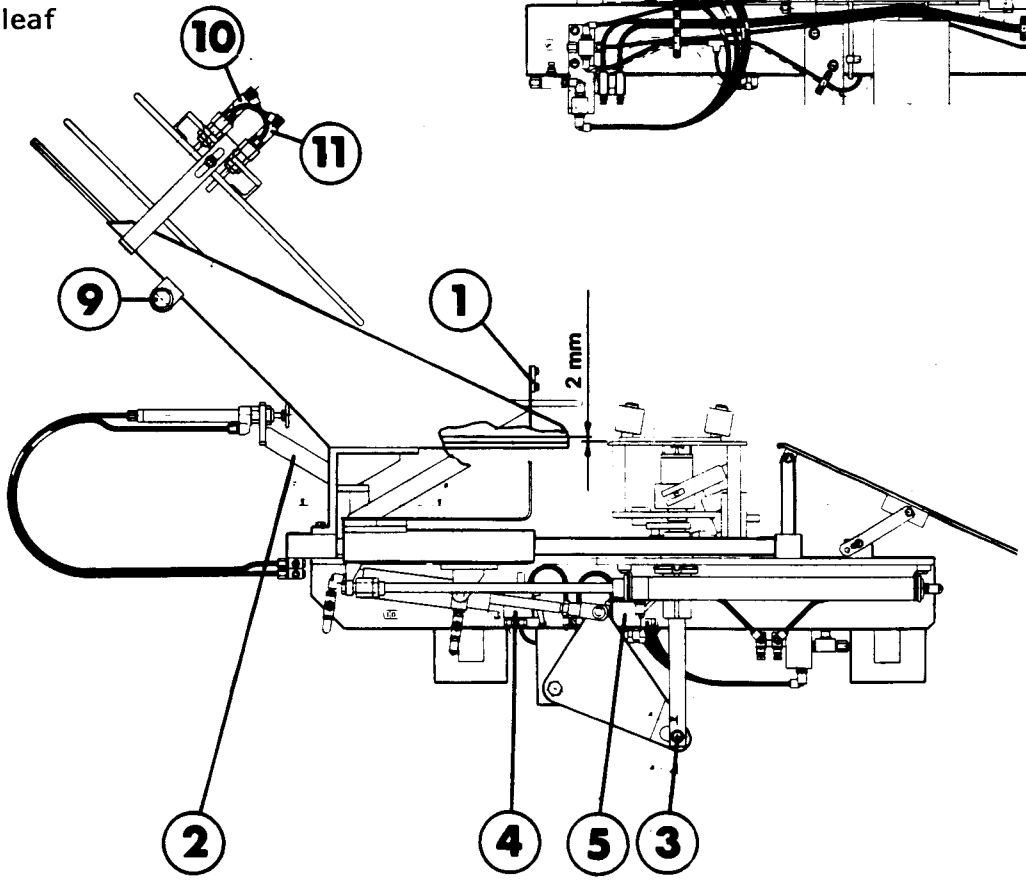

2/MS 879-11:1
227

Cont'd from previous page

Adjust the rollers (8) so that the package is forced down into the centre of the holding table.

Raise the holding table into its top position and check that it is returned to its initial position by its own weight.
If not, adjust by loosening screw (3).

Turn on air and push button (9) for checking of the correct operation of the cylinders (10) and (11).

Actuate the switch (12) with tape and turn the switch on the guard rail to position "1". Start the machine.

If required, adjust the check valve for smooth cylinder movements.

1	Support	7	Limit switch
2	Cylinder holder	8	Roller
3	Screw	9	Push button
4	Limit switch	10	Cylinder
5	Limit switch	11	Cylinder
6	Limit switch	12	Switch

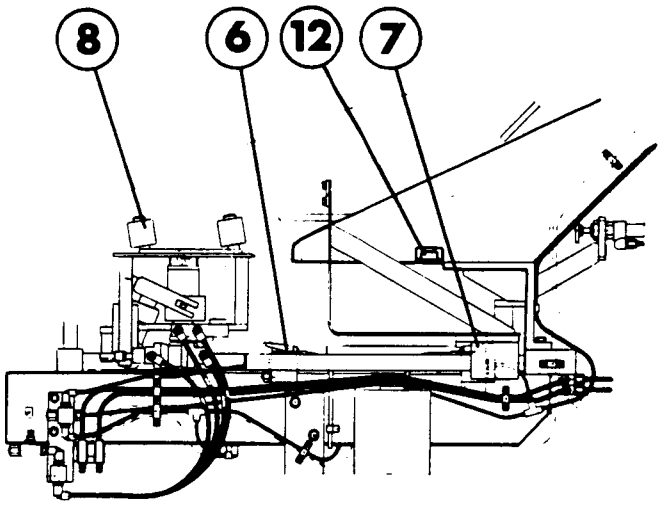

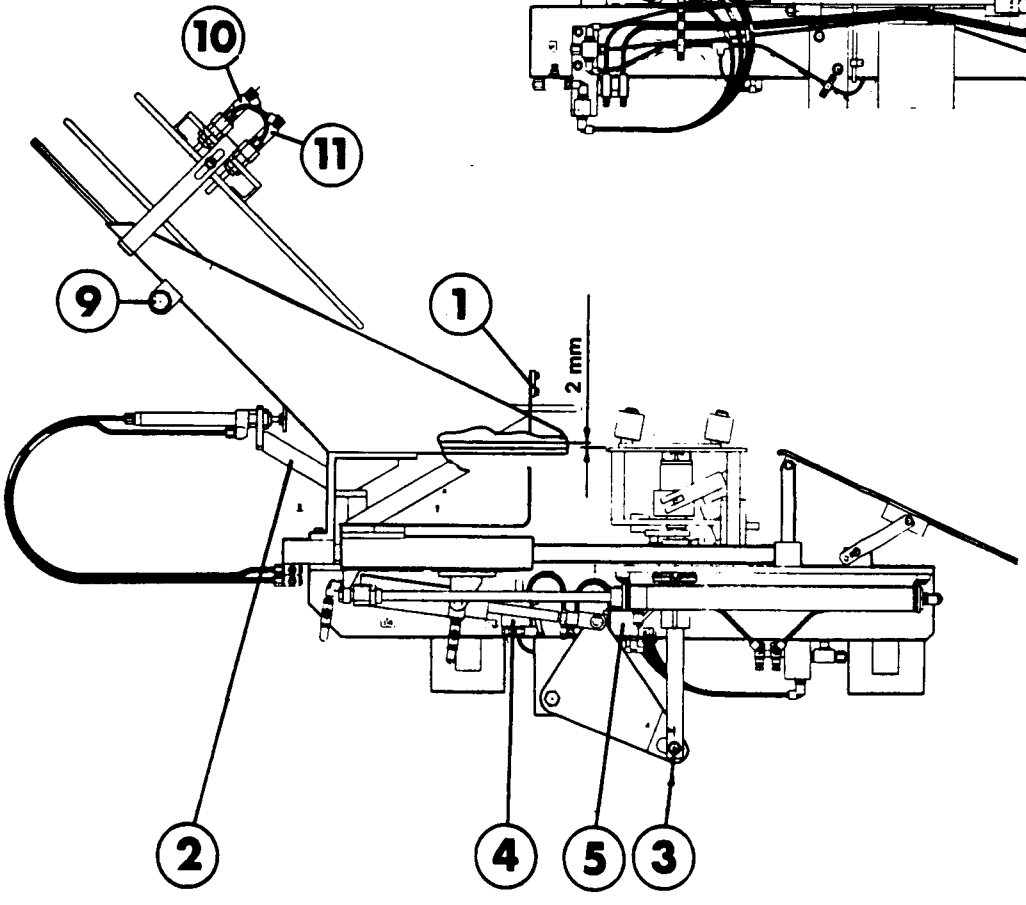

CHECKING

Check:

- wear of the bushings (2) and (3); replace as required.
- that the seal (1) is intact.
- that the play between the axle (7) and the sliding plate (6) is 0.2 - 0.5 mm; if required, loosen the screw (4) and adjust by means of the screws (5).

1 Seal ring
2 Bushing
3 Bushing
4 Screw
5 Screw
6 Sliding plate
7 Axle

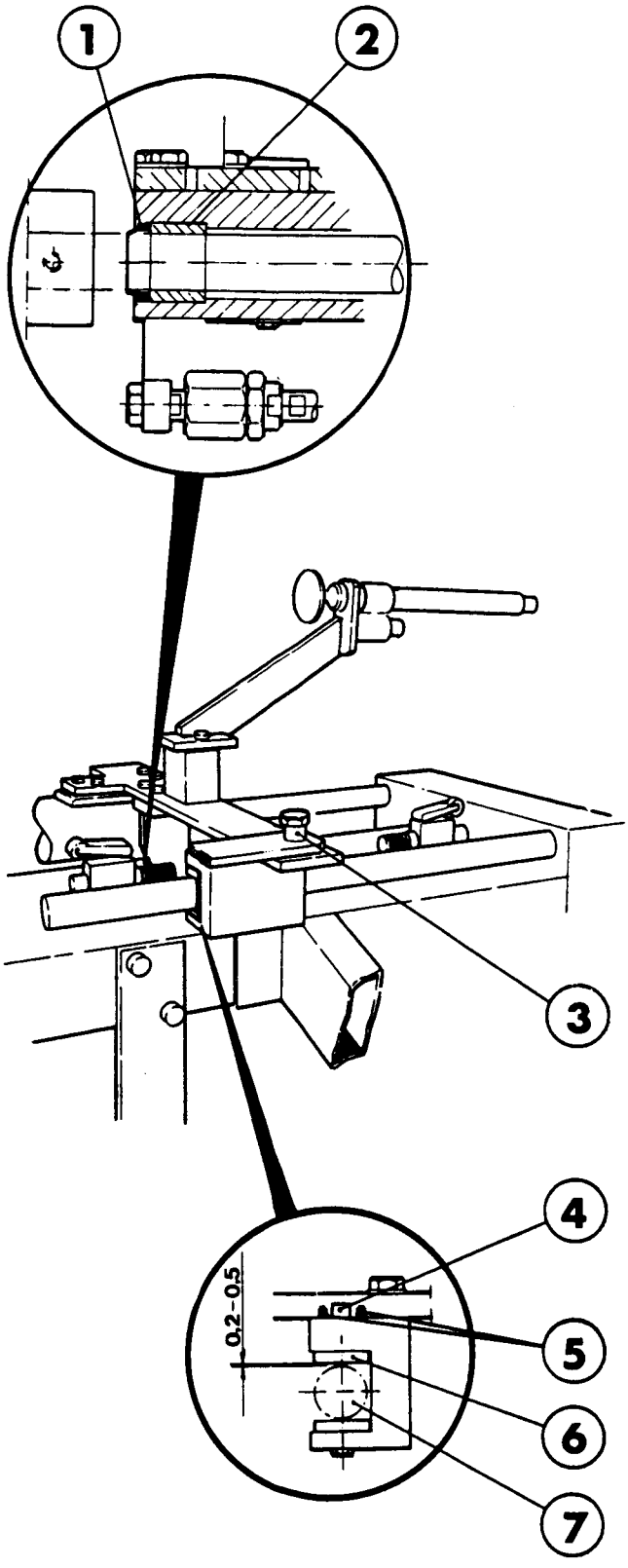

REMOVAL

Disconnect the hoses unit air of the unit (2.1-4.1-5.1-1.1-3.1-6.1-7.1-8.1-3.2-1.3-2.2-4.3-3.3-P) see diagram on page 883-11. Undo the screw (1). Open the cover (2).

Lift the unit out of the frame.

CHECKING

Drain any condensate water from the filter bowls and check that the pressure setting is correct, 0.5 MPa.

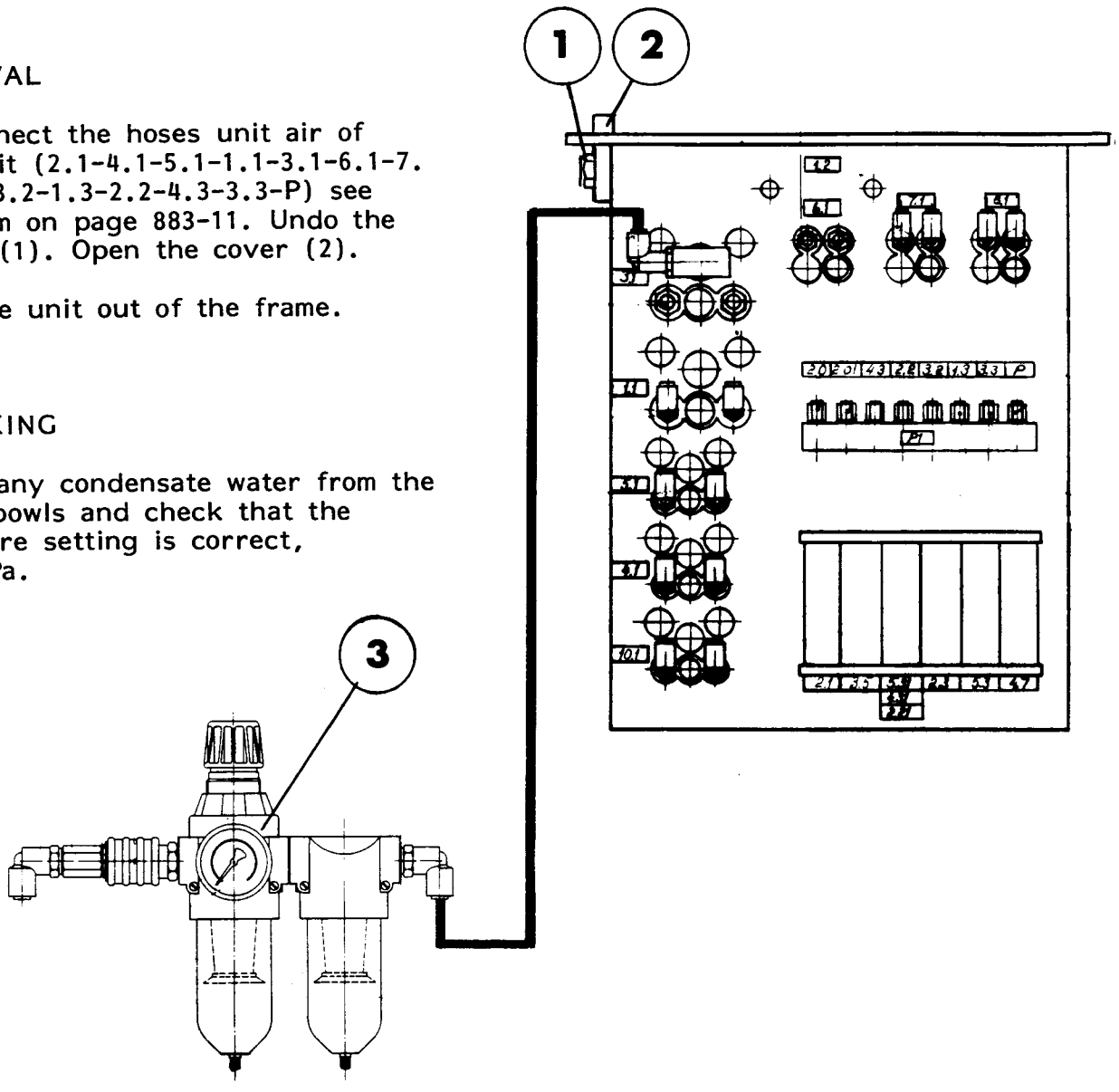

1 Screw
2 Cover
3 Filter regulator

REMOVAL

Unscrew the connection (3) to the vacuum pump, the connection (4) and the connection (2) to the suction cups.

Undo the screws (1) and (5) and take the unit out of the frame.

1 Screw
2 Connection
3 Connection
4 Connection
5 Screw
6 Filter regulator

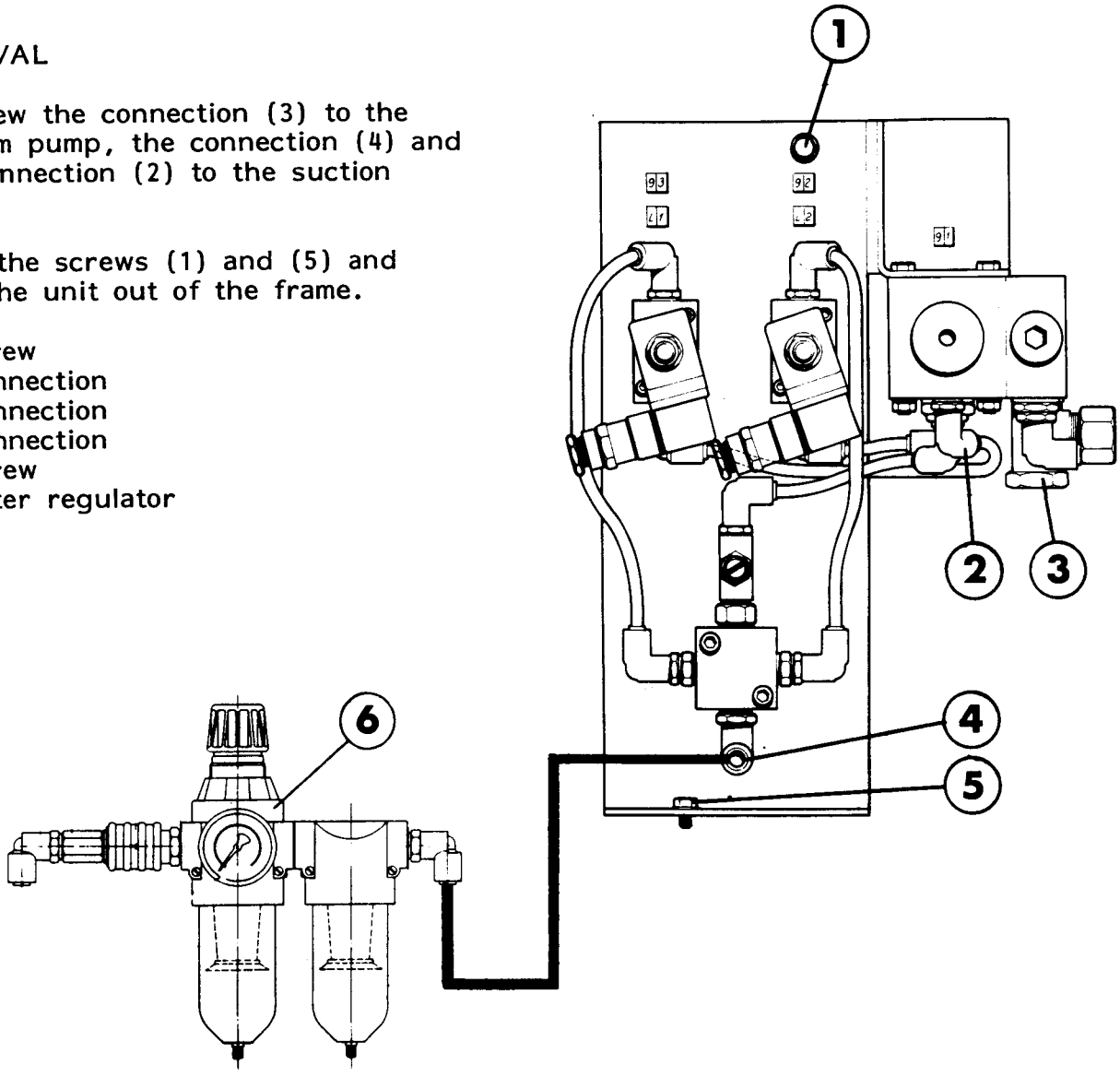

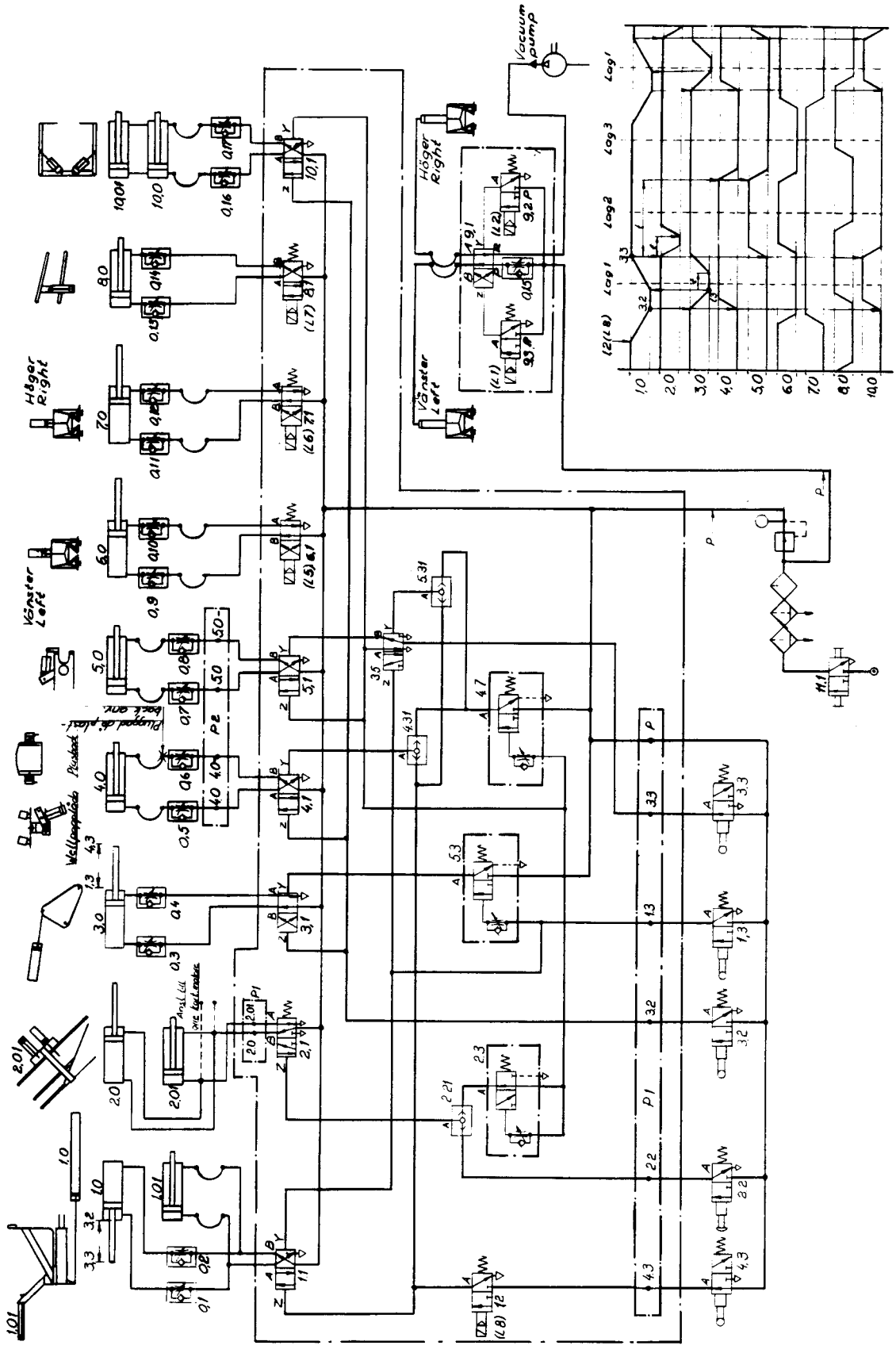

2/MS 883-11
232

DESCRIPTION	PAGE
SA4, bending rollers and bearings - checking	910-11
SA4, teflon hose sleeve, pressure and bending rollers - overhaul	915-31
SA4, element group - checking	920-11
SA4, element group - setting	920-51
SA4, pressure gauge assembly - checking	925-11
SA4, paper guide - checking	930-11
SA4, guide for paper web - checking	940-11
SA4, dating unit - overhaul/cleaning	950-31
SA4, dating unit - setting	950-51

CHECKING

Check that the bending rollers (1) rotate freely in their bearings and that the roller axle pins (2) have not been damaged.

Check the bearings of the bending rollers.

Replace any damaged or worn bearings (3). The radial play between axel and bearing must not exceed 1 mm.

Check the axial play of the bending rollers. If required, adjust by means of shims (4).

Check that the teflon hose sleeve (5) on the rollers has not been damaged. If required, replace the teflon hose according to page 915-31.

1 Bending roller
2 Axle pin
3 Bearing
4 Shim TP No 13401
5 Teflon hose sleeve

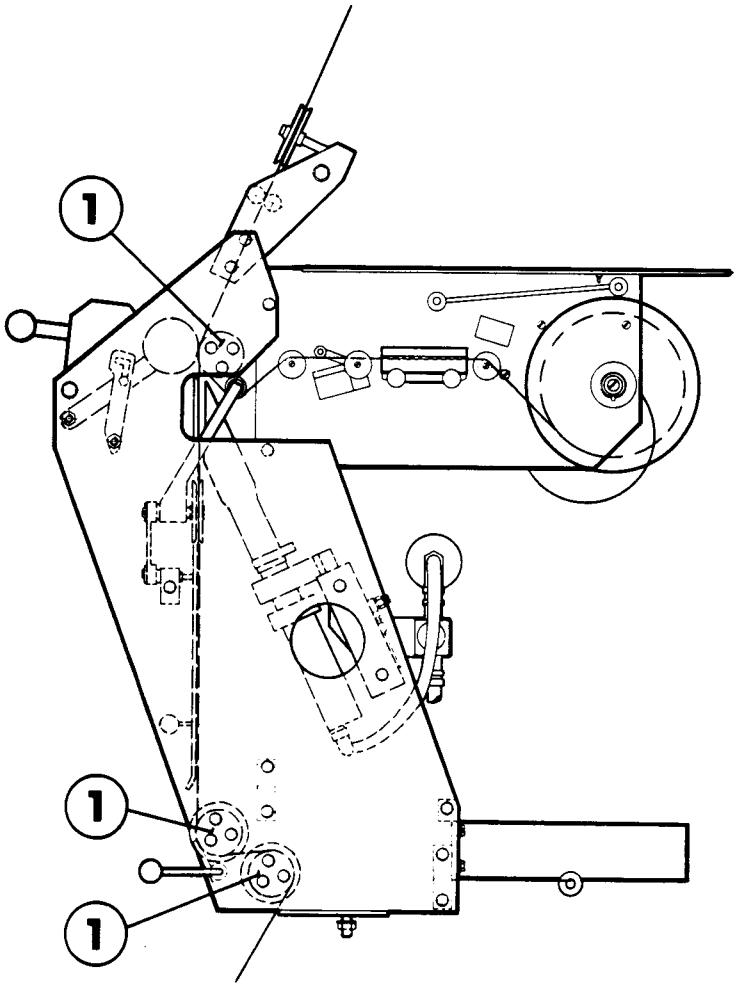

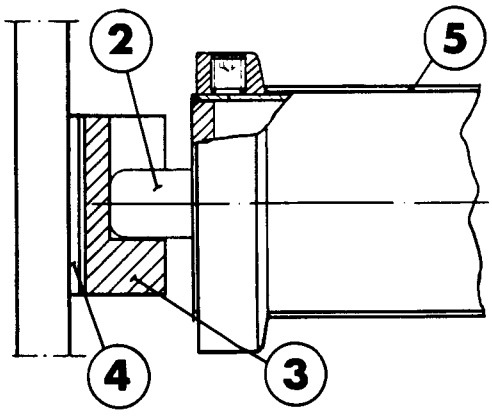

1/MS 910-11
234

OVERHAUL

Use a hot air gun (or oven). Clean the roller to remove grease and other residue.

Put the roller on an axle so that it can revolve, for instance in a lathe.

Cut off a section of shrink-on hose; it should be 5 mm longer than the width of the roller.

If required, clean the inside of the hose with a lint-free cloth.

Slip the hose over the roller and rotate the hose and roller as evenly as possible.

Direct the jet from the hot air gun towards the middle of the roller at a range of 50-80 mm.

Heat this area until the hose shrinks to hug the roller firmly. Reduce the range to approximately 25 mm and then move the air gun outwards to first one and then the other edge, ensuring that the free sections of hose (fig 2) are shrunk to the roller diameter.

After completed shrinking, cut off the protruding bit of hose but leave it 1 mm wider than the roller on either side.

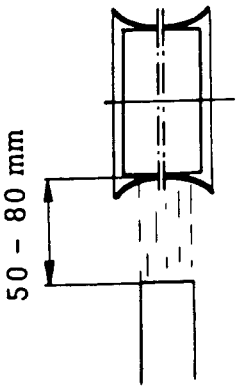

Fig 1

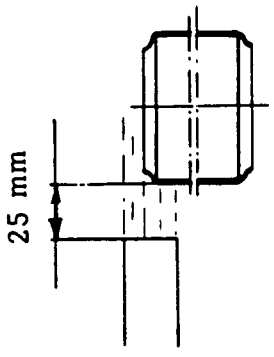

Fig 2

CHECKING

Turn off the air on the superstructure of the machine. Check by hand that the element moves freely on its guides (1).

Check the air hoses (2) and (3).

Make sure that the nozzle holes are not blocked. Scrape off any plastic deposits.

Check the heat shield (5) and replace it, if required.

Turn on the air and check the movement of the cylinder. Adjust the throttles (6) until the movements are smooth and even.

1 Guide
2 Air hose
3 Air hose
4 Nozzle
5 Heat shield
6 Throttle

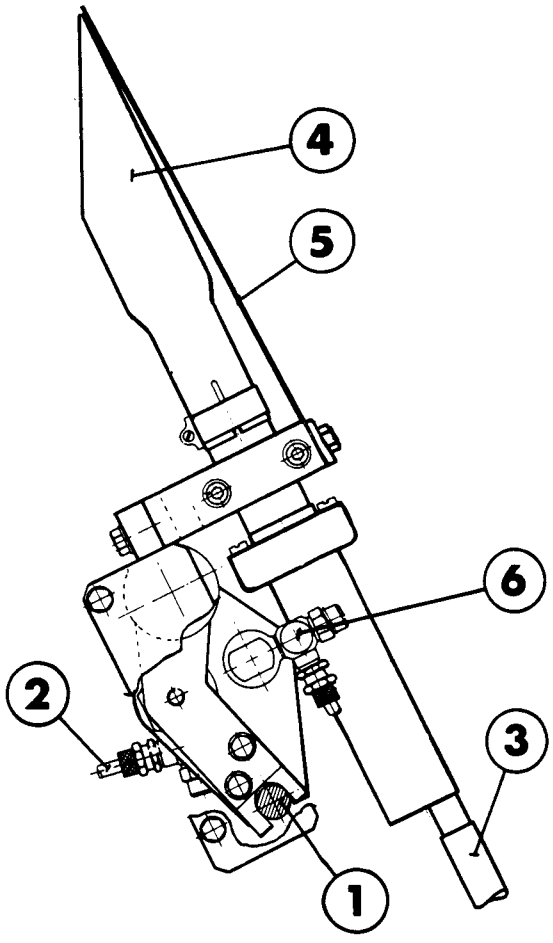

SETTING

The sideways position of the element can be coarsely adjusted by loosening the screw (1) and shifting the yoke (2), or by shifting the holder in its bracket. Final adjustment is made by means of the nut (3).

The LS strip element is to be positioned so that the outer row of holes is in line with the paper edge.

By loosening the screws (4), gap A between the element and the paper web can be adjusted, By loosening the screws (5) and turning the yoke (6), the element can be adjusted so that it is parallel with the paper web.

Gap A should be 2 mm.

1 Screw
2 Yoke
3 Nut
4 Screw
5 Screw

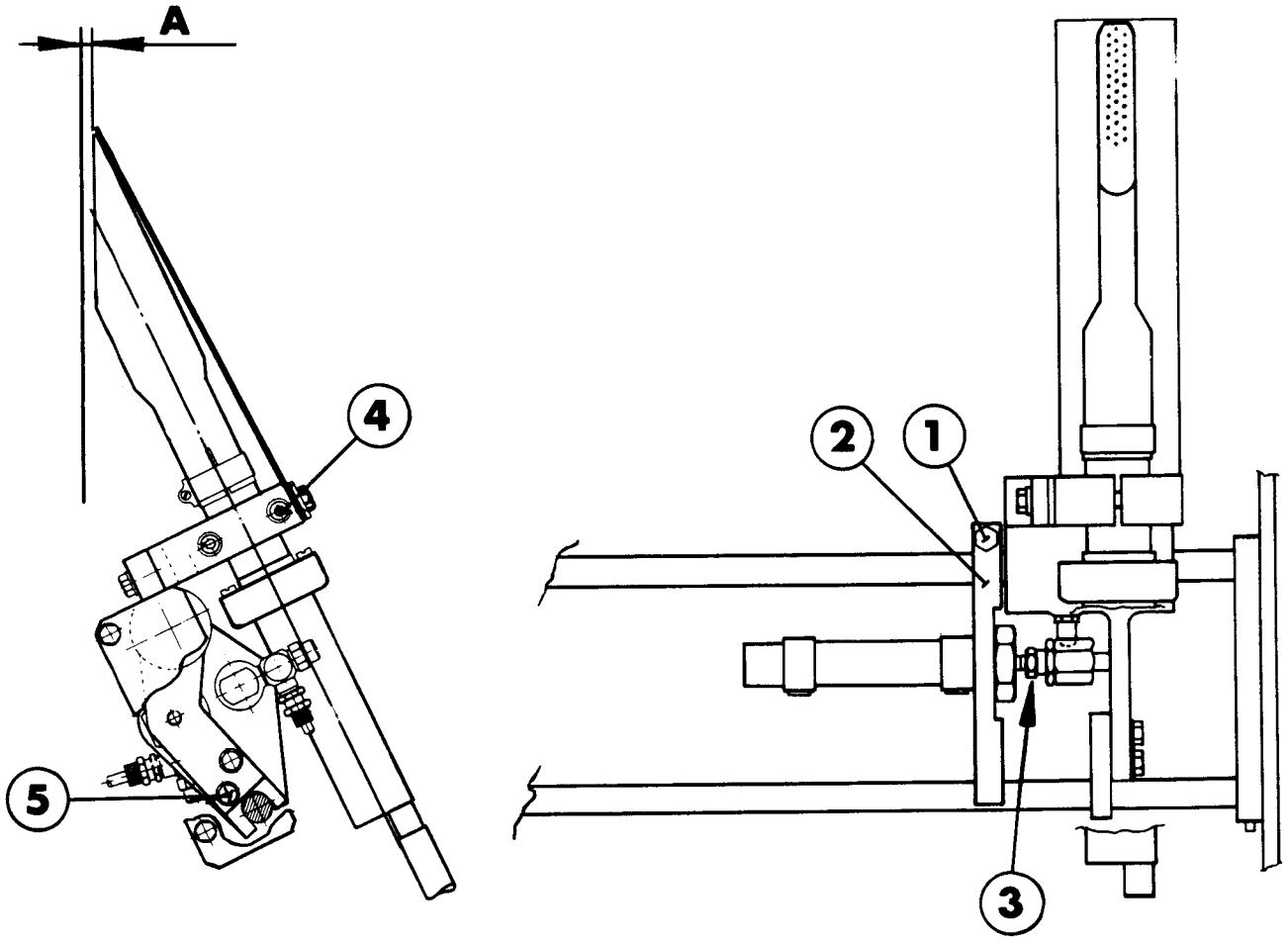

2/MS 920-51
237

CHECKING

Check that the pressure gauge (1) functions and that it indicates the recommended air pressure.

By means of the throttle valve, adjust the air pressure as required.

Check that the air hose to the element is intact.

1 Pressure gauge

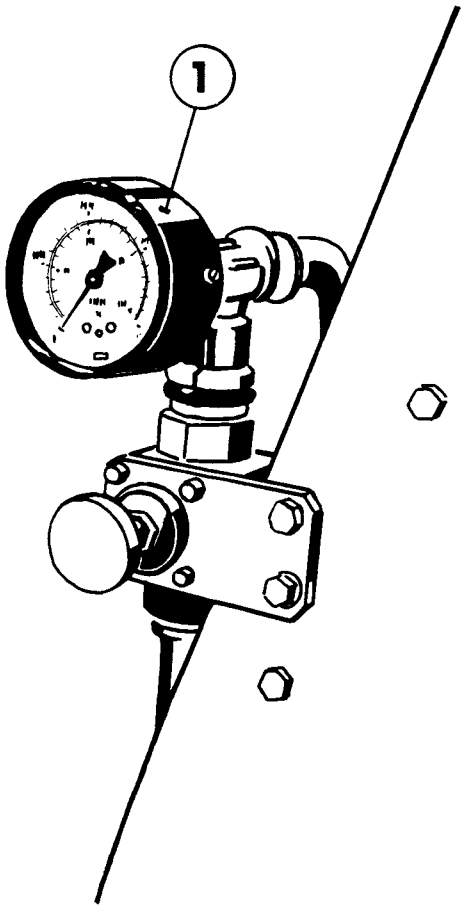

CHECKING

Check that the guide rod (1) is firmly secured.

Scrape off any plastic deposits (wax) and check that there are no rough surfaces on the guide rod which may damage the plastic coating on the paper web. If required, polish the guide rod with fine emery cloth.

1 Guide rod

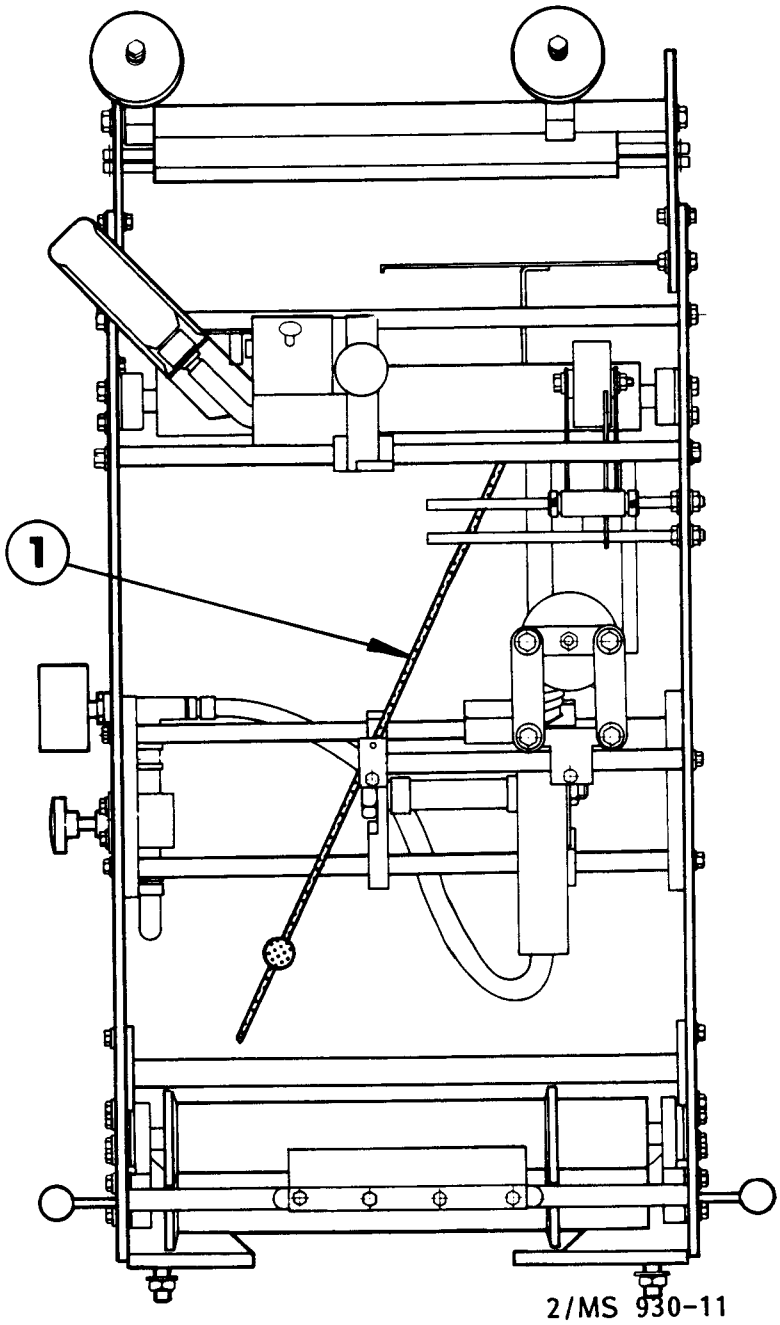

2/MS 930-11
239

CHECKING

Check that the packaging material is under tension from the lower bending rollers to the upper bending roller.

Make sure the paper runs correctly through the guide rollers (1).

Check that the guide rollers rotate freely and without play. Replace as required.

1 Guide roller

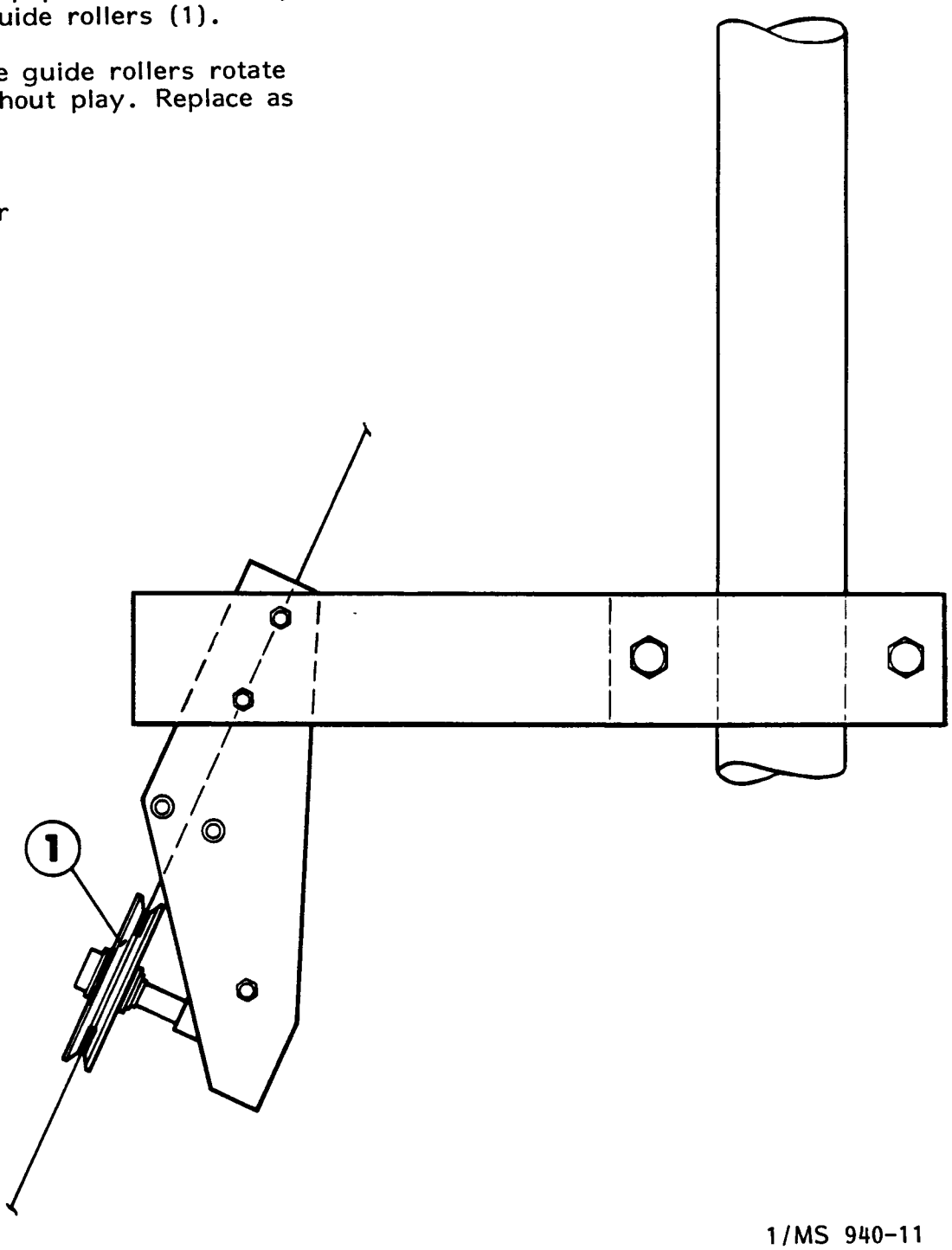

OVERHAUL/CLEANING

Dismantle the ink unit. Clean the components in industrial alcohol, rinse in water, and leave to dry in the air.

Check the axles (1) and (2), axial play 0.2-0.3 mm. Check the O-ring (4) of the distributor roller, O-rings (6) and (7) of the printing wheels. Replace as required.

On assembly do not oil the axles and bushings.

Check that the ink roller (5) is positioned right opposite the distributor roller. Adjust by means of a washer under the flange of the eccentric axle of the ink roller.

Adjust the eccentric axle of the ink roller (turn clockwise to increased pressure) until the rollers do not slip against each other.

Ink
The ink is supplied by Tetra Pak ready-mixed in bottles as spare part No. 90299-13.

WARNING! No other ink must be used. Some other inks react with the wetting agent in the sterile bath with inferior wetting as a result.

1 Eccentric axle of ink roller
2 Axle of distributor roller
3 Distributor roller
4 O-ring
5 Ink roller
6 O-ring
7 O-ring

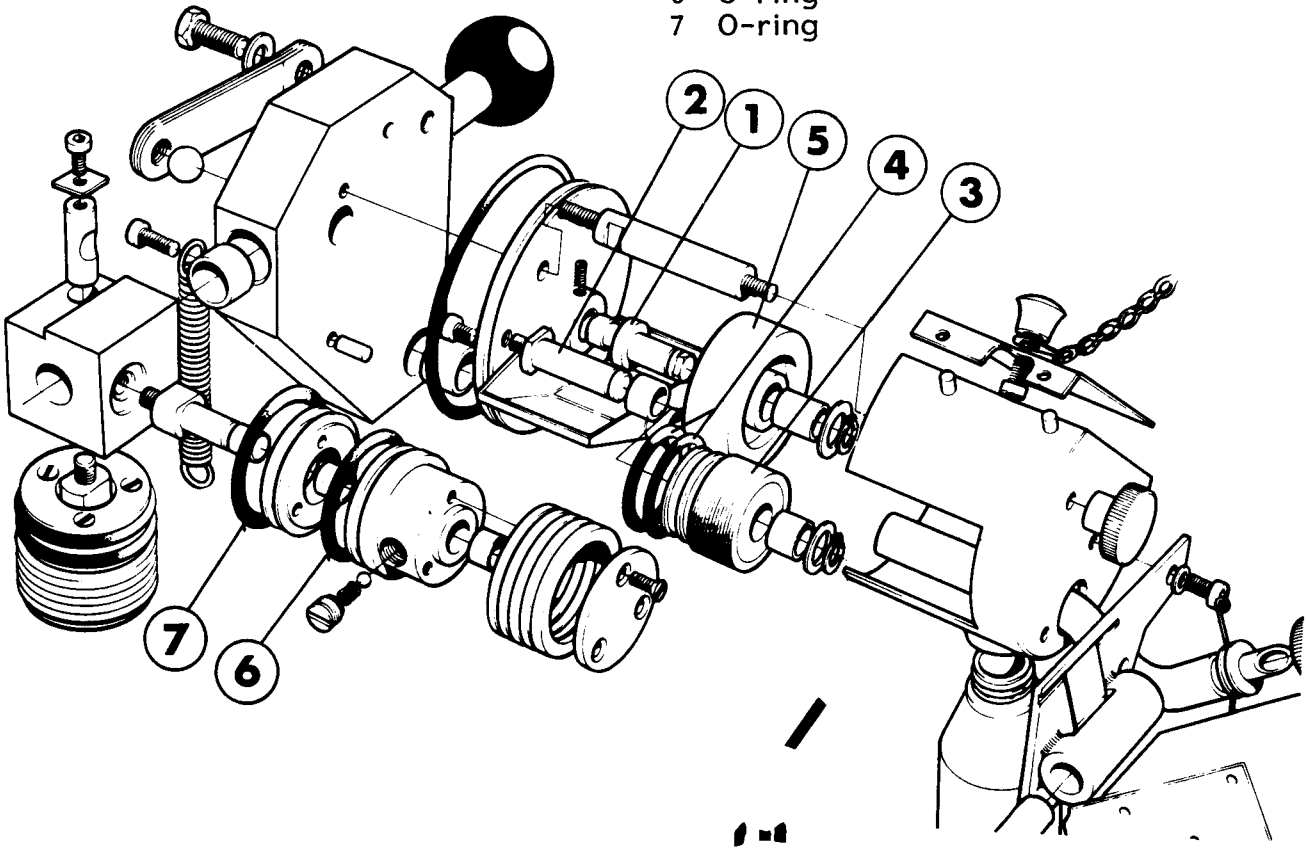

1/MS 950-31
241

SETTING

Check that the inner O-ring (6) of the printing wheel (1) is positioned right between the O-rings (2) of the distributor roller (3). If required, adjust with washers under the flange of the roller axle (8).

The gap between distributor roller (3) and wheel (1) is to be such that the printing wheel is driven by the paper web via the outer O-ring (7).

If required, adjust distributor roller with the eccenter axle of the ink roller (4).

Ink transfer may be reduced by turning the eccentric axle of the ink counter-roller counter-clockwise. Clockwise turning increases the amount of ink transferred.

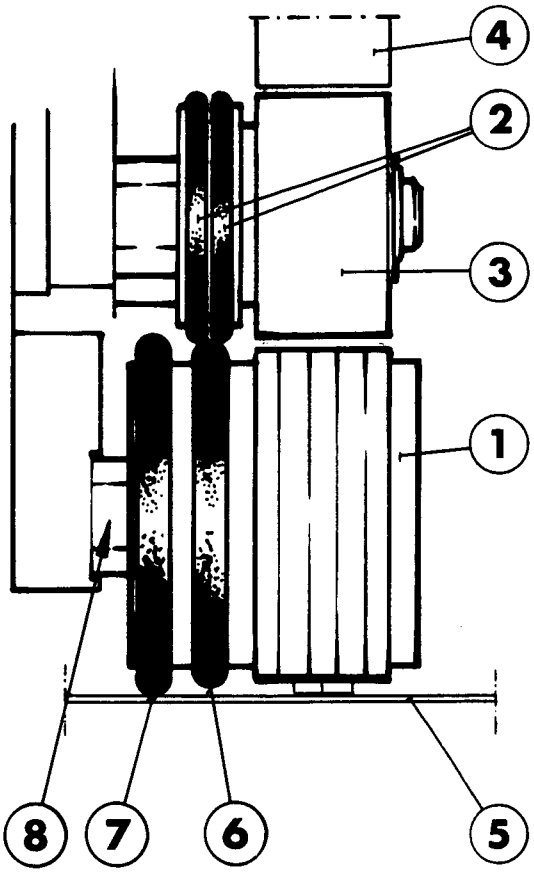

1 Printing wheel
2 O-ring
3 Distributor roller
4 Ink roller
5 Paper web
6 O-ring, inner
7 O-ring, outer
8 Roller axle

DESCRIPTION	PAGE
HS227, bending rollers and bearings - checking	1010-11
Teflon hose, pressure roller and bending roller - overhaul	1015-31
HS227, pull tab unit - setting	1020-11
HS227, pull tab unit - setting	1020-12
HS227, pull tab unit - overhaul	1020-31
HS227, pull tab unit - overhaul	1020-32
HS227, punch unit - checking	1025-11
HS227, punch unit - checking	1025-12
HS227, punch unit - overhaul	1025-31
HS227, punch unit - overhaul	1025-32
HS227, punch unit - setting	1025-51
HS227, sealing unit - checking	1030-11
HS227, sealing unit - checking	1030-12
HS227, sealing unit - knife replacement	1030-31
HS227, sealing unit - setting	1030-51
HS227, carriage - overhaul	1035-31
HS227, carriage - overhaul	1035-32
HS227, carriage - setting	1035-51
HS227, pull tab feed - checking	1040-11
HS227, pneumatic system - checking (3 pages)	1045-11
HS227, pneumatic diagram (2 pages)	1050-71
HS227, mounting plate, LS and IS strips - checking	1055-11

DESCRIPTION	PAGE
HS227, mounting plate, LS and IS strips - setting	1055-51
HS227, element group - checking	1060-11
HS227, element group - setting	1060-51
HS227, air supply unit - checking	1065-11
HS227, air supply unit - checking	1065-12
HS227 paper guide - checking	1070-11
HS227, dating unit holder - checking	1075-11
HS227, dating unit DV6 - overhaul/ /cleaning	1080-31
HS227, dating unit DV6 - setting	1080-51

CHECKING

Check that the bending rollers (1) rotate freely in their bearings, and that their axle pins (2) are not damaged.
Check the bearings of the bending rollers.
Replace damaged or worn bearings (3).
The maximum permitted play between axle pin and bearing is 1 mm.
Check the axial play of the rollers.
If required, adjust by means of shims (4).

Check that the teflon sleeves (5) on the rollers are intact. If required, replace the teflon sleeves acc to page 1015-31.

1 Bending roller
2 Axle pin
3 Bearing
4 Shim TP No 13401
5 Teflon sleeve

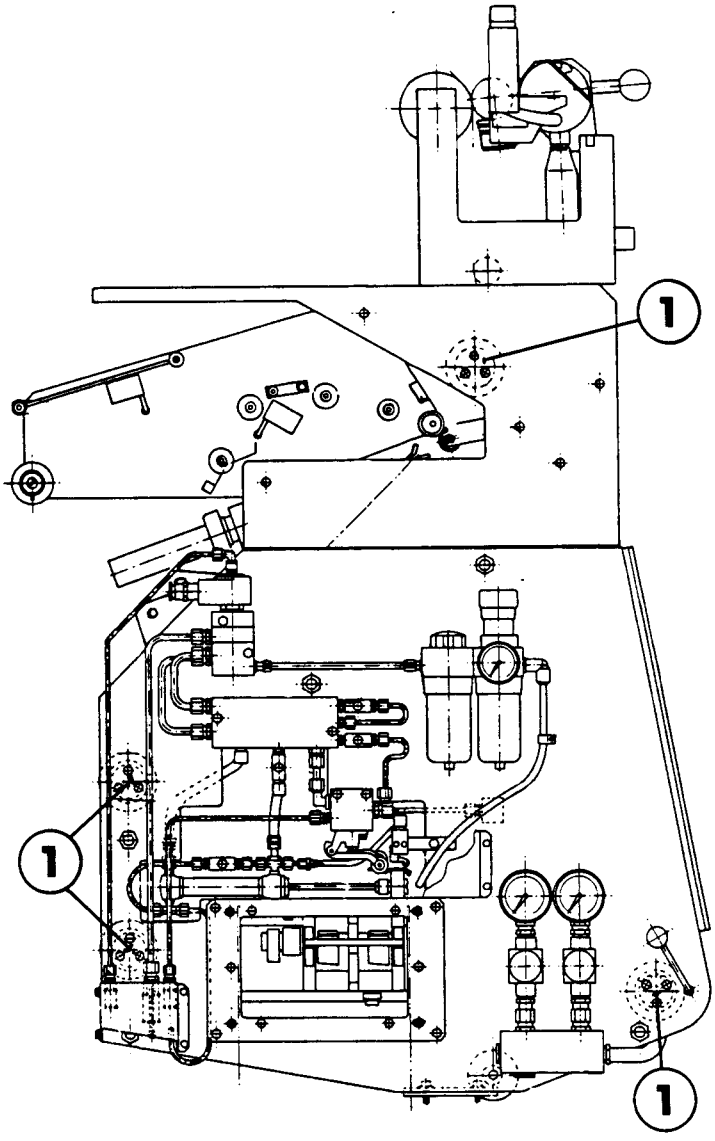

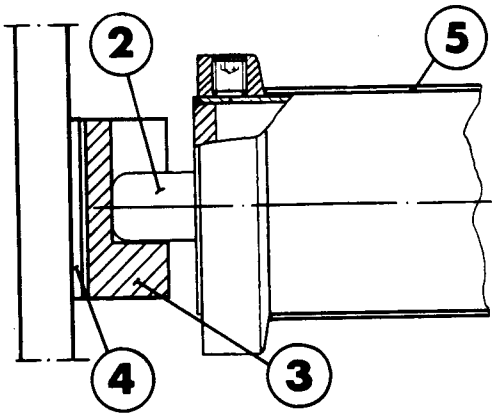

OVERHAUL

Use a hot-air gun (or oven)
Temperature 260 - 400°C.

Clean the roller from fat or other deposits and sandpaper the surface by hand to roughen the surface.

Put the roller on an axle so that it can be rotated, preferably in a lathe.

Cut off a suitable length of the shrink hose (roller width + 5 mm).

If required, clean the inside of the hose with lintfree cloth.

Slide the hose on to the roller and rotate the roller at a with fairly even speed.

Aim the hot air gun at the middle part of the roller at a distance of 50-80 mm. Heat this area until the hose shrinks evenly against the roller (fig 1). Thereafter, reduce the distance to about 25 mm, and move the air gun towards the ends to ensure that the free end (fig 2) of the hose is shrunk to its minimum diameter.

After the hose has been shrunk on securely, shrinking-on, trim its ends with a sharp knife, leaving about 1 mm extending outside the roller edges.

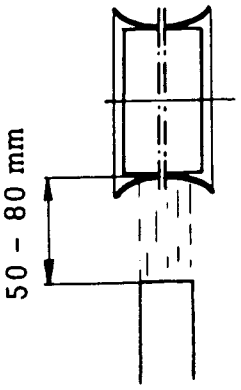

Fig 1

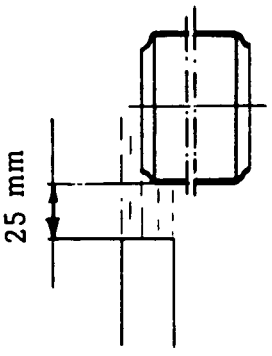

Fig 2

SETTING

Distances A and B, illustrated and listed in the table, specify the basic setting of the pull tab unit for different paper widths.
Final adjustment is to be carried out on test-running. Distance A may be altered by shifting the punch unit (2) along the mounting bar (1).

Distance B is altered by shifting the entire pull tab unit sideways. Loosen the mounting screws (3) and set the frame (4) by means of the adjustment screws (5).

1 Mounting bar
2 Punch unit
3 Mounting screw
4 Frame
5 Adjustment screw

Machine type	Volume ml	Paper width mm	A mm	B mm
TCA/25	8-12	85	245	32
	12-18	105	255	40
	125	180	233	69
	150	197	237	75
	180	214	241	81
TC/150	189	220	242	84
TCA/150	200	226	244	86
TC/300	250	229	260	87
TCA/300	300	248	266	94

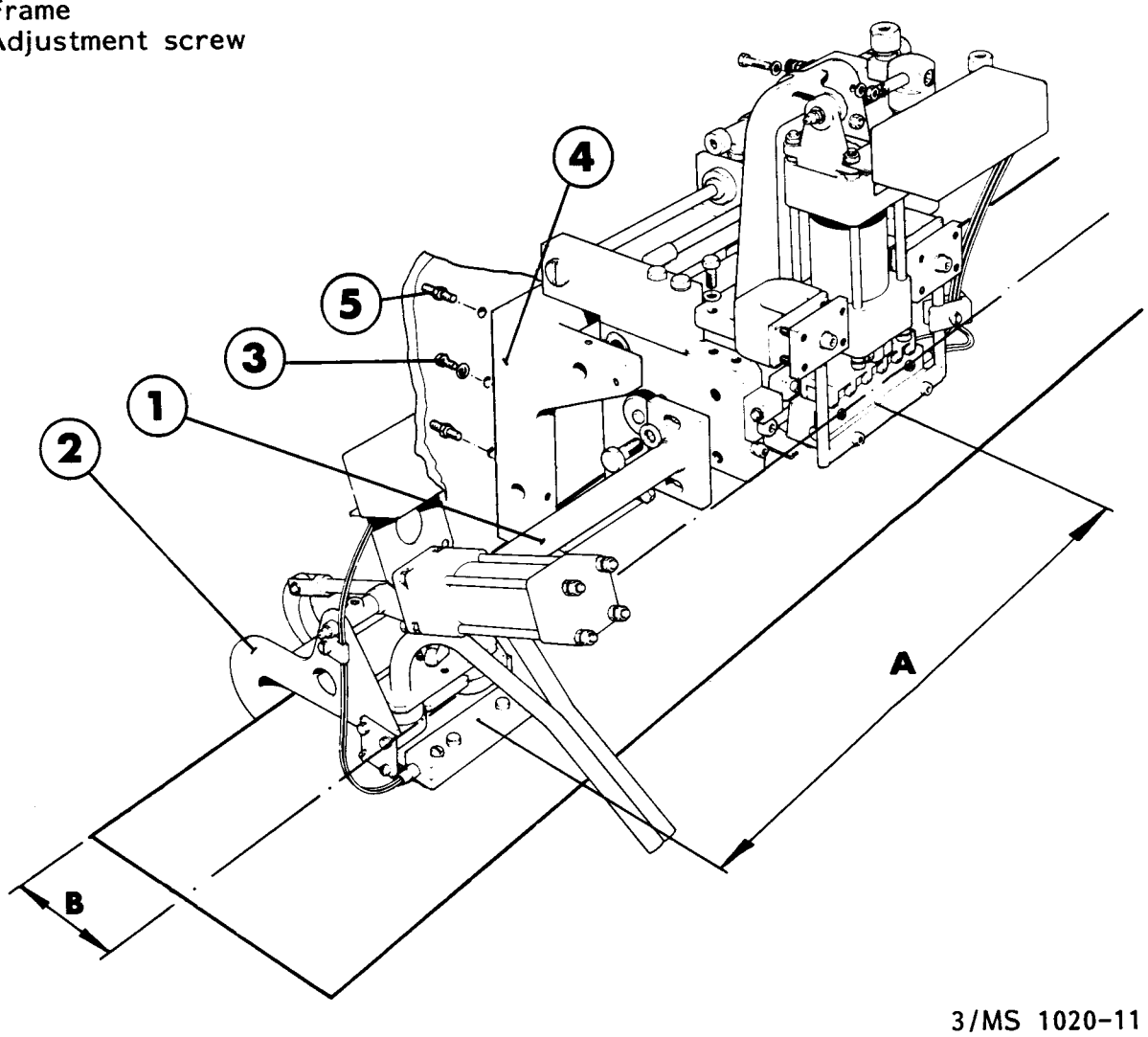

3/MS 1020-11
247

SETTING

Distances A and B, illustrated and listed in the table, specify the basic setting of the pull tab unit for different paper widths.
Final adjustment is to be carried out on test-running. Distance A may be altered by shifting the punch unit (2) along the mounting bar (1).

Distance B is altered by shifting the entire pull tab unit sideways. Loosen the mounting screws (3) and set the frame (4) by means of the adjustment screws (5).

Machine type	Volume mml	Paper width mm	A mm	B mm
TCA/25	8-12	85	245	32
	12-18	105	255	40
	125	180	233	69
	150	197	237	75
	180	214	241	81
TC/150	189	220	242	84
TCA/150	200	226	244	86
TC/300	250	229	260	87
TCA/300	300	248	266	94
TC/500	150	160	303	60
TCA/500				

1 Mounting bar
2 Punch unit
3 Mounting screw
4 Frame
5 Adjustment screw

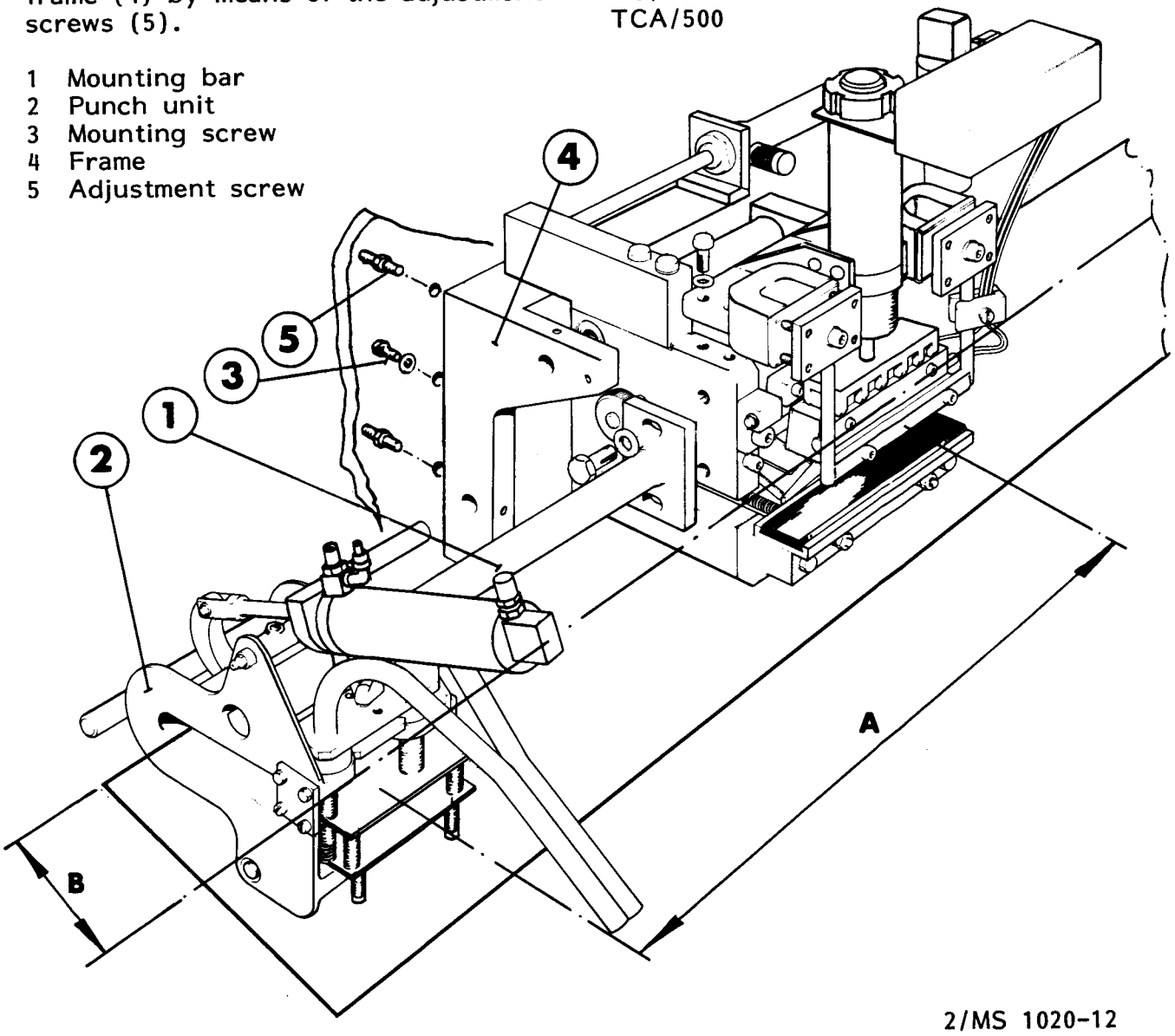

2/MS 1020-12
248

OVERHAUL

Disconnect air and electric power.

Loosen the grub screws (1). Undo the screw (2), push out the bars (3) and (13), and remove the entire unit.

Undo the screw (4) and remove the pipe (5) for punched-out paper discs.

Check the pipe for wear and deformation.

Mark the position of the punch unit (8) on the mounting bar (6). Loosen the clamp union (12) and pull off the punch unit.

Check and overhaul the punch unit (8), sealing unit (9), carriage (10), and pull tab feed (11) acc to separate instructions for each item.

Replace the rubber buffer (7).

On assembly, turn the bar (3) one quarter of a turn, if the ball bearings have worn grooves along the bar. Replace as required.

Set the eccentric axle pins (14) so that the ball bearings (15) rotate easily against the bar (13) but without play.

1 Grub screw
2 Screw
3 Bar
4 Screw
5 Pipe
6 Mounting bar
7 Rubber buffer
8 Punch unit
9 Sealing unit
10 Carriage
11 Pull tab feed
12 Clamp union
13 Bar
14 Eccentric axle pin
15 Ball bearing

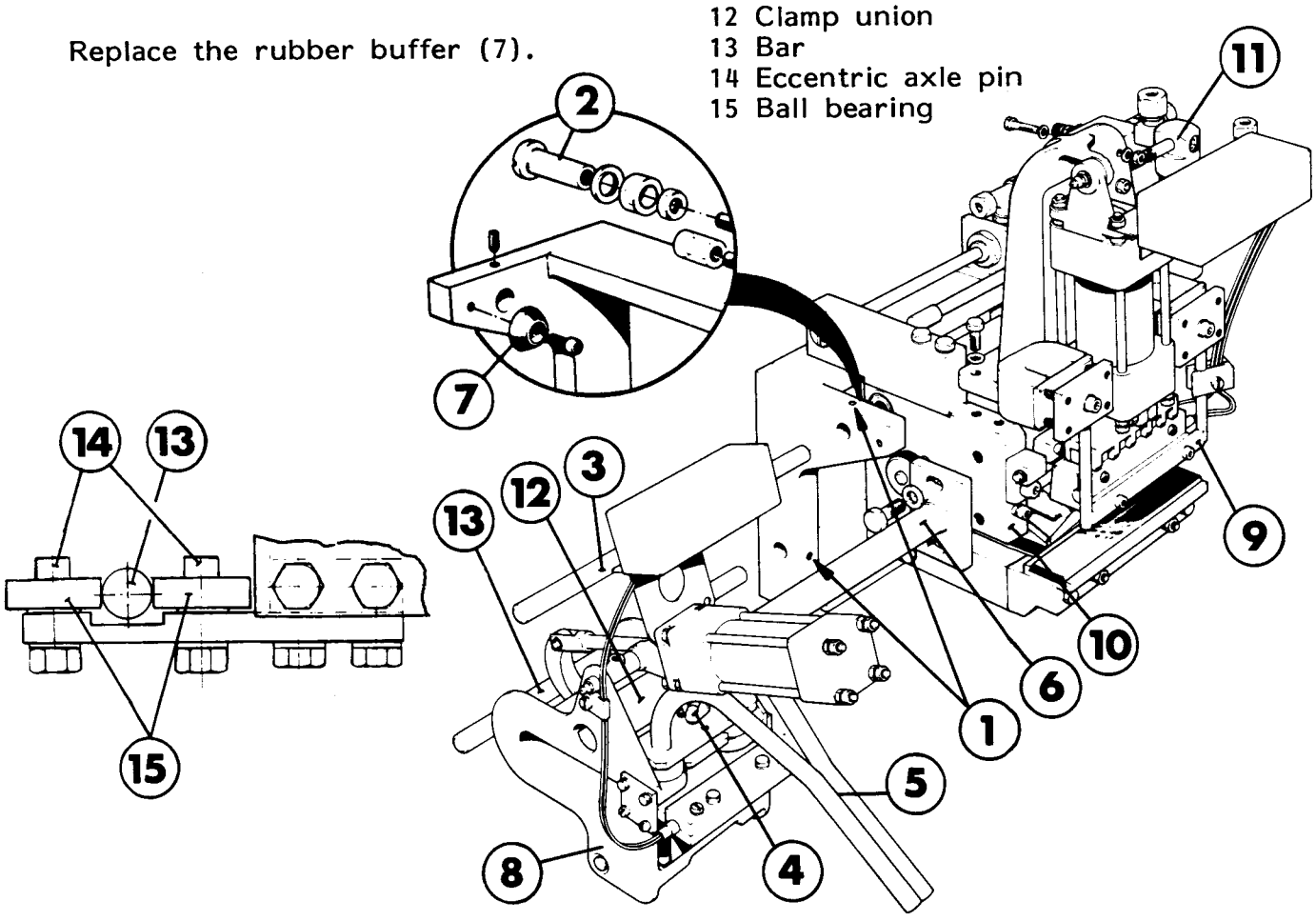

OVERHAUL

Disconnect air and electric power.

Loosen the grub screws (1). Undo the screw (2), push out the bars (3) and (13), and remove the entire unit.

Undo the screw (4) and remove the pipe (5) for punched-out paper discs.

Check the pipe for wear and deformation.

Mark the position of the punch unit (8) on the mounting bar (6). Loosen the clamp union (12) and pull off the punch unit.

Check and overhaul the punch unit (8), sealing unit (9), carriage (10), and pull tab feed (11) acc to separate instructions for each item.

Replace the rubber buffer (7).

On assembly, turn the bar (3) one quarter of a turn, if the ball bearings have worn grooves along the bar. Replace as required.

Set the eccentric axle pins (14) so that the ball bearings (15) rotate easily against the bar (13) but without play.

1 Grub screw
2 Screw
3 Bar
4 Screw
5 Pipe
6 Mounting bar
7 Rubber buffer
8 Punch unit
9 Sealing unit
10 Carriage
11 Pull tab feed
12 Clamp union
13 Bar
14 Eccentric axle pin
15 Ball bearing

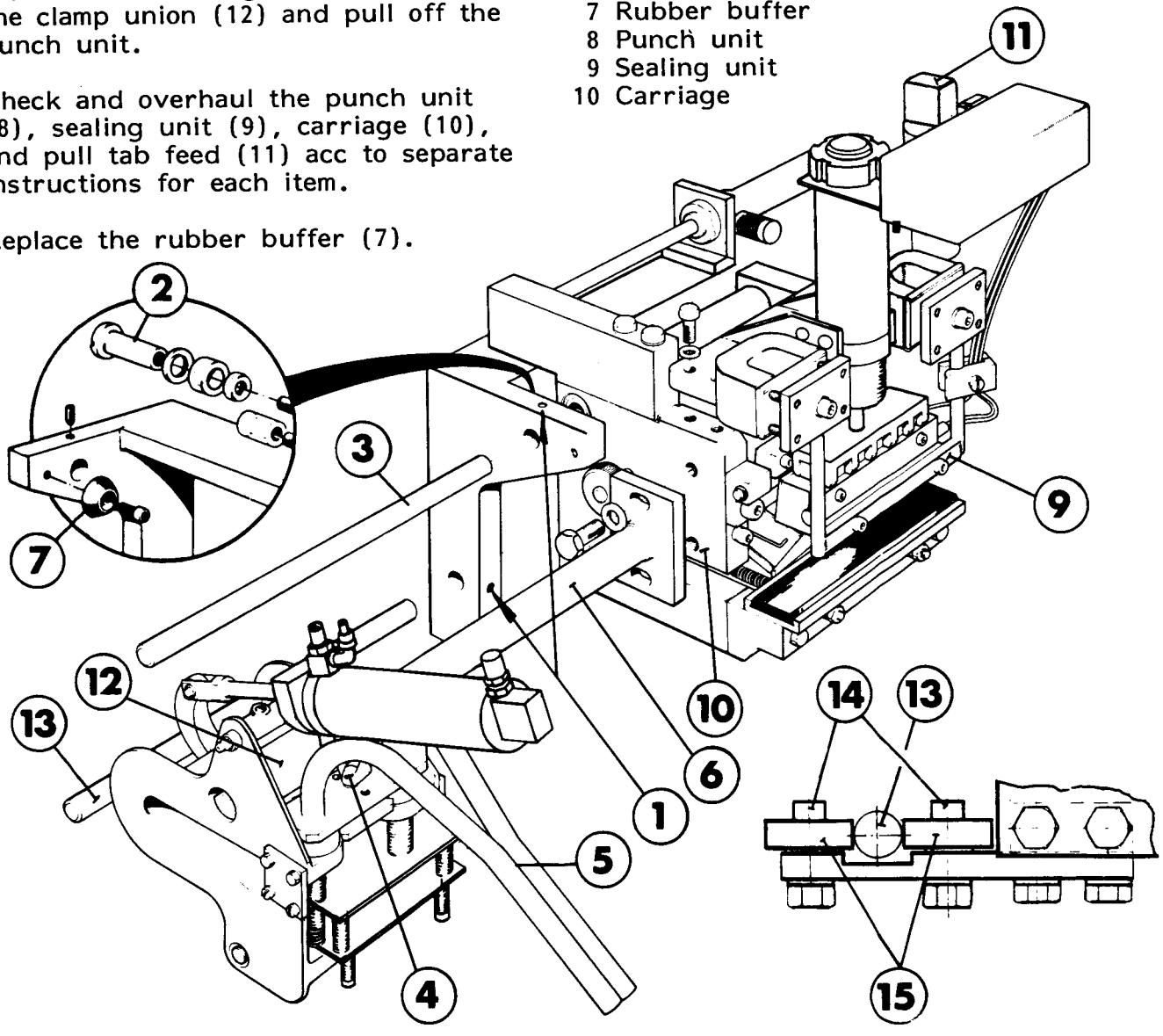

2/MS 1020-32
250

CHECKING

Remove the axle pin (1) of the arm (2) and check that the arm moves easily at the joint with the piston rod head (3).

Check that the punches (4) move easily without play in their bushings (5). In case of play, replace the bushings.

Check that the pressure plate (6) is not deformed.

Check the cylinder (7) for play and leakage. In case of leakage, replace the cylinder.

Put a piece of packaging material in the punches and check their function manually. If the holes are not clean-cut, replace the punches and the dies (8).

1 Axle pin
2 Arm
3 Piston rod head
4 Punch
5 Bushing
6 Pressure plate
7 Cylinder
8 Die

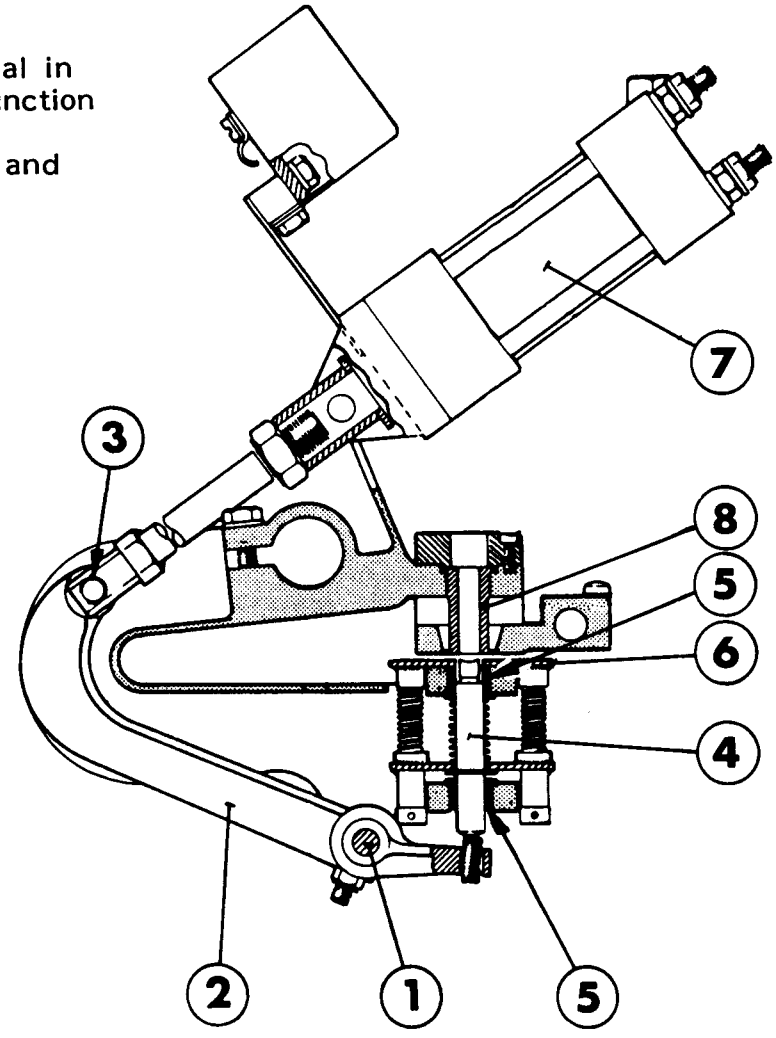

1/MS 1025-11
251

CHECKING

Remove the axle pin (1) of the arm (2) and check that the arm moves easily at the joint with the piston rod head (3).

Check that the punches (4) move easily without play in their bushings (5). In case of play, replace the bushings.

Check that the pressure plate (6) is not deformed.

Check the cylinder (7) for play and leakage. In case of leakage, replace the cylinder.

Put a piece of packaging material in the punches and check their function manually. If the holes are not clean-cut, replace the punches and dies (8).

1 Axle pin
2 Arm
3 Piston rod head
4 Punch
5 Bushing
6 Pressure plate
7 Cylinder
8 Die

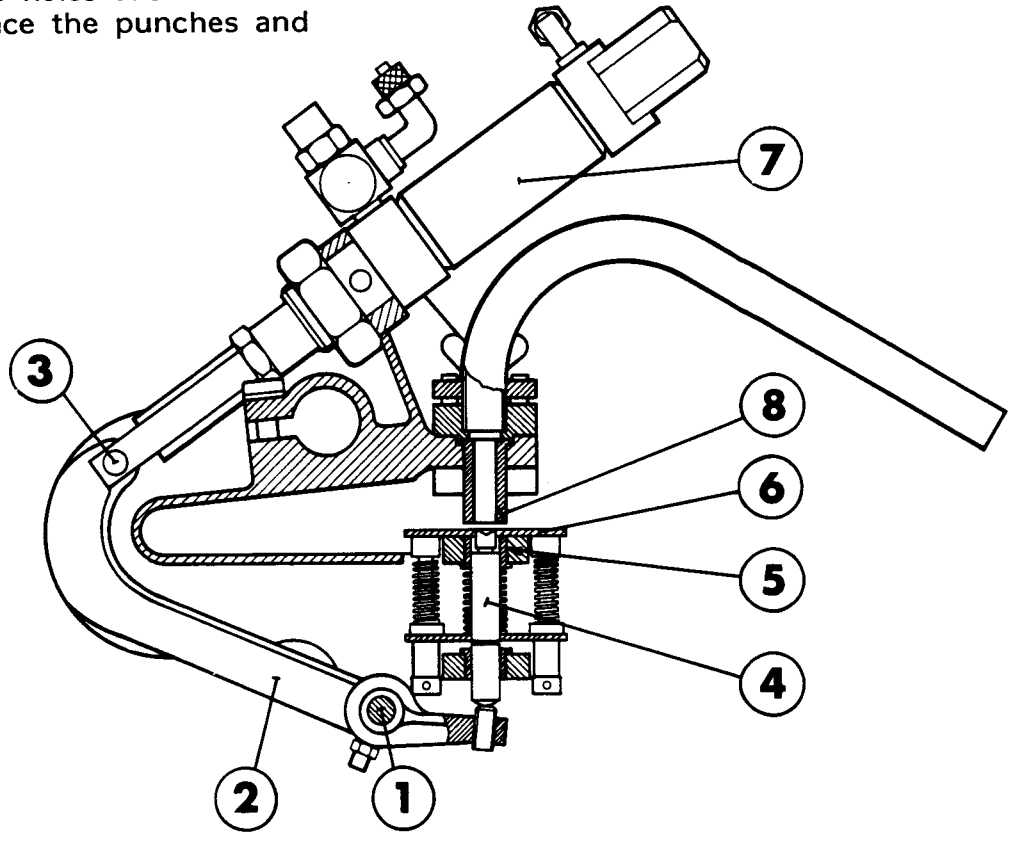

OVERHAUL

Undo the screws (1) and remove the holders (2) and dies (3).

Remove the circlips (4) and lift out the punches (5).

Remove the locking wire (6) and loosen the screws (7). Remove the pressure plate (8). Undo the screws (9) and remove the heating block (10). Check the springs (13) and (14). Replace, as required.

Clean the components and remove plastic deposits.

Replace the punches (4), dies (3), and bushings (11) and (12).

1 Screw
2 Holder
3 Die
4 Circlip
5 Punch
6 Locking wire
7 Screw
8 Pressure plate
9 Screw*
10 Heating block*
11 Bushing
12 Bushing
13 Spring
14 Spring

* Packaging material with outer wax coating.

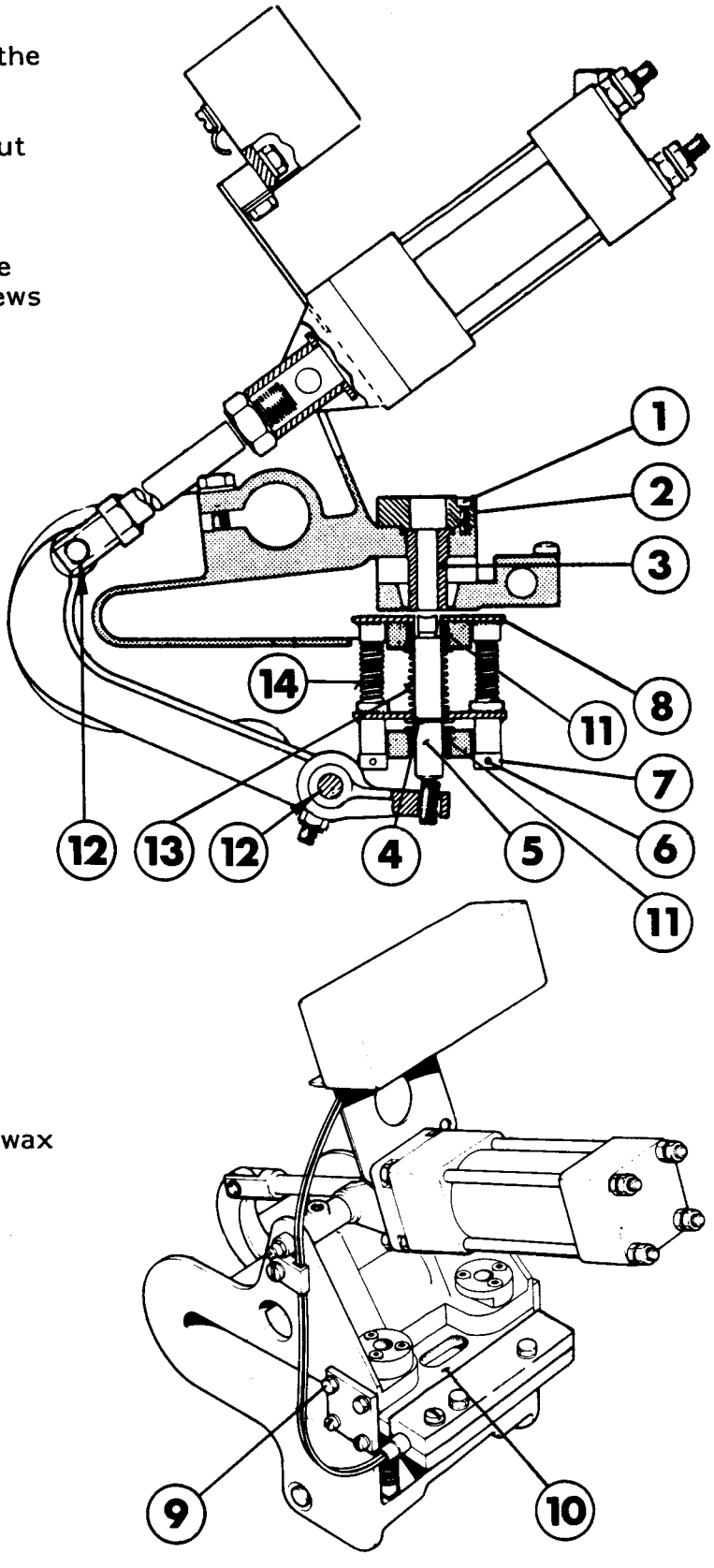

OVERHAUL

Undo the screws (1) and remove the holders (2) and dies (3).

Lift out the punches (5).

Remove the locking wire (6) and loosen the screws (7). Remove the pressure plate (8). Undo the screws (9) and remove the heating block (10). Check the springs (13) and (14). Replace, if required.

Clean the components and remove plastic deposits.

Replace the punches (4), dies (3), and bushings (11) and (12).

1 Screw
2 Holder
3 Die
4 Punch
5 Locking wire
6 Screw
7 Pressure plate
8 Bushing
9 Bushing
10 Spring
11 Spring

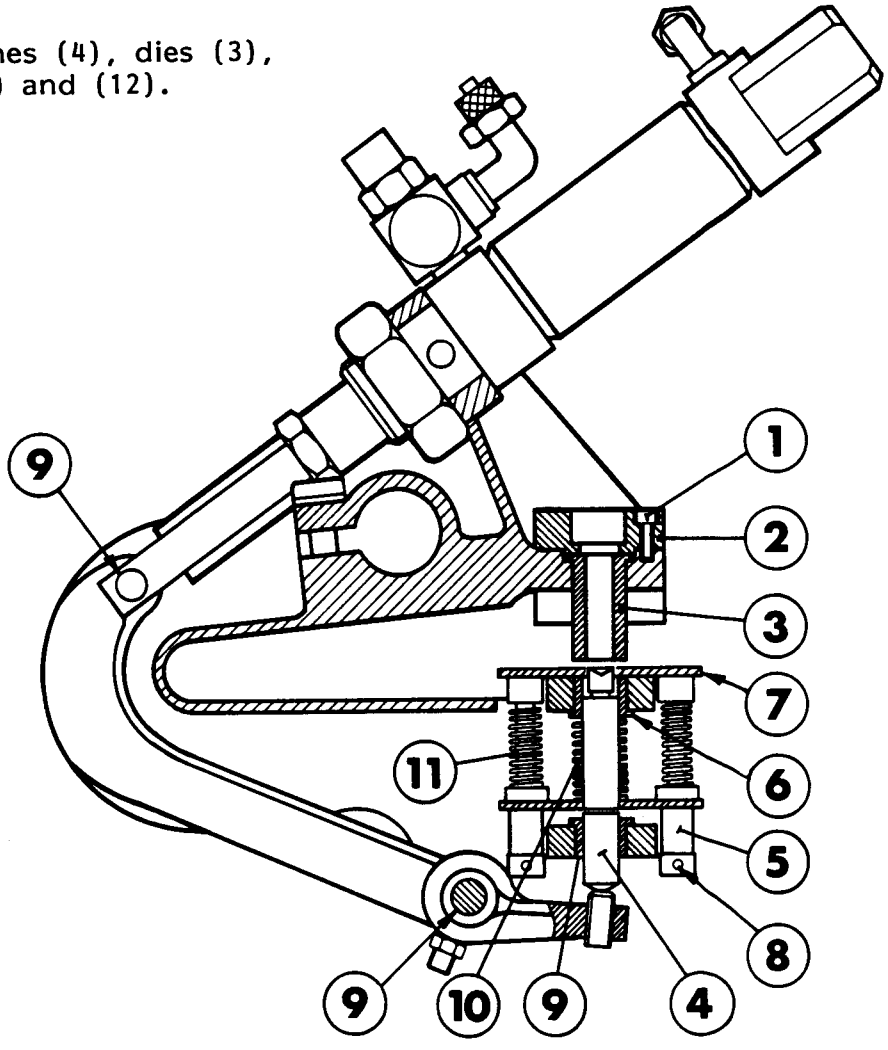

SETTING

Adjust the position of the pressure plate (6) by means of the screws (1) so that a gap of $1\ ^{+0.2}_{-0}$ mm is obtained.

Carry out coarse setting of the punches (3) at the piston rod head and final adjustments by means of the setting screws (4) so that the punches are appr 0.2 mm below the pressure plate, with a penetration of max. 0.5 mm into the dies (5).

NB!
The circlip (7) must lie against the plate (8) for the punch unit to function correctly.

Secure the screws with the locking wire (2).

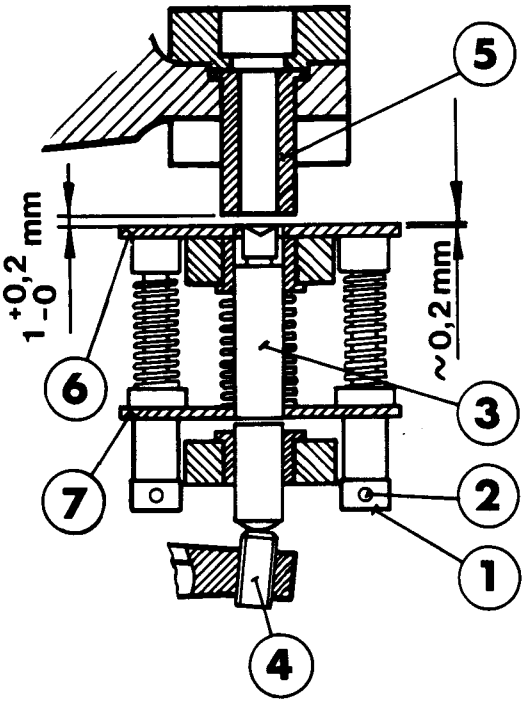

1 Screw
2 Locking wire
3 Punch
4 Setting screw
5 Die
6 Pressure plate
7 Plate

CHECKING

Lift up the cylinder (1) and check for wear in its mounting (2). In case of play, replace the bushings (3).

Check that the mounting frame (4) for the heating block (5) is not deformed.

Clean and check the heating block (5), the heating cartridge connections (6), and the insulation plates (7).

1 Cylinder
2 Mounting
3 Bushing
4 Mounting frame
5 Heating block
6 Heating cartridge connection
7 Insulation plate

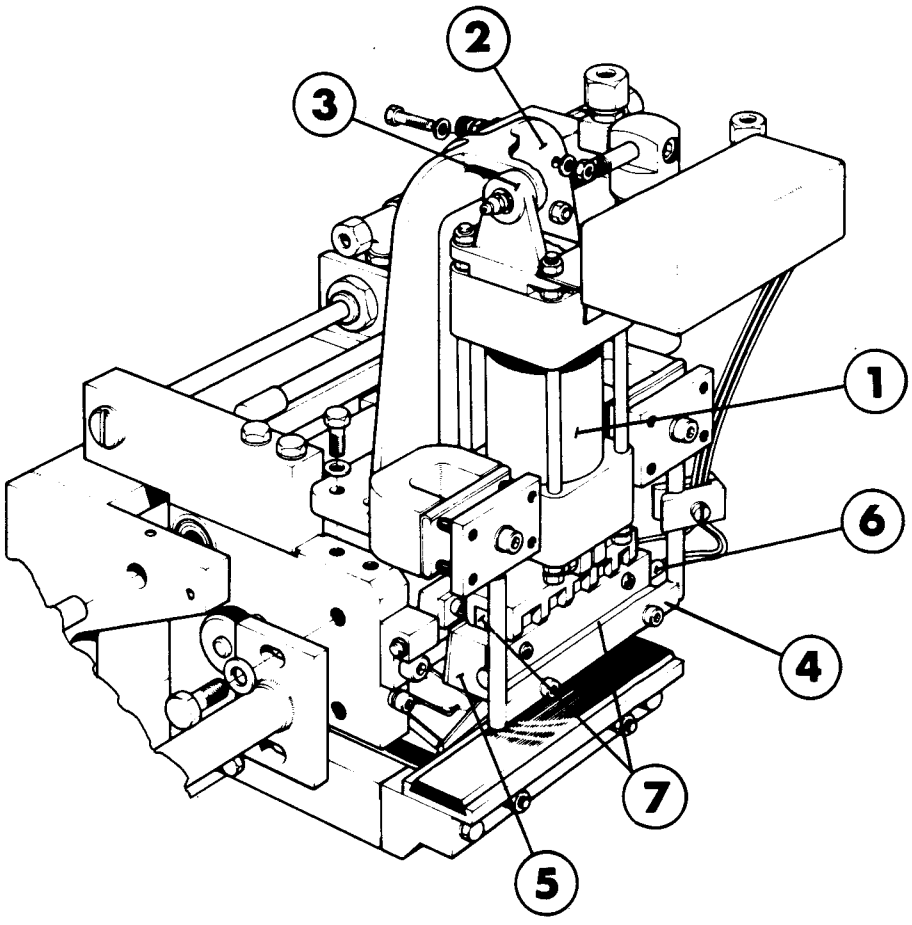

CHECKING

Lift up the cylinder (1) and check for wear in its mounting (2). In case of play, replace the bushings (3).

Check that the mounting frame (4) for the heating block (5) is not deformed.

Clean and check the heating block (5), the heating cartridge connections (6), and the insulation plates (7).

1 Cylinder
2 Mounting
3 Bushing
4 Mounting frame
5 Heating block
6 Heating cartridge connection
7 Insulation plate

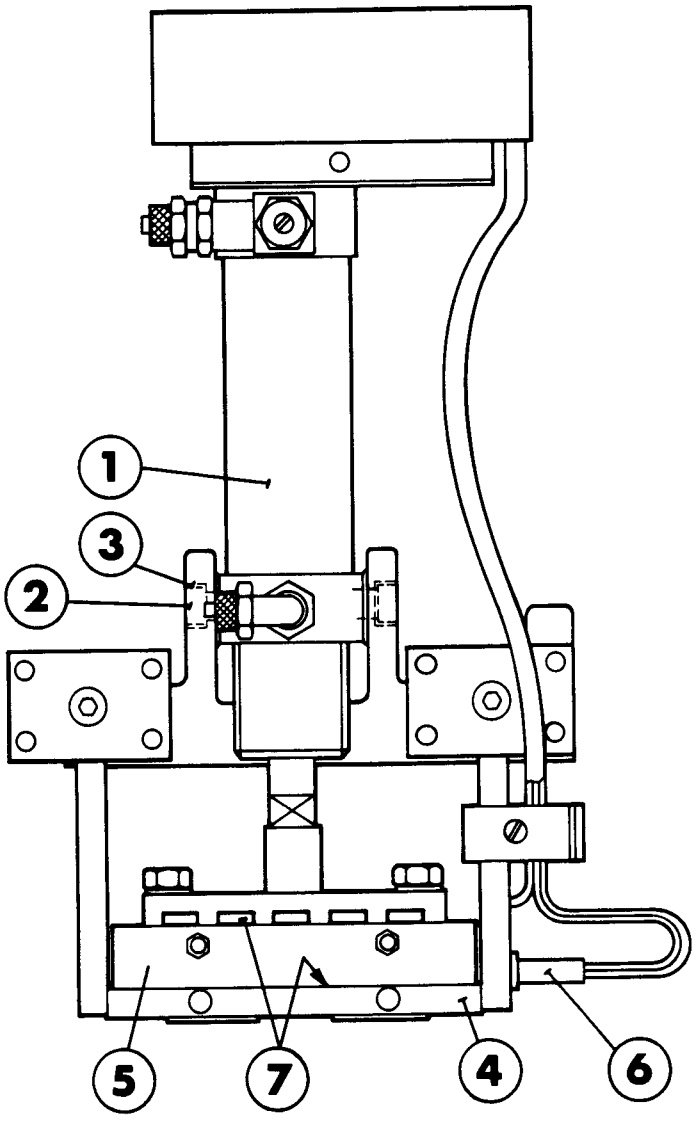

KNIFE REPLACEMENT

If the knife is blunt and cuts badly, replace all the knives as follows:

Remove all the knives.

Fit the moving knives (1) to the sealing block. Make sure that their edges (3) are 0.5 - 1 mm above the sealing surface (4).

Fit the fixed knives (6) and make sure their lower edges are parallel with the rubber die (7).

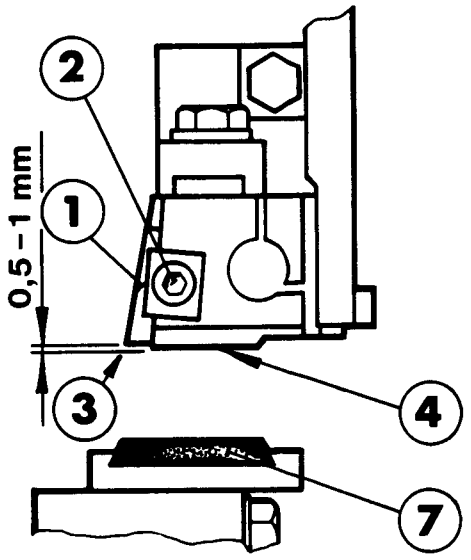

1 Moving knife
2 Mounting screw
3 Knife edge
4 Sealing surface
5 Mounting screw
6 Fixed knife
7 Rubber die

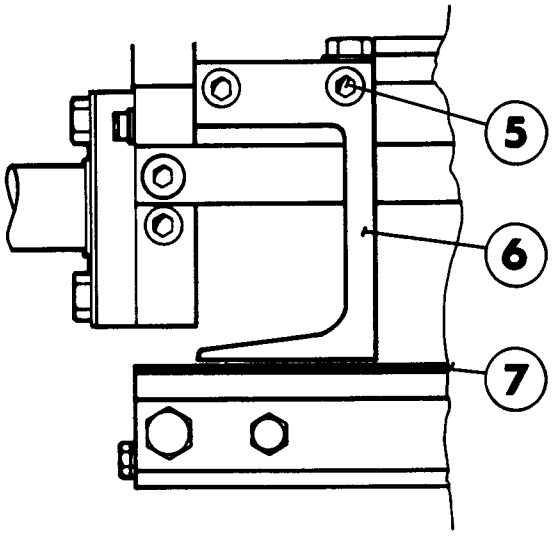

SETTING

Loosen the adjustment screws (1) so that the knives (2) can be moved in a little bit underneath the pull tab strip guides (3).

It is important that the fixed knives (2) do not bear against the moving knives (4) while setting is in progress.

Lower the sealing unit against the rubber die and make sure the sealing surface (5) is symmetrical relative the rubber die (6). While this is being carried out, the contact plates (7) are to be withdrawn so that they do not touch the magnets (8).

Check that the sealing unit and the rubber die are parallel. If required, adjust by means of the guide fork (9).

Adjust the contact plates (7) against the magnets (8) without interfering with the previously achieved setting.

Adjust the contact between the fixed knives and the moving knives with the screw (1). The contact is to be very light and must not result in the sealing unit being shifted out of position.

Test the cutting function manually.

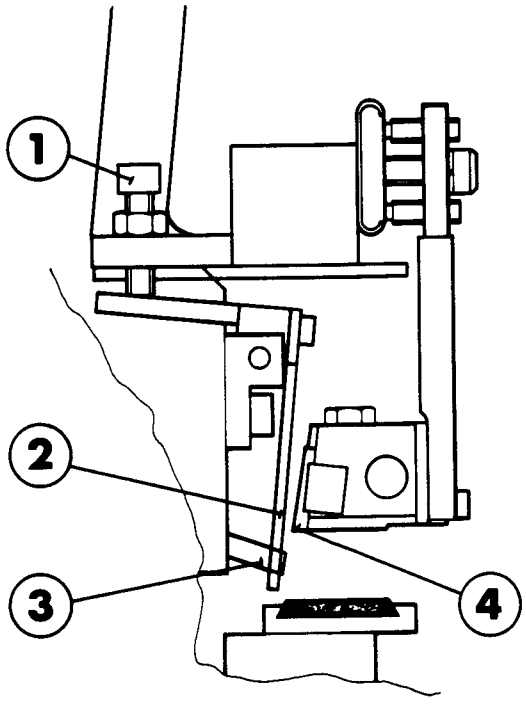

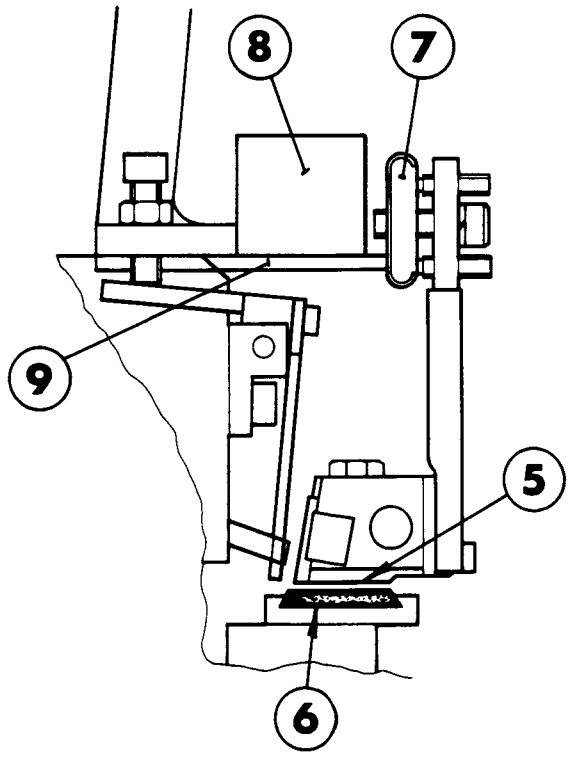

1 Adjustment screw
2 Fixed knife
3 Pull tab guide
4 Moving knife
5 Sealing surface
6 Rubber die
7 Contact plate
8 Magnet
9 Guide fork

OVERHAUL

Replace the pressure rubber (1).

Undo the screw (2). Remove and clean the pull tab guides (3).

Check that the feed roller springs (4) are intact and that their adjustment nuts (5) are secured.

Replace the ball bearings (6), ball bushings (7), and friction bearings (8).

1 Pressure rubber
2 Screw
3 Pull tab guide
4 Spring
5 Adjustment nut
6 Ball bearing
7 Ball bushing
8 Friction bearing

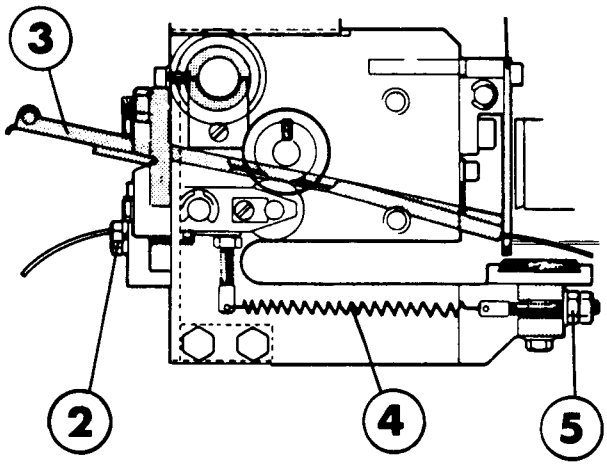

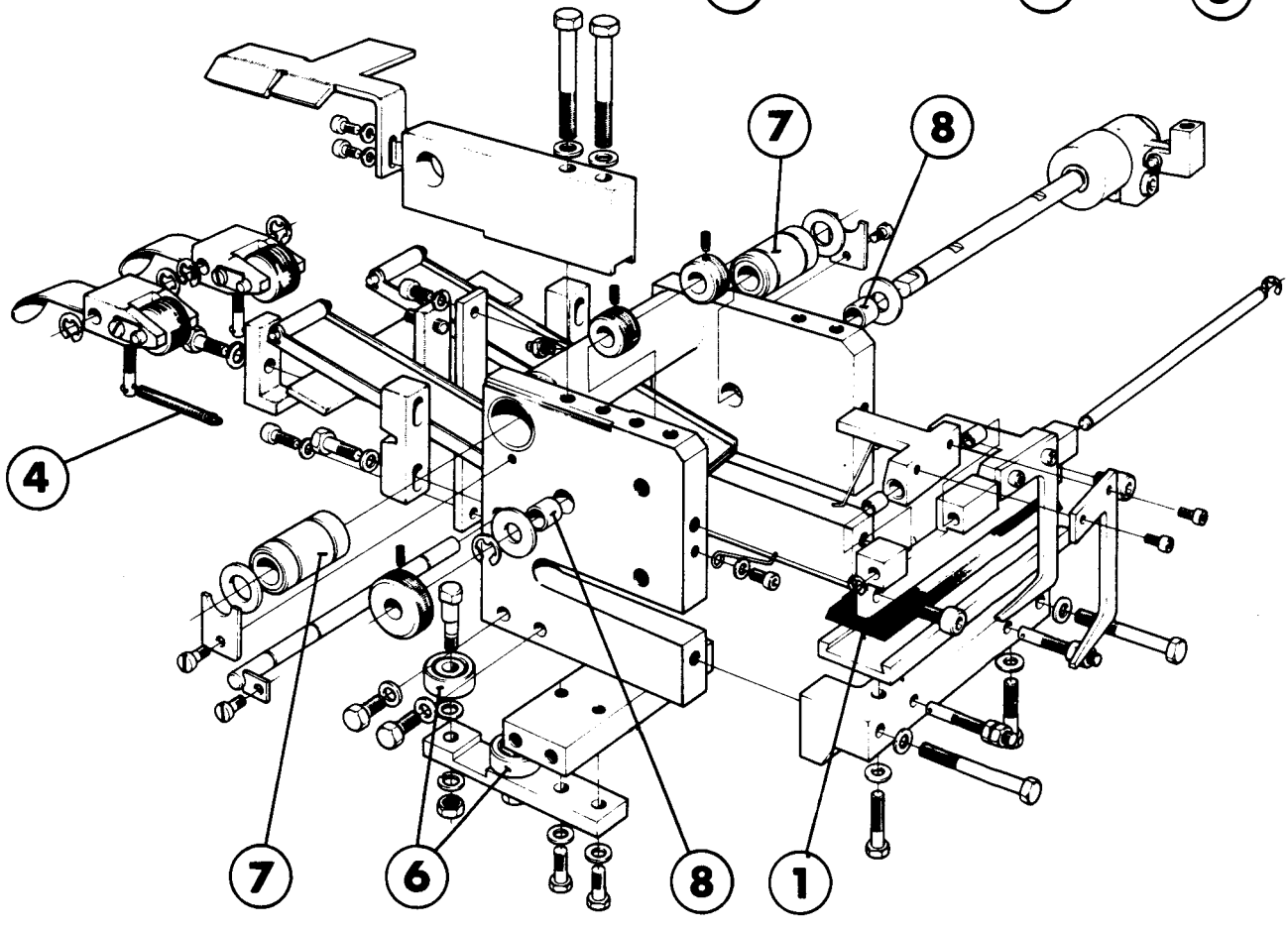

OVERHAUL

Replace the pressure rubber (1).

Undo the screw (2). Remove and clean the pull tab guides (3).

Check that the feed roller springs (4) are intact and that their adjustment nuts (5) are secured.

Replace the ball bearings (6), ball bushings (7), and friction bearings (8).

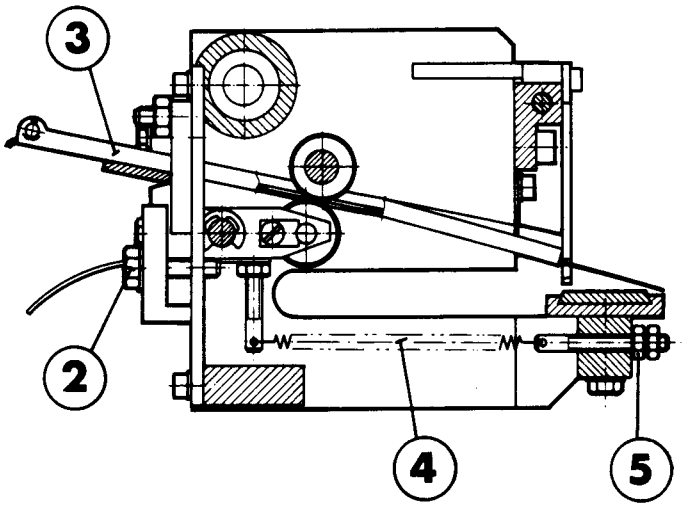

1 Pressure rubber
2 Screw
3 Pull tab guide
4 Spring
5 Adjustment nut
6 Ball bearing
7 Ball bushing
8 Friction bearing

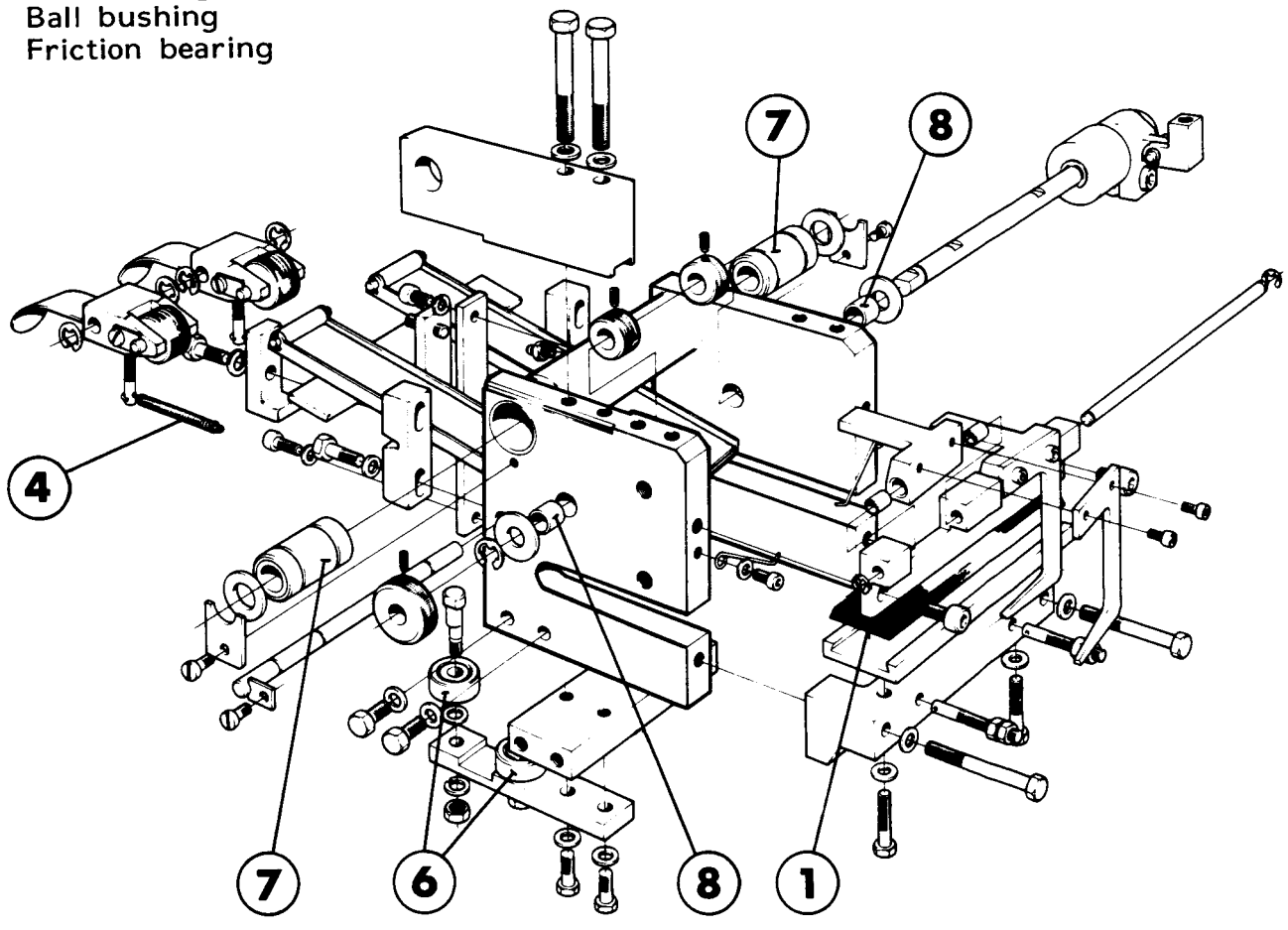

SETTING

Loosen the screw (2) and nut (5). Adjust the pull tab guide (1) with the setting screw (3) so that the pull tab strip (6) is fed out as close to the edge of the fixed knife (4) as possible, appr 0.5 mm above the edge.

Secure the setting screw (3) with the nut (5).

Tighten the screw (2).

Check the setting.

1 Pull tab guide
2 Screw
3 Screw
4 Fixed knife
5 Nut
6 Pull tab strip

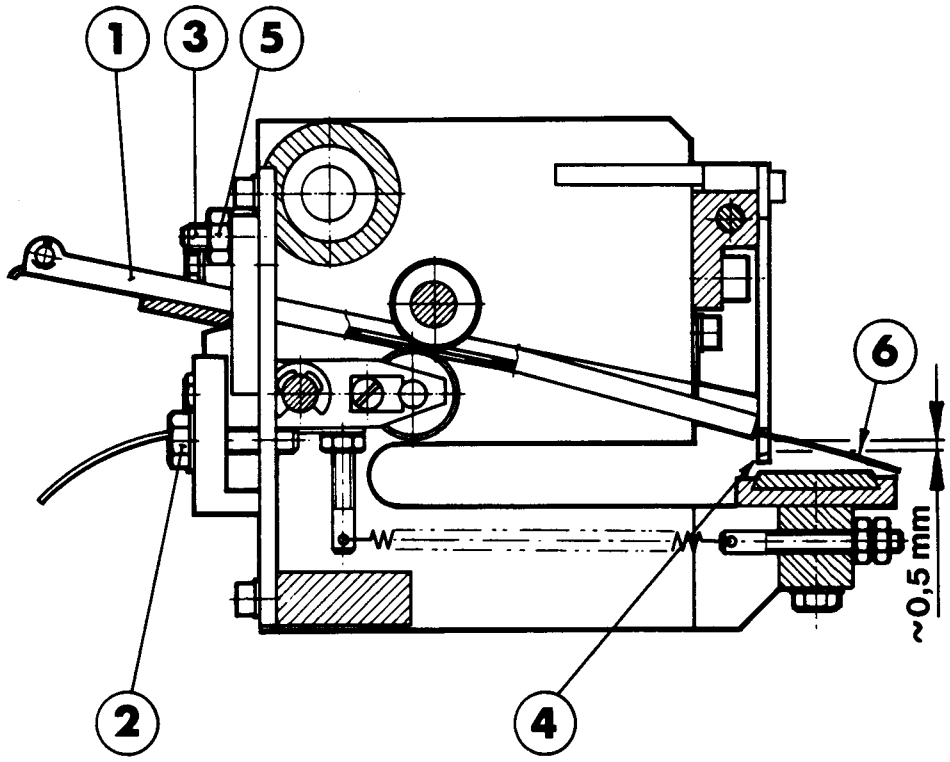

CHECKING

Check that the free-wheel clutch (1) does not fail during feeding.
If required, replace the clutch.

Check that the stop lug (2) is correctly fitted to the piston rod.

To reduce the length of the pull tabs, shift the lug upwards.

Check that there is a gap of appr 2 mm between the clutch clamp union (3) and the nut (4) on the piston rod. Adjust as required.

Check that the cylinder is fitted securely and that all hoses and connections are tight.

1 Free-wheel clutch
2 Stop lug
3 Clutch clamp union
4 Nut
5 Axle
6 Bracket

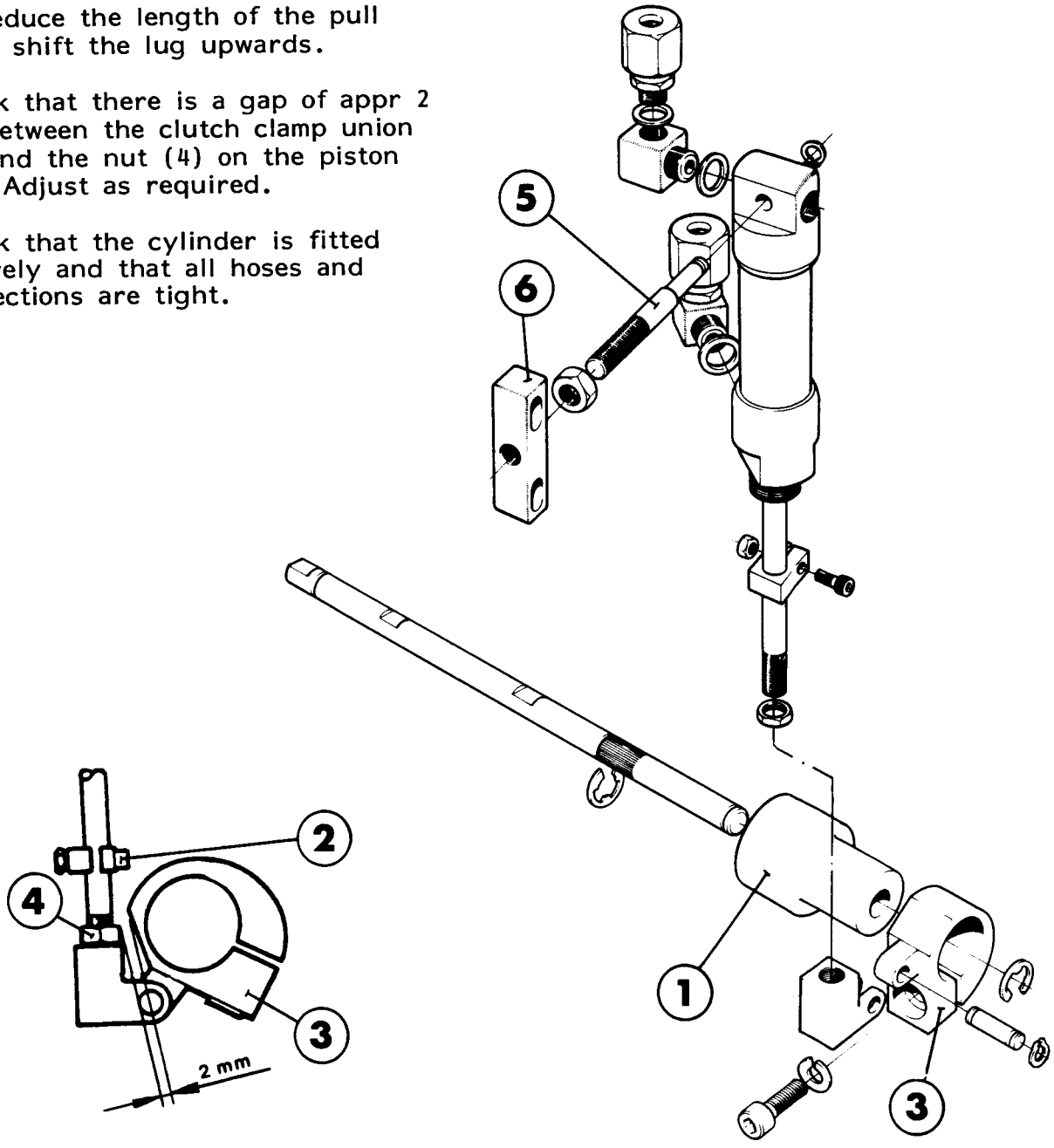

1/MS 1040-11
263

CHECKING

Bleed the hole punch. Move the carriage (1) to its end position. Check that there is an overtravel of 1-2 mm in the operating levers of the bleed valves (2), (3), and (4) when actuated. Also check that the operating levers and rollers move freely.

Check that hoses and piping are intact, that all connections are tight, and that there is no air leakage.

Check that there is no air leakage through the air cylinders (5) and (6).

Check the silencers (7) and clean them, if required.

Check the function of the pressure regulator (8) and mist lubricator (9). Make sure the pressure gauge (10) works. The mist lubricator is to deliver one drop of oil every two minutes. If required, adjust with the setting screw (11). If required, remove and clean the plastic reservoirs. Wash the reservoirs and the sintered filter of the pressure regulator with white spirit (TP No 90298-2). Blow the filter dry from the inside with compressed air.

Cont'd overleaf

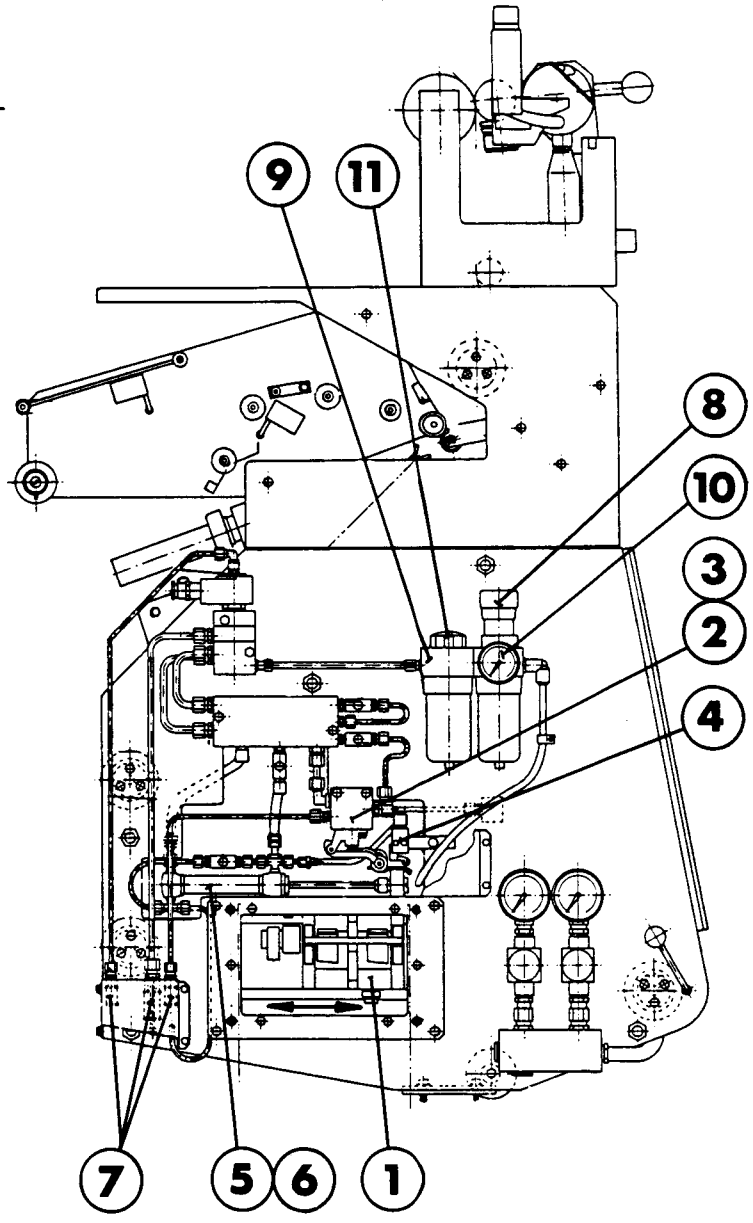

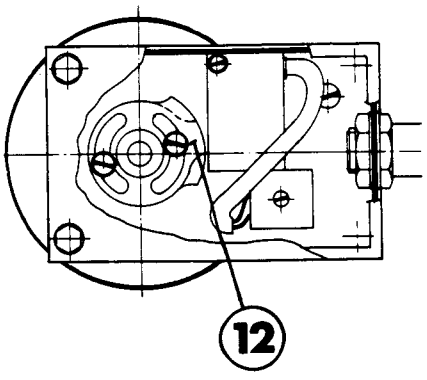

1 Carriage
2 Bleed valve
3 Bleed valve
4 Bleed valve
5 Air cylinder
6 Air cylinder
7 Silencer
8 Pressure regulator
9 Mist lubricator
10 Pressure gauge
11 Setting screw
12 Cam

Cont'd from previous page

Fill the mist lubricator with oil of the recommended type.

Test the function of the hole punch unit. Follow the pneumatic diagram on page 1050-71.

Check that the carriage reverses 10-15 mm before the front end position. If required, adjust by reducing or increasing the length of the cam (12) in the impulse transmitter for the hole punch unit. Shorter cam length means earlier reversing of the carriage, and vice versa.

1 Carriage
2 Bleed valve
3 Bleed valve
4 Bleed valve
5 Air cylinder
6 Air cylinder
7 Silencer
8 Pressure regulator
9 Mist lubricator
10 Pressure gauge
11 Setting screw
12 Cam

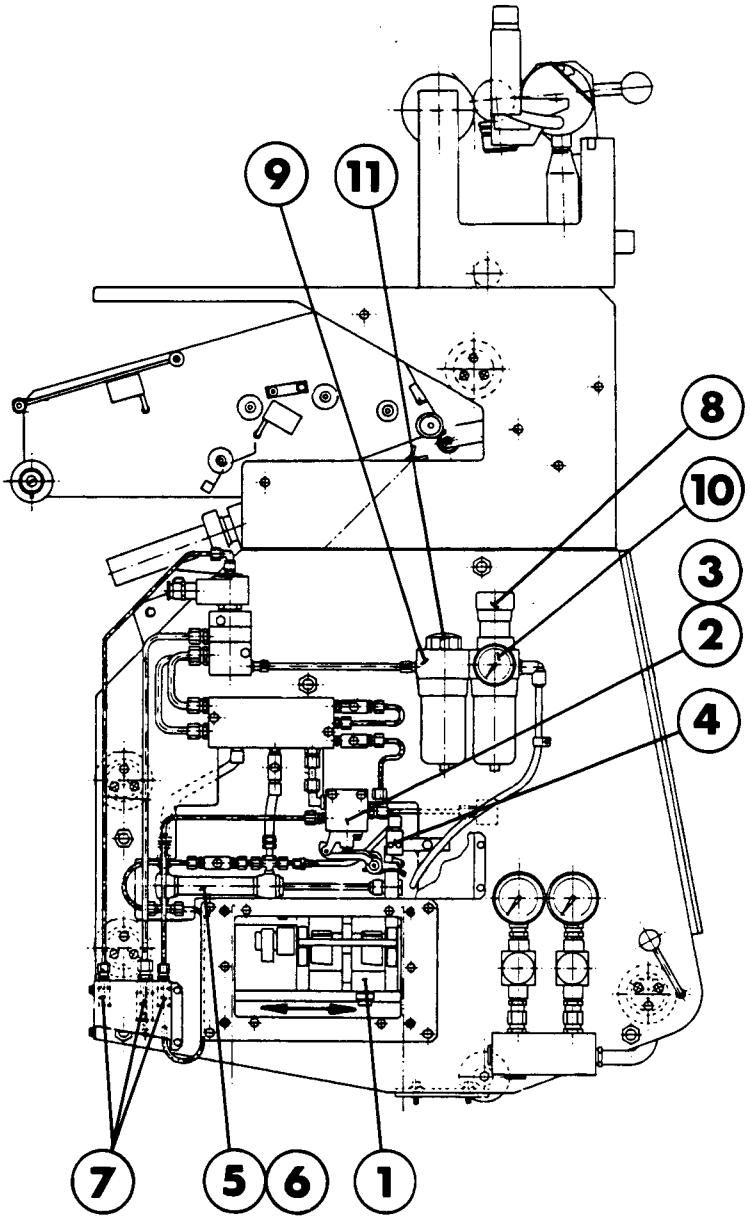

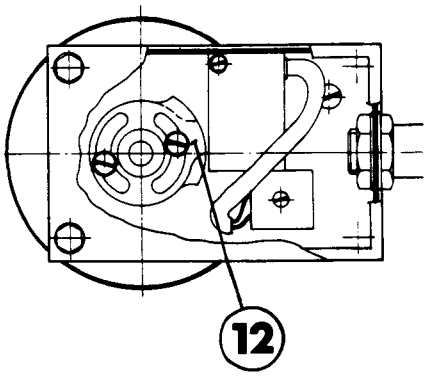

CHECKING

Bleed the hole punch. Move the carriage (1) to its end position. Check the operating levers.

Check that hoses and piping are intact, that all connections are tight, and that there is no air leakage.

Check that there is no air leakage through the air cylinders.

Test the function of the hole punch unit. Follow the pneumatic diagram on page 1050-71.

Check that the carriage reverses 10-15 mm before the front end position. If required, adjust by reducing or increasing the length of the cam (12) in the impulse transmitter for the hole punch unit. A shorter cam length means earlier reversing of the carriage, and vice versa.

1 Carriage
12 Cam

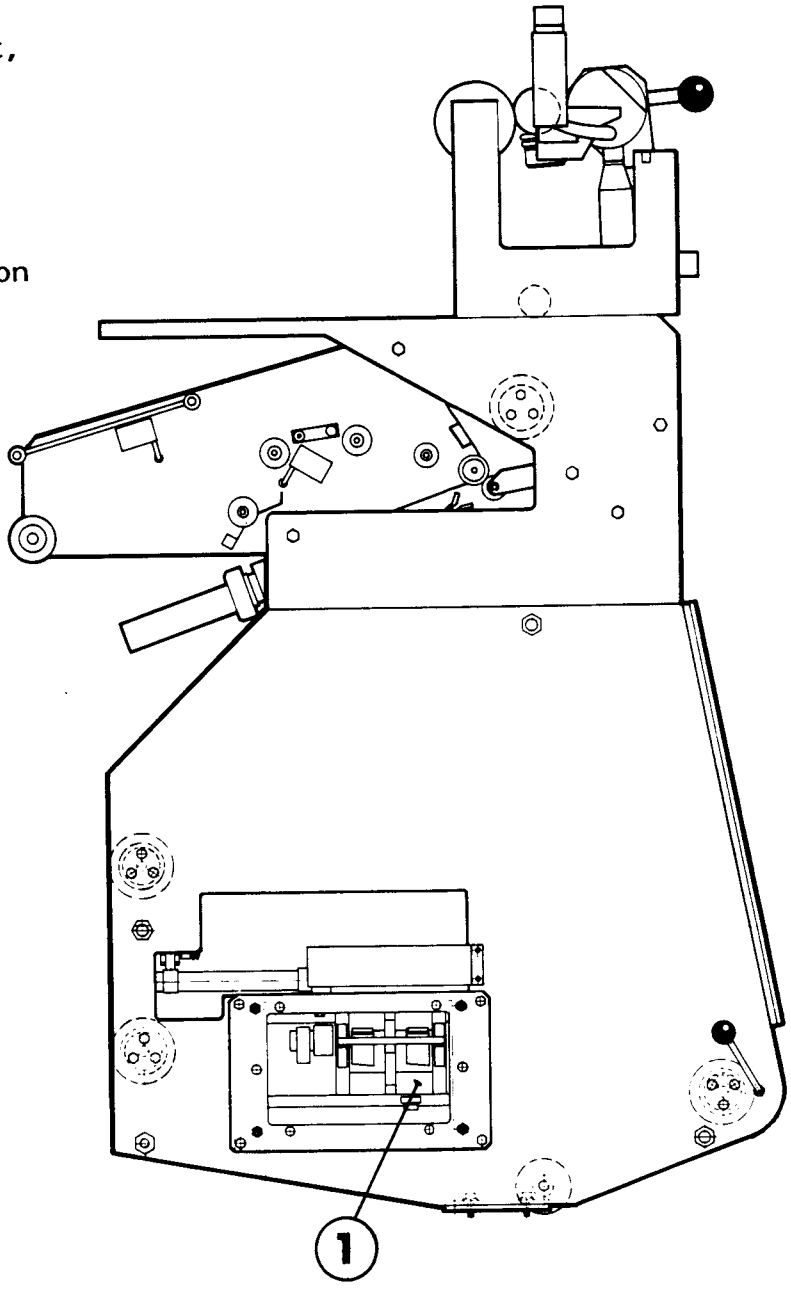

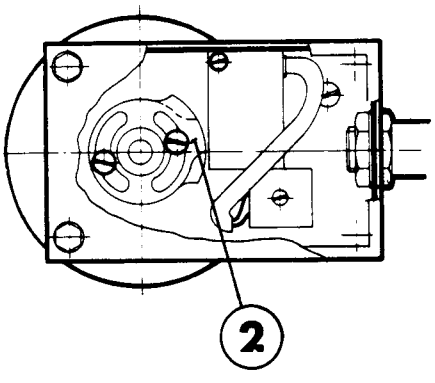

C1 Sealing
C2 Punch
C3 Pull tab feed
C4 Return cylinder
C5 Brake cylinder

V1 Solenoid valve (4-way)
V2 Valve, punch (3-way)
V3 Valve, feed (3-way)
V4 Valve, brake (2-way)
V5 Throttle valve, feed -
V6 Throttle valve, return
V7 Throttle valve, feed +
V8 Check-valve, brake

F Air filter
T Pressure regulator
M Pressure gauge
D Mist lubricator
K Air distributor block
P Impulse transmitter
Q Carriage

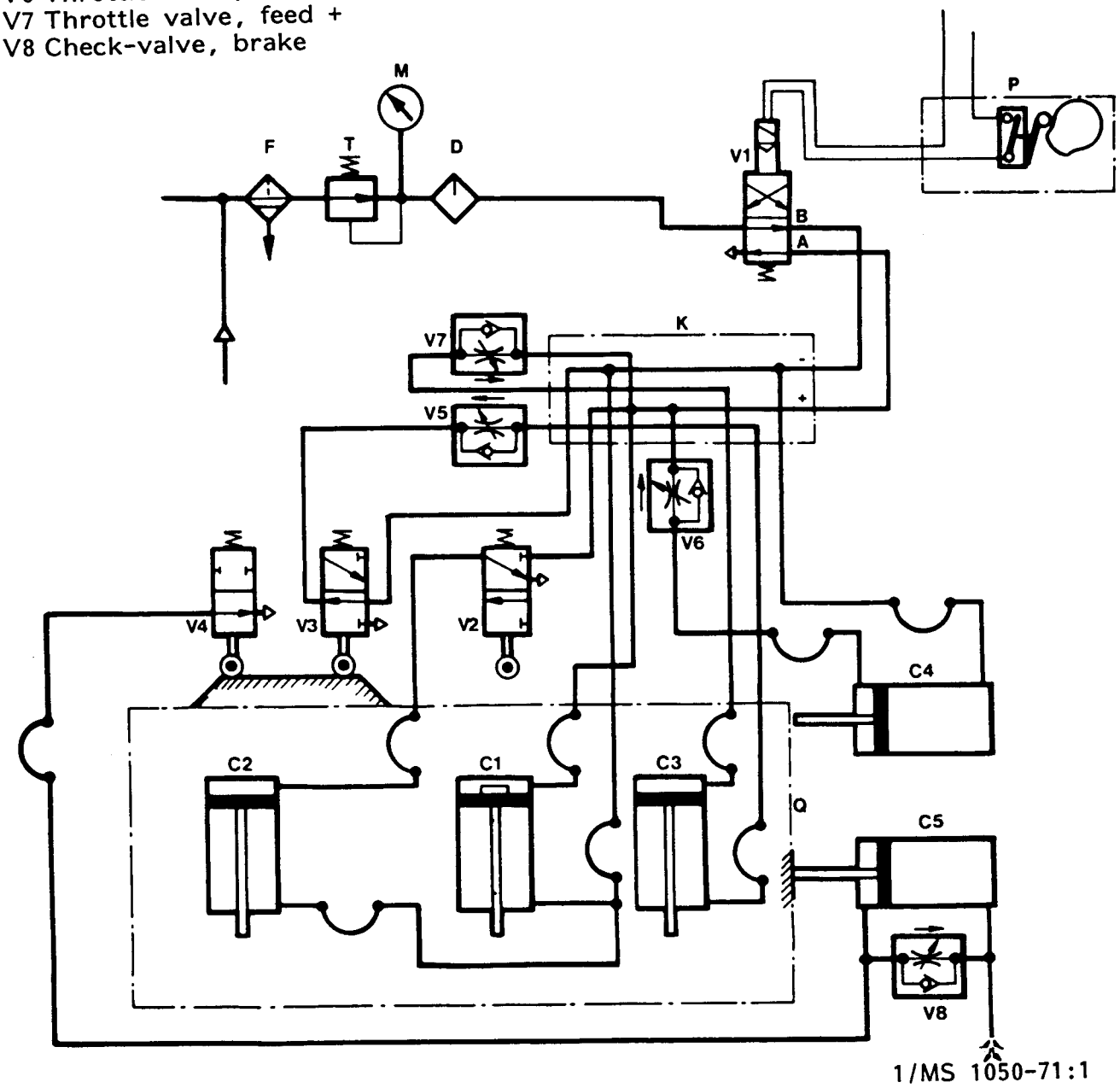

1/MS 1050-71:1
267

B = Impulse emitter
E = Distribution block
H = Signal emitter
R = Heating elements

C1 = Punch cylinder
C2 = Pull tab application
C3 = Pull tab feed cylinder
C4 = Carriage cylinder

V1 = Solenoid control 2/2 valve (signal)
V2 = Solenoid control 5/2 valve (dist)
V3 = Flow control valve (carriage)
V4 = Rapid exhaust valve (carriage)
V5 = Flow control (pull tab feed)
V6 = Flow control valve (pull tab feed)
V7 = Flow control valve (pull tab applicator)
V8 = Flow control valve (punch)

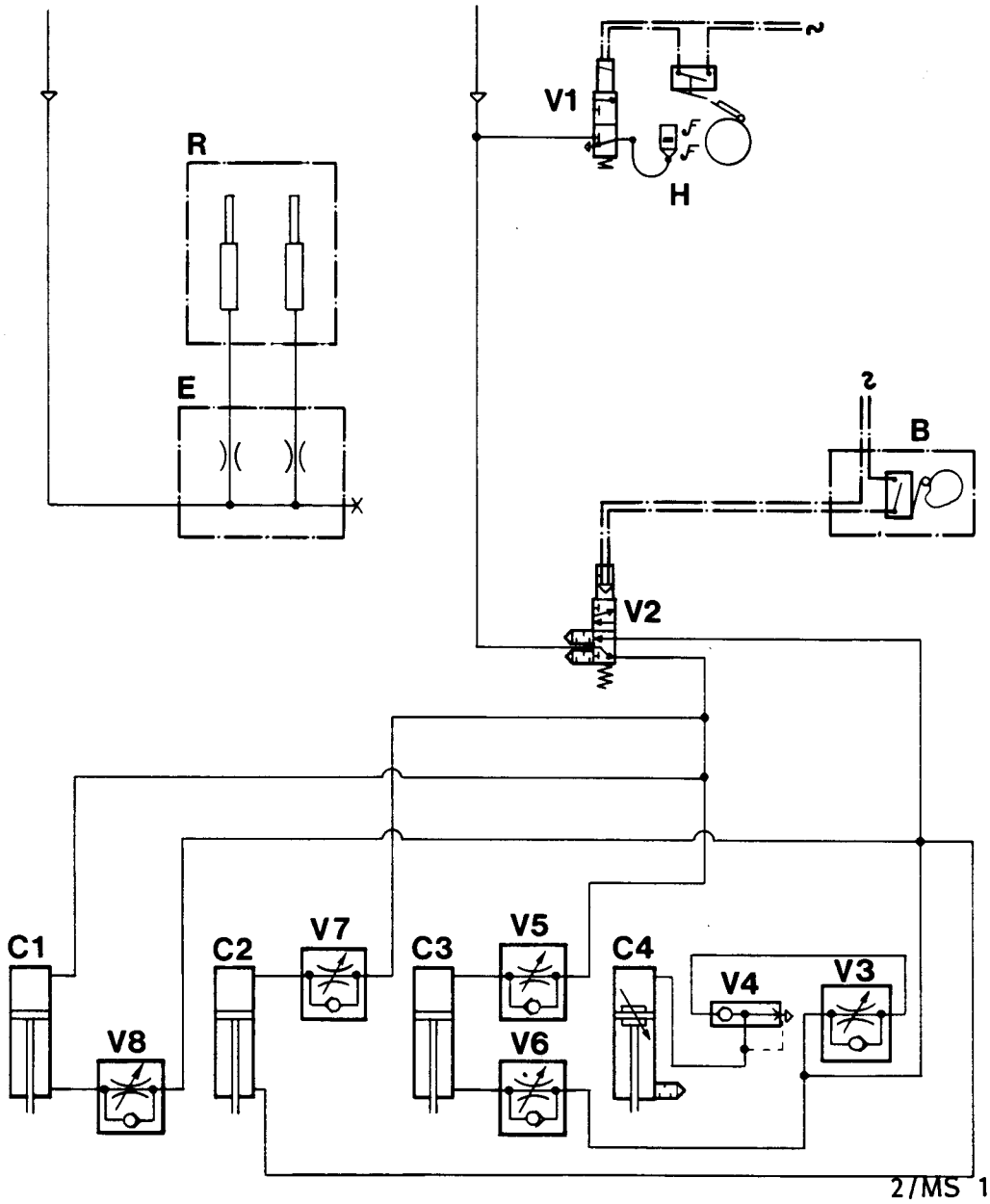

2/MS 1050-71:2
268

CHECKING

Check all the rollers and replace them in case of damage or wear.

Check the rubber surface of the pressure roller (2).

Check the counter roller (1). Remove any plastic deposits.

Check that all the setting screws (3) turn easily and that there is setting margin in both directions.

Check the function of the proximity switches (4).

The supply monitor (5) is to trigger an alarm when the thickness of the strip layers on the bobbin has gone down to appr 10 mm. The broken-strip monitor (6) is to trigger an alarm if the strip is depressed with the fingers.

Check and clean the strip brake (7). If required, adjust the brake action by shifting the counterweight.

1 Counter roller
2 Pressure roller
3 Setting screw
4 Proximity switch
5 Supply monitor
6 Broken strip monitor
7 Strip brake

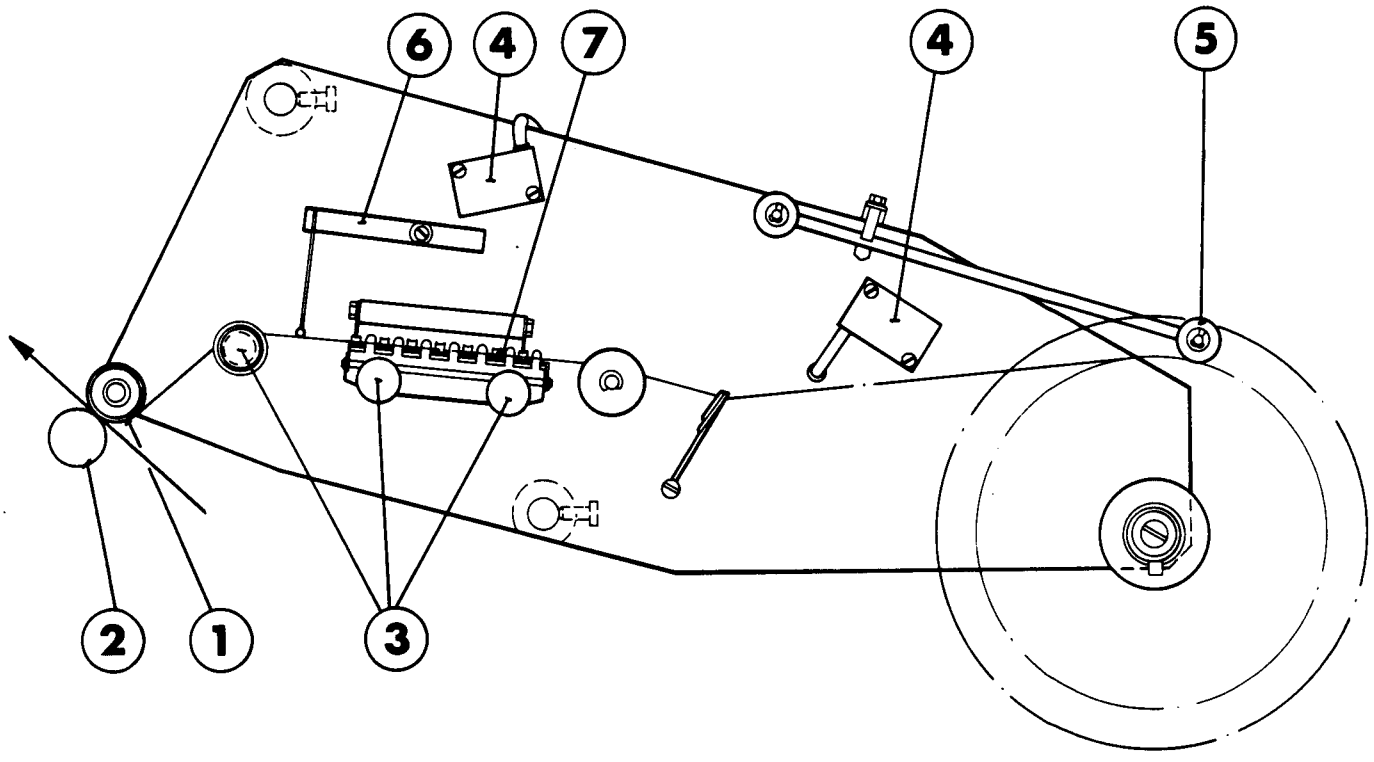

SETTING

Carry out coarse adjustment by loosening the screws (1) and shifting the entire strip applicator mounting plate.

Carry out fine adjustment with the setting screw (2).

Check that the counter roller (3) is aligned above the pressure roller (4). The hole strip (5) is to be aligned symmetrically over the holes. The LS strip (6) is to protrude 3 ± 0.5 mm beyond the paper edge.

1 Screw
2 Setting screw
3 Counter roller
4 Pressure roller
5 Hole strip
6 LS strip

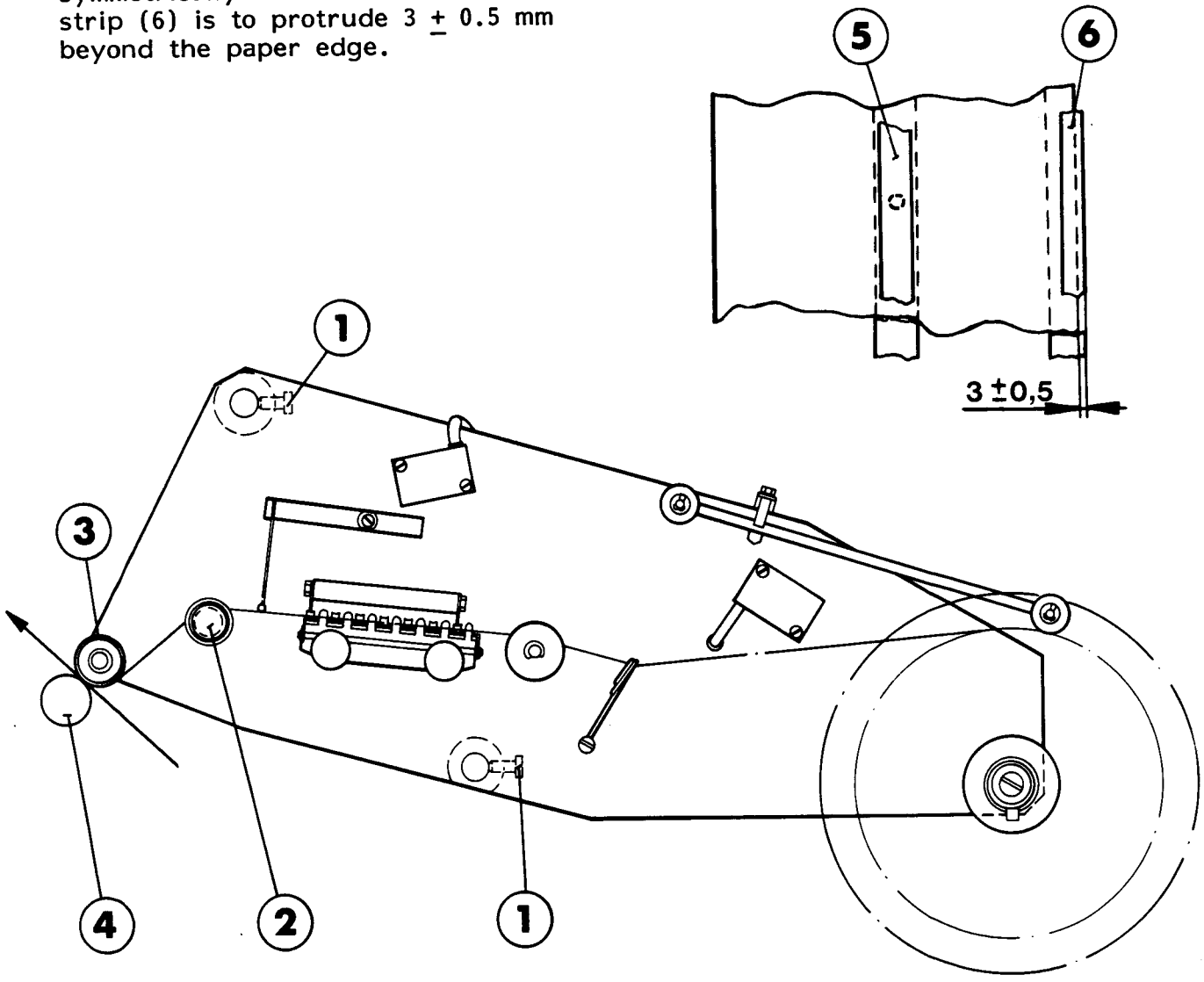

CHECKING

Turn off the air. Move the elements by hand to make sure they slide freely on their guides (1).

Check the air hoses (2) and (3).

Make sure the holes of the nozzles (4) are not blocked. Scrape off any plastic deposits.

Check the heat shield (5) and replace it, if required.
Turn on the air supply and check the movements of the cylinders. Adjust the throttles (6) to obtain smooth movements.

1 Guide
2 Air hose
3 Air hose
4 Nozzle
5 Heat shield
6 Throttle

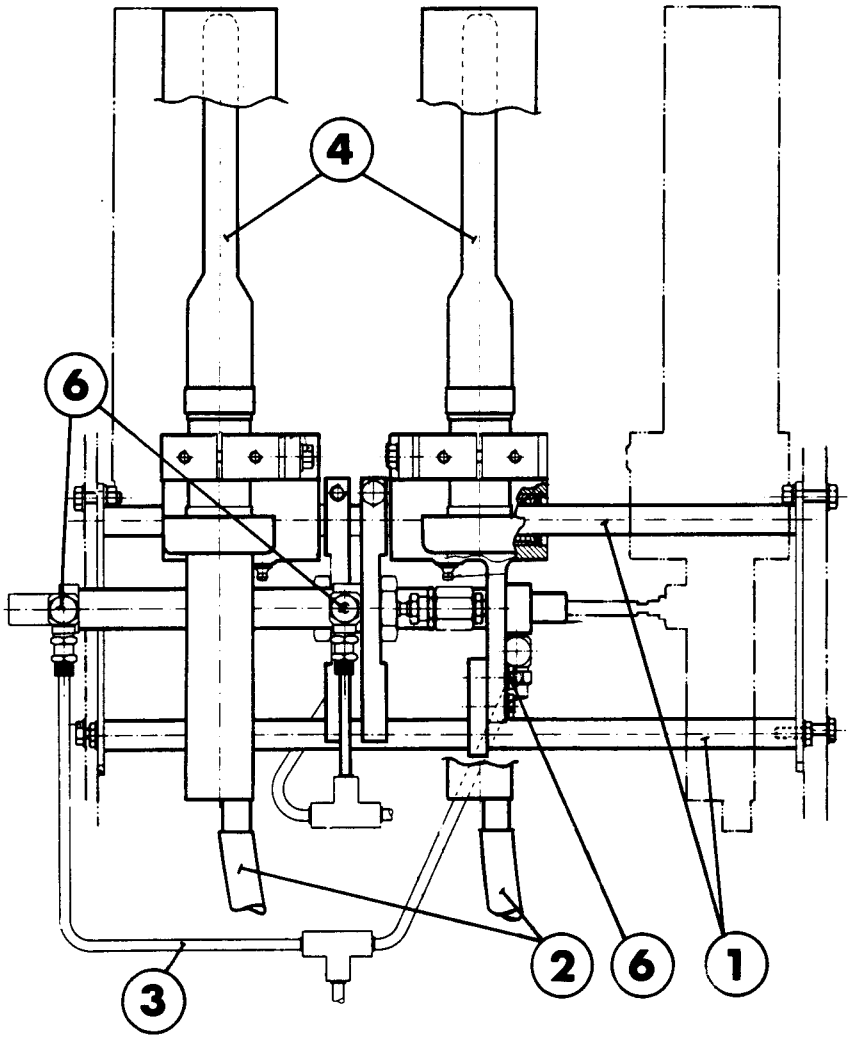

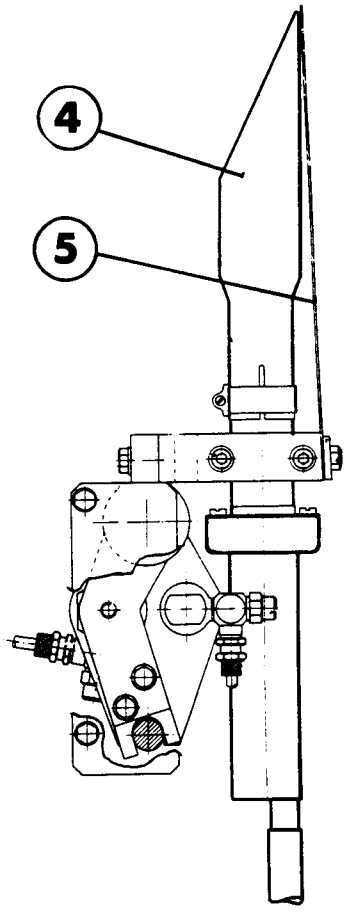

1/MS 1060-11
271

SETTING

Carry out coarse setting of the element position sideways by loosening the screw (1) and shifting the yoke (2).

Carry out fine adjustment by means of the nut (3).

The element for the hole strip is to be aligned above the holes made in the paper web.

The element for the LS strip is to be positioned in such a way that the outer row of holes is in line with the paper edge.

After loosening the screws (4), gap A between the element and the paper web can be adjusted. By loosening the screws (5), the element can be set parallel with the paper web.

Gap A should be appr 2 mm.

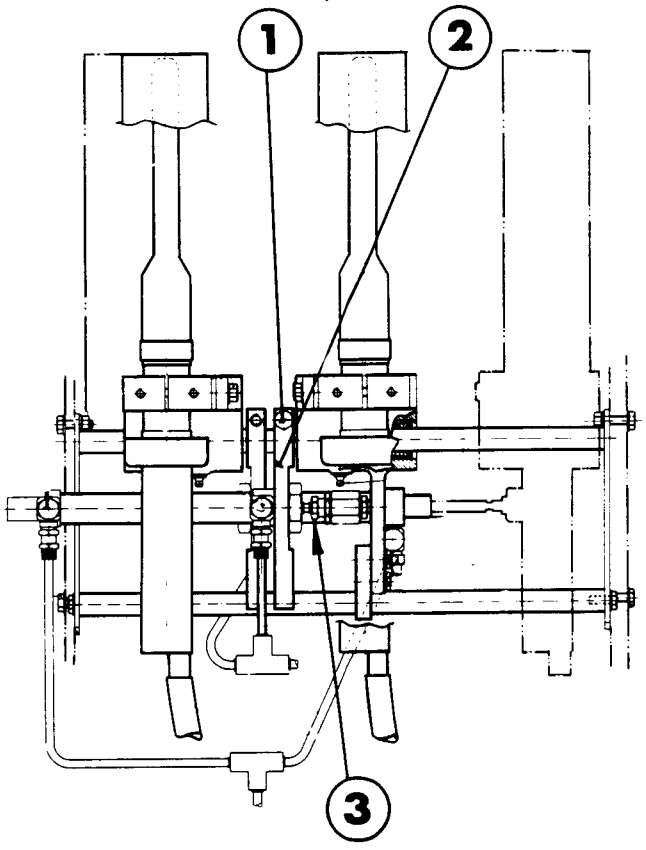

1 Screw
2 Yoke
3 Nut
4 Screw
5 Screw

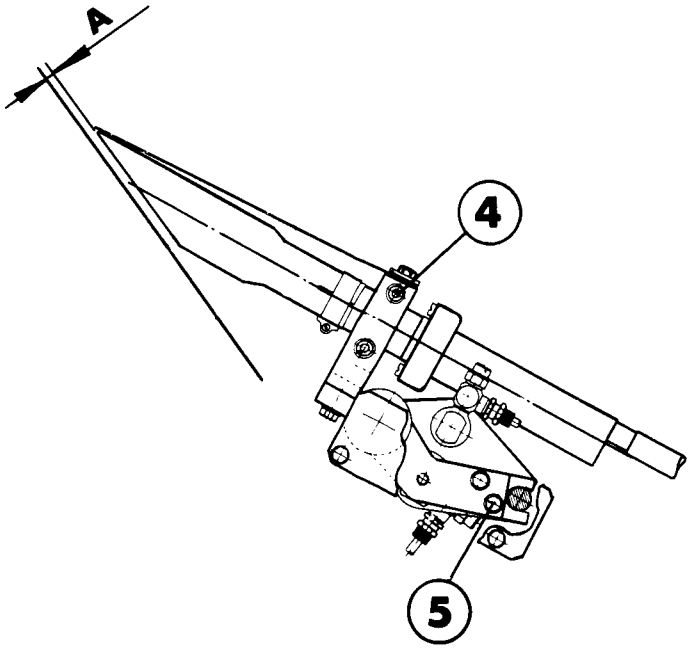

CHECKING

Check that the pressure gauges (1) work and indicate the recommended air pressure. If required, adjust the air pressures by means of the throttle valves (2).

Check that the air hoses (3) to the elements are intact.

1 Pressure gauge
2 Throttle valve
3 Air hose

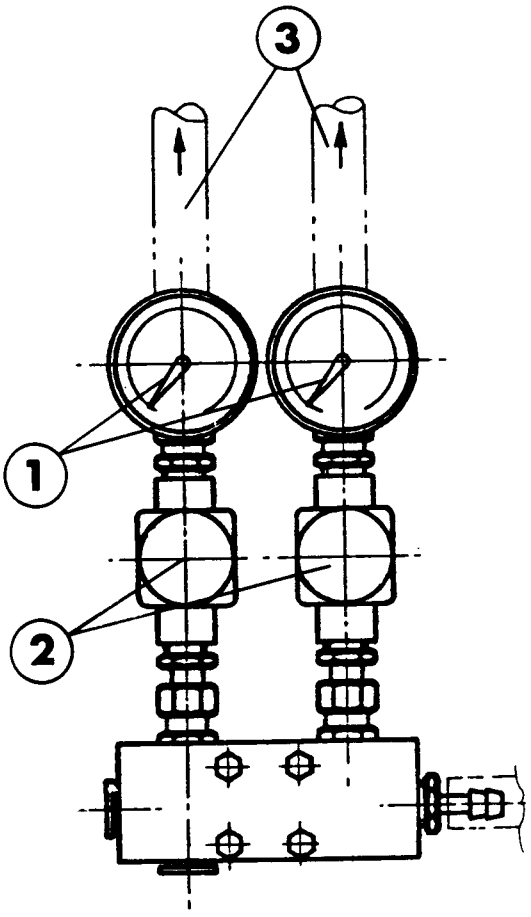

CHECKING

Remove the screws from (1) and (2).

Connect manometer (range 0-4 kPa) or tool 541001.

Set pressure according to page 1455-51:2.

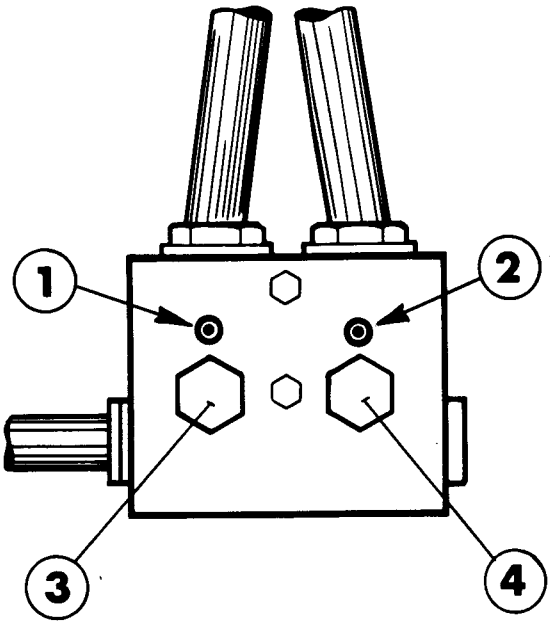

1 Connection, hole strip element
2 Connection, LS strip element
3 Adjustment screw, hole strip element
4 Adjustment screw, LS strip element

CHECKING

Check that the guide rods (1) and (2) are fitted securely. Scrape off any plastic deposits and check that the rods are not uneven, scratched, or burred, which may cause damage to the plastic coating of the packaging material. If required, polish the guide rods with fine emery cloth.

Check that the gap between the double guide rods (1) is 2 mm.

1 Guide rod
2 Guide rod

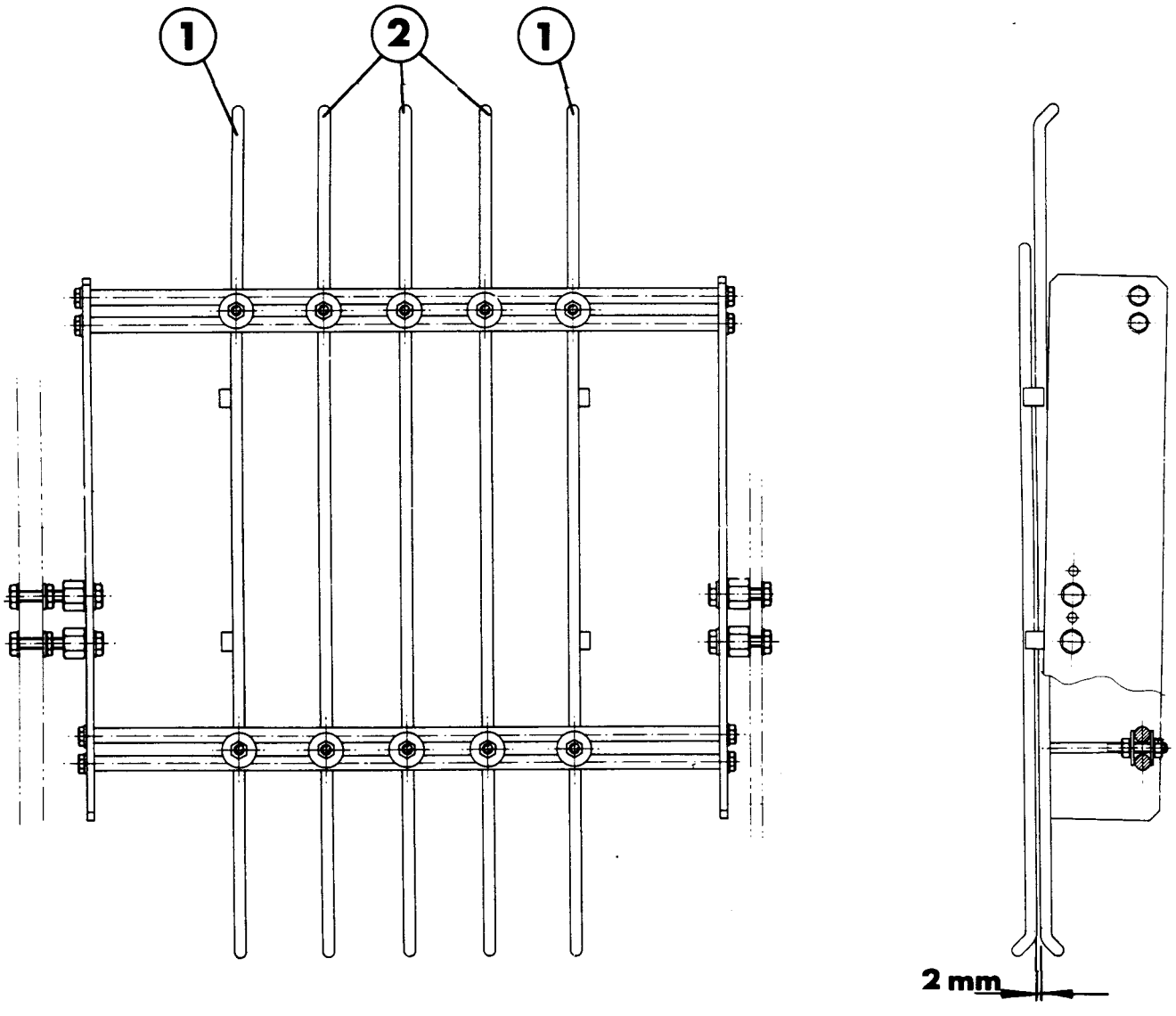

CHECKING

Check that the bending roller (1) rotates freely in its bearings, that its shaft ends (2) are intact, and that there are no defects on the bending roller that might damage the paper web.

Check the bearings of the bending roller. Replace damaged or worn bearings (3). Maximum permitted play between the axle and the bearings is 1 mm.

Check that the rollers (4) rotate freely; replace them, if required.

1 Bending roller
2 Shaft end
3 Bearing
4 Roller

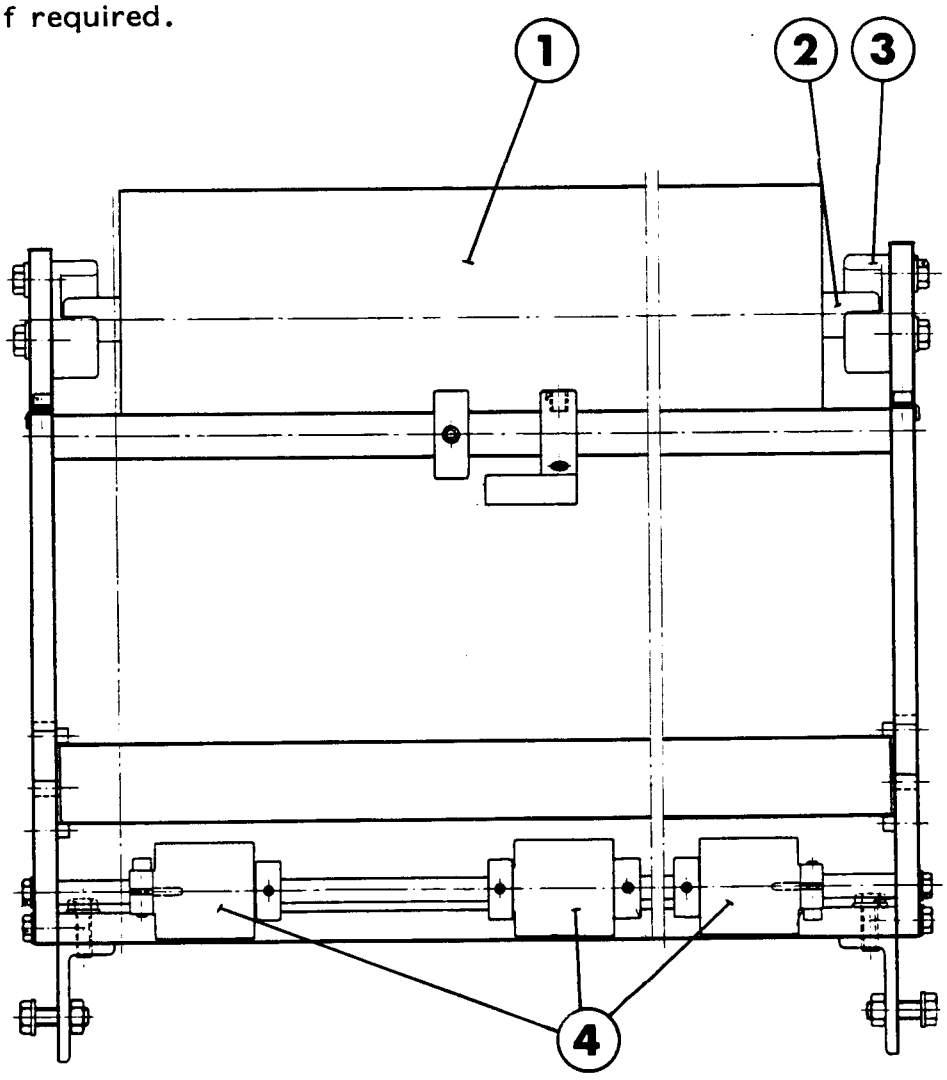

OVERHAUL/CLEANING

Dismantle the ink unit. Clean the components in industrial alcohol, rinse in water, and leave to dry in the air.

Check the axles (1) and (2), axial play 0.2-0.3 mm. Check the O-ring (4) of the distributor roller, O-rings (6) and (7) of the printing wheels. Replace as required.

On assembly do not oil the axles and bushings.

Check that the ink roller (5) is positioned right opposite the distributor roller. Adjust by means of a washer under the flange of the eccentric axle of the ink roller.

Adjust the eccentric axle of the ink roller (turn clockwise to increased pressure) until the rollers do not slip against each other.

Ink

The ink is supplied by Tetra Pak ready-mixed in bottles as spare part No. 90299-13.

WARNING! No other ink must be used. Some other inks react with the wetting agent in the sterile bath with inferior wetting as a result.

1 Eccentric axle of ink roller
2 Axle of distributor roller
3 Distributor roller
4 O-ring
5 Ink roller
6 O-ring
7 O-ring

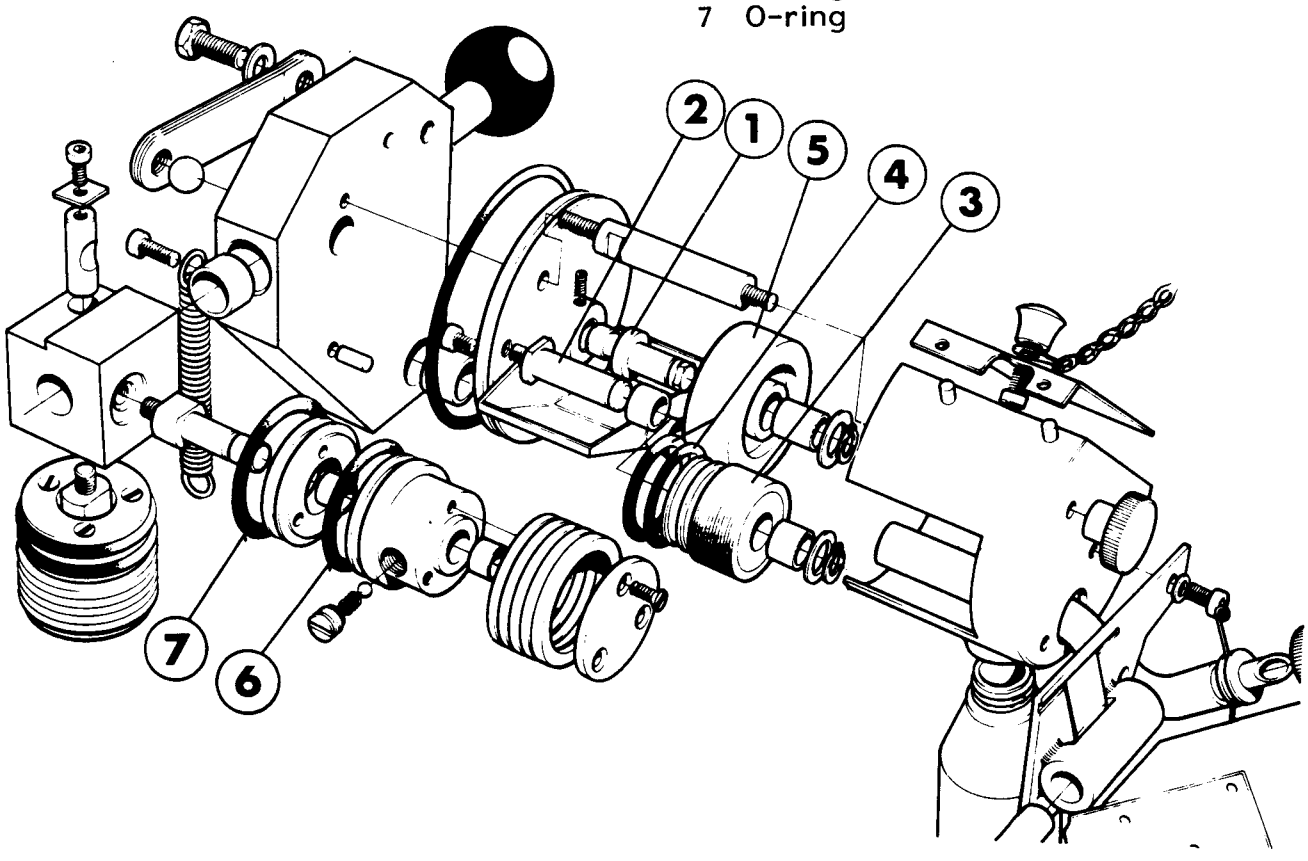

SETTING

Check that the inner O-ring (6) of the printing wheel (1) is positioned right between the O-rings (2) of the distributor roller (3). If required, adjust with washers under the flange of the roller axle (8).

The gap between distributor roller (3) and wheel (1) is to be such that the printing wheel is driven by the paper web via the outer O-ring (7).

If required, adjust distributor roller with the eccenter axle of the ink roller (4).

Ink transfer may be reduced by turning the eccentric axle of the ink counter-roller counter-clockwise. Clockwise turning increases the amount of ink transferred.

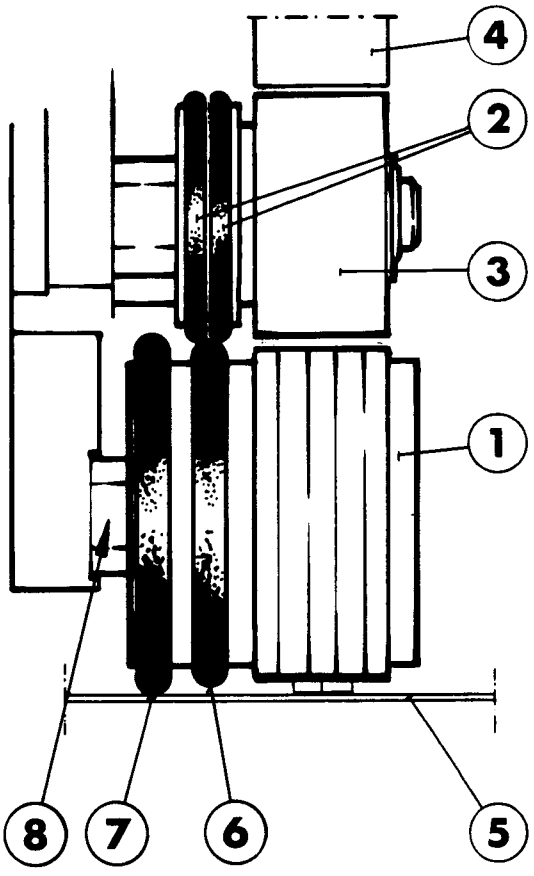

1 Printing wheel
2 O-ring
3 Distributor roller
4 Ink roller
5 Paper web
6 O-ring, inner
7 O-ring, outer
8 Roller axle

DESCRIPTION	PAGE
Templates/tools (3 pages)	1210-1

Intended for	Page	Order No	Machine type	Qty	Fig
Setting of pressure chains of heating sides	341-51	75551-101	TC/TCA 150	1	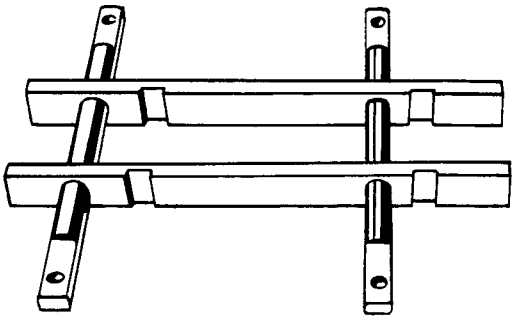
		75551-102	TC/TCA 300	1	
		75551-103	TC/TCA 500	1	
Setting of pressure chains of heating sides	341-51	76548	All 1		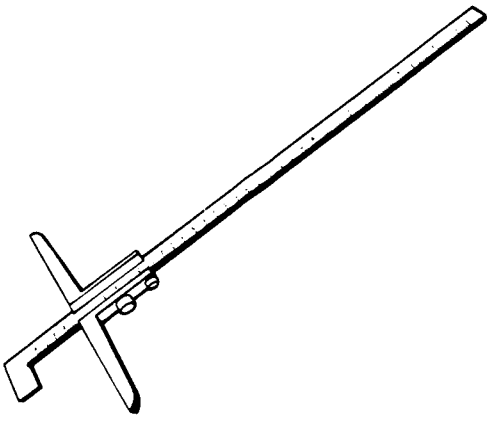
Riveting of the bearings on elevator scoops	733-31	70267	All 1		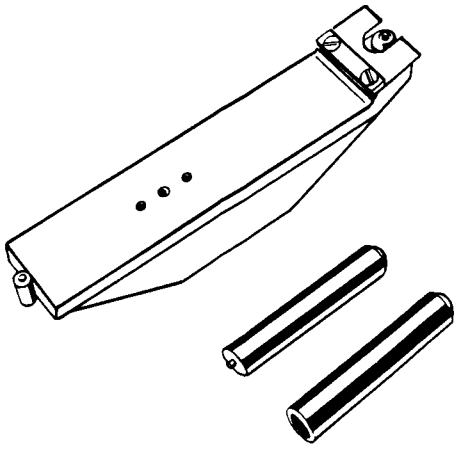

3/MS 1210-1:1
280

Intended for	Page	Order No.	Machine type	Qty	Fig
Setting of chain rails on pressure sides	313-51	75642	TC/TCA 150	1	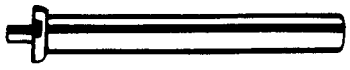
		75641	TC/TCA 300	1	
		75615	TC/TCA 500	1	
Setting of chain rails on pressure sides	313-51	786230-104	All	1	
Setting of chain rails on heating sides	310-51	77076	TC/TCA 150	1	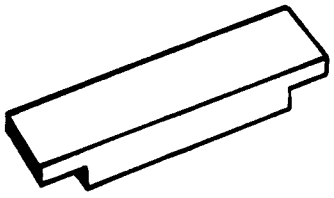
		77077	TC/TCA 300	1	
		77078	TC/TCA 500	1	
Checking and setting: Wear of chain rails.	354-21	782301-101	All	1	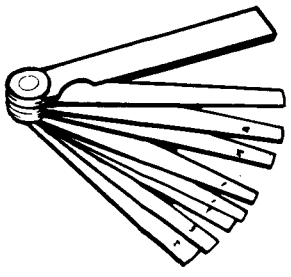
Parallelity of carbon brushes	348-11 349-11				
Distance Chain rails-pressure chains	310-51				
Gear play in cutting unit	541-51				

Intended for	Page	Order No.	Machine type	Qty	Fig
Checking of pressure roller spring force	204-11	74767-102	All	1	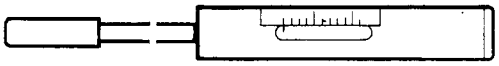
Setting of the holder for contact rail unit	345-51	74976	TC/TCA 150	1	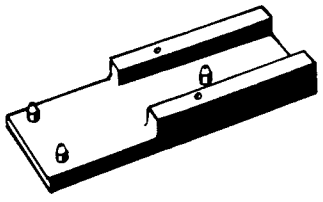
Calibration of jaws	335-51	70027-2	All	1	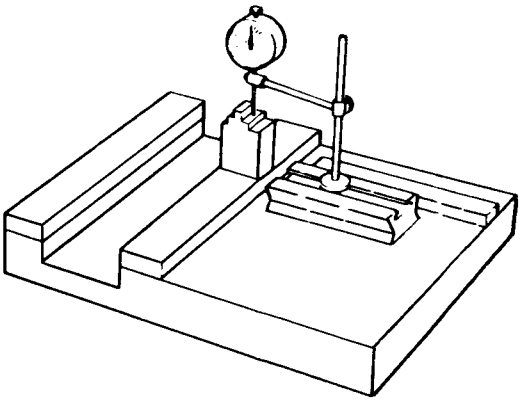
Setting of air pressure in Leister element, HS 227	1065-11:2	541001	All	1	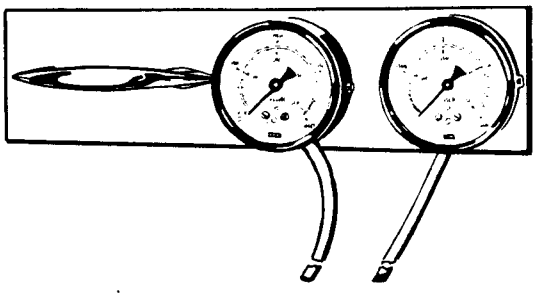

DESCRIPTION	PAGE
Synchronization of cutting unit and frame sides	1405-51
Synchronization of cutting unit and frame sides - final setting of cutting position	1410-51
Syncronization of cutting unit and frame sides - final syncronization	1410-52
Synchronization of impulse emitter	1415-51
Synchronization of elevator chain, packer A	1420-51
Synchronization of package distributor, packer A	1425-51
Synchronization of layer 2 cam, packer A	1430-51
Synchronization of maltese cross and cam, packer A	1435-51
Synchronization of table and plates, packer A	1440-51
Synchronization of elevator chain, elevator	1445-51
Packer synchronization, packer B (3 pages)	1463-51
Settings, TC/300, with elevator E or packer B. (3 pages)	1475-51
Settings, TC/300 with packer A (3 pages)	1480-51
Lubricant recommendations (2 pages)	1490-11

Fit the cutting unit drive chain and tension it. Inch the cutting unit by pulling the drive belt until gap A is obtained between the counter wheel of side 2 and the cutting wheel of side 4; gap A is to be as listed below.

Set the twin chain of heating side 2 to obtain height B between the machined surface of the frame and the lower round axle of the twin chain; height B is to be as listed below.

Fit the side frame drive chain and tension it.

Check that height B is as close to the listed value as possible.

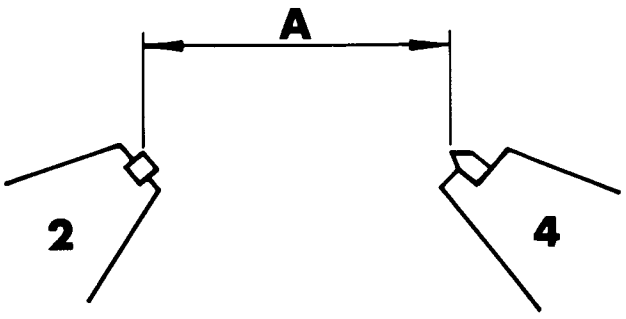

fig 1

Machine type	Gap A	Height B
TC,TCA/150	183	176
TC,TCA/300	22	310
TC,TCA/500	100	325

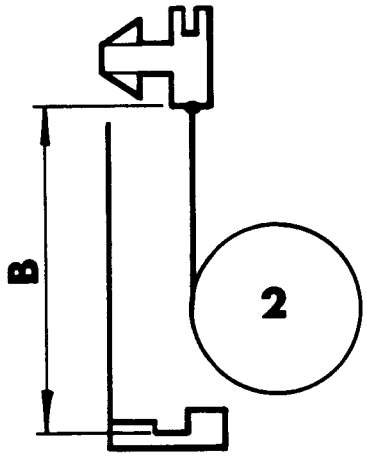

fig 2

FINAL SETTING OF CUTTING POSITION

a) Inch the machine so that the side drive worm gear sprocket is positioned in such a way that the yoke setting screws (4) and (5) are accessible, see fig 3. Switch off MAINS POWER.
b) Use a ruler to make two marks (1), see fig 2.
c) If the cut is made 2 mm below (fig. 1) the correct cutting position between the packages, make a new mark (2) 2 mm above the original mark (fig. 2). If the cut is made above the correct position, make a new mark 2 mm below the original mark.
d) Loosen the three screws (3) in the sprocket, see fig. 3.
e) Turn out the setting screw (4) about one turn, and turn in the setting screw (5) to rotate the sprocket forward in the direction of the arrow. The jaws are now shifted in the normal direction of movement, and it will be possible to align the mark on the jaw with the upper mark (2).
f) Tighten the screws (3) in the sprocket.

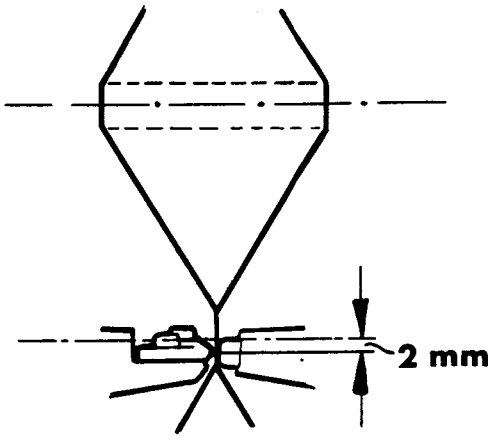

fig 1

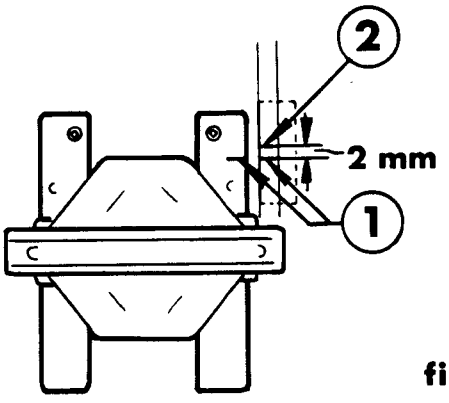

fig 2

If the available adjustment range is insufficient, it will be necessary to move the chain, skipping a tooth on the sprocket and then carry out setting once more as described above.

Note that the impulse emitter must be resynchronized whenever the cutting position is adjusted, see page 1415-51.

1 Mark (original)
2 Mark (second)
3 Screw
4 Setting screw
5 Setting screw

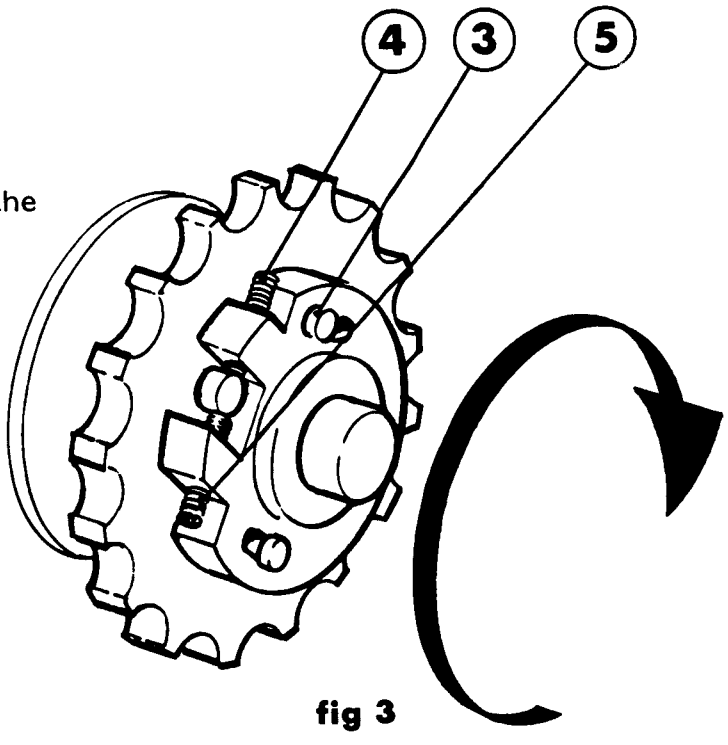

fig 3

FINAL SYNCHRONIZATION

The cut should be made exactly in the middle between the packages so that the fins left on each package are equally wide. This result depends on the position of the jaws in relation to the cutting unit.

Loosen the screw (1), and turn the nut (2) clockwise to shift the cut higher up on the paper tube or counter-clockwise to shift the cut lower down on the paper tube. Orientation of paper tube, see picture on page 307-11.

Tighten the screw (1).

Final synchronization may be made while operating the machine. There is no need to resynchronize the impulse emitter after final synchronization as described.

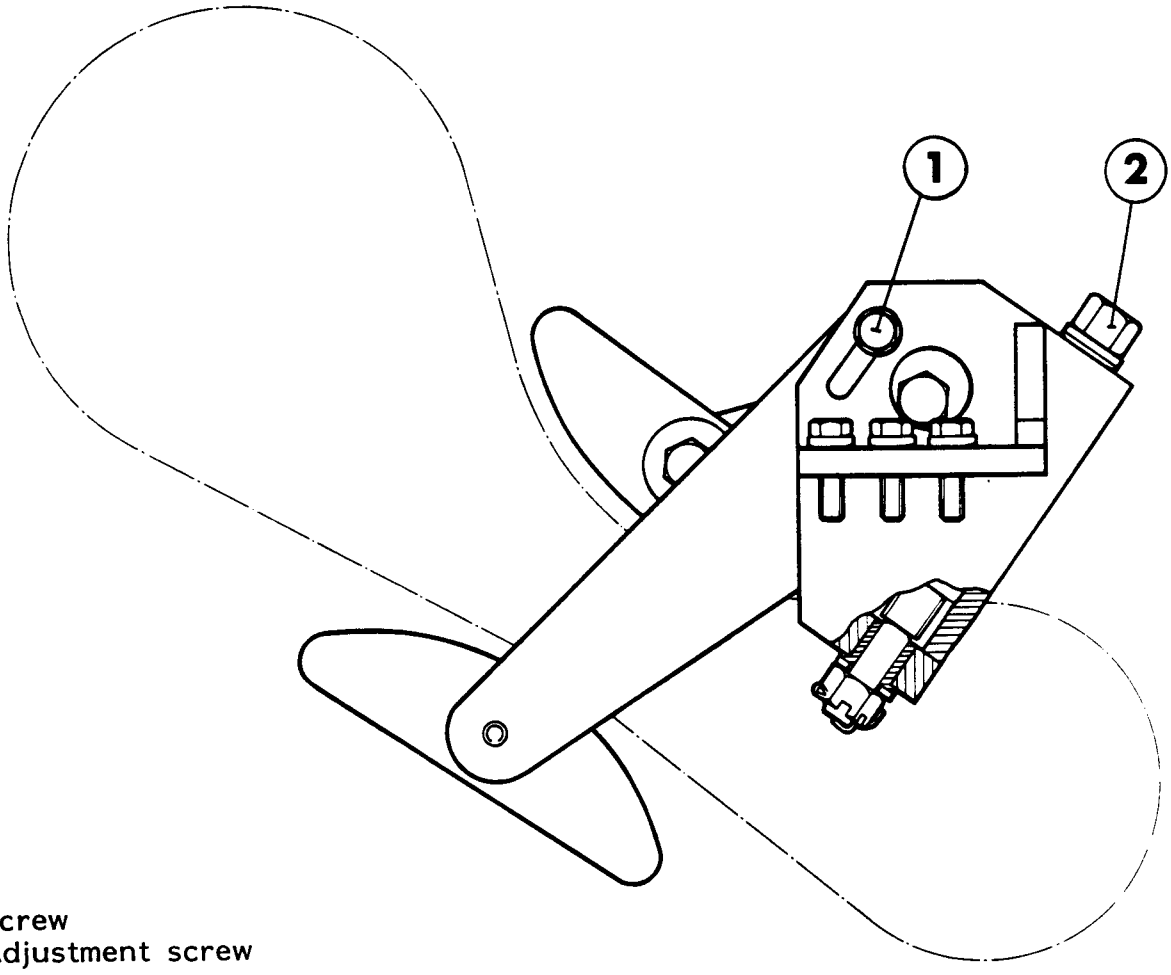

1 Screw
2 Adjustment screw

Switch off MAINS POWER.

TPC Heating:

Disconnect the cables of heating side 1 and connect a buzzer to the two cable leads.

IH Heating:

Loosen the nut (6) and isulate both ends of the IH cable (8) from the connector in the clamp (7). Connect a buzzer to each end of the IH cable. (The cable may have to be removed from the clamp.)

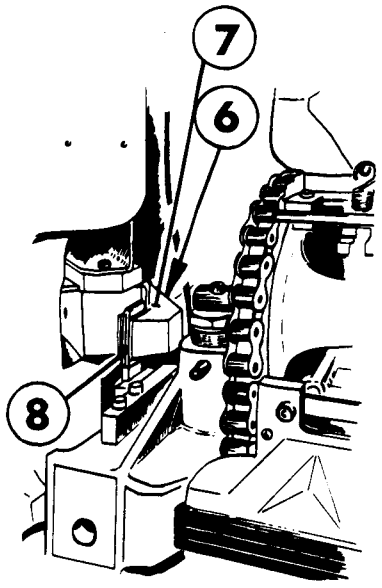

Inch the side forward until the carbon brushes (1) of one of the heating jaws reaches the contact rails (2). The buzzer sounds.

Inch, by means of the Vee-belt, the carbon brushes 20 mm inbetween the contact rails.

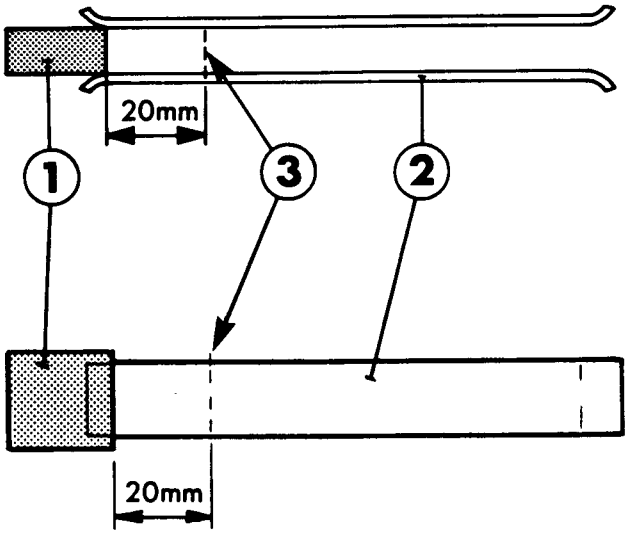

Check that the start point of the impulse cam is now positioned opposite the trigger point (4) of the proximity switch (5).

If required, adjust the cam to correct position. Check with the gauge (9) that the gap between the switch and cam is 1 mm.

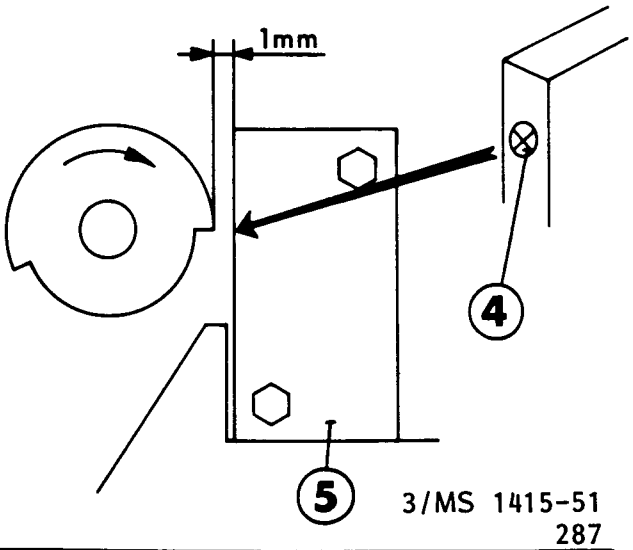

1 Carbon brush
2 Contact rail
3 Position for impulse ON
4 Trigger point
5 Proximity switch
6 Nut
7 Clamp
8 IH Cable
9 Gauge TP No 782301-101

Set the gap between the counter and cutting wheels (sides 2 and 4) acc to fig 1 on page 1405-51.
Fit the elevator chain so that the rear axle of scoop 1 is positioned acc to fig. 1.
Scoop numbering is shown in fig. 2. These scoop Nos are only significant for TC/300 and TCA/300 whose elevator chains have a different number of links between the scoops, see table, and for TC/500 and TCA/500 whose scoops 2 differ in function from scoops 1 and 3.

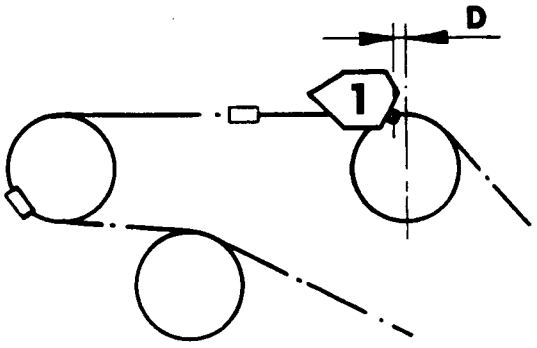

fig 1

Final adjustment of the elevator chain is to be made when test-running, when it is possible to observe how the cut-off packages drop into the scoops; the packages must be given time to settle on the drop plates before being taken away by the scoops. If required, the elevator chain has to skip a tooth on the drive sprocket in either direction if the correct scoop position relative the packages is to be obtained.

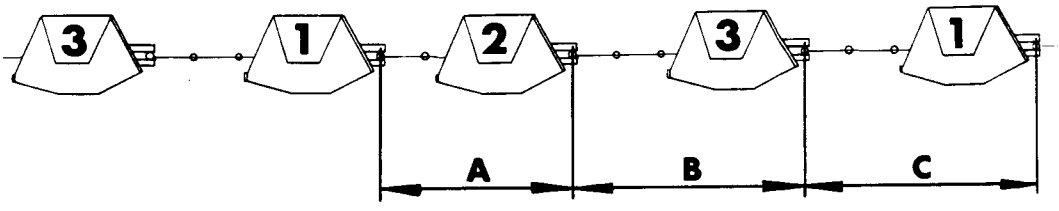

fig 2

Machine type	Number of chain links			
	A	B	C	D
TC/150, TCA/150	15	15	15	1
TC/300, TCA/300	13	16	16	1
TC/500, TCA/500	17	17	17	1

Set scoop 1 acc to fig 1 on page 1420-51.

Slacken the distributor carriage (2) drive chain (1).

Position the distributor carriage A mm from the drive sprocket (3) when the carriage is moving in the direction of the arrow. Distance A can be adjusted, either by skipping a sprocket tooth, or by altering the meshing of the drive shaft (4) bevel gear with the drive unit (5) bevel gear. Tension the drive chain. Check that distance A is as near the listed value as possible.

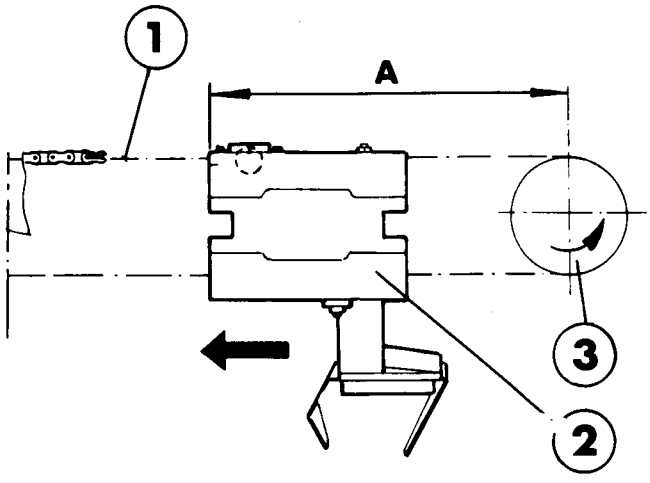

Machine type	A (mm)
TC,TCA/150	96
TC,TCA/300	115
TC,TCA/500	76

1 Chain
2 Distributor carriage
3 Drive sprocket
4 Drive shaft
5 Drive unit

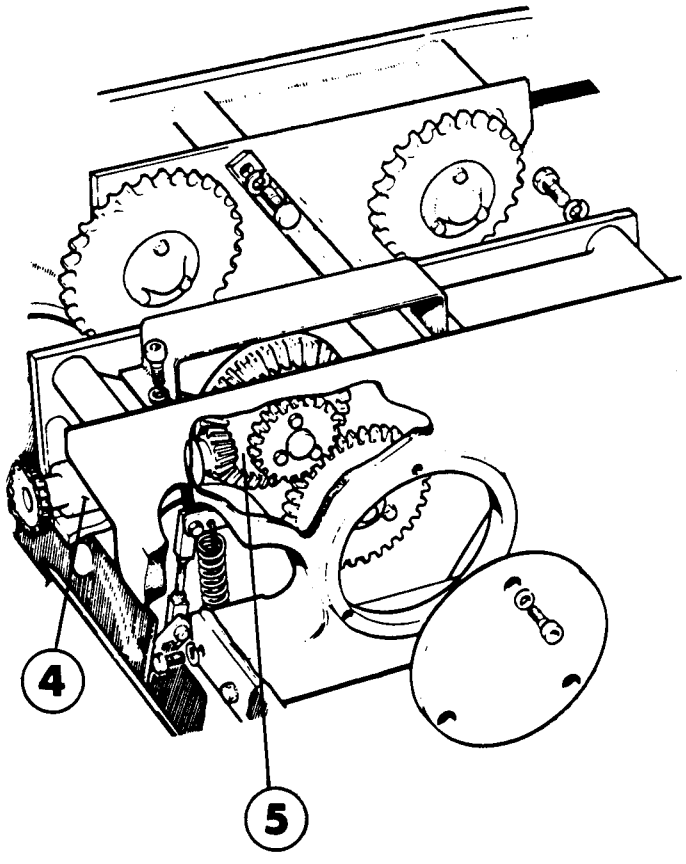

Set scoop 1 acc to fig 1 on page 1420-51.

Set the cam (1) so that the cam roller (2) is positioned at the beginning of the cam high, acc to fig 1.

Adjust the cam position by loosening the screws (3) and turning the cam relative the gear wheel (4). If the oblong holes in the gear wheel are insufficient for the required adjustment, alter the meshing with the gear of the drive unit (5).

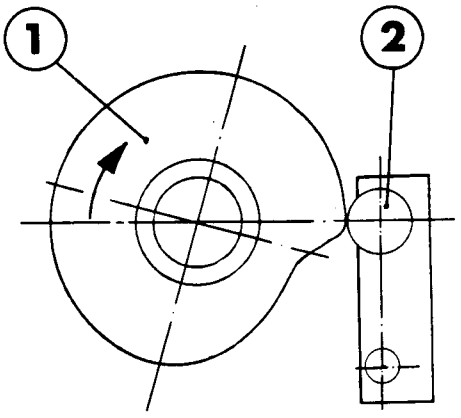

fig 1

1 Cam
2 Cam roller
3 Screw
4 Gear wheel
5 Drive unit

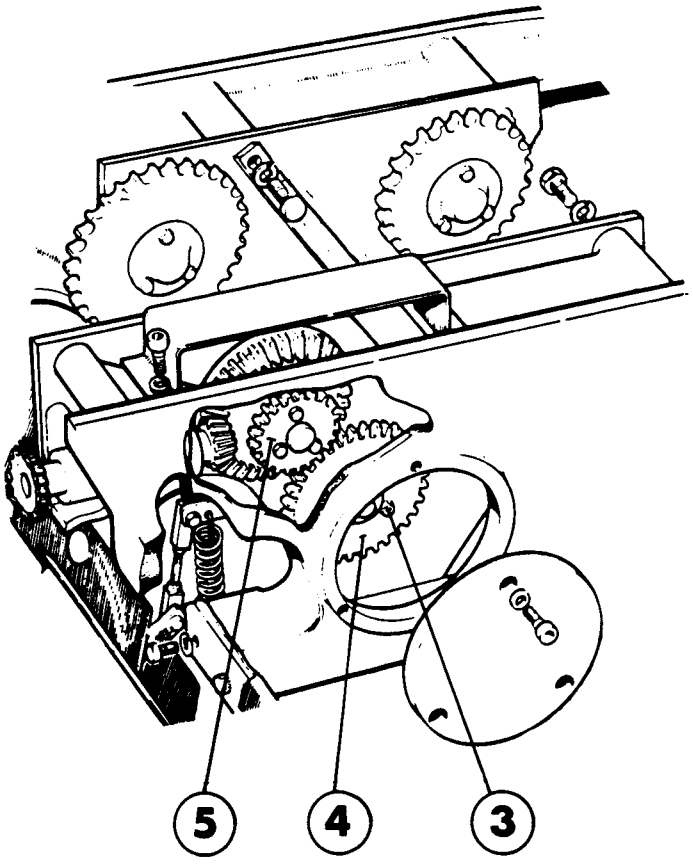

Set the gap between the counter and cutting wheels (sides 2 and 4) acc to fig 1 on page 1405-51.

Set the maltese crank (1) so that its cam roller (2) points towards the centre of the maltese cross and so that it is in line with the table catch (3).

Set the table catch cam (4) so that the cam roller (5) on the catch has just left the cam (4). If this cannot be done, the meshing of the gear wheel (6) with the drive gear must be altered.

Fit the packer drive chain and tension it.

Check the settings carried out.

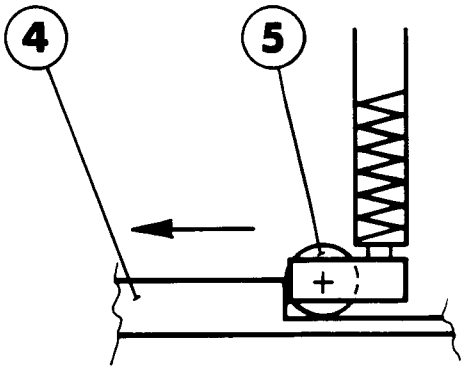

1 Maltese crank
2 Cam roller
3 Catch
4 Cam
5 Cam roller
6 Gear wheel

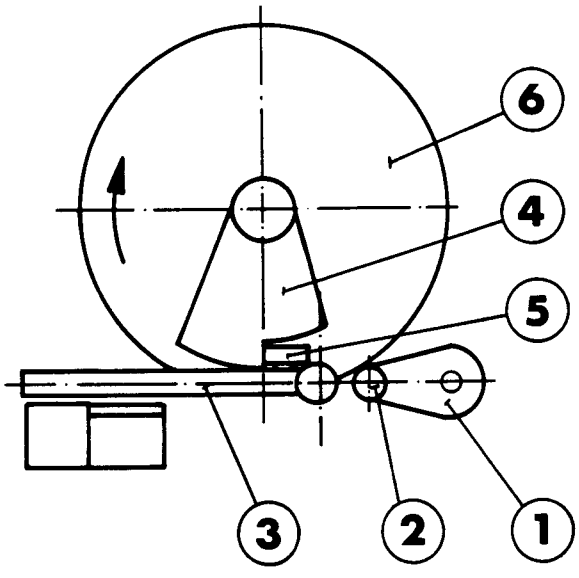

Synchronization is to be done when the packer is positioned with both table and plates at stand-still. The catch cam roller is to have left the table catch cam, acc to page 1435-51.

a) Check that the plates (4) are positioned as illustrated. Adjust by altering the meshing of the plates with the drive gear wheel (1).

b) Loosen the grub screws (2) and turn the table so that the star (3) is positioned appr 5 mm in front of the plate (4) centre. Retighten the grub screws.

c) Put a plastic crate (or whatever outer packing is being used) on the plates a layers 2 and 3. Loosen the screws (5) in the coupling, and position the plates so that one edge of each crate is parallel with the distributor chute. Retighten the screws equally much.

1 Drive gear wheel
2 Grub screw
3 Star
4 Plate
5 Screw

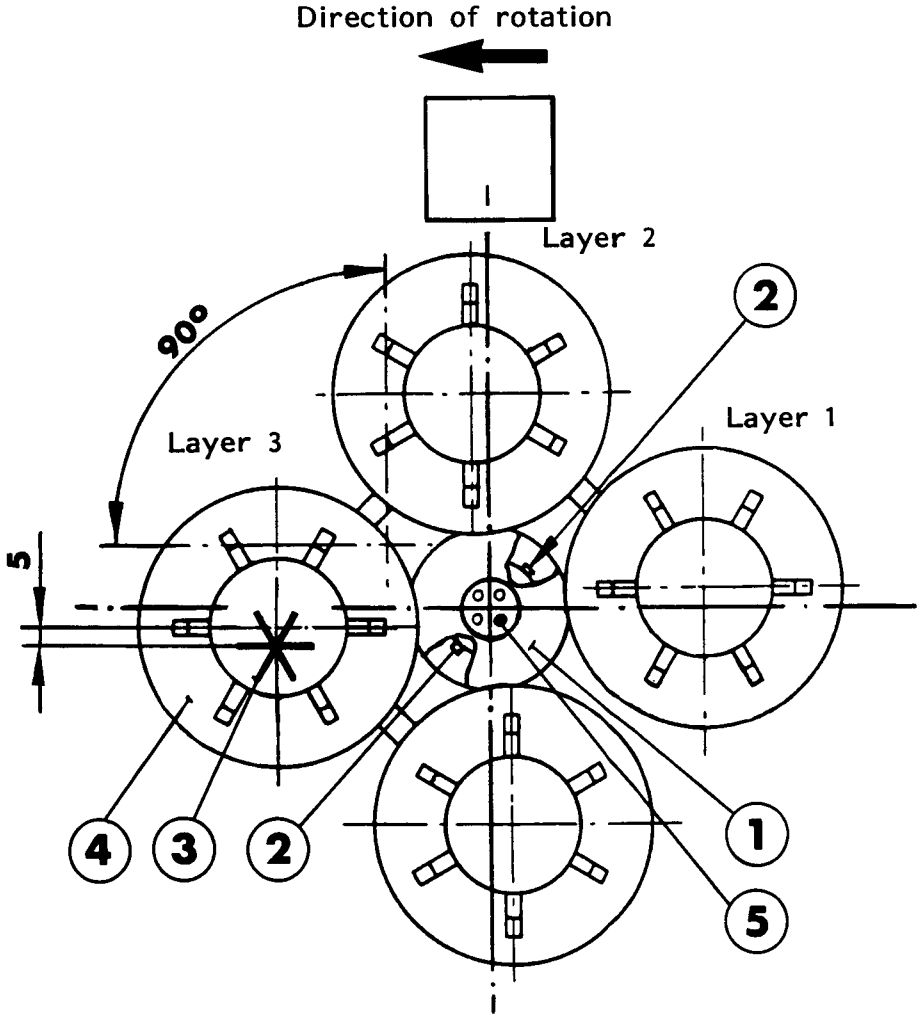

Set the gap between the counter and cutting wheels (sides 2 and 4) acc to fig 1 on page 1405-51.
Fit the elevator chain so that the rear axle of a scoop is positioned acc to fig. 1.

Final adjustment of the elevator chain is to be made when test-running, when it is possible to observe how the cut-off packages drop into the scoops; the packages must be given time to settle on the drop plates before being taken away by the scoops. If required, the elevator chain has to skip a tooth on the drive sprocket in either direction, if the correct scoop position relative the packages is to be obtained.

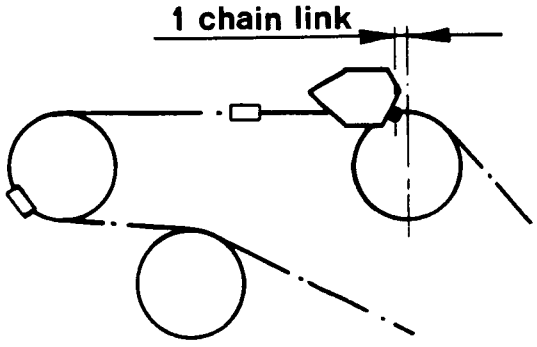

fig 1

PACKER SYNCHRONIZATION, PACKER B

Guide plates

When fitting the guide plates (1), make sure that there is a play of at least 0.5 - 1 mm between the finger (2) of the scoop and the lower edge of the guide plates.

1 Guide plate
2 Scoop finger

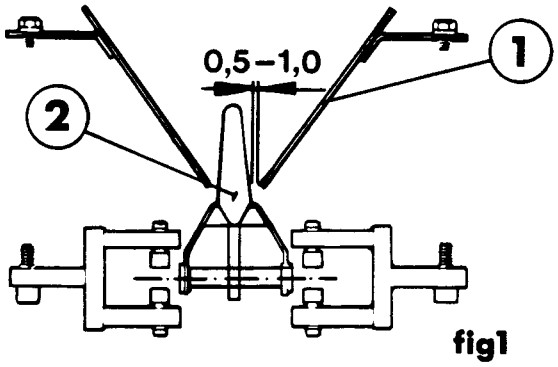

fig1

Fitting and synchronization of elevator chain:

Postition the cutting wheels acc. to page 1405-51.

Fit the elevator chain so that the centre of a round axle is in line with the chain guide. Tolerance ± 5 mm, see fig 5. Tension the elevator chain with the chain tensioner and lock with the nut.

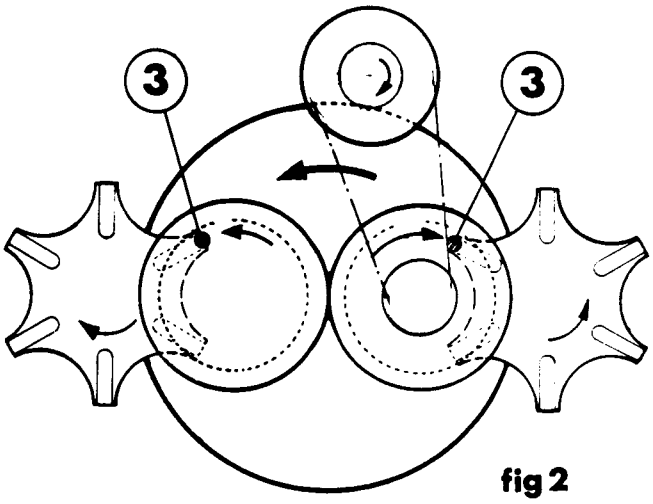

fig 2

Drive chain - packer

Check the position of the cam rollers (3), as shown in fig 2. Check the bearings (4) of the cam wheel unit, see fig 3, before the drive chain (6) is fitted, see fig 4.

Cont'd overleaf

3 Cam roller
4 Bearing

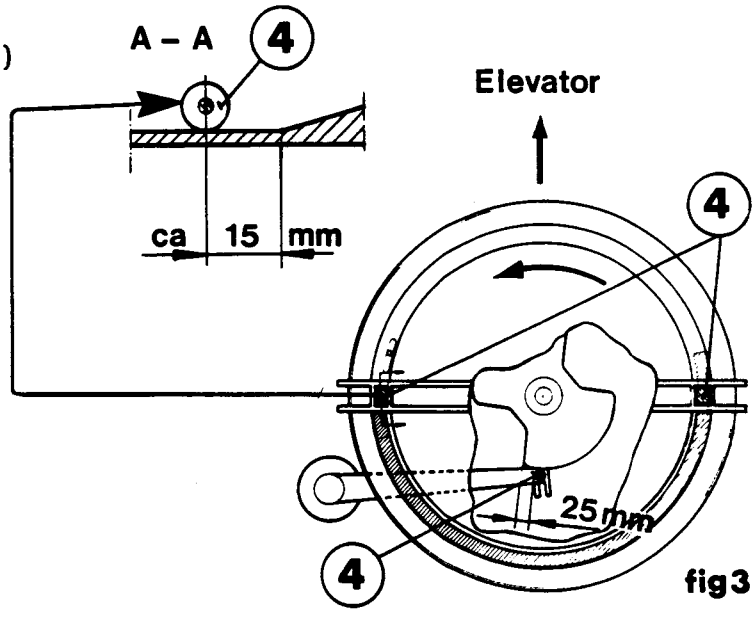

fig3

Con't from previous page.

Fit and tension the drive chain (6) and lock with nut (5).

5 Nut
6 Drive chain

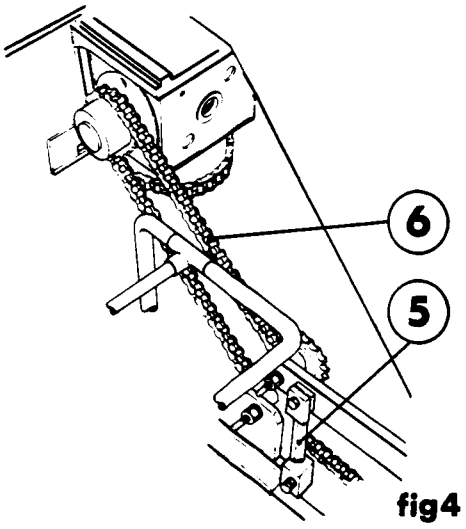

fig4

Packer - elevator chain

When a scoop is in the position shown in fig 5, the collection unit (7) should start turning. If not, loosen the nut (5), fig 4, and reposition the driving chain (6) one tooth forward if the bowl moves too early, and one tooth backwards if it moves too late. Tension the chain again.

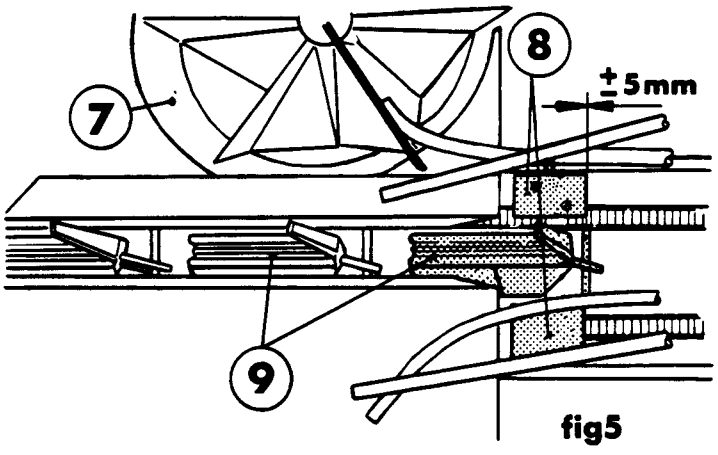

fig5

TC/300:

The rear axle of the scoop should be shifted forwards two chain links (= three chain rollers) from the position shown in fig 5.

7 Collection unit
8 Chain guide
9 Scoop

Swing arm - collection unit

Check the position of the swing arm acc to fig 6. (Impulse emitter is to be at zero degrees.)
Inch the machine forwards until the suction unit is lowered against the collecting unit.
Adjust the swing arm to center the suction cup head in the collecting unit, see fig 7.

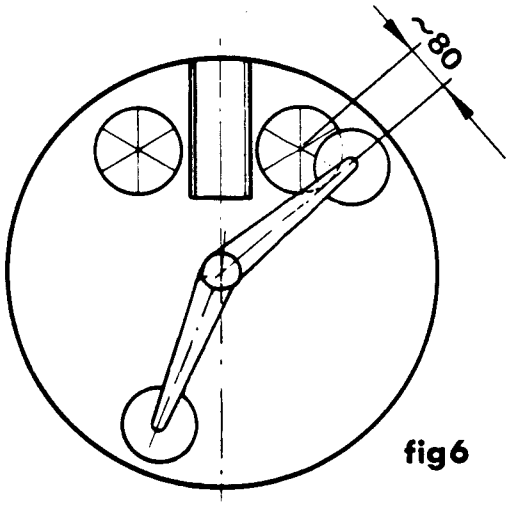

fig6

Adjustment

Loosen the screws (10) on the upper part of the swing arm and tap it until the locking rings come off.

10 Screw

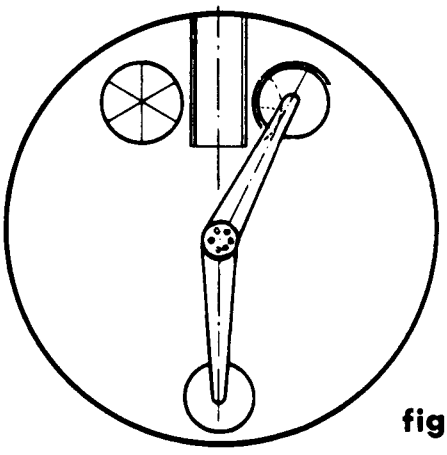

fig7

Vacuum

The vacuum valve should change over when the suction unit is 5 mm above the edge of the collecting unit.

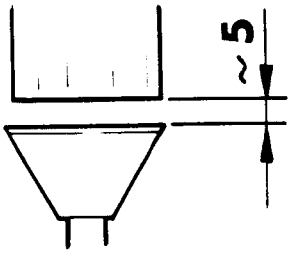

fig8

Impulse emitter

Initial position should be as shown in fig 9 and the dial of the cam unit is to indicate zero.
The degree figures indicate when the microswitches open or close (a click is heard).
Degree valves, see page 870-51.

Time relays, settings:

TC/150:	KV2 Lubrication valve	6.0s
	KV3 Crate monitor delay	5.2s
TC/300:	KV3 Lubrication valve	6.0s
	KV3 Crate monitor delay	6.7s

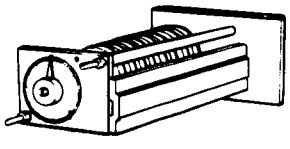

fig9

SETTINGS, TC/300, with elevator E, 120 pkgs per min (7200 pkgs per h) or packer B, 100 pkgs per min (6000 pkgs per h). TPC sealing.

PRESSURE GAUGES

Air supply	600 kPa (6.0 bar)
LS element	1.5 kPa (150 mm WC)
Strip applicator SA4	
LS strip element	2.0 kPa (200 mm WC)
Hole punch unit HS 227	
Hole punch device	500 kPa (5.0 bar)
LS strip element	2.0 kPa (200 mm WC)
IS strip element	2.0 kPa (200 mm WC)
Packer B	550 kPa (5.5 bar)
Central lubrication, manual	1.5 MPa (15 bar)
automatic	0.3 MPa (3 bar)
Hydraulic pressure, milk and juice	1.2 MPa (12 bar)
heavier liquids	1.6 MPa (16 bar)

PRESSURE SWITCHES

MB 3 LS element	0.5 kPa (50 mm WC)
MB 5 Lubrication	150 kPa (15 bar)

TIME RELAYS

Do not alter these settings!

K41	Holding time, release pulse	2.0 s
K43	Programme unit, lubrication	$180^{o}/180^{o}$
K46	Lubrication time, manual lubrication	30 s
K47	Flash relay	2.5 units
K48	Holding time, TS product	10 s
K49	LS Preheating time	10 min.
K50	Delay Hydraulic motor off and TS sealing OFF	5 s
K51	Delay drive motor OFF (Note: 50 Hz; white scale, 60 Hz; black scale)	10 s

OVERLOAD PROTECTIONS

Q 11	Drive motor 380/220 V, 50-60 Hz	2.1	A
	220/127 or 3x220 V, 50-60 Hz	3.6	A
Q 12	Fan motor 380/220 V, 50 Hz	1.2	A
	380/220 V, 60 Hz	1.3	A
	220/127 or 3x220 V, 50 Hz	2.1	A
	220/127 or 3x220 V, 60 Hz	2.2	A
Q 13	Pump motor 380/220 V, 50-60 Hz	0.2	A
	220/127 V or 3x220 V, 50-60 Hz	0.35	A
Q 14	Motor, 380/220 V	50-60 Hz	2.9 A
	Vacuumpump 200/127 V or 3x220V	50-60 Hz	5.0 A
Q 15	Motor, hydraulic pump	50 Hz	0.75A
	380/220 V	60 Hz	0.65A
	220/127 V or 3x220 V	50 Hz	1.3 A
		60 Hz	1.1 A

THERMOSTATS/TEMPERATURE INSTRUMENTS

R 1	Heater instrument in electric cabinet		25°C
A 4	LS element		350°C
A 1	Transversal sealing, righthand side		50%
A 2	Transversal sealing, lefthand side		50%
A 3	Release pulse		50%
A 5	Pulltab sealing	270°C	

Strip applicator SA4

LS strip element	5 - 6 units

Hole punch unit HS227

LS strip element	5 - 6 units
IS strip element	5 - 6 units

SETTINGS TC/300, with packer A, 75 packages per min.
(4500 packages per h.) TPC sealing

PRESSURE GAUGES

Air supply	600 kPa	(6.0 bar)
LS element	1.5 kPa	(150 mm WC)
Strip applicator SA 4		
LS strip element	2.0	(200 mm WC)
Hole punch unit HS 227		
Hole punch device	500 kPa	(5.0 bar)
LS strip element	2.0 kPa	(200 mm WC)
IS strip element	2.0 kPa	(200 mm WC)
Central lubrication, manual	1.5 MPa	(15 bar)
automatic	0.3 MPa	(3 bar)
Hydraulic pressure, milk and juice	1.2 MPa	(12 bar)
heavier liquids	1.6 MPa	(16 bar)

PRESSURE SWITCHES

MB 3 LS element	0.5 kPa	(50 mm WC)
MB 5 Lubrication	150 kPa	(15 bar)

SETTINGS TC/300, with packer A, 75 packages per min.
(4500 packages per h.) TPC sealing

TIME RELAIS

(Do not alter these settings!

K41	Holding Time release pulse	2.0 s
K43	Programme unit, lubrication	$180^{o}/180^{o}$
K46	Lubrication time, manual lubrication	30 s
K47	Flash relay	2.5 units
K48	Holding time TS-product	10 s
K49	LS-Preheating time	10 min
K50	Delay-Hydraulic motor off and TS-sealing off	5 s
K51	Delay-Drive motor off (Note: 50 Hz; white scale, 60 Hz; black scale)	10 s

OVERLOAD PROTECTIONS

Q 11	Drive motor 380/220 V,	50-60 Hz	2.1 A
	220/127 or 3x220 V,	50-60 Hz	3.6 A
Q 12	Fan motor 380/220 V,	50 Hz	1.2 A
	380/220 V,	60 Hz	1.3 A
	220/127 or 3x220 V,	50 Hz	2.1 A
	220/127 or 3x220 V,	60 Hz	2.2 A
Q 13	Pump motor 380/220 V,	50-60 Hz	0.2 A
	220/127 V or 3x220 V,	50-60 Hz	0.35 A
Q 15	Motor, hydraulic pump	50 Hz	0.75 A
	380/220 V	60 Hz	0.65 A
	220/127 V or 3x220 V	50 Hz	1.3 A
		60 Hz	1.1 A

SETTINGS TC/300, with packer A, 75 packages per min.
(4500 packages per h.) TPC sealing

THERMOSTATS/TEMPERATURE INSTRUMENTS

R 1	Heater instrument in electric cabinet	25°C
A 4	LS element (EY)	350°C
A 1	Transversal sealing, righthand side	45%
A 2	Transversal sealing, lefthand side	45%
A 3	Release pulse	50%
A 5	Pulltab sealing	270°C

Strip applicator SA4

LS strip element	5 - 6 units

Hole punch unit HS227

LS strip element	5 - 6 units
IS strip element	5 - 6 units

The table below lists only a selection of lubricants with their respective designations. Comparable lubricants from other suppliers may be selected with the aid of the lubricant specifications (document No in the table).

Lubricant specifications may be ordered from Technical Standardization, AB Tetra Pak, Ruben Rausings gata, 221 86 LUND.

Lubricant Code	Document No	Material No (internal TP designation for material type)	Part No (used when ordering from Tetra Pak)	Example	
				Supplier	Product designation
A Motor oil	M 1251.122	51122–85	90 296–28	BP Esso Statoil Mobil Shell	Energol HD 20W–30 Essolube XD–3 PowerWay D4/ DieselWay D2 HD 20W–30 Shell X–100 20W–30
B High-pressure oil	M 1254.322	54322–220	90 296–73 90 296–78	BP Esso Statoil Mobil Shell	Energol GR–XP 220 Spartan EP 220 LoadWay EP 220 Mobilgear 630 Omala oil 220
		54322–150 For use in production plant with start temperature below 5°C.	90 296–72	BP Esso Statoil Mobil Shell	Energol GR–XP 150 Spartan EP 150 LoadWay EP 150 Mobilgear 629 Omala oil 150
C Hydraulic oil	M 1252.122	52122–32	90 296–53	BP Esso Statoil Mobil Shell	Bartran HV 32 Univis N 32 HydraWay HV 32 DTE Oil 13 Tellus T 32
D Mist lubrication oil	M 1251.822	51822–37	90 296–80	BP Esso Statoil Mobil Shell	Autran GM–MP ATF Dexron II TransWay DX II ATF 220 ATF Dexron II
E Com-pounded cylinder oil	M 1254.922	54922–460	90 296–77 90 296–2	BP Esso Statoil Mobil Shell	Energol AC–C460 Cylesso TK 460 CylWay FZ 460 600W Super Cylinder Oil Valvata Oil J460

9102

(Table cont'd overleaf)

cont'd from previous page

Lubricant Code	Document No	Material No (internal TP designation for material type)	Part No (used when ordering from Tetra Pak)	Example	
				Supplier	Product designation
F Litihum, grease EP type	M 1255.115	55115–20	90 296–68	BP Esso Statoil Mobil Shell	Energrease LS EP 2 Grease XRB 2EP Esso MP Grease/ Beacon EP 2 UniWay EP 2N Mobillux EP 2 Calithia EP Grease T 2 Grease 1344 LiEP 2
H High-pressure oil	M 1254.322	54322–320	90 296–75	BP Esso Statoil Mobil Shell	Energol GR–XP 320 Spartan EP 320 LoadWay EP 320 Mobilgear 632 Omala oil 320
		54322–220 For use in production plant with start temperature below 5°C.	90 296–73 90 296–78	BP Esso Statoil Mobil Shell	Energol GR–XP 220 Spartan EP 220 LoadWay EP 220 Mobilgear 630 Omala oil 220
K Circulation oil	M 1254.942	54942–100	90 296–15	BP Esso Statoil Mobil Shell	Energol CS 100 Teresso 100 TurbWay 100 DTE Oil Heavy Tellus Oil 100
L Silicon grease	M 1255.322	55322–30	90 296–9	Dow Klüber	Dow Corning 7 Compound Unisilikon L 250 L
M Litihum, grease EP type	M 1255.112	55112–10	90 296–70	BP Esso Statoil Mobil	Energrease LS EP 1 Beacon EP 1 UniWay EP 1 Mobillux EP 1
O Lithium–complex grease	M 1255.122	55122–30	90 296–61	BP Esso Statoil Shell	Energrease LS 3 Unirex N3 UniWay HTC3 Alvania Grease R3
P Synthetic compressor oil	M 1254.632	54632–68	90 296–54	BP Esso Statoil Mobil Shell	Energol RC 68 Compressor oil 68 CompWay 68 Rarus 427 Corena Oil P 68

9102

Tetra Pak