Last updating:8801

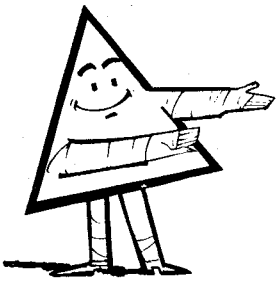

SPC 630329-030V

TETRA STANDARD TS/300

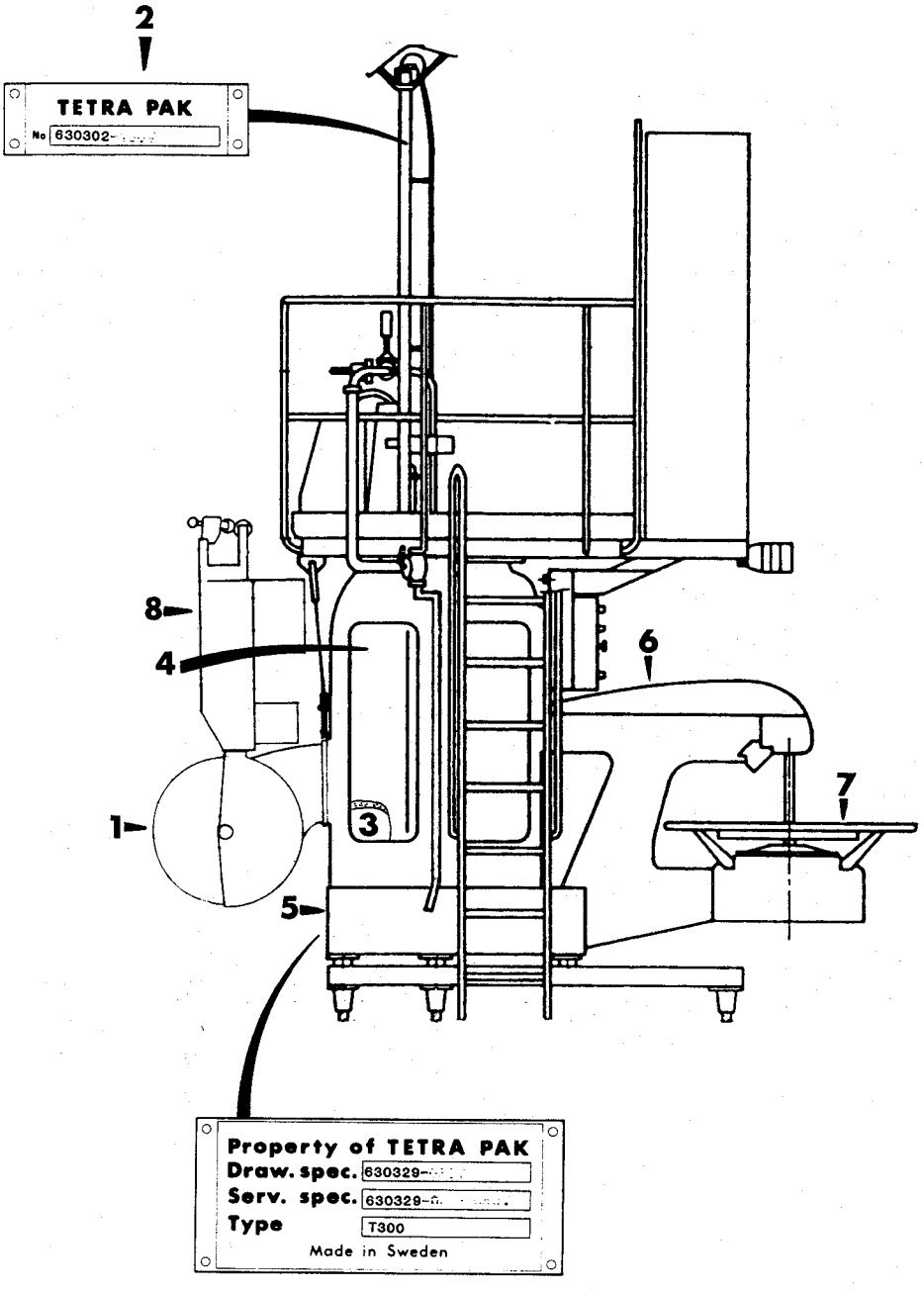

TETRA PAK

DocNo: 87048-01

Magazine
B-630301-

Superstructure
B-630302-

Frame Sides
B-630303-

Machine Body
B-630304-

Cutting Unit
B-630305-

Elevator
B-630306-

Packer A
B-630307-

Strip Applicator alt Hole Punch Device
B-614101-
B-610309-

Accessories
B-630309-
B-630319-

Electrical Equipment

How to find the correct spare part number!

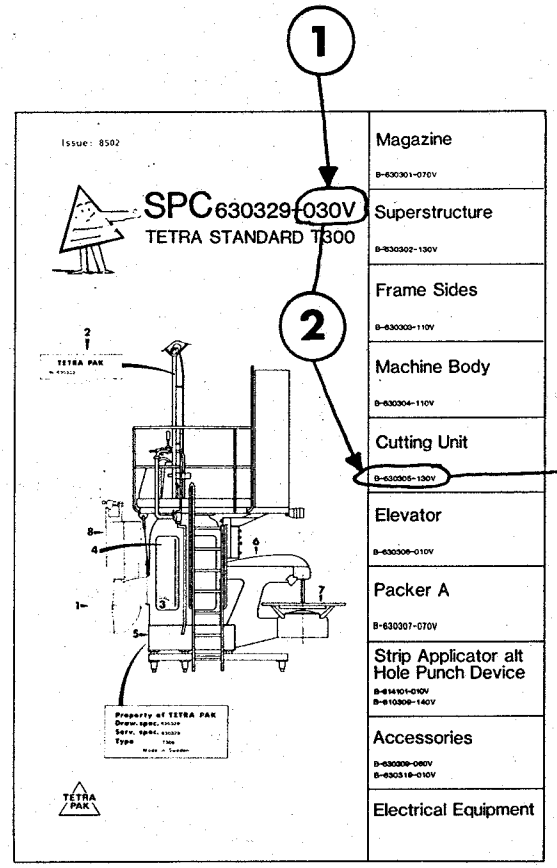

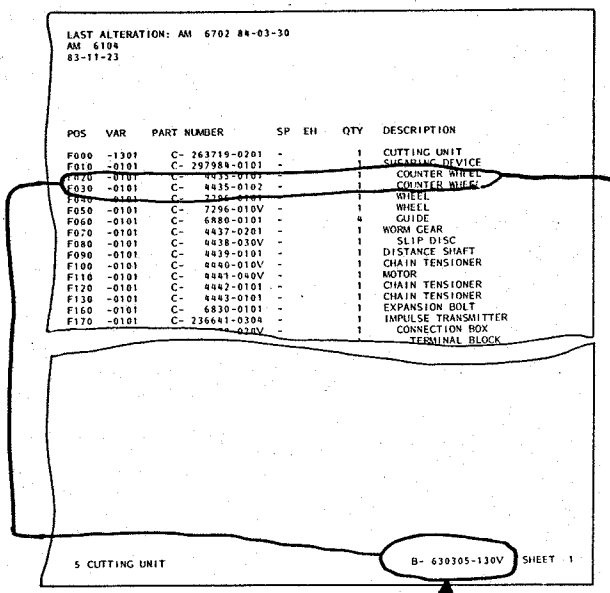

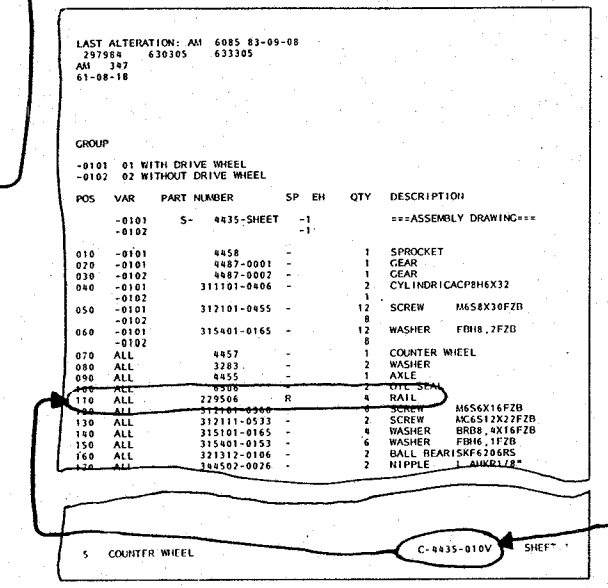

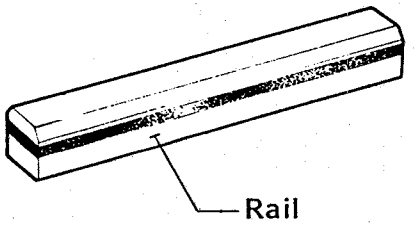

Machine 630329-030V (T300)

1) Find the front page corresponding with your machine ID.

2) Locate the main group in which you desired part belongs.

3) Look up the main group register page. Search on this, either in the illustration or the list, for the actual page number.

4) Go ahead to the found page number and locate the spare part on the illustration. PAY ATTENTION TO EXISTING VARIANTS!

SPC 630329
MAGAZINE

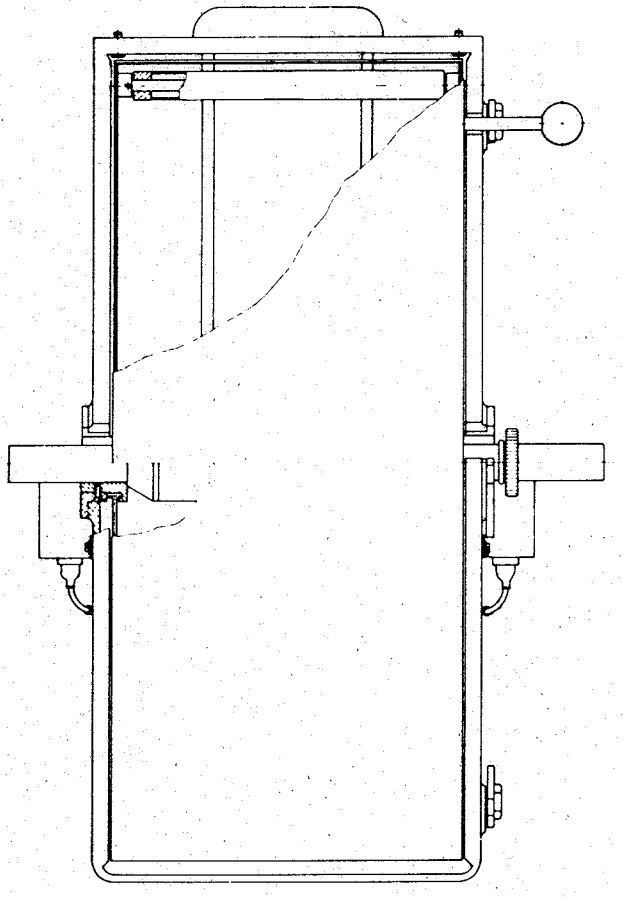

B-630301-

TETRA PAK SERVICE

LAST ALTERATION: AM 10075 87-10-28
630201-060V 630231-010V 630301-060V 633201-080V 633301-080V
AM 4240
79-03-14

GROUP	PAPER WIDTH	PAPER WIDTH	PAPER WIDTH
-0101	PB180	-	-
-0102	PB193	PB197	-
-0103	PB206	-	-
-0104	PB211	PB214	-
-0105	PB220	-	-
-0106	PB226	PB227	PB229
-0107	PB248	-	-
-0108	PB254	-	-
-0109	PB126	PB131	-
-0110	PB160	-	-

POS	VAR	PART NUMBER	SP UN	QTY	DESCRIPTION
	-0101	S- 7105-SHEET	-1		===ASSEMBLY DRAWING===
	-0102		-1		
	-0103		-1		
	-0104		-1		
	-0105		-1		
	-0106		-1		
	-0107		-1		
	-0108		-1		
	-0109		-1		
	-0110		-1		
010	-0101	G- 4071-0004	-	1	SPACER SLEEVE
	-0102			1	
	-0103			1	
	-0104			1	
	-0105			1	
	-0106			1	
	-0107			1	
	-0108			1	
010	-0109	G- 4071-0008	-	1	SPACER SLEEVE
	-0110			1	
020	-0101	7108	-	1	SLEEVE
	-0102			1	
	-0103			1	
	-0104			1	
	-0105			1	
	-0106			1	
	-0107			1	
	-0108			1	
020	-0109	111374	-	1	SLEEVE
	-0110			1	
030	-0101	7109	-	1	SLEEVE
	-0102			1	
	-0103			1	

POS	VAR	PART NUMBER	SP UN	QTY	DESCRIPTION
	-0104			1	
	-0105			1	
	-0106			1	
	-0107			1	
	-0108			1	
030	-0109	111375	-	1	SLEEVE
	-0110			1	
040	-0101	4075-0010	-	1	SPACER RING
040	-0102	4075-0009	-	1	SPACER RING
040	-0103	4075-0005	-	1	SPACER RING
040	-0104	4075-0008	-	1	SPACER RING
040	-0105	4075-0007	-	1	SPACER RING
040	-0106	4075-0004	-	1	SPACER RING
040	-0107	4075-0003	-	1	SPACER RING
040	-0108	4075-0001	-	1	SPACER RING
040	-0109	4075-0017	-	1	SPACER RING
	-0110			1	
050	-0101	4410-0001	-	2	SCREW
	-0102			2	
	-0103			2	
	-0104			2	
	-0105			2	
	-0106			2	
	-0107			2	
	-0108			2	
050	-0109	4410-0002	-	2	SCREW
	-0110			2	
060	-0101	4974-0003	-	1	SHAFT
	-0102			1	
	-0103			1	
	-0104			1	
	-0105			1	
	-0106			1	
	-0107			1	
	-0108			1	
	-0109			1	
060	-0110	4974-0006	-	1	SHAFT
070	ALL	4977-0003	-	1	SPINDLE
080	ALL	4072	-	2	RUBBER RING
090	ALL	4975	-	1	WASHER
100	ALL	4976	-	1	NUT
110	ALL	311102-0369	-	1	CYLINDRICACP6M6X60

LAST ALTERATION: AM 10075 87-10-28
630329-040V
AM 6104
83-11-23

POS	VAR	PART NUMBER	SP UN	QTY	DESCRIPTION
F000	-0701	C- 11040-0401	-	1	CASSETTE
F010	-0701	C- 7105-010V	-	2	PAPER REEL HOLDER

TETRA PAK

1/8502

S-630301-1

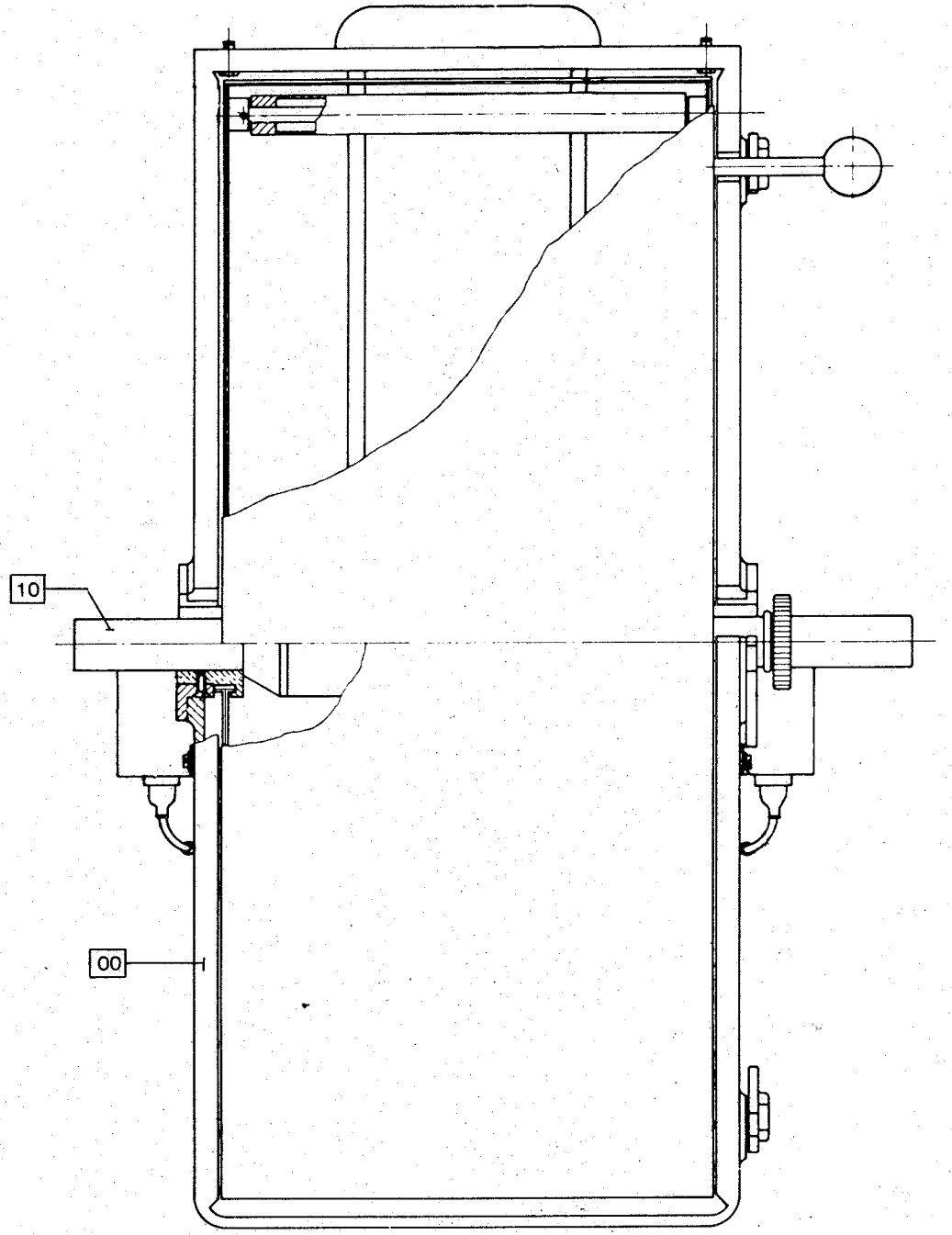

ÄM 6/04

LAST ALTERATION: AM 6704 84-05-15
630201 630301 633201 633301
AM 5719
83-05-18

GROUP FILLMACHINE FILLMACHINE

-0401 AT150 AT300
-0402 T150 T300

POS	VAR	PART NUMBER	SP	EH	QTY	DESCRIPTION
	-0401	S- 11040-SHEET	-3			===ASSEMBLY DRAWING===
	-0402		-3			
010	ALL	445953-0002	-		1	COVER
020	ALL	19477	-		1	CASSETTE
030	ALL	13890-0001	-		1	HOLDER
040	ALL	13890-0002	-		1	HOLDER
045	ALL	294261	-		2	PIPE
046	ALL	294262	-		2	COVER
050	ALL	1013	-		1	AXLE
060	ALL	4287-0004	-		1	AXLE
070	ALL	4288-0007	-		1	BENDING ROLLER
080	ALL	4948	-		2	WINDOW
090	ALL	4961	-		1	CATCH
100	ALL	4962	-		2	SCREW
110	ALL	10325	-		1	CATCH
120	ALL	10363	-		1	PIN
130	ALL	13888	-		2	BEARING
140	ALL	20497	-		1	GROUP NUMBER PLATE
145	ALL	294263	-		2	LUG
150	ALL	90232-0034	-		1	PHOTOCELL
160	ALL	90232-0035	-		1	PHOTOCELL
170	ALL	311305-0238	-		1	SLOTTED PIRPC3X20FZB
180	ALL	311508-0416	-		12	RIVET KN4X10ALUM.
200	ALL	312111-0536	-		4	SCREW MC6S12X30FZB
210	ALL	312125-0289	-		4	SLOTTED HEMCS4X10RFR
215	ALL	312125-0327	-		6	SLOTTED HEMCS5X12RFR
220	ALL	312145-0331	-		4	SLOTTED HEMFS5X20RFR
230	ALL	312165-0366	-		6	SLOTTED HEMKFS6X12RFR
235	ALL	312165-0368	-		8	SLOTTED HEMKFS6X16RFR
240	ALL	312306-0371	-		4	GRUB SCREW P6SS6X22FZB
250	ALL	312502-0221	-		4	DRIVE SCREKDS4X6FNB
260	ALL	315101-0178	-		4	WASHER BRB13X24FZB
270	ALL	315105-0136	-		4	WASHER BRB4,3X8RFR
280	ALL	315105-0146	-		6	WASHER BRB5,3X10RFR
290	ALL	318800-0106	-		1	KNOB LA D.40-M10
320	ALL	352101-0103	-		3	LEAD-IN G 18,6

TETRA PAK

1/8310

S-11040-3

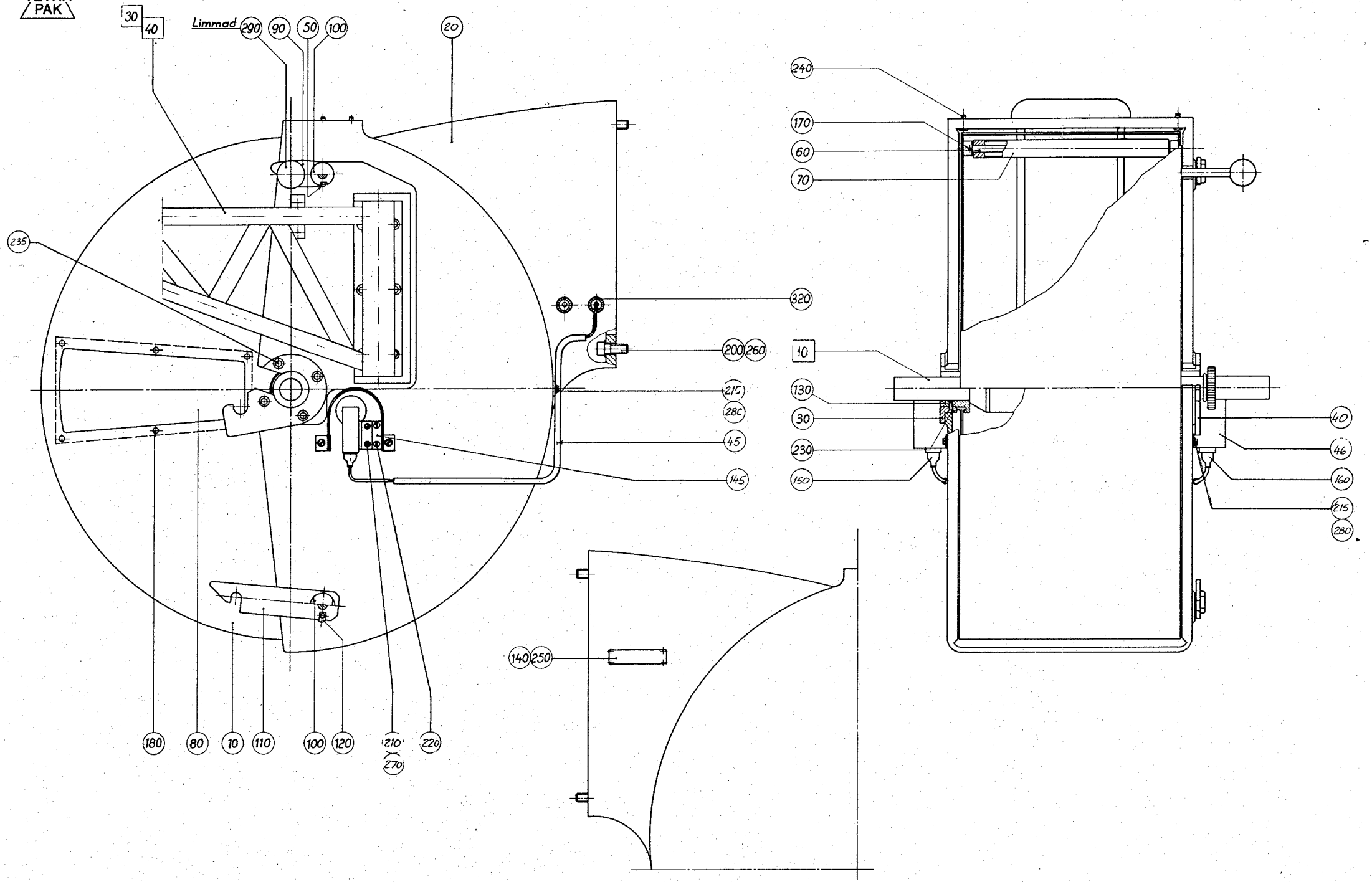

ÅH 5719

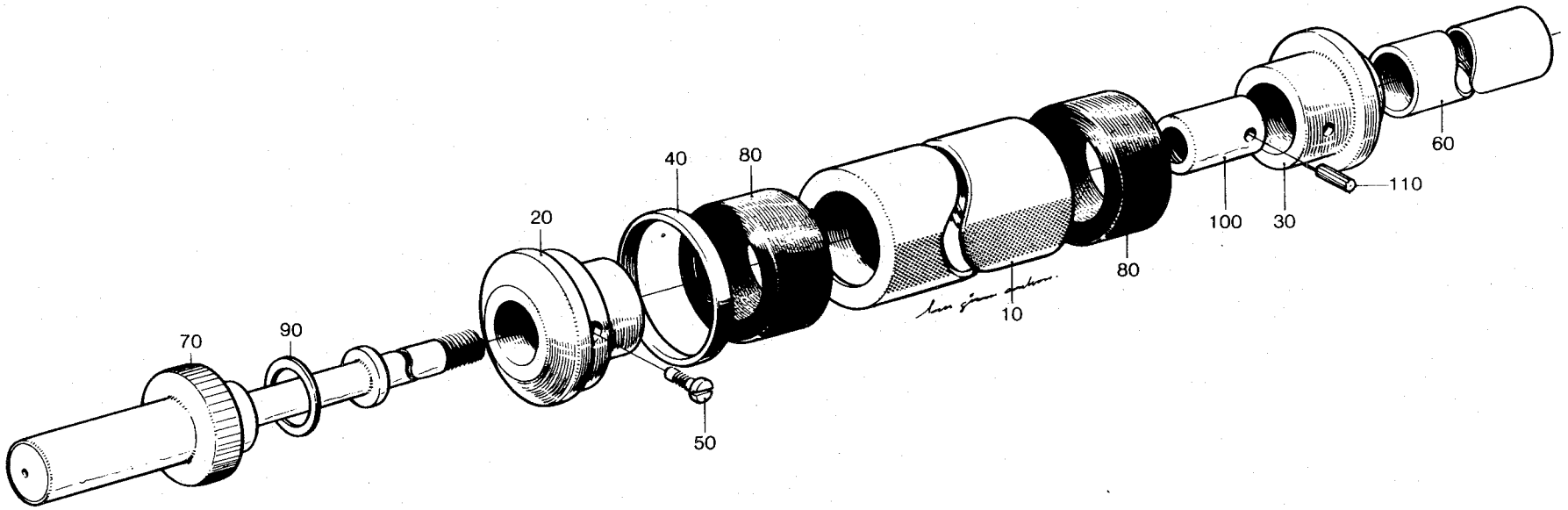
70
90
20
40
80
50
10
80
100
30
110
60

SPC 630329
SUPERSTRUCTURE

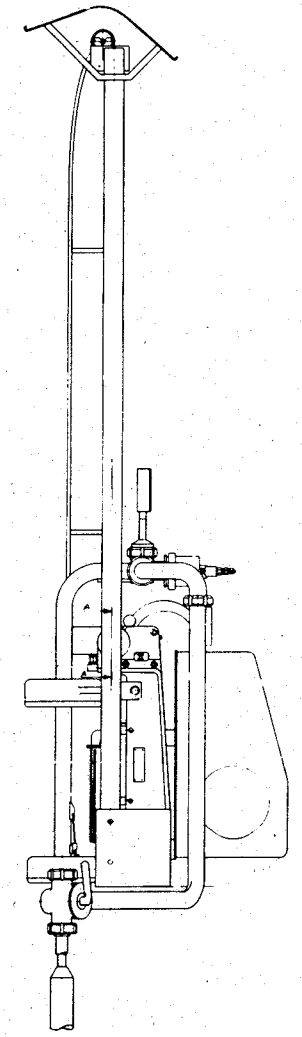

B-630302-

TETRA PAK SERVICE

LAST ALTERATION: AM 9786 86-12-19
630222-040V
AM 9405
86-11-27

GROUP	VOLUME	VOLUME	VOLUME	VOLUME
-1101	V0200	V0189	V0180	V0150
-1102	V062,5	V0125	-	-

POS	VAR	PART NUMBER	SP	UN	QTY	DESCRIPTION
F000	ALL	C- 237086-030V	-		1	SUPERSTRUCTURE
F010	ALL	C- 7859-0102	-		1	SCREEN
F020	ALL	C- 10996-0102	-		1	BEARING
F030	ALL	C- 13247-010V	-		1	UPPER FORMING RING
F040	ALL	C- 33038-020V	-		1	LOWER FORMING RING
F050	-1101	C- 232897-0202	-		1	PIPE WORK
F060	ALL	C- 232938-0201	-		1	VALVE
F250	ALL	C- 237053-0301	-		1	LS-EQUIPMENT
		C- 236892-030V				. ELEMENT GROUP
		C- 207637-020V				. . ELEMENT
		C- 207638-0201				. . . CONTACT
		C- 207638-0202				. . . CONTACT
		C- 232955-020V				. . ELEMENT
		C- 536952-010V				. . LS-ELEMENT
		C- 259407-010V				. PNEUMATIC PANEL
F300	-1101	C- 263028-0101	-		1	FLOAT ASSEMBLY
F310	-1101	C- 263029-0101	-		1	FILLING PIPE
		C- 36351-010V				. PRESSURE ROLLER
F330	ALL	C- 259642-0101	-		1	PHOTOCELL
F340	-1102	C- 532112-0101	-		1	LEVEL CONTROL DEVICE
		C- 457441-0101				. FILLING PIPE
		C- 36351-010V				. . PRESSURE ROLLER
		C- 466465-010V				. FLOAT
F390	-1102	C- 268189-0101	-		1	PAPER GUIDE
		C- 268554-0101				. PAPER GUIDE

LAST ALTERATION: AM 7838 85-09-30
AM 6104
83-11-23

POS	VAR	PART NUMBER	SP	EH	QTY	DESCRIPTION
F000	-1301	C- 237086-0201	-		1	SUPERSTRUCTURE
F010	-0101	C- 7859-0102	-		1	SCREEN
F020	-0101	C- 10996-0102	-		1	BEARING
F030	-0101	C- 11109-020V	-		1	UPPER FORMING RING
F040	-0101	C- 33037-020V	-		1	LOWER FORMING RING
F050	-0101	C- 232897-0202	-		1	PIPE WORK
F060	-0101	C- 232938-0101	-		1	VALVE
F250	-0101	C- 237053-0201	-		1	LS-EQUIPMENT
F260	-0101	C- 236892-0202	-		1	ELEMENT GROUP
F270	-0101	C- 207637-0103	-		1	ELEMENT
F280	-0101	C- 207638-0102	-		1	CONTACT
F290	-0101	C- 232955-0201	-		1	ELEMENT
F295	-0101	C- 259407-010V	-		1	PNEUMATIC PANEL
F300	-0101	C- 263028-0101	-		1	FLOAT ASSEMBLY
F310	-0101	C- 263029-0101	-		1	FILLING TUBE
F320	-0101	C- 36351-0102	-		1	PRESSURE ROLLER
F330	-0101	C- 259642-0101	-		1	PHOTOCELL

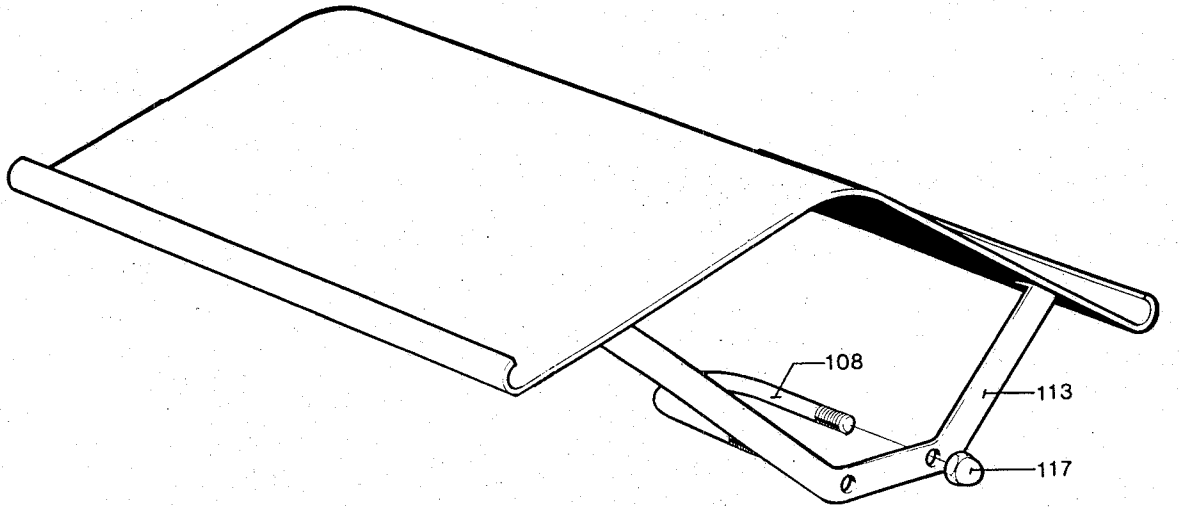
108
113
117

LAST ALTERATION: AM 9786 86-12-19
630329-040V
AM 9405
86-11-27

POS	VAR	PART NUMBER	SP UN	QTY	DESCRIPTION
F000	-1401	C- 237086-0302	-	1	SUPERSTRUCTURE
F010	-1401	C- 7859-0102	-	1	SCREEN
F020	-1401	C- 10996-0102	-	1	BEARING
F030	-1401	C- 11109-020V	-	1	UPPER FORMING RING
F040	-1401	C- 33037-020V	-	1	LOWER FORMING RING
F050	-1401	C- 232897-0202	-	1	PIPE WORK
F060	-1401	C- 232938-0201	-	1	VALVE
F250	-1401	C- 237053-0301	-	1	LS-EQUIPMENT
		C- 236892-030V			. ELEMENT GROUP
		C- 207637-020V			. . ELEMENT
		C- 207638-0201			. . . CONTACT
		C- 207638-0202			. . . CONTACT
		C- 232955-020V			. . ELEMENT
		C- 536952-010V			. . LS-ELEMENT
		C- 259407-010V			. PNEUMATIC PANEL
F300	-1401	C- 263028-0101	-	1	FLOAT ASSEMBLY
F310	-1401	C- 263029-0101	-	1	FILLING PIPE
		C- 36351-010V			. PRESSURE ROLLER
F330	-1401	C- 259642-0101	-	1	PHOTOCELL

TETRA PAK

1/8502

S-630302-1

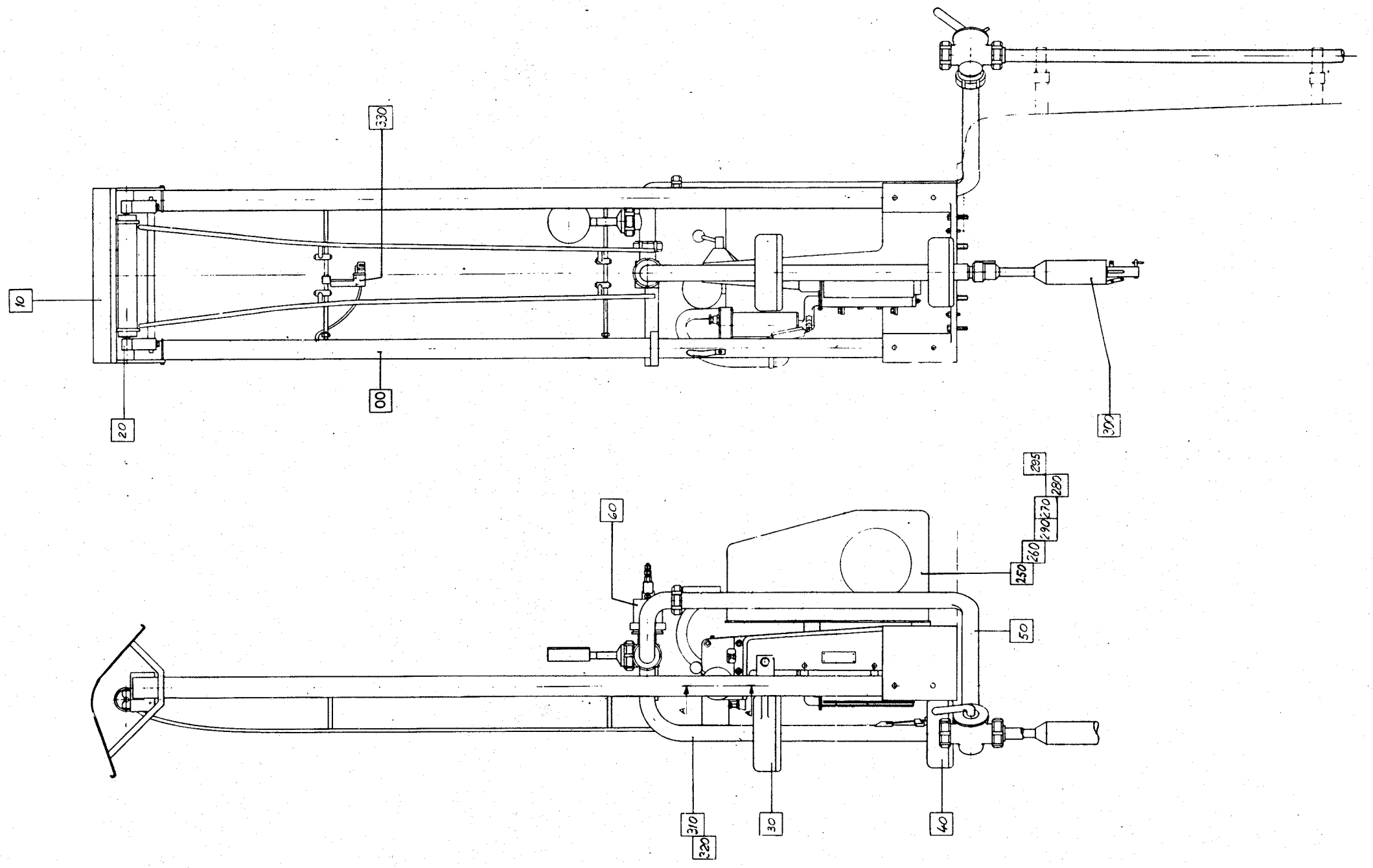

ÅH 6104

LAST ALTERATION: AM 733 63-08-15
630202 630302 630502

GROUP	FILLMACHINE	FILLMACHINE	FILLMACHINE
-0101	T300	-	-
-0102	HT150	HT300	HT500

POS	VAR	PART NUMBER	SP	EH	QTY	DESCRIPTION	
	-0101	S- 7859-SHEET	-1			===ASSEMBLY DRAWING===	
	-0102		-1				
108	-0101	2440	-		2	CLAMP	
108	-0102	2595	-		2	CLAMP	
113	-0102	4255	-		1	SCREEN	
113	-0101	4295	-		1	SCREEN	
117	ALL	312701-0316	-		4	CAP NUT	MHM6FKRB

LAST ALTERATION: AM 842 64-03-06
630202 630302 630502

GROUP	FILLMACHINE	FILLMACHINE	FILLMACHINE
-0101	T300	-	-
-0102	HT150	HT300	HT500

POS	VAR	PART NUMBER	SP	EH	QTY	DESCRIPTION	
	-0101	S- 10996-SHEET		-1		===ASSEMBLY DRAWING===	
	-0102			-1			
108	-0102	4254	-		1	SPACER BAR	
109	-0101	4297	-		1	SPACER BAR	
110	-0101	10997	-		2	HOLDER	
113	-0102	11010	-		2	HOLDER	
112	ALL	10999	-		2	BEARING	
114	ALL	11011	-		2	WASHER	
121	ALL	312115-0449	-		2	SCREW	MC6S8X16RFR
122	ALL	312115-0459	-		2	SCREW	MC6S8X40RFR
123	ALL	312101-0465	-		2	SCREW	M6S8X70FZB
126	ALL	315401-0165	-		6	WASHER	FBH8,2FZB

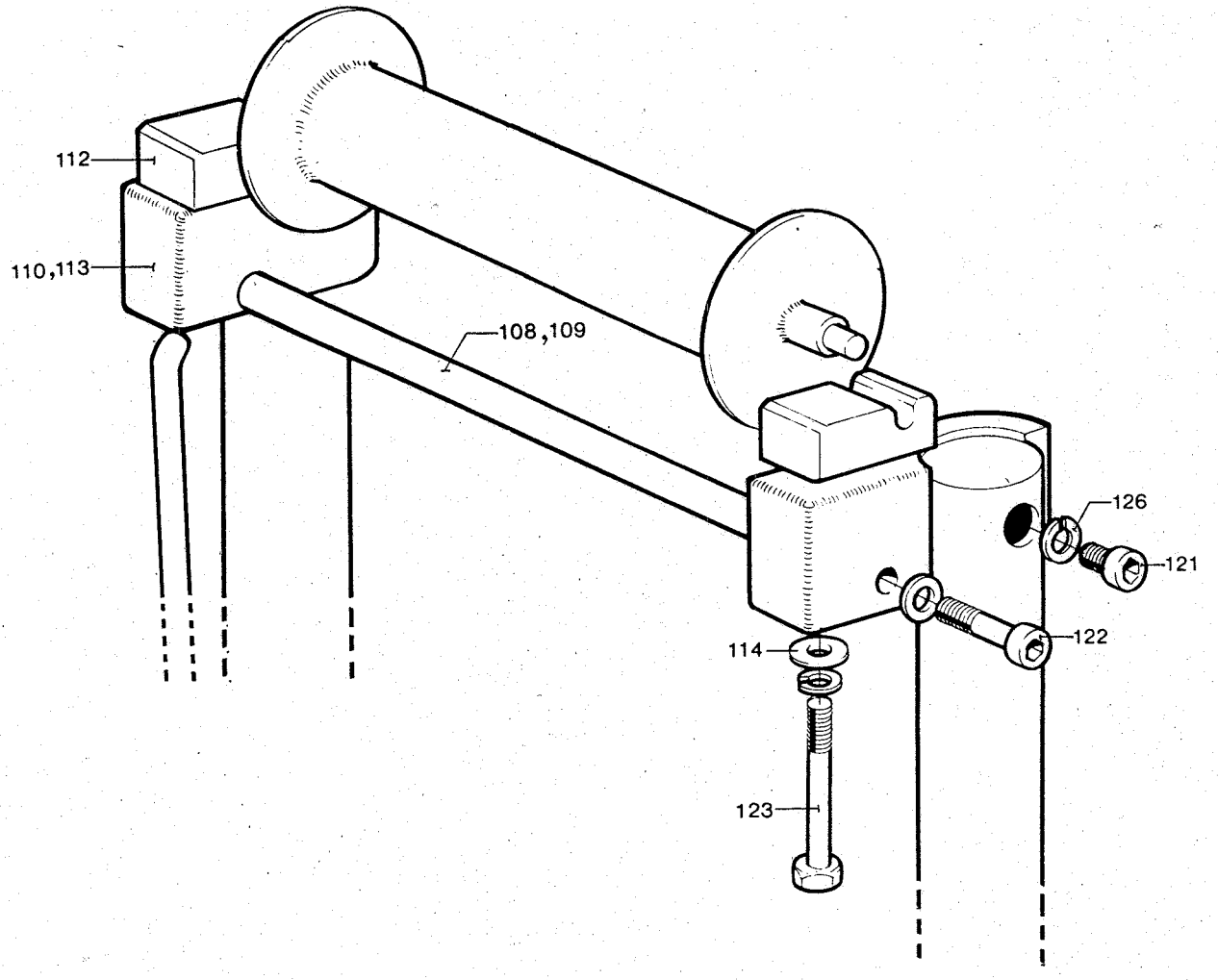
112
110,113
108,109
126
121
122
114
123

LAST ALTERATION: AM 6104 83-11-23
630302 633302

GROUP	VOLUME	VOLUME	VOLUME
-0201	V0227	V0236	V0250
-0202	V0284	V0300	-

POS	VAR	PART NUMBER	SP	EH	QTY	DESCRIPTION
	-0201	S- 11109-SHEET	-1			===ASSEMBLY DRAWING===
	-0202		-1			
110	-0201	2901	-		1	RING
111	-0202	2398	-		1	RING
113	-0201	2395	-		6	AXLE
114	-0202	2402	-		6	AXLE
121	-0201	18281	-		4	ROLLER
122	-0202	18282	-		4	ROLLER
127	-0201	18283	-		1	ROLLER
128	-0202	18284	-		1	ROLLER
133	-0201	18328	-		1	ROLLER
134	-0202	18329	-		1	ROLLER
107	ALL	2033-0002	-		12	WASHER
108	ALL	2033-0003	-		12	WASHER
109	ALL	2033-0005	-		6	WASHER
112	ALL	434342	-		1	LID
115	ALL	2795	-		6	NUT
116	ALL	3654	-		2	KNURLED SCREW
205	ALL	312105-0499	-		1	SCREW M6S10X40RFR
206	ALL	312125-0293	-		6	SLOTTED HEMCS4X16RFR
207	ALL	315105-0173	-		1	WASHER BRB10,5X22RFR
208	ALL	315105-0136	-		2	WASHER BRB4,3X8RFR
210	ALL	311303-0310	-		1	SLOTTED PIRPB5X20FZB
213	ALL	90026-0002	-		2	THREADED BUSH

TETRA PAK

1/8409

S-11109-1

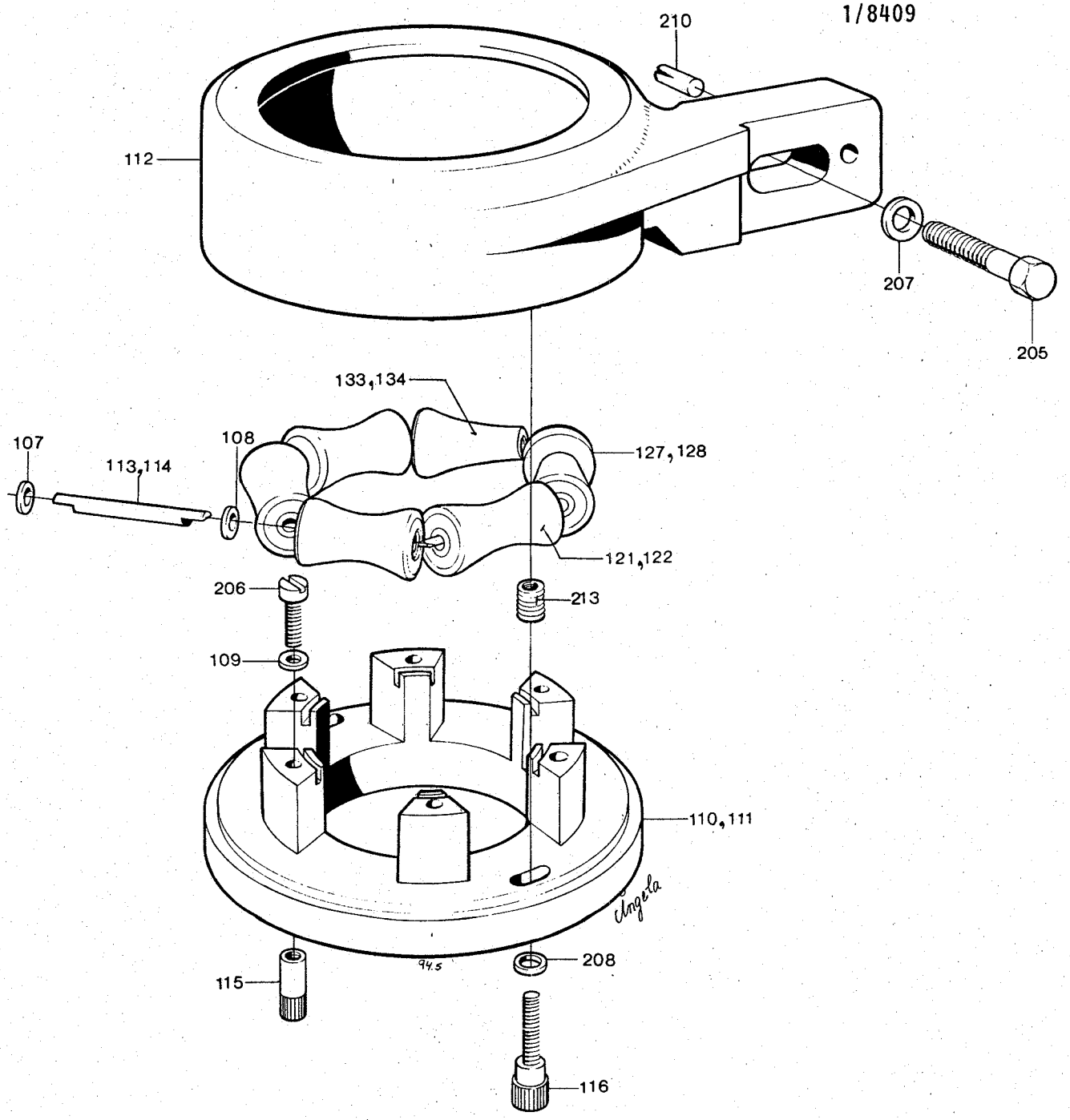

ÄM 6104

LAST ALTERATION: AM 3981 77-12-07
630302 633302
AM 3307
71-09-15

GROUP	VOLUME	VOLUME
-0101	V0227	V0236
-0102	V0250	-
-0103	V0284	V0300

POS	VAR	PART NUMBER	SP	EH	QTY	DESCRIPTION
	-0101	S- 33037-SHEET	-1			===ASSEMBLY DRAWING===
	-0102		-1			
	-0103		-1			
211	-0101	2910-0004	-		6	ROLLER, (STD.SIZE)
211	-0101	2910-0006	-		6	TRIMMING ROLLER / MINUS
211	-0101	2910-0005	-		6	TRIMMING ROLLER PLUS
215	-0102	5611-0004	-		6	ROLLER, (STD.SIZE)
215	-0102	5611-0006	-		6	TRIMMING ROLLER / MINUS
215	-0102	5611-0005	-		6	TRIMMING ROLLER PLUS
219	-0103	2394-0004	-		6	ROLLER, (STD.SIZE)
219	-0103	2394-0006	-		6	TRIMMING ROLLER / MINUS
219	-0103	2394-0005	-		6	TRIMMING ROLLER PLUS
235	-0103	2395	-		6	AXLE
235	-0101	2909	-		6	AXLE
	-0102				6	
238	-0101	18603	-		1	RING
	-0102				1	
238	-0103	18604	-		1	RING
110	ALL	2033-0002	-		12	WASHER
111	ALL	2033-0003	-		12	WASHER
112	ALL	2033-0005	-		6	WASHER
113	ALL	2795	-		6	NUT
114	ALL	8432	-		1	LID
124	ALL	90026-0002	-		2	THREADED BUSH
127	ALL	311103-0236	-		2	CYLINDRICACPR3M6X16RFR
128	ALL	311303-0210	-		1	SLOTTED PIRPB2,5X16FZB
131	ALL	312105-0499	-		1	SCREW M6S10X40RFR
132	ALL	312115-0293	-		6	SCREW MC6S4X16RFR
133	ALL	312115-0297	-		2	SCREW MC6S4X25RFR
134	ALL	312311-0380	-		2	GRUB SCREW T6SS6X50FZB
137	ALL	315105-0173	-		1	WASHER BRB10,5X22RFR

TETRA PAK

1/8409

S-33037-1

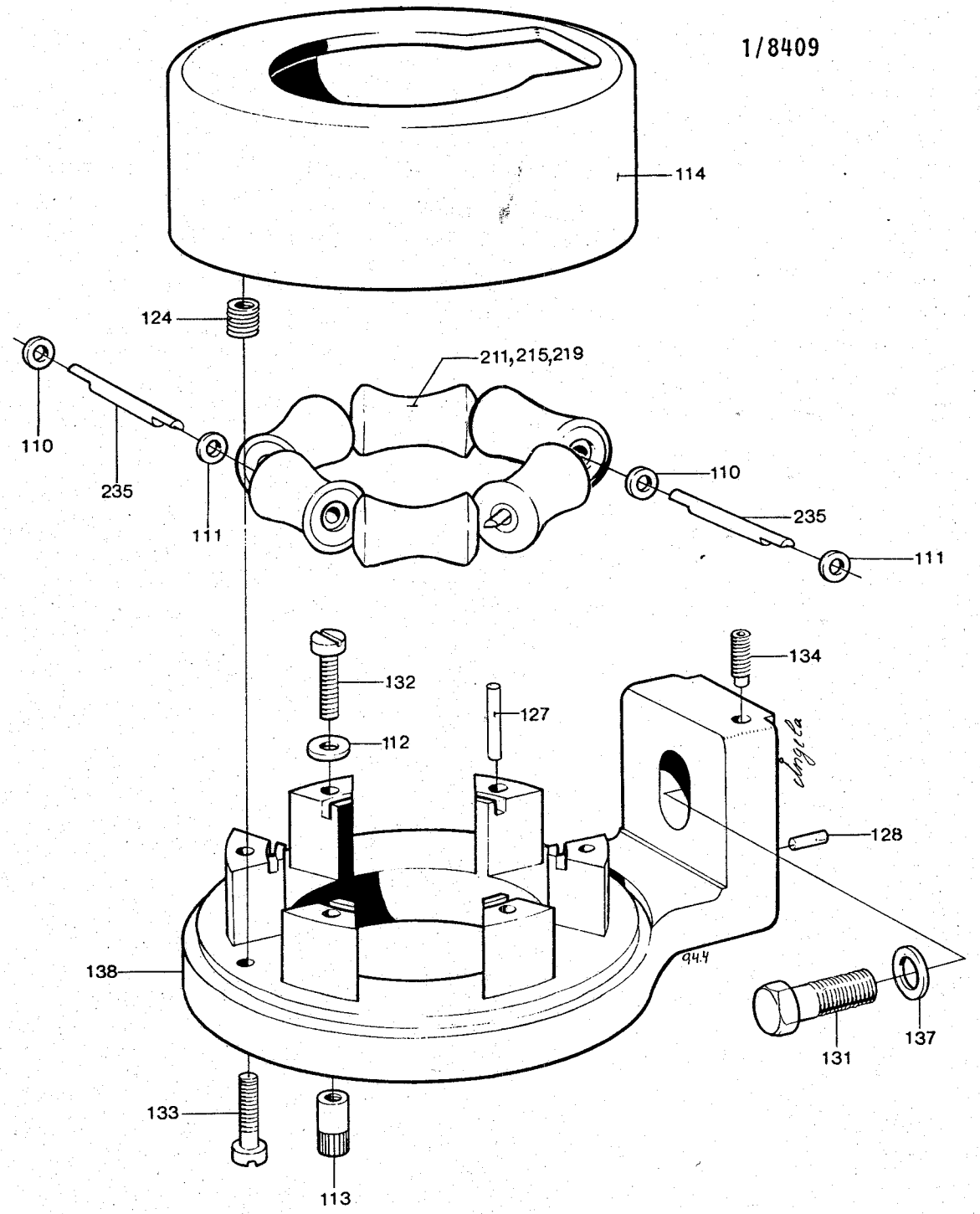

ÄH 3981

LAST ALTERATION: AM 7838 85-09-30
630302-130V 633302-150V

GROUP	VOLUME	VOLUME
-0201	V0227	V0236
-0202	V0250	-
-0203	V0284	V0300

POS	VAR	PART	NUMBER	SP	EH	QTY	DESCRIPTION
	-0201	S-	33037-SHEET	-2			===ASSEMBLY DRAWING===
	-0202			-2			
	-0203			-2			
211	-0201		2910-0004	-		6	ROLLER, (STD.SIZE)
211	-0201		2910-0006	-		6	TRIMMING ROLLER MINUS
211	-0201		2910-0005	-		6	TRIMMING ROLLER PLUS
215	-0202		5611-0004	-		6	ROLLER, (STD.SIZE)
215	-0202		5611-0006	-		6	TRIMMING ROLLER MINUS
215	-0202		5611-0005	-		6	TRIMMING ROLLER PLUS
219	-0203		2394-0004	-		6	ROLLER, (STD.SIZE)
219	-0203		2394-0006	-		6	TRIMMING ROLLER MINUS
219	-0203		2394-0005	-		6	TRIMMING ROLLER PLUS
235	-0203		2395	-		6	SHAFT
235	-0201		2909	-		6	SHAFT
	-0202					6	
238	-0201		18603	-		1	RING
	-0202					1	
238	-0203		18604	-		1	RING
110	ALL		2033-0002	-		12	WASHER
111	ALL		2033-0003	-		12	WASHER
112	ALL		2033-0005	-		6	WASHER
113	ALL		2795	-		6	NUT
114	ALL	G-	8432	-		1	LID
120	ALL		12155	-		1	STOP PIN
124	ALL		90026-0002	-		2	THREADED BUSH
125	ALL		90155-0001	-	MM	500	CHAIN
127	ALL		311103-0236	-		2	CYLINDRICACPR3M6X16RFR
128	ALL		311303-0210	-		1	SLOTTED PIRPB2,5X16FZB
130	ALL		311411-0179	-		2	SPLIT PIN SP3,2X16RFR
131	ALL		312105-0499	-		1	SCREW M6S10X40RFR
132	ALL		312115-0293	-		6	SCREW
133	ALL		312115-0297	-		2	SCREW 4X25 A4 80
134	ALL		312311-0380	-		2	GRUB SCREW T6SS6X50FZB
137	ALL		315105-0173	-		1	WASHER BRB10,5X22RFR

TETRA PAK

1/8512

S-33037-2

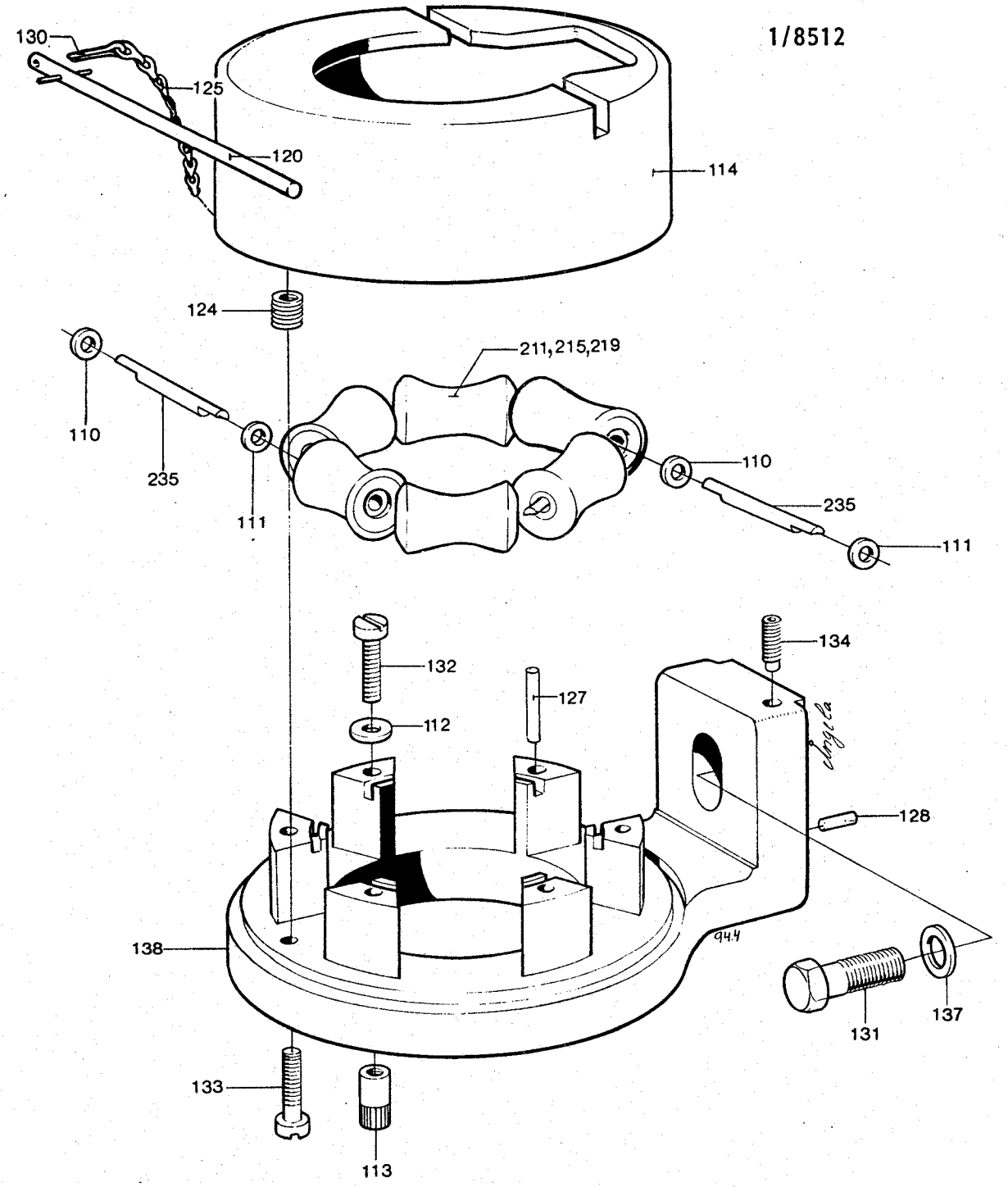

ÅM 7383

LAST ALTERATION: AM 10076 87-10-28
32741-020V 232898-010V 263029-010V 273755-010V 449122-010V
457441-010V
AM 3444
72-12-15

GROUP	VOLUME	VOLUME	VOLUME	VOLUME	VOLUME
-0101	V062,5	V0118	V0125	V0150	150ML SLIM
-0102	V0180	V0189	V0199	V0200	V0227
	V0236	V0250	V0284	V0300	-
-0103	V0473	V0500	V0568	-	-
-0104	V066,5	-	-	-	-
	WITHOUT LS-STRIP				

POS	VAR	PART NUMBER	SP	UN	QTY	DESCRIPTION
	-0101	S- 36351-SHEET	-1			===ASSEMBLY DRAWING===
	-0102		-1			
	-0103		-1			
	-0104		-1			
116	-0103	6692	-		1	SHAFT
118	-0103	10808	-		1	FORK
119	-0103	26619	PU		1	PRESSURE ROLLER
120	-0102	32301	PU		1	PRESS.ROLLER LONG.ELEMENT
121	-0102	32733	-		1	SPRING
	-0103				1	
122	-0102	33017	-		1	FORK
123	-0102	33018	-		1	SHAFT
124	-0101	37586	-		1	SPRING
	-0104				1	
125	-0101	37190	-		1	FORK
	-0104				1	
126	-0101	32197	PU		1	PRESSURE ROLLER
126	-0104	536545	PU		1	PRESSURE ROLLER
127	-0101	37191	-		1	SHAFT
	-0104				1	
117	ALL	10593	PU		1	LOCKING RUBBER
134	ALL	311307-0207	-		1	SLOTTED PIRPD2,5X10FZB

TETRA PAK

1/8406

S-36351-1

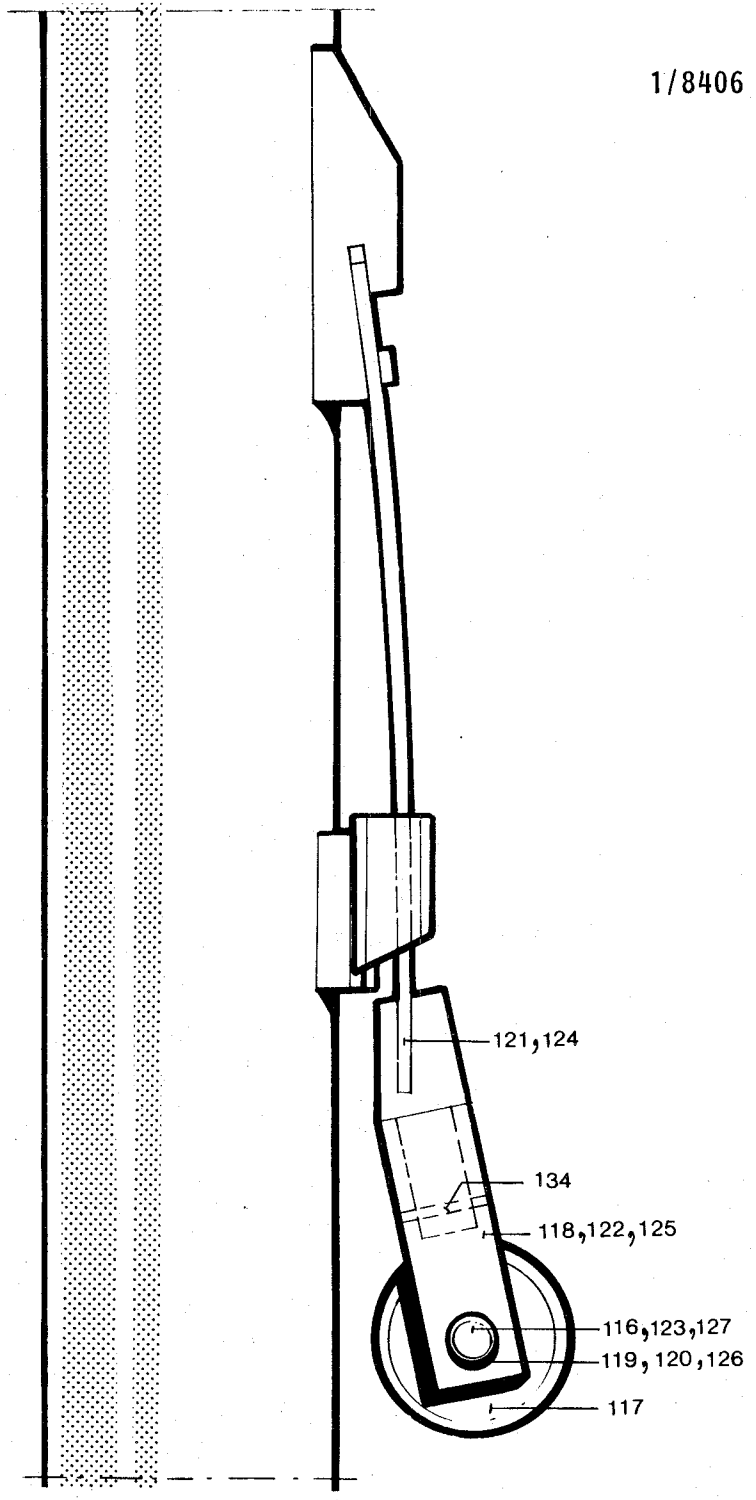

LAST ALTERATION: AM 4289 79-02-26
236892 630202 630302 630502 633202 633302 633502
AM 3836
77-02-01

GROUP

-0101 VERSION 1200/700W
-0102 VERSION 1900W
-0103 VERSION 2500W

POS	VAR	PART NUMBER	SP	EH	QTY	DESCRIPTION
	-0101	S- 207637-SHEET	-1			===ASSEMBLY DRAWING===
	-0102		-1			
	-0103		-1			
F280	ALL	C- 207638-010V	-		1	CONTACT
117	-0101	90206-0031	-		1	HEATING ELEMENT
	-0102				1	
118	-0103	90206-0014	R		1	HEATING ELEMENT
106	ALL	38960	-		1	COIL HEATER
110	ALL	19797	-		3	BUSHING
111	ALL	38962	-		1	CLUTCH PIECE
112	ALL	38963	-		1	LID
121	ALL	312105-0366	-		8	SCREW M6S6X12RFR
122	ALL	312121-0230	-		3	SLOTTED HEMCS3X20FZB
123	ALL	312132-0287	-		1	SLOTTED HEMSCS4X8MSGFN
124	ALL	312601-0310	-		3	NUT M6M3FZB
125	ALL	352100-0106	-		1	CABLE GLANR.18,6-10,5
128	ALL	353103-0130	-		1	CABLE SHOE
131	ALL	315105-0153	-		8	WASHER BRB6,4X12RFR

S-207637-1

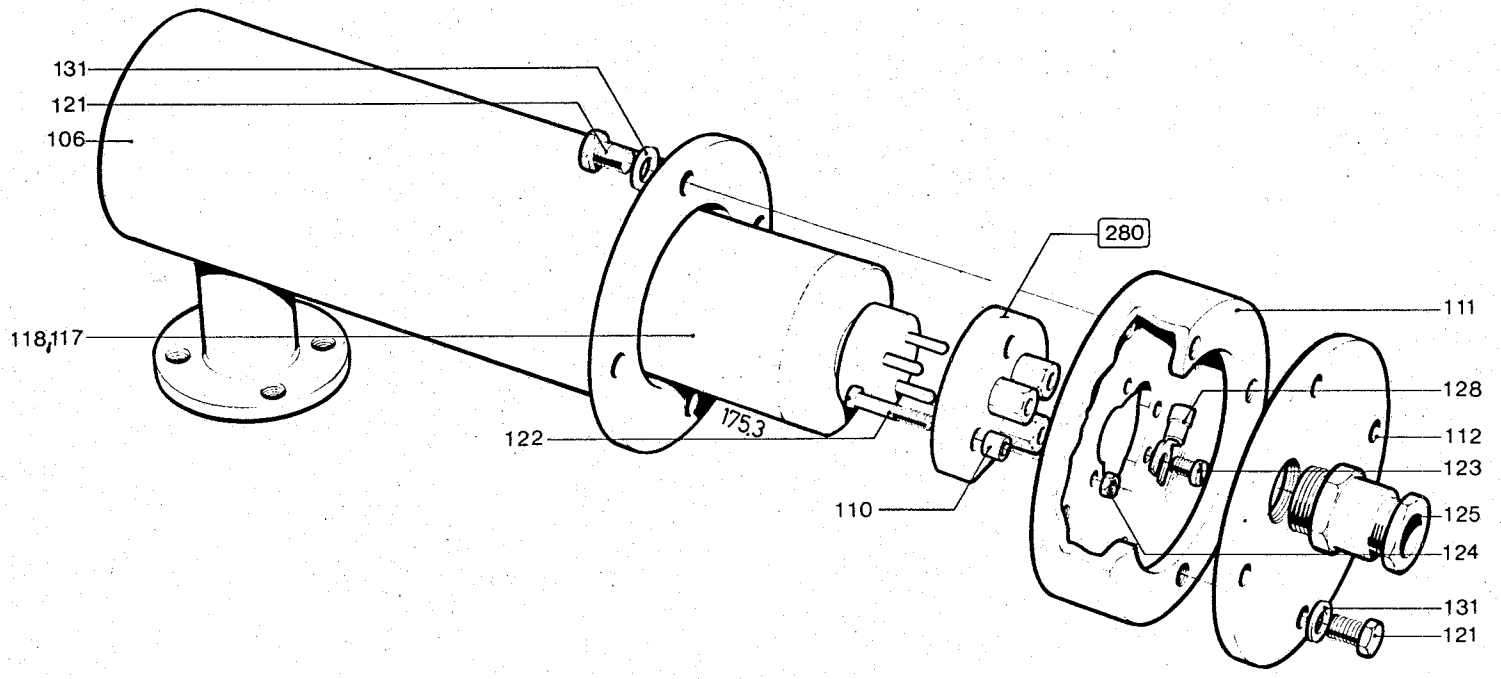

ÄM 4289

LAST ALTERATION: AM 10076 87-10-28
236892-030V
AM 8784
86-05-29

GROUP	FILLMACHINE	FILLMACHINE	FILLMACHINE	MACHINE CONTROL
-0201	TS/150	TS/300	TS/500	RELAY
-0202	TSA/150	TSA/300	TSA/500	RELAY
-0203	TS/155	-	-	TPMC

POS	VAR	PART NUMBER	SP	UN	QTY	DESCRIPTION
	-0201	S- 207637-SHEET		-1		===ASSEMBLY DRAWING===
	-0202			-1		
	-0203			-2		
F280	-0201	C- 207638-0201	-		1	CONTACT
	-0203				1	
F280	-0202	C- 207638-0202	-		1	CONTACT
125	-0201	352103-0106	-		1	CABLE GLANR.18,6/5-10
	-0202				1	
125	-0203	352136-0127	-		1	GLAND
140	-0203	352135-0106	-	M	2	HOSE .016
106	ALL	38960	-		1	COIL HEATER
110	ALL	19797	-		3	BUSHING
111	ALL	38962	-		1	CLUTCH PIECE
112	ALL	38963	-		1	LID
118	ALL	90206-0014	R		1	HEATING ELEMENT
121	ALL	312105-0366	-		8	SCREW M6S6X12RFR
122	ALL	312121-0230	-		3	SLOTTED HEMCS3X20FZB
123	ALL	312132-0287	-		1	SLOTTED HEMSCS4X8MSGFN
124	ALL	312601-0310	-		3	NUT M6M3FZB
128	ALL	353103-0130	-		1	CABLE SHOE
131	ALL	315105-0153	-		8	WASHER BRB6,4X12RFR

TETRA PAK

2/8512

S-207637-1

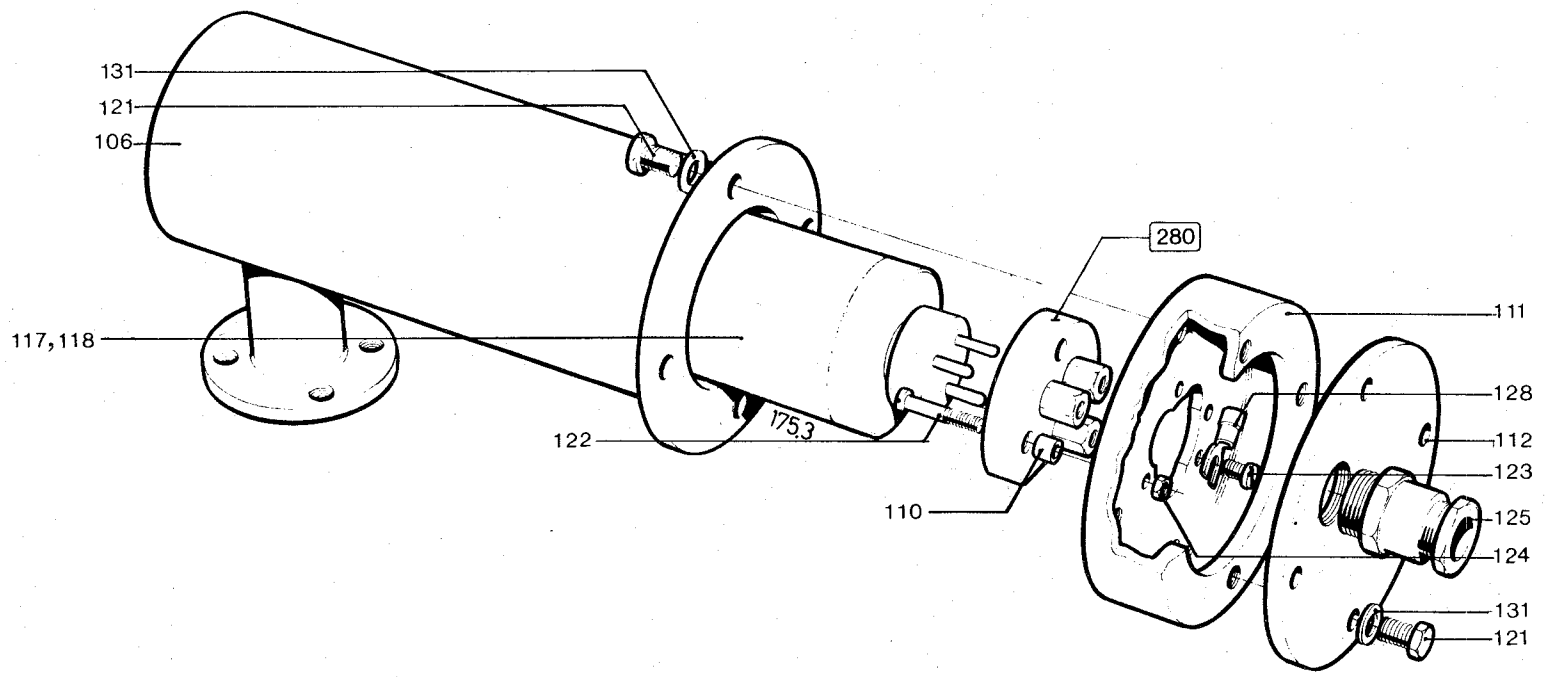

ÄM 4289

LAST ALTERATION: AM 3809 76-02-03
207637 630202 630302 630502 633202 633302 633502

GROUP

-0101 VERSION 1200/700W
-0102 VERSION 1900,2500W

POS	VAR	PART NUMBER	SP	EH	QTY	DESCRIPTION
	-0101	S- 207638-SHEET	-1			===ASSEMBLY DRAWING===
	-0102		-2			
104	-0102	209283	-		1	COUPLING STRIP
115	-0101	353103-0130	-		3	CABLE SHOE
	-0102				2	
103	ALL	207639	-		3	DISTANCE
106	ALL	90125-0020	-		1	BASE TABLE
112	ALL	312132-0287	-		3	SLOTTED HEMSCS4X8MSGFN

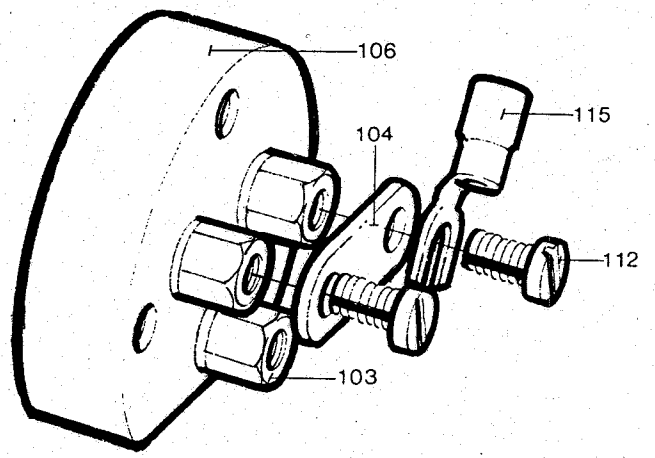

ÅM 3809

LAST ALTERATION: AM 8784 86-05-29
207637-020V

GROUP

-0201 UTF 2500W (1250X2 PARALLELLKOPPLING)
-0202 UTF 625W (1250X2 SERIEKOPPLING)

POS	VAR	PART NUMBER	SP UN	QTY	DESCRIPTION
	-0201	S- 207638-SHEET	-2		===ASSEMBLY DRAWING===
	-0202		-3		
104	-0201	209283	-	1	COUPLING STRIP
103	ALL	207639	-	3	SPACER
106	ALL	90125-0020	-	1	PLATE
112	ALL	312132-0287	-	3	SLOTTED HEMSCS4X8MSGFN
115	ALL	353103-0130	-	2	CABLE SHOE

Not.	Ändring	Datum	Inf.	Not.	Ändring	Datum	Inf.

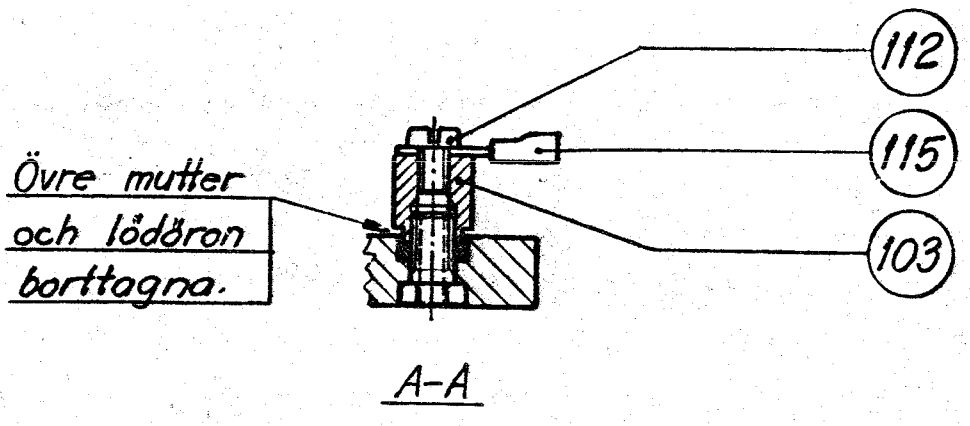

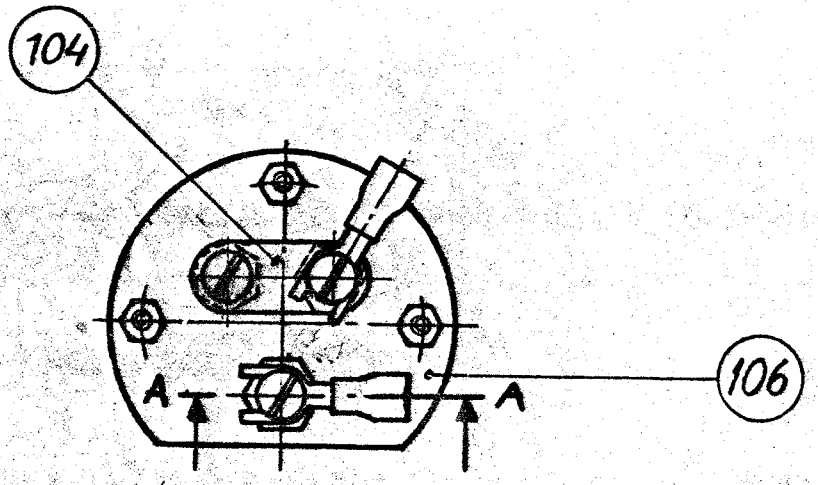

1987 -12- 15

G3-207637						
Tillhör smst Nr		Material			Anmärkning	
[illegible]	76.11.17	[illegible]		1:1		
Ritad	Datum	Kontr.	Godk.	Skala	Ytbesk.	Ytbehandling
TETRA PAK LUND SWEDEN		Hylskontakt				G4-207638-2

Icke di-
erens-
ätt enl.
S model

Tol. ±
0,1
0,2
0,3
0,5
0,8
1,2
2
3

Är eller utlämnas till obehörige
enl. lagen av den 29/5 1931.

LAST ALTERATION: AM 5719 83-05-18
630202 630302 630502

GROUP	FILLMACHINE	FILLMACHINE
-0201	HT500	-
-0202	HT150	T300

POS	VAR	PART NUMBER	SP	EH	QTY	DESCRIPTION
	-0201	S- 232897-SHEET	-1			===ASSEMBLY DRAWING===
	-0202		-1			
108	-0202	245106	-		1	ELBOW PIPE
124	-0201	315250-0103	R		7	GASKET 48/38
	-0202				8	
109	ALL	230950	-		1	PIPE
112	ALL	434348	-		1	ELBOW PIPE
115	ALL	4051-0002	-		1	WASTE PIPE
119	ALL	90043-0050	-		1	PRESSURE GAUGE
120	ALL	90207-0003	-		1	3-WAY COCK
130	ALL	342807-0103	-		1	ELBOW PIPE38

TETRA PAK

1/8310

S-232897-1

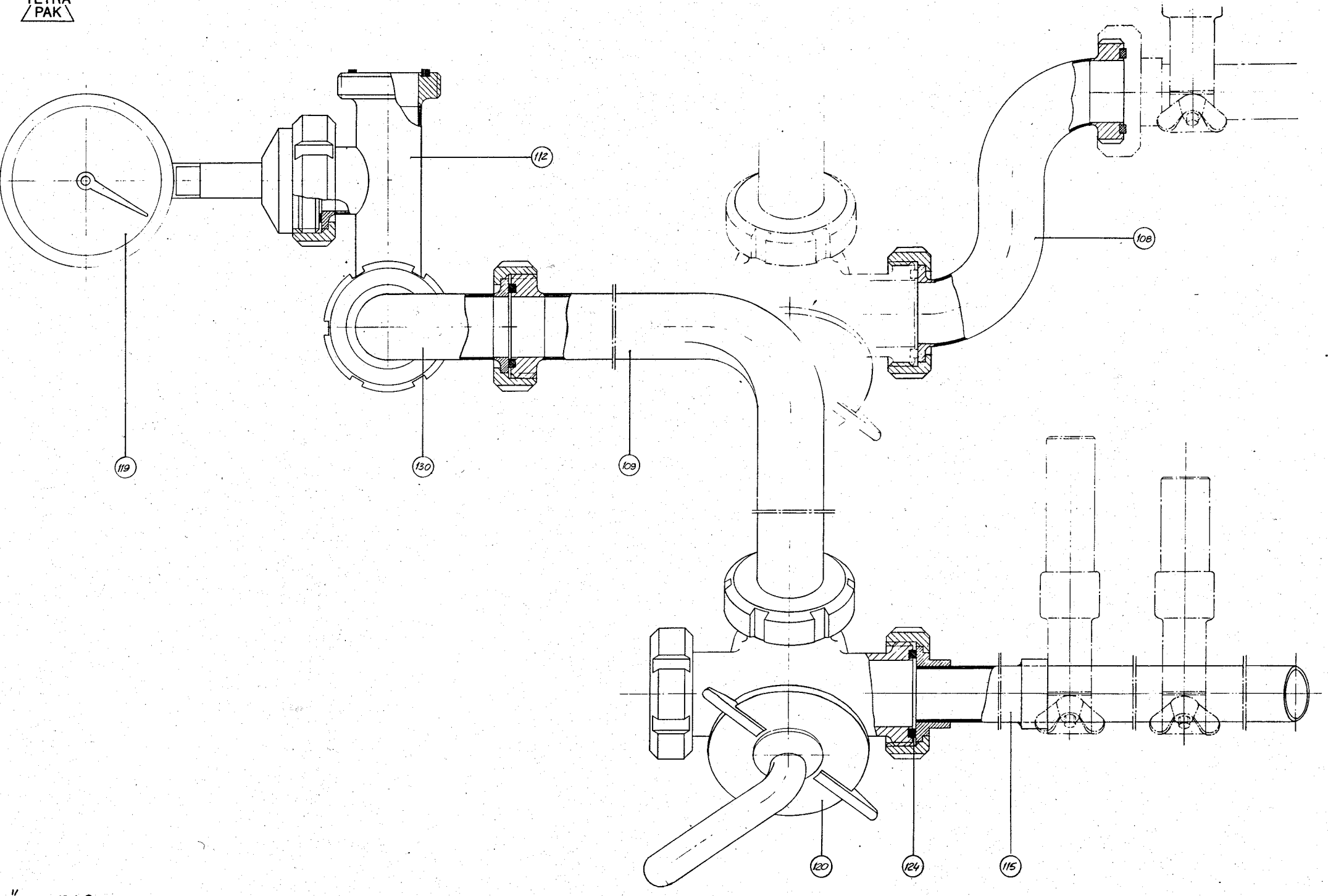

ÄM 5719

LAST ALTERATION: AM 5367 83-03-15
630202 630302 630502
AM 3931
77-04-01

POS	VAR	PART NUMBER	SP	EH	QTY	DESCRIPTION
	-0101	S- 232938-SHEET	-1			===ASSEMBLY DRAWING===
110	-0101	36148	-		1	PISTON HOUSING
111	-0101	36149	-		1	VALVE SPINDLE
112	-0101	230949	-		1	HOUSING
113	-0101	230952	-		1	BRACKET
116	-0101	36160	-		1	PISTON
117	-0101	36161	-		1	NUT
118	-0101	36164	-		1	NUT
119	-0101	36166	-		1	GASKET
120	-0101	36451	-		1	COMPRESSION SPRING
121	-0101	36888	-		1	CYLINDER
122	-0101	230941	-		1	CLAMP
123	-0101	230942	-		1	CLAMP
127	-0101	90131-0003	-		1	NIPPLE
128	-0101	90163-0001	-		1	QUICK RELEASE COUPLING
129	-0101	90224-0090	-		1	REDUCTION SLEEVE
130	-0101	90242-0065	-		2	O-RING
134	-0101	312101-0368	-		4	SCREW M6S6X16FZB
135	-0101	312105-0451	-		4	SCREW M6S8X20RFR
136	-0101	312105-0461	-		2	SCREW M6S8X50RFR
137	-0101	315101-0153	-		4	WASHER BRB6,4X12FZB
138	-0101	315105-0165	-		6	WASHER BRB8,4X16RFR
139	-0101	315204-0216	R		1	O-RING 22,2X3VITON
140	-0101	315204-0301	R		2	O-RING 49,5X3VITON
141	-0101	315204-0302	R		1	O-RING 54,5X3VITON
142	-0101	315233-0109	-		1	SEAL RING R1/8"
143	-0101	342732-0102	-		1	PIPE JOINT D6-R1/8"
144	-0101	346800-0109	-		1	SILENCER FILTER R1/8"

S-232938-1

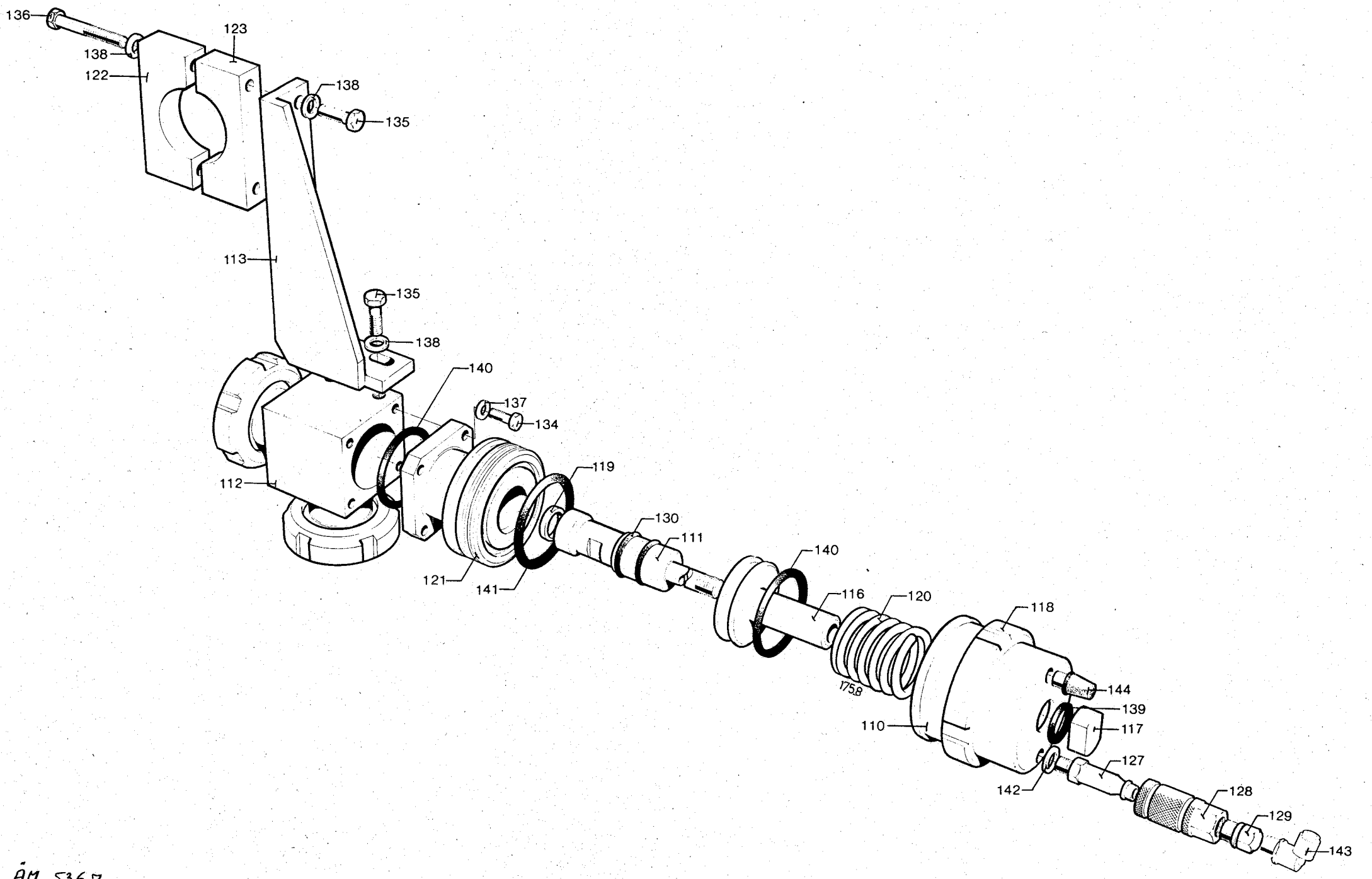

ÅM 5367

LAST ALTERATION: AM 9405 86-11-27
532156-010V 630202-110V 630232-010V 630302-140V 630502-140V

POS	VAR	PART NUMBER	SP UN	QTY	DESCRIPTION
	-0201	S- 232938-SHEET	-2		===ASSEMBLY DRAWING===
110	-0201	36148	-	1	PISTON HOUSING
111	-0201	36149	-	1	VALVE SPINDLE
112	-0201	230949	-	1	VALVE HOUSING
116	-0201	36160	-	1	PISTON
117	-0201	36161	-	1	NUT
118	-0201	36164	-	1	NUT
119	-0201	36166	-	1	GASKET
120	-0201	36451	-	1	COMPRESSION SPRING
121	-0201	36888	-	1	CYLINDER
127	-0201	90131-0003	-	1	HOSE COUPLING
128	-0201	90163-0001	-	1	CONNECTION
		90163-0300	R	0	* GASKET
129	-0201	90224-0090	-	1	SLEEVE
130	-0201	90242-0065	-	2	O-RING
134	-0201	312101-0368	-	4	SCREW M6S6X16FZB
135	-0201	312105-0451	-	2	SCREW M6S8X20RFR
137	-0201	315101-0153	-	4	WASHER BRB6,4X12FZB
138	-0201	315105-0165	-	2	WASHER BRB8,4X16RFR
139	-0201	315204-0216	R	1	O-RING 22,2X3VITON
140	-0201	315204-0301	R	2	O-RING 49,5X3VITON
141	-0201	315204-0302	R	1	O-RING 54,5X3VITON
142	-0201	315233-0109	-	1	SEAL RING R1/8"
143	-0201	342732-0102	-	1	ELBOW COUP D6-R1/8"
144	-0201	346800-0109	-	1	SILENCER FILTER R1/8"

S-232938-2

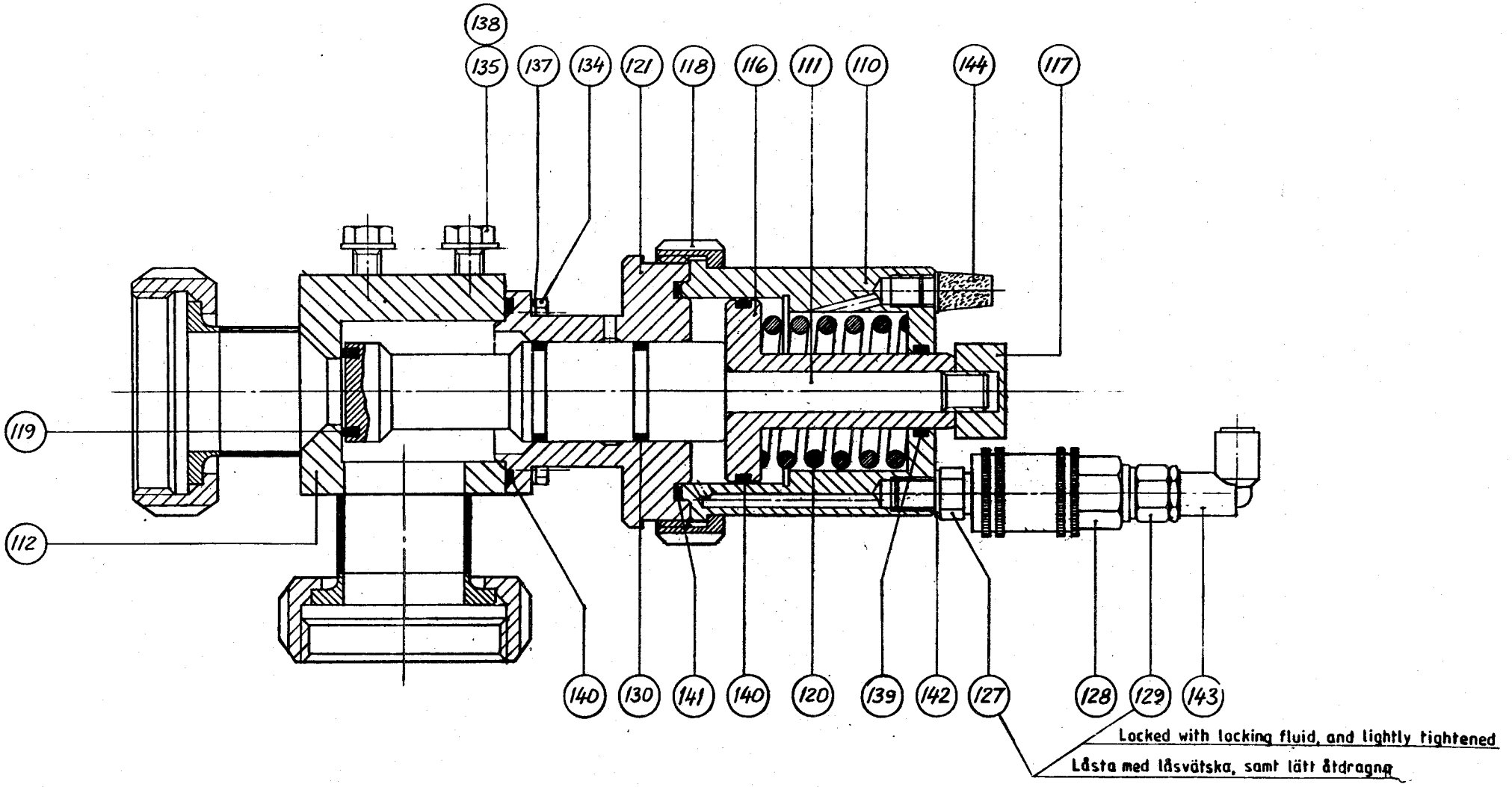
138
135
137
134
121
118
116
111
110
144
117
119
112
140
130
141
140
120
139
142
127
128
129
143
Locked with locking fluid, and lightly tightened
Låsta med låsvätska, samt lätt åtdragna

LAST ALTERATION: AM 6936 85-01-09
236892 630202 630302 630502 633202 633302 633502
AM 5719
83-05-18

GROUP	FILLMACHINE	FILLMACHINE	FILLMACHINE
-0201	HT500	T300	HT150
-0202	AT500	AT300	AT150

POS	VAR	PART NUMBER	SP	EH	QTY	DESCRIPTION
	-0201	S- 232955-SHEET		-1		===ASSEMBLY DRAWING===
	-0202			-1		
113	-0201	32288-0003	-		1	HOLDER
113	-0202	32288-0004	-		1	HOLDER
109	ALL	230494	-		1	RAIL LIFT
114	ALL	230518	-		1	CYLINDER
117	ALL	32289	-		2	PIN
118	ALL	255336	R		1	RAIL
119	ALL	255341	-		1	STRIP
120	ALL	230499	-		1	BRACKET
121	ALL	230500	R		1	RAIL
122	ALL	232946	-		1	HOLDER
124	ALL	232948	-		1	ARM
126	ALL	232950	-		2	WASHER
127	ALL	283147	-		1	BRACKET
128	ALL	283209	-		1	BRACKET
131	ALL	90239-0088	-		1	PISTON ROD COUPLING
132	ALL	90239-0821	-		1	CYLINDER
134	ALL	312105-0447	-		4	SCREW M6S8X12RFR
135	ALL	312125-0285	-		3	SLOTTED HEMCS4X6RFR
136	ALL	312125-0323	-		8	SLOTTED HEMCS5X8RFR
137	ALL	312145-0287	-		4	SLOTTED HEMFS4X8RFR
138	ALL	312105-0376	-		2	SCREW M6S6X35RFR
139	ALL	312318-0360	-		1	GRUB SCREW SK6SS6X6RFR
141	ALL	312605-0316	-		1	NUT M6M6RFR
142	ALL	312605-0318	-		4	NUT M6M8RFR
144	ALL	315105-0136	-		6	WASHER BRB4,3X8RFR
145	ALL	315105-0153	-		3	WASHER BRB6,4X12RFR
146	ALL	315105-0165	-		8	WASHER BRB8,4X16RFR
149	ALL	342792-0102	-		2	BANJO CONN SWV6-LRFZB

TETRA PAK

1/8310

S-232955-1

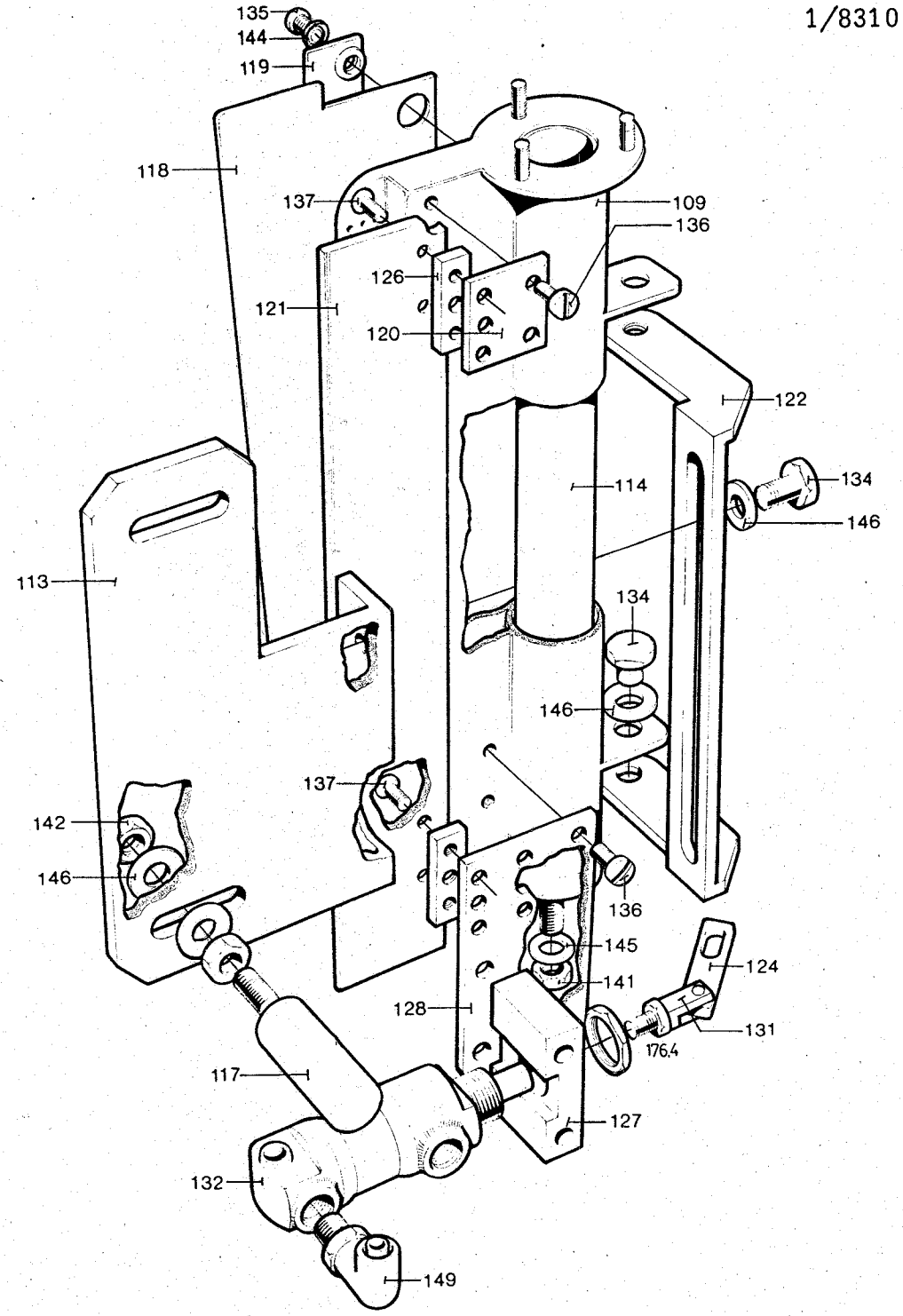

ÄM 5719

LAST ALTERATION: AM 5976 83-09-08

237053 630202 630302 630502 633202 633302 633502

GROUP	FILLMACHINE	FILLMACHINE
-0201	T500	-
-0202	T300	-
-0203	T150	-
-0204	AT300	AT150
-0205	AT500	-

POS	VAR	PART NUMBER	SP	EH	QTY	DESCRIPTION
	-0201	S- 236892-SHEET	-1			===ASSEMBLY DRAWING===
	-0202		-1			
	-0203		-1			
	-0204		-1			
	-0205		-1			
F270	ALL	C- 207637-0103	-		1	ELEMENT
F290	ALL	C- 232955-020V	-		1	ELEMENT
114	-0201	33730-0001	-		2	GASKET
	-0202				2	
	-0203				2	
	-0204				1	
	-0205				1	
115	-0201	208853	-		1	CONTACT FLANGE
	-0202				1	
	-0203				1	
130	-0201	312105-0366	-		8	SCREW M6S6X12RFR
	-0202				8	
	-0203				8	
	-0204				4	
	-0205				4	
136	-0201	315105-0153	-		8	WASHER BRB6,4X12RFR
	-0202				8	
	-0203				8	
	-0204				4	
	-0205				4	
116	ALL	232991	-		1	CONNECTION PIPE
122	ALL	90326-0012	-		1	SPLASH GUARD
123	ALL	90326-0017	-		1	GLAND
125	ALL	90326-0020	-		1	SOCKET
126	ALL	90326-0043	-		1	THERMOCOUPLE
133	ALL	312605-0312	-		3	NUT M6M4RFR
135	ALL	315105-0136	-		3	WASHER BRB4,3X8RFR

S-236892-1

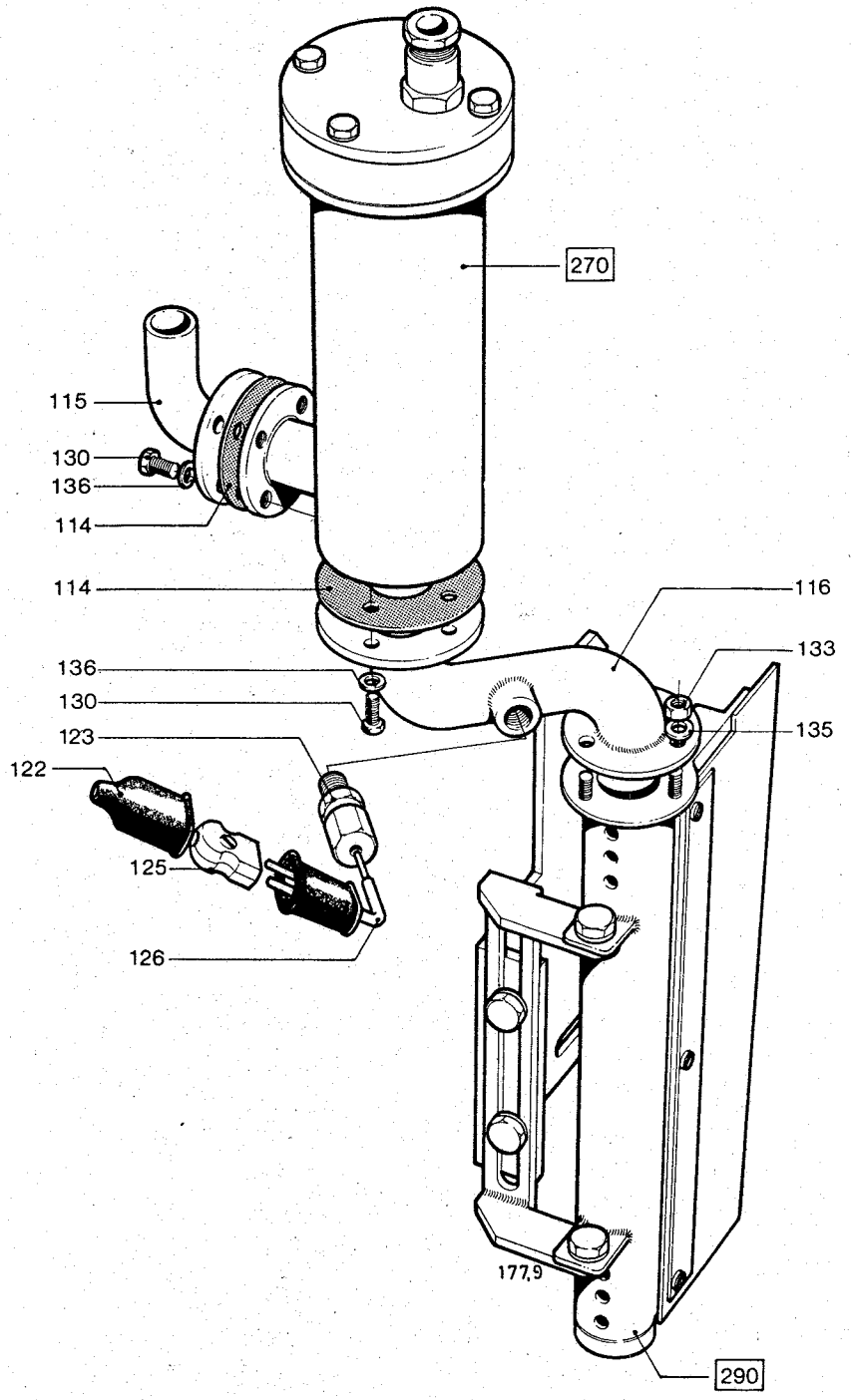

ÅM 5976

LAST ALTERATION: AM 10076 87-10-28
237053-030V 633202-160V 633302-160V 633502-180V
AM 8784
86-05-29

GROUP	FILLMACHINE	VOLUME
-0301	TS/500	-
-0302	TS/300	-
-0303	TS/150	-
-0304	TSA/150	-
	TSA/300	-
-0305	TSA/500	V0500
-0306	TSA/500	150ML SLIM
-0307	TS/155	V066,5

POS	VAR	PART NUMBER	SP UN	QTY	DESCRIPTION
	-0301	S- 236892-SHEET	-1		===ASSEMBLY DRAWING===
	-0302		-1		
	-0303		-1		
	-0304		-1		
	-0305		-1		
	-0306		-1		
	-0307		-1		
F270	ALL	C- 207637-020V	-	1	ELEMENT
		C- 207638-0201			. CONTACT
		C- 207638-0202			. CONTACT
F290	-0301	C- 232955-020V	-	1	ELEMENT
	-0302			1	
	-0303			1	
	-0304			1	
	-0305			1	
F290	-0306	C- 536952-010V	-	1	LS-ELEMENT
	-0307			1	
114	-0301	33730-0001	-	2	GASKET
	-0302			2	
	-0303			2	
	-0304			1	
	-0305			1	
	-0306			1	
	-0307			2	
115	-0301	208853	-	1	CONTACT FLANGE
	-0302			1	
	-0303			1	
	-0307			1	
130	-0301	312105-0366	-	8	SCREW M6S6X12RFR
	-0302			8	
	-0303			8	
	-0304			4	
	-0305			4	
	-0306			4	
	-0307			8	

POS	VAR	PART NUMBER	SP UN	QTY	DESCRIPTION
136	-0301	315105-0153	-	8	WASHER BRB6,4X12RFR
	-0302			8	
	-0303			8	
	-0304			4	
	-0305			4	
	-0306			4	
	-0307			8	
116	ALL	232991	-	1	CONNECTION PIPE
122	ALL	90326-0012	-	1	PROTECTIVE COVER
123	ALL	90326-0017	-	1	GLAND
125	ALL	90326-0020	-	1	SOCKET
126	ALL	90326-0043	-	1	THERMOELEMENT
133	ALL	312605-0312	-	3	NUT M6M4RFR
135	ALL	315105-0136	-	3	WASHER BRB4,3X8RFR

S-236892-1

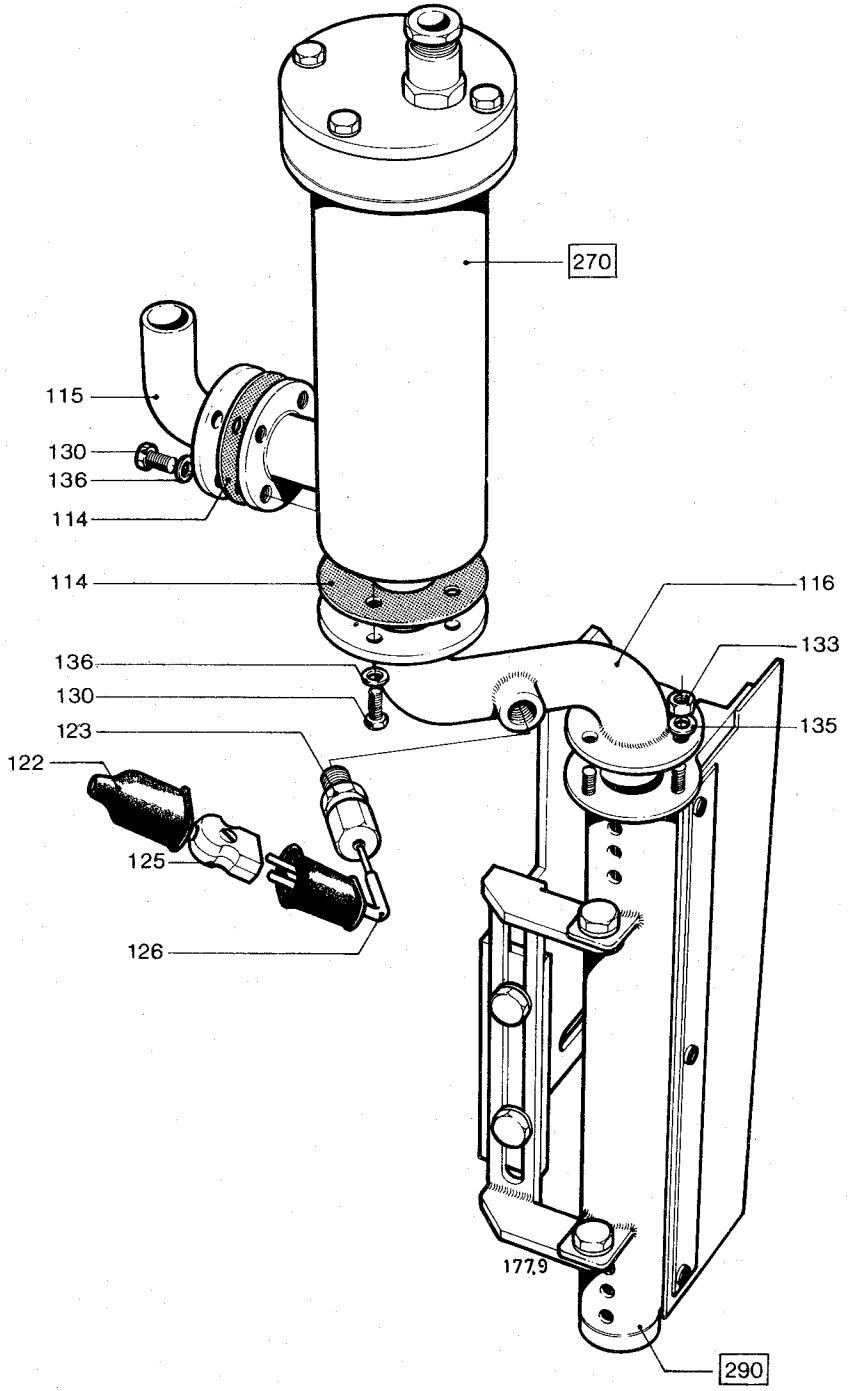

ÅM 5976

LAST ALTERATION: AM 7752 85-09-21
630202-100V 630302-130V 630502-130V
AM 5719
83-05-18

POS	VAR	PART NUMBER	SP	EH	QTY	DESCRIPTION
	-0201	S- 237053-SHEET	-2			===ASSEMBLY DRAWING===
F260	-0201	C- 236892-020V	-		1	ELEMENT GROUP
F295	-0201	C- 259407-010V	-		1	PNEUMATIC PANEL
010	-0201	32698	-		1	COVER
020	-0201	35734	-		1	BOTTOM PLATE
030	-0201	32699	-		2	NET
040	-0201	32296	-		1	CONNECTION PIPE
050	-0201	33730-0001	-		1	GASKET
060	-0201	35717	-		1	CONTACT FLANGE
070	-0201	228828	-		1	PIPE
080	-0201	284730	-		1	CONTACT FLANGE
090	-0201	90030-0056	-		1	PIPE CONNECTION
100	-0201	90043-0028	-		1	PRESSURE GAUGE
110	-0201	90089-0006	-		1	SLEEVE
120	-0201	90113-0013	-		1	REGULATOR
		90113-0359	R		0	* FILTER CARTRIDGE
130	-0201	90235-0291	-		1	CHECK VALVE
140	-0201	90140-0010	-		2	T-PIECE
150	-0201	90163-0067	-		1	HOSE NIPPLE
160	-0201	90166-0013	-	MM	150	HOSE
170	-0201	90166-0060	-	M	1	HOSE
180	-0201	90224-0037	-		1	NIPPLE
190	-0201	90264-0005	-		1	FAN
		90264-0306	U		0	* SILENCER
200	-0201	90273-0006	-		1	PRESSURE GUARD
210	-0201	312101-0323	-		2	SCREW M6S5X8FZB
220	-0201	312101-0451	-		4	SCREW M6S8X20FZB
230	-0201	312101-0489	-		2	SCREW M6S10X16FZB
240	-0201	312105-0366	-		12	SCREW M6S6X12RFR
250	-0201	312105-0449	-		4	SCREW M6S8X16RFR
260	-0201	312121-0327	-		2	SLOTTED HEMCS5X12FZB
270	-0201	312601-0316	-		8	NUT M6M6FZB
280	-0201	315105-0146	-		4	WASHER BRB5,3X10RFR
290	-0201	315105-0153	-		12	WASHER BRB6,4X12RFR
300	-0201	315105-0165	-		8	WASHER BRB8,4X16RFR
310	-0201	315105-0173	-		2	WASHER BRB10,5X22RFR
320	-0201	342240-0111	-		1	T-PIECE ANSL.10
325	-0201	342245-0102	-		1	T-PIECE
330	-0201	342700-0206	-		1	NIPPLE RNA3/8"-1/2"
350	-0201	342701-0203	-		1	BUSHING RNI3/8"-1/4"
355	-0201	342716-0203	-		1	REDUCER 6-8
360	-0201	342720-0104	-		1	PIPE CONNEGA-8-1/4"
365	-0201	342722-0205	-		1	PIPE CONNED=8-R1/4"
370	-0201	342732-0104	-		2	ELBOW COUP D8-R1/4"
380	-0201	342991-0103	-		2	HOSE CLIP 15-24MMRFR

POS	VAR	PART NUMBER	SP	EH	QTY	DESCRIPTION
390	-0201	352020-0102	-		1	CONNECTIONOSA
400	-0201	352103-0106	-		1	CABLE GLANR.18,6/5-10
410	-0201	352103-0111	-		1	CABLE GLANR.PR22,5/10-14

TETRA PAK

2/8512

S-237053-2

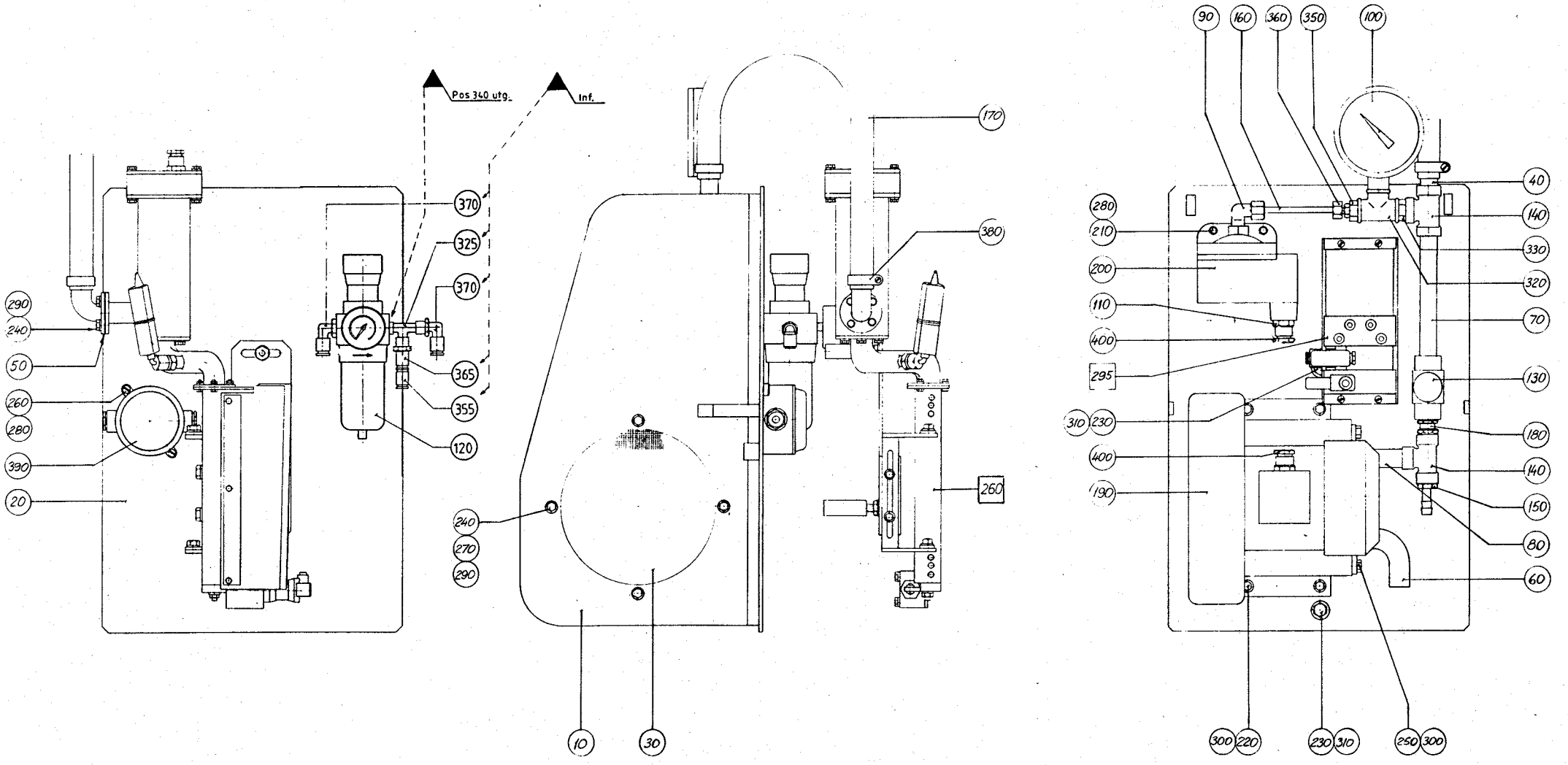

ÄM 7752

LAST ALTERATION: AM 10076 87-10-28
630202-110V 630232-010V 630302-140V 630502-140V
AM 9786
86-12-19

GROUP MACHINE CONTROL

-0301 RELAY
-0302 TPMC

POS	VAR	PART NUMBER	SP	UN	QTY	DESCRIPTION
	-0301	S- 237053-SHEET	-2			===ASSEMBLY DRAWING===
	-0302		-3			
F260	ALL	C- 236892-030V	-		1	ELEMENT GROUP
		C- 207637-020V				. ELEMENT
		C- 207638-0201				. . CONTACT
		C- 207638-0202				. . CONTACT
		C- 232955-020V				. ELEMENT
		C- 536952-010V				. LS-ELEMENT
F295	-0301	C- 259407-010V	-		1	PNEUMATIC PANEL
F295	-0302	C- 535053-0101	-		1	PNEUMATIC PANEL
F320	-0302	C- 534736-0101	-		1	CONNECTION BOX
		C- 534737-0101				. TERMINAL BLOCK
005	-0302	534729	-		1	PLATE
240	-0301	312105-0366	-		12	SCREW M6S6X12RFR
	-0302				15	
260	-0301	312121-0327	-		2	SLOTTED HEMCS5X12FZB
280	-0301	315105-0146	-		4	WASHER BRB5,3X10RFR
	-0302				2	
290	-0301	315105-0153	-		12	WASHER BRB6,4X12RFR
	-0302				15	
390	-0301	352020-0102	-		1	CONNECTIONOSA
405	-0302	352135-0106	-	M	1	HOSE .016
410	-0301	352103-0111	-		1	CABLE GLANR.PR22,5/10-14
410	-0302	352136-0129	-		1	GLAND
010	ALL	32698	-		1	COVER
020	ALL	35734	-		1	BOTTOM PLATE
030	ALL	32699	-		2	NET
040	ALL	32296	-		1	CONNECTION PIPE
050	ALL	33730-0001	-		1	GASKET
060	ALL	534869	-		1	CONTACT FLANGE
070	ALL	228828	-		1	PIPE
080	ALL	534870	-		1	CONTACT FLANGE
090	ALL	90030-0056	-		1	PIPE CONNECTION
100	ALL	90043-0028	-		1	PRESSURE GAUGE
110	ALL	90089-0006	-		1	SLEEVE
120	ALL	90113-0013	-		1	REGULATOR
		90113-0359	S		0	* FILTER CARTRIDGE
130	ALL	90235-0291	-		1	THROTTLE CHECK VALVE
140	ALL	90140-0010	-		2	T-PIECE
150	ALL	90163-0067	-		1	HOSE NIPPLE

POS	VAR	PART NUMBER	SP	UN	QTY	DESCRIPTION
160	ALL	90166-0013	-	MM	150	HOSE
170	ALL	90166-0060	-	M	1	HOSE
180	ALL	90224-0037	-		1	NIPPLE
190	ALL	90264-0005	-		1	FAN
		90264-0306	SU		0	* SILENCER
200	ALL	90273-0006	-		1	PRESSURE GUARD
210	ALL	312101-0323	-		2	SCREW M6S5X8FZB
220	ALL	312101-0451	-		4	SCREW M6S8X20FZB
230	ALL	312101-0489	-		2	SCREW M6S10X16FZB
250	ALL	312105-0368	-		4	SCREW M6S6X16RFR
270	ALL	312601-0316	-		8	NUT M6M6FZB
300	ALL	315105-0165	-		4	WASHER BRB8,4X16RFR
310	ALL	315105-0173	-		2	WASHER BRB10,5X22RFR
320	ALL	342240-0111	-		1	T-PIECE ANSL.10
325	ALL	342245-0102	-		1	T-PIECE
330	ALL	342700-0206	-		1	NIPPLE RNA3/8"-1/2"
350	ALL	342701-0203	-		1	BUSHING RNI3/8"-1/4"
355	ALL	342716-0203	-		1	REDUCER 6-8
360	ALL	342720-0104	-		1	PIPE CONNEGA-8-1/4"
365	ALL	342722-0205	-		1	PIPE CONNED=8-R1/4"
370	ALL	342732-0104	-		2	ELBOW COUP D8-R1/4"
380	ALL	342991-0103	-		2	HOSE CLIP 15-24MMRFR
400	ALL	352103-0106	-		1	CABLE GLANR.18,6/5-10

TETRA PAK

2/8512

S-237053-2

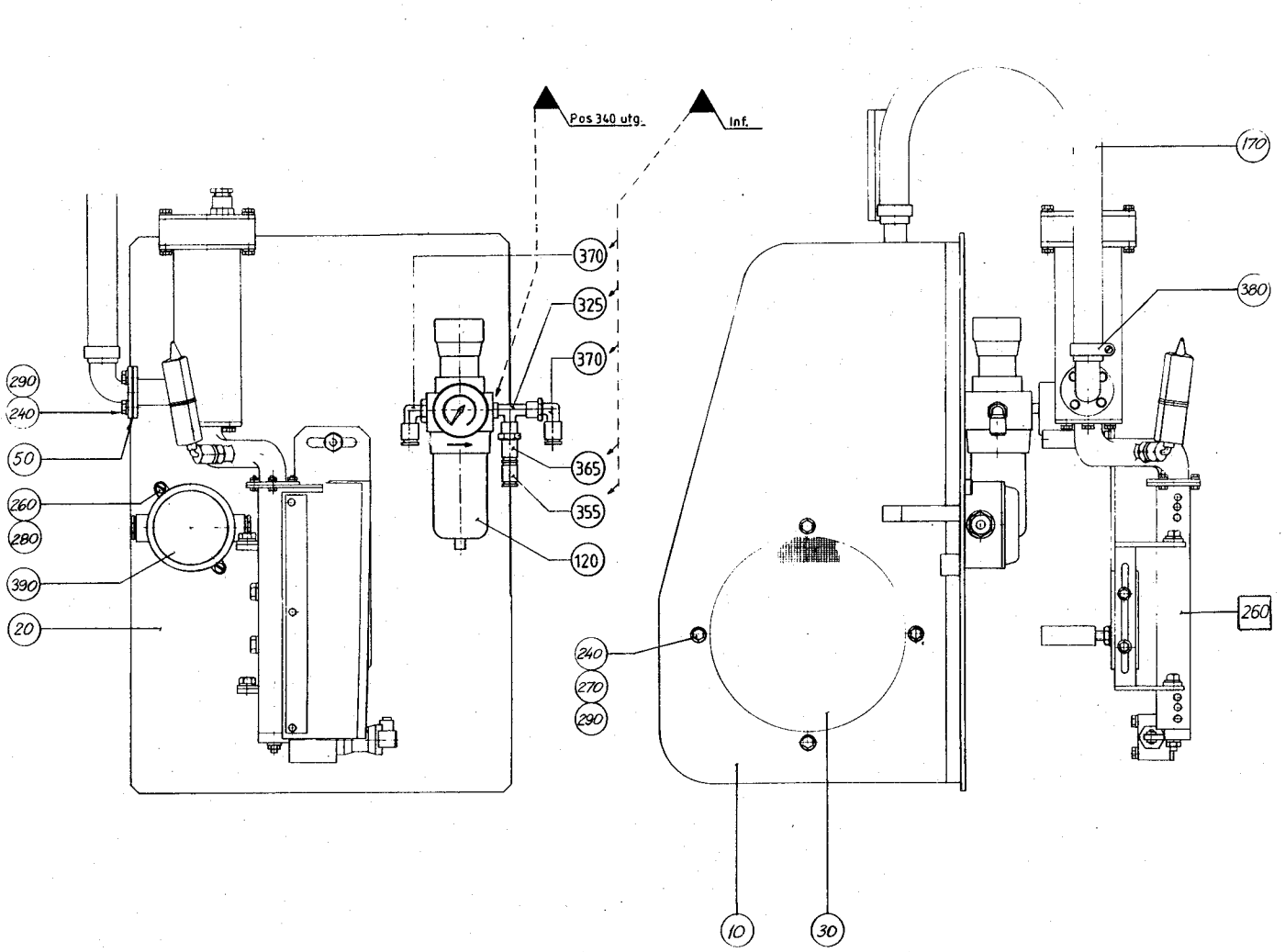

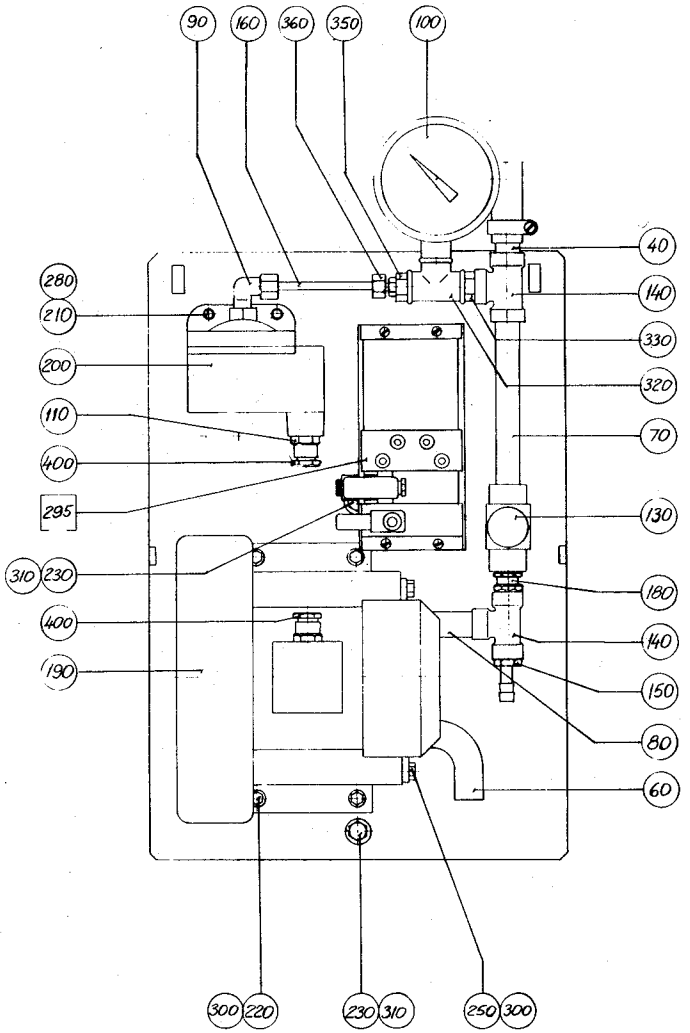

ÄM 7752

LAST ALTERATION: AM 10076 87-10-28
630202-110V 630232-010V 630302-140V 630502-140V
AM 9786
86-12-19

GROUP MACHINE CONTROL

-0301 RELAY
-0302 TPMC

POS	VAR	PART NUMBER	SP	UN	QTY	DESCRIPTION
	-0301	S- 237053-SHEET	-2			===ASSEMBLY DRAWING===
	-0302		-3			
F260	ALL	C- 236892-030V	-		1	ELEMENT GROUP
		C- 207637-020V				. ELEMENT
		C- 207638-0201				. . CONTACT
		C- 207638-0202				. . CONTACT
		C- 232955-020V				. ELEMENT
		C- 536952-010V				. LS-ELEMENT
F295	-0301	C- 259407-010V	-		1	PNEUMATIC PANEL
F295	-0302	C- 535053-0101	-		1	PNEUMATIC PANEL
F320	-0302	C- 534736-0101	-		1	CONNECTION BOX
		C- 534737-0101				. TERMINAL BLOCK
005	-0302	534729	-		1	PLATE
240	-0301	312105-0366	-		12	SCREW M6S6X12RFR
	-0302				15	
260	-0301	312121-0327	-		2	SLOTTED HEMCS5X12FZB
280	-0301	315105-0146	-		4	WASHER BRB5,3X10RFR
	-0302				2	
290	-0301	315105-0153	-		12	WASHER BRB6,4X12RFR
	-0302				15	
390	-0301	352020-0102	-		1	CONNECTIONOSA
405	-0302	352135-0106	-	M	1	HOSE .016
410	-0301	352103-0111	-		1	CABLE GLANR.PR22,5/10-14
410	-0302	352136-0129	-		1	GLAND
010	ALL	32698	-		1	COVER
020	ALL	35734	-		1	BOTTOM PLATE
030	ALL	32699	-		2	NET
040	ALL	32296	-		1	CONNECTION PIPE
050	ALL	33730-0001	-		1	GASKET
060	ALL	534869	-		1	CONTACT FLANGE
070	ALL	228828	-		1	PIPE
080	ALL	534870	-		1	CONTACT FLANGE
090	ALL	90030-0056	-		1	PIPE CONNECTION
100	ALL	90043-0028	-		1	PRESSURE GAUGE
110	ALL	90089-0006	-		1	SLEEVE
120	ALL	90113-0013	-		1	REGULATOR
		90113-0359	S		0	* FILTER CARTRIDGE
130	ALL	90235-0291	-		1	THROTTLE CHECK VALVE
140	ALL	90140-0010	-		2	T-PIECE
150	ALL	90163-0067	-		1	HOSE NIPPLE

POS	VAR	PART NUMBER	SP	UN	QTY	DESCRIPTION
160	ALL	90166-0013	-	MM	150	HOSE
170	ALL	90166-0060	-	M	1	HOSE
180	ALL	90224-0037	-		1	NIPPLE
190	ALL	90264-0005	-		1	FAN
		90264-0306	SU		0	* SILENCER
200	ALL	90273-0006	-		1	PRESSURE GUARD
210	ALL	312101-0323	-		2	SCREW M6S5X8FZB
220	ALL	312101-0451	-		4	SCREW M6S8X20FZB
230	ALL	312101-0489	-		2	SCREW M6S10X16FZB
250	ALL	312105-0368	-		4	SCREW M6S6X16RFR
270	ALL	312601-0316	-		8	NUT M6M6FZB
300	ALL	315105-0165	-		4	WASHER BRB8,4X16RFR
310	ALL	315105-0173	-		2	WASHER BRB10,5X22RFR
320	ALL	342240-0111	-		1	T-PIECE ANSL.10
325	ALL	342245-0102	-		1	T-PIECE
330	ALL	342700-0206	-		1	NIPPLE RNA3/8"-1/2"
350	ALL	342701-0203	-		1	BUSHING RNI3/8"-1/4"
355	ALL	342716-0203	-		1	REDUCER 6-8
360	ALL	342720-0104	-		1	PIPE CONNEGA-8-1/4"
365	ALL	342722-0205	-		1	PIPE CONNED=8-R1/4"
370	ALL	342732-0104	-		2	ELBOW COUP D8-R1/4"
380	ALL	342991-0103	-		2	HOSE CLIP 15-24MMRFR
400	ALL	352103-0106	-		1	CABLE GLANR.18,6/5-10

Nr	Änderung / Alteration	Datum / Date	Sign	Ref
-	Inf. ÄM 10076	87 09.08.	DD	

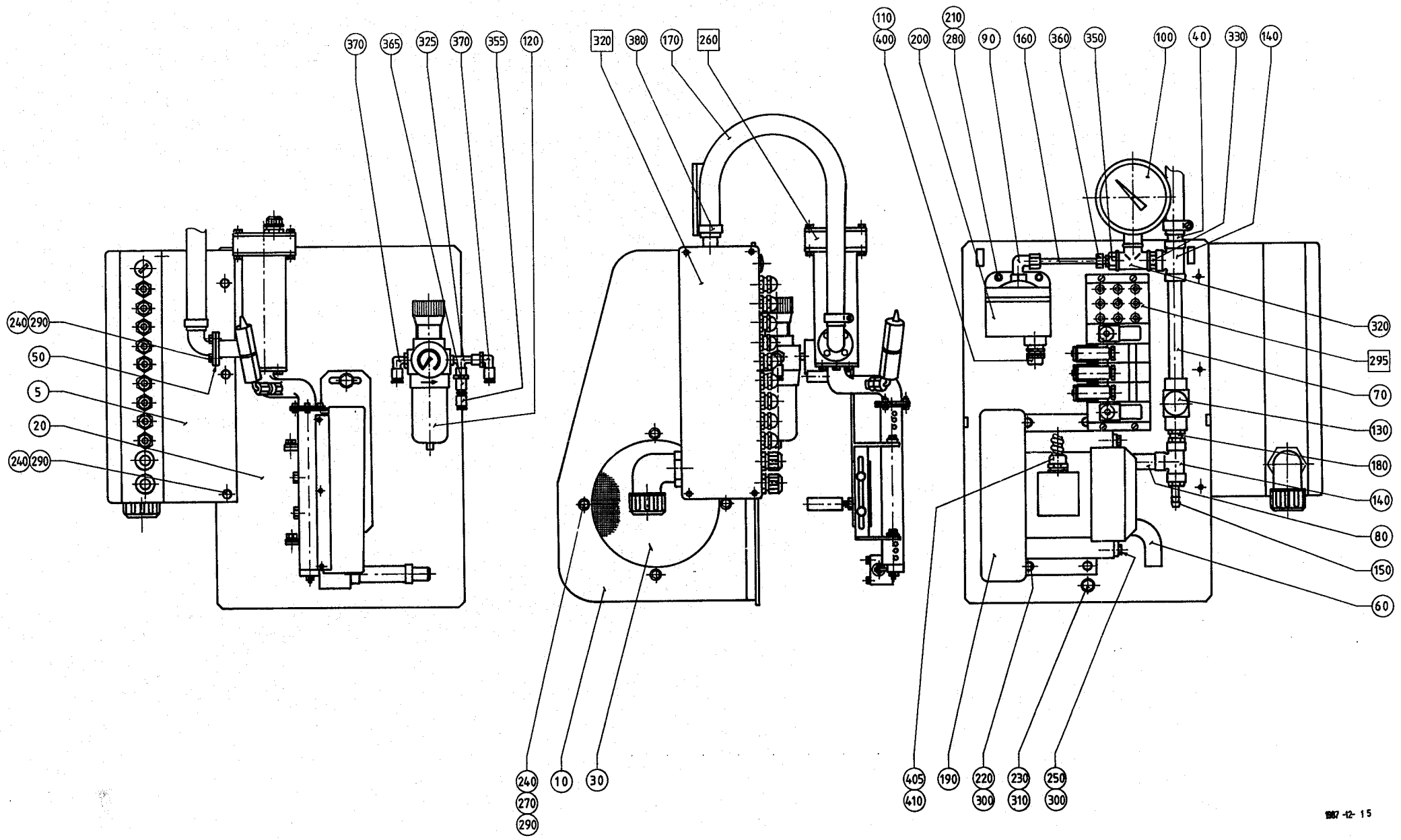

1987 -12- 15

21,0

Designer MS	Marked with PART NUMBER		6302/03/0502
Date 860128	Method / mm - KA 21 83 16		Assembly drawing
Approved	Material		
Scale 1:2,5	Surface roughness		
	Surface treatment		
TETRA PAK SWEDEN	LS-UTRUSTNING LS-EQUIPMENT		S1-237053-3

5719

LAST ALTERATION: AM ~~5367~~ 83-03-15
630202 630302 630502
AM 4379
79-10-02

GROUP	FILLMACHINE	FILLMACHINE	VOLUME	VOLUME	VOLUME
-0201	HT500	T300	-	-	-
-0202	HT150	-	V0200	V0189	V0180
	HT150	-	V0150	V0125	-
-0203	HT150	-	V062.5	-	-

POS	VAR	PART NUMBER	SP	EH	QTY	DESCRIPTION
	-0201	S- 237086-SHEET	-2			===ASSEMBLY DRAWING===
	-0202		-2			
	-0203		-3			
005	-0203	7081	-		2	BRACKET
008	-0203	6947	-		4	NUT
010	-0202	244763	-		1	DISTANCE BLOCK
	-0203				1	
040	-0201	10991	-		1	ROD
	-0202				1	
040	-0203	284052	-		1	ROD
050	-0201	10992	-		1	ROD
	-0202				1	
050	-0203	284053	-		1	ROD
195	-0203	311309-0272	-		1	SLOTTED PIRPE4X20FZB
198	-0203	312101-0335	-		2	SCREW M6S5X30FZB
225	-0203	312115-0378	-		4	SCREW MC6S6X40RFR
355	-0203	315105-0153	-		4	WASHER BRB6,4X12RFR
375	-0203	315401-0153	-		4	WASHER FBH6,1FZB
020	ALL	6043	-		1	SUPERSTRUCTURE
030	ALL	2404	-		1	CLAMP
060	ALL	263668	-		1	BENDING ROLLER
070	ALL	1753	-		1	RING
080	ALL	1755-0001	-		1	WASHER
090	ALL	1756	-		4	SUPPORT
100	ALL	2410	-		1	CRANK
110	ALL	2687	-		2	STRUT
120	ALL	3598	-		1	PAPER CLIP
130	ALL	11012	-		1	COLUMN
140	ALL	11013	-		1	COLUMN
150	ALL	13225	-		1	SUPPORT
160	ALL	20497	-		1	GROUP NUMBER PLATE
170	ALL	266911	-		2	FLANGE
190	ALL	311211-0271	-		2	TAPER PIN GKP5X5X40
200	ALL	312105-0331	-		1	SCREW M6S5X20RFR
210	ALL	312105-0370	-		1	SCREW M6S6X20RFR
220	ALL	312105-0499	-		4	SCREW M6S10X40RFR
230	ALL	312115-0459	-		4	SCREW MC6S8X40RFR
240	ALL	312125-0287	-		1	SLOTTED HEMCS4X8RFR
250	ALL	312151-0368	-		2	SCREW MF6S6X16FZB
260	ALL	312306-0362	-		6	GRUB SCREW P6SS6X8FZB
270	ALL	312311-0360	-		1	GRUB SCREW T6SS6X6FZB

POS	VAR	PART NUMBER	SP	EH	QTY	DESCRIPTION
280	ALL	312311-0372	-		4	GRUB SCREW T6SS6X25FZB
290	ALL	312316-0443	-		8	GRUB SCREW SK6SS8X8FZB
300	ALL	312316-0447	-		8	GRUB SCREW SK6SS8X12FZB
310	ALL	312316-0487	-		2	GRUB SCREW SK6SS10X12FZB
320	ALL	312502-0221	-		4	DRIVE SCREKDS4X6FNB
330	ALL	312605-0314	-		3	NUT M6M5RFR
340	ALL	312605-0316	-		4	NUT M6M6RFR
350	ALL	312605-0320	-		2	NUT M6M10RFR
360	ALL	315105-0165	-		4	WASHER BRB8,4X16RFR
370	ALL	315121-0173	-		4	WASHER BRSB10,5X28FZB
380	ALL	315401-0165	-		6	WASHER FBH8,2FZB
390	ALL	315401-0178	-		4	WASHER FBH12,2FZB
400	ALL	315750-0109	-		1	LOCK RING SGA12
410	ALL	318800-0104	-		1	KNOB LA D.30-M8

TETRA PAK

1/8310

S-237086-2

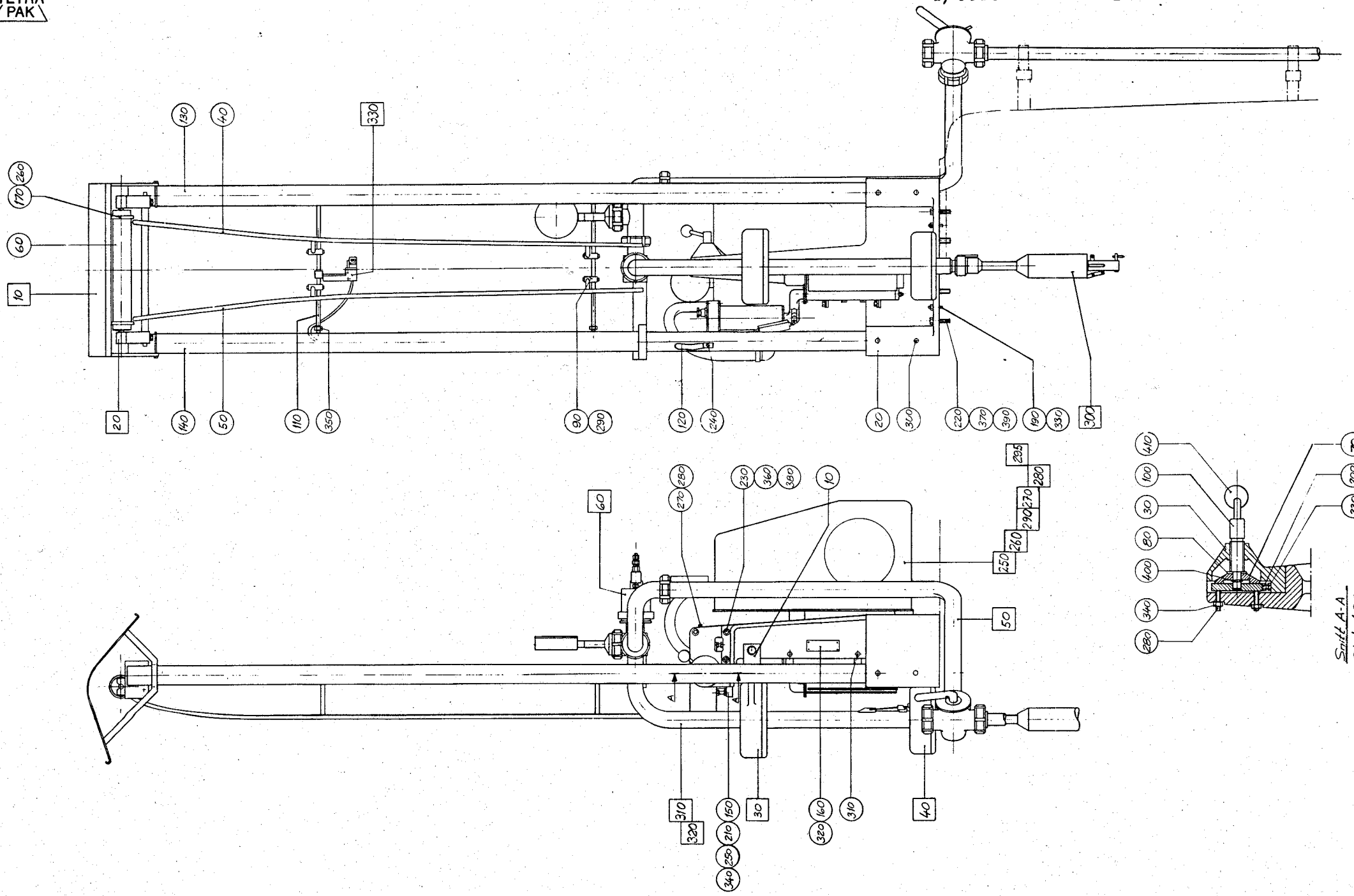

ÄM 5719

5719

LAST ALTERATION: AM ~~5367~~ 83-03-15
630202 630302 630502
AM 4379
79-10-02

GROUP	FILLMACHINE	FILLMACHINE	VOLUME	VOLUME	VOLUME
-0201	HT500	T300	-	-	-
-0202	HT150	-	V0200	V0189	V0180
	HT150	-	V0150	V0125	-
-0203	HT150	-	V062.5	-	-

POS	VAR	PART NUMBER	SP	EH	QTY	DESCRIPTION
	-0201	S- 237086-SHEET	-2			===ASSEMBLY DRAWING===
	-0202		-2			
	-0203		-3			
005	-0203	7081	-		2	BRACKET
008	-0203	6947	-		4	NUT
010	-0202	244763	-		1	DISTANCE BLOCK
	-0203				1	
040	-0201	10991	-		1	ROD
	-0202				1	
040	-0203	284052	-		1	ROD
050	-0201	10992	-		1	ROD
	-0202				1	
050	-0203	284053	-		1	ROD
195	-0203	311309-0272	-		1	SLOTTED PIRPE4X20FZB
198	-0203	312101-0335	-		2	SCREW M6S5X30FZB
225	-0203	312115-0378	-		4	SCREW MC6S6X40RFR
355	-0203	315105-0153	-		4	WASHER BRB6,4X12RFR
375	-0203	315401-0153	-		4	WASHER FBH6,1FZB
020	ALL	6043	-		1	SUPERSTRUCTURE
030	ALL	2404	-		1	CLAMP
060	ALL	263668	-		1	BENDING ROLLER
070	ALL	1753	-		1	RING
080	ALL	1755-0001	-		1	WASHER
090	ALL	1756	-		4	SUPPORT
100	ALL	2410	-		1	CRANK
110	ALL	2687	-		2	STRUT
120	ALL	3598	-		1	PAPER CLIP
130	ALL	11012	-		1	COLUMN
140	ALL	11013	-		1	COLUMN
150	ALL	13225	-		1	SUPPORT
160	ALL	20497	-		1	GROUP NUMBER PLATE
170	ALL	266911	-		2	FLANGE
190	ALL	311211-0271	-		2	TAPER PIN GKP5X5X40
200	ALL	312105-0331	-		1	SCREW M6S5X20RFR
210	ALL	312105-0370	-		1	SCREW M6S6X20RFR
220	ALL	312105-0499	-		4	SCREW M6S10X40RFR
230	ALL	312115-0459	-		4	SCREW MC6S8X40RFR
240	ALL	312125-0287	-		1	SLOTTED HEMCS4X8RFR
250	ALL	312151-0368	-		2	SCREW MF6S6X16FZB
260	ALL	312306-0362	-		6	GRUB SCREW P6SS6X8FZB
270	ALL	312311-0360	-		1	GRUB SCREW T6SS6X6FZB

POS	VAR	PART NUMBER	SP	EH	QTY	DESCRIPTION
280	ALL	312311-0372	-		4	GRUB SCREW T6SS6X25FZB
290	ALL	312316-0443	-		8	GRUB SCREW SK6SS8X8FZB
300	ALL	312316-0447	-		8	GRUB SCREW SK6SS8X12FZB
310	ALL	312316-0487	-		2	GRUB SCREW SK6SS10X12FZB
320	ALL	312502-0221	-		4	DRIVE SCREKDS4X6FNB
330	ALL	312605-0314	-		3	NUT M6M5RFR
340	ALL	312605-0316	-		4	NUT M6M6RFR
350	ALL	312605-0320	-		2	NUT M6M10RFR
360	ALL	315105-0165	-		4	WASHER BRB8,4X16RFR
370	ALL	315121-0173	-		4	WASHER BRSB10,5X28FZB
380	ALL	315401-0165	-		6	WASHER FBH8,2FZB
390	ALL	315401-0178	-		4	WASHER FBH12,2FZB
400	ALL	315750-0109	-		1	LOCK RING SGA12
410	ALL	318800-0104	-		1	KNOB LA D.30-M8

TETRA PAK

1/8310

S-237086-3

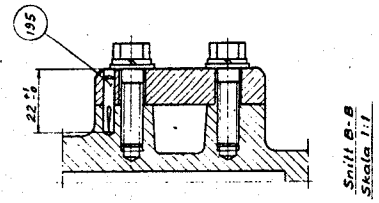

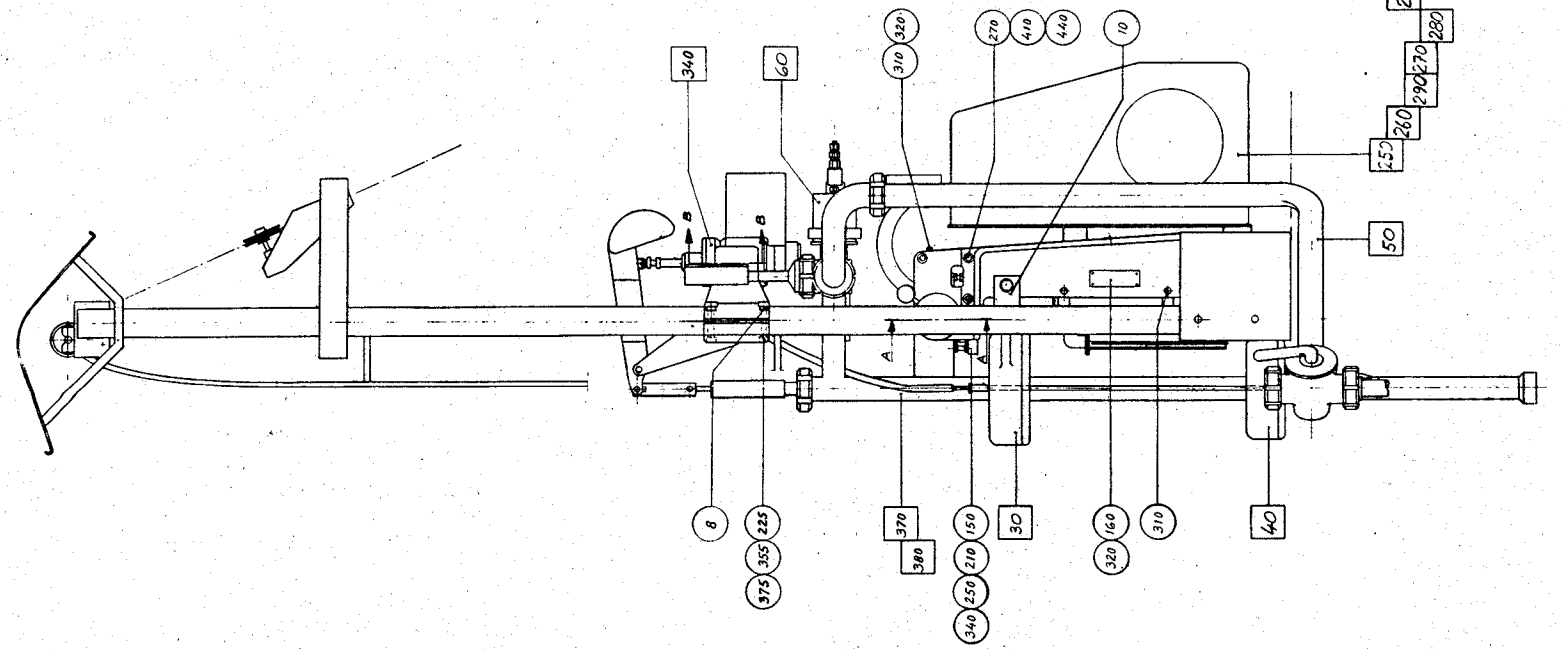

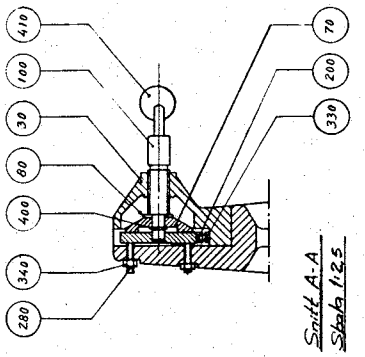

ÄM 5719

LAST ALTERATION: AM 10076 87-10-28
630202-110V 630232-010V 630302-140V 630502-140V
AM 9405
86-11-27

GROUP	FILLMACHINE	VOLUME	VOLUME	VOLUME	VOLUME
-0301	TS/500	-	-	-	-
-0302	TS/300	-	-	-	-
-0303	TS/150	V0200	V0189	V0180	V0150
-0304	TS/150	V0125	V062,5	-	-
-0305	TS/155	V066,5	-	-	-

POS	VAR	PART NUMBER	SP UN	QTY	DESCRIPTION
	-0301	S- 237086-SHEET	-2		===ASSEMBLY DRAWING===
	-0302		-2		
	-0303		-2		
	-0304		-4		
	-0305		-5		
010	-0303	244763	-	1	SPACER LUG
	-0304			1	
	-0305			1	
035	-0301	230952	-	1	BRACKET
	-0302			1	
	-0303			1	
035	-0304	532333	-	1	BRACKET
	-0305			1	
040	-0301	10991	-	1	ROD
	-0302			1	
	-0303			1	
040	-0304	284052	-	1	ROD
	-0305			1	
050	-0301	10992	-	1	ROD
	-0302			1	
	-0303			1	
050	-0304	284053	-	1	ROD
	-0305			1	
060	-0301	263668	-	1	BENDING ROLLER
	-0302			1	
	-0303			1	
	-0304			1	
170	-0301	266911	-	2	FLANGE
	-0302			2	
	-0303			2	
	-0304			2	
260	-0301	312306-0362	-	6	GRUB SCREW P6SS6X8FZB
	-0302			6	
	-0303			6	
	-0304			6	
020	ALL	G- 6043	-	1	SUPERSTRUCTURE
030	ALL	G- 2404	-	1	CLAMP
070	ALL	1753	-	1	CLAMP RING

POS	VAR	PART NUMBER	SP UN	QTY	DESCRIPTION
080	ALL	1755-0001	-	1	WASHER
090	ALL	1756	-	4	SUPPORT
100	ALL	2410	-	1	CRANK
110	ALL	2687	-	2	STRUT
120	ALL	3598	-	1	PAPER CLIP
130	ALL	11012	-	1	COLUMN
140	ALL	11013	-	1	COLUMN
150	ALL	13225	-	1	SUPPORT
160	ALL	20497	-	1	GROUP NUMBER PLATE
164	ALL	230941	-	1	CLAMP
165	ALL	230942	-	1	CLAMP
190	ALL	311211-0271	-	2	TAPER PIN GKP5X5X40
200	ALL	312105-0331	-	1	SCREW M6S5X20 A4 80
210	ALL	312105-0370	-	1	SCREW M6S6X20RFR
215	ALL	312105-0451	-	4	SCREW M6S8X20RFR
217	ALL	312105-0461	-	2	SCREW M6S8X50RFR
220	ALL	312105-0499	-	4	SCREW M6S10X40RFR
230	ALL	312115-0459	-	4	SCREW 8X40 A4 80
240	ALL	312125-0287	-	1	SLOTTED HEMCS4X8RFR
250	ALL	312151-0368	-	2	SCREW MF6S6X16FZB
270	ALL	312311-0360	-	1	GRUB SCREW T6SS6X6FZB
280	ALL	312311-0372	-	4	GRUB SCREW T6SS6X25FZB
290	ALL	312316-0443	-	8	GRUB SCREW SK6SS8X8FZB
300	ALL	312316-0447	-	8	GRUB SCREW SK6SS8X12FZB
310	ALL	312316-0487	-	2	GRUB SCREW SK6SS10X12FZB
320	ALL	312502-0221	-	4	DRIVE SCREKDS4X6FNB
330	ALL	312605-0314	-	3	NUT M6M5RFR
340	ALL	312605-0316	-	4	NUT M6M6RFR
350	ALL	312605-0320	-	2	NUT M6M10RFR
360	ALL	315105-0165	-	8	WASHER BRB8,4X16RFR
370	ALL	315121-0173	-	4	WASHER BRSB10,5X28FZB
380	ALL	315401-0165	-	6	WASHER FBB8,2FZB
390	ALL	315401-0178	-	4	WASHER FBB12,2FZB
400	ALL	315750-0109	-	1	LOCK RING SGA12
410	ALL	318800-0104	-	1	KNOB LA D.30-M8

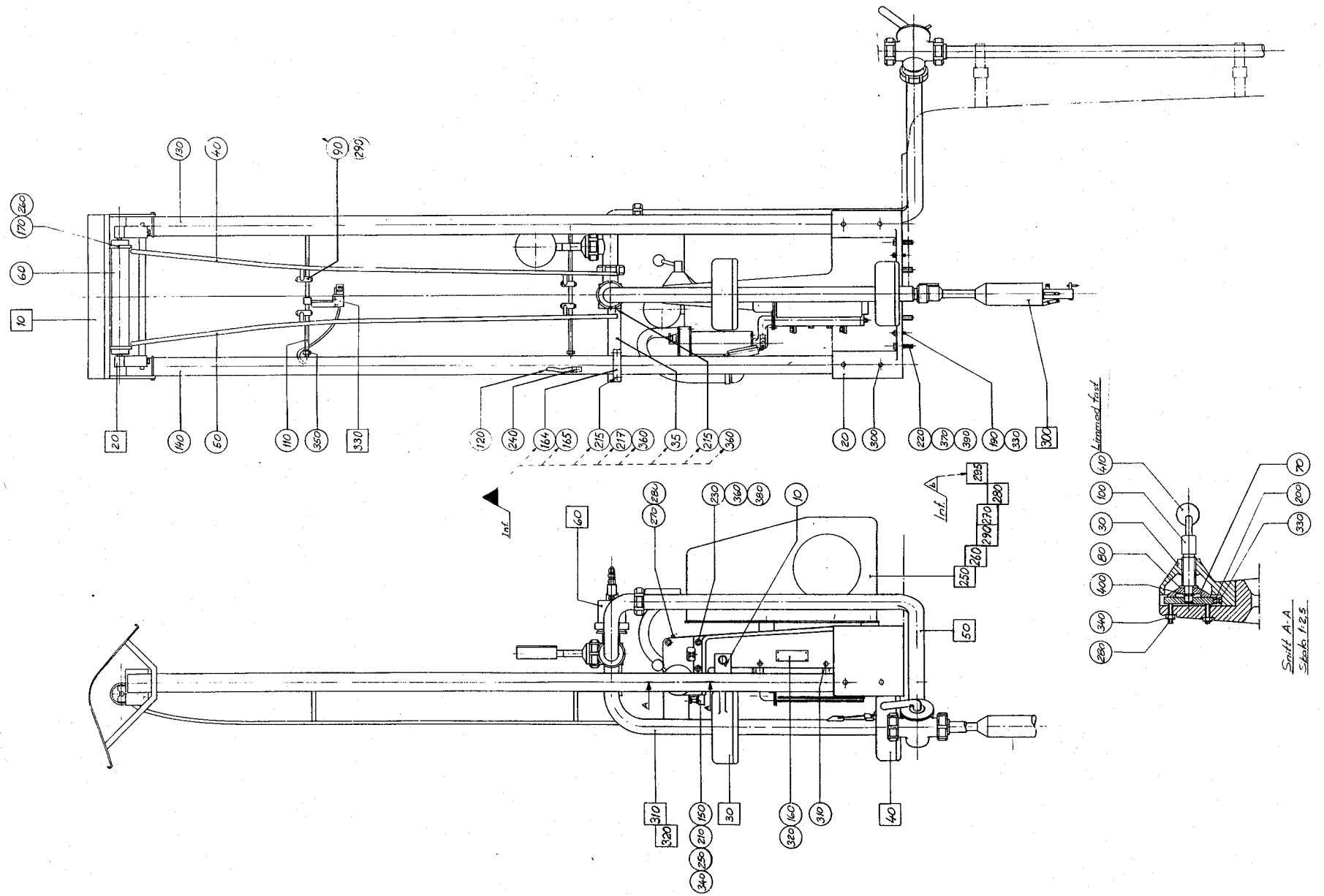
Inf.
Limmed fast
Snitt A-A
Skala 1:2,5

LAST ALTERATION: AM 10076 87-10-28
630202-110V 630232-010V 630302-140V 630502-140V
AM 9405
86-11-27

GROUP	FILLMACHINE	VOLUME	VOLUME	VOLUME	VOLUME
-0301	TS/500	-	-	-	-
-0302	TS/300	-	-	-	-
-0303	TS/150	V0200	V0189	V0180	V0150
-0304	TS/150	V0125	V062,5	-	-
-0305	TS/155	V066,5	-	-	-

POS	VAR	PART NUMBER	SP UN	QTY	DESCRIPTION
	-0301	S- 237086-SHEET	-2		===ASSEMBLY DRAWING===
	-0302		-2		
	-0303		-2		
	-0304		-4		
	-0305		-5		
010	-0303	244763	-	1	SPACER LUG
	-0304			1	
	-0305			1	
035	-0301	230952	-	1	BRACKET
	-0302			1	
	-0303			1	
035	-0304	532333	-	1	BRACKET
	-0305			1	
040	-0301	10991	-	1	ROD
	-0302			1	
	-0303			1	
040	-0304	284052	-	1	ROD
	-0305			1	
050	-0301	10992	-	1	ROD
	-0302			1	
	-0303			1	
050	-0304	284053	-	1	ROD
	-0305			1	
060	-0301	263668	-	1	BENDING ROLLER
	-0302			1	
	-0303			1	
	-0304			1	
170	-0301	266911	-	2	FLANGE
	-0302			2	
	-0303			2	
	-0304			2	
260	-0301	312306-0362	-	6	GRUB SCREW P6SS6X8FZB
	-0302			6	
	-0303			6	
	-0304			6	
020	ALL	G- 6043	-	1	SUPERSTRUCTURE
030	ALL	G- 2404	-	1	CLAMP
070	ALL	1753	-	1	CLAMP RING

POS	VAR	PART NUMBER	SP UN	QTY	DESCRIPTION
080	ALL	1755-0001	-	1	WASHER
090	ALL	1756	-	4	SUPPORT
100	ALL	2410	-	1	CRANK
110	ALL	2687	-	2	STRUT
120	ALL	3598	-	1	PAPER CLIP
130	ALL	11012	-	1	COLUMN
140	ALL	11013	-	1	COLUMN
150	ALL	13225	-	1	SUPPORT
160	ALL	20497	-	1	GROUP NUMBER PLATE
164	ALL	230941	-	1	CLAMP
165	ALL	230942	-	1	CLAMP
190	ALL	311211-0271	-	2	TAPER PIN GKP5X5X40
200	ALL	312105-0331	-	1	SCREW M6S5X20 A4 80
210	ALL	312105-0370	-	1	SCREW M6S6X20RFR
215	ALL	312105-0451	-	4	SCREW M6S8X20RFR
217	ALL	312105-0461	-	2	SCREW M6S8X50RFR
220	ALL	312105-0499	-	4	SCREW M6S10X40RFR
230	ALL	312115-0459	-	4	SCREW 8X40 A4 80
240	ALL	312125-0287	-	1	SLOTTED HEMCS4X8RFR
250	ALL	312151-0368	-	2	SCREW MF6S6X16FZB
270	ALL	312311-0360	-	1	GRUB SCREW T6SS6X6FZB
280	ALL	312311-0372	-	4	GRUB SCREW T6SS6X25FZB
290	ALL	312316-0443	-	8	GRUB SCREW SK6SS8X8FZB
300	ALL	312316-0447	-	8	GRUB SCREW SK6SS8X12FZB
310	ALL	312316-0487	-	2	GRUB SCREW SK6SS10X12FZB
320	ALL	312502-0221	-	4	DRIVE SCREKDS4X6FNB
330	ALL	312605-0314	-	3	NUT M6M5RFR
340	ALL	312605-0316	-	4	NUT M6M6RFR
350	ALL	312605-0320	-	2	NUT M6M10RFR
360	ALL	315105-0165	-	8	WASHER BRB8,4X16RFR
370	ALL	315121-0173	-	4	WASHER BRSB10,5X28FZB
380	ALL	315401-0165	-	6	WASHER FBB8,2FZB
390	ALL	315401-0178	-	4	WASHER FBB12,2FZB
400	ALL	315750-0109	-	1	LOCK RING SGA12
410	ALL	318800-0104	-	1	KNOB LA D.30-M8

S-237086-4

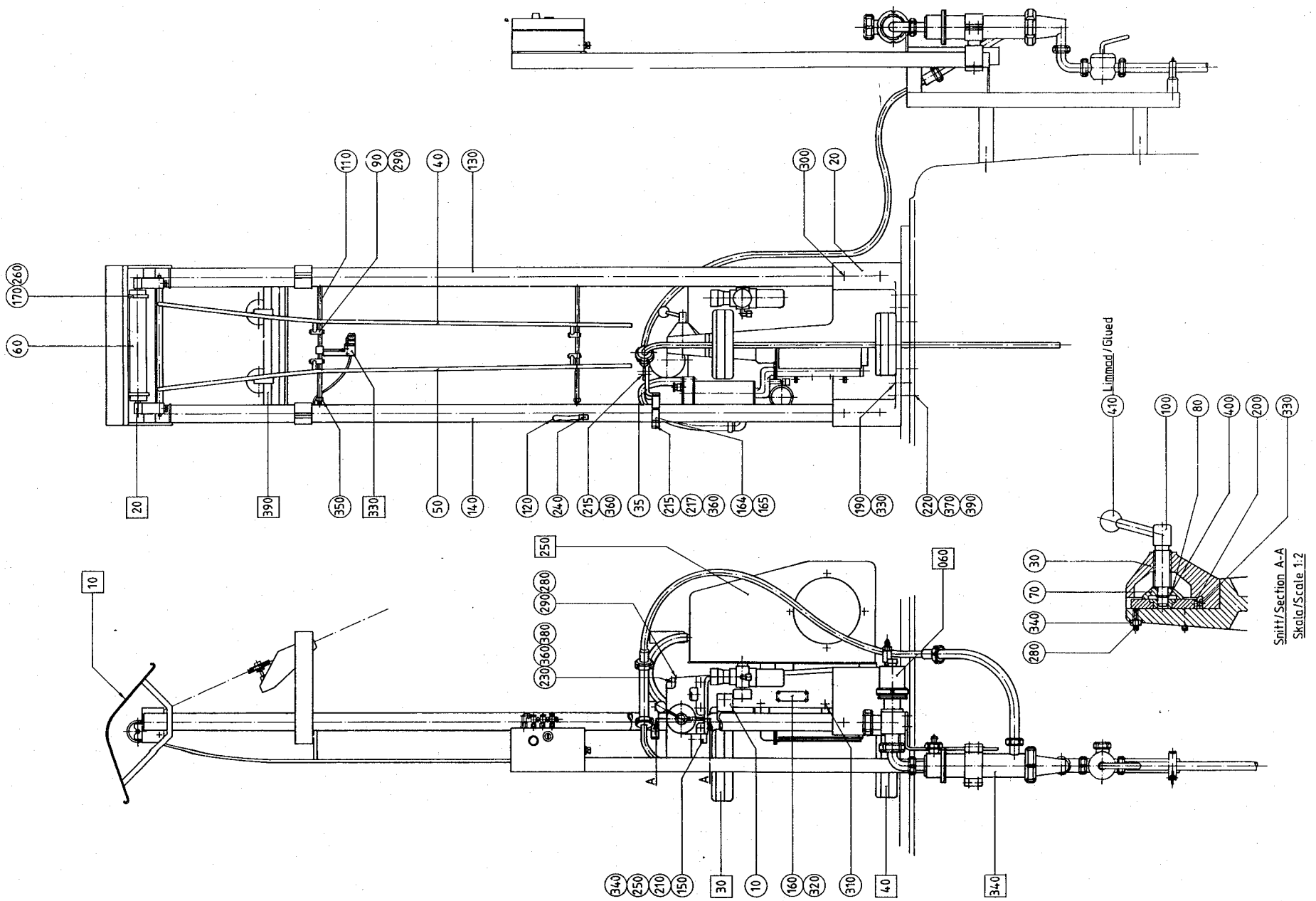

LAST ALTERATION: AM 10076 87-10-28
630202-110V 630232-010V 630302-140V 630502-140V
AM 9405
86-11-27

GROUP	FILLMACHINE	VOLUME	VOLUME	VOLUME	VOLUME
-0301	TS/500	-	-	-	-
-0302	TS/300	-	-	-	-
-0303	TS/150	V0200	V0189	V0180	V0150
-0304	TS/150	V0125	V062,5	-	-
-0305	TS/155	V066,5	-	-	-

POS	VAR	PART NUMBER	SP UN	QTY	DESCRIPTION
	-0301	S- 237086-SHEET	-2		===ASSEMBLY DRAWING===
	-0302		-2		
	-0303		-2		
	-0304		-4		
	-0305		-5		
010	-0303	244763	-	1	SPACER LUG
	-0304			1	
	-0305			1	
035	-0301	230952	-	1	BRACKET
	-0302			1	
	-0303			1	
035	-0304	532333	-	1	BRACKET
	-0305			1	
040	-0301	10991	-	1	ROD
	-0302			1	
	-0303			1	
040	-0304	284052	-	1	ROD
	-0305			1	
050	-0301	10992	-	1	ROD
	-0302			1	
	-0303			1	
050	-0304	284053	-	1	ROD
	-0305			1	
060	-0301	263668	-	1	BENDING ROLLER
	-0302			1	
	-0303			1	
	-0304			1	
170	-0301	266911	-	2	FLANGE
	-0302			2	
	-0303			2	
	-0304			2	
260	-0301	312306-0362	-	6	GRUB SCREW P6SS6X8FZB
	-0302			6	
	-0303			6	
	-0304			6	
020	ALL	G- 6043	-	1	SUPERSTRUCTURE
030	ALL	G- 2404	-	1	CLAMP
070	ALL	1753	-	1	CLAMP RING

POS	VAR	PART NUMBER	SP UN	QTY	DESCRIPTION
080	ALL	1755-0001	-	1	WASHER
090	ALL	1756	-	4	SUPPORT
100	ALL	2410	-	1	CRANK
110	ALL	2687	-	2	STRUT
120	ALL	3598	-	1	PAPER CLIP
130	ALL	11012	-	1	COLUMN
140	ALL	11013	-	1	COLUMN
150	ALL	13225	-	1	SUPPORT
160	ALL	20497	-	1	GROUP NUMBER PLATE
164	ALL	230941	-	1	CLAMP
165	ALL	230942	-	1	CLAMP
190	ALL	311211-0271	-	2	TAPER PIN GKP5X5X40
200	ALL	312105-0331	-	1	SCREW M6S5X20 A4 80
210	ALL	312105-0370	-	1	SCREW M6S6X20RFR
215	ALL	312105-0451	-	4	SCREW M6S8X20RFR
217	ALL	312105-0461	-	2	SCREW M6S8X50RFR
220	ALL	312105-0499	-	4	SCREW M6S10X40RFR
230	ALL	312115-0459	-	4	SCREW 8X40 A4 80
240	ALL	312125-0287	-	1	SLOTTED HEMCS4X8RFR
250	ALL	312151-0368	-	2	SCREW MF6S6X16FZB
270	ALL	312311-0360	-	1	GRUB SCREW T6SS6X6FZB
280	ALL	312311-0372	-	4	GRUB SCREW T6SS6X25FZB
290	ALL	312316-0443	-	8	GRUB SCREW SK6SS8X8FZB
300	ALL	312316-0447	-	8	GRUB SCREW SK6SS8X12FZB
310	ALL	312316-0487	-	2	GRUB SCREW SK6SS10X12FZB
320	ALL	312502-0221	-	4	DRIVE SCREKDS4X6FNB
330	ALL	312605-0314	-	3	NUT M6M5RFR
340	ALL	312605-0316	-	4	NUT M6M6RFR
350	ALL	312605-0320	-	2	NUT M6M10RFR
360	ALL	315105-0165	-	8	WASHER BRB8,4X16RFR
370	ALL	315121-0173	-	4	WASHER BRSB10,5X28FZB
380	ALL	315401-0165	-	6	WASHER FBB8,2FZB
390	ALL	315401-0178	-	4	WASHER FBB12,2FZB
400	ALL	315750-0109	-	1	LOCK RING SGA12
410	ALL	318800-0104	-	1	KNOB LA D.30-M8

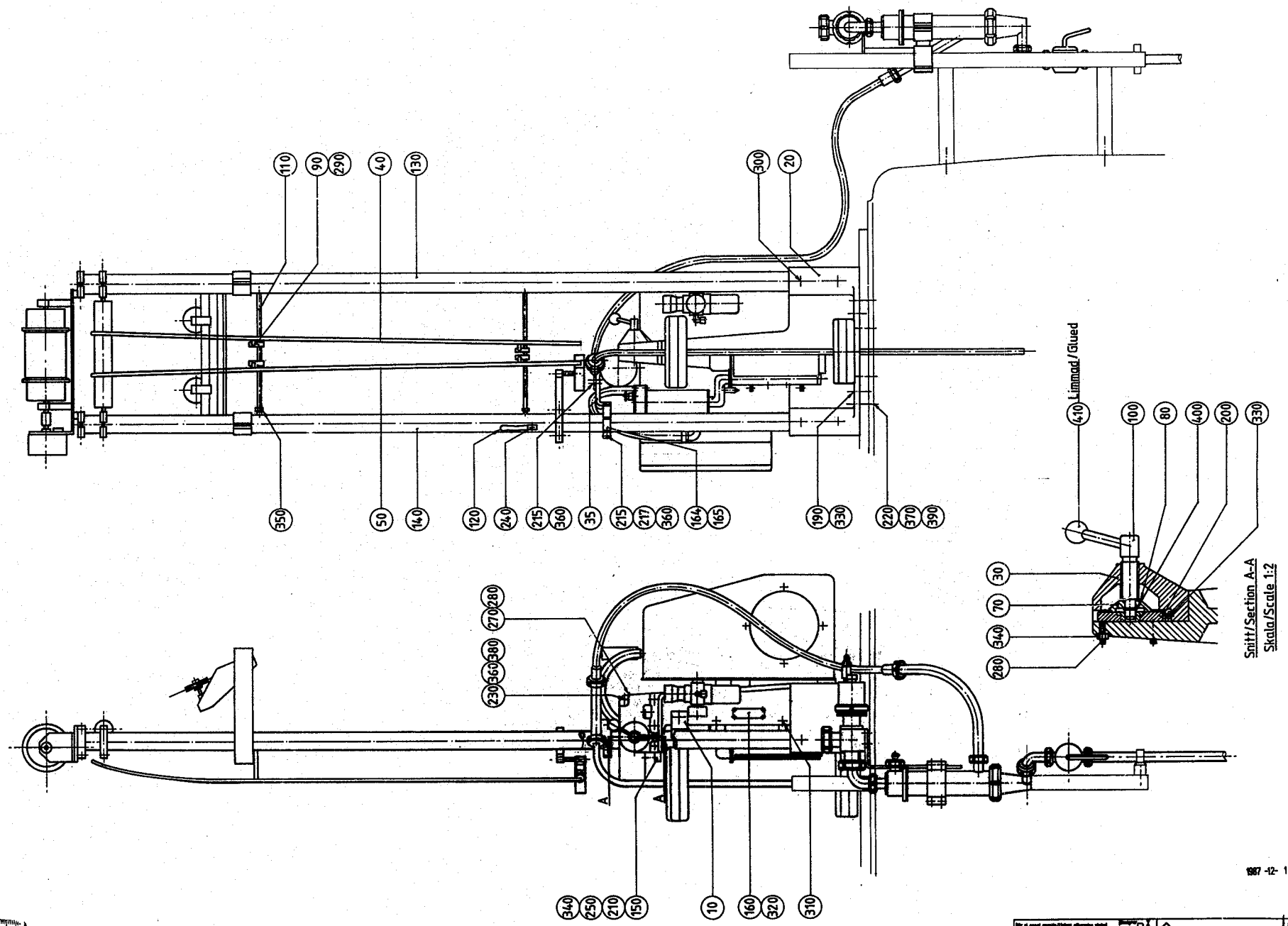

1987 -12- 15

Designer BA	Marked with PART NUMBER		630232
Date 870422	Method / mm - KA 21.03.10		Assembly drawing
Approved	Material		
Scale 1:5, 1:2	Surface roughness		
	Surface treatment		
TETRA PAK LUND SWEDEN	Överdel Superstructure		S1-237086-5

LAST ALTERATION: AM 4381 79-11-08
237053 630202 630204 630302 630304 630502

GROUP FREQUENCY

-0101 HZ-50
-0102 HZ-60

POS	VAR	PART NUMBER	SP	EH	QTY	DESCRIPTION
	-0101	S- 259407-SHEET	-1			===ASSEMBLY DRAWING===
	-0102		-1			
010	-0101	90042-0045	-		1	SOLENOID VALVE
010	-0102	90042-0046	-		1	SOLENOID VALVE
020	-0101	90042-0047	-		1	SOLENOID VALVE
020	-0102	90042-0048	-		1	SOLENOID VALVE
030	ALL	237499	-		1	PLATE
040	ALL	90042-0328	-		1	PLATE
050	ALL	90055-0044	-		4	HOSE NIPPLE
060	ALL	90055-0045	-		1	CONNECTION
070	ALL	90166-0099	-	M	2	PLASTIC HOSE
080	ALL	312121-0368	-		2	SLOTTED HEMCS6X16FZB
090	ALL	342722-0197	-		5	PIPE CONNED=6-M5

TETRA PAK

1/8311

S-259407-1

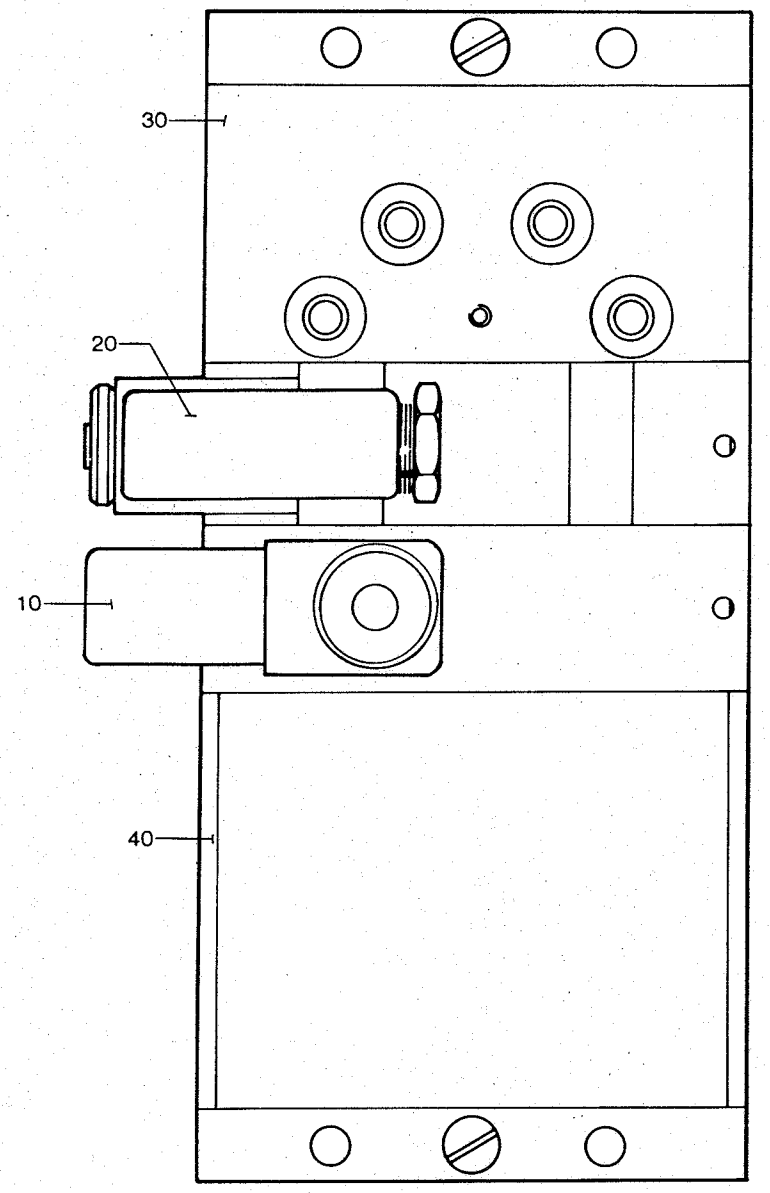

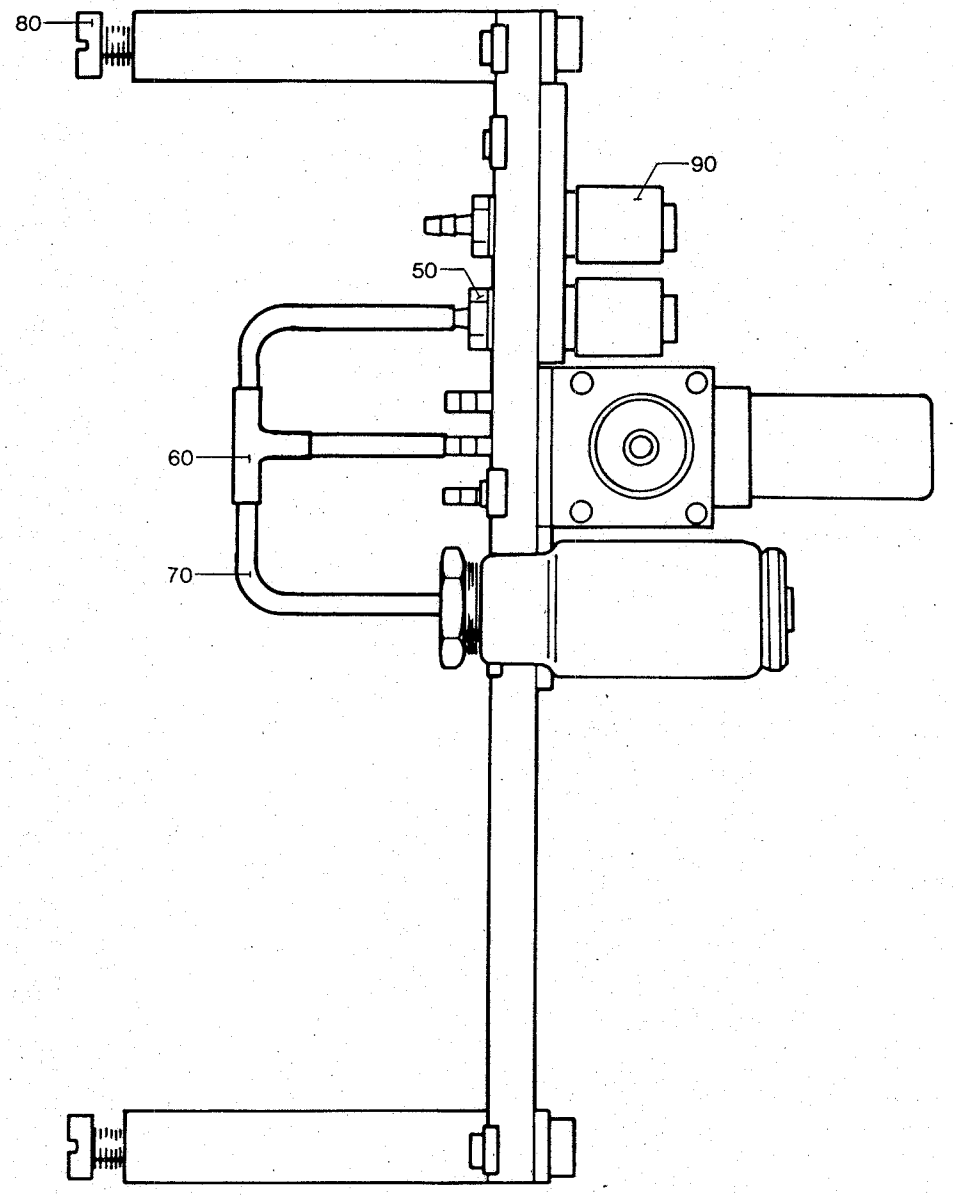

ÄM 4381

LAST ALTERATION: AM 9774 87-01-12
630202-090V 630302-120V 630502-120V
AM 4379
79-10-02

POS	VAR	PART NUMBER	SP UN	QTY	DESCRIPTION
	-0101	S- 259642-SHEET	-1		===ASSEMBLY DRAWING===
010	-0101	250676	-	1	HOLDER
020	-0101	90110-0035	-	2	CABLE CONNECTION
030	-0101	90110-0036	-	2	CABLE CONNECTION
040	-0101	90232-0032	-	1	PHOTOCELL
050	-0101	312105-0327	-	2	SCREW M6S5X12 A4 80
060	-0101	312115-0291	-	2	SCREW MC6S4X12 A4 80
070	-0101	315105-0136	-	2	WASHER BRB4,3X8RFR

TETRA PAK

1/8311

S-259642-1

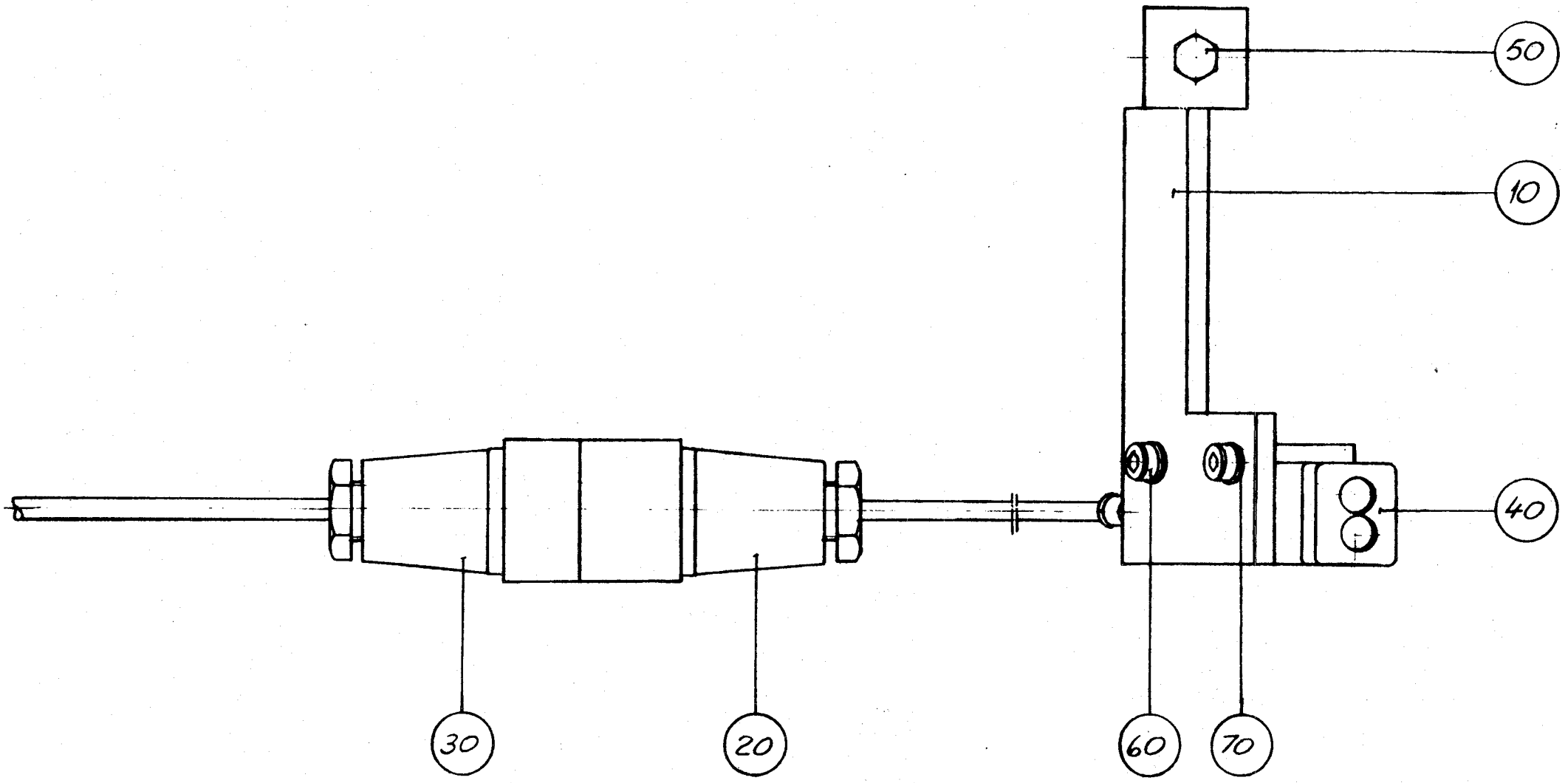

ÄM 4817

LAST ALTERATION: AM 4379 79-10-02
630202 630302

POS	VAR	PART NUMBER	SP	EH	QTY	DESCRIPTION
	-0101	S- 263028-SHEET	-1			===ASSEMBLY DRAWING===
010	-0101	244505	-		1	FILLING TUBE
020	-0101	36815	-		1	THROTTLE
030	-0101	36816	-		1	LINK
040	-0101	36821-0002	-		2	BREAKPIN
050	-0101	38228	-		1	SLEEVE
060	-0101	38229	-		1	ARM
070	-0101	38230	-		1	LOCKING ELEMENT
080	-0101	38700	-		1	FLOAT
090	-0101	245086	-		1	PIN

TETRA PAK

1/8307

S-263028-1

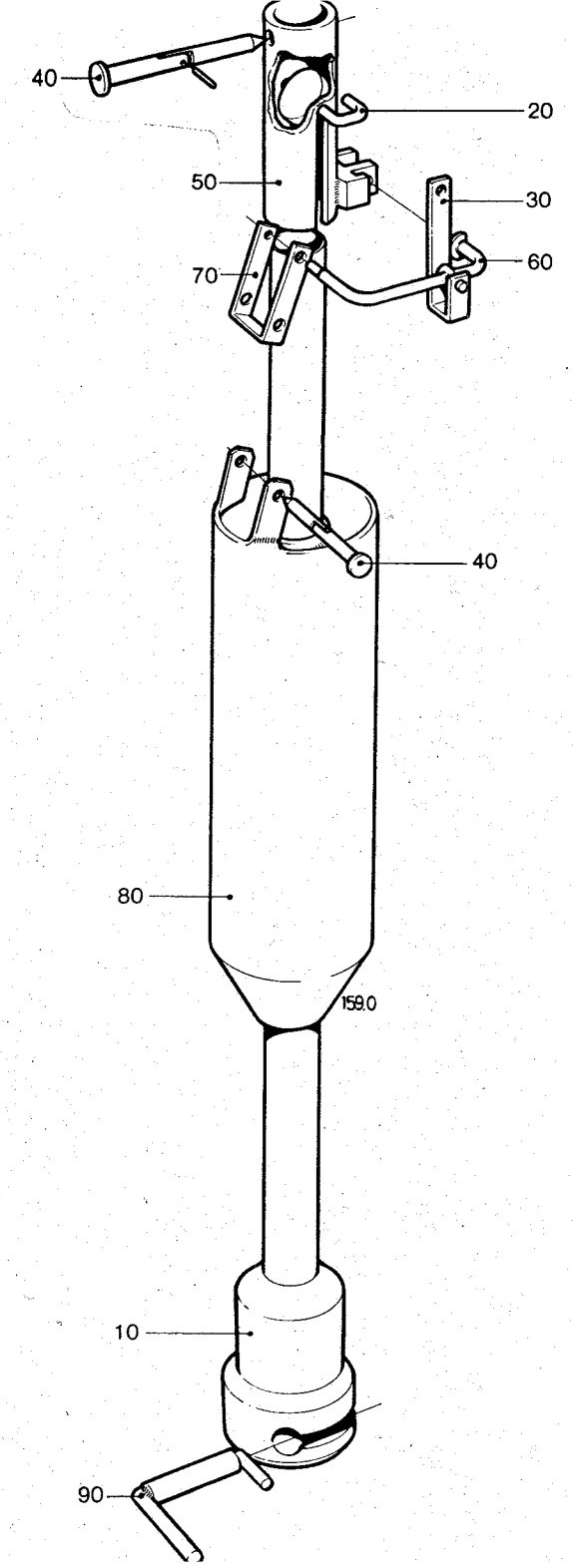

ÅM 4379

LAST ALTERATION: AM 4379 79-10-02
630202 630302

POS	VAR	PART NUMBER	SP	EH	QTY	DESCRIPTION
	-0101	S- 263029-SHEET	-1			===ASSEMBLY DRAWING===
F320	-0101	C- 36351-010V	-		1	PRESSURE ROLLER
020	-0101	244504	-		1	FILLING TUBE
030	-0101	10945	-		1	COVER
040	-0101	315202-0215	R		1	O-RING 19,2X3
050	-0101	315250-0103	-		1	GASKET 48/38

TETRA PAK

1/8310

S-263029-1

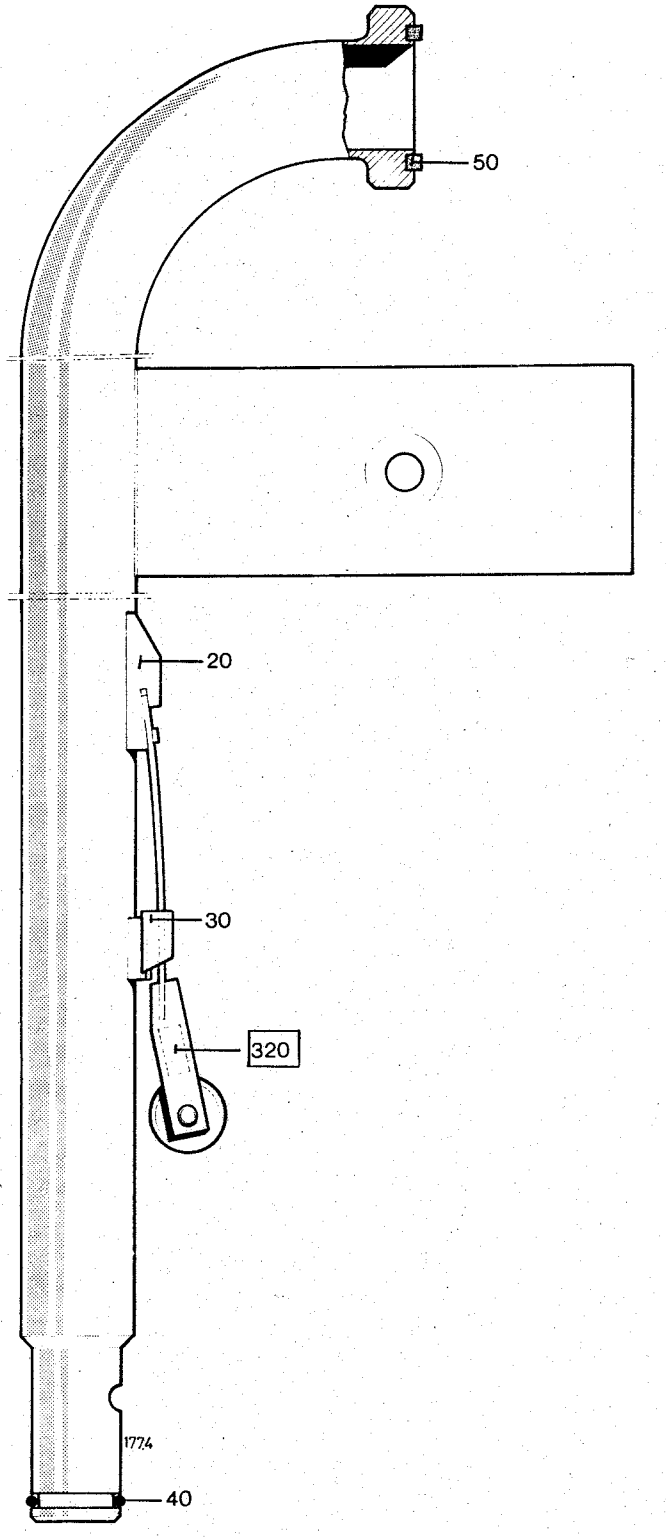

ÄM 4379

LAST ALTERATION: AM 10076 87-10-28
237053-030V

POS	VAR	PART NUMBER	SP UN	QTY	DESCRIPTION
	-0101	S- 534736-SHEET	-1		===ASSEMBLY DRAWING===
F325	-0101	C- 534737-0101	-	1	TERMINAL BLOCK
010	-0101	534739	-	1	CONNECTION BOX
015	-0101	534740	-	1	SEAL RING
020	-0101	90002-0009	-	1	BLANK-OFF PLUG
035	-0101	90012-0060	-	1	GLAND
040	-0101	312121-0364	-	2	SLOTTED HEMCS6X10FZB
045	-0101	312121-0370	-	4	SLOTTED HEMCS6X20FZB
050	-0101	315101-0153	-	2	WASHER BRB6,4X12FZB
060	-0101	352103-0100	-	9	CABLE GLANR.15,2/2-6
070	-0101	352136-0129	-	2	GLAND

This drawing must not without written consent of Tetra Pak be copied, transmitted or disclosed to any third party

Ref Note	Ändring Alteration	Datum Date	Sign	Ref Note	Ändring Alteration	Datum Date	Sign
-	Inf. ÄM 10076	87-08-08	OO				

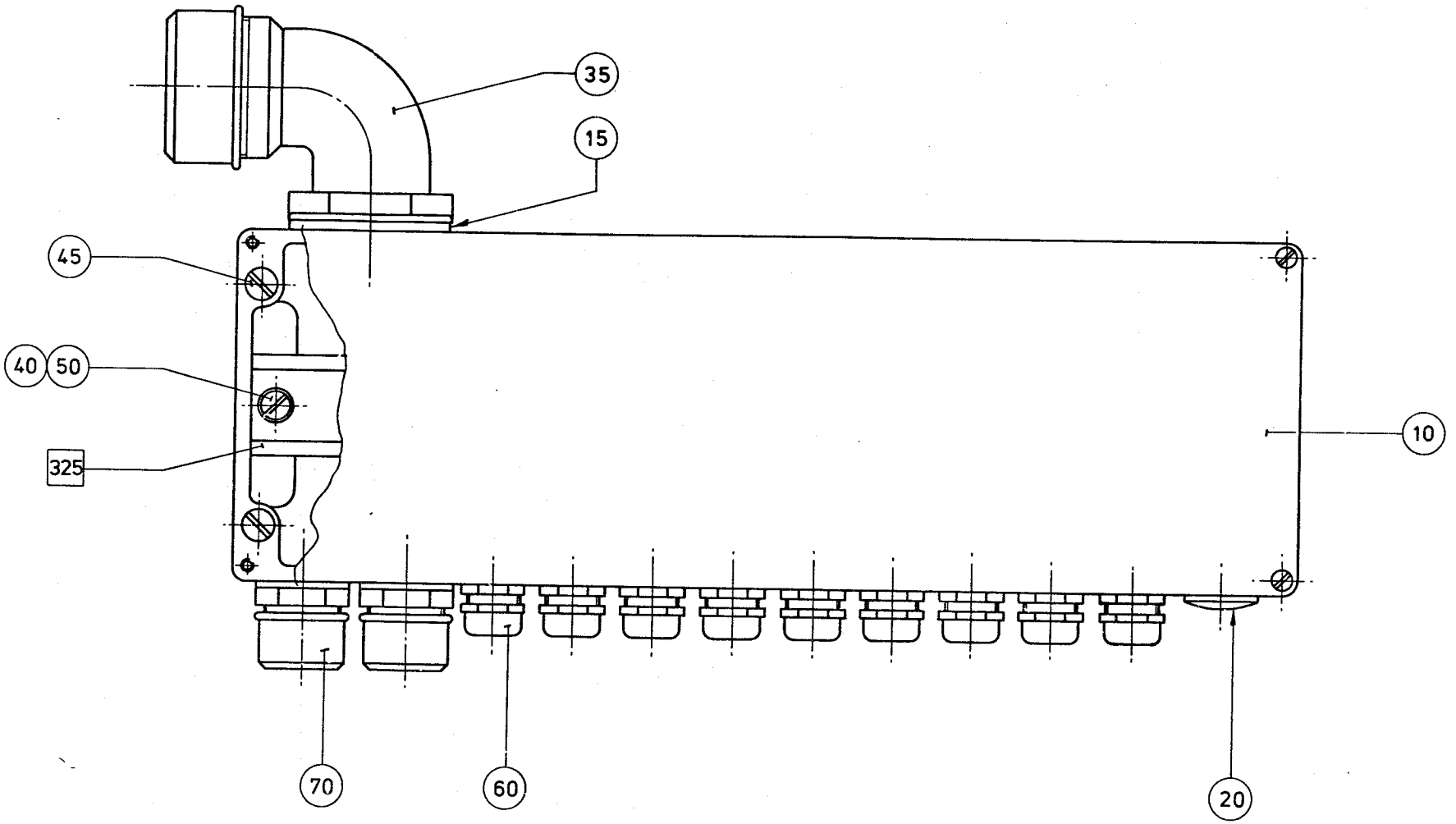

1987 -10- 28

Där e, annat angetts/Unless otherwise stated	Designer BÅ	◇ Marked with PART NUMBER	S1 - 237 053
SKARPA KANTER BRUTNA/SHARP EDGES BROKEN	Date 86 09 15	Method / mm - KA 2103.10	Assembly drawing
Gjutgods Castings KA 2111.10	Approved	Material	
Svetsade konstr./Welded constr. KA 2111.50	Scale 1:1	Surface roughness	
Maskinbearb. ytor/Machined surfaces KA 2111.30		Surface treatment	

Basic size	Tol.	Basic size	Tol.
(1) - 6	0.1	(120) - 315	0.5
(6) - 30	0.2	(315) - 1000	0.8
(30) - 120	0.3	(1000) - 2000	1.2

TETRA PAK (UK) SWEDEN

KOPPLINGSLÅDA
CONNECTION BOX

S2 - 534 736 -1

LAST ALTERATION: AM 10076 87-10-28
534736-010V

POS	VAR	PART NUMBER	SP UN	QTY	DESCRIPTION
	-0101	S- 534737-SHEET	-1		===ASSEMBLY DRAWING===
010	-0101	534738	-	1	RAIL
020	-0101	353021-0212	-	35	CLAMP LÄMMA WDU 2,5
030	-0101	353024-0204	-	11	EARTH CLIPLÄMMA WPE 2,5
040	-0101	353024-0205	-	1	EARTH CLIPLÄMMA WPE 4
050	-0101	359011-0202	-	20	LABEL (JORD)
060	-0101	359011-0807	-	2	SET OF SIG5-FW 1-50

Not Note	Ändring Alteration	Datum Date	Sign.	Not Note	Ändring Alteration	Datum Date	Sign.
-	Inf. ÄM 10076	87 09.08	DD				

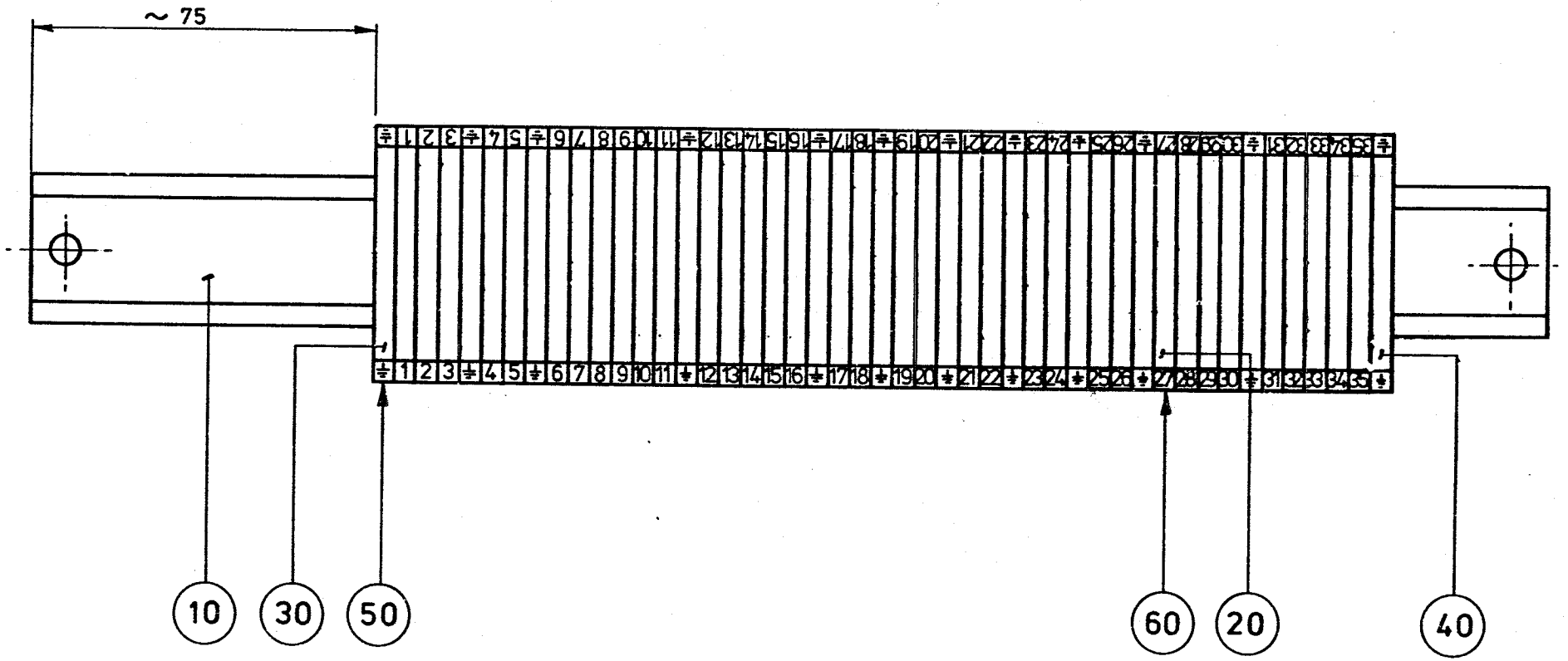

1987 -10- 28

Där ej annat angetts/Unless otherwise stated	Designer BÅ	Marked with PART NUMBER	S2 - 534736
SKARPA KANTER BRUTNA/SHARP EDGES BROKEN	Date 860915	Method ...../.....mm - KA 21 03.10	Assembly drawing
Ajutgods Castings KA 21 11.10	Approved	Material	
Svetsade konstr./Welded constr. KA 21 11.50	Scale 1:1	Surface roughness	
Maskinbearb. ytor/Machined surfaces KA 21 11.30		Surface treatment	

Basic size	Tol. ±	Basic size	Tol. ±
(1) - 6	0.1	(120) - 315	0.5
(6) - 30	0.2	(315) - 1000	0.8
(30) - 120	0.3	(1000) - 2000	1.2

TETRA PAK
LUND SWEDEN

KOPPLINGSPLINT
TERMINAL BLOCK

S3 - 534 737-1

TERRAB YSTAD ARKITEKTKONTOR

LAST ALTERATION: AM 10076 87-10-28
237053-030V

POS	VAR	PART NUMBER	SP	UN	QTY	DESCRIPTION
	-0101	S- 535053-SHEET	-1			===ASSEMBLY DRAWING===
010	-0101	535491	-		1	PLATE
020	-0101	90042-0148	S		2	SOLENOID VALVE
030	-0101	90042-0149	S		3	SOLENOID VALVE
040	-0101	90042-0328	-		1	RAMP
050	-0101	90042-0455	S		5	SOLENOID
060	-0101	90055-0044	S		9	HOSE NIPPLE
070	-0101	90055-0045	S		3	HOSE NIPPLE
080	-0101	90166-0099	S	M	2	HOSE
085	-0101	90224-0339	-		1	END CAP
090	-0101	90236-0026	-		10	BRACKET
100	-0101	312121-0368	-		4	SLOTTED HEMCS6X16FZB
110	-0101	312125-0289	-		10	SLOTTED HEMCS4X10RFR
120	-0101	342722-0197	-		9	PIPE CONNED=6-M5

Denna ritning får inte utan Tetra Paks medgivande kopieras, utlämnas till eller tillgöras tredje man.
This drawing must not without the consent of Tetra Pak be copied, transmitted or disclosed to any third party.

Not Note	Ändring Alteration	Datum Date	Sign.	Not Note	Ändring Alteration	Datum Date	Sign.
-	Inf. ÄM 10075	87. 09.08.	DD				

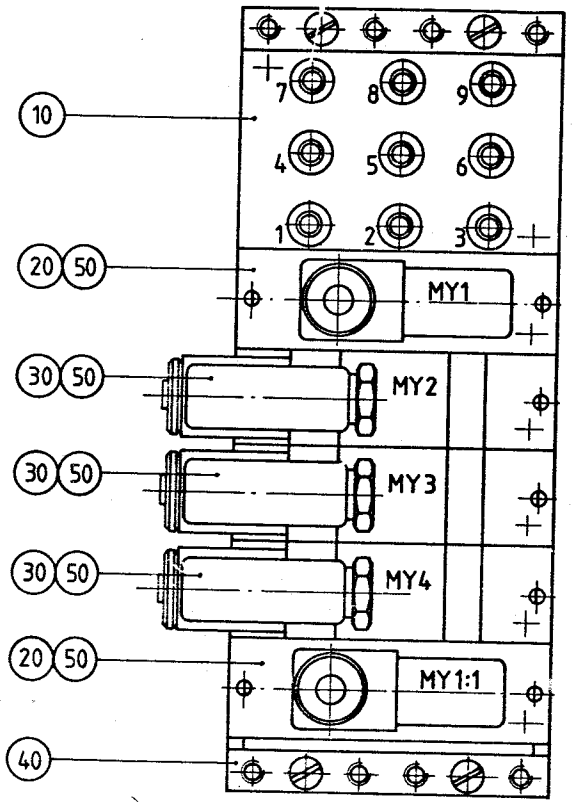

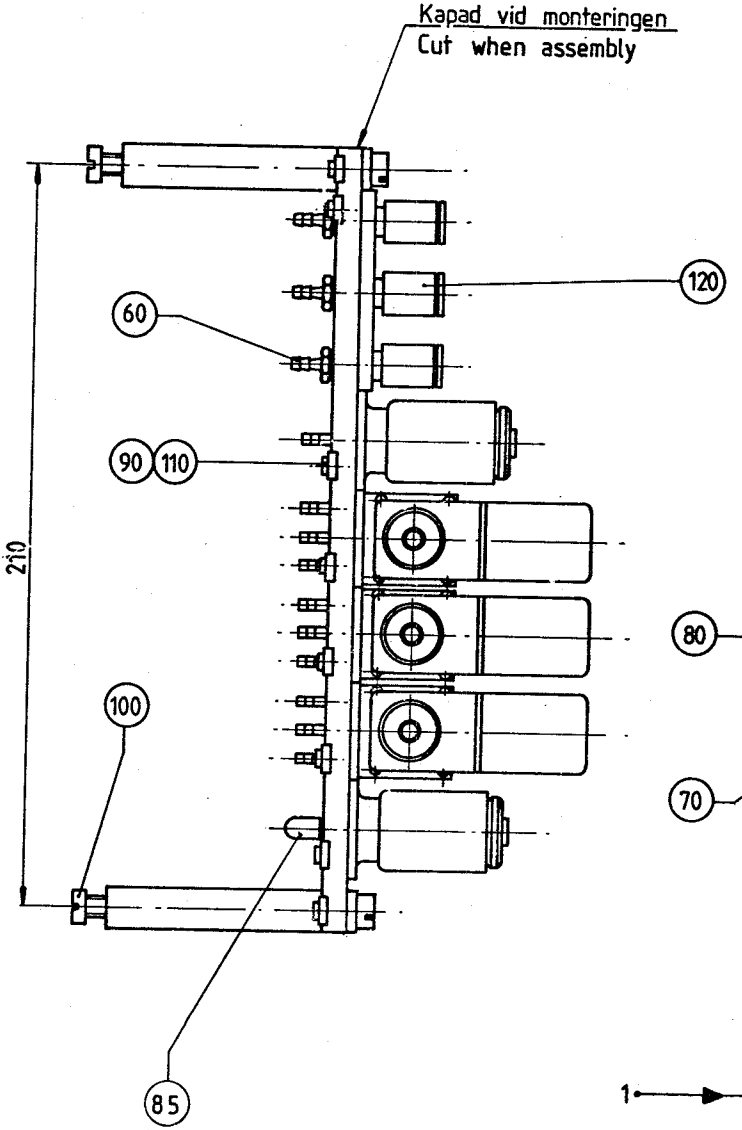

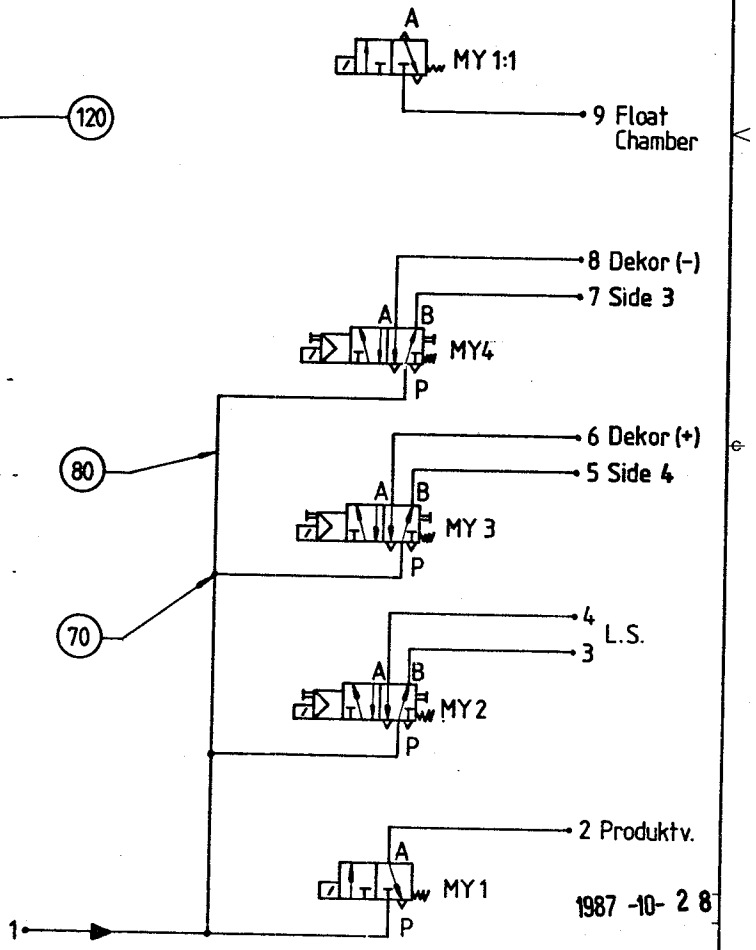

1987 -10- 2 8

Där ej annat angetts/Unless otherwise stated	Designer RC	◇ Marked with PART NUMBER	S-237053
SKARPA KANTER BRUTNA/SHARP EDGES BROKEN	Date 861105	Method / mm - KA 21 03.10	Assembly drawing
Gjutgods / Castings KA 21 11.10	Approved	Material	
Svetsade konstr. /Welded constr. KA 21 11.50	Scale 1:1	Surface roughness	
Maskinbearb. ytor/Machined surfaces KA 21 11.30		Surface treatment	

Basic size	Tol. ±	Basic size	Tol. ±
(1) - 6	0.1	(120) - 315	0.5
(6) - 30	0.2	(315) - 1000	0.8
(30) - 120	0.3	(1000) - 2000	1.2

TETRA PAK LUND SWEDEN

PNEUMATIKPANEL
PNEUMATIC PANEL

S2-535053-1

SPC 630329
FRAME SIDES

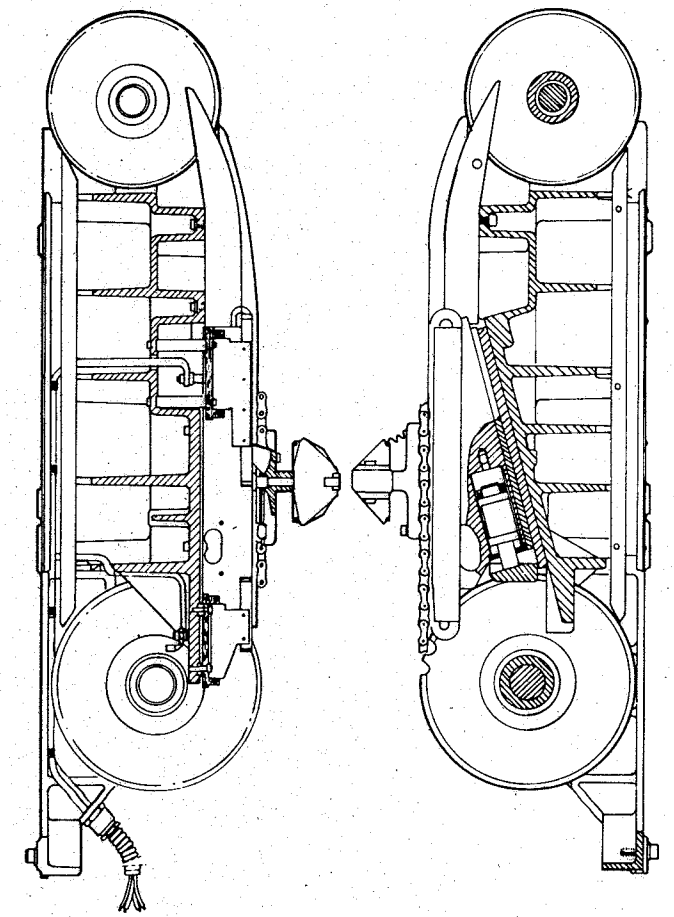

B-630303-

TETRA PAK SERVICE

LAST ALTERATION: AM 8332 85-12-18
630329-040V
AM 4382
79-11-09

GROUP

-1101 HEATING DRIVE SIDE1
-1102 HEATING SIDE2
-1103 PRESSURE SIDE3 SIDE4

POS	VAR	PART NUMBER	SP UN	QTY	DESCRIPTION
F000	-1101	C- 265573-0101	-	1	HEATING SIDE
F000	-1102	C- 265573-0102	-	1	HEATING SIDE
F000	-1103	C- 265574-0101	-	1	PRESSURE SIDE
F050	ALL	C- 2502-0101	-	1	DOUBLE CHAIN 3/4"
F060	ALL	C- 2571-0101	-	2	SPRING CARTRIDGE
F070	ALL	C- 4389-0101	-	1	SPROCKET UPPER
F080	-1101	C- 4390-0101	-	1	SPROCKET LOWER
F080	-1102	C- 4390-0102	-	1	SPROCKET LOWER
	-1103			1	
F090	-1101	C- 229248-0101	-	2	ROLLER CONVEYOR
	-1102			2	
F100	-1101	C- 257999-010V	-	8	HEATING JAW
	-1102			8	
		C- 10092-0101			. SLIDING CONTACT
		C- 257841-0102			. TPC BAR
		C- 257841-0101			. TPC BAR
F140	-1101	C- 263665-0101	-	1	CONTACT UNIT
	-1102			1	
		C- 263664-0101			. CONTACT RAIL
F160	-1101	C- 263667-0101	-	1	CONTACT UNIT
	-1102			1	
		C- 263666-0101			. CONTACT RAIL
		C- 263666-0102			. CONTACT RAIL
F190	-1103	C- 265532-0101	-	1	PRESSURE ROLLER
		C- 229249-0101			. ROLLER CONVEYOR
F210	-1103	C- 265532-0102	-	1	PRESSURE ROLLER
		C- 229249-0101			. ROLLER CONVEYOR
F220	-1103	C- 259446-010V	-	8	PRESSURE JAW
F230	-1101	C- 265712-0101	-	1	CENTRAL LUBRICATION
	-1102			1	
F240	-1103	C- 265713-0101	-	1	CENTRAL LUBRICATION

S-630303-1

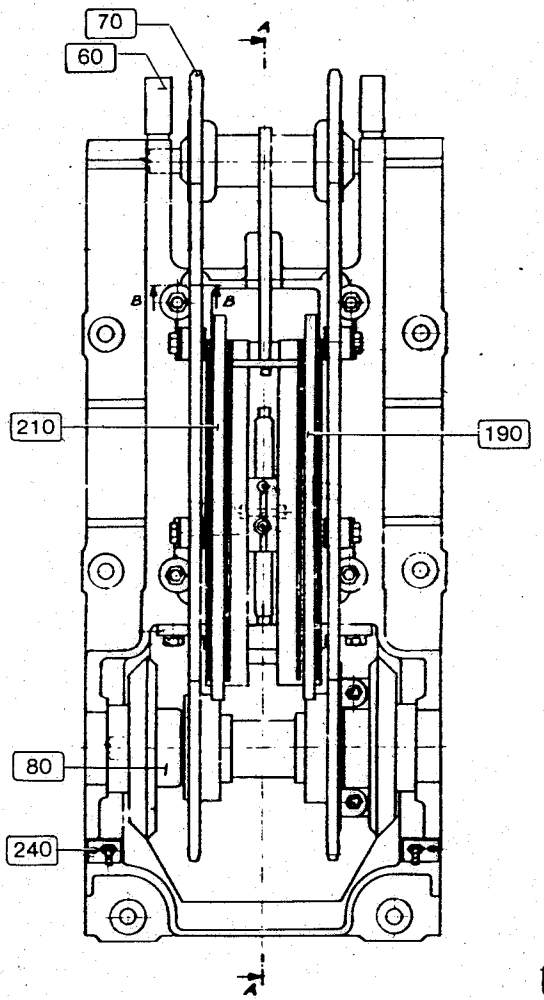

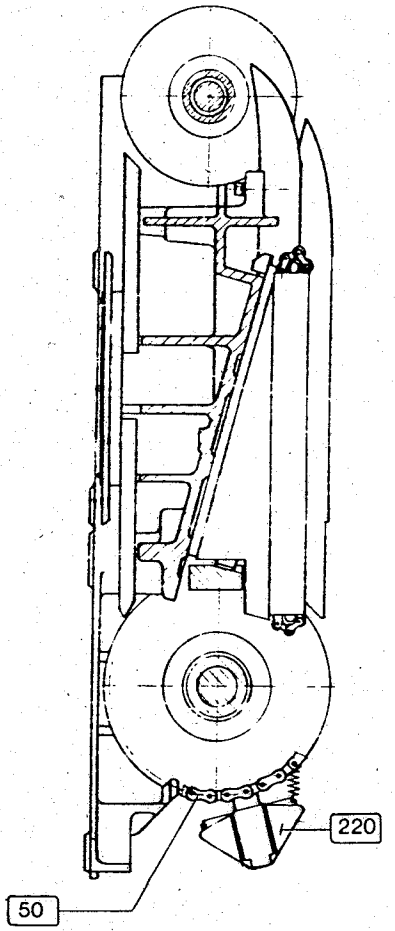

PRESSURE SIDE

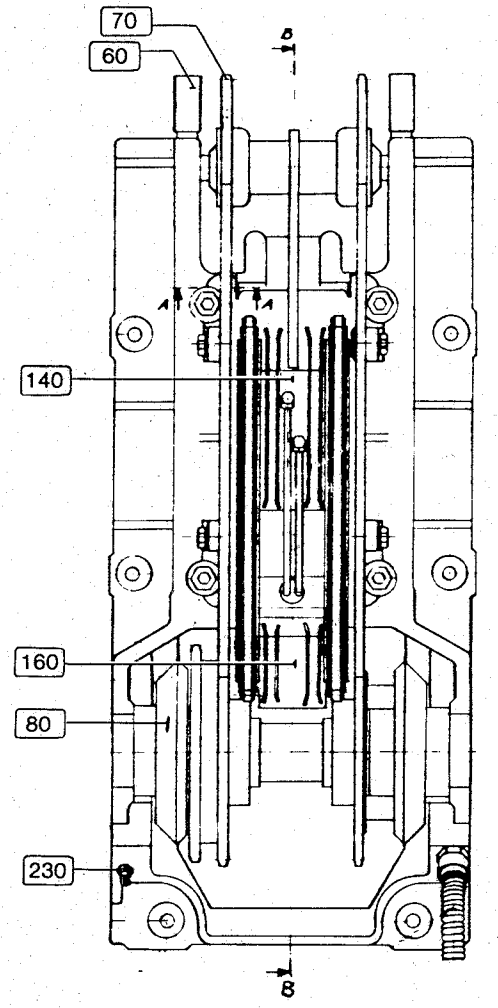

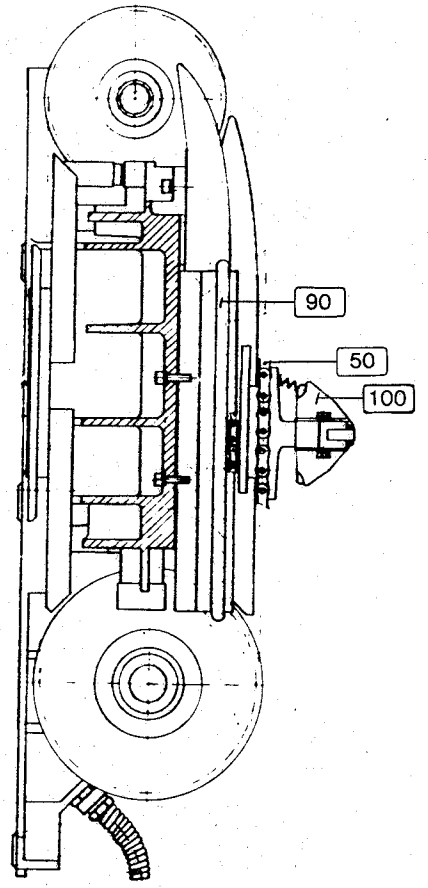

HEATING SIDE

ÄM 4554

LAST ALTERATION: AM 8332 85-12-18
630303-110V 633303-060V
AM 1530
66-08-04

POS	VAR	PART NUMBER	SP UN	QTY	DESCRIPTION
	-0101	S- 2502-SHEET	-1		===ASSEMBLY DRAWING===
010	-0101	1978	R	8	TENSION SPRING
020	-0101	2507	-	2	CHAIN
030	-0101	2508	-	8	SHAFT
040	-0101	2509	-	8	SHAFT

THIS DRAWING MUST NOT WITHOUT THE CONSENT OF TETRA PAK: BE COPIED, TRANSMITTED OR DISCLOSED TO ANY THIRD PARTY.

DENNA RITNING FÅR INTE UTAN TETRA PAKS MEDGIVANDE KOPIERAS, UTLÄMNAS TILL ELLER DELGIVAS TREDJE MAN.

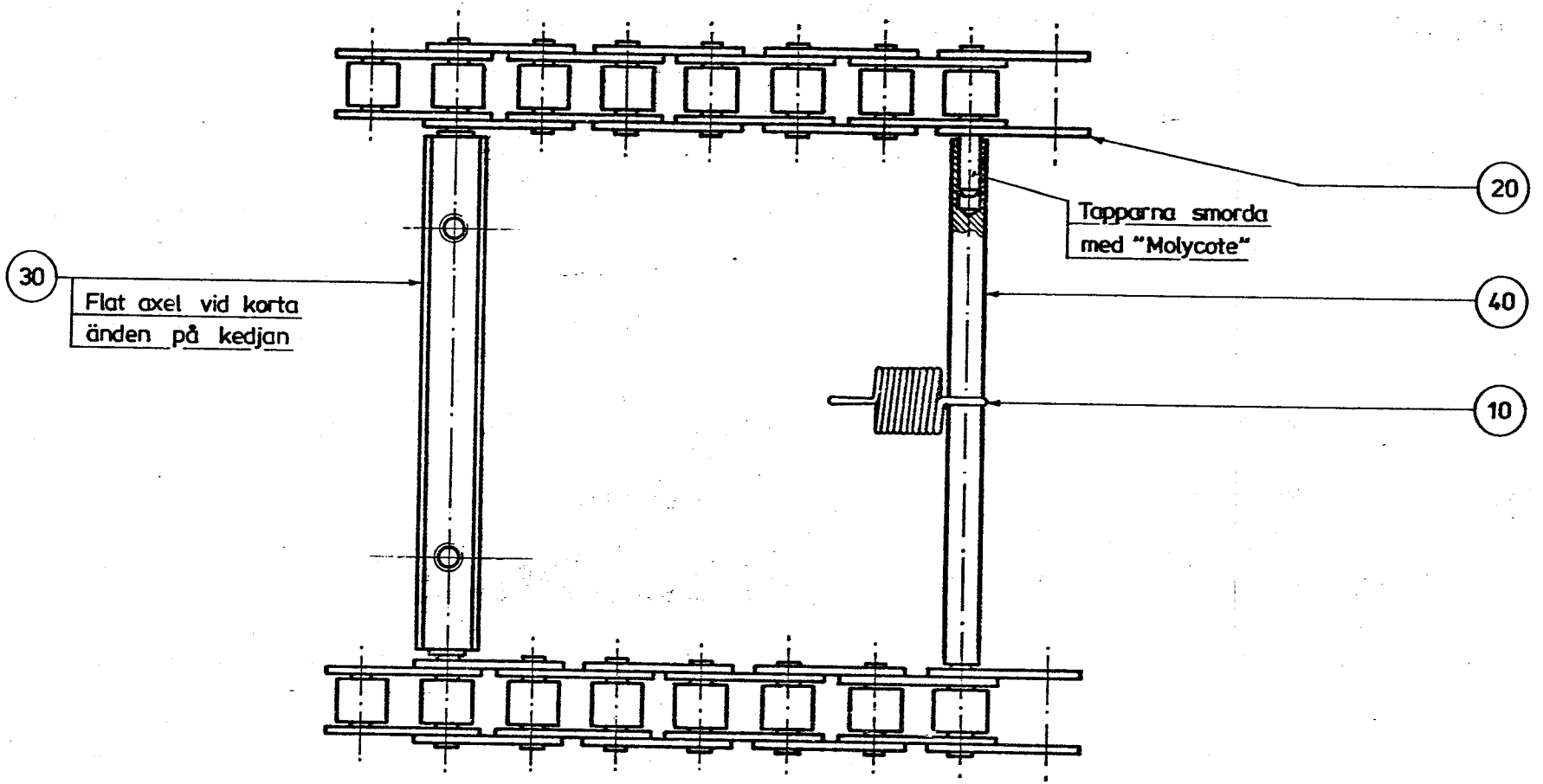

1986-01-09

				0 a	Omritad ÄM 8332	83 01 14	BÅ
NOT. NOTE	ÄNDRING ALTERATION	DATUM DATE	INF. BY	NOT. NOTE	ÄNDRING ALTERATION	DATUM DATE	INF. BY

S1-265574
S1-265573
TILLHÖR SMST NR ASSEMBLY DRG. NO
MATERIAL
ANMÄRKNING REMARKS
EL/BÅ 540519
RITAD DRAWN | DATUM DATE | KONTR. CH'D | GODK. APPR. | 1:1 SKALA SCALE | YTBESK. SURFACE FINISH | YTBEHANDLING TREATMENT

TETRA PAK
LUND SWEDEN

DUBBELKEDJA 3/4"

S3-2502-1

LAST ALTERATION: AM 8332 85-12-18
630303-110V 633303-060V
AM 329
61-06-29

POS	VAR	PART NUMBER	SP UN	QTY	DESCRIPTION
	-0101	S- 2571-SHEET	-1		===ASSEMBLY DRAWING===
010	-0101	2572	-	1	SPRING HOUSING
020	-0101	2573	-	1	PIN
030	-0101	2574	-	1	SCREW
040	-0101	20919	-	1	PIN
050	-0101	90016-0005	-	26	DISC SPRING

Not.	Ändring	Datum	Inf.	Not.	Ändring	Datum	Inf.
0c	Omritad ÄM8332	83 01 14	BÅ				

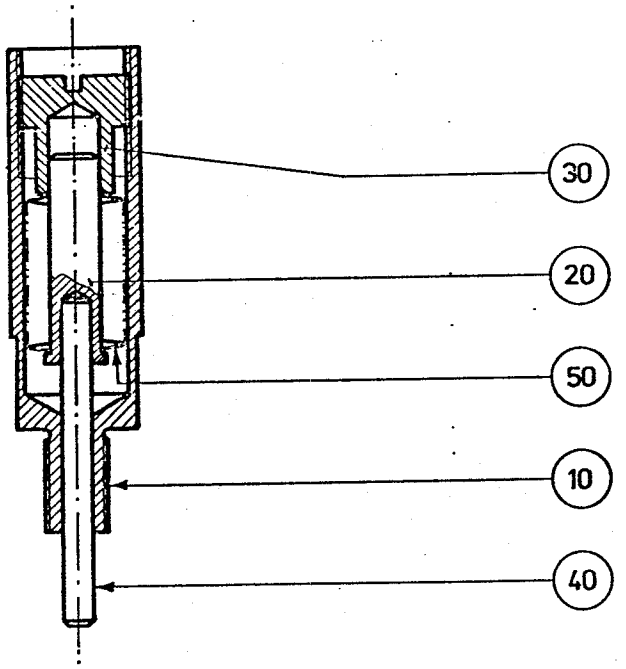

1983-01-09

S1-265 574						
S1-265 573						
TILLHÖR SMST NR ASSEMBLY DRG. NO		MATERIAL			ANMÄRKNING REMARKS	
HS/BÅ	54 05 12			1:1		
PITAD DRAWN	DATUM DATE	KONTR. CHD	GODK. APPR.	SKALA SCALE	YTBESK. SURFACE FINISH	YTBEHANDLING TREATMENT
TETRA PAK LUND SWEDEN		FJÄDER PATRON				S4-2571-1

CONSENT OF TETRA PAK IS CONSENT TRANSMITTED OR DISCLOSED TO ANY THIRD PARTY.
ELLER DELGIVAS TREDJE MAN.

LAST ALTERATION: AM 8332 85-12-18
630303-110V 633303-060V
AM 848
64-03-06

POS	VAR	PART NUMBER	SP UN	QTY	DESCRIPTION
	-0101	S- 4389-SHEET	-1		===ASSEMBLY DRAWING===
010	-0101	G- 2453	-	1	SPROCKET UPPER
020	-0101	2468	-	1	SHAFT
030	-0101	312101-0368	-	6	SCREW M6S6X16FZB
040	-0101	315401-0153	-	6	WASHER FBB6,1FZB
050	-0101	315750-0119	-	2	LOCK RING SGA25
060	-0101	321309-0105	-	2	BALL BEARI SKF6205
070	-0101	321600-0113	-	2	OIL SEAL LL2552
080	-0101	344502-0026	-	1	NIPPLE L AHKR1/8"

THIS DRAWING MUST NOT WITHOUT THE CONSENT OF TETRA PAK: BE COPIED, TRANSMITTED OR DISCLOSED TO ANY THIRD PARTY.

DENNA RITNING FÅR INTE UTAN TETRA PAKS MEDGIVANDE KOPIERAS, UTLÄMNAS TILL ELLER DELGIVAS TREDJE MAN.

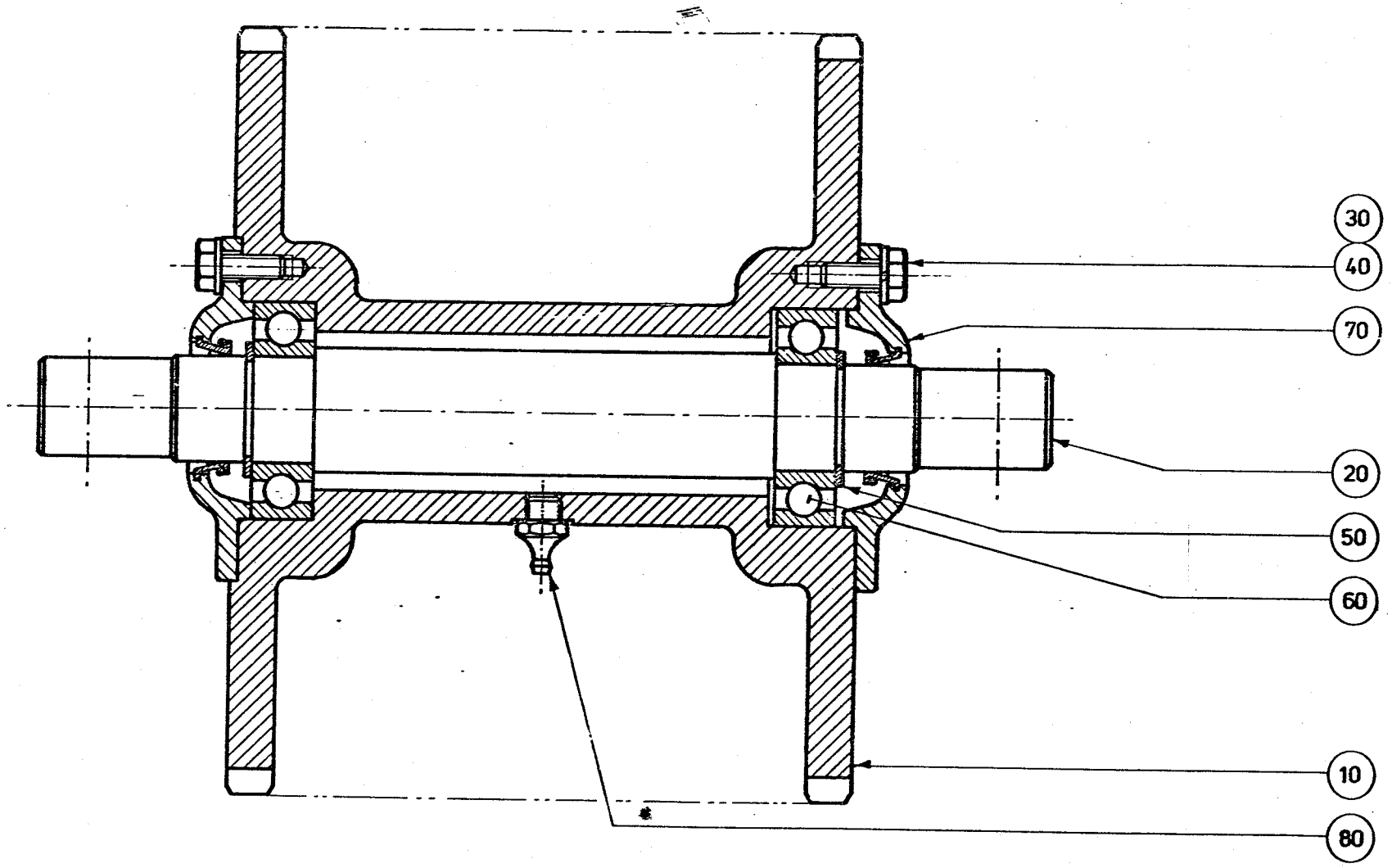

TOLERANCE FOR MACHINED SURFACES UNLESS OTHERWISE SPECIFIED:

NOM. MATT

NOM. MEASURE

OVER MORE THAN	T.O.M. INCL.	Tol. ±
(1)	6	0.1
(6)	30	0.2
(30)	120	0.3
(120)	315	0.5
(315)	1000	0.8
(1000)	2000	1.2
(2000)	4000	2
(4000)	8000	3

NOT. NOTE	ANDRING ALTERATION	DATUM DATE	INF. BY	NOT NOTE	ANDRING ALTERATION	DATUM DATE	INF. BY
				0 a	Omritad ÄM8332	83 01 17	BÅ

S1-265 574

S1-265 573

TILLHÖR SMST NR ASSEMBLY DRG. NO

MATERIAL

ANMÄRKNING REMARKS

PK/BÅ 560611

1:1

RITAD DRAWN	DATUM DATE	KONTR. CHD	GODK. APPR.	SKALA SCALE	YTBESK. SURFACE FINISH	YTBEHANDLING TREATMENT

TETRA PAK LUND SWEDEN

KÄTTINGHJUL, ÖVRE

S3 - 4389 -1

1983 -01-09

TERRAS RYDGÅRD ARKITEKTRITNING

LAST ALTERATION: AM 8332 85-12-18
630303-110V 633303-060V
AM 347
61-08-18

GROUP

-0101 DRIVE SIDE1
-0102 HEATING SIDE2, PRESSURE SIDE3 SIDE4

POS	VAR	PART NUMBER	SP UN	QTY	DESCRIPTION
	-0101	S- 4390-SHEET	-1		===ASSEMBLY DRAWING===
	-0102		-1		
010	-0101	G- 2461	-	1	SPROCKET
020	-0101	312101-0451	-	4	SCREW M6S8X20FZB
030	-0101	315401-0165	-	10	WASHER FBB8,2FZB
	-0102			6	
040	ALL	7841	-	1	SPROCKET
050	ALL	2454	-	1	BEVEL GEAR
060	ALL	2455	-	1	BEVEL GEAR
070	ALL	G- 2459	-	1	BEARING HOUSING
080	ALL	G- 2460	-	1	BEARING HOUSING
090	ALL	2469	-	1	SHAFT
100	ALL	6453-0001	-	2	LUBRICATING PIPE
110	ALL	311201-0329	-	2	TAPER PIN KP8X80SLIPAD
120	ALL	312111-0455	-	4	SCREW MC6S8X30FZB
130	ALL	312306-0501	-	2	GRUB SCREW P6SS10X50FZB
140	ALL	312316-0447	-	4	GRUB SCREW SK6SS8X12FZB
150	ALL	312601-0320	-	2	NUT M6M10FZB
160	ALL	315202-0224	-	2	O-RING 42,2X3
170	ALL	315750-0119	-	2	LOCK RING SGA25
180	ALL	315750-0127	-	2	LOCK RING SGA40
190	ALL	315752-0132	-	1	LOCK RING SGH52
200	ALL	321309-0105	-	2	BALL BEARISKF6205
210	ALL	344502-0026	-	2	NIPPLE L AHKR1/8"

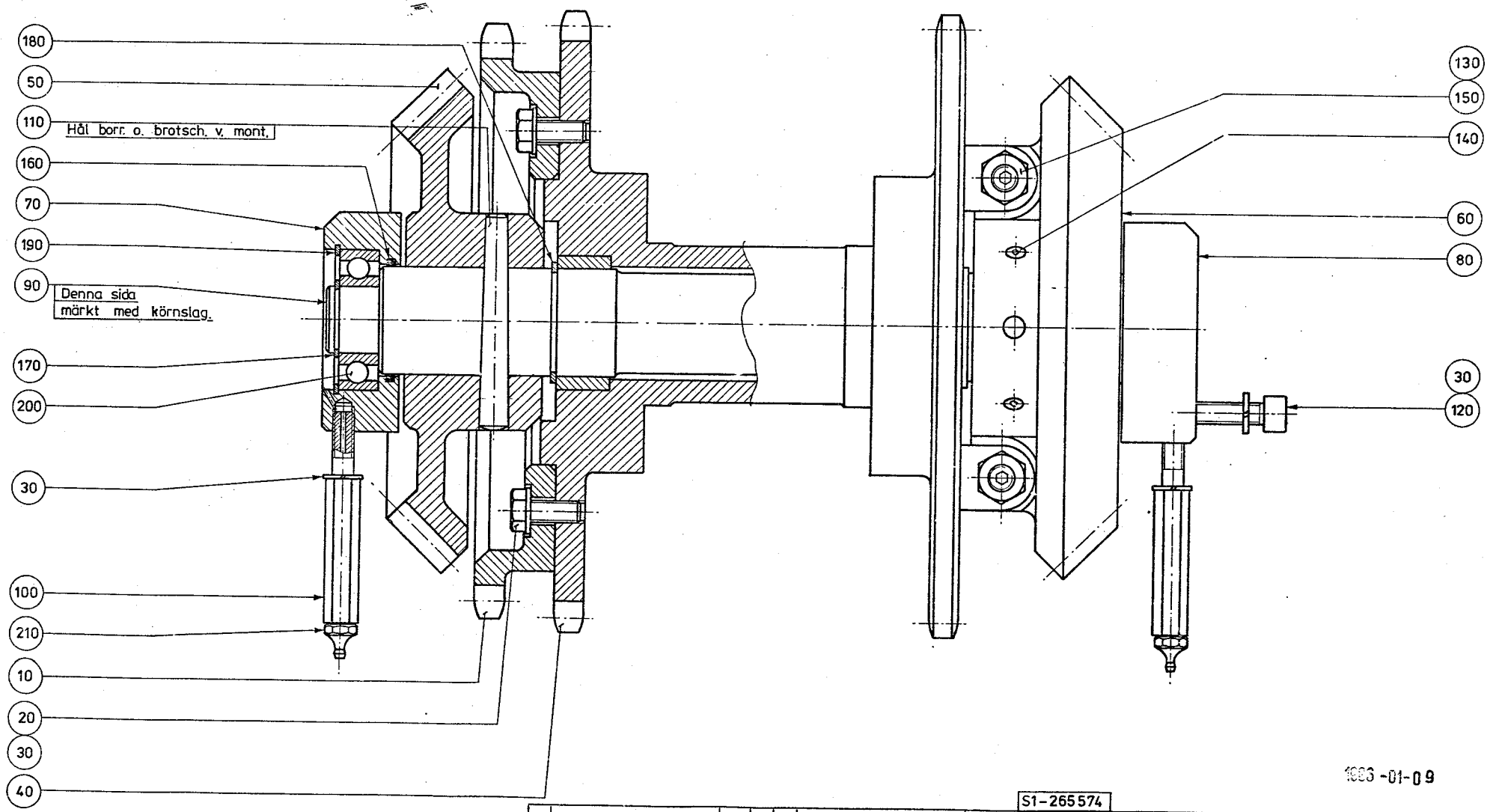

1993-01-09

													S1-265 574				
													S1-265 573				
													TILLHÖR SATSET NR ASSEMBLY DRG. NO		MATERIAL		ANMÄRKNING REMARKS
													PK/BA 560614			1:1	
													RITAD DRAWN	DATUM DATE	KONTR CH'D	GODK APPR	SKALA SCALE	YTBEHANDLING SURFACE FINISH	YTBEHANDLING TREATMENT
											0a	Omritad ÄM8332	93 01 18	BÅ	TETRA PAK LUND SWEDEN	KÄTTINGHJUL, NEDRE	S2-4390-1
NOT. NOTE	ÄNDRING ALTERATION	DATUM DATE	REF. BY	NOT. NOTE	ÄNDRING ALTERATION	DATUM DATE	REF. BY										

THIS DRAWING MUST NOT WITHOUT THE CONSENT OF TETRA PAK BE COPIED, TRANSMITTED OR DISCLOSED TO ANY THIRD PARTY

DENNA RITNING FÅR INTE UTAN TETRA PAKS MEDGIVANDE KOPIERAS, UTLÄMNAS TILL ELLER DELGIVAS TREDJE MAN

NOM MÅTT NOM MEASURE		
ÖVER OVER	T O M INCL	Tol ±
(1)	6	0.1
(6)	30	0.2
(30)	120	0.3
(120)	315	0.5
(315)	1000	0.8
(1000)	2000	1.2
(2000)	4000	2
(4000)	8000	3

TOLERANSER FÖR MASKINBEARBETADE YTOR OM INTE ANNAT ANGES
TOLERANCES FOR MACHINED SURFACES UNLESS OTHERWISE STATED

CES SE

TRYCK: B RYDSTAD ARNTZ REPRO

LAST ALTERATION: AM 3981 77-12-07
10092 630303 633303

POS	VAR	PART NUMBER	SP	EH	QTY	DESCRIPTION
	-0101	S- 10091-SHEET	-1			===ASSEMBLY DRAWING===
105	-0101	10089	-		1	CARBON BRUSH HOLDER
106	-0101	10090	-		1	INSULATOR

TETRA PAK

1/8410

S-10091-1

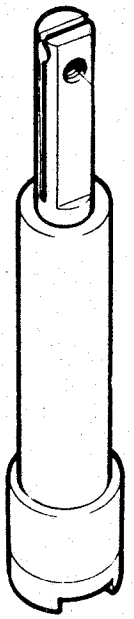

ÄM 3981

LAST ALTERATION: AM 8332 85-12-18
257999-010V
AM 4382
79-11-09

POS	VAR	PART NUMBER	SP UN	QTY	DESCRIPTION
	-0101	S- 10092-SHEET -1			===ASSEMBLY DRAWING===
010	-0101	440560	-	1	INSULATOR
020	-0101	442442	R	1	CARBON BRUSH
030	-0101	312115-0295	-	1	SCREW S 4X20 A4 80
040	-0101	312125-0287	-	1	SLOTTED HEMCS4X8RFR
050	-0101	315401-0136	-	1	WASHER FBB4,1FZB

Not.	Ändring	Datum	Inf.	Not.	Ändring	Datum	Inf.
0 a	Omritad ÄM8332	85 /021	MS				

THIS DRAWING MUST NOT WITHOUT THE CONSENT OF TETRA PAK BE COPIED, TRANSMITTED OR DISCLOSED TO ANY THIRD PARTY.

DENNA RITNING FÅR INTE UTAN TETRA PAKS MEDGIVANDE KOPIERAS, UTLÄMNAS TILL ELLER DELGIVAS TREDJE MAN.

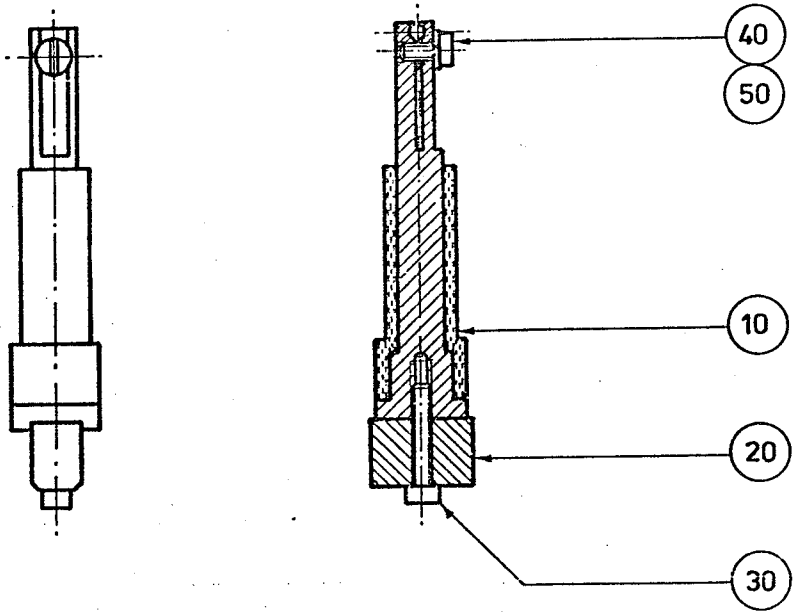

S3 - 257 999		/		T-300	
TILLHÖR SMST NR / ASSEMBLY DRG NO		MATERIAL		ANMÄRKNING / REMARKS	
BÅ	830114		1:1		
RITAD / DRAWN	DATUM / DATE	KONTR. / CHD	GODK. / APPR.	SKALA / SCALE	YTBEHANDLING / TREATMENT

TETRA PAK LUND SWEDEN

SLÄP KONTAKT

S4 - 10 092 - 1

LAST ALTERATION: AM 4382 79-11-09
630303 633303

POS	VAR	PART NUMBER	SP	EH	QTY	DESCRIPTION
	-0101	S- 229248-SHEET	-1			===ASSEMBLY DRAWING===
010	-0101	266763	-		1	RAIL
020	-0101	266764	-		1	HEATING SIDE
030	-0101	266765	-		1	HEATING SIDE
040	-0101	37814	-		1	CHAIN
050	-0101	38348	-		1	RAIL
060	-0101	311305-0274	-		3	SLOTTED PIRPC4X25FZB
070	-0101	312141-0325	-		6	SLOTTED HEMFS5X10FZB

TETRA PAK

1/8409

S-229248-1

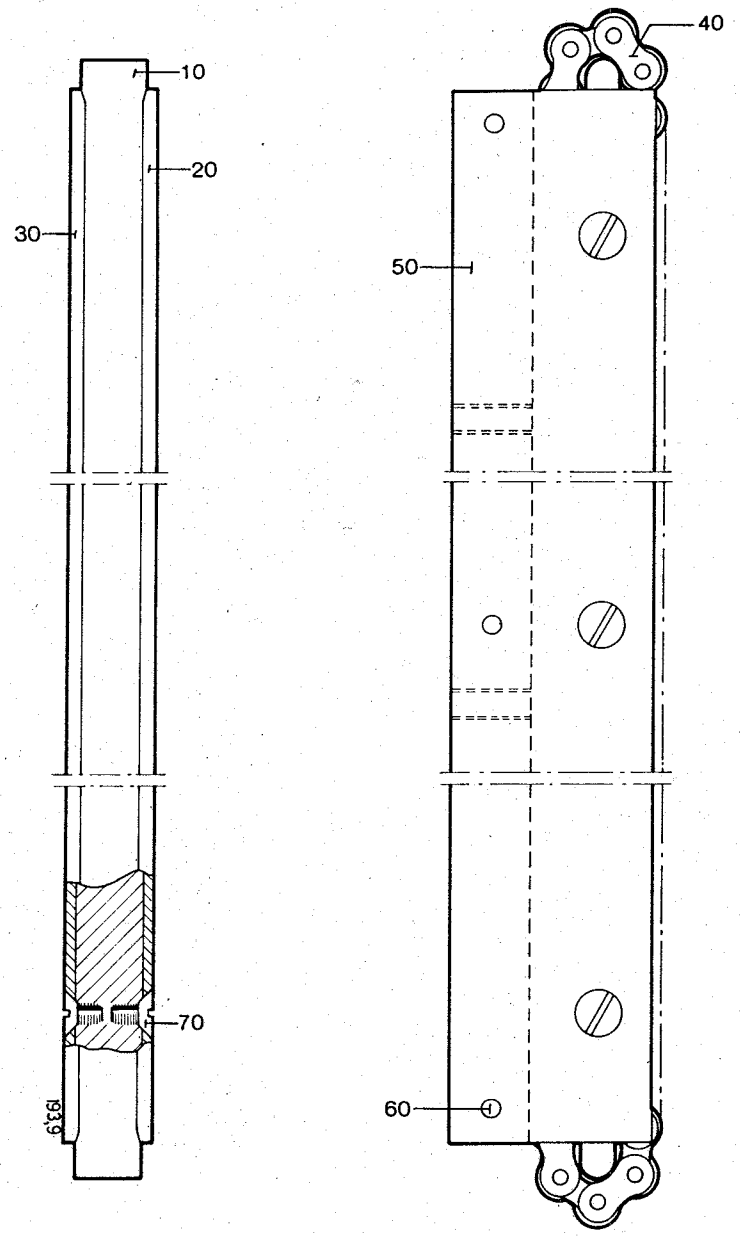

AM 4382

LAST ALTERATION: AM 4382 79-11-09
265532 630303 633303

POS	VAR	PART NUMBER	SP	EH	QTY	DESCRIPTION
	-0101	S- 229249-SHEET	-1			===ASSEMBLY DRAWING===
010	-0101	266763	-		1	RAIL
020	-0101	179848	-		1	HEATING SIDE
030	-0101	179849	-		1	HEATING SIDE
040	-0101	37814	-		1	CHAIN
050	-0101	312141-0325	-		6	SLOTTED HEMFS5X10FZB

TETRA PAK

1/8409

S-229249-1

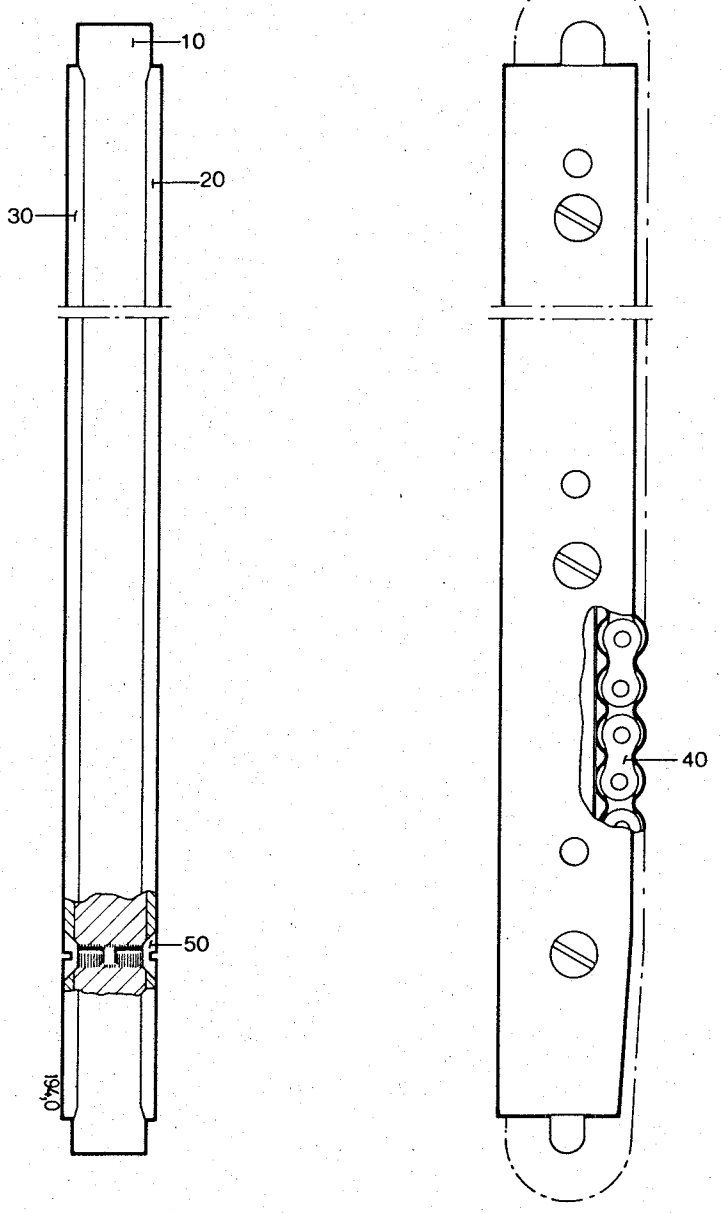

ÅM 4382

LAST ALTERATION: AM 6936 85-01-09
23281 257999 451433 451434 630303 630309 633303 633309
AM 4382
79-11-09

GROUP

-0101 STD. PAPER
-0102 AL-FOL
-0103 1,5MM

POS	VAR	PART NUMBER	SP	EH	QTY	DESCRIPTION
	-0101	S- 257841-SHEET	-1			===ASSEMBLY DRAWING===
	-0102		-1			
010	-0101					
010	-0102					
010	-0103					
020	ALL	CAN ONLY BE ORDERED AS A COMPLETE GROUP				
030	ALL					
040	ALL					
050	ALL					
060	ALL					

TETRA PAK

1/8410

S-257841-1

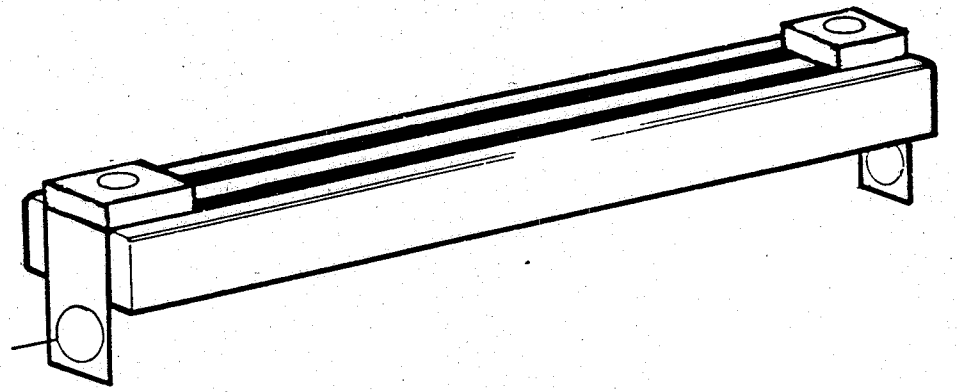

ÄM 6936

LAST ALTERATION: AM 4382 79-11-09
630303 633303

GROUP

-0101	01	AL-FOL	V0300
-0102	02	AL-FOL	V0250V0284
-0103	03	AL-FOL	V0236
-0104	04	AL-FOL	V0227
-0105	05	STD.PAPPER	V0300
-0106	06	STD.PAPPER	V0250V0284
-0107	07	STD.PAPPER	V0236
-0108	08	STD.PAPPER	V0227

POS	VAR	PART NUMBER	SP	EH	QTY	DESCRIPTION
	-0101	S- 257999-SHEET	-1			===ASSEMBLY DRAWING===
	-0102		-1			
	-0103		-1			
	-0104		-1			
	-0105		-1			
	-0106		-1			
	-0107		-1			
	-0108		-1			
F110	-0105	C- 257841-0101	R		1	TPC-BAR
	-0106				1	
	-0107				1	
	-0108				1	
F110	-0101	C- 257841-0102	R		1	TPC-BAR
	-0102				1	
	-0103				1	
	-0104				1	
F120	ALL	C- 10092-0101	-		2	SLIDING CONTACT
010	-0101	3917	-		2	FLAP
	-0105				2	
010	-0102	3918	-		2	FLAP
	-0106				2	
010	-0104	3919-0001	-		2	FLAP
	-0108				2	
010	-0103	5116-0003	-		2	FLAP
	-0107				2	
020	ALL	10603	-		1	HEATING JAW
025	ALL	259406	-		2	COUPLING
030	ALL	2033-0012	R		2	WASHER
035	ALL	2493	-		1	PIN
040	ALL	2497-0003	-		2	GASKET
045	ALL	3630	-		1	ROLLER
050	ALL	3891	-		2	BUSHING
055	ALL	6261-0001	-		2	GASKET
060	ALL	8028	-		4	INSERT
065	ALL	8458	-		2	BAR
070	ALL	90287-0005	-		2	SCREW
075	ALL	311103-0306	-		1	CYLINDRICACPR5M6X12RFR

POS	VAR	PART NUMBER	SP	EH	QTY	DESCRIPTION
080	ALL	311411-0165	-		1	SPLIT PIN SP2,5X16RFR
085	ALL	312101-0287	-		2	SCREW M6S4X8FZB
090	ALL	312105-0368	-		4	SCREW M6S6X16RFR
095	ALL	312111-0455	-		4	SCREW MC6S8X30FZB
100	ALL	312115-0370	-		2	SCREW MC6S6X20RFR
105	ALL	315115-0153	-		4	WASHER TBRB6,4X12RFR
110	ALL	315401-0153	-		2	WASHER FBH6,1FZB

TETRA PAK

1/8409

S-257999-1

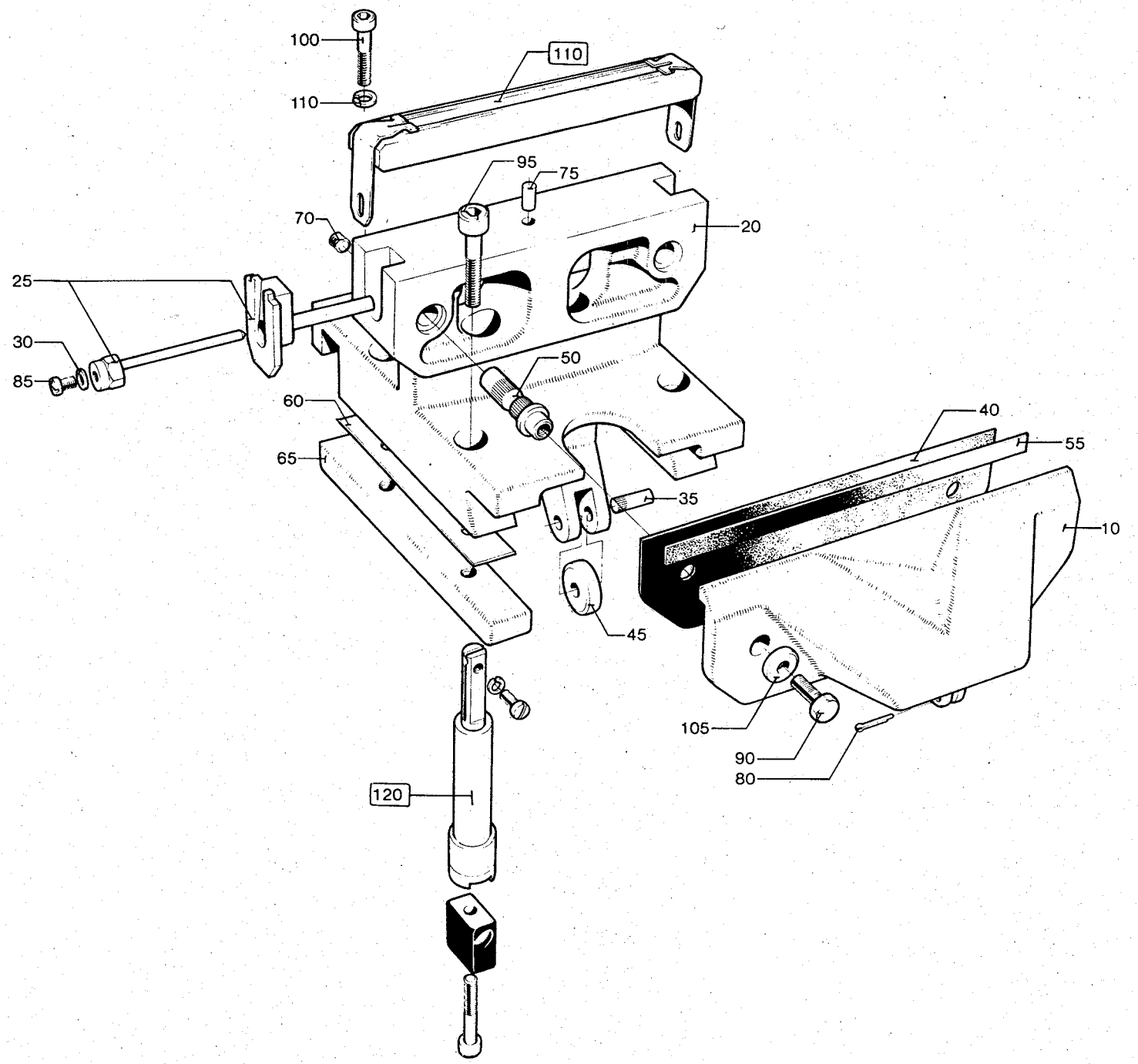

ÄM 4382

LAST ALTERATION: AM 8245 85-11-04
630303-110V 633303-060V
AM 4382
79-11-09

GROUP	SEALING SYSTEM	VOLUME	VOLUME
-0101	TPC	V0300	V0250
-0102	TPC	V0284	-
-0103	TPC	V0236	-
-0104	IH	V0300	V0250

POS	VAR	PART NUMBER	SP	EH	QTY	DESCRIPTION
	-0101	S- 259446-SHEET		-1		===ASSEMBLY DRAWING===
	-0102			-1		
	-0103			-1		
	-0104			-1		
010	-0101	3921	-		1	FLAP
	-0102				2	
	-0104				1	
010	-0103	5116-0001	-		2	FLAP
015	-0101	3922	-		1	FLAP
	-0104				1	
060	-0101	3950	PU		1	RUBBER STRIP
	-0102				1	
	-0103				1	
060	-0104	522402	PU		1	RUBBER STRIP
020	ALL	257952	-		1	PRESSURE JAW
030	ALL	2493	-		1	PIN
040	ALL	3630	-		1	ROLLER
050	ALL	3891	-		2	BUSHING
070	ALL	6253	-		1	RUBBER HOLDER
080	ALL	8028	-		4	INSERT
090	ALL	8458	-		2	BAR
100	ALL	283029	-		2	SUPPORT
110	ALL	311411-0165	-		1	SPLIT PIN SP2,5X16RFR
120	ALL	312105-0366	-		4	SCREW M6S6X12RFR
130	ALL	312111-0455	-		4	SCREW MC6S8X30FZB
140	ALL	312115-0370	-		2	SCREW 6X20 A4 80
150	ALL	312145-0224	-		4	SLOTTED HEMFS3X10RFR
160	ALL	315111-0153	-		4	WASHER TBRB6,4X12FZB
170	ALL	315401-0153	-		2	WASHER FBH6,1FZB

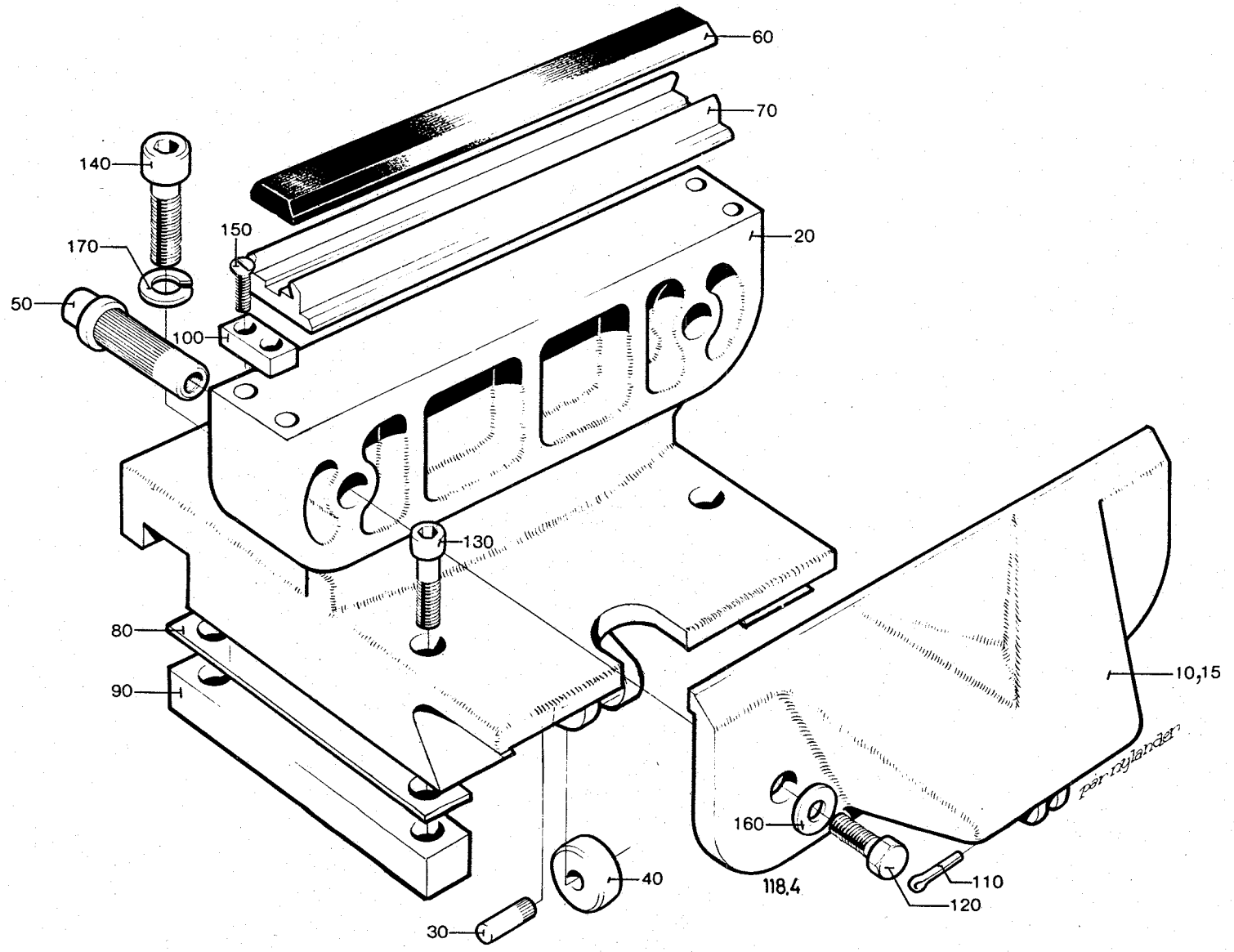

ÄH 5367

LAST ALTERATION: AM 4382 79-11-09
263665 630303 633303

POS	VAR	PART NUMBER	SP	EH	QTY	DESCRIPTION
	-0101	S- 263664-SHEET	-1			===ASSEMBLY DRAWING===
010	-0101	6126	-		1	COPPER BRAID
020	-0101	6130	-		1	COPPER BRAID
030	-0101	263325	-		2	CONTACT RAIL
040	-0101	263652	-		2	CONTACT PLATE
050	-0101	311513-0308	-		8	RIVET FN3X6KPR

S-263664-1

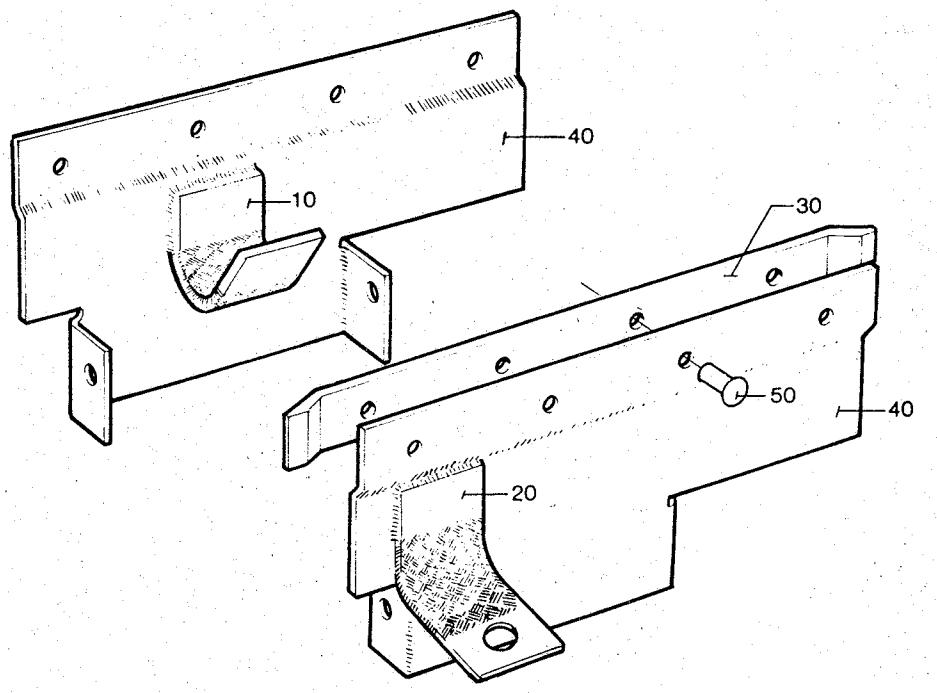

ÄM 4382

LAST ALTERATION: AM 9774 87-01-12
630303-110V 633303-060V
AM 4382
79-11-09

POS	VAR	PART NUMBER	SP UN	QTY	DESCRIPTION
	-0101	S- 263665-SHEET	-1		===ASSEMBLY DRAWING===
F150	-0101	C- 263664-0101	-	2	CONTACT RAIL
020	-0101	263653	-	1	BOTTOM PLATE
030	-0101	6120-0002	-	2	SHAFT
040	-0101	6122	-	4	WASHER
050	-0101	6135	-	8	TORSION SPRING
060	-0101	6136	-	4	SPACER
090	-0101	312101-0374	-	2	SCREW M6S6X30FZB
100	-0101	312115-0374	-	2	SCREW 6X30 A4 80
110	-0101	312125-0295	-	4	SLOTTED HEMCS4X20RFR
120	-0101	312602-0316	-	4	NUT M6M6MSGFN
130	-0101	315103-0153	-	8	WASHER BRB6,4X12MSGFN
150	-0101	353104-0168	-	2	CABLE SHOEYAV 6 CLM 64

TETRA PAK

1/8409

S-263665-1

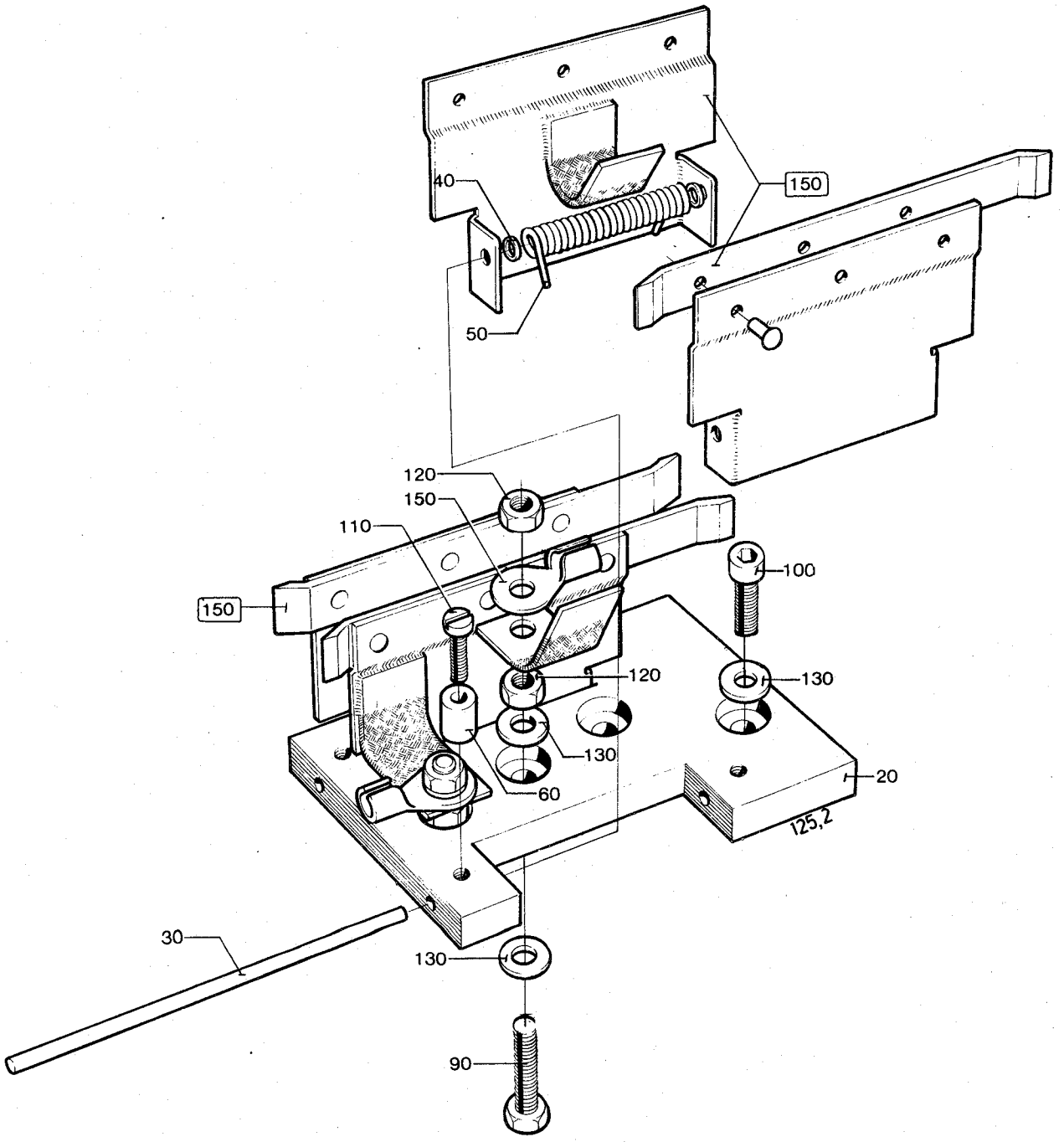

ÄM 5367

LAST ALTERATION: AM 4382 79-11-09
263667 630303 633303

GROUP

-0101 01 LEFT HAND VERSION
-0102 02 RIGTH HAND VERSION

POS	VAR	PART NUMBER	SP	EH	QTY	DESCRIPTION
	-0101	S- 263666-SHEET	-1			===ASSEMBLY DRAWING===
	-0102		-1			
010	-0101	18940-0001	-		1	CONNECTION
010	-0102	18940-0002	-		1	CONNECTION
020	ALL	18939	-		2	CONTACT PLATE
030	ALL	18941-0001	-		1	COPPER BRAID
040	ALL	18941-0002	-		1	COPPER BRAID
050	ALL	263326	-		2	CONTACT RAIL
060	ALL	311513-0308	-		4	RIVET FN3X6KPR

TETRA PAK

1/8409

S-263666-1

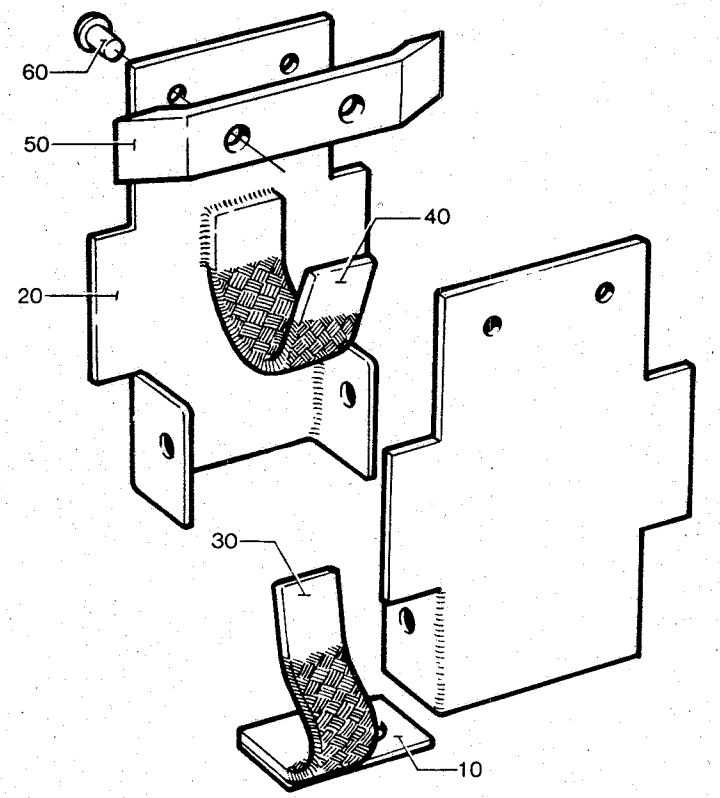

ÄM 4382

LAST ALTERATION: AM 9774 87-01-12
630303-110V 633303-060V
AM 4382
79-11-09

POS	VAR	PART NUMBER	SP	UN	QTY	DESCRIPTION
	-0101	S- 263667-SHEET	-1			===ASSEMBLY DRAWING===
F170	-0101	C- 263666-0101	-		1	CONTACT RAIL
F180	-0101	C- 263666-0102	-		1	CONTACT RAIL
030	-0101	5743	-		2	PIN
040	-0101	18943	-		1	BOTTOM PLATE
050	-0101	18944	-		2	SPACER SLEEVE
060	-0101	18945	-		2	INSULATING TUBE
070	-0101	18947	-		2	SHAFT
080	-0101	23193	-		2	BRACKET
090	-0101	23194	-		2	TORSION SPRING
100	-0101	90079-0002	-		4	WASHER
110	-0101	90160-0001	-	MM	100	INSULATION TUBE
120	-0101	312121-0285	-		2	SLOTTED HEMCS4X6FZB
130	-0101	312121-0287	-		2	SLOTTED HEMCS4X8FZB
140	-0101	312602-0316	-		2	NUT M6M6MSGFN
150	-0101	312602-0318	-		4	NUT M6M8MSGFN
160	-0101	315103-0136	-		4	WASHER BRB4,3X8MSGFN
170	-0101	315103-0165	-		2	WASHER BRB8,4X16MSGFN
180	-0101	353104-0169	-		2	CABLE SHOEYAV 6 CLM 84

TETRA PAK

1/8409

S-263667-1

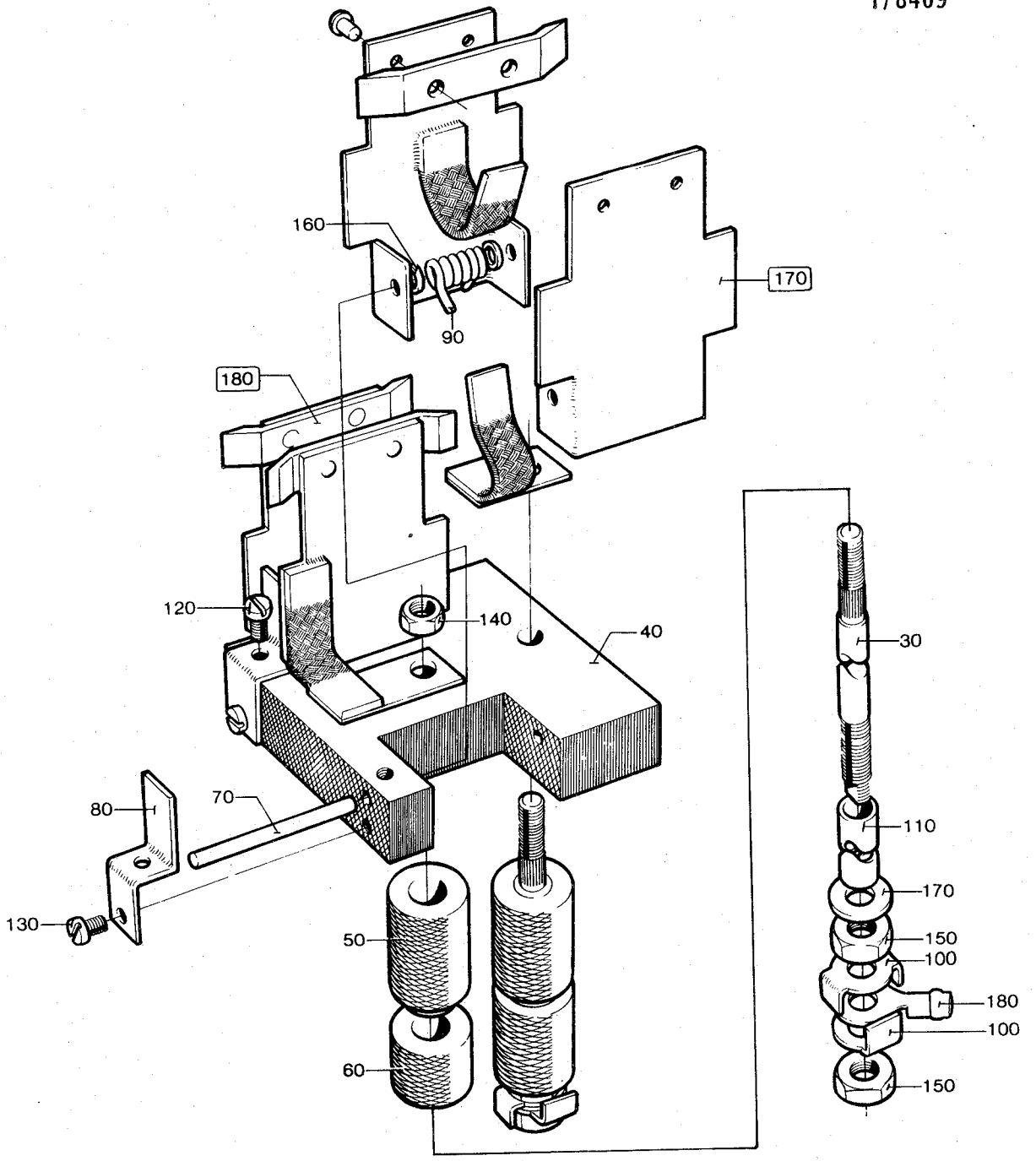

AM5367

LAST ALTERATION: AM 4382 79-11-09
630303 633303

GROUP

-0101 01 RIGTH HAND VERSION
-0102 02 LEFT HAND VERSION

POS	VAR	PART NUMBER	SP	EH	QTY	DESCRIPTION
	-0101	S- 265532-SHEET	-1			===ASSEMBLY DRAWING===
	-0102		-2			
F200	ALL	C- 229249-0101	-		1	RAIL
010	-0102	38349	-		1	PRESSURE ROLLER
010	-0101	38368	-		1	PRESSURE ROLLER
020	ALL	2597	-		1	PLATE
030	ALL	12429	-		1	WASHER
040	ALL	38370	-		1	LINING
050	ALL	38371	-		1	PISTON
060	ALL	263999	-		1	PLATE
070	ALL	265867	-		1	CONNECTION
080	ALL	90020-0008	-		1	SEAL RING
090	ALL	311303-0404	-		1	SLOTTED PIRPB8X28FZB
100	ALL	312111-0368	-		4	SCREW MC6S6X16FZB
110	ALL	312121-0230	-		1	SLOTTED HEMCS3X20FZB
120	ALL	312145-0291	-		8	SLOTTED HEMFS4X12RFR
130	ALL	315101-0153	-		4	WASHER BRB6,4X12FZB
140	ALL	315202-0221	-		1	O-RING 34,2X3
150	ALL	315401-0124	-		1	WASHER FBH3,1FZB
160	ALL	315750-0109	-		1	LOCK RING SGA12
170	ALL	315752-0124	-		1	LOCK RING SGH35

S-265532-1

★Bilden visar tryckrullehållare, H.
Tryckrullehållare V är spegelvänd.
The Illustation shows the Pressure Méchanism, RH.
The Pressure Mechanism LH is mirrored.
Das Bild zeigt Druckkettenhalter, R.
Druckkettenhalter L ist spiegelbildlich.
L´image montre le bloc de pression Droit.
Le bloc de pression Gauche est inversé.

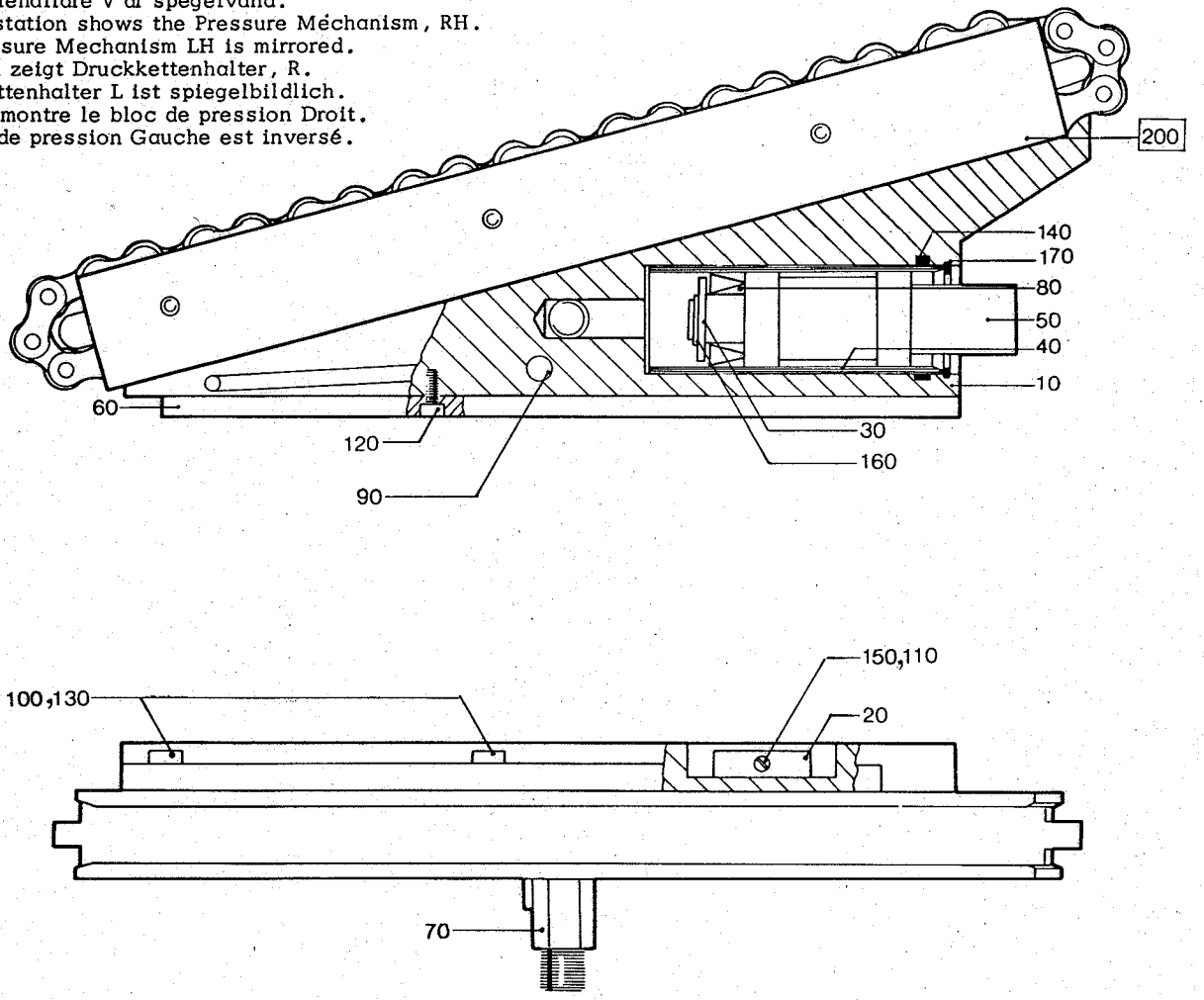

ÄM 4382

LAST ALTERATION: AM 8332 85-12-18
630303-110V 633303-060V
AM 4382
79-11-09

GROUP SEALING SYSTEM

-0101 TPC SIDE1
-0102 TPC SIDE2
-0103 IH SIDE1
-0104 IH SIDE2

POS	VAR	PART NUMBER	SP UN	QTY	DESCRIPTION
	-0101	S- 265573-SHEET	-1		===ASSEMBLY DRAWING===
	-0102		-1		
	-0103		-2		
	-0104		-2		
005	-0104	440792	C	1	CABLE IH 300ML
006	-0103	440793	C	1	CABLE IH 300ML
007	-0103	458411	C	1	HOLDER
	-0104			1	
010	-0101	10816	-	1	MARKING PLATE
	-0103			1	
011	-0103	458412	C	1	LID
	-0104			1	
015	-0103	312101-0370	-	4	SCREW M6S6X20FZB
	-0104			4	
016	-0103	312101-0374	-	4	SCREW M6S6X30FZB
	-0104			4	
020	-0101	312502-0221	-	6	DRIVE SCREKDS4X6FNB
	-0102			4	
	-0103			6	
	-0104			4	
025	-0103	315101-0153	-	16	WASHER BRB6,4X12FZB
	-0104			16	
190	-0101	90073-0003	-	2	CLIP
	-0102			2	
195	-0101	90089-0015	-	1	SLEEVE
	-0102			1	
270	-0101	312121-0287	-	5	SLOTTED HEMCS4X8FZB
	-0102			5	
310	-0101	352100-0122	-	1	CABLE GLANR.37-25,5
	-0102			1	
030	ALL	G- 263239	-	1	SIDE FRAME
050	ALL	38329	-	2	CHAIN RAIL, MOVABLE
060	ALL	2465	-	1	CAM
070	ALL	1881-0004	-	4	COMPRESSION SPRING

POS	VAR	PART NUMBER	SP UN	QTY	DESCRIPTION
080	ALL	1891	-	4	PLUNGER
090	ALL	1892	-	4	PIN
100	ALL	1959	-	2	RAIL
110	ALL	2477	-	4	BUSHING
115	ALL	2481	-	2	PIN
120	ALL	2483	-	4	FLANGE
130	ALL	2484	-	4	SCREW
150	ALL	2487	-	8	SPACER PIECE
155	ALL	20497	-	1	GROUP NUMBER PLATE
160	ALL	2511	-	4	FLANGE
170	ALL	266067	-	2	CHAIN RAIL, LOWER
180	ALL	266068	-	2	CHAIN RAIL, UPPER
181	ALL	266069	-	2	BRACKET
182	ALL	268076-0001	-	1	SHIM
182	ALL	268076-0002	-	1	SHIM
182	ALL	268076-0003	-	1	SHIM
200	ALL	90156-0002	- MM	1000	PLASTIC COIL
220	ALL	312101-0449	-	4	SCREW M6S8X16FZB
230	ALL	312101-0451	-	8	SCREW M6S8X20FZB
240	ALL	312101-0455	-	8	SCREW M6S8X30FZB
245	ALL	312111-0453	-	4	SCREW MC6S8X25FZB
250	ALL	312111-0455	-	2	SCREW MC6S8X30FZB
260	ALL	312111-0540	-	6	SCREW MC6S12X40FZB
280	ALL	312502-0275	-	6	DRIVE SCREKDS6X6FNB
285	ALL	315101-0165	-	4	WASHER BRB8,4X16FZB
290	ALL	315101-0178	-	6	WASHER BRB13X24FZB
300	ALL	315401-0165	-	18	WASHER FBB8,2FZB

TETRA PAK

2/8512

S-265573-1

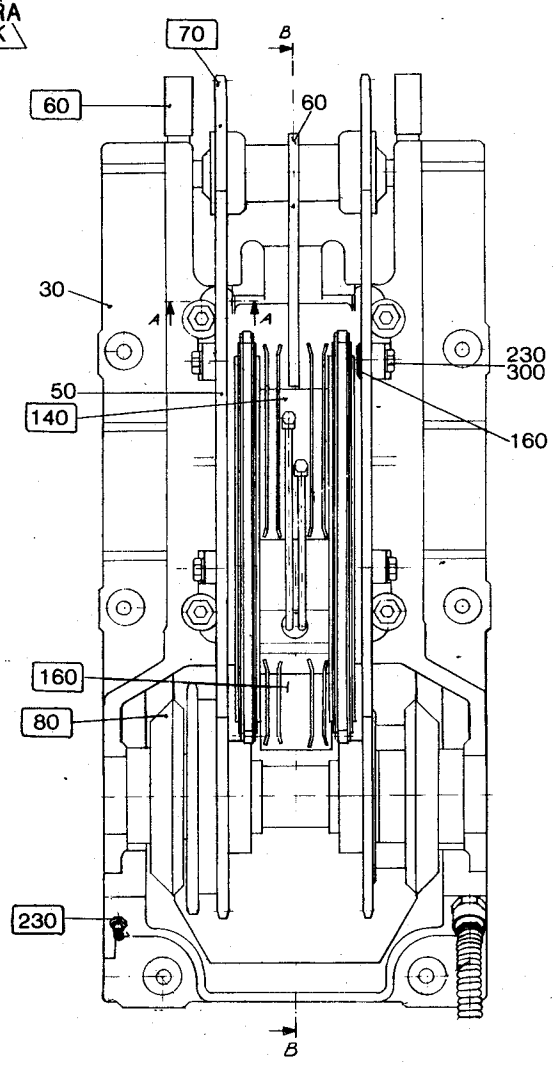

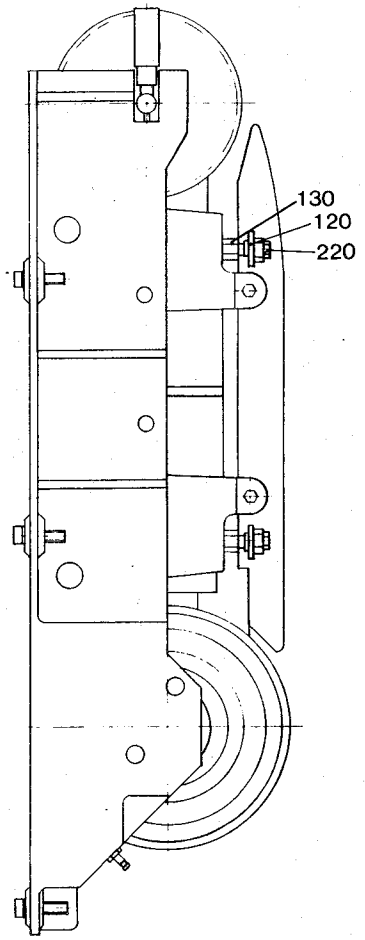

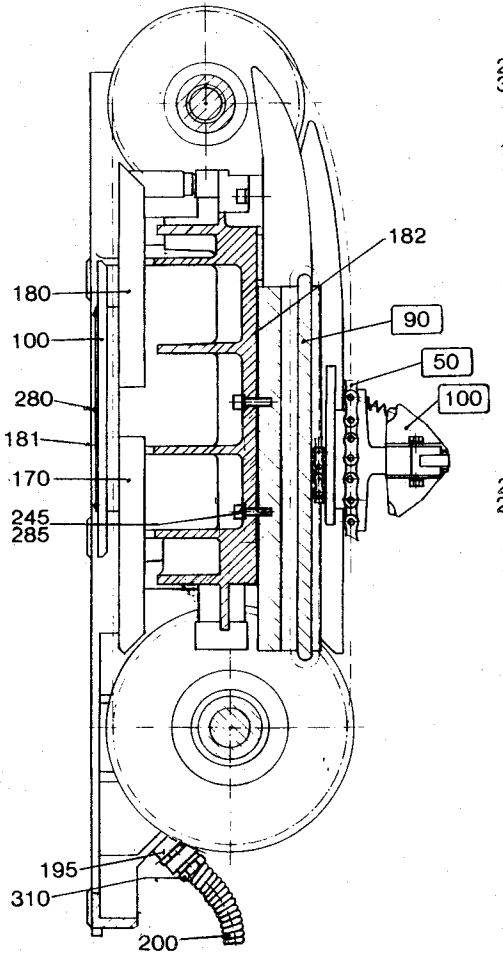

Snitt B-B

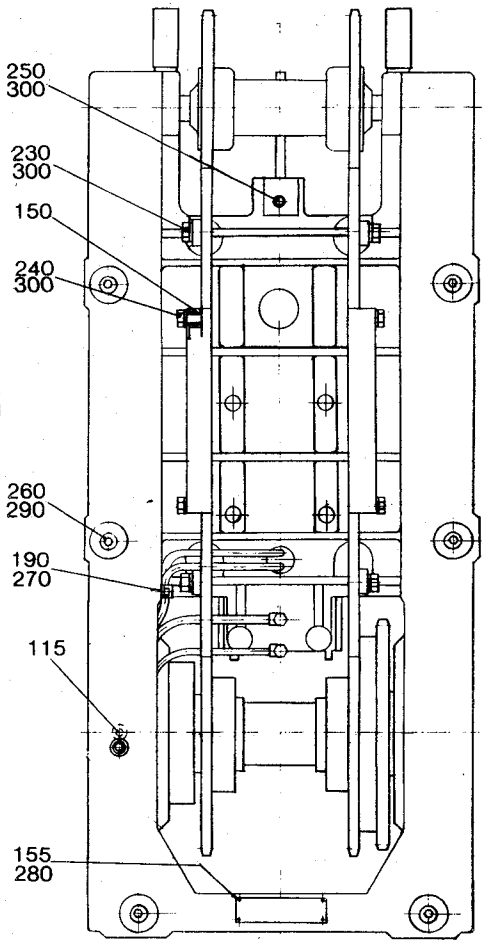

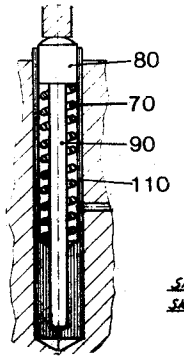

Snitt A-A
Skala 8:1

ÅM 6936

LAST ALTERATION: AM 8332 85-12-18
630303-110V 633303-060V
AM 4382
79-11-09

GROUP SEALING SYSTEM

-0101 TPC SIDE1
-0102 TPC SIDE2
-0103 IH SIDE1
-0104 IH SIDE2

POS	VAR	PART NUMBER	SP UN	QTY	DESCRIPTION
	-0101	S- 265573-SHEET	-1		===ASSEMBLY DRAWING===
	-0102		-1		
	-0103		-2		
	-0104		-2		
005	-0104	440792	C	1	CABLE IH 300ML
006	-0103	440793	C	1	CABLE IH 300ML
007	-0103	458411	C	1	HOLDER
	-0104			1	
010	-0101	10816	-	1	MARKING PLATE
	-0103			1	
011	-0103	458412	C	1	LID
	-0104			1	
015	-0103	312101-0370	-	4	SCREW M6S6X20FZB
	-0104			4	
016	-0103	312101-0374	-	4	SCREW M6S6X30FZB
	-0104			4	
020	-0101	312502-0221	-	6	DRIVE SCREKDS4X6FNB
	-0102			4	
	-0103			6	
	-0104			4	
025	-0103	315101-0153	-	16	WASHER BRB6,4X12FZB
	-0104			16	
190	-0101	90073-0003	-	2	CLIP
	-0102			2	
195	-0101	90089-0015	-	1	SLEEVE
	-0102			1	
270	-0101	312121-0287	-	5	SLOTTED HEMCS4X8FZB
	-0102			5	
310	-0101	352100-0122	-	1	CABLE GLANR.37-25,5
	-0102			1	
030	ALL	G- 263239	-	1	SIDE FRAME
050	ALL	38329	-	2	CHAIN RAIL, MOVABLE
060	ALL	2465	-	1	CAM
070	ALL	1881-0004	-	4	COMPRESSION SPRING

POS	VAR	PART NUMBER	SP UN	QTY	DESCRIPTION
080	ALL	1891	-	4	PLUNGER
090	ALL	1892	-	4	PIN
100	ALL	1959	-	2	RAIL
110	ALL	2477	-	4	BUSHING
115	ALL	2481	-	2	PIN
120	ALL	2483	-	4	FLANGE
130	ALL	2484	-	4	SCREW
150	ALL	2487	-	8	SPACER PIECE
155	ALL	20497	-	1	GROUP NUMBER PLATE
160	ALL	2511	-	4	FLANGE
170	ALL	266067	-	2	CHAIN RAIL, LOWER
180	ALL	266068	-	2	CHAIN RAIL, UPPER
181	ALL	266069	-	2	BRACKET
182	ALL	268076-0001	-	1	SHIM
182	ALL	268076-0002	-	1	SHIM
182	ALL	268076-0003	-	1	SHIM
200	ALL	90156-0002	- MM	1000	PLASTIC COIL
220	ALL	312101-0449	-	4	SCREW M6S8X16FZB
230	ALL	312101-0451	-	8	SCREW M6S8X20FZB
240	ALL	312101-0455	-	8	SCREW M6S8X30FZB
245	ALL	312111-0453	-	4	SCREW MC6S8X25FZB
250	ALL	312111-0455	-	2	SCREW MC6S8X30FZB
260	ALL	312111-0540	-	6	SCREW MC6S12X40FZB
280	ALL	312502-0275	-	6	DRIVE SCREKDS6X6FNB
285	ALL	315101-0165	-	4	WASHER BRB8,4X16FZB
290	ALL	315101-0178	-	6	WASHER BRB13X24FZB
300	ALL	315401-0165	-	18	WASHER FBB8,2FZB

TETRA PAK

1/8512

S-265573-2

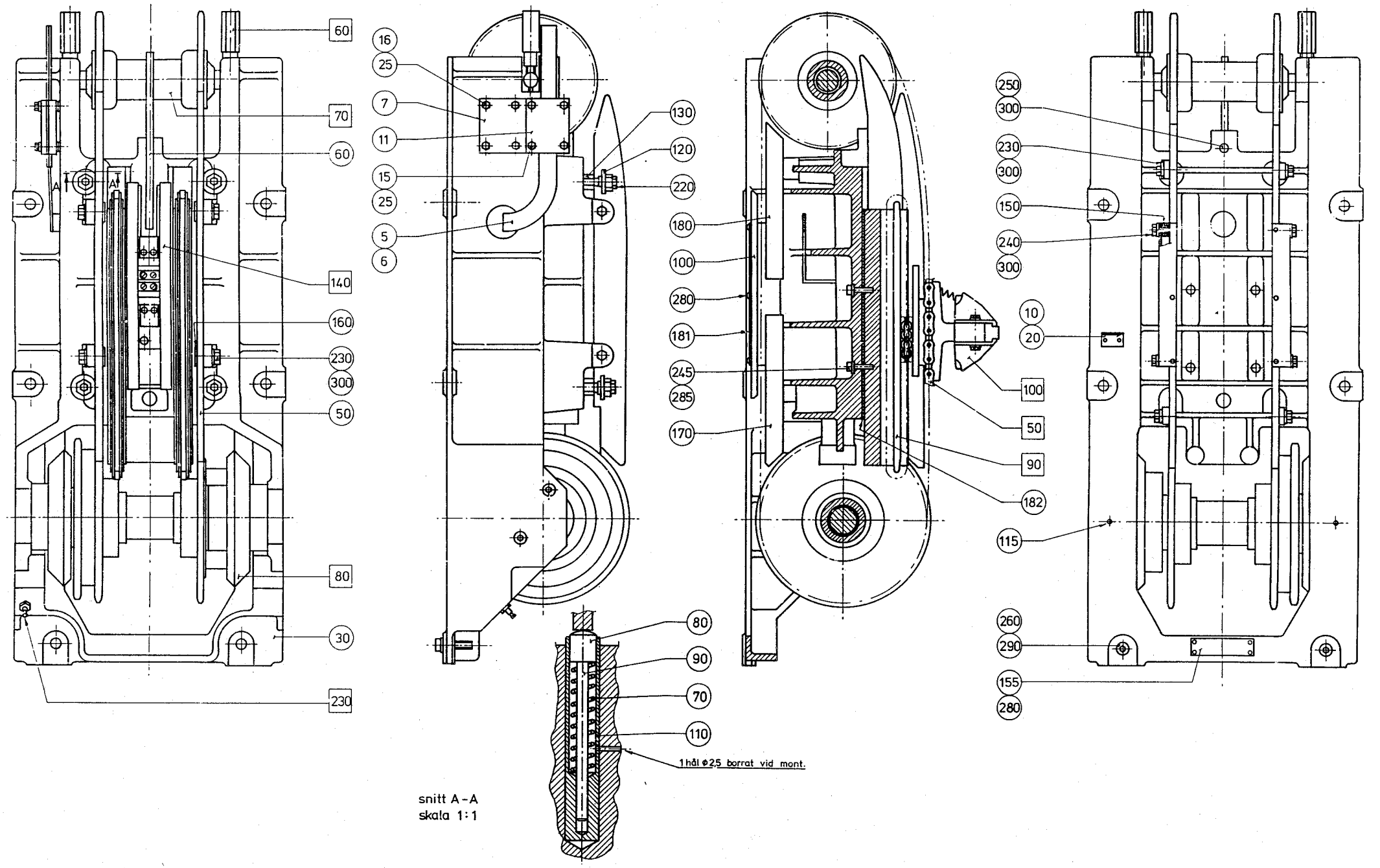

snitt A-A
skala 1:1

9M 8245

LAST ALTERATION: AM 8332 85-12-18
630303-110V 633303-060V
AM 4382
79-11-09

POS	VAR	PART NUMBER	SP UN	QTY	DESCRIPTION
	-0101	S- 265574-SHEET	-1		===ASSEMBLY DRAWING===
010	-0101	263219	-	1	SIDE FRAME
030	-0101	38329	-	2	CHAIN RAIL, MOVABLE
040	-0101	38330	-	1	YOKE
050	-0101	2465	-	1	CAM
060	-0101	263082	-	2	PLATE
070	-0101	1881-0004	-	4	COMPRESSION SPRING
080	-0101	1891	-	4	PLUNGER
090	-0101	1892	-	4	PIN
100	-0101	1959	-	2	RAIL
110	-0101	2189	-	2	SLEEVE
120	-0101	2477	-	4	BUSHING
130	-0101	2481	-	2	PIN
140	-0101	2483	-	4	FLANGE
150	-0101	2484	-	4	SCREW
160	-0101	2487	-	8	SPACER PIECE
170	-0101	2929	-	1	SHAFT
180	-0101	2930	-	1	BRACKET
190	-0101	20497	-	1	GROUP NUMBER PLATE
200	-0101	263083	-	2	LID
210	-0101	2511	-	4	FLANGE
215	-0101	266067	-	2	CHAIN RAIL, LOWER
220	-0101	266068	-	2	CHAIN RAIL, UPPER
225	-0101	266069	-	2	BRACKET
240	-0101	312101-0449	-	4	SCREW M6S8X16FZB
250	-0101	312101-0453	-	8	SCREW M6S8X25FZB
260	-0101	312101-0455	-	8	SCREW M6S8X30FZB
270	-0101	312101-0540	-	3	SCREW M6S12X40FZB
280	-0101	312111-0371	-	1	SCREW MC6S6X22FZB
290	-0101	312111-0455	-	2	SCREW MC6S8X30FZB
300	-0101	312111-0459	-	1	SCREW MC6S8X40FZB
310	-0101	312111-0540	-	6	SCREW MC6S12X40FZB
320	-0101	312115-0287	-	16	SCREW 4X8 A4 80
330	-0101	312145-0285	-	8	SLOTTED HEMFS4X6RFR
335	-0101	312145-0289	-	4	SLOTTED HEMFS4X10RFR
340	-0101	312502-0221	-	4	DRIVE SCREKDS4X6FNB
350	-0101	312502-0275	-	6	DRIVE SCREKDS6X6FNB
360	-0101	315101-0153	-	1	WASHER BRB6,4X12FZB
370	-0101	315101-0165	-	1	WASHER BRB8,4X16FZB
380	-0101	315101-0178	-	6	WASHER BRB13X24FZB
390	-0101	315401-0165	-	14	WASHER FBB8,2FZB

TETRA PAK

2/8512

S-265574-1

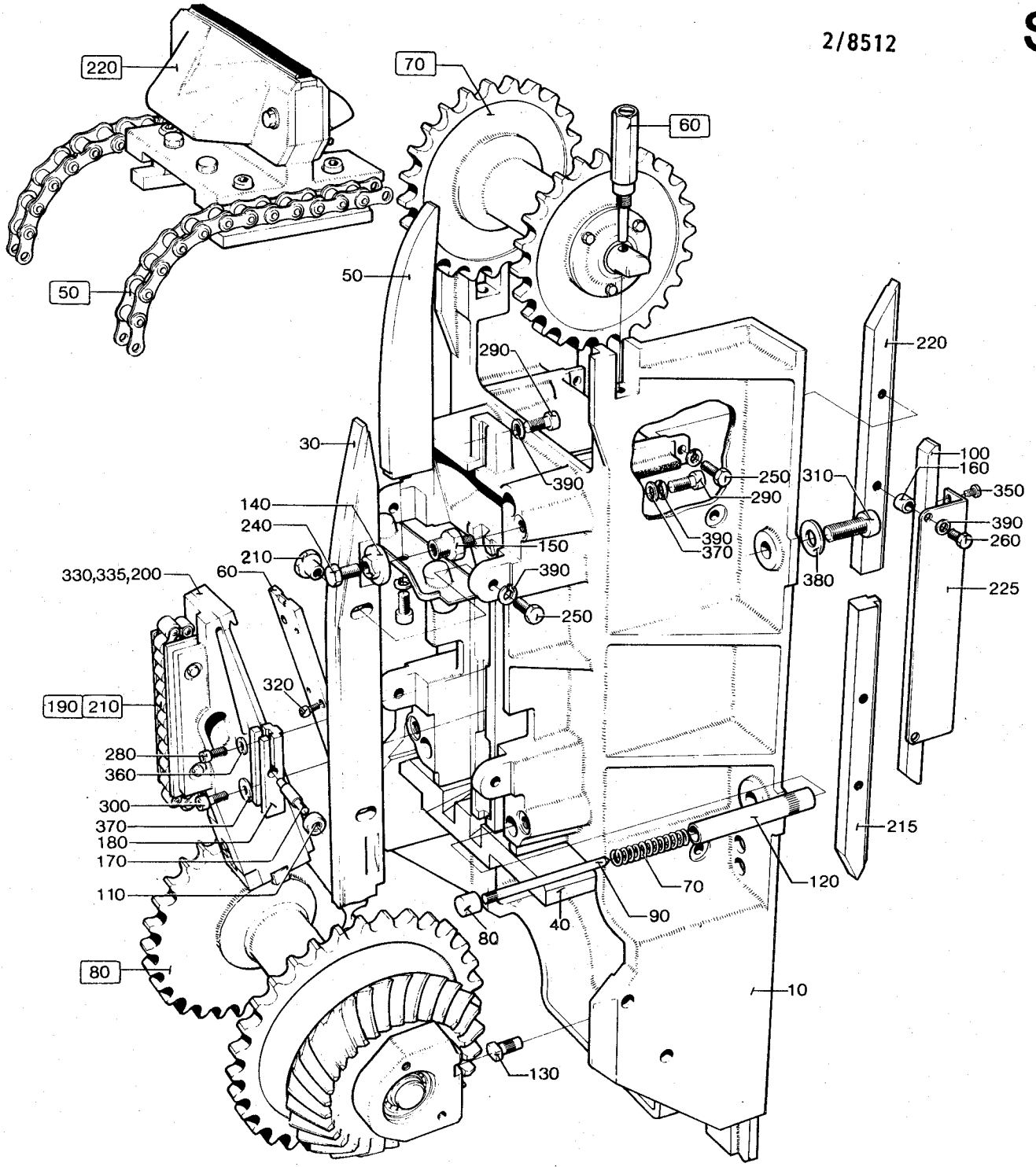

ÄM 7839

LAST ALTERATION: AM 6936 85-01-09
630303-110V 633303-060V
AM 4382
79-11-09

POS	VAR	PART NUMBER	SP	EH	QTY	DESCRIPTION
	-0101	S- 265712-SHEET	-1			===ASSEMBLY DRAWING===
010	-0101	265846	-		1	BRACKET
020	-0101	265878	-		2	BRACKET
030	-0101	259962-0002	-		1	PLATE
040	-0101	90028-0001	R		4	CONE
050	-0101	90032-0012	-		1	JUNCTION BLOCK
060	-0101	90032-0013	-		1	JUNCTION BLOCK
070	-0101	90092-0064	R		3	METERING VALVE
080	-0101	90092-0065	R		2	METERING VALVE
090	-0101	90092-0048	R		4	OIL BRUSH
100	-0101	90134-0003	-		4	BUSHING
110	-0101	90134-0033	-		1	NIPPLE
120	-0101	90134-0034	-		3	NIPPLE
130	-0101	90136-0002	-		4	PLUG
140	-0101	90165-0003	-		1	CLIP
145	-0101	90165-0005	-		1	CLIP
150	-0101	90166-0011	-	MM	700	HOSE
160	-0101	90166-0103	-	M	2	HOSE
190	-0101	312101-0325	-		2	SCREW M6S5X10FZB
200	-0101	312101-0372	-		6	SCREW M6S6X25FZB
205	-0101	312111-0327	-		1	SCREW MC6S5X12FZB
210	-0101	312121-0285	-		5	SLOTTED HEMCS4X6FZB
220	-0101	342724-0102	-		1	PIPE CONNEGI6-LRFZB

TETRA PAK

2/8512

S-265712-1

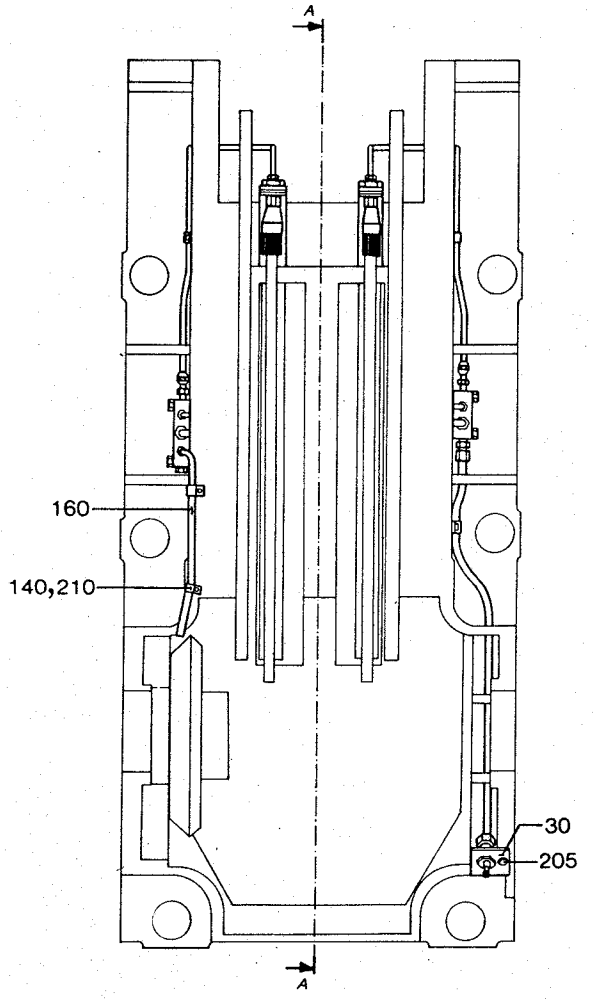

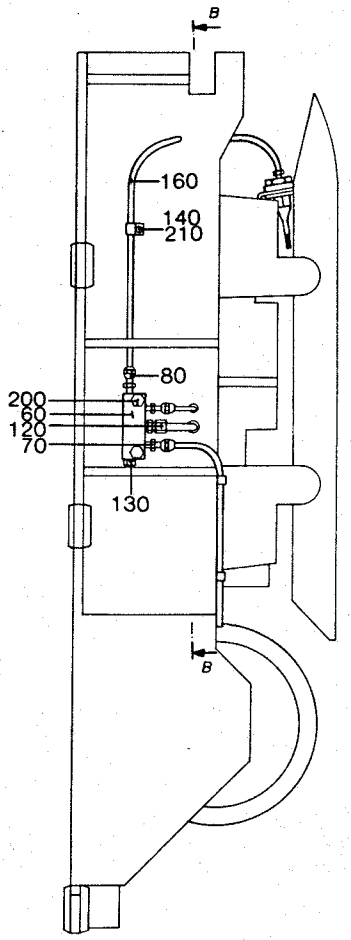

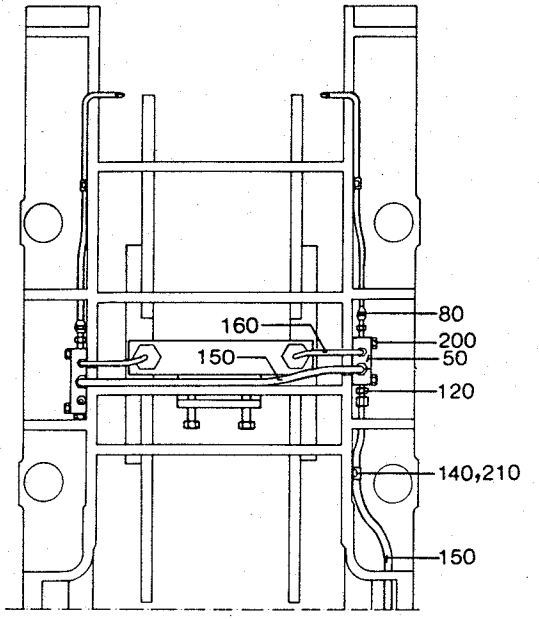

B-B

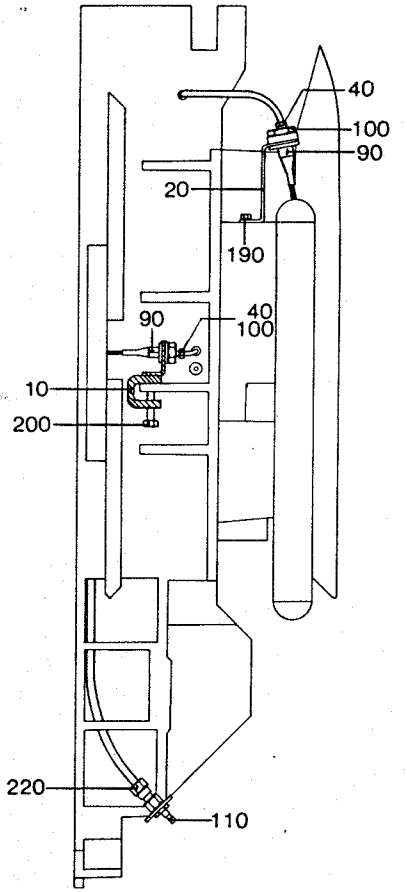

A-A

ÄM 6936

LAST ALTERATION: AM 6936 85-01-09
630303 633303
AM 4382
79-11-09

POS	VAR	PART NUMBER	SP	EH	QTY	DESCRIPTION
	-0101	S- 265713-SHEET	-1			===ASSEMBLY DRAWING===
010	-0101	265846	-		1	HOLDER
020	-0101	265876	-		1	HOLDER
025	-0101	265877	-		1	HOLDER
030	-0101	259962-0002	-		1	PLATE
040	-0101	90028-0001	R		12	SEALING CONE
050	-0101	90032-0012	-		1	JUNCTION BLOCK
060	-0101	90032-0036	-		2	JUNCTION BLOCK
070	-0101	90092-0064	R		3	METERING VALVE
080	-0101	90092-0065	R		6	METERING VALVE
090	-0101	90092-0048	R		4	OIL BRUSH
100	-0101	90134-0003	-		12	BUSHING
110	-0101	90134-0033	-		1	CLUTCH NIPPLE
120	-0101	90134-0034	-		5	NIPPLE
130	-0101	90136-0002	-		4	PLUG
150	-0101	90165-0003	-		2	CLAMP
160	-0101	90166-0011	-	MM	1500	PLASTIC PIPE
170	-0101	90166-0103	-	M	4	HOSE
200	-0101	312101-0372	-		8	SCREW M6S6X25FZB
205	-0101	312111-0327	-		1	SCREW MC6S5X12FZB
220	-0101	312121-0323	-		4	SLOTTED HEMCS5X8FZB
230	-0101	312145-0285	-		2	SLOTTED HEMFS4X6RFR
240	-0101	342724-0102	-		1	PIPE CONNEGI6-LRFZB

TETRA PAK

1/8410

S-265713-1

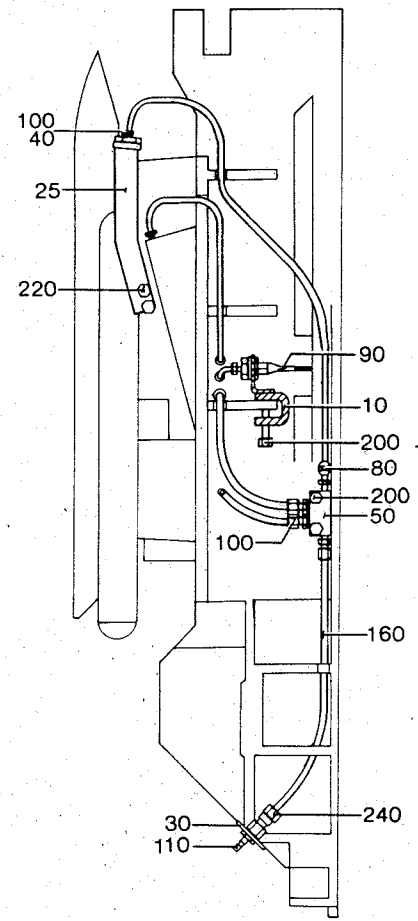

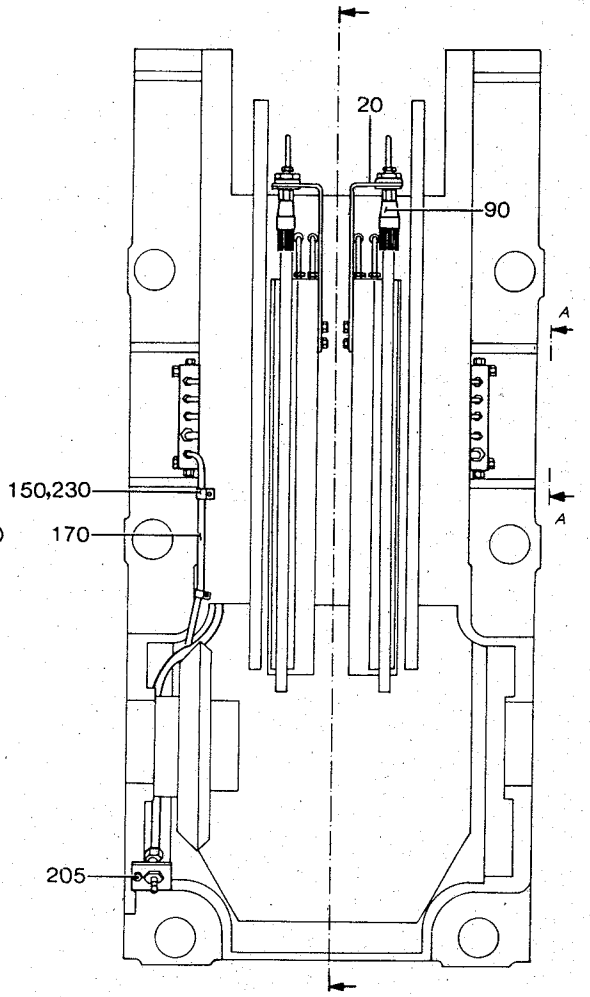

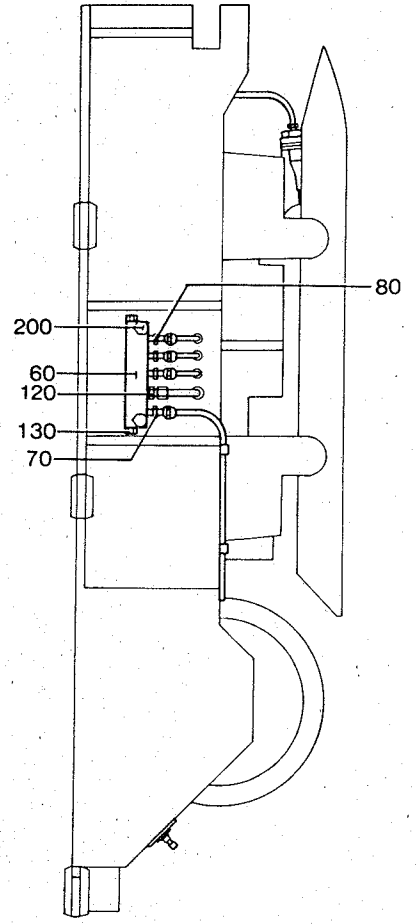

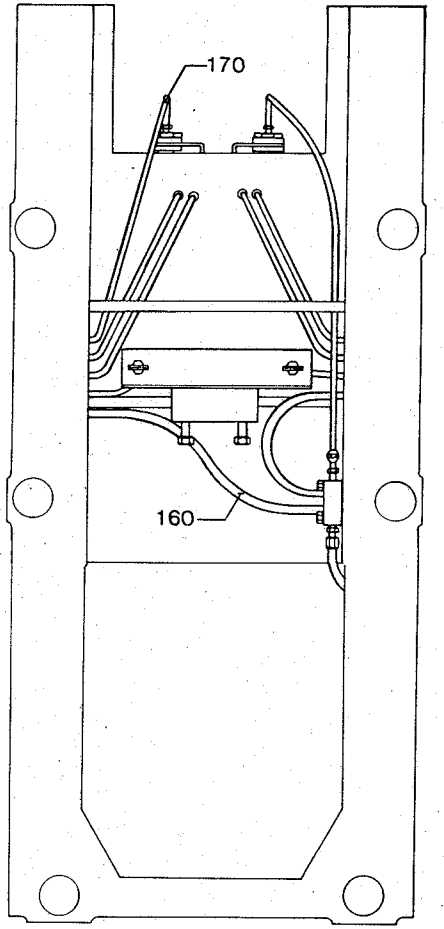

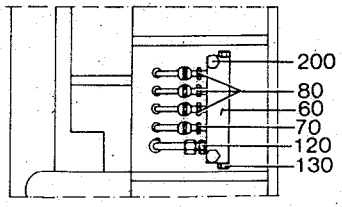

A-A

ÅH 6936

SPC 630329
MACHINE BODY

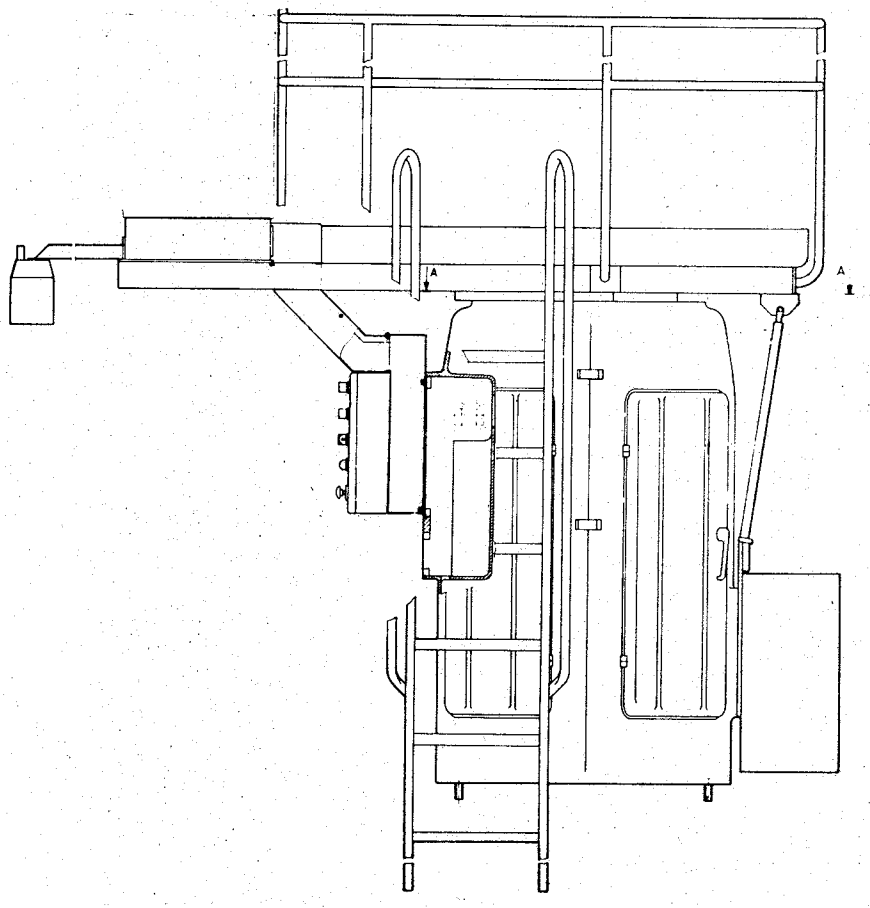

B-630304-

TETRA PAK SERVICE

LAST ALTERATION: AM 6104 83-11-23

POS	VAR	PART NUMBER	SP	EH	QTY	DESCRIPTION
F000	-1101	C- 263880-0201	-		1	MACHINE BODY
F010	-0101	C- 4330-0101	-		2	DOOR
F020	-0101	C- 4331-0101	-		2	DOOR
F030	-0101	C- 434422-0101	-		1	PLATFORM
F040	-0101	C- 436770-0101	-		1	CABLE CONNECTION
F050	-0101	C- 259404-0401	-		1	CONTROL PANEL
F060	-0101	C- 297162-0101	-		1	TERMINAL BLOCK
F080	-0101	C- 263881-0101	-		1	LADDER
F090	-0101	C- 445981-010V	-		1	AIR PIPE-LINE
F100	-0101	C- 265714-0101	-		1	CENTRAL LUBRICATION
F110	-0101	C- 265717-0101	-		1	HYDRAULIC SYSTEM
F120	-0101	C- 265711-0101	-		1	AGGREGATE
F150	-0101	C- 294214-0101	-		1	APPLIANCE BOX
F160	-0101	C- 450114-0101	-		1	TERMINAL BLOCK

TETRA PAK

1/8502

S-630304-1

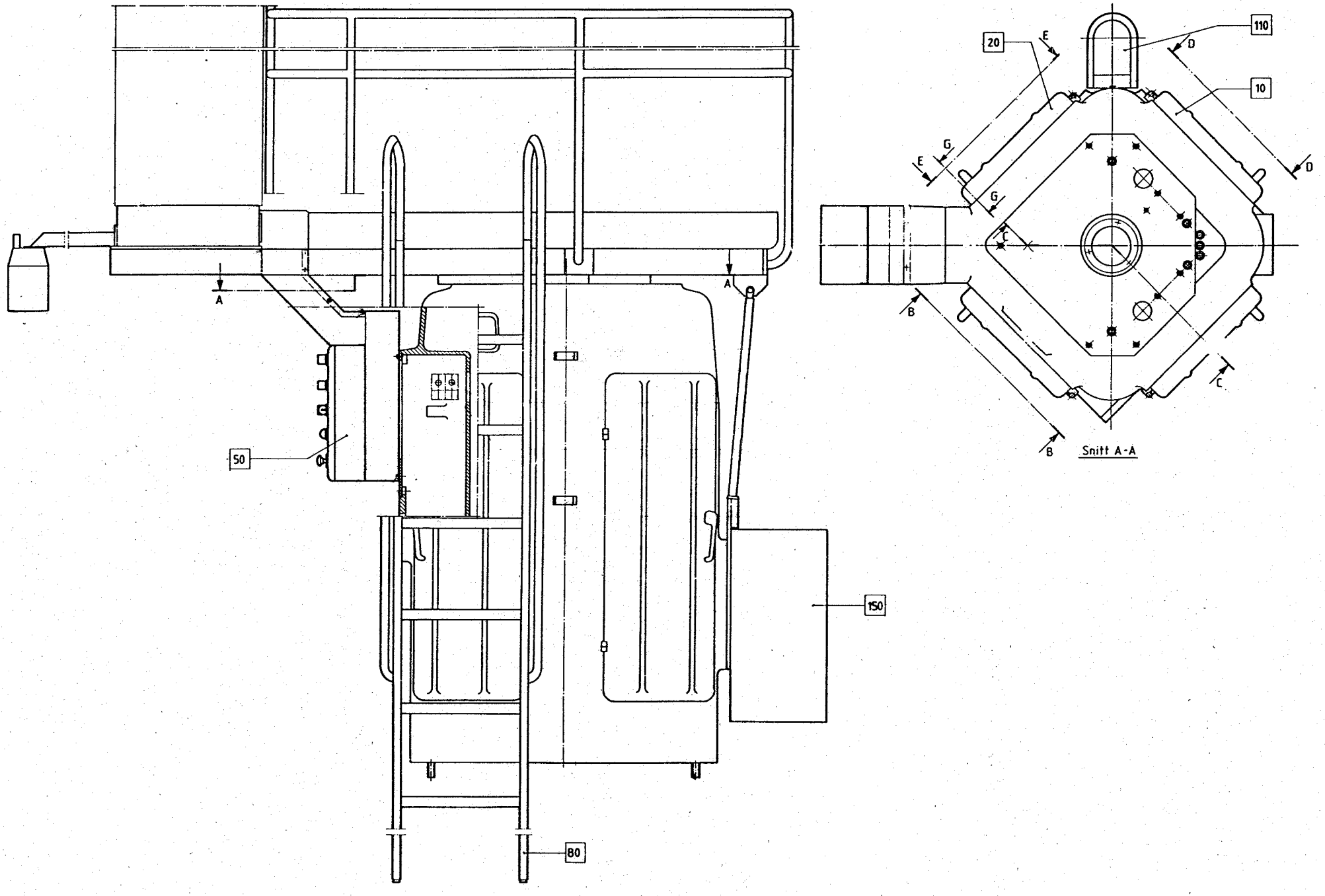

ÄM 6104

LAST ALTERATION: AM 9405 86-11-27
630222-040V

GROUP SEALING SYSTEM

-1201 TPC
-1202 IH

POS	VAR	PART NUMBER	SP UN	QTY	DESCRIPTION
F000	ALL	C- 259536-030V	-	1	MACHINE BODY
F010	ALL	C- 4574-0101	-	2	DOOR
F020	ALL	C- 4575-0101	-	2	DOOR
F030	ALL	C- 434422-0101	-	1	PLATFORM
		C- 436770-0101			. CABLE CONNECTION
F050	ALL	C- 259404-0401	-	1	CONTROL PANEL
		C- 297162-0101			. TERMINAL BLOCK
F080	ALL	C- 263881-0101	-	1	LADDER
F090	ALL	C- 445981-020V	-	1	AIR PIPE-LINE
F110	ALL	C- 266503-0101	-	1	HYDRAULIC PRESSURE SYSTEM
		C- 265711-0101			. HYDRAULIC UNIT
F130	ALL	C- 263812-0101	-	1	CENTRAL LUBRICATION
F150	ALL	C- 294214-0101	-	1	APPLIANCE BOX
		C- 450114-0101			. TERMINAL BLOCK
F170	-1202	C- 434423-0101	-	1	UNIT

LAST ALTERATION: AM 8441 85-12-13
630304-090V 633304-120V
AM 1530
66-08-04

POS	VAR	PART NUMBER	SP	UN	QTY	DESCRIPTION
	-0101	S- 4330-SHEET	-1			===ASSEMBLY DRAWING===
010	-0101	4336	-		1	DOOR
020	-0101	G- 2704	-		1	HANDLE
030	-0101	2702	-		1	LATCH
040	-0101	2703	-		1	COMPRESSION SPRING
050	-0101	3675	-		1	TETRA PAK NAME PLATE
060	-0101	5204	-		2	RUBBER STOPPER
070	-0101	90153-0002	-	ML	X	ADHESIVE
080	-0101	311307-0240	-		1	SLOTTED PIRPD3X24FZB
090	-0101	311508-0199	-		3	RIVET KN2X6ALUM.
100	-0101	312101-0327	-		2	SCREW M6S5X12FZB
110	-0101	312115-0467	-		1	SCREW MC6S8X80RFR
120	-0101	315401-0146	-		2	WASHER FBB5,1FZB

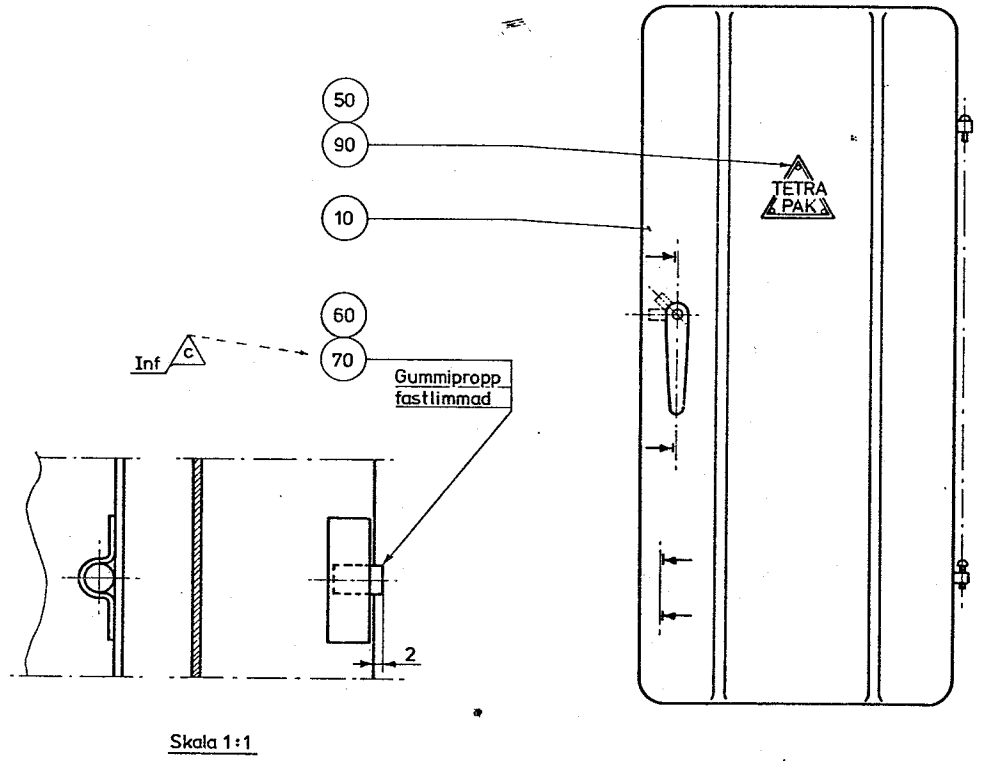

Skala 1:1

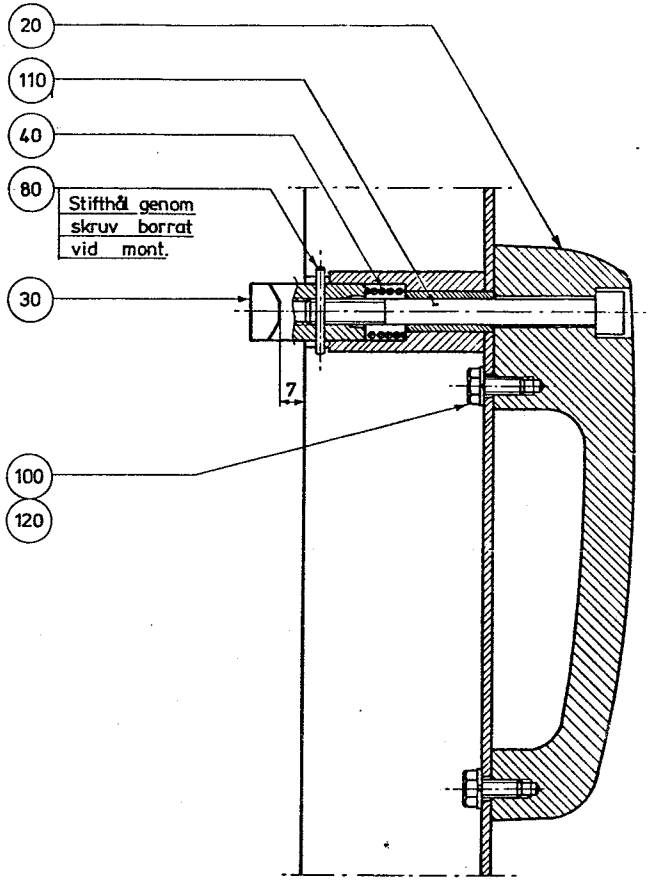

Skala 1:1

THIS DRAWING MUST NOT, WITHOUT THE CONSENT OF TETRA PAK BE COPIED, TRANSMITTED OR DISCLOSED TO ANY THIRD PARTY.

TOLERANS FÖR ICKE DIREKT TOLERANSSATTA MÅTT PÅ BEARBETADE YTOR

TOLERANCE FOR MACHINED SURFACES UNLESS OTHERWISE SPECIFIED

OVER	TO M INCL	Tol
NOM MATT		
NOM MEASURE		
	6	0.1
(6)	30	0.2
(30)	120	0.3
(120)	315	0.5
(315)	1000	0.8
(1000)	2000	1.2
(2000)	4000	2
(4000)		3

												S1-263 880	
												S1-11 127	
												TILLHÖR SNITT NR / ASSEMBLY DRG NO	MATERIAL
												PK/BÅ 5606 20	1:5 (1:1)
												RITAD DRAWN	DATUM DATE	KONTR CHD	GODK APPR	SKALA SCALE	YTBEH SK SURFACE FINISH

LAST ALTERATION: AM 8441 85-12-13
630304-090V 633304-120V
AM 1530
66-08-04

POS	VAR	PART NUMBER	SP	UN	QTY	DESCRIPTION
	-0101	S- 4331-SHEET	-1			===ASSEMBLY DRAWING===
010	-0101	4337	-		1	DOOR
020	-0101	G- 2704	-		1	HANDLE
030	-0101	2702	-		1	LATCH
040	-0101	2703	-		1	COMPRESSION SPRING
050	-0101	3675	-		1	TETRA PAK NAME PLATE
060	-0101	5204	-		2	RUBBER STOPPER
070	-0101	90153-0002	-	ML	X	ADHESIVE
080	-0101	311307-0240	-		1	SLOTTED PIRPD3X24FZB
090	-0101	311508-0199	-		3	RIVET KN2X6ALUM.
100	-0101	312101-0327	-		2	SCREW M6S5X12FZB
110	-0101	312115-0467	-		1	SCREW MC6S8X80RFR
120	-0101	315401-0146	-		2	WASHER FBB5,1FZB

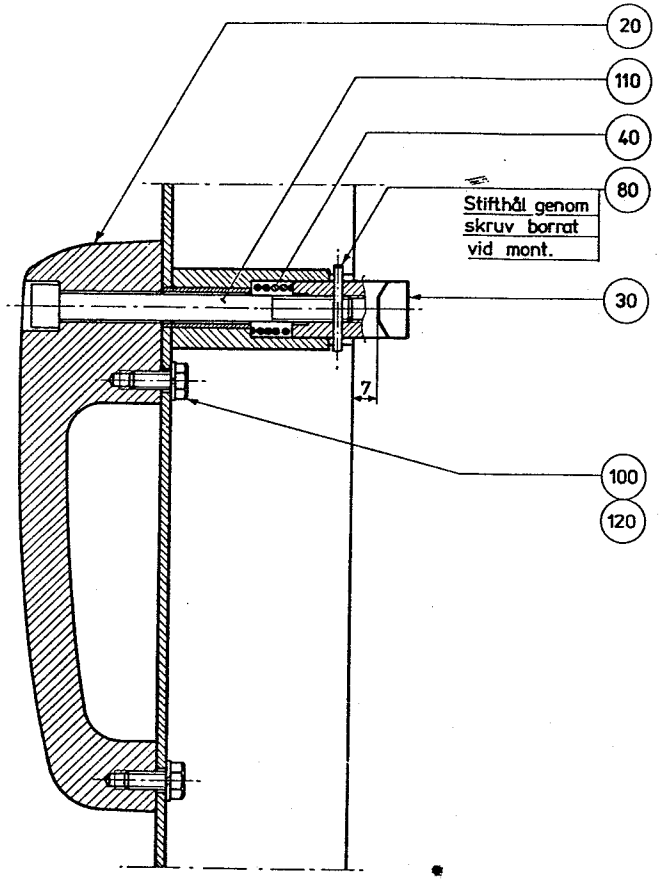

Skala 1:1

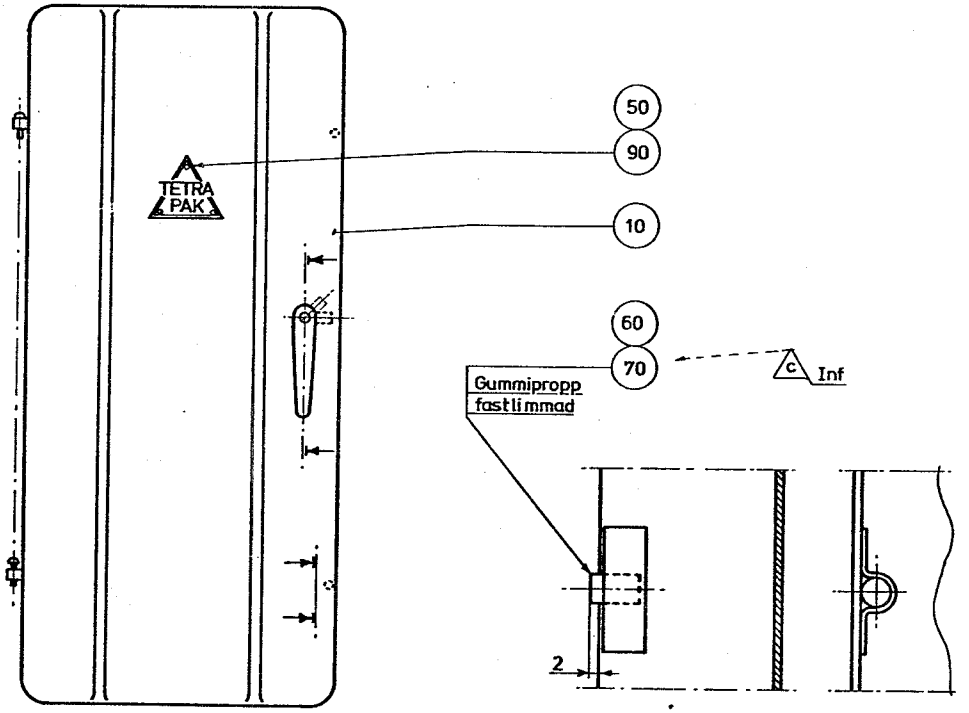

Skala 1:1

THIS DRAWING MUST NOT BE COPIED WITHOUT THE CONSENT OF TETRA PAK AND IS NOT TO BE TRANSMITTED OR DISCLOSED TO ANY THIRD PARTY

1988-01-07

													S1-263 880		
													S1-11 127		
													MATERIAL		ANMÄRKNING REMARKS
													PK/BA 560621	1:5 (1:1)	
													RITAD DRAWN	DATUM DATE	KONTR CHD.	GODK APPR.	SKALA SCALE	YTBEH. SURFACE FINISH	YTBEHANDLING TREATMENT
													TETRA PAK LUND SWEDEN	DÖRR, vänster	S2-4331-1
NOT NOTE	ÄNDRING ALTERATION	DATUM DATE	INIT BY	NOT NOTE	ÄNDRING ALTERATION	DATUM DATE	INIT BY								
				0c	Omritad ÄM8441	83 03 30	BÅ								

TOLERANS FÖR MÅTT UTAN ANGIVEN TOLERANS
TOLERANCE FOR MEASURE WITHOUT SPECIFIED TOLERANCE

MÅTT MEASURE	TOLERANS TOLERANCE
0 - 6	±0,1
6 - 30	±0,2
30 - 120	±0,3
120 - 315	±0,5
315 - 1000	±0,8
1000 - 2000	±1,2
2000 - 4000	±2
4000 - 8000	±3

LAST ALTERATION: AM 9774 87-01-12
630204-110V 630304-110V 630504-200V
AM 5719
83-05-18

POS	VAR	PART NUMBER	SP UN	QTY	DESCRIPTION
	-0401	S- 259404-SHEET	-2		===ASSEMBLY DRAWING===
F060	-0401	C- 297162-0101	-	1	TERMINAL BLOCK
010	-0401	297161	-	1	CONNECTION BOX
020	-0401	90036-0011	-	2	BULB
030	-0401	90064-0041	-	4	PUSH BUTTON
		90064-0306	S	0	* GUARD
		90064-0309	S	0	* GASKET
040	-0401	90064-0052	-	1	PUSH BUTTON
050	-0401	90064-0054	-	3	PUSH BUTTON
		90064-0306	S	0	* GUARD
		90064-0309	S	0	* GASKET
060	-0401	90111-0064	-	1	SWITCH
070	-0401	90124-0008	-	4	SIGNALLAMP
080	-0401	311520-0429	-	24	BLANK RIVE3,2X7,4
090	-0401	312121-0287	-	2	SLOTTED HEMCS4X8FZB
100	-0401	312121-0378	-	4	SLOTTED HEMCS6X40FZB
110	-0401	312141-0293	-	4	SLOTTED HEMFS4X16FZB
120	-0401	312601-0312	-	4	NUT M6M4FZB
130	-0401	315101-0136	-	4	WASHER BRB4,3X8FZB
140	-0401	352103-0106	-	2	CABLE GLANR.18,6/5-10
150	-0401	352103-0116	-	1	CABLE GLANR.28,3/13-18
160	-0401	359240-0100	-	12	SIGN HOLDER

TETRA PAK

2/8502

S-259404-2

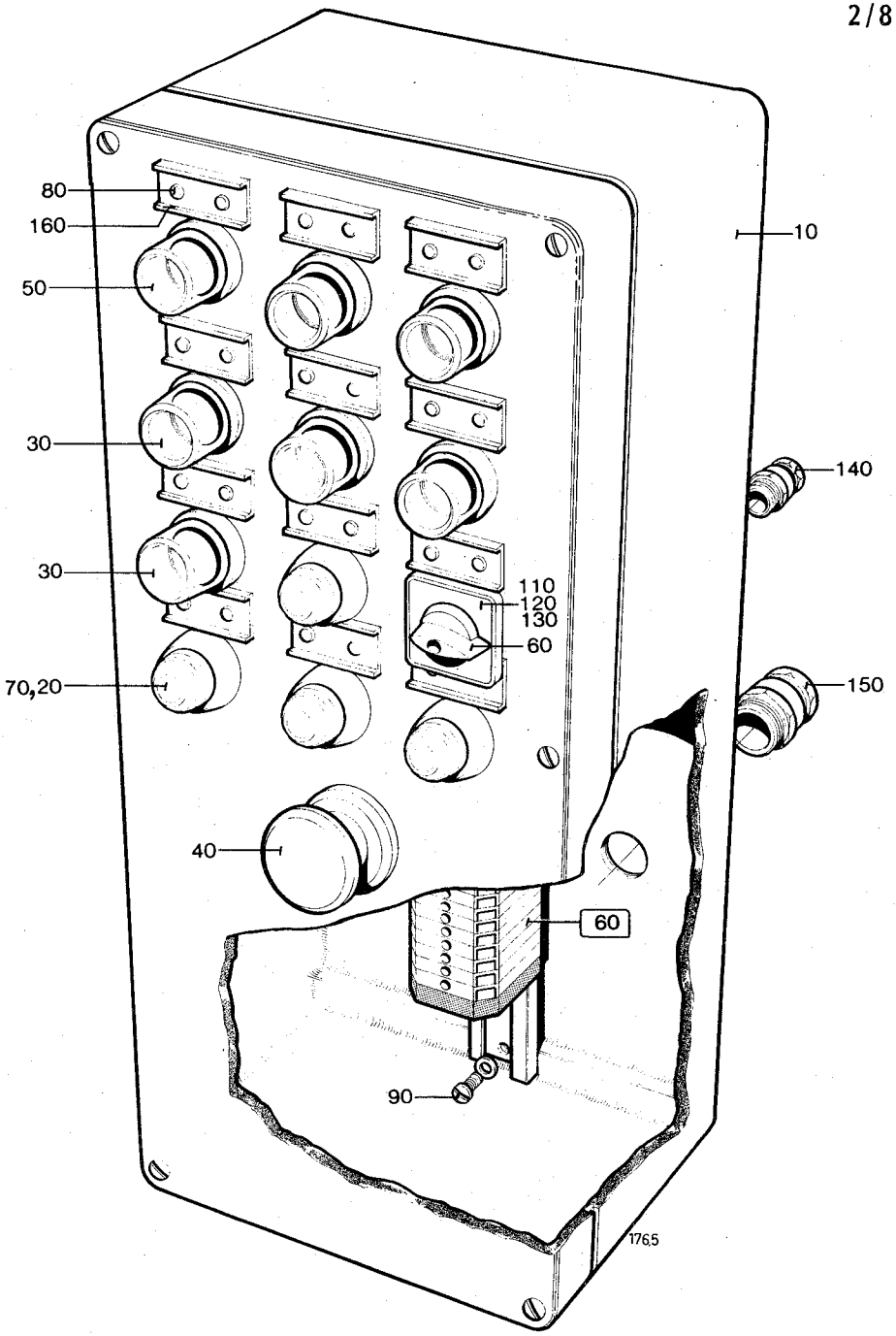

ÄM 6936

LAST ALTERATION: AM 9774 87-01-12
630304-110V
AM 6104
83-11-23

POS	VAR	PART NUMBER	SP UN	QTY	DESCRIPTION
	-0201	S- 263880-SHEET	-2		===ASSEMBLY DRAWING===
010	-0201	G- 263192	-	1	MACHINE BODY
020	-0201	445518	-	1	CABLE DUCT
030	-0201	243819	-	1	PLATE
040	-0201	265952	-	1	BRACKET
050	-0201	236651	-	1	PLATE
060	-0201	445711	-	1	PLATE
070	-0201	445760	-	1	COVER
080	-0201	445761	-	1	CABLE DUCT
090	-0201	2612-0001	-	12	WASHER
090	-0201	2612-0002	-	12	WASHER
090	-0201	2612-0003	-	12	WASHER
090	-0201	2612-0004	-	12	WASHER
100	-0201	2613	-	12	SCREW
110	-0201	2975	-	1	RING
120	-0201	7099-0004	-	1	PIPE HOLDER
130	-0201	7099-0005	-	1	PIPE HOLDER
140	-0201	11174	-	8	HINGE
150	-0201	20497	-	1	GROUP NUMBER PLATE
160	-0201	111602	-	4	SPACER
170	-0201	445712	-	1	ROPE
180	-0201	445713	-	1	PROTECTION PIPE
190	-0201	90110-0061	-	16	CONTACT PIN
200	-0201	90110-0063	-	8	CONTACT HOUSING
210	-0201	90110-0064	-	8	CONTACT HOUSING
220	-0201	311305-0310	-	12	SLOTTED PIRPC5X20FZB
230	-0201	312101-0447	-	4	SCREW M6S8X12FZB
235	-0201	312101-0554	-	5	SCREW M6S12X110FZB
240	-0201	312111-0366	-	16	SCREW MC6S6X12FZB
245	-0201	312111-0465	-	2	SCREW MC6S8X70FZB
250	-0201	312111-0546	-	5	SCREW MC6S12X70FZB
260	-0201	312111-0630	-	4	SCREW MC6S16X50FZB
270	-0201	312121-0299	-	4	SLOTTED HEMCS4X30FZB
280	-0201	312121-0366	-	6	SLOTTED HEMCS6X12FZB
300	-0201	312125-0370	-	4	SLOTTED HEMCS6X20RFR
310	-0201	312165-0329	-	3	SLOTTED HEMKFS5X16RFR
320	-0201	312165-0368	-	2	SLOTTED HEMKFS6X16RFR
330	-0201	312502-0221	-	4	DRIVE SCREKDS4X6FNB
340	-0201	312503-0336	-	6	DRIVE SCRERXKB8X6,5FZB
350	-0201	312601-0316	-	2	NUT M6M6FZB
360	-0201	312810-0322	-	5	LOCK NUT 12FZB
370	-0201	312810-0324	-	1	LOCK NUT 16FZB
380	-0201	315101-0153	-	10	WASHER BRB6,4X12FZB

POS	VAR	PART NUMBER	SP UN	QTY	DESCRIPTION
390	-0201	315101-0165	-	6	WASHER BRB8,4X16FZB
400	-0201	315101-0186	-	6	WASHER BRB17X30FZB
410	-0201	315121-0178	-	10	WASHER TBRSB13X36FZB
420	-0201	352101-0103	-	15	LEAD-IN G 18,6

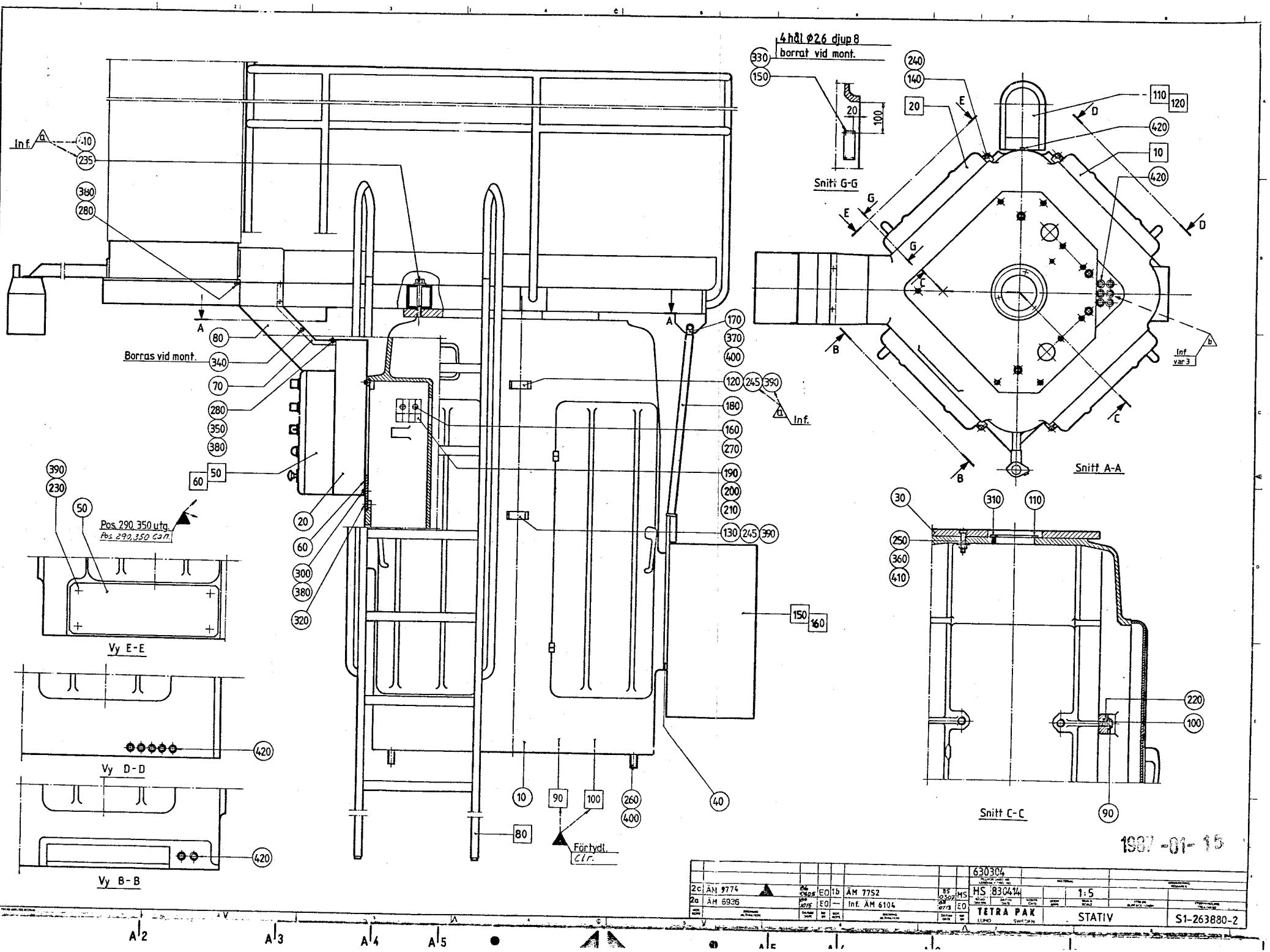

2c	ÄM 9774		EO	1b	ÄM 7752		MS	630304	
2a	ÄM 6936		EO	—	Inf. ÄM 6104		EO	HS 830414	1:5
								TETRA PAK LUND SWEDEN	STATIV S1-263880-2

1987 -01- 15

LAST ALTERATION: AM 5976 83-09-08
630204 630304 630504 633202 633302 633502
AM 4381
79-11-08

GROUP	FILLMACHINE	FILLMACHINE
-0101	HT150	T300
-0102	HT500	-
-0103	HT500	-
-0104	AT150	AT300
-0105	AT500	-

POS	VAR	PART NUMBER	SP	EH	QTY	DESCRIPTION	
	-0101	S- 263881-SHEET	-1			===ASSEMBLY DRAWING===	
	-0102		-1				
	-0103		-1				
	-0104		-1				
	-0105		-1				
010	-0101	263879-0001	-		1	SIDE PIECE	
010	-0102	263879-0003	-		1	SIDE PIECE	
010	-0103	263879-0005	-		1	SIDE PIECE	
010	-0104	263879-0007	-		1	SIDE PIECE	
010	-0105	263879-0009	-		1	SIDE PIECE	
020	-0101	263879-0002	-		1	SIDE PIECE	
020	-0102	263879-0004	-		1	SIDE PIECE	
020	-0103	263879-0006	-		1	SIDE PIECE	
020	-0104	263879-0008	-		1	SIDE PIECE	
020	-0105	263879-0010	-		1	SIDE PIECE	
030	-0101	208361-0001	-		7	STEP	
	-0102				7		
	-0103				8		
	-0104				10		
	-0105				12		
040	-0101	208658-0001	-		28	DISTANCE	
	-0102				28		
	-0103				32		
	-0104				40		
	-0105				48		
050	-0101	90287-0056	-		28	SCREW	
	-0102				28		
	-0103				32		
	-0104				40		
	-0105				48		
060	ALL	312104-0501	-		2	SCREW	M6S10X50HFZB
070	ALL	312601-0320	-		2	NUT	M6M10FZB

TETRA PAK

1/8307

S-263881-1

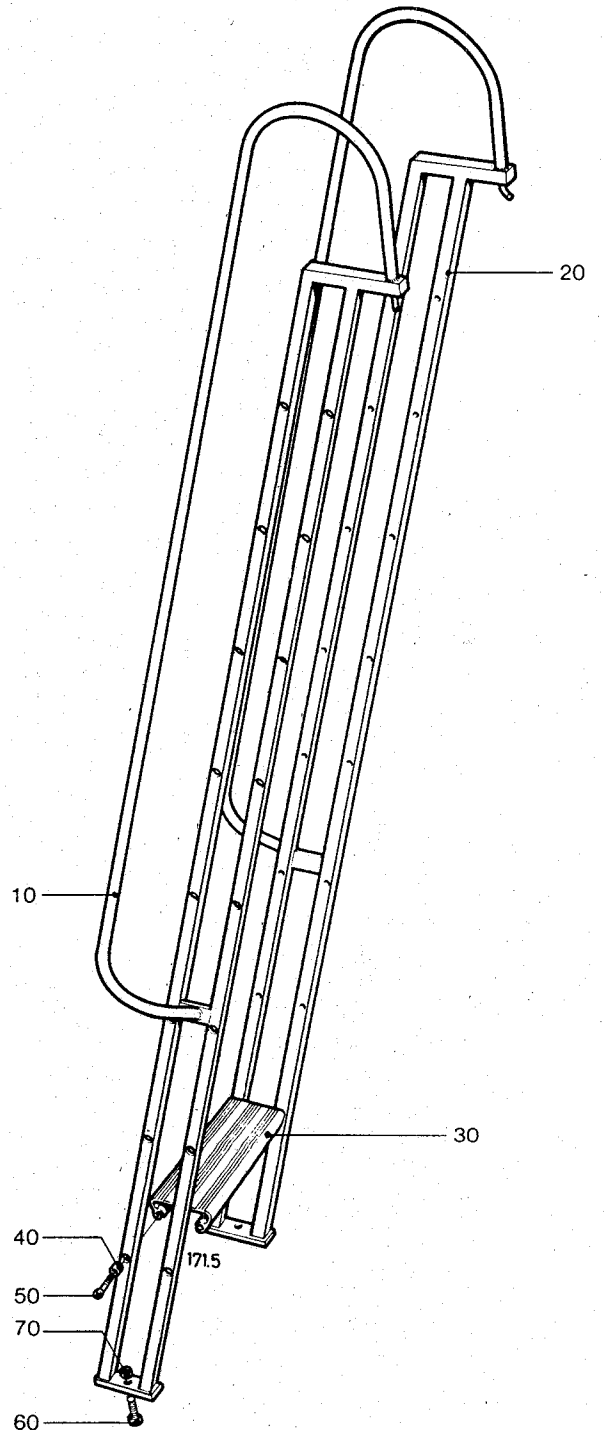

ÄH 5976

LAST ALTERATION: AM 8441 85-12-13
255160-010V 265717-010V 266503-010V 532160-010V
AM 4401
79-10-18

POS	VAR	PART NUMBER	SP UN	QTY	DESCRIPTION	
	-0101	S- 265711-SHEET	-1		===ASSEMBLY DRAWING===	
010	-0101	263973	-	1	COVER	
020	-0101	90321-0023	-	1	AGGREGAT	
030	-0101	312101-0451	-	4	SCREW	M6S8X20FZB
040	-0101	315101-0165	-	4	WASHER	BRB8,4X16FZB

TETRA PAK

1/8408

S-265711-1

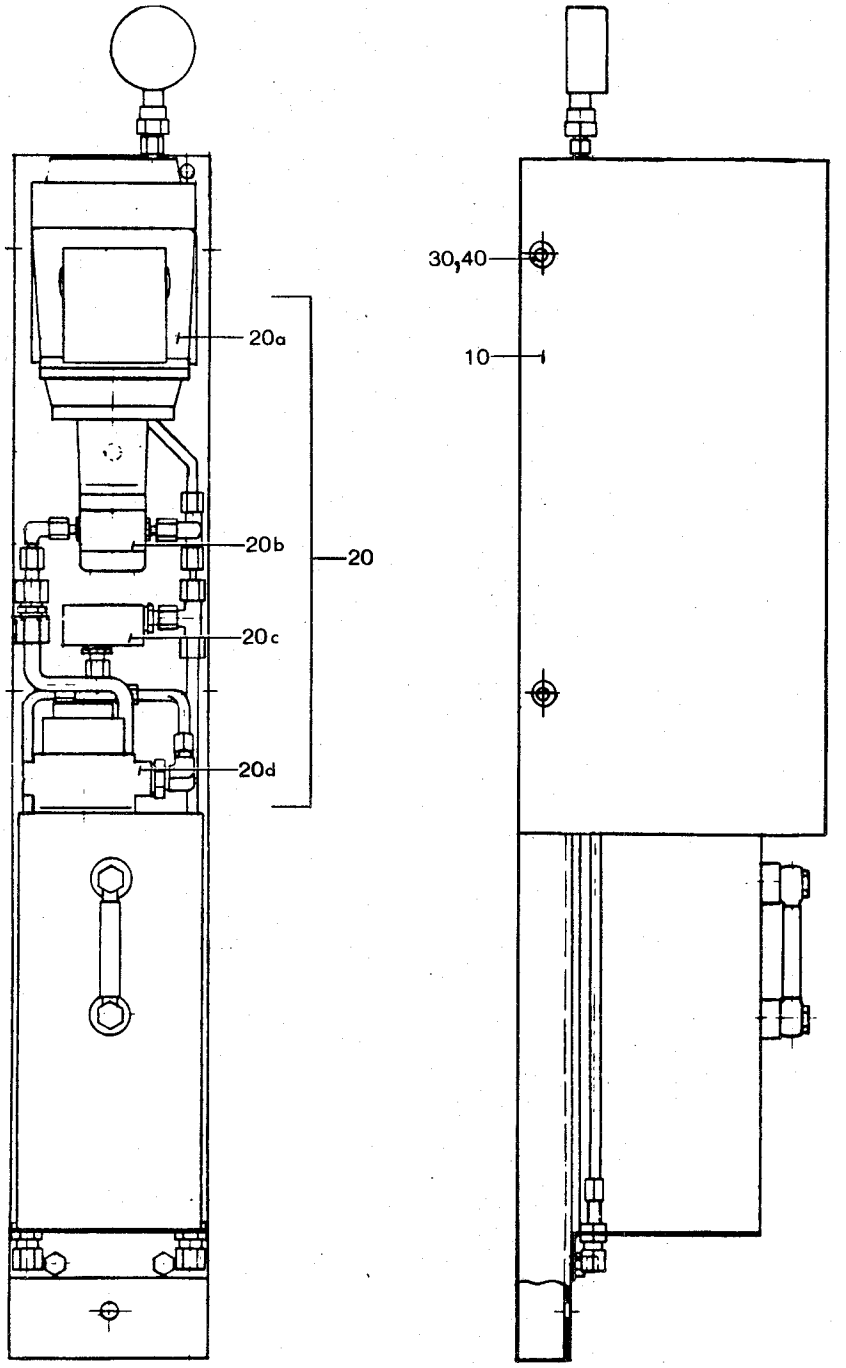

ÄM 4401

LAST ALTERATION: AM 4554 80-08-14
630304 633304
AM 4381
79-11-08

POS	VAR	PART NUMBER	SP	EH	QTY	DESCRIPTION
	-0101	S- 265714-SHEET -1				===ASSEMBLY DRAWING===
005	-0101	268022	-		4	ANGLE BRACKET
010	-0101	90032-0012	-		3	JUNCTION BLOCK
020	-0101	90032-0013	-		1	JUNCTION BLOCK
030	-0101	90092-0064	R		3	METERING VALVE
040	-0101	90134-0032	-		4	QUICK RELEASE COUPLING
050	-0101	90134-0034	-		13	NIPPLE
060	-0101	90136-0002	-		1	PLUG
070	-0101	90165-0005	-		3	CLIP
080	-0101	90166-0011	-	MM	3500	PLASTIC PIPE
095	-0101	312101-0368	-		8	SCREW M6S6X16FZB
100	-0101	312101-0372	-		8	SCREW M6S6X25FZB
110	-0101	312121-0285	-		3	SLOTTED HEMCS4X6FZB

TETRA PAK

1/8410

S-265714-1

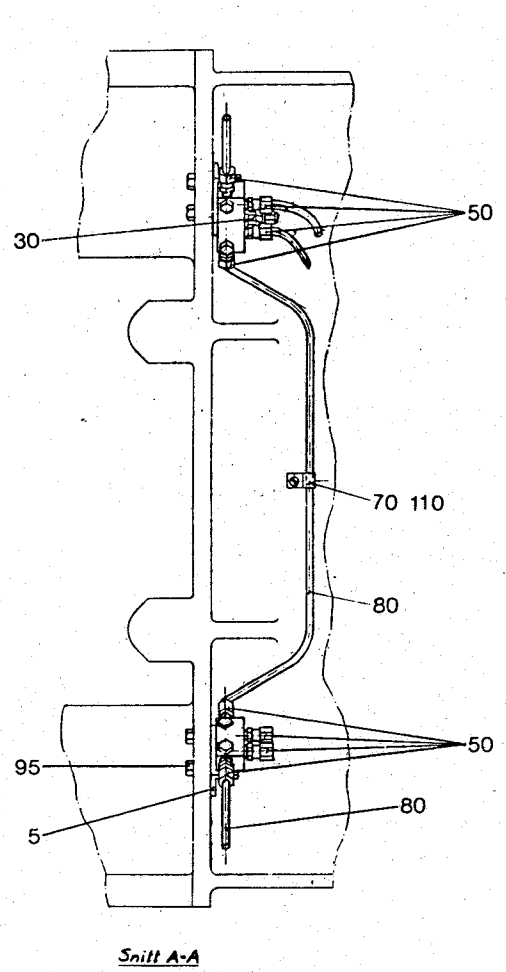

Snitt A-A

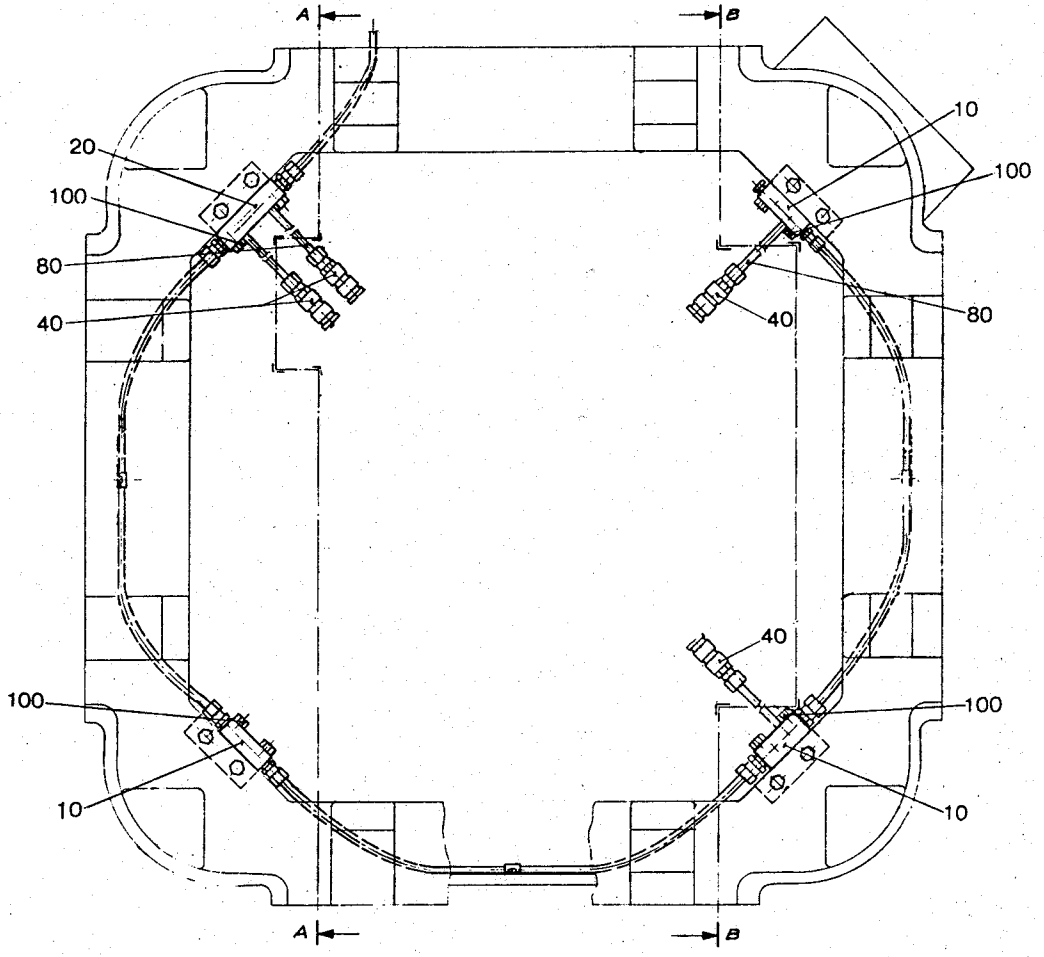

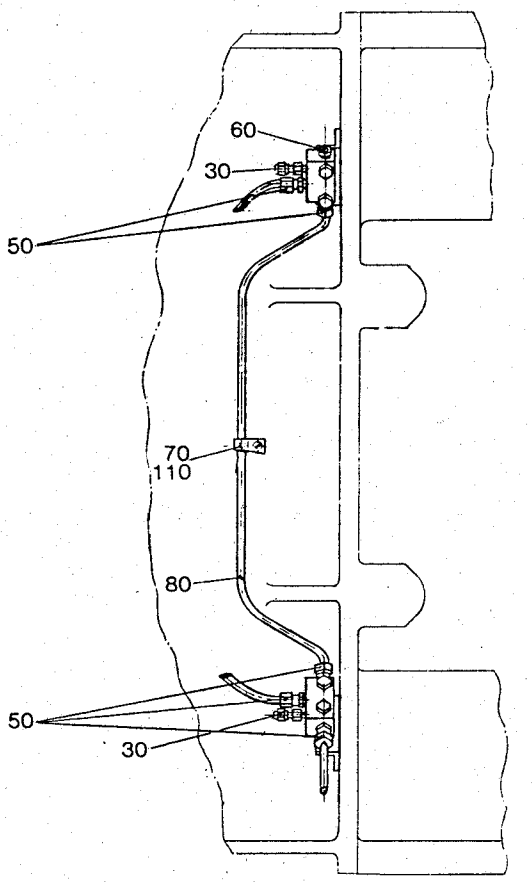

Snitt B-B

AM 4554

LAST ALTERATION: AM 7840 85-10-15
630304-090V 633304-120V
AM 4381
79-11-08

POS	VAR	PART NUMBER	SP	EH	QTY	DESCRIPTION
	-0101	S- 265717-SHEET	-1			===ASSEMBLY DRAWING===
F120	-0101	C- 265711-0101	-		1	HYDRAULIC UNIT
010	-	283817	-		1	PIPE
020	-	259961	-		4	BRACKET
025	-	265879	-		1	PIPE
030	-	266044	-		2	CONNECTION PIPE
035	-	259962-0001	-		2	PLATE
037	-	284116	-		4	CLAMP
040	-	90030-0125	-		2	PIE CONNECTION
060	-	90055-0056	-		17	HOSE COUPLING
070	-	90055-0057	-		9	HOSE COUPLING
080	-	90055-0058	-		7	HOSE COUPLING
090	-	90074-0001	-		4	CLIP
110	-	90148-0010	-	MM	1840	HOSE
120	-	90148-0010	-	MM	430	HOSE
130	-	90148-0010	-	MM	370	HOSE
140	-	90148-0010	-	MM	340	HOSE
150	-	90148-0010	-	MM	870	HOSE
160	-	90148-0010	-	MM	1460	HOSE
170	-	90148-0010	-	MM	3000	HOSE
180	-	90163-0043	-		3	CONNECTION
190	-	90163-0044	-		6	CONNECTION
200	-	90165-0013	-		1	CLIP
210	-	312101-0327	-		4	SCREW M6S5X12FZB
215	-	312111-0327	-		18	SCREW MC6S5X12FZB
218	-	312121-0220	-		1	SLOTTED HEMCS3X6FZB
220	-	312121-0323	-		4	SLOTTED HEMCS5X8FZB
230	-	312301-0544	-		2	STUD BOLT PS12X60FZB
240	-	312601-0322	-		3	NUT M6M12FZB
250	-	342727-0103	-		1	PIPE CONNEG8-LFZB
260	-	342737-0103	-		1	ELBOW COUP W8-LFZB
270	-	352101-0103	-		1	LEAD-IN G 18,6

TETRA PAK

2/8512

S-265717-1

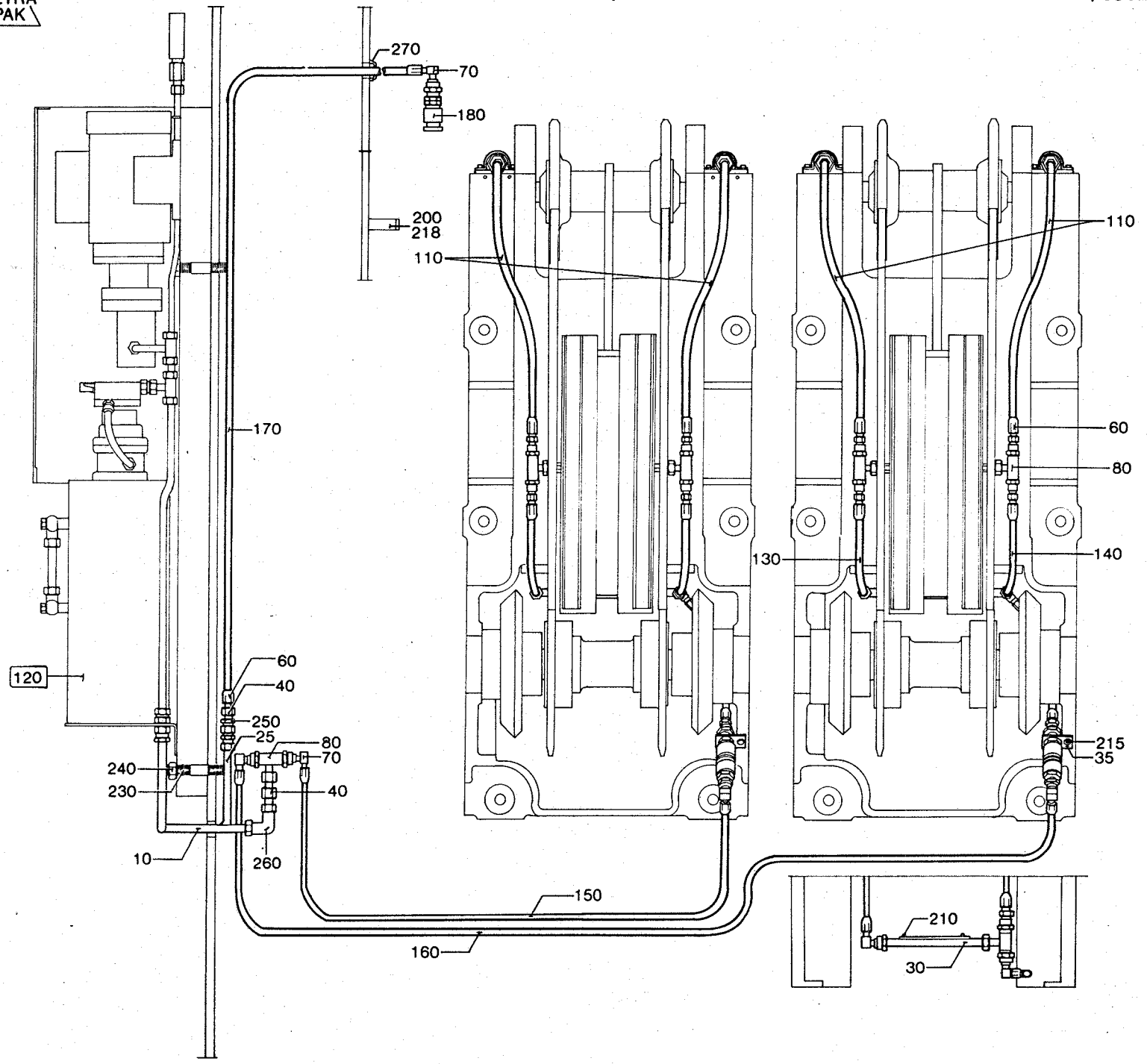

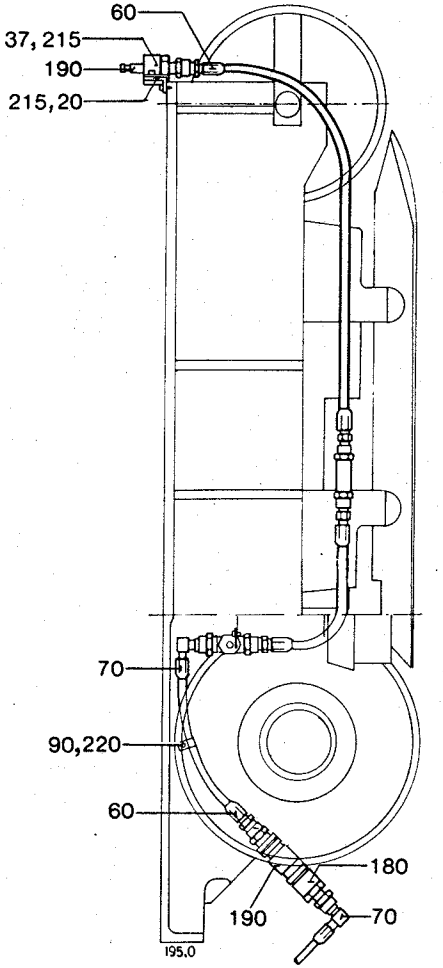

ÄM 7840

LAST ALTERATION: AM 10977 87-11-03
630204-110V 630234-010V 630304-110V 630504-200V 633004-170V
633204-180V 633304-120V 633504-220V
AM 5719
83-05-18

GROUP	FILLMACHINE	FILLMACHINE	FILLMACHINE	MACHINE CONTROL
-0101	TS/150	TS/300	-	RELAY
	TSA/150	TSA/300	TSA/500	RELAY
-0102	TSA/25	-	-	RELAY
-0103	TS/150	TS/155	TS/300	TPMC
	TSA/150	TSA/500	TSA/300	TPMC

POS	VAR	PART NUMBER	SP	UN	QTY	DESCRIPTION
	-0101	S- 294214-SHEET	-1			===ASSEMBLY DRAWING===
	-0102		-1			
	-0103		-1			
F160	ALL	C- 450114-0101	-		1	TERMINAL BLOCK
F200	-0102	C- 21675-010V	-		1	LEG
010	-0101	G- 436613	-		1	BOX
	-0103				1	
010	-0102	G- 493543	-		1	BOX
080	-0101	312101-0540	-		4	SCREW M6S12X40FZB
	-0103				4	
120	-0101	315101-0178	-		4	WASHER BRB13X24FZB
	-0103				4	
160	-0101	352103-0110	-		6	CABLE GLANR.22,5/4-13
	-0102				6	
160	-0103	352136-0129	-		4	GLAND
020	ALL	436614	-		1	COVER
030	ALL	21613	-		5	SCREW
035	ALL	90002-0004	-		3	PLUG
036	ALL	90002-0009	-		15	BLANK-OFF PLUG
037	ALL	90002-0013	-		4	BLANK-OFF PLUG
040	ALL	90077-0310	-		2	BRACKET
050	ALL	90143-0012	-	MM	1400	STRIP
090	ALL	312121-0366	-		6	SLOTTED HEMCS6X12FZB
100	ALL	312122-0364	-		1	SLOTTED HEMCS6X10MSGFN
110	ALL	315101-0153	-		6	WASHER BRB6,4X12FZB
130	ALL	351175-0106	-	MM	80	CABLE
140	ALL	352103-0100	-		4	CABLE GLANR.15,2/2-6
150	ALL	352103-0106	-		26	CABLE GLANR.18,6/5-10
170	ALL	353101-0153	-		1	CABLE SHOEYAE 10 M 64

TETRA PAK

1/8307

S-294214-1

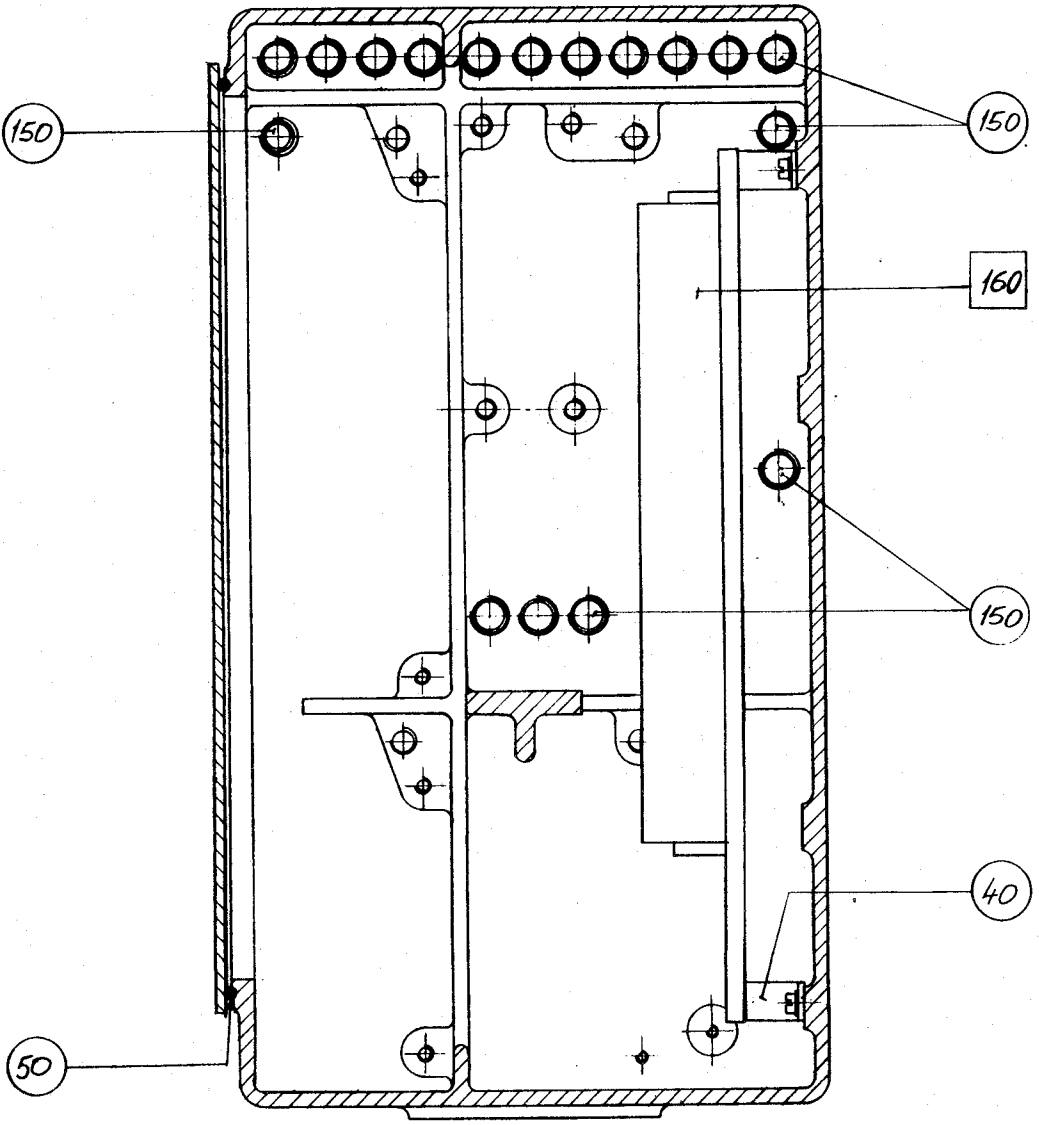

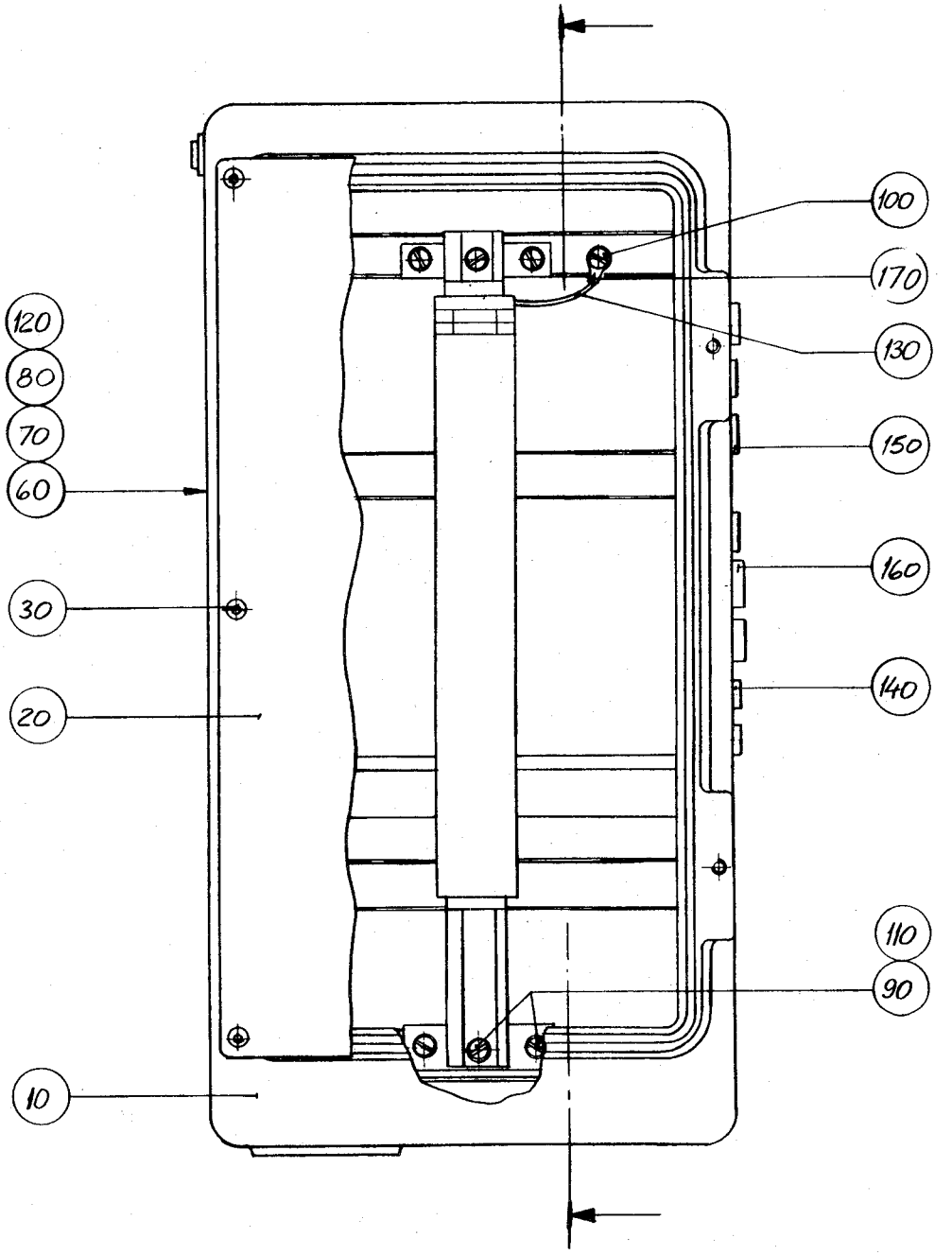

ÄM 6104

LAST ALTERATION: AM 5719 83-05-18
259404 630204 630304 630504

POS	VAR	PART NUMBER	SP	EH	QTY	DESCRIPTION
	-0101	S- 297162-SHEET	-1			===ASSEMBLY DRAWING===
010	-0101	8490-0009	-		1	RAIL
020	-0101	90077-0079	-		32	TERMINAL BLOCK
030	-0101	90135-0026	-		6	TERMINAL
040	-0101	359011-0801	-		2	LABEL BSFW 0-49

TETRA PAK

1/8307

S-297162-1

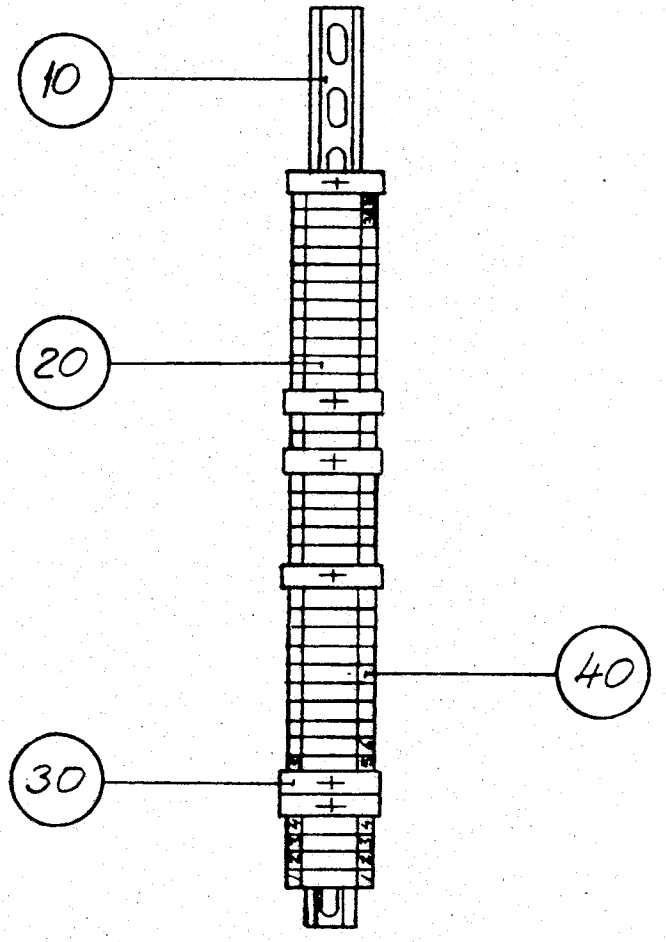

ÄM 5719

LAST ALTERATION: AM 10078 87-10-06
630204-110V 630234-010V 630304-110V 630504-200V
AM 5719
83-05-18

GROUP	SEALING SYSTEM	MACHINE CONTROL
-0101	TPC	RELAY
-0102	IH	RELAY
-0103	TPC	TPMC

POS	VAR	PART NUMBER	SP	UN	QTY	DESCRIPTION
	-0101	S- 434422-SHEET	-1			===ASSEMBLY DRAWING===
	-0102		-1			
	-0103		-1			
F040	-0101	C- 436770-0101	-		1	CABLE CONNECTION
	-0102				1	
F040	-0103	C- 536534-0101	-		1	CABLE CONNECTION
045	-0102	442059	-		1	COVER
110	-0101	90036-0036	S		1	BULB
	-0102				1	
110	-0103	90036-0052	S		1	BULB
010	ALL	434209	-		1	FRAME
020	ALL	266142	-		1	RAILING
030	ALL	266143	-		1	RAILING
040	ALL	434570	-		1	PLATFORM
050	ALL	232491	-		2	PLATFORM
060	ALL	294255	-		1	BRACKET
070	ALL	434087	-		1	BOX
080	ALL	434571	-		1	RAILING
090	ALL	232494	-		1	RAILING
100	ALL	266442	-		2	PLATE
120	ALL	90143-0008	-	M	6	STRIP
130	ALL	90419-0005	-		1	ALARM LAMP
		90419-0302	S		1	* LENS
140	ALL	312101-0368	-		6	SCREW M6S6X16FZB
160	ALL	312101-0449	-		4	SCREW M6S8X16FZB
170	ALL	312101-0453	-		12	SCREW M6S8X25FZB
180	ALL	312101-0503	-		20	SCREW M6S10X60FZB
190	ALL	312101-0511	-		8	SCREW M6S10X100FZB
210	ALL	312115-0453	-		4	SCREW 8X25 A4 80
220	ALL	312141-0366	-		20	SLOTTED HEMFS6X12FZB
230	ALL	312141-0447	-		3	SLOTTED HEMFS8X12FZB
240	ALL	312601-0320	-		28	NUT M6M10FZB
250	ALL	312605-0318	-		10	NUT M6M8RFR
260	ALL	315105-0153	-		6	WASHER BRB6,4X12RFR
270	ALL	315105-0165	-		16	WASHER BRB8,4X16RFR
280	ALL	315105-0173	-		56	WASHER BRB10,5X22RFR
290	ALL	315111-0165	-		4	WASHER TBRB8,4X16FZB

TETRA PAK

1/8307

S-434422-1

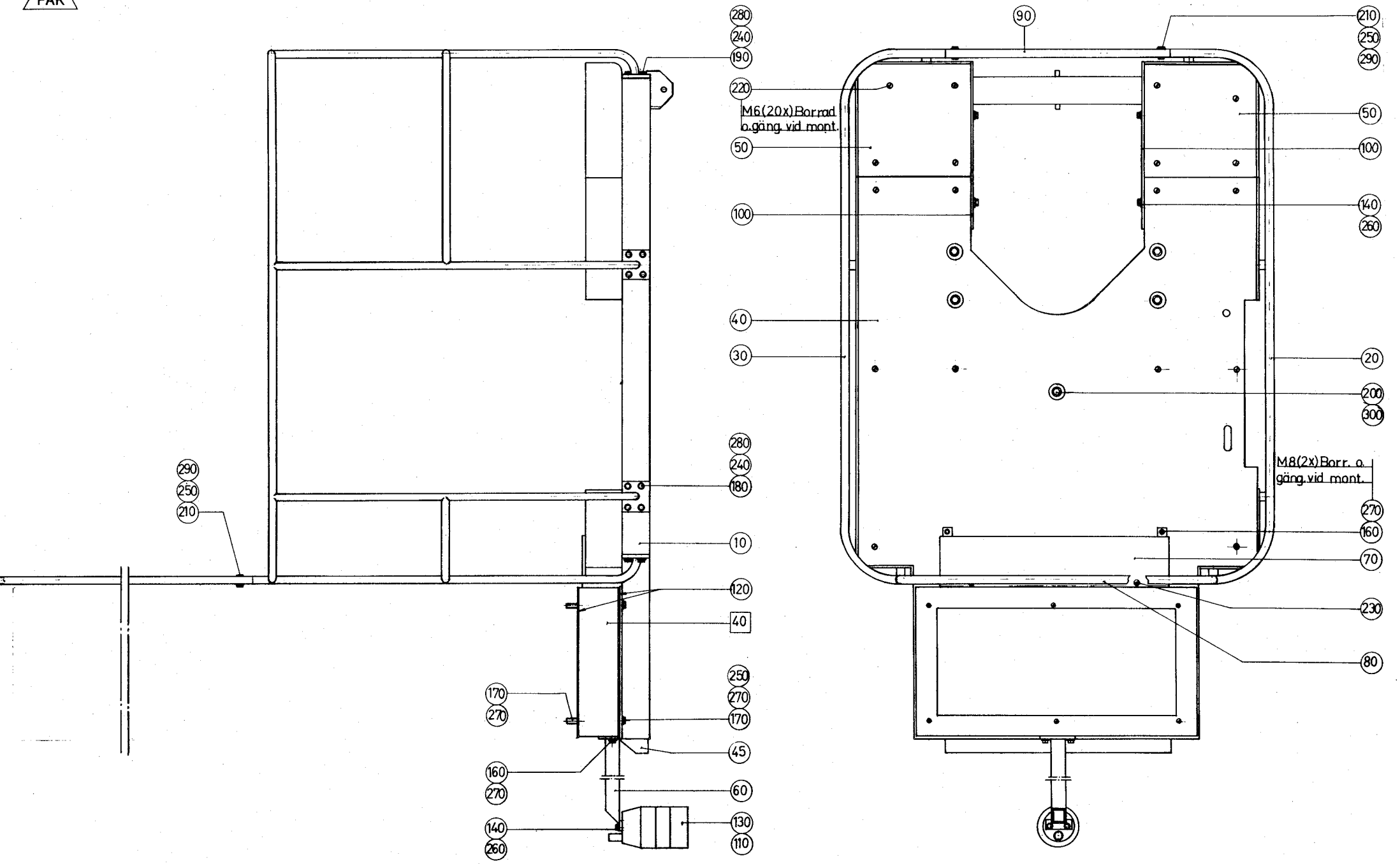

ÄM 6936

LAST ALTERATION: AM 5719 83-05-18
434422 630204 630304 630504

POS	VAR	PART NUMBER	SP	EH	QTY	DESCRIPTION
	-0101	S- 436770-SHEET -1				===ASSEMBLY DRAWING===
010	-0101	434086	-		1	FRAME
020	-0101	434572	-		1	FLANGE
030	-0101	434573	-		1	FLANGE
040	-0101	434574	-		1	FLANGE
050	-0101	90002-0010	-		1	PLUG
060	-0101	312121-0451	-		12	SLOTTED HEMCS8X20FZB
070	-0101	352101-0102	-		18	LEAD-IN G 15,2
080	-0101	352101-0103	-		7	LEAD-IN G 18,6
090	-0101	352101-0105	-		11	LEAD-IN G 22,5
100	-0101	352101-0106	-		2	LEAD-IN G 28,3
110	-0101	352100-0120	-		1	CABLE GLANR. 37-21
120	-0101	352141-0800	-		3	FLANGE DGP 21

TETRA PAK

1/8307

S-436770-1

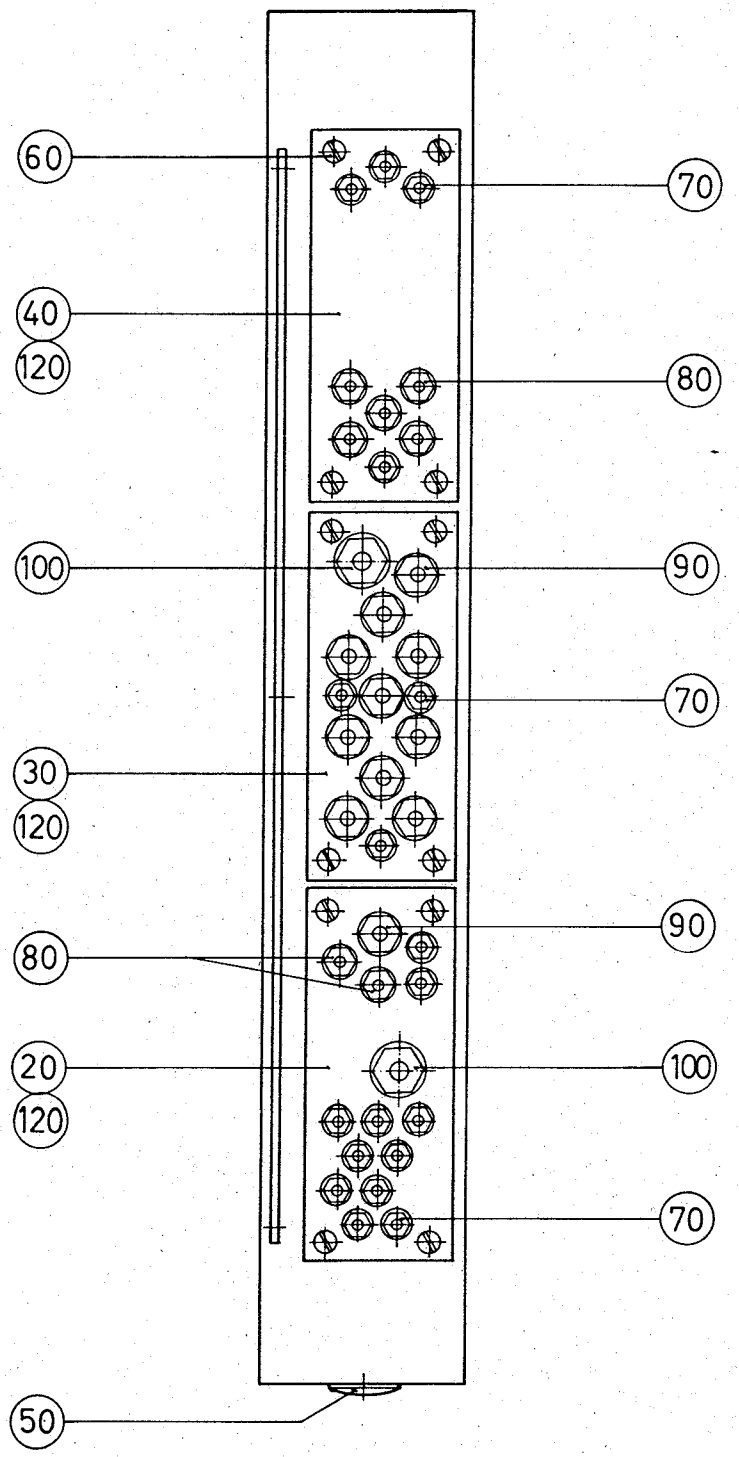

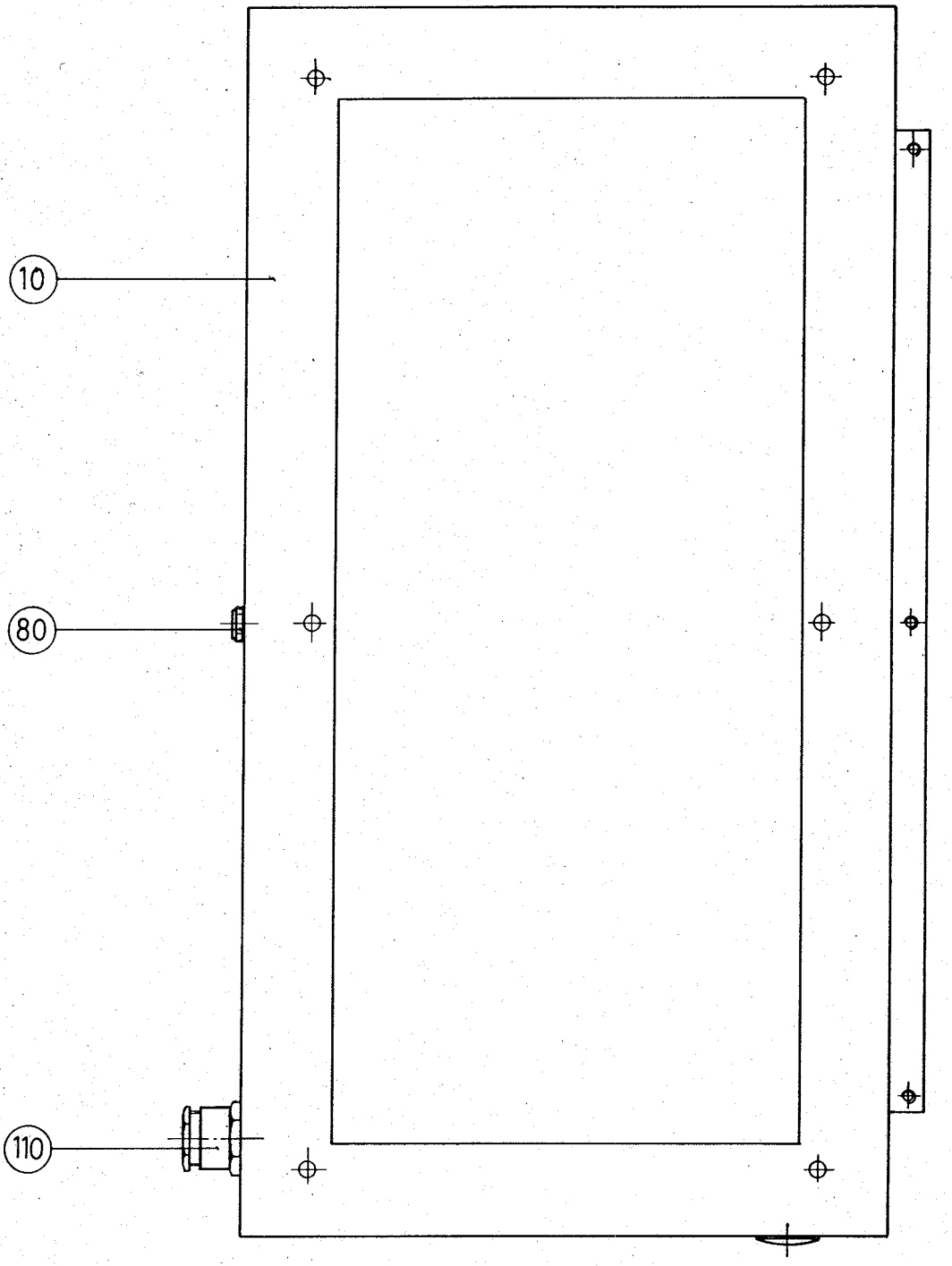

H5719

LAST ALTERATION: AM 7752 85-09-21
630204-110V 630304-110V 630504-200V
AM 5719
83-05-18

GROUP	FILLMACHINE	HOLEPUNCH-DESIGN	VOLUME	VOLUME	VOLUME
-0101	T150	MHS	V0150	V0180	V0189
	T150	MHS	V0200	-	-
	T300	MHS	-	-	-
-0102	T150	MHS	62,5ML	V0125	-
-0103	T150	UHS	V0150	V0180	V0189
	T150	UHS	V0200	-	-
	T300	UHS	-	-	-
-0104	T150	UHS	62,5ML	V0125	-
-0105	T500	-	-	-	-

POS	VAR	PART NUMBER	SP	EH	QTY	DESCRIPTION
	-0101	S- 445981-SHEET	-1			===ASSEMBLY DRAWING===
	-0102		-1			
	-0102		-2			
	-0103		-1			
	-0104		-1			
	-0104		-2			
	-0105		-3			
010	-0102	6832	-		1	CLUTCH PIECE
	-0104				1	
020	-0102	6834	-		1	BRACKET
	-0104				1	
040	-0102	90009-0003	-		3	WASHER
	-0104				3	
050	-0102	90043-0004	-		1	PRESSURE GAUGE
	-0104				1	
060	-0102	90113-0001	-		1	REDUCTION VALVE
	-0104				1	
070	-0101	90166-0013	-	M	7	HOSE
	-0102				9	
	-0103				7	
	-0104				9	
	-0105				7	
080	-0102	312101-0335	-		2	SCREW M6S5X30FZB
	-0104				2	
090	-0102	312101-0489	-		1	SCREW M6S10X16FZB
	-0104				1	
100	-0102	312132-0284	-		1	SLOTTED HEMSCS4X5MSGFN
	-0104				1	
110	-0102	315401-0146	-		2	WASHER FBH5,1FZB
	-0104				2	
120	-0102	315401-0173	-		1	WASHER FBH10,2FZB
	-0104				1	
130	-0102	342700-0201	-		1	NIPPLE RNA 1/8"-1/4"
	-0104				1	
140	-0102	342722-0204	-		1	PIPE CONNED=8-R1/8"

POS	VAR	PART NUMBER	SP	EH	QTY	DESCRIPTION
	-0104				1	
150	-0101	342722-0205	-		3	PIPE CONNED=8-R1/4"
	-0102				4	
	-0103				2	
	-0104				3	
	-0105				2	
160	-0101	342748-0103	-		1	T-PIECE D=8
	-0102				2	
	-0103				1	
	-0104				2	
190	-0101	342713-0210	-		2	BLANK-OFF
	-0102				2	
	-0103				3	
	-0104				3	
	-0105				2	
210	-0101	342715-0103	-		2	PLUG D=8
	-0102				2	
	-0103				2	
	-0104				2	
	-0105				1	
250	-0101	342742-0104	-		3	T-PIECE D8-R1/4"
	-0102				3	
	-0103				3	
	-0104				3	
	-0105				2	
270	-0101	342767-0104	-		4	GROMMET R1/4
	-0102				4	
	-0103				4	
	-0104				4	
	-0105				3	
170	ALL	90163-0008	-		1	CONNECTION
180	ALL	90166-0081	-	M	8	HOSE
230	ALL	342732-0104	-		1	ELBOW COUP D8-R1/4"
240	ALL	342735-0103	-		2	ELBOW COUP D=8
260	ALL	342748-0102	-		2	T-PIECE D=6

TETRA PAK

2/8512

S-445981-1

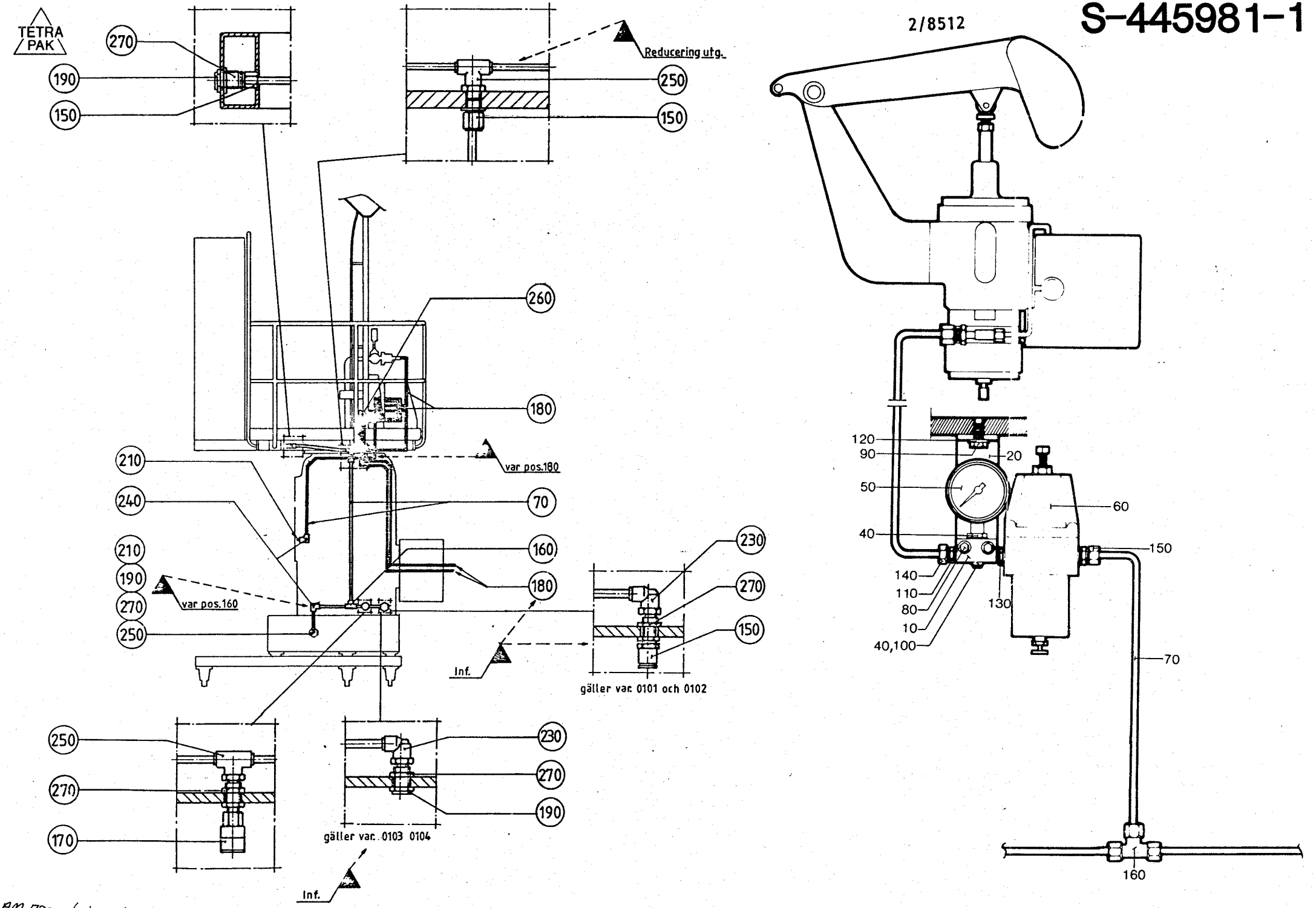

AM 7952 (-1,-2)

LAST ALTERATION: AM 9774 87-01-12
630204-120V
AM 9405
86-11-27

GROUP	FILLMACHINE	HOLEPUNCH-DESIGN	VOLUME	VOLUME	VOLUME
-0201	TS/150	MHS	V0150	V0180	V0189
	TS/150	MHS	V0200	-	-
	TS/300	MHS	-	-	-
-0203	TS/150	UHS	V0150	V0180	V0189
	TS/150	UHS	V0200	-	-
	TS/300	UHS	-	-	-
-0204	TS/150	UHS	V062,5	V0125	-
-0205	TS/500	-	-	-	-

POS	VAR	PART NUMBER	SP	UN	QTY	DESCRIPTION
	-0201	S- 445981-SHEET	-1			===ASSEMBLY DRAWING===
	-0203		-1			
	-0204		-4			
	-0205		-3			
070	-0201	90166-0013	-	M	7	HOSE
	-0204				15	
	-0205				7	
150	-0201	342722-0205	-		3	PIPE CONNED=8-R1/4"
	-0203				2	
	-0204				3	
	-0205				2	
160	-0201	342748-0103	-		1	T-PIECE D=8
	-0203				1	
	-0204				2	
180	-0201	90166-0081	-	M	8	HOSE
	-0203				8	
	-0204				10	
	-0205				8	
190	-0201	342713-0210	-		2	BLANK-OFF
	-0203				3	
	-0204				3	
	-0205				2	
210	-0201	342715-0103	-		2	PLUG D=8
	-0203				2	
	-0204				2	
	-0205				1	
250	-0201	342742-0104	-		3	T-PIECE D8-R1/4"
	-0203				3	
	-0204				3	
	-0205				2	
260	-0201	342748-0102	-		2	T-PIECE D=6
	-0203				2	
	-0204				4	
	-0205				2	

POS	VAR	PART NUMBER	SP	UN	QTY	DESCRIPTION
270	-0201	342767-0104	-		5	GROMMET R1/4
	-0203				5	
	-0204				5	
	-0205				4	
170	ALL	90163-0008	-		1	CONNECTION
230	ALL	342732-0104	-		1	ELBOW COUP D8-R1/4"
240	ALL	342735-0103	-		2	ELBOW COUP D=8

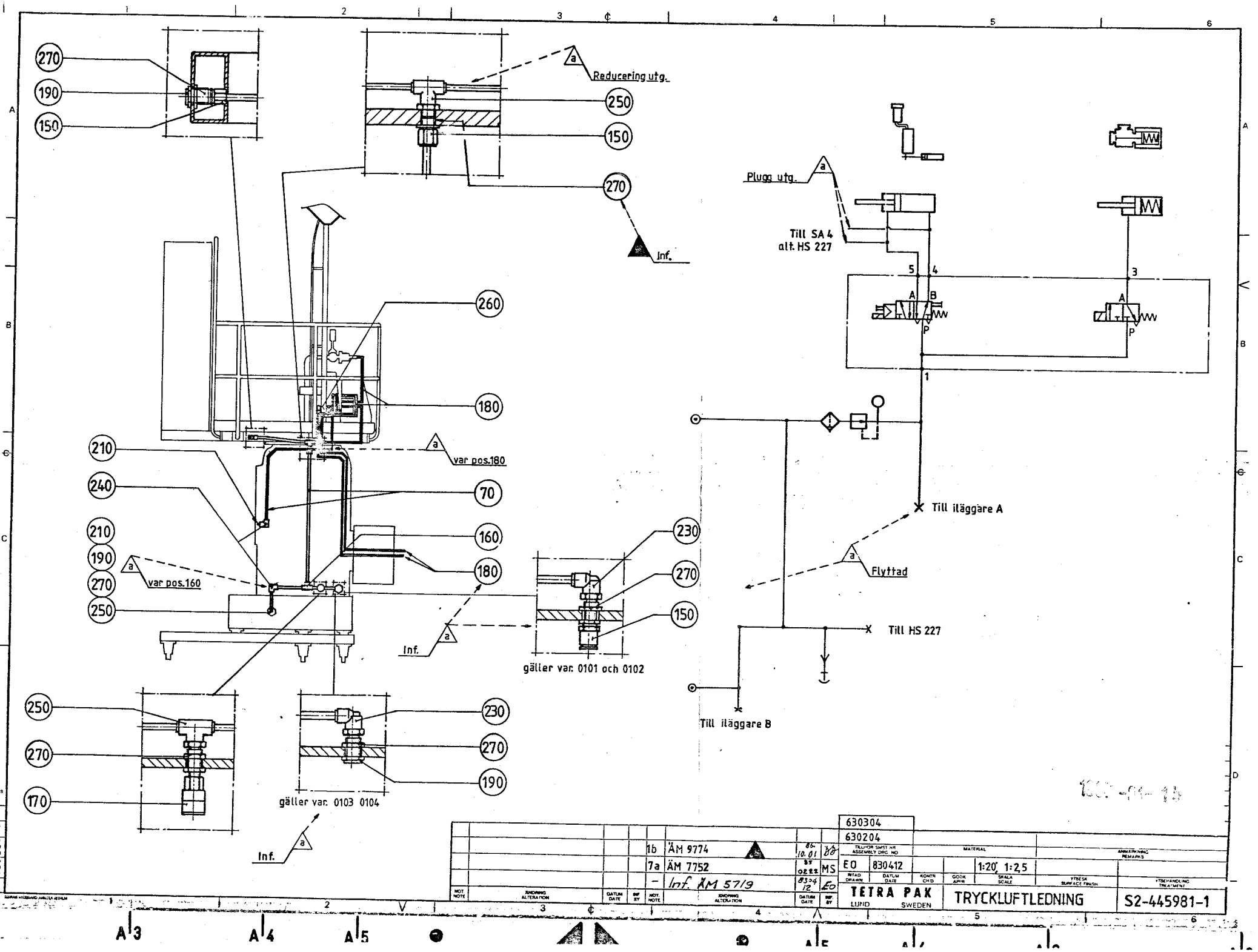

270
190
150
Reducering utg.
250
150
270
Inf.
260
180
210
var pos.180
240
70
210
160
190
180
270
var pos.160
250
230
270
150
Inf.
gäller var. 0101 och 0102
250
270
170
230
270
190
gäller var. 0103 0104
Inf.
Plugg utg.
Till SA 4
alt. HS 227
5
4
3
A
B
P
A
P
1
Till iläggare A
Flyttad
Till HS 227
Till iläggare B
630304
630204
1b ÄM 9774
7a ÄM 7752
– Inf. ÄM 5719
EO 830412
1:20, 1:2,5
TETRA PAK
LUND SWEDEN
TRYCKLUFTLEDNING
S2-445981-1

LAST ALTERATION: AM 9774 87-01-12
630204-120V
AM 9405
86-11-27

GROUP	FILLMACHINE	HOLEPUNCH-DESIGN	VOLUME	VOLUME	VOLUME
-0201	TS/150	MHS	V0150	V0180	V0189
	TS/150	MHS	V0200	-	-
	TS/300	MHS	-	-	-
-0203	TS/150	UHS	V0150	V0180	V0189
	TS/150	UHS	V0200	-	-
	TS/300	UHS	-	-	-
-0204	TS/150	UHS	V062,5	V0125	-
-0205	TS/500	-	-	-	-

POS	VAR	PART NUMBER	SP	UN	QTY	DESCRIPTION
	-0201	S- 445981-SHEET	-1			===ASSEMBLY DRAWING===
	-0203		-1			
	-0204		-4			
	-0205		-3			
070	-0201	90166-0013	-	M	7	HOSE
	-0204				15	
	-0205				7	
150	-0201	342722-0205	-		3	PIPE CONNED=8-R1/4"
	-0203				2	
	-0204				3	
	-0205				2	
160	-0201	342748-0103	-		1	T-PIECE D=8
	-0203				1	
	-0204				2	
180	-0201	90166-0081	-	M	8	HOSE
	-0203				8	
	-0204				10	
	-0205				8	
190	-0201	342713-0210	-		2	BLANK-OFF
	-0203				3	
	-0204				3	
	-0205				2	
210	-0201	342715-0103	-		2	PLUG D=8
	-0203				2	
	-0204				2	
	-0205				1	
250	-0201	342742-0104	-		3	T-PIECE D8-R1/4"
	-0203				3	
	-0204				3	
	-0205				2	
260	-0201	342748-0102	-		2	T-PIECE D=6
	-0203				2	
	-0204				4	
	-0205				2	

POS	VAR	PART NUMBER	SP	UN	QTY	DESCRIPTION
270	-0201	342767-0104	-		5	GROMMET R1/4
	-0203				5	
	-0204				5	
	-0205				4	
170	ALL	90163-0008	-		1	CONNECTION
230	ALL	342732-0104	-		1	ELBOW COUP D8-R1/4"
240	ALL	342735-0103	-		2	ELBOW COUP D=8

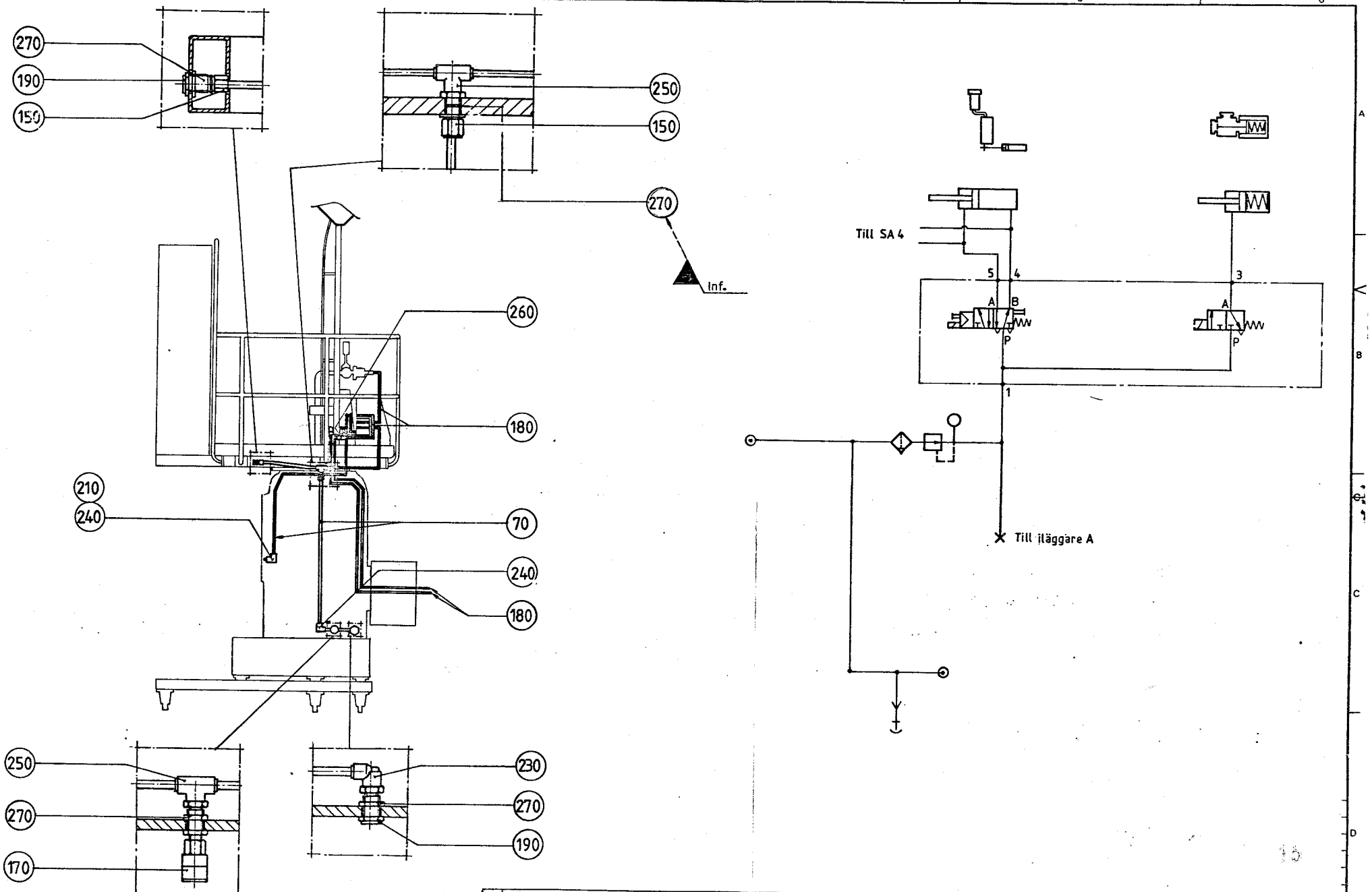

													630504				
													MS	850222		1:20; 1:2,5	
													RITAD DRAWN	DATUM DATE	KONTR CHD	GODK APPR	SKALA SCALE
													TETRA PAK LUND SWEDEN			TRYCKLUFTLEDNING	S2-445981-3

LAST ALTERATION: AM 5976 83-09-08
294214-010V 630204-110V 630304-110V 630504-200V 633204-180V
633304-120V 633504-220V

POS	VAR	PART NUMBER	SP	EH	QTY	DESCRIPTION
	-0101	S- 450114-SHEET	-1			===ASSEMBLY DRAWING===
010	-0101	10793-0030	-		1	RAIL
020	-0101	90077-0065	-		42	TERMINAL BLOCK
030	-0101	90135-0021	-		17	EARTHING CLAMP
040	-0101	359011-0801	-		2	LABEL BSFW 0-49

TETRA PAK

1/8405

S-450114-1

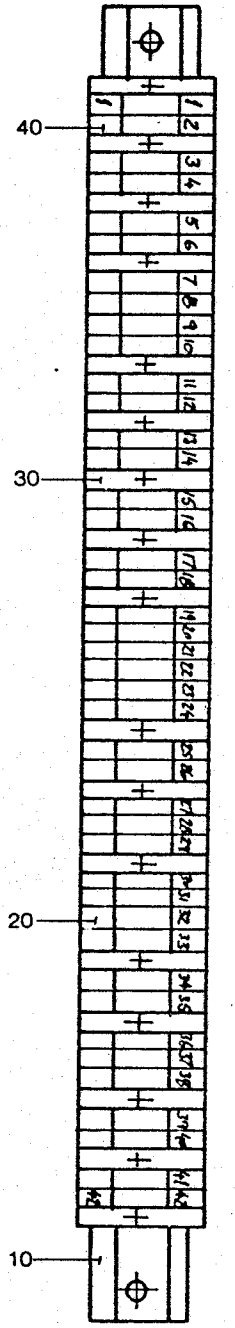

ÄM 5976

SPC 630329
CUTTING UNIT

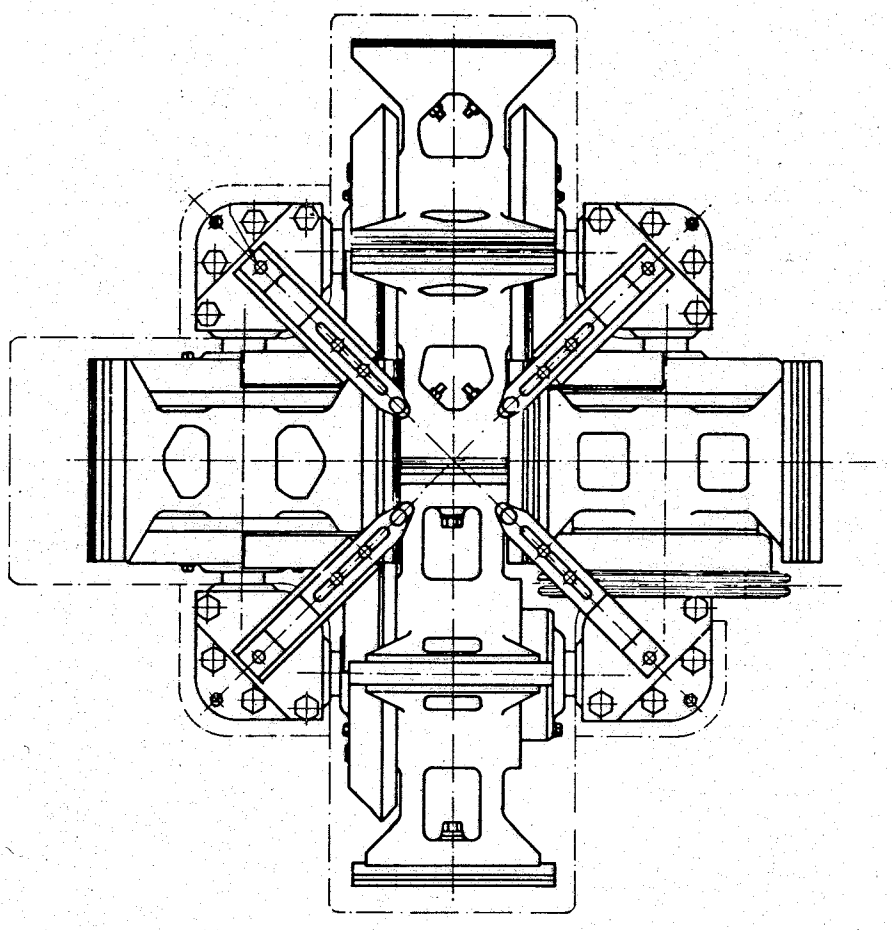

B-630305-

TETRA PAK SERVICE

LAST ALTERATION: AM 6702 84-03-30
AM 6104
83-11-23

POS	VAR	PART NUMBER	SP	EH	QTY	DESCRIPTION
F000	-1301	C- 263719-0201	-		1	CUTTING UNIT
F010	-0101	C- 297984-0101	-		1	SHEARING DEVICE
F020	-0101	C- 4435-0101	-		1	COUNTER WHEEL
F030	-0101	C- 4435-0102	-		1	COUNTER WHEEL
F040	-0101	C- 7296-0101	-		1	WHEEL
F050	-0101	C- 7296-010V	-		1	WHEEL
F060	-0101	C- 6880-0101	-		4	GUIDE
F070	-0101	C- 4437-0201	-		1	WORM GEAR
F080	-0101	C- 4438-030V	-		1	SLIP DISC
F090	-0101	C- 4439-0101	-		1	DISTANCE SHAFT
F100	-0101	C- 4440-010V	-		1	CHAIN TENSIONER
F110	-0101	C- 4441-040V	-		1	MOTOR
F120	-0101	C- 4442-0101	-		1	CHAIN TENSIONER
F130	-0101	C- 4443-0101	-		1	CHAIN TENSIONER
F160	-0101	C- 6830-0101	-		1	EXPANSION BOLT
F170	-0101	C- 236641-0304	-		1	IMPULSE TRANSMITTER
F180	-0101	C- 236638-020V	-		1	CONNECTION BOX
F190	-0101	C- 236637-0101	-		1	TERMINAL BLOCK
F200	-0101	C- 13372-020V	-		1	DRIVE SHAFT
F210	-0101	C- 230177-0201	-		1	CENTRAL LUBRICATION
F220	-0101	C- 265715-0201	-		1	CENTRAL LUBRICATION
F230	-0101	C- 4941-0101	-		1	COVER
F240	-0101	C- 440325-0101	-		1	IMPULSE TRANSMITTER

TETRA PAK

1/8502

S-630305-1

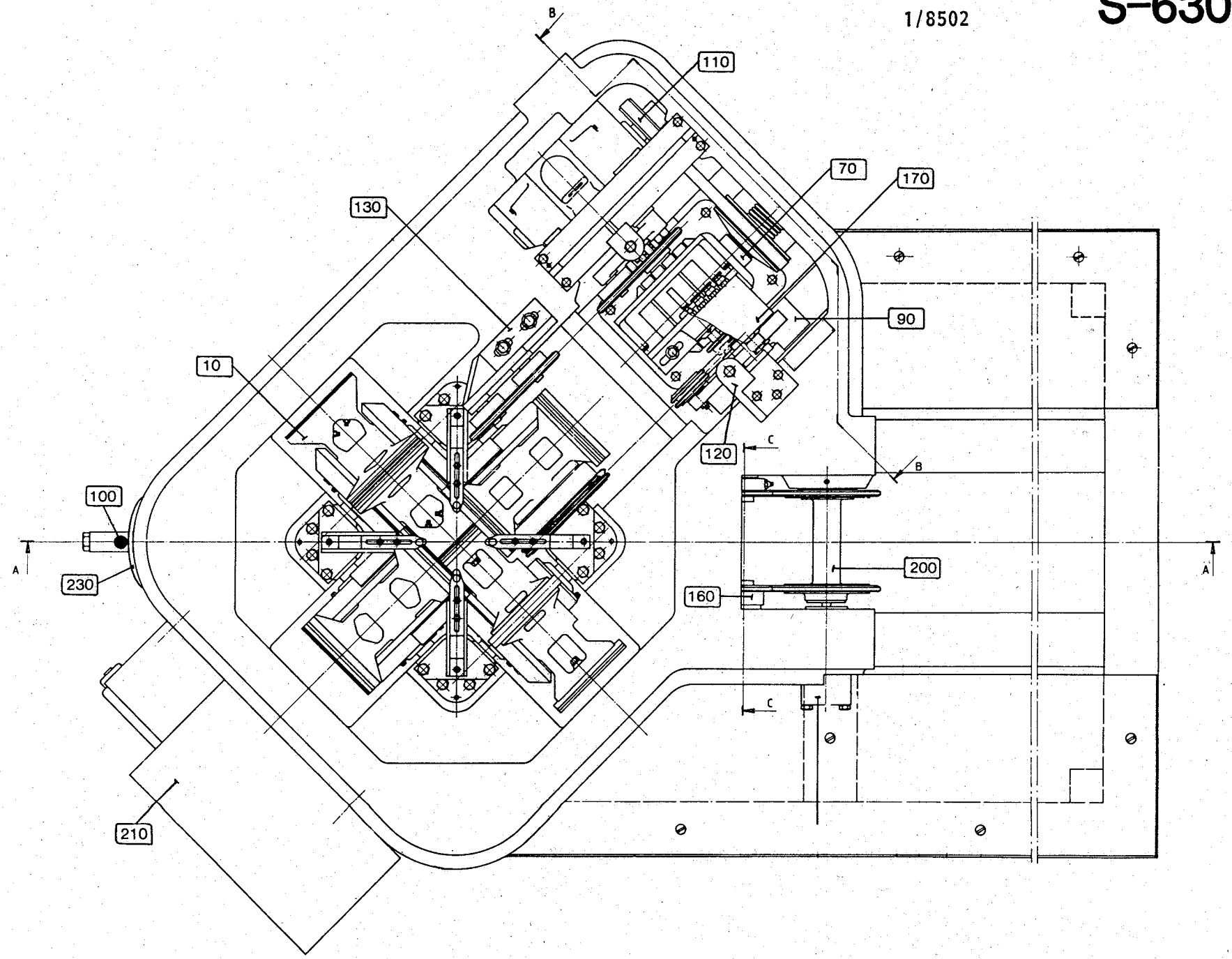

ÄM 6702

LAST ALTERATION: AM 8810 86-06-06
630329-040V

POS	VAR	PART NUMBER	SP UN	QTY	DESCRIPTION
F000	-1401	C- 263719-0301	-	1	CUTTING UNIT
F010	-1401	C- 297984-0201	-	1	SHEARING DEVICE
		C- 4435-0101			. COUNTER WHEEL
		C- 4435-0102			. COUNTER WHEEL
		C- 6880-0101			. GUIDE
		C- 529462-0101			. CUTTING WHEEL
F070	-1401	C- 4437-0201	-	1	WORM GEAR
		C- 4438-030V			. SLIP DISC
F090	-1401	C- 4439-0101	-	1	INTERMEDIARY SHAFT
F100	-1401	C- 4440-010V	-	1	CHAIN TENSIONER
F110	-1401	C- 4441-040V	-	1	MOTOR
F120	-1401	C- 4442-0101	-	1	CHAIN TENSIONER
F130	-1401	C- 4443-0101	-	1	CHAIN TENSIONER
F160	-1401	C- 6830-0101	-	1	EXPANSION BOLT
F170	-1401	C- 236641-0304	-	1	IMPULSE TRANSMITTER
		C- 236638-020V			. CONNECTION BOX
		C- 236637-0101			. . TERMINAL BLOCK
F200	-1401	C- 13372-020V	-	1	DRIVE SHAFT
F210	-1401	C- 230177-0301	-	1	CENTRAL LUBRICATION
F220	-1401	C- 265715-0201	-	1	CENTRAL LUBRICATION
F230	-1401	C- 4941-0101	-	1	COVER
F240	-1401	C- 440325-0101	-	1	IMPULSE TRANSMITTER

LAST ALTERATION: AM 6085 83-09-08
297984 630305 633305
AM 347
61-08-18

GROUP

-0101 01 WITH DRIVE WHEEL
-0102 02 WITHOUT DRIVE WHEEL

POS	VAR	PART NUMBER	SP	EH	QTY	DESCRIPTION
	-0101	S- 4435-SHEET	-1			===ASSEMBLY DRAWING===
	-0102		-1			
010	-0101	4458	-		1	SPROCKET
020	-0101	4487-0001	-		1	GEAR
030	-0102	4487-0002	-		1	GEAR
040	-0101	311101-0406	-		2	CYLINDRICACP8H6X32
	-0102				1	
050	-0101	312101-0455	-		12	SCREW M6S8X30FZB
	-0102				8	
060	-0101	315401-0165	-		12	WASHER FBH8,2FZB
	-0102				8	
070	ALL	4457	-		1	COUNTER WHEEL
080	ALL	3283	-		2	WASHER
090	ALL	4455	-		1	AXLE
100	ALL	6506	-		2	OIL SEAL
110	ALL	229506	R		4	RAIL
120	ALL	312101-0368	-		6	SCREW M6S6X16FZB
130	ALL	312111-0533	-		2	SCREW MC6S12X22FZB
140	ALL	315101-0165	-		4	WASHER BRB8,4X16FZB
150	ALL	315401-0153	-		6	WASHER FBH6,1FZB
160	ALL	321312-0106	-		2	BALL BEARISKF6206RS
170	ALL	344502-0026	-		2	NIPPLE L AHKR1/8"

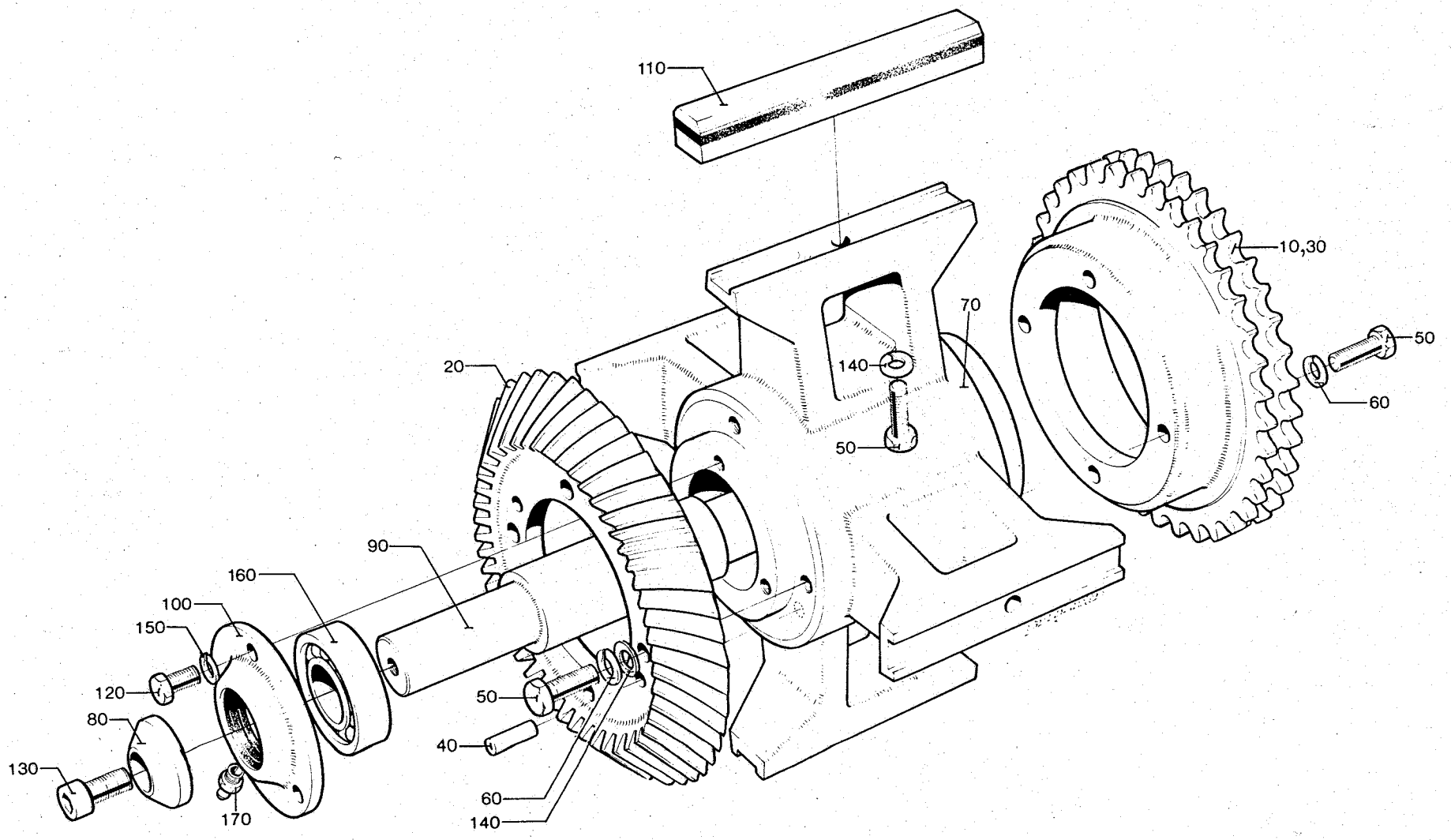
110
10,30
70
50
140
50
60
20
90
160
100
150
120
80
130
170
50
40
60
140

ÅM6085

LAST ALTERATION: AM 6702 84-03-30
630305 633305

POS	VAR	PART NUMBER	SP	EH	QTY.	DESCRIPTION
	-0201	S- 4437-SHEET	-2			===ASSEMBLY DRAWING===
F040	-0201	C- 4438-030V	-		1	SLIP DISC
010	-0101	4464	-		1	FLANGE
020	-0101	4461	-		1	SPROCKET
030	-0101	4462	-		1	GEAR
040	-0101	4463	-		1	SPROCKET
050	-0101	90056-0076	-		1	WORM GEAR
060	-0101	312101-0374	-		3	SCREW M6S6X30FZB
070	-0101	312306-0371	-		2	GRUB SCREW P6SS6X22FZB
080	-0101	312316-0362	-		6	GRUB SCREW SK6SS6X8FZB
090	-0101	315101-0153	-		3	WASHER BRB6,4X12FZB
100	-0101	315701-0274	-		1	FLAT WEDGE8X7X60
110	-0101	315701-0301	-		1	FLAT WEDGE10X8X40
120	-0101	315701-0308	-		1	FLAT WEDGE10X8X80

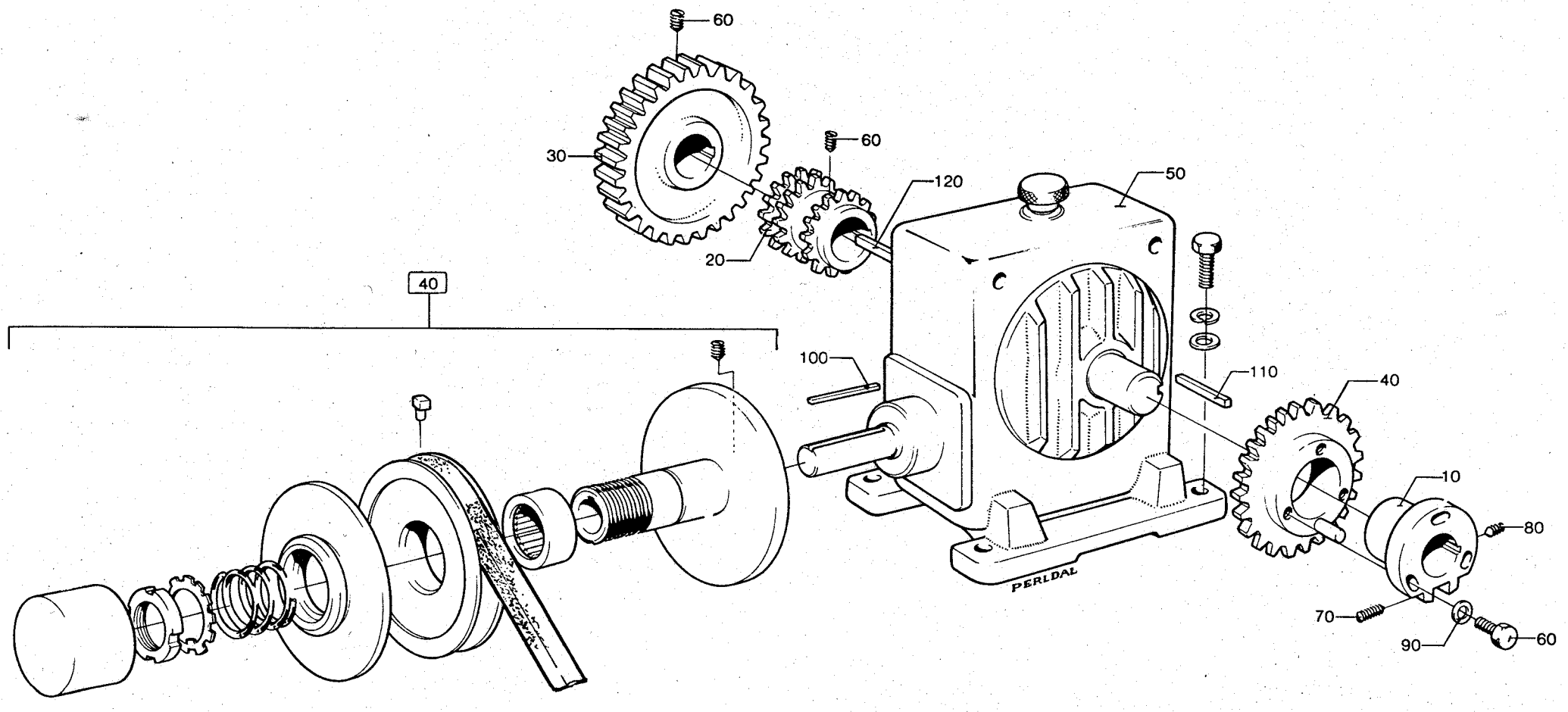
60
30
60
120
50
20
40
100
110
40
10
80
70
90
60
PERLDAL

LAST ALTERATION: AM 6702 84-03-30
4437-020V 4866-030V 630205-160V 630305-130V 633205-120V
633305-060V

GROUP	FILLMACHINE	FILLMACHINE	MACHINE SPEED	FREQUENCY
-0301	T300	AT300	FM075	HZ-50
-0302	T150	AT150	FM075	HZ-50
-0303	T300	AT300	FM075	HZ-60
-0304	T150	AT150	FM075	HZ-60
-0305	HT300	-	FM120	HZ-50
-0306	HT150	-	FM120	HZ-50
-0307	HT300	-	FM120	HZ-60
-0308	HT150	-	FM120	HZ-60

POS	VAR	PART NUMBER	SP	EH	QTY	DESCRIPTION
	-0301	S- 4438-SHEET	-2			===ASSEMBLY DRAWING===
	-0302		-2			
	-0303		-2			
	-0304		-2			
	-0305		-2			
	-0306		-2			
	-0307		-2			
	-0308		-2			
010	-0301	4465-0001	-		1	PULLEY
	-0305				1	
010	-0302	4465-0002	-		1	PULLEY
	-0306				1	
010	-0303	4465-0003	-		1	PULLEY
	-0307				1	
010	-0304	4465-0004	-		1	PULLEY
	-0308				1	
020	-0301	4466-0001	-		1	FLANGE
	-0303				1	
	-0305				1	
	-0307				1	
020	-0302	4466-0002	-		1	FLANGE
	-0304				1	
	-0306				1	
	-0308				1	
030	-0301	318101-0030	-		1	V-BELT B30
030	-0303	318101-0031	-		1	V-BELT B31
030	-0305	318101-0033	-		1	V-BELT B33
030	-0307	318101-0035	-		1	V-BELT B35
030	-0302	318101-0039	-		1	V-BELT B39
030	-0304	318101-0040	-		1	V-BELT B40
030	-0306	318101-0043	-		1	V-BELT B43
030	-0308	318101-0044	-		1	V-BELT B44
040	ALL	4467	-		1	HUB
050	ALL	4468	-		1	PIN
060	ALL	4469	-		1	SPRING
070	ALL	5450-0001	-		1	CAPSULE
080	ALL	312316-0362	-		2	GRUB SCREW SK6SS6X8FZB

POS	VAR	PART NUMBER	SP	EH	QTY	DESCRIPTION
090	ALL	312805-0108	-		1	NUT KM8
100	ALL	315410-0108	-		1	LOCK WASHESKFMB8
110	ALL	321511-0422	-		1	NEEDLE BEANK40/20

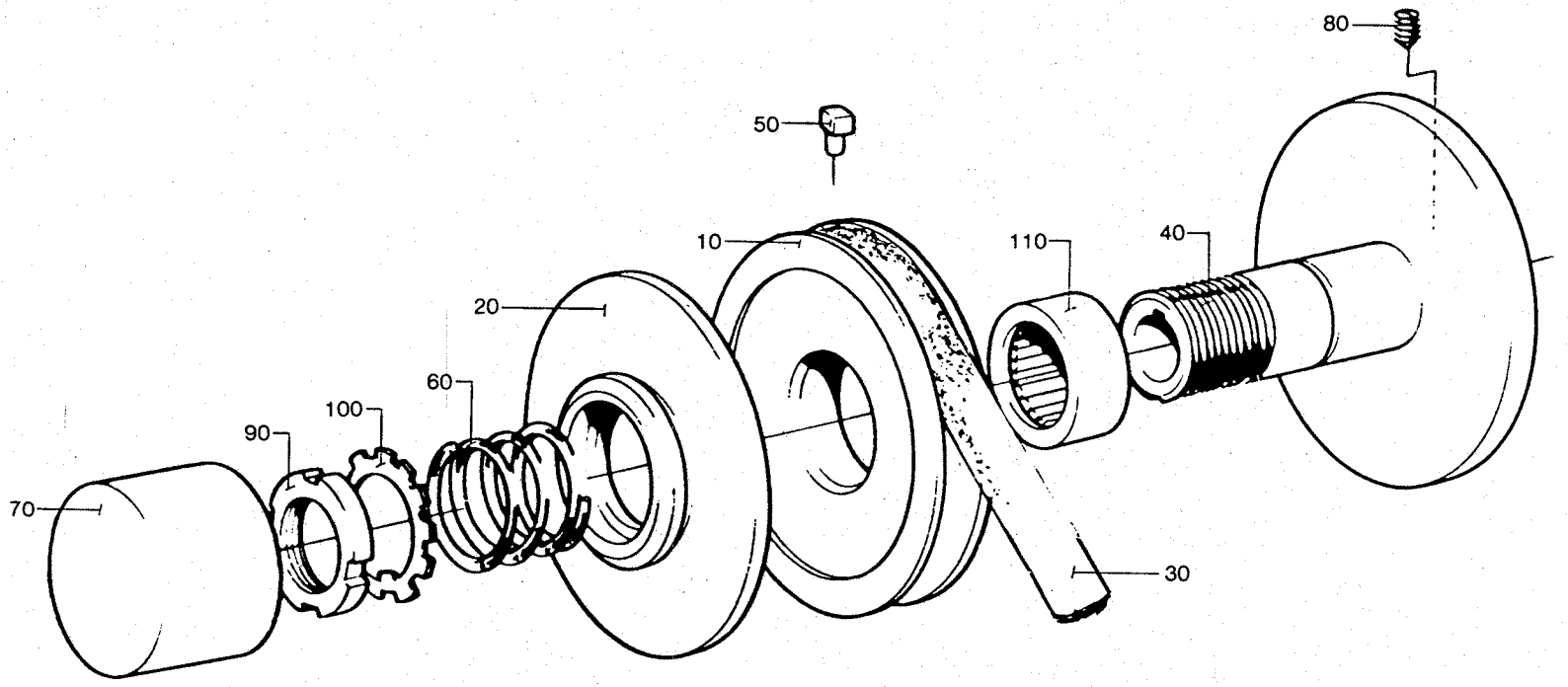
80
50
10
110
40
20
60
100
90
70
30

LAST ALTERATION: AM 8410 86-03-10
630305-120V 633305-060V
AM 848
64-03-06

POS	VAR	PART NUMBER	SP UN	QTY	DESCRIPTION
	-0101	S- 4439-SHEET	-1		===ASSEMBLY DRAWING===
010	-0101	4470	-	1	BEARING BRACKET
020	-0101	3303	-	1	GEAR WHEEL
030	-0101	4471	-	1	GEAR WHEEL
040	-0101	4472	-	1	SHAFT
050	-0101	311201-0296	-	1	TAPER PIN KP6X40SLIPAD
060	-0101	312101-0327	-	6	SCREW M6S5X12FZB
070	-0101	312101-0455	-	4	SCREW M6S8X30FZB
080	-0101	312316-0323	-	3	GRUB SCREW SK6SS5X8FZB
090	-0101	315101-0165	-	4	WASHER BRB8,4X16FZB
100	-0101	315401-0146	-	6	WASHER FBB5,1FZB
110	-0101	315401-0165	-	4	WASHER FBB8,2FZB
120	-0101	315701-0230	-	1	FLAT WEDGE6X6X16
130	-0101	321306-0105	-	2	BALL BEARISKF6005
140	-0101	321600-0110	-	2	OIL SEAL LL2547
150	-0101	344502-0046	-	1	NIPPLE L BHKR1/8"

THIS DRAWING MUST NOT WITHOUT THE CONSENT OF TETRA PAK BE COPIED, TRANSMITTED OR DISCLOSED TO ANY THIRD PARTY.

DENNA RITNING FÅR INTE UTAN TETRA PAKS MEDGIVANDE KOPIERAS, UTLÄMNAS TILL ELLER DELGIVAS TREDJE MAN.

Packed with Grease

Fettpackad

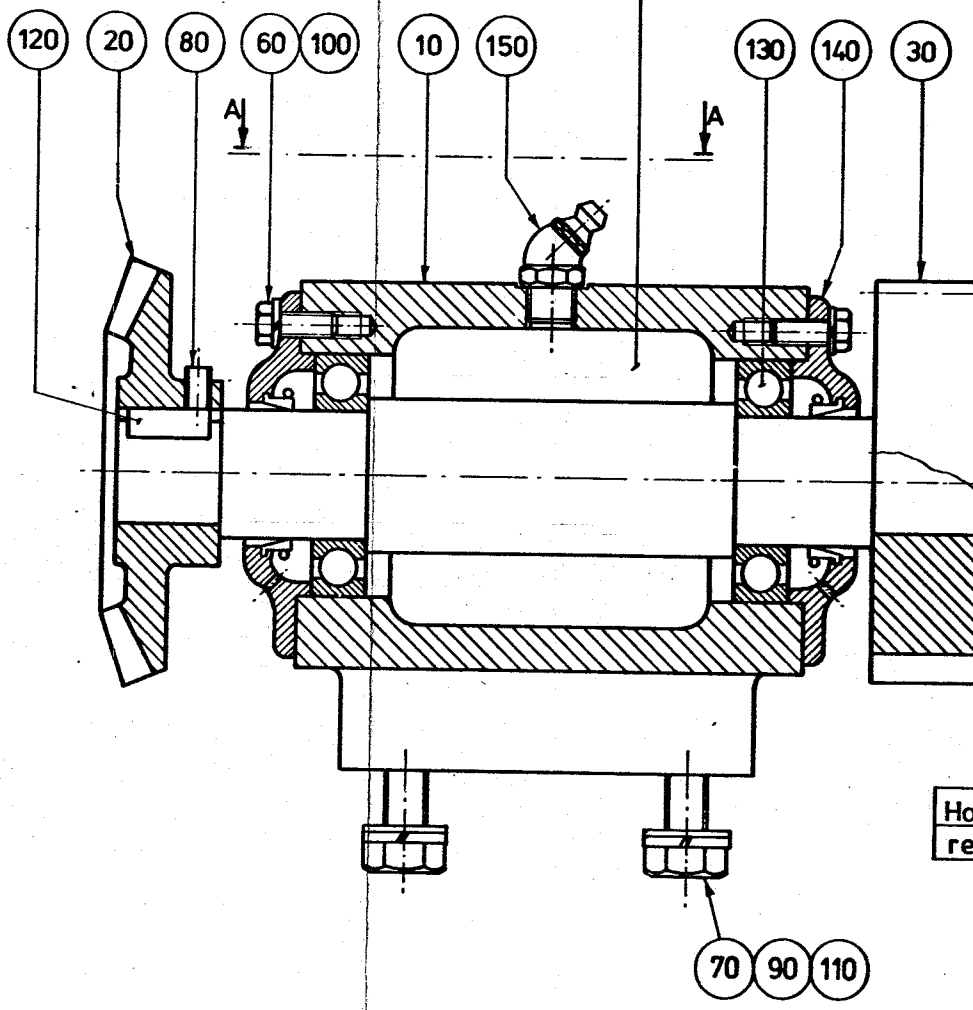

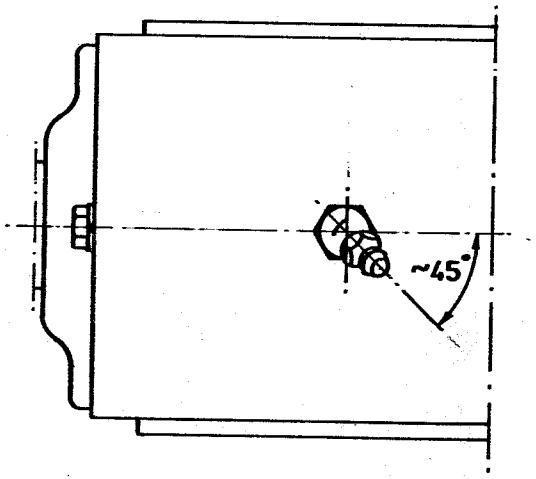

Vy A-A

Hål borrat och bratschat vid mont.

Hole drilled and reamed when assembled

NOT NOTE	ÄNDRING ALTERATION	DATUM DATE	INF BY	NOT NOTE	ÄNDRING ALTERATION	DATUM DATE	INF BY
					Od Omritad AM8410	84 01 17	BÅ

S1-263 719

TILLHÖR SMST NR ASSEMBLY DRG. NO

MATERIAL

ANMÄRKNING REMARKS

RITAD DRAWN	DATUM DATE	KONTR CH'D	GODK APPR	SKALA SCALE	YTBEH SURFACE FINISH
BÅ	84 01 16			1:1	

YTBEHANDLING TREATMENT

TETRA PAK
LUND SWEDEN

MELLANAXEL
INTERMEDIARY DRIVESHAFT

S3-4439-1

LAST ALTERATION: AM 8410 86-03-10
630305-120V 633305-060V
AM 726
64-01-24

GROUP	PACKER	ELEVATOR
-0101	A	-
-0102	-	E

POS	VAR	PART NUMBER	SP UN	QTY	DESCRIPTION
	-0101 S-	4440-SHEET	-1		===ASSEMBLY DRAWING===
	-0102		-1		
010	-0101	4831-0001	-	2	BOLT
020	-0102	4832	-	2	BOLT
030	-0101	5635	-	2	PIN
040	-0102	7354-0001	-	1	SCREW
050	-0101	7354-0002	-	1	SCREW
060	ALL	4473	-	1	TENSION ARM
070	ALL	4902	-	2	SPROCKET
080	ALL	4903	-	2	SEAL COVER
090	ALL	4904	-	2	SPACER RING
100	ALL	7352	-	1	COMPRESSION SPRING
110	ALL	7353	-	1	COVER
120	ALL	312151-0291	-	6	SCREW MF6S4X12FZB
130	ALL	312316-0366	-	1	GRUB SCREW SK6SS6X12FZB
140	ALL	312601-0322	-	1	NUT M6M12FZB
150	ALL	315101-0178	-	1	WASHER BRB13X24FZB
160	ALL	315202-0520	-	4	O-RING 26,58X3,53
170	ALL	321330-0103	-	2	BALL BEARI SKF3203
180	ALL	344502-0021	-	2	NIPPLE L AHM6

THIS DRAWING MUST NOT WITHOUT THE CONSENT OF TETRA PAK BE COPIED TRANSMITTED OR DISCLOSED TO ANY THIRD PARTY

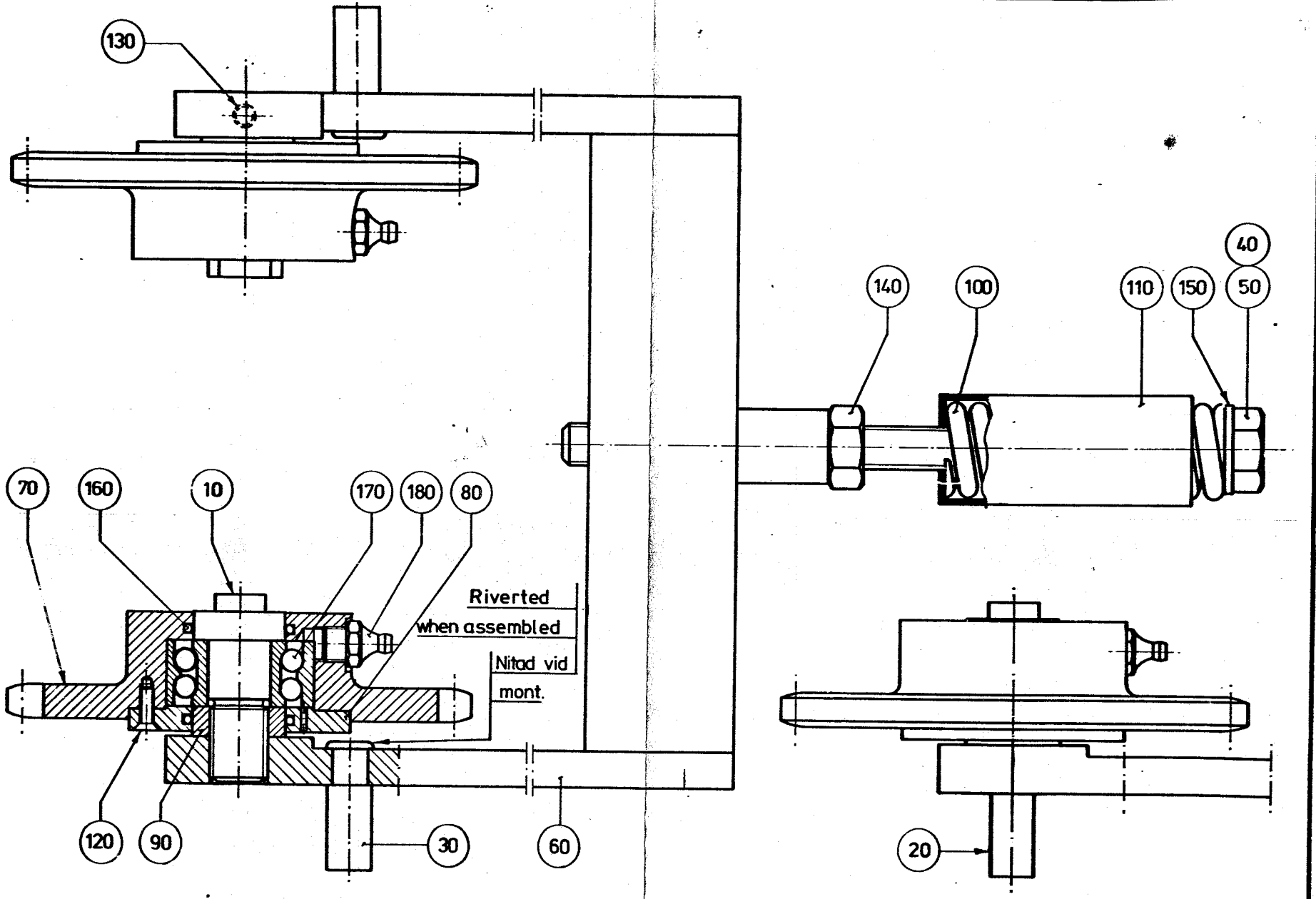

LAST ALTERATION: AM 6702 84-03-30
630305 633305

GROUP MACHINE SPEED

-0401 FM075
-0402 FM120

POS	VAR	PART NUMBER	SP	EH	QTY	DESCRIPTION
	-0401	S- 4441-SHEET	-3			===ASSEMBLY DRAWING===
	-0402		-3			
010	-0401	284893	-		1	PULLEY
020	-0402	284894	-		1	PULLEY
040	-0402	312316-0323	-		2	GRUB SCREW SK6SS5X8FZB
050	ALL	27018	-		1	BRACKET
060	ALL	2141	-		1	BOLT
070	ALL	4448	-		1	AXLE
080	ALL	4449	-		1	SHELF
090	ALL	4474-0001	-		1	TENSION ARM
100	ALL	4904	-		1	SPACER RING
110	ALL	4906	-		1	SPROCKET
120	ALL	458170	-		1	BOLT
130	ALL	458171	-		1	LID
140	ALL	90045-0049	-		1	MOTOR
150	ALL	311401-0199	-		2	SPLIT PIN SP4X32FZB
160	ALL	312101-0455	-		4	SCREW M6S8X30FZB
170	ALL	312104-0546	-		1	SCREW M6S12X70HFZB
180	ALL	312151-0287	-		3	SCREW MF6S4X8FZB
190	ALL	312316-0362	-		1	GRUB SCREW SK6SS6X8FZB
200	ALL	312601-0318	-		6	NUT M6M8FZB
210	ALL	312601-0322	-		1	NUT M6M12FZB
220	ALL	315203-0520	-		1	O-RING 26,58X3,53F
230	ALL	315401-0165	-		4	WASHER FBH8,2FZB
240	ALL	315701-0236	-		1	FLAT WEDGE6X6X30
250	ALL	321330-0103	-		1	BALL BEARISKF3203
260	ALL	344502-0026	-		1	NIPPLE L AHKR1/8"

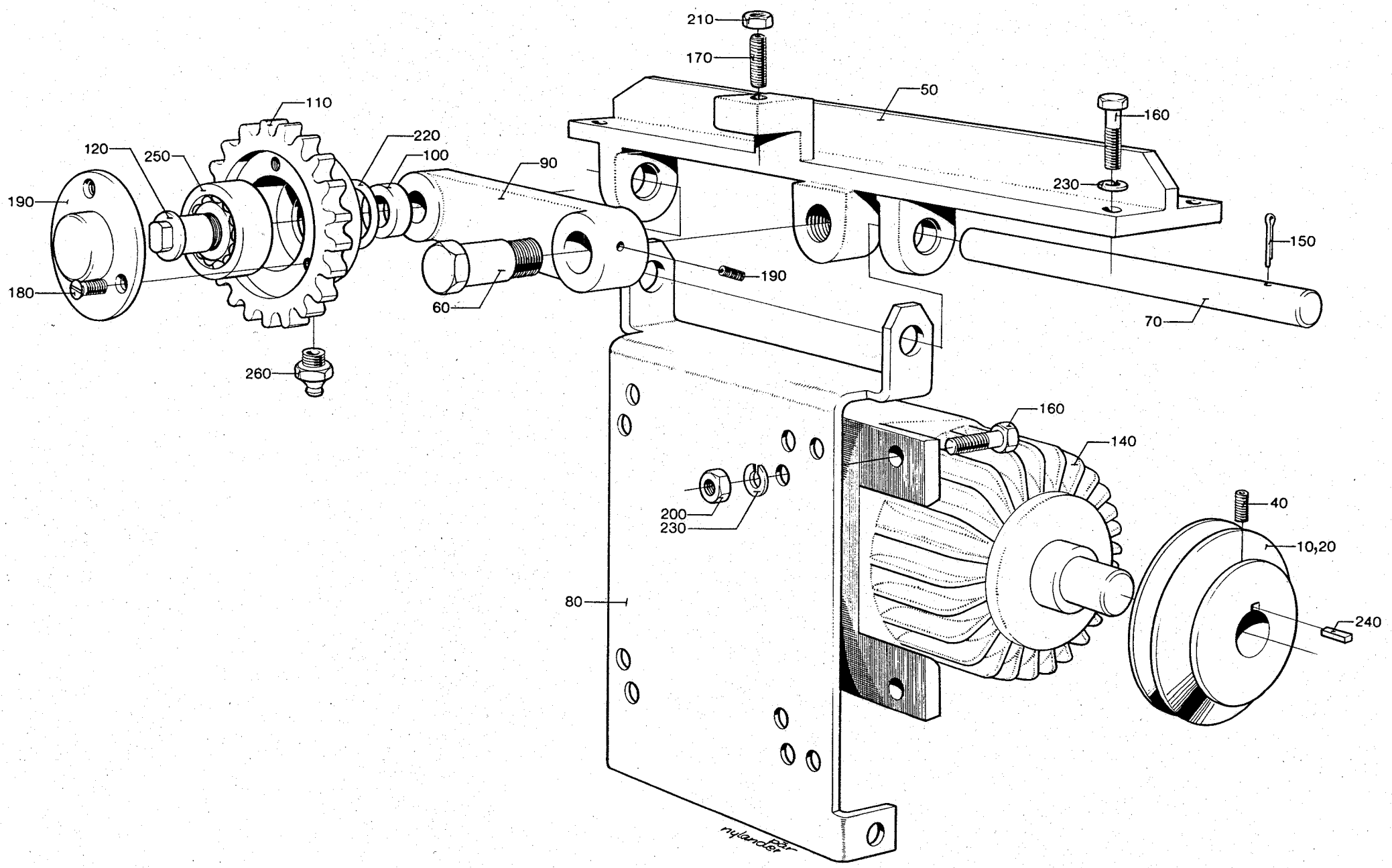
210
170
50
160
230
150
70
110
120
250
220
100
90
190
180
60
190
260
160
140
200
230
40
10,20
240
80
mylander

LAST ALTERATION: AM 6085 83-09-08
630305 633305
AM 1530
66-08-04

POS	VAR	PART NUMBER	SP	EH	QTY	DESCRIPTION	
	-0101	S- 4442-SHEET	-1			===ASSEMBLY DRAWING===	
010	-0101	4476	-		1	BRACKET	
020	-0101	2141	-		1	BOLT	
030	-0101	3397	-		1	AXLE	
040	-0101	4474-0002	-		1	TENSION ARM	
050	-0101	4477	-		1	SPROCKET	
060	-0101	5063	-		1	SEAL RING	
070	-0101	5064	-		1	WASHER	
080	-0101	312104-0547	-		1	SCREW	M6S12X75HFZB
090	-0101	312151-0287	-		3	SCREW	MF6S4X8FZB
100	-0101	312601-0320	-		1	NUT	M6M10FZB
110	-0101	312601-0322	-		1	NUT	M6M12FZB
120	-0101	315202-0513	-		1	O-RING	17,13X2,62
130	-0101	315401-0173	-		1	WASHER	FBH10,2FZB
140	-0101	321330-0100	-		1	BALL BEARI	SKF3200
150	-0101	344502-0066	-		1	NIPPLE	L CHKR1/8"

TETRA PAK

1/8410

S-4442-1

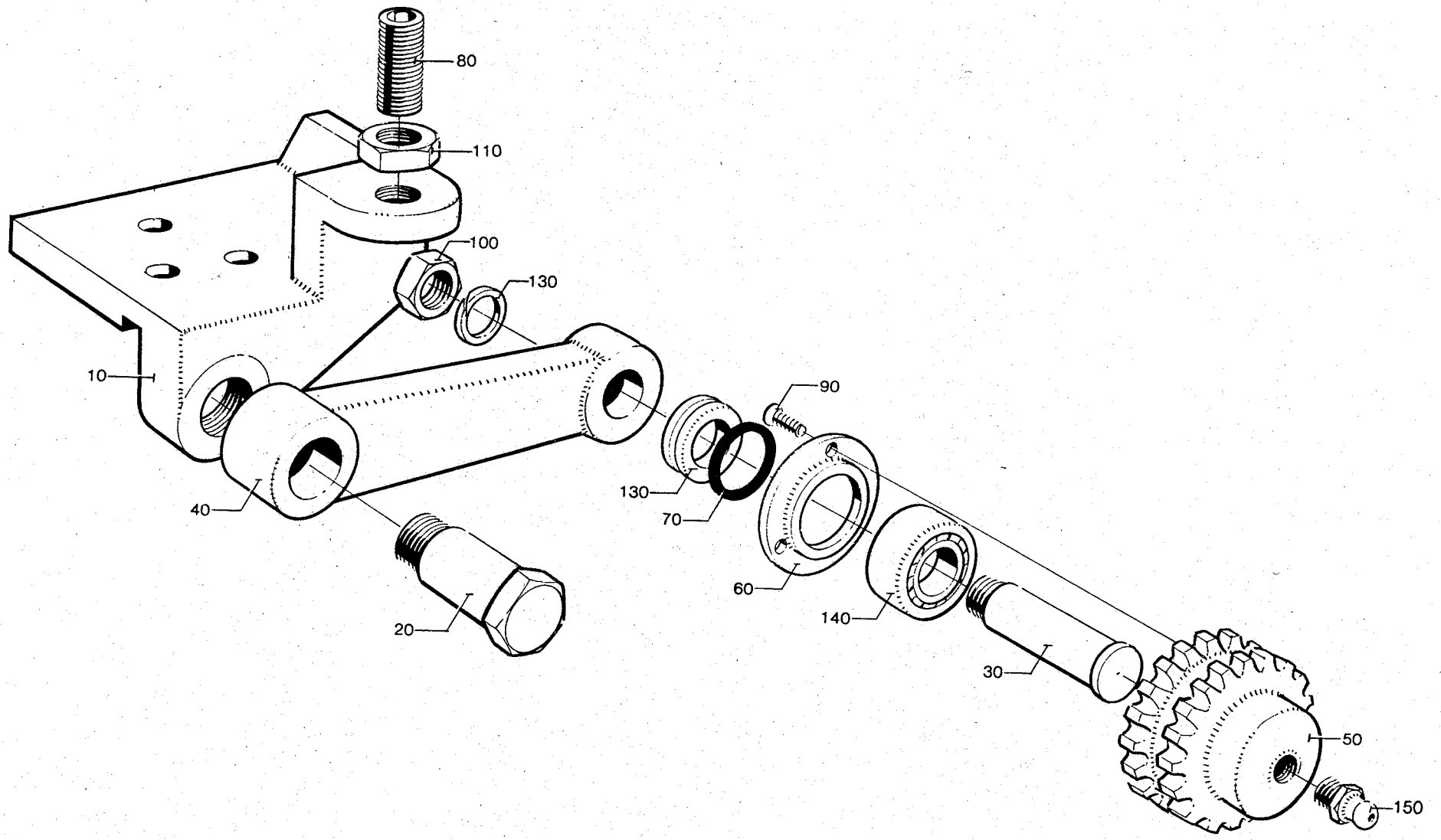

ÄM 6085

LAST ALTERATION: AM 6085 83-09-08
630305 633305
AM 1530
66-08-04

POS	VAR	PART NUMBER	SP	EH	QTY	DESCRIPTION
	-0101	S- 4443-SHEET	-1			===ASSEMBLY DRAWING===
010	-0101	4478	-		1	BRACKET
020	-0101	3274-0001	-		2	BOLT
030	-0101	4830	-		2	LID
040	-0101	4904	-		2	SPACER RING
050	-0101	4906	-		2	SPROCKET
060	-0101	312151-0287	-		6	SCREW MF6S4X8FZB
070	-0101	312316-0366	-		1	GRUB SCREW SK6SS6X12FZB
080	-0101	315202-0520	-		2	O-RING 26,58X3,53
090	-0101	321330-0103	-		2	BALL BEARISKF3203
100	-0101	344502-0026	-		2	NIPPLE L AHKR1/8"

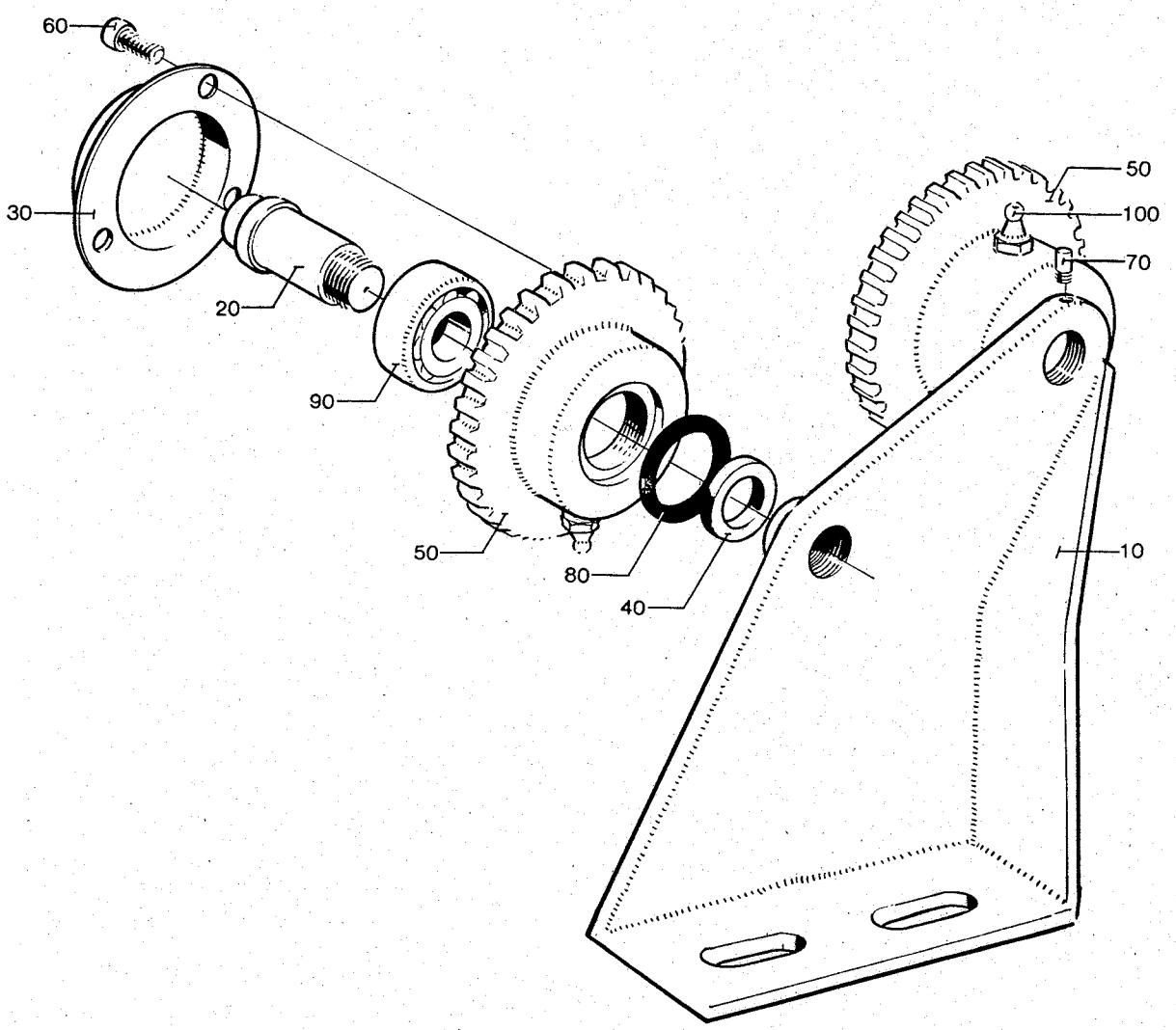
60
30
20
90
50
80
40
50
100
70
10

LAST ALTERATION: AM 6085 83-09-08
630305 633305
AM 1530
66-08-04

POS	VAR	PART NUMBER	SP	EH	QTY	DESCRIPTION
	-0101	S- 4941-SHEET	-1			===ASSEMBLY DRAWING===
010	-0101	4942	-		1	COVER
020	-0101	312125-0366	-		1	SLOTTED HEMCS6X12RFR
030	-0101	318800-0103	-		1	KNOB LA D.25-M6

TETRA PAK

1/8410

S-4941-1

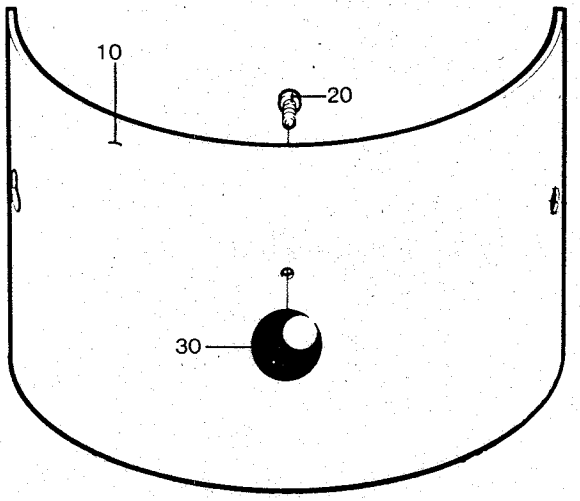

ÄM 6085

LAST ALTERATION: AM 5976 83-09-08
630205 630305 630505 633205 633305 633505
AM 1530
66-08-04

POS	VAR	PART NUMBER	SP	EH	QTY	DESCRIPTION	
	-0101	S- 6830-SHEET	-1			===ASSEMBLY DRAWING===	
010	-0101	6827	-		1	CONE	
020	-0101	6831	-		1	BOLT	
030	-0101	312111-0340	-		1	SCREW	MC6S5X45FZB

S-6830-1

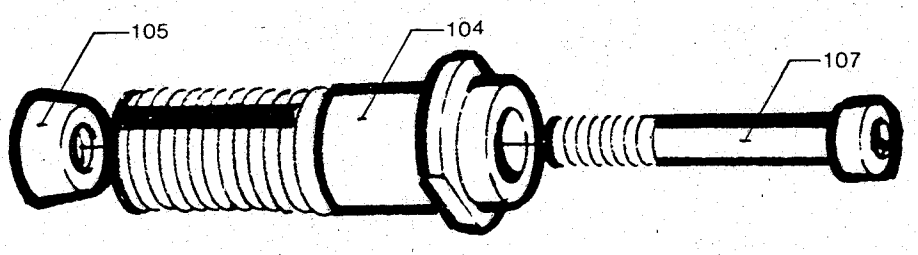

ÄM 5976

LAST ALTERATION: AM 8410 86-03-10
297984-010V 434042-010V 630205-150V 630305-120V
AM 1530
66-08-04

GROUP	FILLMACHINE	FILLMACHINE
-0101	TS/300	TSA/300
-0102	TS/150	TSA/150

POS	VAR	PART NUMBER	SP UN	QTY	DESCRIPTION	
	-0101 S-	6880-SHEET	-1		===ASSEMBLY DRAWING===	
	-0102		-1			
010	ALL	6881	-	1	BRACKET	
020	ALL	6882	-	1	GUIDE ARM	
030	ALL	312101-0368	-	2	SCREW	M6S6X16FZB
040	ALL	315101-0153	-	2	WASHER	BRB6,4X12FZB
050	ALL	315401-0153	-	2	WASHER	FBB6,1FZB

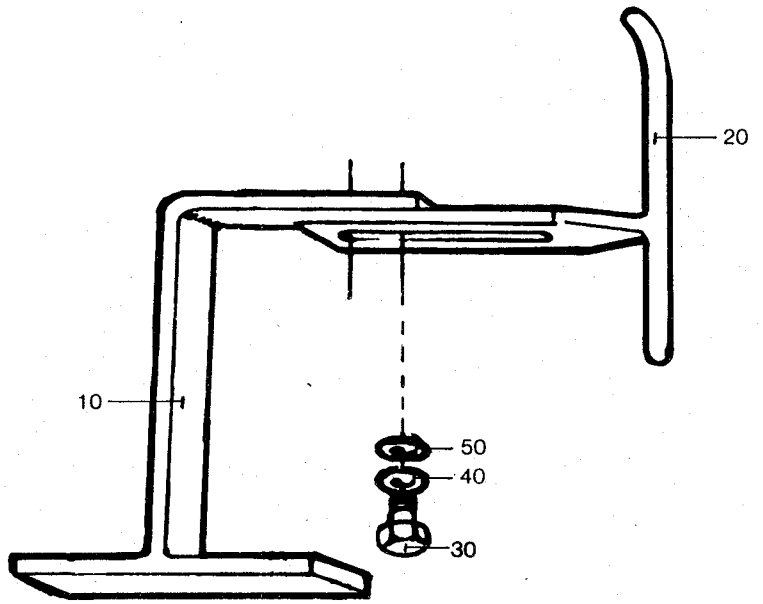
20
10
50
40
30

LAST ALTERATION: AM 9774 87-01-12
297984-010V 630305-120V
AM 1082
65-02-02

GROUP

-0101 01 UTAN RIVANVISNING
-0102 02 MED RIVANVISNING PB229
-0103 03 MED RIVANVISNING PB248
-0104 04 MED RIVANVISNING PB206

POS	VAR	PART NUMBER	SP UN	QTY	DESCRIPTION
	-0101	S- 7296-SHEET	-1		===ASSEMBLY DRAWING===
	-0102		-1		
	-0103		-1		
	-0104		-1		
010	-0101	484816	-	4	KNIFE
020	-0102	7599	-	4	GUIDE
	-0103			4	
	-0104			4	
030	-0102	10977-0001	-	4	NOTCHING KNIFE
040	-0103	10977-0002	-	4	NOTCHING KNIFE
050	-0104	10977-0003	-	4	NOTCHING KNIFE
060	ALL	G- 7291	-	1	WHEEL
070	ALL	3283	-	2	WASHER
080	ALL	4455	-	1	SHAFT
090	ALL	4486	-	8	PIN
100	ALL	4487-0001	-	1	GEAR WHEEL
110	ALL	4487-0002	-	1	GEAR WHEEL
120	ALL	6506	-	2	OIL SEAL
130	ALL	311101-0406	-	2	CYLINDRICACP8H6X32
140	ALL	312101-0368	-	6	SCREW M6S6X16FZB
150	ALL	312101-0455	-	8	SCREW M6S8X30FZB
160	ALL	312111-0371	-	8	SCREW MC6S6X22FZB
170	ALL	312111-0533	-	2	SCREW MC6S12X22FZB
180	ALL	312311-0372	-	8	GRUB SCREW T6SS6X25FZB
190	ALL	312601-0316	-	16	NUT M6M6FZB
200	ALL	315101-0165	-	8	WASHER BRB8,4X16FZB
210	ALL	315111-0153	-	8	WASHER TBRB6,4X12FZB
220	ALL	315401-0153	-	6	WASHER FBB6,1FZB
230	ALL	315401-0165	-	8	WASHER FBB8,2FZB
240	ALL	321312-0106	-	2	BALL BEARISKF6206RS
250	ALL	344502-0026	-	2	NIPPLE L AHKR1/8"

THIS DRAWING MUST NOT WITHOUT THE CONSENT OF TETRA PAK BE COPIED, TRANSMITTED OR DISCLOSED TO ANY THIRD PARTY.

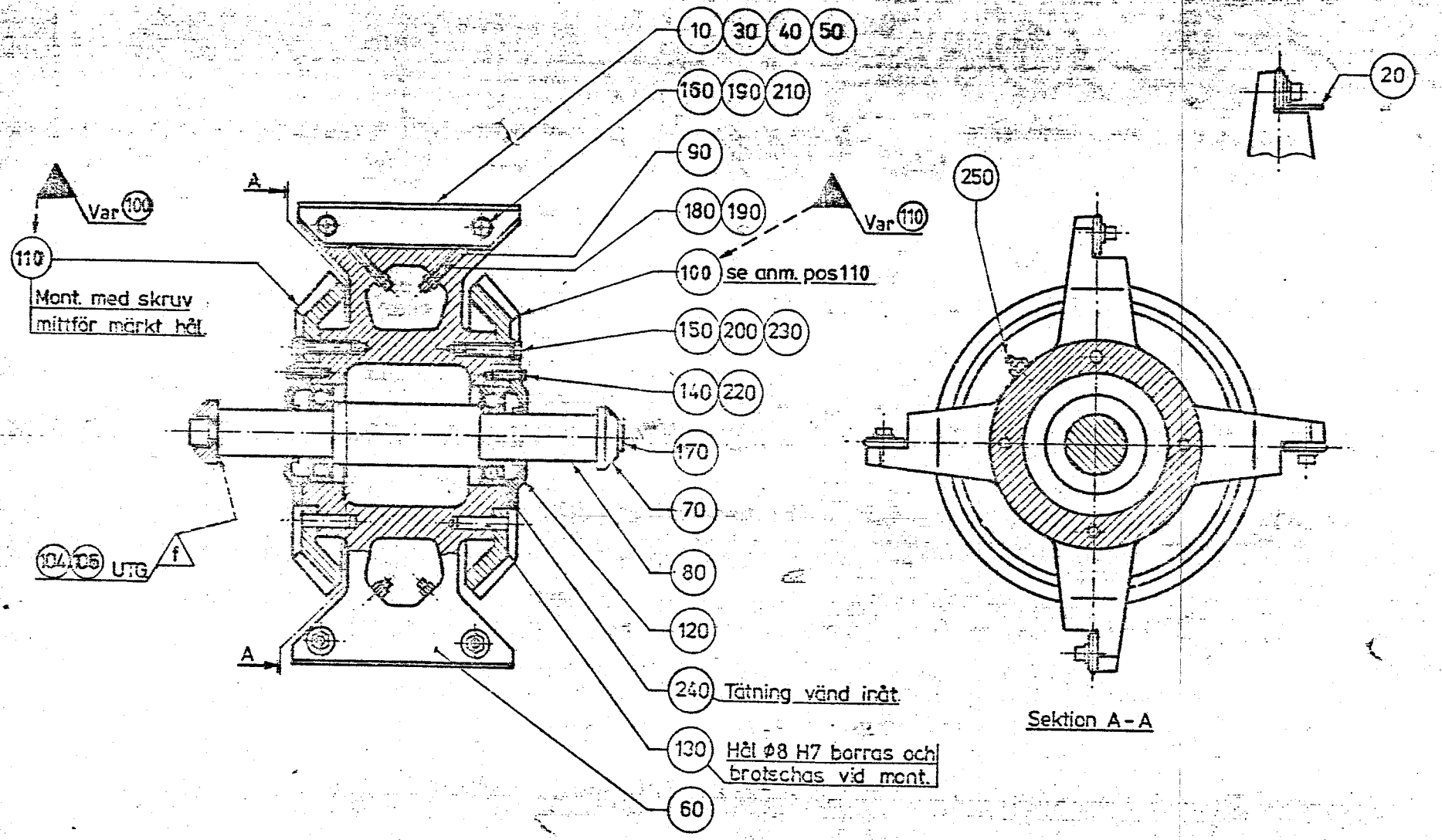

1986-05-23

								S2-297 984-1						
								TILLHÖR SAMST NR ASSEMBLY DWG. NO		MATERIAL				ANMÄRKNING REMARKS
								85/BÅ	58 12 12			1 : 2,5		
2g	ÄM8823	86 0129	MS	1f	ÄM 6085 Omritad	82 05 12	BÅ	RITAD DRAWN	DATUM DATE	KONTR. CHKD	GODK. APPR.	SKALA SCALE	YTBESK. SURFACE FINISH	YTBEHANDLING EMPLOYMENT
NOT. NOTE	ÄNDRING ALTERATION	DATUM DATE	INF. BY	NOT. NOTE	ÄNDRING ALTERATION	DATUM DATE	INF. BY	TETRA PAK LUND SWEDEN		KLIPPHJUL				S3-7296-1

LAST ALTERATION: AM 8410 86-03-10
630205-150V 630235-010V 630305-120V 633205-120V 633305-060V
AM 3654
74-04-02

GROUP	PACKER	ELEVATOR
-0201	B	-
-0202	A	E

POS	VAR	PART NUMBER	SP UN	QTY	DESCRIPTION
	-0201	S- 13372-SHEET	-1		===ASSEMBLY DRAWING===
	-0202		-1		
010	-0202	G- 4460	-	1	DOUBLE SPROCKET
020	-0201	33939	-	1	SPROCKET
030	-0202	312111-0452	-	4	SCREW MC6S8X22FZB
040	-0201	312111-0461	-	4	SCREW MC6S8X50FZB
050	ALL	12358	-	1	SHAFT
060	ALL	12359	-	1	AXLE SUPPORT
070	ALL	3303	-	1	GEAR WHEEL
080	ALL	5056	-	1	BEARING HOUSING
090	ALL	5057	-	1	FLANGED SHAFT
100	ALL	5058	-	1	LID
110	ALL	5059	-	1	SPROCKET
120	ALL	11460	-	1	WASHER
140	ALL	312101-0453	-	1	SCREW M6S8X25FZB
150	ALL	312111-0329	-	3	SCREW MC6S5X16FZB
160	ALL	312151-0291	-	3	SCREW MF6S4X12FZB
170	ALL	312151-0327	-	3	SCREW MF6S5X12FZB
180	ALL	315121-0165	-	1	WASHER TBRSB8,4X26FZB
190	ALL	315202-0224	-	1	O-RING 42,2X3
200	ALL	315202-0523	-	1	O-RING 31,34X3,53
210	ALL	315401-0146	-	3	WASHER FBB5,1FZB
220	ALL	315401-0165	-	5	WASHER FBB8,2FZB
230	ALL	315701-0230	-	1	FLAT WEDGE6X6X16
240	ALL	315701-0260	-	1	FLAT WEDGE8X7X14
250	ALL	321313-0103	-	1	BALL BEARISKF6203-2RS
260	ALL	321330-0105	-	1	BALL BEARISKF3205
270	ALL	344502-0026	-	1	NIPPLE L AHKR1/8"

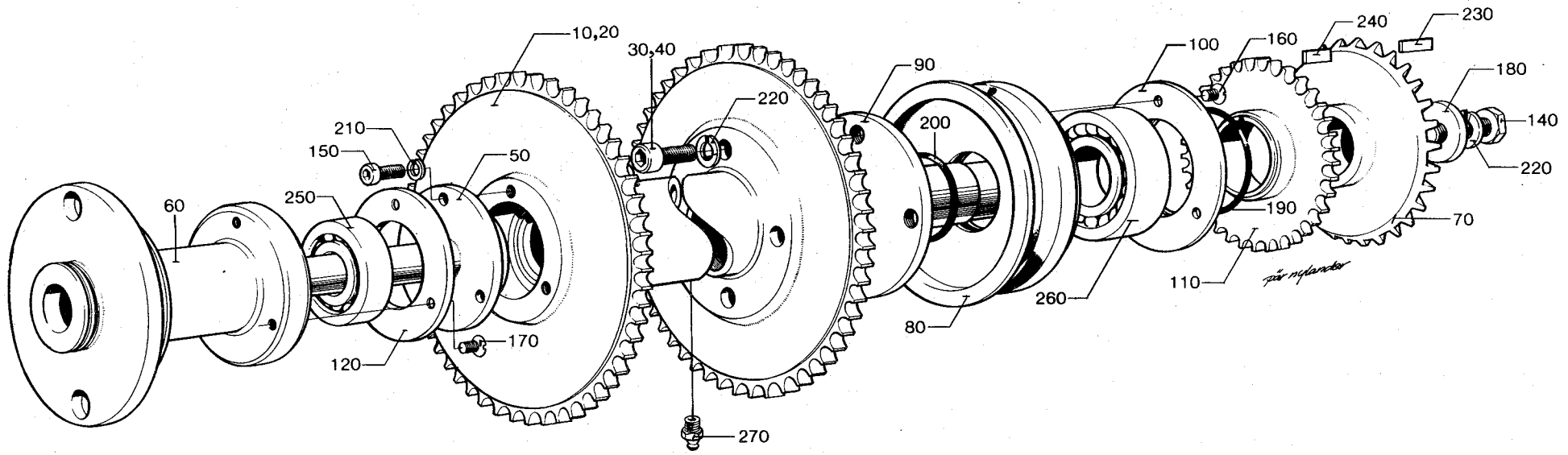
10,20
30,40
90
100
160
240
230
180
140
220
210
150
50
220
200
60
250
190
70
120
170
80
260
110
för nylandor
270

ÄM 6085

LAST ALTERATION: AM 7841 85-10-21
630205-150V 630305-120V 630505-100V 633008-070V 633205-120V
633305-060V 633505-060V
AM 4327
79-08-29

POS	VAR	PART NUMBER	SP	EH	QTY	DESCRIPTION
	-0201	S- 230177-SHEET	-3			===ASSEMBLY DRAWING===
010	-0201	230179	-		1	GUARD
020	-0201	252665	-		1	BRACKET
030	-0201	230180	-		1	COVER
040	-0201	7309	-		1	HANDLE
050	-0201	90030-0004	-		1	CONNECTION
060	-0201	90030-0126	-		1	PIPE CONNECTION
070	-0201	90030-0127	-		1	PIPE CONNECITON
080	-0201	90030-0128	-		1	PIPE CONNECTION
090	-0201	90030-0129	-		1	PIPE CONNECTION
100	-0201	90030-0130	-		1	PIPE CONNECITON
110	-0201	90030-0131	-		1	PIPE CONNECTION
120	-0201	90030-0132	-		1	PLUG
125	-0201	90030-0146	-		1	CONNECTION
130	-0201	90042-0128	-		1	SOLENOID VALVE
140	-0201	90042-0350	-		1	BRACKET
150	-0201	90043-0015	-		1	PRESSURE GAUGE
160	-0201	90048-0007	-		1	OILPUMP
		90048-0338	R		0	* GASKET
		90048-0417	R		0	* LEVEL GLASS
		90048-0418	R		0	* MOTOR
		90048-0419	R		0	* PUMP
		90048-0420	R		0	* FILTER
		90048-0421	R		0	* GASKET
		90048-0423	R		0	* VALVE SEAT
		90048-0424	R		0	* BRACKET
		90048-0425	R		0	* ADJUSTING SCREW
		90048-0426	R		0	* SPRING
		90048-0427	R		0	* STEEL BALL
		90048-0441	R		0	* REPAIR KIT
		90048-0445	R		0	* FILLING NOZZLE
170	-0201	90048-0016	-		1	ACKUMULATOR
		90048-0447	R		0	* SPARE PARTS KIT
180	-0201	90074-0002	-		2	CLIP
190	-0201	90157-0021	-	ML	X	LOCKING FLUID
200	-0201	90165-0040	-		1	CLIP
210	-0201	90166-0011	-	M	3	HOSE
220	-0201	90266-0006	-	MM	X	TUBE
230	-0201	90266-0006	-	MM	X	TUBE
240	-0201	90274-0003	-		1	PRESSURE GUARD
		90274-0300	R		0	* CONTACT HOUSING
250	-0201	90415-0004	-		1	FILTER
		90415-0302	S		0	* FILTER
255	-0201	311101-0405	-		2	CYLINDRICACP8H6X30

POS	VAR	PART NUMBER	SP	EH	QTY	DESCRIPTION
260	-0201	312101-0362	-		2	SCREW M6S6X8FZB
270	-0201	312101-0461	-		4	SCREW M6S8X50FZB
280	-0201	312115-0327	-		4	SCREW MC6S5X12 A4 80
290	-0201	312121-0285	-		4	SLOTTED HEMCS4X6FZB
295	-0201	312121-0325	-		2	SLOTTED HEMCS5X10FZB
300	-0201	312121-0364	-		6	SLOTTED HEMCS6X10FZB
310	-0201	312204-0154	-		4	SCREW U6S5/16X25FZB
320	-0201	312311-0455	-		4	GRUB SCREW T6SS8X30FZB
330	-0201	312316-0284	-		2	GRUB SCREW SK6SS4X5FZB
340	-0201	315111-0165	-		8	WASHER TBRB8,4X16FZB
350	-0201	315233-0109	-		2	SEAL RING R1/8"
360	-0201	315233-0110	-		1	SEAL RING R1/4"
380	-0201	342731-0102	-		2	ELBOW COUP WE6-LRFZB
390	-0201	342754-0102	-		1	CROSS CONNK6-LFZB
400	-0201	342790-0202	-		1	CONNECTIONMAV6-S/R3/8FZB
405	-0201	352100-0107	-		1	CABLE GLANR.18,6-12
410	-0201	352101-0103	-		5	LEAD-IN G 18,6

TETRA PAK

2/8512

S-230177-3

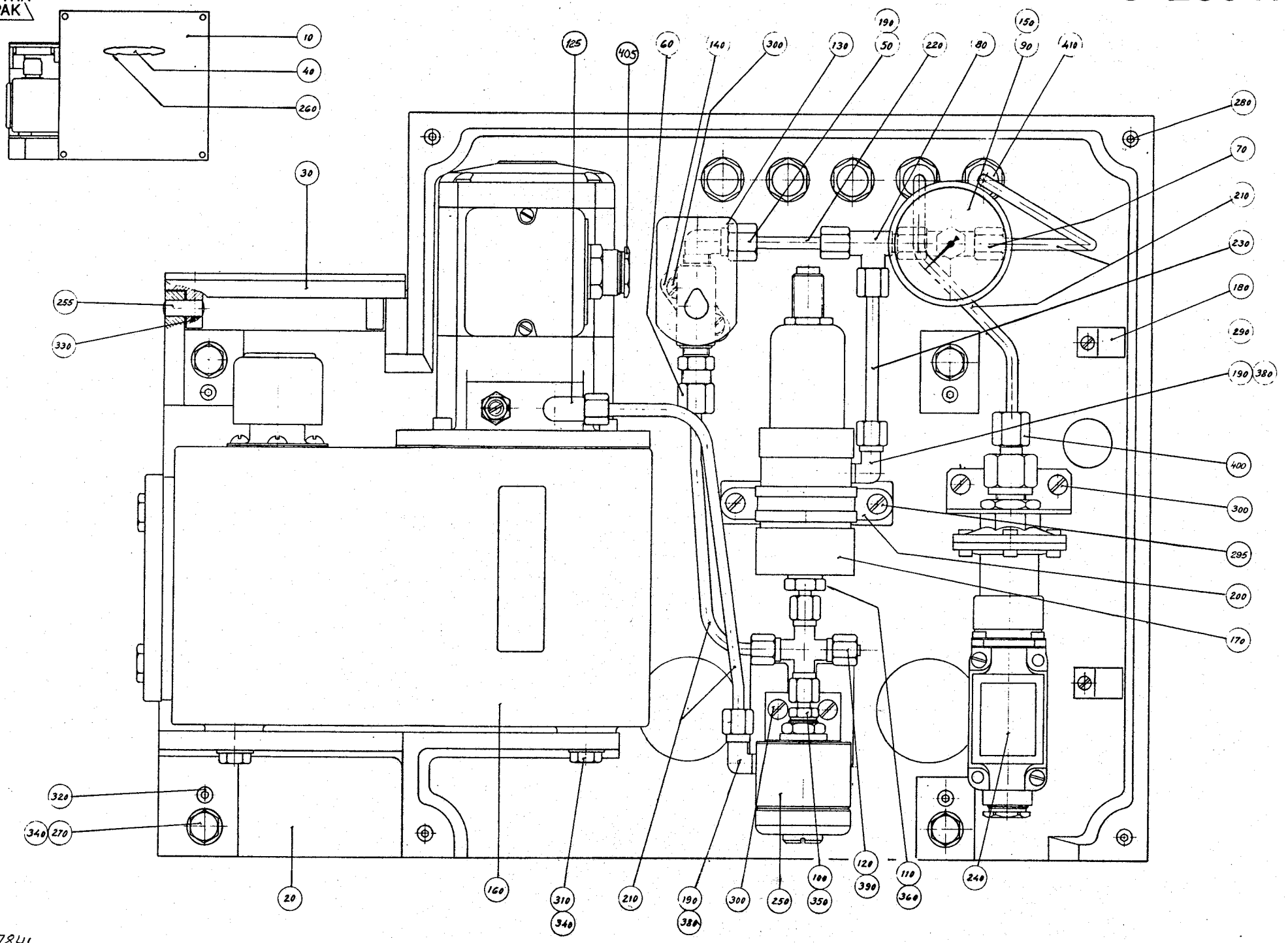

ÄM 7841

LAST ALTERATION: AM 10079 87-10-16
630205-170V 630235-010V 630305-140V 630505-120V 633205-130V
633305-070V 633505-080V
AM 8810
86-06-06

GROUP MACHINE CONTROL

-0301 RELAY
-0302 TPMC

POS	VAR	PART NUMBER	SP	UN	QTY	DESCRIPTION
	-0301	S- 230177-SHEET	-4			===ASSEMBLY DRAWING===
	-0302		-4			
130	-0301	90042-0128	-		1	SOLENOID VALVE
130	-0302	90042-0150	S		1	SOLENOID VALVE
405	-0301	352100-0107	-		1	CABLE GLANR.18,6-12
405	-0302	352136-0127	-		1	GLAND
010	ALL	230179	-		1	FRONT GUARD
020	ALL	G- 252665	-		1	BRACKET
030	ALL	230180	-		1	COVER
040	ALL	7309	-		1	HANDLE
050	ALL	90030-0004	-		1	CONNECTION
060	ALL	90030-0126	-		1	PIPE CONNECTION
070	ALL	90030-0127	-		1	PIPE CONNECITON
080	ALL	90030-0128	-		1	PIPE CONNECTION
090	ALL	90030-0129	-		1	PIPE CONNECTION
100	ALL	90030-0130	-		1	PIPE CONNECITON
110	ALL	90030-0131	-		1	PIPE CONNECTION
120	ALL	90030-0132	-		1	PLUG
125	ALL	90030-0146	-		1	CONNECTION
140	ALL	90042-0350	-		1	BRACKET
150	ALL	90043-0015	-		1	PRESSURE GAUGE
160	ALL	90048-0007	-		1	OILPUMP
		90048-0338	S		0	* GASKET
		90048-0417	S		0	* LEVEL GLASS
		90048-0418	S		0	* MOTOR
		90048-0419	S		0	* PUMP
		90048-0420	S		0	* FILTER
		90048-0421	S		0	* GASKET
		90048-0423	S		0	* VALVE SEAT
		90048-0424	S		0	* BRACKET
		90048-0425	S		0	* ADJUSTING SCREW
		90048-0426	S		0	* SPRING
		90048-0427	S		0	* STEEL BALL
		90048-0441	S		0	* REPAIR KIT
		90048-0445	S		0	* FILLING NOZZLE
170	ALL	90048-0016	-		1	ACKUMULATOR
		90048-0447	R		0	* SPARE PARTS KIT
180	ALL	90074-0002	-		2	CLIP
190	ALL	90157-0021	-	ML	X	LOCKING FLUID

POS	VAR	PART NUMBER	SP	UN	QTY	DESCRIPTION
200	ALL	90165-0040	-		1	CLIP
210	ALL	90166-0011	-	M	3	HOSE
220	ALL	90266-0006	-	MM	X	TUBE
230	ALL	90266-0006	-	MM	X	TUBE
240	ALL	90274-0056	-		1	PRESSURE GUARD
250	ALL	90415-0004	-		1	FILTER
		90415-0302	S		0	* FILTER
		90415-0329	S		0	* GASKET
255	ALL	311101-0405	-		2	CYLINDRICACP8H6X30
260	ALL	312101-0362	-		2	SCREW M6S6X8FZB
270	ALL	312101-0461	-		4	SCREW M6S8X50FZB
280	ALL	312115-0327	-		4	SCREW MC6S5X12 A4 80
290	ALL	312121-0285	-		4	SLOTTED HEMCS4X6FZB
295	ALL	312121-0325	-		2	SLOTTED HEMCS5X10FZB
297	ALL	312121-0339	-		2	SLOTTED HEMCS5X40FZB
300	ALL	312121-0364	-		4	SLOTTED HEMCS6X10FZB
310	ALL	312204-0154	-		4	SCREW U6S5/16X25FZB
330	ALL	312316-0284	-		2	GRUB SCREW SK6SS4X5FZB
340	ALL	315111-0165	-		8	WASHER TBRB8,4X16FZB
350	ALL	315233-0109	-		2	SEAL RING R1/8"
360	ALL	315233-0110	-		1	SEAL RING R1/4"
380	ALL	342731-0102	-		2	ELBOW COUP WE6-LRFZB
390	ALL	342754-0102	-		1	CROSS CONNK6-LFZB
400	ALL	342921-0114	-		1	PIPE CONNE6/4-1/4"
410	ALL	352101-0103	-		5	LEAD-IN G 18,6

S-230177-4

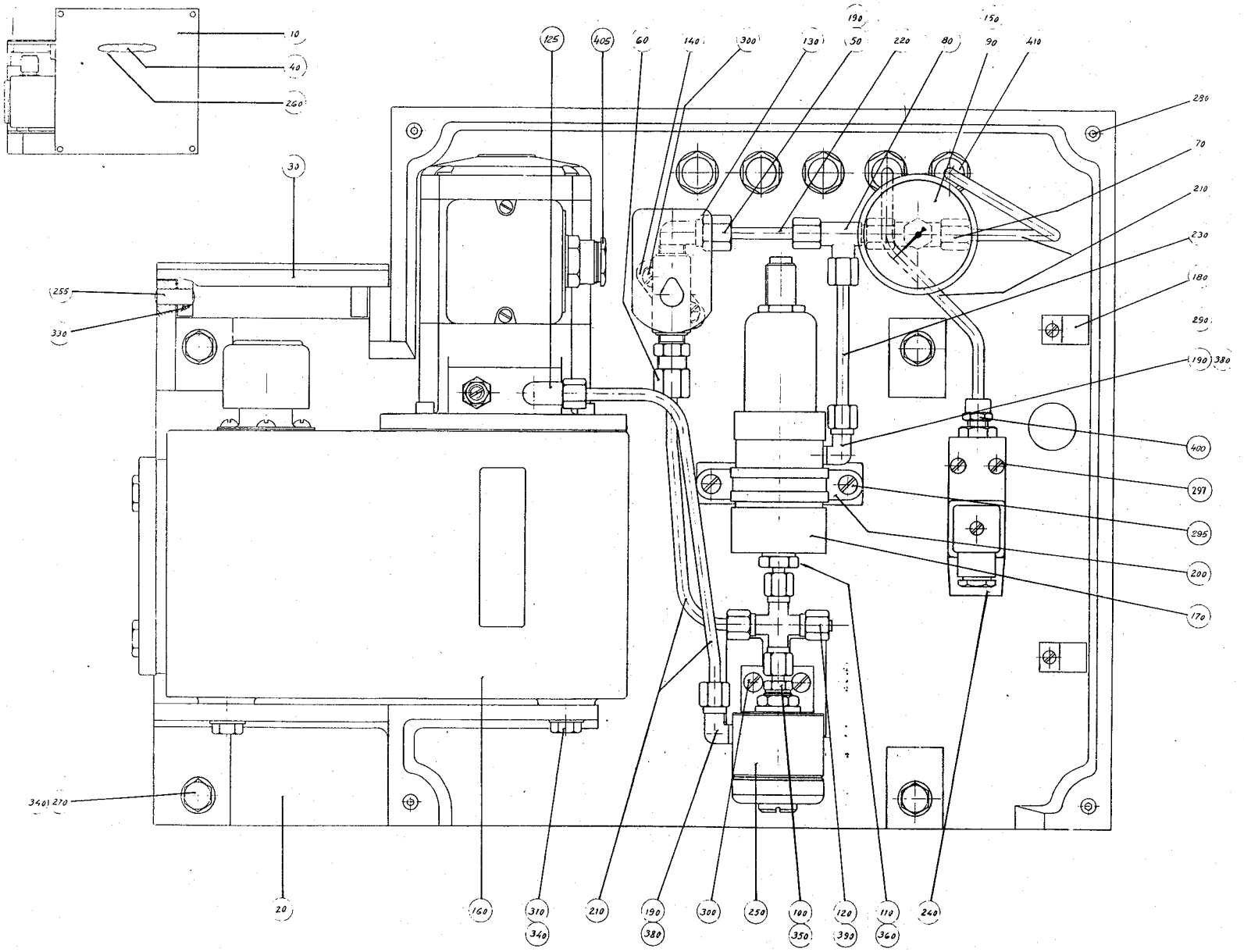
10
40
260
30
255
330
340
270
20
125
405
60
140
300
130
190
50
220
80
150
90
410
290
70
210
230
180
290
190
380
400
297
295
200
170
160
310
340
210
190
380
300
250
100
350
120
390
110
360
240

LAST ALTERATION: AM 5719 83-05-18
236638 630205 630305 630505 633005 633205 633305 633505
AM 4380
79-10-25

POS	VAR	PART NUMBER	SP	EH	QTY	DESCRIPTION
	-0101	S- 236637-SHEET	-1			===ASSEMBLY DRAWING===
109	-0101	8490-0003	-		1	RAIL
112	-0101	90077-0079	-		18	TERMINAL BLOCK
114	-0101	90135-0026	-		2	TERMINAL
116	-0101	359011-0802	-		1	LABEL BSFW 1-25

TETRA PAK

1/8310

S-236637-1

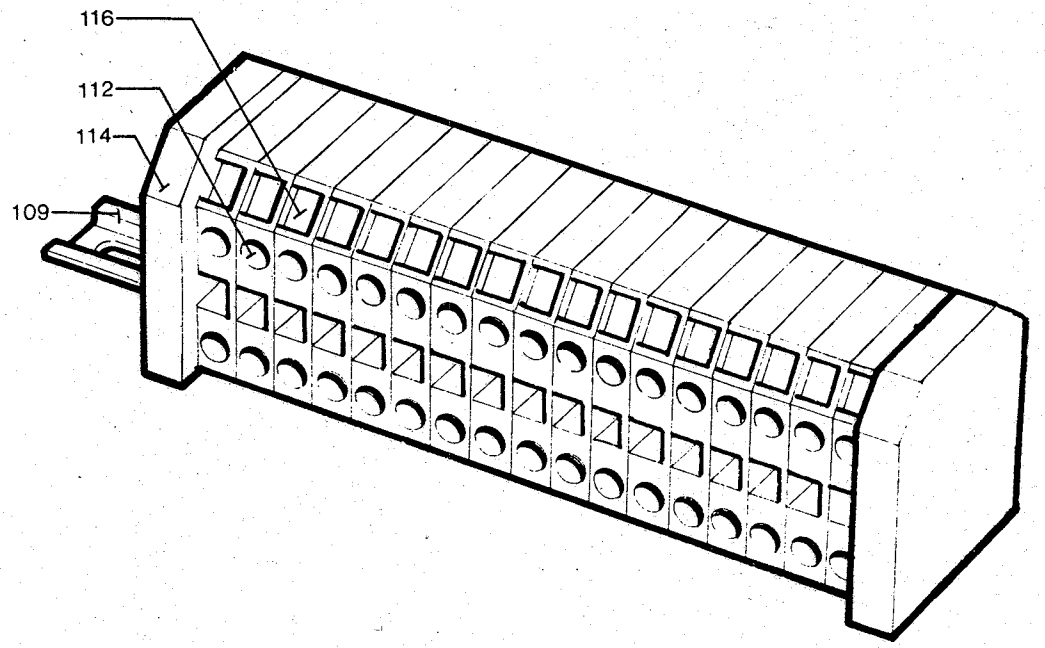

ÄH 5719

LAST ALTERATION: AM 7841 85-10-21
236641-030V 630205-160V 630305-130V 630505-110V 633205-120V
633305-060V 633505-070V
AM 5719
83-05-18

GROUP SEALING SYSTEM

-0201 IH
-0202 TPC

POS	VAR	PART NUMBER	SP	EH	QTY	DESCRIPTION
	-0201	S- 236638-SHEET	-2			===ASSEMBLY DRAWING===
	-0202		-3			
F190	ALL	C- 236637-0101	-		1	TERMINAL BLOCK
010	-0201	90002-0003	-		1	BLANK-OFF PLUG
020	-0201	90002-0013	-		3	BLANK-OFF PLUG
030	-0201	352103-0101	-		1	CABLE GLANR.15,2/4-8
	-0202				4	
040	-0202	352103-0106	-		1	CABLE GLANR.18,6/5-10
050	ALL	440578	-		1	CONNECTION BOX
060	ALL	10641	-		2	SPACER
070	ALL	312121-0291	-		2	SLOTTED HEMCS4X12FZB
080	ALL	315101-0136	-		2	WASHER BRB4,3X8FZB
090	ALL	352103-0115	-		1	CABLE GLANR.PR28,3/7-16

TETRA PAK

1/8312

S-236638-2

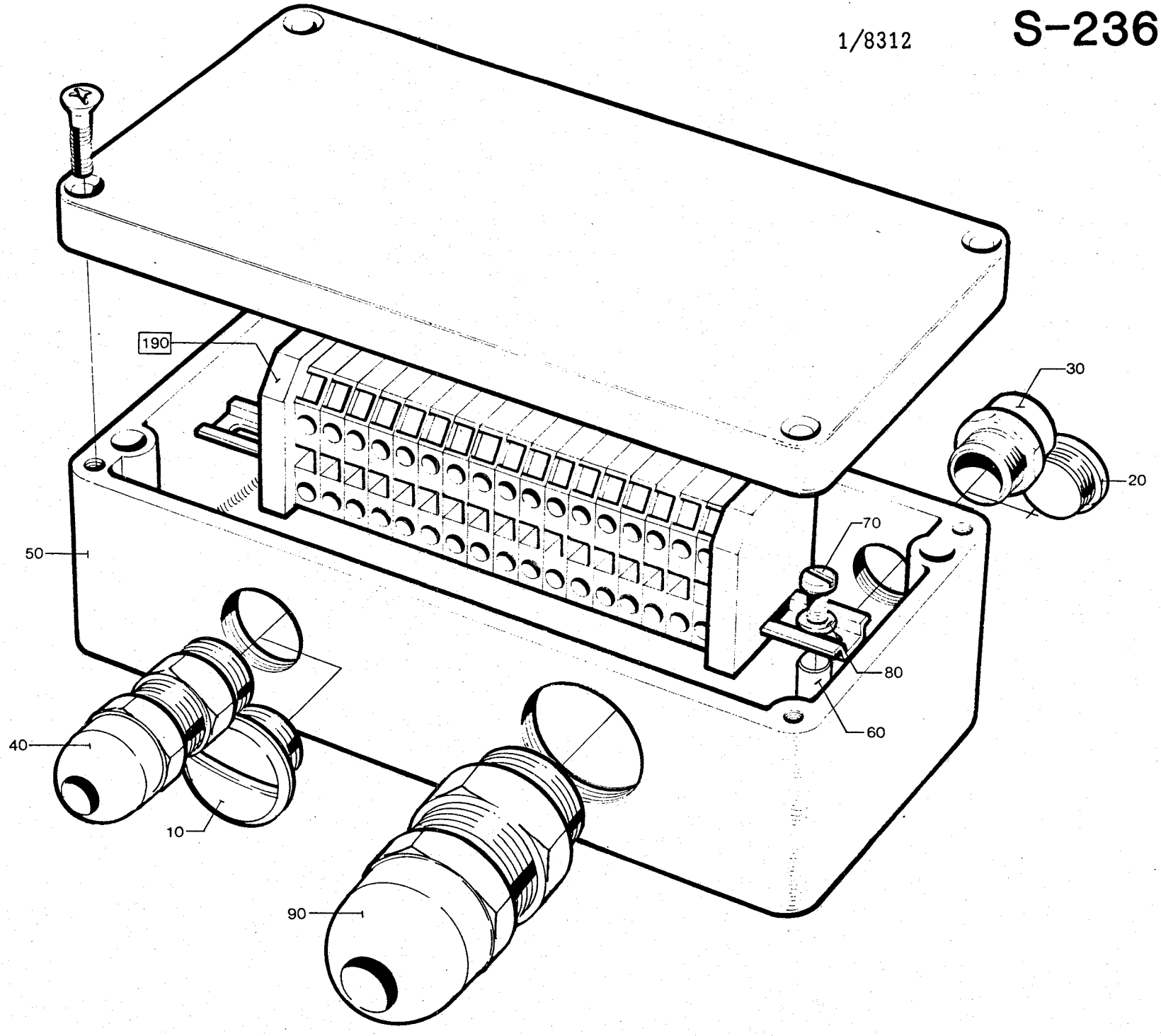

ÅM 6105

LAST ALTERATION: AM 8810 86-06-06
630205-160V 630305-130V 630505-110V 633205-120V 633305-060V
633505-070V
AM 5719
83-05-18

GROUP	FILLMACHINE	FILLMACHINE	SEALING SYSTEM
-0301	TS/150	TSA/150	IH
-0302	TS/150	TSA/150	TPC
	TS/500	TSA/500	TPC
-0303	TSA/500	-	TPC
	WITHOUT AL-FOIL.		
-0304	TS/300	TSA/300	TPC
-0305	TSA/300	-	IH
-0306	TSA/500	-	IH

POS	VAR	PART NUMBER	SP UN	QTY	DESCRIPTION
	-0301	S- 236641-SHEET	-2		===ASSEMBLY DRAWING===
	-0302		-3		
	-0303		-3		
	-0304		-3		
	-0305		-2		
	-0306		-2		
F180	ALL	C- 236638-020V	-	1	CONNECTION BOX
		C- 236637-0101			. TERMINAL BLOCK
010	-0301	283791	-	1	CAM
010	-0302	440476-0001	-	1	CAM
010	-0303	440476-0002	-	1	CAM
010	-0304	440477	-	1	CAM
010	-0305	449959	-	1	CAM
010	-0306	458790	-	1	CAM
020	-0301	236647-0001	-	1	GAUGE BLOCK
	-0302			2	
	-0303			2	
	-0304			2	
	-0305			1	
	-0306			1	
030	-0301	236986	-	2	STUD BOLT
	-0305			2	
	-0306			2	
030	-0302	445975	-	4	STUD BOLT
	-0303			4	
	-0304			4	
040	-0301	90044-0104	R	1	PROXIMITY SWITCH
	-0302			4	
	-0303			4	
	-0304			4	
	-0305			1	
	-0306			1	
050	-0301	90099-0050	-	4	NUT

POS	VAR	PART NUMBER	SP UN	QTY	DESCRIPTION
	-0302			8	
	-0303			8	
	-0304			8	
	-0305			4	
	-0306			4	
060	-0301	315101-0124	-	4	WASHER BRB3,2X6FZB
	-0302			8	
	-0303			8	
	-0304			8	
	-0305			4	
	-0306			4	
070	ALL	G- 236644	-	1	MACHINE BODY
080	ALL	236645	-	1	HOLDER
090	ALL	236646	-	1	COVER
100	ALL	6216	-	1	SPROCKET
110	ALL	230613	-	1	FLANGE
120	ALL	236649	-	1	SHAFT
130	ALL	522159	-	2	BRACKET
140	ALL	263110	-	1	SIGN
150	ALL	90208-0004	-	1	LOCKING ELEMENT
160	ALL	312101-0368	-	2	SCREW M6S6X16FZB
170	ALL	312111-0327	-	3	SCREW MC6S5X12FZB
180	ALL	312111-0341	-	2	SCREW MC6S5X50FZB
190	ALL	312121-0293	-	2	SLOTTED HEMCS4X16FZB
200	ALL	312121-0327	-	6	SLOTTED HEMCS5X12FZB
210	ALL	312121-0366	-	2	SLOTTED HEMCS6X12FZB
220	ALL	312306-0287	-	1	GRUB SCREW P6SS4X8FZB
230	ALL	315101-0146	-	9	WASHER BRB5,3X10FZB
240	ALL	315101-0153	-	6	WASHER BRB6,4X12FZB
250	ALL	315701-0198	-	1	FLAT WEDGE5X5X14
260	ALL	321309-0102	-	2	BALL BEARISKF6202
270	ALL	321600-0102	-	2	OIL SEAL LL1535

S-236641-3

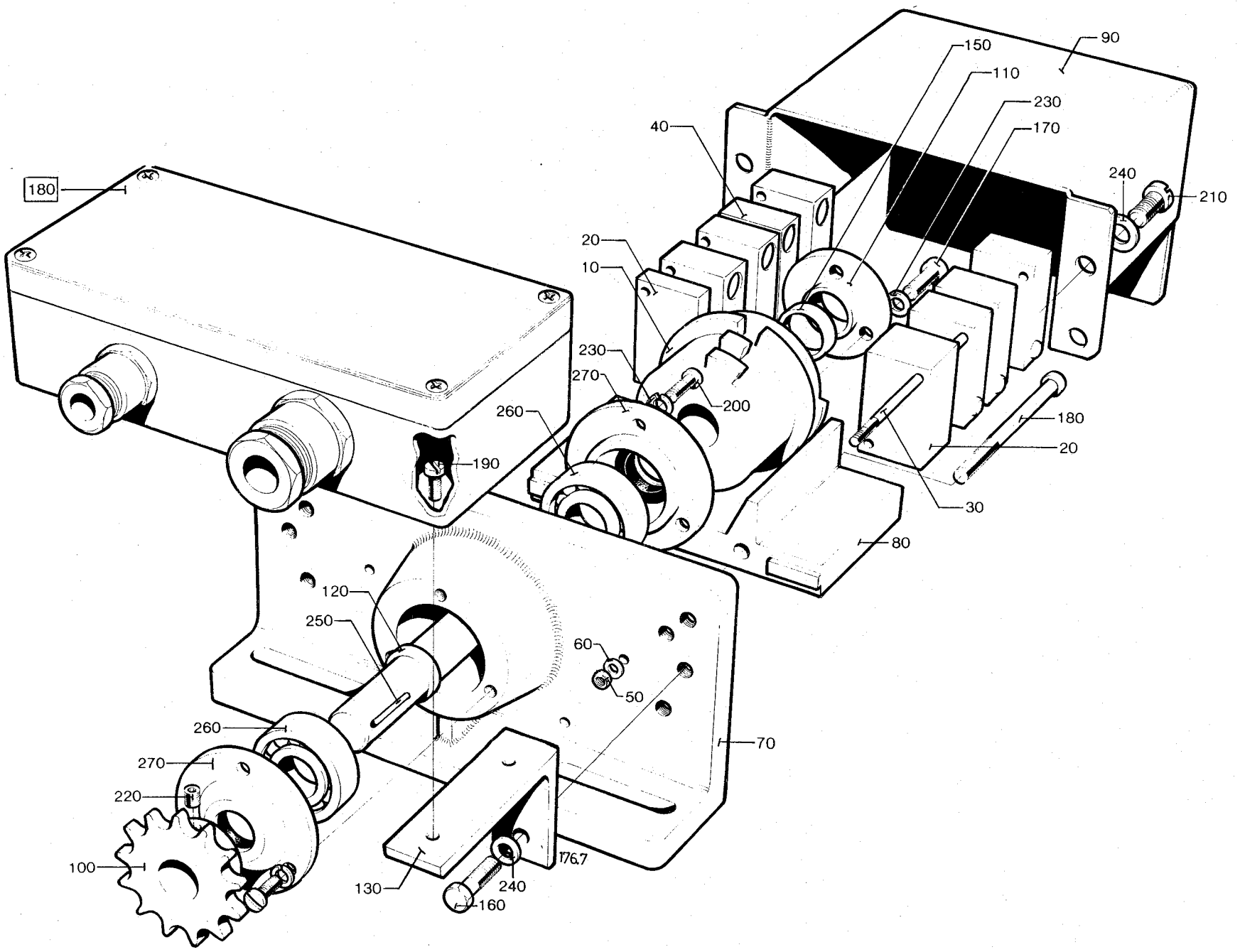

ÄM 5719

LAST ALTERATION: AM 8823 86-05-17
630305-130V 633305-060V
AM 6085
83-09-08

GROUP	FILLMACHINE	PACKER	ELEVATOR
-0201	TS/300	A	E
-0202	TS/300	B	-
-0203	TSA/300	A	E
-0204	TSA/300	B	-

POS	VAR	PART NUMBER	SP UN	QTY	DESCRIPTION
	-0201	S- 263719-SHEET	-4		===ASSEMBLY DRAWING===
	-0201		-5		
	-0202		-4		
	-0202		-5		
	-0202		-6		
	-0203		-7		
	-0203		-8		
	-0204		-7		
	-0204		-8		
	-0204		-9		
010	-0202	36291-0002	-	1	GUIDE PLATE
	-0204			1	
010	-0201	4451	-	1	GUIDE PLATE
	-0203			1	
012	-0201	263204	-	1	FRAME
	-0202			1	
013	-0203	3269	-	1	BRACKET
	-0204			1	
014	-0203	3270	-	1	BRACKET
	-0204			1	
015	-0201	3271	-	5	BRACKET
	-0202			5	
	-0203			3	
	-0204			3	
020	-0202	36265	-	1	BRACKET
	-0204			1	
030	-0202	36266	-	1	BRACKET
	-0204			1	
040	-0202	36267	-	1	PLATE
	-0204			1	
050	-0202	36268	-	1	PLATE
	-0204			1	
060	-0202	36284	-	1	PROTECTION PLATE
	-0204			1	
064	-0201	263267	-	3	SPACER
	-0202			3	
065	-0201	263268	-	1	SPACER
	-0202			1	
066	-0201	263269	-	1	SPACER

POS	VAR	PART NUMBER	SP UN	QTY	DESCRIPTION	
	-0202			1		
067	-0201	450083	-	1	PLATE	
	-0202			1		
070	-0201	3324	-	4	BAR	
	-0203			4		
070	-0202	33938	-	4	BAR	
	-0204			4		
080	-0201	3274-0001	-	1	BOLT	
	-0203			1		
090	-0201	3311	-	1	STUD	
	-0203			1		
100	-0201	3329	-	2	GUIDE RAIL	
	-0203			2		
100	-0202	33936	-	2	GUIDE PLATE	
	-0204			2		
110	-0201	4453	-	4	HOLDER	
	-0203			4		
110	-0202	36269	-	2	BRACKET	
	-0204			2		
120	-0201	4830	-	2	LID	
	-0203			2		
130	-0201	4904	-	2	SPACER RING	
	-0203			2		
140	-0201	5036	-	2	SPROCKET	
	-0203			2		
150	-0202	33935	-	2	BRACKET	
	-0204			2		
160	-0202	36261	-	1	SPACER	
	-0204			1		
170	-0202	36262	-	1	SPACER	
	-0204			1		
175	-0201	450084	-	1	PLATE	
	-0202			1		
180	-0202	312101-0327	-	2	SCREW	M6S5X12FZB
	-0204			2		
190	-0201	312101-0451	-	8	SCREW	M6S8X20FZB
	-0202			4		
	-0203			8		
	-0204			4		
195	-0201	312101-0495	-	39	SCREW	M6S10X30FZB
	-0202			39		
	-0203			25		
	-0204			25		
196	-0201	312101-0556	-	5	SCREW	M6S12X120FZB
	-0202			5		
200	-0202	312105-0366	-	1	SCREW	M6S6X12RFR
	-0204			1		
210	-0202	312111-0459	-	6	SCREW	MC6S8X40FZB
	-0204			6		

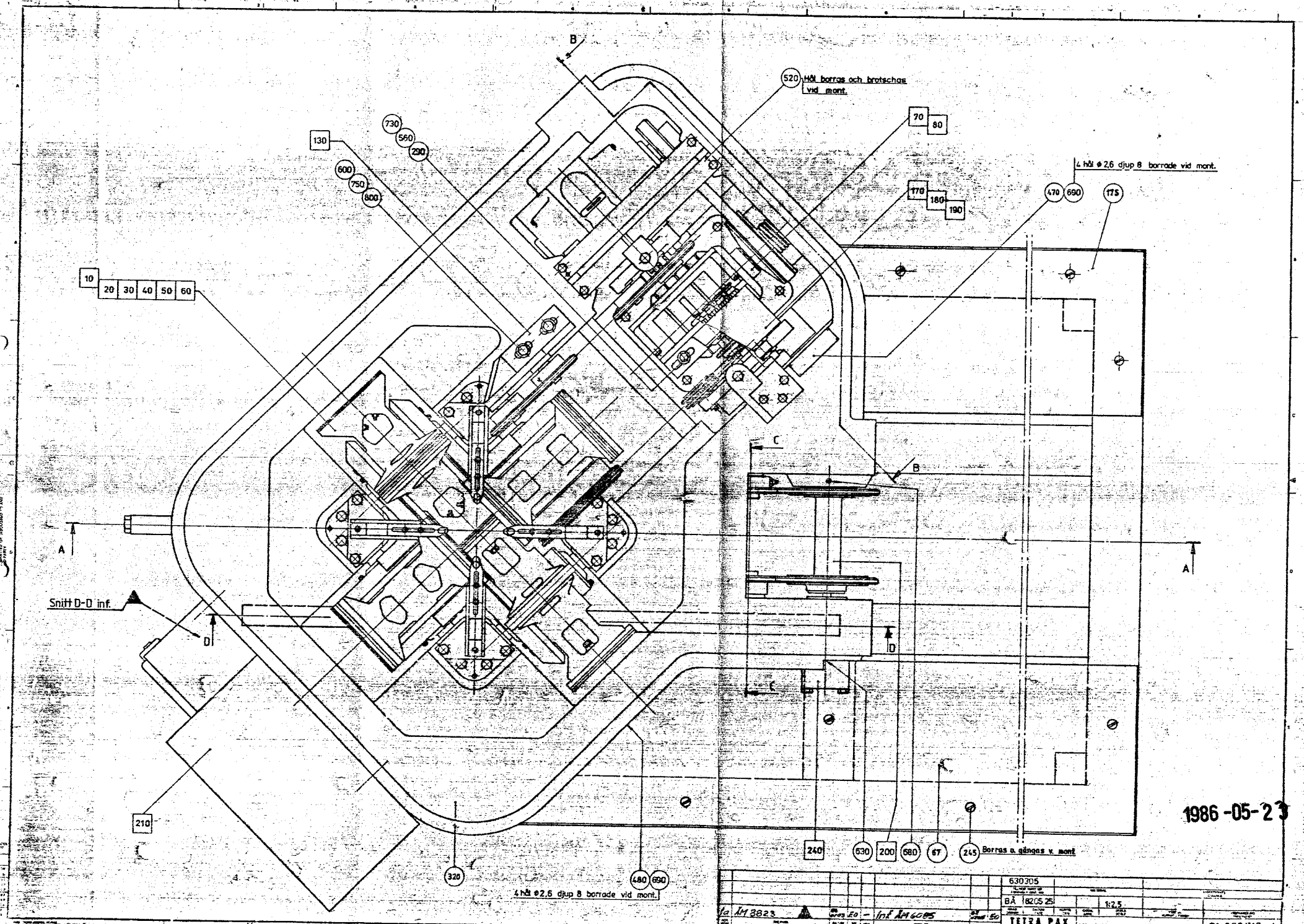
520 Hål borras och brotschas vid mont.
4 hål ø2,6 djup 8 borrade vid mont.
Snitt D-D inf.
4 hål ø2,6 djup 8 borrade vid mont.
Borras o gängas v. mont
1986-05-23
630305
BÅ 8205 25
1:2,5
TETRA PAK
KLIPPMASKIN T300
S1-263719-4

POS	VAR	PART NUMBER	SP UN	QTY	DESCRIPTION
220	-0202	312111-0461	-	2	SCREW MC6S8X50FZB
	-0204			2	
230	-0201	312151-0287	-	6	SCREW MF6S4X8FZB
	-0203			6	
240	-0202	312151-0636	-	4	SCREW MF6S16X80FZB
	-0204			4	
245	-0201	312165-0366	-	8	SLOTTED HEMKFS6X12RFR
	-0202			8	
250	-0201	312316-0530	-	2	GRUB SCREW SK6SS12X16FZB
	-0203			2	
260	-0202	315101-0146	-	2	WASHER BRB5,3X10FZB
	-0204			2	
265	-0201	315101-0173	-	31	WASHER BRB10,5X22FZB
	-0202			31	
	-0203			33	
	-0204			33	
270	-0202	315105-0153	-	1	WASHER BRB6,4X12RFR
	-0204			1	
275	-0201	315121-0178	-	5	WASHER TBRSB13X36FZB
	-0202			5	
280	-0201	315203-0520	-	2	O-RING 26,58X3,53F
	-0203			2	
290	-0201	315401-0165	-	25	WASHER FBB8,2FZB
	-0202			23	
	-0203			25	
	-0204			23	
295	-0201	315401-0173	-	28	WASHER FBB10,2FZB
	-0202			28	
	-0203			12	
	-0204			12	
300	-0201	321330-0103	-	2	BALL BEARISKF3203
	-0203			2	
310	-0201	344502-0026	-	2	NIPPLE L AHKR1/8"
	-0203			2	
320	ALL	G- 4446	-	1	CUTTING MECHANISM BODY
340	ALL	4452	-	1	MOTOR COVER
350	ALL	284539	-	1	SHELF
370	ALL	G- 4447	-	1	SHELF
380	ALL	284540	-	2	BRACKET
420	ALL	3318	-	5	LEG
430	ALL	4488	-	1	BRACKET
440	ALL	7309	-	2	HANDLE
450	ALL	7470-0005	-	1	CHAIN
460	ALL	10920	-	1	TENSION SPRING
470	ALL	20497	-	1	GROUP NUMBER PLATE
480	ALL	27402	-	1	MACHINE NO PLATE
490	ALL	440467	-	1	CABLE HOLDER
500	ALL	90089-0003	-	1	SLEEVE
510	ALL	311211-0267	-	2	TAPER PIN GKP5X5X30

POS	VAR	PART NUMBER	SP UN	QTY	DESCRIPTION
520	ALL	311303-0310	-	8	SLOTTED PIRPB5X20FZB
530	ALL	311303-0318	-	4	SLOTTED PIRPB5X40FZB
540	ALL	312101-0327	-	3	SCREW M6S5X12FZB
550	ALL	312101-0366	-	2	SCREW M6S6X12FZB
560	ALL	312101-0449	-	4	SCREW M6S8X16FZB
570	ALL	312101-0455	-	13	SCREW M6S8X30FZB
590	ALL	312101-0499	-	4	SCREW M6S10X40FZB
600	ALL	312101-0540	-	2	SCREW M6S12X40FZB
620	ALL	312111-0293	-	8	SCREW MC6S4X16FZB
630	ALL	312111-0368	-	2	SCREW MC6S6X16FZB
640	ALL	312111-0447	-	2	SCREW MC6S8X12FZB
650	ALL	312125-0333	-	2	SLOTTED HEMCS5X25RFR
670	ALL	312165-0372	-	4	SLOTTED HEMKFS6X25RFR
680	ALL	312311-0368	-	2	GRUB SCREW T6SS6X16FZB
690	ALL	312502-0221	-	8	DRIVE SCREKDS4X6FNB
700	ALL	312601-0314	-	4	NUT M6M5FZB
710	ALL	312601-0320	-	4	NUT M6M10FZB
720	ALL	315101-0136	-	16	WASHER BRB4,3X8FZB
730	ALL	315101-0165	-	2	WASHER BRB8,4X16FZB
750	ALL	315101-0178	-	2	WASHER BRB13X24FZB
770	ALL	315401-0136	-	8	WASHER FBB4,1FZB
780	ALL	315401-0153	-	1	WASHER FBB6,1FZB
800	ALL	315401-0178	-	2	WASHER FBB12,2FZB
810	ALL	318201-0054	-	1	ROLLER CHA3/8"
820	ALL	318231-0126	-	1	ROLLER CHA3/8"
830	ALL	321601-0103	-	1	OIL SEAL LL40
840	ALL	352100-0106	-	1	CABLE GLANR.18,6-10,5

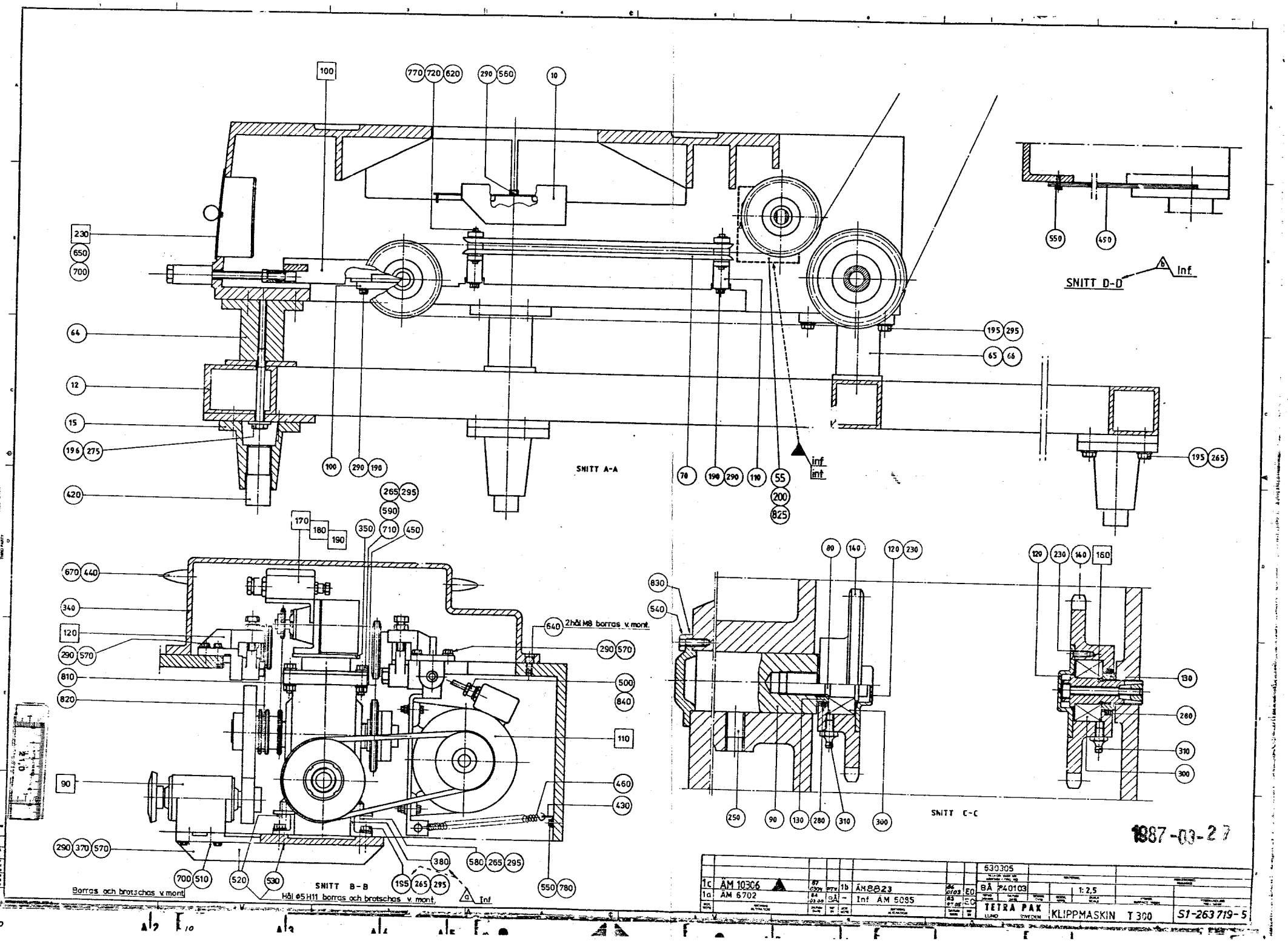
SNITT A-A
SNITT B-B
SNITT C-C
SNITT D-D
inf
int
Inf
2hål M8 borras v. mont.
Borras och brotschas v. mont
Hål Ø5 H11 borras och brotschas v. mont.
1987-03-27
630305
1c ÅM 10306
1a ÅM 6702
1b ÅM8823
Inf ÅM 5085
BÅ P40103
1:2,5
TETRA PAK
KLIPPMASKIN T 300
S1-263719-5

LAST ALTERATION: AM 10306 87-03-25
630305-140V 633305-070V
AM 8810
86-06-06

GROUP	FILLMACHINE	PACKER	ELEVATOR
-0301	TS/300	A	E
-0302	TS/300	B	-
-0303	TSA/300	A	E
-0304	TSA/300	B	-

POS	VAR	PART NUMBER	SP UN	QTY	DESCRIPTION
	-0301	S- 263719-SHEET	-4		===ASSEMBLY DRAWING===
	-0301		-5		
	-0302		-4		
	-0302		-5		
	-0302		-6		
	-0303		-7		
	-0303		-8		
	-0304		-7		
	-0304		-8		
	-0304		-9		
010	-0302	36291-0002	-	1	GUIDE PLATE
	-0304			1	
010	-0301	4451	-	1	GUIDE PLATE
	-0303			1	
012	-0301	263204	-	1	FRAME
	-0302			1	
013	-0303	3269	-	1	BRACKET
	-0304			1	
014	-0303	3270	-	1	BRACKET
	-0304			1	
015	-0301	3271	-	5	BRACKET
	-0302			5	
	-0303			3	
	-0304			3	
020	-0302	36265	-	1	BRACKET
	-0304			1	
030	-0302	36266	-	1	BRACKET
	-0304			1	
040	-0302	36267	-	1	PLATE
	-0304			1	
050	-0302	36268	-	1	PLATE
	-0304			1	
060	-0302	36284	-	1	PROTECTION PLATE
	-0304			1	
064	-0301	263267	-	3	SPACER
	-0302			3	
065	-0301	263268	-	1	SPACER
	-0302			1	
066	-0301	263269	-	1	SPACER

POS	VAR	PART NUMBER	SP UN	QTY	DESCRIPTION	
	-0302			1		
067	-0301	450083	-	1	PLATE	
	-0302			1		
070	-0301	3324	-	4	BAR	
	-0303			4		
070	-0302	33938	-	4	BAR	
	-0304			4		
080	-0301	3274-0001	-	1	BOLT	
	-0303			1		
090	-0301	3311	-	1	STUD	
	-0303			1		
100	-0301	3329	-	2	GUIDE RAIL	
	-0303			2		
100	-0302	33936	-	2	GUIDE PLATE	
	-0304			2		
110	-0301	4453	-	4	HOLDER	
	-0303			4		
110	-0302	36269	-	2	BRACKET	
	-0304			2		
120	-0301	4830	-	2	LID	
	-0303			2		
130	-0301	4904	-	2	SPACER RING	
	-0303			2		
140	-0301	5036	-	2	SPROCKET	
	-0303			2		
150	-0302	33935	-	2	BRACKET	
	-0304			2		
160	-0302	36261	-	1	SPACER	
	-0304			1		
170	-0302	36262	-	1	SPACER	
	-0304			1		
175	-0301	450084	-	1	PLATE	
	-0302			1		
180	-0302	312101-0327	-	2	SCREW	M6S5X12FZB
	-0304			2		
190	-0301	312101-0451	-	8	SCREW	M6S8X20FZB
	-0302			4		
	-0303			8		
	-0304			4		
195	-0301	312101-0495	-	39	SCREW	M6S10X30FZB
	-0302			39		
	-0303			25		
	-0304			25		
196	-0301	312101-0556	-	5	SCREW	M6S12X120FZB
	-0302			5		
200	-0301	312105-0366	-	2	SCREW	M6S6X12RFR
	-0302			3		
	-0303			2		
	-0304			3		

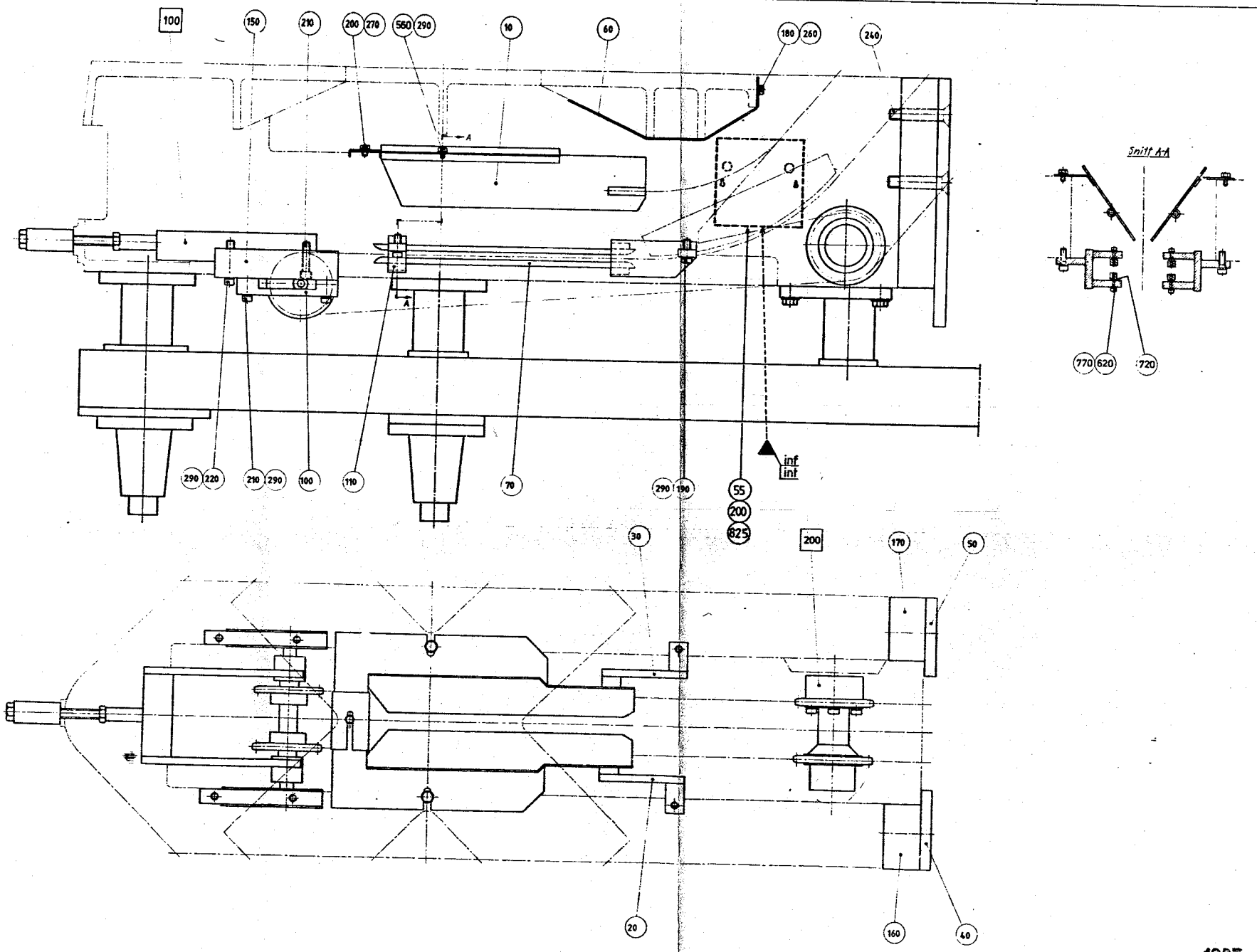

1987-03-27

1a	ÄM 10306	87 0304	7TH	–	Inf. ÄM 6085	83 0705	60
Nr.	Ändring	Datum	Inf.	Nr.	Ändring	Datum	Inf.

630305						
Tillhör enst. Nr		Material			Anmärkning	
BÅ	8205 25			1:25		
Sked	Datum	Konstr.	Godk.	Skala	Tidsk.	Tidsbestämning
TETRA PAK LUND				KLIPPMASKIN T300		S1-263719-6

POS	VAR	PART NUMBER	SP UN	QTY	DESCRIPTION
210	-0302	312111-0459	-	6	SCREW MC6S8X40FZB
	-0304			6	
220	-0302	312111-0461	-	2	SCREW MC6S8X50FZB
	-0304			2	
230	-0301	312151-0287	-	6	SCREW MF6S4X8FZB
	-0303			6	
240	-0302	312151-0636	-	4	SCREW MF6S16X80FZB
	-0304			4	
245	-0301	312165-0366	-	8	SLOTTED HEMKFS6X12RFR
	-0302			8	
250	-0301	312316-0530	-	2	GRUB SCREW SK6SS12X16FZB
	-0303			2	
260	-0302	315101-0146	-	2	WASHER BRB5,3X10FZB
	-0304			2	
265	-0301	315101-0173	-	31	WASHER BRB10,5X22FZB
	-0302			31	
	-0303			33	
	-0304			33	
270	-0302	315105-0153	-	1	WASHER BRB6,4X12RFR
	-0304			1	
275	-0301	315121-0178	-	5	WASHER TBRSB13X36FZB
	-0302			5	
280	-0301	315203-0520	-	2	O-RING 26,58X3,53F
	-0303			2	
290	-0301	315401-0165	-	25	WASHER FBB8,2FZB
	-0302			23	
	-0303			25	
	-0304			23	
295	-0301	315401-0173	-	28	WASHER FBB10,2FZB
	-0302			28	
	-0303			12	
	-0304			12	
300	-0301	321330-0103	-	2	BALL BEARI SKF3203
	-0303			2	
310	-0301	344502-0026	-	2	NIPPLE L AHKR1/8"
	-0303			2	
055	ALL	538137	-	1	LID
320	ALL	G- 4446	-	1	CUTTING MECHANISM BODY
340	ALL	4452	-	1	MOTOR COVER
350	ALL	284539	-	1	SHELF
370	ALL	G- 4447	-	1	SHELF
380	ALL	284540	-	2	BRACKET
420	ALL	3318	-	5	LEG
430	ALL	4488	-	1	BRACKET
440	ALL	7309	-	2	HANDLE
450	ALL	7470-0005	-	1	CHAIN
460	ALL	10920	-	1	TENSION SPRING
470	ALL	20497	-	1	GROUP NUMBER PLATE
480	ALL	27402	-	1	MACHINE NO PLATE

POS	VAR	PART NUMBER	SP UN	QTY	DESCRIPTION
490	ALL	440467	-	1	CABLE HOLDER
500	ALL	90089-0003	-	1	SLEEVE
510	ALL	311211-0267	-	2	TAPER PIN GKP5X5X30
520	ALL	311303-0310	-	8	SLOTTED PIRPB5X20FZB
530	ALL	311303-0318	-	4	SLOTTED PIRPB5X40FZB
540	ALL	312101-0327	-	3	SCREW M6S5X12FZB
550	ALL	312101-0366	-	2	SCREW M6S6X12FZB
560	ALL	312101-0449	-	4	SCREW M6S8X16FZB
570	ALL	312101-0455	-	13	SCREW M6S8X30FZB
590	ALL	312101-0499	-	4	SCREW M6S10X40FZB
600	ALL	312101-0540	-	2	SCREW M6S12X40FZB
620	ALL	312111-0293	-	8	SCREW MC6S4X16FZB
630	ALL	312111-0368	-	2	SCREW MC6S6X16FZB
640	ALL	312111-0447	-	2	SCREW MC6S8X12FZB
650	ALL	312125-0333	-	2	SLOTTED HEMCS5X25RFR
670	ALL	312165-0372	-	4	SLOTTED HEMKFS6X25RFR
680	ALL	312311-0370	-	2	GRUB SCREW T6SS6X20FZB
690	ALL	312502-0221	-	8	DRIVE SCREKDS4X6FNB
700	ALL	312601-0314	-	4	NUT M6M5FZB
710	ALL	312601-0320	-	4	NUT M6M10FZB
720	ALL	315101-0136	-	16	WASHER BRB4,3X8FZB
730	ALL	315101-0165	-	2	WASHER BRB8,4X16FZB
750	ALL	315101-0178	-	2	WASHER BRB13X24FZB
770	ALL	315401-0136	-	8	WASHER FBB4,1FZB
780	ALL	315401-0153	-	1	WASHER FBB6,1FZB
800	ALL	315401-0178	-	2	WASHER FBB12,2FZB
810	ALL	318201-0054	-	1	ROLLER CHA3/8"
820	ALL	318231-0126	-	1	ROLLER CHA3/8"
825	ALL	318871-0101	-	2	KNOB
830	ALL	321601-0103	-	1	OIL SEAL LL40
840	ALL	352100-0106	-	1	CABLE GLANR.18,6-10,5

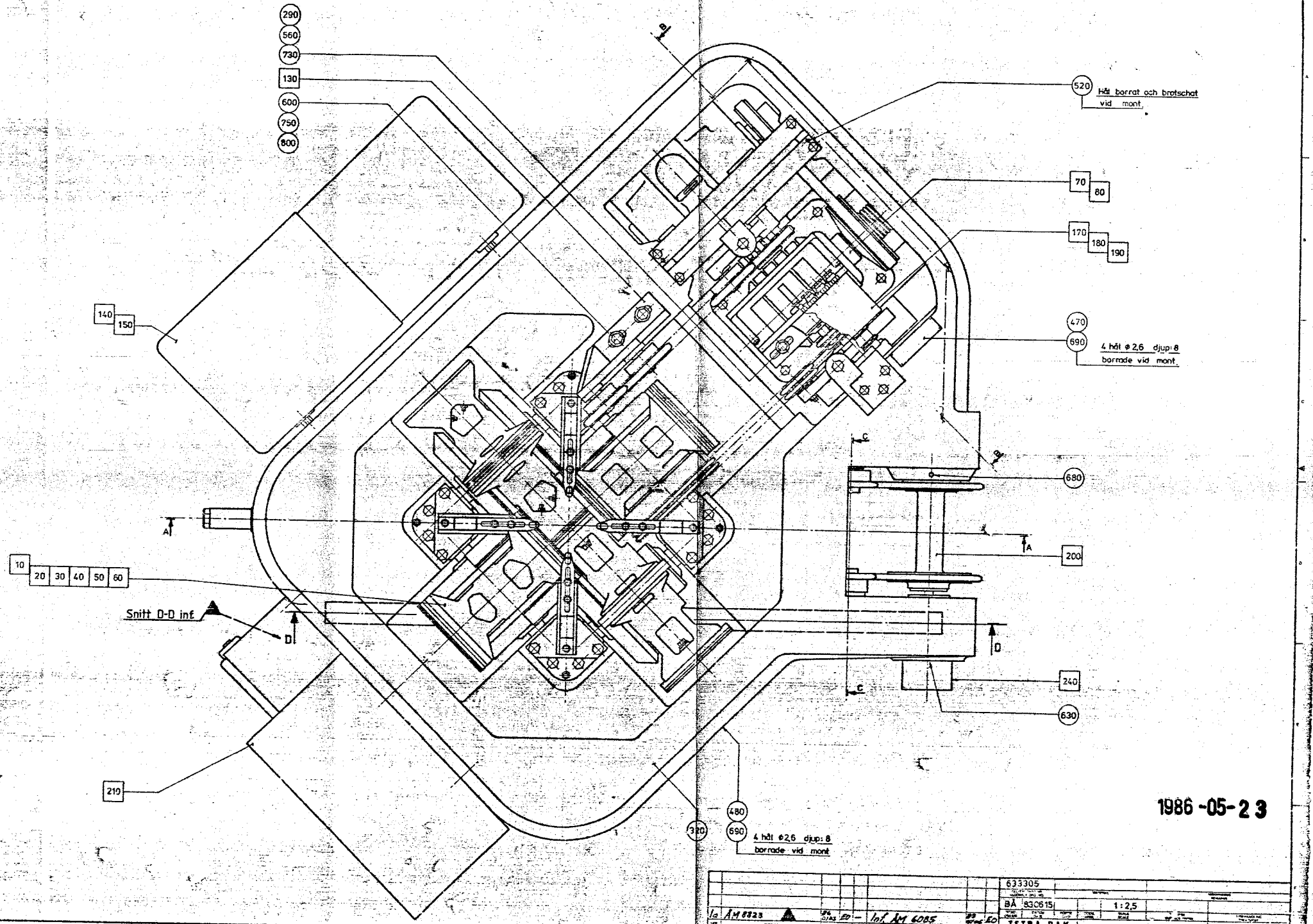
290
560
730
130
600
750
800
520
Hål borrat och brotschat vid mont.
70
80
170
180
190
140
150
470
690
4 hål ø 2,6 djup: 8 borrade vid mont.
680
200
10
20
30
40
50
60
Snitt D-D inf
240
630
210
480
690
320
4 hål ø 2,6 djup: 8 borrade vid mont
1986 -05- 2 3
633305
BA 830615
1:2,5
Inf. AM 6085
TETRA PAK
KLIPPMASKIN, AT 300
S1-263719-7

LAST ALTERATION: AM 10306 87-03-25
630305-140V 633305-070V
AM 8810
86-06-06

GROUP	FILLMACHINE	PACKER	ELEVATOR
-0301	TS/300	A	E
-0302	TS/300	B	-
-0303	TSA/300	A	E
-0304	TSA/300	B	-

POS	VAR	PART NUMBER	SP UN	QTY	DESCRIPTION
	-0301	S- 263719-SHEET	-4		===ASSEMBLY DRAWING===
	-0301		-5		
	-0302		-4		
	-0302		-5		
	-0302		-6		
	-0303		-7		
	-0303		-8		
	-0304		-7		
	-0304		-8		
	-0304		-9		
010	-0302	36291-0002	-	1	GUIDE PLATE
	-0304			1	
010	-0301	4451	-	1	GUIDE PLATE
	-0303			1	
012	-0301	263204	-	1	FRAME
	-0302			1	
013	-0303	3269	-	1	BRACKET
	-0304			1	
014	-0303	3270	-	1	BRACKET
	-0304			1	
015	-0301	3271	-	5	BRACKET
	-0302			5	
	-0303			3	
	-0304			3	
020	-0302	36265	-	1	BRACKET
	-0304			1	
030	-0302	36266	-	1	BRACKET
	-0304			1	
040	-0302	36267	-	1	PLATE
	-0304			1	
050	-0302	36268	-	1	PLATE
	-0304			1	
060	-0302	36284	-	1	PROTECTION PLATE
	-0304			1	
064	-0301	263267	-	3	SPACER
	-0302			3	
065	-0301	263268	-	1	SPACER
	-0302			1	
066	-0301	263269	-	1	SPACER

POS	VAR	PART NUMBER	SP UN	QTY	DESCRIPTION	
	-0302			1		
067	-0301	450083	-	1	PLATE	
	-0302			1		
070	-0301	3324	-	4	BAR	
	-0303			4		
070	-0302	33938	-	4	BAR	
	-0304			4		
080	-0301	3274-0001	-	1	BOLT	
	-0303			1		
090	-0301	3311	-	1	STUD	
	-0303			1		
100	-0301	3329	-	2	GUIDE RAIL	
	-0303			2		
100	-0302	33936	-	2	GUIDE PLATE	
	-0304			2		
110	-0301	4453	-	4	HOLDER	
	-0303			4		
110	-0302	36269	-	2	BRACKET	
	-0304			2		
120	-0301	4830	-	2	LID	
	-0303			2		
130	-0301	4904	-	2	SPACER RING	
	-0303			2		
140	-0301	5036	-	2	SPROCKET	
	-0303			2		
150	-0302	33935	-	2	BRACKET	
	-0304			2		
160	-0302	36261	-	1	SPACER	
	-0304			1		
170	-0302	36262	-	1	SPACER	
	-0304			1		
175	-0301	450084	-	1	PLATE	
	-0302			1		
180	-0302	312101-0327	-	2	SCREW	M6S5X12FZB
	-0304			2		
190	-0301	312101-0451	-	8	SCREW	M6S8X20FZB
	-0302			4		
	-0303			8		
	-0304			4		
195	-0301	312101-0495	-	39	SCREW	M6S10X30FZB
	-0302			39		
	-0303			25		
	-0304			25		
196	-0301	312101-0556	-	5	SCREW	M6S12X120FZB
	-0302			5		
200	-0301	312105-0366	-	2	SCREW	M6S6X12RFR
	-0302			3		
	-0303			2		
	-0304			3		

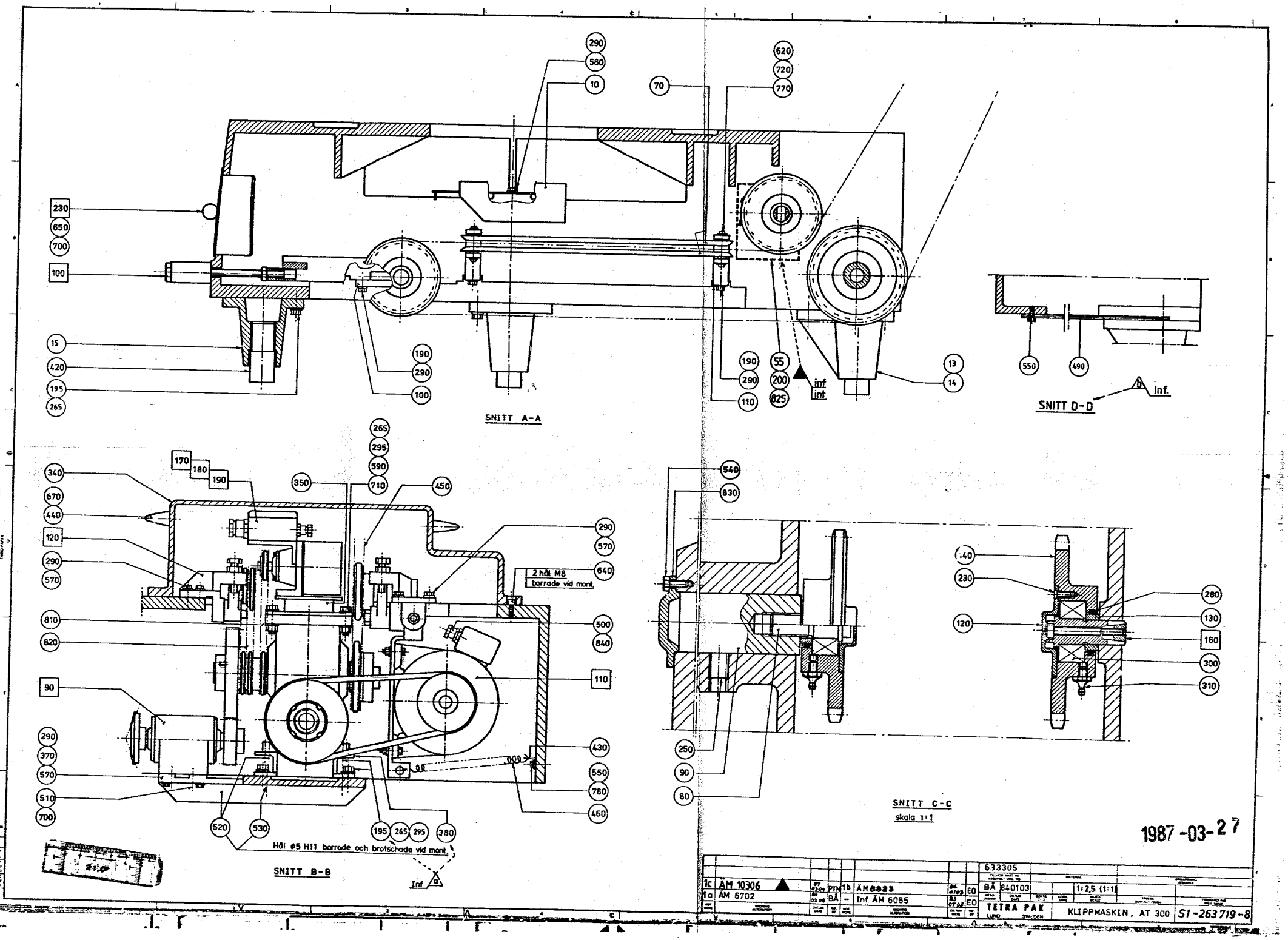
SNITT A-A
SNITT B-B
SNITT C-C
skala 1:1
SNITT D-D
inf
int
Inf.
2 hål M8
borrade vid mont.
Hål ø5 H11 borrade och brotschade vid mont.
1987-03-27
633305
1c ÄM 10306
1a ÄM 6702
1b ÄM 8823
Inf ÄM 6085
BÅ 840103
1:2,5 (1:1)
TETRA PAK
LUND SWEDEN
KLIPPMASKIN, AT 300
S1-263719-8

LAST ALTERATION: AM 6702 84-03-30
630305 633305

POS	VAR	PART NUMBER	SP	EH	QTY	DESCRIPTION
	-0201	S- 265715-SHEET	-2			===ASSEMBLY DRAWING===
010	-0201	458169	-		1	BRACKET
020	-0201	265585	-		1	HOLDER
030	-0201	458204	-		1	HOLDER
040	-0201	458205	-		1	HOLDER
050	-0201	458206	-		1	HOLDER
070	-0201	90028-0001	R		4	SEALING CONE
090	-0201	90032-0036	-		1	JUNCTION BLOCK
100	-0201	90092-0048	R		4	OIL BRUSH
110	-0201	90092-0064	R		5	METERING VALVE
130	-0201	90134-0003	-		4	BUSHING
140	-0201	90134-0034	-		2	NIPPLE
160	-0201	90165-0003	-		3	CLAMP
170	-0201	90165-0016	-		2	CLAMP
180	-0201	90166-0011	-	MM	2500	PLASTIC PIPE
190	-0201	90166-0103	-	M	4	HOSE
210	-0201	312101-0325	-		4	SCREW M6S5X10FZB
220	-0201	312101-0366	-		2	SCREW M6S6X12FZB
230	-0201	312101-0372	-		2	SCREW M6S6X25FZB
235	-0201	312111-0287	-		4	SCREW MC6S4X8FZB
240	-0201	312121-0285	-		3	SLOTTED HEMCS4X6FZB
250	-0201	315101-0146	-		4	WASHER BRB5,3X10FZB
260	-0201	315101-0153	-		4	WASHER BRB6,4X12FZB

TETRA PAK

1/8410

S-265715-2

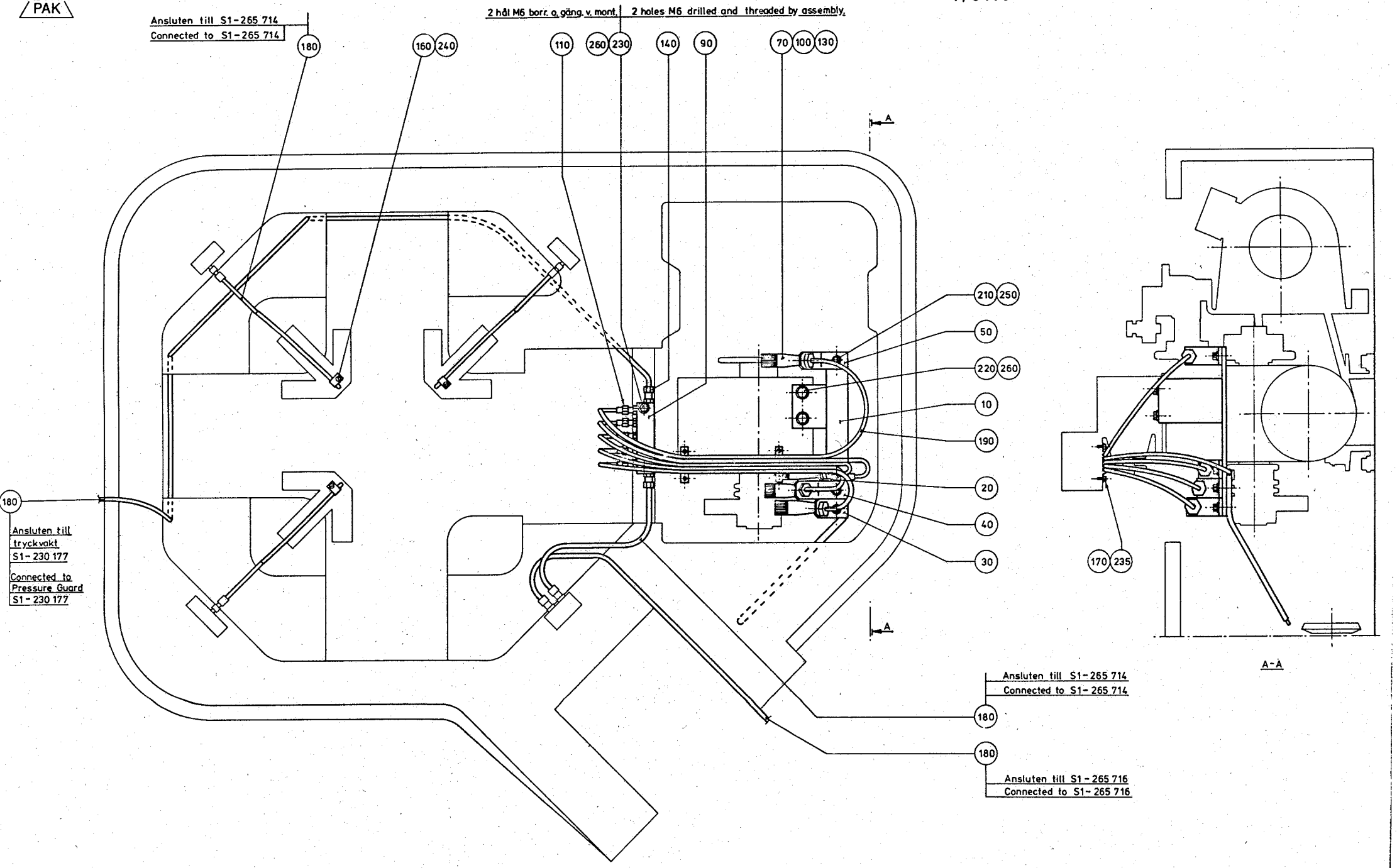

ÄM 6702

LAST ALTERATION: AM 6085 83-09-08
630305 633305

POS	VAR	PART NUMBER	SP	EH	QTY	DESCRIPTION
	-0101	S- 297984-SHEET	-1			===ASSEMBLY DRAWING===
F020	-0101	C- 4435-0101	-		1	COUNTER WHEEL
F030	-0101	C- 4435-0102	-		1	COUNTER WHEEL
F040	-0101	C- 6880-0101	-		4	GUIDE
F050	-0101	C- 7296-0101	-		1	WHEEL
F060	-0101	C- 7296-010V	-		1	WHEEL
010	-0101	4475	-		3	GUARD
020	-0101	3267	-		4	BRACKET
030	-0101	1755-0002	-		40	WASHER
040	-0101	1755-0003	-		40	WASHER
050	-0101	311211-0299	-		4	TAPER PIN GKP6X6X55
060	-0101	312101-0370	-		4	SCREW M6S6X20FZB
070	-0101	312101-0503	-		8	SCREW M6S10X60FZB
080	-0101	312101-0505	-		4	SCREW M6S10X70FZB
090	-0101	312101-0540	-		8	SCREW M6S12X40FZB
100	-0101	312601-0316	-		4	NUT M6M6FZB
110	-0101	315401-0153	-		4	WASHER FBH6,1FZB
120	-0101	315401-0173	-		12	WASHER FBH10,2FZB
130	-0101	315401-0178	-		8	WASHER FBH12,2FZB

TETRA PAK

1/8410

S-297984-1

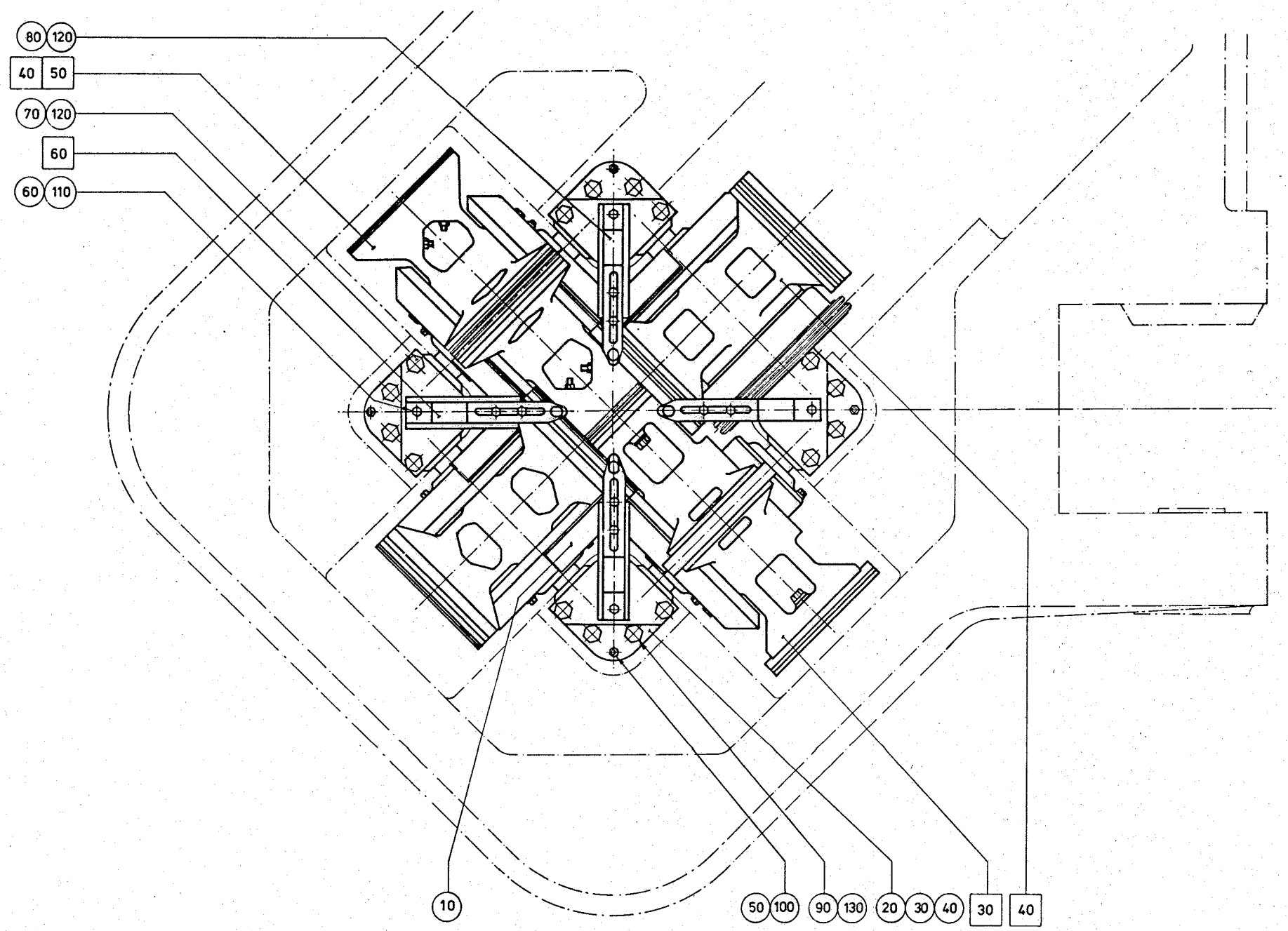

ÄH 6085

LAST ALTERATION: AM 8810 86-06-06
630305-140V 633305-070V

POS	VAR	PART NUMBER	SP UN	QTY	DESCRIPTION
	-0201	S- 297984-SHEET	-1		===ASSEMBLY DRAWING===
F020	-0201	C- 4435-0101	-	1	COUNTER WHEEL
F030	-0201	C- 4435-0102	-	1	COUNTER WHEEL
F040	-0201	C- 6880-0101	-	4	GUIDE
F050	-0201	C- 529462-0101	-	2	CUTTING WHEEL
010	-0201	4475	-	3	GUARD
020	-0201	G- 3267	-	4	BEARING BRACKET
030	-0201	1755-0002	-	40	WASHER
040	-0201	1755-0003	-	40	WASHER
050	-0201	311211-0299	-	4	TAPER PIN GKP6X6X55
060	-0201	312101-0370	-	4	SCREW M6S6X20FZB
070	-0201	312101-0503	-	8	SCREW M6S10X60FZB
080	-0201	312101-0505	-	4	SCREW M6S10X70FZB
090	-0201	312101-0540	-	8	SCREW M6S12X40FZB
100	-0201	312601-0316	-	4	NUT M6M6FZB
110	-0201	315401-0153	-	4	WASHER FBB6,1FZB
120	-0201	315401-0173	-	12	WASHER FBB10,2FZB
130	-0201	315401-0178	-	8	WASHER FBB12,2FZB

LAST ALTERATION: AM 5719 83-05-18
630205-160V 630305-130V 633205-120V 633305-060V

POS	VAR	PART NUMBER	SP	UN	QTY	DESCRIPTION
	-0101	S- 440325-SHEET	-1			===ASSEMBLY DRAWING===
010	-0101	11458	-		1	HOUSE
020	-0101	11459	-		1	LID
030	-0101	436381	-		1	CAM
040	-0101	436382	-		1	CAM
050	-0101	90005-0010	-		4	WASHER
060	-0101	90012-0064	-		2	GLAND
070	-0101	90044-0062	-		1	PROXIMITY SWITCH
080	-0101	90152-0033	-	M	1	HOSE
090	-0101	90161-0006	-	MM	500	STRIP
100	-0101	90195-0020	-		1	TERMINAL BLOCK
110	-0101	312101-0340	-		4	SCREW M6S5X45FZB
120	-0101	312121-0230	-		3	SLOTTED HEMCS3X20FZB
130	-0101	312125-0287	-		2	SLOTTED HEMCS4X8RFR
140	-0101	312132-0323	-		1	SLOTTED HEMSCS5X8MSGFN
150	-0101	312311-0366	-		2	GRUB SCREW T6SS6X12FZB
160	-0101	312318-0285	-		2	GRUB SCREW SK6SS4X6RFR
170	-0101	315101-0124	-		2	WASHER BRB3,2X6FZB
180	-0101	315105-0136	-		2	WASHER BRB4,3X8RFR
190	-0101	315202-0123	-		1	O-RING 35,1X1,6
200	-0101	315750-0124	-		1	LOCK RING SGA35

TETRA PAK

1/8410

S-297984-1

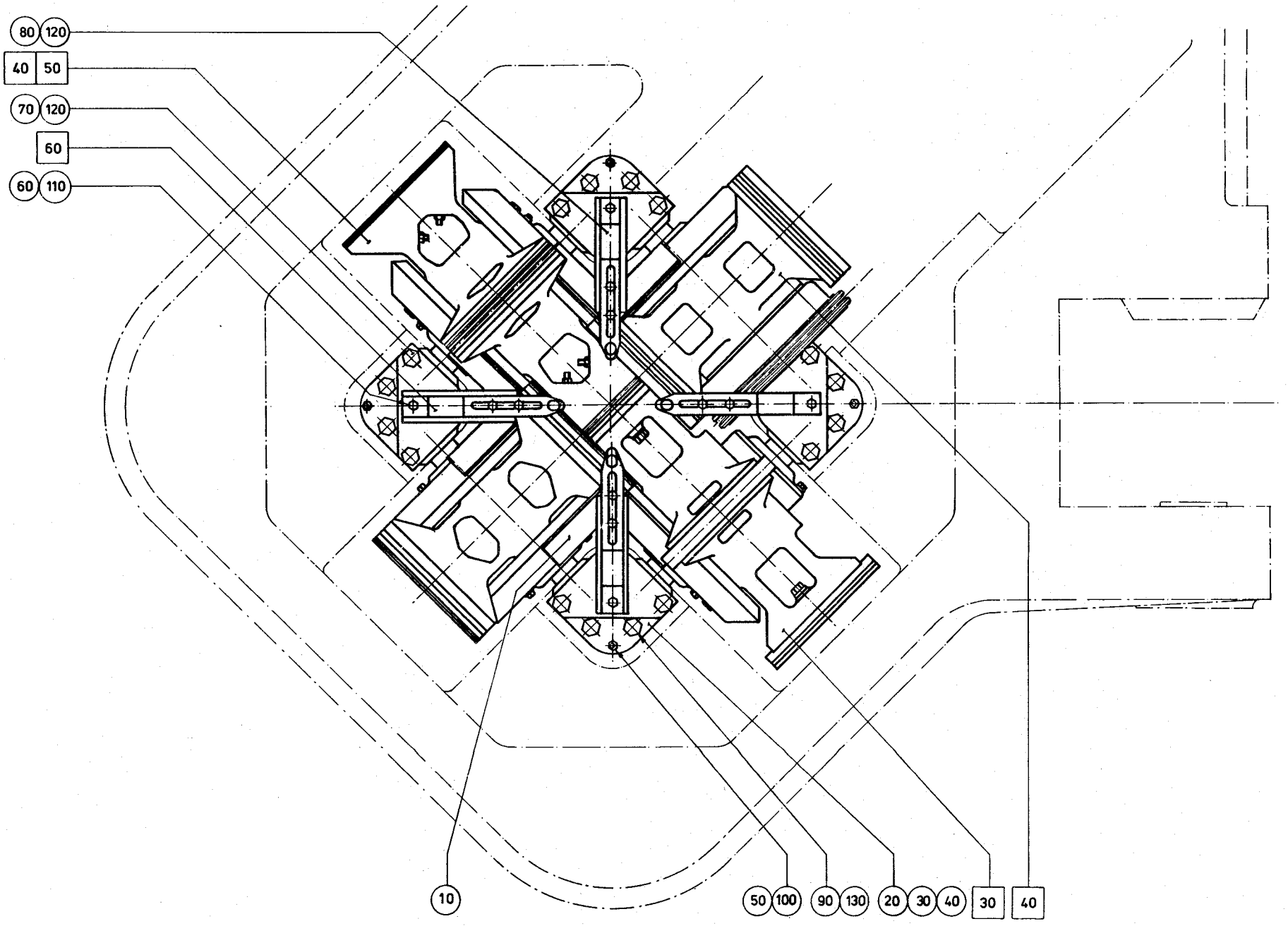

ÄM 6085

THIS DRAWING MUST NOT WITHOUT THE CONSENT OF TETRA PAK BE COPIED TRANSMITTED OR DISCLOSED TO ANY THIRD PARTY.

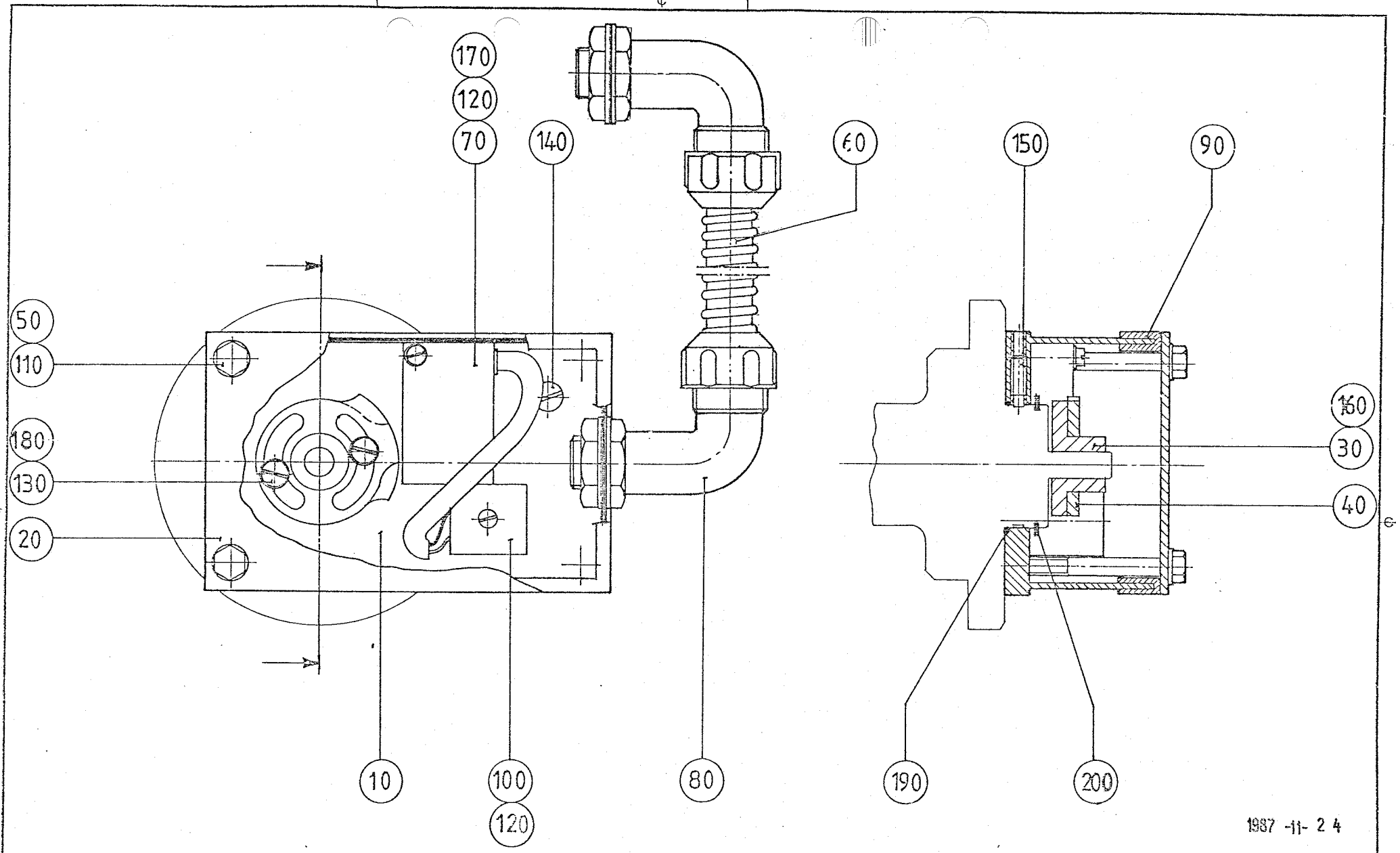

1987 -11- 2 4

NOT NOTE	ÄNDRING ALTERATION	DATUM DATE	INF BY	NOT NOTE	ÄNDRING ALTERATION	DATUM DATE	INF BY
				-	Int ÄM 5719	8302 24	EÖ

630205 TILLHÖR SATS NR ASSEMBLY DRG. NO	MATERIAL				ANMÄRKNING REMARKS	
EO	021203			1:1		
RITAD DRAWN	DATUM DATE	KONTR CHD	GODK APPR	SKALA SCALE	YTSKYDD SURFACE FINISH	YTBEHANDLING TREATMENT
TETRA PAK LUND SWEDEN	IMPULSGIVARE HS					S3-440325-1

TETRA PAK STANDARD ARKITEKTSYSTEM

LAST ALTERATION: AM 8810 86-06-06
297984-020V

POS	VAR	PART NUMBER	SP UN	QTY	DESCRIPTION
	-0101	S- 529462-SHEET	-1		===ASSEMBLY DRAWING===
010	-0101	G- 529463	-	1	WHEEL
020	-0101	484816	-	4	KNIFE
030	-0101	3283	-	2	WASHER
040	-0101	4455	-	1	SHAFT
050	-0101	4487-0001	-	1	GEAR WHEEL
060	-0101	4487-0002	-	1	GEAR WHEEL
070	-0101	6506	-	2	OIL SEAL
080	-0101	529293	-	4	SCREW
090	-0101	529294	-	4	NUT
100	-0101	311101-0406	-	2	CYLINDRICACP8H6X32
110	-0101	312101-0368	-	6	SCREW M6S6X16FZB
120	-0101	312101-0455	-	8	SCREW M6S8X30FZB
130	-0101	312111-0371	-	8	SCREW MC6S6X22FZB
140	-0101	312111-0533	-	2	SCREW MC6S12X22FZB
150	-0101	312601-0316	-	8	NUT M6M6FZB
160	-0101	315101-0165	-	8	WASHER BRB8,4X16FZB
170	-0101	315111-0153	-	8	WASHER TBRB6,4X12FZB
180	-0101	315401-0153	-	6	WASHER FBB6,1FZB
190	-0101	315401-0165	-	8	WASHER FBB8,2FZB
200	-0101	321312-0106	-	2	BALL BEARISKF6206RS
210	-0101	344502-0026	-	2	NIPPLE L AHKR1/8"

Not Note	Ändring Alteration	Datum Date	Sign.	Not Note	Ändring Alteration	Material Material	
				—	Inf AM 88 10	860204	RC

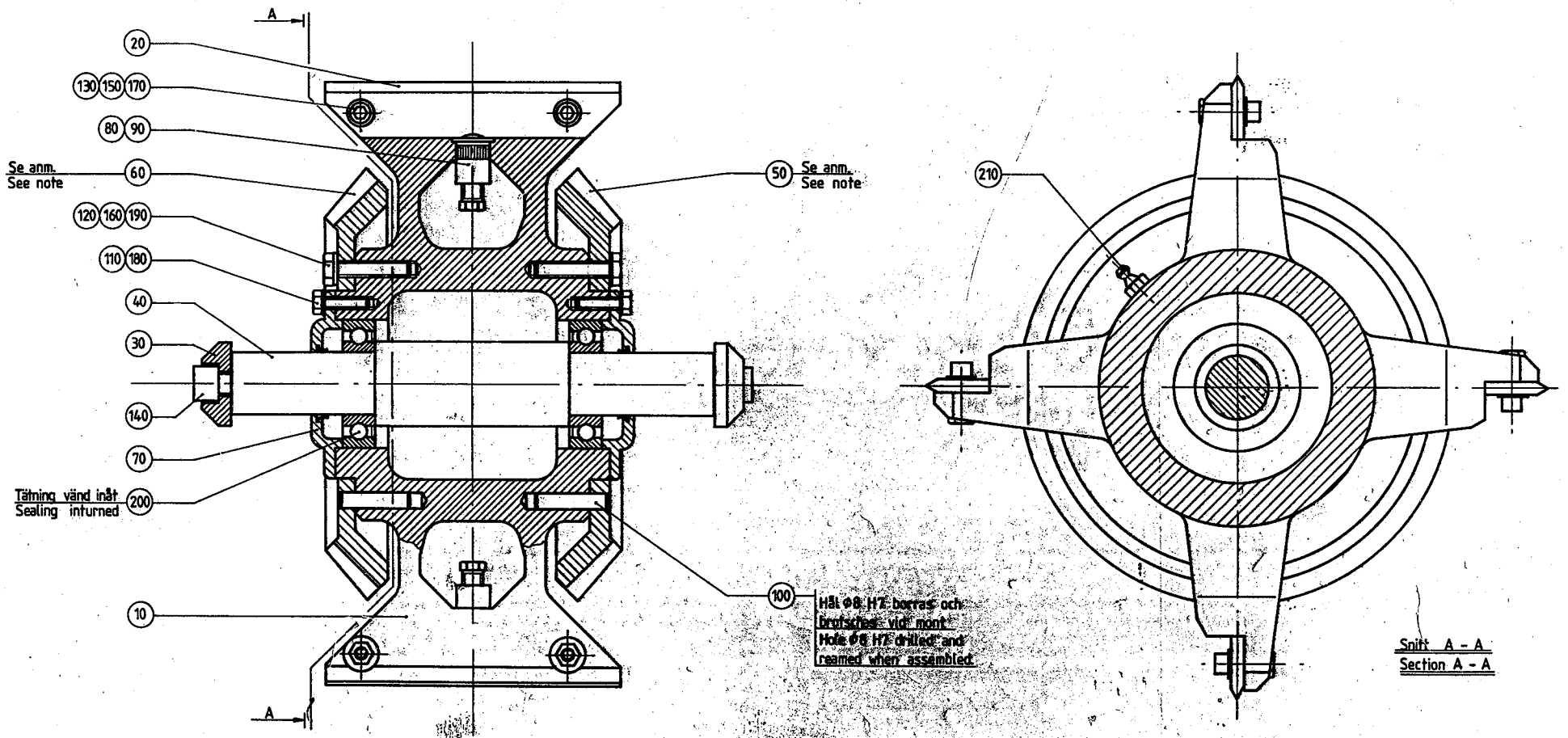

Anm	Monterad med skruv mitt för märkt hål
Note	Mounted with screw in central of marked hole

1987 -12- 15

Dör ej annat angetts/Tänkes otherwise stated	Designer RC	Marked with PART NUMBER	S2-297984-1
SKARPA KANTER BRUTNA/SHARP EDGES BROKEN	Date 851129	Method / mm - KA2103.10	Assembly drawing
Grundade Cartilage KA 2111.10	Approved	Material	
Brotsade hanstr./Welded constr. KA 2111.20			
Maskinbearb. ytor/Machined surfaces KA 2111.30	Scale 1:1	Surface roughness	
Basic size Tol. ± Basic size Tol. ±		Surface treatment	
(1) - 8 0.1 (3) - 30 0.2 (30) - 120 0.3 (120) - 315 0.5 (315) - 1000 0.8 (1000) - 2000 1.2			
TETRA PAK LUND SWEDEN	KLIPPHJUL AT/T-300 CUTTING WHEEL		S1-529462-1