# Tetra Classic TC/300
**630329-**

Issue 9003 Doc No. SPC-87049-1


# Tetra Classic TC/300
**630329-**

Issue 9003 Doc No. SPC-87049-1

# Tetra Classic TC/300
**630329-**

Issue 9003 Doc No. SPC-87049-1

# Tetra Classic TC/300
**630329-**

Issue 9003 Doc No. SPC-87049-1

# Tetra Classic TC/300
**630329-**

Issue 9003 Doc No. SPC-87049-1

# Tetra Classic TC/300
**630329-**

Issue 9003 Doc No. SPC-87049-1

# Tetra Classic TC/300
**630329-**

Issue 9003 Doc No. SPC-87049-1

# Tetra Classic TC/300
**630329-**

Issue 9003 Doc No. SPC-87049-1

# Tetra Classic TC/300
**630329-**

Issue 9003 Doc No. SPC-87049-1

# Tetra Classic TC/300
**630329-**

Issue 9003 Doc No. SPC-87049-1

# Tetra Classic TC/300
**630329-**

Issue 9003 Doc No. SPC-87049-1

# Tetra Classic TC/300
**630329-**

Issue 9003 Doc No. SPC-87049-1

# Tetra Classic TC/300
**630329-**

Issue 9003 Doc No. SPC-87049-1

# Tetra Classic TC/300
**630329-**

Issue 9003 Doc No. SPC-87049-1

# Tetra Classic TC/300
**630329-**

Issue 9003 Doc No. SPC-87049-1

# SPC 630329
## Tetra Classic TC/300

87049-1

©Tetra Pak
Issue 9003

Important Info
000
cassette
100
Superstructure
200
Frame Side
300
Machine Body
400
Cutting Unit
500
Elevator
600
Packer A
700
Strip Applicator
800
Standard Equipment
900

# Machine identification

As in the car industry, we have machine- and group number plates on the machine, to give information about machine type and development status.

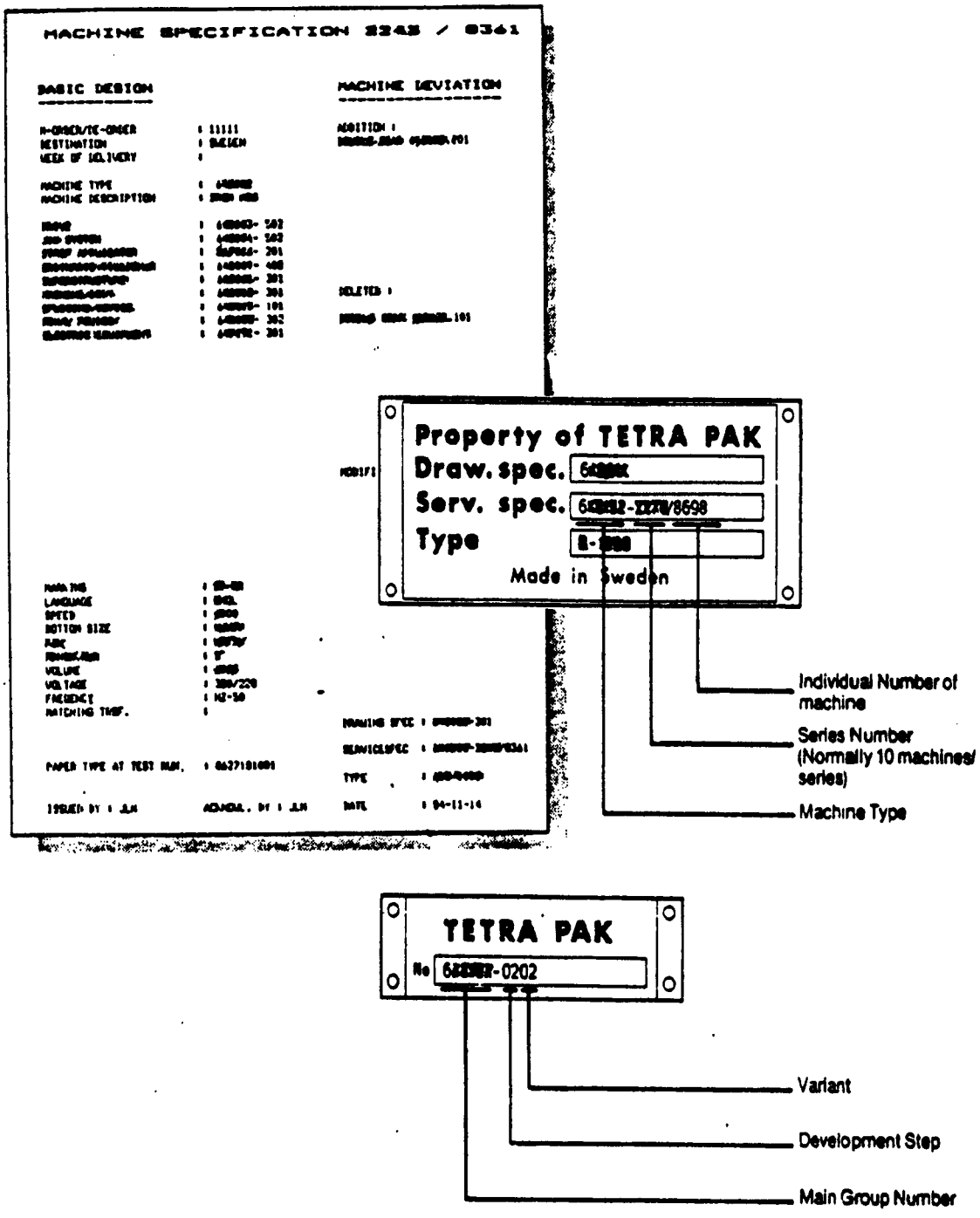


In all communication regarding a machine, it ismost important that both sides are talking about the same thing.As our machines are under continous development,it is impossible for our stores and service engineers to find a correct spare part if the customer orders e.g. "the new version of volume flap". The machine status must be clearly specified utilizing its machine and series numbers. When the machine is delivered,the actual status is fully registered on its machine plates and also in a machine specification sent with the machine. If local rebuildings or modifications are made, corresponding updating has to be made on the machine number plate and machine specification. Alterations are also to be reported to Tetra Pak Service for updating of our computer files.

# Introduction to the Catalogue System.

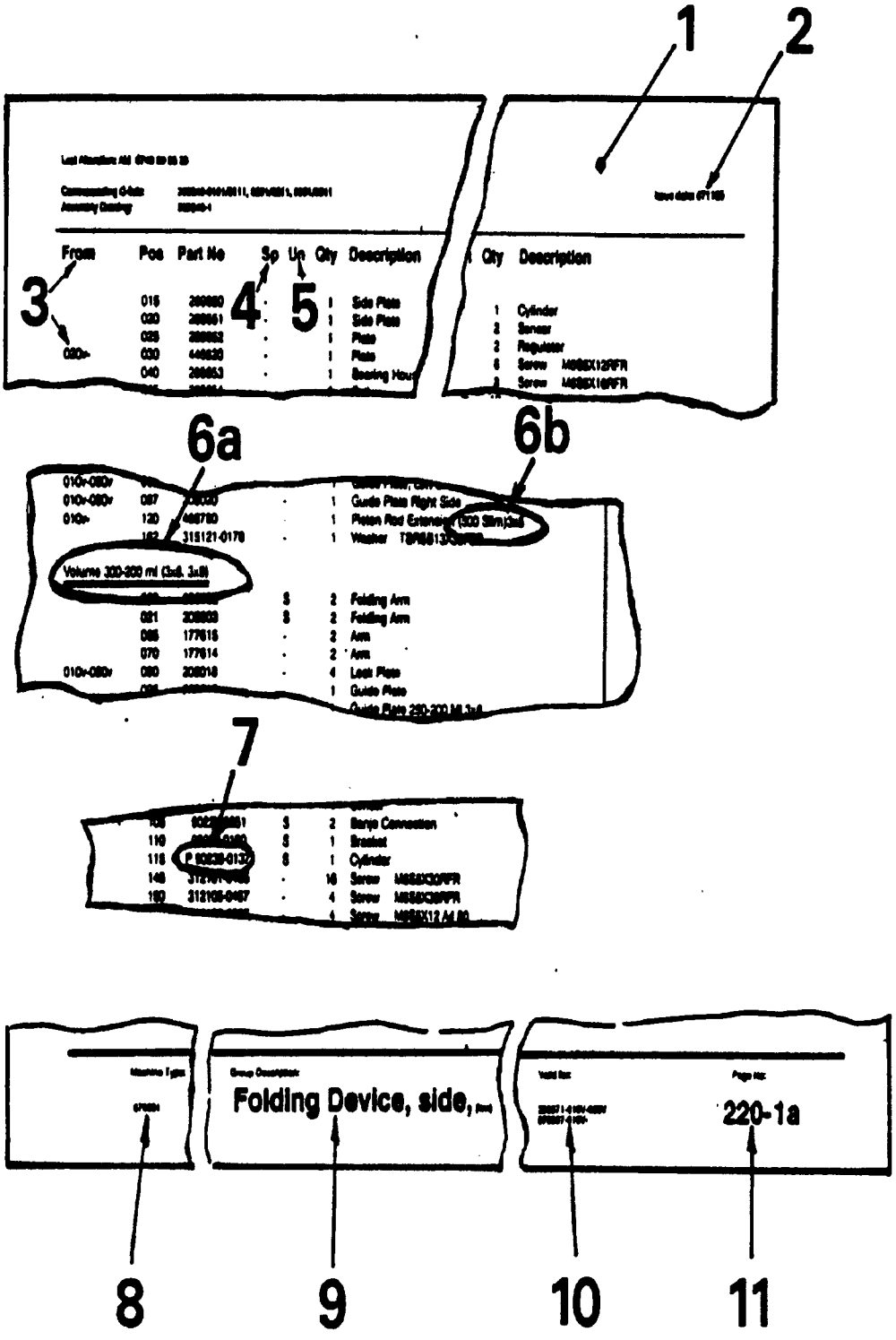

## Introduction to the Catalogue System.

1. The *shaded area* on top of the page contains internal information for the Catalogue Group.

2. **Issue Date:** of the page.

3. **From**: indicates the "valid from or for" development step of the main group.

4. **Sp**: Spare Part Code. The appearing codes are:
   U = Start Up Kit
   P = Production Kit
   S = Service Station Kit
   C = Central Store
   (Security Parts)

5. **Un**: Unit Code. e.g. mm, kg etc.

6. a **Variant Headline**. Normally the variants (volumes, package pattern etc) are written in blocks, described by separate headlines.

   b Minor deviations within a variant block can be given as an extended part description.

7. **P-**: in front of a Part Number indicates, that this particular part is a foreign bought part, with own registered spares.These parts are listed in a separate, COMPONENT CATALOGUE.

8. **Machine Type:**. Machine Type(s) for which this page can be used.

9. **Group Description:**. A function description, maybe completed with some minor variant text.

10. **Valid for**: Main Group number(s) with development steps, for which the page can be used.

11. **Page Number**: The first digit indicates **catalogue section**, the second and third digit the **function** in the group. The digits after the dash are **variants or developments** of the page (function).

**Note! From now on illustration/text are on facing pages. Before searching any spare part number in the catalogue, MAKE SURE that you know your machine status.**

# SPC 630329
## Tetra Classic TC/300

| | | | |
|---|---|---|---|
| Machine specification | | | 630329-050V |
| Serial number | | | T-12709 |
| 1 | Cassette | 630301-0_0V | 070 |
| 2 | Superstructure | 630302-0_0V | 140 |
| 3 | Frame Side | 630303-0_0V | 110 |
| 4 | Machine Body | 630304-0_0V | 110 |
| 5 | Cutting Unit | 630305-0_0V | 140 |
| 6 | Elevator | 630306-0_0V | 020 |
| 7 | Packer A | 630307-0_0V | 070 |
| 8 | Strip Applicator | 614101-0_0 | 010 |
| 9 | Accessories | 630309-0_0V | 070 |
| | Extra equipment | 630319-0_0V | 010 |

| Page No | Description | Group No |
|---|---|---|
| 101-1a | CASSETTE | C- 11040-040V |
| 101-1b | CASSETTE TC/500 | C- 10326-030V |
| 102-1a | PAPER REEL HOLDER | C- 7105-010V |
| 102-1b | PAPER REEL HOLDER TC/500 | C- 4258-010V |
| 103-1 | SPLICING DEVICE | C- 33263-010V |
| 103-1.1 | BRACKET | C- 33216-010V |
| 201-1 | SUPERSTRUCTURE | C- 237086-030V |
| 201-1 | SUPERSTRUCTURE | C- 237086-040V |
| 202-1 | SCREEN | C- 7859-010V |
| 203-1 | BEARING | C- 10996-010V |
| 203-2 | BEARING HOLDER | C- 547882-010V |
| 204-1a | UPPER FORMING RING TC/150 | C- 13247-010V |
| 204-1b | UPPER FORMING RING TC/300 | C- 11109-020V |
| 204-1c | UPPER FORMING RING TC/500 | C- 12152-010V |
| 205-1a | LOWER FORMING RING TC/150 | C- 33038-020V |
| 205-1b | LOWER FORMING RING TC/300 | C- 33037-020V |
| 205-1c | LOWER FORMING RING TC/500 | C- 12153-020V |
| 206-1 | PIPE WORK | C- 232897-020V |
| 207-1 | VALVE | C- 232938-020V |
| 208-1 | LS-EQUIPMENT | C- 237053-030V |
| 208-1.1 | . ELEMENT GROUP | C- 236892-030V |
| 208-1.1.1 | . . ELEMENT | C- 207637-020V |
| 208-1.1.1 | . . ELEMENT | C- 207637-030V |
| 208-1.1.1.1 | . . . CONTACT | C- 207638-020V |
| 208-1.1.2 | . . ELEMENT | C- 232955-020V |
| 208-1.2 | . PNEUMATIC PANEL | C- 259407-010V |
| 208-2 | LS-EQUIPMENT | C- 544577-010V |
| 208-2.1 | . ELEMENT GROUP | C- 236892-040V |
| 208-2.1.2 | . . ELEMENT | C- 536952-020V |
| 208-2.2 | . PNEUMATIC PANEL | C- 544578-010V |
| 208-2.3 | . CONNECTION BOX | C- 534736-020V |
| 208-2.3.1 | . . TERMINAL BLOCK | C- 549284-010V |
| 209-1a | FLOAT ASSEMBLY TC/150 TC/300 | C- 263028-010V |
| 209-1b | FLOAT ASSEMBLY TC/500 | C- 232854-010V |
| 209-1b.1 | . AXLE LINK | C- 16831-010V |
| 210-1a | FILLING PIPE TC/150 TC/300 | C- 263029-010V |
| 210-1b | FILLING PIPE TC/500 | C- 232898-010V |
| 210-1.1 | . PRESSURE ROLLER | C- 36351-010V |
| 211-1 | PHOTOCELL | C- 259642-010V |
| 212-1 | LEVEL CONTROL DEVICE TC/150 125ml | C- 532112-010V |
| 212-1.1 | . FILLING PIPE | C- 457441-010V |
| 212-1.2 | . FLOAT | C- 466465-010V |
| 213-1 | PAPER GUIDE TC/150 62,5ml 125ml | C- 268189-010V |
| 213-1.1 | . PAPER GUIDE | C- 268554-010V |
| 301-1a | HEATING SIDE | C- 266177-020V |
| 301-2a | HEATING SIDE | C- 536535-010V |
| 301-1b | HEATING SIDE | C- 265573-010V |
| 301-1c | HEATING SIDE | C- 38438-040V |
| 302-1a | PRESSURE SIDE | C- 266494-020V |
| 302-2a | PRESSURE SIDE | C- 536536-010V |
| 302-1b | PRESSURE SIDE | C- 265574-010V |
| 302-1c | PRESSURE SIDE | C- 207529-030V |
| 303-1a | SPROCKET | C- 4579-010V |
| 303-1b | SPROCKET UPPER | C- 4389-010V |
| 303-1c | SPROCKET UPPER | C- 4395-010V |
| 304-1a | SPROCKET | C- 4580-010V |
| 304-1b | SPROCKET LOWER | C- 4390-010V |
| 304-1c | SPROCKET LOWER | C- 4396-010V |
| 305-1a | DOUBLE CHAIN 3/4" | C- 4586-020V |
| 305-1b | DOUBLE CHAIN 3/4" | C- 2502-010V |
| 305-1c | DOUBLE CHAIN 7/8" | C- 2896-010V |
| 306-1a | PRESSURE ROLLER | C- 37796-020V |
| 306-1a.1 | . ROLLER CONVEYOR | C- 208745-020V |
| 306-2a | PLUNGER | C- 532007-010V |
| 306-1b | PRESSURE ROLLER | C- 265532-010V |
| 306-1b.1 | . ROLLER CONVEYOR | C- 229249-010V |
| 307-1a | ROLLER CONVEYOR | C- 208744-020V |
| 307-2a | ROLLER CONVEYOR | C- 532009-010V |
| 307-1b | ROLLER CONVEYOR | C- 229248-010V |
| 307-1c | ROLLER CONVEYOR | C- 497160-020V |
| 308-1a | CONTACT UNIT | C- 259767-020V |
| 308-1a.1 | . CONTACT UNIT | C- 259764-020V |
| 308-1a.2 | . CONTACT UNIT | C- 259765-020V |
| 308-1b | CONTACT UNIT | C- 263665-010V |
| 308-1b.1 | . CONTACT RAIL | C- 263664-010V |
| 308-1c | CONTACT UNIT | C- 533394-010V |
| 308-1c.1 | . CONTACT RAIL LEFT | C- 236663-010V |
| 308-1c.1 | . CONTACT RAIL RIGHT | C- 236662-010V |
| 309-1a | CONTACT UNIT | C- 283911-010V |
| 309-1a.1 | . CONTACT UNIT | C- 283912-010V |
| 309-1b | CONTACT UNIT | C- 263667-010V |
| 309-1b.1 | . CONTACT RAIL | C- 263666-010V |
| 309-1c | CONTACT UNIT | C- 236664-030V |
| 309-1c.1 | . CONTACT RAIL RIGHT | C- 13188-030V |
| 309-1c.1 | . CONTACT RAIL LEFT | C- 13187-030V |
| 310-1a | CENTRAL LUBRICATION | C- 263635-010V |
| 310-2a | CENTRAL LUBRICATION Pressure side | C- 536537-010V |
| 310-1b | CENTRAL LUBRICATION Heating side | C- 265712-010V |
| 310-1c | CENTRAL LUBRICATION | C- 247426-020V |
| 311-1a | CENTRAL LUBRICATION | C- 263641-010V |
| 311-2a | CENTRAL LUBRICATION Heating side | C- 536538-010V |
| 311-1b | CENTRAL LUBRICATION Pressure side | C- 265713-010V |
| 311-1c | CENTRAL LUBRICATION | C- 247427-020V |
| 312-1a | HEATING JAW TPC | C- 266498-020V |
| 312-1a.1 | . SLIDING CONTACT | C- 18215-030V |
| 312-2a | HEATING JAW TPC | C- 531141-010V |
| 312-2a.1 | . SLIDING CONTACT | C- 534145-010V |
| 312-1b | HEATING JAW | C- 257999-010V |
| 312-1b.1 | . SLIDING CONTACT | C- 10092-010V |
| 312-1c | HEATING JAW TPC | C- 232957-010V |
| 312-1c.1 | . HEATING RAIL | C- 230995-010V |
| 312-1c.2 | . SLIDING CONTACT | C- 7283-010V |
| 312-1c.3 | . COUPLING | C- 232980-010V |
| 313-1a | HEATING JAW IH | C- 283773-010V |
| 314-1a | PRESSURE JAW | C- 266500-020V |
| 314-2a | PRESSURE JAW | C- 532011-010V |
| 314-1b | PRESSURE JAW | C- 259446-010V |
| 314-1c | PRESSURE JAW | C- 497161-010V |
| 315-1b | SPRING CARTRIDGE | C- 2571-010V |
| 315-1c | PLUNGER | C- 497158-010V |
| 316-1a | HYDRAULIC SYSTEM | C- 532157-010V |
| 316-1c | HYDRAULIC SYSTEM | C- 532159-010V |
| 317-1a | CHAIN RAIL | C- 542226-010V |
| 317-1c | CHAIN RAIL | C- 497159-010V |
| 318-1a | CHAIN RAIL | C- 532010-010V |
| 401-1a | MACHINE BODY TC/150 | C- 259536-030V |
| 401-2a | MACHINE BODY TC/150 | C- 536539-020V |
| 401-2.1 | LIGHT FIXTURE | C- 441535-010V |
| 401-1b | MACHINE BODY TC/300 | C- 263880-020V |
| 401-1c | MACHINE BODY TC/500 | C- 237618-030V |
| 402-1 | DOOR | C- 4574-0101 |
| 402-1 | DOOR | C- 4575-0101 |
| 402-1 | DOOR | C- 4330-0101 |
| 402-1 | DOOR | C- 4331-0101 |
| 402-1 | DOOR | C- 3914-0101 |
| 402-1 | DOOR | C- 3915-0101 |
| 402-2a | DOOR | C- 548468-010V |
| 403-1 | PLATFORM | C- 434422-0101 |
| 403-1.1 | . CABLE CONNECTION | C- 436770-0101 |
| 403-2 | PLATFORM | C- 547884-010V |
| 404-1 | CONTROL PANEL | C- 259404-0401 |
| 404-1.1 | . TERMINAL BLOCK | C- 297162-0101 |
| 405-1 | LADDER | C- 263881-0101 |
| 406-1 | AIR PIPE-LINE | C- 445981-010V |
| 406-1 | AIR PIPE-LINE | C- 445981-020V |
| 406-2 | AIR PIPE-LINE | C- 549286-010V |
| 407-1a | HYDRAULIC PRESSURE SYSTEM TC/150 | C- 266503-0101 |
| 407-1a.1 | . HYDRAULIC UNIT | C- 265711-0101 |
| 407-1b | HYDRAULIC PRESSURE SYSTEM TC/300 | C- 265717-0101 |
| 407-1c | HYDRAULIC PRESSURE SYSTEM TC/150 TC/500 | C- 532160-020V |
| 407-1c.1 | . HYDRAULIC UNIT TC/150 TC/500 | C- 537961-0101 |
| 408-1a | CENTRAL LUBRICATION TC/150 | C- 263812-0101 |
| 408-1b | CENTRAL LUBRICATION TC/300 | C- 265714-0101 |
| 408-1c | CENTRAL LUBRICATION TC/500 | C- 247428-0101 |
| 409-1 | APPLIANCE BOX | C- 294214-0101 |
| 409-1 | APPLIANCE BOX | C- 294214-020V |
| 409-1.1 | . TERMINAL BLOCK | C- 450114-0101 |
| 409-1.2 | . TERMINAL BLOCK | C- 549283-010V |
| 410-1a | IH UNIT TC/150 | C- 434423-0101 |
| 411-1a | EMERGENCY STOP | C- 534730-010V |
| 412-1a | PUSH BUTTON BOX | C- 550486-010V |
| 501-1a | CUTTING UNIT | C- 257840-030V |
| 501-2a | CUTTING UNIT | C- 536945-010V |
| 501-1b | CUTTING UNIT | C- 263719-030V |
| 501-1c | CUTTING UNIT | C- 237092-0402 |
| 502-1a | SHEARING DEVICE | C- 434042-0201 |
| 502-1a.1 | . COUNTER WHEEL | C- 4865-0301 |
| 502-1.2 | . GUIDE | C- 6880-0101 |
| 502-1a.3 | . CUTTING WHEEL | C- 529316-0101 |
| 502-1b | SHEARING DEVICE | C- 297984-0201 |
| 502-1b.1 | . COUNTER WHEEL | C- 4435-0101 |
| 502-1b.3 | . CUTTING WHEEL | C- 529462-0101 |
| 502-1c | SHEARING DEVICE | C- 293567-0201 |
| 502-1c.1 | . COUNTER WHEEL | C- 3341-0201 |
| 502-1c.2 | . CUTTING WHEEL | C- 529291-0101 |
| 503-1.1 | . SLIP DISC | C- 4438-030V |
| 503-1a | WORM GEAR | C- 4866-0301 |
| 503-1b | WORM GEAR | C- 4437-0201 |
| 503-1c | WORM GEAR | C- 5120-0201 |
| 504-1 | COVER | C- 4867-0101 |
| 504-1 | COVER | C- 4941-0101 |
| 504-1 | COVER | C- 4381-0101 |
| 505-1a | INTERMEDIARY SHAFT | C- 4868-0101 |
| 505-1b | INTERMEDIARY SHAFT | C- 4439-0101 |
| 505-1c | INTERMEDIARY SHAFT | C- 3327-0101 |
| 506-1a | CHAIN TENSIONER | C- 4869-0101 |
| 506-1c | CHAIN TENSIONER | C- 458470-010V |
| 506-2a | AJUSTER TC/150 | C- 535052-010V |
| 507-1a | CHAIN TENSIONER | C- 4870-010V |
| 507-1b | CHAIN TENSIONER | C- 4440-010V |
| 507-1c | CHAIN TENSIONER | C- 3346-010V |
| 508-1a | CHAIN TENSIONER | C- 4871-0101 |
| 508-1b | CHAIN TENSIONER | C- 4442-0101 |
| 508-1c | CHAIN TENSIONER | C- 3347-020V |
| 509-1b | CHAIN TENSIONER | C- 4443-0101 |
| 510-1a | MOTOR TC/150 | C- 4872-050V |
| 510-1b | MOTOR TC/300 | C- 4441-040V |
| 510-1c | MOTOR TC/500 | C- 237091-020V |
| 510-2a | MOTOR CRADLE TC/150 | C- 542811-010V |
| 510-2a.1 | CONNECTION BOX | C- 542756-010V |
| 511-1 | IMPULSE TRANSMITTER | C- 236641-0302 |
| 511-1.1 | . CONNECTION BOX | C- 236638-020V |
| 511-1.1.1 | . . TERMINAL BLOCK | C- 236637-0101 |
| 511-2 | ANGLE ENCODER | C- 535051-010V |
| 512-1 | IMPULSE TRANSMITTER | C- 440325-0101 |
| 513-1a | DRIVE SHAFT | C- 13372-020V |
| 513-1c | DRIVE SHAFT | C- 5055-0101 |
| 514-1 | EXPANSION BOLT | C- 6830-0101 |
| 515-1 | CHAIN TENSIONER | C- 33946-0101 |
| 516-1 | CENTRAL LUBRICATION | C- 230177-0301 |
| 517-1a | CENTRAL LUBRICATION | C- 263843-0201 |

| Page No | Description | Group No |
|---|---|---|
| 517-1b | CENTRAL LUBRICATION | C- 265715-0201 |
| 517-1c | CENTRAL LUBRICATION | C- 247429-0301 |
| 517-2a | CENTRAL LUBRICATION TC/150 | C- 536947-010V |
| 601-1a | ELEVATOR With Tilting Tray TC/150 | C- 5332-030V |
| 601-1a | ELEVATOR With Tilting Tray TC/150 | C- 5332-020V |
| 601-1b | ELEVATOR With Tilting Tray TC/300 | C- 5373-020V |
| 601-1c | ELEVATOR TC/500 | C- 3489-040V |
| 601-1d | ELEVATOR | C- 535881-010V |
| 602-1a | ELEVATOR Without Tilting Tray TC/150 | C- 5392-010V |
| 602-1b | ELEVATOR Without Tilting Tray TC/300 | C- 5391-010V |
| 603-1a | CHAIN TC/150 | C- 5333-010V |
| 603-1b | CHAIN TC/300 | C- 4366-010V |
| 603-1c | CHAIN TC/500 | C- 3511-010V |
| 603-1d | CHAIN FEED CONVEYOR | C- 33738-010V |
| 604-1 | TILTING TRAY With tilting Tray TC/150 TC/300 | C- 497873-010V |
| 605-1 | PNEUMATIC PANEL With tilting Tray | C- 450344-010V |
| 606-1 | DISTRIBUTOR TC/500 | C- 237648-010V |
| 607-1a | CENTRAL LUBRICATION TC/150 | C- 522409-010V |
| 607-1b | CENTRAL LUBRICATION TC/300 | C- 526535-010V |
| 607-1c | CENTRAL LUBRICATION TC/500 | C- 526711-010V |
| 608-1 | CARTON GUIDE | C- 236727-010V |
| 609-1 | FRAME | C- 535876-010V |
| 701-1a | PACKER TC/150 | C- 7750-040V |
| 701-1b | PACKER TC/300 | C- 14681-040V |
| 701-1c | PACKER TC/500 | C- 14598-060V |
| 702-1 | CATCH | C- 3502-010V |
| 703-1a | CENTER ARM TC/150 TC/300 | C- 4502-010V |
| 703-1b | CENTER ARM TC/500 | C- 3457-010V |
| 704-1a | SPROCKET PLATE TC/150 TC/300 | C- 4504-010V |
| 704-1b | SPROCKET PLATE TC/500 | C- 3459-010V |
| 705-1a | TUBULAR AXLE TC/150 TC/300 | C- 4506-010V |
| 705-1b | TUBULAR AXLE TC/500 | C- 3503-010V |
| 706-1a | TABLE TC/150 TC/300 | C- 5029-010V |
| 706-1b | TABLE TC/500 | C- 5035-010V |
| 707-1 | CHAIN TENSIONER | C- 5039-010V |
| 708-1 | CHAIN TENSIONER | C- 5876-010V |
| 709-1 | MALTESE CROSS CRANK | C- 6005-020V |
| 710-1a | BEVEL GEAR TC/150 TC/300 | C- 6202-010V |
| 710-1b | BEVEL GEAR TC/500 | C- 4566-010V |
| 711-1 | CONNECTION | C- 6273-010V |
| 712-1a | TABLE TC/150 TC/300 | C- 6246-010V |
| 712-1b | TABLE TC/500 | C- 4987-010V |
| 712-1.1 | . MALTESE CROSS | C- 3463-010V |
| 713-1 | CURVE WHEEL | C- 7299-030V |
| 714-1a | CARRIAGE TC/150 | C- 7476-010V |
| 714-1b | CARRIAGE TC/300 | C- 10462-010V |
| 714-1c | CARRIAGE TC/500 | C- 7538-020V |
| 715-1a | SCOOP TC/150 | C- 7755-030V |
| 715-1b | SCOOP TC/300 | C- 4509-010V |
| 715-1c | SCOOP TC/500 | C- 3510-010V |
| 715-1c.1 | .SCOOP TC/500 | C- 5935-010V |
| 716-1 | PLATE | C- 7771-010V |
| 717-1a | CHUTE TC/150 | C- 7753-020V |
| 717-1b | CHUTE TC/300 | C- 11186-010V |
| 718-1 | UNIT | C- 13493-020V |
| 718-1.1 | . FAN | C- 19723-010V |
| 719-1 | STAR | C- 31686-010V |
| 720-1a | CENTRAL LUBRICATION TC/150 TC/300 | C- 265716-010V |
| 720-1b | CENTRAL LUBRICATION TC/500 | C- 247480-020V |
| 721-1 | OPERETING ARM TC/500 | C- 5942-010V |
| 751-1 | ELEVATOR with Elevator | C- 236717-0202 |
| 751-1.1 | . CHAIN FEED CONVEYOR | C- 33738-0101 |
| 751-1.2 | . CARTON GUIDE | C- 236727-0101 |
| 752-1 | PACKER | C- 35754-0301 |
| 753-1 | BOWL | C- 33925-0101 |
| 754-1 | LIFTING UNIT | C- 35519-0201 |
| 754-1.1 | . LINK ARM | C- 37098-0201 |
| 755-1 | MACHINE BODY | C- 236759-0301 |
| 755-1.1 | . DRIVE UNIT | C- 33799-0201 |
| 755-1.1.1 | . . MALTESE CROSS | C- 33772-0101 |
| 755-1.1.2 | . . MALTESE CROSS | C- 33779-0101 |
| 755-1.1.3 | . . MALTESE CROSS | C- 33780-0101 |
| 755-1.1.4 | . . CENTRAL LUBRICATION | C- 33900-0101 |
| 755-1.2 | . CURVE WHEEL | C- 33964-0201 |
| 755-1.3 | . CARRIER | C- 33971-0201 |
| 755-1.4 | . CARRIER | C- 33976-0301 |
| 755-1.5 | . IMPULSE TRANSMITTER | C- 33997-0201 |
| 755-1.6 | . PIVOT ARM | C- 35574-0101 |
| 755-1.7 | . PUMP | C- 35710-0201 |
| 755-1.8 | . CENTRAL LUBRICATION | C- 35764-0201 |
| 755-1.9 | . VALVE GROUP | C- 38436-010V |
| 755-1.10 | . PNEUMATIC UNIT | C- 206750-020V |
| 756-1 | COVER PLATE | C- 209336-0101 |
| 757-1 | AIR REGULATOR | C- 294100-0101 |
| 758-1 | AIR PIPE-LINE | C- 239733-0201 |
| 759-1 | CRATE SHIFTER | C- 237566-0104 |
| 759-1.1a | . TABLE TOP PLATE Crate 3730 | C- 38341-0101 |
| 759-1.1b | . TABLE TOP PLATE Crate 3710 | C- 239525-0101 |
| 759-1.2 | . CONNECTION BLOCK | C- 38975-0101 |
| 759-1.3 | . CAM | C- 38979-0101 |
| 759-1.4 | . BEAM | C- 237575-0102 |
| 759-1.5 | . DROP WING | C- 237594-0101 |
| 759-1.6 | . DROP CHUTE | C- 239473-0106 |
| 759-1.7 | . SLIDE | C- 239474-0101 |
| 759-1.8 | . FEED DEVICE | C- 239475-0101 |
| 760-1 | SPARE PART KIT | C- 36470-020V |
| 801-1 | STRIP APPLICATOR Rebuild Designed | C- 268788-0102 |
| 801-1 | STRIP APPLICATOR Series Designed | C- 268788-0101 |
| 802-1 | HOSE CLAMP | C- 20036-0103 |
| 803 | PRESSURE ROLLER | C- 22427-0102 |
| 804-1 | DATING UNIT | C- 37460-0101 |
| 804-1.1 | . PRINTING WHEEL | C- 37461-0101 |
| 804-1.1.1 | . . SCREW | C- 33608-0101 |
| 805-1 | PAPER GUIDE | C- 268554-0101 |
| 806-1 | CONNECTION BOX Rebuild Designed | C- 268623-0101 |
| 806-1.1 | . TERMINAL BLOCK | C- 268625-0101 |
| 807-1 | STRIP GUIDE | C- 283455-0101 |
| 808-1 | ELEMENT GROUP | C- 283768-0101 |
| 809-1 | STRIP APPLICATOR | C- 283737-0101 |
| 809-1.1 | . BOBBIN | C- 20387-0101 |
| 809-1.2 | . BRAKE | C- 20389-0101 |
| 810-1 | SPARE PART KIT | C- 434068-0101 |
| 901-1 | ROLLER STAND | C- 499134-010V |
| 902-1 | TOOL | C- 451431-010V |
| 903-1 | START-UP KIT | C- 451433-010V |
| 903-1.1 | . TPC BAR TC/150 | C- 255554-020V |
| 903-1.2 | . TPC BAR TC/150 TC/300 | C- 257841-010V |
| 903-1.3 | . HEATING RAIL TC/150 TC/500 | C- 230995-010V |
| 904-1 | LIFTING UNIT | C- 279580-0101 |

## SPC 6303
## Tetra Classic TC

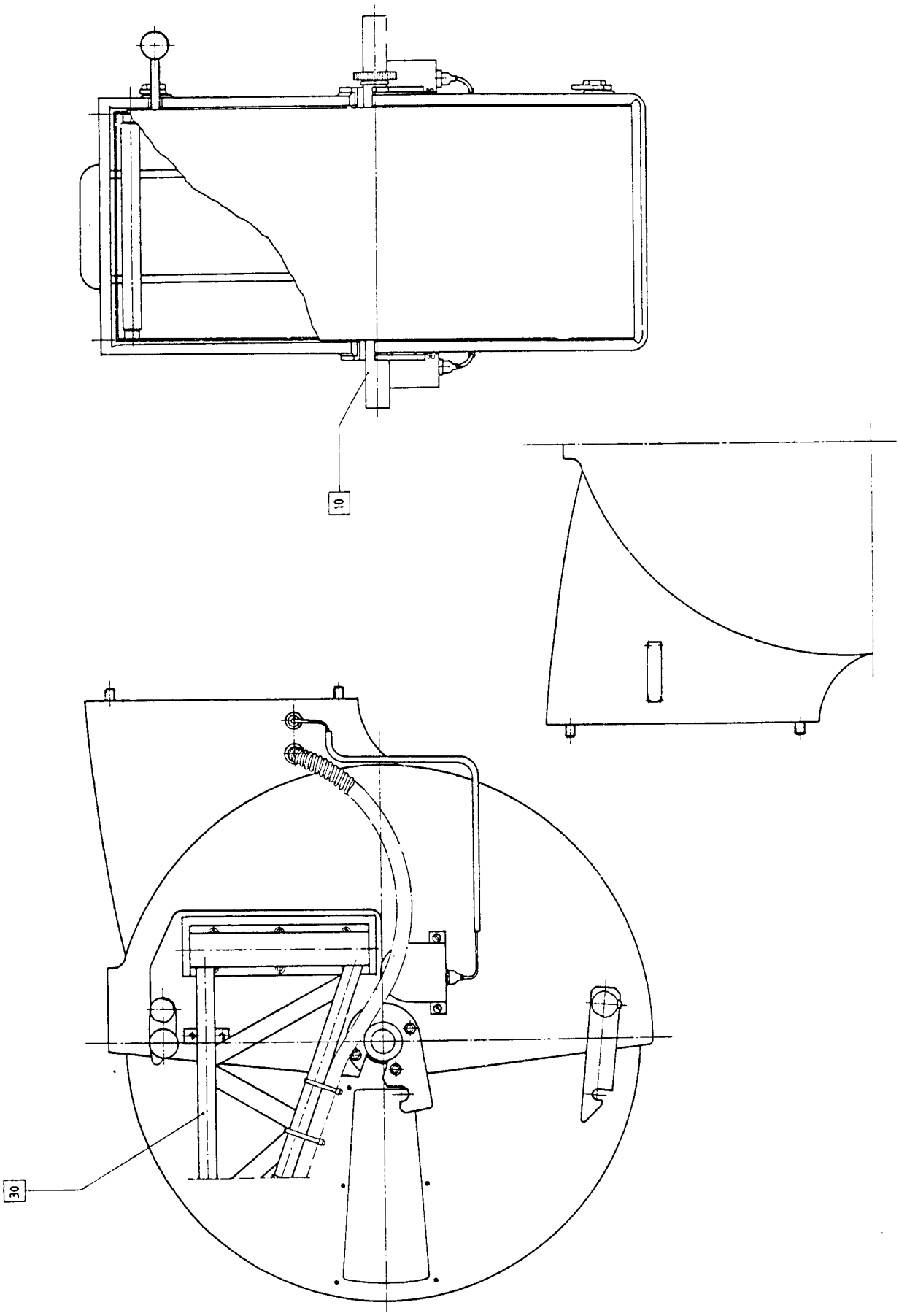
10
30

| From | Pos | Page No | Description |
|---|---|---|---|
| | F000 | 101-1a | CASSETTE |
| | F000 | 101-1b | CASSETTE TC/500 |
| | F010 | 102-1a | PAPER REEL HOLDER |
| | F010 | 102-1b | PAPER REEL HOLDER TC/500 |
| 080V- | F030 | 103-1a | SPLICING UNIT TC/150 |
| | | 103-1A.1 | .BRACKET |

| From | Pos | Page No | Description |
|---|---|---|---|

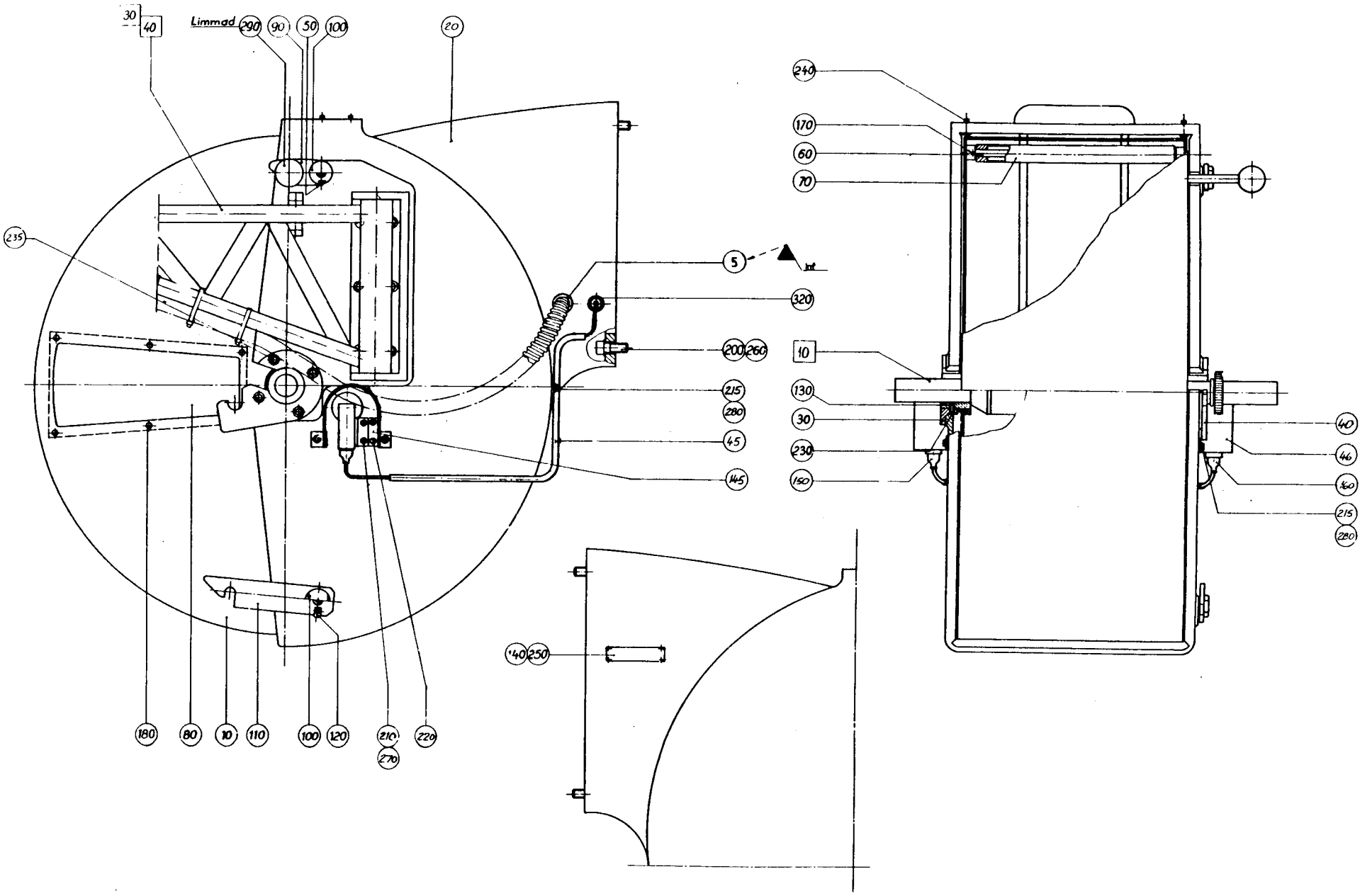
30
40
Limmad
290
90
50
100
20
235
5
320
200
260
215
280
45
145
180
80
10
110
100
120
210
270
220
240
170
60
70
10
130
30
230
150
40
46
160
215
280
140
250

| From | Pos | Part No | SP | UN | Qty | Description |
|---|---|---|---|---|---|---|
| | 005 | 352103-0106 | - | | 1 | CABLE GLANR.18,6/5-10 Relay |
| | 005 | 352136-0127 | - | | 1 | GLAND TPMC |
| | 010 | 445953-0002 | - | | 1 | COVER |
| | 020 | 19477 | - | | 1 | CASSETTE |
| | 030 | 13890-0001 | - | | 1 | HOLDER |
| | 040 | 13890-0002 | - | | 1 | HOLDER |
| | 045 | 294261 | - | | 2 | PIPE |
| | 046 | 294262 | - | | 2 | COVER |
| | 050 | 1013 | - | | 1 | SHAFT |
| | 060 | 4287-0004 | - | | 1 | SHAFT |
| | 070 | 4288-0007 | - | | 1 | BENDING ROLLER |
| | 080 | 4948 | - | | 2 | WINDOW |
| | 090 | 4961 | - | | 1 | CATCH |
| | 100 | 4962 | - | | 2 | SCREW |
| | 110 | 10325 | - | | 1 | CATCH |
| | 120 | 10363 | - | | 1 | PIN |
| | 130 | 13888 | - | | 2 | BEARING |
| | 140 | 20497 | - | | 1 | GROUP NUMBER PLATE |
| | 145 | 294263 | - | | 2 | LUG |
| | 150 | 90232-0034 | - | | 1 | PHOTOCELL |
| | 160 | 90232-0035 | - | | 1 | PHOTOCELL |
| | 170 | 311305-0238 | - | | 1 | SLOTTED PIRPC3X20FZB |
| | 180 | 311508-0416 | - | | 12 | RIVET KN4X10ALUM. |
| | 200 | 312111-0536 | - | | 4 | SCREW MC6S12X30FZB |
| | 210 | 312125-0289 | - | | 4 | SLOTTED HEMCS4X10RFR |
| | 215 | 312125-0327 | - | | 6 | SLOTTED HEMCS5X12RFR |
| | 220 | 312145-0331 | - | | 4 | SLOTTED HEMFS5X20RFR |
| | 230 | 312165-0366 | - | | 6 | SLOTTED HEMKFS6X12RFR |
| | 235 | 312165-0368 | - | | 8 | SLOTTED HEMKFS6X16RFR |
| | 240 | 312306-0371 | - | | 4 | GRUB SCREW P6SS6X22FZB |
| | 250 | 312502-0221 | - | | 4 | DRIVE SCREKDS4X6FNB |
| | 260 | 315101-0178 | - | | 4 | WASHER BRB13X24FZB |
| | 270 | 315105-0136 | - | | 4 | WASHER BRB4,3X8RFR |
| | 280 | 315105-0146 | - | | 6 | WASHER BRB5,3X10RFR |
| | 290 | 318800-0106 | - | | 1 | KNOB LA D.40-M10 |
| | 320 | 352101-0103 | - | | 2 | LEAD-IN G 18,6 |

| From | Pos | Part No | SP | UN | Qty | Description |
|---|---|---|---|---|---|---|

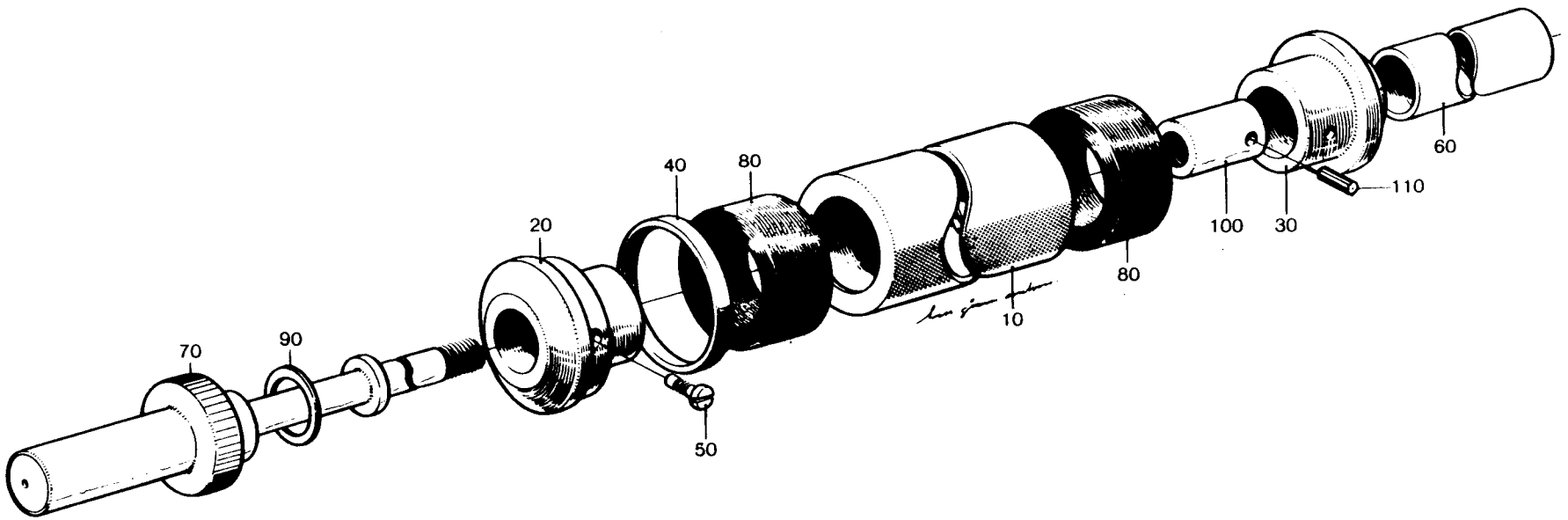
70
90
20
40
80
50
10
80
100
30
110
60

| From | Pos | Part No | SP | UN | Qty | Description |
|---|---|---|---|---|---|---|
| **Paper Width 180mm** | | | | | | |
| | 010 | G- 4071-0004 | - | | 1 | SPACER SLEEVE |
| | 020 | 7108 | - | | 1 | SLEEVE |
| | 030 | 7109 | - | | 1 | SLEEVE |
| | 040 | 4075-0010 | - | | 1 | SPACER RING |
| | 050 | 4410-0001 | - | | 2 | SCREW |
| | 060 | 4974-0003 | - | | 1 | SHAFT |
| **Paper Width 193mm 197mm** | | | | | | |
| | 010 | 4071-0004 | - | | 1 | SPACER SLEEVE |
| | 020 | 7108 | - | | 1 | SLEEVE |
| | 030 | 7109 | - | | 1 | SLEEVE |
| | 040 | 4075-0009 | - | | 1 | SPACER RING |
| | 050 | 4410-0001 | - | | 2 | SCREW |
| | 060 | 4974-0003 | - | | 1 | SHAFT |
| **Paper Width 206mm** | | | | | | |
| | 010 | 4071-0004 | - | | 1 | SPACER SLEEVE |
| | 020 | 7108 | - | | 1 | SLEEVE |
| | 030 | 7109 | - | | 1 | SLEEVE |
| | 040 | 4075-0005 | - | | 1 | SPACER RING |
| | 050 | 4410-0001 | - | | 2 | SCREW |
| | 060 | 4974-0003 | - | | 1 | SHAFT |
| **Paper Width 211mm 214mm** | | | | | | |
| | 010 | 4071-0004 | - | | 1 | SPACER SLEEVE |
| | 020 | 7108 | - | | 1 | SLEEVE |
| | 030 | 7109 | - | | 1 | SLEEVE |
| | 040 | 4075-0008 | - | | 1 | SPACER RING |
| | 050 | 4410-0001 | - | | 2 | SCREW |
| | 060 | 4974-0003 | - | | 1 | SHAFT |
| **Paper Width 220mm** | | | | | | |
| | 010 | 4071-0004 | - | | 1 | SPACER SLEEVE |
| | 020 | 7108 | - | | 1 | SLEEVE |
| | 030 | 7109 | - | | 1 | SLEEVE |
| | 040 | 4075-0007 | - | | 1 | SPACER RING |
| | 050 | 4410-0001 | - | | 2 | SCREW |
| | 060 | 4974-0003 | - | | 1 | SHAFT |
| **Paper Width 226mm 227mm 229mm** | | | | | | |
| | 010 | 4071-0004 | - | | 1 | SPACER SLEEVE |
| | 020 | 7108 | - | | 1 | SLEEVE |
| | 030 | 7109 | - | | 1 | SLEEVE |
| | 040 | 4075-0004 | - | | 1 | SPACER RING |
| | 050 | 4410-0001 | - | | 2 | SCREW |
| | 060 | 4974-0003 | - | | 1 | SHAFT |

| From | Pos | Part No | SP | UN | Qty | Description |
|---|---|---|---|---|---|---|
| **Paper Width 248mm** | | | | | | |
| | 010 | 4071-0004 | - | | 1 | SPACER SLEEVE |
| | 020 | 7108 | - | | 1 | SLEEVE |
| | 030 | 7109 | - | | 1 | SLEEVE |
| | 040 | 4075-0003 | - | | 1 | SPACER RING |
| | 050 | 4410-0001 | - | | 2 | SCREW |
| | 060 | 4974-0003 | - | | 1 | SHAFT |
| **Paper Width 254mm** | | | | | | |
| | 010 | 4071-0004 | - | | 1 | SPACER SLEEVE |
| | 020 | 7108 | - | | 1 | SLEEVE |
| | 030 | 7109 | - | | 1 | SLEEVE |
| | 040 | 4075-0001 | - | | 1 | SPACER RING |
| | 050 | 4410-0001 | - | | 2 | SCREW |
| | 060 | 4974-0003 | - | | 1 | SHAFT |
| **Paper Width 126mm 131mm** | | | | | | |
| | 010 | G- 4071-0008 | - | | 1 | SPACER SLEEVE |
| | 020 | 111374 | - | | 1 | SLEEVE |
| | 030 | 111375 | - | | 1 | SLEEVE |
| | 040 | 4075-0017 | - | | 1 | SPACER RING |
| | 050 | 4410-0002 | - | | 2 | SCREW |
| | 060 | 4974-0003 | - | | 1 | SHAFT |
| **Paper Width 160mm** | | | | | | |
| | 010 | 4071-0008 | - | | 1 | SPACER SLEEVE |
| | 020 | 111374 | - | | 1 | SLEEVE |
| | 030 | 111375 | - | | 1 | SLEEVE |
| | 040 | 4075-0017 | - | | 1 | SPACER RING |
| | 050 | 4410-0002 | - | | 2 | SCREW |
| | 060 | 4974-0006 | - | | 1 | SHAFT |
| **Common Parts** | | | | | | |
| | 070 | 4977-0003 | - | | 1 | SPINDLE |
| | 080 | 4072 | - | | 2 | RUBBER RING |
| | 090 | 4975 | - | | 1 | WASHER |
| | 100 | 4976 | - | | 1 | NUT |
| | 110 | 311102-0369 | - | | 1 | CYLINDRICACP6M6X60 |

# SPC 6303
## Tetra Classic TC

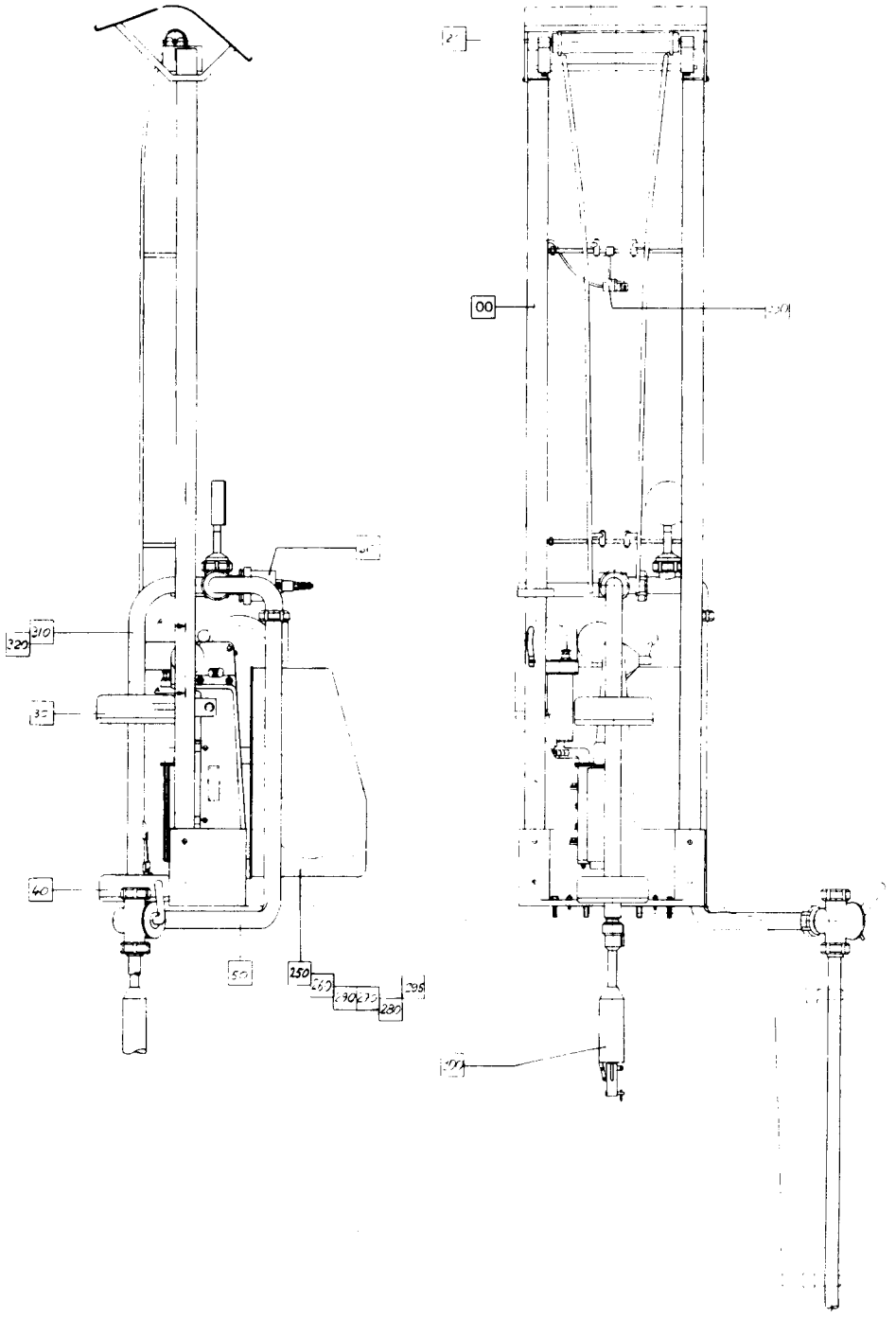
00
310
320
40
50
250
260
290
270
280
295

| From | Pos | Page No | Description |
|---|---|---|---|
| | F000 | 201-1 | SUPERSTRUCTURE |
| | F010 | 202-1 | SCREEN |
| | F020 | 203-1 | BEARING HOLDER |
| 120V- | F020 | 203-2 | BEARING HOLDER |
| | F030 | 204-1a | UPPER FORMING RING TC/150 |
| | F030 | 204-1b | UPPER FORMING RING TC/300 |
| | F030 | 204-1c | UPPER FORMING RING TC/500 |
| | F040 | 205-1a | LOWER FORMING RING TC/150 |
| | F040 | 205-1b | LOWER FORMING RING TC/300 |
| | F040 | 205-1c | LOWER FORMING RING TC/500 |
| | F050 | 206-1 | PIPE WORK |
| | F060 | 207-1 | VALVE |
| | F250 | 208-1 | LS-EQUIPMENT |
| | | 208-1.1 | . ELEMENT GROUP |
| | | 208-1.1.1 | . . ELEMENT |
| | | 208-1.1.1.1 | . . . CONTACT |
| | | 208-1.1.2 | . . ELEMENT |
| | | 208-1.2 | . PNEUMATIC PANEL |
| 120V- | F250 | 208-2 | LS-EQUIPMENT TC/150 |
| | | 208-2.1 | . ELEMENT GROUP |
| | | 208-2.1.1 | . . ELEMENT |
| | | 208-1.1.1.1 | . . . CONTACT |
| | | 208-2.1.2 | . . ELEMENT |
| | | 208-2.2 | . PNEUMATIC PANEL |
| | | 208-2.3 | . CONNECTION BOX |
| | | 208-2.3.1 | . . TERMINAL BLOCK |
| | F300 | 209-1a | FLOAT ASSEMBLY TC/150 TC/300 |
| | F300 | 209-1b | FLOAT ASSEMBLY TC/500 |
| | | 209-1b.1 | . AXLE LINK |
| | F310 | 210-1a | FILLING PIPE TC/150 TC/300 |
| | | 210-1.1 | . PRESSURE ROLLER |
| | F310 | 210-1b | FILLING PIPE TC/500 |
| | | 210-1.1 | . PRESSURE ROLLER |
| | F330 | 211-1 | PHOTOCELL |
| | F340 | 212-1 | LEVEL CONTROL DEVICE TC/150 125ml |
| | | 212-1.1 | . FILLING PIPE |
| | | 210-1.1 | . . PRESSURE ROLLER |
| | | 212-1.2 | . FLOAT |
| | F390 | 213-1 | PAPER GUIDE TC/150 125ml |
| | | 213-1.1 | . PAPER GUIDE |

| From | Pos | Page No | Description |
|---|---|---|---|

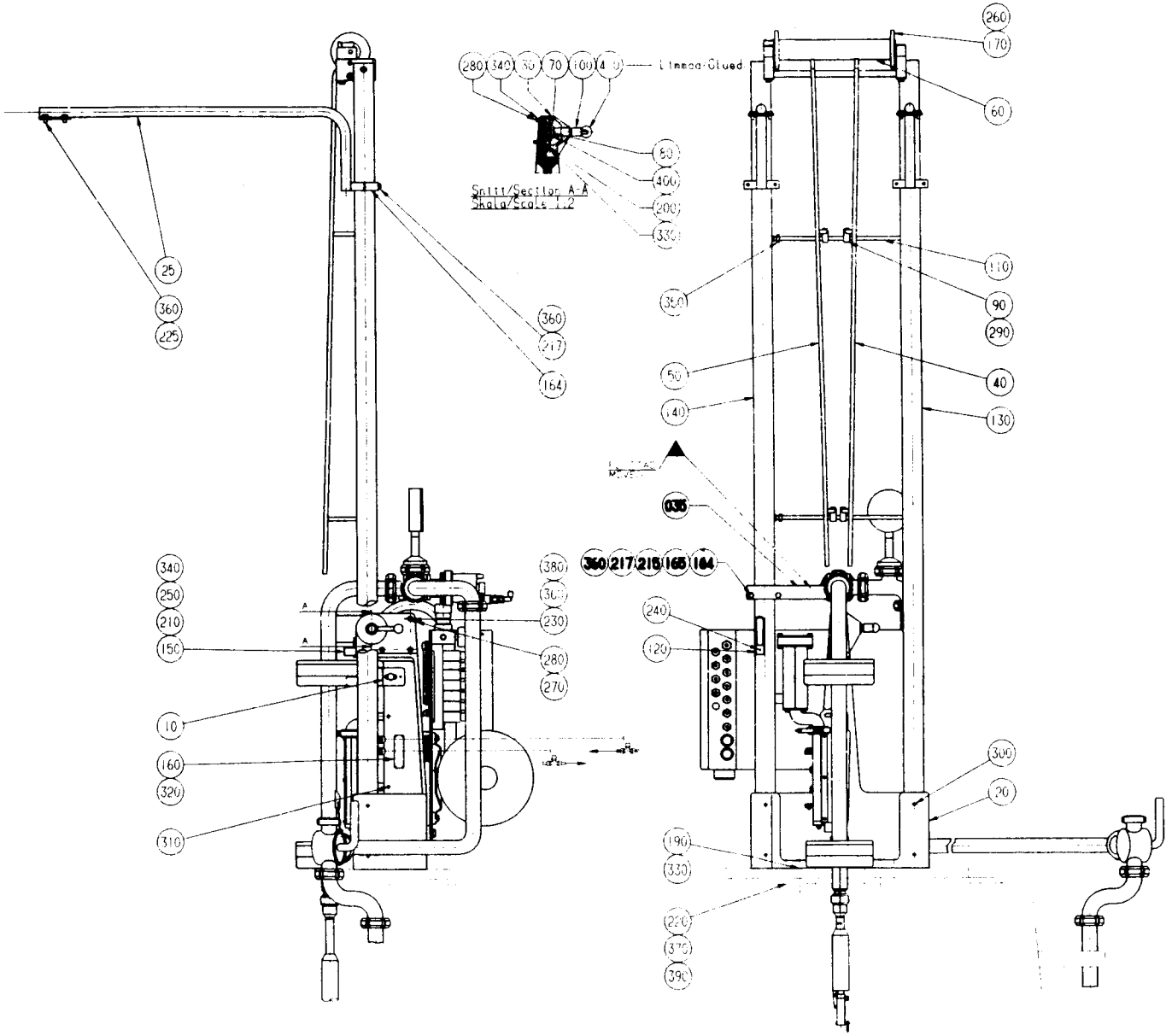
Limmad/Glued
Snitt/Section A-A
Skala/Scale 1:2
280 340 30 70 100 400
80
400
200
330
25
360
225
360
217
164
260
170
60
110
90
290
350
50
40
140
130
035
360 217 215 165 164
240
120
340
250
210
150
10
160
320
310
380
360
230
280
270
300
20
190
330
220
370
390

| From | Pos | Part No | SP | UN | Qty | Description |
|---|---|---|---|---|---|---|
| **TC/500 TC/300** | | | | | | |
| **140V** | | **C-237086-0301** | | | | **COMPLETE ASS'Y TC/500** |
| **140V** | | **C-237086-0302** | | | | **COMPLETE ASS'Y TC/300** |
| | | **C-237086-0401** | | | | **COMPLETE ASS'Y TC/300 TC/500** |
| | 035 | 230952 | - | | 1 | BRACKET |
| | 040 | 10991 | - | | 1 | ROD |
| | 050 | 10992 | - | | 1 | ROD |
| -140V | 060 | 263668 | - | | 1 | BENDING ROLLER |
| | 060 | 547880 | - | | 1 | BENDING ROLLER |
| | 164 | 230941 | - | | 1 | CLAMP |
| | 165 | 230942 | - | | 1 | CLAMP |
| | 170 | 266911 | - | | 2 | FLANGE |
| | 215 | 312105-0451 | - | | 4 | SCREW M6S8X20RFR |
| | 217 | 312105-0461 | - | | 6 | SCREW M6S8X50RFR |
| | 260 | 312306-0362 | - | | 6 | GRUB SCREW P6SS6X8FZB |
| | 360 | 315105-0165 | - | | 20 | WASHER BRB8,4X16RFR |
| **TC/150 200ml 189ml 180ml 150ml** | | | | | | |
| **110V** | | **C-237086-0303** | | | | **COMPLETE ASS'Y TC/150** |
| **120V** | | **C-237086-0402** | | | | **COMPLETE ASS'Y TC/150** |
| | 010 | 244763 | - | | 1 | SPACER LUG |
| | 035 | 230952 | - | | 1 | BRACKET |
| | 040 | 10991 | - | | 1 | ROD |
| | 050 | 10992 | - | | 1 | ROD |
| -110V | 060 | 263668 | - | | 1 | BENDING ROLLER |
| | 060 | 547880 | - | | 1 | BENDING ROLLER |
| | 164 | 230941 | - | | 1 | CLAMP |
| | 165 | 230942 | - | | 1 | CLAMP |
| | 170 | 266911 | - | | 2 | FLANGE |
| | 215 | 312105-0451 | - | | 4 | SCREW M6S8X20RFR |
| | 217 | 312105-0461 | - | | 6 | SCREW M6S8X50RFR |
| | 260 | 312306-0362 | - | | 6 | GRUB SCREW P6SS6X8FZB |
| | 360 | 315105-0165 | - | | 20 | WASHER BRB8,4X16RFR |

| From | Pos | Part No | SP | UN | Qty | Description |
|---|---|---|---|---|---|---|
| **Common Parts** | | | | | | |
| | 020 | G- 6043 | - | | 1 | SUPERSTRUCTURE |
| 120V- | 025 | 549712 | - | | 2 | STRUT TC/150 |
| | 030 | G- 2404 | - | | 1 | CLAMP |
| | 070 | 1753 | - | | 1 | CLAMP RING |
| | 080 | 1755-0001 | - | | 1 | WASHER |
| | 090 | 1756 | - | | 4 | SUPPORT |
| | 100 | 2410 | - | | 1 | CRANK |
| | 110 | 2687 | - | | 2 | STRUT |
| | 120 | 3598 | - | | 1 | PAPER CLIP |
| | 130 | 11012 | - | | 1 | COLUMN |
| | 140 | 11013 | - | | 1 | COLUMN |
| 120V- | 130 | 549710 | - | | 1 | COLUMN TC/150 |
| 120V- | 140 | 549709 | - | | 1 | COLUMN TC/150 |
| | 150 | 13225 | - | | 1 | SUPPORT |
| | 160 | 20497 | - | | 1 | GROUP NUMBER PLATE |
| | 190 | 311211-0271 | - | | 2 | TAPER PIN GKP5X5X40 |
| | 200 | 312105-0331 | - | | 1 | SCREW M6S5X20 A4 80 |
| | 210 | 312105-0370 | - | | 1 | SCREW M6S6X20RFR |
| | 220 | 312105-0499 | - | | 4 | SCREW M6S10X40RFR |
| | 230 | 312115-0459 | - | | 4 | SCREW 8X40 A4 80 |
| | 240 | 312125-0287 | - | | 1 | SLOTTED HEMCS4X8RFR |
| | 250 | 312151-0368 | - | | 2 | SCREW MF6S6X16FZB |
| | 270 | 312311-0360 | - | | 1 | GRUB SCREW T6SS6X6FZB |
| | 280 | 312311-0372 | - | | 4 | GRUB SCREW T6SS6X25FZB |
| | 290 | 312316-0443 | - | | 8 | GRUB SCREW SK6SS8X8FZB |
| | 300 | 312316-0447 | - | | 8 | GRUB SCREW SK6SS8X12FZB |
| | 310 | 312316-0487 | - | | 2 | GRUB SCREW SK6SS10X12FZB |
| | 320 | 312502-0221 | - | | 4 | DRIVE SCREKDS4X6FNB |
| | 330 | 312605-0314 | - | | 3 | NUT M6M5RFR |
| | 340 | 312605-0316 | - | | 4 | NUT M6M6RFR |
| | 350 | 312605-0320 | - | | 2 | NUT M6M10RFR |
| | 370 | 315121-0173 | - | | 4 | WASHER BRSB10,5X28FZB |
| | 380 | 315401-0165 | - | | 6 | WASHER FBH8,2FZB |
| | 390 | 315401-0178 | - | | 4 | WASHER FBH12,2FZB |
| | 400 | 315750-0109 | - | | 1 | LOCK RING SGA12 |
| | 410 | 318800-0104 | - | | 1 | KNOB LA D.30-M8 |

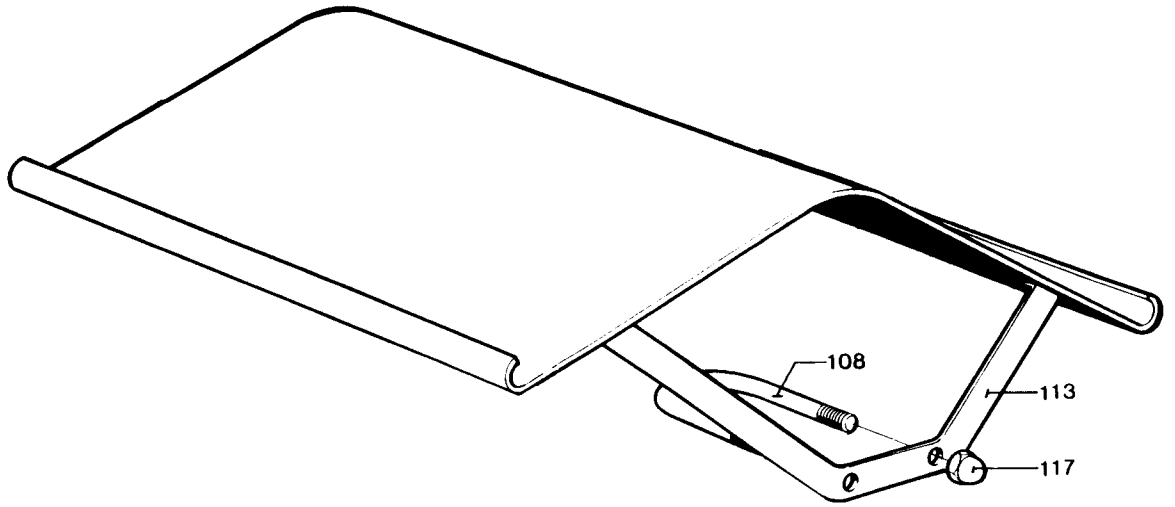
108
113
117

| From | Pos | Part No | SP | UN | Qty | Description | |
|---|---|---|---|---|---|---|---|
| | 108 | 2595 | - | | 2 | CLAMP | |
| | 113 | 4255 | - | | 1 | SCREEN | |
| | 117 | 312701-0316 | - | | 4 | CAP NUT | MHM6FKRB |

| From | Pos | Part No | SP | UN | Qty | Description |
|---|---|---|---|---|---|---|

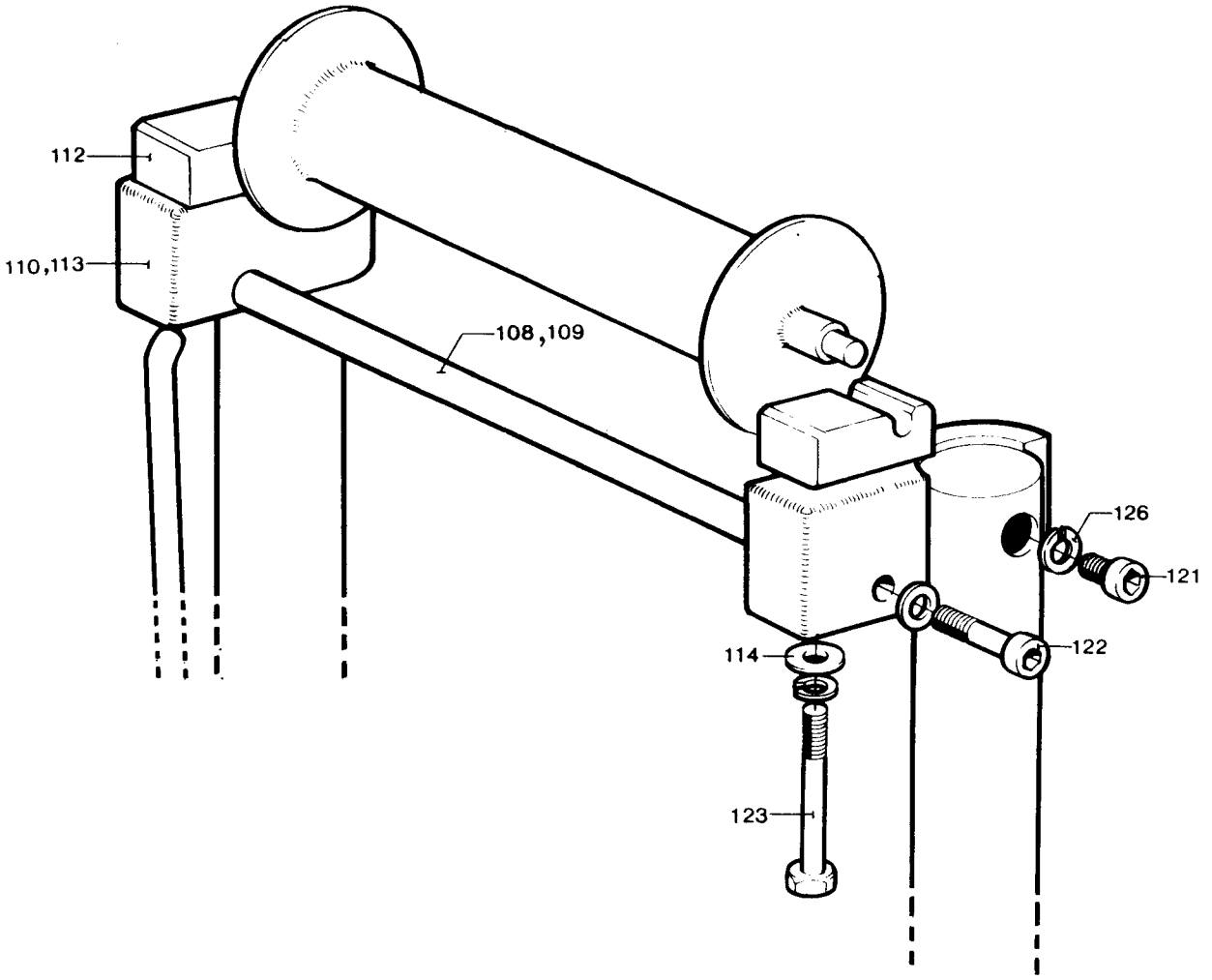
112
110,113
108,109
126
121
122
114
123

| From | Pos | Part No | SP | UN | Qty | Description |
|---|---|---|---|---|---|---|
| | 108 | 4254 | - | | 1 | SPACER BAR |
| | 113 | 11010 | - | | 2 | BEARING HOLDER |
| | 112 | 10999 | - | | 2 | BEARING |
| | 114 | 11011 | - | | 2 | WASHER |
| | 121 | 312115-0449 | - | | 2 | SCREW 8X16 A4 80 |
| | 122 | 312115-0459 | - | | 2 | SCREW 8X40 A4 80 |
| | 123 | 312101-0465 | - | | 2 | SCREW M6S8X70FZB |
| | 126 | 315401-0165 | - | | 2 | WASHER FBH8,2FZB |

| From | Pos | Part No | SP | UN | Qty | Description |
|---|---|---|---|---|---|---|

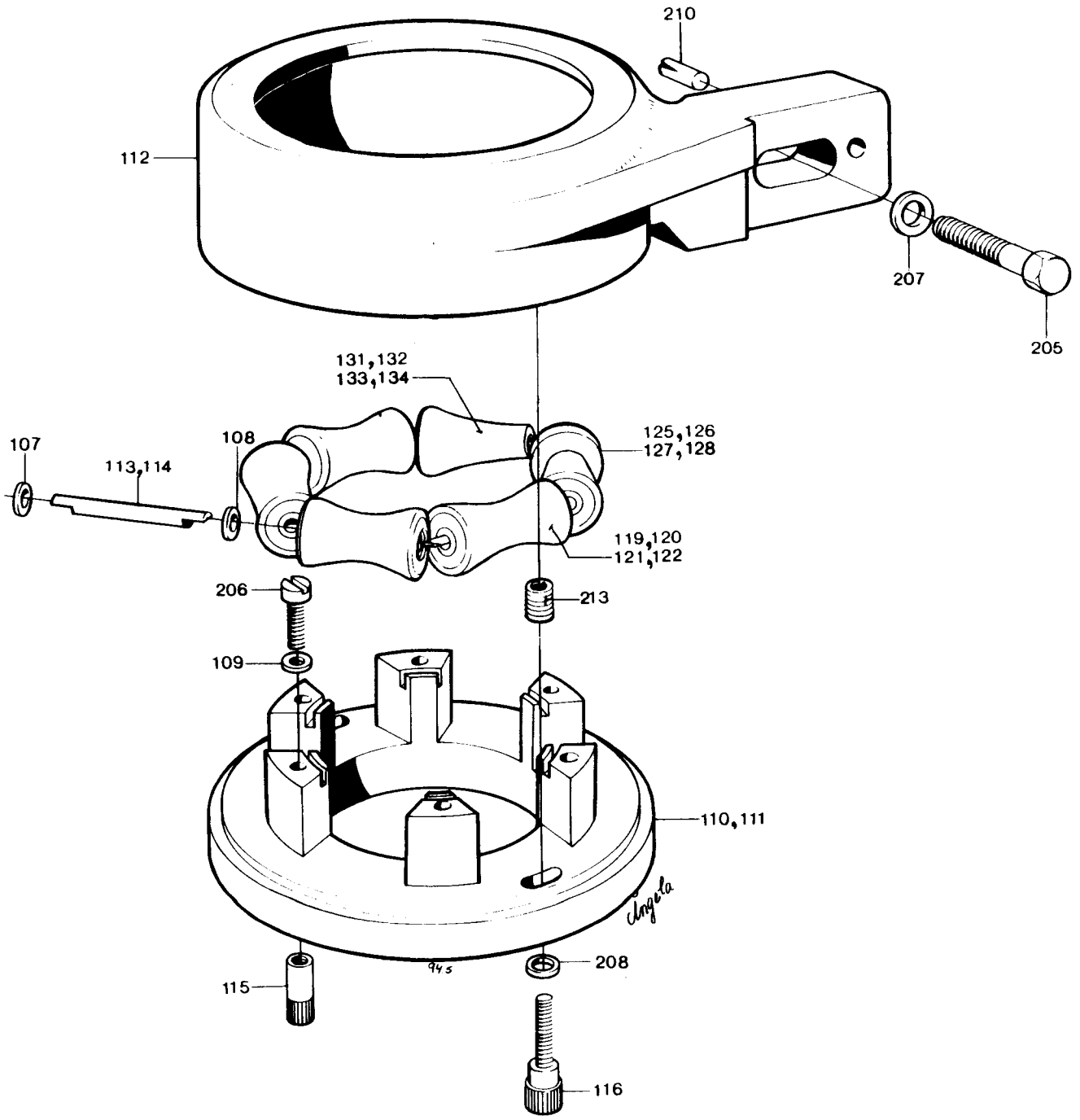
210
112
207
205
131,132
133,134
125,126
127,128
107
113,114
108
119,120
121,122
206
213
109
110,111
208
115
116

| From | Pos | Part No | SP | UN | Qty | Description |
|---|---|---|---|---|---|---|
| **Volume 227ml 236ml 250ml** | | | | | | |
| | 110 | 2901 | - | | 1 | RING |
| | 113 | 2395 | - | | 6 | SHAFT |
| | 121 | 18281 | - | | 4 | ROLLER |
| | 127 | 18283 | - | | 1 | ROLLER |
| | 133 | 18328 | - | | 1 | ROLLER |
| **Volume 284ml 300ml** | | | | | | |
| | 111 | 2398 | - | | 1 | RING |
| | 114 | 2402 | - | | 6 | SHAFT |
| | 122 | 18282 | - | | 4 | ROLLER |
| | 128 | 18284 | - | | 1 | ROLLER |
| | 134 | 18329 | - | | 1 | ROLLER |
| **Common Parts** | | | | | | |
| | 107 | 2033-0002 | - | | 12 | WASHER |
| | 108 | 2033-0003 | - | | 12 | WASHER |
| | 109 | 2033-0005 | - | | 6 | WASHER |
| | 112 | G- 434342 | - | | 1 | LID |
| | 115 | 2795 | - | | 6 | NUT |
| | 116 | 3654 | - | | 2 | KNURLED SCREW |
| | 205 | 312105-0499 | - | | 1 | SCREW M6S10X40RFR |
| | 206 | 312125-0293 | - | | 6 | SLOTTED HEMCS4X16RFR |
| | 207 | 315105-0173 | - | | 1 | WASHER BRB10,5X22RFR |
| | 208 | 315105-0136 | - | | 2 | WASHER BRB4,3X8RFR |
| | 210 | 311303-0310 | - | | 1 | SLOTTED PIRPB5X20FZB |
| | 213 | 90026-0002 | - | | 2 | THREADED BUSH |

| From | Pos | Part No | SP | UN | Qty | Description |
|---|---|---|---|---|---|---|

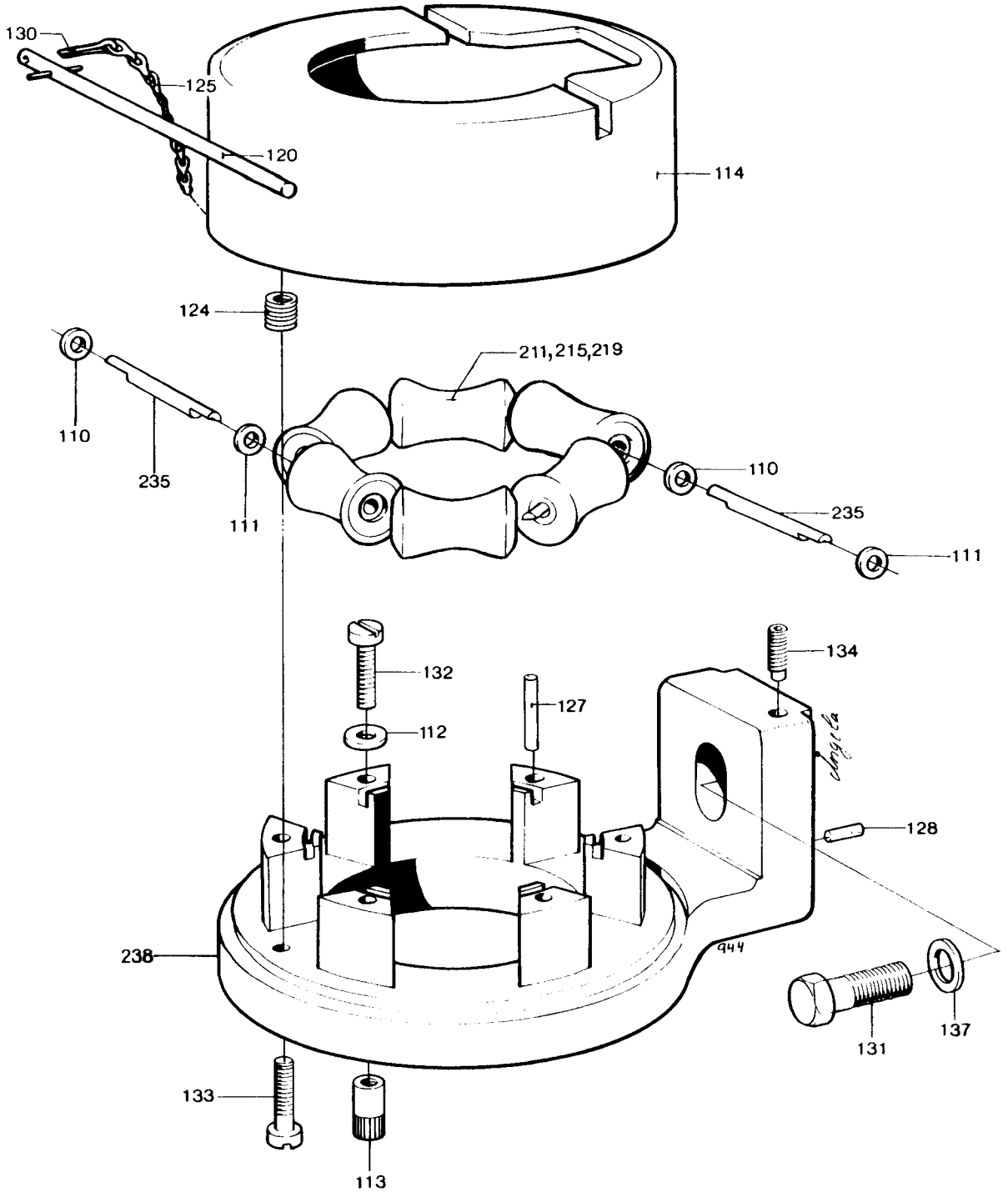
130
125
120
114
124
211,215,219
110
235
111
110
235
111
132
112
127
134
128
238
944
131
137
133
113

| From | Pos | Part No | SP | UN | Qty | Description |
|---|---|---|---|---|---|---|
| **Volume 227ml 236ml** | | | | | | |
| | 211 | 2910-0001 | - | | 6 | ROLLER TO LOWER RING |
| | 211 | 2910-0002 | - | | 6 | ROLLER TO LOWER RING |
| | 211 | 2910-0003 | - | | 6 | ROLLER TO LOWER RING |
| | 235 | 2909 | - | | 6 | SHAFT |
| | 238 | 18603 | - | | 1 | RING |
| **Volume 250ml** | | | | | | |
| | 215 | 5611-0003 | - | | 6 | ROLLER TO LOWER RING |
| | 215 | 5611-0002 | - | | 6 | ROLLER TO LOWER RING |
| | 215 | 5611-0001 | - | | 6 | ROLLER TO LOWER RING |
| | 235 | 2909 | - | | 6 | SHAFT |
| | 238 | 18603 | - | | 1 | RING |
| **Volume 284ml 300ml** | | | | | | |
| | 219 | 2394-0003 | - | | 6 | ROLLER TO LOWER RING |
| | 219 | 2394-0002 | - | | 6 | ROLLER TO LOWER RING |
| | 219 | 2394-0001 | - | | 6 | ROLLER TO LOWER RING |
| | 235 | 2395 | - | | 6 | SHAFT |
| | 238 | 18604 | - | | 1 | RING |
| **Common Parts** | | | | | | |
| | 110 | 2033-0002 | - | | 12 | WASHER |
| | 111 | 2033-0003 | - | | 12 | WASHER |
| | 112 | 2033-0005 | - | | 6 | WASHER |
| | 113 | 2795 | - | | 6 | NUT |
| | 114 | G- 8432 | - | | 1 | LID |
| | 120 | 12155 | - | | 1 | STOP PIN |
| | 124 | 90026-0002 | - | | 2 | THREADED BUSH |
| | 125 | 90155-0001 | - | MM | 500 | CHAIN |
| | 127 | 311103-0236 | - | | 2 | CYLINDRICACPR3M6X16RFR |
| | 128 | 311303-0210 | - | | 1 | SLOTTED PIRPB2,5X16FZB |
| | 130 | 311411-0179 | - | | 2 | SPLIT PIN SP3,2X16RFR |
| | 131 | 312105-0499 | - | | 1 | SCREW M6S10X40RFR |
| | 132 | 312115-0293 | - | | 6 | SCREW 4 X 16 A4 80 |
| | 133 | 312115-0297 | - | | 2 | SCREW 4X25 A4 80 |
| | 134 | 312311-0380 | - | | 2 | GRUB SCREW T6SS6X50FZB |
| | 137 | 315105-0173 | - | | 1 | WASHER BRB10,5X22RFR |

| From | Pos | Part No | SP | UN | Qty | Description |
|---|---|---|---|---|---|---|

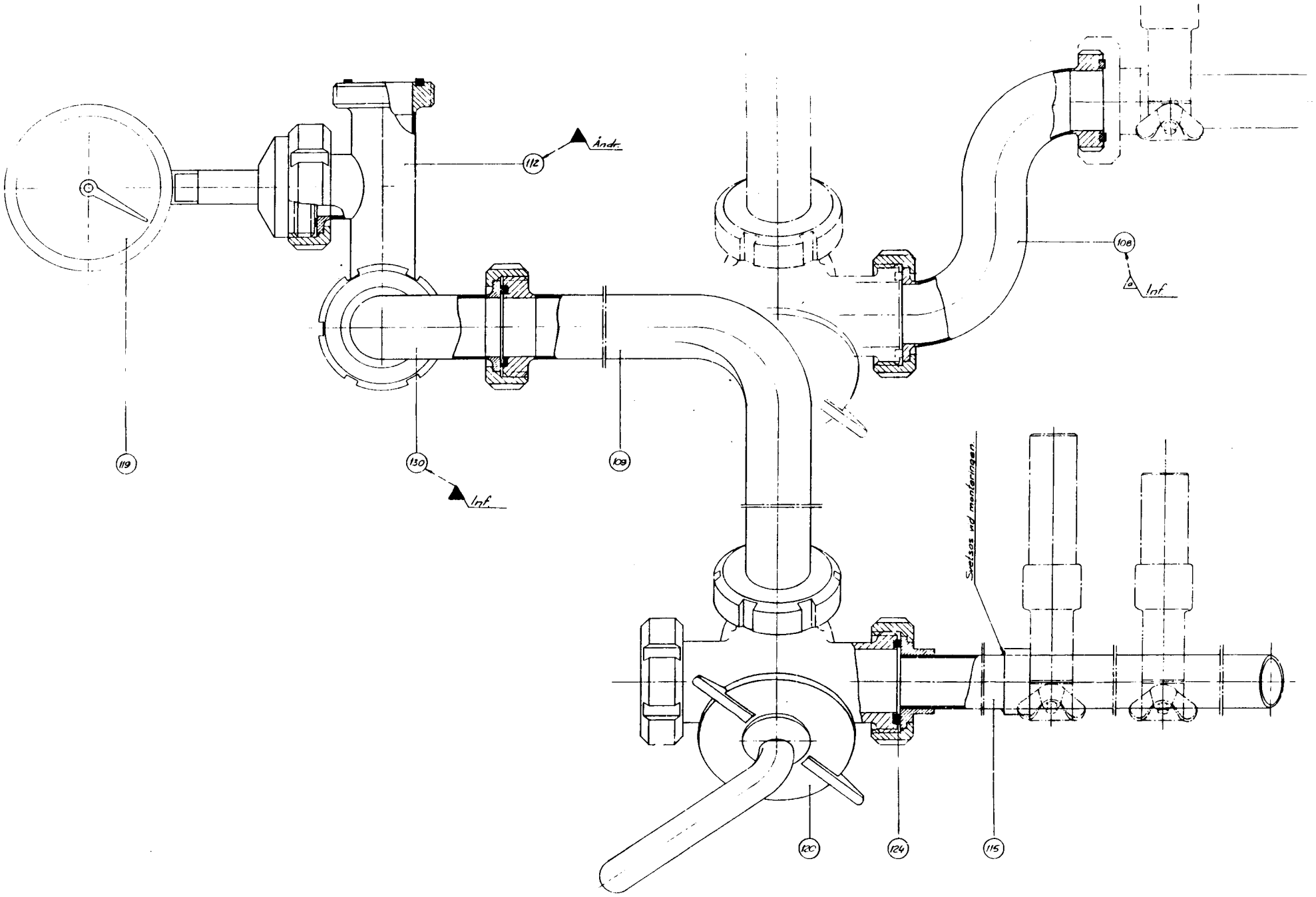
Ändr.
112
119
130
Inf.
109
108
Inf.
Svetsas vid montaget.
120
124
115

| From | Pos | Part No | SP | UN | Qty | Description |
|---|---|---|---|---|---|---|
| | 124 | 315250-0103 | R | | 7 | GASKET 48/38 TC/500 |
| | 108 | 245106 | - | | 1 | ELBOW PIPE TC/150 TC/300 |
| | 124 | 315250-0103 | R | | 8 | GASKET 48/38 TC/150 TC/300 |
| | 109 | 230950 | - | | 1 | PIPE |
| | 112 | 434348 | - | | 1 | ELBOW PIPE |
| | 115 | 4051-0002 | - | | 1 | WASTE PIPE |
| | 119 | 90043-0050 | - | | 1 | PRESSURE GAUGE |
| | 120 | 90207-0003 | - | | 1 | COCK |
| | | 90207-0302 | R | | 0 | * O-RING |
| | | 90207-0303 | R | | 0 | * O-RING |
| | 130 | 342807-0103 | - | | 1 | ELBOW PIPE38 |

| From | Pos | Part No | SP | UN | Qty | Description |
|---|---|---|---|---|---|---|

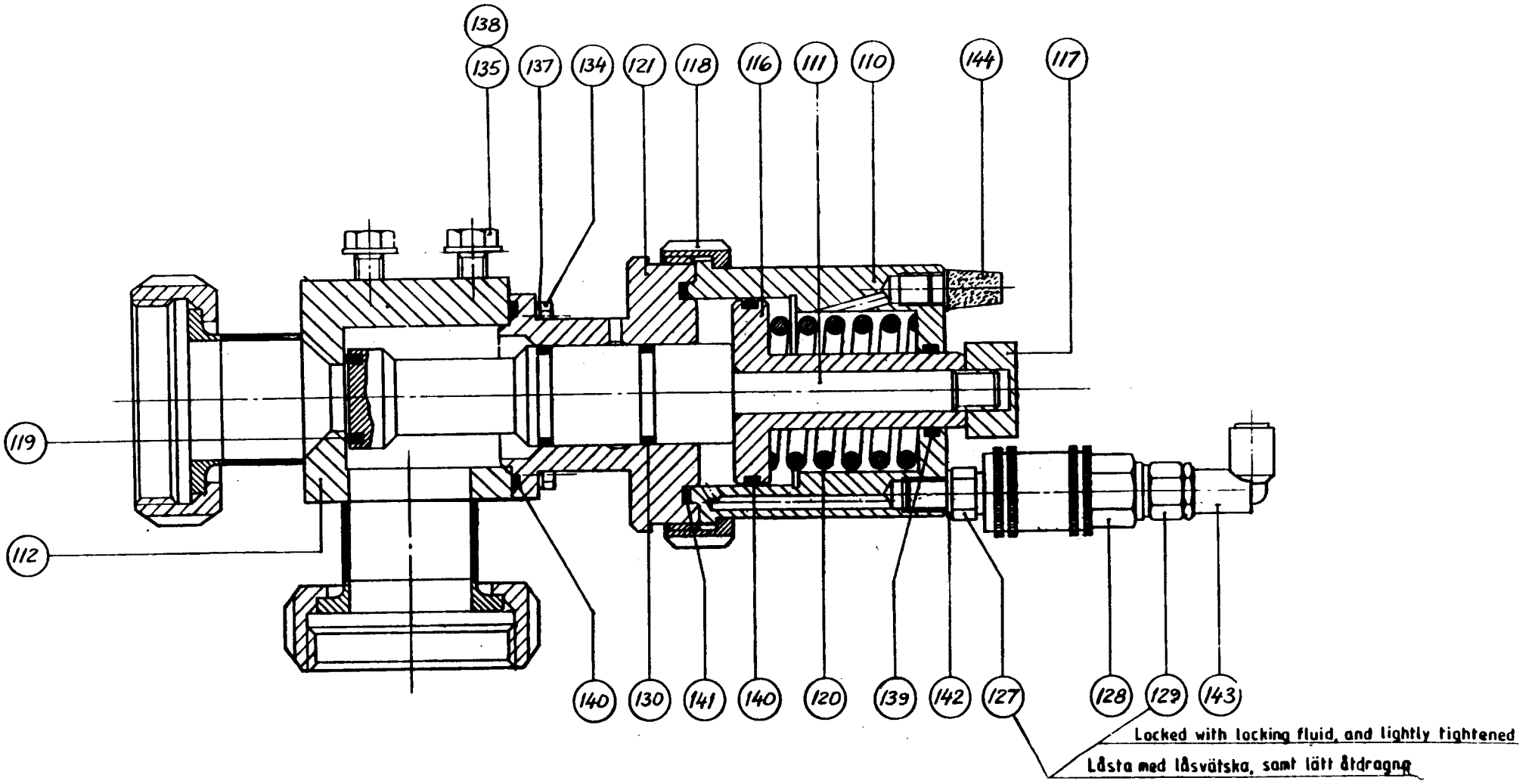
138
135
137
134
121
118
116
111
110
144
117
119
112
140
130
141
140
120
139
142
127
128
129
143
Locked with locking fluid, and lightly tightened
Låsta med låsvätska, samt lätt åtdragna

| From | Pos | Part No | SP | UN | Qty | Description |
|---|---|---|---|---|---|---|
| | 110 | 36148 | - | | 1 | PISTON HOUSING |
| | 111 | 36149 | - | | 1 | VALVE SPINDLE |
| | 112 | 230949 | - | | 1 | VALVE HOUSING |
| | 116 | 36160 | - | | 1 | PISTON |
| | 117 | 36161 | - | | 1 | NUT |
| | 118 | 36164 | - | | 1 | NUT |
| | 119 | 36166 | - | | 1 | GASKET |
| | 120 | 36451 | - | | 1 | COMPRESSION SPRING |
| | 121 | 36888 | - | | 1 | CYLINDER |
| | 127 | 90131-0003 | - | | 1 | HOSE COUPLING |
| | 128 | 90163-0001 | - | | 1 | CONNECTION |
| | | 90163-0300 | R | | 0 | * GASKET |
| | 129 | 90224-0090 | - | | 1 | SLEEVE |
| | 130 | 90242-0065 | - | | 2 | O-RING |
| | 134 | 312101-0368 | - | | 4 | SCREW M6S6X16FZB |
| | 135 | 312105-0451 | - | | 2 | SCREW M6S8X20RFR |
| | 137 | 315101-0153 | - | | 4 | WASHER BRB6,4X12FZB |
| | 138 | 315105-0165 | - | | 2 | WASHER BRB8,4X16RFR |
| | 139 | 315204-0216 | R | | 1 | O-RING 22,2X3VITON |
| | 140 | 315204-0301 | R | | 2 | O-RING 49,5X3VITON |
| | 141 | 315204-0302 | R | | 1 | O-RING 54,5X3VITON |
| | 142 | 315233-0109 | - | | 1 | SEAL RING R1/8" |
| | 143 | 342732-0102 | - | | 1 | ELBOW COUP D6-R1/8" |
| | 144 | 346800-0109 | - | | 1 | SILENCER FILTER R1/8" |

| From | Pos | Part No | SP | UN | Qty | Description |
|---|---|---|---|---|---|---|

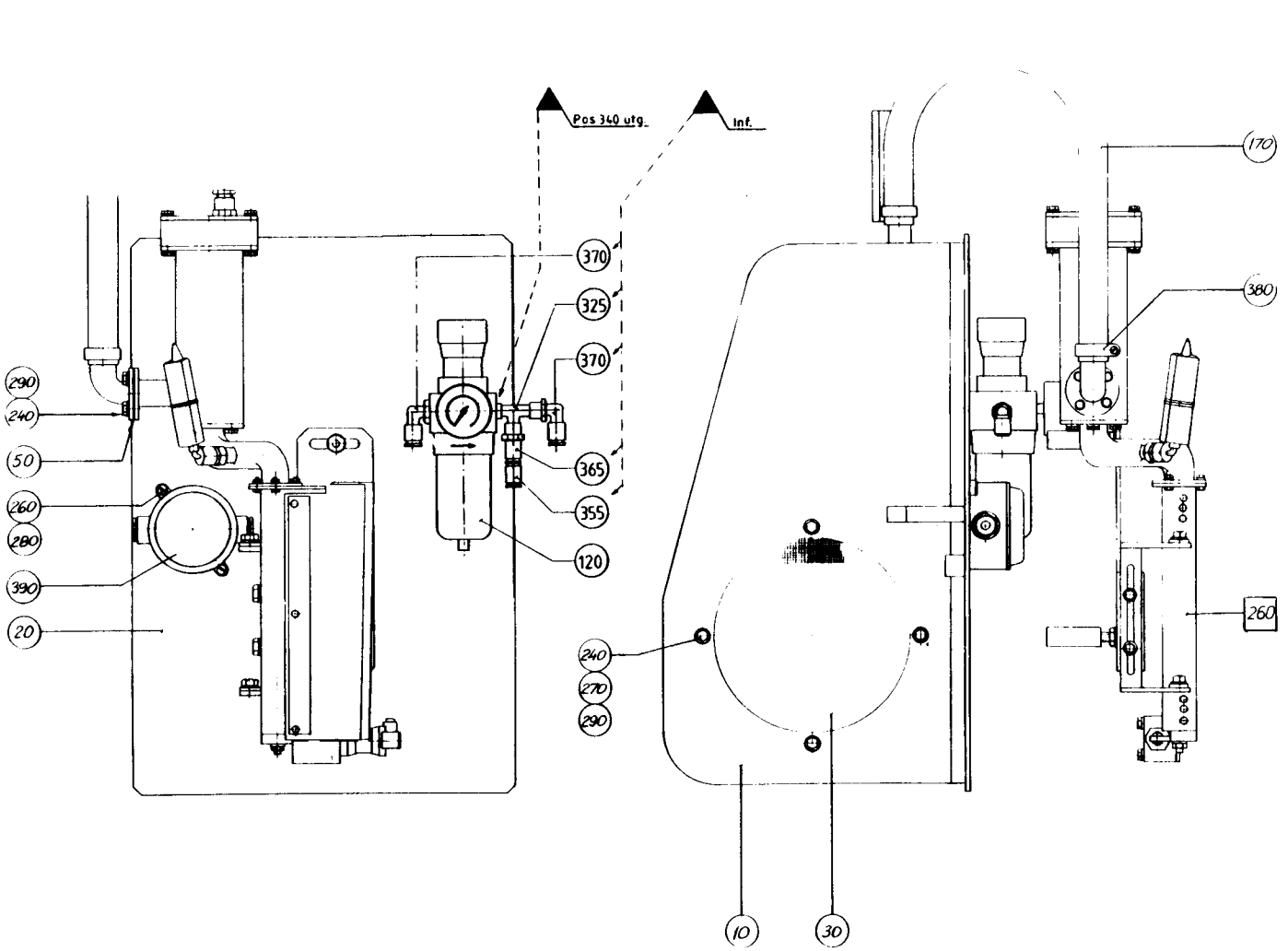
Pos 340 utg.
Inf.
290
240
50
260
280
390
20
370
325
370
365
355
120
170
380
260
240
270
290
10
30

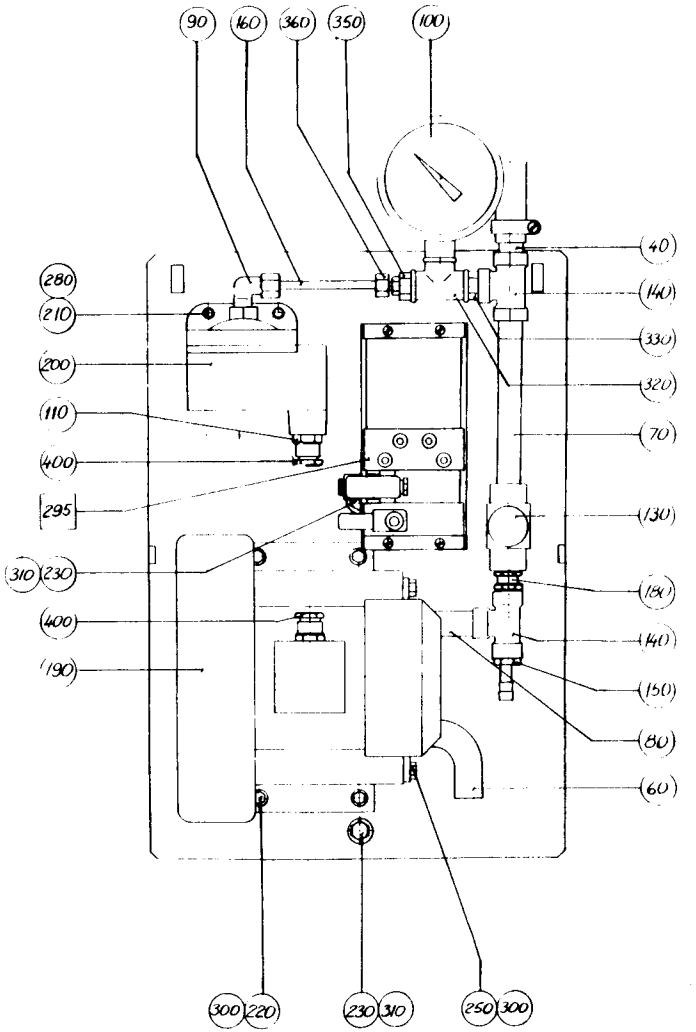
90
160
360
350
100
280
210
200
110
400
295
310
230
400
190
40
140
330
320
70
130
180
140
150
80
60
300
220
230
310
250
300

| From | Pos | Part No | SP | UN | Qty | Description |
|---|---|---|---|---|---|---|
| | F260 | ==>208-1.1 | - | | 1 | **ELEMENT GROUP** |
| | | ==>208-1.1.1 | | | | **. ELEMENT** |
| | | ==>208-1.1.1.1 | | | | **. . CONTACT** |
| | | ==>208-1.1.2 | | | | **. ELEMENT** |
| | F295 | ==>208-1.2 | - | | 1 | **PNEUMATIC PANEL** |
| | 010 | 32698 | - | | 1 | COVER |
| | 020 | 35734 | - | | 1 | BOTTOM PLATE |
| | 030 | 32699 | - | | 2 | NET |
| | 040 | 32296 | - | | 1 | CONNECTION PIPE |
| | 050 | 33730-0001 | - | | 1 | GASKET |
| | 060 | 534869 | - | | 1 | CONTACT FLANGE |
| | 070 | 228828 | - | | 1 | PIPE |
| | 080 | 534870 | - | | 1 | CONTACT FLANGE |
| | 090 | 90030-0056 | - | | 1 | PIPE CONNECTION |
| | 100 | 90043-0028 | - | | 1 | PRESSURE GAUGE |
| | 110 | 90089-0006 | - | | 1 | SLEEVE |
| | 120 | 90113-0013 | - | | 1 | REGULATOR |
| | | 90113-0359 | S | | 0 | * FILTER CARTRIDGE |
| | 130 | 90235-0291 | - | | 1 | THROTTLE CHECK VALVE |
| | 140 | 90140-0010 | - | | 2 | T-PIECE |
| | 150 | 90163-0067 | - | | 1 | HOSE NIPPLE |
| | 160 | 90166-0013 | - | MM | 150 | HOSE |
| | 170 | 90166-0060 | - | M | 1 | HOSE |
| | 180 | 90224-0037 | - | | 1 | NIPPLE |
| | 190 | 90264-0005 | - | | 1 | FAN |
| | | 90264-0306 | S | | 0 | * SILENCER |
| | 200 | 90273-0006 | - | | 1 | PRESSURE GUARD |
| | 210 | 312101-0323 | - | | 2 | SCREW M6S5X8FZB |
| | 220 | 312101-0451 | - | | 4 | SCREW M6S8X20FZB |
| | 230 | 312101-0489 | - | | 2 | SCREW M6S10X16FZB |
| | 240 | 312105-0366 | - | | 12 | SCREW M6S6X12RFR |
| | 250 | 312105-0368 | - | | 4 | SCREW M6S6X16RFR |
| | 260 | 312121-0327 | - | | 2 | SLOTTED HEMCS5X12FZB |
| | 270 | 312601-0316 | - | | 8 | NUT M6M6FZB |
| | 280 | 315105-0146 | - | | 4 | WASHER BRB5,3X10RFR |
| | 290 | 315105-0153 | - | | 12 | WASHER BRB6,4X12RFR |
| | 300 | 315105-0165 | - | | 4 | WASHER BRB8,4X16RFR |
| | 310 | 315105-0173 | - | | 2 | WASHER BRB10,5X22RFR |
| | 320 | 342240-0111 | - | | 1 | T-PIECE ANSL.10 |
| | 325 | 342245-0102 | - | | 1 | T-PIECE |
| | 330 | 342700-0206 | - | | 1 | NIPPLE RNA3/8"-1/2" |
| | 350 | 342701-0203 | - | | 1 | BUSHING RNI3/8"-1/4" |
| | 355 | 342716-0203 | - | | 1 | REDUCER 6-8 |
| | 360 | 342720-0104 | - | | 1 | PIPE CONNEGA-8-1/4" |
| | 365 | 342722-0205 | - | | 1 | PIPE CONNED=8-R1/4" |
| | 370 | 342732-0104 | - | | 2 | ELBOW COUP D8-R1/4" |
| | 380 | 342991-0103 | - | | 2 | HOSE CLIP 15-24MMRFR |
| | 390 | 352020-0102 | - | | 1 | CONNECTIONOSA |
| | 400 | 352103-0106 | - | | 1 | CABLE GLANR.18,6/5-10 |
| | 410 | 352103-0111 | - | | 1 | CABLE GLANR.PR22,5/10-14 |

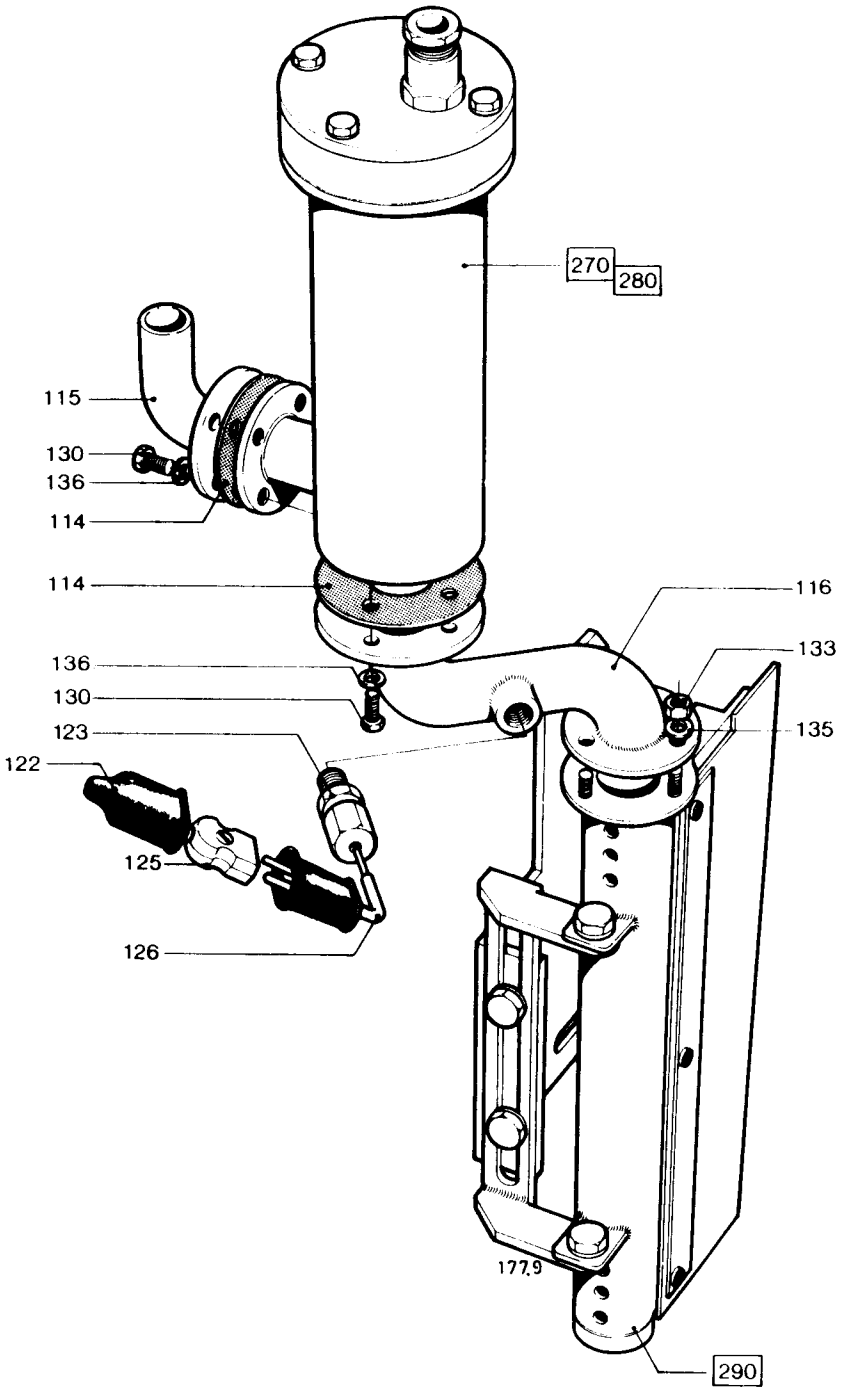
270
280
115
130
136
114
114
116
133
136
130
135
123
122
125
126
177.9
290

| From | Pos | Part No | SP | UN | Qty | Description |
|---|---|---|---|---|---|---|
| | F270 | ==>208-1.1.1 | - | | 1 | ELEMENT |
| | | ==>208-1.1.1.1 | | | | . CONTACT |
| | F290 | ==>208-1.1.2 | - | | 1 | ELEMENT |
| **Volume TC/500** | | | | | | |
| | 114 | 33730-0001 | - | | 2 | GASKET |
| | 115 | 208853 | - | | 1 | CONTACT FLANGE |
| | 130 | 312105-0366 | - | | 8 | SCREW M6S6X12RFR |
| | 136 | 315105-0153 | - | | 8 | WASHER BRB6,4X12RFR |
| **Volume TC/300** | | | | | | |
| | 114 | 33730-0001 | - | | 2 | GASKET |
| | 115 | 208853 | - | | 1 | CONTACT FLANGE |
| | 130 | 312105-0366 | - | | 8 | SCREW M6S6X12RFR |
| | 136 | 315105-0153 | - | | 8 | WASHER BRB6,4X12RFR |
| **Volume TC/150** | | | | | | |
| | 114 | 33730-0001 | - | | 2 | GASKET |
| | 115 | 208853 | - | | 1 | CONTACT FLANGE |
| | 130 | 312105-0366 | - | | 8 | SCREW M6S6X12RFR |
| | 136 | 315105-0153 | - | | 8 | WASHER BRB6,4X12RFR |
| **Common Parts** | | | | | | |
| | 116 | 232991 | - | | 1 | CONNECTION PIPE |
| | 122 | 90326-0012 | - | | 1 | PROTECTIVE COVER |
| | 123 | 90326-0017 | - | | 1 | GLAND |
| | 125 | 90326-0020 | - | | 1 | SOCKET |
| | 126 | 90326-0043 | - | | 1 | THERMOELEMENT |
| | 133 | 312605-0312 | - | | 3 | NUT M6M4RFR |
| | 135 | 315105-0136 | - | | 3 | WASHER BRB4,3X8RFR |

| From | Pos | Part No | SP | UN | Qty | Description |
|---|---|---|---|---|---|---|

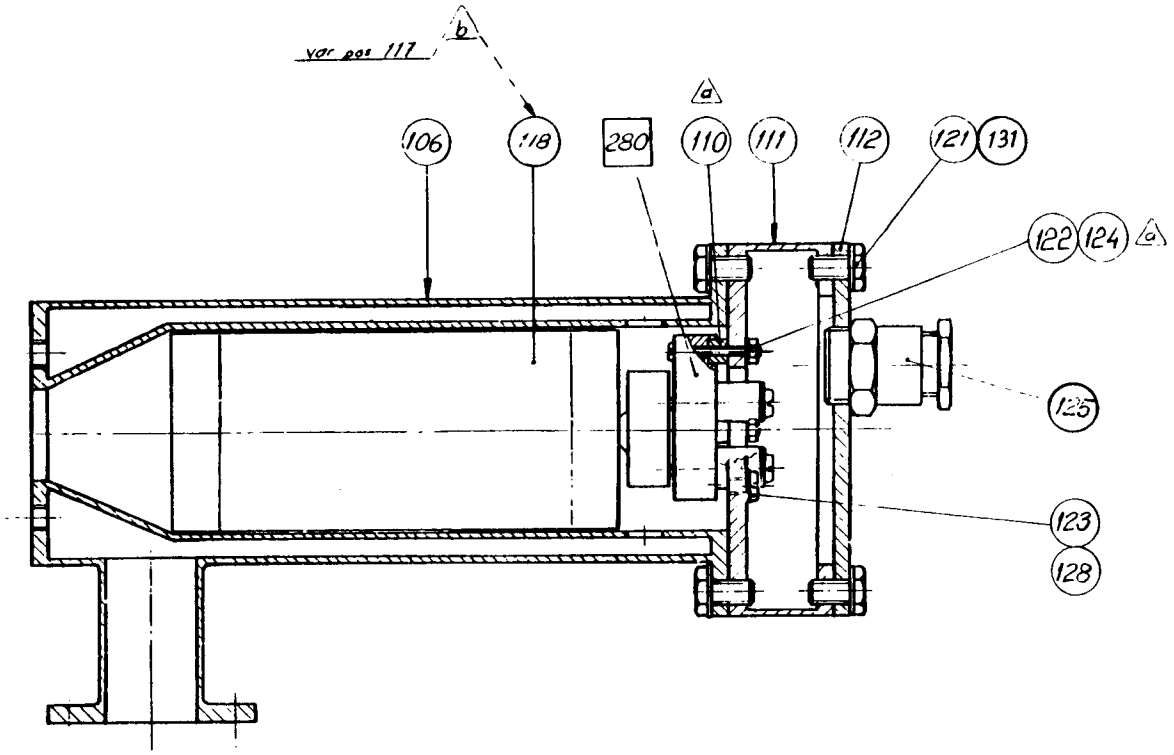
var pos 117
b
a
106
118
280
110
111
112
121
131
122
124
a
125
123
128

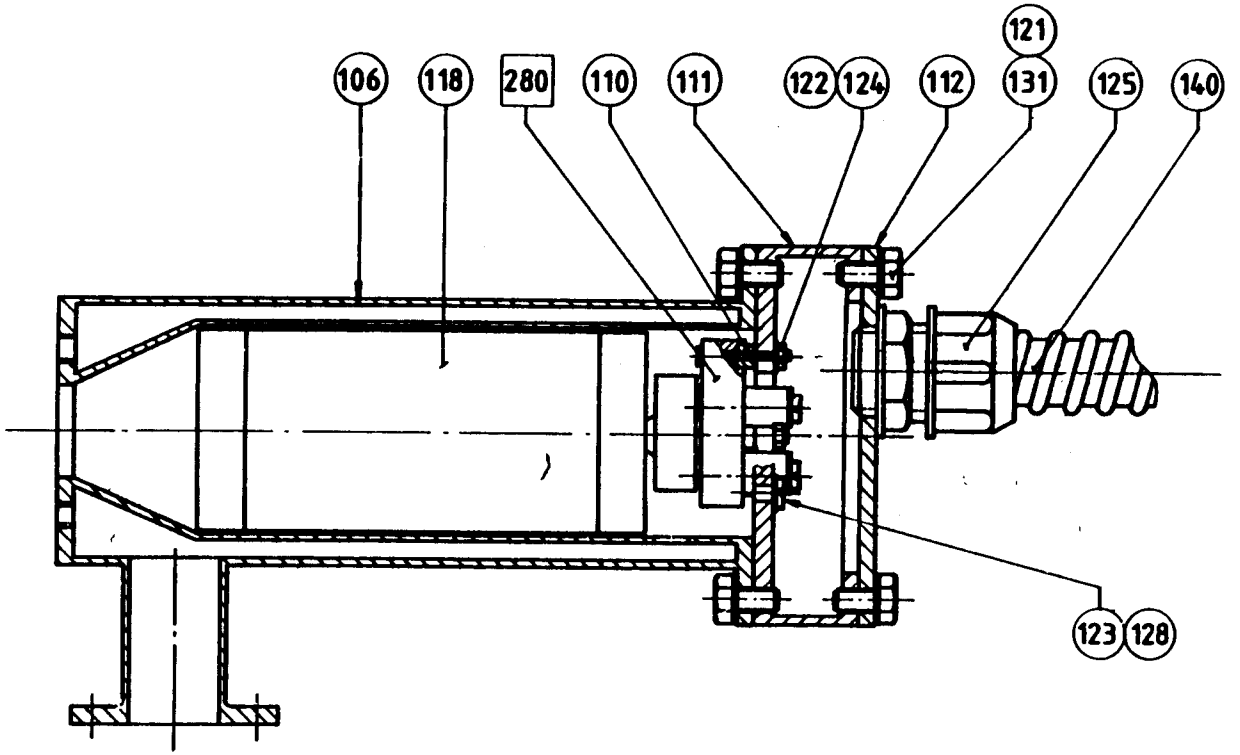
106
118
280
110
111
122
124
112
121
131
125
140
123
128

| From | Pos | Part No | SP | UN | Qty | Description |
|---|---|---|---|---|---|---|
| | 000 | C- 207637-0201 | | | | ELEMENT |
| 120V- | 000 | C- 207637-0301 | | | | ELEMENT |
| | F280 | ==>208-1.1.1.1 | - | | 1 | CONTACT |
| | 106 | 38960 | - | | 1 | COIL HEATER |
| | 110 | 19797 | - | | 3 | BUSHING |
| | 111 | 38962 | - | | 1 | CLUTCH PIECE |
| | 112 | 38963 | - | | 1 | LID |
| | 118 | 90206-0014 | R | | 1 | HEATING ELEMENT |
| | 120 | 352136-0127 | - | | 1 | GLAND |
| | 121 | 312105-0366 | - | | 8 | SCREW M6S6X12RFR |
| | 122 | 312121-0230 | - | | 3 | SLOTTED HEMCS3X20FZB |
| | 123 | 312132-0287 | - | | 1 | SLOTTED HEMSCS4X8MSGFN |
| | 124 | 312601-0310 | - | | 3 | NUT M6M3FZB |
| | 125 | 352103-0106 | - | | 1 | CABLE GLANR.18,6/5-10 |
| | 128 | 353103-0130 | - | | 1 | CABLE SHOE |
| | 131 | 315105-0153 | - | | 8 | WASHER BRB6,4X12RFR |
| | 140 | 352135-0106 | - | M | 2 | HOSE |

| From | Pos | Part No | SP | UN | Qty | Description |
|---|---|---|---|---|---|---|

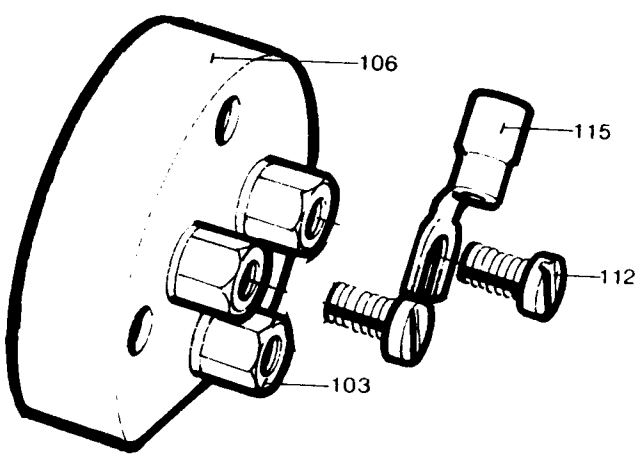
106
115
112
103

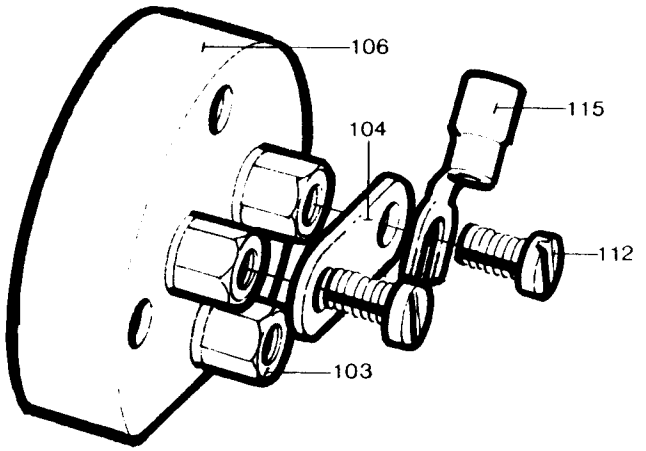
106
115
104
112
103

| From | Pos | Part No | SP | UN | Qty | Description |
|---|---|---|---|---|---|---|
| | 104 | 209283 | - | | 1 | COUPLING STRIP 2500W |
| | 103 | 207639 | - | | 3 | SPACER |
| | 106 | 90125-0020 | - | | 1 | PLATE |
| | | 270926 | S | | 6 | * NUT |
| | | 270927 | S | | 3 | * SCREW |
| | | 294464 | S | | 1 | * BASE PLATE |
| | 112 | 312132-0287 | - | | 3 | SLOTTED HEMSCS4X8MSGFN |
| | 115 | 353103-0130 | - | | 2 | CABLE SHOE |

| From | Pos | Part No | SP | UN | Qty | Description |
|---|---|---|---|---|---|---|

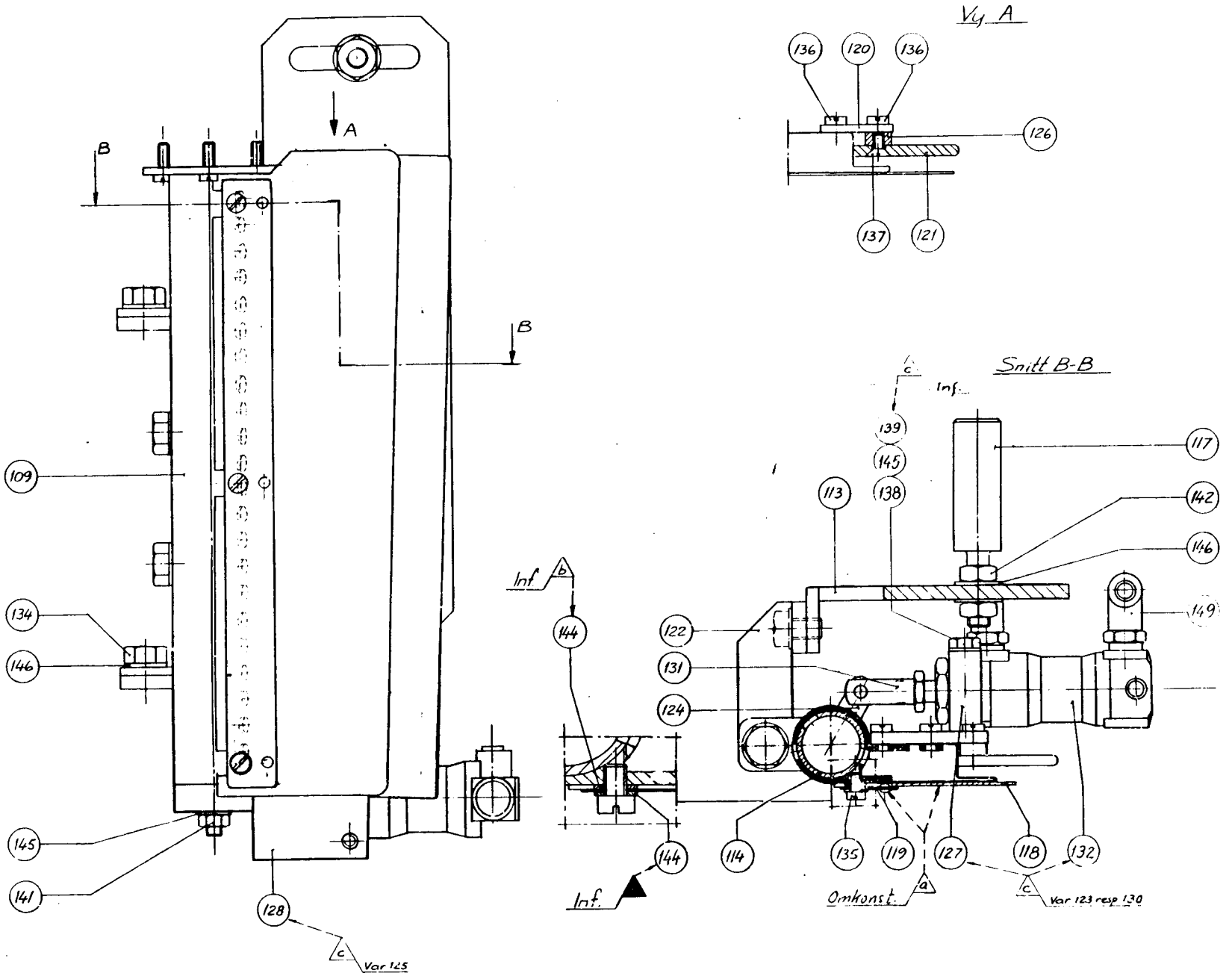
Vy A
136
120
136
126
137
121
A
B
B
109
134
146
145
141
128
c
Var 125
Snitt B-B
c
Inf.
139
145
138
113
117
142
146
149
Inf
b
144
122
131
124
144
Inf.
114
135
119
127
118
132
Omkonst.
a
c
Var 123 resp 130

| From | Pos | Part No | SP | UN | Qty | Description |
|---|---|---|---|---|---|---|
| | 109 | 230494 | - | | 1 | CASING |
| | 113 | 32288-0003 | - | | 1 | HOLDER, LS ELEMENT |
| | 114 | 230518 | - | | 1 | CYLINDER |
| | 117 | 32289 | - | | 2 | PIN |
| | 118 | 255336 | R | | 1 | SLIDE RAIL |
| | 119 | 255341 | - | | 1 | STRIP |
| | 120 | 230499 | - | | 1 | BRACKET |
| | 121 | 230500 | R | | 1 | SLIDE RAIL |
| | 122 | 232946 | - | | 1 | HOLDER |
| | 124 | 232948 | - | | 1 | ARM |
| | 126 | 232950 | - | | 2 | WASHER |
| | 127 | 283147 | - | | 1 | BRACKET |
| | 128 | 283209 | - | | 1 | BRACKET |
| | 131 | 90239-0088 | - | | 1 | BRACKET |
| | 132 | 90239-0821 | - | | 1 | CYLINDER |
| | 134 | 312105-0447 | - | | 4 | SCREW M6S8X12RFR |
| | 135 | 312125-0285 | - | | 3 | SLOTTED HEMCS4X6RFR |
| | 136 | 312125-0323 | - | | 8 | SLOTTED HEMCS5X8RFR |
| | 137 | 312145-0287 | - | | 4 | SLOTTED HEMFS4X8RFR |
| | 138 | 312105-0376 | - | | 2 | SCREW M6S6X35RFR |
| | 139 | 312318-0360 | - | | 1 | GRUB SCREW SK6SS6X6RFR |
| | 141 | 312605-0316 | - | | 1 | NUT M6M6RFR |
| | 142 | 312605-0318 | - | | 4 | NUT M6M8RFR |
| | 144 | 315105-0136 | - | | 6 | WASHER BRB4,3X8RFR |
| | 145 | 315105-0153 | - | | 3 | WASHER BRB6,4X12RFR |
| | 146 | 315105-0165 | - | | 8 | WASHER BRB8,4X16RFR |
| | 149 | 342792-0102 | - | | 2 | BANJO CONN |

| From | Pos | Part No | SP | UN | Qty | Description |
|---|---|---|---|---|---|---|

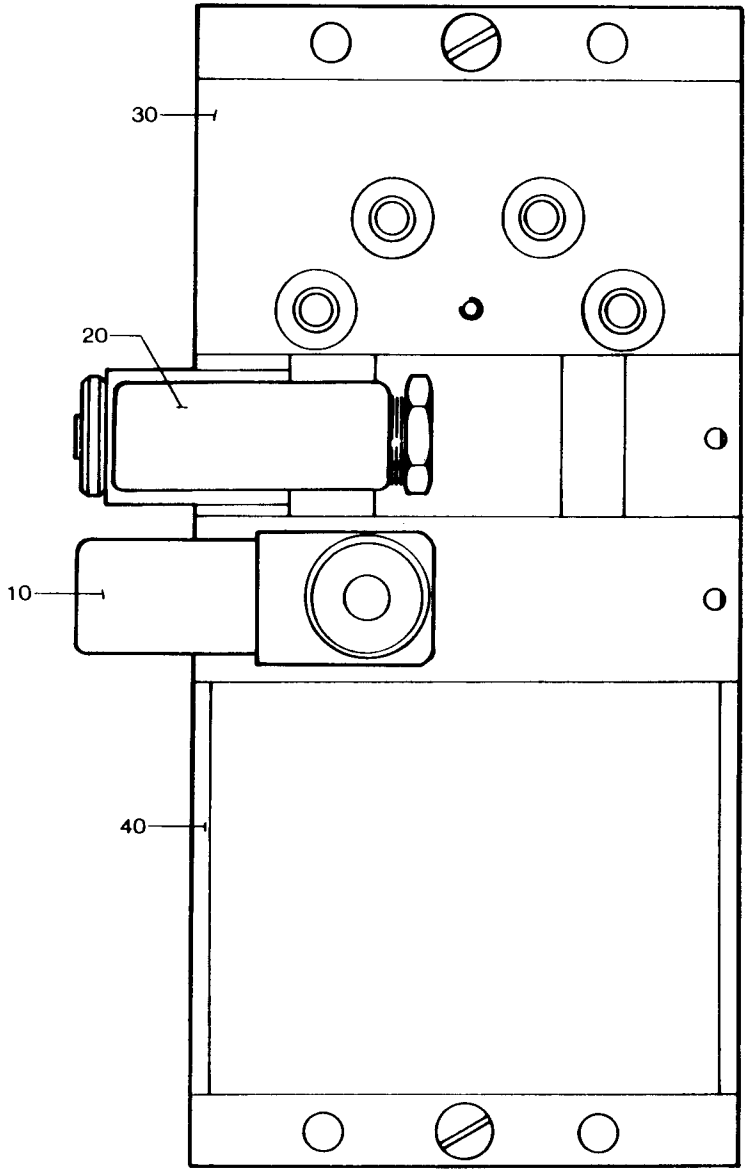
30
20
10
40

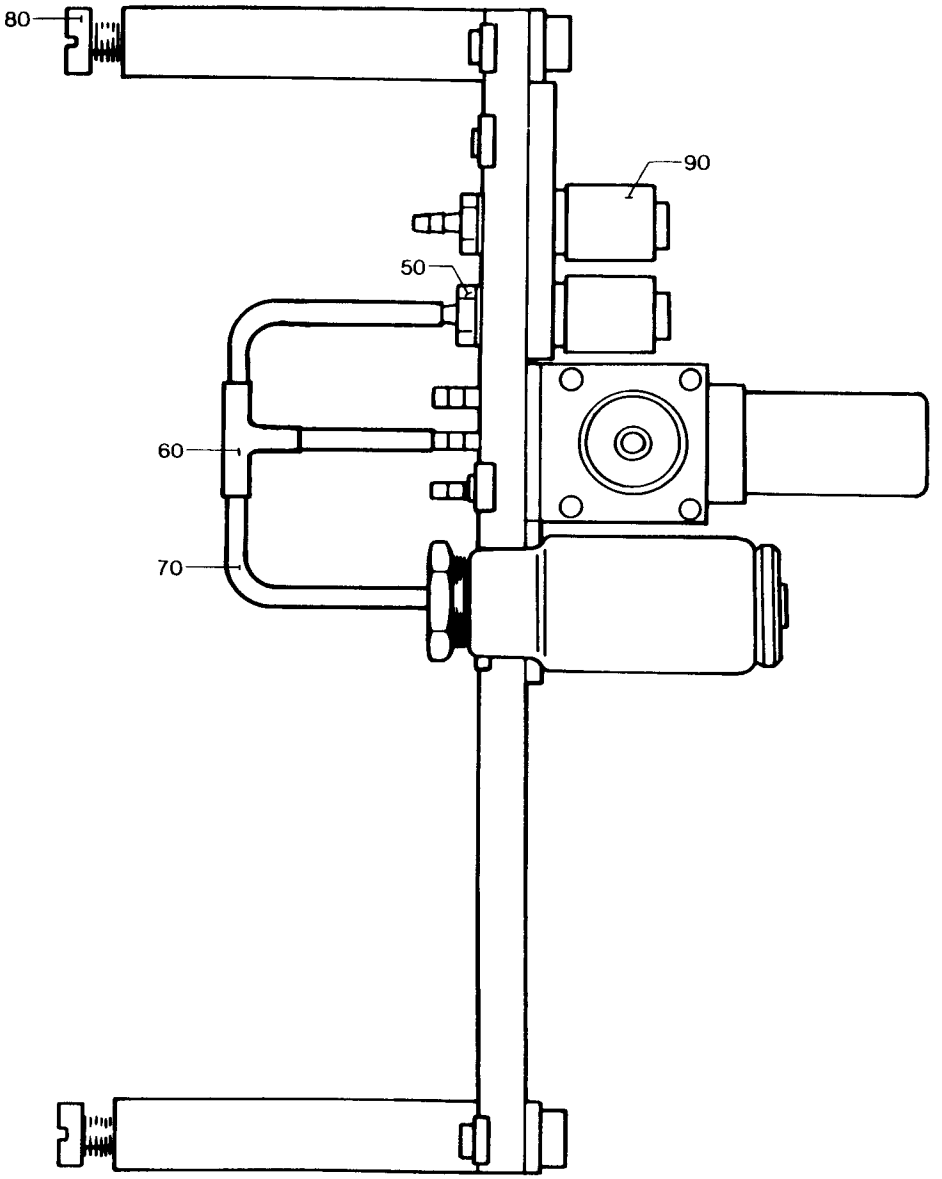
80
90
50
60
70

| From | Pos | Part No | SP | UN | Qty | Description |
|---|---|---|---|---|---|---|
| | 010 | 90042-0045 | - | | 1 | SOLENOID VALVE 50Hz |
| | | 90042-0346 | S | | 1 | * COIL |
| | 010 | 90042-0046 | - | | 1 | SOLENOID VALVE 60Hz |
| | | 90042-0379 | S | | 1 | * COIL |
| | 020 | 90042-0047 | - | | 1 | SOLENOID VALVE 50Hz |
| | | 90042-0346 | S | | 1 | * COIL |
| | 020 | 90042-0048 | - | | 1 | SOLENOID VALVE 60Hz |
| | | 90042-0379 | S | | 1 | * COIL |
| | 030 | 237499 | - | | 1 | PLATE |
| | 040 | 90042-0328 | - | | 1 | RAMP |
| | 050 | 90055-0044 | - | | 4 | HOSE NIPPLE |
| | 060 | 90055-0045 | - | | 1 | HOSE NIPPLE |
| | 070 | 90166-0099 | - | M | 2 | HOSE |
| | 080 | 312121-0368 | - | | 2 | SLOTTED HEMCS6X16FZB |
| | 090 | 342722-0197 | - | | 5 | PIPE CONNED=6-M5 |

| From | Pos | Part No | SP | UN | Qty | Description |
|---|---|---|---|---|---|---|

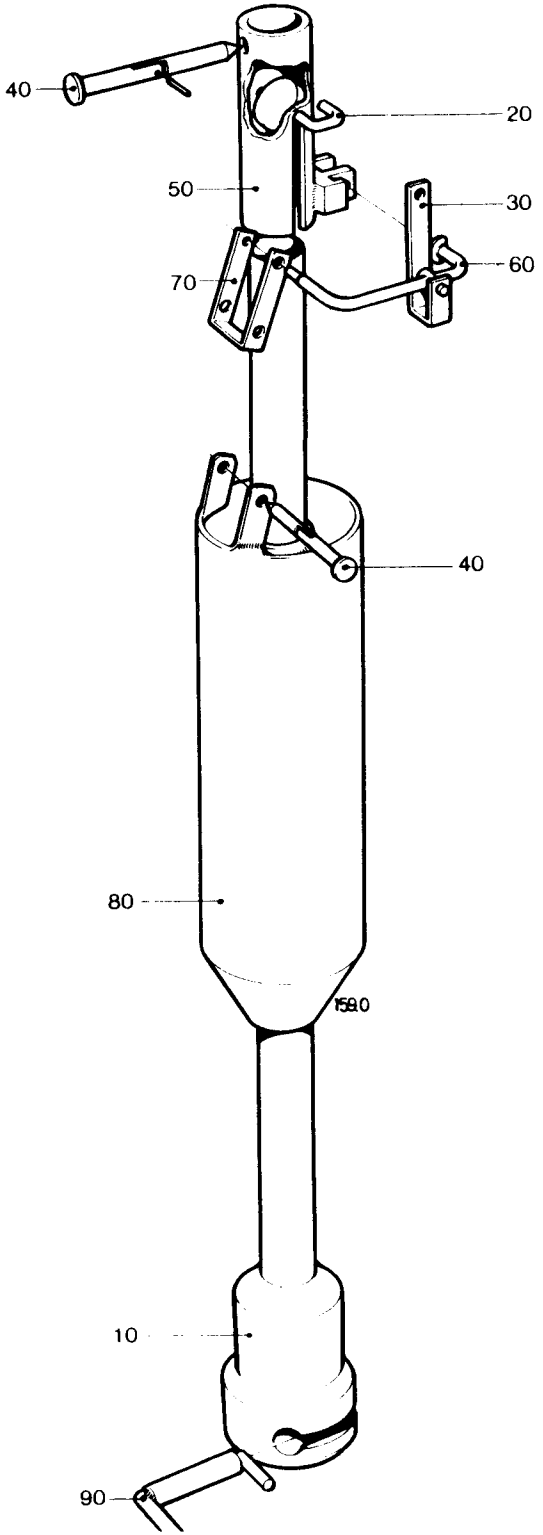
40
20
50
30
60
70
40
80
10
90

Last Alteration: AM 4379 79-10-02

Corresponding C-lists: C- 263028-010V
Assembly Drawing: 263028-1

Date Printed: 900131

| From | Pos | Part No | SP | UN | Qty | Description |
|---|---|---|---|---|---|---|
| | 010 | 244505 | - | | 1 | FILLING PIPE |
| | 020 | 36815 | - | | 1 | THROTTLE |
| | 030 | 36816 | - | | 1 | LINK |
| | 040 | 36821-0002 | - | | 2 | SHEAR PIN |
| | 050 | 38228 | - | | 1 | SLEEVE |
| | 060 | 38229 | - | | 1 | ARM |
| | 070 | 38230 | - | | 1 | CLAMPING ELEMENT |
| | 080 | 38700 | - | | 1 | FLOAT |
| | 090 | 245086 | - | | 1 | PIN |

| From | Pos | Part No | SP | UN | Qty | Description |
|---|---|---|---|---|---|---|

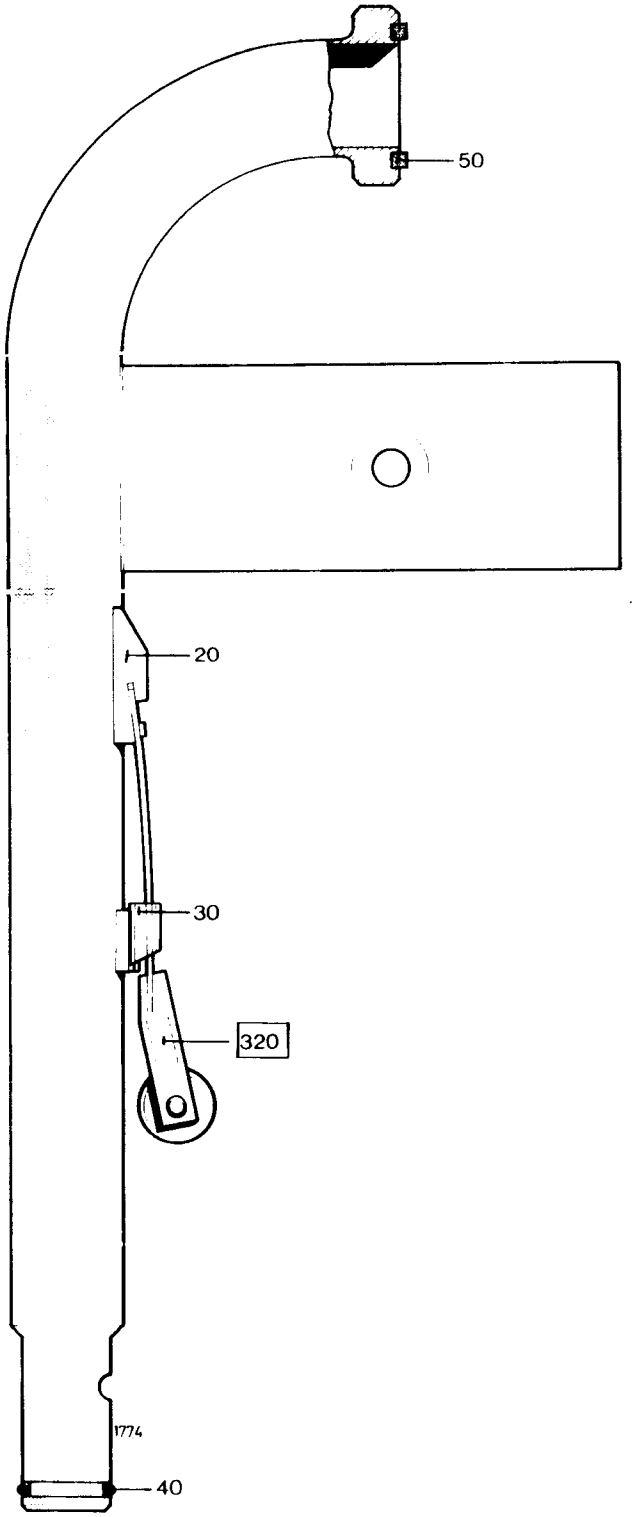
50
20
30
320
1774
40

| From | Pos | Part No | SP | UN | Qty | Description |
|---|---|---|---|---|---|---|
| | F320 | ==>210-1.1 | - | | 1 | PRESSURE ROLLER |
| | 020 | 244504 | - | | 1 | FILLING PIPE |
| | 030 | 10945 | - | | 1 | COVER |
| | 040 | 315202-0215 | R | | 1 | O-RING 19,2X3 |
| | 050 | 315250-0103 | - | | 1 | GASKET 48/38 |

| From | Pos | Part No | SP | UN | Qty | Description |
|---|---|---|---|---|---|---|

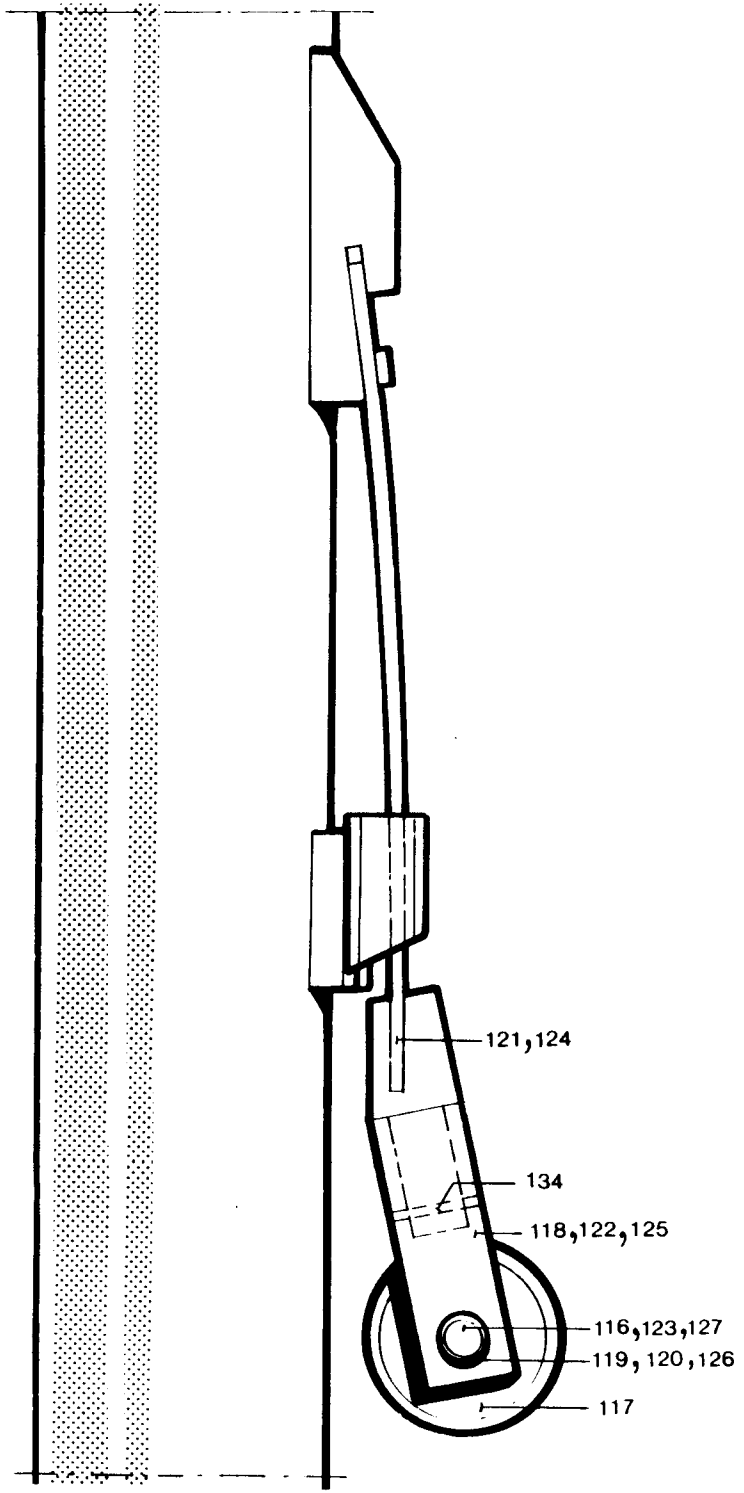
121,124
134
118,122,125
116,123,127
119, 120,126
117

| From | Pos | Part No | SP | UN | Qty | Description |
|---|---|---|---|---|---|---|
| **Volume 62,5ml-150ml 150ml SLIM** | | | | | | |
| | 124 | 37586 | - | | 1 | SPRING |
| | 125 | 37190 | - | | 1 | FORK |
| | 126 | 32197 | PU | | 1 | PRESSURE ROLLER |
| | 127 | 37191 | - | | 1 | SHAFT |
| **Volume 180ml-300ml** | | | | | | |
| | 120 | 32301 | PU | | 1 | PRESS.ROLLER LONG.ELEMENT |
| | 121 | 32733 | - | | 1 | SPRING |
| | 122 | 33017 | - | | 1 | FORK |
| | 123 | 33018 | - | | 1 | SHAFT |
| **Volume 473ml-568ml** | | | | | | |
| | 116 | 6692 | - | | 1 | SHAFT |
| | 118 | 10808 | - | | 1 | FORK |
| | 119 | 26619 | PU | | 1 | PRESSURE ROLLER |
| | 121 | 32733 | - | | 1 | SPRING |
| **Common Parts** | | | | | | |
| | 117 | 10593 | PU | | 1 | LOCKING RUBBER |
| | 134 | 311307-0207 | - | | 1 | SLOTTED PIRPD2,5X10FZB |

| From | Pos | Part No | SP | UN | Qty | Description |
|---|---|---|---|---|---|---|

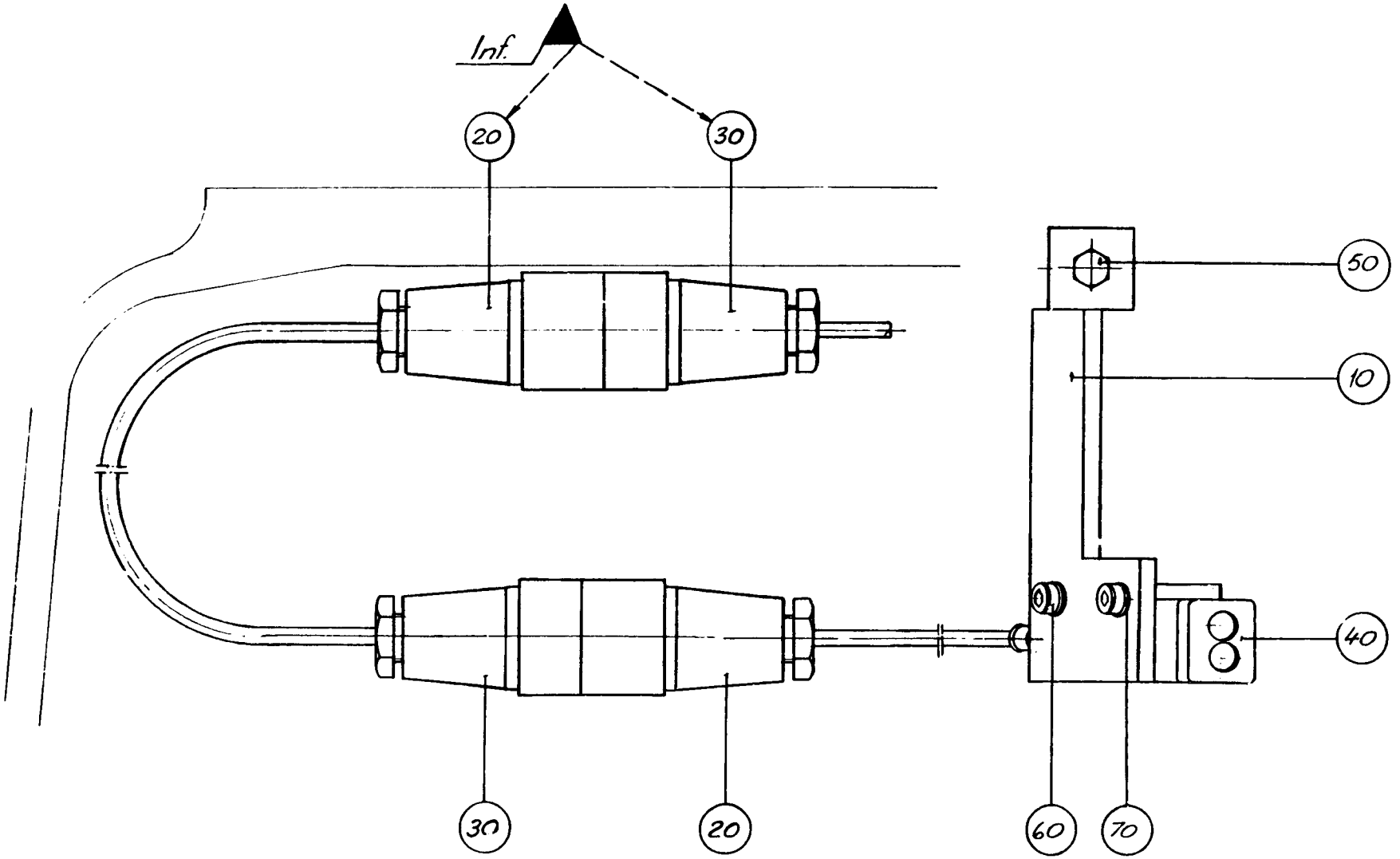
Inf.
20
30
50
10
40
30
20
60
70

| From | Pos | Part No | SP | UN | Qty | Description |
|---|---|---|---|---|---|---|
| | 010 | 250676 | - | | 1 | HOLDER |
| | 020 | 90110-0035 | - | | 2 | CABLE CONNECTION |
| | 030 | 90110-0036 | - | | 2 | CABLE CONNECTION |
| | 040 | 90232-0032 | - | | 1 | PHOTOCELL |
| | 050 | 312105-0327 | - | | 2 | SCREW M6S5X12 A4 80 |
| | 060 | 312115-0291 | - | | 2 | SCREW MC6S4X12 A4 80 |
| | 070 | 315105-0136 | - | | 2 | WASHER BRB4,3X8RFR |

| From | Pos | Part No | SP | UN | Qty | Description |
|---|---|---|---|---|---|---|

**SPC 6303**
**Tetra Classic TC**

| From | Pos | Page No | Description |
|---|---|---|---|
| | F000 | 301-1b | HEATING SIDE |
| | F000 | 302-1b | PRESSURE SIDE |
| | F070 | 303-1b | SPROCKET UPPER |
| | F080 | 304-1b | SPROCKET LOWER |
| | F050 | 305-1b | DOUBLE CHAIN 3/4" |
| | F190 | 306-1b | PRESSURE ROLLER |
| | | 306-1b.1 | . ROLLER CONVEYOR |
| | F090 | 307-1b | ROLLER CONVEYOR |
| | F140 | 308-1b | CONTACT UNIT |
| | | 308-1b.1 | . CONTACT RAIL |
| | F160 | 309-1b | CONTACT UNIT |
| | | 309-1b.1 | . CONTACT RAIL |
| | F230 | 310-1b | CENTRAL LUBRICATION Heating side |
| | F240 | 311-1b | CENTRAL LUBRICATION Pressure side |
| | F100 | 312-1b | HEATING JAW |
| | | 312-1b.1 | . SLIDING CONTACT |
| | F220 | 314-1 | PRESSURE JAW |
| | F060 | 315-1 | SPRING CARTRIDGE |

| From | Pos | Page No | Description |
|---|---|---|---|

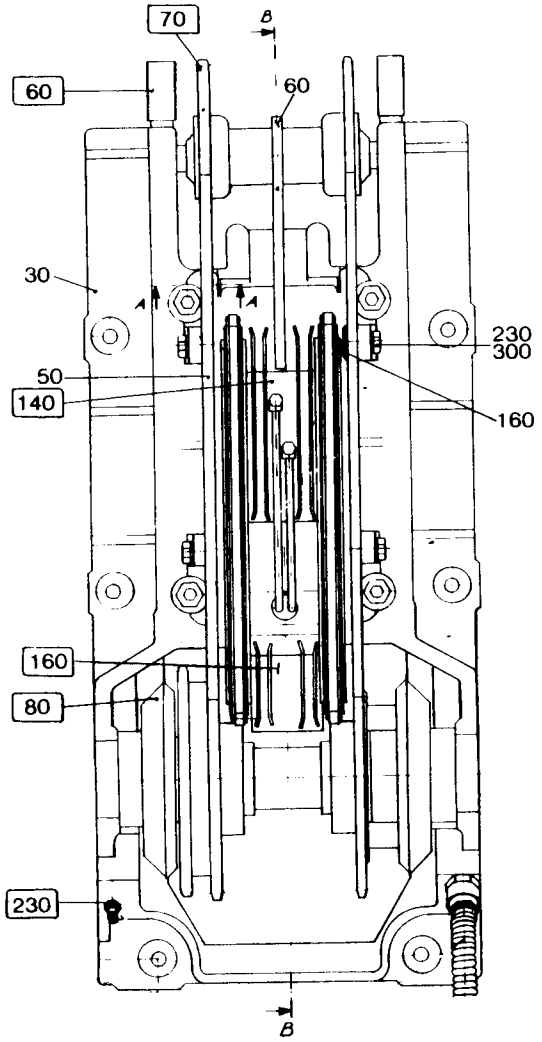


TPC

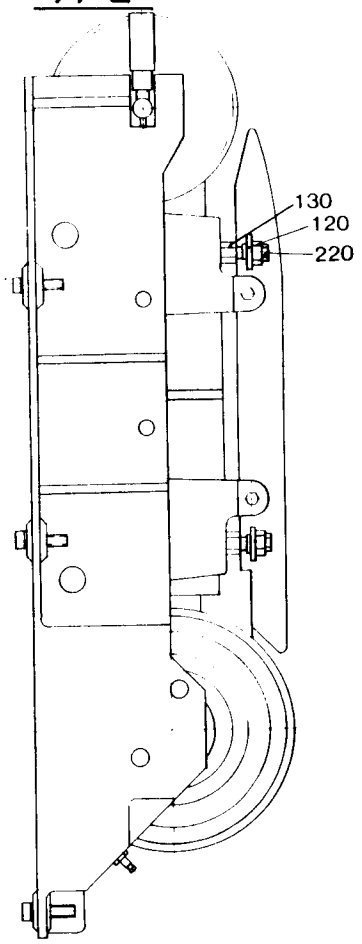


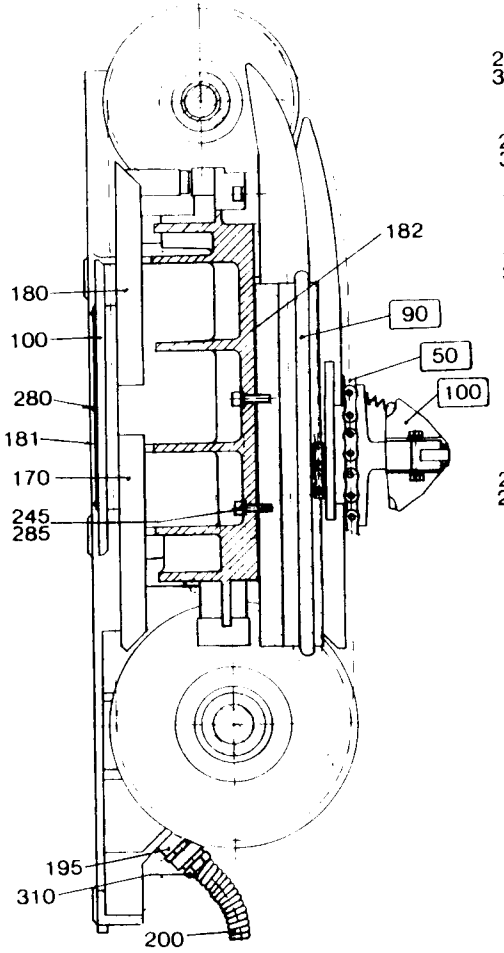


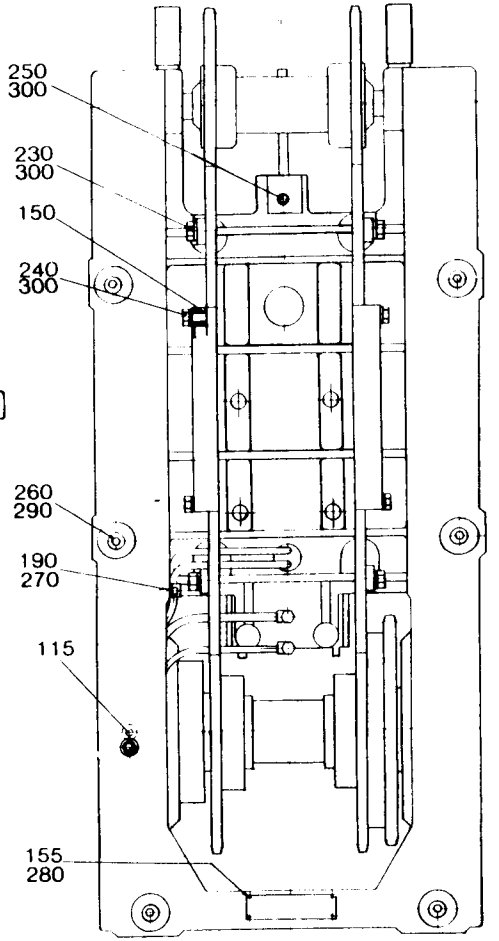


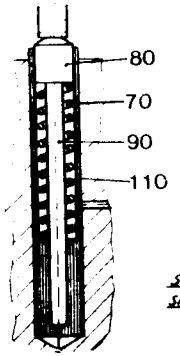


Snitt A-A
Skala 1:1

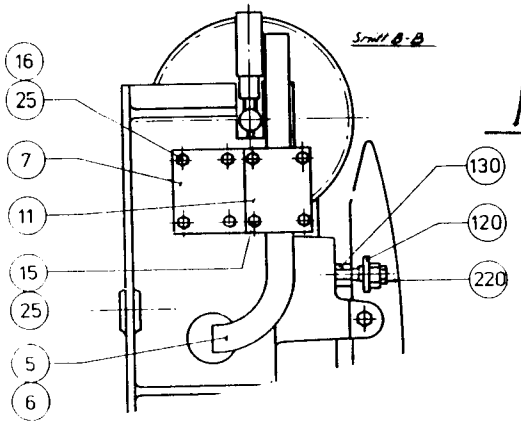


1H

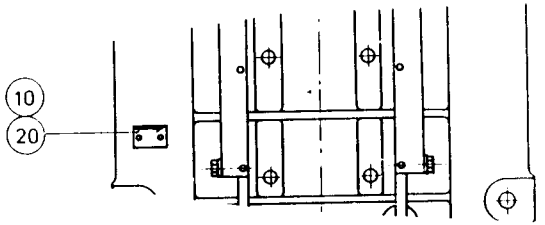

| From | Pos | Part No | SP | UN | Qty | Description |
|---|---|---|---|---|---|---|
| **TPC side 1** | | | | | | |
| | 010 | 10816 | - | | 1 | MARKING PLATE |
| | 020 | 312502-0221 | - | | 6 | DRIVE SCREKDS4X6FNB |
| | 190 | 90073-0003 | - | | 2 | CLIP |
| | 195 | 90089-0015 | - | | 1 | SLEEVE |
| | 270 | 312121-0287 | - | | 5 | SLOTTED HEMCS4X8FZB |
| | 310 | 352100-0122 | - | | 1 | CABLE GLANR.37-25,5 |
| **TPC side 2** | | | | | | |
| | 020 | 312502-0221 | - | | 4 | DRIVE SCREKDS4X6FNB |
| | 190 | 90073-0003 | - | | 2 | CLIP |
| | 195 | 90089-0015 | - | | 1 | SLEEVE |
| | 270 | 312121-0287 | - | | 5 | SLOTTED HEMCS4X8FZB |
| | 310 | 352100-0122 | - | | 1 | CABLE GLANR.37-25,5 |
| **IH side 1** | | | | | | |
| | 006 | 440793 | C | | 1 | CABLE IH 300ML |
| | 007 | 458411 | C | | 1 | HOLDER |
| | 010 | 10816 | - | | 1 | MARKING PLATE |
| | 011 | 458412 | C | | 1 | LID |
| | 015 | 312101-0370 | - | | 4 | SCREW M6S6X20FZB |
| | 016 | 312101-0374 | - | | 4 | SCREW M6S6X30FZB |
| | 020 | 312502-0221 | - | | 6 | DRIVE SCREKDS4X6FNB |
| | 025 | 315101-0153 | - | | 16 | WASHER BRB6,4X12FZB |
| **IH side 2** | | | | | | |
| | 005 | 440792 | C | | 1 | CABLE IH 300ML |
| | 007 | 458411 | C | | 1 | HOLDER |
| | 011 | 458412 | C | | 1 | LID |
| | 015 | 312101-0370 | - | | 4 | SCREW M6S6X20FZB |
| | 016 | 312101-0374 | - | | 4 | SCREW M6S6X30FZB |
| | 020 | 312502-0221 | - | | 4 | DRIVE SCREKDS4X6FNB |
| | 025 | 315101-0153 | - | | 16 | WASHER BRB6,4X12FZB |
| **Common Parts** | | | | | | |
| | 030 | G- 263239 | - | | 1 | SIDE FRAME |
| | 050 | 38329 | - | | 2 | CHAIN RAIL, MOVABLE |
| | 060 | 2465 | - | | 1 | CAM |
| | 070 | 1881-0004 | - | | 4 | COMPRESSION SPRING |
| | 080 | 1891 | - | | 4 | PLUNGER |
| | 090 | 1892 | - | | 4 | PIN |
| | 100 | 1959 | - | | 2 | RAIL |
| | 110 | 2477 | - | | 4 | BUSHING |
| | 115 | 2481 | - | | 2 | PIN |
| | 120 | 2483 | - | | 4 | FLANGE |
| | 130 | 2484 | - | | 4 | SCREW |

| From | Pos | Part No | SP | UN | Qty | Description |
|---|---|---|---|---|---|---|
| | 150 | 2487 | - | | 8 | SPACER PIECE |
| | 155 | 20497 | - | | 1 | GROUP NUMBER PLATE |
| | 160 | 2511 | - | | 4 | FLANGE |
| | 170 | 266067 | - | | 2 | CHAIN RAIL, LOWER |
| | 180 | 266068 | - | | 2 | CHAIN RAIL, UPPER |
| | 181 | 266069 | - | | 2 | BRACKET |
| | 182 | 268076-0001 | - | | 1 | SHIM |
| | 182 | 268076-0002 | - | | 1 | SHIM |
| | 182 | 268076-0003 | - | | 1 | SHIM |
| | 200 | 90156-0002 | - | MM | 000 | PLASTIC COIL |
| | 220 | 312101-0449 | - | | 4 | SCREW M6S8X16FZB |
| | 230 | 312101-0451 | - | | 8 | SCREW M6S8X20FZB |
| | 240 | 312101-0455 | - | | 8 | SCREW M6S8X30FZB |
| | 245 | 312111-0453 | - | | 4 | SCREW MC6S8X25FZB |
| | 250 | 312111-0455 | - | | 2 | SCREW MC6S8X30FZB |
| | 260 | 312111-0540 | - | | 6 | SCREW MC6S12X40FZB |
| | 280 | 312502-0275 | - | | 6 | DRIVE SCREKDS6X6FNB |
| | 285 | 315101-0165 | - | | 4 | WASHER BRB8,4X16FZB |
| | 290 | 315101-0178 | - | | 6 | WASHER BRB13X24FZB |
| | 300 | 315401-0165 | - | | 18 | WASHER FBH8,2FZB |

# 302-1b

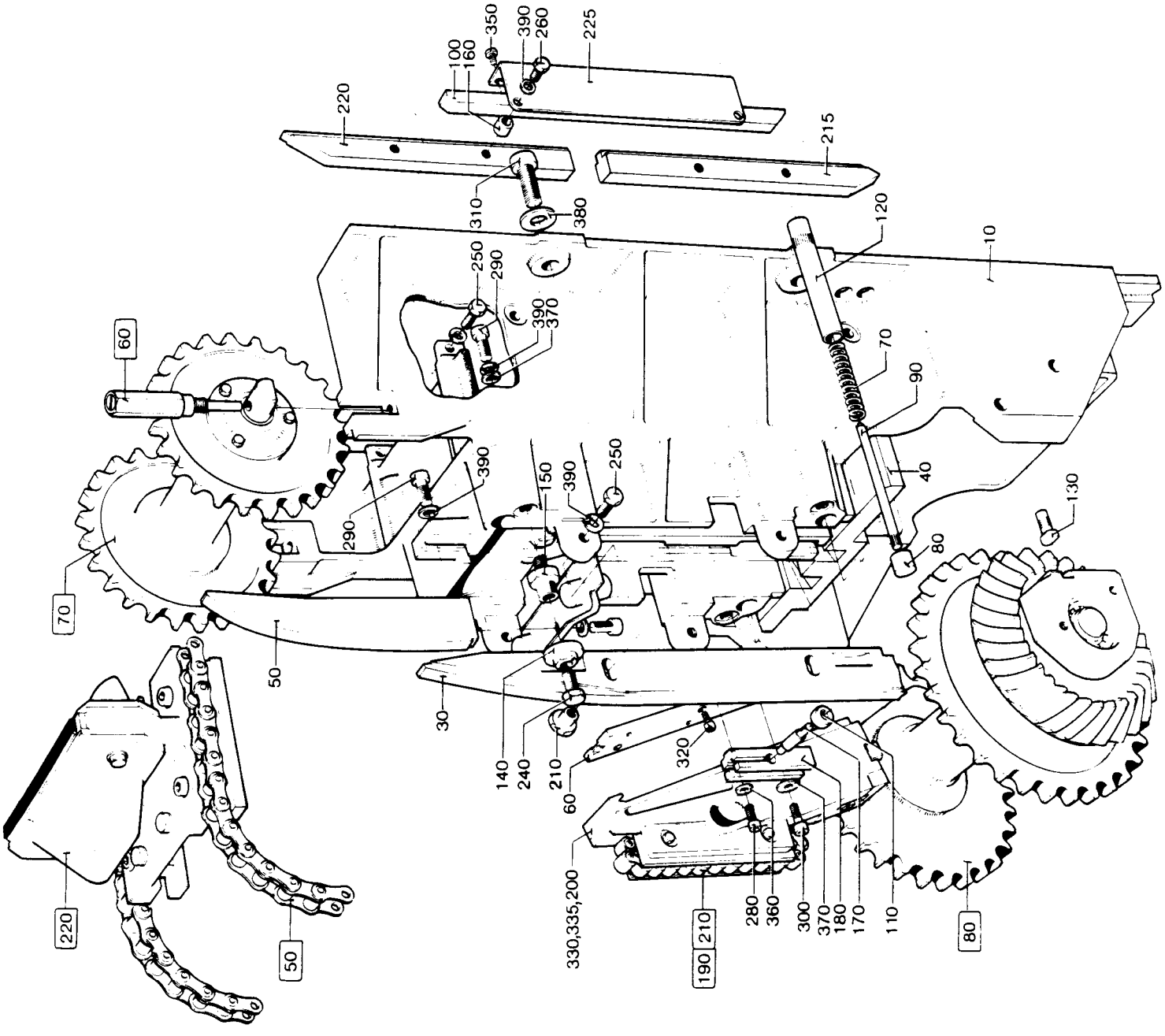
100
160
350
390
260
225
220
215
310
380
120
10
250
290
390
370
60
70
90
390
150
390
250
290
40
130
80
70
50
30
140
240
210
60
320
330,335,200
280
360
300
370
180
170
110
80
190
210
220
50

| From | Pos | Part No | SP | UN | Qty | Description |
|---|---|---|---|---|---|---|
| | 010 | 263219 | - | | 1 | SIDE FRAME |
| | 030 | 38329 | - | | 2 | CHAIN RAIL, MOVABLE |
| | 040 | 38330 | - | | 1 | YOKE |
| | 050 | 2465 | - | | 1 | CAM |
| | 060 | 263082 | - | | 2 | PLATE |
| | 070 | 1881-0004 | - | | 4 | COMPRESSION SPRING |
| | 080 | 1891 | - | | 4 | PLUNGER |
| | 090 | 1892 | - | | 4 | PIN |
| | 100 | 1959 | - | | 2 | RAIL |
| | 110 | 2189 | - | | 2 | SLEEVE |
| | 120 | 2477 | - | | 4 | BUSHING |
| | 130 | 2481 | - | | 2 | PIN |
| | 140 | 2483 | - | | 4 | FLANGE |
| | 150 | 2484 | - | | 4 | SCREW |
| | 160 | 2487 | - | | 8 | SPACER PIECE |
| | 170 | 2929 | - | | 1 | SHAFT |
| | 180 | 2930 | - | | 1 | BRACKET |
| | 190 | 20497 | - | | 1 | GROUP NUMBER PLATE |
| | 200 | 263083 | - | | 2 | LID |
| | 210 | 2511 | - | | 4 | FLANGE |
| | 215 | 266067 | - | | 2 | CHAIN RAIL, LOWER |
| | 220 | 266068 | - | | 2 | CHAIN RAIL, UPPER |
| | 225 | 266069 | - | | 2 | BRACKET |
| | 240 | 312101-0449 | - | | 4 | SCREW M6S8X16FZB |
| | 250 | 312101-0453 | - | | 8 | SCREW M6S8X25FZB |
| | 260 | 312101-0455 | - | | 8 | SCREW M6S8X30FZB |
| | 270 | 312101-0540 | - | | 3 | SCREW M6S12X40FZB |
| | 280 | 312111-0371 | - | | 1 | SCREW MC6S6X22FZB |
| | 290 | 312111-0455 | - | | 2 | SCREW MC6S8X30FZB |
| | 300 | 312111-0459 | - | | 1 | SCREW MC6S8X40FZB |
| | 310 | 312111-0540 | - | | 6 | SCREW MC6S12X40FZB |
| | 320 | 312115-0287 | - | | 16 | SCREW 4X8 A4 80 |
| | 330 | 312145-0285 | - | | 8 | SLOTTED HEMFS4X6RFR |
| | 335 | 312145-0289 | - | | 4 | SLOTTED HEMFS4X10RFR |
| | 340 | 312502-0221 | - | | 4 | DRIVE SREKDS4X6FNB |
| | 350 | 312502-0275 | - | | 6 | DRIVE SREKDS6X6FNB |
| | 360 | 315101-0153 | - | | 1 | WASHER BRB6,4X12FZB |
| | 370 | 315101-0165 | - | | 1 | WASHER BRB8,4X16FZB |
| | 380 | 315101-0178 | - | | 6 | WASHER BRB13X24FZB |
| | 390 | 315401-0165 | - | | 14 | WASHER FBH8,2FZB |

| From | Pos | Part No | SP | UN | Qty | Description |
|---|---|---|---|---|---|---|

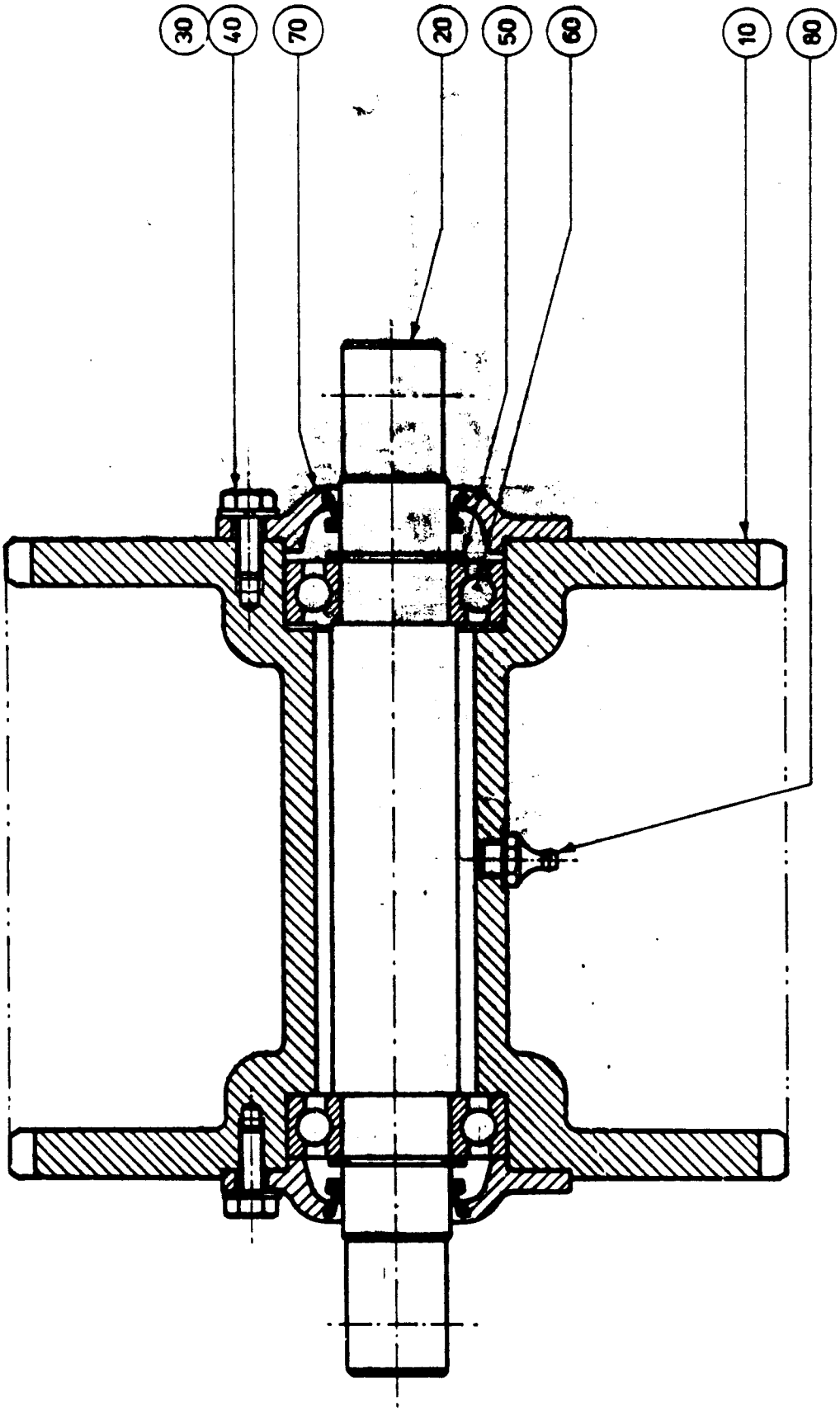
30
40
70
20
50
60
10
80

| From | Pos | Part No | SP | UN | Qty | Description |
|---|---|---|---|---|---|---|
| | 010 | G- 2453 | - | | 1 | SPROCKET UPPER |
| | 020 | 2468 | - | | 1 | SHAFT |
| | 030 | 312101-0368 | - | | 6 | SCREW M6S6X16FZB |
| | 040 | 315401-0153 | - | | 6 | WASHER FBH6,1FZB |
| | 050 | 315750-0119 | - | | 2 | LOCK RING SGA25 |
| | 060 | 321309-0105 | - | | 2 | BALL BEARISKF6205 |
| | 070 | 321600-0113 | - | | 2 | OIL SEAL LL2552 |
| | 080 | 344502-0026 | - | | 1 | NIPPLE L AHKR1/8" |

| From | Pos | Part No | SP | UN | Qty | Description |
|---|---|---|---|---|---|---|

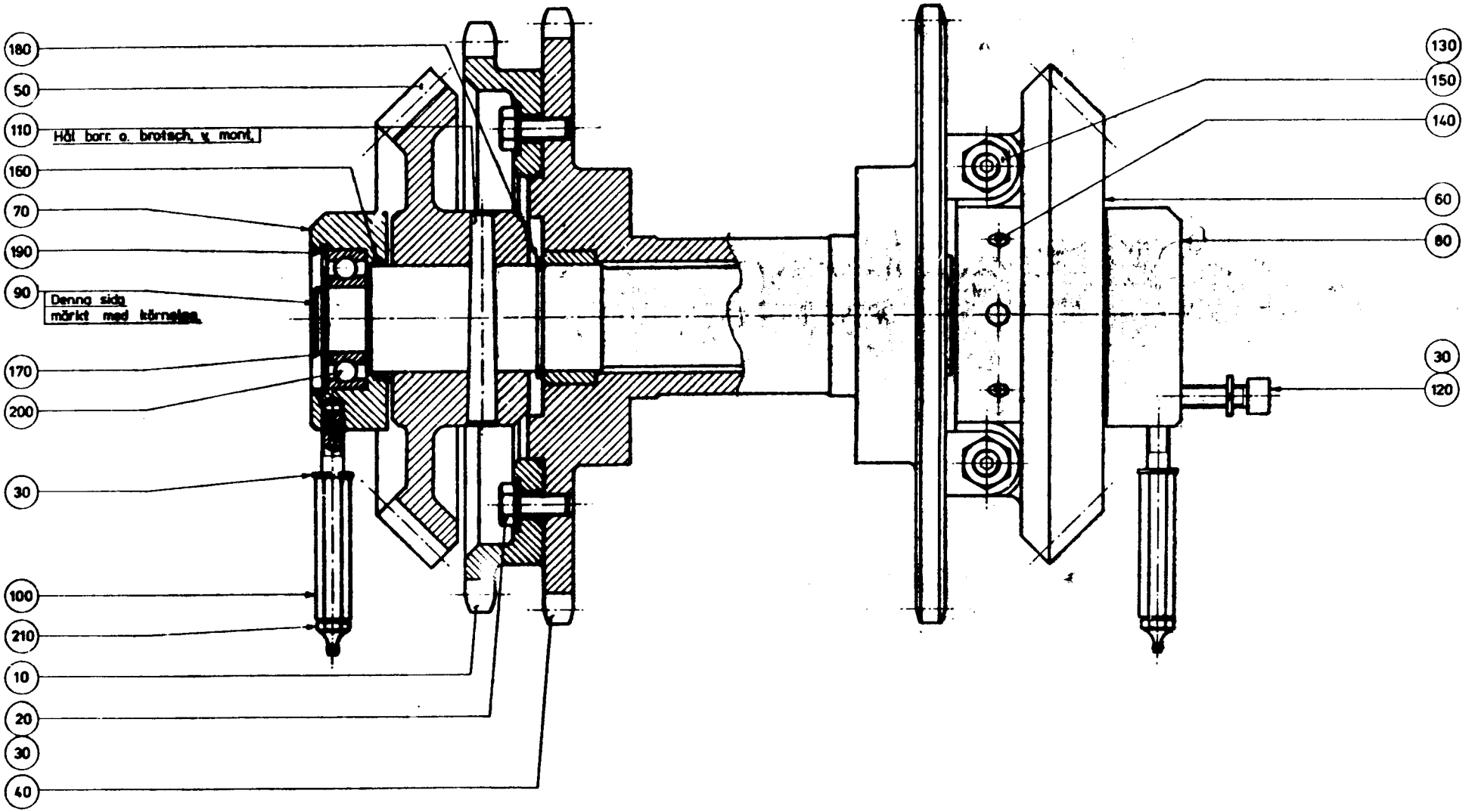
180
50
110
Hål borr. o. brotsch. v. mont.
160
70
190
90
Denna sida märkt med körnslag
170
200
30
100
210
10
20
30
40
130
150
140
60
80
30
120

| From | Pos | Part No | SP | UN | Qty | Description |
|---|---|---|---|---|---|---|
| | 010 | G- 2461 | - | | 1 | SPROCKET Drive side 1 |
| | 020 | 312101-0451 | - | | 4 | SCREW M6S8X20FZB Drive side 1 |
| | 030 | 315401-0165 | - | | 10 | WASHER FBH8,2FZB |
| | 040 | 7841 | - | | 1 | SPROCKET |
| | 050 | 2454 | - | | 1 | BEVEL GEAR |
| | 060 | 2455 | - | | 1 | BEVEL GEAR |
| | 070 | G- 2459 | - | | 1 | BEARING HOUSING |
| | 080 | G- 2460 | - | | 1 | BEARING HOUSING |
| | 090 | 2469 | - | | 1 | SHAFT |
| | 100 | 6453-0001 | - | | 2 | LUBRICATING PIPE |
| | 110 | 311201-0329 | - | | 2 | TAPER PIN KP8X80SLIPAD |
| | 120 | 312111-0455 | - | | 4 | SCREW MC6S8X30FZB |
| | 130 | 312306-0501 | - | | 2 | GRUB SCREW P6SS10X50FZB |
| | 140 | 312316-0447 | - | | 4 | GRUB SCREW SK6SS8X12FZB |
| | 150 | 312601-0320 | - | | 2 | NUT M6M10FZB |
| | 160 | 315202-0224 | - | | 2 | O-RING 42,2X3 |
| | 170 | 315750-0119 | - | | 2 | LOCK RING SGA25 |
| | 180 | 315750-0127 | - | | 2 | LOCK RING SGA40 |
| | 190 | 315752-0132 | - | | 1 | LOCK RING SGH52 |
| | 200 | 321309-0105 | - | | 2 | BALL BEARISKF6205 |
| | 210 | 344502-0026 | - | | 2 | NIPPLE L AHKR1/8" |

| From | Pos | Part No | SP | UN | Qty | Description |
|---|---|---|---|---|---|---|

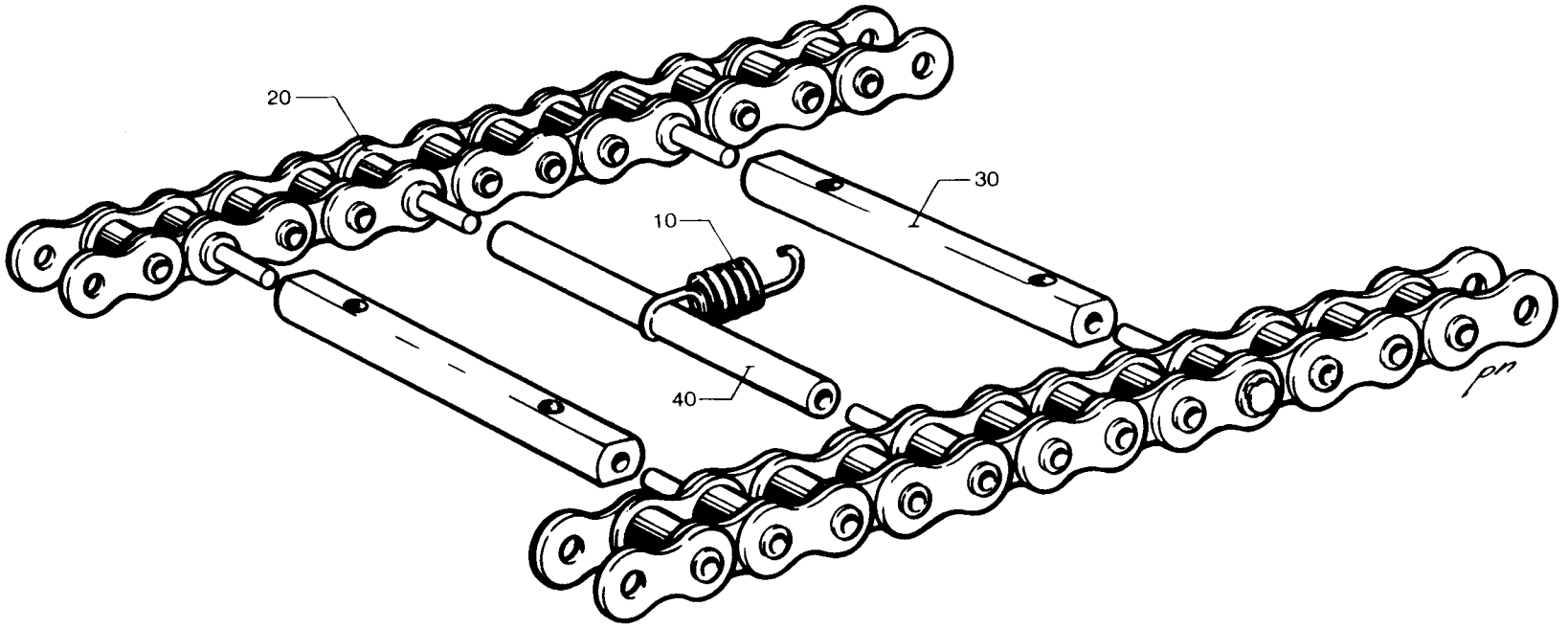
20
30
10
40

| From | Pos | Part No | SP | UN | Qty | Description |
|---|---|---|---|---|---|---|
| | 010 | 1978 | R | | 8 | TENSION SPRING |
| | 020 | 2507 | - | | 2 | CHAIN |
| | 030 | 2508 | - | | 8 | SHAFT |
| | 040 | 2509 | - | | 8 | SHAFT |

| From | Pos | Part No | SP | UN | Qty | Description |
|---|---|---|---|---|---|---|

★Bilden visar tryckrullehållare, H.
Tryckrullehållare V är spegelvänd.
The Illustation shows the Pressure Mechanism, RH.
The Pressure Mechanism LH is mirrored.
Das Bild zeigt Druckkettenhalter, R.
Druckkettenhalter L ist spiegelbildlich.
L'image montre le bloc de pression Droit.
Le bloc de pression Gauche est inversé.

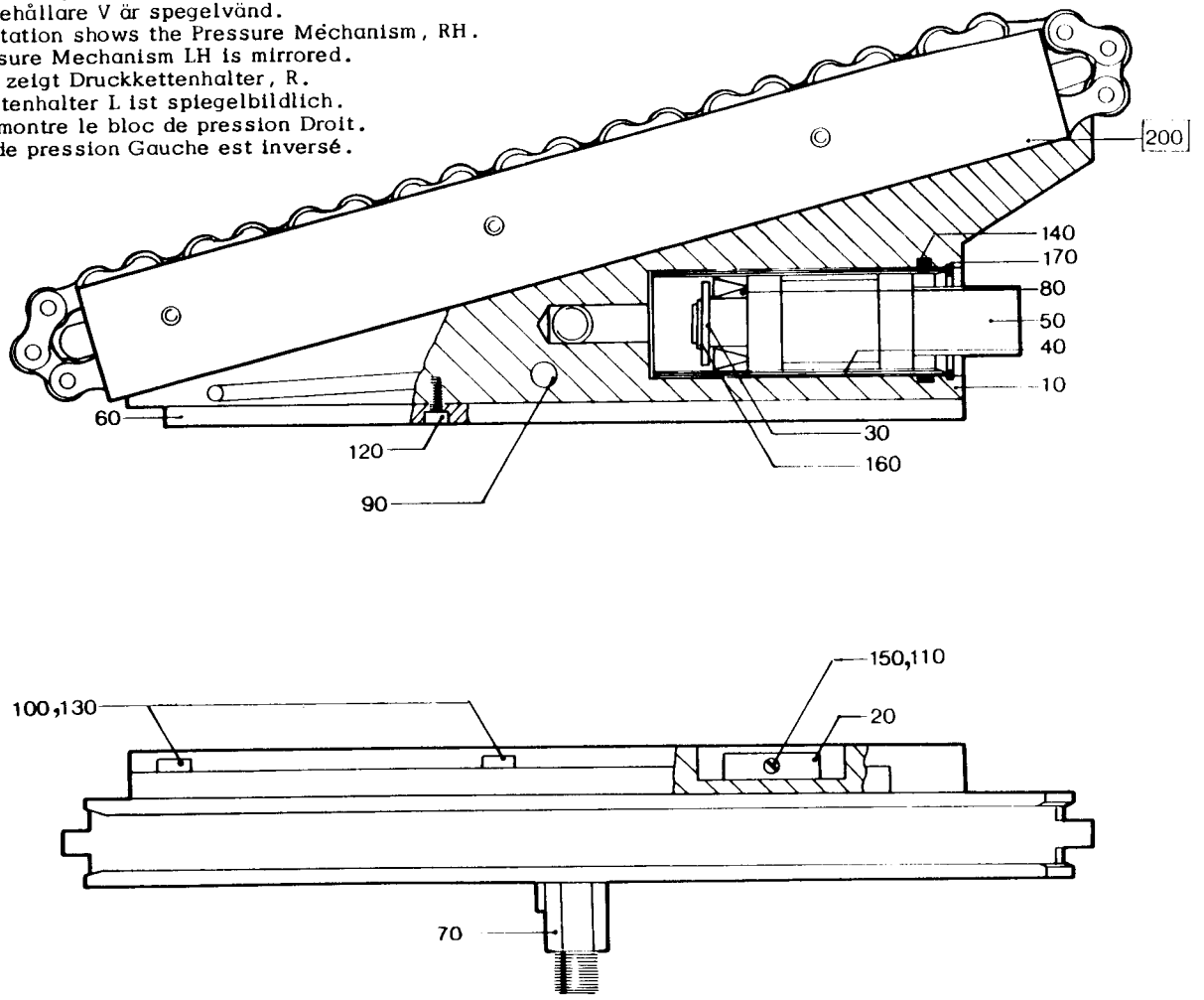

| From | Pos | Part No | SP | UN | Qty | Description |
|---|---|---|---|---|---|---|
| | F200 | ==>306-1b.1 | - | | 1 | ROLLER CONVEYOR |
| | 010 | 38349 | - | | 1 | PRESSURE ROLLER Left Hand design |
| | 010 | 38368 | - | | 1 | PRESSURE ROLLER Right Hand Design |
| | 020 | 2597 | - | | 1 | PLATE |
| | 030 | 12429 | - | | 1 | WASHER |
| | 040 | 38370 | - | | 1 | LINING |
| | 050 | 38371 | - | | 1 | PISTON |
| | 060 | 263999 | - | | 1 | PLATE |
| | 070 | 265867 | - | | 1 | CONNECTION |
| | 080 | 90020-0008 | - | | 1 | SLEEVE |
| | 090 | 311303-0404 | - | | 1 | SLOTTED PIRPB8X28FZB |
| | 100 | 312111-0368 | - | | 4 | SCREW MC6S6X16FZB |
| | 110 | 312121-0230 | - | | 1 | SLOTTED HEMCS3X20FZB |
| | 120 | 312145-0291 | - | | 8 | SLOTTED HEMFS4X12RFR |
| | 130 | 315101-0153 | - | | 4 | WASHER BRB6,4X12FZB |
| | 140 | 315202-0221 | - | | 1 | O-RING 34,2X3 |
| | 150 | 315401-0124 | - | | 1 | WASHER FBH 3,1 FZB |
| | 160 | 315750-0109 | - | | 1 | LOCK RING SGA12 |
| | 170 | 315752-0124 | - | | 1 | LOCK RING SGH35 |

| From | Pos | Part No | SP | UN | Qty | Description |
|---|---|---|---|---|---|---|

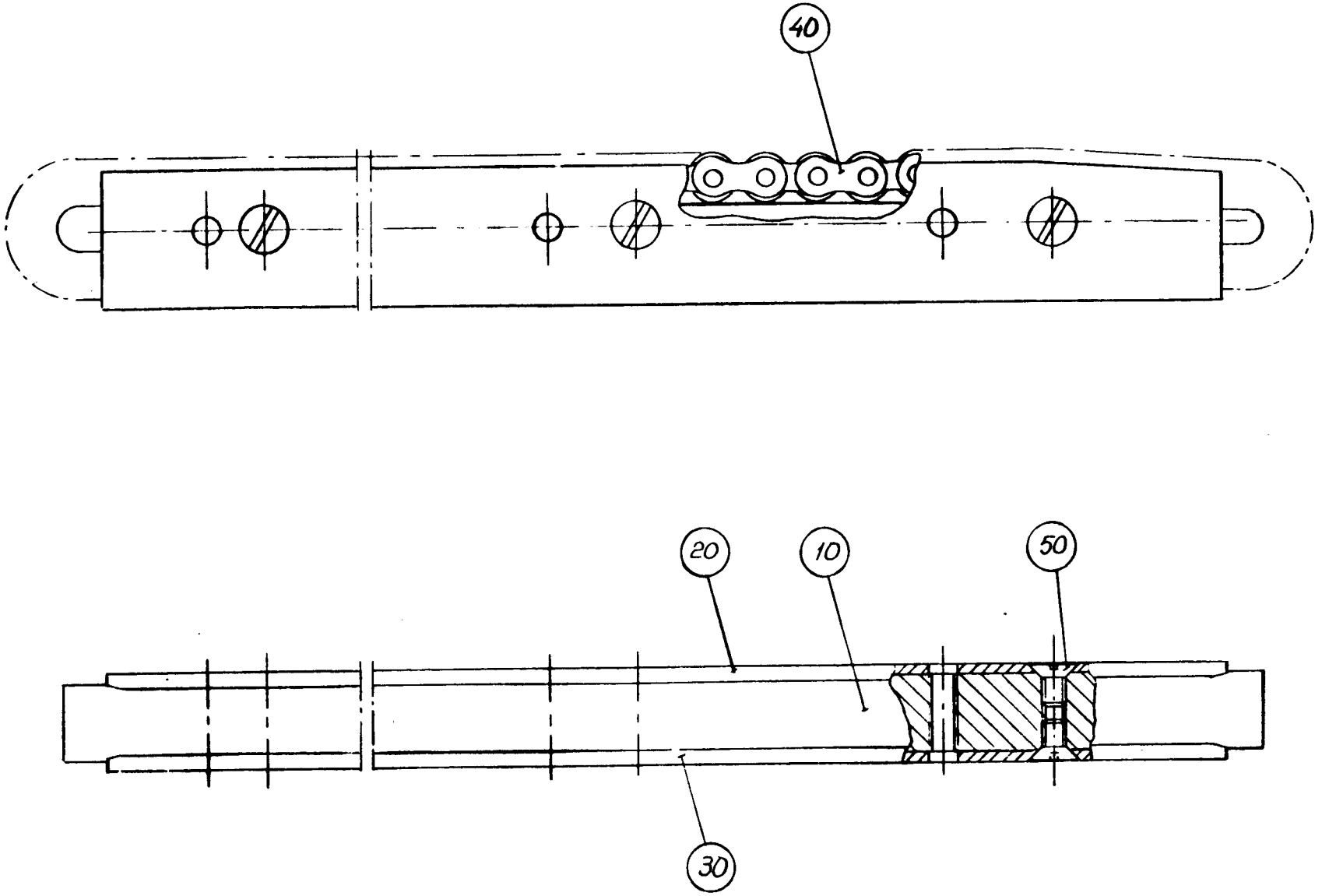
40
20
10
50
30

Last Alteration: 4382 79-11-09

Corresponding C-lists: 229249-010V
Assembly Drawing: 229249-1

Date Printed: 990202

| From | Pos | Part No | SP | UN | Qty | Description |
|---|---|---|---|---|---|---|
| | 010 | 266763 | - | | 1 | ROLLER CONVEYOR |
| | 020 | 179848 | - | | 1 | HEATING SIDE |
| | 030 | 179849 | - | | 1 | HEATING SIDE |
| | 040 | 37814 | - | | 1 | CHAIN |
| | 050 | 312141-0325 | - | | 6 | SLOTTED HEMFS5X10FZB |

| From | Pos | Part No | SP | UN | Qty | Description |
|---|---|---|---|---|---|---|

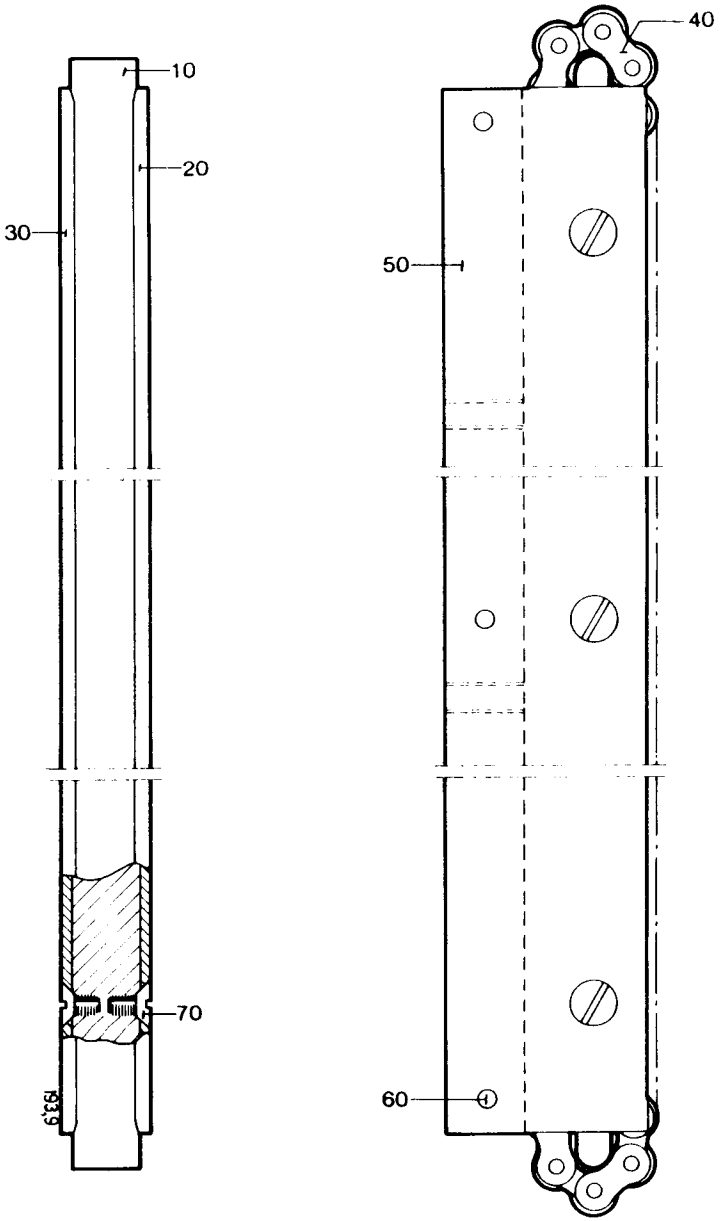
10
20
30
40
50
60
70
1939

Last Alteration: 4382 79-11-09

Corresponding C-lists: 229248-010V
Assembly Drawing: 229248-1

Date Printed: 900202

| From | Pos | Part No | SP | UN | Qty | Description |
|---|---|---|---|---|---|---|
| | 010 | 266763 | - | | 1 | ROLLER CONVEYOR |
| | 020 | 266764 | - | | 1 | HEATING SIDE |
| | 030 | 266765 | - | | 1 | HEATING SIDE |
| | 040 | 37814 | - | | 1 | CHAIN |
| | 050 | 38348 | - | | 1 | RAIL |
| | 060 | 311305-0274 | - | | 3 | SLOTTED PIRPC4X25FZB |
| | 070 | 312141-0325 | - | | 6 | SLOTTED HEMFS5X10FZB |

| From | Pos | Part No | SP | UN | Qty | Description |
|---|---|---|---|---|---|---|

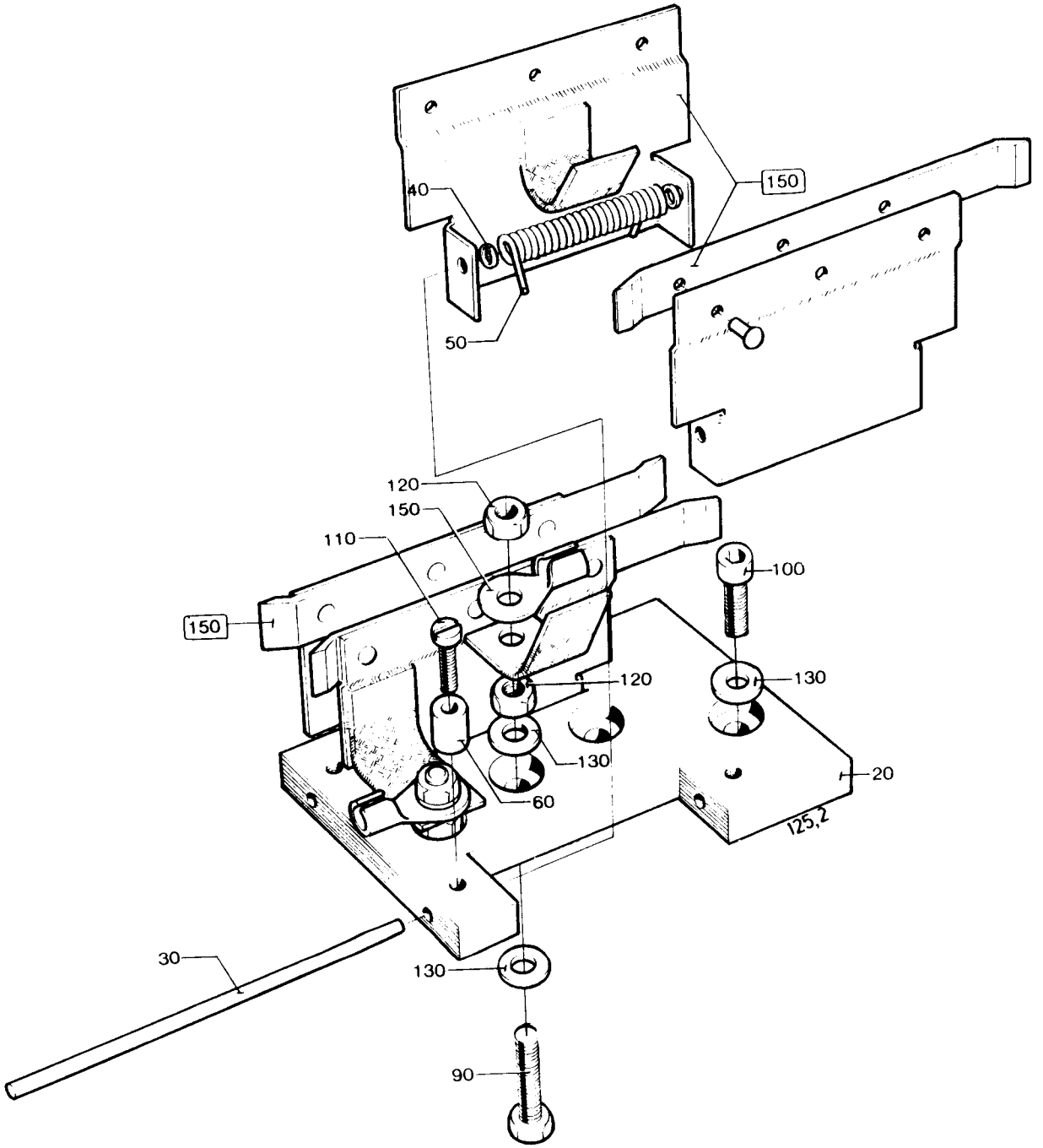
40
150
50
120
150
110
150
100
120
130
130
60
20
125,2
30
130
90

| From | Pos | Part No | SP | UN | Qty | Description |
|---|---|---|---|---|---|---|
| | F150 | ==>308-1b.1 | - | | 2 | CONTACT RAIL |
| | 020 | 263653 | - | | 1 | BOTTOM PLATE |
| | 030 | 6120-0002 | - | | 2 | SHAFT |
| | 040 | 6122 | - | | 4 | WASHER |
| | 050 | 6135 | - | | 8 | TORSION SPRING |
| | 060 | 6136 | - | | 4 | SPACER |
| | 090 | 312101-0374 | - | | 2 | SCREW M6S6X30FZB |
| | 100 | 312115-0374 | - | | 2 | SCREW 6X30 A4 80 |
| | 110 | 312125-0295 | - | | 4 | SLOTTED HEMCS4X20RFR |
| | 120 | 312602-0316 | - | | 4 | NUT M6M6MSGFN |
| | 130 | 315103-0153 | - | | 8 | WASHER BRB6,4X12MSGFN |
| | 150 | 353104-0168 | - | | 2 | CABLE SHOEYAV 6 CLM 64! |

| From | Pos | Part No | SP | UN | Qty | Description |
|---|---|---|---|---|---|---|

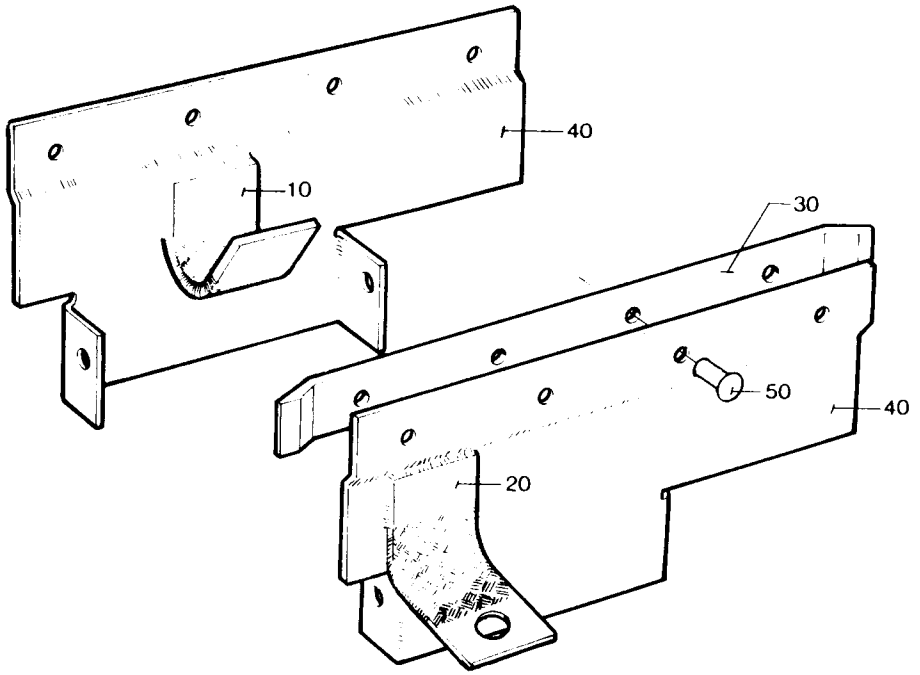
40
10
30
50
40
20

Last Alteration: 4382 79-11-09

Corresponding C-lists: 263664-010V
Assembly Drawing: 263664-1

Date Printed: 900202

| From | Pos | Part No | SP | UN | Qty | Description |
|---|---|---|---|---|---|---|
| | 010 | 6126 | - | | 1 | COPPER BRAID |
| | 020 | 6130 | - | | 1 | COPPER BRAID |
| | 030 | 263325 | - | | 2 | CONTACT RAIL |
| | 040 | 263652 | - | | 2 | CONTACT PLATE |
| | 050 | 311513-0308 | - | | 8 | RIVET FN3X6KPR |

| From | Pos | Part No | SP | UN | Qty | Description |
|---|---|---|---|---|---|---|

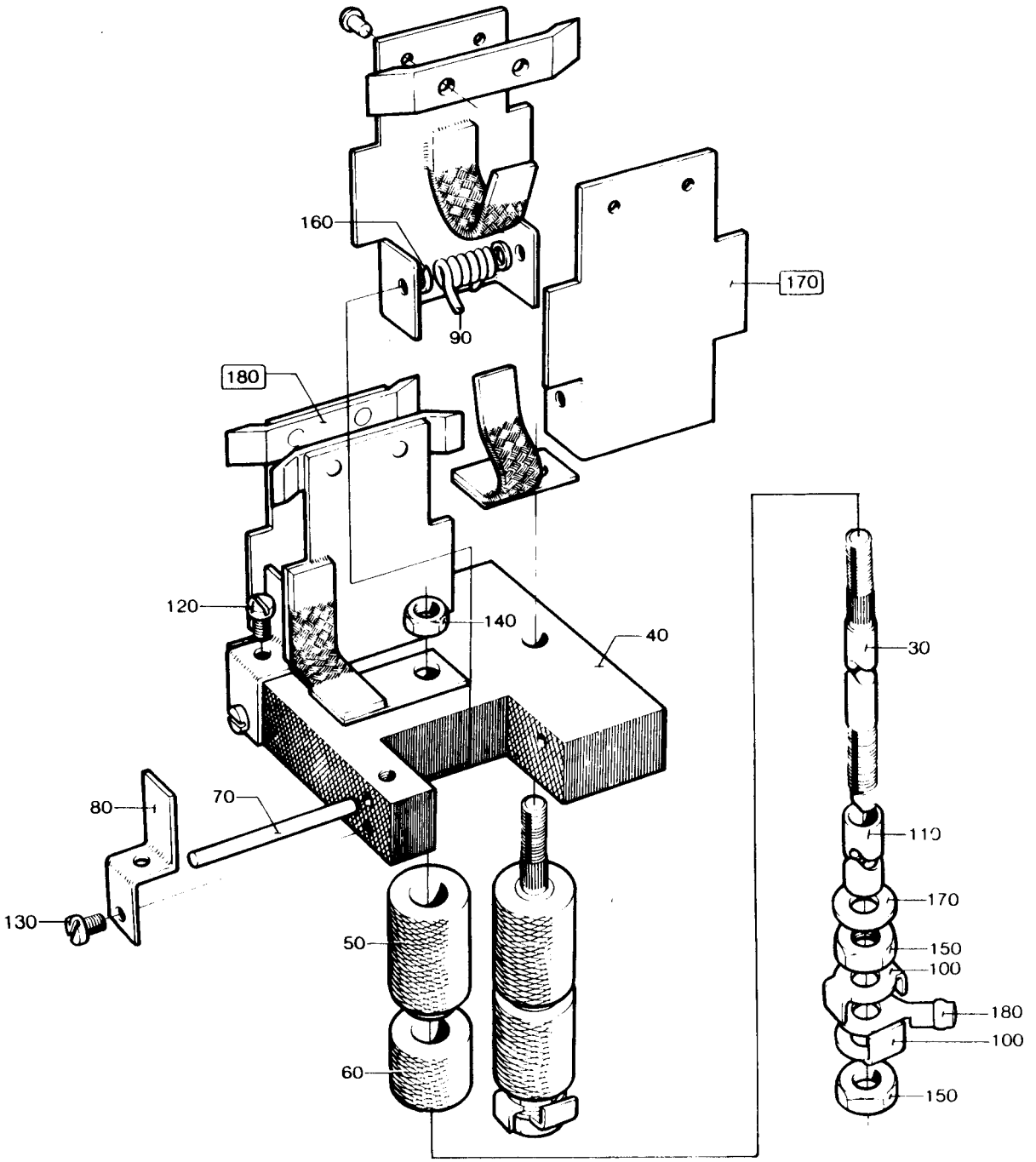
160
90
170
180
120
140
40
30
80
70
110
170
130
150
100
50
180
100
60
150

| From | Pos | Part No | SP | UN | Qty | Description |
|---|---|---|---|---|---|---|
| | F170 | ==>309-1b.1 | - | | 1 | **CONTACT RAIL Left Hand** |
| | F180 | ==>309-1b.1 | - | | 1 | **CONTACT RAIL Right hand** |
| | 030 | 5743 | - | | 2 | PIN |
| | 040 | 18943 | - | | 1 | BOTTOM PLATE |
| | 050 | 18944 | - | | 2 | SPACER SLEEVE |
| | 060 | 18945 | - | | 2 | INSULATING TUBE |
| | 070 | 18947 | - | | 2 | SHAFT |
| | 080 | 23193 | - | | 2 | BRACKET |
| | 090 | 23194 | - | | 2 | TORSION SPRING |
| | 100 | 90079-0002 | - | | 4 | WASHER |
| | 110 | 90160-0001 | - | MM | 100 | INSULATION TUBE |
| | 120 | 312121-0285 | - | | 2 | SLOTTED HEMCS4X6FZB |
| | 130 | 312121-0287 | - | | 2 | SLOTTED HEMCS4X8FZB |
| | 140 | 312602-0316 | - | | 2 | NUT M6M6MSGFN |
| | 150 | 312602-0318 | - | | 4 | NUT M6M8MSGFN |
| | 160 | 315103-0136 | - | | 4 | WASHER BRB4,3X8MSGFN |
| | 170 | 315103-0165 | - | | 2 | WASHER BRB8,4X16MSGFN |
| | 180 | 353104-0169 | - | | 2 | CABLE SHOEYAV 6 CLM 84! |

| From | Pos | Part No | SP | UN | Qty | Description |
|---|---|---|---|---|---|---|

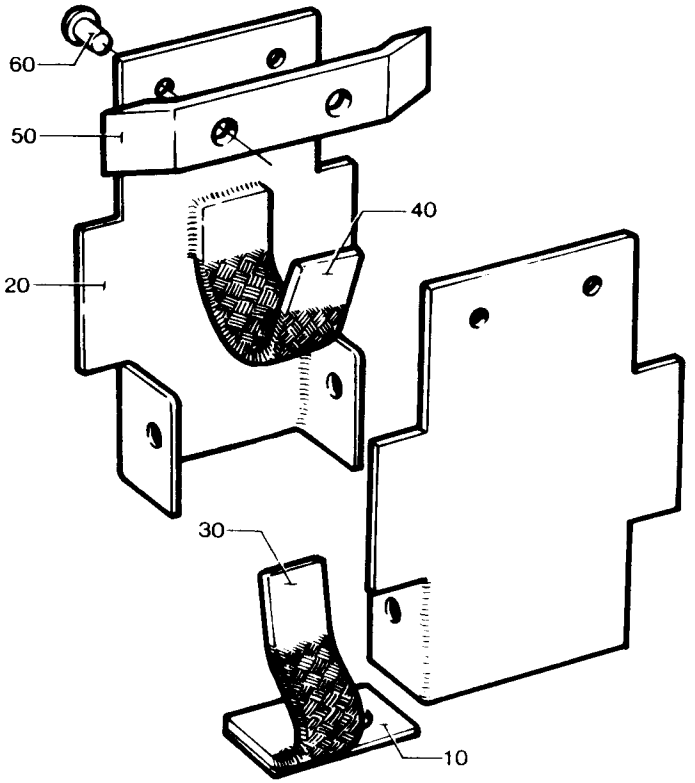
60
50
40
20
30
10

| From | Pos | Part No | SP | UN | Qty | Description |
|---|---|---|---|---|---|---|
| | 010 | 18940-0001 | - | | 1 | CONNECTION Left Hand |
| | 010 | 18940-0002 | - | | 1 | CONNECTION Right Hand |
| | 020 | 18939 | - | | 2 | CONTACT PLATE |
| | 030 | 18941-0001 | - | | 1 | COPPER BRAID |
| | 040 | 18941-0002 | - | | 1 | COPPER BRAID |
| | 050 | 263326 | - | | 2 | CONTACT RAIL |
| | 060 | 311513-0308 | - | | 4 | RIVET FN3X6KPR |

| From | Pos | Part No | SP | UN | Qty | Description |
|---|---|---|---|---|---|---|

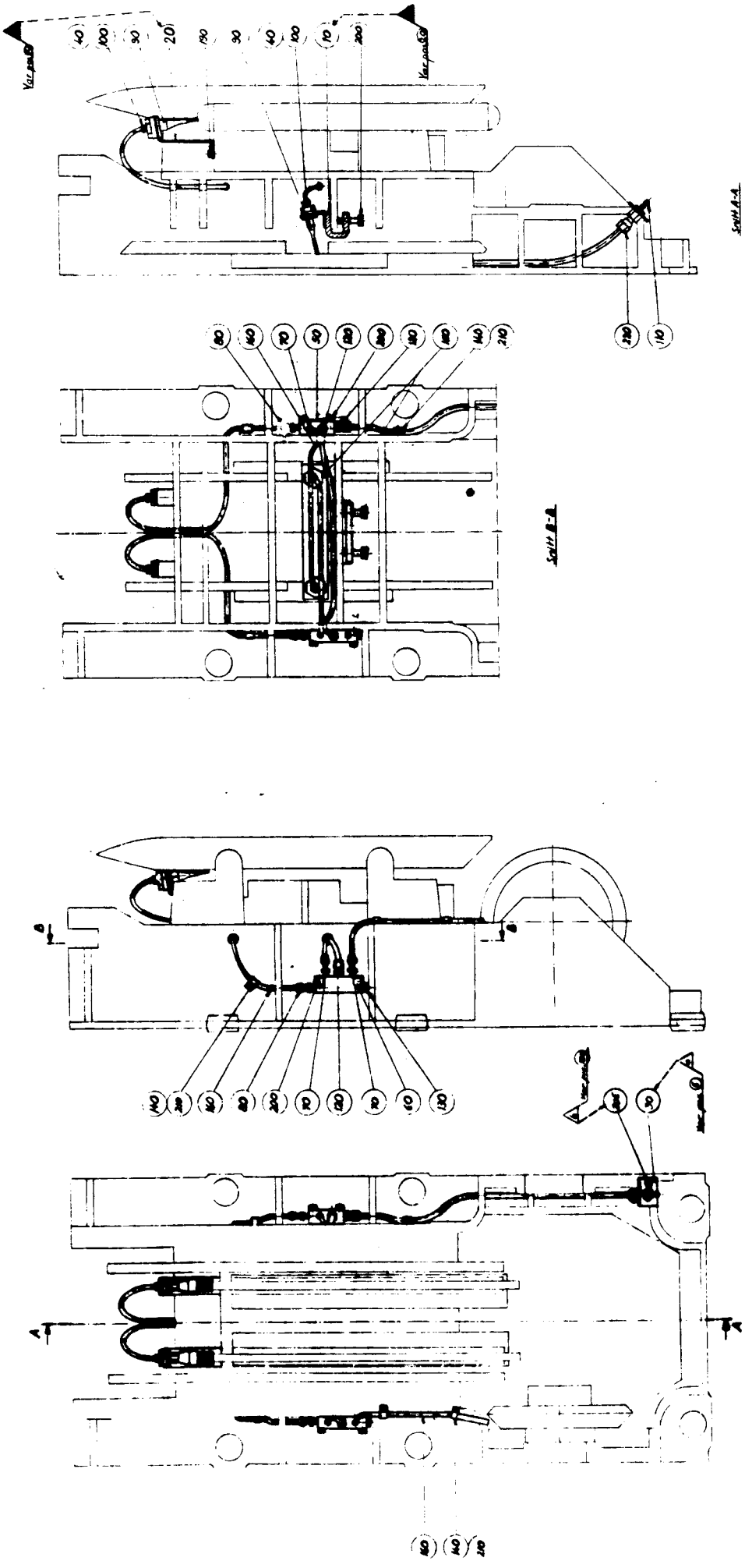

| From | Pos | Part No | SP | UN | Qty | Description |
|---|---|---|---|---|---|---|
| | 010 | 265846 | - | | 1 | HOLDER |
| | 020 | 265878 | - | | 2 | HOLDER |
| | 030 | 259962-0002 | - | | 1 | PLATE |
| | 040 | 90028-0001 | R | | 4 | CONE |
| | 050 | 90032-0012 | - | | 1 | JUNCTION BLOCK |
| | 060 | 90032-0013 | - | | 1 | JUNCTION BLOCK |
| | 070 | 90092-0064 | R | | 3 | METERING VALVE |
| | 080 | 90092-0065 | R | | 2 | METERING VALVE |
| | 090 | 90092-0048 | R | | 4 | OIL BRUSH |
| | 100 | 90134-0003 | - | | 4 | BUSHING |
| | 110 | 90134-0033 | - | | 1 | NIPPLE |
| | 120 | 90134-0034 | - | | 3 | NIPPLE |
| | 130 | 90136-0002 | - | | 4 | PLUG |
| | 140 | 90165-0003 | - | | 1 | CLIP |
| | 145 | 90165-0005 | - | | 1 | CLIP |
| | 150 | 90166-0011 | - | MM | 700 | HOSE |
| | 160 | 90166-0103 | - | M | 2 | HOSE |
| | 190 | 312101-0325 | - | | 2 | SCREW M6S5X10FZB |
| | 200 | 312101-0372 | - | | 6 | SCREW M6S6X25FZB |
| | 205 | 312111-0327 | - | | 1 | SCREW MC6S5X12FZB |
| | 210 | 312121-0285 | - | | 5 | SLOTTED HEMCS4X6FZB |
| | 220 | 342724-0102 | - | | 1 | PIPE CONNEGI6-LRFZB |

| From | Pos | Part No | SP | UN | Qty | Description |
|---|---|---|---|---|---|---|

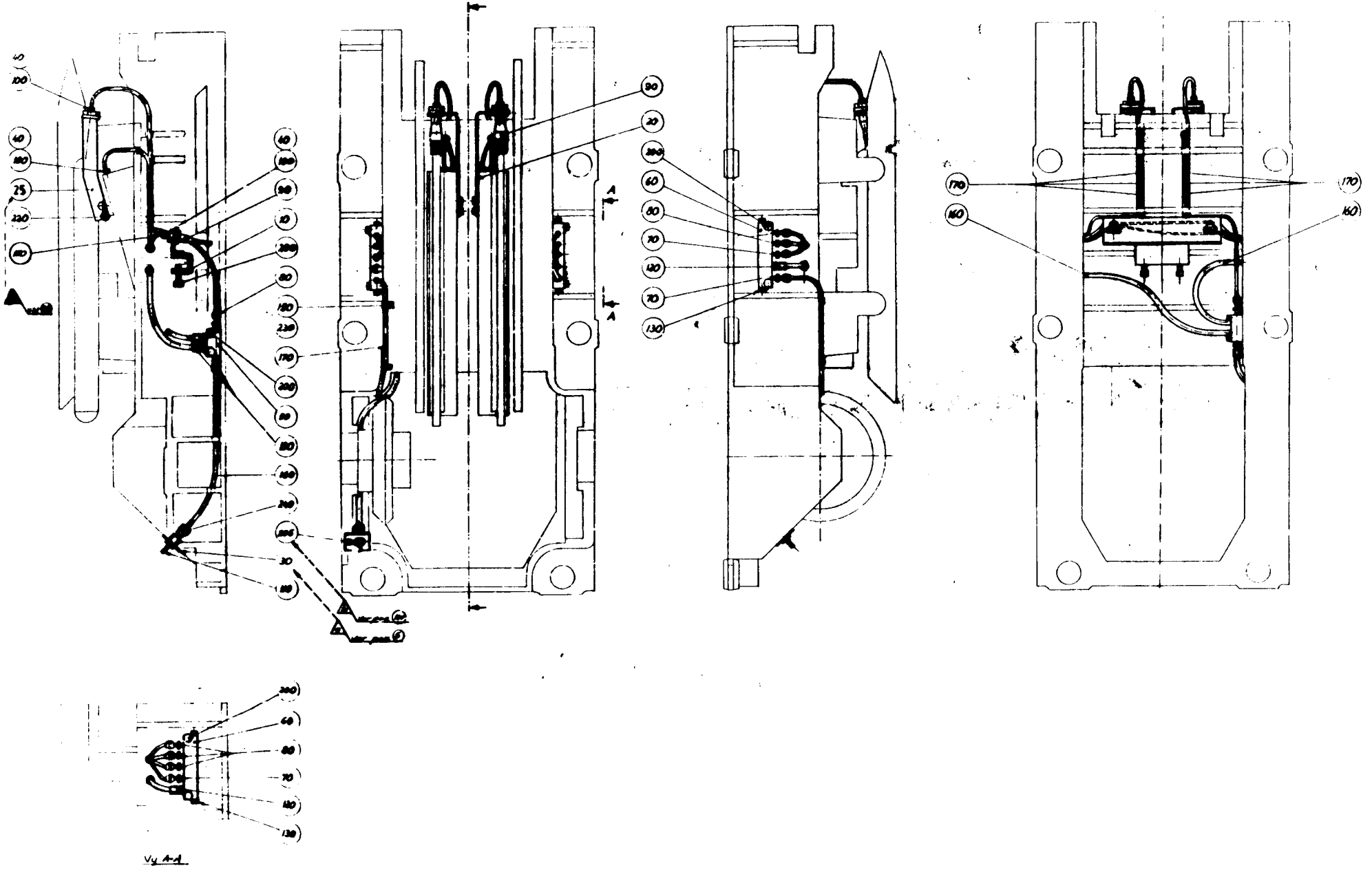
A
A
Vy A-A

| From | Pos | Part No | SP | UN | Qty | Description |
|---|---|---|---|---|---|---|
| | 010 | 265846 | - | | 1 | HOLDER |
| | 020 | 265876 | - | | 1 | HOLDER |
| | 025 | 265877 | - | | 1 | HOLDER |
| | 030 | 259962-0002 | - | | 1 | PLATE |
| | 040 | 90028-0001 | R | | 12 | CONE |
| | 050 | 90032-0012 | - | | 1 | JUNCTION BLOCK |
| | 060 | 90032-0036 | - | | 2 | JUNCTION BLOCK |
| | 070 | 90092-0064 | R | | 3 | METERING VALVE |
| | 080 | 90092-0065 | R | | 6 | METERING VALVE |
| | 090 | 90092-0048 | R | | 4 | OIL BRUSH |
| | 100 | 90134-0003 | - | | 12 | BUSHING |
| | 110 | 90134-0033 | - | | 1 | NIPPLE |
| | 120 | 90134-0034 | - | | 5 | NIPPLE |
| | 130 | 90136-0002 | - | | 4 | PLUG |
| | 150 | 90165-0003 | - | | 2 | CLIP |
| | 160 | 90166-0011 | - | MM1500 | | HOSE |
| | 170 | 90166-0103 | - | M | 4 | HOSE |
| | 200 | 312101-0372 | - | | 8 | SCREW M6S6X25FZB |
| | 205 | 312111-0327 | - | | 1 | SCREW MC6S5X12FZB |
| | 220 | 312121-0323 | - | | 4 | SLOTTED HEMCS5X8FZB |
| | 230 | 312145-0285 | - | | 2 | SLOTTED HEMFS4X6RFR |
| | 240 | 342724-0102 | - | | 1 | PIPE CONNEGI6-LRFZB |

| From | Pos | Part No | SP | UN | Qty | Description |
|---|---|---|---|---|---|---|

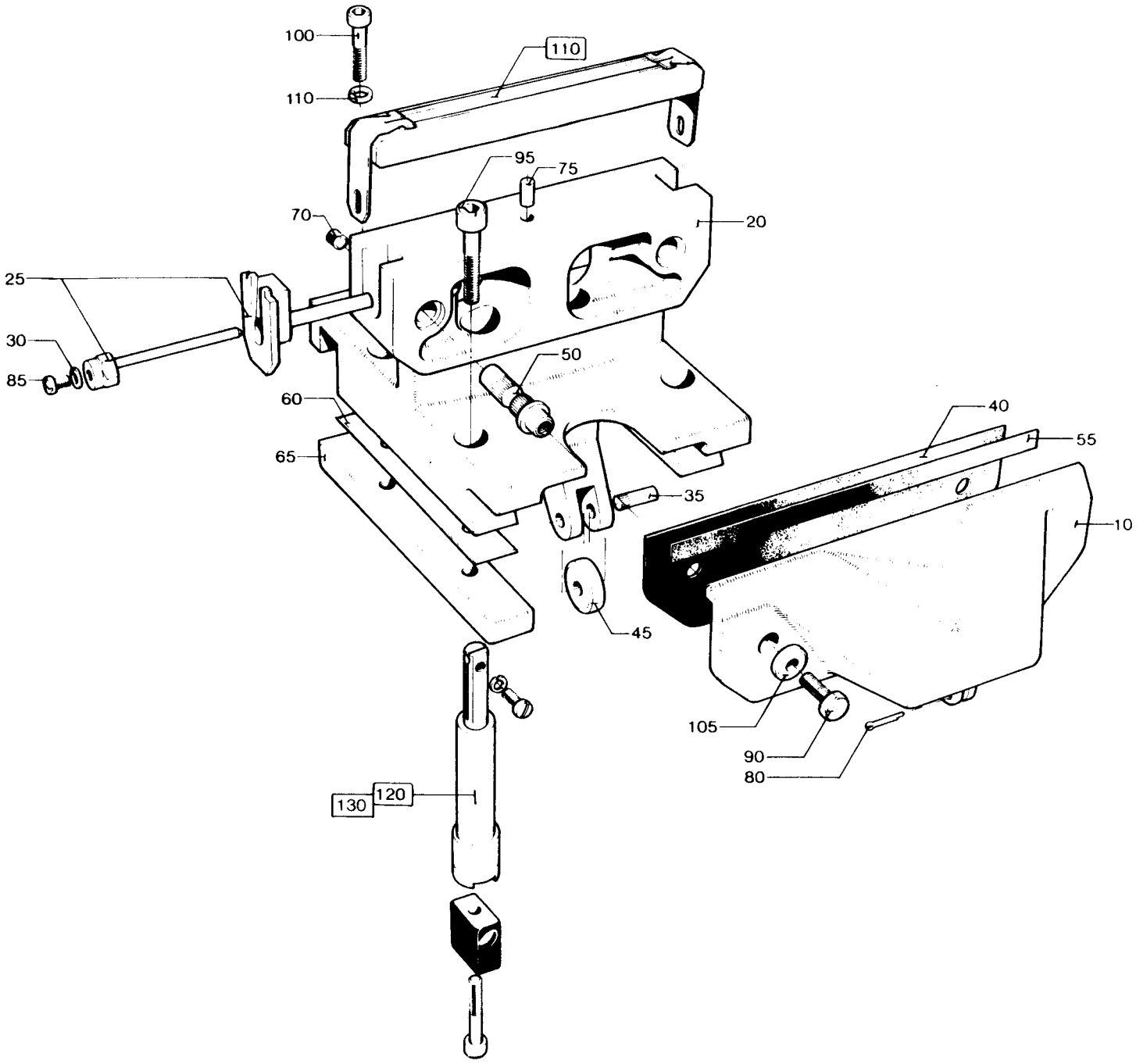
100
110
110
95
75
70
20
25
30
85
50
60
65
40
55
35
10
45
105
90
80
130
120

| From | Pos | Part No | SP | UN | Qty | Description |
|---|---|---|---|---|---|---|
| | F120 | ==>312-1b.1 | - | | 2 | SLIDING CONTACT |
| | F110 | C- 257841-0101 | R | | 1 | TPC BAR Al-foil |
| | F110 | C- 257841-0102 | R | | 1 | TPC BAR Std.paper |
| | 010 | 3917 | - | | 2 | FLAP |
| | 010 | 3917 | - | | 2 | FLAP |
| | 010 | 3918 | - | | 2 | FLAP |
| | 010 | 3918 | - | | 2 | FLAP |
| | 010 | 3919-0001 | - | | 2 | FLAP |
| | 010 | 3919-0001 | - | | 2 | FLAP |
| | 010 | 5116-0003 | - | | 2 | FLAP |
| | 010 | 5116-0003 | - | | 2 | FLAP |
| | 020 | 10603 | - | | 1 | HEATING JAW |
| | 025 | 259406 | - | | 2 | COUPLING |
| | 030 | 2033-0012 | R | | 2 | WASHER |
| | 035 | 2493 | - | | 1 | PIN |
| | 040 | 2497-0003 | - | | 2 | GASKET |
| | 045 | 3630 | - | | 1 | ROLLER |
| | 050 | 3891 | - | | 2 | BUSHING |
| | 055 | 6261-0001 | - | | 2 | GASKET |
| | 060 | 8028 | - | | 4 | SHIM |
| | 065 | 8458 | - | | 2 | BAR |
| | 070 | 90287-0005 | - | | 2 | BRUB SCREW |
| | 075 | 311103-0306 | - | | 1 | CYLINDRICACPR5M6X12RFR |
| | 080 | 311411-0165 | - | | 1 | SPLIT PIN SP2,5X16RFR |
| | 085 | 312101-0287 | - | | 2 | SCREW M6S4X8FZB |
| | 090 | 312105-0368 | - | | 4 | SCREW M6S6X16RFR |
| | 095 | 312111-0455 | - | | 4 | SCREW MC6S8X30FZB |
| | 100 | 312115-0370 | - | | 2 | SCREW 6X20 A4 80 |
| | 105 | 315115-0153 | - | | 4 | WASHER TBRB6,4X12RFR |
| | 110 | 315401-0153 | - | | 2 | WASHER FBH6,1FZB |

| From | Pos | Part No | SP | UN | Qty | Description |
|---|---|---|---|---|---|---|

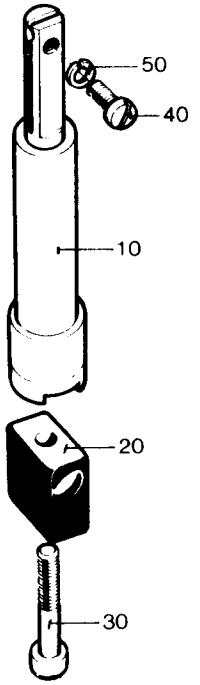
50
40
10
20
30

Last Alteration: 8332 85-12-18

Corresponding C-lists: 10092-010V
Assembly Drawing: 10092-1

Date Printed: 900202

| From | Pos | Part No | SP | UN | Qty | Description |
|---|---|---|---|---|---|---|
| | 010 | 440560 | - | | 1 | INSULATOR |
| | 020 | 442442 | R | | 1 | CARBON BRUSH |
| | 030 | 312115-0295 | - | | 1 | SCREW S 4X20 A4 80 |
| | 040 | 312125-0287 | - | | 1 | SLOTTED HEMCS4X8RFR |
| | 050 | 315401-0136 | - | | 1 | WASHER FBH 4,1 FZB |

| From | Pos | Part No | SP | UN | Qty | Description |
|---|---|---|---|---|---|---|

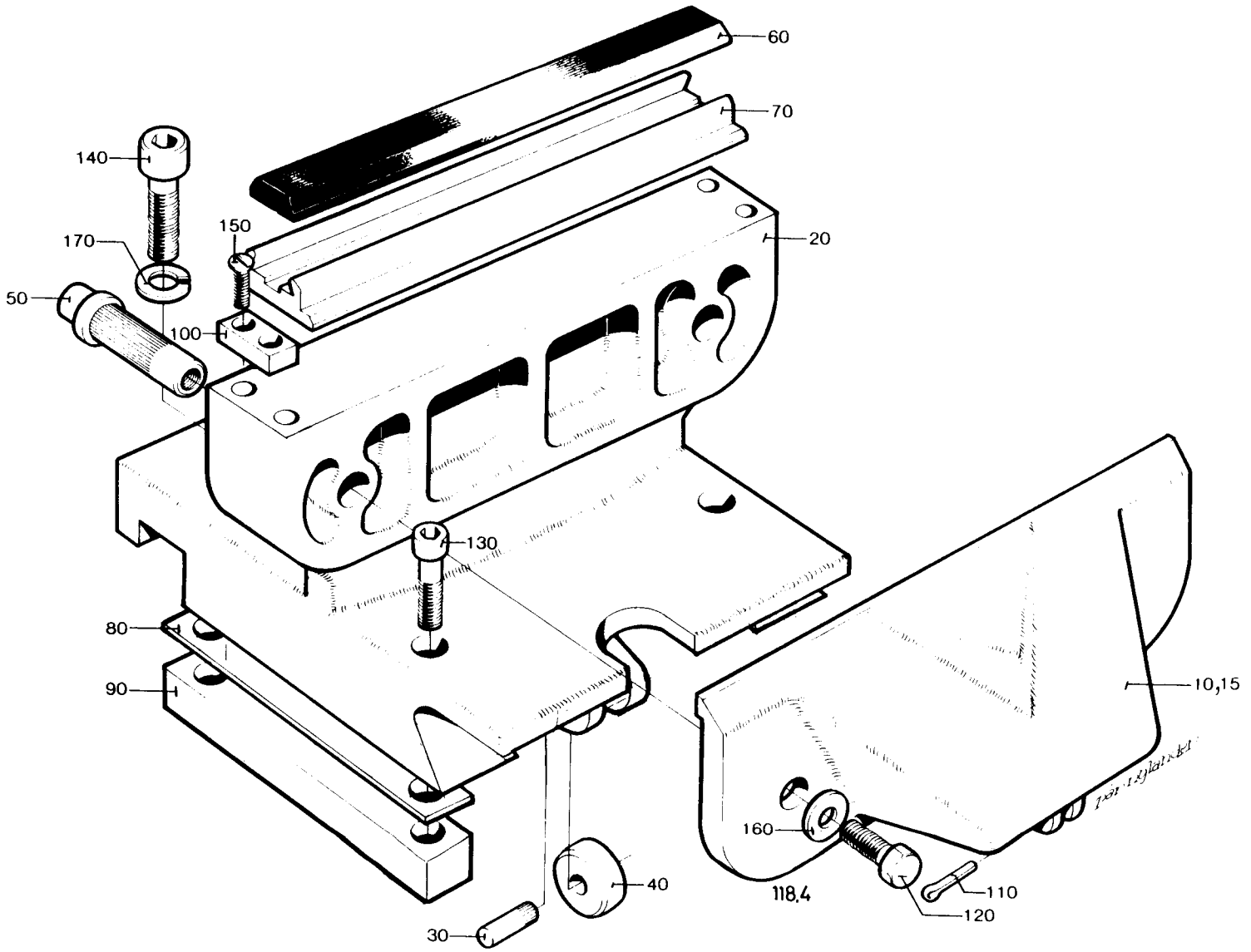
60
70
140
150
170
20
50
100
130
80
90
10,15
160
40
118.4
110
120
30

| From | Pos | Part No | SP | UN | Qty | Description |
|---|---|---|---|---|---|---|
| **Volume 300ml TPC** | | | | | | |
| | 010 | 3921 | - | | 1 | FLAP |
| | 015 | 3922 | - | | 1 | FLAP |
| | 060 | 3950 | PU | | 1 | RUBBER STRIP |
| **Volume 284ml TPC** | | | | | | |
| | 010 | 3921 | - | | 2 | FLAP |
| | 060 | 3950 | PU | | 1 | RUBBER STRIP |
| **Volume 236ml TPC** | | | | | | |
| | 010 | 5116-0001 | - | | 2 | FLAP |
| | 060 | 3950 | PU | | 1 | RUBBER STRIP |
| **Volume 300ml 250ml IH** | | | | | | |
| | 010 | 3921 | - | | 1 | FLAP |
| | 015 | 3922 | - | | 1 | FLAP |
| | 060 | 522402 | PU | | 1 | RUBBER STRIP |
| **Common Parts** | | | | | | |
| | 020 | 257952 | - | | 1 | PRESSURE JAW |
| | 030 | 2493 | - | | 1 | PIN |
| | 040 | 3630 | - | | 1 | ROLLER |
| | 050 | 3891 | - | | 2 | BUSHING |
| | 070 | 6253 | - | | 1 | RUBBER HOLDER |
| | 080 | 8028 | - | | 4 | SHIM |
| | 090 | 8458 | - | | 2 | BAR |
| | 100 | 283029 | - | | 2 | SUPPORT |
| | 110 | 311411-0165 | - | | 1 | SPLIT PIN SP2,5X16RFR |
| | 120 | 312105-0366 | - | | 4 | SCREW M6S6X12RFR |
| | 130 | 312111-0455 | - | | 4 | SCREW MC6S8X30FZB |
| | 140 | 312115-0370 | - | | 2 | SCREW 6X20 A4 80 |
| | 150 | 312145-0224 | - | | 4 | SLOTTED HEMFS3X10RFR |
| | 160 | 315111-0153 | - | | 4 | WASHER TBRB6,4X12FZB |
| | 170 | 315401-0153 | - | | 2 | WASHER FBH6,1FZB |

| From | Pos | Part No | SP | UN | Qty | Description |
|---|---|---|---|---|---|---|

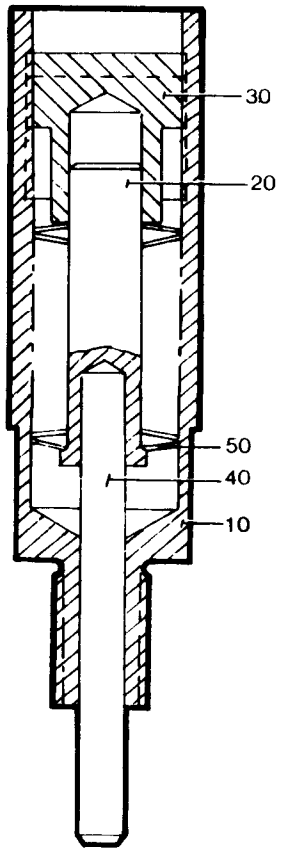
30
20
50
40
10

| From | Pos | Part No | SP | UN | Qty | Description |
|---|---|---|---|---|---|---|
| | 010 | 2572 | - | | 1 | SPRING HOUSING |
| | 020 | 2573 | - | | 1 | PIN |
| | 030 | 2574 | - | | 1 | SCREW |
| | 040 | 20919 | - | | 1 | PIN |
| | 050 | 90016-0005 | - | | 26 | DISC SPRING |

| From | Pos | Part No | SP | UN | Qty | Description |
|---|---|---|---|---|---|---|

**SPC 6303**
**Tetra Classic TC**

| From | Pos | Page No | Description |
|---|---|---|---|
| | F000 | 401-1b | MACHINE BODY TC/300 |
| | F010 | 402-1 | DOOR |
| | F020 | 402-1 | DOOR |
| | F030 | 403-1 | PLATFORM |
| | | 403-1.1 | . CABLE CONNECTION |
| | F050 | 404-1 | CONTROL PANEL |
| | | 404-1.1 | . TERMINAL BLOCK |
| | F080 | 405-1 | LADDER |
| | F090 | 406-1 | AIR PIPE-LINE |
| | F110 | 407-1b | HYDRAULIC PRESSURE SYSTEM TC/300 |
| | | 407-1.1 | . HYDRAULIC UNIT |
| | F130 | 408-1b | CENTRAL LUBRICATION TC/300 |
| | F150 | 409-1 | APPLIANCE BOX |
| | | 409-1.1 | . TERMINAL BLOCK |
| | | 409-1.2 | . TERMINAL BLOCK |

| From | Pos | Page No | Description |
|---|---|---|---|

# 401-1b

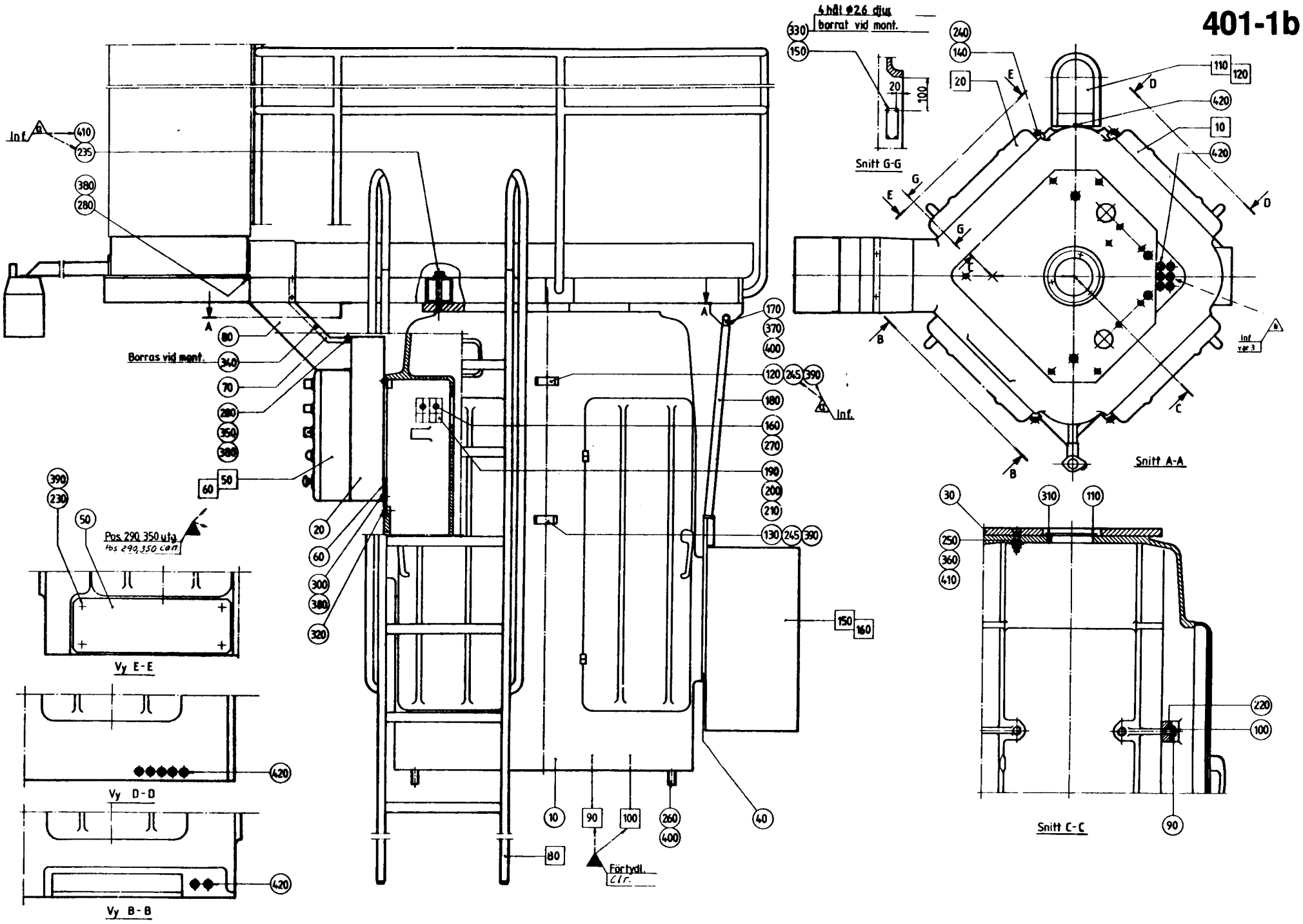

4 hål Ø2,6 djup
borrat vid mont.
Snitt G-G
Snitt A-A
Snitt C-C
Borras vid mont.
Pos. 290, 350 utg.
Pos. 290, 350 can.
Vy E-E
Vy D-D
Vy B-B
Förtydl.
Clr.
Inf.
Inf. var 3

| From | Pos | Part No | SP | UN | Qty | Description |
|---|---|---|---|---|---|---|
| | 010 | G- 263192 | - | | 1 | MACHINE BODY |
| | 020 | 445518 | - | | 1 | CABLE DUCT |
| | 030 | 243819 | - | | 1 | PLATE |
| | 040 | 265952 | - | | 1 | BRACKET |
| | 050 | 236651 | - | | 1 | PLATE |
| | 060 | 445711 | - | | 1 | PLATE |
| | 070 | 445760 | - | | 1 | COVER |
| | 080 | 445761 | - | | 1 | CABLE DUCT |
| | 090 | 2612-0001 | - | | 12 | WASHER |
| | 090 | 2612-0002 | - | | 12 | WASHER |
| | 090 | 2612-0003 | - | | 12 | WASHER |
| | 090 | 2612-0004 | - | | 12 | WASHER |
| | 100 | 2613 | - | | 12 | SCREW |
| | 110 | 2975 | - | | 1 | RING |
| | 120 | 7099-0004 | - | | 1 | PIPE HOLDER |
| | 130 | 7099-0005 | - | | 1 | PIPE HOLDER |
| | 140 | 11174 | - | | 8 | HINGE |
| | 150 | 20497 | - | | 1 | GROUP NUMBER PLATE |
| | 160 | 111602 | - | | 4 | SPACER |
| | 170 | 445712 | - | | 1 | ROPE |
| | 180 | 445713 | - | | 1 | PROTECTION PIPE |
| | 190 | 90110-0061 | - | | 16 | CONTACT PIN |
| | 200 | 90110-0063 | - | | 8 | CONTACT HOUSING |
| | 210 | 90110-0064 | - | | 8 | CONTACT HOUSING |
| | 220 | 311305-0310 | - | | 12 | SLOTTED PIRPC5X20FZB |
| | 230 | 312101-0447 | - | | 4 | SCREW M6S8X12FZB |
| | 235 | 312101-0554 | - | | 5 | SCREW M6S12X110FZB |
| | 240 | 312111-0366 | - | | 16 | SCREW MC6S6X12FZB |
| | 245 | 312111-0465 | - | | 2 | SCREW MC6S8X70FZB |
| | 250 | 312111-0546 | - | | 5 | SCREW MC6S12X70FZB |
| | 260 | 312111-0630 | - | | 4 | SCREW MC6S16X50FZB |
| | 270 | 312121-0299 | - | | 4 | SLOTTED HEMCS4X30FZB |
| | 280 | 312121-0366 | - | | 6 | SLOTTED HEMCS6X12FZB |
| | 300 | 312125-0370 | - | | 4 | SLOTTED HEMCS6X20RFR |
| | 310 | 312165-0329 | - | | 3 | SLOTTED HEMKFS5X16RFR |
| | 320 | 312165-0368 | - | | 2 | SLOTTED HEMKFS6X16RFR |
| | 330 | 312502-0221 | - | | 4 | DRIVE SCREKDS4X6FNB |
| | 340 | 312503-0336 | - | | 6 | DRIVE SCRERXKB8X6,5FZB |
| | 350 | 312601-0316 | - | | 2 | NUT M6M6FZB |
| | 360 | 312810-0322 | - | | 5 | LOCK NUT 12FZB |
| | 370 | 312810-0324 | - | | 1 | LOCK NUT 16FZB |
| | 380 | 315101-0153 | - | | 10 | WASHER BRB6,4X12FZB |
| | 390 | 315101-0165 | - | | 6 | WASHER BRB8,4X16FZB |
| | 400 | 315101-0186 | - | | 6 | WASHER BRB17X30FZB |
| | 410 | 315121-0178 | - | | 10 | WASHER TBRSB13X36FZB |
| | 420 | 352101-0103 | - | | 15 | LEAD-IN G 18,6 |

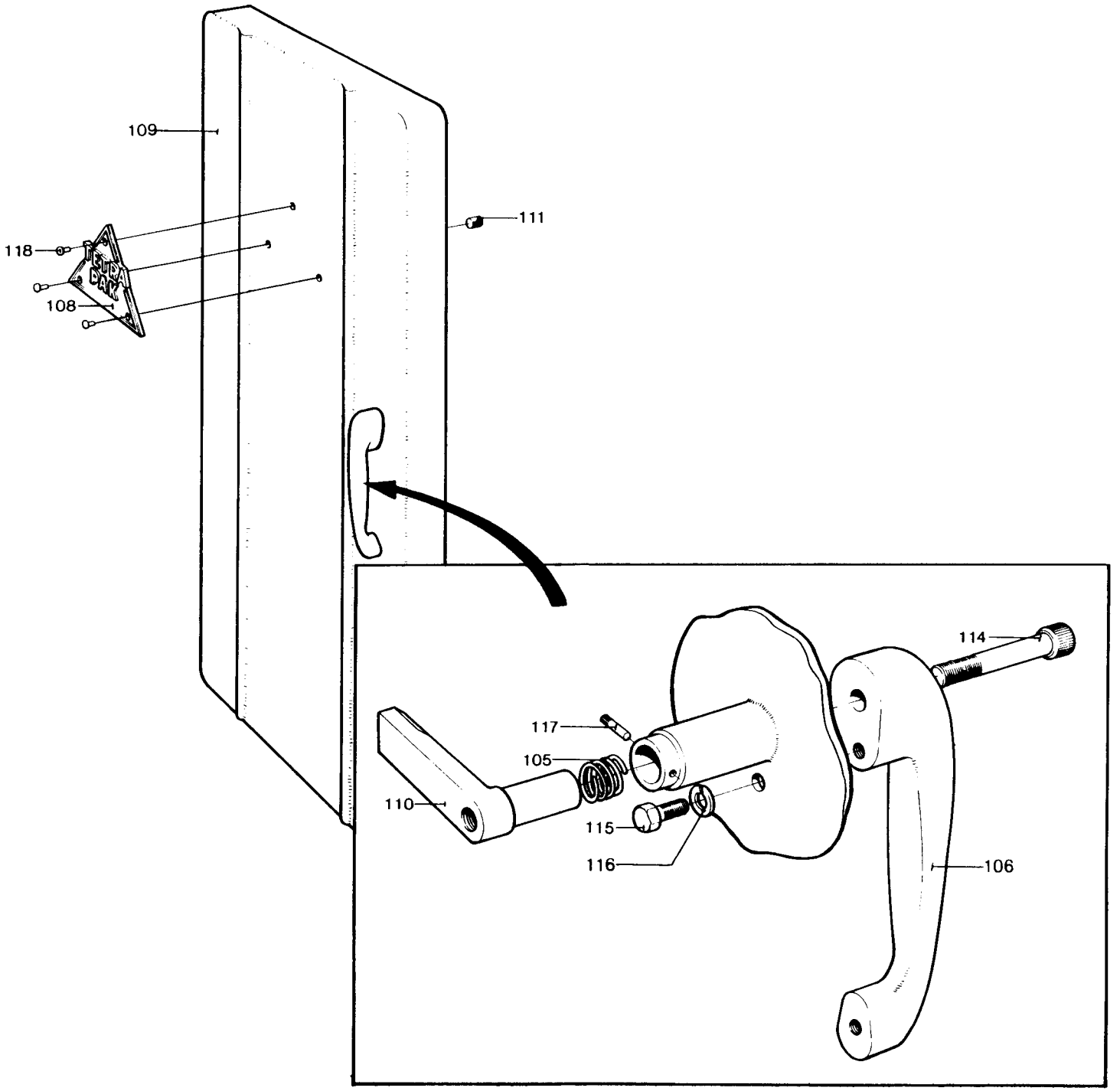
109
111
118
108
114
117
105
110
115
116
106

| From | Pos | Part No | SP | UN | Qty | Description |
|---|---|---|---|---|---|---|
| | 105 | 2703 | - | | 1 | COMPRESSION SPRING |
| | 106 | G- 2704 | - | | 1 | HANDLE |
| | 108 | 3675 | - | | 1 | TETRA PAK NAME PLATE |
| | 109 | 10548 | - | | 1 | DOOR TC/500 Left hand version |
| | 109 | 10549 | - | | 1 | DOOR TC/500 Right hand version |
| | 109 | 4336 | - | | 1 | DOOR TC/300 Right hand version |
| | 109 | 4337 | - | | 1 | DOOR TC/300 Left hand version |
| | 109 | 4629 | - | | 1 | DOOR TC/150 Left hand version |
| | 109 | 4630 | - | | 1 | DOOR TC/150 Right hand version |
| | 110 | 2702 | - | | 1 | LATCH TC/300 |
| | 110 | 2885 | - | | 1 | LATCH TC/500 |
| | 110 | G- 4631 | - | | 1 | LATCH TC/150 |
| | 111 | 5204 | - | | 2 | RUBBER STOPPER |
| | 070 | 90153-0002 | - | ML | X | ADHESIVE |
| | 114 | 312115-0467 | - | | 1 | SCREW MC6S8X80RFR |
| | 115 | 312101-0327 | - | | 2 | SCREW M6S5X12FZB |
| | 116 | 315401-0146 | - | | 2 | WASHER FBH 5,1 FZB |
| | 117 | 311307-0240 | - | | 1 | SLOTTED PIRPD3X24FZB |
| | 118 | 311508-0199 | - | | 3 | RIVET KN2X6ALUM. |

| From | Pos | Part No | SP | UN | Qty | Description |
|---|---|---|---|---|---|---|

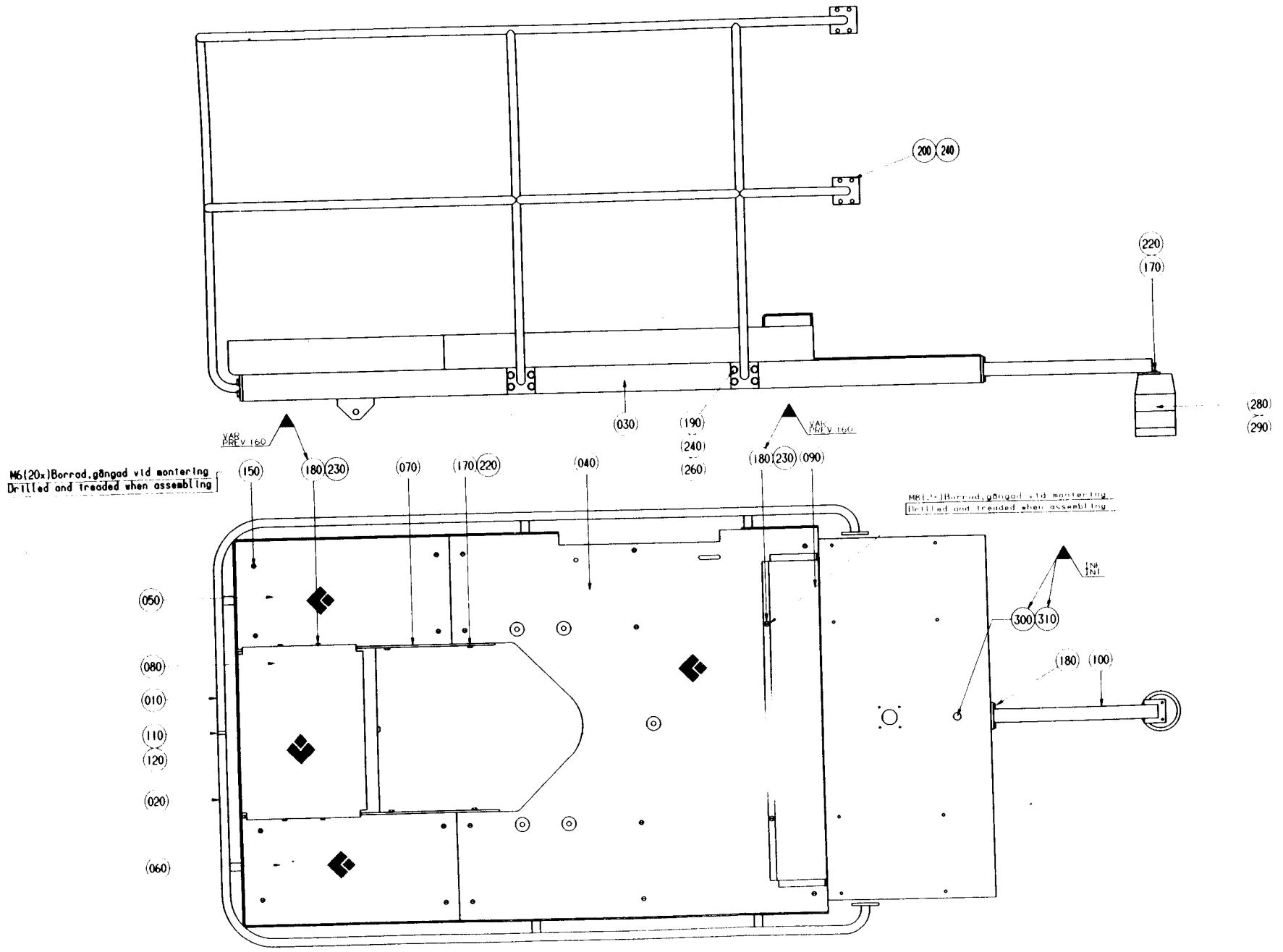
200 240
220
170
280
290
030
190
240
260
VAR PREV 160
VAR PREV 160
M6(20x)Borrad,gängad vid montering
Drilled and treaded when assembling
150
180 230
070
170 220
040
180 230 090
M8(20x)Borrad,gängad vid montering
Drilled and treaded when assembling
IN IN1
300 310
180 100
050
080
010
110
120
020
060

| From | Pos | Part No | SP | UN | Qty | Description |
|---|---|---|---|---|---|---|
| | F040 | ==>403-1.1 | - | | 1 | CABLE CONNECTION |
| | 110 | 90036-0036 | S | | 1 | BULB |
| | 010 | 434209 | - | | 1 | FRAME |
| | 020 | 266142 | - | | 1 | RAILING |
| | 030 | 266143 | - | | 1 | RAILING |
| | 040 | 434570 | - | | 1 | PLATFORM |
| | 050 | 232491 | - | | 2 | PLATFORM |
| | 060 | 294255 | - | | 1 | BRACKET |
| | 070 | 434087 | - | | 1 | BOX |
| | 080 | 434571 | - | | 1 | RAILING |
| | 090 | 232494 | - | | 1 | RAILING |
| | 100 | 266442 | - | | 2 | PLATE |
| | 120 | 90143-0008 | - | M | 6 | STRIP |
| | 130 | 90419-0005 | - | | 1 | ALARM LAMP |
| | | 90419-0302 | S | | 1 | * LENS |
| | 140 | 312101-0368 | - | | 6 | SCREW M6S6X16FZB |
| | 160 | 312101-0449 | - | | 4 | SCREW M6S8X16FZB |
| | 170 | 312101-0453 | - | | 12 | SCREW M6S8X25FZB |
| | 180 | 312101-0503 | - | | 20 | SCREW M6S10X60FZB |
| | 190 | 312101-0511 | - | | 8 | SCREW M6S10X100FZB |
| | 210 | 312115-0453 | - | | 4 | SCREW 8X25 A4 80 |
| | 220 | 312151-0366 | - | | 20 | SCREW MF6S6X12FZB |
| | 230 | 312151-0447 | - | | 3 | SCREW MF6S8X12FZB |
| | 240 | 312601-0320 | - | | 28 | NUT M6M10FZB |
| | 250 | 312605-0318 | - | | 10 | NUT M6M8RFR |
| | 260 | 315105-0153 | - | | 6 | WASHER BRB6,4X12RFR |
| | 270 | 315105-0165 | - | | 16 | WASHER BRB8,4X16RFR |
| | 280 | 315105-0173 | - | | 56 | WASHER BRB10,5X22RFR |
| | 290 | 315111-0165 | - | | 4 | WASHER TBRB8,4X16FZB |

| From | Pos | Part No | SP | UN | Qty | Description |
|---|---|---|---|---|---|---|

403-1. I

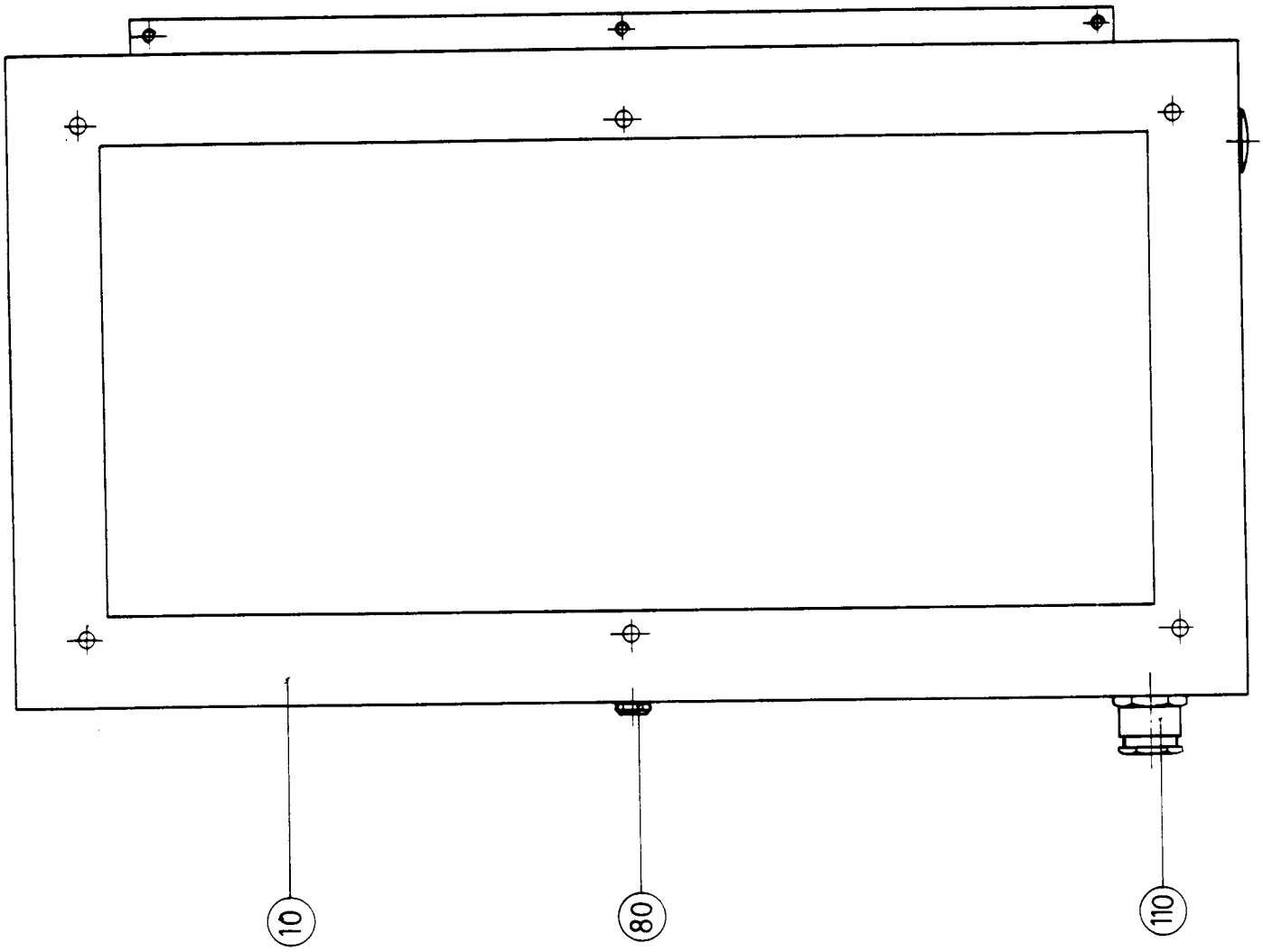


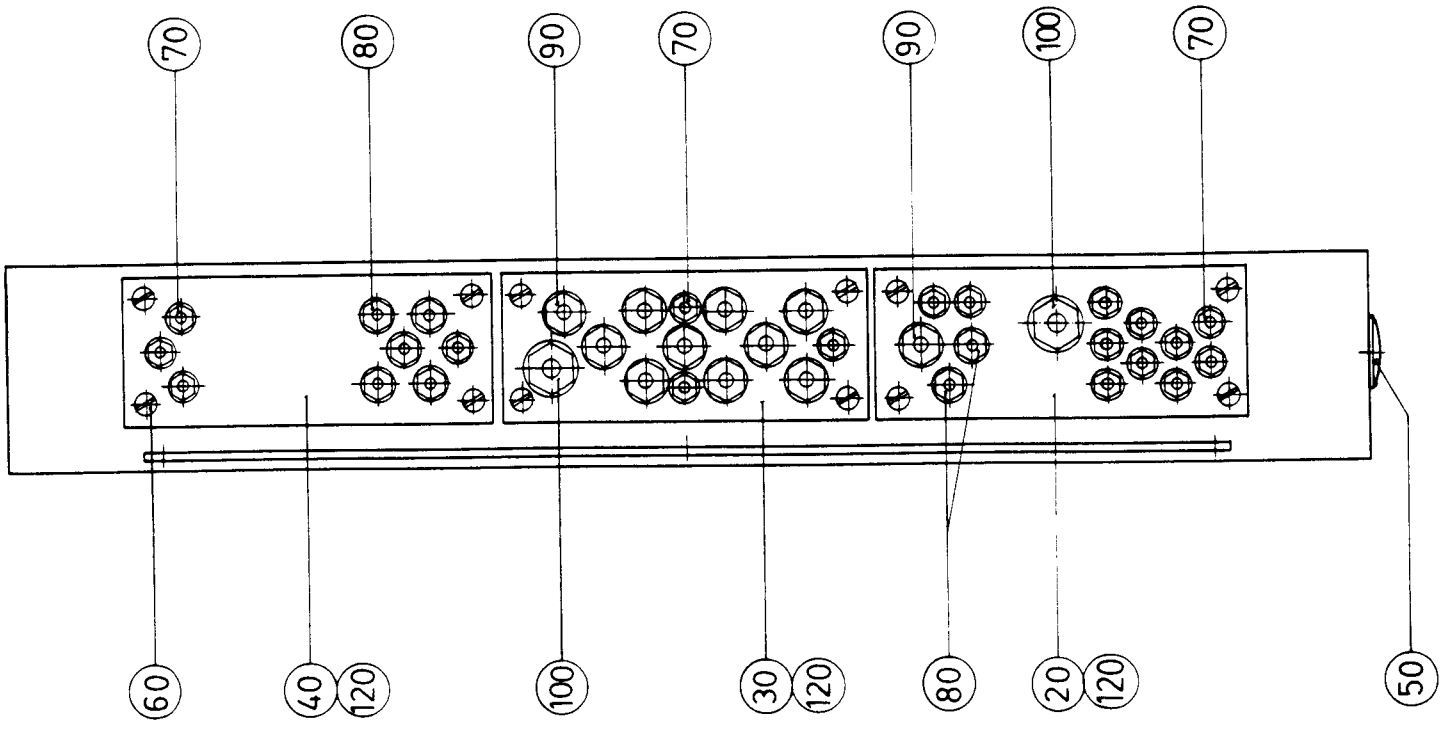

Last Alteration: 5719 83-05-18

Corresponding C-lists: 436770-010V
Assembly Drawing: 436770-1

Date Printed: 900314

| From | Pos | Part No | SP | UN | Qty | Description |
|---|---|---|---|---|---|---|
| | 010 | 434086 | - | | 1 | FRAME |
| | 020 | 434572 | - | | 1 | FLANGE |
| | 030 | 434573 | - | | 1 | FLANGE |
| | 040 | 434574 | - | | 1 | FLANGE |
| | 050 | 90002-0010 | - | | 1 | PLUG |
| | 060 | 312121-0451 | - | | 12 | SLOTTED HEMCS8X20FZB |
| | 070 | 352101-0102 | - | | 18 | LEAD-IN G 15,2 |
| | 080 | 352101-0103 | - | | 7 | LEAD-IN G 18,6 |
| | 090 | 352101-0105 | - | | 11 | LEAD-IN G 22,5 |
| | 100 | 352101-0106 | - | | 2 | LEAD-IN G 28,3 |
| | 110 | 352100-0120 | - | | 1 | CABLE GLANR. 37-21 |
| | 120 | 352141-0800 | - | | 3 | FLANGE DGP 21 |

| From | Pos | Part No | SP | UN | Qty | Description |
|---|---|---|---|---|---|---|

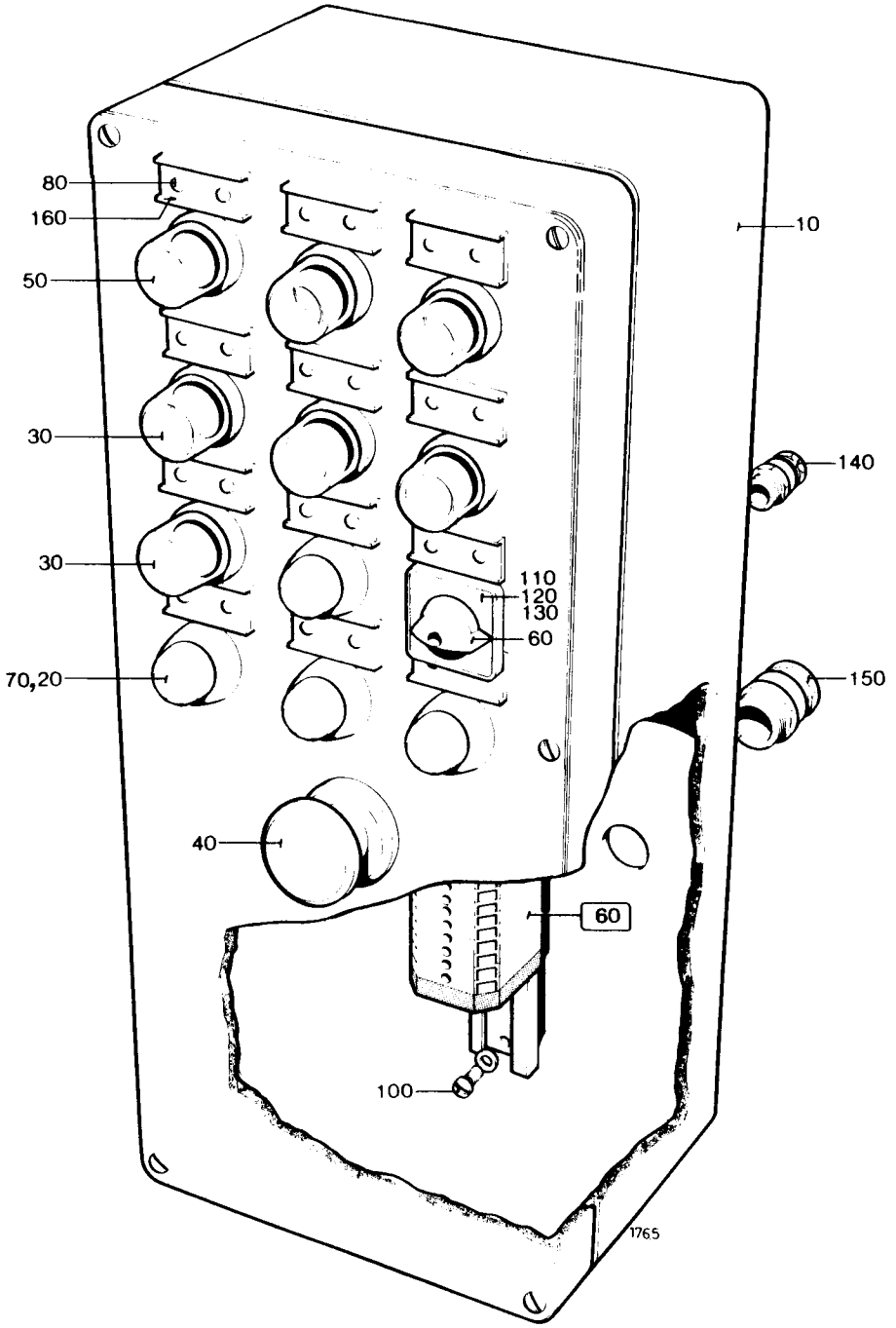
80
160
50
30
30
70,20
10
140
110
120
130
60
150
40
60
100
1765

| From | Pos | Part No | SP | UN | Qty | Description |
|---|---|---|---|---|---|---|
| | **F060** | **==>404-1.1** | **-** | | **1** | **TERMINAL BLOCK** |
| | 010 | 297161 | - | | 1 | CONNECTION BOX |
| | 020 | 90036-0011 | - | | 2 | BULB |
| | 030 | 90064-0041 | - | | 4 | PUSH BUTTON |
| | | 90064-0306 | S | | 0 | * GUARD |
| | | 90064-0309 | S | | 0 | * GASKET |
| | 040 | 90064-0052 | - | | 1 | PUSH BUTTON |
| | 050 | 90064-0054 | - | | 3 | PUSH BUTTON |
| | | 90064-0306 | S | | 0 | * GUARD |
| | | 90064-0309 | S | | 0 | * GASKET |
| | 060 | 90111-0064 | - | | 1 | SWITCH |
| | 070 | 90124-0008 | - | | 4 | SIGNALLAMP |
| | 080 | 311520-0429 | - | | 24 | BLANK RIVE3,2X7,4 |
| | 090 | 312121-0287 | - | | 2 | SLOTTED HEMCS4X8FZB |
| | 100 | 312121-0378 | - | | 4 | SLOTTED HEMCS6X40FZB |
| | 110 | 312141-0293 | - | | 4 | SLOTTED HEMFS4X16FZB |
| | 120 | 312601-0312 | - | | 4 | NUT M6M4FZB |
| | 130 | 315101-0136 | - | | 4 | WASHER BRB4,3X8FZB |
| | 140 | 352103-0106 | - | | 2 | CABLE GLANR.18,6/5-10 |
| | 150 | 352103-0116 | - | | 1 | CABLE GLANR.28,3/13-18 |
| | 160 | 359240-0100 | - | | 12 | SIGN HOLDER |

| From | Pos | Part No | SP | UN | Qty | Description |
|---|---|---|---|---|---|---|

404-1.1

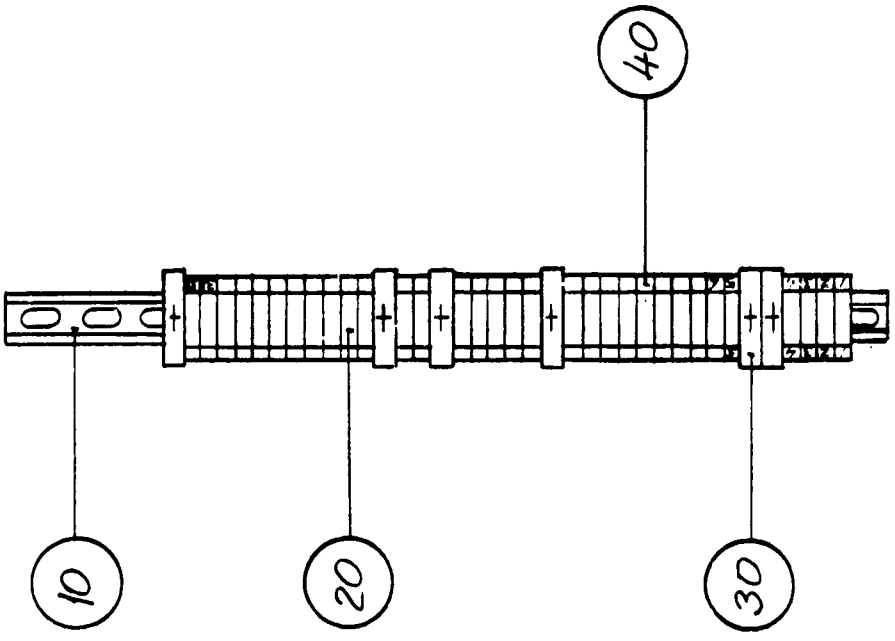

Last Alteration: 5719 83-05-18

Corresponding C-lists: 297162-010V
Assembly Drawing: 297162-1

Date Printed: 900302

| From | Pos | Part No | SP | UN | Qty | Description |
|---|---|---|---|---|---|---|
| | 010 | 8490-0009 | - | | 1 | RAIL |
| | 020 | 90077-0079 | - | | 32 | TERMINAL BLOCK |
| | 030 | 90135-0026 | - | | 6 | EARTHING CLAMP |
| | 040 | 359011-0801 | - | | 2 | LABEL BSFW 0-49 |

| From | Pos | Part No | SP | UN | Qty | Description |
|---|---|---|---|---|---|---|

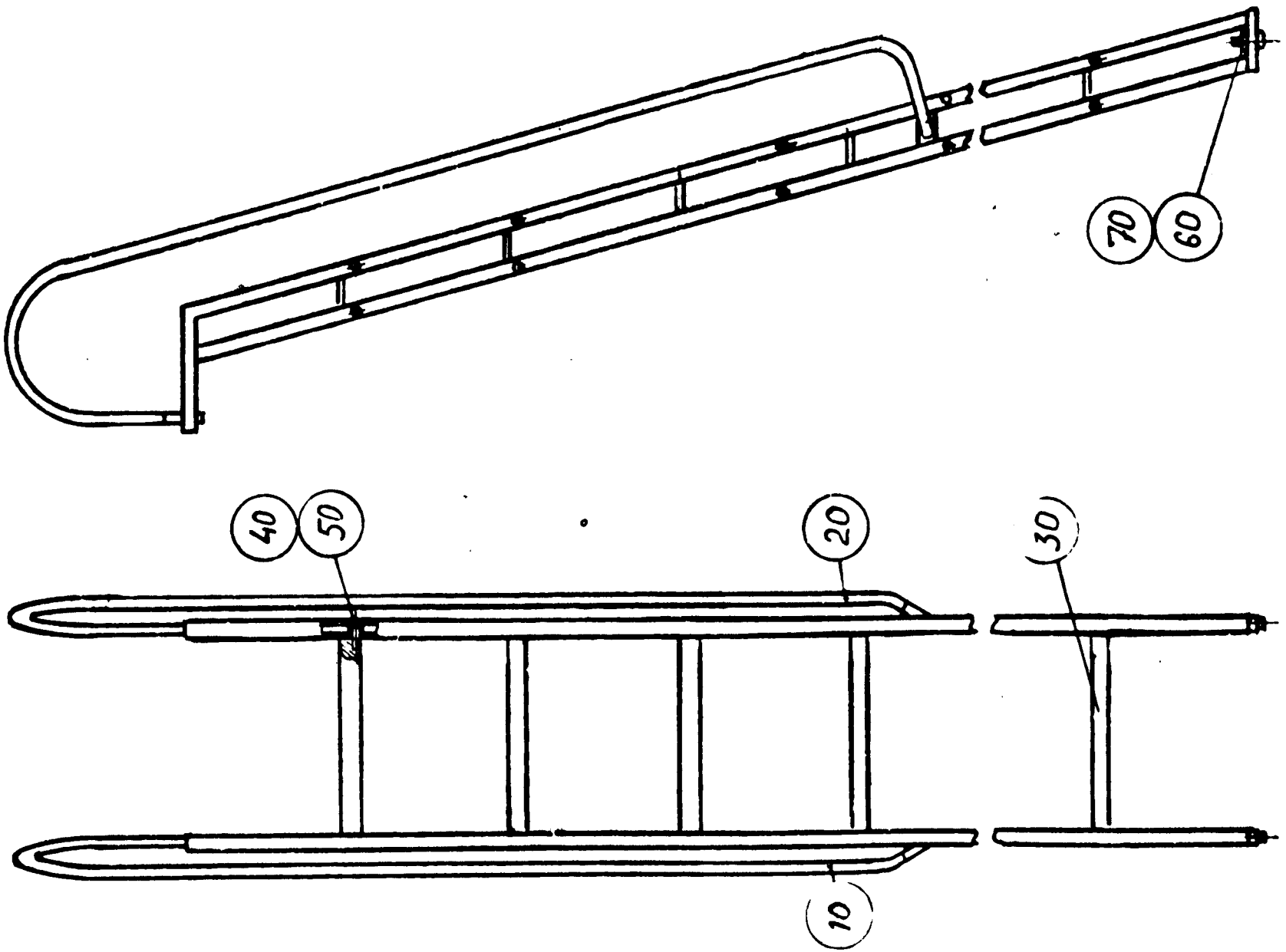
70
60
40
50
20
30
10

Last Alteration: 5976 83-09-08

Corresponding C-lists: 263881-010V
Assembly Drawing: 263881-1

Date Printed: 900205

| From | Pos | Part No | SP | UN | Qty | Description | |
|---|---|---|---|---|---|---|---|
| **TC/150 TC/300** | | | | | | | |
| | 010 | 263879-0001 | - | | 1 | SIDE PIECE | |
| | 020 | 263879-0002 | - | | 1 | SIDE PIECE | |
| | 030 | 208361-0001 | - | | 7 | STEP | |
| | 040 | 208658-0001 | - | | 28 | SPACER | |
| | 050 | 90287-0056 | - | | 28 | SCREW | |
| **TC/500** | | | | | | | |
| | 010 | 263879-0003 | - | | 1 | SIDE PIECE | |
| | 020 | 263879-0004 | - | | 1 | SIDE PIECE | |
| | 030 | 208361-0001 | - | | 7 | STEP | |
| | 040 | 208658-0001 | - | | 28 | SPACER | |
| | 050 | 90287-0056 | - | | 28 | SCREW | |
| **TC/500** | | | | | | | |
| | 010 | 263879-0005 | - | | 1 | SIDE PIECE | |
| | 020 | 263879-0006 | - | | 1 | SIDE PIECE | |
| | 030 | 208361-0001 | - | | 8 | STEP | |
| | 040 | 208658-0001 | - | | 32 | SPACER | |
| | 050 | 90287-0056 | - | | 32 | SCREW | |
| **Common Parts** | | | | | | | |
| | 060 | 312104-0501 | - | | 2 | SCREW | M6S10X50H8.8FZB |
| | 070 | 312601-0320 | - | | 2 | NUT | M6M10FZB |

| From | Pos | Part No | SP | UN | Qty | Description |
|---|---|---|---|---|---|---|

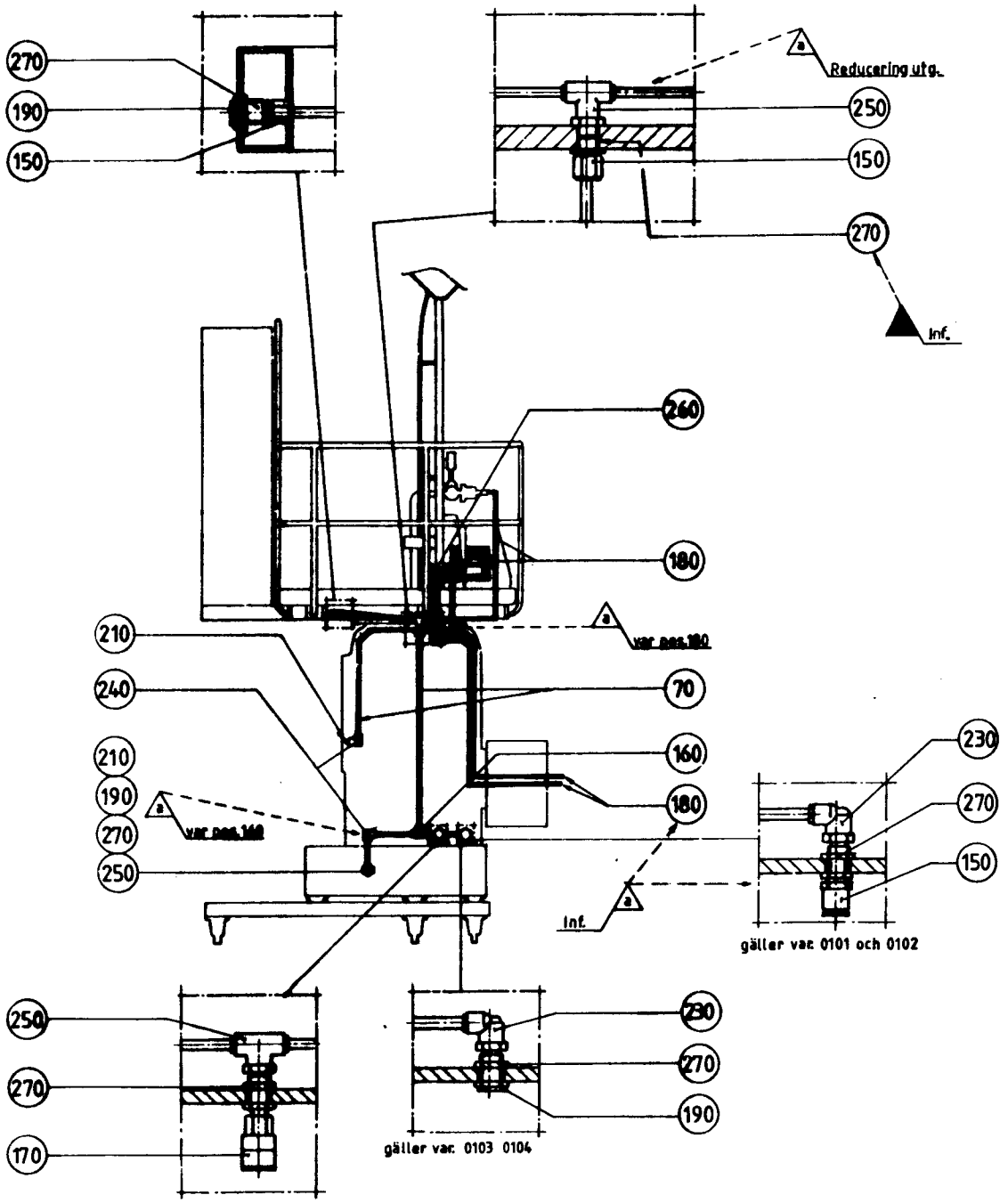
270
190
150
Reducering utg.
250
150
270
Inf.
260
180
var pos.180
210
240
70
210
190
270
250
var pos.160
160
180
Inf.
230
270
150
gäller vac 0101 och 0102
250
270
170
230
270
190
gäller vac 0103 0104

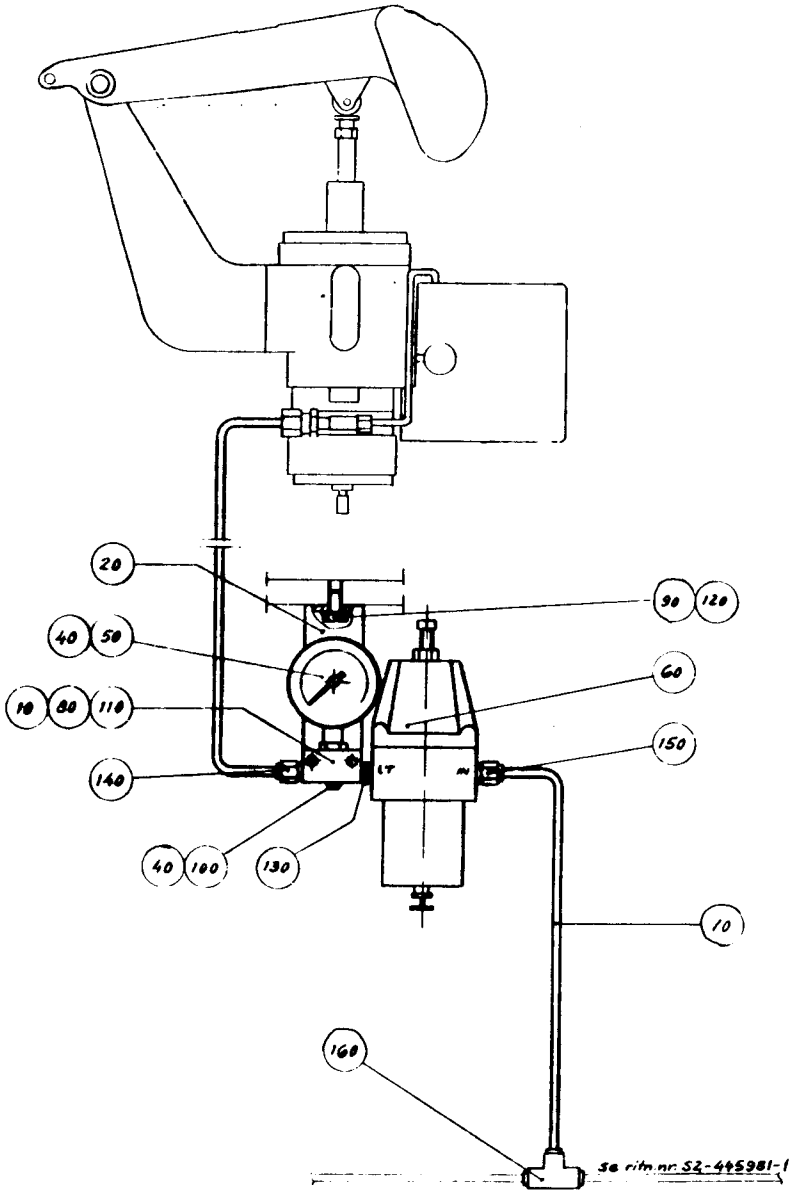
20
90
120
40
50
60
10
80
110
150
140
40
100
130
10
160
Se ritn nr 52-445981-1

| From | Pos | Part No | SP | UN | Qty | Description |
|---|---|---|---|---|---|---|
| **Volume 150ml-200ml TC/150 TC/300 with pull-tab** | | | | | | |
| | 070 | 90166-0013 | - | M | 7 | HOSE |
| | 150 | 342722-0205 | - | | 3 | PIPE CONNED=8-R1/4" |
| | 160 | 342748-0103 | - | | 1 | T-PIECE D=8 |
| | 190 | 342713-0210 | - | | 2 | BLANK-OFF |
| | 210 | 342715-0103 | - | | 2 | PLUG D=8 |
| | 250 | 342742-0104 | - | | 3 | T-PIECE D8-R1/4" |
| | 270 | 342767-0104 | - | | 5 | GROMMET R1/4 |
| **Volume 62,5ml 125ml TC/150 with pull-tab** | | | | | | |
| | 010 | 6832 | - | | 1 | CLUTCH PIECE |
| | 020 | 6834 | - | | 1 | BRACKET |
| | 040 | 90009-0003 | - | | 3 | WASHER |
| | 050 | 90043-0004 | - | | 1 | PRESSURE GAUGE |
| | 060 | 90113-0001 | - | | 1 | REDUCTION VALVE |
| | 070 | 90166-0013 | - | M | 9 | HOSE |
| | 080 | 312101-0335 | - | | 2 | SCREW M6S5X30FZB |
| | 090 | 312101-0489 | - | | 1 | SCREW M6S10X16FZB |
| | 100 | 312132-0284 | - | | 1 | SLOTTED HEMSCS4X5MSGFN |
| | 110 | 315401-0146 | - | | 2 | WASHER FBH 5,1 FZB |
| | 120 | 315401-0173 | - | | 1 | WASHER FBH10,2FZB |
| | 130 | 342700-0201 | - | | 1 | NIPPLE RNA 1/8"-1/4" |
| | 140 | 342722-0204 | - | | 1 | PIPE CONNED=8-R1/8" |
| | 150 | 342722-0205 | - | | 4 | PIPE CONNED=8-R1/4" |
| | 160 | 342748-0103 | - | | 2 | T-PIECE D=8 |
| | 190 | 342713-0210 | - | | 2 | BLANK-OFF |
| | 210 | 342715-0103 | - | | 2 | PLUG D=8 |
| | 250 | 342742-0104 | - | | 3 | T-PIECE D8-R1/4" |
| | 270 | 342767-0104 | - | | 4 | GROMMET R1/4 |
| **Volume 150ml-200ml TC/150 TC/300 without pull-tab** | | | | | | |
| -110V | 070 | 90166-0013 | - | M | 7 | HOSE |
| | 150 | 342722-0205 | - | | 2 | PIPE CONNED=8-R1/4" |
| | 160 | 342748-0103 | - | | 1 | T-PIECE D=8 |
| | 190 | 342713-0210 | - | | 3 | BLANK-OFF |
| | 210 | 342715-0103 | - | | 2 | PLUG D=8 |
| | 250 | 342742-0104 | - | | 3 | T-PIECE D8-R1/4" |
| | 270 | 342767-0104 | - | | 5 | GROMMET R1/4 |
| **Volume 62,5ml 125ml TC/150 without pull-tab** | | | | | | |
| -110V | 010 | 6832 | - | | 1 | CLUTCH PIECE |
| -110V | 020 | 6834 | - | | 1 | BRACKET |
| -110V | 040 | 90009-0003 | - | | 3 | WASHER |
| -110V | 050 | 90043-0004 | - | | 1 | PRESSURE GAUGE |
| -110V | 060 | 90113-0001 | - | | 1 | REDUCTION VALVE |
| -110V | 070 | 90166-0013 | - | M | 159 | HOSE |

| From | Pos | Part No | SP | UN | Qty | Description |
|---|---|---|---|---|---|---|
| -110V | 080 | 312101-0335 | - | | 2 | SCREW M6S5X30FZB |
| -110V | 090 | 312101-0489 | - | | 1 | SCREW M6S10X16FZB |
| -110V | 100 | 312132-0284 | - | | 1 | SLOTTED HEMSCS4X5MSGFN |
| -110V | 110 | 315401-0146 | - | | 2 | WASHER FBH 5,1 FZB |
| -110V | 120 | 315401-0173 | - | | 1 | WASHER FBH10,2FZB |
| -110V | 130 | 342700-0201 | - | | 1 | NIPPLE RNA 1/8"-1/45" |
| -110V | 140 | 342722-0204 | - | | 1 | PIPE CONNED=8-R1/8" |
| | 150 | 342722-0205 | - | | 3 | PIPE CONNED=8-R1/4" |
| | 160 | 342748-0103 | - | | 2 | T-PIECE D=8 |
| | 190 | 342713-0210 | - | | 3 | BLANK-OFF |
| | 210 | 342715-0103 | - | | 2 | PLUG D=8 |
| | 250 | 342742-0104 | - | | 4 | T-PIECE D8-R1/4" |
| | 270 | 342767-0104 | - | | 5 | GROMMET R1/4 |
| **TC/500** | | | | | | |
| | 070 | 90166-0013 | - | M | 7 | HOSE |
| | 150 | 342722-0205 | - | | 2 | PIPE CONNED=8-R1/4" |
| | 190 | 342713-0210 | - | | 2 | BLANK-OFF |
| | 210 | 342715-0103 | - | | 1 | PLUG D=8 |
| | 250 | 342742-0104 | - | | 2 | T-PIECE D8-R1/4" |
| | 270 | 342767-0104 | - | | 4 | GROMMET R1/4 |
| **Common Parts** | | | | | | |
| | 170 | 90163-0008 | - | | 1 | CONNECTION |
| | 180 | 90166-0081 | - | M | 10 | HOSE |
| | 230 | 342732-0104 | - | | 1 | ELBOW COUP D8-R1/4" |
| | 240 | 342735-0103 | - | | 2 | ELBOW COUP D=8 |
| | 260 | 342748-0102 | - | | 4 | T-PIECE D=6 |

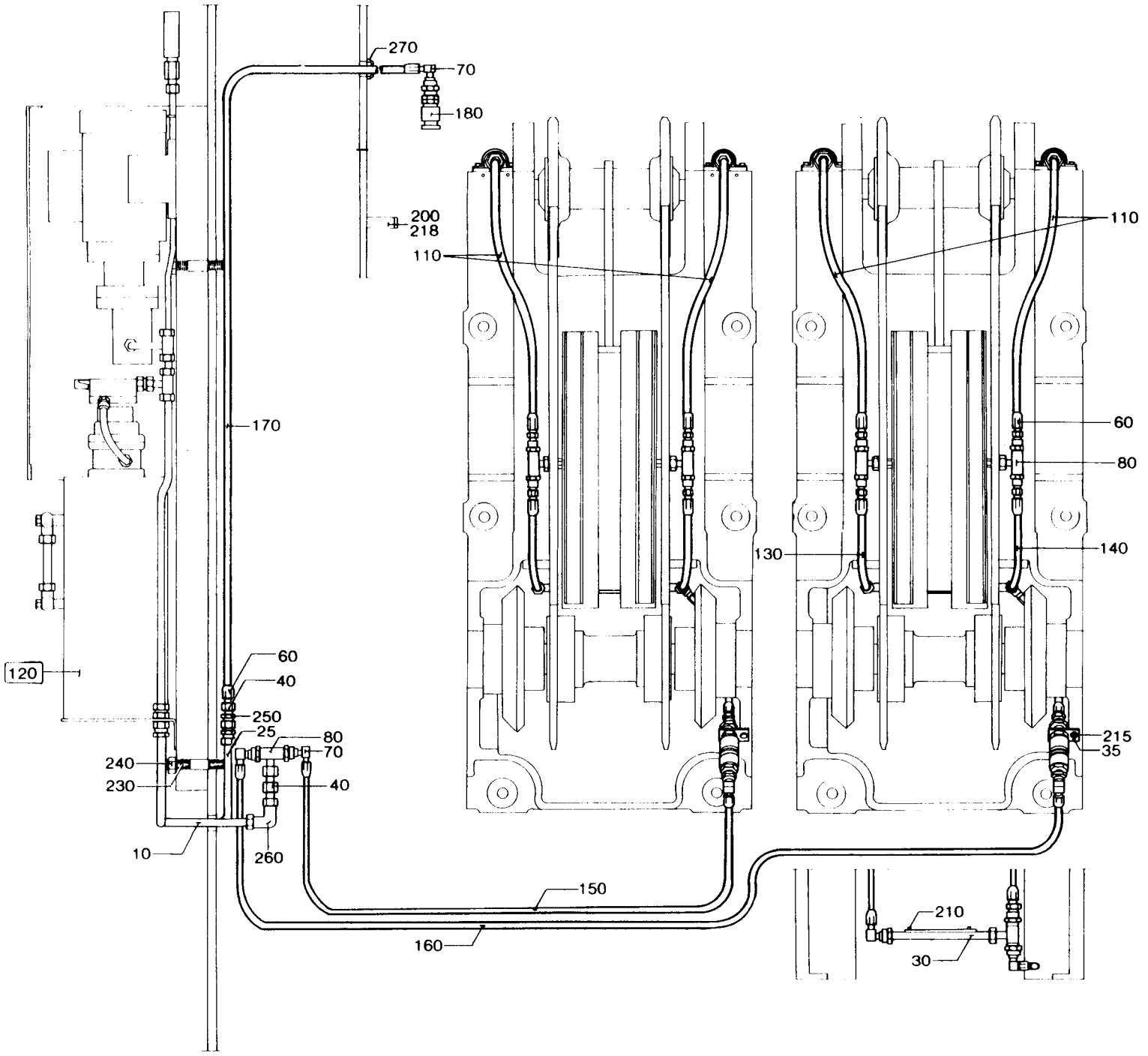
270
70
180
200
218
110
170
60
40
250
25
80
70
240
230
40
10
260
120
150
160
110
60
80
140
130
215
35
210
30

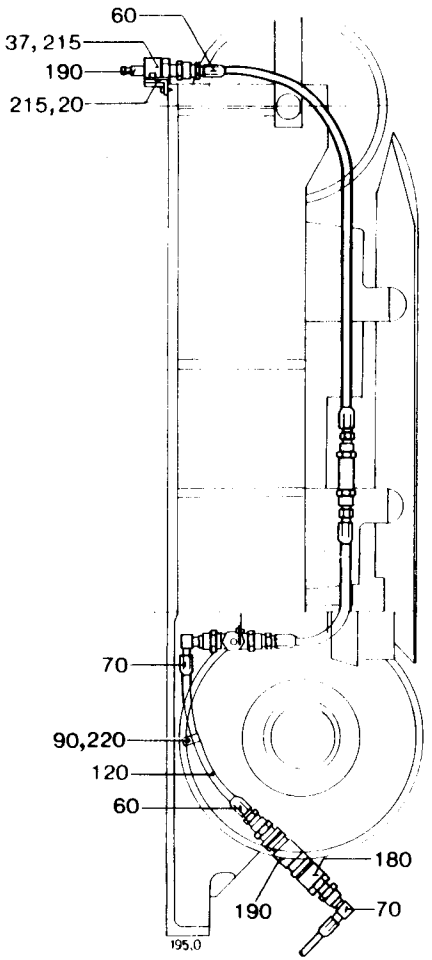
60
37, 215
190
215,20
70
90,220
120
60
180
190
70
195.0

| From | Pos | Part No | SP | UN | Qty | Description |
|---|---|---|---|---|---|---|
| | F120 | ==>407-1a.1 | - | | 1 | HYDRAULIC UNIT |
| | 010 | 283817 | - | | 1 | PIPE |
| | 020 | 259961 | - | | 4 | HOLDER |
| | 025 | 265879 | - | | 1 | PIPE |
| | 030 | 266044 | - | | 2 | CONNECTION PIPE |
| | 035 | 259962-0001 | - | | 2 | PLATE |
| | 037 | 284116 | - | | 4 | CLAMP |
| | 040 | 90030-0125 | - | | 2 | PIE CONNECTION |
| | 060 | 90055-0056 | - | | 17 | HOSE COUPLING |
| | 070 | 90055-0057 | - | | 9 | HOSE COUPLING |
| | 080 | 90055-0058 | - | | 7 | HOSE COUPLING |
| | 090 | 90074-0001 | - | | 4 | CLIP |
| | 110 | 90148-0010 | - | MM | 1840 | HOSE |
| | 120 | 90148-0010 | - | MM | 430 | HOSE |
| | 130 | 90148-0010 | - | MM | 370 | HOSE |
| | 140 | 90148-0010 | - | MM | 340 | HOSE |
| | 150 | 90148-0010 | - | MM | 870 | HOSE |
| | 160 | 90148-0010 | - | MM | 1460 | HOSE |
| | 170 | 90148-0010 | - | MM | 3000 | HOSE |
| | 180 | 90163-0043 | - | | 3 | CONNECTION |
| | 190 | 90163-0044 | - | | 6 | CONNECTION |
| | 200 | 90165-0013 | - | | 1 | CLIP |
| | 210 | 312101-0327 | - | | 4 | SCREW M6S5X12FZB |
| | 215 | 312111-0327 | - | | 18 | SCREW MC6S5X12FZB |
| | 218 | 312121-0220 | - | | 1 | SLOTTED HEMCS3X6FZB |
| | 220 | 312121-0323 | - | | 4 | SLOTTED HEMCS5X8FZB |
| | 230 | 312301-0544 | - | | 2 | STUD BOLT PS12X60FZB |
| | 240 | 312601-0322 | - | | 3 | NUT M6M12FZB |
| | 250 | 342727-0103 | - | | 1 | PIPE CONNEG8-LFZB |
| | 260 | 342737-0103 | - | | 1 | ELBOW COUP W8-LFZB |
| | 270 | 352101-0103 | - | | 1 | LEAD-IN G 18,6 |

| From | Pos | Part No | SP | UN | Qty | Description |
|---|---|---|---|---|---|---|

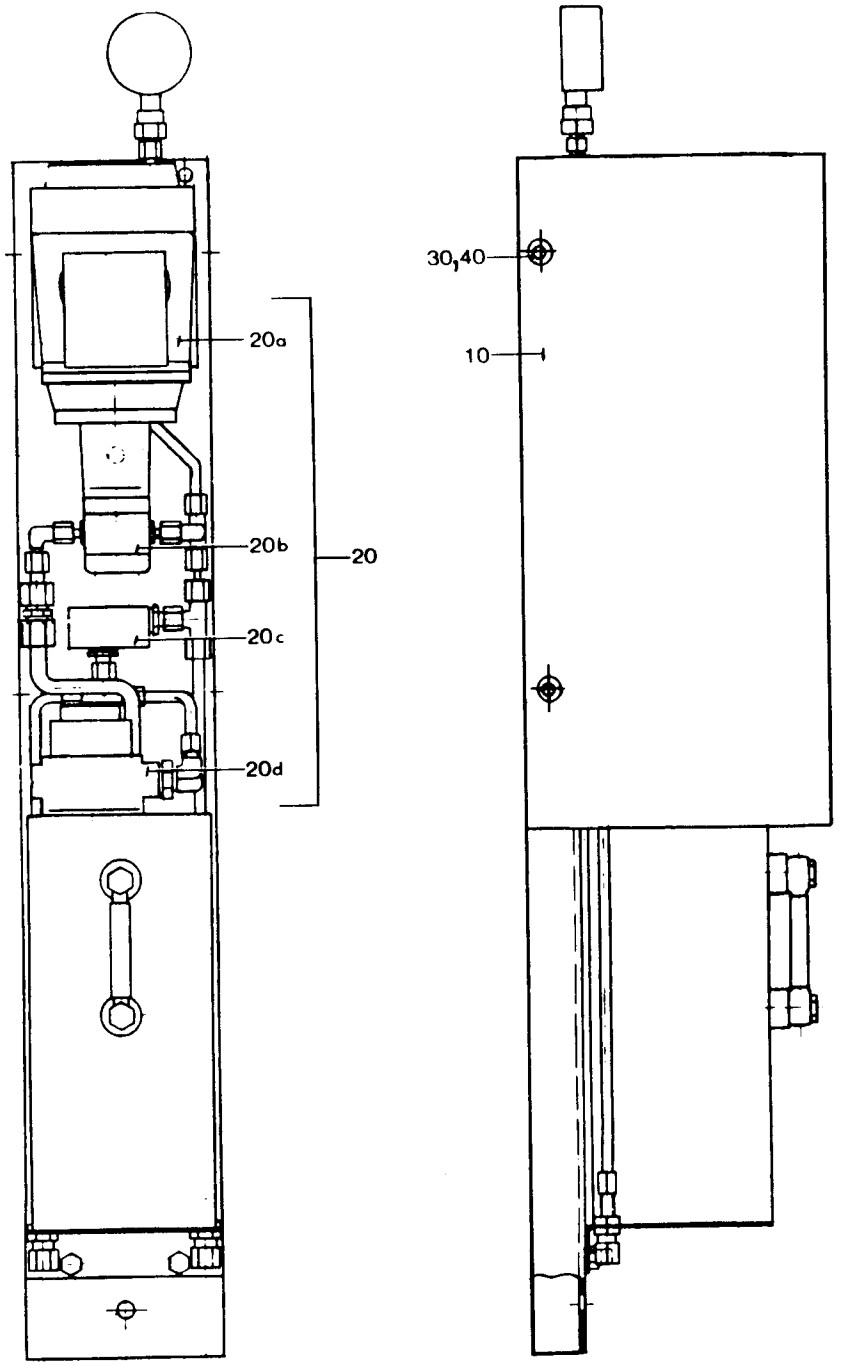
20a
20b
20c
20d
20
30,40
10

Last Alteration: 8441 85-12-19

Corresponding C-lists: 265711-010V
Assembly Drawing: 265711-1

Date Printed: 900205

| From | Pos | Part No | SP | UN | Qty | Description |
|---|---|---|---|---|---|---|
| | 010 | 263973 | - | | 1 | COVER |
| | 020 | 90321-0023 | - | | 1 | AGGREGAT |
| | 030 | 312101-0451 | - | | 4 | SCREW M6S8X20FZB |
| | 040 | 315101-0165 | - | | 4 | WASHER BRB8,4X16FZB |

| From | Pos | Part No | SP | UN | Qty | Description |
|---|---|---|---|---|---|---|

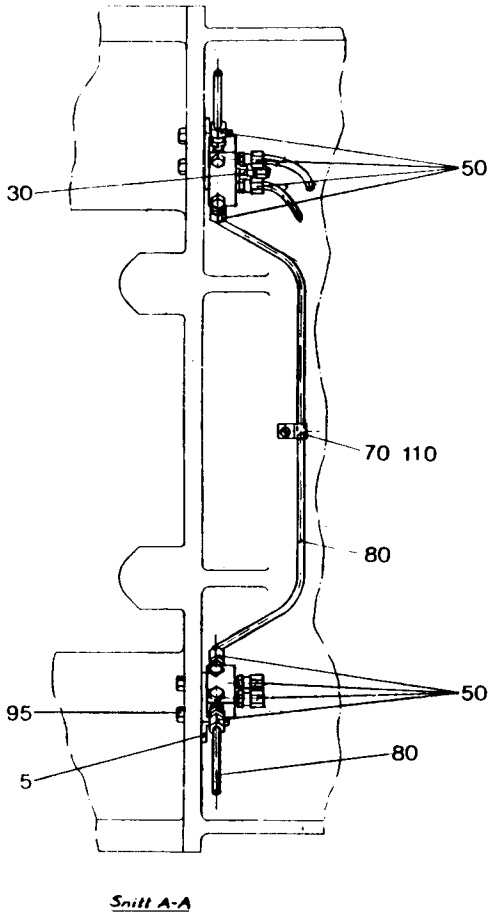


Snitt A-A

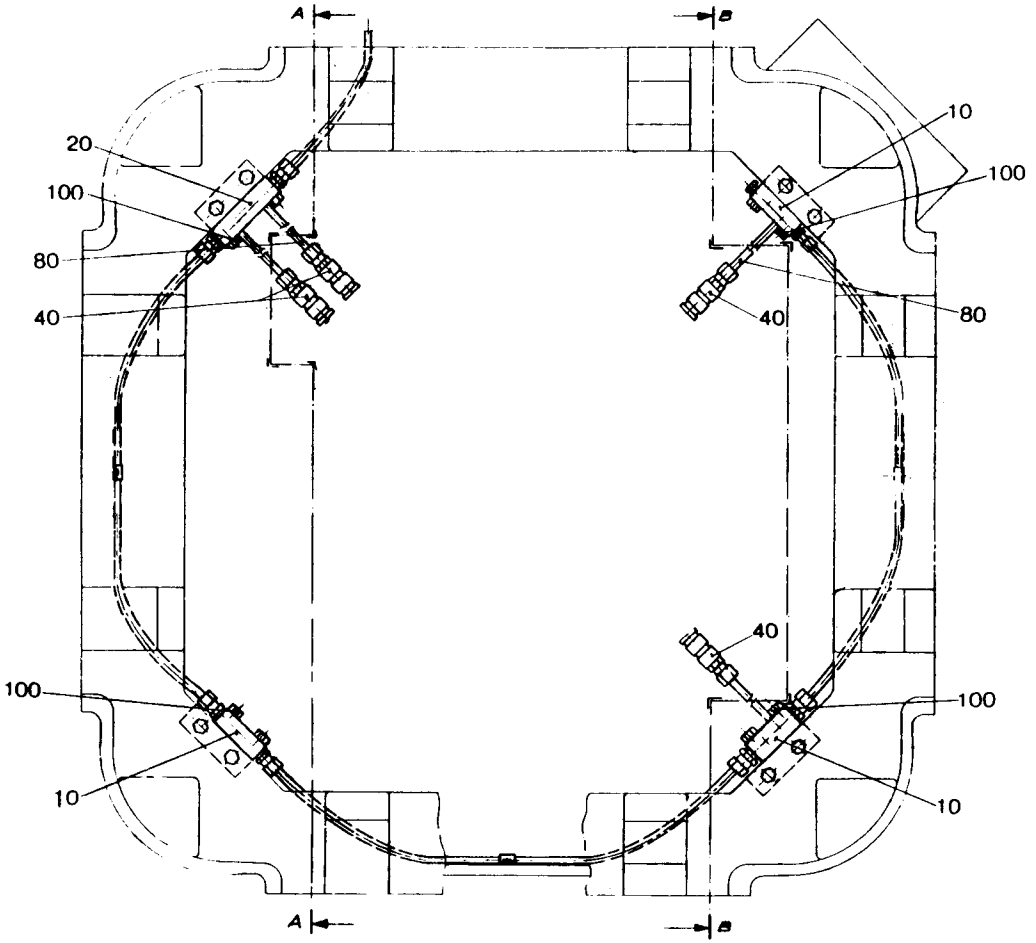


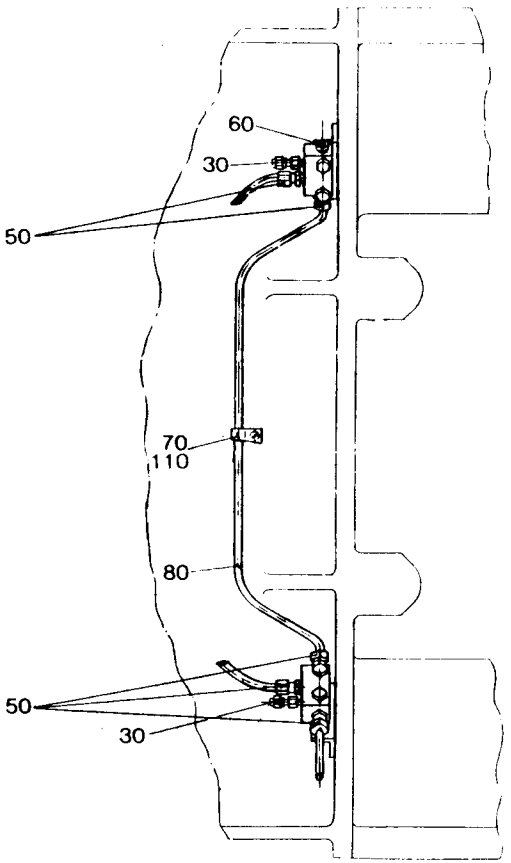


Snitt B-B

| From | Pos | Part No | SP | UN | Qty | Description |
|---|---|---|---|---|---|---|
| | 005 | 268022 | - | | 4 | BRACKET |
| | 010 | 90032-0012 | - | | 3 | JUNCTION BLOCK |
| | 020 | 90032-0013 | - | | 1 | JUNCTION BLOCK |
| | 030 | 90092-0064 | R | | 3 | METERING VALVE |
| | 040 | 90134-0032 | - | | 4 | CONNECTION |
| | 050 | 90134-0034 | - | | 13 | NIPPLE |
| | 060 | 90136-0002 | - | | 1 | PLUG |
| | 070 | 90165-0005 | - | | 3 | CLIP |
| | 080 | 90166-0011 | - | MM | 3500 | HOSE |
| | 095 | 312101-0368 | - | | 8 | SCREW M6S6X16FZB |
| | 100 | 312101-0372 | - | | 8 | SCREW M6S6X25FZB |
| | 110 | 312121-0285 | - | | 3 | SLOTTED HEMCS4X6FZB |

| From | Pos | Part No | SP | UN | Qty | Description |
|---|---|---|---|---|---|---|

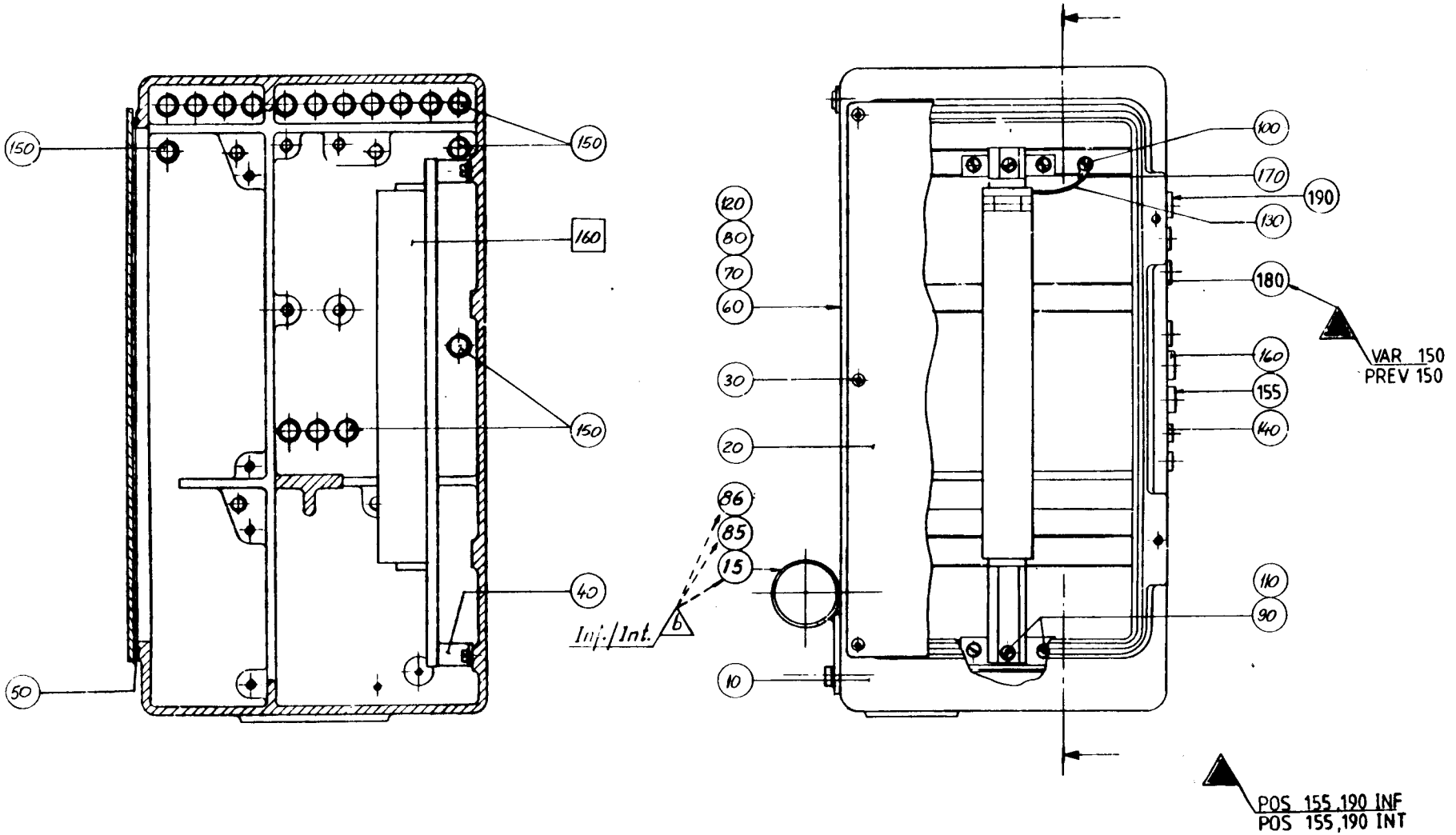
150
150
160
150
40
50
120
80
70
60
30
20
86
85
15
10
Inf./Int.
b
100
170
190
130
180
160
155
140
110
90
VAR 150
PREV 150
POS 155,190 INF
POS 155,190 INT

| From | Pos | Part No | SP | UN | Qty | Description |
|---|---|---|---|---|---|---|
| **TC/150 TC/300 TC/500 Relay Machine** | | | | | | |
| | **000** | **C- 294214-0101** | | | | **APPLIANCE BOX** |
| | 010 | G- 436613 | - | | 1 | BOX |
| | 080 | 312101-0540 | - | | 4 | SCREW M6S12X40FZB |
| | 120 | 315101-0178 | - | | 4 | WASHER BRB13X24FZB |
| | 160 | 352103-0110 | - | | 6 | CABLE GLANR.22,5/4-13 |
| **TC/150 TC/300 TPMC** | | | | | | |
| | **000** | **C- 294214-0103** | | | | **APPLIANCE BOX** |
| **130V-** | **000** | **C- 294214-0201** | | | | **APPLIANCE BOX** |
| | 010 | G- 436613 | - | | 1 | BOX |
| | 015 | 544750 | - | | 1 | HOLDER |
| | 080 | 312101-0540 | - | | 4 | SCREW M6S12X40FZB |
| | 085 | 312105-0451 | - | | 2 | SCREW M6S8X20RFR |
| | 086 | 315105-0165 | - | | 2 | WASHER BRB8,4X16RFR |
| | 120 | 315101-0178 | - | | 4 | WASHER BRB13X24FZB |
| 130V- | 155 | 352103-0110 | - | | 1 | GLAND TC/150 |
| 130V- | 180 | 352136-0126 | - | | 3 | GLAND TC/150 |
| | 190 | 352136-0129 | - | | 4 | GLAND |
| **Common Parts** | | | | | | |
| | **160** | **==>409-1.1** | **-** | | **1** | **TERMINAL BLOCK** |
| **130V-** | **160** | **==>409-1.2** | **-** | | **1** | **TERMINAL BLOCK TC/150** |
| | 020 | 436614 | - | | 1 | COVER |
| | 030 | 21613 | - | | 5 | SCREW |
| | 035 | 90002-0004 | - | | 3 | PLUG |
| | 036 | 90002-0009 | - | | 15 | BLANK-OFF PLUG |
| | 037 | 90002-0013 | - | | 4 | BLANK-OFF PLUG |
| | 040 | 90077-0310 | - | | 2 | BRACKET |
| | 050 | 90143-0012 | - | MM | 1400 | STRIP |
| | 090 | 312121-0366 | - | | 6 | SLOTTED HEMCS6X12FZB |
| | 100 | 312122-0364 | - | | 1 | SLOTTED HEMCS6X10MSGFN |
| | 110 | 315101-0153 | - | | 6 | WASHER BRB6,4X12FZB |
| | 130 | 351175-0106 | - | MM | 80 | CABLE AWM YELL/GREEN 4,0 |
| | 140 | 352103-0100 | - | | 4 | CABLE GLANR.15,2/2-6 |
| | 150 | 352103-0106 | - | | 26 | CABLE GLANR.18,6/5-10 |
| | 170 | 353101-0153 | - | | 1 | CABLE SHOEYAE 10 M 64 |

| From | Pos | Part No | SP | UN | Qty | Description |
|---|---|---|---|---|---|---|

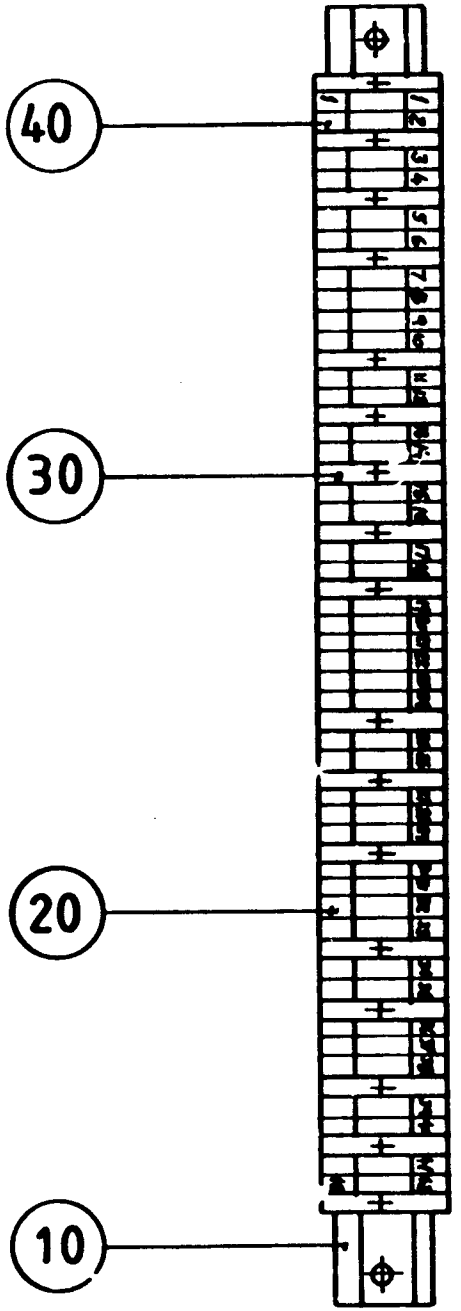
40
30
20
10

Last Alteration: 5976 83-09-08

Corresponding C-lists: 450114-010V
Assembly Drawing: 450114-1

Date Printed: 900205

| From | Pos | Part No | SP | UN | Qty | Description |
|---|---|---|---|---|---|---|
| | 010 | 10793-0030 | - | | 1 | RAIL |
| | 020 | 90077-0065 | - | | 42 | TERMINAL BLOCK |
| | 030 | 90135-0021 | - | | 17 | EARTHING CLAMP |
| | 040 | 359011-0801 | - | | 2 | LABEL BSFW 0-49 |

| From | Pos | Part No | SP | UN | Qty | Description |
|---|---|---|---|---|---|---|

**SPC 6303**
**Tetra Classic TC**

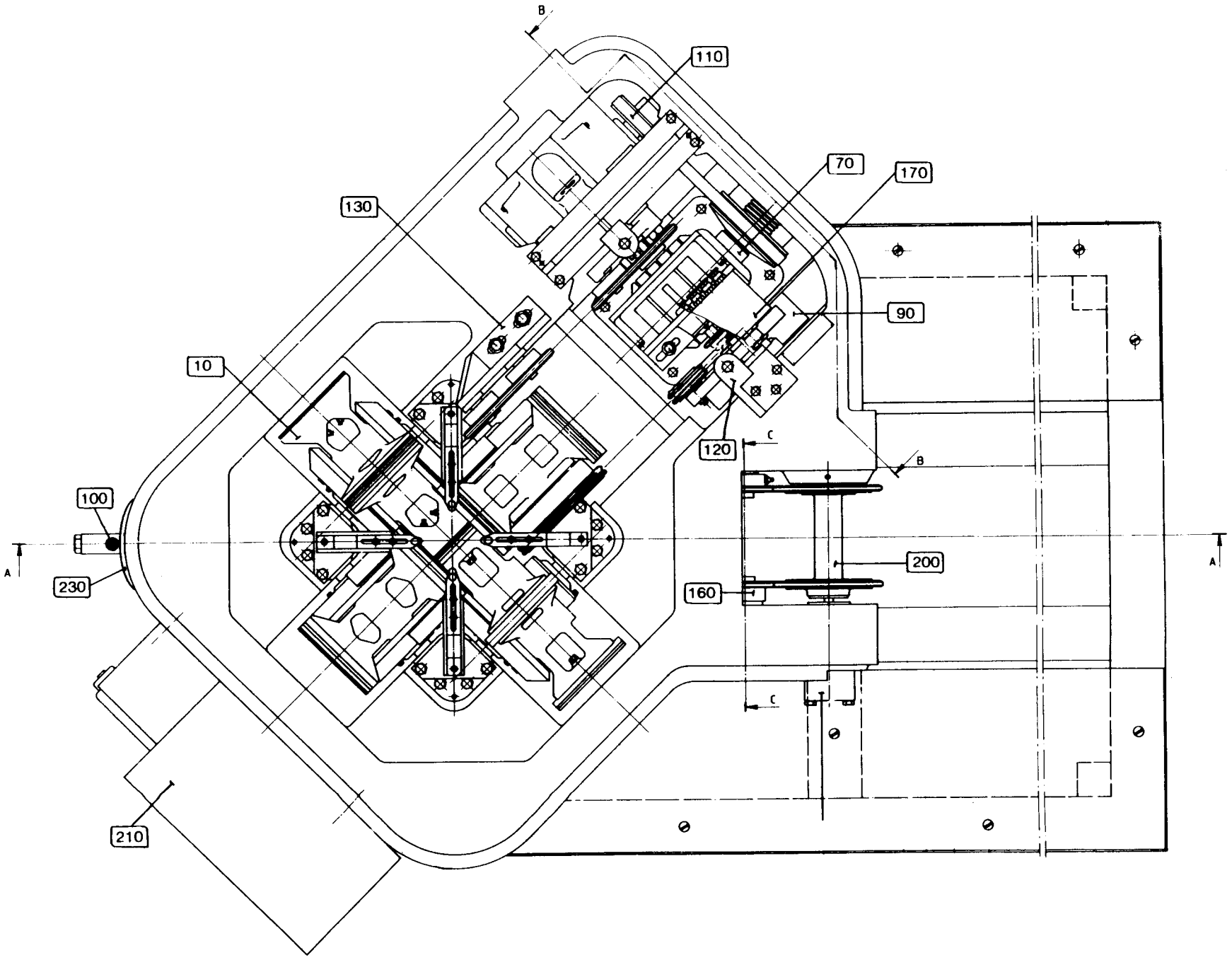
B
110
70
170
130
90
10
120
C
B
100
A
A
230
200
160
C
210

| From | Pos | Page No | Description |
|---|---|---|---|
| | F000 | 501-1b | CUTTING UNIT TC/300 |
| | F010 | 502-1b | SHEARING DEVICE |
| | | 502-1b.1 | . COUNTER WHEEL |
| | | 502-1a.2 | . GUIDE TC/300 |
| | | 502-1b.3 | . CUTTING WHEEL |
| | F070 | 503-1b | WORM GEAR |
| | | 503-1a.1 | . SLIP DISC TC/300 |
| | F230 | 504-1 | COVER |
| | F090 | 505-1b | INTERMEDIARY SHAFT |
| | F100 | 507-1b | CHAIN TENSIONER |
| | F120 | 508-1b | CHAIN TENSIONER |
| | F130 | 509-1b | CHAIN TENSIONER |
| | F110 | 510-1b | MOTOR |
| | F170 | 511-1 | IMPULSE TRANSMITTER |
| 180V- | F170 | 511-2 | ANGLE ENCODER |
| | | 511-1.1 | . CONNECTION BOX |
| | | 511-1.1.1 | . . TERMINAL BLOCK |
| | F240 | 512-1 | IMPULSE TRANSMITTER TC/300 |
| | F200 | 513-1a | DRIVE SHAFT TC/300 |
| | F160 | 514-1 | EXPANSION BOLT |
| | F210 | 516-1 | CENTRAL LUBRICATION |
| | F220 | 517-1b | CENTRAL LUBRICATION TC/300 |

| From | Pos | Page No | Description |
|---|---|---|---|

501-1b

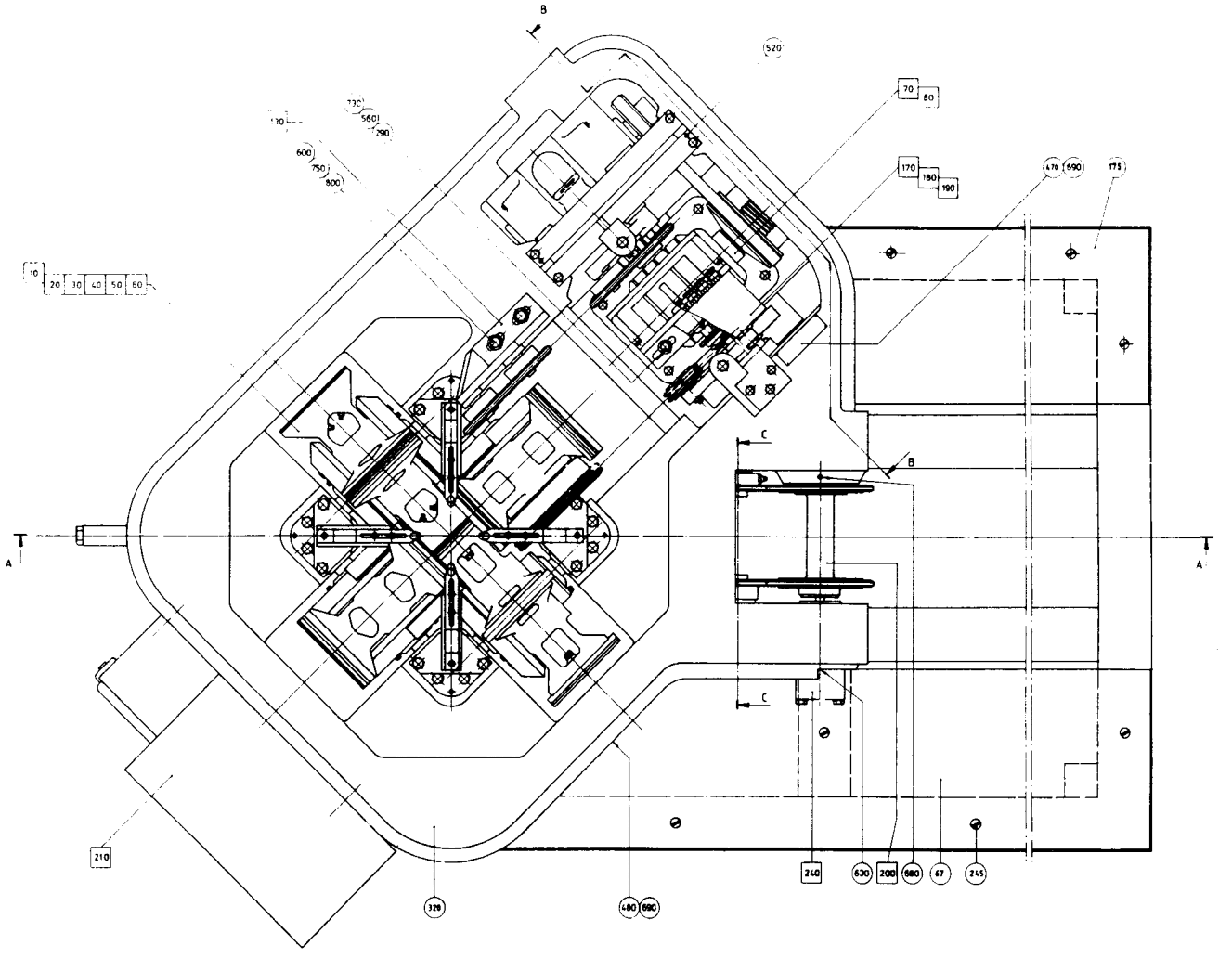

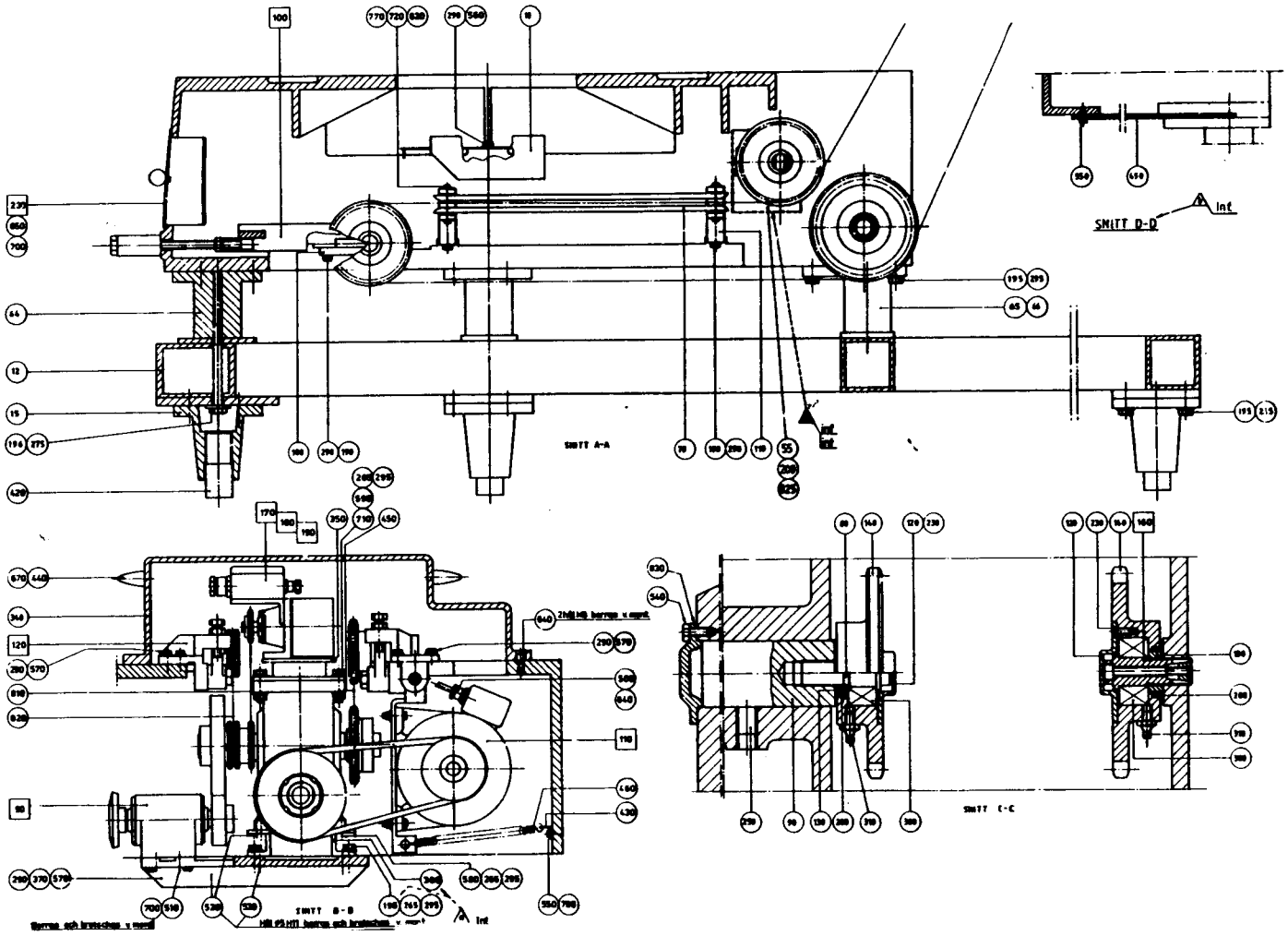

| From | Pos | Part No | SP | UN | Qty | Description |
|---|---|---|---|---|---|---|
| **TC/300 packer A and elvator E** | | | | | | |
| | 010 | 4451 | - | | 1 | GUIDE PLATE |
| | 012 | 263204 | - | | 1 | FRAME |
| | 015 | 3271 | - | | 5 | BRACKET |
| | 064 | 263267 | - | | 3 | SPACER |
| | 065 | 263268 | - | | 1 | SPACER |
| | 066 | 263269 | - | | 1 | SPACER |
| | 067 | 450083 | - | | 1 | PLATE |
| | 070 | 3324 | - | | 4 | BAR |
| | 080 | 3274-0001 | - | | 1 | BOLT |
| | 090 | 3311 | - | | 1 | STUD |
| | 100 | 3329 | - | | 2 | GUIDE RAIL |
| | 110 | 4453 | - | | 4 | HOLDER |
| | 120 | 4830 | - | | 2 | LID |
| | 130 | 4904 | - | | 2 | SPACER RING |
| | 140 | 5036 | - | | 2 | SPROCKET |
| | 175 | 450084 | - | | 1 | PLATE |
| | 190 | 312101-0451 | - | | 8 | SCREW M6S8X20FZB |
| | 195 | 312101-0495 | - | | 39 | SCREW M6S10X30FZB |
| | 196 | 312101-0556 | - | | 5 | SCREW M6S12X120FZB |
| | 200 | 312105-0366 | - | | 2 | SCREW M6S6X12RFR |
| | 230 | 312151-0287 | - | | 6 | SCREW MF6S4X8FZB |
| | 245 | 312165-0366 | - | | 8 | SLOTTED HEMKFS6X12RFR |
| | 250 | 312316-0530 | - | | 2 | GRUB SCREW SK6SS12X16FZB |
| | 265 | 315101-0173 | - | | 31 | WASHER BRB10,5X22FZB |
| | 275 | 315121-0178 | - | | 5 | WASHER TBRSB13X36FZB |
| | 280 | 315203-0520 | - | | 2 | O-RING 26,58X3,53F |
| | 290 | 315401-0165 | - | | 25 | WASHER FBH8,2FZB |
| | 295 | 315401-0173 | - | | 28 | WASHER FBH10,2FZB |
| | 300 | 321330-0103 | - | | 2 | BALL BEARISKF3203 |
| | 310 | 344502-0026 | - | | 2 | NIPPLE L AHKR1/8" |
| **TC/300 packer B** | | | | | | |
| | 010 | 36291-0002 | - | | 1 | GUIDE PLATE |
| | 012 | 263204 | - | | 1 | FRAME |
| | 015 | 3271 | - | | 5 | BRACKET |
| | 020 | 36265 | - | | 1 | BRACKET |
| | 030 | 36266 | - | | 1 | BRACKET |
| | 040 | 36267 | - | | 1 | PLATE |
| | 050 | 36268 | - | | 1 | PLATE |
| | 060 | 544431 | - | | 1 | PROTECTION PLATE |
| | 064 | 263267 | - | | 3 | SPACER |
| | 065 | 263268 | - | | 1 | SPACER |
| | 066 | 263269 | - | | 1 | SPACER |
| | 067 | 450083 | - | | 1 | PLATE |
| | 070 | 33938 | - | | 4 | BAR |
| | 100 | 33936 | - | | 2 | GUIDE PLATE |
| | 110 | 36269 | - | | 2 | BRACKET |
| | 150 | 33935 | - | | 2 | BRACKET |
| | 160 | 36261 | - | | 1 | SPACER |
| | 170 | 36262 | - | | 1 | SPACER |
| | 175 | 450084 | - | | 1 | PLATE |
| | 180 | 312101-0327 | - | | 2 | SCREW M6S5X12FZB |
| | 190 | 312101-0451 | - | | 4 | SCREW M6S8X20FZB |
| | 195 | 312101-0495 | - | | 39 | SCREW M6S10X30FZB |
| | 196 | 312101-0556 | - | | 5 | SCREW M6S12X120FZB |
| | 200 | 312105-0366 | - | | 3 | SCREW M6S6X12RFR |
| | 210 | 312111-0459 | - | | 6 | SCREW MC6S8X40FZB |
| | 220 | 312111-0461 | - | | 2 | SCREW MC6S8X50FZB |
| | 240 | 312151-0636 | - | | 4 | SCREW MF6S16X80FZB |
| | 245 | 312165-0366 | - | | 8 | SLOTTED HEMKFS6X12RFR |
| | 260 | 315101-0146 | - | | 2 | WASHER BRB5,3X10FZB |
| | 265 | 315101-0173 | - | | 31 | WASHER BRB10,5X22FZB |
| | 270 | 315105-0153 | - | | 1 | WASHER BRB6,4X12RFR |
| | 275 | 315121-0178 | - | | 5 | WASHER TBRSB13X36FZB |
| | 290 | 315401-0165 | - | | 23 | WASHER FBH8,2FZB |
| | 295 | 315401-0173 | - | | 28 | WASHER FBH10,2FZB |
| **Common Parts** | | | | | | |
| | 055 | 538137 | - | | 1 | LID |
| | 320 | G- 4446 | - | | 1 | CUTTING MECHANISM BODY |
| | 340 | 4452 | - | | 1 | MOTOR COVER |
| | 350 | 284539 | - | | 1 | SHELF |
| | 370 | G- 4447 | - | | 1 | SHELF |
| | 380 | 284540 | - | | 2 | BRACKET |
| | 420 | 3318 | - | | 5 | LEG |
| | 430 | 4488 | - | | 1 | BRACKET |
| | 440 | 7309 | - | | 2 | HANDLE |
| | 450 | 7470-0005 | - | | 1 | CHAIN |
| | 460 | 10920 | - | | 1 | TENSION SPRING |
| | 470 | 20497 | - | | 1 | GROUP NUMBER PLATE |
| | 480 | 27402 | - | | 1 | MACHINE PLATE |
| | 490 | 440467 | - | | 1 | CABLE HOLDER |
| | 500 | 90089-0003 | - | | 1 | SLEEVE |
| | 510 | 311211-0267 | - | | 2 | TAPER PIN GKP5X5X30 |
| | 520 | 311303-0310 | - | | 8 | SLOTTED PIRPB5X20FZB |
| | 530 | 311303-0318 | - | | 4 | SLOTTED PIRPB5X40FZB |
| | 540 | 312101-0327 | - | | 3 | SCREW M6S5X12FZB |
| | 550 | 312101-0366 | - | | 2 | SCREW M6S6X12FZB |
| | 560 | 312101-0449 | - | | 4 | SCREW M6S8X16FZB |

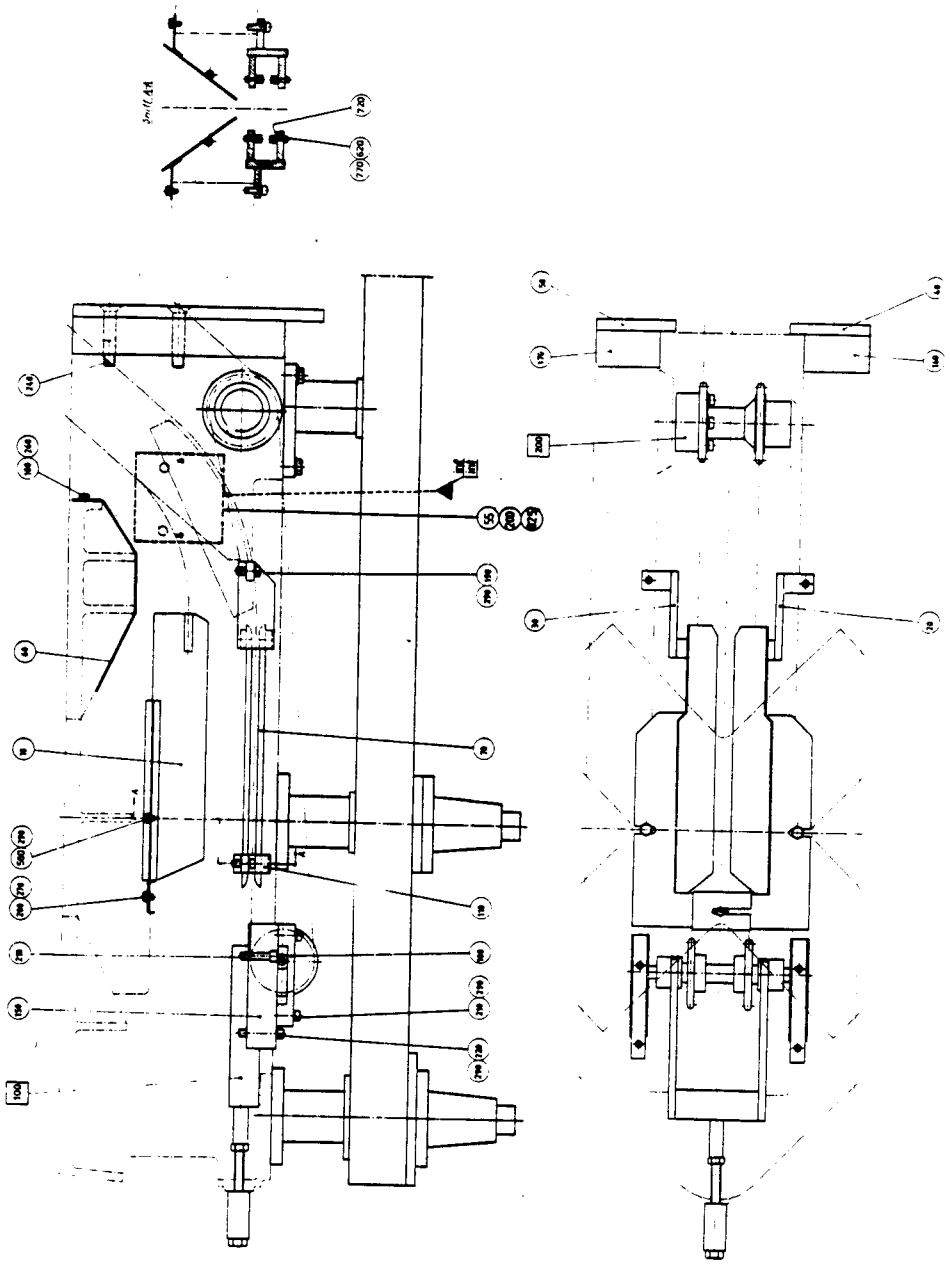

| From | Pos | Part No | SP | UN | Qty | Description |
|---|---|---|---|---|---|---|
| | 570 | 312101-0455 | - | | 13 | SCREW M6S8X30FZB |
| | 590 | 312101-0499 | - | | 4 | SCREW M6S10X40FZB |
| | 600 | 312101-0540 | - | | 2 | SCREW M6S12X40FZB |
| | 620 | 312111-0293 | - | | 8 | SCREW MC6S4X16FZB |
| | 630 | 312111-0368 | - | | 2 | SCREW MC6S6X16FZB |
| | 640 | 312111-0447 | - | | 2 | SCREW MC6S8X12FZB |
| | 650 | 312125-0333 | - | | 2 | SLOTTED HEMCS5X25RFR |
| | 670 | 312165-0372 | - | | 4 | SLOTTED HEMKFS6X25RFR |
| | 680 | 312311-0370 | - | | 2 | GRUB SCREW T6SS6X20FZB |
| | 690 | 312502-0221 | - | | 8 | DRIVE SCREKDS4X6FNB |
| | 700 | 312601-0314 | - | | 4 | NUT M6M5FZB |
| | 710 | 312601-0320 | - | | 4 | NUT M6M10FZB |
| | 720 | 315101-0136 | - | | 16 | WASHER BRB4,3X8FZB |
| | 730 | 315101-0165 | - | | 2 | WASHER BRB8,4X16FZB |
| | 750 | 315101-0178 | - | | 2 | WASHER BRB13X24FZB |
| | 770 | 315401-0136 | - | | 8 | WASHER FBH 4,1 FZB |
| | 780 | 315401-0153 | - | | 1 | WASHER FBH6,1FZB |
| | 800 | 315401-0178 | - | | 2 | WASHER FBH12,2FZB |
| | 810 | 318201-0054 | - | | 1 | ROLLER CHA3/8" |
| | 820 | 318231-0126 | - | | 1 | ROLLER CHA3/8" |
| | 825 | 318871-0101 | - | | 2 | KNOB |
| | 830 | 321601-0103 | - | | 1 | OIL SEAL LL40 |
| | 840 | 352100-0106 | - | | 1 | CABLE GLANR.18,6-10,5 |

| From | Pos | Part No | SP | UN | Qty | Description |
|---|---|---|---|---|---|---|

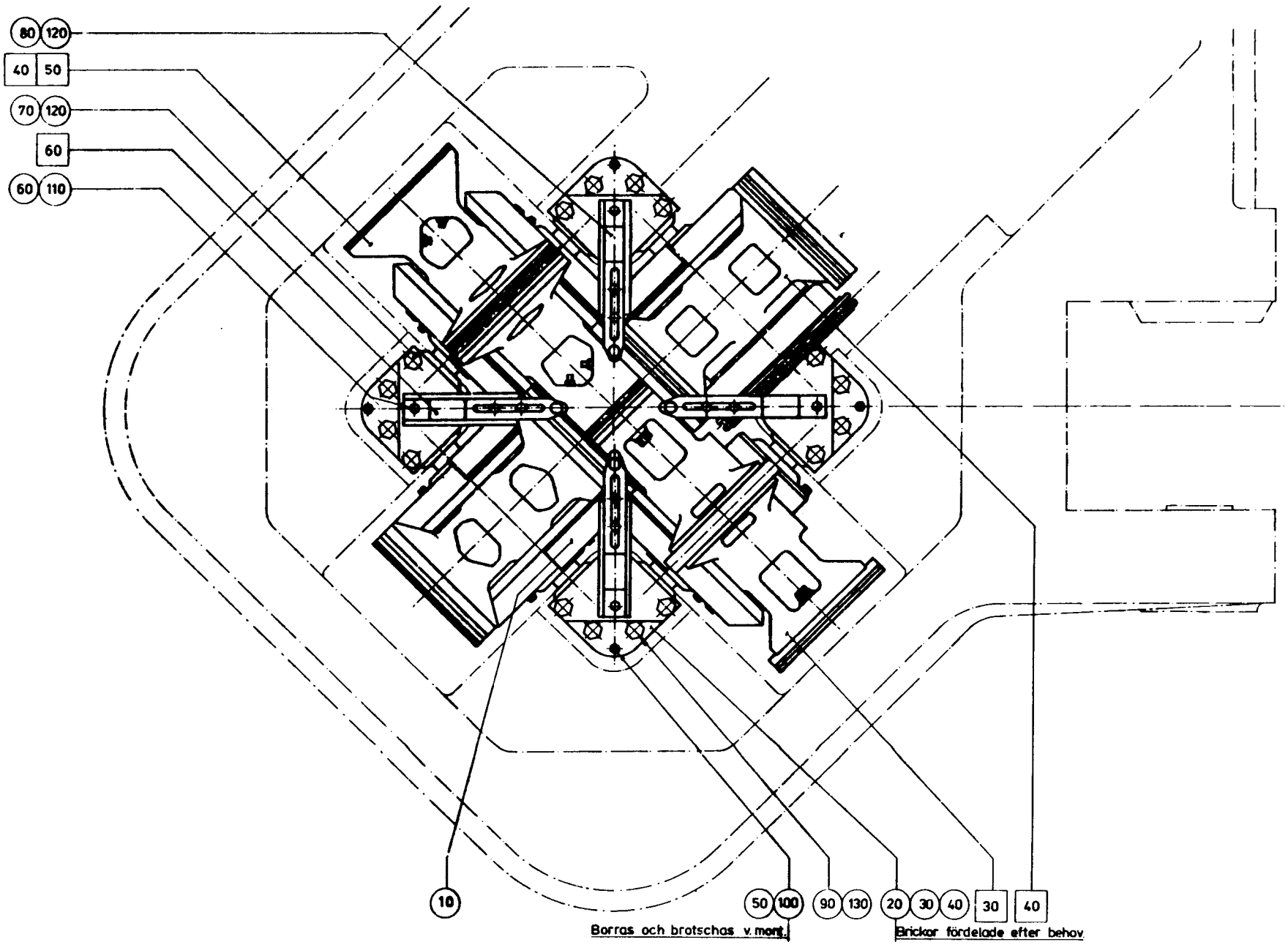
80 120
40 50
70 120
60
60 110
10
50 100
90 130
20 30 40
30
40
Borras och brotschas v. mont.
Brickor fördelade efter behov

| From | Pos | Part No | SP | UN | Qty | Description |
|---|---|---|---|---|---|---|
| | F020 | ==>502-1b.1 | - | | 1 | COUNTER WHEEL |
| | F030 | ==>502-1b.1 | - | | 1 | COUNTER WHEEL |
| | F040 | ==>502-1.2 | - | | 4 | GUIDE |
| | F050 | ==>502-1b.3 | - | | 2 | CUTTING WHEEL |
| | 010 | 4475 | - | | 3 | GUARD |
| | 020 | G- 3267 | - | | 4 | BEARING BRACKET |
| | 030 | 1755-0002 | - | | 40 | WASHER |
| | 040 | 1755-0003 | - | | 40 | WASHER |
| | 050 | 311211-0299 | - | | 4 | TAPER PIN GKP6X6X55 |
| | 060 | 312101-0370 | - | | 4 | SCREW M6S6X20FZB |
| | 070 | 312101-0503 | - | | 8 | SCREW M6S10X60FZB |
| | 080 | 312101-0505 | - | | 4 | SCREW M6S10X70FZB |
| | 090 | 312101-0540 | - | | 8 | SCREW M6S12X40FZB |
| | 100 | 312601-0316 | - | | 4 | NUT M6M6FZB |
| | 110 | 315401-0153 | - | | 4 | WASHER FBH6,1FZB |
| | 120 | 315401-0173 | - | | 12 | WASHER FBH10,2FZB |
| | 130 | 315401-0178 | - | | 8 | WASHER FBH12,2FZB |

| From | Pos | Part No | SP | UN | Qty | Description |
|---|---|---|---|---|---|---|

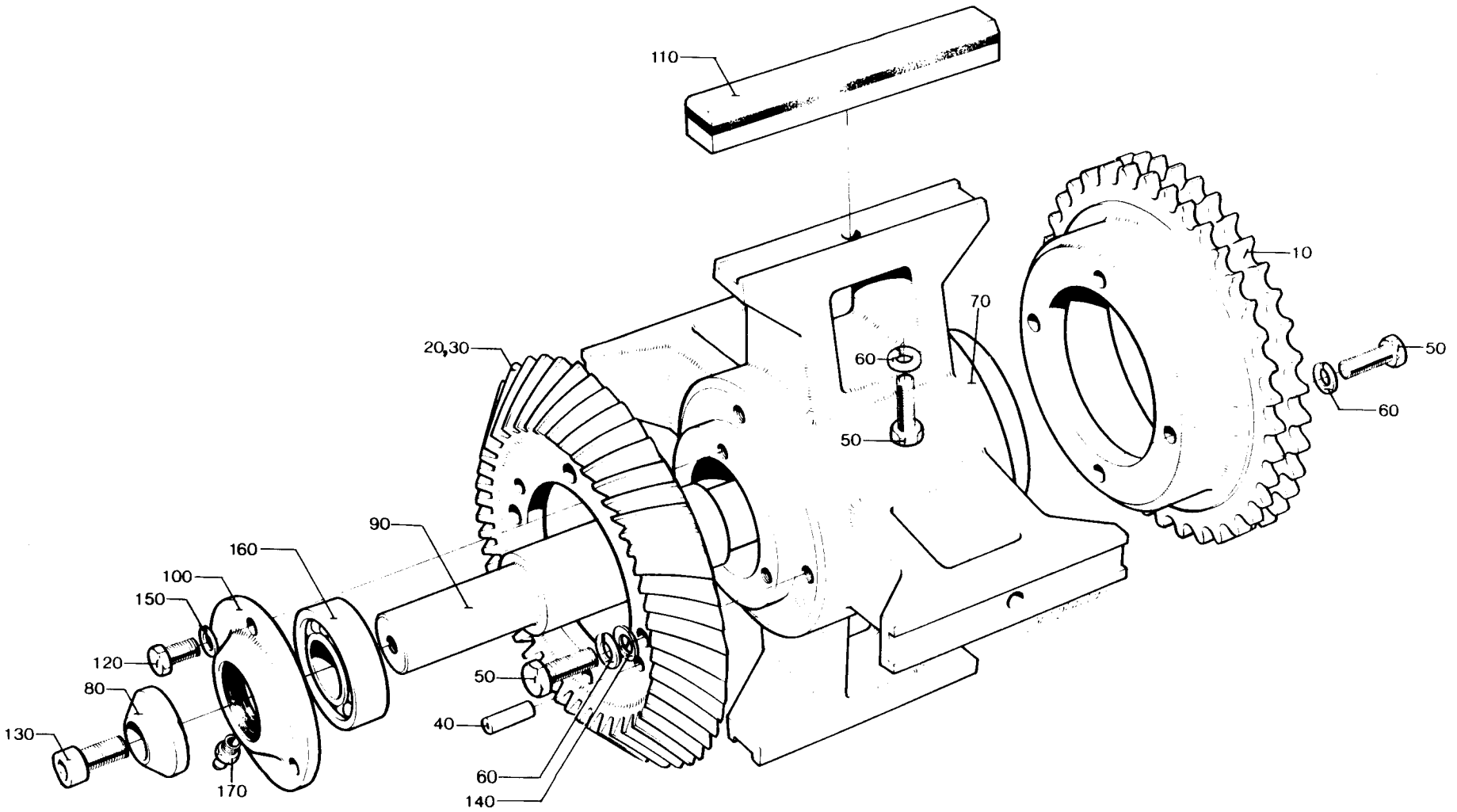
110
10
70
20,30
60
50
50
60
90
160
100
150
120
80
130
50
40
60
140
170

| From | Pos | Part No | SP | UN | Qty | Description |
|---|---|---|---|---|---|---|
| **With Drive Wheel** | | | | | | |
| | 010 | 4458 | - | | 1 | SPROCKET |
| | 020 | 4487-0001 | - | | 1 | GEAR WHEEL |
| | 040 | 311101-0406 | - | | 2 | CYLINDRICACP8H6X32 |
| | 050 | 312101-0455 | - | | 12 | SCREW M6S8X30FZB |
| | 060 | 315401-0165 | - | | 12 | WASHER FBH8,2FZB |
| **Without Drive Wheel** | | | | | | |
| | 030 | 4487-0002 | - | | 1 | GEAR WHEEL |
| | 040 | 311101-0406 | - | | 1 | CYLINDRICACP8H6X32 |
| | 050 | 312101-0455 | - | | 8 | SCREW M6S8X30FZB |
| | 060 | 315401-0165 | - | | 8 | WASHER FBH8,2FZB |
| **Common Parts** | | | | | | |
| | 070 | 4457 | - | | 1 | COUNTER WHEEL |
| | 080 | 3283 | - | | 2 | WASHER |
| | 090 | 4455 | - | | 1 | SHAFT |
| | 100 | 6506 | - | | 2 | OIL SEAL |
| | 110 | 229506 | R | | 4 | RAIL |
| | 120 | 312101-0368 | - | | 6 | SCREW M6S6X16FZB |
| | 130 | 312111-0533 | - | | 2 | SCREW MC6S12X22FZB |
| | 140 | 315101-0165 | - | | 4 | WASHER BRB8,4X16FZB |
| | 150 | 315401-0153 | - | | 6 | WASHER FBH6,1FZB |
| | 160 | 321312-0106 | - | | 2 | BALL BEARISKF6206RS |
| | 170 | 344502-0026 | - | | 2 | NIPPLE L AHKR1/8" |

| From | Pos | Part No | SP | UN | Qty | Description |
|---|---|---|---|---|---|---|

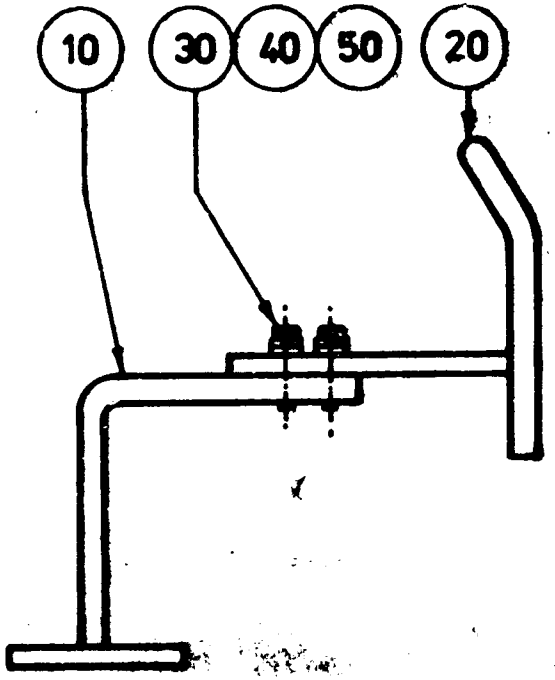


S4-6880-0101

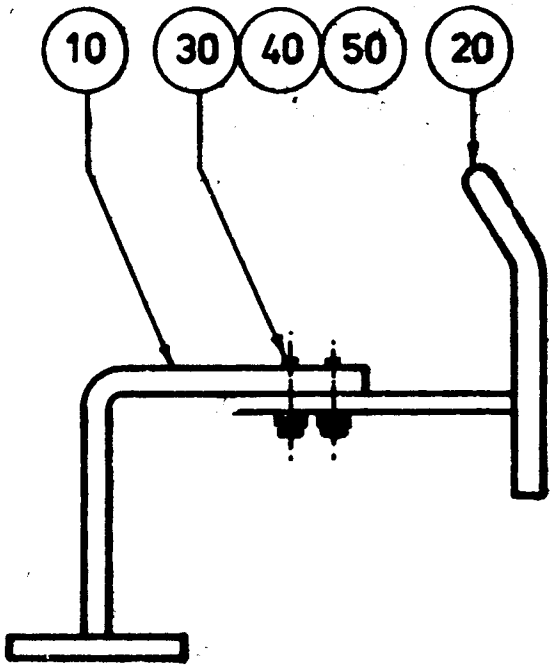


S4-6880-0102

| From | Pos | Part No | SP | UN | Qty | Description |
|---|---|---|---|---|---|---|
| | 010 | 6881 | - | | 1 | BRACKET |
| | 020 | 6882 | - | | 1 | GUIDE ARM |
| | 030 | 312101-0368 | - | | 2 | SCREW M6S6X16FZB |
| | 040 | 315101-0153 | - | | 2 | WASHER BRB6,4X12FZB |
| | 050 | 315401-0153 | - | | 2 | WASHER FBH6,1FZB |

| From | Pos | Part No | SP | UN | Qty | Description |
|---|---|---|---|---|---|---|

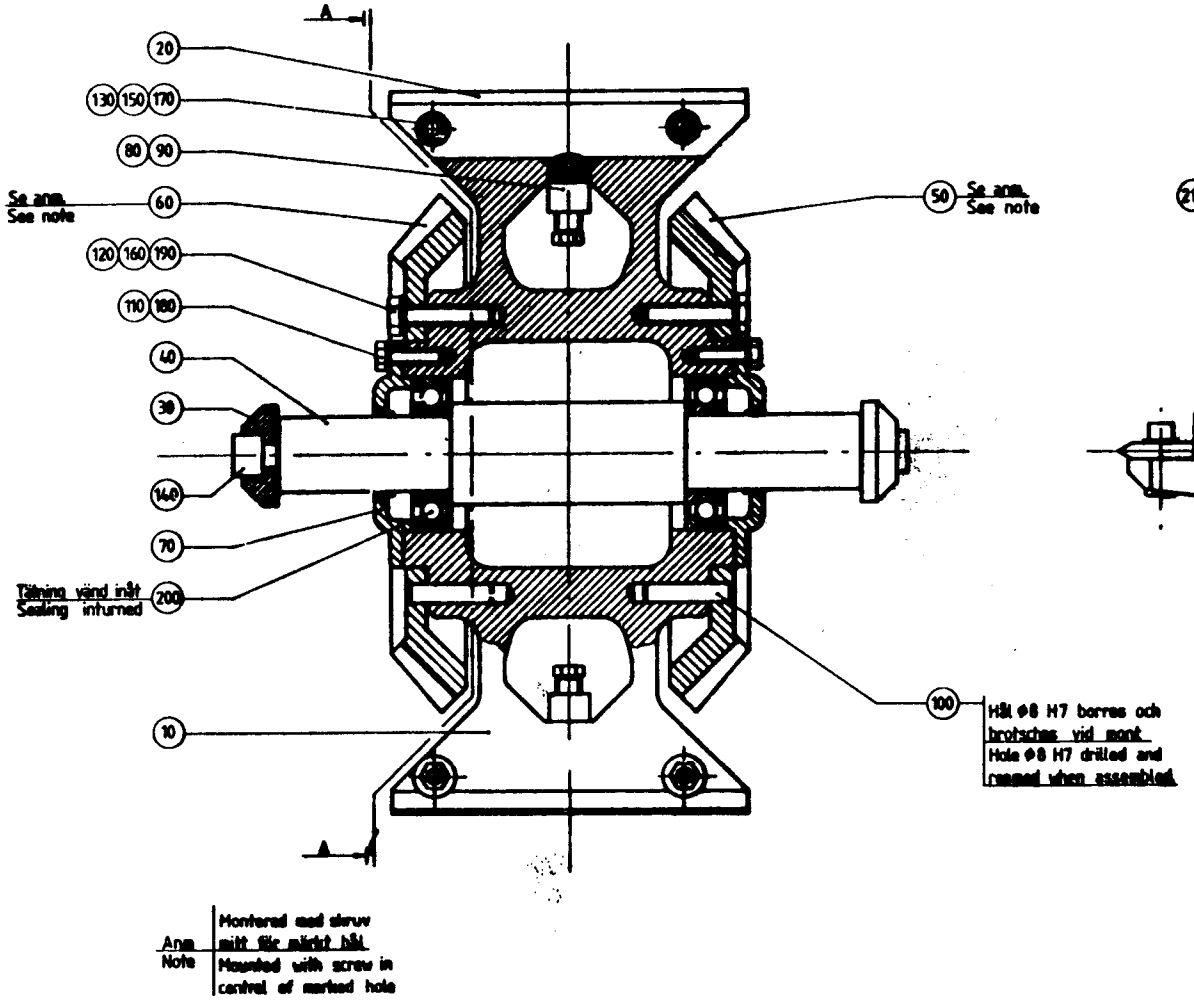


| | |
|---|---|
| Anm<br>Note | Monterad med skruv mitt för märkt hål<br>Mounted with screw in centrel of marked hole |

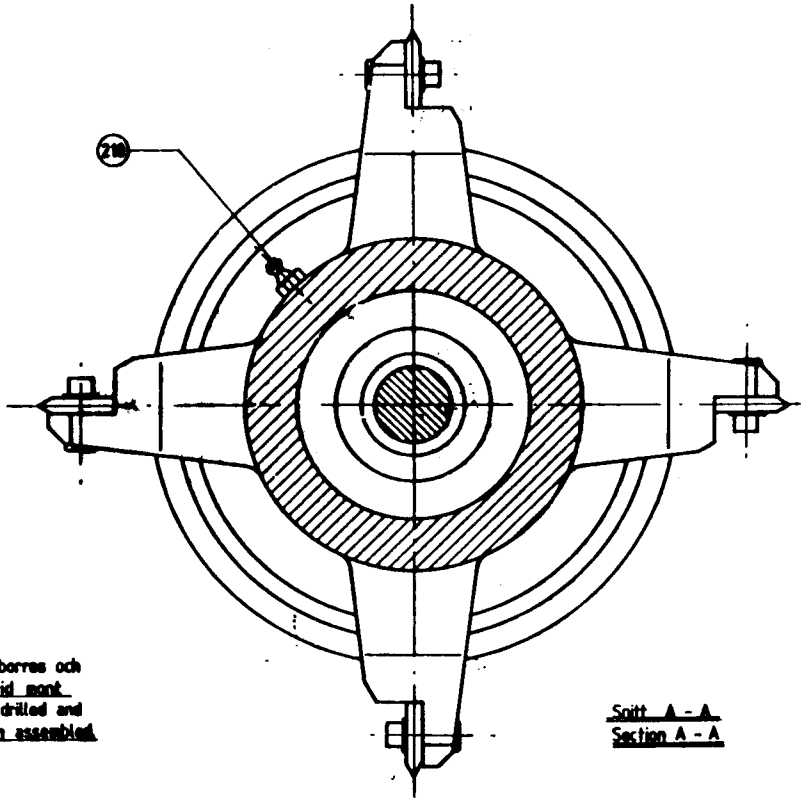


Snitt A - A
Section A - A

| From | Pos | Part No | SP | UN | Qty | Description |
|---|---|---|---|---|---|---|
| | 010 | G- 529463 | - | | 1 | WHEEL |
| | 020 | 484816 | - | | 4 | KNIFE |
| | 030 | 3283 | - | | 2 | WASHER |
| | 040 | 4455 | - | | 1 | SHAFT |
| | 050 | 4487-0001 | - | | 1 | GEAR WHEEL |
| | 060 | 4487-0002 | - | | 1 | GEAR WHEEL |
| | 070 | 6506 | - | | 2 | OIL SEAL |
| | 080 | 529293 | - | | 4 | SCREW |
| | 090 | 529294 | - | | 4 | NUT |
| | 100 | 311101-0406 | - | | 2 | CYLINDRICACP8H6X32 |
| | 110 | 312101-0368 | - | | 6 | SCREW M6S6X16FZB |
| | 120 | 312101-0455 | - | | 8 | SCREW M6S8X30FZB |
| | 130 | 312111-0371 | - | | 8 | SCREW MC6S6X22FZB |
| | 140 | 312111-0533 | - | | 2 | SCREW MC6S12X22FZB |
| | 150 | 312601-0316 | - | | 8 | NUT M6M6FZB |
| | 160 | 315101-0165 | - | | 8 | WASHER BRB8,4X16FZB |
| | 170 | 315111-0153 | - | | 8 | WASHER TBRB6,4X12FZB |
| | 180 | 315401-0153 | - | | 6 | WASHER FBH6,1FZB |
| | 190 | 315401-0165 | - | | 8 | WASHER FBH8,2FZB |
| | 200 | 321312-0106 | - | | 2 | BALL BEARISKF6206RS |
| | 210 | 344502-0026 | - | | 2 | NIPPLE L AHKR1/8" |

| From | Pos | Part No | SP | UN | Qty | Description |
|---|---|---|---|---|---|---|

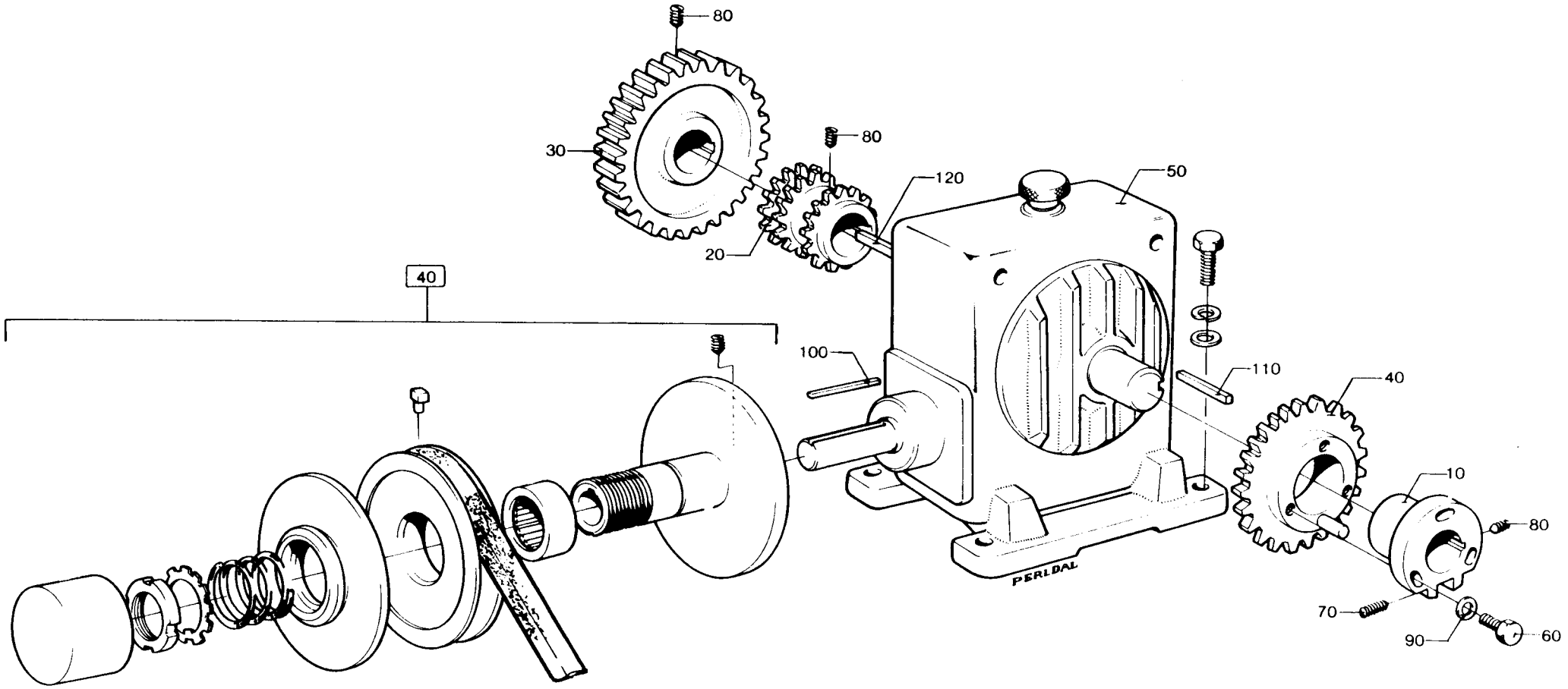
80
30
80
120
50
20
40
100
110
40
10
80
70
90
60
PERLDAL

| From | Pos | Part No | SP | UN | Qty | Description |
|---|---|---|---|---|---|---|
| | F040 | ==>503-1.1 | - | | 1 | SLIP DISC |
| | 010 | 4464 | - | | 1 | FLANGE |
| | 020 | 4461 | - | | 1 | SPROCKET |
| | 030 | 4462 | - | | 1 | GEAR WHEEL |
| | 040 | 4463 | - | | 1 | SPROCKET |
| | 050 | 90056-0076 | - | | 1 | WORM GEAR |
| | 060 | 312101-0374 | - | | 3 | SCREW M6S6X30FZB |
| | 070 | 312306-0371 | - | | 2 | GRUB SCREW P6SS6X22FZB |
| | 080 | 312316-0362 | - | | 6 | GRUB SCREW SK6SS6X8FZB |
| | 090 | 315101-0153 | - | | 3 | WASHER BRB6,4X12FZB |
| | 100 | 315701-0274 | - | | 1 | FLAT WEDGE8X7X60 |
| | 110 | 315701-0301 | - | | 1 | FLAT WEDGE10X8X40 |
| | 120 | 315701-0308 | - | | 1 | FLAT WEDGE10X8X80 |

| From | Pos | Part No | SP | UN | Qty | Description |
|---|---|---|---|---|---|---|

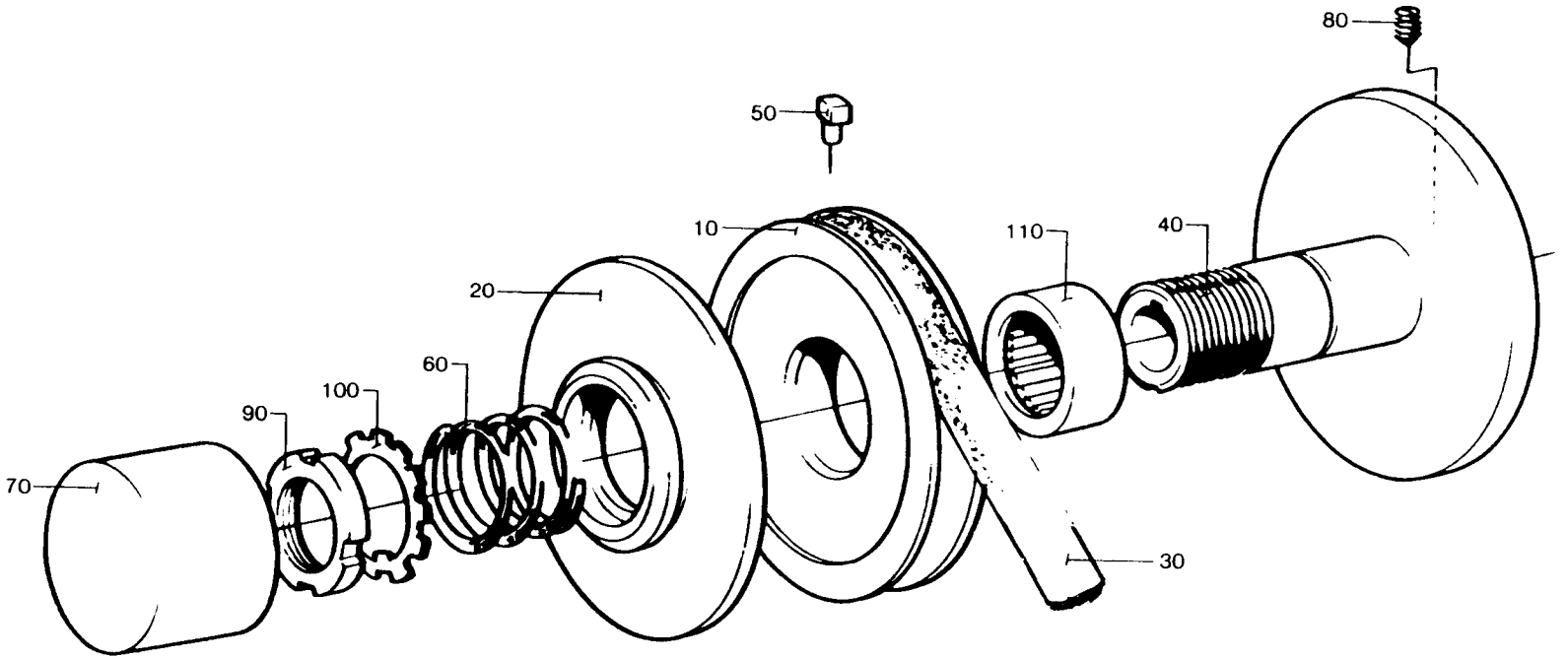
80
50
10
110
40
20
60
100
90
70
30

| From | Pos | Part No | SP | UN | Qty | Description |
|---|---|---|---|---|---|---|
| **TC/300 75/m 50Hz** | | | | | | |
| | 010 | 4465-0001 | - | | 1 | PULLEY |
| | 020 | 4466-0001 | - | | 1 | FLANGE |
| | 030 | 318101-0030 | - | | 1 | V-BELT B30 |
| **TC/150 75/m 50Hz** | | | | | | |
| | 010 | 4465-0002 | - | | 1 | PULLEY |
| | 020 | 4466-0002 | - | | 1 | FLANGE |
| | 030 | 318101-0039 | - | | 1 | V-BELT B39 |
| **TC/300 75/m 60Hz** | | | | | | |
| | 010 | 4465-0003 | - | | 1 | PULLEY |
| | 020 | 4466-0001 | - | | 1 | FLANGE |
| | 030 | 318101-0031 | - | | 1 | V-BELT B31 |
| **TC/150 75/m 60hz** | | | | | | |
| | 010 | 4465-0004 | - | | 1 | PULLEY |
| | 020 | 4466-0002 | - | | 1 | FLANGE |
| | 030 | 318101-0040 | - | | 1 | V-BELT B40 |
| **TC/300 120/m 50Hz** | | | | | | |
| | 010 | 4465-0001 | - | | 1 | PULLEY |
| | 020 | 4466-0001 | - | | 1 | FLANGE |
| | 030 | 318101-0033 | - | | 1 | V-BELT B33 |
| **TC/150 120/m 50Hz** | | | | | | |
| | 010 | 4465-0002 | - | | 1 | PULLEY |
| | 020 | 4466-0002 | - | | 1 | FLANGE |
| | 030 | 318101-0043 | - | | 1 | V-BELT B43 |
| **TC/300 120/m 60Hz** | | | | | | |
| | 010 | 4465-0003 | - | | 1 | PULLEY |
| | 020 | 4466-0001 | - | | 1 | FLANGE |
| | 030 | 318101-0035 | - | | 1 | V-BELT B35 |
| **TC/150 120/m 60Hz** | | | | | | |
| | 010 | 4465-0004 | - | | 1 | PULLEY |
| | 020 | 4466-0002 | - | | 1 | FLANGE |
| | 030 | 318101-0044 | - | | 1 | V-BELT B44 |
| **Common Parts** | | | | | | |
| | 040 | G- 4467 | - | | 1 | HUB |
| | 050 | 4468 | - | | 1 | PIN |
| | 060 | 4469 | - | | 1 | SPRING |
| | 070 | 5450-0001 | - | | 1 | CARTON |
| | 080 | 312316-0362 | - | | 2 | GRUB SCREW SK6SS6X8FZB |
| | 090 | 312805-0108 | - | | 1 | NUT KM8 |
| | 100 | 315410-0108 | - | | 1 | LOCK WASHESKFMB8 |
| | 110 | 321511-0422 | - | | 1 | NEEDLE BEANK40/20 |

| From | Pos | Part No | SP | UN | Qty | Description |
|---|---|---|---|---|---|---|

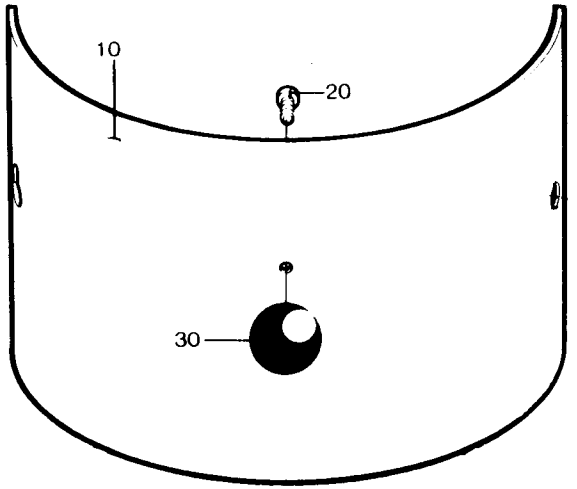
10
20
30

| From | Pos | Part No | SP | UN | Qty | Description |
|---|---|---|---|---|---|---|
| | 010 | 4912 | - | | 1 | COVER TC/150 |
| | 010 | 4942 | - | | 1 | COVER TC/300 |
| | 010 | 4380 | - | | 1 | COVER TC/500 |
| | 020 | 312125-0366 | - | | 1 | SLOTTED HEMCS6X12RFR |
| | 030 | 318800-0103 | - | | 1 | KNOB LA D.25-M6 |

| From | Pos | Part No | SP | UN | Qty | Description |
|---|---|---|---|---|---|---|

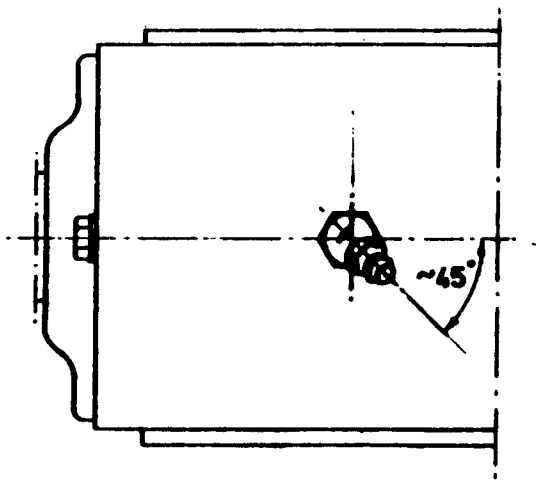
~45°

Vy A-A

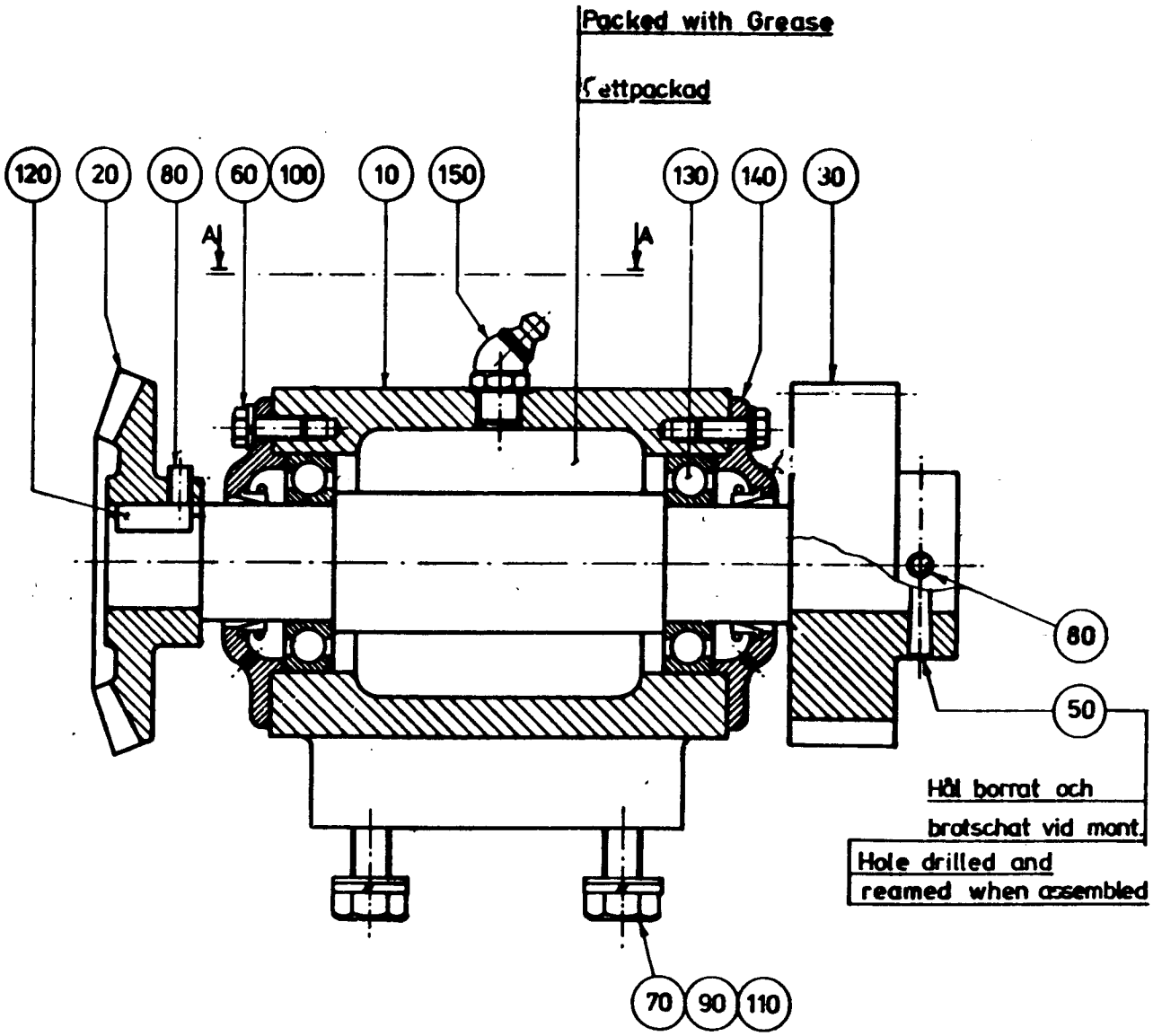
Packed with Grease
Fettpackad
120
20
80
60
100
10
150
130
140
30
A
A
80
50
Hål borrat och
bratschat vid mont.
Hole drilled and
reamed when assembled
70
90
110

| From | Pos | Part No | SP | UN | Qty | Description |
|---|---|---|---|---|---|---|
| | 010 | 4470 | - | | 1 | BEARING BRACKET |
| | 020 | 3303 | - | | 1 | GEAR WHEEL |
| | 030 | 4471 | - | | 1 | GEAR WHEEL |
| | 040 | 4472 | - | | 1 | SHAFT |
| | 050 | 311201-0296 | - | | 1 | TAPER PIN KP6X40SLIPAD |
| | 060 | 312101-0327 | - | | 6 | SCREW M6S5X12FZB |
| | 070 | 312101-0455 | - | | 4 | SCREW M6S8X30FZB |
| | 080 | 312316-0323 | - | | 3 | GRUB SCREW SK6SS5X8FZB |
| | 090 | 315101-0165 | - | | 4 | WASHER BRB8,4X16FZB |
| | 100 | 315401-0146 | - | | 6 | WASHER FBH 5,1 FZB |
| | 110 | 315401-0165 | - | | 4 | WASHER FBH8,2FZB |
| | 120 | 315701-0230 | - | | 1 | FLAT WEDGE6X6X16 |
| | 130 | 321306-0105 | - | | 2 | BALL BEARISKF6005 |
| | 140 | 321600-0110 | - | | 2 | OIL SEAL LL2547 |
| | 150 | 344502-0046 | - | | 1 | NIPPLE L BHKR1/8" |

| From | Pos | Part No | SP | UN | Qty | Description |
|---|---|---|---|---|---|---|

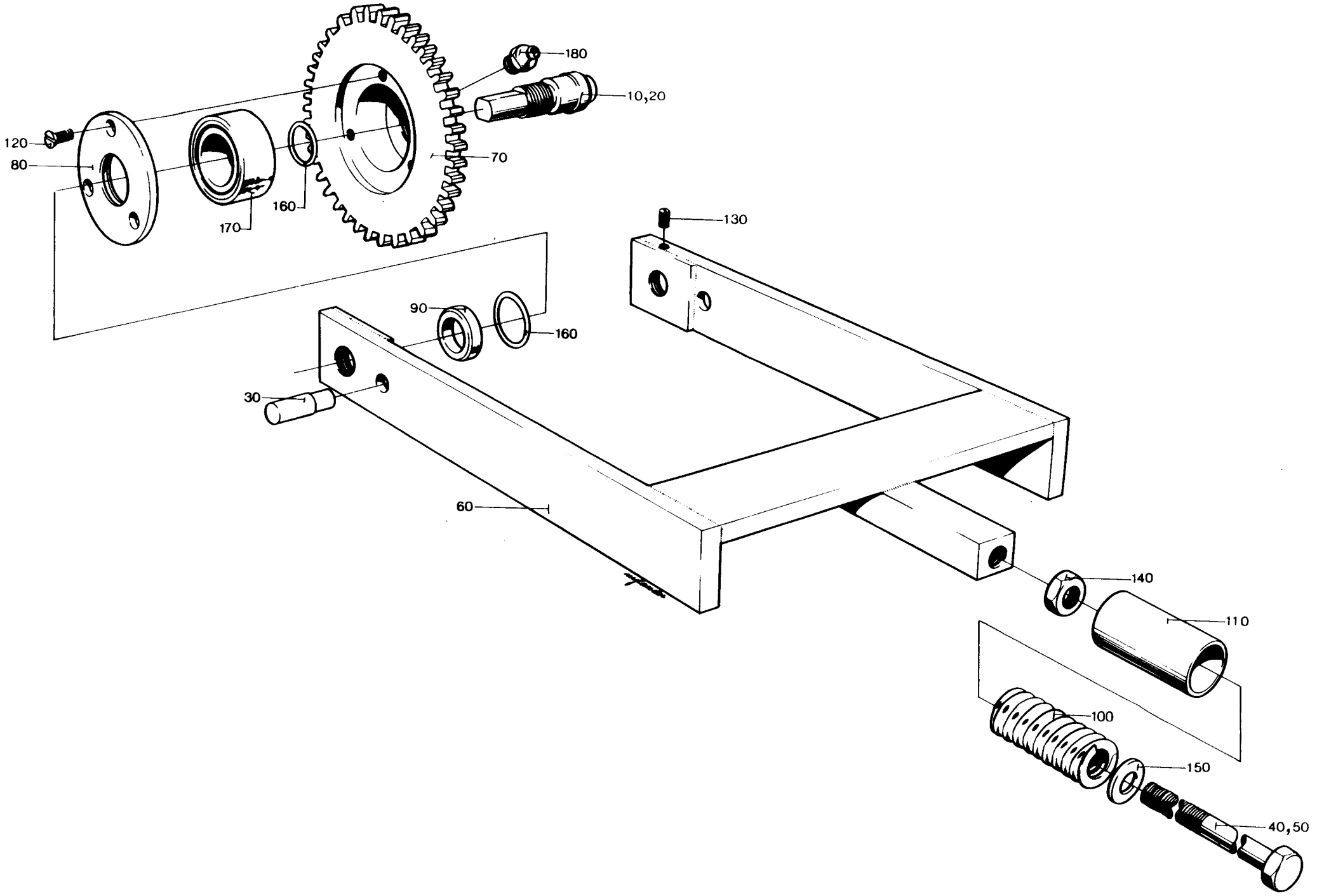
180
10,20
120
80
70
160
170
130
90
160
30
60
140
110
100
150
40,50

| From | Pos | Part No | SP | UN | Qty | Description |
|---|---|---|---|---|---|---|
| **Packer A** | | | | | | |
| | 010 | 4831-0001 | - | | 2 | BOLT |
| | 030 | 5635 | - | | 2 | PIN |
| | 050 | 7354-0002 | - | | 1 | SCREW |
| **Elevator E** | | | | | | |
| | 020 | 4832 | - | | 2 | BOLT |
| | 040 | 7354-0001 | - | | 1 | SCREW |
| **Common Parts** | | | | | | |
| | 060 | 4473 | - | | 1 | TENSION ARM |
| | 070 | 4902 | - | | 2 | SPROCKET |
| | 080 | 4903 | - | | 2 | SEAL COVER |
| | 090 | 4904 | - | | 2 | SPACER RING |
| | 100 | 7352 | - | | 1 | COMPRESSION SPRING |
| | 110 | 7353 | - | | 1 | COVER |
| | 120 | 312151-0291 | - | | 6 | SCREW MF6S4X12FZB |
| | 130 | 312316-0366 | - | | 1 | GRUB SCREW SK6SS6X12FZB |
| | 140 | 312601-0322 | - | | 1 | NUT M6M12FZB |
| | 150 | 315101-0178 | - | | 1 | WASHER BRB13X24FZB |
| | 160 | 315202-0520 | - | | 4 | O-RING 26,58X3,53 |
| | 170 | 321330-0103 | - | | 2 | BALL BEARISKF3203 |
| | 180 | 344502-0021 | - | | 2 | NIPPLE L AHM6 |

| From | Pos | Part No | SP | UN | Qty | Description |
|---|---|---|---|---|---|---|

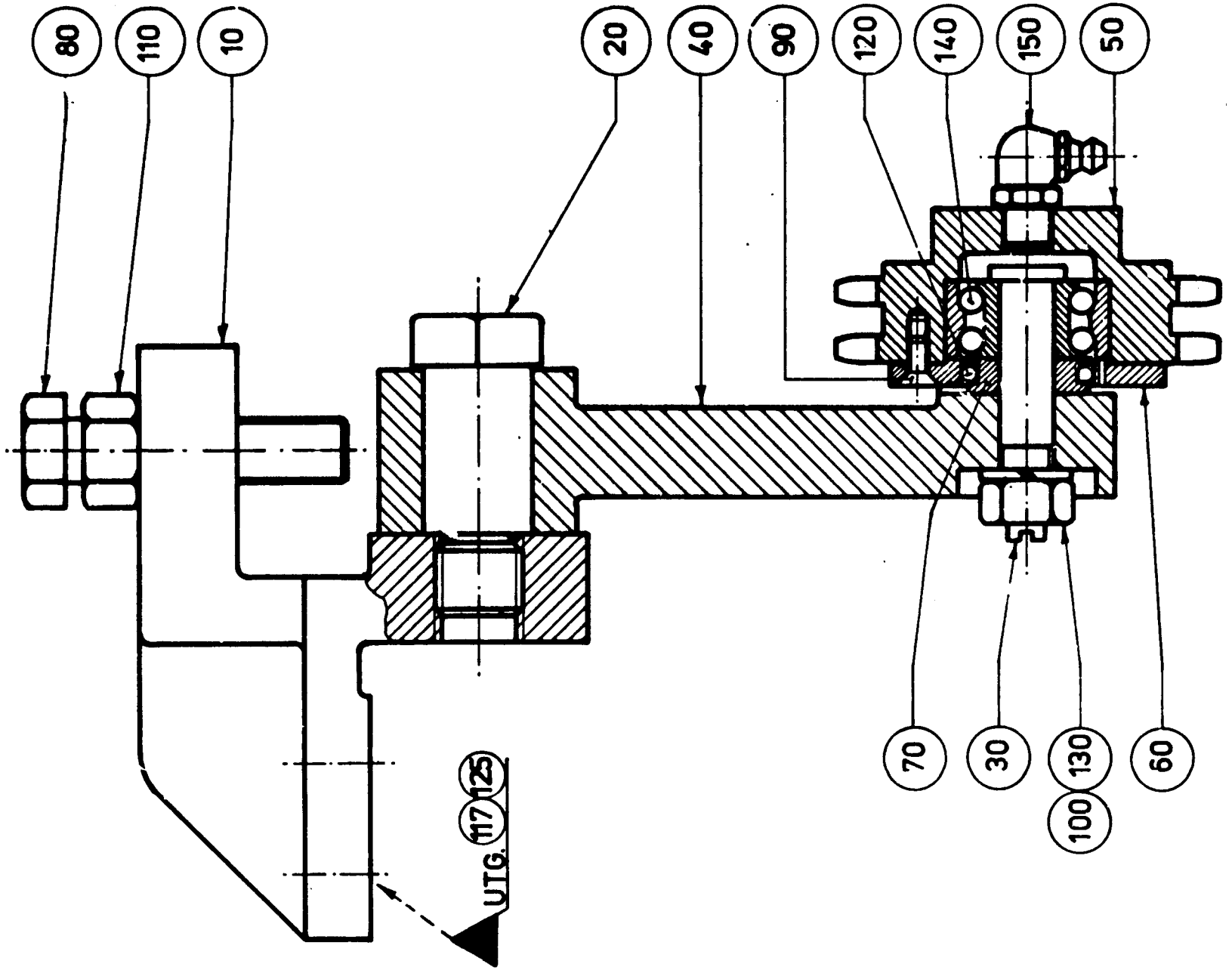
80
110
10
20
40
90
120
140
150
50
70
30
130
100
60
117
125
UTG.

| From | Pos | Part No | SP | UN | Qty | Description |
|---|---|---|---|---|---|---|
| | 010 | G- 4476 | - | | 1 | BRACKET |
| | 020 | 2141 | - | | 1 | BOLT |
| | 030 | 3397 | - | | 1 | SHAFT |
| | 040 | 4474-0002 | - | | 1 | TENSION ARM |
| | 050 | 4477 | - | | 1 | SPROCKET |
| | 060 | 5063 | - | | 1 | SEAL RING |
| | 070 | 5064 | - | | 1 | WASHER |
| | 080 | 312104-0547 | - | | 1 | SCREW M6S12X75H8.8FZB |
| | 090 | 312151-0287 | - | | 3 | SCREW MF6S4X8FZB |
| | 100 | 312601-0320 | - | | 1 | NUT M6M10FZB |
| | 110 | 312601-0322 | - | | 1 | NUT M6M12FZB |
| | 120 | 315202-0513 | - | | 1 | O-RING 17,13X2,62 |
| | 130 | 315401-0173 | - | | 1 | WASHER FBH10,2FZB |
| | 140 | 321330-0100 | - | | 1 | BALL BEARISKF3200 |
| | 150 | 344502-0066 | - | | 1 | NIPPLE L CHKR1/8" |

| From | Pos | Part No | SP | UN | Qty | Description |
|---|---|---|---|---|---|---|

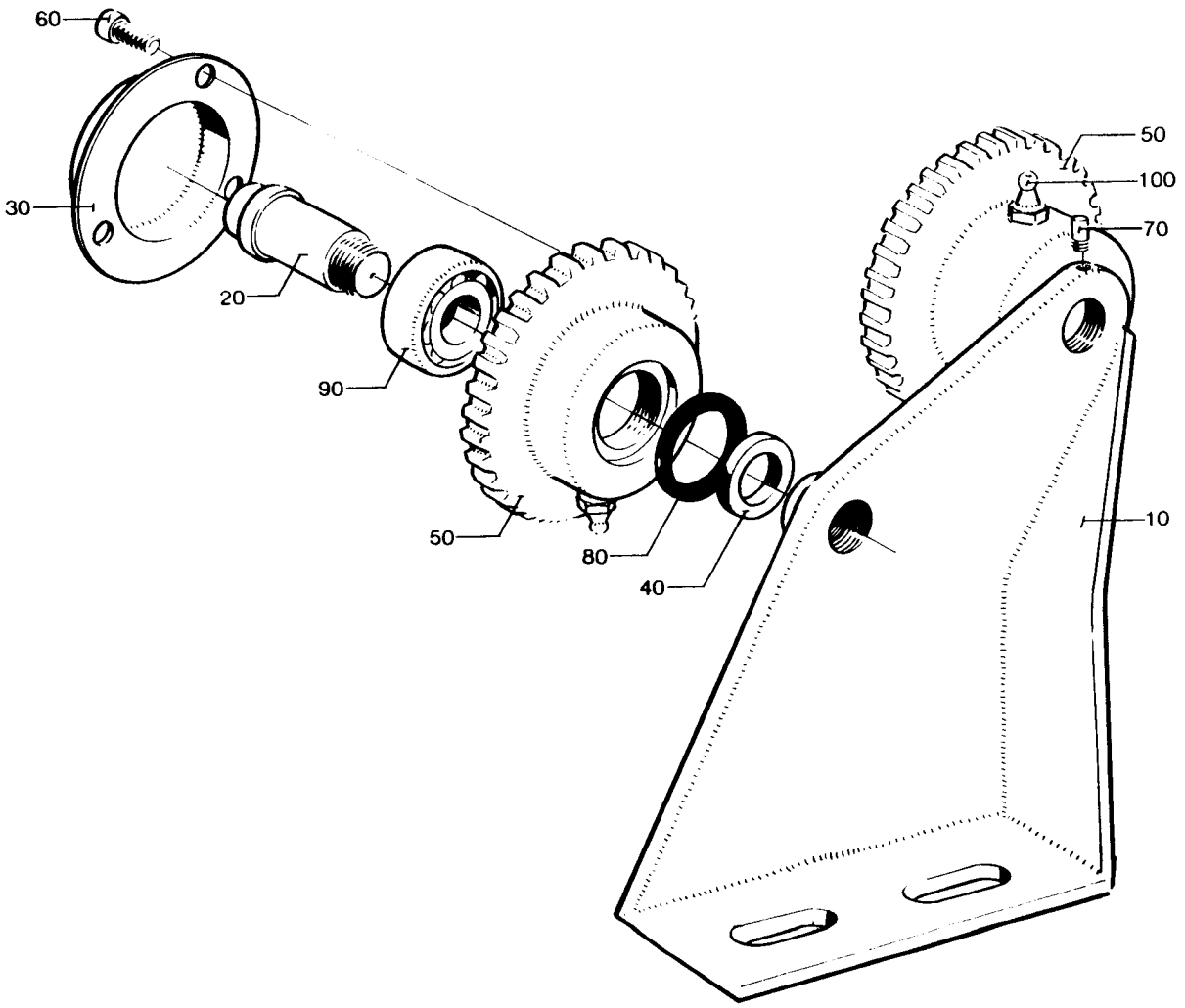
60
30
20
90
50
80
40
50
100
70
10

| From | Pos | Part No | SP | UN | Qty | Description |
|---|---|---|---|---|---|---|
| | 010 | G- 4478 | - | | 1 | BRACKET |
| | 020 | 3274-0001 | - | | 2 | BOLT |
| | 030 | 4830 | - | | 2 | LID |
| | 040 | 4904 | - | | 2 | SPACER RING |
| | 050 | 4906 | - | | 2 | SPROCKET |
| | 060 | 312151-0287 | - | | 6 | SCREW MF6S4X8FZB |
| | 070 | 312316-0366 | - | | 1 | GRUB SCREW SK6SS6X12FZB |
| | 080 | 315202-0520 | - | | 2 | O-RING 26,58X3,53 |
| | 090 | 321330-0103 | - | | 2 | BALL BEARISKF3203 |
| | 100 | 344502-0026 | - | | 2 | NIPPLE L AHKR1/8" |

| From | Pos | Part No | SP | UN | Qty | Description |
|---|---|---|---|---|---|---|

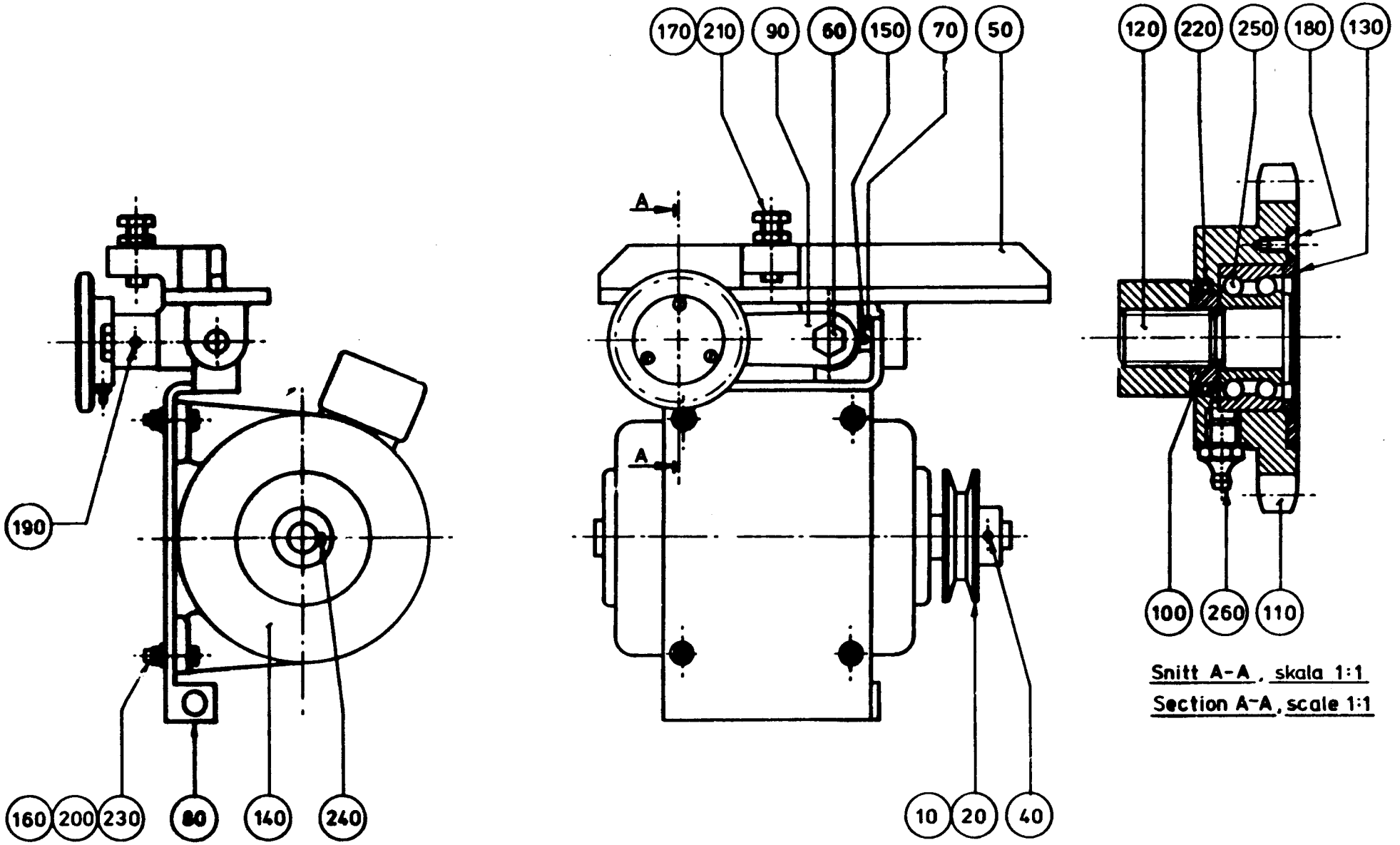


Snitt A-A, skala 1:1
Section A-A, scale 1:1

| From | Pos | Part No | SP | UN | Qty | Description |
|---|---|---|---|---|---|---|
| | 010 | 284893 | - | | 1 | PULLEY speed 75/m |
| | 020 | 284894 | - | | 1 | PULLEY speed 120/m |
| | 040 | 312316-0323 | - | | 2 | GRUB SCREW SK6SS5X8FZB speed 120/m |
| | 050 | G- 27018 | - | | 1 | MOTOR BRACKET |
| | 060 | 2141 | - | | 1 | BOLT |
| | 070 | 4448 | - | | 1 | SHAFT |
| | 080 | 4449 | - | | 1 | MOTOR SHELF |
| | 090 | 4474-0001 | - | | 1 | TENSION ARM |
| | 100 | 4904 | - | | 1 | SPACER RING |
| | 110 | 4906 | - | | 1 | SPROCKET |
| | 120 | 458170 | - | | 1 | BOLT |
| | 130 | 458171 | - | | 1 | LID |
| | 140 | 90045-0049 | - | | 1 | MOTOR |
| | 150 | 311401-0199 | - | | 2 | SPLIT PIN SP4X32FZB |
| | 160 | 312101-0455 | - | | 4 | SCREW M6S8X30FZB |
| | 170 | 312104-0546 | - | | 1 | SCREW M6S12X70H8.8FZB |
| | 180 | 312151-0287 | - | | 3 | SCREW MF6S4X8FZB |
| | 190 | 312316-0362 | - | | 1 | GRUB SCREW SK6SS6X8FZB |
| | 200 | 312601-0318 | - | | 6 | NUT M6M8FZB |
| | 210 | 312601-0322 | - | | 1 | NUT M6M12FZB |
| | 220 | 315203-0520 | - | | 1 | O-RING 26,58X3,53F |
| | 230 | 315401-0165 | - | | 4 | WASHER FBH8,2FZB |
| | 240 | 315701-0236 | - | | 1 | FLAT WEDGE6X6X30 |
| | 250 | 321330-0103 | - | | 1 | BALL BEARISKF3203 |
| | 260 | 344502-0026 | - | | 1 | NIPPLE L AHKR1/8" |

| From | Pos | Part No | SP | UN | Qty | Description |
|---|---|---|---|---|---|---|

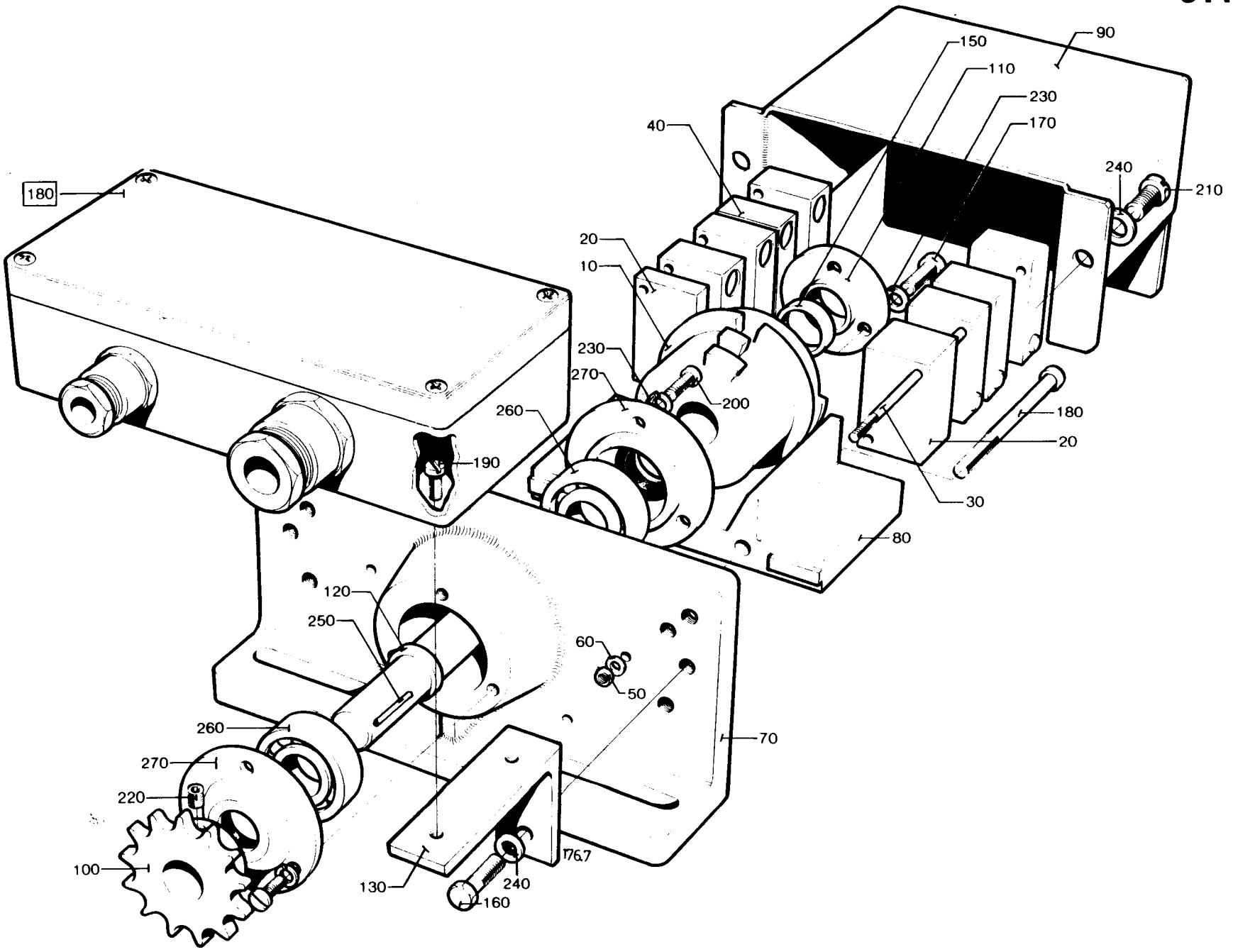
90
150
110
230
170
240
210
40
180
20
10
230
270
200
260
180
20
190
30
80
120
250
60
50
260
70
270
220
100
176.7
130
240
160

| From | Pos | Part No | SP | UN | Qty | Description |
|---|---|---|---|---|---|---|
| **TC/150 IH** | | | | | | |
| | 010 | 283791 | - | | 1 | CAM |
| | 020 | 236647-0001 | - | | 1 | GAUGE BLOCK |
| | 030 | 236986 | - | | 2 | STUD BOLT |
| | 040 | 90044-0104 | R | | 1 | PROXIMITY SWITCH |
| | 050 | 90099-0050 | - | | 4 | NUT |
| | 060 | 315101-0124 | - | | 4 | WASHER BRB3,2X6FZB |
| **TC/150 TPC TC/500 TPC** | | | | | | |
| | 010 | 440476-0001 | - | | 1 | CAM |
| | 020 | 236647-0001 | - | | 2 | GAUGE BLOCK |
| | 030 | 445975 | - | | 4 | STUD BOLT |
| | 040 | 90044-0104 | R | | 4 | PROXIMITY SWITCH |
| | 050 | 90099-0050 | - | | 8 | NUT |
| | 060 | 315101-0124 | - | | 8 | WASHER BRB3,2X6FZB |
| **TC/300 TPC** | | | | | | |
| | 010 | 440477 | - | | 1 | CAM |
| | 020 | 236647-0001 | - | | 2 | GAUGE BLOCK |
| | 030 | 445975 | - | | 4 | STUD BOLT |
| | 040 | 90044-0104 | R | | 4 | PROXIMITY SWITCH |
| | 050 | 90099-0050 | - | | 8 | NUT |
| | 060 | 315101-0124 | - | | 8 | WASHER BRB3,2X6FZB |
| **Common Parts** | | | | | | |
| | **F180** | **==>511-1.1** | - | | 1 | **CONNECTION BOX** |
| | | **==>511-1.1.1** | | | | **. TERMINAL BLOCK** |
| | 070 | G- 236644 | - | | 1 | MACHINE BODY |
| | 080 | 236645 | - | | 1 | HOLDER |
| | 090 | 236646 | - | | 1 | COVER |
| | 100 | 6216 | - | | 1 | SPROCKET |
| | 110 | 230613 | - | | 1 | FLANGE |
| | 120 | 236649 | - | | 1 | SHAFT |
| | 130 | 522159 | - | | 2 | BRACKET |
| | 140 | 263110 | - | | 1 | SIGN |
| | 150 | 90208-0004 | - | | 1 | LOCKING ELEMENT |
| | 160 | 312101-0368 | - | | 2 | SCREW M6S6X16FZB |
| | 170 | 312111-0327 | - | | 3 | SCREW MC6S5X12FZB |
| | 180 | 312111-0341 | - | | 2 | SCREW MC6S5X50FZB |
| | 190 | 312121-0293 | - | | 2 | SLOTTED HEMCS4X16FZB |
| | 200 | 312121-0327 | - | | 6 | SLOTTED HEMCS5X12FZB |
| | 210 | 312121-0366 | - | | 2 | SLOTTED HEMCS6X12FZB |
| | 220 | 312306-0287 | - | | 1 | GRUB SCREW P6SS4X8FZB |
| | 230 | 315101-0146 | - | | 9 | WASHER BRB5,3X10FZB |
| | 240 | 315101-0153 | - | | 6 | WASHER BRB6,4X12FZB |

| From | Pos | Part No | SP | UN | Qty | Description |
|---|---|---|---|---|---|---|
| | 250 | 315701-0198 | - | | 1 | FLAT WEDGE5X5X14 |
| | 260 | 321309-0102 | - | | 2 | BALL BEARISKF6202 |
| | 270 | 321600-0102 | - | | 2 | OIL SEAL LL1535 |

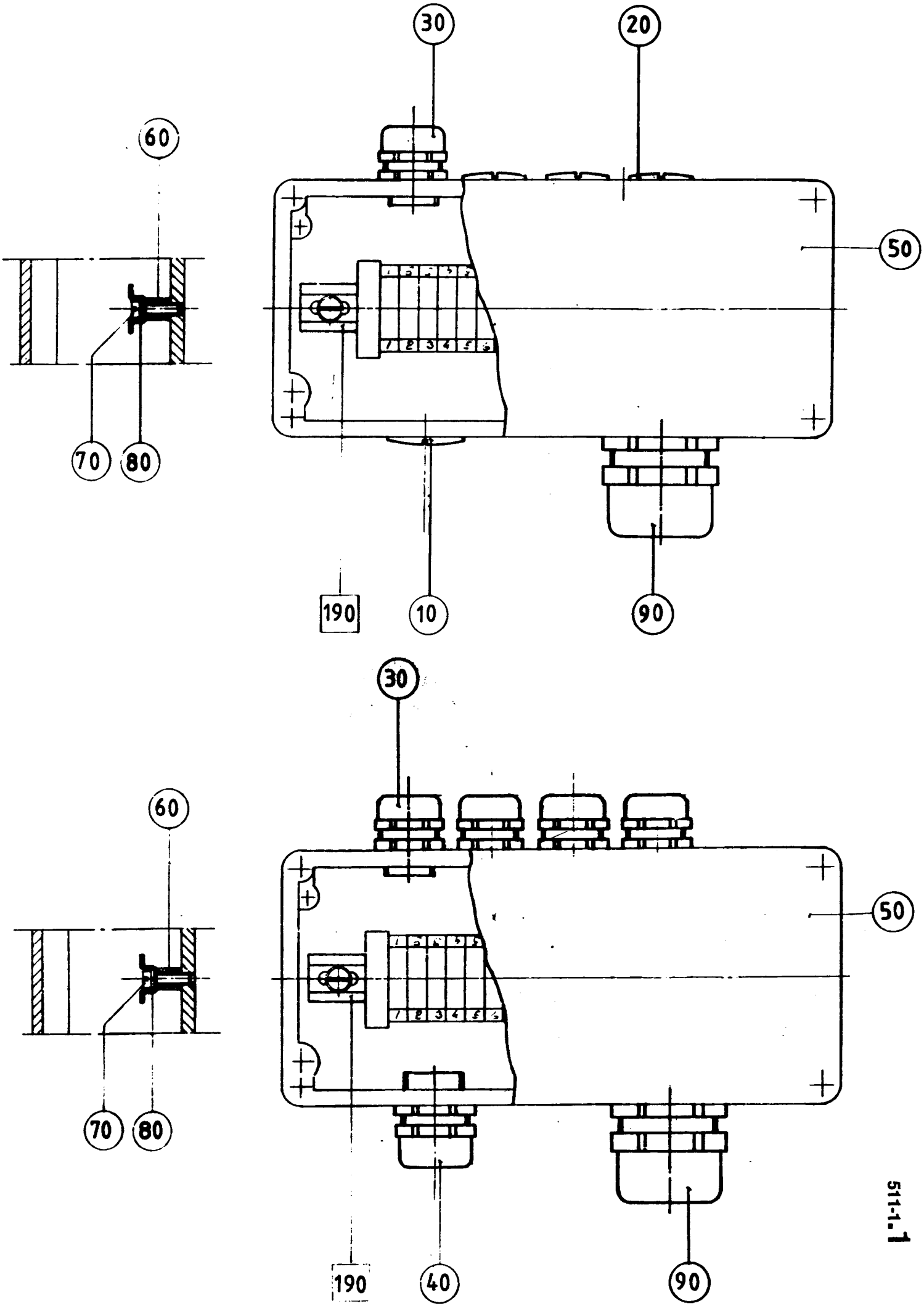


511-1.1

| From | Pos | Part No | SP | UN | Qty | Description |
|---|---|---|---|---|---|---|
| **TPC** | | | | | | |
| | 010 | 90002-0003 | - | | 1 | BLANK-OFF PLUG |
| | 020 | 90002-0013 | - | | 3 | BLANK-OFF PLUG |
| | 030 | 352103-0101 | - | | 1 | CABLE GLANR.15,2/4-8 |
| **IH** | | | | | | |
| | 030 | 352103-0101 | - | | 4 | CABLE GLANR.15,2/4-8 |
| | 040 | 352103-0106 | - | | 1 | CABLE GLANR.18,6/5-10 |
| **Common Parts** | | | | | | |
| | F190 | ==>511-1.1.1 | - | | 1 | **TERMINAL BLOCK** |
| | 050 | 440578 | - | | 1 | CONNECTION BOX |
| | 060 | 10641 | - | | 2 | SPACER |
| | 070 | 312121-0291 | - | | 2 | SLOTTED HEMCS4X12FZB |
| | 080 | 315101-0136 | - | | 2 | WASHER BRB4,3X8FZB |
| | 090 | 352103-0115 | - | | 1 | CABLE GLANR.PR28,3/7-16 |

| From | Pos | Part No | SP | UN | Qty | Description |
|---|---|---|---|---|---|---|

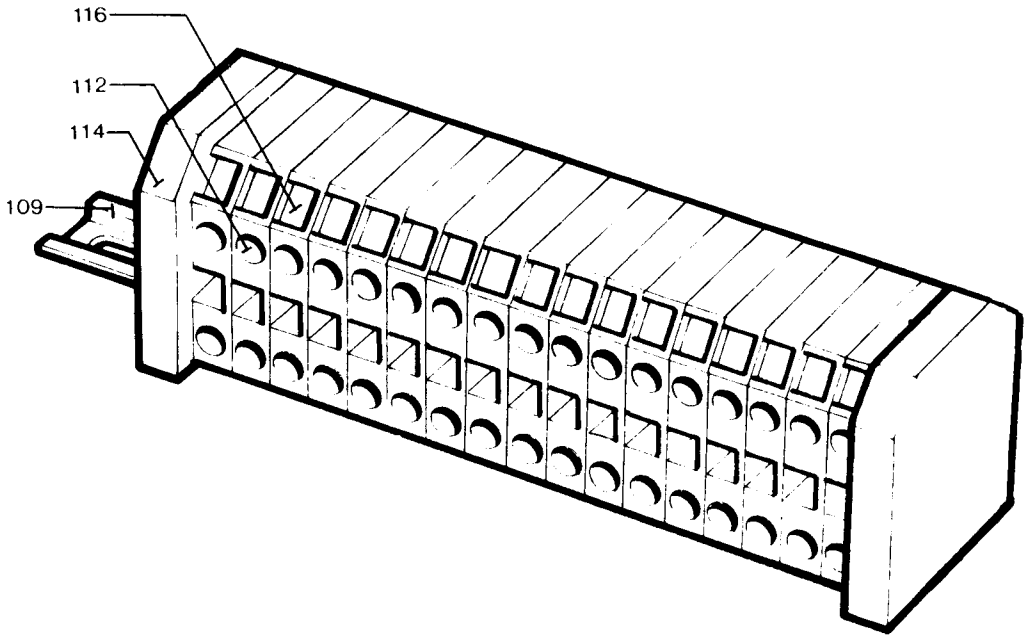
116
112
114
109

Last Alteration: 5719 83-05-18

Corresponding C-lists: 236637-010V
Assembly Drawing: 236637-1

Date Printed: 900205

| From | Pos | Part No | SP | UN | Qty | Description |
|---|---|---|---|---|---|---|
| | 109 | 8490-0003 | - | | 1 | RAIL |
| | 112 | 90077-0079 | - | | 18 | TERMINAL BLOCK |
| | 114 | 90135-0026 | - | | 2 | EARTHING CLAMP |
| | 116 | 359011-0802 | - | | 1 | LABEL BSFW 11-20 |

| From | Pos | Part No | SP | UN | Qty | Description |
|---|---|---|---|---|---|---|

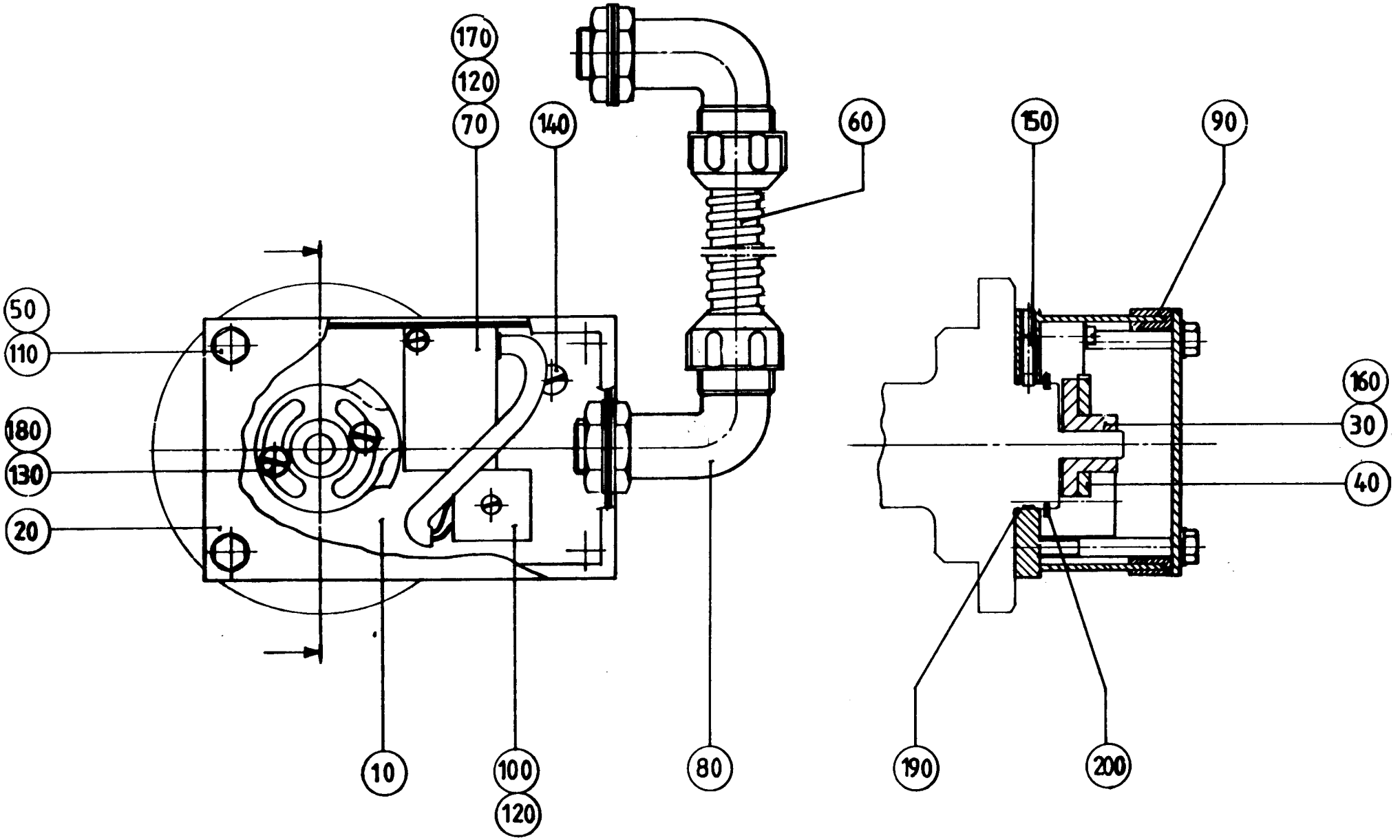
170
120
70
140
60
150
90
50
110
180
130
20
160
30
40
10
100
120
80
190
200

Last Alteration: 5719 83-05-18

Corresponding C-lists: 440325-010V
Assembly Drawing: 440325-1

Date Printed: 900205

| From | Pos | Part No | SP | UN | Qty | Description |
|---|---|---|---|---|---|---|
| | 010 | 11458 | - | | 1 | HOUSE |
| | 020 | 11459 | - | | 1 | LID |
| | 030 | 436381 | - | | 1 | CAM |
| | 040 | 436382 | - | | 1 | CAM |
| | 050 | 90005-0010 | - | | 4 | WASHER |
| | 060 | 90012-0064 | - | | 2 | GLAND |
| | 070 | 90044-0062 | - | | 1 | PROXIMITY SWITCH |
| | 080 | 90152-0033 | - | M | 1 | HOSE |
| | 090 | 90161-0006 | - | MM | 500 | STRIP |
| | 100 | 90195-0020 | - | | 1 | TERMINAL BLOCK |
| | 110 | 312101-0340 | - | | 4 | SCREW M6S5X45FZB |
| | 120 | 312121-0230 | - | | 3 | SLOTTED HEMCS3X20FZB |
| | 130 | 312125-0287 | - | | 2 | SLOTTED HEMCS4X8RFR |
| | 140 | 312132-0323 | - | | 1 | SLOTTED HEMSCS5X8MSGFN |
| | 150 | 312311-0366 | - | | 2 | GRUB SCREW T6SS6X12FZB |
| | 160 | 312318-0285 | - | | 2 | GRUB SCREW SK6SS4X6RFR |
| | 170 | 315101-0124 | - | | 2 | WASHER BRB3,2X6FZB |
| | 180 | 315105-0136 | - | | 2 | WASHER BRB4,3X8RFR |
| | 190 | 315202-0123 | - | | 1 | O-RING 35,1X1,6 |
| | 200 | 315750-0124 | - | | 1 | LOCK RING SGA35 |

| From | Pos | Part No | SP | UN | Qty | Description |
|---|---|---|---|---|---|---|

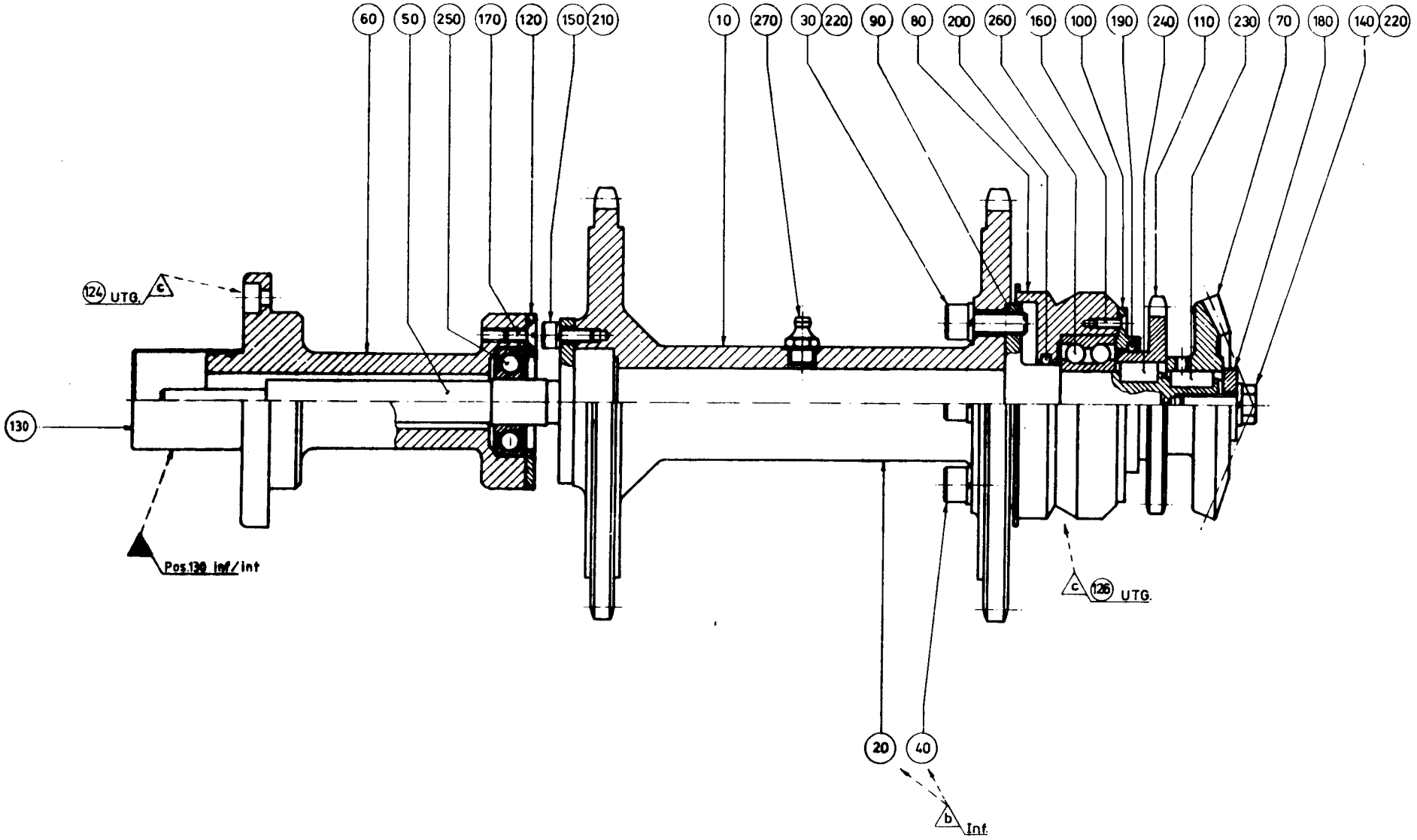
60
50
250
170
120
150
210
10
270
30
220
90
80
200
260
160
100
190
240
110
230
70
180
140
220
124 UTG.
c
130
Pos.130 inf./int
c
126 UTG.
20
40
b
Inf.

Last Alteration: 8410 86-03-10
Corresponding C-lists: 13372-020V
Assembly Drawing: 13372-1
Date Printed:

| From | Pos | Part No | SP | UN | Qty | Description |
|---|---|---|---|---|---|---|
| **Packer B** | | | | | | |
| | 020 | 33939 | - | | 1 | SPROCKET |
| | 040 | 312111-0461 | - | | 4 | SCREW MC6S8X50FZB |
| **Packer A Elevator E** | | | | | | |
| | 010 | G- 4460 | - | | 1 | DOUBLE SPROCKET |
| | 030 | 312111-0452 | - | | 4 | SCREW MC6S8X22FZB |
| **Common Parts** | | | | | | |
| | 050 | 12358 | - | | 1 | SHAFT |
| | 060 | 12359 | - | | 1 | AXLE SUPPORT |
| | 070 | 3303 | - | | 1 | GEAR WHEEL |
| | 080 | 5056 | - | | 1 | BEARING HOUSING |
| | 090 | 5057 | - | | 1 | FLANGED SHAFT |
| | 100 | 5058 | - | | 1 | LID |
| | 110 | 5059 | - | | 1 | SPROCKET |
| | 120 | 11460 | - | | 1 | WASHER |
| | 140 | 312101-0453 | - | | 1 | SCREW M6S8X25FZB |
| | 150 | 312111-0329 | - | | 3 | SCREW MC6S5X16FZB |
| | 160 | 312151-0291 | - | | 3 | SCREW MF6S4X12FZB |
| | 170 | 312151-0327 | - | | 3 | SCREW MF6S5X12FZB |
| | 180 | 315121-0165 | - | | 1 | WASHER TBRSB8,4X26FZB |
| | 190 | 315202-0224 | - | | 1 | O-RING 42,2X3 |
| | 200 | 315202-0523 | - | | 1 | O-RING 31,34X3,53 |
| | 210 | 315401-0146 | - | | 3 | WASHER FBH 5,1 FZB |
| | 220 | 315401-0165 | - | | 5 | WASHER FBH8,2FZB |
| | 230 | 315701-0230 | - | | 1 | FLAT WEDGE6X6X16 |
| | 240 | 315701-0260 | - | | 1 | FLAT WEDGE8X7X14 |
| | 250 | 321313-0103 | - | | 1 | BALL BEARISKF6203-2RS |
| | 260 | 321330-0105 | - | | 1 | BALL BEARISKF3205 |
| | 270 | 344502-0026 | - | | 1 | NIPPLE L AHKR1/8" |

| From | Pos | Part No | SP | UN | Qty | Description |
|---|---|---|---|---|---|---|

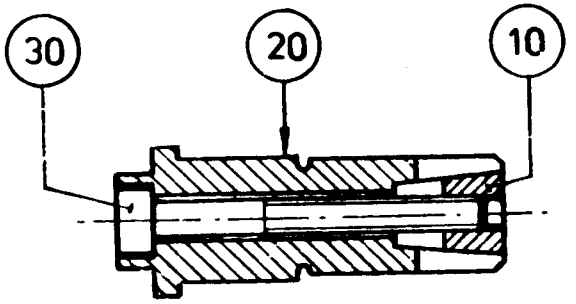
30
20
10

| From | Pos | Part No | SP | UN | Qty | Description | |
|---|---|---|---|---|---|---|---|
| | 010 | 6827 | - | | 1 | CONE | |
| | 020 | 6831 | - | | 1 | BOLT | |
| | 030 | 312111-0340 | - | | 1 | SCREW | MC6S5X45FZB |

| From | Pos | Part No | SP | UN | Qty | Description |
|---|---|---|---|---|---|---|

516-1

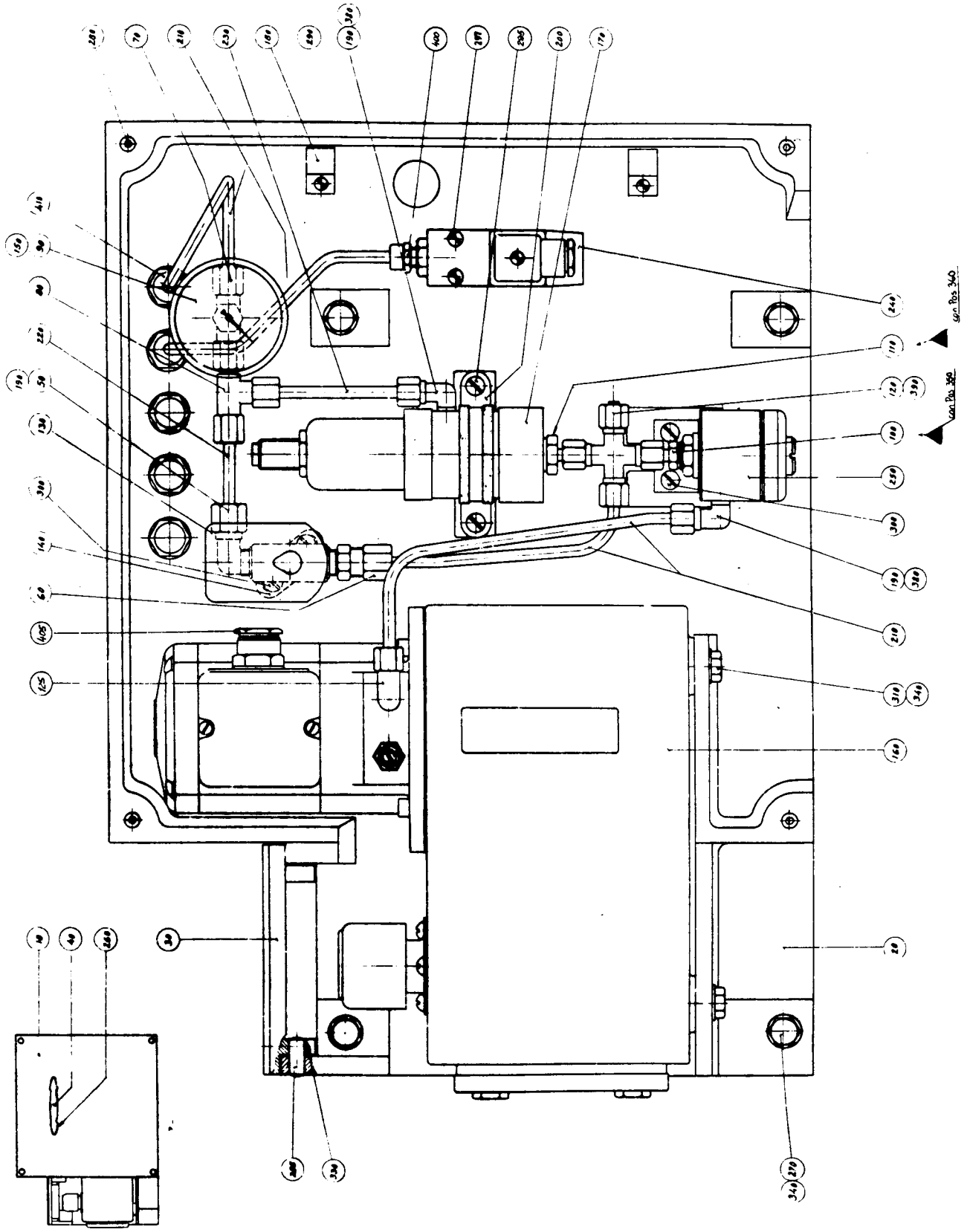

| From | Pos | Part No | SP | UN | Qty | Description |
|---|---|---|---|---|---|---|
| **Relay machine** | | | | | | |
| | 130 | 90042-0128 | - | | 1 | SOLENOID VALVE |
| | 405 | 352100-0107 | - | | 1 | CABLE GLANR.18,6-12 |
| **TPC machine** | | | | | | |
| | 130 | 90042-0150 | S | | 1 | SOLENOID VALVE |
| | 405 | 352136-0127 | - | | 1 | GLAND |
| **Common Parts** | | | | | | |
| | 010 | 230179 | - | | 1 | FRONT GUARD |
| | 020 | G- 252665 | - | | 1 | BRACKET |
| | 030 | 230180 | - | | 1 | COVER |
| | 040 | 7309 | - | | 1 | HANDLE |
| | 050 | 90030-0004 | - | | 1 | CONNECTION |
| | 060 | 90030-0126 | - | | 1 | PIPE CONNECTION |
| | 070 | 90030-0127 | - | | 1 | PIPE CONNECITON |
| | 080 | 90030-0128 | - | | 1 | PIPE CONNECTION |
| | 090 | 90030-0129 | - | | 1 | PIPE CONNECTION |
| | 100 | 90030-0130 | - | | 1 | PIPE CONNECITON |
| | 110 | 90030-0131 | - | | 1 | PIPE CONNECTION |
| | 120 | 90030-0132 | - | | 1 | PLUG |
| | 125 | 90030-0146 | - | | 1 | CONNECTION |
| | 140 | 90042-0350 | - | | 1 | BRACKET |
| | 150 | 90043-0015 | - | | 1 | PRESSURE GAUGE |
| | 160 | 90048-0007 | - | | 1 | OILPUMP |
| | | 90048-0338 | S | | 0 | * GASKET |
| | | 90048-0417 | S | | 0 | * LEVEL GLASS |
| | | 90048-0418 | S | | 0 | * MOTOR |
| | | 90048-0419 | S | | 0 | * PUMP |
| | | 90048-0420 | S | | 0 | * FILTER |
| | | 90048-0421 | S | | 0 | * GASKET |
| | | 90048-0423 | S | | 0 | * VALVE SEAT |
| | | 90048-0424 | S | | 0 | * BRACKET |
| | | 90048-0425 | S | | 0 | * ADJUSTING SCREW |
| | | 90048-0426 | S | | 0 | * SPRING |
| | | 90048-0427 | S | | 0 | * STEEL BALL |
| | | 90048-0441 | S | | 0 | * REPAIR KIT |
| | | 90048-0445 | S | | 0 | * FILLING NOZZLE |
| | 170 | 90048-0016 | - | | 1 | ACKUMULATOR |
| | | 90048-0447 | R | | 0 | * SPARE PARTS KIT |
| | 180 | 90074-0002 | - | | 2 | CLIP |
| | 190 | 90157-0021 | - | ML | X | LOCKING FLUID |
| | 200 | 90165-0040 | - | | 1 | CLIP |
| | 210 | 90166-0011 | - | M | 3 | HOSE |
| | 220 | 90266-0006 | - | MM | X | TUBE |
| | 230 | 90266-0006 | - | MM | X | TUBE |
| | 240 | 90274-0056 | - | | 1 | PRESSURE GUARD |
| | 250 | 90415-0004 | - | | 1 | FILTER |
| | | 90415-0302 | S | | 0 | * FILTER |
| | | 90415-0329 | S | | 0 | * GASKET |
| | 255 | 311101-0405 | - | | 2 | CYLINDRICACP8H6X30 |
| | 260 | 312101-0362 | - | | 2 | SCREW M6S6X8FZB |
| | 270 | 312101-0461 | - | | 4 | SCREW M6S8X50FZB |
| | 280 | 312115-0327 | - | | 4 | SCREW MC6S5X12 A4 80 |
| | 290 | 312121-0285 | - | | 4 | SLOTTED HEMCS4X6FZB |
| | 295 | 312121-0325 | - | | 2 | SLOTTED HEMCS5X10FZB |
| | 297 | 312121-0339 | - | | 2 | SLOTTED HEMCS5X40FZB |
| | 300 | 312121-0364 | - | | 4 | SLOTTED HEMCS6X10FZB |
| | 310 | 312204-0154 | - | | 4 | SCREW U6S5/16X25FZB |
| | 330 | 312316-0284 | - | | 2 | GRUB SCREW SK6SS4X5FZB |
| | 340 | 315111-0165 | - | | 8 | WASHER TBRB8,4X16FZB |
| | 380 | 342731-0102 | - | | 2 | ELBOW COUP WE6-LRFZB |
| | 390 | 342754-0102 | - | | 1 | CROSS CONNK6-LFZB |
| | 400 | 342921-0114 | - | | 1 | PIPE CONNE6/4-1/4" |
| | 410 | 352101-0103 | - | | 5 | LEAD-IN G 18,6 |

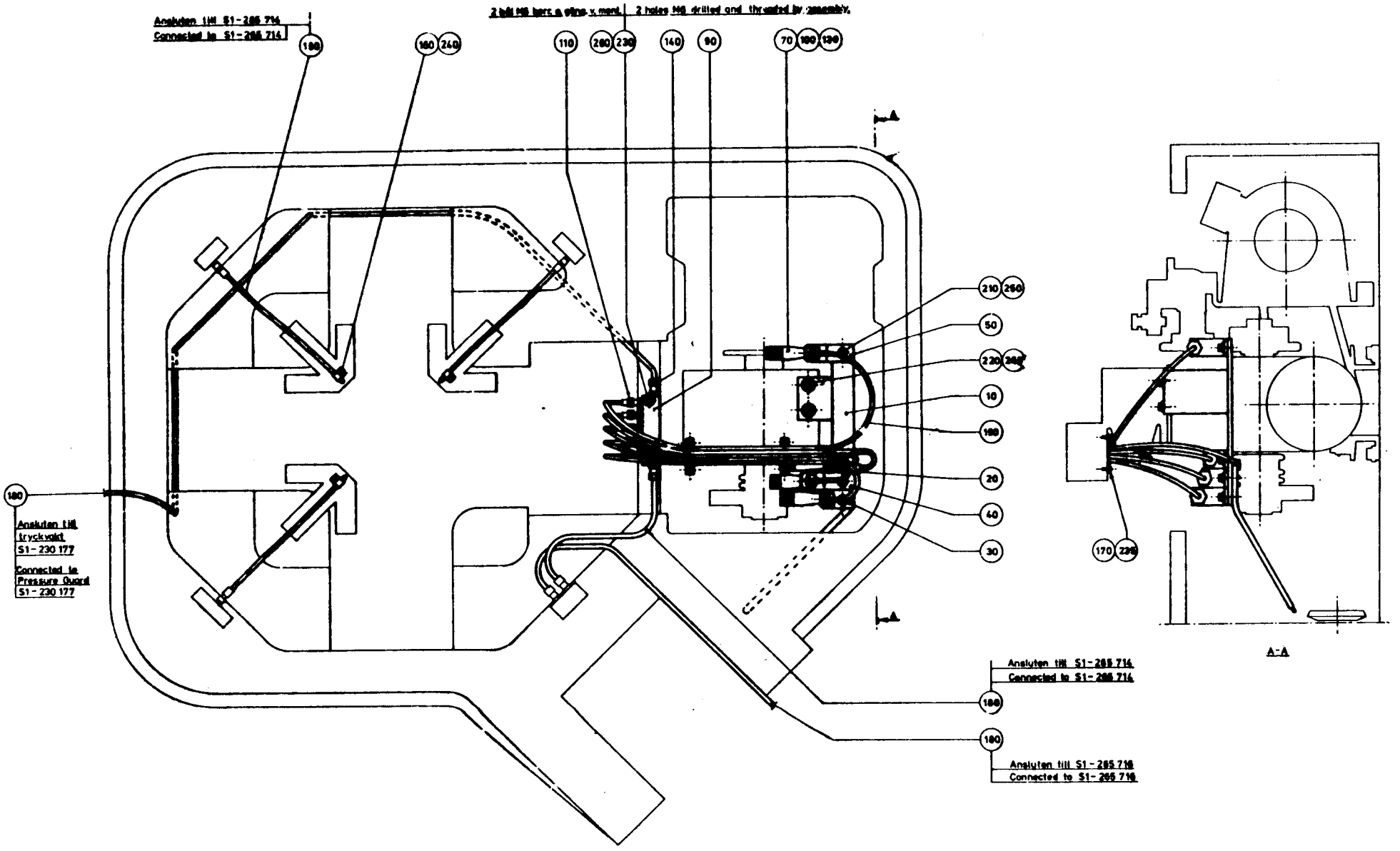
Ansluten till S1-265 714
Connected to S1-265 714
2 hole M6 drilled and threaded by assembly.
Ansluten till tryckvakt S1-230 177
Connected to Pressure Guard S1-230 177
Ansluten till S1-265 714
Connected to S1-265 714
Ansluten till S1-265 716
Connected to S1-265 716
A-A

| From | Pos | Part No | SP | UN | Qty | Description |
|---|---|---|---|---|---|---|
| | 010 | 458169 | - | | 1 | BRACKET |
| | 020 | 265585 | - | | 1 | HOLDER |
| | 030 | 458204 | - | | 1 | HOLDER |
| | 040 | 458205 | - | | 1 | HOLDER |
| | 050 | 458206 | - | | 1 | HOLDER |
| | 070 | 90028-0001 | R | | 4 | CONE |
| | 090 | 90032-0036 | - | | 1 | JUNCTION BLOCK |
| | 100 | 90092-0048 | R | | 4 | OIL BRUSH |
| | 110 | 90092-0064 | R | | 5 | METERING VALVE |
| | 130 | 90134-0003 | - | | 4 | BUSHING |
| | 140 | 90134-0034 | - | | 2 | NIPPLE |
| | 160 | 90165-0003 | - | | 3 | CLIP |
| | 170 | 90165-0016 | - | | 2 | CLIP |
| | 180 | 90166-0011 | - | MM2500 | | HOSE |
| | 190 | 90166-0103 | - | M | 4 | HOSE |
| | 210 | 312101-0325 | - | | 4 | SCREW M6S5X10FZB |
| | 220 | 312101-0366 | - | | 2 | SCREW M6S6X12FZB |
| | 230 | 312101-0372 | - | | 2 | SCREW M6S6X25FZB |
| | 235 | 312111-0287 | - | | 4 | SCREW MC6S4X8FZB |
| | 240 | 312121-0285 | - | | 3 | SLOTTED HEMCS4X6FZB |
| | 250 | 315101-0146 | - | | 4 | WASHER BRB5,3X10FZB |
| | 260 | 315101-0153 | - | | 4 | WASHER BRB6,4X12FZB |

| From | Pos | Part No | SP | UN | Qty | Description |
|---|---|---|---|---|---|---|

# SPC 6303
## Tetra Classic TC

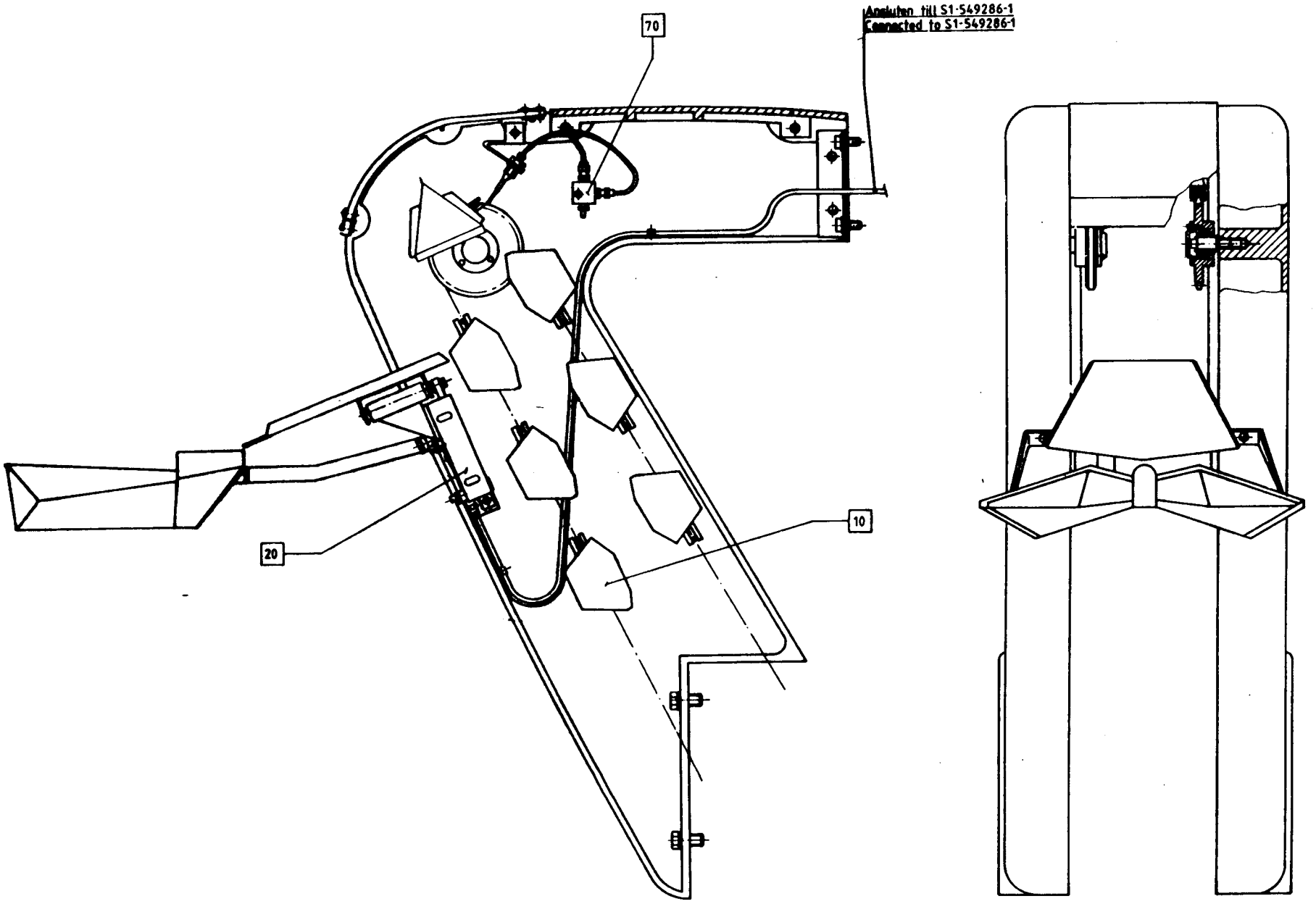
Ansluten till S1-549286-1
Connected to S1-549286-1
70
10
20

| From | Pos | Page No | Description |
|---|---|---|---|
| | F000 | 601-1a | ELEVATOR With Tilting Tray TC/150 |
| | F000 | 601-1b | ELEVATOR With Tilting Tray TC/300 |
| | F000 | 601-1c | ELEVATOR TC/500 |
| | F000 | 602-1a | ELEVATOR Without Tilting Tray TC/150 |
| | F000 | 602-1b | ELEVATOR Without Tilting Tray TC/300 |
| | F010 | 603-1a | CHAIN TC/150 |
| | F010 | 603-1b | CHAIN TC/300 |
| | F010 | 603-1c | CHAIN TC/500 |
| | F020 | 604-1 | TILTING TRAY With tilting Tray TC/150 TC/300 |
| | F060 | 605-1 | PNEUMATIC PANEL With tilting Tray |
| | F065 | 606-1 | DISTRIBUTOR TC/500 |
| | F070 | 607-1a | CENTRAL LUBRICATION TC/150 |
| | F070 | 607-1b | CENTRAL LUBRICATION TC/300 |
| | F070 | 607-1c | CENTRAL LUBRICATION TC/500 |

| From | Pos | Page No | Description |
|---|---|---|---|

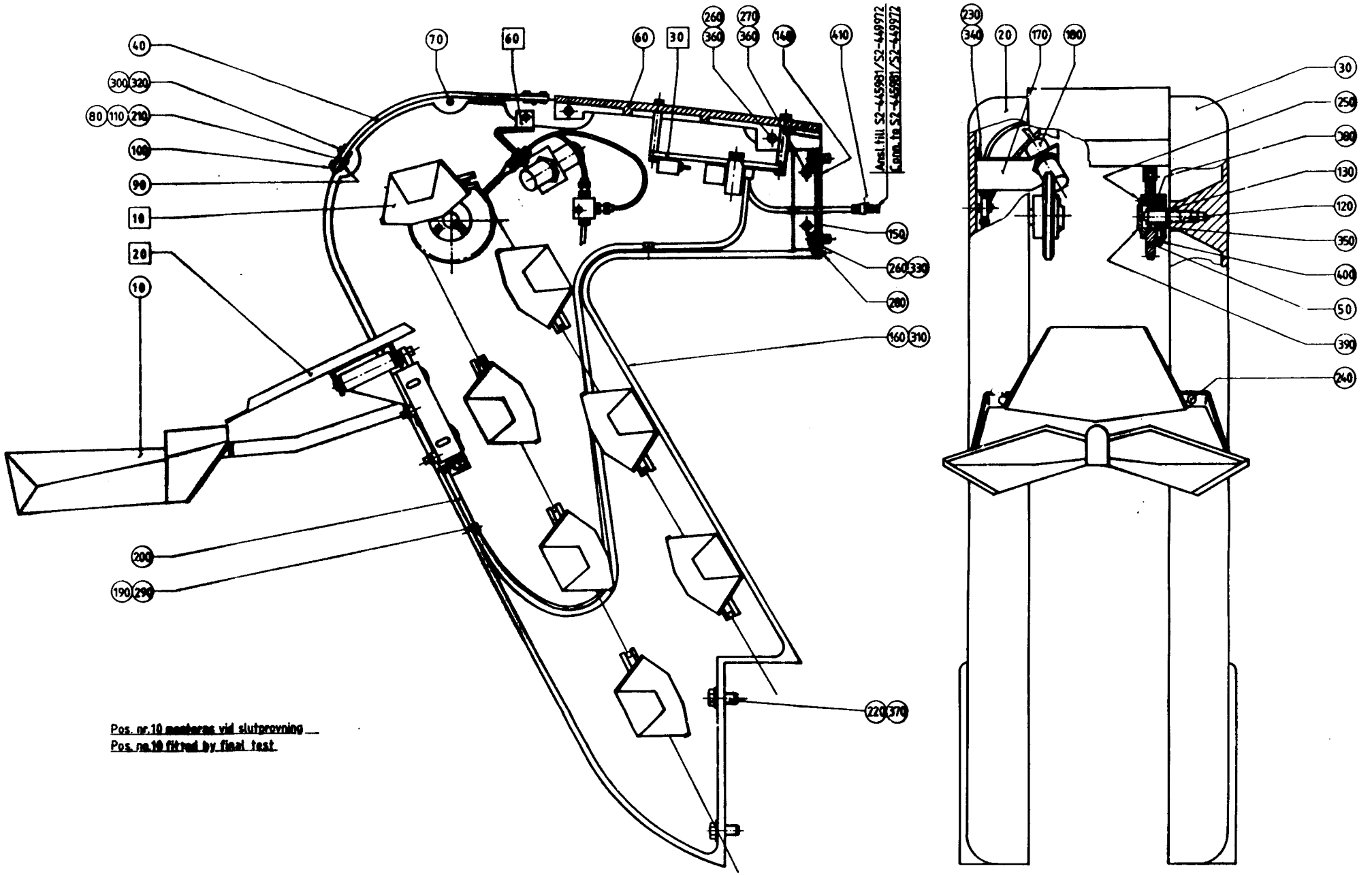


Pos. nr.10 monteras vid slutprovning
Pos. no.10 fitted by final test

| From | Pos | Part No | SP | UN | Qty | Description |
|---|---|---|---|---|---|---|
| | 010 | 5350 | - | | 1 | GUIDE PLATE |
| | 020 | G- 5374 | - | | 1 | ELEVATOR FRAME LEFT |
| | 030 | G- 5375 | - | | 1 | ELEVATOR FRAME RIGHT |
| | 040 | 4370 | - | | 1 | PLASTIC COVER |
| | 050 | 4554 | - | | 2 | SPROCKET |
| | 060 | G- 5376 | - | | 1 | PLATE |
| | 070 | 1013 | - | | 2 | SHAFT |
| | 080 | 2551 | - | | 4 | PIN |
| | 090 | 2767 | - | | 2 | HINGE |
| | 100 | 2768 | - | | 2 | COVER PLATE |
| | 110 | 2781 | - | | 2 | COMPRESSION SPRING |
| | 120 | 3274-0002 | - | | 2 | BOLT |
| | 130 | 4569 | - | | 2 | SPACER RING |
| | 140 | 4862 | - | | 1 | PROTECTION PLATE |
| | 150 | 5752 | - | | 2 | BRACKET |
| | 160 | 20497 | - | | 1 | GROUP NUMBER PLATE |
| | 170 | 243361 | - | | 1 | BRACKET |
| | 180 | 90044-0082 | - | | 1 | GIVER |
| | 190 | 90074-0001 | - | | 2 | CLIP |
| | 200 | 90166-0089 | - | M | 3 | HOSE |
| | 210 | 311307-0210 | - | | 4 | SLOTTED PIRPD2,5X16FZB |
| | 220 | 312101-0624 | - | | 4 | SCREW M6S16X30FZB |
| | 230 | 312105-0364 | - | | 2 | SCREW M6S6X10RFR |
| | 240 | 312105-0449 | - | | 2 | SCREW M6S8X16RFR |
| | 250 | 312111-0291 | - | | 6 | SCREW MC6S4X12FZB |
| | 260 | 312111-0492 | - | | 8 | SCREW MC6S10X22FZB |
| | 270 | 312115-0491 | - | | 4 | SCREW 10X20 A4 80 |
| | 280 | 312121-0321 | - | | 1 | SLOTTED HEMCS5X6FZB |
| | 290 | 312125-0323 | - | | 2 | SLOTTED HEMCS5X8RFR |
| | 300 | 312165-0329 | - | | 16 | SLOTTED HEMKFS5X16RFR |
| | 310 | 312502-0221 | - | | 4 | DRIVE SCREKDS4X6FNB |
| | 320 | 312605-0314 | - | | 16 | NUT M6M5RFR |
| | 330 | 315101-0173 | - | | 4 | WASHER BRB10,5X22FZB |
| | 340 | 315105-0153 | - | | 2 | WASHER BRB6,4X12RFR |
| | 350 | 315202-0518 | - | | 2 | O-RING 23,40X3,53 |
| | 360 | 315401-0173 | - | | 8 | WASHER FBH10,2FZB |
| | 370 | 315401-0186 | - | | 4 | WASHER FBH16,2FZB |
| | 380 | 321330-0103 | - | | 2 | BALL BEARISKF3203 |
| | 390 | 321601-0103 | - | | 2 | OIL SEAL LL40 |
| | 400 | 344502-0026 | - | | 2 | NIPPLE L AHKR1/8" |
| | 410 | 342716-0203 | - | | 1 | REDUCER 6-8 |

| From | Pos | Part No | SP | UN | Qty | Description |
|---|---|---|---|---|---|---|

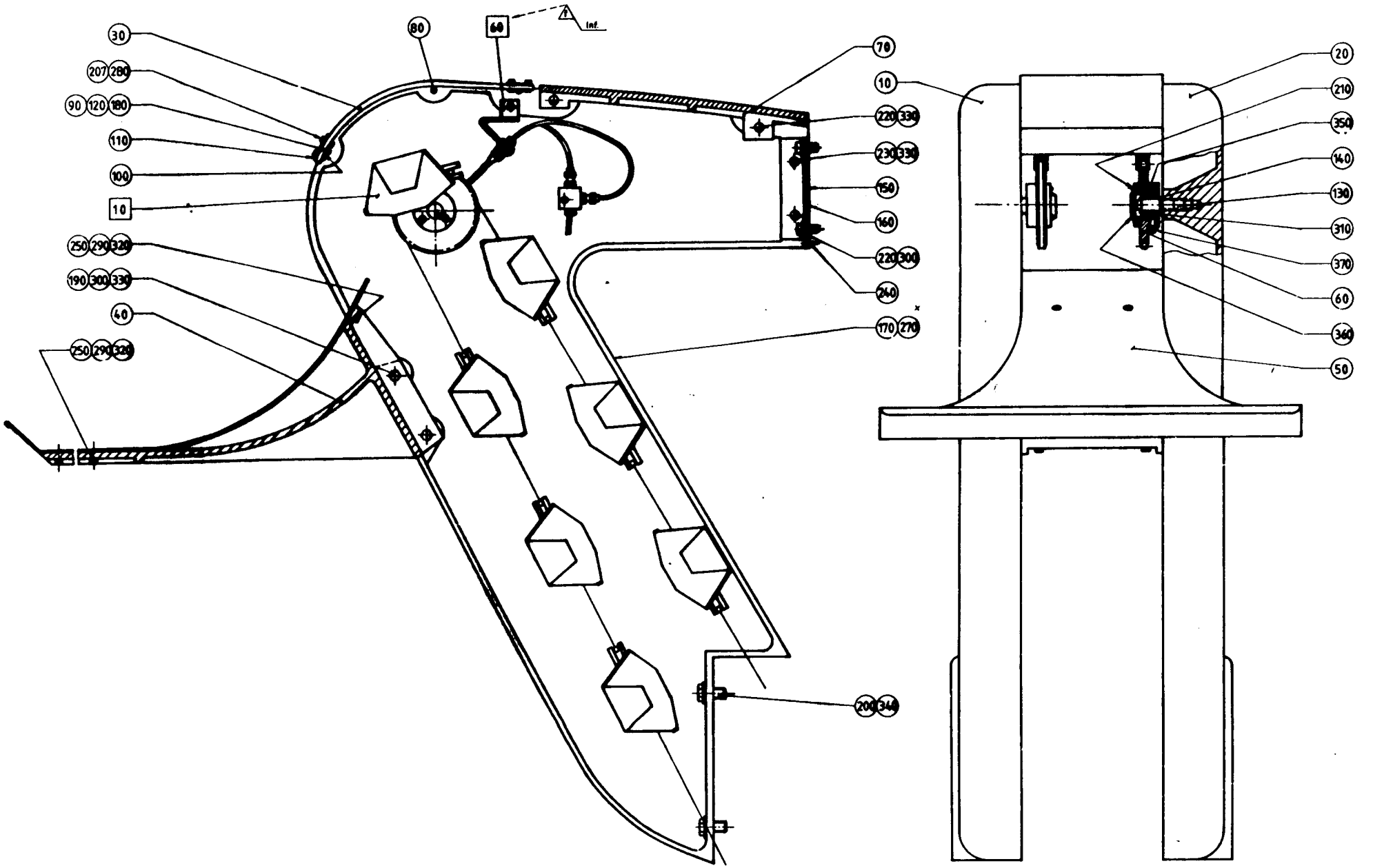
30
207 280
90 120 180
110
100
10
250 290 320
190 300 330
40
250 290 320
80
60
Inf.
70
10
220 330
230 340
150
160
220 300
240
170 270
200 340
20
210
350
140
130
310
370
60
360
50

| From | Pos | Part No | SP | UN | Qty | Description |
|---|---|---|---|---|---|---|
| | 010 | G- 5374 | - | | 1 | ELEVATOR FRAME LEFT |
| | 020 | G- 5375 | - | | 1 | ELEVATOR FRAME RIGHT |
| | 030 | 4370 | - | | 1 | PLASTIC COVER |
| | 040 | 5393 | - | | 1 | BRACKET |
| | 050 | 5394 | - | | 1 | DISCHARGE TRAY |
| | 060 | 4554 | - | | 2 | SPROCKET |
| | 070 | G- 5376 | - | | 1 | PLATE |
| | 080 | 1013 | - | | 2 | SHAFT |
| | 090 | 2551 | - | | 4 | PIN |
| | 100 | 2767 | - | | 2 | HINGE |
| | 110 | 2768 | - | | 2 | COVER PLATE |
| | 120 | 2781 | - | | 2 | COMPRESSION SPRING |
| | 130 | 3274-0002 | - | | 2 | BOLT |
| | 140 | 4569 | - | | 2 | SPACER RING |
| | 150 | 4862 | - | | 1 | PROTECTION PLATE |
| | 160 | 5752 | - | | 2 | BRACKET |
| | 170 | 20497 | - | | 1 | GROUP NUMBER PLATE |
| | 180 | 311307-0210 | - | | 4 | SLOTTED PIRPD2,5X16FZB |
| | 190 | 312101-0495 | - | | 4 | SCREW M6S10X30FZB |
| | 200 | 312101-0624 | - | | 4 | SCREW M6S16X30FZB |
| | 210 | 312111-0291 | - | | 6 | SCREW MC6S4X12FZB |
| | 220 | 312111-0492 | - | | 8 | SCREW MC6S10X22FZB |
| | 230 | 312115-0491 | - | | 4 | SCREW 10X20 A4 80 |
| | 240 | 312121-0321 | - | | 1 | SLOTTED HEMCS5X6FZB |
| | 250 | 312145-0368 | - | | 6 | SLOTTED HEMFS6X16RFR |
| | 260 | 312165-0329 | - | | 16 | SLOTTED HEMKFS5X16RFR |
| | 270 | 312502-0221 | - | | 4 | DRIVE SCREKDS4X6FNB |
| | 280 | 312605-0314 | - | | 16 | NUT M6M5RFR |
| | 290 | 312605-0316 | - | | 6 | NUT M6M6RFR |
| | 300 | 315101-0173 | - | | 8 | WASHER BRB10,5X22FZB |
| | 310 | 315202-0518 | - | | 2 | O-RING 23,40X3,53 |
| | 320 | 315401-0153 | - | | 6 | WASHER FBH6,1FZB |
| | 330 | 315401-0173 | - | | 12 | WASHER FBH10,2FZB |
| | 340 | 315401-0186 | - | | 4 | WASHER FBH16,2FZB |
| | 350 | 321330-0103 | - | | 2 | BALL BEARISKF3203 |
| | 360 | 321601-0103 | - | | 2 | OIL SEAL LL40 |
| | 370 | 344502-0026 | - | | 2 | NIPPLE L AHKR1/8" |

| From | Pos | Part No | SP | UN | Qty | Description |
|---|---|---|---|---|---|---|

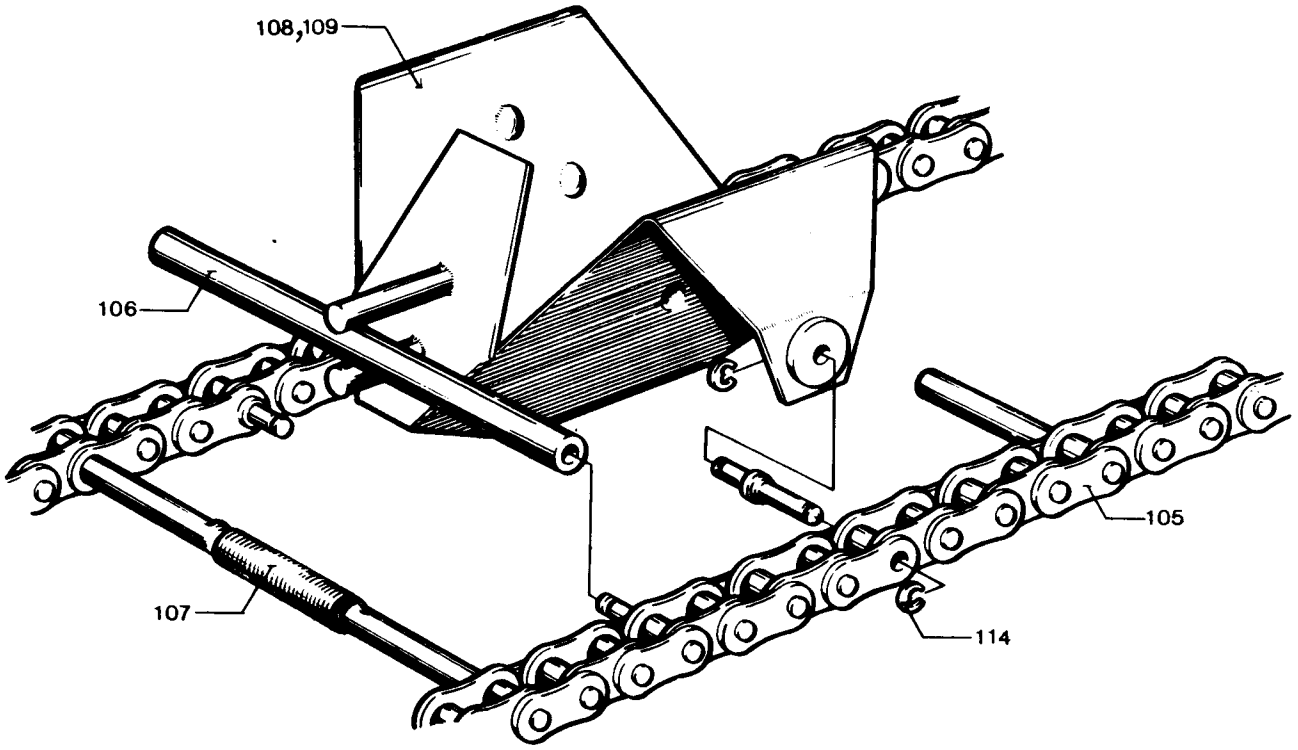
108,109
106
107
105
114

| From | Pos | Part No | SP | UN | Qty | Description |
|---|---|---|---|---|---|---|
| | 108 | 6529 | - | | 16 | SCOOP 180ml-250ml |
| | 109 | 10541 | - | | 16 | SCOOP 284ml 300ml |
| | 105 | 4373-0002 | - | | 2 | CONVEYOR CHAIN |
| | 106 | 4374 | - | | 16 | SHAFT |
| | 107 | 6116-0002 | - | | 16 | TENSION SPRING |
| | 114 | 315754-0105 | - | | 32 | CIRCLIP E 3,2 |

| From | Pos | Part No | SP | UN | Qty | Description |
|---|---|---|---|---|---|---|

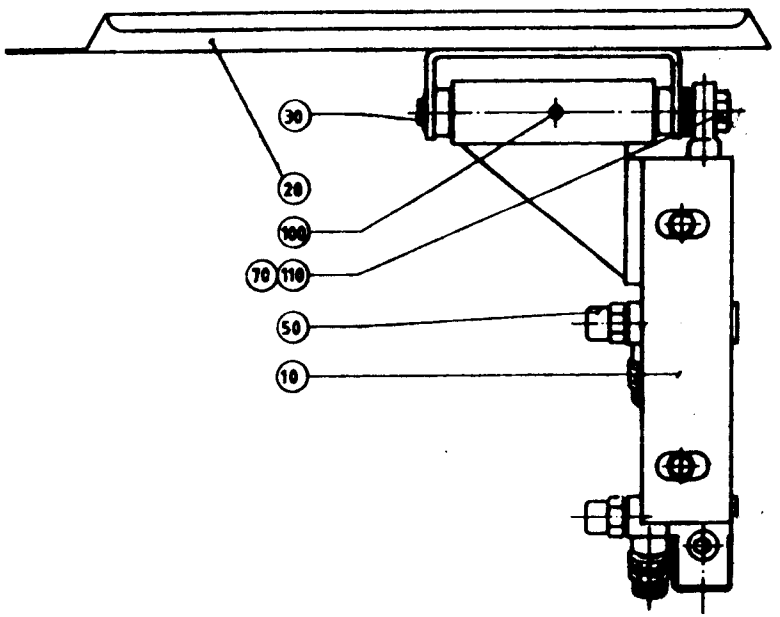
30
20
100
70
110
50
10

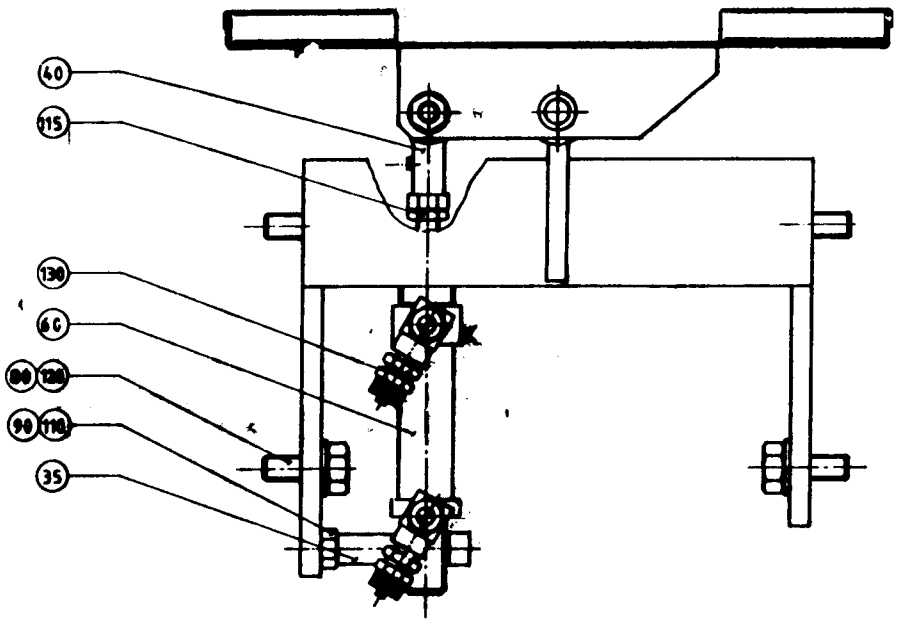
40
115
130
60
80
120
90
110
35

| From | Pos | Part No | SP | UN | Qty | Description |
|---|---|---|---|---|---|---|
| | 010 | 466014 | - | | 1 | BRACKET |
| | 020 | 522160 | - | | 1 | CHUTE |
| | 030 | 5310 | - | | 1 | SHAFT |
| | 035 | 522303 | - | | 1 | SPACER PIPE |
| | 040 | 90115-0008 | - | | 1 | ROD END |
| | 050 | 90235-0241 | - | | 2 | VALVE |
| | 060 | 90239-0821 | - | | 1 | CYLINDER |
| | 070 | 312105-0455 | - | | 1 | SCREW M6S8X30RFR |
| | 080 | 312105-0493 | - | | 4 | SCREW M6S10X25RFR |
| | 090 | 312115-0463 | - | | 1 | SCREW 8X60 A4 80 |
| | 100 | 312306-0366 | - | | 1 | GRUB SCREW P6SS6X12FZB |
| | 110 | 312605-0318 | - | | 2 | NUT M6M8RFR |
| | 115 | 312621-0318 | - | | 1 | NUT ML6M8FZB |
| | 120 | 315105-0173 | - | | 4 | WASHER BRB10,5X22RFR |
| | 130 | 342920-0113 | - | | 2 | PIPE CONNE6/4-1/8 |

| From | Pos | Part No | SP | UN | Qty | Description |
|---|---|---|---|---|---|---|

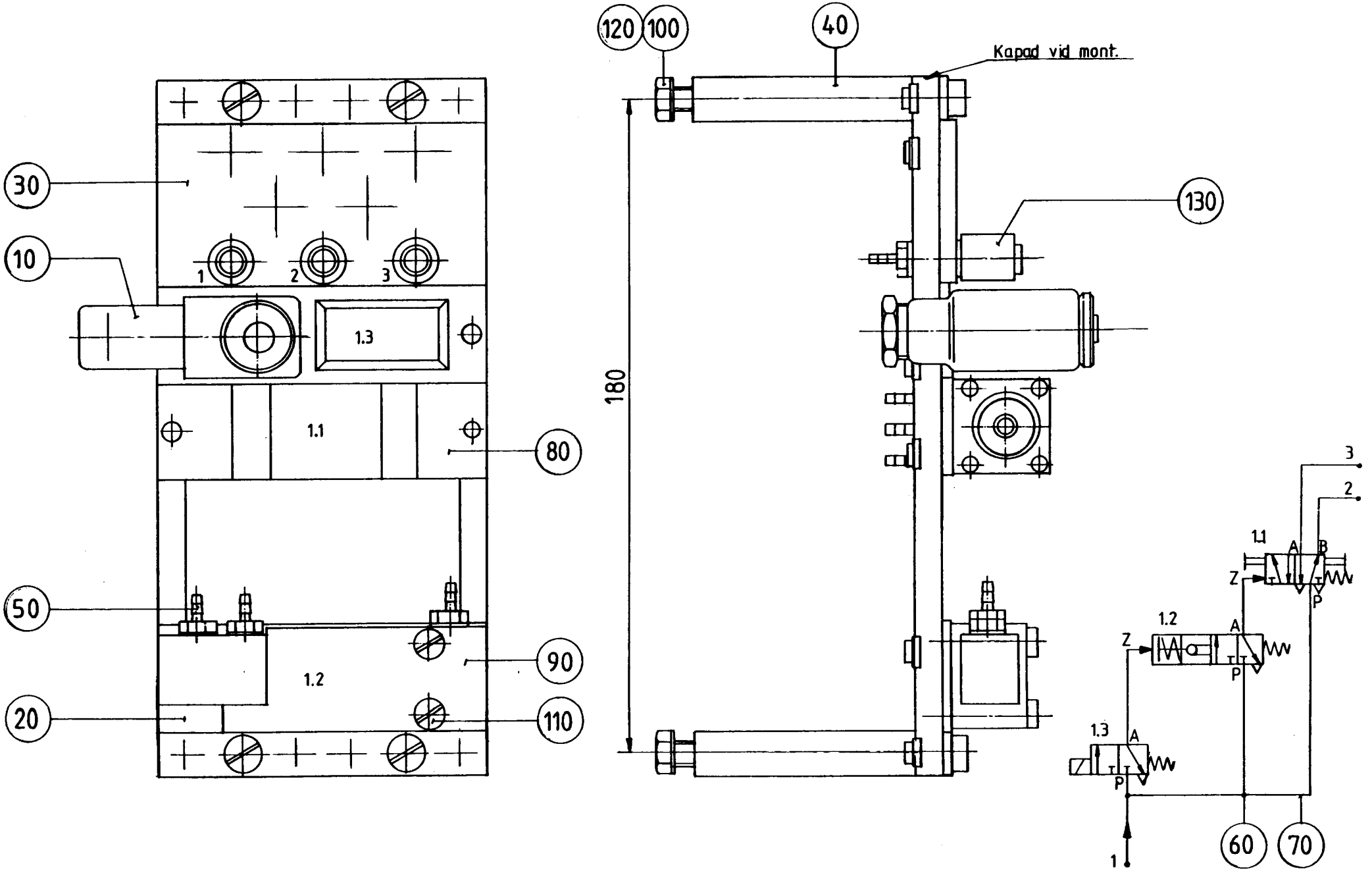
120
100
40
Kapad vid mont.
130
30
10
1
2
3
1.3
1.1
80
180
50
90
1.2
20
110
3
2
1.1
A
B
Z
P
1.2
Z
A
T
T
P
1.3
A
T
T
P
1
60
70

Last Alteration: 8333 86-03-10

Corresponding C-lists: 450344-010V
Assembly Drawing: 450344-1

Date Printed: 900205

| From | Pos | Part No | SP | UN | Qty | Description |
|---|---|---|---|---|---|---|
| | 010 | 90042-0045 | - | | 1 | SOLENOID VALVE 50HZ |
| | | 90042-0346 | S | | 1 | * COIL |
| | 010 | 90042-0046 | - | | 1 | SOLENOID VALVE 60Hz |
| | | 90042-0379 | S | | 1 | * COIL |
| | 020 | 237427 | - | | 1 | PLATE |
| | 030 | 237499 | - | | 1 | PLATE |
| | 040 | 90042-0328 | - | | 1 | RAMP |
| | 050 | 90055-0044 | - | | 6 | HOSE NIPPLE |
| | 060 | 90055-0045 | - | | 2 | HOSE NIPPLE |
| | 070 | 90166-0099 | - | M | 1 | HOSE |
| | 080 | 90235-0194 | - | | 1 | VALVE |
| | 090 | 90235-0198 | - | | 1 | VALVE |
| | 095 | 90236-0026 | - | | 4 | BRACKET |
| | 100 | 312105-0370 | - | | 4 | SCREW M6S6X20RFR |
| | 105 | 312125-0289 | - | | 4 | SLOTTED HEMCS4X10RFR |
| | 110 | 312125-0299 | - | | 2 | SLOTTED HEMCS4X30RFR |
| | 120 | 315105-0153 | - | | 4 | WASHER BRB6,4X12RFR |
| | 130 | 342722-0197 | - | | 3 | PIPE CONNED=6-M5 |

| From | Pos | Part No | SP | UN | Qty | Description |
|---|---|---|---|---|---|---|

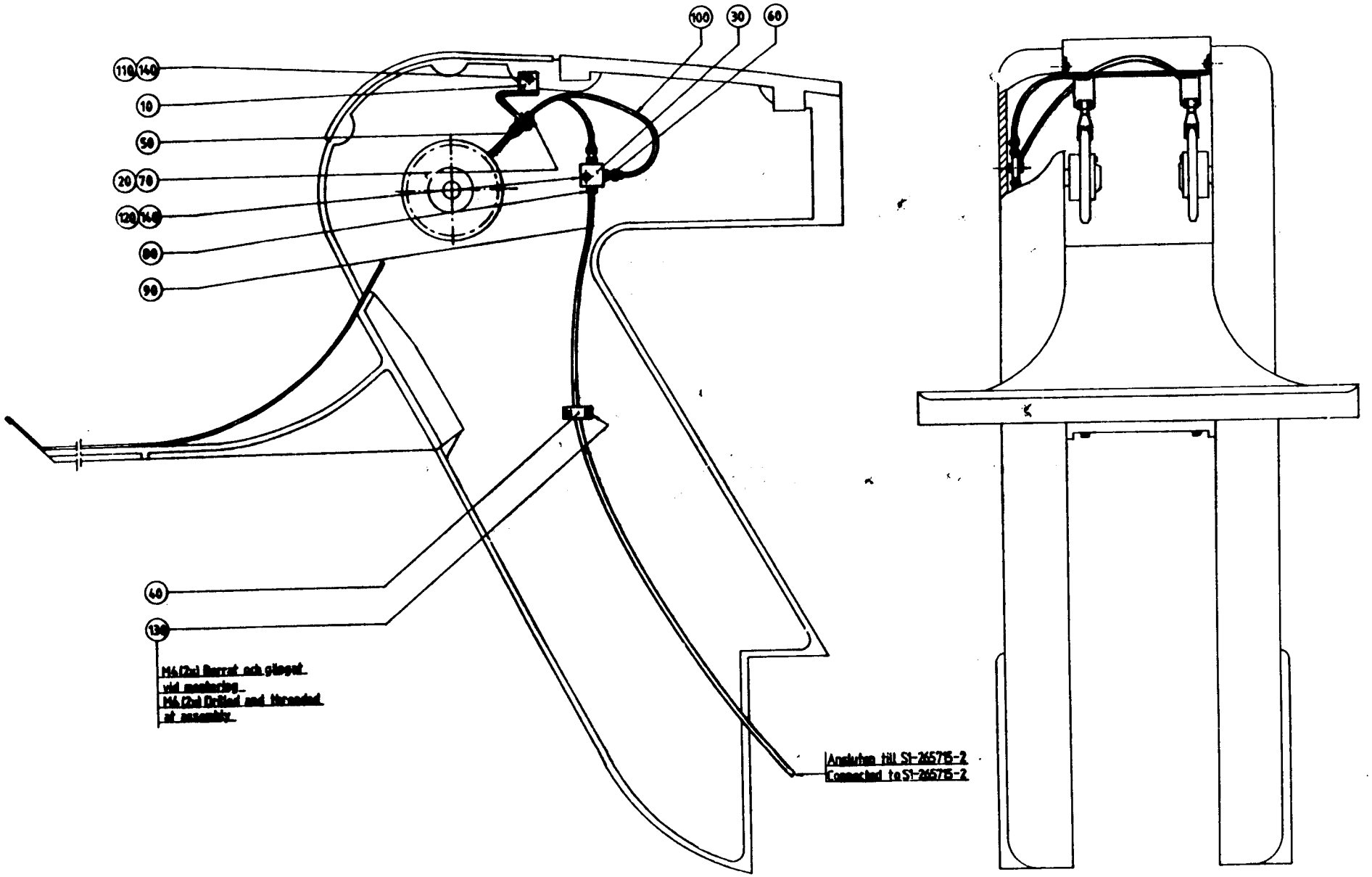
100
30
60
110
140
10
50
20
70
120
140
80
90
40
130
M6 (Tot) Borrat och gängat vid montering
M6 (Tot) Drilled and threaded at assembly
Ansluten till S1-265715-2
Connected to S1-265715-2

Last Alteration: 8333 86-09-10

Corresponding C-lists: 526535-010V
Assembly Drawing: 526535-1

Date Printed: 900205

| From | Pos | Part No | SP | UN | Qty | Description |
|---|---|---|---|---|---|---|
| | 010 | 522021 | - | | 1 | HOLDER |
| | 020 | 90028-0001 | - | | 2 | CONE |
| | 030 | 90032-0027 | - | | 1 | BRANSCH |
| | 040 | 90074-0018 | - | | 1 | CLIP |
| | 050 | 90092-0048 | - | | 2 | OIL BRUSH |
| | 060 | 90092-0065 | - | | 2 | METERING VALVE |
| | 070 | 90134-0003 | - | | 2 | BUSHING |
| | 080 | 90134-0034 | - | | 1 | NIPPLE |
| | 090 | 90166-0011 | - | M | 2 | HOSE |
| | 100 | 90166-0103 | - | M | 1 | HOSE |
| | 110 | 312105-0366 | - | | 2 | SCREW M6S6X12RFR |
| | 120 | 312105-0372 | - | | 1 | SCREW M6S6X25RFR |
| | 130 | 312125-0287 | - | | 2 | SLOTTED HEMCS4X8RFR |
| | 140 | 315105-0153 | - | | 3 | WASHER BRB6,4X12RFR |

| From | Pos | Part No | SP | UN | Qty | Description |
|---|---|---|---|---|---|---|

**SPC 6303**
**Tetra Classic TC**

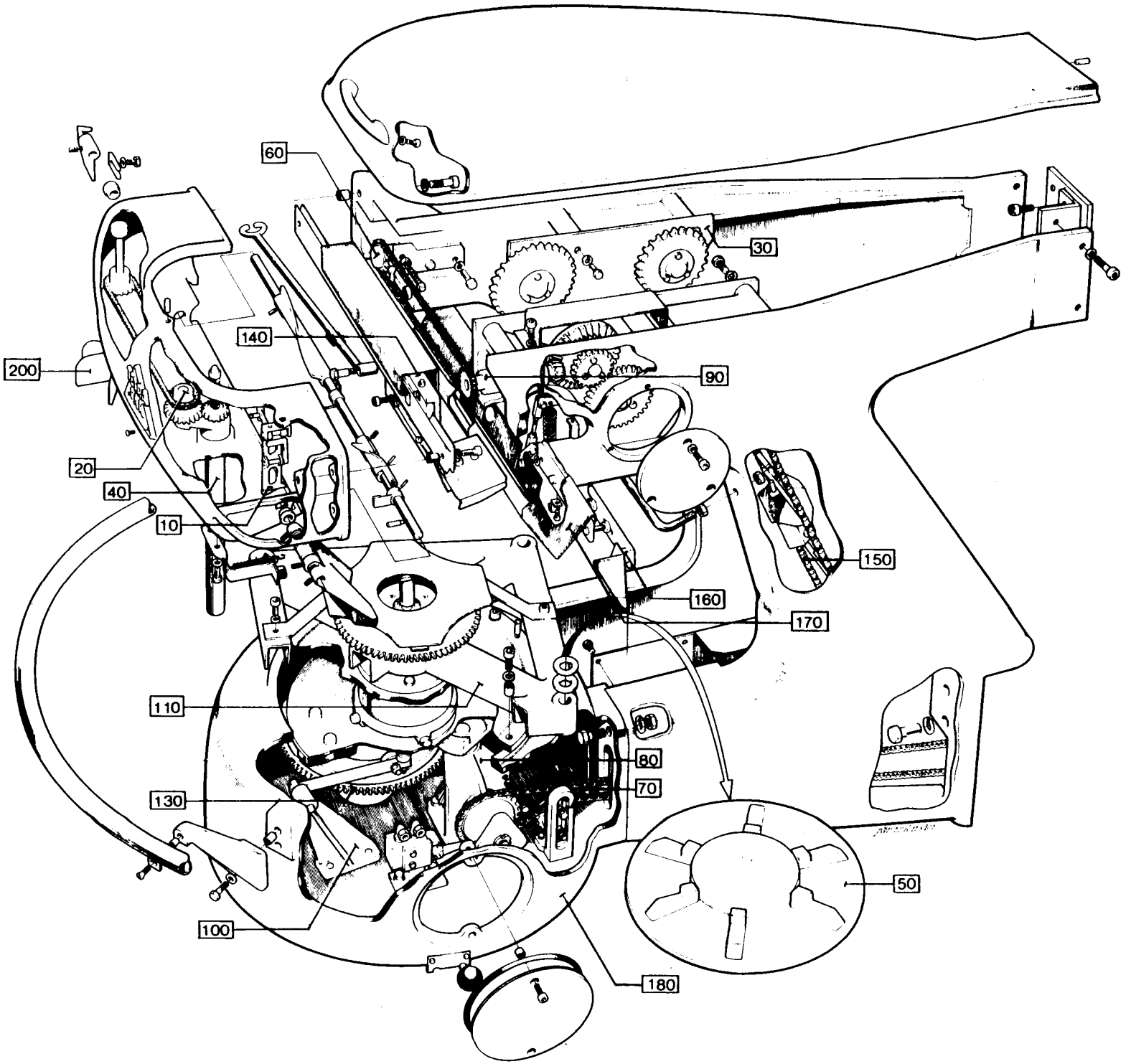
60
30
140
200
90
20
40
10
150
160
170
110
80
70
130
50
100
180

| From | Pos | Page No | Description |
|---|---|---|---|
| | F000 | 701-1a | PACKER TC/150 |
| | F000 | 701-1b | PACKER TC/300 |
| | F000 | 701-1c | PACKER TC/500 |
| | F010 | 702-1 | CATCH |
| | F020 | 703-1a | CENTER ARM TC/150 TC/300 |
| | F020 | 703-1b | CENTER ARM TC/500 |
| | F030 | 704-1a | SPROCKET PLATE TC/150 TC/300 |
| | F030 | 704-1b | SPROCKET PLATE TC/500 |
| | F040 | 705-1a | TUBULAR AXLE TC/150 TC/300 |
| | F040 | 705-1b | TUBULAR AXLE TC/500 |
| | F050 | 706-1a | TABLE TC/150 TC/300 |
| | F050 | 706-1b | TABLE TC/500 |
| | F060 | 707-1 | CHAIN TENSIONER |
| | F070 | 708-1 | CHAIN TENSIONER |
| | F080 | 709-1 | MALTESE CROSS CRANK |
| | F090 | 710-1a | BEVEL GEAR TC/150 TC/300 |
| | F090 | 710-1b | BEVEL GEAR TC/500 |
| | F100 | 711-1 | CONNECTION |
| | F110 | 712-1a | TABLE TC/150 TC/300 |
| | F110 | 712-1b | TABLE TC/500 |
| | | 712-1.1 | . MALTESE CROSS |
| | F130 | 713-1 | CURVE WHEEL |
| | F140 | 714-1a | CARRIAGE TC/150 |
| | F140 | 714-1b | CARRIAGE TC/300 |
| | F140 | 714-1c | CARRIAGE TC/500 |
| | F150 | 715-1a | SCOOP TC/150 |
| | F150 | 715-1b | SCOOP TC/300 |
| | F150 | 715-1c | SCOOP TC/500 |
| | | 715-1c.1 | .SCOOP TC/500 |
| | F160 | 716-1 | PLATE |
| | F170 | 717-1a | CHUTE TC/150 |
| | F170 | 717-1b | CHUTE TC/300 |
| | F180 | 718-1 | UNIT |
| | | 718-1.1 | . FAN |
| | F200 | 719-1 | STAR |
| | F210 | 720-1a | CENTRAL LUBRICATION TC/150 TC/300 |
| | F210 | 720-1b | CENTRAL LUBRICATION TC/500 |
| | F220 | 721-1 | OPERETING ARM TC/500 |

| From | Pos | Page No | Description |
|---|---|---|---|

# 701-1b

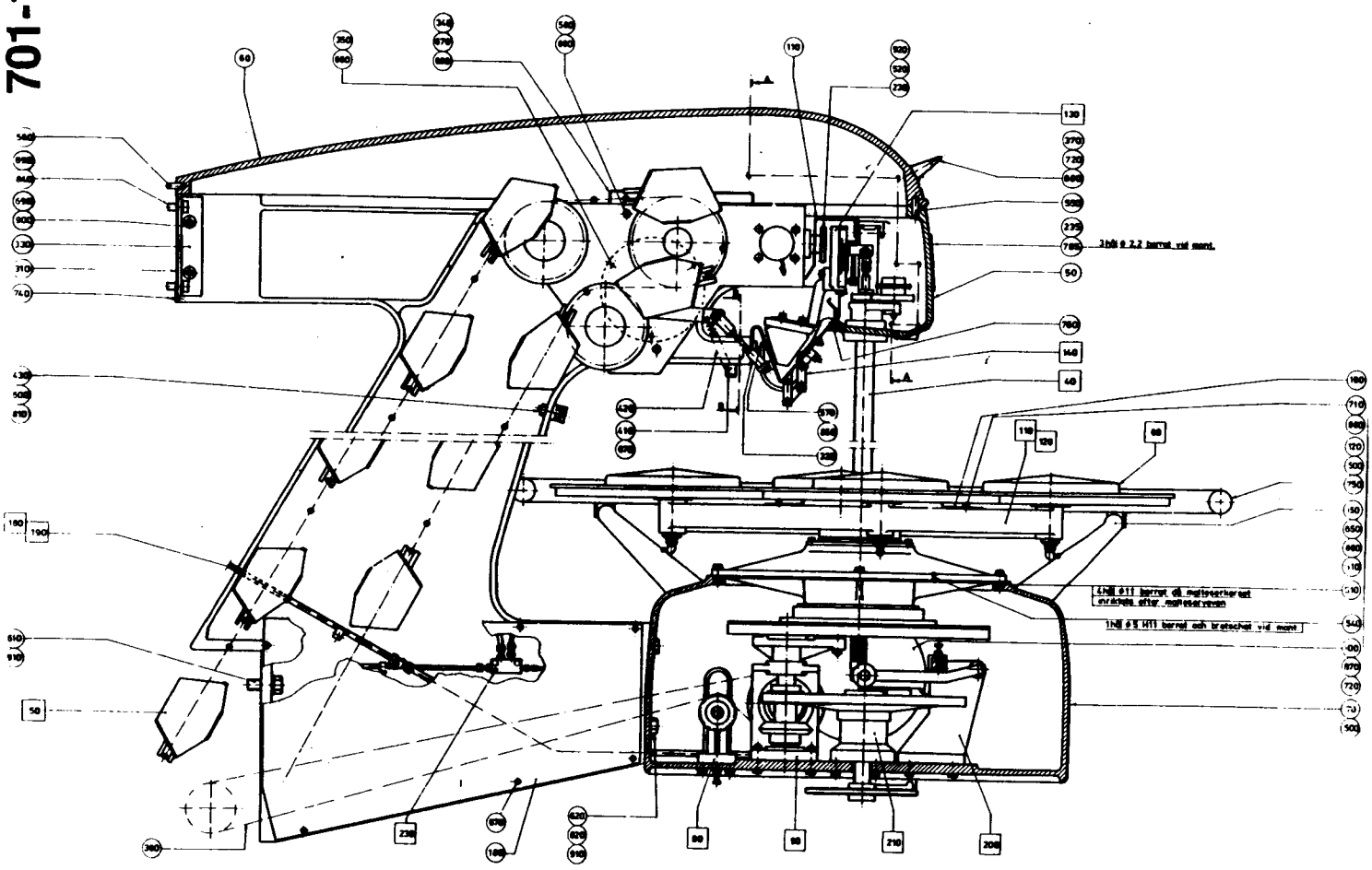

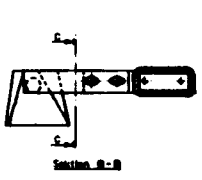

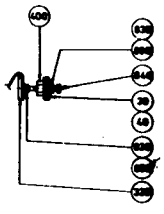

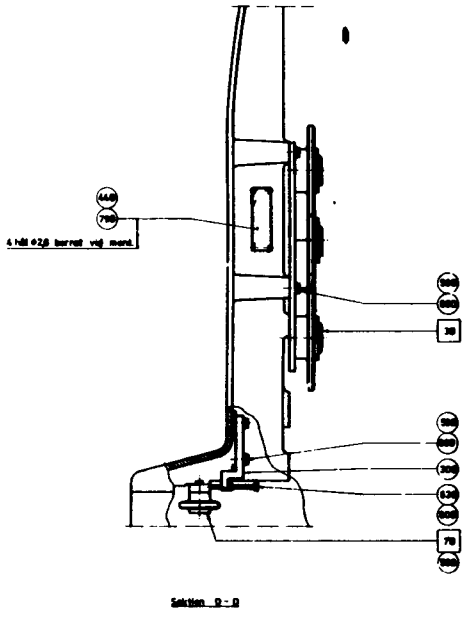

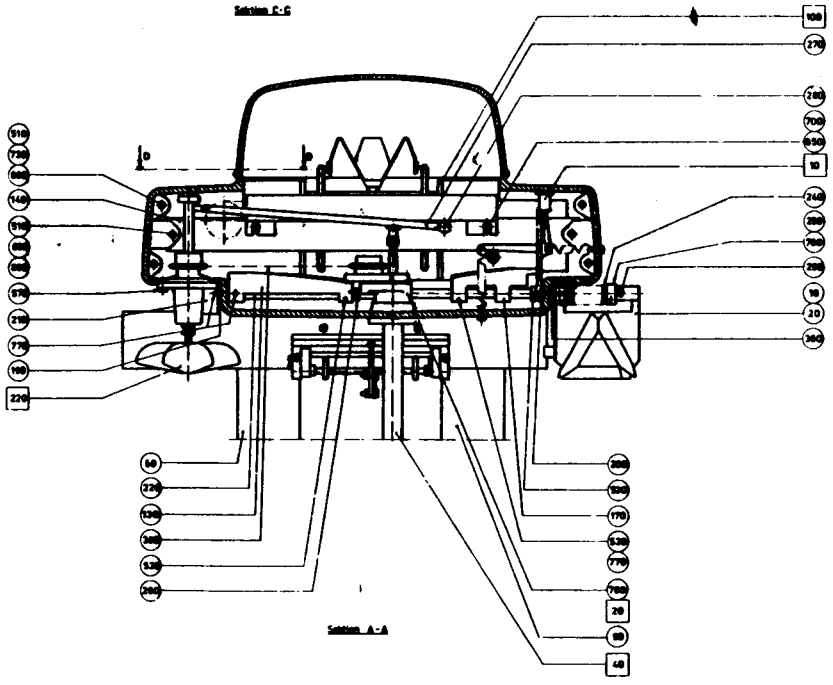

Last Alteration: 8331 86-02-11

Corresponding C-lists: 14681-040V
Assembly Drawing: 14681-2/3

Date Printed: 900205

| From | Pos | Part No | SP | UN | Qty | Description |
|---|---|---|---|---|---|---|
| | 010 | 5426 | - | | 1 | FLAP 236ml 250ml |
| | 020 | 5568 | - | | 1 | FLAP 284ml 300ml |
| | 030 | 5427 | - | | 1 | STOP PLATE 236ml 250ml |
| | 040 | 5569 | - | | 1 | STOP PLATE 284ml 300ml |
| | 050 | 4515 | - | | 1 | COVER |
| | 060 | 4516-0001 | - | | 1 | COVER |
| | 070 | 4519 | - | | 1 | LOWER SECTION |
| | 080 | 31515-0001 | - | | 1 | PACKER FRAME |
| | 090 | G- 31516-0001 | - | | 1 | PACKER FRAME RIGHT |
| | 100 | G- 3464 | - | | 1 | COVER |
| | 110 | 4550 | - | | 1 | CHAIN GUARD |
| | 120 | 4549 | - | | 1 | RAILING |
| | 130 | 3365 | - | | 1 | CAM |
| | 140 | 3370 | - | | 1 | RAIL |
| | 150 | 3476 | - | | 4 | HOLDER |
| | 160 | 3499-0003 | - | | 1 | PROTECTION PLATE |
| | 170 | 6437 | - | | 1 | CAM |
| | 180 | 493974 | - | | 1 | PROTECTION PLATE |
| | 190 | 3382 | - | | 2 | BEARING |
| | 200 | 3391 | - | | 1 | CATCH |
| | 210 | 3392 | - | | 1 | FLAP |
| | 220 | 3399-0001 | - | | 1 | SHAFT |
| | 230 | 3448 | - | | 1 | CHAIN |
| | 235 | 3675 | - | | 1 | TETRA PAK NAME PLATE |
| | 240 | 4185 | - | | 1 | SPRING |
| | 250 | 4186 | - | | 1 | COLLET |
| | 260 | 4492 | - | | 1 | SPRING |
| | 270 | 4522 | - | | 1 | LEVER |
| | 280 | 4523 | - | | 1 | SCREW |
| | 290 | 4551 | - | | 1 | PIN |
| | 300 | 4560 | - | | 1 | BRACKET |
| | 310 | 4862 | - | | 1 | PROTECTION PLATE |
| | 320 | 5429 | - | | 1 | REINFORCEMENT |
| | 330 | 5752 | - | | 2 | BRACKET |
| | 340 | 6304 | - | | 1 | PROTECTION PLATE |
| | 350 | G- 6436 | - | | 1 | LID |
| | 360 | 6540 | - | | 5 | SHIM |
| | 370 | 7309 | - | | 1 | HANDLE |
| | 380 | 7471-0003 | - | | 1 | ROLLER CHAIN |
| | 390 | 7472-0002 | - | | 1 | CHAIN |
| | 400 | 7772 | - | | 2 | ADJUSTING NUT |
| | 410 | 8401 | - | | 1 | BRACKET |
| | 420 | 8407 | - | | 1 | SPRING |
| | 430 | 10720 | - | | 1 | PROTECTION PLATE |
| | 440 | 20497 | - | | 1 | GROUP NUMBER PLATE |

| From | Pos | Part No | SP | UN | Qty | Description |
|---|---|---|---|---|---|---|
| | 500 | 90026-0004 | - | | 6 | THREADED BUSH |
| | 510 | 90026-0005 | - | | 18 | THREADED BUSH |
| | 520 | 90061-0002 | - | | 1 | GRAB RING |
| | 530 | 311201-0239 | - | | 3 | TAPER PIN KP4X22SLIPAD |
| | 540 | 311303-0310 | - | | 1 | SLOTTED PIRPB5X20FZB |
| | 550 | 311303-0404 | - | | 1 | SLOTTED PIRPB8X28FZB |
| | 560 | 311309-0403 | - | | 1 | SLOTTED PIRPE8X25FZB |
| | 570 | 312101-0368 | - | | 7 | SCREW M6S6X16FZB |
| | 580 | 312101-0453 | - | | 12 | SCREW M6S8X25FZB |
| | 590 | 312101-0455 | - | | 1 | SCREW M6S8X30FZB |
| | 600 | 312101-0495 | - | | 2 | SCREW M6S10X30FZB |
| | 610 | 312101-0628 | - | | 4 | SCREW M6S16X40FZB |
| | 620 | 312101-0630 | - | | 3 | SCREW M6S16X50FZB |
| | 630 | 312104-0463 | - | | 1 | SCREW M6S8X60H8.8 FZB |
| | 640 | 312109-0381 | - | | 2 | SCREW M6S6X55HA480 |
| | 650 | 312105-0455 | - | | 8 | SCREW M6S8X30RFR |
| | 660 | 312111-0329 | - | | 3 | SCREW MC6S5X16FZB |
| | 670 | 312111-0362 | - | | 10 | SCREW MC6S6X8FZB |
| | 680 | 312111-0455 | - | | 2 | SCREW MC6S8X30FZB |
| | 690 | 312111-0492 | - | | 8 | SCREW MC6S10X22FZB |
| | 700 | 312115-0366 | - | | 3 | SCREW 6X12 A4 80 |
| | 710 | 312115-0368 | - | | 4 | SCREW 6X16 A4 80 |
| | 720 | 312115-0372 | - | | 4 | SCREW MC6S6X25 A4 80 |
| | 730 | 312115-0455 | - | | 4 | SCREW 8X30 A4 80 |
| | 740 | 312121-0321 | - | | 1 | SLOTTED HEMCS5X6FZB |
| | 750 | 312151-0368 | - | | 4 | SCREW MF6S6X16FZB |
| | 760 | 312165-0366 | - | | 3 | SLOTTED HEMKFS6X12RFR |
| | 770 | 312316-0321 | - | | 4 | GRUB SCREW SK6SS5X6FZB |
| | 780 | 312316-0362 | - | | 4 | GRUB SCREW SK6SS6X8FZB |
| | 785 | 312502-0171 | - | | 3 | DRIVE SCREKDS2X6FNB |
| | 790 | 312502-0221 | - | | 8 | DRIVE SCREKDS4X6FNB |
| | 800 | 312601-0318 | - | | 1 | NUT M6M8FZB |
| | 810 | 312601-0320 | - | | 2 | NUT M6M10FZB |
| | 820 | 312601-0324 | - | | 3 | NUT M6M16FZB |
| | 830 | 312605-0316 | - | | 4 | NUT M6M6RFR |
| | 840 | 315101-0173 | - | | 4 | WASHER BRB10,5X22FZB |
| | 850 | 315105-0153 | - | | 8 | WASHER BRB6,4X12RFR |
| | 860 | 315105-0165 | - | | 8 | WASHER BRB8,4X16RFR |
| | 870 | 315202-0643 | - | | 1 | O-RING 196,44X3,53 |
| | 880 | 315401-0153 | - | | 12 | WASHER FBH6,1FZB |
| | 890 | 315401-0165 | - | | 16 | WASHER FBH8,2FZB |
| | 900 | 315401-0173 | - | | 4 | WASHER FBH10,2FZB |
| | 910 | 315401-0186 | - | | 7 | WASHER FBH16,2FZB |
| | 920 | 321305-0095 | - | | 1 | BALL BEARISKF635-2Z |

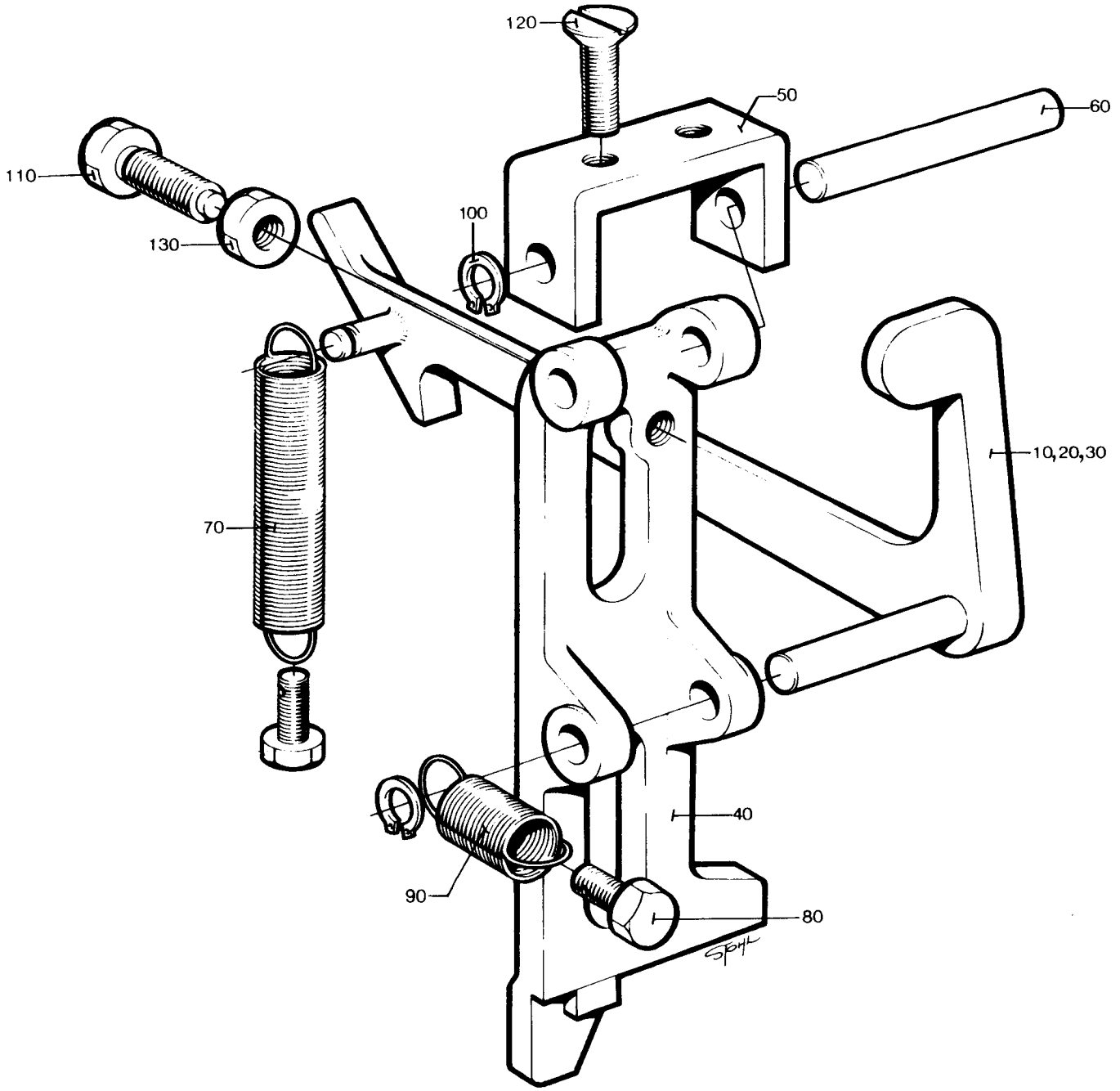
120
50
60
110
100
130
10,20,30
70
40
90
80

| From | Pos | Part No | SP | UN | Qty | Description |
|---|---|---|---|---|---|---|
| | 010 | 6526 | - | | 1 | CATCH TC/300 |
| | 020 | 3406 | - | | 1 | CATCH TC/500 |
| | 030 | 7762 | - | | 1 | CATCH TC/150 |
| | 040 | 3405 | - | | 1 | CATCH |
| | 050 | 3407 | - | | 1 | CLAMP |
| | 060 | 3455 | - | | 1 | SHAFT |
| | 070 | 3488 | - | | 1 | TENSION SPRING |
| | 080 | 3496 | - | | 2 | SCREW |
| | 090 | 4493 | - | | 1 | TENSION SPRING |
| | 100 | 90061-0003 | - | | 4 | GRAB RING |
| | 110 | 312101-0372 | - | | 1 | SCREW M6S6X25FZB |
| | 120 | 312165-0368 | - | | 2 | SLOTTED HEMKFS6X16RFR |
| | 130 | 312601-0316 | - | | 1 | NUT M6M6FZB |

| From | Pos | Part No | SP | UN | Qty | Description |
|---|---|---|---|---|---|---|

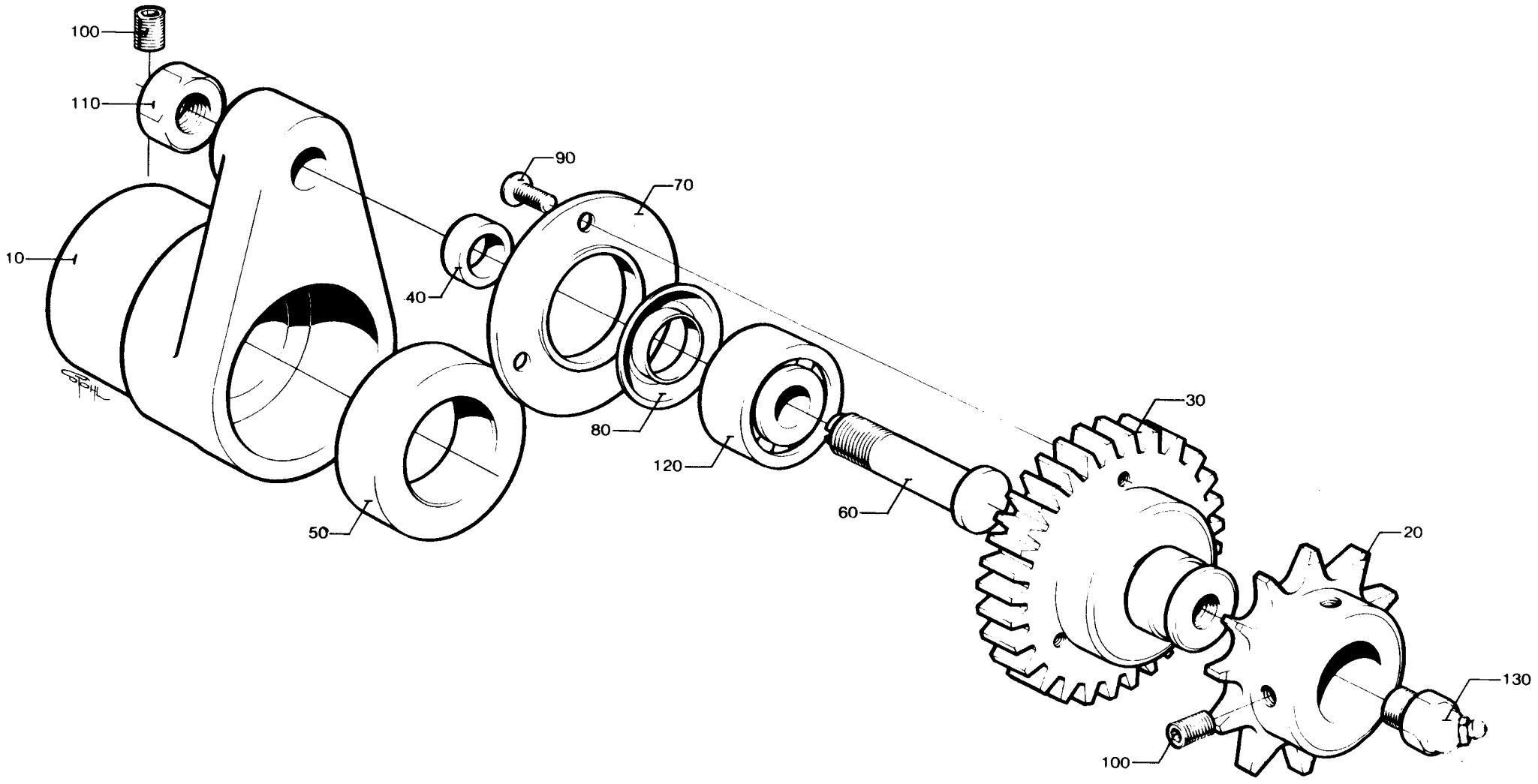
100
110
10
90
70
40
80
120
50
60
30
20
130
100

| From | Pos | Part No | SP | UN | Qty | Description |
|---|---|---|---|---|---|---|
| | 010 | 4527 | - | | 1 | BEARING HOUSING |
| | 020 | 3373 | - | | 1 | SPROCKET |
| | 030 | 3376 | - | | 1 | GEAR WHEEL |
| | 040 | 3379 | - | | 1 | SPACER DISC |
| | 050 | 3383 | - | | 1 | BEARING |
| | 060 | 3397 | - | | 1 | SHAFT |
| | 070 | 3400 | - | | 1 | WASHER |
| | 080 | 90118-0002 | - | | 1 | SEALING RING |
| | 090 | 312151-0287 | - | | 3 | SCREW MF6S4X8FZB |
| | 100 | 312316-0362 | - | | 2 | GRUB SCREW SK6SS6X8FZB |
| | 110 | 312601-0320 | - | | 1 | NUT M6M10FZB |
| | 120 | 321330-0100 | - | | 1 | BALL BEARISKF3200 |
| | 130 | 344502-0026 | - | | 1 | NIPPLE L AHKR1/8" |

| From | Pos | Part No | SP | UN | Qty | Description |
|---|---|---|---|---|---|---|

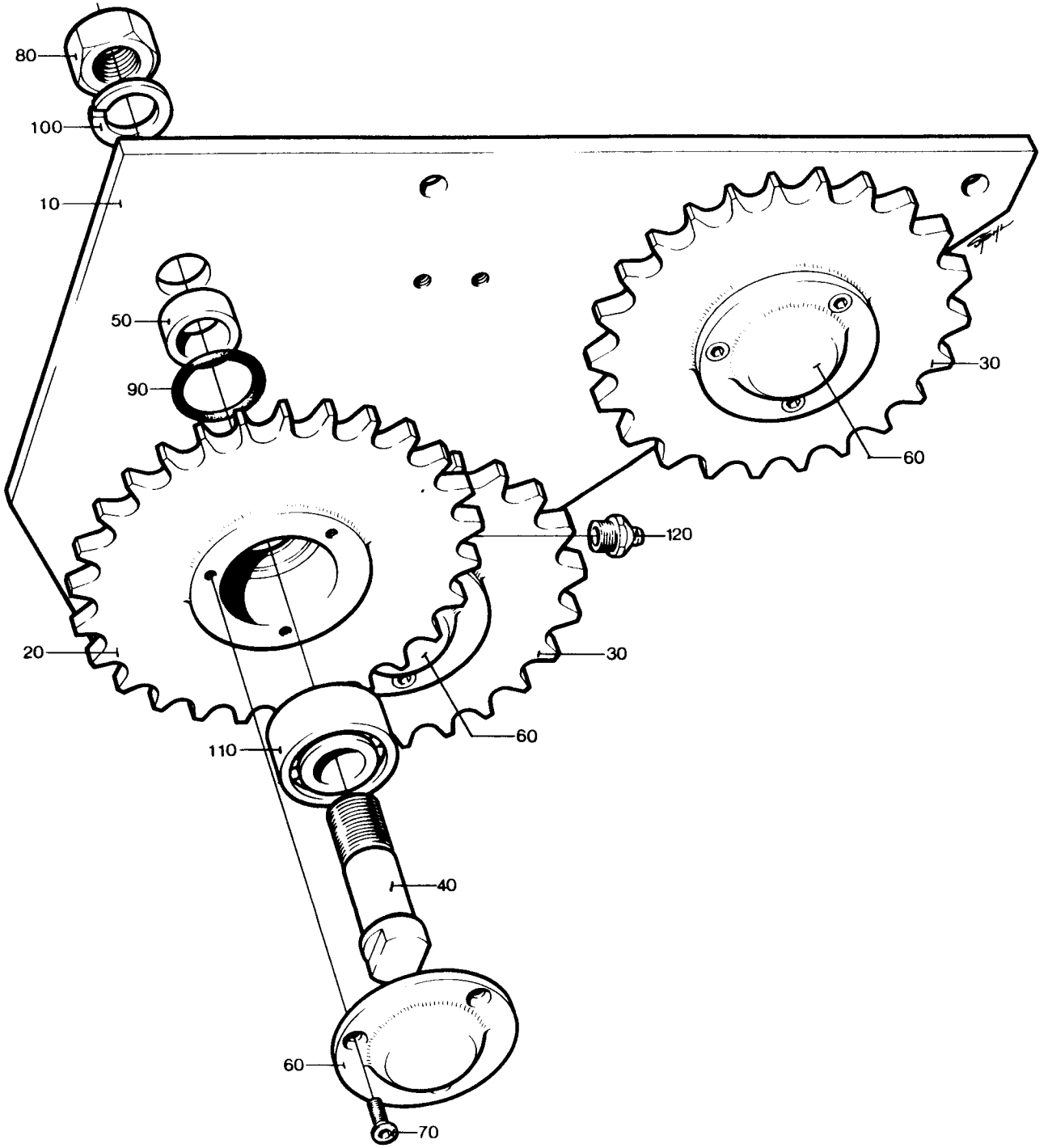
80
100
10
50
90
30
60
120
20
30
60
110
40
60
70

| From | Pos | Part No | SP | UN | Qty | Description |
|---|---|---|---|---|---|---|
| | 010 | 4529 | - | | 1 | PLATE |
| | 020 | 4553 | - | | 1 | SPROCKET |
| | 030 | 4554 | - | | 2 | SPROCKET |
| | 040 | 3274-0005 | - | | 3 | BOLT |
| | 050 | 4555 | - | | 3 | SPACER RING |
| | 060 | 5716 | - | | 3 | LID |
| | 070 | 312151-0291 | - | | 9 | SCREW MF6S4X12FZB |
| | 080 | 312601-0324 | - | | 3 | NUT M6M16FZB |
| | 090 | 315202-0518 | - | | 3 | O-RING 23,40X3,53 |
| | 100 | 315401-0186 | - | | 3 | WASHER FBH16,2FZB |
| | 110 | 321330-0103 | - | | 3 | BALL BEARISKF3203 |
| | 120 | 344502-0026 | - | | 3 | NIPPLE L AHKR1/8" |

| From | Pos | Part No | SP | UN | Qty | Description |
|---|---|---|---|---|---|---|

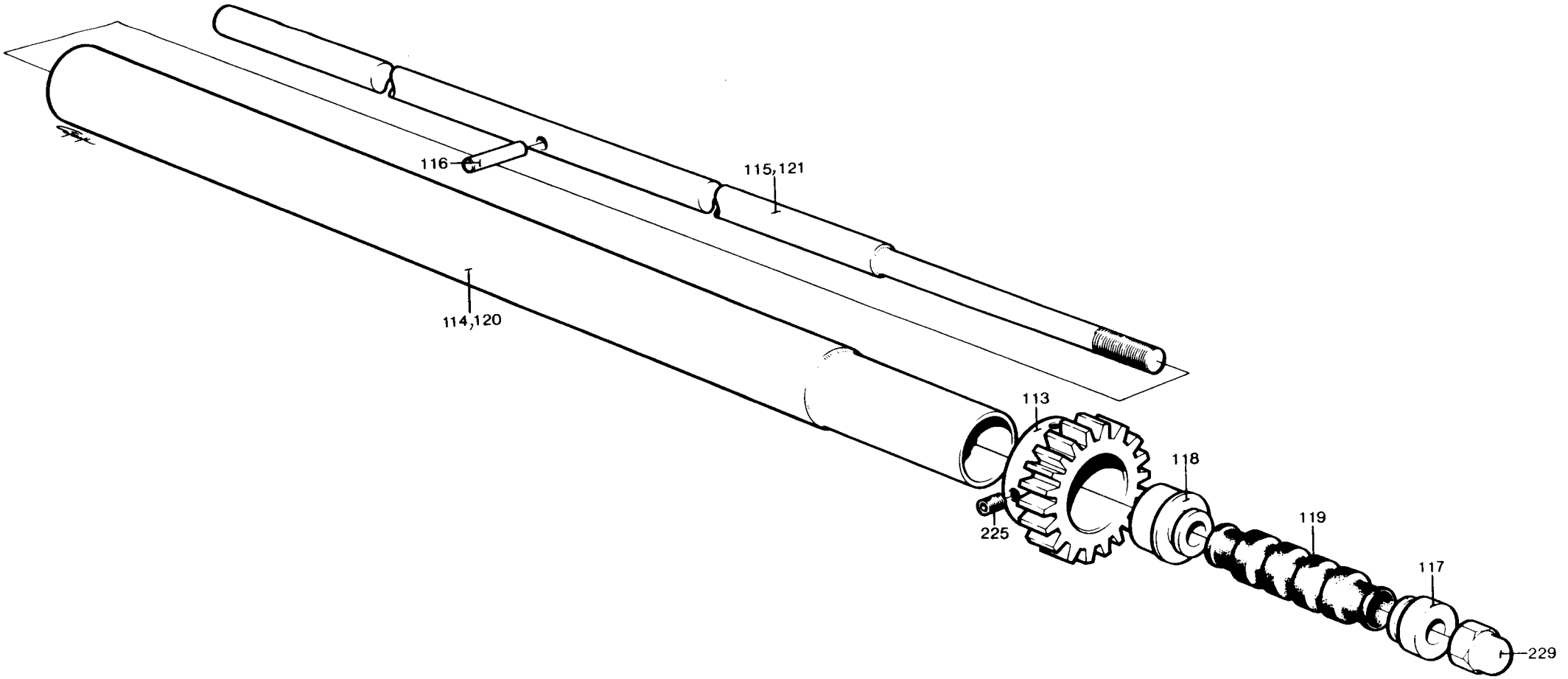
116
115,121
114,120
113
118
225
119
117
229

| From | Pos | Part No | SP | UN | Qty | Description |
|---|---|---|---|---|---|---|
| | 114 | 4531 | - | | 1 | TUBULAR AXLE TC/300 |
| | 115 | 4532 | - | | 1 | ROD TC/300 |
| | 120 | 20881 | - | | 1 | TUBULAR AXLE TC/150 |
| | 121 | 20882 | - | | 1 | ROD TC/150 |
| | 113 | 3375 | - | | 1 | GEAR WHEEL |
| | 116 | 5917 | - | | 1 | PIN |
| | 117 | 6450 | - | | 1 | NUT |
| | 118 | 6451 | - | | 1 | BEARING |
| | 119 | 6452 | - | | 1 | BELLOWS |
| | 225 | 312316-0321 | - | | 2 | GRUB SCREW SK6SS5X6FZB |
| | 229 | 312701-0318 | - | | 1 | CAP NUT MHM8FKRB |

| From | Pos | Part No | SP | UN | Qty | Description |
|---|---|---|---|---|---|---|

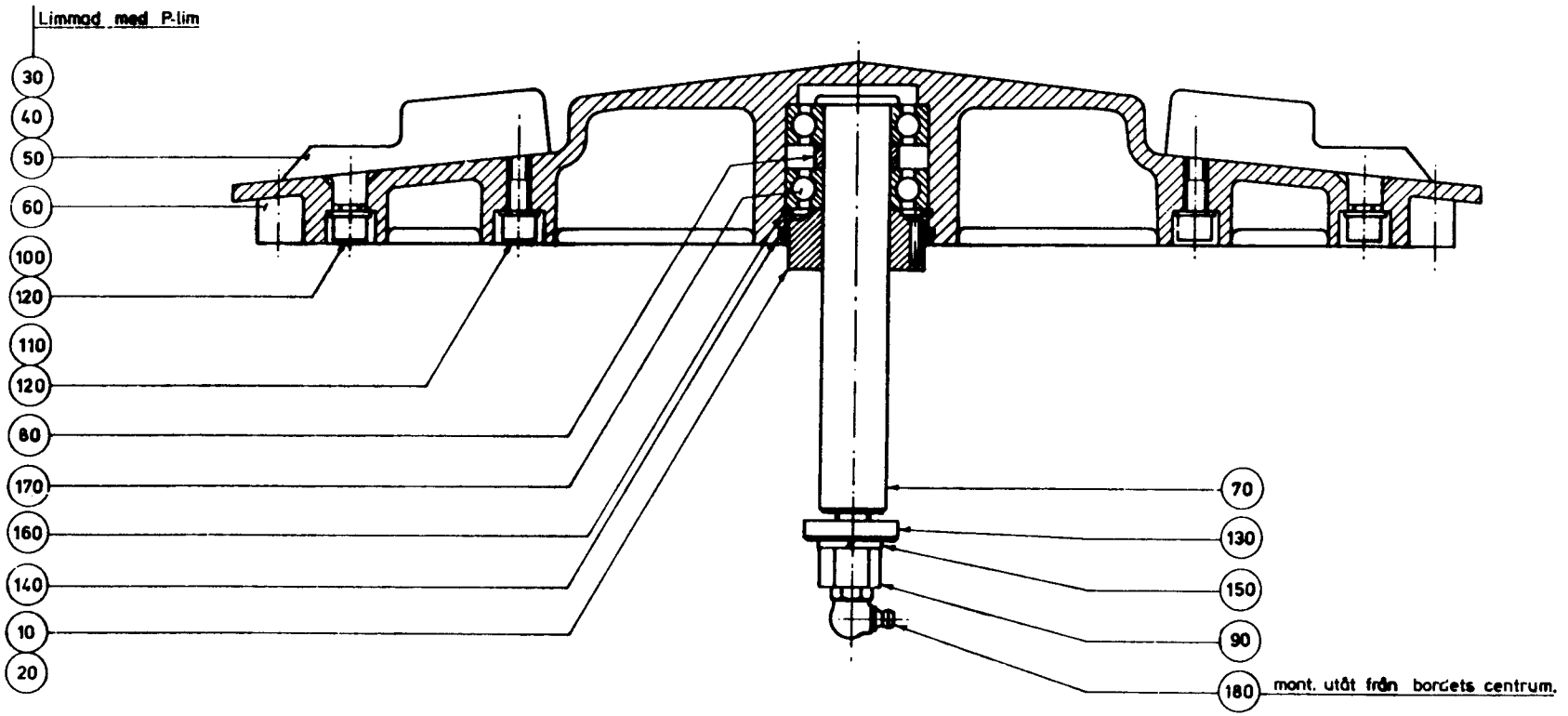
Limmad med P-lim
30
40
50
60
100
120
110
120
80
170
160
140
10
20
70
130
150
90
180
mont. utåt från borcets centrum.

| From | Pos | Part No | SP | UN | Qty | Description |
|---|---|---|---|---|---|---|
| | 010 | 5032-0004 | - | | 1 | SPACER SLEEVE TC/150 |
| | 020 | 5032-0001 | - | | 1 | SPACER SLEEVE TC/300 236ml 250ml |
| | 020 | 5032-0001 | - | | 1 | SPACER SLEEVE TC/300 284ml 300ml |
| | 030 | 7770 | - | | 6 | LUG TC/150 |
| | 040 | 6741-0001 | - | | 6 | LUG TC/300 236ml 250ml |
| | 050 | 6741-0002 | - | | 6 | LUG TC/300 284ml 300ml |
| | 060 | 5030 | - | | 1 | TOOTHED DISC |
| | 070 | 5031-0001 | - | | 1 | SHAFT |
| | 080 | 5033-0001 | - | | 1 | SPACER SLEEVE |
| | 090 | 6524 | - | | 1 | SCREW |
| | 100 | 312115-0366 | - | | 6 | SCREW 6X12 A4 80 |
| | 110 | 312115-0374 | - | | 6 | SCREW 6X30 A4 80 |
| | 120 | 315105-0153 | - | | 12 | WASHER BRB6,4X12RFR |
| | 130 | 315121-0173 | - | | 1 | WASHER BRSB10,5X28FZB |
| | 140 | 315202-0224 | - | | 1 | O-RING 42,2X3 |
| | 150 | 315401-0173 | - | | 1 | WASHER FBH10,2FZB |
| | 160 | 315752-0128 | - | | 1 | LOCK RING SGH42 |
| | 170 | 321306-0104 | - | | 2 | BALL BEARISKF6004 |
| | 180 | 344502-0066 | - | | 1 | NIPPLE L CHKR1/8" |

| From | Pos | Part No | SP | UN | Qty | Description |
|---|---|---|---|---|---|---|

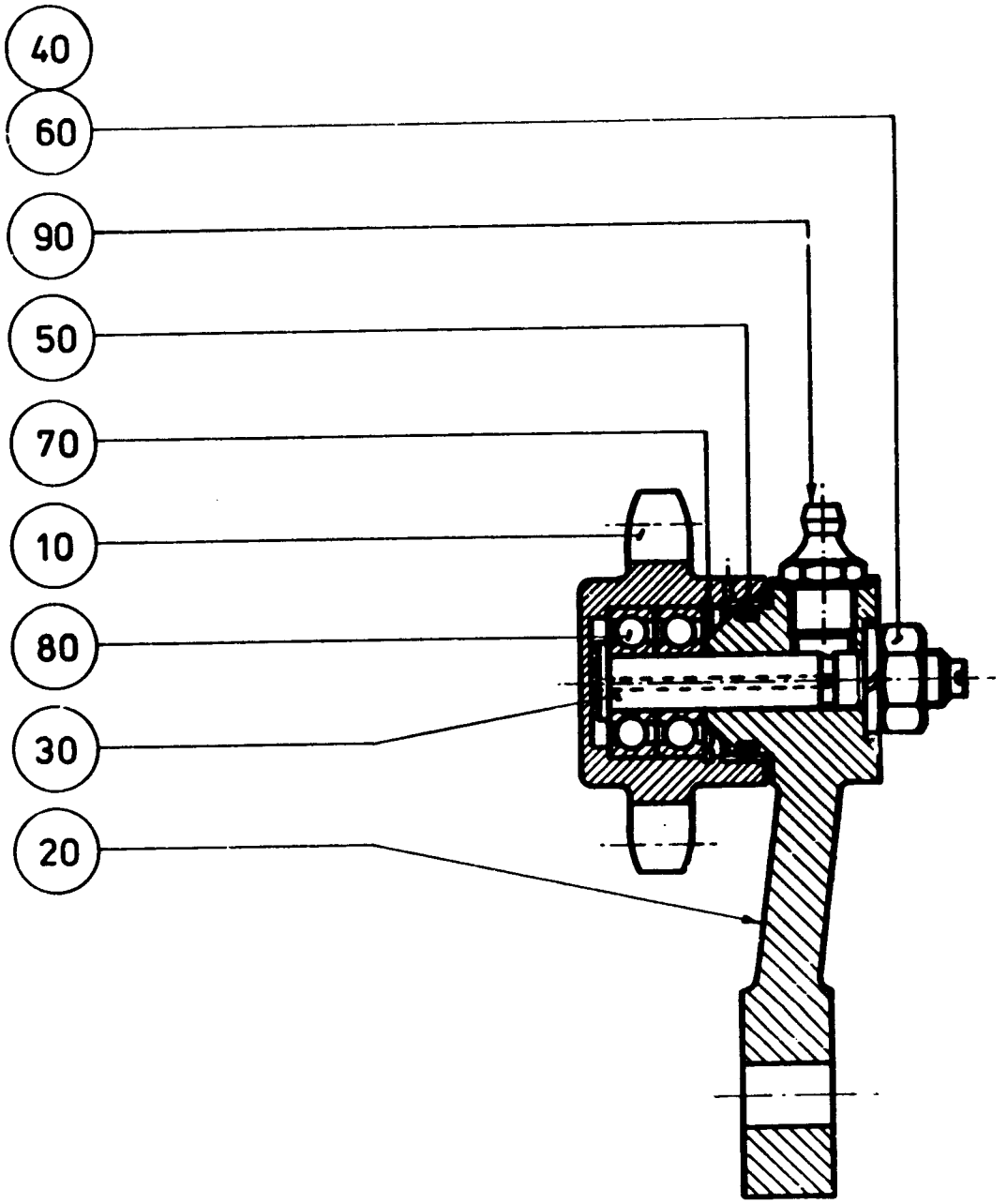
40
60
90
50
70
10
80
30
20

Last Alteration: 5976 83-09-08

Corresponding C-lists: 5039-010V
Assembly Drawing: 5039-1

Date Printed: 900205

| From | Pos | Part No | SP | UN | Qty | Description |
|---|---|---|---|---|---|---|
| | 010 | 5040 | - | | 1 | SPROCKET |
| | 020 | G- 5041 | - | | 1 | CHAIN TENSIONER |
| | 030 | 3395 | - | | 1 | BOLT |
| | 040 | 312601-0318 | - | | 1 | NUT M6M8FZB |
| | 050 | 315202-0513 | - | | 1 | O-RING 17,13X2,62 |
| | 060 | 315401-0165 | - | | 1 | WASHER FBH8,2FZB |
| | 070 | 315752-0117 | - | | 1 | LOCK RING SGH22 |
| | 080 | 321300-0098 | - | | 2 | BALL BEARISKF608 |
| | 090 | 344502-0026 | - | | 1 | NIPPLE L AHKR1/8" |

| From | Pos | Part No | SP | UN | Qty | Description |
|---|---|---|---|---|---|---|

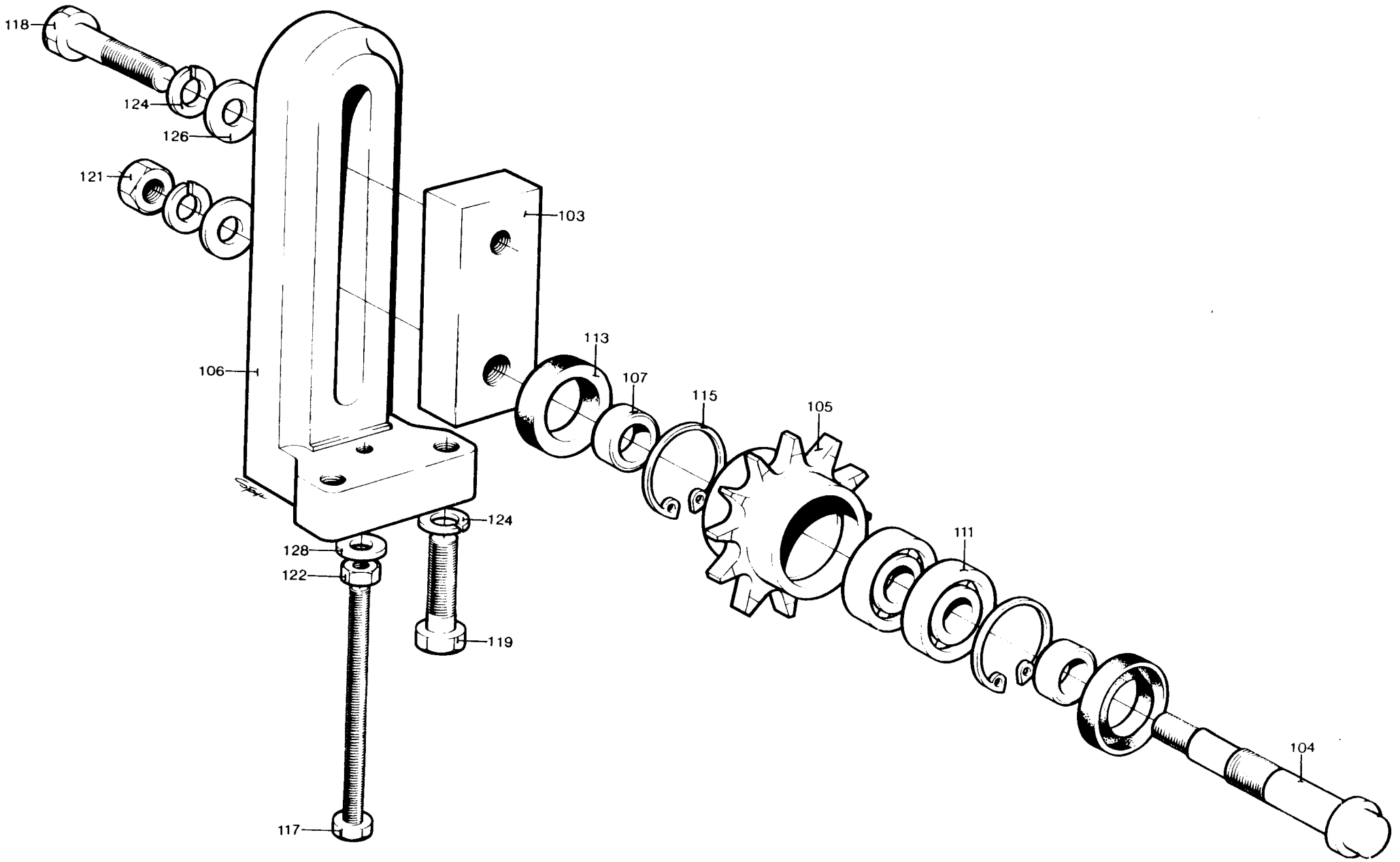
118
124
126
121
103
106
113
107
115
105
111
124
128
122
119
117
104

| From | Pos | Part No | SP | UN | Qty | Description |
|---|---|---|---|---|---|---|
| | 103 | 5878 | - | | 1 | PLATE |
| | 104 | 5880 | - | | 1 | BOLT |
| | 105 | 6139 | - | | 1 | SPROCKET |
| | 106 | G- 6140 | - | | 1 | BRACKET |
| | 107 | 6141 | - | | 2 | SPACER RING |
| | 111 | 321306-0101 | - | | 2 | BALL BEARISKF6001 |
| | 113 | 90091-0004 | - | | 2 | SEAL RING |
| | 115 | 315752-0121 | - | | 2 | LOCK RING SGH28 |
| | 117 | 312104-0386 | - | | 1 | SCREW M6S6X80H8.8 FZB |
| | 118 | 312101-0459 | - | | 1 | SCREW M6S8X40FZB |
| | 119 | 312101-0455 | - | | 2 | SCREW M6S8X30FZB |
| | 121 | 312601-0318 | - | | 1 | NUT M6M8FZB |
| | 122 | 312601-0316 | - | | 1 | NUT M6M6FZB |
| | 124 | 315401-0165 | - | | 4 | WASHER FBH8,2FZB |
| | 126 | 315101-0165 | - | | 2 | WASHER BRB8,4X16FZB |
| | 128 | 315111-0153 | - | | 1 | WASHER TBRB6,4X12FZB |

| From | Pos | Part No | SP | UN | Qty | Description |
|---|---|---|---|---|---|---|

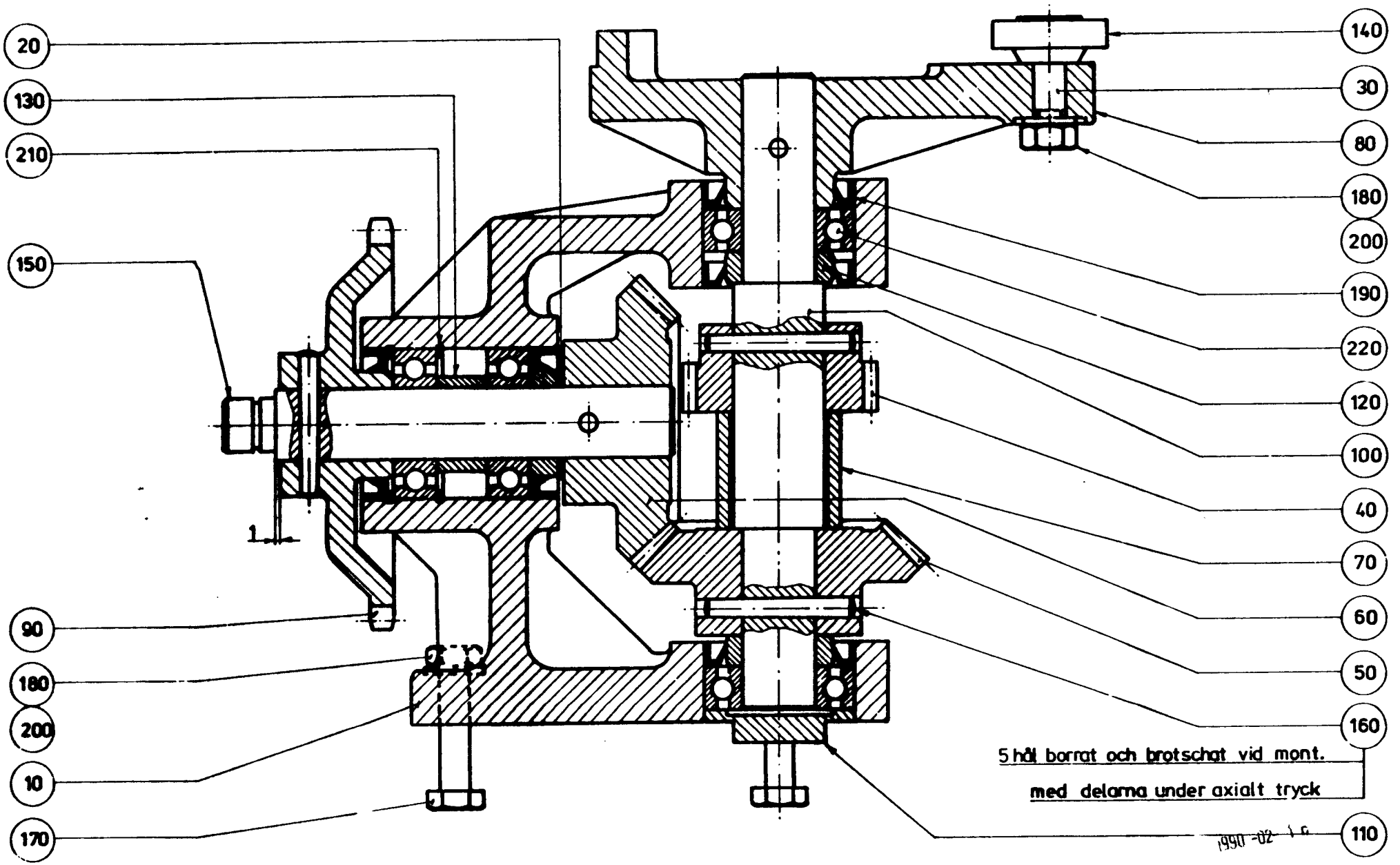
20
130
210
150
90
180
200
10
170
140
30
80
180
200
190
220
120
100
40
70
60
50
160
110
1
5 hål borrat och brotschat vid mont.
med delarna under axialt tryck
1990-02-16

Last Alteration: 8331 86-02-11
Corresponding C-lists: 6005-020V
Assembly Drawing: 6005-2
Data Printed:

| From | Pos | Part No | SP | UN | Qty | Description |
|---|---|---|---|---|---|---|
| | 010 | G- 6006 | - | | 1 | BEARING HOUSING |
| | 020 | 2612-0007 | - | | 1 | WASHER |
| | 030 | 3443 | - | | 1 | CRANK PIN |
| | 040 | 3445 | - | | 1 | GEAR WHEEL |
| | 050 | 3483-0001 | - | | 1 | GEAR WHEEL |
| | 060 | 3483-0002 | - | | 1 | GEAR WHEEL |
| | 070 | 3487 | - | | 1 | SPACER PIPE |
| | 080 | 6007 | - | | 1 | CRANK |
| | 090 | 6008 | - | | 1 | SPROCKET |
| | 100 | 6009 | - | | 1 | SHAFT |
| | 110 | 6011 | - | | 1 | PLUG |
| | 120 | 6012 | - | | 3 | SPACER RING |
| | 130 | 6013 | - | | 1 | SPACER PIPE |
| | 140 | 7419 | - | | 1 | ROLLER |
| | 150 | 13383 | - | | 1 | SHAFT |
| | 160 | 311201-0271 | - | | 5 | TAPER PIN KP5X40SLIPAD |
| | 170 | 312101-0459 | - | | 3 | SCREW M6S8X40FZB |
| | 180 | 312601-0318 | - | | 4 | NUT M6M8FZB |
| | 190 | 315221-0168 | - | | 5 | SEAL RING CB30X42X7 |
| | 200 | 315401-0165 | - | | 4 | WASHER FBH8,2FZB |
| | 210 | 315752-0128 | - | | 2 | LOCK RING SGH42 |
| | 220 | 321306-0104 | - | | 4 | BALL BEARISKF6004 |

| From | Pos | Part No | SP | UN | Qty | Description |
|---|---|---|---|---|---|---|

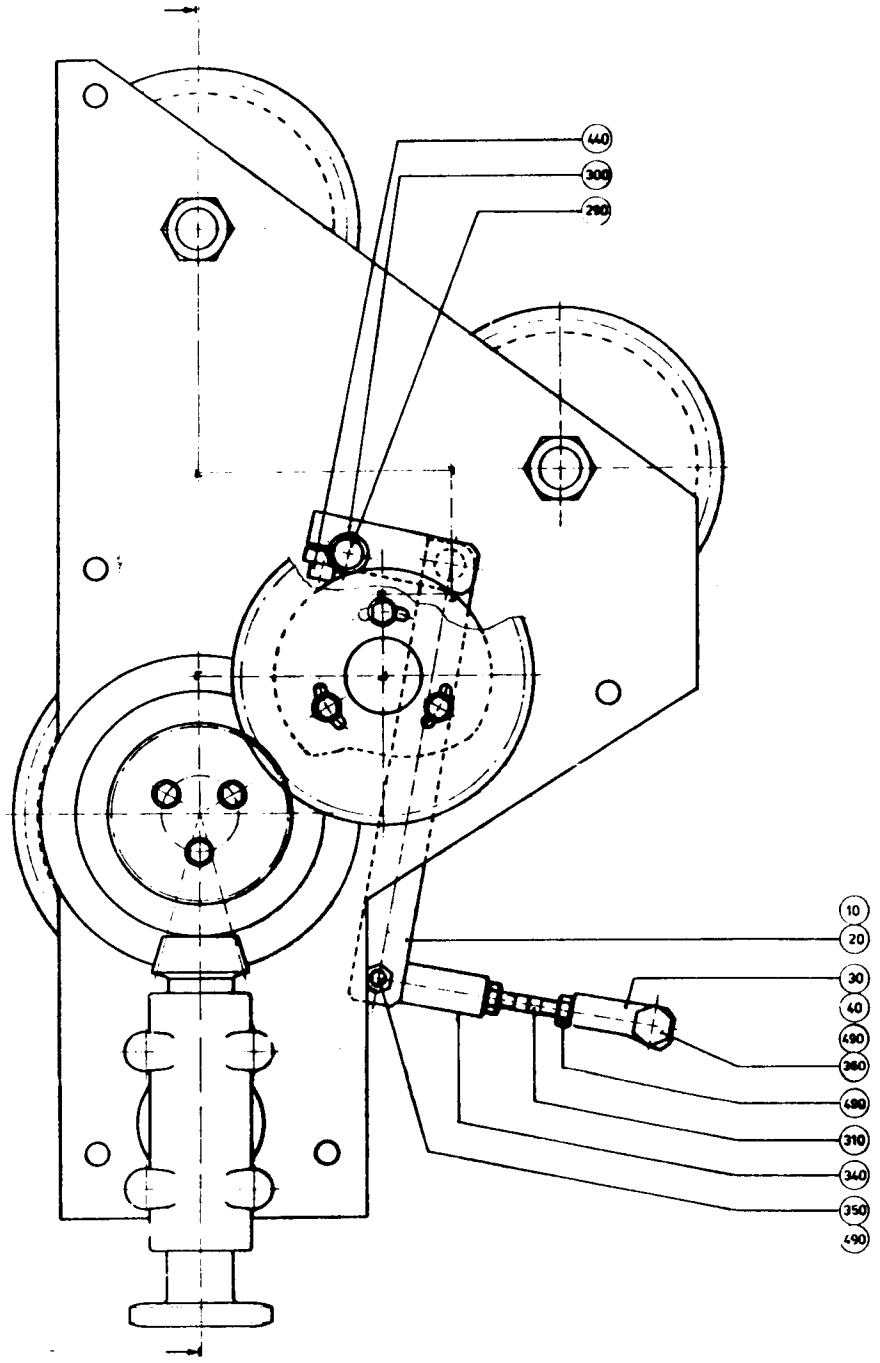
440
300
290
10
20
30
40
490
380
690
310
340
350
490

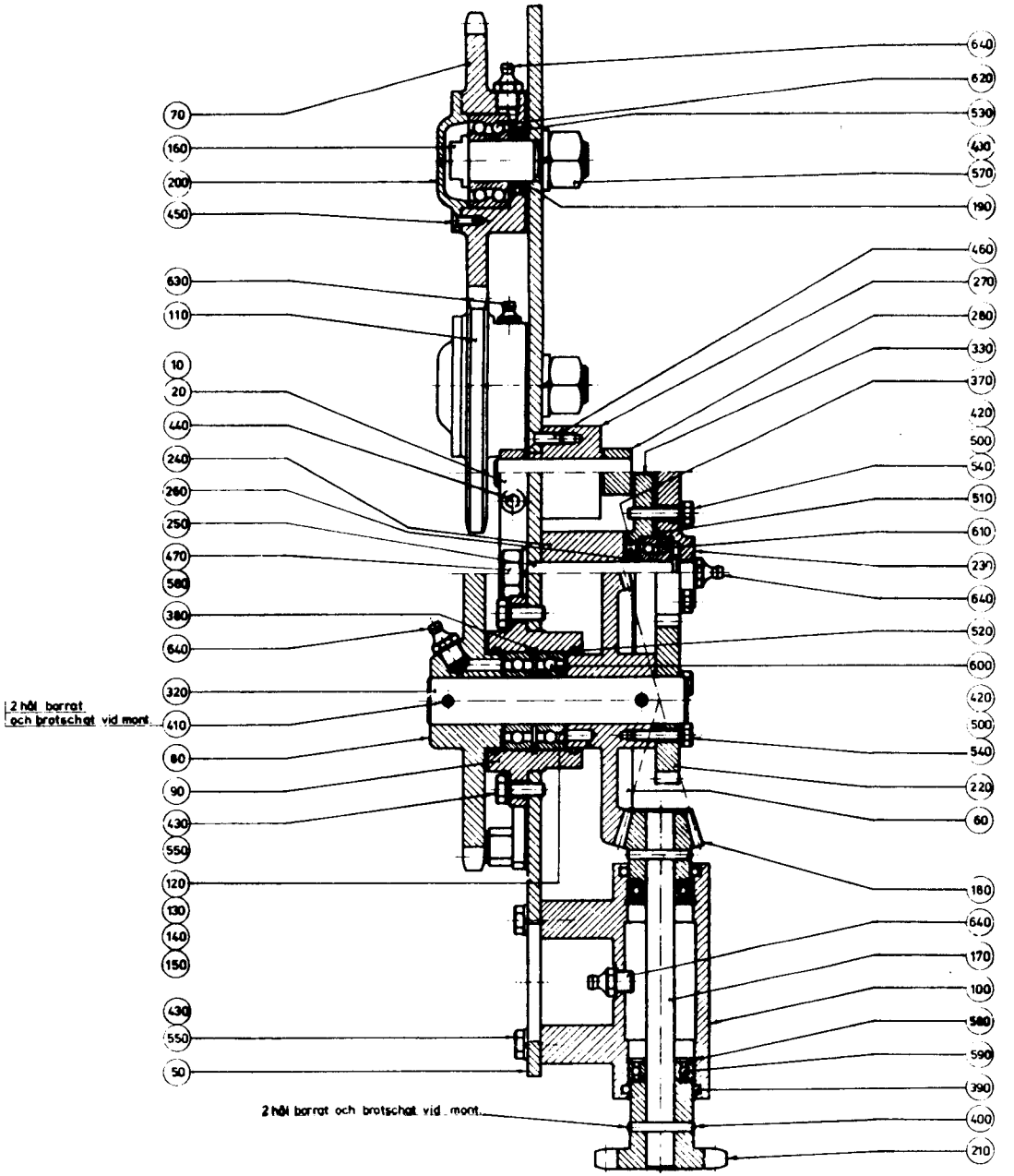
70
160
200
450
630
110
10
20
440
240
260
250
470
580
380
640
320
2 hål borrat och brotschat vid mont.
410
80
90
430
550
120
130
140
150
430
550
50
2 hål borrat och brotschat vid mont.
640
620
530
400
570
190
460
270
280
330
370
420
500
540
510
610
230
640
520
600
420
500
540
220
60
180
640
170
100
580
590
390
400
210

| From | Pos | Part No | SP | UN | Qty | Description |
|---|---|---|---|---|---|---|
| | 040 | 11189 | - | | 1 | ROD END |
| | 020 | 6099 | - | | 1 | LEVER |
| | 050 | 6194 | - | | 1 | PLATE |
| | 060 | G- 4533 | - | | 1 | BEVEL GEAR |
| | 070 | 4554 | - | | 1 | SPROCKET |
| | 080 | G- 4564 | - | | 1 | SPROCKET |
| | 090 | G- 4565 | - | | 1 | BEARING HOUSING |
| | 100 | 5432 | - | | 1 | BEARING HOUSING |
| | 110 | 10973 | - | | 1 | SPROCKET |
| | 120 | 2612-0005 | - | | 1 | WASHER |
| | 130 | 2612-0006 | - | | 1 | WASHER |
| | 140 | 2612-0007 | - | | 1 | WASHER |
| | 150 | 2612-0008 | - | | 1 | WASHER |
| | 160 | 3274-0005 | - | | 2 | BOLT |
| | 170 | 3398-0002 | - | | 1 | SHAFT |
| | 180 | 4534 | - | | 1 | BEVEL GEAR |
| | 190 | 4555 | - | | 2 | SPACER RING |
| | 200 | 5716 | - | | 2 | LID |
| | 210 | 5729 | - | | 1 | SPROCKET |
| | 220 | 6089 | - | | 1 | GEAR WHEEL |
| | 230 | 6090 | - | | 1 | GEAR WHEEL |
| | 240 | 6091 | - | | 1 | SLEEVE |
| | 250 | 6092 | - | | 1 | SHAFT |
| | 260 | 6093 | - | | 1 | SPACER RING |
| | 270 | 6095 | - | | 1 | BEARING SLEEVE |
| | 280 | 6096 | - | | 1 | LEVER |
| | 290 | 6097 | - | | 1 | SHAFT |
| | 300 | 6098 | - | | 1 | ROLLER |
| | 310 | 6100 | - | | 1 | STRUT |
| | 320 | 6112 | - | | 1 | SHAFT |
| | 330 | 7764 | - | | 1 | CAM |
| | 340 | 8001 | - | | 1 | ROD END |
| | 350 | 8002-0001 | - | | 1 | SPACER BOLT |
| | 360 | 8002-0002 | - | | 1 | SPACER BOLT |
| | 370 | 90091-0003 | - | | 1 | SEAL RING |
| | 380 | 90141-0001 | - | | 1 | LOCK RING |
| | 390 | 90242-0011 | - | | 2 | O-RING |
| | 400 | 311201-0241 | - | | 2 | TAPER PIN KP4X25SLIPAD |
| | 410 | 311201-0271 | - | | 2 | TAPER PIN KP5X40SLIPAD |
| | 420 | 312101-0332 | - | | 6 | SCREW M6S5X22FZB |
| | 430 | 312101-0368 | - | | 8 | SCREW M6S6X16FZB |
| | 440 | 312111-0368 | - | | 2 | SCREW MC6S6X16FZB |
| | 450 | 312151-0291 | - | | 6 | SCREW MF6S4X12FZB |
| | 460 | 312151-0327 | - | | 3 | SCREW MF6S5X12FZB |
| | 470 | 312601-0320 | - | | 1 | NUT M6M10FZB |
| | 480 | 312601-0324 | - | | 2 | NUT M6M16FZB |
| | 490 | 312605-0316 | - | | 4 | NUT M6M6RFR |
| | 500 | 315101-0146 | - | | 6 | WASHER BRB5,3X10FZB |
| | 510 | 315202-0219 | - | | 1 | O-RING 29,2X3 |
| | 520 | 315203-0224 | - | | 2 | O-RING 42,2X3F |
| | 530 | 315203-0518 | - | | 2 | O-RING 23,4X3,53F |
| | 540 | 315401-0146 | - | | 6 | WASHER FBH 5,1 FZB |
| | 550 | 315401-0153 | - | | 8 | WASHER FBH6,1FZB |
| | 560 | 315401-0173 | - | | 1 | WASHER FBH10,2FZB |
| | 570 | 315401-0186 | - | | 2 | WASHER FBH16,2FZB |
| | 580 | 315752-0121 | - | | 2 | LOCK RING SGH28 |
| | 590 | 321306-0101 | - | | 2 | BALL BEARISKF6001 |
| | 600 | 321306-0104 | - | | 2 | BALL BEARISKF6004 |
| | 610 | 321330-0100 | - | | 1 | BALL BEARISKF3200 |
| | 620 | 321330-0103 | - | | 2 | BALL BEARISKF3203 |
| | 630 | 344502-0021 | - | | 1 | NIPPLE L AHM6 |
| | 640 | 344502-0026 | - | | 4 | NIPPLE L AHKR1/8" |

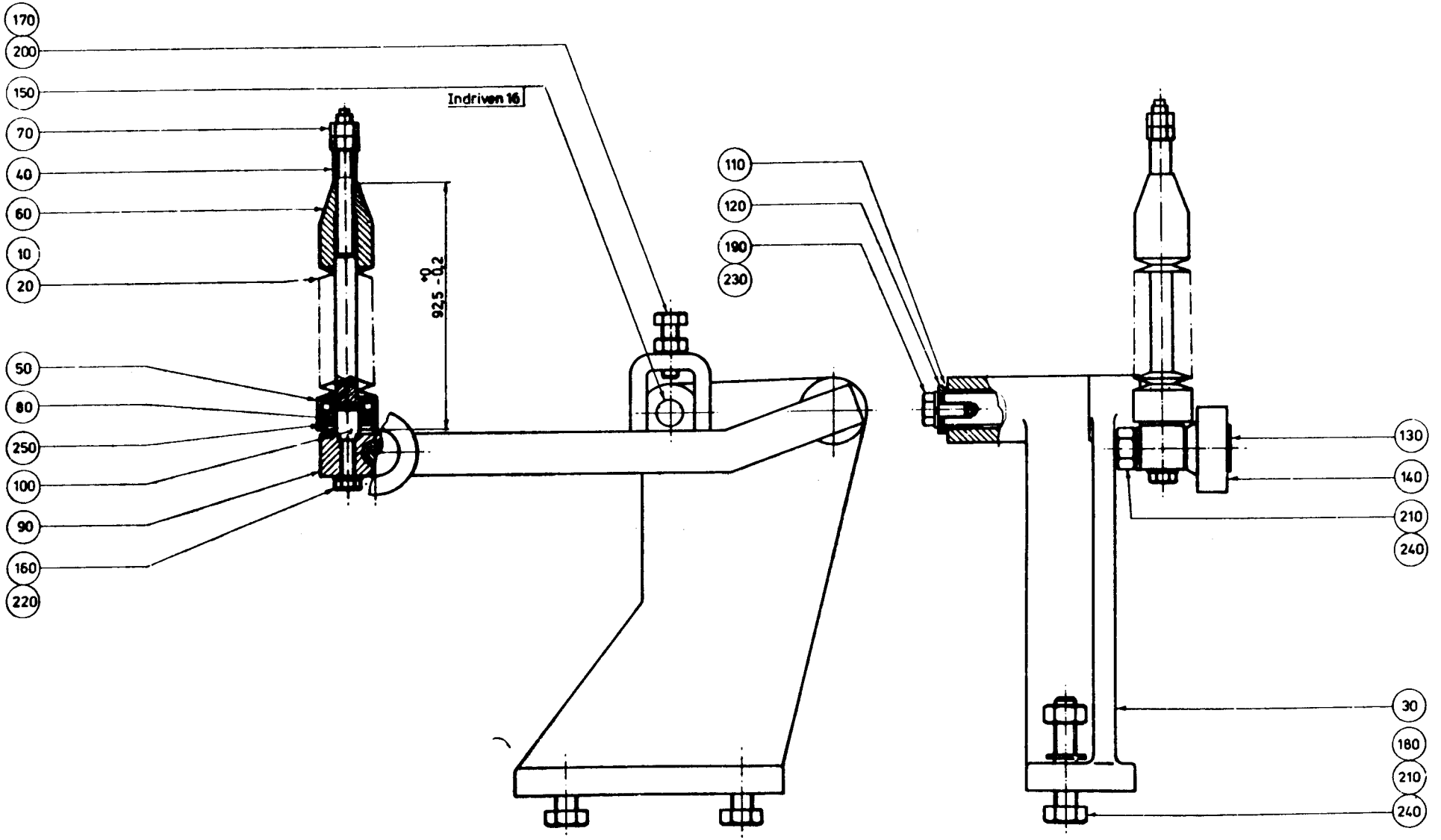
170
200
150
70
40
60
10
20
50
80
250
100
90
160
220
Indriven 16
925 +0 -0,2
110
120
190
230
130
140
210
240
30
180
210
240

| From | Pos | Part No | SP | UN | Qty | Description |
|---|---|---|---|---|---|---|
| | 020 | 90016-0003 | - | | 46 | DISC SPRING |
| | 030 | 6274 | - | | 1 | BEARING BRACKET |
| | 040 | 3433 | - | | 1 | SPACER PIPE |
| | 050 | 3434 | - | | 1 | CLUTCH PIN |
| | 060 | 3435 | - | | 1 | CLUTCH CONE |
| | 070 | 4543 | - | | 2 | NUT |
| | 080 | 5066 | - | | 1 | BEARING |
| | 090 | 6275 | - | | 1 | LEVER |
| | 100 | 6276 | - | | 1 | PIVOT PIN |
| | 110 | 6277 | - | | 2 | BUSHING |
| | 120 | 6278 | - | | 1 | WASHER |
| | 130 | 7440 | - | | 1 | CRANK PIN |
| | 140 | 7441 | - | | 1 | ROLLER |
| | 150 | 311309-0460 | - | | 1 | SLOTTED PIREP10X35FZB |
| | 160 | 312101-0332 | - | | 1 | SCREW M6S5X22FZB |
| | 170 | 312101-0370 | - | | 1 | SCREW M6S6X20FZB |
| | 180 | 312101-0459 | - | | 2 | SCREW M6S8X40FZB |
| | 190 | 312105-0366 | - | | 1 | SCREW M6S6X12RFR |
| | 200 | 312601-0316 | - | | 1 | NUT M6M6FZB |
| | 210 | 312601-0318 | - | | 3 | NUT M6M8FZB |
| | 220 | 315401-0146 | - | | 1 | WASHER FBH 5,1 FZB |
| | 230 | 315401-0153 | - | | 1 | WASHER FBH6,1FZB |
| | 240 | 315401-0165 | - | | 3 | WASHER FBH8,2FZB |
| | 250 | 315752-0115 | - | | 1 | LOCK RING SGH19 |

| From | Pos | Part No | SP | UN | Qty | Description |
|---|---|---|---|---|---|---|

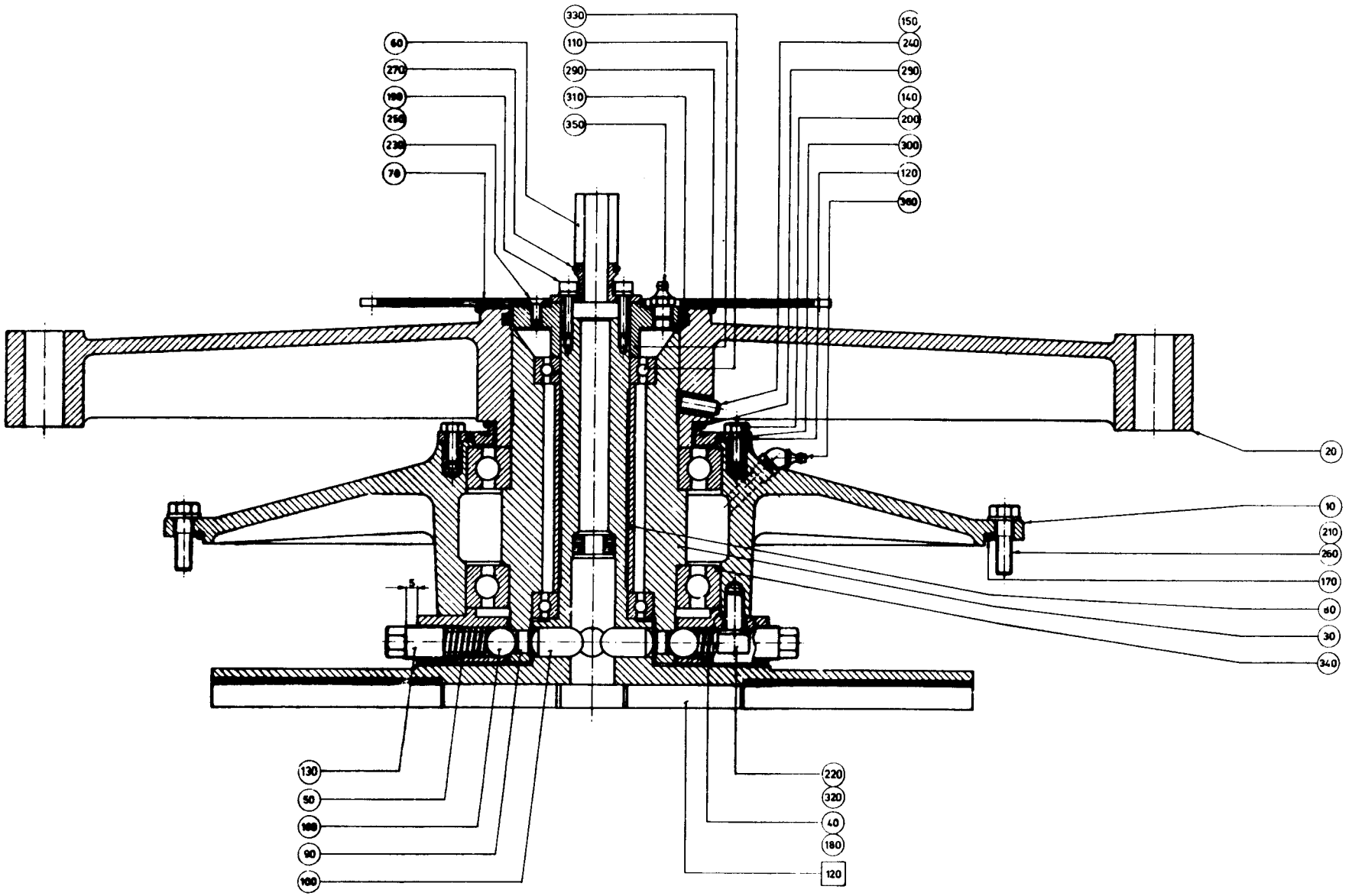
330
110
290
310
350
60
270
100
250
230
70
150
240
290
140
200
300
120
360
20
10
210
260
170
80
30
340
5
130
50
100
90
100
220
320
40
180
120

| From | Pos | Part No | SP | UN | Qty | Description |
|---|---|---|---|---|---|---|
| | F120 | ==>712-1.1 | - | | 1 | MALTESE CROSS |
| | 010 | 3409 | - | | 1 | LID |
| | 020 | 6245 | - | | 1 | TURNSTILE |
| | 030 | 3428 | - | | 1 | COUPLING SLEEVE |
| | 040 | 10526 | - | | 1 | CLAMP RING |
| | 050 | 3408 | - | | 4 | COMPRESSION SPRING |
| | 060 | 3425 | - | | 1 | CARRIER |
| | 070 | 3426 | - | | 1 | GEAR WHEEL |
| | 080 | 3430 | - | | 1 | SPACER SLEEVE |
| | 090 | 3438 | - | | 4 | SPACER DISC |
| | 100 | 3439 | - | | 4 | CLUTCH PIN |
| | 110 | 4538 | - | | 1 | HUB |
| | 120 | 6226 | - | | 1 | SEAL RING |
| | 130 | 10487 | - | | 4 | PLUG |
| | 140 | 90026-0004 | - | | 8 | THREADED BUSH |
| | 150 | 90026-0005 | - | | 2 | THREADED BUSH |
| | 160 | 90090-0001 | - | | 4 | STEEL BALL |
| | 170 | 90143-0055 | - | MM | 1300 | STRIP |
| | 180 | 311303-0310 | - | | 1 | SLOTTED PIRPB5X20FZB |
| | 190 | 312101-0333 | - | | 4 | SCREW M6S5X25FZB |
| | 200 | 312105-0368 | - | | 8 | SCREW M6S6X16RFR |
| | 210 | 312105-0455 | - | | 4 | SCREW M6S8X30RFR |
| | 220 | 312111-0491 | - | | 4 | SCREW MC6S10X20FZB |
| | 230 | 312151-0327 | - | | 3 | SCREW MF6S5X12FZB |
| | 240 | 312316-0451 | - | | 2 | GRUB SCREW SK6SS8X20FZB |
| | 250 | 315101-0146 | - | | 4 | WASHER BRB5,3X10FZB |
| | 260 | 315105-0165 | - | | 4 | WASHER BRB8,4X16RFR |
| | 270 | 315202-0214 | - | | 1 | O-RING 17,3X2,4 |
| | 280 | 315202-0310 | - | | 1 | O-RING 94,5X3 |
| | 290 | 315202-0312 | - | | 1 | O-RING 104,5X3 |
| | 300 | 315202-0316 | - | | 1 | O-RING 124,5X3 |
| | 310 | 315202-0544 | - | | 1 | O-RING 88,27X5,33 |
| | 320 | 315401-0173 | - | | 4 | WASHER FBH10,2FZB |
| | 330 | 321306-0107 | - | | 2 | BALL BEARISKF6007 |
| | 340 | 321306-0117 | - | | 2 | BALL BEARISKF6017 |
| | 350 | 344502-0026 | - | | 1 | NIPPLE L AHKR1/8" |
| | 360 | 344502-0046 | - | | 1 | NIPPLE L BHKR1/8" |

| From | Pos | Part No | SP | UN | Qty | Description |
|---|---|---|---|---|---|---|

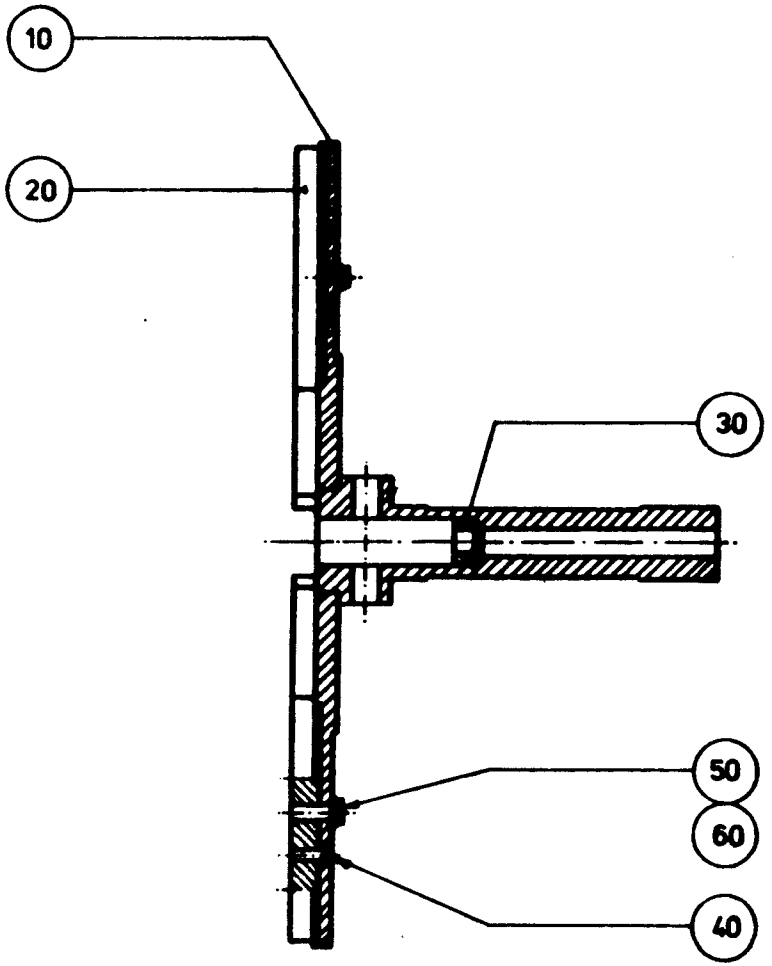


Snitt A-A

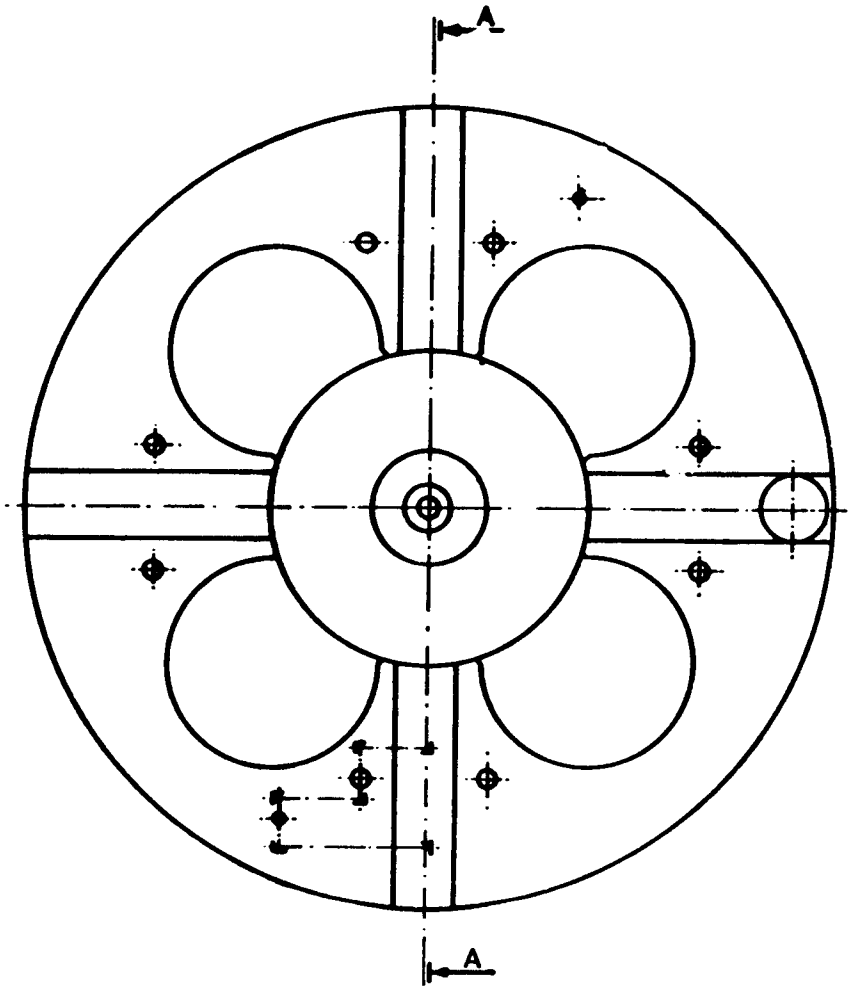

| From | Pos | Part No | SP | UN | Qty | Description |
|---|---|---|---|---|---|---|
| | 010 | 3441 | - | | 1 | MALTESE DISC |
| | 020 | 3442 | - | | 1 | MALTESE CROSS |
| | 030 | 3431 | - | | 1 | BEARING |
| | 040 | 311303-0310 | - | | 2 | SLOTTED PIRPB5X20FZB |
| | 050 | 312101-0451 | - | | 8 | SCREW M6S8X20FZB |
| | 060 | 315401-0165 | - | | 8 | WASHER FBH8,2FZB |

| From | Pos | Part No | SP | UN | Qty | Description |
|---|---|---|---|---|---|---|

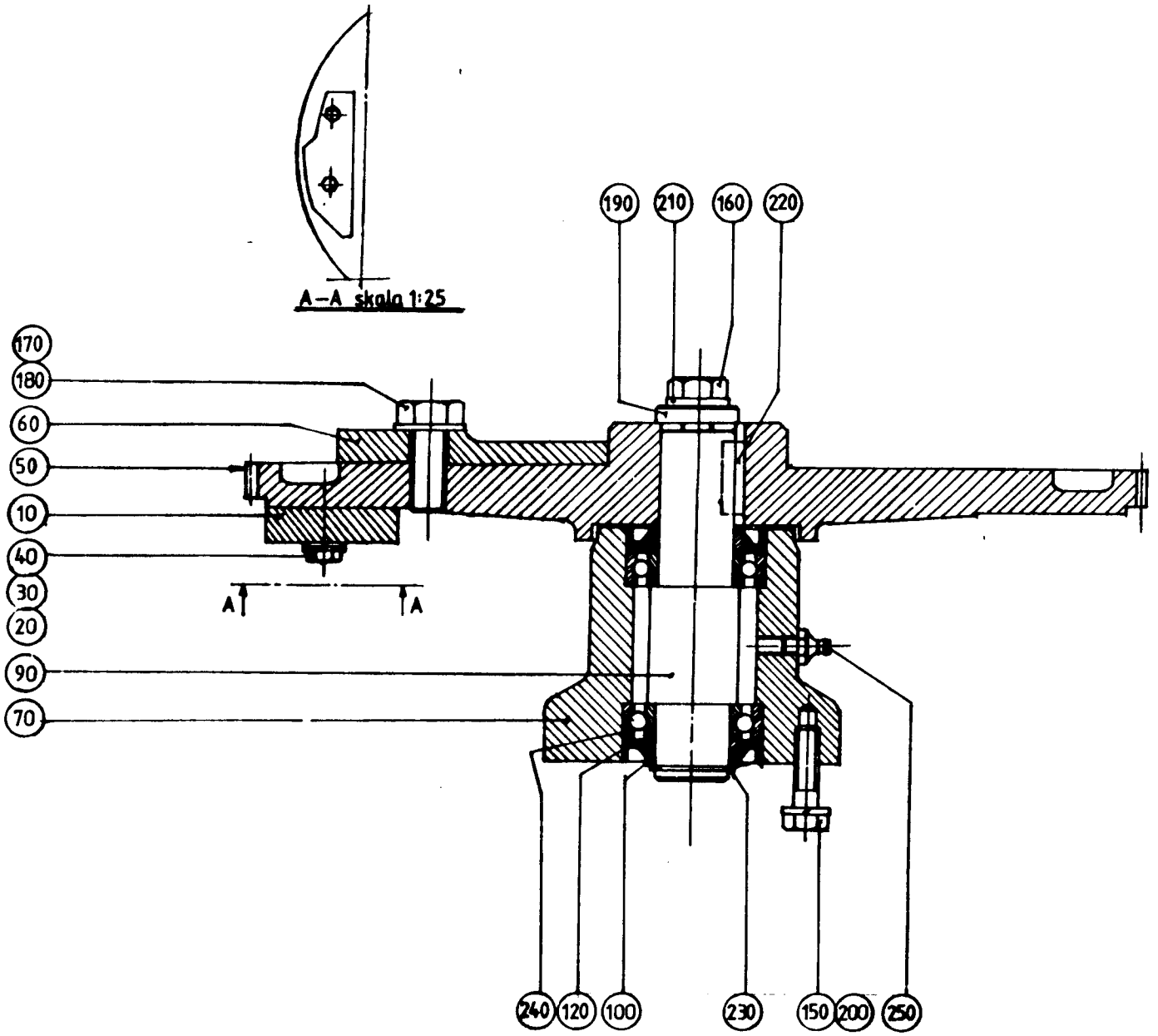
A–A skala 1:25
190
210
160
220
170
180
60
50
10
40
30
20
90
70
A
A
240
120
100
230
150
200
250

| From | Pos | Part No | SP | UN | Qty | Description |
|---|---|---|---|---|---|---|
| | 050 | 7300 | - | | 1 | GEAR WHEEL |
| | 060 | 5720 | - | | 1 | CAM |
| | 070 | 7302 | - | | 1 | BEARING HOUSING |
| | 090 | 538520 | - | | 1 | AXLE |
| | 100 | 7304 | - | | 2 | SPACER RING |
| | 120 | 90091-0002 | - | | 2 | SEAL RING |
| | 150 | 312101-0455 | - | | 3 | SCREW M6S8X30FZB |
| | 160 | 312101-0491 | - | | 1 | SCREW M6S10X20FZB |
| | 170 | 312101-0536 | - | | 1 | SCREW M6S12X30FZB |
| | 180 | 315101-0178 | - | | 1 | WASHER BRB13X24FZB |
| | 190 | 315121-0173 | - | | 1 | WASHER BRSB10,5X28FZB |
| | 200 | 315401-0165 | - | | 3 | WASHER FBH8,2FZB |
| | 210 | 315401-0173 | - | | 1 | WASHER FBH10,2FZB |
| | 220 | 315701-0265 | - | | 1 | FLAT WEDGE8X7X25 |
| | 230 | 315750-0119 | - | | 1 | LOCK RING SGA25 |
| | 240 | 321306-0105 | - | | 2 | BALL BEARISKF6005 |
| | 250 | 344502-0021 | - | | 1 | NIPPLE L AHM6 |

| From | Pos | Part No | SP | UN | Qty | Description |
|---|---|---|---|---|---|---|

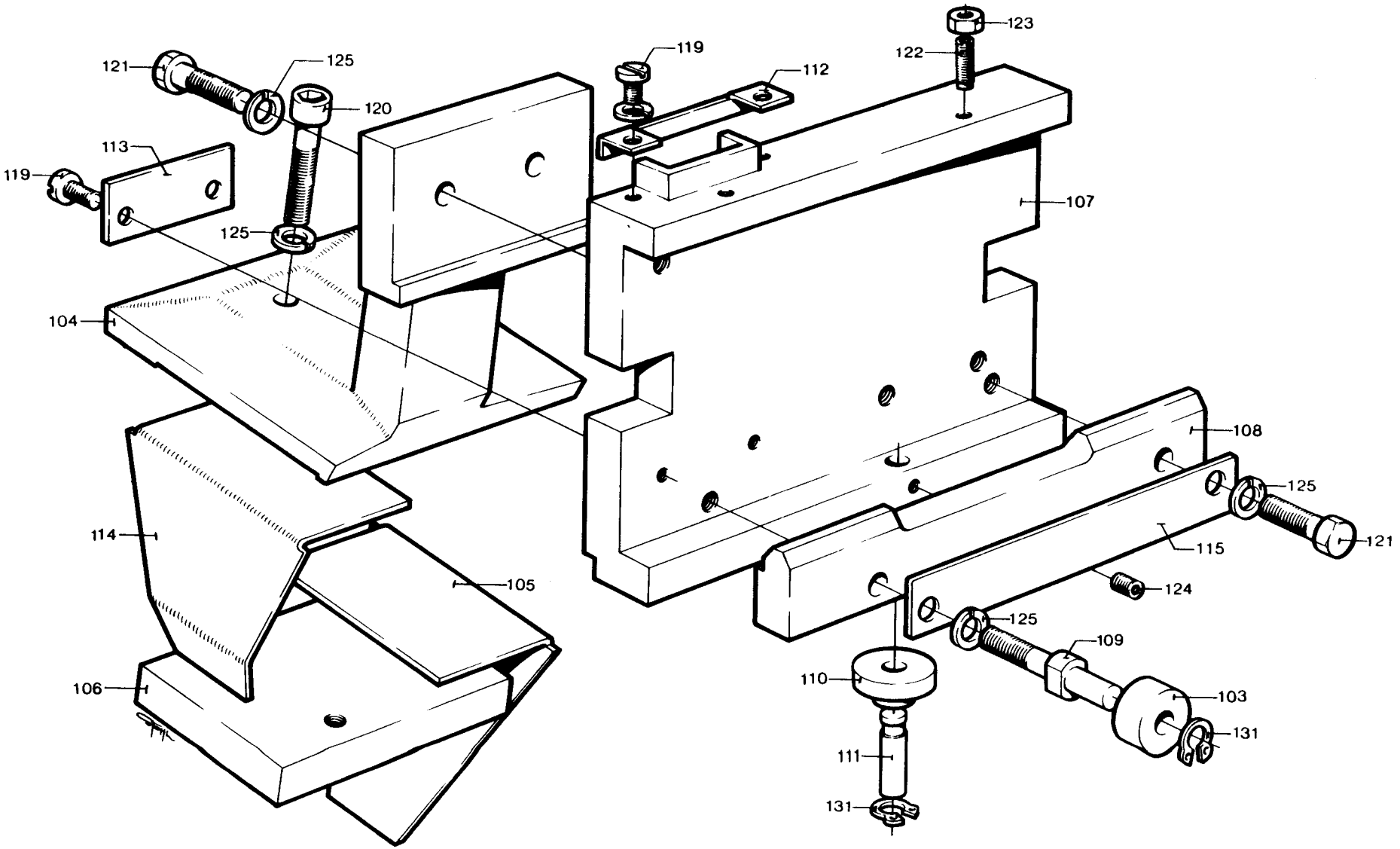
121
125
120
113
119
125
104
114
105
106
119
112
123
122
107
108
125
121
115
124
125
109
110
103
131
111
131

| From | Pos | Part No | SP | UN | Qty | Description |
|---|---|---|---|---|---|---|
| | 103 | 3402 | - | | 1 | ROLLER |
| | 104 | G- 10463 | - | | 1 | DISTRIBUTOR ARM |
| | 105 | 10523 | - | | 1 | DISTRIBUTOR WING |
| | 106 | 10464 | - | | 1 | CLIP |
| | 107 | 7539 | - | | 1 | CARRIAGE |
| | 108 | 7540 | - | | 2 | SLIDER |
| | 109 | 7541 | - | | 1 | PIN |
| | 110 | 7542 | - | | 1 | ROLLER |
| | 111 | 7543 | - | | 1 | PIN |
| | 112 | 7544 | - | | 1 | BRACKET |
| | 113 | 7545 | - | | 1 | PLATE |
| | 114 | 10465 | - | | 1 | DISTRIBUTOR WING |
| | 115 | 10104 | - | | 2 | WASHER |
| | 119 | 312121-0287 | - | | 4 | SLOTTED HEMCS4X8FZB |
| | 120 | 312111-0374 | - | | 2 | SCREW MC6S6X30FZB |
| | 121 | 312101-0370 | - | | 5 | SCREW M6S6X20FZB |
| | 122 | 312311-0291 | - | | 2 | GRUB SCREW T6SS4X12FZB |
| | 123 | 312605-0312 | - | | 2 | NUT M6M4RFR |
| | 124 | 312316-0285 | - | | 1 | GRUB SCREW SK6SS4X6FZB |
| | 125 | 315401-0153 | - | | 8 | WASHER FBH6,1FZB |
| | 126 | 315401-0136 | - | | 4 | WASHER FBH 4,1 FZB |
| | 131 | 315750-0103 | - | | 2 | LOCK RING SGA6 |

| From | Pos | Part No | SP | UN | Qty | Description |
|---|---|---|---|---|---|---|

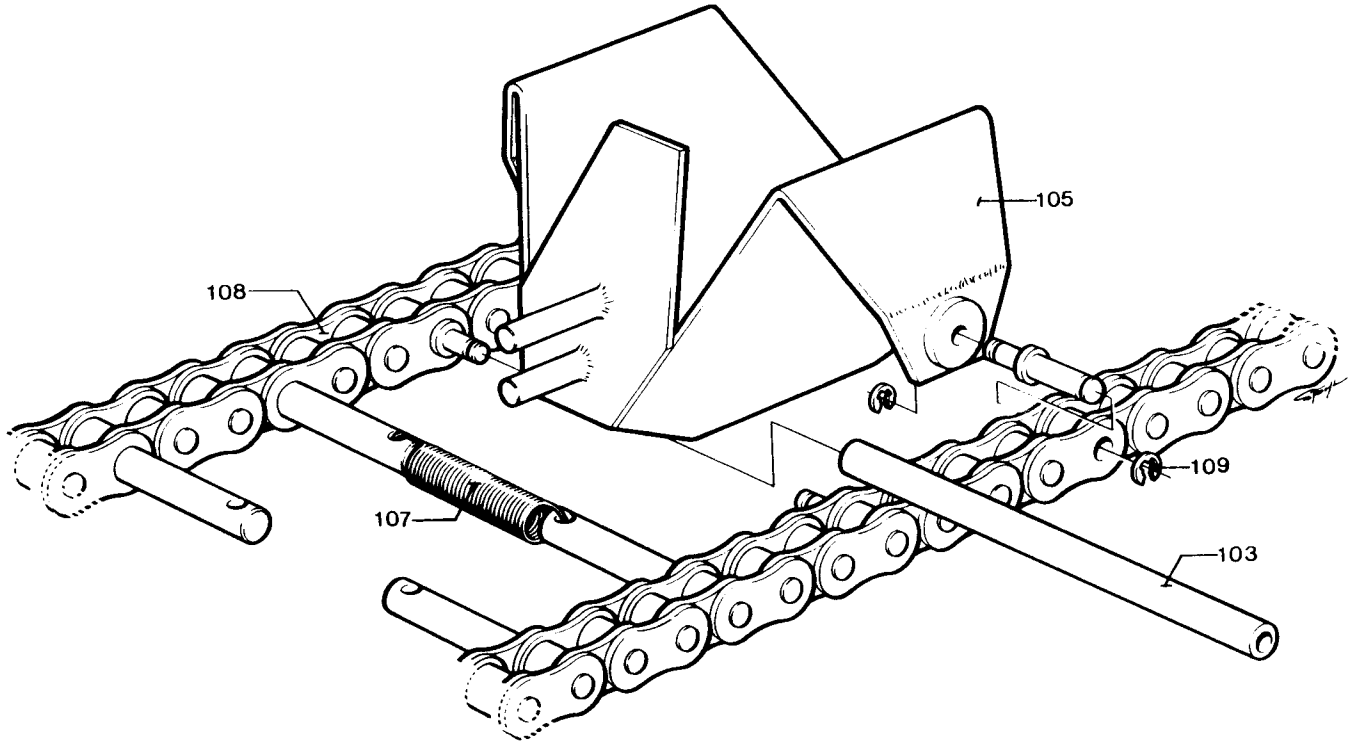
105
108
109
107
103

| From | Pos | Part No | SP | UN | Qty | Description |
|---|---|---|---|---|---|---|
| | 105 | 10541 | - | | 18 | SCOOP 250ml 236ml |
| | 105 | 6529 | - | | 18 | SCOOP 300ml 284ml |
| | 103 | 4374 | - | | 18 | SHAFT |
| | 107 | 6116-0002 | - | | 18 | TENSION SPRING |
| | 108 | 4373-0001 | - | | 2 | CONVEYOR CHAIN |
| | 109 | 315754-0105 | R | | 36 | CIRCLIP E 3,2 |

| From | Pos | Part No | SP | UN | Qty | Description |
|---|---|---|---|---|---|---|

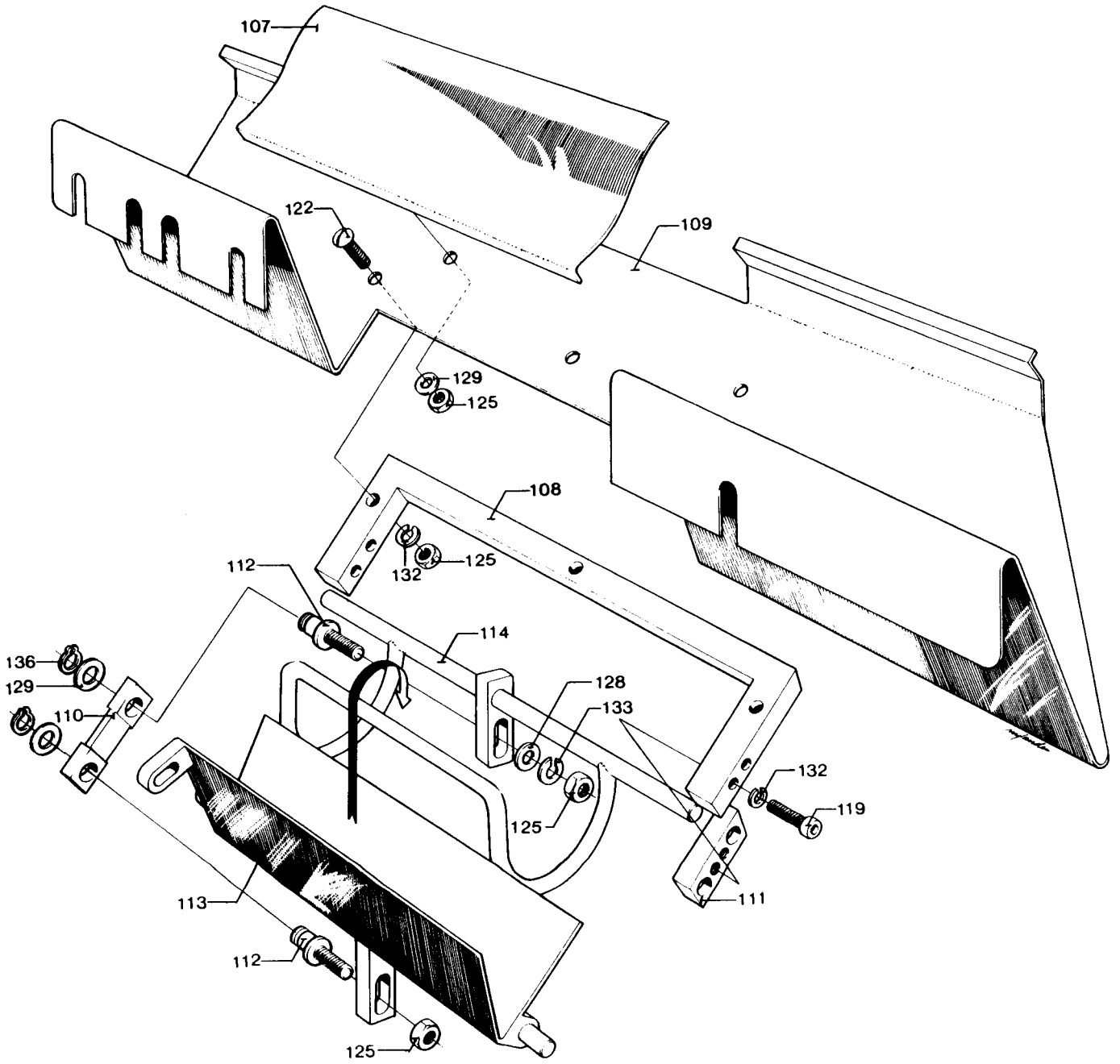
107
122
109
129
125
108
132
125
112
114
136
129
110
128
133
132
119
125
111
113
112
125

| From | Pos | Part No | SP | UN | Qty | Description |
|---|---|---|---|---|---|---|
| | 107 | 5430-0001 | - | | 1 | PLATE |
| | 108 | 6103 | - | | 1 | FRAME |
| | 109 | 6190 | - | | 1 | CHUTE |
| | 110 | 8007-0001 | - | | 1 | LINK |
| | 111 | 8008 | - | | 2 | BEARING |
| | 112 | 10817 | - | | 2 | BOLT |
| | 113 | 11187 | - | | 1 | TILTING CHUTE |
| | 114 | 11188 | - | | 1 | TILT SUPPORT |
| | 119 | 312115-0297 | - | | 4 | SCREW 4X25 A4 80 |
| | 122 | 312165-0372 | - | | 3 | SLOTTED HEMKFS6X25RFR |
| | 125 | 312605-0316 | - | | 7 | NUT M6M6RFR |
| | 128 | 315105-0153 | - | | 1 | WASHER BRB6,4X12RFR |
| | 129 | 315105-0165 | - | | 2 | WASHER BRB8,4X16RFR |
| | 132 | 315401-0136 | - | | 4 | WASHER FBH 4,1 FZB |
| | 133 | 315401-0153 | - | | 6 | WASHER FBH6,1FZB |
| | 136 | 315750-0105 | - | | 2 | LOCK RING SGA8 |

| From | Pos | Part No | SP | UN | Qty | Description |
|---|---|---|---|---|---|---|

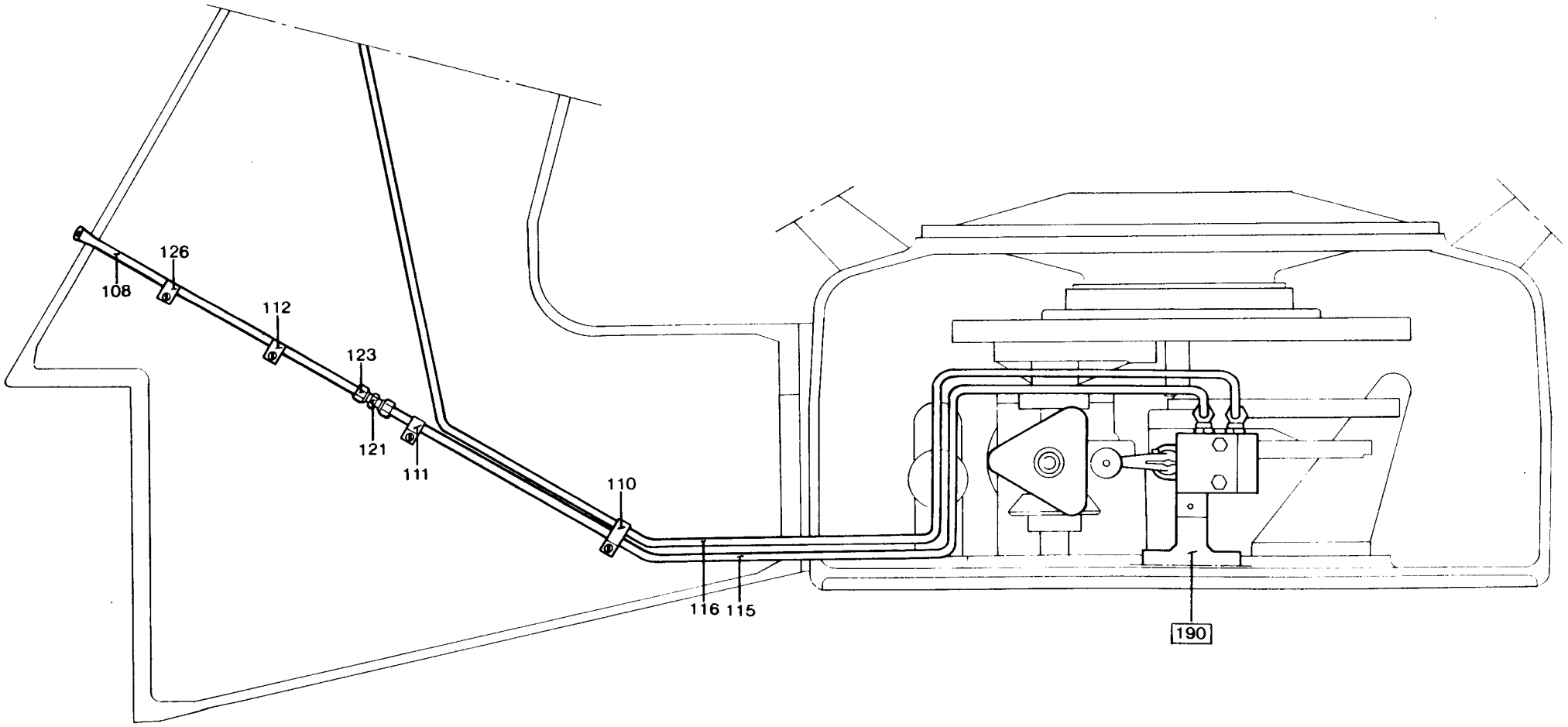
108
126
112
123
121
111
110
116
115
190

| From | Pos | Part No | SP | UN | Qty | Description |
|---|---|---|---|---|---|---|
| | F190 | ==>718-1.1 | - | | 1 | FAN |
| | 108 | 13491 | - | | 1 | NOZZLE |
| | 110 | 90073-0003 | - | | 2 | CLIP |
| | 111 | 90073-0001 | - | | 2 | CLIP |
| | 112 | 90165-0002 | - | | 2 | CLIP |
| | 115 | 90166-0013 | - | MM | 1200 | HOSE |
| | 116 | 90166-0013 | - | M | 2 | HOSE |
| | 121 | 342726-0103 | - | | 1 | PIPE CONNEG-8 |
| | 123 | 342710-0103 | - | | 1 | REDUCER RBM8/5 |
| | 126 | 312121-0287 | - | | 6 | SLOTTED HEMCS4X8FZB |

| From | Pos | Part No | SP | UN | Qty | Description |
|---|---|---|---|---|---|---|

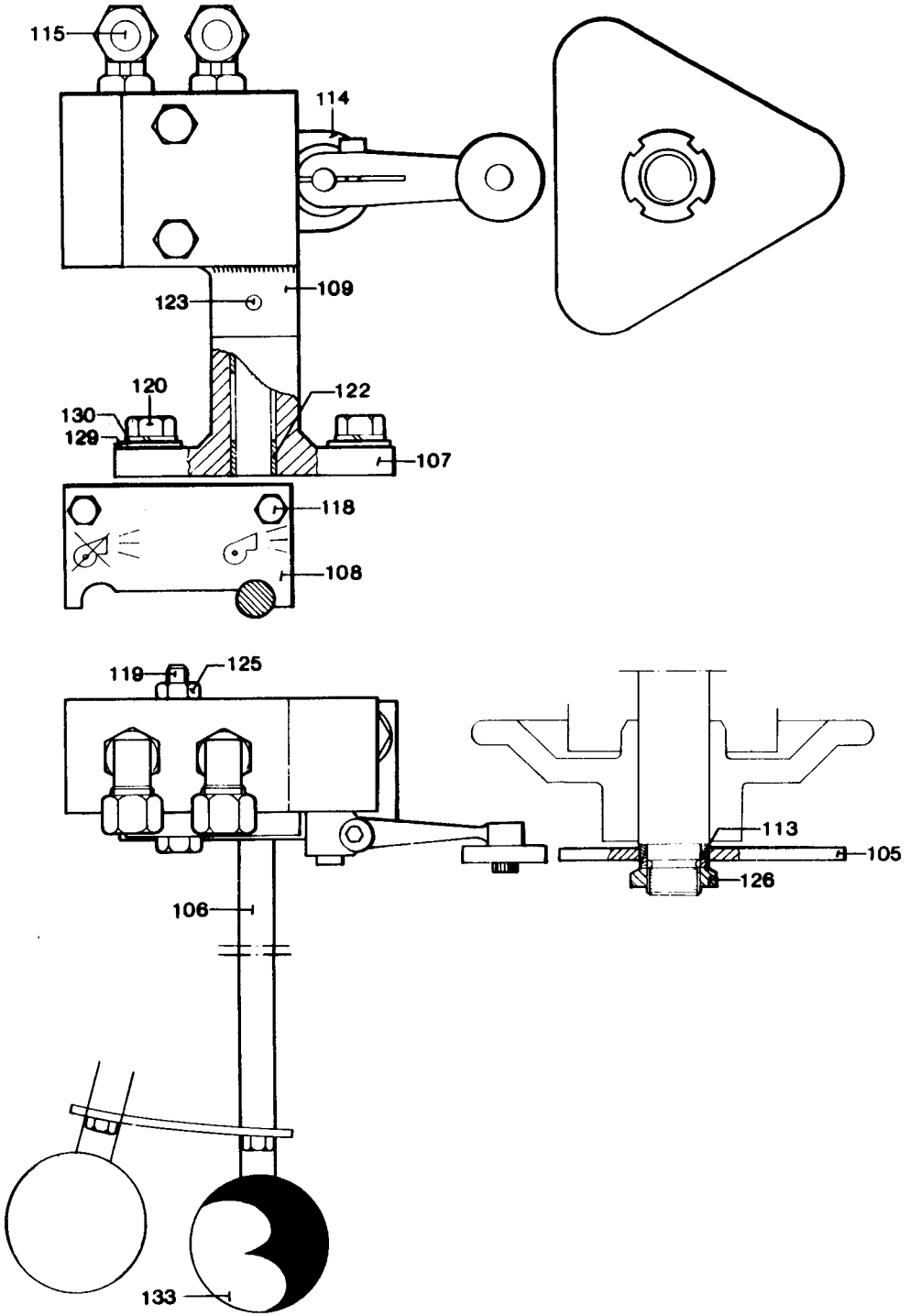
115
114
123
109
120
130
129
122
107
118
108
119
125
113
105
126
106
133

| From | Pos | Part No | SP | UN | Qty | Description |
|---|---|---|---|---|---|---|
| | 115 | 342732-0104 | - | | 2 | ELBOW COUP D8-R1/4" TC/500 |
| | 115 | 342732-0104 | - | | 1 | ELBOW COUP D8-R1/4" TC/150 |
| | 105 | 13384 | - | | 1 | CAM |
| | 106 | 13385 | - | | 1 | ROD |
| | 107 | 13387 | - | | 1 | BRACKET |
| | 108 | 13388 | - | | 1 | SIGN |
| | 109 | 19722 | - | | 1 | VALVE PLATE |
| | 113 | 90208-0004 | - | | 1 | LOCKING ELEMENT |
| | 114 | 90235-0010 | - | | 1 | VALVE |
| | | 90235-0384 | S | | 1 | * SEAL KIT |
| | 118 | 312101-0327 | - | | 2 | SCREW M6S5X12FZB |
| | 119 | 312101-0380 | - | | 2 | SCREW M6S6X50FZB |
| | 120 | 312101-0453 | - | | 2 | SCREW M6S8X25FZB |
| | 122 | 321120-0104 | - | | 2 | BUSHING 10/12X10 |
| | 123 | 311305-0274 | - | | 1 | SLOTTED PIRPC4X25FZB |
| | 125 | 312601-0316 | - | | 2 | NUT M6M6FZB |
| | 126 | 312805-0102 | - | | 1 | NUT KM2 |
| | 129 | 315101-0165 | - | | 2 | WASHER BRB8,4X16FZB |
| | 130 | 315401-0165 | - | | 2 | WASHER FBH8,2FZB |
| | 133 | 318800-0106 | - | | 1 | KNOB LA D.40-M10 |

| From | Pos | Part No | SP | UN | Qty | Description |
|---|---|---|---|---|---|---|

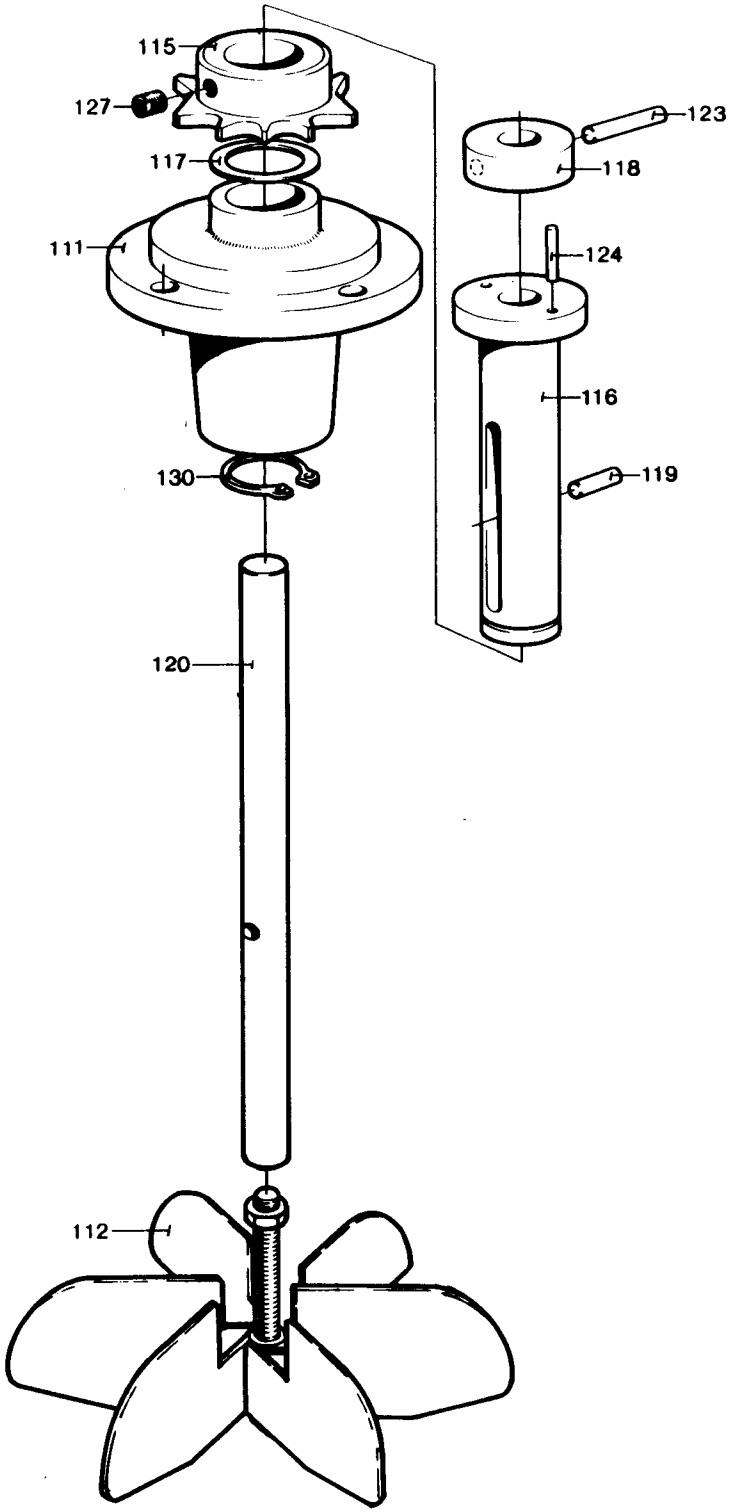
115
127
117
111
130
120
112
123
118
124
116
119

| From | Pos | Part No | SP | UN | Qty | Description |
|---|---|---|---|---|---|---|
| | 111 | 3357 | - | | 1 | BEARING HOUSING TC/150 |
| | 111 | 6525 | - | | 1 | BEARING HOUSING TC/300 |
| | 112 | 31460 | - | | 1 | STAR |
| | 115 | 3373 | - | | 1 | SPROCKET |
| | 116 | 3385 | - | | 1 | BEARING |
| | 117 | 3387 | - | | 1 | WASHER |
| | 118 | 3388 | - | | 1 | WASHER |
| | 119 | 5917 | - | | 1 | PIN |
| | 120 | 31459 | - | | 1 | SHAFT |
| | 123 | 311101-0274 | - | | 1 | CYLINDRICACP4H6X25 |
| | 124 | 311305-0210 | - | | 2 | SLOTTED PIRPC2,5X16FZB |
| | 127 | 312316-0362 | - | | 1 | GRUB SCREW SK6SS6X8FZB |
| | 130 | 315750-0116 | - | | 1 | LOCK RING SGA20 |

| From | Pos | Part No | SP | UN | Qty | Description |
|---|---|---|---|---|---|---|

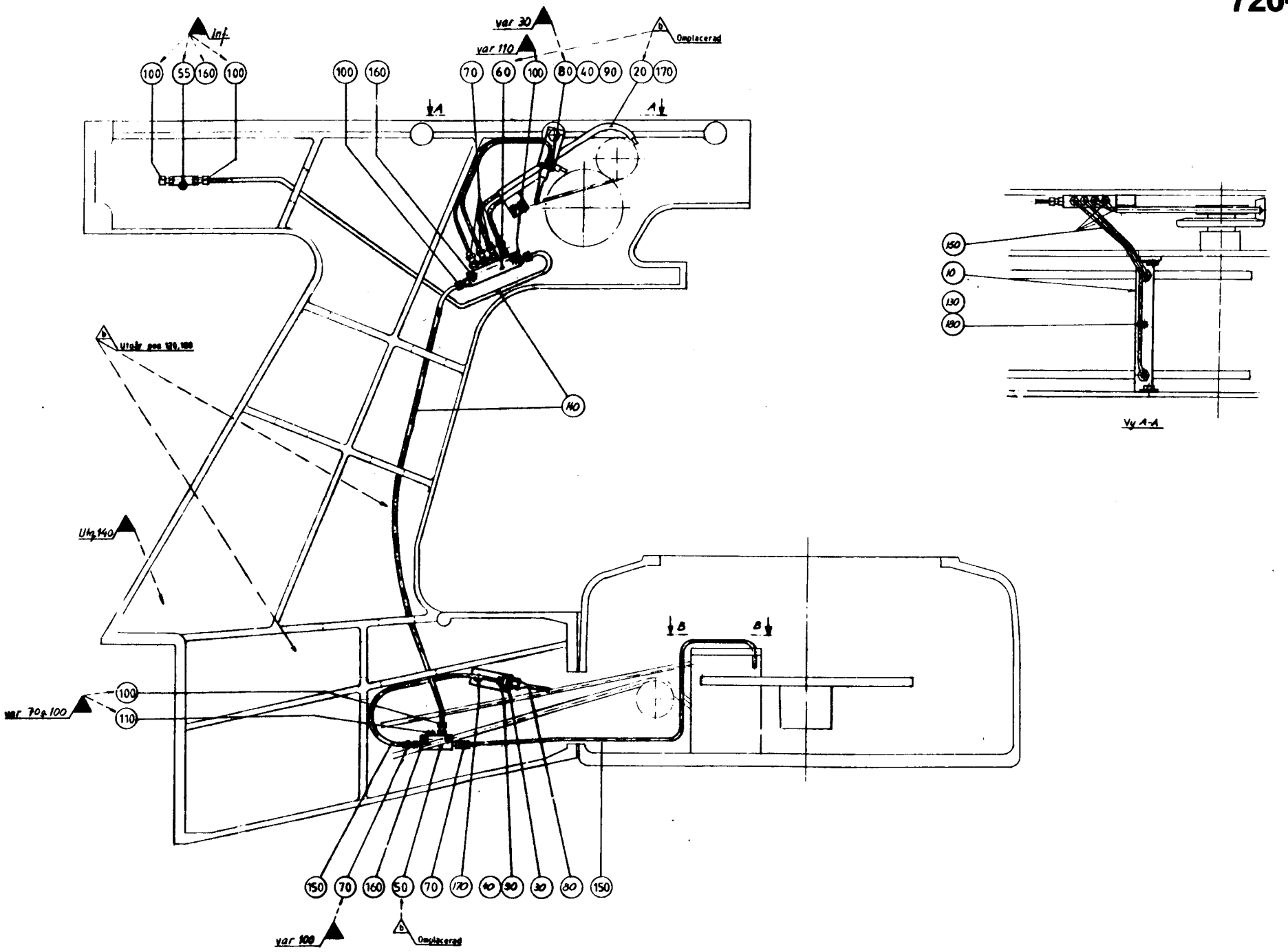
Inf.
var 30
var 110
Omplacerad
100
55
160
100
100
160
70
60
100
80
40
90
20
170
A
A
Utgår pos 120, 130
140
Utg. 140
var 70 & 100
100
110
150
70
160
50
70
170
40
90
30
30
150
var 100
Omplacerad
B
B
150
10
130
190
Vy A-A

| From | Pos | Part No | SP | UN | Qty | Description |
|---|---|---|---|---|---|---|
| | 010 | 265728 | - | | 1 | HOLDER |
| | 020 | 265729 | - | | 1 | PIPE HOLDER |
| | 030 | 265730 | - | | 1 | HOLDER |
| | 040 | 90028-0001 | R | | 3 | CONE |
| | 050 | 90032-0012 | - | | 1 | JUNCTION BLOCK |
| | 055 | 90032-0015 | - | | 1 | JUNCTION BLOCK |
| | 060 | 90032-0028 | - | | 1 | JUNCTION BLOCK |
| | 070 | 90092-0064 | R | | 6 | METERING VALVE |
| | 080 | 90092-0048 | R | | 3 | OIL BRUSH |
| | 090 | 90134-0003 | - | | 3 | BUSHING |
| | 100 | 90134-0034 | - | | 5 | NIPPLE |
| | 110 | 90136-0002 | - | | 1 | PLUG |
| | 130 | 90165-0005 | - | | 5 | CLIP |
| | 140 | 90166-0011 | - | M | 2 | HOSE |
| | 150 | 90166-0103 | - | M | 3 | HOSE |
| | 160 | 312101-0372 | - | | 5 | SCREW M6S6X25FZB |
| | 170 | 312101-0364 | - | | 3 | SCREW M6S6X10FZB |
| | 180 | 312121-0285 | - | | 5 | SLOTTED HEMCS4X6FZB |

| From | Pos | Part No | SP | UN | Qty | Description |
|---|---|---|---|---|---|---|

**SPC 6303**
**Tetra Classic TC**

| From | Pos | Page No | Description |
|---|---|---|---|
| | F010 | 901-1 | ROLLER STAND |
| | F020 | 902-1 | TOOL |
| | F030 | 903-1 | START-UP KIT |
| | | 903-1.1 | . TPC BAR TC/150 |
| | | 903-1.2 | . TPC BAR TC/150 TC/300 |
| | | 903-1.3 | . HEATING RAIL TC/150 TC/500 |
| | | 904-1 | LIFTING UNIT |

| From | Pos | Page No | Description |
|---|---|---|---|

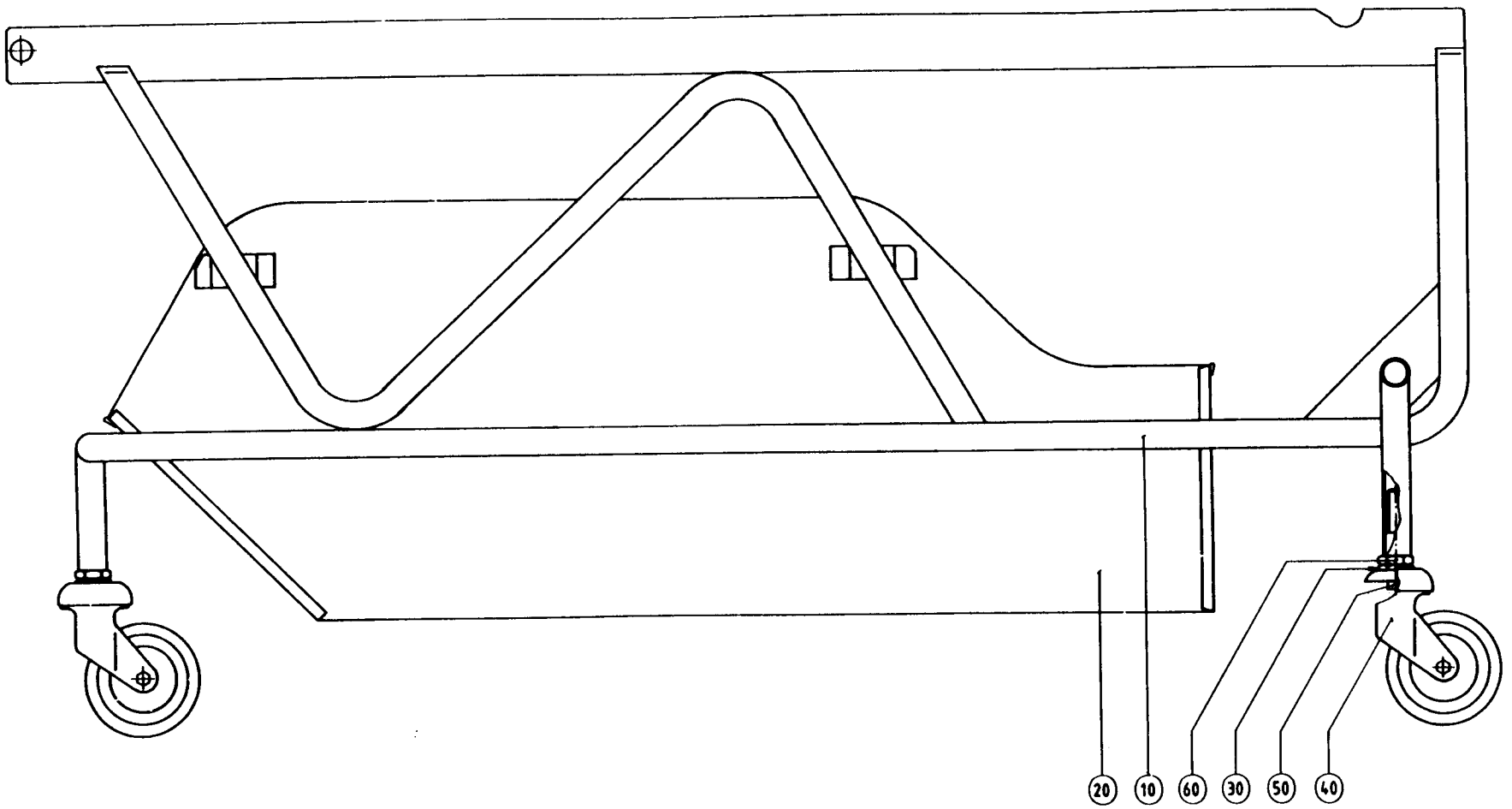
20
10
60
30
50
40

Last Alteration: AM 14063 89-11-21

Corresponding C-lists: 499134-010V
Assembly Drawing: 499134-1

Date Printed: 900205

| From | Pos | Part No | SP | UN | Qty | Description |
|---|---|---|---|---|---|---|
| **TC/150 62,5ml** | | | | | | |
| | 010 | 499047-0001 | - | | 1 | MACHINE BODY |
| | 020 | 263640 | - | | 1 | VAT |
| **TC/150** | | | | | | |
| | 010 | 499047-0001 | - | | 1 | MACHINE BODY |
| | 020 | 11045 | - | | 1 | VAT |
| **TC/300** | | | | | | |
| | 010 | 499047-0002 | - | | 1 | MACHINE BODY |
| | 020 | 11045 | - | | 1 | VAT |
| **TC/500** | | | | | | |
| | 010 | 499046-0001 | - | | 1 | MACHINE BODY |
| | 020 | 10311 | - | | 1 | VAT |
| **Common Parts** | | | | | | |
| | 030 | 499048 | - | | 3 | PIN |
| | 040 | 90191-0045 | - | | 3 | WHEEL |
| | 050 | 312111-0495 | - | | 3 | SCREW MC6S10X30FZB |
| | 060 | 312621-0324 | - | | 3 | NUT ML6M16FZB |

| From | Pos | Part No | SP | UN | Qty | Description |
|---|---|---|---|---|---|---|

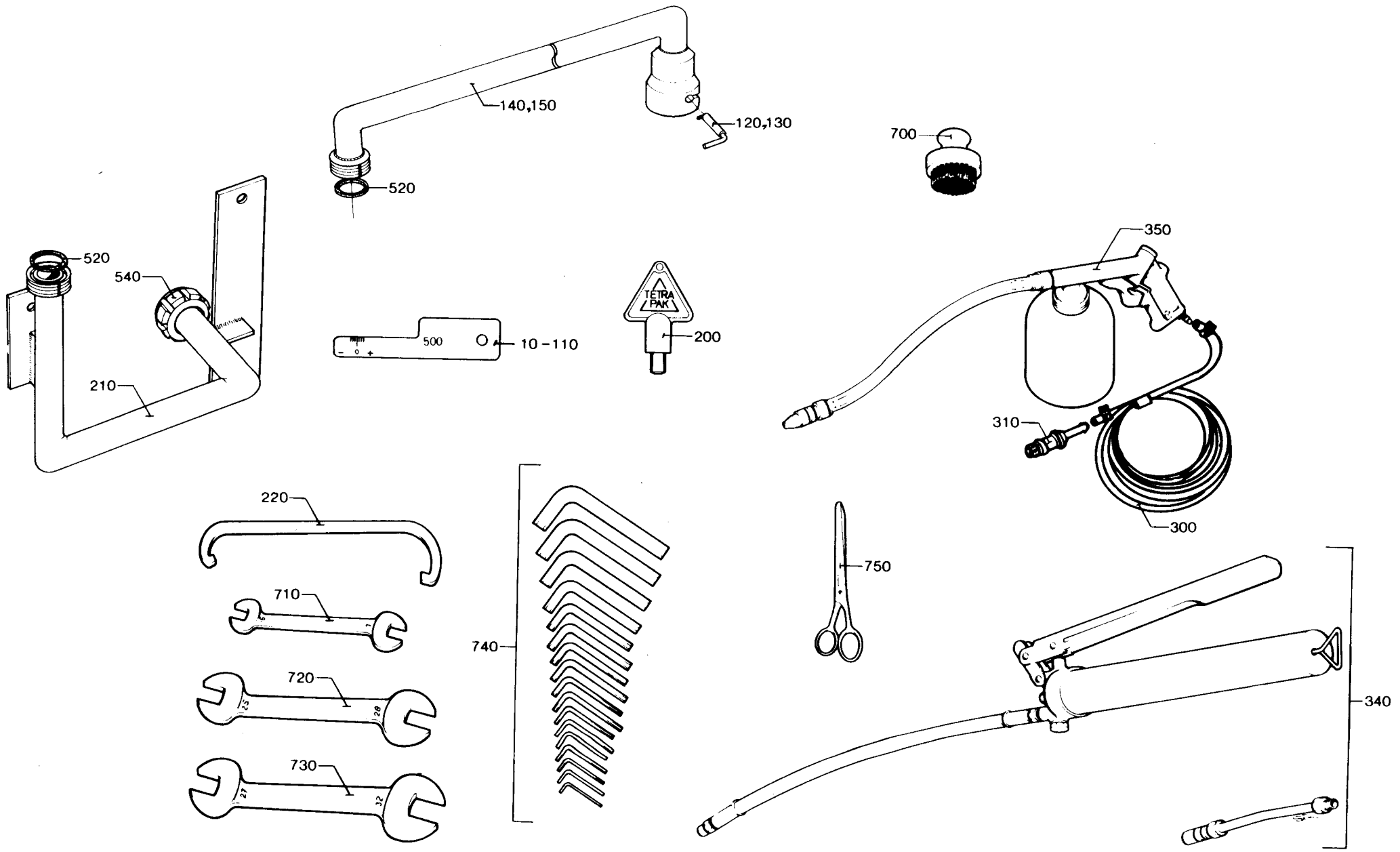
140,150
120,130
520
700
520
540
210
500
10-110
TETRA PAK
200
350
310
300
220
710
720
730
740
750
340

| From | Pos | Part No | SP | UN | Qty | Description |
|---|---|---|---|---|---|---|
| **TC/150** | | | | | | |
| | 060 | 7090-0001 | - | | 1 | DIP STICK 200ml |
| | 070 | 7090-0002 | - | | 1 | DIP STICK 189ml |
| | 080 | 7090-0003 | - | | 1 | DIP STICK 180ml |
| | 090 | 7090-0007 | - | | 1 | DIP STICK 150ml |
| | 100 | 7090-0010 | - | | 1 | DIP STICK 125ml |
| | 130A | 245086 | - | | 1 | PIN |
| | 150A | 451330 | - | | 1 | CLEANING PIPE |
| **TC/300** | | | | | | |
| | 030 | 3577-0004 | - | | 1 | DIP STICK 236ml |
| | 040 | 3577-0005 | - | | 1 | DIP STICK 250ml |
| | 050 | 3577-0007 | - | | 1 | DIP STICK 300ml |
| | 130A | 245086 | - | | 1 | PIN |
| | 150A | 451330 | - | | 1 | CLEANING PIPE |
| **TC/500ml** | | | | | | |
| | 010 | 3576-0001 | - | | 1 | DIP STICK 500ml |
| | 020 | 3576-0003 | - | | 1 | DIP STICK 473ml |
| | 110 | 7090-0013 | - | | 1 | DIP STICK 500ml |
| | 120A | 37294 | - | | 1 | PIN |
| | 140A | 283821 | - | | 1 | CLEANING PIPE |
| **Common Parts** | | | | | | |
| | 200 | 2705 | - | | 2 | KEY |
| | 210A | 283995 | - | | 1 | PIPE |
| | 220 | 72947 | - | | 1 | HOOK SPANNER |
| | 300B | 90148-0002 | - | M | 5 | HOSE |
| | 310B | 90163-0006 | - | | 1 | NIPPLE |
| | 330 | 90256-0001 | - | | 1 | TAPE HOLDER |
| | 340 | 90278-0001 | - | | 1 | PUMP |
| | 350B | 90279-0002 | - | | 1 | SPRAY GUN |
| | 500A | 312101-0335 | - | | 3 | SCREW M6S5X30FZB |
| | 510A | 315105-0153 | - | | 3 | WASHER BRB6,4X12RFR |
| | 520A | 315250-0101 | - | | 1 | GASKET 32/25 |
| | 530 | 315250-0103 | - | | 1 | GASKET 48/38 |
| | 540A | 342803-0101 | - | | 1 | NUT 25 |
| | 550 | 342803-0103 | - | | 1 | NUT 38 |
| | 560 | 342812-0101 | - | | 1 | SLEEVE ANSL.25 |
| | 570 | 342812-0103 | - | | 1 | SLEEVE ANSL.38 |
| | 580A | 342991-0103 | - | | 2 | HOSE CLIP 15-24MMRFR |
| | 700 | 776422-0101 | - | | 2 | BRASS WIRESTE |
| | 710 | 777120-0243 | - | | 1 | KEY L |
| | 720 | 777120-0269 | - | | 1 | KEY L |
| | 730 | 777120-0274 | - | | 1 | KEY L |
| | 740 | 777150-0800 | - | | 1 | KEY SET ,SEXKANT |
| | 750 | 777510-0101 | - | | 1 | SCISSORS |

| From | Pos | Part No | SP | UN | Qty | Description |
|---|---|---|---|---|---|---|

| From | Pos | Part No | SP | UN | Qty | Description |
|---|---|---|---|---|---|---|
| **TC/150 TPC Volume 62,5ml 125ml** | | | | | | |
| | 020 | 2033-0012 | - | | 2 | WASHER |
| | 060 | 4617 | - | | 5 | ROLLER |
| | 080 | 32197 | - | | 2 | PRESSURE ROLLER |
| | 100 | 36026 | - | | 8 | CARBON BRUSH |
| | 120 | 209972 | - | | 2 | RAIL |
| | 160 | 263964 | - | | 40 | RUBBER STRIP |
| | 170 | 266495 | - | | 2 | TENSION SPRING |
| | 220 | 283028 | - | | 4 | SUPPORT |
| | 320 | 90020-0020 | - | | 1 | SLEEVE |
| | 330 | 315202-0112 | - | | 5 | O-RING 14,1X1,6 |
| | 340 | 315202-0202 | - | | 5 | O-RING 3,3X2,4 |
| | 350 | 315202-0204 | - | | 5 | O-RING 5,3X2,4 |
| | 360 | 315202-0210 | - | | 5 | O-RING 11,3X2,4 |
| | 390 | 315202-0219 | - | | 1 | O-RING 29,2X3 |
| **TC/150 TPC Volume 150-200ml** | | | | | | |
| | 020 | 2033-0012 | - | | 2 | WASHER |
| | 060 | 4617 | - | | 5 | ROLLER |
| | 090 | 32301 | - | | 2 | PRESS.ROLLER LONG.ELEMENT |
| | 100 | 36026 | - | | 8 | CARBON BRUSH |
| | 120 | 209972 | - | | 2 | RAIL |
| | 160 | 263964 | - | | 40 | RUBBER STRIP |
| | 170 | 266495 | - | | 2 | TENSION SPRING |
| | 220 | 283028 | - | | 4 | SUPPORT |
| | 320 | 90020-0020 | - | | 1 | SLEEVE |
| | 370 | 315202-0215 | - | | 10 | O-RING 19,2X3 |
| | 390 | 315202-0219 | - | | 1 | O-RING 29,2X3 |
| **TC/150 IH Volume 62,5ml** | | | | | | |
| | 060 | 4617 | - | | 5 | ROLLER |
| | 080 | 32197 | - | | 2 | PRESSURE ROLLER |
| | 120 | 209972 | - | | 2 | RAIL |
| | 160 | 263964 | - | | 40 | RUBBER STRIP |
| | 170 | 266495 | - | | 2 | TENSION SPRING |
| | 190 | 536380 | - | | 1 | INDUCTOR 150IH |
| | 200 | G- 279233 | - | | 8 | CARBON BRUSH HOLDER |
| | 210 | 279668 | - | | 8 | CARBON BRUSH |
| | 220 | 283028 | - | | 4 | SUPPORT |
| | 320 | 90020-0020 | - | | 1 | SLEEVE |
| | 330 | 315202-0112 | - | | 5 | O-RING 14,1X1,6 |
| | 340 | 315202-0202 | - | | 5 | O-RING 3,3X2,4 |
| | 350 | 315202-0204 | - | | 5 | O-RING 5,3X2,4 |
| | 360 | 315202-0210 | - | | 5 | O-RING 11,3X2,4 |
| | 390 | 315202-0219 | - | | 1 | O-RING 29,2X3 |

| From | Pos | Part No | SP | UN | Qty | Description |
|---|---|---|---|---|---|---|
| **TC/150 IH Volume 150ml** | | | | | | |
| | 060 | 4617 | - | | 5 | ROLLER |
| | 090 | 32301 | - | | 2 | PRESS.ROLLER LONG.ELEMENT |
| | 120 | 209972 | - | | 2 | RAIL |
| | 160 | 263964 | - | | 40 | RUBBER STRIP |
| | 170 | 266495 | - | | 2 | TENSION SPRING |
| | 190 | 536382 | - | | 1 | INDUCTOR 150IH |
| | 200 | G- 279233 | - | | 8 | CARBON BRUSH HOLDER |
| | 210 | 279668 | - | | 8 | CARBON BRUSH |
| | 220 | 283028 | - | | 4 | SUPPORT |
| | 320 | 90020-0020 | - | | 1 | SLEEVE |
| | 370 | 315202-0215 | - | | 10 | O-RING 19,2X3 |
| | 390 | 315202-0219 | - | | 1 | O-RING 29,2X3 |
| **TC/150 IH Volume 125ml** | | | | | | |
| | 060 | 4617 | - | | 5 | ROLLER |
| | 080 | 32197 | - | | 2 | PRESSURE ROLLER |
| | 120 | 209972 | - | | 2 | RAIL |
| | 160 | 263964 | - | | 40 | RUBBER STRIP |
| | 170 | 266495 | - | | 2 | TENSION SPRING |
| | 190 | 536381 | - | | 1 | INDUCTOR 150IH |
| | 200 | G- 279233 | - | | 8 | CARBON BRUSH HOLDER |
| | 210 | 279668 | - | | 8 | CARBON BRUSH |
| | 220 | 283028 | - | | 4 | SUPPORT |
| | 320 | 90020-0020 | - | | 1 | SLEEVE |
| | 330 | 315202-0112 | - | | 5 | O-RING 14,1X1,6 |
| | 340 | 315202-0202 | - | | 5 | O-RING 3,3X2,4 |
| | 350 | 315202-0204 | - | | 5 | O-RING 5,3X2,4 |
| | 360 | 315202-0210 | - | | 5 | O-RING 11,3X2,4 |
| | 390 | 315202-0219 | - | | 1 | O-RING 29,2X3 |
| **TC/150 IH Volume 180ml-200ml** | | | | | | |
| | 060 | 4617 | - | | 5 | ROLLER |
| | 090 | 32301 | - | | 2 | PRESS.ROLLER LONG.ELEMENT |
| | 120 | 209972 | - | | 2 | RAIL |
| | 160 | 263964 | - | | 40 | RUBBER STRIP |
| | 170 | 266495 | - | | 2 | TENSION SPRING |
| | 190 | 530647 | - | | 1 | INDUCTOR 150IH |
| | 200 | G- 279233 | - | | 8 | CARBON BRUSH HOLDER |
| | 210 | 279668 | - | | 8 | CARBON BRUSH |
| | 220 | 283028 | - | | 4 | SUPPORT |
| | 320 | 90020-0020 | - | | 1 | SLEEVE |
| | 370 | 315202-0215 | - | | 10 | O-RING 19,2X3 |
| | 390 | 315202-0219 | - | | 1 | O-RING 29,2X3 |

| From | Pos | Part No | | SP | UN | Qty | Description |
|---|---|---|---|---|---|---|---|
| **TC/300 Volume 236ml 300ml** | | | | | | | |
| | 010 | 1978 | - | | | 2 | TENSION SPRING |
| | 020 | 2033-0012 | - | | | 2 | WASHER |
| | 040 | 3630 | - | | | 5 | ROLLER |
| | 050 | 3950 | - | | | 40 | RUBBER STRIP |
| | 090 | 32301 | - | | | 2 | PRESS.ROLLER LONG.ELEMENT |
| | 140 | 229506 | - | | | 2 | RAIL |
| | 230 | 283029 | - | | | 4 | SUPPORT |
| | 250 | 442442 | - | | | 8 | CARBON BRUSH |
| | 310 | 90020-0008 | - | | | 1 | SLEEVE |
| | 370 | 315202-0215 | - | | | 10 | O-RING 19,2X3 |
| | 400 | 315202-0221 | - | | | 1 | O-RING 34,2X3 |
| **TC/500 Volume 473ml 500ml** | | | | | | | |
| | 020 | 2033-0012 | - | | | 2 | WASHER |
| | 030 | 2881 | - | | | 2 | TENSION SPRING |
| | 070 | 26619 | - | | | 2 | PRESSURE ROLLER |
| | 110 | 207661 | - | | | 5 | ROLLER |
| | 130 | 229505 | - | | | 2 | RAIL |
| | 150 | 232956 | - | | | 40 | RUBBER STRIP |
| | 180 | 269916 | - | | | 4 | SUPPORT |
| | 240 | 442441 | - | | | 8 | CARBON BRUSH |
| | 300 | 90020-0007 | - | | | 1 | SLEEVE |
| | 380 | 315202-0217 | - | | | 10 | O-RING 24,2X3 |
| | 410 | 315202-0224 | - | | | 1 | O-RING 42,2X3 |
| **Common Parts** | | | | | | | |
| | **F020** | **==>903-1.1** | - | | | **8** | **TPC BAR TC/150 TPC** |
| | **F030** | **==>903-1.2** | - | | | **8** | **TPC BAR TC/300** |
| | **F010** | **==>903-1.3** | - | | | **8** | **HEATING RAIL TC/500 TPC** |
| | 500 | 10593 | - | | | 10 | LOCKING RUBBER |
| | 510 | 230500 | - | | | 1 | SLIDE RAIL |
| | 520 | 255336 | - | | | 3 | SLIDE RAIL |
| | 600 | 90028-0001 | - | | | 10 | CONE |
| | 605 | 90044-0104 | - | | | 1 | PROXIMITY SWITCH |
| | 610 | 90092-0048 | - | | | 2 | OIL BRUSH |
| | 615 | 90092-0064 | - | | | 2 | METERING VALVE |
| | 620 | 90092-0065 | - | | | 2 | METERING VALVE |
| | 625 | 90099-0050 | - | | | 2 | NUT |
| | 630 | 90144-0003 | - | | | 1 | TAPE |
| | 635 | 90206-0014 | - | | | 1 | HEATING ELEMENT |
| | 640 | 90296-0053 | - | | L | 1 | OIL |
| | 645 | 90299-0010 | - | | | 1 | PRIMER |
| | 650 | 90299-0025 | - | | | 1 | PAINT |
| | 655 | 90299-0037 | - | | | 1 | PAINT |
| | 660 | 90312-0006 | - | | | 1 | PLASTIC STRIP |
| | 700 | 315204-0216 | - | | | 2 | O-RING 22,2X3VITON |
| | 705 | 315204-0301 | - | | | 2 | O-RING 49,5X3VITON |
| | 710 | 315204-0302 | - | | | 1 | O-RING 54,5X3VITON |
| | 715 | 315250-0101 | - | | | 5 | GASKET 32/25 |
| | 720 | 315250-0103 | - | | | 10 | GASKET 48/38 |
| | 725 | 315754-0105 | - | | | 10 | CIRCLIP E 3,2 |

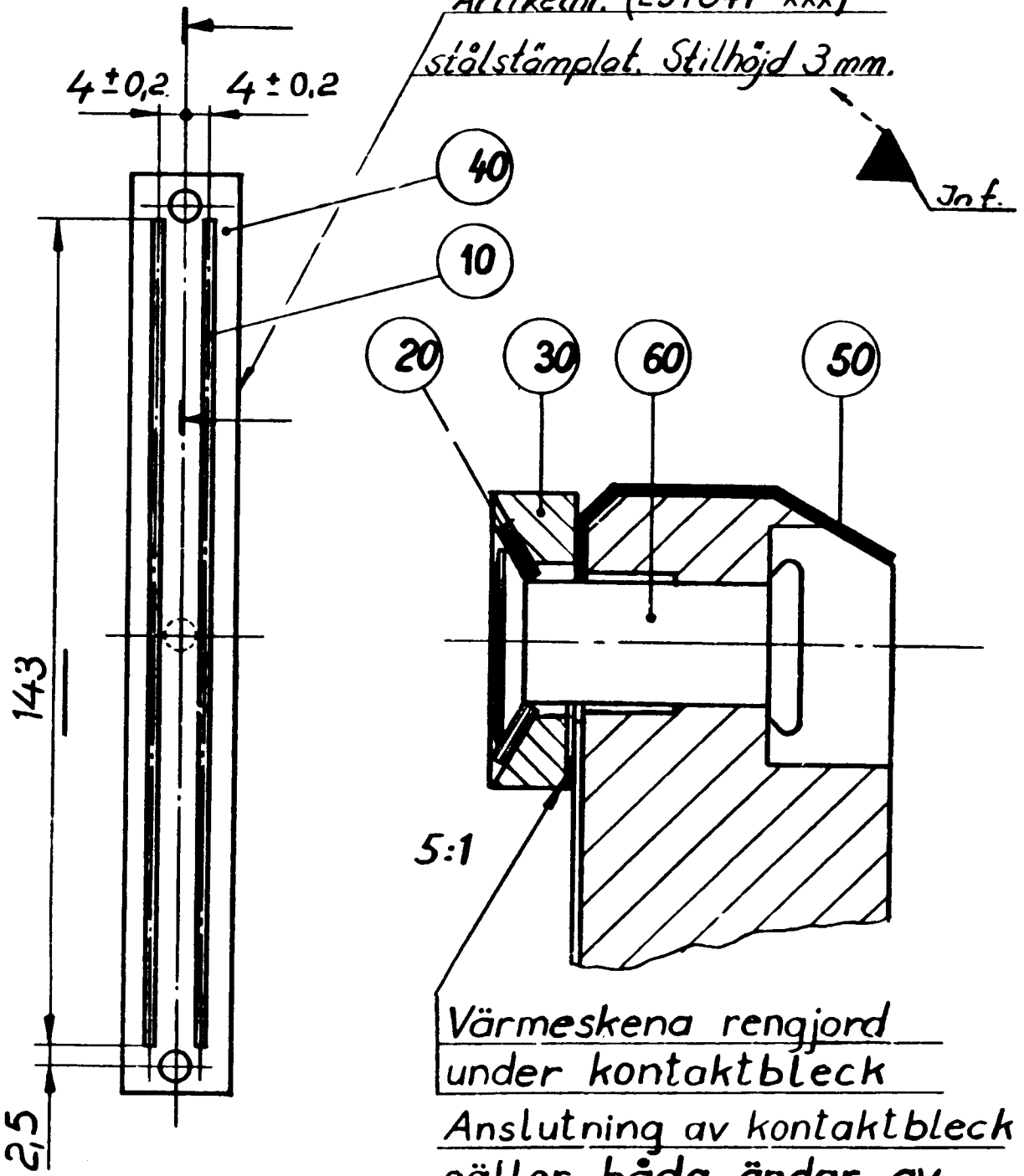


Värmeskena rengjord under kontaktbleck

Anslutning av kontaktbleck gäller båda ändar av TPC - skena.

| From | Pos | Part No | SP | UN | Qty | Description |
|---|---|---|---|---|---|---|
| | 010 | 90276-0004 | - | MM | 286 | HEATING RIBBON STD.Paper |
| | 010 | 90276-0012 | - | MM | 286 | HEATING RIBBON Al-foil |
| | 010 | 90276-0013 | - | MM | 286 | HEATING RIBBON 1,5mm |
| | 020 | 37168 | - | | 2 | WASHER |
| | 030 | 37169 | - | | 2 | CONNECTION PLATE |
| | 040 | 257842 | - | | 1 | HEATING RAIL |
| | 050 | 257843 | - | | 2 | CONTACT LINK |
| | 060 | 90367-0004 | - | | 2 | RIVET |

| From | Pos | Part No | SP | UN | Qty | Description |
|---|---|---|---|---|---|---|

Tetra Pak