# MS 6330 TCA/25

# MAINTENANCE SYSTEM

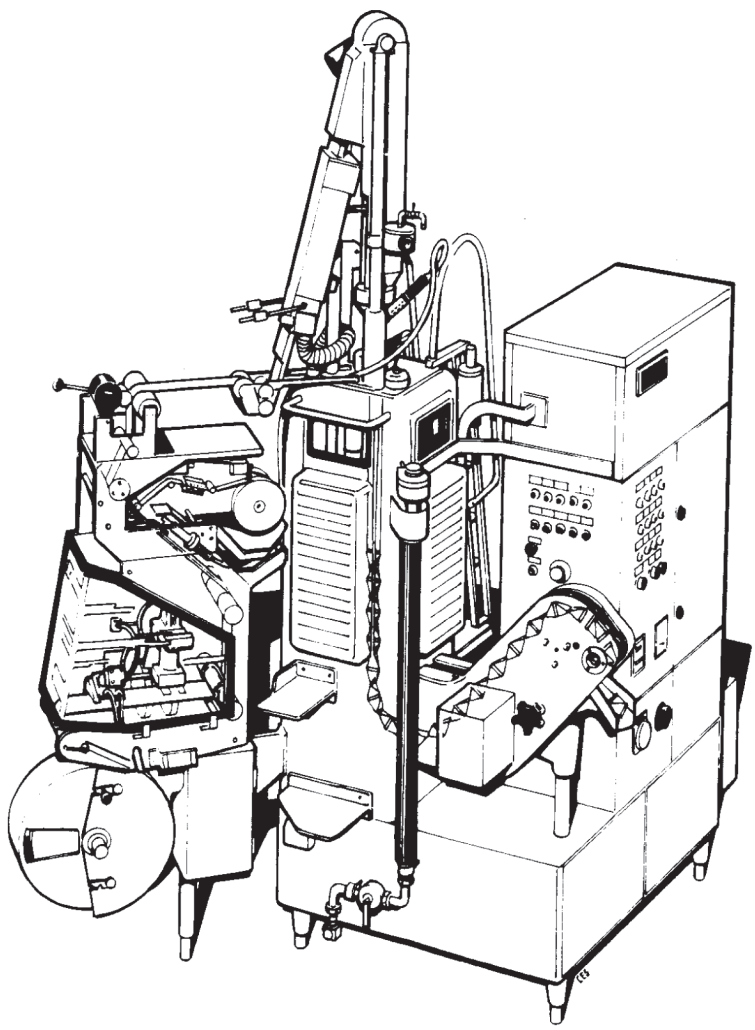

TETRA PAK
Technical Publications
Lund, Sweden

MS 87010-03

76

MAGAZINE 100

SUPERSTRUCTURE 200

SIDES 300

MACHINE BODY 400

CUTTING MACHINE 500

600

700

STERILE AIR SYSTEM
AIR HEATER
LUBRICATION 800

900

1000

1100

1200

1300

1400

1500

This page intentionally left blank

# CASSETTE


| | |
|---|---|
| Cassette | 101-1 |
| Splicing device | 102-1 |
| Dating unit | 103-1 |

# CASSETTE

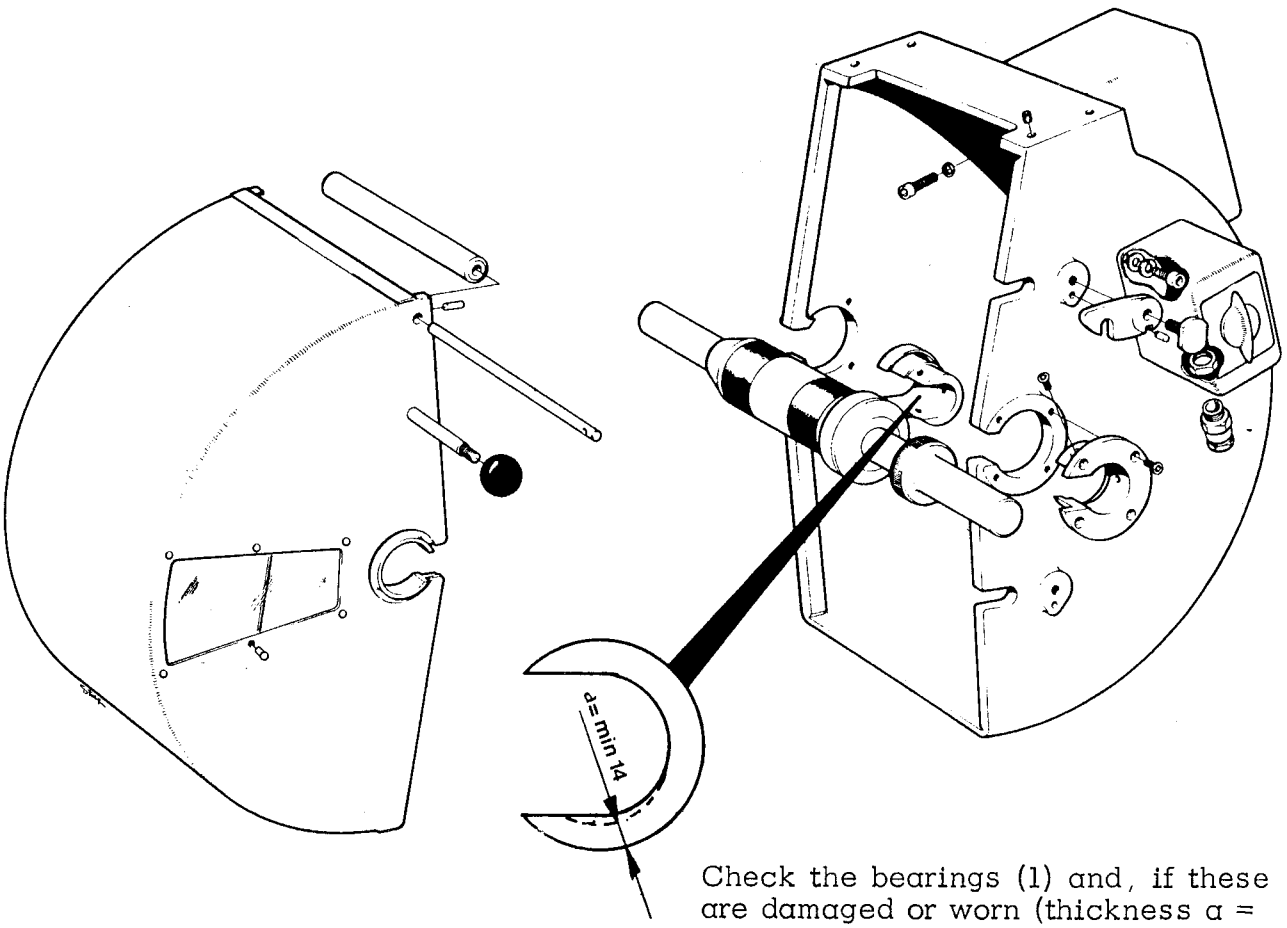


1 Bearing
2 Screw
3 Screw
4 Roller
5 Axle
6 Paper reel holder
7 Bearing holder

Check the bearings (1) and, if these are damaged or worn (thickness a = minimum 14 mm), undo the screws (2) and (3), remove and replace the bearing.

Check that the screws (3) are not too long so that they go right through the bearing (1) damaging the paper reel holder.

Check that the roller (4) rotates easily on its axle.

Check that the paper reel holder (6) locks the paper reel when fitted and that the thread does not bind or seize.

# SPLICING DEVICE

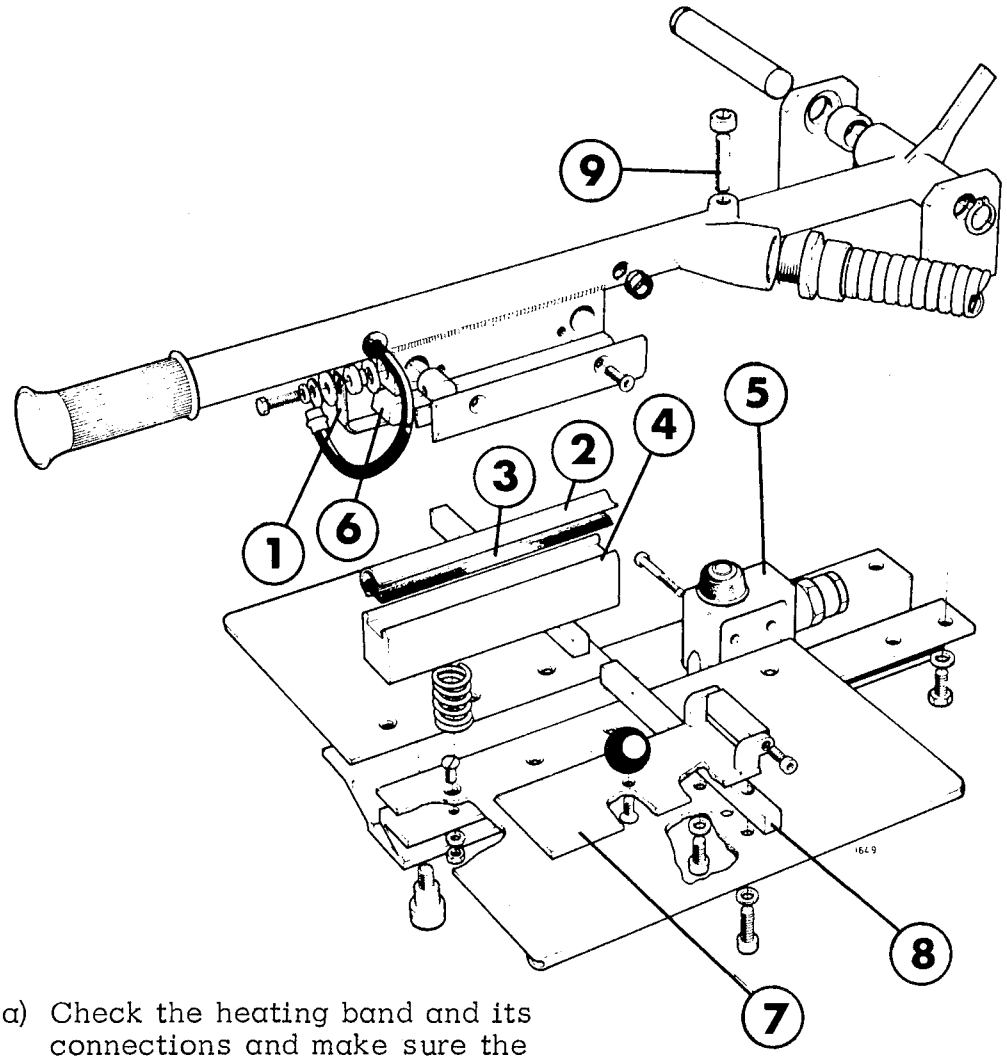


a) Check the heating band and its connections and make sure the TPC bar is not damaged.

b) Check the pressure rubber and its teflon cover. Replace damaged parts.

c) Check the function of the splicing device.
The heating impulse is to begin when the lever is depressed with a force of appr 25 N (2,5kp). If necessary, adjust with the screw (9).

The impulse time can be set on the time relay, located in the transformer box, so that a perfect splice may be obtained for different paper types.

Basic setting: .... s

1 Heating band
2 Teflon cover
3 Pressure rubber
4 Pressure jaw, spring loaded
5 Microswitch
6 TPC bar
7 Tear-off device
8 Guide bar
9 Adjustment screw

# DATING UNIT DV6

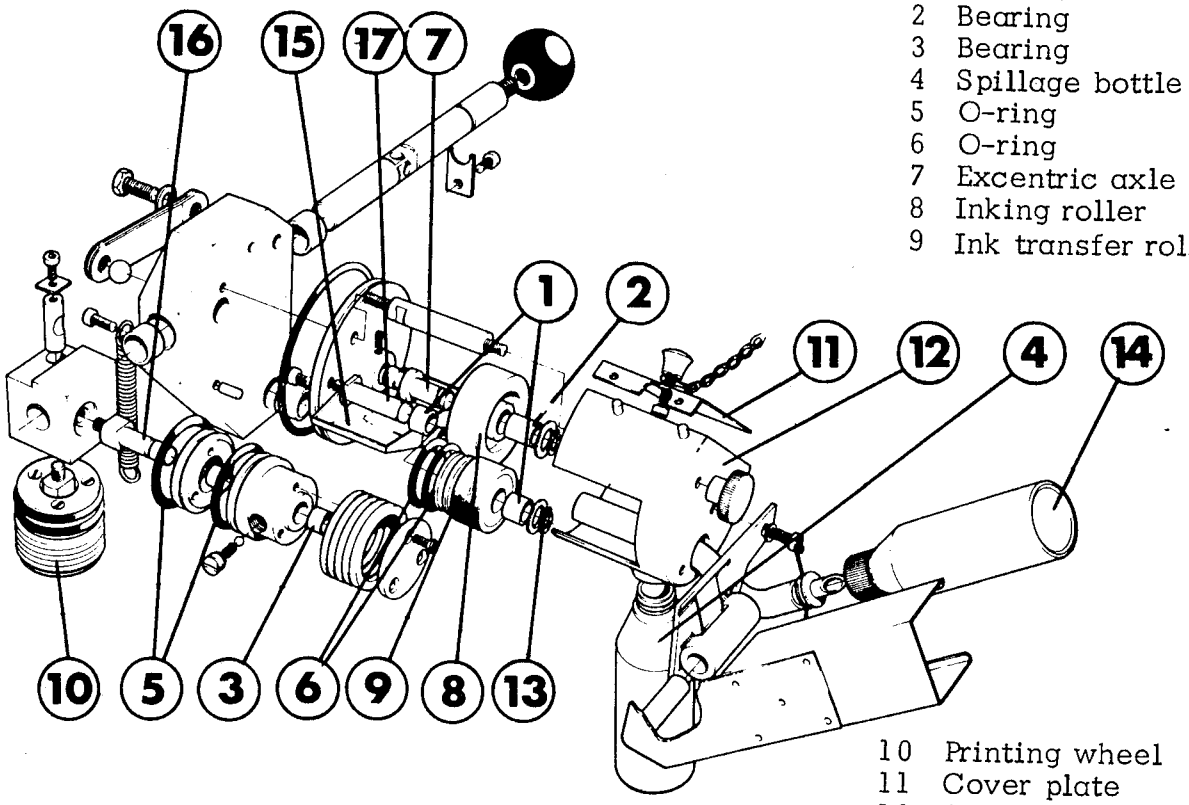


1 Bearing
2 Bearing
3 Bearing
4 Spillage bottle
5 O-ring
6 O-ring
7 Excentric axle
8 Inking roller
9 Ink transfer roller
10 Printing wheel
11 Cover plate
12 Cover
13 Circlip
14 Ink bottle (90299-13)
15 Ink container
16 Shaft
17 Shaft

Check the play in the bearings (1), (2), and (3) of the wheel and rollers. Max play 0,2 mm. If required, replace worn bearings/axles. Check the O-rings (5) and (6).

Adjusting the ink transfer

By turning the excentric axle (7) counter-clockwise the ink transfer can be reduced. Turning it clockwise increases the quantity of ink.

Cleaning

The dating unit must be dismantled and cleaned carefully each week. Immerse the rollers (8) and (9) and the printing wheel (10) in methylated spirit for at least half an hour.

Wash the other parts with spirit. Let the wheel and rollers air-dry before fitting them again.

Ink

Ink is supplied by Tetra Pak ready-mixed in a bottle as a spare part (90299-13).

CAUTION! No other ink must be used.

Experience shows that certain inks react with the wetting agent in the sterile bath jeopardizing the wetting.

# SUPERSTRUCTURE


| | |
|---|---|
| Presterilizer | 201-1 |
| Paper drier | 202-1 |
| Aseptic chamber | 203-1 |
| Upper bending roller with auxiliary motor | 204-1 |
| Upper and lower forming rings | 205-1 |
| Longitudinal element | 206-1 |
| Air knife | 207-1 |
| Filling system | 208-1 ①② |

# PRESTERILIZER

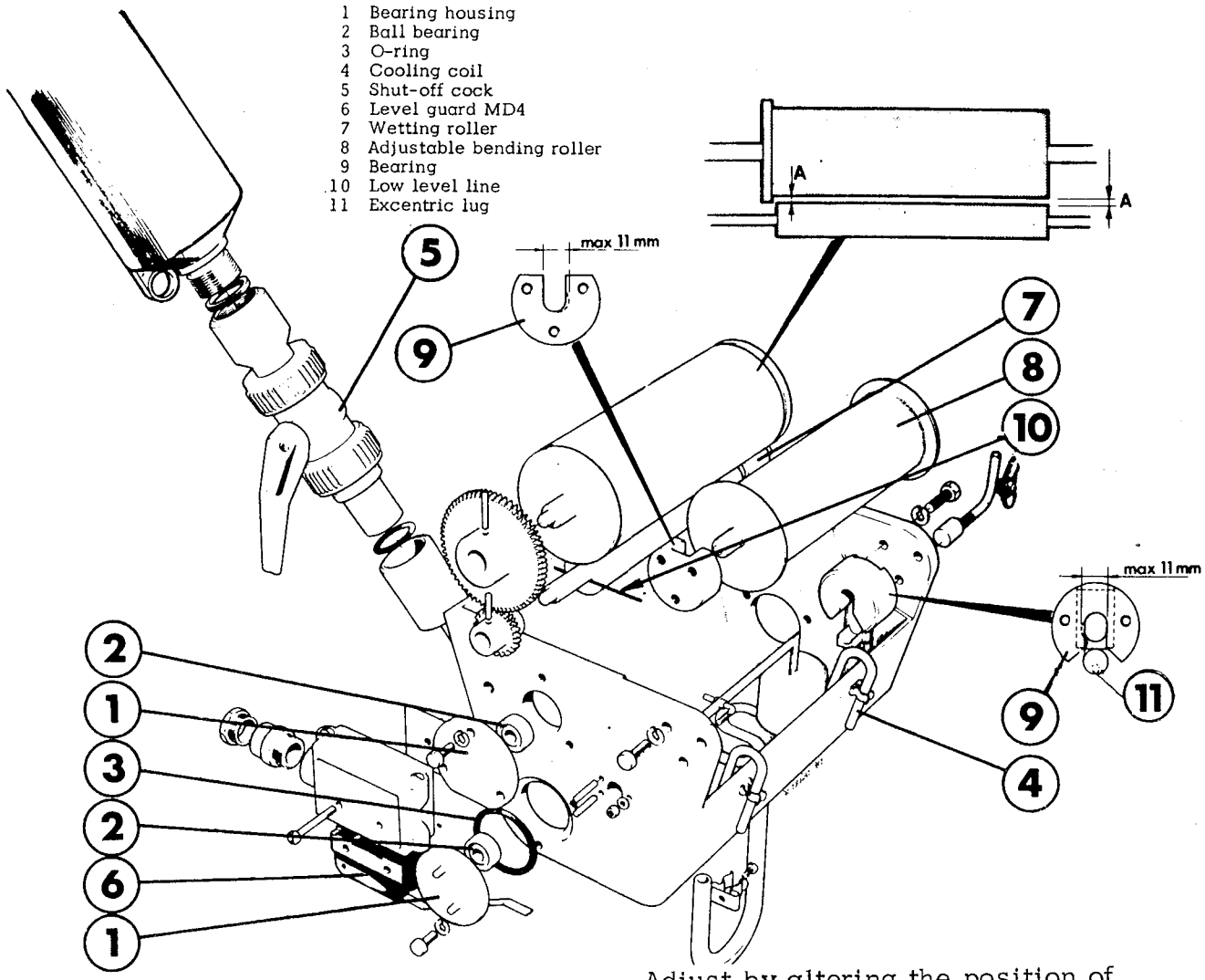


## Replacing bearings

a) Dismantle the bearing housings (1). Replace damaged or worn ball bearings (2) and O-rings (3).

b) Reassemble and readjust the gap of A mm between the upper and lower rollers by turning the lower excentric bearing housings. NB! The rollers must be parallel.

Gap A = 5 mm

## Adjusting the peroxide level

The level guard is to give a signal when the liquid level just touches the underside of the wetting roller shaft (7).

Adjust by altering the position of the level guard switch (6) or by bending the switch arm.

## Adjustable bending roller

a) Make sure the surface of the roller is not damaged.

b) Check the bearing (9) and replace them if the groove width B exceeds 11 mm.

c) Check the passage of the paper through the sterile bath and adjust if necessary by altering the inclination of the roller by means of the excentric lug (11).

## Sterile bath

Remove the cooling coil (4) and clean the bath.

# PAPER DRIER

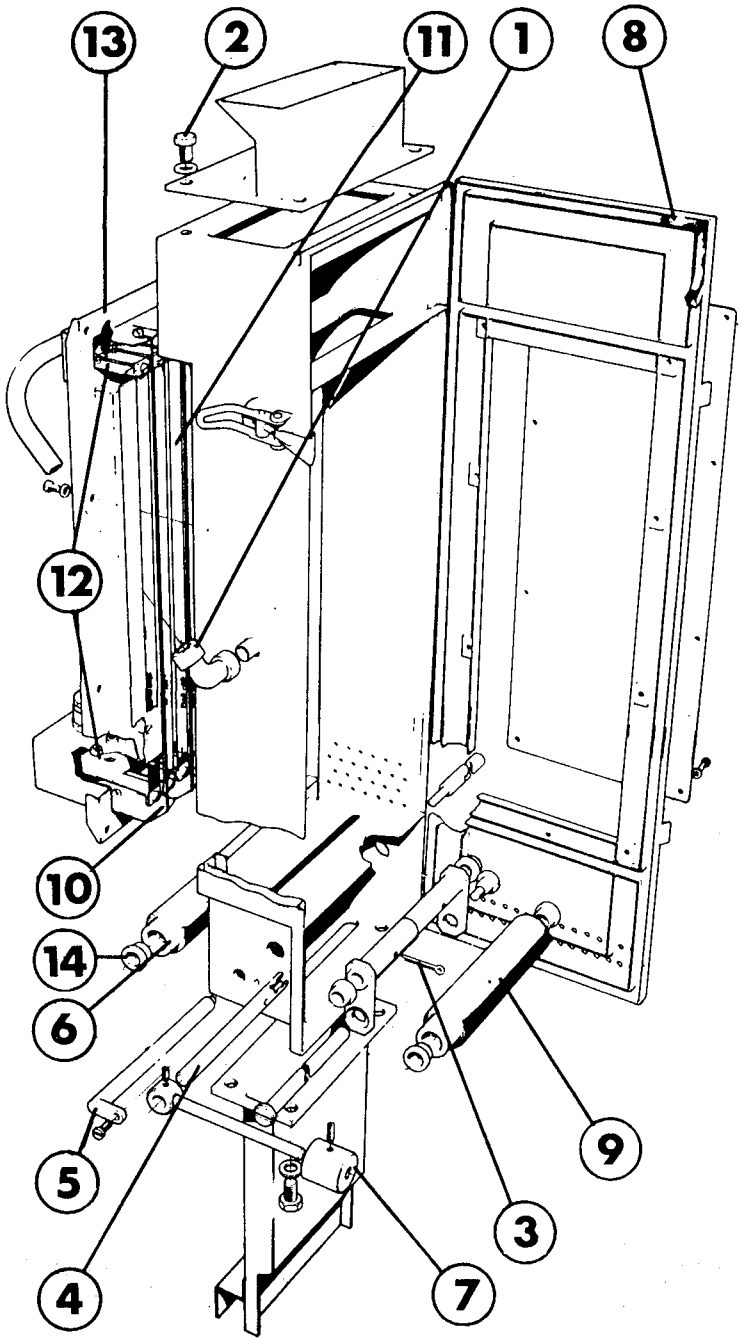


Check the heating bands, their attachments and the distance wires. Replace damaged parts.

To check the band attachments and connections the paper drier must be taken off the machine and the heating unit removed.

a) Undo the sterile air connection (1).
b) Unscrew the mounting screws (2).
c) Lift down the paper drier and take out the heating unit (13).

Check the bushings (14) in the squeezing rollers and replace them if there is any play.

## Replacing the bushings

a) Remove the split pin (3) and pull out the axle (4) from the movable squeezing roller.
b) Remove the axle (5) of the fixed roller (6).
c) Replace damaged or worn bushings.
d) Check the rubber sleeves and their surfaces. Replace damaged or worn parts.

Check the door sealing strips and replace damaged strips.

## Adjusting the peroxide consumption

Adjust by means of the counterweights in relation to the amount of wetting agent in the peroxide.

Consumption should be 250-350 ml/h and must not exceed the upper limit.

1 Sterile air connection
2 Mounting screw
3 Split pin
4 Axle
5 Axle
6 Fixed squeezing roller
7 Counterweight
8 Sealing strip
9 Rubber sleeve
10 Distance wire
11 Heating band
12 Band attachment
13 Heating unit
14 Bushing

# ASEPTIC CHAMBER

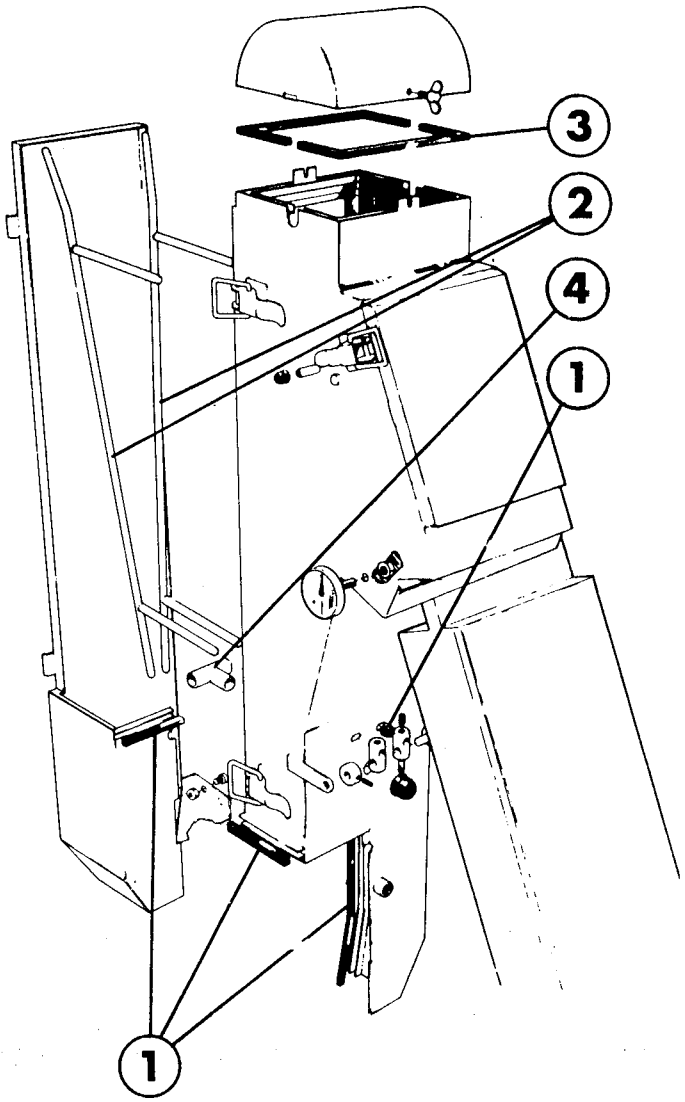


Seals and guide rods

a) Replace in case of wear or damage.
b) Check the rubber seals (1) where the guide rods are attached.
c) If the guide rods have to be taken off mark their positions before undoing the mounting screws.
d) Clean the sterile air inlet pipe.
e) Check the teflon covering of the guide rods and replace them if there is any damage.

Thermometer

Check its function by putting it in warm water together with another thermometer.

Checking the temperature inside the aseptic chamber

If, during production, the temperature rises too high, the paper web may get stuck to the upper bending roller so that it is pulled forward.

If so, adjust the temperature by reducing the effect of the paper drier. The sterile air temperature must not be reduced.

Basic setting of the variable transformer of the paper drier: 5,6 A.

1 Rubber seal
2 Guide rods
3 Sealing strip
4 Sterile air inlet

# UPPER BENDING ROLLER with auxiliary motor

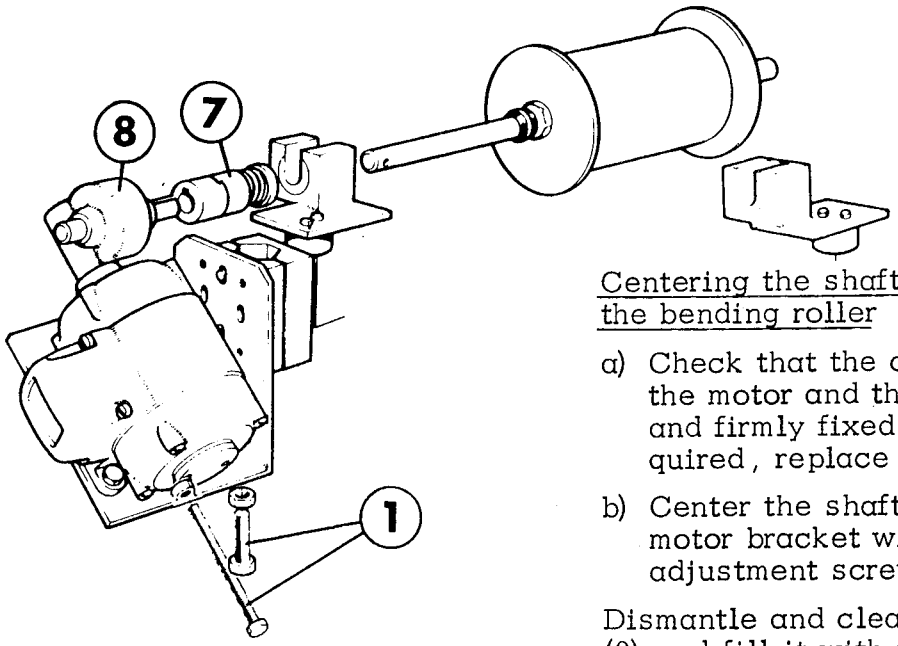


1 Adjustment screw
2 End section
3 Locking nut
4 Conical ring
5 Seal
6 Bearing
7 Clutch
8 Worm gear

Centering the shafts of the motor and the bending roller

a) Check that the clutch (7) between the motor and the roller is intact and firmly fixed in place. If required, replace the clutch.

b) Center the shafts by moving the motor bracket with the aid of the adjustment screws (1).

Dismantle and clean the worm gear (8) and fill it with fresh grease.

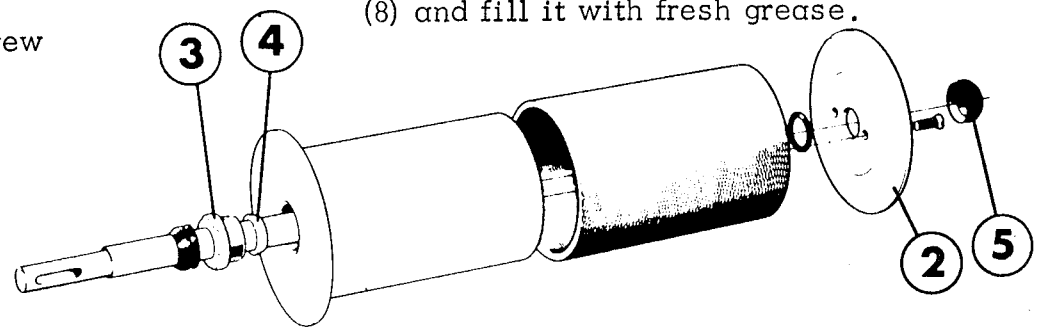


Upper bending roller

Check the roller bearings and replace them in case of damage or if the thickness is less than 3 mm (see picture).

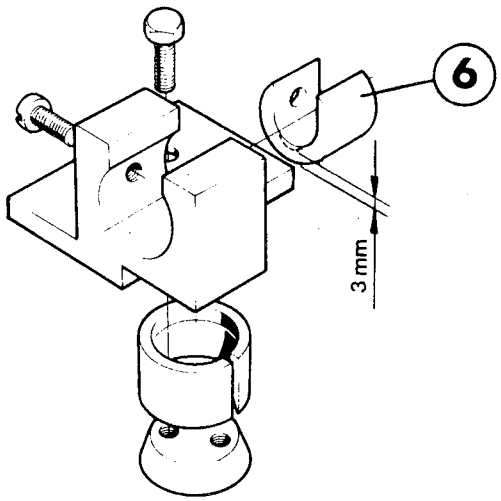


Make sure the teflon sleeve is not worn or damaged. If required, replace it.

Replacing the teflon sleeve:

a) Remove the end section (2) and cut away the damaged teflon sleeve.
b) Immerse the new sleeve in warm water before fitting it.
c) Fit the sleeve, reassemble the roller, and check that the nut (3) locks the roller on its shaft. If not, replace the conical ring (4).
d) When the roller has been put together check that the seals fit tightly into the end sections.

# UPPER AND LOWER FORMING RINGS

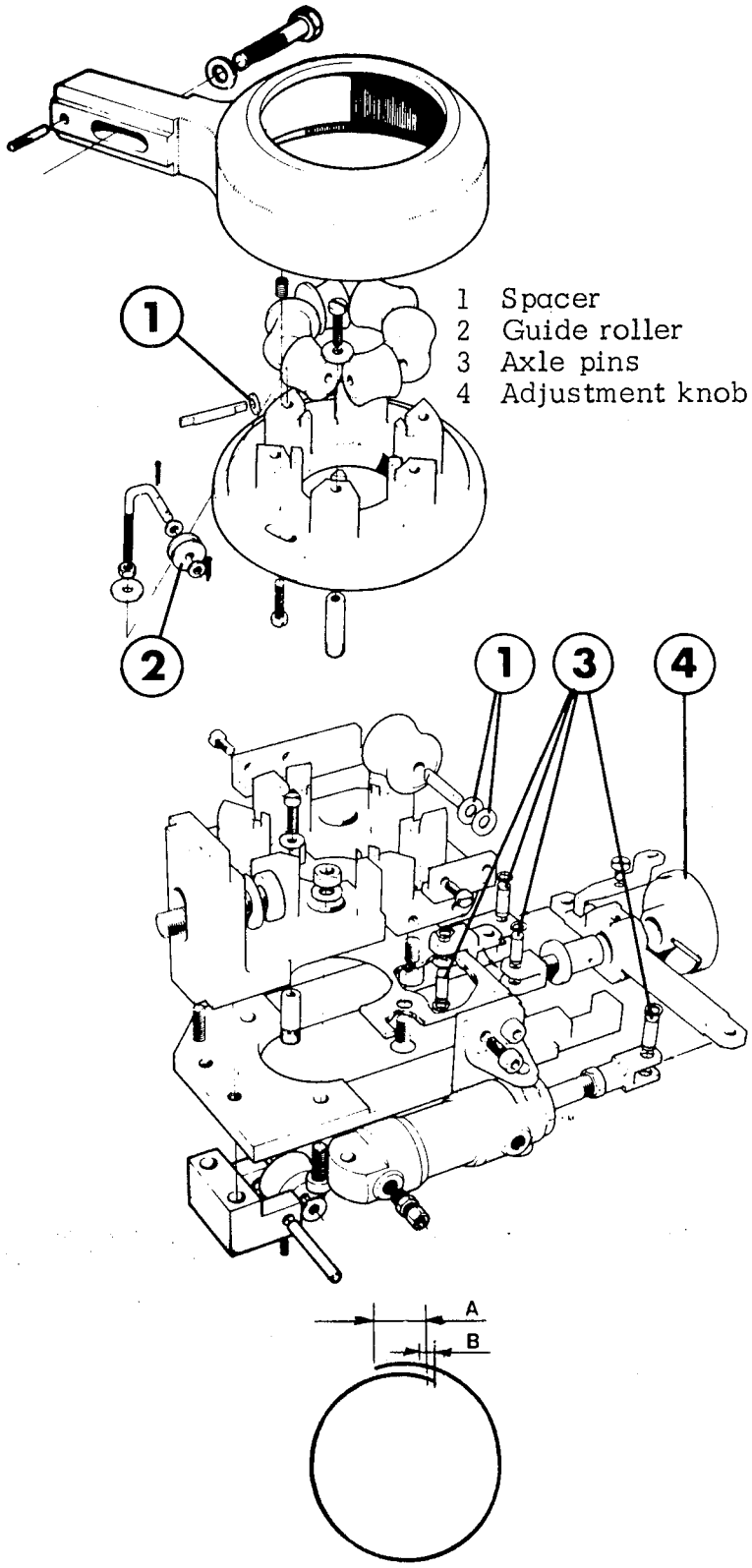


1 Spacer
2 Guide roller
3 Axle pins
4 Adjustment knob

Upper forming ring

a) Check wear of rollers and axles and any damage to the roller surfaces.
b) Replace damaged or worn parts.
c) Distribute the play between the rollers equally all around by fitting spacers (1).
Max play 0,1 - 0,3 mm.
d) Check that the lower part of the forming ring moves easily.

Guide roller

a) Check wear.
b) Check while the machine is in operation that the right hand paper edge runs in the groove of the roller (2).

Lower forming ring

a) Check wear of rollers and axles and any damage to the roller surfaces.
b) Replace damaged or worn parts.
c) Distribute the play between the rollers equally all around by fitting spacers (1).
d) Check wear of all axle pins and that they move freely.
e) Replace worn or damaged parts.
f) Check that the adjustment knob can be turned easily.
g) Dismantle the cylinder and check the piston rod and seals for wear. Replace worn parts.

LS overlap

The longitudinal seal must run across the milled out section of the pressure jaw faces. This is achieved by moving the upper or lower forming rings and the guiderods.

| | |
|---|---|
| LS overlap | A = 5-8 mm |
| Maximum variation | B = 2,5 mm |

# LONGITUDINAL ELEMENT

Check the element for wear or damage.

Clean the element block and the connections.

Replacing the element

a) Remove the cable connections (1) and the locking rings (2). Unscrew the grub screw (6) and the nut (5).
b) Check the springs (3).
c) Fit the new element and make sure it is kept under tension by the springs. Do not tighten the locking nut (5).
d) Check that the bands do not touch at the point marked (7) and that the screws (4) support the bands.
e) Operate the machine on water and adjust the element so that a good longitudinal seal is obtained.

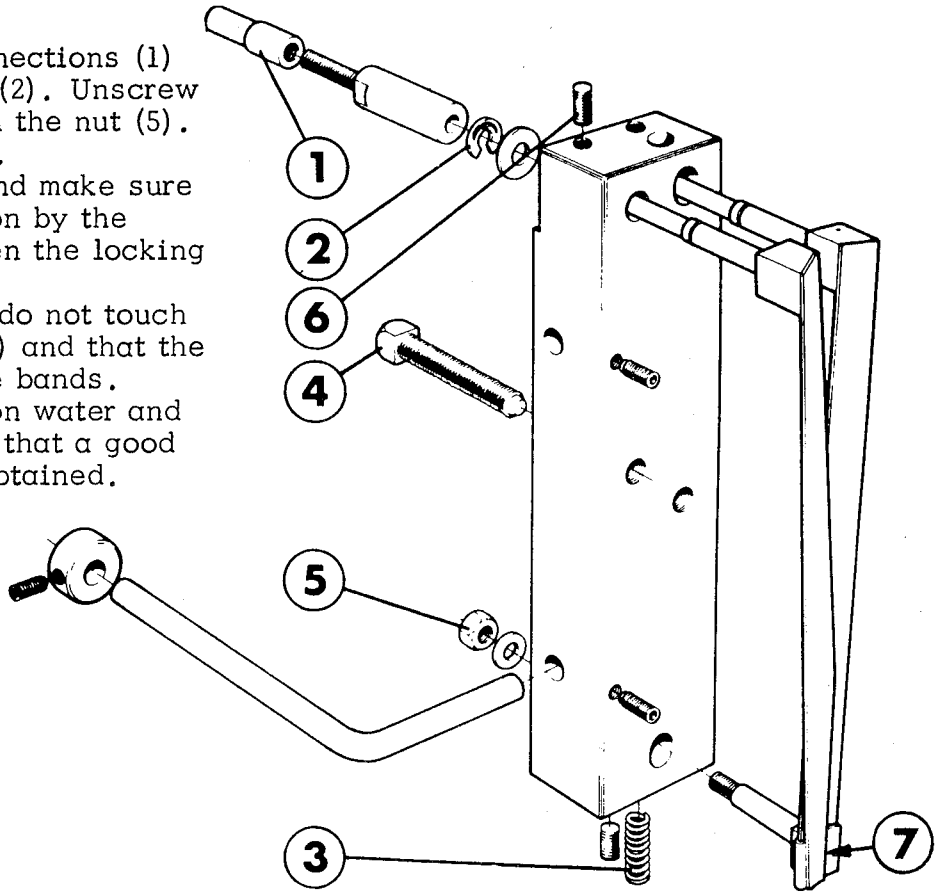


1 Cable connection
2 Locking ring
3 Spring
4 Support screw
5 Locking nut
6 Grub screw

# AIR KNIFE

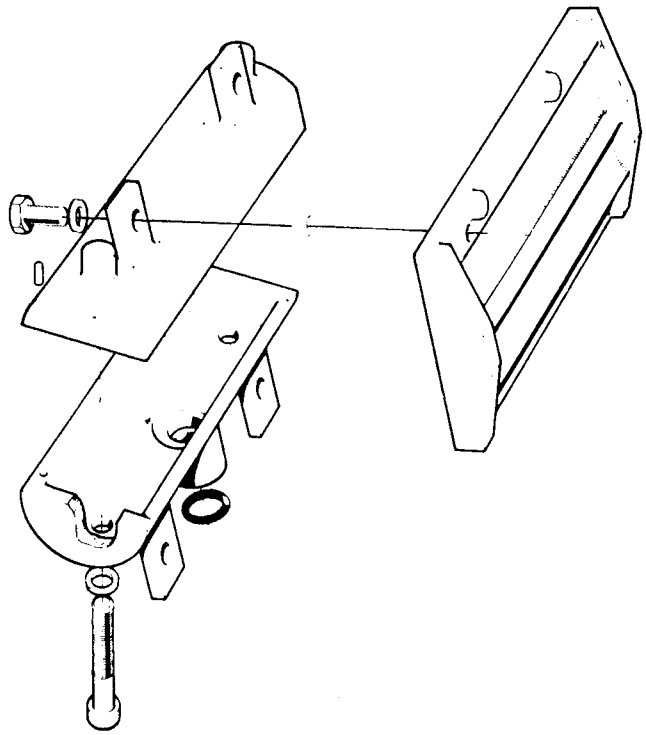

On machines with air knife, clean the slit with a feeler gauge.

Remove paper residue and dust from the knife and cover.

Pipe-lines

a) Replace all seals.
b) Check the teflon coating in the flexible tube (5). In case of damage, replace the complete tube.

Sterile air pipe

a) Check for damage.
b) Clean the air holes (3).

Regulating valve

Dismantle and clean. Replace all seals and O-rings. Check that the valve is fully closed, when the regulating hand-wheel is in its zero position.
The locking spring (8) of the valve shaft must hug the regulating hand-wheel closely to prevent the shaft from being blown out by the steam pressure on sterilization.

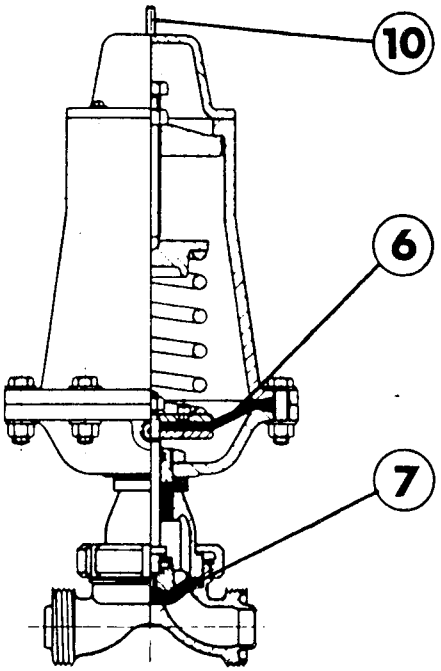


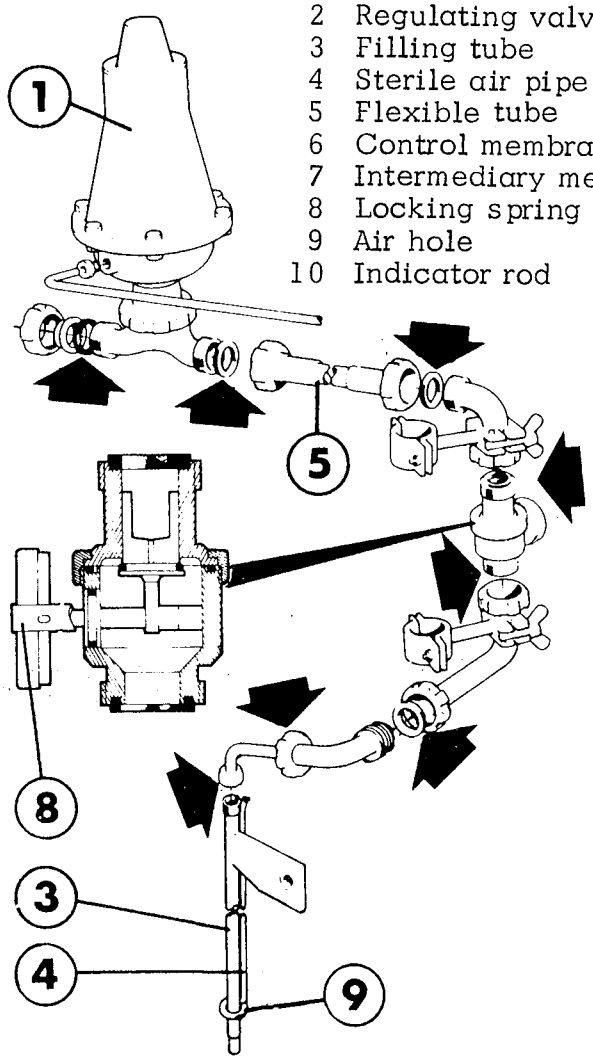


1 Product valve
2 Regulating valve
3 Filling tube
4 Sterile air pipe
5 Flexible tube
6 Control membrane
7 Intermediary membrane
8 Locking spring
9 Air hole
10 Indicator rod

Dismantling and cleaning the product valve

a) Remove the top cover and relieve the spring tension. (NB! Make a note of how many turns).
b) Dismantle and clean the entire valve.
c) Inspect the control membrane (6) for cracks or fatigue.
d) Inspect the intermediary membrane (7) for cracks or splitting caused by the spring pressure. If there are signs of damage replace it (sterility risk!).
e) Lubricate the spindle thinly with grease and reassemble the parts. Restore the spring pressure.

Checking the function of the product valve

Check that the valve works by watching the indicator rod (10).

The spring pressure is to close the valve against air pressure of 40 kPa (4 kp/cm$^2$).

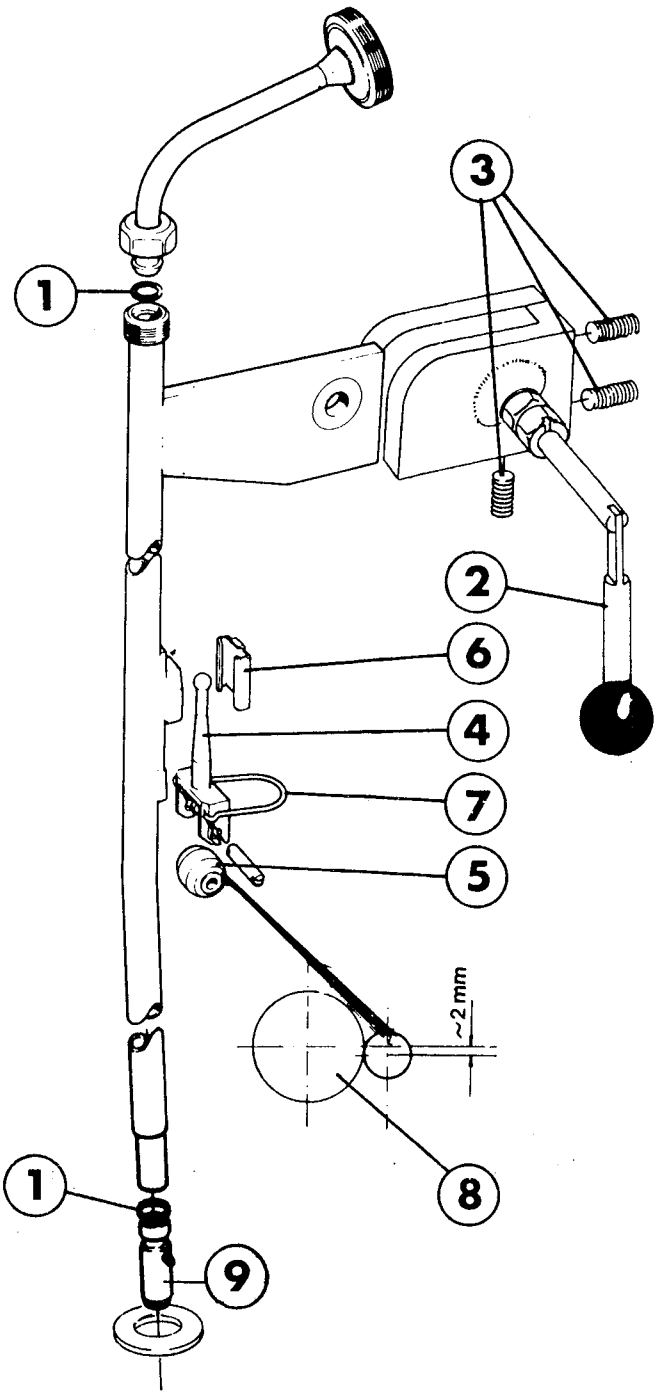


1 O-ring
2 Locking handle
3 Adjustment screws
4 Ball pin
5 Pressure roller
6 Clip
7 Spring
8 Counter roller
9 Nozzle

Checking the filling tube

Fit new seals and make sure the nozzle (9) is firmly in place.

Check that the tube is centered in relation to the jaws and that the locking handle (2) turns easily.

Centering the filling tube

Adjust the position of the filling tube with the adjustment screws (3) in the bracket.

It might be necessary to bend the tube slightly to achieve perfect centering.

Checking the pressure roller

a) Make sure the ball pin (4) is not damaged.
b) Check wear of the pressure roller and its axle. In case of wear or damage, replace the parts.
c) Check that the clip(6) locks the ball pin properly and that the spring (7) locks the pressure roller.
d) Check the position of the pressure roller in relation to the counter roller.

# SIDE FRAMES


| | |
|---|---|
| Dismantling and checking heating sides | 301-1 |
| Dismantling and checking pressure sides | 302-1 |
| Fitting and synchronization of sides | 303-1 |
| Check-measuring of sides | 304-1 |
| Checking jaw pressure | 305-1 |
| Checking pressure length | 306-1 |
| Pressure mechanism | 307-1 ①② |
| Pressure jaw | 308-1 |
| Lower sprockets | 309-1 |
| Spring cartridge | 310-1 |
| Double chains | 311-1 |
| Upper chain wheels | 312-1 |
| Chain rails | 313-1 |
| Pressure roller holder, heating sides | 314-1 |
| Contact rails | 315-1 |
| Heating jaw | 316-1 |
| Calibration of pressure and heating jaws | 317-1 |

# HEATING SIDES

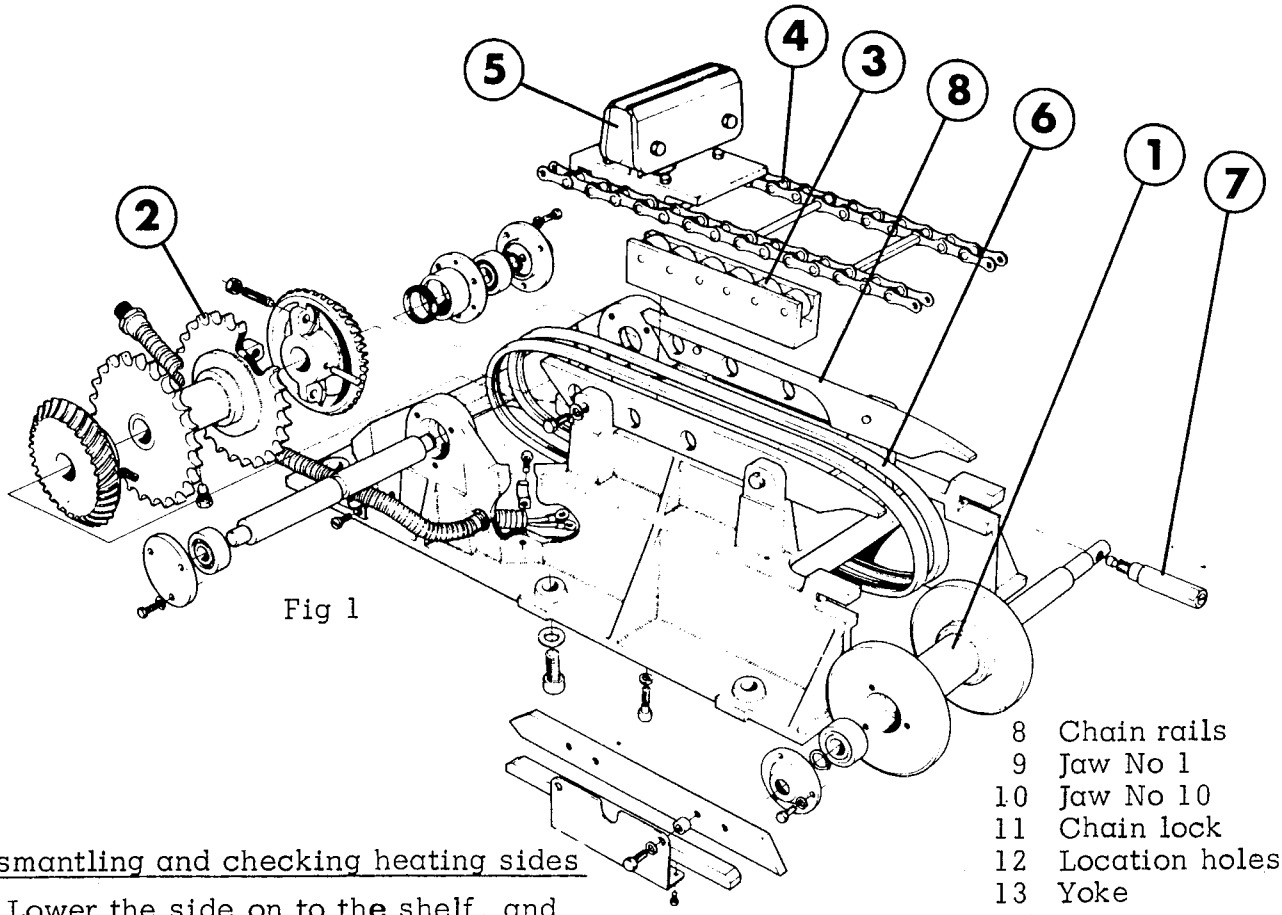


Fig 1

8 Chain rails
9 Jaw No 1
10 Jaw No 10
11 Chain lock
12 Location holes
13 Yoke

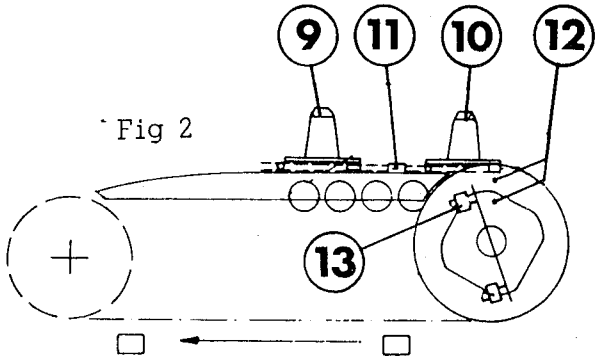


Fig 2

Dismantling and checking heating sides

a) Lower the side on to the shelf, and disconnect the cables and lubrication pipe. Move the whole side over to a work bench.
b) Loosen the chain tensioner and remove all the jaws.
c) Undo the chain locks and pull off the double chains.
d) Check the upper chain wheels and the lower sprockets for bearing play. In case there is play, remove and replace the bearings in accordance with pages 312-1 and 309-1 respectively.
e) Remove the oil pipe and mounting bolts. Remove the pressure roller holders.
f) Clean and check the following parts:

1 Upper chain wheel
2 Lower sprockets
3 Pressure roller holders
4 Double chains
5 Heating jaws
6 Contact rails
7 Spring cartridge

g) Reassemble in reverse order.
h) Make sure that the double chains are fitted according to fig 2 so that the drilled location holes in the sprocket and the flat axle of jaw No 10 are lined up opposite one another.

OVERHAUL ALL FOUR SIDES AND REFIT THEM SIMULTANEOUSLY IN THE MACHINE BODY!

On refitting the sides synchronize them as described on page 303-1.

# PRESSURE SIDES

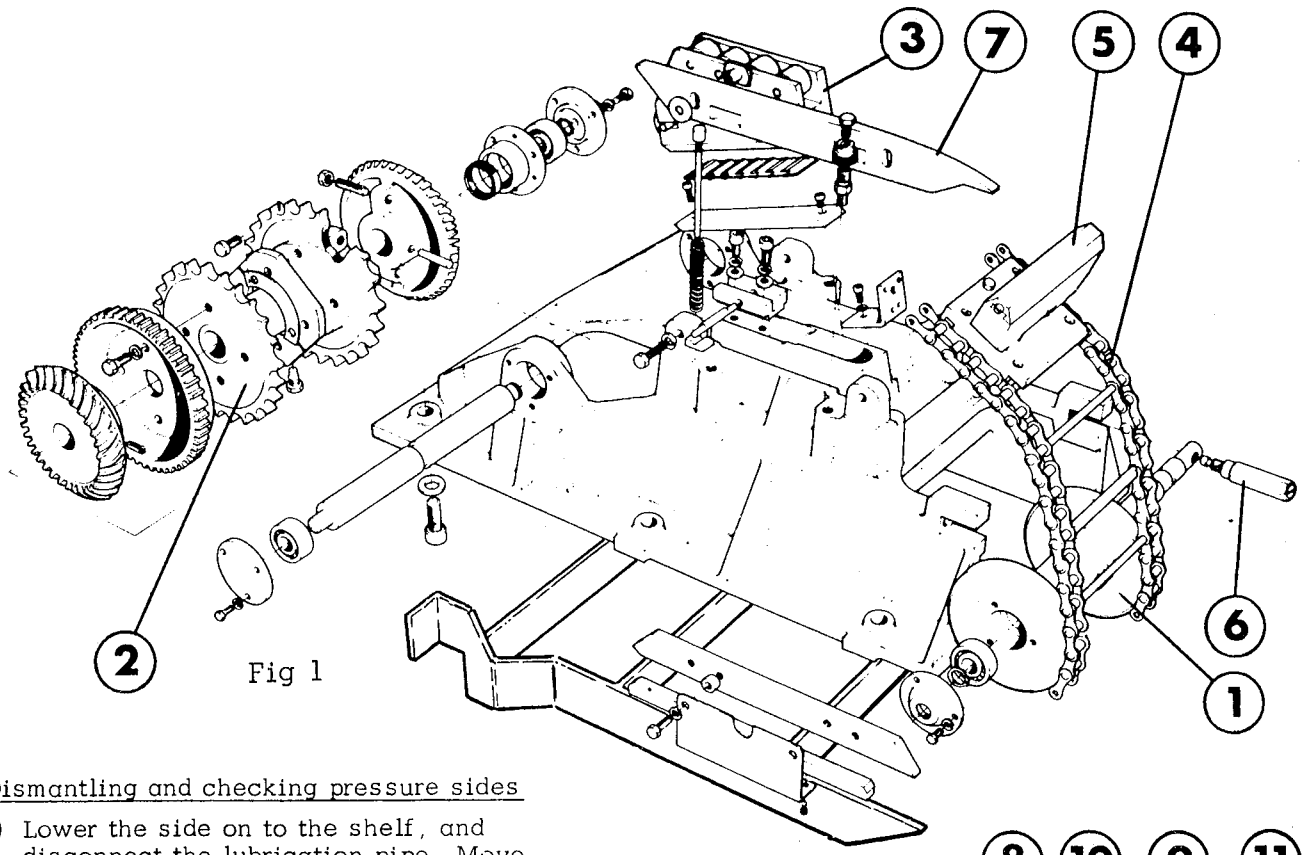


Fig 1

Dismantling and checking pressure sides

a) Lower the side on to the shelf, and disconnect the lubrication pipe. Move the whole side over to a work bench.
b) Loosen the chain tensioner and remove all jaws.
c) Undo the chain locks and pull off the double chains.
d) Check the upper chain wheels and the lower sprockets for bearing play. In case there is play, remove and replace the bearings in accordance with pages 312-1 and 309-1 respectively.
e) Unscrew the mounting screw of the pressure roller holders, the oil pipes, and the return spring. Lift out the two pressure roller holders together. CAUTION! Do not lose the guide lugs.
f) Clean and check the following parts:

| | | |
|---|---|---|
| 1 | Upper chain wheel | 312-1 |
| 2 | Lower sprockets | 309-1 |
| 3 | Pressure roller holders | 307-1 |
| 4 | Double chains | 311-1 |
| 5 | Pressure jaws | 308-1 |
| 6 | Spring cartridges | 310-1 |
| 7 | Chain rails | 313-1 |
| 8 | Jaw No 1 | |
| 9 | Jaw No 10 | |
| 10 | Chain lock | |
| 11 | Location holes | |
| 12 | Yoke | |

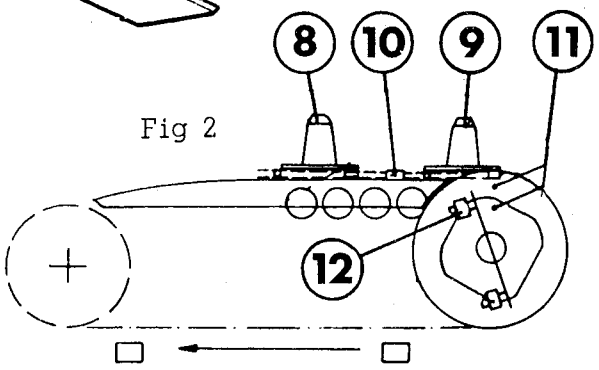


Fig 2

g) Reassemble in reverse order. Check the adjustment of the pressure roller according to page 307-1.
h) Make sure that the double chains are fitted acc. to fig 2 so that the drilled location holes in the sprocket and the flat axle of jaw No 10 are lined up opposite one another.

OVERHAUL ALL FOUR SIDES AND REFIT THEM SIMULTANEOUSLY IN THE MACHINE BODY!

On refitting the sides, synchronize them as described on page 303-1.

# FITTING AND SYNCHRONIZATION OF SIDES

Fitting and synchronization of sides

a) Fit sides 4, 1, and 2 in the machine.
b) Check that the jaws are synchronized with the lower sprockets.
c) Make sure the sides are placed correctly in the machine body.
d) Check the position of jaw No 1 on all four sides. The rivet on this jaw is to be lined up opposite the rivet on the machine body.
Check distance A which is to be 435 mm for sides 1 and 3, and 378 mm for sides 2 and 4.
e) When the jaws are in the position described above, the lower sprocket yokes of sides 1 and 3 are to be turned inwards at an angle of 45°, and the yokes of sides 2 and 4 are to be vertical. The adjustment screws on all four yokes must be accessible from the outside.
f) Check the distance between the pressure roller holders of sides 2 and 4 according to page 304-1.
Check and, if required, adjust the pressure length according to page 306-1.
g) Fit side 3 and lower side 4 to carry out the adjustments as per items e) and f) for sides 1 and 3.
h) Check all metering valves and oil pipes according to page 510-1.
i) Fit side 4.
j) Check and, if required, adjust the play between the gear wheel of the side 4 lower sprocket and the intermediary shaft according to page 402-1.

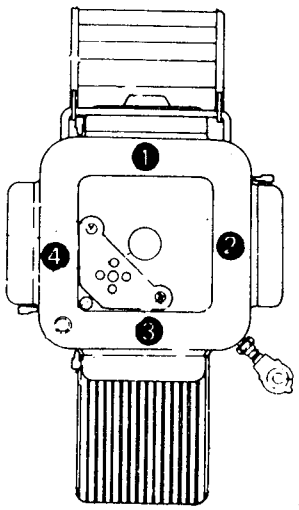


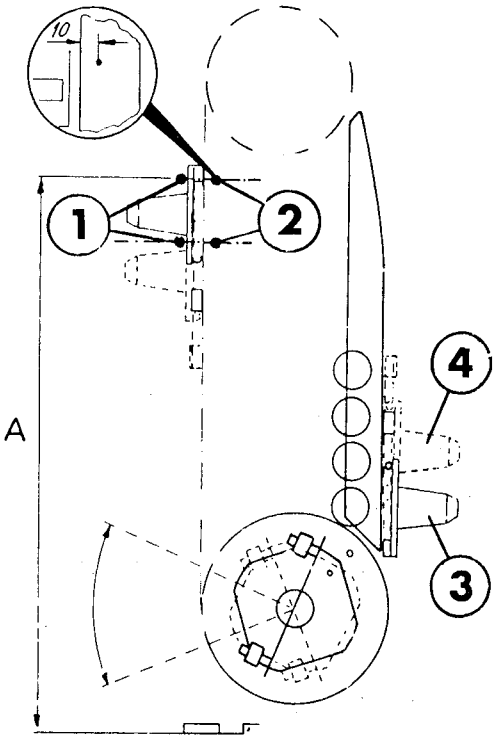


1 Rivet on jaw
2 Rivet on machine body
3 Jaw on sides 1 and 3
4 Jaw on sides 2 and 4

# PRESSURE AND HEATING SIDES

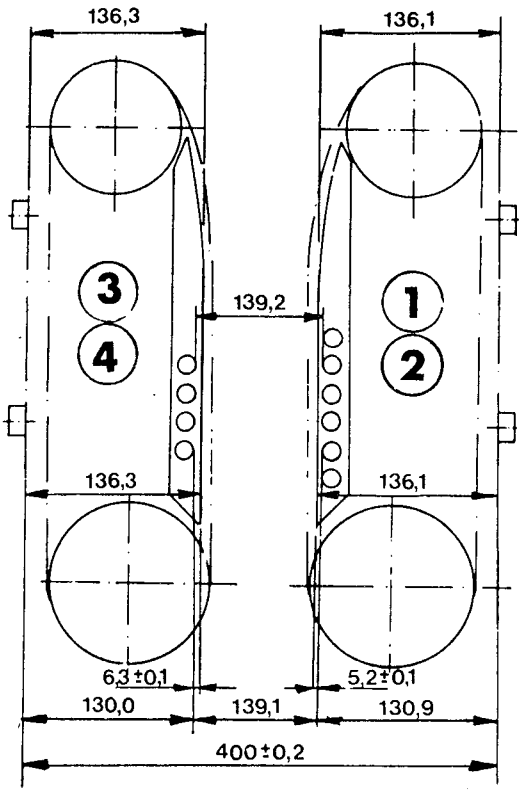


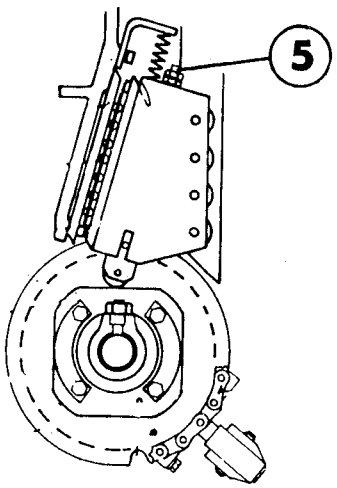


Check - Measuring sides

a) Fit sides 4, 1 and 2.
b) Check that the distance between the upper rollers of the pressure roller holders is on the sides 2 and 4 is 139,2 - 0,1 mm. Adjust, if required, with the screw (1) on the pressure roller holder.
If the deviation is greater than 0,1 mm the positioning of the side frames must be adjusted with the aid of a jig or fixture. (Distance 400 ± 0,2).
c) Check that the distance between the lower rollers of the pressure roller holders is 139,1 - 0,1 mm. In case of deviation adjust by shimming (with brass shims) under the pressure roller holders of the heating sides.
d) Lower side 4 and fit side 3. Check and adjust sides 1 and 3 in the same manner.

1 Heating side No 1
2 Heating side No 2
3 Pressure side No 3
4 Pressure side No 4
5 Adjustment screw

NB! Adjustment must be done with unloaded plunders.

# CHECKING JAW PRESSURE

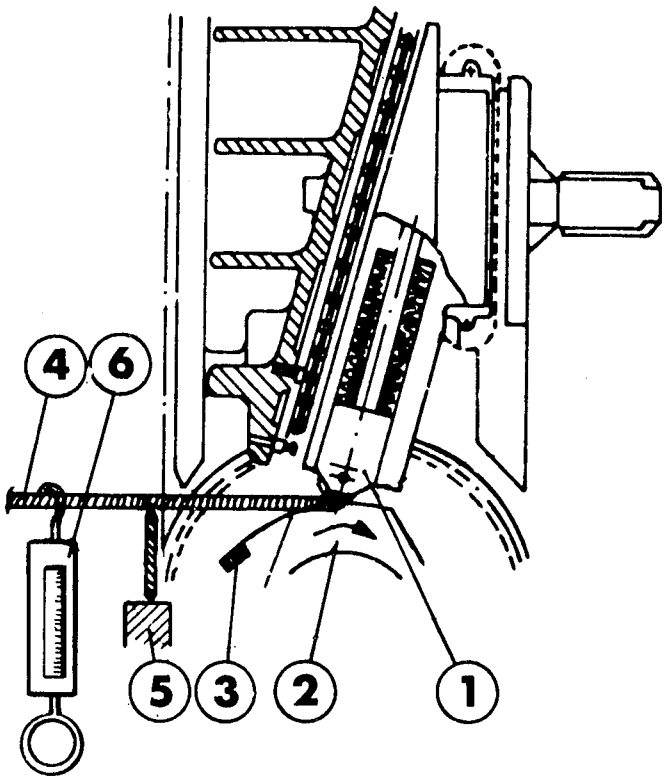


1 Plunger
2 Cam
3 Weight
4 Lever
5 Support (fulcrum)
6 Spring balance

Checking jaw pressure

a) Place pieces of paper folded double between the jaws.
b) Run the machine so that the plunger (1) will be resting against the middle of the cam (2).
c) Arrange a lever in such a way that it will lift the plunger. Suitable leverage ratio is 1:5.
d) Place a piece of sheet metal (0,1 mm) with a weight (3) attached to it between the plunger roller and the cam.
e) Apply a load to the spring balance and read its scale when the piece of sheet metal with its weight (3) falls off. Guide value, see table.

| Packaging material | Pressure |
|---|---|
| Ext. alifoil | 70 - 80 N (7,0-8,0 kp) |
| Int. alifoil | 85 - 95 N (8,5-9,5 kp) |

In case of deviation overhaul the pressure roller holders according to page 307-1.

Checking is to be done on at least three jaws. In case of non-uniformity calibrate the heating and pressure jaws according to page 317-1.

# CHECKING PRESSURE LENGTH

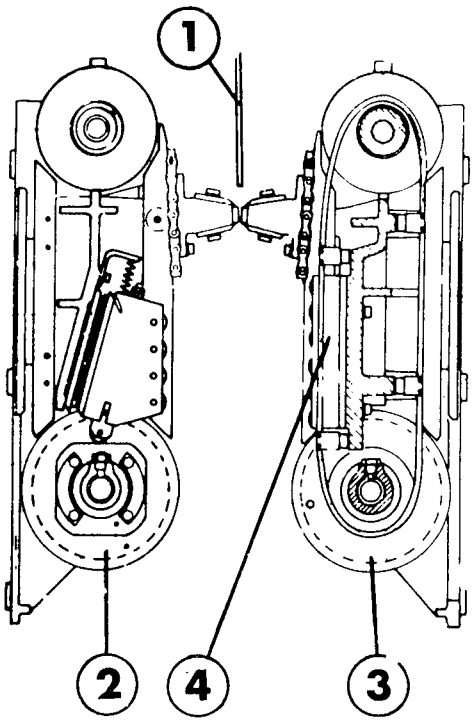


Checking pressure length

a) Place a piece of packaging material, double folded, between the jaws and run the machine forward.
b) Make a scribe mark on the side frame in line with the jaw casting at the exact moment the jaws grip the spacer.
c) Make another scribe mark on the side frame when the jaws let go of the spacer.
The distance between the two scribe marks should be 65 $\pm$ 5 mm.

In case of any deviation adjust by placing brass shims under the heating side pressure roller holders.

1 Spacer
2 Pressure side
3 Heating side
4 Pressure roller holder

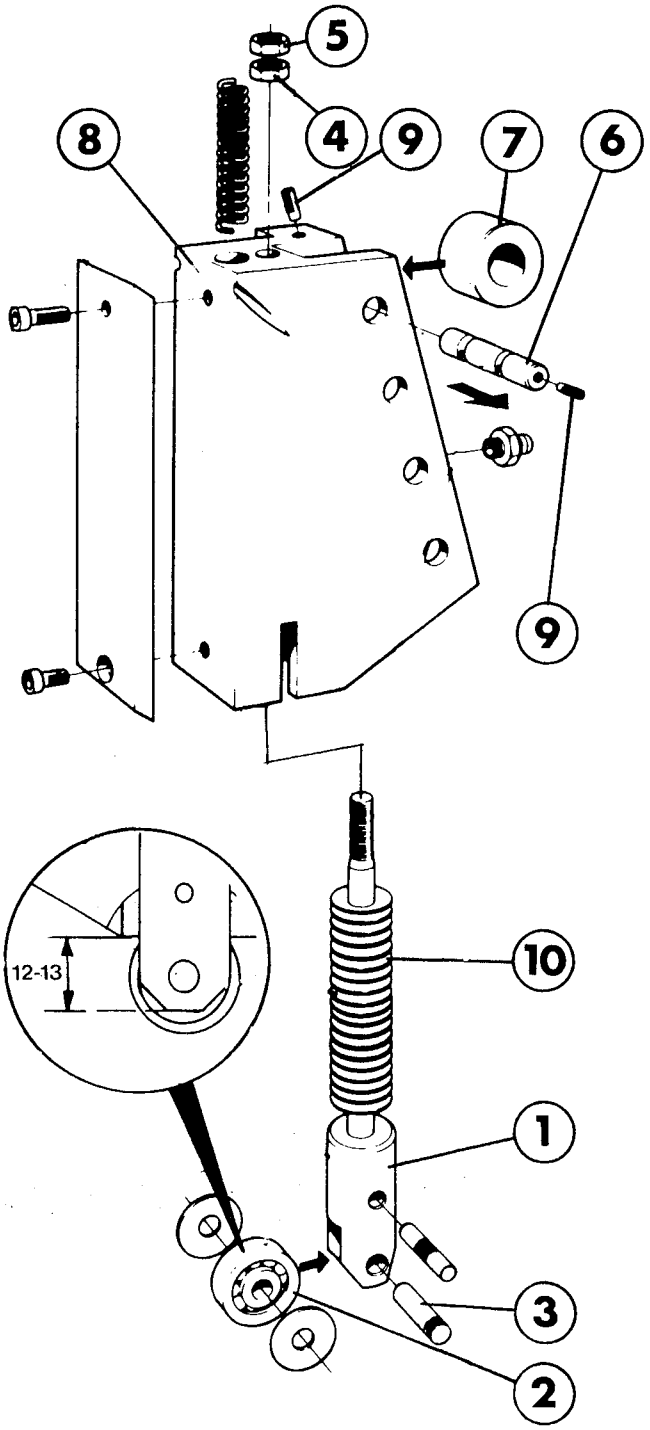


Overhaul (exchange unit)

Dismantle and clean the pressure roller holder.

If the plunger (1) shows signs of damage or corrosion it has to be replaced. Slip the cup springs (10) (62 - 70 of them depending on the jaw pressure) over the plunger, and grease the pile of springs well (Esso Beacon 2).

Inspect the ball bearing (2) and axle pin (3) and replace them, if worn or damaged.

Fit the plunger (1) in the holder and tighten the nut (4) so that the lower edge of the plunger is 12 - 13 mm below the holder. Tighten the lock nut (5).

Punch out the axle pin (6) in the direction indicated by the arrow and fit a new roller (7).

Clean the lubrication holes carefully and blow them clear with compressed air.

1 Plunger
2 Ball bearing
3 Axle pin
4 Nut
5 Locking nut
6 Axle pin
7 Roller
8 Pressure roller holder
9 Screw plug
10 Cup springs

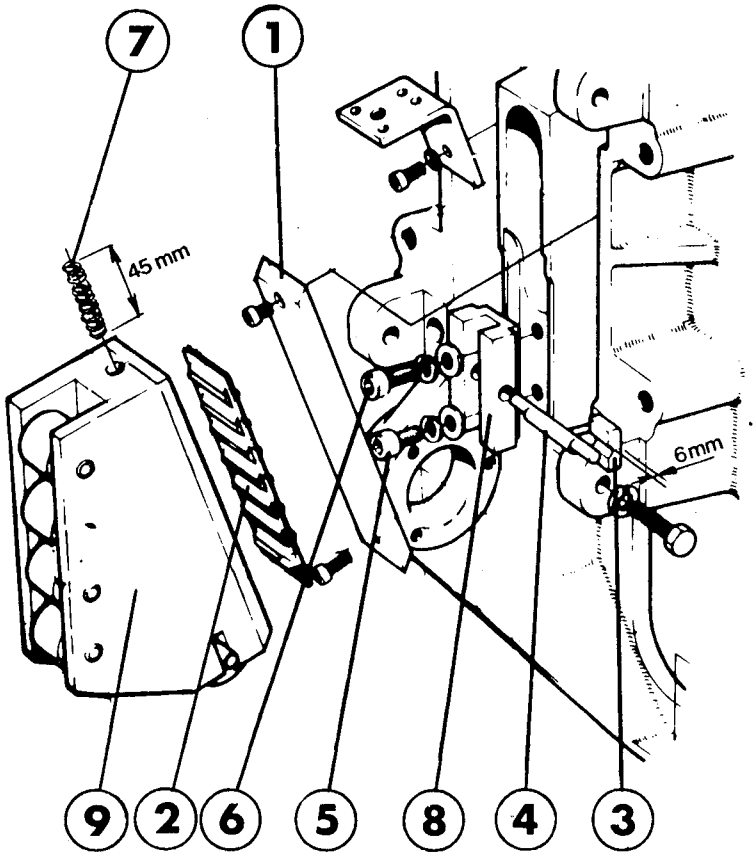


1 Pressure plate
2 Roller bearing
3 Guide lug
4 Excentric axle
5 Locking screw
6 Mounting screw
7 Return spring
8 Mounting bracket
9 Pressure roller holder

Fitting and adjusting pressure roller holders

a) Replace or turn around the pressure plates (1) and the roller bearing (2). Use new screws on assembly. Check the guide lugs and replace them if their thickness has been worn down below 6 mm.
b) Stick the guide lugs (3) in their positions in the grooves in the pressure roller holders with grease.
c) Inspect the excentric axle (4) and replace it if worn or damaged. Fit the axle with the excentric section in its highest position. Fit the locking screw (5).
d) Position the various parts together the way they are to be fitted together in the pressure side and lift the entire unit into position. Fit the mounting screw (6) but do not tighten it.
e) Check the return spring. Replace it if it is shorter than 45 mm.
f) Adjust play between the guide lug (3) and the pressure roller holder on the centric side of the excentric axle by moving the mounting bracket (8) up or down until it is in a position where there is a 0,2 mm play and where at the same time the pressure roller holder moves freely in both directions. When the pressure side has been lowered and the pressure roller holder is pushed upwards it should slide back due only to the return spring and the inclination of the pressure plate.
g) Adjust the other pressure roller holder by undoing the locking screw (5) and turning the excentric axle so that the excentric section allows the same play here, when the locking screw (5) has been retightened.
h) Check that the pressure roller holders move freely and that the rollers follow the cams when the lower sprocket is rotated.

# PRESSURE JAW

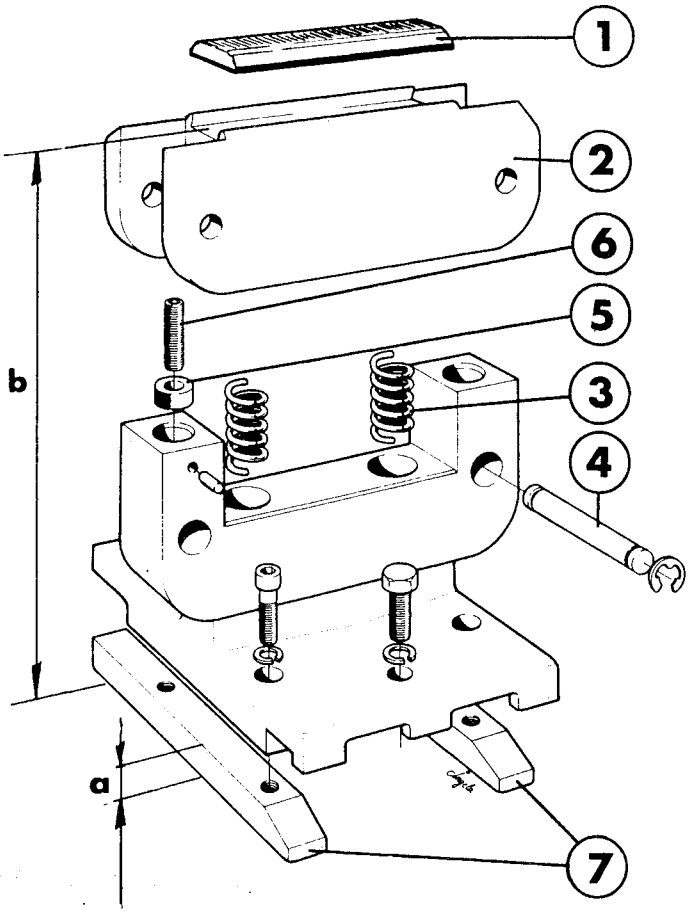


## Checking pressure jaws

Remove and clean the pressure bar (1) and its holder (2). If the serrated surface has been damaged the bar has to be replaced. Check that the springs (3), when unloaded, are not shorter than 22,5 mm.

If the pins (4) are damaged, worn, or deformed they are to be replaced. Also replace damaged or worn plastic bushings (5).

NB! Altering the volume screw (6) will also alter the volume setting of the machine. If the volume trimming facilities in the jaws are not taken advantage of, and the machine is instead operated with the jaws fully screwed home, distance "b" is to be checked according to page 317-1.

Replace the pressure rails (7) if they show signs of wear or if their thickness "a" drops below 7,4 mm.
NB! The pressure rails must only be replaced in pairs.

## Overhaul pressure jaws

Remove and clean all parts. Fit new pressure bar, springs, plastic bushings and pressure rails.
NB! Check that the right pressure bar is used.

1 Pressure bar
2 Holder
3 Spring
4 Pin
5 Plastic bushing
6 Volume screw
7 Pressure rail

# LOWER SPROCKET

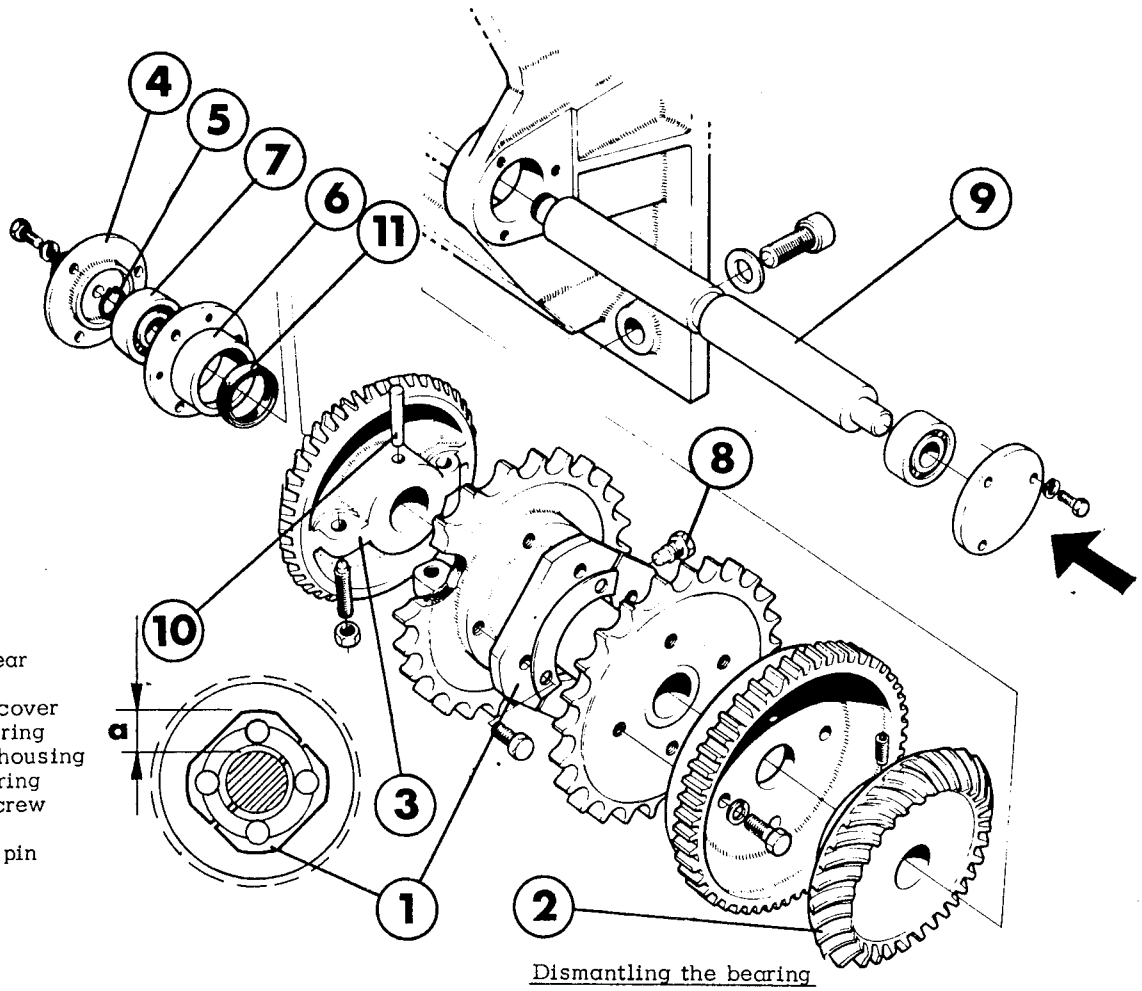


1 Cam
2 Bevel gear
3 Yoke
4 Bearing cover
5 Locking ring
6 Bearing housing
7 Ball bearing
8 Guide screw
9 Shaft
10 Conical pin

Checking the cams

If the cams (1) show indentations or scratches or the thickness "a" is less than 23 mm, they have to be replaced.

Checking the bevel gears

Do this with the sides fitted in place but with the jaws removed.
Check wear and play of the bevel gears (2). If there is play only the gear wheels can be pinned to the new shafts.
Check the setting of the yoke (3) in relation to the other sides. If there are considerable differences, these might be due to the double chains being wrongly mounted and the incorrect jaw positions corrected by means of the yokes.
NB! When replacing the shafts a template must be used.

Checking the bearing

Check the bearing of the lower sprocket for wear, abnormal sound, or heavy running. Replace if required.

Dismantling the bearing

a) Remove the cover (4) and the locking ring (5).
b) Use the cover screws for removing the bearing housing (6) with the aid of the puller hole.
c) Detach the bearing (7) from the bearing housing.

Dismantling the lower sprocket

a) Remove and dismantle the bearings as described above.
b) Undo one of the setting screws on the yoke (3) and remove the shaft (9) guide screw (8).
c) Punch out the conical pin (10).
NB! The pin may be stuck very hard. On the drive side, No 1, the pin in the left hand sprocket (same side as the yoke) is to be punched out first. Then the sprocket is to be slid as far as possible over to the left so the right hand pin becomes accessible behind the drive sprocket.
d) Force the shaft (9) out in the direction indicated by the arrow (towards the shaft end with a punch mark).
e) Replace damaged and worn parts and reassemble in reverse order.

Dismantling the lower sprocket

a) Remove and dismantle the bearings as described above.
b) Undo one of the setting screws on the yoke (3) and remove the shaft (9) guide screw (8).
c) Punch out the conical pin (10).
NB! The pin may be stuck very hard. On the drive side, No 1, the pin in the left hand sprocket (same side as the yoke) is to be punched out first. Then the sprocket is to be slid as far as possible over to the left so the right hand pin becomes accessible behind the drive sprocket.
d) Force the shaft (9) out in the direction indicated by the arrow (towards the shaft end with a punch mark).
e) Replace damaged and worn parts and reassemble in reverse order.

## Dismantling and checking pressure sides

a) Lower the side on to the shelf, and disconnect the lubrication pipe. Move the whole side over to a work bench.
b) Loosen the chain tensioner and remove all jaws.
c) Undo the chain locks and pull off the double chains.
d) Check the upper chain wheels and the lower sprockets for bearing play. In case there is play, remove and replace the bearings in accordance with pages 312-1 and 309-1 respectively.
e) Unscrew the mounting screw of the pressure roller holders, the oil pipes, and the return spring. Lift out the two pressure roller holders together. CAUTION! Do not lose the guide lugs.
f) Clean and check the following parts:

| | | |
|---|---|---|
| 1 | Upper chain wheel | 312-1 |
| 2 | Lower sprockets | 309-1 |
| 3 | Pressure roller holders | 307-1 |
| 4 | Double chains | 311-1 |
| 5 | Pressure jaws | 308-1 |
| 6 | Spring cartridges | 310-1 |
| 7 | Chain rails | 313-1 |
| 8 | Jaw No 1 | |
| 9 | Jaw No 10 | |
| 10 | Chain lock | |
| 11 | Location holes | |
| 12 | Yoke | |

g) Reassemble in reverse order. Check the adjustment of the pressure roller according to page 307-1.
h) Make sure that the double chains are fitted acc. to fig 2 so that the drilled location holes in the sprocket and the flat axle of jaw No 10 are lined up opposite one another.

OVERHAUL ALL FOUR SIDES AND REFIT THEM SIMULTANEOUSLY IN THE MACHINE BODY!

On refitting the sides, synchronize them as described on page 303-1.

# LOWER SPROCKET

1 Cam
2 Bevel gear
3 Yoke
4 Bearing cover
5 Locking ring
6 Bearing housing
7 Ball bearing
8 Guide screw
9 Shaft
10 Conical pin

## Checking the cams

If the cams (1) show indentations or scratches or the thickness "a" is less than 23 mm, they have to be replaced.

## Checking the bevel gears

Do this with the sides fitted in place but with the jaws removed.
Check wear and play of the bevel gears (2). If there is play only the gear wheels can be pinned to the new shafts.
Check the setting of the yoke (3) in relation to the other sides. If there are considerable differences, these might be due to the double chains being wrongly mounted and the incorrect jaw positions corrected by means of the yokes.
NB! When replacing the shafts a template must be used.

## Checking the bearing

Check the bearing of the lower sprocket for wear, abnormal sound, or heavy running. Replace if required.

## Dismantling the bearing

a) Remove the cover (4) and the locking ring (5).
b) Use the cover screws for removing the bearing housing (6) with the aid of the puller hole.
c) Detach the bearing (7) from the bearing housing.

# SPRING CARTRIDGE

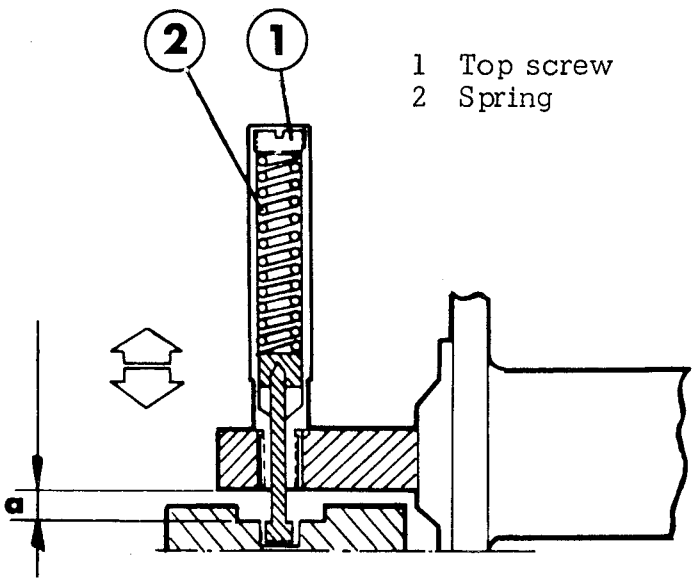


1 Top screw
2 Spring

Checking the spring cartridge

After mounting the double chains check that gap "a" is the same all around the machine, that the chains are well tensioned, and that the spring action works out all the way down (a = 0) when the double chains are lifted.
Gap "a" for new double chains should be 10 mm, but might be as much as 13 mm if the chains are worn.
Adjust gap "a" with the top screw (1).
If the desired gap cannot be obtained fit exchange cartridges.

Overhauling the spring cartridge (exchange unit)

Dismantle and clean the cartridge.
Fill the spring position with grease (Beacon 2 or similar grease - 90296-13) and fit a new spring (2).

# DOUBLE CHAIN

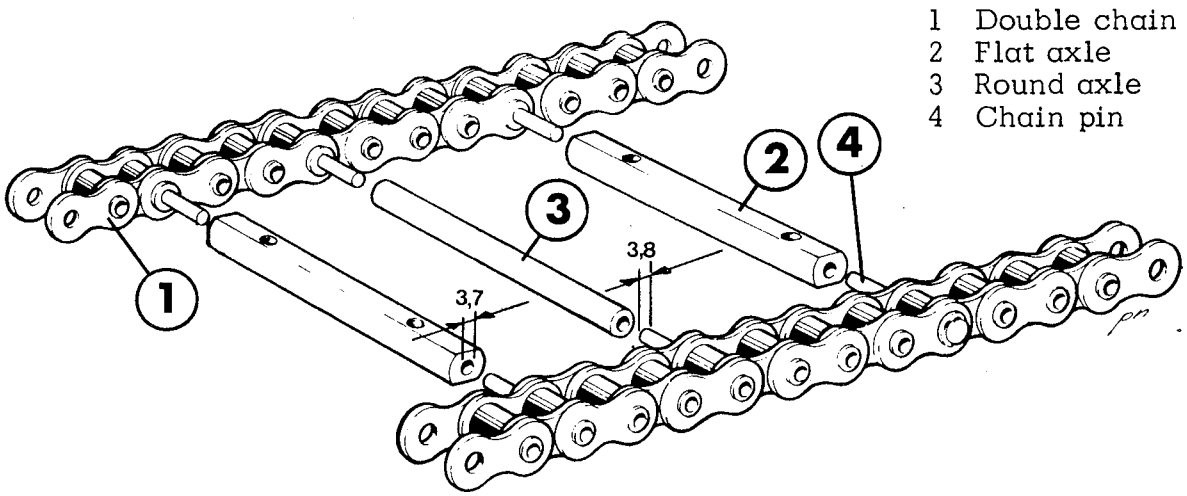


1 Double chain
2 Flat axle
3 Round axle
4 Chain pin

| | |
|---|---|
| Flat axle, hole diameter | max 3,7 mm |
| Chain pins | min 3,8 mm |

a) Observe the direction of rotation.
b) Remove the chain locks and pull off the double chain.
c) Remove all axles.
d) Immerse the chain in a cleaning agent to dissolve dirt and loosen stuck links.
e) Rinse off the cleaning agent and check wear of pins and rollers.
f) Check that the round axles are straight. Replace bent ones as those will give volume variations.

If the pins for the flat axles are worn down to a diameter below 3,8 mm the chain can be turned around. The flat axles are then fitted on the pins that used to take round axles which cause less wear.

If the rollers of the chain are worn flat the chain must be replaced.
NB! When replacing chains all 8 chains must be replaced together to avoid incorrect jaw positions.

# UPPER CHAIN WHEEL

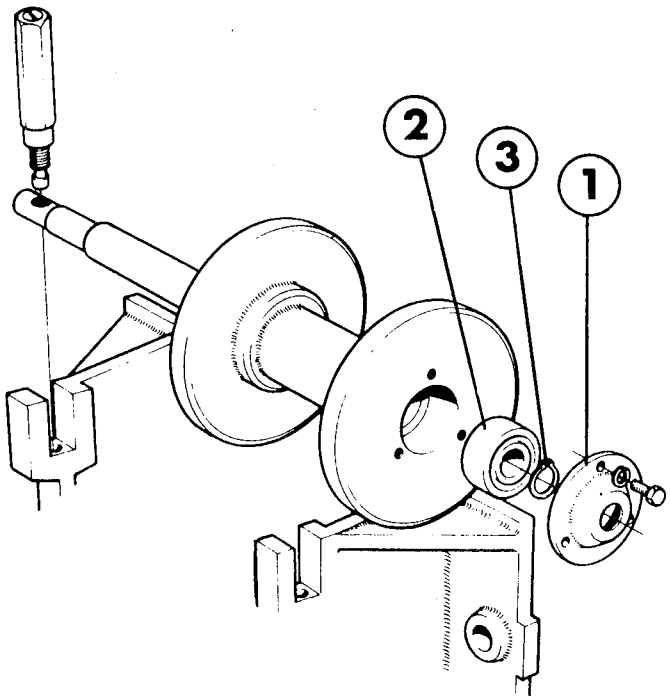


Checking and overhauling

Remove the bearing covers (1) and check the bearings (2) for play. If there is any play, take out the circlip (3), pull off the bearings, and replace them. Check the seals in the bearing covers and, if required, replace the covers.

1 Bearing cover
2 Bearing
3 Circlip

# CHAIN RAILS

Check that the chain rail (5) suspension functions by depressing the rails with your hand.

Check wear of the chain rails (5). If they are less than 29,7 mm thick, they have to be replaced.

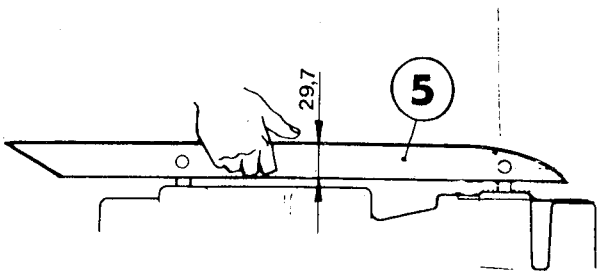


1,2 Heating sides
3,4 Pressure sides
5 Chain rail
6 Adjustment screw
7 Locking screw

The chain rails of the heating sides are fixed.

On the pressure sides the distance of 136,3 mm is to be set at both upper and lower ends of the chain rails.

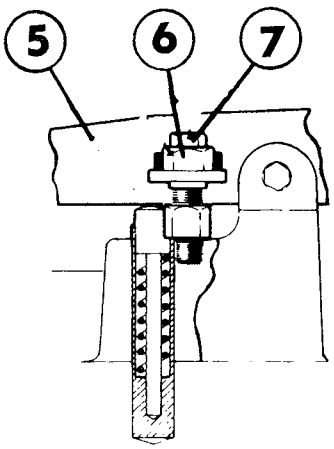


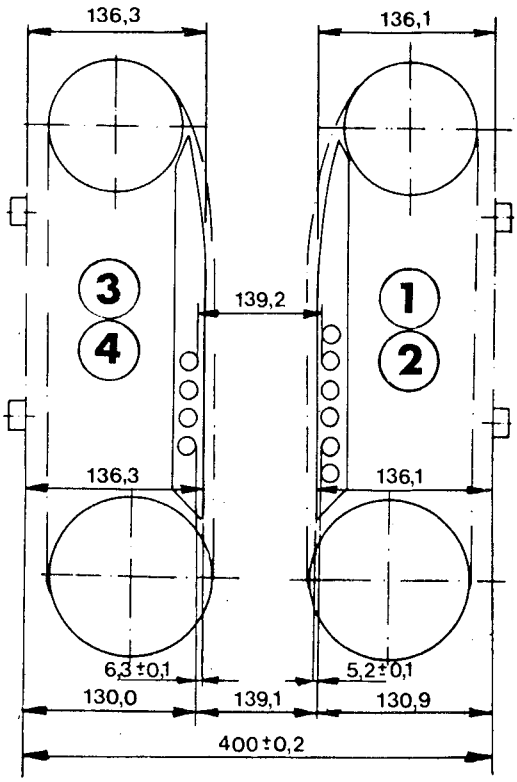


Also, see page 304-1, Check - Measuring sides.

# PRESSURE ROLLER HOLDER, heating side

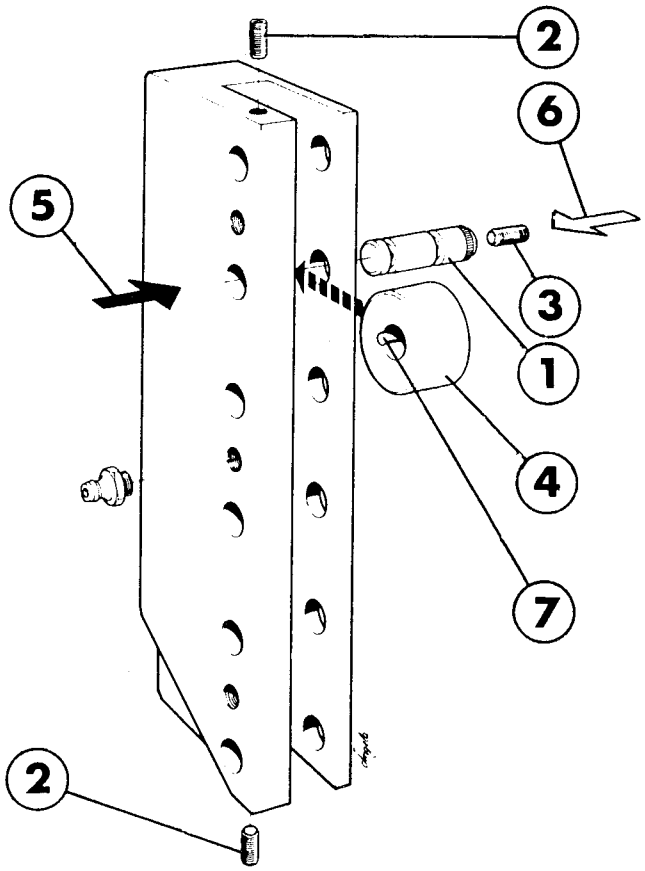


1 Axle pin
2 Screw plug
3 Screw plug
4 Needle bearing
5 Dismantling direction
6 Reassembly direction
7 Lubrication groove

Overhauling the pressure roller holder (exchange unit)

Force out the axle pins (1) with the aid of a punch. Note the direction in which they should be pushed out. Remove the screw plugs (2) and (3) and clean the lubrication ducts in the pressure roller holder block with white spirit. After cleaning reassemble the parts putting in new axle pins and needle bearings. Make sure the lubrication groove (7) is turned inwards as shown in the picture.

# CONTACT RAILS

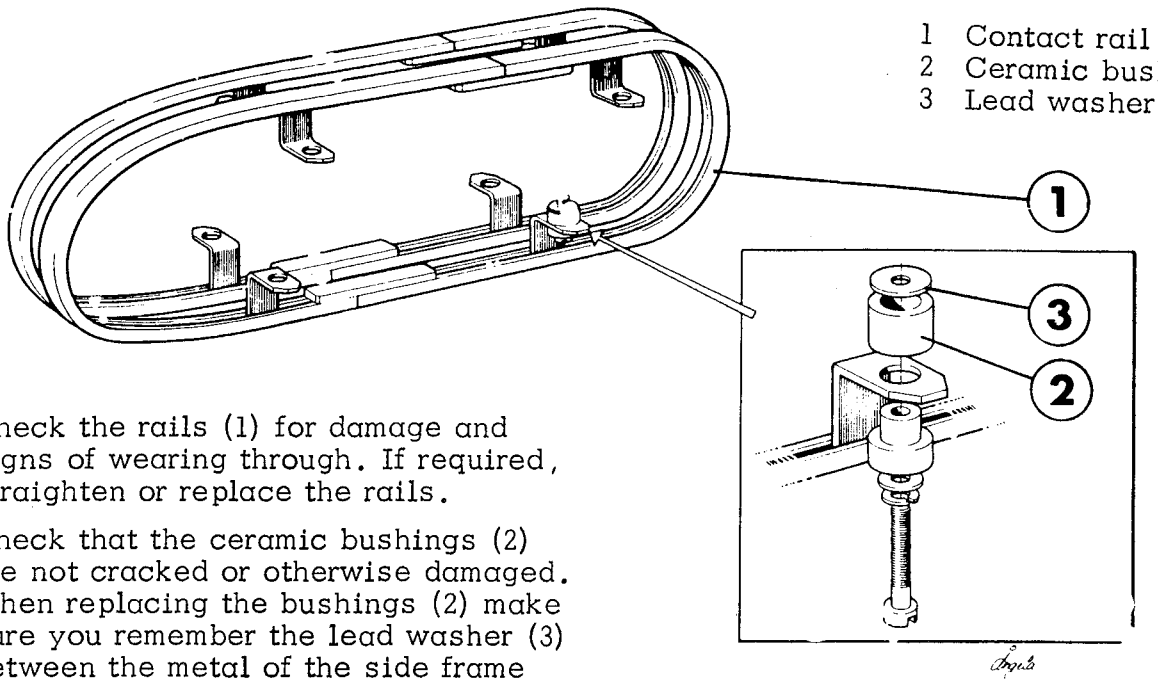


1 Contact rail
2 Ceramic bushing
3 Lead washer

Check the rails (1) for damage and signs of wearing through. If required, straighten or replace the rails.

Check that the ceramic bushings (2) are not cracked or otherwise damaged. When replacing the bushings (2) make sure you remember the lead washer (3) between the metal of the side frame and the bushing. Check the cable connection and if necessary remove oxidation.

# HEATING JAW

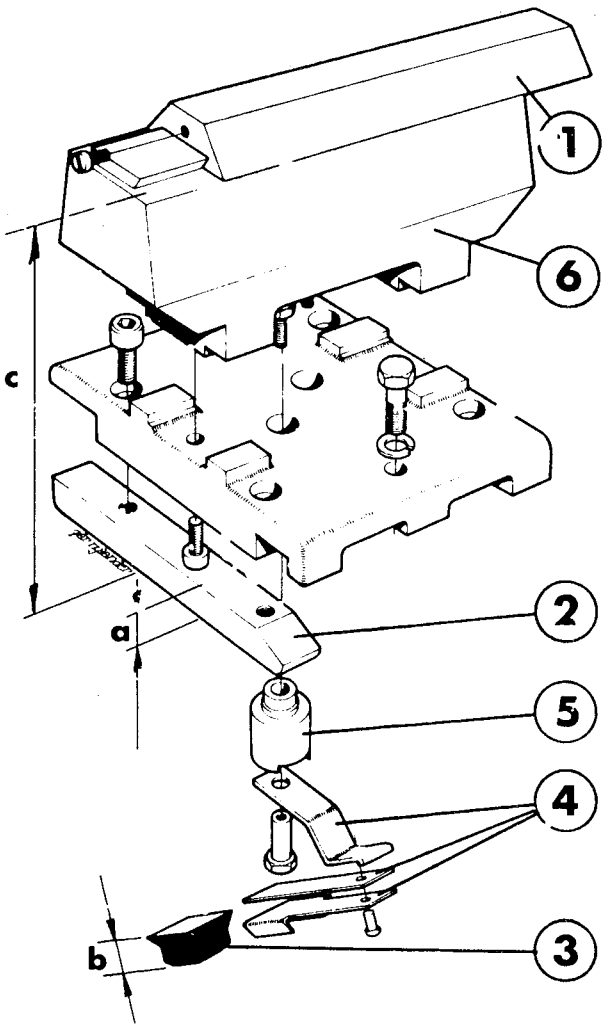


Overhauling the heating jaw

Dismantle and clean the heating jaw. Replace the brush holders with their carbon brushes, the insulators, pressure bars, and pressure rails. Measure insulation and resistance values, and if these turn out to be inadequate, replace the element block (6).

Checking the heating jaw

Inspect the pressure bars (1) for damage or deformation. If required, replace them.

Check the pressure rails (2) for damage and wear. Replace them if their thickness "a" is less than 7,4 mm. NB! Pressure rails must always be replaced in pairs.

Check wear of the carbon brushes, and replace them if their thickness "b" is less than 3 mm. Also check the condition of the carbon brush holders (4) by depressing the carbon brushes with your finger. If there are any indications of fatigue or signs of cracks in the riveting or springs, replace the carbon brush holders (4).

Measure insulation and resistance

Test the insulation of the jaws between one of the carbon brush holders and the metal of the jaw. If the insulation value is in excess of 6000Ω it is considered good, and if in excess of 3000Ω acceptable. If the value is below 3000 Ω, the jaw is to be dismantled and cleaned. Especially check the insulators (5) and the connections, and surfaces close to these. If this brings no improvement, replace the insulators (5), a value in excess of 3000Ω is acceptable. If the value still does not reach 3000Ω the element block (6) has to be replaced.

Measure the resistance of the element between the two carbon brush holders. If the value is 23,0 - 23,5Ω it is acceptable. If the value is lower, replace the element block (6).
CAUTION! Always make sure the instrument shows correct readings and has been correctly set up.

Check distance "c" according to page 317-1.

1 Pressure bar
2 Pressure rail
3 Carbon brush
4 Brush holder
5 Insulator
6 Element block

# CALIBRATING PRESSURE AND HEATING JAWS

1 Gauge
2 Checking fixture V-70027
3 Dial indicator
4 Steel bar
5 Pressure jaw
6 Heating jaw
7 Pressure rail

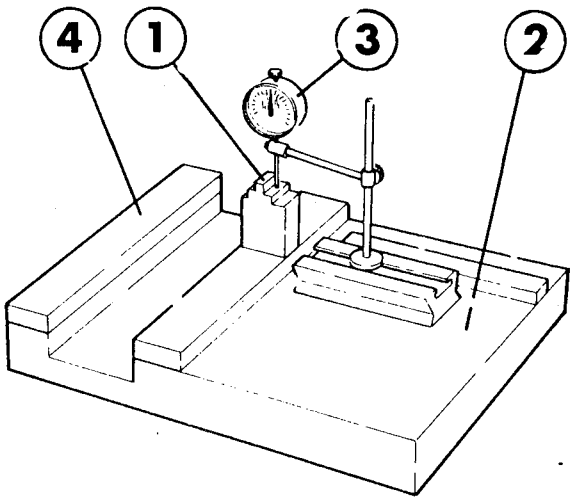


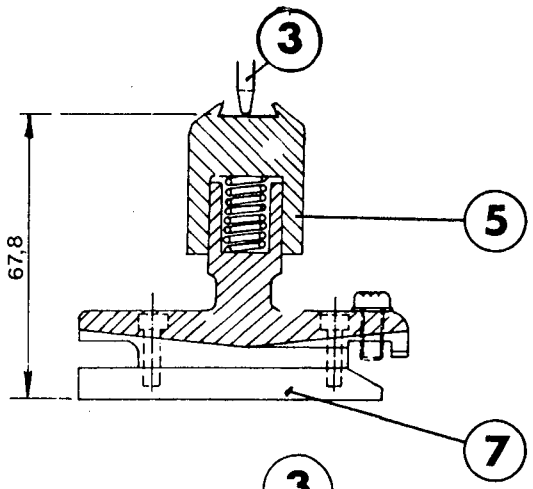


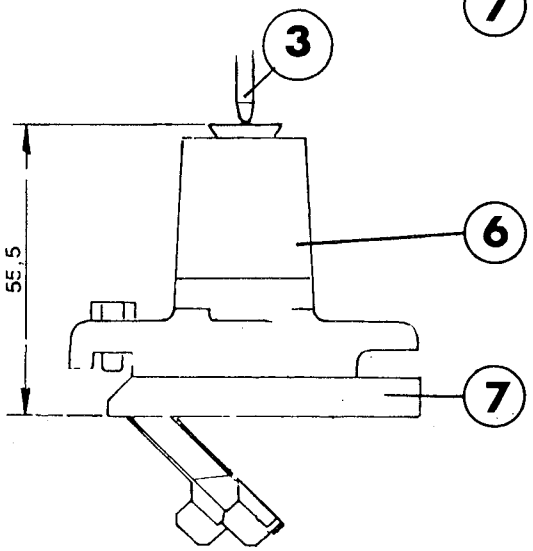


Calibrating pressure and heating jaws

a) Adjust with the aid of the gauge (1) the checking fixture (2) for the right type of jaw.
b) Zero the dial indicator (3).
c) Place a jaw on the steel bars and slide the dial indicator along top of the jaw.
d) If the dial indicator readings vary more than ± 0,05 mm from the preset value, adjust the jaw height by placing shims between the jaw (5, 6) and the pressure rail (7).

Superstructure raising device 401-1
Drive unit 402-1 ①②

# SUPERSTRUCTURE RAISING DEVICE

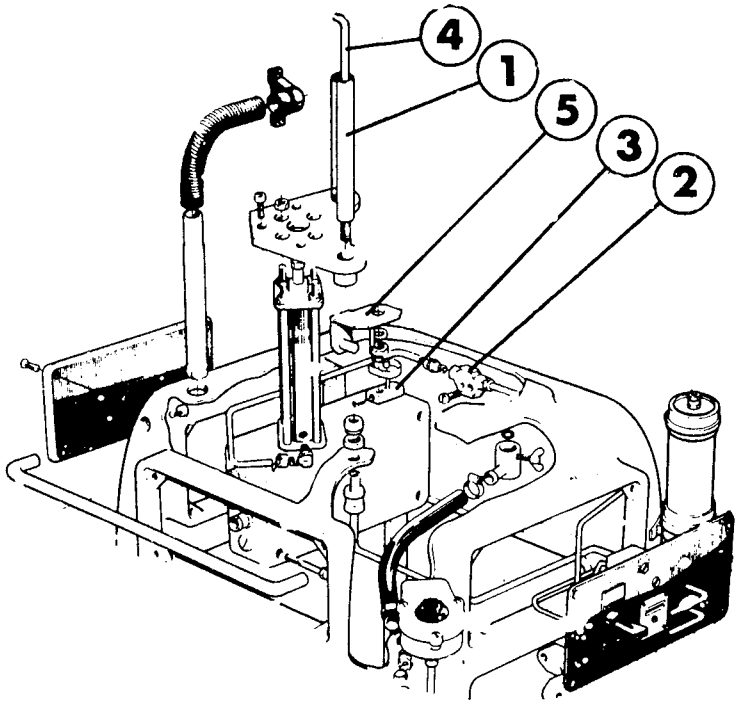


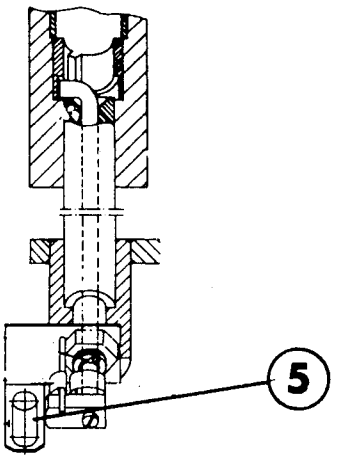


1 Column
2 Regulating valve
3 Arm
4 Hook
5 Bracket

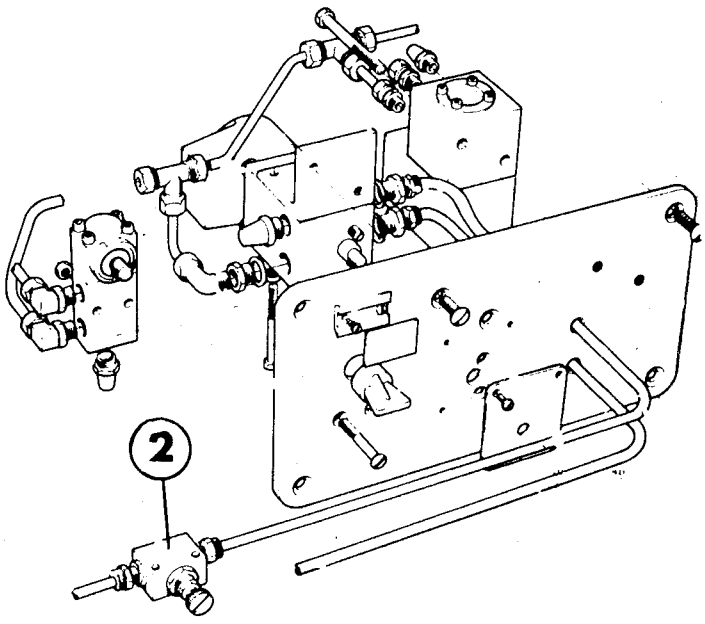


Raising device

a) Clean and grease the columns (1).
b) Check the function and, if required, adjust the speed with the regulating valve (2).
The speed should be such that it takes appr 3 seconds to lower the superstructure.

Safety catch

a) Check for damage.
b) Check function.

NB! The arm (3) is to be fitted in such a way that the hook (4) will be freed when the steam line is attached to the catch, and so that the hook locks the superstructure when the steam line is removed.

Adjust by turning the arm to the correct position.

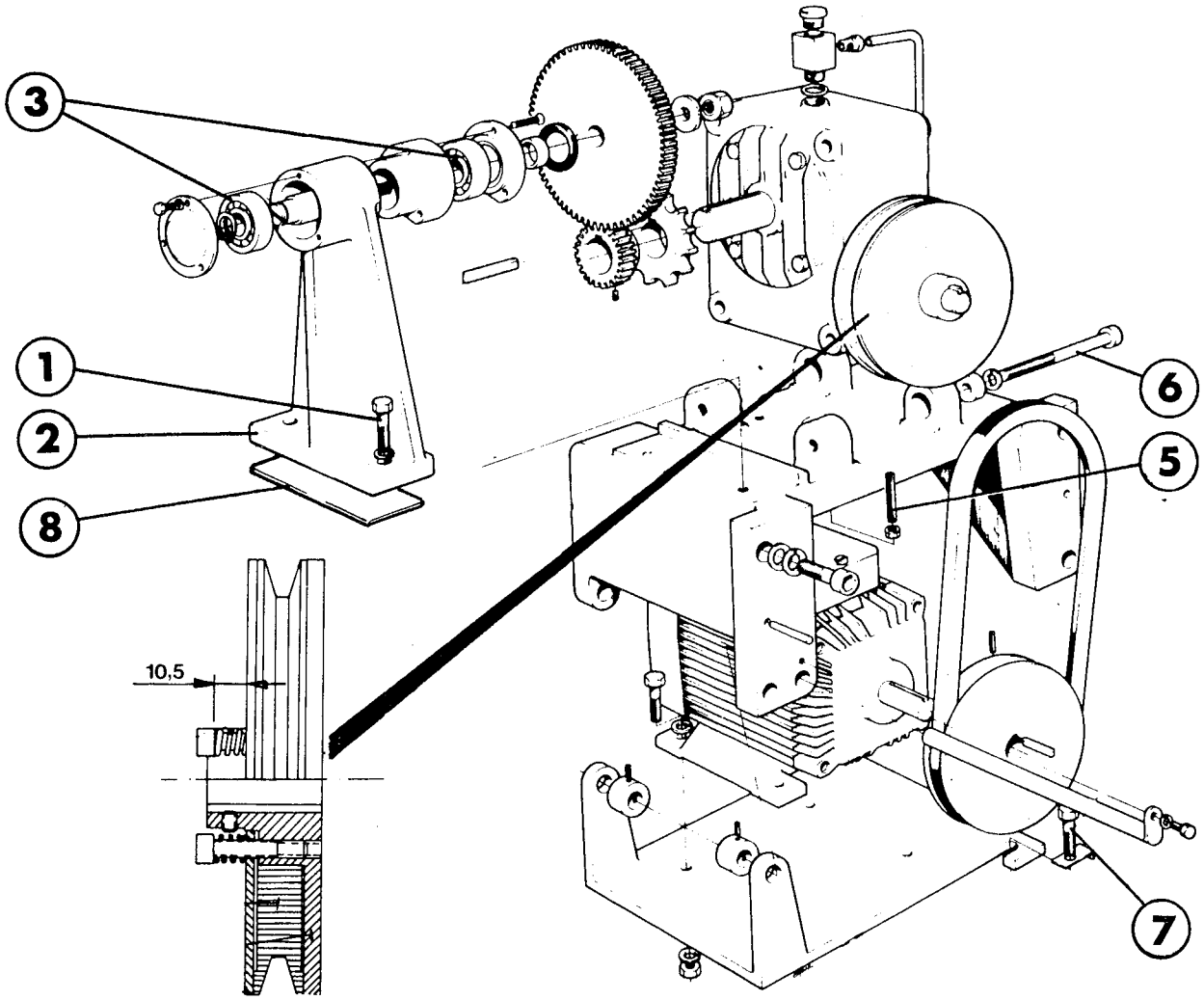


Undo the screws (1) and remove the bearing bracket (2). Remove and inspect the ball bearings (3) and replace it if required.
Check for any play in the worm gear shafts. Adjust if required by shimming at the covers.
Check for any play in the drive motor shaft and overhaul, if required, according to page 2 below.
Dismantle and clean the slip clutch disc.
Adjust friction between the hub and the belt pulley by screwing in the three spring-loaded screws so that a distance of 10,5 mm is obtained.
Fit and tension the Vee-belt by means of the screw (7), lock the screw with the locking device.

| | | | |
|---|---|---|---|
| 1 | Screw | 5 | Setting screw |
| 2 | Bearing bracket | 6 | Mounting bolt |
| 3 | Ball bearing | 7 | Tensioning scre |
| 4 | Adjustment screw | 8 | Shim |

Adjusting the drive unit in relation to side No 4

a) Adjust the intermediary shaft up towards the gear wheel on side No 4 so that there is no play, by placing shims (8) under the bearing bracket (2).
b) Move the worm gear upwards by undoing the mounting screw (6) and adjusting with the setting screw (5) until all play has been eliminated.

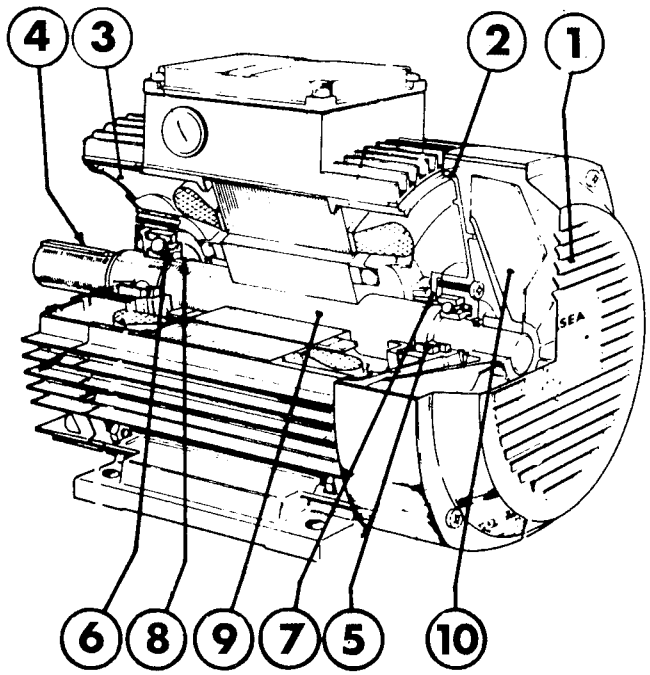


Overhauling the motor (90045-49)

Detach the fan cover (1) and the motor shields (2) and (3). Remove the key (4). Pull off the fan (10). NB! A special extractor is needed. Pull off the front (5) and rear (6) ball bearings. Fit new bearings.

CAUTION! Make sure on reassembly that the drain holes in the motor shields are facing downwards.

1 Fan cover
2 Front motor shield
3 Rear motor shield
4 Key
5 Front ball bearing (321312-103)
6 Rear ball bearing (321312-104)
7 Front inner bearing cover
8 Rear inner bearing cover
9 Shaft
10 Fan

# CUTTING UNIT


| | |
|---|---|
| Dismantling and checking cutting unit | 501-1 |
| Synchronization cutting unit - sides | 502-1 |
| Test running and function check | 503-1 |
| Chain tensioner | 504-1 |
| Triple sprocket | 505-1 |
| Counter | 506-1 |
| Cutting wheel | 507-1 |
| Knife shaft | 508-1 |
| Impulse transmitters | 509-1 |
| Central lubrication system | 510-1 ①② |

# DISMANTLING AND CHECKING CUTTING UNIT

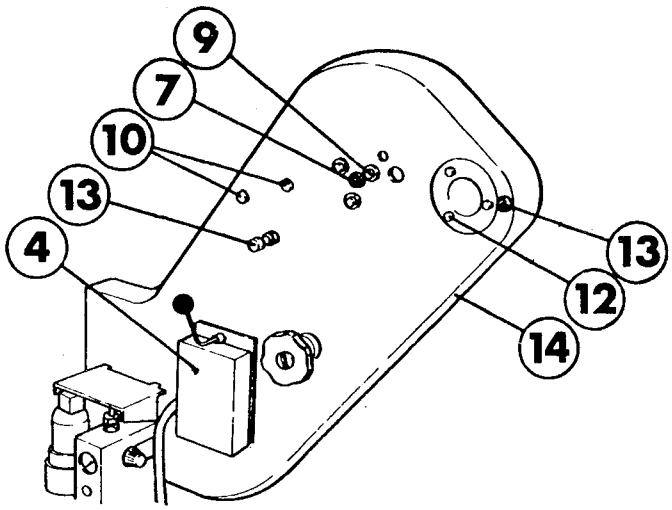


Dismantling and checking the cutting unit

a) Remove the plastic cover, package guide, and chain guard.
b) Crank the machine so that the chain lock of the cutting wheel chain (16) becomes accessible behind the hole for the counter (8) through the right hand side section.
The lock of the drive chain (17) will then be on the triple sprocket (5).
b) Mark the positions of the gear wheels with a felt tip pen in order to make reassembly easier. Untension the chain tensioners of both chains.
c) Remove the screws (10) of the safety switch.
d) Mark the position of the left hand impulse transmitter (4) cam, remove the unit, and detach the bearing housing (its screws are found on the inside of the side section).
Note that this only applies to machines with design correction.
e) Detach the lubrication unit and place it on the machine body. NB! Do not disconnect air and oil piping and electrical cables.
f) Remove the screws (12) of the knife shaft and its bearing cover, the screws (9) of the cam and cutting wheel (7), the screws of the spacers (13) and the hand wheel of the counter.
g) Support the side section (14) with a wooden block and unscrew the supporting leg mounting screws (19).

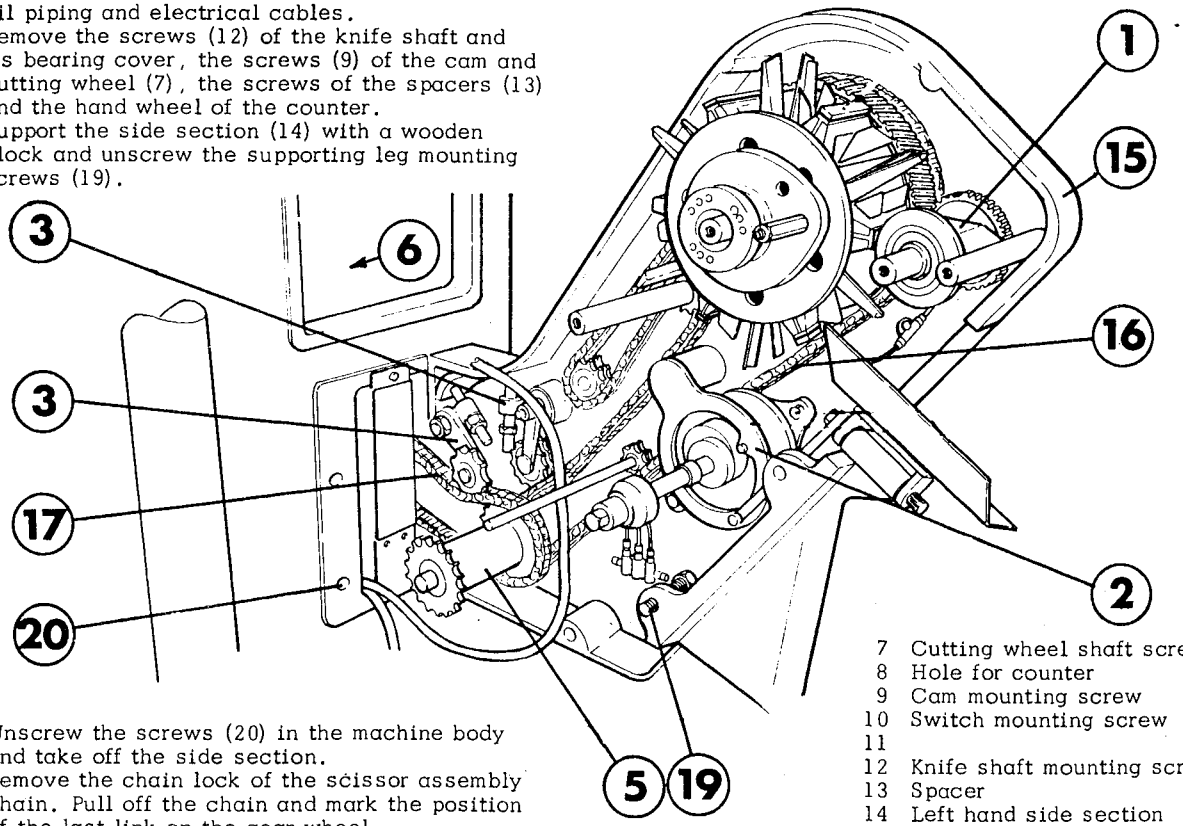


h) Unscrew the screws (20) in the machine body and take off the side section.
i) Remove the chain lock of the scissor assembly chain. Pull off the chain and mark the position of the last link on the gear wheel.
j) Unscrew the screws of the cam and cutting wheel in the right hand side section (15). Take off and overhaul the cutting wheel according to page 507-1.
k) Clean and check the following parts:

| | | |
|---|---|---|
| 1 | Rotating knife shaft | 508-1 |
| 2 | Counter | 506-1 |
| 3 | Chain tensioner | 504-1 |
| 4 | Impulse transmitters | 509-1 |
| 5 | Triple sprocket | 505-1 |
| 6 | Drive unit | 402-1 |

l) Reassemble the parts in reverse order on the right hand side section.

7 Cutting wheel shaft screw
8 Hole for counter
9 Cam mounting screw
10 Switch mounting screw
11
12 Knife shaft mounting screw
13 Spacer
14 Left hand side section
15 Right hand side section
16 Cutting wheel chain
17 Drive chain
18 Screw
19 Screw

m) Position one pair of scissors of the cutting wheel vertically and put the chain round the cutting wheel with a long pin 3 - 3 1/2 teeth (32 mm) ahead of a counter bar, and with the chain lock accessible through the hole for the counting unit.
NB! Do not join the chain together yet.

7 Cutting wheel shaft screw
8 Hole for counter
9 Cam mounting screw
10 Switch mounting screw
11
12 Knife shaft mounting screw
13 Spacer
14 Left hand side section
15 Right hand side section
16 Cutting wheel chain
17 Drive chain
18 Screw
19 Screw

7 Cutting wheel shaft screw
8 Hole for counter
9 Cam mounting screw
10 Switch mounting screw
11
12 Knife shaft mounting screw
13 Spacer
14 Left hand side section
15 Right hand side section
16 Cutting wheel chain
17 Drive chain
18 Screw
19 Screw

Dismantling and checking the cutting unit

a) Remove the plastic cover, package guide, and chain guard.
b) Crank the machine so that the chain lock of the cutting wheel chain (16) becomes accessible behind the hole for the counter (8) through the right hand side section.
The lock of the drive chain (17) will then be on the triple sprocket (5).
b) Mark the positions of the gear wheels with a felt tip pen in order to make reassembly easier.
Untension the chain tensioners of both chains.
c) Remove the screws (10) of the safety switch.
d) Mark the position of the left hand impulse transmitter (4) cam, remove the unit, and detach the bearing housing (its screws are found on the inside of the side section).
Note that this only applies to machines with design correction.
e) Detach the lubrication unit and place it on the machine body. NB! Do not disconnect air and oil piping and electrical cables.
f) Remove the screws (12) of the knife shaft and its bearing cover, the screws (9) of the cam and cutting wheel (7), the screws of the spacers (13) and the hand wheel of the counter.
g) Support the side section (14) with a wooden block and unscrew the supporting leg mounting screws (19).
h) Unscrew the screws (20) in the machine body and take off the side section.
i) Remove the chain lock of the scissor assembly chain. Pull off the chain and mark the position of the last link on the gear wheel.
j) Unscrew the screws of the cam and cutting wheel in the right hand side section (15). Take off and overhaul the cutting wheel according to page 507-1.
k) Clean and check the following parts:

| | | |
|---|---|---|
| 1 | Rotating knife shaft | 508-1 |
| 2 | Counter | 506-1 |
| 3 | Chain tensioner | 504-1 |
| 4 | Impulse transmitters | 509-1 |
| 5 | Triple sprocket | 505-1 |
| 6 | Drive unit | 402-1 |

l) Reassemble the parts in reverse order on the right hand side section.
m) Position one pair of scissors of the cutting wheel vertically and put the chain round the cutting wheel with a long pin 3 - 3 1/2 teeth (32 mm) ahead of a counter bar, and with the chain lock accessible through the hole for the counting unit.
NB! Do not join the chain together yet.

## Dismantling and checking the cutting unit

a) Remove the plastic cover, package guide, and chain guard.
b) Crank the machine so that the chain lock of the cutting wheel chain (16) becomes accessible behind the hole for the counter (8) through the right hand side section.
The lock of the drive chain (17) will then be on the triple sprocket (5).
b) Mark the positions of the gear wheels with a felt tip pen in order to make reassembly easier.
Untension the chain tensioners of both chains.
c) Remove the screws (10) of the safety switch.
d) Mark the position of the left hand impulse transmitter (4) cam, remove the unit, and detach the bearing housing (its screws are found on the inside of the side section).
Note that this only applies to machines with design correction.
e) Detach the lubrication unit and place it on the machine body. NB! Do not disconnect air and oil piping and electrical cables.
f) Remove the screws (12) of the knife shaft and its bearing cover, the screws (9) of the cam and cutting wheel (7), the screws of the spacers (13) and the hand wheel of the counter.
g) Support the side section (14) with a wooden block and unscrew the supporting leg mounting screws (19).
h) Unscrew the screws (20) in the machine body and take off the side section.
i) Remove the chain lock of the scissor assembly chain. Pull off the chain and mark the position of the last link on the gear wheel.
j) Unscrew the screws of the cam and cutting wheel in the right hand side section (15). Take off and overhaul the cutting wheel according to page 507-1.
k) Clean and check the following parts:

| | | |
|---|---|---|
| 1 | Rotating knife shaft | 508-1 |
| 2 | Counter | 506-1 |
| 3 | Chain tensioner | 504-1 |
| 4 | Impulse transmitters | 509-1 |
| 5 | Triple sprocket | 505-1 |
| 6 | Drive unit | 402-1 |

l) Reassemble the parts in reverse order on the right hand side section.
m) Position one pair of scissors of the cutting wheel vertically and put the chain round the cutting wheel with a long pin 3 - 3 1/2 teeth (32 mm) ahead of a counter bar, and with the chain lock accessible through the hole for the counting unit.
NB! Do not join the chain together yet.

# ASSEMBLY AND SYNCHRONIZATION OF CUTTING UNIT

Assembly and synchronization of the cutting unit

a) Fit the drive chain with its chain lock positioned immediately ahead of the triple sprocket.
b) Tension the chain lightly and check that the jaws do not move out of their synchronized positions.
c) Fit the left hand cutting unit side section. NB! Make sure that the previously marked gear wheels of the cutting wheel and knife shaft are correctly related to one another.
d) Check that one of the scissor pairs of the cutting wheel is vertical, and that a long pin of the chain is 3 - 3 1/2 teeth ahead of the counter rail. Turn the setting hand wheel of the counter to the 10 index mark, and position a short pin of the chain opposite the centre of the large ratchet wheel. Hold the triple sprocket firmly, slip the cutting wheel chain over the sprocket teeth, fit the chain lock, and tension the chain lightly.
e) Fit the impulse transmitters, the lubrication unit, and the safety switch.
f) Check that the pitch between scissor pairs and counter bars is equal. Adjust if necessary according to page 507-1.
g) Eliminate any play between the cutting wheel and rotating knife shaft gears (see below).
h) Tension both chains and lock the adjustment screws.
i) Check and adjust the cutting length according to page 508-1.
j) Fit the plastic cover, the package guide and chain guard.

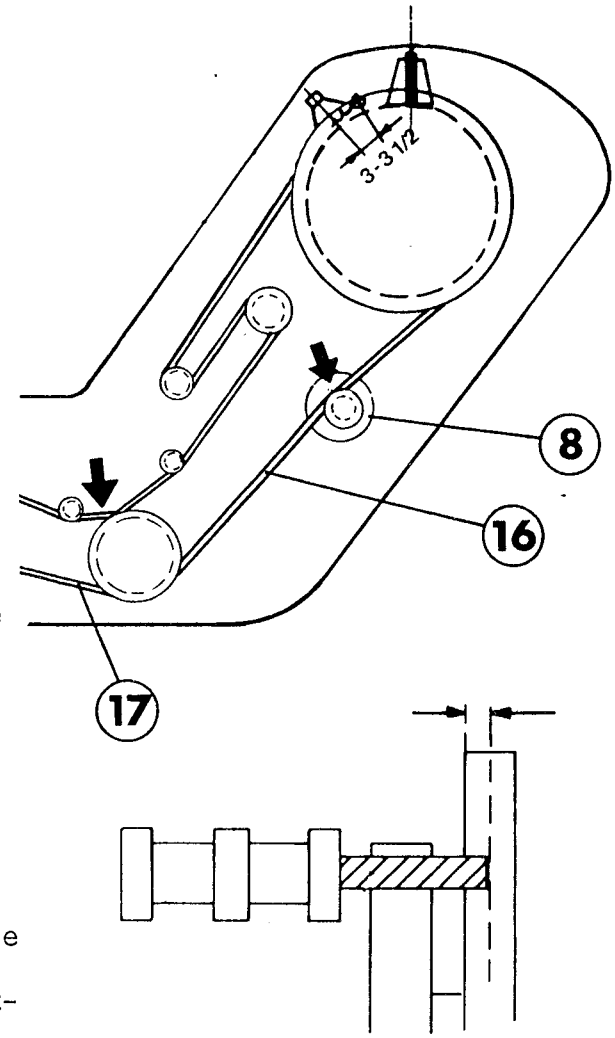


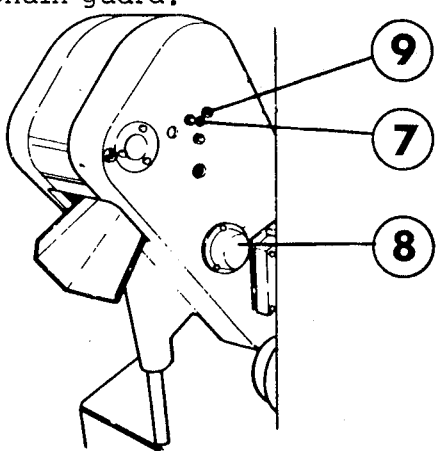


Adjusting the play between the cutting wheel and knife shaft gears

a) Undo the screws (9), replace the screw (7) of the cutting wheel shaft with two screws long enough to reach bottom in the scissor assembly shaft which is ex centric.
b) By means of these screws turn the cutting wheel shaft until the gear play has been eliminated.
c) Tighten the cam screws (9), remove the adjustment screws, and fit the shaft mounting screws (7).

# TEST RUNNING AND FUNCTION CHECK

Test running and function check

a) Operate the machine with water.
b) Check the cutting of the packages and that two packages following one another are equally long.
Adjust, if required, by lowering side No 4 and moving the gear wheel of the intermediary shaft one cog forward, or backward, in relation to the drive side.
CAUTION! Adjustment must not be carried out by means of the yokes.
c) Check the hole punch unit and adjust the carriage return movement with the regulating valve on the connection block (marked return cylinder).
Check the positioning and sealing of the hole and longitudinal sealing strips.
Check the holes punched and the positioning length, and sealing of the pull tab.
d) Check synchronization between the machine and the hole punch unit.
Adjust, if required, by turning the impulse transmitter on the right hand side.

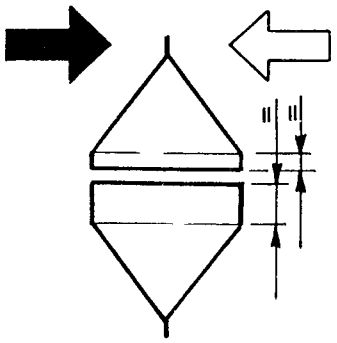

# CHAIN TENSIONER

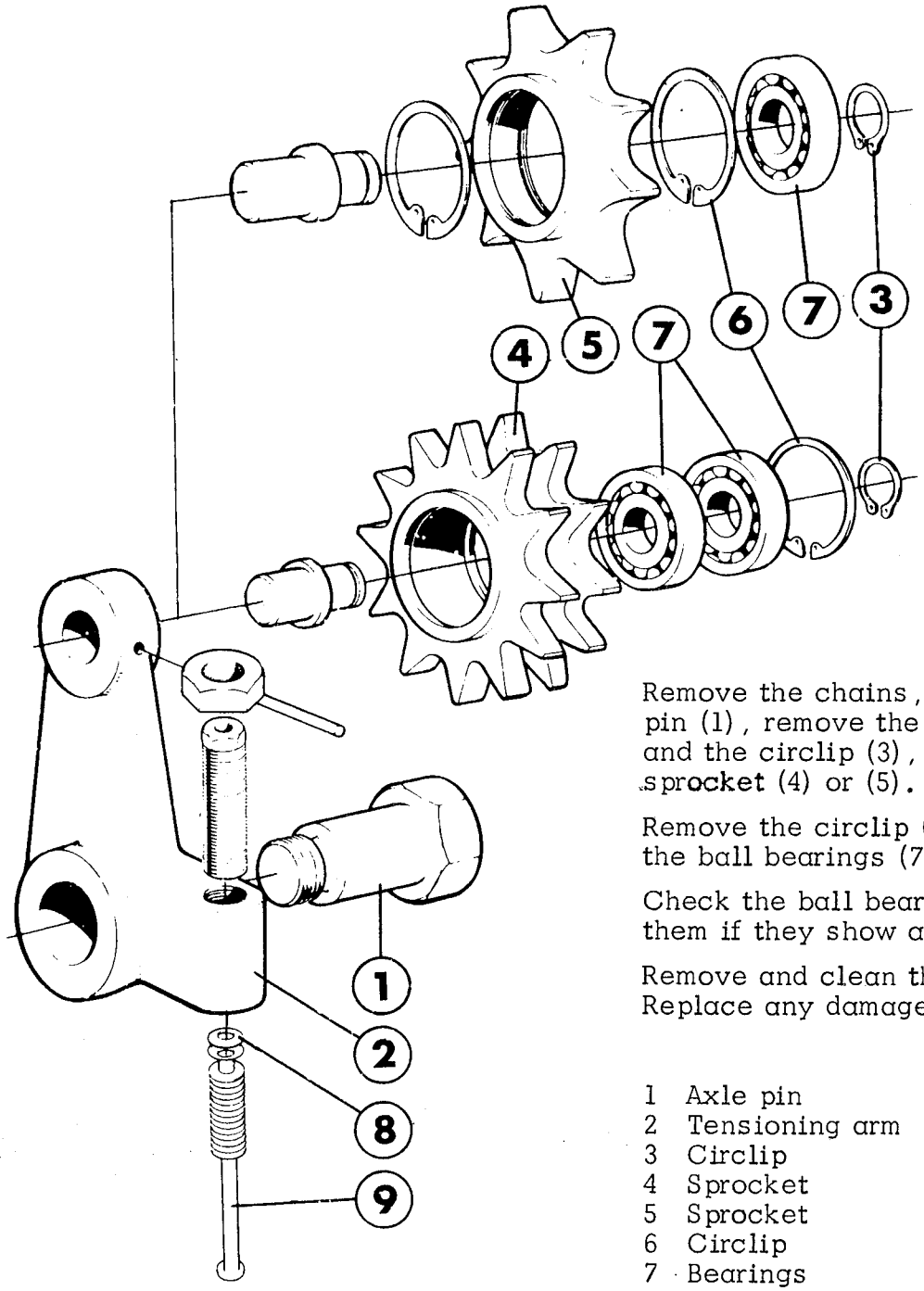


Remove the chains, slip out the axle pin (1), remove the tensioning arm (2) and the circlip (3), and pull off the sprocket (4) or (5).

Remove the circlip (6) and push out the ball bearings (7).

Check the ball bearings and replace them if they show any play.

Remove and clean the cup springs (8). Replace any damaged cup springs.

1 Axle pin
2 Tensioning arm
3 Circlip
4 Sprocket
5 Sprocket
6 Circlip
7 Bearings
8 Cup spring
9 Guide pin

# TRIPLE SPROCKET

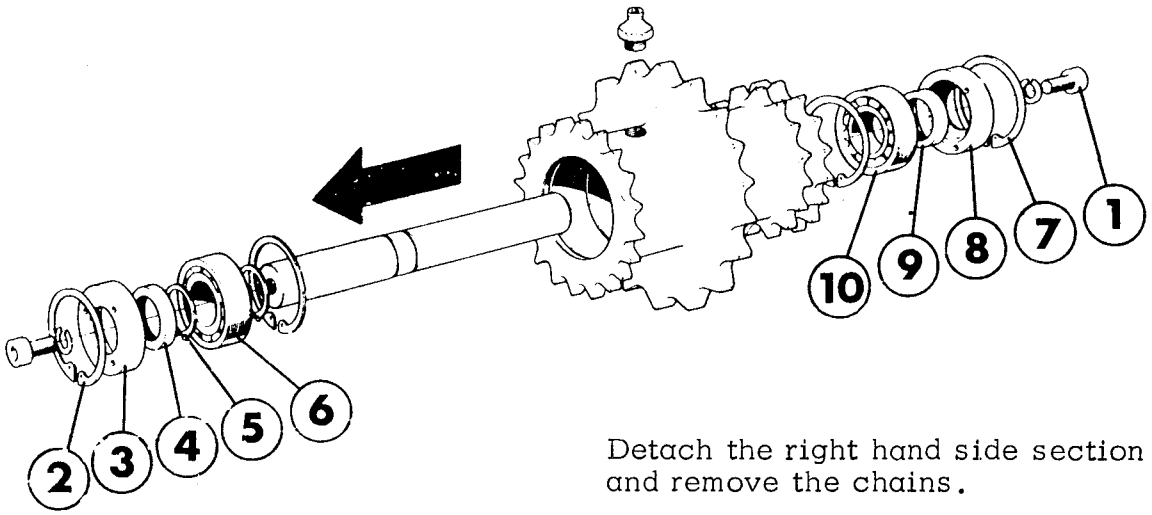


1 Screw
2 Circlip
3 Cover
4 Sealing ring
5 Circlip
6 Ball bearing
7 Circlip
8 Cover
9 Sealing ring
10 Ball bearing

Detach the right hand side section and remove the chains.

Undo the screw (1) and pull out the shaft with the sprocket.

Remove the circlip (2), cover (3), and sealing ring (4). Push out the shaft in the direction indicated by the arrow.

Remove the circlip (5) and pull of the ball bearing (6). Remove the circlip (7), cover (8), and sealing ring (9). Push out the bearing (10).

Check the ball bearings (6) and (7) and replace them, if required.

Reassemble the parts in reverse order, and replace, in case of damage, the sealing rings (4) and (9).

# COUNTER

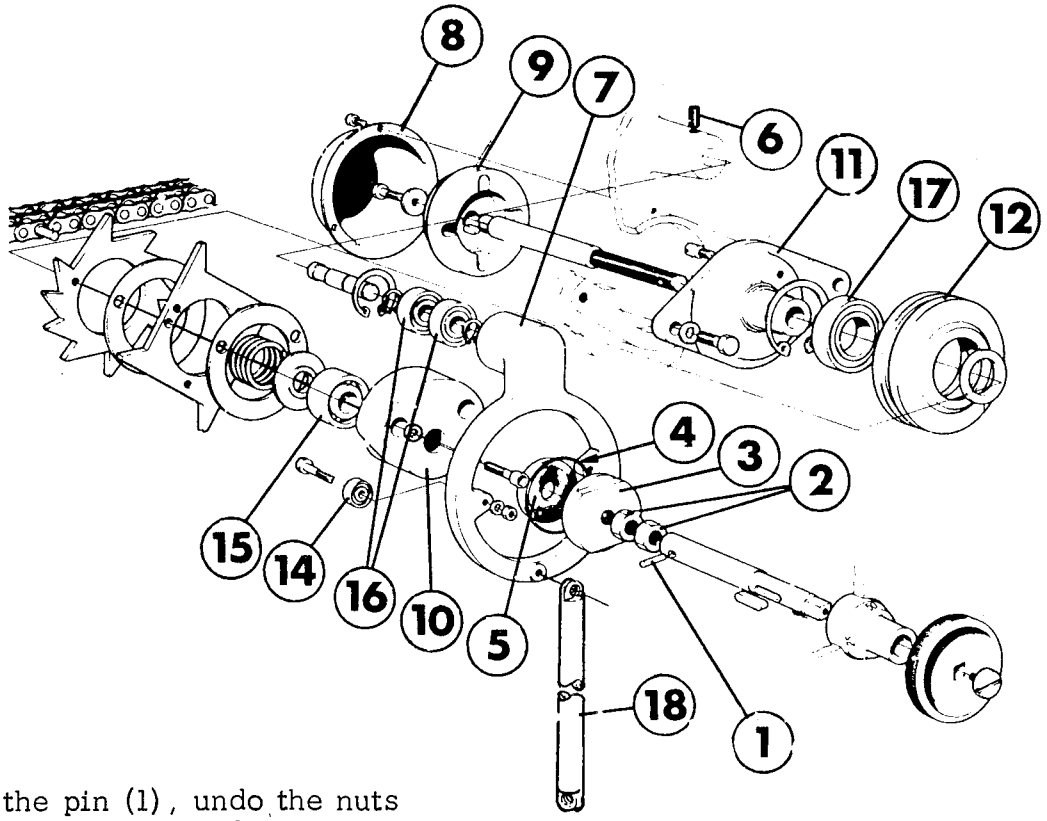


Push out the pin (1), undo the nuts (2), and remove the shaft with the hand wheel. Detach the brake plate (3), remove the O-ring (4), and the brake disc (5). Undo the locking screw (6) and remove the ring bracket (7).

Remove the cover (8). Detach and remove the sleeve (9), cam (10), holder (11), and bending wheel (12). Pull out the shaft (13).

Check and replace, if required, the ball bearings (14), (15), (16), and (17).

Check that the thickness of the brake disc (5) is not less than 3,5 mm. If thinner, replace it.

Reassemble in reverse order.

CAUTION! Take care on assembly to avoid oil or grease on the brake plate (3) or brake disc (5).

The total length of the guide rod between the mounting screws is to be 155 mm.

| | | | |
|---|---|---|---|
| 1 | Pin | 10 | Cam |
| 2 | Nut | 11 | Holder |
| 3 | Brake plate | 12 | Bending wheel |
| 4 | O-ring | 13 | Shaft |
| 5 | Brake disc | 14 | Ball bearing |
| 6 | Screw | 15 | Ball bearing |
| 7 | Ring braket | 16 | Ball bearing |
| 8 | Cover | 17 | Ball bearing |
| 9 | Sleeve | 18 | Guide rod |

# SCISSOR ASSEMBLY

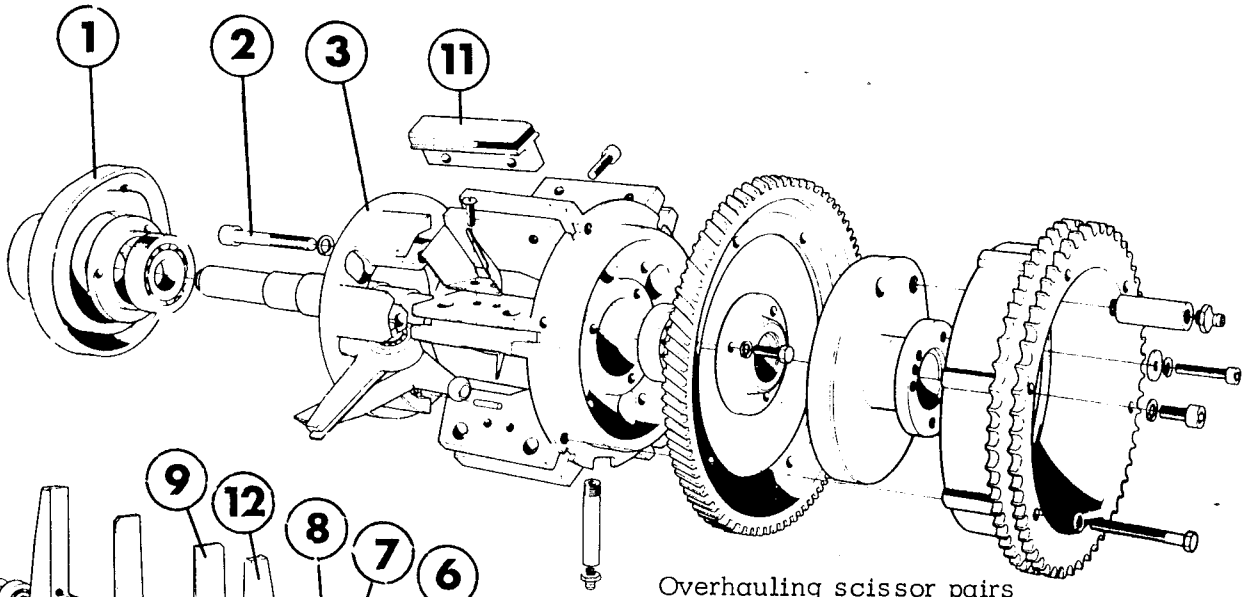


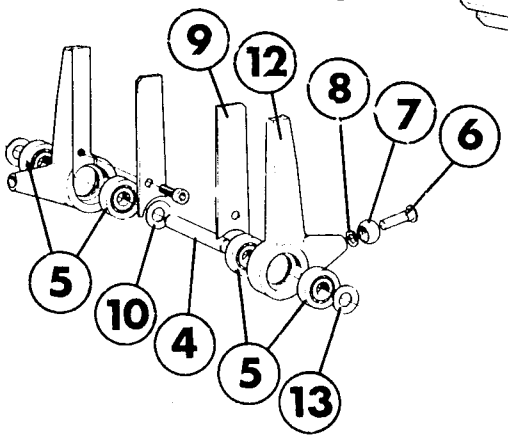


1 Cam
2 Screw
3 End section
4 Shaft
5 Bearing
6 Axle pin
7 Roller
8 Washer
9 Scissor blade
10 Spacer washer
11 Counter rail
12 Scissor arm
13 Outer washer

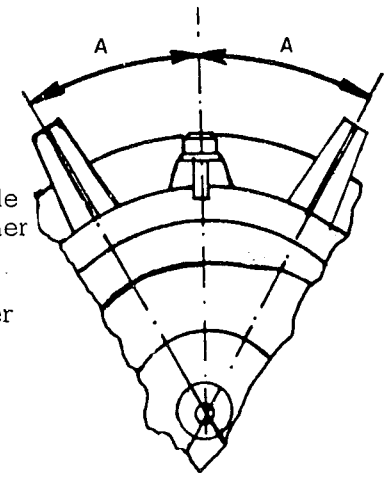


Overhauling scissor pairs

Remove the cam (1), undo the screws (2), and pull off the end section (3) with the pairs of scissors. Force out the shaft (4) and push out the bearing (5). Remove the axle pin (6), the roller (7), and the washer (8). Replace damaged or worn parts.

Check that the scissor blades (9) are sharp and replace whenever required.

Reassemble in reverse order.
CAUTION! Make sure the spacer (10) and outer washers (13) are not mixed up (spacer washer thickness 0,5 - 0,6 mm, outer washer thickness 1,3 - 1,4 mm).

Check the spring tension of the scissor blades, 0,8 - 1,0 mm.

NB! When reassembling the end section of the scissor assembly, check that the pitch of scissor pairs and counter rails is even, i e the distance from the centre of one scissor pair to the centre of the following counter rail is the same as the distance from the centre of the counter rail to the centre of the next scissor pair; distance A must be equal all around.

Check that the rubber has not come off the counter rail (11), or that the knife has not damaged the counter rail. If required, replace faulty parts.

1 Cam
2 Screw
3 End section
4 Shaft
5 Bearing
6 Axle pin
7 Roller
8 Washer
9 Scissor blade
10 Spacer washer
11 Counter rail
12 Scissor arm
13 Outer washer

Overhauling scissor pairs

Remove the cam (1), undo the screws (2), and pull off the end section (3) with the pairs of scissors. Force out the shaft (4) and push out the bearing (5). Remove the axle pin (6), the roller (7), and the washer (8). Replace damaged or worn parts.

Check that the scissor blades (9) are sharp and replace whenever required.

Reassemble in reverse order. CAUTION! Make sure the spacer (10) and outer washers (13) are not mixed up (spacer washer thickness 0,5 - 0,6 mm, outer washer thickness 1,3 - 1,4 mm).

Check the spring tension of the scissor blades, 0,8 - 1,0 mm.

NB! When reassembling the end section of the scissor assembly, check that the pitch of scissor pairs and counter rails is even, i e the distance from the centre of one scissor pair to the centre of the following counter rail is the same as the distance from the centre of the counter rail to the centre of the next scissor pair; distance A must be equal all around.

Check that the rubber has not come off the counter rail (11), or that the knife has not damaged the counter rail. If required, replace faulty parts.

# KNIFE SHAFT

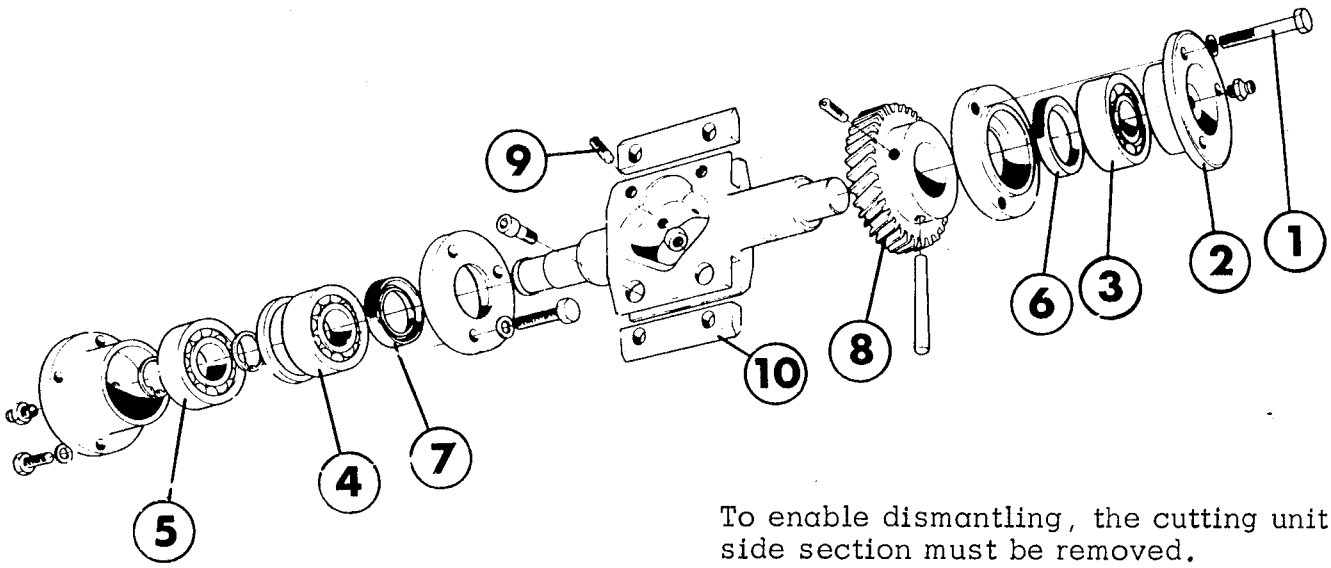


| | | | |
|---|---|---|---|
| 1 | Screw | | |
| 2 | Bearing cover | 7 | Sealing ring |
| 3 | Ball bearing | 8 | Gear wheel |
| 4 | Ball bearing | 9 | Screw |
| 5 | Ball bearing | 10 | Knife |
| 6 | Sealing ring | 11 | Counter rail |

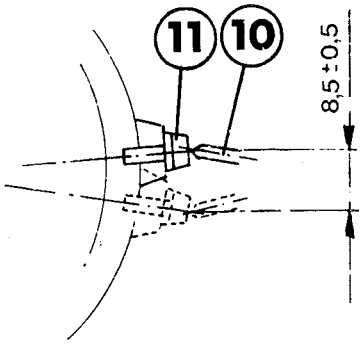


To enable dismantling, the cutting unit side section must be removed.

Undo the screws (1), remove the bearing cover (2), and pull out the shaft.

Remove and check the ball bearings (3), (4), and (5), and the sealing rings (6) and (7). If play or damage is found replace the faulty parts.

NB! The gear wheel (8) is not to be dismantled unless deformed or broken.

Check that the knives are sharp. Replace them if required.

Reassemble in reverse order and adjust the cutting length as described below.

Adjusting the cutting length

Adjust the position of the knives with the screws (9) so that the knives and the counter rail are parallel (thin line of light) and so that the distance of $8,5 \pm 0,5$ mm is obtained, i e the distance between the knife/counter rail positions when they just engage and just disengage.

# IMPULSE TRANSMITTERS

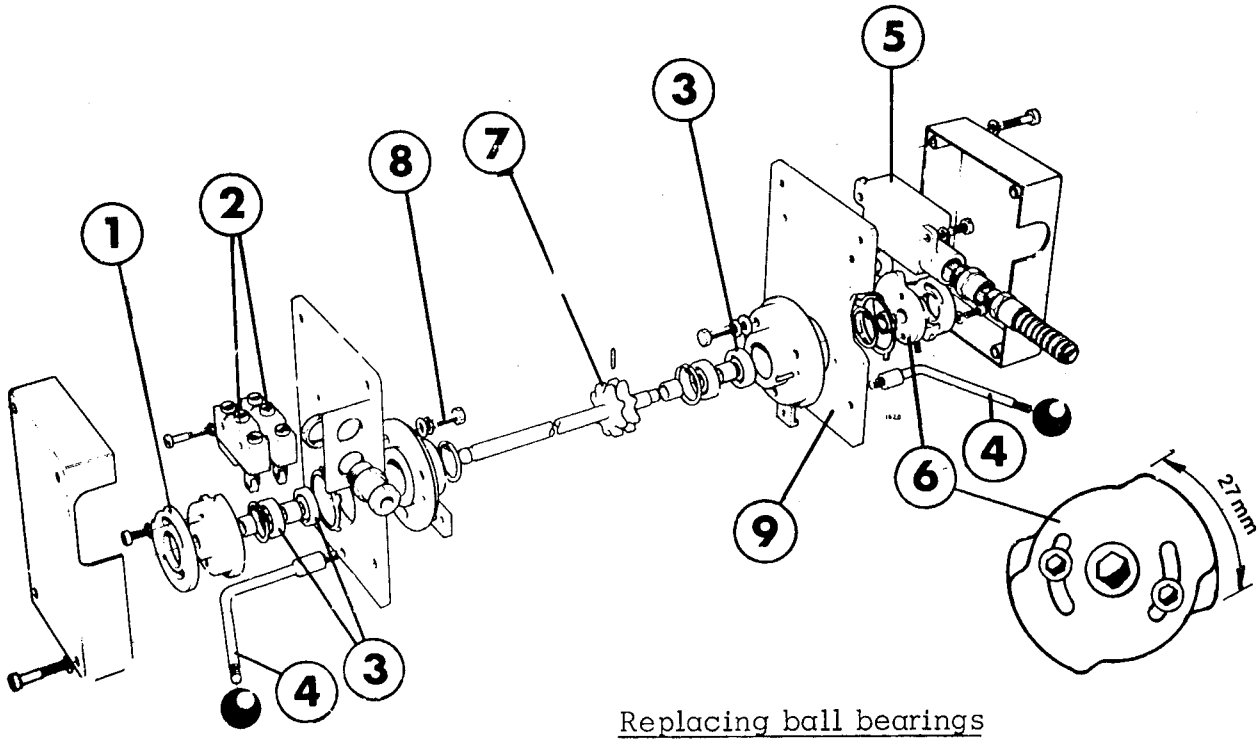


Remove the covers and check the bearings (3). Replace them if there is any play.

Check the microswitches and their connections.

1 Cam (printed design)
2 Microswitch (printed design)
3 Ball bearing
4 Locking handle
5 Microswitch (hole punch)
6 Cam (hole punch)
7 Sprocket
8 Mounting screw
9 Back plate

Replacing ball bearings

a) Remove the cams (1) and (5) after having marked their positions in relation to the shaft.
b) Remove the circlips and remove the back plates (9) with the electrical connections.
c) Unscrew the mounting screws (8) from the inside of the cutting unit side section. Twist out the right hand bearing housing with its bearing. Remove the left hand bearing housing with the shaft.
d) Remove the circlips from the bearing housings. Force the bearing out and replace them.
e) Reassemble in reverse order. Note that the bearings are double-sealed and cannot be lubricated.
f) Adjust the microswitches.

The basic setting of the hole punch cam (6) is 27 mm.

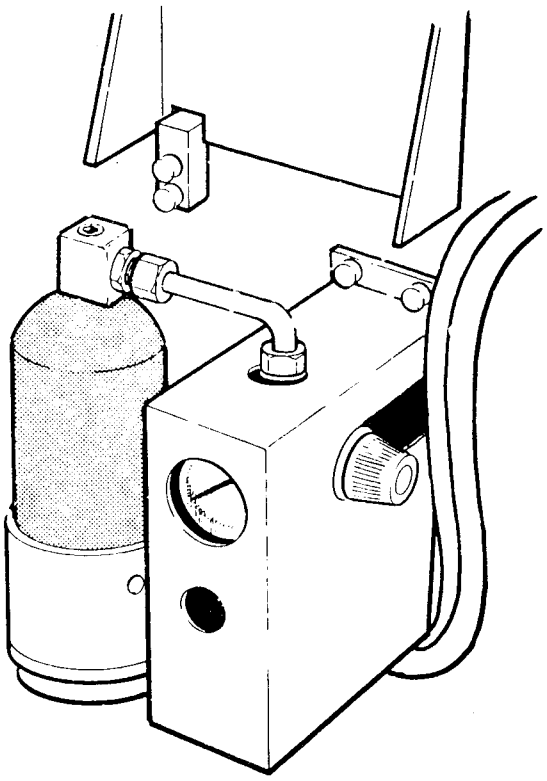

Turn off the air, and remove and clean the oil tank. Fill it with fresh oil.

Lubrication takes place every 12 minutes via the KV2 and KV3 time relays and the L2 pressure regulator.

The amount of oil delivered to the various lubrication points can be adjusted by:

a) altering the impulse length of KV3.
   or
b) altering the air pressure by means of the air regulator L2.

NB! The KV2 and KV3 time relays are mounted behind the control panel in the electrical cabinet.

1 Oil filling
2 L2 pressure regulator

Normal impulse length = 4 seconds

Normal oil consumption = 50 - 60 ml/h

1 Pressure roller holders, heating sides
2 Pressure roller holders, heating sides
3 Double chains
4 Double chains
5 Bevel gear
6 Pressure roller holders, pressure sides
7 Roller bearings
8 Roller bearings
9 Pressure roller holders, pressure sides
10 Drive chain
11 Double chains
12 Double chains
13 Bevel gear
14 Triple sprocket
15 Rotating knife shaft

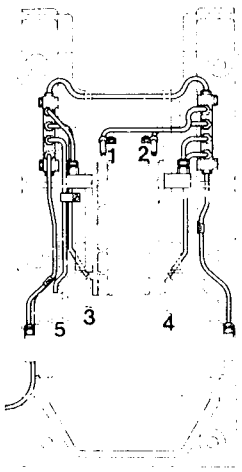


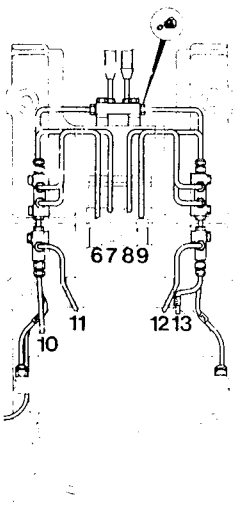


Checking lubrication pipe-lines and metering valves

Lower side No 4 and depress the button for manual lubrication.
Check that the right amount of oil is being delivered to all the lubrication points. If required, replace clogged metering valves.
Check all piping and connections for leakage and damage.
Adjust whenever necessary the amount of oil.
Too much oil results in smoke, coated heating jaws, and oil on the packages.

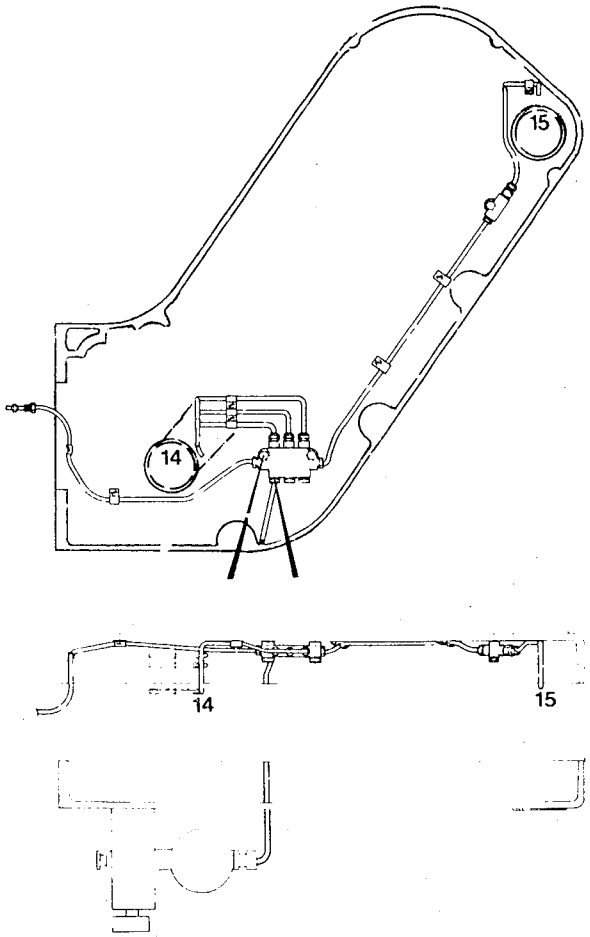

| | |
|---|---|
| Sterile Air System | 801-1 |
| Air Heater | 802-1 |
| Sterilization System, steam | 803-1 |

# STERILE AIR SYSTEM

1 Pressure gauge
2 Pressure guard
3 Filter insert
4 Mounting screws
5 Pressure regulator

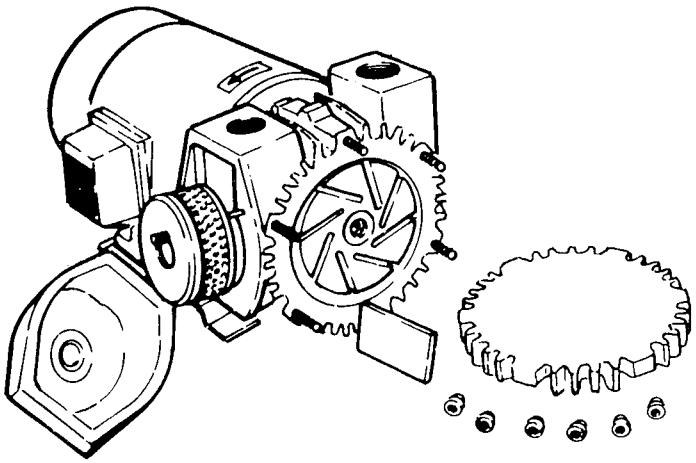

## Compressor

Remove and clean the air filter and replace the filter insert (3).
Check that the compressor delivers a pressure of 30 kPa (0,3 kp/cm$^2$).
Check that the pressure guard is set at 15 kPa (0,15 kp/cm$^2$).
If the pressure gauge indicates a lower pressure, dismantle and overhaul the compressor.

## Dismantling and overhauling the compressc

a) Disconnect air lines and cables.
b) Remove the mounting screws.
c) Take out the compressor.
d) Remove and check the vanes. If they are less than . . . . mm wide, replace them.
When fitting the vanes, make sure of the direction of rotation and that their rounded edges are positioned correctly in relation to the cylinder wall.
e) Clean the rotor and cylinder with benzine.
f) Check for any play in the motor bearings. If required, replace them.

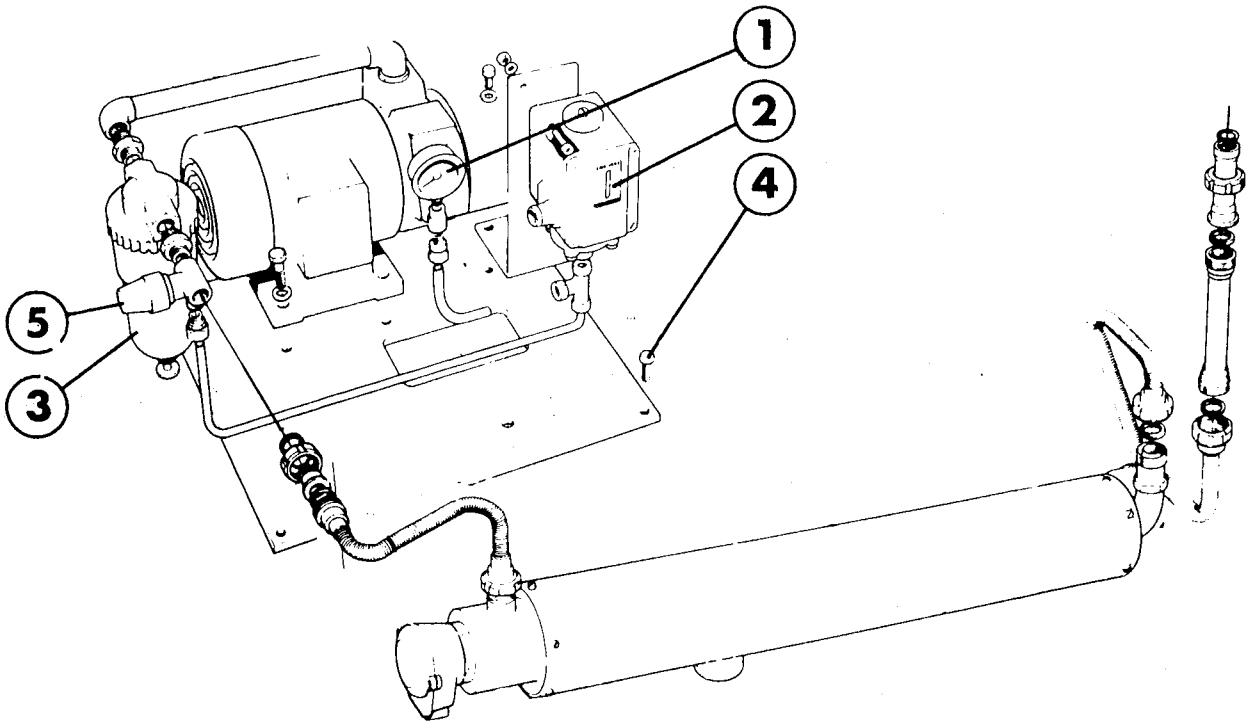

# AIR HEATER

1 Electrical connection
2 Nut
3 Thermo-element
4 Element
5 Filter
6 Housing
7 Air connection

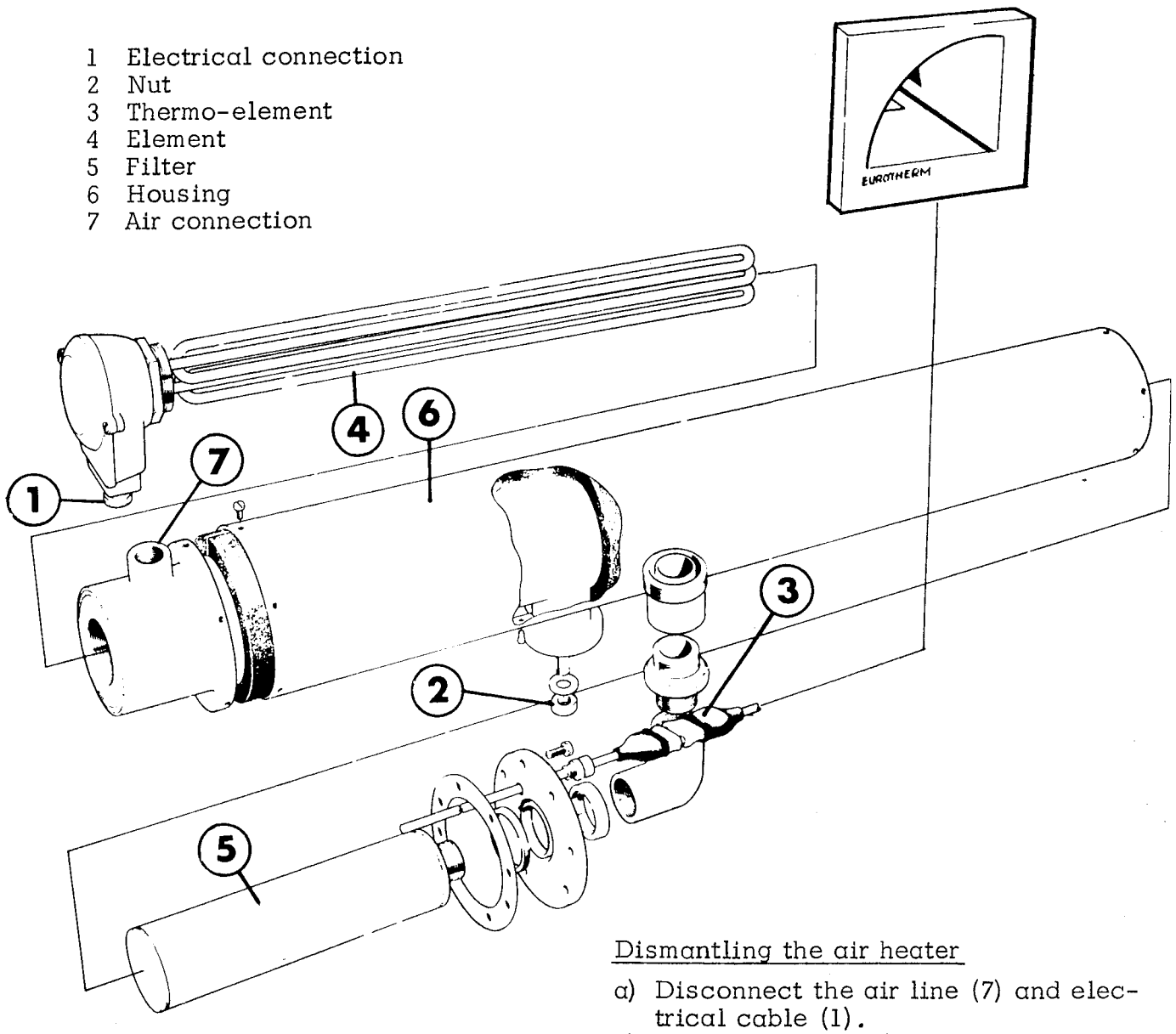


Checking the sterile air temperature

Check that the grey pointer of the Eurotherm instrument is set at 320°C, which is the temperature at which the sterilization time begins, and that the black pointer points to 340°C; at the latter temperature the "Sterile air temperature too low" alarm is to be received.

Dismantling the air heater

a) Disconnect the air line (7) and electrical cable (1).
b) Unscrew the nut (2) on the underside of the machine.
c) Take out the heater.
d) Detach the element (4) and filter (5). Replace the element if it shows damage or corrosion.
e) Clean the filter in detergent and blow it dry with compressed air.
f) Check and clean the thermo-element (3). If it is damaged, replace it.
g) Reassemble in reverse order and put in new seals.

# STERILIZATION SYSTEM, steam

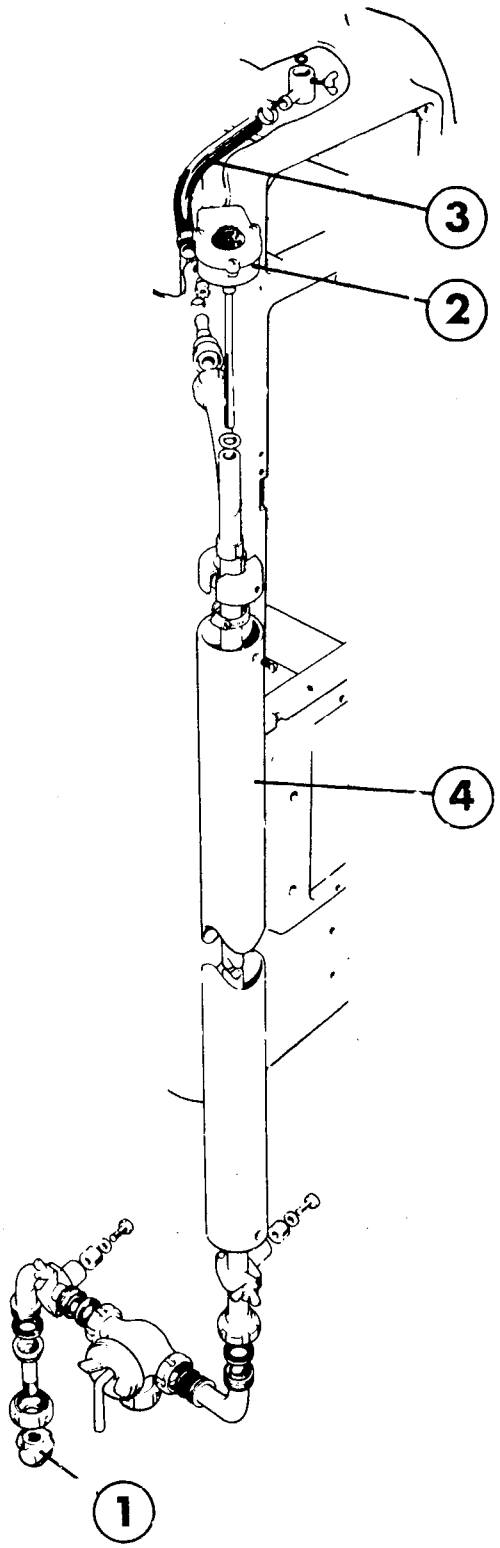


1 Steam trap
2 Thermostat
3 Rubber tube
4 Pipe shield

Steam and cleaning connection

a) Check the rubber tube (3) for dry cracking or other damage. If required, replace it. Check tightness at the hose clips.
b) Replace all seals in the pipe-lines.
c) Check that the thermostat is set at 150°C, and that the KV1 time relay is set at 20 minutes.
d) Clean the steam trap and check its function.
e) Check the pipe shield (4) and replace it, if damaged.

TETRA PAK

Machine 6330 (AT25)

250 hours inspection
(monthly service)

Place of operation .....

Prepared by .....

Action code: A = Faultless
B = Adjustment
C = Exchange
● = To be carried out during production

Month ..... Year .....

Machine type .....

Machine No .....

Operating time of machine .....

| Page | | Inspect | | Done | Comment |
|---|---|---|---|---|---|
| 510-1 | | Lubrication Oil Pump<br>Check oil pump function | | | |
| 302-1 | | Pressure Sides<br>Lower sides, dismantle. | | | |
| 307-1 | | Clean and check pressure roller holders. | | | |
| 301-1 | | Heating Sides<br>Lower sides, dismantle. | | | |
| 314-1 | | Clean and check pressure roller holders. | | | |
| 315-1 | | Clean and check contact rails. | | | |
| 316-1 | | Check heating jaws. | | | |
| 507-1 | | Cutting Unit<br>Check counter rail rubbers. | | | |
| 504-1 | | Check bearing play in chain tensioners. | | | |
| 402-1 | | Check vee-belt tension. | | | |
| 303-1 | | Raise side frames and check synchronization. | | | |
| 503-1 | ● | Check cutting unit function. | | | |
| 101-1 | | Cassette<br>Clean cassette. | | | |
| 102-1 | | Splicing Device<br>Clean equipment, check heating band and connections. | | | |
| 103-1 | | Dating Unit<br>Clean unit, check O-rings, and all rollers and shafts. | | | |
| | ● | Check function and adjust, if required, ink quantity. | | | |
| 201-1 | | Presterilizer<br>Clean sterile bath, check wetting roller bearing play. | | | |
| | | Check and, if required, adjust gap between rollers. | | | 0,5 - 0,7 mm |
| | ● | Level guard setting and function. | | | |

TETRA PAK

Machine 6330 (AT25)

250 hours inspection

| Page | | Inspect | | Done | Comment |
|---|---|---|---|---|---|
| 202-1 | | Paper Drier<br>Check heating band, distance wires, heating band connections and reflector. | | | |
| | | Check squee-gee rollers and rubber sleeves. In case of damage, replace. | | | |
| | | Brush away paper particles and dust with soft brush. | | | |
| | ● | Check and adjust peroxide consumption. | | | |
| 203-1 | | Aseptic Chamber<br>Check and clean guide rails, remove plastic deposits. | | | |
| | | Check and, if required, clean chamber and sterile air inlet. | | | |
| | | Check tightness of doors and hatches. | | | |
| 204-1 | | Upper Bending Roller and Auxiliary Motor<br>Check roller teflon sleeve. | | | |
| 205-1 | | Upper and Lower Forming Rings<br>Check all rollers and their surfaces. | | | |
| | | Check play between rollers. | | | 0,1 - 0,3 mm |
| | | Check wear and adjustment of guide roller. | | | |
| | ● | Check design correction equipment. | | | |
| 206-1 | | Longitudinal Element<br>Check heating bands. | | | |
| 208-1 | | Filling System<br>Replace all seals in pipe-line and regulating valve. | | | |
| | | Check teflon coating in flexible tube. If damaged, replace. | | | (sterility risk) |
| | | Check centering of filling tube in machine. | | | |
| | | Check pressure roller. | | | |
| | | Remove, dismantle and clean product valve. Check middle membrane. If damaged or worn, replace. | | | (sterility risk) |
| 801-1 | | Sterile Air System<br>Check and clean suction filter. | | | |
| | | Check sterile air temperature. | | | 320 - 340°C |
| | | Check tightness of system. | | | |
| 803-1 | | Sterilization System, Steam<br>Check rubber hose. In case of damage, replace. | | | |

Report seen .....
Production man. /supervisor

Inspection report issued in triplicate.
Distr.: Top copy to prod. manager/supervisor
2 carbons to Tetra Pak

The following parts or units should be adjusted, repaired, or replaced at the next 1000 or 3000 hours inspection:

TETRA PAK

Machine 6330 (AT25)

1000 hours inspection
(tertiary service)

Place of operation . . . . . Month . . . . . Year . . . . .

Prepared by . . . . . Machine type . . . . . .

Action code: A = Faultless
B = Adjustment
C = Exchange
● = To be carried out during production

Machine No . . . . . .

Operating time of machine . . . . . .

| Page | | Inspect | Code | Done | Comment |
|---|---|---|---|---|---|
| | | Lubrication oil pump | | | |
| 510-1 | | Clean oil tank, check setting | | | |
| | | Pressure sides | | | |
| 302-1 | | Lower sides, dismantle | | | |
| 307-1 | | Clean and check pressure roller holders | | | |
| 309-1 | | Check play in lower sprockets | | | |
| 308-1 | | Check and calibrate pressure jaws | | | |
| | | Heating sides | | | |
| 301-1 | | Lower sides, dismantle | | | |
| 314-1 | | Clean and check pressure roller holders | | | |
| 315-1 | | Clean and check contact rails | | | |
| 309-1 | | Check play in lower sprockets | | | |
| 316-1 | | Check heating jaws | | | |
| | | Cutting unit | | | |
| 508-1 | | Check sharpness of rotating knife | | | |
| 507-1 | | Check wear and bearing play in scissor arms and counter rail rubbers | | | |
| 504-1 | | Check bearing play in chain tensioners | | | |
| 509-1 | | Check impulse transmitter shaft bearing play | | | |
| 501-1 | | If play or wear found remove cutting unit end section and overhaul parts | | | |
| 402-1 | | Check vee-belt tension and function of slip clutch disc | | | |
| | | Check worm gear oil level | | | |
| 303-1 | | Raise side frames and check synchronization | | | |
| 502-1 | | Reassemble cutting unit and check settings | | | |
| 503-1 | ● | Check cutting unit function | | | |
| | | Cassette | | | |
| 101-1 | | Clean cassette and check bearings of paper roller holder | | | |

| Page | | Inspect | Code | Done | Comment |
|---|---|---|---|---|---|
| 208-1 | | Filling System<br>Replace all seals in pipe-line and regulating valve | | | |
| | | Check teflon coating in flexible tube. If damaged, replace | | | |
| | | Check ball pin and pressure roller | | | |
| | | Check centering of filling tube in machine | | | |
| | | Remove, dismantle and clean product valve. | | | |
| | | Check middle membrane. If damaged or worn, replace | | | (sterility risk) |
| 401-1 | | Superstructure Raising Device<br>Check function and speed. | | | |
| | | Check function of safety catch. | | | |
| 801-1 | | Sterile Air System<br>Check and clean suction filter | | | |
| | ● | Check air pressure and setting of pressure guard | | | 30kPa (0,3 kp/cm$^2$)<br>15kPa (0,15kp/cm$^2$) |
| 802-1 | | Check sterile air temperature | | | 320 - 340°C |
| | ● | Check tightness of system | | | |
| 803-1 | | Sterilization System, Steam<br>Check rubber hose and pipe shield | | | |
| | | Clean steam trap | | | |

Report seen . . . . . .
Production manager / supervisor

Inspection report issued in triplicate.
Distribution: Top copy to production manager/supervisor
2 carbons to Tetra Pak

The following parts or units should be adjusted, repaired, or replaced at the next 1000 or 3000 hours inspection:

TETRA PAK

Machine 6330 (AT25) 1000 hours inspection

| Page | | Inspect | Code | Done | Comment |
|---|---|---|---|---|---|
| 102-1 | | Splicing Device<br>Clean equipment, check heating band and connections | | | |
| 103-1 | | Dating Unit<br>Clean unit, check O-rings, and all rollers and shafts | | | |
| | ● | Check function and adjust, if required, ink quantity | | | |
| 201-1 | | Presterilizer<br>Clean sterile bath, check wetting roller bearing play | | | |
| | | Check and, if required, adjust gap between rollers | | | 0,5 mm |
| | ● | Level guard setting and function | | | |
| 202-1 | | Paper Drier<br>Check heating band, distance wires, and heating band connections and reflector | | | |
| | | Check squee-gee roller bearings and rubber sleeves. In case of damage, replace | | | |
| | | Brush away paper particles and dust with soft brush | | | |
| | ● | Check and adjust peroxide consumption | | | |
| 203-1 | | Aseptic Chamber<br>Check and clean guide rails, remove plastic deposits | | | |
| | | Check and, if required, clean chamber and sterile air inlet | | | |
| | | Check tightness of doors and hatches | | | |
| 204-1 | | Upper Bending Roller and Auxiliary Motor<br>Check bearings and roller teflon sleeve | | | |
| | | Check centering of roller with motor shaft and check clutch | | | |
| 205-1 | | Upper and Lower Forming Rings<br>Check all rollers and their surfaces | | | |
| | | Check play between rollers | | | 0,1 - 0,3 mm |
| | | Check wear and adjustment of guide roller | | | |
| | ● | Check LS overlap | | | |
| | ● | Check design correction equipment | | | |
| 206-1 | | Longitudinal Element<br>Check heating bands and their spring tensioners | | | |
| | | Check connections | | | |
| | ● | Check quality of longitudinal seal | | | |

TETRA PAK

Machine 6330 (AT25)

3000 hours inspection
(annual service)

Place of operation . . . . . Month . . . . . Year . . . . .

Prepared by . . . . . Machine type . . . . . .

Action code: A = Faultless
B = Adjustment
C = Exchange
● = To be carried out during production

Machine No . . . . . .

Operating time of machine . . . . .

| Side | | Inspect | Code | Done | Comment |
|---|---|---|---|---|---|
| | | Lubrication oil Pump | | | |
| 510-1 | | Clean oil tank, check setting | | | |
| | | Pressure Sides | | | |
| 302-1 | | Lower sides, dismantle | | | |
| 307-1 | | Overhaul pressure roller holders | | | |
| 312-1 | | Check bearing play in upper chain wheels | | | |
| 309-1 | | Check wear of cam curves and bearing play in lower sprockets | | | |
| 310-1 | | Overhaul spring cartridges | | | |
| 311-1 | | Check wear of double chains and pins | | | |
| 313-1 | | Check wear of chain rails | | | |
| 308-1 | | Overhaul and calibrate pressure jaws | | | |
| | | Heating Sides | | | |
| 301-1 | | Lower sides, dismantle | | | |
| 314-1 | | Overhaul pressure roller holders | | | |
| 315-1 | | Clean and check contact rails | | | |
| 312-1 | | Check bearing play in upper chain wheels | | | |
| 309-1 | | Check bearing play in lower sprockets | | | |
| 311-1 | | Check wear of double chains and pins | | | |
| 310-1 | | Overhaul spring cartridges | | | |
| 316-1 | | Overhaul heating jaws | | | |
| | | Cutting Unit | | | |
| 501-1 | | Dismantle cutting unit | | | |
| 504-1 | | Check bearing play in chain tensioner | | | |
| 505-1 | | Check bearing play in triple sprocket | | | |
| 506-1 | | Check function and setting of counter | | | |
| 508-1 | | Overhaul rotating knife shaft | | | |
| 507-1 | | Overhaul scissor assembly | | | |
| 509-1 | | Check and overhaul impulse transmitters | | | |
| | | Drive Unit | | | |
| 402-1 | | Remove and dismantle intermediary shaft and check bearing play | | | |
| | | Check vee-belt and slip-disc | | | |
| | | Eliminate any play in worm gear by shimming | | | |
| | | Check oil level | | | |

| Page | | Inspect | Code | Done | Comment |
|---|---|---|---|---|---|
| 205-1 | | Upper and Lower Forming Rings<br>Check all rollers and their surfaces | | | |
| | | Check play between rollers | | | 0,1 - 0,3 mm |
| | | Check wear and adjustment of guide roller | | | |
| | ● | Check LS overlap | | | |
| | | Check design correction equipment | | | |
| 206-1 | | Longitudinal Element<br>Replace heating bands, clean element block and connections | | | |
| | ● | Check quality of longitudinal seal | | | |
| 208-1 | | Filling System<br>Replace all seals in pipe-line and regulating valve | | | |
| | | Check teflon coating in flexible tube, if damaged replace | | | |
| | | Check ball pin and pressure roller | | | |
| | | Check centering of filling tube in machine | | | |
| | | Remove, dismantle and clean product valve, replace seals and membranes | | | |
| 801-1 | | Sterile Air System<br>Clean suction filter | | | |
| | ● | Check air pressure and setting of pressure guard | | | 30kPa (0,3 kp/cm$^2$)<br>15kPa (0,15kp/cm$^2$) |
| | | Replace compressor filter | | | |
| | ● | Check tightness of system | | | |
| 802-1 | ● | Check sterile air temperature | | | 320 - 340°C |
| | | Check element filter and connections in air heater | | | |
| 803-1 | | Sterilization System, Steam<br>Check rubber tube and pipe shield | | | |
| | | Clean steam trap | | | |

Report seen . . . . . .
Production manager / supervisor

Inspection report issued in triplicate.
Distribution: Top copy to production manager/supervisor.
2 carbons to Tetra Pak.

The following parts or units should be adjusted, repaired, or replaced at the next 1000 or 3000 hours inspection:

| Page | | Inspect | Code | Done | Comment |
|---|---|---|---|---|---|
| 303-1 | | Refit side frames and check synchronization | | | |
| 502-1 | | Refit cutting unit side section and check synchronization | | | |
| 503-1 | ● | Check function of cutting unit | | | |
| 101-1 | | Cassette<br>Clean cassette and chefk paper reel holder bearings | | | |
| 102-1 | | Splicing Device<br>Clean equipment, check heating bands and connections | | | |
| 103-1 | | Dating Unit<br>Clean unit, check ink, transfer roller, and printing wheel | | | |
| | | Replace O-rings | | | |
| | | Check plastic tubes and injector | | | |
| | ● | Adjustment | | | |
| 201-1 | | Presterilizer<br>Clean sterile bath, check wetting roller bearing play | | | |
| | | Check and adjust gap between rollers | | | 0,5 mm |
| | ● | Setting and function of level guard | | | |
| 202-1 | | Paper Drier<br>Check heating bands and distance wires, heating band connections and reflector | | | |
| | | Check squee-gee roller bearings and rubber sleeves, if damaged replace | | | |
| | | Brush off paper residue and dust with soft brush | | | |
| | ● | Check and adjust peroxide consumption | | | |
| 203-1 | | Aseptic Chamber<br>Check and clean guide rods, remove plastic deposits | | | |
| | | Check and, if required, clean chamber and sterile air inlet | | | |
| | | Check tightness of doors and hatches | | | |
| 204-1 | | Upper Bending Roller with Auxiliary Motor<br>Check bearings and roller teflon sleeve | | | |
| | | Check centering of roller with motor shaft and check clutch | | | |
| | | Check and clean worm gear | | | |
| | | Change grease | | | |