SPC
Spare Parts Catalogue

TCA/25

633013-0600

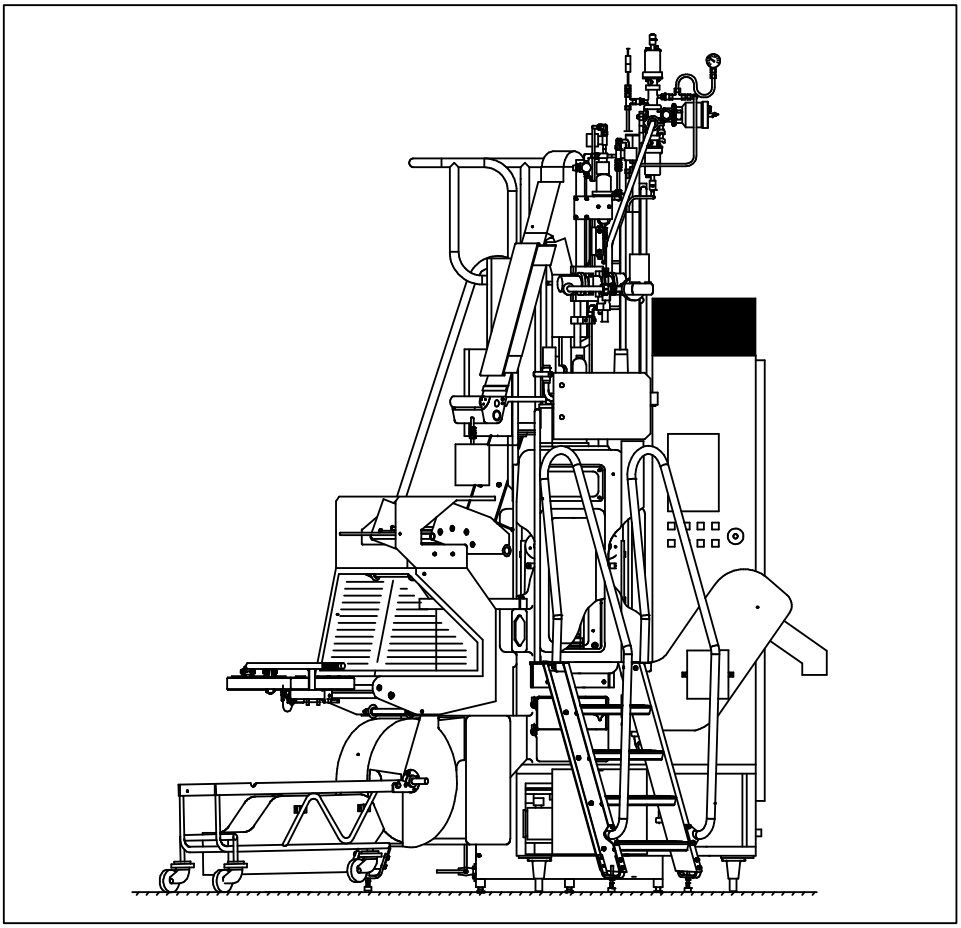

Tetra Pak

Doc. No: SPC-85567-0105

Main Groups of the Machine

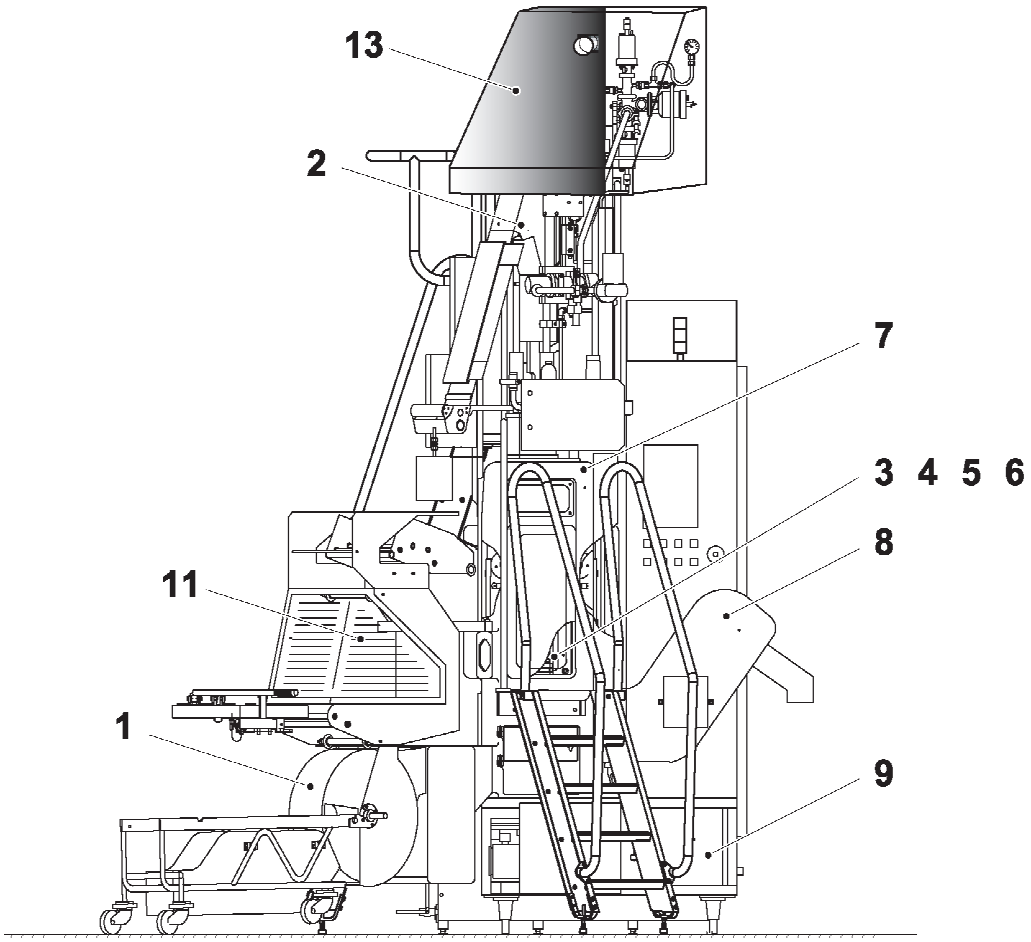

1 - Cassette
2 - Superstructure
3 - Side Frame
4 - Side Frame
5 - Side Frame
6 - Side Frame
7 - Machine Body
8 - Cutting Device
9 - Lower Section
10 - Standard Equipment
11 - Hole Punch
12 - Electric Equipment
13 - Hood

For the correct machine data, check your machine specification, supplied with the machine!

This document is valid for:

Series No/Machine No Sign.

SPC
Spare Parts Catalogue

Tetra Classic Aseptic
TCA/25
633013-0600

Table of Content:

Introduction ..... , **5**

Cassette
B- 633001-0400 ..... , **9**

Superstructure
B- 633002-1100 ..... , **25**

Side Frame
B- 633007-0100 ..... , **91**

Side Frame
B- 633010-0100 ..... , **109**

Side Frame
B- 633006-0100 ..... , **129**

Side Frame
B- 633011-0100 ..... , **147**

Machine Body
B- 633004-2000 ..... , **167**

Cutting Device
B- 633005-1500 ..... , **205**

Lower Section
B- 633008-1100 ..... , **229**

Standard Equipment
B- 633009-0700 ..... , **265**

Hole Punch
B- 610323-0500 ..... , **291**

Electric Equipment
B- 639336-0600 ..... , **367**

Hood
B- 1362040-0100 ..... , **387**

Part Number Index ..... , **391**

Doc. No: SPC-85567-0105

Issue 2003-02-06

Tetra Pak

Tetra Pak Carton Ambient AB

General information

Manufacturer

This machine is produced by:
Tetra Pak Carton Ambient AB
Ruben Rausings gata
221 86 LUND /Sweden

Document producer

This document has been produced by:
Tetra Pak Carton Ambient AB
Design Process Development
Ruben Rausings gata
221 86 LUND /Sweden

Number of pages

This document contains totally **420 pages,** including the first **8** introduction pages.

Copyright © 2003 Tetra Pak Carton Ambient AB

All rights reserved. No parts of this document may be reproduced or copied in any forms or by any means, without written permission from Tetra Pak Carton Ambient AB.

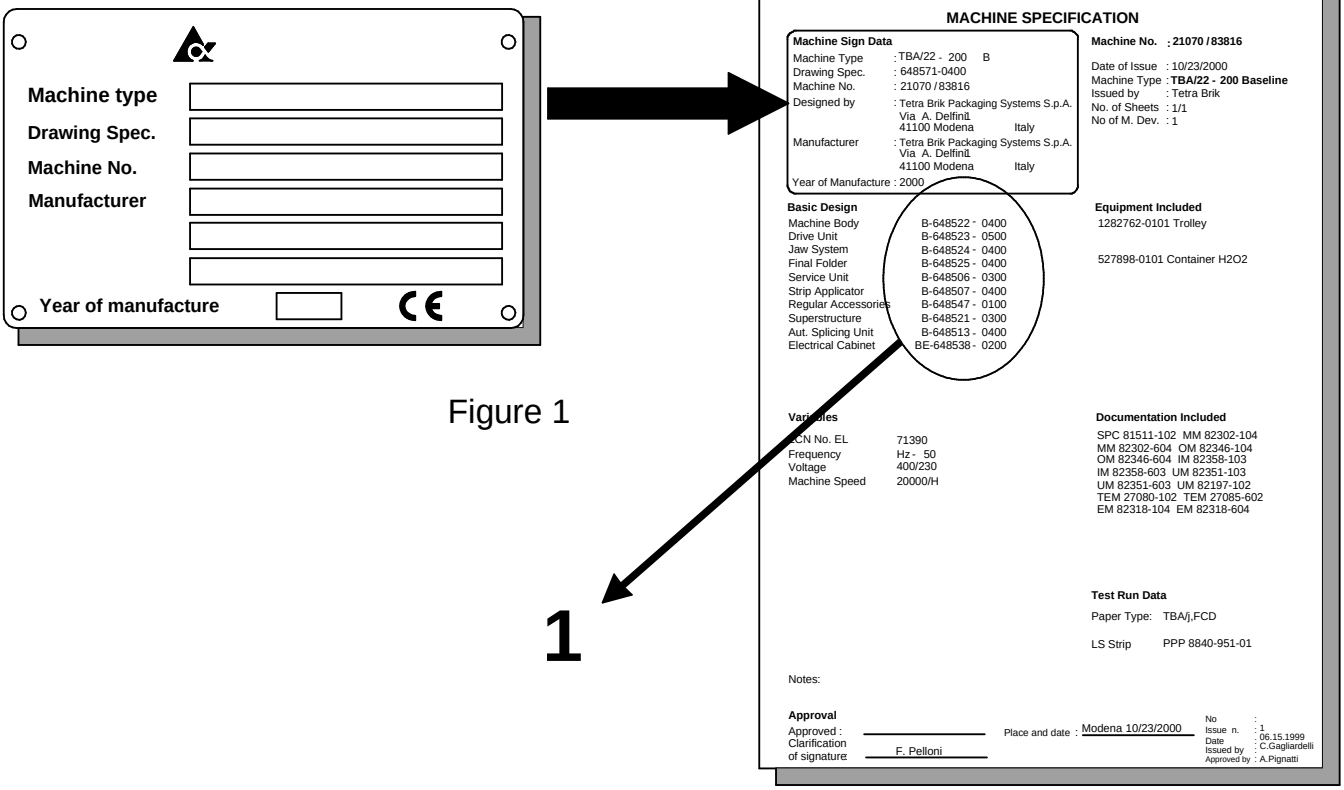

Figure 1

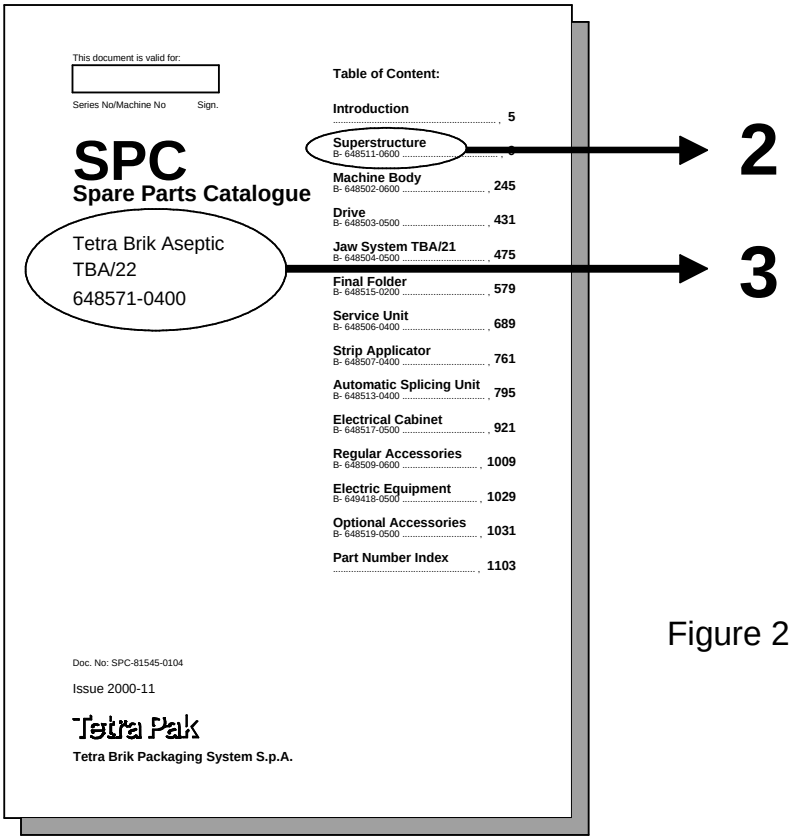

Figure 2

Figure 3 A-648571-0400

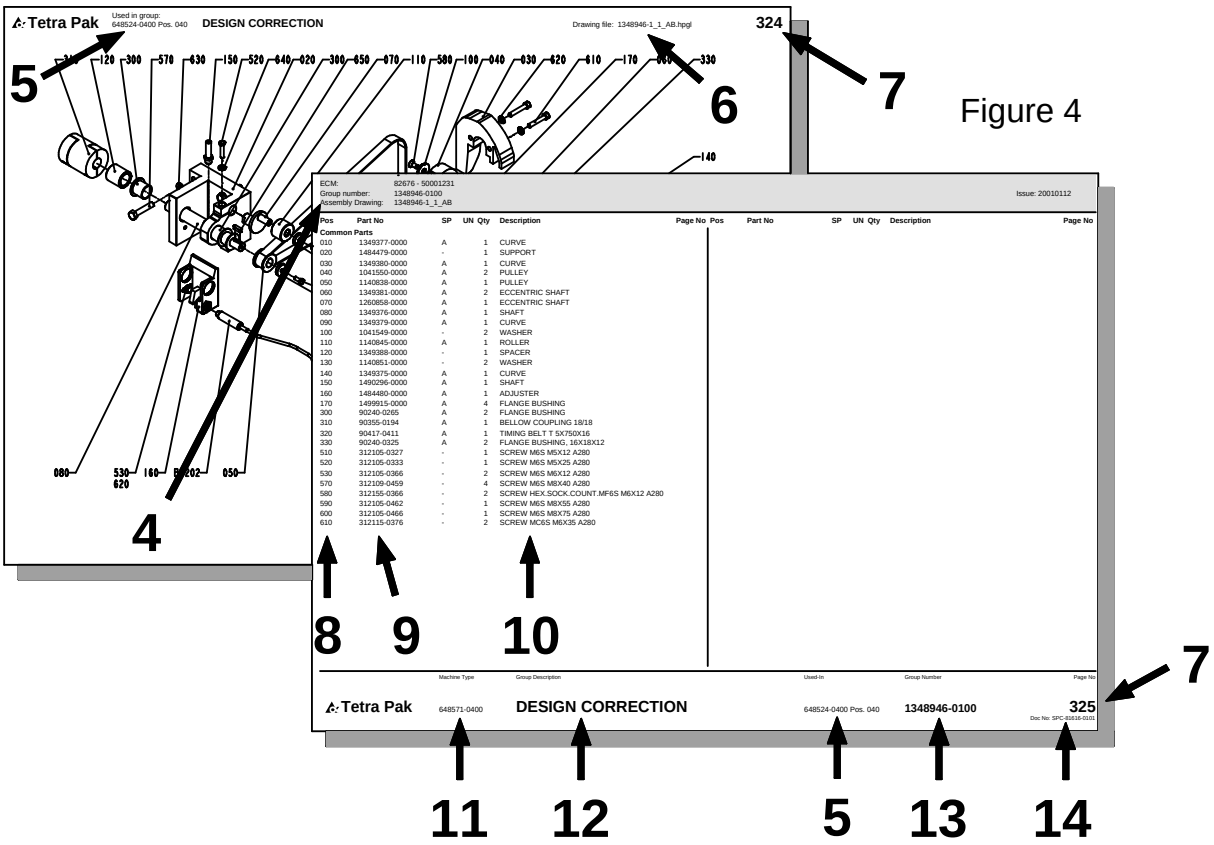

Figure 4

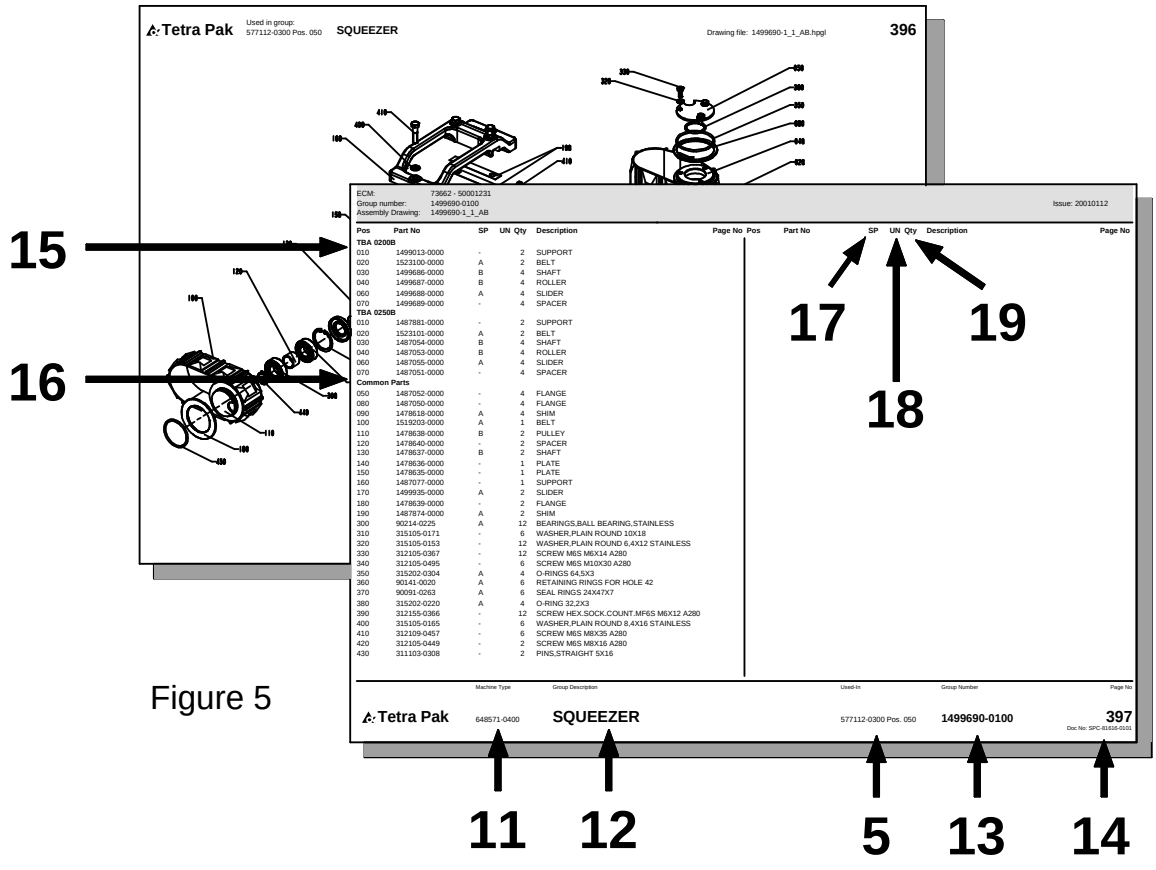

Figure 5

General information

Service

When ordering spare parts for your machine, contact the nearest Tetra Pak service station.

Machine identification

This machine plate is an example of the type of machine plate, attached to the machine frame. The plate carries data needed when contacting Tetra Pak concerning this particular machine **(see Figure 1).**

Purpose of the Spare Parts Catalogue

The purpose of the Spare Parts Catalogue (SPC) is to provide the technicians and contact personnel with information on how to find and order spare parts for maintenance and service of the machine.
For instructions of how to replace parts and adjust machine setup, see the Maintenance Manual (MM).

Delivered documentation

The technical documentation delivered with this machine is started in the Machine Specification.
Note! If any of these documents is missing, it must be reported in the document **Start Up Machine Quality Report**. For more information, see chapter 8 Preparation for Commissioning in the Installation Manual.
It is important that you keep these documents for the life of the equipment, and pass the documents on to any subsequent holder or user of the equipment.

Design modification

The content of this document is in accordance with the design and construction of the machine at the time it was delivered from the Tetra Pak machine production facility.

Further copies

Additional copies can be ordered from the nearst Tetra Pak service station. When ordering technical publications, always quote the document number printed on the front cover of the document concerned.

Tetra Pak Part numbering system

The third and forth digits in the sub-number, specify one unique group which can be ordered. If the forth digit is replaced by a "0", the number combination only points to a bill-of-material document.
The first and second digits in the sub-number, specify the development step (model) of the machine or group. **(see fig. 3)**
Main number of machine /group /article, depending on level.
Prefix, giving information about level, eg.
A = Machine
B = Main section (*)
C = Groups and subgroups
*) Customized distribution machines are registered as B-level as well.

How to find the correct Spare Part Number

A. Check that the data on your machine sign, and/or machine specification, corresponds with the catalogue. **(see fig.1)**

1) Main groups of the machine

B. The second catalogue sheet contains a table of content for the main groups, included in the catalogue. The information regarding machine and main group page status MUST correspond with your machine specification.
Locate and choose the main groups page number (1), in which you want to search for spare parts. **(see fig.2)**

2) Main group
3) Machine type

C. Search in the main group illustration, the item number, which may hold your wanted spare part. Go to the text page below and find the page number for the actual group. **(see fig. 4)**

4) Internal information, such as latest Engineering Change, Bill-of-Material included in the catalogue page and the Assembly Drawing required
5) Used-In reference to next higher level in the machine structure
6) Assembly drawing number including the archive file extension
7) Continuous page numbering through the document
8) Pos number corresponding to illustration
9) Group or article number
10) Group or article description. The letter "B" in front of some article numbers indicates that this article contains other parts, directly listed below the B-article. Letter "A" indicates a subgroup number with an own page directly after the actual page
11) Machine type including development status
12) Group description
13) Group number (bill-of-material) including development status
14) Document number

D. Continue to the found page number, and search in the illustration for your spare part. Go to the text row for the found item number, and read the part number. Take eventual variant headings in consideration; if you are unsure, read your machine specification. **(see fig. 5)**

15) Variant heading, eg volume, left/right etc.
16) Heading for common parts
17) SP = Code for articles, which are included into various spare part kits.
    A = Critical Spare Part
    B = Non Critical Spares Part
    C = Don't stop function, can bypassed
    D = Seldom break, long time production
18) UN = Short code for measure units, eg mm, kg etc.
19) Qty = Number of items needed in the complete assembly.

SPC
Spare Parts Catalogue

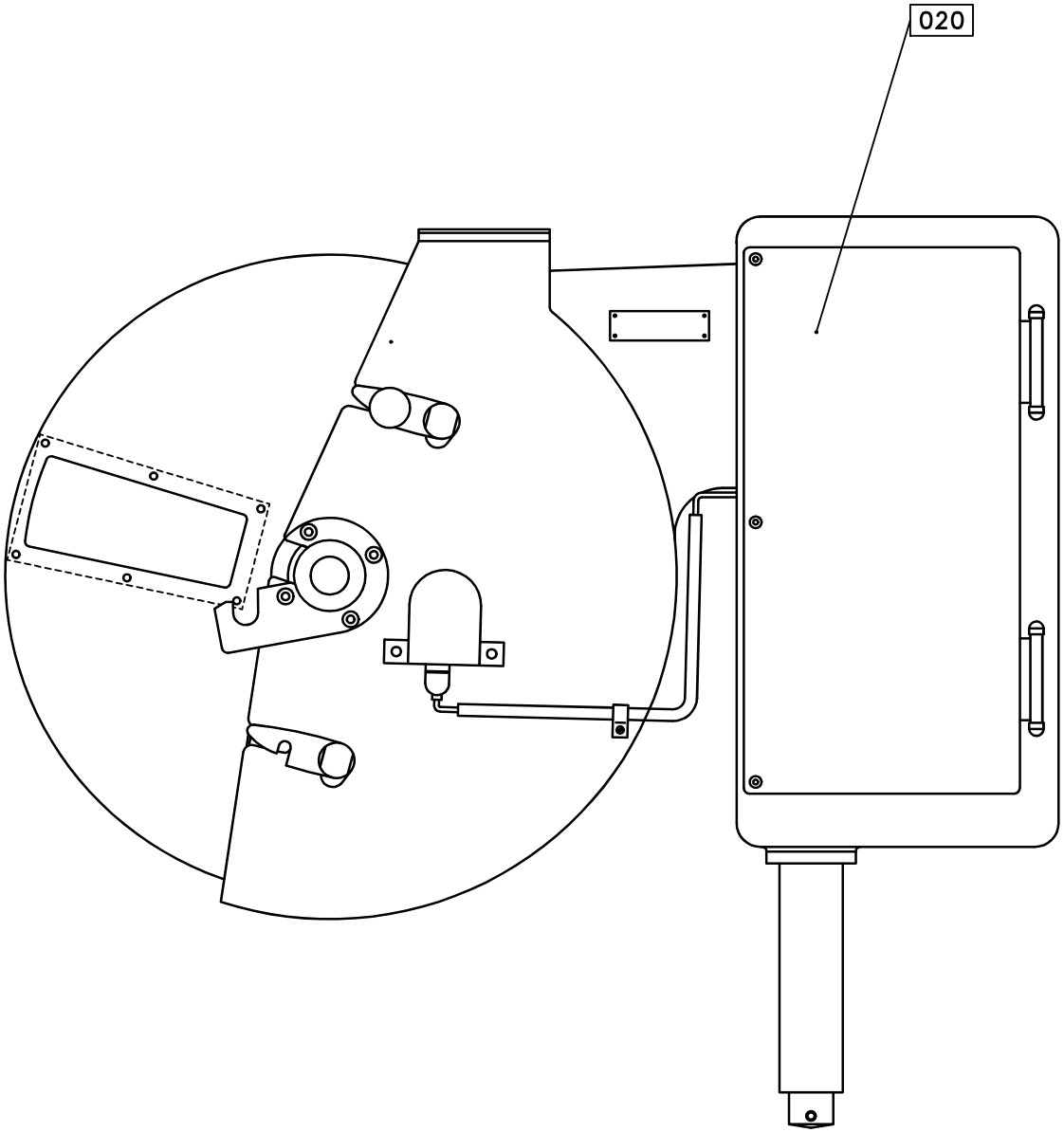
020

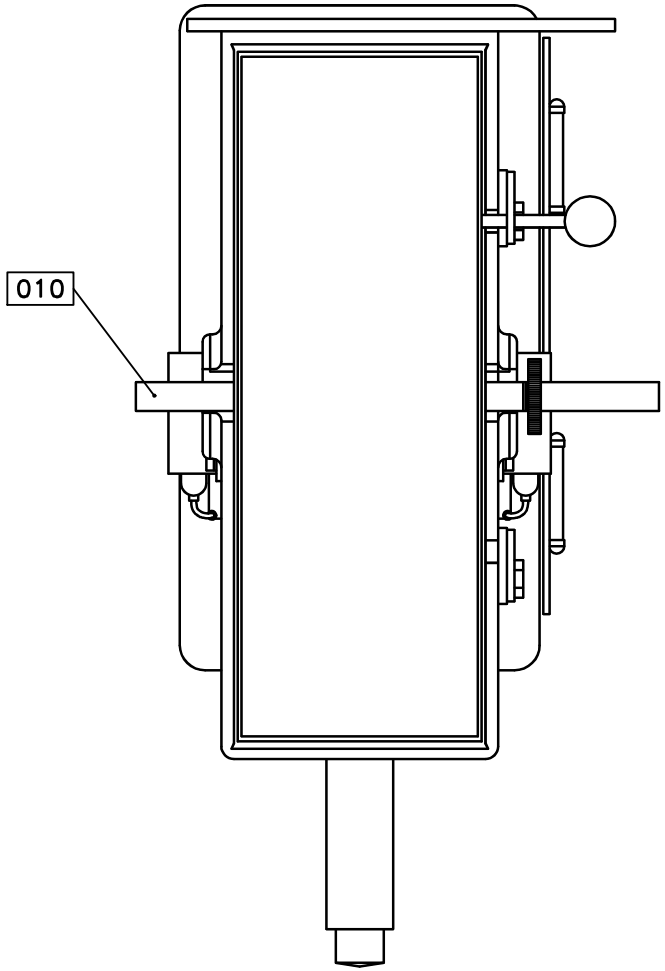
010

Pos	Part No	SP	UN	Qty	Description	Page No
Common Parts						
F000	A541108-0200	-		1	CASSETTE	**13**
F010	A12453-0100	-		2	PAPER REEL HOLDER	**15**
F020	A294214-0300	-		1	APPLIANCE BOX	**17**

Pos	Part No	SP	UN	Qty	Description	Page No

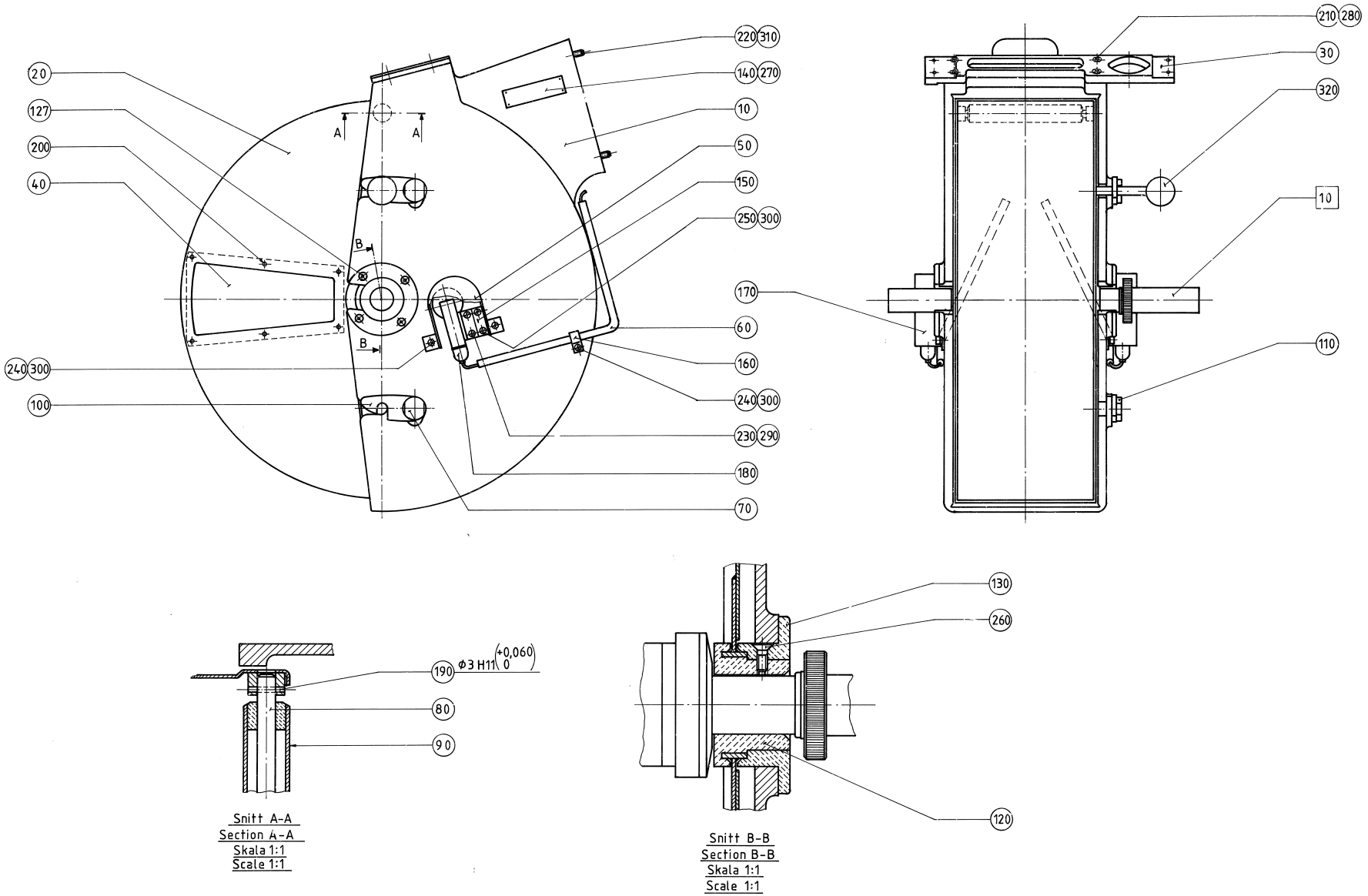
20
127
200
40
240 300
100
220 310
140 270
10
50
150
250 300
170
60
160
240 300
230 290
180
70
210 280
30
320
10
110
A
A
B
B
190 Φ3 H11 (+0,060 0)
80
90
Snitt A-A
Section A-A
Skala 1:1
Scale 1:1
130
260
120
Snitt B-B
Section B-B
Skala 1:1
Scale 1:1

Pos	Part No	SP	UN	Qty	Description	Page No
Common Parts						
010	12727-0000	-		1	CASSETTE	
020	12728-0000	-		1	HOOD	
030	19528-0000	-		1	SUPPORTING SHEET	
040	12738-0000	-		2	WINDOW	
050	294262-0000	-		2	COVER	
060	493965-0000	-		2	PROTECTION PIPE	
070	1013-0000	-		2	SHAFT	
080	4287-0007	-		1	SHAFT	
090	4288-0008	-		1	BENDING ROLLER	
100	4961-0000	-		2	CATCH	
110	4962-0000	-		2	SCREW	
120	13888-0000	B		2	BEARING	
127	312125-0289	-		4	SCREW SLOT.PAN HD. MCS 4X10 A480	
130	554844-0000	-		1	HOLDER	
135	554843-0000	-		1	HOLDER	
140	20497-0000	-		1	GROUP NUMBER PLATE	
150	294263-0000	-		2	LUG	
160	90165-0007	-		2	PIPE CLIP FOR TUBE D=8 MM	
170	90232-0034	-		1	PHOTOCELL OMRON	
180	90232-0035	-		1	PHOTOCELL OMRON	
190	311305-0238	-		1	SLOTTED PIRPC3X20FZB	
200	311508-0416	-		12	RIVET, ROUND HEAD, KN, 4X10	
210	312111-0368	-		4	SCREW HEX.SOCK.HD.MC6S-TT 6X16 88 FZB	
220	312111-0453	-		4	SCREW HEX.SOCK.HD.MC6S-TT 8X25 88 FZB	
240	312125-0327	-		6	SCREW PAN HEAD MCS M5X12 SS	
250	312145-0331	-		4	SCREW COUNTERS.SLOT.HD. MFS 5X20 SS	
260	312151-0368	-		14	SCREW HEX.SOCK.COUNT.MF6S 6X16 FZB	
270	312502-0221	-		4	DRIVE SCREW ROUND HEAD KDS 4X6	
280	315101-0153	-		4	WASHER PLAIN, BRB, 6,4/12 H=1,5	
290	315105-0136	-		4	WASHER ISO 7089-4-200 HV-A4	
300	315105-0146	-		6	WASHER ISO 7089-5-200 HV-A4	
310	315401-0165	-		4	WASHER FBH8,2FZB	
320	318800-0106	-		1	HANDLE,SPHERICAL KNOB,INT.THRE,D.40-M10	
330	312165-0368	-		8	SCREW SLOT.RAIS.COUNT.HD.MKFS 6X16 SS	

Pos	Part No	SP	UN	Qty	Description	Page No

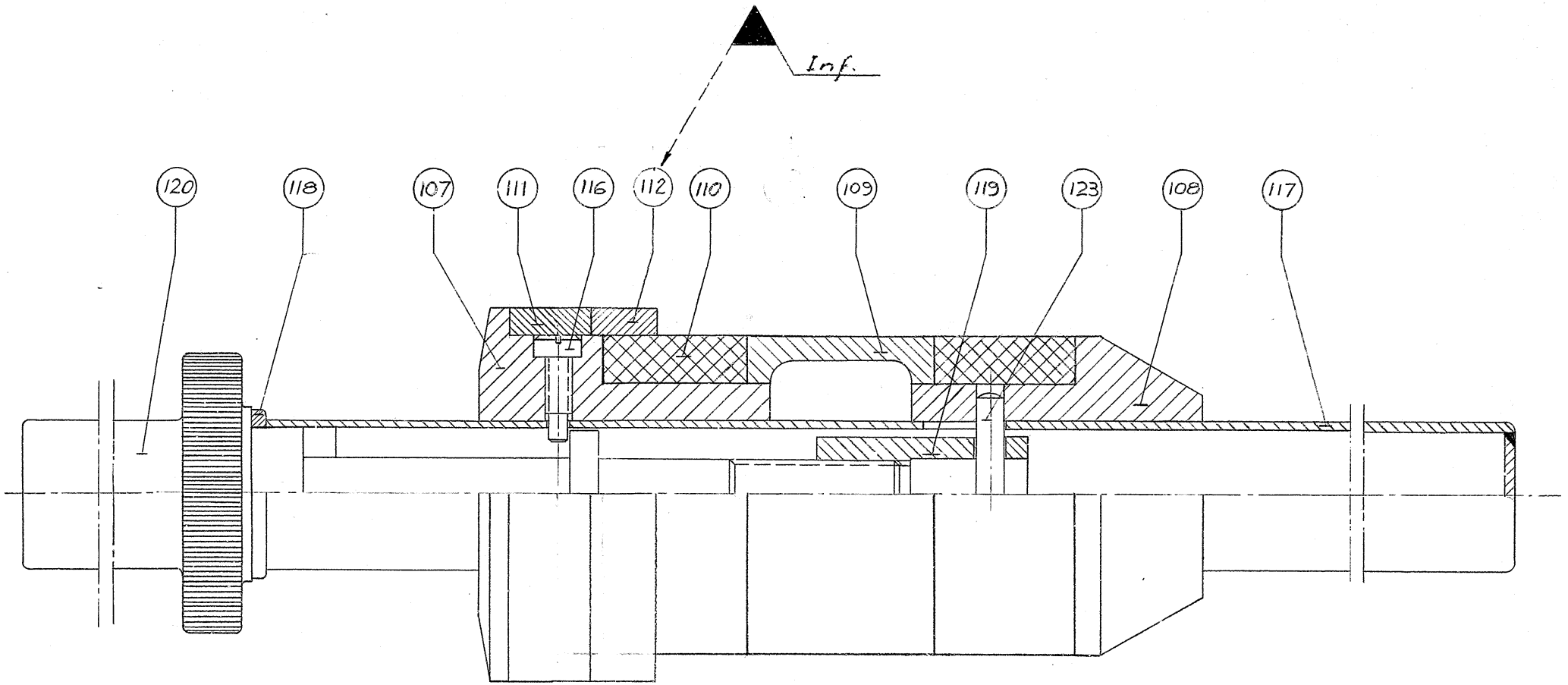
Inf.
120
118
107
111
116
112
110
109
119
123
108
117

Pos	Part No	SP	UN	Qty	Description	Page No
PB105						
111	4075-0016	-		1	SPACER RING	
PB85						
112	243746-0000	-		1	SPACER RING	
Common Parts						
107	4069-0000	-		1	STOP SLEEVE	
108	4070-0000	B		1	PUSH SLEEVE	
109	4071-0007	-		1	SPACER SLEEVE	
110	4072-0000	-		2	RUBBER RING	
116	4410-0001	-		2	SCREW	
117	4974-0005	-		1	SHAFT	
118	4975-0000	-		1	WASHER	
119	4976-0000	-		1	NUT	
120	4977-0005	-		1	SPINDLE	
123	311102-0363	-		1	PARALLELL PIN, CP, M6, 6X45 MM	

Pos	Part No	SP	UN	Qty	Description	Page No

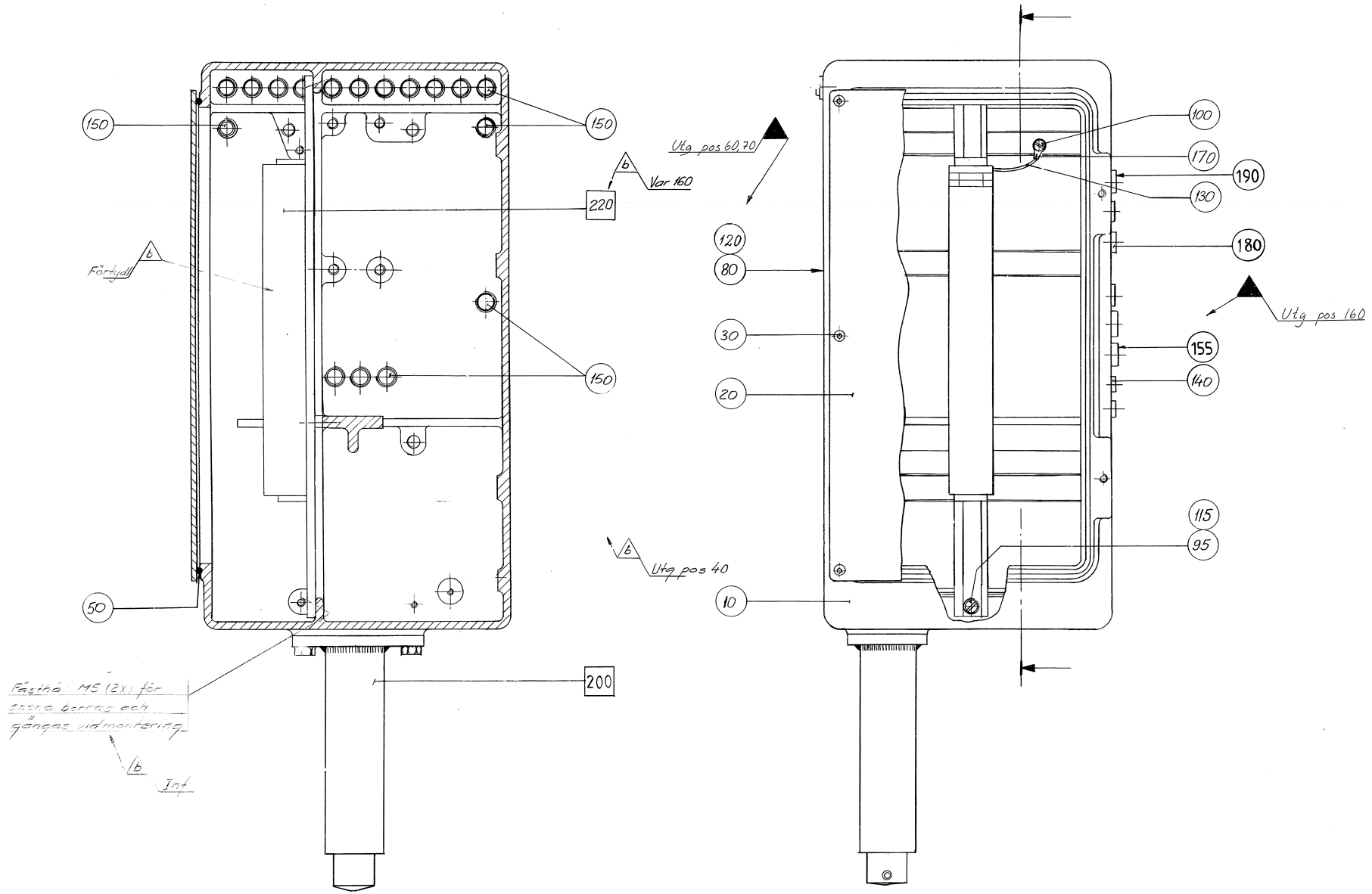
150
150
220
Var 160
Förtydl
150
50
200
Fästhål M5 (2x) för
skena berörs ej
gängas vid montering
Inf
Utg pos 60,70
120
80
30
20
10
Utg pos 40
100
170
190
130
180
Utg pos 160
155
140
115
95

ECM: 114308 - 20021219
Group number: 294214-0300
Assembly Drawing: 294214-2_1_AA

Issue: 20030206

Pos	Part No	SP	UN	Qty	Description	Page No
Common Parts						
010	493543-0000	-		1	BOX	
020	436614-0000	-		1	HATCH	
025	359705-0015	-		1	WARNING SIGN ISO, RISK OF ELECTRIC SHOCK	
030	21613-0000	-		5	SCREW	
035	90002-0004	-		3	BLANK-OFF PLUG, PR 22,5 SKINDICHT-BLK16	
036	90002-0009	-		15	BLANK-OFF PLUG, PR 18.6 SKINDICHT-BLK11	
037	90002-0013	-		4	BLANK-OFF PLUG, PR 15,2 SKINDICHT-BLK9	
050	90143-0012	-	MM	1400	STRIP	
080	312115-0540	-		4	SCREW ISO4762 M12X40 A4	
095	312125-0325	-		2	SCREW SLOT.PAN HD. MCS 5X10 A480	
100	312125-0364	-		1	SCREW SLOT.PAN HD. MCS 6X10 A480	
115	315105-0146	-		2	WASHER ISO 7089-5-200 HV-A4	
120	315105-0178	-		4	WASHER ISO 7089-12-200 HV-A4	
130	351162-0106	-	MM	80	CABLE AWM 1X4 MM2 YELLOW-GREEN	
140	352103-0100	-		4	CABLE GLAND, STR 9, PR15,2/PG9	
150	352103-0106	-		23	CABLE GLAND, ST 11, PR18,6/PG11	
155	352103-0110	-		6	CABLE GLAND, STR 16, PR22,5/PG16	
170	353101-0153	-		1	CABLE SHOE 4-6MM2 YELLOW	
180	352136-0126	-		3	GLAND FITTING	
190	352136-0129	-		3	GLAND FITTING PR22,5/PG16 DI=16MM	
F200	A21675-0100	-		1	LEG	**19**
F210	A243875-0300	-		1	PNEUMATIC UNIT	**21**
F220	A573514-0100	-		1	TERMINAL PLINTH	**23**

Pos	Part No	SP	UN	Qty	Description	Page No

Machine Type | Group Description | Used-In | Group Number | Page No

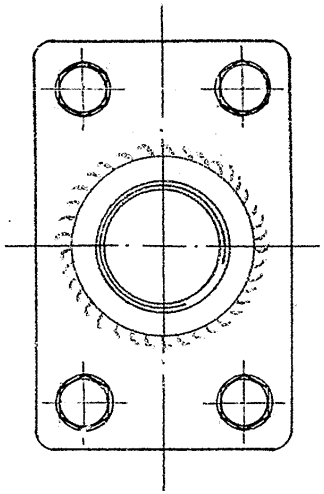

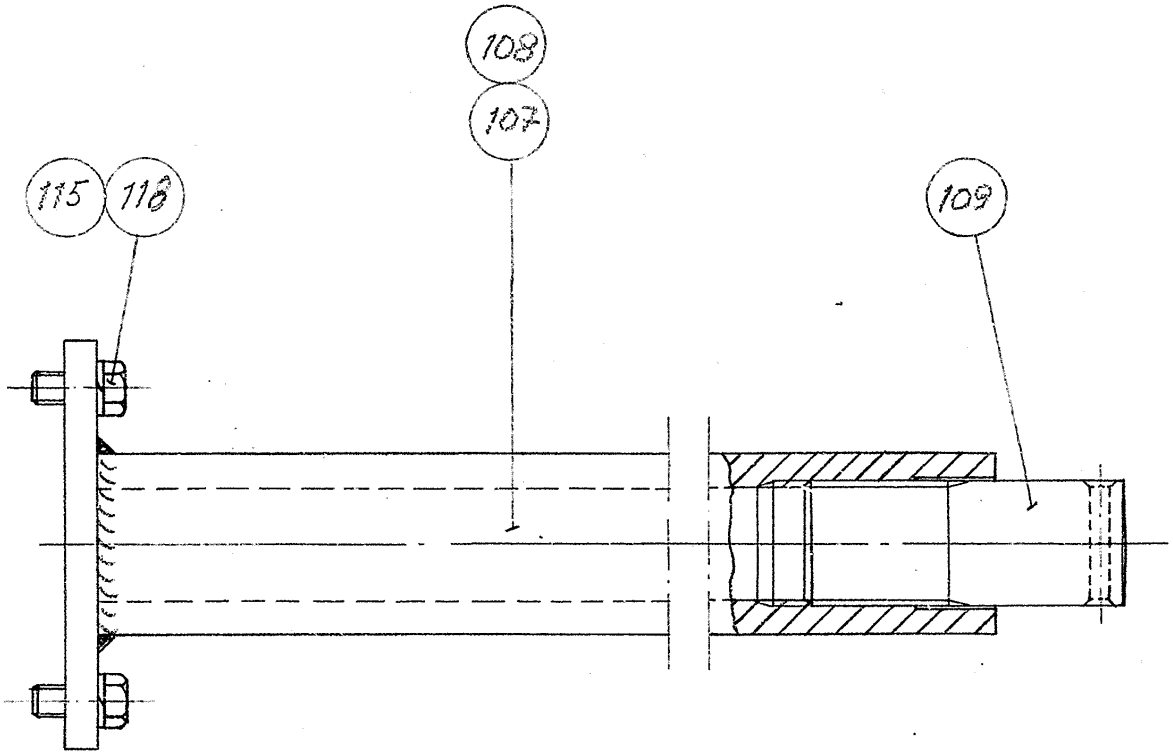
108
107
115
118
109

Pos	Part No	SP	UN	Qty	Description	Page No
TCA/25						
108	21676-0002	-		1	BRACKET	
Common Parts						
109	3318-0000	-		1	LEG	
115	312101-0493	-		4	SCREW M6S M10X25 FZB	
118	315401-0173	-		4	WASHER FBH10,2FZB	

Pos	Part No	SP	UN	Qty	Description	Page No

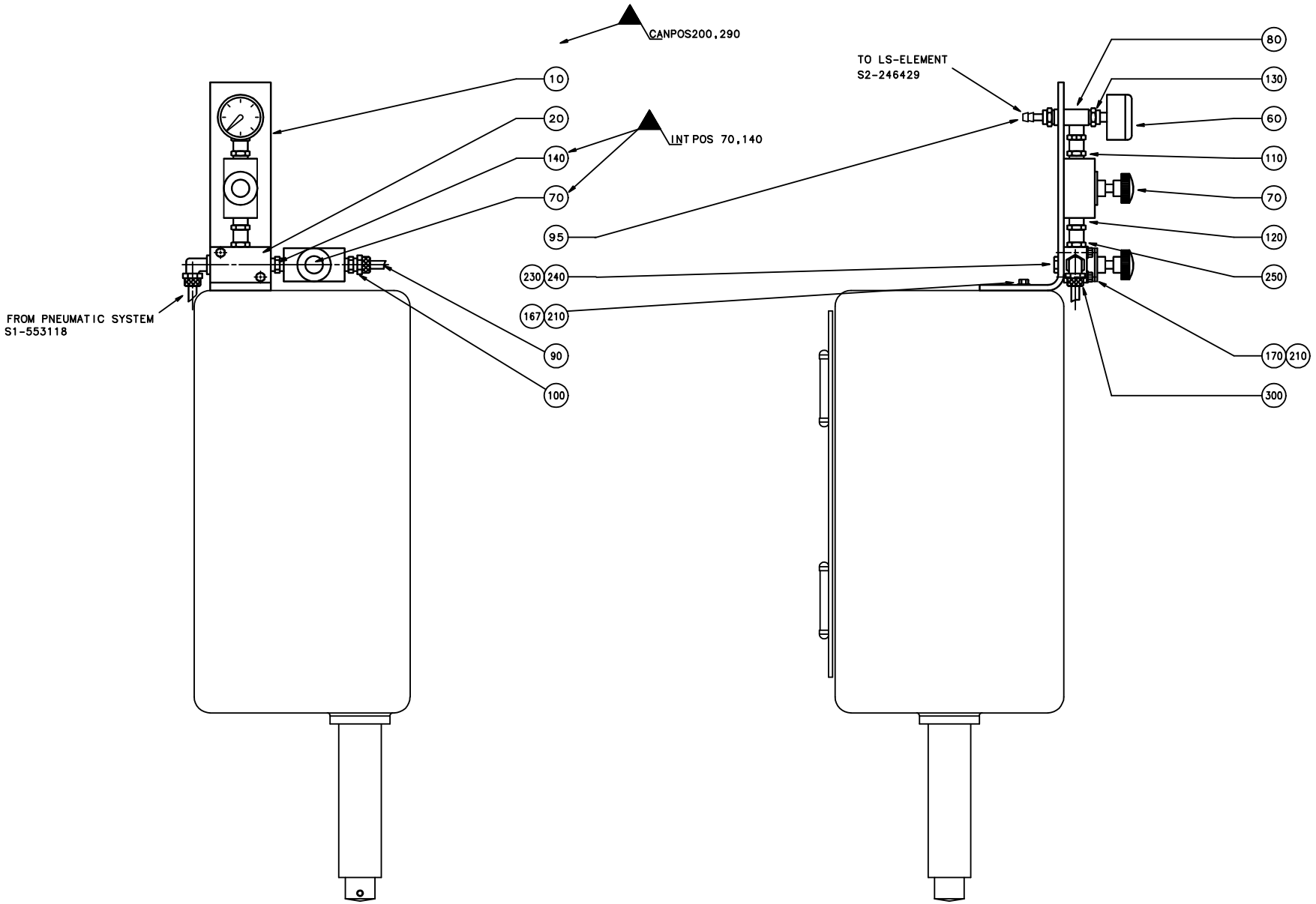
CANPOS200,290
INT POS 70,140
TO LS-ELEMENT
S2-246429
FROM PNEUMATIC SYSTEM
S1-553118
10
20
140
70
95
230
240
167
210
90
100
80
130
60
110
70
120
250
170
210
300

ECM: 114125 - 20021219
Group number: 243875-0300
Assembly Drawing: 243875-3_1_AA

Issue: 20030206

Pos	Part No	SP	UN	Qty	Description	Page No
Common Parts						
010	493542-0000	-		1	GAUGE BRACKET	
020	493544-0000	-		1	JUNCTION BLOCK	
060	90043-0061	A		1	PRESSURE GAUGE, 2061 D=63 MM, THROTTLED	
070	90235-0291	-		2	THROTTLE CHECK VALVE	
080	90140-0010	-		1	T-PIPE, INT. THREAD, 20031/2	
090	90166-0140	-	M	1	HOSE	
095	90163-0067	-		1	HOSE NIPPLE N-1/2-P13	
100	342921-0134	-		1	STRAIGHT COUPL.,EXT.THREADED 10/8-G1/2"	
110	90224-0037	-		3	CONN. STRAIGHT, ART.NO. 8632-12-120	
120	90224-0078	-		1	PIPE SOCKET, ART.NO RAN 1612	
130	90224-0122	-		1	REDUCER, ART. NO RMM 1214	
140	90330-0021	-		1	NIPPLES, EXT. THREAD. R-207R1/2	
167	312101-0367	-		2	SCREW M6S M6X14 FZB	
170	312101-0378	-		2	SCREW M6S M6X40 FZB	
210	315101-0153	-		8	WASHER PLAIN, BRB, 6,4/12 H=1,5	
230	315233-0109	-		1	WASHER PL.RND.NYL.10,3/14,H=1	
240	90330-0066	-		1	PLUG, EXT. G-THREAD, G1/8	
250	342720-0115	-		1	CONN. STR. GA-16-G1/2	
300	342930-0134	-		1	ELBOW 90 COUPL.,EXT.THREAD 10/8-R1/2"	

Pos	Part No	SP	UN	Qty	Description	Page No

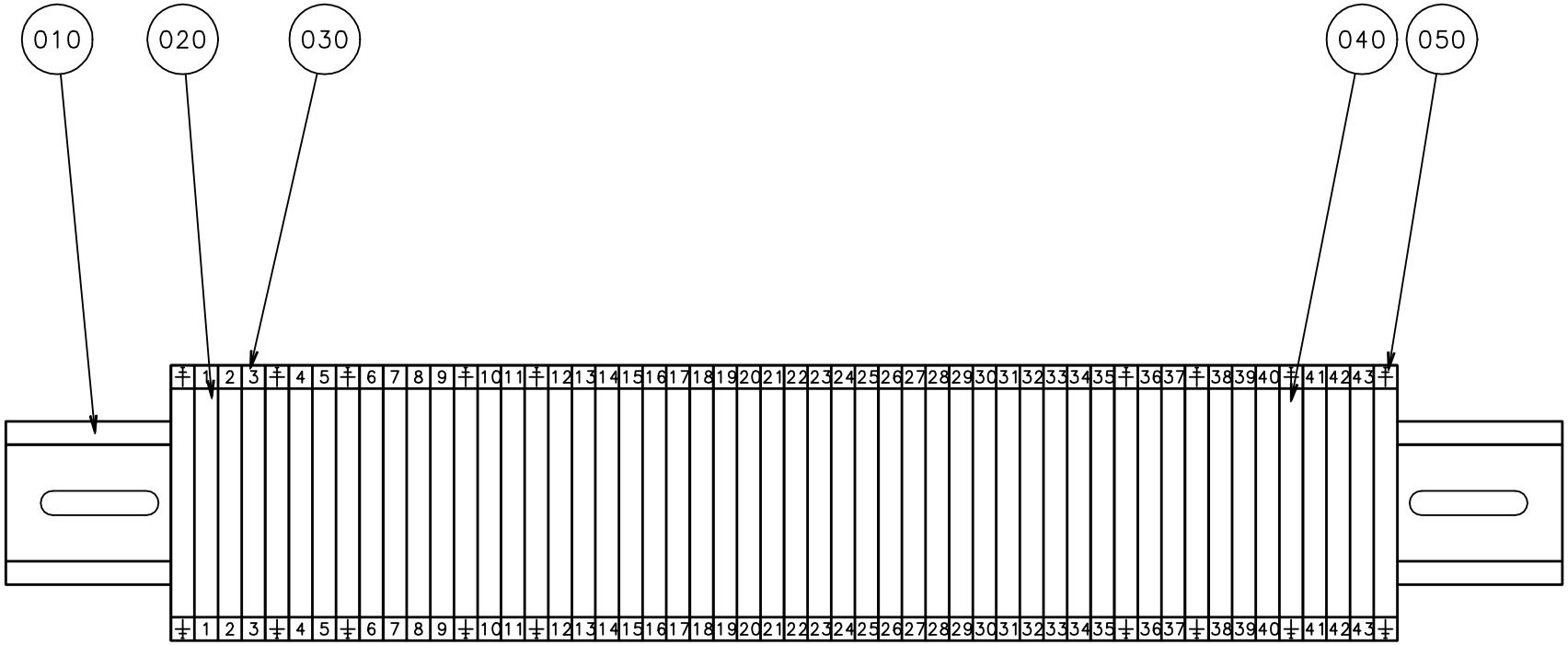

POS	DESCRIPTION	PART NO	Q
010	RAIL TS35x7.5 051450	353042-004	1
020	TERMINAL WDU 2.5 BROWN	353021-212	43
030	MARKING 5 FW 4734.6	359011-807	2
040	EARTH TERMINAL WPE 2.5	353024-204	9
050	MARKING PLATE BSGW 0	359011-202	1

ECM: 114225 - 20021219
Group number: 573514-0100
Assembly Drawing: 573514-1_1_AA

Issue: 20030206

Pos	Part No	SP	UN	Qty	Description	Page No
Common Parts						
010	353042-0005	-	M	550	RAIL TS 35/7.5	
020	353021-0212	-		43	FEED THROUGH TERMINAL, 10200.0	
030	359011-0807	-		2	MARKING PLATES 5-FW 1-50	
040	353024-0204	-		9	EARTH TERMINAL WPE 2,5	
050	359011-0819	-		1	MARKING PLATES 5-GW (EARTH)	

Pos	Part No	SP	UN	Qty	Description	Page No

Tetra Pak

SPC
Spare Parts Catalogue

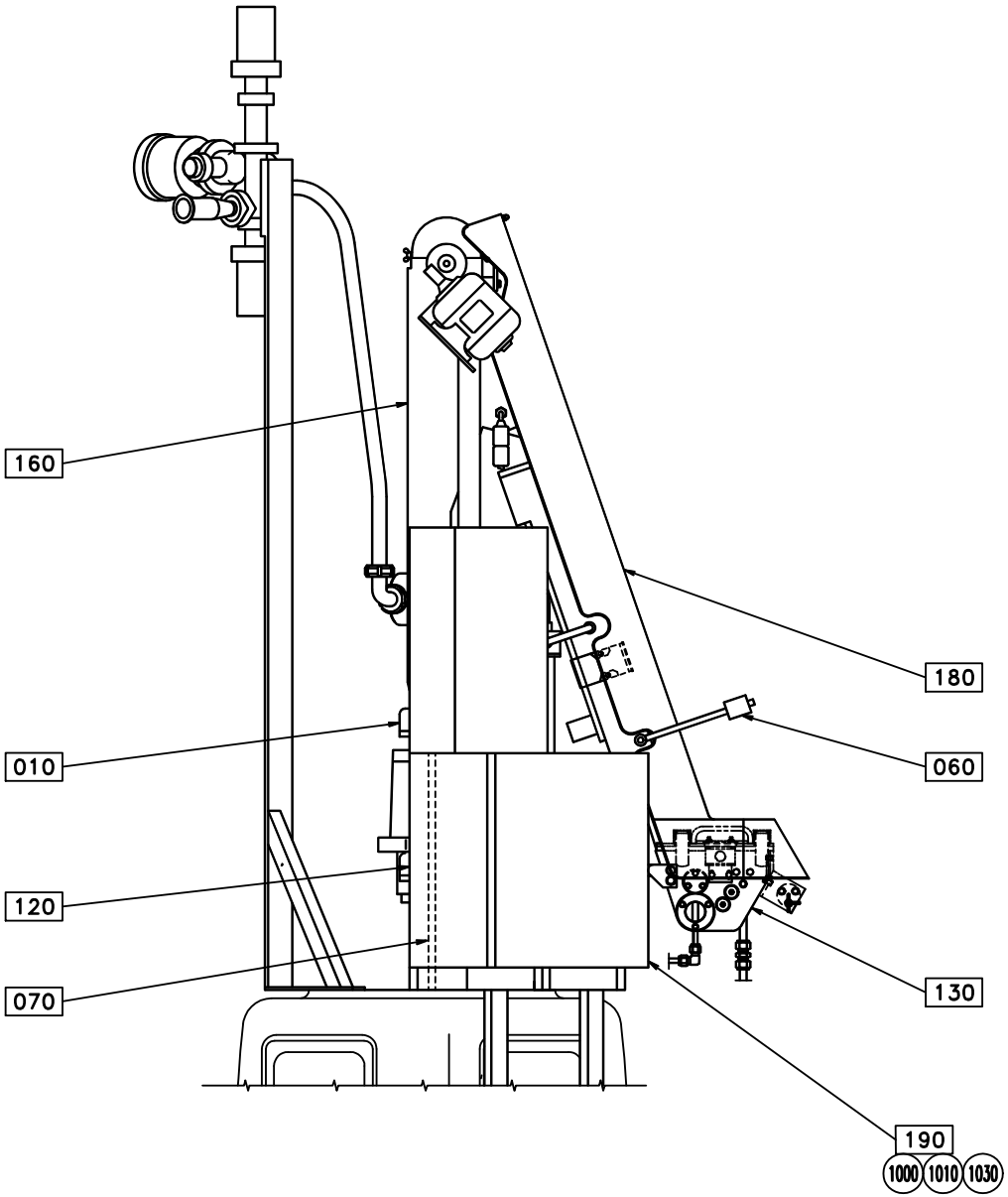
160
180
010
060
120
130
070
190
1000
1010
1030

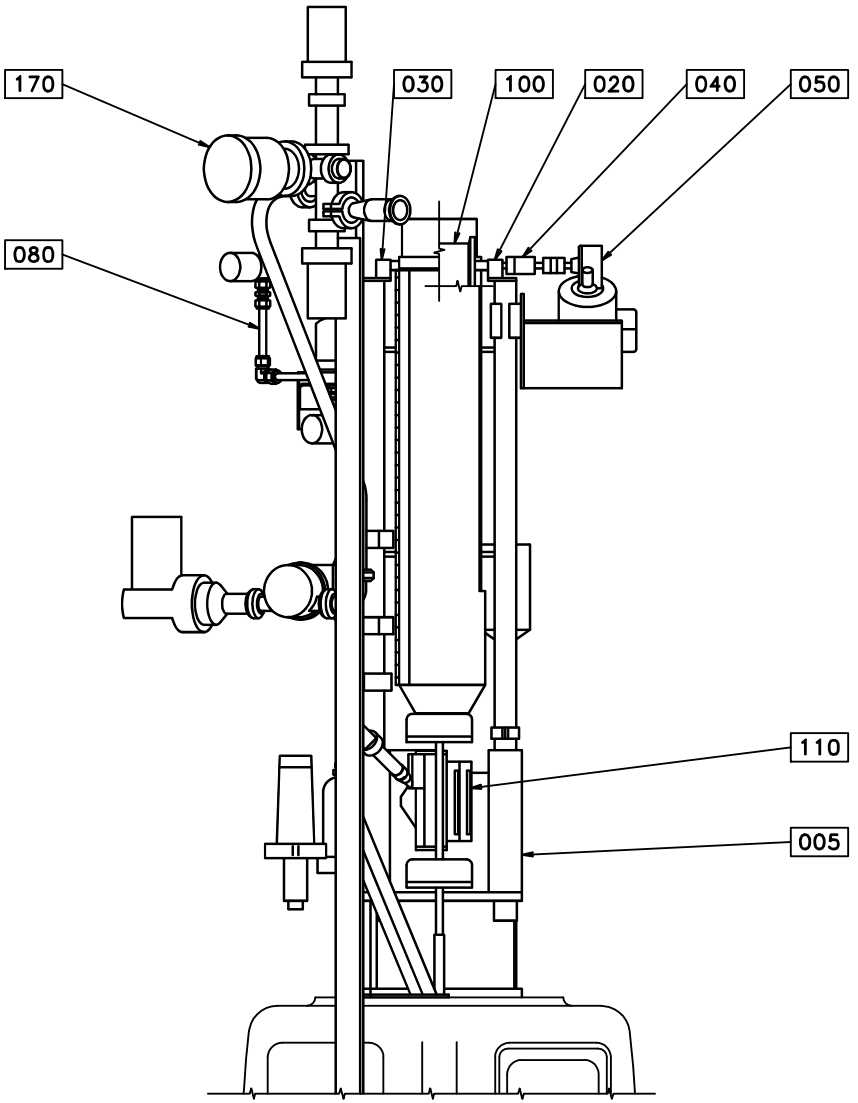
170
030
100
020
040
050
080
110
005

ECM: 125934 - 20030124
Group number: 633002-1100
Assembly Drawing: 633002-2_1_AA

Issue: 20030206

Pos	Part No	SP	UN	Qty	Description	Page No
Common Parts						
1010	580159-0000	-		1	PNEUMATIC CHART	
1030	577897-0001	-		1	AIR PIPE-LINE	
F005	A263920-0200	-		1	SUPERSTRUCTURE	**29**
F010	A19337-0300	-		1	FORMING RING	**31**
F020	A21510-0400	-		1	BEARING HOUSING	**33**
F030	A2563747-0100	-		1	BEARING HOUSING	**35**
F040	A554253-0200	-		1	CONNECTION	**37**
F050	A27939-0300	-		1	MOTOR	**39**
F060	A31330-0300	-		1	PAPER DRIER	**41**
F070	A573300-0100	-		1	FILLER TUBE	**47**
F100	A239794-0200	-		1	BENDING ROLLER	**49**
F110	A246429-0300	-		1	LS ELEMENT SPARES KIT	**51**
F120	A257796-0100	-		1	LOWER FORMING RING	**57**
F130	A577906-0100	-		1	STERILIZATION BATH	**59**
F160	A265548-0300	-		1	ASEPTIC CHAMBER	**61**
F170	A560190-0300	-		1	PRODUCT VALVE	**63, 65**
F180	A568098-0100	-		1	GAS GUARD	**83**
F190	A580159-0200	-		1	PNEUMATIC UNIT	**85**

Pos	Part No	SP	UN	Qty	Description	Page No

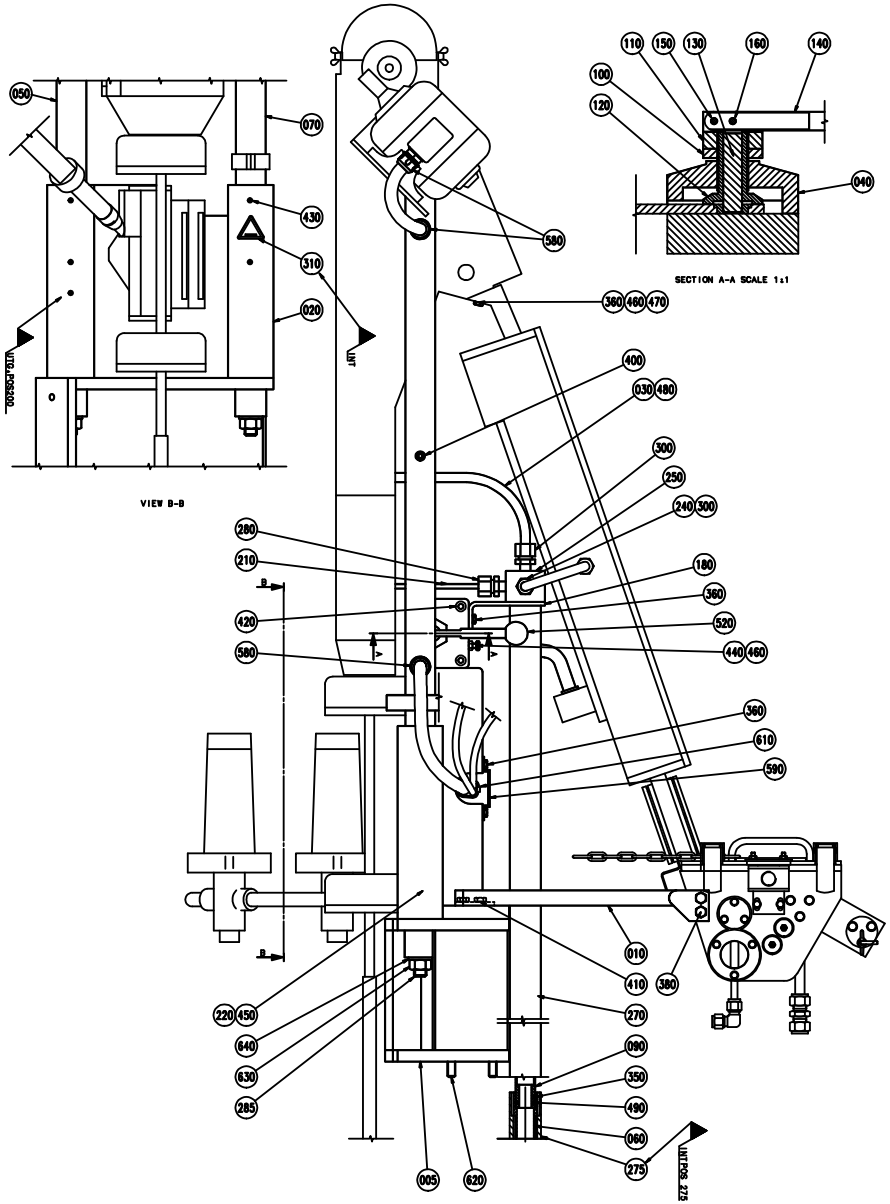
050
070
430
310
020
580
110
150
130
160
140
100
120
040
SECTION A-A SCALE 1:1
360
460
470
400
030
480
300
250
240
300
280
210
180
360
420
520
580
440
460
360
610
590
010
410
380
220
450
270
640
090
630
350
285
490
060
275
005
620
VIEW B-B

ECM: 114821 - 20021219
Group number: 263920-0200
Assembly Drawing: 263920-2_1_AA

Issue: 20030206

Pos	Part No	SP	UN	Qty	Description	Page No
Common Parts						
10	19312-0000	-		1	BRACKET	
100	3159-0000	-		1	NUT	
110	3160-0000	-		1	NUT	
120	3161-0000	-		1	GRUB SCREW	
130	3162-0000	-		1	SHAFT	
140	3163-0000	-		1	HANDLE	
150	3164-0000	-		1	PIN	
160	3165-0000	-		1	PIN	
180	19374-0000	-		1	HOLDER	
20	19368-0000	-		1	SUPERSTRUCTURE	
210	90166-0191	-	M	1	PLASTIC HOSE	
220	20497-0000	-		1	GROUP NUMBER PLATE	
240	23063-0000	-		3	THROTTLE WASHER	
250	574205-0000	-		1	JUNCTION BLOCK	
270	575508-0000	-		1	INSULATION PIPE	
275	575509-0000	-		1	INSULATION PIPE	
280	342921-0103	-		1	"PIPE COUPL5/3-1/8"""	
285	19349-0000	-		2	SHAFT	
30	19324-0000	-		1	AIR PIPE	
300	90030-0187	-		3	CONN. STR. GA-12-G3/8	
310	90194-0143	-		1	WARNING SIGN ISO, HOT SURFACE	
350	311103-0241	-		1	CYLINDRICAL PIN CP M6 3X28 RFR	
360	312105-0366	-		6	SCREW M6S M6X12 A280	
380	312105-0447	-		4	SCREW M6S ISO 4017 M8X12 A480	
40	19369-0000	-		1	CAP	
400	312115-0368	-		4	SCREW ISO4762 M6X16 A4	
410	312115-0447	-		4	SCREW ISO4762 M8X12 A4	
420	312115-0455	-		3	SCREW ISO4762 M8X30 A4	
430	312318-0362	-		5	SCREW ISO4029 M6X8 A4	
440	312316-0378	-		3	SCREW HEX.SOCK.SET CUP P.MSK6SS6X40 FZB	
450	312502-0221	-		4	DRIVE SCREW ROUND HEAD KDS 4X6	
460	312605-0316	-		8	HEXAGON NUT, M6M M6 A280	
470	315105-0153	-		5	WASHER ISO 7089-6-200 HV-A4	
480	315204-0206	-		1	O-RING 7,3X2,4 MM	
490	315204-0215	B		1	O-RING 19,2X3 MM	
5	552791-0000	-		1	INTERMEDIARY SECTION	
50	19370-0000	-		1	PILLAR	
520	318800-0104	B		1	HANDLE,SPHERICAL KNOB,INT.THRE.,D.30-M8	
580	90012-0063	-		3	CABLE GLAND PR 15,2	
590	352112-0101	-	MM	100	LOCATING STRIP, TUB 12	
60	22782-0000	-		1	AIR PIPE	
610	352113-0104	-		5	CLIP STRIP, 300X4,8 MM	
620	312115-0491	-		3	SCREW ISO4762 M10X20 A4	
630	312605-0324	-		2	HEXAGON NUT, M6M M16 A280	
640	315105-0186	-		2	WASHER ISO 7089-16-200 HV-A4	
70	27965-0000	-		1	PILLAR	
90	257761-0000	-		1	AIR PIPE	

Machine Type	Group Description	Used-In	Group Number	Page No

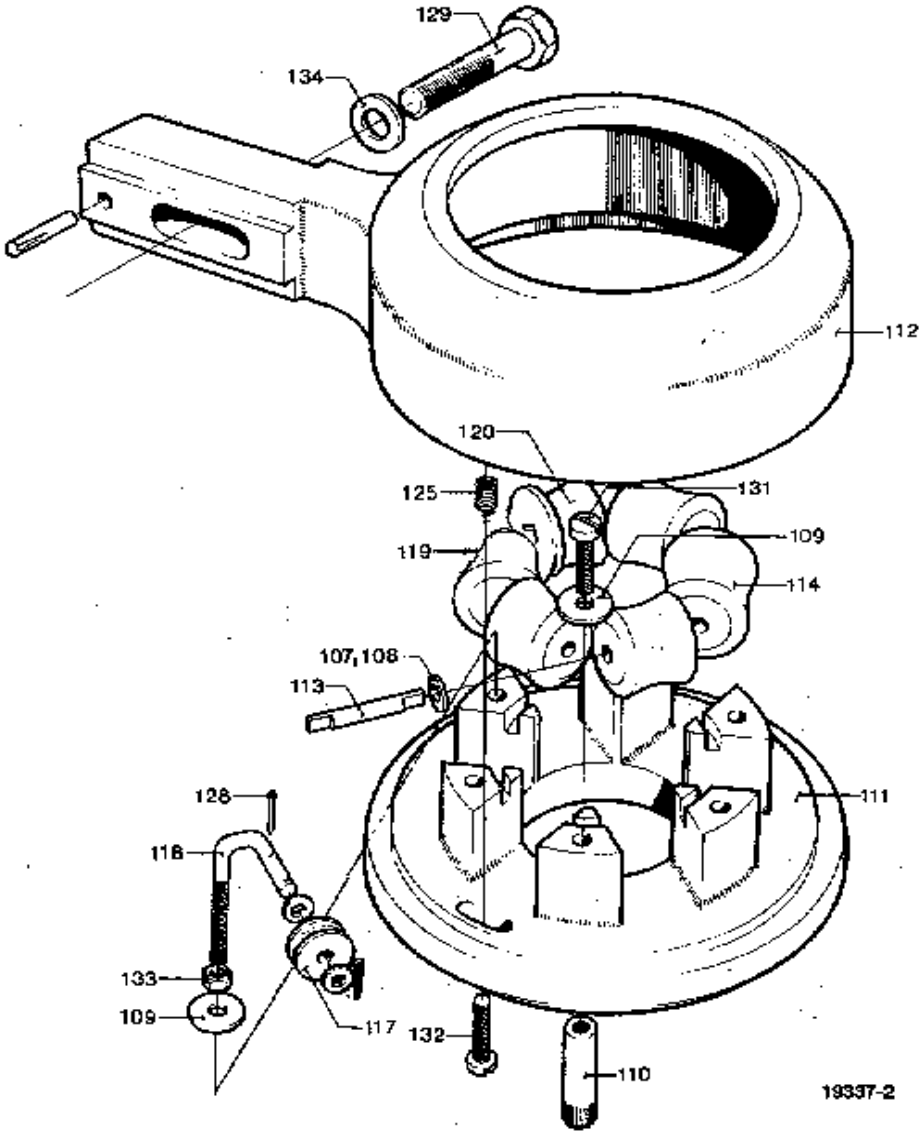
129
134
112
120
125
131
109
119
114
107,108
113
128
111
118
133
109
117
132
110
19337-2

ECM: 114160 - 20021219
Group number: 19337-0300
Assembly Drawing: 19337-2_1_AA

Issue: 20030206

Pos	Part No	SP	UN	Qty	Description	Page No
PB105						
114	19338-0000	B		4	ROLL	
118	22778-0000	-		1	HOLDER	
119	38196-0000	B		1	ROLL	
120	38197-0000	B		1	ROLL	
PB85						
114	239005-0000	B		4	ROLL	
118	239006-0000	B		1	HOLDER	
119	239004-0000	B		1	ROLL	
120	239003-0000	B		1	ROLL	
Common Parts						
106	2033-0010	B		12	WASHER	
107	2033-0002	B		12	WASHER	
108	2033-0003	B		12	WASHER	
109	2033-0005	B		6	WASHER	
110	2795-0000	-		6	NUT	
111	3102-0000	-		1	RING	
112	3103-0000	-		1	LID	
113	3125-0000	A		6	SHAFT	
117	22777-0000	B		1	WHEEL	
125	90026-0002	-		2	THREADED INSERTS, BUSHING, M4	
128	311411-0116	-		2	SPLIT PIN SP1X8RFR	
129	312105-0499	-		1	SCREW M6S ISO 4014 M10X40 A480	
131	312125-0293	-		5	SCREW PAN HEAD MCS M4X16 SS	
132	312125-0295	-		2	SCREW PAN HEAD MCS M4X20 SS	
133	312605-0312	-		1	HEXAGON NUT, M6M M4 A280	
134	315105-0173	-		1	WASHER ISO 7089-10-200 HV-A4	
135	315105-0136	-		4	WASHER ISO 7089-4-200 HV-A4	

Pos	Part No	SP	UN	Qty	Description	Page No

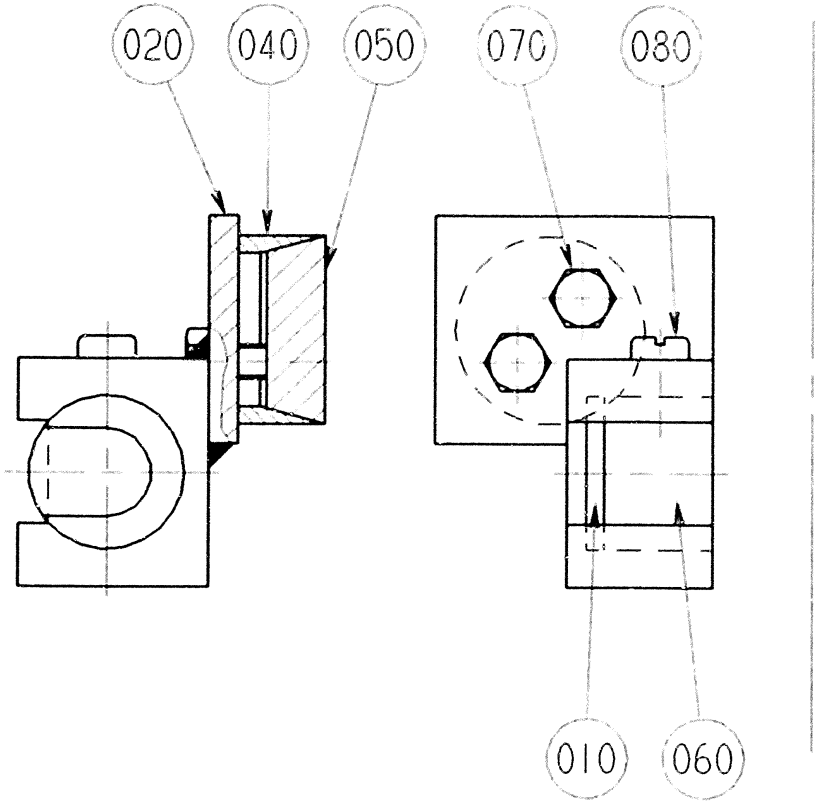

VÄNSTER SIDA/LEFT SIDE

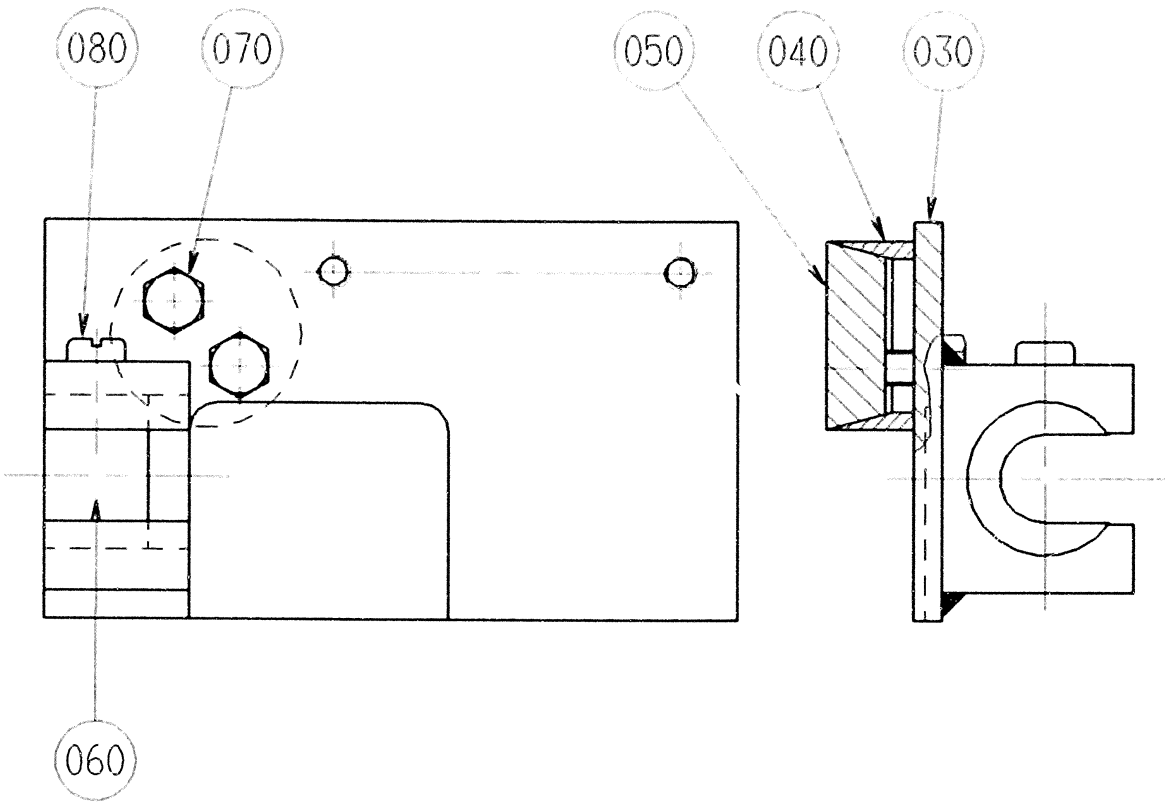

HÖGER SIDA/RIGHT SIDE

ECM: 114226 - 20021219
Group number: 21510-0400
Assembly Drawing: 21510-2_1_AA

Issue: 20030206

Pos	Part No	SP	UN	Qty	Description	Page No
Common Parts						
30	568305-0000	-		1	BEARING	
40	21513-0000	-		1	CLAMP RING	
50	21514-0000	-		1	CLAMPING PLATE	
60	21515-0000	B		1	BUSHING	
70	312105-0371	-		2	SCREW M6S ISO 4017 M6X22 A480	
80	312125-0364	-		1	SCREW SLOT.PAN HD. MCS 6X10 A480	

Pos	Part No	SP	UN	Qty	Description	Page No

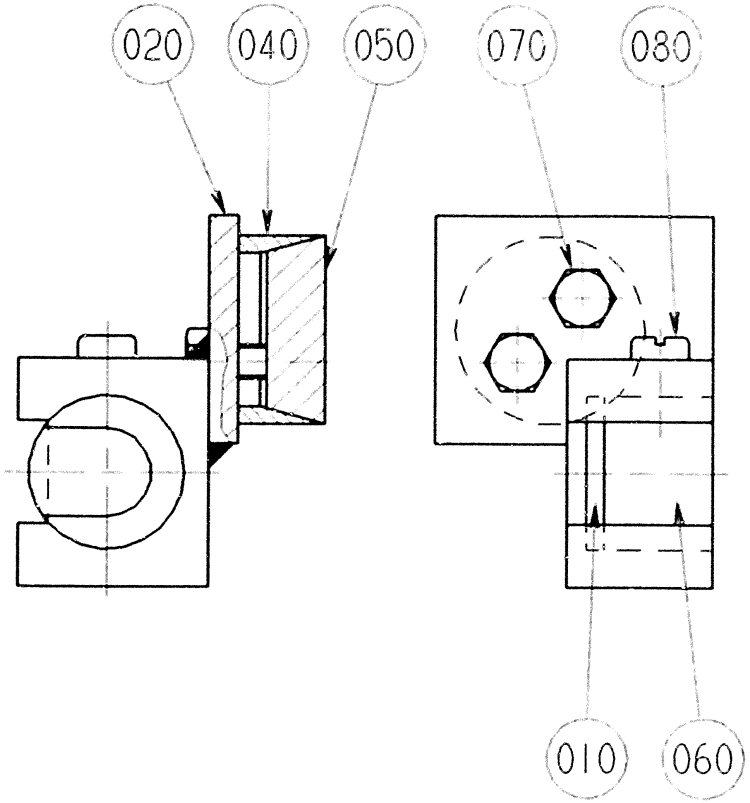

VÄNSTER SIDA/LEFT SIDE

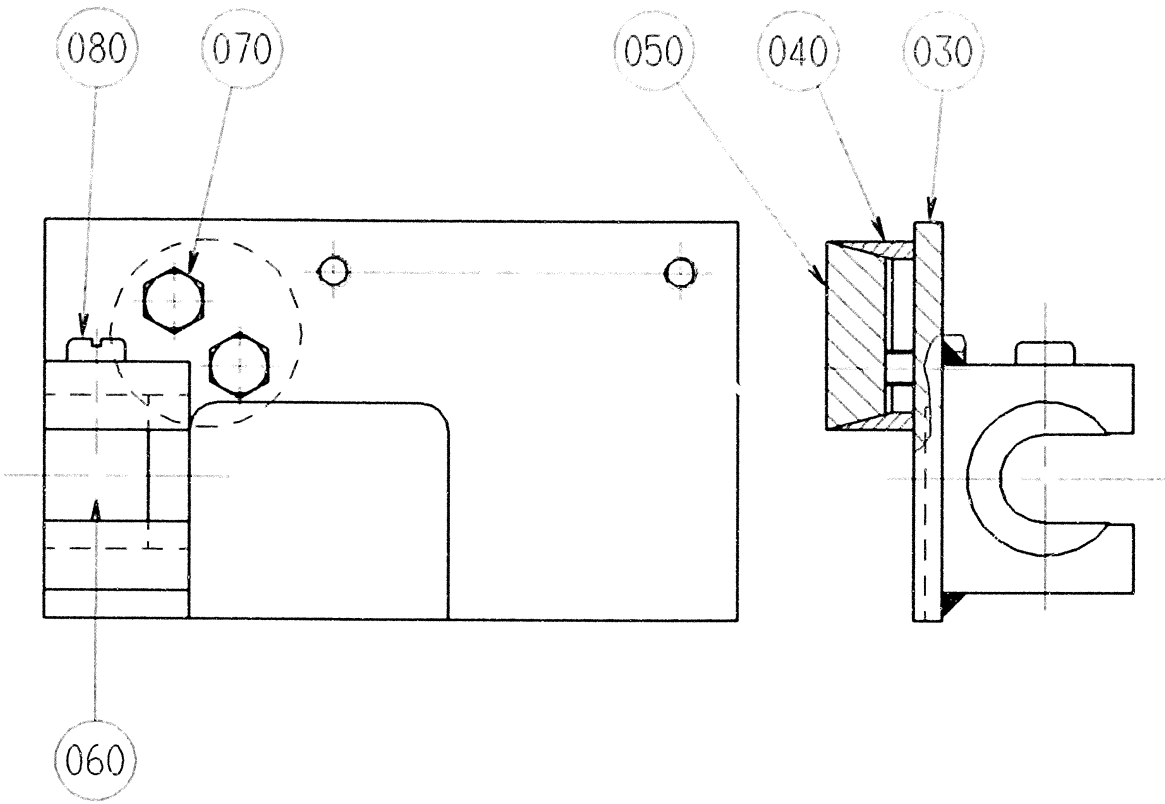

HÖGER SIDA/RIGHT SIDE

ECM: 114309 - 20021219
Group number: 2563747-0100
Assembly Drawing: 2563747-100_1_AA

Issue: 20030206

Pos	Part No	SP	UN	Qty	Description	Page No
Common Parts						
10	21516-0000	-		1	THRUST BEARING	
20	31320-0000	-		1	BEARING	
40	21513-0000	-		1	CLAMP RING	
50	21514-0000	-		1	CLAMPING PLATE	
60	21515-0000	B		1	BUSHING	
70	312105-0371	-		2	SCREW M6S ISO 4017 M6X22 A480	
80	312125-0364	-		1	SCREW SLOT.PAN HD. MCS 6X10 A480	

Pos	Part No	SP	UN	Qty	Description	Page No

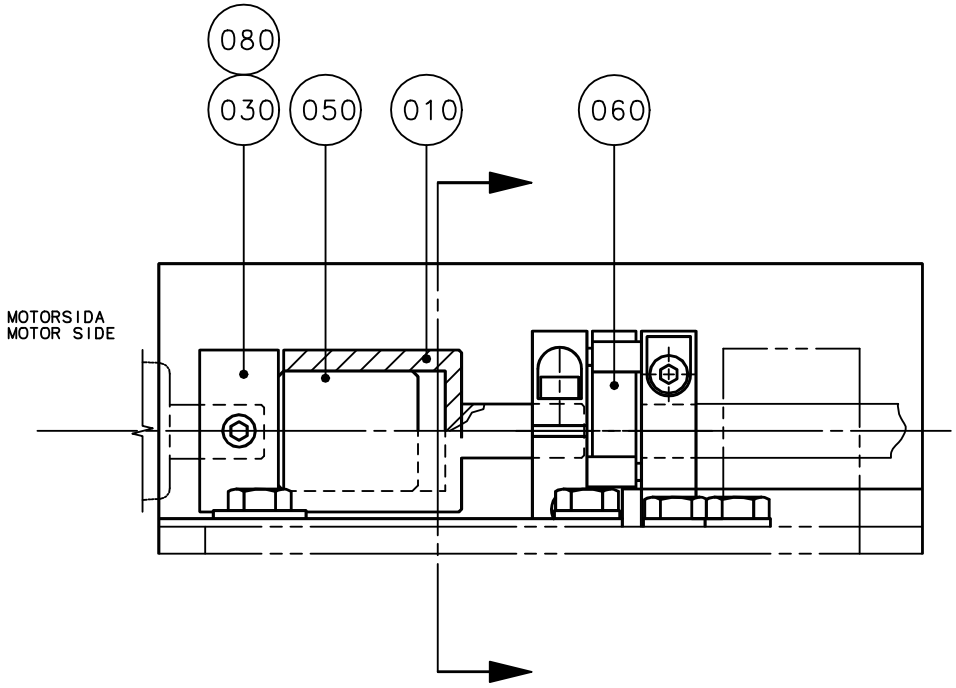

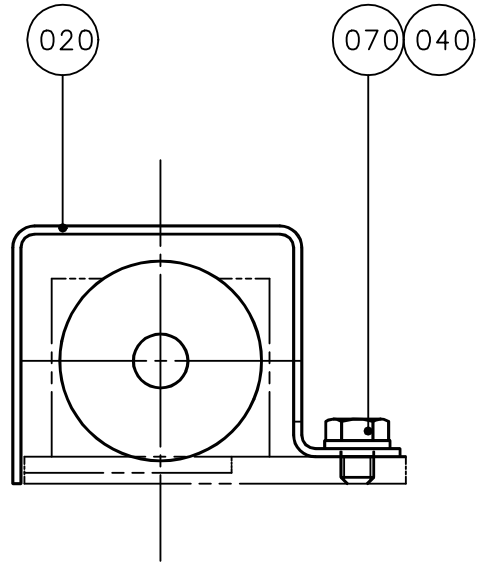

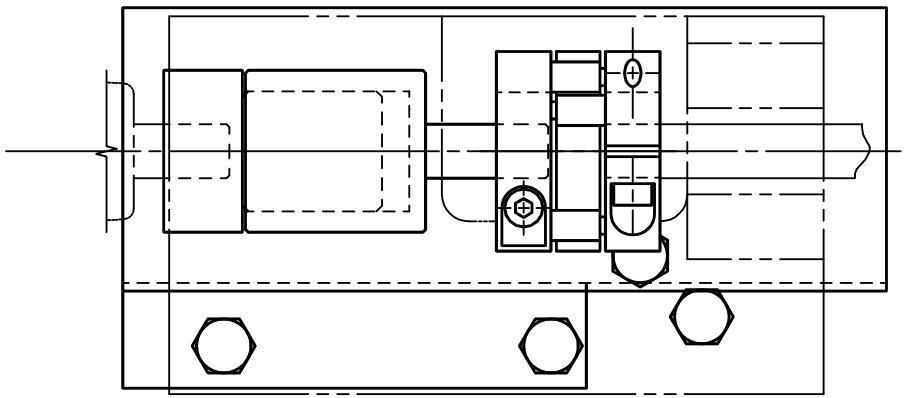

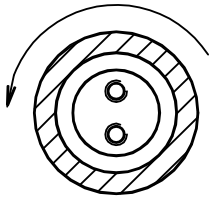

FRIHJULSRIKTNING
FREE WHEEL DIRECTION

POS (050) MONTERAS MED FRIHJUL I PAPPERSBANANS MATNINGSRIKTN. I MASKINEN.

POS (050) IS MOUNTED WITH FREE WHEEL IN THE DIRECTION OF FEED OF THE PAPER WEB IN THE MACHINE.

ECM: 114771 - 20021219
Group number: 554253-0200
Assembly Drawing: 554253-2_1_AA

Issue: 20030206

Pos	Part No	SP	UN	Qty	Description	Page No
Common Parts						
10	554251-0000	-		1	SLEEVE	
20	568306-0000	-		1	PROTECTIVE GRATING	
30	255899-0000	-		1	HUB	
40	315105-0153	-		2	WASHER ISO 7089-6-200 HV-A4	
50	90348-0007	A		1	FREE WHEEL COUPLING	
60	90355-0108	A		1	FLEXIBLE COUPLING, 10X10 MM	
70	312105-0362	-		2	SCREW M6S ISO 4017 M6X8 A480	
80	312318-0364	-		1	SCREW ISO4029 M6X10 A4	

Pos	Part No	SP	UN	Qty	Description	Page No

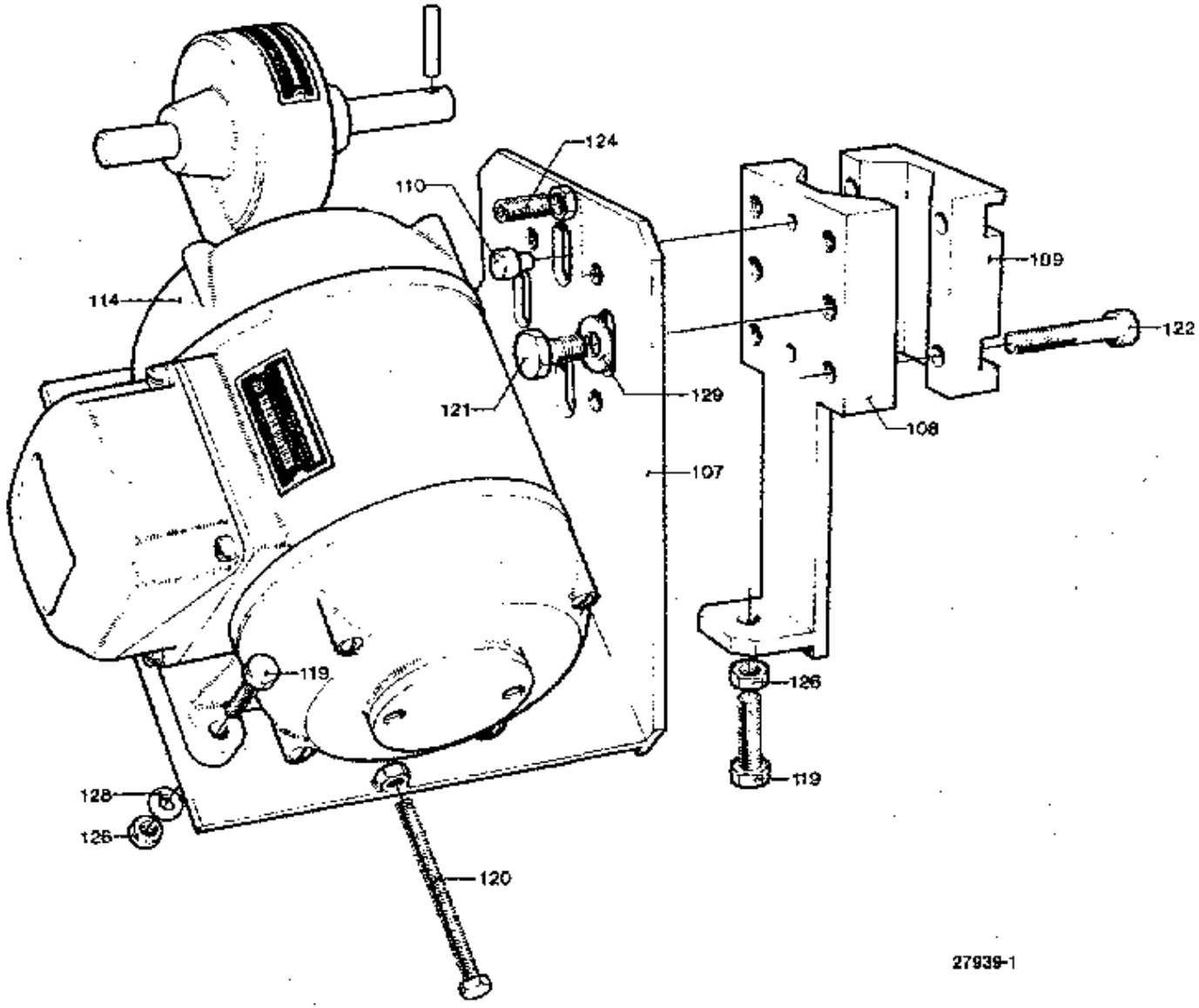
124
110
109
114
122
129
121
108
107
119
126
119
128
126
120
27939-1

Pos	Part No	SP	UN	Qty	Description	Page No
Common Parts						
107	554252-0000	-		1	MOTOR SHELF	
108	27941-0000	-		1	CLAMP HALF	
109	27942-0000	-		1	CLAMP HALF	
110	27943-0000	-		2	DOWEL	
114	90069-0286	A		1	GEARS, WORM MOTOR WKM/DM90-60E2	
119	312105-0371	-		5	SCREW M6S ISO 4017 M6X22 A480	
120	312109-0381	-		1	SCREW M6S ISO 4017 M6X55 A480	
121	312105-0449	-		2	SCREW M6S ISO 4017 M8X16 A480	
122	312115-0378	-		4	SCREW ISO4762 M6X40 A4	
124	312316-0366	-		4	SCREW HEX.SOCK.SET CUP P.MSK6SS6X12 FZB	
126	312605-0316	-		10	HEXAGON NUT, M6M M6 A280	
128	315105-0153	-		4	WASHER ISO 7089-6-200 HV-A4	
129	315105-0165	-		2	WASHER ISO 7089-8-200 HV-A4	

Pos	Part No	SP	UN	Qty	Description	Page No

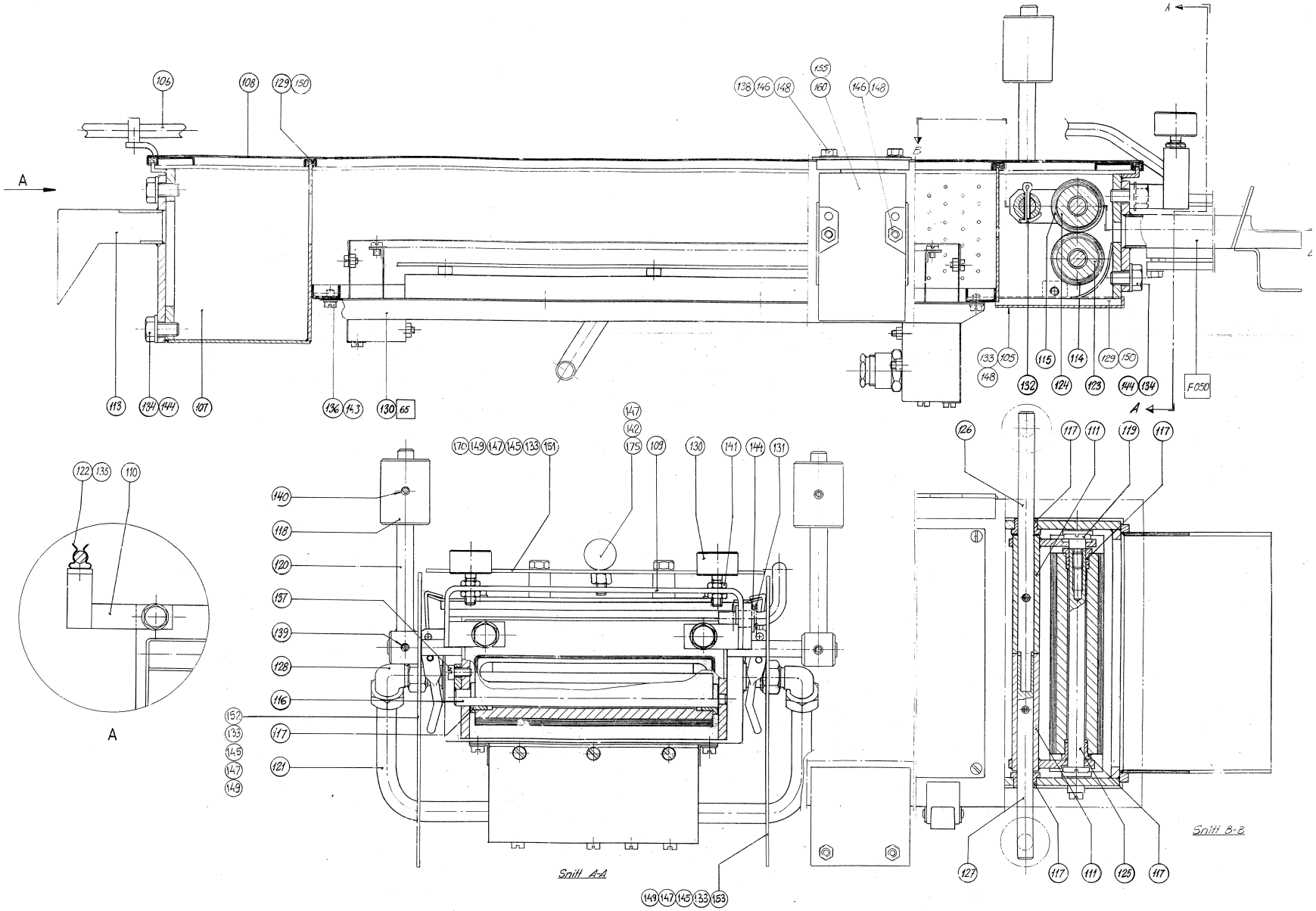
A
A
A
Snitt A-A
Snitt B-B
F050

ECM: 114863 - 20021219
Group number: 31330-0300
Assembly Drawing: 31330-3_1_AA

Issue: 20030206

Pos	Part No	SP	UN	Qty	Description	Page No
Common Parts						
105	578250-0000	-		1	HATCH	
106	568294-0000	-		1	STRUT	
107	31331-0000	-		1	BOX	
108	238592-0000	-		1	HATCH	
109	568295-0000	-		1	FASTENING IRON	
110	568298-0000	-		1	HOLDER	
111	32149-0000	-		2	ARM	
112	31334-0000	-		1	CLUTCH PIECE	
113	31335-0000	-		1	CLUTCH PIECE	
114	31397-0001	A		1	WEAR RUBBER	
115	31397-0002	A		1	WEAR RUBBER	
116	31336-0000	-		1	SHAFT	
117	31337-0000	A		6	BUSHING	
118	31338-0000	-		2	COUNTERWEIGHT	
119	32195-0000	-		1	SCREW	
120	31340-0000	-		2	PIN	
121	31341-0000	-		2	PIPE BEND	
122	568299-0000	-		1	CLAMPING SPRING	
123	31344-0001	A		1	SQUEE-GEE ROLLER	
124	31344-0002	A		1	SQUEE-GEE ROLLER	
125	31345-0000	-		1	SHAFT	
126	32193-0000	-		1	SHAFT	
127	32194-0000	-		1	SHAFT	
128	90030-0096	-		2	CONN. ELBOW W-12	
129	90143-0014	-	MM	3000	STRIP	
130	90347-0034	-		2	VIBRATION DAMPER	
131	311411-0152	-		1	SPLIT PIN SP2X16RFR	
132	311411-0197	-		2	SPLIT PIN SP4X25RFR	
133	312105-0325	-		12	SCREW M6S ISO 4017 M5X10 A480	
134	312105-0449	-		8	SCREW M6S ISO 4017 M8X16 A480	
135	312125-0220	-		1	SCREW SLOT.PAN HD. MCS 3X6 A480	
136	312125-0285	-		8	SCREW SLOT.PAN HD. MCS 4X6 A480	
137	312125-0323	-		1	SCREW PAN HEAD MCS M5X8 SS	
138	312145-0327	-		2	SCREW COUNTERS.SLOT.HD. MFS 5X12 SS	
139	312318-0360	-		4	SCREW ISO4029 M6X6 A4	
140	312318-0366	-		2	SCREW ISO4029 M6X12 A4	
141	312625-0316	-		4	HEXAGON THIN NUT, EN 24035 ML6M M6 A4	
142	312105-0366	-		1	SCREW M6S M6X12 A280	
143	315105-0136	-		8	WASHER ISO 7089-4-200 HV-A4	
144	315105-0165	-		10	WASHER ISO 7089-8-200 HV-A4	
145	315101-0153	-		10	WASHER PLAIN, BRB, 6,4/12 H=1,5	
146	312605-0314	-		4	HEXAGON NUT, M6M M5 A280	
147	312605-0316	-		10	HEXAGON NUT, M6M M6 A280	
148	315105-0146	-		6	WASHER ISO 7089-5-200 HV-A4	
149	1361978-0000	-		10	SPACER	
150	90153-0023	-		1	ADHESIVE, SILICON 251470 TUB 90CC	
151	1361971-0000	-		1	PROTECTIVE CASING	
152	1361972-0000	-		1	PROTECTIVE CASING	
153	1361973-0000	-		1	PROTECTIVE CASING	
155	90044-0201	-		1	KEY SAF.SW. AZ16-03 ZVR K-2254	
160	90044-0310	-		1	KEY FOR SAFETY SWITCH, AZ 15/16 B1	
170	359705-0007	-		1	WARNING SIGN ISO, HOT SURFACE	
175	318800-0103	-		1	HANDLES,SPHERICAL KNOB,INT.THRE.,D.25-M6	
F050	A578255-0100	-		1	JOINT DUCT	**43**
F065	A269820-0100	-		1	PAPER DRIER	**45**

Machine Type | Group Description | Used-In | Group Number | Page No

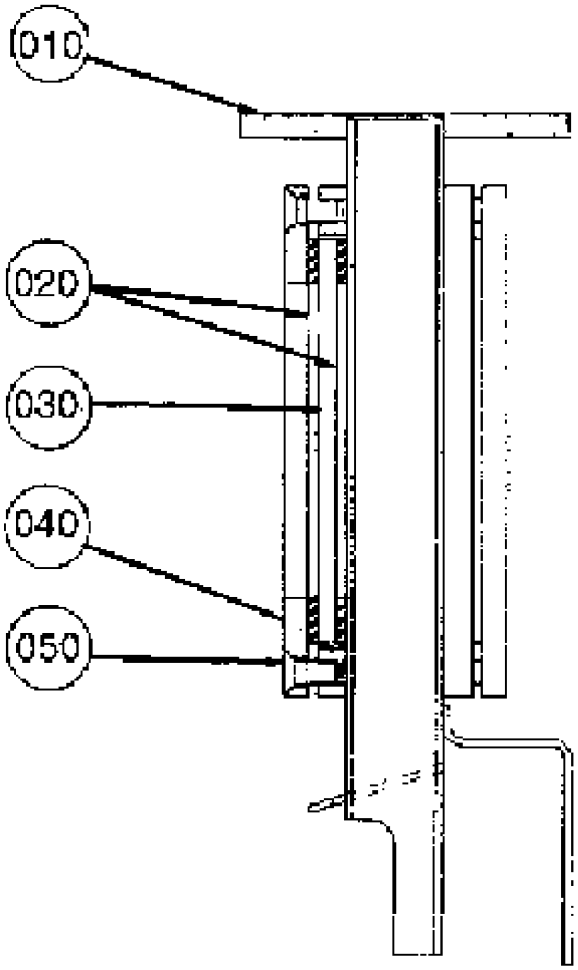
010
020
030
040
050

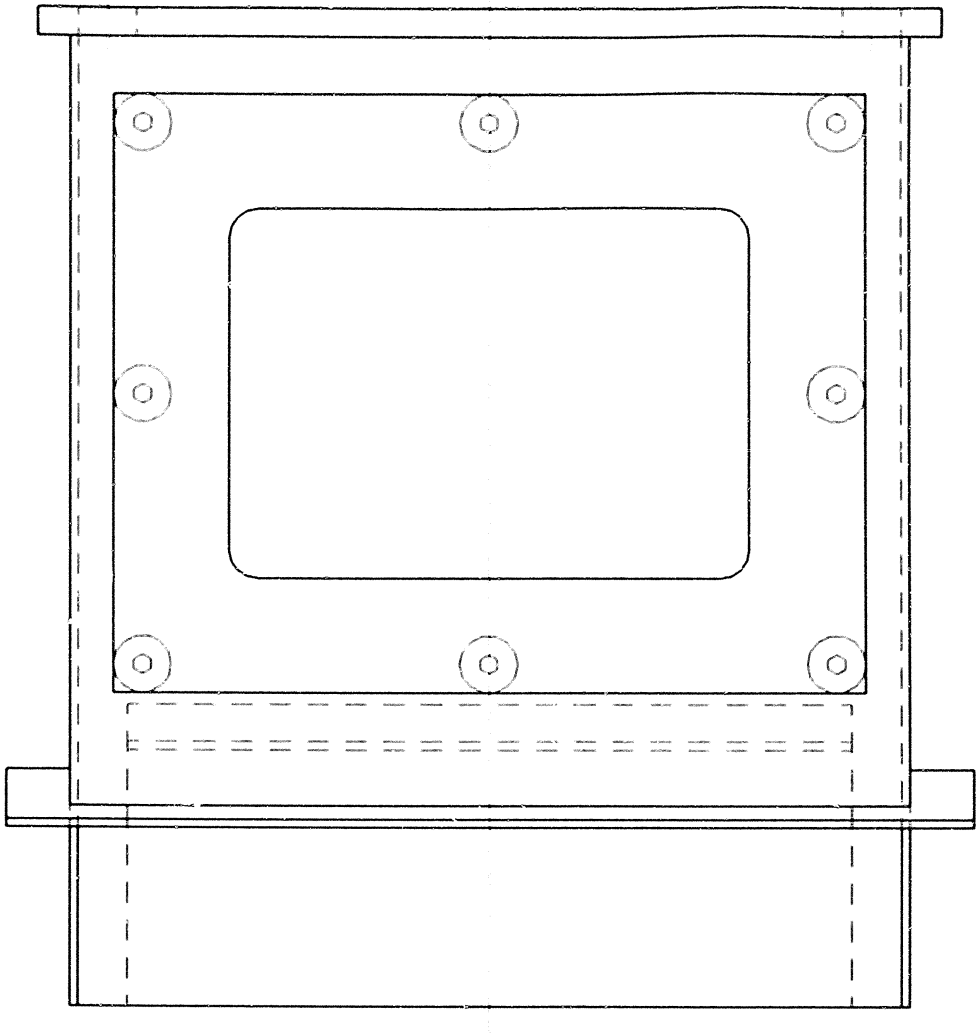

ECM: 115020 - 20021219
Group number: 578255-0100
Assembly Drawing: 578255-1_1_AA

Issue: 20030206

Pos	Part No	SP	UN	Qty	Description	Page No
Common Parts						
10	578065-0000	-		1	JOINT DUCT	
20	578066-0000	-		4	GASKET	
30	578067-0000	-		2	SIGHT GLASS	
40	578068-0000	-		2	FRAME	
50	312155-0327	-		16	SCREW EN 10642 MF6S M5X12 A480	

Pos	Part No	SP	UN	Qty	Description	Page No

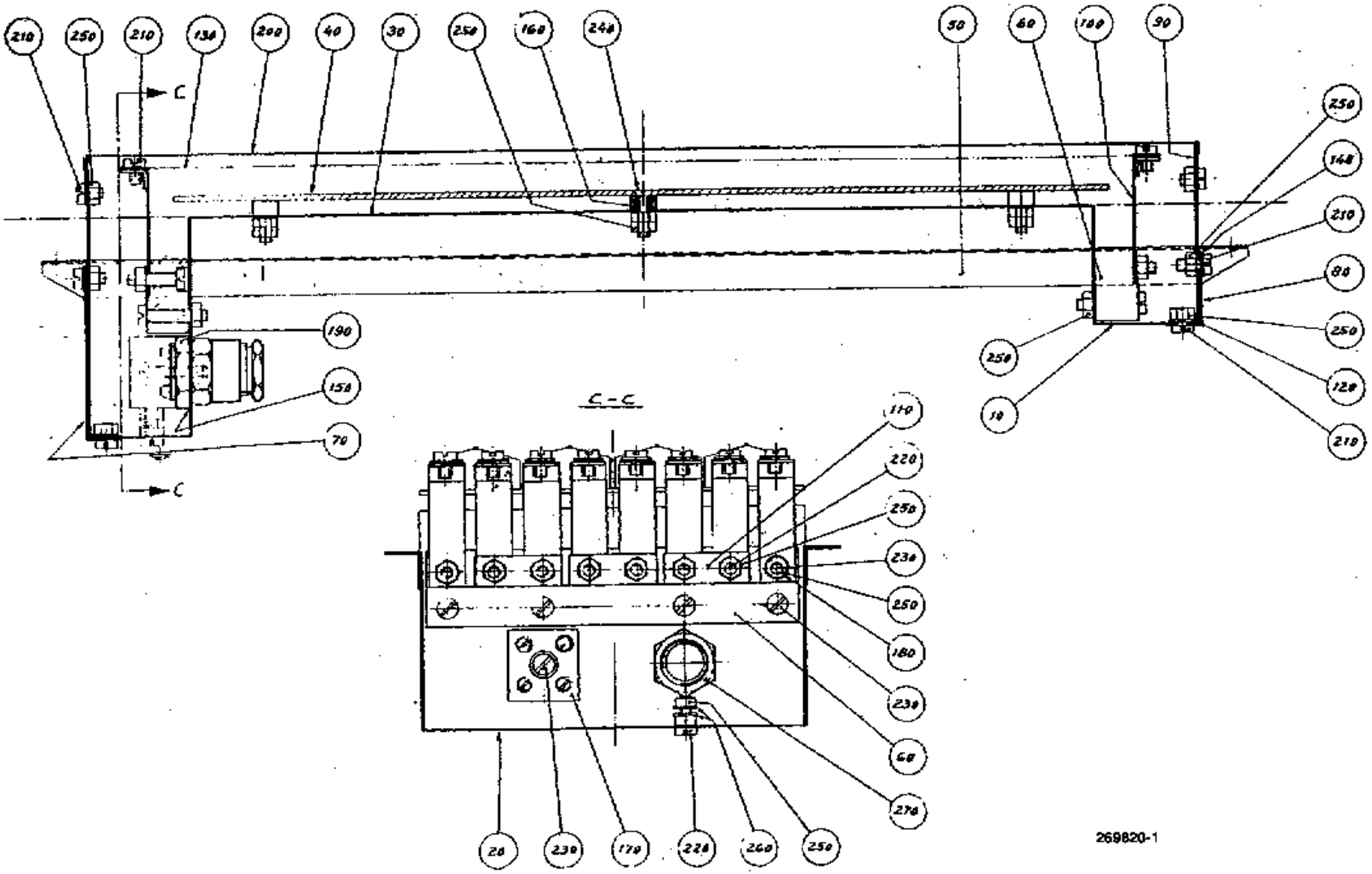
C
C
C - C
269820-1

ECM: 115019 - 20021219
Group number: 269820-0100
Assembly Drawing: 269820-1_1_AA

Issue: 20030206

Pos	Part No	SP	UN	Qty	Description	Page No
Common Parts						
10	269807-0000	-		1	BOX	
10	269808-0000	-		1	BOX	
100	269814-0000	-		16	SPRING	
110	269815-0000	-		7	BRIDGE CONNECTOR	
120	269816-0000	-		2	REINFORCEMENT IRON	
130	269817-0000	-		8	LINE HEATER	
140	269818-0000	-		6	WASHER	
150	269819-0000	-		1	PROTECTION	
160	90006-0019	-		6	BUSHING	
170	90077-0101	-		1	TERMINAL BLOCK, 179 512	
180	353101-0120	-		2	CABLE SHOE 1,25-4MM2	
190	90099-0002	-		1	NUT PR 18,6 BRASS	
200	90145-0005	-	MM	1660	WIRE	
210	312125-0285	-		36	SCREW SLOT.PAN HD. MCS 4X6 A480	
220	312125-0289	-		15	SCREW SLOT.PAN HD. MCS 4X10 A480	
230	312125-0295	-		11	SCREW PAN HEAD MCS M4X20 SS	
240	312145-0292	-		6	SLOTTED HEMFS4X14RFR	
250	312605-0312	-		57	HEXAGON NUT, M6M M4 A280	
260	315105-0136	-		4	WASHER ISO 7089-4-200 HV-A4	
270	352100-0106	-		1	CABLE GLANR.18,6-10,5	
30	269805-0000	-		1	HOLDER	
40	269806-0000	-		1	REFLECTOR	
50	269809-0000	-		2	REINFORCEMENT IRON	
60	90206-0302	-		2	DRYER	
70	269811-0000	-		1	COVERING PLATE	
80	269812-0000	-		1	COVERING PLATE	
90	269813-0000	-		2	TIGHTENING PIECE	

Pos	Part No	SP	UN	Qty	Description	Page No

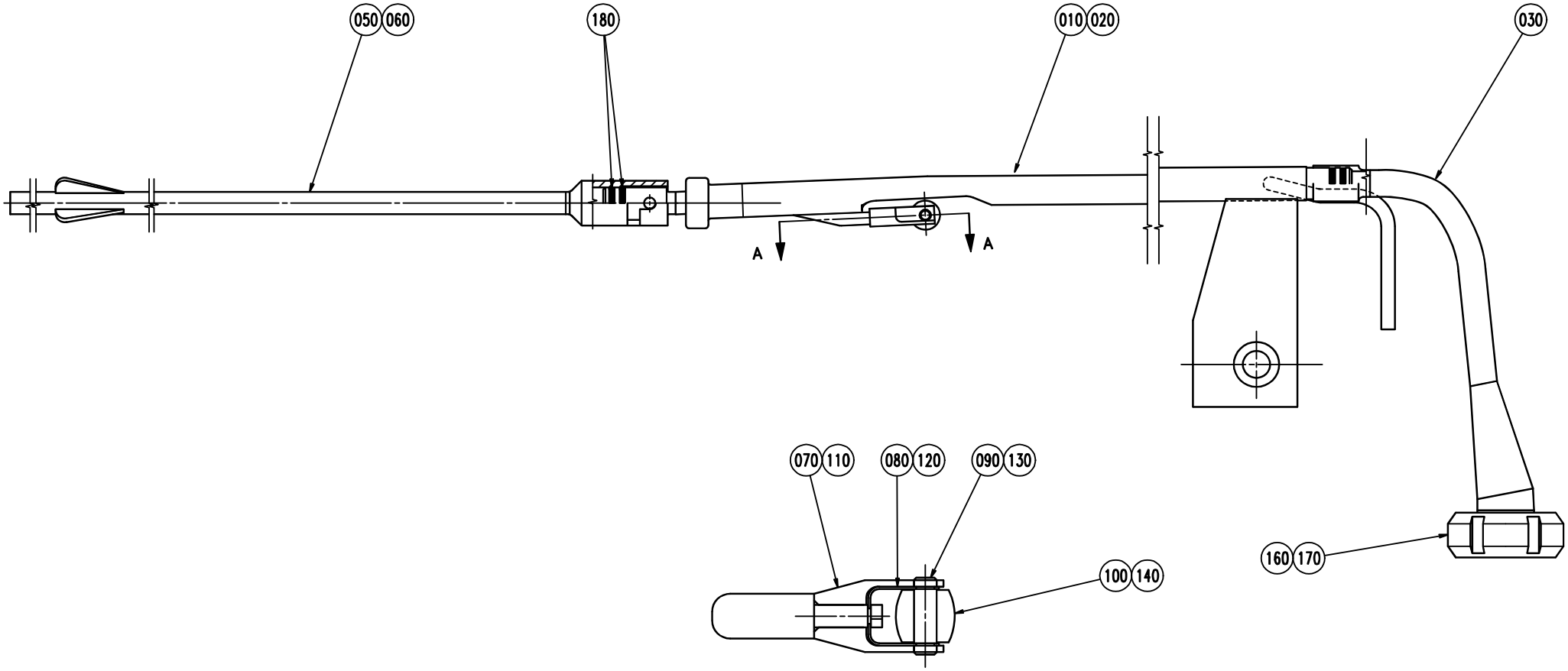

SECTION A-A
SCALE 2:1

Pos	Part No	SP	UN	Qty	Description	Page No
PB105						
110	552789-0000	-		1	FORK	
120	573303-0000	-		1	LOCK SHEET	
130	573304-0000	-		1	SHAFT	
140	552787-0000	-		1	PRESSURE ROLLER	
20	573301-0000	-		1	FILLER TUBE	
60	564604-0000	-		1	ROLL	
PB85						
10	579905-0000	-		1	FILLER TUBE	
100	560118-0000	-		1	PRESSURE ROLLER	
30	555915-0000	-		1	INTERMEDIATE PIPE	
50	564603-0000	-		1	FILLING PIPE	
70	560115-0000	-		1	FORK	
80	560116-0000	-		1	LOCK SHEET	
90	560117-0000	-		1	SHAFT	
Common Parts						
160	315250-0101	-		1	GASKET 32X25X5,5 MM	
170	342803-0101	-		1	UNION NUT, RD 40-6 (SMS 25)	
180	315204-0109	-		4	O-RING 11,1X1,6 MM	

Pos	Part No	SP	UN	Qty	Description	Page No

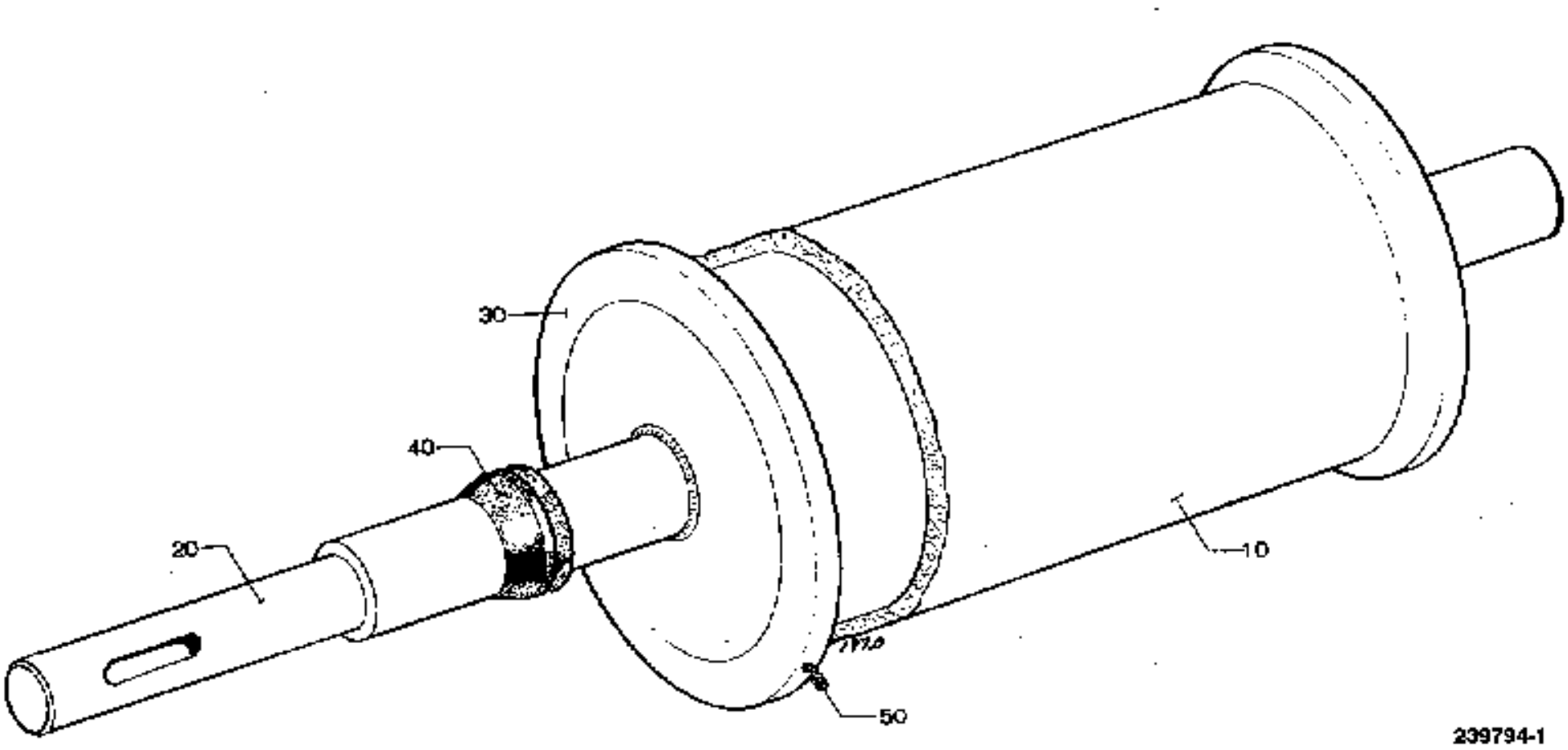
30
40
20
10
50
239794-1

Pos	Part No	SP	UN	Qty	Description	Page No
PB105						
10	19295-0004	A		1	TEFLON PIPE	
30	239016-0000	-		2	FLANGE	
PB85						
10	19295-0005	A		1	TEFLON PIPE	
30	573519-0000	-		2	FLANGE	
Common Parts						
20	554573-0000	-		1	BENDING ROLLER	
40	90091-0031	A		2	V-RING 12,5X18,5X7,7 MM	
50	312318-0366	-		6	SCREW ISO4029 M6X12 A4	

Pos	Part No	SP	UN	Qty	Description	Page No

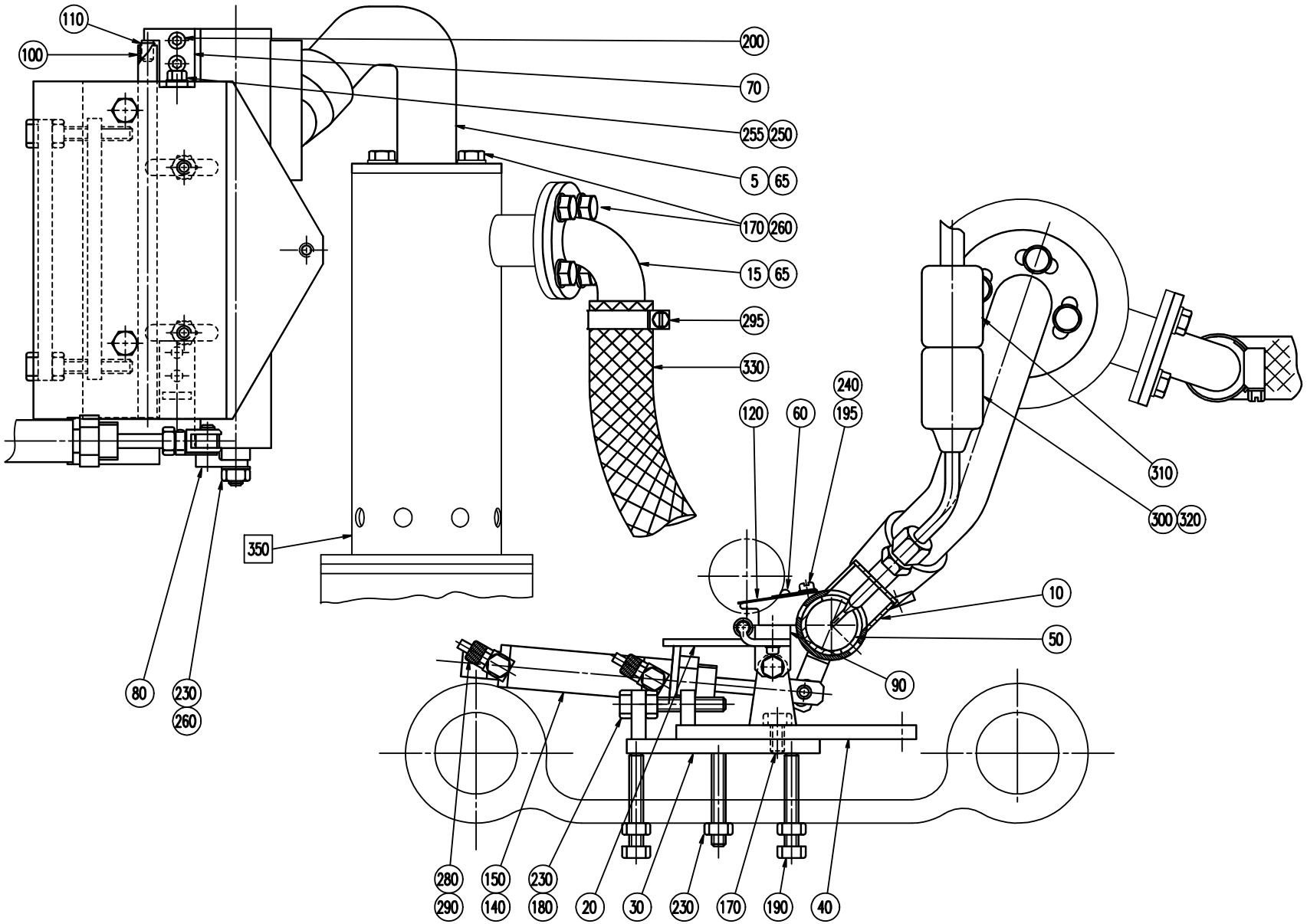
110
100
200
70
255
250
5
65
170
260
15
65
295
330
240
120
60
195
310
300
320
350
10
50
90
80
230
260
280
290
150
140
230
180
20
30
230
170
190
40

ECM: 115078 - 20021219
Group number: 246429-0300
Assembly Drawing: 246429-3_1_AA

Issue: 20030206

Pos	Part No	SP	UN	Qty	Description	Page No
Common Parts						
10	579766-0000	-		1	COIL HEATER	
100	553436-0000	-		1	TEFLON PIPE	
110	553438-0000	-		1	PIPE	
120	265752-0000	A		1	SLIDE RAIL	
140	90239-0816	A		1	DOUBLE ACTING, MINI-ISO, CYL.16-25	
15	208853-0000	-		1	CONTACT FLANGE	
150	90239-0489	-		1	ROD END, CLEVIS WITH AXLE M6X1,25	
170	312105-0366	-		10	SCREW M6S M6X12 A280	
180	312109-0374	-		2	SCREW M6S ISO 4017 M6X30 A480	
190	312109-0378	-		5	SCREW M6S ISO4017 M6X40 A480	
195	312121-0284	-		4	SCREW SLOT.PAN HD. MCS 4X5 FZB	
20	553435-0000	-		1	BRACKET	
200	312115-0291	-		4	SCREW ISO4762 M4X12 A4	
230	312605-0316	-		10	HEXAGON NUT, M6M M6 A280	
240	315105-0136	-		6	WASHER ISO 7089-4-200 HV-A4	
250	312115-0293	-		1	SCREW ISO4762 M4X16 A4	
255	312605-0312	-		1	HEXAGON NUT, M6M M4 A280	
260	315105-0153	-		11	WASHER ISO 7089-6-200 HV-A4	
280	342980-0111	-		2	BANJO-CONNECTION,RING 6/4-M5	
290	B342980-0301	-		1	BANJO-HOLLOW BOLT COUPL.,EXT.THREA.01-M5	
	315233-0101	*C*		*1*	*WASHER PL.RND.NYL.5,2/8,H=1*	
295	342991-0104	-		2	HOSE CLIP,WORM DRIVE TYPE (23)-27	
30	245293-0000	-		1	FASTENING PLATE	
300	90326-0043	-		1	THERMOCOUPLE, CR-ALPREM.G	
310	90326-0020	-		1	PLUG, FEMALE YELLOW CR-AL	
320	90326-0012	-		1	PROTECTIVE COVER, T31A4618	
330	90166-0060	-	M	2	HOSE 19/26-27 REINF.PVC	
40	245294-0000	-		1	ADJUSTMENT PLATE	
5	566014-0000	-		1	ATTACHMENT PIPE	
50	247091-0000	A		1	CYLINDER	
60	265751-0000	-		1	RAIL	
65	33730-0001	B		2	GASKET	
70	553439-0000	-		1	BRACKET	
80	553589-0000	-		1	ARM	
90	553437-0000	-		2	LACE	
F350	A207637-0300	-		1	ELEMENT	**53**

Pos	Part No	SP	UN	Qty	Description	Page No

Machine Type | Group Description | Used-In | Group Number | Page No

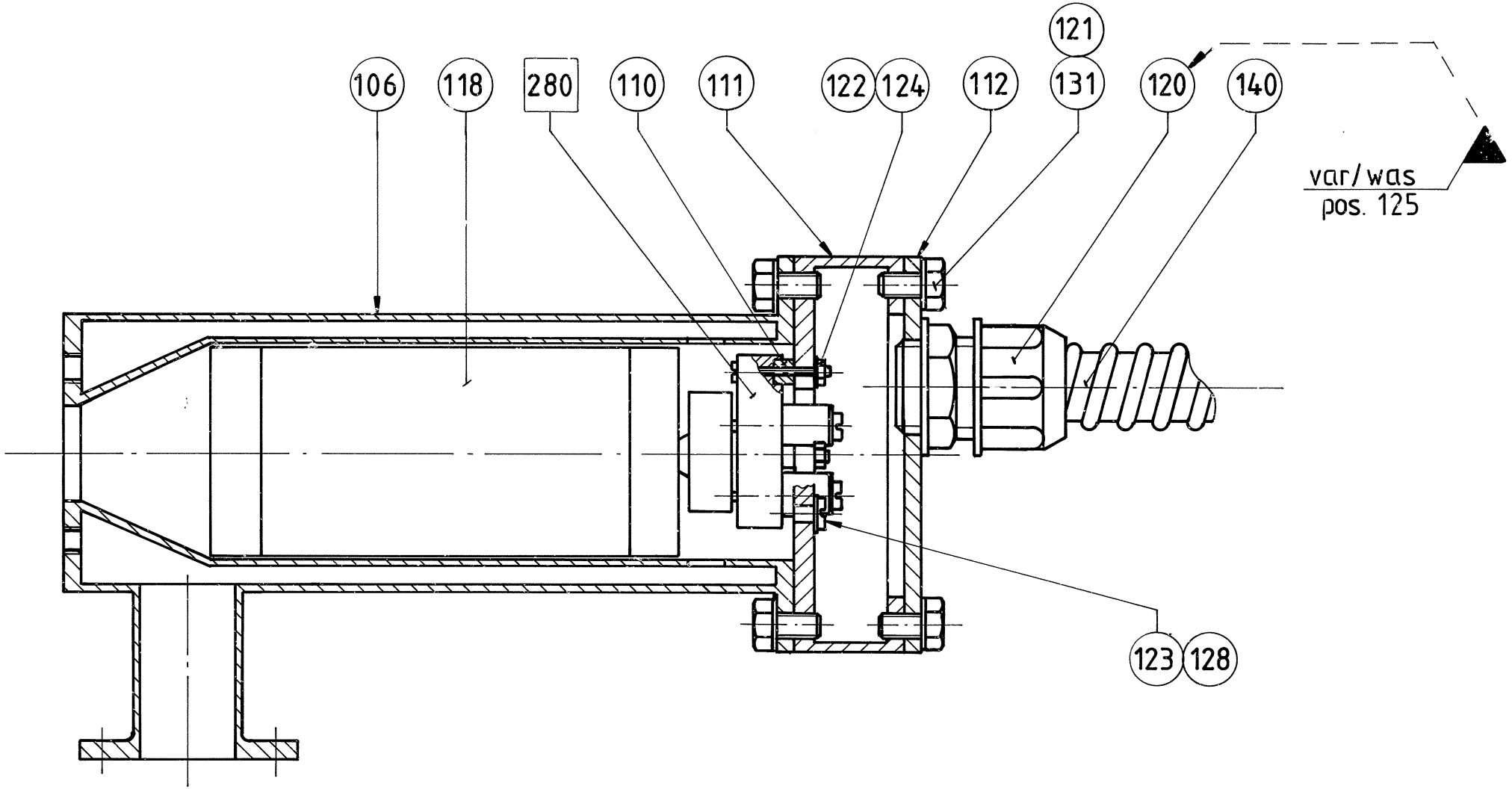
106
118
280
110
111
122
124
112
121
131
120
140
var/was
pos. 125
123
128

Pos	Part No	SP	UN	Qty	Description	Page No
TCA/25 TPMC						
118 1	90206-0031	A		1	HEATING ELEMENT 700+1200W,220V	
F280 3	A207638-0203	-		1	SLEEVE CONTACT	**55**
Common Parts						
106	38960-0000	A		1	COIL HEATER	
110	19797-0000	A		3	BUSHING	
111	38962-0000	A		1	CLUTCH PIECE	
112	38963-0000	A		1	LID	
121	312105-0366	-		8	SCREW M6S M6X12 A280	
122	312121-0230	-		3	SCREW SLOT.PAN HD. MCS 3X20 FZB	
123	312132-0287	-		1	SCREW SLOT. PAN HEAD MSCS M4X8	
124	312601-0310	-		3	NUT M6M3FZB	
125	352136-0127	-		1	GLAND FITTING PR 18,6	
128	353103-0130	-		1	CABLE SHOE	
131	315105-0153	-		8	WASHER ISO 7089-6-200 HV-A4	
140	352135-0106	-	M	2	SPIRAL CONDUIT DI=16 MM	

Pos	Part No	SP	UN	Qty	Description	Page No

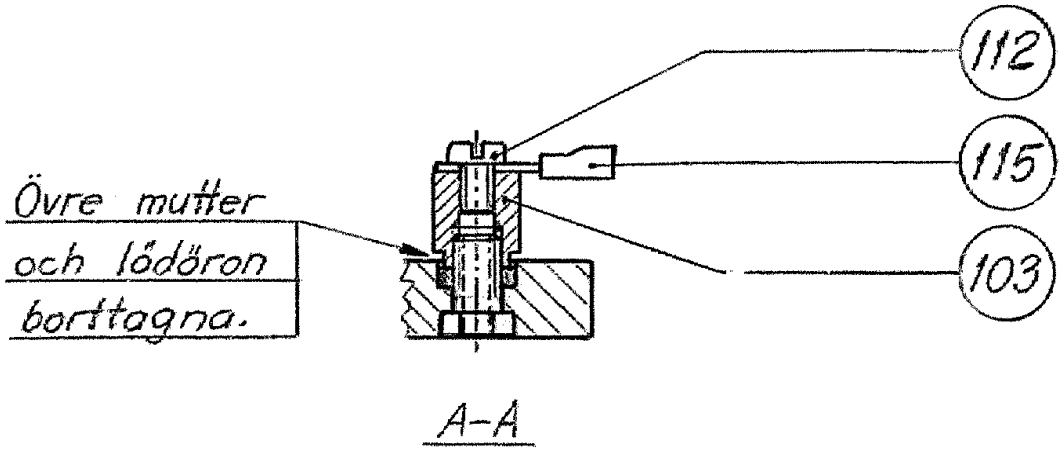
112
115
103
Övre mutter
och lödöron
borttagna.
A–A

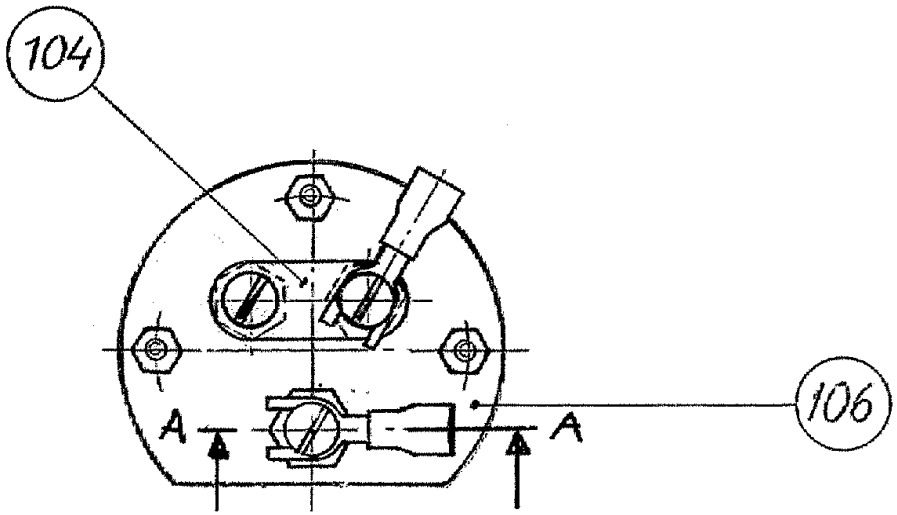
104
106
A
A

ECM: - -
Group number: 207638-0203
Assembly Drawing: 207638-2_1_AA

Issue: 20030206

Pos	Part No	SP	UN	Qty	Description	Page No
Common Parts						
103	207639-0000	-		3	SPACER	
104	209283-0000	-		1	BRIDGE CONNECTOR	
106	B90125-0020	-		1	PLATE	
	294464-0000	*A*		*1*	*BASE PLATE*	
	270927-0000	*A*		*3*	*SCREW*	
	270926-0000	*A*		*6*	*NUT*	
112	312132-0287	-		3	SCREW SLOT. PAN HEAD MSCS M4X8	
115	353103-0130	-		2	CABLE SHOE	

Pos	Part No	SP	UN	Qty	Description	Page No

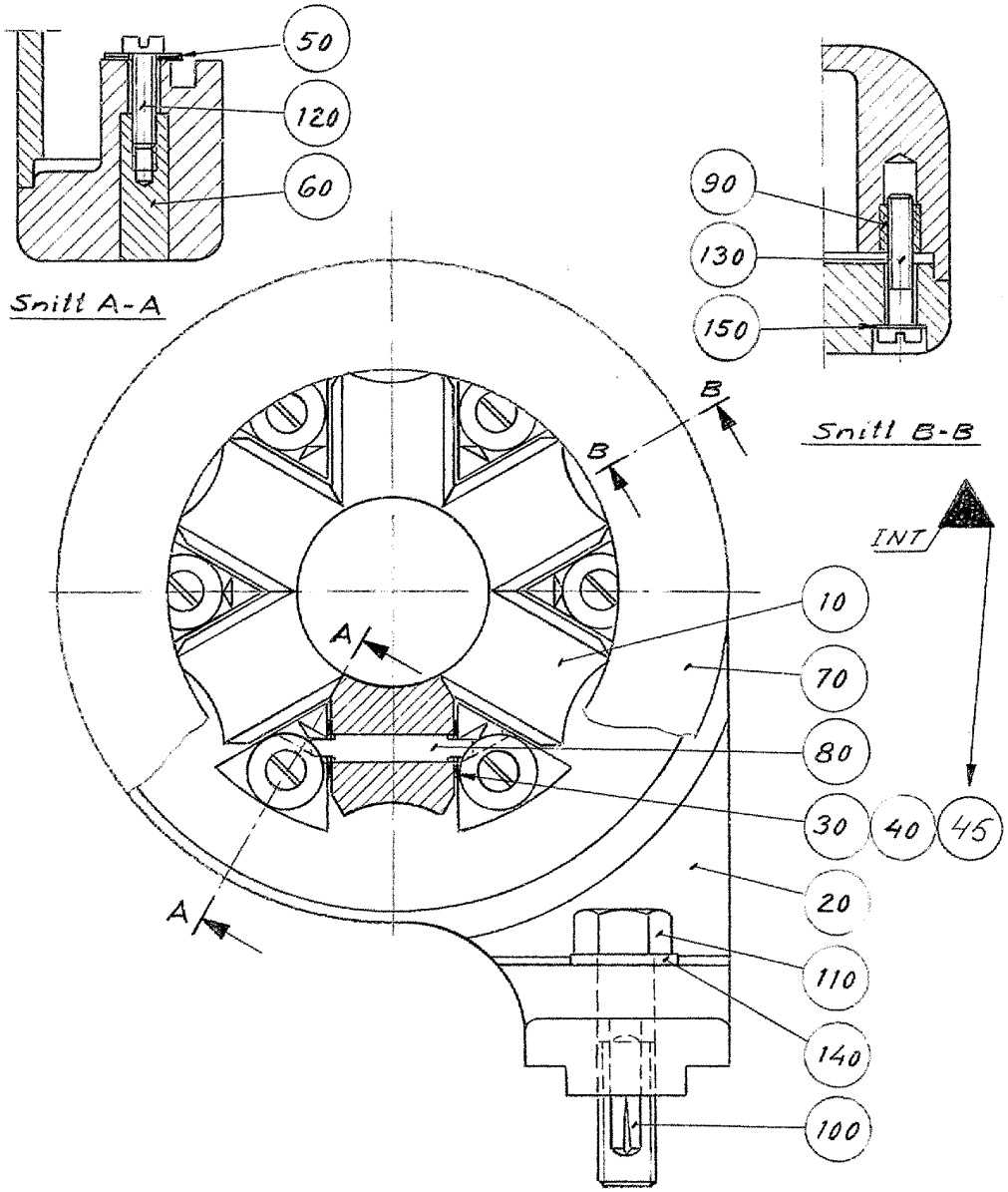
50
120
60
Snitt A-A
90
130
150
B
B
Snitt B-B
INT
A
A
10
70
80
30
40
45
20
110
140
100

ECM: 115130 - 20021219
Group number: 257796-0100
Assembly Drawing: 257796-1_1_AA

Issue: 20030206

Pos	Part No	SP	UN	Qty	Description	Page No
PB105						
10	257680-0000	B		6	ROLL	
PB85						
10	257681-0000	B		6	ROLL	
Common Parts						
100	311303-0310	-		1	SLOTTED PIRPB5X20FZB	
110	312105-0499	-		1	SCREW M6S ISO 4014 M10X40 A480	
120	312125-0293	-		6	SCREW PAN HEAD MCS M4X16 SS	
130	312125-0297	-		2	SCREW PAN HEAD MCS M4X25 SS	
140	315105-0173	-		1	WASHER ISO 7089-10-200 HV-A4	
150	315105-0136	-		2	WASHER ISO 7089-4-200 HV-A4	
20	3093-0000	-		1	RING	
30	2033-0002	B		12	WASHER	
40	2033-0003	B		12	WASHER	
45	2033-0010	B		12	WASHER	
50	2033-0005	B		6	WASHER	
60	2795-0000	-		6	NUT	
70	3094-0000	-		1	LID	
80	3095-0000	A		6	SHAFT	
90	90026-0002	-		2	THREADED INSERTS, BUSHING, M4	

Pos	Part No	SP	UN	Qty	Description	Page No

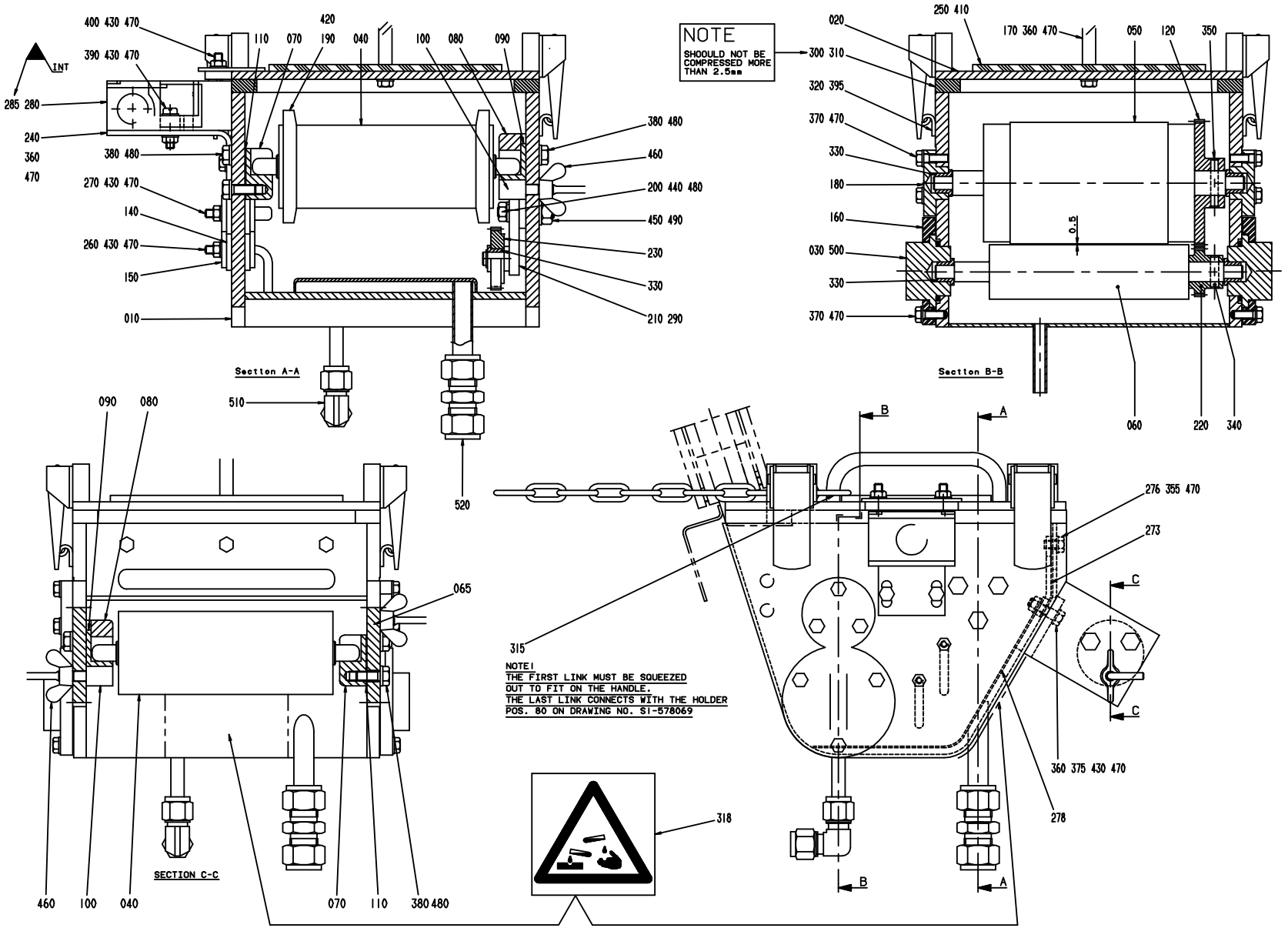
NOTE
SHOULD NOT BE COMPRESSED MORE THAN 2.5mm
Section A-A
Section B-B
SECTION C-C
NOTE!
THE FIRST LINK MUST BE SQUEEZED OUT TO FIT ON THE HANDLE.
THE LAST LINK CONNECTS WITH THE HOLDER POS. 80 ON DRAWING NO. SI-578069
INT
400 430 470
390 430 470
285 280
240
360
470
420
110
070
190
040
100
080
090
380 480
460
200 440 480
450 490
230
330
210 290
270 430 470
140
260 430 470
150
010
510
520
020
300 310
320 395
370 470
330
180
160
030 500
330
370 470
250 410
170 360 470
050
120
350
0.5
060
220
340
090
080
065
315
276 355 470
273
C
360 375 430 470
278
318
460
100
040
070
110
380 480
B
A

Pos	Part No	SP	UN	Qty	Description	Page No
PB105						
50	577913-0002	A		1	BENDING ROLLER	
PB85						
50	577913-0001	A		1	BENDING ROLLER	
Common Parts						
10	577907-0000	-		1	STERILIZATION BATH	
100	10563-0000	-		2	ECCENTRIC	
110	13401-0000	-		10	LACE	
120	27726-0000	-		1	GEAR WHEEL	
140	553114-0000	-		4	SEALING WASHER	
150	553115-0000	-		2	WASHER	
160	562882-0000	-		2	LOCKING CIRCLIP	
170	562884-0000	-		1	HANDLE	
180	577908-0000	-		2	BEARING HOLDER	
190	577909-0000	-		2	FLANGE	
20	577918-0000	-		1	LID	
200	577911-0000	-		1	DOWEL	
210	577912-0000	-		1	LEVER	
220	577915-0000	-		1	GEAR WHEEL	
230	577916-0000	-		1	GEAR WHEEL	
240	577919-0000	-		1	SWITCH BRACKET	
250	578062-0000	-		1	SIGHT GLASS	
260	578063-0001	-		1	ELECTRODE	
270	578063-0002	-		1	ELECTRODE	
273	578077-0000	A		1	RUBBER SEAL	
276	578078-0000	-		1	SEAL HOLDER	
278	580152-0000	-		1	PROTECTION	
280	90044-0201	-		1	KEY SAF.SW. AZ16-03 ZVR K-2254	
285	90044-0310	-		1	KEY FOR SAFETY SWITCH, AZ 15/16 B1	
290	90141-0015	-		1	RETAIN. RING, 8	
30	562875-0000	-		2	ECCENTRIC	
300	90143-0088	A	MM	900	RUBBER STRIP	
310	90153-0016	-	L	1	ADHESIVE,TUBE 100G RHODORSIL CAF 3	
315	90155-0016	-	MM	575	HANGER CHAIN, HL3-2	
318	90194-0141	-		1	CAUTION SIGN ISO, DANGEROUS CHEMICALS	
320	90237-0331	-		4	HOOK FOR 90237-68	
330	90240-0172	A		5	FLANGE BUSHING 8X12X10	
340	311103-0310	-		1	PARALLELL PIN, M6, 5X20 MM	
350	311103-0314	-		1	PARALLELL PIN, M6, 5X30 MM	
355	312105-0323	-		3	SCREW M6S ISO 4017 M5X8 A480	
360	312105-0327	-		6	SCREW M6S ISO 4017 M5X12 A480	
370	312105-0328	-		12	SCREW M6S ISO 4017 M5X14 A480	
375	312105-0331	-		1	SCREW M6S ISO 4017 M5X20 A480	
380	312105-0368	-		10	SCREW M6S M6X16 A280	
390	312125-0331	-		2	SCREW PAN HEAD MCS M5X20 SS	
395	312145-0220	-		8	SCREW COUNTERS.SLOT.HD. MFS 3X6 SS	
40	577910-0000	A		2	BENDING ROLLER	
400	312145-0329	-		2	SCREW COUNTERS.SLOT.HD. MFS 5X16 SS	
410	312165-0323	-		8	SCREW SLOT.RAIS.COUNT.HD.MKFS 5X8 SS	
420	312318-0323	-		6	SCREW ISO4029 M5X8 A4	
430	312605-0314	-		7	HEXAGON NUT, M6M M5 A280	
440	312605-0316	-		1	HEXAGON NUT, M6M M6 A280	
450	312605-0318	-		1	HEXAGON NUT, M6M M8 A280	
460	312715-0116	-		2	NUT WING COLD WORK.MVM-K M6 A280	
470	315105-0146	-		29	WASHER ISO 7089-5-200 HV-A4	
480	315105-0153	-		12	WASHER ISO 7089-6-200 HV-A4	
490	315105-0165	-		1	WASHER ISO 7089-8-200 HV-A4	
500	315204-0220	A		2	O-RING 32,2X3 MM	
510	90030-0279	-		1	CONN. ELBOW, 8	
520	90030-0282	-		1	CONN. PIPE 12	
60	577914-0000	-		1	WETTING ROLLER	
65	580174-0000	A		1	ROLLER BRACKET	
70	10349-0000	A		2	BEARING	
80	10561-0000	-		2	BEARING BRACKET	
90	10562-0000	-		2	BEARING BOX	

Machine Type | Group Description | Used-In | Group Number | Page No

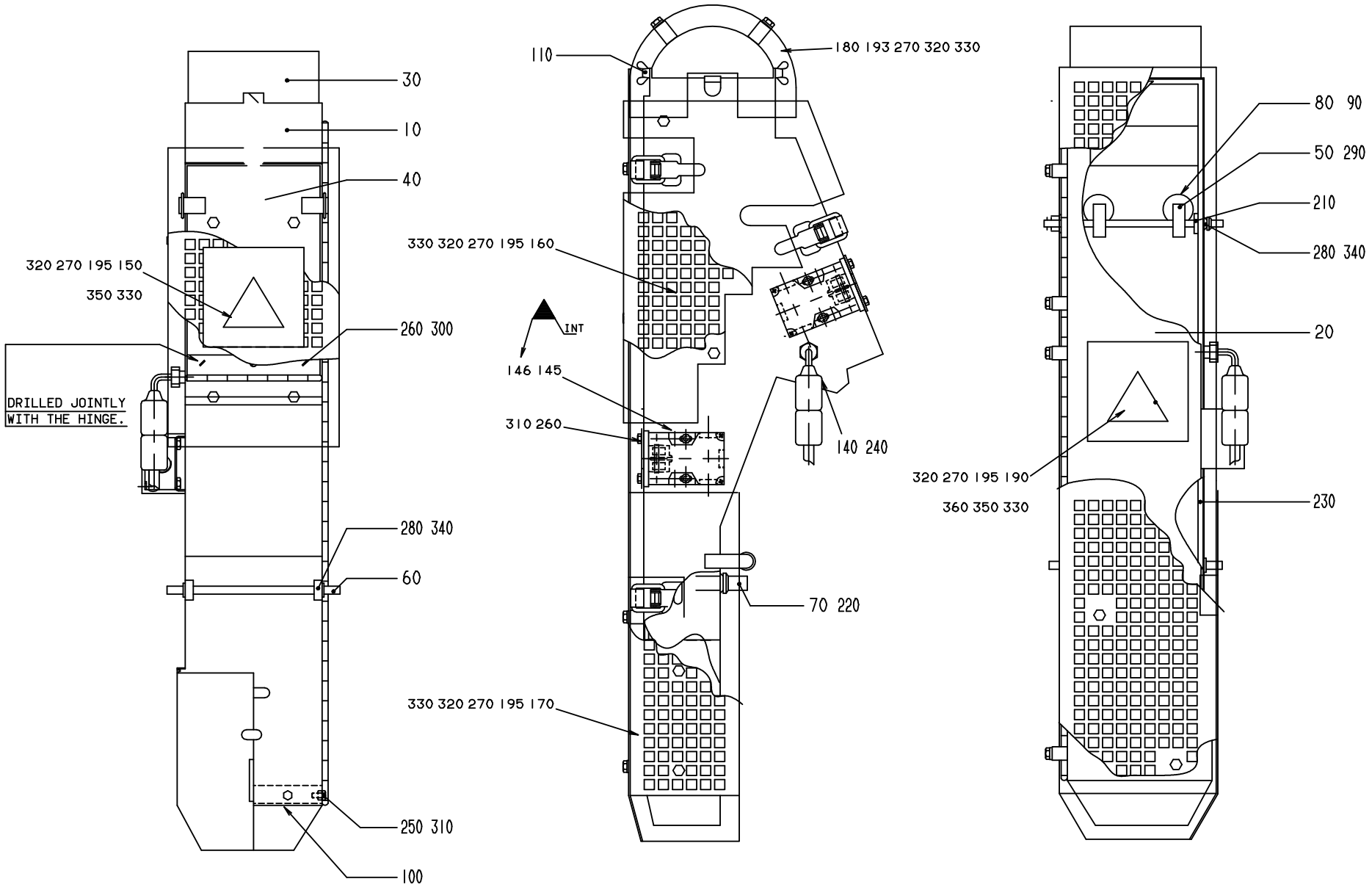
30
10
40
320 270 195 150
350 330
260 300
DRILLED JOINTLY
WITH THE HINGE.
280 340
60
250 310
100
110
180 193 270 320 330
330 320 270 195 160
INT
146 145
310 260
140 240
70 220
330 320 270 195 170
80 90
50 290
210
280 340
20
320 270 195 190
360 350 330
230

ECM: 124732 - 20030120
Group number: 265548-0300
Assembly Drawing: 265548-3_1_AB

Issue: 20030206

Pos	Part No	SP	UN	Qty	Description	Page No
Common Parts						
10	239372-0000	-		1	HOUSE	
100	36920-0000	-		1	LID	
110	239246-0000	-		2	THUMB SCREW	
140	90326-0053	A		1	THERMOCOUPLE, 12826-35	
145	90044-0201	-		2	KEY SAF.SW. AZ16-03 ZVR K-2254	
146	90044-0310	-		2	KEY FOR SAFETY SWITCH, AZ 15/16 B1	
150	1361966-0000	-		1	TOUCH GUARD	
160	1361967-0000	-		1	TOUCH GUARD	
170	1361968-0000	-		1	TOUCH GUARD	
180	1361969-0000	-		1	TOUCH GUARD	
190	1361970-0000	-		1	TOUCH GUARD	
193	1361957-0000	-		4	SPACER	
195	1361978-0000	-		19	SPACER	
20	239373-0000	-		1	DOOR	
210	90091-0030	-		2	V-RING 7X11X5,2 MM	
220	90091-0031	-		1	V-RING 12,5X18,5X7,7 MM	
230	90143-0014	-	MM	2800	STRIP	
240	90330-0034	-		1	NUT, HEXAGON, G1/4	
250	312105-0325	-		3	SCREW M6S ISO 4017 M5X10 A480	
260	312145-0327	-		2	SCREW COUNTERS.SLOT.HD. MFS 5X12 SS	
270	312105-0372	-		23	SCREW M6S ISO 4017 M6X25 A480	
275	312105-0366	-		2	SCREW M6S M6X12 A280	
280	312318-0285	-		8	SCREW ISO4029 M4X6 A4	
290	312318-0360	-		8	SCREW ISO4029 M6X6 A4	
30	19317-0000	-		1	HOOD	
300	312605-0310	-		3	HEXAGON NUT, M6M M3 A280	
310	312605-0314	-		7	HEXAGON NUT, M6M M5 A280	
320	312605-0316	-		23	HEXAGON NUT, M6M M6 A280	
330	315101-0153	-		25	WASHER PLAIN, BRB, 6,4/12 H=1,5	
340	315742-0104	-		8	COLLAR, 8/20, H=9	
350	359705-0007	-		2	WARNING SIGN ISO, HOT SURFACE	
360	318800-0103	-		2	HANDLES,SPHERICAL KNOB,INT.THRE.,D.25-M6	
40	22751-0000	-		1	HATCH	
50	1312-0000	-		4	ROD SUPPORT	
60	19281-0000	-		2	STRUT	
70	19330-0000	-		1	NOZZLE	
80	552990-0000	-		2	ROLL	
90	552991-0000	-		2	SHAFT	

Pos	Part No	SP	UN	Qty	Description	Page No

Machine Type	Group Description	Used-In	Group Number	Page No

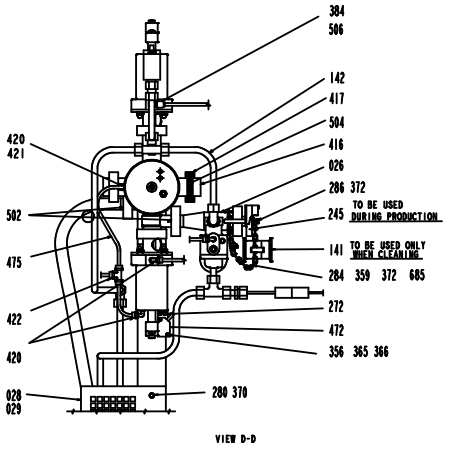

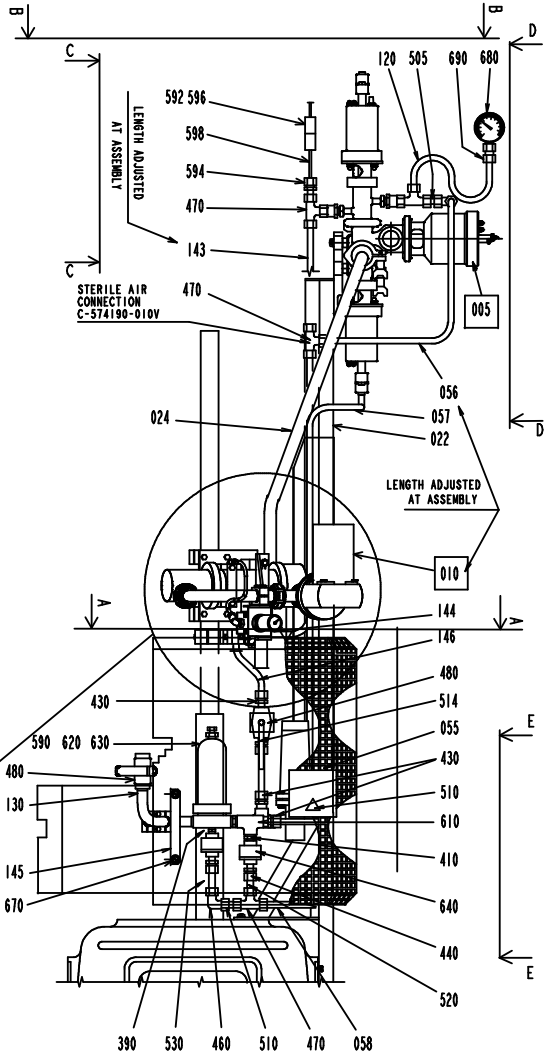

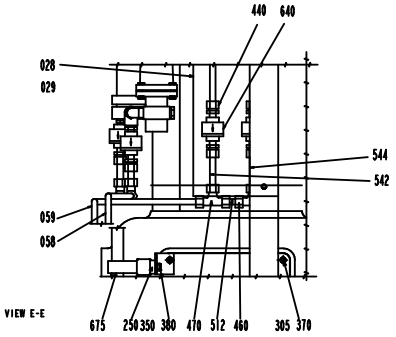

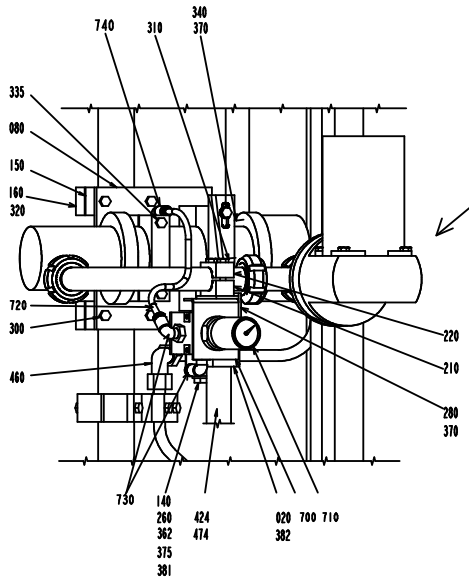

560190-5
ECM 93547

ECM: 115223 - 20021219
Group number: 560190-0300
Assembly Drawing: 560190-5_1_AA

Issue: 20030206

Pos	Part No	SP	UN	Qty	Description	Page No
Common Parts						
120	555921-0000	-		1	PRESSURE GAUGE TUBE	
130	555914-0000	-		1	STEAM PIPE	
135	562954-0000	-		1	BRACKET	
140	567070-0009	-		1	ELECTRODE	
141	571293-0000	-		1	CLEANING PIPE	
142	572785-0000	-		1	STEAM PIPE	
143	572786-0000	-		1	STEAM PIPE	
144	572787-0000	-		1	STEAM PIPE	
145	562955-0000	-		1	HOLDER	
146	572788-0000	-		1	STEAM PIPE	
150	555894-0000	-		3	PIPE CLAMP	
160	555895-0000	-		3	PIPE CLAMP	
170	555898-0000	-		1	PIPE CLAMP	
180	555899-0000	-		1	PIPE CLAMP	
190	555900-0000	-		1	PIPE CLAMP	
20	579929-0000	-		1	HOLDER	
200	555901-0000	-		1	PIPE CLAMP	
210	555902-0000	-		1	PIPE CLAMP	
22	570969-0000	-		1	VALVE BRACKET	
220	555903-0000	-		1	PIPE CLAMP	
230	555904-0000	-		2	PIPE CLAMP	
235	555906-0000	-		1	INTERMEDIATE SECTION	
24	570970-0000	-		1	INTERMEDIATE PIPE	
240	555907-0000	-		1	INTERMEDIARY SECTION	
245	580157-0000	-		1	BLIND PLUG	
250	577389-0000	-		1	SPACER	
255	1362013-0000	-		1	BRACKET	
26	572782-0000	-		1	INTERMEDIATE PIPE	
260	580148-0000	-		1	BRACKET	
265	581612-0000	-		1	COVER PLATE	
272	566362-0000	-		1	MOUNTING SHEET	
275	581906-0000	-		1	TOUCH GUARD	
28	572790-0000	-		1	TOUCH GUARD	
280	312105-0364	-		11	SCREW M6S ISO 4017 M6X10 A480	
284	312105-0327	-		1	SCREW M6S ISO 4017 M5X12 A480	
286	312105-0333	-		1	SCREW M6S ISO 4017 M5X25 A480	
29	572798-0000	-		1	TOUCH GUARD	
290	312105-0366	-		11	SCREW M6S M6X12 A280	
30	572778-0000	-		1	ANGLE BRACKET	
300	312105-0368	-		6	SCREW M6S M6X16 A280	
305	312105-0370	-		7	SCREW M6S ISO 4017 M6X20 A480	
310	312105-0372	-		4	SCREW M6S ISO 4017 M6X25 A480	
320	312105-0376	-		6	SCREW M6S ISO 4014 M6X35 A480	
335	312105-0380	-		3	SCREW M6S ISO 4014 M6X50 A480	
340	312105-0381	-		2	SCREW M6S ISO 4014 M6X55 A480	
345	312105-0382	-		2	SCREW M6S ISO 4014 M6X60 A480	
350	312105-0451	-		1	SCREW M6S ISO 4017 M8X20 A480	
354	312105-0455	-		4	SCREW M6S ISO 4017 M8X30 A480	
356	312125-0230	-		2	SCREW PAN HEAD MCS M3X20 SS	
358	312125-0234	-		2	SCREW PAN HEAD MCS M3X30 SS	
359	312605-0314	-		1	HEXAGON NUT, M6M M5 A280	
360	312605-0316	-		2	HEXAGON NUT, M6M M6 A280	
362	312605-0312	-		2	HEXAGON NUT, M6M M4 A280	
365	315105-0124	-		4	WASHER ISO 7089-3-200 HV-A4	
366	312812-0310	-		2	HEXAGON NUT, NY-LOCK M3 A480	
370	315105-0153	-		23	WASHER ISO 7089-6-200 HV-A4	
372	315105-0146	-		2	WASHER ISO 7089-5-200 HV-A4	
375	315105-0136	-		3	WASHER ISO 7089-4-200 HV-A4	
380	315105-0165	-		9	WASHER ISO 7089-8-200 HV-A4	
381	315204-0208	A		1	O-RING 9,3X2,4 MM	
382	315204-0215	-		2	O-RING 19,2X3 MM	
384	315233-0109	-		1	WASHER PL.RND.NYL.10,3/14,H=1	
385	315250-0101	-		1	GASKET 32X25X5,5 MM	
386	342219-0204	-		2	SHUTTER	
390	342700-0110	-		1	"NIPPLES,HEXAGON,EXT.G-THREAD G1/4""-G1/4"""	
40	1361999-0000	-		1	PROTECTION	
400	342700-0113	-		3	"NIPPLES,HEXAGON,EXT.G-THREAD G1/2""-G1/2"""	
410	342700-0205	-		1	"NIPPLES,HEXAGON,EXT.G-THREAD G1/2""-G1/4"""	
415	342807-0101	-		1	PIPE ELBOW 90 DEGR. SMS1220, D=25 MM	
416	342830-0203	-		3	FERRULE, SMS 1145, 2343, NO.9611-31-0200	
417	342840-0103	-		6	CLAMPING PIECE	
420	342930-0113	-		5	"ELBOW 90 COUPL.,EXT.THREAD 6/4-R1/8"""	
421	315233-0101	-		1	WASHER PL.RND.NYL.5,2/8,H=1	
422	342946-0112	-		1	T-COUPLING,UNION 6/4	
424	342991-0105	-		1	HOSE CLIP,WORM DRIVE TYPE (27)-30	
425	346800-0109	-		4	"SILENCER FILTER R1/8"""	
430	90030-0213	-		4	CONN. STR. M12 MSC1/2K-316 EXT. TAPPERED	
440	90030-0274	-		4	CONN. STR.12-1/4 NPT, EXT. TAPPERED	
45	1362001-0000	-		1	PLATE	
450	90030-0276	-		1	CONN. ELBOW, 12-1/2 NPT, EXT.THREAD	
460	90030-0280	-		5	CONN. ELBOW, 12	
470	90030-0281	-		5	CONN. T-PIPE 12	
472	90044-0104	-		3	PROX.SWITCH IFM IN 3002	

Machine Type | Group Description | Used-In | Group Number | Page No

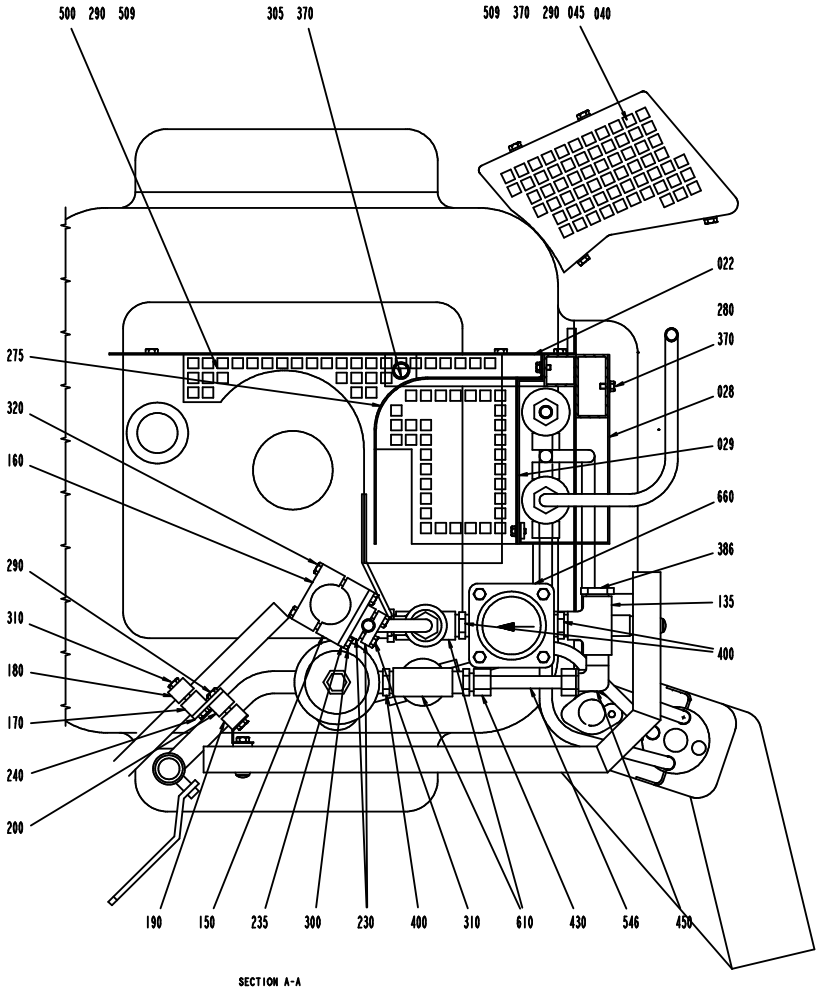

SECTION A-A

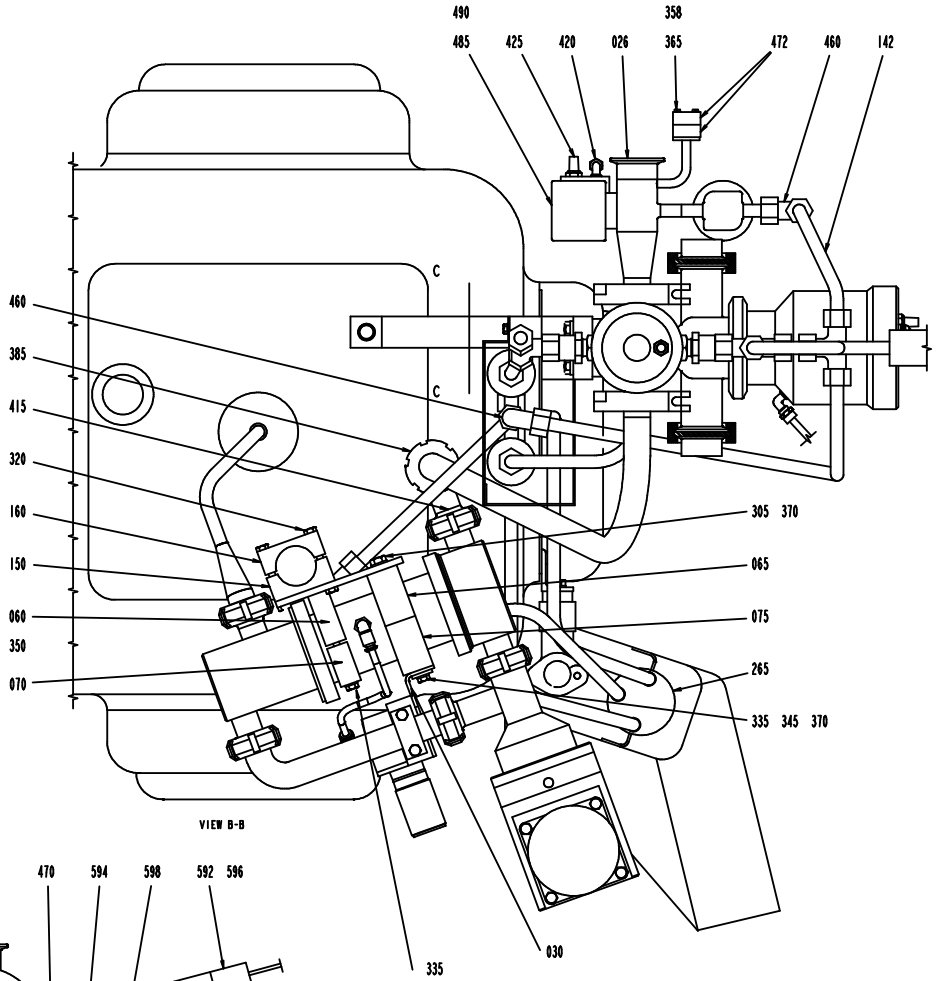

VIEW B-B

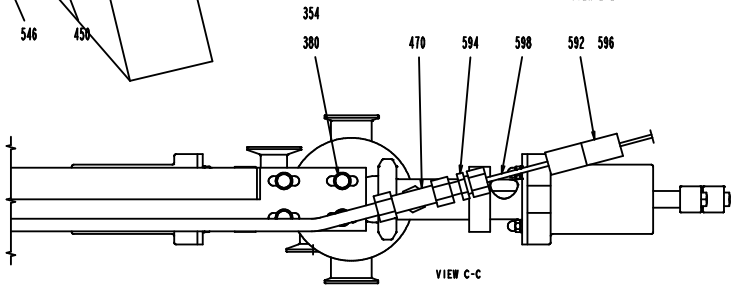

VIEW C-C

560190-6
ECN 93547

Pos	Part No	SP	UN	Qty	Description	Page No
Common Parts (Cont'd)						
474	90166-0060	-	M	3	HOSE 19/26-27 REINF.PVC	
475	90166-0081	-	M	25	TUBE 6 MM PA BLUE	
480	90187-0125	A		2	BALL VALVE G1/2	
485	90187-0313	-		2	DIAPHRAGM	
490	90187-0115	A		2	GUIDING ARBOR	
500	1362011-0000	-		1	TOUCH GUARD	
502	90217-0306	-		2	GASKET 22,8X50,5X5,5 MM	
504	90217-0307	-		4	GASKET 35,8X50,5X5,5 MM	
505	90266-0154	-	MM	53	PIPE	
506	90235-0288	B		1	VALVE	
509	359705-0007	-		3	WARNING SIGN ISO, HOT SURFACE	
510	90266-0154	-	MM	55	PIPE	
512	90266-0154	-	MM	58	PIPE	
514	90266-0154	-	MM	60	PIPE	
520	90266-0154	-	MM	65	PIPE	
530	90266-0154	-	MM	80	PIPE	
542	90266-0154	-	MM	105	PIPE	
544	90266-0154	-	MM	105	PIPE	
546	90266-0154	-	MM	112	PIPE	
55	1362009-0000	-		1	TOUCH GUARD	
56	572783-0000	-		1	STEAM PIPE	
57	572784-0000	-		1	STEAM PIPE	
58	579301-0000	-		1	DRAIN PIPE	
59	579302-0000	-		1	DRAIN PIPE	
590	90277-0339	-		1	O-RING, ACS0272 EU FOR PALL FILTER	
592	90326-0012	-		2	PROTECTIVE COVER, T31A4618	
594	90326-0306	-		2	"GLAND FITTING 9041-45-KS-KR.1/8"" D=4,5MM"	
596	90326-0020	-		2	PLUG, FEMALE YELLOW CR-AL	
598	90326-0037	A		2	THERMOCOUPLE, CR-AL PREM.G	
60	555896-0000	-		1	PIPE CLAMP	
610	90330-0049	-		2	T-PIPE, INT. THREAD, R-221R1/2	
620	90337-0315	B		1	FILTERINSERT / MCS 4463	
630	B90277-0055	-		1	FILTER HOUSING / MDS 4463 G 08 H	
	90277-0339	*-*		*1*	*O-RING, ACS0272 EU FOR PALL FILTER*	
640	90360-0025	B		4	"STEAM TRAP / MST 18,G 1/4; 6 DEGREE C"	
65	573509-0000	-		1	DRAIN CLAMP	
660	90360-0015	-		1	REDUCING VALVE	
670	B90237-0074	-		4	FAST LOCK, SK-M6	
	90237-0359	*-*		*1*	*SNAP IN LOCK*	
675	90165-0176	-		1	PIPE SUPPORT, FOR DIAM. 25 MM PIPE	
680	90043-0082	A		1	PRESSURE GAUGE, 2740, D=63 MM	
685	90155-0008	-	MM	420	HANGER CHAIN, 18	
690	342790-0109	-		1	CONN. PRESS. GAUGE MAV12-LRFZB	
70	555897-0000	-		1	PIPE CLAMP	
700	2519590-0000	-		1	BRACKET	
710	90113-0097	-		1	PRESSURE REGULATOR	
720	90166-0081	-	MM	2000	TUBE 6 MM PA BLUE	
730	90458-2957	-		2	ELBOW PIPE JOINT, EXT.THREAD, D=6MM-G1/4	
740	90458-2956	-		1	ELBOW PIPE JOINT, EXT.THREAD, D=6MM-G1/8	
75	572780-0000	-		1	DRAIN CLAMP	
80	572779-0000	-		1	INTERMEDIARY SECTION	
F005	A566373-0100	-		1	AP-VALVE 38/25	**67**
F010	A736620-0200	-		1	CONSTANT FLOW VALVE	**79, 81**

Machine Type | Group Description | Used-In | Group Number | Page No

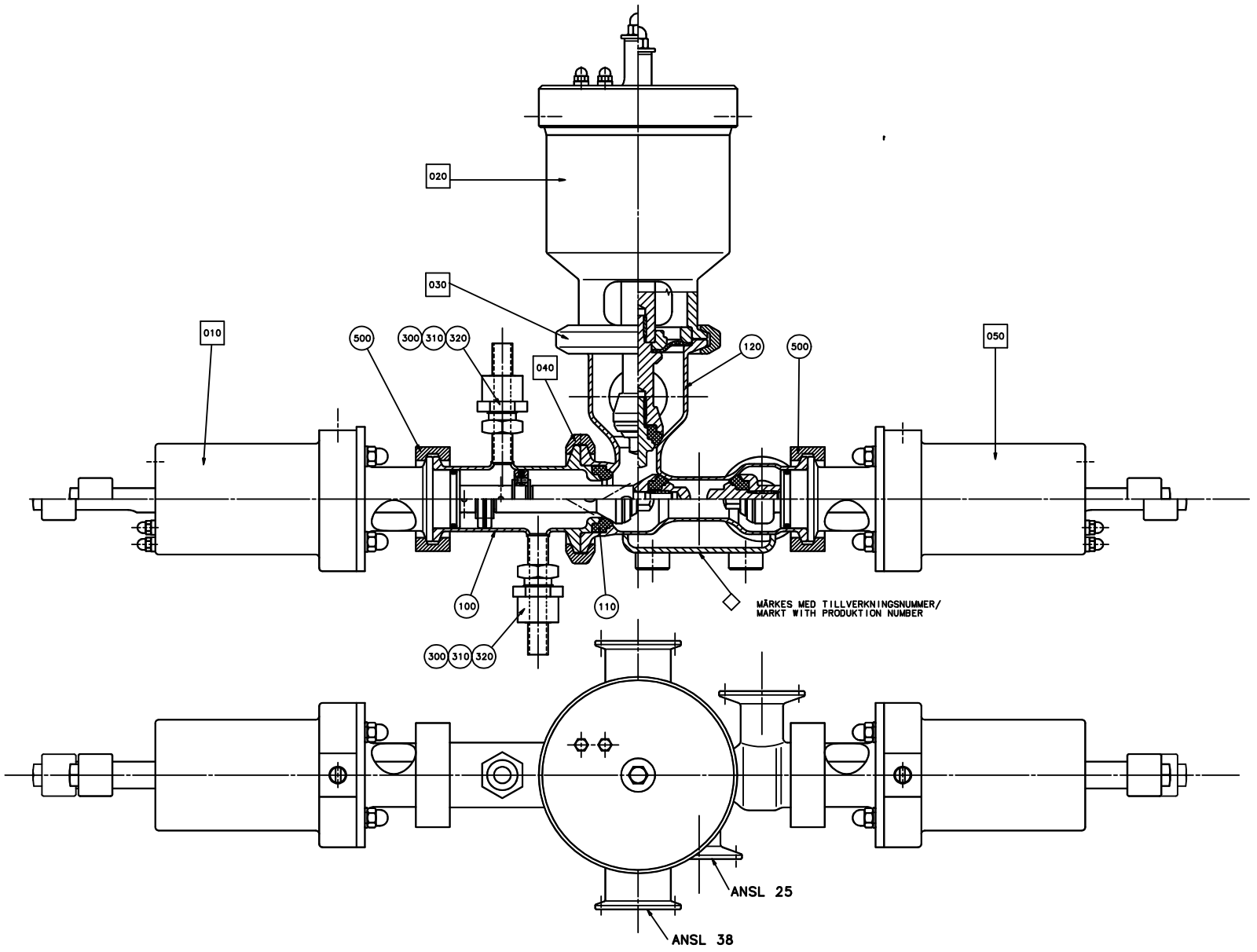
020
030
010
500
300
310
320
040
120
500
050
100
110
300
310
320
MÄRKES MED TILLVERKNINGSNUMMER/
MARKT WITH PRODUKTION NUMBER
ANSL 25
ANSL 38

ECM: 81923 - 20000814
Group number: 566373-0100
Assembly Drawing: 566373-1_1_AA

Issue: 20030206

Pos	Part No	SP	UN	Qty	Description	Page No
Common Parts						
100	566353-0000	-		1	STEAM HOUSE	
110	566356-0000	B		1	SEAL RING	
120	566352-0000	A		1	VALVE HOUSING	
300	90091-0266	B		2	SEAL RING 10,4X16,3X2,5 MM	
310	90030-0336	-		2	CONN. STRAIGHT, 316L-12M-BVCO-3	
320	90030-0338	-		2	NUT, PIPE & CONNECTORS, SS-8-BVCO-4	
500	342840-0103	-		2	CLAMPING PIECE	
F010	A566371-0101	-		1	C-CYLINDER 38/25	**69**
F020	A566374-0101	-		1	A-CYLINDER 25	**71**
F030	A541164-0201	-		1	CLAMP RING	**73**
F040	A566376-0101	-		1	CLAMP RING	**75**
F050	A566372-0101	-		1	B-CYLINDER 38/25	**77**

Pos	Part No	SP	UN	Qty	Description	Page No

Machine Type | Group Description | Used-In | Group Number | Page No

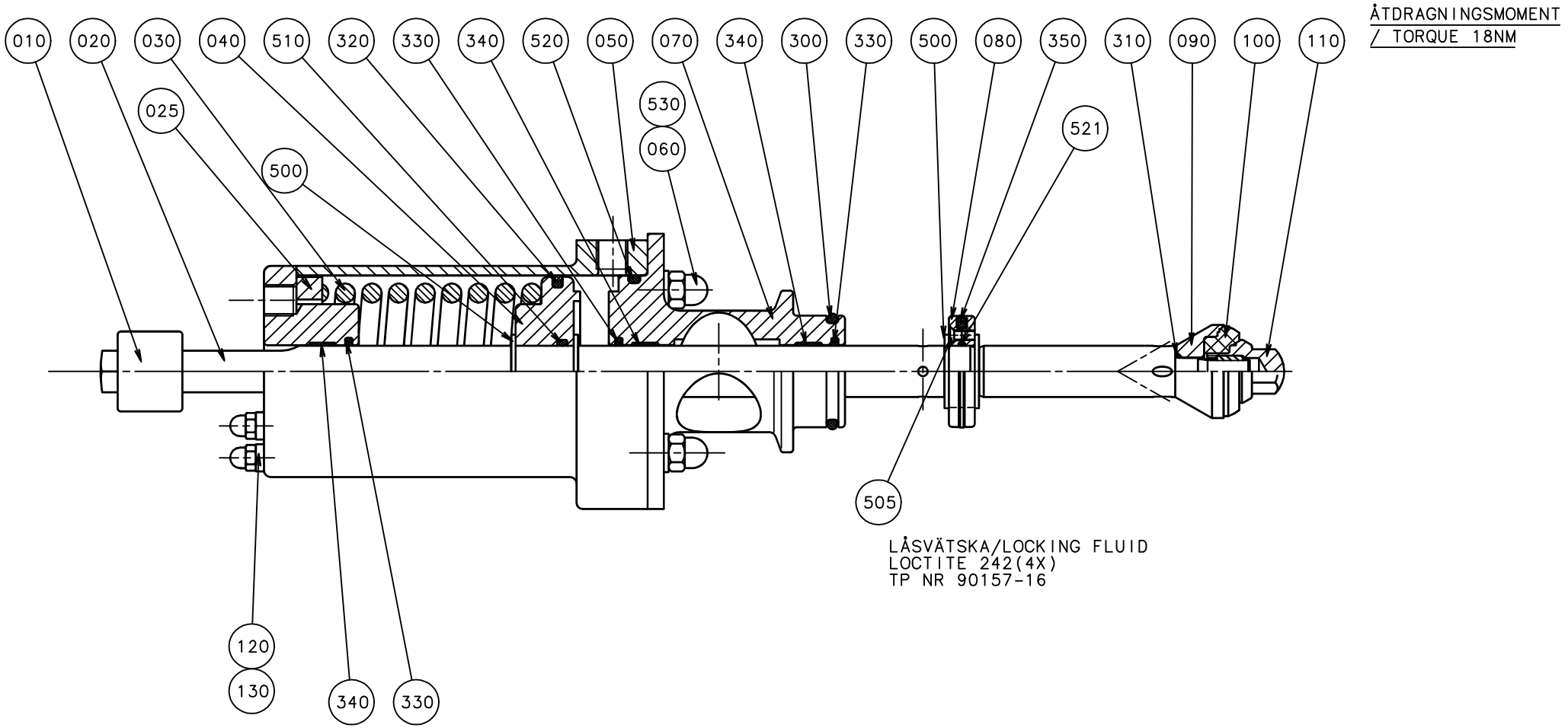
010
020
030
040
510
320
330
340
520
050
070
340
300
330
500
080
350
310
090
100
110
025
530
060
500
521
505
120
130
340
330
ÅTDRAGNINGSMOMENT / TORQUE 18NM
LÅSVÄTSKA/LOCKING FLUID
LOCTITE 242(4X)
TP NR 90157-16

ECM: 83470 - 20000925
Group number: 566371-0101
Assembly Drawing: 566371-1_1_AA

Issue: 20030206

Pos	Part No	SP	UN	Qty	Description	Page No
Common Parts						
10	566370-0000	A		1	LUG	
100	556118-0000	A		1	SEAL-RING (25)	
110	566357-0000	A		1	VALVE CONE	
120	554857-0000	-		1	SCREW	
130	554856-0000	-		1	WASHER	
20	566359-0000	A		1	PISTON ROD	
25	566483-0000	A		1	SPACER	
30	566368-0000	A		1	SPRING	
300	90242-0110	B		1	O-RING 29,2X3,0 MM	
310	90242-0109	B		1	O-RING 7,1X1,6 MM	
320	90091-0269	B		1	PISTON SEAL, GLIDORING 52,5X60X3 MM	
330	90091-0268	B		3	ROD SEAL, GLIDORING 16X20,9X1,78 MM	
340	90091-0267	B		3	WEAR RING 16X18X8,1 MM	
350	90091-0282	B		1	PISTON SEAL 27X35X1,78 MM	
40	566360-0000	A		1	PISTON	
50	566355-0000	A		1	AIR CYLINDER	
500	315755-0112	-		4	LOCKING WASHER 12	
505	312145-0220	-		4	SCREW COUNTERS.SLOT.HD. MFS 3X6 SS	
510	315204-0213	B		1	O-RING 15,2X2,4 MM	
520	315204-0302	B		1	O-RING 54,5X3 MM	
521	315204-0113	B		1	O-RING 15,1X1,6 MM	
530	315105-0153	-		4	WASHER ISO 7089-6-200 HV-A4	
60	566367-0000	-		4	SCREW	
70	566354-0000	-		1	END SEKTION CYLINDER	
80	566485-0000	A		2	VALVE DISC	
90	566358-0000	A		1	COUNTER PLATE	

Pos	Part No	SP	UN	Qty	Description	Page No

Machine Type | Group Description | Used-In | Group Number | Page No

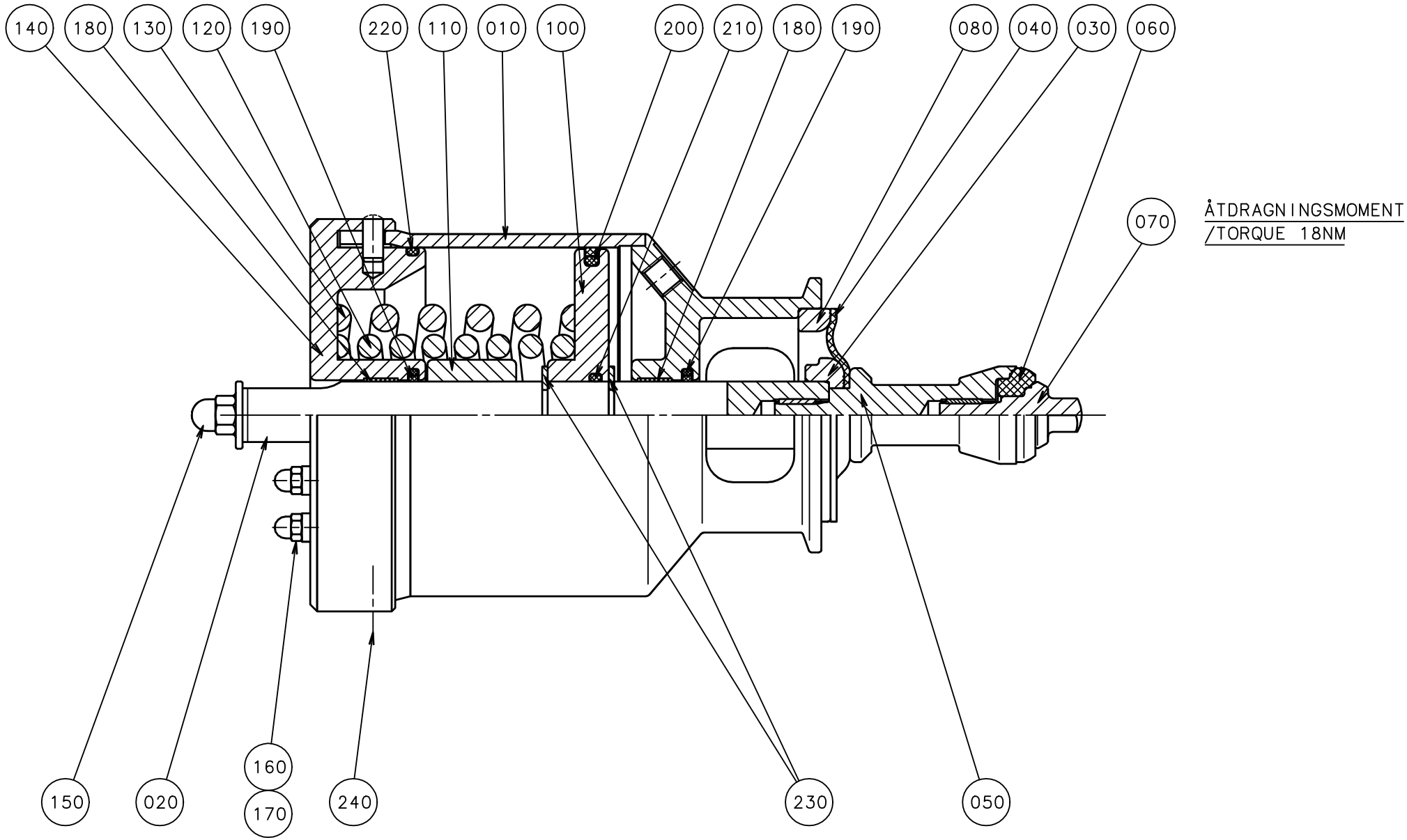
140
180
130
120
190
220
110
010
100
200
210
180
190
080
040
030
060
070
ÅTDRAGNINGSMOMENT
/TORQUE 18NM
150
020
160
170
240
230
050

ECM: 83473 - 20000925
Group number: 566374-0101
Assembly Drawing: 566374-1_1_AA

Issue: 20030206

Pos	Part No	SP	UN	Qty	Description	Page No
Common Parts						
10	556109-0000	-		1	CYLINDER HOUSING	
100	556116-0000	A		1	PISTON	
110	556110-0000	-		1	SPACER	
120	556112-0000	A		1	COMPRESSION SPRING	
130	556120-0000	A		1	COMPRESSION SPRING	
140	556111-0000	-		1	END SECTION	
150	554855-0000	-		1	SCREW	
160	554856-0000	-		2	WASHER	
170	554857-0000	-		2	SCREW	
180	90091-0238	B		2	WEAR RING 20X22X10 MM	
190	90091-0237	B		2	ROD SEAL, GLIDORING 20X27,5X3 MM	
20	556117-0000	A		1	PISTON ROD	
200	90091-0236	B		1	PISTON SEAL, GLIDORING 89X100X4 MM	
210	315204-0215	B		1	O-RING 19,2X3 MM	
220	315204-0310	B		1	O-RING 94,5X3 MM	
230	315754-0113	A		2	LOCKING WAE 15	
240	312125-0323	-		1	SCREW PAN HEAD MCS M5X8 SS	
245	315233-0101	B		1	WASHER PL.RND.NYL.5,2/8,H=1	
30	556115-0000	A		1	WASHER	
40	794246-0000	B		1	DIAPHRAGM	
50	566363-0000	-		1	SEAL-RING HOLDER	
60	556118-0000	B		1	SEAL-RING (25)	
70	556113-0000	A		1	VALVE CONE	
80	556114-0000	A		1	RING	

Pos	Part No	SP	UN	Qty	Description	Page No

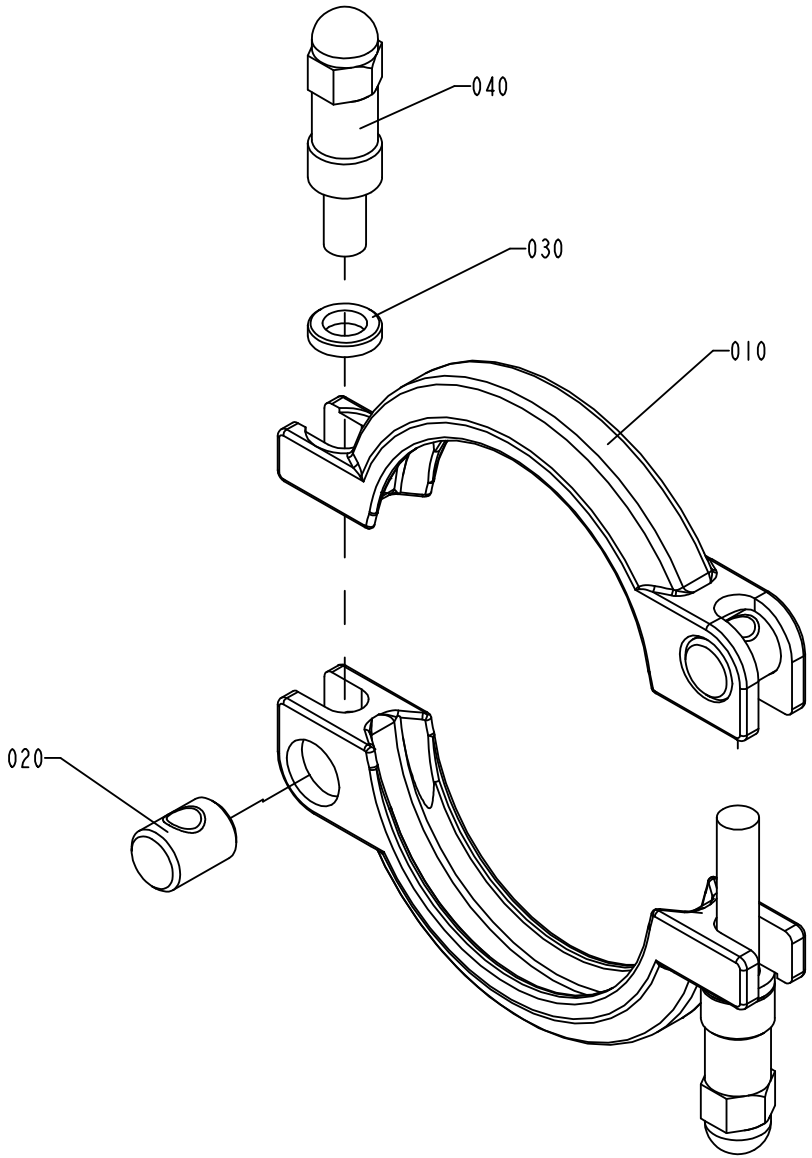

S-541164-2
ECN 71956

ECM: 83459 - 20000925
Group number: 541164-0201
Assembly Drawing: 541164-2_1_AB

Issue: 20030206

Pos	Part No	SP	UN	Qty	Description	Page No
Common Parts						
10	532118-0000	A		2	CLAMP RING	
20	497748-0000	A		2	PIN	
30	541165-0000	A		2	WASHER	
40	554162-0000	A		2	SCREW	

Pos	Part No	SP	UN	Qty	Description	Page No

Machine Type	Group Description	Used-In	Group Number	Page No

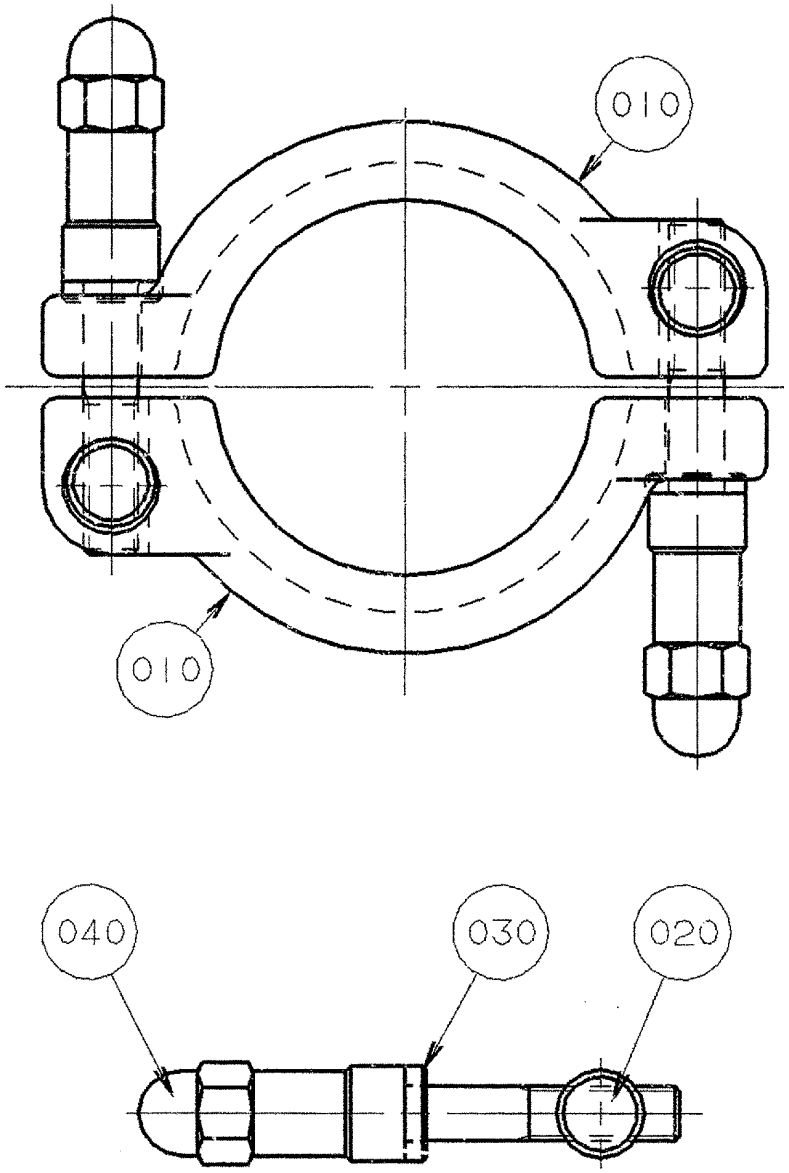
010
010
040
030
020

ECM: - -
Group number: 566376-0101
Assembly Drawing: 566376-1_1_AA

Issue: 20030206

Pos	Part No	SP	UN	Qty	Description	Page No
Common Parts						
10	566375-0000	-		2	CLAMP RING	
20	497748-0000	-		2	PIN	
30	541165-0000	-		2	WASHER	
40	554162-0000	-		2	SCREW	

Pos	Part No	SP	UN	Qty	Description	Page No

Machine Type	Group Description	Used-In	Group Number	Page No

ÅTDRAGNINGSMOMENT
/TORQUE 18NM

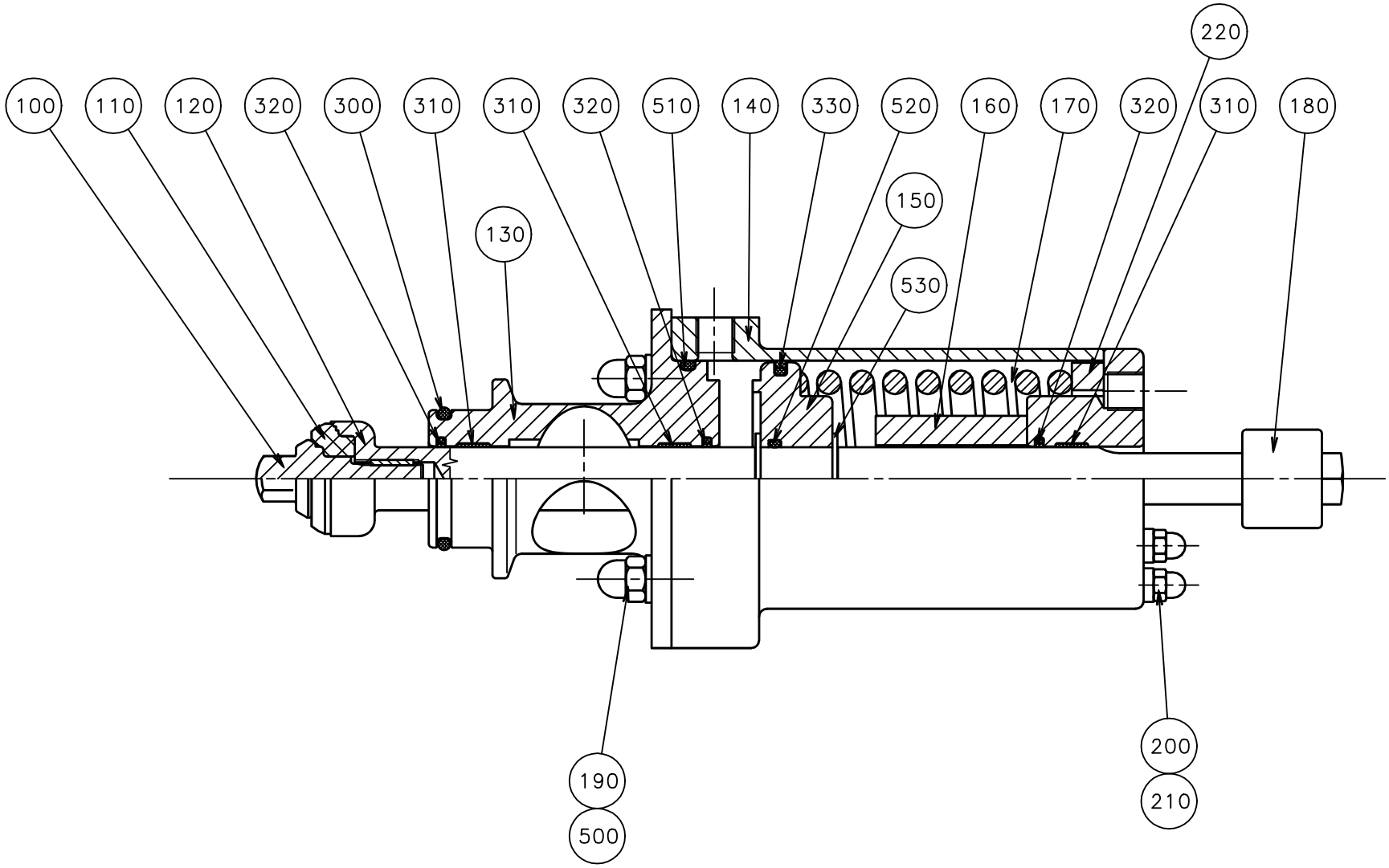

ECM: 83471 - 20000925
Group number: 566372-0101
Assembly Drawing: 566372-1_1_AA

Issue: 20030206

Pos	Part No	SP	UN	Qty	Description	Page No
Common Parts						
100	556113-0000	A		1	VALVE CONE	
110	556118-0000	B		1	SEAL-RING (25)	
120	566361-0000	A		1	PISTON ROD	
130	566354-0000	-		1	END SEKTION CYLINDER	
140	566355-0000	A		1	AIR CYLINDER	
150	566360-0000	A		1	PISTON	
160	566369-0000	-		1	STOP SLEEVE	
170	566368-0000	A		1	SPRING	
180	566370-0000	A		1	LUG	
190	566367-0000	-		4	SCREW	
200	554857-0000	-		2	SCREW	
210	554856-0000	-		2	WASHER	
220	566483-0000	A		1	SPACER	
300	90242-0110	B		1	O-RING 29,2X3,0 MM	
310	90091-0267	B		3	WEAR RING 16X18X8,1 MM	
320	90091-0268	B		3	ROD SEAL, GLIDORING 16X20,9X1,78 MM	
330	90091-0269	B		1	PISTON SEAL, GLIDORING 52,5X60X3 MM	
500	315105-0153	-		4	WASHER ISO 7089-6-200 HV-A4	
510	315204-0302	B		1	O-RING 54,5X3 MM	
520	315204-0213	B		1	O-RING 15,2X2,4 MM	
530	315755-0112	-		2	LOCKING WASHER 12	

Pos	Part No	SP	UN	Qty	Description	Page No

Machine Type | Group Description | Used-In | Group Number | Page No

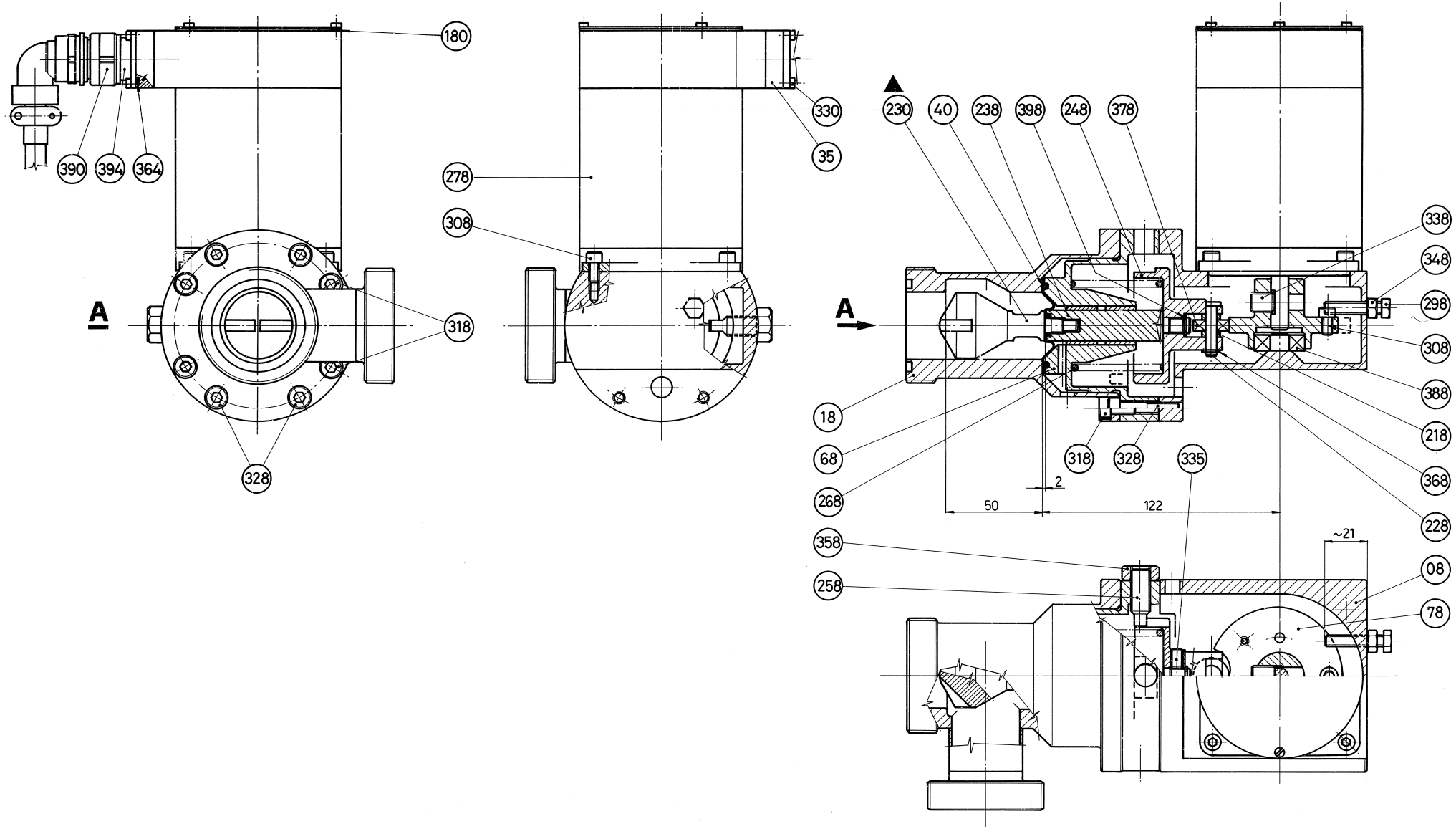
180
390
394
364
A
318
328
330
35
278
308
230
40
238
398
248
378
338
348
298
308
388
218
368
228
18
68
268
318
328
335
2
50
122
358
258
~21
08
78

ECM: 115216 - 20021219
Group number: 736620-0200
Assembly Drawing: 736620-1_1_AA

Issue: 20030206

Pos	Part No	SP	UN	Qty	Description	Page No
TCA/25						
100	555477-0000	-		1	PIPE	
18	555479-0000	-		1	VALVE HOUSING	
20	555480-0000	-		1	VALVE HOUSING	
230	555478-0000	-		1	PISTON	
60	555481-0000	-		1	HOUSE	
83	12242-0001	-		3	GASKET 32X25X5,5	
Common Parts						
120	529908-0000	-		1	WASHER	
130	795930-0000	A		1	TIE ROD	
140	529910-0000	-		1	THRUST WASHER	
150	795931-0000	A		1	CLOSING DEVICE	
180	736288-0000	-		1	GASKET	
200	736514-0000	-		1	SHOCK ABSORBER	
210	925091-0000	-		2	DIAPHRAGM	
218	736619-0000	-		2	WASHER	
228	736624-0000	-		1	SPINDLE	
238	736625-0000	-		1	SHAFT	
248	736626-0000	-		1	FORK	
258	736627-0000	-		1	SCREW	
268	736629-0000	A		1	COMPRESSION SPRING	
278	736630-0000	-		1	MOTOR	
298	312109-0374	-		1	SCREW M6S ISO 4017 M6X30 A480	
30	924361-0000	-		1	BODY CENTRAL VALVE	
308	312115-0325	-		5	SCREW ISO4762 M5X10 A4	
318	312115-0366	-		4	SCREW ISO4762 M6X12 A4	
320	312115-0368	-		8	SCREW ISO4762 M6X16 A4	
328	312115-0374	-		4	SCREW ISO4762 M6X30 A4	
330	312125-0222	-		4	SCREW PAN HEAD MCS M3X8 SS	
335	312318-0364	-		2	SCREW ISO4029 M6X10 A4	
338	312318-0487	-		1	SCREW ISO4029 M10X12 A4	
348	312605-0316	-		1	HEXAGON NUT, M6M M6 A280	
35	736286-0000	-		1	FLANGE	
358	312605-0320	-		1	HEXAGON NUT, M6M M10 A280	
364	315202-0118	-		1	O-RING 22,1X1,6 MM	
368	315751-0103	A		1	RETAIN. RING, 6	
378	321302-0296	-		1	BALL BEARING, 2 SEALS, 6X19X6 MM	
388	321308-0200	-		1	BALL BEARING, 2 SEALS, 10X26X8 MM	
390	90001-0004	-		1	CONNECTOR, MS 3108E-14S-2S	
394	90110-0003	-		1	PLUG, MS 3102E-14S-2P	
398	90140-0015	-		1	T-PIPE, INT. THREAD, 2003-1/8	

Pos	Part No	SP	UN	Qty	Description	Page No
40	736508-0001	-		1	MEMBRANE	
68	736622-0000	-		1	BODY	
78	736623-0000	-		1	CAM	
8	736621-0000	-		1	HOLDER	
90	439854-0000	A		1	COMPRESSION SPRING	
90	529659-0000	-		1	COMPRESSION SPRING	
90	529657-0000	-		1	COMPRESSION SPRING	

Machine Type | Group Description | Used-In | Group Number | Page No

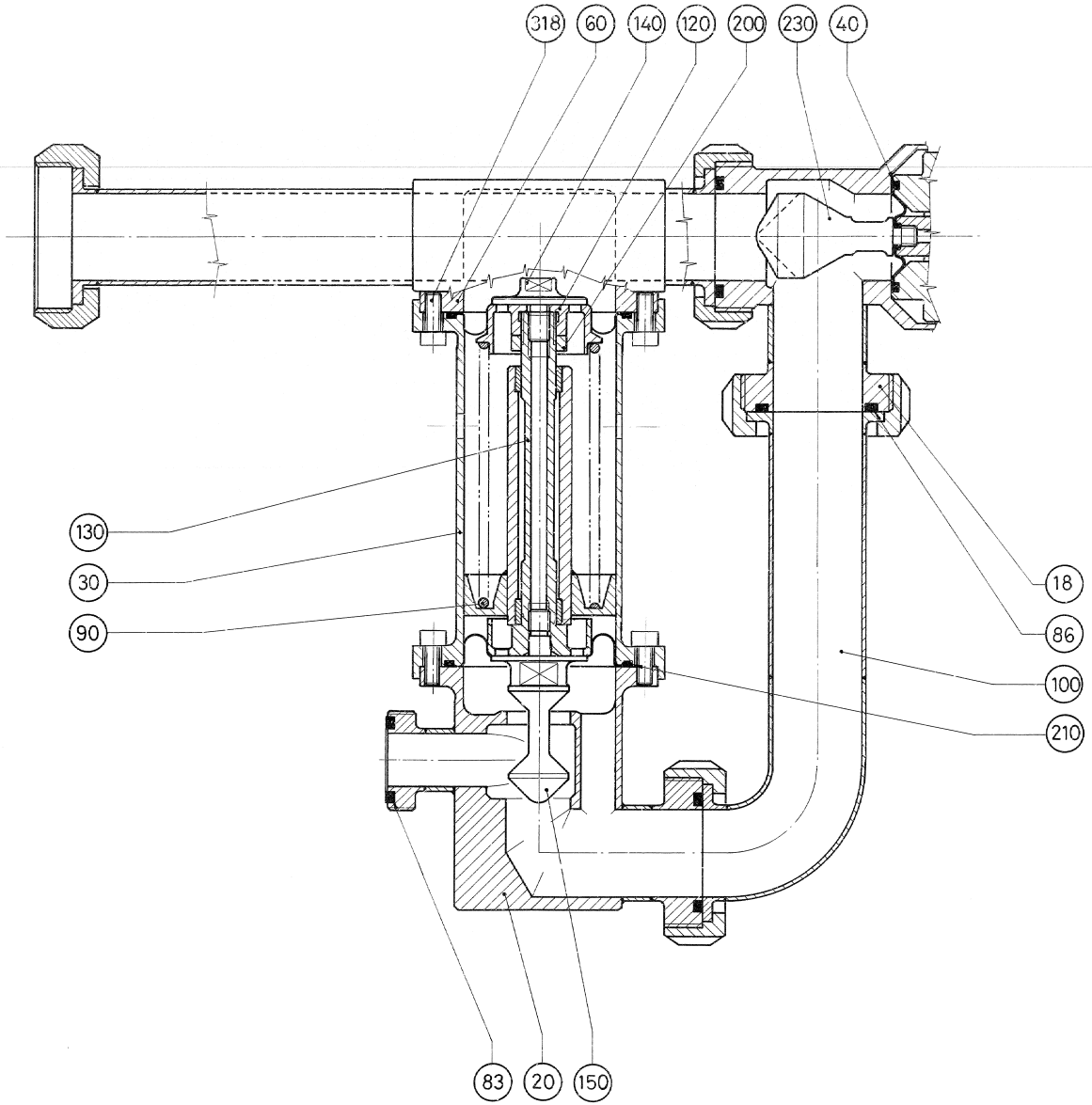
318
60
140
120
200
230
40
130
30
90
18
86
100
210
83
20
150

ECM: 115216 - 20021219
Group number: 736620-0200
Assembly Drawing: 736620-3_1_AA

Issue: 20030206

Pos	Part No	SP	UN	Qty	Description	Page No
TCA/25						
100	555477-0000	-		1	PIPE	
18	555479-0000	-		1	VALVE HOUSING	
20	555480-0000	-		1	VALVE HOUSING	
230	555478-0000	-		1	PISTON	
60	555481-0000	-		1	HOUSE	
83	12242-0001	-		3	GASKET 32X25X5,5	
Common Parts						
120	529908-0000	-		1	WASHER	
130	795930-0000	A		1	TIE ROD	
140	529910-0000	-		1	THRUST WASHER	
150	795931-0000	A		1	CLOSING DEVICE	
180	736288-0000	-		1	GASKET	
200	736514-0000	-		1	SHOCK ABSORBER	
210	925091-0000	-		2	DIAPHRAGM	
218	736619-0000	-		2	WASHER	
228	736624-0000	-		1	SPINDLE	
238	736625-0000	-		1	SHAFT	
248	736626-0000	-		1	FORK	
258	736627-0000	-		1	SCREW	
268	736629-0000	A		1	COMPRESSION SPRING	
278	736630-0000	-		1	MOTOR	
298	312109-0374	-		1	SCREW M6S ISO 4017 M6X30 A480	
30	924361-0000	-		1	BODY CENTRAL VALVE	
308	312115-0325	-		5	SCREW ISO4762 M5X10 A4	
318	312115-0366	-		4	SCREW ISO4762 M6X12 A4	
320	312115-0368	-		8	SCREW ISO4762 M6X16 A4	
328	312115-0374	-		4	SCREW ISO4762 M6X30 A4	
330	312125-0222	-		4	SCREW PAN HEAD MCS M3X8 SS	
335	312318-0364	-		2	SCREW ISO4029 M6X10 A4	
338	312318-0487	-		1	SCREW ISO4029 M10X12 A4	
348	312605-0316	-		1	HEXAGON NUT, M6M M6 A280	
35	736286-0000	-		1	FLANGE	
358	312605-0320	-		1	HEXAGON NUT, M6M M10 A280	
364	315202-0118	-		1	O-RING 22,1X1,6 MM	
368	315751-0103	A		1	RETAIN. RING, 6	
378	321302-0296	-		1	BALL BEARING, 2 SEALS, 6X19X6 MM	
388	321308-0200	-		1	BALL BEARING, 2 SEALS, 10X26X8 MM	
390	90001-0004	-		1	CONNECTOR, MS 3108E-14S-2S	
394	90110-0003	-		1	PLUG, MS 3102E-14S-2P	
398	90140-0015	-		1	T-PIPE, INT. THREAD, 2003-1/8	

Pos	Part No	SP	UN	Qty	Description	Page No
40	736508-0001	-		1	MEMBRANE	
68	736622-0000	-		1	BODY	
78	736623-0000	-		1	CAM	
8	736621-0000	-		1	HOLDER	
90	439854-0000	A		1	COMPRESSION SPRING	
90	529659-0000	-		1	COMPRESSION SPRING	
90	529657-0000	-		1	COMPRESSION SPRING	

Machine Type | Group Description | Used-In | Group Number | Page No

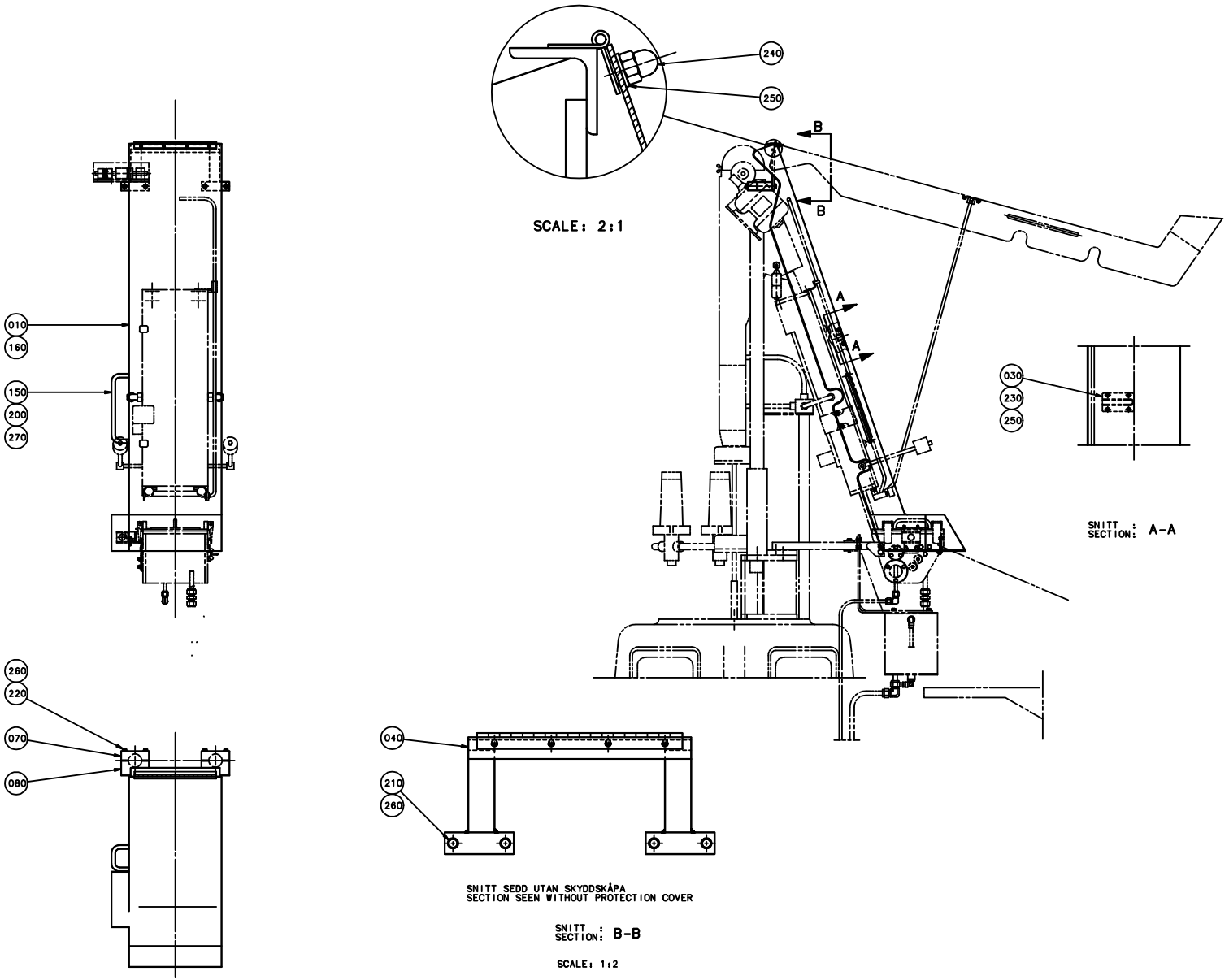
240
250
B
B
SCALE: 2:1
A
A
030
230
250
SNITT
SECTION: A-A
010
160
150
200
270
260
220
070
080
040
210
260
SNITT SEDD UTAN SKYDDSKÅPA
SECTION SEEN WITHOUT PROTECTION COVER
SNITT
SECTION: B-B
SCALE: 1:2

ECM: 115217 - 20021219
Group number: 568098-0100
Assembly Drawing: 568098-1_1_AA

Issue: 20030206

Pos	Part No	SP	UN	Qty	Description	Page No
Common Parts						
10	568292-0000	-		1	PROTECTIVE CASING	
150	579281-0000	-		1	HANDLE	
160	90143-0060	-	MM	3800	EDGE STRIP 9,5X6,3MM BLACK PVC	
200	312105-0327	-		2	SCREW M6S ISO 4017 M5X12 A480	
210	312105-0371	-		4	SCREW M6S ISO 4017 M6X22 A480	
220	312105-0379	-		4	SCREW M6S ISO 4014 M6X45 A480	
230	312605-0314	-		4	HEXAGON NUT, M6M M5 A280	
240	312705-0314	-		4	NUT HEX. DOMED CAP MHM-6 M5 A280	
250	315105-0146	-		8	WASHER ISO 7089-5-200 HV-A4	
260	315105-0153	-		8	WASHER ISO 7089-6-200 HV-A4	
270	315402-0146	-		2	LOCK WASHER FBB 5,1	
30	568094-0000	-		1	SUPPORT	
40	568293-0000	-		1	BOW CLAMP	
70	568296-0000	-		2	CRAMP	
80	568297-0000	-		2	CRAMP	

Pos	Part No	SP	UN	Qty	Description	Page No

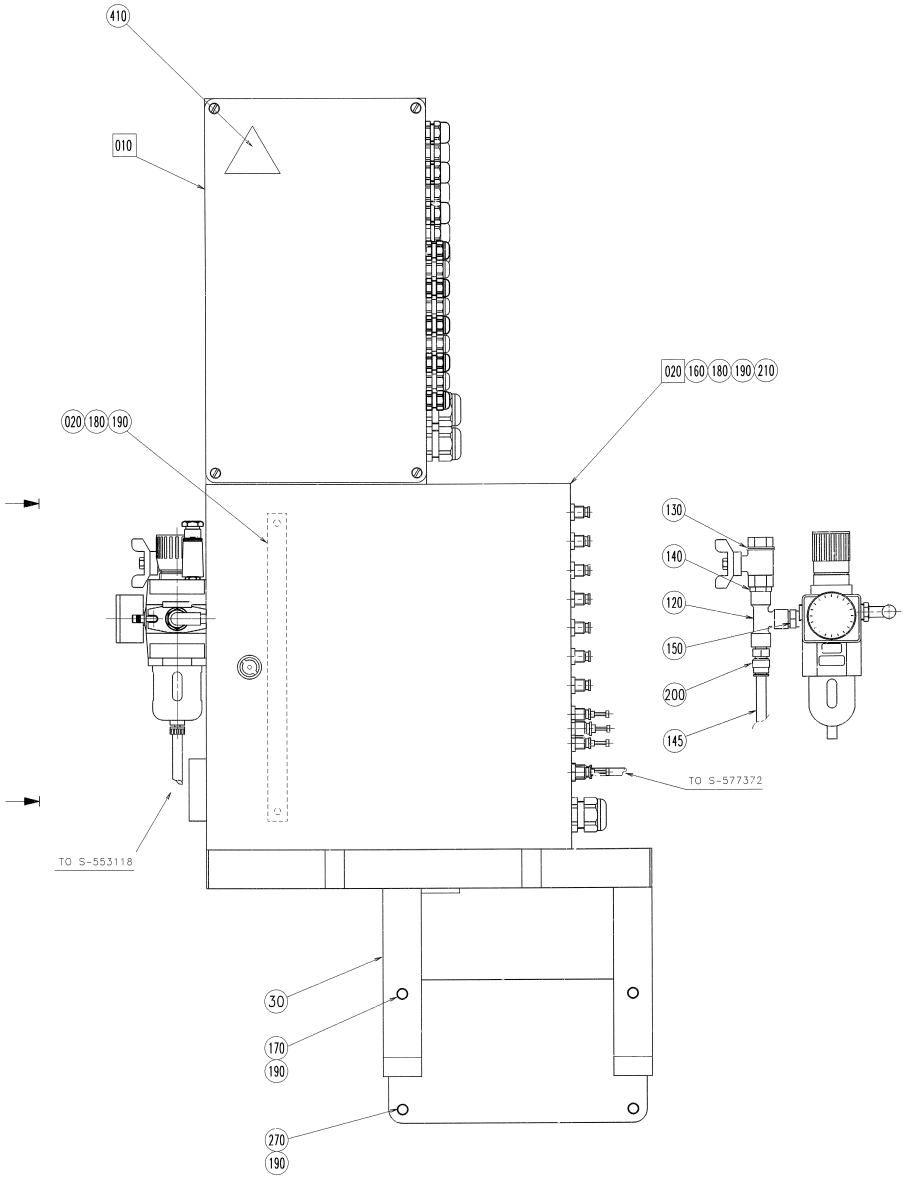
410
010
020 160 180 190 210
020 180 190
130
140
120
150
200
145
TO S-577372
TO S-553118
30
170
190
270
190

ECM: 125935 - 20030124
Group number: 580159-0200
Assembly Drawing: 580159-4_1_AA

Issue: 20030206

Pos	Part No	SP	UN	Qty	Description	Page No
Common Parts						
120	90140-0016	-		1	T-PIPE, INT. THREAD, 2003-3/8	
125	90166-0013	-	M	5	TUBE 8 MM PA BLUE	
130	90187-0089	-		1	BALL VALVE G3/8, NPBR	
135	90166-0081	-	M	30	TUBE 6 MM PA BLUE	
140	90330-0028	-		1	NIPPLES, EXT. THREAD. R-207R3/8	
145	90166-0160	-	M	4	TUBE 10 MM PA BLUE	
150	90330-0083	-		1	NIPPLES, EXT. THREAD. R3/8-R1/4	
160	312105-0366	-		4	SCREW M6S M6X12 A280	
170	312105-0376	-		2	SCREW M6S ISO 4014 M6X35 A480	
180	312605-0316	-		6	HEXAGON NUT, M6M M6 A280	
190	315105-0153	-		12	WASHER ISO 7089-6-200 HV-A4	
20	581074-0000	-		1	HOLDER	
200	342722-0212	-		1	"STRAIGHT COUPLING D=10-G3/8"""	
210	577897-0001	-		1	AIR PIPE-LINE	
270	312105-0368	-		4	SCREW M6S M6X16 A280	
30	579295-0000	-		1	BRACKET	
310	359000-0400	-		2	"MARKING CO2/4""0"""	
330	359000-0402	-		4	"MARKING COLLAR 2/4 ""2"" YELLOW"	
350	359000-0404	-		4	"MARKING COLLAR PA2/4 ""4"" YELLOW"	
400	359000-0409	-		2	"MARKING COLLAR PA2/4 ""9"" YELLOW"	
410	359705-0015	-		1	WARNING SIGN ISO, RISK OF ELECTRIC SHOCK	
F010	A580149-0200	-		1	CONNECTION BOX	**87**
F020	A580165-0200	-		1	PNEUMATIC UNIT	**89**

Pos	Part No	SP	UN	Qty	Description	Page No

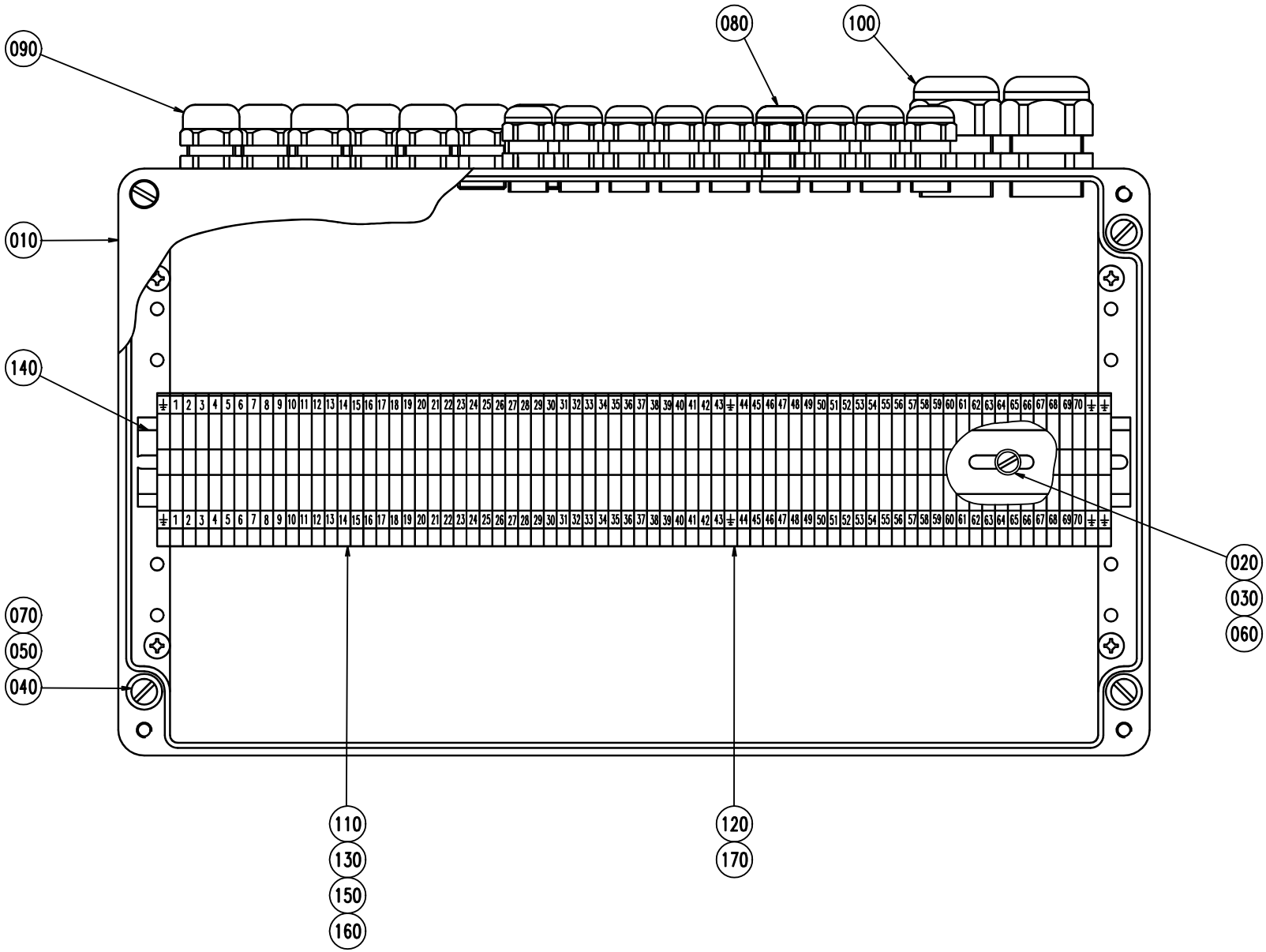
090
080
100
010
140
020
030
060
070
050
040
110
130
150
160
120
170

ECM: 115219 - 20021219
Group number: 580149-0200
Assembly Drawing: 580149-1_1_AA

Issue: 20030206

Pos	Part No	SP	UN	Qty	Description	Page No
Common Parts						
10	580150-0000	-		1	CONNECTION BOX	
100	352103-0116	-		2	CABLE GLAND, ST 21, PR28,3/PG21	
110	353021-0216	-		58	FEED THROUGH TERMINAL, 10200.8	
120	353024-0204	-		13	EARTH TERMINAL WPE 2,5	
130	353034-0030	-		7	BRIDGE CONNECTOR WQV 2,5/10, 10544.6	
140	353042-0004	-	MM	385	RAIL TS 35/7,5	
150	359011-0807	-		2	MARKING PLATES 5-FW 1-50	
160	359011-0808	-		2	MARKING PLATES 5-FW 51-100	
170	359011-0819	-		1	MARKING PLATES 5-GW (EARTH)	
20	580151-0000	-		3	SPACER	
30	312125-0339	-		3	SCREW PAN HEAD MCS M5X40 SS	
40	312125-0374	-		4	SCREW PAN HEAD MCS M6X30 SS	
50	312605-0316	-		4	HEXAGON NUT, M6M M6 A280	
60	315105-0146	-		3	WASHER ISO 7089-5-200 HV-A4	
70	315105-0153	-		4	WASHER ISO 7089-6-200 HV-A4	
80	352103-0101	-		9	CABLE GLAND, ST 9, PR15,2/PG9	
90	352103-0106	-		14	CABLE GLAND, ST 11, PR18,6/PG11	

Pos	Part No	SP	UN	Qty	Description	Page No

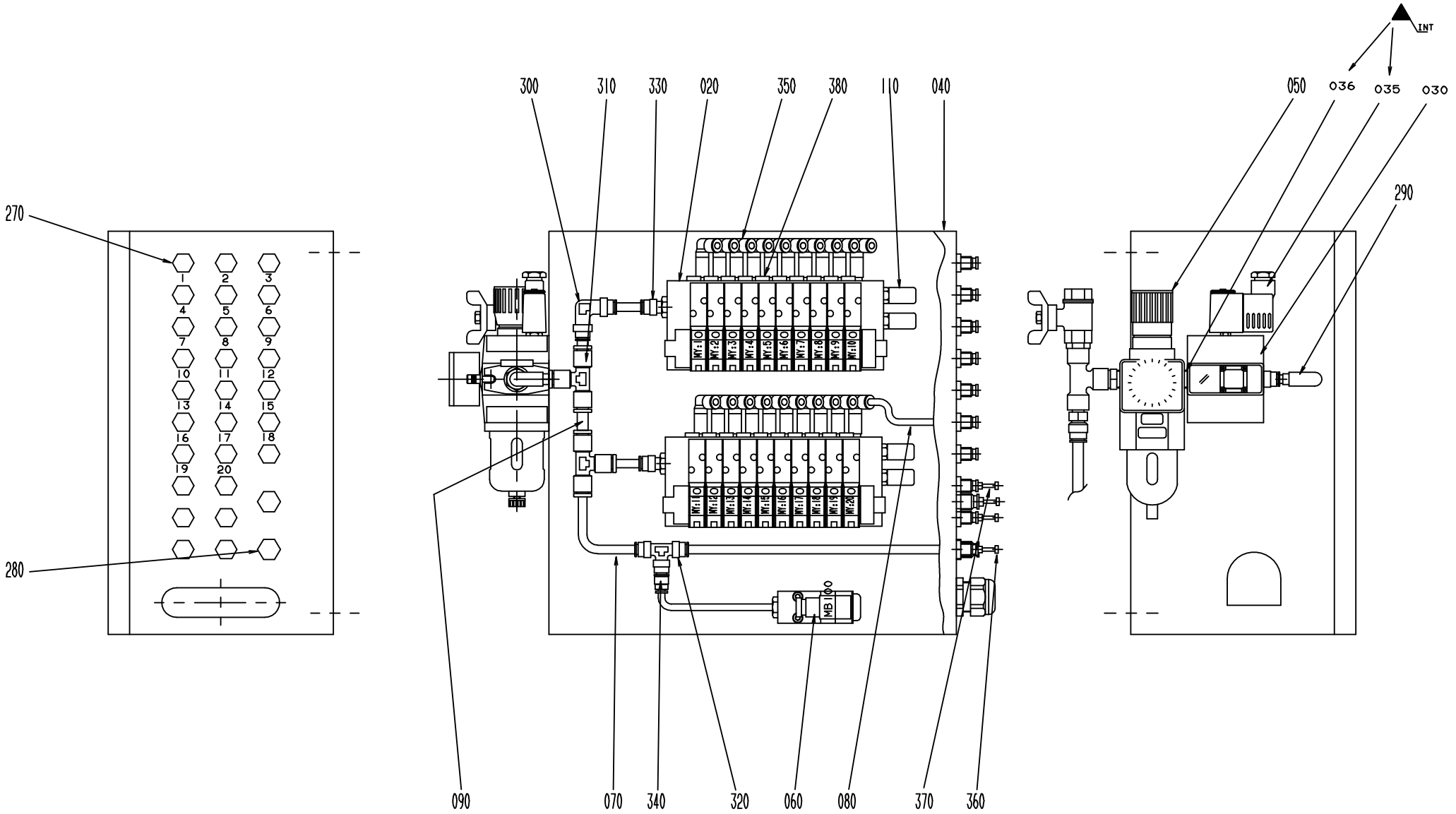
270
280
300
310
330
020
350
380
110
040
050
036
035
030
290
090
070
340
320
060
080
370
360
INT
MB 100

ECM: 122622 - 20030120
Group number: 580165-0200
Assembly Drawing: 580165-2_1_AB

Issue: 20030206

Pos	Part No	SP	UN	Qty	Description	Page No
Common Parts						
110	90328-0012	-		1	SILENCER	
20	581328-0000	-		1	VALVE GROUP	
270	342768-0102	-		1	BULKHEAD CONNECTOR, 6 MM	
280	342768-0103	-		1	BULKHEAD CONNECTOR, 8 MM	
290	90458-2961	-		1	ELBOW PIPE JOINT, EXT.THREAD,D=10MM-G1/4	
30	90042-0156	-		1	SOLENOID VALVE FESTO MFHE-3-1/4-B	
300	342735-0104	-		1	ELBOW PIPE JOINT	
310	342748-0104	-		1	T-CONNECTION 10MM	
320	342748-0103	-		1	T-CONNECTION 8MM	
330	342722-0204	-		1	PIPE COUPLING	
340	342716-0207	-		1	REDUCER 6-10	
35	90042-0455	A		1	COIL FESTO MSFG 24VDC	
350	90458-2956	-		1	ELBOW PIPE JOINT, EXT.THREAD, D=6MM-G1/8	
36	90224-0240	-		1	REDUCER, ART.NO 3575	
360	342715-0103	-		1	BLIND PLUG 8 MM	
370	342715-0102	-		1	BLIND PLUG 6 MM	
380	342713-0208	-		1	PLUG, EXT. THREAD HEX. SOCKET. BPM10	
40	581073-0000	-		1	CABINET	
50	B90113-0013	-		1	REGULATOR	
	90113-0359	*C*		*1*	*FILTER CARTRIDGE*	
	90234-0328	*C*		*1*	*COVER*	
	90113-0359	*C*		*1*	*FILTER CARTRIDGE*	
60	90274-0074	-		1	PRESSURE GUARD, 530 KPA	
70	90166-0013	-	M	1	TUBE 8 MM PA BLUE	
80	90166-0081	-	M	1	TUBE 6 MM PA BLUE	
90	90166-0160	-	M	1	TUBE 10 MM PA BLUE	

Pos	Part No	SP	UN	Qty	Description	Page No

Machine Type | Group Description | Used-In | Group Number | Page No

Tetra Pak

SPC
Spare Parts Catalogue

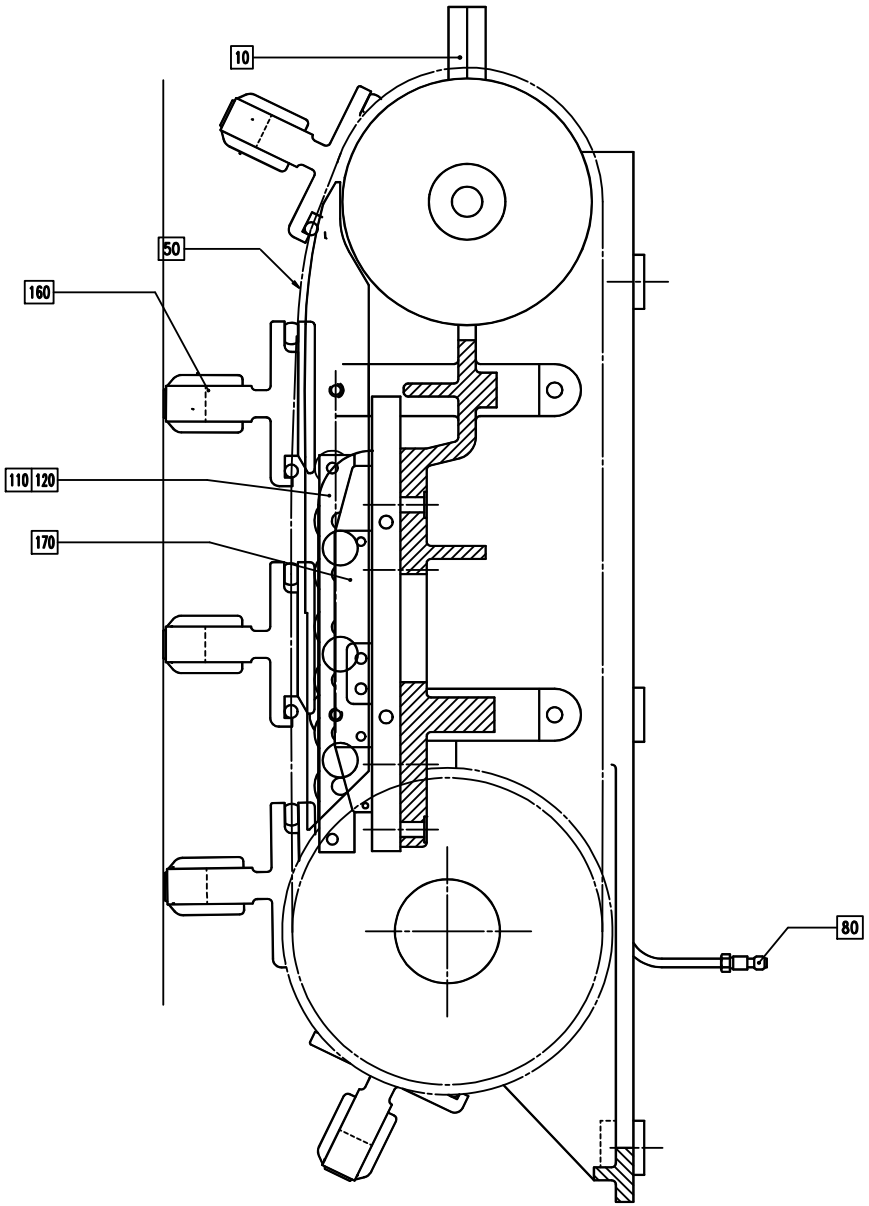
10
50
160
110
120
170
80

Pos	Part No	SP	UN	Qty	Description	Page No
Common Parts						
F000	A259606-0200	-		1	SIDE FRAME	**95**
F010	A1988-0200	-		2	SPRING CARTRIDGE	**97, 115, 135, 153**
F050	A12563-0100	-		1	CHAIN	**99, 117, 137, 155**
F090	A23524-0100	-		1	PLUNGER BODY	**101, 139**
F100	A2565390-0100	-		1	PLUNGER BODY	**103, 141**
F130	A27026-0100	-		1	CENTRAL LUBRICATION	**105**
F150	A259575-0100	A		10	PRESSURE JAW	**107, 145**

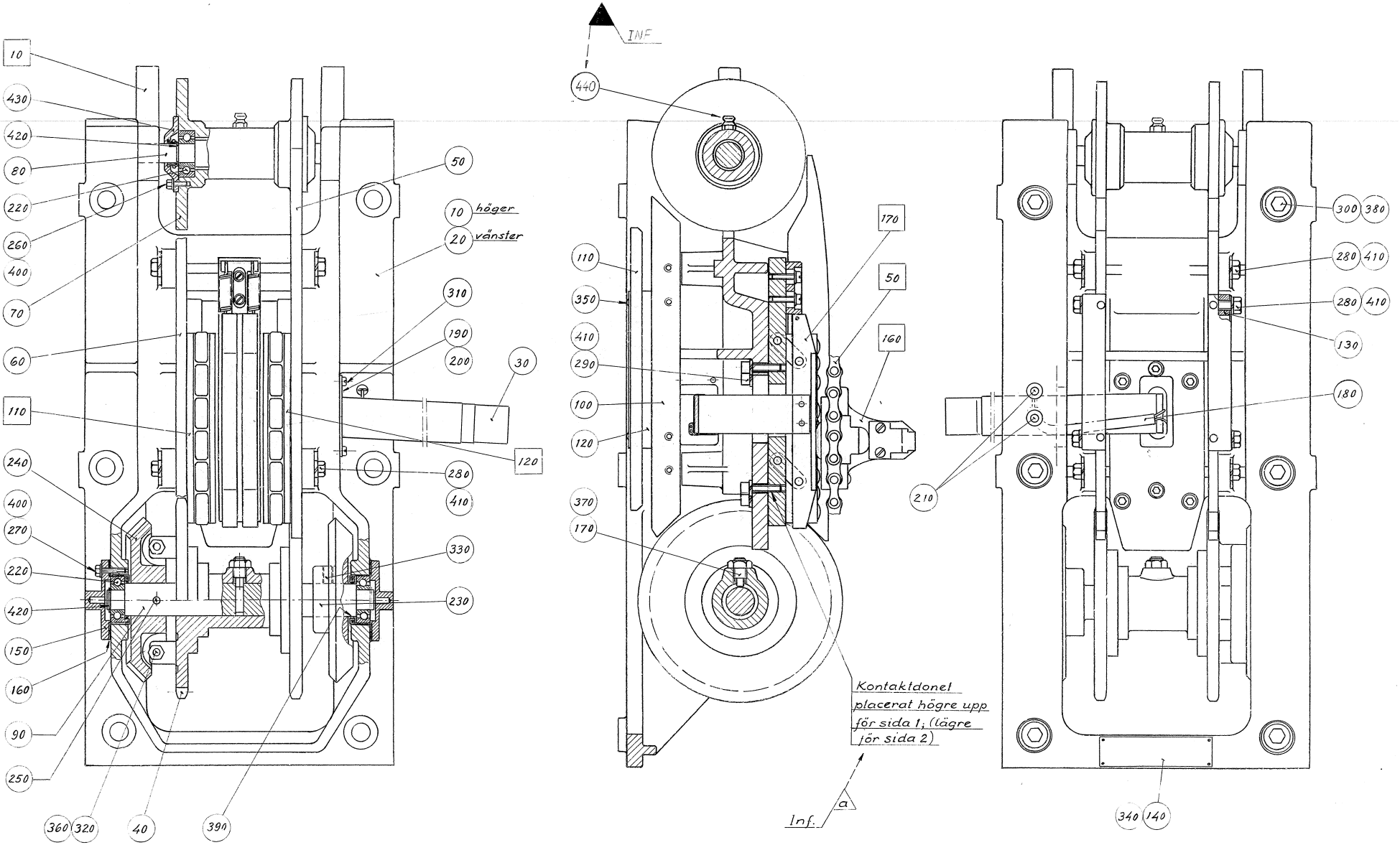
10
430
420
80
220
260
400
70
60
110
240
400
270
220
420
150
160
90
250
360
320
40
390
50
10 höger
20 vänster
310
190
200
30
120
280
410
330
230
INF
440
110
350
410
290
100
120
370
170
170
50
160
210
Kontaktdonet placerat högre upp för sida 1; (lägre för sida 2)
Inf.
a
300
380
280
410
280
410
130
180
340
140

ECM: 115702 - 20021219
Group number: 259606-0200
Assembly Drawing: 259606-1_1_AA

Issue: 20030206

Pos	Part No	SP	UN	Qty	Description	Page No
Common Parts						
10	259864-0000	-		1	SIDE FRAME	
100	2079-0000	-		2	TRANSMISSION RAIL	
110	2080-0000	-		2	RAIL	
120	2081-0000	-		2	ANGLE	
130	2082-0000	-		4	SPACER RING	
140	20497-0000	-		1	GROUP NUMBER PLATE	
150	21678-0000	-		2	LID	
160	21679-0000	-		2	BEARING SEAT	
170	230770-0000	-		1	SCREW	
180	252967-0000	A		1	CABLE	
190	255350-0000	-		1	CABLE HOLDER	
200	255351-0000	-		1	CABLE HOLDER	
210	90110-0065	-		2	SLEEVE CONTACT	
220	90214-0098	A		4	BALL BEARING, 15X35X11 MM	
230	574207-0000	-		1	CONICAL GEAR	
240	574208-0000	-		1	CONICAL GEAR	
250	311201-0298	-		2	PIN, TAPERED, KP, 6X50 GROUND	
260	312101-0327	-		6	SCREW M6S M5X12 FZB	
270	312101-0329	-		6	SCREW M6S M5X16 FZB	
280	312101-0370	-		12	SCREW M6S M6X20 FZB	
290	312111-0371	-		4	SCREW HEX.SOCK.HD.MC6S-TT 6X22 88 FZB	
30	B552152-0000	-		1	CABLE	
	90144-0030	-	*MM*	*1*	*TAPE*	
	90166-0173	-	*M*	*1*	*SHRINKABLE HOSE BLACK*	
	90144-0030	-	*MM*	*1*	*TAPE*	
300	312111-0540	-		6	SCREW HEX.SOCK.HD.MC6S-TT 12X40 88 FZ	
310	312121-0291	-		3	SCREW SLOT.PAN HD. MCS 4X12 FZB	
320	312306-0374	-		2	SCREW HEX.SOCK.SET FLAT P.MP6SS 6X30FZB	
330	312316-0366	-		4	SCREW HEX.SOCK.SET CUP P.MSK6SS6X12 FZB	
340	312502-0221	-		4	DRIVE SCREW ROUND HEAD KDS 4X6	
350	312502-0275	-		4	DRIVE SCREW ROUND HEAD KDS 6X6	
360	312601-0316	-		2	NUT M6M 6-8 FZB	
370	312601-0320	-		1	NUT M6M 10-8 FZB	
380	315101-0178	-		6	WASHER PLAIN, BRB, 13/24 H=2	
390	315230-0300	B		2	BEARING SEAL 25X32X4 MM	
40	2065-0000	-		1	SPROCKET	
400	315401-0146	-		12	WASHER FBH 5,1 FZB	
410	315401-0153	-		16	WASHER FBH6,1FZB	
420	315750-0112	A		3	RETAIN. RING, 15	
430	321600-0102	A		2	OIL SEAL (LL1535	
440	344502-0021	-		1	GREASE NIPPLE STRAIGHT M6	
50	12559-0000	A		1	TRANSMISSION RAIL	
60	12560-0000	A		1	TRANSMISSION RAIL	
70	2066-0000	-		1	GUIDE WHEEL	
80	2070-0000	-		1	SHAFT	
90	2071-0000	-		1	SHAFT	

Machine Type | Group Description | Used-In | Group Number | Page No

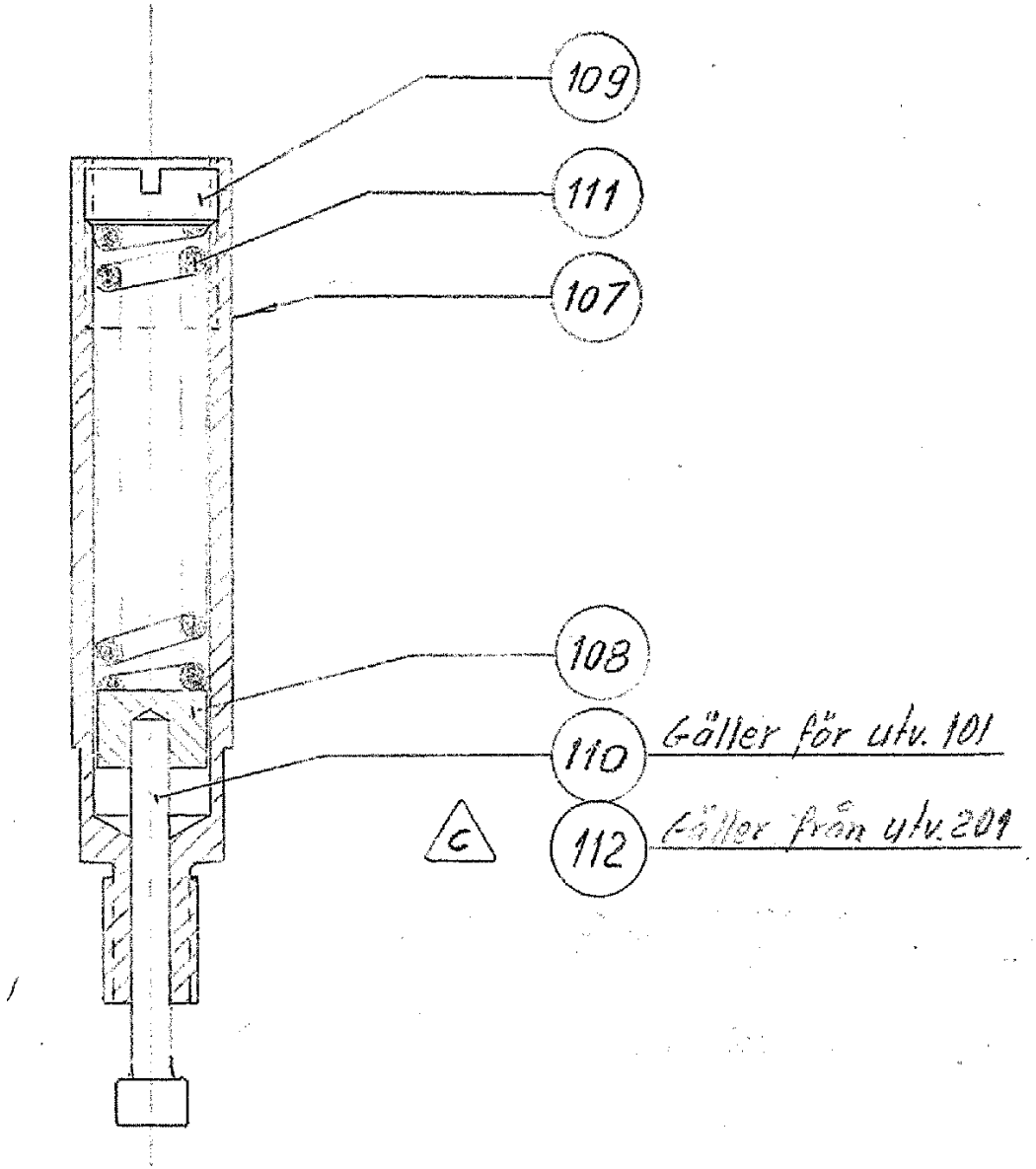
109
111
107
108
110
Gäller för utv. 101
C
112
Gäller från utv. 201

Pos	Part No	SP	UN	Qty	Description	Page No
Common Parts						
107	1989-0000	-		1	SPRING HOUSING	
108	1990-0000	-		1	BUFFER	
109	1991-0000	-		1	SETTING STOPPER	
111	1993-0001	A		1	COMPRESSION SPRING	
112	27723-0000	-		1	PLUNGER	

Pos	Part No	SP	UN	Qty	Description	Page No

Machine Type	Group Description	Used-In	Group Number	Page No

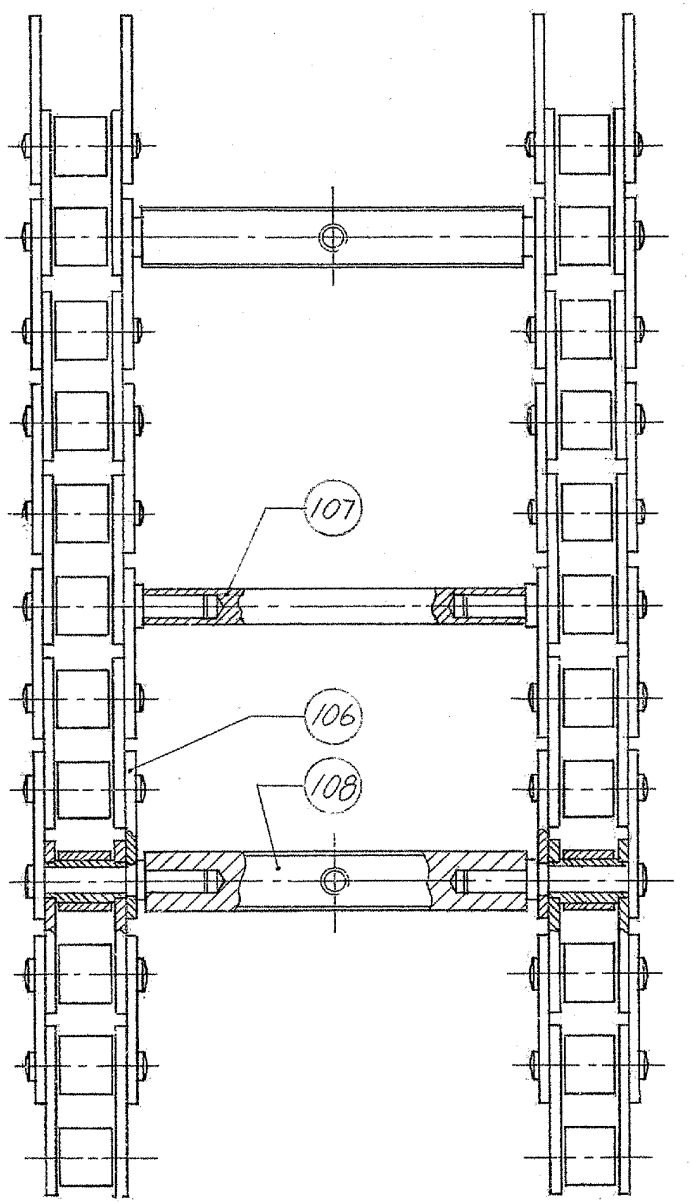
107
106
108

Pos	Part No	SP	UN	Qty	Description	Page No
Common Parts						
106	2295-0000	A		2	LINK CHAIN	
107	12567-0000	A		10	SHAFT	
108	12568-0000	A		10	SHAFT	

Pos	Part No	SP	UN	Qty	Description	Page No

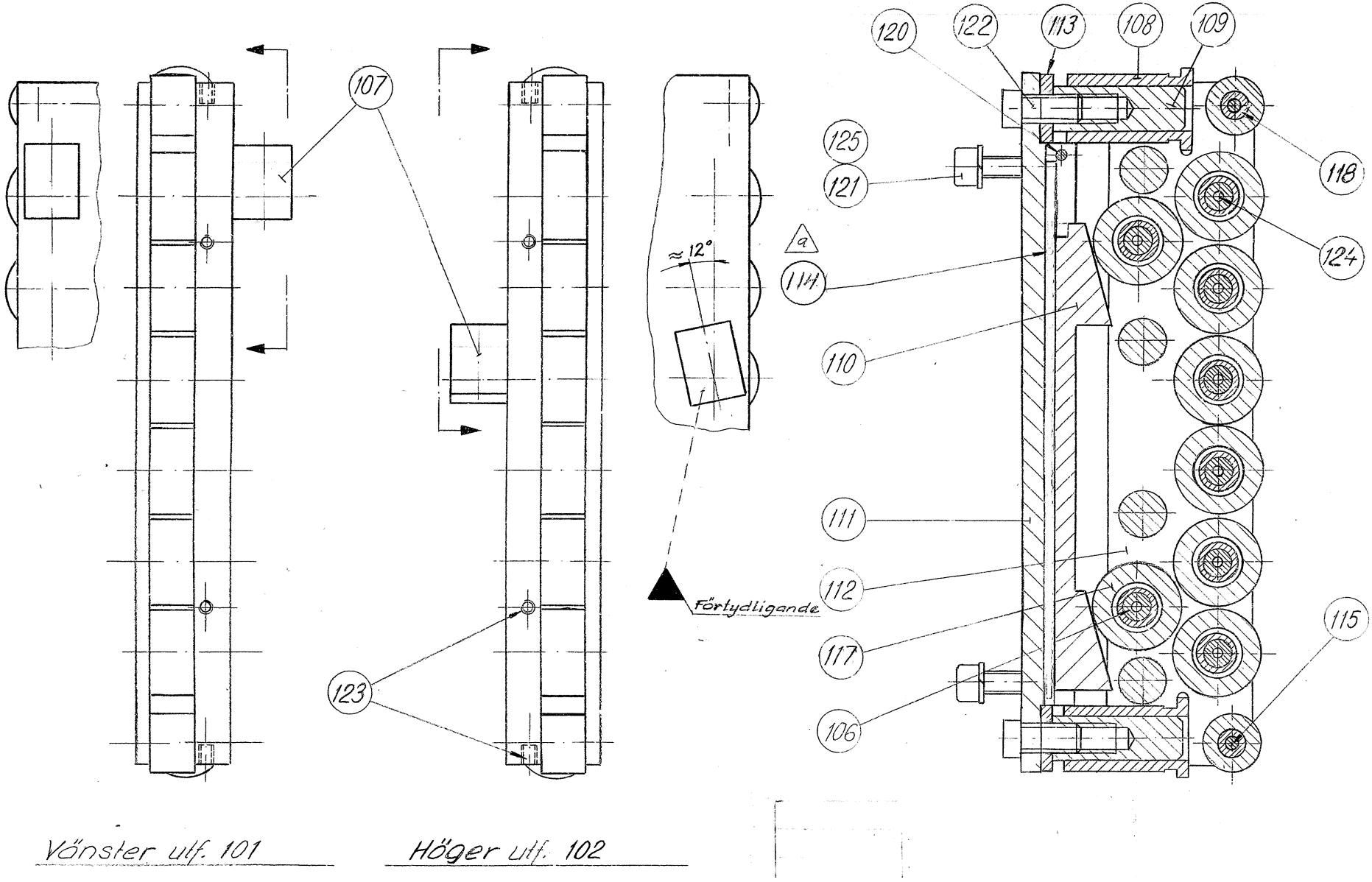
107
123
≈12°
a
Förtydligande
120
122
113
108
109
125
121
114
110
111
112
117
106
118
124
115
Vänster utf. 101
Höger utf. 102

Pos	Part No	SP	UN	Qty	Description	Page No
Common Parts						
106	12553-0000	A		7	SHAFT	
107	23525-0000	A		1	SHAFT	
108	23526-0000	-		2	SLEEVE	
109	23527-0000	A		2	SHAFT	
110	23528-0000	-		1	WEDGE	
111	23529-0000	-		1	RAIL	
112	567112-0000	-		1	PLUNGER BODY	
113	23531-0000	-		2	WASHER	
114	230843-0000	A		1	SLIDE RAIL	
115	230466-0000	A		2	SHAFT	
117	321570-0164	A		8	BEARING ROLLER, 2 SEALS, 8X24X12 MM	
118	321576-0109	A		2	BEARING ROLLER, 2 SEALS, 5X16X12 MM	
120	311102-0236	-		1	PARALLELL PIN, CP, M6, 3X16 MM	
121	312111-0368	-		2	SCREW HEX.SOCK.HD.MC6S-TT 6X16 88 FZB	
122	312101-0449	-		2	SCREW M6S M8X16 FZB	
123	312316-0283	A		4	SCREW HEX.SOCK.SET CUP P.MSK6SS4X4 FZB	
124	312316-0219	A		8	SCREW HEX.SOCK.SET CUP P.MSK6SS 3X5 FZB	
125	315401-0153	-		2	WASHER FBH6,1FZB	

Pos	Part No	SP	UN	Qty	Description	Page No

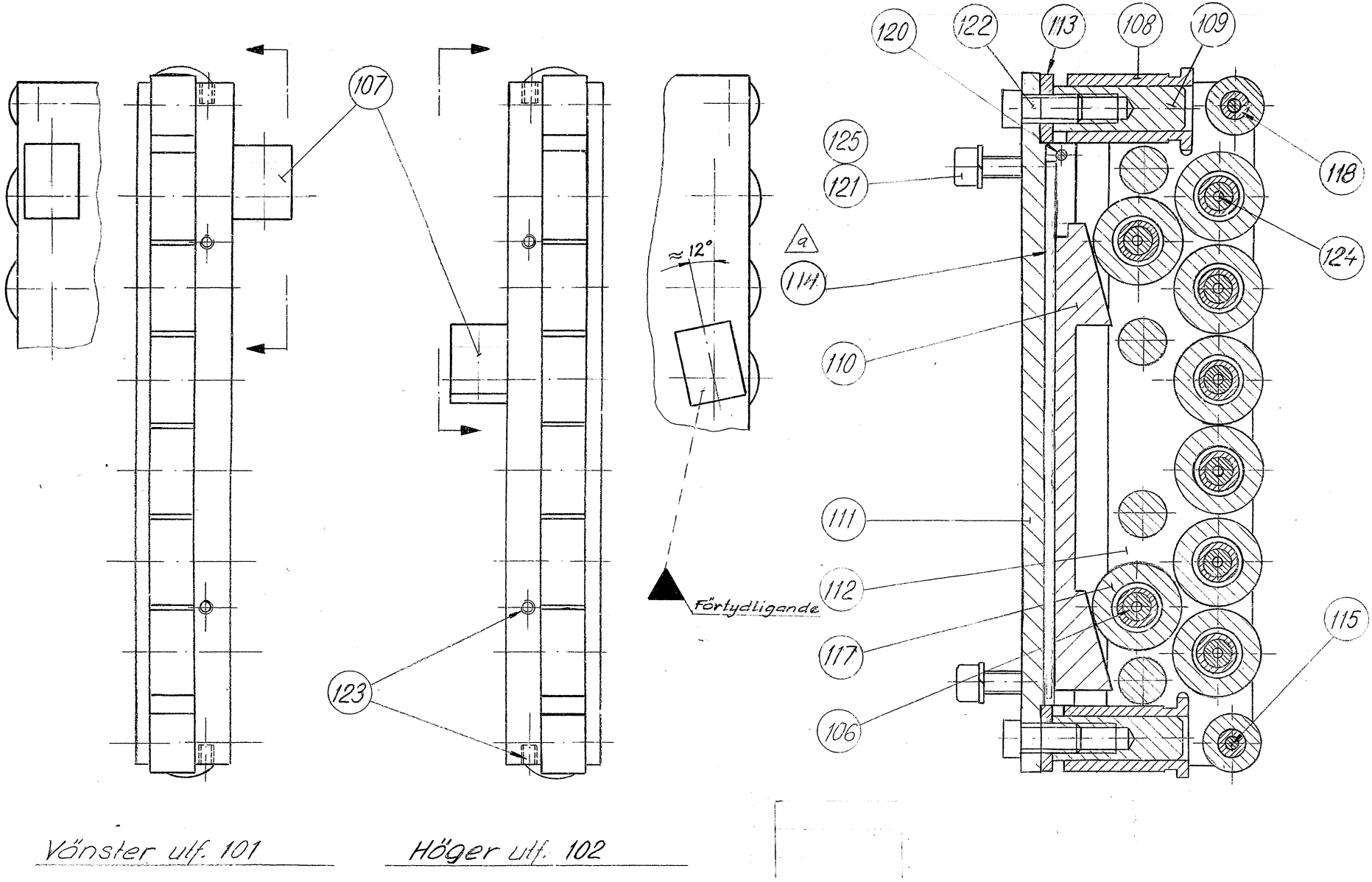
107
123
≈12°
a
Förtydligande
120
122
113
108
109
125
121
118
114
124
110
111
112
115
117
106
Vänster utf. 101
Höger utf. 102

Pos	Part No	SP	UN	Qty	Description	Page No
Common Parts						
106	12553-0000	-		7	SHAFT	
107	23525-0000	-		1	SHAFT	
108	23526-0000	-		2	SLEEVE	
109	23527-0000	-		2	SHAFT	
110	23528-0000	-		1	WEDGE	
111	23529-0000	-		1	RAIL	
112	567112-0000	-		1	PLUNGER BODY	
113	23531-0000	-		2	WASHER	
114	230843-0000	-		1	SLIDE RAIL	
115	230466-0000	-		2	SHAFT	
117	321570-0164	-		8	BEARING ROLLER, 2 SEALS, 8X24X12 MM	
118	321576-0109	-		2	BEARING ROLLER, 2 SEALS, 5X16X12 MM	
120	311102-0236	-		1	PARALLELL PIN, CP, M6, 3X16 MM	
121	312111-0368	-		2	SCREW HEX.SOCK.HD.MC6S-TT 6X16 88 FZB	
122	312101-0449	-		2	SCREW M6S M8X16 FZB	
123	312316-0283	-		4	SCREW HEX.SOCK.SET CUP P.MSK6SS4X4 FZB	
124	312316-0219	-		8	SCREW HEX.SOCK.SET CUP P.MSK6SS 3X5 FZB	
125	315401-0153	-		2	WASHER FBH6,1FZB	

Pos	Part No	SP	UN	Qty	Description	Page No

1970

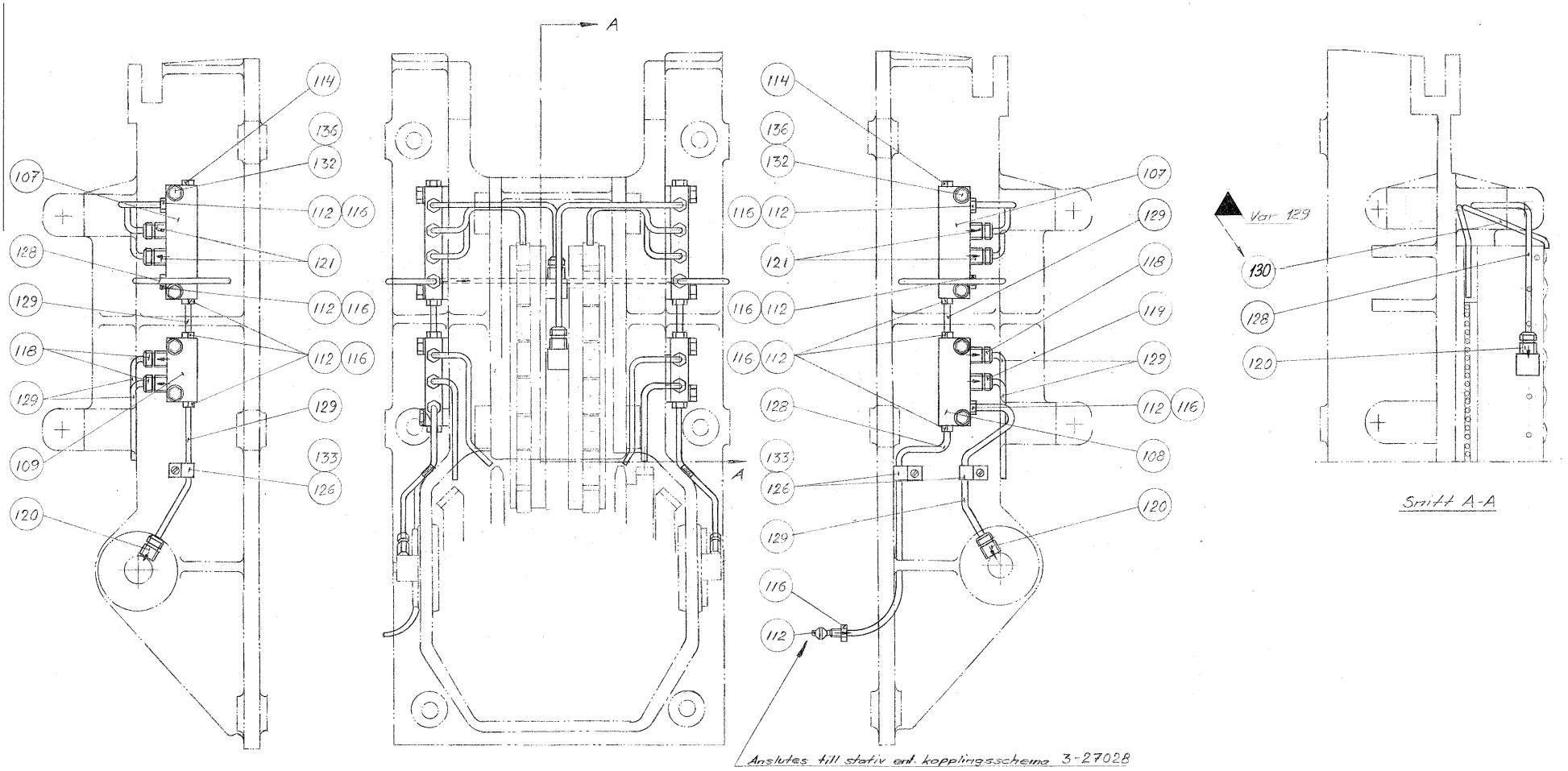
A
A
Var 129
Snitt A-A
Anslutes till stativ enl. kopplingsschema 3-27028

Pos	Part No	SP	UN	Qty	Description	Page No
Common Parts						
107	90032-0028	-		2	DISTR. BLOCK & DIST.5/16-24UNF X6	
108	90032-0013	-		1	DISTR. BLOCK & DIST.5/16-24UNF X5	
109	90032-0012	-		1	DISTR. BLOCK & DIST.5/16-24UNF X4	
112	90028-0001	-		12	"CONE 5/32""""	
114	90136-0002	-		2	"PLUG 5/16""24"	
116	90134-0003	-		12	BUSHING	
118	90092-0066	A		3	METERING VALVE, FJB 2, 5/16-24 UNF	
119	90092-0065	A		1	METERING VALVE, FJB 1, 5/16-24 UNF	
120	90092-0072	A		4	METERING VALVE, FSB 2, G1/8	
121	90092-0062	A		4	METERING VALVE, FJB 3/0, 5/16-24 UNF	
126	90165-0003	-		3	PIPE CLIP FOR TUBE D=4 MM	
128	90166-0051	-	M	1	TUBE PA,TRANSP.	
129	90166-0103	-	MM	1200	TUBE PA BLACK	
130	90151-0001	-	MM	400	BRASS PIPE DI=2,6 MM	
132	312101-0332	-		8	SCREW M6S M5X22 FZB	
133	312121-0285	-		3	SCREW SLOT.PAN HD. MCS 4X6 FZB	
136	315101-0146	-		8	WASHER PLAIN, BRB, 5,3/10 H=1	

Pos	Part No	SP	UN	Qty	Description	Page No

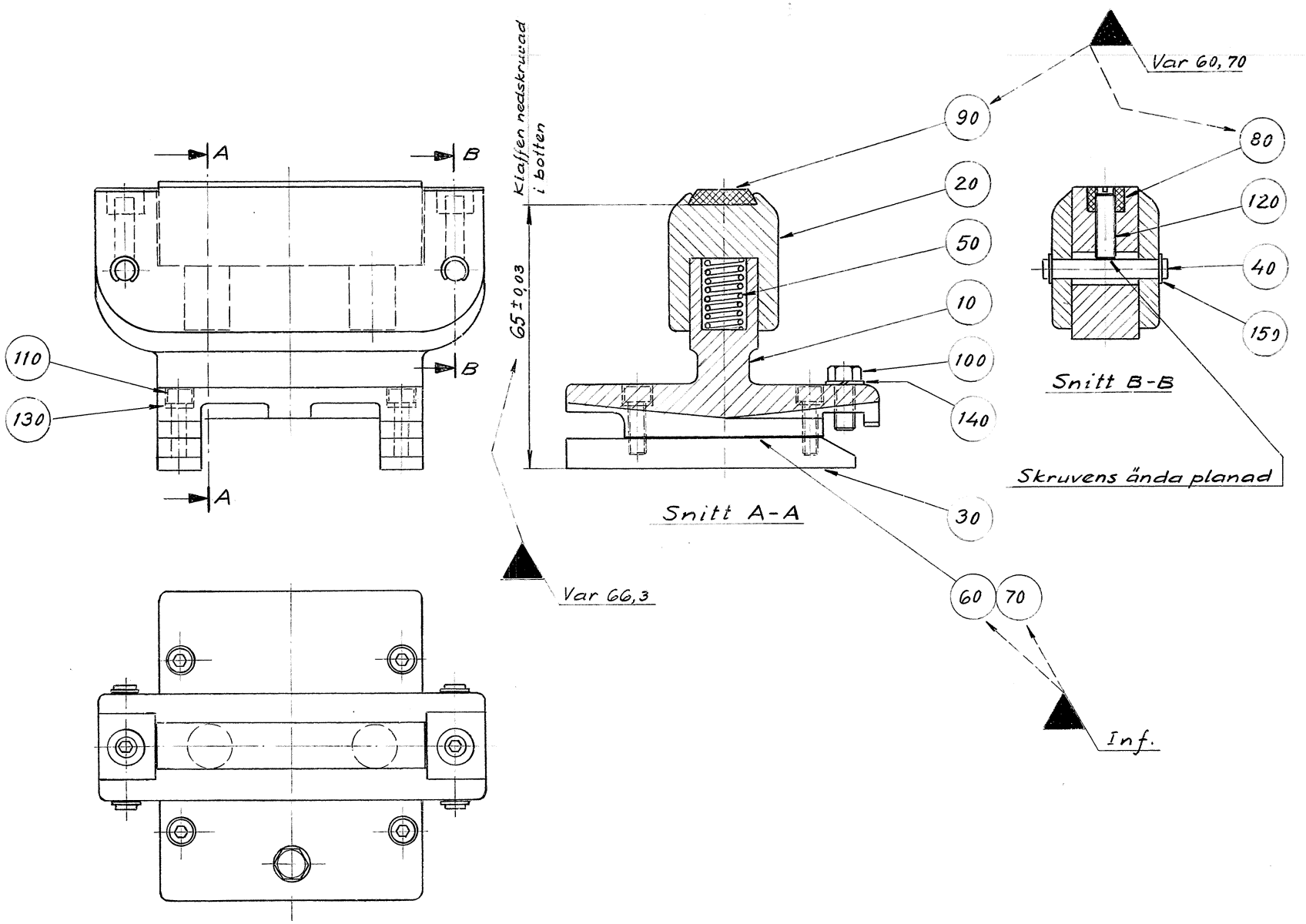
A
B
B
A
110
130
Klaffen nedskruvad i botten
65 ± 0,03
Var 66,3
Snitt A-A
Var 60, 70
90
20
50
10
100
140
30
60
70
80
120
40
159
Snitt B-B
Skruvens ända planad
Inf.

ECM: 115701 - 20021219
Group number: 259575-0100
Assembly Drawing: 259575-1_1_AA

Issue: 20030206

Pos	Part No	SP	UN	Qty	Description	Page No
Common Parts						
10	12508-0000	-		1	PRESSURE JAW	
100	312105-0327	-		1	SCREW M6S ISO 4017 M5X12 A480	
110	312111-0291	-		4	SCREW HEX.SOCK.HD.MC6S-TT 4X12 88 FZB	
120	312306-0329	-		2	SCREW HEX.SOCK.SET FLAT P.MP6SS 5X16FZB	
130	315401-0136	-		4	WASHER FBH 4,1 FZB	
140	315401-0146	-		1	WASHER FBH 5,1 FZB	
150	315754-0105	A		4	LOCKING WAE 3,2	
20	259576-0000	-		1	FLAP	
30	2060-0000	A		2	ROLLER BAR	
40	12512-0000	A		2	SHAFT	
50	12513-0000	A		2	COMPRESSION SPRING	
60	230786-0001	-		5	LACE	
70	230786-0002	-		5	LACE	
80	259577-0000	-		2	LOCK NUT	
90	532368-0000	A		1	RUBBER DOLLY	

Pos	Part No	SP	UN	Qty	Description	Page No

Tetra Pak

SPC
Spare Parts Catalogue

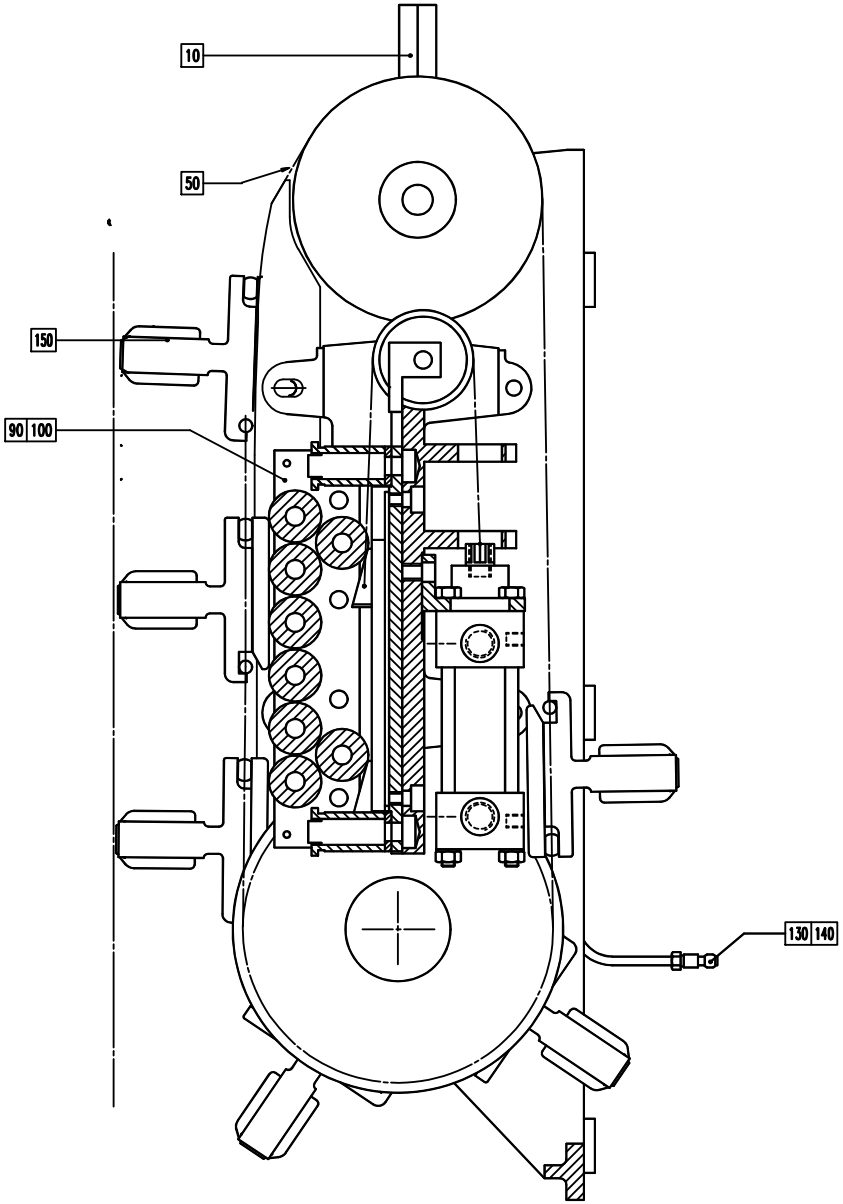
10
50
150
90 100
130 140

ECM: 116006 - 20021219
Group number: 633010-0100
Assembly Drawing: 633010-100_1_AA

Issue: 20030206

Pos	Part No	SP	UN	Qty	Description	Page No
Common Parts						
F000	A23523-0300	-		1	SIDE FRAME	**113**
F010	A1988-0200	-		2	SPRING CARTRIDGE	**97, 115, 135, 153**
F050	A12563-0100	-		1	CHAIN	**99, 117, 137, 155**
F080	A20970-0300	-		1	CENTRAL LUBRICATION	**119, 157**
F110	A23534-0100	-		1	PLUNGER BODY	**121, 159**
F120	A23536-0100	-		1	PLUNGER BODY	**123, 161**
F160	A259856-0200	-		10	SEALING JAW	**125, 163**
F170	A259857-0200	-		1	CONTACT UNIT	**127, 165**

Pos	Part No	SP	UN	Qty	Description	Page No

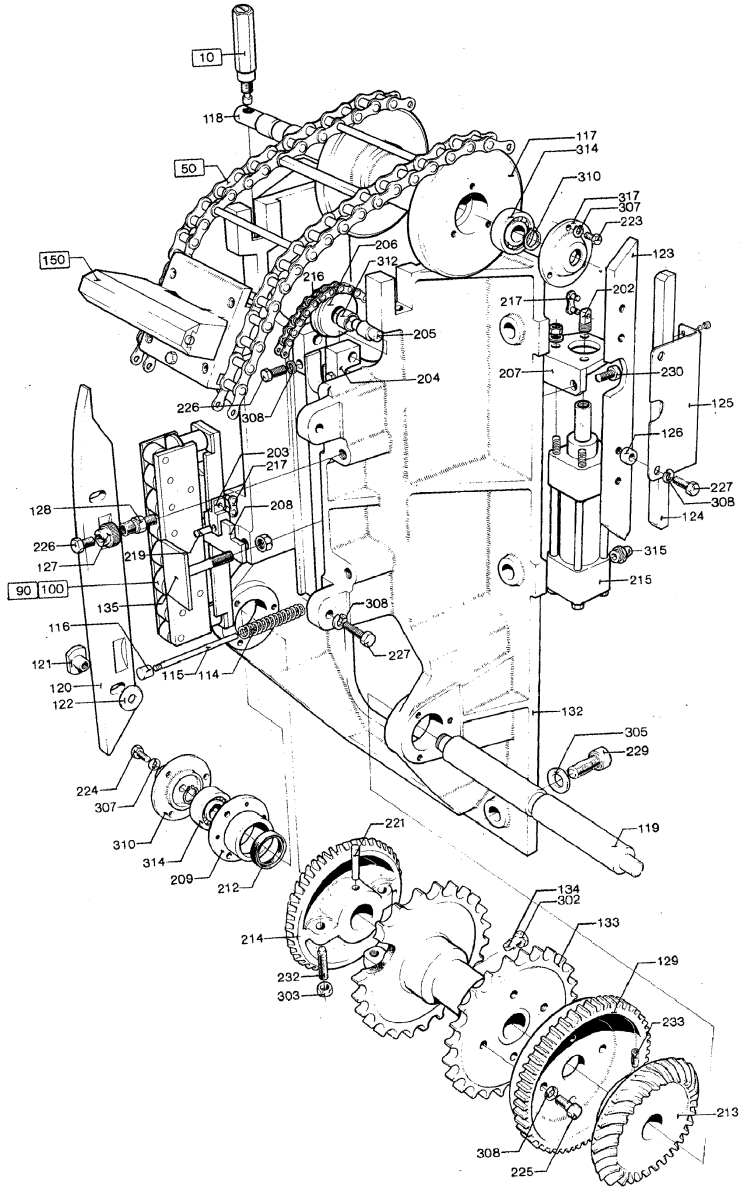
10
118
50
150
117
314
310
317
307
223
123
206
312
216
202
217
205
207
230
204
125
226
308
126
203
217
227
308
128
208
124
226
219
315
127
215
90
100
135
308
116
227
121
115
114
120
122
132
305
229
224
307
119
310
221
314
209
212
134
302
214
133
129
232
303
233
213
308
225

ECM: 116033 - 20021219
Group number: 23523-0300
Assembly Drawing: 23523-1_1_AA

Issue: 20030206

Pos	Part No	SP	UN	Qty	Description	Page No
Common Parts						
114	72-0004	-		4	COMPRESSION SPRING	
115	1574-0000	-		4	TACK	
116	1591-0000	-		4	PLUNGER	
117	2066-0000	-		1	GUIDE WHEEL	
118	2070-0000	-		1	SHAFT	
119	2071-0000	-		1	SHAFT	
120	2076-0000	A		2	TRANSMISSION RAIL	
121	2077-0000	-		4	GUIDE FLANGE	
122	2078-0000	-		4	WASHER	
123	2079-0000	-		2	TRANSMISSION RAIL	
124	2080-0000	-		2	RAIL	
125	2081-0000	-		2	ANGLE	
126	2082-0000	-		4	SPACER RING	
127	2448-0000	-		4	FLANGE	
128	2449-0000	-		4	SCREW	
131	20497-0000	-		1	GROUP NUMBER PLATE	
132	21219-0000	-		1	SIDE FRAME	
133	26693-0000	-		1	SPROCKET	
134	230770-0000	-		1	SCREW	
135	279634-0000	-		1	STOP PLATE	
202	23538-0000	-		1	LINK BOLT	
203	23539-0000	-		1	LINK	
204	23540-0000	-		2	BRACKET	
205	23541-0000	-		1	SHAFT	
206	23542-0000	-		1	GUIDE SPROCKET	
207	23543-0000	-		1	BRACKET	
208	23544-0000	-		1	YOKE	
209	21679-0000	-		2	BEARING SEAT	
210	21678-0000	-		2	LID	
212	315230-0300	B		2	BEARING SEAL 25X32X4 MM	
213	574207-0000	-		1	CONICAL GEAR	
214	574208-0000	-		1	CONICAL GEAR	
215	90239-0132	A		1	CYLINDER	
216	318201-0023	-		1	ROLLER CHAIN, SINGLE 3/8 -23	
217	318209-0081	A		2	"CONNECTING LINK SINGLE 3/8"""	
219	311102-0270	-		1	PARALLELL PIN, CP, M6, 4X16 MM	
220	311103-0306	-		2	PARALLELL PIN, M6, 5X12 MM	
221	311201-0298	A		2	PIN, TAPERED, KP, 6X50 GROUND	
223	312101-0327	-		7	SCREW M6S M5X12 FZB	
224	312101-0329	-		6	SCREW M6S M5X16 FZB	
226	312101-0368	-		6	SCREW M6S M6X16 FZB	
227	312101-0370	-		12	SCREW M6S M6X20 FZB	
229	312111-0540	-		6	SCREW HEX.SOCK.HD.MC6S-TT 12X40 88 FZ	
230	312111-0447	-		2	SCREW HEX.SOCK.HD.MC6S-TT 8X12 88 FZB	
232	312306-0374	-		2	SCREW HEX.SOCK.SET FLAT P.MP6SS 6X30FZB	
233	312316-0366	-		4	SCREW HEX.SOCK.SET CUP P.MSK6SS6X12 FZB	
235	312502-0221	-		4	DRIVE SCREW ROUND HEAD KDS 4X6	
236	312502-0275	-		4	DRIVE SCREW ROUND HEAD KDS 6X6	
302	312621-0320	-		1	NUT ML6M10FZB	
303	312601-0316	-		2	NUT M6M 6-8 FZB	
305	315101-0178	-		6	WASHER PLAIN, BRB, 13/24 H=2	
306	315105-0146	-		5	WASHER ISO 7089-5-200 HV-A4	
307	315401-0146	-		12	WASHER FBH 5,1 FZB	
308	315401-0153	-		18	WASHER FBH6,1FZB	
310	315750-0112	A		3	RETAIN. RING, 15	
312	321120-0111	A		1	BEARING BUSHING WITHOUT FLANGE,12/14X15	
314	90214-0098	A		4	BALL BEARING, 15X35X11 MM	
315	90257-0001	-		1	FILTER PLUG PARTNO 8145-00-140 TYP F14	
317	321600-0102	A		2	OIL SEAL (LL1535	
320	90005-0012	-		2	WASHER,PL.RND.CU.13,5/17,H=1,5	
330	90055-0042	A		1	NIPPLES, EXT. THREAD, HEXAGON, NO. 6835-	
340	90055-0056	-		1	HOSE COUPLING	
345	90055-0057	-		1	HOSE COUPLING	
350	90163-0043	-		1	QUICK COUPLING, (F) MD-006-0-WR013	
360	90148-0010	-	MM	800	HOSE	
370	344502-0021	-		1	GREASE NIPPLE STRAIGHT M6	

Machine Type | Group Description | Used-In | Group Number | Page No

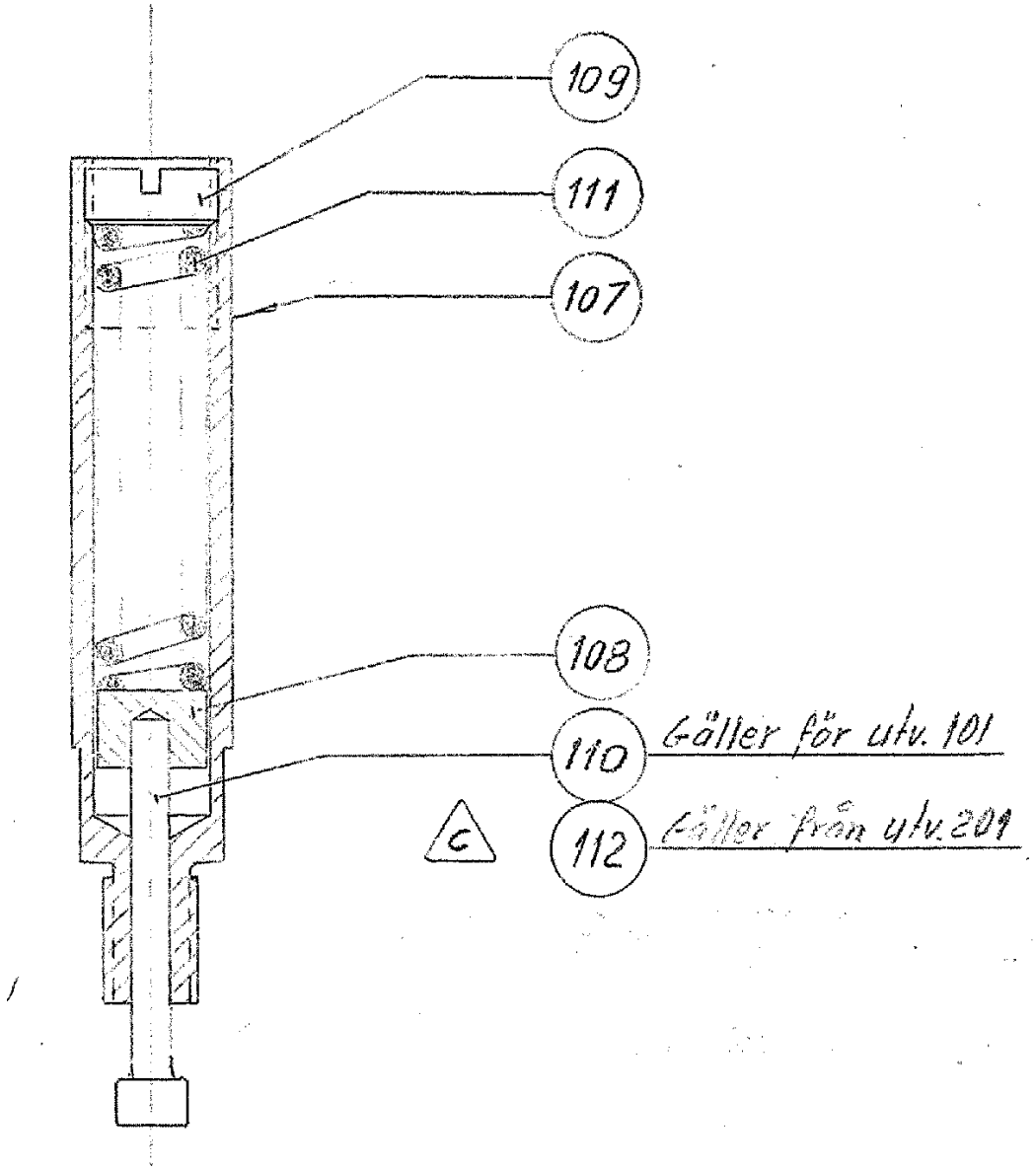
109
111
107
108
110
Gäller för utv. 101
C
112
Gäller från utv. 201

Pos	Part No	SP	UN	Qty	Description	Page No
Common Parts						
107	1989-0000	-		1	SPRING HOUSING	
108	1990-0000	-		1	BUFFER	
109	1991-0000	-		1	SETTING STOPPER	
111	1993-0001	A		1	COMPRESSION SPRING	
112	27723-0000	-		1	PLUNGER	

Pos	Part No	SP	UN	Qty	Description	Page No

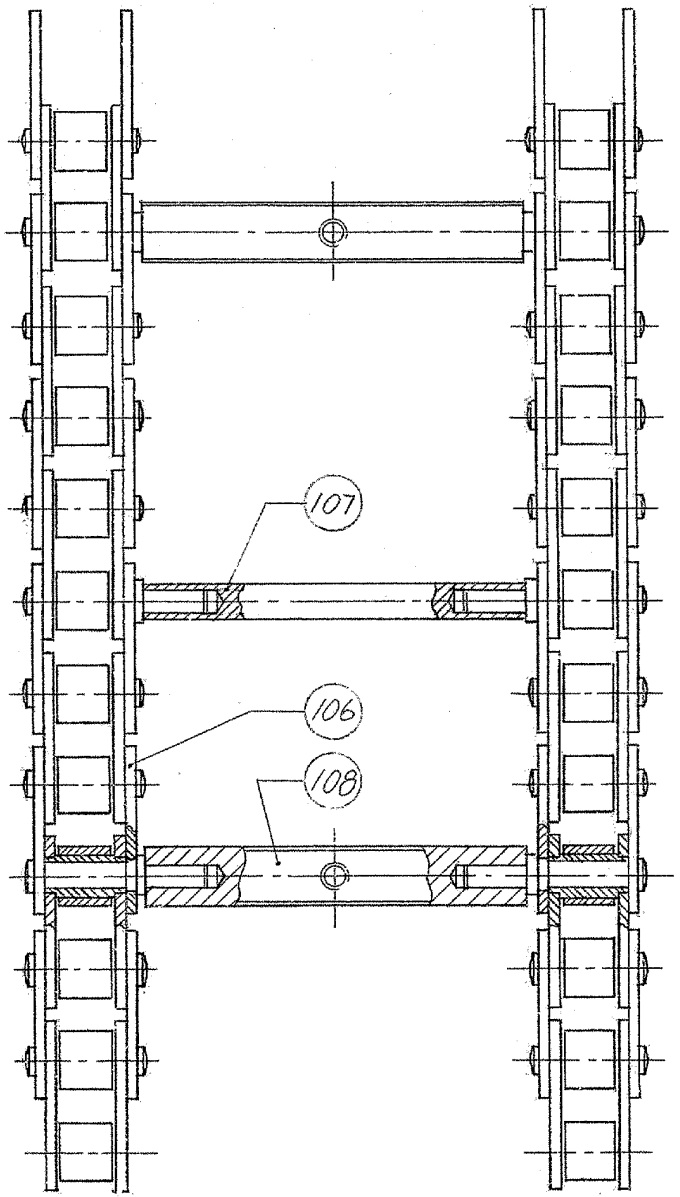
107
106
108

Pos	Part No	SP	UN	Qty	Description	Page No
Common Parts						
106	2295-0000	A		2	LINK CHAIN	
107	12567-0000	A		10	SHAFT	
108	12568-0000	A		10	SHAFT	

Pos	Part No	SP	UN	Qty	Description	Page No

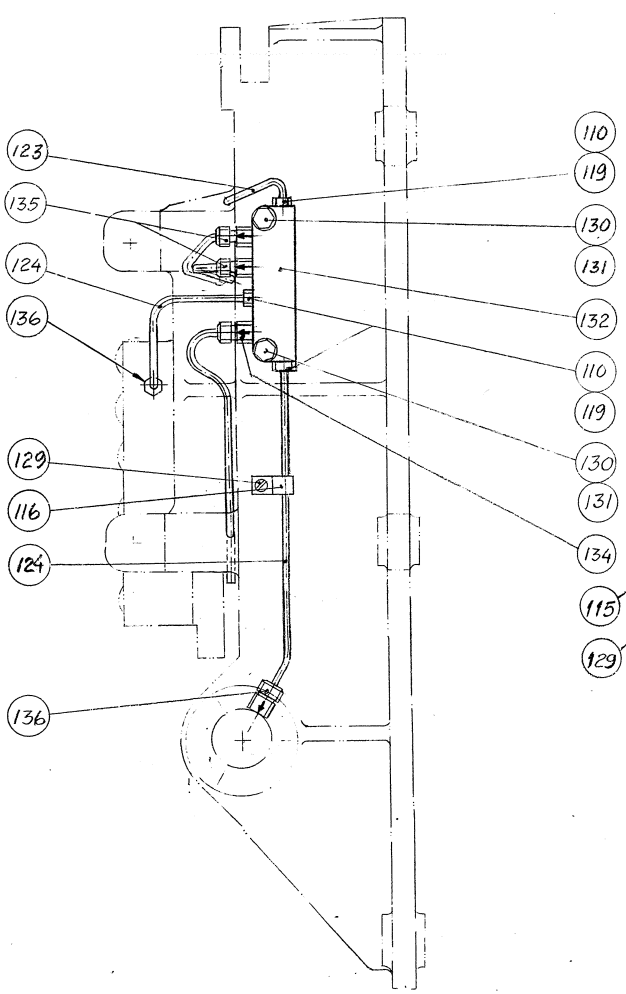

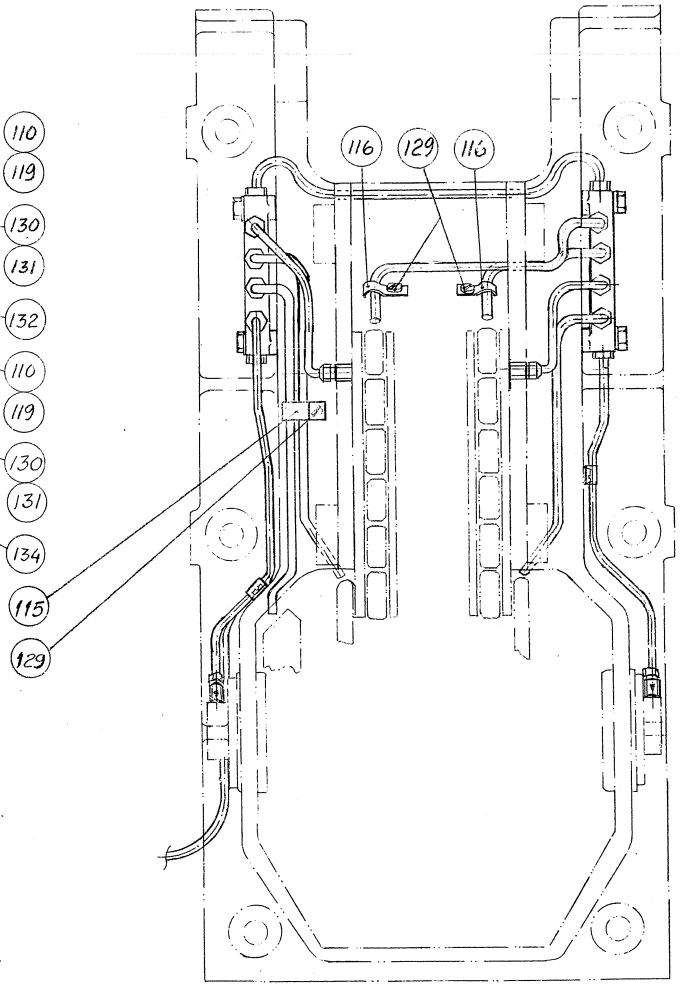

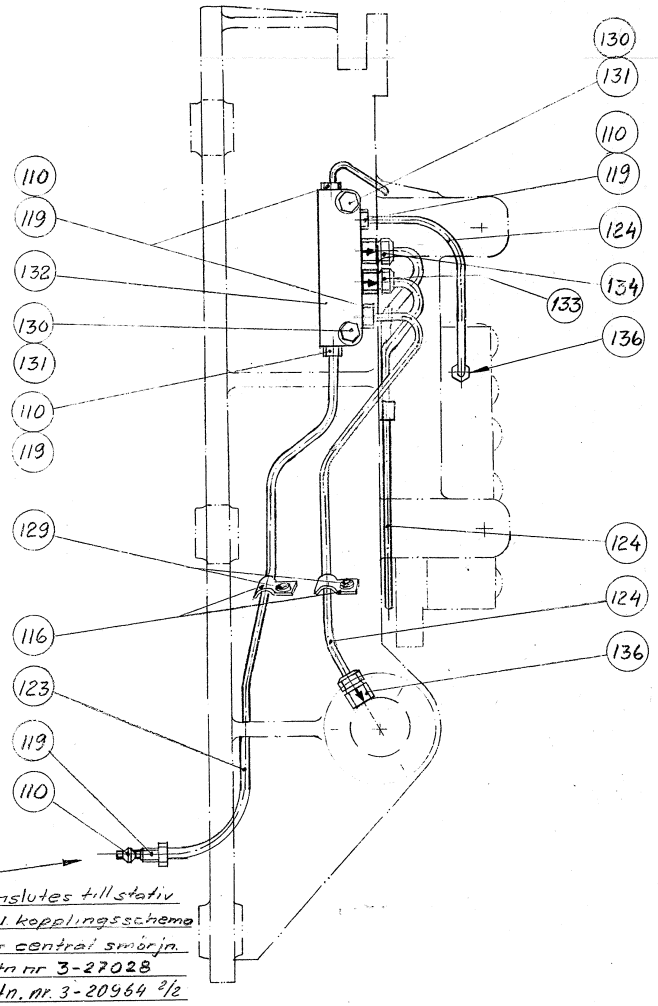

	Anslutes till stativ enl kopplingsschema för central smörjn. Ritn nr 3-27028
Utv. 301	
Utv. 302	Ritn. nr 3-20964 2/2

C

C

Gäller utv. skede 301 och 302

För utv skede 201 se ritn nr J2-20970 2/3

För utv skede 100 se ritn nr J2-20970 1/3

Pos	Part No	SP	UN	Qty	Description	Page No
Common Parts						
110	90028-0001	A		8	"CONE 5/32""""	
115	90073-0001	-		1	CABLE CLIPS, D=8 MM	
116	90165-0003	-		5	PIPE CLIP FOR TUBE D=4 MM	
119	90134-0003	-		8	BUSHING	
123	90166-0109	A	MM	400	TUBE 4 MM PA,TRANSP.	
124	90166-0103	A	MM	1200	TUBE PA BLACK	
129	312121-0285	-		6	SCREW SLOT.PAN HD. MCS 4X6 FZB	
130	312101-0332	-		4	SCREW M6S M5X22 FZB	
131	315101-0146	-		4	WASHER PLAIN, BRB, 5,3/10 H=1	
132	90032-0028	-		2	DISTR. BLOCK & DIST.5/16-24UNF X6	
133	90092-0065	A		1	METERING VALVE, FJB 1, 5/16-24 UNF	
134	90092-0066	A		2	METERING VALVE, FJB 2, 5/16-24 UNF	
135	90092-0062	A		2	METERING VALVE, FJB 3/0, 5/16-24 UNF	
136	90092-0072	A		4	METERING VALVE, FSB 2, G1/8	

Pos	Part No	SP	UN	Qty	Description	Page No

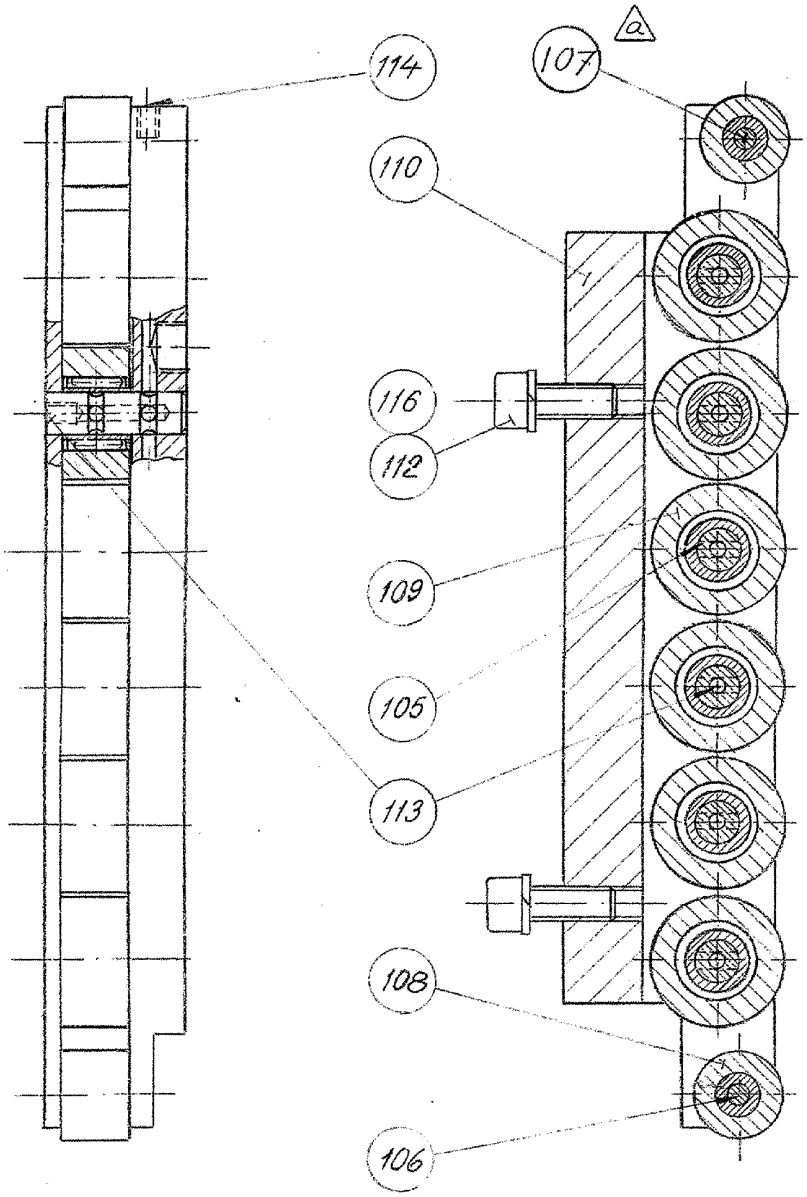
114
107
a
110
116
112
109
105
113
108
106

Pos	Part No	SP	UN	Qty	Description	Page No
Common Parts						
105	12553-0000	A		6	SHAFT	
106	23533-0000	A		1	SHAFT	
107	230466-0000	-		1	SHAFT	
108	321576-0109	A		2	BEARING ROLLER, 2 SEALS, 5X16X12 MM	
109	321570-0164	A		6	BEARING ROLLER, 2 SEALS, 8X24X12 MM	
110	23535-0000	-		1	PLUNGER BODY	
112	312111-0368	-		2	SCREW HEX.SOCK.HD.MC6S-TT 6X16 88 FZB	
113	312316-0219	A		6	SCREW HEX.SOCK.SET CUP P.MSK6SS 3X5 FZB	
114	312316-0283	A		1	SCREW HEX.SOCK.SET CUP P.MSK6SS4X4 FZB	
116	315401-0153	-		2	WASHER FBH6,1FZB	

Pos	Part No	SP	UN	Qty	Description	Page No

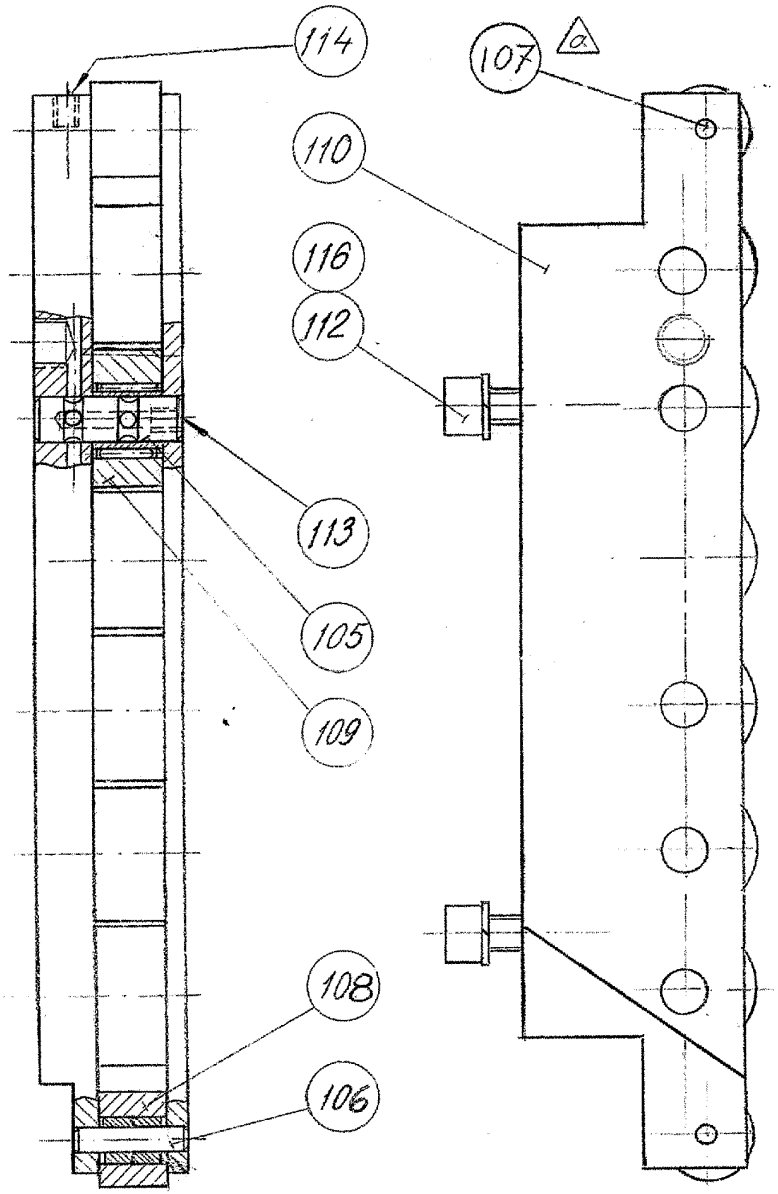
114
107
a
110
116
112
113
105
109
108
106

Pos	Part No	SP	UN	Qty	Description	Page No
Common Parts						
105	12553-0000	-		6	SHAFT	
106	23533-0000	-		1	SHAFT	
107	230466-0000	-		1	SHAFT	
108	321576-0109	A		2	BEARING ROLLER, 2 SEALS, 5X16X12 MM	
109	321570-0164	A		6	BEARING ROLLER, 2 SEALS, 8X24X12 MM	
110	23535-0000	-		1	PLUNGER BODY	
112	312111-0368	-		2	SCREW HEX.SOCK.HD.MC6S-TT 6X16 88 FZB	
113	312316-0219	A		6	SCREW HEX.SOCK.SET CUP P.MSK6SS 3X5 FZB	
114	312316-0283	A		1	SCREW HEX.SOCK.SET CUP P.MSK6SS4X4 FZB	
116	315401-0153	-		2	WASHER FBH6,1FZB	

Pos	Part No	SP	UN	Qty	Description	Page No

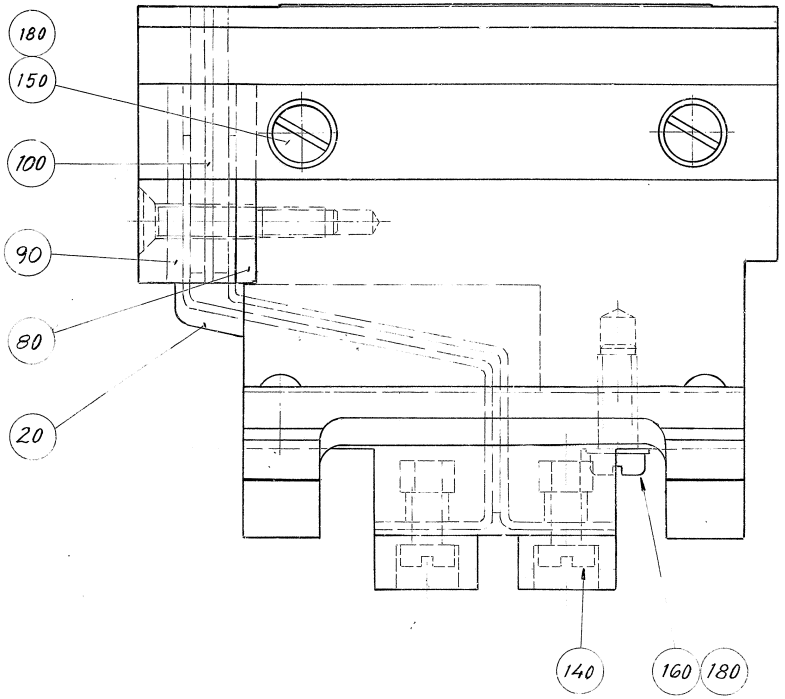
180
150
100
90
80
20
140
160
180

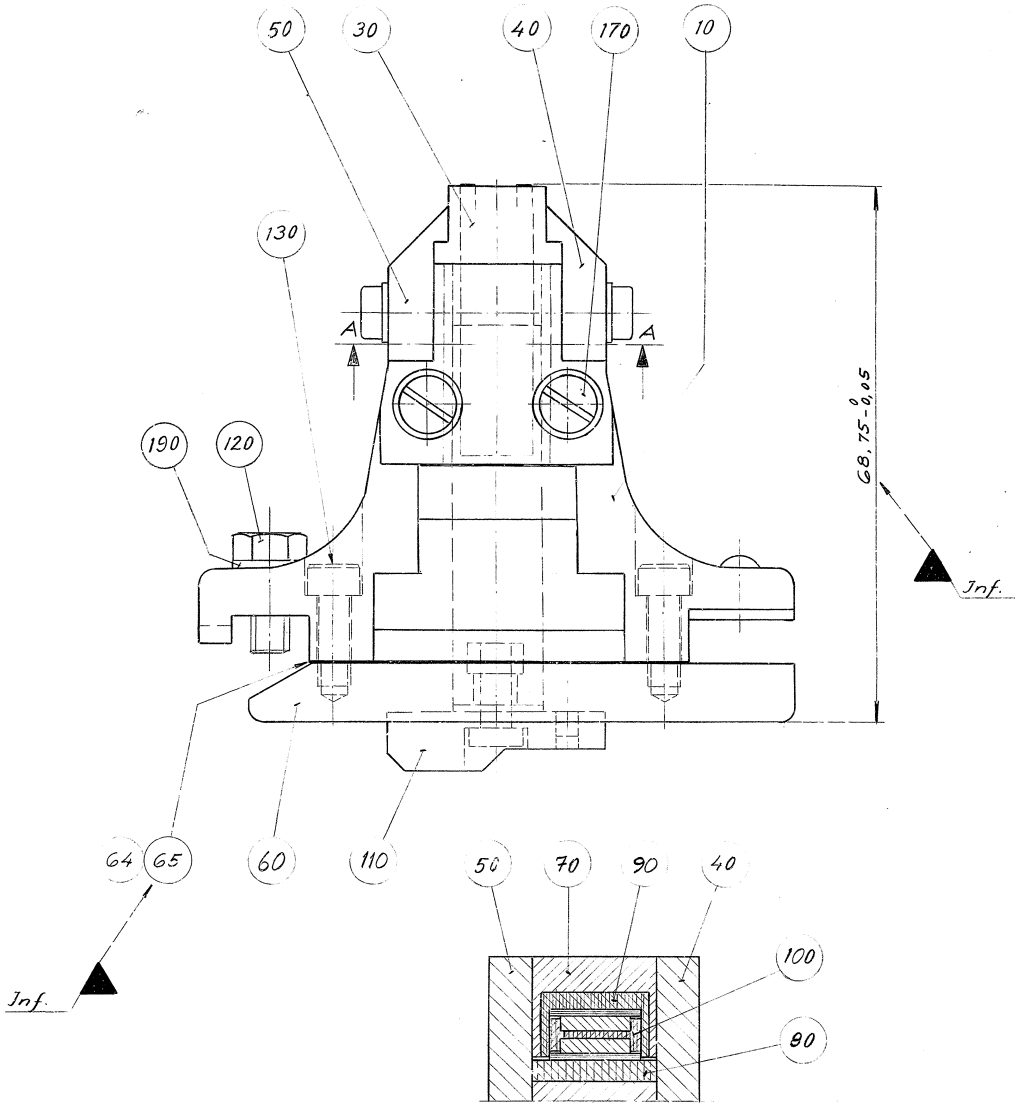
50
30
40
170
10
130
A
A
190
120
68,75 -0,05
Inf.
64
65
60
110
Inf.
50
70
90
40
100
80

Snitt A-A

Pos	Part No	SP	UN	Qty	Description	Page No
PB105						
30	554846-0000	A		1	INDUCTOR	
PB85						
30	568077-0000	A		1	INDUCTOR	
Common Parts						
10	259858-0000	-		1	HEATING JAW	
100	236963-0000	-		1	LACE	
110	259863-0000	A		2	CONTACT PIECE	
120	312105-0327	-		1	SCREW M6S ISO 4017 M5X12 A480	
130	312115-0291	-		4	SCREW ISO4762 M4X12 A4	
140	312122-0287	-		2	SCREW PAN HEAD MCS M4X8 NL. PL.	
150	312125-0291	-		4	SCREW PAN HEAD MCS M4X12 SS	
160	312125-0293	-		1	SCREW PAN HEAD MCS M4X16 SS	
170	312145-0297	-		2	SCREW COUNTERS.SLOT.HD. MFS 4X25 SS	
180	315105-0136	-		5	WASHER ISO 7089-4-200 HV-A4	
190	315105-0146	-		1	WASHER ISO 7089-5-200 HV-A4	
20	259859-0000	-		1	INSULATOR	
40	263924-0000	-		1	RULER	
50	263925-0000	-		1	RULER	
60	2060-0000	A		2	ROLLER BAR	
64	230786-0001	A		5	LACE	
65	230786-0002	A		5	LACE	
70	236954-0000	-		1	CLAMPING PART	
80	236955-0000	-		1	CLAMPING PLATE	
90	236959-0000	-		1	LACE	

Pos	Part No	SP	UN	Qty	Description	Page No

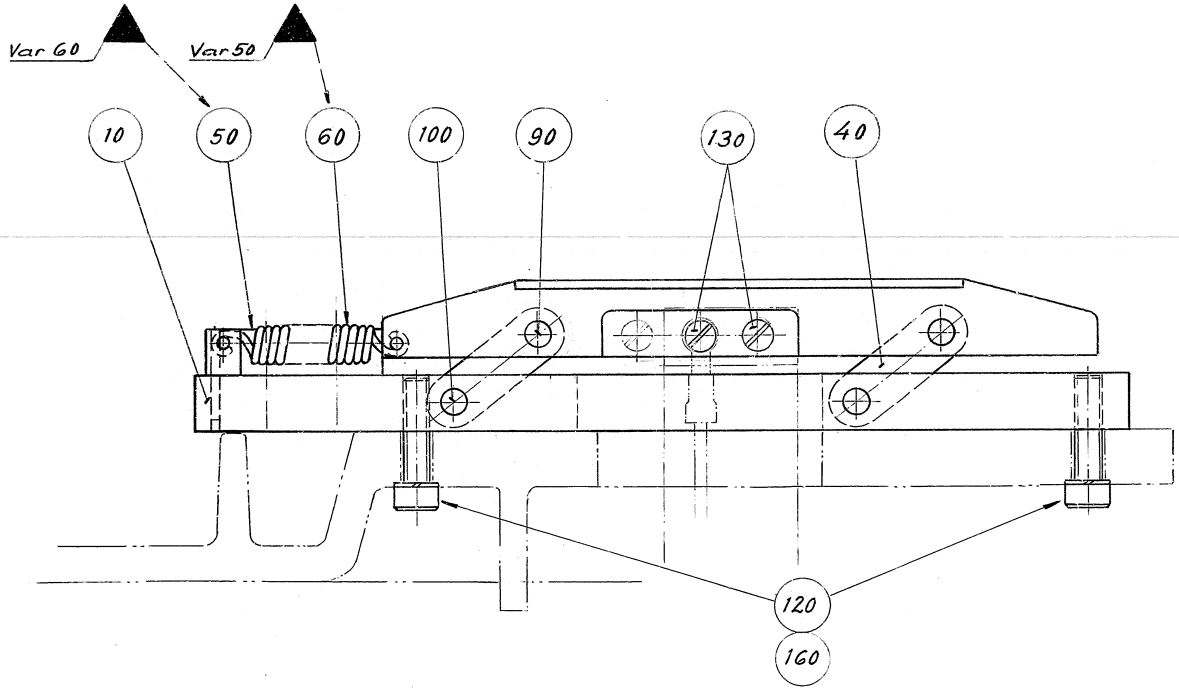
Var 60
Var 50
10
50
60
100
90
130
40
120
160

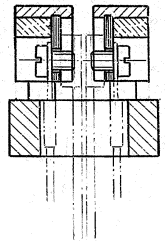

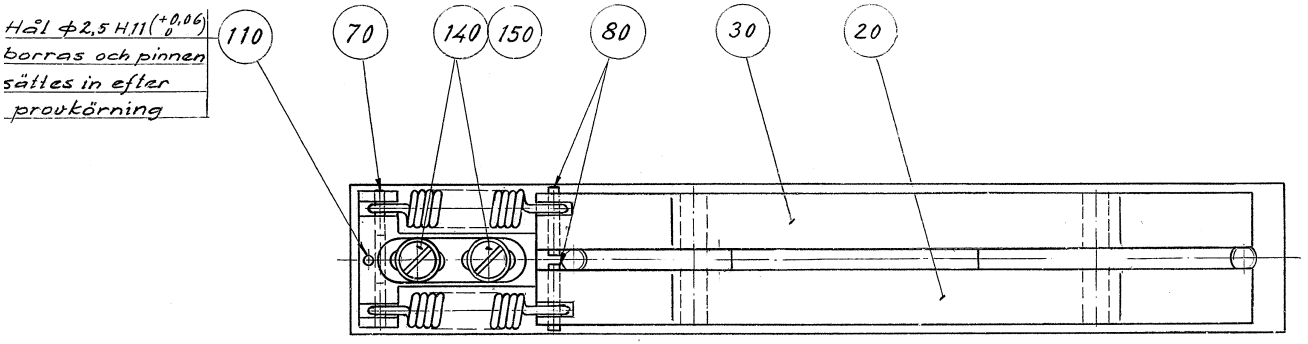
Hål ⌀2,5 H11 (+0,06 0)
borras och pinnen
sättes in efter
provkörning
110
70
140
150
80
30
20

ECM: 116047 - 20021219
Group number: 259857-0200
Assembly Drawing: 259857-1_1_AA

Issue: 20030206

Pos	Part No	SP	UN	Qty	Description	Page No
Common Parts						
10	259860-0000	-		1	BOTTOM PLATE	
100	311103-0358	-		2	PIN,STRIGHT M6 6X32 RFR	
110	311305-0212	-		1	SLOTTED PIRPC2,5X20FZB	
120	312111-0372	-		2	SCREW HEX.SOCK.HD.MC6S-TT 6X25 88 FZB	
130	312122-0285	-		4	SCREW SLOT.PAN HD. MCS 4X6 BR NP	
140	312125-0329	-		2	SCREW PAN HEAD MCS M5X16 SS	
150	315105-0146	-		2	WASHER ISO 7089-5-200 HV-A4	
160	315401-0153	-		2	WASHER FBH6,1FZB	
20	554589-0000	A		1	CONTACT RAIL	
30	554588-0000	A		1	CONTACT RAIL	
40	12917-0000	A		4	LINK ARM	
50	236969-0000	-		1	SPRING BRACKET	
60	267464-0000	A		2	TENSION SPRING	
70	311102-0207	-		2	PARALLELL PIN, CP, M6, 2,5X10 MM	
80	311102-0208	-		2	PARALLELL PIN, CP, M6, 2,5X12 MM	
90	311103-0350	-		4	PARALLELL PIN, CP, M6, 6X14 MM	

Pos	Part No	SP	UN	Qty	Description	Page No

Tetra Pak

SPC
Spare Parts Catalogue

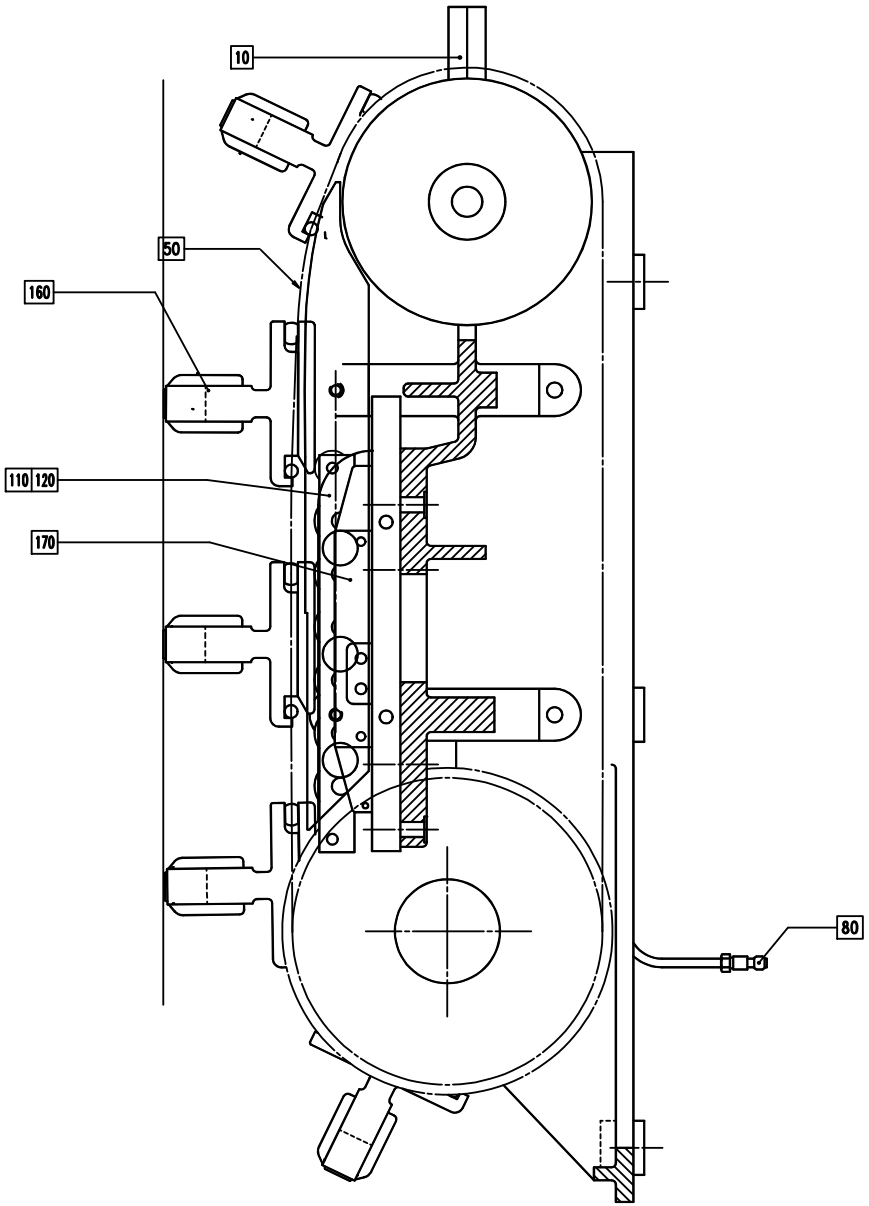
10
50
160
110
120
170
80

Pos	Part No	SP	UN	Qty	Description	Page No
Common Parts						
F000	A2565757-0100	-		1	SIDE FRAME	**133**
F010	A1988-0200	-		2	SPRING CARTRIDGE	**97, 115, 135, 153**
F050	A12563-0100	-		1	CHAIN	**99, 117, 137, 155**
F090	A23524-0100	-		1	PLUNGER BODY	**101, 139**
F100	A2565390-0100	-		1	PLUNGER BODY	**103, 141**
F140	A27027-0100	-		1	CENTRAL LUBRICATION	**143**
F150	A259575-0100	A		10	PRESSURE JAW	**107, 145**

Pos	Part No	SP	UN	Qty	Description	Page No

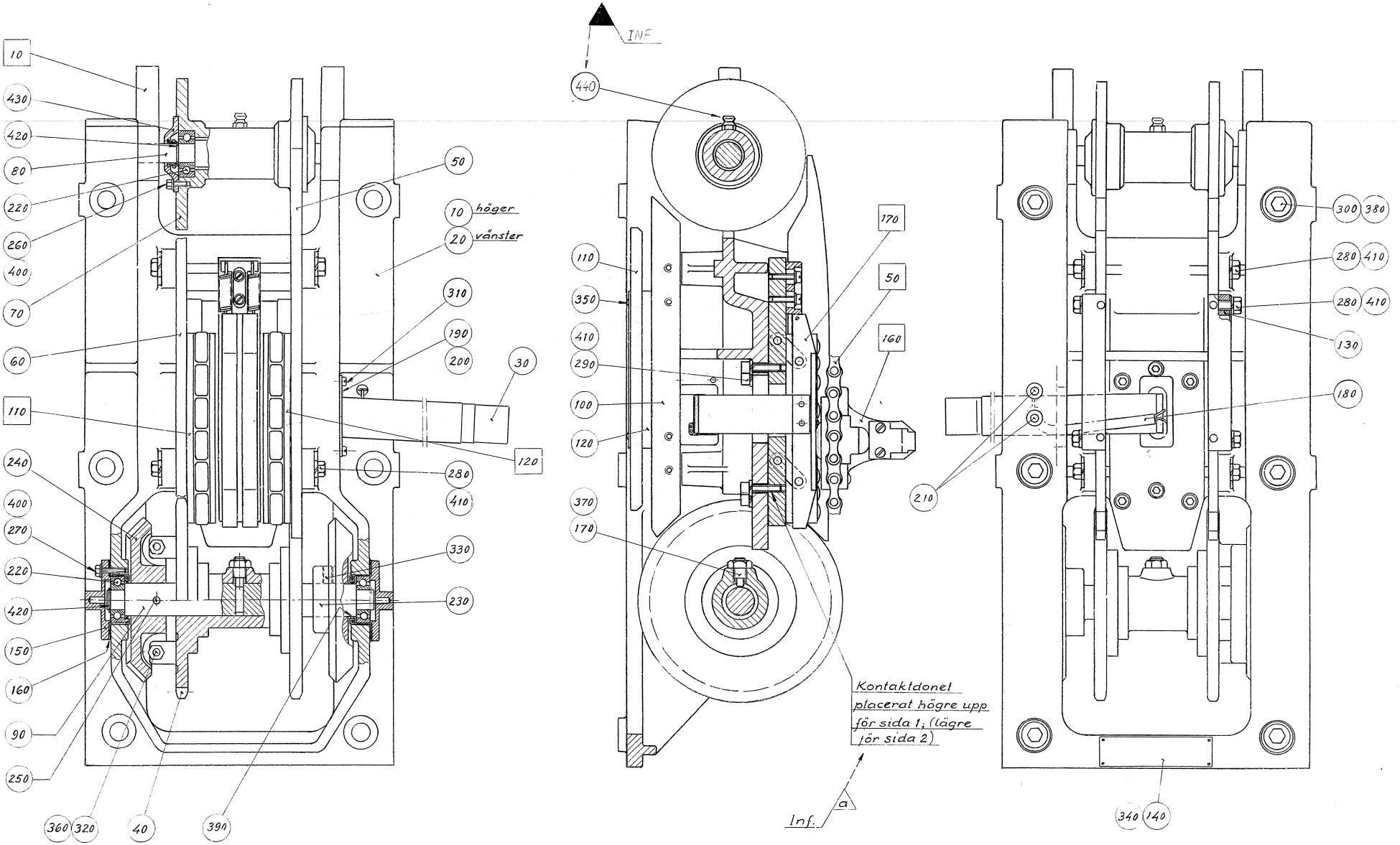
10
430
420
80
220
260
400
70
60
110
240
400
270
220
420
150
160
90
250
360
320
40
390
50
10 höger
20 vänster
310
190
200
30
120
280
410
330
230
INF
440
110
350
410
290
100
120
370
170
170
50
160
210
Kontaktdonet placerat högre upp för sida 1; (lägre för sida 2)
Inf.
a
300
380
280
410
280
410
130
180
340
140

ECM: 115994 - 20021219
Group number: 2565757-0100
Assembly Drawing: 2565757-100_1_AA

Issue: 20030206

Pos	Part No	SP	UN	Qty	Description	Page No
Common Parts						
100	2079-0000	-		2	TRANSMISSION RAIL	
110	2080-0000	-		2	RAIL	
120	2081-0000	-		2	ANGLE	
130	2082-0000	-		4	SPACER RING	
140	20497-0000	-		1	GROUP NUMBER PLATE	
150	21678-0000	-		2	LID	
160	21679-0000	-		2	BEARING SEAT	
170	230770-0000	-		1	SCREW	
180	252967-0000	-		1	CABLE	
190	255350-0000	-		1	CABLE HOLDER	
20	259865-0000	-		1	SIDE FRAME	
200	255351-0000	-		1	CABLE HOLDER	
210	90110-0065	-		2	SLEEVE CONTACT	
220	90214-0098	-		4	BALL BEARING, 15X35X11 MM	
230	574207-0000	-		1	CONICAL GEAR	
240	574208-0000	-		1	CONICAL GEAR	
250	311201-0298	-		2	PIN, TAPERED, KP, 6X50 GROUND	
260	312101-0327	-		6	SCREW M6S M5X12 FZB	
270	312101-0329	-		6	SCREW M6S M5X16 FZB	
280	312101-0370	-		12	SCREW M6S M6X20 FZB	
290	312111-0371	-		4	SCREW HEX.SOCK.HD.MC6S-TT 6X22 88 FZB	
30	B552152-0000	-		1	CABLE	
	90144-0030	-	*MM*	*1*	*TAPE*	
	90166-0173	-	*M*	*1*	*SHRINKABLE HOSE BLACK*	
	90144-0030	-	*MM*	*1*	*TAPE*	
300	312111-0540	-		6	SCREW HEX.SOCK.HD.MC6S-TT 12X40 88 FZ	
310	312121-0291	-		3	SCREW SLOT.PAN HD. MCS 4X12 FZB	
320	312306-0374	-		2	SCREW HEX.SOCK.SET FLAT P.MP6SS 6X30FZB	
330	312316-0366	-		4	SCREW HEX.SOCK.SET CUP P.MSK6SS6X12 FZB	
340	312502-0221	-		4	DRIVE SCREW ROUND HEAD KDS 4X6	
350	312502-0275	-		4	DRIVE SCREW ROUND HEAD KDS 6X6	
360	312601-0316	-		2	NUT M6M 6-8 FZB	
370	312601-0320	-		1	NUT M6M 10-8 FZB	
380	315101-0178	-		6	WASHER PLAIN, BRB, 13/24 H=2	
390	315230-0300	-		2	BEARING SEAL 25X32X4 MM	
40	2065-0000	-		1	SPROCKET	
400	315401-0146	-		12	WASHER FBH 5,1 FZB	
410	315401-0153	-		16	WASHER FBH6,1FZB	
420	315750-0112	-		3	RETAIN. RING, 15	
430	321600-0102	-		2	OIL SEAL (LL1535	
440	344502-0021	-		1	GREASE NIPPLE STRAIGHT M6	
50	12559-0000	-		1	TRANSMISSION RAIL	
60	12560-0000	-		1	TRANSMISSION RAIL	
70	2066-0000	-		1	GUIDE WHEEL	
80	2070-0000	-		1	SHAFT	
90	2071-0000	-		1	SHAFT	

Machine Type	Group Description	Used-In	Group Number	Page No

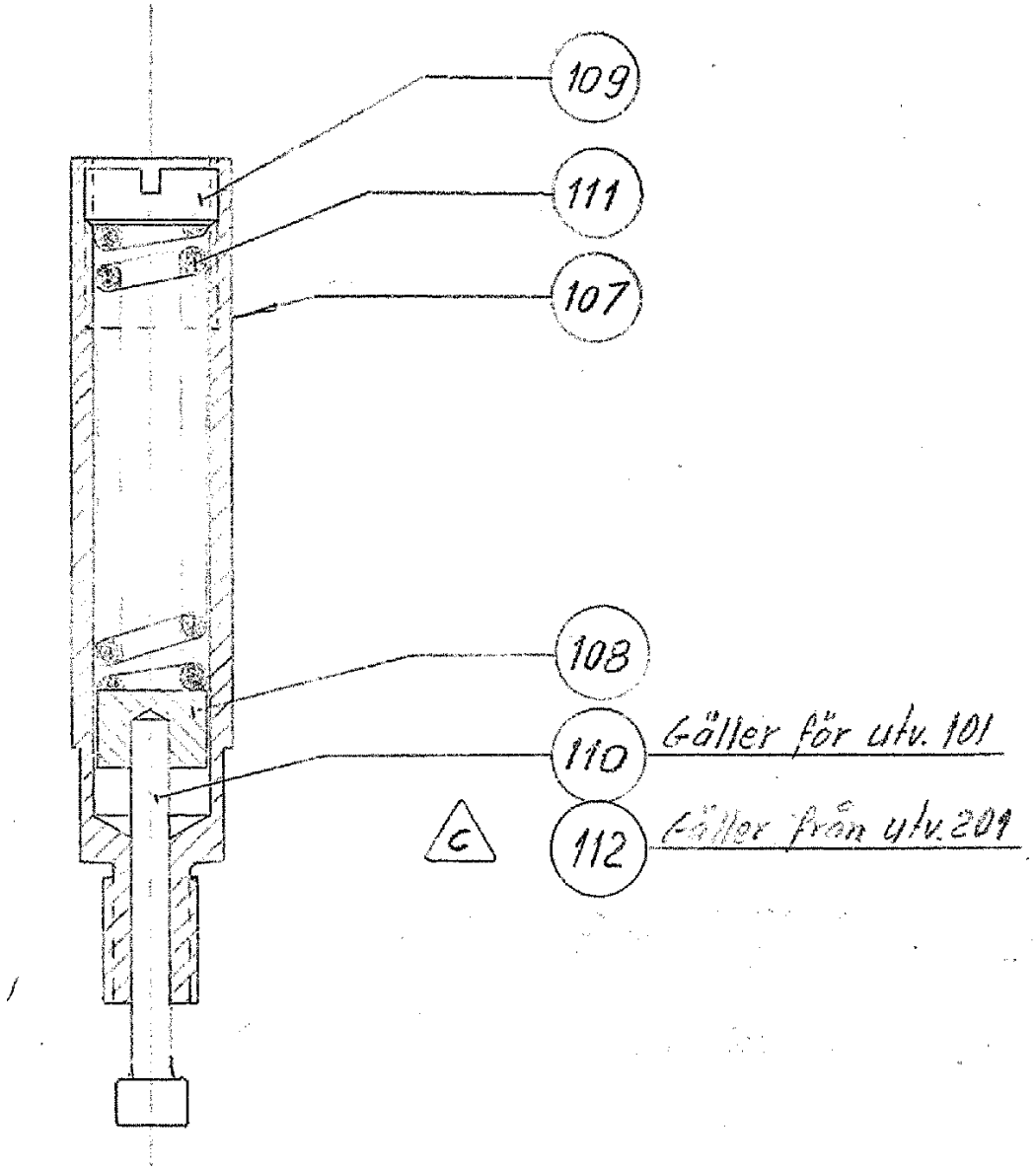
109
111
107
108
110
Gäller för utv. 101
C
112
Gäller från utv. 201

Pos	Part No	SP	UN	Qty	Description	Page No
Common Parts						
107	1989-0000	-		1	SPRING HOUSING	
108	1990-0000	-		1	BUFFER	
109	1991-0000	-		1	SETTING STOPPER	
111	1993-0001	A		1	COMPRESSION SPRING	
112	27723-0000	-		1	PLUNGER	

Pos	Part No	SP	UN	Qty	Description	Page No

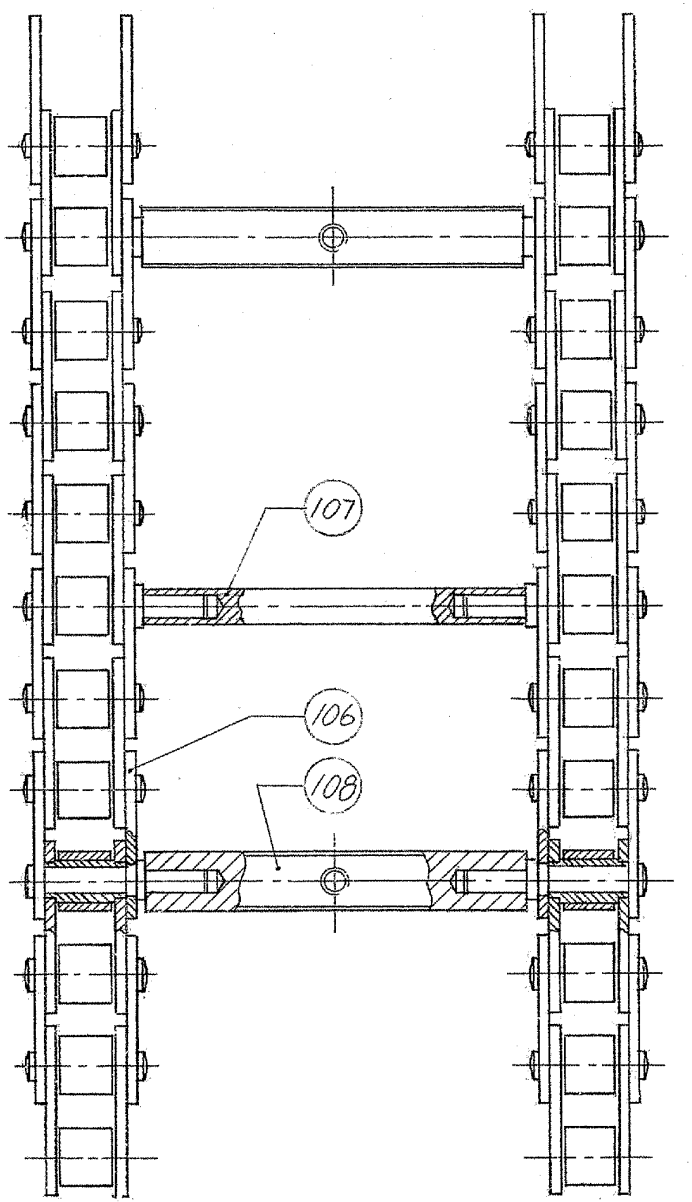
107
106
108

Pos	Part No	SP	UN	Qty	Description	Page No
Common Parts						
106	2295-0000	A		2	LINK CHAIN	
107	12567-0000	A		10	SHAFT	
108	12568-0000	A		10	SHAFT	

Pos	Part No	SP	UN	Qty	Description	Page No

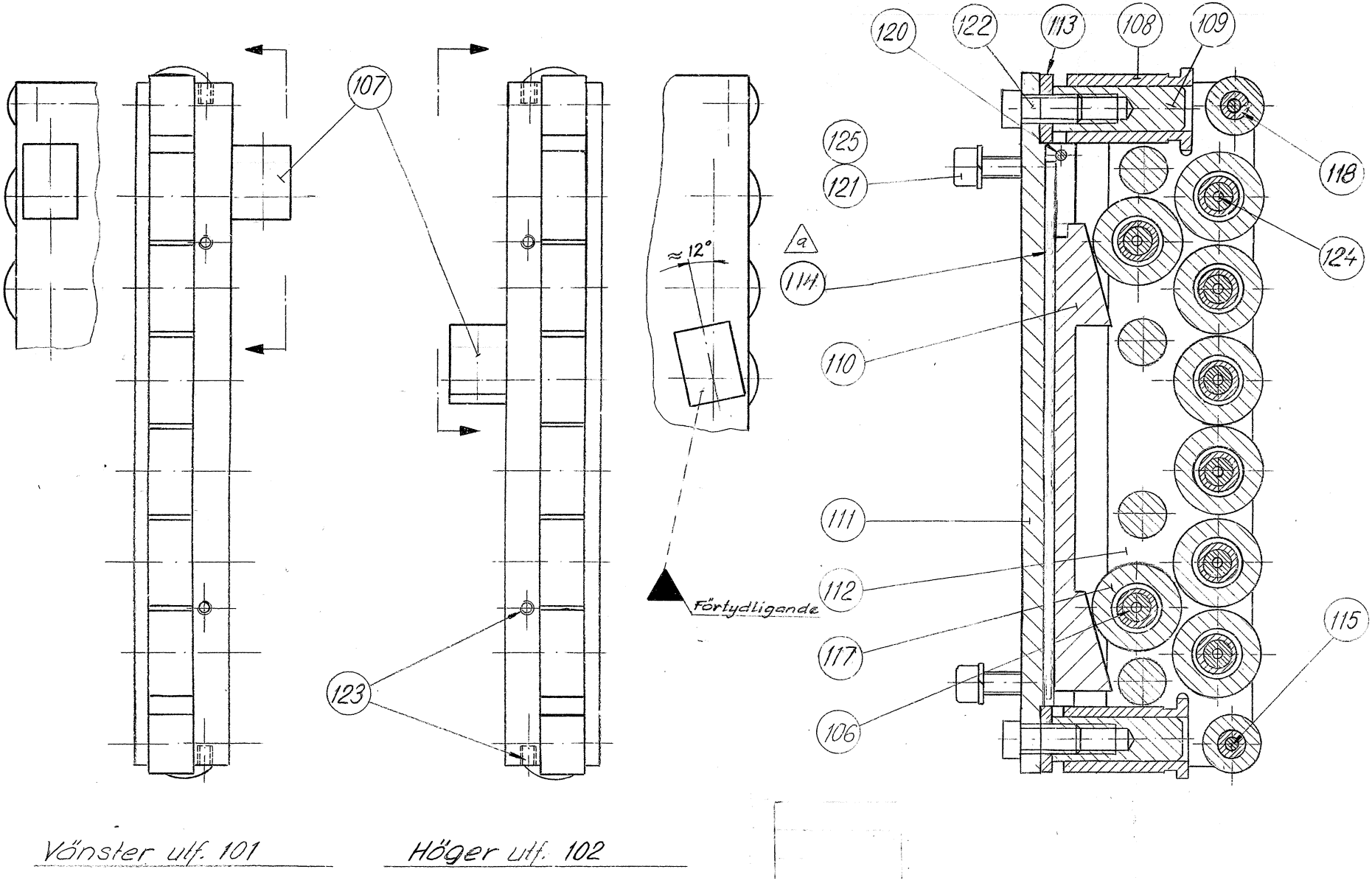
107
123
≈12°
Förtydligande
120
122
113
108
109
125
121
118
a
114
124
110
111
112
115
117
106
Vänster utf. 101
Höger utf. 102

Pos	Part No	SP	UN	Qty	Description	Page No
Common Parts						
106	12553-0000	A		7	SHAFT	
107	23525-0000	A		1	SHAFT	
108	23526-0000	-		2	SLEEVE	
109	23527-0000	A		2	SHAFT	
110	23528-0000	-		1	WEDGE	
111	23529-0000	-		1	RAIL	
112	567112-0000	-		1	PLUNGER BODY	
113	23531-0000	-		2	WASHER	
114	230843-0000	A		1	SLIDE RAIL	
115	230466-0000	A		2	SHAFT	
117	321570-0164	A		8	BEARING ROLLER, 2 SEALS, 8X24X12 MM	
118	321576-0109	A		2	BEARING ROLLER, 2 SEALS, 5X16X12 MM	
120	311102-0236	-		1	PARALLELL PIN, CP, M6, 3X16 MM	
121	312111-0368	-		2	SCREW HEX.SOCK.HD.MC6S-TT 6X16 88 FZB	
122	312101-0449	-		2	SCREW M6S M8X16 FZB	
123	312316-0283	A		4	SCREW HEX.SOCK.SET CUP P.MSK6SS4X4 FZB	
124	312316-0219	A		8	SCREW HEX.SOCK.SET CUP P.MSK6SS 3X5 FZB	
125	315401-0153	-		2	WASHER FBH6,1FZB	

Pos	Part No	SP	UN	Qty	Description	Page No

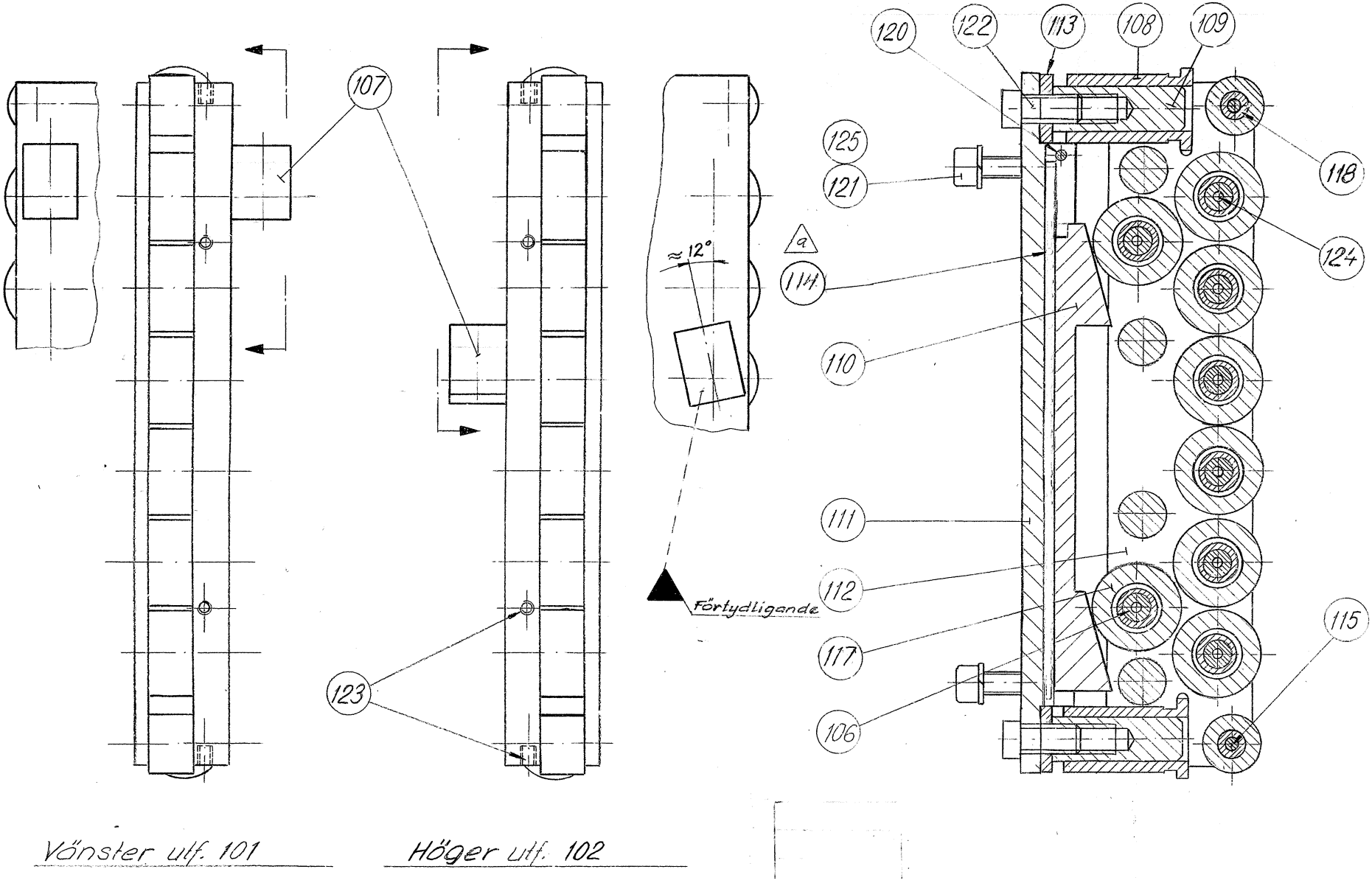
107
123
≈12°
a
Förtydligande
120
122
113
108
109
125
121
118
114
124
110
111
112
115
117
106
Vänster utf. 101
Höger utf. 102

Pos	Part No	SP	UN	Qty	Description	Page No
Common Parts						
106	12553-0000	-		7	SHAFT	
107	23525-0000	-		1	SHAFT	
108	23526-0000	-		2	SLEEVE	
109	23527-0000	-		2	SHAFT	
110	23528-0000	-		1	WEDGE	
111	23529-0000	-		1	RAIL	
112	567112-0000	-		1	PLUNGER BODY	
113	23531-0000	-		2	WASHER	
114	230843-0000	-		1	SLIDE RAIL	
115	230466-0000	-		2	SHAFT	
117	321570-0164	-		8	BEARING ROLLER, 2 SEALS, 8X24X12 MM	
118	321576-0109	-		2	BEARING ROLLER, 2 SEALS, 5X16X12 MM	
120	311102-0236	-		1	PARALLELL PIN, CP, M6, 3X16 MM	
121	312111-0368	-		2	SCREW HEX.SOCK.HD.MC6S-TT 6X16 88 FZB	
122	312101-0449	-		2	SCREW M6S M8X16 FZB	
123	312316-0283	-		4	SCREW HEX.SOCK.SET CUP P.MSK6SS4X4 FZB	
124	312316-0219	-		8	SCREW HEX.SOCK.SET CUP P.MSK6SS 3X5 FZB	
125	315401-0153	-		2	WASHER FBH6,1FZB	

Pos	Part No	SP	UN	Qty	Description	Page No

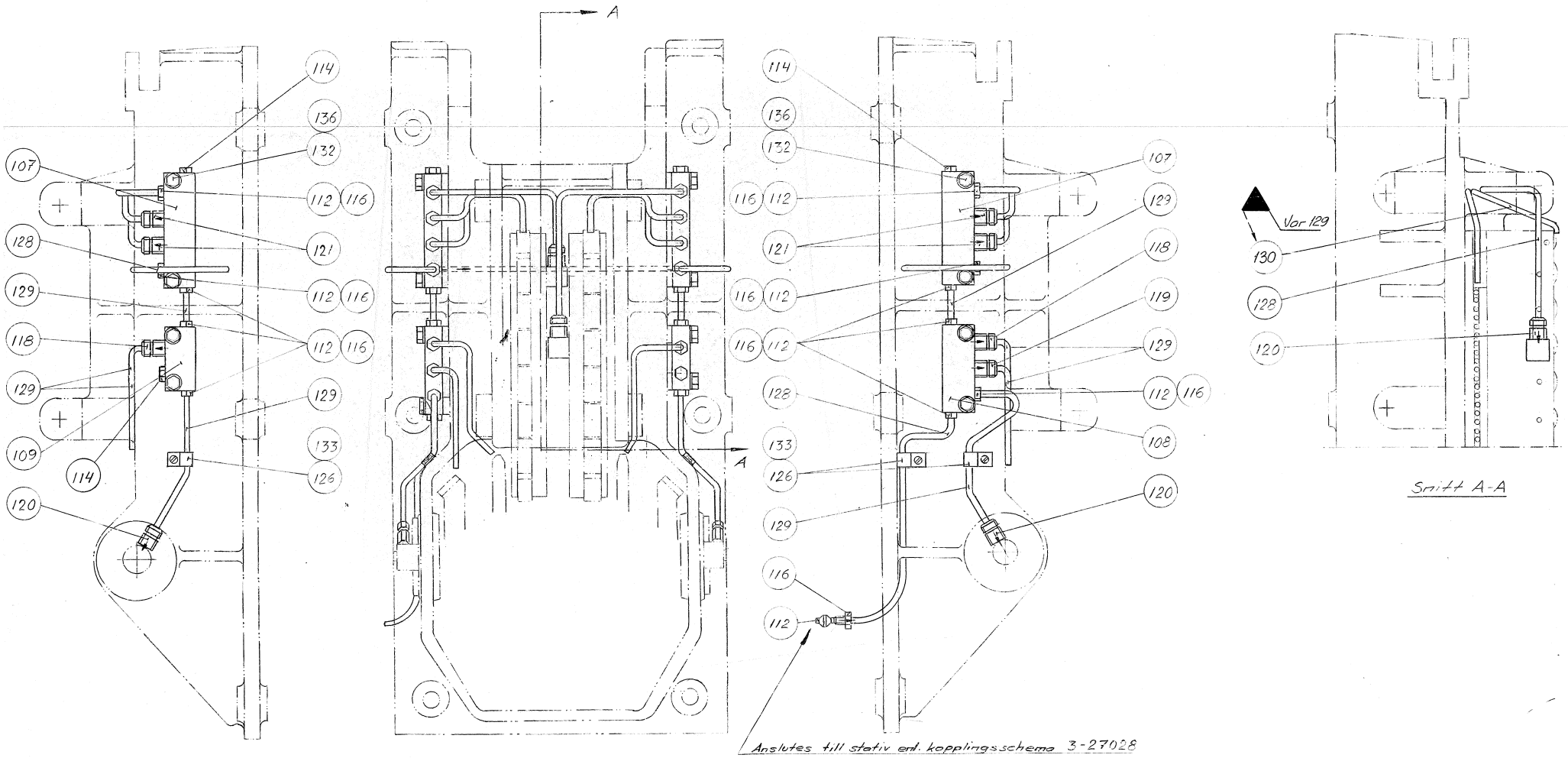
A
A
Anslutes till stativ enl. kopplingsschema 3-27028
Var 129
Snitt A-A

Pos	Part No	SP	UN	Qty	Description	Page No
Common Parts						
	27028-0001	-		1	WIRING DIAGRAM	
107	90032-0028	-		2	DISTR. BLOCK & DIST.5/16-24UNF X6	
108	90032-0013	-		1	DISTR. BLOCK & DIST.5/16-24UNF X5	
109	90032-0012	-		1	DISTR. BLOCK & DIST.5/16-24UNF X4	
112	90028-0001	-		12	"CONE 5/32""""	
114	90136-0002	-		3	"PLUG 5/16""24"	
116	90134-0003	-		12	BUSHING	
118	90092-0066	A		2	METERING VALVE, FJB 2, 5/16-24 UNF	
119	90092-0065	A		1	METERING VALVE, FJB 1, 5/16-24 UNF	
120	90092-0072	A		4	METERING VALVE, FSB 2, G1/8	
121	90092-0062	A		4	METERING VALVE, FJB 3/0, 5/16-24 UNF	
126	90165-0003	-		3	PIPE CLIP FOR TUBE D=4 MM	
128	90166-0051	-	M	1	TUBE PA,TRANSP.	
129	90166-0103	-	MM	1200	TUBE PA BLACK	
130	90151-0001	-	MM	400	BRASS PIPE DI=2,6 MM	
132	312101-0332	-		8	SCREW M6S M5X22 FZB	
133	312121-0285	-		3	SCREW SLOT.PAN HD. MCS 4X6 FZB	
136	315101-0146	-		8	WASHER PLAIN, BRB, 5,3/10 H=1	

Pos	Part No	SP	UN	Qty	Description	Page No

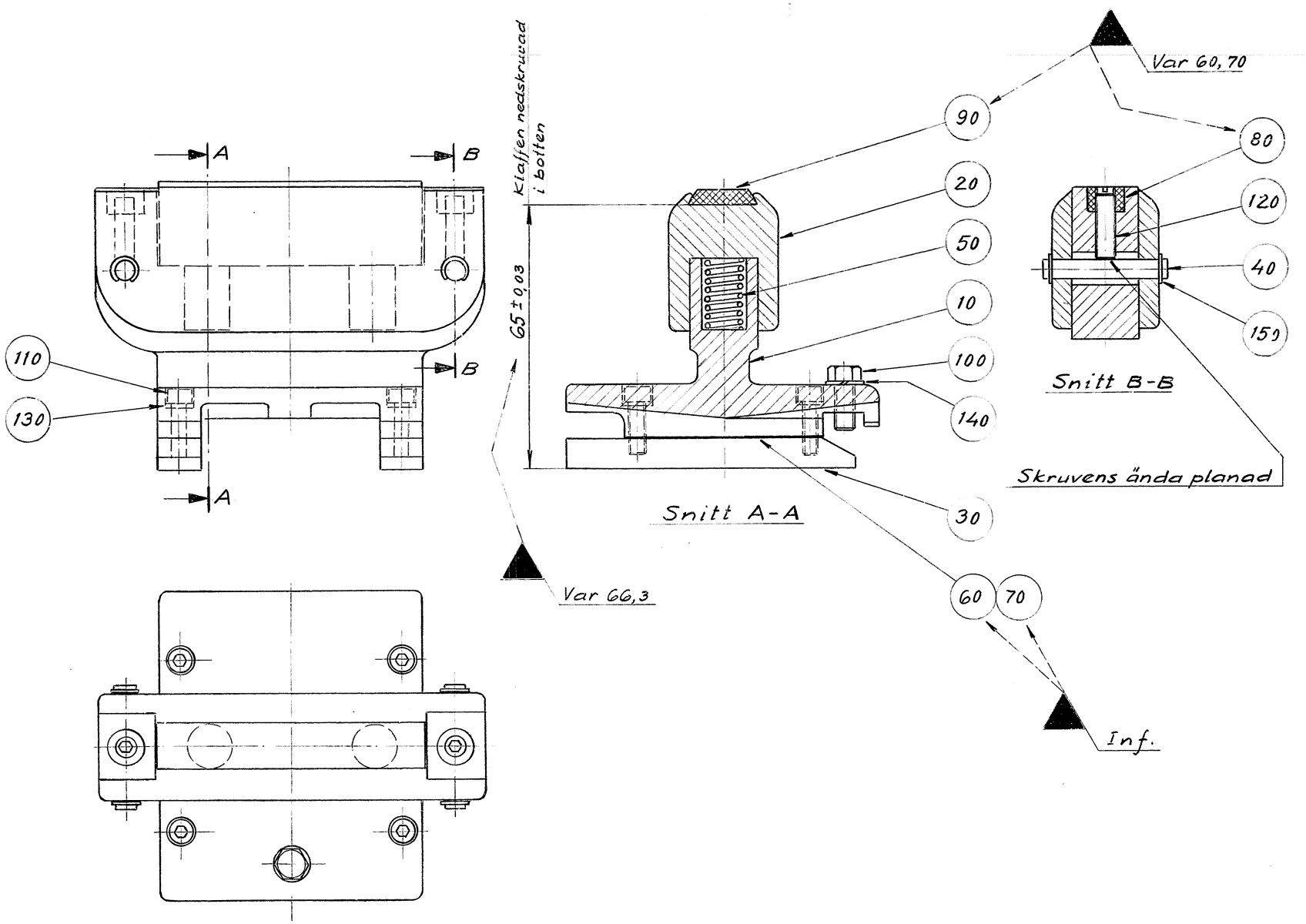
A
B
B
A
110
130
Klaffen nedskruvad i botten
65 ± 0,03
Var 66,3
Snitt A-A
Var 60, 70
90
20
50
10
100
140
30
60
70
80
120
40
159
Snitt B-B
Skruvens ända planad
Inf.

Pos	Part No	SP	UN	Qty	Description	Page No
Common Parts						
10	12508-0000	-		1	PRESSURE JAW	
100	312105-0327	-		1	SCREW M6S ISO 4017 M5X12 A480	
110	312111-0291	-		4	SCREW HEX.SOCK.HD.MC6S-TT 4X12 88 FZB	
120	312306-0329	-		2	SCREW HEX.SOCK.SET FLAT P.MP6SS 5X16FZB	
130	315401-0136	-		4	WASHER FBH 4,1 FZB	
140	315401-0146	-		1	WASHER FBH 5,1 FZB	
150	315754-0105	A		4	LOCKING WAE 3,2	
20	259576-0000	-		1	FLAP	
30	2060-0000	A		2	ROLLER BAR	
40	12512-0000	A		2	SHAFT	
50	12513-0000	A		2	COMPRESSION SPRING	
60	230786-0001	-		5	LACE	
70	230786-0002	-		5	LACE	
80	259577-0000	-		2	LOCK NUT	
90	532368-0000	A		1	RUBBER DOLLY	

Pos	Part No	SP	UN	Qty	Description	Page No

Tetra Pak

SPC
Spare Parts Catalogue

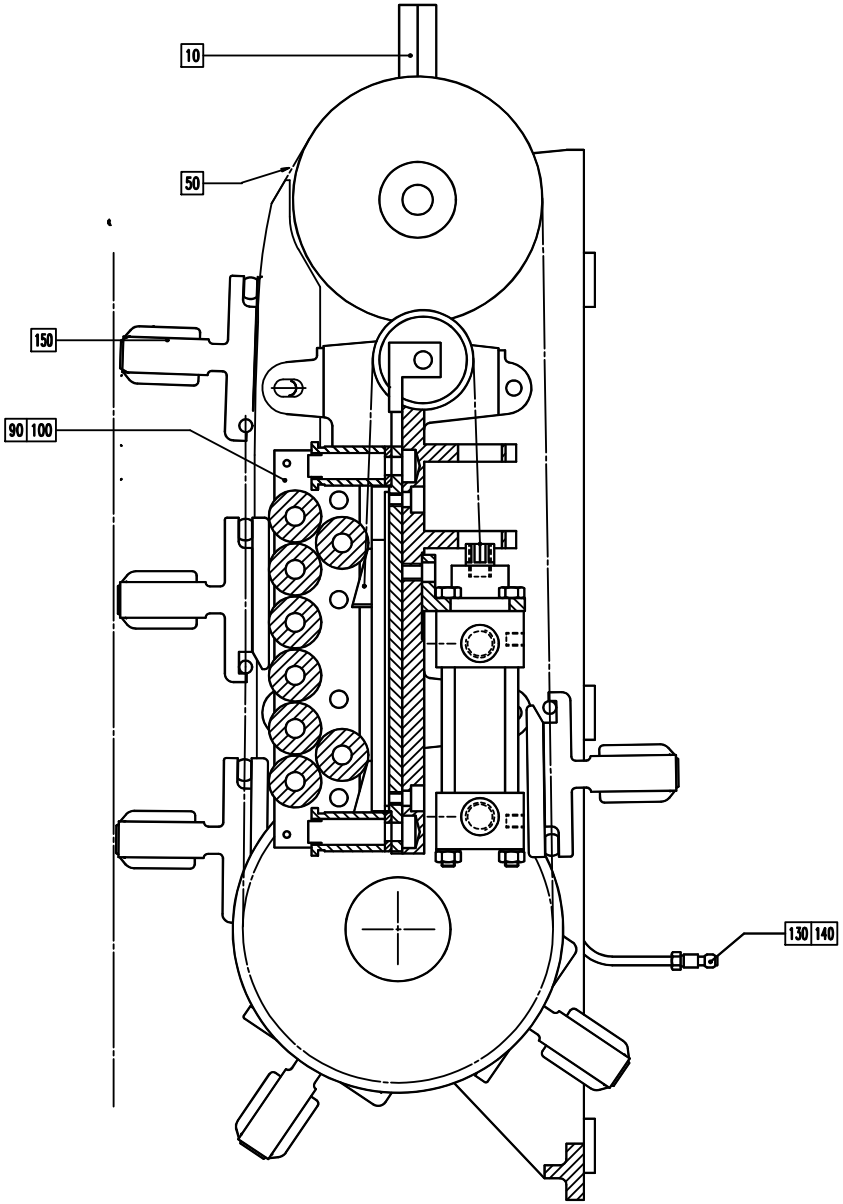
10
50
150
90 100
130 140

Pos	Part No	SP	UN	Qty	Description	Page No
Common Parts						
F000	A2565799-0100	-		1	SIDE FRAME	**151**
F010	A1988-0200	A		2	SPRING CARTRIDGE	**97, 115, 135, 153**
F050	A12563-0100	-		1	CHAIN	**99, 117, 137, 155**
F080	A20970-0300	-		1	CENTRAL LUBRICATION	**119, 157**
F110	A23534-0100	-		1	PLUNGER BODY	**121, 159**
F120	A23536-0100	-		1	PLUNGER BODY	**123, 161**
F160	A259856-0200	-		10	SEALING JAW	**125, 163**
F170	A259857-0200	-		1	CONTACT UNIT	**127, 165**

Pos	Part No	SP	UN	Qty	Description	Page No

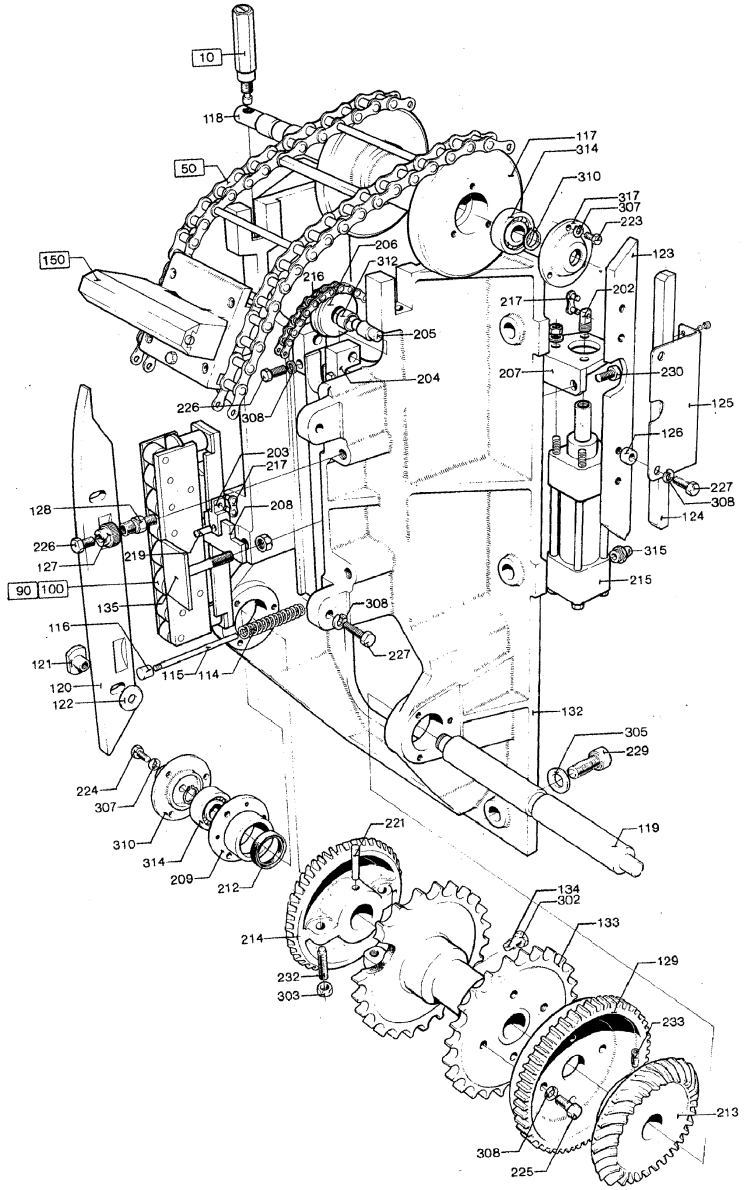
10
118
50
150
117
314
310
317
307
223
206
312
216
123
202
217
205
207
230
204
226
308
125
126
203
217
227
308
128
208
124
226
219
315
127
215
90
100
135
308
116
227
121
115
114
120
122
132
305
229
224
307
119
310
221
314
209
212
134
302
214
133
129
232
303
233
213
308
225

ECM: 116037 - 20021219
Group number: 2565799-0100
Assembly Drawing: 2565799-100_1_AA

Issue: 20030206

Pos	Part No	SP	UN	Qty	Description	Page No
Common Parts						
114	72-0004	-		4	COMPRESSION SPRING	
115	1574-0000	-		4	TACK	
116	1591-0000	-		4	PLUNGER	
117	2066-0000	-		1	GUIDE WHEEL	
118	2070-0000	-		1	SHAFT	
119	2071-0000	-		1	SHAFT	
120	2076-0000	A		2	TRANSMISSION RAIL	
121	2077-0000	-		4	GUIDE FLANGE	
122	2078-0000	-		4	WASHER	
123	2079-0000	-		2	TRANSMISSION RAIL	
124	2080-0000	-		2	RAIL	
125	2081-0000	-		2	ANGLE	
126	2082-0000	-		4	SPACER RING	
127	2448-0000	-		4	FLANGE	
128	2449-0000	-		4	SCREW	
129	12566-0000	-		1	GEAR WHEEL	
131	20497-0000	-		1	GROUP NUMBER PLATE	
132	21219-0000	-		1	SIDE FRAME	
133	26693-0000	-		1	SPROCKET	
134	230770-0000	-		1	SCREW	
135	279634-0000	-		1	STOP PLATE	
202	23538-0000	-		1	LINK BOLT	
203	23539-0000	-		1	LINK	
204	23540-0000	-		2	BRACKET	
205	23541-0000	-		1	SHAFT	
206	23542-0000	-		1	GUIDE SPROCKET	
207	23543-0000	-		1	BRACKET	
208	23544-0000	-		1	YOKE	
209	21679-0000	-		2	BEARING SEAT	
210	21678-0000	-		2	LID	
212	315230-0300	B		2	BEARING SEAL 25X32X4 MM	
213	574207-0000	-		1	CONICAL GEAR	
214	574208-0000	-		1	CONICAL GEAR	
215	90239-0132	A		1	CYLINDER	
216	318201-0023	-		1	ROLLER CHAIN, SINGLE 3/8 -23	
217	318209-0081	A		2	"CONNECTING LINK SINGLE 3/8"""	
219	311102-0270	-		1	PARALLELL PIN, CP, M6, 4X16 MM	
220	311103-0306	-		2	PARALLELL PIN, M6, 5X12 MM	
221	311201-0298	A		2	PIN, TAPERED, KP, 6X50 GROUND	
223	312101-0327	-		7	SCREW M6S M5X12 FZB	
224	312101-0329	-		6	SCREW M6S M5X16 FZB	
225	312101-0366	-		4	SCREW M6S M6X12 FZB	
226	312101-0368	-		6	SCREW M6S M6X16 FZB	
227	312101-0370	-		12	SCREW M6S M6X20 FZB	
229	312111-0540	-		6	SCREW HEX.SOCK.HD.MC6S-TT 12X40 88 FZ	
230	312111-0447	-		2	SCREW HEX.SOCK.HD.MC6S-TT 8X12 88 FZB	
232	312306-0374	-		2	SCREW HEX.SOCK.SET FLAT P.MP6SS 6X30FZB	
233	312316-0366	-		4	SCREW HEX.SOCK.SET CUP P.MSK6SS6X12 FZB	
235	312502-0221	-		4	DRIVE SCREW ROUND HEAD KDS 4X6	
236	312502-0275	-		4	DRIVE SCREW ROUND HEAD KDS 6X6	
302	312621-0320	-		1	NUT ML6M10FZB	
303	312601-0316	-		2	NUT M6M 6-8 FZB	
305	315101-0178	-		6	WASHER PLAIN, BRB, 13/24 H=2	
306	315105-0146	-		5	WASHER ISO 7089-5-200 HV-A4	
307	315401-0146	-		12	WASHER FBH 5,1 FZB	
308	315401-0153	-		18	WASHER FBH6,1FZB	
310	315750-0112	A		3	RETAIN. RING, 15	
312	321120-0111	A		1	BEARING BUSHING WITHOUT FLANGE,12/14X15	
314	90214-0098	A		4	BALL BEARING, 15X35X11 MM	
315	90257-0001	-		1	FILTER PLUG PARTNO 8145-00-140 TYP F14	
317	321600-0102	A		2	OIL SEAL (LL1535	
320	90005-0012	-		2	WASHER,PL.RND.CU.13,5/17,H=1,5	
330	90055-0042	A		1	NIPPLES, EXT. THREAD, HEXAGON, NO. 6835-	
340	90055-0056	-		1	HOSE COUPLING	
345	90055-0057	-		1	HOSE COUPLING	
350	90163-0043	-		1	QUICK COUPLING, (F) MD-006-0-WR013	
360	90148-0010	-	MM	800	HOSE	
370	344502-0021	-		1	GREASE NIPPLE STRAIGHT M6	

Machine Type | Group Description | Used-In | Group Number | Page No

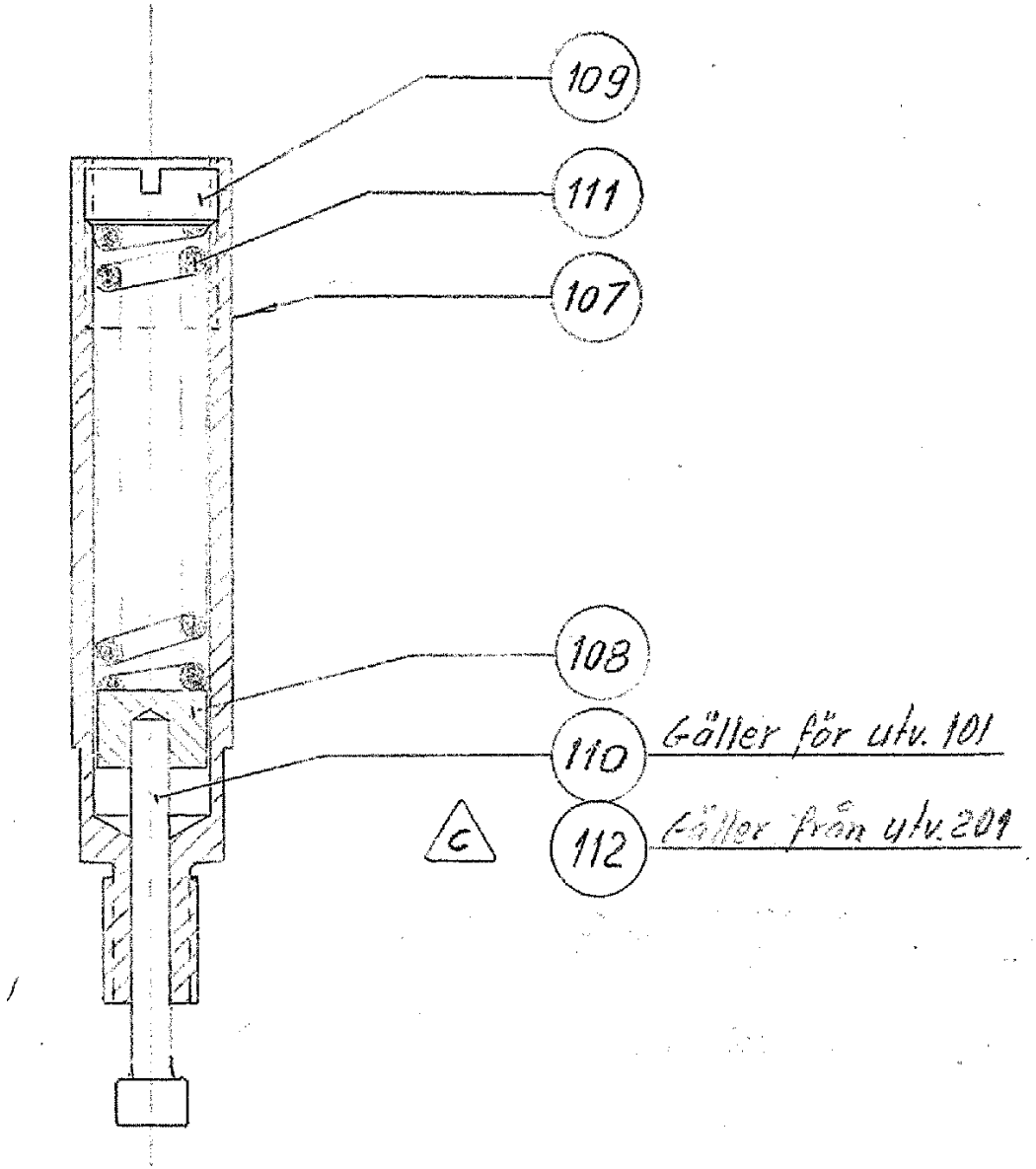
109
111
107
108
110
Gäller för utv. 101
C
112
Gäller från utv. 201

Pos	Part No	SP	UN	Qty	Description	Page No
Common Parts						
107	1989-0000	-		1	SPRING HOUSING	
108	1990-0000	-		1	BUFFER	
109	1991-0000	-		1	SETTING STOPPER	
111	1993-0001	A		1	COMPRESSION SPRING	
112	27723-0000	-		1	PLUNGER	

Pos	Part No	SP	UN	Qty	Description	Page No

Machine Type	Group Description	Used-In	Group Number	Page No

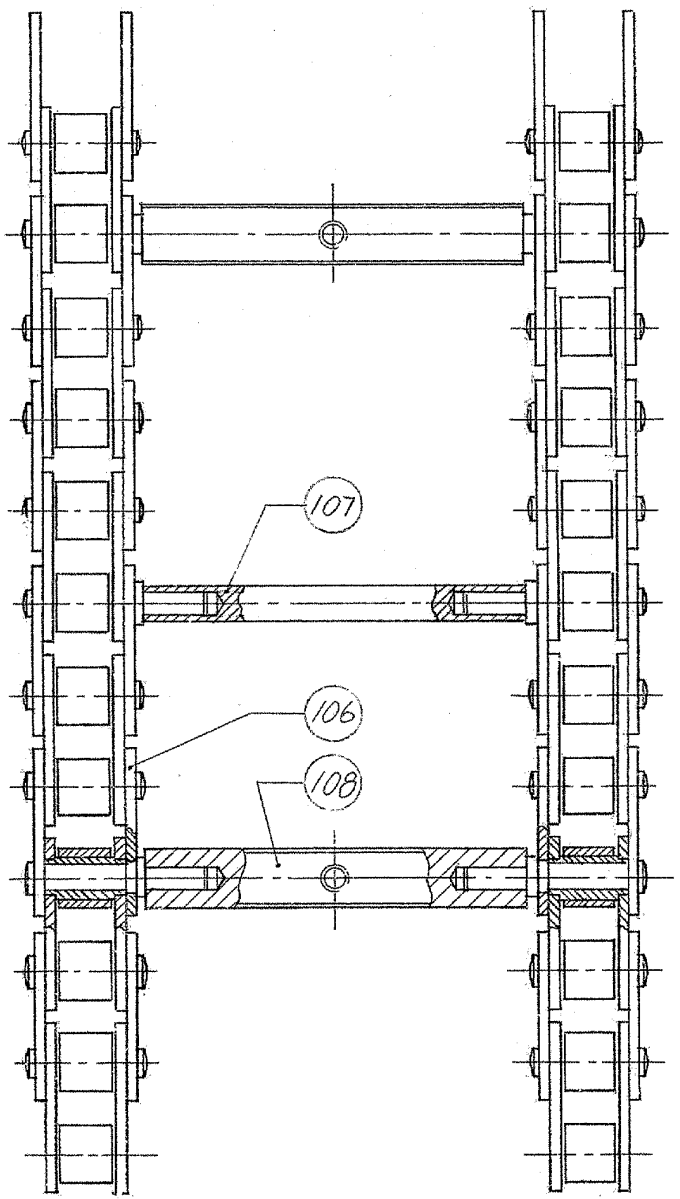
107
106
108

Pos	Part No	SP	UN	Qty	Description	Page No
Common Parts						
106	2295-0000	A		2	LINK CHAIN	
107	12567-0000	A		10	SHAFT	
108	12568-0000	A		10	SHAFT	

Pos	Part No	SP	UN	Qty	Description	Page No

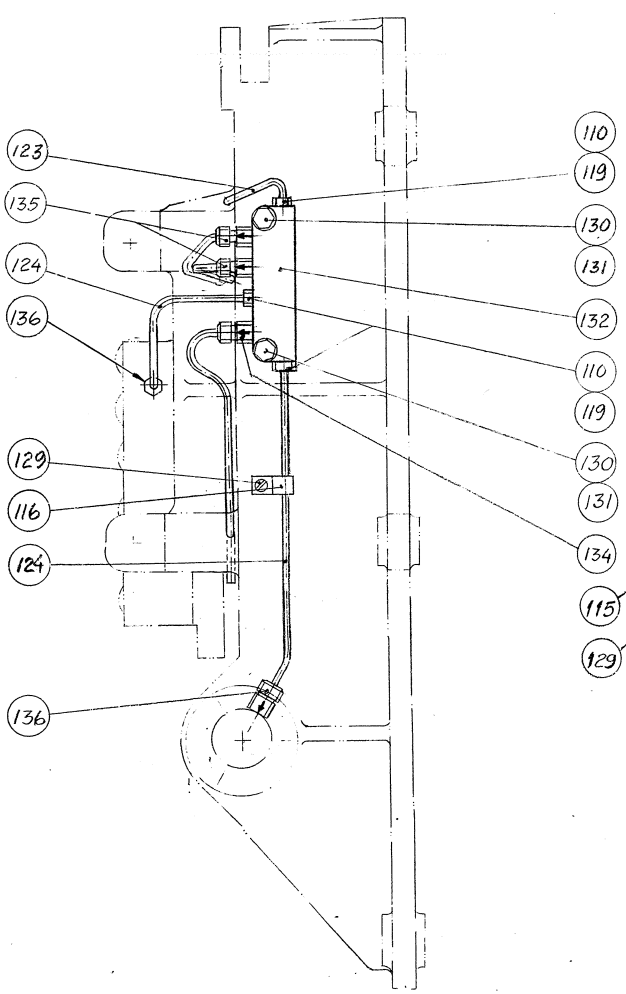

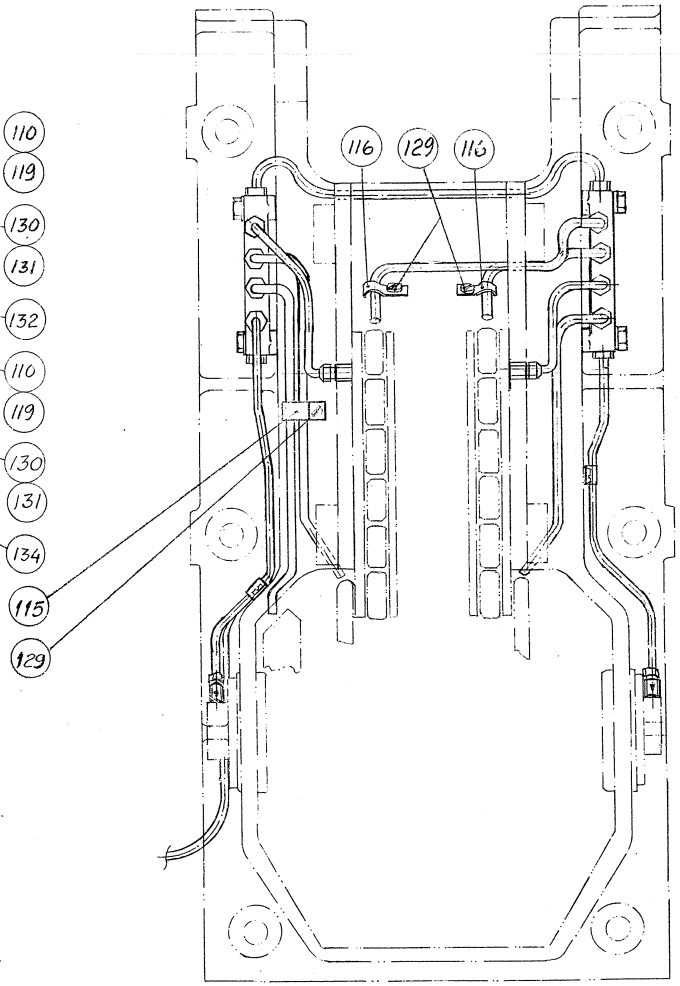

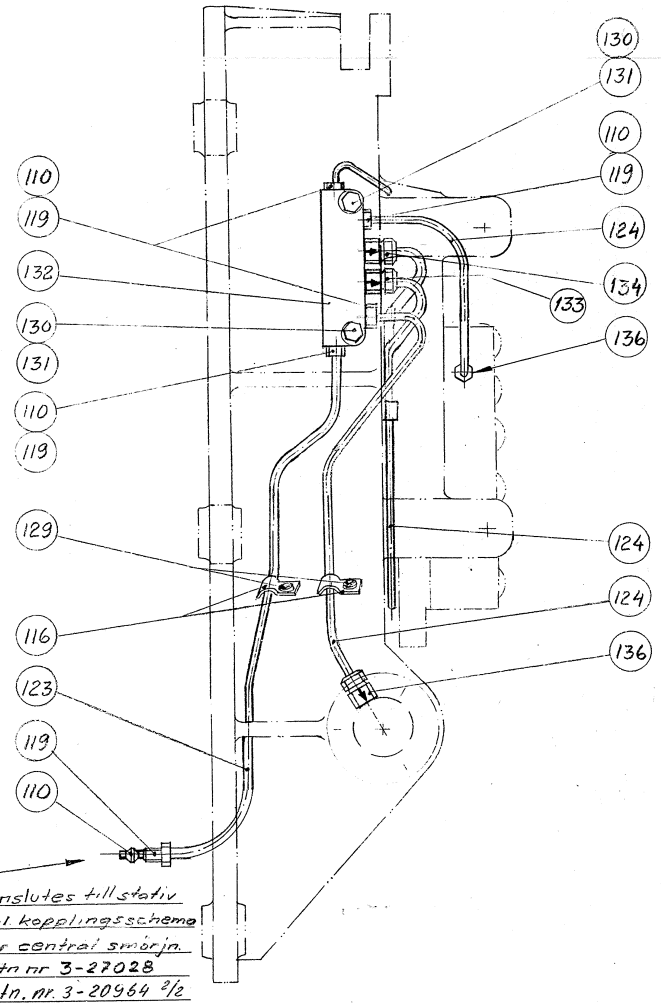

Anslutes till stativ enl kopplingsschema för central smörjn.
Utv. 301 Ritn nr 3-27028
Utv. 302 Ritn. nr 3-20964 2/2

Gäller utv. skede 301 och 302
För utv skede 201 se ritn nr J2-20970 2/3
För utv skede 100 se ritn nr J2-20970 1/3

Pos	Part No	SP	UN	Qty	Description	Page No
Common Parts						
110	90028-0001	A		8	"CONE 5/32""""	
115	90073-0001	-		1	CABLE CLIPS, D=8 MM	
116	90165-0003	-		5	PIPE CLIP FOR TUBE D=4 MM	
119	90134-0003	-		8	BUSHING	
123	90166-0109	A	MM	400	TUBE 4 MM PA,TRANSP.	
124	90166-0103	A	MM	1200	TUBE PA BLACK	
129	312121-0285	-		6	SCREW SLOT.PAN HD. MCS 4X6 FZB	
130	312101-0332	-		4	SCREW M6S M5X22 FZB	
131	315101-0146	-		4	WASHER PLAIN, BRB, 5,3/10 H=1	
132	90032-0028	-		2	DISTR. BLOCK & DIST.5/16-24UNF X6	
133	90092-0065	A		1	METERING VALVE, FJB 1, 5/16-24 UNF	
134	90092-0066	A		2	METERING VALVE, FJB 2, 5/16-24 UNF	
135	90092-0062	A		2	METERING VALVE, FJB 3/0, 5/16-24 UNF	
136	90092-0072	A		4	METERING VALVE, FSB 2, G1/8	

Pos	Part No	SP	UN	Qty	Description	Page No

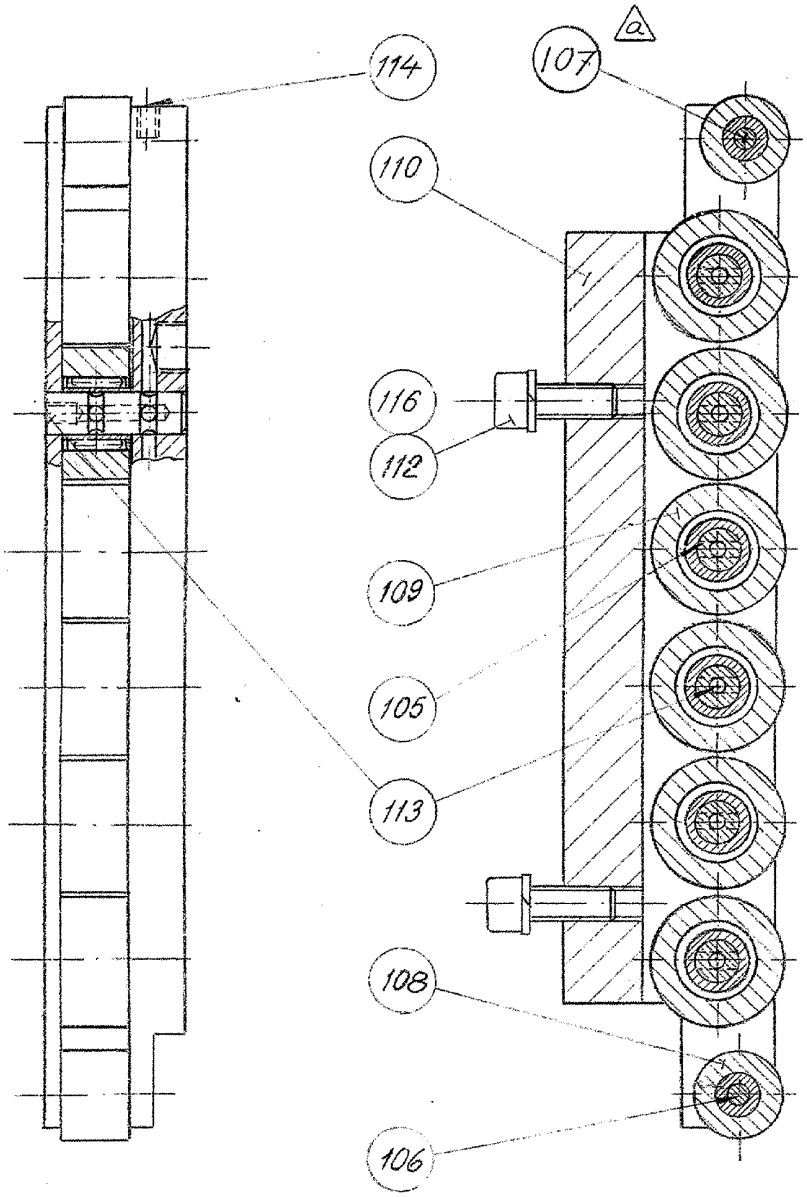
114
107
a
110
116
112
109
105
113
108
106

Pos	Part No	SP	UN	Qty	Description	Page No
Common Parts						
105	12553-0000	A		6	SHAFT	
106	23533-0000	A		1	SHAFT	
107	230466-0000	-		1	SHAFT	
108	321576-0109	A		2	BEARING ROLLER, 2 SEALS, 5X16X12 MM	
109	321570-0164	A		6	BEARING ROLLER, 2 SEALS, 8X24X12 MM	
110	23535-0000	-		1	PLUNGER BODY	
112	312111-0368	-		2	SCREW HEX.SOCK.HD.MC6S-TT 6X16 88 FZB	
113	312316-0219	A		6	SCREW HEX.SOCK.SET CUP P.MSK6SS 3X5 FZB	
114	312316-0283	A		1	SCREW HEX.SOCK.SET CUP P.MSK6SS4X4 FZB	
116	315401-0153	-		2	WASHER FBH6,1FZB	

Pos	Part No	SP	UN	Qty	Description	Page No

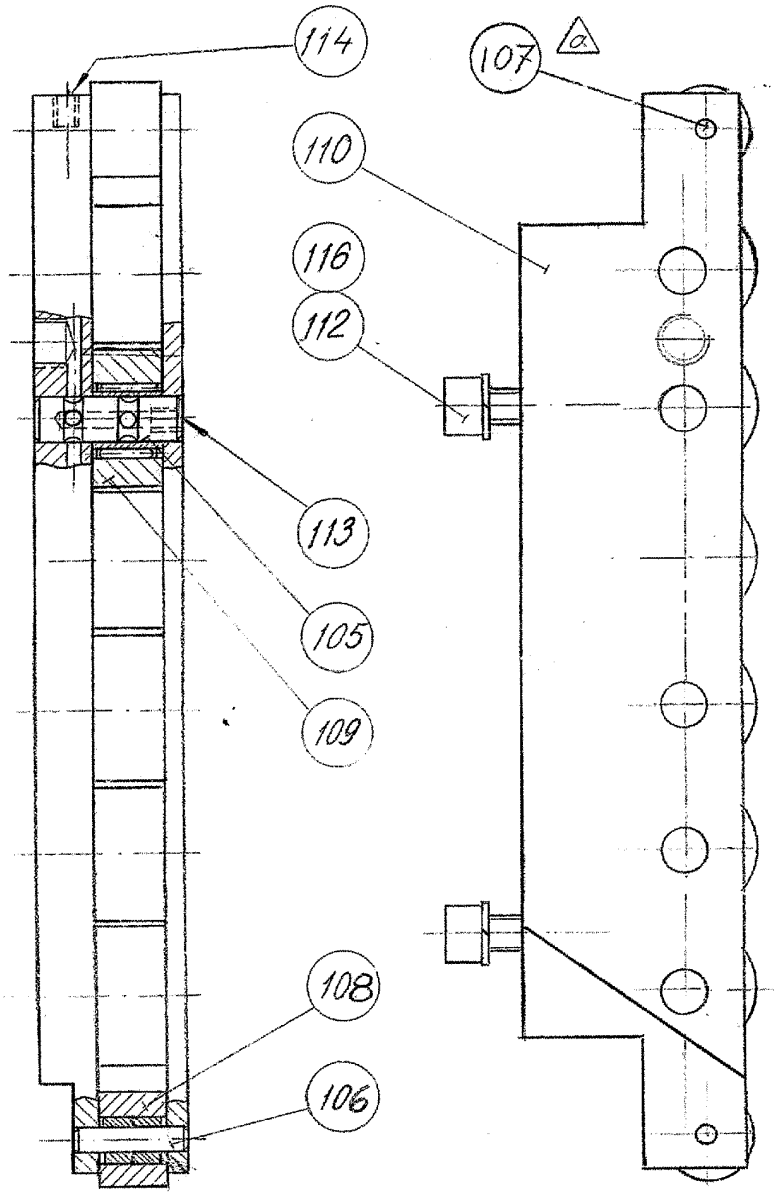
114
107
a
110
116
112
113
105
109
108
106

Pos	Part No	SP	UN	Qty	Description	Page No
Common Parts						
105	12553-0000	-		6	SHAFT	
106	23533-0000	-		1	SHAFT	
107	230466-0000	-		1	SHAFT	
108	321576-0109	A		2	BEARING ROLLER, 2 SEALS, 5X16X12 MM	
109	321570-0164	A		6	BEARING ROLLER, 2 SEALS, 8X24X12 MM	
110	23535-0000	-		1	PLUNGER BODY	
112	312111-0368	-		2	SCREW HEX.SOCK.HD.MC6S-TT 6X16 88 FZB	
113	312316-0219	A		6	SCREW HEX.SOCK.SET CUP P.MSK6SS 3X5 FZB	
114	312316-0283	A		1	SCREW HEX.SOCK.SET CUP P.MSK6SS4X4 FZB	
116	315401-0153	-		2	WASHER FBH6,1FZB	

Pos	Part No	SP	UN	Qty	Description	Page No

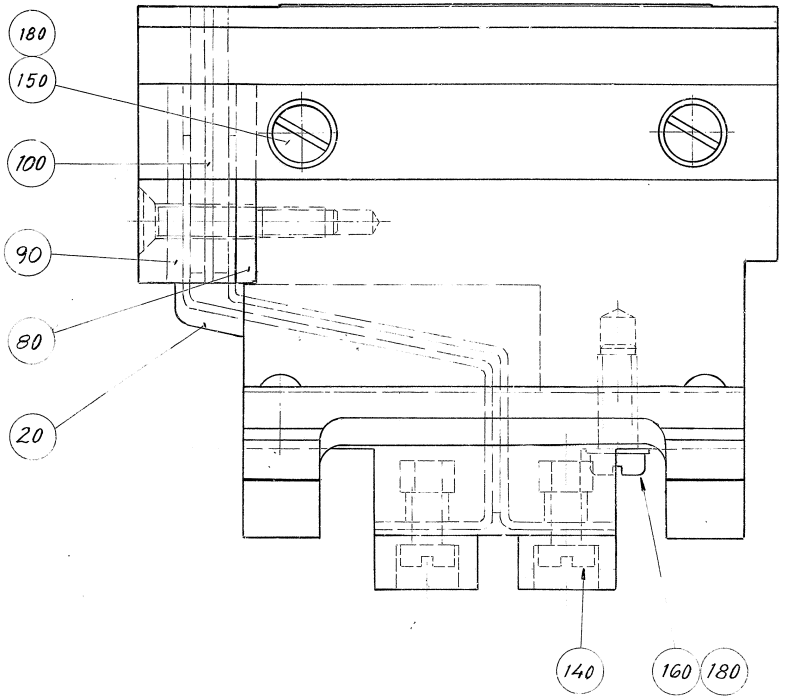
180
150
100
90
80
20
140
160
180

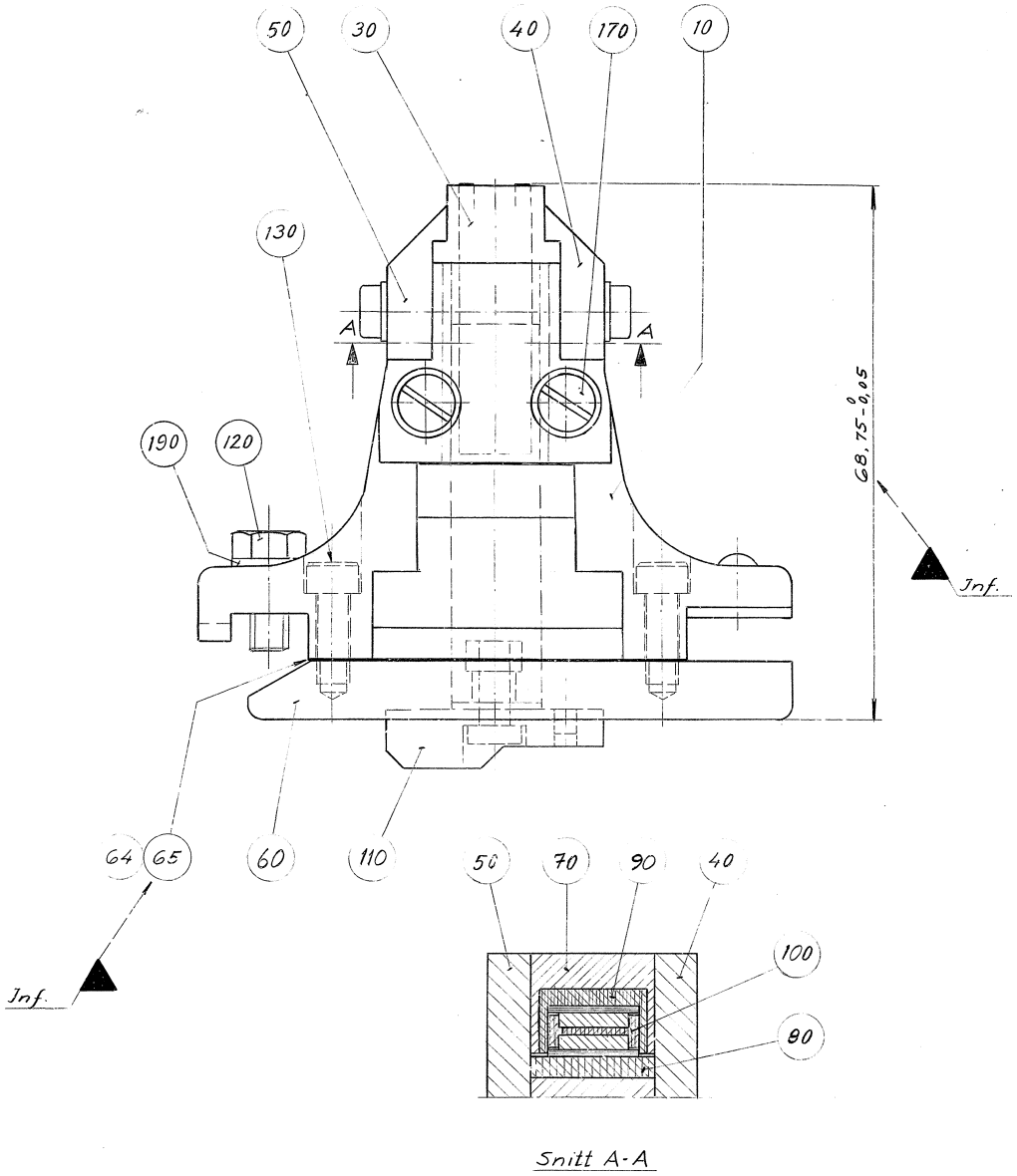
50
30
40
170
10
130
A
A
190
120
68,75 -0,05
Inf.
64
65
60
110
50
70
90
40
100
80
Inf.
Snitt A-A

Pos	Part No	SP	UN	Qty	Description	Page No
PB105						
30	554846-0000	A		1	INDUCTOR	
PB85						
30	568077-0000	A		1	INDUCTOR	
Common Parts						
10	259858-0000	-		1	HEATING JAW	
100	236963-0000	-		1	LACE	
110	259863-0000	A		2	CONTACT PIECE	
120	312105-0327	-		1	SCREW M6S ISO 4017 M5X12 A480	
130	312115-0291	-		4	SCREW ISO4762 M4X12 A4	
140	312122-0287	-		2	SCREW PAN HEAD MCS M4X8 NL. PL.	
150	312125-0291	-		4	SCREW PAN HEAD MCS M4X12 SS	
160	312125-0293	-		1	SCREW PAN HEAD MCS M4X16 SS	
170	312145-0297	-		2	SCREW COUNTERS.SLOT.HD. MFS 4X25 SS	
180	315105-0136	-		5	WASHER ISO 7089-4-200 HV-A4	
190	315105-0146	-		1	WASHER ISO 7089-5-200 HV-A4	
20	259859-0000	-		1	INSULATOR	
40	263924-0000	-		1	RULER	
50	263925-0000	-		1	RULER	
60	2060-0000	A		2	ROLLER BAR	
64	230786-0001	A		5	LACE	
65	230786-0002	A		5	LACE	
70	236954-0000	-		1	CLAMPING PART	
80	236955-0000	-		1	CLAMPING PLATE	
90	236959-0000	-		1	LACE	

Pos	Part No	SP	UN	Qty	Description	Page No

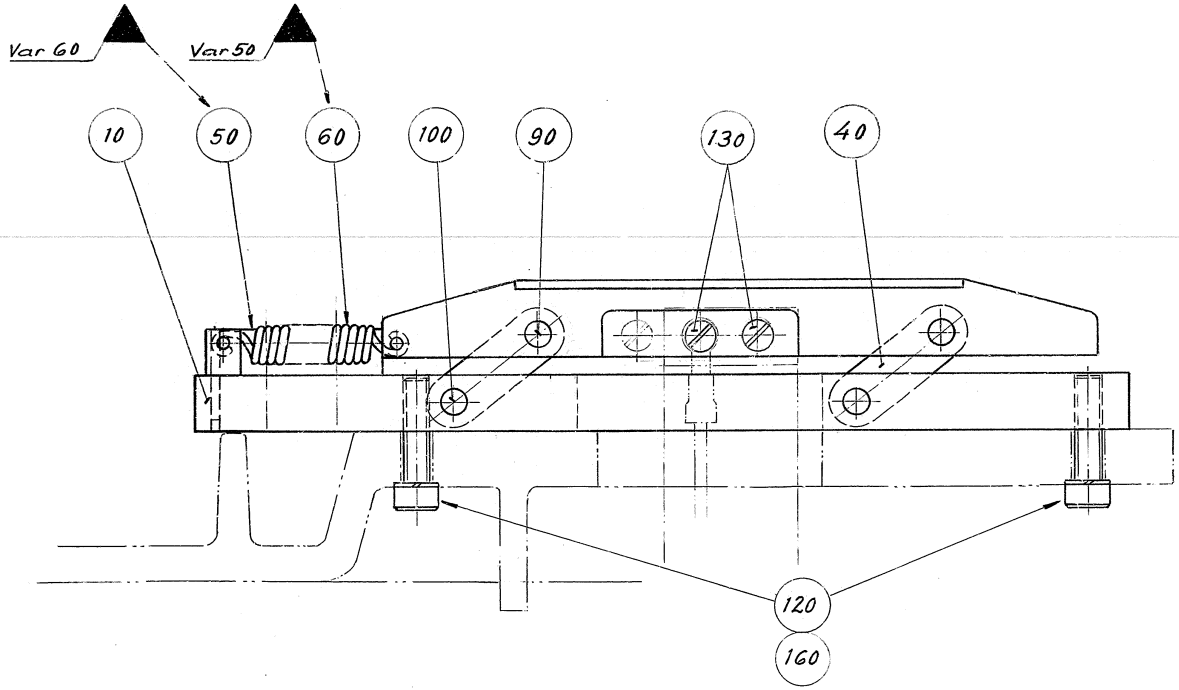
Var 60
Var 50
10
50
60
100
90
130
40
120
160

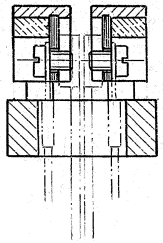

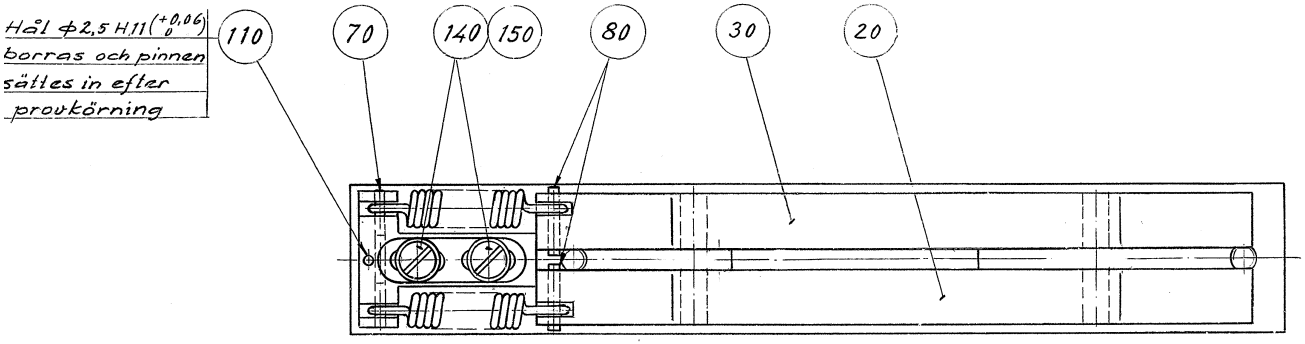
Hål ⌀2,5 H11 (+0,06 0)
borras och pinnen
sätts in efter
provkörning
110
70
140
150
80
30
20

ECM: 116047 - 20021219
Group number: 259857-0200
Assembly Drawing: 259857-1_1_AA

Issue: 20030206

Pos	Part No	SP	UN	Qty	Description	Page No
Common Parts						
10	259860-0000	-		1	BOTTOM PLATE	
100	311103-0358	-		2	PIN,STRIGHT M6 6X32 RFR	
110	311305-0212	-		1	SLOTTED PIRPC2,5X20FZB	
120	312111-0372	-		2	SCREW HEX.SOCK.HD.MC6S-TT 6X25 88 FZB	
130	312122-0285	-		4	SCREW SLOT.PAN HD. MCS 4X6 BR NP	
140	312125-0329	-		2	SCREW PAN HEAD MCS M5X16 SS	
150	315105-0146	-		2	WASHER ISO 7089-5-200 HV-A4	
160	315401-0153	-		2	WASHER FBH6,1FZB	
20	554589-0000	A		1	CONTACT RAIL	
30	554588-0000	A		1	CONTACT RAIL	
40	12917-0000	A		4	LINK ARM	
50	236969-0000	-		1	SPRING BRACKET	
60	267464-0000	A		2	TENSION SPRING	
70	311102-0207	-		2	PARALLELL PIN, CP, M6, 2,5X10 MM	
80	311102-0208	-		2	PARALLELL PIN, CP, M6, 2,5X12 MM	
90	311103-0350	-		4	PARALLELL PIN, CP, M6, 6X14 MM	

Pos	Part No	SP	UN	Qty	Description	Page No

Tetra Pak

SPC
Spare Parts Catalogue

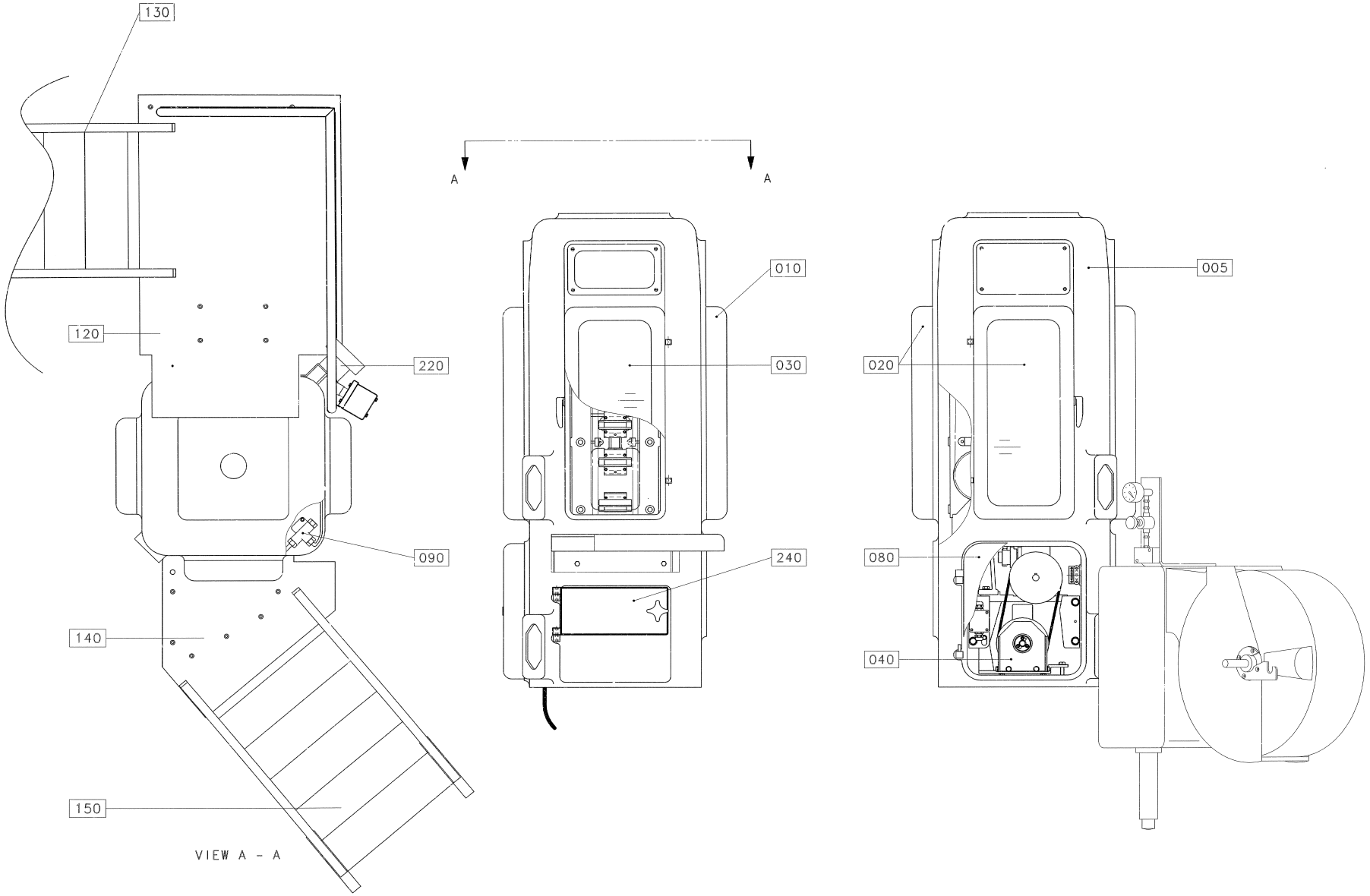
130
120
220
090
140
150
VIEW A - A
A
A
010
030
240
005
020
080
040

ECM: 123692 - 20030120
Group number: 633004-2000
Assembly Drawing: 633004-3_1_AA

Issue: 20030206

Pos	Part No	SP	UN	Qty	Description	Page No
Common Parts						
F005	A259448-0600	-		1	MACHINE BODY	**171**
F010	A12458-0300	-		1	DOOR	**175**
F020	A12459-0300	-		2	DOOR	**177**
F030	A12460-0300	-		1	DOOR	**179**
F040	A19393-0700	-		1	DRIVE UNIT	**181**
F080	A20199-0200	-		1	DOOR	**187**
F090	A20966-0200	-		1	CENTRAL LUBRICATION	**189**
F120	A2578512-0100	-		1	PLATFORM	**191**
F130	A2578513-0100	-		1	LADDER	**193**
F140	A2578514-0100	-		1	PLATFORM	**195**
F150	A2578515-0100	-		1	LADDER	**197**
F220	A554134-0100	-		1	TRANSFORMER	**199**
F240	A554123-0200	-		1	DOOR	**203**

Pos	Part No	SP	UN	Qty	Description	Page No

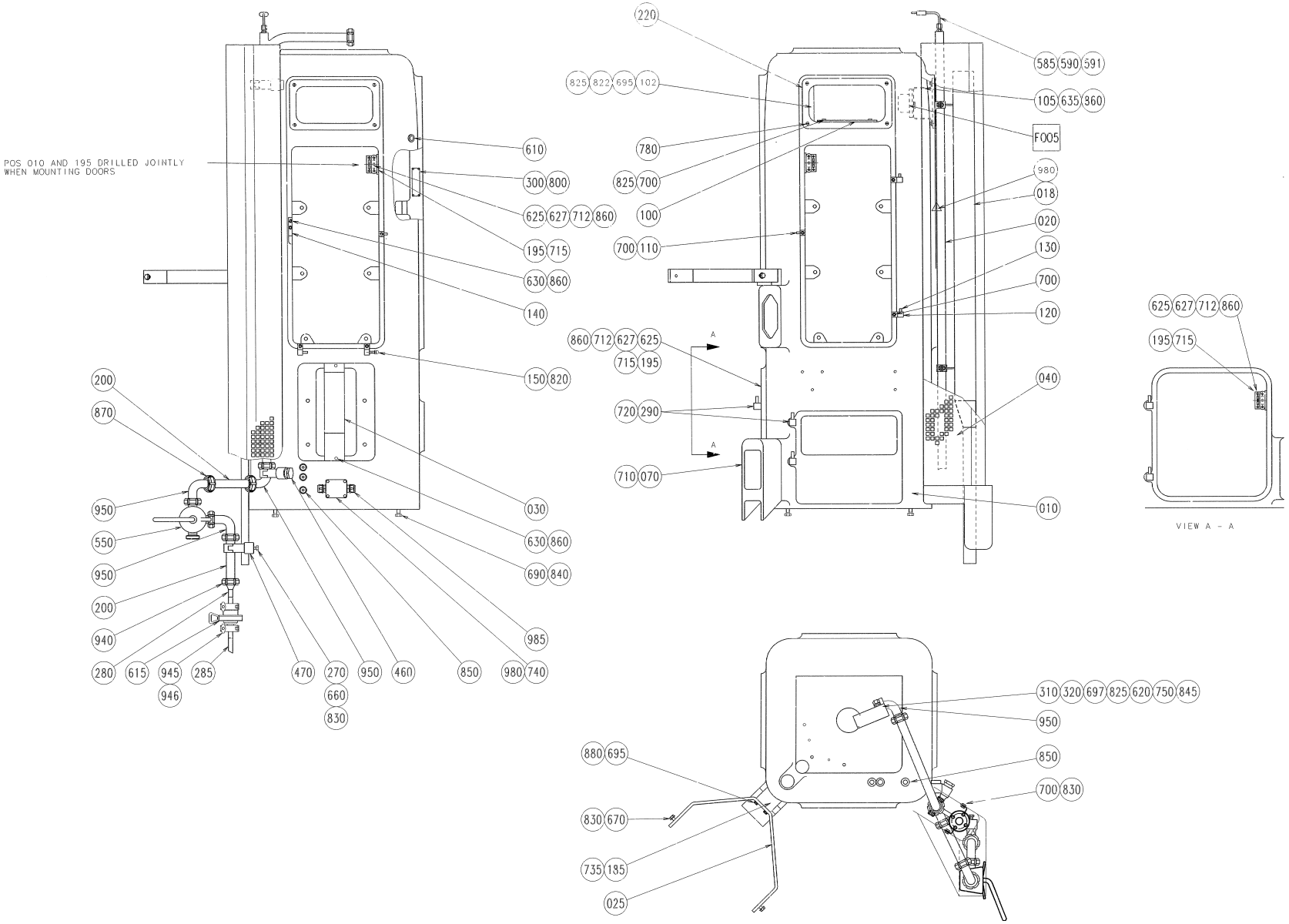
POS 010 AND 195 DRILLED JOINTLY WHEN MOUNTING DOORS
610
300 800
625 627 712 860
195 715
630 860
140
150 820
200
870
950
550
950
200
940
280 615 945 946 285
470 270 660 830 950 460 850 980 740
030
630 860
690 840
985
220
825 822 695 102
780
825 700
100
700 110
860 712 627 625
715 195
720 290
710 070
585 590 591
105 635 360
F005
980
018
020
130
700
120
040
010
A
A
625 627 712 860
195 715
VIEW A - A
310 320 697 825 620 750 845
950
850
700 830
880 695
830 670
735 185
025

Pos	Part No	SP	UN	Qty	Description	Page No
Common Parts						
010	239120-0000	-		1	MACHINE BODY	
018	568173-0000	-		1	DRAIN PIPE	
020	567220-0000	-		1	WASTE PIPE	
025	23503-0000	-		1	SUPPORT	
030	10590-0000	-		1	PROTECTION	
040	569390-0000	-		1	TOUCH GUARD	
070	23454-0000	-		1	SPACER	
100	579911-0000	-		1	PROTECTION	
102	1362016-0000	-		1	TOUCH GUARD	
105	579910-0000	-		2	BOW CLAMP	
110	1072-0000	-		4	LOCKING FINGER	
120	1121-0000	-		8	HINGE	
130	1122-0001	-		7	PIN	
140	1532-0000	-		1	SPRING	
150	1815-0000	-		1	DOWEL	
170	6584-0000	-		2	SPACER RING	
185	11244-0000	-		1	BRACKET	
195	568796-0000	-		5	BRACKET	
200	562958-0000	-		2	PIPE	
220	553441-0000	-		2	FRAME	
270	2594824-0000	-		1	INSERT	
280	576420-0000	-		1	PIPE	
285	576421-0000	-		1	DRAIN PIPE	
290	20198-0000	-		4	DOOR HINGE	
300	20497-0000	-		1	GROUP NUMBER PLATE	
310	576988-0000	-		1	PIPE CLAMP	
320	576989-0000	-		1	INDUCTIVE SWITCH	
460	90330-0037	-		1	PLUG, EXT. G-THREAD, G1/2	
470	90165-0176	-		3	PIPE SUPPORT, FOR DIAM. 25 MM PIPE	
550	B90207-0001	-		1	3-WAY COCK	
	90207-0301	*B*		*1*	*O-RING*	
	90207-0300	*B*		*1*	*O-RING*	
588	90326-0012	-		1	PROTECTIVE COVER, T31A4618	
590	90326-0020	-		1	PLUG, FEMALE YELLOW CR-AL	
591	90326-0053	A		1	THERMOCOUPLE, 12826-35	
610	90261-0014	-		2	PLUG F21	
615	581617-0000	-		1	STEAM TRAP	
620	90044-0104	-		2	PROX.SWITCH IFM IN 3002	
625	90044-0201	-		5	KEY SAF.SW. AZ16-03 ZVR K-2254	
627	90044-0310	-		5	KEY FOR SAFETY SWITCH, AZ 15/16 B1	
630	312105-0327	-		6	SCREW M6S ISO 4017 M5X12 A480	
635	312105-0325	-		4	SCREW M6S ISO 4017 M5X10 A480	
660	312105-0447	-		1	SCREW M6S ISO 4017 M8X12 A480	
670	312105-0451	-		2	SCREW M6S ISO 4017 M8X20 A480	
690	312105-0491	-		4	SCREW M6S ISO 4017 M10X20 A480	
695	312105-0368	-		5	SCREW M6S M6X16 A280	
697	312105-0372	-		2	SCREW M6S ISO 4017 M6X25 A480	
700	312115-0366	-		20	SCREW ISO4762 M6X12 A4	
710	312115-0455	-		4	SCREW ISO4762 M8X30 A4	
712	312115-0329	-		10	SCREW ISO4762 M5X16 A4	
715	312145-0327	-		10	SCREW COUNTERS.SLOT.HD. MFS 5X12 SS	
720	312318-0364	-		4	SCREW ISO4029 M6X10 A4	
735	312115-0461	-		2	SCREW ISO4762 M8X50 A4	
740	312115-0295	-		2	SCREW ISO4762 M4X20 A4	
780	312165-0366	-		8	SCREW SLOT.RAIS.COUNT.HD.MKFS 6X12 SS	
800	311521-0142	-		4	BLANK RIVET 3,2X6	
820	312705-0316	-		1	NUT HEX. DOMED CAP MHM-6 M6 A280	
822	312605-0316	-		3	HEXAGON NUT, M6M M6 A280	
825	315105-0153	-		11	WASHER ISO 7089-6-200 HV-A4	
830	315105-0165	-		9	WASHER ISO 7089-8-200 HV-A4	
840	315105-0173	-		6	WASHER ISO 7089-10-200 HV-A4	
845	315105-0124	-		2	WASHER ISO 7089-3-200 HV-A4	
850	352101-0103	-		5	LEAD-IN, PR18,6/PG11, E-1457518	
860	315105-0146	-		20	WASHER ISO 7089-5-200 HV-A4	
870	315250-0101	A		8	GASKET 32X25X5,5 MM	
880	315402-0156	-		2	LOCK WASHER FBB 6,5	
940	342803-0101	-		1	UNION NUT, RD 40-6 (SMS 25)	
945	342840-0101	-		2	CLAMP, 12,7 AND 19,1 MM 3-A PCS+PMCS	
946	342850-0201	-		2	GASKET, FDA, 3-A, 1/2	
950	342807-0101	-		4	PIPE ELBOW 90 DEGR. SMS1220, D=25 MM	
980	359705-0007	-		1	WARNING SIGN ISO, HOT SURFACE	
F005	A1350004-0100	B		1	LIGHT FIXTURE	**173**

Machine Type | Group Description | Used-In | Group Number | Page No

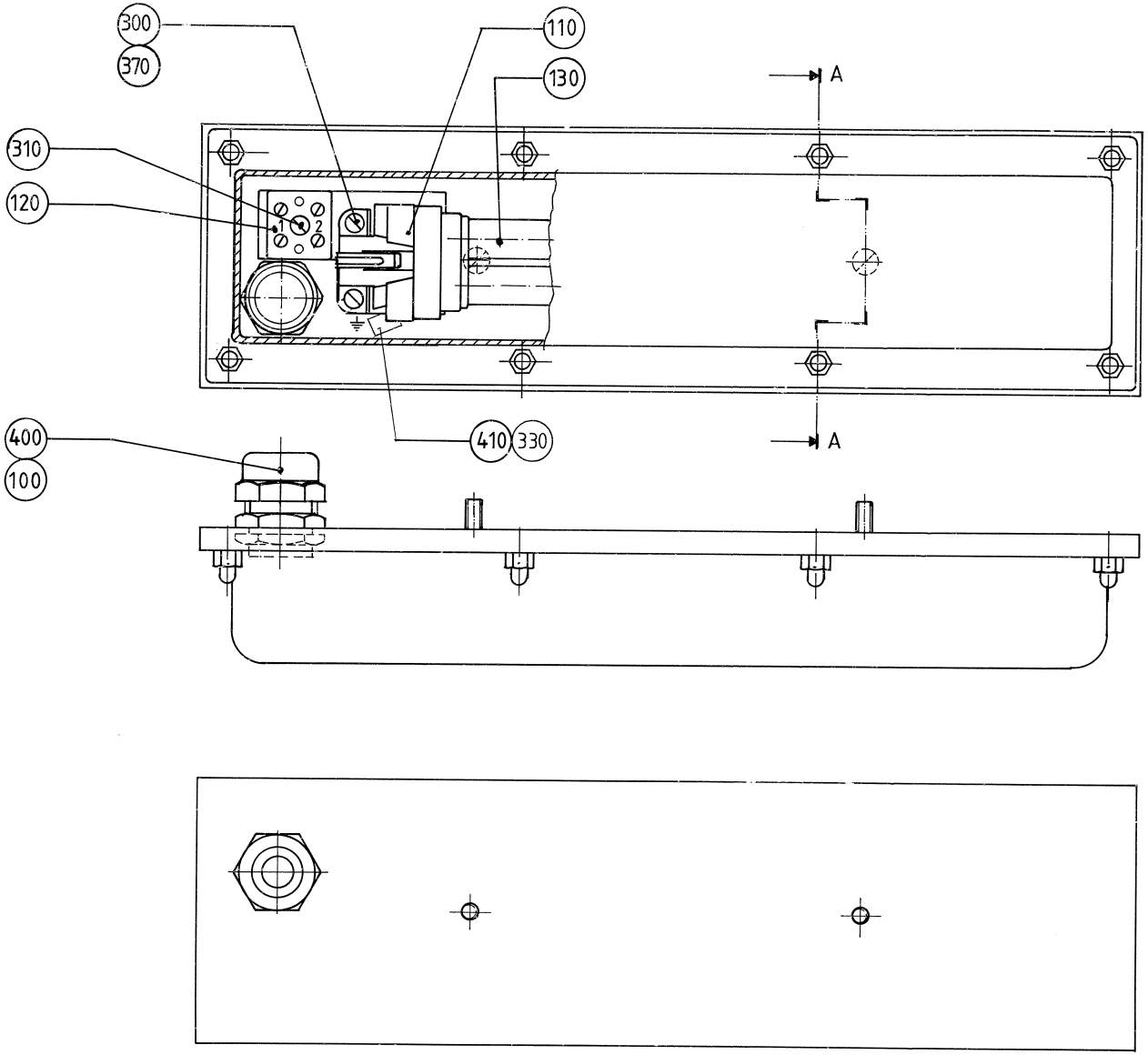
300
370
110
130
A
310
120
1
2
400
100
410
330
A

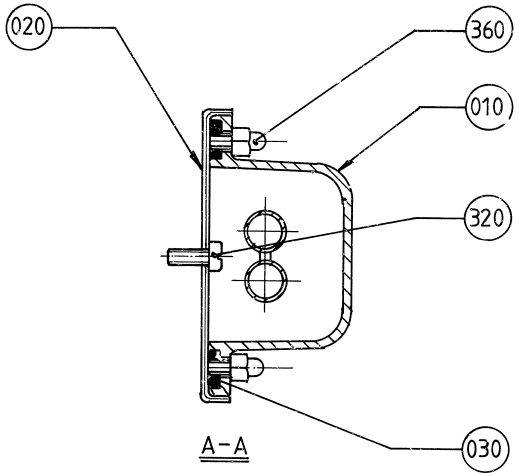
020
360
010
320
030
A-A

ECM: 72799 - 19990729
Group number: 1350004-0100
Assembly Drawing: 1350004-1_1_AA

Issue: 20030206

Pos	Part No	SP	UN	Qty	Description	Page No
Common Parts						
010	456260-0000	C		1	COVER	
020	456262-0000	-		1	SHEET	
030	441536-0000	C		1	GASKET	
100	90099-0087	-		1	NUT PR=20,4	
110	90164-0301	C		1	HOLDING FIXTURE	
120	90195-0020	-		1	TERMINAL BLOCK, 1977.2	
130	90297-0007	C		1	FLUORESCENT TUBE, PL11	
300	312125-0220	-		2	SCREW SLOT.PAN HD. MCS 3X6 A480	
310	312125-0230	-		1	SCREW PAN HEAD MCS M3X20 SS	
320	312125-0327	-		2	SCREW PAN HEAD MCS M5X12 SS	
330	312132-0284	-		1	SCREW SLOT. PAN HEAD MSCS M4X5	
360	312705-0314	-		8	NUT HEX. DOMED CAP MHM-6 M5 A280	
370	315105-0124	-		2	WASHER ISO 7089-3-200 HV-A4	
400	352103-0108	-		1	CABLE GLAND, ST 13,5 , PR20,4/PG13,5	
410	353101-0129	-		1	CABLE SHOE	

Pos	Part No	SP	UN	Qty	Description	Page No

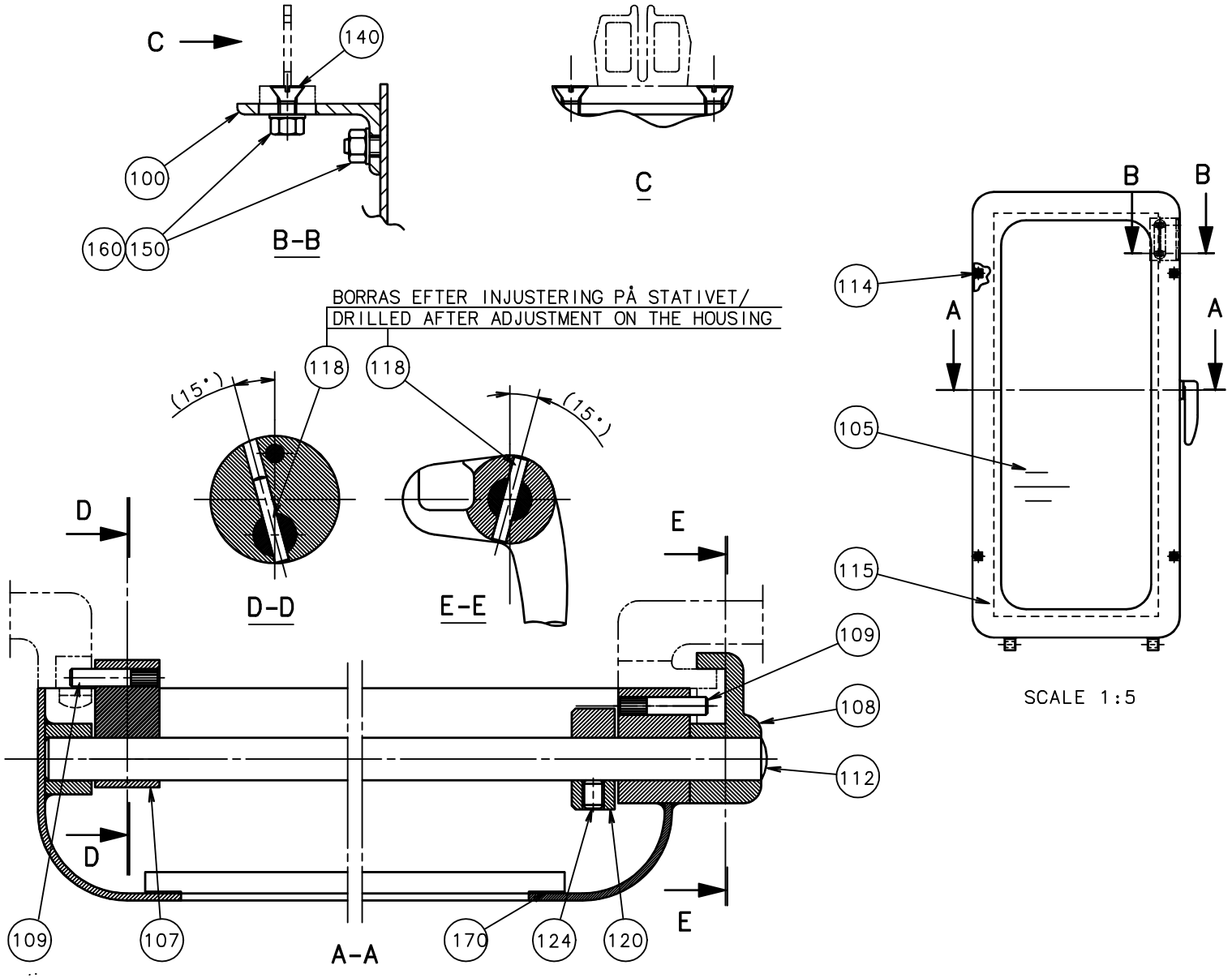
C
140
100
160
150
B-B
C
BORRAS EFTER INJUSTERING PÅ STATIVET/
DRILLED AFTER ADJUSTMENT ON THE HOUSING
118
118
(15°)
(15°)
D-D
E-E
D
E
D
E
109
107
A-A
170
124
120
109
108
112
B
B
A
A
114
105
115
SCALE 1:5

Pos	Part No	SP	UN	Qty	Description	Page No
Common Parts						
100	568797-0000	-		1	FASTENING BRACKET	
105	568799-0000	-		1	WINDOW	
107	1531-0000	-		1	ECCENTRIC	
108	1534-0000	-		1	HANDLE	
109	1573-0000	-		2	TACK	
112	2247-0000	-		1	SHAFT	
114	5204-0000	-		4	RUBBER STOPPER	
115	569654-0000	-		1	DOOR	
118	311201-0241	-		2	PIN, TAPERED, KP, 4X25 GROUND	
120	315742-0108	-		1	COLLAR, 12/28, H=12	
124	312316-0362	-		1	SCREW HEX.SOCK.SET CUP P.MSK6SS6X8 FZB	
140	312145-0327	-		2	SCREW COUNTERS.SLOT.HD. MFS 5X12 SS	
150	312605-0314	-		4	HEXAGON NUT, M6M M5 A280	
160	315105-0146	-		4	WASHER ISO 7089-5-200 HV-A4	
170	90157-0041	-		1	SEALING COMPOUND	

Pos	Part No	SP	UN	Qty	Description	Page No

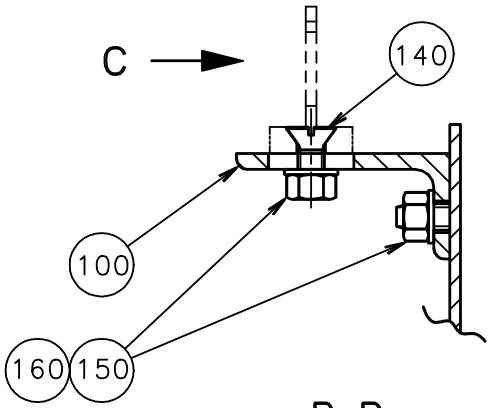

B-B

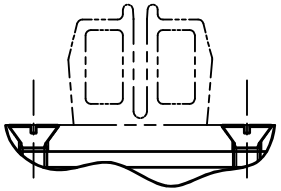

C

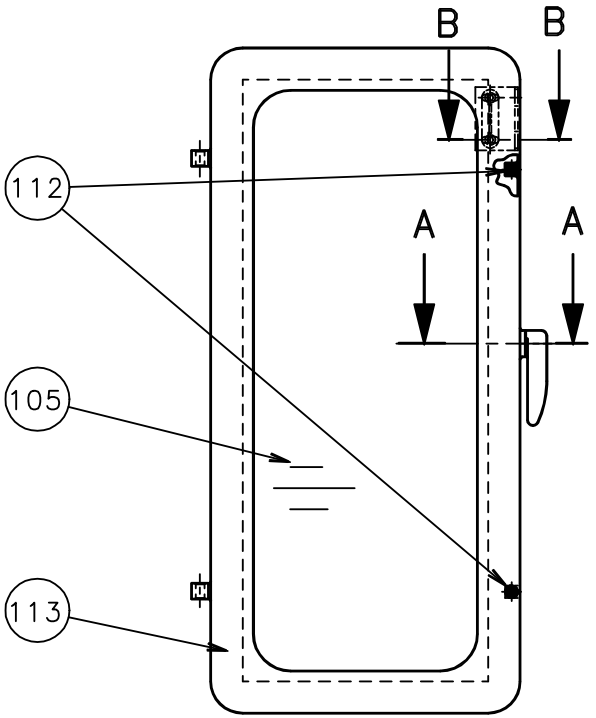

SCALE 1:5

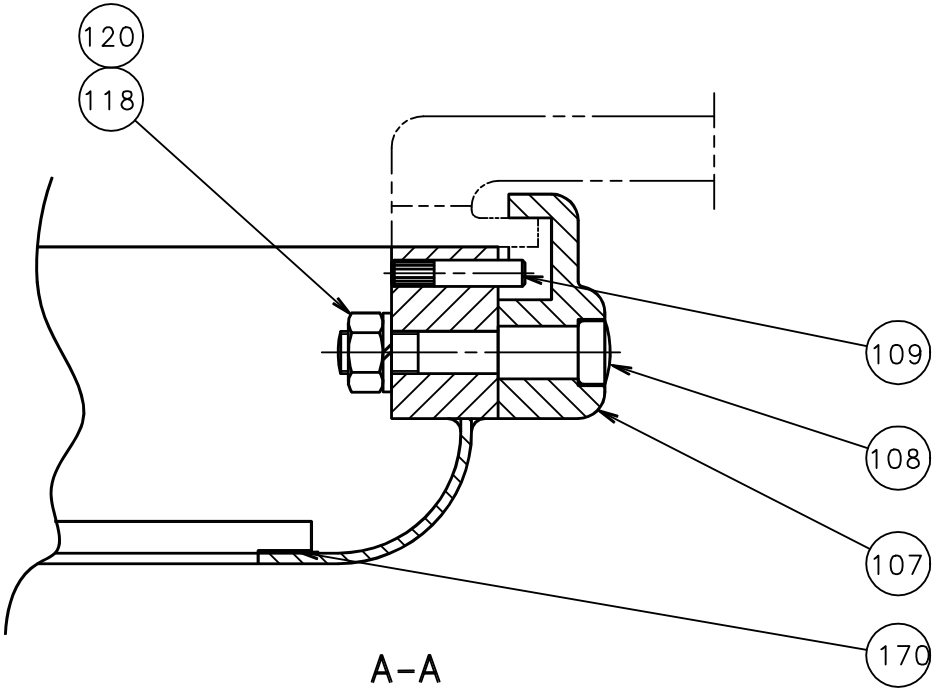

A-A

ECM: 116280 - 20021219
Group number: 12459-0300
Assembly Drawing: 12459-3_1_AA

Issue: 20030206

Pos	Part No	SP	UN	Qty	Description	Page No
Common Parts						
100	568797-0000	-		1	FASTENING BRACKET	
105	568799-0000	-		1	WINDOW	
107	1070-0000	-		1	HANDLE	
108	1071-0000	-		1	PIN	
109	1573-0000	-		1	TACK	
112	5204-0000	-		2	RUBBER STOPPER	
113	569655-0000	-		1	DOOR	
118	312812-0318	-		1	HEXAGON NUT, NY-LOCK M8 A480	
120	315401-0165	-		1	WASHER FBH8,2FZB	
140	312145-0327	-		2	SCREW COUNTERS.SLOT.HD. MFS 5X12 SS	
150	312605-0314	-		4	HEXAGON NUT, M6M M5 A280	
160	315105-0146	-		4	WASHER ISO 7089-5-200 HV-A4	
170	90157-0041	-		1	SEALING COMPOUND	

Pos	Part No	SP	UN	Qty	Description	Page No

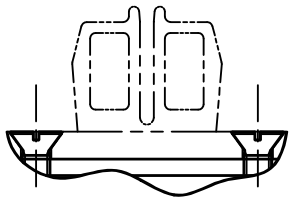

C

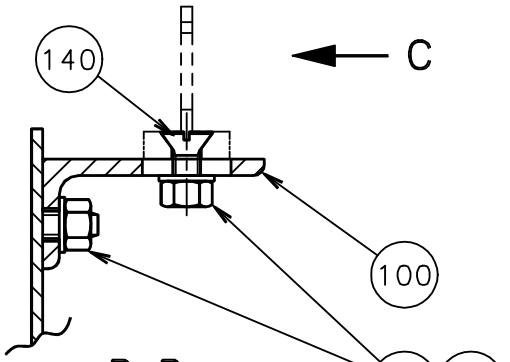

B-B

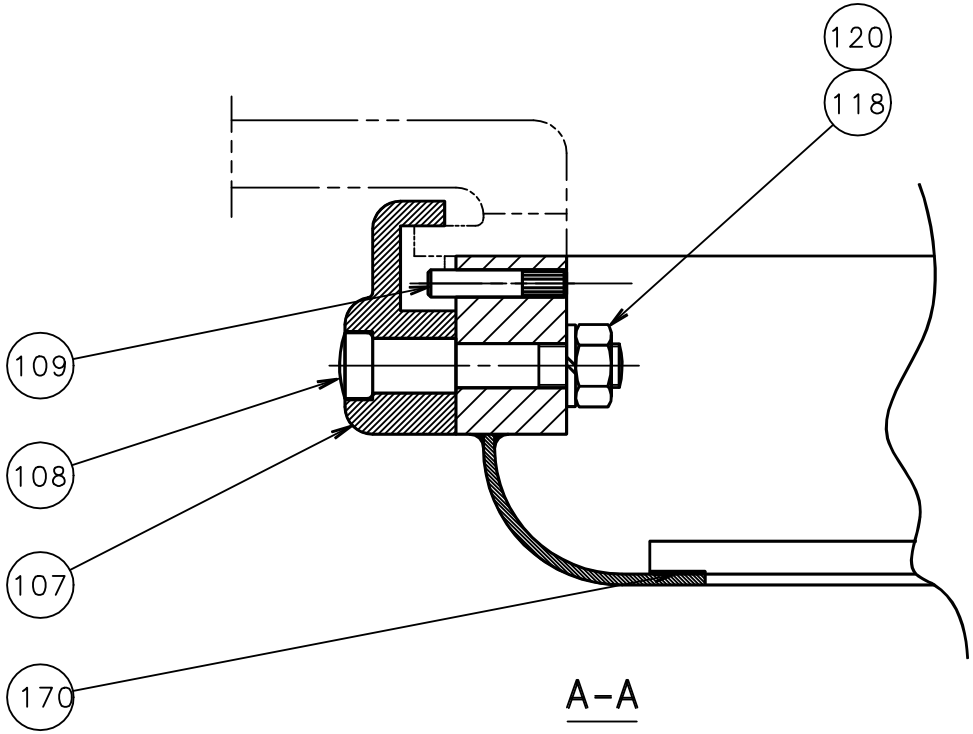

A-A

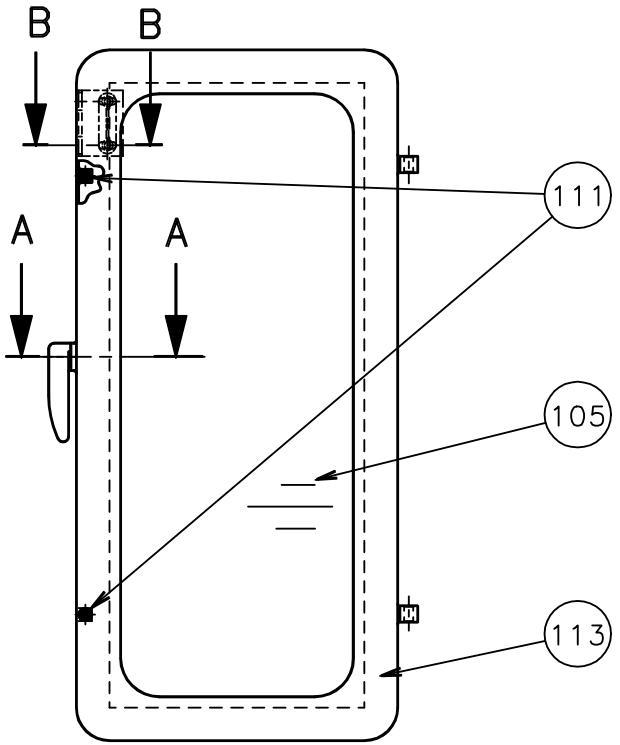

SCALE 1:5

ECM: 116281 - 20021219
Group number: 12460-0300
Assembly Drawing: 12460-3_1_AA

Issue: 20030206

Pos	Part No	SP	UN	Qty	Description	Page No
Common Parts						
100	568797-0000	-		1	FASTENING BRACKET	
105	568799-0000	-		1	WINDOW	
107	12486-0000	-		1	HANDLE	
108	1071-0000	-		1	PIN	
109	1573-0000	-		1	TACK	
111	5204-0000	-		2	RUBBER STOPPER	
113	569653-0000	-		1	DOOR	
118	312812-0318	-		1	HEXAGON NUT, NY-LOCK M8 A480	
120	315401-0165	-		1	WASHER FBH8,2FZB	
140	312145-0327	-		2	SCREW COUNTERS.SLOT.HD. MFS 5X12 SS	
150	312605-0314	-		4	HEXAGON NUT, M6M M5 A280	
160	315105-0146	-		4	WASHER ISO 7089-5-200 HV-A4	
170	90157-0041	-		1	SEALING COMPOUND	

Pos	Part No	SP	UN	Qty	Description	Page No

Machine Type | Group Description | Used-In | Group Number | Page No

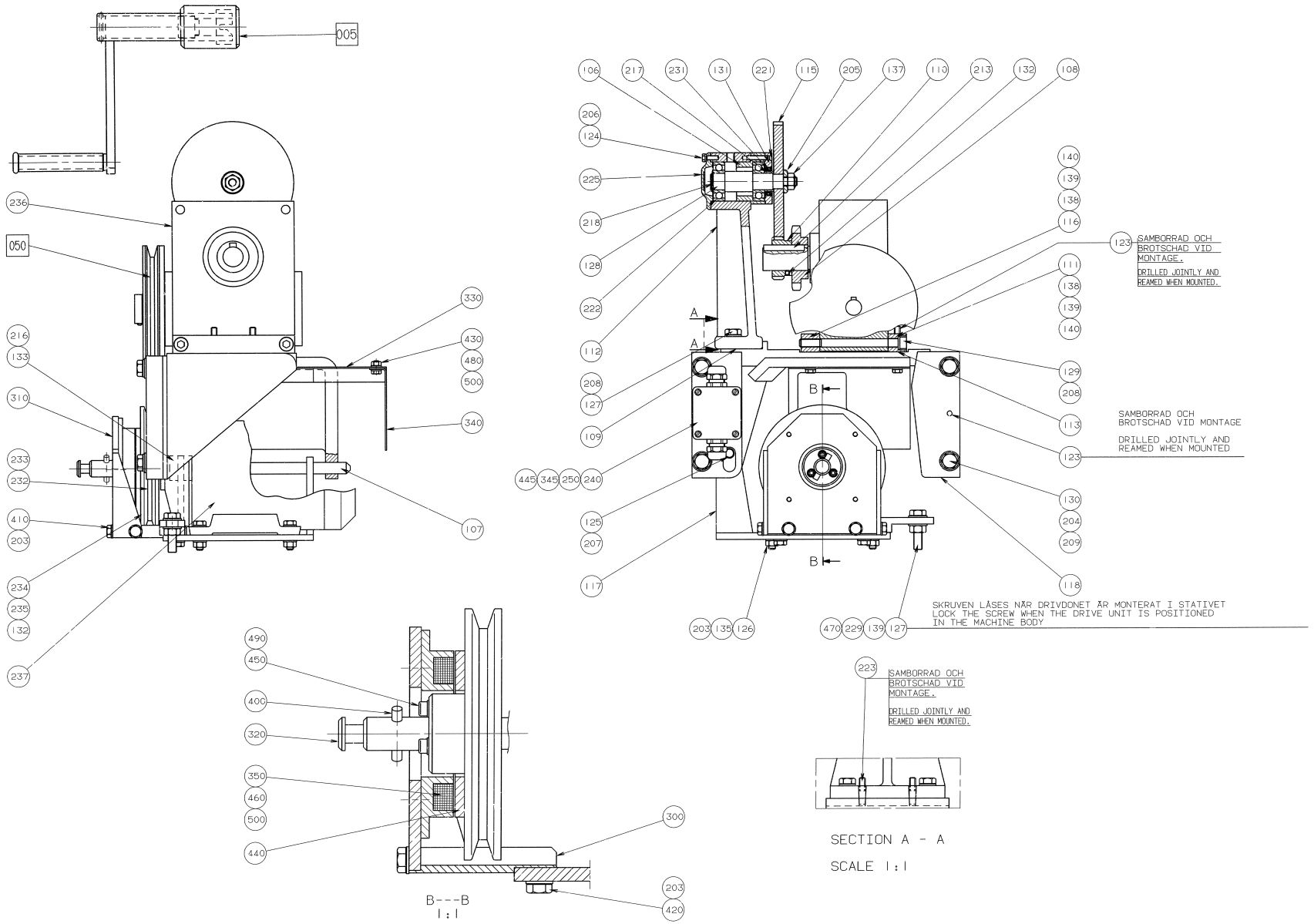
005
050
SAMBORRAD OCH BROTSCHAD VID MONTAGE.
DRILLED JOINTLY AND REAMED WHEN MOUNTED.
SAMBORRAD OCH BROTSCHAD VID MONTAGE
DRILLED JOINTLY AND REAMED WHEN MOUNTED
SKRUVEN LÅSES NÄR DRIVDONET ÄR MONTERAT I STATIVET
LOCK THE SCREW WHEN THE DRIVE UNIT IS POSITIONED IN THE MACHINE BODY
SAMBORRAD OCH BROTSCHAD VID MONTAGE.
DRILLED JOINTLY AND REAMED WHEN MOUNTED.
SECTION A - A
SCALE 1:1
B---B
1:1

ECM: 116282 - 20021219
Group number: 19393-0700
Assembly Drawing: 19393-3_1_AA

Issue: 20030206

Pos	Part No	SP	UN	Qty	Description	Page No
50HZ						
127	312101-0495	-		2	SCREW M6S M10X30 FZB	
229	312101-0499	-		1	SCREW M6S M10X40 FZB	
233	318100-0032	A		1	V-BELT A32 848X13	
234	578239-0000	-		1	PULLEY	
60HZ						
127	312101-0495	-		3	SCREW M6S M10X30 FZB	
232	318100-0031	A		1	V-BELT A31	
235	578240-0000	-		1	PULLEY	
Common Parts						
106	23163-0000	-		1	BEARING COVER	
107	2174-0000	-		1	SHAFT	
108	554845-0000	-		1	SPROCKET	
109	560193-0000	-		1	SHIM	
110	553103-0000	-		1	GEARING	
111	552795-0000	-		1	BRACKET	
112	12501-0000	-		1	BEARING BRACKET	
113	573513-0000	-		2	SHIM	
115	12523-0000	-		1	GEAR WHEEL	
116	552796-0000	-		1	BRACKET	
117	578241-0000	-		1	MOTOR SHELF	
118	552794-0000	-		1	SHELF	
123	311211-0296	-		4	PIN, THREADED AND TAPER. GKP, M6X6X40	
124	312101-0327	-		3	SCREW M6S M5X12 FZB	
125	312101-0366	-		1	SCREW M6S M6X12 FZB	
126	312101-0455	-		4	SCREW M6S M8X30 FZB	
128	23164-0000	-		1	SHAFT	
129	312111-0515	-		2	SCREW HEX.SOCK.HD.MC6S-TT 10X120 88 F	
130	312111-0540	-		4	SCREW HEX.SOCK.HD.MC6S-TT 12X40 88 FZ	
131	23165-0000	-		1	LID	
132	312316-0321	-		2	SCREW HEX.SOCK.SET CUP P.MSK6SS5X6 FZB	
133	312316-0323	-		4	SCREW HEX.SOCK.SET CUP P.MSK6SS5X8 FZB	
135	312601-0318	-		4	NUT M6M8FZB	
137	312810-0320	-		1	HEXAGON NUT, NY-LOCK M10 FZB	
138	312111-0499	-		4	SCREW HEX.SOCK.HD.MC6S-TT 10X40 88 FZ	
139	315101-0173	-		6	WASHER PLAIN, BRB, 10,5/22 H=2	
140	312605-0320	-		4	HEXAGON NUT, M6M M10 A280	
203	315101-0165	-		10	WASHER PLAIN, BRB, 8,4/16 H=1,5	
204	315101-0178	-		4	WASHER PLAIN, BRB, 13/24 H=2	
205	315121-0173	-		1	WASHER PLAIN, TBRSB 10,5/28 H=6	
206	315401-0146	-		3	WASHER FBH 5,1 FZB	
207	315401-0153	-		1	WASHER FBH6,1FZB	
208	315401-0173	-		4	WASHER FBH10,2FZB	
209	315401-0178	-		4	WASHER FBH12,2FZB	
213	315701-0273	-		1	PARALLEL KEY W. ROUND ENDS 8X7X56 MM	
216	315740-0111	-		2	RETAINING RING, 15X30X12 MM	
217	23166-0000	-		1	SPACER	
218	315750-0116	-		1	RETAIN. RING, 20	
221	312151-0335	-		3	SCREW HEX.SOCK.COUNT.MF6S 5X30 FZB	
222	321309-0104	A		2	BALL BEARING, 20X47X14 MM	
223	311211-0294	-		2	PIN, THREADED AND TAPER. GKP, M6X6X35	
225	321601-0108	-		1	OIL SEAL (LL47	
231	315221-0156	B		1	RADIAL SEAL 25X35X7 MM	
236	90056-0103	A		1	WORM GEAR BS 63	
237	90045-0049	A		1	MOTOR 3GAA 082002-ASA	
240	90265-0037	-		1	CONNECTION BOX ROSE	
250	352103-0106	-		2	CABLE GLAND, ST 11, PR18,6/PG11	
300	578242-0000	-		1	BRACKET	
310	578243-0000	-		1	BRACKET	
320	541978-0000	-		1	FLANGED SHAFT	
330	575506-0000	-		1	PROTECTION PLATE	
340	575507-0000	-		1	PROTECTION PLATE	
345	579919-0000	-		1	SPACER	
350	90432-0014	-		1	ELECTROMAG. BRAKE, 24 VDC	
400	311103-0359	-		1	PARALLELL PIN, M6, 6X35 MM	
410	312101-0449	-		4	SCREW M6S M8X16 FZB	
420	312101-0451	-		2	SCREW M6S M8X20 FZB	
430	312105-0366	-		2	SCREW M6S M6X12 A280	
440	312115-0327	-		3	SCREW ISO4762 M5X12 A4	
445	312115-0297	-		2	SCREW ISO4762 M4X25 A4	
450	312115-0331	-		3	SCREW ISO472 M5X20 A4	
460	312115-0366	-		4	SCREW ISO4762 M6X12 A4	
470	312601-0320	-		1	NUT M6M 10-8 FZB	
480	312605-0316	-		2	HEXAGON NUT, M6M M6 A280	
490	315105-0146	-		33	WASHER ISO 7089-5-200 HV-A4	
500	315105-0153	-		8	WASHER ISO 7089-6-200 HV-A4	
F005	A578236-0100	-		1	CRANK	**183**
F050	A4766-0200	-		1	SLIP DISC	**185**

Machine Type | Group Description | Used-In | Group Number | Page No

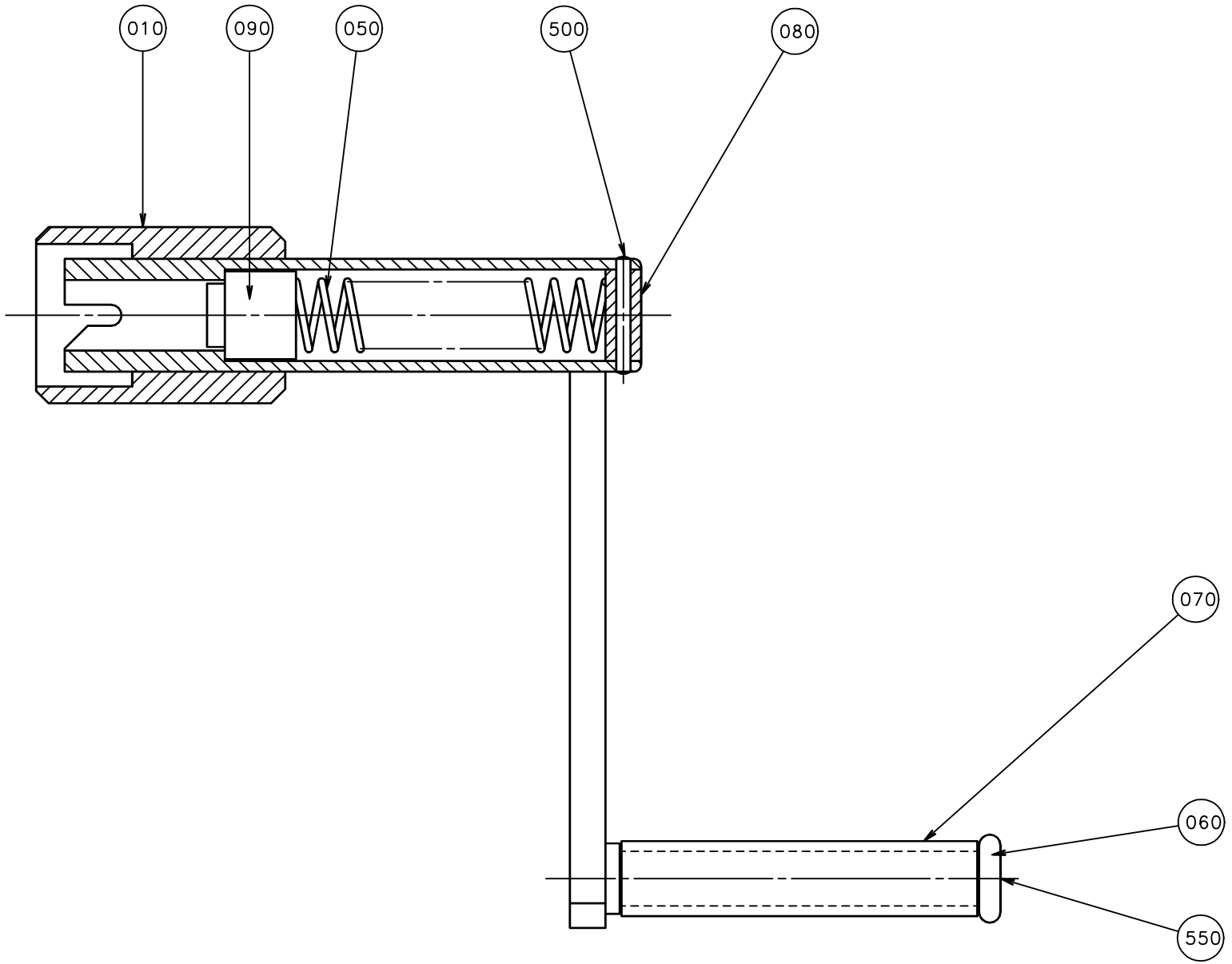
010
090
050
500
080
070
060
550

ECM: 116285 - 20021219
Group number: 578236-0100
Assembly Drawing: 578236-1_1_AA

Issue: 20030206

Pos	Part No	SP	UN	Qty	Description	Page No
Common Parts						
010	541977-0000	-		1	CRANK	
050	6183-0000	-		1	SPRING	
060	256814-0000	-		1	WASHER	
070	256816-0000	-		1	PIPE	
080	257328-0000	-		1	END PIECE	
090	541979-0000	-		1	SLIDER	
500	311103-0277	-		1	PIN,STRAIGHT CP M6 4X32 RFR	
550	312155-0368	-		1	SCREW EN 10642 MF6S M6X16 A480	

Pos	Part No	SP	UN	Qty	Description	Page No

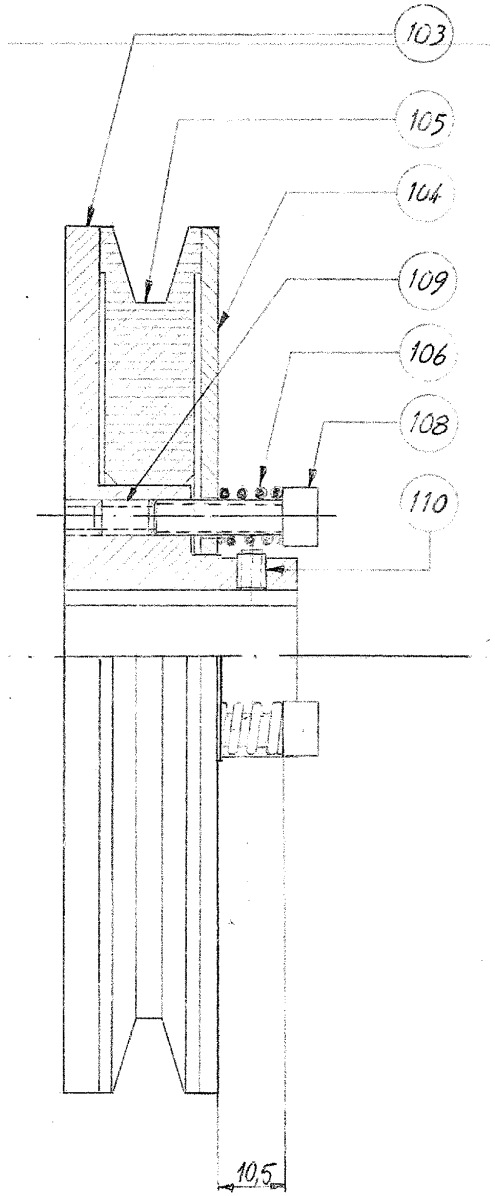
103
105
104
109
106
108
110
10,5

ECM: 116283 - 20021219
Group number: 4766-0200
Assembly Drawing: 4766-1_1_AA

Issue: 20030206

Pos	Part No	SP	UN	Qty	Description	Page No
Common Parts						
103	553104-0000	-		1	HUB	
104	4768-0000	-		1	FLANGE	
105	4015-0003	-		1	PULLEY	
106	4018-0000	A		3	COMPRESSION SPRING	
108	312111-0371	-		3	SCREW HEX.SOCK.HD.MC6S-TT 6X22 88 FZB	
109	312306-0364	A		3	SCREW HEX.SOCK.SET FLAT P.MP6SS 6X10FZB	
110	312316-0323	-		2	SCREW HEX.SOCK.SET CUP P.MSK6SS5X8 FZB	

Pos	Part No	SP	UN	Qty	Description	Page No

* POS. 030 AND 050
DRILLED WHEN MOUNTED

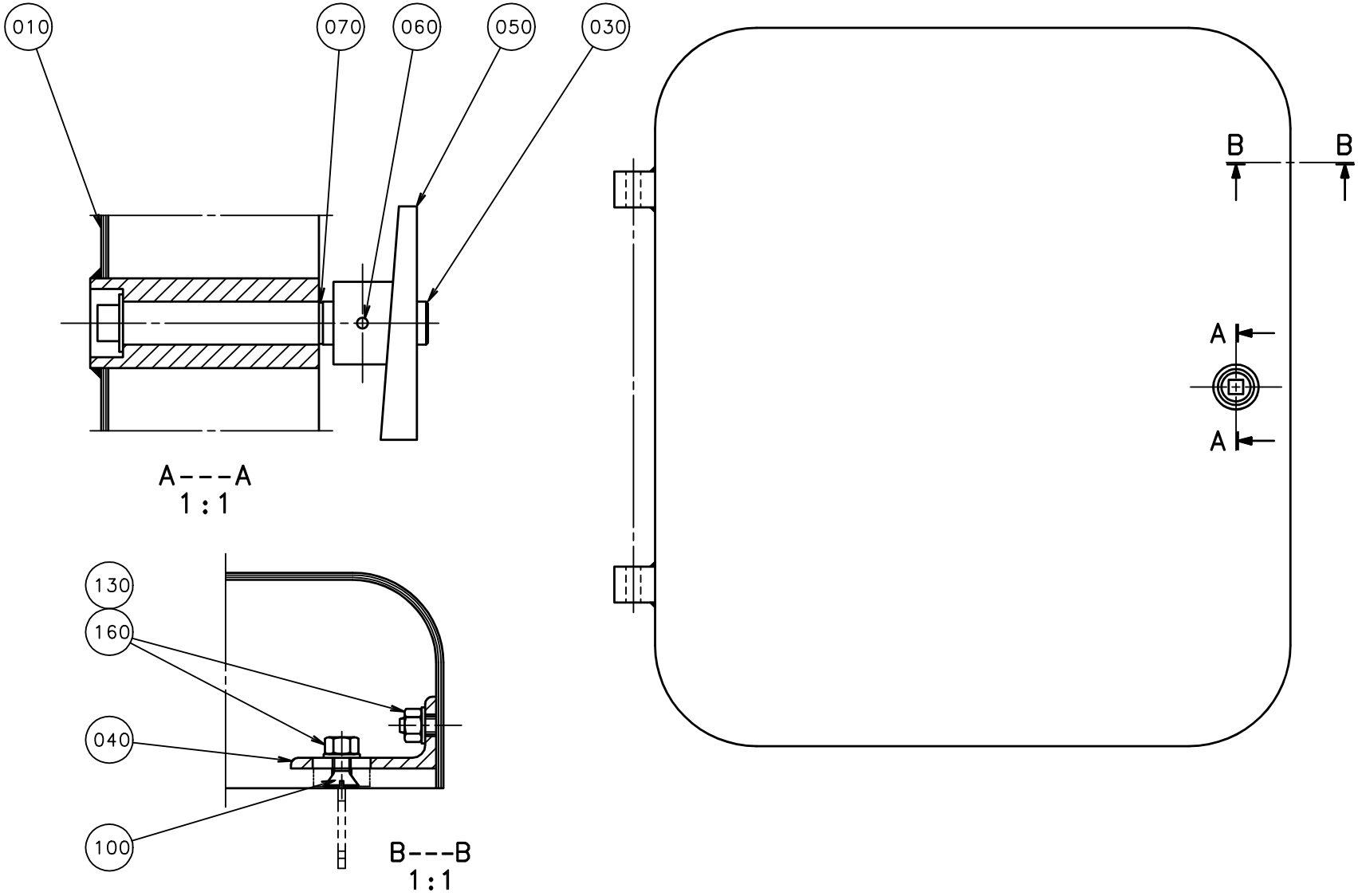

ECM: 116287 - 20021219
Group number: 20199-0200
Assembly Drawing: 20199-2_1_AA

Issue: 20030206

Pos	Part No	SP	UN	Qty	Description	Page No
Common Parts						
010	578237-0000	-		1	DOOR	
030	578238-0000	-		1	HOLDING BOLT	
040	568797-0000	-		1	FASTENING BRACKET	
050	90365-0003	-		1	LATCH, GN 218, 5X 65X12 MM	
060	311303-0238	-		1	SLOTTED PIRPB3X20FZB	
070	315751-0109	-		1	RETAIN. RING, 12	
100	312145-0327	-		2	SCREW COUNTERS.SLOT.HD. MFS 5X12 SS	
130	312605-0314	-		4	HEXAGON NUT, M6M M5 A280	
160	315105-0146	-		4	WASHER ISO 7089-5-200 HV-A4	

Pos	Part No	SP	UN	Qty	Description	Page No

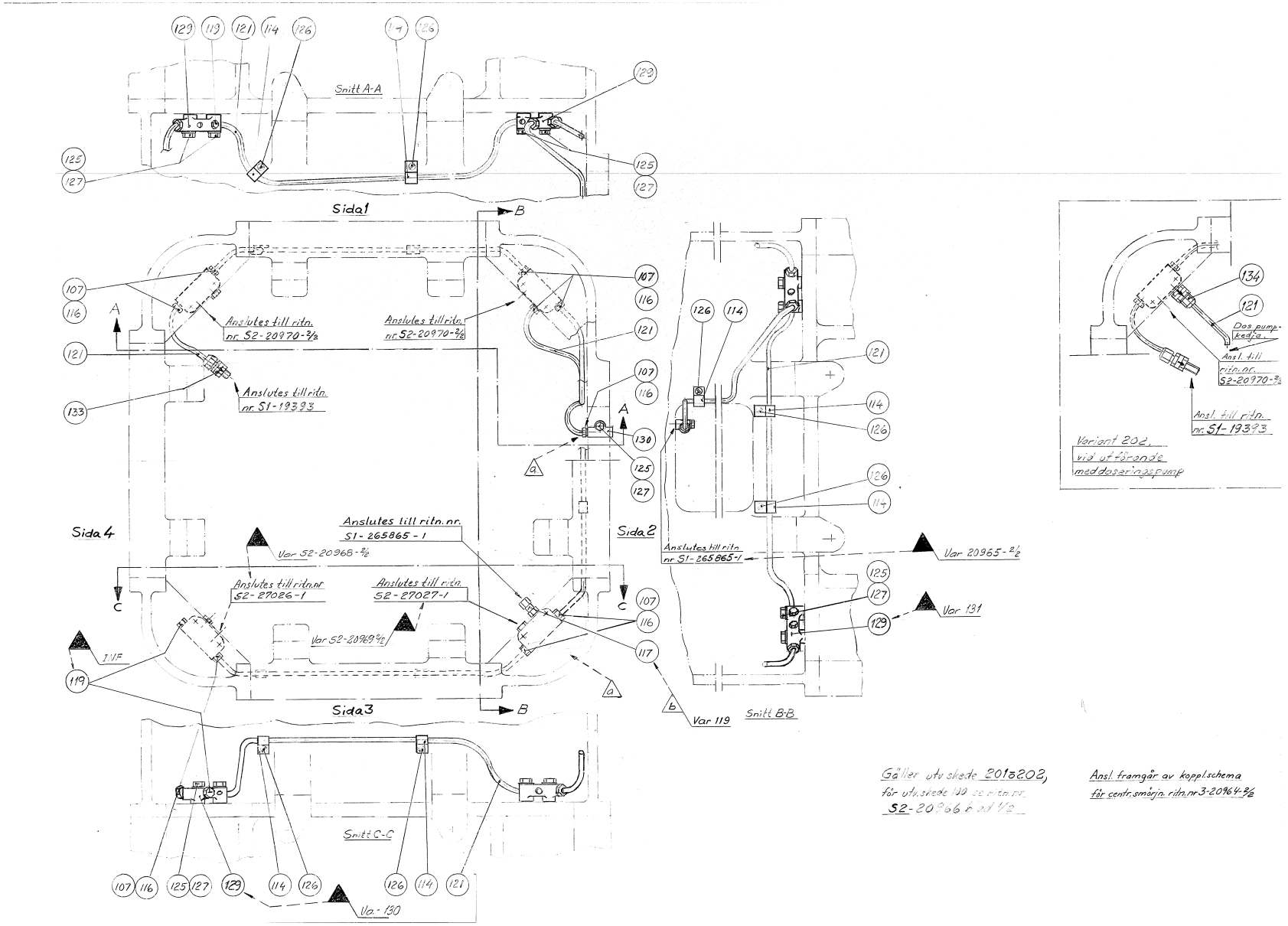
Snitt A-A
Sida1
Sida2
Sida3
Sida4
Anslutes till ritn. nr. S2-20970-3/2
Anslutes till ritn. nr. S1-19393
Anslutes till ritn. nr. S1-265865-1
Anslutes till ritn.nr S2-27026-1
Anslutes till ritn S2-27027-1
Var S2-20968-3/2
Var S2-20969 1/2
Var 20965-2/2
Var 131
Var 119
Var 130
I.V.F
Snitt B-B
Snitt C-C
Dos pump-kedj.a.
Ansl. till ritn. nr. S2-20970-3/2
Ansl. till ritn. nr. S1-19393
Variant 202, vid utförande med doseringspump
Gäller utv.skede 201 & 202, för utv.skede 100 se ritn.nr. S2-20966 resp 1/2
Ansl framgår av kopplschema för centr.smörjn. ritn.nr 3-20964-3/2

Pos	Part No	SP	UN	Qty	Description	Page No
Common Parts						
	20964-0002	-		1	WIRING DIAGRAM	
104	90165-0003	-		7	PIPE CLIP FOR TUBE D=4 MM	
107	90028-0001	A		9	CONE 5/32"	
116	90134-0003	-		9	BUSHING	
117	B90134-0034	-		1	NIPPLE	
	90030-0101	*-*		*1*	*TAPER*	
119	90136-0002	-		3	PLUG 5/16"24	
121	90166-0109	A	M	2	TUBE 4 MM PA,TRANSP.	
125	315101-0146	-		9	WASHER PLAIN, BRB, 5,3/10 H=1	
126	312121-0285	-		7	SCREW SLOT.PAN HD. MCS 4X6 FZB	
127	312101-0332	-		9	SCREW M6S M5X22 FZB	
129	90032-0012	-		4	DISTR. BLOCK & DIST.5/16-24UNF X4	
130	90032-0015	-		1	JUNCT. BLOCK & DIST.5/16-24UNF X2	
133	90092-0072	A		1	METERING VALVE, FSB 2, G1/8	

Pos	Part No	SP	UN	Qty	Description	Page No

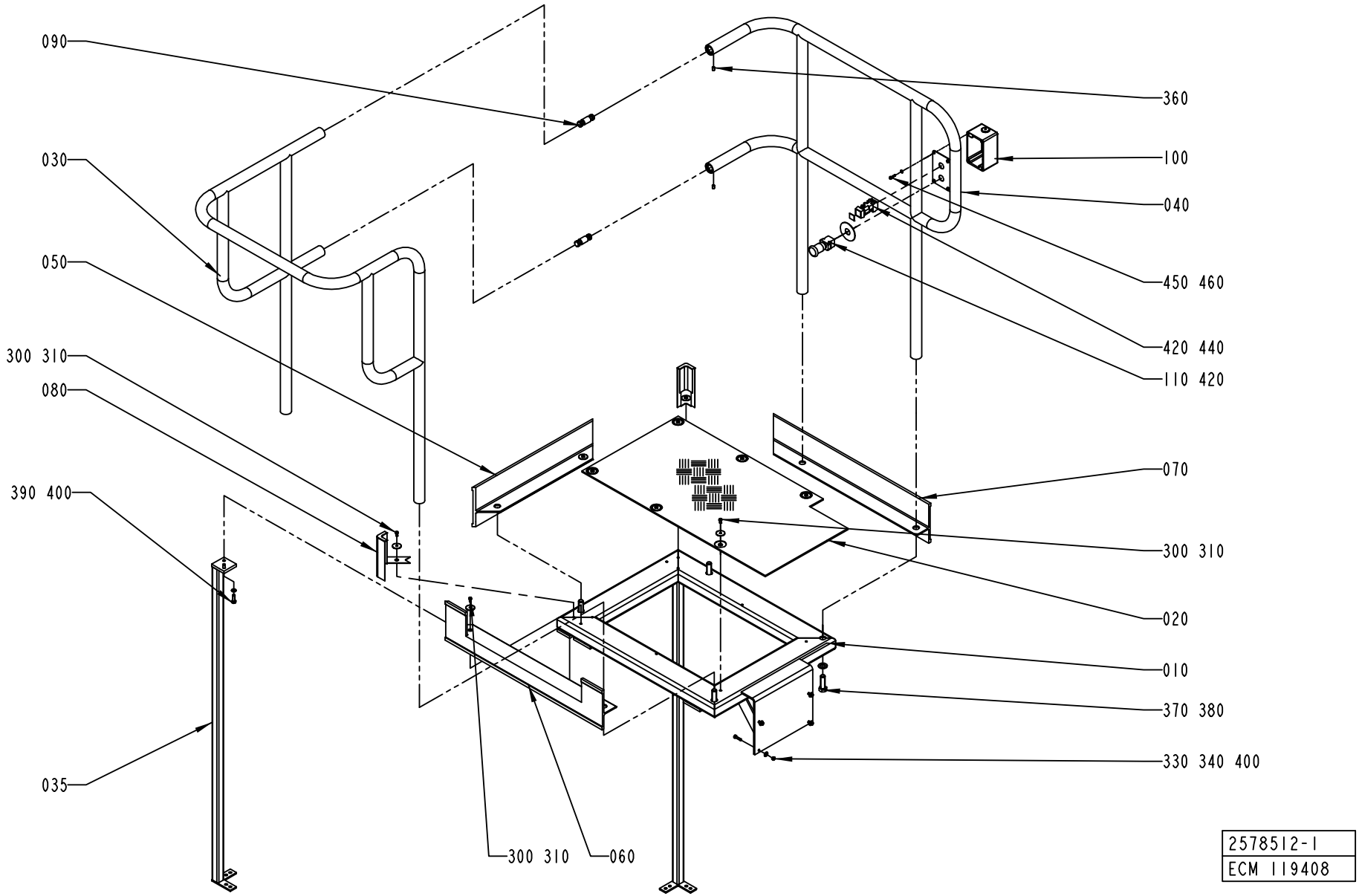
090
030
050
300 310
080
390 400
035
360
100
040
450 460
420 440
110 420
070
300 310
020
010
370 380
330 340 400
300 310
060
2578512-1
ECM 119408

ECM: 119414 - 20030120
Group number: 2578512-0100
Assembly Drawing: 2578512-1_1_AA

Issue: 20030206

Pos	Part No	SP	UN	Qty	Description	Page No
Common Parts						
010	2578516-0000	-		1	PLATFORM	
020	2578517-0000	-		1	CHECKER PLATE	
030	2578526-0000	-		1	RAILING	
035	2578521-0000	-		2	BRACKET	
040	2578525-0000	-		1	RAILING	
050	2578524-0000	-		1	PLATE	
060	2578522-0000	-		1	PLATE	
070	2578523-0000	-		1	PLATE	
080	1254027-0000	-		2	CORNER STRIP	
090	1517247-0000	-		2	PIN	
100	2564115-0000	-		1	PUSH BUTTON BOX	
110	486826-0001	-		1	SIGN "EMERGENCY STOP"	
300	90458-0072	-		10	SCREW, HEX.SOCK.BUTTON HEAD M6X12	
310	90458-0073	-		10	WASHER 6,4/30, H=1,5	
350	315105-0153	-		4	WASHER ISO 7089-6-200 HV-A4	
360	312318-0447	-		4	SCREW ISO4029 M8X12 A4	
370	312105-0630	-		4	SCREW M6S ISO 4017 M16X50 A480	
380	315105-0186	-		4	WASHER ISO 7089-16-200 HV-A4	
390	312105-0453	-		4	SCREW M6S ISO 4017 M8X25 A480	
400	315105-0165	-		4	WASHER ISO 7089-8-200 HV-A4	
410	90064-0085	-		1	PUSH BUTTON, RED	
420	90064-0124	-		1	SWITCH, EM. STOP, ZB2-BS844+ZB2-BZ1045	
430	90458-0315	-		1	CABLE GLAND, M20X1,5, NO.5311 1120	
440	359301-0110	-		1	SIGN "SHORT STOP"	
450	312105-0331	-		4	SCREW M6S ISO 4017 M5X20 A480	
460	315105-0146	-		4	WASHER ISO 7089-5-200 HV-A4	

Pos	Part No	SP	UN	Qty	Description	Page No

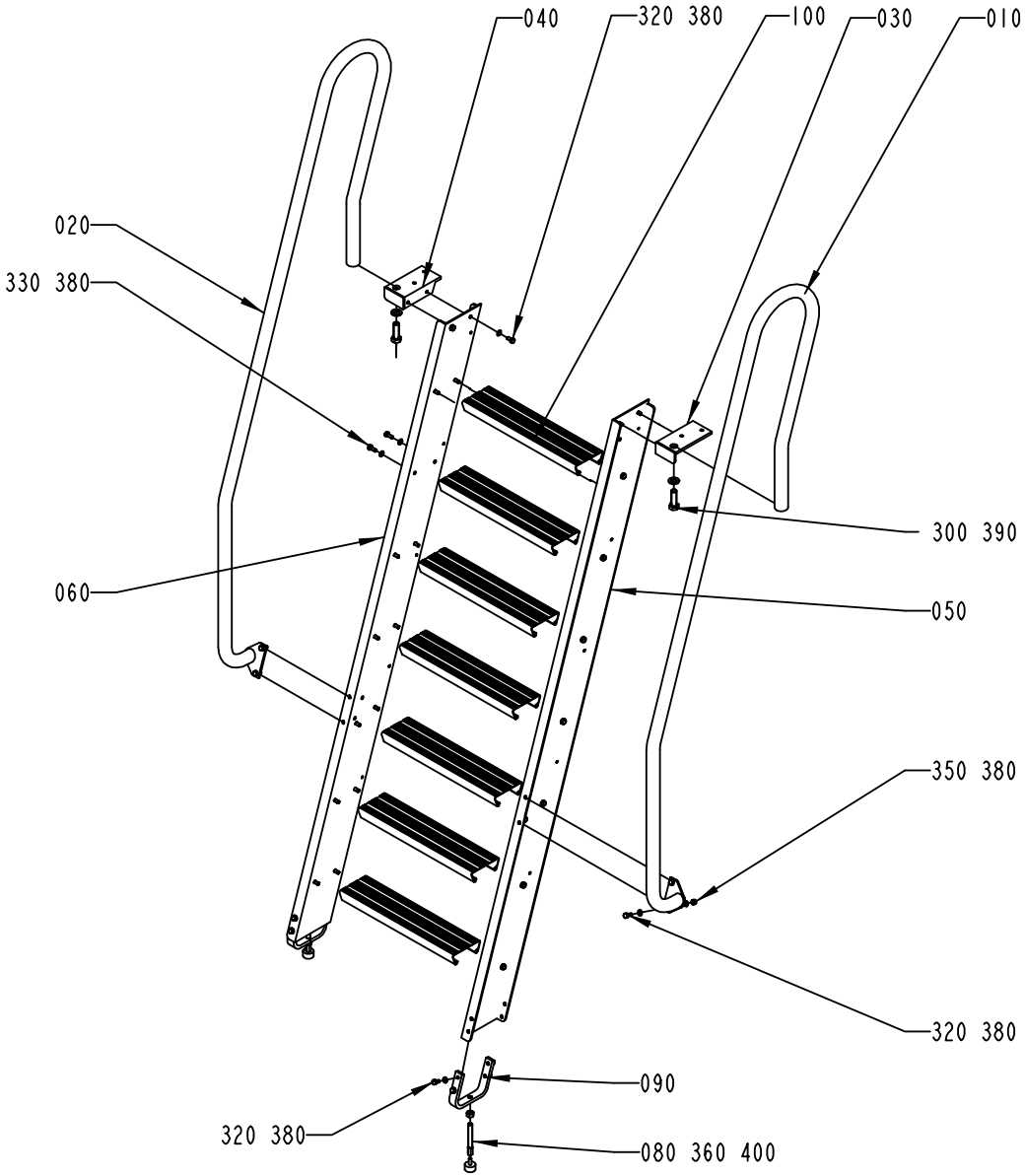

2578513-1
ECM 119408

Pos	Part No	SP	UN	Qty	Description	Page No
Common Parts						
010	597874-0000	-		1	RAIL RIGHT	
020	597875-0000	-		1	RAIL LEFT	
030	597888-0000	-		1	BRACKET	
040	597889-0000	-		1	BRACKET	
050	2578527-0000	-		1	SIDE PIECE	
060	2578528-0000	-		1	SIDE PIECE	
080	B441905-0000	-		2	RETARD PIN	
	312911-0126	*-*		*1*	*HELI-COIL M8X1,5D*	
090	979966-0000	-		2	BRACKET	
100	597887-0000	-		7	STEP	
300	312105-0630	-		2	SCREW M6S ISO 4017 M16X50 A480	
320	312105-0449	-		12	SCREW M6S ISO 4017 M8X16 A480	
330	312105-0451	-		36	SCREW M6S ISO 4017 M8X20 A480	
350	312605-0318	-		4	HEXAGON NUT, M6M M8 A280	
360	312605-0322	-		2	HEXAGON NUT, M6M M12 A280	
380	315105-0165	-		48	WASHER ISO 7089-8-200 HV-A4	
390	315105-0186	-		2	WASHER ISO 7089-16-200 HV-A4	
400	90347-0004	-		2	VIBRATION DAMPER D=30 TH=M8 H=17 H2=21MM	

Pos	Part No	SP	UN	Qty	Description	Page No

Machine Type | Group Description | Used-In | Group Number | Page No

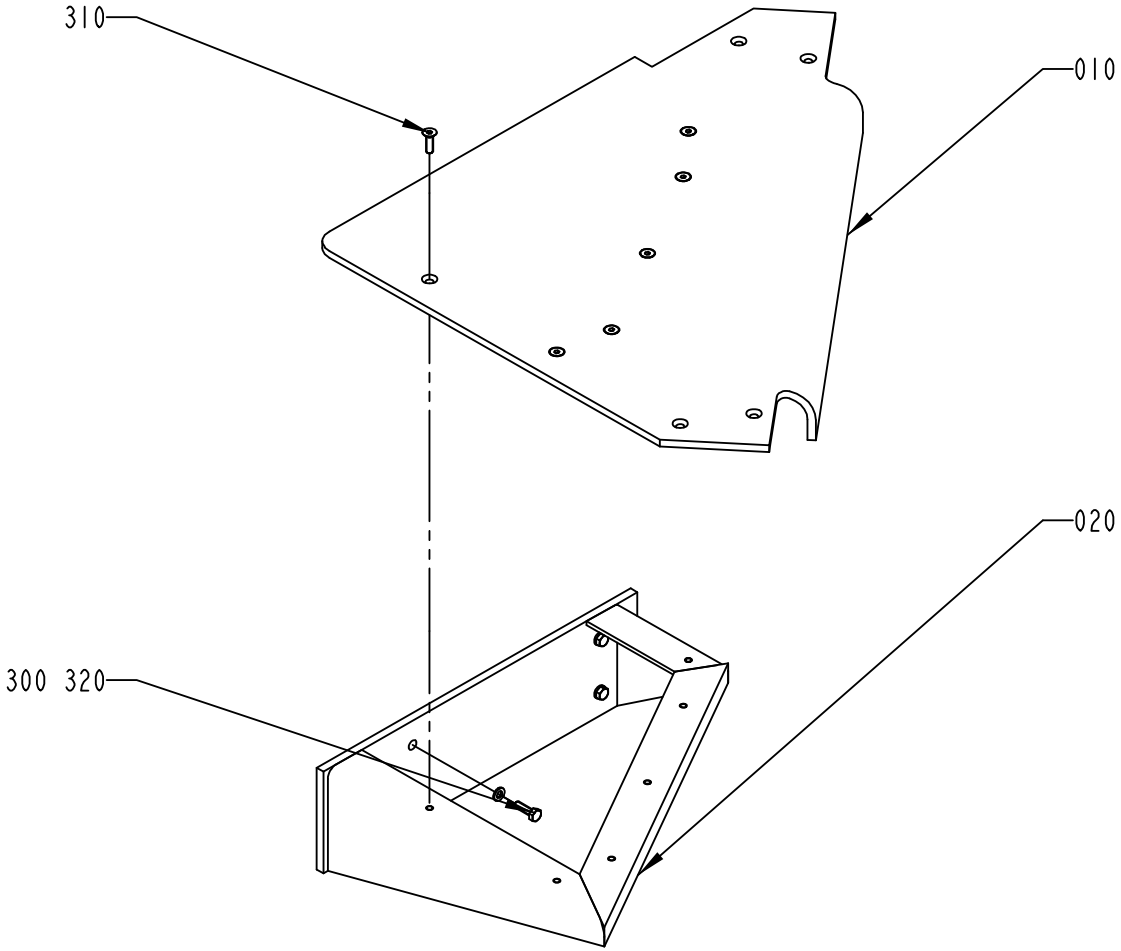

2578514-1
ECM 119408

ECM: 119415 - 20030120
Group number: 2578514-0100
Assembly Drawing: 2578514-1_1_AA

Issue: 20030206

Pos	Part No	SP	UN	Qty	Description	Page No
Common Parts						
010	2578518-0000	-		1	PLATFORM	
030	1361983-0000	-		1	CANTILEVER	
300	312105-0370	-		5	SCREW M6S ISO 4017 M6X20 A480	
310	312155-0370	-		6	SCREW EN 10642 MF6S M6X20 A480	
320	315105-0153	-		5	WASHER ISO 7089-6-200 HV-A4	

Pos	Part No	SP	UN	Qty	Description	Page No

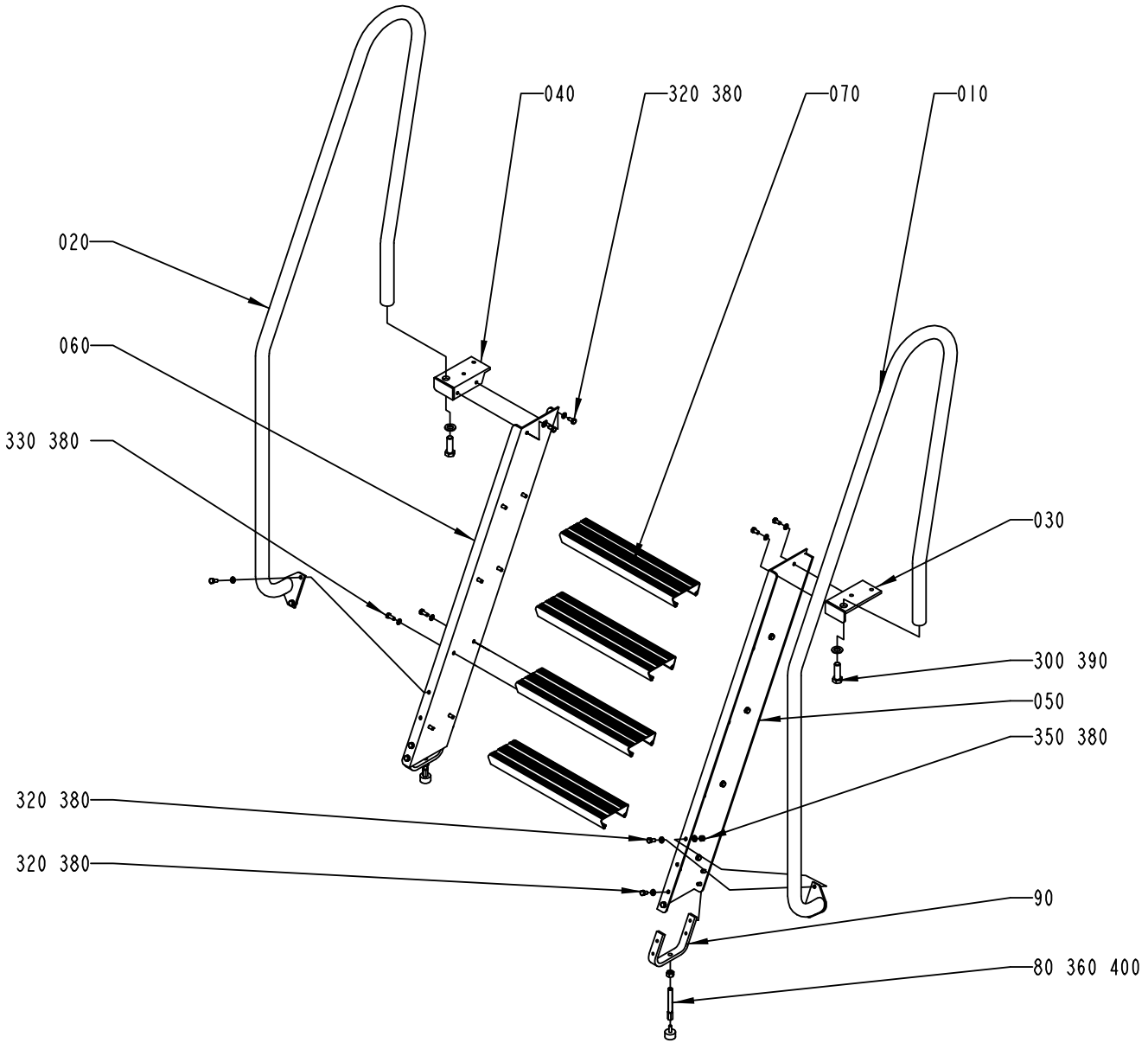

2578515-1
ECM 119408

ECM: 119412 - 20030120
Group number: 2578515-0100
Assembly Drawing: 2578515-1_1_AA

Issue: 20030206

Pos	Part No	SP	UN	Qty	Description	Page No
Common Parts						
010	2578519-0000	-		1	RAIL	
020	2578520-0000	-		1	RAIL	
030	597888-0000	-		1	BRACKET	
040	597889-0000	-		1	BRACKET	
050	2578529-0000	-		1	SIDE PIECE	
060	2578530-0000	-		1	SIDE PIECE	
070	597887-0000	-		4	STEP	
080	B441905-0000	-		2	RETARD PIN	
	312911-0126	-		*1*	*HELI-COIL M8X1,5D*	
090	2578531-0000	-		2	BRACKET	
300	312105-0630	-		2	SCREW M6S ISO 4017 M16X50 A480	
320	312105-0449	-		12	SCREW M6S ISO 4017 M8X16 A480	
330	312105-0451	-		20	SCREW M6S ISO 4017 M8X20 A480	
350	312605-0318	-		4	HEXAGON NUT, M6M M8 A280	
360	312605-0322	-		2	HEXAGON NUT, M6M M12 A280	
380	315105-0165	-		36	WASHER ISO 7089-8-200 HV-A4	
390	315105-0186	-		2	WASHER ISO 7089-16-200 HV-A4	
400	90347-0004	-		2	VIBRATION DAMPER D=30 TH=M8 H=17 H2=21MM	

Pos	Part No	SP	UN	Qty	Description	Page No

Machine Type | Group Description | Used-In | Group Number | Page No

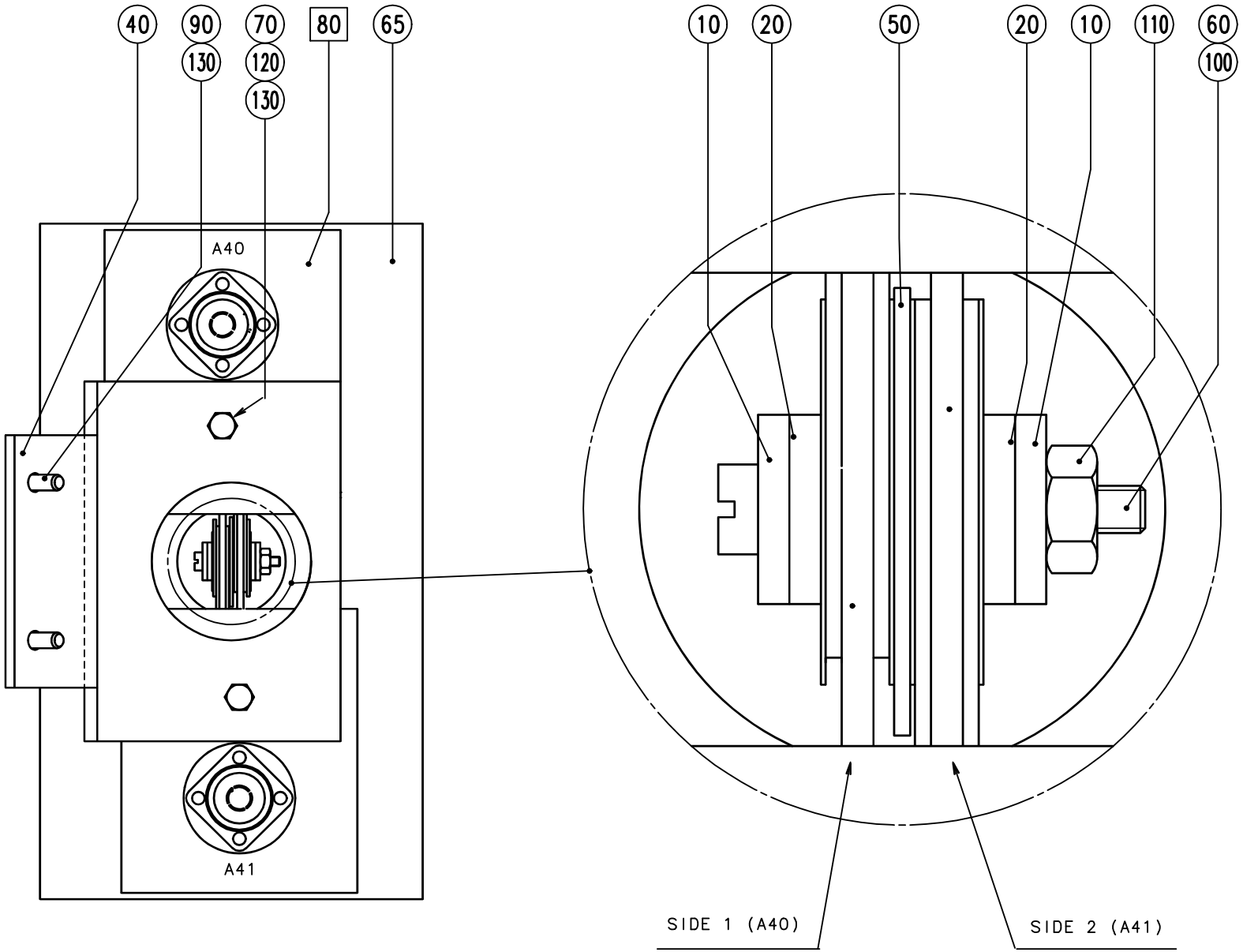
40
90
130
70
120
130
80
65
A40
A41
10
20
50
20
10
110
60
100
SIDE 1 (A40)
SIDE 2 (A41)

Pos	Part No	SP	UN	Qty	Description	Page No
Common Parts						
010	28509-0000	-		2	WASHER	
020	32079-0000	-		2	WASHER	
040	554601-0000	-		1	HOLDER	
050	554718-0000	-		1	INSULATING PLATE	
060	554719-0000	-		1	INSULATING PLATE	
065	554839-0000	-		1	FLANGE	
070	312101-0345	-		2	SCREW M6S M5X70 FZB	
090	312105-0327	-		2	SCREW M6S ISO 4017 M5X12 A480	
100	312122-0297	-		1	SCREW SLOT.PAN HD. MCS 4X25 BR NP	
110	312602-0312	-		1	HEXAGON NUT, EN 24032 M6M M4 NIPLBR	
120	312601-0314	-		2	NUT M6M5FZB	
130	315105-0146	-		4	WASHER ISO 7089-5-200 HV-A4	
F080	A67379-0100	-		2	IH EQUIPMENT	**201**

Pos	Part No	SP	UN	Qty	Description	Page No

This page is intentionally left blank.

Pos	Part No	SP	UN	Qty	Description	Page No
Common Parts						
060	532701-0000	-		1	FäSTBRICKA	
070	543111-0000	-		1	MöNSTERKORT	
080	551828-0000	-		1	CABLE	
100	532699-0000	-		1	KåPA	
150	532704-0000	-		1	F- LEDNING	
220	532700-0000	-		1	SEKUNDäRSPOLE	
230	532714-0000	-		1	MELLANBIT	
280	532715-0000	-		1	DISTANS	
300	543115-0000	-		1	FIXERINGSPLåT	
320	542036-0000	-		1	TP SIGN BOARD "PART NO" 84X140MM	
330	532698-0000	-		1	ASSEMBLY INSTRUCTION	
350	556518-0001	-		1	COMPONENTS WITHOUT TP-NO	
360	556518-0002	-		1	COMPONENTS WITHOUT TP-NO	
370	556518-0003	-		1	COMPONENTS WITHOUT TP-NO	
380	556518-0004	-		1	COMPONENTS WITHOUT TP-NO	
390	556518-0005	-		1	COMPONENTS WITHOUT TP-NO	
400	556518-0006	-		1	COMPONENTS WITHOUT TP-NO	
410	556518-0007	-		1	COMPONENTS WITHOUT TP-NO	
420	556518-0008	-		1	COMPONENTS WITHOUT TP-NO	
430	556518-0009	-		1	COMPONENTS WITHOUT TP-NO	
440	556518-0010	-		1	COMPONENTS WITHOUT TP-NO	
450	556518-0013	-		1	COMPONENTS WITHOUT TP-NO	
460	556518-0014	-		1	COMPONENTS WITHOUT TP-NO	
470	556518-0015	-		1	COMPONENTS WITHOUT TP-NO	
F130	68474-0101	-		1	TPIH COIL 5 TURN	
F140	68474-0102	-		1	COIL 6 TURN	
F210	68474-0103	-		1	COIL 4 TURN	

Pos	Part No	SP	UN	Qty	Description	Page No

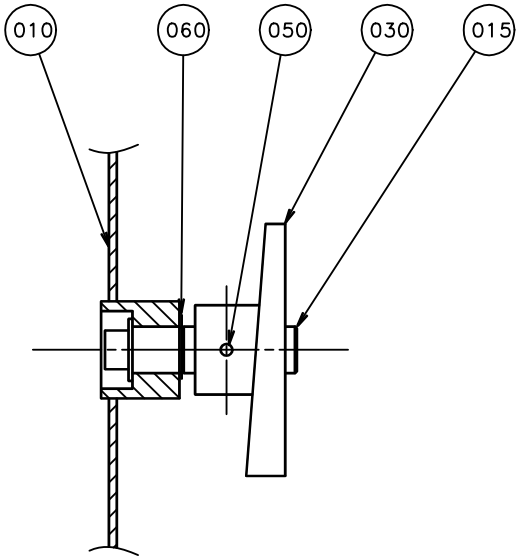

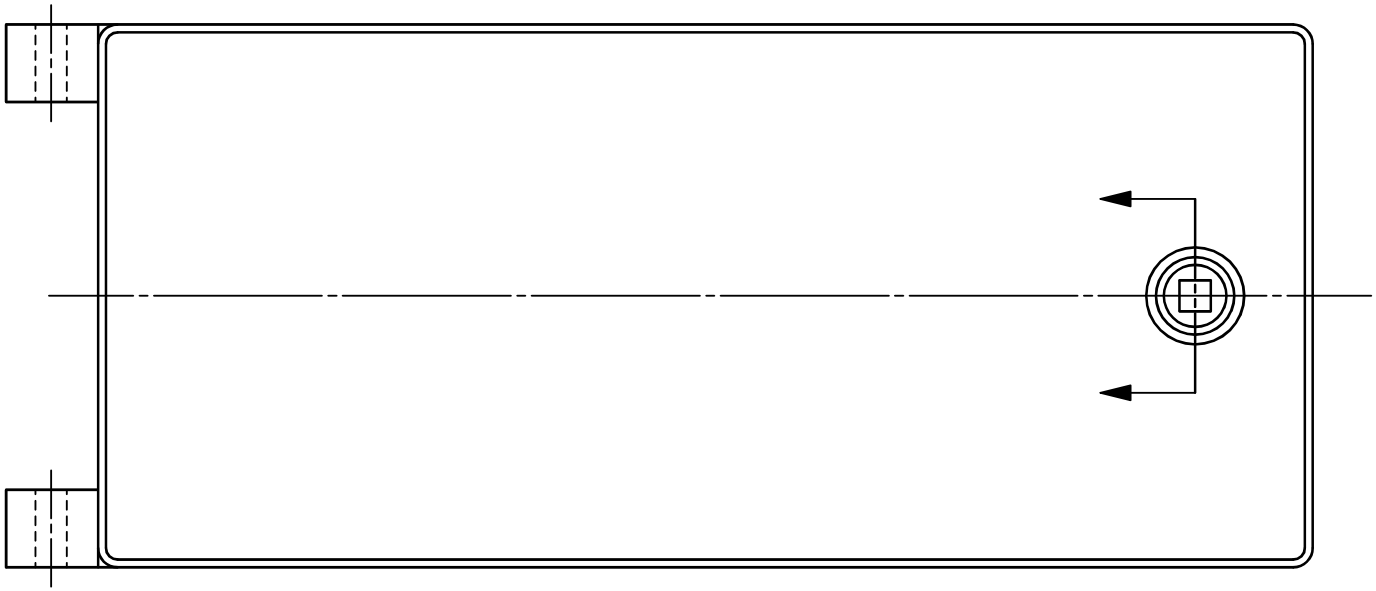

* POS. 030 AND 015
DRILLED WHEN MOUNTED

ECM: 116291 - 20021219
Group number: 554123-0200
Assembly Drawing: 554123-2_1_AA

Issue: 20030206

Pos	Part No	SP	UN	Qty	Description	Page No
Common Parts						
010	553100-0000	-		1	DOOR	
015	568794-0000	-		1	HOLDING BOLT	
030	90365-0003	-		1	LATCH, GN 218, 5X 65X12 MM	
050	311303-0238	-		1	SLOTTED PIRPB3X20FZB	
060	315751-0109	-		1	RETAIN. RING, 12	

Pos	Part No	SP	UN	Qty	Description	Page No

Tetra Pak

SPC
Spare Parts Catalogue

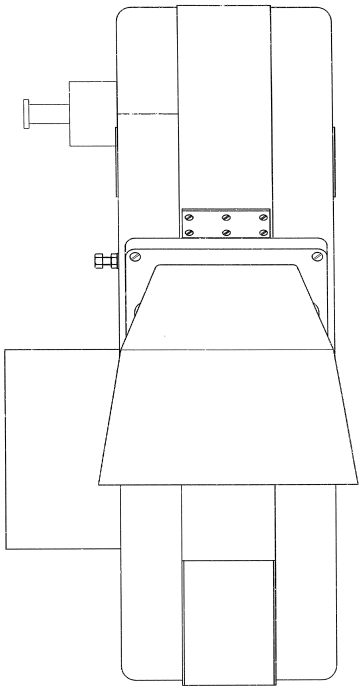

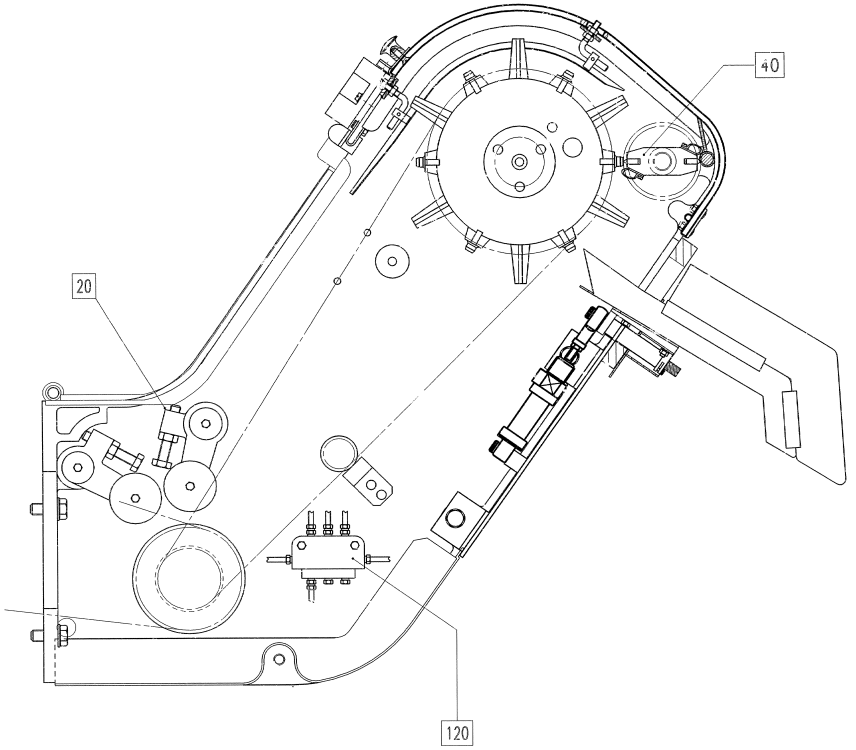
40
20
120

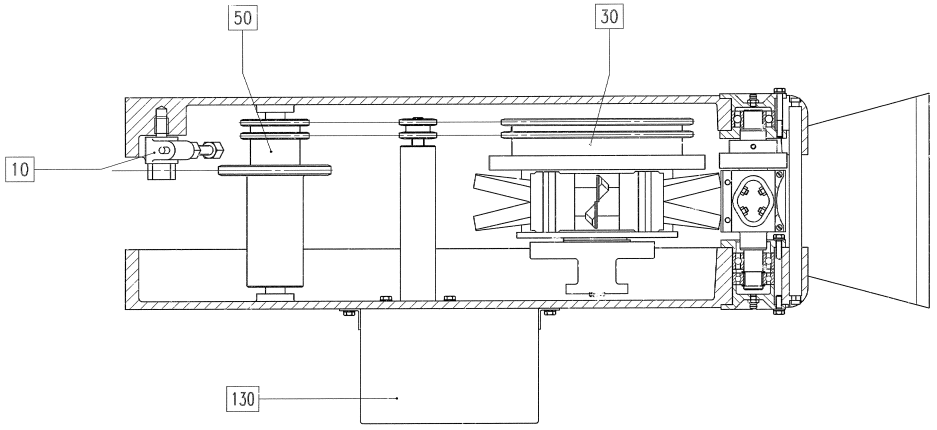
50
30
10
130

Pos	Part No	SP	UN	Qty	Description	Page No
Common Parts						
F000	A237620-0400	-		1	CUTTING DEVICE	**209, 211**
F010	A10582-0200	-		1	CHAIN TENSIONER	**213**
F020	A10587-0300	-		1	CHAIN TENSIONER	**215**
F030	A12473-0300	-		1	CUTTING WHEEL	**217**
F040	A12550-0200	-		1	KNIFE SHAFT	**219**
F050	A19258-0100	-		1	SPROCKET	**221**
F120	A265865-0100	-		1	CENTRAL LUBRICATION	**223**
F130	A553234-0100	-		1	ANGLE ENCODER	**225**

Pos	Part No	SP	UN	Qty	Description	Page No

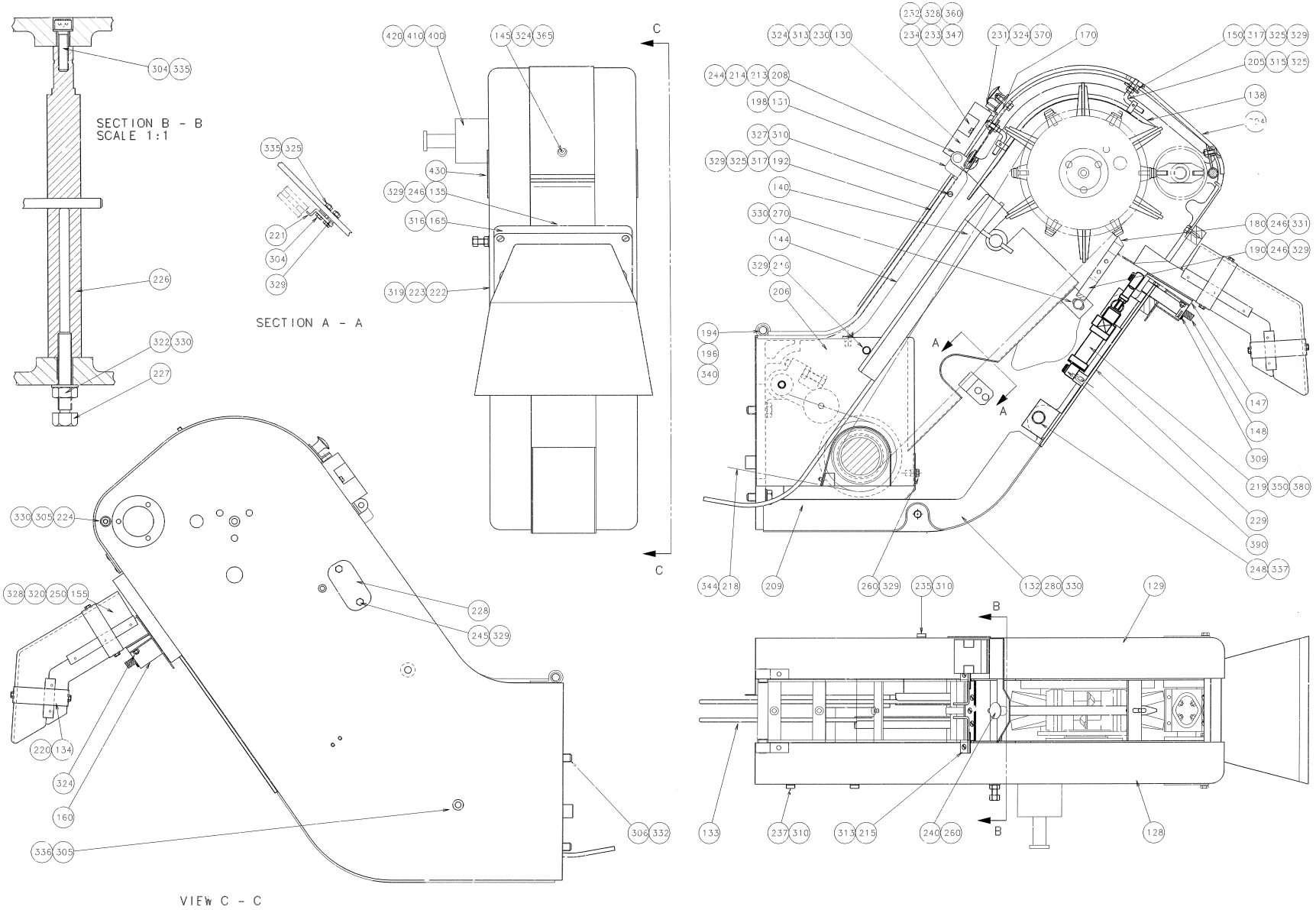
SECTION B - B
SCALE 1:1
SECTION A - A
VIEW C - C
A
B
C

Pos	Part No	SP	UN	Qty	Description	Page No
Common Parts						
128	552989-0000	-		1	CUTTING MECHANISM BODY	
129	573517-0000	-		1	CUTTING MECHANISM BODY	
130	553214-0000	-		1	HOLDER	
131	1361963-0000	-		1	BRACKET	
132	1361965-0000	-		1	PROTECTION	
133	10980-0000	-		1	HAND RAIL	
134	1362014-0000	-		4	BRACKET	
135	581600-0000	-		1	COVERING PLATE	
138	553213-0000	-		1	RAIL	
140	318232-0120	-		1	ROLLER CHAIN, DUPLEX 1/2"-120	
144	568831-0000	-		1	COVER	
145	581601-0000	-		1	SPACER	
147	2128-0000	-		1	CHUTE BRACKET	
148	2130-0000	-		1	SHAFT	
150	32644-0000	-		2	WASHER	
155	569015-0000	-		1	COVER	
160	570943-0000	-		1	PROTECTION PLATE	
165	570944-0000	-		1	COVER	
170	581598-0000	-		1	BRACKET	
180	581602-0000	-		1	FENDER WALING	
190	581603-0000	-		1	BRACKET	
192	1361964-0000	-		1	PLATE	
194	1361962-0000	-		2	AXLE SUPPORT	
196	1361961-0000	-		1	SHAFT	
198	1361960-0000	-		1	BOLT	
204	581599-0000	-		1	COVER	
205	553207-0000	-		2	CATCH	
206	570090-0000	-		1	COVER	
208	2552-0000	-		2	COMPRESSION SPRING	
209	570091-0000	-		1	COVER	
213	567941-0000	-		2	LOCK GRIP	
214	567942-0000	-		1	CAP	
215	567943-0000	-		2	LOCKING LUG	
218	10592-0000	A		1	ROLLER CHAIN	
219	90239-0821	A		1	DOUBLE ACTING, MINI-ISO, CYL.20-25	
220	1362015-0000	-		1	DRIP GUARD	
221	13206-0000	-		1	CHAIN SUPPORT	
222	27402-0000	-		1	MACHINE PLATE 50X120MM	
223	20497-0000	-		1	GROUP NUMBER PLATE	
224	553209-0000	-		1	STRUT	
226	30358-0000	-		1	STRUT	
227	30360-0000	-		1	GRUB SCREW	
228	553099-0000	-		1	HATCH	
229	572776-0000	-		1	CYLINDER BRACKET	
230	553210-0000	-		1	COVERING PLATE	
231	568178-0000	-		1	BRACKET	
232	581607-0000	-		1	BRACKET	
233	90044-0310	A		1	KEY FOR SAFETY SWITCH, AZ 15/16 B1	
234	90044-0201	-		1	KEY SAF.SW. AZ16-03 ZVR K-2254	
235	90074-0001	-		4	CABLE CLIPS, D=10 MM	
237	90074-0014	-		2	CABLE CLIPS, D=20 MM	
240	90051-0082	-		1	KNOB, CIRCUL, THREADED BUSH, M6 25X21 MM	
244	311112-0188	-		2	SPRING PIN, ISO 8752 2,5X16-C	
245	312105-0366	-		2	SCREW M6S M6X12 A280	
246	312105-0368	-		10	SCREW M6S M6X16 A280	
248	312105-0495	-		4	SCREW M6S ISO 4017 M10X30 A480	
250	312105-0327	-		8	SCREW M6S ISO 4017 M5X12 A480	
260	312105-0370	-		4	SCREW M6S ISO 4017 M6X20 A480	
270	312105-0447	-		1	SCREW M6S ISO 4017 M8X12 A480	
280	312105-0451	-		2	SCREW M6S ISO 4017 M8X20 A480	
304	312115-0371	-		3	SCREW ISO4762 M6X22 A4	
305	312115-0452	-		4	SCREW HEX.SOCK.HD.MC6S-TT 8X22 A480	
306	312115-0536	-		4	SCREW ISO4762 M12X30 A4	
309	312311-0327	-		1	SCREW ISO4028 M5X12 FZB	
310	312125-0287	-		7	SCREW PAN HEAD MCS M4X8 SS	
313	312165-0329	-		5	SCREW SLOT.RAIS.COUNT.HD.MKFS 5X16 SS	
315	312318-0287	-		4	SCREW ISO4029 M4X8 A4	
316	312165-0335	-		4	SCREW SLOT.RAIS.COUNT.HD.MKFS 5X30 SS	
317	312155-0370	-		6	SCREW EN 10642 MF6S M6X20 A480	
319	312502-0221	-		8	DRIVE SCREW ROUND HEAD KDS 4X6	
320	312812-0314	-		8	HEXAGON NUT, NY-LOCK M5 A480	
322	312605-0318	-		1	HEXAGON NUT, M6M M8 A280	
324	312605-0314	-		12	HEXAGON NUT, M6M M5 A280	
325	312605-0316	-		14	HEXAGON NUT, M6M M6 A280	
327	315105-0136	-		1	WASHER ISO 7089-4-200 HV-A4	
328	315105-0146	-		15	WASHER ISO 7089-5-200 HV-A4	
329	315105-0153	-		27	WASHER ISO 7089-6-200 HV-A4	
330	315105-0165	-		6	WASHER ISO 7089-8-200 HV-A4	
331	315115-0153	-		2	WASHER PLAIN, TBRB 6,4/12 H=3	
332	315105-0178	-		4	WASHER ISO 7089-12-200 HV-A4	
335	315402-0156	-		3	LOCK WASHER FBB 6,5	
336	315402-0165	-		2	LOCK WASHER FBB 8,2	
337	315402-0173	-		4	LOCK WASHER FBB 10,2	

Machine Type | Group Description | Used-In | Group Number | Page No

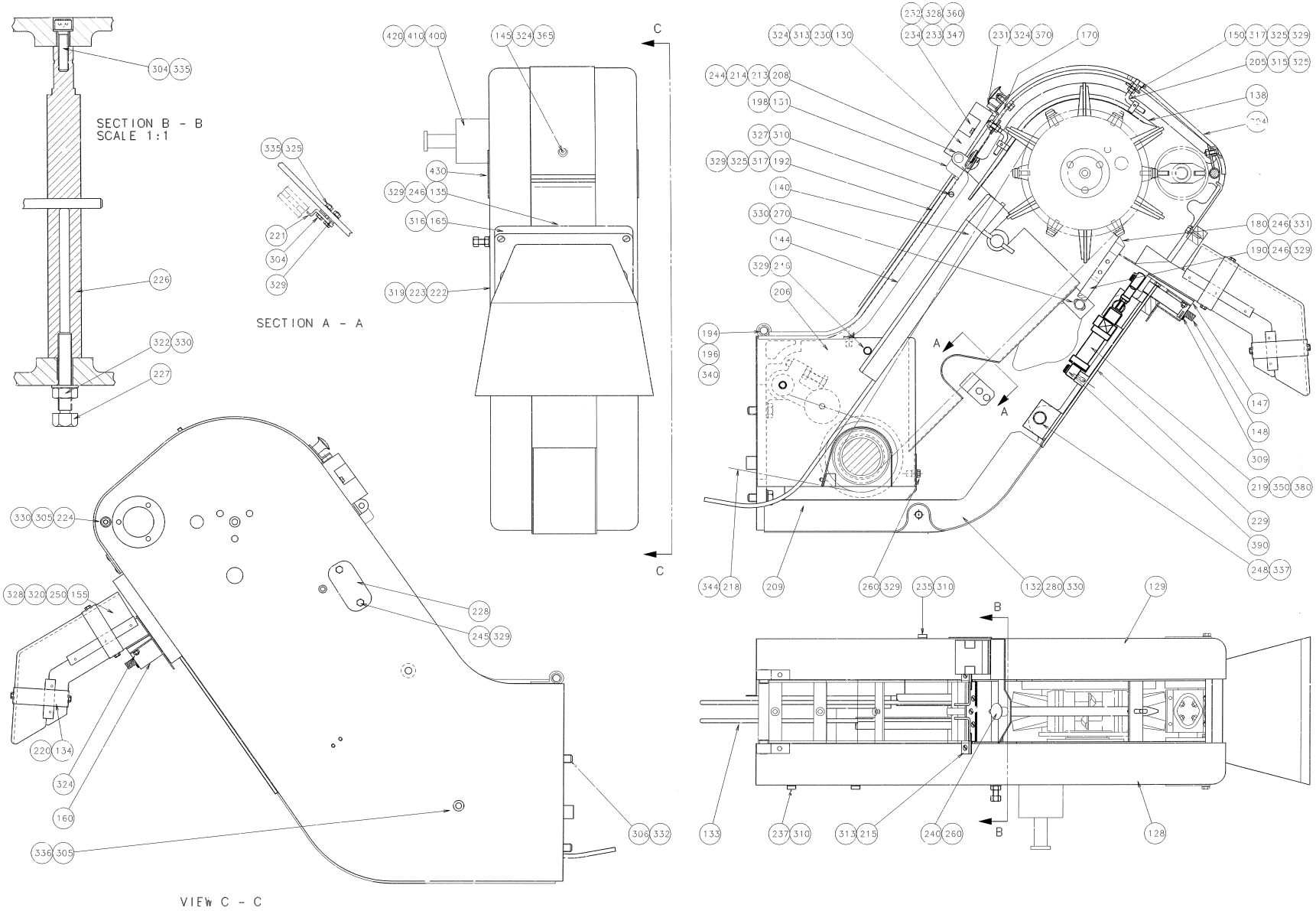
SECTION B - B
SCALE 1:1
SECTION A - A
VIEW C - C
304 335
226
322 330
227
335 325
221
304
329
420 410 400
145 324 365
430
329 246 135
316 165
319 223 222
C
C
232 328 360
234 233 347
324 313 230 130
231 324 370
170
150 317 325 329
205 315 325
138
244 214 213 208
198 131
327 310
329 325 317 192
140
330 270
144
329 216
206
180 246 331
190 246 329
194
196
340
A
A
147
148
309
219 350 380
229
390
248 337
344 218
209
260 329
235 310
132 280 330
129
B
B
133
237 310
313 215
240 260
128
330 305 224
328 320 250 155
228
245 329
220 134
324
160
336 305
306 332

Pos	Part No	SP	UN	Qty	Description	Page No
Common Parts (Cont'd)						
340	315751-0109	-		2	RETAIN. RING, 12	
344	318209-0190	A		1	CONNECTING LINK SINGLE 3/4"	
347	352100-0106	-		1	CABLE GLANR.18,6-10,5	
350	90239-0492	-		1	ROD END,BALL JOINT EYE,MINI-ISO M8	
360	312125-0331	-		2	SCREW PAN HEAD MCS M5X20 SS	
365	312155-0331	-		1	SCREW EN 10642 MF6S M5X20 A480	
370	312165-0325	-		2	SCREW SLOT.RAIS.COUNT.HD.MKFS 5X10 SS	
380	312180-0447	-		1	SCREW, HEX.SOCK.HEAD SHOULD. M6X12	
390	312180-0453	-		1	SCREW, HEX.SOCK.HEAD SHOULD. M6X25	
400	90064-0124	-		1	SWITCH, EM. STOP, ZB2-BS844+ZB2-BZ1045	
410	90066-0030	-		1	PUSH BUTTON BOX XAL J01	
420	90064-0336	-		1	EARTHING PLATE	
430	359705-0001	-		1	WARNING SIGN ISO, ENTAGLEMENT	

Pos	Part No	SP	UN	Qty	Description	Page No

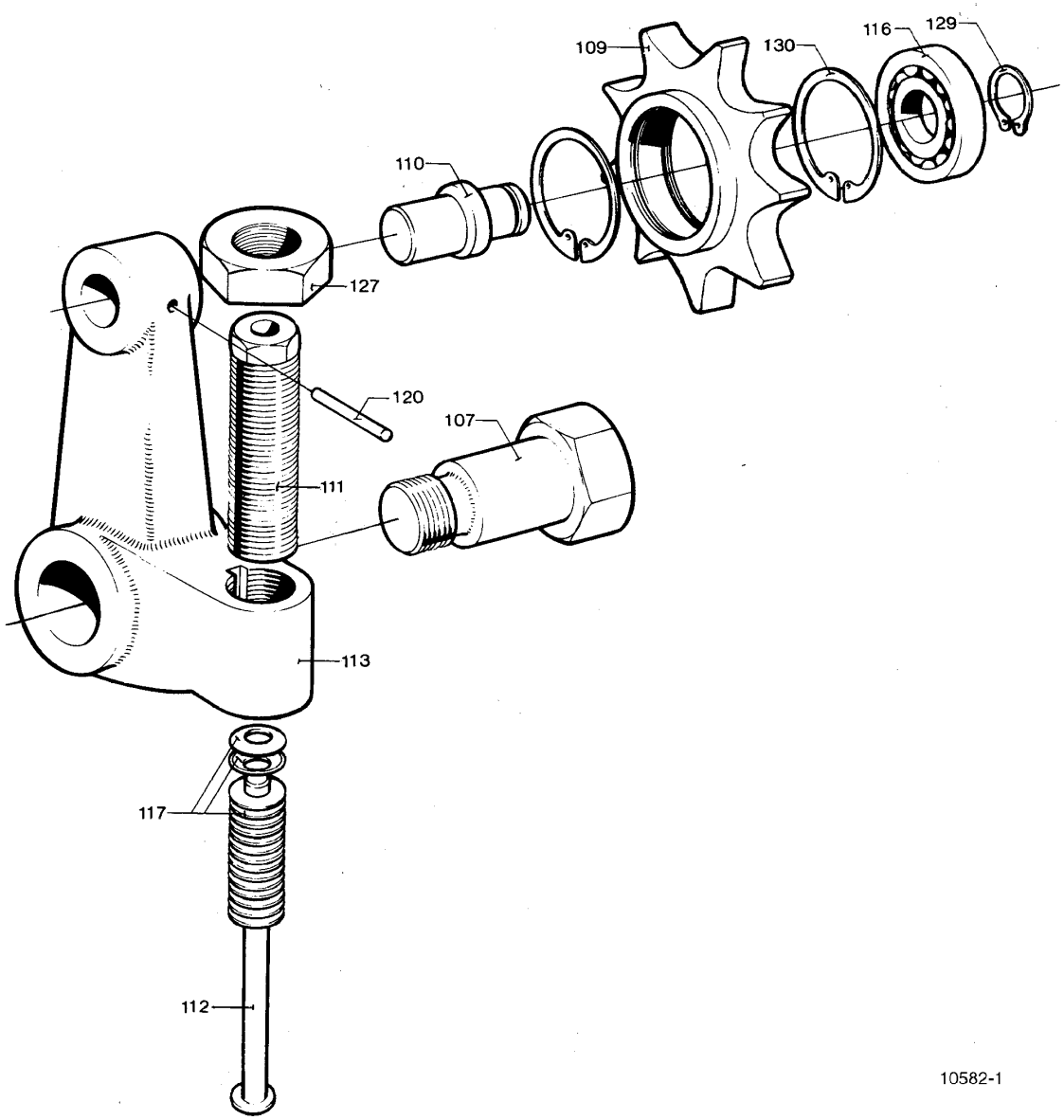
109
130
116
129
110
127
120
107
111
113
117
112
10582-1

ECM: 116454 - 20021219
Group number: 10582-0200
Assembly Drawing: 10582-1_1_AA

Issue: 20030206

Pos	Part No	SP	UN	Qty	Description	Page No
Common Parts						
107	2974-0000	-		1	FITTING BOLT	
109	10583-0000	-		1	SPROCKET	
110	10584-0000	A		1	SHAFT	
111	21716-0000	-		1	SLEEVE	
112	21717-0000	-		1	GUIDE PIN	
113	21137-0000	-		1	TENSION ARM	
116	321308-0201	A		1	BALL BEARING, 2 SEALS, 12X28X8 MM	
117	90016-0021	A		30	DISC SPRING, CONICAL 12,5X6,2X0,5 MM	
120	311305-0274	A		1	SLOTTED PIRPC4X25FZB	
127	312601-0324	-		1	NUT M6M 16-8 FZB	
129	315750-0109	-		1	RETAIN. RING, 12	
130	315752-0121	A		1	RETAIN. RING, 28	

Pos	Part No	SP	UN	Qty	Description	Page No

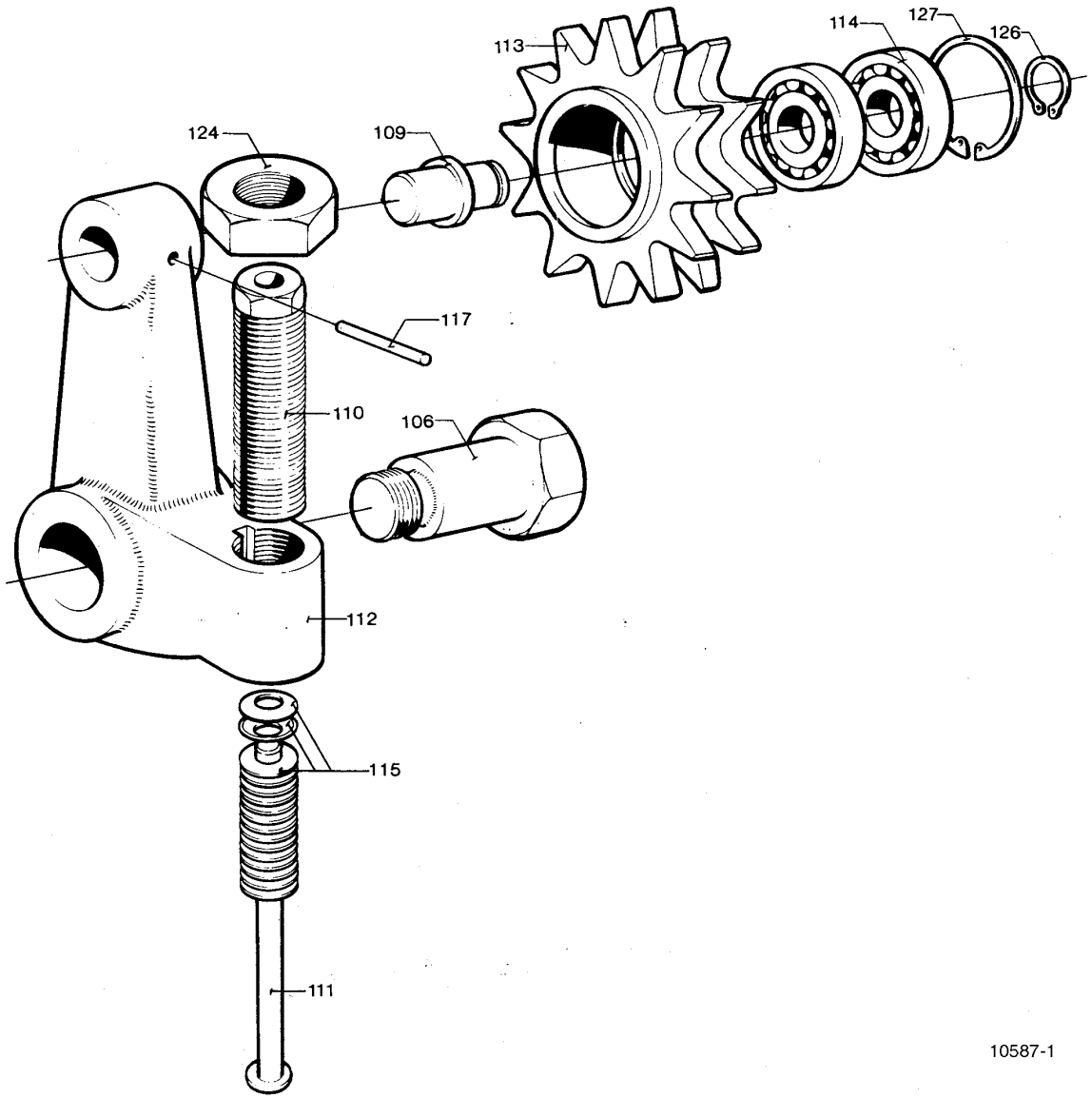
113
114
127
126
124
109
117
110
106
112
115
111
10587-1

ECM: 116455 - 20021219
Group number: 10587-0300
Assembly Drawing: 10587-1_1_AA

Issue: 20030206

Pos	Part No	SP	UN	Qty	Description	Page No
Common Parts						
106	2974-0000	-		1	FITTING BOLT	
109	10581-0000	A		1	SHAFT	
110	21716-0000	-		1	SLEEVE	
111	21717-0000	-		1	GUIDE PIN	
112	21137-0000	-		1	TENSION ARM	
113	30362-0000	-		1	SPROCKET	
114	321308-0201	A		2	BALL BEARING, 2 SEALS, 12X28X8 MM	
115	90016-0021	A		30	DISC SPRING, CONICAL 12,5X6,2X0,5 MM	
117	311305-0274	A		1	SLOTTED PIRPC4X25FZB	
124	312601-0324	-		1	NUT M6M 16-8 FZB	
126	315750-0109	-		1	RETAIN. RING, 12	
127	315752-0121	A		1	RETAIN. RING, 28	

Pos	Part No	SP	UN	Qty	Description	Page No

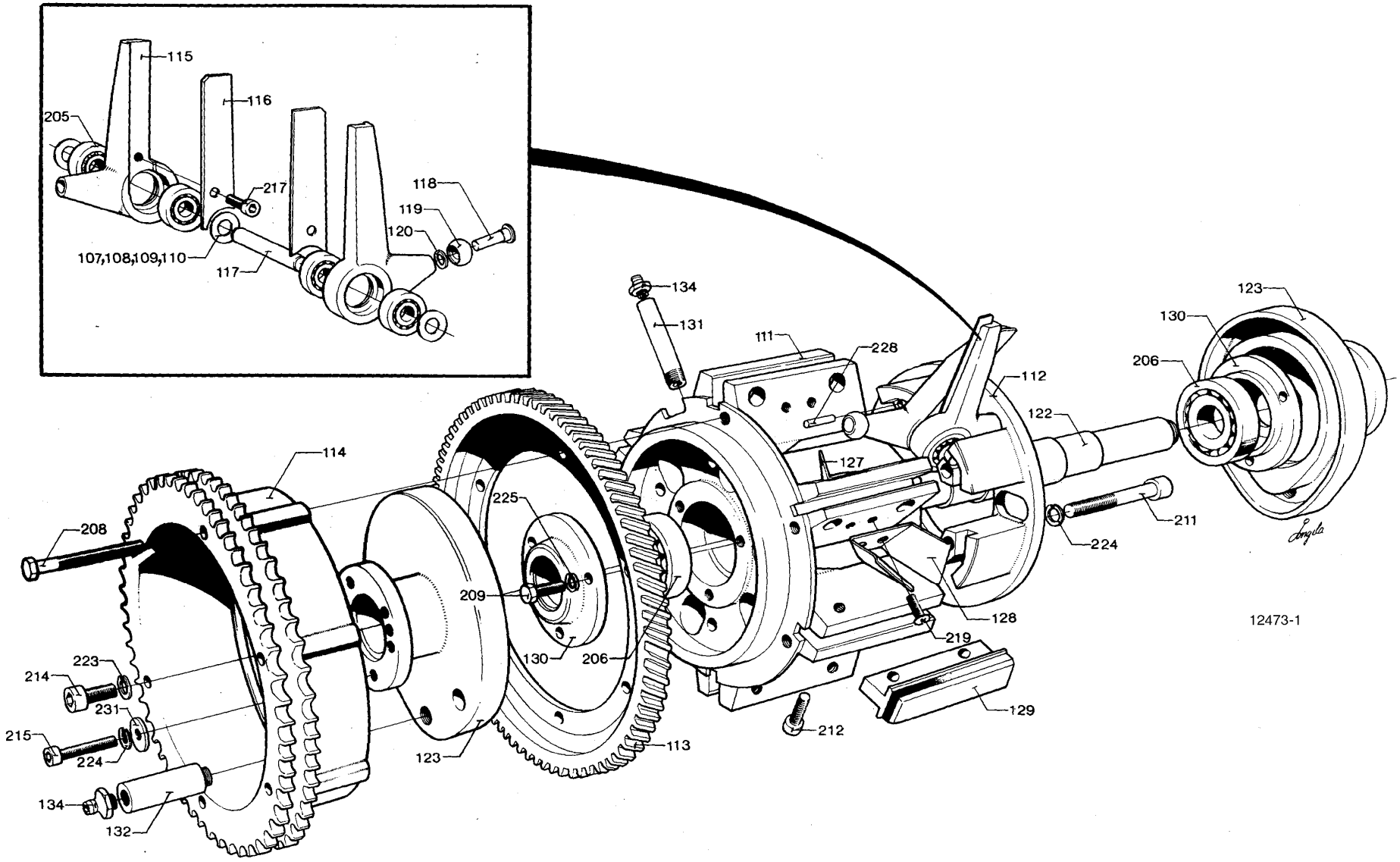
115
116
205
217
118
119
120
107,108,109,110
117
134
131
111
228
112
123
130
206
122
127
114
225
208
209
211
224
128
219
223
214
231
215
224
130
206
212
129
113
123
134
132
12473-1

ECM: 116456 - 20021219
Group number: 12473-0300
Assembly Drawing: 12473-1_1_AA

Issue: 20030206

Pos	Part No	SP	UN	Qty	Description	Page No
PB105						
127	30363-0000	-		6	HEAD PLATE	
128	30364-0000	-		6	HEAD PLATE	
PB85						
127	554849-0000	-		6	HEAD PLATE	
128	554848-0000	-		6	HEAD PLATE	
Common Parts						
107	1883-0004	-		1	WASHER	
108	1883-0005	-		1	WASHER	
109	1883-0008	-		1	WASHER	
110	1883-0007	-		1	WASHER	
111	12497-0000	-		1	CUTTING WHEEL	
112	2112-0000	-		1	GABLE PART	
113	12564-0000	-		1	GEAR RIM	
114	11106-0000	-		1	SPROCKET	
115	10574-0000	A		12	SCISSOR ARM	
116	10575-0000	A		12	SCISSOR BLADE	
117	2117-0000	A		2	SHAFT	
118	2118-0000	-		12	FITTING BOLT	
119	2119-0000	A		12	ROLL	
120	2120-0000	-		12	WASHER	
122	2122-0000	A		1	SHAFT	
123	2123-0000	-		2	CURVE	
129	12569-0000	A		6	RAIL	
130	321600-0110	-		2	OIL SEAL (LL2547	
131	12575-0000	-		1	SPACER PIPE	
132	10588-0000	-		2	SPACER PIPE	
134	344502-0021	-		3	GREASE NIPPLE STRAIGHT M6	
136	90157-0008	-		1	LOCKING COMPOUND	
205	90214-0027	A		24	BALL BEARING, 2 SEALS, 8X22X7 MM	
206	321306-0105	A		2	BALL BEARING, 25X47X12 MM	
208	312101-0384	-		6	SCREW M6S M6X70 FZB	
209	312101-0329	-		6	SCREW M6S M5X16 FZB	
211	312111-0380	-		6	SCREW HEX.SOCK.HD.MC6S-TT 6X50 88 FZB	
212	312111-0327	-		12	SCREW HEX.SOCK.HD.MC6S-TT 5X12 88 FZB	
214	312115-0449	-		2	SCREW ISO4762 M8X16 A4	
215	312111-0376	-		6	SCREW HEX.SOCK.HD.MC6S-TT 6X35 88 FZB	
217	312111-0287	-		12	SCREW HEX.SOCK.HD.MC6S-TT 4X8 88 FZB	
219	312165-0287	-		24	SCREW SLOT.RAIS.COUNT.HD.MKFS 4X8 SS	
223	315401-0165	-		2	WASHER FBH8,2FZB	
224	315401-0153	-		18	WASHER FBH6,1FZB	
225	315401-0146	-		6	WASHER FBH 5,1 FZB	
228	311305-0236	A		12	SLOTTED PIN RPC 3X16 ZINC COATED	
231	315121-0153	-		6	WASHER PLAIN, TBRSB 6,4/22 H=4	

Machine Type | Group Description | Used-In | Group Number | Page No

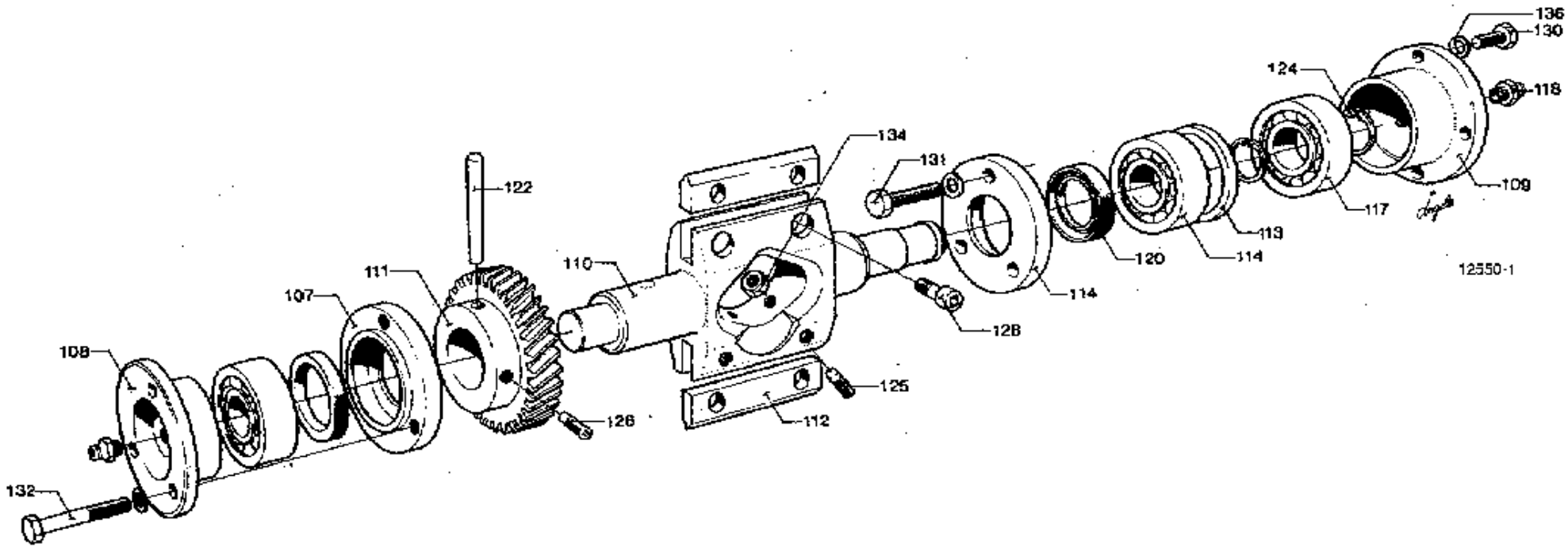
136
130
124
118
134
131
122
109
117
119
120
114
111
110
114
107
128
108
125
126
112
132
12550-1

Pos	Part No	SP	UN	Qty	Description	Page No
PERFORATION KNIFE						
112	1361959-0000	A		2	KNIFE	
STRAIGHT KNIFE						
112	12573-0000	A		2	KNIFE	
Common Parts						
107	12517-0000	-		1	LID	
108	12518-0000	-		1	LID	
109	12519-0000	-		1	LID	
110	12520-0000	A		1	KNIFE SHAFT	
111	12565-0000	A		1	GEARING	
113	12578-0000	-		1	SPACER RING	
114	12584-0000	-		1	LID	
115	545393-0000	-		2	GUIDING ARBOR	
116	321322-0104	A		2	SPHERICAL BALL BEARING, 20X47X18 MM	
117	321309-0104	A		1	BALL BEARING, 20X47X14 MM	
118	344502-0021	-		2	GREASE NIPPLE STRAIGHT M6	
120	315221-0164	A		2	RADIAL SEAL 28X40X7 MM	
122	311201-0273	A		1	PIN, TAPERED, KP, 5X50 GROUND	
124	315750-0116	A		2	RETAIN. RING, 20	
125	312306-0329	-		4	SCREW HEX.SOCK.SET FLAT P.MP6SS 5X16FZB	
126	312316-0366	-		1	SCREW HEX.SOCK.SET CUP P.MSK6SS6X12 FZB	
128	312111-0366	-		4	SCREW HEX.SOCK.HD.MC6S-TT 6X12 88 FZB	
130	312101-0368	-		3	SCREW M6S M6X16 FZB	
131	312101-0370	-		3	SCREW M6S M6X20 FZB	
132	312101-0380	-		3	SCREW M6S M6X50 FZB	
134	312601-0314	-		4	NUT M6M5FZB	
135	312121-0323	-		4	SCREW SLOT.PAN HD. MCS 5X8 FZB	
136	315101-0153	-		9	WASHER PLAIN, BRB, 6,4/12 H=1,5	

Pos	Part No	SP	UN	Qty	Description	Page No

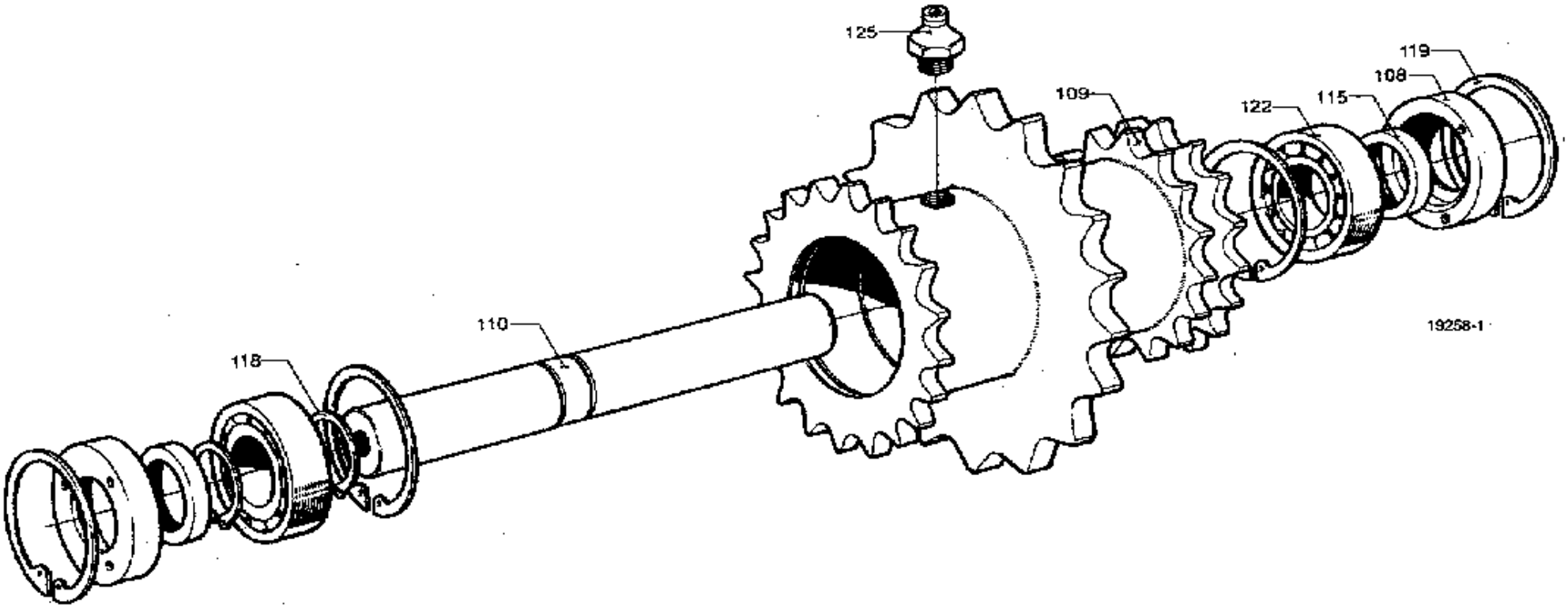
125
119
108
109
115
122
110
118
19258-1

ECM: 116458 - 20021219
Group number: 19258-0100
Assembly Drawing: 19258-1_1_AA

Issue: 20030206

Pos	Part No	SP	UN	Qty	Description	Page No
Common Parts						
108	12557-0000	-		2	LID	
109	19259-0000	A		1	SPROCKET, DIV. INTO THREE	
110	19260-0000	A		1	SHAFT	
115	315221-0143	A		2	RADIAL SEAL 20X30X7 MM	
118	315750-0116	A		2	RETAIN. RING, 20	
119	315752-0128	-		4	RETAIN. RING, 42	
122	321306-0104	A		2	BALL BEARING, 20X42X12 MM	
125	344502-0026	-		1	GREASE NIPPLE STRAIGHT R1/8 CON.	

Pos	Part No	SP	UN	Qty	Description	Page No

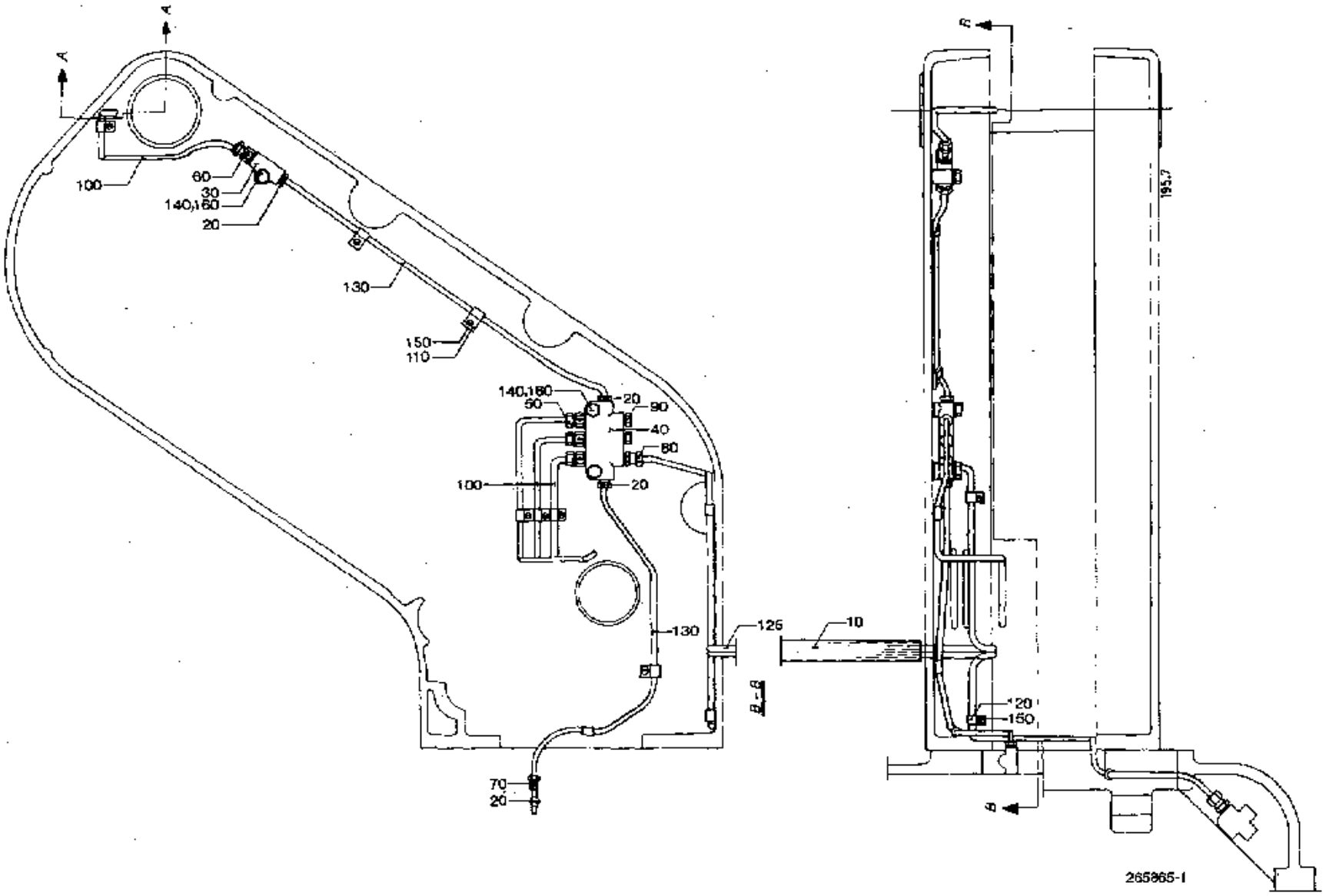
A
A
100
60
30
140,160
20
130
150
110
140,160
50
20
90
40
80
100
20
130
125
10
B–B
70
20
B
B
195,7
20
150
265865-1

Pos	Part No	SP	UN	Qty	Description	Page No
Common Parts						
010	265930-0000	-		1	GUIDE PIPE	
020	90028-0001	-		3	CONE 5/32"	
030	90032-0015	-		1	JUNCT. BLOCK & DIST.5/16-24UNF X2	
040	90032-0029	-		1	DISTR. BLOCK & DIST.5/16-24UNF X8	
050	90092-0064	B		4	METERING VALVE, FJB 0, 5/16-24 UNF	
070	90134-0003	-		3	BUSHING	
080	B90134-0034	-		1	NIPPLE	
	90030-0101	*-*		*1*	*TAPER*	
090	90136-0002	-		2	PLUG 5/16"24	
100	90151-0001	-	MM	500	BRASS PIPE DI=2,6 MM	
110	90165-0003	-		9	PIPE CLIP FOR TUBE D=4 MM	
120	90165-0005	-		3	PIPE CLIP FOR TUBE D=6 MM	
125	90166-0108	-	M	3	TUBE 6 MM PA,TRANSP.	
130	90166-0109	-	M	1	TUBE 4 MM PA,TRANSP.	
140	312101-0332	-		3	SCREW M6S M5X22 FZB	
145	312105-0460	-		2	SCREW M6S ISO 4014 M8X45 A480	
150	312121-0285	-		12	SCREW SLOT.PAN HD. MCS 4X6 FZB	
160	315101-0146	-		3	WASHER PLAIN, BRB, 5,3/10 H=1	

Pos	Part No	SP	UN	Qty	Description	Page No

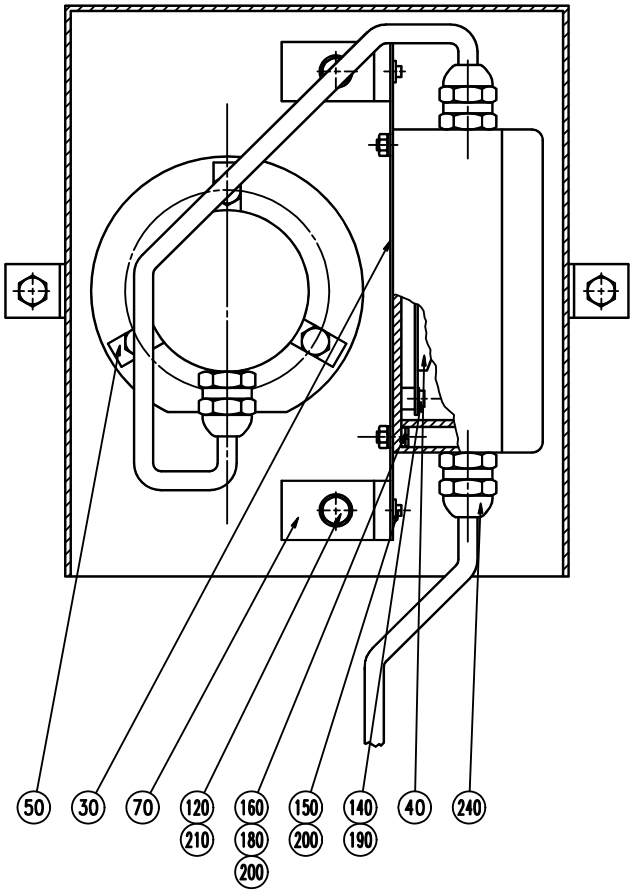
50
30
70
120
210
160
180
200
150
200
140
190
40
240

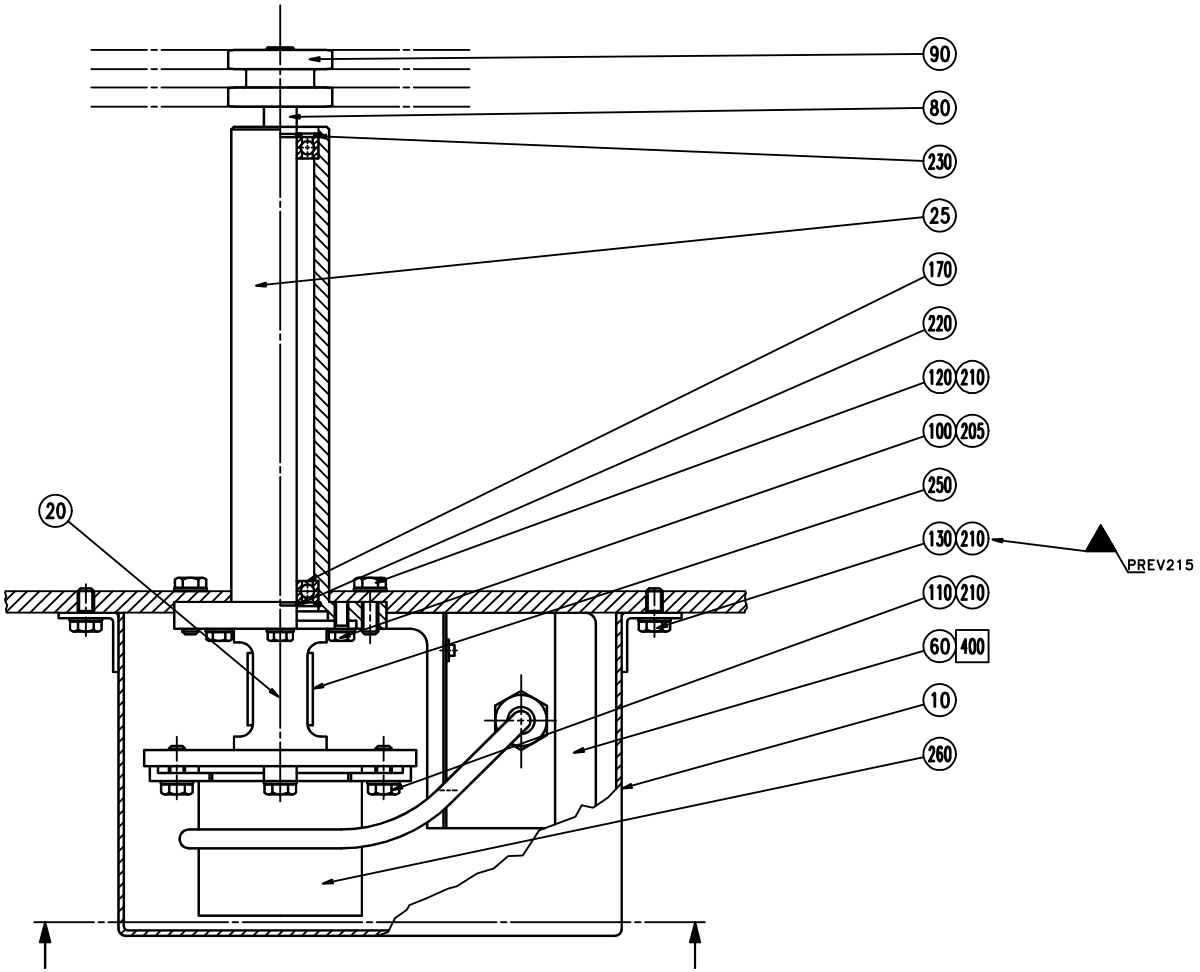
90
80
230
25
170
220
120
210
100
205
250
130
210
PREV215
110
210
60
400
10
260
20

ECM: 116461 - 20021219
Group number: 553234-0100
Assembly Drawing: 553234-1_1_AA

Issue: 20030206

Pos	Part No	SP	UN	Qty	Description	Page No
Common Parts						
010	552980-0000	-		1	PROTECTION	
020	534725-0000	-		1	BRACKET	
025	552978-0000	-		1	CANTILEVER	
030	534726-0000	-		1	MOUNTING SHEET	
040	451423-0000	-		1	CIRCUIT BOARD	
050	456529-0000	-		3	CLAMP HOLDER	
060	464297-0000	-		1	CONNECTION BOX	
070	522159-0000	-		2	CANTILEVER	
080	552979-0000	-		1	SHAFT	
090	12639-0000	-		1	SPROCKET	
100	312105-0327	-		3	SCREW M6S ISO 4017 M5X12 A480	
110	312105-0367	-		3	SCREW M6S M6X14 A280	
120	312105-0368	-		5	SCREW M6S M6X16 A280	
130	312105-0366	-		2	SCREW M6S M6X12 A280	
140	312125-0220	-		4	SCREW SLOT.PAN HD. MCS 3X6 A480	
150	312125-0285	-		4	SCREW SLOT.PAN HD. MCS 4X6 A480	
160	312125-0291	-		4	SCREW PAN HEAD MCS M4X12 SS	
170	321308-0201	-		2	BALL BEARING, 2 SEALS, 12X28X8 MM	
180	312605-0312	-		4	HEXAGON NUT, M6M M4 A280	
190	315105-0124	-		4	WASHER ISO 7089-3-200 HV-A4	
200	315105-0136	-		8	WASHER ISO 7089-4-200 HV-A4	
205	315105-0146	-		3	WASHER ISO 7089-5-200 HV-A4	
210	315105-0153	-		10	WASHER ISO 7089-6-200 HV-A4	
220	315751-0109	-		2	RETAIN. RING, 12	
230	315753-0121	-		2	RETAIN. RING, 28	
240	352103-0106	-		2	CABLE GLAND, ST 11, PR18,6/PG11	
250	90355-0031	A		1	TORQUE RIGID COUPLING, 10X10 MM	
260	90061-0027	-		1	ANGLE ENCODER 670900035	
F400	A68917-0100	-		1	ANGLE INDICATOR	**227**

Pos	Part No	SP	UN	Qty	Description	Page No

Machine Type | Group Description | Used-In | Group Number | Page No

This page is intentionally left blank.

ECM: - -
Group number: 68917-0100
Assembly Drawing:

Issue: 20030206

Pos	Part No	SP	UN	Qty	Description	Page No
Common Parts						
010	540306-0001	-		1	COMPONENTS WITHOUT TP-NO	
020	540307-0000	-		1	PRINTED CIRCUIT BOARD	

Pos	Part No	SP	UN	Qty	Description	Page No

Tetra Pak

SPC
Spare Parts Catalogue

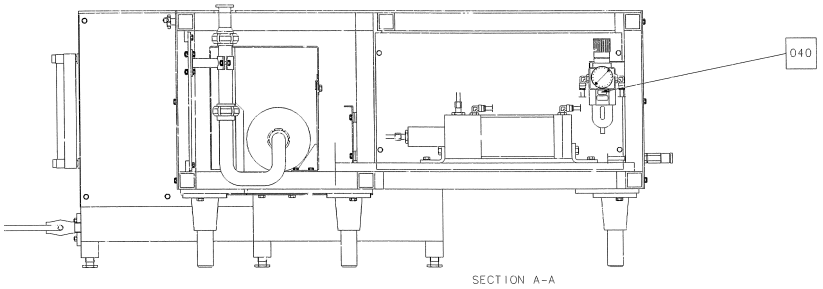
040
SECTION A-A

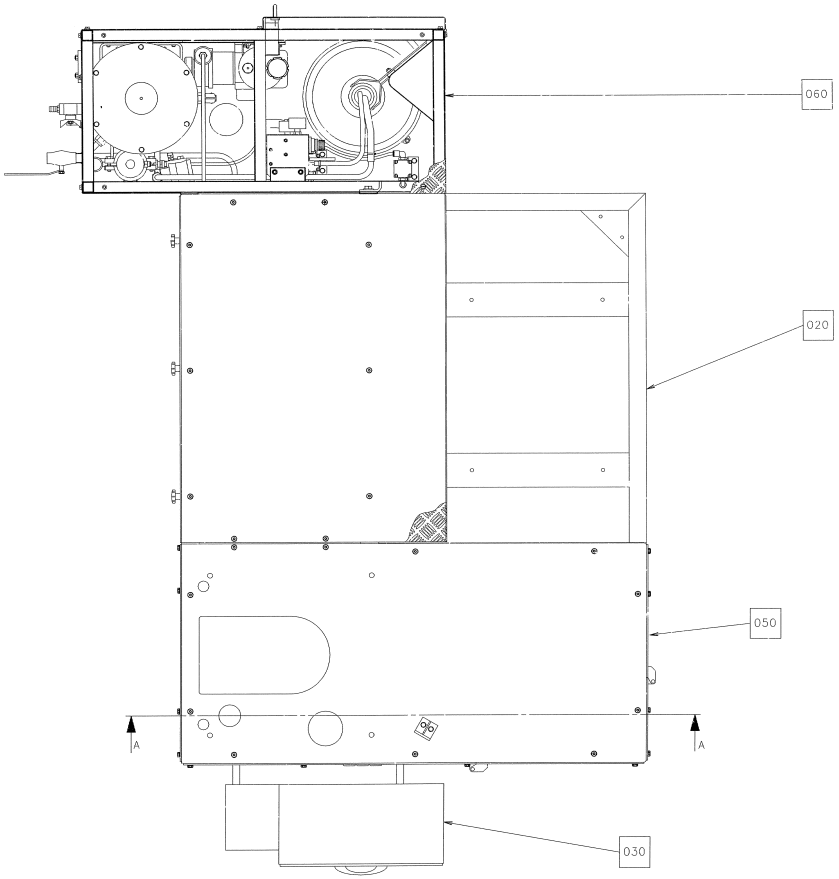
060
020
050
030
A
A

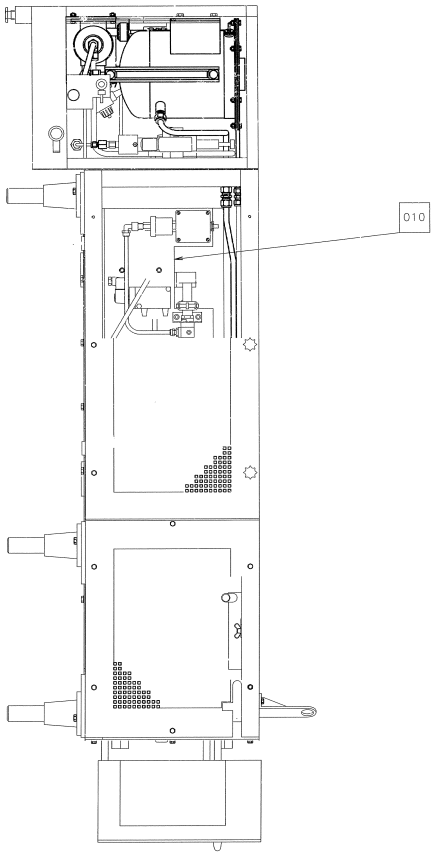
010

ECM: 116621 - 20021219
Group number: 633008-1100
Assembly Drawing: 633008-3_1_AA

Issue: 20030206

Pos	Part No	SP	UN	Qty	Description	Page No
Common Parts						
F010	A553118-0300	-		1	STERILE AIR SYSTEM	**233**
F020	A554250-0400	-		1	LOWER SECTION	**237**
F030	A230177-0300	-		1	CENTRAL LUBRICATION	**239**
F040	A577372-0200	-		1	AIR PIPE-LINE	**241**
F050	A28422-0300	-		1	HYDRAULIC SYSTEM	**243**
F060	A578069-0100	-		1	PEROXIDE UNIT	**245**

Pos	Part No	SP	UN	Qty	Description	Page No

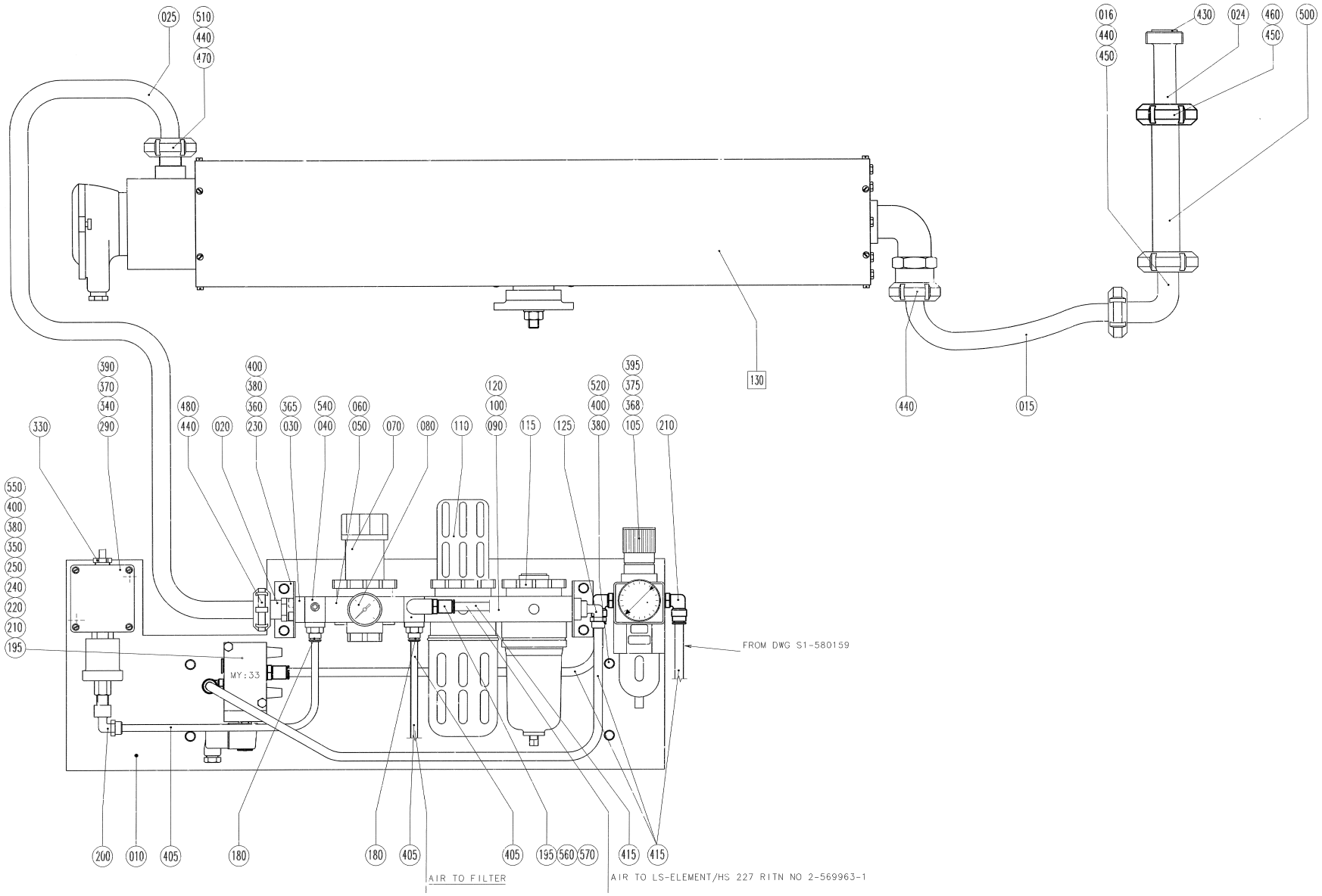
025
510
440
470
016
440
450
430
024
460
450
500
130
440
015
390
370
340
290
400
380
360
230
480
440
020
365
030
540
040
060
050
070
080
110
120
100
090
115
125
520
400
380
395
375
368
105
210
330
550
400
380
350
250
240
220
210
195
MY:33
FROM DWG S1-580159
200
010
405
180
180
405
405
195
560
570
415
415
AIR TO FILTER
AIR TO LS-ELEMENT/HS 227 RITN NO 2-569963-1

ECM: 116612 - 20021219
Group number: 553118-0300
Assembly Drawing: 553118-3_1_AA

Issue: 20030206

Pos	Part No	SP	UN	Qty	Description	Page No
Common Parts						
010	553102-0000	-		1	ASSEMBLY PLATE	
015	553116-0000	-		1	PIPE JUNCTION	
016	553117-0000	-		1	ELBOW PIPE JOINT	
020	553119-0000	-		1	MUFF	
024	19301-0000	-		1	PIPE	
025	22956-0000	-		1	PIPE JUNCTION	
030	90113-0353	-		1	END CONNECTION	
040	90113-0405	-		2	PORTING BLOCK	
050	90113-0338	-		1	YOKE	
060	90113-0334	-		2	INSERT	
070	90113-0116	A		1	REGULATOR - NEED YOKE 90113-0417	
080	90043-0021	A		1	PRESSURE GAUGE WIEGAND 0-1 BAR 1/8"	
090	90113-0352	-		1	ASSEMBLY UNIT	
100	90113-0339	-		1	YOKE	
105	B90113-0013	-		1	REGULATOR	
	90113-0359	*C*		*1*	*FILTER CARTRIDGE*	
	90234-0328	*C*		*1*	*COVER*	
	90113-0359	*C*		*1*	*FILTER CARTRIDGE*	
110	B90277-0104	-		1	FILTER F64B-NNN-ARO	
	90113-0458	-		*1*	*FILTER ELEMENTS*	
	90113-0457	-		*1*	*FILTER ELEMENTS*	
115	90277-0105	-		1	AIR-PRESSURE FILTER	
120	90113-0335	-		1	INSERT	
125	342930-0133	-		1	ELBOW 90 COUPL.,EXT.THREAD 10/8-R3/8"	
180	342722-0205	-		2	STRAIGHT COUPLING D=8-G1/4"	
195	342722-0211	-		2	STRAIGHT COUPLING D=10-G1/4"	
200	342933-0122	-		1	ELBOW 90 COUPL.,INT.THREAD 8/6-G1/4"	
210	90458-2961	-		3	ELBOW PIPE JOINT, EXT.THREAD,D=10MM-G1/4	
220	B90042-0154	-		1	SOLENOID VALVE FESTO MFH-5-1/4	
	90042-0346	-		*1*	*COIL REPL.BY 90042-379*	
230	90236-0041	-		1	BRACKET	
240	346800-0110	-		2	SILENCER FILTER R1/4"	
250	90042-0455	-		1	COIL FESTO MSFG 24VDC	
290	90274-0032	-		1	PRESSURE SWITCH, 14 KPA	
330	352103-0106	-		1	CABLE GLAND, ST 11, PR18,6/PG11	
340	312115-0295	-		2	SCREW ISO4762 M4X20 A4	
350	312105-0378	-		2	SCREW M6S ISO 4014 M6X40 A480	
360	312115-0370	-		4	SCREW ISO4762 M6X20 A4	
365	312115-0380	-		2	SCREW ISO4762 M6X50 A4	
368	312121-0343	-		2	SCREW SLOT.PAN HD. MCS 5X60 FZB	
370	312605-0312	-		2	HEXAGON NUT, M6M M4 A280	
375	312605-0314	-		2	HEXAGON NUT, M6M M5 A280	
380	312605-0316	-		10	HEXAGON NUT, M6M M6 A280	
390	315105-0136	A		2	WASHER ISO 7089-4-200 HV-A4	
395	315105-0146	-		2	WASHER ISO 7089-5-200 HV-A4	
400	315105-0153	-		14	WASHER ISO 7089-6-200 HV-A4	
405	90166-0013	-	MM	300	TUBE 8 MM PA BLUE	
415	90166-0160	-	M	2	TUBE 10 MM PA BLUE	
430	90242-0030	-		1	O-RING 24,2X3 MM	
440	90091-0180	B		4	GASKET 32X25X4,8 MM	
450	90091-0181	-		2	GASKET, GRAPHITE, 32/40 MM, H=4,8 MM	
460	342803-0102	-		1	UNION NUT, RD 48-6 (SMS 32)	
470	19300-0000	-		1	NIPPLE	
480	342803-0101	-		2	UNION NUT, RD 40-6 (SMS 25)	
500	19302-0000	-		1	PIPE	
510	90005-0016	-		1	GASKET BOLT HEAD 27/35X2,5 MM G3/4"	
520	312105-0368	-		4	SCREW M6S M6X16 A280	
540	342713-0209	-		3	PLUG, EXT THREAD HEX SOCKET 8638-00-180	
550	342713-0210	-		1	PLUG, EXT THREAD HEX SOCKET 8638-00-140	
560	90330-0013	-		1	NIPPLES, EXT. THREAD. ISO 7/1 R1/4-R1/8	
570	90330-0081	-		1	ELBOW, 90 INT. THREAD, R-222R1/4	
F130	A19268-0300	-		1	AIR SUPER-HEATER	**235**

Machine Type | Group Description | Used-In | Group Number | Page No

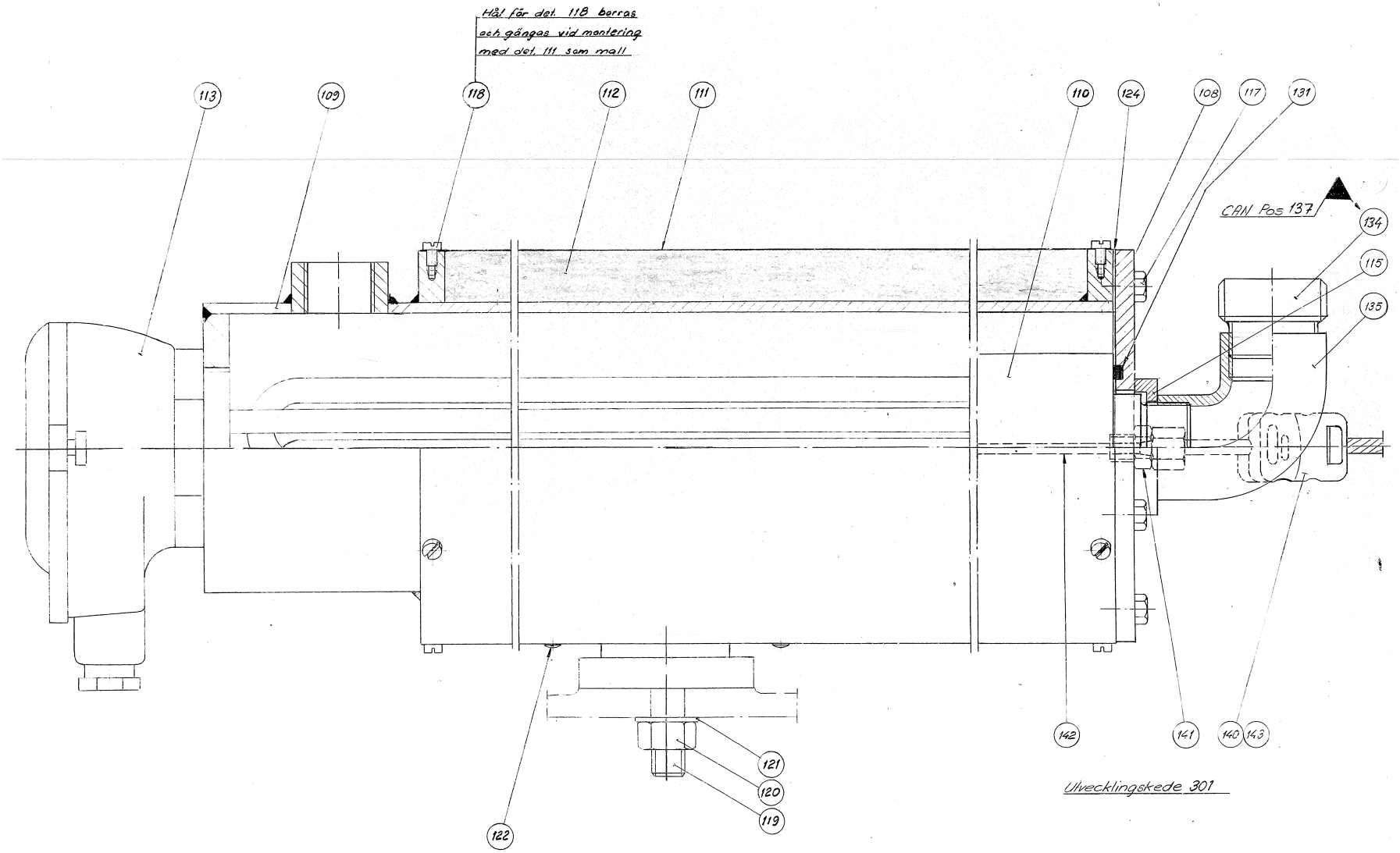

Not: Pos 112, Nätmatta nr. 441 t=20 köpes från Rockwool i Skövde.
Samtliga rörgångor tätas m. teflontape 90:44-4.

Pos	Part No	SP	UN	Qty	Description	Page No
Common Parts						
108	31384-0000	-		1	LID	
109	19270-0000	-		1	TUBE	
110	19271-0000	B		1	FILTER	
111	19272-0000	-		1	MANTLE	
112	90411-0001	-		1	INSULATING MAT	
113	19269-0002	-		1	ELEMENT	
115	22951-0000	-		1	SPACER RING	
117	312105-0368	-		8	SCREW M6S M6X16 A280	
118	312125-0285	-		12	SCREW SLOT.PAN HD. MCS 4X6 A480	
119	312303-0541	-		1	SCREW DIN 938 PS M12X30 A4 80	
120	312605-0322	-		1	HEXAGON NUT, M6M M12 A280	
121	315105-0178	-		1	WASHER ISO 7089-12-200 HV-A4	
122	311520-0420	-		1	RIVET, BLANK 3,2X4	
124	535698-0000	B		1	GASKET	
131	90005-0032	B		1	WASHER,PL.RND.CU.50/60,H=3	
134	90217-0044	-		1	NIPPLE LKBN, RD 40-6 - R1 M	
135	90330-0014	-		1	ELBOW, 90 INT. THREAD, R-222R1	
140	90326-0012	-		1	PROTECTIVE COVER, T31A4618	
141	90326-0306	B		1	GLAND FITTING 9041-45-KS-KR.1/8" D=4,5MM	
142	90326-0019	B		1	THERMOELEMENT	
143	90326-0020	B		1	PLUG, FEMALE YELLOW CR-AL	

Pos	Part No	SP	UN	Qty	Description	Page No

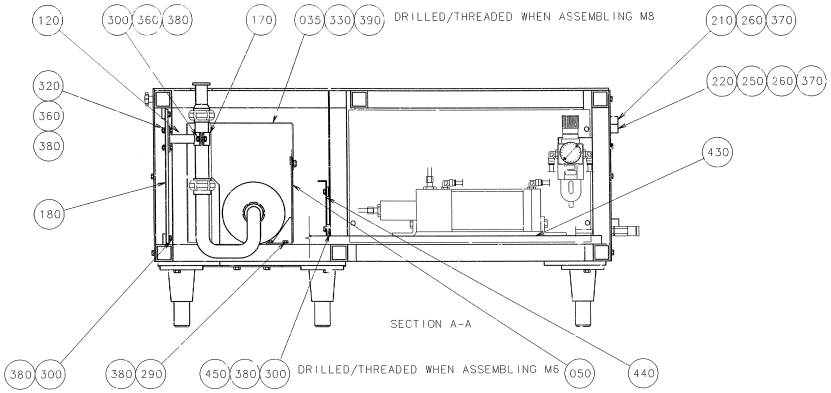
120
300 360 380
170
035 330 390
DRILLED/THREADED WHEN ASSEMBLING M8
210 260 370
220 250 260 370
320
360
380
430
180
SECTION A-A
380 300
380 290
450 380 300
DRILLED/THREADED WHEN ASSEMBLING M6
050
440

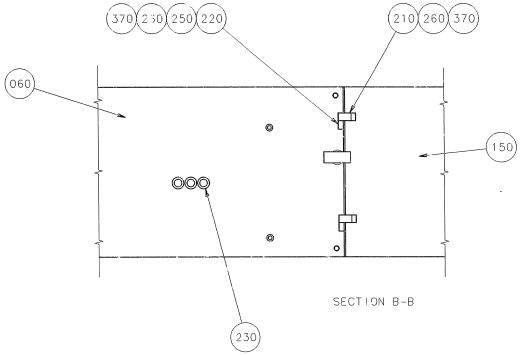
370 230 250 220
210 260 370
060
150
SECTION B-B
230

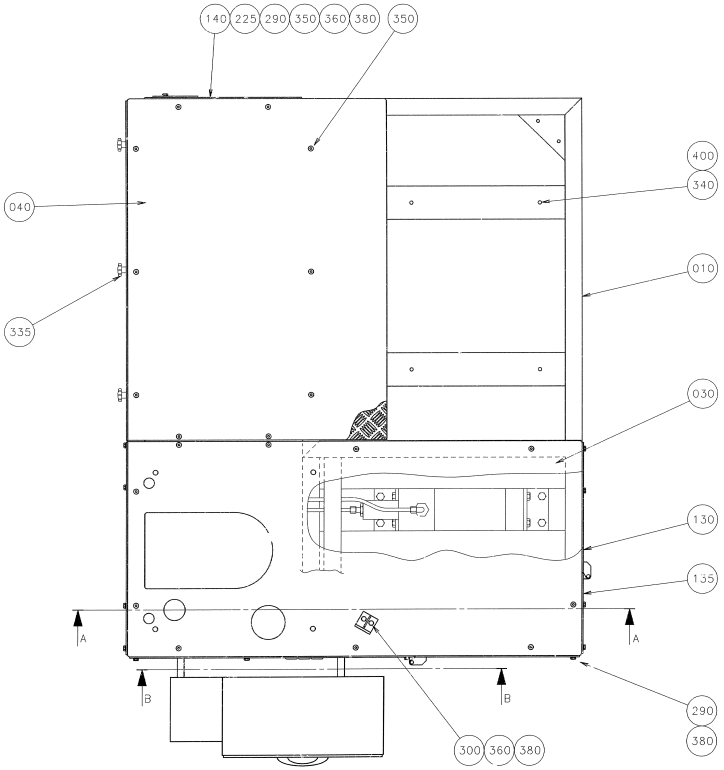
140 225 290 350 360 380 350
400
340
040
010
335
030
130
135
A
A
B
B
290
380
300 360 380

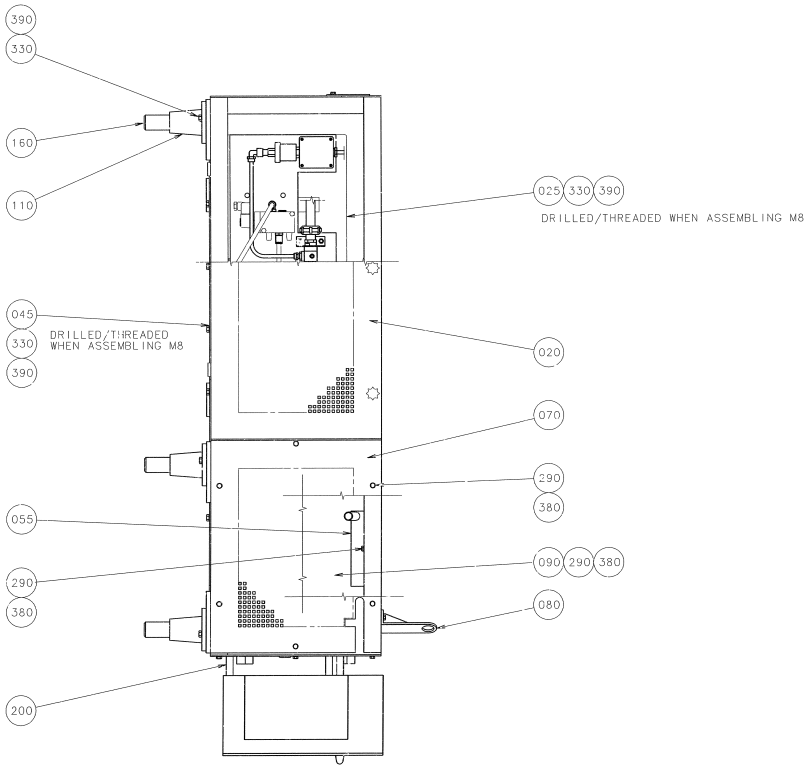
390
330
160
110
025 330 390
DRILLED/THREADED WHEN ASSEMBLING M8
045
330
390
DRILLED/THREADED
WHEN ASSEMBLING M8
020
070
290
380
055
090 290 380
290
380
080
200

ECM: 116614 - 20021219
Group number: 554250-0400
Assembly Drawing: 554250-3_1_AA

Issue: 20030206

Pos	Part No	SP	UN	Qty	Description	Page No
Common Parts						
010	553191-0000	-		1	LOWER SECTION	
020	553196-0000	-		1	GABLE PLATE	
025	1361974-0000	-		1	HEAT GUARD	
030	553198-0000	-		1	PLATFORM	
040	553199-0000	-		1	PLATFORM	
045	1361976-0000	-		1	TOUCH GUARD	
050	553202-0000	-		1	HEAT GUARD	
055	553107-0000	-		1	WASTE BOX	
060	553194-0000	-		1	GABLE PLATE	
070	579926-0000	-		1	GABLE PLATE	
080	553200-0000	-		1	HOLDER	
090	560192-0000	-		1	HEAT GUARD	
110	1537-0000	-		6	BRACKET	
120	19408-0000	-		1	CANTILEVER	
130	570088-0000	-		1	GABLE PLATE	
135	570089-0000	-		1	GABLE PLATE	
140	579924-0000	-		1	GABLE PLATE	
150	553197-0000	-		1	GABLE PLATE	
160	7203-0000	-		6	LEG	
170	19409-0000	-		1	CAP	
180	19410-0000	-		1	HOLDER	
200	553203-0000	-		4	SPACER	
210	553204-0000	-		4	HINGE	
220	553205-0000	-		4	HINGE	
230	90015-0033	-		3	LEAD-IN BUSHING	
250	311103-0405	-		4	PARALLELL PIN, M6, 8X30 MM	
260	312105-0287	-		16	SCREW M6S ISO4017 M4X8 A480	
290	312105-0366	-		37	SCREW M6S M6X12 A280	
300	312105-0368	-		16	SCREW M6S M6X16 A280	
320	312105-0372	-		4	SCREW M6S ISO 4017 M6X25 A480	
330	312105-0453	-		42	SCREW M6S ISO 4017 M8X25 A480	
335	90051-0084	-		3	KNOB, EXTERNAL THREAD. NO. 8308-1534	
340	312105-0491	-		4	SCREW M6S ISO 4017 M10X20 A480	
350	312155-0366	-		23	SCREW EN 10642 MF6S M6X12 A480	
360	312605-0316	-		9	HEXAGON NUT, M6M M6 A280	
370	315105-0136	-		16	WASHER ISO 7089-4-200 HV-A4	
380	315105-0153	-		59	WASHER ISO 7089-6-200 HV-A4	
390	315105-0165	-		42	WASHER ISO 7089-8-200 HV-A4	
400	315105-0173	-		4	WASHER ISO 7089-10-200 HV-A4	
430	352031-0349	-	M	1	CABLE DUCT, 75X20 MM	
440	352031-0517	-	M	1	CABLE DUCT, 150X20 MM	
450	315125-0153	-		4	WASHER TBRSB 6,4X22X4 A4	

Machine Type | Group Description | Used-In | Group Number | Page No

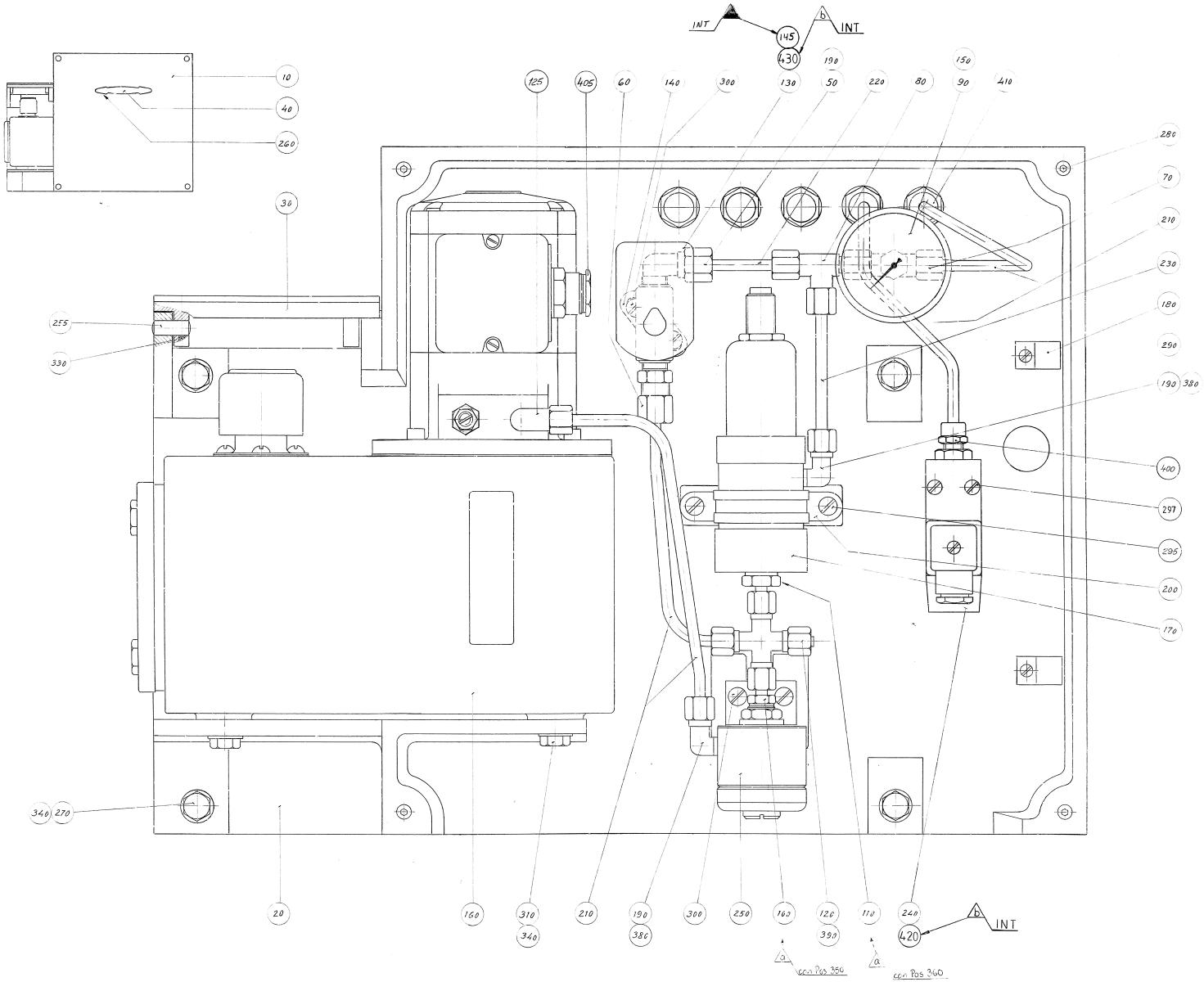
INT
INT
145
430
10
40
260
30
125
405
60
140
300
130
50
220
80
90
410
150
190
280
70
210
230
180
290
190
380
400
297
295
200
170
255
330
340
270
20
160
310
340
210
190
386
300
250
160
120
390
110
240
420
INT
a
a
cfr Pos 350
cfr Pos 360

Pos	Part No	SP	UN	Qty	Description	Page No
RELAY						
130	B90042-0128	A		1	SOLENOID VALVE ASCO 220V 50HZ	
	90042-0423	*-*		*1*	*COIL*	
405	352100-0107	-		1	CABLE GLANR.18,6-12	
TPMC						
130	B90042-0150	-		1	SOLENOID VALVE	
	90042-0446	*-*		*1*	*COIL ASCO 400-325-242*	
405	352136-0127	-		1	GLAND FITTING PR 18,6	
Common Parts						
010	230179-0000	-		1	FRONT GUARD	
020	252665-0000	-		1	CANTILEVER	
030	230180-0000	-		1	HATCH	
040	7309-0000	-		1	HANDLE	
050	90030-0004	-		1	ELBOW CONN., 6-R1/4, EXT.THREAD	
060	90030-0126	-		1	STRAIGHT CONN., 6-R1/4,EXT. THREAD	
070	90030-0127	-		1	CONN. T-PIPE ADJ. ,EVT,INT.T-6	
080	90030-0128	-		1	ADJ. L-PIPE CONNECTION EVL, INT.T-6	
090	90030-0129	-		1	NIPPLE, GIG-LR (INV R 1/8UTV. M12X1,5)	
100	90030-0131	-		1	PIPE SOCKET RS 6-L/1/8NPT	
110	90030-0130	-		1	PIPE SOCKET RS 6-L/1/4NPT	
120	90030-0132	-		1	ACCESSORIES, PLUG PL-6	
125	90030-0146	-		1	ADJUSTABLE ELBOW CONNECTION,EXT 6-G1/8	
140	90042-0350	-		1	BRACKET ASCO 90-862-1	
145	90042-0564	-		1	INDICATOR 19145 FESTO	
150	90043-0015	A		1	PRESSURE GAUGE, 2041 D=63 MM	
160	B90048-0007	A		1	LUBR. UNIT, 30220, 380/220V 50HZ	
	90048-0424	*C*		*1*	*BRACKET*	
	90048-0425	*C*		*1*	*ADJUSTING SCREW*	
	90048-0426	*C*		*1*	*SPRING*	
	90048-0427	*C*		*1*	*STEEL BALL*	
	90048-0441	*C*		*1*	*REPAIR KIT*	
	90048-0445	*C*		*1*	*FILLING NOZZLE*	
	90048-0423	*C*		*1*	*VALVE SEAT*	
	90048-0338	*C*		*1*	*GASKET*	
	90048-0417	*C*		*1*	*LEVEL GLASS*	
	90048-0418	*C*		*1*	*MOTOR*	
	90048-0419	*C*		*1*	*PUMP*	
	90048-0420	*B*		*1*	*FILTER*	
	90048-0421	*B*		*1*	*GASKET*	
170	B90048-0016	A		1	ACKUMULATOR FOR LUBR. SYST. 8 BARS	
	90048-0447	*-*		*1*	*SPARE PARTS KIT*	
180	90074-0002	-		2	CABLE CLIPS, D=11 MM	
190	90157-0021	-	KG	1	LOCKING FLUID	
200	90165-0040	-		1	CLIP	
210	90166-0108	-	M	3	TUBE 6 MM PA,TRANSP.	
220	90266-0006	-	MM	1	TUBE	
230	90266-0006	-	MM	1	TUBE	
240	90274-0056	A		1	PRESSURE SWITCH, 100 - 1200 KPA	
250	B90415-0004	A		1	FILTER, SU-0,5 X 25, NO. 19850 (25æ)	
	90415-0302	*B*		*1*	*FILTERINSERT FOR -4*	
	90415-0329	*B*		*1*	*GASKET B 6814 FOR -4*	
255	311103-0401	-		2	PARALLELL PIN, M6, 8X20 MM	
260	312105-0462	-		2	SCREW M6S ISO 4014 M8X55 A480	
270	312105-0469	-		4	SCREW M6S ISO 4014 M8X90 A480	
280	312115-0327	-		4	SCREW ISO4762 M5X12 A4	
290	312125-0285	-		4	SCREW SLOT.PAN HD. MCS 4X6 A480	
295	312125-0325	-		2	SCREW SLOT.PAN HD. MCS 5X10 A480	
297	312125-0339	-		2	SCREW PAN HEAD MCS M5X40 SS	
300	312125-0364	-		4	SCREW SLOT.PAN HD. MCS 6X10 A480	
310	312204-0154	-		4	SCREW U6S5/16X25FZB	
330	312318-0284	-		2	SCREW ISO4029 M4X5 A4	
340	315115-0165	-		8	WASHER PLAIN, TBRB 8,4/16 H=3	
380	342731-0102	-		2	CONN. ELBOW WE 6-LRFZB	
390	342754-0102	-		1	CONN. CROSS K6-LFZB	
400	342921-0114	-		1	STRAIGHT COUPLING,EXT.THREADED 6/4-G1/4"	
410	352101-0103	-		5	LEAD-IN, PR18,6/PG11, E-1457518	
420	352103-0101	-		1	CABLE GLAND, ST 9, PR15,2/PG9	
430	352103-0105	-		1	CABLE GLAND, STR 11, PR 18,6/PG11	

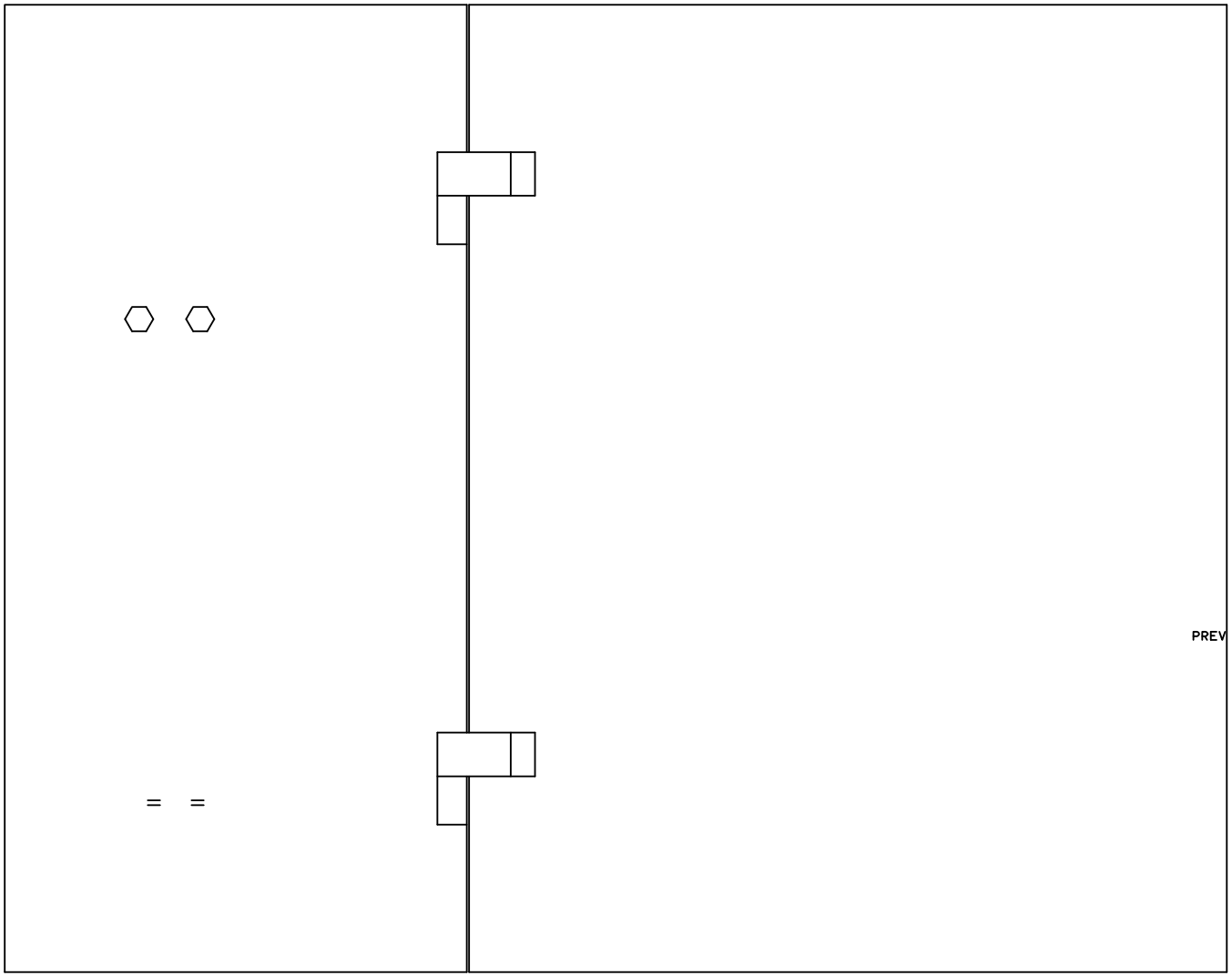

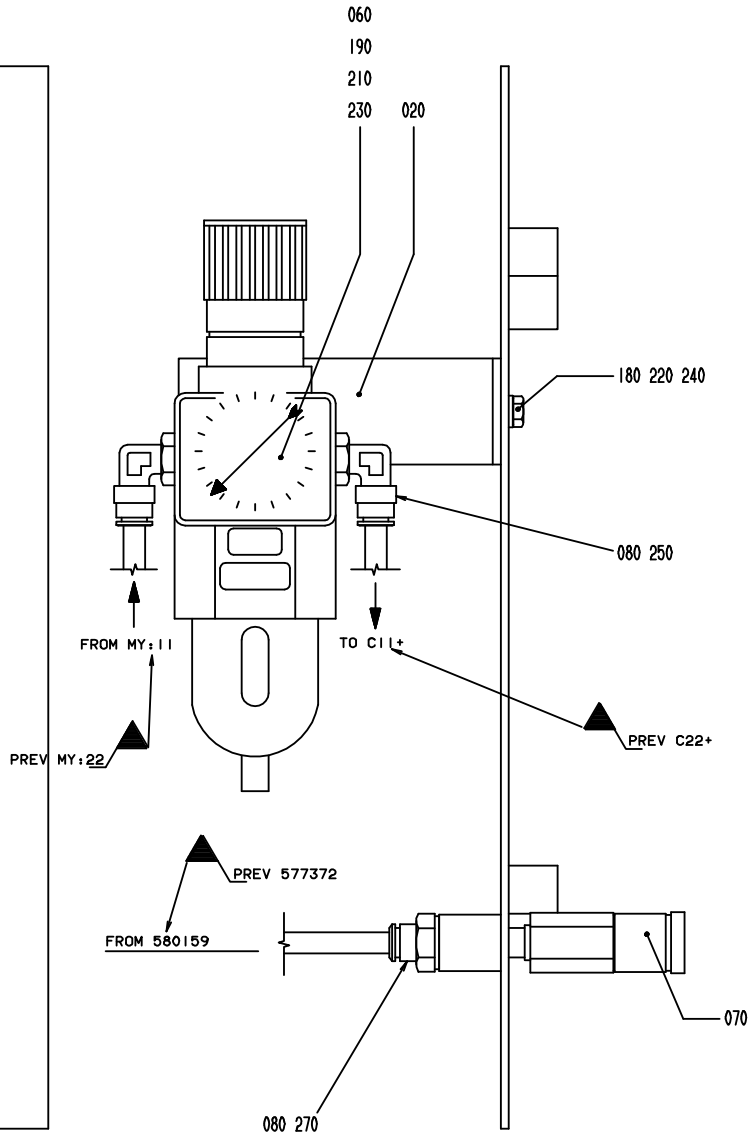
060
190
210
230
020
180 220 240
080 250
FROM MY:11
TO C11+
PREV MY:22
PREV C22+
PREV 577372
FROM 580159
070
080 270

ECM: 116615 - 20021219
Group number: 577372-0200
Assembly Drawing: 577372-1_1_AB

Issue: 20030206

Pos	Part No	SP	UN	Qty	Description	Page No
Common Parts						
010	579450-0000	-		1	ASSEMBLY PLATE	
020	560189-0000	-		1	MOUNTING SHEET	
060	B90113-0013	-		1	REGULATOR	
	90113-0359	*C*		*1*	*FILTER CARTRIDGE*	
	90234-0328	*C*		*1*	*COVER*	
	90113-0359	*C*		*1*	*FILTER CARTRIDGE*	
070	90163-0008	-		1	CONNECTION 1/4"	
080	90166-0013	-	M	6	TUBE 8 MM PA BLUE	
085	90166-0081	-	M	30	TUBE 6 MM PA BLUE	
120	90328-0012	-		2	SILENCER	
140	312105-0367	-		4	SCREW M6S M6X14 A280	
160	312105-0339	-		2	SCREW M6S ISO 4014 M5X40 A480	
170	312105-0340	-		2	SCREW M6S ISO 4014 M5X45 A480	
180	312105-0368	-		2	SCREW M6S M6X16 A280	
190	312111-0345	-		2	SCREW HEX.SOCK.HD.MC6S-TT 5X70 88 FZB	
210	312605-0314	-		4	HEXAGON NUT, M6M M5 A280	
220	312605-0316	-		6	HEXAGON NUT, M6M M6 A280	
230	315105-0146	-		14	WASHER ISO 7089-5-200 HV-A4	
240	315105-0153	-		10	WASHER ISO 7089-6-200 HV-A4	
250	90458-2958	-		2	ELBOW PIPE JOINT, EXT.THREAD, D=8MM-G1/4	
270	342722-0205	-		1	STRAIGHT COUPLING D=8-G1/4"	

Pos	Part No	SP	UN	Qty	Description	Page No

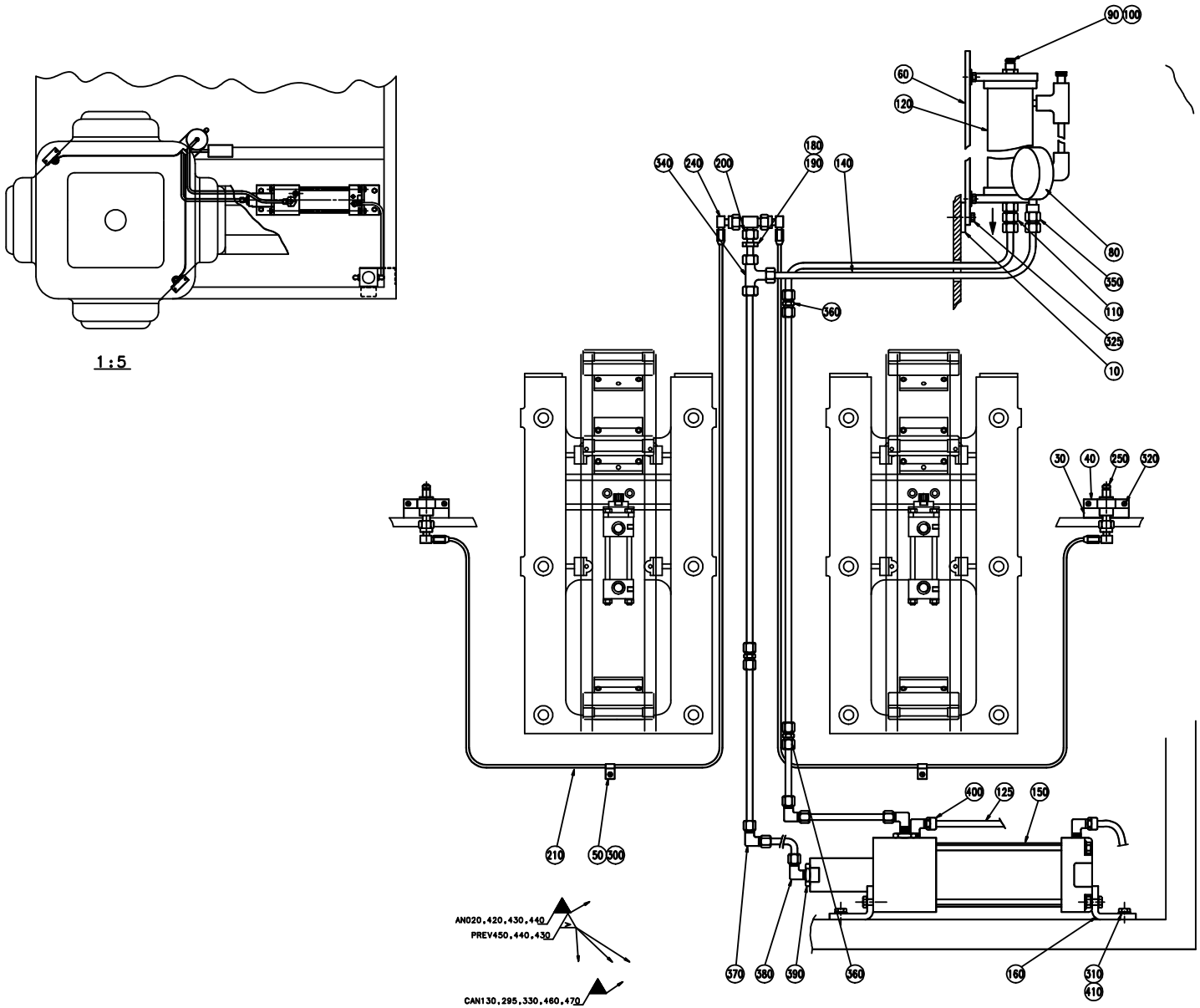
1:5
90
100
60
120
180
340
240
200
190
140
80
350
110
360
325
10
30
40
250
320
400
125
150
210
50
300
AN020,420,430,440
PREV450,440,430
CAN130,295,330,460,470
570
380
390
360
160
510
410

Pos	Part No	SP	UN	Qty	Description	Page No
Common Parts						
010	38116-0000	-		1	LUG	
030	259961-0000	-		2	HOLDER	
040	284116-0000	-		2	CAP	
050	3202-0000	-		6	CRAMP	
060	230252-0000	-		1	BRACKET	
080	90043-0008	-		1	PRESSURE GAUGE, 2040, D=80 MM, THROTTLED	
090	90163-0014	A		1	QUICK COUPLING, (M) LP-006-1-WR013	
100	90163-0028	-		1	QUICK COUPLING, LP 006-0-WR513	
110	90230-0007	-		1	NON-RETURN VALVE	
120	90239-0131	-		1	CONTAINER	
125	90166-0013	A	M	2	TUBE 8 MM PA BLUE	
140	90266-0013	-	M	4	TUBE 8X1	
150	B90450-0172	A		1	PRESSURE HEADER	
	90450-0658	*A*		*1*	*SEAL KIT 0493 532 08*	
160	90239-0458	-		2	BRACKET	
180	90030-0102	A		1	FERRULE, PIPE & CONNECTORS D8-LS	
190	90030-0125	-		1	PIPE SOCKET RS-8-LR	
200	90055-0058	A		1	HOSE COUPLING	
210	90148-0010	A	MM	4300	HOSE	
240	90055-0057	A		4	HOSE COUPLING	
250	90163-0044	-		2	QUICK COUPLING, (M) MD-006-2-WRD13	
300	312125-0287	-		6	SCREW PAN HEAD MCS M4X8 SS	
310	312105-0493	-		4	SCREW M6S ISO 4017 M10X25 A480	
320	312115-0327	-		8	SCREW ISO4762 M5X12 A4	
325	312115-0451	-		2	SCREW ISO4762 M8X20 A4	
340	342747-0103	-		1	CONN. T-PIPE T-8	
350	342790-0203	-		1	CONN. PRESS. GAUGE MAV8-S/R3/8FZB	
360	342727-0103	-		3	CONN. PIPE G-8-LFZB	
370	342737-0103	-		2	CONN. ELBOW W 8-LFZB	
380	90030-0071	-		2	CONN. ELBOW WA 8-R1/4	
390	342206-0107	-		2	BUSHING, TAPERED, INT/EXT. THRÿNO. R211	
400	342930-0123	-		2	ELBOW 90 COUPL.,EXT.THREAD 8/6-R3/8"	
410	315402-0173	-		4	LOCK WASHER FBB 10,2	

Pos	Part No	SP	UN	Qty	Description	Page No

Machine Type | Group Description | Used-In | Group Number | Page No

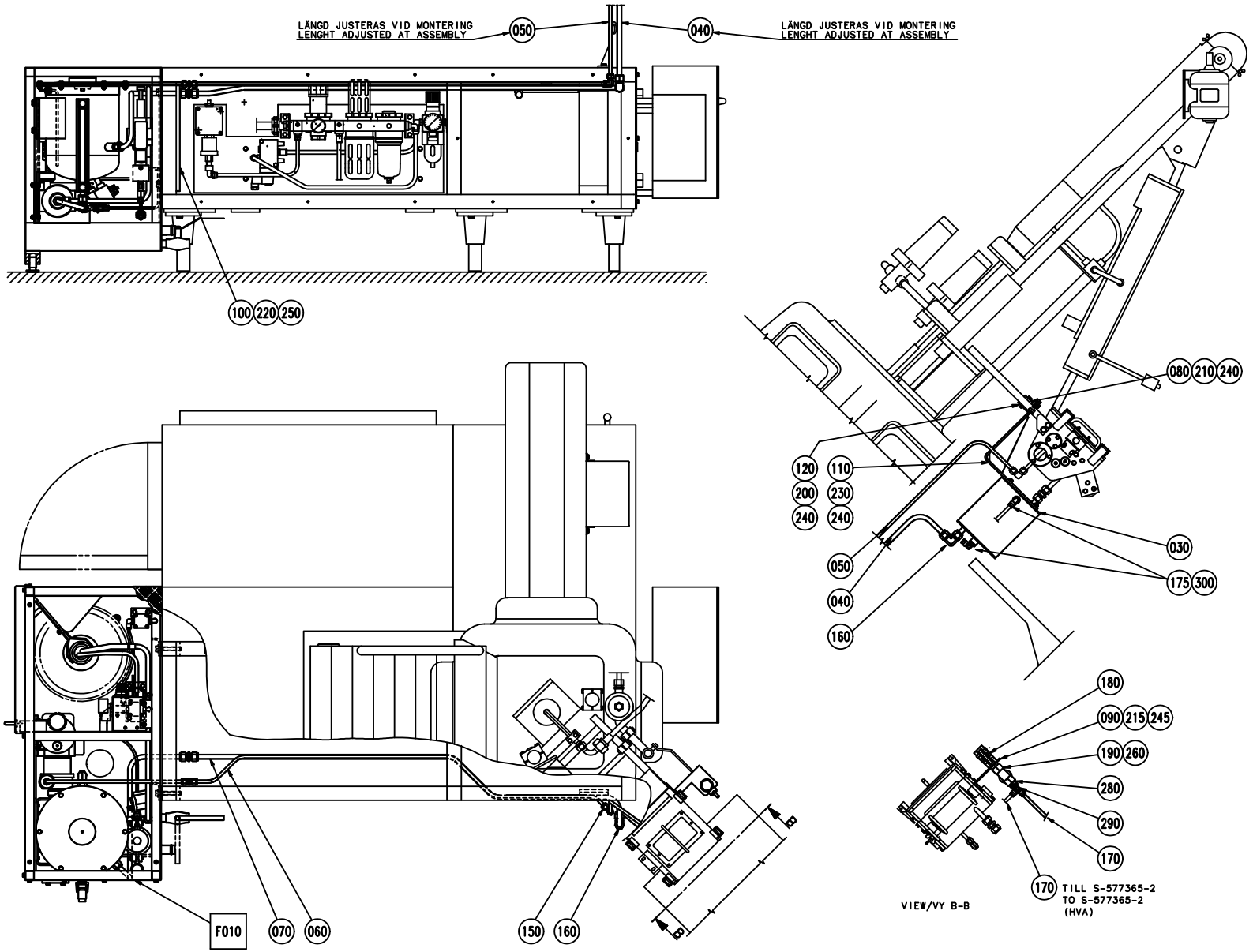
LÄNGD JUSTERAS VID MONTERING
LENGHT ADJUSTED AT ASSEMBLY
050
040
LÄNGD JUSTERAS VID MONTERING
LENGHT ADJUSTED AT ASSEMBLY
100
220
250
080
210
240
120
110
200
230
240
240
030
050
175
300
040
160
180
090
215
245
190
260
280
290
170
170
TILL S-577365-2
TO S-577365-2
(HVA)
VIEW/VY B-B
F010
070
060
150
160
B
B

ECM: 116616 - 20021219
Group number: 578069-0100
Assembly Drawing: 578069-1_1_AA

Issue: 20030206

Pos	Part No	SP	UN	Qty	Description	Page No
Common Parts						
030	578228-0000	-		1	COOLER	
040	578232-0000	-		1	PEROXIDE PIPE	
050	578233-0000	-		1	PEROXIDE PIPE	
060	578074-0000	-		1	PEROXIDE PIPE	
070	578075-0000	-		1	PEROXIDE PIPE	
080	578231-0000	-		1	CANTILEVER	
090	581610-0000	-		1	HOLDER	
100	578227-0000	-		2	FASTENING IRON	
110	578230-0000	-		1	ANGLE BRACKET	
120	578229-0000	-		1	FASTENING IRON	
150	90030-0279	-		1	CONN. ELBOW, 8	
160	90030-0280	-		2	CONN. ELBOW, 12	
170	90166-0118	-	M	5	TUBE 8 MM PA BLACK	
175	90166-0119	-	M	10	HOSE PUR 4/6 BLACK	
180	90187-0029	A		1	BALL VALVE G1/2, NPBR	
190	90415-0019	A		1	FILTER / ART.NO. HH-M15-RG	
200	312105-0366	-		2	SCREW M6S M6X12 A280	
210	312105-0376	-		2	SCREW M6S ISO 4014 M6X35 A480	
215	312105-0449	-		2	SCREW M6S ISO 4017 M8X16 A480	
220	312105-0505	-		4	SCREW M6S ISO 4014 M10X70 A480	
230	312605-0316	-		2	HEXAGON NUT, M6M M6 A280	
240	315105-0153	-		8	WASHER ISO 7089-6-200 HV-A4	
245	315105-0165	-		2	WASHER ISO 7089-8-200 HV-A4	
250	315105-0173	-		4	WASHER ISO 7089-10-200 HV-A4	
260	342700-0113	-		1	NIPPLES,HEXAGON,EXT.G-THREAD G1/2"-G1/2"	
280	342701-0205	-		1	BUSHING,INT./EXT.G-THREAD G1/2"-G1/4"	
290	342722-0205	-		1	STRAIGHT COUPLING D=8-G1/4"	
300	90458-2957	-		2	ELBOW PIPE JOINT, EXT.THREAD, D=6MM-G1/4	
F010	A563435-0100	-		1	PEROXIDE UNIT	**247**

Pos	Part No	SP	UN	Qty	Description	Page No

Machine Type	Group Description	Used-In	Group Number	Page No

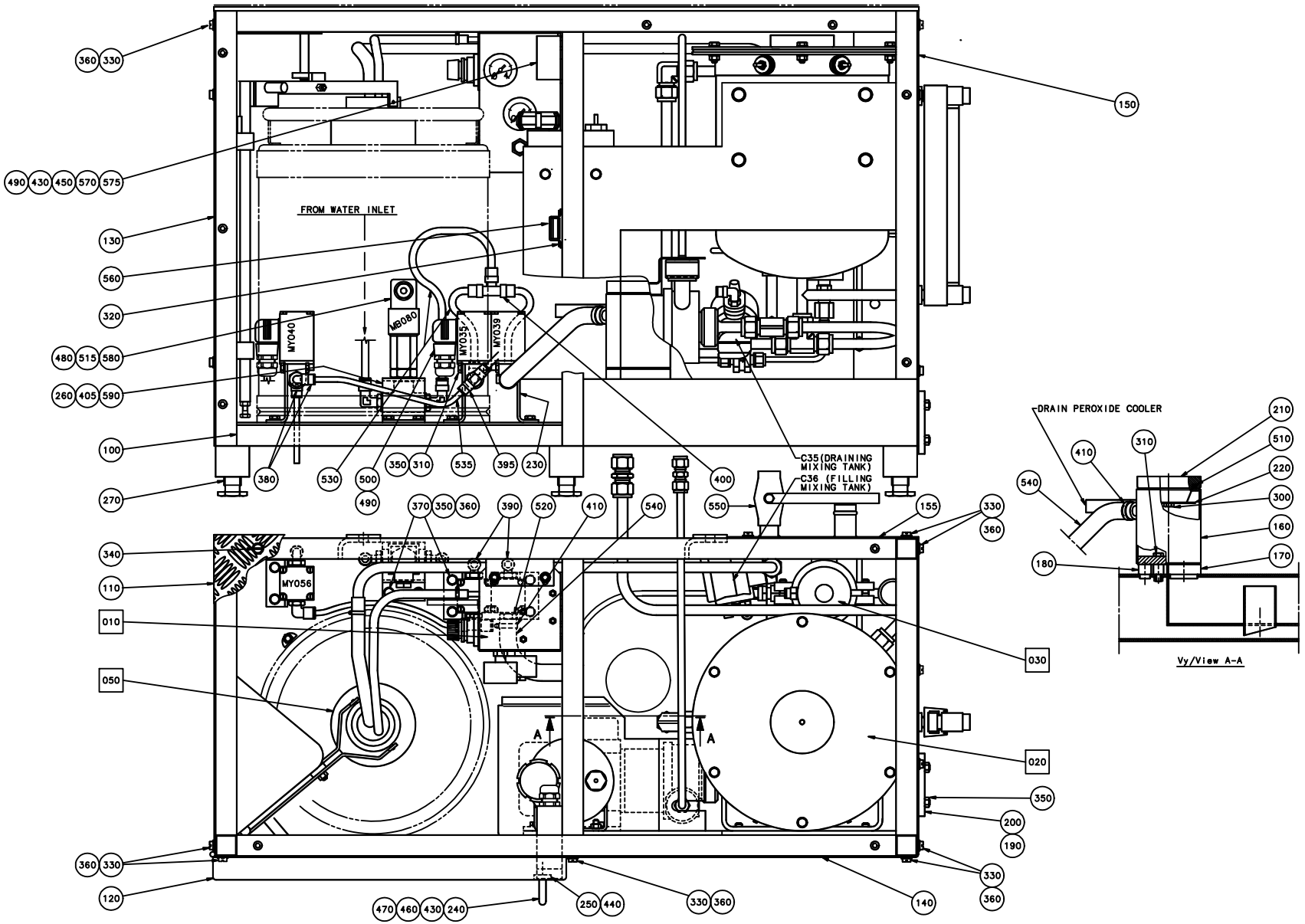
FROM WATER INLET
MB080
MY040
MY035
MY039
MY056
C35(DRAINING MIXING TANK)
C36 (FILLING MIXING TANK)
DRAIN PEROXIDE COOLER
Vy/View A-A
A
360 330
490 430 450 570 575
130
560
320
480 515 580
260 405 590
100
270
380
530
500
490
350 310
535
395
230
400
370 350 360
390
520
410
540
550
155
330 360
340
110
010
050
030
020
350
200
190
330 360
140
360 330
120
470 460 430 240
250 440
330 360
150
210
510
220
300
160
170
180
410
310
540

ECM: 124733 - 20030120
Group number: 563435-0100
Assembly Drawing: 563435-2_1_AA

Issue: 20030206

Pos	Part No	SP	UN	Qty	Description	Page No
TCA/25						
100	578070-0000	-		1	FRAME	
100	578249-0000	-		1	PLATFORM	
150	578076-0000	-		1	COVERING PLATE	
155	578081-0000	-		1	COVERING PLATE	
270	578254-0000	-		3	SETTING SCREW	
330	312125-0368	-		22	SCREW PAN HEAD MCS M6X16 SS	
570	90044-0201	-		1	KEY SAF.SW. AZ16-03 ZVR K-2254	
575	90044-0310	-		1	KEY FOR SAFETY SWITCH, AZ 15/16 B1	
Common Parts						
120	569608-0000	-		1	DOOR	
130	563432-0000	-		1	COVERING PLATE	
140	563442-0000	-		1	COVERING PLATE	
160	752810-0000	-		1	METERING DEVICE	
170	527905-0000	-		1	GASKET	
180	527906-0000	-		1	GASKET	
190	532205-0000	-		1	LID	
200	532206-0000	-		1	GASKET	
210	566147-0000	-		1	SAFETY VALVE	
220	568116-0000	-		1	CUP SPRING	
230	570817-0000	-		3	HOLDER	
240	562884-0000	-		1	HANDLE	
250	570842-0000	-		1	FASTENING IRON	
260	578225-0000	-		1	BRACKET	
300	312105-0368	-		1	SCREW M6S M6X16 A280	
310	312105-0374	-		7	SCREW M6S ISO 4014 M6X30 A480	
320	312125-0220	-		2	SCREW SLOT.PAN HD. MCS 3X6 A480	
340	312165-0374	-		4	SCREW SLOT.RAIS.COUNT.HD.MKFS 6X30 SS	
350	312605-0316	-		18	HEXAGON NUT, M6M M6 A280	
360	315105-0153	-		29	WASHER ISO 7089-6-200 HV-A4	
370	312105-0367	-		8	SCREW M6S M6X14 A280	
380	90458-2957	-		2	ELBOW PIPE JOINT, EXT.THREAD, D=6MM-G1/4	
390	90458-0958	-		2	FLARE TUBE END NUT 12MM, 8BTXSS	
395	342742-0103	-		1	T-COUPLING,ADJUST,F.PLASTIC TUBE 6-G1/4"	
400	342748-0103	-		1	T-CONNECTION 8MM	
405	342732-0105	-		2	ELBOW PIPE D8-R3/8"	
410	342991-0103	-		2	HOSE CLIP,WORM DRIVE TYPE (19)-23	
430	315105-0146	-		5	WASHER ISO 7089-5-200 HV-A4	
440	312125-0327	-		1	SCREW PAN HEAD MCS M5X12 SS	
450	312125-0329	-		2	SCREW PAN HEAD MCS M5X16 SS	
460	312145-0325	-		1	SCREW COUNTERS.SLOT.HD. MFS 5X10 SS	
470	312145-0329	-		2	SCREW COUNTERS.SLOT.HD. MFS 5X16 SS	
480	315233-0111	-		2	WASHER PL.RND.NYL.17/22,H=1	
490	352103-0105	-		4	CABLE GLAND, STR 11, PR 18,6/PG11	
500	90042-0107	-		3	SOL.VALVE BURKERT 24VDC	
510	90143-0020	-	MM	200	STRIP	
515	90110-0095	-		1	CONNECTOR 3 POLE + EARTH	
520	90163-0052	-		1	HOSE NIPPLE, EXT.THR. 1/4-12 MM	
530	90166-0118	-	MM	4000	TUBE 8 MM PA BLACK	
535	90166-0119	-	MM	500	HOSE PUR 4/6 BLACK	
540	90166-0121	-	MM	200	HOSE	
550	90187-0059	-		1	BALL VALVE FOR HYDR.PER. G1/2 3MM HOLE	
560	90237-0046	-		1	MAGNETIC LOCK, 46X33X15 MM	
580	90274-0042	-		1	PRESSURE GUARD, 200 KPA	
590	90330-0067	-		1	T-PIPE, INT. THREAD, R-221R3/8	
F010	A563434-0100	-		1	VALVE PANEL	**249, 251**
F020	A563450-0100	-		1	TANK	**253, 255**
F030	A566143-0100	-		1	METERING DEVICE	**257**
F040	A566149-0100	-		1	SPRAY SYSTEM	**259**
F050	A569616-0100	-		1	CONNECTION	**263**

Machine Type | Group Description | Used-In | Group Number | Page No

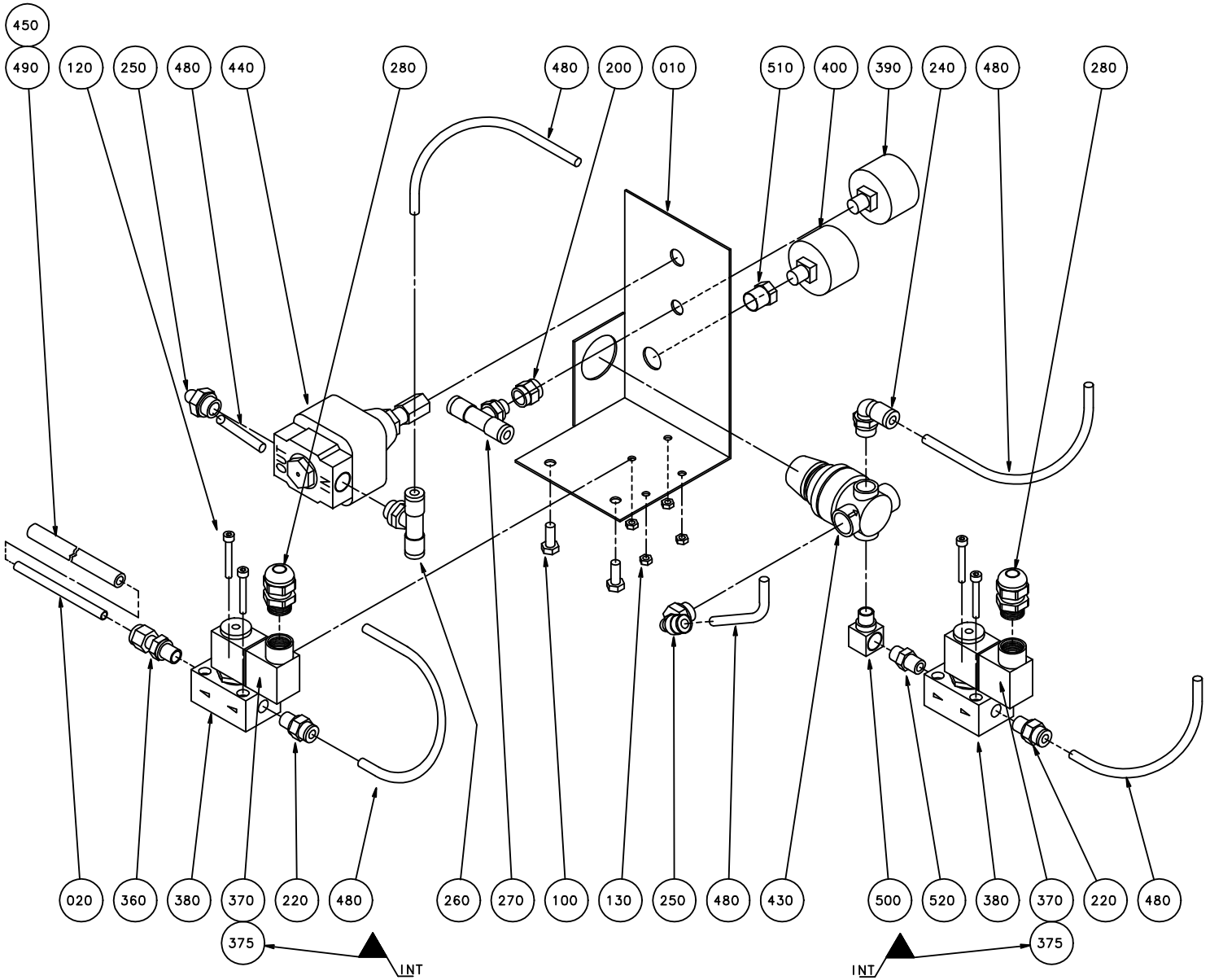
450
490
120
250
480
440
280
480
200
010
510
400
390
240
480
280
020
360
380
370
220
480
375
INT
260
270
100
130
250
480
430
500
520
380
370
220
480
375
INT

ECM: 116618 - 20021219
Group number: 563434-0100
Assembly Drawing: 563434-1_1_AA

Issue: 20030206

Pos	Part No	SP	UN	Qty	Description	Page No
Common Parts						
010	563431-0000	-		1	HOLDER	
020	569617-0000	-		1	PIPE	
100	312105-0366	-		2	SCREW M6S M6X12 A280	
120	312115-0299	-		4	SCREW ISO4762 M4X30 A4	
130	312605-0312	-		4	HEXAGON NUT, M6M M4 A280	
200	342707-0109	-		1	SLEEVE, INT. THREAD, NO. 2543-1/8	
210	342715-0102	-		1	BLIND PLUG 6 MM	
220	342722-0202	-		4	PIPE COUPLING 1/8" D=6MM	
240	90458-2956	-		1	ELBOW PIPE JOINT, EXT.THREAD, D=6MM-G1/8	
250	90458-2957	-		2	ELBOW PIPE JOINT, EXT.THREAD, D=6MM-G1/4	
260	342742-0103	-		1	T-COUPLING,ADJUST,F.PLASTIC TUBE 6-G1/4"	
270	342742-0102	-		1	T-COUPLING,ADJUST,F.PLASTIC TUBE 6-G1/8"	
280	352103-0101	-		2	CABLE GLAND, ST 9, PR15,2/PG9	
360	90030-0233	-		1	CONN. STR., 6-G1/8, EXT. THREAD	
370	90042-0237	-		2	SOLENOID ACTUATOR FESTO	
375	90042-0563	-		2	INDICATOR FESTO 19143 MF-LD-12...24	
380	90235-0788	-		2	BASIC VALVE	
390	90043-0021	-		1	PRESSURE GAUGE WIEGAND 0-1 BAR 1/8"	
400	90043-0069	-		1	PRESSURE GAUGE 0-4BAR WIEGAND 2040	
430	90113-0021	-		1	AIR PRESSURE REGULATOR	
440	90113-0056	-		1	REGULATOR	
450	90132-0021	-		2	HOSE CLIP 6-10MM	
460	90144-0073	-		1	TREBOFLON-TAPE W=13MM	
480	90166-0081	-	MM	1100	TUBE 6 MM PA BLUE	
490	90166-0101	-	MM	300	HOSE, SILICONE, 60 SHORE, 6/10 MM	
500	90224-0031	-		1	CONN. ELBOW, ART.NO 3814	
510	90330-0025	-		1	BUSHING, INT/EXT. THR. R1/4-RP1/8	
520	90330-0032	-		1	NIPPLES, EXT. THREAD. ISO 7/1 R1/8-R1/8	

Pos	Part No	SP	UN	Qty	Description	Page No

Machine Type | Group Description | Used-In | Group Number | Page No

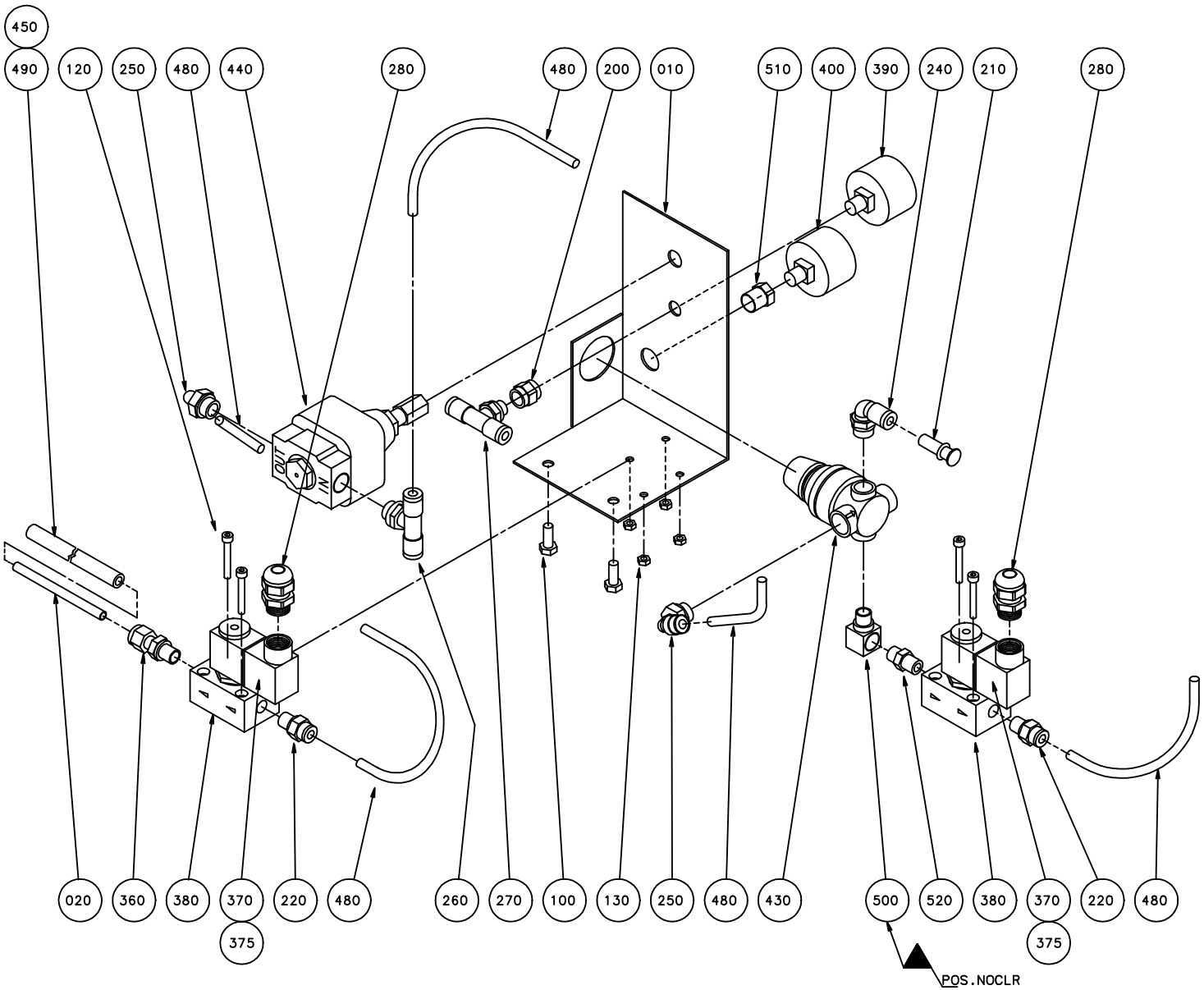
450
490
120
250
480
440
280
480
200
010
510
400
390
240
210
280
020
360
380
370
375
220
480
260
270
100
130
250
480
430
500
520
380
370
375
220
480
POS.NOCLR

ECM: 116618 - 20021219
Group number: 563434-0100
Assembly Drawing: 563434-2_1_AA

Issue: 20030206

Pos	Part No	SP	UN	Qty	Description	Page No
Common Parts						
010	563431-0000	-		1	HOLDER	
020	569617-0000	-		1	PIPE	
100	312105-0366	-		2	SCREW M6S M6X12 A280	
120	312115-0299	-		4	SCREW ISO4762 M4X30 A4	
130	312605-0312	-		4	HEXAGON NUT, M6M M4 A280	
200	342707-0109	-		1	SLEEVE, INT. THREAD, NO. 2543-1/8	
210	342715-0102	-		1	BLIND PLUG 6 MM	
220	342722-0202	-		4	PIPE COUPLING 1/8" D=6MM	
240	90458-2956	-		1	ELBOW PIPE JOINT, EXT.THREAD, D=6MM-G1/8	
250	90458-2957	-		2	ELBOW PIPE JOINT, EXT.THREAD, D=6MM-G1/4	
260	342742-0103	-		1	T-COUPLING,ADJUST,F.PLASTIC TUBE 6-G1/4"	
270	342742-0102	-		1	T-COUPLING,ADJUST,F.PLASTIC TUBE 6-G1/8"	
280	352103-0101	-		2	CABLE GLAND, ST 9, PR15,2/PG9	
360	90030-0233	-		1	CONN. STR., 6-G1/8, EXT. THREAD	
370	90042-0237	-		2	SOLENOID ACTUATOR FESTO	
375	90042-0563	-		2	INDICATOR FESTO 19143 MF-LD-12...24	
380	90235-0788	-		2	BASIC VALVE	
390	90043-0021	-		1	PRESSURE GAUGE WIEGAND 0-1 BAR 1/8"	
400	90043-0069	-		1	PRESSURE GAUGE 0-4BAR WIEGAND 2040	
430	90113-0021	-		1	AIR PRESSURE REGULATOR	
440	90113-0056	-		1	REGULATOR	
450	90132-0021	-		2	HOSE CLIP 6-10MM	
460	90144-0073	-		1	TREBOFLON-TAPE W=13MM	
480	90166-0081	-	MM	1100	TUBE 6 MM PA BLUE	
490	90166-0101	-	MM	300	HOSE, SILICONE, 60 SHORE, 6/10 MM	
500	90224-0031	-		1	CONN. ELBOW, ART.NO 3814	
510	90330-0025	-		1	BUSHING, INT/EXT. THR. R1/4-RP1/8	
520	90330-0032	-		1	NIPPLES, EXT. THREAD. ISO 7/1 R1/8-R1/8	

Pos	Part No	SP	UN	Qty	Description	Page No

Machine Type | Group Description | Used-In | Group Number | Page No

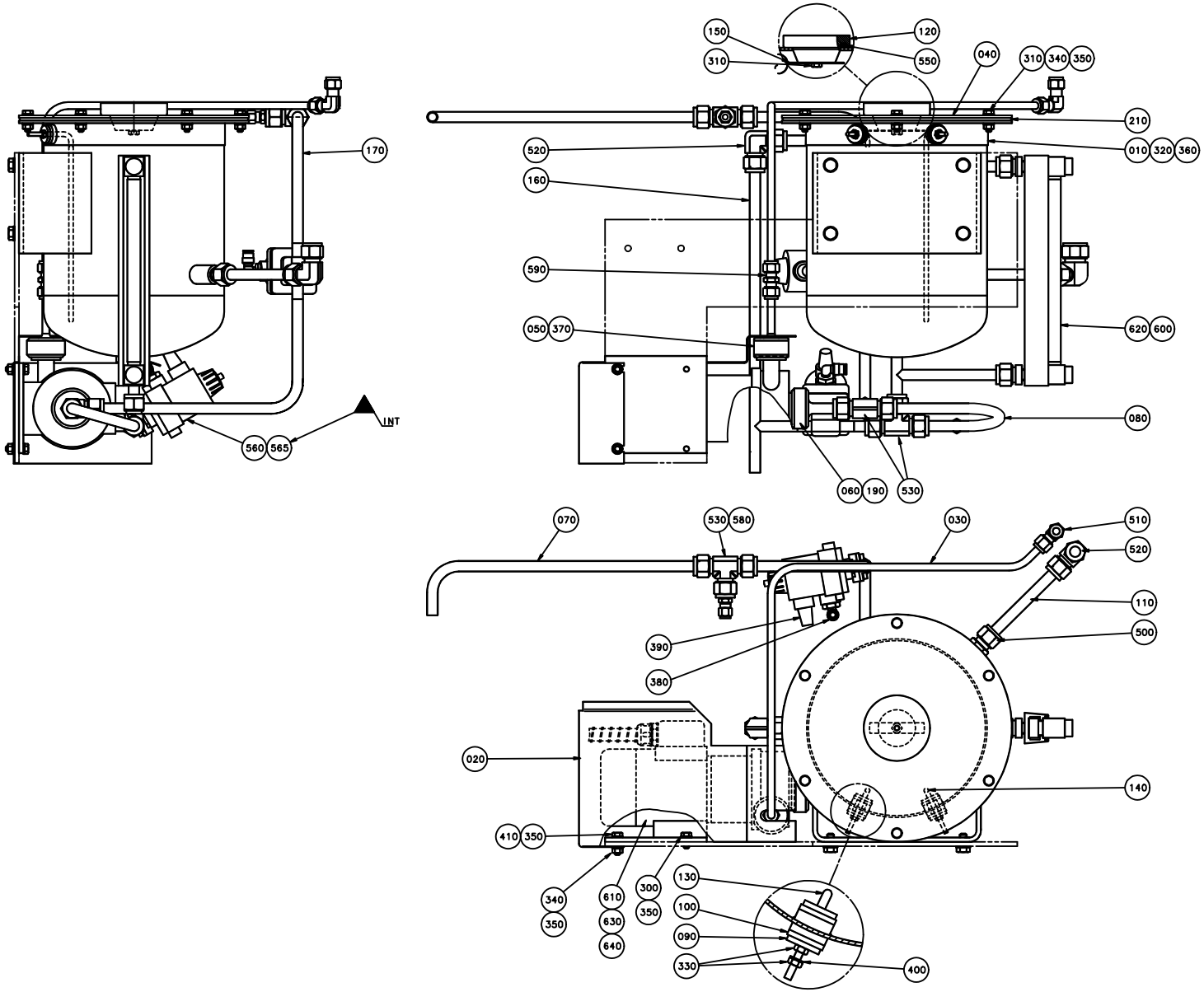
170
560
565
INT
150
120
310
550
040
310
340
350
210
520
010
320
360
160
590
050
370
620
600
080
060
190
530
070
530
580
030
510
520
110
500
390
380
020
140
410
350
340
350
610
630
640
300
350
130
100
090
330
400

ECM: 116619 - 20021219
Group number: 563450-0100
Assembly Drawing: 563450-1_1_AA

Issue: 20030206

Pos	Part No	SP	UN	Qty	Description	Page No
TCA/25						
030	578072-0000	-		1	PEROXIDE PIPE	
110	578073-0000	-		1	PEROXIDE PIPE	
130	566148-0003	-		1	ELECTRODE	
160	578079-0000	-		1	DRAIN PIPE	
170	578080-0000	-		1	PEROXIDE PIPE	
380	90458-2956	-		2	ELBOW PIPE JOINT, EXT.THREAD, D=6MM-G1/8	
390	346800-0109	-		2	SILENCER FILTER R1/8"	
520	90030-0280	-		1	CONN. ELBOW, 12	
525	90030-0282	-		1	CONN. PIPE 12	
530	90030-0281	-		2	CONN. T-PIPE 12	
570	90187-0115	-		2	GUIDING ARBOR	
575	90187-0313	-		2	DIAPHRAGM	
590	90030-0477	-		2	CONN. PIPE 8	
Common Parts						
010	563443-0000	-		1	CONTAINER	
020	576148-0000	-		1	COVER PLATE	
040	563444-0000	-		1	LID	
050	563445-0000	-		1	ATTACHMENT	
060	563446-0000	-		1	ATTACHMENT	
080	568136-0000	-		1	PEROXIDE PIPE	
090	263311-0000	-		2	WASHER	
100	553114-0000	-		4	SEALING WASHER	
120	566147-0000	-		1	SAFETY VALVE	
140	566148-0002	-		1	ELECTRODE	
150	568116-0000	-		1	CUP SPRING	
190	12242-0001	-		1	GASKET 32X25X5,5	
210	570835-0000	-		1	GASKET	
300	312105-0367	-		2	SCREW M6S M6X14 A280	
310	312105-0368	-		7	SCREW M6S M6X16 A280	
320	312105-0449	-		4	SCREW M6S ISO 4017 M8X16 A480	
330	312605-0312	-		4	HEXAGON NUT, M6M M4 A280	
340	312605-0316	-		8	HEXAGON NUT, M6M M6 A280	
350	315105-0153	-		18	WASHER ISO 7089-6-200 HV-A4	
360	315105-0165	-		4	WASHER ISO 7089-8-200 HV-A4	
370	315204-0215	-		1	O-RING 19,2X3 MM	
400	315105-0136	-		2	WASHER ISO 7089-4-200 HV-A4	
410	312105-0371	-		2	SCREW M6S ISO 4017 M6X22 A480	
500	90030-0275	-		1	CONN. STR.12-3/8 NPT, EXT. TAPPERED	
550	90143-0020	-	MM	200	STRIP	
600	90030-0379	-		2	CONN. STR. 12-1/4 NPT, EXT. TAPPERED	
610	90321-0097	-		1	MAGNET PUMP	
620	567197-0000	-		1	FLOW METER	
630	90012-0063	-		1	CABLE GLAND PR 15,2	
640	90152-0033	-	MM	1000	SPIRAL CONDUIT FOR PR 15,2(PG 9)	

Machine Type Group Description Used-In Group Number Page No

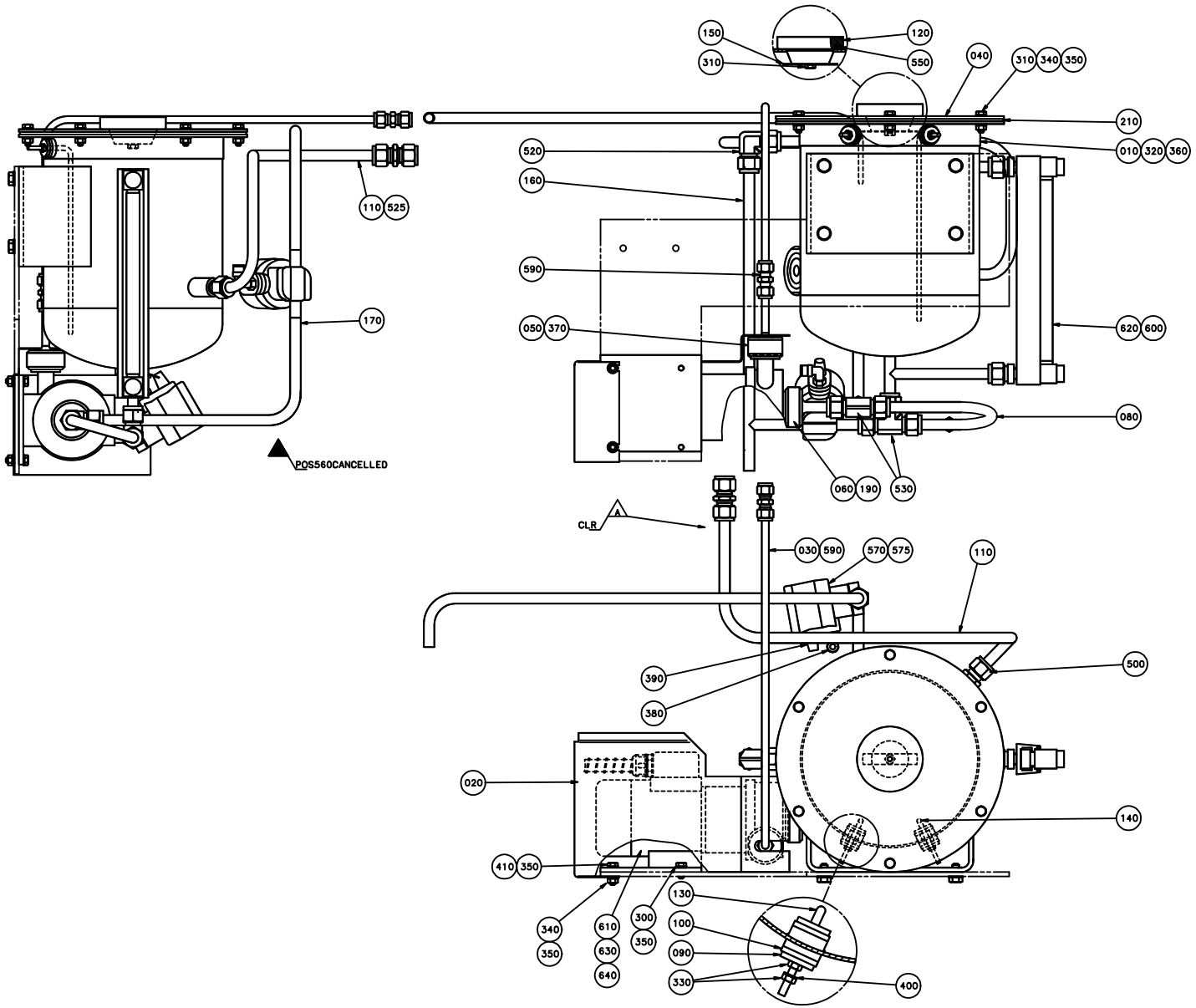
150
120
310
550
040
310
340
350
210
520
010
320
360
160
110
525
590
170
050
370
620
600
080
POS560CANCELLED
060
190
530
CLR
A
030
590
570
575
110
390
500
380
020
140
410
350
130
340
610
300
100
350
630
350
090
640
330
400

ECM: 116619 - 20021219
Group number: 563450-0100
Assembly Drawing: 563450-2_1_AA

Issue: 20030206

Pos	Part No	SP	UN	Qty	Description	Page No
TCA/25						
030	578072-0000	-		1	PEROXIDE PIPE	
110	578073-0000	-		1	PEROXIDE PIPE	
130	566148-0003	-		1	ELECTRODE	
160	578079-0000	-		1	DRAIN PIPE	
170	578080-0000	-		1	PEROXIDE PIPE	
380	90458-2956	-		2	ELBOW PIPE JOINT, EXT.THREAD, D=6MM-G1/8	
390	346800-0109	-		2	SILENCER FILTER R1/8"	
520	90030-0280	-		1	CONN. ELBOW, 12	
525	90030-0282	-		1	CONN. PIPE 12	
530	90030-0281	-		2	CONN. T-PIPE 12	
570	90187-0115	-		2	GUIDING ARBOR	
575	90187-0313	-		2	DIAPHRAGM	
590	90030-0477	-		2	CONN. PIPE 8	
Common Parts						
010	563443-0000	-		1	CONTAINER	
020	576148-0000	-		1	COVER PLATE	
040	563444-0000	-		1	LID	
050	563445-0000	-		1	ATTACHMENT	
060	563446-0000	-		1	ATTACHMENT	
080	568136-0000	-		1	PEROXIDE PIPE	
090	263311-0000	-		2	WASHER	
100	553114-0000	-		4	SEALING WASHER	
120	566147-0000	-		1	SAFETY VALVE	
140	566148-0002	-		1	ELECTRODE	
150	568116-0000	-		1	CUP SPRING	
190	12242-0001	-		1	GASKET 32X25X5,5	
210	570835-0000	-		1	GASKET	
300	312105-0367	-		2	SCREW M6S M6X14 A280	
310	312105-0368	-		7	SCREW M6S M6X16 A280	
320	312105-0449	-		4	SCREW M6S ISO 4017 M8X16 A480	
330	312605-0312	-		4	HEXAGON NUT, M6M M4 A280	
340	312605-0316	-		8	HEXAGON NUT, M6M M6 A280	
350	315105-0153	-		18	WASHER ISO 7089-6-200 HV-A4	
360	315105-0165	-		4	WASHER ISO 7089-8-200 HV-A4	
370	315204-0215	-		1	O-RING 19,2X3 MM	
400	315105-0136	-		2	WASHER ISO 7089-4-200 HV-A4	
410	312105-0371	-		2	SCREW M6S ISO 4017 M6X22 A480	
500	90030-0275	-		1	CONN. STR.12-3/8 NPT, EXT. TAPPERED	
550	90143-0020	-	MM	200	STRIP	
600	90030-0379	-		2	CONN. STR. 12-1/4 NPT, EXT. TAPPERED	
610	90321-0097	-		1	MAGNET PUMP	
620	567197-0000	-		1	FLOW METER	
630	90012-0063	-		1	CABLE GLAND PR 15,2	
640	90152-0033	-	MM	1000	SPIRAL CONDUIT FOR PR 15,2(PG 9)	

Machine Type | Group Description | Used-In | Group Number | Page No

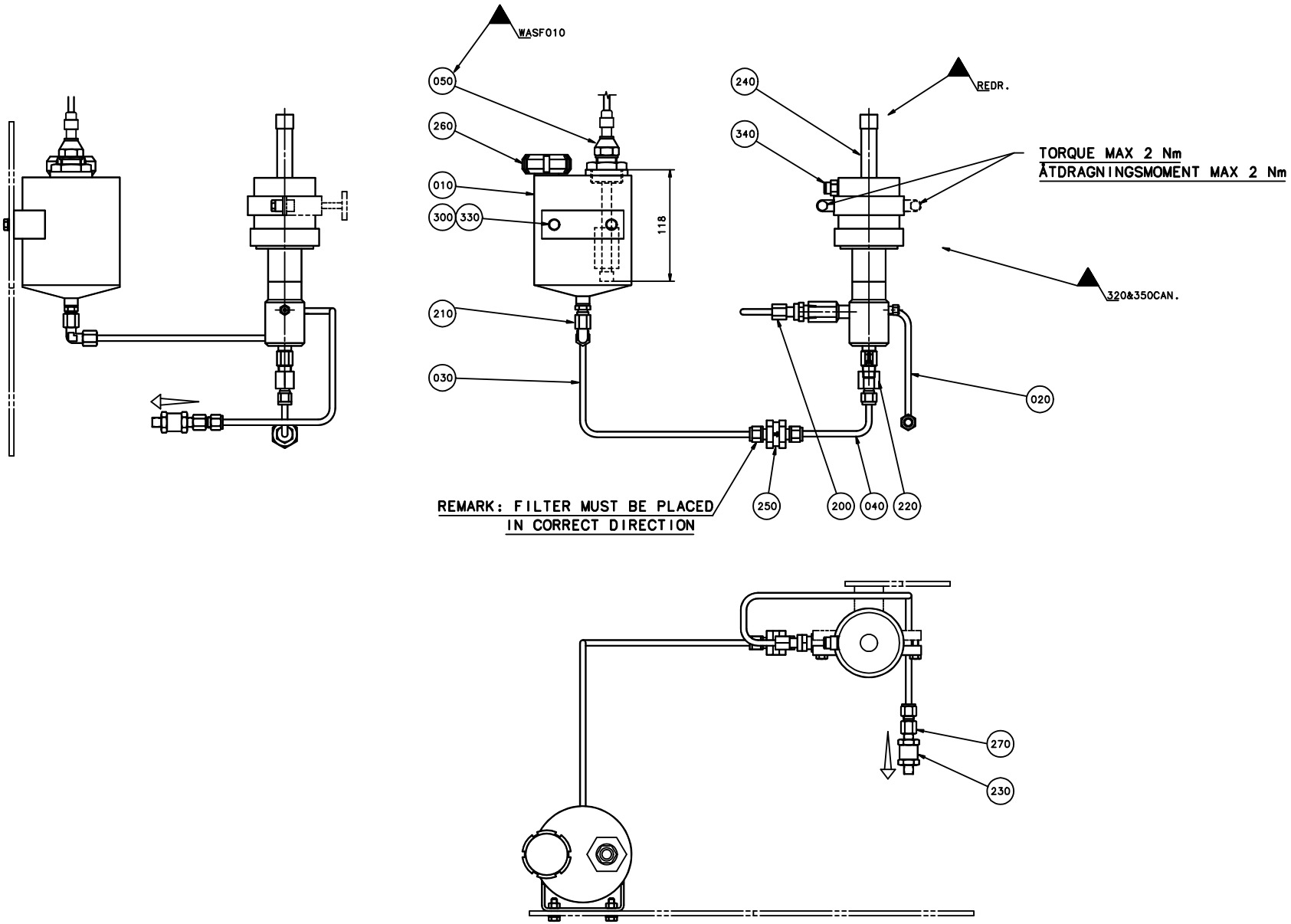
WASF010
050
260
010
300
330
118
210
030
240
340
REDR.
TORQUE MAX 2 Nm
ÅTDRAGNINGSMOMENT MAX 2 Nm
320&350CAN.
020
REMARK: FILTER MUST BE PLACED
IN CORRECT DIRECTION
250
200
040
220
270
230

ECM: 116620 - 20021219
Group number: 566143-0100
Assembly Drawing: 566143-1_1_AA

Issue: 20030206

Pos	Part No	SP	UN	Qty	Description	Page No
Common Parts						
010	1175118-0000	-		1	CONTAINER	
020	568135-0000	-		1	WETTING PIPE	
030	568137-0000	-		1	WETTING PIPE	
040	566146-0000	-		1	WETTING PIPE	
050	1175119-0000	-		1	FLOAT	
200	90030-0062	-		1	CONN. STR. GE 6-1/4-18 NPTF	
210	90030-0171	-		1	ADJUSTABLE ELBOW CONNECTION,EXT 6-G1/8	
220	90030-0479	-		1	CONN. STR., 6-1/4 NPT, INT. THREAD	
230	90230-0047	-		1	NON-RETURN VALVE 2M-C4L-1-SS	
240	90321-0098	-		1	METERING PUMP WILLIAMS	
250	90415-0017	-		1	FILTER	
260	90217-0026	-		1	NUT	
270	90030-0478	-		1	CONN. STR., 6-1/8 NPT, INT. THREAD	
300	312105-0368	-		2	SCREW M6S M6X16 A280	
330	315105-0153	-		2	WASHER ISO 7089-6-200 HV-A4	
340	342722-0202	-		1	PIPE COUPLING 1/8" D=6MM	

Pos	Part No	SP	UN	Qty	Description	Page No

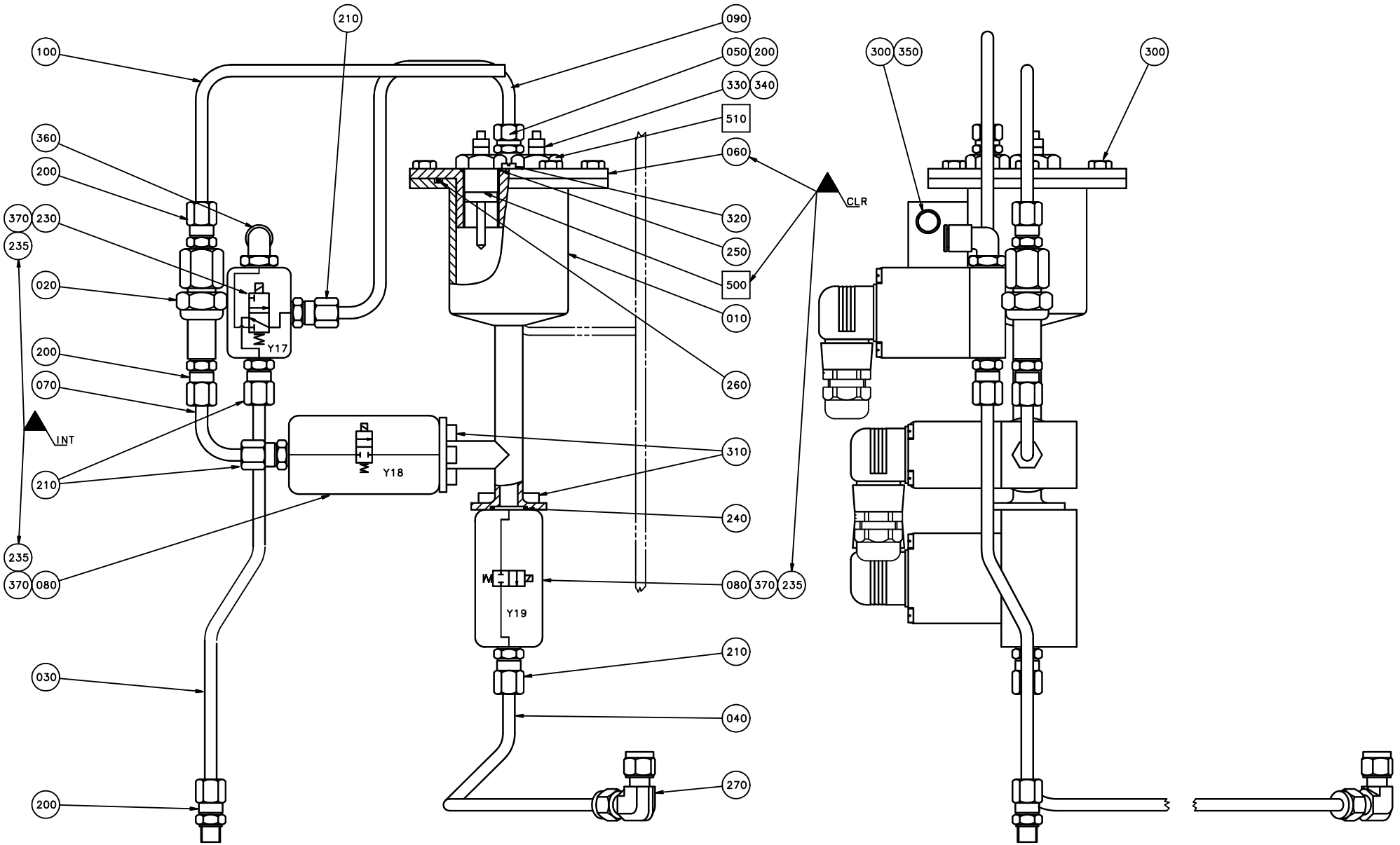
100
210
090
050
200
330
340
510
060
360
200
320
250
500
010
370
230
235
020
Y17
200
070
260
INT
310
Y18
210
240
235
370
080
080
370
235
Y19
210
030
040
270
200
300
350
300
CLR

ECM: 116859 - 20021219
Group number: 566149-0100
Assembly Drawing: 566149-1_1_AA

Issue: 20030206

Pos	Part No	SP	UN	Qty	Description	Page No
Common Parts						
010	752576-0000	-		1	CONTAINER	
020	B484196-0000	-		1	FILTER	
	484197-0000	*-*		*1*	*FILTER*	
030	568114-0000	-		1	DRAINING PIPE	
040	568115-0000	-		1	PEROXIDE PIPE	
050	450833-0000	-		1	FILTER	
060	563441-0000	-		1	LID	
070	456900-0000	-		1	PIPE	
080	B544906-0000	-		2	SOLENOID VALVE	
	90042-0465	*-*		*1*	*O-RING VITON 17,17X1,78*	
	90042-0464	*-*		*1*	*DIAPHRAGM VITON 1211321*	
090	563447-0000	-		1	PEROXIDE PIPE	
100	563449-0000	-		1	PEROXIDE PIPE	
200	90030-0233	-		4	CONN. STR., 6-G1/8, EXT. THREAD	
210	90030-0232	-		4	CONN. PIPE SS-6MO-1-4RP	
230	B90042-0171	-		1	SOLENOID VALVE BUERKERT	
	90042-0466	*C*		*1*	*DIAPHRAGM 330.95.2 VITON*	
235	90042-0564	-		3	INDICATOR 19145 FESTO	
240	315204-0211	-		2	O-RING 13,3X2,4 MM	
250	315204-0213	-		3	O-RING 15,2X2,4 MM	
260	315204-0305	-		1	O-RING 69,5X3 MM	
270	90030-0480	-		1	CONN. ELBOW, 6	
300	312105-0366	-		8	SCREW M6S M6X12 A280	
310	312115-0323	-		6	SCREW ISO4762 M5X8 A4	
320	312125-0285	-		1	SCREW SLOT.PAN HD. MCS 4X6 A480	
330	312605-0312	-		4	HEXAGON NUT, M6M M4 A280	
340	315105-0136	-		4	WASHER ISO 7089-4-200 HV-A4	
350	315115-0153	-		2	WASHER PLAIN, TBRB 6,4/12 H=3	
360	90458-2957	-		1	ELBOW PIPE JOINT, EXT.THREAD, D=6MM-G1/4	
370	352103-0105	-		3	CABLE GLAND, STR 11, PR 18,6/PG11	
F500	A567189-0100	-		1	ELECTRODE	**261**
F510	A567189-0100	-		1	ELECTRODE	**261**

Pos	Part No	SP	UN	Qty	Description	Page No

Machine Type | Group Description | Used-In | Group Number | Page No

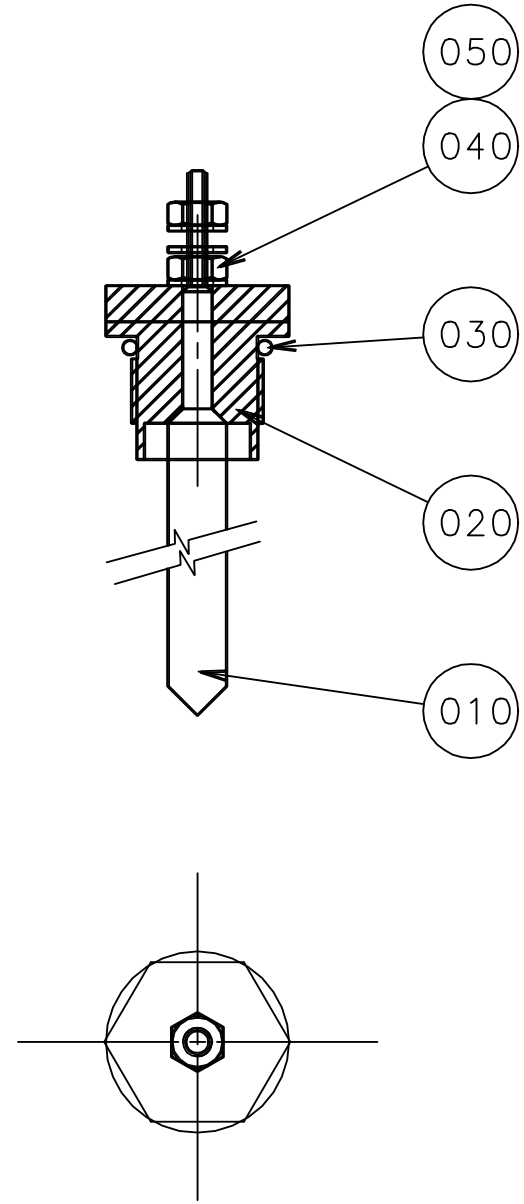
050
040
030
020
010

ECM: - -
Group number: 567189-0100
Assembly Drawing: 567189-1_1_AA

Issue: 20030206

Pos	Part No	SP	UN	Qty	Description	Page No
Common Parts						
010 1	567070-0012	-		1	ELECTRODE	
010 10	567070-0010	-		1	ELECTRODE	
010 11	567070-0001	-		1	ELECTRODE	
010 12	567070-0004	-		1	ELECTRODE	
010 13	979500-0002	-		1	ELECTRODE	
010 14	979500-0003	-		1	ELECTRODE	
010 15	567070-0005	-		1	ELECTRODE	
010 2	567070-0006	-		1	ELECTRODE	
010 3	567070-0003	-		1	ELECTRODE	
010 4	567070-0011	-		1	ELECTRODE	
010 5	567070-0007	-		1	ELECTRODE	
010 6	567070-0008	-		1	ELECTRODE	
010 7	567070-0014	-		1	ELECTRODE	
010 8	567070-0002	-		1	ELECTRODE	
010 9	567070-0013	-		1	ELECTRODE	
020	560931-0000	-		1	BRACKET	
030	90242-0168	-		1	O-RING	
040	312605-0312	-		2	HEXAGON NUT, M6M M4 A280	
050	315105-0136	-		3	WASHER ISO 7089-4-200 HV-A4	

Pos	Part No	SP	UN	Qty	Description	Page No

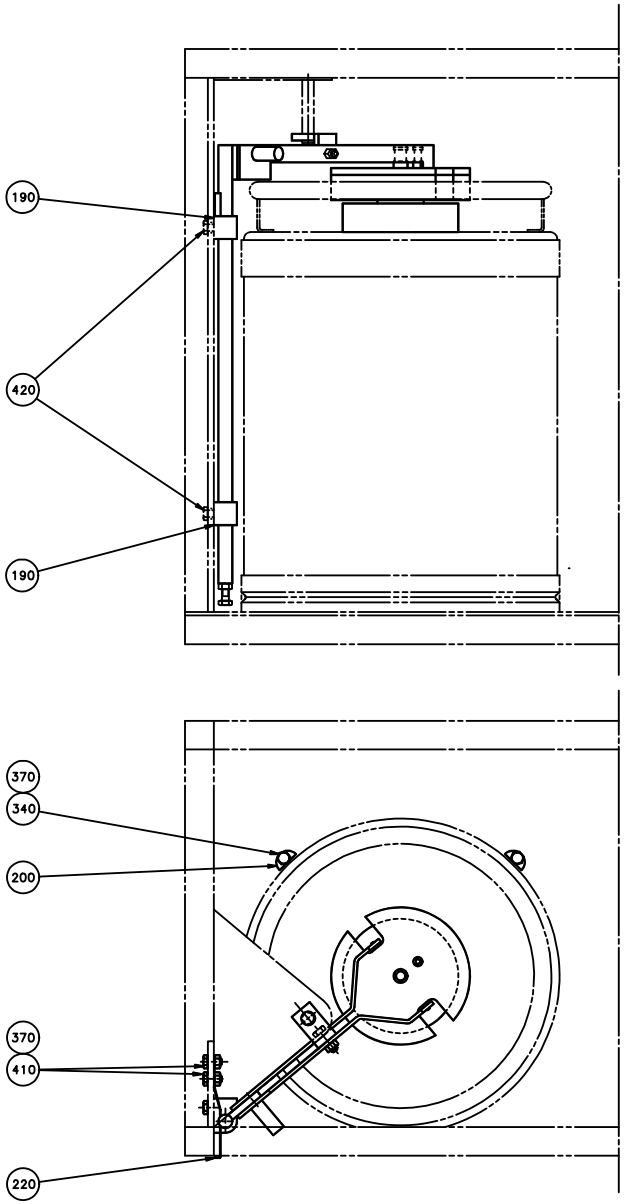
190
420
190
370
340
200
370
410
220

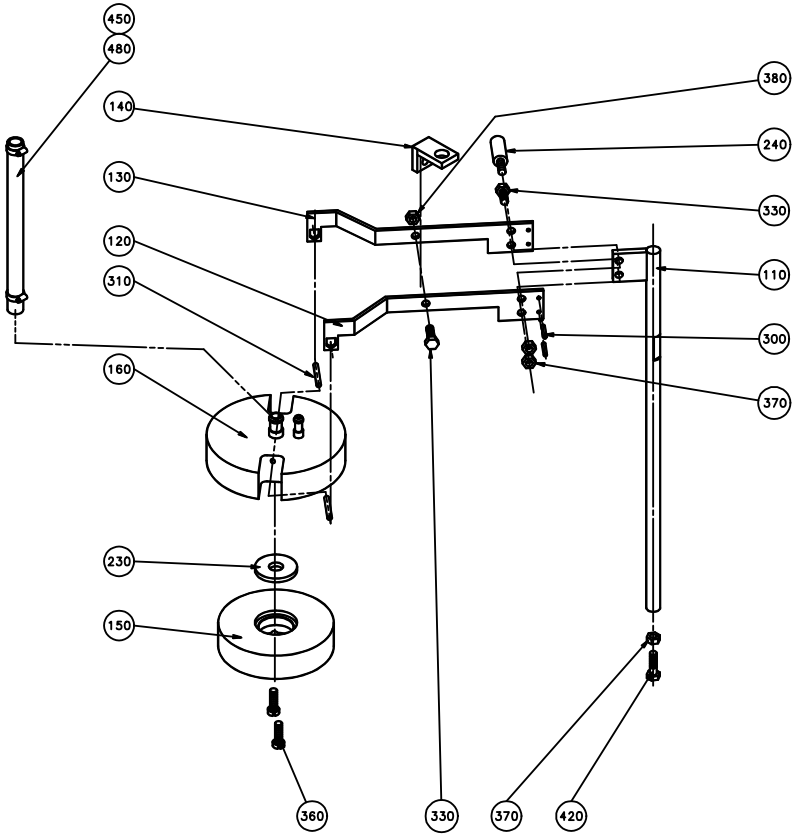
450
480
140
130
120
310
160
230
150
380
240
330
110
300
370
360
330
370
420

ECM: 82077 - 20000814
Group number: 569616-0100
Assembly Drawing: 569616-1_1_AA

Issue: 20030206

Pos	Part No	SP	UN	Qty	Description	Page No
Common Parts						
110	569618-0000	-		1	STEERING	
120	527121-0001	A		1	BOW CLAMP	
130	527121-0002	A		1	BOW CLAMP	
140	570844-0000	-		1	GUIDE FLANGE	
150	273982-0000	-		1	WEIGHT	
160	919706-0000	-		1	ATTACHMENT	
190	527124-0000	A		2	BEARING	
200	527125-0000	A		2	STEERING	
220	915996-0000	-		1	LEAF SPRING	
230	273981-0000	A		1	GASKET	
240	527127-0000	-		1	DOWEL	
300	311103-0234	-		2	PARALLELL PIN, M6, 3X12 MM	
310	311103-0273	-		2	PIN,STRAIGHT M6 4X22 RFR	
330	312105-0370	-		2	SCREW M6S ISO 4017 M6X20 A480	
340	312105-0378	-		2	SCREW M6S ISO 4014 M6X40 A480	
360	312125-0370	-		2	SCREW PAN HEAD MCS M6X20 SS	
370	312605-0316	-		7	HEXAGON NUT, M6M M6 A280	
380	312811-0316	-		1	NUT HEX.LOCK HELI COIL MID GRIP M6 SS	
410	312105-0366	-		2	SCREW M6S M6X12 A280	
420	312105-0372	-		2	SCREW M6S ISO 4017 M6X25 A480	
450	342991-0101	-		2	HOSE CLIP,WORM DRIVE TYPE (13)-16	
480	90166-0138	-	MM	400	HOSE	

Pos	Part No	SP	UN	Qty	Description	Page No

Tetra Pak

SPC
Spare Parts Catalogue

This page is intentionally left blank.

Pos	Part No	SP	UN	Qty	Description	Page No
WITH CFV PB85						
120	576422-0000	-		1	CONNECTION	
140	315202-0118	-		2	O-RING 22,1X1,6 MM	
Common Parts						
130	576423-0000	-		1	CONNECTION	
150	90229-0009	-		1	LADDER	
F005	A499134-0100	-		1	ROLLER STAND	**269**
F010	A2578569-0100	-		1	SET OF SIGNS TCA	**271**
F030	A567691-0100	-		1	INSTALLATION MATERIAL	**273**
F040	A527898-0100	-		1	CONTAINER H2O2	**275**
F060	A20317-0300	-		1	TOOL	**277**
F090	A265943-0400	-		1	START-UP KIT	**287**
F100	A267052-0400	-		1	START-UP KIT	**289, 357**

Pos	Part No	SP	UN	Qty	Description	Page No

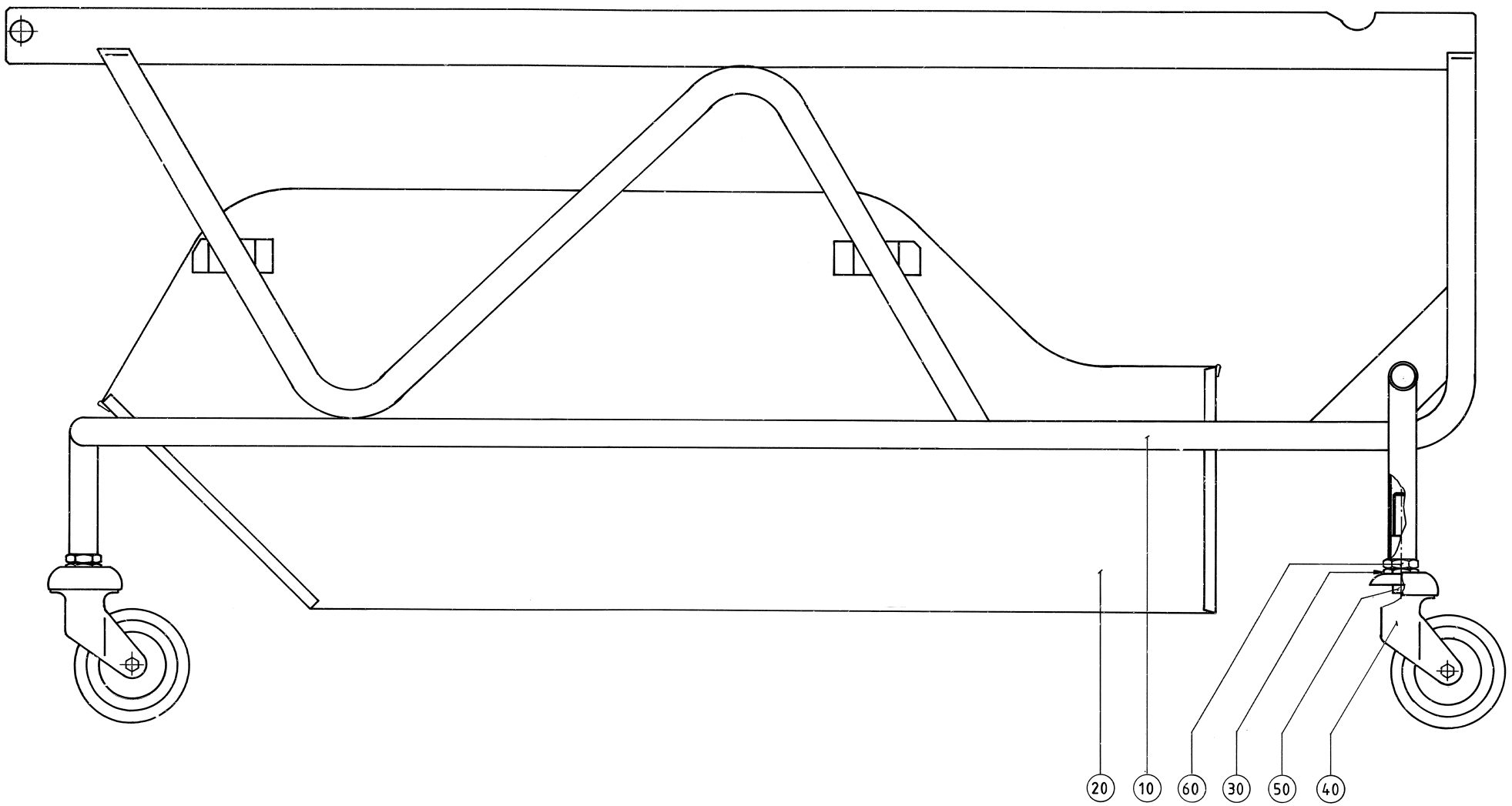
20
10
60
30
50
40

ECM: 116858 - 20021219
Group number: 499134-0100
Assembly Drawing: 499134-1_1_AA

Issue: 20030206

Pos	Part No	SP	UN	Qty	Description	Page No
TCA/25						
010	499047-0003	-		1	MACHINE BODY	
010	553830-0000	-		1	MACHINE BODY	
020	553829-0000	-		1	VAT	
Common Parts						
030	499048-0000	-		3	DOWEL	
040	90191-0045	-		3	WHEEL	
050	312111-0495	-		3	SCREW HEX.SOCK.HD.MC6S-TT 10X30 88 FZ	
060	312621-0324	-		3	NUT ML6M16FZB	

Pos	Part No	SP	UN	Qty	Description	Page No

This page is intentionally left blank.

ECM: 118702 - 20021219
Group number: 2578569-0100
Assembly Drawing:

Issue: 20030206

Pos	Part No	SP	UN	Qty	Description	Page No
Common Parts						
010	551613-0000	-		2	MACHINE PLATE TCA	
020	564605-0000	-		2	ROD	
030	564606-0000	-		2	BRACKET	

Pos	Part No	SP	UN	Qty	Description	Page No

Machine Type | Group Description | Used-In | Group Number | Page No

This page is intentionally left blank.

ECM: 116861 - 20021219
Group number: 567691-0100
Assembly Drawing:

Issue: 20030206

Pos	Part No	SP	UN	Qty	Description	Page No
Common Parts						
010	90347-0079	-		7	DAMPER TFE 601	
020	90163-0007	-		2	CONNECTION	
030	342812-0203	-		2	FERRULE, SMS 1145, 2343, NO.190996	
040	342803-0103	-		2	UNION NUT, RD 60-6 (SMS 38)	
050	315250-0103	-		4	GASKET 48X38X5,5 MM	

Pos	Part No	SP	UN	Qty	Description	Page No

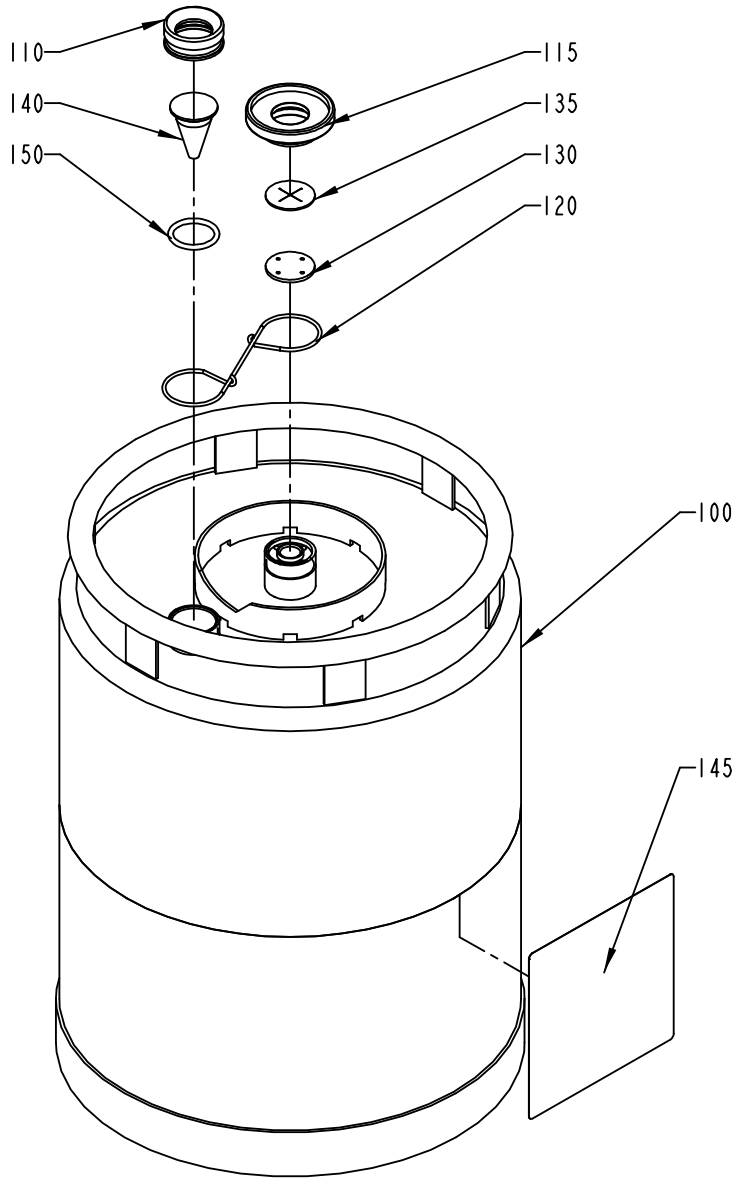

S-527898-I
ECN 72802

ECM: 115873 - 20020930
Group number: 527898-0100
Assembly Drawing: 527898-1_1_AB

Issue: 20030206

Pos	Part No	SP	UN	Qty	Description	Page No
Common Parts						
100	561427-0000	-		1	CONTAINER	
110	273977-0000	-		1	NUT	
115	273996-0000	-		1	NUT	
120	273980-0000	-		1	SPRING	
130	565250-0000	B		1	WASHER	
135	565251-0000	B		1	VALVE	
140	273978-0000	-		1	LEVEL GLASS	
145	532655-0000	A		1	CAUTION SIGN	
150	927422-0003	B		1	O.RING 24.2X3 SILICON	

Pos	Part No	SP	UN	Qty	Description	Page No

This page is intentionally left blank.

ECM: 116622 - 20021219
Group number: 20317-0300
Assembly Drawing:

Issue: 20030206

Pos	Part No	SP	UN	Qty	Description	Page No
Common Parts						
010	22297-0000	-		1	SHELF	
110	90303-0012	-		1	PROTECTIVE GLOVES	
160	90303-0011	-		1	PROTECTIVE GOGGLES	
180	72947-0000	-		1	HOOK SPANNER	
190	568177-0000	-		1	KEY	
200	90243-0164	-		2	HOOK SPANNER ADJUST.DIA.4	
230	90303-0013	-		1	APRON	
240	90337-0009	-		1	MEASURING CYLINDER	
250	90337-0007	-		1	AEROMETER	
260	90337-0003	-		1	PIPETTE	
F010	A567111-0100	-		1	AIR JET GUN	**279**
F210	A449969-0100	-		1	TOOL DISMOUNTING	**281**
F220	A566480-0100	-		1	TOOL	**283**
F260	A571480-0100	-		1	SETTING TEMPLATE	**285**

Pos	Part No	SP	UN	Qty	Description	Page No

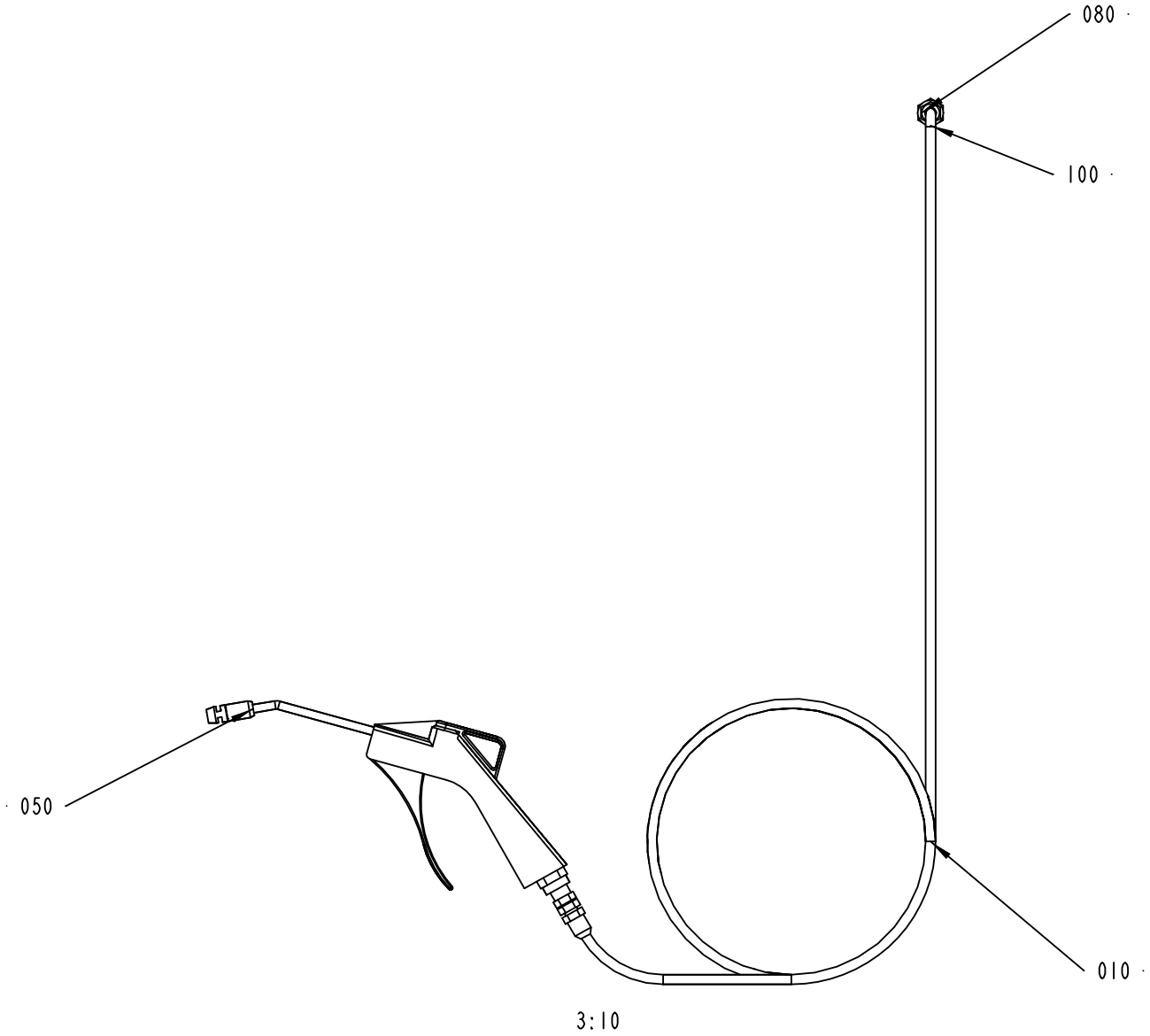

567111-1
ECN 28052

ECM: - -
Group number: 567111-0100
Assembly Drawing: 567111-1_1_AB

Issue: 20030206

Pos	Part No	SP	UN	Qty	Description	Page No
Common Parts						
010	90152-0016	C		1	HOSE (SPIRAL)	
050	90243-0061	C		1	AIR GUN, CEJN SERIE 204 ED: 90459-0173	
080	90163-0007	-		1	CONNECTION	
100	90330-0102	-		1	SLEEVE, INT, THREAD, NO., R-201R1/4	

Pos	Part No	SP	UN	Qty	Description	Page No

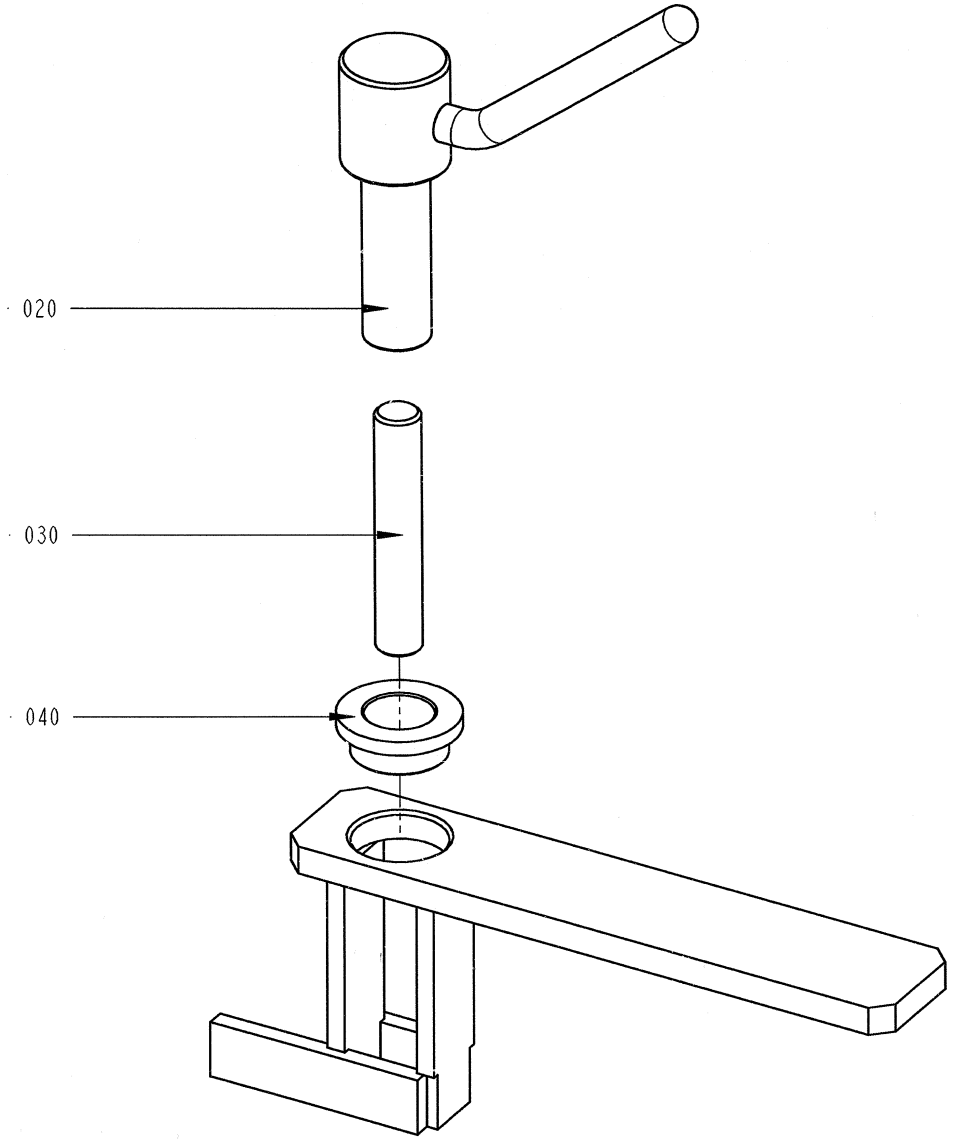

449969-1
ECN 93294

ECM: - -
Group number: 449969-0100
Assembly Drawing: 449969-1_1_AA

Issue: 20030206

Pos	Part No	SP	UN	Qty	Description	Page No
Common Parts						
010	449970-0000	-		1	HOLDER	
020	449971-0000	-		1	SPINDLE	
030	312306-0546	-		1	SCREW HEX.SOCK.SET FLAT P.MP6SS 12X70FZB	
040	321101-0222	-		1	BEAR.BUSHING W.FLANGE 18/25X12	

Pos	Part No	SP	UN	Qty	Description	Page No

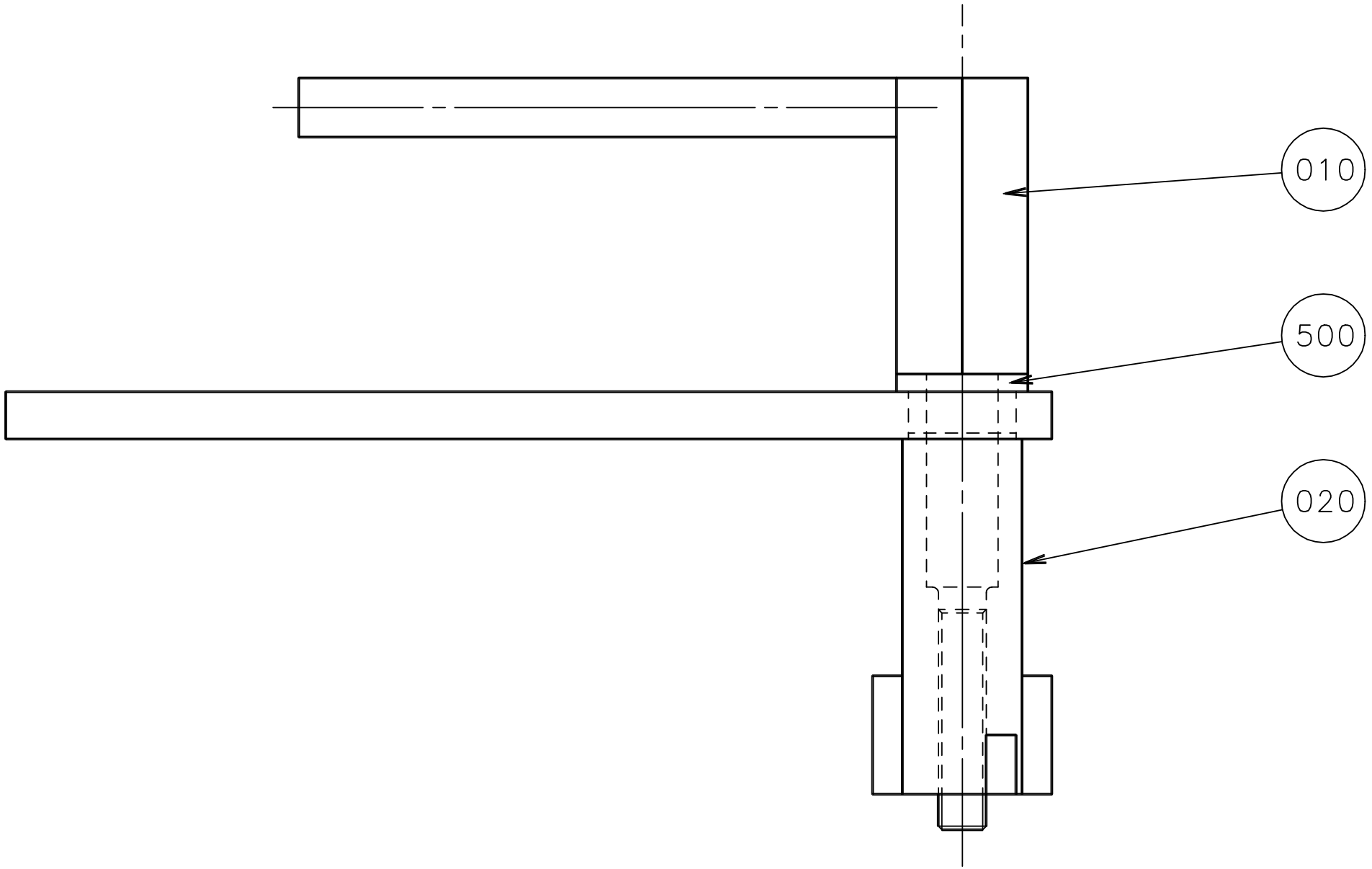
010
500
020

ECM: - -
Group number: 566480-0100
Assembly Drawing: 566480-1_1_AA

Issue: 20030206

Pos	Part No	SP	UN	Qty	Description	Page No
Common Parts						
010	566478-0000	-		1	SPINDLE	
020	566479-0000	-		1	HOLDER	
500	321101-0172	-		1	FLANGE BUS 12F7X10	

Pos	Part No	SP	UN	Qty	Description	Page No

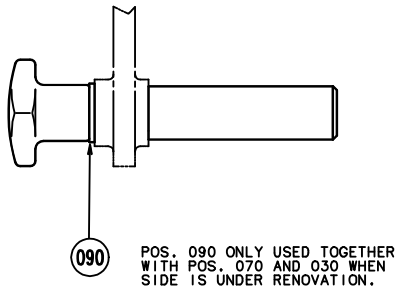
090
POS. 090 ONLY USED TOGETHER
WITH POS. 070 AND 030 WHEN
SIDE IS UNDER RENOVATION.

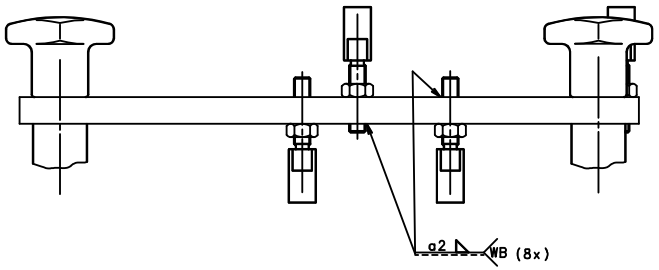
a2
WB (8x)

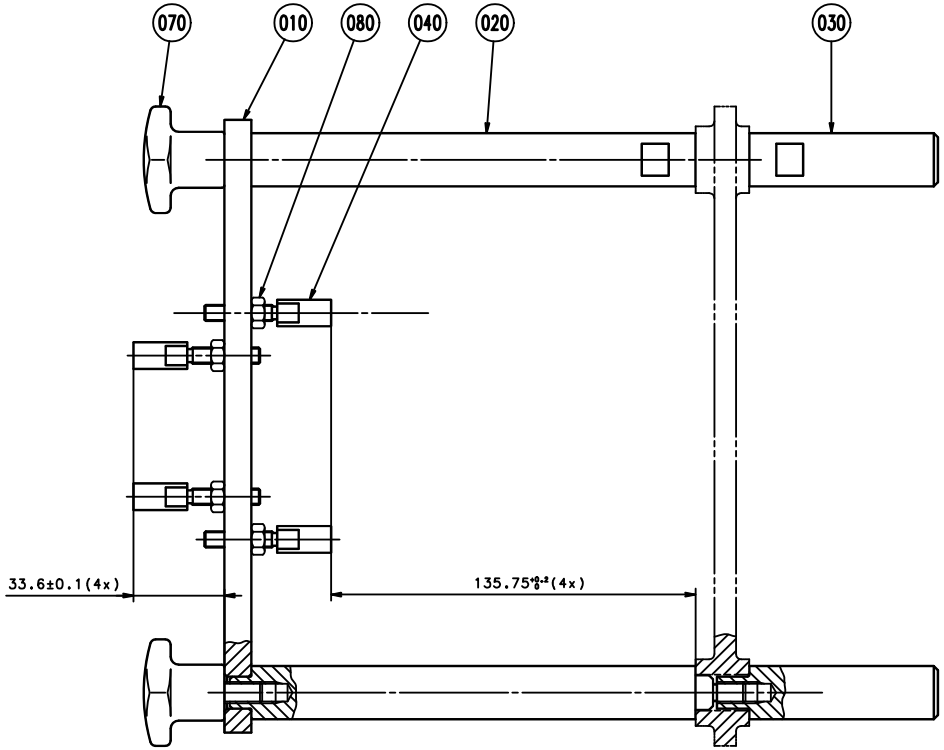
070
010
080
040
020
030
33.6±0.1(4x)
135.75±0.2(4x)

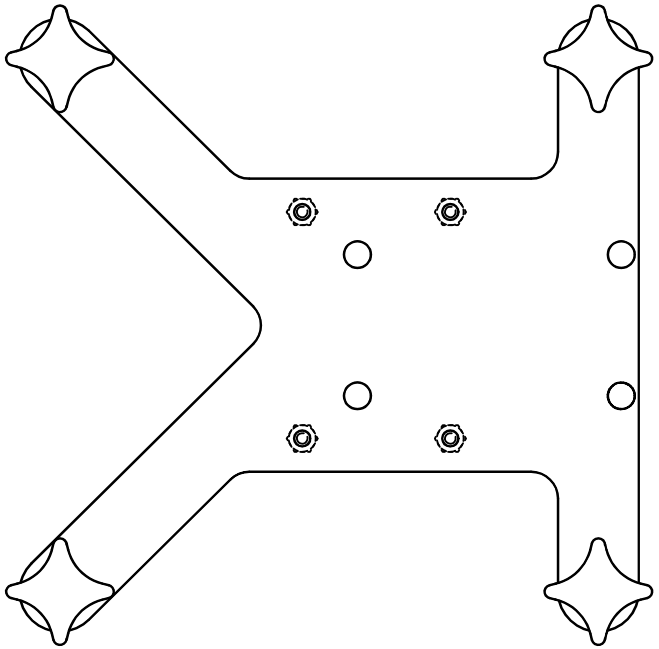

ECM: 116984 - 20021219
Group number: 571480-0100
Assembly Drawing: 571480-1_1_AA

Issue: 20030206

Pos	Part No	SP	UN	Qty	Description	Page No
Common Parts						
010	570958-0000	-		1	PLATE	
020	570957-0000	-		4	TEMPLATE COLUMN	
030	570955-0000	-		4	LEG	
040	570956-0000	-		8	LUG	
070	90051-0025	-		4	KNOB, EXTERNAL THREAD. NO. 8306-0200	
080	312630-0316	-		8	HEX.NUT FINE, EN 24032 M6M M6X0,75 FZB8	
090	315103-0173	-		4	WASHER PLAIN, BRB, 10,5/22,H=2 NI PL BR	

Pos	Part No	SP	UN	Qty	Description	Page No

This page is intentionally left blank.

ECM: 124480 - 20030120
Group number: 265943-0400
Assembly Drawing:
Issue: 20030206

Pos	Part No	SP	UN	Qty	Description	Page No
WITH CFV PB105						
020	554846-0000	-		2	INDUCTOR	
030	552787-0000	-		2	PRESSURE ROLLER	
060	573303-0000	-		1	LOCK SHEET	
WITH CFV PB85						
010	568077-0000	-		2	INDUCTOR	
090	560116-0000	-		1	LOCK SHEET	
110	560118-0000	-		2	PRESSURE ROLLER	
Common Parts						
140	532368-0000	-		20	RUBBER DOLLY	
180	269817-0000	-		2	LINE HEATER	
190	265752-0000	-		1	SLIDE RAIL	
200	315204-0109	-		4	O-RING 11,1X1,6 MM	
210	736508-0001	-		1	MEMBRANE	
220	925091-0000	-		3	DIAPHRAGM	
260	90206-0031	-		1	HEATING ELEMENT 700+1200W,220V	
280	90206-0324	-		1	HEATING CARTRIDGE 1400W 220V	
480	315204-0215	-		1	O-RING 19,2X3 MM	
500	311411-0164	-		1	SPLIT PIN SP2,5X14RFR	
520	315202-0118	-		1	O-RING 22,1X1,6 MM	
530	776422-0101	-		1	BRASS WIRESTE	
550	90217-0308	-		1	CLAMP, ISO2852 FOR PIPE 25,4 AND 38,1 MM	
580	554588-0000	-		1	CONTACT RAIL	
590	777510-0101	-		1	SCISSORS	
600	90450-0170	-		1	DOUBLE ACTING,ROUND,CYL 32-25	
610	90217-0307	-		4	GASKET 35,8X50,5X5,5 MM	
620	342830-0203	-		3	FERRULE, SMS 1145, 2343, NO.9611-31-0200	
630	554589-0000	-		1	CONTACT RAIL	
640	12573-0000	-		1	KNIFE	
650	12569-0000	-		1	RAIL	
660	794246-0000	-		1	DIAPHRAGM	
670	556118-0000	-		3	SEAL-RING (25)	
680	90242-0110	-		2	O-RING 29,2X3,0 MM	
690	90091-0267	-		6	WEAR RING 16X18X8,1 MM	
700	90091-0268	-		6	ROD SEAL, GLIDORING 16X20,9X1,78 MM	
710	90091-0269	-		2	PISTON SEAL, GLIDORING 52,5X60X3 MM	
720	90091-0236	-		1	PISTON SEAL, GLIDORING 89X100X4 MM	
730	90091-0237	-		2	ROD SEAL, GLIDORING 20X27,5X3 MM	
740	90091-0238	-		2	WEAR RING 20X22X10 MM	
750	315204-0310	-		1	O-RING 94,5X3 MM	
760	315204-0302	-		2	O-RING 54,5X3 MM	
770	315204-0213	-		2	O-RING 15,2X2,4 MM	
780	90242-0109	-		1	O-RING 7,1X1,6 MM	
790	90091-0282	-		1	PISTON SEAL 27X35X1,78 MM	
800	315204-0113	-		1	O-RING 15,1X1,6 MM	

Machine Type | Group Description | Used-In | Group Number | Page No

This page is intentionally left blank.

Pos	Part No	SP	UN	Qty	Description	Page No
TCA/25						
130	18052-0003	-		5	MANTEL RUBBER	
Common Parts						
180	538527-0000	-		1	RUBBER RAIL	
320	90206-0073	-		1	HEATING ELEMENT, 300W 240V	
325	90206-0324	-		1	HEATING CARTRIDGE 1400W 220V	

Pos	Part No	SP	UN	Qty	Description	Page No

Tetra Pak

SPC
Spare Parts Catalogue

This page is intentionally left blank.

Pos	Part No	SP	UN	Qty	Description	Page No
Common Parts						
F010	A610308-1700	-		1	HOLE PUNCH	**295**

Pos	Part No	SP	UN	Qty	Description	Page No

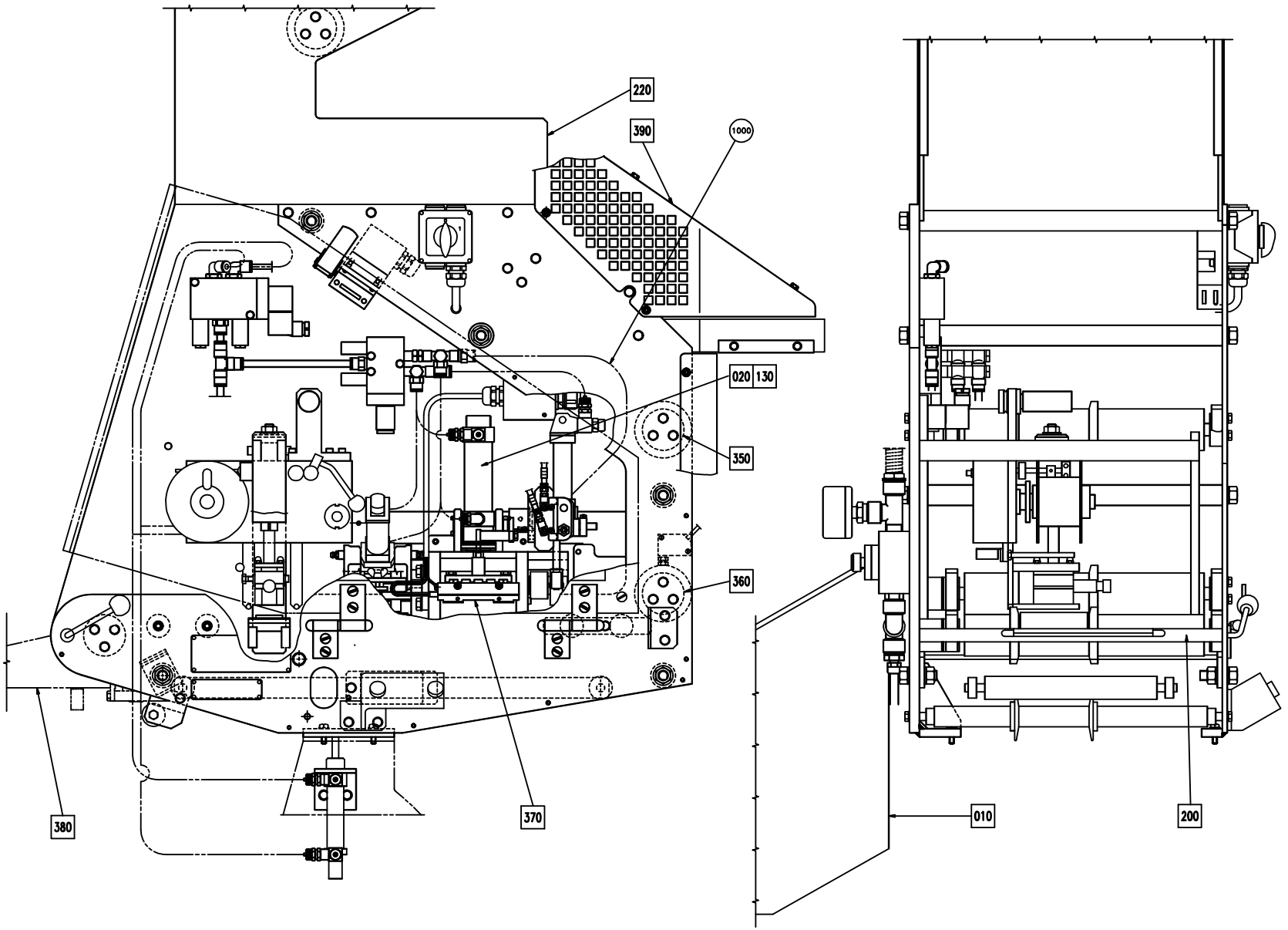
220
390
1000
020
130
350
360
380
370
010
200

Pos	Part No	SP	UN	Qty	Description	Page No
Common Parts						
1000	569963-0001	-		1	PNEUMATIC CHART	
F000	A265768-0500	-		1	HOLE PUNCH	**297, 299**
F010	A13852-0300	-		1	MAGAZINE	**301**
F130	A19519-0400	-		1	OPENING ARRANGEMENT	**303, 305, 307, 309**
F200	A20036-0200	-		1	HOSE CLAMP	**327**
F220	A251344-0300	-		1	STRIP APPLICATOR	**329**
F360	A239793-0100	-		1	BENDING ROLLER	**355**
F370	A267052-0400	-		1	START-UP KIT	**289, 357**
F380	A554717-0100	-		1	SPLICING TABLE	**359, 361**
F390	A570262-0200	-		1	PROTECTION	**363**
F400	A2502204-0100	-		1	LEVER MECHANISM	**365**

Pos	Part No	SP	UN	Qty	Description	Page No

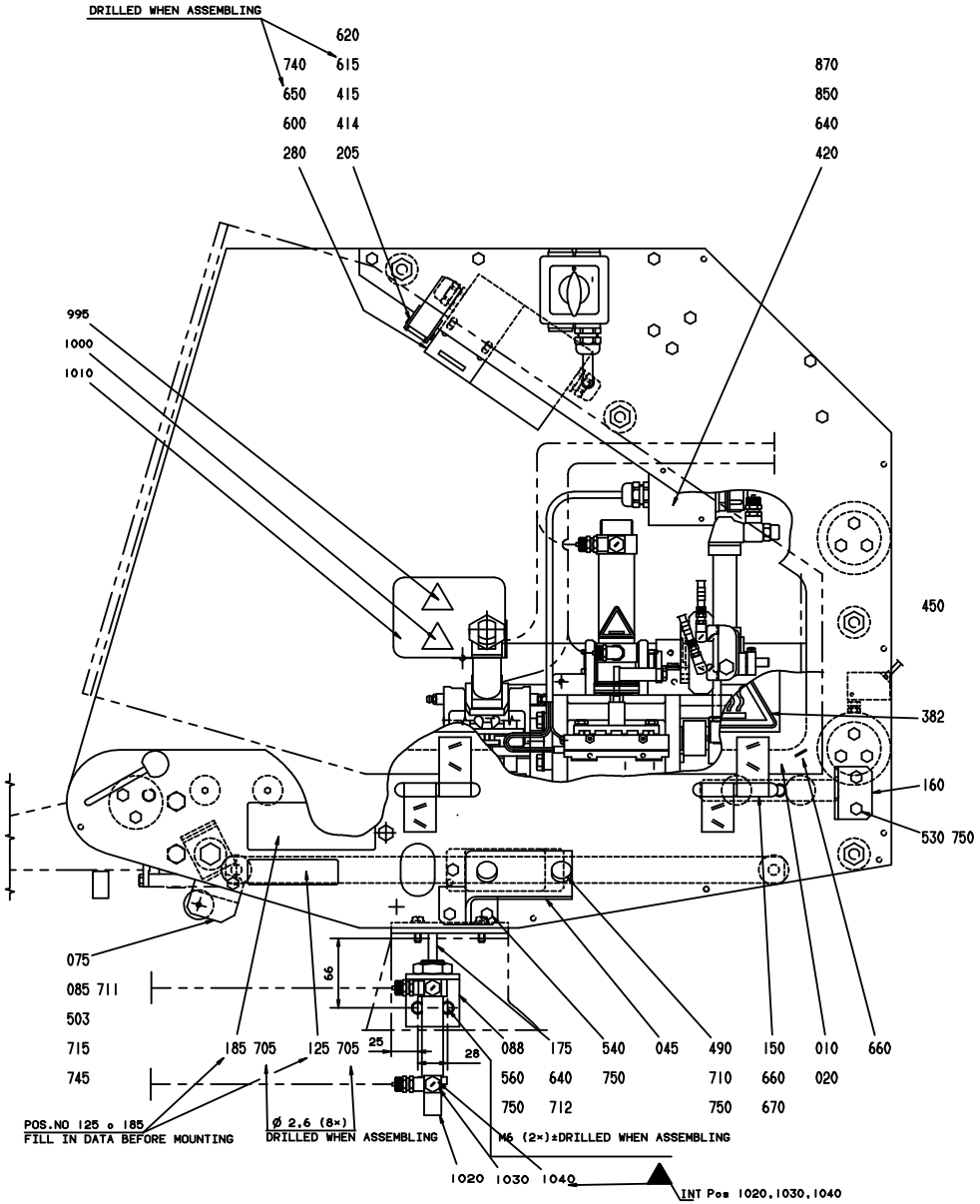
DRILLED WHEN ASSEMBLING
620
740 615
650 415
600 414
280 205
870
850
640
420
995
1000
1010
450
382
160
530 750
075
085 711
503
715
745
185 705
125 705
25
28
66
088 175 540 045 490 150 010 660
560 640 750 710 660 020
750 712 750 670
POS.NO 125 o 185
FILL IN DATA BEFORE MOUNTING
Ø 2.6 (8×)
DRILLED WHEN ASSEMBLING
M6 (2×)±DRILLED WHEN ASSEMBLING
1020 1030 1040
INT Pos 1020,1030,1040

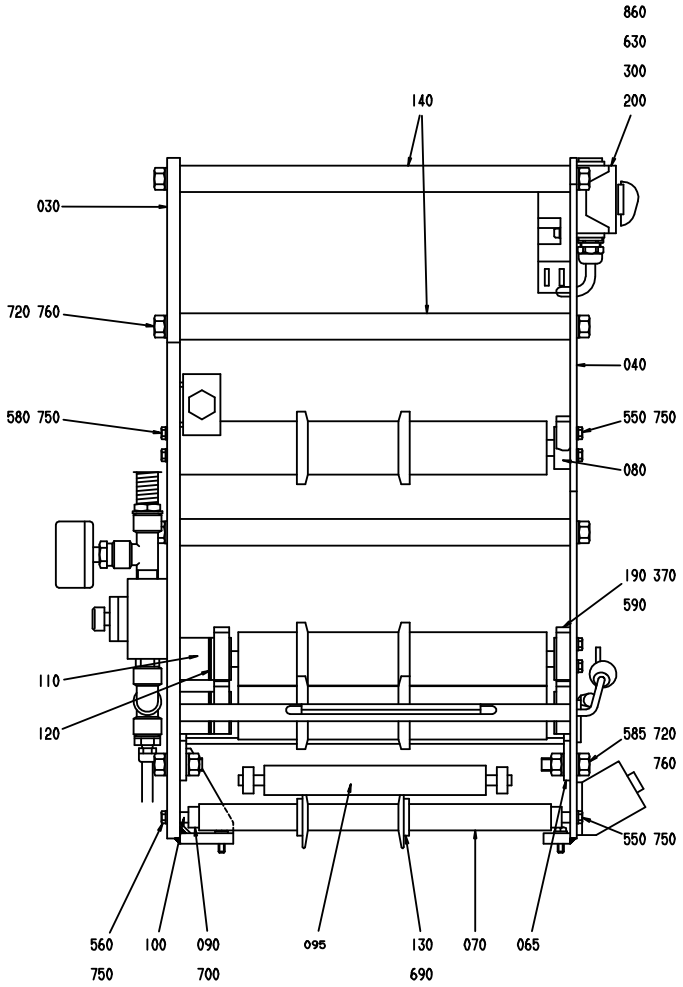
860
630
300
200
140
030
720 760
040
580 750
550 750
080
190 370
590
110
120
585 720
760
550 750
560 750
100
090 700
095
130 690
070
065

ECM: 121776 - 20030120
Group number: 265768-0500
Assembly Drawing: 265768-11_1_AB

Issue: 20030206

Pos	Part No	SP	UN	Qty	Description	Page No
Common Parts						
010	540345-0000	-		1	FRAME	
020	540346-0000	-		1	PROTECTIVE GLASS	
030	570196-0000	-		1	SIDE PIECE	
040	570197-0000	-		1	SIDE PIECE	
045	23267-0000	-		1	SUPPORT	
050	36679-0000	-		1	FRAME	
065	1362005-0000	-		1	TOUCH GUARD	
070	4288-0005	-		1	BENDING ROLLER	
075	579906-0000	-		1	BRACKET	
080	4317-0000	A		6	BEARING	
085	579907-0000	-		1	BRACKET	
088	579908-0000	-		1	CYLINDER BRACKET	
090	10908-0000	-		2	RETAINING RING	
095	581615-0000	-		1	DATING UNIT	
100	11448-0000	-		1	SHAFT	
1000	359705-0001	-		1	WARNING SIGN ISO, ENTAGLEMENT	
1010	1362012-0000	-		1	ASSEMBLY PLATE	
1020	90458-2102	-		1	DOUBLE ACTING, MINI-ISO, CYL. 20-50	
1030	90235-0846	-		2	THROTTLE CHECK VALVE G1/8", MANUAL, 6	
1040	2590335-0000	A		1	FOOT	
110	11452-0000	-		3	LACE	
120	13401-0000	-		9	LACE	
125	20497-0000	-		1	GROUP NUMBER PLATE	
130	20674-0000	-		2	GUIDE FLANGE	
140	21155-0000	-		4	SPACER ROD	
150	21161-0000	-		2	HINGE	
160	23266-0000	-		1	STOP	
170	267385-0002	-		4	SPACER	
175	19556-0000	-		1	STOP LUG	
180	541739-0000	-		1	SPACER	
185	27402-0000	-		1	MACHINE PLATE 50X120MM	
190	575505-0000	-		6	SPACER	
200	90002-0009	-		3	BLANK-OFF PLUG, PR 18.6 SKINDICHT-BLK11	
205	580175-0000	-		1	SPACER	
260	90043-0061	A		2	PRESSURE GAUGE, 2061 D=63 MM, THROTTLED	
270	90044-0104	-		1	PROX.SWITCH IFM IN 3002	
280	90044-0146	-		1	SAFETY SWITCH	
300	90111-0073	-		1	SWITCH, CA10A201PN	
310	90140-0010	-		1	T-PIPE, INT. THREAD, 20031/2	
320	90140-0011	-		2	T-PIPE, INT. THREAD, NO. 2070-1/2-1/2	
330	90140-0012	-		2	ELBOW, 90 INT/EXT, 2020-1/2-1/2	
360	90163-0067	-		2	HOSE NIPPLE N-1/2-P13	
370	90165-0015	-		6	CLIP	
382	90194-0075	-		1	WARNING SIGN ISO, HOT SURFACE	
400	90166-0160	-	MM	2000	TUBE 10 MM PA BLUE	
410	90235-0291	-		2	THROTTLE CHECK VALVE	
414	90237-0068	-		1	QUICK-LOCK, V 951-L03-1-1BP	
415	90237-0069	-		1	HOOK FOR 90237-13, -68	
420	90265-0037	-		1	CONNECTION BOX ROSE	
460	90330-0021	-		2	NIPPLES, EXT. THREAD. R-207R1/2	
480	90330-0085	-		2	BUSHING, INT/EXT. THR. R1/2-RP1/4	
490	90347-0007	B		2	VIBRATION DAMPER	
495	311520-0435	-		2	RIVET, BLANK 3,2X10	
503	312105-0333	-		2	SCREW M6S ISO 4017 M5X25 A480	
520	312105-0341	-		2	SCREW M6S ISO 4014 M5X50 A480	
530	312105-0364	-		2	SCREW M6S ISO 4017 M6X10 A480	
540	312105-0366	-		3	SCREW M6S M6X12 A280	
550	312101-0368	-		10	SCREW M6S M6X16 FZB	
560	312105-0370	-		9	SCREW M6S ISO 4017 M6X20 A480	
570	312105-0379	-		4	SCREW M6S ISO 4014 M6X45 A480	
580	312105-0380	-		9	SCREW M6S ISO 4014 M6X50 A480	
585	312105-0538	-		2	SCREW M6S ISO 4017 M12X35 A480	
590	312115-0291	-		12	SCREW ISO4762 M4X12 A4	
600	312115-0329	-		2	SCREW ISO4762 M5X16 A4	
605	312115-0378	-		6	SCREW ISO4762 M6X40 A4	
615	312125-0226	-		2	SCREW PAN HEAD MCS M3X12 SS	
620	312125-0230	-		6	SCREW PAN HEAD MCS M3X20 SS	
630	312125-0291	-		4	SCREW PAN HEAD MCS M4X12 SS	
640	312125-0293	-		3	SCREW PAN HEAD MCS M4X16 SS	
650	312155-0327	-		2	SCREW EN 10642 MF6S M5X12 A480	
660	312165-0366	-		12	SCREW SLOT.RAIS.COUNT.HD.MKFS 6X12 SS	
670	312165-0370	-		6	SCREW SLOT.RAIS.COUNT.HD.MKFS 6X20 SS	
680	312303-0378	-		4	SCREW DIN 938 PS M6X30 A4 80	
690	312318-0284	-		2	SCREW ISO4029 M4X5 A4	
700	312318-0360	-		2	SCREW ISO4029 M6X6 A4	
705	312502-0221	-		8	DRIVE SCREW ROUND HEAD KDS 4X6	
710	312605-0316	-		6	HEXAGON NUT, M6M M6 A280	
711	312155-0368	-		2	SCREW EN 10642 MF6S M6X16 A480	
712	312605-0312	-		1	HEXAGON NUT, M6M M4 A280	
715	312605-0314	-		2	HEXAGON NUT, M6M M5 A280	
720	312605-0322	-		10	HEXAGON NUT, M6M M12 A280	
730	315105-0124	-		2	WASHER ISO 7089-3-200 HV-A4	
745	315105-0146	-		2	WASHER ISO 7089-5-200 HV-A4	

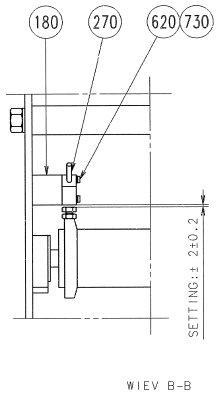
180
270
620
730
SETTING:± 2±0.2
WIEV B-B

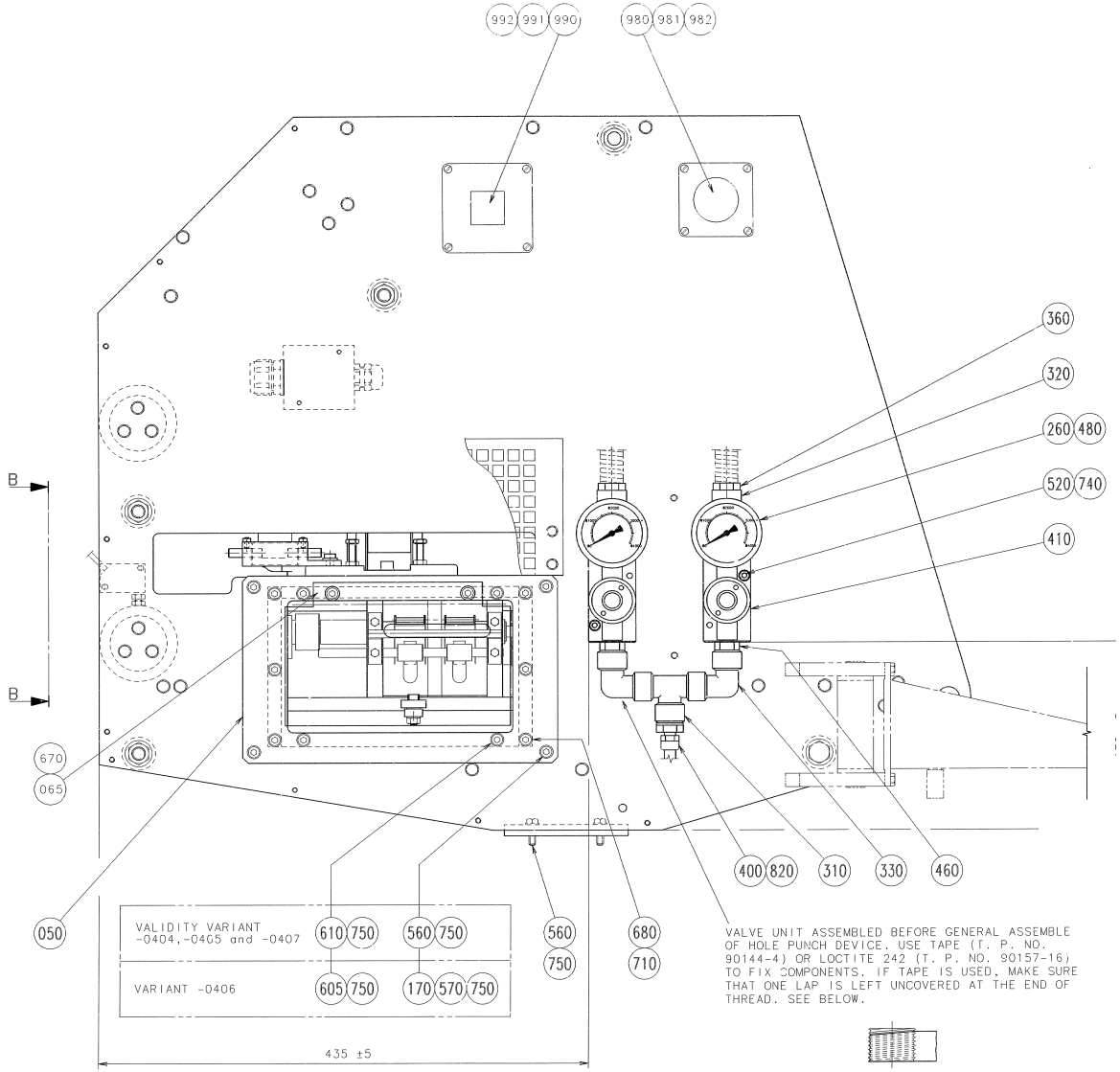
992
991
990
980
981
982
360
320
260
480
520
740
410
B
B
670
065
050
400
820
310
330
460
560
750
680
710
VALIDITY VARIANT
-0404,-0405 and -0407
610
750
560
750
VARIANT -0406
605
750
170
570
750
435 ±5
VALVE UNIT ASSEMBLED BEFORE GENERAL ASSEMBLE OF HOLE PUNCH DEVICE. USE TAPE (T. P. NO. 90144-4) OR LOCTITE 242 (T. P. NO. 90157-16) TO FIX COMPONENTS. IF TAPE IS USED, MAKE SURE THAT ONE LAP IS LEFT UNCOVERED AT THE END OF THREAD. SEE BELOW.

Pos	Part No	SP	UN	Qty	Description	Page No
Common Parts (Cont'd)						
750	315105-0153	-		43	WASHER ISO 7089-6-200 HV-A4	
760	315105-0179	-		12	WASHER PLAIN, BRB, 13,5/24,H=2	
820	342921-0134	-		1	STRAIGHT COUPL.,EXT.THREADED 10/8-G1/2"	
830	342980-0313	-		2	BANJO-HOLLOW BOLT COUPL,EXT.THR.02-G1/8"	
840	342981-0113	-		4	BANJO CONNEC,RING,FOR PLAST.TUBE 6-G1/8"	
850	352103-0105	-		1	CABLE GLAND, STR 11, PR 18,6/PG11	
860	352103-0106	-		1	CABLE GLAND, ST 11, PR18,6/PG11	
865	359240-0100	-		1	SIGN HOLDER FOR 359240-0001	
870	352136-0127	-		1	GLAND FITTING PR 18,6	
871	359241-0271	-		1	SIGN	
910	359000-0403	-		2	MARKING COLLAR PA2/4 "3" YELLOW	
980	90064-0124	-		1	SWITCH, EM. STOP, ZB2-BS844+ZB2-BZ1045	
981	90066-0030	-		1	PUSH BUTTON BOX XAL J01	
982	B90064-0093	-		1	PUSH BUTTON, GREEN	
	90036-0057	*C*		*1*	*LIGHT BULB, BA9S 28V*	
990	90066-0021	-		1	PUSH BUTTON BOX XAP-M1501	
991	B90064-0093	-		1	PUSH BUTTON, GREEN	
	90036-0057	*C*		*1*	*LIGHT BULB, BA9S 28V*	
992	359301-0090	-		1	SIGN "INCHING"	
995	359705-0007	-		1	WARNING SIGN ISO, HOT SURFACE	

Pos	Part No	SP	UN	Qty	Description	Page No

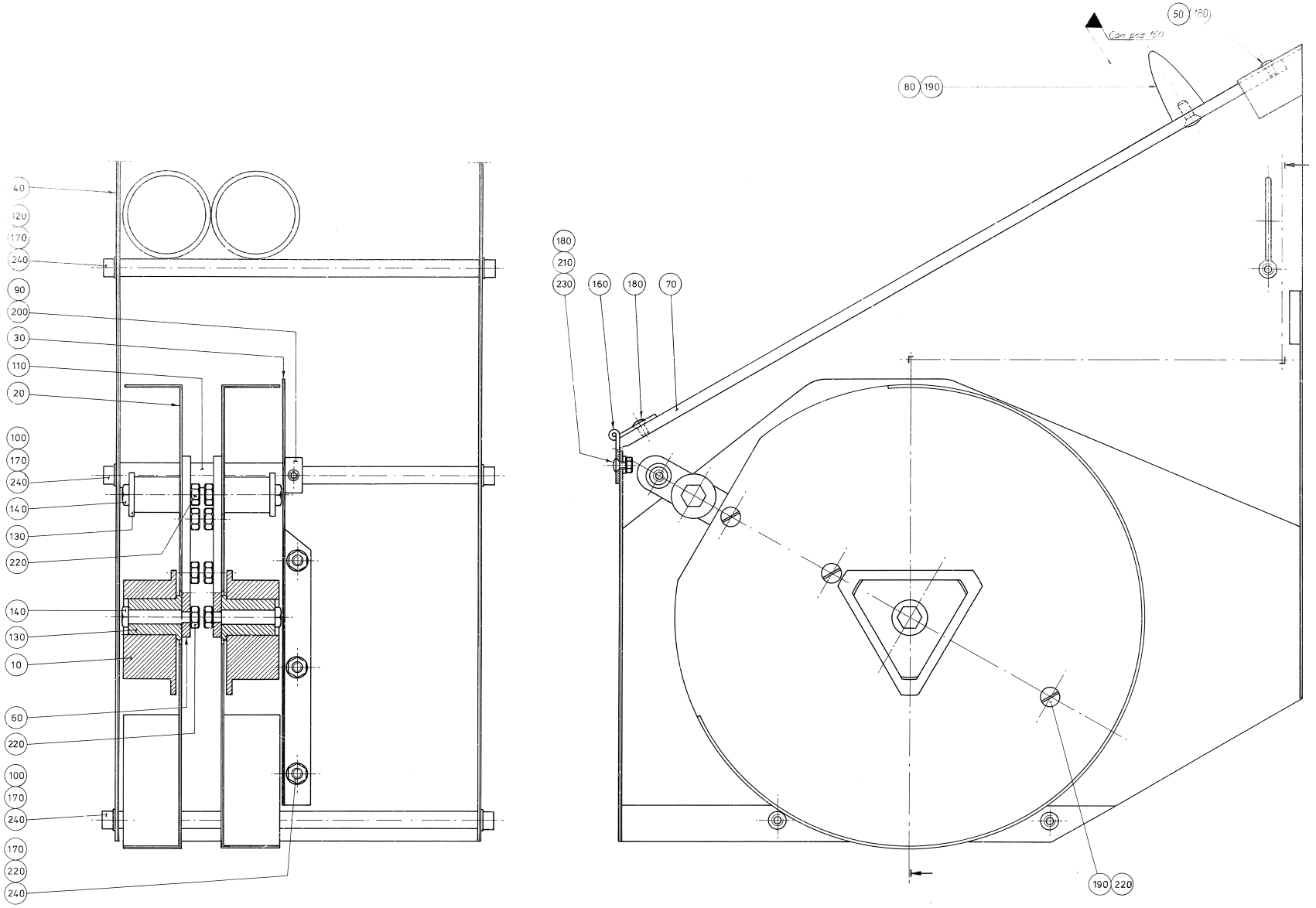
40
120
170
240
90
200
30
110
20
100
170
240
140
130
220
140
130
10
60
220
100
170
240
170
220
240
50 150
Can pos 150
80 190
180
210
230
160
180
70
190 220

Pos	Part No	SP	UN	Qty	Description	Page No
Common Parts						
010	13665-0000	-		2	BOBBIN HOLDER	
020	13663-0000	-		2	CASSETTE	
030	13853-0000	-		1	GABLE PLATE	
040	13854-0000	-		1	HOLDER	
050	11445-0000	-		1	MOUNTINGS	
060	13664-0000	-		2	ARM	
070	575504-0000	-		1	LID	
080	7309-0000	-		1	HANDLE	
090	10908-0000	-		1	RETAINING RING	
100	11305-0000	-		3	SPACER	
110	11307-0000	A		1	BUSHING	
120	11312-0000	-		1	GUIDE RING	
130	13666-0000	-		4	BUSHING	
140	13667-0000	-		4	SHOULDER BOLT	
160	90248-0002	-		2	HINGE, 4002-2	
170	312115-0366	-		13	SCREW ISO4762 M6X12 A4	
180	312165-0287	-		14	SCREW SLOT.RAIS.COUNT.HD.MKFS 4X8 SS	
190	312165-0366	-		8	SCREW SLOT.RAIS.COUNT.HD.MKFS 6X12 SS	
200	312306-0360	-		1	SCREW HEX.SOCK.SET FLAT P.MP6SS 6X6FZB	
210	312605-0312	-		6	HEXAGON NUT, M6M M4 A280	
220	312605-0316	-		15	HEXAGON NUT, M6M M6 A280	
230	315105-0136	-		6	WASHER ISO 7089-4-200 HV-A4	
240	315105-0153	-		13	WASHER ISO 7089-6-200 HV-A4	
241	1362005-0000	-		1	TOUCH GUARD	

Pos	Part No	SP	UN	Qty	Description	Page No

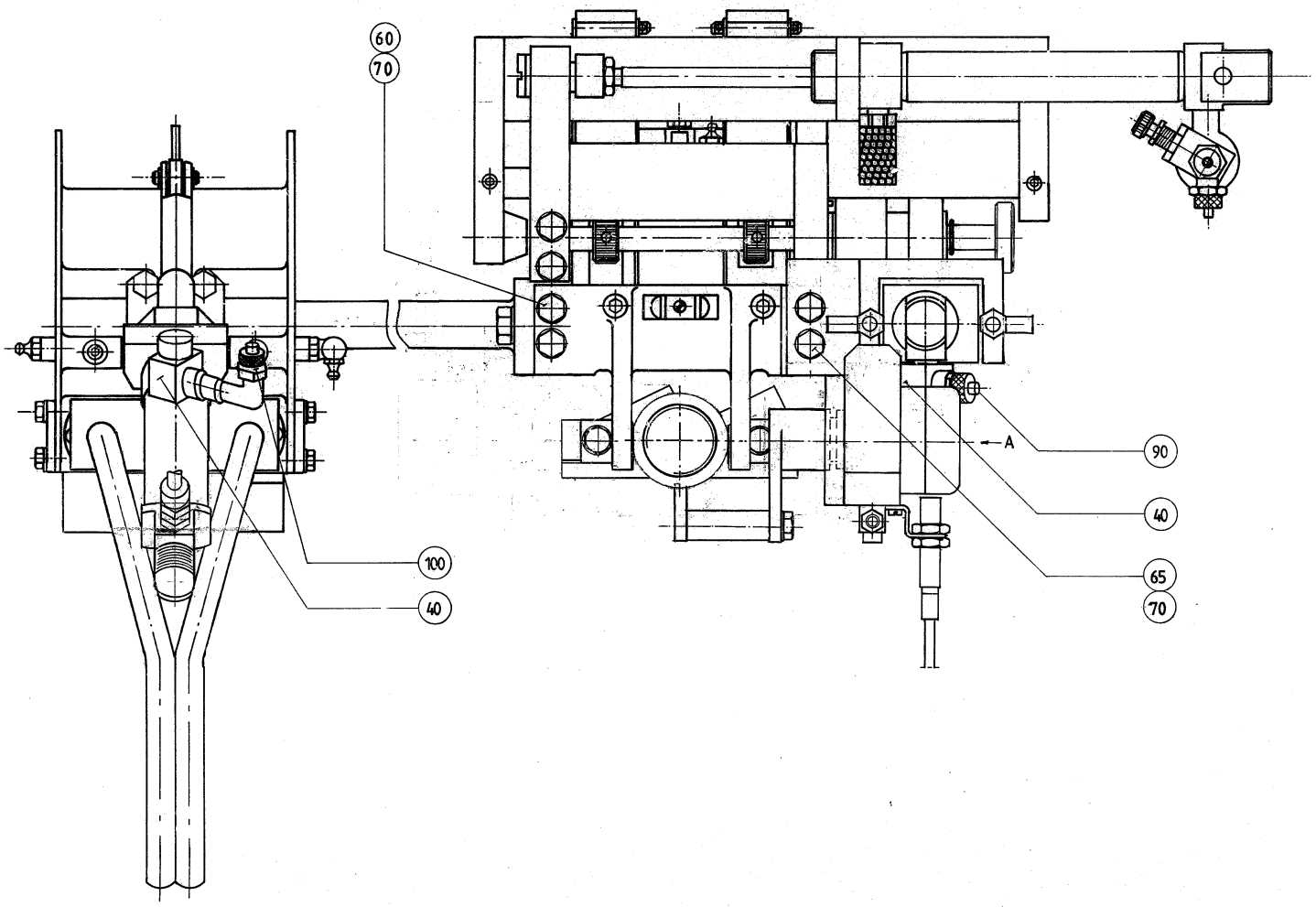

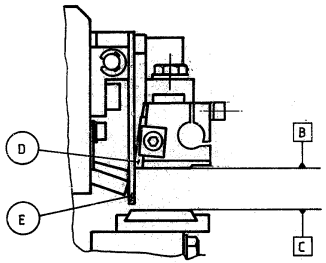

vy - view A ↷90°

Ytorna B och C justerade till ett parallellt förhållande, där den totala förseglingsytan (värmekropp och kniv) ligger symetriskt mot gummiskenan. Knivarna E därefter justerade mot knivarna D, tills ett fullgott klipp av pulltabmaterialet erhålls.

Surfaces B and C adjusted to a parallel relation, so that the total sealing area (heating element and knife) is symetric with rubber dolly. Then, knifes E adjusted in conjunction with knifes D until satisfactory cut of pull-tab strip is achieved.

Pos	Part No	SP	UN	Qty	Description	Page No
TCA/25						
010	581619-0000	-		1	PIPE	
F130	A19526-0300	-		1	FRAME	**311**
F140	A263886-0400	-		1	SEALING DEVICE	**313**
F150	A19521-0200	-		1	CARRIAGE	**315**
F190	A265823-0300	-		1	PUNCH UNIT	**323**
Common Parts						
020	11436-0000	-		2	SHAFT	
040	90458-2738	-		3	THROTTLE CHECK VALVE, GRLA-1/8-B	
050	312101-0453	-		2	SCREW M6S M8X25 FZB	
060	312105-0374	-		2	SCREW M6S ISO 4014 M6X30 A480	
065	312105-0376	-		2	SCREW M6S ISO 4014 M6X35 A480	
070	315105-0153	-		4	WASHER ISO 7089-6-200 HV-A4	
080	315105-0165	-		2	WASHER ISO 7089-8-200 HV-A4	
090	342920-0113	-		2	STRAIGHT COUPLING,EXT.THREADED 6/4-R1/8"	
100	342950-0113	-		1	L-COUPLING,EXT.THREAD 6/4-R1/8"	
F090	A486705-0200	-		1	FEEDER	**325**

Pos	Part No	SP	UN	Qty	Description	Page No

OPENING ARRANGEMENT

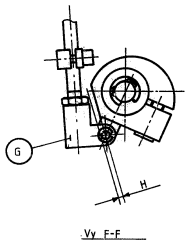

Vy F-F

Cylindern i plusläge:
Kolvstången skall vara inskruvad i detalj G så att avståndet H är ~2mm.
Frammatningslängden justeras därefter med stoppklack 19556

The cylinder in plus position:
The cylindershaft must be screwed in to part G so the gap H is ~2mm.
The pull-tab lenght (cylinder stroke) can now be adjuste by the stopper 19556

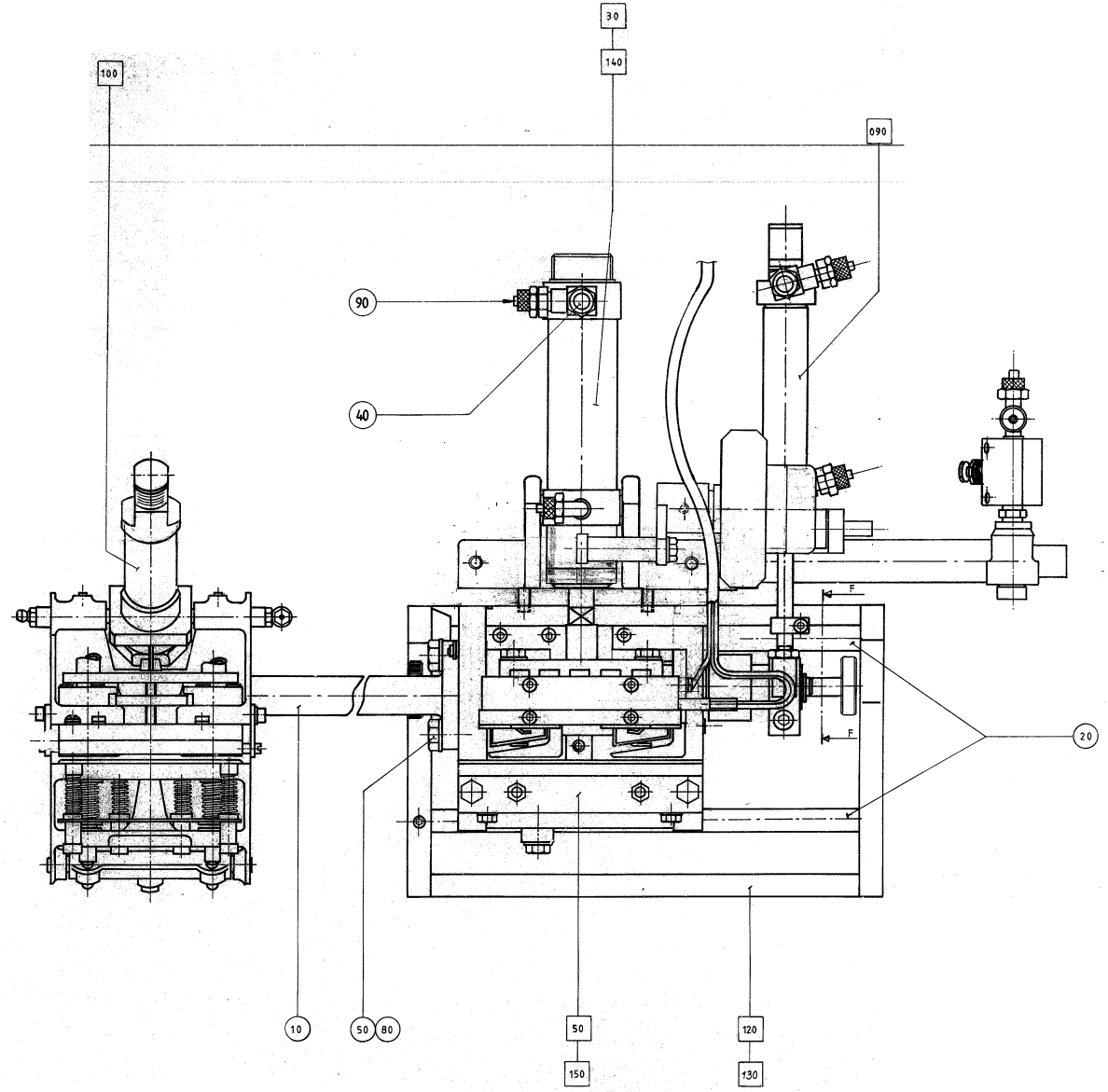

Pos	Part No	SP	UN	Qty	Description	Page No
TCA/25						
010	581619-0000	-		1	PIPE	
F130	A19526-0300	-		1	FRAME	**311**
F140	A263886-0400	-		1	SEALING DEVICE	**313**
F150	A19521-0200	-		1	CARRIAGE	**315**
F190	A265823-0300	-		1	PUNCH UNIT	**323**
Common Parts						
020	11436-0000	-		2	SHAFT	
040	90458-2738	-		3	THROTTLE CHECK VALVE, GRLA-1/8-B	
050	312101-0453	-		2	SCREW M6S M8X25 FZB	
060	312105-0374	-		2	SCREW M6S ISO 4014 M6X30 A480	
065	312105-0376	-		2	SCREW M6S ISO 4014 M6X35 A480	
070	315105-0153	-		4	WASHER ISO 7089-6-200 HV-A4	
080	315105-0165	-		2	WASHER ISO 7089-8-200 HV-A4	
090	342920-0113	-		2	STRAIGHT COUPLING,EXT.THREADED 6/4-R1/8"	
100	342950-0113	-		1	L-COUPLING,EXT.THREAD 6/4-R1/8"	
F090	A486705-0200	-		1	FEEDER	**325**

Pos	Part No	SP	UN	Qty	Description	Page No

OPENING ARRANGEMENT

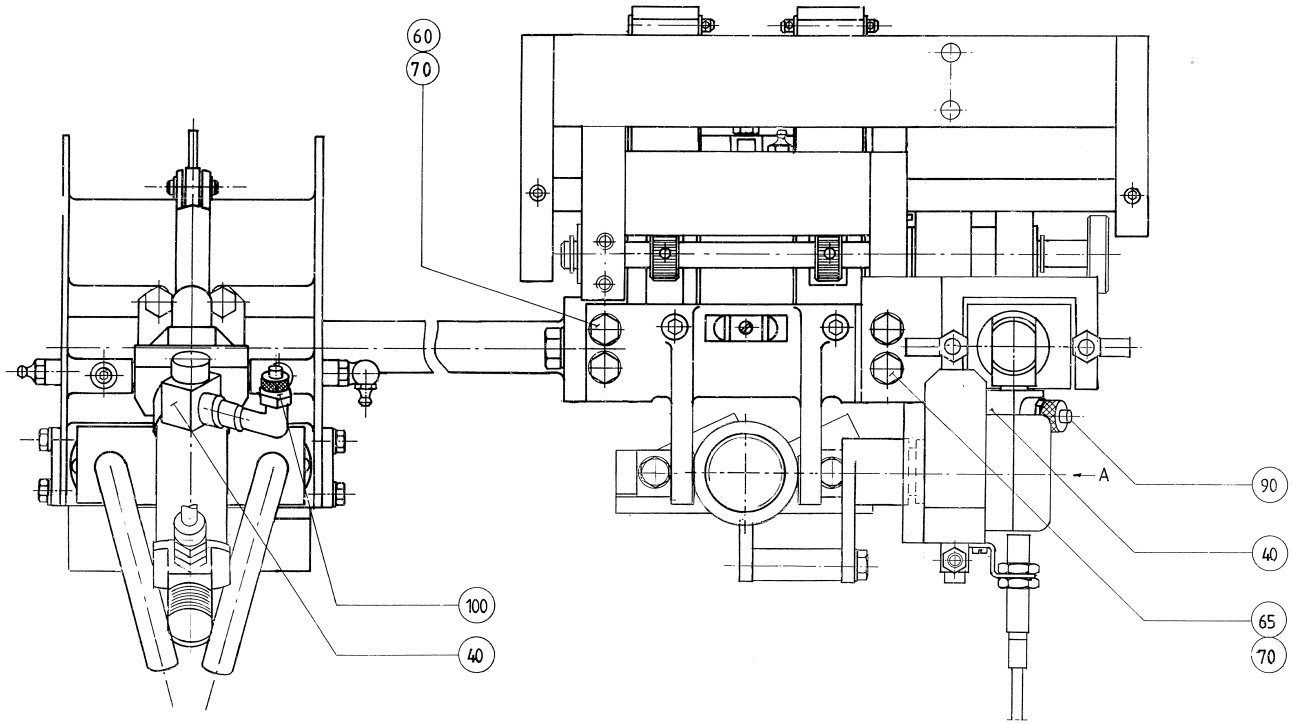

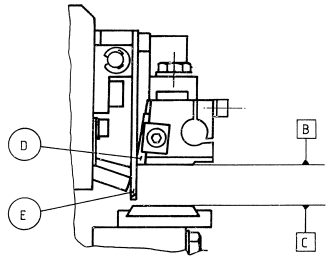

vy - view A ↶90°

Ytorna B och C justerade till ett parallellt förhållande, där den totala förseglingsytan (värmekropp och kniv) ligger symetriskt mot gummiskenan. Knivarna E därefter justerade mot knivarna D, tills ett fullgott klipp av pulltabmaterialet erhålls.

Surfaces B and C adjusted to a parallel relation, so that the total sealing area (heating element and knife) is symetric with rubber dolly. Then, knifes E adjusted in conjunction with knifes D until satisfactory cut of pull-tab strip is achieved.

Pos	Part No	SP	UN	Qty	Description	Page No
TCA/25						
010	581619-0000	-		1	PIPE	
F130	A19526-0300	-		1	FRAME	**311**
F140	A263886-0400	-		1	SEALING DEVICE	**313**
F150	A19521-0200	-		1	CARRIAGE	**315**
F190	A265823-0300	-		1	PUNCH UNIT	**323**
Common Parts						
020	11436-0000	-		2	SHAFT	
040	90458-2738	-		3	THROTTLE CHECK VALVE, GRLA-1/8-B	
050	312101-0453	-		2	SCREW M6S M8X25 FZB	
060	312105-0374	-		2	SCREW M6S ISO 4014 M6X30 A480	
065	312105-0376	-		2	SCREW M6S ISO 4014 M6X35 A480	
070	315105-0153	-		4	WASHER ISO 7089-6-200 HV-A4	
080	315105-0165	-		2	WASHER ISO 7089-8-200 HV-A4	
090	342920-0113	-		2	STRAIGHT COUPLING,EXT.THREADED 6/4-R1/8"	
100	342950-0113	-		1	L-COUPLING,EXT.THREAD 6/4-R1/8"	
F090	A486705-0200	-		1	FEEDER	**325**

Pos	Part No	SP	UN	Qty	Description	Page No

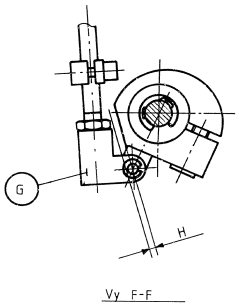

Vy F-F

Cylindern i plusläge:
Kolvstången skall vara inskruvad i detalj G så att avståndet H är ~2mm.
Frammatningslängden justeras därefter med stoppklack 19556

The cylinder in plus position:
The cylindershaft must be screwed in to part G so the gap H is ~2mm.
The pull-tab lenght (cylinder stroke) can now be adjuste by the stopper 19556

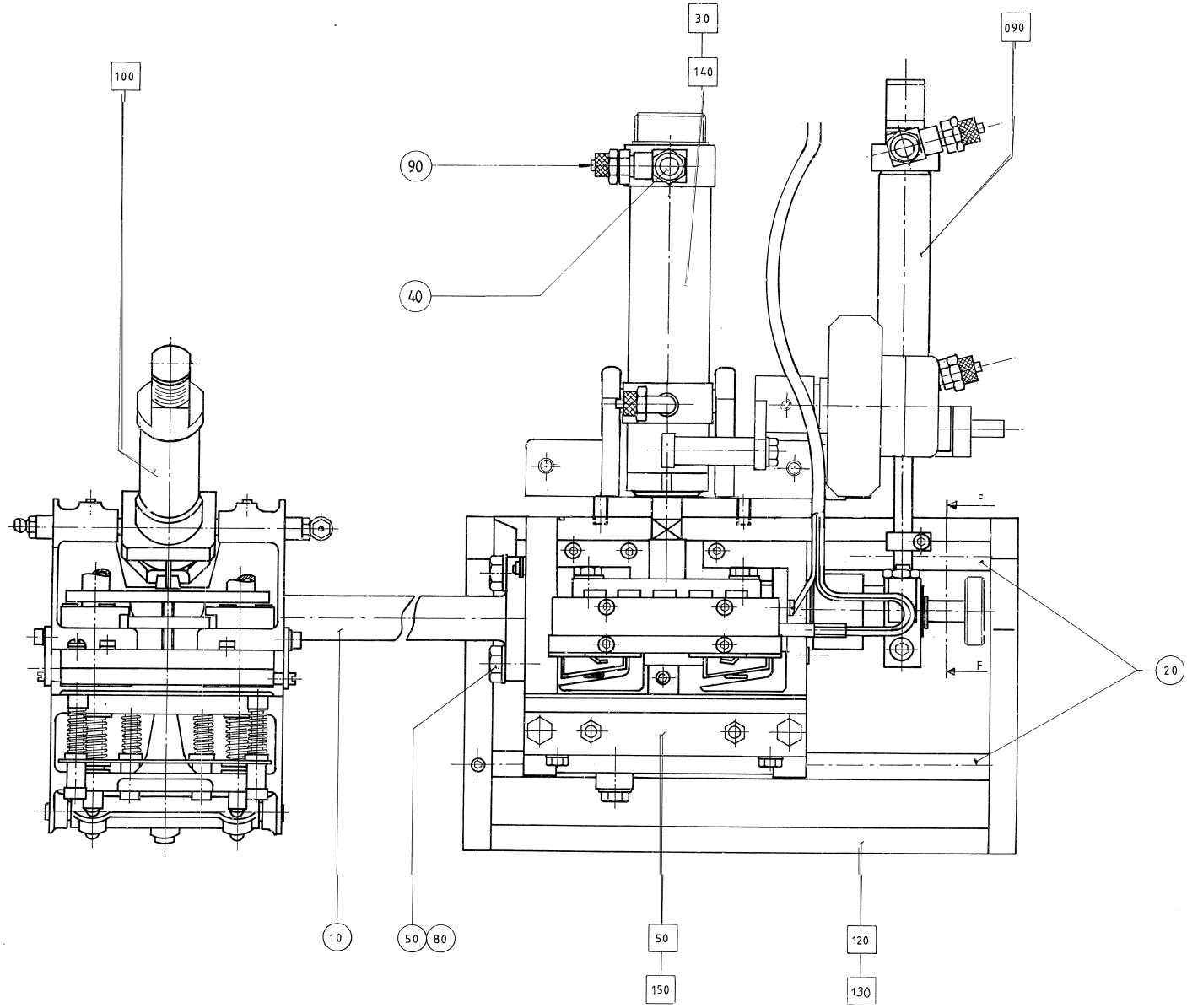

Pos	Part No	SP	UN	Qty	Description	Page No
TCA/25						
010	581619-0000	-		1	PIPE	
F130	A19526-0300	-		1	FRAME	**311**
F140	A263886-0400	-		1	SEALING DEVICE	**313**
F150	A19521-0200	-		1	CARRIAGE	**315**
F190	A265823-0300	-		1	PUNCH UNIT	**323**
Common Parts						
020	11436-0000	-		2	SHAFT	
040	90458-2738	-		3	THROTTLE CHECK VALVE, GRLA-1/8-B	
050	312101-0453	-		2	SCREW M6S M8X25 FZB	
060	312105-0374	-		2	SCREW M6S ISO 4014 M6X30 A480	
065	312105-0376	-		2	SCREW M6S ISO 4014 M6X35 A480	
070	315105-0153	-		4	WASHER ISO 7089-6-200 HV-A4	
080	315105-0165	-		2	WASHER ISO 7089-8-200 HV-A4	
090	342920-0113	-		2	STRAIGHT COUPLING,EXT.THREADED 6/4-R1/8"	
100	342950-0113	-		1	L-COUPLING,EXT.THREAD 6/4-R1/8"	
F090	A486705-0200	-		1	FEEDER	**325**

Pos	Part No	SP	UN	Qty	Description	Page No

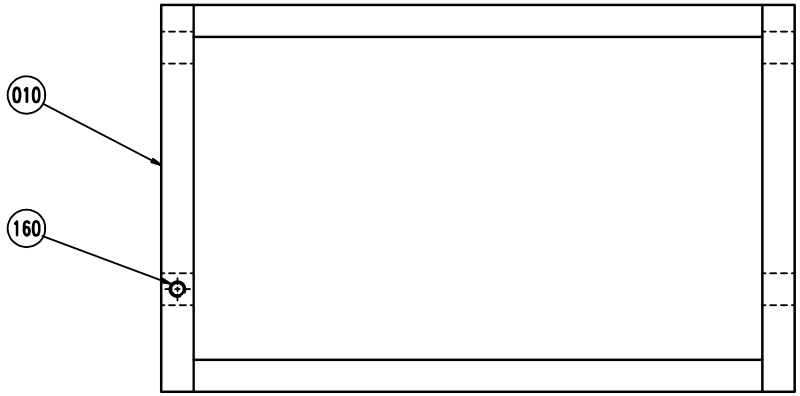
010
160

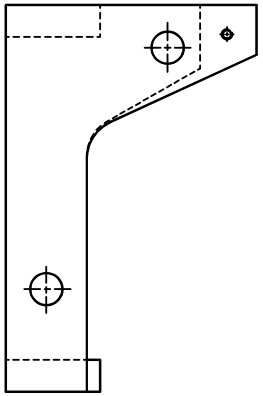

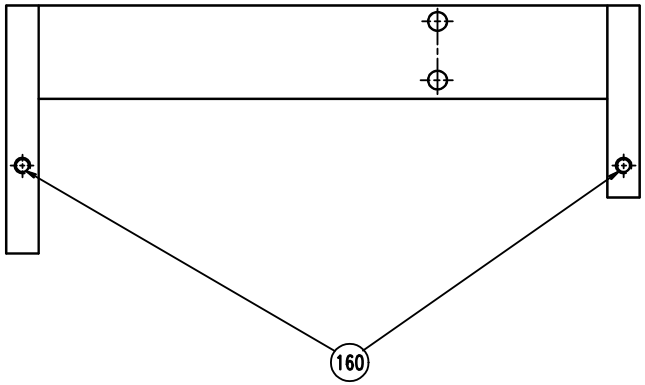
160

ECM: 117009 - 20021219
Group number: 19526-0300
Assembly Drawing: 19526-3_1_AA

Issue: 20030206

Pos	Part No	SP	UN	Qty	Description	Page No
Common Parts						
010	19564-0000	-		1	FRAME	
160	312316-0362	-		3	SCREW HEX.SOCK.SET CUP P.MSK6SS6X8 FZB	

Pos	Part No	SP	UN	Qty	Description	Page No

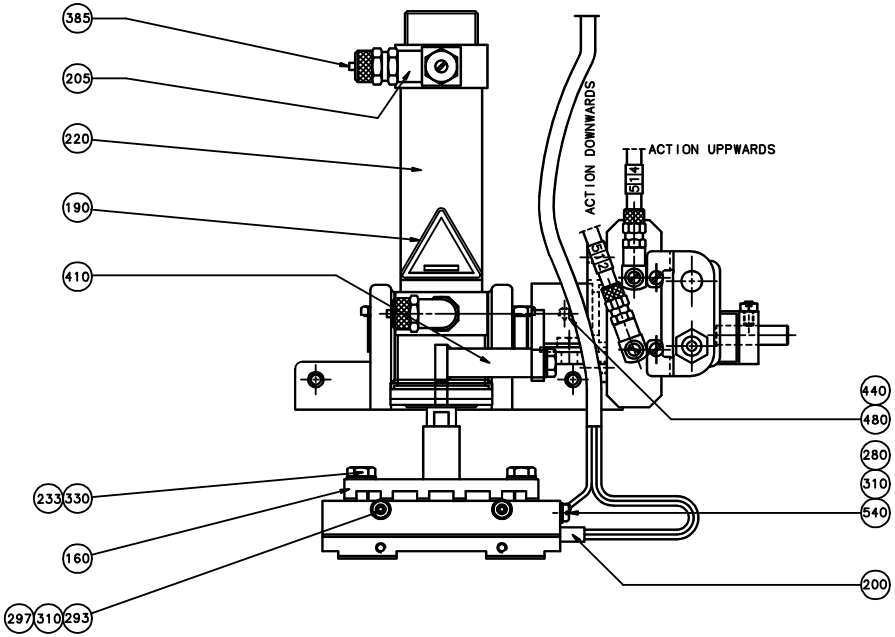
385
205
220
190
410
ACTION DOWNWARDS
ACTION UPPWARDS
514
513
440
480
280
310
540
200
233
330
160
297
310
293

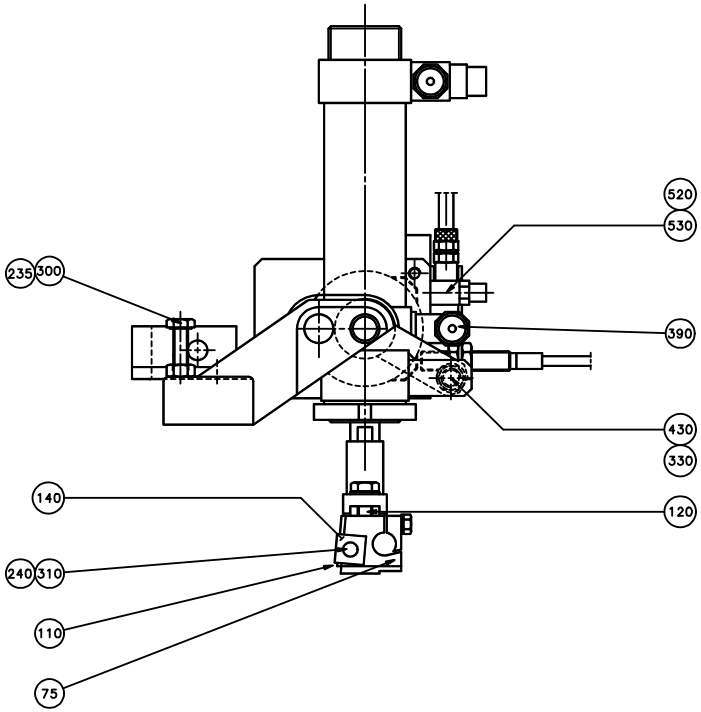
520
530
235
300
390
430
330
140
120
240
310
110
75

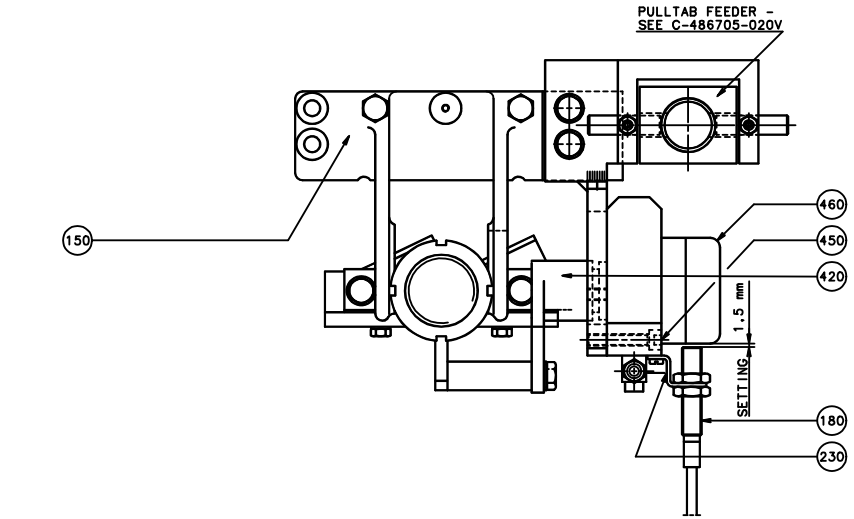
PULLTAB FEEDER -
SEE C-486705-020V
150
460
450
420
1.5 mm
SETTING
180
230

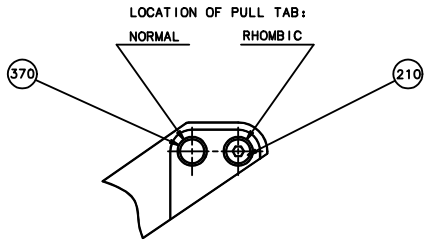
LOCATION OF PULL TAB:
NORMAL
RHOMBIC
370
210

Pos	Part No	SP	UN	Qty	Description	Page No
TCA/25						
075	580156-0000	-		2	HEATING BLOCK	
Common Parts						
110	19128-0000	-		1	KNIFE	
120	19129-0000	-		2	INSULATION	
140	19536-0000	-		1	CLAMPING PART	
150	569644-0000	-		1	BRACKET	
160	486704-0000	-		1	BRACKET	
180	90044-0145	-		1	PROX.SW. 922 AAIY-A9P-050-LZ876	
190	90194-0143	-		1	WARNING SIGN ISO, HOT SURFACE	
200	90206-0073	A		1	HEATING ELEMENT, 300W 240V	
205	90458-2738	-		1	THROTTLE CHECK VALVE, GRLA-1/8-B	
210	90239-0505	-		2	BRACKET	
220	90450-0170	A		1	DOUBLE ACTING,ROUND,CYL 32-25	
230	90450-0748	-		1	BRACKET	
233	312105-0368	-		2	SCREW M6S M6X16 A280	
235	312104-0379	-		2	SCREW M6S M6X45H FZB	
240	312125-0291	-		2	SCREW PAN HEAD MCS M4X12 SS	
280	312125-0289	-		1	SCREW SLOT.PAN HD. MCS 4X10 A480	
293	312316-0295	-		2	SCREW HEX.SOCK.SET CUP P.MSK6SS4X20 FZB	
297	312605-0312	-		2	HEXAGON NUT, M6M M4 A280	
300	312605-0316	-		2	HEXAGON NUT, M6M M6 A280	
310	315105-0136	-		5	WASHER ISO 7089-4-200 HV-A4	
330	315105-0153	-		3	WASHER ISO 7089-6-200 HV-A4	
370	321120-0098	A		4	BEAR.BUSHING W/O FL 10/12X8	
385	342920-0113	-		1	STRAIGHT COUPLING,EXT.THREADED 6/4-R1/8"	
390	342930-0113	-		1	ELBOW 90 COUPL.,EXT.THREAD 6/4-R1/8"	
410	561404-0000	-		1	BRACKET	
420	561405-0000	A		1	BRACKET	
430	312105-0366	-		1	SCREW M6S M6X12 A280	
440	312318-0285	-		1	SCREW ISO4029 M4X6 A4	
450	312115-0331	-		2	SCREW ISO472 M5X20 A4	
460	90239-0977	A		1	ROTARY ACTUATOR DSR-16-180-P	
480	315701-0138	-		1	PARALLEL KEY W. ROUND ENDS 3X3X18 MM	
520	90235-0289	-		2	VALVE	
530	342921-0111	-		2	STRAIGHT COUPL,EXT.THREAD.6/4-M5	
540	353101-0120	-		1	CABLE SHOE 1,25-4MM2	

Pos	Part No	SP	UN	Qty	Description	Page No

Machine Type	Group Description	Used-In	Group Number	Page No

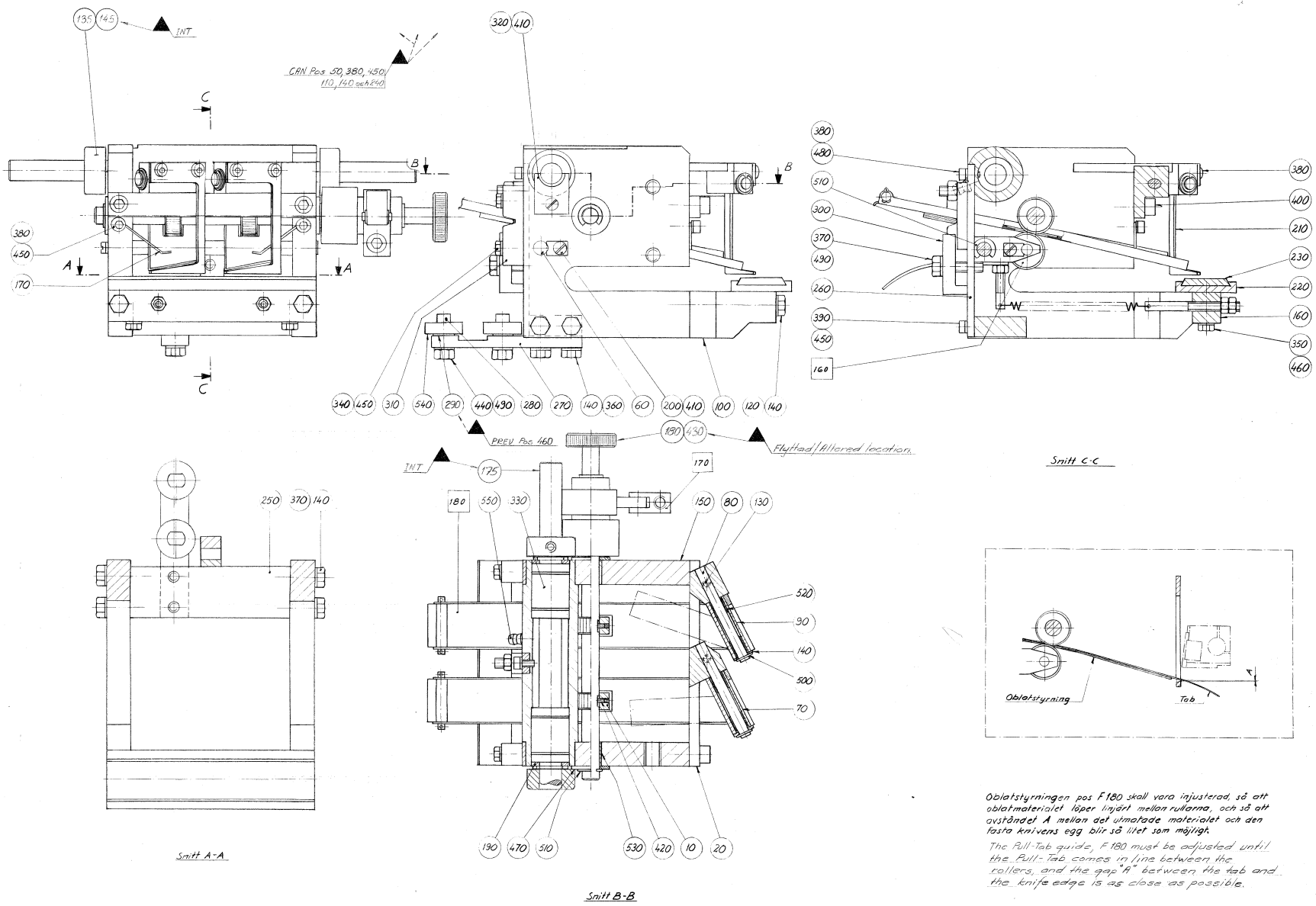

Oblatstyrningen pos F180 skall vara injusterad, så att oblatmaterialet löper linjärt mellan rullarna, och så att avståndet A mellan det utmatade materialet och den fasta knivens egg blir så litet som möjligt.

The Pull-Tab guide, F 180 must be adjusted until the Pull-Tab comes in line between the rollers, and the gap "A" between the tab and the knife edge is as close as possible.

Pos	Part No	SP	UN	Qty	Description	Page No
TAB RECTANGULAR						
020	19125-0000	-		1	LINK	
030	19140-0000	-		2	KNIFE HOLDER	
040	19142-0000	-		1	SHAFT	
060	19547-0000	-		1	SHAFT	
110	312105-0380	-		4	SCREW M6S ISO 4014 M6X50 A480	
240	19540-0000	-		1	CARRIER	
TAB RHOMBOID						
020	36657-0000	-		1	LINK	
060	36661-0000	-		1	SHAFT	
070	36658-0000	-		1	KNIFE HOLDER	
080	36659-0000	-		2	SHAFT	
090	36662-0000	-		1	KNIFE HOLDER	
100	36663-0000	-		2	SPACER	
120	312105-0383	-		2	SCREW M6S ISO 4014 M6X65 A480	
130	312318-0321	-		2	SCREW ISO4029 M5X6 A4	
135	312318-0362	-		2	SCREW ISO4029 M6X8 A4	
145	315742-0108	-		2	COLLAR, 12/28, H=12	
Common Parts						
010	36656-0000	B		2	ROLL	
140	315105-0153	-		10	WASHER ISO 7089-6-200 HV-A4	
150	19537-0000	-		1	FRAME	
160	19538-0000	-		1	BRACKET	
170	11423-0000	B		2	SPRING	
175	11436-0000	-		1	SHAFT	
180	547297-0000	-		1	SHIFTER HANDLE	
190	13643-0000	-		2	WASHER	
200	19135-0000	-		1	LOCK WASHER	
210	19139-0000	-		2	KNIFE	
220	538526-0000	-		1	RAIL	
230	538527-0000	-		1	RUBBER RAIL	
250	19542-0000	-		1	SPACER	
260	19543-0000	-		1	SUPPORT	
270	19544-0000	-		1	BRACKET	
280	19545-0000	-		2	ECCENTRIC SHAFT	
290	19546-0000	-		2	WASHER	
300	19548-0000	-		1	CLAMPING PIECE	
310	19549-0000	-		2	BRACKET	
320	21014-0000	-		2	BALL BUSHING	
330	90189-0003	-		2	BALL BUSHING, 12X22X32 MM	
340	312105-0293	-		4	SCREW M6S ISO 4017 M4X16 A480	
350	312101-0332	-		2	SCREW M6S M5X22 FZB	
360	312105-0368	-		2	SCREW M6S M6X16 A280	
370	312105-0372	-		5	SCREW M6S ISO 4017 M6X25 A480	
380	312105-0287	-		5	SCREW M6S ISO4017 M4X8 A480	
390	312115-0291	-		1	SCREW ISO4762 M4X12 A4	
400	312115-0368	-		2	SCREW ISO4762 M6X16 A4	
410	312125-0287	-		3	SCREW PAN HEAD MCS M4X8 SS	
420	312318-0283	-		2	SCREW ISO4029 M4X4 A4	
430	312318-0287	-		1	SCREW ISO4029 M4X8 A4	
440	312605-0316	-		2	HEXAGON NUT, M6M M6 A280	
450	315105-0136	-		5	WASHER ISO 7089-4-200 HV-A4	
460	315105-0146	-		2	WASHER ISO 7089-5-200 HV-A4	
470	315105-0173	-		2	WASHER ISO 7089-10-200 HV-A4	
480	315401-0136	-		1	WASHER FBH 4,1 FZB	
490	315401-0153	-		5	WASHER FBH6,1FZB	
500	315755-0106	A		2	LOCKING WASHER 4	
510	315755-0109	A		5	LOCKING WASHER 7	
520	321141-0064	-		4	BEARING BUSHING WITHOUT FL, 6X8X10 MM	
530	321141-0140	-		2	BEARING BUSHING WITHOUT FL, 10X12X10 MM	
540	321302-0298	A		2	BALL BEARING, 2 SEALS, 8X22X7 MM	
550	344502-0021	-		1	GREASE NIPPLE STRAIGHT M6	
F160	A19522-0100	-		2	COUNTER ROLLER	**317**
F170	A19523-0100	-		1	FREE-WHEEL COUPLING	**319**
F180	A20991-0100	-		1	STEERING	**321**

Machine Type | Group Description | Used-In | Group Number | Page No

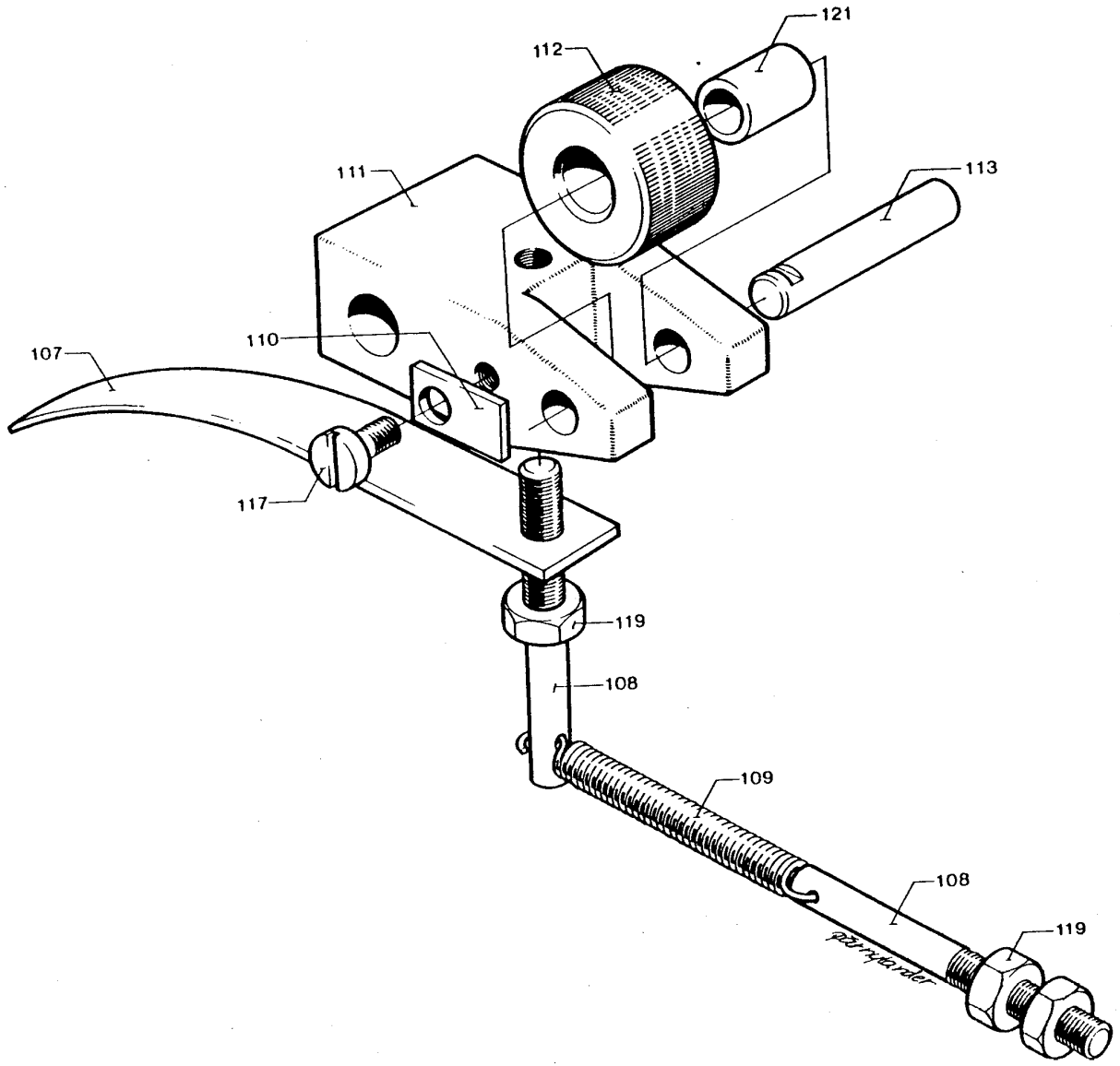

19522-1

Pos	Part No	SP	UN	Qty	Description	Page No
TAB RECTANGULAR						
114	11390-0000	-		2	SCREW	
TAB RHOMBOID						
108	36664-0000	-		1	SCREW	
114	11390-0000	-		1	SCREW	
Common Parts						
107	11389-0000	-		1	BOW CLAMP	
109	11391-0002	A		1	TENSION SPRING	
110	19135-0000	-		1	LOCK WASHER	
111	19551-0000	-		1	HOLDER	
112	19552-0000	A		1	ROLL	
113	19553-0000	A		1	SHAFT	
117	312125-0285	-		1	SCREW SLOT.PAN HD. MCS 4X6 A480	
119	312605-0314	-		3	HEXAGON NUT, M6M M5 A280	
121	321120-0102	A		1	BEARING BUSHING W/O FLANGE,6/8X10	

Pos	Part No	SP	UN	Qty	Description	Page No

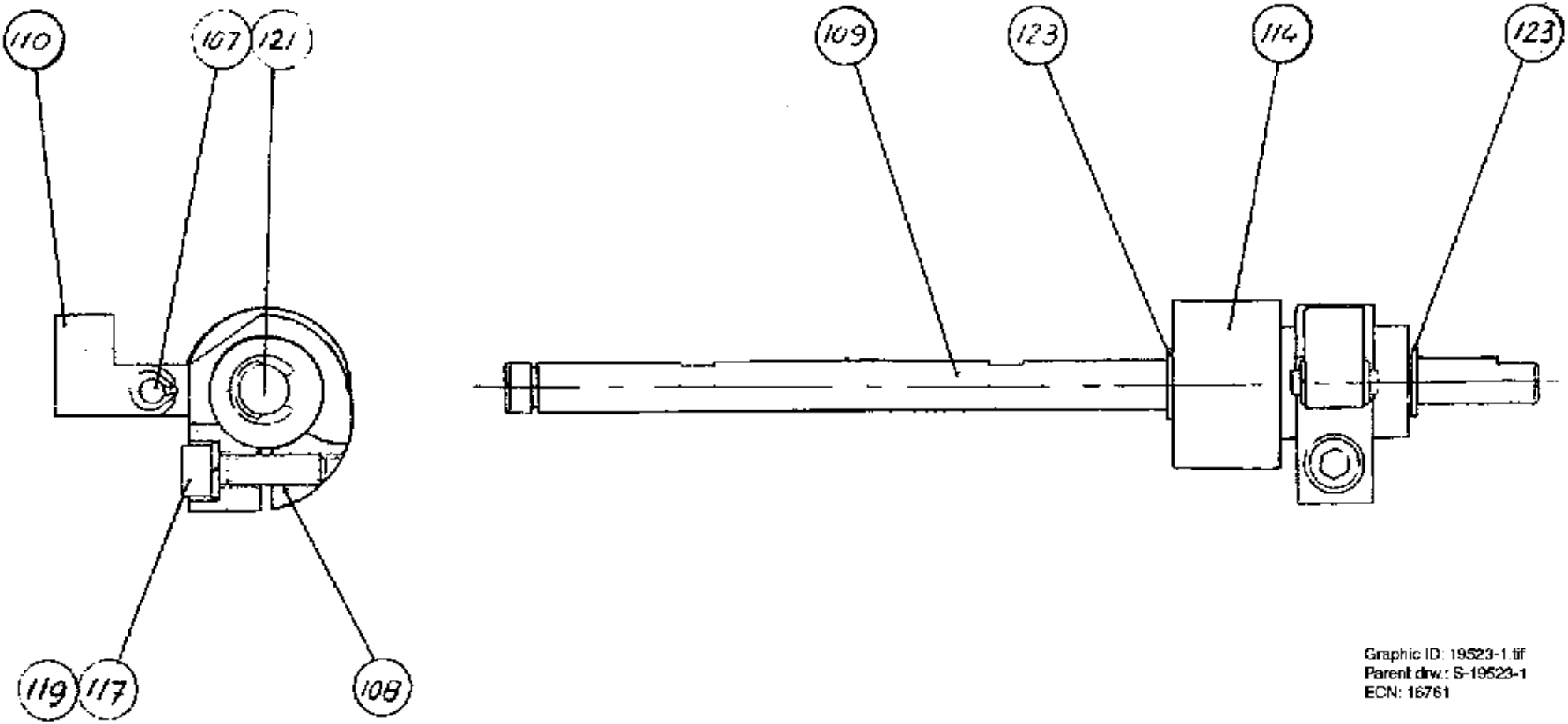

Graphic ID: 19523-1.tif
Parent drw.: S-19523-1
ECN: 16761

Pos	Part No	SP	UN	Qty	Description	Page No
Common Parts						
107	13354-0000	A		1	SHAFT	
108	14637-0000	-		1	LINK	
109	546420-0002	A		1	SHAFT	
109	546420-0001	A		1	SHAFT	
110	19555-0000	-		1	FORK	
114	B90340-0014	A		1	FREE WHEEL COUPLING	
	90340-0309	*C*		*1*	*SPRING*	
117	312111-0371	-		1	SCREW HEX.SOCK.HD.MC6S-TT 6X22 88 FZB	
119	315401-0153	-		1	WASHER FBH6,1FZB	
121	315750-0102	-		2	RETAIN. RING, 5	
123	315754-0109	A		2	LOCKING WAE 7	

Pos	Part No	SP	UN	Qty	Description	Page No

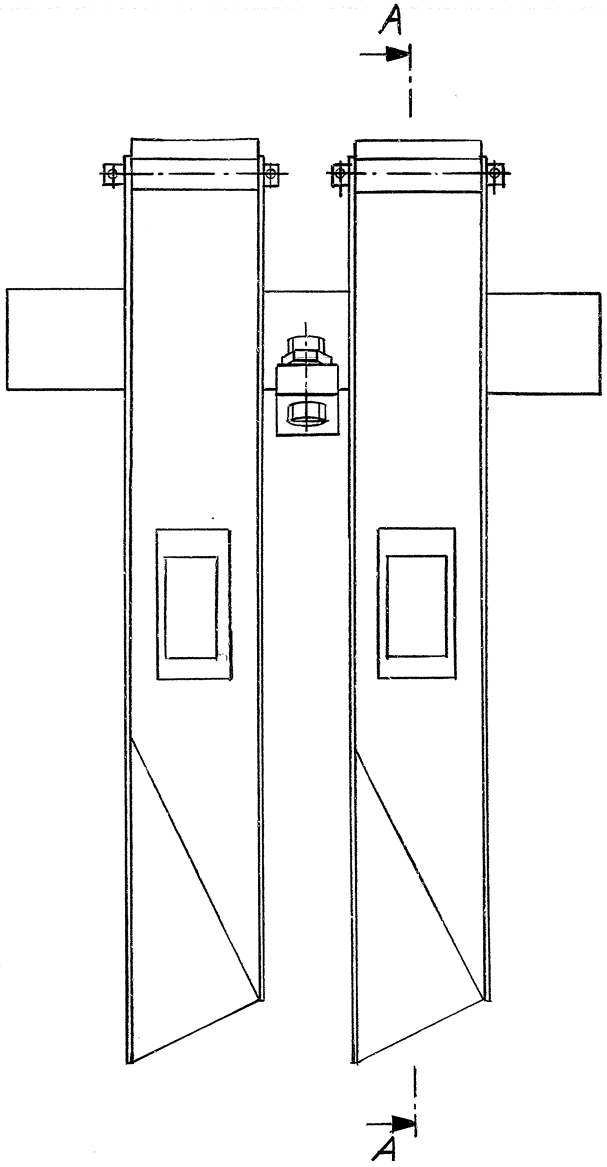

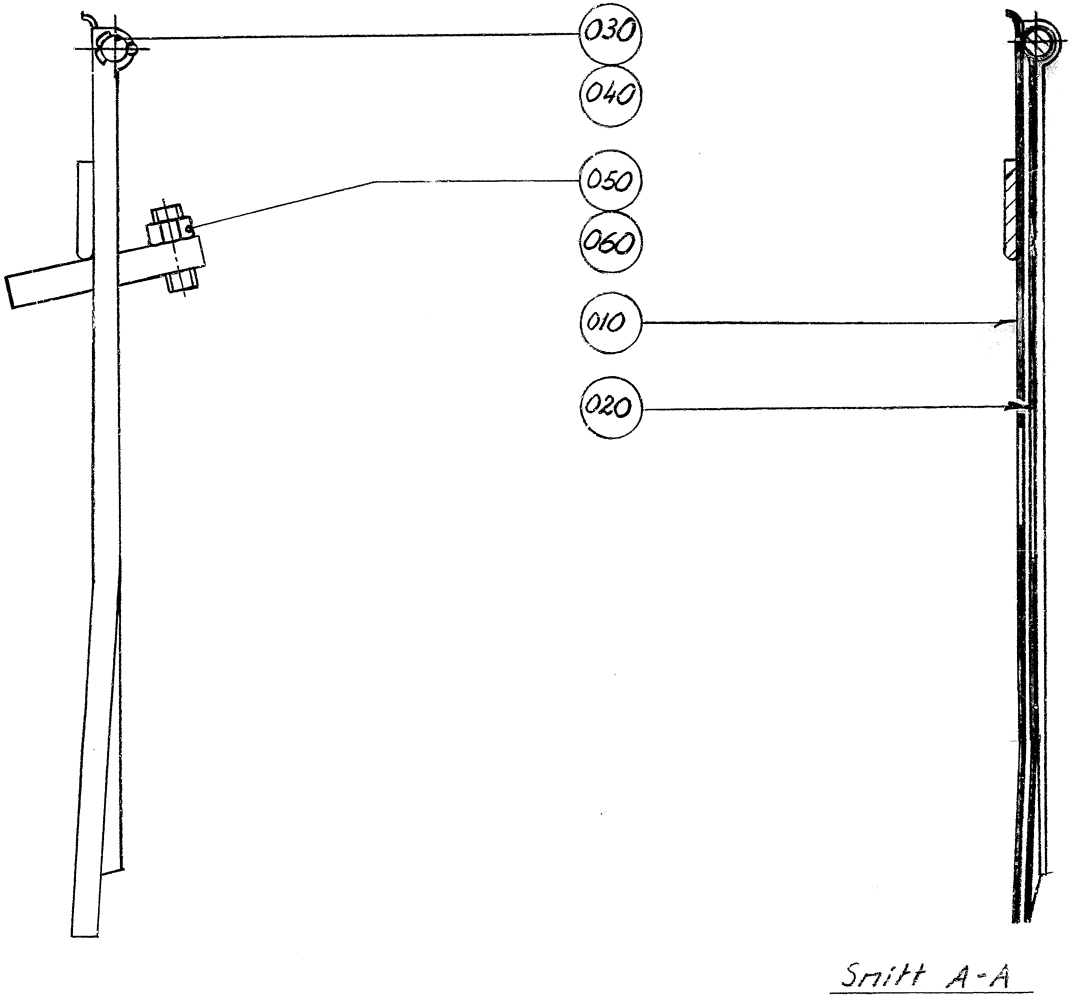

Snitt A-A

Pos	Part No	SP	UN	Qty	Description	Page No
TAB RECTANGULAR						
010	20992-0000	-		1	STEERING RAIL	
020	14617-0000	-		2	HEAD PLATE	
TAB RHOMBOID						
010	36676-0000	-		1	STEERING RAIL	
020	36675-0000	-		2	HEAD PLATE	
Common Parts						
030	14618-0000	-		2	SHAFT	
040	311411-0117	-		4	SPLIT PIN SP1X10RFR	
050	312316-0368	-		1	SCREW HEX.SOCK.SET CUP P.MSK6SS6X16 FZB	
060	312601-0316	-		1	NUT M6M 6-8 FZB	

Pos	Part No	SP	UN	Qty	Description	Page No

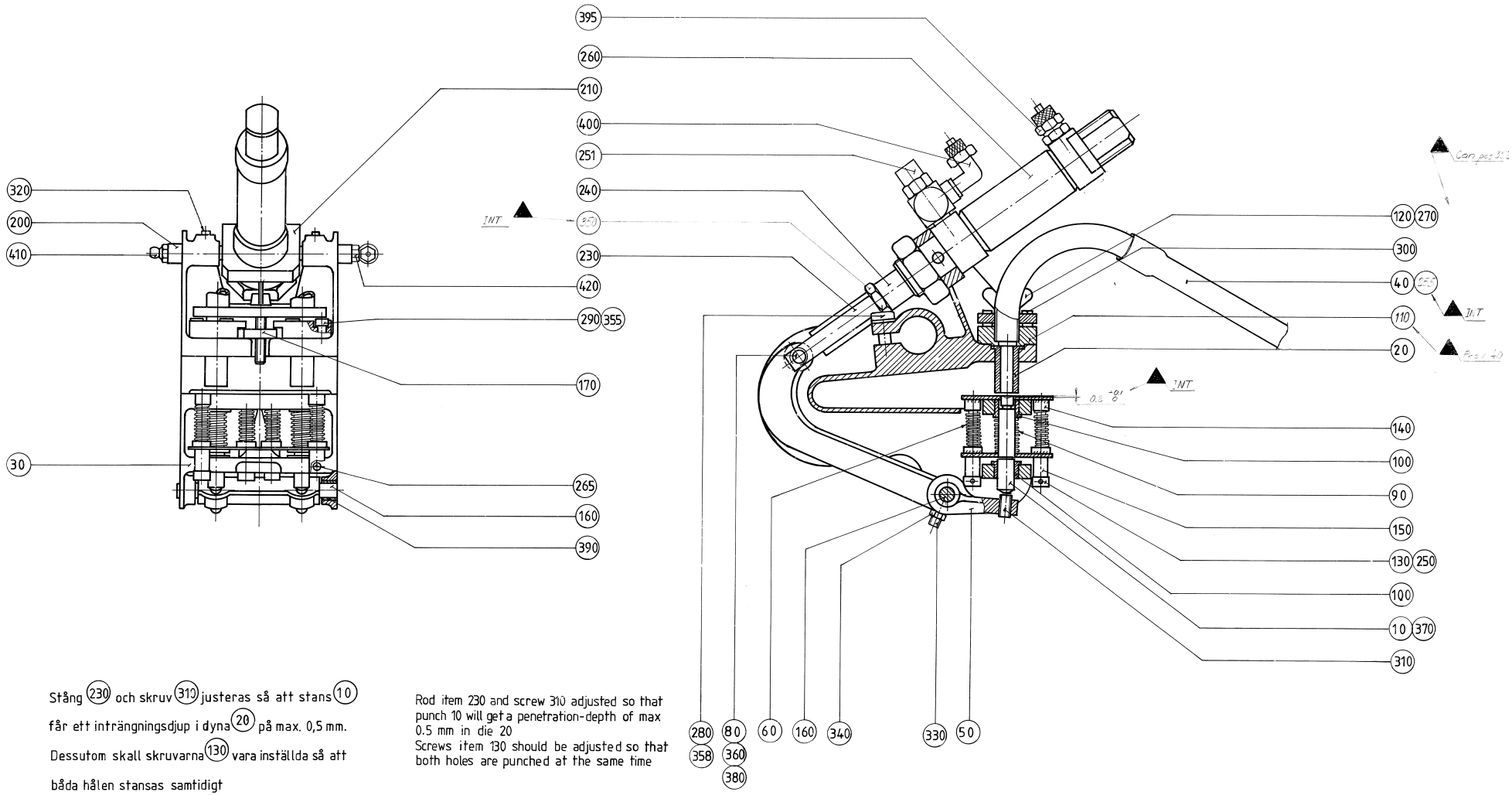

Stång (230) och skruv (310) justeras så att stans (10) får ett inträngningsdjup i dyna (20) på max. 0,5 mm. Dessutom skall skruvarna (130) vara inställda så att båda hålen stansas samtidigt

Rod item 230 and screw 310 adjusted so that punch 10 will get a penetration-depth of max 0.5 mm in die 20
Screws item 130 should be adjusted so that both holes are punched at the same time

Pos	Part No	SP	UN	Qty	Description	Page No
PD=6,0						
010	21520-0004	A		2	PUNCH	
020	21522-0004	A		2	DIE	
PD=8,0						
010	21520-0005	A		2	PUNCH	
020	21522-0005	A		2	DIE	
Common Parts						
030	579012-0000	-		1	BRACKET	
040	580168-0000	-		1	BRACKET	
050	267281-0000	-		1	LEVER	
060	8479-0000	A		4	COMPRESSION SPRING	
080	21518-0000	-		1	SHAFT	
090	21521-0000	A		2	COMPRESSION SPRING	
100	21524-0000	A		4	BUSHING	
110	579013-0000	-		2	LID	
120	21622-0000	-		1	THUMB SCREW	
130	35806-0000	-		4	SCREW	
140	36670-0000	-		1	PLATE	
150	36671-0000	-		1	PLATE	
160	36672-0000	-		1	SHAFT	
170	36674-0000	-		1	PLATE	
200	486707-0000	-		2	SHAFT	
210	486709-0000	-		1	FASTENING PLATE	
230	486703-0000	-		1	BRACKET	
240	486714-0000	-		1	SPACER SLEEVE	
250	90145-0003	-	MM	220	WIRE	
251	90458-2738	A		1	THROTTLE CHECK VALVE, GRLA-1/8-B	
255	90166-0007	-	MM	800	HOSE PVC 10/14 TRANSP.	
260	90239-0828	A		1	DOUBLE ACTING, MINI-ISO, CYL.25-25	
265	311103-0274	-		2	PARALLELL PIN, M6, 4X25 MM	
270	311411-0117	-		1	SPLIT PIN SP1X10RFR	
280	312115-0370	-		2	SCREW ISO4762 M6X20 A4	
290	312115-0291	-		8	SCREW ISO4762 M4X12 A4	
300	312306-0327	-		2	SCREW HEX.SOCK.SET FLAT P.MP6SS 5X12FZB	
310	312306-0366	-		2	SCREW HEX.SOCK.SET FLAT P.MP6SS 6X12FZB	
320	312316-0323	-		2	SCREW HEX.SOCK.SET CUP P.MSK6SS5X8 FZB	
330	312316-0329	-		1	SCREW HEX.SOCK.SET CUP P.MSK6SS5X16 FZB	
340	312601-0314	-		1	NUT M6M5FZB	
350	90099-0051	-		1	NUT HEX. M10X1,25, FE FZB	
355	315401-0136	-		8	WASHER FBH 4,1 FZB	
358	315401-0153	-		2	WASHER FBH6,1FZB	
360	315754-0106	A		2	RET. RING FOR RAD. ASSEMBLY, 4X0,7 MM	
370	315754-0109	A		2	LOCKING WAE 7	
380	321120-0101	B		1	BEARING BUSHING WITHOUT FLANGE,6/8X6	
390	321120-0103	B		2	BEARING BUSHING WITHOUT FLANGE,8/10X8	
395	342920-0113	-		1	STRAIGHT COUPLING,EXT.THREADED 6/4-R1/8"	
400	342930-0113	-		1	ELBOW 90 COUPL.,EXT.THREAD 6/4-R1/8"	
410	344502-0021	-		1	GREASE NIPPLE STRAIGHT M6	
420	344502-0061	-		1	GREASE NIPPLE 90 DEG ANGLE M6	

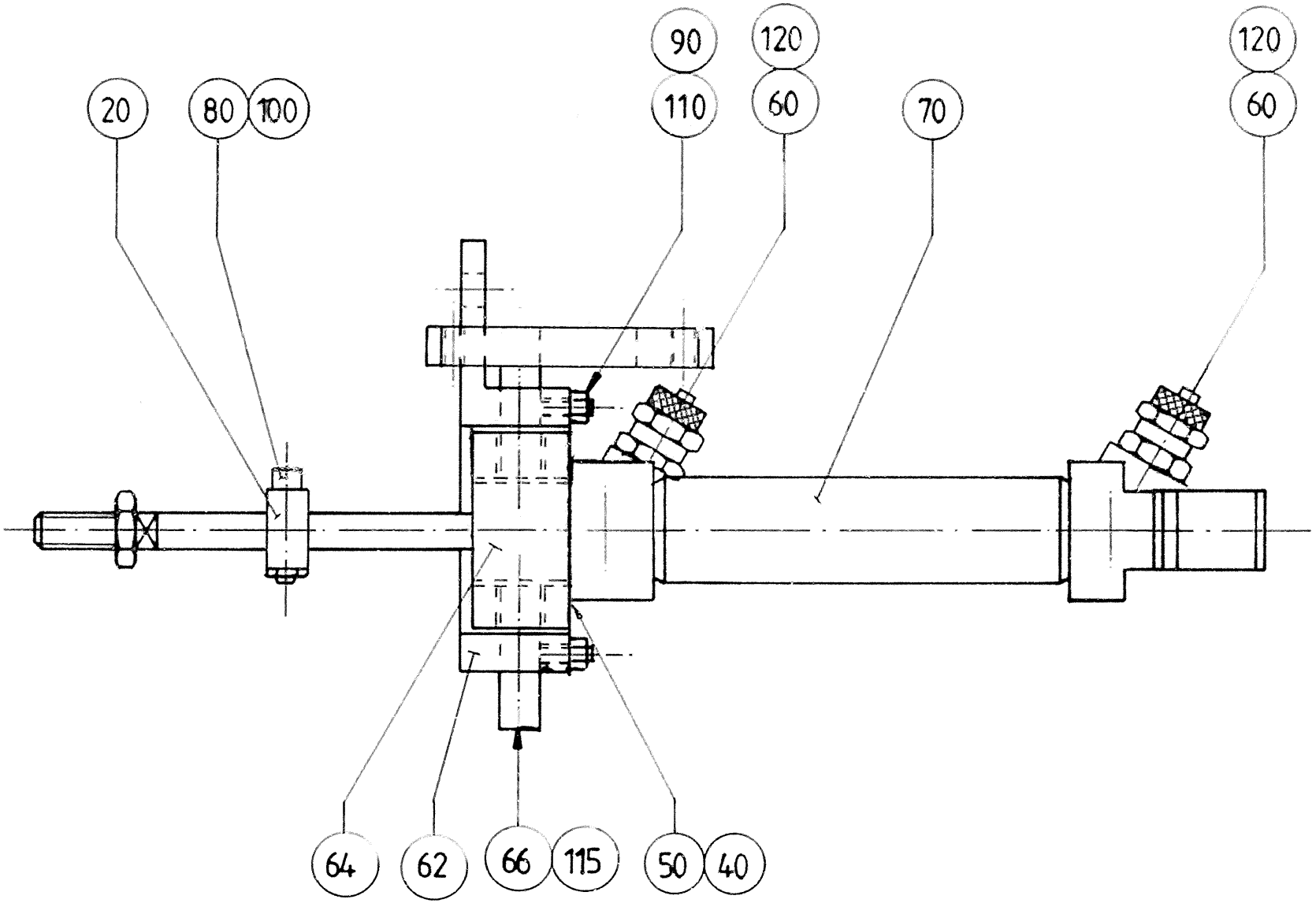
20
80
100
90
110
120
60
70
120
60
64
62
66
115
50
40

ECM: 117012 - 20021219
Group number: 486705-0200
Assembly Drawing: 486705-2_1_AA

Issue: 20030206

Pos	Part No	SP	UN	Qty	Description	Page No
Common Parts						
020	19556-0000	-		1	STOP LUG	
040	527131-0000	-		3	SHIM	
050	526969-0000	-		3	SHIM	
060	90458-2738	-		2	THROTTLE CHECK VALVE, GRLA-1/8-B	
062	570774-0000	-		1	CYLINDER CONSOLE	
064	549238-0000	-		1	CYLINDER BRACKET	
066	549239-0000	-		2	SHAFT	
070	90239-0822	A		1	DOUBLE ACTING, MINI-ISO, CYL.20-50	
080	312111-0293	-		1	SCREW HEX.SOCK.HD.MC6S-TT 4X16 88 FZB	
090	312318-0289	-		2	SCREW ISO4029 M4X10 A4	
100	312601-0312	-		1	NUT M6M 4-8 FZB	
110	312605-0312	-		2	HEXAGON NUT, M6M M4 A280	
115	321120-0103	B		2	BEARING BUSHING WITHOUT FLANGE,8/10X8	
120	342920-0113	-		2	STRAIGHT COUPLING,EXT.THREADED 6/4-R1/8"	

Pos	Part No	SP	UN	Qty	Description	Page No

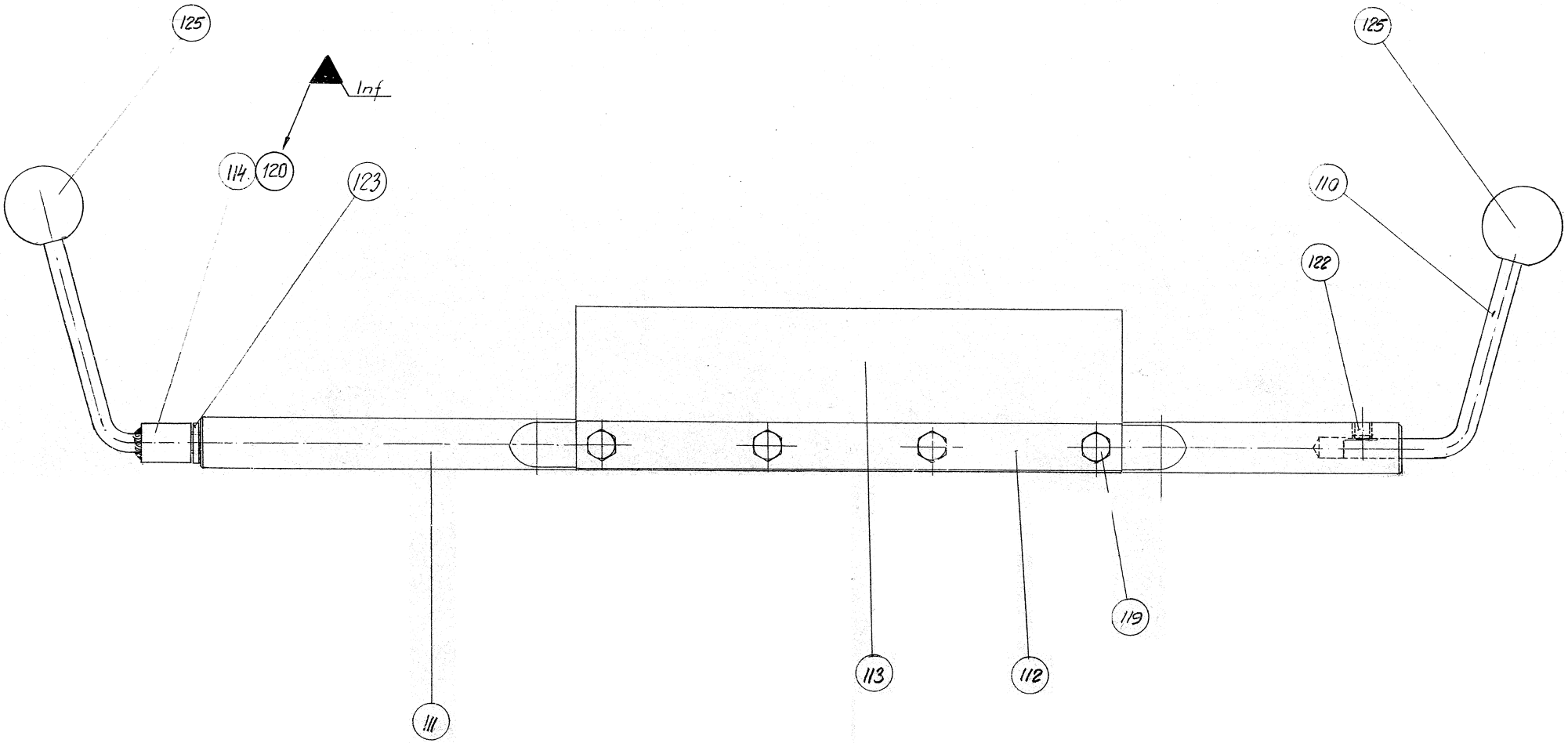
125
Inf
114
120
123
125
110
122
119
113
112
111

ECM: 82109 - 20000814
Group number: 20036-0200
Assembly Drawing: 20036-1_1_AA

Issue: 20030206

Pos	Part No	SP	UN	Qty	Description	Page No
TCA/25						
111 1	20037-0000	-		1	SHAFT	
120	312105-0367	-		1	SCREW M6S M6X14 A280	
125	318800-0103	-		1	HANDLES,SPHERICAL KNOB,INT.THRE.,D.25-M6	
Common Parts						
110	4292-0000	-		1	HANDSPIKE	
111 2	268815-0000	-		1	SHAFT	
112	20038-0000	-		1	CLAMP PLATE	
113	20039-0000	A		1	RUBBER STRIP	
119	312105-0329	-		4	SCREW M6S ISO 4017 M5X16 A480	
122	312316-0360	-		1	STOP SCREW SK6SS6X6FZB	
123	315105-0153	-		1	WASHER ISO 7089-6-200 HV-A4	

Pos	Part No	SP	UN	Qty	Description	Page No

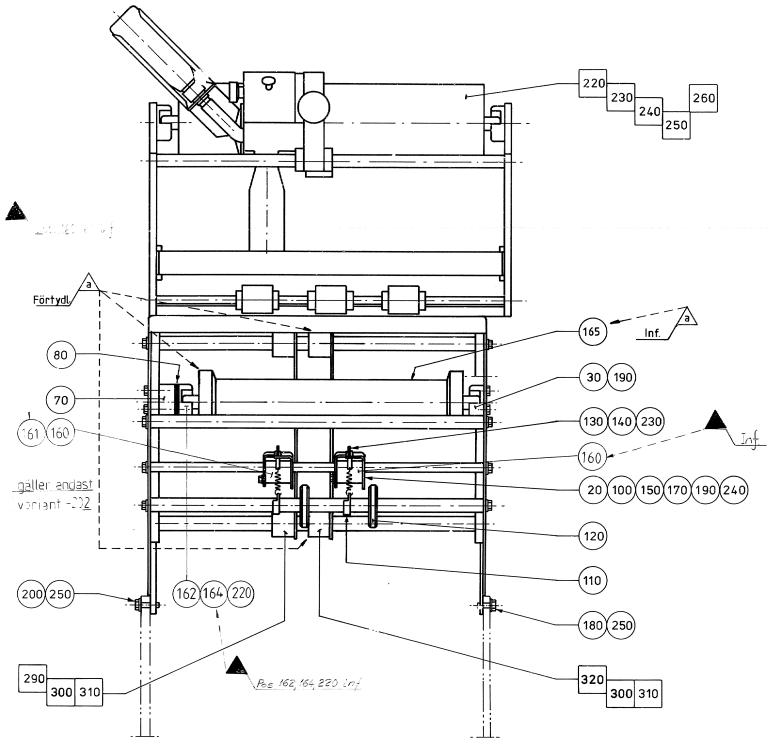
220
230
240
250
260
Förtydl
a
165
Inf.
80
30
190
70
130
140
230
61
160
Inf.
160
gäller endast
variant -002
20
100
150
170
190
240
120
110
200
250
162
164
220
180
250
290
300
310
320
300
310

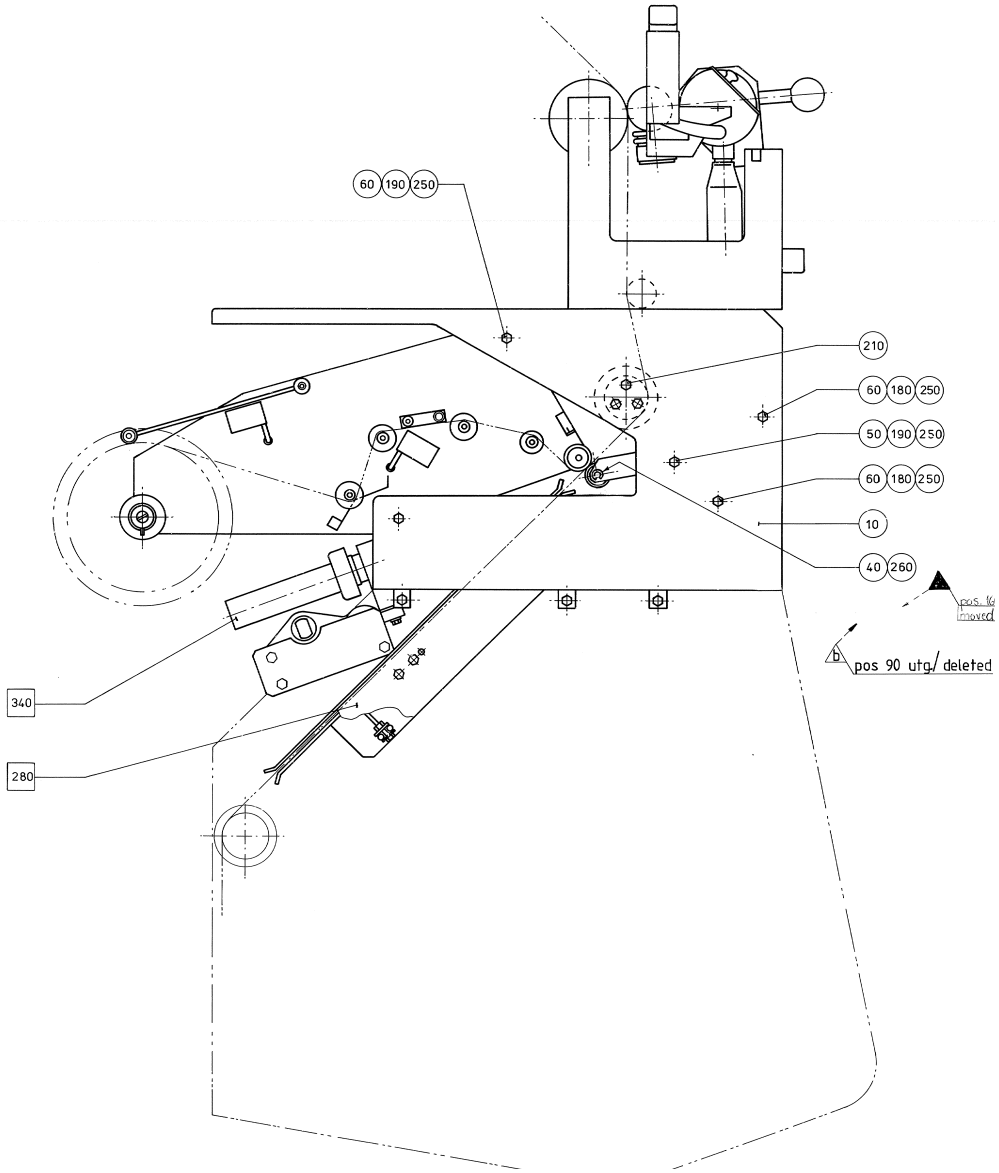
60
190
250
210
60
180
250
50
190
250
60
180
250
10
40
260
pos. 10
moved
b
pos 90 utg./ deleted
340
280

Pos	Part No	SP	UN	Qty	Description	Page No
Common Parts						
010	19779-0000	-		1	HOUSE	
020	23169-0000	-		2	FORK	
030	4317-0000	A		2	BEARING	
040	6759-0001	A		2	SHAFT	
050	11448-0000	-		1	SHAFT	
060	11450-0000	-		4	SHAFT	
070	11452-0000	-		1	LACE	
080	13401-0000	-		3	LACE	
100	19791-0000	-		2	RETAINING RING	
110	19792-0000	B		2	SPRING BRACKET	
120	20401-0000	-		2	RING	
130	21631-0000	B		2	TENSION SPRING	
140	23175-0000	-		2	SCREW	
150	23176-0000	-		4	BRACKET	
160	539619-0000	B		2	ROLL	
162	575505-0000	-		1	SPACER	
164	90165-0015	-		1	CLIP	
165	90166-0053	B	MM	300	SHRINKABLE HOSE 43-53 MM (2")	
170	312105-0325	-		8	SCREW M6S ISO 4017 M5X10 A480	
180	312105-0366	-		7	SCREW M6S M6X12 A280	
190	312105-0368	-		11	SCREW M6S M6X16 A280	
200	312105-0370	-		3	SCREW M6S ISO 4017 M6X20 A480	
210	312105-0378	-		3	SCREW M6S ISO 4014 M6X40 A480	
220	312115-0289	-		2	SCREW ISO4762 M4X10 A4	
230	312715-0116	-		2	NUT WING COLD WORK.MVM-K M6 A280	
240	315105-0146	-		14	WASHER ISO 7089-5-200 HV-A4	
250	315105-0153	-		16	WASHER ISO 7089-6-200 HV-A4	
260	315754-0106	A		4	RET. RING FOR RAD. ASSEMBLY, 4X0,7 MM	
F220	A37459-0100	-		1	HOLDER	**331**
F280	A450343-0200	-		1	PAPER GUIDE	**341**
F290	A293483-0100	-		1	FASTENING PLATE	**343**
F320	A293484-0100	-		1	FASTENING PLATE	**349**
F340	A294112-0300	-		1	ELEMENT GROUP	**351, 353**

Pos	Part No	SP	UN	Qty	Description	Page No

Machine Type | Group Description | Used-In | Group Number | Page No

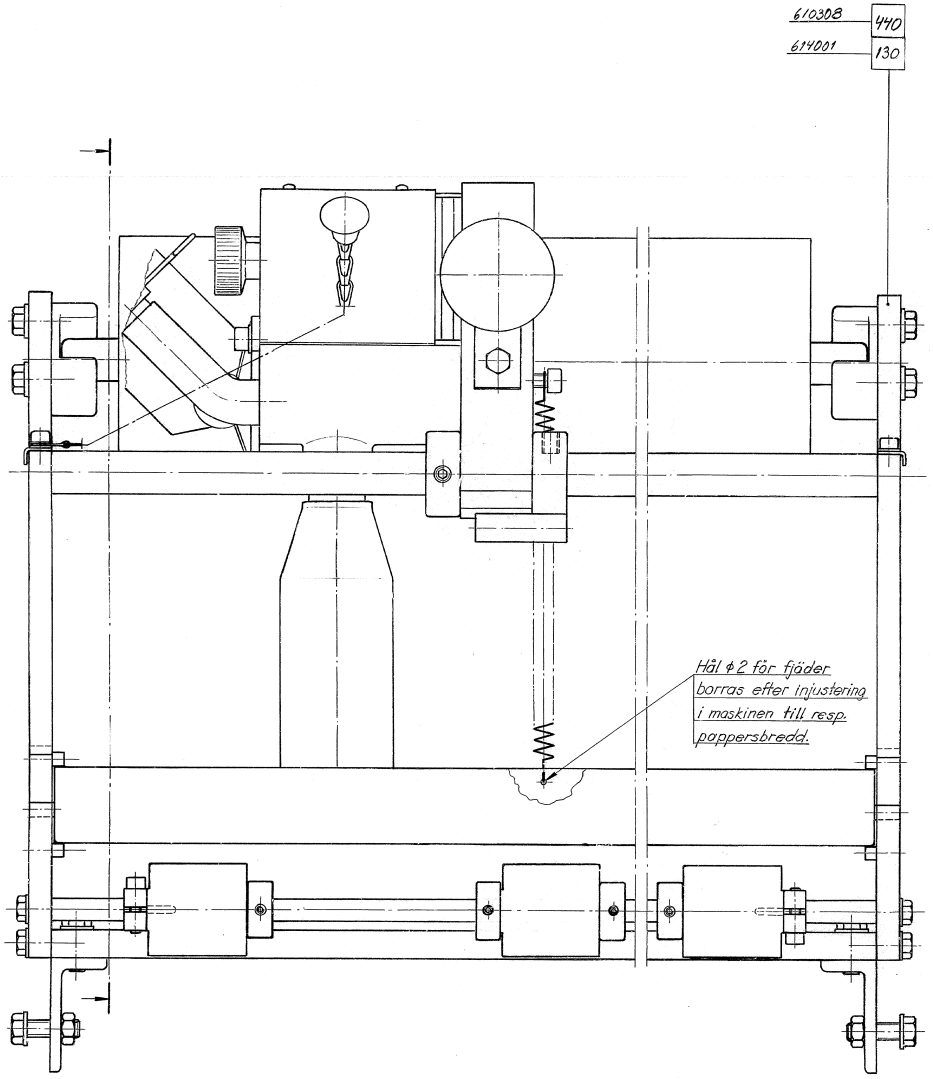
610308
440
614001
130
Hål ϕ2 för fjäder borras efter injustering i maskinen till resp. pappersbredd.

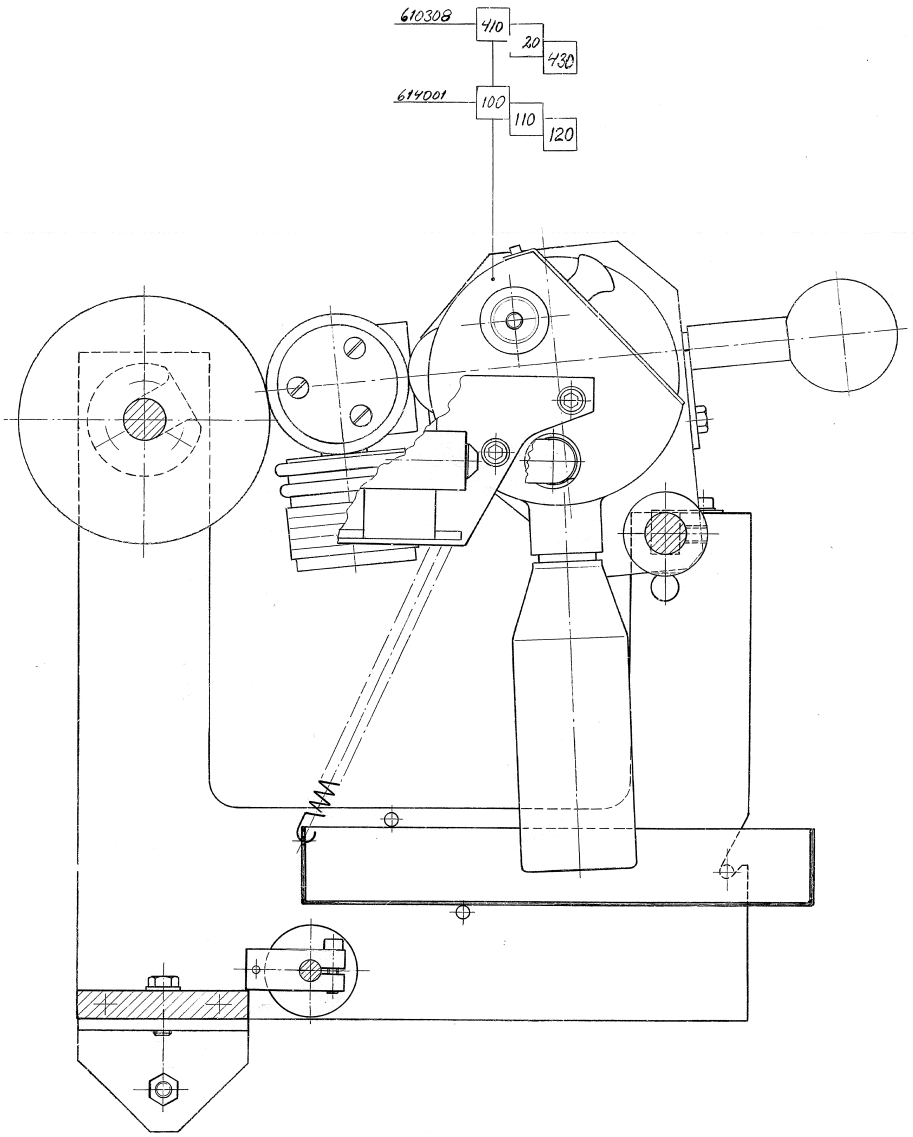
610308
410
20
430
614001
100
110
120

Pos	Part No	SP	UN	Qty	Description	Page No
Common Parts						
F100	A37460-0100	-		1	DATING UNIT	**333**
F130	A37485-0100	-		1	HOLDER	**339**

Pos	Part No	SP	UN	Qty	Description	Page No

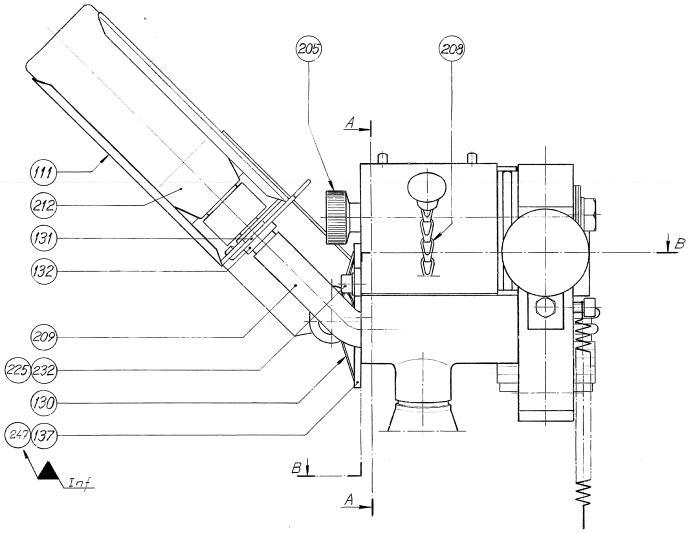
205
208
A
111
212
131
132
209
225
232
130
247
137
Inf
B
A

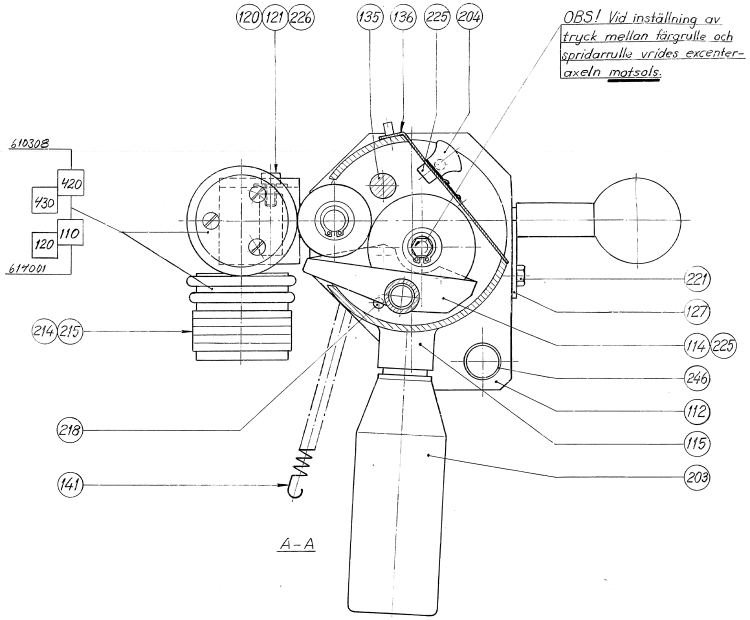
120
121
226
135
136
225
204
OBS! Vid inställning av tryck mellan färgrulle och spridarrulle vrides excenter-axeln motsols.
610308
420
430
120
110
617001
214
215
218
141
221
127
114
225
246
112
115
203
A-A

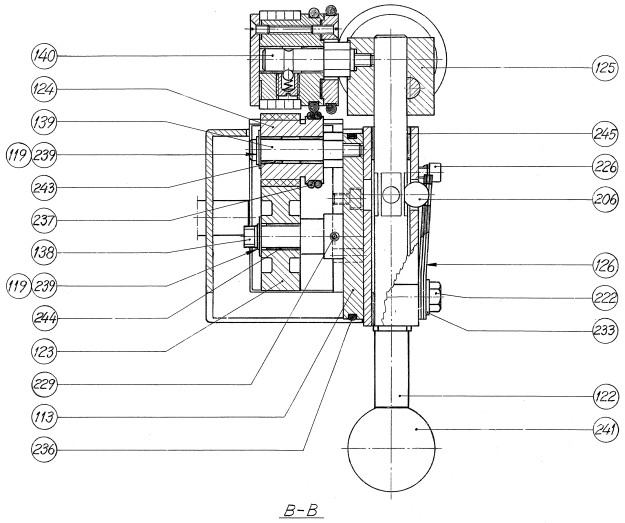
140
124
139
119
239
243
237
138
119
239
244
123
229
113
236
125
245
226
206
126
222
233
122
241
B-B

Pos	Part No	SP	UN	Qty	Description	Page No
Common Parts						
111	36361-0000	-		1	HOLDER	
112	37465-0000	-		1	HEAD	
113	37466-0000	-		1	ROLLER BRACKET	
114	37467-0000	-		1	INK WELL	
115	37468-0000	-		1	COVER	
119	2033-0009	-		2	WASHER	
120	6071-0000	-		1	LOCKING FINGER	
121	6074-0000	-		1	WASHER	
122	33611-0000	-		1	PIVOT AXLE	
123	33615-0000	-		1	INK ROLLER	
124	33617-0000	-		1	INK TRANSFER ROLLER	
125	33621-0000	-		1	MOUNTING BLOCK	
126	33622-0000	-		1	LEAF SPRING	
127	33624-0000	-		1	SECURING PLATE	
130	35547-0000	-		1	SPRING	
131	35548-0000	-		1	SPRING	
132	35549-0000	-		1	CANNULAR TUBE	
135	37476-0000	-		1	SHAFT	
136	37477-0000	-		1	LID	
137	37478-0000	-		1	PIVOT BRACKET	
138	37482-0000	-		1	ECCENTRIC SHAFT	
139	37483-0000	-		1	SHAFT	
140	37484-0000	-		2	SHAFT	
141	37486-0000	-		1	TENSION SPRING	
203	90050-0008	-		1	BOTTLE	
204	90051-0026	-		1	KNOB, CIRKUL, THREADED BUSH, M5 17X14 MM	
205	90051-0053	-		1	KNOB, INTERNAL THREAD, M6 24X17	
206	90090-0003	-		1	BALL, D=12,7 MM	
208	90155-0001	-	MM	400	VALVE CHAIN, 14	
209	90166-0113	-	MM	100	HOSE	
212	90299-0072	-		1	INK	
214	90413-0033	-		2	CODE INSERT SET 0-9	
215	90413-0047	-		2	CODE INSERT SET	
218	311103-0351	-		2	PARALLELL PIN, M6, 6X16 MM	
221	312105-0327	-		1	SCREW M6S ISO 4017 M5X12 A480	
222	312105-0449	-		1	SCREW M6S ISO 4017 M8X16 A480	
225	312115-0323	-		4	SCREW ISO4762 M5X8 A4	
226	312115-0325	-		2	SCREW ISO4762 M5X10 A4	
229	312318-0285	-		1	SCREW ISO4029 M4X6 A4	
232	315105-0146	-		2	WASHER ISO 7089-5-200 HV-A4	
233	315105-0165	-		1	WASHER ISO 7089-8-200 HV-A4	
236	315202-0307	-		1	O-RING 79,5X3 MM	
237	315202-0910	-		2	O-RING 25,80X3,53 MM	
239	315750-0107	-		2	RETAIN. RING, 10	
241	318800-0106	-		1	HANDLE,SPHERICAL KNOB,INT.THRE,D.40-M10	
243	321141-0140	-		2	BEARING BUSHING WITHOUT FL, 10X12X10 MM	
244	321141-0145	-		1	BEARING BUSHING WITHOUT FL, 10X12X15 MM	
245	321120-0122	-		2	BEARING BUSHING WITHOUT FL, 15X17X15 MM	
246	321120-0124	-		1	BEARING BUSHING WITHOUT FL, 15X17X25 MM	
247	321141-0178	-		2	BEARING BUSHING WITHOUT FL, 12X14X10 MM	
F110	A37461-0100	-		2	PRINTING WHEEL	**335**

Machine Type | Group Description | Used-In | Group Number | Page No

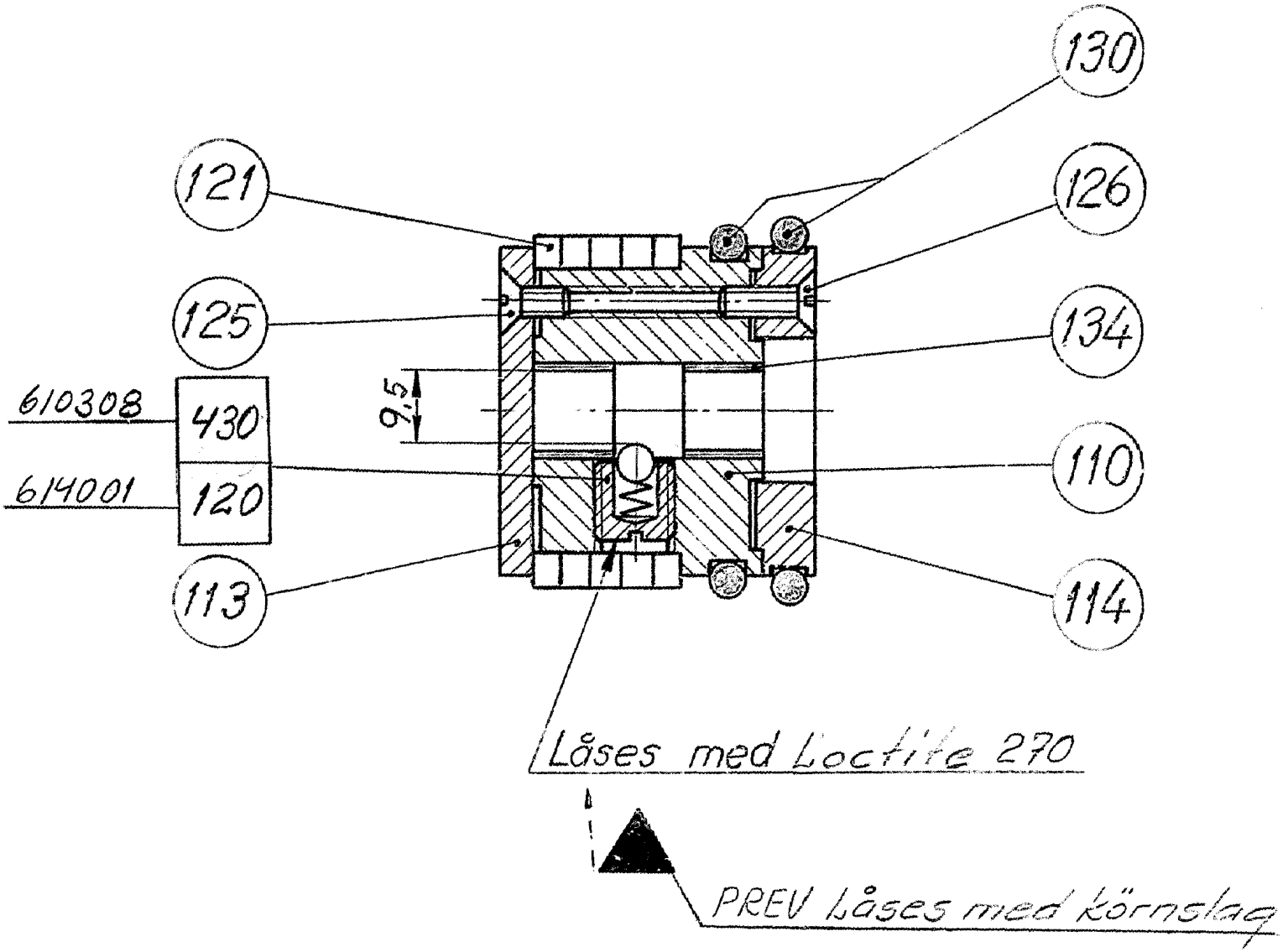
130
121
126
125
134
610308
430
9,5
614001
120
110
113
114
Låses med Loctite 270
PREV Låses med körnslag

ECM: 118864 - 20021219
Group number: 37461-0100
Assembly Drawing: 37461-1_1_AA

Issue: 20030206

Pos	Part No	SP	UN	Qty	Description	Page No
Common Parts						
110	37469-0000	-		1	PRINTING WHEEL	
113	33618-0000	-		1	LID	
114	37479-0000	-		1	RING	
121	90427-0312	-		5	DATING UNIT	
125	312145-0287	-		3	SCREW COUNTERS.SLOT.HD. MFS 4X8 SS	
126	312145-0291	-		3	SCREW COUNT.SLOT.HD. 4X12 A4	
130	315202-0527	-		2	O-RING 37,47X5,33 MM	
134	321120-0104	-		2	BEAR.BUSHING W/O FLANGE 10/12X10	
F120	A33608-0100	-		1	SCREW	**337**

Pos	Part No	SP	UN	Qty	Description	Page No

Machine Type | Group Description | Used-In | Group Number | Page No

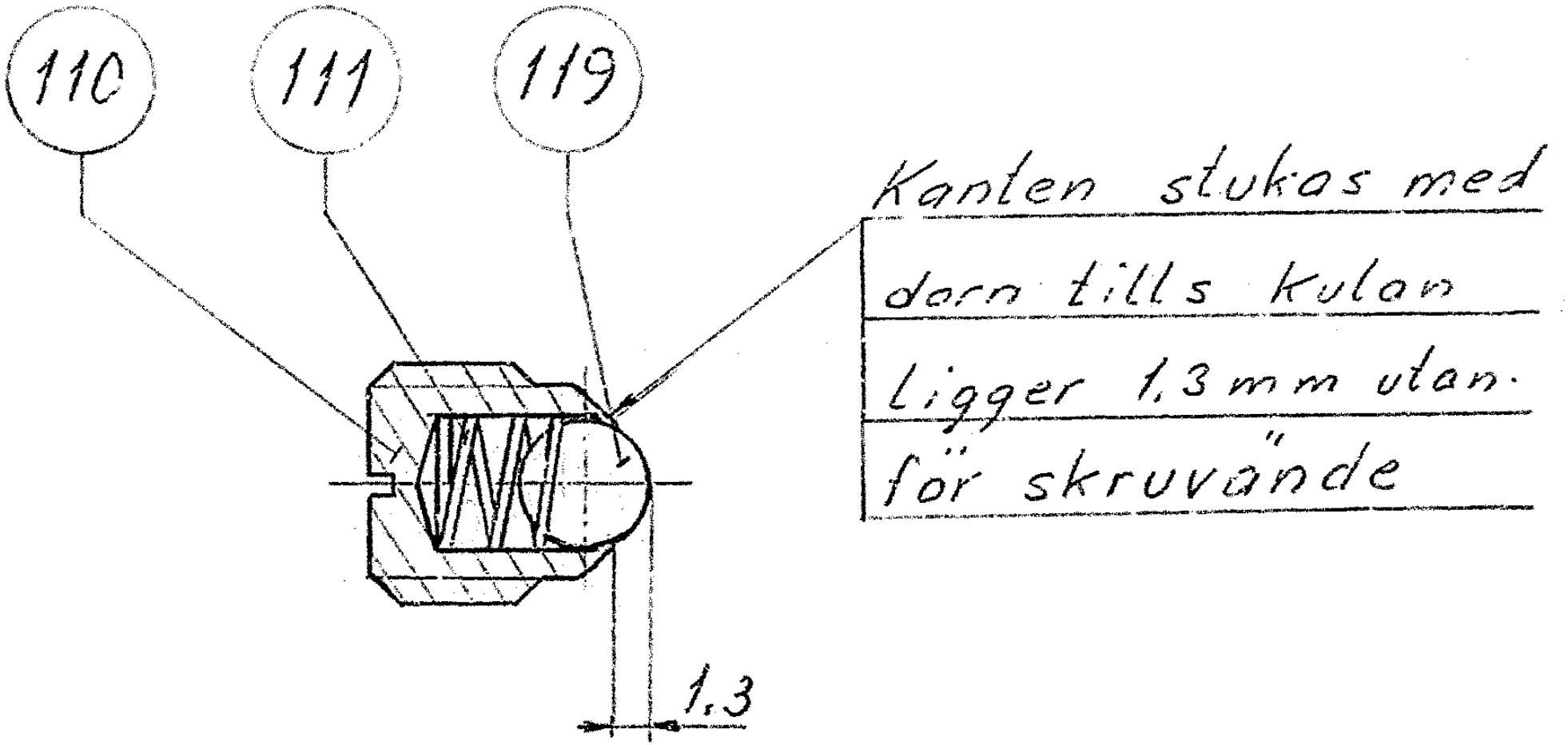
110
111
119
Kanten stukas med
dorn tills kulan
ligger 1,3 mm utan-
för skruvände
1,3

ECM: 118865 - 20021219
Group number: 33608-0100
Assembly Drawing: 33608-1_1_AA

Issue: 20030206

Pos	Part No	SP	UN	Qty	Description	Page No
Common Parts						
110	33625-0000	-		1	SCREW	
111	33626-0000	-		1	COMPRESSION SPRING	
119	90090-0002	-		1	BALL, D=5,556 MM	

Pos	Part No	SP	UN	Qty	Description	Page No

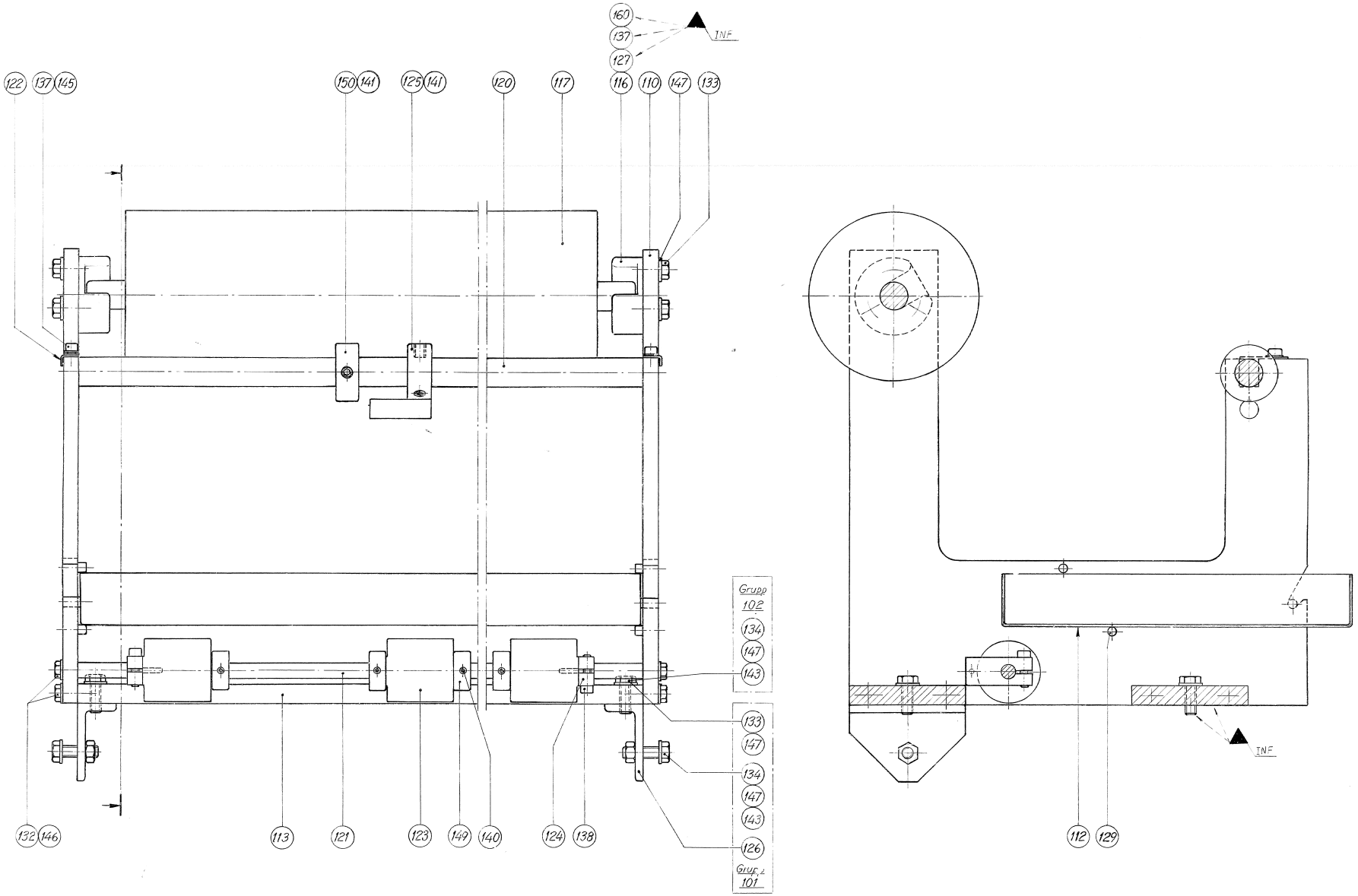
160
137
127
INF
122
137
145
150
141
125
141
120
117
116
110
147
133
Grupp
102
134
147
143
133
147
134
147
143
126
Grupp
101
132
146
113
121
123
149
140
124
138
INF
112
129

Pos	Part No	SP	UN	Qty	Description	Page No
HS227						
133	312105-0368	-		6	SCREW M6S M6X16 A280	
RP3						
126	37771-0000	-		2	FASTENING BRACKET	
133	312105-0368	-		8	SCREW M6S M6X16 A280	
Common Parts						
110	37462-0000	-		2	END SECTION	
112	37463-0000	-		1	BOX	
113	37464-0000	-		2	BOTTOM PLATE	
116	4317-0000	-		2	BEARING	
117	4319-0005	-		1	COUNTER ROLLER	
120	37470-0000	-		1	SHAFT	
121	37471-0000	-		1	SHAFT	
122	37472-0000	-		2	LOCK	
123	37473-0000	-		3	ROLL	
124	37474-0000	-		2	GUIDE FINGER	
125	37475-0000	-		1	HOLDER	
127	575505-0000	-		2	SPACER	
129	311103-0306	-		4	PARALLELL PIN, M6, 5X12 MM	
132	312105-0329	-		10	SCREW M6S ISO 4017 M5X16 A480	
134	312105-0370	-		4	SCREW M6S ISO 4017 M6X20 A480	
137	312115-0287	-		6	SCREW ISO4762 M4X8 A4	
138	312115-0293	-		2	SCREW ISO4762 M4X16 A4	
140	312318-0285	-		4	SCREW ISO4029 M4X6 A4	
143	312605-0316	-		4	HEXAGON NUT, M6M M6 A280	
143	312318-0360	-		3	SCREW ISO4029 M6X6 A4	
145	315105-0136	-		3	WASHER ISO 7089-4-200 HV-A4	
146	315105-0146	-		10	WASHER ISO 7089-5-200 HV-A4	
147	315105-0153	-		10	WASHER ISO 7089-6-200 HV-A4	
149	315742-0104	-		4	COLLAR, 8/20, H=9	
150	315742-0111	-		1	COLLAR, 15/30, H=12	
160	90165-0015	-		2	CLIP	

Pos	Part No	SP	UN	Qty	Description	Page No

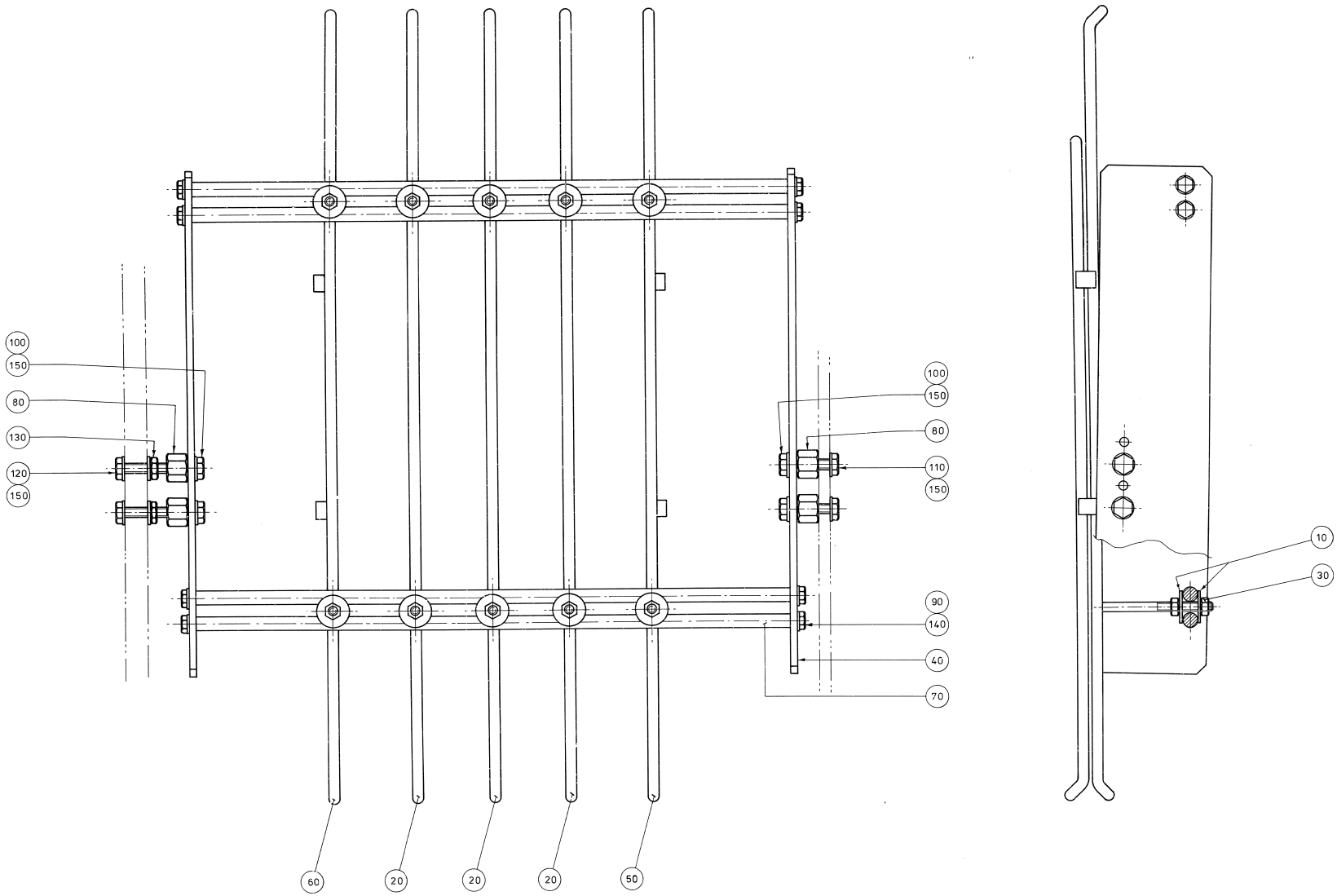
100
150
80
130
120
150
100
150
80
110
150
90
140
40
70
60
20
20
20
50
10
30

ECM: 117019 - 20021219
Group number: 450343-0200
Assembly Drawing: 450343-1_1_AA

Issue: 20030206

Pos	Part No	SP	UN	Qty	Description	Page No
TCA/25						
010	19262-0000	-		12	WASHER	
020	283721-0000	-		1	GUIDE ROD	
030	312605-0314	-		12	HEXAGON NUT, M6M M5 A280	
Common Parts						
040	267922-0000	-		2	END SECTION	
050	283719-0000	-		1	GUIDE ROD	
060	547874-0000	-		1	GUIDE ROD	
060	283720-0000	-		1	GUIDE ROD	
070	4318-0009	-		4	SHAFT	
080	267929-0000	-		4	NUT	
090	312105-0329	-		8	SCREW M6S ISO 4017 M5X16 A480	
100	312105-0364	-		4	SCREW M6S ISO 4017 M6X10 A480	
110	312105-0366	-		2	SCREW M6S M6X12 A280	
120	312105-0374	-		2	SCREW M6S ISO 4014 M6X30 A480	
130	312605-0316	-		2	HEXAGON NUT, M6M M6 A280	
140	315105-0146	-		8	WASHER ISO 7089-5-200 HV-A4	
150	315105-0153	-		10	WASHER ISO 7089-6-200 HV-A4	

Pos	Part No	SP	UN	Qty	Description	Page No

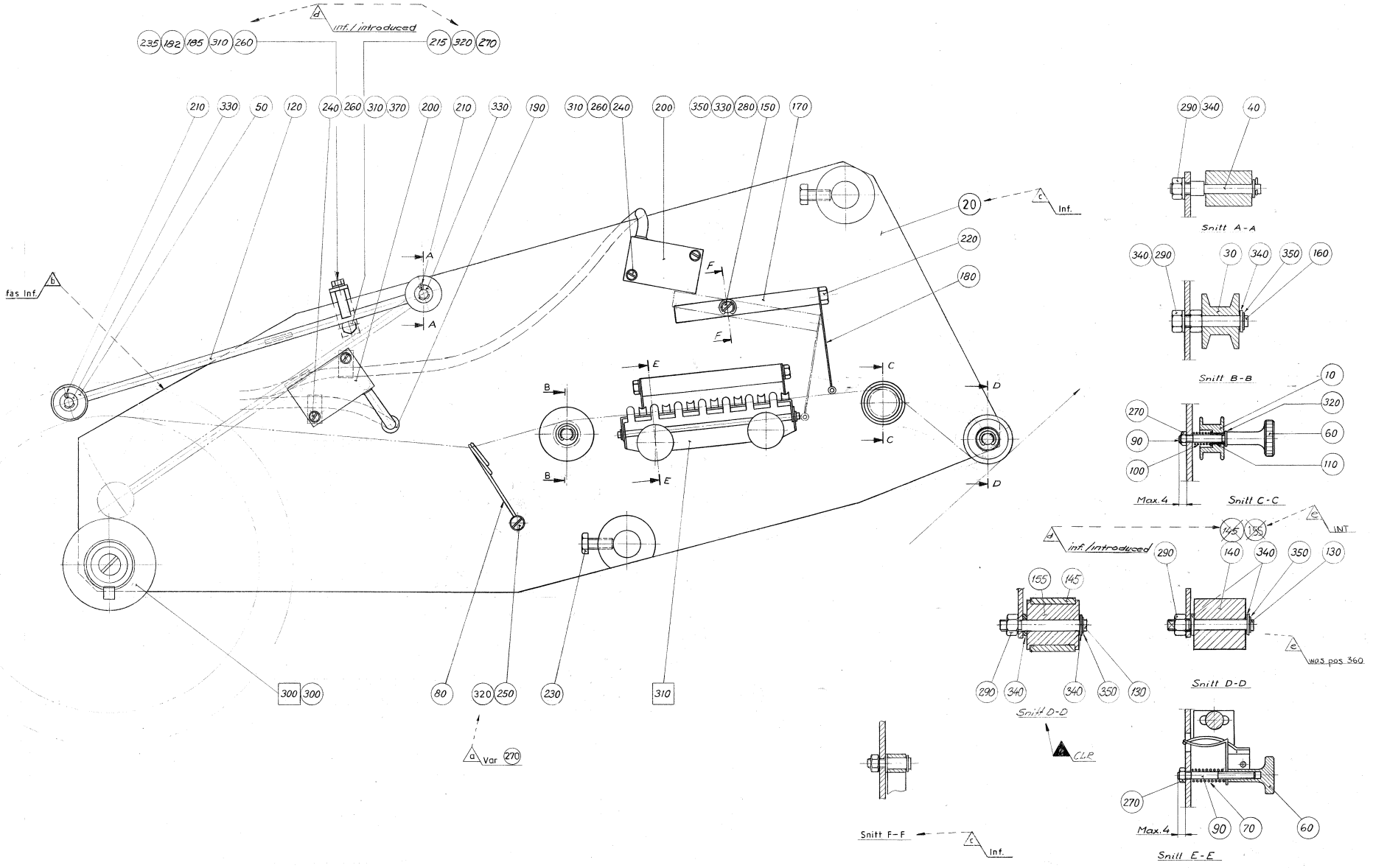
inf./introduced
fas Inf
Inf.
Var
Snitt A-A
Snitt B-B
Snitt C-C
Snitt D-D
Snitt D-D
Snitt E-E
Snitt F-F
Max.4
Max.4
INT
CLR
was pos 360

ECM: 117016 - 20021219
Group number: 293483-0100
Assembly Drawing: 293483-1_1_AA

Issue: 20030206

Pos	Part No	SP	UN	Qty	Description	Page No
TCA/25 TPMC RB-10						
010	19787-0002	A		1	ROLL	
155	546177-0000	A		1	ROLL	
200	90044-0062	-		2	PROX.SWITCH IFM IN-2002AB	
F300	A20387-0100	-		1	BOBBIN	**345**
F310	A20389-0100	-		1	HOSE CLAMP	**347**
TCA/25 TPMC RB-12						
010	19787-0004	A		1	ROLL	
155	546177-0000	A		1	ROLL	
200	90044-0062	-		2	PROX.SWITCH IFM IN-2002AB	
F300	A20387-0100	-		1	BOBBIN	**345**
F310	A20389-0100	-		1	HOSE CLAMP	**347**
Common Parts						
020	436566-0000	-		1	MOUNTING SHEET	
030	6695-0000	A		1	ROLL	
040	14964-0002	-		1	SHAFT	
050	14966-0000	-		1	ROLL	
060	19217-0000	-		3	KNURLED SCREW	
070	19223-0000	-		2	COMPRESSION SPRING	
080	19788-0000	-		1	BOW CLAMP	
090	19790-0000	-		3	STUD SCREW	
100	19795-0000	A		1	COMPRESSION SPRING	
110	19797-0000	A		1	BUSHING	
120	269051-0000	-		1	ARM	
130	436567-0000	-		1	SHAFT	
145	18052-0003	A		1	MANTEL RUBBER	
150	436569-0000	-		1	SCREW	
160	436571-0000	-		1	SHAFT	
170	449600-0000	-		1	LINK	
180	449601-0000	-		1	ARM	
182	529025-0000	-		1	CRAMP	
185	538431-0000	-		1	HOLDER	
190	90015-0026	-		1	BUSHING	
210	311411-0137	-		3	SS 2343 SP1,6X10RFR	
215	312105-0289	-		2	SCREW M6S ISO 4017 M4X10 A480	
220	312105-0325	-		1	SCREW M6S ISO 4017 M5X10 A480	
230	312105-0366	-		2	SCREW M6S M6X12 A280	
235	312125-0220	-		1	SCREW SLOT.PAN HD. MCS 3X6 A480	
240	312125-0230	-		4	SCREW PAN HEAD MCS M3X20 SS	
250	312125-0285	-		1	SCREW SLOT.PAN HD. MCS 4X6 A480	
260	312605-0310	-		5	HEXAGON NUT, M6M M3 A280	
270	312605-0312	-		5	HEXAGON NUT, M6M M4 A280	
280	312605-0314	-		1	HEXAGON NUT, M6M M5 A280	
290	312605-0316	-		3	HEXAGON NUT, M6M M6 A280	
300	312605-0318	-		1	HEXAGON NUT, M6M M8 A280	
310	315105-0124	-		5	WASHER ISO 7089-3-200 HV-A4	
320	315105-0136	-		5	WASHER ISO 7089-4-200 HV-A4	
330	315105-0146	-		5	WASHER ISO 7089-5-200 HV-A4	
340	315105-0153	-		8	WASHER ISO 7089-6-200 HV-A4	
350	315754-0106	A		3	RET. RING FOR RAD. ASSEMBLY, 4X0,7 MM	
370	352110-0100	-		2	CABLE CLIPS, D=5-7 MM	

Machine Type Group Description Used-In Group Number Page No

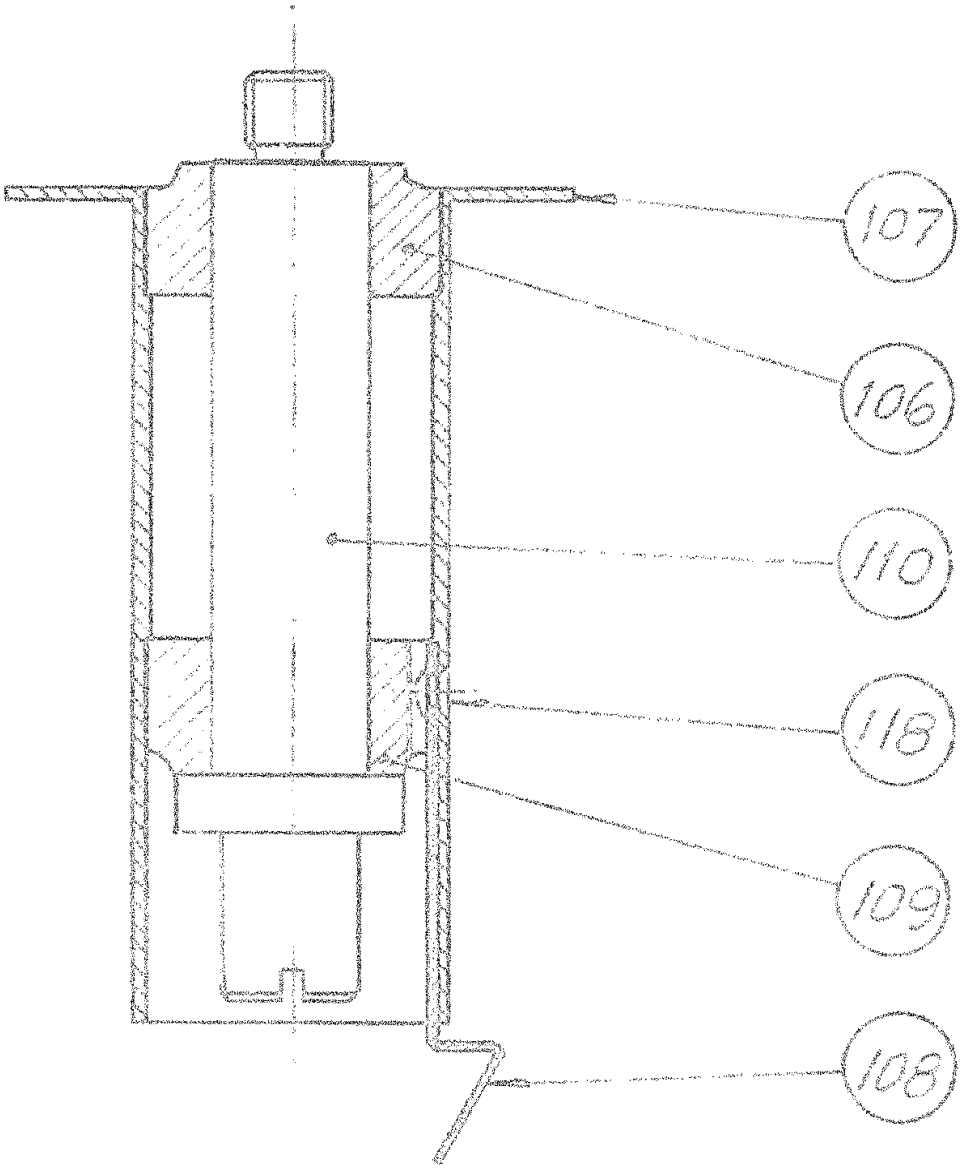
107
106
110
118
109
108

ECM: 82110 - 20000814
Group number: 20387-0100
Assembly Drawing: 20387-1_1_AA

Issue: 20030206

Pos	Part No	SP	UN	Qty	Description	Page No
Common Parts						
106	5486-0000	A		1	BEARING	
107	6157-0000	A		1	BOBBIN	
108	6158-0000	A		1	SPRING	
109	6159-0000	A		1	BEARING	
110	19784-0000	A		1	SHAFT	
118	311506-0278	-		1	RIVET, ROUND HEAD, KN, 2,6X6	

Pos	Part No	SP	UN	Qty	Description	Page No

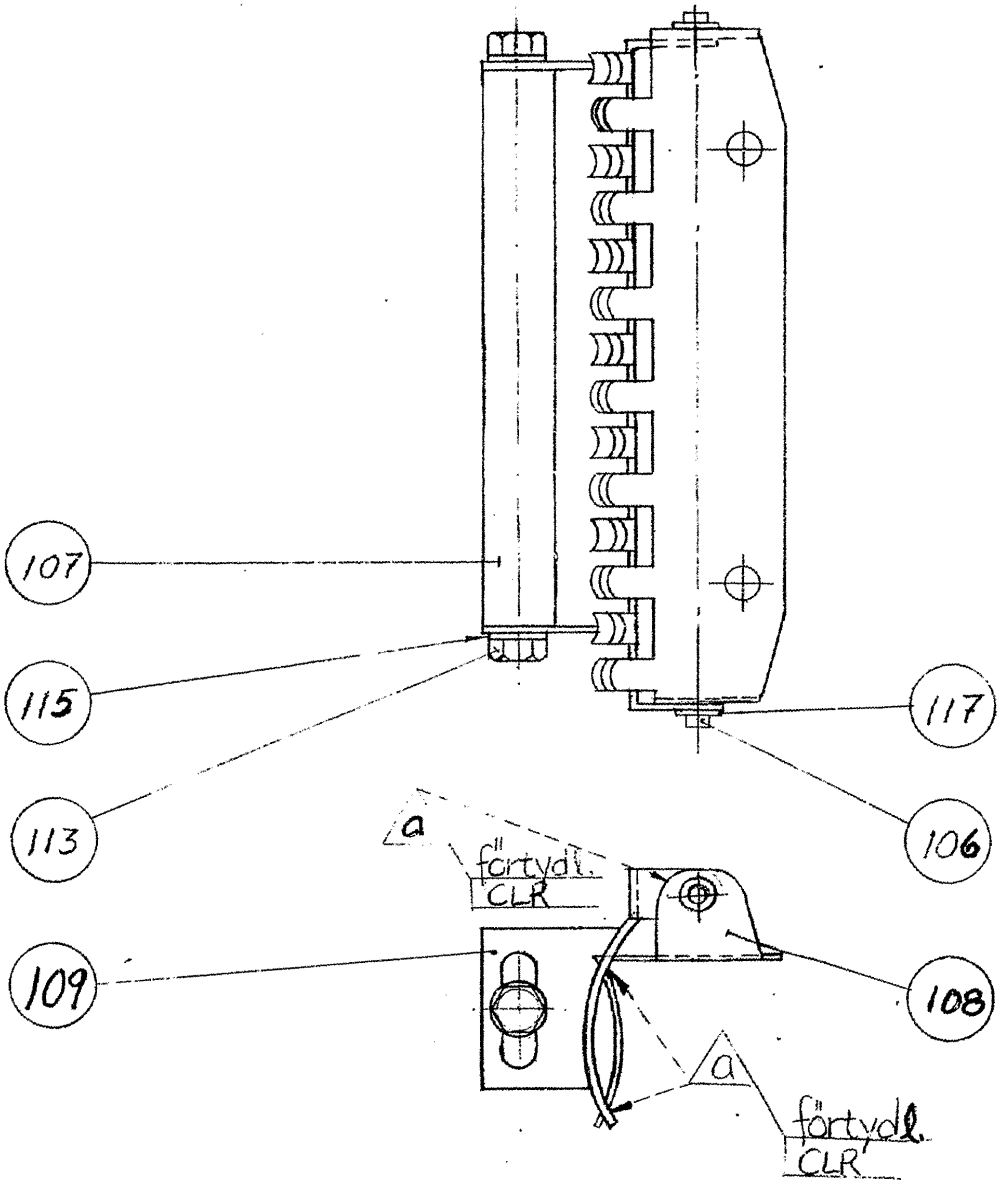
107
115
113
117
106
a
fortydl.
CLR
109
108
a
fortydl.
CLR

Pos	Part No	SP	UN	Qty	Description	Page No
Common Parts						
106	5778-0000	A		1	SHAFT	
107	19083-0000	-		1	WEIGHT	
108	21071-0000	A		1	BRAKE	
109	21072-0000	A		1	BRAKE	
113	312101-0291	-		2	SCREW M6S M4X12 FZB	
115	315105-0136	-		2	WASHER ISO 7089-4-200 HV-A4	
117	315754-0103	A		2	RET. RING FOR RAD. ASSEMBLY, 1,9X0,5 MM	

Pos	Part No	SP	UN	Qty	Description	Page No

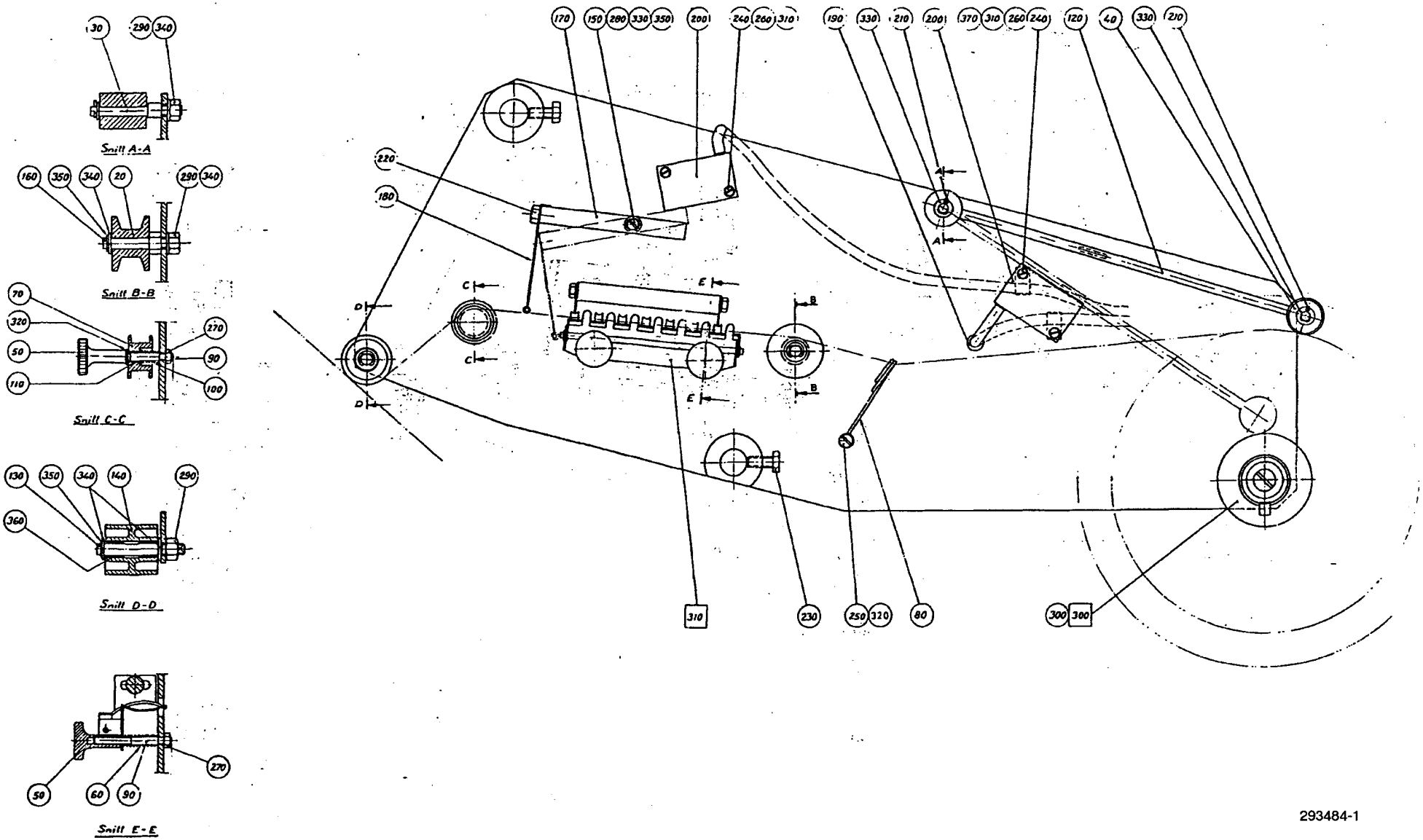
Snitt A-A
Snitt B-B
Snitt C-C
Snitt D-D
Snitt E-E
293484-1

ECM: 117017 - 20021219
Group number: 293484-0100
Assembly Drawing: 293484-1_1_AA

Issue: 20030206

Pos	Part No	SP	UN	Qty	Description	Page No
RELAY						
200	90044-0062	-		2	PROX.SWITCH IFM IN-2002AB	
TPMC						
200	90044-0194	-		2	PROX.SW. IN5329/IN3002-BPKG	
Common Parts						
010	574617-0000	-		1	MOUNTING SHEET	
020	6695-0000	A		1	ROLL	
030	14964-0002	-		1	SHAFT	
040	14966-0000	A		1	ROLL	
050	19217-0000	-		3	KNURLED SCREW	
060	19223-0000	-		2	COMPRESSION SPRING	
070	19787-0001	-		1	ROLL	
080	19788-0000	-		1	BOW CLAMP	
090	19790-0000	-		3	STUD SCREW	
100	19795-0000	A		1	COMPRESSION SPRING	
110	19797-0000	A		1	BUSHING	
120	269051-0000	-		1	ARM	
130	436567-0000	-		1	SHAFT	
140	539619-0000	A		1	ROLL	
150	436569-0000	-		1	SCREW	
160	436571-0000	-		1	SHAFT	
170	449600-0000	-		1	LINK	
180	449601-0000	-		1	ARM	
182	538431-0000	-		1	HOLDER	
187	529025-0000	-		1	CRAMP	
190	90015-0026	-		1	BUSHING	
210	311411-0137	-		3	SS 2343 SP1,6X10RFR	
215	312105-0289	-		2	SCREW M6S ISO 4017 M4X10 A480	
220	312105-0325	-		1	SCREW M6S ISO 4017 M5X10 A480	
230	312105-0366	-		2	SCREW M6S M6X12 A280	
235	312125-0220	-		1	SCREW SLOT.PAN HD. MCS 3X6 A480	
240	312125-0230	-		4	SCREW PAN HEAD MCS M3X20 SS	
250	312125-0285	-		1	SCREW SLOT.PAN HD. MCS 4X6 A480	
260	312605-0310	-		5	HEXAGON NUT, M6M M3 A280	
270	312605-0312	-		5	HEXAGON NUT, M6M M4 A280	
280	312605-0314	-		1	HEXAGON NUT, M6M M5 A280	
290	312605-0316	-		3	HEXAGON NUT, M6M M6 A280	
300	312605-0318	-		1	HEXAGON NUT, M6M M8 A280	
310	315105-0124	-		5	WASHER ISO 7089-3-200 HV-A4	
320	315105-0136	-		5	WASHER ISO 7089-4-200 HV-A4	
330	315105-0146	-		5	WASHER ISO 7089-5-200 HV-A4	
340	315105-0153	-		8	WASHER ISO 7089-6-200 HV-A4	
350	315754-0106	A		3	RET. RING FOR RAD. ASSEMBLY, 4X0,7 MM	
370	352110-0100	-		2	CABLE CLIPS, D=5-7 MM	
F300	A20387-0100	-		1	BOBBIN	**345**
F310	A20389-0100	-		1	HOSE CLAMP	**347**

Machine Type Group Description Used-In Group Number Page No

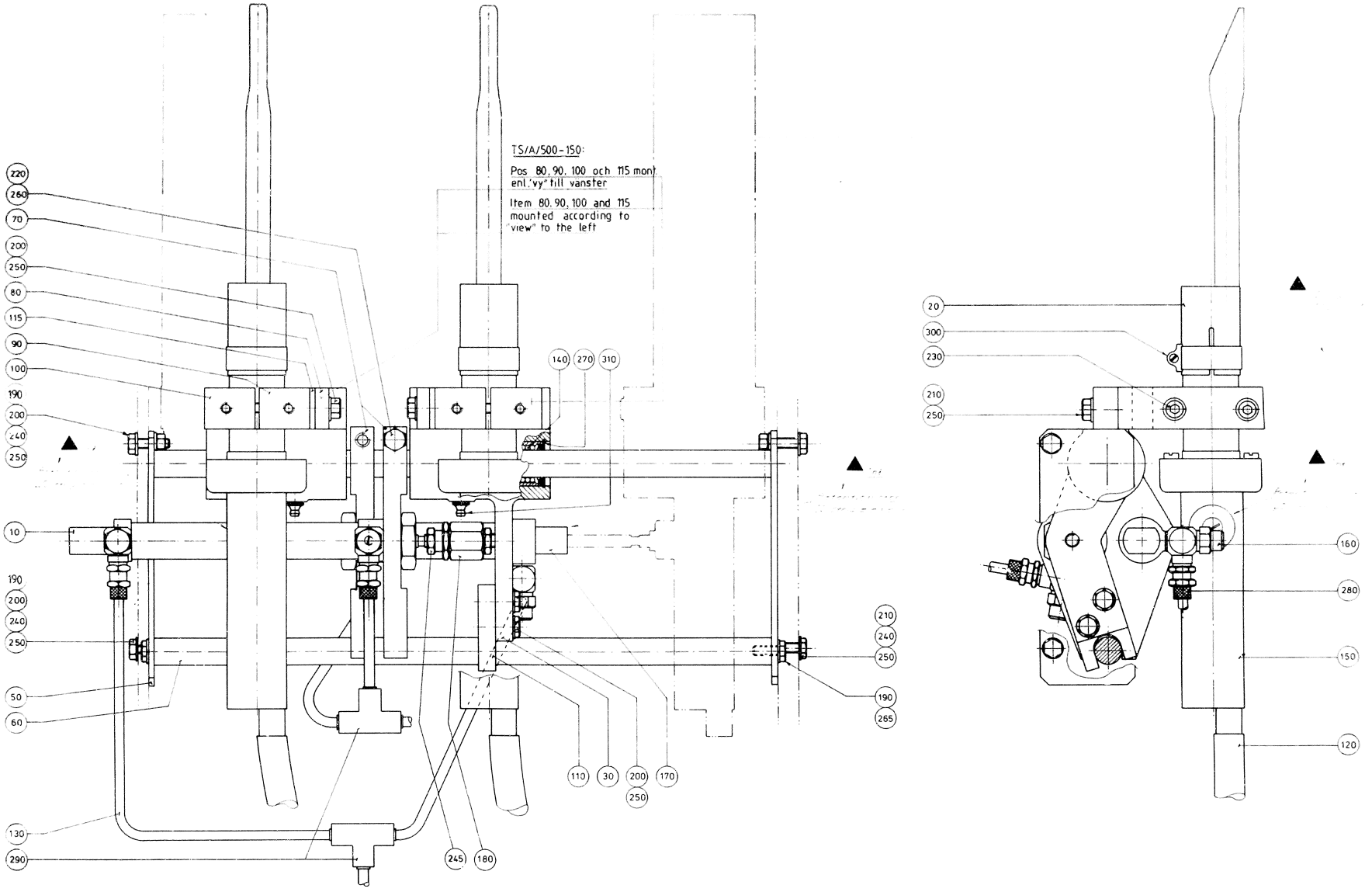
TS/A/500-150:
Pos 80, 90, 100 och 115 mont enl. "vy" till vänster
Item 80, 90, 100 and 115 mounted according to "view" to the left
220
260
70
200
250
80
115
90
100
190
200
240
250
10
190
200
240
250
50
60
130
290
245
180
110
30
200
250
170
140
270
310
210
240
250
190
265
20
300
230
210
250
160
280
150
120

Pos	Part No	SP	UN	Qty	Description	Page No
TCA/25						
010	90239-0823	-		1	DOUBLE ACTING, MINI-ISO, CYL.20-80	
020	567953-0000	-		1	NOZZLE	
025	567952-0000	-		1	NOZZLE	
025	570087-0000	-		1	NOZZLE	
Common Parts						
030	283468-0000	-		2	BEARING CONSOLE	
050	267923-0000	-		2	PLATE	
060	267924-0000	-		2	SHAFT	
070	283470-0000	-		2	YOKE	
080	283471-0000	-		2	BRACKET	
090	1483031-0000	-		2	BRACKET	
100	1483032-0000	-		2	CRAMP	
110	283474-0000	-		2	STEERING	
115	294498-0000	-		2	INSULATING PLATE	
120	90166-0098	-	MM	600	SHRINKABLE HOSE PVC 25MM	
130	90166-0081	-	MM	2000	TUBE 6 MM PA BLUE	
140	90189-0011	-		4	BALL BUSHING, 16X26X36 MM	
150	B90206-0052	-		2	HOT AIR GUN; 1400W 230V	
	90166-0190	*C*	*M*	*1*	*PLASTIC HOSE*	
	90206-0324	*C*		*1*	*HEATING CARTRIDGE 1400W 220V*	
160	90458-2738	-		4	THROTTLE CHECK VALVE, GRLA-1/8-B	
170	90239-0821	-		1	DOUBLE ACTING, MINI-ISO, CYL.20-25	
180	90239-0370	-		2	CONNECTION	
190	312105-0368	-		2	SCREW M6S M6X16 A280	
200	312105-0370	-		10	SCREW M6S ISO 4017 M6X20 A480	
210	312105-0372	-		6	SCREW M6S ISO 4017 M6X25 A480	
220	312105-0455	-		2	SCREW M6S ISO 4017 M8X30 A480	
230	312115-0378	-		4	SCREW ISO4762 M6X40 A4	
240	312605-0316	-		4	HEXAGON NUT, M6M M6 A280	
245	312621-0318	-		2	ROD END,NUT M8	
250	315105-0153	-		20	WASHER ISO 7089-6-200 HV-A4	
260	315105-0165	-		2	WASHER ISO 7089-8-200 HV-A4	
265	315121-0153	-		2	WASHER PLAIN, TBRSB 6,4/22 H=4	
270	315752-0120	-		4	RETAIN. RING, 26	
280	342920-0113	-		4	STRAIGHT COUPLING,EXT.THREADED 6/4-R1/8"	
290	342946-0112	-		2	T-COUPLING,UNION 6/4	
300	342991-0106	-		2	HOSE CLIP,WORM DRIVE TYPE (30)-36	
310	344502-0021	-		2	GREASE NIPPLE STRAIGHT M6	

Pos	Part No	SP	UN	Qty	Description	Page No

Machine Type | Group Description | Used-In | Group Number | Page No

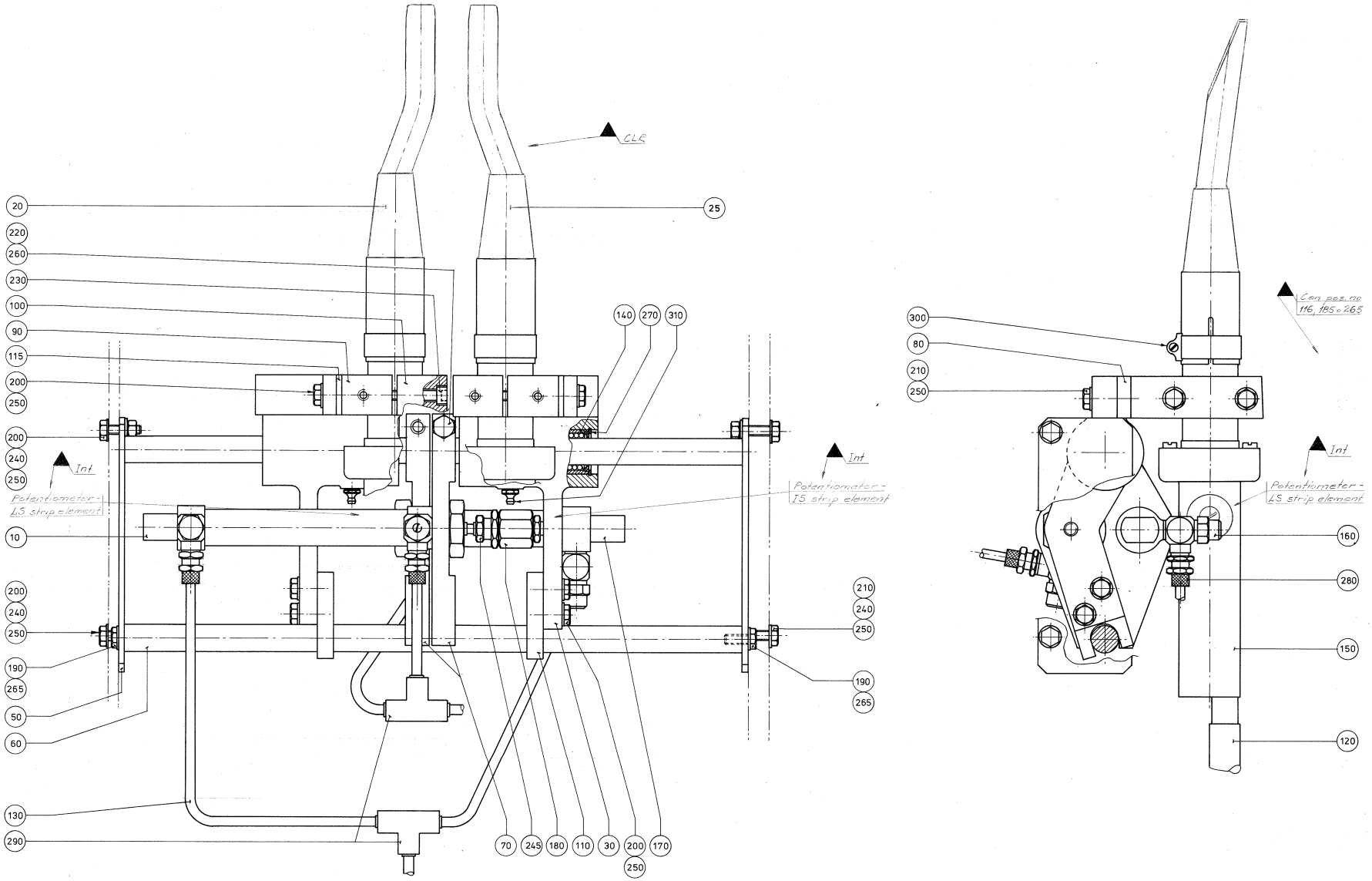
CLR
20
220
260
230
100
90
115
200
250
25
140
270
310
Int
Potentiometer - LS strip element
Int
Potentiometer - IS strip element
200
240
250
10
200
240
250
190
265
50
60
210
240
250
190
265
130
290
70
245
180
110
30
200
250
170
Con pos. no 116, 185 o 265
300
80
210
250
Int
Potentiometer - LS strip element
160
280
150
120

Pos	Part No	SP	UN	Qty	Description	Page No
TCA/25						
010	90239-0823	-		1	DOUBLE ACTING, MINI-ISO, CYL.20-80	
020	567953-0000	-		1	NOZZLE	
025	567952-0000	-		1	NOZZLE	
025	570087-0000	-		1	NOZZLE	
Common Parts						
030	283468-0000	-		2	BEARING CONSOLE	
050	267923-0000	-		2	PLATE	
060	267924-0000	-		2	SHAFT	
070	283470-0000	-		2	YOKE	
080	283471-0000	-		2	BRACKET	
090	1483031-0000	-		2	BRACKET	
100	1483032-0000	-		2	CRAMP	
110	283474-0000	-		2	STEERING	
115	294498-0000	-		2	INSULATING PLATE	
120	90166-0098	-	MM	600	SHRINKABLE HOSE PVC 25MM	
130	90166-0081	-	MM	2000	TUBE 6 MM PA BLUE	
140	90189-0011	-		4	BALL BUSHING, 16X26X36 MM	
150	B90206-0052	-		2	HOT AIR GUN; 1400W 230V	
	90166-0190	*C*	*M*	*1*	*PLASTIC HOSE*	
	90206-0324	*C*		*1*	*HEATING CARTRIDGE 1400W 220V*	
160	90458-2738	-		4	THROTTLE CHECK VALVE, GRLA-1/8-B	
170	90239-0821	-		1	DOUBLE ACTING, MINI-ISO, CYL.20-25	
180	90239-0370	-		2	CONNECTION	
190	312105-0368	-		2	SCREW M6S M6X16 A280	
200	312105-0370	-		10	SCREW M6S ISO 4017 M6X20 A480	
210	312105-0372	-		6	SCREW M6S ISO 4017 M6X25 A480	
220	312105-0455	-		2	SCREW M6S ISO 4017 M8X30 A480	
230	312115-0378	-		4	SCREW ISO4762 M6X40 A4	
240	312605-0316	-		4	HEXAGON NUT, M6M M6 A280	
245	312621-0318	-		2	ROD END,NUT M8	
250	315105-0153	-		20	WASHER ISO 7089-6-200 HV-A4	
260	315105-0165	-		2	WASHER ISO 7089-8-200 HV-A4	
265	315121-0153	-		2	WASHER PLAIN, TBRSB 6,4/22 H=4	
270	315752-0120	-		4	RETAIN. RING, 26	
280	342920-0113	-		4	STRAIGHT COUPLING,EXT.THREADED 6/4-R1/8"	
290	342946-0112	-		2	T-COUPLING,UNION 6/4	
300	342991-0106	-		2	HOSE CLIP,WORM DRIVE TYPE (30)-36	
310	344502-0021	-		2	GREASE NIPPLE STRAIGHT M6	

Pos	Part No	SP	UN	Qty	Description	Page No

Machine Type | Group Description | Used-In | Group Number | Page No

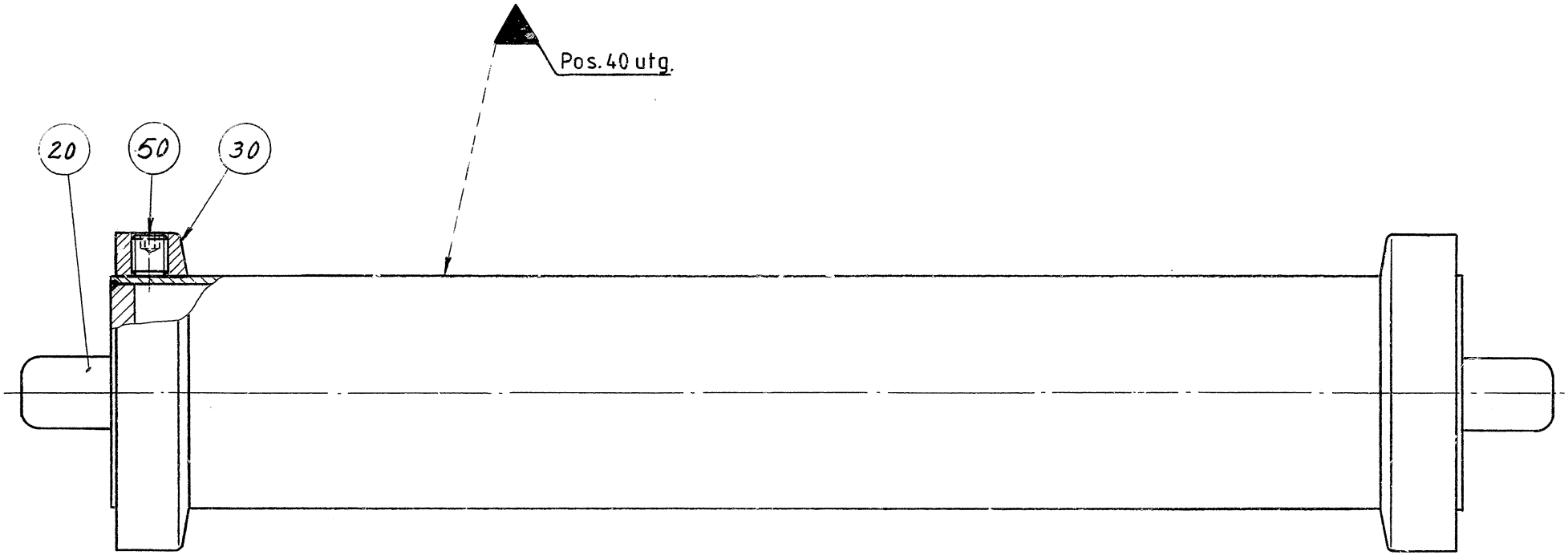
Pos. 40 utg.
20
50
30

ECM: 117013 - 20021219
Group number: 239793-0100
Assembly Drawing: 239793-1_1_AA

Issue: 20030206

Pos	Part No	SP	UN	Qty	Description	Page No
TCA/25						
030	239011-0000	-		3	FLANGE	
050	312318-0362	-		8	SCREW ISO4029 M6X8 A4	
Common Parts						
020	239010-0000	-		1	BENDING ROLLER	
060	312105-0366	-		1	SCREW M6S M6X12 A280	
070	312605-0316	-		1	HEXAGON NUT, M6M M6 A280	

Pos	Part No	SP	UN	Qty	Description	Page No

This page is intentionally left blank.

Pos	Part No	SP	UN	Qty	Description	Page No
TCA/25						
130	18052-0003	-		5	MANTEL RUBBER	
Common Parts						
180	538527-0000	-		1	RUBBER RAIL	
320	90206-0073	-		1	HEATING ELEMENT, 300W 240V	
325	90206-0324	-		1	HEATING CARTRIDGE 1400W 220V	

Pos	Part No	SP	UN	Qty	Description	Page No

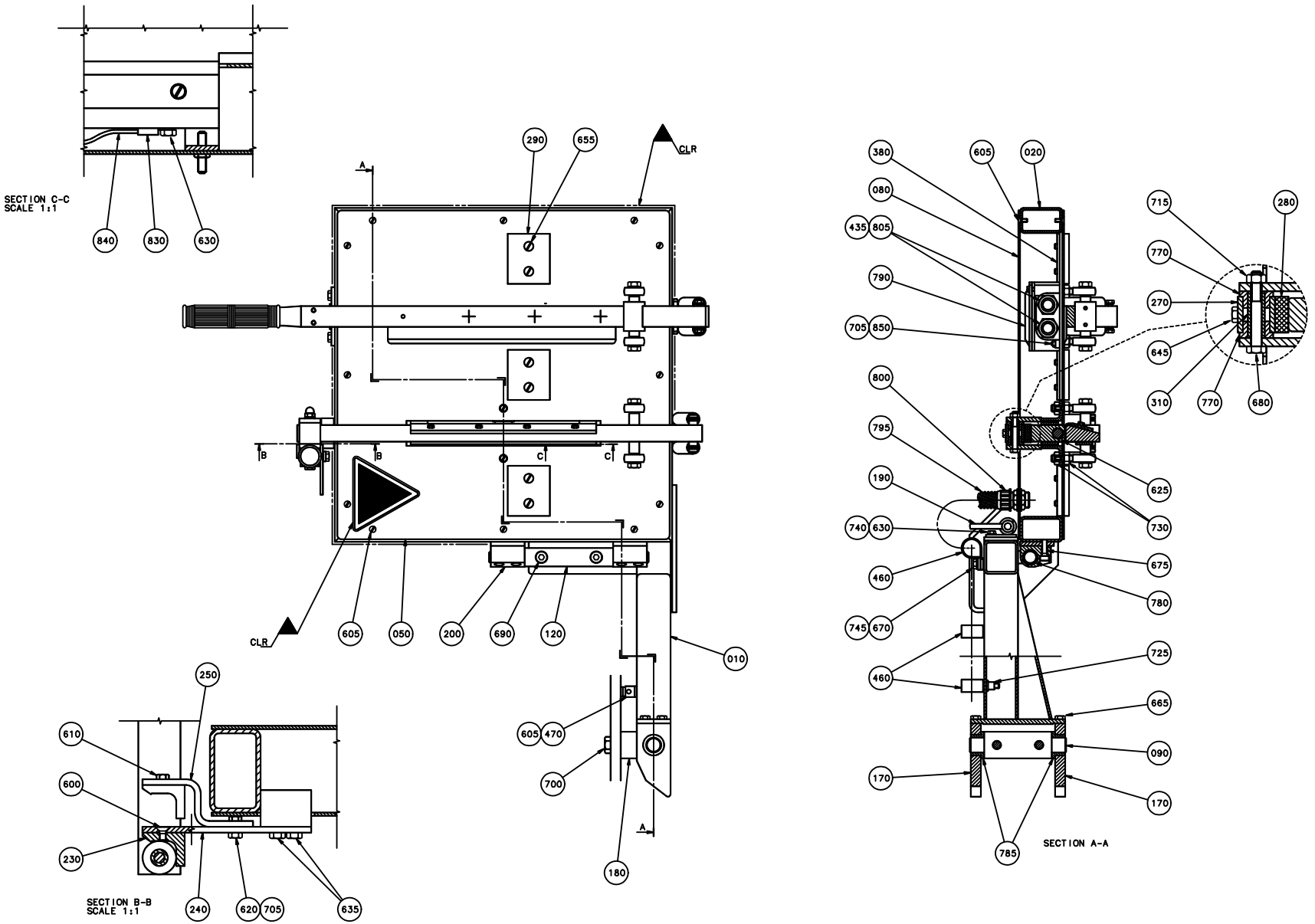
SECTION C-C
SCALE 1:1
840
830
630
290
655
CLR
A
B
B
C
C
CLR
605
050
200
690
120
010
250
610
600
230
240
620
705
635
605
470
700
180
A
380
605
020
080
435
805
790
705
850
800
795
190
740
630
460
745
670
460
715
280
770
270
645
310
770
680
625
730
675
780
725
665
090
170
170
785
SECTION A-A
SECTION B-B
SCALE 1:1

ECM: 117022 - 20021219
Group number: 554717-0100
Assembly Drawing: 554717-1_1_AA

Issue: 20030206

Pos	Part No	SP	UN	Qty	Description	Page No
Common Parts						
010	554235-0000	-		1	ARM	
020	554237-0000	-		1	TABLE	
030	554245-0000	-		1	PRESSURE ARM	
040	554221-0000	-		1	PRESSURE ARM	
050	554225-0000	-		1	TABLE TOP PLATE	
060	554226-0000	-		1	HEATING BLOCK	
070	554239-0000	-		1	HANDSPIKE	
080	554247-0000	-		1	BOTTOM PANEL	
090	554215-0000	-		1	SHAFT	
100	554219-0000	-		1	KNIFE	
110	554227-0000	-		3	SIDE PLATE	
120	554236-0000	-		1	SHAFT	
130	554238-0000	-		1	BOW CLAMP	
140	554232-0000	-		1	LOCK BAR	
150	37884-0000	-		1	SHAFT	
160	206913-0000	-		1	LOCKING LOOP	
170	554213-0000	-		2	LEAD PLATE	
180	554214-0000	-		1	SPACER	
190	554216-0000	-		1	LOCK	
200	554217-0000	-		2	BEARING HOUSING	
210	554218-0000	-		1	LOCKING LUG	
220	554220-0000	-		2	SHAFT	
230	554222-0000	-		2	LOCK	
240	554223-0000	-		1	SPRING	
250	554224-0000	-		1	SPRING	
260	554228-0000	-		2	TEFLON CLOTH	
270	554229-0000	-		1	BRACKET	
280	554230-0000	-		1	INSULATING PLATE	
290	554231-0000	-		3	GUIDE WASHER	
300	554233-0000	-		1	KNIFE	
310	554234-0000	-		1	SHAFT	
320	554240-0000	-		1	LOCKING CATCH	
330	554241-0000	-		1	BUSHING	
340	554242-0000	-		2	SPACER	
350	554243-0000	-		1	ROLL	
360	554244-0000	-		1	STOP RAIL	
370	554246-0000	-		1	SPACER	
380	555919-0000	-		3	FASTENING PLATE	
400	90206-0036	-		1	HEATING ELEMENT, 500W 220V	
410	90059-0001	-		1	THERMOSTAT	
420	90017-0001	-		2	BIKE HANDLE	
430	90115-0054	-		4	ROD END, ID=8 MM, M8X1,25	
435	90142-0005	-	MM	600	HOSE	
440	90335-0004	-		2	TENSION SPRING 42380, 2X22X62,8	
445	90144-0060	-		1	TAPE	
450	21631-0000	-		2	TENSION SPRING	
460	90165-0053	-		3	CLIP	
465	90194-0075	-		1	WARNING SIGN ISO, HOT SURFACE	
470	90237-0070	-		1	SNAP-IN BALL LOCK, 69X19 MM	
480	90335-0130	-		4	SPRING BRACKET	
600	312145-0287	-		6	SCREW COUNTERS.SLOT.HD. MFS 4X8 SS	
605	312145-0289	-		42	SCREW COUNTERS.SLOT.HD. MFS 4X10 SS	
610	312105-0287	-		2	SCREW M6S ISO4017 M4X8 A480	
615	312105-0289	-		4	SCREW M6S ISO 4017 M4X10 A480	
620	312105-0291	-		4	SCREW M6S ISO 4017 M4X12 A480	
625	312318-0285	-		3	SCREW ISO4029 M4X6 A4	
630	312105-0325	-		3	SCREW M6S ISO 4017 M5X10 A480	
635	312105-0327	-		4	SCREW M6S ISO 4017 M5X12 A480	
640	312105-0329	-		4	SCREW M6S ISO 4017 M5X16 A480	
645	312105-0337	-		2	SCREW M6S ISO 4014 M5X35 A480	
650	312318-0321	-		4	SCREW ISO4029 M5X6 A4	
655	312145-0368	-		6	SCREW COUNTERS.SLOT.HD. MFS 6X16 SS	
660	312105-0364	-		1	SCREW M6S ISO 4017 M6X10 A480	
665	312105-0366	-		5	SCREW M6S M6X12 A280	
670	312105-0367	-		3	SCREW M6S M6X14 A280	
675	312115-0370	-		4	SCREW ISO4762 M6X20 A4	
680	312105-0379	-		2	SCREW M6S ISO 4014 M6X45 A480	
685	312105-0383	-		1	SCREW M6S ISO 4014 M6X65 A480	
690	312115-0451	-		2	SCREW ISO4762 M8X20 A4	
695	312105-0453	-		4	SCREW M6S ISO 4017 M8X25 A480	
700	312105-0501	-		2	SCREW M6S ISO 4014 M10X50 A480	
705	312605-0312	-		4	HEXAGON NUT, M6M M4 A280	
710	312923-0123	-		2	RIVET NUT M5, CLAMP. LENGTH 2,0 - 3,0	
715	312605-0316	-		11	HEXAGON NUT, M6M M6 A280	
720	312705-0316	-		2	NUT HEX. DOMED CAP MHM-6 M6 A280	
725	312923-0131	-		7	RIVET NUT M6, CLAMP. LENGTH 1,5 - 3,0	
730	312605-0318	-		8	HEXAGON NUT, M6M M8 A280	
735	315105-0136	-		6	WASHER ISO 7089-4-200 HV-A4	
740	315105-0146	-		7	WASHER ISO 7089-5-200 HV-A4	
745	315105-0153	-		9	WASHER ISO 7089-6-200 HV-A4	
750	315115-0153	-		1	WASHER PLAIN, TBRB 6,4/12 H=3	
755	315125-0153	-		1	WASHER TBRSB 6,4X22X4 A4	
760	315211-0106	-		1	GASKET BOLT HEAD 10,7X16X1,5 MM M10	

Machine Type | Group Description | Used-In | Group Number | Page No

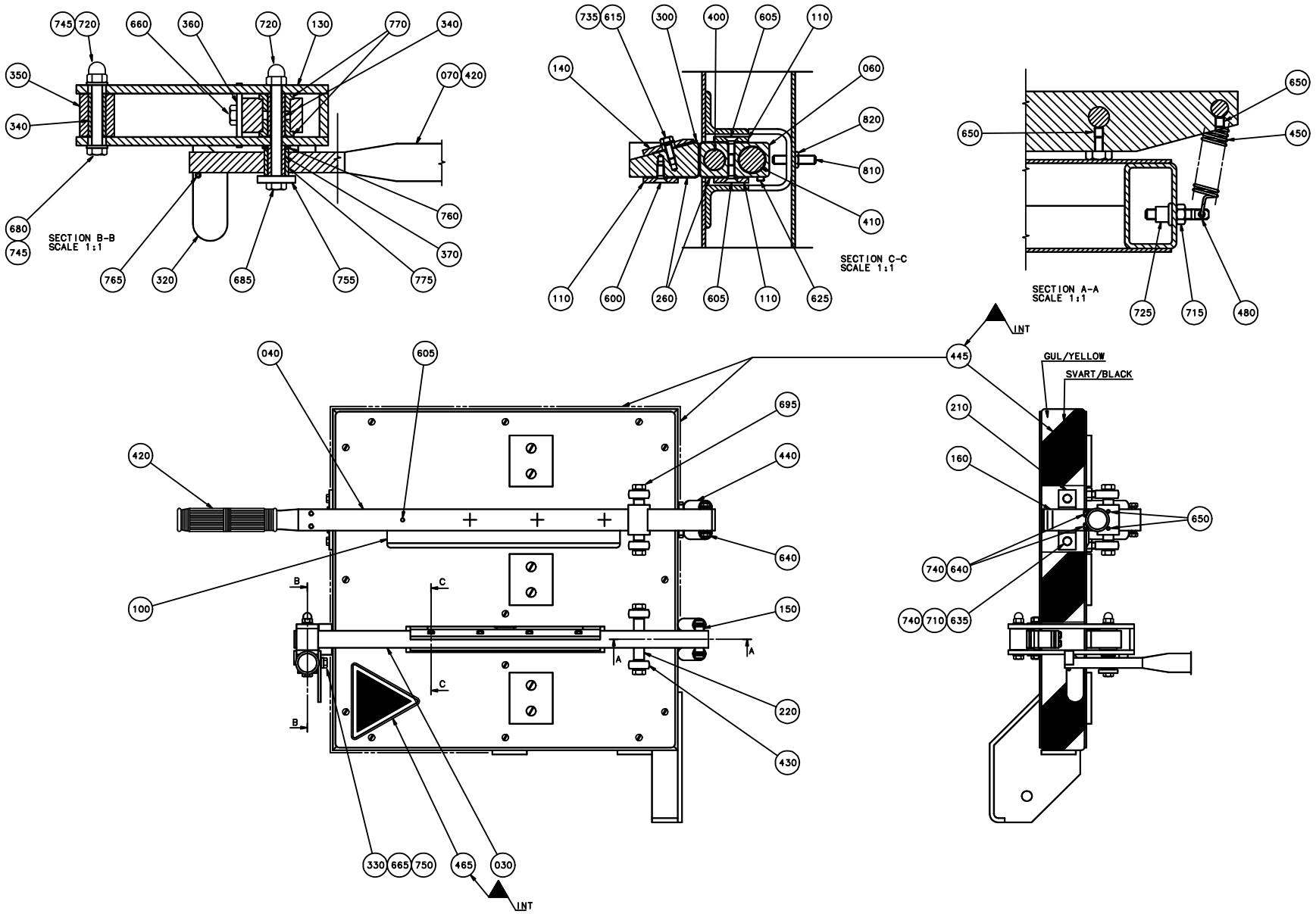
745 720 660 360 720 130 770 340
350
340
070 420
680
745
760
370
765 320 685 755 775
SECTION B-B
SCALE 1:1
735 615 300 400 605 110
140
060
820
810
410
110 600 260 605 110 625
SECTION C-C
SCALE 1:1
650
650
450
725 715 480
SECTION A-A
SCALE 1:1
INT
445
GUL/YELLOW
SVART/BLACK
040 605
695
440
420
640
100
150
220
430
210
160
650
740 640
740 710 635
330 665 750 465 030
INT

Pos	Part No	SP	UN	Qty	Description	Page No
Common Parts (Cont'd)						
765	311112-0205	-		1	SPRING PIN, ISO 8752 3X10-C	
770	321101-0163	-		4	FLANGE BUS 10F7X10	
775	321116-0128	-		1	BEAR. BUSH. WITHOUT FL, 10X14X16	
780	321116-0181	-		4	BEAR. BUSH. WITHOUT FL, 14X18X20	
785	321101-0223	-		2	BEAR.BUSHING W.FLANGE 18/25X16	
790	352020-0105	-		1	TERMINAL BOX, UE5	
795	352135-0106	-	M	2	SPIRAL CONDUIT DI=16 MM	
800	352136-0127	-		1	GLAND FITTING PR 18,6	
805	352103-0105	-		3	CABLE GLAND, STR 11, PR 18,6/PG11	
810	312316-0333	-		2	SCREW HEX.SOCK.SET CUP P.MSK6SS5X25 FZB	
820	312605-0314	-		2	HEXAGON NUT, M6M M5 A280	
830	353101-0122	-		1	CABLE SHOE	
840	351162-0104	-	MM	600	CABLE AWM 1X1,5 MM2 YELLOW-GREEN	
850	312145-0293	-		2	SCREW COUNTERS.SLOT.HD. MFS 4X16 SS	

Pos	Part No	SP	UN	Qty	Description	Page No

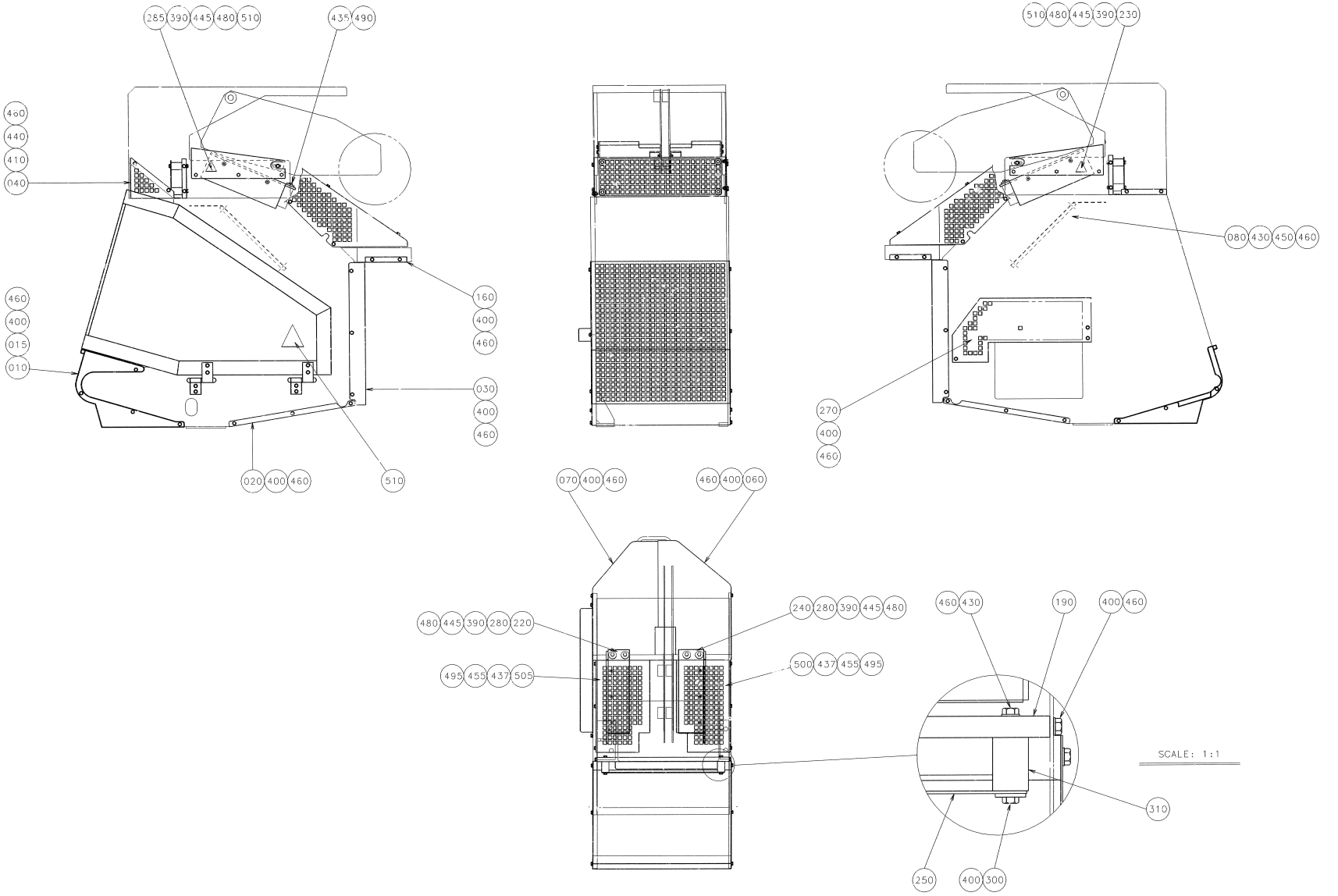
285 390 445 480 510
435 490
460 440 410 040
460 400 015 010
160 400 460
030 400 460
020 400 460
510
510 480 445 390 230
080 430 450 460
270 400 460
070 400 460
460 400 060
480 445 390 280 220
495 455 437 505
240 280 390 445 480
500 437 455 495
460 430
190
400 460
SCALE: 1:1
310
250
400 300

Pos	Part No	SP	UN	Qty	Description	Page No
Common Parts						
010	579904-0000	-		1	TOUCH GUARD	
015	580166-0000	-		1	COVERING PLATE	
020	579305-0000	-		1	TOUCH GUARD	
030	570200-0000	-		1	TOUCH GUARD	
040	570201-0000	-		1	TOUCH GUARD	
060	570203-0000	-		1	PROTECTIVE CASING	
070	570204-0000	-		1	PROTECTIVE CASING	
080	572777-0000	-		1	HEAT GUARD	
160	570208-0000	-		1	TOUCH GUARD	
190	570209-0000	-		1	HEAT GUARD	
220	580169-0000	-		1	HEAT GUARD	
230	580171-0000	-		1	HEAT GUARD	
240	580170-0000	-		1	HEAT GUARD	
250	570798-0000	-		1	TOUCH GUARD	
270	577895-0000	-		1	PROTECTION	
280	580173-0000	-		2	BRACKET	
285	581608-0000	-		1	HEAT GUARD	
300	315125-0153	-		4	WASHER TBRSB 6,4X22X4 A4	
310	570799-0000	-		4	SPACER	
390	312155-0291	-		10	SCREW EN 10642 MF6S M4X12 A480	
400	312105-0323	-		43	SCREW M6S ISO 4017 M5X8 A480	
410	312105-0327	-		4	SCREW M6S ISO 4017 M5X12 A480	
430	312105-0331	-		8	SCREW M6S ISO 4017 M5X20 A480	
435	312105-0368	-		4	SCREW M6S M6X16 A280	
437	312105-0291	-		6	SCREW M6S ISO 4017 M4X12 A480	
440	312155-0329	-		4	SCREW EN 10642 MF6S M5X16 A480	
445	312605-0316	-		10	HEXAGON NUT, M6M M6 A280	
450	312605-0314	-		4	HEXAGON NUT, M6M M5 A280	
455	312605-0316	-		6	HEXAGON NUT, M6M M6 A280	
460	315105-0146	-		73	WASHER ISO 7089-5-200 HV-A4	
480	315105-0136	-		10	WASHER ISO 7089-4-200 HV-A4	
490	315125-0153	-		4	WASHER TBRSB 6,4X22X4 A4	
495	315105-0153	-		6	WASHER ISO 7089-6-200 HV-A4	
500	1362007-0000	-		1	TOUCH GUARD	
505	1362008-0000	-		1	TOUCH GUARD	
510	359705-0007	-		3	WARNING SIGN ISO, HOT SURFACE	

Pos	Part No	SP	UN	Qty	Description	Page No

Machine Type	Group Description	Used-In	Group Number	Page No

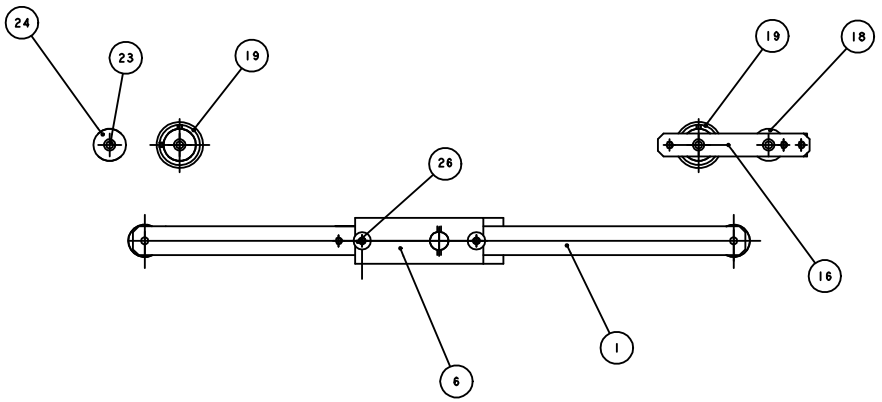
24
23
19
19
18
26
16
6
1

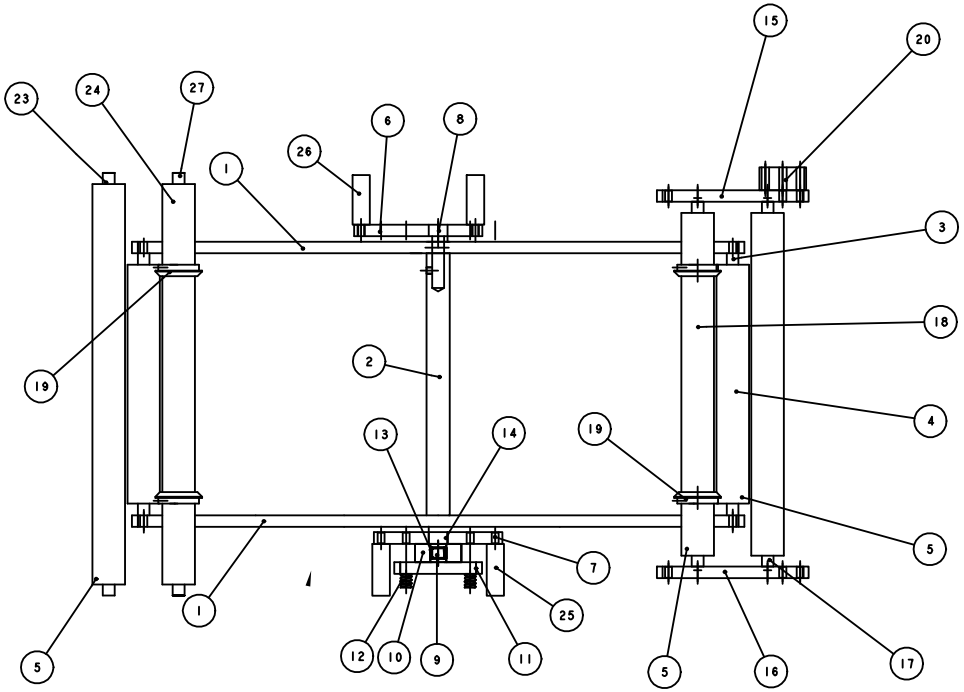
15
20
23
24
27
6
8
26
1
3
18
19
2
4
13
14
19
5
7
1
25
5
12
10
9
11
5
16
17

ECM: 121777 - 20030120
Group number: 2502204-0100
Assembly Drawing: 2502204-1_1_AB

Issue: 20030206

Pos	Part No	SP	UN	Qty	Description	Page No
Common Parts						
001	2502211-0000	-		2	ARM	
002	2502223-0000	-		1	SHAFT	
003	2502221-0000	-		2	SHAFT	
004	2502222-0000	-		2	ROLLER	
005	321307-0100	A		10	BALL BEARISKF6000Z	
006	2502212-0000	-		1	MOUNTINGS	
007	2502213-0000	-		1	MOUNTINGS	
008	2502206-0000	-		1	SHAFT	
009	2502207-0000	-		1	SHAFT	
010	2502208-0000	A		1	WHEEL	
011	2502209-0000	-		1	FRICTION BLOCK	
012	2502205-0000	A		2	SPRING	
013	90458-1844	A		1	FREE-WHEEL COUPLING, 10X10 MM	
014	90458-1860	A		2	BEAR. BUSH. WITHOUT FL, 10X16X10	
015	2502214-0000	-		1	MOUNTINGS	
016	2502224-0000	-		1	MOUNTINGS	
017	2502219-0000	-		2	SHAFT	
018	2502220-0000	-		2	ROLLER	
019	2502218-0000	-		4	GUIDE RING	
020	2502215-0000	-		1	SPACER	
023	2502225-0000	-		1	SHAFT	
024	2502227-0000	-		2	ROLLER	
025	2502216-0000	-		2	SPACER BUSHING	
026	2502217-0000	-		2	SPACER BUSHING	
027	2502226-0000	-		1	SHAFT	

Pos	Part No	SP	UN	Qty	Description	Page No

Machine Type | Group Description | Used-In | Group Number | Page No

Tetra Pak

SPC
Spare Parts Catalogue

This page is intentionally left blank.

ECM: 102834 - 20020215
Group number: 639336-0600
Assembly Drawing:

Issue: 20030206

Pos	Part No	SP	UN	Qty	Description	Page No
Common Parts						
0010	A558199-0600	-		1	ELECTRICAL CABINET TCA/25	**371, 373, 375, 377, 379**
0020	A558200-0600	-		1	CABLE LIST TCA/25	**383**
0030	A558203-0600	-		1	ELECTRICAL DOCUMENT TCA/25	**385**

Pos	Part No	SP	UN	Qty	Description	Page No

This page is intentionally left blank.

ECM: 118526 - 20021211
Group number: 558199-0600
Assembly Drawing:
Issue: 20030206

Pos	Part No	SP	UN	Qty	Description	Page No
Common Parts						
0001	359240-0100	-		1	SIGN HOLDER FOR 359240-0001	
0003	90194-0080	-		1	SIGN, IDENTIFICATION OF WIRING	
0004	90194-0016	-		1	SIGN, FLASH, ELECTRIC EQUIPMENT SYMBOL	
0005	90135-0031	-		1	BUSBAR HOLDER K&M SHO165/2	
0005:1	90135-0032	-		1	BUSBAR CONNECTION 8JH4105	
0012:1	90264-0330	-		1	FOAM FILTER / 4-35684-02	
A001	A68471-0100	-		1	PRINTED DESIGN CORR.LOGIC	**381**
A001:1	B68262-0101	-		1	BACKPLANE FRONT RACK 8TE	
100	*543371-0000*	-		*1*	*CIRCUIT BOARD 8TE*	
110	*551927-0001*	-		*1*	*COMPONENTS WITHOUT TP-NO*	
120	*551928-0000*	-		*1*	*TERMINAL LABELS 8TE*	
A001:2	B68445-0105	-		1	FRONT PLATE 10TE	
010 5	*543921-0005*	-		*1*	*COMPONENTS WITHOUT TP-NO*	
A001:2	B68445-0104	-		1	FRONT PLATE 8 TE	
010 4	*543921-0004*	-		*1*	*COMPONENTS WITHOUT TP-NO*	
A001:2	B68445-0101	-		1	FRONT PLATE 4TE	
010 1	*543921-0001*	-		*1*	*COMPONENTS WITHOUT TP-NO*	
A001:2	B67388-0102	-		1	RACK FRONTMOUNTED 84TE	
020 2	*542038-0002*	-		*1*	*COMPONENTS WITHOUT TP-NO*	
A002	B68465-0101	-		1	DESIGN CORRECTION POT.	
110	*551937-0000*	-		*1*	*BOX FOR POT.68456-101*	
120	*551939-0000*	-		*1*	*CABLE 800MM FOR POT.68456*	
130	*551936-0001*	-		*1*	*COMPONENTS WITHOUT TP-NO*	
A002:1	90195-0020	-		1	TERMINAL BLOCK, 1977.2	
A002:1	551922-0000	-		1	LABEL,POTENTIOMETER DESIGN CORR.	
A003	B68262-0101	-		1	BACKPLANE FRONT RACK 8TE	
100	*543371-0000*	-		*1*	*CIRCUIT BOARD 8TE*	
110	*551927-0001*	-		*1*	*COMPONENTS WITHOUT TP-NO*	
120	*551928-0000*	-		*1*	*TERMINAL LABELS 8TE*	
A003	68447-0101	-		1	CIRCUIT BOARD	
A003:1	B68262-0101	-		1	BACKPLANE FRONT RACK 8TE	
100	*543371-0000*	-		*1*	*CIRCUIT BOARD 8TE*	
110	*551927-0001*	-		*1*	*COMPONENTS WITHOUT TP-NO*	
120	*551928-0000*	-		*1*	*TERMINAL LABELS 8TE*	
A004	B68450-0101	-		1	STEPPER MOTOR DRIVER	
040	*543326-0000*	-		*1*	*COVERPLATE HANDLE 5TE*	
700	*543897-0001*	-		*1*	*COMPONENTS WITHOUT TP-NO*	
710	*543898-0000*	-		*1*	*FRONT PANEL 14TE*	
720	*543899-0000*	-		*1*	*COOLING FLANGE*	
730	*543900-0000*	-		*1*	*COOLING FLANGE DISTANCE*	
740	*543901-0000*	-		*1*	*COOLING BLOCK*	
750	*543902-0000*	-		*1*	*SIGN BOARD*	
760	*556502-0000*	-		*1*	*LAYOUTS FOR PLATES,LABLES*	
F100	*B68451-0101*	-		*1*	*STEP. MOT. DR. MAIN CARD*	
400	*543903-0001*	-		*1*	*COMPONENTS WITHOUT TP-NO*	
410	*543880-0000*	-		*1*	*PRINTED CIRCUIT BOARD*	
F110	*B68452-0101*	-		*1*	*STEP. MOT. DR. AUX. CARD*	
600	*551913-0001*	-		*1*	*COMPONENTS WITHOUT TP-NO*	
610	*543881-0000*	-		*1*	*PRINTED CIRCUIT BOARD*	
620	*551914-0000*	-		*1*	*MACHINING OF DRIVER MODUL*	
A004:1	B68262-0101	-		1	BACKPLANE FRONT RACK 8TE	
100	*543371-0000*	-		*1*	*CIRCUIT BOARD 8TE*	
110	*551927-0001*	-		*1*	*COMPONENTS WITHOUT TP-NO*	
120	*551928-0000*	-		*1*	*TERMINAL LABELS 8TE*	
A005	553186-0001	-		1	CIRCUIT BOARD	
A005:1	553186-0002	-		1	CIRCUIT BOARD	
A005:2	553185-0001	-		1	DISPLAY	
A020	359241-0121	-		1	SIGN "STEAM"	
A020	90410-0043	-		1	TEMPERATURE REGULATOR, E5 CS_QIKJX-20	
A021	90410-0043	-		1	TEMPERATURE REGULATOR, E5 CS_QIKJX-20	
A021	359241-0233	-		1	SIGN "TEMP AIR OUT OF HOUSE"	
A022	90410-0043	-		1	TEMPERATURE REGULATOR, E5 CS_QIKJX-20	
A022	359241-0130	-		1	SIGN, TEMP. AIR SUPER HEATER	
A023	359241-0131	-		1	SIGN, TEMP. LS HEATER	
A023	90410-0043	-		1	TEMPERATURE REGULATOR, E5 CS_QIKJX-20	
A024	359241-0272	-		1	SIGN	
A024	90410-0043	-		1	TEMPERATURE REGULATOR, E5 CS_QIKJX-20	
A026	90410-0043	-		1	TEMPERATURE REGULATOR, E5 CS_QIKJX-20	
A026	359241-0318	-		1	SIGN "STEA STEAM"	
A026	359240-0100	-		1	SIGN HOLDER FOR 359240-0001	
A027	359241-0319	-		1	SIGN "TEMP STERILE AIR"	
A027	359240-0100	-		1	SIGN HOLDER FOR 359240-0001	
A027	90410-0043	-		1	TEMPERATURE REGULATOR, E5 CS_QIKJX-20	
A030	90458-2580	-		1	LEVEL CONTROL RELAY RM4-LA32M	
A031	90458-2580	-		1	LEVEL CONTROL RELAY RM4-LA32M	
A040	B67600-0501	-		1	TPIH GENERATOR	
10	*542036-0000*	-			*TP SIGN BOARD "PART NO" 84X140MM*	
500	*565140-0001*	-			*COMPONENTS WITHOUT TP-NO*	
510	*565144-0000*	-			*LABEL LED*	
520	*565145-0000*	-			*LABEL X1/X2*	
530	*565146-0000*	-			*INSULATION SPACER*	
540	*565147-0000*	-			*GUIDE RAIL LEFT*	
550	*565148-0000*	-			*GUIDE RAIL RIGHT*	

Machine Type | Group Description | Used-In | Group Number | Page No

This page is intentionally left blank.

Pos	Part No	SP	UN	Qty	Description	Page No
Common Parts (Cont'd)						
A040:1	90110-0121	-		1	FEMALE INSERT GDS A-H 09 06 215 2811	
A040:2	90110-0122	-		1	COVER, 09 06 000 9957	
A040:2	551969-0001	-		1	COAXIAL CABLE L=1900 MM	
A041	B67600-0501	-		1	TPIH GENERATOR	
10	*542036-0000*	-			*TP SIGN BOARD "PART NO" 84X140MM*	
500	*565140-0001*	-			*COMPONENTS WITHOUT TP-NO*	
510	*565144-0000*	-			*LABEL LED*	
520	*565145-0000*	-			*LABEL X1/X2*	
530	*565146-0000*	-			*INSULATION SPACER*	
540	*565147-0000*	-			*GUIDE RAIL LEFT*	
550	*565148-0000*	-			*GUIDE RAIL RIGHT*	
560	*565149-0000*	-			*GUIDE RAIL BACK*	
570	*565150-0000*	-			*FRONT HANDLE*	
580	*565151-0000*	-			*BOX BOTTOM*	
590	*565152-0000*	-			*FRAME*	
600	*565153-0000*	-			*COMPLETE BOX*	
610	*565154-0000*	-			*BOX UPPER PART*	
F100	*B67577-0501*	-			*POWER CARD*	
130	*573137-0001*	-			*COMPONENTS WITHOUT TP-NO*	
140	*565299-0000*	-			*SORTING INSTRUCTION*	
150	*543112-0000*	-			*MODIFYING EUROPECONNECTOR*	
160	*573138-0000*	-		*3*	*HEAT SINK L*	
180	*565301-0000*	-			*CAPACITOR CABLE RED*	
190	*565300-0000*	-			*CAPACITOR CABLE BLACK*	
200	*575980-0000*	-			*CIRCUIT DIAGRAM*	
F101	*B67564-0101*	-			*THIH TOROID COIL 1*	
100	*564253-0001*	-			*COMPONENTS WITHOUT TP-NO*	
110	*532687-0000*	-			*TOROID COIL 1*	
F102	*B67565-0101*	-			*TPIH TOROID COIL 2*	
100	*564254-0001*	-			*COMPONENTS WITHOUT TP-NO*	
110	*532688-0000*	-			*TOROID COIL 2*	
F103	*B67566-0101*	-			*TPIH TOROID COIL 3*	
100	*564255-0001*	-			*COMPONENTS WITHOUT TP-NO*	
110	*532689-0000*	-			*TOROID COIL 3*	
F104	*B67567-0101*	-			*TPIH THERMOSTAT CABLE*	
100	*564256-0001*	-			*COMPONENTS WITHOUT TP-NO*	
110	*532690-0000*	-			*THERMOSTAT CABLE*	
F105	*B67568-0101*	-			*TPIH COIL SINGLE LAYER*	
100	*564257-0001*	-			*COMPONENTS WITHOUT TP-NO*	
110	*532692-0000*	-			*COIL SINGLE LAYER*	
120	*532691-0000*	-			*COIL FORMER*	
F106	*B67569-0101*	-			*TPIH TANK COIL*	
100	*564260-0001*	-			*COMPONENTS WITHOUT TP-NO*	
110	*532693-0000*	-			*BOTTOM GABLE*	
120	*532695-0000*	-			*GABLE*	
130	*532696-0000*	-			*RING SPRING*	
140	*532697-0000*	-			*WINDING HOLDER*	
150	*565286-0000*	-			*WINDING HOLDER*	
160	*565287-0000*	-			*SPACER*	
170	*532694-0000*	-			*TANK COIL*	
F107	*B67570-0101*	-			*TPIH CAPACITOR CARD*	
100	*564261-0001*	-			*COMPONENTS WITHOUT TP-NO*	
120	*484995-0000*	-			*PRINTED CIRCUIT BOARD*	
130	*565289-0000*	-			*COMPONENT REFERENCE*	
F108	*B67582-0101*	-			*TPIH HEATSINK PREREGULATO*	
100	*573134-0001*	-			*COMPONENTS WITHOUT TP-NO*	
110	*565290-0000*	-			*HEAT SINK V1*	
120	*532703-0000*	-			*HEAT SINK V2*	
130	*565291-0000*	-			*HEAT SINK V3*	
140	*573135-0000*	-			*HEAT SINK PREREGULATOR*	
F110	*B67573-0101*	-			*TPIH TRANSISTOR PACKAGE R*	
100	*564264-0001*	-			*COMPONENTS WITHOUT TP-NO*	
110	*565295-0000*	-			*GABLE LEFT*	
120	*532709-0000*	-			*GABLE RIGHT*	
130	*532710-0000*	-			*STUDSCREW*	
140	*532711-0000*	-			*HEAT SINK PLATE PLANE*	
150	*532712-0000*	-			*DISTANCE PLATE*	
160	*565296-0000*	-			*WASHER*	
170	*565297-0000*	-			*TRANSISTOR PACKAGE R*	
F111	*B67581-0101*	-			*TPIH TRANSISTOR PACKAGE L*	
100	*565312-0001*	-			*COMPONENTS WITHOUT TP-NO*	
110	*565295-0000*	-			*GABLE LEFT*	
120	*532709-0000*	-			*GABLE RIGHT*	
130	*532710-0000*	-			*STUDSCREW*	
140	*532711-0000*	-			*HEAT SINK PLATE PLANE*	
150	*532712-0000*	-			*DISTANCE PLATE*	
160	*565296-0000*	-			*WASHER*	
180	*565298-0000*	-			*TRANSISTOR PACKAGE L*	
F112	*B67574-0401*	-			*OUTPUT TRANSFORMER*	
100	*565134-0001*	-			*COMPONENTS WITHOUT TP-NO*	
110	*532716-0000*	-			*OUTPUT TRANSFORMER*	
F200	*B67578-0101*	-			*TPIH FAN HOLDER*	
202	*565136-0001*	-			*COMPONENTS WITHOUT TP-NO*	

Machine Type | Group Description | Used-In | Group Number | Page No

This page is intentionally left blank.

Pos	Part No	SP	UN	Qty	Description	Page No
Common Parts (Cont'd)						
A041	B67600-0501	-		1	TPIH GENERATOR	
10	*542036-0000*	-			*TP SIGN BOARD "PART NO" 84X140MM*	
500	*565140-0001*	-			*COMPONENTS WITHOUT TP-NO*	
510	*565144-0000*	-			*LABEL LED*	
520	*565145-0000*	-			*LABEL X1/X2*	
530	*565146-0000*	-			*INSULATION SPACER*	
540	*565147-0000*	-			*GUIDE RAIL LEFT*	
550	*565148-0000*	-			*GUIDE RAIL RIGHT*	
560	*565149-0000*	-			*GUIDE RAIL BACK*	
570	*565150-0000*	-			*FRONT HANDLE*	
580	*565151-0000*	-			*BOX BOTTOM*	
590	*565152-0000*	-			*FRAME*	
600	*565153-0000*	-			*COMPLETE BOX*	
610	*565154-0000*	-			*BOX UPPER PART*	
F100	*B67577-0501*	-			*POWER CARD*	
130	*573137-0001*	-			*COMPONENTS WITHOUT TP-NO*	
140	*565299-0000*	-			*SORTING INSTRUCTION*	
150	*543112-0000*	-			*MODIFYING EUROPECONNECTOR*	
160	*573138-0000*	-		*3*	*HEAT SINK L*	
180	*565301-0000*	-			*CAPACITOR CABLE RED*	
190	*565300-0000*	-			*CAPACITOR CABLE BLACK*	
200	*575980-0000*	-			*CIRCUIT DIAGRAM*	
F101	*B67564-0101*	-			*THIH TOROID COIL 1*	
100	*564253-0001*	-			*COMPONENTS WITHOUT TP-NO*	
110	*532687-0000*	-			*TOROID COIL 1*	
F102	*B67565-0101*	-			*TPIH TOROID COIL 2*	
100	*564254-0001*	-			*COMPONENTS WITHOUT TP-NO*	
110	*532688-0000*	-			*TOROID COIL 2*	
F103	*B67566-0101*	-			*TPIH TOROID COIL 3*	
100	*564255-0001*	-			*COMPONENTS WITHOUT TP-NO*	
110	*532689-0000*	-			*TOROID COIL 3*	
F104	*B67567-0101*	-			*TPIH THERMOSTAT CABLE*	
100	*564256-0001*	-			*COMPONENTS WITHOUT TP-NO*	
110	*532690-0000*	-			*THERMOSTAT CABLE*	
F105	*B67568-0101*	-			*TPIH COIL SINGLE LAYER*	
100	*564257-0001*	-			*COMPONENTS WITHOUT TP-NO*	
110	*532692-0000*	-			*COIL SINGLE LAYER*	
120	*532691-0000*	-			*COIL FORMER*	
F106	*B67569-0101*	-			*TPIH TANK COIL*	
100	*564260-0001*	-			*COMPONENTS WITHOUT TP-NO*	
110	*532693-0000*	-			*BOTTOM GABLE*	
120	*532695-0000*	-			*GABLE*	
130	*532696-0000*	-			*RING SPRING*	
140	*532697-0000*	-			*WINDING HOLDER*	
150	*565286-0000*	-			*WINDING HOLDER*	
160	*565287-0000*	-			*SPACER*	
170	*532694-0000*	-			*TANK COIL*	
F107	*B67570-0101*	-			*TPIH CAPACITOR CARD*	
100	*564261-0001*	-			*COMPONENTS WITHOUT TP-NO*	
120	*484995-0000*	-			*PRINTED CIRCUIT BOARD*	
130	*565289-0000*	-			*COMPONENT REFERENCE*	
F108	*B67582-0101*	-			*TPIH HEATSINK PREREGULATO*	
100	*573134-0001*	-			*COMPONENTS WITHOUT TP-NO*	
110	*565290-0000*	-			*HEAT SINK V1*	
120	*532703-0000*	-			*HEAT SINK V2*	
130	*565291-0000*	-			*HEAT SINK V3*	
140	*573135-0000*	-			*HEAT SINK PREREGULATOR*	
F110	*B67573-0101*	-			*TPIH TRANSISTOR PACKAGE R*	
100	*564264-0001*	-			*COMPONENTS WITHOUT TP-NO*	
110	*565295-0000*	-			*GABLE LEFT*	
120	*532709-0000*	-			*GABLE RIGHT*	
130	*532710-0000*	-			*STUDSCREW*	
140	*532711-0000*	-			*HEAT SINK PLATE PLANE*	
150	*532712-0000*	-			*DISTANCE PLATE*	
160	*565296-0000*	-			*WASHER*	
170	*565297-0000*	-			*TRANSISTOR PACKAGE R*	
F111	*B67581-0101*	-			*TPIH TRANSISTOR PACKAGE L*	
100	*565312-0001*	-			*COMPONENTS WITHOUT TP-NO*	
110	*565295-0000*	-			*GABLE LEFT*	
120	*532709-0000*	-			*GABLE RIGHT*	
130	*532710-0000*	-			*STUDSCREW*	
140	*532711-0000*	-			*HEAT SINK PLATE PLANE*	
150	*532712-0000*	-			*DISTANCE PLATE*	
160	*565296-0000*	-			*WASHER*	
180	*565298-0000*	-			*TRANSISTOR PACKAGE L*	
F112	*B67574-0401*	-			*OUTPUT TRANSFORMER*	
100	*565134-0001*	-			*COMPONENTS WITHOUT TP-NO*	
110	*532716-0000*	-			*OUTPUT TRANSFORMER*	
F200	*B67578-0101*	-			*TPIH FAN HOLDER*	
202	*565136-0001*	-			*COMPONENTS WITHOUT TP-NO*	
203	*543120-0000*	-			*PARTITION WALL*	
204	*533839-0000*	-			*FILTER*	
205	*533840-0000*	-			*GASKET*	

Machine Type | Group Description | Used-In | Group Number | Page No

This page is intentionally left blank.

Pos	Part No	SP	UN	Qty	Description	Page No
Common Parts (Cont'd)						
F021	90233-0303	-		1	FUSE HOLDER, ST10	
FO19	90007-0129	-		1	CIRCUIT BREAKER, 1P 10 A K	
FO20	90233-0303	-		1	FUSE HOLDER, ST10	
FO22	90007-0129	-		1	CIRCUIT BREAKER, 1P 10 A K	
G908	B90025-0055	-		1	POWER SUPPLY UNIT TPMC PS32	
	352551-0136	-		*1*	*FINE-WIRE FUSE 3,15 A SLOW*	
H011	90124-0027	-		1	LAMP HOLDER BA9S	
H011:1	90036-0057	-		1	LIGHT BULB, BA9S 28V	
H012	90124-0027	-		1	LAMP HOLDER BA9S	
H012:1	90036-0057	-		1	LIGHT BULB, BA9S 28V	
H013	90124-0027	-		1	LAMP HOLDER BA9S	
H013:1	90036-0057	-		1	LIGHT BULB, BA9S 28V	
H014	90124-0027	-		1	LAMP HOLDER BA9S	
H014:1	90036-0057	-		1	LIGHT BULB, BA9S 28V	
H015	90124-0027	-		1	LAMP HOLDER BA9S	
H015:1	90036-0057	-		1	LIGHT BULB, BA9S 28V	
H016	90124-0027	-		1	LAMP HOLDER BA9S	
H016:1	90036-0057	-		1	LIGHT BULB, BA9S 28V	
H017	90124-0027	-		1	LAMP HOLDER BA9S	
H017:1	90036-0057	-		1	LIGHT BULB, BA9S 28V	
H018	90124-0027	-		1	LAMP HOLDER BA9S	
H018:1	90036-0057	-		1	LIGHT BULB, BA9S 28V	
H042	90064-0101	-		1	SIGNAL LAMP RED	
H043	90064-0101	-		1	SIGNAL LAMP RED	
K001	B90075-0124	-		1	CONTACTOR, 4KW 24VDC	
	90075-0313	*A*		*1*	*AUXILIARY CONTACT K&M 22 DILM.2NO;2NC*	
K002	B90075-0124	-		1	CONTACTOR, 4KW 24VDC	
	90075-0313	*A*		*1*	*AUXILIARY CONTACT K&M 22 DILM.2NO;2NC*	
K003	B90075-0124	-		1	CONTACTOR, 4KW 24VDC	
	90075-0313	*A*		*1*	*AUXILIARY CONTACT K&M 22 DILM.2NO;2NC*	
K005	B90075-0124	-		1	CONTACTOR, 4KW 24VDC	
	90075-0313	*A*		*1*	*AUXILIARY CONTACT K&M 22 DILM.2NO;2NC*	
K006	B90075-0124	-		1	CONTACTOR, 4KW 24VDC	
	90075-0313	*A*		*1*	*AUXILIARY CONTACT K&M 22 DILM.2NO;2NC*	
K007	B90075-0124	-		1	CONTACTOR, 4KW 24VDC	
	90075-0313	*A*		*1*	*AUXILIARY CONTACT K&M 22 DILM.2NO;2NC*	
K008	B90075-0124	-		1	CONTACTOR, 4KW 24VDC	
	90075-0313	*A*		*1*	*AUXILIARY CONTACT K&M 22 DILM.2NO;2NC*	
K009	B90075-0124	-		1	CONTACTOR, 4KW 24VDC	
	90075-0313	*A*		*1*	*AUXILIARY CONTACT K&M 22 DILM.2NO;2NC*	
K010	B90075-0124	-		1	CONTACTOR, 4KW 24VDC	
	90075-0313	*A*		*1*	*AUXILIARY CONTACT K&M 22 DILM.2NO;2NC*	
K015	90119-0056	-		1	RELAY, AUXILIARY MK3P5-S 24VDC	
K015:1	90129-0006	-		1	BASE, S3-B	
K016	90119-0056	-		1	RELAY, AUXILIARY MK3P5-S 24VDC	
K016:1	90129-0006	-		1	BASE, S3-B	
K017	90119-0056	-		1	RELAY, AUXILIARY MK3P5-S 24VDC	
K017:1	90129-0006	-		1	BASE, S3-B	
K018	90119-0056	-		1	RELAY, AUXILIARY MK3P5-S 24VDC	
K018:1	90129-0006	-		1	BASE, S3-B	
K019	90119-0056	-		1	RELAY, AUXILIARY MK3P5-S 24VDC	
K019:1	90129-0006	-		1	BASE, S3-B	
K020	90119-0056	-		1	RELAY, AUXILIARY MK3P5-S 24VDC	
K020:1	90129-0006	-		1	BASE, S3-B	
K021	90119-0056	-		1	RELAY, AUXILIARY MK3P5-S 24VDC	
K021:1	90129-0006	-		1	BASE, S3-B	
K022	90119-0056	-		1	RELAY, AUXILIARY MK3P5-S 24VDC	
K022:1	90129-0006	-		1	BASE, S3-B	
K030	90119-0067	-		1	SOLID-STATE RELAY, H12WD4850	
K031	90119-0067	-		1	SOLID-STATE RELAY, H12WD4850	
K032	90119-0067	-		1	SOLID-STATE RELAY, H12WD4850	
K033	90119-0067	-		1	SOLID-STATE RELAY, H12WD4850	
K038	90119-0056	-		1	RELAY, AUXILIARY MK3P5-S 24VDC	
K038:1	90129-0006	-		1	BASE, S3-B	
K039	90119-0056	-		1	RELAY, AUXILIARY MK3P5-S 24VDC	
K039:1	90129-0006	-		1	BASE, S3-B	
K200	B90075-0126	-		1	CONTACTOR, 22KW 24VDC	
	90075-0313	*A*		*1*	*AUXILIARY CONTACT K&M 22 DILM.2NO;2NC*	
K200:1	90075-0313	-		1	AUXILIARY CONTACT K&M 22 DILM.2NO;2NC	
K201	B90075-0126	-		1	CONTACTOR, 22KW 24VDC	
	90075-0313	*A*		*1*	*AUXILIARY CONTACT K&M 22 DILM.2NO;2NC*	
K201:1	90075-0313	-		1	AUXILIARY CONTACT K&M 22 DILM.2NO;2NC	
K300	B90075-0126	-		1	CONTACTOR, 22KW 24VDC	
	90075-0313	*A*		*1*	*AUXILIARY CONTACT K&M 22 DILM.2NO;2NC*	
K300:1	90075-0313	-		1	AUXILIARY CONTACT K&M 22 DILM.2NO;2NC	
K301	B90075-0126	-		1	CONTACTOR, 22KW 24VDC	
	90075-0313	*A*		*1*	*AUXILIARY CONTACT K&M 22 DILM.2NO;2NC*	
K301:1	90075-0313	-		1	AUXILIARY CONTACT K&M 22 DILM.2NO;2NC	
L001	90297-0306	-		1	BALLAST COIL 50/60 HZ	
L002	90297-0306	-		1	BALLAST COIL 50/60 HZ	
M010	90264-0015	-		1	FAN 34W 208-240V	
P001	90178-0007	-		1	HOUR COUNTER, BG 40,17-1 12-48VDC	
P002	90000-0024	-		1	AMMETER, IQ48 15-100HZ	

Machine Type | Group Description | Used-In | Group Number | Page No

This page is intentionally left blank.

Pos	Part No	SP	UN	Qty	Description	Page No
Common Parts (Cont'd)						
P002	359241-0282	-		1	SIGN, PAPER WEB DRIER	
P003	90053-0028	-		1	3 DIGIT COUNTER KOYO KCX-3-DM-V	
P003:1	90053-0309	-		1	BASE	
P004	90053-0029	-		1	COUNTER, F524.800FA3C 24VDC	
P005	90053-0024	-		1	COUNTER 24VDC 6 DIGITS	
P005:1	90053-0311	-		1	BASE 916	
P005:2	90053-0305	-		1	FRAME F 1 DV	
P006	90119-0029	-		1	UNDERCURRENTRELAY 4-8A DOLD R833T	
Q001	90259-0026	-		1	OVERLOAD RELAY, 6 - 10 A	
Q001:1	90259-0306	-		1	AUX CONTACT	
Q002	90095-0070	-		1	OVERLOAD PROTECTION, PKZM 0,4 A	
Q002:1	90259-0306	-		1	AUX CONTACT	
Q002:2	90259-0310	-		1	ADAPTER PLATE, K&M SP PKZ M	
Q003	90069-0069	-		1	GEARS, WORM MOTOR DM90-80 E4	
Q003:1	90259-0306	-		1	AUX CONTACT	
Q003:2	90259-0310	-		1	ADAPTER PLATE, K&M SP PKZ M	
Q004	90259-0026	-		1	OVERLOAD RELAY, 6 - 10 A	
Q004:1	90259-0310	-		1	ADAPTER PLATE, K&M SP PKZ M	
Q005	90095-0070	-		1	OVERLOAD PROTECTION, PKZM 0,4 A	
Q005:1	90259-0310	-		1	ADAPTER PLATE, K&M SP PKZ M	
Q005:2	553768-0001	-		1	PLINTH	
Q005:3	90259-0306	-		1	AUX CONTACT	
Q020	359241-0124	-		1	SIGN, MAIN SWITCH	
Q020	359240-0100	-		1	SIGN HOLDER FOR 359240-0001	
Q020	779910-0101	-		1	PADLOCK	
Q020	90111-0134	-		1	MAIN SWITCH P3-63/EA/SVB-SW/N/HI11/H-P3	
Q021	90259-0031	-		1	OVERLOAD RELAY, 25-40 A	
R002	B90130-0015	-		1	POTENTIOMETER, 5 KOHM	
	90130-0301	*-*		*1*	*ADJUSTING KNOB WITH DIAL*	
R002:1	90130-0301	-		1	ADJUSTING KNOB WITH DIAL	
R002:1	359241-0282	-		1	SIGN, PAPER WEB DRIER	
R040	B90130-0015	-		1	POTENTIOMETER, 5 KOHM	
	90130-0301	*-*		*1*	*ADJUSTING KNOB WITH DIAL*	
R040:1	359241-0193	-		1	SIGN"TRANSSKARVSFÖRSEG.S1	
R040:1	90130-0301	-		1	ADJUSTING KNOB WITH DIAL	
R041	B90130-0015	-		1	POTENTIOMETER, 5 KOHM	
	90130-0301	*-*		*1*	*ADJUSTING KNOB WITH DIAL*	
R041:1	359241-0194	-		1	SIGN"TRANSSKARVSÖRSEGL.S2	
R041:1	90130-0301	-		1	ADJUSTING KNOB WITH DIAL	
S01H	B90064-0093	-		1	PUSH BUTTON, GREEN	
	90036-0057	*C*		*1*	*LIGHT BULB, BA9S 28V*	
S01H	359301-0001	-		1	SIGN "UP"	
S02H	359301-0005	-		1	SIGN "DOWN"	
S02H	B90064-0082	-		1	PUSH BUTTON, WHITE	
	90036-0057	*B*		*1*	*LIGHT BULB, BA9S 28V*	
S03H	B90064-0093	-		1	PUSH BUTTON, GREEN	
	90036-0057	*C*		*1*	*LIGHT BULB, BA9S 28V*	
S03H	359301-0090	-		1	SIGN "INCHING"	
S04H	359301-0110	-		1	SIGN "SHORT STOP"	
S04H	90064-0085	-		1	PUSH BUTTON, RED	
S05H	90064-0084	-		1	PUSH BUTTON, YELLOW	
S06H	90064-0084	-		1	PUSH BUTTON, YELLOW	
S06H	359301-0456	-		1	BUTTON SIGN, PACKAGE DISPOSAL	
S07H	90064-0084	-		1	PUSH BUTTON, YELLOW	
S07H	359301-0215	-		1	SIGN "WASH PRODUCT VALVE"	
S07H	359301-0125	-		1	SIGN "LUBRICATION"	
S08H	90064-0084	-		1	PUSH BUTTON, YELLOW	
S08H	359301-0131	-		1	BUTTON SIGN, LAMP TEST / ALARM RES.	
S10	486826-0001	-		1	SIGN "EMERGENCY STOP"	
S10	90064-0124	-		1	SWITCH, EM. STOP, ZB2-BS844+ZB2-BZ1045	
S12	90111-0120	-		1	SWITCH, 2 POS.704.510 .0A+704.901.5/A	
S12	359241-0133	-		1	SIGN, SERVICE SWITCH	
S15H	90064-0084	-		1	PUSH BUTTON, YELLOW	
S15H	359241-0286	-		1	SIGN, VOLUME ACKNOWLEDGEMENT	
S20	359240-0100	-		1	SIGN HOLDER FOR 359240-0001	
S20	90111-0122	-		1	KEY SWITCH, 2 NO CONTACTS	
S20	359241-0250	-		1	SIGN "CLEANING OF STEAM BARRIER"	
T001	529259-0000	-		1	TRANSFORMER	
T002	23096-0001	-		1	TRANSFORMER 1PH 800VA	
V001	90038-0025	-		1	RECTIFIER, 6,5/15A SKD 30/04A1	
V002	90430-0032	-		1	THYRISTOR UNIT, 425A/25A	
X001	1363808-0000	-		1	TERMINAL X001	
X002	1363809-0000	-		1	GROUND TERMINAL	
X003	1363810-0000	-		1	NEUTRAL TERMINAL	
X004	90195-0019	-		1	TERMINAL BLOCK, 1978.2	
X005	90001-0033	-		1	WALL SOCKET OUTLET	
XL10	1363451-0000	-		1	TERMINAL XL10,11,50,51	
XL20	1363452-0000	-		1	TERMINALXL20,21,30,31	
Z100	90024-0031	-		1	POWER LINE FILTER, 75 A 230/400 VAC	

Machine Type | Group Description | Used-In | Group Number | Page No

This page is intentionally left blank.

ECM: - -
Group number: 68471-0100
Assembly Drawing:

Issue: 20030206

Pos	Part No	SP	UN	Qty	Description	Page No
Common Parts						
080	556524-0001	-			COMPONENTS WITHOUT TP-NO	
090	556525-0000	-			FRONT PANEL 8TE	
230	543924-0000	-			COVER PLATE:HANDLE 8TE	
260	556523-0000	-			DISCETTE FOR LAYOUTS	
300	564246-0000	-			COVERING PLATE	

Pos	Part No	SP	UN	Qty	Description	Page No

This page is intentionally left blank.

ECM: 120342 - 20021211
Group number: 558200-0600
Assembly Drawing:

Issue: 20030206

Pos	Part No	SP	UN	Qty	Description	Page No
Common Parts						
0001	351150-0413	-	CM	500	CABLE OLFLEX 4X1,5 MM2 LIGHT/GREY	
0002	351150-0413	-	CM	500	CABLE OLFLEX 4X1,5 MM2 LIGHT/GREY	
0003	351150-0413	-	CM	450	CABLE OLFLEX 4X1,5 MM2 LIGHT/GREY	
0005	351150-0412	-	CM	500	CABLE OLFLEX 3X1,5 MM2 LIGHT/GREY	
0006	351150-0412	-	CM	500	CABLE OLFLEX 3X1,5 MM2 LIGHT/GREY	
0007	351150-0412	-	CM	500	CABLE OLFLEX 3X1,5 MM2 LIGHT/GREY	
0008	351150-0412	-	CM	500	CABLE OLFLEX 3X1,5 MM2 LIGHT/GREY	
0009	351150-0412	-	CM	500	CABLE OLFLEX 3X1,5 MM2 LIGHT/GREY	
0010	351150-0418	-	CM	250	CABLE OLFLEX 4X2,5 MM2 LIGHT/GREY	
0011	90220-0108	-	CM	550	SCR. CABLE 5X1,5MM2	
0014	351150-0412	-	CM	500	CABLE OLFLEX 3X1,5 MM2 LIGHT/GREY	
0020	90220-0059	-	CM	550	THERMOCOUPLE CABLE K/ 2X0,81MM2	
0021	90220-0059	-	CM	550	THERMOCOUPLE CABLE K/ 2X0,81MM2	
0022	90220-0059	-	CM	550	THERMOCOUPLE CABLE K/ 2X0,81MM2	
0023	90220-0059	-	CM	550	THERMOCOUPLE CABLE K/ 2X0,81MM2	
0024	90220-0059	-	CM	550	THERMOCOUPLE CABLE K/ 2X0,81MM2	
0025	90220-0059	-	CM	550	THERMOCOUPLE CABLE K/ 2X0,81MM2	
0026	90220-0059	-	CM	550	THERMOCOUPLE CABLE K/ 2X0,81MM2	
0028	351150-0407	-	CM	550	CABLE OLFLEX 12X0,75 MM2 LIGHT/GREY	
0032	351150-0406	-	CM	600	CABLE OLFLEX 7X0,75 MM2 LIGHT/GREY	
0033	351150-0406	-	CM	550	CABLE OLFLEX 7X0,75 MM2 LIGHT/GREY	
0034	351150-0403	-	CM	200	CABLE OLFLEX 3X0,75 MM2 LIGHT/GREY	
0035	351150-0403	-	CM	500	CABLE OLFLEX 3X0,75 MM2 LIGHT/GREY	
0036	351150-0424	-	CM	600	CABLE OLFLEX 18X0,75 MM2 LIGHT/GREY	
0037	351150-0407	-	CM	500	CABLE OLFLEX 12X0,75 MM2 LIGHT/GREY	
0038	351150-0407	-	CM	500	CABLE OLFLEX 12X0,75 MM2 LIGHT/GREY	
0039	351150-0424	-	CM	500	CABLE OLFLEX 18X0,75 MM2 LIGHT/GREY	
0041	351150-0405	-	CM	500	CABLE OLFLEX 5X0,75 MM2 LIGHT/GREY	
0042	351150-0405	-	CM	550	CABLE OLFLEX 5X0,75 MM2 LIGHT/GREY	
0043	351150-0404	-	CM	500	CABLE OLFLEX 4X0,75 MM2 LIGHT/GREY	
0051	351150-0404	-	CM	350	CABLE OLFLEX 4X0,75 MM2 LIGHT/GREY	
0052	351150-0403	-	CM	350	CABLE OLFLEX 3X0,75 MM2 LIGHT/GREY	
0053	351150-0404	-	CM	500	CABLE OLFLEX 4X0,75 MM2 LIGHT/GREY	
0055	351150-0406	-	CM	300	CABLE OLFLEX 7X0,75 MM2 LIGHT/GREY	
0056	351150-0406	-	CM	300	CABLE OLFLEX 7X0,75 MM2 LIGHT/GREY	
0057	351150-0406	-	CM	300	CABLE OLFLEX 7X0,75 MM2 LIGHT/GREY	
0058	351150-0406	-	CM	300	CABLE OLFLEX 7X0,75 MM2 LIGHT/GREY	
0059	351150-0406	-	CM	300	CABLE OLFLEX 7X0,75 MM2 LIGHT/GREY	
0060	351150-0406	-	CM	300	CABLE OLFLEX 7X0,75 MM2 LIGHT/GREY	
0061	351150-0406	-	CM	300	CABLE OLFLEX 7X0,75 MM2 LIGHT/GREY	
0062	351150-0406	-	CM	300	CABLE OLFLEX 7X0,75 MM2 LIGHT/GREY	
0070	351150-0413	-	CM	500	CABLE OLFLEX 4X1,5 MM2 LIGHT/GREY	
0071	351120-0144	-	CM	500	CABLE SIHF 3X1,5MM2 GREEN/YELLOW	
0072	351120-0144	-	CM	500	CABLE SIHF 3X1,5MM2 GREEN/YELLOW	
0073	351150-0403	-	CM	300	CABLE OLFLEX 3X0,75 MM2 LIGHT/GREY	
0078	351150-0403	-	CM	200	CABLE OLFLEX 3X0,75 MM2 LIGHT/GREY	
0079	351150-0431	-	CM	200	CABLE OLFLEX 2X0,75 MM2 LIGHT/GREY	
0081	351150-0404	-	CM	600	CABLE OLFLEX 4X0,75 MM2 LIGHT/GREY	
0091	351120-0144	-	CM	200	CABLE SIHF 3X1,5MM2 GREEN/YELLOW	
0092	351120-0144	-	CM	200	CABLE SIHF 3X1,5MM2 GREEN/YELLOW	
0093	351120-0144	-	CM	200	CABLE SIHF 3X1,5MM2 GREEN/YELLOW	
0094	351150-0412	-	CM	250	CABLE OLFLEX 3X1,5 MM2 LIGHT/GREY	
0100	90220-0059	-	CM	250	THERMOCOUPLE CABLE K/ 2X0,81MM2	
0109	351150-0403	-	CM	300	CABLE OLFLEX 3X0,75 MM2 LIGHT/GREY	
0206	351150-0413	-	CM	400	CABLE OLFLEX 4X1,5 MM2 LIGHT/GREY	
0400	351150-0403	-	CM	450	CABLE OLFLEX 3X0,75 MM2 LIGHT/GREY	
0600	351150-0403	-	CM	600	CABLE OLFLEX 3X0,75 MM2 LIGHT/GREY	
0808	351150-0403	-	CM	400	CABLE OLFLEX 3X0,75 MM2 LIGHT/GREY	
0813	351150-0403	-	CM	400	CABLE OLFLEX 3X0,75 MM2 LIGHT/GREY	
0814	351150-0403	-	CM	400	CABLE OLFLEX 3X0,75 MM2 LIGHT/GREY	
0815	351150-0403	-	CM	400	CABLE OLFLEX 3X0,75 MM2 LIGHT/GREY	
0817	351150-0403	-	CM	400	CABLE OLFLEX 3X0,75 MM2 LIGHT/GREY	
0831	351150-0403	-	CM	400	CABLE OLFLEX 3X0,75 MM2 LIGHT/GREY	
0833	351150-0406	-	CM	400	CABLE OLFLEX 7X0,75 MM2 LIGHT/GREY	
0836	351150-0404	-	CM	400	CABLE OLFLEX 4X0,75 MM2 LIGHT/GREY	
0843	351150-0406	-	CM	400	CABLE OLFLEX 7X0,75 MM2 LIGHT/GREY	

Machine Type | Group Description | Used-In | Group Number | Page No

This page is intentionally left blank.

Pos	Part No	SP	UN	Qty	Description	Page No
Common Parts						
0010	A558199-0600	-		1	ELECTRICAL CABINET TCA/25	**371, 373, 375, 377, 379**
0020	A558200-0600	-		1	CABLE LIST TCA/25	**383**

Pos	Part No	SP	UN	Qty	Description	Page No

Tetra Pak

SPC
Spare Parts Catalogue

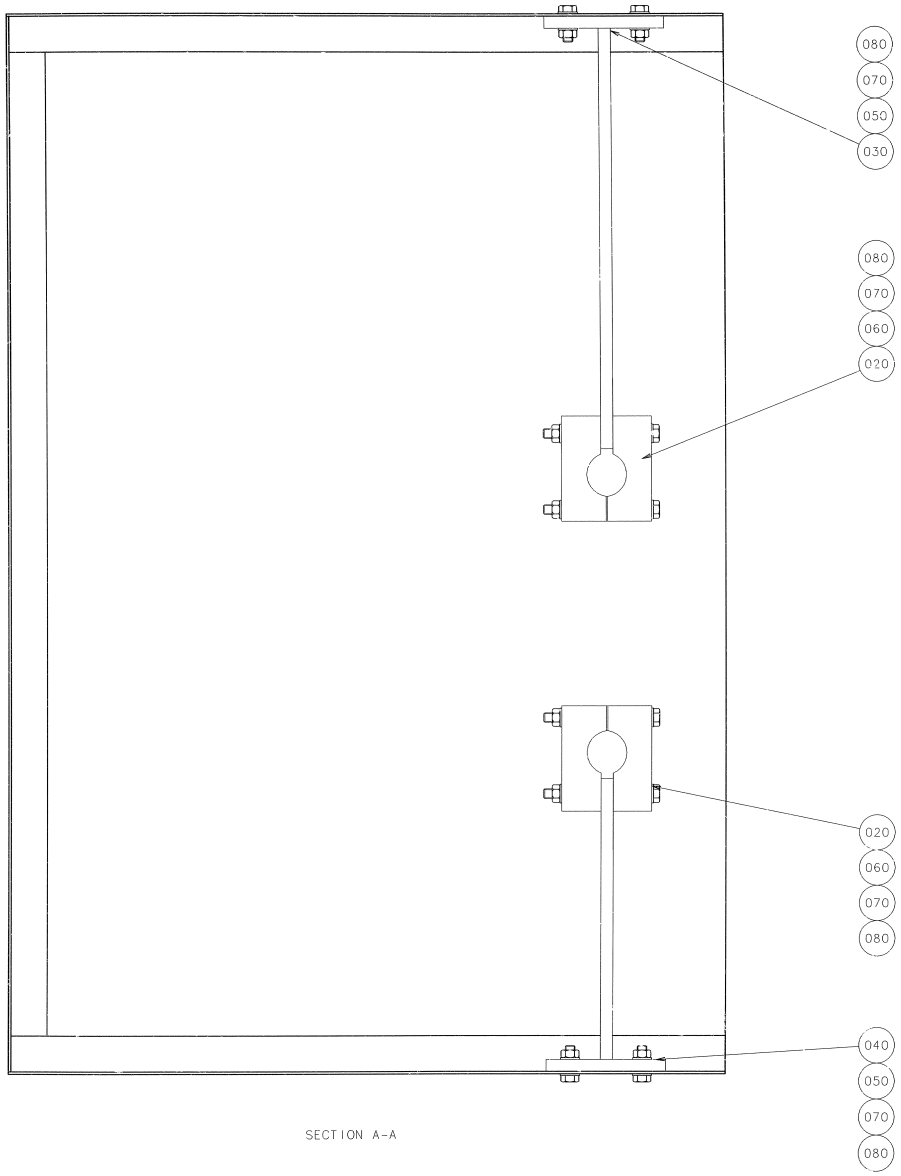
080
070
050
030
080
070
060
020
020
060
070
080
040
050
070
080
SECTION A-A

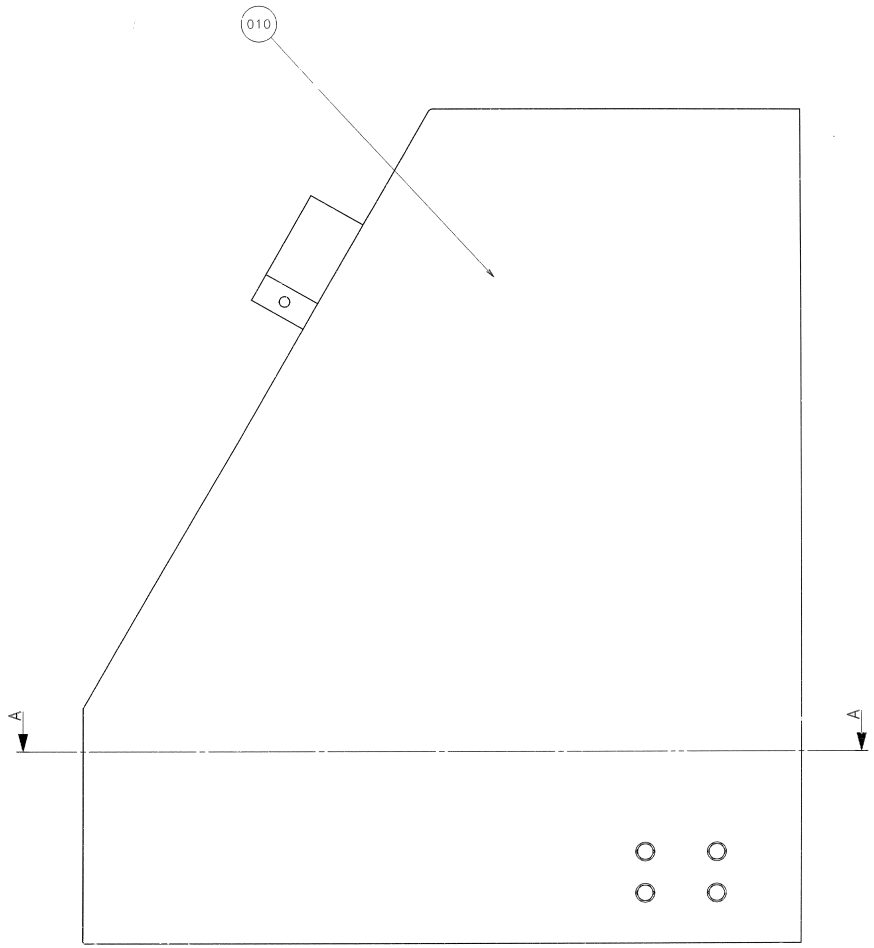
010
A
A

ECM: 117882 - 20021219
Group number: 1362040-0100
Assembly Drawing: 1362040-1_1_AA

Issue: 20030206

Pos	Part No	SP	UN	Qty	Description	Page No
Common Parts						
010	1361994-0000	-		1	HOOD	
020	1361995-0000	-		4	BRACKET	
030	1361996-0000	-		1	BRACKET	
040	1361997-0000	-		1	BRACKET	
050	312105-0372	-		8	SCREW M6S ISO 4017 M6X25 A480	
060	312105-0467	-		8	SCREW M6S ISO 4014 M8X80 A480	
070	312605-0318	-		16	HEXAGON NUT, M6M M8 A280	
080	315105-0165	-		32	WASHER ISO 7089-8-200 HV-A4	

Pos	Part No	SP	UN	Qty	Description	Page No

Machine Type | Group Description | Used-In | Group Number | Page No

Tetra Pak

SPC
Spare Parts Catalogue

Part No	Description	Page No
72-0004	COMPRESSION SPRING	113, 151
1013-0000	SHAFT	13
1070-0000	HANDLE	177
1071-0000	PIN	177, 179
1072-0000	LOCKING FINGER	171
1121-0000	HINGE	171
1122-0001	PIN	171
1312-0000	ROD SUPPORT	61
1531-0000	ECCENTRIC	175
1532-0000	SPRING	171
1534-0000	HANDLE	175
1537-0000	BRACKET	237
1573-0000	TACK	175, 177, 179
1574-0000	TACK	113, 151
1591-0000	PLUNGER	113, 151
1815-0000	DOWEL	171
1883-0004	WASHER	217
1883-0005	WASHER	217
1883-0007	WASHER	217
1883-0008	WASHER	217
1988-0200	SPRING CARTRIDGE	93, 111, 131, 149
1989-0000	SPRING HOUSING	97, 115, 135, 153
1990-0000	BUFFER	97, 115, 135, 153
1991-0000	SETTING STOPPER	97, 115, 135, 153
1993-0001	COMPRESSION SPRING	97, 115, 135, 153
2033-0002	WASHER	31, 57
2033-0003	WASHER	31, 57
2033-0005	WASHER	31, 57
2033-0009	WASHER	333
2033-0010	WASHER	31, 57
2060-0000	ROLLER BAR	107, 125, 145, 163
2065-0000	SPROCKET	95, 133
2066-0000	GUIDE WHEEL	95, 113, 133, 151
2070-0000	SHAFT	95, 113, 133, 151
2071-0000	SHAFT	95, 113, 133, 151
2076-0000	TRANSMISSION RAIL	113, 151
2077-0000	GUIDE FLANGE	113, 151
2078-0000	WASHER	113, 151
2079-0000	TRANSMISSION RAIL	95, 113, 133, 151
2080-0000	RAIL	95, 113, 133, 151
2081-0000	ANGLE	95, 113, 133, 151
2082-0000	SPACER RING	95, 113, 133, 151
2112-0000	GABLE PART	217
2117-0000	SHAFT	217
2118-0000	FITTING BOLT	217
2119-0000	ROLL	217
2120-0000	WASHER	217
2122-0000	SHAFT	217
2123-0000	CURVE	217
2128-0000	CHUTE BRACKET	209, 211
2130-0000	SHAFT	209, 211
2174-0000	SHAFT	181
2247-0000	SHAFT	175
2295-0000	LINK CHAIN	99, 117, 137, 155
2448-0000	FLANGE	113, 151
2449-0000	SCREW	113, 151
2552-0000	COMPRESSION SPRING	209, 211
2795-0000	NUT	31, 57
2974-0000	FITTING BOLT	213, 215
3093-0000	RING	57
3094-0000	LID	57
3095-0000	SHAFT	57
3102-0000	RING	31
3103-0000	LID	31
3125-0000	SHAFT	31
3159-0000	NUT	29
3160-0000	NUT	29
3161-0000	GRUB SCREW	29
3162-0000	SHAFT	29
3163-0000	HANDLE	29
3164-0000	PIN	29
3165-0000	PIN	29
3202-0000	CRAMP	243
3318-0000	LEG	19
4015-0003	PULLEY	185
4018-0000	COMPRESSION SPRING	185
4069-0000	STOP SLEEVE	15
4070-0000	PUSH SLEEVE	15
4071-0007	SPACER SLEEVE	15
4072-0000	RUBBER RING	15
4075-0016	SPACER RING	15
4287-0007	SHAFT	13
4288-0005	BENDING ROLLER	297, 299
4288-0008	BENDING ROLLER	13

Part No	Description	Page No
4292-0000	HANDSPIKE	327
4317-0000	BEARING	297, 299, 329, 339
4318-0009	SHAFT	341
4319-0005	COUNTER ROLLER	339
4410-0001	SCREW	15
4766-0200	SLIP DISC	181
4768-0000	FLANGE	185
4961-0000	CATCH	13
4962-0000	SCREW	13
4974-0005	SHAFT	15
4975-0000	WASHER	15
4976-0000	NUT	15
4977-0005	SPINDLE	15
5204-0000	RUBBER STOPPER	175, 177, 179
5486-0000	BEARING	345
5778-0000	SHAFT	347
6071-0000	LOCKING FINGER	333
6074-0000	WASHER	333
6157-0000	BOBBIN	345
6158-0000	SPRING	345
6159-0000	BEARING	345
6183-0000	SPRING	183
6584-0000	SPACER RING	171
6695-0000	ROLL	343, 349
6759-0001	SHAFT	329
7203-0000	LEG	237
7309-0000	HANDLE	239, 301
8479-0000	COMPRESSION SPRING	323
10349-0000	BEARING	59
10561-0000	BEARING BRACKET	59
10562-0000	BEARING BOX	59
10563-0000	ECCENTRIC	59
10574-0000	SCISSOR ARM	217
10575-0000	SCISSOR BLADE	217
10581-0000	SHAFT	215
10582-0200	CHAIN TENSIONER	207
10583-0000	SPROCKET	213
10584-0000	SHAFT	213
10587-0300	CHAIN TENSIONER	207
10588-0000	SPACER PIPE	217
10590-0000	PROTECTION	171
10592-0000	ROLLER CHAIN	209, 211
10908-0000	RETAINING RING	297, 299, 301
10980-0000	HAND RAIL	209, 211
11106-0000	SPROCKET	217
11244-0000	BRACKET	171
11305-0000	SPACER	301
11307-0000	BUSHING	301
11312-0000	GUIDE RING	301
11389-0000	BOW CLAMP	317
11390-0000	SCREW	317
11391-0002	TENSION SPRING	317
11423-0000	SPRING	315
11436-0000	SHAFT	303, 305, 307, 309, 315
11445-0000	MOUNTINGS	301
11448-0000	SHAFT	297, 299, 329
11450-0000	SHAFT	329
11452-0000	LACE	297, 299, 329
12242-0001	GASKET 32X25X5,5	79, 81, 253, 255
12453-0100	PAPER REEL HOLDER	11
12458-0300	DOOR	169
12459-0300	DOOR	169
12460-0300	DOOR	169
12473-0300	CUTTING WHEEL	207
12486-0000	HANDLE	179
12497-0000	CUTTING WHEEL	217
12501-0000	BEARING BRACKET	181
12508-0000	PRESSURE JAW	107, 145
12512-0000	SHAFT	107, 145
12513-0000	COMPRESSION SPRING	107, 145
12517-0000	LID	219
12518-0000	LID	219
12519-0000	LID	219
12520-0000	KNIFE SHAFT	219
12523-0000	GEAR WHEEL	181
12550-0200	KNIFE SHAFT	207
12553-0000	SHAFT	101, 103, 121, 123, 139, 141, 159, 161
12557-0000	LID	221
12559-0000	TRANSMISSION RAIL	95, 133
12560-0000	TRANSMISSION RAIL	95, 133
12563-0100	CHAIN	93, 111, 131, 149
12564-0000	GEAR RIM	217
12565-0000	GEARING	219
12566-0000	GEAR WHEEL	151

Part No	Description	Page No
12567-0000	SHAFT	99, 117, 137, 155
12568-0000	SHAFT	99, 117, 137, 155
12569-0000	RAIL	217, 287
12573-0000	KNIFE	219, 287
12575-0000	SPACER PIPE	217
12578-0000	SPACER RING	219
12584-0000	LID	219
12639-0000	SPROCKET	225
12727-0000	CASSETTE	13
12728-0000	HOOD	13
12738-0000	WINDOW	13
12917-0000	LINK ARM	127, 165
13206-0000	CHAIN SUPPORT	209, 211
13354-0000	SHAFT	319
13401-0000	LACE	59, 297, 299, 329
13643-0000	WASHER	315
13663-0000	CASSETTE	301
13664-0000	ARM	301
13665-0000	BOBBIN HOLDER	301
13666-0000	BUSHING	301
13667-0000	SHOULDER BOLT	301
13852-0300	MAGAZINE	295
13853-0000	GABLE PLATE	301
13854-0000	HOLDER	301
13888-0000	BEARING	13
14617-0000	HEAD PLATE	321
14618-0000	SHAFT	321
14637-0000	LINK	319
14964-0002	SHAFT	343, 349
14966-0000	ROLL	343, 349
18052-0003	MANTEL RUBBER	289, 343, 357
19083-0000	WEIGHT	347
19125-0000	LINK	315
19128-0000	KNIFE	313
19129-0000	INSULATION	313
19135-0000	LOCK WASHER	315, 317
19139-0000	KNIFE	315
19140-0000	KNIFE HOLDER	315
19142-0000	SHAFT	315
19217-0000	KNURLED SCREW	343, 349
19223-0000	COMPRESSION SPRING	343, 349
19258-0100	SPROCKET	207
19259-0000	SPROCKET, DIV. INTO THREE	221
19260-0000	SHAFT	221
19262-0000	WASHER	341
19268-0300	AIR SUPER-HEATER	233
19269-0002	ELEMENT	235
19270-0000	TUBE	235
19271-0000	FILTER	235
19272-0000	MANTLE	235
19281-0000	STRUT	61
19295-0004	TEFLON PIPE	49
19295-0005	TEFLON PIPE	49
19300-0000	NIPPLE	233
19301-0000	PIPE	233
19302-0000	PIPE	233
19312-0000	BRACKET	29
19317-0000	HOOD	61
19324-0000	AIR PIPE	29
19330-0000	NOZZLE	61
19337-0300	FORMING RING	27
19338-0000	ROLL	31
19349-0000	SHAFT	29
19368-0000	SUPERSTRUCTURE	29
19369-0000	CAP	29
19370-0000	PILLAR	29
19374-0000	HOLDER	29
19393-0700	DRIVE UNIT	169
19408-0000	CANTILEVER	237
19409-0000	CAP	237
19410-0000	HOLDER	237
19519-0400	OPENING ARRANGEMENT	295
19521-0200	CARRIAGE	303, 305, 307, 309
19522-0100	COUNTER ROLLER	315
19523-0100	FREE-WHEEL COUPLING	315
19526-0300	FRAME	303, 305, 307, 309
19528-0000	SUPPORTING SHEET	13
19536-0000	CLAMPING PART	313
19537-0000	FRAME	315
19538-0000	BRACKET	315
19540-0000	CARRIER	315
19542-0000	SPACER	315
19543-0000	SUPPORT	315
19544-0000	BRACKET	315

Part No	Description	Page No
19545-0000	ECCENTRIC SHAFT	315
19546-0000	WASHER	315
19547-0000	SHAFT	315
19548-0000	CLAMPING PIECE	315
19549-0000	BRACKET	315
19551-0000	HOLDER	317
19552-0000	ROLL	317
19553-0000	SHAFT	317
19555-0000	FORK	319
19556-0000	STOP LUG	297, 299, 325
19564-0000	FRAME	311
19779-0000	HOUSE	329
19784-0000	SHAFT	345
19787-0001	ROLL	349
19787-0002	ROLL	343
19787-0004	ROLL	343
19788-0000	BOW CLAMP	343, 349
19790-0000	STUD SCREW	343, 349
19791-0000	RETAINING RING	329
19792-0000	SPRING BRACKET	329
19795-0000	COMPRESSION SPRING	343, 349
19797-0000	BUSHING	53, 343, 349
20036-0200	HOSE CLAMP	295
20037-0000	SHAFT	327
20038-0000	CLAMP PLATE	327
20039-0000	RUBBER STRIP	327
20198-0000	DOOR HINGE	171
20199-0200	DOOR	169
20317-0300	TOOL	267
20387-0100	BOBBIN	343, 349
20389-0100	HOSE CLAMP	343, 349
20401-0000	RING	329
20497-0000	GROUP NUMBER PLATE	13, 29, 95, 113, 133, 151, 171, 209, 211, 297, 299
20674-0000	GUIDE FLANGE	297, 299
20964-0002	WIRING DIAGRAM	189
20966-0200	CENTRAL LUBRICATION	169
20970-0300	CENTRAL LUBRICATION	111, 149
20991-0100	STEERING	315
20992-0000	STEERING RAIL	321
21014-0000	BALL BUSHING	315
21071-0000	BRAKE	347
21072-0000	BRAKE	347
21137-0000	TENSION ARM	213, 215
21155-0000	SPACER ROD	297, 299
21161-0000	HINGE	297, 299
21219-0000	SIDE FRAME	113, 151
21510-0400	BEARING HOUSING	27
21513-0000	CLAMP RING	33, 35
21514-0000	CLAMPING PLATE	33, 35
21515-0000	BUSHING	33, 35
21516-0000	THRUST BEARING	35
21518-0000	SHAFT	323
21520-0004	PUNCH	323
21520-0005	PUNCH	323
21521-0000	COMPRESSION SPRING	323
21522-0004	DIE	323
21522-0005	DIE	323
21524-0000	BUSHING	323
21613-0000	SCREW	17
21622-0000	THUMB SCREW	323
21631-0000	TENSION SPRING	329, 359, 361
21675-0100	LEG	17
21676-0002	BRACKET	19
21678-0000	LID	95, 113, 133, 151
21679-0000	BEARING SEAT	95, 113, 133, 151
21716-0000	SLEEVE	213, 215
21717-0000	GUIDE PIN	213, 215
22297-0000	SHELF	277
22751-0000	HATCH	61
22777-0000	WHEEL	31
22778-0000	HOLDER	31
22782-0000	AIR PIPE	29
22951-0000	SPACER RING	235
22956-0000	PIPE JUNCTION	233
23063-0000	THROTTLE WASHER	29
23096-0001	TRANSFORMER 1PH 800VA	371, 373, 375, 377, 379
23163-0000	BEARING COVER	181
23164-0000	SHAFT	181
23165-0000	LID	181
23166-0000	SPACER	181
23169-0000	FORK	329
23175-0000	SCREW	329
23176-0000	BRACKET	329
23266-0000	STOP	297, 299

Part No	Description	Page No
23267-0000	SUPPORT	297, 299
23454-0000	SPACER	171
23503-0000	SUPPORT	171
23523-0300	SIDE FRAME	111
23524-0100	PLUNGER BODY	93, 131
23525-0000	SHAFT	101, 103, 139, 141
23526-0000	SLEEVE	101, 103, 139, 141
23527-0000	SHAFT	101, 103, 139, 141
23528-0000	WEDGE	101, 103, 139, 141
23529-0000	RAIL	101, 103, 139, 141
23531-0000	WASHER	101, 103, 139, 141
23533-0000	SHAFT	121, 123, 159, 161
23534-0100	PLUNGER BODY	111, 149
23535-0000	PLUNGER BODY	121, 123, 159, 161
23536-0100	PLUNGER BODY	111, 149
23538-0000	LINK BOLT	113, 151
23539-0000	LINK	113, 151
23540-0000	BRACKET	113, 151
23541-0000	SHAFT	113, 151
23542-0000	GUIDE SPROCKET	113, 151
23543-0000	BRACKET	113, 151
23544-0000	YOKE	113, 151
26693-0000	SPROCKET	113, 151
27026-0100	CENTRAL LUBRICATION	93
27027-0100	CENTRAL LUBRICATION	131
27028-0001	WIRING DIAGRAM	143
27402-0000	MACHINE PLATE 50X120MM	209, 211, 297, 299
27723-0000	PLUNGER	97, 115, 135, 153
27726-0000	GEAR WHEEL	59
27939-0300	MOTOR	27
27941-0000	CLAMP HALF	39
27942-0000	CLAMP HALF	39
27943-0000	DOWEL	39
27965-0000	PILLAR	29
28422-0300	HYDRAULIC SYSTEM	231
28509-0000	WASHER	199
30358-0000	STRUT	209, 211
30360-0000	GRUB SCREW	209, 211
30362-0000	SPROCKET	215
30363-0000	HEAD PLATE	217
30364-0000	HEAD PLATE	217
31320-0000	BEARING	35
31330-0300	PAPER DRIER	27
31331-0000	BOX	41
31334-0000	CLUTCH PIECE	41
31335-0000	CLUTCH PIECE	41
31336-0000	SHAFT	41
31337-0000	BUSHING	41
31338-0000	COUNTERWEIGHT	41
31340-0000	PIN	41
31341-0000	PIPE BEND	41
31344-0001	SQUEE-GEE ROLLER	41
31344-0002	SQUEE-GEE ROLLER	41
31345-0000	SHAFT	41
31384-0000	LID	235
31397-0001	WEAR RUBBER	41
31397-0002	WEAR RUBBER	41
32079-0000	WASHER	199
32149-0000	ARM	41
32193-0000	SHAFT	41
32194-0000	SHAFT	41
32195-0000	SCREW	41
32644-0000	WASHER	209, 211
33608-0100	SCREW	335
33611-0000	PIVOT AXLE	333
33615-0000	INK ROLLER	333
33617-0000	INK TRANSFER ROLLER	333
33618-0000	LID	335
33621-0000	MOUNTING BLOCK	333
33622-0000	LEAF SPRING	333
33624-0000	SECURING PLATE	333
33625-0000	SCREW	337
33626-0000	COMPRESSION SPRING	337
33730-0001	GASKET	51
35547-0000	SPRING	333
35548-0000	SPRING	333
35549-0000	CANNULAR TUBE	333
35806-0000	SCREW	323
36361-0000	HOLDER	333
36656-0000	ROLL	315
36657-0000	LINK	315
36658-0000	KNIFE HOLDER	315
36659-0000	SHAFT	315
36661-0000	SHAFT	315

Part No	Description	Page No
36662-0000	KNIFE HOLDER	315
36663-0000	SPACER	315
36664-0000	SCREW	317
36670-0000	PLATE	323
36671-0000	PLATE	323
36672-0000	SHAFT	323
36674-0000	PLATE	323
36675-0000	HEAD PLATE	321
36676-0000	STEERING RAIL	321
36679-0000	FRAME	297, 299
36920-0000	LID	61
37459-0100	HOLDER	329
37460-0100	DATING UNIT	331
37461-0100	PRINTING WHEEL	333
37462-0000	END SECTION	339
37463-0000	BOX	339
37464-0000	BOTTOM PLATE	339
37465-0000	HEAD	333
37466-0000	ROLLER BRACKET	333
37467-0000	INK WELL	333
37468-0000	COVER	333
37469-0000	PRINTING WHEEL	335
37470-0000	SHAFT	339
37471-0000	SHAFT	339
37472-0000	LOCK	339
37473-0000	ROLL	339
37474-0000	GUIDE FINGER	339
37475-0000	HOLDER	339
37476-0000	SHAFT	333
37477-0000	LID	333
37478-0000	PIVOT BRACKET	333
37479-0000	RING	335
37482-0000	ECCENTRIC SHAFT	333
37483-0000	SHAFT	333
37484-0000	SHAFT	333
37485-0100	HOLDER	331
37486-0000	TENSION SPRING	333
37771-0000	FASTENING BRACKET	339
37884-0000	SHAFT	359, 361
38116-0000	LUG	243
38196-0000	ROLL	31
38197-0000	ROLL	31
38960-0000	COIL HEATER	53
38962-0000	CLUTCH PIECE	53
38963-0000	LID	53
67379-0100	IH EQUIPMENT	199
67388-0102	RACK FRONTMOUNTED 84TE	371, 373, 375, 377, 379
67600-0501	TPIH GENERATOR	371, 373, 375, 377, 379
68262-0101	BACKPLANE FRONT RACK 8TE	371, 373, 375, 377, 379
68445-0101	FRONT PLATE 4TE	371, 373, 375, 377, 379
68445-0104	FRONT PLATE 8 TE	371, 373, 375, 377, 379
68445-0105	FRONT PLATE 10TE	371, 373, 375, 377, 379
68447-0101	CIRCUIT BOARD	371, 373, 375, 377, 379
68450-0101	STEPPER MOTOR DRIVER	371, 373, 375, 377, 379
68465-0101	DESIGN CORRECTION POT.	371, 373, 375, 377, 379
68471-0100	PRINTED DESIGN CORR.LOGIC	371, 373, 375, 377, 379
68474-0101	TPIH COIL 5 TURN	201
68474-0102	COIL 6 TURN	201
68474-0103	COIL 4 TURN	201
68917-0100	ANGLE INDICATOR	225
72947-0000	HOOK SPANNER	277
90000-0024	AMMETER, IQ48 15-100HZ	371, 373, 375, 377, 379
90001-0004	CONNECTOR, MS 3108E-14S-2S	79, 81
90001-0033	WALL SOCKET OUTLET	371, 373, 375, 377, 379
90002-0004	BLANK-OFF PLUG, PR 22,5 SKINDICHT-BLK16	17
90002-0009	BLANK-OFF PLUG, PR 18.6 SKINDICHT-BLK11	17, 297, 299
90002-0013	BLANK-OFF PLUG, PR 15,2 SKINDICHT-BLK9	17
90005-0012	WASHER,PL.RND.CU.13,5/17,H=1,5	113, 151
90005-0016	GASKET BOLT HEAD 27/35X2,5 MM G3/4"	233
90005-0032	WASHER,PL.RND.CU.50/60,H=3	235
90006-0019	BUSHING	45
90007-0129	CIRCUIT BREAKER, 1P 10 A K	371, 373, 375, 377, 379
90012-0063	CABLE GLAND PR 15,2	29, 253, 255
90015-0026	BUSHING	343, 349
90015-0033	LEAD-IN BUSHING	237
90016-0021	DISC SPRING, CONICAL 12,5X6,2X0,5 MM	213, 215
90017-0001	BIKE HANDLE	359, 361
90024-0031	POWER LINE FILTER, 75 A 230/400 VAC	371, 373, 375, 377, 379
90025-0016	ENCODER MODULE TPMC	371, 373, 375, 377, 379
90025-0017	INPUT MODULE TPMC	371, 373, 375, 377, 379
90025-0024	TERMINAL BLOCK 168-307 TPMC	371, 373, 375, 377, 379
90025-0025	TERMINAL BLOCK ENCODER TPMC	371, 373, 375, 377, 379
90025-0052	MAIN RACK COMPAKT (MCR)	371, 373, 375, 377, 379
90025-0053	OUTPUT MODULE TPMC OM16	371, 373, 375, 377, 379

Part No	Description	Page No
90025-0054	TERMINAL PLINTH TPMC OT-16	371, 373, 375, 377, 379
90025-0055	POWER SUPPLY UNIT TPMC PS32	371, 373, 375, 377, 379
90025-0058	EXPANSIONS RACK COMPACT-8	371, 373, 375, 377, 379
90025-0070	PROCESSOR TPMC CPU 64.1	371, 373, 375, 377, 379
90026-0002	THREADED INSERTS, BUSHING, M4	31, 57
90028-0001	"CONE 5/32""""	105, 119, 143, 157, 189, 223
90030-0004	ELBOW CONN., 6-R1/4, EXT.THREAD	239
90030-0062	CONN. STR. GE 6-1/4-18 NPTF	257
90030-0071	CONN. ELBOW WA 8-R1/4	243
90030-0096	CONN. ELBOW W-12	41
90030-0102	FERRULE, PIPE & CONNECTORS D8-LS	243
90030-0125	PIPE SOCKET RS-8-LR	243
90030-0126	STRAIGHT CONN., 6-R1/4,EXT. THREAD	239
90030-0127	CONN. T-PIPE ADJ. ,EVT,INT.T-6	239
90030-0128	ADJ. L-PIPE CONNECTION EVL, INT.T-6	239
90030-0129	NIPPLE, GIG-LR (INV R 1/8UTV. M12X1,5)	239
90030-0130	PIPE SOCKET RS 6-L/1/4NPT	239
90030-0131	PIPE SOCKET RS 6-L/1/8NPT	239
90030-0132	ACCESSORIES, PLUG PL-6	239
90030-0146	ADJUSTABLE ELBOW CONNECTION,EXT 6-G1/8	239
90030-0171	ADJUSTABLE ELBOW CONNECTION,EXT 6-G1/8	257
90030-0187	CONN. STR. GA-12-G3/8	29
90030-0213	CONN. STR. M12 MSC1/2K-316 EXT. TAPPERED	63, 65
90030-0232	CONN. PIPE SS-6MO-1-4RP	259
90030-0233	CONN. STR., 6-G1/8, EXT. THREAD	249, 251, 259
90030-0274	CONN. STR.12-1/4 NPT, EXT. TAPPERED	63, 65
90030-0275	CONN. STR.12-3/8 NPT, EXT. TAPPERED	253, 255
90030-0276	CONN. ELBOW, 12-1/2 NPT, EXT.THREAD	63, 65
90030-0279	CONN. ELBOW, 8	59, 245
90030-0280	CONN. ELBOW, 12	63, 65, 245, 253, 255
90030-0281	CONN. T-PIPE 12	63, 65, 253, 255
90030-0282	CONN. PIPE 12	59, 253, 255
90030-0336	CONN. STRAIGHT, 316L-12M-BVCO-3	67
90030-0338	NUT, PIPE & CONNECTORS, SS-8-BVCO-4	67
90030-0379	CONN. STR. 12-1/4 NPT, EXT. TAPPERED	253, 255
90030-0477	CONN. PIPE 8	253, 255
90030-0478	CONN. STR., 6-1/8 NPT, INT. THREAD	257
90030-0479	CONN. STR., 6-1/4 NPT, INT. THREAD	257
90030-0480	CONN. ELBOW, 6	259
90032-0012	DISTR. BLOCK & DIST.5/16-24UNF X4	105, 143, 189
90032-0013	DISTR. BLOCK & DIST.5/16-24UNF X5	105, 143
90032-0015	JUNCT. BLOCK & DIST.5/16-24UNF X2	189, 223
90032-0028	DISTR. BLOCK & DIST.5/16-24UNF X6	105, 119, 143, 157
90032-0029	DISTR. BLOCK & DIST.5/16-24UNF X8	223
90036-0057	LIGHT BULB, BA9S 28V	371, 373, 375, 377, 379
90038-0025	RECTIFIER, 6,5/15A SKD 30/04A1	371, 373, 375, 377, 379
90042-0107	SOL.VALVE BURKERT 24VDC	247
90042-0128	SOLENOID VALVE ASCO 220V 50HZ	239
90042-0150	SOLENOID VALVE	239
90042-0154	SOLENOID VALVE FESTO MFH-5-1/4	233
90042-0156	SOLENOID VALVE FESTO MFHE-3-1/4-B	89
90042-0171	SOLENOID VALVE BUERKERT	259
90042-0237	SOLENOID ACTUATOR FESTO	249, 251
90042-0350	BRACKET ASCO 90-862-1	239
90042-0455	COIL FESTO MSFG 24VDC	89, 233
90042-0563	INDICATOR FESTO 19143 MF-LD-12...24	249, 251
90042-0564	INDICATOR 19145 FESTO	239, 259
90043-0008	PRESSURE GAUGE, 2040, D=80 MM, THROTTLED	243
90043-0015	PRESSURE GAUGE, 2041 D=63 MM	239
90043-0021	PRESSURE GAUGE WIEGAND 0-1 BAR 1/8"	233, 249, 251
90043-0061	PRESSURE GAUGE, 2061 D=63 MM, THROTTLED	21, 297, 299
90043-0069	PRESSURE GAUGE 0-4BAR WIEGAND 2040	249, 251
90043-0082	PRESSURE GAUGE, 2740, D=63 MM	63, 65
90044-0062	PROX.SWITCH IFM IN-2002AB	343, 349
90044-0104	PROX.SWITCH IFM IN 3002	63, 65, 171, 297, 299
90044-0145	PROX.SW. 922 AAIY-A9P-050-LZ876	313
90044-0146	SAFETY SWITCH	297, 299
90044-0194	PROX.SW. IN5329/IN3002-BPKG	349
90044-0201	KEY SAF.SW. AZ16-03 ZVR K-2254	41, 59, 61, 171, 209, 211, 247
90044-0310	KEY FOR SAFETY SWITCH, AZ 15/16 B1	41, 59, 61, 171, 209, 211, 247
90045-0049	MOTOR 3GAA 082002-ASA	181
90048-0007	LUBR. UNIT, 30220, 380/220V 50HZ	239
90048-0016	ACKUMULATOR FOR LUBR. SYST. 8 BARS	239
90050-0008	BOTTLE	333
90051-0025	KNOB, EXTERNAL THREAD. NO. 8306-0200	285
90051-0026	KNOB, CIRKUL, THREADED BUSH, M5 17X14 MM	333
90051-0053	KNOB, INTERNAL THREAD, M6 24X17	333
90051-0082	KNOB, CIRCUL, THREADED BUSH, M6 25X21 MM	209, 211
90051-0084	KNOB, EXTERNAL THREAD. NO. 8308-1534	237
90053-0024	COUNTER 24VDC 6 DIGITS	371, 373, 375, 377, 379
90053-0028	3 DIGIT COUNTER KOYO KCX-3-DM-V	371, 373, 375, 377, 379
90053-0029	COUNTER, F524.800FA3C 24VDC	371, 373, 375, 377, 379
90053-0305	FRAME F 1 DV	371, 373, 375, 377, 379
90053-0309	BASE	371, 373, 375, 377, 379

Part No	Description	Page No
90053-0311	BASE 916	371, 373, 375, 377, 379
90055-0042	NIPPLES, EXT. THREAD, HEXAGON, NO. 6835-	113, 151
90055-0056	HOSE COUPLING	113, 151
90055-0057	HOSE COUPLING	113, 151, 243
90055-0058	HOSE COUPLING	243
90056-0103	WORM GEAR BS 63	181
90059-0001	THERMOSTAT	359, 361
90061-0027	ANGLE ENCODER 670900035	225
90064-0082	PUSH BUTTON, WHITE	371, 373, 375, 377, 379
90064-0084	PUSH BUTTON, YELLOW	371, 373, 375, 377, 379
90064-0085	PUSH BUTTON, RED	191, 371, 373, 375, 377, 379
90064-0093	PUSH BUTTON, GREEN	297, 299, 371, 373, 375, 377, 379
90064-0101	SIGNAL LAMP RED	371, 373, 375, 377, 379
90064-0124	SWITCH, EM. STOP, ZB2-BS844+ZB2-BZ1045	191, 209, 211, 297, 299, 371, 373, 375, 377, 379
90064-0336	EARTHING PLATE	209, 211
90066-0021	PUSH BUTTON BOX XAP-M1501	297, 299
90066-0030	PUSH BUTTON BOX XAL J01	209, 211, 297, 299
90069-0069	GEARS, WORM MOTOR DM90-80 E4	371, 373, 375, 377, 379
90069-0286	GEARS, WORM MOTOR WKM/DM90-60E2	39
90073-0001	CABLE CLIPS, D=8 MM	119, 157
90074-0001	CABLE CLIPS, D=10 MM	209, 211
90074-0002	CABLE CLIPS, D=11 MM	239
90074-0014	CABLE CLIPS, D=20 MM	209, 211
90075-0124	CONTACTOR, 4KW 24VDC	371, 373, 375, 377, 379
90075-0126	CONTACTOR, 22KW 24VDC	371, 373, 375, 377, 379
90075-0313	AUXILIARY CONTACT K&M 22 DILM.2NO;2NC	371, 373, 375, 377, 379
90077-0101	TERMINAL BLOCK, 179 512	45
90090-0002	BALL, D=5,556 MM	337
90090-0003	BALL, D=12,7 MM	333
90091-0030	V-RING 7X11X5,2 MM	61
90091-0031	V-RING 12,5X18,5X7,7 MM	49, 61
90091-0180	GASKET 32X25X4,8 MM	233
90091-0181	GASKET, GRAPHITE, 32/40 MM, H=4,8 MM	233
90091-0236	PISTON SEAL, GLIDORING 89X100X4 MM	71, 287
90091-0237	ROD SEAL, GLIDORING 20X27,5X3 MM	71, 287
90091-0238	WEAR RING 20X22X10 MM	71, 287
90091-0266	SEAL RING 10,4X16,3X2,5 MM	67
90091-0267	WEAR RING 16X18X8,1 MM	69, 77, 287
90091-0268	ROD SEAL, GLIDORING 16X20,9X1,78 MM	69, 77, 287
90091-0269	PISTON SEAL, GLIDORING 52,5X60X3 MM	69, 77, 287
90091-0282	PISTON SEAL 27X35X1,78 MM	69, 287
90092-0062	METERING VALVE, FJB 3/0, 5/16-24 UNF	105, 119, 143, 157
90092-0064	METERING VALVE, FJB 0, 5/16-24 UNF	223
90092-0065	METERING VALVE, FJB 1, 5/16-24 UNF	105, 119, 143, 157
90092-0066	METERING VALVE, FJB 2, 5/16-24 UNF	105, 119, 143, 157
90092-0072	METERING VALVE, FSB 2, G1/8	105, 119, 143, 157, 189
90095-0070	OVERLOAD PROTECTION, PKZM 0,4 A	371, 373, 375, 377, 379
90099-0002	NUT PR 18,6 BRASS	45
90099-0051	NUT HEX. M10X1,25, FE FZB	323
90099-0087	NUT PR=20,4	173
90110-0003	PLUG, MS 3102E-14S-2P	79, 81
90110-0065	SLEEVE CONTACT	95, 133
90110-0095	CONNECTOR 3 POLE + EARTH	247
90110-0121	FEMALE INSERT GDS A-H 09 06 215 2811	371, 373, 375, 377, 379
90110-0122	COVER, 09 06 000 9957	371, 373, 375, 377, 379
90111-0073	SWITCH, CA10A201PN	297, 299
90111-0120	SWITCH, 2 POS.704.510 .0A+704.901.5/A	371, 373, 375, 377, 379
90111-0122	KEY SWITCH, 2 NO CONTACTS	371, 373, 375, 377, 379
90111-0134	MAIN SWITCH P3-63/EA/SVB-SW/N/HI11/H-P3	371, 373, 375, 377, 379
90113-0013	REGULATOR	89, 233, 241
90113-0021	AIR PRESSURE REGULATOR	249, 251
90113-0056	REGULATOR	249, 251
90113-0097	PRESSURE REGULATOR	63, 65
90113-0116	REGULATOR - NEED YOKE 90113-0417	233
90113-0334	INSERT	233
90113-0335	INSERT	233
90113-0338	YOKE	233
90113-0339	YOKE	233
90113-0352	ASSEMBLY UNIT	233
90113-0353	END CONNECTION	233
90113-0405	PORTING BLOCK	233
90115-0054	ROD END, ID=8 MM, M8X1,25	359, 361
90119-0029	UNDERCURRENTRELAY 4-8A DOLD R833T	371, 373, 375, 377, 379
90119-0056	RELAY, AUXILIARY MK3P5-S 24VDC	371, 373, 375, 377, 379
90119-0067	SOLID-STATE RELAY, H12WD4850	371, 373, 375, 377, 379
90119-0072	SAFETY RELAY, JSBR4	371, 373, 375, 377, 379
90124-0027	LAMP HOLDER BA9S	371, 373, 375, 377, 379
90125-0020	PLATE	55
90129-0006	BASE, S3-B	371, 373, 375, 377, 379
90130-0015	POTENTIOMETER, 5 KOHM	371, 373, 375, 377, 379
90130-0301	ADJUSTING KNOB WITH DIAL	371, 373, 375, 377, 379
90132-0021	HOSE CLIP 6-10MM	249, 251
90134-0003	BUSHING	105, 119, 143, 157, 189, 223
90134-0034	NIPPLE	189, 223

Part No	Description	Page No
90135-0031	BUSBAR HOLDER K&M SHO165/2	371, 373, 375, 377, 379
90135-0032	BUSBAR CONNECTION 8JH4105	371, 373, 375, 377, 379
90136-0002	"PLUG 5/16""24"	105, 143, 189, 223
90140-0010	T-PIPE, INT. THREAD, 20031/2	21, 297, 299
90140-0011	T-PIPE, INT. THREAD, NO. 2070-1/2-1/2	297, 299
90140-0012	ELBOW, 90 INT/EXT, 2020-1/2-1/2	297, 299
90140-0015	T-PIPE, INT. THREAD, 2003-1/8	79, 81
90140-0016	T-PIPE, INT. THREAD, 2003-3/8	85
90141-0015	RETAIN. RING, 8	59
90142-0005	HOSE	359, 361
90143-0012	STRIP	17
90143-0014	STRIP	41, 61
90143-0020	STRIP	247, 253, 255
90143-0060	EDGE STRIP 9,5X6,3MM BLACK PVC	83
90143-0088	RUBBER STRIP	59
90144-0060	TAPE	359, 361
90144-0073	TREBOFLON-TAPE W=13MM	249, 251
90145-0003	WIRE	323
90145-0005	WIRE	45
90148-0010	HOSE	113, 151, 243
90151-0001	BRASS PIPE DI=2,6 MM	105, 143, 223
90152-0016	HOSE (SPIRAL)	279
90152-0033	SPIRAL CONDUIT FOR PR 15,2(PG 9)	253, 255
90153-0016	ADHESIVE,TUBE 100G RHODORSIL CAF 3	59
90153-0023	ADHESIVE, SILICON 251470 TUB 90CC	41
90155-0001	VALVE CHAIN, 14	333
90155-0008	HANGER CHAIN, 18	63, 65
90155-0016	HANGER CHAIN, HL3-2	59
90157-0008	LOCKING COMPOUND	217
90157-0021	LOCKING FLUID	239
90157-0041	SEALING COMPOUND	175, 177, 179
90163-0007	CONNECTION	273, 279
90163-0008	CONNECTION 1/4"	241
90163-0014	QUICK COUPLING, (M) LP-006-1-WR013	243
90163-0028	QUICK COUPLING, LP 006-0-WR513	243
90163-0043	QUICK COUPLING, (F) MD-006-0-WR013	113, 151
90163-0044	QUICK COUPLING, (M) MD-006-2-WRD13	243
90163-0052	HOSE NIPPLE, EXT.THR. 1/4-12 MM	247
90163-0067	HOSE NIPPLE N-1/2-P13	21, 297, 299
90164-0301	HOLDING FIXTURE	173, 371, 373, 375, 377, 379
90165-0003	PIPE CLIP FOR TUBE D=4 MM	105, 119, 143, 157, 189, 223
90165-0005	PIPE CLIP FOR TUBE D=6 MM	223
90165-0007	PIPE CLIP FOR TUBE D=8 MM	13
90165-0015	CLIP	297, 299, 329, 339
90165-0040	CLIP	239
90165-0053	CLIP	359, 361
90165-0176	PIPE SUPPORT, FOR DIAM. 25 MM PIPE	63, 65, 171
90166-0007	HOSE PVC 10/14 TRANSP.	323
90166-0013	TUBE 8 MM PA BLUE	85, 89, 233, 241, 243
90166-0051	TUBE PA,TRANSP.	105, 143
90166-0053	SHRINKABLE HOSE 43-53 MM (2")	329
90166-0060	HOSE 19/26-27 REINF.PVC	51, 63, 65
90166-0081	TUBE 6 MM PA BLUE	63, 65, 85, 89, 241, 249, 251, 351, 353
90166-0098	SHRINKABLE HOSE PVC 25MM	351, 353
90166-0101	HOSE, SILICONE, 60 SHORE, 6/10 MM	249, 251
90166-0103	TUBE PA BLACK	105, 119, 143, 157
90166-0108	TUBE 6 MM PA,TRANSP.	223, 239
90166-0109	TUBE 4 MM PA,TRANSP.	119, 157, 189, 223
90166-0113	HOSE	333
90166-0118	TUBE 8 MM PA BLACK	245, 247
90166-0119	HOSE PUR 4/6 BLACK	245, 247
90166-0121	HOSE	247
90166-0138	HOSE	263
90166-0140	HOSE	21
90166-0160	TUBE 10 MM PA BLUE	85, 89, 233, 297, 299
90166-0191	PLASTIC HOSE	29
90178-0007	HOUR COUNTER, BG 40,17-1 12-48VDC	371, 373, 375, 377, 379
90187-0029	BALL VALVE G1/2, NPBR	245
90187-0059	BALL VALVE FOR HYDR.PER. G1/2 3MM HOLE	247
90187-0089	BALL VALVE G3/8, NPBR	85
90187-0115	GUIDING ARBOR	63, 65, 253, 255
90187-0125	BALL VALVE G1/2	63, 65
90187-0313	DIAPHRAGM	63, 65, 253, 255
90189-0003	BALL BUSHING, 12X22X32 MM	315
90189-0011	BALL BUSHING, 16X26X36 MM	351, 353
90191-0045	WHEEL	269
90194-0016	SIGN, FLASH, ELECTRIC EQUIPMENT SYMBOL	371, 373, 375, 377, 379
90194-0075	WARNING SIGN ISO, HOT SURFACE	297, 299, 359, 361
90194-0080	SIGN, IDENTIFICATION OF WIRING	371, 373, 375, 377, 379
90194-0141	CAUTION SIGN ISO, DANGEROUS CHEMICALS	59
90194-0143	WARNING SIGN ISO, HOT SURFACE	29, 313
90195-0019	TERMINAL BLOCK, 1978.2	371, 373, 375, 377, 379
90195-0020	TERMINAL BLOCK, 1977.2	173, 371, 373, 375, 377, 379
90206-0031	HEATING ELEMENT 700+1200W,220V	53, 287

Part No	Description	Page No
90206-0036	HEATING ELEMENT, 500W 220V	359, 361
90206-0052	HOT AIR GUN; 1400W 230V	351, 353
90206-0073	HEATING ELEMENT, 300W 240V	289, 313, 357
90206-0302	DRYER	45
90206-0324	HEATING CARTRIDGE 1400W 220V	287, 289, 357
90207-0001	3-WAY COCK	171
90214-0027	BALL BEARING, 2 SEALS, 8X22X7 MM	217
90214-0098	BALL BEARING, 15X35X11 MM	95, 113, 133, 151
90217-0026	NUT	257
90217-0044	NIPPLE LKBN, RD 40-6 - R1 M	235
90217-0306	GASKET 22,8X50,5X5,5 MM	63, 65
90217-0307	GASKET 35,8X50,5X5,5 MM	63, 65, 287
90217-0308	CLAMP, ISO2852 FOR PIPE 25,4 AND 38,1 MM	287
90220-0059	THERMOCOUPLE CABLE K/ 2X0,81MM2	383
90220-0108	SCR. CABLE 5X1,5MM2	383
90224-0031	CONN. ELBOW, ART.NO 3814	249, 251
90224-0037	CONN. STRAIGHT, ART.NO. 8632-12-120	21
90224-0078	PIPE SOCKET, ART.NO RAN 1612	21
90224-0122	REDUCER, ART. NO RMM 1214	21
90224-0240	REDUCER, ART.NO 3575	89
90229-0009	LADDER	267
90230-0007	NON-RETURN VALVE	243
90230-0047	NON-RETURN VALVE 2M-C4L-1-SS	257
90232-0034	PHOTOCELL OMRON	13
90232-0035	PHOTOCELL OMRON	13
90233-0027	TUBE FUSE, 16A	371, 373, 375, 377, 379
90233-0028	TUBE FUSE, 10A	371, 373, 375, 377, 379
90233-0303	FUSE HOLDER, ST10	371, 373, 375, 377, 379
90235-0288	VALVE	63, 65
90235-0289	VALVE	313
90235-0291	THROTTLE CHECK VALVE	21, 297, 299
90235-0788	BASIC VALVE	249, 251
90235-0846	THROTTLE CHECK VALVE G1/8", MANUAL, 6	297, 299
90236-0041	BRACKET	233
90237-0046	MAGNETIC LOCK, 46X33X15 MM	247
90237-0068	QUICK-LOCK, V 951-L03-1-1BP	297, 299
90237-0069	HOOK FOR 90237-13, -68	297, 299
90237-0070	SNAP-IN BALL LOCK, 69X19 MM	359, 361
90237-0074	FAST LOCK, SK-M6	63, 65
90237-0331	HOOK FOR 90237-68	59
90239-0131	CONTAINER	243
90239-0132	CYLINDER	113, 151
90239-0370	CONNECTION	351, 353
90239-0458	BRACKET	243
90239-0489	ROD END, CLEVIS WITH AXLE M6X1,25	51
90239-0492	ROD END,BALL JOINT EYE,MINI-ISO M8	209, 211
90239-0505	BRACKET	313
90239-0816	DOUBLE ACTING, MINI-ISO, CYL.16-25	51
90239-0821	DOUBLE ACTING, MINI-ISO, CYL.20-25	209, 211, 351, 353
90239-0822	DOUBLE ACTING, MINI-ISO, CYL.20-50	325
90239-0823	DOUBLE ACTING, MINI-ISO, CYL.20-80	351, 353
90239-0828	DOUBLE ACTING, MINI-ISO, CYL.25-25	323
90239-0977	ROTARY ACTUATOR DSR-16-180-P	313
90240-0172	FLANGE BUSHING 8X12X10	59
90242-0030	O-RING 24,2X3 MM	233
90242-0109	O-RING 7,1X1,6 MM	69, 287
90242-0110	O-RING 29,2X3,0 MM	69, 77, 287
90242-0168	O-RING	261
90243-0061	AIR GUN, CEJN SERIE 204 ED: 90459-0173	279
90243-0164	HOOK SPANNER ADJUST.DIA.4	277
90248-0002	HINGE, 4002-2	301
90257-0001	FILTER PLUG PARTNO 8145-00-140 TYP F14	113, 151
90259-0026	OVERLOAD RELAY, 6 - 10 A	371, 373, 375, 377, 379
90259-0031	OVERLOAD RELAY, 25-40 A	371, 373, 375, 377, 379
90259-0306	AUX CONTACT	371, 373, 375, 377, 379
90259-0310	ADAPTER PLATE, K&M SP PKZ M	371, 373, 375, 377, 379
90261-0014	PLUG F21	171
90264-0015	FAN 34W 208-240V	371, 373, 375, 377, 379
90264-0330	FOAM FILTER / 4-35684-02	371, 373, 375, 377, 379
90265-0037	CONNECTION BOX ROSE	181, 297, 299
90266-0006	TUBE	239
90266-0013	TUBE 8X1	243
90266-0154	PIPE	63, 65
90274-0032	PRESSURE SWITCH, 14 KPA	233
90274-0042	PRESSURE GUARD, 200 KPA	247
90274-0056	PRESSURE SWITCH, 100 - 1200 KPA	239
90274-0074	PRESSURE GUARD, 530 KPA	89
90277-0055	FILTER HOUSING / MDS 4463 G 08 H	63, 65
90277-0104	FILTER F64B-NNN-ARO	233
90277-0105	AIR-PRESSURE FILTER	233
90277-0339	O-RING, ACS0272 EU FOR PALL FILTER	63, 65
90297-0006	FLUORESCENT TUBE, PL9	371, 373, 375, 377, 379
90297-0007	FLUORESCENT TUBE, PL11	173
90297-0306	BALLAST COIL 50/60 HZ	371, 373, 375, 377, 379

Part No	Description	Page No
90299-0072	INK	333
90303-0011	PROTECTIVE GOGGLES	277
90303-0012	PROTECTIVE GLOVES	277
90303-0013	APRON	277
90321-0097	MAGNET PUMP	253, 255
90321-0098	METERING PUMP WILLIAMS	257
90326-0012	PROTECTIVE COVER, T31A4618	51, 63, 65, 171, 235
90326-0019	THERMOELEMENT	235
90326-0020	PLUG, FEMALE YELLOW CR-AL	51, 63, 65, 171, 235
90326-0037	THERMOCOUPLE, CR-AL PREM.G	63, 65
90326-0043	THERMOCOUPLE, CR-ALPREM.G	51
90326-0053	THERMOCOUPLE, 12826-35	61, 171
90326-0306	"GLAND FITTING 9041-45-KS-KR.1/8"" D=4,5MM"	63, 65, 235
90328-0012	SILENCER	89, 241
90330-0013	NIPPLES, EXT. THREAD. ISO 7/1 R1/4-R1/8	233
90330-0014	ELBOW, 90 INT. THREAD, R-222R1	235
90330-0021	NIPPLES, EXT. THREAD. R-207R1/2	21, 297, 299
90330-0025	BUSHING, INT/EXT. THR. R1/4-RP1/8	249, 251
90330-0028	NIPPLES, EXT. THREAD. R-207R3/8	85
90330-0032	NIPPLES, EXT. THREAD. ISO 7/1 R1/8-R1/8	249, 251
90330-0034	NUT, HEXAGON, G1/4	61
90330-0037	PLUG, EXT. G-THREAD, G1/2	171
90330-0049	T-PIPE, INT. THREAD, R-221R1/2	63, 65
90330-0066	PLUG, EXT. G-THREAD, G1/8	21
90330-0067	T-PIPE, INT. THREAD, R-221R3/8	247
90330-0081	ELBOW, 90 INT. THREAD, R-222R1/4	233
90330-0083	NIPPLES, EXT. THREAD. R3/8-R1/4	85
90330-0085	BUSHING, INT/EXT. THR. R1/2-RP1/4	297, 299
90330-0102	SLEEVE, INT, THREAD, NO., R-201R1/4	279
90335-0004	TENSION SPRING 42380, 2X22X62,8	359, 361
90335-0130	SPRING BRACKET	359, 361
90337-0003	PIPETTE	277
90337-0007	AEROMETER	277
90337-0009	MEASURING CYLINDER	277
90337-0315	FILTERINSERT / MCS 4463	63, 65
90340-0014	FREE WHEEL COUPLING	319
90347-0004	VIBRATION DAMPER D=30 TH=M8 H=17 H2=21MM	193, 197
90347-0007	VIBRATION DAMPER	297, 299
90347-0034	VIBRATION DAMPER	41
90347-0079	DAMPER TFE 601	273
90348-0007	FREE WHEEL COUPLING	37
90355-0031	TORQUE RIGID COUPLING, 10X10 MM	225
90355-0108	FLEXIBLE COUPLING, 10X10 MM	37
90360-0015	REDUCING VALVE	63, 65
90360-0025	"STEAM TRAP / MST 18,G 1/4; 6 DEGREE C"	63, 65
90365-0003	LATCH, GN 218, 5X 65X12 MM	187, 203
90410-0043	TEMPERATURE REGULATOR, E5 CS_QIKJX-20	371, 373, 375, 377, 379
90411-0001	INSULATING MAT	235
90413-0033	CODE INSERT SET 0-9	333
90413-0047	CODE INSERT SET	333
90415-0004	FILTER, SU-0,5 X 25, NO. 19850 (25æ)	239
90415-0017	FILTER	257
90415-0019	FILTER / ART.NO. HH-M15-RG	245
90427-0312	DATING UNIT	335
90430-0032	THYRISTOR UNIT, 425A/25A	371, 373, 375, 377, 379
90432-0014	ELECTROMAG. BRAKE, 24 VDC	181
90450-0170	DOUBLE ACTING,ROUND,CYL 32-25	287, 313
90450-0172	PRESSURE HEADER	243
90450-0748	BRACKET	313
90457-0092	SAFETY RELAY RT9-24VDC	371, 373, 375, 377, 379
90458-0072	SCREW, HEX.SOCK.BUTTON HEAD M6X12	191
90458-0073	WASHER 6,4/30, H=1,5	191
90458-0315	CABLE GLAND, M20X1,5, NO.5311 1120	191
90458-0672	PROXIMITY SENSOR E2E2-X5MB1-5M	371, 373, 375, 377, 379
90458-0958	FLARE TUBE END NUT 12MM, 8BTXSS	247
90458-1844	FREE-WHEEL COUPLING, 10X10 MM	365
90458-1860	BEAR. BUSH. WITHOUT FL, 10X16X10	365
90458-2102	DOUBLE ACTING, MINI-ISO, CYL. 20-50	297, 299
90458-2580	LEVEL CONTROL RELAY RM4-LA32M	371, 373, 375, 377, 379
90458-2738	THROTTLE CHECK VALVE, GRLA-1/8-B	303, 305, 307, 309, 313, 323, 325, 351, 353
90458-2956	ELBOW PIPE JOINT, EXT.THREAD, D=6MM-G1/8	63, 65, 89, 249, 251, 253, 255
90458-2957	ELBOW PIPE JOINT, EXT.THREAD, D=6MM-G1/4	63, 65, 245, 247, 249, 251, 259
90458-2958	ELBOW PIPE JOINT, EXT.THREAD, D=8MM-G1/4	241
90458-2961	ELBOW PIPE JOINT, EXT.THREAD,D=10MM-G1/4	89, 233
206913-0000	LOCKING LOOP	359, 361
207637-0300	ELEMENT	51
207638-0203	SLEEVE CONTACT	53
207639-0000	SPACER	55
208853-0000	CONTACT FLANGE	51
209283-0000	BRIDGE CONNECTOR	55
230177-0300	CENTRAL LUBRICATION	231
230179-0000	FRONT GUARD	239
230180-0000	HATCH	239
230252-0000	BRACKET	243

Part No	Description	Page No
230466-0000 ..	SHAFT	101, 103, 121, 123, 139, 141, 159, 161
230770-0000 ..	SCREW	95, 113, 133, 151
230786-0001 ..	LACE	107, 125, 145, 163
230786-0002 ..	LACE	107, 125, 145, 163
230843-0000 ..	SLIDE RAIL	101, 103, 139, 141
236954-0000 ..	CLAMPING PART	125, 163
236955-0000 ..	CLAMPING PLATE	125, 163
236959-0000 ..	LACE	125, 163
236963-0000 ..	LACE	125, 163
236969-0000 ..	SPRING BRACKET	127, 165
237620-0400 ..	CUTTING DEVICE	207
238592-0000 ..	HATCH	41
239003-0000 ..	ROLL	31
239004-0000 ..	ROLL	31
239005-0000 ..	ROLL	31
239006-0000 ..	HOLDER	31
239010-0000 ..	BENDING ROLLER	355
239011-0000 ..	FLANGE	355
239016-0000 ..	FLANGE	49
239120-0000 ..	MACHINE BODY	171
239246-0000 ..	THUMB SCREW	61
239372-0000 ..	HOUSE	61
239373-0000 ..	DOOR	61
239793-0100 ..	BENDING ROLLER	295
239794-0200 ..	BENDING ROLLER	27
243746-0000 ..	SPACER RING	15
243875-0300 ..	PNEUMATIC UNIT	17
245293-0000 ..	FASTENING PLATE	51
245294-0000 ..	ADJUSTMENT PLATE	51
246429-0300 ..	LS ELEMENT SPARES KIT	27
247091-0000 ..	CYLINDER	51
251344-0300 ..	STRIP APPLICATOR	295
252665-0000 ..	CANTILEVER	239
252967-0000 ..	CABLE	95, 133
255350-0000 ..	CABLE HOLDER	95, 133
255351-0000 ..	CABLE HOLDER	95, 133
255899-0000 ..	HUB	37
256814-0000 ..	WASHER	183
256816-0000 ..	PIPE	183
257328-0000 ..	END PIECE	183
257680-0000 ..	ROLL	57
257681-0000 ..	ROLL	57
257761-0000 ..	AIR PIPE	29
257796-0100 ..	LOWER FORMING RING	27
259448-0600 ..	MACHINE BODY	169
259575-0100 ..	PRESSURE JAW	93, 131
259576-0000 ..	FLAP	107, 145
259577-0000 ..	LOCK NUT	107, 145
259606-0200 ..	SIDE FRAME	93
259856-0200 ..	SEALING JAW	111, 149
259857-0200 ..	CONTACT UNIT	111, 149
259858-0000 ..	HEATING JAW	125, 163
259859-0000 ..	INSULATOR	125, 163
259860-0000 ..	BOTTOM PLATE	127, 165
259863-0000 ..	CONTACT PIECE	125, 163
259864-0000 ..	SIDE FRAME	95
259865-0000 ..	SIDE FRAME	133
259961-0000 ..	HOLDER	243
263311-0000 ..	WASHER	253, 255
263886-0400 ..	SEALING DEVICE	303, 305, 307, 309
263920-0200 ..	SUPERSTRUCTURE	27
263924-0000 ..	RULER	125, 163
263925-0000 ..	RULER	125, 163
265548-0300 ..	ASEPTIC CHAMBER	27
265751-0000 ..	RAIL	51
265752-0000 ..	SLIDE RAIL	51, 287
265768-0500 ..	HOLE PUNCH	295
265823-0300 ..	PUNCH UNIT	303, 305, 307, 309
265865-0100 ..	CENTRAL LUBRICATION	207
265930-0000 ..	GUIDE PIPE	223
265943-0400 ..	START-UP KIT	267
267052-0400 ..	START-UP KIT	267, 295
267281-0000 ..	LEVER	323
267385-0002 ..	SPACER	297, 299
267464-0000 ..	TENSION SPRING	127, 165
267922-0000 ..	END SECTION	341
267923-0000 ..	PLATE	351, 353
267924-0000 ..	SHAFT	351, 353
267929-0000 ..	NUT	341
268815-0000 ..	SHAFT	327
269051-0000 ..	ARM	343, 349
269805-0000 ..	HOLDER	45
269806-0000 ..	REFLECTOR	45
269807-0000 ..	BOX	45

Part No	Description	Page No
269808-0000 ..	BOX	45
269809-0000 ..	REINFORCEMENT IRON	45
269811-0000 ..	COVERING PLATE	45
269812-0000 ..	COVERING PLATE	45
269813-0000 ..	TIGHTENING PIECE	45
269814-0000 ..	SPRING	45
269815-0000 ..	BRIDGE CONNECTOR	45
269816-0000 ..	REINFORCEMENT IRON	45
269817-0000 ..	LINE HEATER	45, 287
269818-0000 ..	WASHER	45
269819-0000 ..	PROTECTION	45
269820-0100 ..	PAPER DRIER	41
273977-0000 ..	NUT	275
273978-0000 ..	LEVEL GLASS	275
273980-0000 ..	SPRING	275
273981-0000 ..	GASKET	263
273982-0000 ..	WEIGHT	263
273996-0000 ..	NUT	275
279634-0000 ..	STOP PLATE	113, 151
283468-0000 ..	BEARING CONSOLE	351, 353
283470-0000 ..	YOKE	351, 353
283471-0000 ..	BRACKET	351, 353
283474-0000 ..	STEERING	351, 353
283719-0000 ..	GUIDE ROD	341
283720-0000 ..	GUIDE ROD	341
283721-0000 ..	GUIDE ROD	341
284116-0000 ..	CAP	243
293483-0100 ..	FASTENING PLATE	329
293484-0100 ..	FASTENING PLATE	329
294112-0300 ..	ELEMENT GROUP	329
294214-0300 ..	APPLIANCE BOX	11
294262-0000 ..	COVER	13
294263-0000 ..	LUG	13
294498-0000 ..	INSULATING PLATE	351, 353
311102-0207 ..	PARALLELL PIN, CP, M6, 2,5X10 MM	127, 165
311102-0208 ..	PARALLELL PIN, CP, M6, 2,5X12 MM	127, 165
311102-0236 ..	PARALLELL PIN, CP, M6, 3X16 MM	101, 103, 139, 141
311102-0270 ..	PARALLELL PIN, CP, M6, 4X16 MM	113, 151
311102-0363 ..	PARALLELL PIN, CP, M6, 6X45 MM	15
311103-0234 ..	PARALLELL PIN, M6, 3X12 MM	263
311103-0241 ..	CYLINDRICAL PIN CP M6 3X28 RFR	29
311103-0273 ..	PIN,STRAIGHT M6 4X22 RFR	263
311103-0274 ..	PARALLELL PIN, M6, 4X25 MM	323
311103-0277 ..	PIN,STRAIGHT CP M6 4X32 RFR	183
311103-0306 ..	PARALLELL PIN, M6, 5X12 MM	113, 151, 339
311103-0310 ..	PARALLELL PIN, M6, 5X20 MM	59
311103-0314 ..	PARALLELL PIN, M6, 5X30 MM	59
311103-0350 ..	PARALLELL PIN, CP, M6, 6X14 MM	127, 165
311103-0351 ..	PARALLELL PIN, M6, 6X16 MM	333
311103-0358 ..	PIN,STRIGHT M6 6X32 RFR	127, 165
311103-0359 ..	PARALLELL PIN, M6, 6X35 MM	181
311103-0401 ..	PARALLELL PIN, M6, 8X20 MM	239
311103-0405 ..	PARALLELL PIN, M6, 8X30 MM	237
311112-0188 ..	SPRING PIN, ISO 8752 2,5X16-C	209, 211
311112-0205 ..	SPRING PIN, ISO 8752 3X10-C	359, 361
311201-0241 ..	PIN, TAPERED, KP, 4X25 GROUND	175
311201-0273 ..	PIN, TAPERED, KP, 5X50 GROUND	219
311201-0298 ..	PIN, TAPERED, KP, 6X50 GROUND	95, 113, 133, 151
311211-0294 ..	PIN, THREADED AND TAPER. GKP, M6X6X35	181
311211-0296 ..	PIN, THREADED AND TAPER. GKP, M6X6X40	181
311303-0238 ..	SLOTTED PIRPB3X20FZB	187, 203
311303-0310 ..	SLOTTED PIRPB5X20FZB	57
311305-0212 ..	SLOTTED PIRPC2,5X20FZB	127, 165
311305-0236 ..	SLOTTED PIN RPC 3X16 ZINC COATED	217
311305-0238 ..	SLOTTED PIRPC3X20FZB	13
311305-0274 ..	SLOTTED PIRPC4X25FZB	213, 215
311411-0116 ..	SPLIT PIN SP1X8RFR	31
311411-0117 ..	SPLIT PIN SP1X10RFR	321, 323
311411-0137 ..	SS 2343 SP1,6X10RFR	343, 349
311411-0152 ..	SPLIT PIN SP2X16RFR	41
311411-0164 ..	SPLIT PIN SP2,5X14RFR	287
311411-0197 ..	SPLIT PIN SP4X25RFR	41
311506-0278 ..	RIVET, ROUND HEAD, KN, 2,6X6	345
311508-0416 ..	RIVET, ROUND HEAD, KN, 4X10	13
311520-0420 ..	RIVET, BLANK 3,2X4	235
311520-0435 ..	RIVET, BLANK 3,2X10	297, 299
311521-0142 ..	BLANK RIVET 3,2X6	171
312101-0291 ..	SCREW M6S M4X12 FZB	347
312101-0327 ..	SCREW M6S M5X12 FZB	95, 113, 133, 151, 181
312101-0329 ..	SCREW M6S M5X16 FZB	95, 113, 133, 151, 217
312101-0332 ..	SCREW M6S M5X22 FZB	105, 119, 143, 157, 189, 223, 315
312101-0345 ..	SCREW M6S M5X70 FZB	199
312101-0366 ..	SCREW M6S M6X12 FZB	151, 181
312101-0367 ..	SCREW M6S M6X14 FZB	21

Part No	Description	Page No
312101-0368 ..	SCREW M6S M6X16 FZB	113, 151, 219, 297, 299
312101-0370 ..	SCREW M6S M6X20 FZB	95, 113, 133, 151, 219
312101-0378 ..	SCREW M6S M6X40 FZB	21
312101-0380 ..	SCREW M6S M6X50 FZB	219
312101-0384 ..	SCREW M6S M6X70 FZB	217
312101-0449 ..	SCREW M6S M8X16 FZB	101, 103, 139, 141, 181
312101-0451 ..	SCREW M6S M8X20 FZB	181
312101-0453 ..	SCREW M6S M8X25 FZB	303, 305, 307, 309
312101-0455 ..	SCREW M6S M8X30 FZB	181
312101-0493 ..	SCREW M6S M10X25 FZB	19
312101-0495 ..	SCREW M6S M10X30 FZB	181
312101-0499 ..	SCREW M6S M10X40 FZB	181
312104-0379 ..	SCREW M6S M6X45H FZB	313
312105-0287 ..	SCREW M6S ISO4017 M4X8 A480	237, 315, 359, 361
312105-0289 ..	SCREW M6S ISO 4017 M4X10 A480	343, 349, 359, 361
312105-0291 ..	SCREW M6S ISO 4017 M4X12 A480	359, 361, 363
312105-0293 ..	SCREW M6S ISO 4017 M4X16 A480	315
312105-0323 ..	SCREW M6S ISO 4017 M5X8 A480	59, 363
312105-0325 ..	SCREW M6S ISO 4017 M5X10 A480	41, 61, 171, 329, 343, 349, 359, 361
312105-0327 ..	SCREW M6S ISO 4017 M5X12 A480	59, 63, 65, 83, 107, 125, 145, 163, 171, 199, 209, 211, 225, 333, 359, 361, 363
312105-0328 ..	SCREW M6S ISO 4017 M5X14 A480	59
312105-0329 ..	SCREW M6S ISO 4017 M5X16 A480	327, 339, 341, 359, 361
312105-0331 ..	SCREW M6S ISO 4017 M5X20 A480	59, 191, 363
312105-0333 ..	SCREW M6S ISO 4017 M5X25 A480	63, 65, 297, 299
312105-0337 ..	SCREW M6S ISO 4014 M5X35 A480	359, 361
312105-0339 ..	SCREW M6S ISO 4014 M5X40 A480	241
312105-0340 ..	SCREW M6S ISO 4014 M5X45 A480	241
312105-0341 ..	SCREW M6S ISO 4014 M5X50 A480	297, 299
312105-0362 ..	SCREW M6S ISO 4017 M6X8 A480	37
312105-0364 ..	SCREW M6S ISO 4017 M6X10 A480	63, 65, 297, 299, 341, 359, 361
312105-0366 ..	SCREW M6S M6X12 A280	29, 41, 51, 53, 61, 63, 65, 85, 181, 209, 211, 225, 237, 245, 249, 251, 259, 263, 297, 299, 313, 329, 341, 343, 349, 355, 359, 361
312105-0367 ..	SCREW M6S M6X14 A280	225, 241, 247, 253, 255, 327, 359, 361
312105-0368 ..	SCREW M6S M6X16 A280	59, 63, 65, 85, 171, 209, 211, 225, 233, 235, 237, 241, 247, 253, 255, 257, 313, 315, 329, 339, 351, 353, 363
312105-0370 ..	SCREW M6S ISO 4017 M6X20 A480	63, 65, 195, 209, 211, 263, 297, 299, 329, 339, 351, 353
312105-0371 ..	SCREW M6S ISO 4017 M6X22 A480	33, 35, 39, 83, 253, 255
312105-0372 ..	SCREW M6S ISO 4017 M6X25 A480	61, 63, 65, 171, 237, 263, 315, 351, 353, 389
312105-0374 ..	SCREW M6S ISO 4014 M6X30 A480	247, 303, 305, 307, 309, 341
312105-0376 ..	SCREW M6S ISO 4014 M6X35 A480	63, 65, 85, 245, 303, 305, 307, 309
312105-0378 ..	SCREW M6S ISO 4014 M6X40 A480	233, 263, 329
312105-0379 ..	SCREW M6S ISO 4014 M6X45 A480	83, 297, 299, 359, 361
312105-0380 ..	SCREW M6S ISO 4014 M6X50 A480	63, 65, 297, 299, 315
312105-0381 ..	SCREW M6S ISO 4014 M6X55 A480	63, 65
312105-0382 ..	SCREW M6S ISO 4014 M6X60 A480	63, 65
312105-0383 ..	SCREW M6S ISO 4014 M6X65 A480	315, 359, 361
312105-0447 ..	SCREW M6S ISO 4017 M8X12 A480	29, 171, 209, 211
312105-0449 ..	SCREW M6S ISO 4017 M8X16 A480	39, 41, 193, 197, 245, 253, 255, 333
312105-0451 ..	SCREW M6S ISO 4017 M8X20 A480	63, 65, 171, 193, 197, 209, 211
312105-0453 ..	SCREW M6S ISO 4017 M8X25 A480	191, 237, 359, 361
312105-0455 ..	SCREW M6S ISO 4017 M8X30 A480	63, 65, 351, 353
312105-0460 ..	SCREW M6S ISO 4014 M8X45 A480	223
312105-0462 ..	SCREW M6S ISO 4014 M8X55 A480	239
312105-0467 ..	SCREW M6S ISO 4014 M8X80 A480	389
312105-0469 ..	SCREW M6S ISO 4014 M8X90 A480	239
312105-0491 ..	SCREW M6S ISO 4017 M10X20 A480	171, 237
312105-0493 ..	SCREW M6S ISO 4017 M10X25 A480	243
312105-0495 ..	SCREW M6S ISO 4017 M10X30 A480	209, 211
312105-0499 ..	SCREW M6S ISO 4014 M10X40 A480	31, 57
312105-0501 ..	SCREW M6S ISO 4014 M10X50 A480	359, 361
312105-0505 ..	SCREW M6S ISO 4014 M10X70 A480	245
312105-0538 ..	SCREW M6S ISO 4017 M12X35 A480	297, 299
312105-0630 ..	SCREW M6S ISO 4017 M16X50 A480	191, 193, 197
312109-0374 ..	SCREW M6S ISO 4017 M6X30 A480	51, 79, 81
312109-0378 ..	SCREW M6S ISO4017 M6X40 A480	51
312109-0381 ..	SCREW M6S ISO 4017 M6X55 A480	39
312111-0287 ..	SCREW HEX.SOCK.HD.MC6S-TT 4X8 88 FZB	217
312111-0291 ..	SCREW HEX.SOCK.HD.MC6S-TT 4X12 88 FZB	107, 145
312111-0293 ..	SCREW HEX.SOCK.HD.MC6S-TT 4X16 88 FZB	325
312111-0327 ..	SCREW HEX.SOCK.HD.MC6S-TT 5X12 88 FZB	217
312111-0345 ..	SCREW HEX.SOCK.HD.MC6S-TT 5X70 88 FZB	241
312111-0366 ..	SCREW HEX.SOCK.HD.MC6S-TT 6X12 88 FZB	219
312111-0368 ..	SCREW HEX.SOCK.HD.MC6S-TT 6X16 88 FZB	13, 101, 103, 121, 123, 139, 141, 159, 161
312111-0371 ..	SCREW HEX.SOCK.HD.MC6S-TT 6X22 88 FZB	95, 133, 185, 319
312111-0372 ..	SCREW HEX.SOCK.HD.MC6S-TT 6X25 88 FZB	127, 165
312111-0376 ..	SCREW HEX.SOCK.HD.MC6S-TT 6X35 88 FZB	217
312111-0380 ..	SCREW HEX.SOCK.HD.MC6S-TT 6X50 88 FZB	217
312111-0447 ..	SCREW HEX.SOCK.HD.MC6S-TT 8X12 88 FZB	113, 151
312111-0453 ..	SCREW HEX.SOCK.HD.MC6S-TT 8X25 88 FZB	13
312111-0495 ..	SCREW HEX.SOCK.HD.MC6S-TT 10X30 88 FZ	269
312111-0499 ..	SCREW HEX.SOCK.HD.MC6S-TT 10X40 88 FZ	181
312111-0515 ..	SCREW HEX.SOCK.HD.MC6S-TT 10X120 88 F	181
312111-0540 ..	SCREW HEX.SOCK.HD.MC6S-TT 12X40 88 FZ	95, 113, 133, 151, 181

Part No	Description	Page No
312115-0287 ..	SCREW ISO4762 M4X8 A4	339
312115-0289 ..	SCREW ISO4762 M4X10 A4	329
312115-0291 ..	SCREW ISO4762 M4X12 A4	51, 125, 163, 297, 299, 315, 323
312115-0293 ..	SCREW ISO4762 M4X16 A4	51, 339
312115-0295 ..	SCREW ISO4762 M4X20 A4	171, 233
312115-0297 ..	SCREW ISO4762 M4X25 A4	181
312115-0299 ..	SCREW ISO4762 M4X30 A4	249, 251
312115-0323 ..	SCREW ISO4762 M5X8 A4	259, 333
312115-0325 ..	SCREW ISO4762 M5X10 A4	79, 81, 333
312115-0327 ..	SCREW ISO4762 M5X12 A4	181, 239, 243
312115-0329 ..	SCREW ISO4762 M5X16 A4	171, 297, 299
312115-0331 ..	SCREW ISO472 M5X20 A4	181, 313
312115-0366 ..	SCREW ISO4762 M6X12 A4	79, 81, 171, 181, 301
312115-0368 ..	SCREW ISO4762 M6X16 A4	29, 79, 81, 315
312115-0370 ..	SCREW ISO4762 M6X20 A4	233, 323, 359, 361
312115-0371 ..	SCREW ISO4762 M6X22 A4	209, 211
312115-0374 ..	SCREW ISO4762 M6X30 A4	79, 81
312115-0378 ..	SCREW ISO4762 M6X40 A4	39, 297, 299, 351, 353
312115-0380 ..	SCREW ISO4762 M6X50 A4	233
312115-0447 ..	SCREW ISO4762 M8X12 A4	29
312115-0449 ..	SCREW ISO4762 M8X16 A4	217
312115-0451 ..	SCREW ISO4762 M8X20 A4	243, 359, 361
312115-0452 ..	SCREW HEX.SOCK.HD.MC6S-TT 8X22 A480	209, 211
312115-0455 ..	SCREW ISO4762 M8X30 A4	29, 171
312115-0461 ..	SCREW ISO4762 M8X50 A4	171
312115-0491 ..	SCREW ISO4762 M10X20 A4	29
312115-0536 ..	SCREW ISO4762 M12X30 A4	209, 211
312115-0540 ..	SCREW ISO4762 M12X40 A4	17
312121-0230 ..	SCREW SLOT.PAN HD. MCS 3X20 FZB	53
312121-0284 ..	SCREW SLOT.PAN HD. MCS 4X5 FZB	51
312121-0285 ..	SCREW SLOT.PAN HD. MCS 4X6 FZB	105, 119, 143, 157, 189, 223
312121-0291 ..	SCREW SLOT.PAN HD. MCS 4X12 FZB	95, 133
312121-0323 ..	SCREW SLOT.PAN HD. MCS 5X8 FZB	219
312121-0343 ..	SCREW SLOT.PAN HD. MCS 5X60 FZB	233
312122-0285 ..	SCREW SLOT.PAN HD. MCS 4X6 BR NP	127, 165
312122-0287 ..	SCREW PAN HEAD MCS M4X8 NL. PL.	125, 163
312122-0297 ..	SCREW SLOT.PAN HD. MCS 4X25 BR NP	199
312125-0220 ..	SCREW SLOT.PAN HD. MCS 3X6 A480	41, 173, 225, 247, 343, 349
312125-0222 ..	SCREW PAN HEAD MCS M3X8 SS	79, 81
312125-0226 ..	SCREW PAN HEAD MCS M3X12 SS	297, 299
312125-0230 ..	SCREW PAN HEAD MCS M3X20 SS	63, 65, 173, 297, 299, 343, 349
312125-0234 ..	SCREW PAN HEAD MCS M3X30 SS	63, 65
312125-0285 ..	SCREW SLOT.PAN HD. MCS 4X6 A480	41, 45, 225, 235, 239, 259, 317, 343, 349
312125-0287 ..	SCREW PAN HEAD MCS M4X8 SS	209, 211, 243, 315
312125-0289 ..	SCREW SLOT.PAN HD. MCS 4X10 A480	13, 45, 313
312125-0291 ..	SCREW PAN HEAD MCS M4X12 SS	125, 163, 225, 297, 299, 313
312125-0293 ..	SCREW PAN HEAD MCS M4X16 SS	31, 57, 125, 163, 297, 299
312125-0295 ..	SCREW PAN HEAD MCS M4X20 SS	31, 45
312125-0297 ..	SCREW PAN HEAD MCS M4X25 SS	57
312125-0323 ..	SCREW PAN HEAD MCS M5X8 SS	41, 71
312125-0325 ..	SCREW SLOT.PAN HD. MCS 5X10 A480	17, 239
312125-0327 ..	SCREW PAN HEAD MCS M5X12 SS	13, 173, 247
312125-0329 ..	SCREW PAN HEAD MCS M5X16 SS	127, 165, 247
312125-0331 ..	SCREW PAN HEAD MCS M5X20 SS	59, 209, 211
312125-0339 ..	SCREW PAN HEAD MCS M5X40 SS	87, 239
312125-0364 ..	SCREW SLOT.PAN HD. MCS 6X10 A480	17, 33, 35, 239
312125-0368 ..	SCREW PAN HEAD MCS M6X16 SS	247
312125-0370 ..	SCREW PAN HEAD MCS M6X20 SS	263
312125-0374 ..	SCREW PAN HEAD MCS M6X30 SS	87
312132-0284 ..	SCREW SLOT. PAN HEAD MSCS M4X5	173
312132-0287 ..	SCREW SLOT. PAN HEAD MSCS M4X8	53, 55
312145-0220 ..	SCREW COUNTERS.SLOT.HD. MFS 3X6 SS	59, 69
312145-0287 ..	SCREW COUNTERS.SLOT.HD. MFS 4X8 SS	335, 359, 361
312145-0289 ..	SCREW COUNTERS.SLOT.HD. MFS 4X10 SS	359, 361
312145-0291 ..	SCREW COUNT.SLOT.HD. 4X12 A4	335
312145-0292 ..	SLOTTED HEMFS4X14RFR	45
312145-0293 ..	SCREW COUNTERS.SLOT.HD. MFS 4X16 SS	359, 361
312145-0297 ..	SCREW COUNTERS.SLOT.HD. MFS 4X25 SS	125, 163
312145-0325 ..	SCREW COUNTERS.SLOT.HD. MFS 5X10 SS	247
312145-0327 ..	SCREW COUNTERS.SLOT.HD. MFS 5X12 SS	41, 61, 171, 175, 177, 179, 187
312145-0329 ..	SCREW COUNTERS.SLOT.HD. MFS 5X16 SS	59, 247
312145-0331 ..	SCREW COUNTERS.SLOT.HD. MFS 5X20 SS	13
312145-0368 ..	SCREW COUNTERS.SLOT.HD. MFS 6X16 SS	359, 361
312151-0335 ..	SCREW HEX.SOCK.COUNT.MF6S 5X30 FZB	181
312151-0368 ..	SCREW HEX.SOCK.COUNT.MF6S 6X16 FZB	13
312155-0291 ..	SCREW EN 10642 MF6S M4X12 A480	363
312155-0327 ..	SCREW EN 10642 MF6S M5X12 A480	43, 297, 299
312155-0329 ..	SCREW EN 10642 MF6S M5X16 A480	363
312155-0331 ..	SCREW EN 10642 MF6S M5X20 A480	209, 211
312155-0366 ..	SCREW EN 10642 MF6S M6X12 A480	237
312155-0368 ..	SCREW EN 10642 MF6S M6X16 A480	183, 297, 299
312155-0370 ..	SCREW EN 10642 MF6S M6X20 A480	195, 209, 211
312165-0287 ..	SCREW SLOT.RAIS.COUNT.HD.MKFS 4X8 SS	217, 301
312165-0323 ..	SCREW SLOT.RAIS.COUNT.HD.MKFS 5X8 SS	59

Part No	Description	Page No
312165-0325 ..	SCREW SLOT.RAIS.COUNT.HD.MKFS 5X10 SS	209, 211
312165-0329 ..	SCREW SLOT.RAIS.COUNT.HD.MKFS 5X16 SS	209, 211
312165-0335 ..	SCREW SLOT.RAIS.COUNT.HD.MKFS 5X30 SS	209, 211
312165-0366 ..	SCREW SLOT.RAIS.COUNT.HD.MKFS 6X12 SS	171, 297, 299, 301
312165-0368 ..	SCREW SLOT.RAIS.COUNT.HD.MKFS 6X16 SS	13
312165-0370 ..	SCREW SLOT.RAIS.COUNT.HD.MKFS 6X20 SS	297, 299
312165-0374 ..	SCREW SLOT.RAIS.COUNT.HD.MKFS 6X30 SS	247
312180-0447 ..	SCREW, HEX.SOCK.HEAD SHOULD. M6X12	209, 211
312180-0453 ..	SCREW, HEX.SOCK.HEAD SHOULD. M6X25	209, 211
312204-0154 ..	SCREW U6S5/16X25FZB	239
312303-0378 ..	SCREW DIN 938 PS M6X30 A4 80	297, 299
312303-0541 ..	SCREW DIN 938 PS M12X30 A4 80	235
312306-0327 ..	SCREW HEX.SOCK.SET FLAT P.MP6SS 5X12FZB	323
312306-0329 ..	SCREW HEX.SOCK.SET FLAT P.MP6SS 5X16FZB	107, 145, 219
312306-0360 ..	SCREW HEX.SOCK.SET FLAT P.MP6SS 6X6FZB	301
312306-0364 ..	SCREW HEX.SOCK.SET FLAT P.MP6SS 6X10FZB	185
312306-0366 ..	SCREW HEX.SOCK.SET FLAT P.MP6SS 6X12FZB	323
312306-0374 ..	SCREW HEX.SOCK.SET FLAT P.MP6SS 6X30FZB	95, 113, 133, 151
312306-0546 ..	SCREW HEX.SOCK.SET FLAT P.MP6SS 12X70FZB	281
312311-0327 ..	SCREW ISO4028 M5X12 FZB	209, 211
312316-0219 ..	SCREW HEX.SOCK.SET CUP P.MSK6SS 3X5 FZB	101, 103, 121, 123, 139, 141, 159, 161
312316-0283 ..	SCREW HEX.SOCK.SET CUP P.MSK6SS4X4 FZB	101, 103, 121, 123, 139, 141, 159, 161
312316-0295 ..	SCREW HEX.SOCK.SET CUP P.MSK6SS4X20 FZB	313
312316-0321 ..	SCREW HEX.SOCK.SET CUP P.MSK6SS5X6 FZB	181
312316-0323 ..	SCREW HEX.SOCK.SET CUP P.MSK6SS5X8 FZB	181, 185, 323
312316-0329 ..	SCREW HEX.SOCK.SET CUP P.MSK6SS5X16 FZB	323
312316-0333 ..	SCREW HEX.SOCK.SET CUP P.MSK6SS5X25 FZB	359, 361
312316-0360 ..	STOP SCREW SK6SS6X6FZB	327
312316-0362 ..	SCREW HEX.SOCK.SET CUP P.MSK6SS6X8 FZB	175, 311
312316-0366 ..	SCREW HEX.SOCK.SET CUP P.MSK6SS6X12 FZB	39, 95, 113, 133, 151, 219
312316-0368 ..	SCREW HEX.SOCK.SET CUP P.MSK6SS6X16 FZB	321
312316-0378 ..	SCREW HEX.SOCK.SET CUP P.MSK6SS6X40 FZB	29
312318-0283 ..	SCREW ISO4029 M4X4 A4	315
312318-0284 ..	SCREW ISO4029 M4X5 A4	239, 297, 299
312318-0285 ..	SCREW ISO4029 M4X6 A4	61, 313, 333, 339, 359, 361
312318-0287 ..	SCREW ISO4029 M4X8 A4	209, 211, 315
312318-0289 ..	SCREW ISO4029 M4X10 A4	325
312318-0321 ..	SCREW ISO4029 M5X6 A4	315, 359, 361
312318-0323 ..	SCREW ISO4029 M5X8 A4	59
312318-0360 ..	SCREW ISO4029 M6X6 A4	41, 61, 297, 299, 339
312318-0362 ..	SCREW ISO4029 M6X8 A4	29, 315, 355
312318-0364 ..	SCREW ISO4029 M6X10 A4	37, 79, 81, 171
312318-0366 ..	SCREW ISO4029 M6X12 A4	41, 49
312318-0447 ..	SCREW ISO4029 M8X12 A4	191
312318-0487 ..	SCREW ISO4029 M10X12 A4	79, 81
312502-0221 ..	DRIVE SCREW ROUND HEAD KDS 4X6	13, 29, 95, 113, 133, 151, 209, 211, 297, 299
312502-0275 ..	DRIVE SCREW ROUND HEAD KDS 6X6	95, 113, 133, 151
312601-0310 ..	NUT M6M3FZB	53
312601-0312 ..	NUT M6M 4-8 FZB	325
312601-0314 ..	NUT M6M5FZB	199, 219, 323
312601-0316 ..	NUT M6M 6-8 FZB	95, 113, 133, 151, 321
312601-0318 ..	NUT M6M8FZB	181
312601-0320 ..	NUT M6M 10-8 FZB	95, 133, 181
312601-0324 ..	NUT M6M 16-8 FZB	213, 215
312602-0312 ..	HEXAGON NUT, EN 24032 M6M M4 NIPLBR	199
312605-0310 ..	HEXAGON NUT, M6M M3 A280	61, 343, 349
312605-0312 ..	HEXAGON NUT, M6M M4 A280	31, 45, 51, 63, 65, 225, 233, 249, 251, 253, 255, 259, 261, 297, 299, 301, 313, 325, 343, 349, 359, 361
312605-0314 ..	HEXAGON NUT, M6M M5 A280	41, 59, 61, 63, 65, 83, 175, 177, 179, 187, 209, 211, 233, 241, 297, 299, 317, 341, 343, 349, 359, 361, 363
312605-0316 ..	HEXAGON NUT, M6M M6 A280	29, 39, 41, 51, 59, 61, 63, 65, 79, 81, 85, 87, 171, 181, 209, 211, 233, 237, 241, 245, 247, 253, 255, 263, 297, 299, 301, 313, 315, 339, 341, 343, 349, 351, 353, 355, 359, 361, 363
312605-0318 ..	HEXAGON NUT, M6M M8 A280	59, 193, 197, 209, 211, 343, 349, 359, 361, 389
312605-0320 ..	HEXAGON NUT, M6M M10 A280	79, 81, 181
312605-0322 ..	HEXAGON NUT, M6M M12 A280	193, 197, 235, 297, 299
312605-0324 ..	HEXAGON NUT, M6M M16 A280	29
312621-0318 ..	ROD END,NUT M8	351, 353
312621-0320 ..	NUT ML6M10FZB	113, 151
312621-0324 ..	NUT ML6M16FZB	269
312625-0316 ..	HEXAGON THIN NUT, EN 24035 ML6M M6 A4	41
312630-0316 ..	HEX.NUT FINE, EN 24032 M6M M6X0,75 FZB8	285
312705-0314 ..	NUT HEX. DOMED CAP MHM-6 M5 A280	83, 173
312705-0316 ..	NUT HEX. DOMED CAP MHM-6 M6 A280	171, 359, 361
312715-0116 ..	NUT WING COLD WORK.MVM-K M6 A280	59, 329
312810-0320 ..	HEXAGON NUT, NY-LOCK M10 FZB	181
312811-0316 ..	NUT HEX.LOCK HELI COIL MID GRIP M6 SS	263
312812-0310 ..	HEXAGON NUT, NY-LOCK M3 A480	63, 65
312812-0314 ..	HEXAGON NUT, NY-LOCK M5 A480	209, 211
312812-0318 ..	HEXAGON NUT, NY-LOCK M8 A480	177, 179
312923-0123 ..	RIVET NUT M5, CLAMP. LENGTH 2,0 - 3,0	359, 361
312923-0131 ..	RIVET NUT M6, CLAMP. LENGTH 1,5 - 3,0	359, 361
315101-0146 ..	WASHER PLAIN, BRB, 5,3/10 H=1	105, 119, 143, 157, 189, 223
315101-0153 ..	WASHER PLAIN, BRB, 6,4/12 H=1,5	13, 21, 41, 61, 219

Part No	Description	Page No
315101-0165 ..	WASHER PLAIN, BRB, 8,4/16 H=1,5	181
315101-0173 ..	WASHER PLAIN, BRB, 10,5/22 H=2	181
315101-0178 ..	WASHER PLAIN, BRB, 13/24 H=2	95, 113, 133, 151, 181
315103-0173 ..	WASHER PLAIN, BRB, 10,5/22,H=2 NI PL BR	285
315105-0124 ..	WASHER ISO 7089-3-200 HV-A4	63, 65, 171, 173, 225, 297, 299, 343, 349
315105-0136 ..	WASHER ISO 7089-4-200 HV-A4	13, 31, 41, 45, 51, 57, 63, 65, 125, 163, 209, 211, 225, 233, 237, 253, 255, 259, 261, 301, 313, 315, 339, 343, 347, 349, 359, 361, 363
315105-0146 ..	WASHER ISO 7089-5-200 HV-A4	13, 17, 41, 59, 63, 65, 83, 87, 113, 125, 127, 151, 163, 165, 171, 175, 177, 179, 181, 187, 191, 199, 209, 211, 225, 233, 241, 247, 297, 299, 315, 329, 333, 339, 341, 343, 349, 359, 361, 363
315105-0153 ..	WASHER ISO 7089-6-200 HV-A4	29, 37, 39, 51, 53, 59, 63, 65, 69, 77, 83, 85, 87, 171, 181, 191, 195, 209, 211, 225, 233, 237, 241, 245, 247, 253, 255, 257, 297, 299, 301, 303, 305, 307, 309, 313, 315, 327, 329, 339, 341, 343, 349, 351, 353, 359, 361, 363
315105-0165 ..	WASHER ISO 7089-8-200 HV-A4	39, 41, 59, 63, 65, 171, 191, 193, 197, 209, 211, 237, 245, 253, 255, 303, 305, 307, 309, 333, 351, 353, 389
315105-0173 ..	WASHER ISO 7089-10-200 HV-A4	31, 57, 171, 237, 245, 315
315105-0178 ..	WASHER ISO 7089-12-200 HV-A4	17, 209, 211, 235
315105-0179 ..	WASHER PLAIN, BRB, 13,5/24,H=2	297, 299
315105-0186 ..	WASHER ISO 7089-16-200 HV-A4	29, 191, 193, 197
315115-0153 ..	WASHER PLAIN, TBRB 6,4/12 H=3	209, 211, 259, 359, 361
315115-0165 ..	WASHER PLAIN, TBRB 8,4/16 H=3	239
315121-0153 ..	WASHER PLAIN, TBRSB 6,4/22 H=4	217, 351, 353
315121-0173 ..	WASHER PLAIN, TBRSB 10,5/28 H=6	181
315125-0153 ..	WASHER TBRSB 6,4X22X4 A4	237, 359, 361, 363
315202-0118 ..	O-RING 22,1X1,6 MM	79, 81, 267, 287
315202-0307 ..	O-RING 79,5X3 MM	333
315202-0527 ..	O-RING 37,47X5,33 MM	335
315202-0910 ..	O-RING 25,80X3,53 MM	333
315204-0109 ..	O-RING 11,1X1,6 MM	47, 287
315204-0113 ..	O-RING 15,1X1,6 MM	69, 287
315204-0206 ..	O-RING 7,3X2,4 MM	29
315204-0208 ..	O-RING 9,3X2,4 MM	63, 65
315204-0211 ..	O-RING 13,3X2,4 MM	259
315204-0213 ..	O-RING 15,2X2,4 MM	69, 77, 259, 287
315204-0215 ..	O-RING 19,2X3 MM	29, 63, 65, 71, 253, 255, 287
315204-0220 ..	O-RING 32,2X3 MM	59
315204-0302 ..	O-RING 54,5X3 MM	69, 77, 287
315204-0305 ..	O-RING 69,5X3 MM	259
315204-0310 ..	O-RING 94,5X3 MM	71, 287
315211-0106 ..	GASKET BOLT HEAD 10,7X16X1,5 MM M10	359, 361
315221-0143 ..	RADIAL SEAL 20X30X7 MM	221
315221-0156 ..	RADIAL SEAL 25X35X7 MM	181
315221-0164 ..	RADIAL SEAL 28X40X7 MM	219
315230-0300 ..	BEARING SEAL 25X32X4 MM	95, 113, 133, 151
315233-0101 ..	WASHER PL.RND.NYL.5,2/8,H=1	63, 65, 71
315233-0109 ..	WASHER PL.RND.NYL.10,3/14,H=1	21, 63, 65
315233-0111 ..	WASHER PL.RND.NYL.17/22,H=1	247
315250-0101 ..	GASKET 32X25X5,5 MM	47, 63, 65, 171
315250-0103 ..	GASKET 48X38X5,5 MM	273
315401-0136 ..	WASHER FBH 4,1 FZB	107, 145, 315, 323
315401-0146 ..	WASHER FBH 5,1 FZB	95, 107, 113, 133, 145, 151, 181, 217
315401-0153 ..	WASHER FBH6,1FZB	95, 101, 103, 113, 121, 123, 127, 133, 139, 141, 151, 159, 161, 165, 181, 217, 315, 319, 323
315401-0165 ..	WASHER FBH8,2FZB	13, 177, 179, 217
315401-0173 ..	WASHER FBH10,2FZB	19, 181
315401-0178 ..	WASHER FBH12,2FZB	181
315402-0146 ..	LOCK WASHER FBB 5,1	83
315402-0156 ..	LOCK WASHER FBB 6,5	171, 209, 211
315402-0165 ..	LOCK WASHER FBB 8,2	209, 211
315402-0173 ..	LOCK WASHER FBB 10,2	209, 211, 243
315701-0138 ..	PARALLEL KEY W. ROUND ENDS 3X3X18 MM	313
315701-0273 ..	PARALLEL KEY W. ROUND ENDS 8X7X56 MM	181
315740-0111 ..	RETAINING RING, 15X30X12 MM	181
315742-0104 ..	COLLAR, 8/20, H=9	61, 339
315742-0108 ..	COLLAR, 12/28, H=12	175, 315
315742-0111 ..	COLLAR, 15/30, H=12	339
315750-0102 ..	RETAIN. RING, 5	319
315750-0107 ..	RETAIN. RING, 10	333
315750-0109 ..	RETAIN. RING, 12	213, 215
315750-0112 ..	RETAIN. RING, 15	95, 113, 133, 151
315750-0116 ..	RETAIN. RING, 20	181, 219, 221
315751-0103 ..	RETAIN. RING, 6	79, 81
315751-0109 ..	RETAIN. RING, 12	187, 203, 209, 211, 225
315752-0120 ..	RETAIN. RING, 26	351, 353
315752-0121 ..	RETAIN. RING, 28	213, 215
315752-0128 ..	RETAIN. RING, 42	221
315753-0121 ..	RETAIN. RING, 28	225
315754-0103 ..	RET. RING FOR RAD. ASSEMBLY, 1,9X0,5 MM	347
315754-0105 ..	LOCKING WAE 3,2	107, 145
315754-0106 ..	RET. RING FOR RAD. ASSEMBLY, 4X0,7 MM	323, 329, 343, 349
315754-0109 ..	LOCKING WAE 7	319, 323
315754-0113 ..	LOCKING WAE 15	71
315755-0106 ..	LOCKING WASHER 4	315
315755-0109 ..	LOCKING WASHER 7	315

Part No	Description	Page No
315755-0112	LOCKING WASHER 12	69, 77
318100-0031	V-BELT A31	181
318100-0032	V-BELT A32 848X13	181
318201-0023	ROLLER CHAIN, SINGLE 3/8 -23	113, 151
318209-0081	"CONNECTING LINK SINGLE 3/8""""	113, 151
318209-0190	CONNECTING LINK SINGLE 3/4"	209, 211
318232-0120	ROLLER CHAIN, DUPLEX 1/2"-120	209, 211
318800-0103	HANDLES,SPHERICAL KNOB,INT.THRE.,D.25-M6	41, 61, 327
318800-0104	HANDLE,SPHERICAL KNOB,INT.THRE.,D.30-M8	29
318800-0106	HANDLE,SPHERICAL KNOB,INT.THRE,D.40-M10	13, 333
321101-0163	FLANGE BUS 10F7X10	359, 361
321101-0172	FLANGE BUS 12F7X10	283
321101-0222	BEAR.BUSHING W.FLANGE 18/25X12	281
321101-0223	BEAR.BUSHING W.FLANGE 18/25X16	359, 361
321116-0128	BEAR. BUSH. WITHOUT FL, 10X14X16	359, 361
321116-0181	BEAR. BUSH. WITHOUT FL, 14X18X20	359, 361
321120-0098	BEAR.BUSHING W/O FL 10/12X8	313
321120-0101	BEARING BUSHING WITHOUT FLANGE,6/8X6	323
321120-0102	BEARING BUSHING W/O FLANGE,6/8X10	317
321120-0103	BEARING BUSHING WITHOUT FLANGE,8/10X8	323, 325
321120-0104	BEAR.BUSHING W/O FLANGE 10/12X10	335
321120-0111	BEARING BUSHING WITHOUT FLANGE,12/14X15	113, 151
321120-0122	BEARING BUSHING WITHOUT FL, 15X17X15 MM	333
321120-0124	BEARING BUSHING WITHOUT FL, 15X17X25 MM	333
321141-0064	BEARING BUSHING WITHOUT FL, 6X8X10 MM	315
321141-0140	BEARING BUSHING WITHOUT FL, 10X12X10 MM	315, 333
321141-0145	BEARING BUSHING WITHOUT FL, 10X12X15 MM	333
321141-0178	BEARING BUSHING WITHOUT FL, 12X14X10 MM	333
321302-0296	BALL BEARING, 2 SEALS, 6X19X6 MM	79, 81
321302-0298	BALL BEARING, 2 SEALS, 8X22X7 MM	315
321306-0104	BALL BEARING, 20X42X12 MM	221
321306-0105	BALL BEARING, 25X47X12 MM	217
321307-0100	BALL BEARISKF6000Z	365
321308-0200	BALL BEARING, 2 SEALS, 10X26X8 MM	79, 81
321308-0201	BALL BEARING, 2 SEALS, 12X28X8 MM	213, 215, 225
321309-0104	BALL BEARING, 20X47X14 MM	181, 219
321322-0104	SPHERICAL BALL BEARING, 20X47X18 MM	219
321570-0164	BEARING ROLLER, 2 SEALS, 8X24X12 MM	101, 103, 121, 123, 139, 141, 159, 161
321576-0109	BEARING ROLLER, 2 SEALS, 5X16X12 MM	101, 103, 121, 123, 139, 141, 159, 161
321600-0102	OIL SEAL (LL1535	95, 113, 133, 151
321600-0110	OIL SEAL (LL2547	217
321601-0108	OIL SEAL (LL47	181
342206-0107	BUSHING, TAPERED, INT/EXT. THRÿNO. R211	243
342219-0204	SHUTTER	63, 65
342700-0110	"NIPPLES,HEXAGON,EXT.G-THREAD G1/4""-G1/4"""	63, 65
342700-0113	"NIPPLES,HEXAGON,EXT.G-THREAD G1/2""-G1/2"""	63, 65, 245
342700-0205	"NIPPLES,HEXAGON,EXT.G-THREAD G1/2""-G1/4"""	63, 65
342701-0205	BUSHING,INT./EXT.G-THREAD G1/2"-G1/4"	245
342707-0109	SLEEVE, INT. THREAD, NO. 2543-1/8	249, 251
342713-0208	PLUG, EXT. THREAD HEX. SOCKET. BPM10	89
342713-0209	PLUG, EXT THREAD HEX SOCKET 8638-00-180	233
342713-0210	PLUG, EXT THREAD HEX SOCKET 8638-00-140	233
342715-0102	BLIND PLUG 6 MM	89, 249, 251
342715-0103	BLIND PLUG 8 MM	89
342716-0207	REDUCER 6-10	89
342720-0115	CONN. STR. GA-16-G1/2	21
342722-0202	PIPE COUPLING 1/8" D=6MM	249, 251, 257
342722-0204	PIPE COUPLING	89
342722-0205	STRAIGHT COUPLING D=8-G1/4"	233, 241, 245
342722-0211	STRAIGHT COUPLING D=10-G1/4"	233
342722-0212	"STRAIGHT COUPLING D=10-G3/8"""	85
342727-0103	CONN. PIPE G-8-LFZB	243
342731-0102	CONN. ELBOW WE 6-LRFZB	239
342732-0105	ELBOW PIPE D8-R3/8"	247
342735-0104	ELBOW PIPE JOINT	89
342737-0103	CONN. ELBOW W 8-LFZB	243
342742-0102	T-COUPLING,ADJUST,F.PLASTIC TUBE 6-G1/8"	249, 251
342742-0103	T-COUPLING,ADJUST,F.PLASTIC TUBE 6-G1/4"	247, 249, 251
342747-0103	CONN. T-PIPE T-8	243
342748-0103	T-CONNECTION 8MM	89, 247
342748-0104	T-CONNECTION 10MM	89
342754-0102	CONN. CROSS K6-LFZB	239
342768-0102	BULKHEAD CONNECTOR, 6 MM	89
342768-0103	BULKHEAD CONNECTOR, 8 MM	89
342790-0109	CONN. PRESS. GAUGE MAV12-LRFZB	63, 65
342790-0203	CONN. PRESS. GAUGE MAV8-S/R3/8FZB	243
342803-0101	UNION NUT, RD 40-6 (SMS 25)	47, 171, 233
342803-0102	UNION NUT, RD 48-6 (SMS 32)	233
342803-0103	UNION NUT, RD 60-6 (SMS 38)	273
342807-0101	PIPE ELBOW 90 DEGR. SMS1220, D=25 MM	63, 65, 171
342812-0203	FERRULE, SMS 1145, 2343, NO.190996	273
342830-0203	FERRULE, SMS 1145, 2343, NO.9611-31-0200	63, 65, 287
342840-0101	CLAMP, 12,7 AND 19,1 MM 3-A PCS+PMCS	171
342840-0103	CLAMPING PIECE	63, 65, 67

Part No	Description	Page No
342850-0201 ..	GASKET, FDA, 3-A, 1/2	171
342920-0113 ..	STRAIGHT COUPLING,EXT.THREADED 6/4-R1/8"	303, 305, 307, 309, 313, 323, 325, 351, 353
342921-0103 ..	"PIPE COUPL5/3-1/8"""	29
342921-0111 ..	STRAIGHT COUPL,EXT.THREAD.6/4-M5	313
342921-0114 ..	STRAIGHT COUPLING,EXT.THREADED 6/4-G1/4"	239
342921-0134 ..	STRAIGHT COUPL.,EXT.THREADED 10/8-G1/2"	21, 297, 299
342930-0113 ..	"ELBOW 90 COUPL.,EXT.THREAD 6/4-R1/8"""	63, 65, 313, 323
342930-0123 ..	ELBOW 90 COUPL.,EXT.THREAD 8/6-R3/8"	243
342930-0133 ..	ELBOW 90 COUPL.,EXT.THREAD 10/8-R3/8"	233
342930-0134 ..	ELBOW 90 COUPL.,EXT.THREAD 10/8-R1/2"	21
342933-0122 ..	ELBOW 90 COUPL.,INT.THREAD 8/6-G1/4"	233
342946-0112 ..	T-COUPLING,UNION 6/4	63, 65, 351, 353
342950-0113 ..	L-COUPLING,EXT.THREAD 6/4-R1/8"	303, 305, 307, 309
342980-0111 ..	BANJO-CONNECTION,RING 6/4-M5	51
342980-0301 ..	BANJO-HOLLOW BOLT COUPL.,EXT.THREA.01-M5	51
342980-0313 ..	BANJO-HOLLOW BOLT COUPL,EXT.THR.02-G1/8"	297, 299
342981-0113 ..	BANJO CONNEC,RING,FOR PLAST.TUBE 6-G1/8"	297, 299
342991-0101 ..	HOSE CLIP,WORM DRIVE TYPE (13)-16	263
342991-0103 ..	HOSE CLIP,WORM DRIVE TYPE (19)-23	247
342991-0104 ..	HOSE CLIP,WORM DRIVE TYPE (23)-27	51
342991-0105 ..	HOSE CLIP,WORM DRIVE TYPE (27)-30	63, 65
342991-0106 ..	HOSE CLIP,WORM DRIVE TYPE (30)-36	351, 353
344502-0021 ..	GREASE NIPPLE STRAIGHT M6	95, 113, 133, 151, 217, 219, 315, 323, 351, 353
344502-0026 ..	GREASE NIPPLE STRAIGHT R1/8 CON.	221
344502-0061 ..	GREASE NIPPLE 90 DEG ANGLE M6	323
346800-0109 ..	"SILENCER FILTER R1/8"""	63, 65, 253, 255
346800-0110 ..	SILENCER FILTER R1/4"	233
351120-0144 ..	CABLE SIHF 3X1,5MM2 GREEN/YELLOW	383
351150-0403 ..	CABLE OLFLEX 3X0,75 MM2 LIGHT/GREY	383
351150-0404 ..	CABLE OLFLEX 4X0,75 MM2 LIGHT/GREY	383
351150-0405 ..	CABLE OLFLEX 5X0,75 MM2 LIGHT/GREY	383
351150-0406 ..	CABLE OLFLEX 7X0,75 MM2 LIGHT/GREY	383
351150-0407 ..	CABLE OLFLEX 12X0,75 MM2 LIGHT/GREY	383
351150-0412 ..	CABLE OLFLEX 3X1,5 MM2 LIGHT/GREY	383
351150-0413 ..	CABLE OLFLEX 4X1,5 MM2 LIGHT/GREY	383
351150-0418 ..	CABLE OLFLEX 4X2,5 MM2 LIGHT/GREY	383
351150-0424 ..	CABLE OLFLEX 18X0,75 MM2 LIGHT/GREY	383
351150-0431 ..	CABLE OLFLEX 2X0,75 MM2 LIGHT/GREY	383
351162-0104 ..	CABLE AWM 1X1,5 MM2 YELLOW-GREEN	359, 361
351162-0106 ..	CABLE AWM 1X4 MM2 YELLOW-GREEN	17
352020-0105 ..	TERMINAL BOX, UE5	359, 361
352031-0349 ..	CABLE DUCT, 75X20 MM	237
352031-0517 ..	CABLE DUCT, 150X20 MM	237
352100-0106 ..	CABLE GLANR.18,6-10,5	45, 209, 211
352100-0107 ..	CABLE GLANR.18,6-12	239
352101-0103 ..	LEAD-IN, PR18,6/PG11, E-1457518	171, 239
352103-0100 ..	CABLE GLAND, STR 9, PR15,2/PG9	17
352103-0101 ..	CABLE GLAND, ST 9, PR15,2/PG9	87, 239, 249, 251
352103-0105 ..	CABLE GLAND, STR 11, PR 18,6/PG11	239, 247, 259, 297, 299, 359, 361
352103-0106 ..	CABLE GLAND, ST 11, PR18,6/PG11	17, 87, 181, 225, 233, 297, 299
352103-0108 ..	CABLE GLAND, ST 13,5 , PR20,4/PG13,5	173
352103-0110 ..	CABLE GLAND, STR 16, PR22,5/PG16	17
352103-0116 ..	CABLE GLAND, ST 21, PR28,3/PG21	87
352110-0100 ..	CABLE CLIPS, D=5-7 MM	343, 349
352112-0101 ..	LOCATING STRIP, TUB 12	29
352113-0104 ..	CLIP STRIP, 300X4,8 MM	29
352135-0106 ..	SPIRAL CONDUIT DI=16 MM	53, 359, 361
352136-0126 ..	GLAND FITTING	17
352136-0127 ..	GLAND FITTING PR 18,6	53, 239, 297, 299, 359, 361
352136-0129 ..	GLAND FITTING PR22,5/PG16 DI=16MM	17
353021-0212 ..	FEED THROUGH TERMINAL, 10200.0	23
353021-0216 ..	FEED THROUGH TERMINAL, 10200.8	87
353024-0204 ..	EARTH TERMINAL WPE 2,5	23, 87
353034-0030 ..	BRIDGE CONNECTOR WQV 2,5/10, 10544.6	87
353042-0004 ..	RAIL TS 35/7,5	87
353042-0005 ..	RAIL TS 35/7.5	23
353101-0120 ..	CABLE SHOE 1,25-4MM2	45, 313
353101-0122 ..	CABLE SHOE	359, 361
353101-0129 ..	CABLE SHOE	173
353101-0153 ..	CABLE SHOE 4-6MM2 YELLOW	17
353103-0130 ..	CABLE SHOE	53, 55
359000-0400 ..	"MARKING CO2/4""0"""	85
359000-0402 ..	"MARKING COLLAR 2/4 ""2"" YELLOW"	85
359000-0403 ..	MARKING COLLAR PA2/4 "3" YELLOW	297, 299
359000-0404 ..	"MARKING COLLAR PA2/4 ""4"" YELLOW"	85
359000-0409 ..	"MARKING COLLAR PA2/4 ""9"" YELLOW"	85
359011-0807 ..	MARKING PLATES 5-FW 1-50	23, 87
359011-0808 ..	MARKING PLATES 5-FW 51-100	87
359011-0819 ..	MARKING PLATES 5-GW (EARTH)	23, 87
359240-0100 ..	SIGN HOLDER FOR 359240-0001	297, 299, 371, 373, 375, 377, 379
359241-0121 ..	SIGN "STEAM"	371, 373, 375, 377, 379
359241-0124 ..	SIGN, MAIN SWITCH	371, 373, 375, 377, 379
359241-0130 ..	SIGN, TEMP. AIR SUPER HEATER	371, 373, 375, 377, 379
359241-0131 ..	SIGN, TEMP. LS HEATER	371, 373, 375, 377, 379

Part No	Description	Page No
359241-0133 ..	SIGN, SERVICE SWITCH	371, 373, 375, 377, 379
359241-0193 ..	SIGN"TRANSSKARVSFÖRSEG.S1	371, 373, 375, 377, 379
359241-0194 ..	SIGN"TRANSSKARVSÖRSEGL.S2	371, 373, 375, 377, 379
359241-0233 ..	SIGN "TEMP AIR OUT OF HOUSE"	371, 373, 375, 377, 379
359241-0250 ..	SIGN "CLEANING OF STEAM BARRIER"	371, 373, 375, 377, 379
359241-0271 ..	SIGN	297, 299
359241-0272 ..	SIGN	371, 373, 375, 377, 379
359241-0282 ..	SIGN, PAPER WEB DRIER	371, 373, 375, 377, 379
359241-0286 ..	SIGN, VOLUME ACKNOWLEDGEMENT	371, 373, 375, 377, 379
359241-0318 ..	SIGN "STEA STEAM"	371, 373, 375, 377, 379
359241-0319 ..	SIGN "TEMP STERILE AIR"	371, 373, 375, 377, 379
359301-0001 ..	SIGN "UP"	371, 373, 375, 377, 379
359301-0005 ..	SIGN "DOWN"	371, 373, 375, 377, 379
359301-0090 ..	SIGN "INCHING"	297, 299, 371, 373, 375, 377, 379
359301-0110 ..	SIGN "SHORT STOP"	191, 371, 373, 375, 377, 379
359301-0125 ..	SIGN "LUBRICATION"	371, 373, 375, 377, 379
359301-0131 ..	BUTTON SIGN, LAMP TEST / ALARM RES.	371, 373, 375, 377, 379
359301-0215 ..	SIGN "WASH PRODUCT VALVE"	371, 373, 375, 377, 379
359301-0456 ..	BUTTON SIGN, PACKAGE DISPOSAL	371, 373, 375, 377, 379
359705-0001 ..	WARNING SIGN ISO, ENTAGLEMENT	209, 211, 297, 299
359705-0007 ..	WARNING SIGN ISO, HOT SURFACE	41, 61, 63, 65, 171, 297, 299, 363
359705-0015 ..	WARNING SIGN ISO, RISK OF ELECTRIC SHOCK	17, 85
436566-0000 ..	MOUNTING SHEET	343
436567-0000 ..	SHAFT	343, 349
436569-0000 ..	SCREW	343, 349
436571-0000 ..	SHAFT	343, 349
436614-0000 ..	HATCH	17
439854-0000 ..	COMPRESSION SPRING	79, 81
441536-0000 ..	GASKET	173
441905-0000 ..	RETARD PIN	193, 197
449600-0000 ..	LINK	343, 349
449601-0000 ..	ARM	343, 349
449969-0100 ..	TOOL DISMOUNTING	277
449970-0000 ..	HOLDER	281
449971-0000 ..	SPINDLE	281
450343-0200 ..	PAPER GUIDE	329
450833-0000 ..	FILTER	259
451423-0000 ..	CIRCUIT BOARD	225
456260-0000 ..	COVER	173
456262-0000 ..	SHEET	173
456529-0000 ..	CLAMP HOLDER	225
456900-0000 ..	PIPE	259
464297-0000 ..	CONNECTION BOX	225
484196-0000 ..	FILTER	259
486703-0000 ..	BRACKET	323
486704-0000 ..	BRACKET	313
486705-0200 ..	FEEDER	303, 305, 307, 309
486707-0000 ..	SHAFT	323
486709-0000 ..	FASTENING PLATE	323
486714-0000 ..	SPACER SLEEVE	323
486826-0001 ..	SIGN "EMERGENCY STOP"	191, 371, 373, 375, 377, 379
493542-0000 ..	GAUGE BRACKET	21
493543-0000 ..	BOX	17
493544-0000 ..	JUNCTION BLOCK	21
493965-0000 ..	PROTECTION PIPE	13
497748-0000 ..	PIN	73, 75
499047-0003 ..	MACHINE BODY	269
499048-0000 ..	DOWEL	269
499134-0100 ..	ROLLER STAND	267
522159-0000 ..	CANTILEVER	225
526969-0000 ..	SHIM	325
527121-0001 ..	BOW CLAMP	263
527121-0002 ..	BOW CLAMP	263
527124-0000 ..	BEARING	263
527125-0000 ..	STEERING	263
527127-0000 ..	DOWEL	263
527131-0000 ..	SHIM	325
527898-0100 ..	CONTAINER H2O2	267
527905-0000 ..	GASKET	247
527906-0000 ..	GASKET	247
529025-0000 ..	CRAMP	343, 349
529259-0000 ..	TRANSFORMER	371, 373, 375, 377, 379
529657-0000 ..	COMPRESSION SPRING	79, 81
529659-0000 ..	COMPRESSION SPRING	79, 81
529908-0000 ..	WASHER	79, 81
529910-0000 ..	THRUST WASHER	79, 81
532118-0000 ..	CLAMP RING	73
532205-0000 ..	LID	247
532206-0000 ..	GASKET	247
532368-0000 ..	RUBBER DOLLY	107, 145, 287
532655-0000 ..	CAUTION SIGN	275
532698-0000 ..	ASSEMBLY INSTRUCTION	201
532699-0000 ..	KåPA	201
532700-0000 ..	SEKUNDäRSPOLE	201

Part No	Description	Page No
532701-0000 ..	FäSTBRICKA	201
532704-0000 ..	F- LEDNING	201
532714-0000 ..	MELLANBIT	201
532715-0000 ..	DISTANS	201
534725-0000 ..	BRACKET	225
534726-0000 ..	MOUNTING SHEET	225
535698-0000 ..	GASKET	235
538431-0000 ..	HOLDER	343, 349
538526-0000 ..	RAIL	315
538527-0000 ..	RUBBER RAIL	289, 315, 357
539619-0000 ..	ROLL	329, 349
540306-0001 ..	COMPONENTS WITHOUT TP-NO	227
540307-0000 ..	PRINTED CIRCUIT BOARD	227
540345-0000 ..	FRAME	297, 299
540346-0000 ..	PROTECTIVE GLASS	297, 299
541108-0200 ..	CASSETTE	11
541164-0201 ..	CLAMP RING	67
541165-0000 ..	WASHER	73, 75
541739-0000 ..	SPACER	297, 299
541977-0000 ..	CRANK	183
541978-0000 ..	FLANGED SHAFT	181
541979-0000 ..	SLIDER	183
542036-0000 ..	TP SIGN BOARD "PART NO" 84X140MM	201
543111-0000 ..	MöNSTERKORT	201
543115-0000 ..	FIXERINGSPLåT	201
543924-0000 ..	COVER PLATE:HANDLE 8TE	381
544906-0000 ..	SOLENOID VALVE	259
545393-0000 ..	GUIDING ARBOR	219
546177-0000 ..	ROLL	343
546420-0001 ..	SHAFT	319
546420-0002 ..	SHAFT	319
547297-0000 ..	SHIFTER HANDLE	315
547874-0000 ..	GUIDE ROD	341
549238-0000 ..	CYLINDER BRACKET	325
549239-0000 ..	SHAFT	325
551613-0000 ..	MACHINE PLATE TCA	271
551828-0000 ..	CABLE	201
551922-0000 ..	LABEL,POTENTIOMETER DESIGN CORR.	371, 373, 375, 377, 379
551969-0001 ..	COAXIAL CABLE L=1900 MM	371, 373, 375, 377, 379
552152-0000 ..	CABLE	95, 133
552787-0000 ..	PRESSURE ROLLER	47, 287
552789-0000 ..	FORK	47
552791-0000 ..	INTERMEDIARY SECTION	29
552794-0000 ..	SHELF	181
552795-0000 ..	BRACKET	181
552796-0000 ..	BRACKET	181
552978-0000 ..	CANTILEVER	225
552979-0000 ..	SHAFT	225
552980-0000 ..	PROTECTION	225
552989-0000 ..	CUTTING MECHANISM BODY	209, 211
552990-0000 ..	ROLL	61
552991-0000 ..	SHAFT	61
553099-0000 ..	HATCH	209, 211
553100-0000 ..	DOOR	203
553102-0000 ..	ASSEMBLY PLATE	233
553103-0000 ..	GEARING	181
553104-0000 ..	HUB	185
553107-0000 ..	WASTE BOX	237
553114-0000 ..	SEALING WASHER	59, 253, 255
553115-0000 ..	WASHER	59
553116-0000 ..	PIPE JUNCTION	233
553117-0000 ..	ELBOW PIPE JOINT	233
553118-0300 ..	STERILE AIR SYSTEM	231
553119-0000 ..	MUFF	233
553185-0001 ..	DISPLAY	371, 373, 375, 377, 379
553186-0001 ..	CIRCUIT BOARD	371, 373, 375, 377, 379
553186-0002 ..	CIRCUIT BOARD	371, 373, 375, 377, 379
553191-0000 ..	LOWER SECTION	237
553194-0000 ..	GABLE PLATE	237
553196-0000 ..	GABLE PLATE	237
553197-0000 ..	GABLE PLATE	237
553198-0000 ..	PLATFORM	237
553199-0000 ..	PLATFORM	237
553200-0000 ..	HOLDER	237
553202-0000 ..	HEAT GUARD	237
553203-0000 ..	SPACER	237
553204-0000 ..	HINGE	237
553205-0000 ..	HINGE	237
553207-0000 ..	CATCH	209, 211
553209-0000 ..	STRUT	209, 211
553210-0000 ..	COVERING PLATE	209, 211
553213-0000 ..	RAIL	209, 211
553214-0000 ..	HOLDER	209, 211
553234-0100 ..	ANGLE ENCODER	207

Part No	Description	Page No
553435-0000 ..	BRACKET	51
553436-0000 ..	TEFLON PIPE	51
553437-0000 ..	LACE	51
553438-0000 ..	PIPE	51
553439-0000 ..	BRACKET	51
553441-0000 ..	FRAME	171
553589-0000 ..	ARM	51
553768-0001 ..	PLINTH	371, 373, 375, 377, 379
553829-0000 ..	VAT	269
553830-0000 ..	MACHINE BODY	269
554123-0200 ..	DOOR	169
554134-0100 ..	TRANSFORMER	169
554162-0000 ..	SCREW	73, 75
554213-0000 ..	LEAD PLATE	359, 361
554214-0000 ..	SPACER	359, 361
554215-0000 ..	SHAFT	359, 361
554216-0000 ..	LOCK	359, 361
554217-0000 ..	BEARING HOUSING	359, 361
554218-0000 ..	LOCKING LUG	359, 361
554219-0000 ..	KNIFE	359, 361
554220-0000 ..	SHAFT	359, 361
554221-0000 ..	PRESSURE ARM	359, 361
554222-0000 ..	LOCK	359, 361
554223-0000 ..	SPRING	359, 361
554224-0000 ..	SPRING	359, 361
554225-0000 ..	TABLE TOP PLATE	359, 361
554226-0000 ..	HEATING BLOCK	359, 361
554227-0000 ..	SIDE PLATE	359, 361
554228-0000 ..	TEFLON CLOTH	359, 361
554229-0000 ..	BRACKET	359, 361
554230-0000 ..	INSULATING PLATE	359, 361
554231-0000 ..	GUIDE WASHER	359, 361
554232-0000 ..	LOCK BAR	359, 361
554233-0000 ..	KNIFE	359, 361
554234-0000 ..	SHAFT	359, 361
554235-0000 ..	ARM	359, 361
554236-0000 ..	SHAFT	359, 361
554237-0000 ..	TABLE	359, 361
554238-0000 ..	BOW CLAMP	359, 361
554239-0000 ..	HANDSPIKE	359, 361
554240-0000 ..	LOCKING CATCH	359, 361
554241-0000 ..	BUSHING	359, 361
554242-0000 ..	SPACER	359, 361
554243-0000 ..	ROLL	359, 361
554244-0000 ..	STOP RAIL	359, 361
554245-0000 ..	PRESSURE ARM	359, 361
554246-0000 ..	SPACER	359, 361
554247-0000 ..	BOTTOM PANEL	359, 361
554250-0400 ..	LOWER SECTION	231
554251-0000 ..	SLEEVE	37
554252-0000 ..	MOTOR SHELF	39
554253-0200 ..	CONNECTION	27
554573-0000 ..	BENDING ROLLER	49
554588-0000 ..	CONTACT RAIL	127, 165, 287
554589-0000 ..	CONTACT RAIL	127, 165, 287
554601-0000 ..	HOLDER	199
554717-0100 ..	SPLICING TABLE	295
554718-0000 ..	INSULATING PLATE	199
554719-0000 ..	INSULATING PLATE	199
554839-0000 ..	FLANGE	199
554843-0000 ..	HOLDER	13
554844-0000 ..	HOLDER	13
554845-0000 ..	SPROCKET	181
554846-0000 ..	INDUCTOR	125, 163, 287
554848-0000 ..	HEAD PLATE	217
554849-0000 ..	HEAD PLATE	217
554855-0000 ..	SCREW	71
554856-0000 ..	WASHER	69, 71, 77
554857-0000 ..	SCREW	69, 71, 77
555477-0000 ..	PIPE	79, 81
555478-0000 ..	PISTON	79, 81
555479-0000 ..	VALVE HOUSING	79, 81
555480-0000 ..	VALVE HOUSING	79, 81
555481-0000 ..	HOUSE	79, 81
555894-0000 ..	PIPE CLAMP	63, 65
555895-0000 ..	PIPE CLAMP	63, 65
555896-0000 ..	PIPE CLAMP	63, 65
555897-0000 ..	PIPE CLAMP	63, 65
555898-0000 ..	PIPE CLAMP	63, 65
555899-0000 ..	PIPE CLAMP	63, 65
555900-0000 ..	PIPE CLAMP	63, 65
555901-0000 ..	PIPE CLAMP	63, 65
555902-0000 ..	PIPE CLAMP	63, 65
555903-0000 ..	PIPE CLAMP	63, 65

Part No	Description	Page No
555904-0000 ..	PIPE CLAMP	63, 65
555906-0000 ..	INTERMEDIATE SECTION	63, 65
555907-0000 ..	INTERMEDIARY SECTION	63, 65
555914-0000 ..	STEAM PIPE	63, 65
555915-0000 ..	INTERMEDIATE PIPE	47
555919-0000 ..	FASTENING PLATE	359, 361
555921-0000 ..	PRESSURE GAUGE TUBE	63, 65
556109-0000 ..	CYLINDER HOUSING	71
556110-0000 ..	SPACER	71
556111-0000 ..	END SECTION	71
556112-0000 ..	COMPRESSION SPRING	71
556113-0000 ..	VALVE CONE	71, 77
556114-0000 ..	RING	71
556115-0000 ..	WASHER	71
556116-0000 ..	PISTON	71
556117-0000 ..	PISTON ROD	71
556118-0000 ..	SEAL-RING (25)	69, 71, 77, 287
556120-0000 ..	COMPRESSION SPRING	71
556518-0001 ..	COMPONENTS WITHOUT TP-NO	201
556518-0002 ..	COMPONENTS WITHOUT TP-NO	201
556518-0003 ..	COMPONENTS WITHOUT TP-NO	201
556518-0004 ..	COMPONENTS WITHOUT TP-NO	201
556518-0005 ..	COMPONENTS WITHOUT TP-NO	201
556518-0006 ..	COMPONENTS WITHOUT TP-NO	201
556518-0007 ..	COMPONENTS WITHOUT TP-NO	201
556518-0008 ..	COMPONENTS WITHOUT TP-NO	201
556518-0009 ..	COMPONENTS WITHOUT TP-NO	201
556518-0010 ..	COMPONENTS WITHOUT TP-NO	201
556518-0013 ..	COMPONENTS WITHOUT TP-NO	201
556518-0014 ..	COMPONENTS WITHOUT TP-NO	201
556518-0015 ..	COMPONENTS WITHOUT TP-NO	201
556523-0000 ..	DISCETTE FOR LAYOUTS	381
556524-0001 ..	COMPONENTS WITHOUT TP-NO	381
556525-0000 ..	FRONT PANEL 8TE	381
558199-0600 ..	ELECTRICAL CABINET TCA/25	369, 385
558200-0600 ..	CABLE LIST TCA/25	369, 385
558203-0600 ..	ELECTRICAL DOCUMENT TCA/25	369
560115-0000 ..	FORK	47
560116-0000 ..	LOCK SHEET	47, 287
560117-0000 ..	SHAFT	47
560118-0000 ..	PRESSURE ROLLER	47, 287
560189-0000 ..	MOUNTING SHEET	241
560190-0300 ..	PRODUCT VALVE	27
560192-0000 ..	HEAT GUARD	237
560193-0000 ..	SHIM	181
560931-0000 ..	BRACKET	261
561404-0000 ..	BRACKET	313
561405-0000 ..	BRACKET	313
561427-0000 ..	CONTAINER	275
562875-0000 ..	ECCENTRIC	59
562882-0000 ..	LOCKING CIRCLIP	59
562884-0000 ..	HANDLE	59, 247
562954-0000 ..	BRACKET	63, 65
562955-0000 ..	HOLDER	63, 65
562958-0000 ..	PIPE	171
563431-0000 ..	HOLDER	249, 251
563432-0000 ..	COVERING PLATE	247
563434-0100 ..	VALVE PANEL	247
563435-0100 ..	PEROXIDE UNIT	245
563441-0000 ..	LID	259
563442-0000 ..	COVERING PLATE	247
563443-0000 ..	CONTAINER	253, 255
563444-0000 ..	LID	253, 255
563445-0000 ..	ATTACHMENT	253, 255
563446-0000 ..	ATTACHMENT	253, 255
563447-0000 ..	PEROXIDE PIPE	259
563449-0000 ..	PEROXIDE PIPE	259
563450-0100 ..	TANK	247
564246-0000 ..	COVERING PLATE	381
564603-0000 ..	FILLING PIPE	47
564604-0000 ..	ROLL	47
564605-0000 ..	ROD	271
564606-0000 ..	BRACKET	271
565250-0000 ..	WASHER	275
565251-0000 ..	VALVE	275
566014-0000 ..	ATTACHMENT PIPE	51
566143-0100 ..	METERING DEVICE	247
566146-0000 ..	WETTING PIPE	257
566147-0000 ..	SAFETY VALVE	247, 253, 255
566148-0002 ..	ELECTRODE	253, 255
566148-0003 ..	ELECTRODE	253, 255
566149-0100 ..	SPRAY SYSTEM	247
566352-0000 ..	VALVE HOUSING	67
566353-0000 ..	STEAM HOUSE	67

Part No	Description	Page No
566354-0000 ..	END SEKTION CYLINDER	69, 77
566355-0000 ..	AIR CYLINDER	69, 77
566356-0000 ..	SEAL RING	67
566357-0000 ..	VALVE CONE	69
566358-0000 ..	COUNTER PLATE	69
566359-0000 ..	PISTON ROD	69
566360-0000 ..	PISTON	69, 77
566361-0000 ..	PISTON ROD	77
566362-0000 ..	MOUNTING SHEET	63, 65
566363-0000 ..	SEAL-RING HOLDER	71
566367-0000 ..	SCREW	69, 77
566368-0000 ..	SPRING	69, 77
566369-0000 ..	STOP SLEEVE	77
566370-0000 ..	LUG	69, 77
566371-0101 ..	C-CYLINDER 38/25	67
566372-0101 ..	B-CYLINDER 38/25	67
566373-0100 ..	AP-VALVE 38/25	63, 65
566374-0101 ..	A-CYLINDER 25	67
566375-0000 ..	CLAMP RING	75
566376-0101 ..	CLAMP RING	67
566478-0000 ..	SPINDLE	283
566479-0000 ..	HOLDER	283
566480-0100 ..	TOOL	277
566483-0000 ..	SPACER	69, 77
566485-0000 ..	VALVE DISC	69
567070-0001 ..	ELECTRODE	261
567070-0002 ..	ELECTRODE	261
567070-0003 ..	ELECTRODE	261
567070-0004 ..	ELECTRODE	261
567070-0005 ..	ELECTRODE	261
567070-0006 ..	ELECTRODE	261
567070-0007 ..	ELECTRODE	261
567070-0008 ..	ELECTRODE	261
567070-0009 ..	ELECTRODE	63, 65
567070-0010 ..	ELECTRODE	261
567070-0011 ..	ELECTRODE	261
567070-0012 ..	ELECTRODE	261
567070-0013 ..	ELECTRODE	261
567070-0014 ..	ELECTRODE	261
567111-0100 ..	AIR JET GUN	277
567112-0000 ..	PLUNGER BODY	101, 103, 139, 141
567189-0100 ..	ELECTRODE	259
567197-0000 ..	FLOW METER	253, 255
567220-0000 ..	WASTE PIPE	171
567691-0100 ..	INSTALLATION MATERIAL	267
567941-0000 ..	LOCK GRIP	209, 211
567942-0000 ..	CAP	209, 211
567943-0000 ..	LOCKING LUG	209, 211
567952-0000 ..	NOZZLE	351, 353
567953-0000 ..	NOZZLE	351, 353
568077-0000 ..	INDUCTOR	125, 163, 287
568094-0000 ..	SUPPORT	83
568098-0100 ..	GAS GUARD	27
568114-0000 ..	DRAINING PIPE	259
568115-0000 ..	PEROXIDE PIPE	259
568116-0000 ..	CUP SPRING	247, 253, 255
568135-0000 ..	WETTING PIPE	257
568136-0000 ..	PEROXIDE PIPE	253, 255
568137-0000 ..	WETTING PIPE	257
568173-0000 ..	DRAIN PIPE	171
568177-0000 ..	KEY	277
568178-0000 ..	BRACKET	209, 211
568292-0000 ..	PROTECTIVE CASING	83
568293-0000 ..	BOW CLAMP	83
568294-0000 ..	STRUT	41
568295-0000 ..	FASTENING IRON	41
568296-0000 ..	CRAMP	83
568297-0000 ..	CRAMP	83
568298-0000 ..	HOLDER	41
568299-0000 ..	CLAMPING SPRING	41
568305-0000 ..	BEARING	33
568306-0000 ..	PROTECTIVE GRATING	37
568794-0000 ..	HOLDING BOLT	203
568796-0000 ..	BRACKET	171
568797-0000 ..	FASTENING BRACKET	175, 177, 179, 187
568799-0000 ..	WINDOW	175, 177, 179
568831-0000 ..	COVER	209, 211
569015-0000 ..	COVER	209, 211
569390-0000 ..	TOUCH GUARD	171
569608-0000 ..	DOOR	247
569616-0100 ..	CONNECTION	247
569617-0000 ..	PIPE	249, 251
569618-0000 ..	STEERING	263
569644-0000 ..	BRACKET	313

Part No	Description	Page No
569653-0000 ..	DOOR	179
569654-0000 ..	DOOR	175
569655-0000 ..	DOOR	177
569963-0001 ..	PNEUMATIC CHART	295
570087-0000 ..	NOZZLE	351, 353
570088-0000 ..	GABLE PLATE	237
570089-0000 ..	GABLE PLATE	237
570090-0000 ..	COVER	209, 211
570091-0000 ..	COVER	209, 211
570196-0000 ..	SIDE PIECE	297, 299
570197-0000 ..	SIDE PIECE	297, 299
570200-0000 ..	TOUCH GUARD	363
570201-0000 ..	TOUCH GUARD	363
570203-0000 ..	PROTECTIVE CASING	363
570204-0000 ..	PROTECTIVE CASING	363
570208-0000 ..	TOUCH GUARD	363
570209-0000 ..	HEAT GUARD	363
570262-0200 ..	PROTECTION	295
570774-0000 ..	CYLINDER CONSOLE	325
570798-0000 ..	TOUCH GUARD	363
570799-0000 ..	SPACER	363
570817-0000 ..	HOLDER	247
570835-0000 ..	GASKET	253, 255
570842-0000 ..	FASTENING IRON	247
570844-0000 ..	GUIDE FLANGE	263
570943-0000 ..	PROTECTION PLATE	209, 211
570944-0000 ..	COVER	209, 211
570955-0000 ..	LEG	285
570956-0000 ..	LUG	285
570957-0000 ..	TEMPLATE COLUMN	285
570958-0000 ..	PLATE	285
570969-0000 ..	VALVE BRACKET	63, 65
570970-0000 ..	INTERMEDIATE PIPE	63, 65
571293-0000 ..	CLEANING PIPE	63, 65
571480-0100 ..	SETTING TEMPLATE	277
572776-0000 ..	CYLINDER BRACKET	209, 211
572777-0000 ..	HEAT GUARD	363
572778-0000 ..	ANGLE BRACKET	63, 65
572779-0000 ..	INTERMEDIARY SECTION	63, 65
572780-0000 ..	DRAIN CLAMP	63, 65
572782-0000 ..	INTERMEDIATE PIPE	63, 65
572783-0000 ..	STEAM PIPE	63, 65
572784-0000 ..	STEAM PIPE	63, 65
572785-0000 ..	STEAM PIPE	63, 65
572786-0000 ..	STEAM PIPE	63, 65
572787-0000 ..	STEAM PIPE	63, 65
572788-0000 ..	STEAM PIPE	63, 65
572790-0000 ..	TOUCH GUARD	63, 65
572798-0000 ..	TOUCH GUARD	63, 65
573300-0100 ..	FILLER TUBE	27
573301-0000 ..	FILLER TUBE	47
573303-0000 ..	LOCK SHEET	47, 287
573304-0000 ..	SHAFT	47
573509-0000 ..	DRAIN CLAMP	63, 65
573513-0000 ..	SHIM	181
573514-0100 ..	TERMINAL PLINTH	17
573517-0000 ..	CUTTING MECHANISM BODY	209, 211
573519-0000 ..	FLANGE	49
574205-0000 ..	JUNCTION BLOCK	29
574207-0000 ..	CONICAL GEAR	95, 113, 133, 151
574208-0000 ..	CONICAL GEAR	95, 113, 133, 151
574617-0000 ..	MOUNTING SHEET	349
575504-0000 ..	LID	301
575505-0000 ..	SPACER	297, 299, 329, 339
575506-0000 ..	PROTECTION PLATE	181
575507-0000 ..	PROTECTION PLATE	181
575508-0000 ..	INSULATION PIPE	29
575509-0000 ..	INSULATION PIPE	29
576148-0000 ..	COVER PLATE	253, 255
576420-0000 ..	PIPE	171
576421-0000 ..	DRAIN PIPE	171
576422-0000 ..	CONNECTION	267
576423-0000 ..	CONNECTION	267
576988-0000 ..	PIPE CLAMP	171
576989-0000 ..	INDUCTIVE SWITCH	171
577372-0200 ..	AIR PIPE-LINE	231
577389-0000 ..	SPACER	63, 65
577895-0000 ..	PROTECTION	363
577897-0001 ..	AIR PIPE-LINE	27, 85
577906-0100 ..	STERILIZATION BATH	27
577907-0000 ..	STERILIZATION BATH	59
577908-0000 ..	BEARING HOLDER	59
577909-0000 ..	FLANGE	59
577910-0000 ..	BENDING ROLLER	59

Part No	Description	Page No
577911-0000 ..	DOWEL	59
577912-0000 ..	LEVER	59
577913-0001 ..	BENDING ROLLER	59
577913-0002 ..	BENDING ROLLER	59
577914-0000 ..	WETTING ROLLER	59
577915-0000 ..	GEAR WHEEL	59
577916-0000 ..	GEAR WHEEL	59
577918-0000 ..	LID	59
577919-0000 ..	SWITCH BRACKET	59
578062-0000 ..	SIGHT GLASS	59
578063-0001 ..	ELECTRODE	59
578063-0002 ..	ELECTRODE	59
578065-0000 ..	JOINT DUCT	43
578066-0000 ..	GASKET	43
578067-0000 ..	SIGHT GLASS	43
578068-0000 ..	FRAME	43
578069-0100 ..	PEROXIDE UNIT	231
578070-0000 ..	FRAME	247
578072-0000 ..	PEROXIDE PIPE	253, 255
578073-0000 ..	PEROXIDE PIPE	253, 255
578074-0000 ..	PEROXIDE PIPE	245
578075-0000 ..	PEROXIDE PIPE	245
578076-0000 ..	COVERING PLATE	247
578077-0000 ..	RUBBER SEAL	59
578078-0000 ..	SEAL HOLDER	59
578079-0000 ..	DRAIN PIPE	253, 255
578080-0000 ..	PEROXIDE PIPE	253, 255
578081-0000 ..	COVERING PLATE	247
578225-0000 ..	BRACKET	247
578227-0000 ..	FASTENING IRON	245
578228-0000 ..	COOLER	245
578229-0000 ..	FASTENING IRON	245
578230-0000 ..	ANGLE BRACKET	245
578231-0000 ..	CANTILEVER	245
578232-0000 ..	PEROXIDE PIPE	245
578233-0000 ..	PEROXIDE PIPE	245
578236-0100 ..	CRANK	181
578237-0000 ..	DOOR	187
578238-0000 ..	HOLDING BOLT	187
578239-0000 ..	PULLEY	181
578240-0000 ..	PULLEY	181
578241-0000 ..	MOTOR SHELF	181
578242-0000 ..	BRACKET	181
578243-0000 ..	BRACKET	181
578249-0000 ..	PLATFORM	247
578250-0000 ..	HATCH	41
578254-0000 ..	SETTING SCREW	247
578255-0100 ..	JOINT DUCT	41
579012-0000 ..	BRACKET	323
579013-0000 ..	LID	323
579281-0000 ..	HANDLE	83
579295-0000 ..	BRACKET	85
579301-0000 ..	DRAIN PIPE	63, 65
579302-0000 ..	DRAIN PIPE	63, 65
579305-0000 ..	TOUCH GUARD	363
579450-0000 ..	ASSEMBLY PLATE	241
579766-0000 ..	COIL HEATER	51
579904-0000 ..	TOUCH GUARD	363
579905-0000 ..	FILLER TUBE	47
579906-0000 ..	BRACKET	297, 299
579907-0000 ..	BRACKET	297, 299
579908-0000 ..	CYLINDER BRACKET	297, 299
579910-0000 ..	BOW CLAMP	171
579911-0000 ..	PROTECTION	171
579919-0000 ..	SPACER	181
579924-0000 ..	GABLE PLATE	237
579926-0000 ..	GABLE PLATE	237
579929-0000 ..	HOLDER	63, 65
580148-0000 ..	BRACKET	63, 65
580149-0200 ..	CONNECTION BOX	85
580150-0000 ..	CONNECTION BOX	87
580151-0000 ..	SPACER	87
580152-0000 ..	PROTECTION	59
580156-0000 ..	HEATING BLOCK	313
580157-0000 ..	BLIND PLUG	63, 65
580159-0000 ..	PNEUMATIC CHART	27
580159-0200 ..	PNEUMATIC UNIT	27
580165-0200 ..	PNEUMATIC UNIT	85
580166-0000 ..	COVERING PLATE	363
580168-0000 ..	BRACKET	323
580169-0000 ..	HEAT GUARD	363
580170-0000 ..	HEAT GUARD	363
580171-0000 ..	HEAT GUARD	363
580173-0000 ..	BRACKET	363

Part No	Description	Page No
580174-0000 ..	ROLLER BRACKET	59
580175-0000 ..	SPACER	297, 299
581073-0000 ..	CABINET	89
581074-0000 ..	HOLDER	85
581328-0000 ..	VALVE GROUP	89
581598-0000 ..	BRACKET	209, 211
581599-0000 ..	COVER	209, 211
581600-0000 ..	COVERING PLATE	209, 211
581601-0000 ..	SPACER	209, 211
581602-0000 ..	FENDER WALING	209, 211
581603-0000 ..	BRACKET	209, 211
581607-0000 ..	BRACKET	209, 211
581608-0000 ..	HEAT GUARD	363
581610-0000 ..	HOLDER	245
581612-0000 ..	COVER PLATE	63, 65
581615-0000 ..	DATING UNIT	297, 299
581617-0000 ..	STEAM TRAP	171
581619-0000 ..	PIPE	303, 305, 307, 309
581906-0000 ..	TOUCH GUARD	63, 65
597874-0000 ..	RAIL RIGHT	193
597875-0000 ..	RAIL LEFT	193
597887-0000 ..	STEP	193, 197
597888-0000 ..	BRACKET	193, 197
597889-0000 ..	BRACKET	193, 197
610308-1700 ..	HOLE PUNCH	293
736286-0000 ..	FLANGE	79, 81
736288-0000 ..	GASKET	79, 81
736508-0001 ..	MEMBRANE	79, 81, 287
736514-0000 ..	SHOCK ABSORBER	79, 81
736619-0000 ..	WASHER	79, 81
736620-0200 ..	CONSTANT FLOW VALVE	63, 65
736621-0000 ..	HOLDER	79, 81
736622-0000 ..	BODY	79, 81
736623-0000 ..	CAM	79, 81
736624-0000 ..	SPINDLE	79, 81
736625-0000 ..	SHAFT	79, 81
736626-0000 ..	FORK	79, 81
736627-0000 ..	SCREW	79, 81
736629-0000 ..	COMPRESSION SPRING	79, 81
736630-0000 ..	MOTOR	79, 81
752576-0000 ..	CONTAINER	259
752810-0000 ..	METERING DEVICE	247
776422-0101 ..	BRASS WIRESTE	287
777510-0101 ..	SCISSORS	287
779910-0101 ..	PADLOCK	371, 373, 375, 377, 379
794246-0000 ..	DIAPHRAGM	71, 287
795930-0000 ..	TIE ROD	79, 81
795931-0000 ..	CLOSING DEVICE	79, 81
915996-0000 ..	LEAF SPRING	263
919706-0000 ..	ATTACHMENT	263
924361-0000 ..	BODY CENTRAL VALVE	79, 81
925091-0000 ..	DIAPHRAGM	79, 81, 287
927422-0003 ..	O.RING 24.2X3 SILICON	275
979500-0002 ..	ELECTRODE	261
979500-0003 ..	ELECTRODE	261
979966-0000 ..	BRACKET	193
1175118-0000 .	CONTAINER	257
1175119-0000 .	FLOAT	257
1254027-0000 .	CORNER STRIP	191
1350004-0100 .	LIGHT FIXTURE	171
1361957-0000 .	SPACER	61
1361959-0000 .	KNIFE	219
1361960-0000 .	BOLT	209, 211
1361961-0000 .	SHAFT	209, 211
1361962-0000 .	AXLE SUPPORT	209, 211
1361963-0000 .	BRACKET	209, 211
1361964-0000 .	PLATE	209, 211
1361965-0000 .	PROTECTION	209, 211
1361966-0000 .	TOUCH GUARD	61
1361967-0000 .	TOUCH GUARD	61
1361968-0000 .	TOUCH GUARD	61
1361969-0000 .	TOUCH GUARD	61
1361970-0000 .	TOUCH GUARD	61
1361971-0000 .	PROTECTIVE CASING	41
1361972-0000 .	PROTECTIVE CASING	41
1361973-0000 .	PROTECTIVE CASING	41
1361974-0000 .	HEAT GUARD	237
1361976-0000 .	TOUCH GUARD	237
1361978-0000 .	SPACER	41, 61
1361983-0000 .	CANTILEVER	195
1361994-0000 .	HOOD	389
1361995-0000 .	BRACKET	389
1361996-0000 .	BRACKET	389
1361997-0000 .	BRACKET	389

Part No	Description	Page No
1361999-0000	.PROTECTION	63, 65
1362001-0000	.PLATE	63, 65
1362005-0000	.TOUCH GUARD	297, 299, 301
1362007-0000	.TOUCH GUARD	363
1362008-0000	.TOUCH GUARD	363
1362009-0000	.TOUCH GUARD	63, 65
1362011-0000	.TOUCH GUARD	63, 65
1362012-0000	.ASSEMBLY PLATE	297, 299
1362013-0000	.BRACKET	63, 65
1362014-0000	.BRACKET	209, 211
1362015-0000	.DRIP GUARD	209, 211
1362016-0000	.TOUCH GUARD	171
1363451-0000	.TERMINAL XL10,11,50,51	371, 373, 375, 377, 379
1363452-0000	.TERMINALXL20,21,30,31	371, 373, 375, 377, 379
1363808-0000	.TERMINAL X001	371, 373, 375, 377, 379
1363809-0000	.GROUND TERMINAL	371, 373, 375, 377, 379
1363810-0000	.NEUTRAL TERMINAL	371, 373, 375, 377, 379
1483031-0000	.BRACKET	351, 353
1483032-0000	.CRAMP	351, 353
1517247-0000	.PIN	191
2502204-0100	.LEVER MECHANISM	295
2502205-0000	.SPRING	365
2502206-0000	.SHAFT	365
2502207-0000	.SHAFT	365
2502208-0000	.WHEEL	365
2502209-0000	.FRICTION BLOCK	365
2502211-0000	.ARM	365
2502212-0000	.MOUNTINGS	365
2502213-0000	.MOUNTINGS	365
2502214-0000	.MOUNTINGS	365
2502215-0000	.SPACER	365
2502216-0000	.SPACER BUSHING	365
2502217-0000	.SPACER BUSHING	365
2502218-0000	.GUIDE RING	365
2502219-0000	.SHAFT	365
2502220-0000	.ROLLER	365
2502221-0000	.SHAFT	365
2502222-0000	.ROLLER	365
2502223-0000	.SHAFT	365
2502224-0000	.MOUNTINGS	365
2502225-0000	.SHAFT	365
2502226-0000	.SHAFT	365
2502227-0000	.ROLLER	365
2519590-0000	.BRACKET	63, 65
2563747-0100	.BEARING HOUSING	27
2564115-0000	.PUSH BUTTON BOX	191
2565390-0100	.PLUNGER BODY	93, 131
2565757-0100	.SIDE FRAME	131
2565799-0100	.SIDE FRAME	149
2578512-0100	.PLATFORM	169
2578513-0100	.LADDER	169
2578514-0100	.PLATFORM	169
2578515-0100	.LADDER	169
2578516-0000	.PLATFORM	191
2578517-0000	.CHECKER PLATE	191
2578518-0000	.PLATFORM	195
2578519-0000	.RAIL	197
2578520-0000	.RAIL	197
2578521-0000	.BRACKET	191
2578522-0000	.PLATE	191
2578523-0000	.PLATE	191
2578524-0000	.PLATE	191
2578525-0000	.RAILING	191
2578526-0000	.RAILING	191
2578527-0000	.SIDE PIECE	193
2578528-0000	.SIDE PIECE	193
2578529-0000	.SIDE PIECE	197
2578530-0000	.SIDE PIECE	197
2578531-0000	.BRACKET	197
2578569-0100	.SET OF SIGNS TCA	267
2590335-0000	.FOOT	297, 299
2594824-0000	.INSERT	171

Tetra Pak

SPC binder labels. 40 mm Full width *Note! This page is generated* **automatically.**
using the **variable definitions** *made in the* **front page** *file!!*

TCA/25
633013-0600
Issue: 2003-02-06 Doc No: SPC-85567-0105

TCA/25
633013-0600
Issue: 2003-02-06 Doc No: SPC-85567-0105

TCA/25
633013-0600
Issue: 2003-02-06 Doc No: SPC-85567-0105

TCA/25
633013-0600
Issue: 2003-02-06 Doc No: SPC-85567-0105

TCA/25
633013-0600
Issue: 2003-02-06 Doc No: SPC-85567-0105

TCA/25
633013-0600
Issue: 2003-02-06 Doc No: SPC-85567-0105

TCA/25
633013-0600
Issue: 2003-02-06 Doc No: SPC-85567-0105

TCA/25
633013-0600
Issue: 2003-02-06 Doc No: SPC-85567-0105

TCA/25
633013-0600
Issue: 2003-02-06 Doc No: SPC-85567-0105

TCA/25
633013-0600
Issue: 2003-02-06 Doc No: SPC-85567-0105

TCA/25
633013-0600
Issue: 2003-02-06 Doc No: SPC-85567-0105