TCA/65

Training Document

This Training Document is intended for Training purpose only, and must not be used for any other purpose.

The Training Document is not replacing any instructions or procedures (e.g. OM, MM, TeM, IM, SPC) intended for specific equipment, and must not be used as such.

Note!

For safe and proper procedures, refer to the equipment specific documentation.

Name:

.....

.....

Course Introduction	1
TCA/65 Introduction	2
Machine Ladder	3
Sterile System	4
Filling System	5
Peroxide System	6
Tube Forming	7
Sealing	8
Design Control System	9
Drive System	10
Hydraulic System	11
Lubrication System	12
Electrical System	13
Compressed Air System	14
Packaging Material	15
TPMS Checklist Overview	16
Spare Part Kit	17
	18
	19
	20

Tetra Pak

Technical Training Centre
Lund, Sweden
WB-115-01
Issue 2/0104

1

Course Introduction

Information regarding Safety Regulations at the Technical Training Centre in Lund

This list summarizes a number of items which may concern you, as a participant in this training course. Read the list, and if anything remains less than clear, or if you have any questions, feel free to contact your instructor.

1. Study and follow the sections on Safety in the course literature, for instance the OM, MM and EM.
2. You are entitled to ask persons who have no business to be near the machine, to stay at distance, for safety reasons.
3. Never touch any other machines than those used in your own training course.
4. There may be cables which are still electrically live, although they have been disconnected from their terminals.
5. In some machines, safety switches may be bridged or disconnected, for training reasons.
6. Find out exactly where the emergency stop switches for the machine as well as the conveyor are located.
7. When starting a machine, the **person doing the starting** must make absolutely sure that this does not expose anyone else to danger.
8. Certain chemicals, used in your training course, may be hazardous to your health and constitute a danger of fire or explosion. Make sure you know how such chemicals are marked and how to handle them.
9. It is strictly prohibited to wear rings, watch, or necktie when working with the machine. This prohibition also applies to loose-fitting clothes or anything else that might get caught in the machinery.
10. A first aid kit and stretcher are kept in the machine hall.
11. Study the information on what to do in case of fire and which escape routes to follow. A diagram of escape and evacuation routes is posted in every classroom.
12. If you observe or discover anything that might jeopardize safety, immediately tell your instructor.

Information to Course Participants at the Technical Training Centre in Lund

Welcome to Technical Training Centre!

Here is some information which might be helpful to you as a course participant. If you need additional information or help, feel free to ask your instructor.

Start of course

Normally, the first day of your course begins at 08.30. Your instructor will meet and welcome you in the coffee room.

Daily time schedule

Classes	08.00 - 09.30
Breakfast	09.30 - 10.00
Classes	10.00 - 12.00
Lunch	12.00 - 13.00
Classes	13.00 - 16.00

Your instructor will tell you if there are any changes in the schedule.

Breakfast

Breakfast is free of charge and served in the restaurant, where a special area has been reserved for Technical Training Centre course participants. Breakfast consists of coffee or tea and bread rolls. If you want anything in additional, for instance from the serving counters of the restaurant or cafeteria, you have to pay for it yourself. Your instructor will help you with the procedure.

Lunch

Lunch is served in the restaurant. You can choose among several dishes; menus are posted at the restaurant entrance and in the coffee room.
If you are a customer course participant, your instructor will give you a cash card. For participants other than customers, cash cards are for sale in the cafeteria. Your instructor will help you with the procedure.

Coffee room

You are invited to use the coffee room and the vending machine during all breaks in classes.

Smoking

The entire Tetra Pak plant, outdoors as well as indoors, is a no smoking area. Smoking is allowed though in the smoking-room adjoining the machine hall.

Telephones

If you need to call long-distance within Sweden or abroad, please use the phone in the telephone room. There are also telephones in the coffee room and in the spare parts store, adjoining the machine hall. These phones are for local or internal calls only. When using the phones, please be brief, as there may be others who wish to make calls. Furthermore, there is a pay-phone outside the assembly-hall.

Computers

There are three computers for the use of course participants. Two computers in the machine hall, on which ORBIS (the Tetra Pak Intranet) is available, and one in the coffee room, on which Internet and the World Wide Web is available.

ID card

On your first day you will recieve an ID card. This card must be returned at the Tetra Pak Main reception at the end of the course. Anyone not handing the card back will be charged SEK 400.

Safety regulations

At the start of the course, your instructor will go through the Safety Regulations (TM-00001). These regulations must be strictly observed. In case you are uncertain about anything in the regulations, you must clarify it with your instructor.

Course evaluation

You are requested to write down your comments on the course on the Course Evaluation form. At the end of the course your instructor will collect all the forms.

Working clothes

It is necessary to wear safety shoes in the Technical Training Centre, while working at the machines. If you didn't bring your own, safety shoes are for sale in the Tetra Shop. Your instructor will take you there. For your use during the course, you may borrow a set of coveralls.

Each participant is given a locker in the changing-room. The instructor will hand you the locker key. You may then select a set of coveralls from the coveralls cabinet in the changing-room. Your instructor will help you if needed.

You may exchange your coveralls for clean ones every Monday morning. Ask your instructor if you need to change at any other time. Used and soiled coveralls are to be placed in the laundry basket in the changing-room.

At the end of the course you have to empty and lock your locker and return the key to the instructor. If you wish to retain your locker for a subsequent training course, tell your instructor.

Valuables

You are responsible for your own valuables.

Money exchange

To change currency or cash traveller's cheques, please go to the cashier's office, which is open 09.00 - 16.00.

Hotels

In the coffee room, there is a list of the various hotels, with addresses, phone numbers, etc. If you want to change hotel during the course period, please contact the course co-ordinator at Technical Training Centre.

Transport

Certain hotels provide free of charge transport to and from Tetra Pak. Ask the hotel receptionist about this. If you wish to use this service, you must tell the receptionist the day before.

Travel arrangements

Go to the Resespecialisterna travel agency for reservations, reservation changes, or confirmation of reservations. The travel agency is located at the plant and open 07.30 - 17.30 (fridays - 17.00).

Visa

Course participants from certain countries require visas in case they wish to visit another scandinavian country, for example Denmark. The Resespecialisterna travel agency deals with all visa applications and related matters. A Letter of Guarantee, which is required to apply for a visa, can be obtained from the course co-ordinator at Technical Training Centre.

Medical care

For medical care, unless it is an emergency situation, go to Citykliniken, located in the centre of Lund. Information concerning this clinic is posted on the notice board in the coffee room.

Leisure time

In the coffee room you will find information about the city of Lund and the surrounding region as well as on available facilities and activities.

Sport Centre Bookings for the Tetra Pak Sport Centre are free of charge and can be made at the Main Guard, located next to the Main Reception. If you visit the Sport Centre, you must enter and leave via the Main Guard.

Gifts and souvenirs Gifts, souvenirs, articles of clothing, etc. are on sale in the Tetra Shop, which is open 09.00 - 15.00.

Tetra Pak

Part of the plant at
Ruben Rausings gata
Lund

1. Main Reception
2. Main Guard
3. Technical Training Centre
4. Restaurant
5. Cashier´s office
6. Resespecialisterna Travel agency
7. Sport Centre
8. Tetra Shop

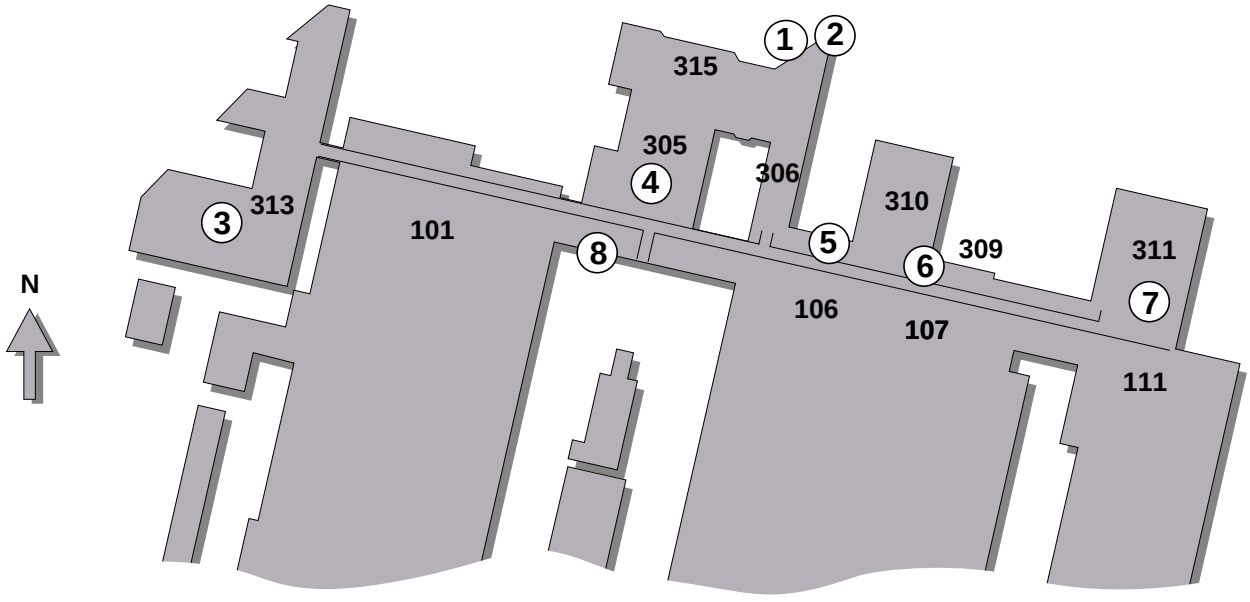

Course Content

TCA/65, Tetra Pak / Customer Staff

Course Length

- 3 weeks

Target Group

- Tetra Pak or Customer technicians

Previous Knowledge

- To be able to operate a TCA/65 with help of an Operation Manual (OM). Good mechanical skills and basic electrical knowledge.

Course Objectives

- To achieve an understanding of how the machines different components work, individually and together.
- To be able carry out servicing and trouble shooting

Course Content / Subjects

- Function of the sterile system during start-up and operation.
- Basic setting of the jaw setting.
- Setting and synchronisation of the cutting unit.
- Setting and trouble shooting on the design control system.
- Setting and trouble shooting on the filling system.
- Setting and trouble shooting on the IH sealing system.
- Electrical system components.
- Electrical safety.
- Mechanical and electrical trouble shooting.

2

TCA/65 Introduction

Tetra Classic Packaging Machine TCA/65

Capacity

Packages per hour	9000

Electric power

Phase:	3N~
Frequency, Hz	50/60
Voltage, V:	400/230
Other voltages require an adaption transformer.	
Effect, kW:	9.8

Compressed air

Supply pressure, kPa (bar) [psi]:	600-700 (6-7) [87-101.5]
Consumption, Nl/min (N cu ft/min):	900 (31.6)
Max supply pressure, kPa (bar) [psi]:	900 (9) [130.5]

Product

Supply pressure, kPa (bar) [psi]:	60-300 (0.6-3) [8.7-43.5]
Pipe connection ∅, mm:	38

Steam

Supply pressure, kPa (bar) [psi]:	270±30 (2.7±0.3) [39.1±4.3]
Temperature, °C (°F):	130±4 (266±39.2)

Noise level

During production dB A:	max 76

Installation of the machine according to Installation Manual.

Packaging material

Volume cm^3 (ml)	Approximate no. of packages per reel	Approximate weight of reel, kg	Material web width, mm
65	9000	26	129

Business Unit Tetra Brik
Tetra Classic Systems

Main Groups of the Machine

1 Cassette
2 Superstructure
3 Side frame
4 Machine body
5 Cutting device
6 Elevator
13 Strip applicator
20 Electrical equipment

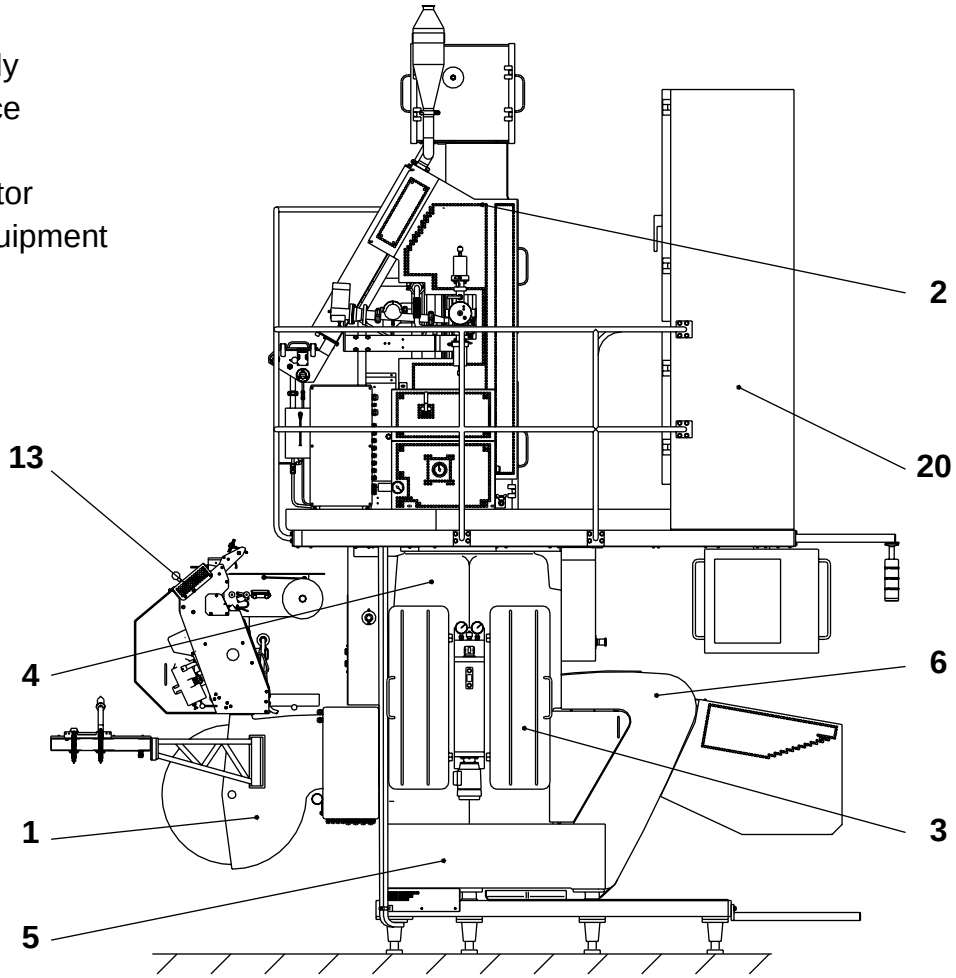

MM2.2Introd.en

Equipment orientation

Numbering of machine sides

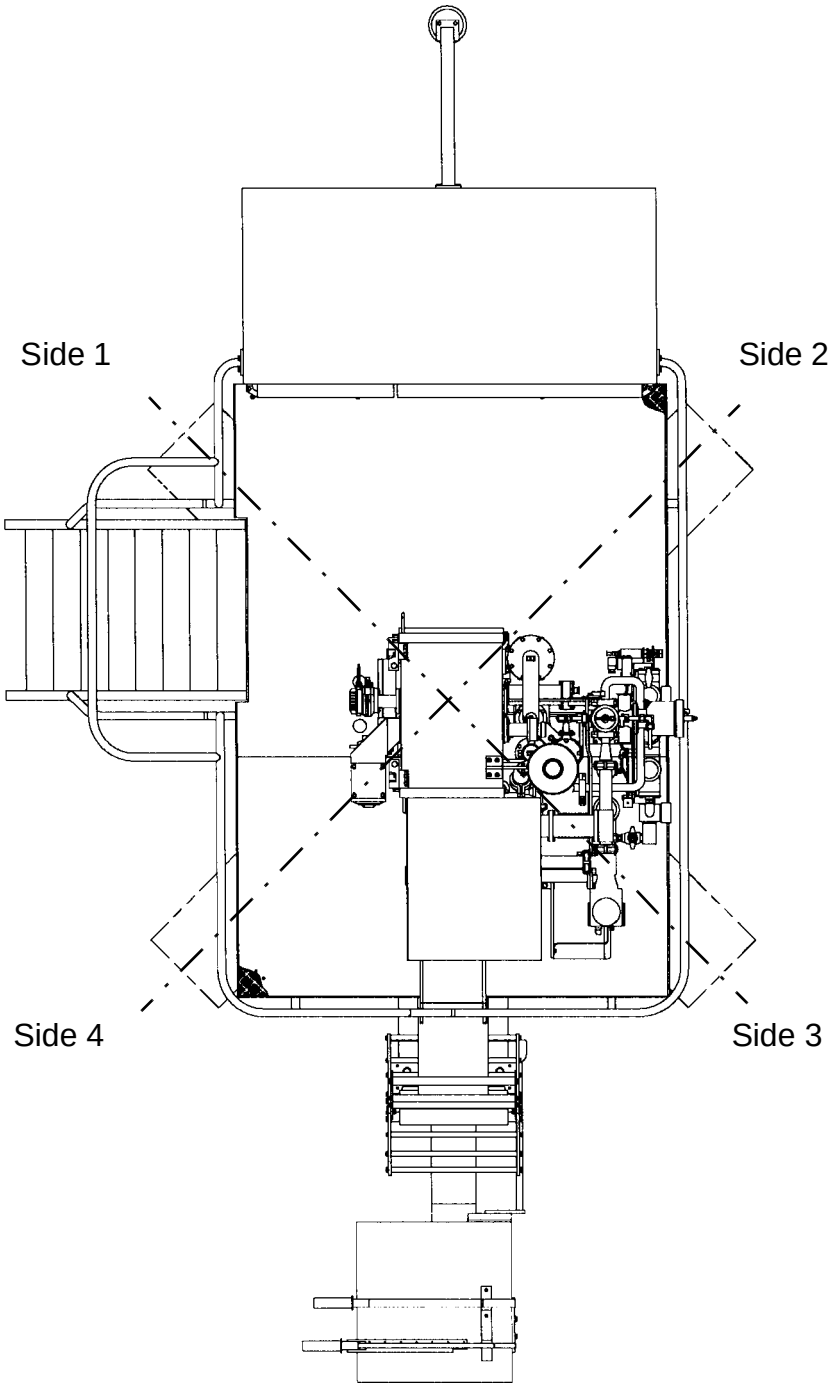

MM2.2Introd.en

Numbering of jaws and packages

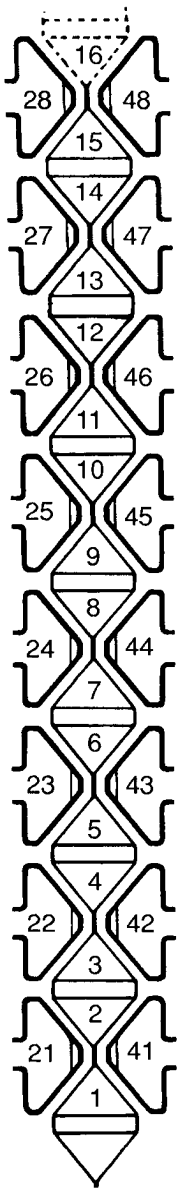

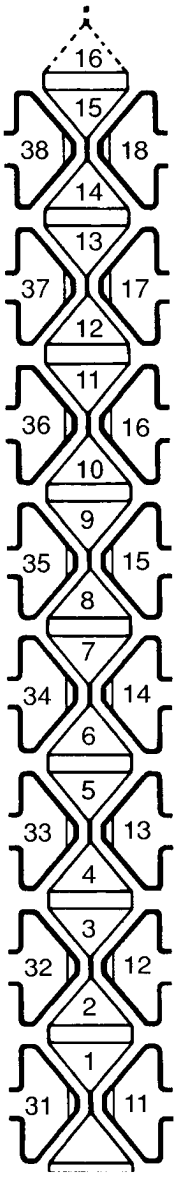

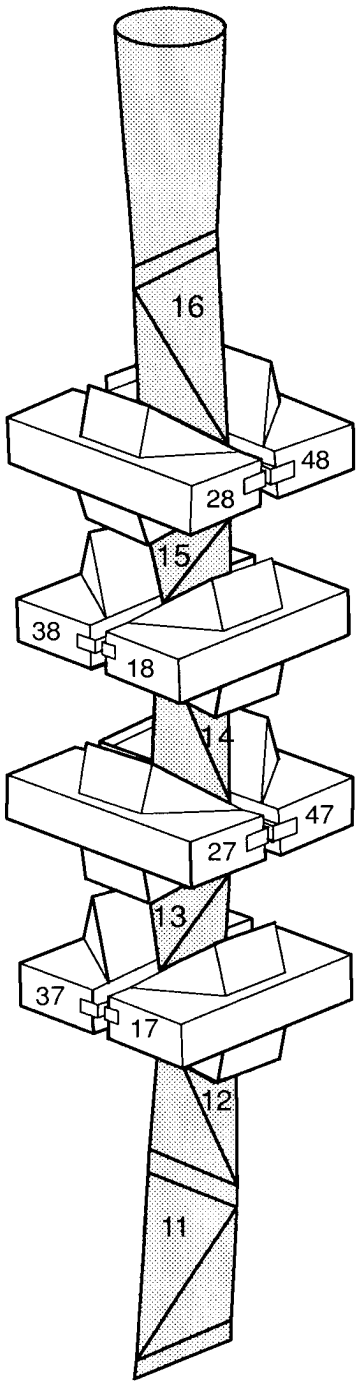

Side 2 Heating jaws 21–28	Side 4 Pressure jaws 41–48	Side 3 Pressure jaws 31–38	Side 1 Heating jaws 11–18

3

Machine Ladder

Machine Ladder Position

Flashing light	Action	P	Fix light
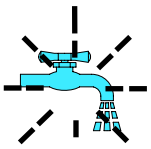	Filling on Packaging Material in design Production	6	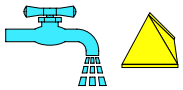
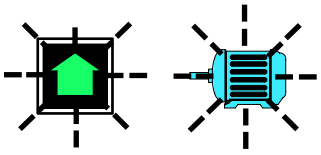	Step up for 10 s Mootor start	5	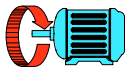
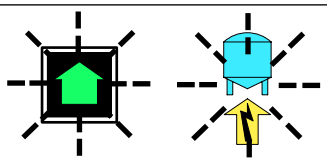	Signal to sterilizer Signal from sterilizer	4	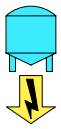
	Drying T05 = 30 min	3	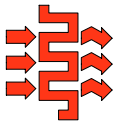
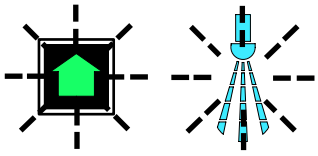	Step up Spraytank high level + T02 = 2 s Spraying C05 counts 110 1Hz flash	3	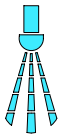
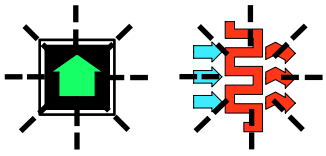	Step up Preheating II T11 = 14 min 58 s	2	
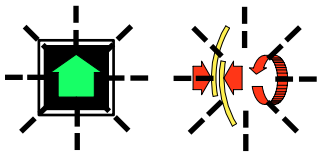	Step up Tubesealing T14 = 35 s	1	
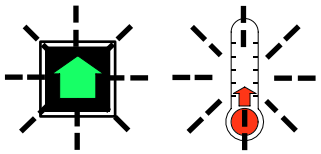	Step up SA OK (appr. 400℃) LS OK (appr. 280℃) DON D01 =1 m	1	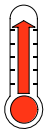
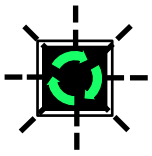	Inching pushbutton Lubrication sequence = 5 min	0	
	Air, water on	0	

4

Sterile System

Sterile system TCA/65 050V

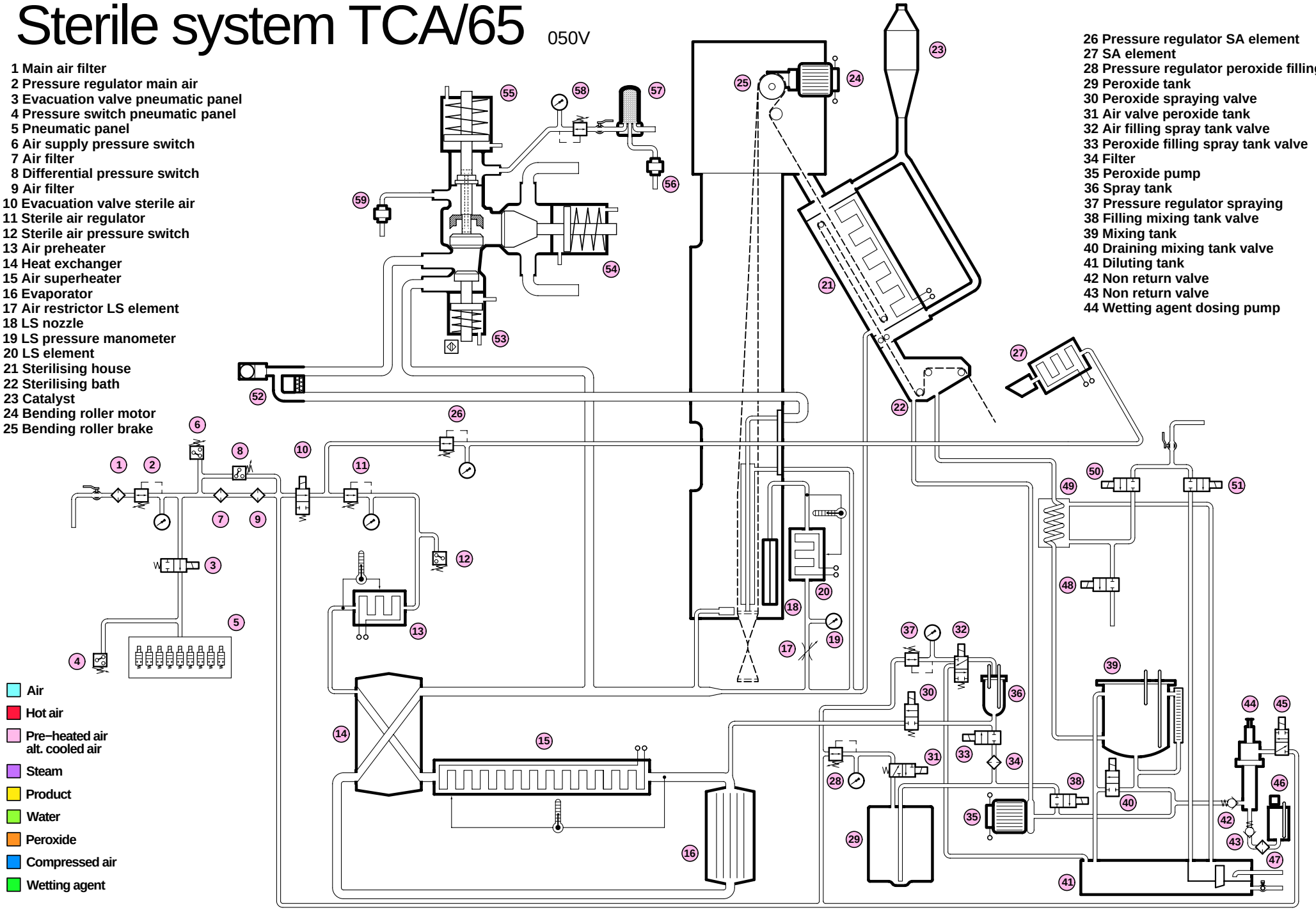

1 Main air filter
2 Pressure regulator main air
3 Evacuation valve pneumatic panel
4 Pressure switch pneumatic panel
5 Pneumatic panel
6 Air supply pressure switch
7 Air filter
8 Differential pressure switch
9 Air filter
10 Evacuation valve sterile air
11 Sterile air regulator
12 Sterile air pressure switch
13 Air preheater
14 Heat exchanger
15 Air superheater
16 Evaporator
17 Air restrictor LS element
18 LS nozzle
19 LS pressure manometer
20 LS element
21 Sterilising house
22 Sterilising bath
23 Catalyst
24 Bending roller motor
25 Bending roller brake
26 Pressure regulator SA element
27 SA element
28 Pressure regulator peroxide filling
29 Peroxide tank
30 Peroxide spraying valve
31 Air valve peroxide tank
32 Air filling spray tank valve
33 Peroxide filling spray tank valve
34 Filter
35 Peroxide pump
36 Spray tank
37 Pressure regulator spraying
38 Filling mixing tank valve
39 Mixing tank
40 Draining mixing tank valve
41 Diluting tank
42 Non return valve
43 Non return valve
44 Wetting agent dosing pump

Air
Hot air
Pre−heated air
alt. cooled air
Steam
Product
Water
Peroxide
Compressed air
Wetting agent

45 Wetting agent dosing valve
46 Wetting agent tank
47 Filter
48 Draining valve peroxide cooling
49 Cooler
50 Cooling water zoneheater
51 Water ON/OFF
52 Constant flow valve
53 B−valve
54 A−valve
55 C−valve
56 Steam trap
57 Steam filter
58 Pressure regulator steam
59 Steam trap

Technical Training Centre
Lund, Sweden

Machine type
TCA/65 050V

Issue
1/0006

OH 967:1

Sterile system TCA/65 050V

Preheating I Pos. 1

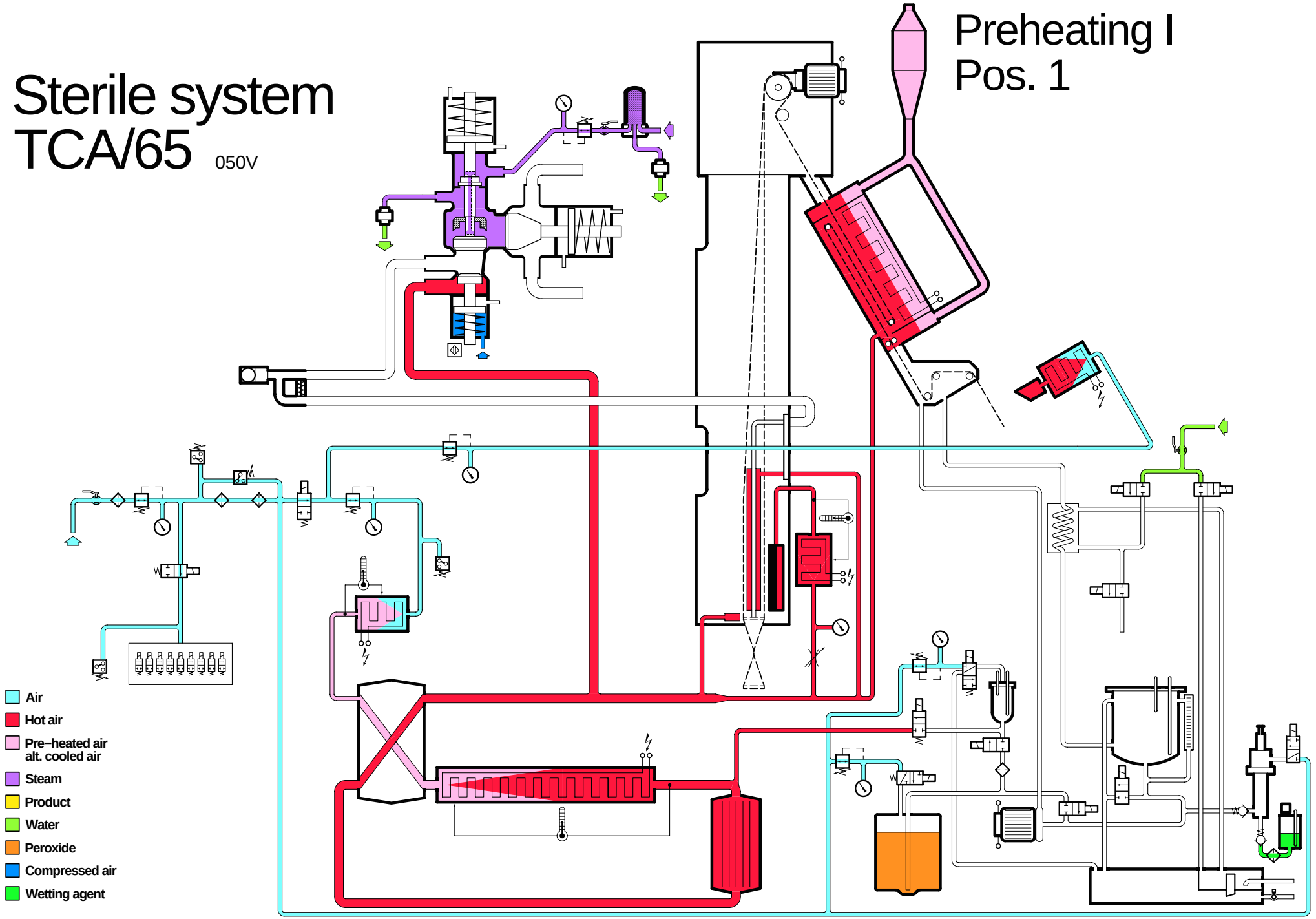

Technical Training Centre
Lund, Sweden

Machine type
TCA/65 050V

Issue
1/0006

OH 967:2

Sterile system TCA/65 050V

Tube sealing Pos. 1

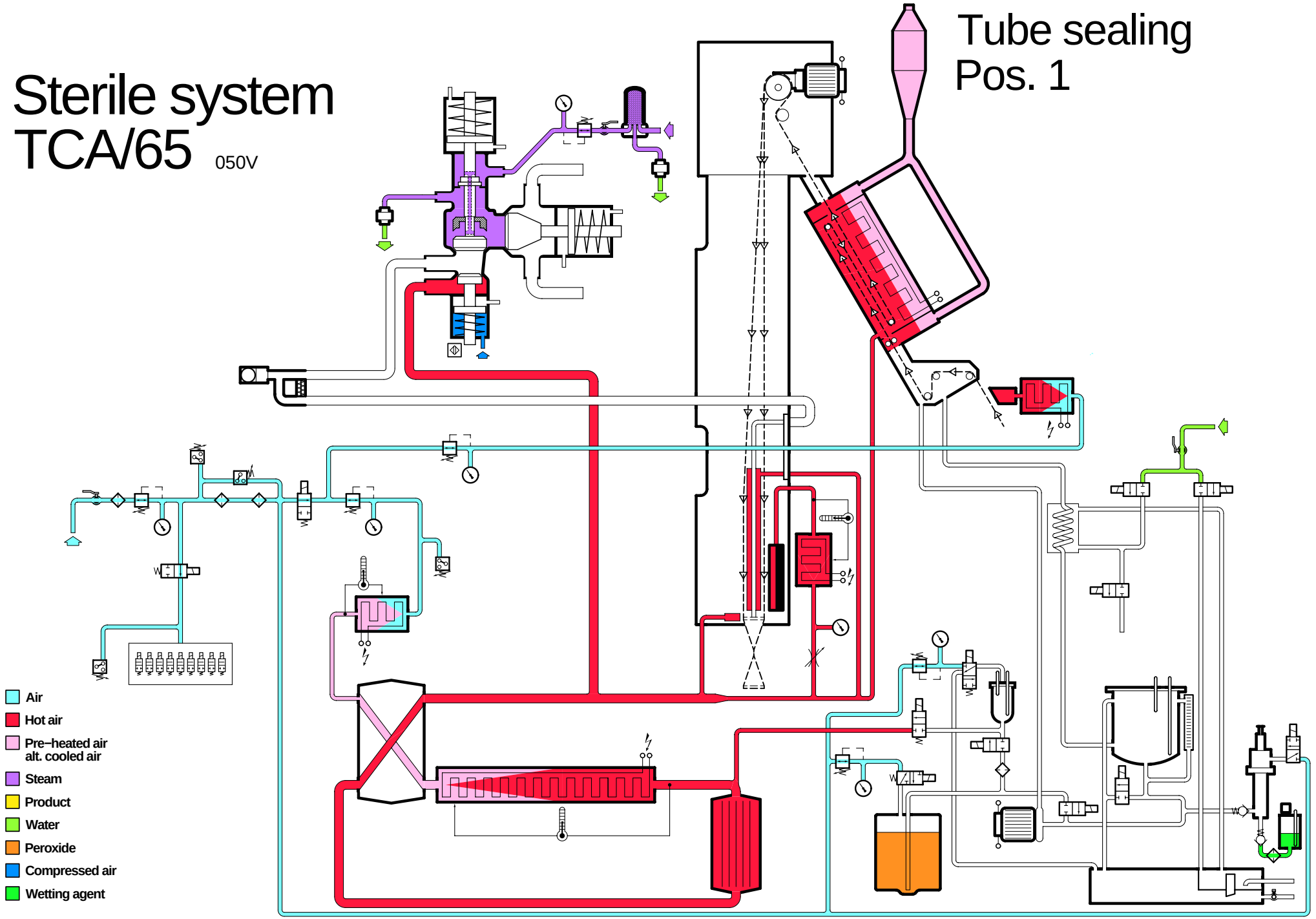

Technical Training Centre
Lund, Sweden

Machine type
TCA/65 050V

Issue
1/0006

OH 967:3

Sterile system TCA/65 050V

Preheating II 15 min (0–10 min) Pos. 2

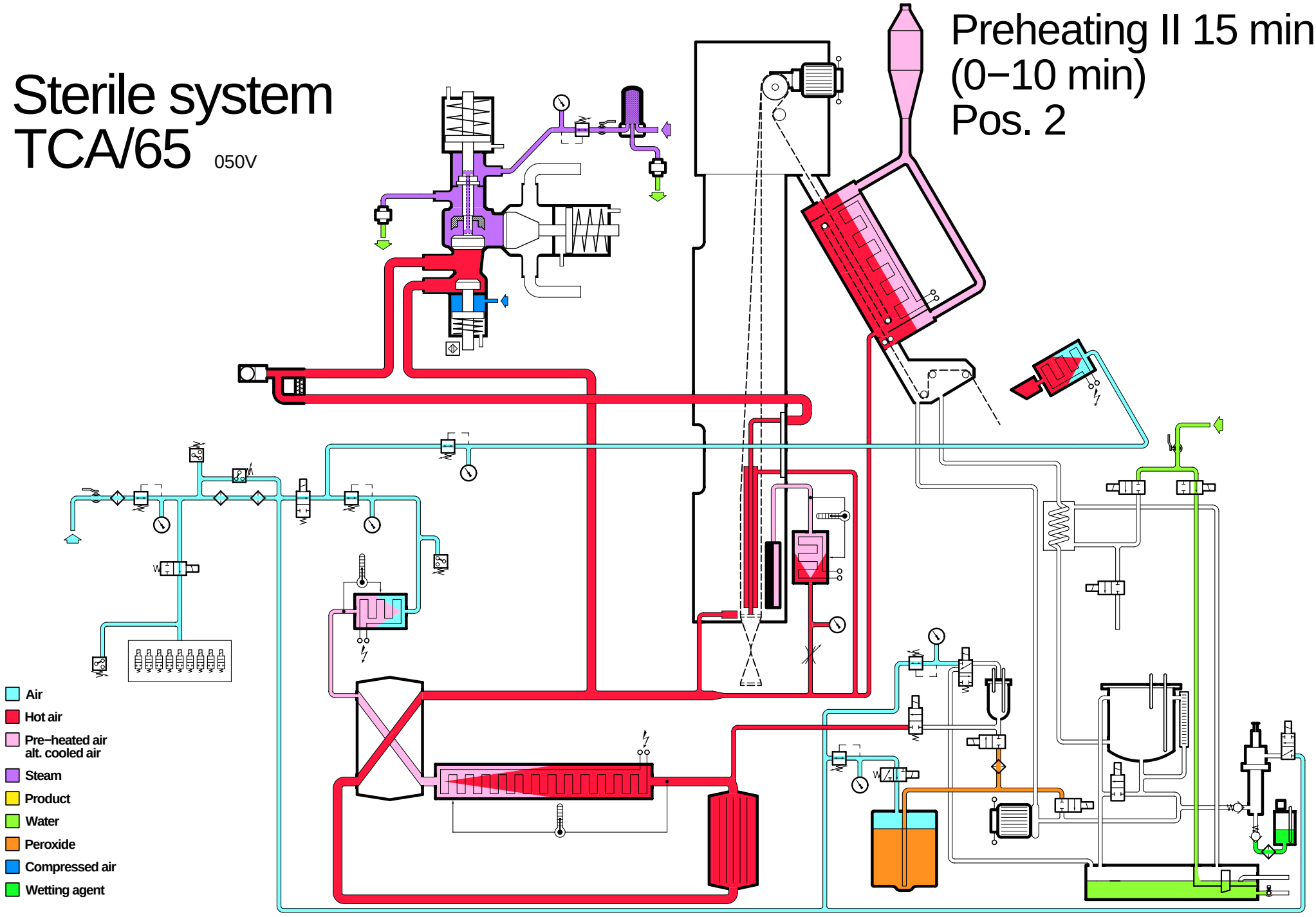

Technical Training Centre
Lund, Sweden

Machine type
TCA/65 050V

Issue
1/0006

OH 967:4

Sterile system TCA/65 050V

Preheating II 15 min (10–15 min) Pos. 2

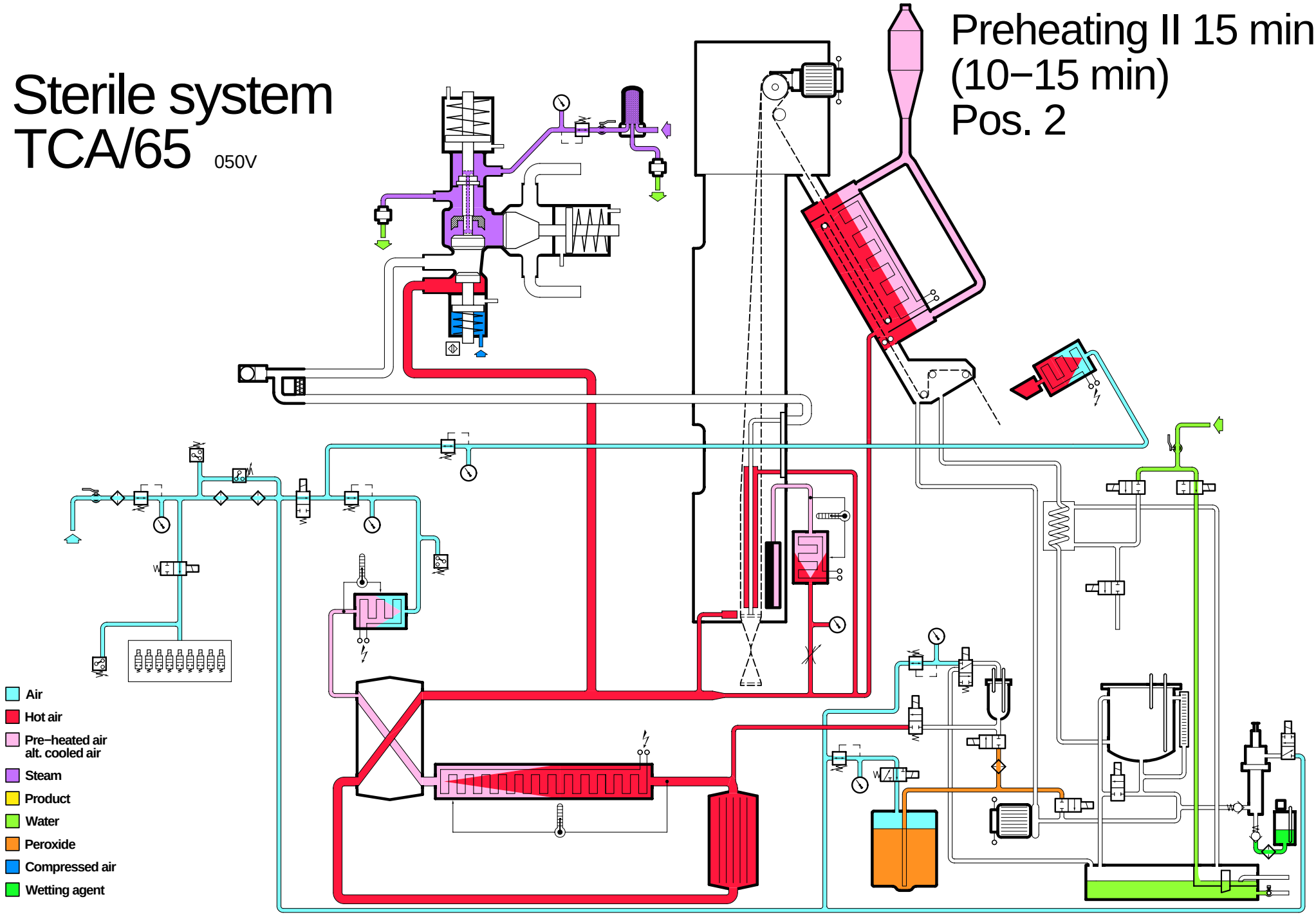

Technical Training Centre
Lund, Sweden

Machine type
TCA/65 050V

Issue
1/0006

OH 967:5

Sterile system TCA/65 050V

Filling peroxide Pos. 3

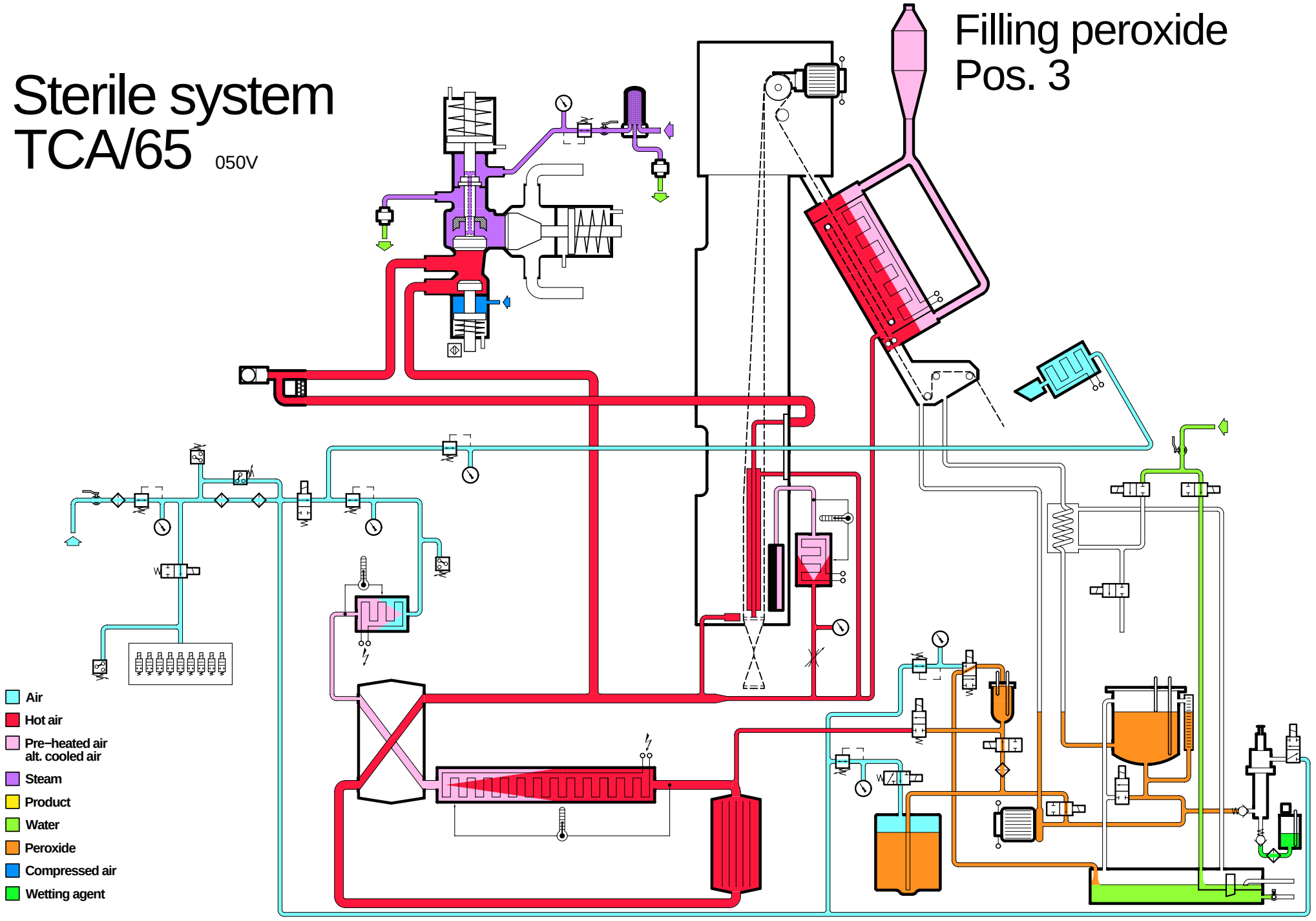

Technical Training Centre
Lund, Sweden

Machine type
TCA/65 050V

Issue
1/0006

OH 967:6

Sterile system TCA/65 050V

Spraying
Pos. 3

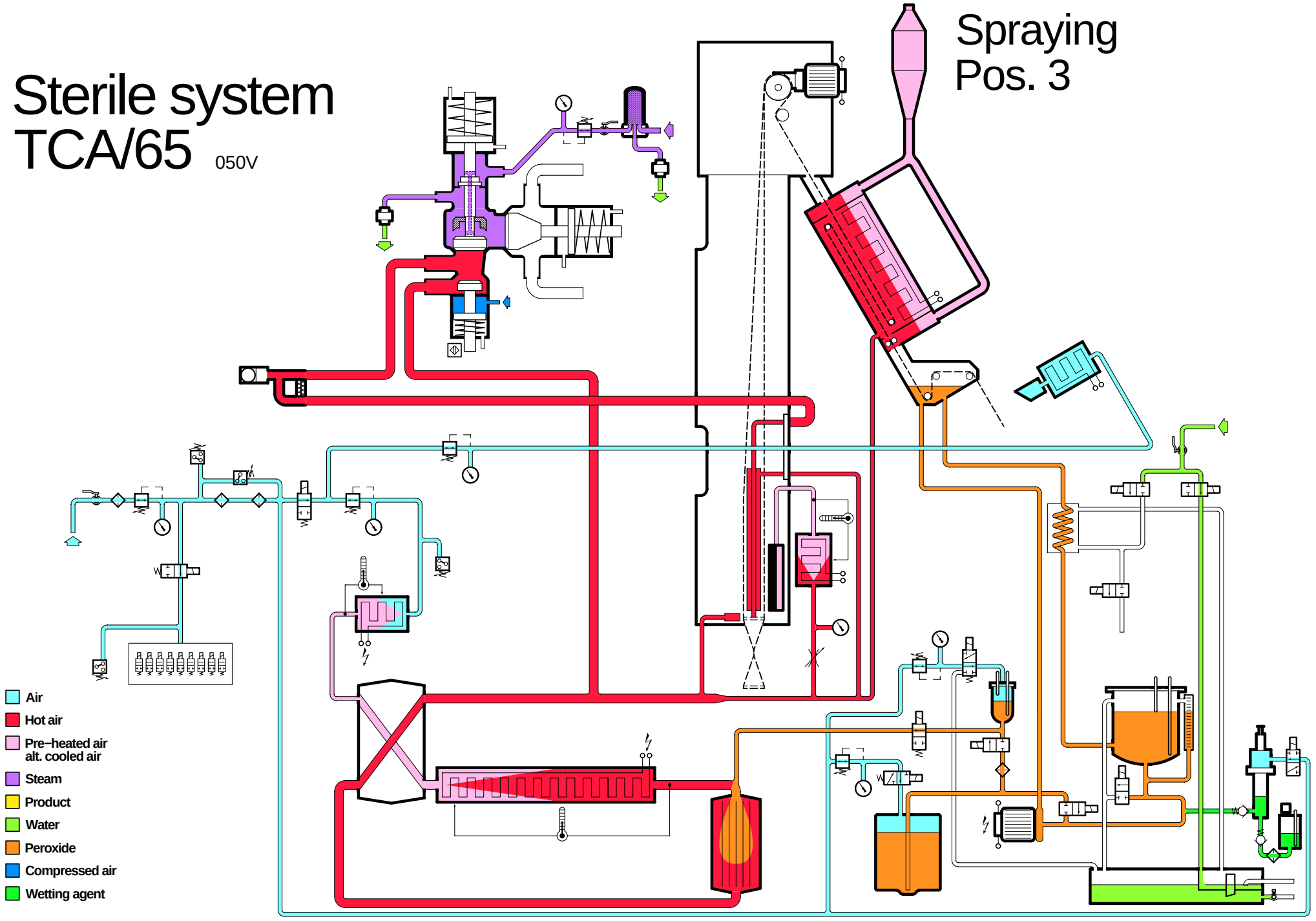

Technical Training Centre
Lund, Sweden

Machine type
TCA/65 050V

Issue
1/0006

OH 967:7

Sterile system TCA/65 050V

Drying 30 min (0–25 min) Pos. 3

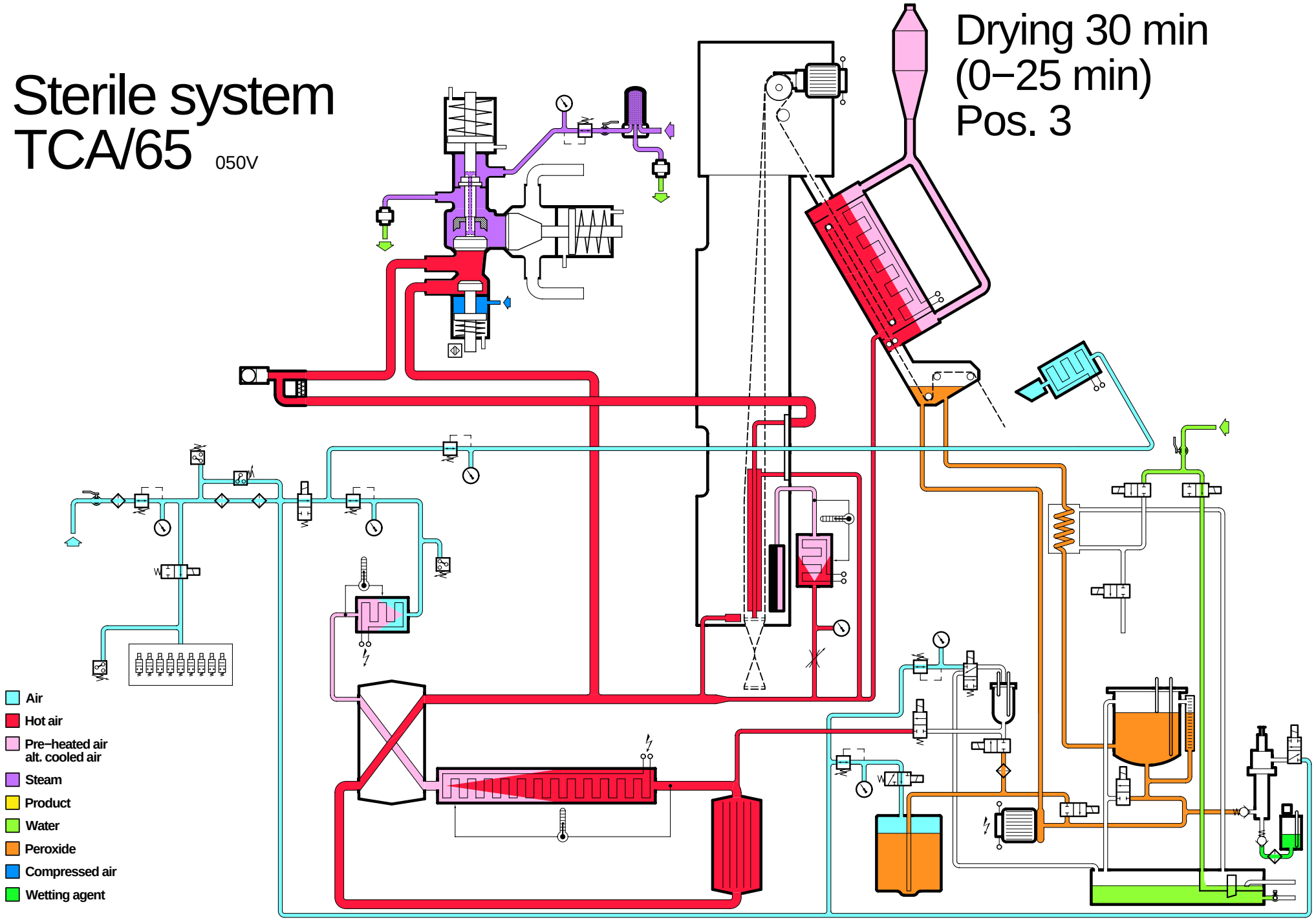

Technical Training Centre
Lund, Sweden

Machine type
TCA/65 050V

Issue
1/0006

OH 967:8

Sterile system TCA/65 050V

Drying 30 min (25–30 min) Pos. 3

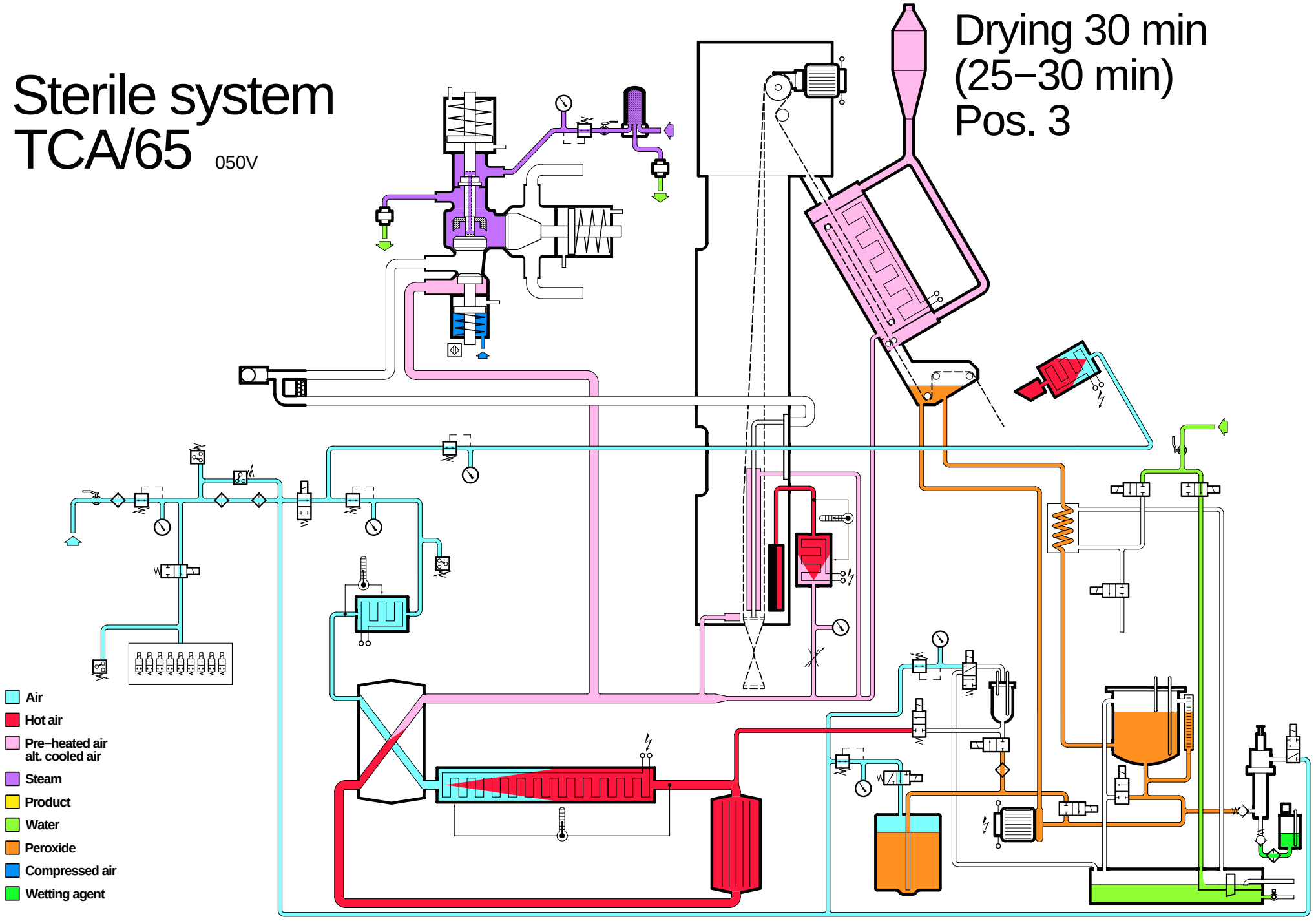

Technical Training Centre
Lund, Sweden

Machine type
TCA/65 050V

Issue
1/0006

OH 967:9

Sterile system TCA/65 050V

Ready for production
Pos. 4

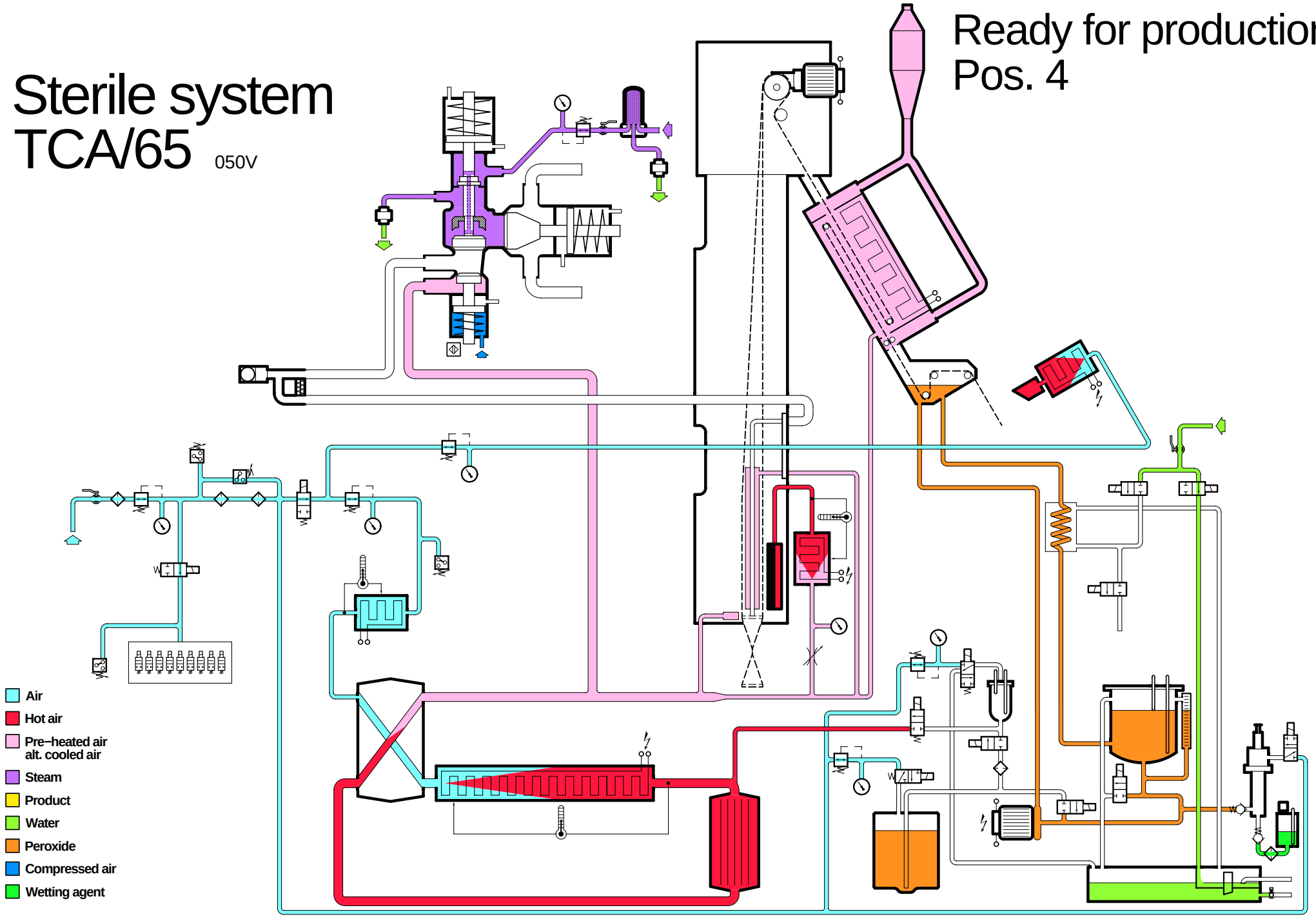

Technical Training Centre
Lund, Sweden

Machine type
TCA/65 050V

Issue
1/0006

OH 967:10

Sterile system TCA/65 050V

Start sequence Pos. 4

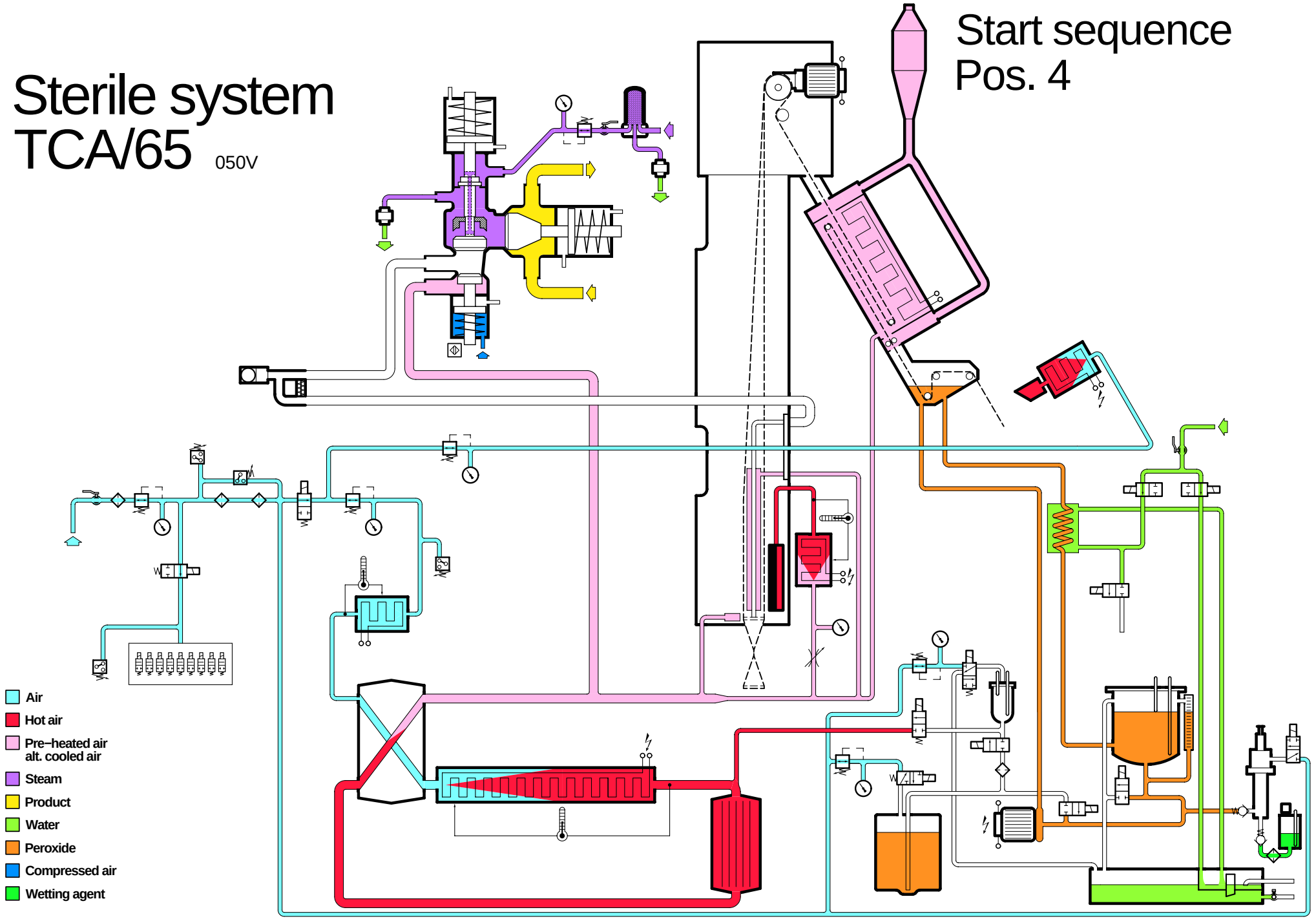

Technical Training Centre
Lund, Sweden

Machine type
TCA/65 050V

Issue
1/0006

OH 967:11

Sterile system TCA/65 050V

Motor start Pos. 5

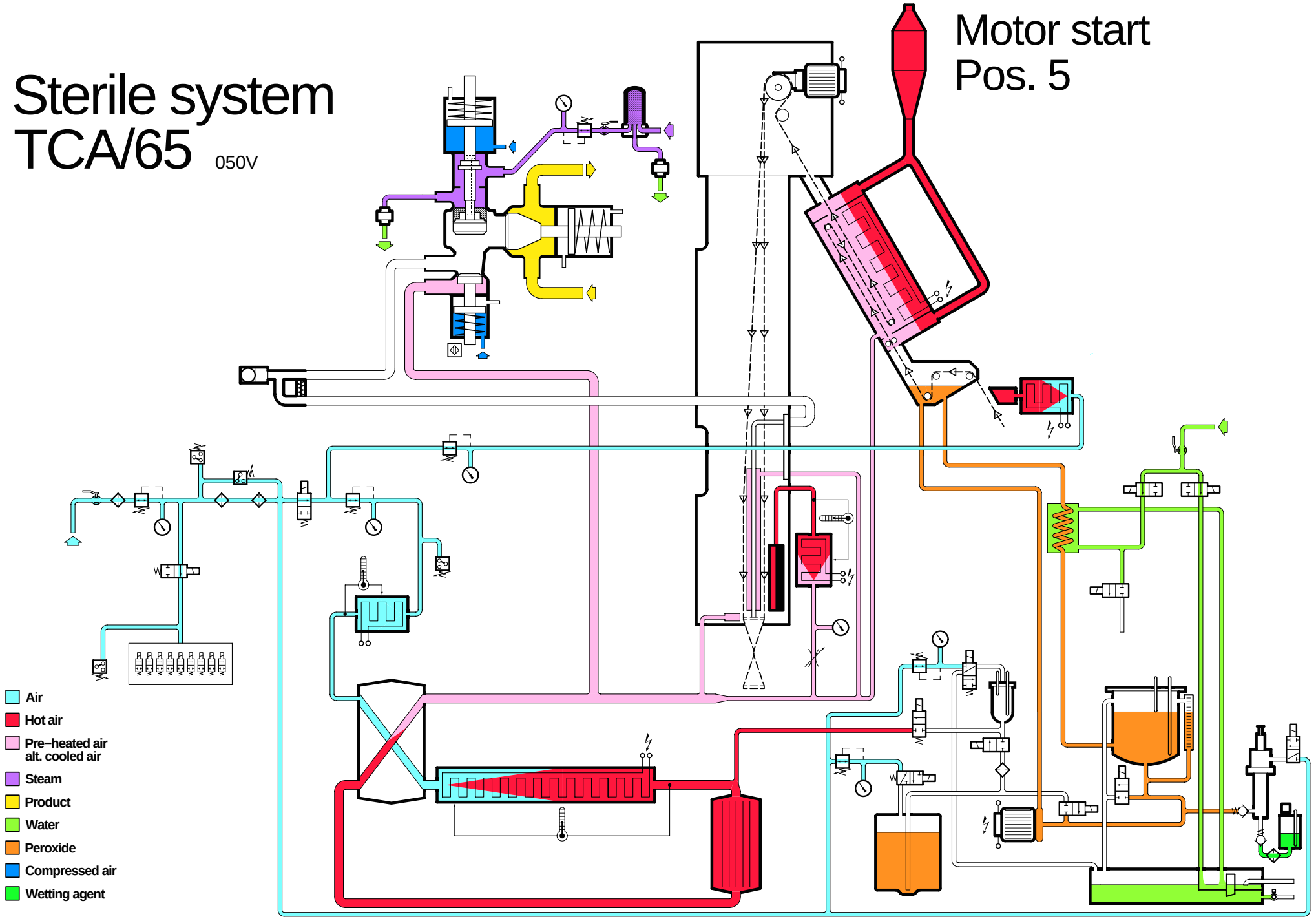

Technical Training Centre
Lund, Sweden

Machine type
TCA/65 050V

Issue
1/0006

OH 967:12

Sterile system TCA/65 050V

Production
Pos. 6

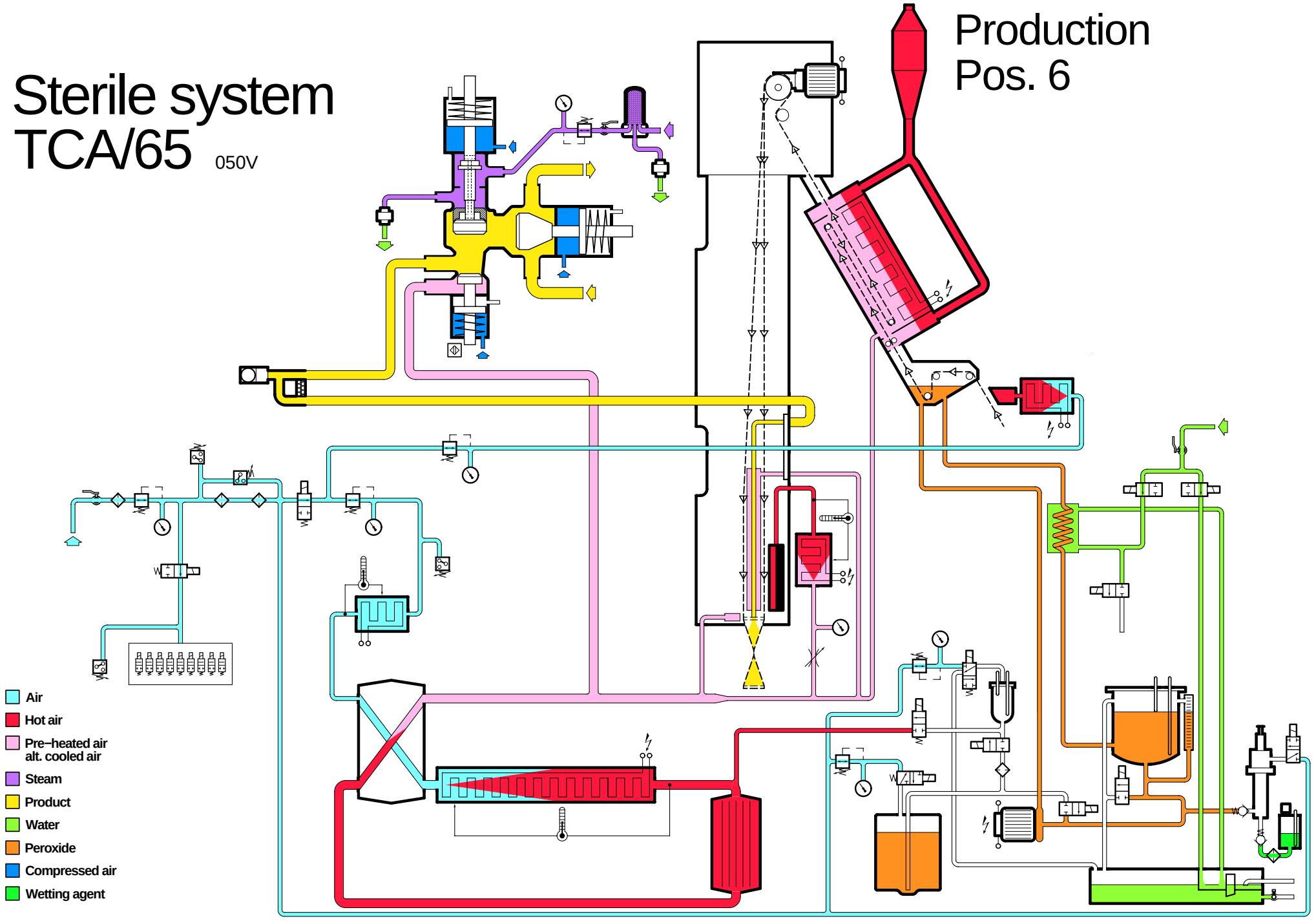

Technical Training Centre
Lund, Sweden

Machine type
TCA/65 050V

Issue
1/0006

OH 967:13

Sterile system TCA/65 050V

Short stop Pos. 6

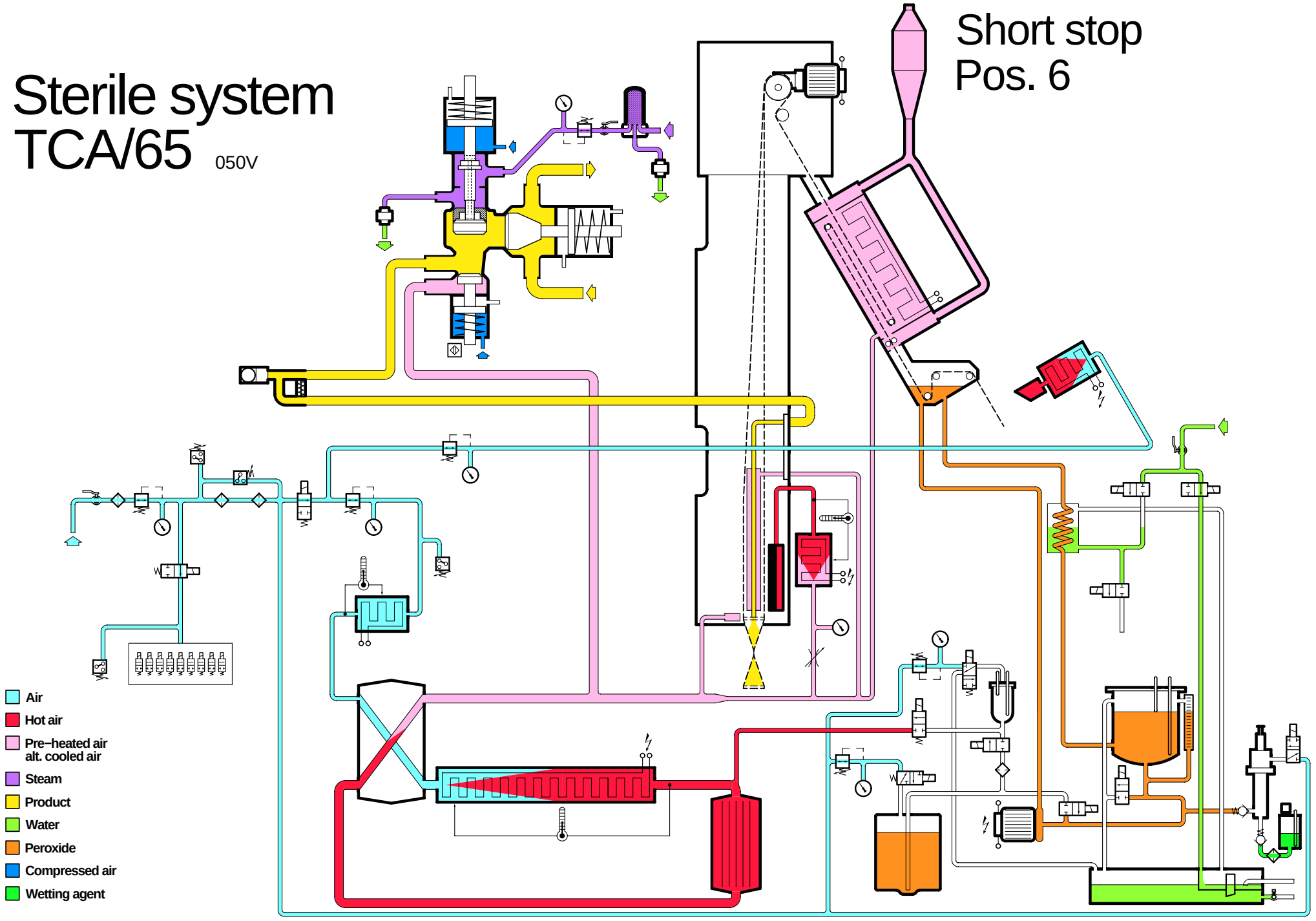

Technical Training Centre
Lund, Sweden

Machine type
TCA/65 050V

Issue
1/0006

OH 967:14

Sterile system TCA/65 050V

End of production
Pos. 7

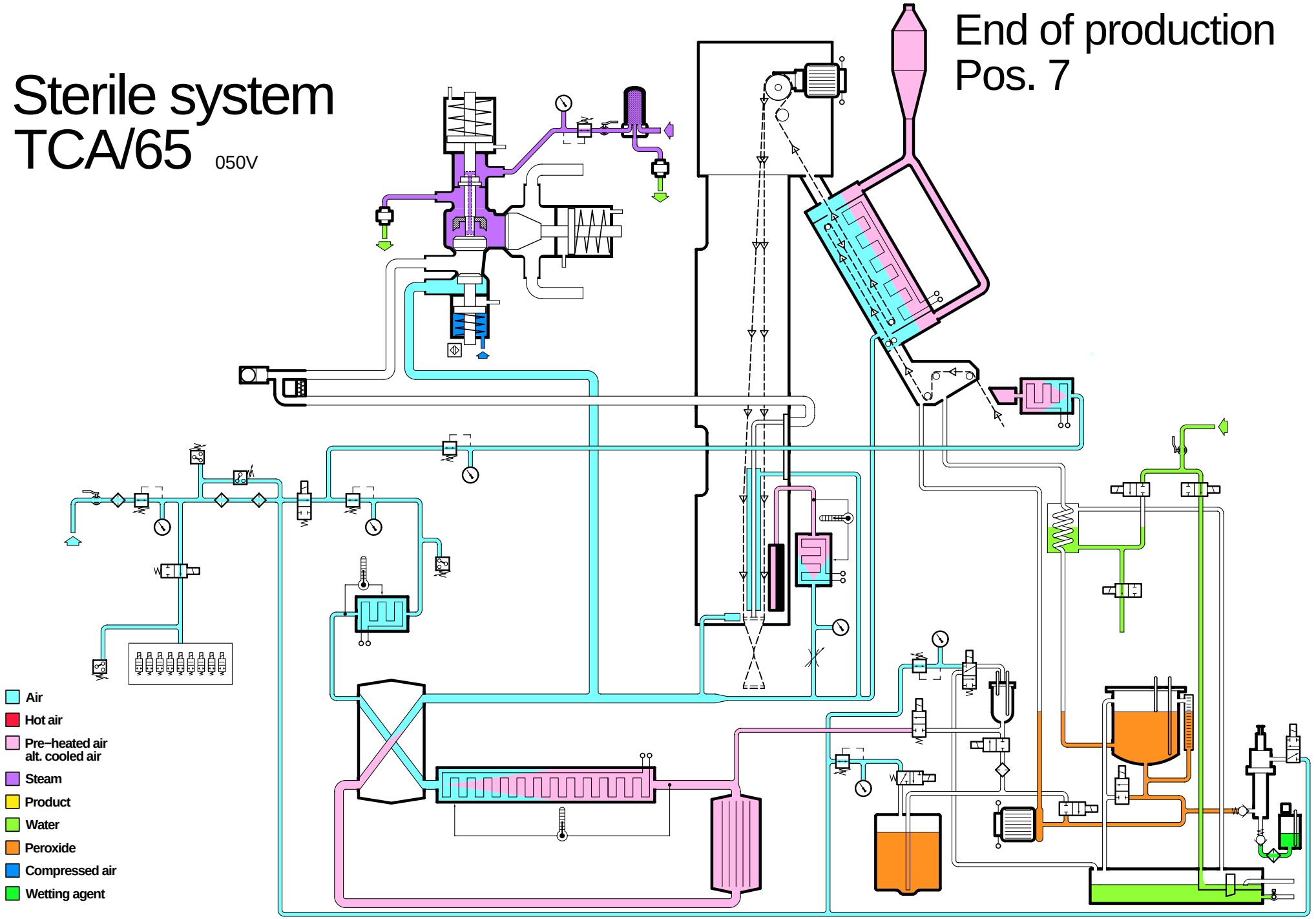

Technical Training Centre
Lund, Sweden

Machine type
TCA/65 050V

Issue
1/0006

OH 967:15

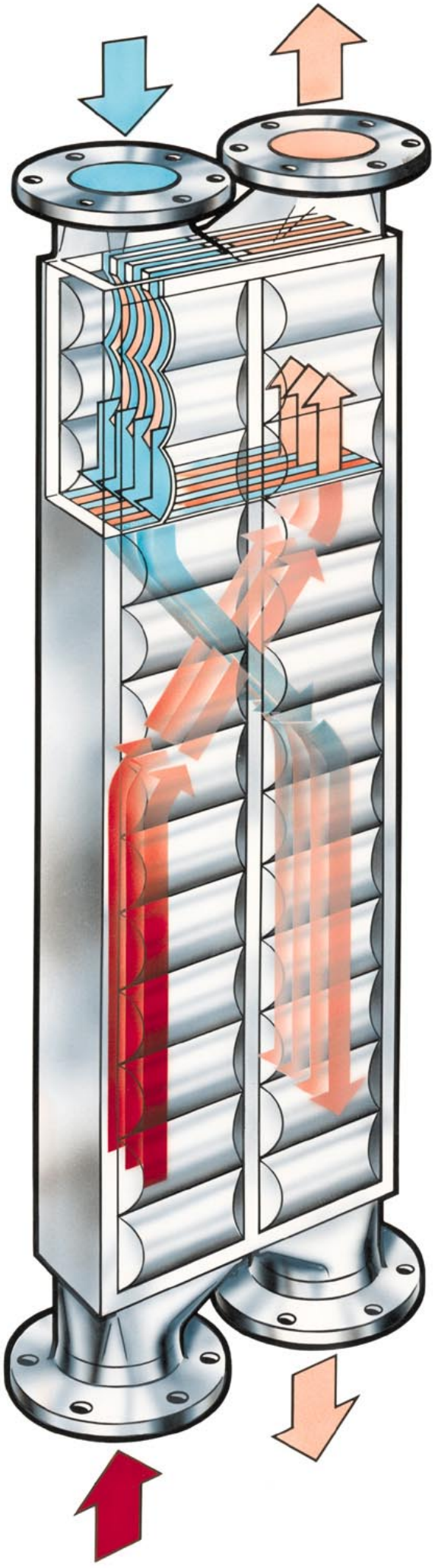

Sterile system

Principle function of heat exchanger

Air

Hot air

Pre-heated air alt. cooled air

Technical Training Centre Lund, Sweden	Machine TBA/8, TBA/9	Model	Issue 2/8902	OH 106

5

Filling System

Fill system overview

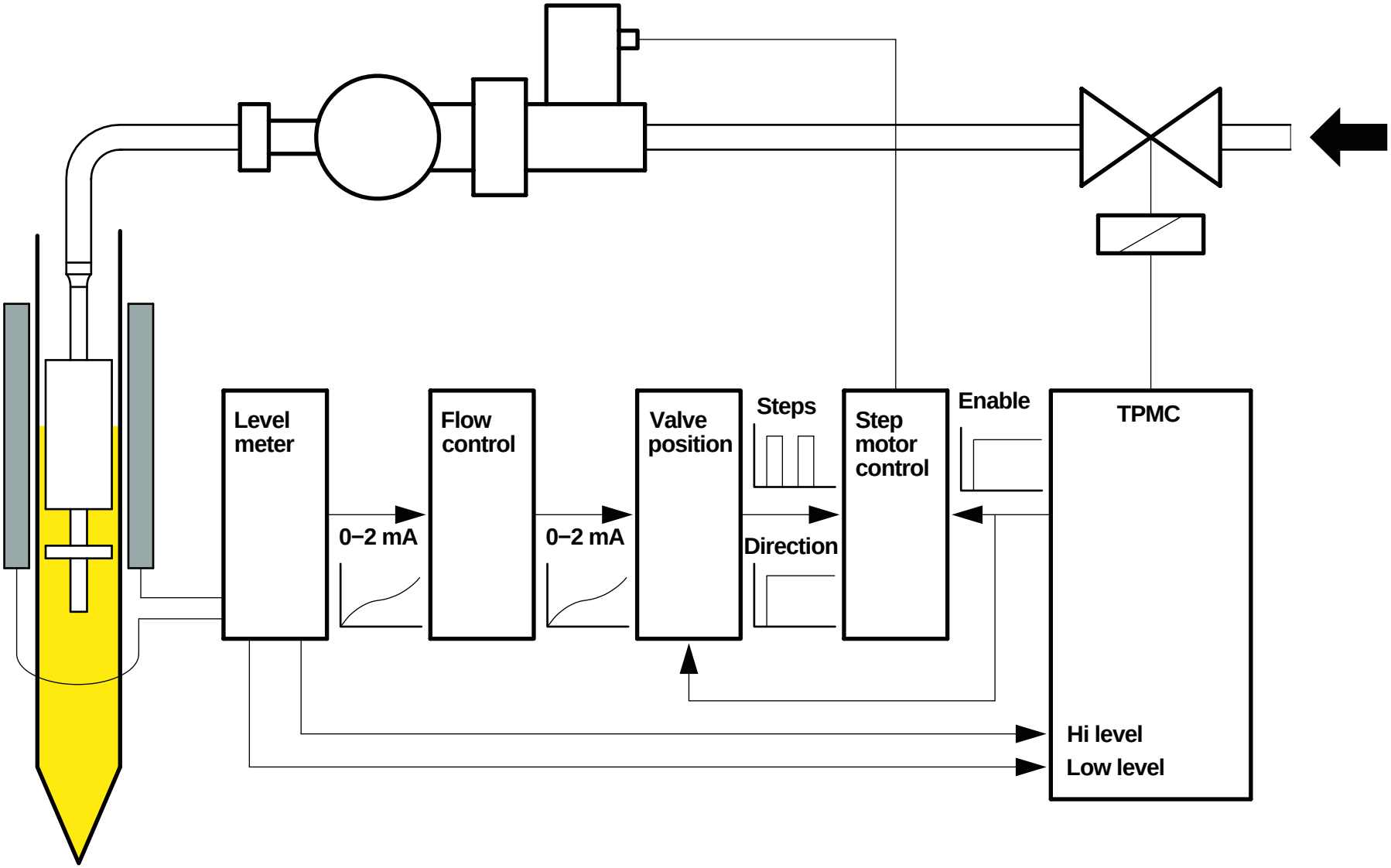

Constant-flow valve group

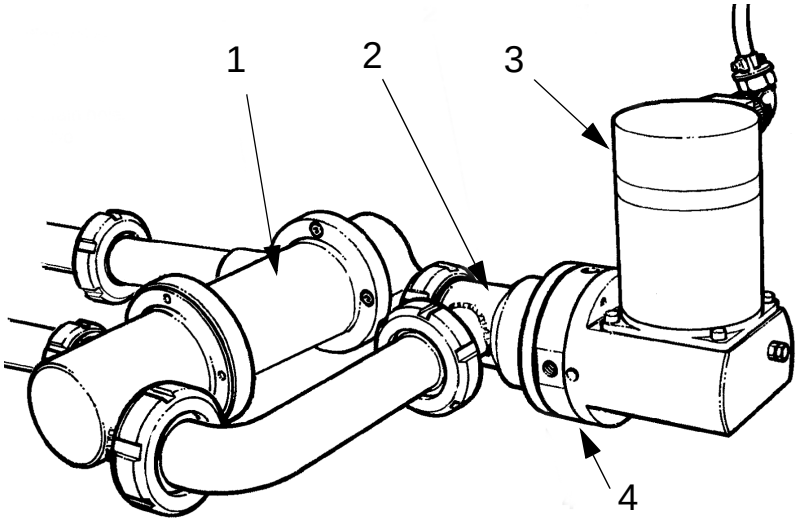

1 Regulating valve
2 Dosing valve
3 Stepping motor
4 Product drain hole,
dosing valve

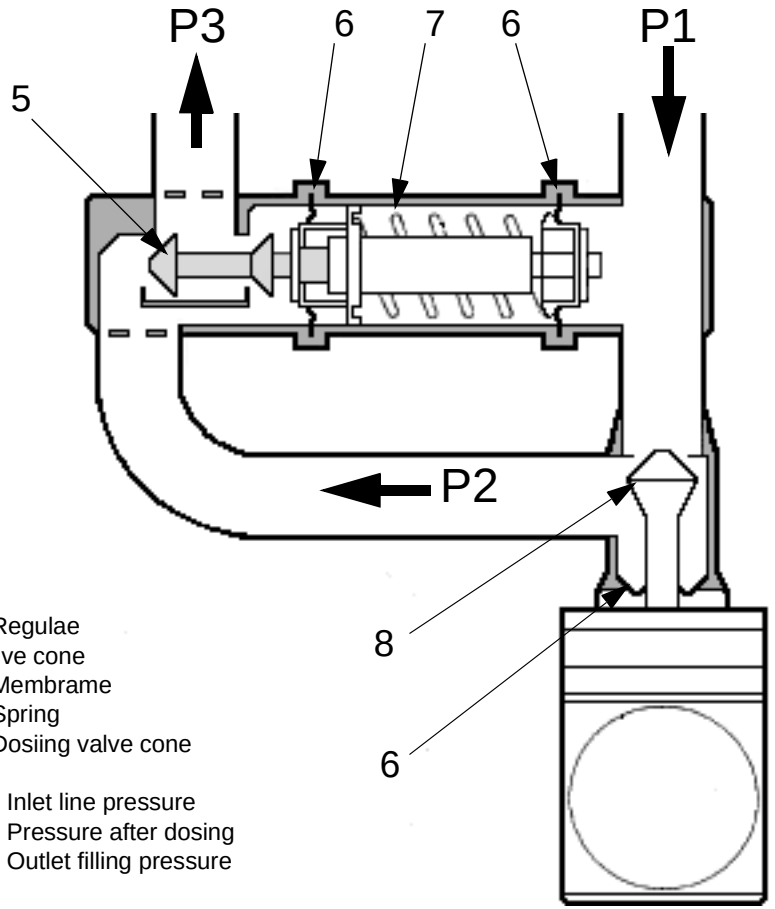

5 Regulae
valve cone
6 Membrame
7 Spring
8 Dosiing valve cone

P1 Inlet line pressure
P2 Pressure after dosing
P3 Outlet filling pressure

Level meter card A6

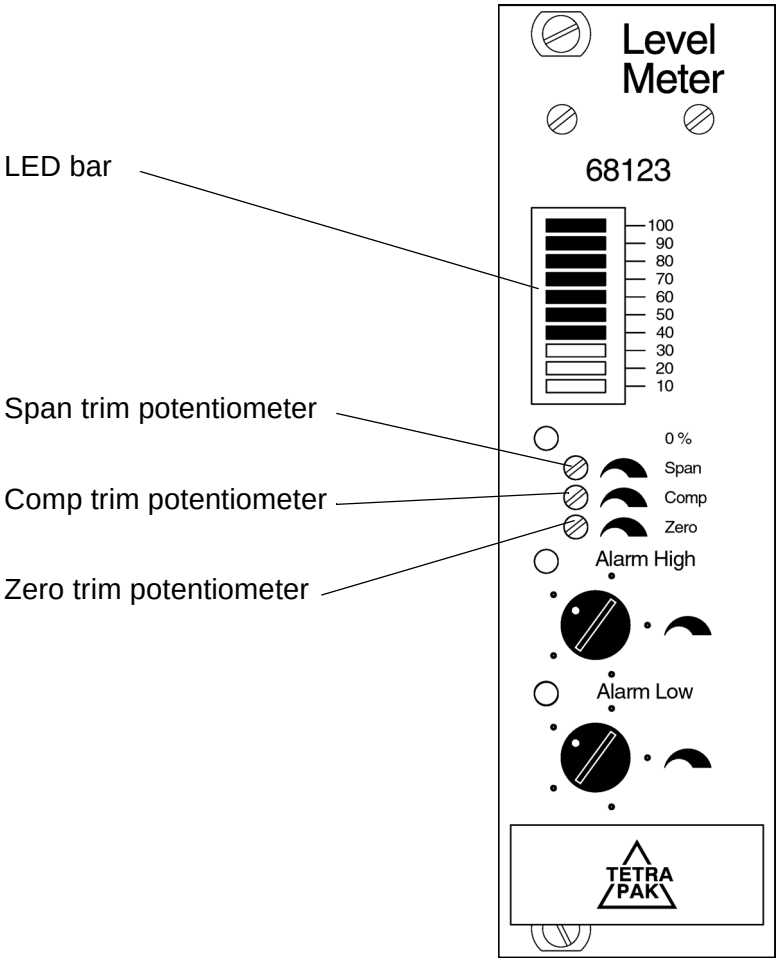

Flow controller card A7

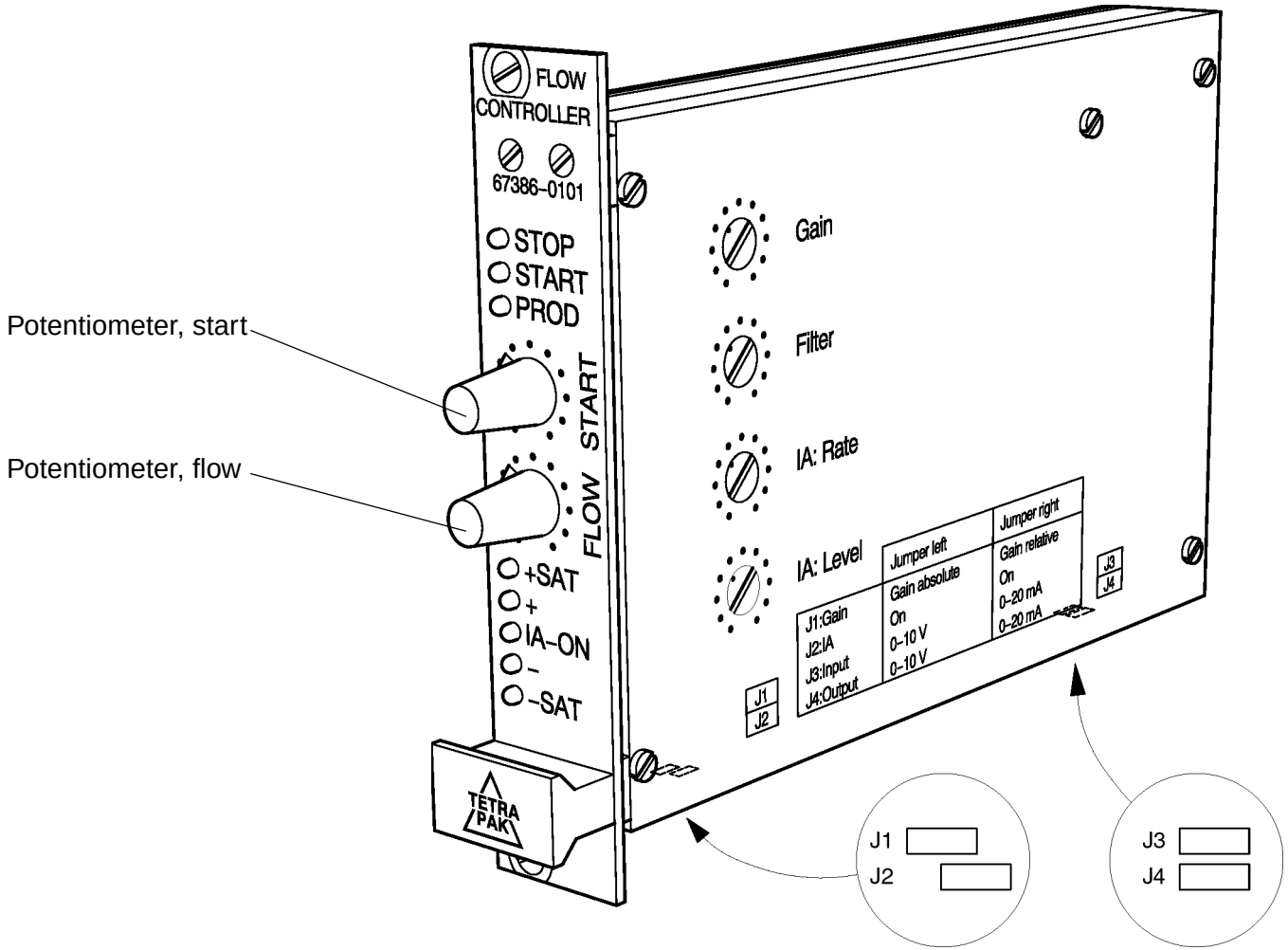

Valve positioner A8

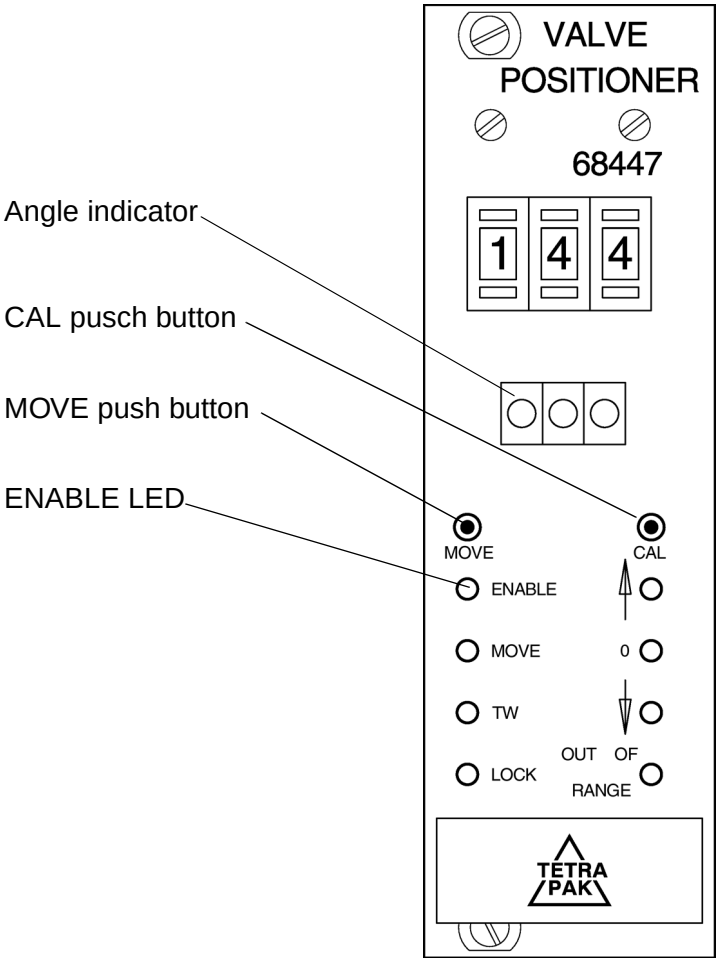

Step motor A9

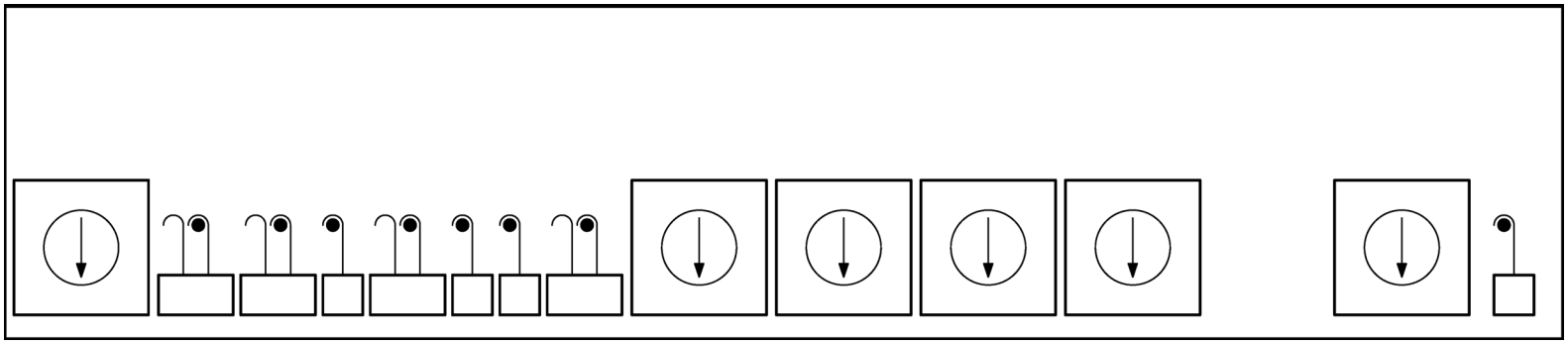

Sw 1 - 7	not in use
Sw 8	Closed (right, external clock)
Sw 9 - 12	not in use
Sw 13	0 (current setting)
Sw 14	closed (analog input signal current)

Aseptic Product Valve 440630-101/102

(The function is identical with valve 90207-40/41)

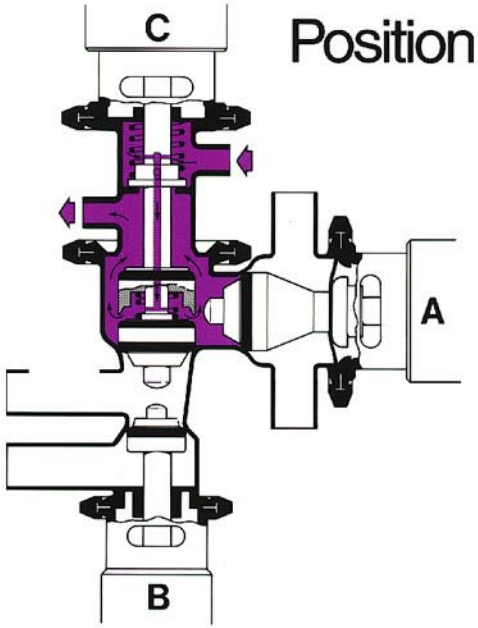

Position 1

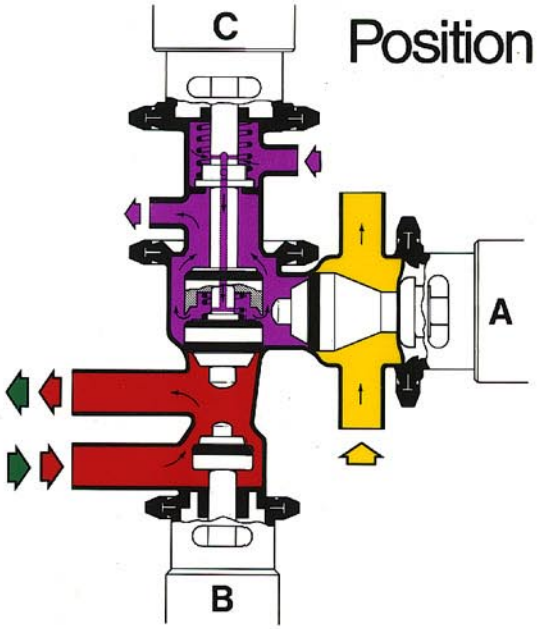

Position 2

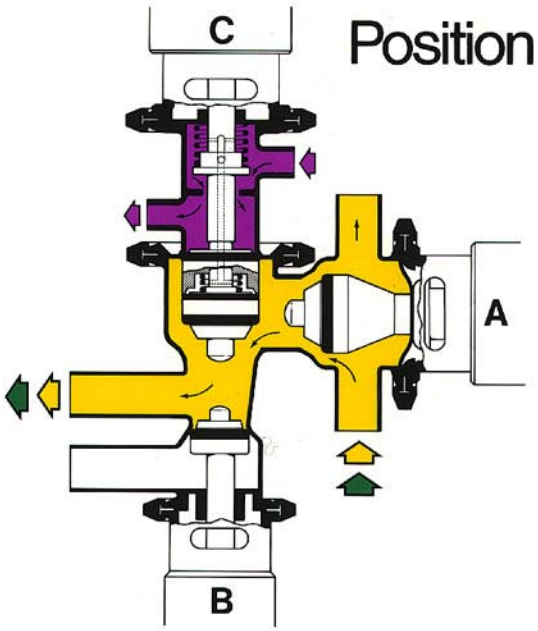

Position 3

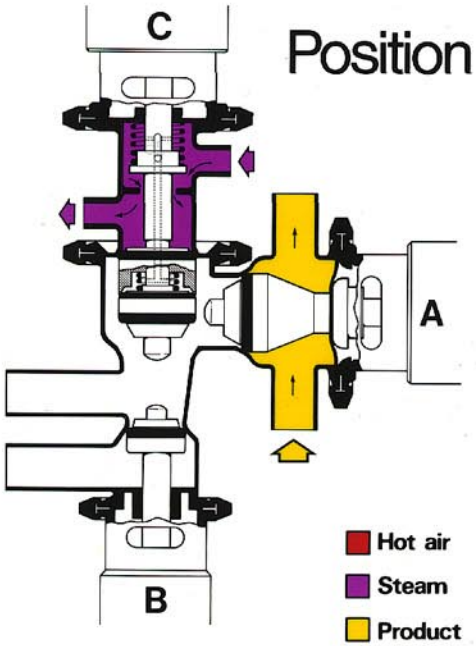

Position 4

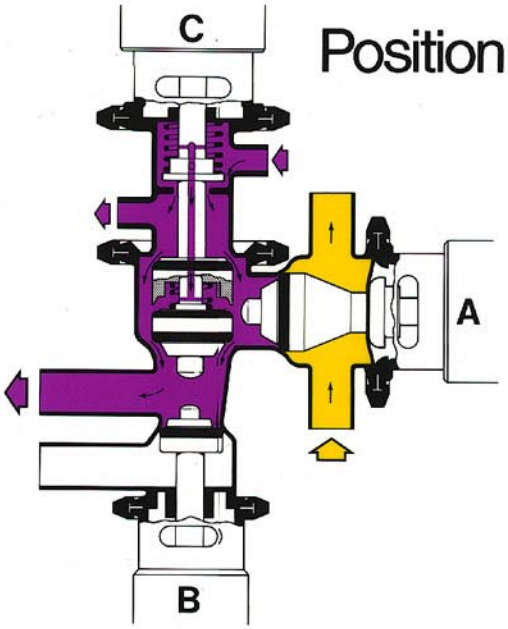

Position 5

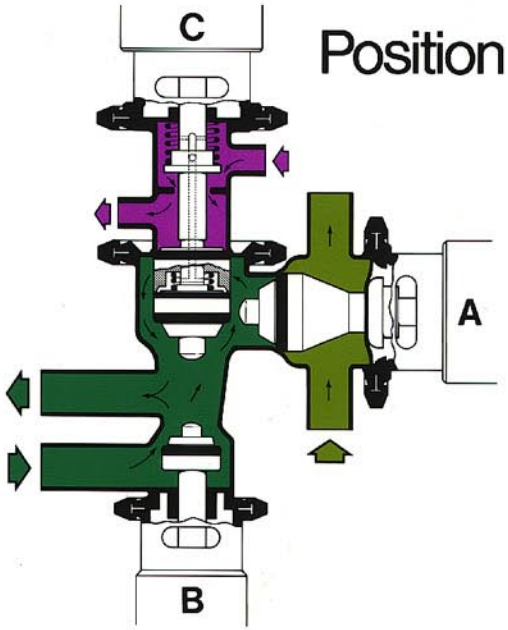

Position 6

Hot air
Steam
Product
Cleaning liquid
Cleaning liquid

TETRA PAK®
Technical Training Centre
Lund, Sweden

Machine	
Model	
Issue	1/8408
	OH 1:7

6

Peroxide System

Level relay

Peroxide spray container

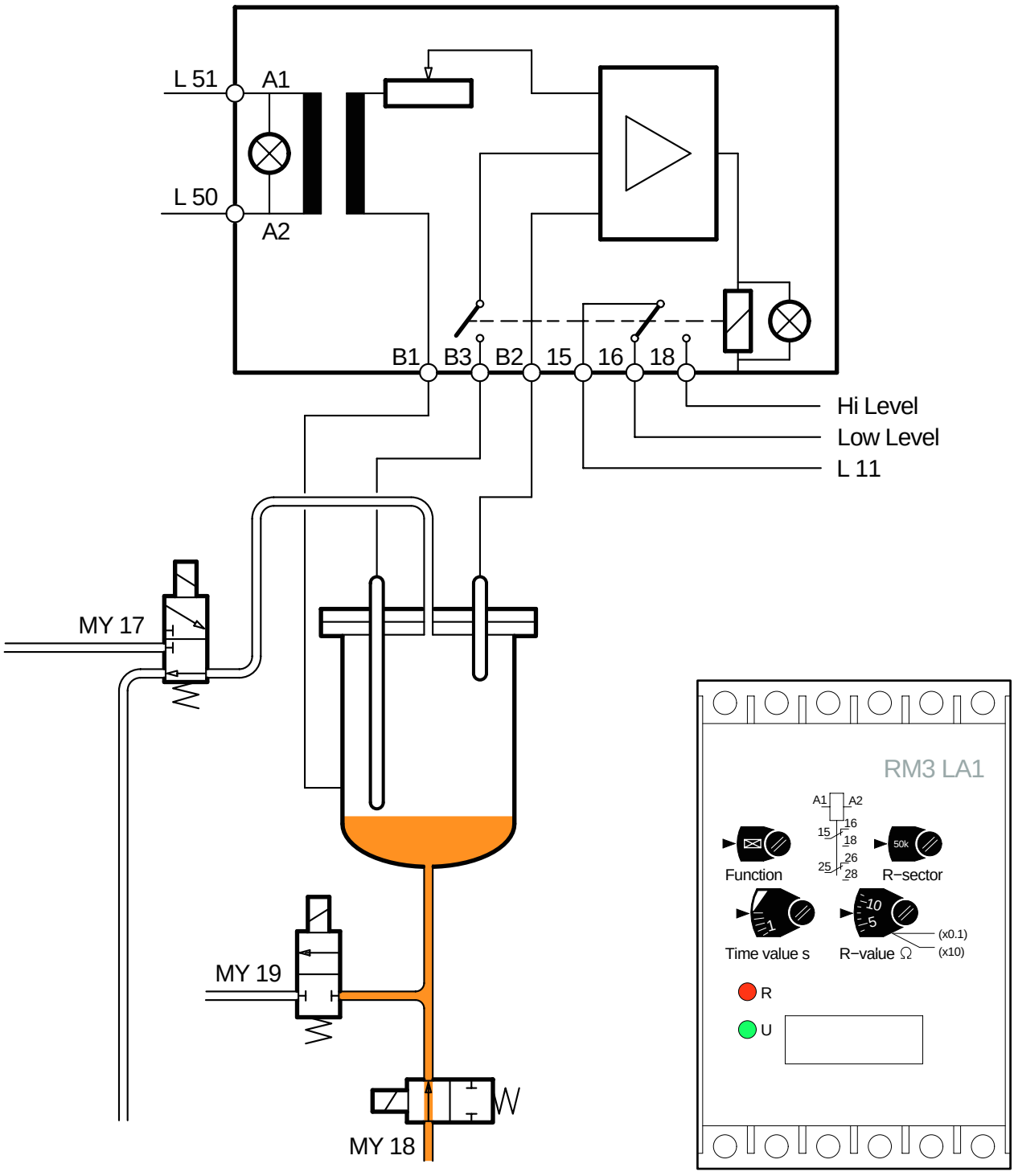

Level relay

Peroxide spray container

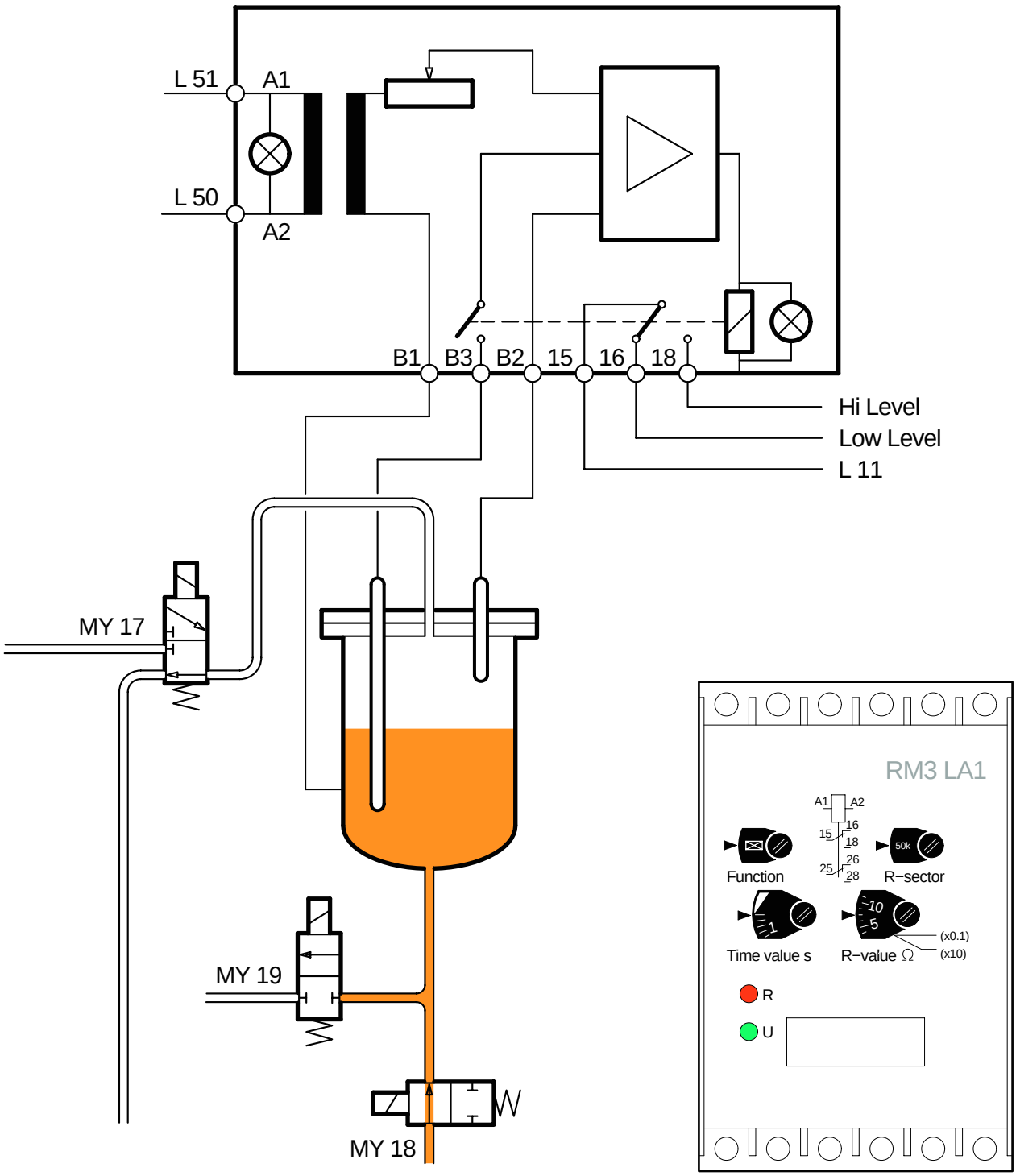

Level relay

Peroxide spray container

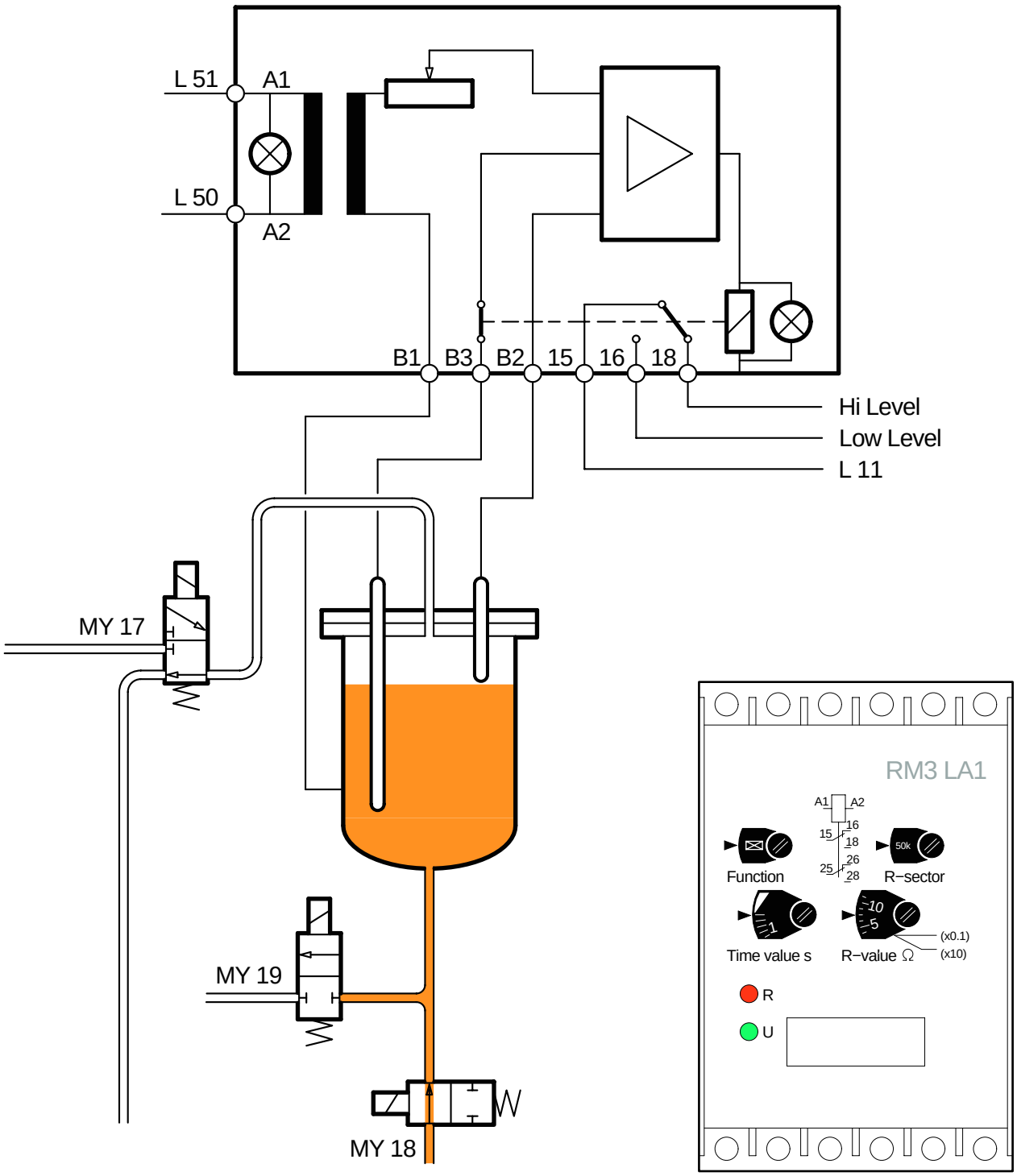

Level relay

Peroxide spray container

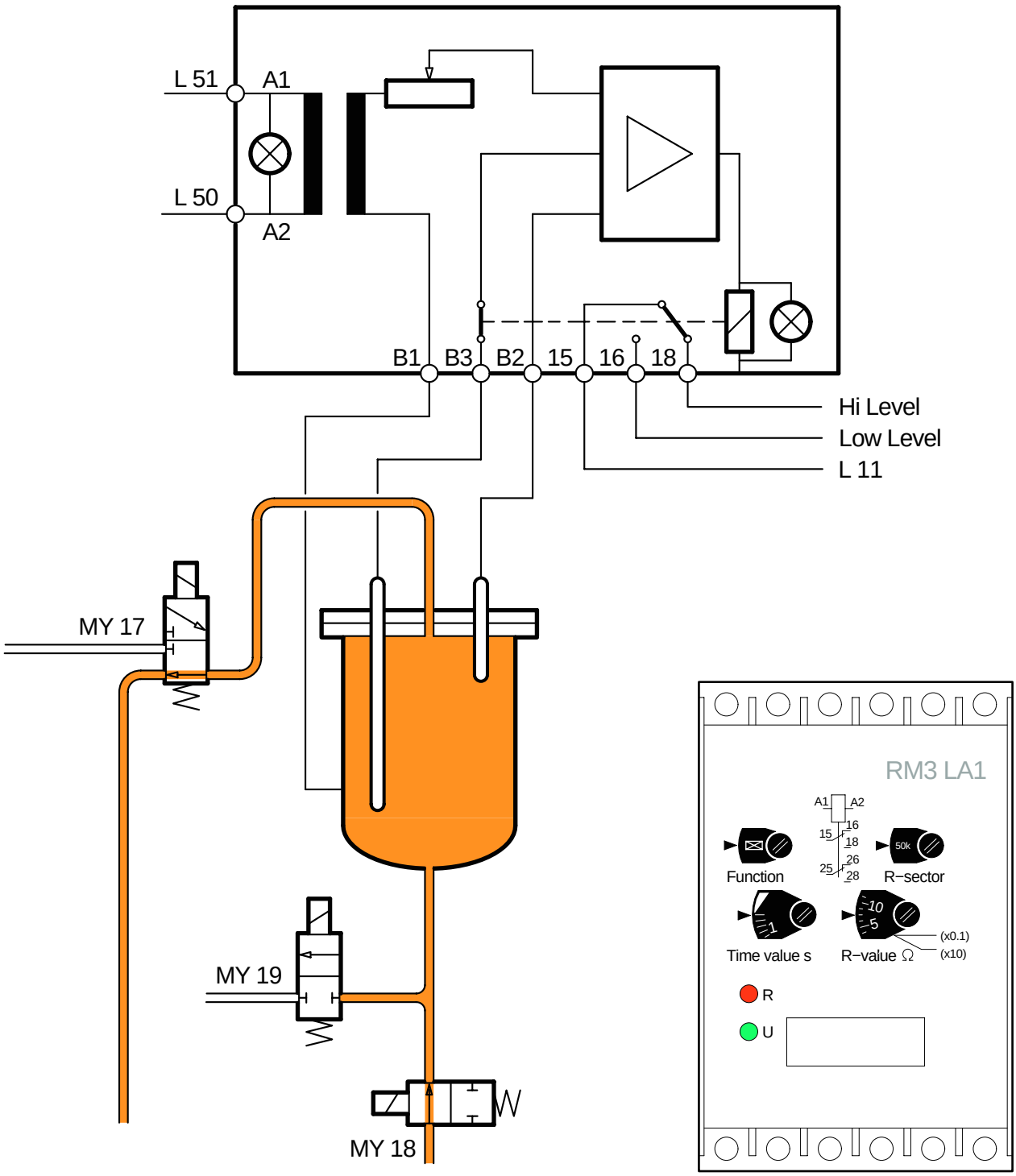

Level relay

Peroxide spray container

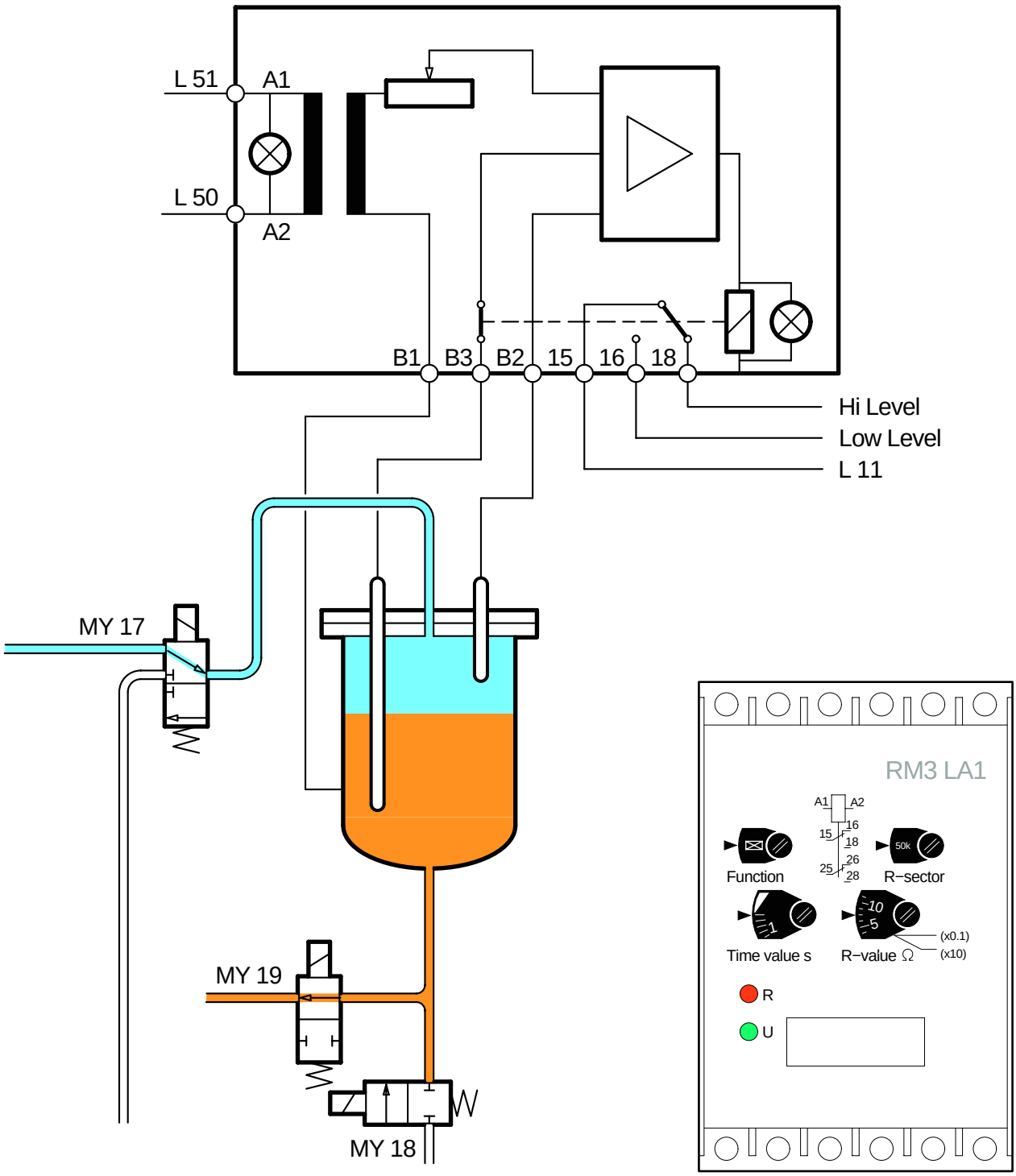

Level relay

Peroxide spray container

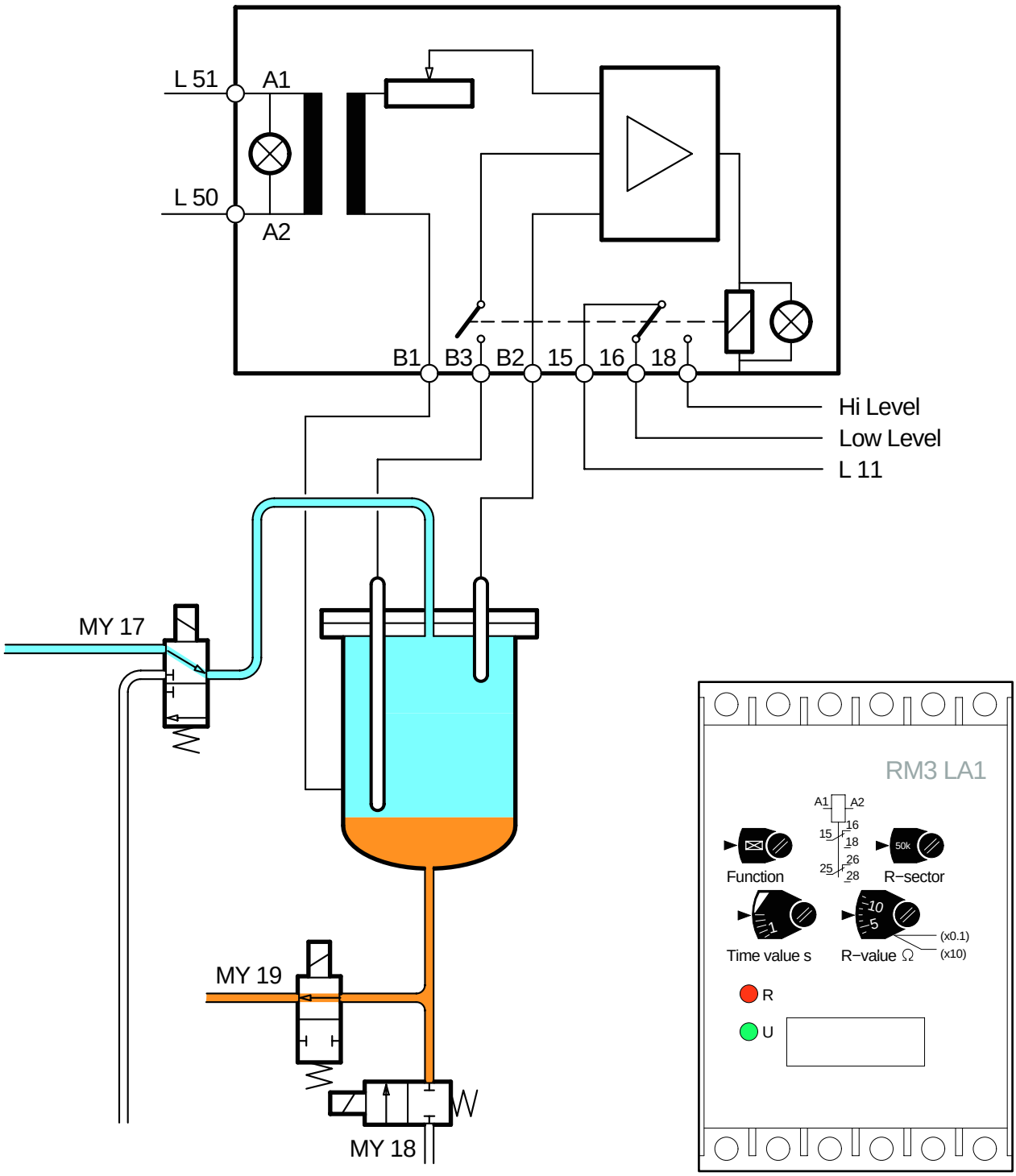

Peroxide system
TCA/65 050V

Technical Training Centre
Lund, Sweden

Machine type
TCA/65 050V

Issue
1/0103

OH 1028:1

1 Sterilising bath
2 Pressure regulator peroxide filling
3 Peroxide tank
4 Peroxide spraying valve
5 Air valve peroxide tank
6 Air filling spray tank valve
7 Peroxide filling spray tank valve
8 Filter
9 Peroxide pump
10 Spray tank
11 Pressure regulator spraying
12 Filling mixing tank valve
13 Mixing tank
14 Draining mixing tank valve
15 Diluting tank
16 Non return valve
17 Non return valve
18 Wetting agent dosing pump
19 Wetting agent dosing valve
20 Wetting agent tank
21 Filter
22 Draining valve peroxide cooling
23 Cooler
24 Cooling water zoneheater
25 Water ON/OFF

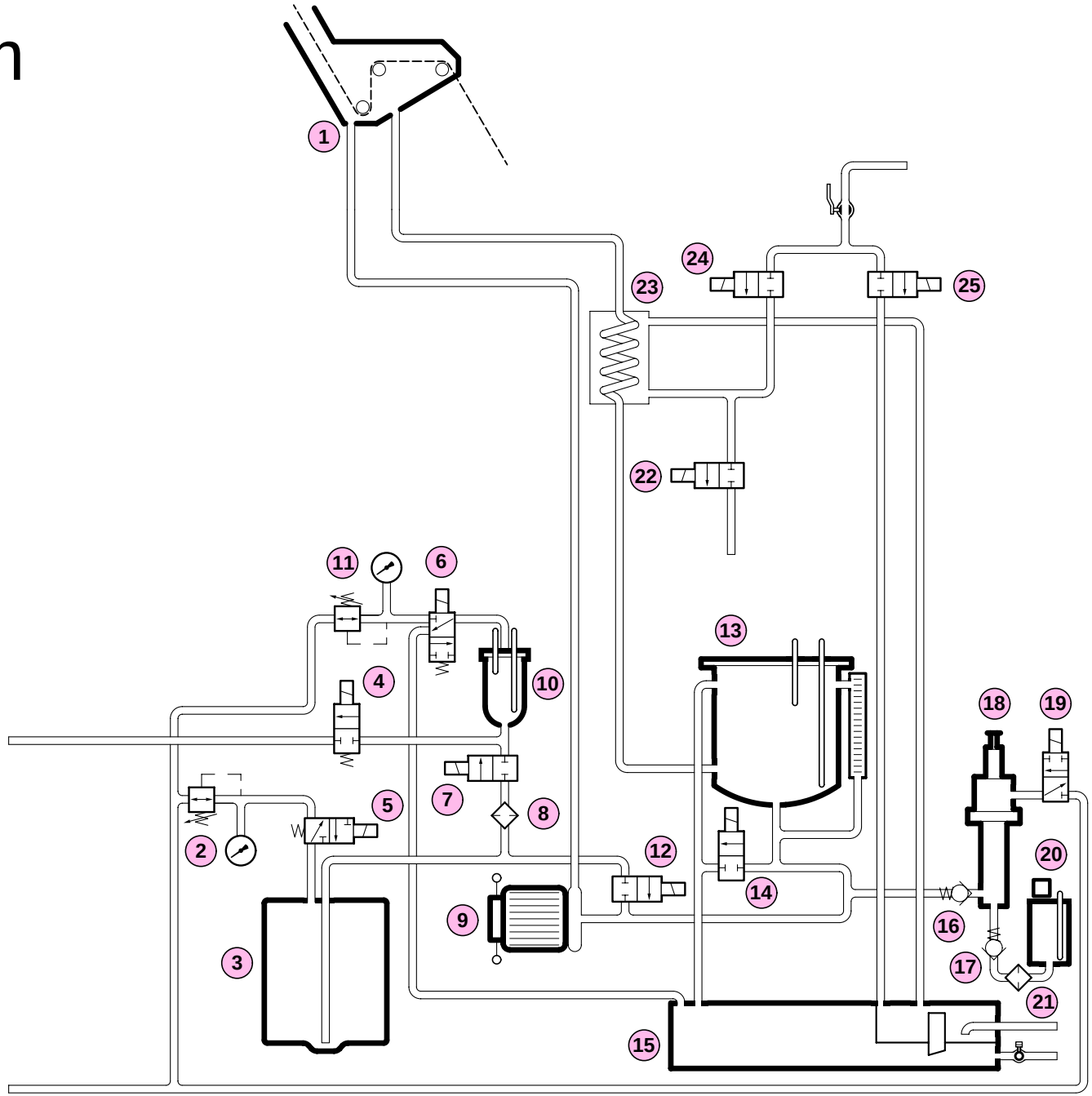

Air
Water
Peroxide
Wetting agent

Peroxide system TCA/65 050V

Preheating II
Pos. 2

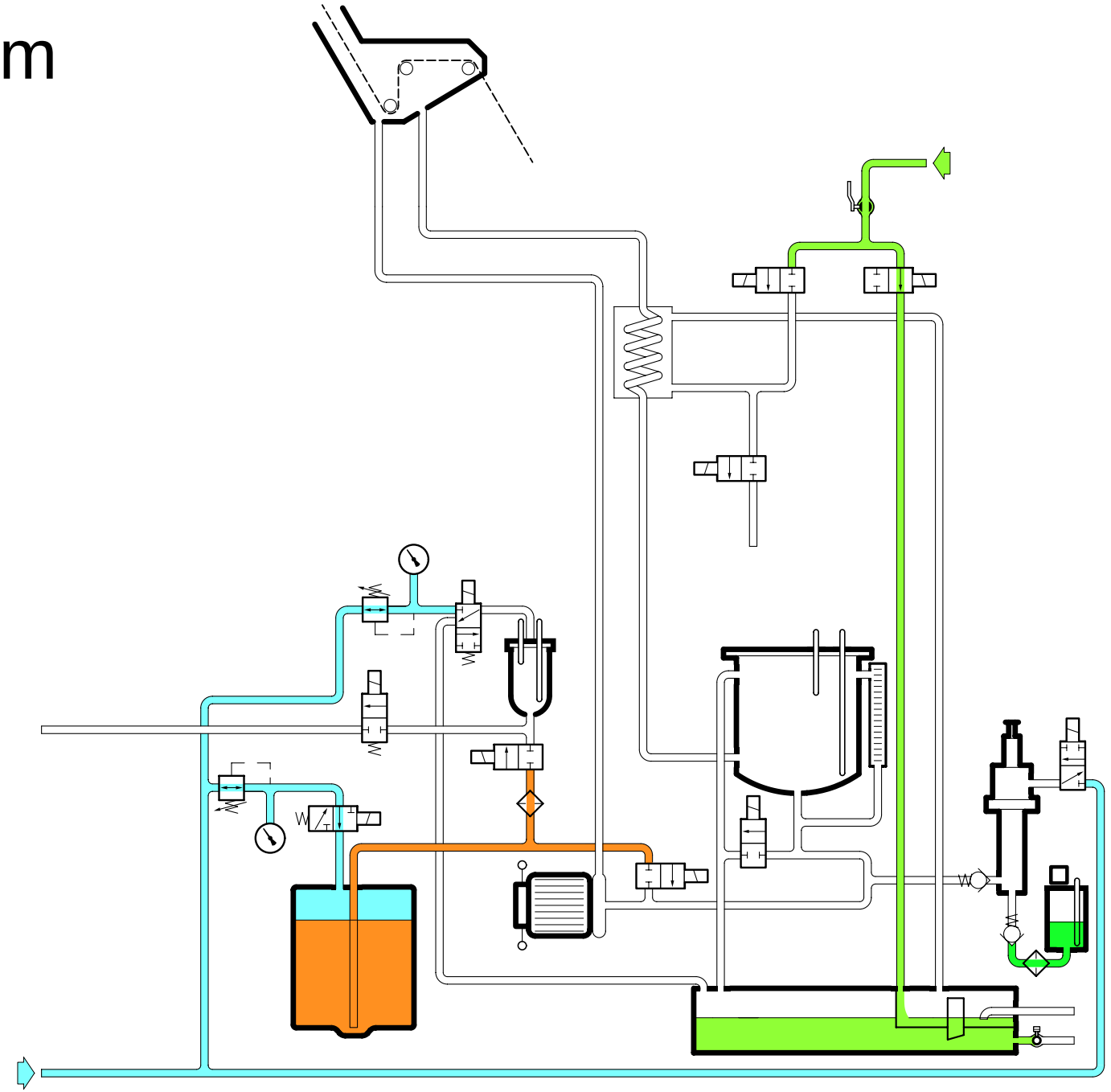

Technical Training Centre
Lund, Sweden

Machine type
TCA/65 050V

Issue
1/0103

OH 1028:2

Peroxide system TCA/65 050V

Filling peroxide Pos. 3

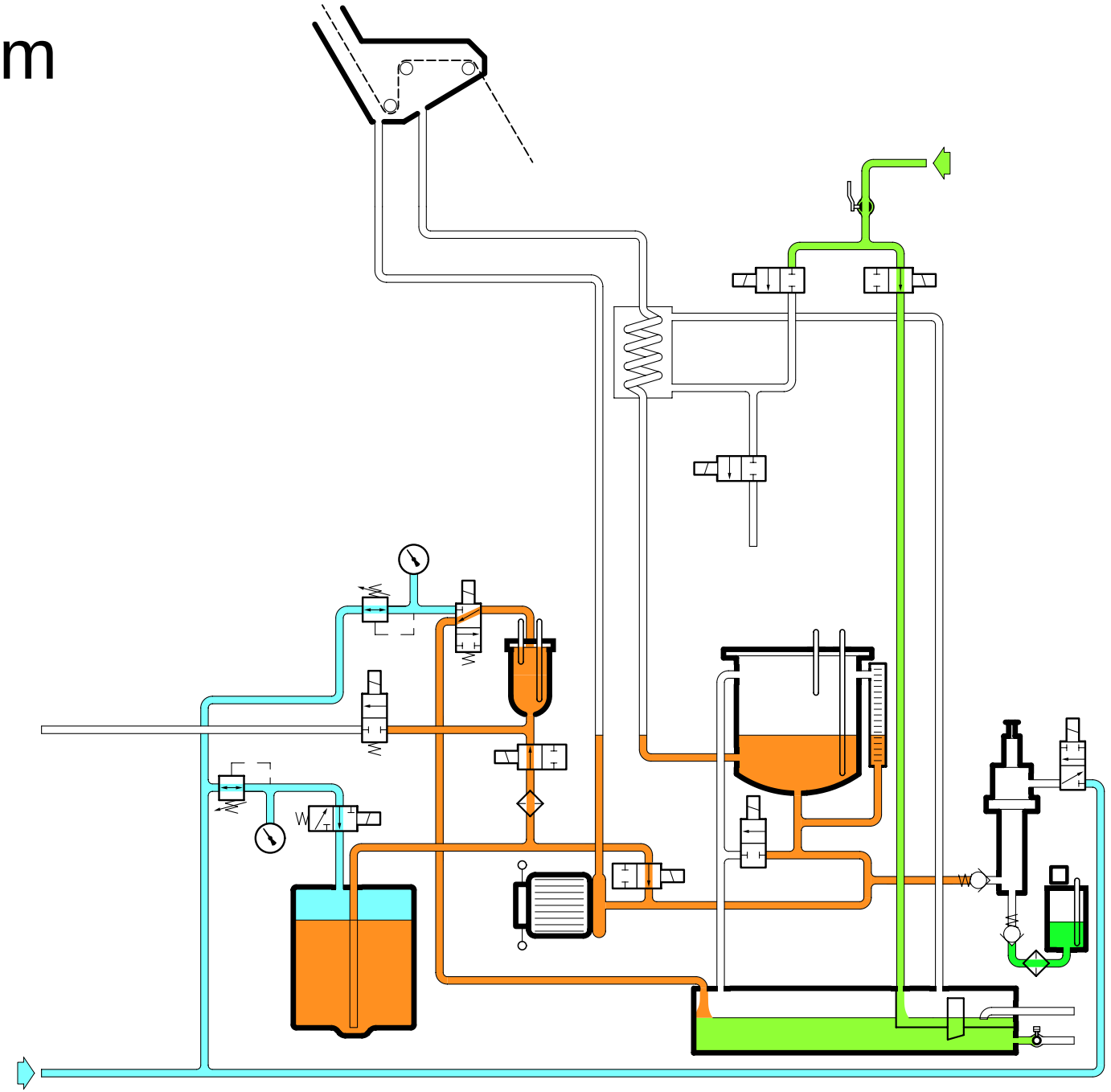

Technical Training Centre
Lund, Sweden

Machine type
TCA/65 050V

Issue
1/0103

OH 1028:3

Peroxide system TCA/65 050V

Spraying
Pos. 3

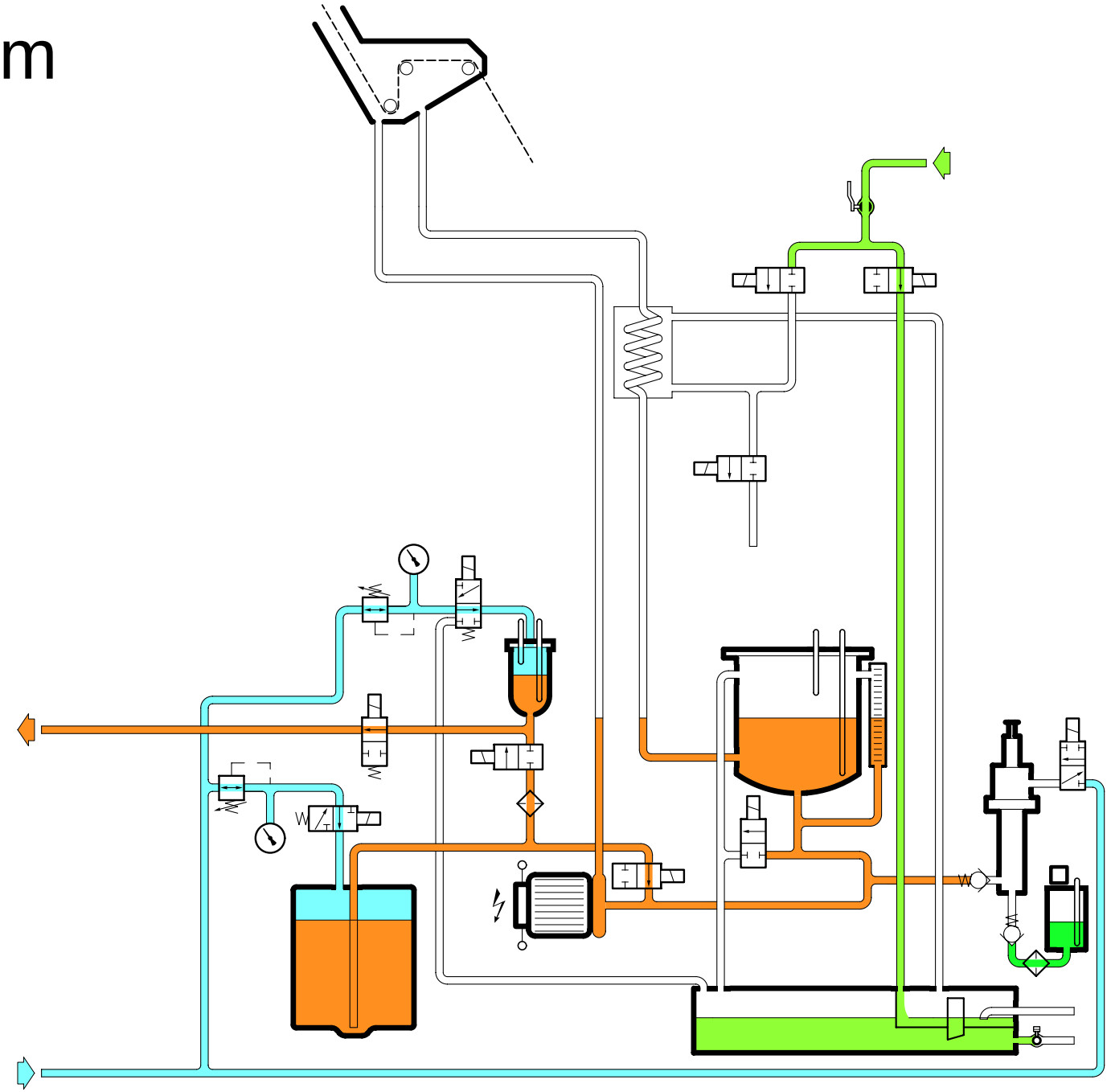

- Air
- Water
- Peroxide
- Wetting agent

Technical Training Centre
Lund, Sweden

Machine type
TCA/65 050V

Issue
1/0103

OH 1028:4

Peroxide system TCA/65 050V

Drying
Pos. 3

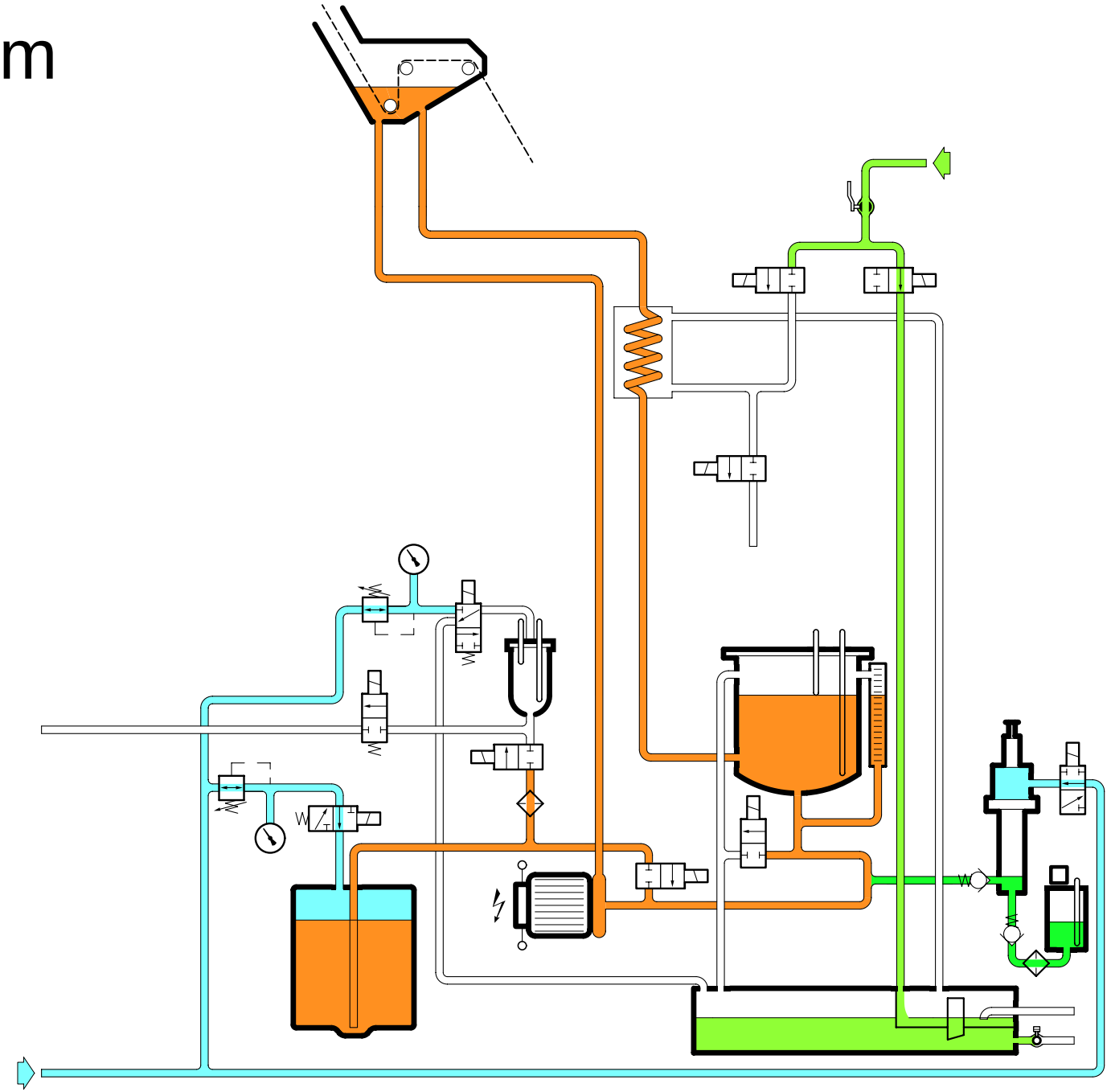

- Air
- Water
- Peroxide
- Wetting agent

Technical Training Centre
Lund, Sweden

Machine type
TCA/65 050V

Issue
1/0103

OH 1028:5

Peroxide system TCA/65 050V

Ready for production

Pos. 4

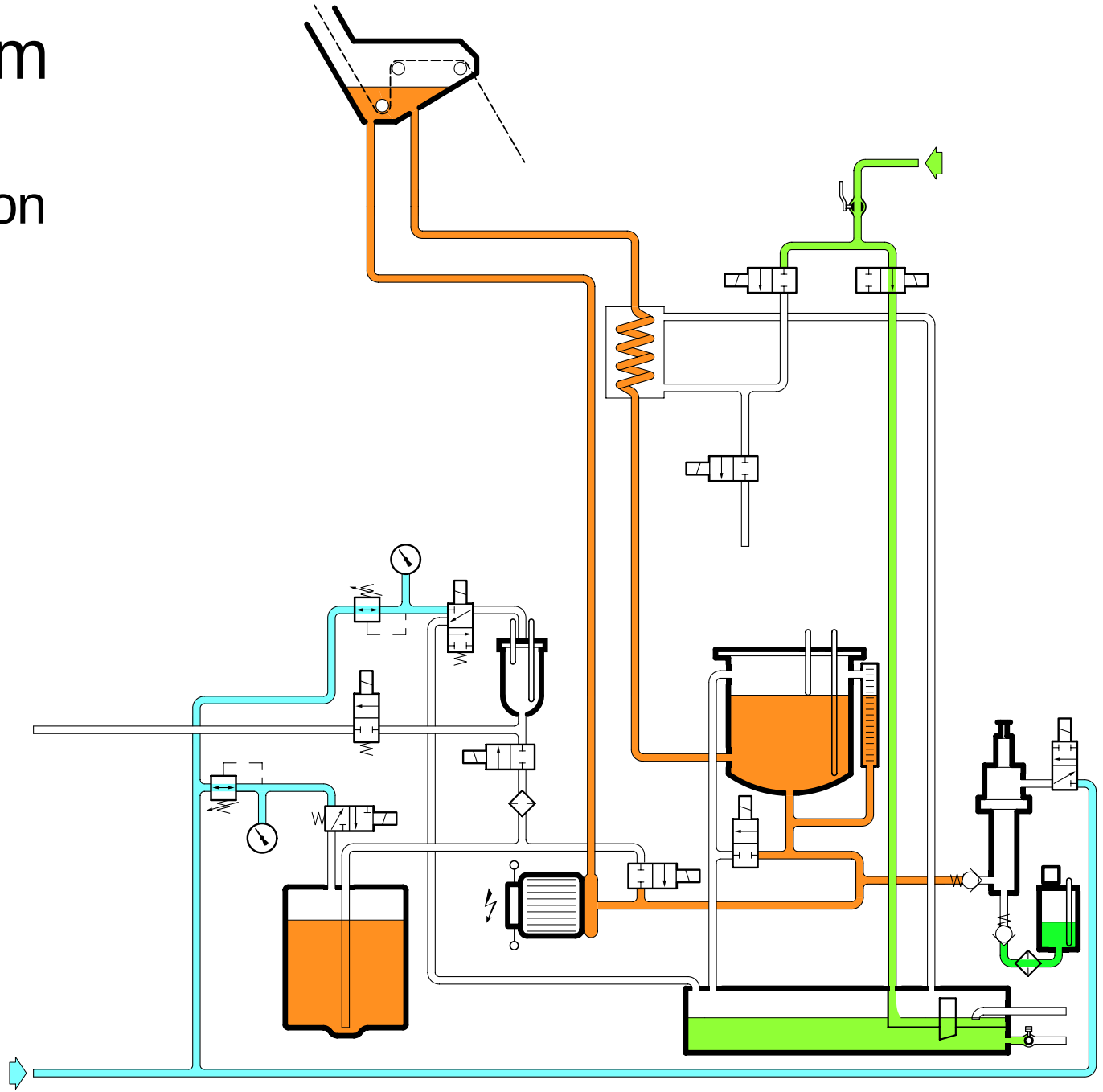

- Air
- Water
- Peroxide
- Wetting agent

Technical Training Centre
Lund, Sweden

Machine type
TCA/65 050V

Issue
1/0103

OH 1028:6

Technical Training Centre
Lund, Sweden

Machine type
TCA/65 050V

Issue
1/0103

OH 1028:7

Peroxide system TCA/65 050V

Start sequence
Pos. 4

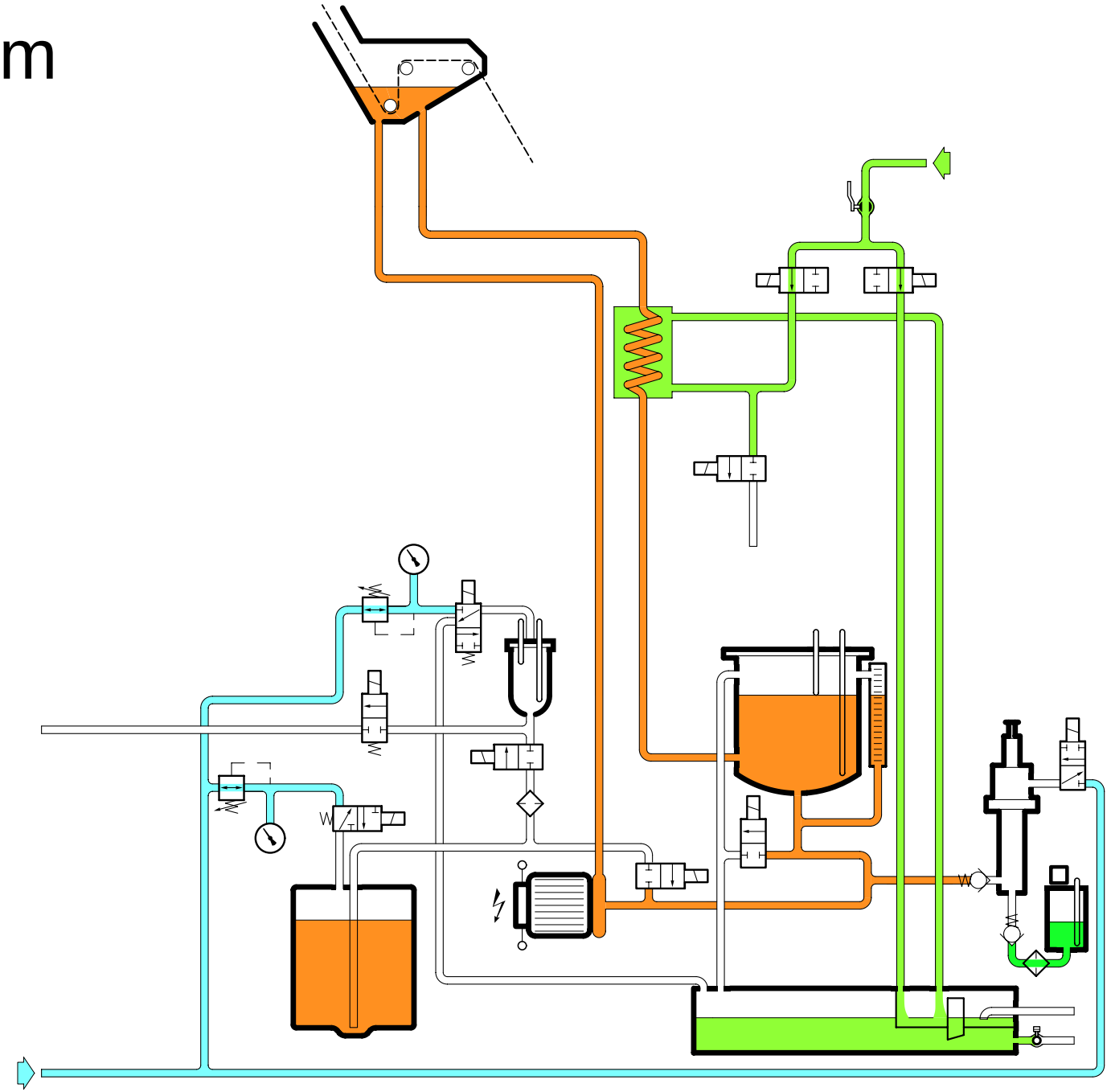

- Air
- Water
- Peroxide
- Wetting agent

Peroxide system TCA/65 050V

Motor start
Pos. 5

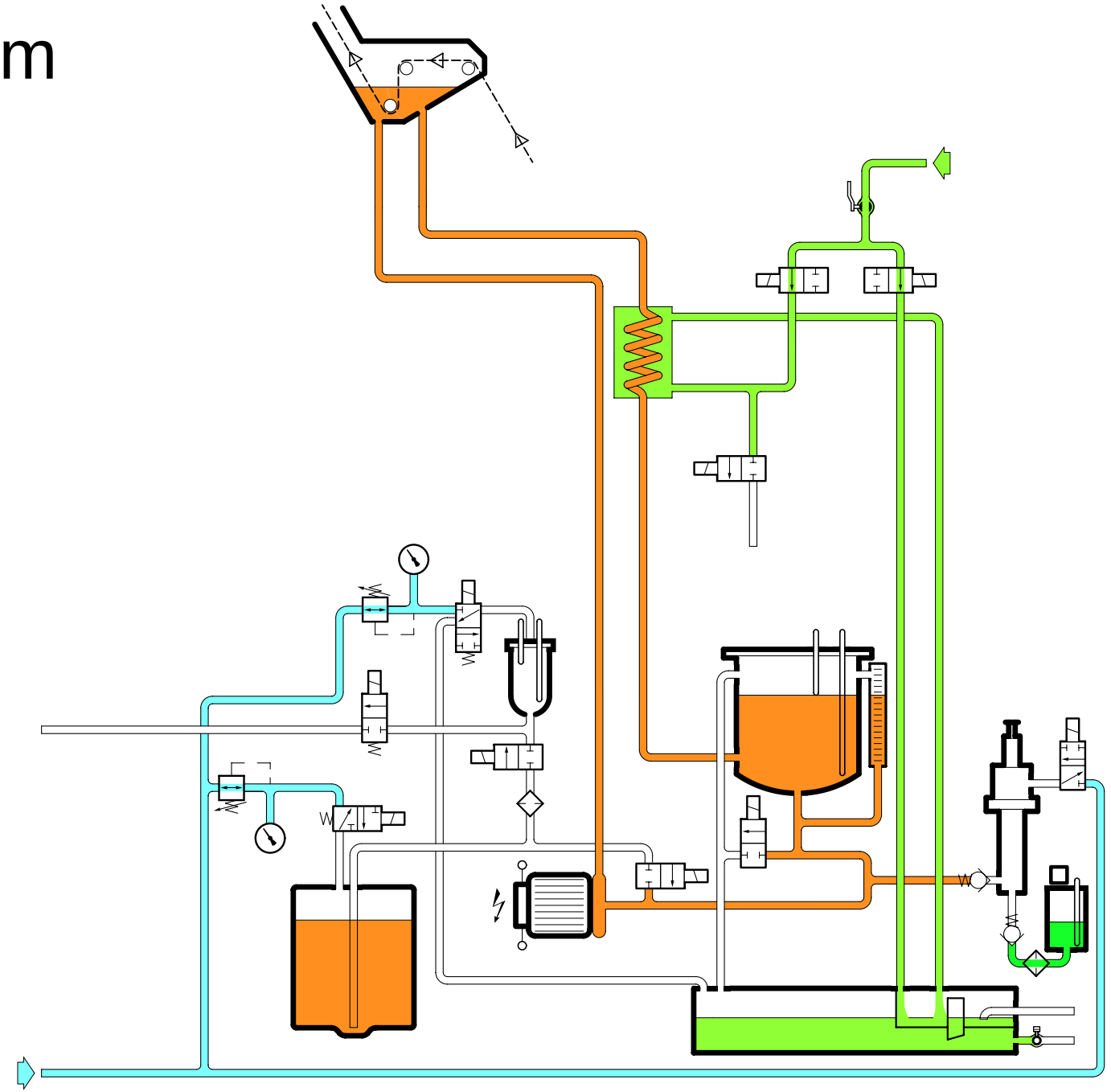

- Air
- Water
- Peroxide
- Wetting agent

Technical Training Centre
Lund, Sweden

Machine type
TCA/65 050V

Issue
1/0103

OH 1028:8

Technical Training Centre
Lund, Sweden

Machine type
TCA/65 050V

Issue
1/0103

OH 1028:9

Peroxide system TCA/65 050V

Production
Pos. 6

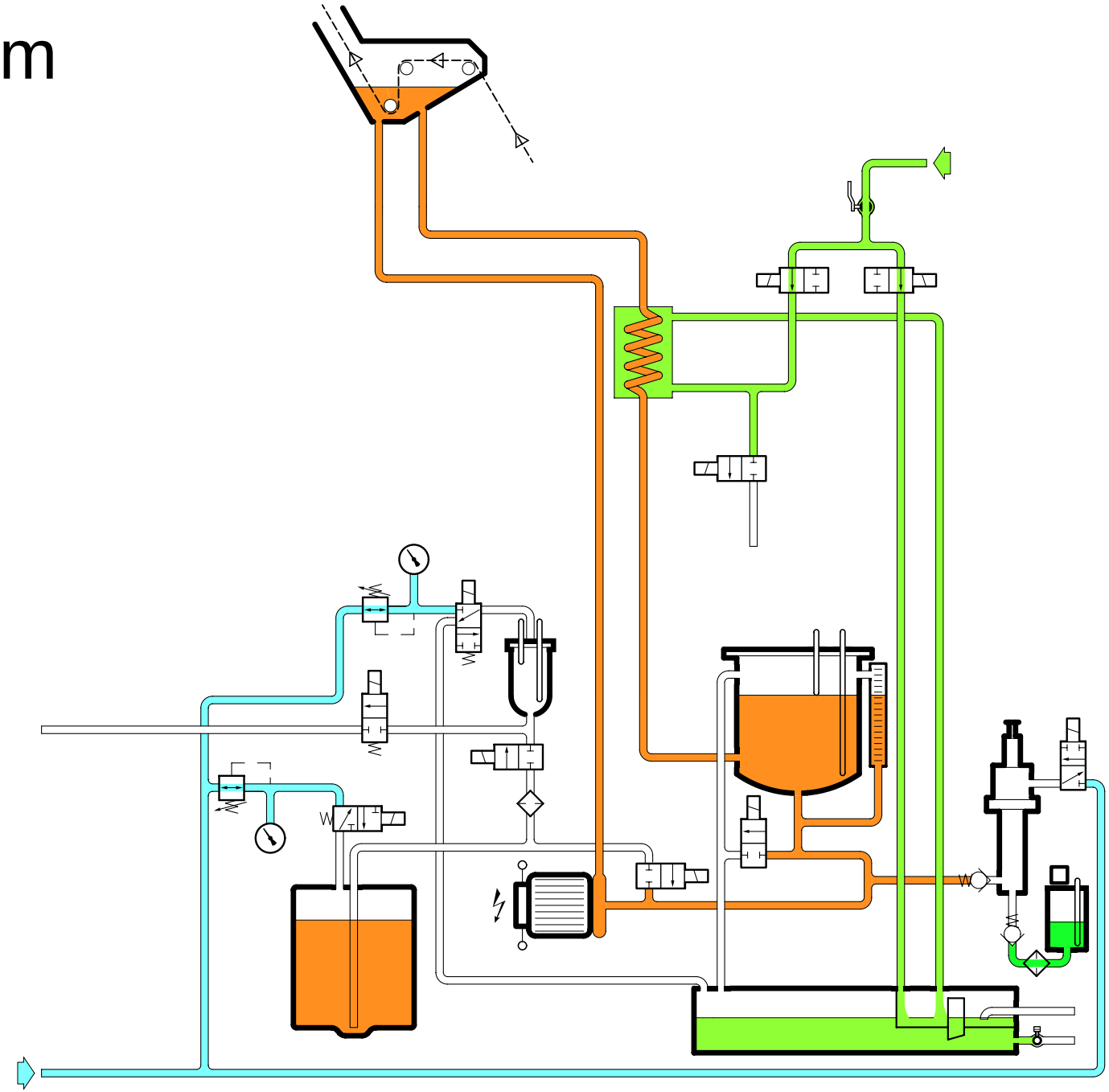

- Air
- Water
- Peroxide
- Wetting agent

Peroxide system TCA/65 050V

Short stop
Pos. 6

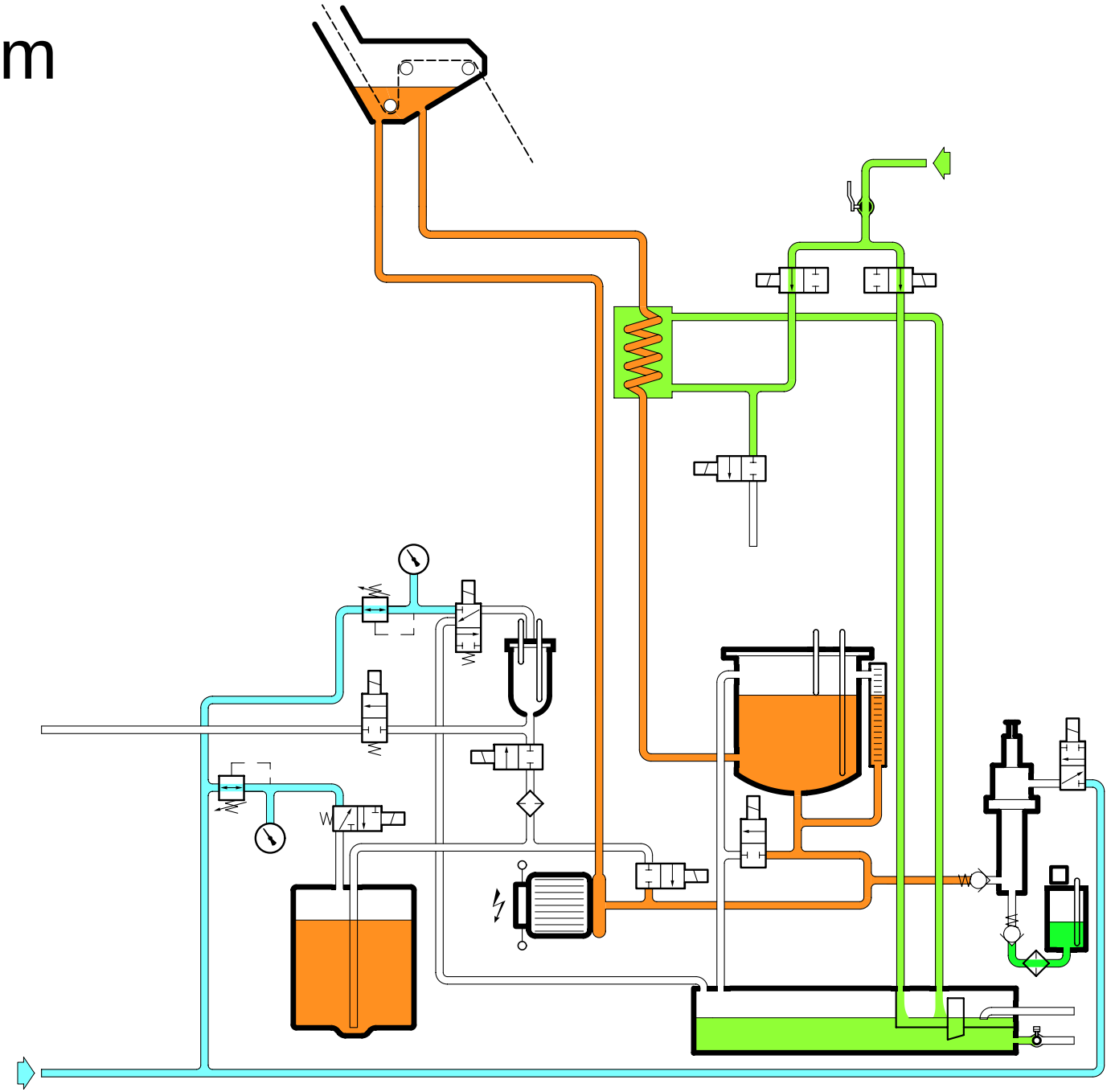

- Air
- Water
- Peroxide
- Wetting agent

Technical Training Centre
Lund, Sweden

Machine type
TCA/65 050V

Issue
1/0103

OH 1028:10

Peroxide system TCA/65 050V

End of production
Pos. 7

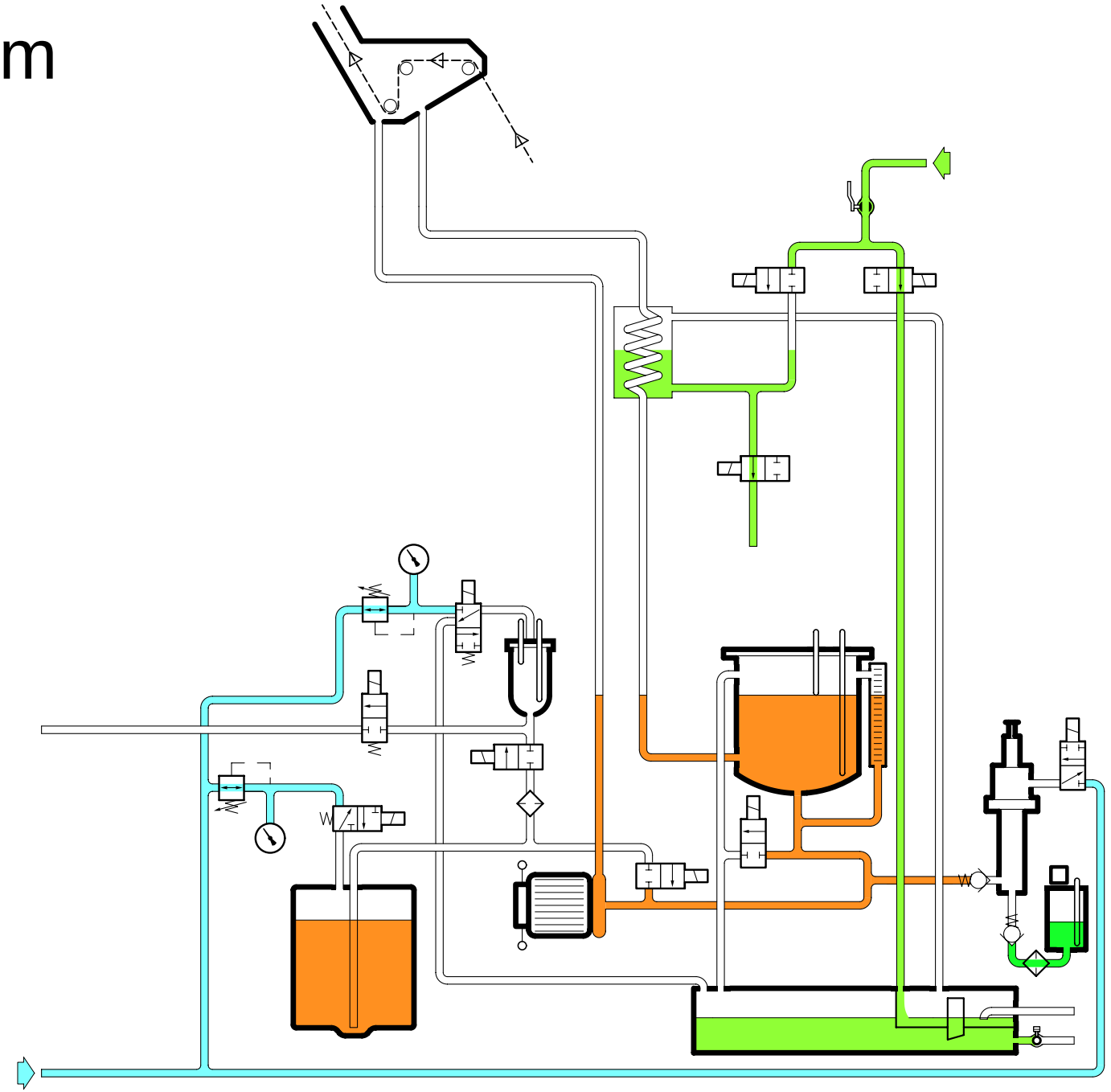

Technical Training Centre
Lund, Sweden

Machine type
TCA/65 050V

Issue
1/0103

OH 1028:11

Wetting Agent (PSM)

Level Monitoring

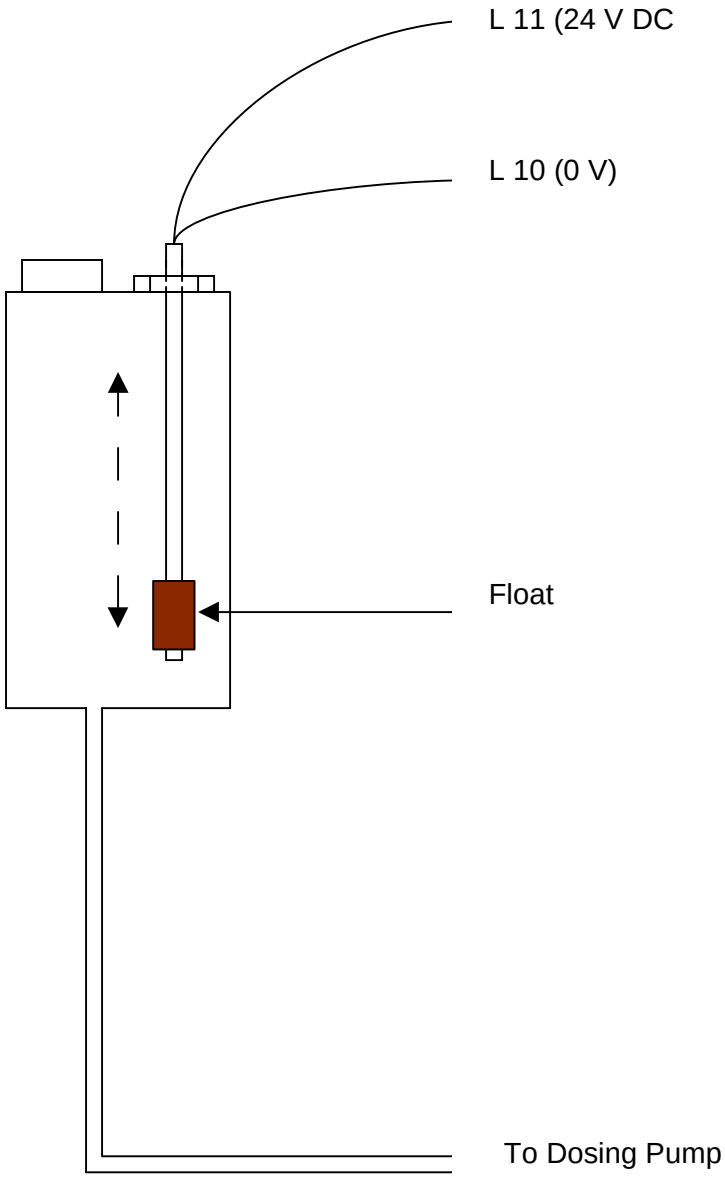

Dosing Pump Principle

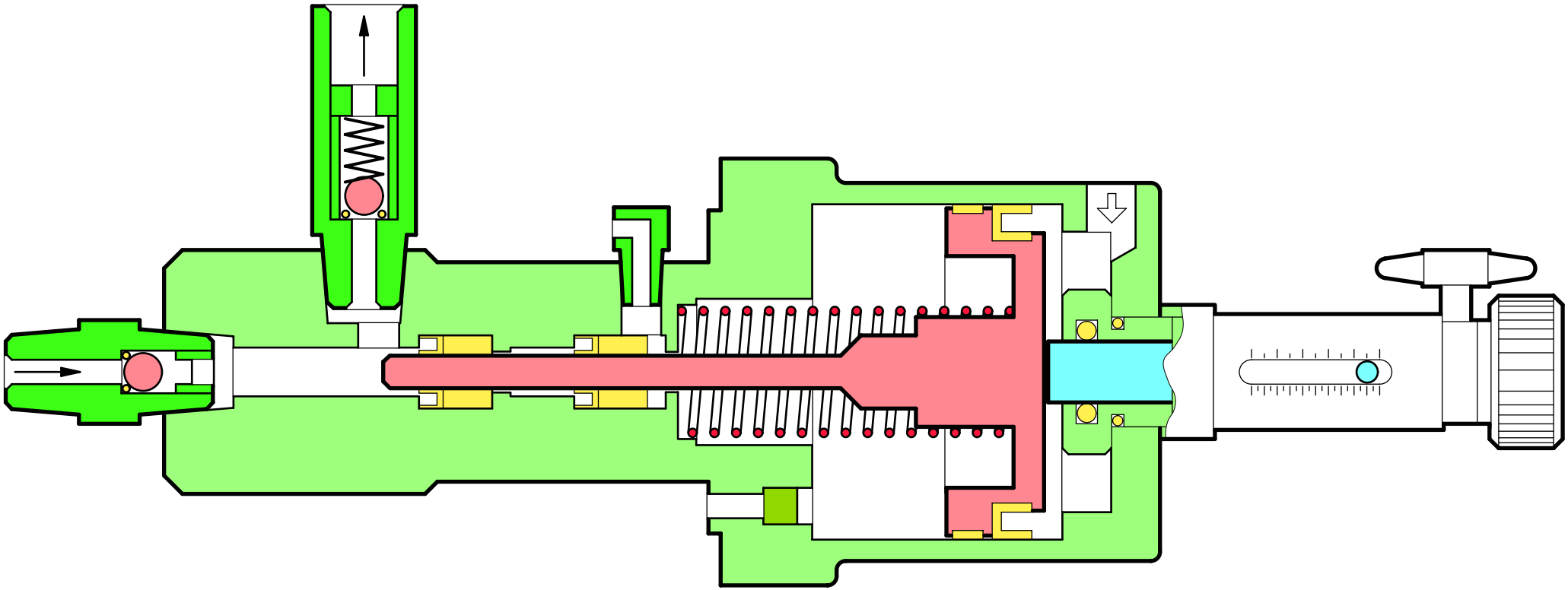

Technical Training Centre
Lund, Sweden

Machine type

Issue
1/0104

OH 1035

7

Tube Forming

Forming Rings

Liwer forming ring

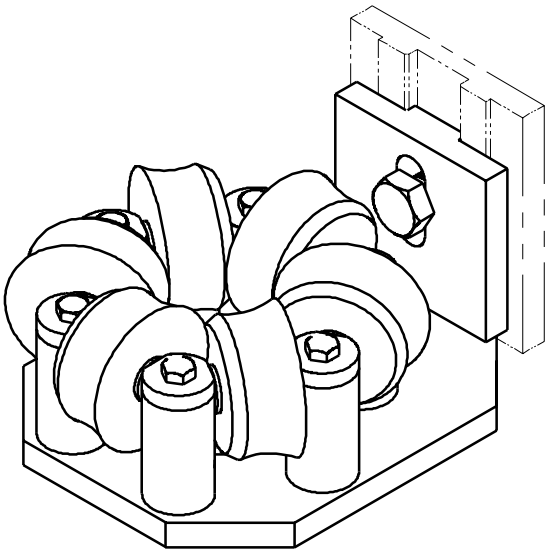

Upper forming ring

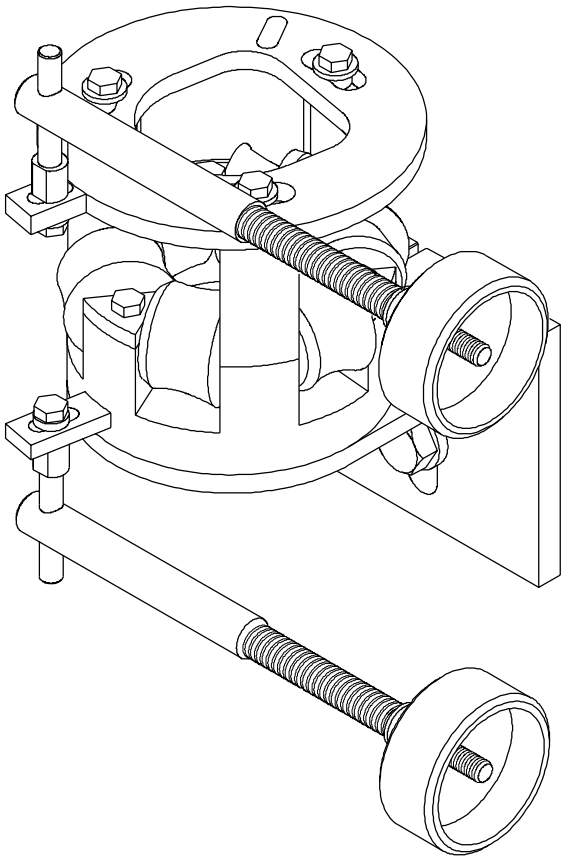

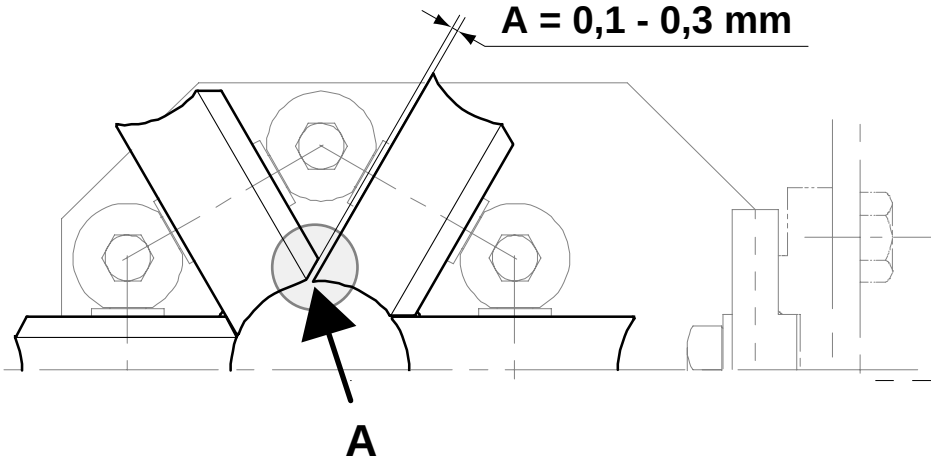

Position of LS

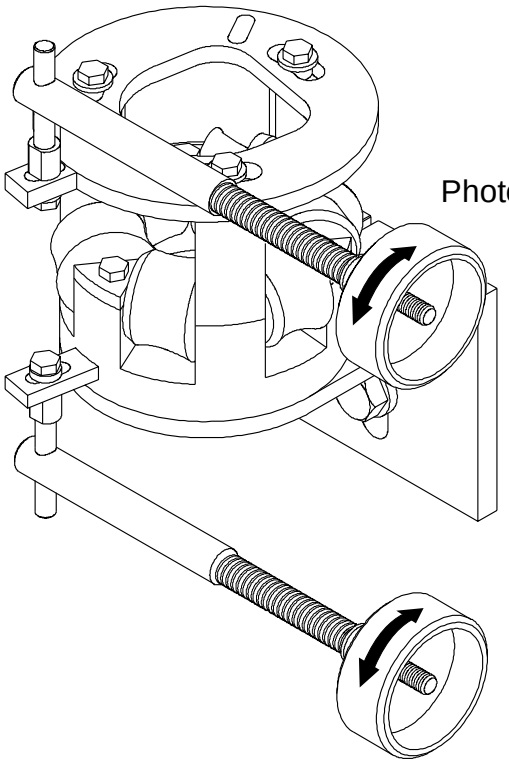

Photocell position

Tube position

Package 1

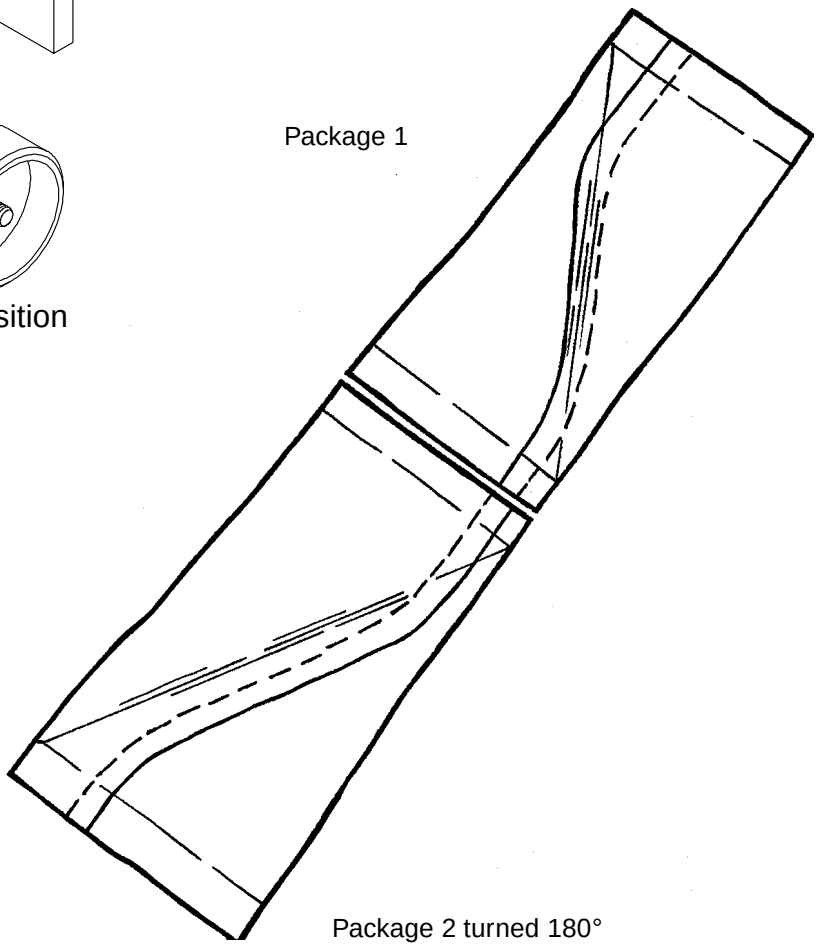

Package 2 turned 180°

8

Sealing

Transversal Sealing Diagram

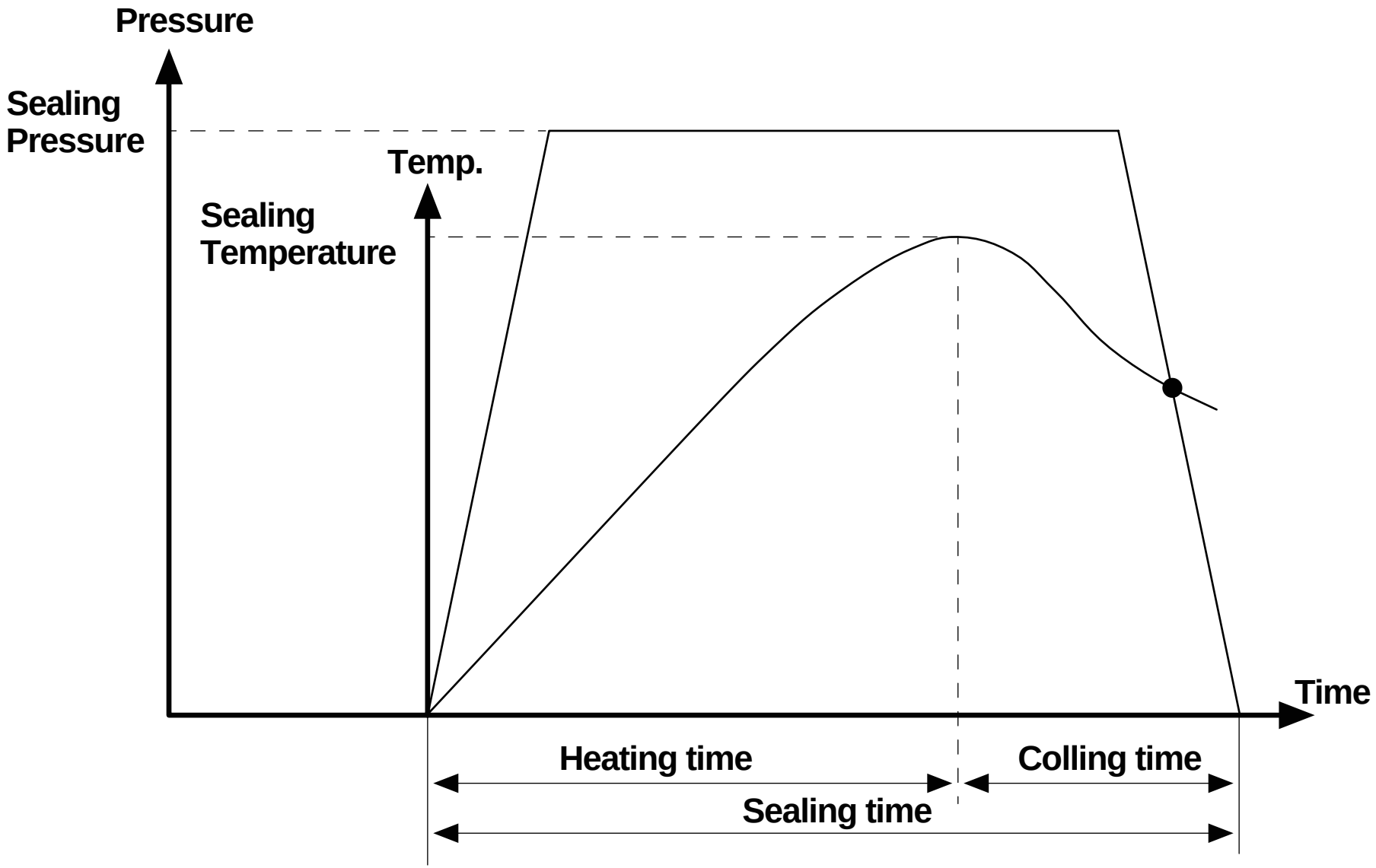

Liquid products
(LVS)

Viscous products
(MVS)

Textbook

TPIH-2000

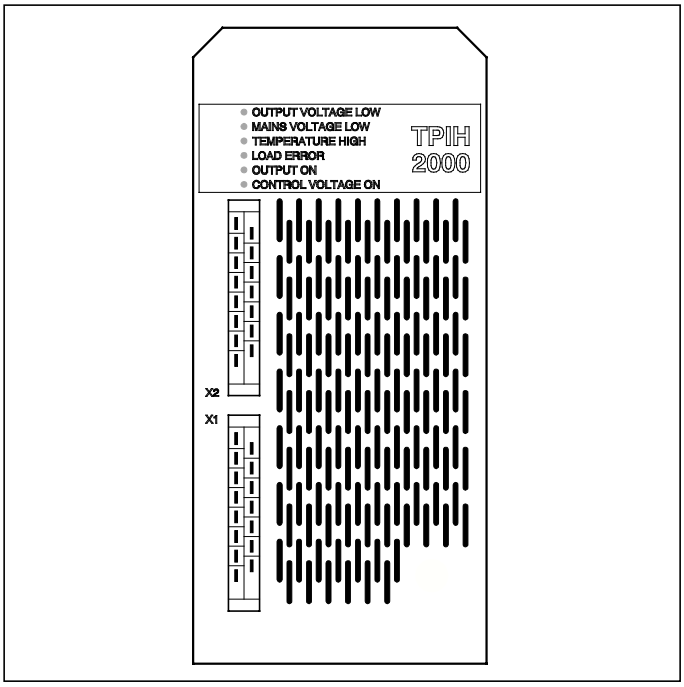

MT-83014-2

Technical Training Centre
Lund, Sweden

This textbook has been compiled by the Technical Training Centre in Lund.

Some of the pictures in the book are also available as OH pictures.

For further information on training material, please contact the Technical Training Centre.

Issue 2/9608

© 1998, Technical Training Centre

No part of this publication may be reproduced, stored in a retrieval system or transmitted in any form or by any means: electronic, electrostatic, magnetic tape, mechanical photocopying, recording or otherwise, without permission in writing from Technical Training Centre.

TPIH-2000

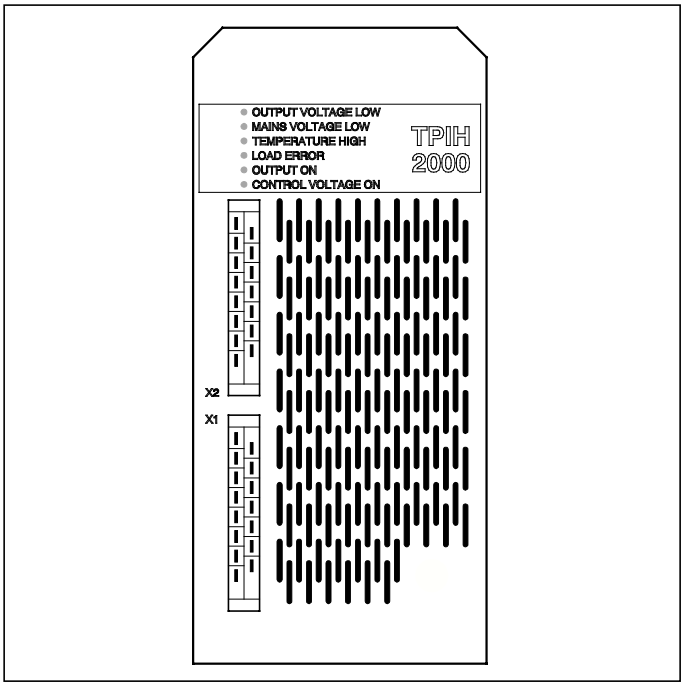

Training Document

This Training Document is intended for Training purpose only, and must not be used for other purpose.

The Training Document is not replacing any instructions or procedures (e.g. OM, MM, TeM, IM, SPC) intended for specific equipment, and must not be used as such.

Note!

For safe and proper procedures, refer to the equipment specific documentation.

Technical Training Centre

Contents

General information on IH 5
TPIH-2000 8
Comparison between TPIH- 2000 and older IH generators 13
TPIH test instrument 14

General information on IH

Induce = to bring about, to produce

TPIH-2000 is a generator, which generates a high–frequency current. This current is utilized to induce heat in the packaging material, for instance in transversal sealing. TPIH stands for **T**etra **P**ak **I**nduction **H**eating.

IH = induction heating

The TBA machines are equipped with IH generators, and the high–frequency current induces heat in the aluminium foil layer of the packaging material. The heat causes the plastic (PE layers) to melt, and thus the packages can be sealed.

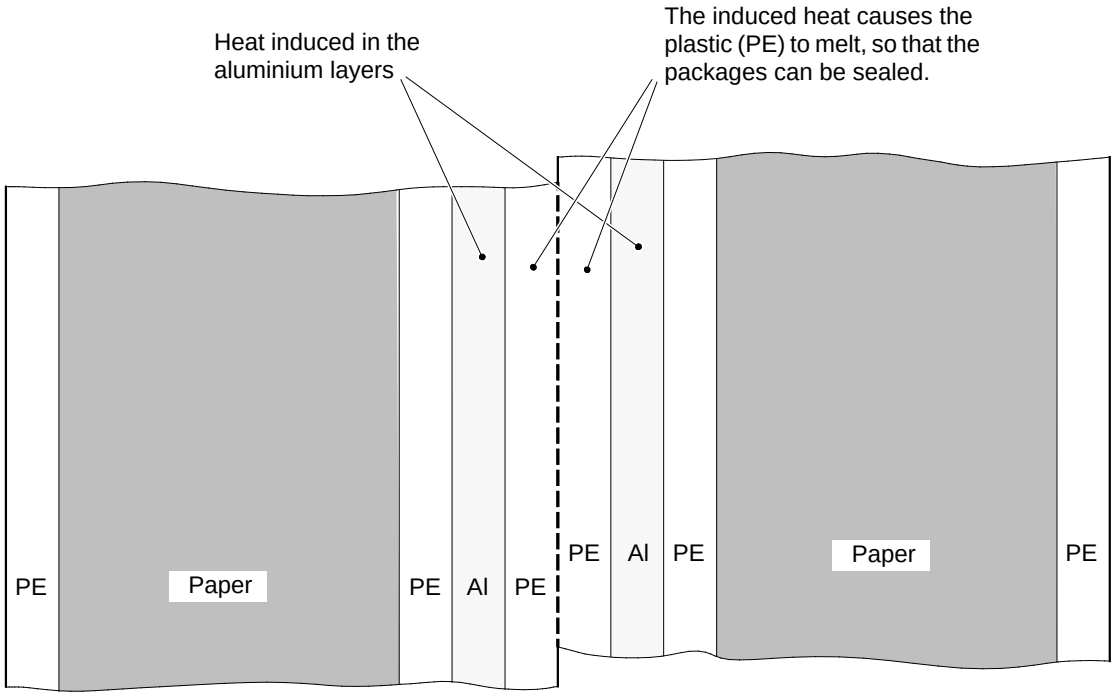

PE=Polyethylene Al=Aluminium

Induction heating is also employed to heat the PE layer at the opening arrangement of the package. The heat changes the structure of the PE layer, making the plastic more brittle. For this reason, the package becomes easier to open.

The method of heating a material without a direct source of heat, i e to produce heat in the material, is based on a current of high frequency. One could say that the high–frequency current transfers energy to the material,

There are two ways of producing heat by means of high–frequency current:

- **Induction heating** (for instance transversal sealing in TBA machines)
- **Dielectric heating** (for instance in a microwave oven)

Induction heating

Induction heating is used to heat materials which are electrically conductive (metals). This is the method employed in the TBA machines for transversal sealing, zone heating at the opening arrangement of the package, longitudinal sealing (TBA/21), strip application (TBA/21), and splicing of the packaging material (TBA/21).

The diagram below shows the principle of this method.

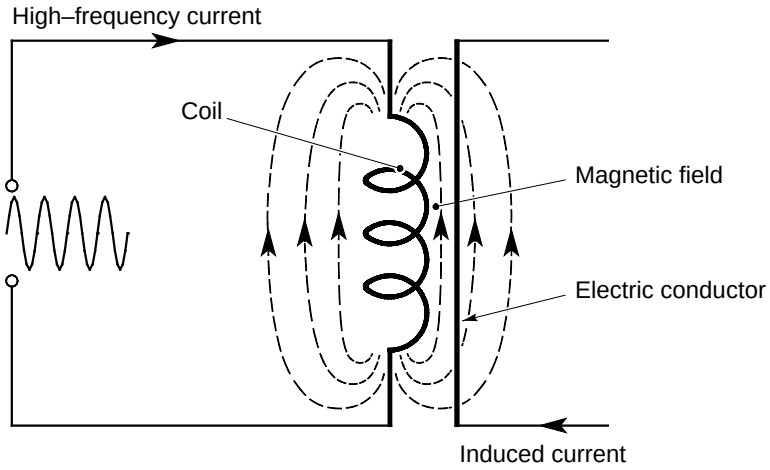

The high–frequency current creates a magnetic field around the coil. This magnetcic field oscillates in time (at the same frequency) with the current, inducing a current in an electric conductor placed in the magnetic field. In its turn, the induced current oscillates in time with the magnetic field and produces the energy that heats the material.

In the TBA machines, induction heating works as shown in the diagram below.

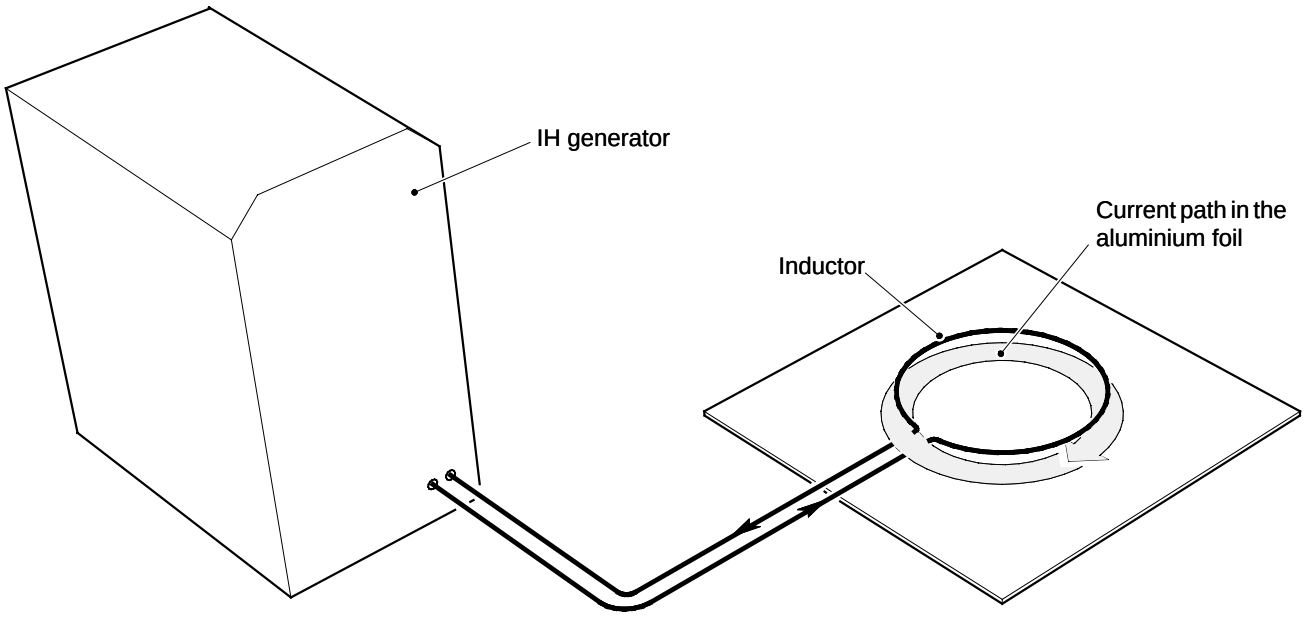

The IH generator (TPIH-2000) generates a current of high frequency. The inductor functions as a coil and creates a magnetic field. Heat is induced in the packaging material as a result of a current being induced in the aluminium foil. This leads to the melting of the PE layers, so that they can be sealed.

Dielectric heating

Dielectric heating is used to heat non–conductive materials, such as wood. This method is also employed in microwave ovens.

The diagram below shows the principle of this method.

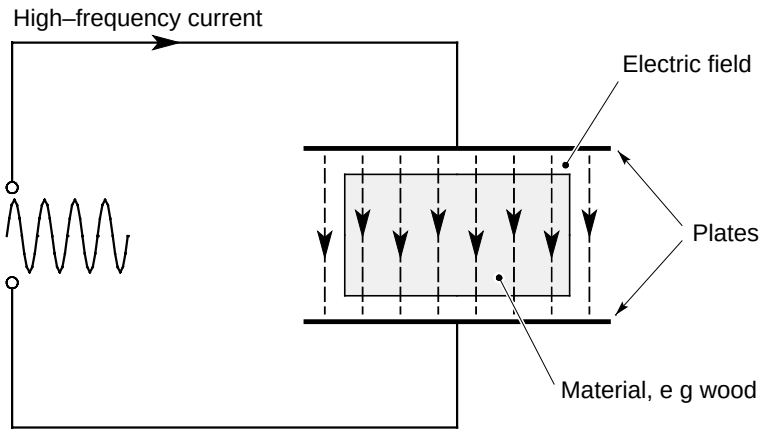

The high–frequency current produces an electric field between the plates. The field oscillates in time with the current, and the molecules of the material will in their turn also oscillate in time with the field. The oscillations produce energy, which heats the material.

Note
In order for this method to work, the material must contain ions or polar molecules, i e molecules which are influenced by electric fields. Water molecules are polar, and as wood always contains a certain amount of moisture, it is perfectly possible to heat wood according to this method.

TPIH-2000

An IH system incorporating a TPIH generator is designed as the diagram below shows.

IH system

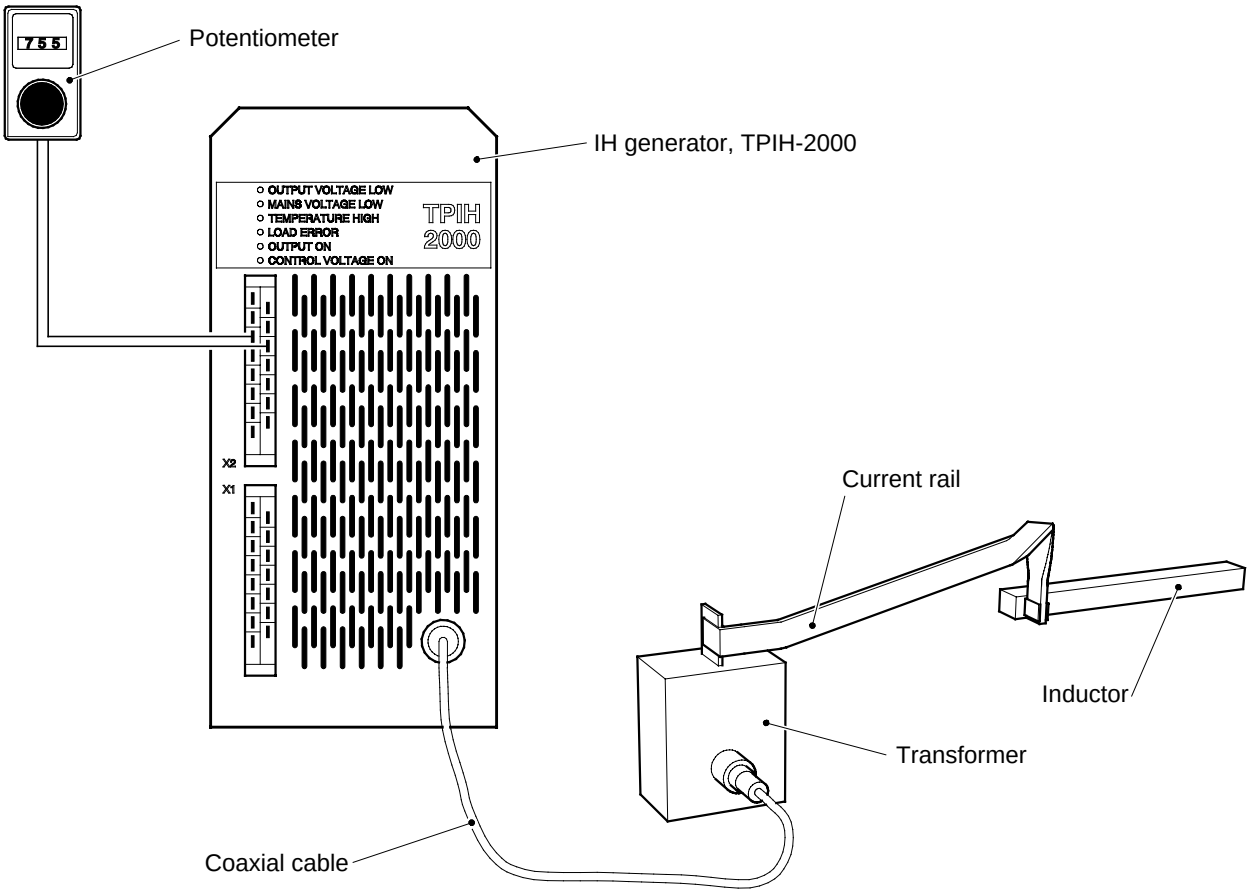

The generator converts the mains voltage to a high–frequency voltage. The magnitude of the high–frequency voltage is set by means of the potentiometer as a percentage of the maximum voltage; for instance, 850 translates as 85% of the maximum voltage. In its turn, the high–frequency voltage determines the power in the inductor. This relationship of the voltage is proportional to the square of the power; for instance, if the potentiometer is set at 850, the power in the inductor becomes 0.85 x 0.85 = 0.72, i e 72% of the maximum power. On page 10, more can be found on the relationship between voltage and power.

The coaxial cable conducts the high–frequency current to a transformer near the inductor. The transformer has a transformation ratio of 5:1, i e it reduces the voltage and increases the current by a factor of 5. Consequently, the power remains unchanged, but low voltage in the inductor cuts down the danger of spark–over and improves safety.

The last part of the passage of the current to the inductor goes through a current rail. In the current rail, power losses occur, and for this reason, the rail is made as short as possible.

The inductor functions as a coil and creates a magnetic field which induces current in the packaging material.

Usually, a TBA machine is equipped with several IH generators, for instance three, one for each pair of jaws and one for the zone heater.

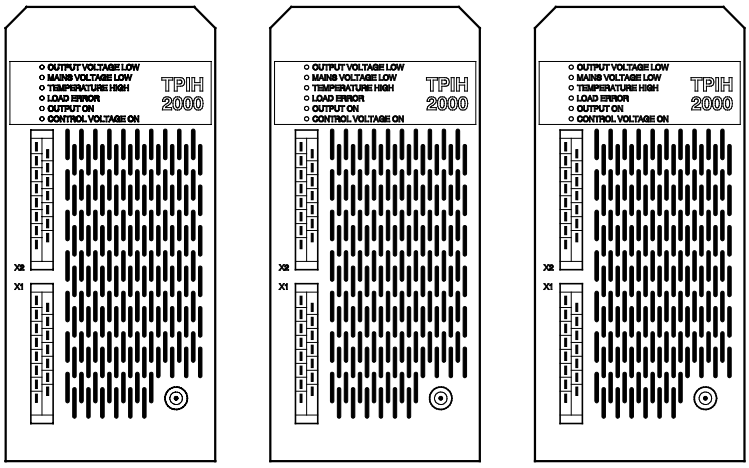

Generator TPIH-2000

On the front of the generator, there is an alarm panel, connections for control signals and power inputs, and an output for high–frequency current. The light–emitting diodes on the alarm panel indicate faults and errors etc, and can be used to facilitate fault–finding.

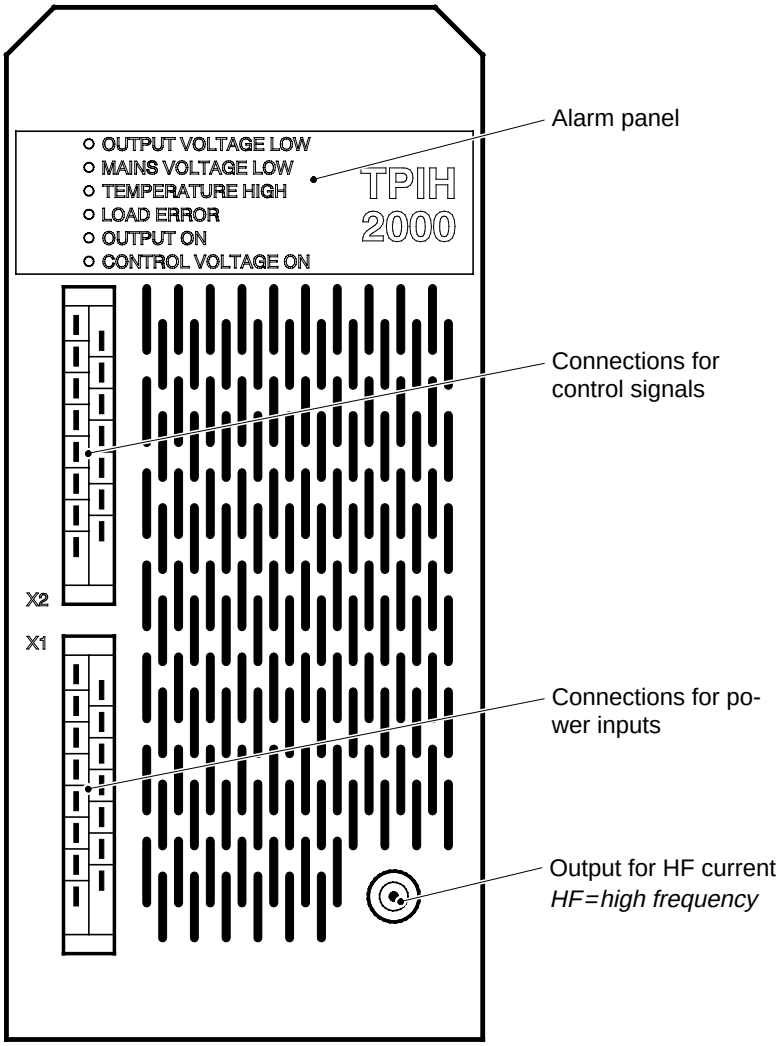

Explanation of the light–emitting diodes on the alarm panel:

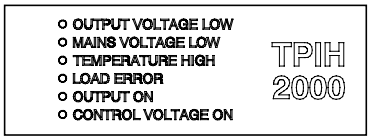

Output Voltage Low (red). If this is the only red light–emitting diode that is on, one of the following faults has occurred: **1**) The generator is defective and must be replaced. **2**) 10 V DC is not being supplied to the potentiometer. **3**) The potentiometer has been set at too low a value. **4**) The potentiometer is defective.

Mains Voltage Low (red). Power feed to the generator is insufficient. At least one of the phases supplies less than 85% of the nominal power, and the generator cannot in its turn provide the correct power. Check the input power fuses.

Temperature High (red). The temperature inside the generator is too high. Most likely, the fan is defective. If this is the case, the complete generator assembly must be replaced.

Load Error (red). There is an error in the load, i e the coaxial cable, current rail, transformer, or inductor.

Output On (green). Lights up when a pulse is being converted into the correct load, i e when the system functions correctly.

Control Voltage On (green). The power feed to the control section functions correctly.

The diagram below shows the connections for the control signals and input power. The No at each connection, shows how the cable concerned is marked.



30 } Power alarm. Common alarm to PLC for: Output
28 } Voltage Low, Mains Voltage Low, and Load Error.

26 } Temperature alarm to PLC.
24 }

22 Power setting from POT.
20 10 V DC to POT
16 0 V

14 24 V DC
12 0 V

8 Sealing pulse from PLC

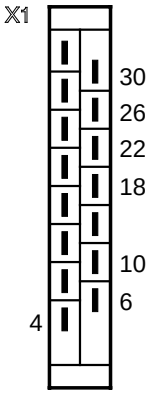

30 Neutral
26, 230 V AC 50/60 Hz

Three–phase 230/400 V AC 50/60 Hz
22 Phase R
18 Phase S
10 Phase T
6 Neutral

4 Ground

Function

The TPIH-2000 generator works in accordance with the block diagram below. It comprises an **power section** and a **control section**.

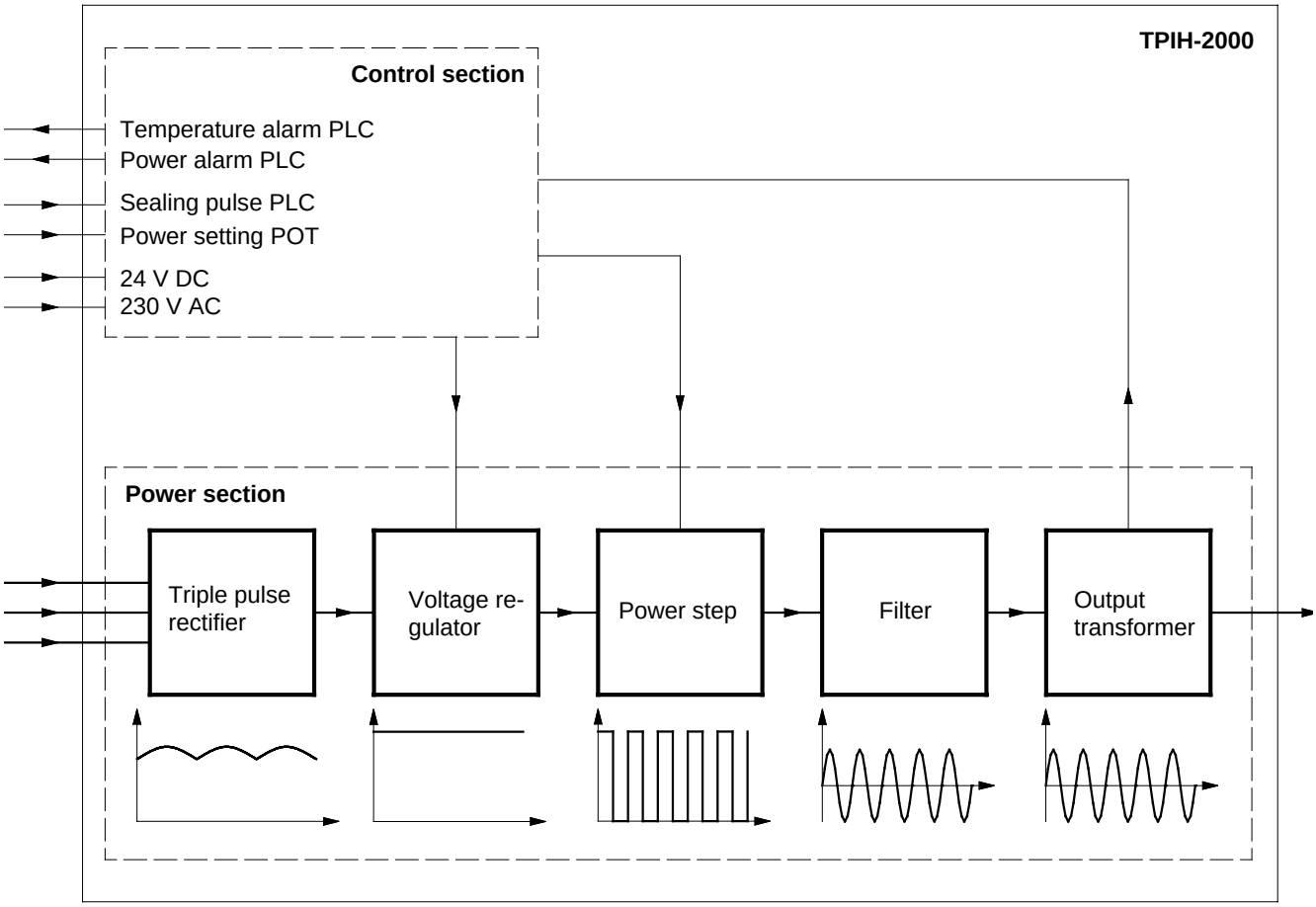

The control section is powered by 230 V AC and 24 V DC. It controls, for instance, voltage and frequency, and monitors the unit. It also controls the alarm panel.

The power section is powered by 3x400 V AC and incorporates the following functions:

Triple pulse rectifier, which converts the alternating voltage (AC) into a direct current (DC) of appr 325 V.

Voltage regulator, which stabilises the direct voltage at appr 350 V.

Power step, which converts the direct voltage into a high–frequency square pulse of 350 V, 0.5 MHz.

Filter, which generates a sinus–shaped high–frequency alternating voltage of 300 V, 0.5 MHz.

Transformer, with a ratio of 1:1, which is used to isolate the load from the generator. The load comprises the coaxial cable, transformer, current rail, and inductor.

Power regulation

As previously mentioned, the power in the inductor is determined by the output voltage from the generator. In order to understand how the output voltage is regulated, we have to take a closer look at what happens in the **filter section** of the generator.

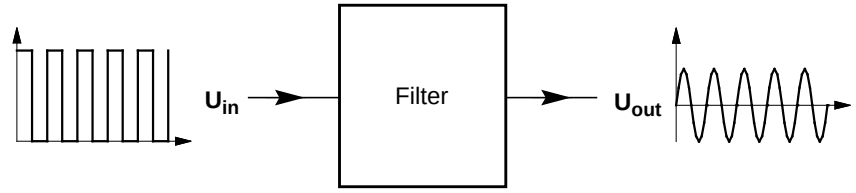

In order to regulate the output voltage, the fact is exploited that the ratio between the output and input voltages (U_{out}/U_{in}) in the filter is not constant. This ratio depends on the frequency, as shown in the diagram below.

At the **resonance frequency**, the ratio between output and input voltage reaches maximum.

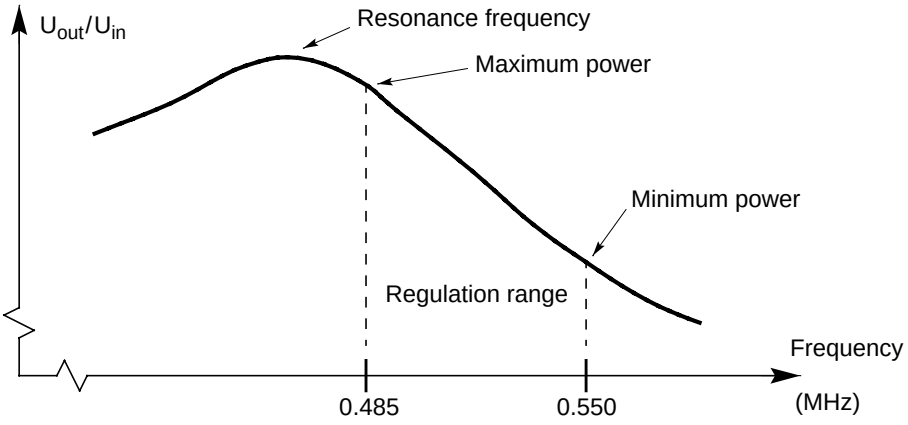

The 0.485-0.550 MHz frequency range is utilized to regulate the output voltage and thus the output power. Within this frequency range, the ratio between output and input voltage is virtually linear. Thus it is the frequency which is altered in order to regulate the power. The setting of 999 on the potentiometer is equal to a frequency of 0.485 MHz, which gives maximum power (2kW). The setting of 850 corresponds to a frequency which gives the power of 0.85^2 x maximum power ($0.85^2 \times 2 = 1.4$ kW), etc.

Note

This way of calculating disregards the fact that the phase angle, cosine φ, varies with the power. At low power, cosine φ is reduced; for instance, at a potentiometer setting of 440, the power may be ***0.9*** *x* 0.44^2 *x maximum power.*

Comparison between TPIH-2000 and older IH generators

TPIH-2000 has been installed in the following machines from the development step specified.

- TBA/8 060V
- TBA/9 140V
- TBA/10 120V
- TBA/21

The significant difference between TPIH-2000 and the older model generator is that TPIH-2000 is a transistor generator, while the older model is an electronic valve generator. A comparison between the two generator types shows the following differences:

- The output power of TPIH-2000 is adjustable while the machine is running. This is not possible with the older IH generator.
- In TPIH-2000, the output power is not dependent on the mains voltage (within a range of -15 to +10 per cent of the nominal value). In the old model, there is a direct relationship between mains voltage and output power.
- TPIH-2000 consumes 1.5 kW while the old model uses up appr 4 kW. Nevertheless, the inductor power is equally high, appr 1 kW, which is due to the losses in the TPIH-2000 system being lower.

Much of the loss occurs in the current rail. In the TPIH-2000 system, a major part of the current rail has been replaced by a coaxial cable. But the coaxial cable cannot cope with as high an amperage as a rail, so therefore the current is transformed in a transformer near the inductor instead of in the generator itself.

TPIH-2000

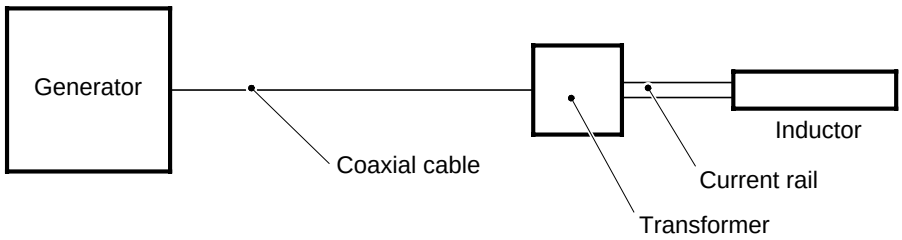

Old model IH generator

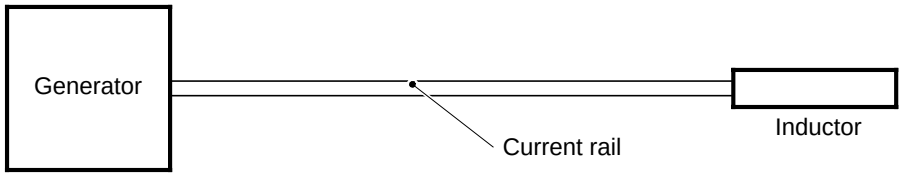

- The voltage across the inductor in the TPIH-2000 system is 40-50 V; in the old IH generator it is appr 90 V. Low voltage is preferable as it reduces the danger of spark–over and improves safety.
- The frequency in TPIH-2000 is 0.5 MHz, compared with 1.8 MHz in the old generator.
- TPIH-2000 is based on transistor technology, and the old model IH generator on electronic valves. Transistors are very reliable with a long working life, while valves have a limited life.
- Inside TPIH-2000, there is no high-tension. Maximum voltage is 400 V, while the high-tension section of the old model generator carries 5000 V.

TPIH test instrument

For TPIH-2000, there is a special test instrument (TP 68462-101). It can be used for the measuring of:

- HF voltage
- HF current
- Load phase angle (cosine φ)
- Pulse time (duration)

The test instrument is intended to be connected in series with the coaxial cable from the generator, as shown in the diagram below.

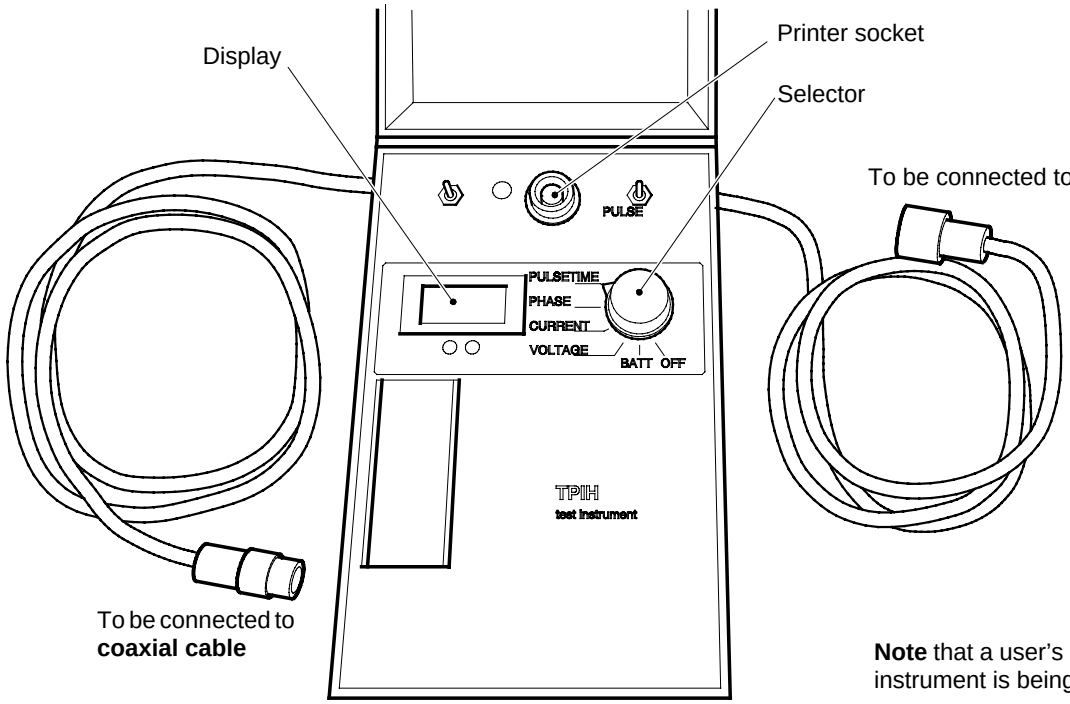

Note that a user's manual for the instrument is being supplied.

The measuring results can be used to calculate the power and impedance of the load.

P=UxIxcosφ (Power = Voltage x Amperage x Cosine φ)

Z=U/I (Impedance = Voltage/Amperage)

Impedance is to be roughly 50 Ω. Normal value is 40-65 Ω.

Note
The pulse time is determined by the machine PLC and does not require adjustment.

Pulse time meter
HF voltmeter

If the special test instrument for TPIH-2000 is not available, the pulse time can be measured by means of a pulse time meter (TP 102 90243-90) and the HF voltage by means of an HF voltmeter (TP 103 90243-114). In this case, measuring is done at the copper rail by the inductor (secondary transformer side).

Instruction manual

***Note**: The following is copy of the instruction manual enclosed to the TPIH test instrument 68462.*

TPIH test instrument 68462

Instructions (rev Sep 91)

The TPIH test instrument is used for checking the high frequency part of a TPIH system.

1 Connecting

The instrument is connected in series with the coaxial cable between the generator and the IH-transformer, usually closest to the generator.

NOTE: Connection and disconnection of the test instrument must be done, when the generator is not pulsing e g with the machine in the short stop position.

2 On and off

The instrument is started with a rotary switch. Approximately five minutes after the latest activation of the switch, the instrument is automatically turned off.

3 Measuring

Voltage (V), Current (A), Phase angle between voltage and current (degrees) and Pulsetime can all be measured. Disregard any numbers that are displayed prior to the measurements. When the measurement is finished note the values directly.

a **Pulses**

The toggle switch to the right is put in position ”pulse”. The instrument measures and stores pulse time after every pulse. The voltage, current and phase angle are measured and stored after half the pulse time. In order for the instruments to make correct measurements, i e in the middle of the pulses, **at least 2 pulses are needed**. The LED ”pulse” lights up during the pulse and ”sample” lights up when a measurement is taking place. Put the toggle switch in position ”hold” when no more new measurements are needed.

b **Continuous signals**

The toggle switch to the right is put in position ”Continuous”. The instrument shows the measurements for voltage, current and phase angle appr. 3 times/second. If, at a certain point, the measurements are to be stored, the toggle switch is put in position ”hold”.

c **Single pulse**

The rotary switch is turned to position ”pulse time” and the toggle switch to the right to position ”Continuous”. The toggle switch to the left is used to preset an expected pulse time (N.B.! Pos. values). Change the toggle switch to the right to position ”pulse”. It is now possible to measure a single pulse.

4 Power, energy etc

By using the measured values several others can be calculated.

Power = Voltage x Current x Cos (phase angle) (W).

Pulse energy = Power x Pulse time (mWs).

The Impedance's absolute value = Voltage/Current (ohm).

Cos 0° = 1 Cos ±5 = 0.996 Cos ±10 = 0.985

Cos X $1 - x^2 : 6700$ $-40° < x < 40°$

5 Trouble shooting for load error

If there is a load problem only short pulses are delivered by the generator. The results from the measurements will be approximate but they could make trouble shooting easier. During a pulse with load problem the LED "sample" is lit up during the entire pulse, while LED "pulse" is off.

Load examples (Test instrument connected closest to the generator)	**Phaseangle (Degrees)**	**Voltage/Current (Ohm)**
Optimal load (no load problem)	0	50
Normal load (no load problem)	±15	40 - 65
Short circuit in coax. cable, contacts, primary of IH-transf.	pos (3)	1 - 10 (1)
Open circuit in same as above.	neg (3)	200 - 2000 (2)
Short circuit in inductor, current rail, secondary of IH-transformer.	pos	10 - 20
Open circuit in same as above	neg	2 - 5
No packaging material on the inductor.	neg	5 - 15

(1) = The greater value, the greater distance between problem and instrument.

(2) = The greater value, the shorter distance between problem and instrument.

(3) = The greater phase difference, the greater distance between problem and instrument.

6 Connection of chart recorder

To record voltage, current and phase as a function of time a chart recorder e g Brush can be connected.

1 Connect the included cable to the recorder.

marking "V" :	Voltage	100 mv = 100 V
marking "C" :	Current	50 mv = 1 A
marking "P" :	Phase	10 mv = 1 ˚
marking "O" :	O	

2 Isolate cables that are not used.

3 Connect to the instrument. The toggle switch to the right is put in position "pulse".

7 Battery

The instrument is powered with a standard 9 V battery e g 6LR61. An alcaline battery gives approximately 40 hours operation. When approximately 5 hours operation are left, ”batt” is displayed. The instrument gives correct values until 000 is displayed and it switches off automatically. The battery eliminator is used when you want to measure during long time, e g with a recorder. With the battery eliminator connected and the rotary switch in position ”batt” the display should show 8,5 V - 14 V.

8 Accuracy

Accuracy for new instruments used according to 3a and 3b.

Voltage	± (2 % + 1 V)	100 - 350 V
Current	± (2 % + 0,03 A)	2 - 7 A
Phase	± (5 % + 2 ˚)	-30° - +30°
Pulse time	± (2 % + 2 ms)	10 - 1000 ms

To compare two instruments, connect them in series. Then interchange them since the values depend on the distance from the load, especially if the load differs from 50 ohm.

9 General

The instrument can operate in temperatures from 0 to 45 ˚C.

It should not be used immediately after major temerature change.

Store the instrument in a dry place.

Temporary storage temperature: -20 to +60 ˚C

Do not use the instrument if water has penetrated into it.

Do not dismantle the instrument when the coaxial cables are connected.

The panel can be opened if the lower screw in the middle is loosened.

9

Design Control System

Design control 2

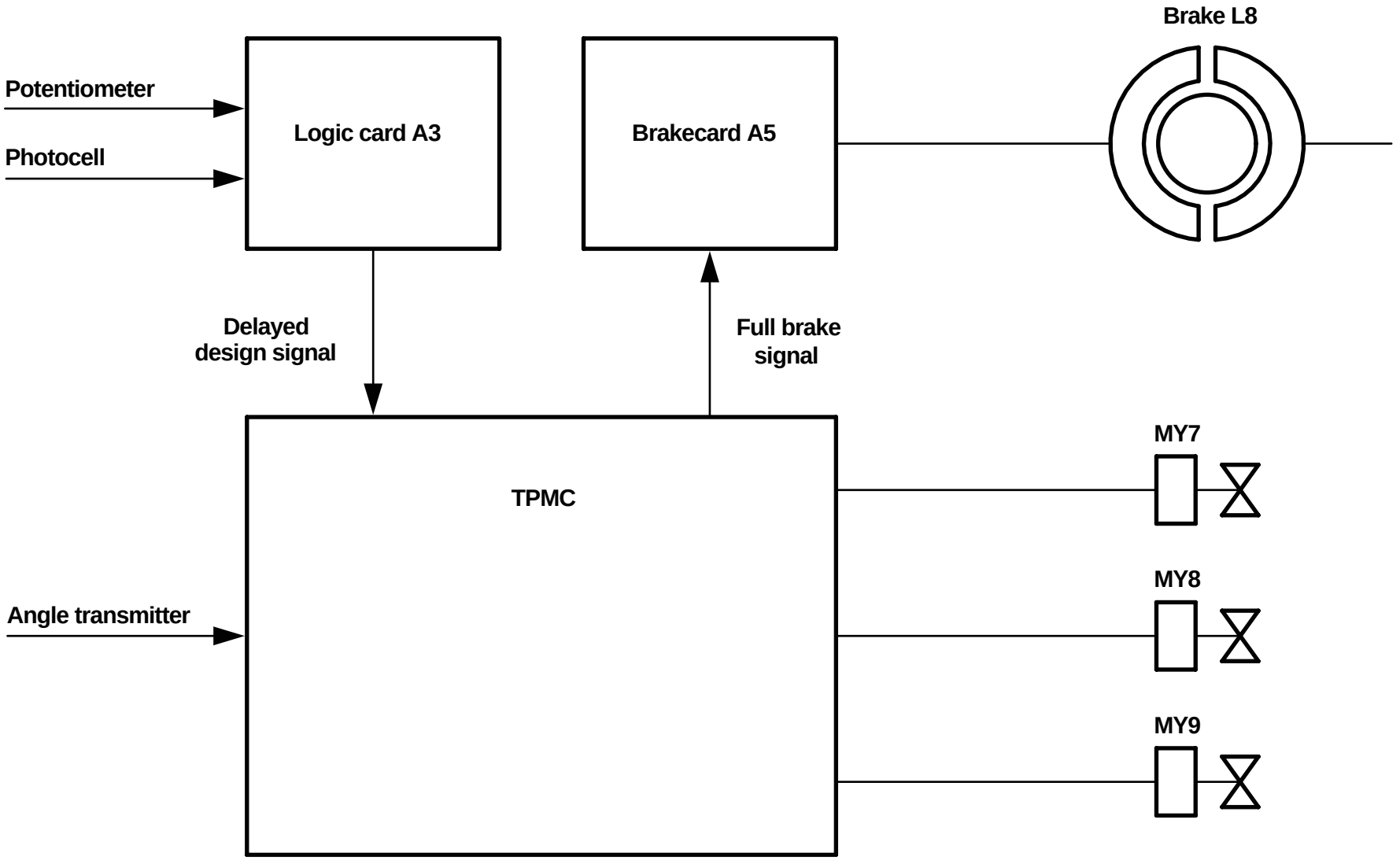

Design control 2

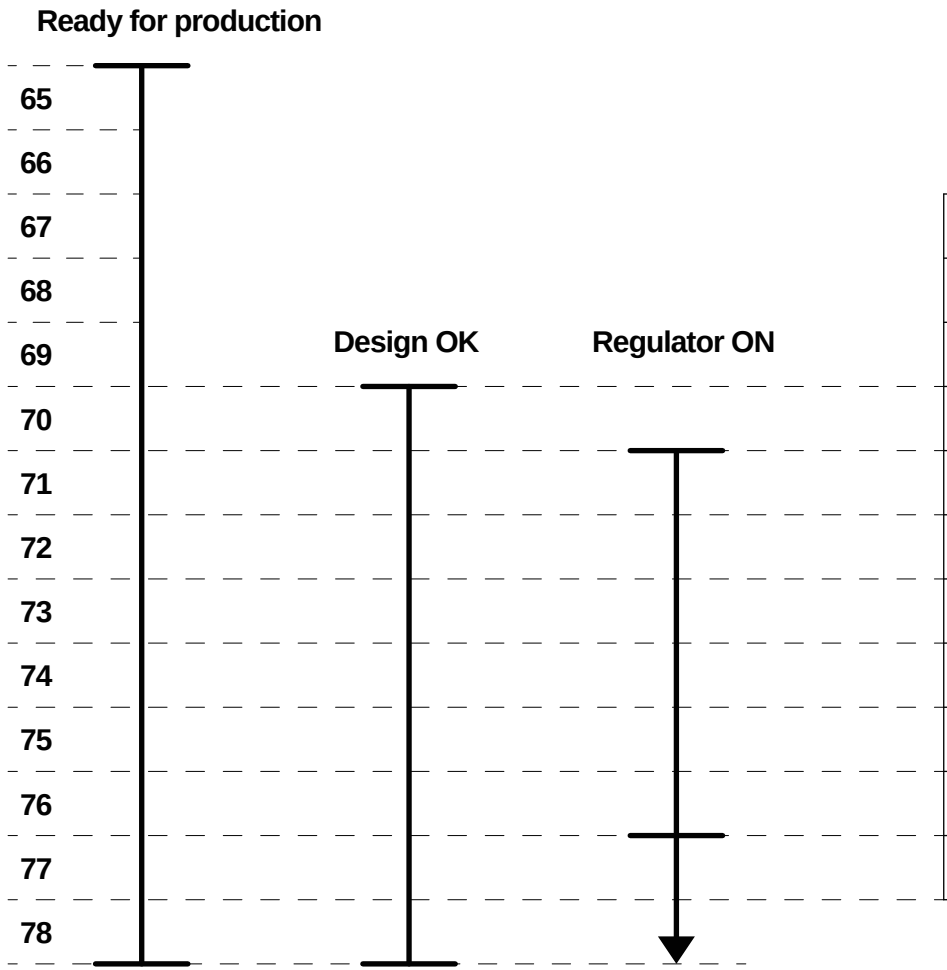

MY7	MY8	MY9	
C1	C1	C1	
0.5	1.0	2.0	Result
			0
X			0.5
	X		1.0
X	X		1.5
		X	2.0
X		X	2.5
	X	X	3.0
X	X	X	3.5

Design correction logic A3

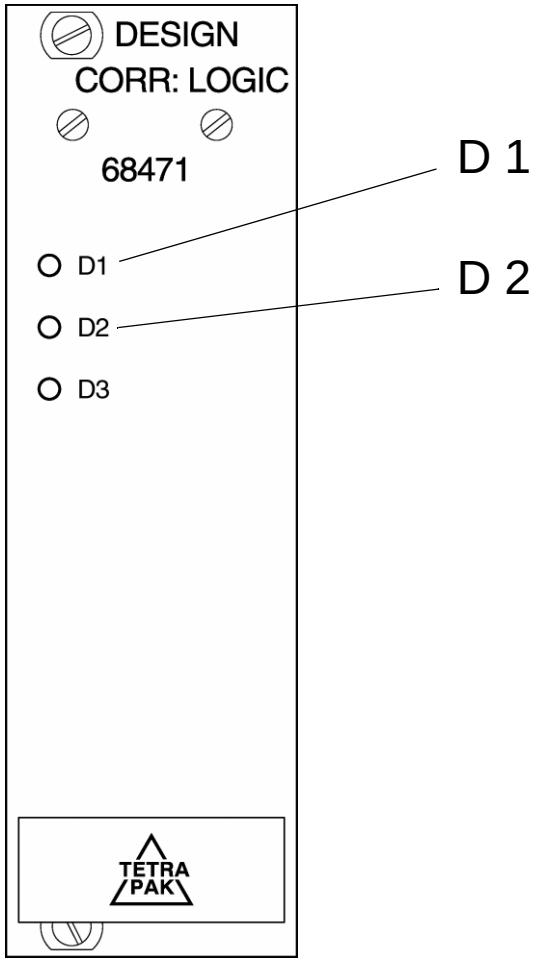

A 023

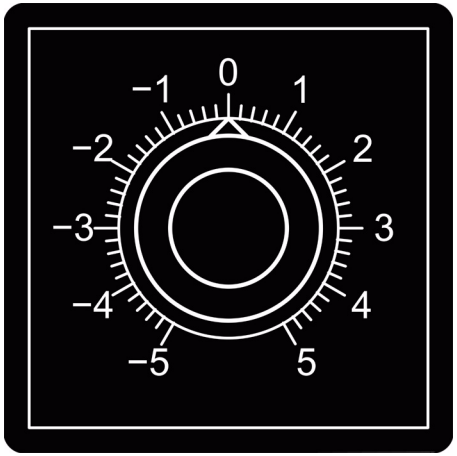

Brake regulator analog A5

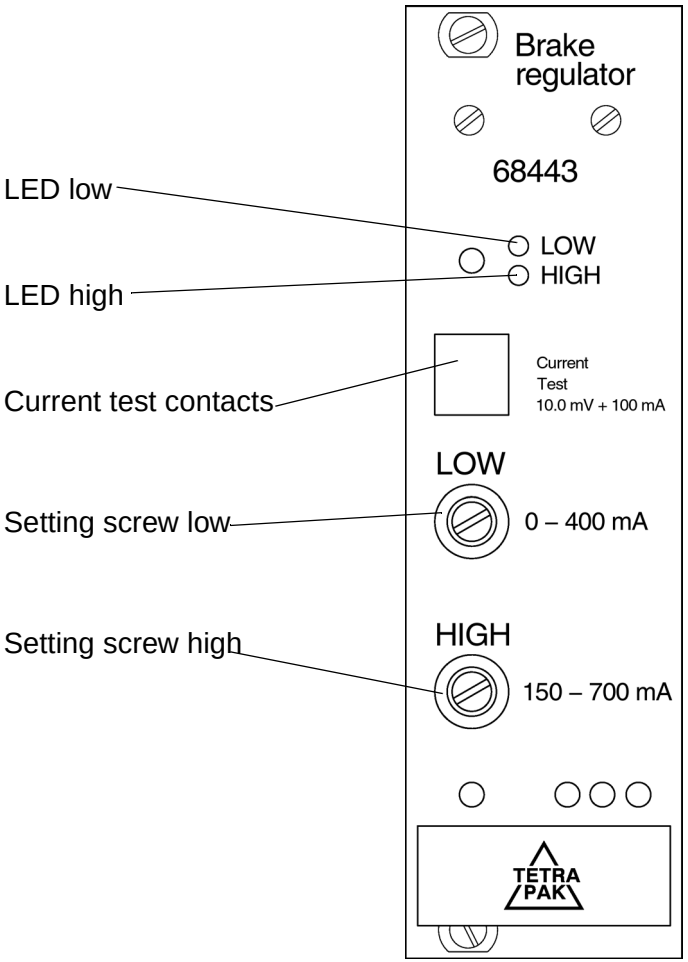

10

Drive System

Drive System

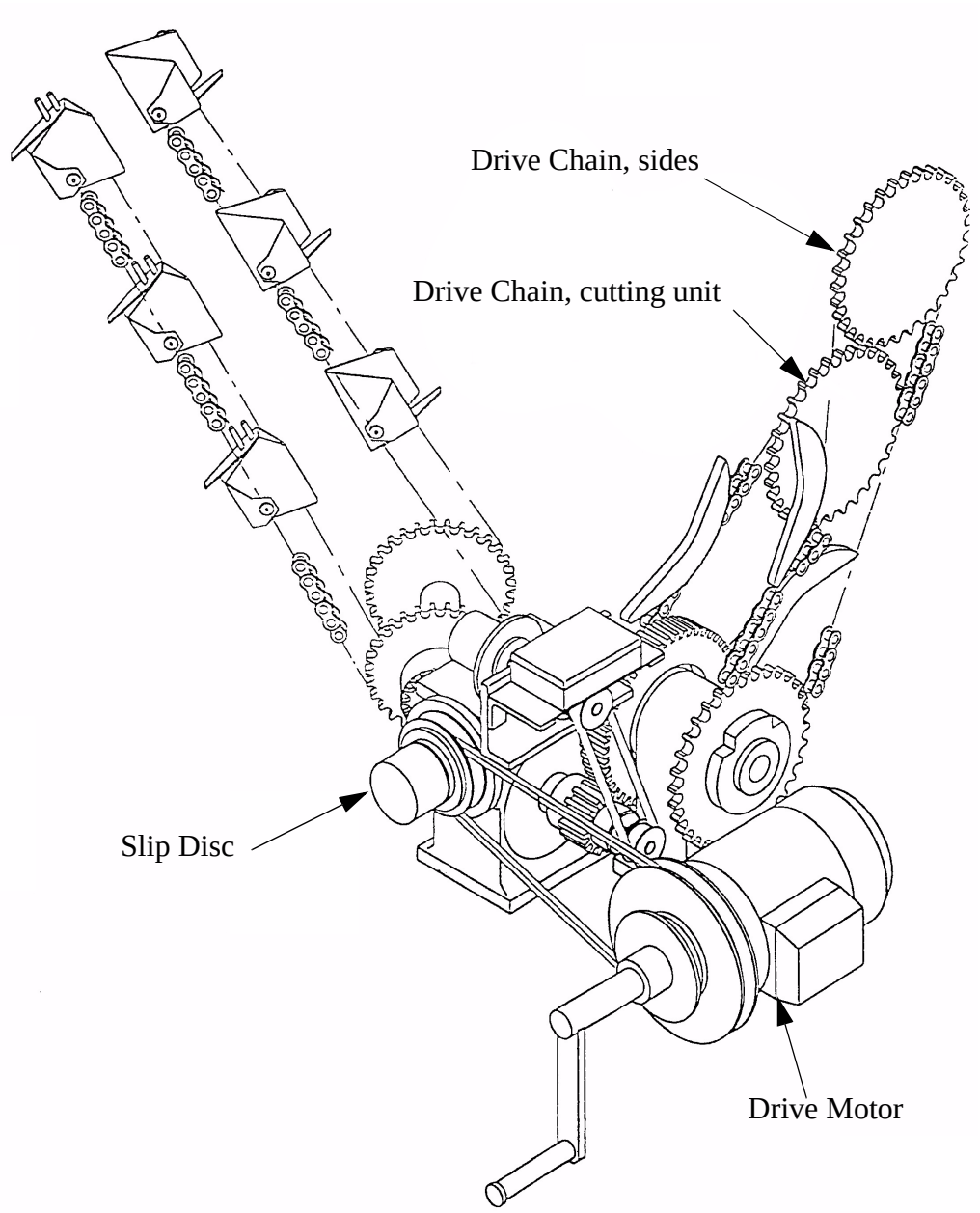

Drive Chain, side

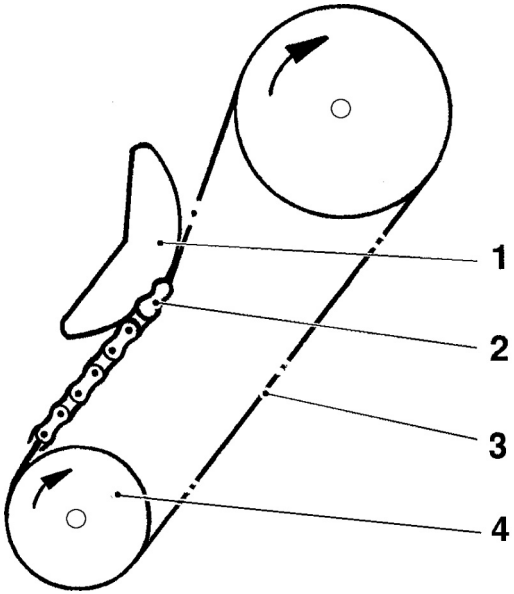

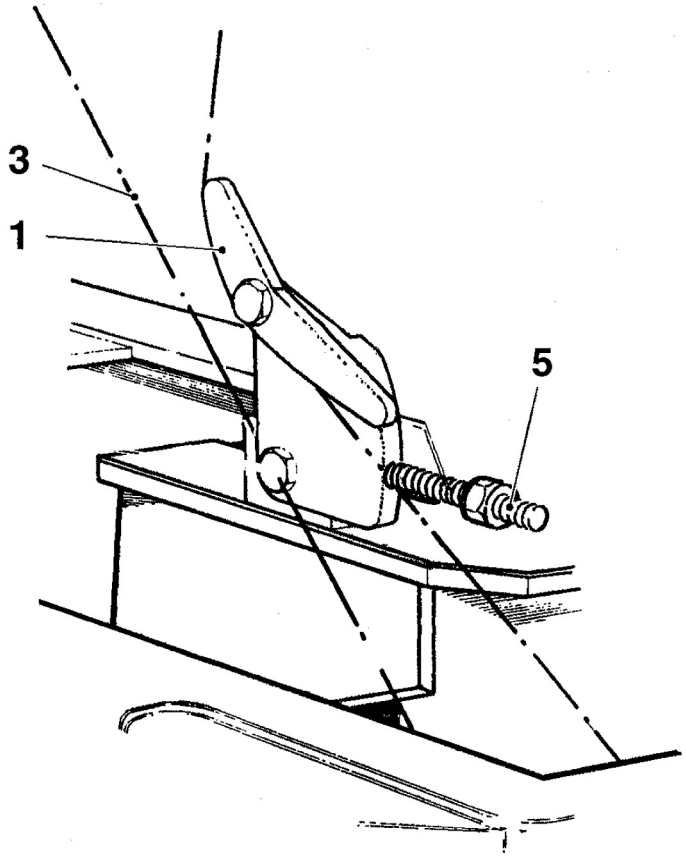

1 Chain tensioner cam
2 Chain lock
3 Drive chain
4 Intermediate shaft
5 Tensioning screw

Drive Chain, cutting unit

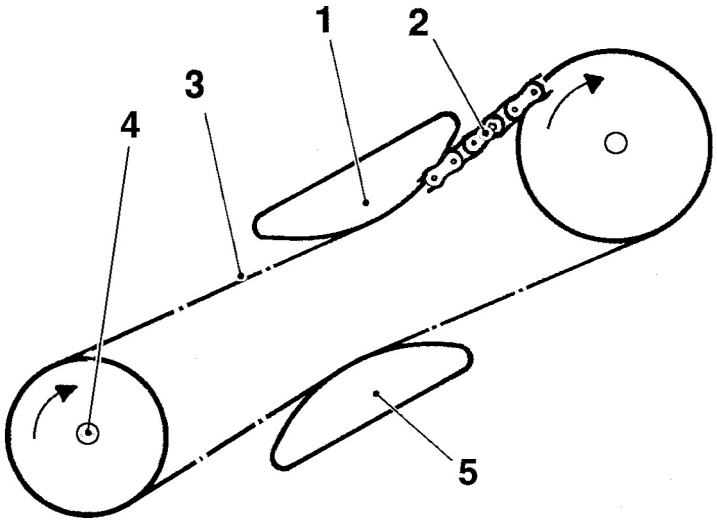

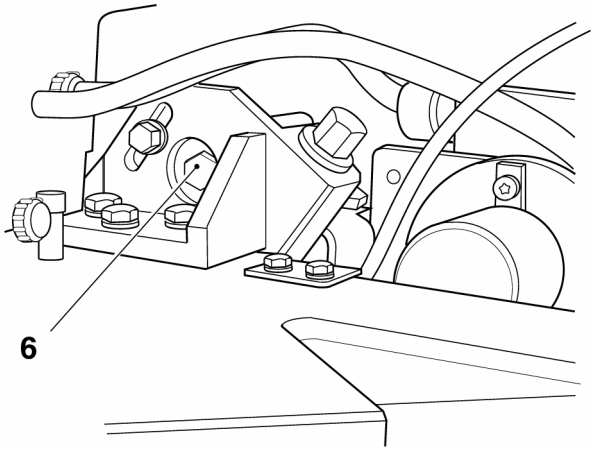

1 Chain tensioner cam, upper
2 Chain lock
3 Drive chain
4 Intermediate shaft
5 Chain tensioner cam, lower
6 Chain tensioner lock screw

Slip Disc

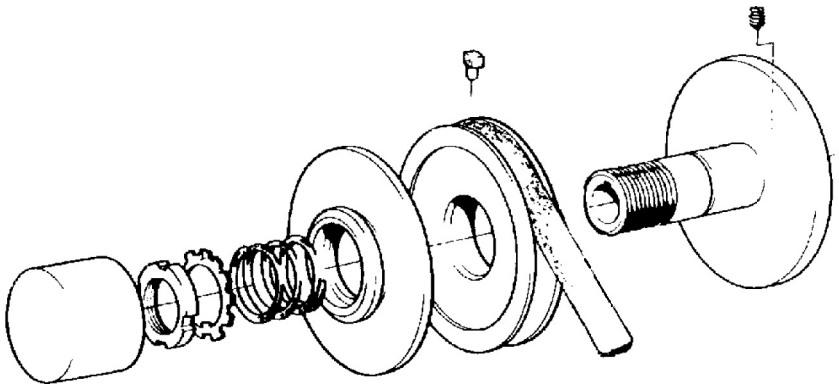

A = min 21 mm
B = 13 mm

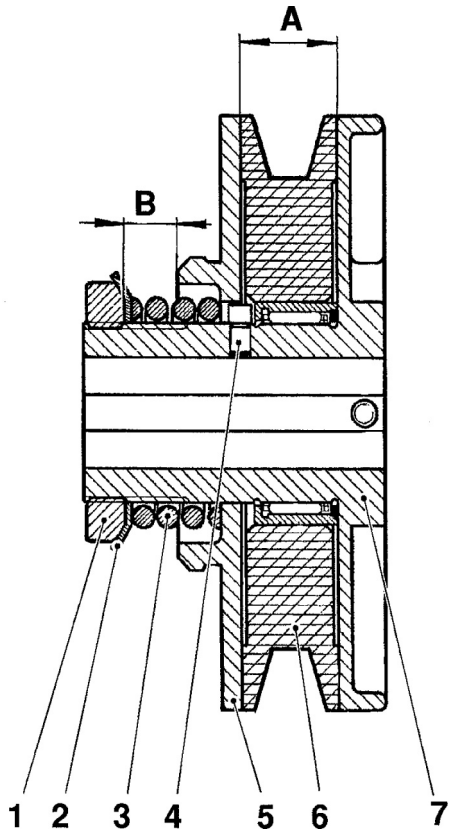

1 Nut
2 Lock plate
3 Coil spring
4 Doewl
5 Flange
6 V-belt pulley
7 Hub

Drive Motor

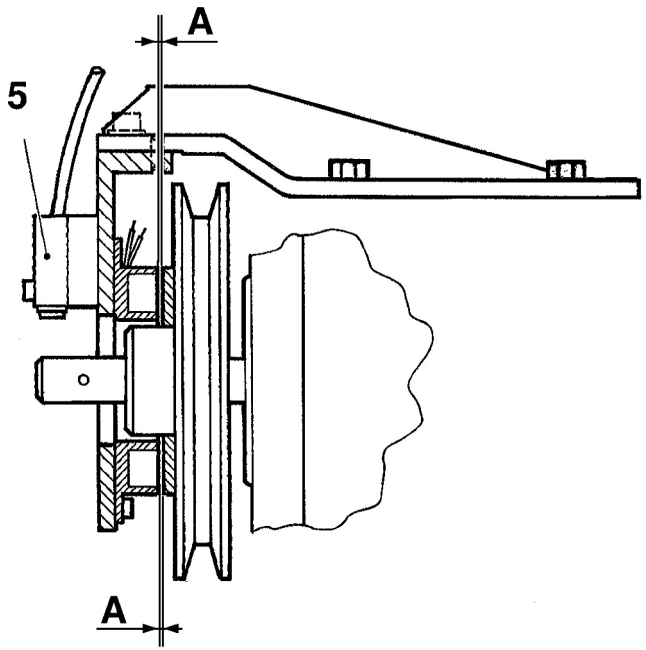

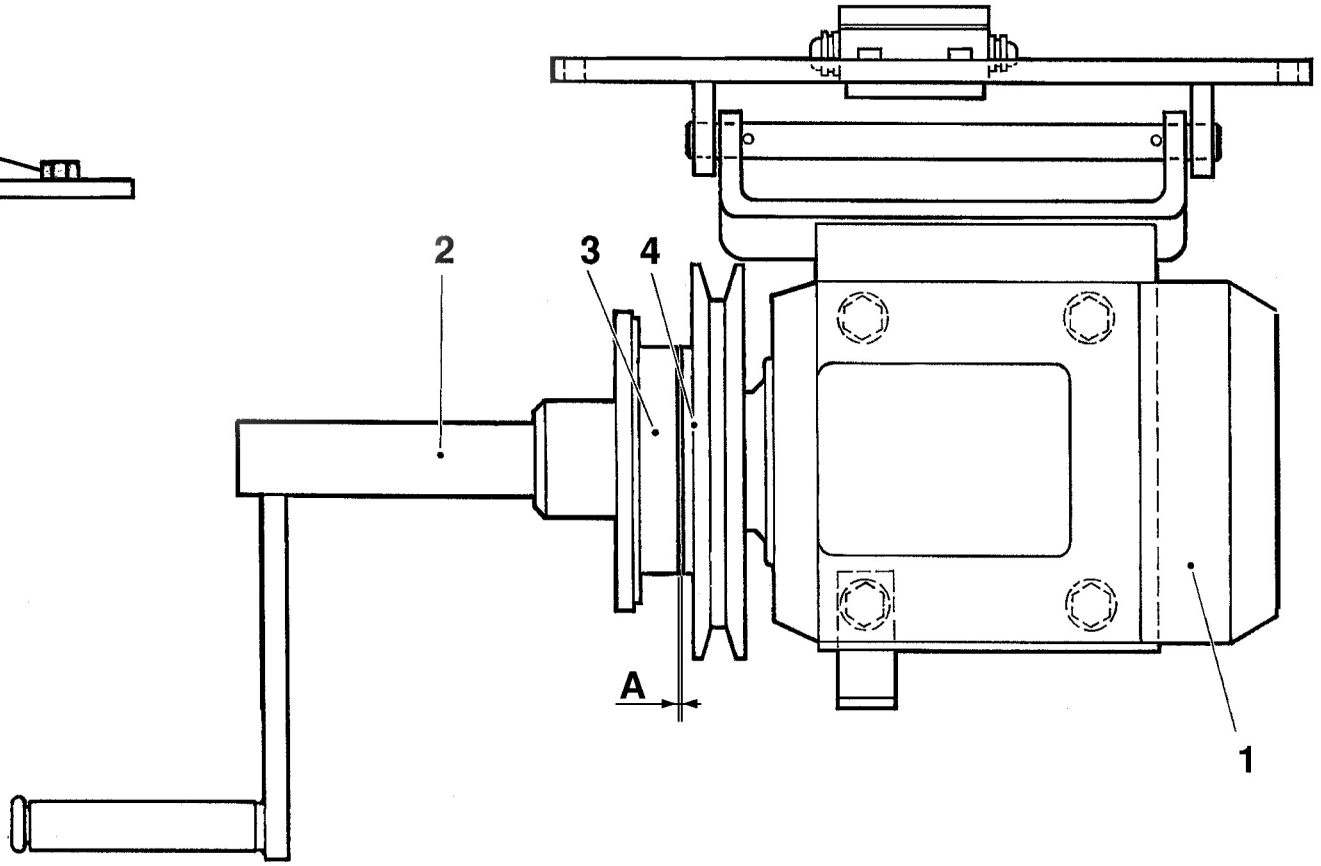

A = 0.10 - 0.30 mm

1 Drive motor
2 Crank
3 Magnet
4 Brake ???
5 Inductive switch

11

Hydraulic System

Hydraulic System

Overview

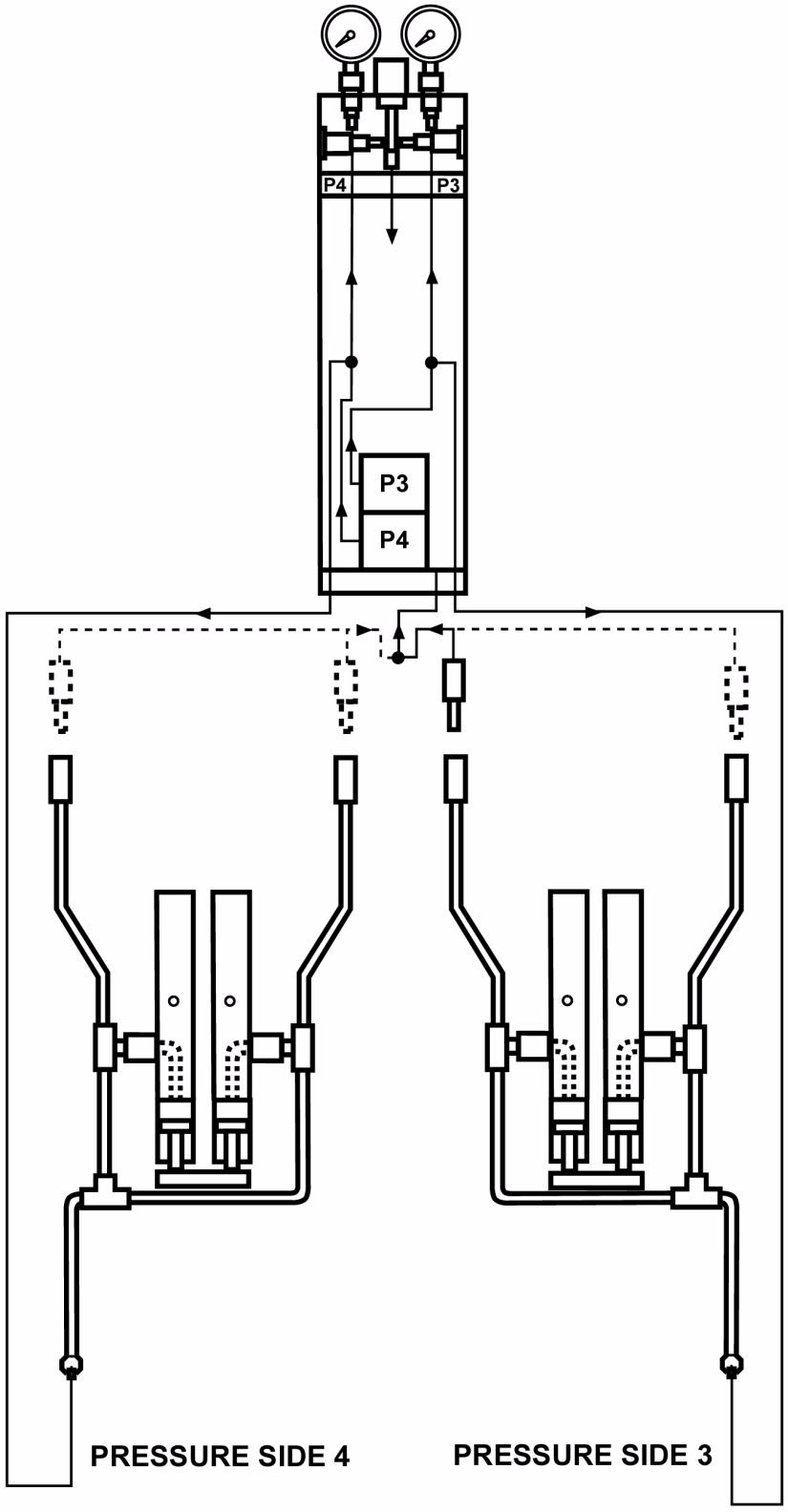

Hydraulic Pump

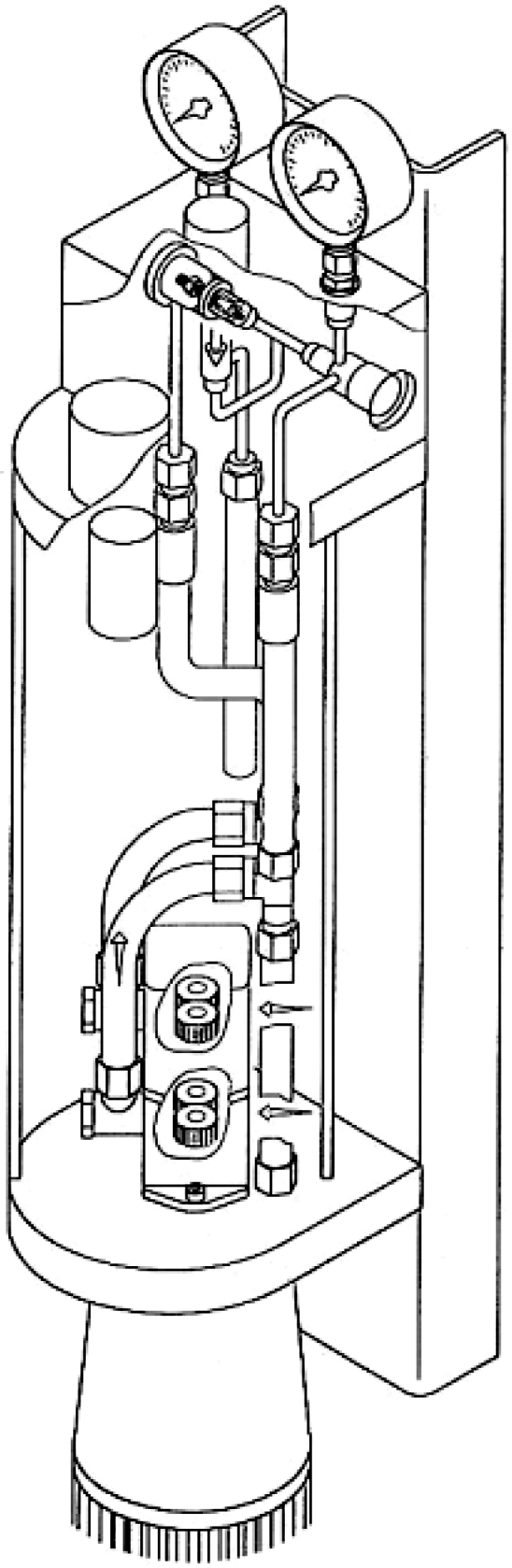

Hydraulic Pump

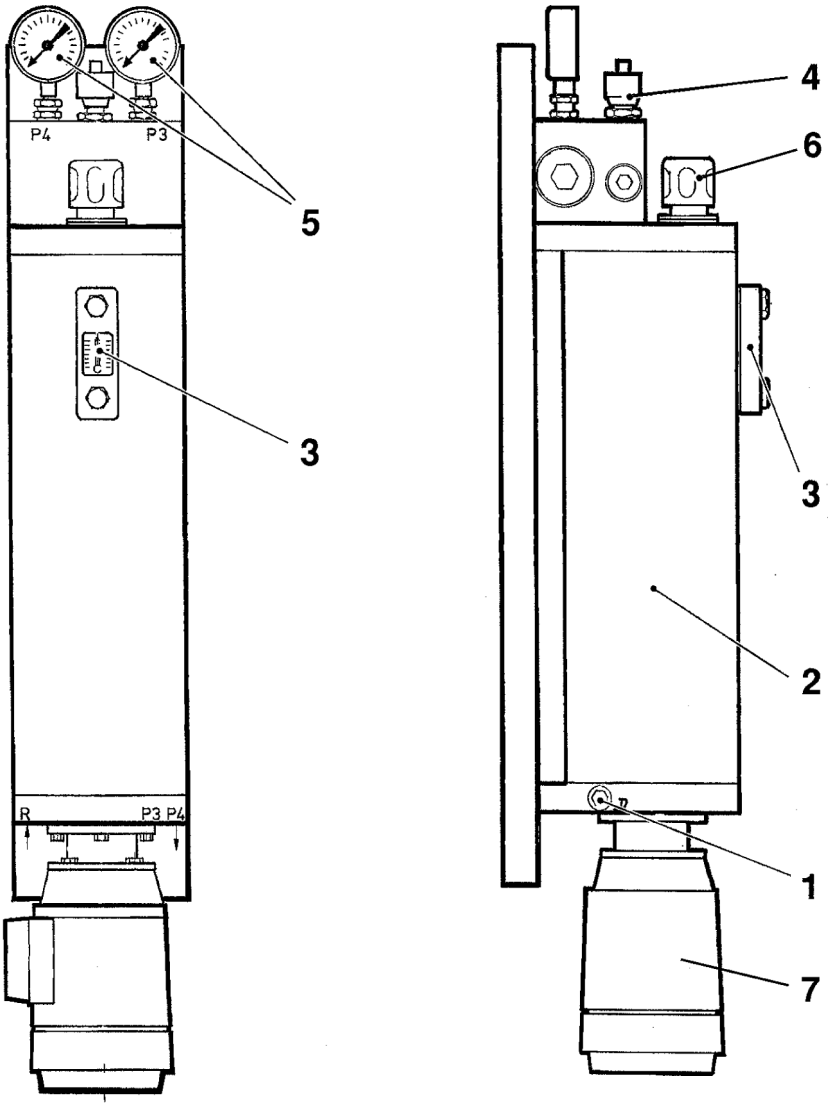

1 Drain plug
2 Tank
3 Inspection glass
4 Pressure regulator
5 Pressure gauge
6 Filler cap
7 Punp

12

Lubrication System

Central lubrication system

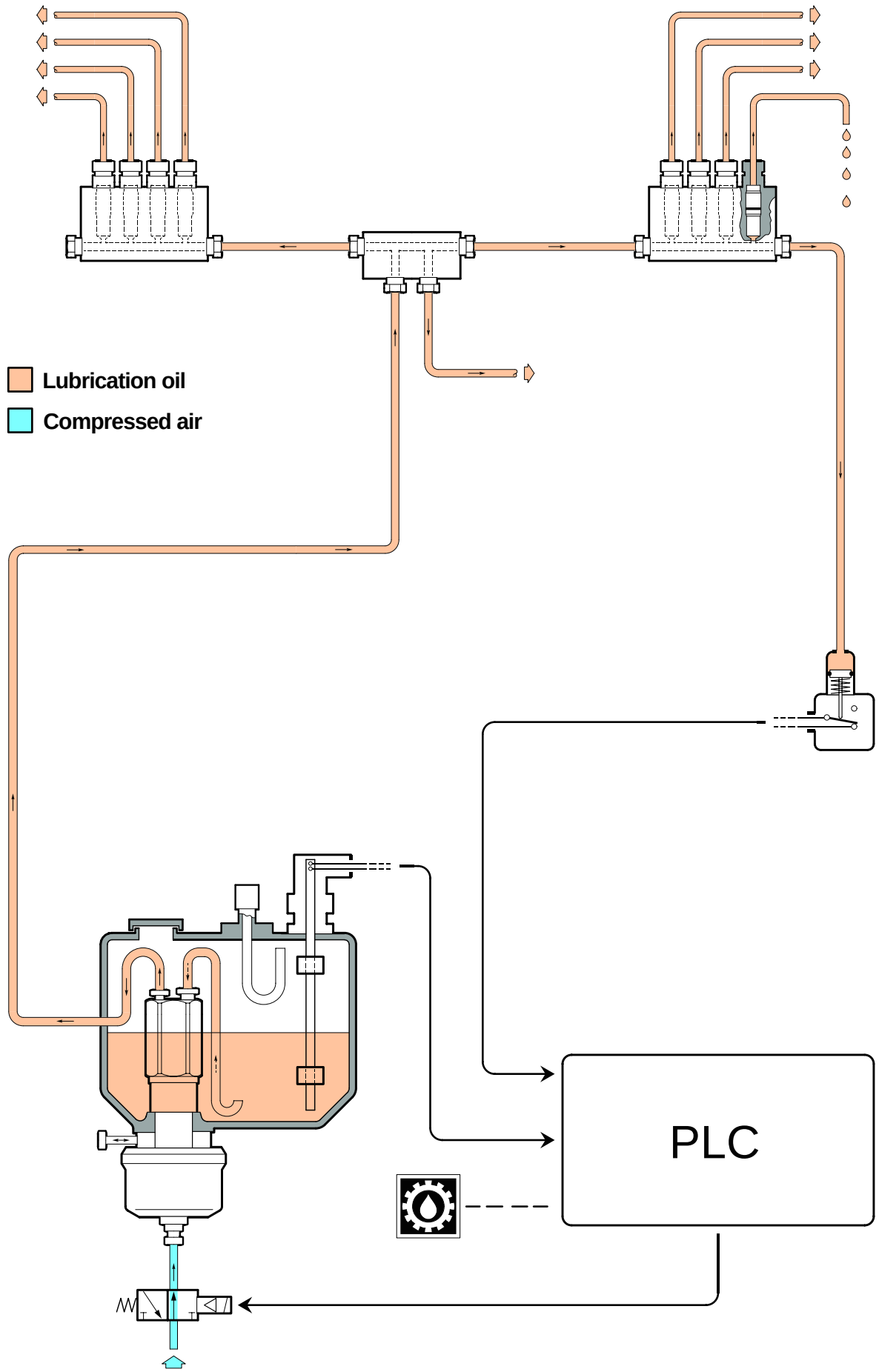

Technical Training Centre Lund, Sweden	Machine type TCA/65	Issue 1/0104	OH 1037

High pressure lubrication system

Distribution block

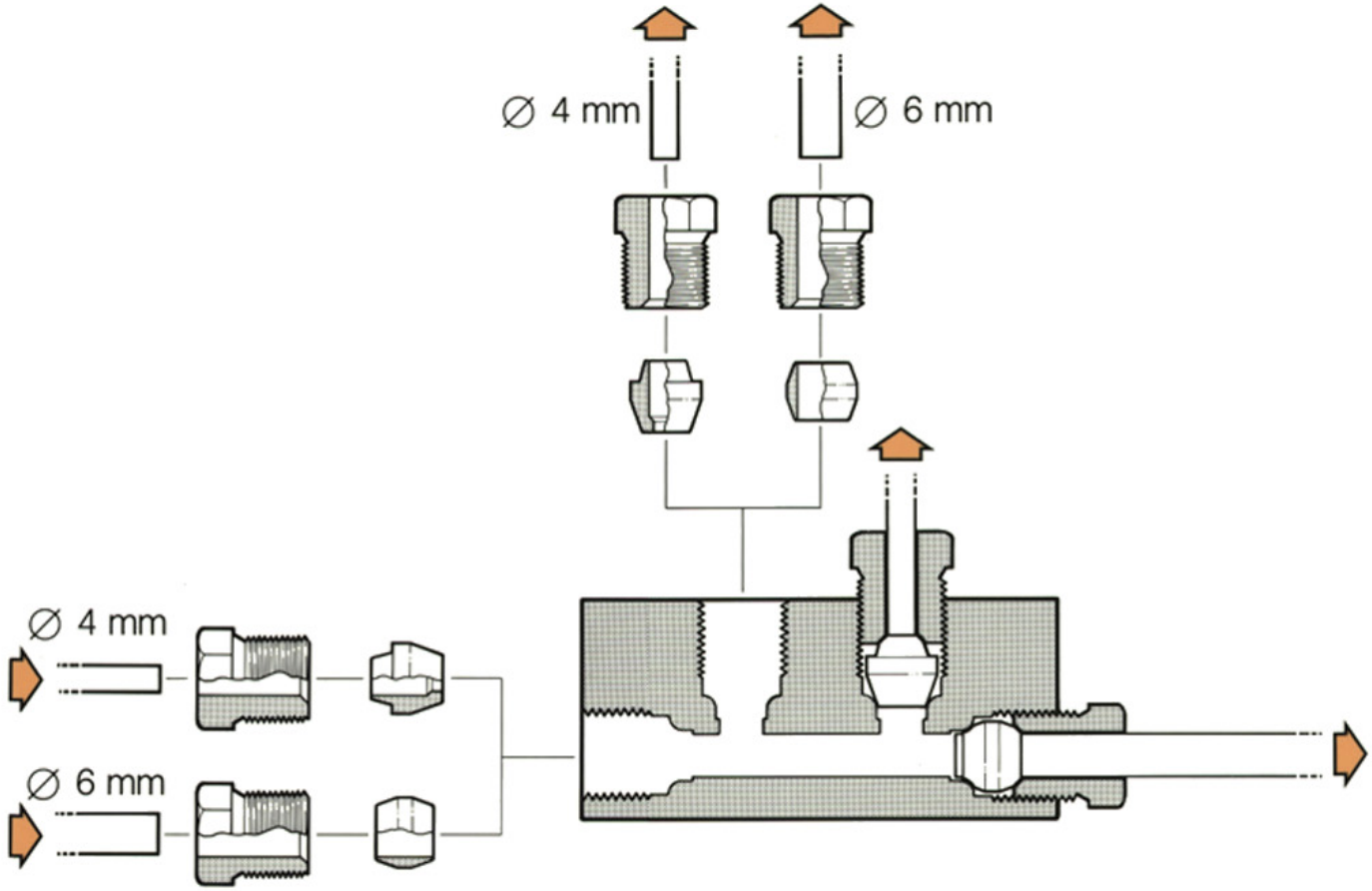

Central lubrication pump and dosing valve

Rest position

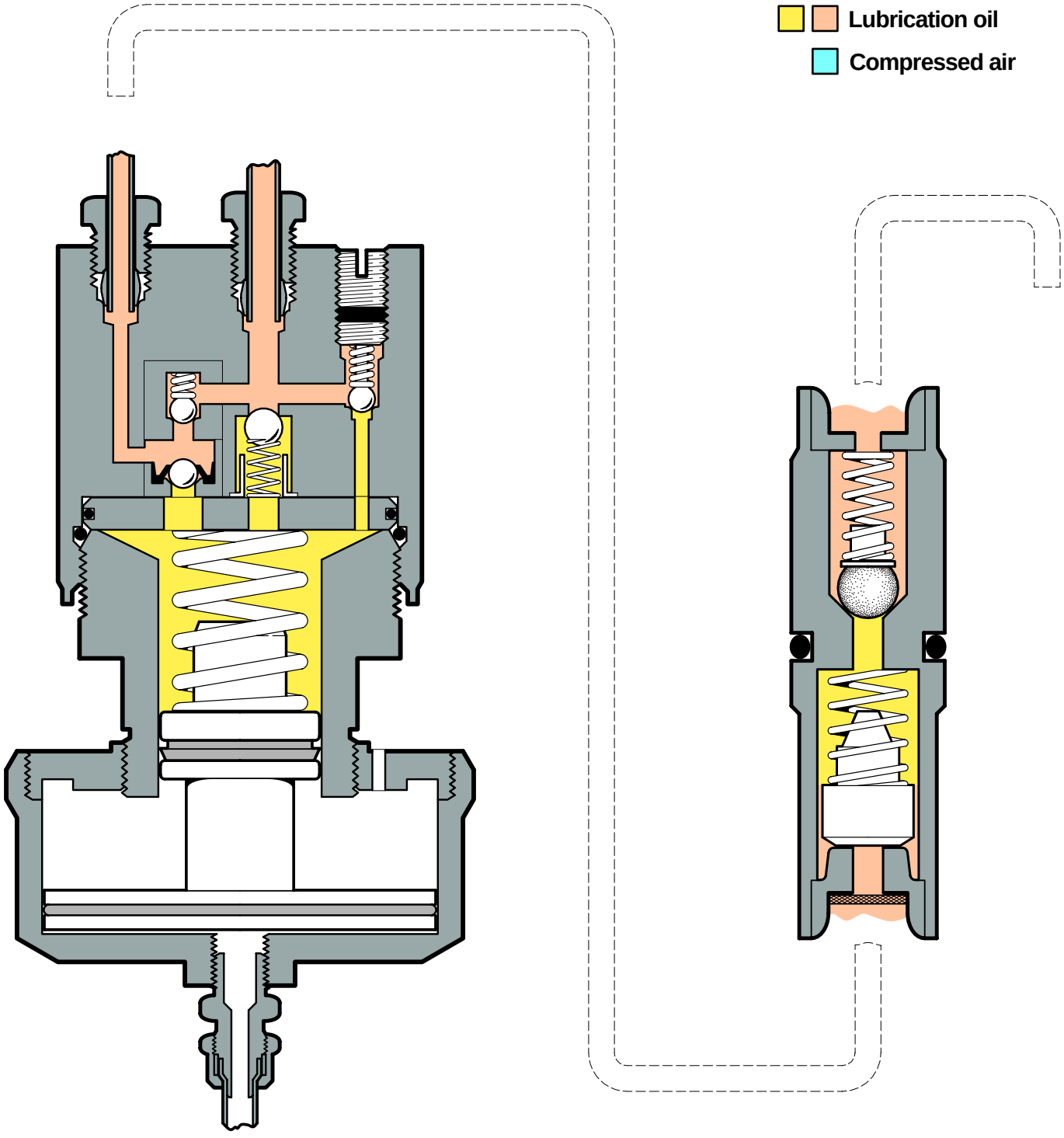

Central lubrication pump and dosing valve

Pressure stroke

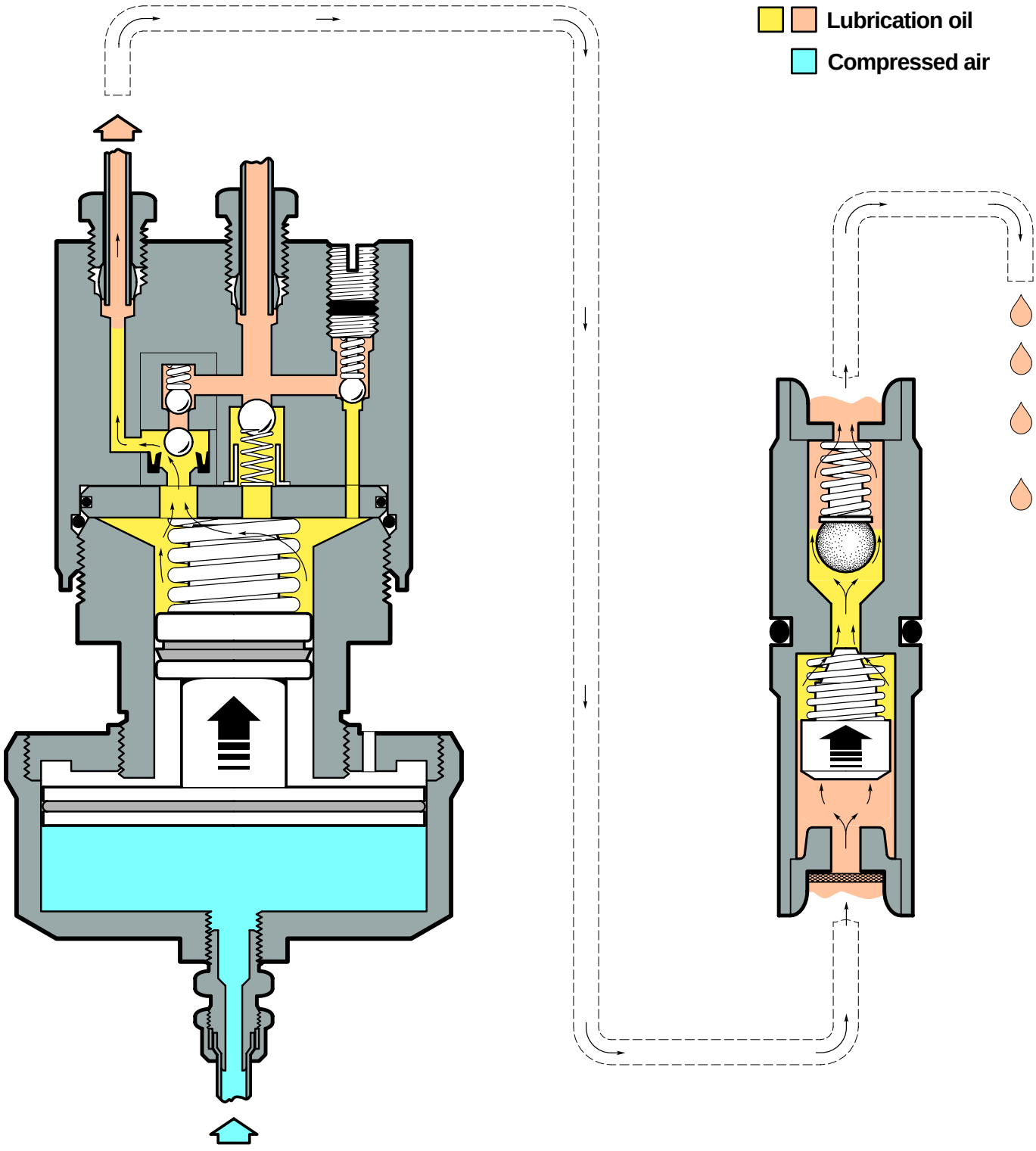

Central lubrication pump and dosing valve

Discharge pressure

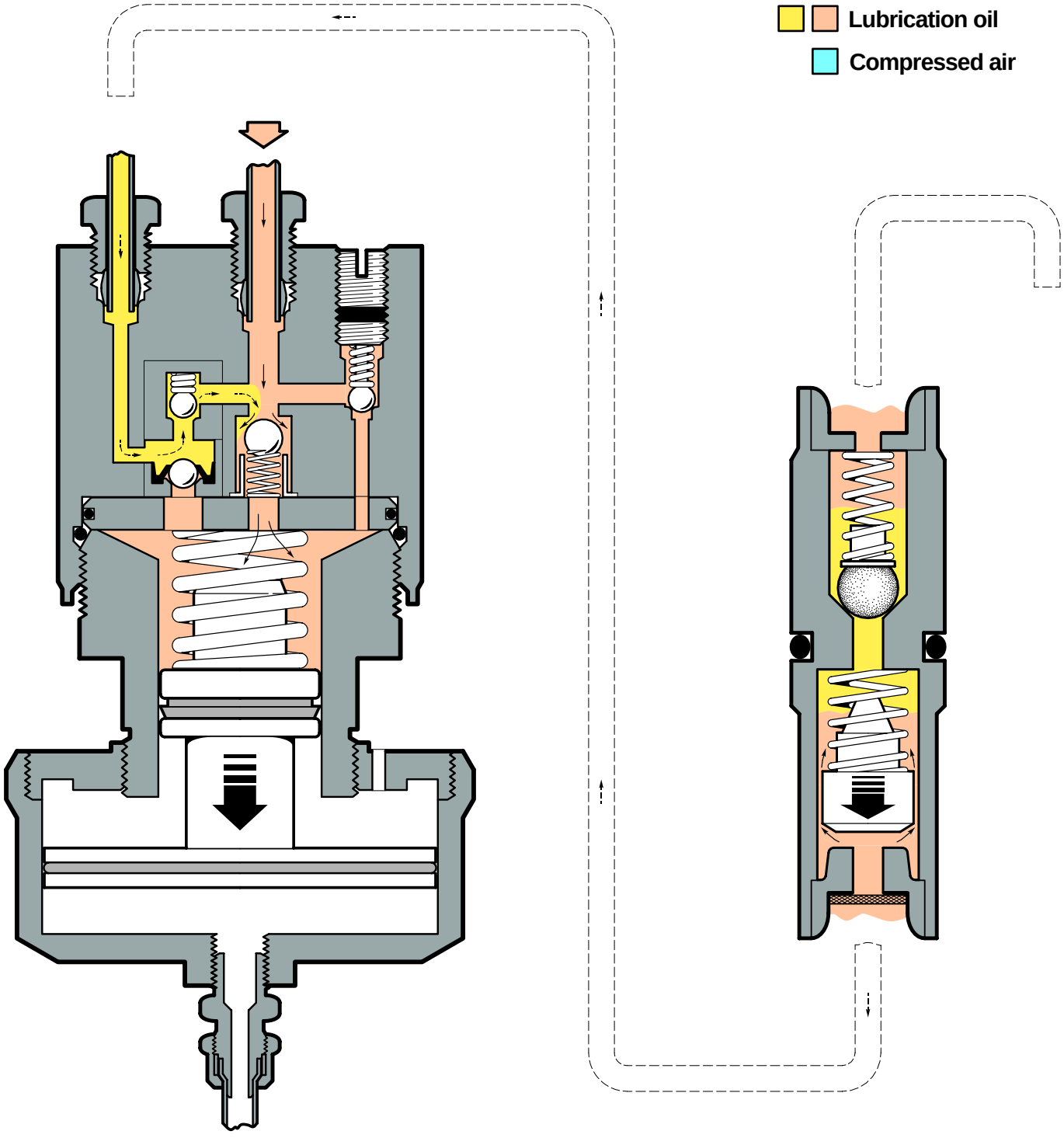

Lubrication points

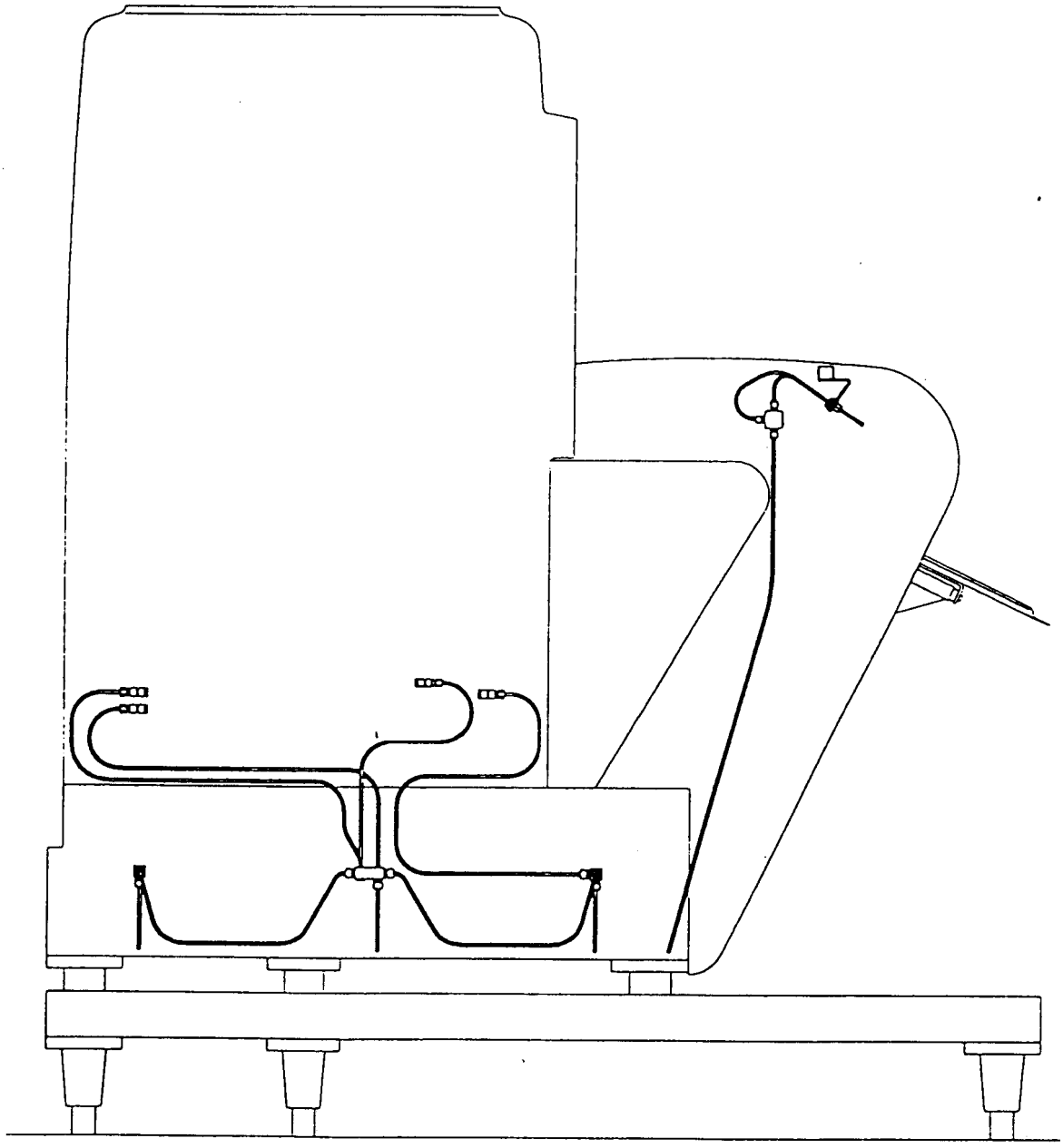

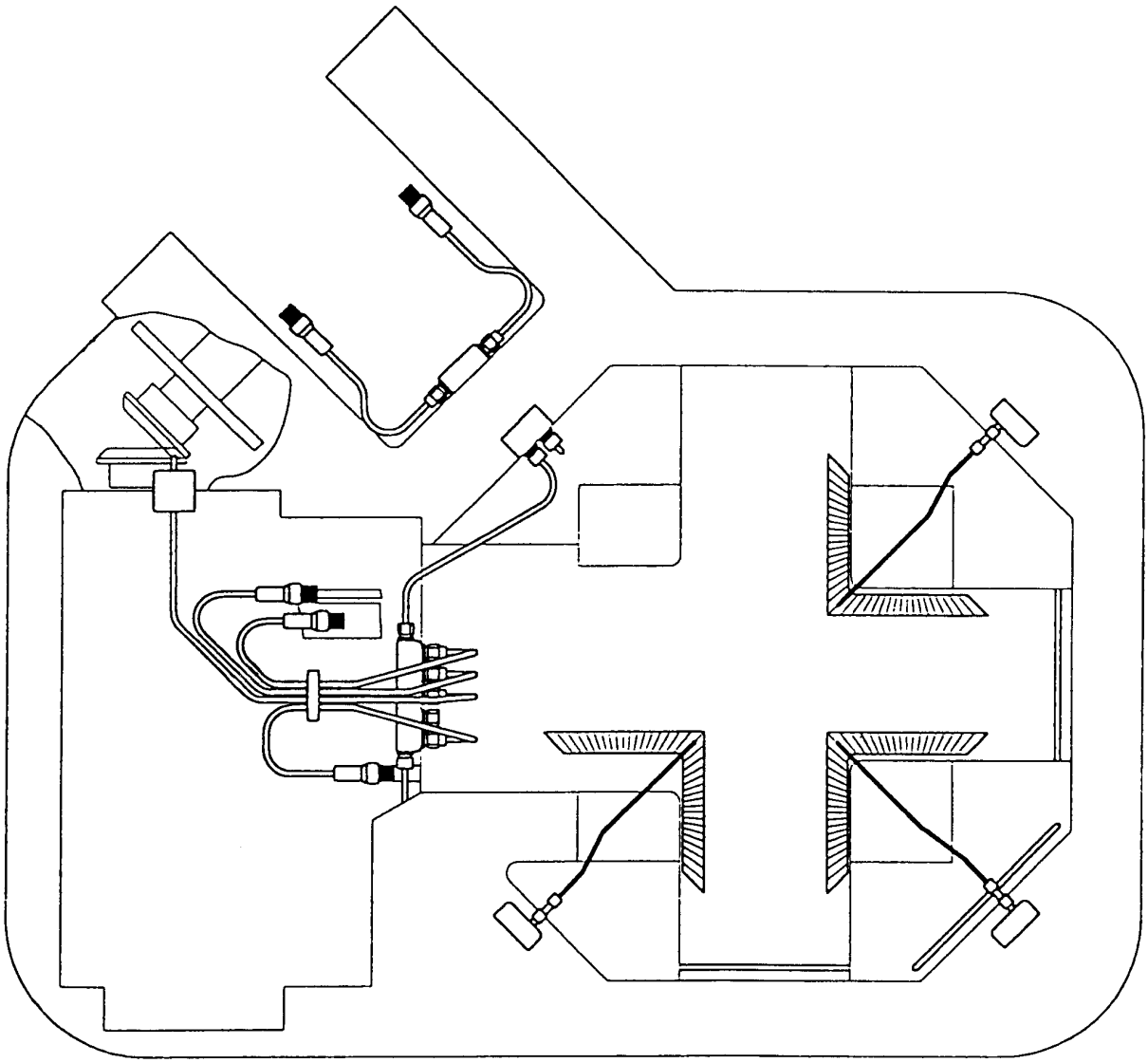

13

Electrical System

JOKAB SAFETY



SCALE 1:1

Safety Relay for:

Emergency Stop

Interlocked Gate/ Hatch

Safety Brake Strips

Foot Switches

Machine I/O

Approvals:

EMC

(NTRL/C=USA & Canada)

SAFETY RELAY JSBR3

JSBR3 is used to:

- **Comply with safety levels for safety devices**
- **Give safe stops to dangerous machines and processes**
- **Supervise the internal safety of machines**
- **Fulfil regulations**

MACHINES & PROCESSES

Safety relays can be used for a wide range of applications including: Industrial Robots, Presses, Automatic Production Systems, Paper Machines, X-Ray Machines, Bakery Machines, Printing Machines, Automatic Warehouses, Laser Machines, Handling Equipment, Power Shears etc.

FUNCTION

JSBR3 has one input which must be closed for the safety outputs to be held closed.

For the safety outputs to close the reset input must both close and break. This is to prevent unintentional resetting during a short circuit in a cable or if a reset button sticks when pressed.

The reset input is also used as a test to monitor if contactors and valves have dropped/returned before a new start can be permitted.

SAFETY LEVEL

JSBR3 has dual and monitored safety functions internally. Power failure, internal component faults or external interference (with the exception of short circuiting) do not result in a dangerous function.

The reset input is protected from short circuiting. Input A, however, is not protected from short circuiting and therefore the installation fully determines the safety level.

As the device has a single input channel it is important to note that the unit cannot distinguish between a true input and a short circuit across the input. If this is required a suitable dual channel input device should be used (see JSBR4).

REGULATIONS & STANDARDS

The JSBR4 is designed and approved in accordance to relevant standards. Examples of relevant standards are EN 292-1/2, EN 60 204-1, IEC 204, VDE 0110, VDE 0113, BS 2771...

CONNECTION HANDBOOK

In our connection handbook are numerous circuit diagrams showing examples of Safety Relay combinations solving safety problems e g:

- Time reset of safety devices
- Safe time delay of stop function

Single Input Channel

3NO/1NC Outputs

Short circuit supervised reset

LED Indication of Power on, Inputs and Outputs

Available in wide range of voltages

DIN-rail Mounting

45 mm in width

Technical Data JSBR3

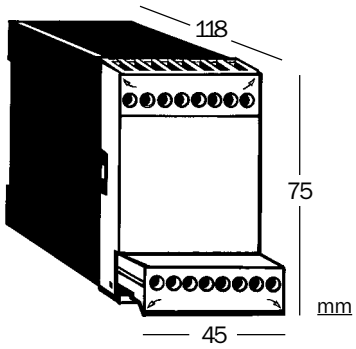

Manufacture:	JOKAB SAFETY AB, Sweden
Colour:	Black and Beige
Power supply:	24 VDC +/- 15 % 24/48/115/230VAC +/- 15%, 50 - 60 Hz
Power consumption:	< 2 VA
Relay outputs:	3 NO + 1 NC
Max. (min.) connected power outputs:	6A/250VAC/1500 VA/150W (10mA/10V)
Max. Input Wire res. at nom voltage:	150 Ohm (S13 - S14)
Drop out time:	< 15 ms (145 ms with switched supply/ power loss)
Terminals:	Single strand: 1x4 mm^2/2x1,5 mm^2 Conductor with socket contact DIN 46228: 1x2,5 mm^2/2x1mm^2, Max screw torque 1 Nm
Mounting:	35 mm DIN-rail. In cabinet or similar which fulfils demands of enclosure IP54.
Safety class enclosure/terminals:	IP 40/20 IEC 5291, DIN VDE 0470
Operating temperature range:	-10°C - +50°C
Air gap and creepage space:	4KV/2 DIN VDE 0110
Function indication:	Electrical Supply, Inputs, Outputs
Weight:	350 g (24V) 460 g (48-230V)
Ordering data:	JSBR3 and supply voltage

Technical Description JSBR3

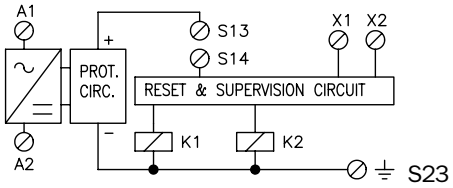

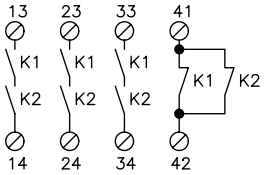

The electrical supply is connected across A1 and A2. After Voltage reduction and Rectification (AC versions) or reverse polarisation protection (DC version) there is an overload protection circuit. When the Input, S13-S14 is closed and the reset operation completed the relays K1 and K2 are energized. A dual Stop signal is given, K1 and K2 deenergize, when there is an opening of the input or at power loss. Both relays K1 and K2, have to deenergize in order to reset the module again.

The supervision circuit monitors the Relays K1, K2 and that the externally connected circuit across X1 and X2 both closes and opens before K1 and K2 are energized. Both the stop and reset function inside fulfills the requirement that one component failure or external disturbance shall not prevent the safe function of the JSBR3. The risk of short circuit across the input is not supervised and has to be dealt with by correct and protected wiring.

The safety outputs consist of contacts from K1 and K2 connected internally in series across terminals 13 - 14, 23 - 24 and 33 - 34. These contacts are used to cut the power to components which stop or prevent hazardous movements/functions. It is recommended that all switched loads are adequately suppressed and/or fused in order to provide additional protection for the safety contacts.
The NC output 41 - 42 should only be used for monitoring purpose e.g. Indication lamp or PLC input etc.

Electrical Connection examples JSBR3

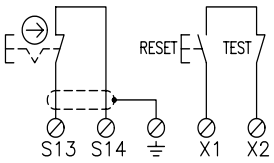

Emergency stop with manual reset.

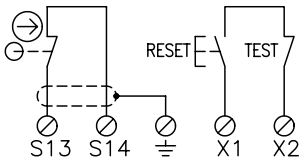

Interlocked gate with manual reset.

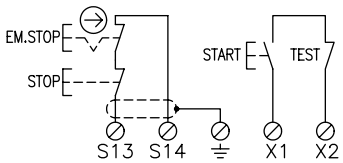

JSBR3 as emergency stop and control relay with stopfunction and supervised start.

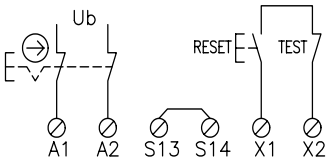

Emergency stop connected to the electrical supply. NB The drop out time is increased in this configuration (see Technical Data).

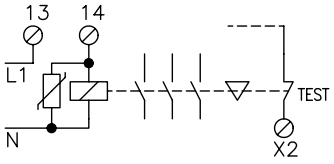

Controlling and supervision of external contactor, relay, valve or JOKAB SAFETY'S expansion relays JSR-serie.

The JSBR3 with AC-supply, S23/ ⏚ must be connected to protective earth.
For all units if cable shielding is used this must be connected to the earth rail or corresponding earth point.

JOKAB SAFETY

JOKAB SAFETY AB - SWEDEN
Hästvägen 4A
SE-212 35 MALMÖ
Tele: 040 - 14 36 30
Fax: 040 - 49 77 44
e-mail: info@jokabsafety.se

Smörhålevägen 5
SE-434 42 KUNGSBACKA
Tel: 0300 - 359 00
Fax: 0300 - 730 85

JOKAB SAFETY (UK) LTD - UNITED KINGDOM
26 Hanborough House, Hanborough Business Park
Lodge Road, Long Hanborough, Witney, Oxon OX8 8LH
Tel: (01993) 88 29 00
Fax: (01993) 88 20 01

Austria: Contra, 0222-278 25 55. **Belgium:** SAFE-TEC, 02-361 1540. **Brazil:** JOKAB SAFETY div. of ABG, 041-843 1366. **Canada/USA:** NCC ELECTRONICS, 1-800-265 26 33. **Denmark:** Jokab Safety DK A/S, 44-34 14 54. **Finland:** JUHA - ELEKTRO OY, 09-478 411. **France:** Paris, ELECDIS SARL, 01-47 88 83 11, St.Etienne, JLP Automatisme 04-7793 58 58. **Germany:** Hamburg, Inko 040-670 61 33-35. Köln, Debra 02234-788 98, Frankfurt, Centerline, 06209-40 21, Stuttgart: ptm-Autech, 07424-92212. **Holland:** SCHIFF ELECTRONIC B.V, 0488-45 32 54. **Ireland:** MCC CONTROLS, 01-450 6236. **Italy:** Masautomazione, 02 -26 92 20 90. **Norway:** Automasjon og Sikkerhet AS, 64 94 58 60. **Spain:** SAFEWORK, 93-440 81 25. **Switzerland:** Mattle Industrieprodukte AG, 01-938 13 33.

While every effort has been taken to ensure the accuracy of information contained in our data sheets, promotional and information material JOKAB SAFETY (UK) LIMITED cannot accept responsibility for errors or omissions and reserves the right to make any improvements without notice. It is the users responsibility to ensure that this equipment is correctly designed, specified, installed, cared for and operated to meet all applicable local, national and international codes/regulations. Technical data in our data sheets is correct to the level of accuracy of Jokab Safety´s test procedures as verified by various international approved bodies. Other information (such as application examples, wiring diagrams, operation or use) is intended solely to illustrate the various uses of our products. JOKAB SAFETY (UK) LIMITED does not guarantee or imply that the product when used in accordance with such examples in a particular environment will fulfil any particular safety requirement and does not assume any responsibility or liability for actual use of the product based on the examples given. Printed in Sweden

Safety Relay JSBR3

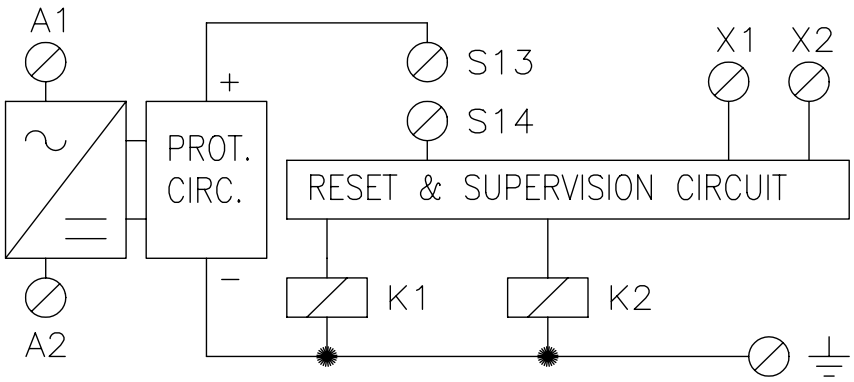

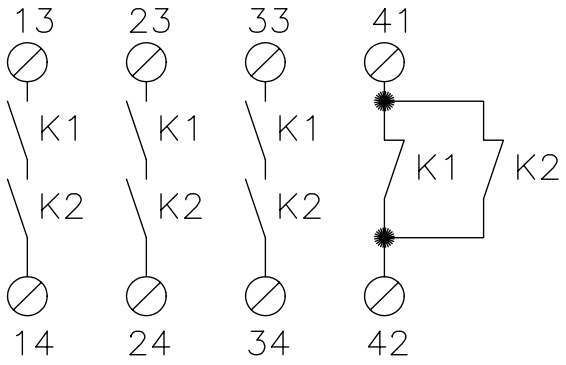

JOKAB SAFETY

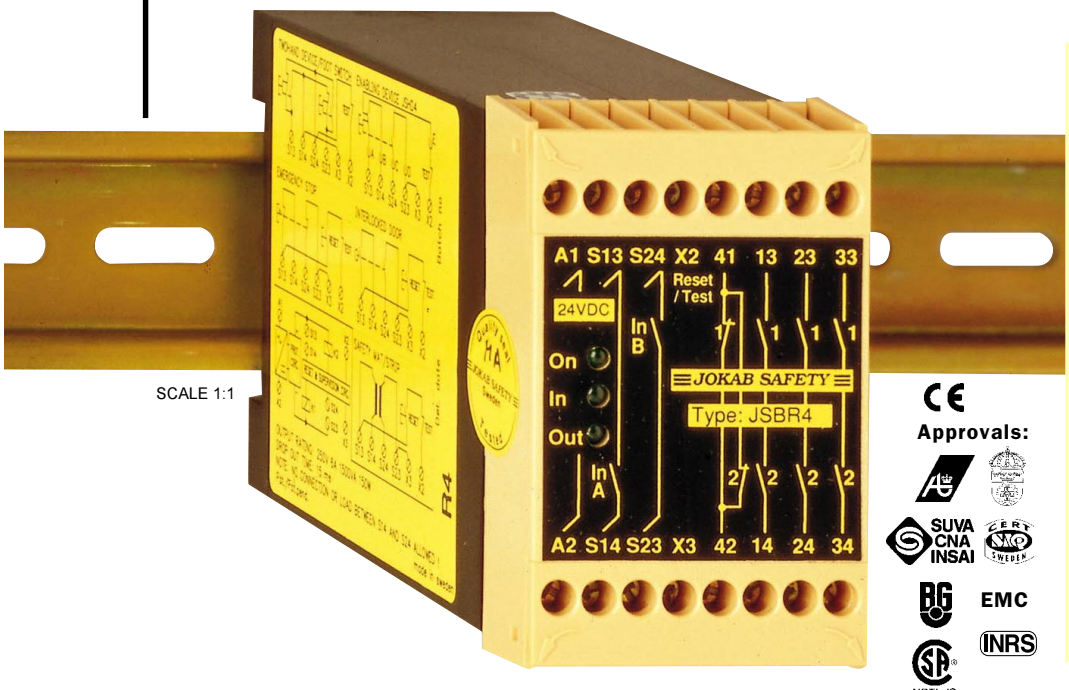

SCALE 1:1

Safety Relay for:

Two Hand Control
Emergency Stop
Interlocked Gate/Hatch
Enabling Device
Safety Strips
Safety Mats
Foot Switches
Area Restriction
Machine I/O
Category 4

CE
Approvals:
SUVA CNA INSAI
EMC
INRS
NRTL/C
(NRTL/C=USA & Canada)

SAFETY RELAY JSBR4

Dual Input Channels
3NO/1NC Outputs
Short circuit supervised reset
LED Indication of Power on, Inputs and Outputs
Available in wide range of voltages
DIN-rail Mounting
45 mm in width

UNIVERSAL RELAY

JSBR4 is used to:

- **Comply with safety levels for safety devices**
- **Give safe stops to dangerous machines and processes**
- **Supervise the internal safety of machines**
- **Fulfil regulations**

MACHINES & PROCESSES

Safety relays can be used for a wide range of applications including: Industrial Robots, Presses, Automatic Production Systems, Paper Machines, X-Ray Machines, Bakery Machines, Printing Machines, Automatic Warehouses, Laser Machines, Handling Equipment, Power Shears etc.

FUNCTION

The JSBR4 has two inputs, both of which have to be closed to keep the safety output contacts closed. A short circuit across the inputs will cause the output contacts to open. The inputs can however be subjected to a continuous short circuit without damaging the safety relay.

In order to make the safety outputs close the reset input must be closed and opened. In this way an unintentional reset is prevented in the case of a short circuit in the reset button cable or if the button gets jammed in the actuated position. The reset input can also be used for test/supervision to ensure that contactors or valves have returned to their initial off "stop" position before a new start can be allowed by the safety relay.

When the JSBR4 is used as a Two Hand relay both buttons have to be pressed within 0.5 seconds of each other in order to close the outputs.

When the JSBR4 is used for Safety Mats and Safety Strips the ”stop” condition is given following detection of a short circuit between input channels A and B. Neither the safety mat, safety strip or the relay will be damaged by a continuous short circuit. This also gives the advantage that if there is a failure between the inputs in the installation, the safety relay will not be damaged.

SAFETY LEVEL

The JSBR4 has a twin supervised safety function. Neither component failure, short circuit or external disturbances (power loss etc) will prevent the safe function of the relay. This is valid both for the inputs A and B as well as for the reset input. The JSBR4 operates at the highest safety level for safety relays (category 4).

The true two channel safety function has the advantage that the installation demands for safety can be reduced depending on the fact that a short circuit between the input opens the safety outputs directly.

REGULATIONS & STANDARDS

The JSBR4 is designed and approved in accordance to relevant standards. Examples of relevant standards are EN 292-1/2, EN 60 204-1, IEC 204, VDE 0110, VDE 0113, BS 2771...

CONNECTION HANDBOOK

In our connection handbook are numerous circuit diagrams showing examples of Safety Relay combinations solving safety problems eg:

- Time reset of safety devices
- Safe time delay of stop function

Simple - Safe - Reliable

Technical Data JSBR4

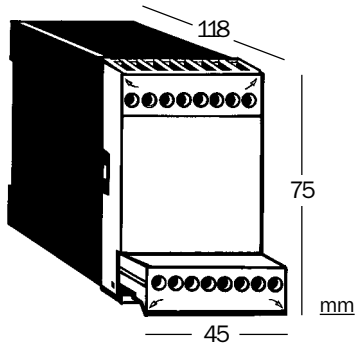

Manufacture:	JOKAB SAFETY AB, Sweden
Colour:	Black and Beige
Power supply:	24 VDC +/- 15% 24/48/115/230VAC +/- 15%, 50 - 60 Hz
Power consumption:	< 2 VA
Relay outputs:	3 NO + 1 NC
Max. (min.) connected power outputs:	6A/250VAC/1500 VA/150W (10mA/10V)
Max. Input Wire res. at nom voltage:	300 Ohm (S13 - S14 and S23 - S24)
Drop out time:	< 15 ms (145 ms with switched supply/ power loss)
Terminals:	Single strand: 1x4 mm^2/2x1,5 mm^2 Conductor with socket contact DIN 46228: 1x2,5 mm^2/2x1mm^2, Max screw torque 1Nm
Mounting:	35 mm DIN-rail. In cabinet or similar which fulfils demands of enclosure IP54.
Safety class enclosure/terminals:	IP 40/20 IEC 5291, DIN VDE 0470
Operating temperature range:	-10°C – +50°C
Air gap and creepage space:	4KV/2 DIN VDE 0110
Function indication:	Electrical Supply, Inputs, Outputs
Weight:	350 g (24V) 460 g (48-230V)
Ordering data:	JSBR4 and supply voltage

Technical Description JSBR4

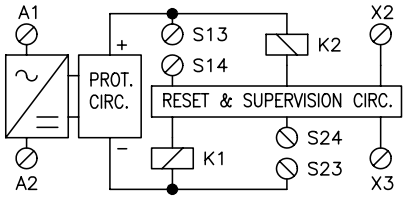

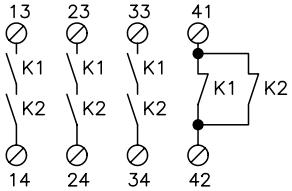

The electrical supply is connected across A1 and A2. After Voltage reduction and Rectification (AC-versions) or reverse polarisation protection (DC-version) there is an overload protection circuit.

When the inputs S13-S14 and S23-S24 have closed and the reset is made, the relays K1 and K2 are activated.

A dual stop signal is given, K1 and K2 drop, with short circuiting between or opening of the inputs, and with power failure. If one input is opened the other input must also be opened for K1 and K2 to be activated again.

The monitoring circuit checks K1 and K2 and that the reset circuit to X2 is both closed and opened before K1 and K2 are energized. Both the stop and reset function therefore comply with the requirement that a component fault, short circuit or external interference do not result in a dangerous function.

The safety outputs consist of contacts from K1 and K2 connected internally in series across terminals 13 - 14, 23 -24 and 33 - 34. These contacts are used to cut the power to components which stop or prevent hazardous movements/ functions. It is recommended that all switched loads are adequately suppressed and/or fused in order to provide additional protection for the safety contacts.

Note: Output 41-42 is intended for the indication of activated protection, e.g. gate opened. No connection or load between S14 and S24 allowed.

Electrical Connection examples JSBR4

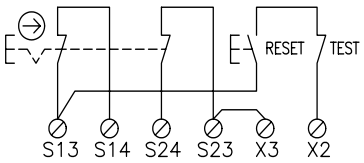

Emergency stop with manual resetting.

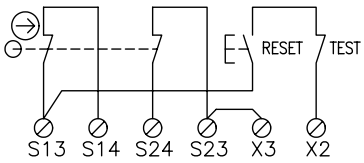

Interlocked gate with manual reset.

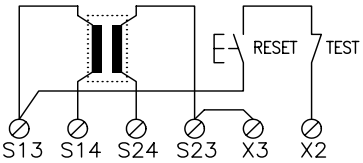

Contact mat/strip with manual reset.

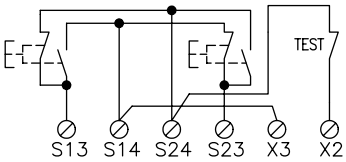

Two hand device with buttons in separate or same enclosure. Buttons to be pressed in within 0.5 s of each other. Footpedal switches can be connected in the same configuration.

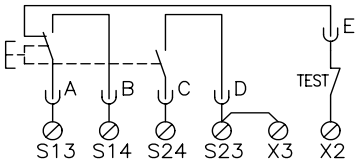

Enabling device, JSHD4. Stop condition is given in both top and bottom PB positions.

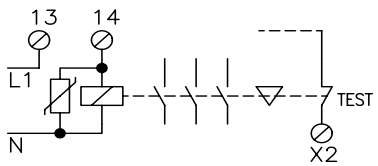

Control and supervision of external conductor, relay, valve or JOKAB SAFETY'S expansion relays JSR-serie.

JOKAB SAFETY

JOKAB SAFETY AB - SWEDEN
Hästvägen 4A
SE-212 35 MALMÖ
Tele: 040 - 14 36 30
Fax: 040 - 49 77 44
e-mail: info@jokabsafety.se

Smörhålevägen 5
SE-434 42 KUNGSBACKA
Tel: 0300 - 359 00
Fax: 0300 - 730 85

JOKAB SAFETY (UK) LTD - UNITED KINGDOM
26 Hanborough House, Hanborough Business Park
Lodge Road, Long Hanborough, Witney, Oxon OX8 8LH
Tel: (01993) 88 29 00
Fax: (01993) 88 20 01

Austria: Contra, 0222-278 25 55. **Belgium:** SAFE-TEC, 02-361 1540. **Brazil:** JOKAB SAFETY div. of ABG, 041-843 1366. **Canada/USA:** NCC ELECTRONICS, 1-800-265 26 33. **Denmark:** Jokab Safety DK A/S, 44-34 14 54. **Finland:** JUHA - ELEKTRO OY, 09-478 411. **France:** Paris, ELECDIS SARL, 01-47 88 83 11, St.Etienne, JLP Automatisme 04-7793 58 58. **Germany:** Hamburg, Inko 040-670 61 33-35. Köln, Debra 02234-788 98, Frankfurt, Centerline, 06209-40 21, Stuttgart: ptm-Autech, 07424-92212. **Holland:** SCHIFF ELECTRONIC B.V, 0488-45 32 54. **Ireland:** MCC CONTROLS, 01-450 6236. **Italy:** Masautomazione, 02 -26 92 20 90. **Norway:** Automasjon og Sikkerhet AS, 64 94 58 60. **Spain:** SAFEWORK, 93-440 81 25. **Switzerland:** Mattle Industrieprodukte AG, 01-938 13 33.

While every effort has been taken to ensure the accuracy of information contained in our data sheets, promotional and information material JOKAB SAFETY (UK) LIMITED cannot accept responsibility for errors or omissions and reserves the right to make any improvements without notice. It is the users responsibility to ensure that this equipment is correctly designed, specified, installed, cared for and operated to meet all applicable local, national and international codes/regulations. Technical data in our data sheets is correct to the level of accuracy of Jokab Safety´s test procedures as verified by various international approved bodies. Other information (such as application examples, wiring diagrams, operation or use) is intended solely to illustrate the various uses of our products. JOKAB SAFETY (UK) LIMITED does not guarantee or imply that the product when used in accordance with such examples in a particular environment will fulfil any particular safety requirement and does not assume any responsibility or liability for actual use of the product based on the examples given. Printed in Sweden

Safety Relay JSBR4

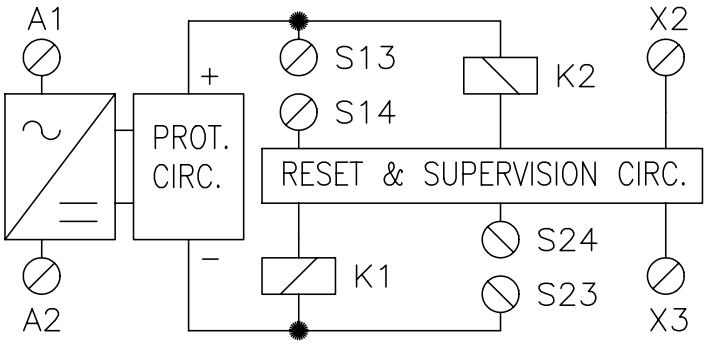

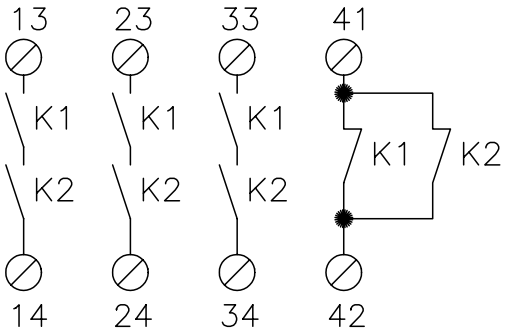

Safety relay

24 VDC

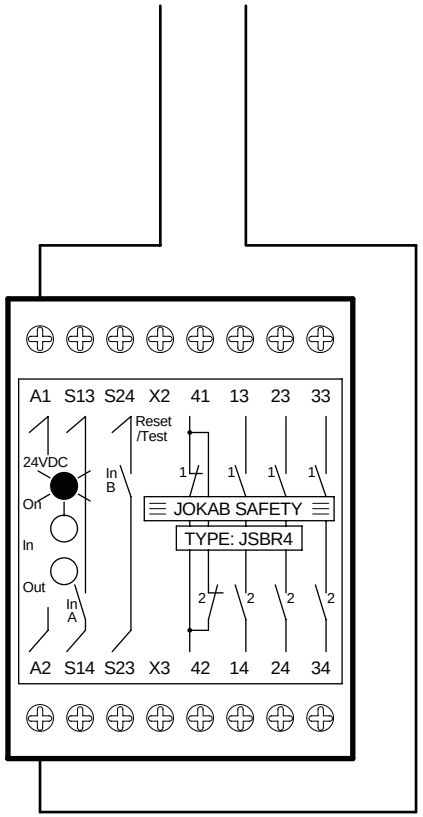

Emergency switch

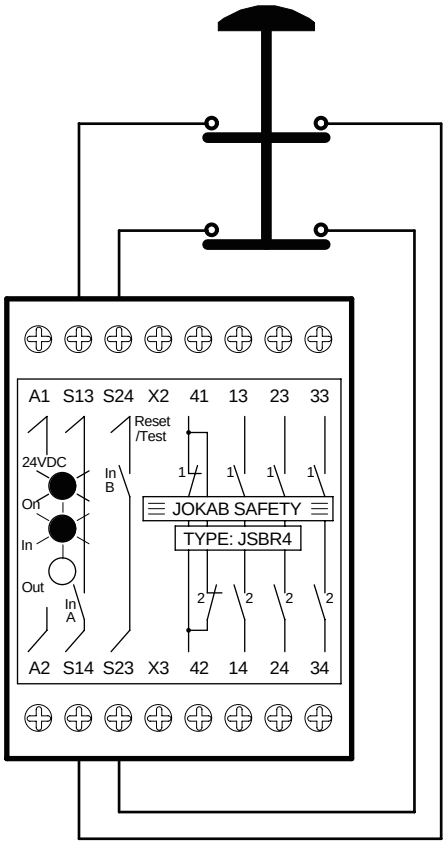

Alarm reset

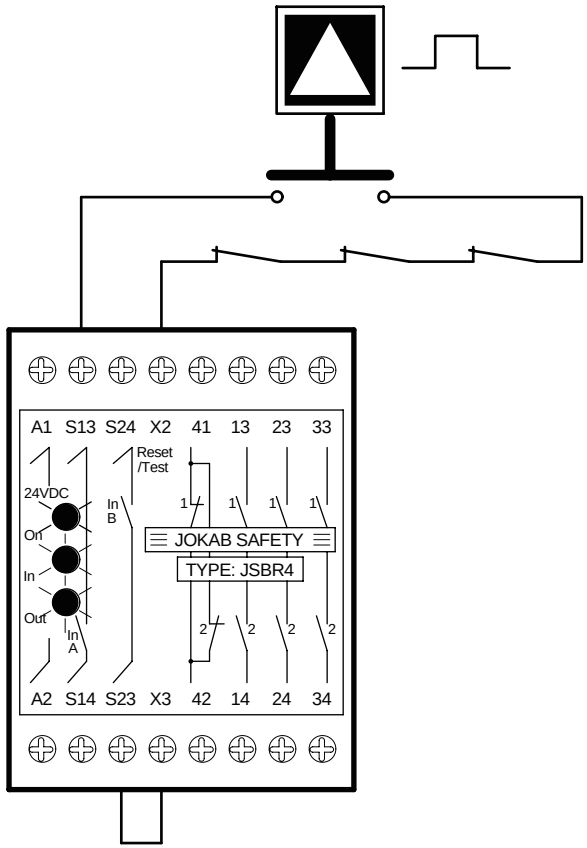

Temperature regulating principle

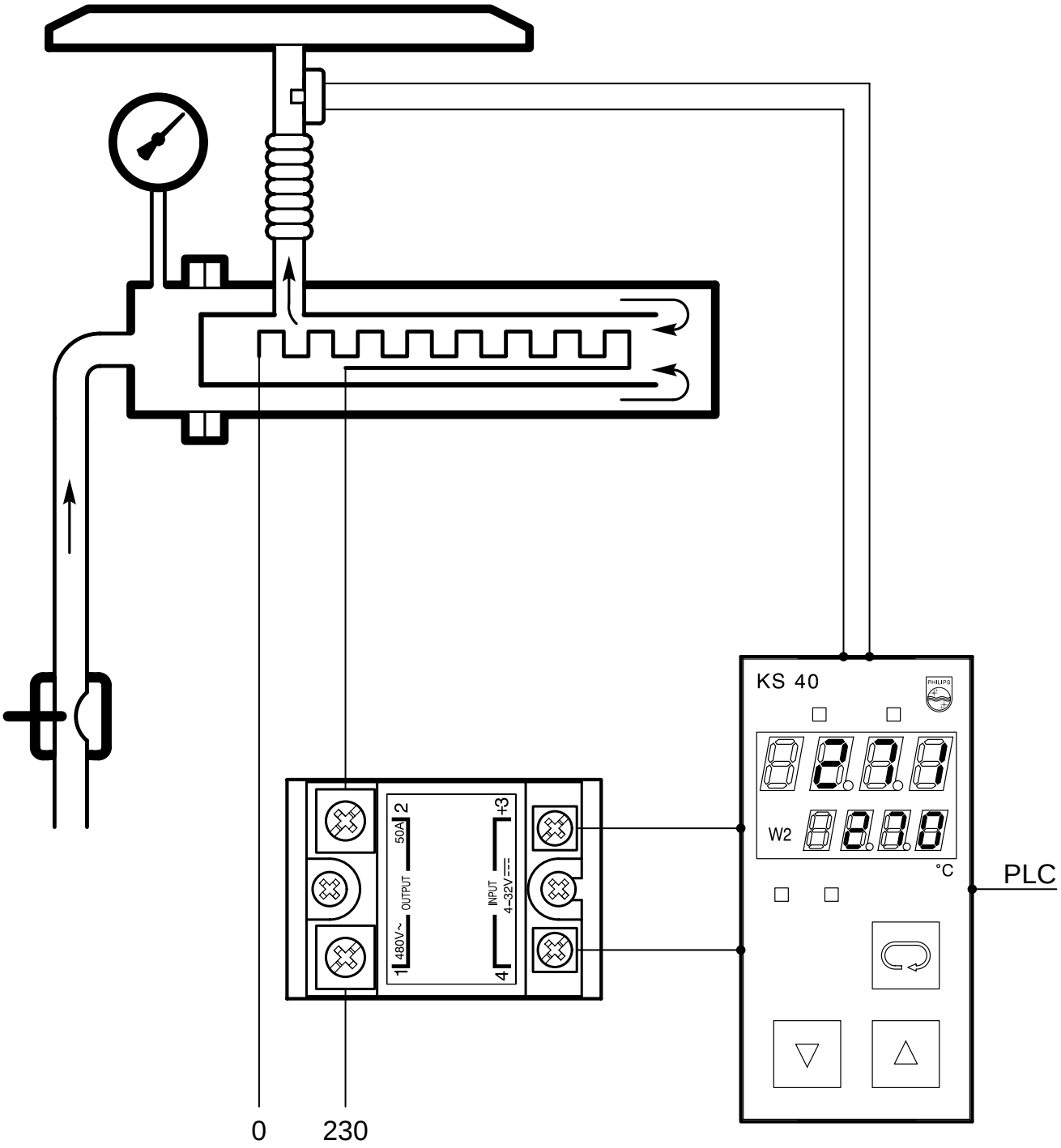

Solid state relay

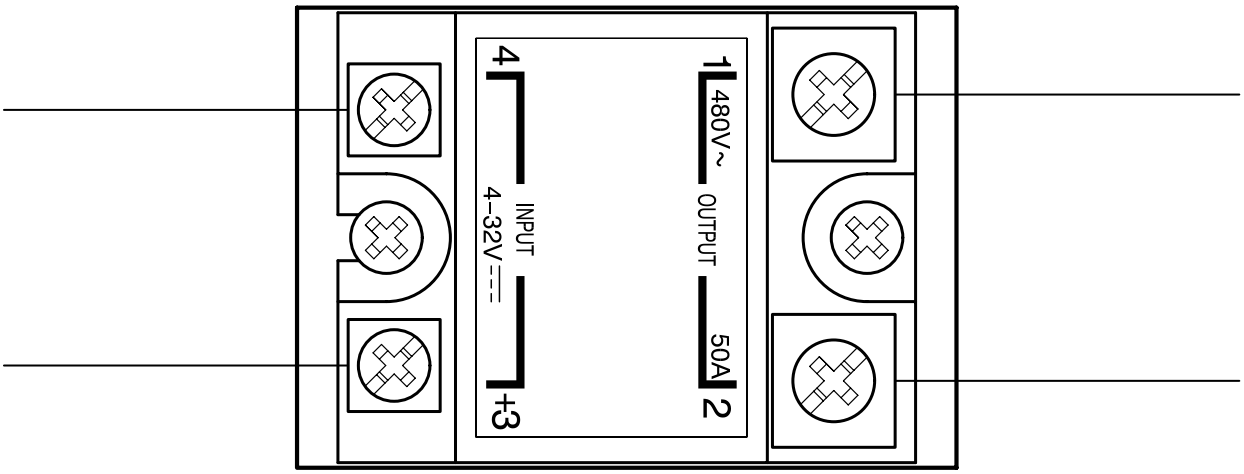

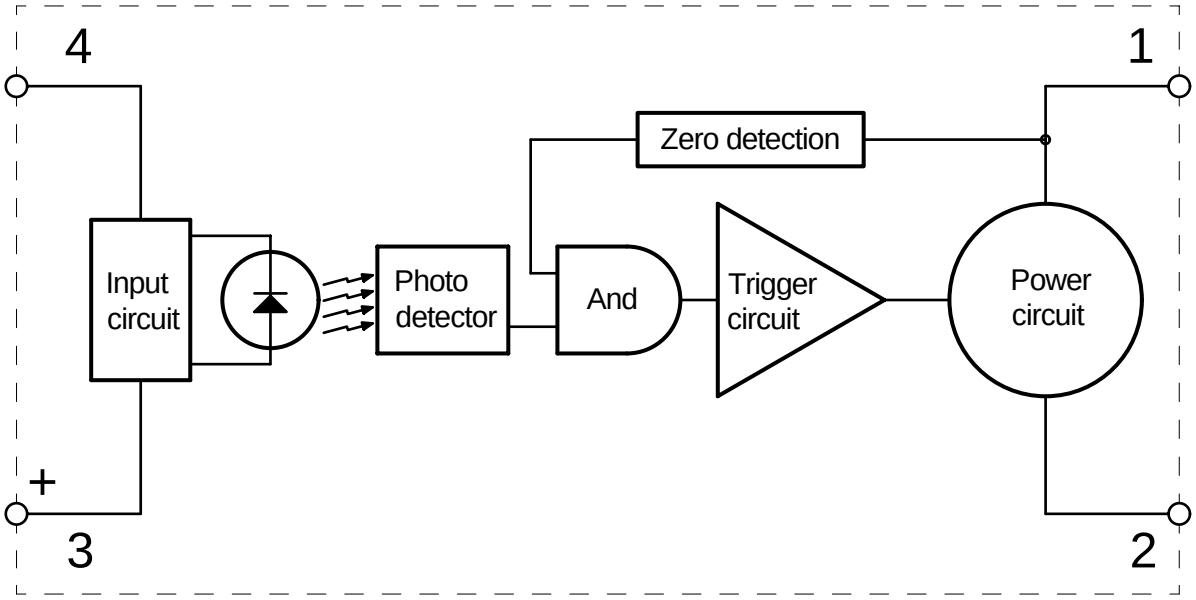

Thermocouple type K

Material: Nickel−Cromium v Nickel−Aluminium (NiCr − NiAl)

Voltage: DC 4mV / 100 ˚C

Colour: Overall — yellow

NiCr — yellow — positive

NiAl — red — negativ

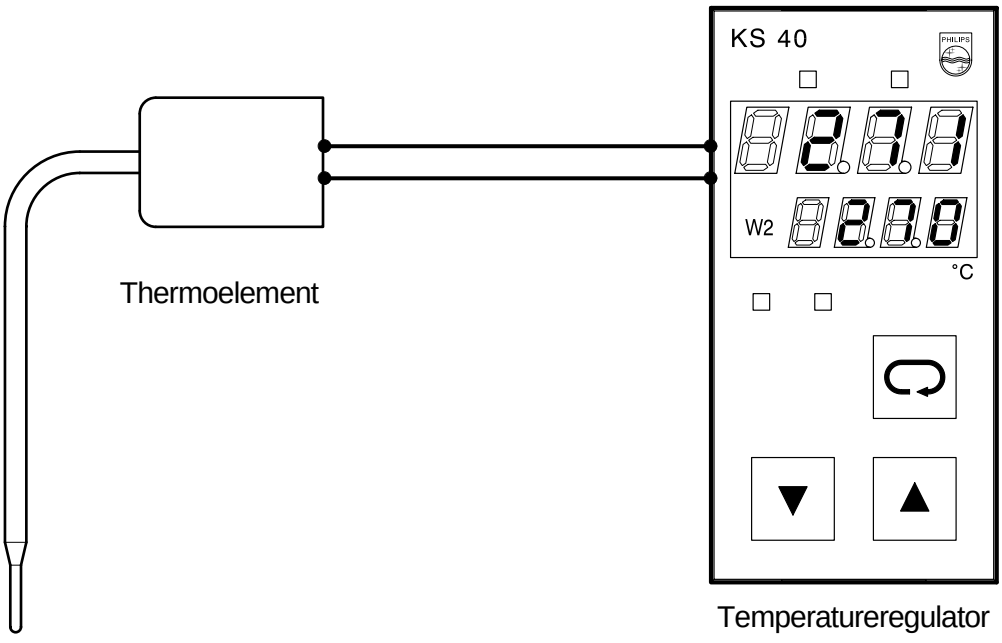

Temperature controller

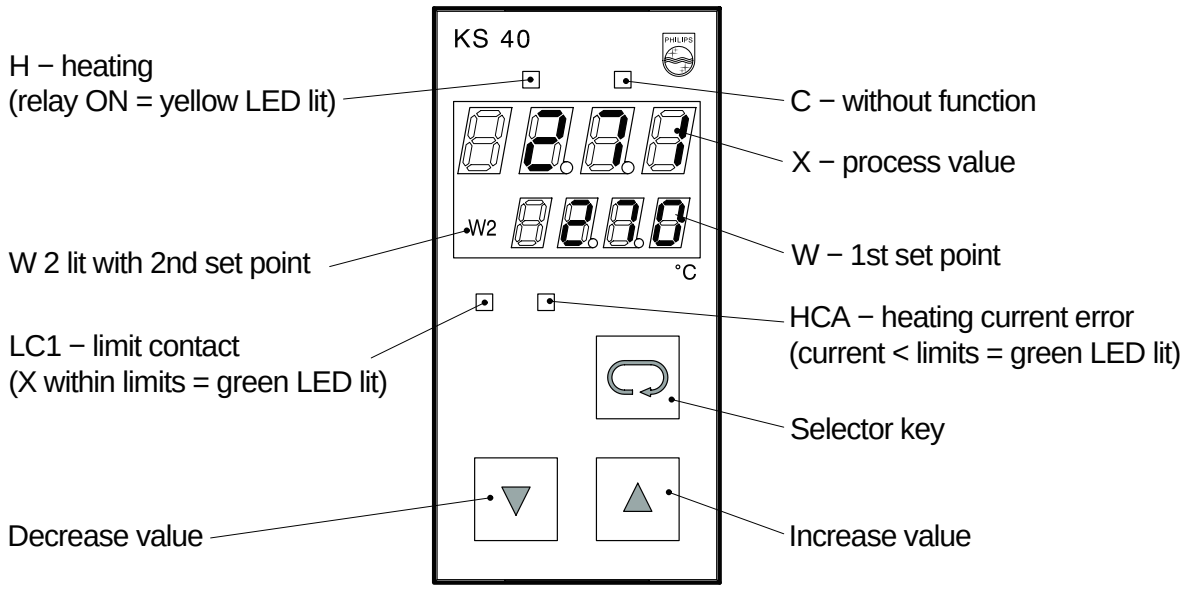

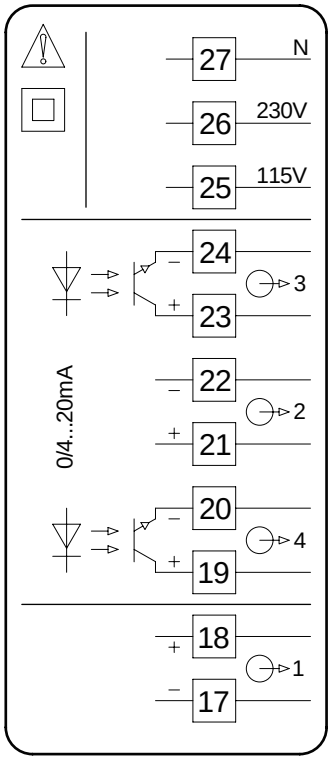

Mains

Alarm 1

Continous output
0/4 ... 20mA

Alarm 2

Heating (logic output)
0/≥5V DC Typical 13 V DC

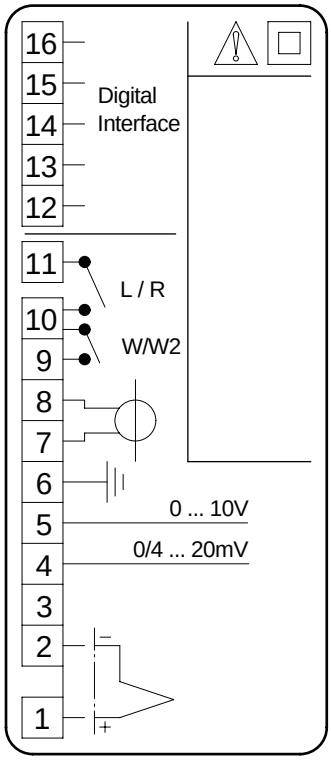

Digital interface

Local (open) / remote

1st set−point (open) 2nd set−point

Current converter
9404 407 50001

Earth terminal

Voltage

Current

Pt 100

0

Thermocouple

Parameter list		
Parameter	Symbol	Adjustment range
2nd set-point w2 (ramp)	**SP2**	w_0...w_{100} *
Segment time t2 (ramp)	**Pt2**	0...9999 min
3rd set-point w3	**SP3**	w_0...w_{100}
Segment time t3	**Pt3**	0...9999 min
4th set-point w4	**SP4**	w_0...w_{100}
Segment time t4	**Pt4**	0...9999 min
Limit contact 1 low	**LCL1**	relative: 1...9999 ; absolute: x_0...9999 *
Limit contact 1 high	**LCH1**	relative: 1...9999 ; absolute: x_0...9999 *
Limit contact 2 low	**LCL2**	relative: 1...9999 ; absolute: x_0...9999 *
Limit contact 2 high	**LCH2**	relative: 1...9999 ; absolute: x_0...9999 *
Heating current	**HC**	only display
Heating current limit	**HCA**	0...30,0 A *
Operation locking	**Loc**	0...4 (→ locking)
Set-point limit low w_0	**SPL**	x_0...x_{100}
Set-point limit high w_{100}	**SPH**	x_0...x_{100}
Proportional band Xp1 (heating)	**Pb1**	0,1...999,9 %
Proportional band Xp2 (cooling)	**Pb2**	0,1...999,9 %
Integral time T_n	**ti**	0...9999 s (0 = no integral action)
Derivative time T_V	**td**	0...9999 s (0 = no derivative time)
Cycle time heating	**t1**	0,4...999,9 s
Decimal point **	**dP**	0 or 1 (0 = no decimal point)
Span start x_0 **	**InL**	- 999...9999
Span end x_{100} **	**InH**	- 999...9999
Interface address	**Adr**	0...99

Specifications in % refer to control range $X_h = x_{100} - x_0$ (span)

*) can be switched off via key ▼ (display '**- - - -**')

**) Only with Pt 100, 0/4...20 mA or 0...10 V input

☞ Dependent of configuration, only the parameters for the relevant instrument function are displayed.

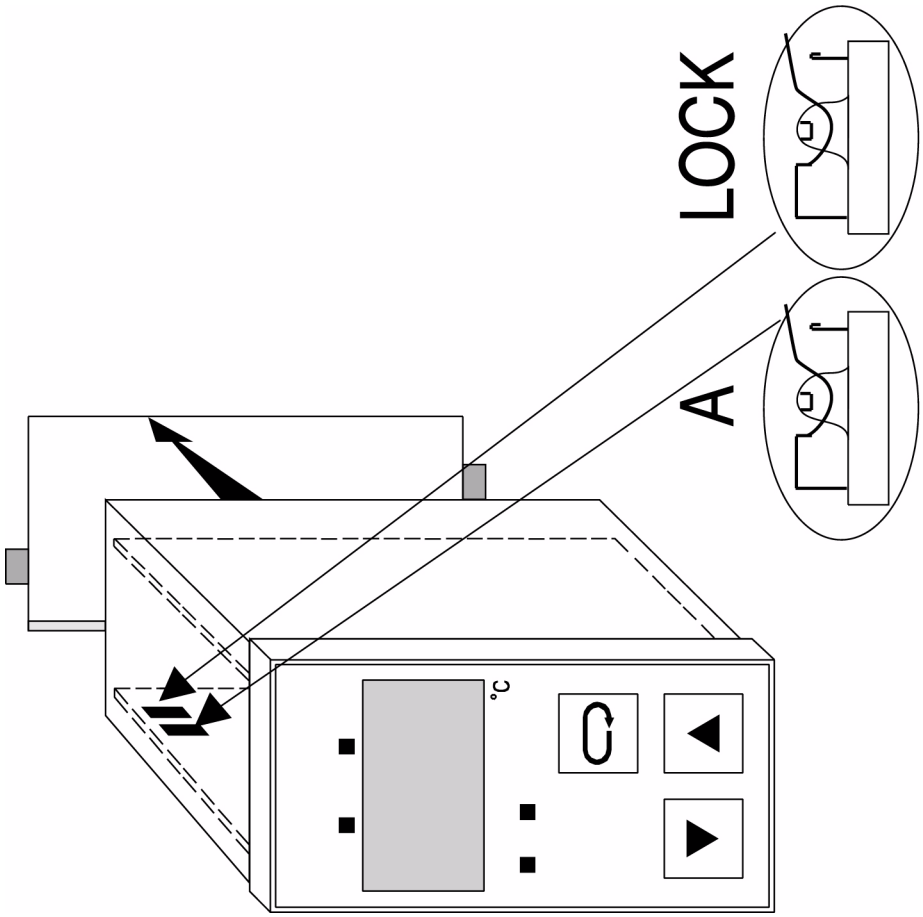
LOCK
A
°C

Locking (parameter Loc)

Loc	Operation enable (only for controller operation)
0	X and W display with adjustment, self-tuning permitted
1	X and W display with adjustment
2	X and W display, but without adjustment
3	Only X display, lower display is off (no set-point adjustment)
4	X and W display with adjustment, 2nd set-point display and adjustment

☞ With parameter **Loc** > 0, the parameters following **Loc** in the table are not displayed, i.e. they cannot be changed.

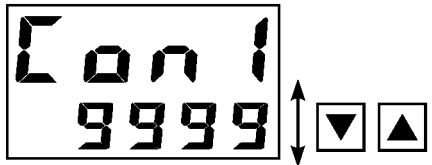

Scaling/ measurement loop monitoring [3]	Input type	Controller type		Alarm1 / Optocoupler output 3 [4]
	0 type L	output 1	**0** signaller direct	**0** relative limit contact(LC1) [1]
	1 type J		**1** signaller inverse	**1** absolute limit contact(LC1) [1]
0 °C / upscale	**2** type K		**2** DPID direct	**2** rel.LC1/heating current alarm [1]
	3 type N		**3** DPID inverse	**3** abs.LC1/heating current alarm [1]
1 °C / downscale	**4** type S		**4** adjuster	**4** relative limit contact(LC1) [2]
	5 type R	Outputs 1/2	**5** 3-pt. DPID/DPID *	**5** absolute limit contact (LC1) [2]
2 °F / upscale	**6** Pt100		**6** adjuster/adjuster *	**6** rel.LC1/heating current alarm [2]
	7 0...20mA lin		**7** continuous direct	**7** abs.LC1/heating current alarm [2]
3 °F / downscale	**8** 4...20mA lin		**8** continuous inverse	**8** rel.LC1 [1] (suppressed during start-up or when changing W)
	9 0...10V lin			

* logic output (1)'heating'; continuous output 0/4...20 mA 'cooling'

1) Normally closed operation (Optocoupler output not active with alarm)
2) Normally open operation (Optocoupler output active with alarm)
3) With upscale, measuring loop monitoring reacts as with x > w
   With downscale, the measuring loop monitoring reacts as with x < w
4) The heating current alarm acts on optocoupler output 3 in addition to the LC

☞ The switching differential of signallers is 0,2 %.

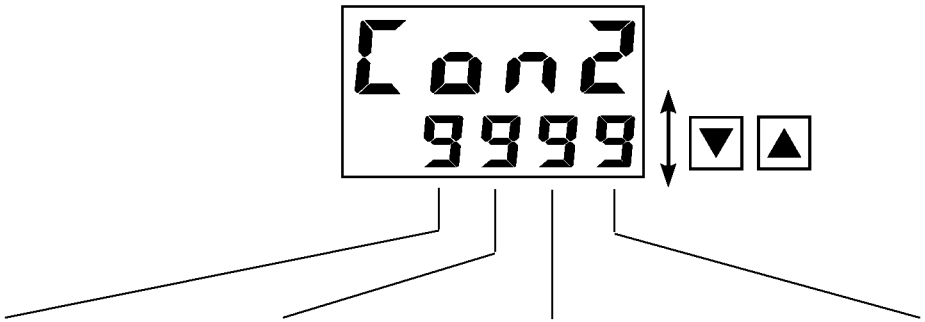

Interface option	Programmer	Continuous output	Alarm 2 / Optocoupler output 4
0 no interface	**0** ramp function permitted programmer disabled	**0** no continuous output	**0** relative limit contact(LC2) [1]
1 2400 Bd		**1** 0...20mA	**1** absolute limit contact(LC2) [1]
2 4800 Bd	**1** programmer permitted		**4** relative limit contact(LC2) [2]
3 9600 Bd		**2** 4...20mA	**5** absolute limit contact (LC2) [2]
4 19200 Bd			**8** rel.LC2 [1] (suppressed during start-up or when changing W)

☞ Exit from the configuration level is not possible via timeout!

☞ When re-configuring the input type, all set-points and their limits must be matched to the new measuring range!

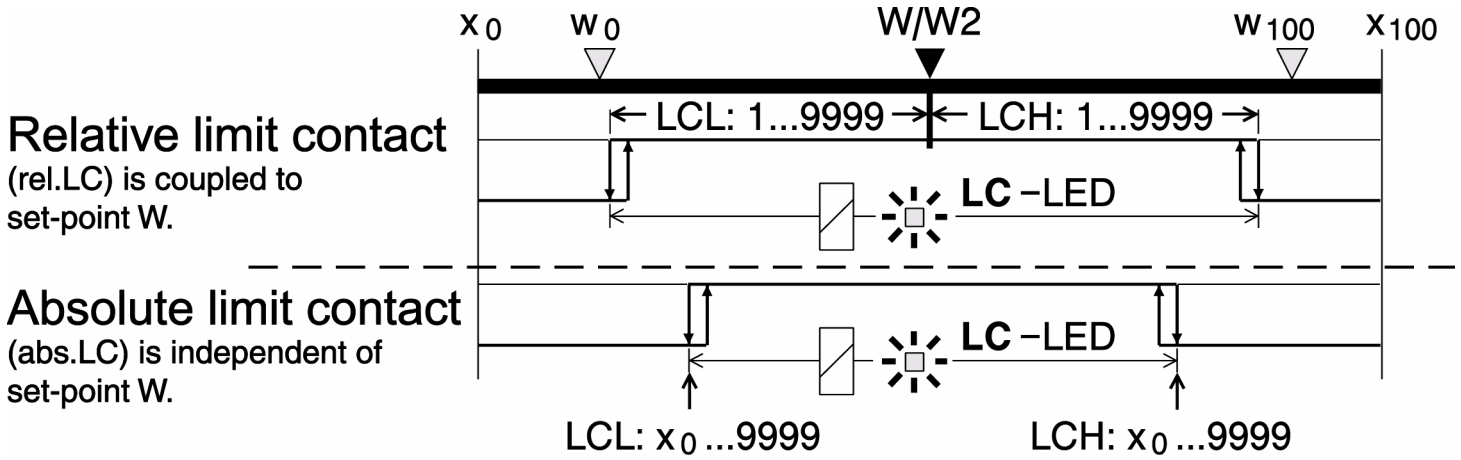
x 0
w 0
W/W2
w 100
x 100
Relative limit contact
(rel.LC) is coupled to
set-point W.
← LCL: 1...9999 →
← LCH: 1...9999 →
LC –LED
Absolute limit contact
(abs.LC) is independent of
set-point W.
LC –LED
LCL: x 0 ...9999
LCH: x 0 ...9999

Error Messages

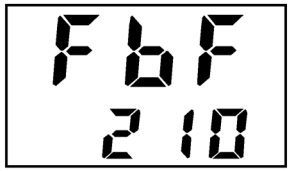

Sensor break or with
4...20 mA: Input < 2 mA
Remove error



Wrong sensor polarity or with
Pt100: Sensor short-circuit
Remove error



Adaption error (→ below)
Acknowledgement:
Press key [O]

14

Compressed Air System

Compressed air system

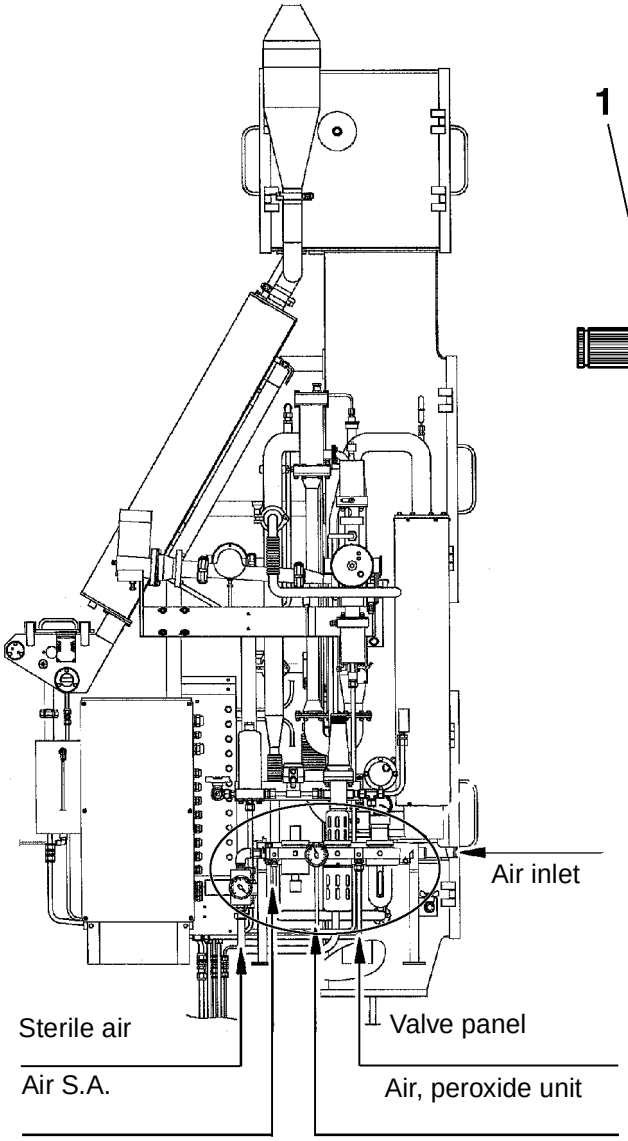

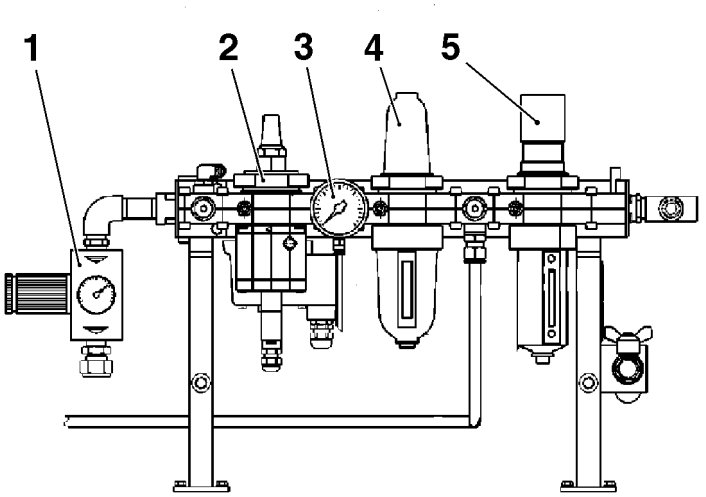

1 Pressure regulator, sterile air
2 Ventilating air, sterile air
3 Pressure gauge, air supply
4 Air filter
5 Pressure regulator, air supply

Compressed air system

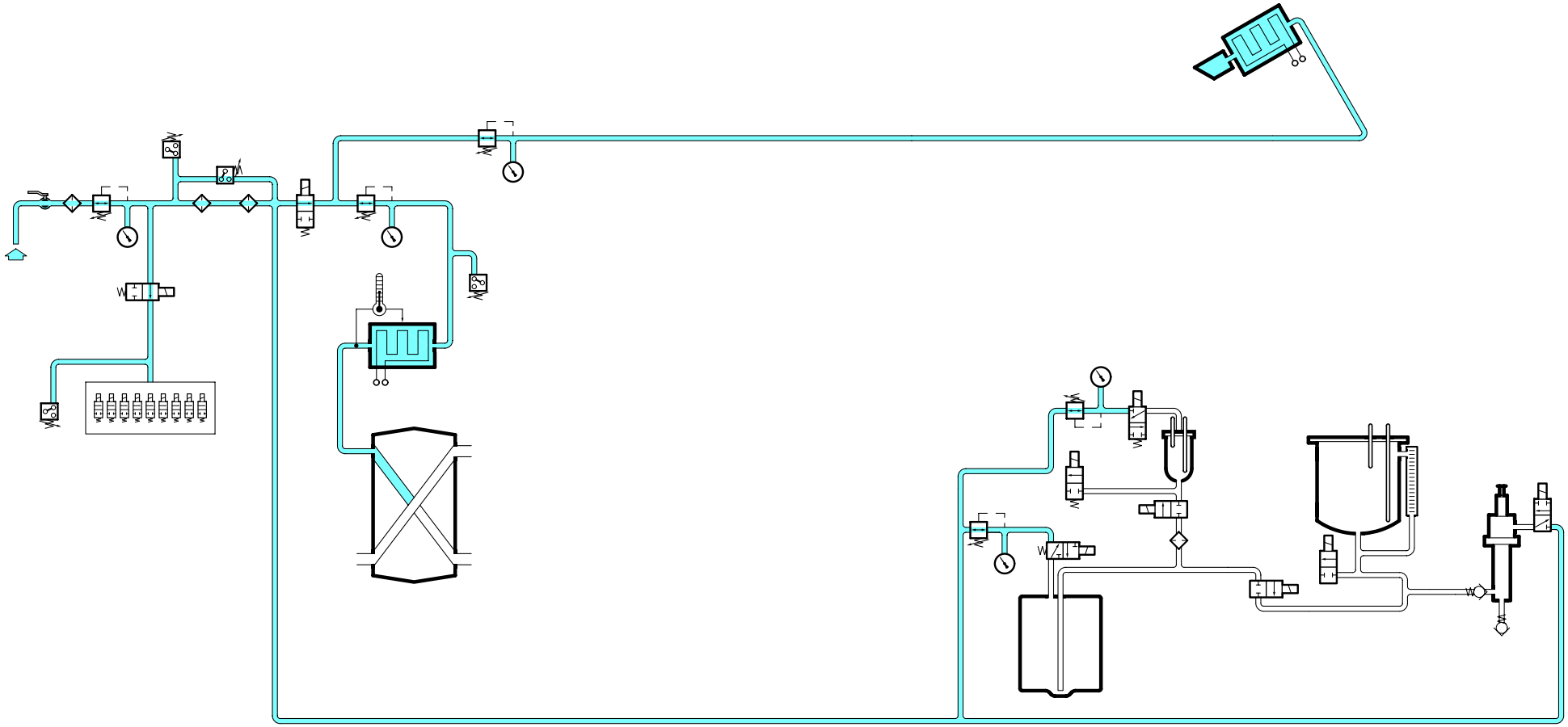

Technical Training Centre
Lund, Sweden

Machine type
TCA/65 050V

Issue
1/0103

OH 1029

2.12-1 Compressed air system - check

Check the hoses and the air connections to make sure that there is no leakage.

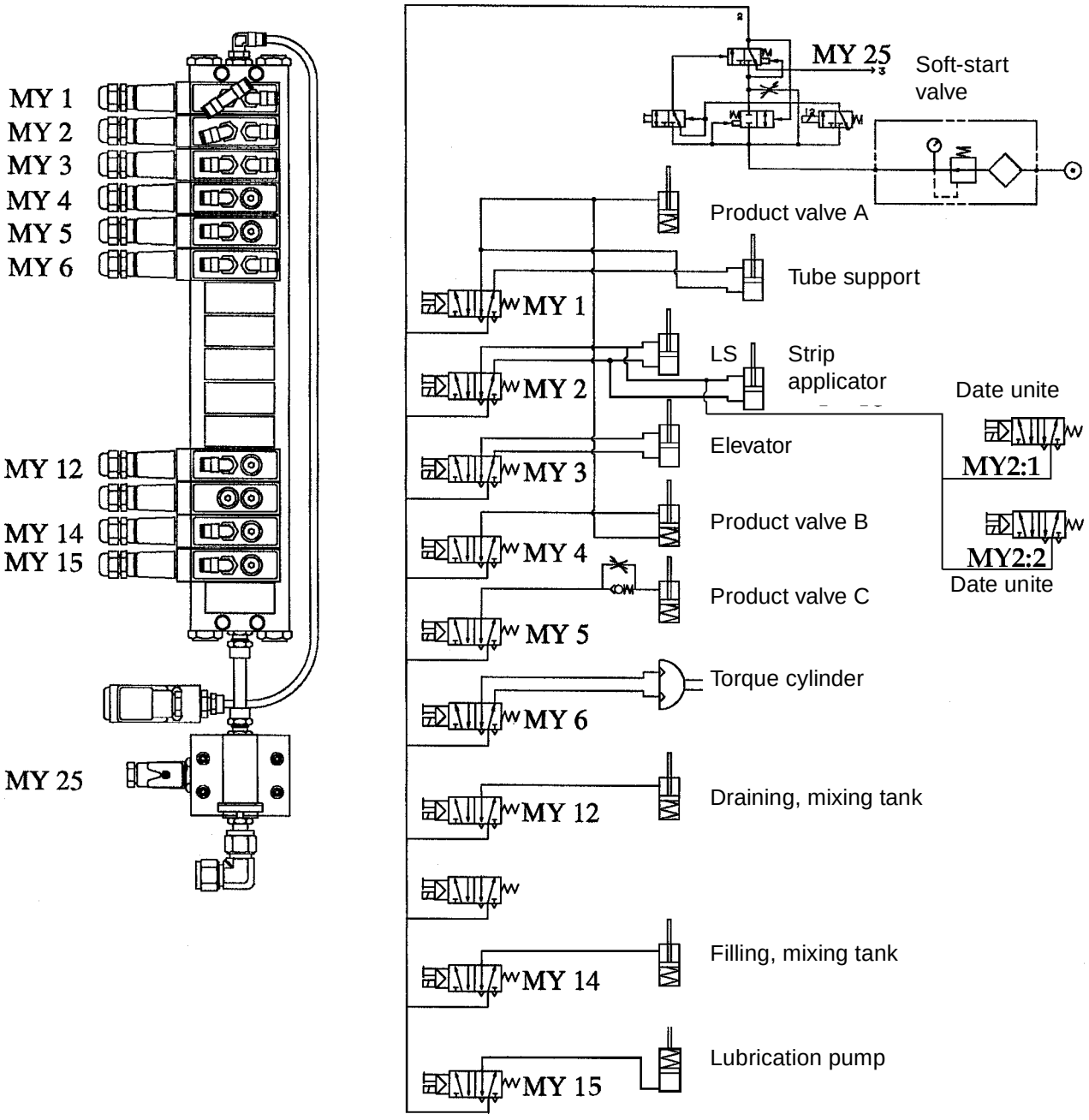

15

Packaging Material

Packaging material, TBA/m and TBA/j

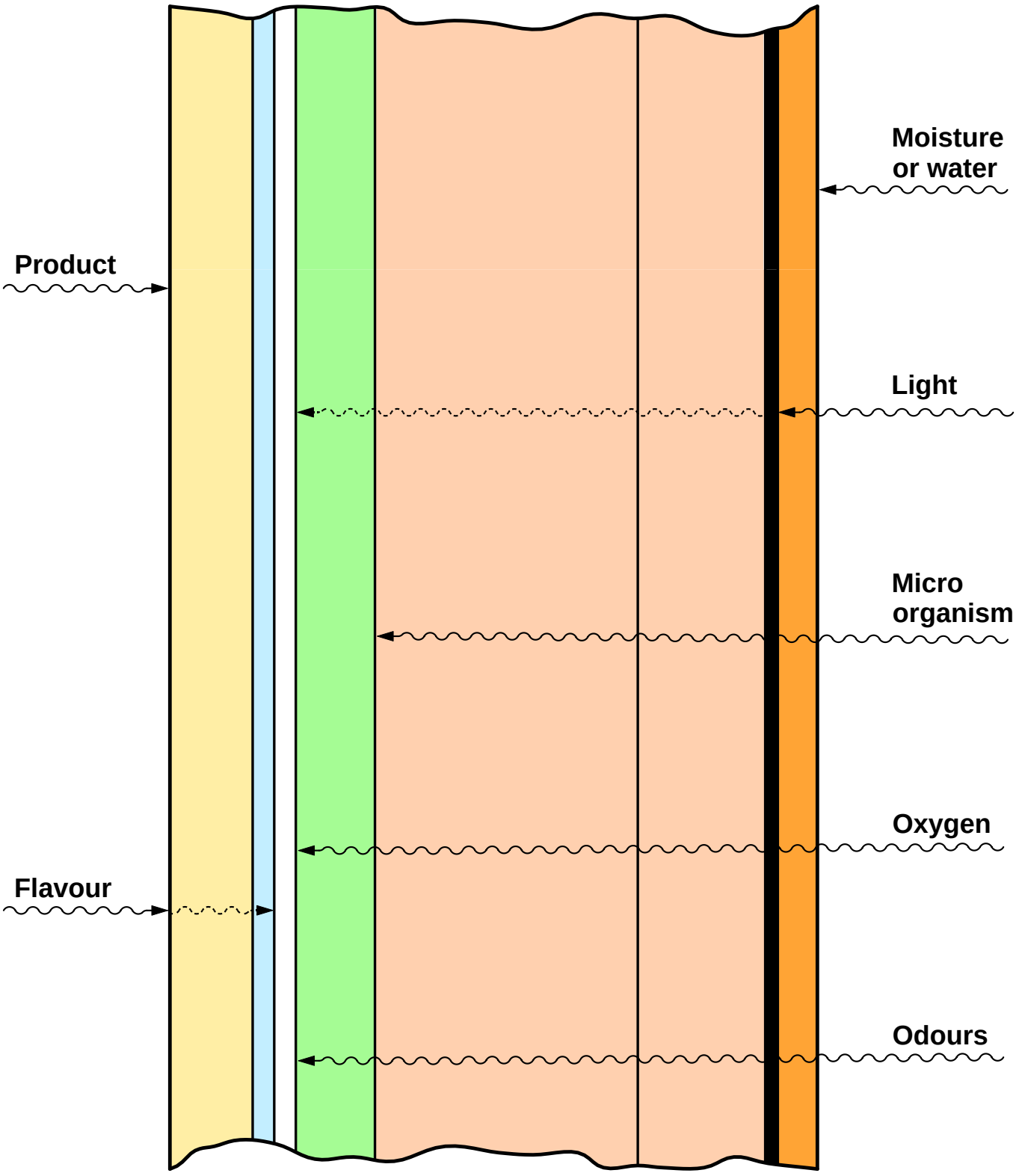

Technical Training Centre Lund, Sweden	Machine type Tetra Brik Aseptic	Issue 1/9501	OH 526

Packaging material

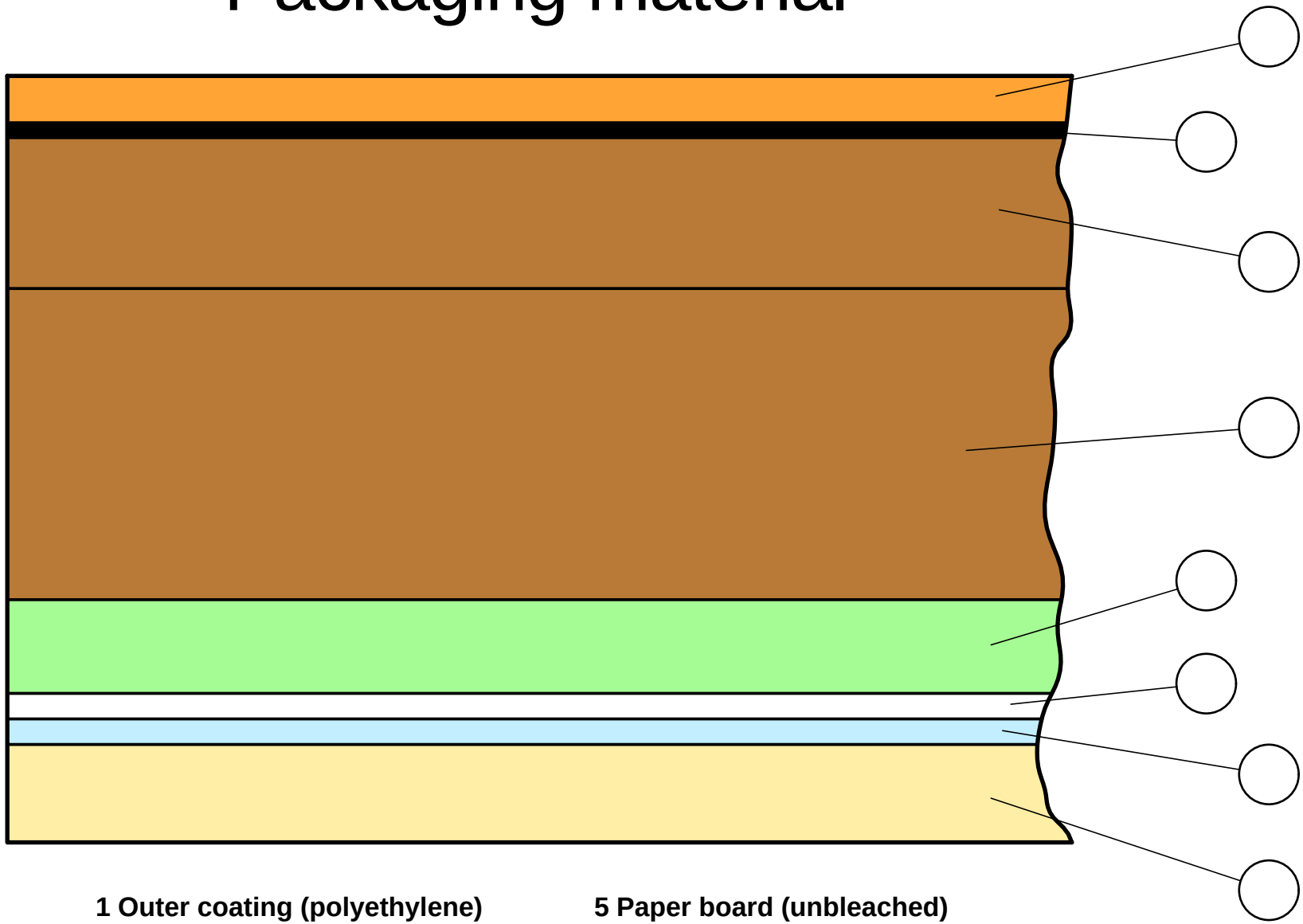

1 Outer coating (polyethylene)
2 Paper board (Bleached)
3 Alifoil
4 Internal coating 1
5 Paper board (unbleached)
6 Printing
7 Lamination (polyethylene)
8 Internal coating 2 (polyethylene)

TETRA PAK
Technical Training Centre
Lund, Sweden
Machine type
TBA/3 –8 –9
Issue
3/9003
OH 135:5

16

TPMS Checklist Overview

Checklist Overview by Machine Type

Issued By: Lars Olof Petersson

Issue Date: 2000-01-01

Approved By: Lars Olof Petersson

Customer:

Line No:

Document Reference:
MM - 85571 - 0101
OM - 85572 - 0101
SPC- 85574 - 0101

Checklist Overview

Machine Type:		Responsible:	
Tetra Classic Aseptic 65 633251		All	
Machine No:	List Variant:	Issue Date:	Page No:
	040V Valid for dev step 040V	2000-01-01	1 / ...

Pos No	Sub Pos	Time	Document Reference	Section/Description	Action	Cycle Not Cycle	Restart After	S	Conn. Items	On Req. Activate	Not with	Variant Specification
00 Pre-Maintenance Checks												
20		[5]	MM 85564-01	WARNING! Before starting any service work, read the safety precaution in the corresponding Maintenance Manual. Doc No:	Check	1000		7	P			
40		[10]		250 h check lists. Go through the lists carried out since the last 1000 h service. If all checks are not completed carry them out together with this service.	Check	1000		7				
60		[5]	MM 2.9	LS-overlap	Check	1000		7				
80		[5]		LS Position of Longitudinal sealing	Check	1000		7				
100		[5]		Strip applicator; Strip Position	Check	1000		7				
120		[5]		Package; Quality of Seals	Check	1000		7				
01 Cassette												
10020		5	MM 1.1-1	Material reel holder;Condition	Check	500		3				
10040		30	MM 1.2.1-1	Cassette; Bearing	Check	1000		3			10080	
10060		30	MM 1.2.1-2	Cassette; Bearing	Change	5000		3	P			
10080		5	MM 1.2.2-1	Material Supply Monitor	Check	250		3				
10100		15	MM 1.2.3-1	Splicing apparatus;Saw Blade	Check	1000		3	P			
10120		30	MM 1.2.3-1	Splicing apparatus;Teflon cloth	Change	1000		3	P			

Pos No	Sub Pos	Time	Document Reference	Section/Description	Action	Cycle Not Cycle	Restart After	S	Conn. Items	On Req. Activate	Not with	Variant Specification
02 Superstructure												
20020		10	MM 2.1-1	House	Check	1000		7				
20040		40	MM 2.1-2	House	Overhaul	4000		7	P			
20060		5	MM 2.2-1	Forming Rings	Check	250		3				
20080		15	MM 2.2-2	Forming ring; Position of Longitudinal sealing	Check	1000		7	P			
20100		10	MM 2.2-3	Forming ring; Package weight	Check	1000		3				
20120		40	MM 2.2-4	Forming Rings Remove Fitting Rollers	Overhaul	2000		7	P			
20140		10	MM 2.3-1	Heating unit; Check - Set Position	Check	1000		7				
20160		5	MM 2.3-2	Heating unit; Air pressure	Check	500		3				
20180		10	MM 2.3-3	Heating unit - Check	Clean	250		3				
20200		10	MM 2.3-3	Heating unit; Protective cloth	Change	500		3	P		20240	
20220		10	MM 2.3-3	Heating unit; Slide rail - Teflon pipe	Change	1000		3	P		20240	
20240		40	MM 2.3-3	Heating unit	Overhaul	6000		7	P			
20260		30	MM 2.3-5	Heating element	Overhaul	3000		7				
20280		10	MM 2.4-1	Filling pipe	Check	250		3	P			
20300		5	MM 2.4.1-1	Pressure roller	Check	500		3				
20320		5	MM 2.4.2-1	Lower Filling pipe	Check	250		3	P			
20340		10	MM 2.5-1	Sterilization Bath	Check	1000		7				
20360		30	MM 2.5-2	Sterilization Bath	Overhaul	2000		7	P		20440	

Pos No	Sub Pos	Time	Document Reference	Section/Description	Action	Cycle Not Cycle	Restart After	S	Conn. Items	On Req. Activate	Not with	Variant Specification
20380		10	MM 2.6-1	Sterile air cooler; Leakage	Check	1000		7				
20400		10	MM 2.7.1-1	Sterilization House; Group Bending rollers	Check	1000		7				
20420		10	MM 2.7.2-1	Sterilization House; Element Group	Check	1000		7				
20440		15	MM 2.8-1	Steam system - Steam Traps	Clean	3000		7				
20460		5	MM 2.8-2	Steam system - Steam filter	Change	3000		7	P			
20480		90	MM 2.10-2	AP - Valve; Seals and Diaphragms	Change	2000		7	P			
20500		60	MM 2.10-3	AP - Valve; A and B Cylinder - Seals	Change	4000		3				
20520		30	MM 2.10-4	AP - Valve; C Cylinder - Seals	Change	4000		7	P			
20540		15	MM 2.11-2	Constant flow valve; Regulating valve Membrane	Change	500		3	P			
20560		15	MM 2.11-2	Constant flow valve; Dosing valve - Membrane	Change	500		3	P			
20580		30	MM 2.12-1	Compressed air system	Check	1000		7				
20600		30	MM 2.12-2	Compressed air system - Pressure switch	Check	3000		7				
20620		5	MM 2.12-2	Sterile air pressure; Switch - Function	Check	3000		7				
20640		5	MM 2.12-4	Compressed-air filter	Change	1000		7	P			
03 Side Frame												
30020		20	MM 3.1-1	Cutting and pressure jaws	Check	1000		3				
30040		20	MM 3.1.1-1	Pressure jaws	Check	1000		7			30060	

Pos No	Sub Pos	Time	Document Reference	Section/Description	Action	Cycle Not Cycle	Restart After	S	Conn. Items	On Req. Activate	Not with	Variant Specification
30060		40	MM 3.1.1-1	Pressure jaws	Overhaul	4000		7	P			
30080		30	MM 3.1.2-1	Heating jaw	Check	1000		7				
30100		30	MM 3.1.2-2	Heating jaw; Inductors and Carbon brushes	Change	2000		7	P			
30120		80	MM 3.1.2-2	Heating jaw	Overhaul	4000		7	P			
30140		30	MM 3.2-1	Chain unit	Check	1000		7				
30160		30	MM 3.2-2	Chain unit	Change	4000		7				
30180		40	MM 3.3-1	Twin Chain tensioner	Overhaul	4000		7	P			
30200		60	MM 3.4-1	Link chain wheel	Overhaul	4000		7	P			
30220		60	MM 3.5-1	Sprocket	Overhaul	4000		7	P			
30240		30	MM 3.6-1	Finger Cam	Check	1000		7				
30260		40	MM 3.7-2	Plunger	Overhaul	2000		7	P			
30280		20	MM 3.8-1	Pressure Side; Transmission Rail	Overhaul	4000		7				
30300		10	MM 3.10-1	Contact Rail Unit	Check	1000		7				
30320		60	MM 3.10-3	Contact Rail Unit	Overhaul	4000		7	P			
04 Machine body												
40020		15	MM 4.1-1	Hydraulic system	Check	1000		7				
40040		30	MM 4.1-2	Hydraulic system; Oil	Change	1000		7	P			
40060		20	MM 4.1-3	Hydraulic; Oil filter	Change	1000		3	P			
40080		5	MM 4.2-1	Tube flushing; Distributor	Check	250		3	P			

Pos No	Sub Pos	Time	Document Reference	Section/Description	Action	Cycle Not Cycle	Restart After	S	Conn. Items	On Req. Activate	Not with	Variant Specification
05 Cutting device												
50020		20	MM 5.1-1	Central lubrication system	Check	250		3				
50040		30	MM 5.1-1	Central lubrication system	Check	1000		7				
50060		10	MM 5.2-2	Central lubrication system; Oil tank	Clean	1000		3				
50080		10	MM 5.2-3	Central lubrication system; Air pressure Switch	Check	1000		7				
50100		10	MM 5.2-4	Central lubrication system; Oil pump - Level switch	Check	1000		7				
50120		20	MM 5.3-1	Sides - Drive Chain	Check	1000		7			50400	
50140		20	MM 5.3-1	Sides - Drive Chain	Change	6000		7	P			
50160		20	MM 5.4-1	Cutting unit - Drive Chain	Check	1000		7				
50180		20	MM 5.4-1	Cutting unit - Drive Chain	Change	6000		7				
50200		20	MM 5.5-1	Chain tensioner; Sides	Check	1000		7			50460	
50220		40	MM 5.5-1	Chain tensioner; Sides	Change	4000		7	P			
50240		20	MM 5.6-1	Chain tensioner; Cutting unit	Check	1000		7			50500	
50260		40	MM 5.6-1	Chain tensioner; Cutting unit	Change	4000		7	P			
50280		40	MM 5.7-1	Worm gear	Change	18000		7	P			
50300		60	MM 5.7-2	Worm gear	Overhaul	6000		7	P		50300	
50320		10	MM 5.8-1	Worm gear; Slip Disc - Measure	Check	2000		7				
50340		30	MM 5.8-1	Worm gear; Slip Disc	Overhaul	4000		7	P			

Pos No	Sub Pos	Time	Document Reference	Section/Description	Action	Cycle Not Cycle	Restart After	S	Conn. Items	On Req. Activate	Not with	Variant Specification
50360		120	MM 5.9-2	Intermediate shaft	Overhaul	4000		7	P			
50380		10	MM 5.10-1	Drive shaft - Elevator	Check	1000		7				
50400		120	MM 5.10-2	Drive shaft - Elevator	Overhaul	4000		7	P			
50420		5	MM 5.12-1	Drive motor; V-belt - Tension	Check	1000		7				
50440		5	MM 5.12-1	Drive motor; V-belt pulley	Check	3000		7	P			
50460		10	MM 5.12-1	Drive motor - V-belt	Change	3000		7	P		50340	
50480		5	MM 5.12-1	Drive motor; V-belt - Tension spring	Change	3000		7	P			
50500		30	MM 5.12-3	Drive motor; Bearings	Check	6000		7	P			
50520		10	MM 5.13-1	Cutting unit; Knives	Check	250		3	P			
50540		10	MM 5.13-1	Cutting unit; Rail	Check	250		3	P			
50560		60	MM 5.13-3	Cutting unit	Set	2000		7				
50580		120	MM 5.13-4	Cutting unit; Cutting wheel	Overhaul	4000		7	P			
50600		120	MM 5.13-4	Cutting unit; Counter wheel	Overhaul	4000		7	P			
50620		100	MM 5.13-5	Cutting unit	Set	1000		7				
50640		20	MM 5.14-1	Tube support	Check	1000		7				
06 Elevator												
60020		5	MM 6.1-1	Elevator Chain; Tension	Check	1000		3				
60040		45	MM 6.1-2	Elevator Chain	Change	4000		7	P			
60060		30	MM 6.2-1	Sprockets	Overhaul	4000		7	P			
60080		160	MM 6.3-2	Elevator Scoops	Overhaul	4000		7	T P			

Pos No	Sub Pos	Time	Document Reference	Section/Description	Action	Cycle Not Cycle	Restart After	S	Conn. Items	On Req. Activate	Not with	Variant Specification
60100		30	MM 6.4-2	Chain tensioner	Overhaul	4000		7	P			
60120		20	MM 6.5-1	Tilting Tray; Cylinder	Change	6000		7	P			
13 Strip applicator												
130020		10	MM 13.1-1	Hose clamp - Rubber strip	Change	1000		3	P			
130040		10	MM 13.2-1	Bending rollers; Surface; Bearings	Check	1000		7				
130060		45	MM 13.3-1	Pressure and Counter Roller; Teflon cloth	Change	1000		7				
130080		30	MM 13.4-1	Element Group-Clean	Check	250		3				
130100		60	MM 13.4-2	Element Group;Cylinder and Bearings	Change	6000		7	P			
130120		5	MM 13.5-1	Pressure gaugeStrip applicator	Check	1000		7				
130140		5	MM 13.6-1	Photocell Sensor - Intensity	Check	1000		7				
130160		15	Elmoprint manual	Dating unit	Clean	250		3				
130180		20	Elmoprint manual	Dating unit - Stamp - Force	Adjust	250		3				
130200		20	Elmoprint manual	Dating unit	Overhaul	1000		7				
21 Miscellaneous												
210020		15	MM 21.1-1	Cutting unit and Side Frame - Synchronization	Check	1000		7				
210040		5	MM 21.1-1	Final Cutting Position	Set	1000		7				

Pos No	Sub Pos	Time	Document Reference	Section/Description	Action	Cycle Not Cycle	Restart After	S	Conn. Items	On Req. Activate	Not with	Variant Specification
210060		10	MM 21.1-2	Angle encoder - Synchronization	Check	1000		7				
210080		5	OM	Lubrication	Check	1000		7				
95 After-Maintenance Checks												
950020		5		Package; Volume	Check	1000		7				
950040		5		Tube; Centering	Check	1000		7				
950060		5	MM 2.9	LS-overlap	Check	1000		7				
950080		5		LS nozzle; Setting	Check	1000		7				
950100		5		Strip applicator; Nozzle-Setting	Check	1000		7				
950120		5		Sterilization Bath; Web Position	Check	1000		7				
950140		5	OM	Package; Sealing-Quality	Check	1000		7				
950160		5		Shape	Check	1000		7				
950180		5		Jaw-Position	Check	250		3				
950200		5		Package-Length	Check	250		3				
950220		5	MM 14.1	Cutting-Position	Check	1000		7				
950240		5		Cutting and pressure jaws-Position	Check	1000		7				
950260		5		Package-Length	Check	1000		7				
950280		5		Strip applicator; Web guide-Clean-Setting	Check	1000		3				
950300		5	MM 2.10	Package weight	Check	1000		7				
950320		20		Package Length	Check	1000		7				

Pos No	Sub Pos	Time	Document Reference	Section/Description	Action	Cycle Not Cycle	Restart After	S	Conn. Items	On Req. Activate	Not with	Variant Specification
950340		5		Package weight; Adjust	Check	1000		7				

17

Spare Part Kit

Report Name: **Connected items by Machine Type 0/0** | Country No: **001** | Page No: **1**

Machine Type No: **633251** | List Variant: **040V** | Machine Type: **Tetra Classic Aseptic 65**

Pos No	Item Identity	Description	Qty	Variant Specification
Spare Parts				
20	90415-302	Filter insert	1	
10060	13888	Bearing	2	
10100	33177	Saw Blade	2	
10120	33179	Teflon cloth	2	
20040	90214-98	Ball bearing	4	
	90240-184	Flange bushing	2	
20080	2033-11	Spacing washer	12	
	563412	Roller	4	
	563413	Roller	1	
	563414	Roller	1	
20120	2033-11	Spacing washer	12	
	563403	Roller	6	
20200	1345167	Protective cloth	1	
20220	547517	Teflon pipe	1	
	1345167	Protective cloth	1	
20240	90239-816	Cylinder	0	
	547517	Teflon pipe	1	
	1345158	Spring	1	
	1345162	Bushing	1	
	1345167	Protective cloth	1	
20280	90030-482	Gasket	2	
20320	10593	Locking rubber	1	
	32197	Pressure roller	1	
20360	90214-40	Ball bearing	2	
	90240-172	Flange bushing	2	
	315204-220	O-ring	2	
	562873	Seal	1	
	1175111	Bearing	2	
20460	90277-55	Filter	1	
	90337-315	Filter	1	
20480	90091-282	Seal ring	1	
	90242-110	O-ring	2	
	556118	Seal ring	3	
	794246	Diaphragm	1	
20520	90091-236	Seal ring	1	
	90091-237	Seal ring	2	
	90091-238	Seal ring	2	
	90091-267	Seal ring	6	
	90091-268	Seal ring	6	
	90091-269	Seal ring	2	
	90242-109	O-ring	1	
	315105-153	O-ring	1	
	315204-213	O-ring	2	
	315204-215	O-ring	1	

Report Name: **Connected items by Machine Type 0/0** | Country No: **001** | Page No: **2**

Machine Type No: **633251** | List Variant: **040V** | Machine Type: **Tetra Classic Aseptic 65**

Pos No	Item Identity	Description	Qty	Variant Specification
Spare Parts				
20520	315204-302	O-ring	2	
	315204-310	O-ring	1	
20540	925091	Diaphragms	2	
20560	736508-1	Membrane	1	
20640	90415-19	Filter	1	
30060	315750-112	Circlip	32	
	321576-197	Support roller	32	
	484674	Shaft	16	
	543509	Roll	16	
	550193	Pin	16	
	568106	Rubber rail	0	VAR: LVS
	594731	Rubber	16	VAR: MVS
	594732	Teflon cloth	16	VAR: MVS
	1110377-1	Dolly	32	VAR: MVS
30100	576147	Inductor	16	VAR: LVS
	1175098	Inductor	16	VAR: MVS
30120	4615	Roller Bar	32	
	284046	Gasket	32	
	543509	Roll	16	
	550193	Pin	16	
	576147	Inductor	16	
	1175098	Inductor	16	
30180	273545	Compression spring	8	
30200	315202-528	O-ring	4	
	315750-116	Circlip	8	
	315750-124	Circlip	8	
	315752-130	Circlip	4	
	321101-282	Flange bushing	8	
	321309-104	Ball bearing	8	
30220	315750-116	Circlip	8	
	321309-104	Ball bearing	8	
30260	37807	Lining	2	
	37808	Piston	2	
	90020-20	Sleeve	2	
	315202-219	O-ring	2	
	541032	Roller conveyor	2	
	543501	Roller plate	2	
30320	580310	Contact Rail	2	
	580311	Contact Rail	2	
40040	90296-53	Hydraulic Oil	1	
40060	90242-144	O-ring	1	
	90415-334	Filter	1	
40080	1483042	Distributor	1	
50140	7470-6	Chain	1	
	7470-7	Chain	1	

Report Name: **Connected items by Machine Type 0/0** | Country No: **001** | Page No: **3**

Machine Type No: **633251** | List Variant: **040V** | Machine Type: **Tetra Classic Aseptic 65**

Pos No	Item Identity	Description	Qty	Variant Specification
Spare Parts				
50220	4892	Curve	1	
	4894-1	Bolt	1	
	4894-2	Bolt	1	
50260	321111-163	Flange bushing	1	
	321111-241	Flange bushing	1	
	457648	Curve	2	
	536921	Curve Hub	2	
50280	4881	Gear wheel	1	
	4882	Gear wheel	1	
	90056-75	Worm gear	1	
	534728	Toothed pulley	1	
50300	4881	Gear wheel	1	
	4882	Gear wheel	1	
	90091-262	Seal ring	1	
	315202-316	O-ring	1	
	315221-185	Seal ring	2	
	321309-108	Ball bearing	2	
	321314-103	Ball bearing	1	
	321314-106	Ball bearing	1	
50340	4466-1	Flange	1	
	4469	Coil Spring	1	
	318101-43	V-belt	1	VAR: 50 HZ
	318101-44	V-belt	1	VAR: 60 HZ
	1175043	V-belt pulley	1	VAR: 50 HZ
	1483058	Pulley	1	VAR: 60 HZ
50360	4876	Sprocket	1	
	4877	Gear wheel	1	
	4879	Sprocket	1	
	321306-107	Ball bearing	1	
	321309-107	Ball bearing	1	
50400	3303	Gear wheel	1	
	4460	Sprocket	1	
	315202-224	O-ring	1	
	315202-523	O-ring	1	
	321313-103	Bearing	1	
	321330-105	Bearing	1	
50440	560678	Pulley	1	
50460	318101-43	V-belt	1	VAR: 50 HZ
	318101-44	V-belt	1	VAR: 60 HZ
50480	10920	Tension spring	1	
50500	321312-103	Front bearings	1	
	321312-104	Rear bearings	1	
50520	484815	Knife	4	VAR: STRAIGHT CUT
	594729	Notch knife	4	VAR: LARGE SIDE 3
	594730	Notch knife	4	VAR: LARGE SIDE 4
	594735	Notch knife	4	VAR: SMALL SIDE 3

Report Name: **Connected items by Machine Type 0/0** | Country No: **001** | Page No: **4**

Machine Type No: **633251** | List Variant: **040V** | Machine Type: **Tetra Classic Aseptic 65**

Pos No	Item Identity	Description	Qty	Variant Specification
Spare Parts				
50520	594736	Notch knife	4	VAR: SMALL SIDE 4
	594754	Z-Knife	4	VAR: Z-CUT SIDE 3
	594755	Z-Knife	4	VAR: Z-CUT SIDE 4
50540	209972	Rail	4	
50580	2467	Oil seal - "Lövalock"	2	
	321312-105	Ball bearing	2	
50600	2467	Oil seal - "Lövalock"	2	
	321312-105	Ball bearing	2	
60040	5344-2	Chain	2	
60060	4554	Sprocket	2	
	315202-518	O-ring	2	
	321330-103	Ball bearing	2	
60080	5926	Bearing	30	
60100	4902	Spocket	2	
	7352	Compression spring	1	
	315202-520	O-ring	4	
	321330-103	Ball bearing	2	
60120	90239-821	Cylinder	1	
130020	20039	Rubber strip	1	
130100	90239-821	Cylinder	1	

Report Name: **Connected items by Machine Type 0/0**

Country No: **001**

Page No: **5**

Machine Type No: **633251**

List Variant: **040V**

Machine Type: **Tetra Classic Aseptic 65**

Pos No	Item Identity	Description	Qty	Variant Specification
Tools				
60080	70267	Elevator Scoops Tools	1	
End of connected items				