OM
Operation Manual

TCA/65

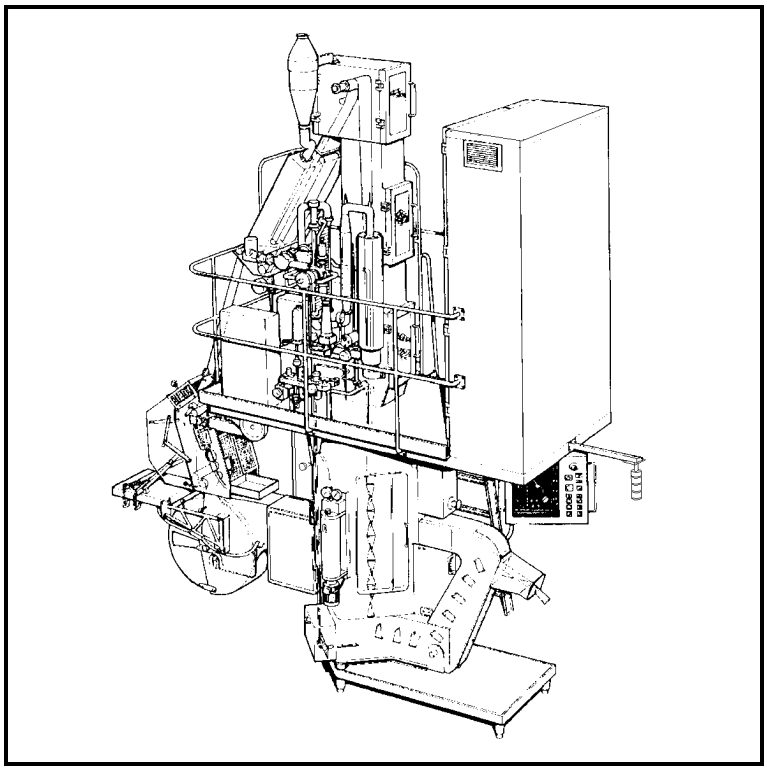

2.263325103.FRO

Tetra Pak

Doc No. OM-85562-1

This document is valid for:

Series No/ Machine No Sign.

OM
Operation Manual

TCA/65
Tetra Classic Aseptic
633251-030V

Equipment included:

SA 4
Strip applicator
614101-0501

ZH
Zone heater
566072-0101

2.263325103.FRO

Doc No. OM-85562-1

Issue 9702

Tetra Pak

Tetra Pak Stålvall AB

Table of contents

Safety precautions 1

Introduction 13

Alarms /Troubleshooting 51

Preparation 55

Sterilization 61

Start 77

Production checks 85

Package checks 93

Strip supply 103

Changing of printing ribbon 107

Packaging material splice 111

Stop 119

After production care 125

Weekly care 141

Sterilization liquid 153

Technical data 159

Lubrication 161

2.263325103.TOC

This page intentionally left blank

2.263325103.TOC

Safety precautions

To ensure maximum safety for the operator, always read this section carefully before doing any work on the machine or making any adjustments.



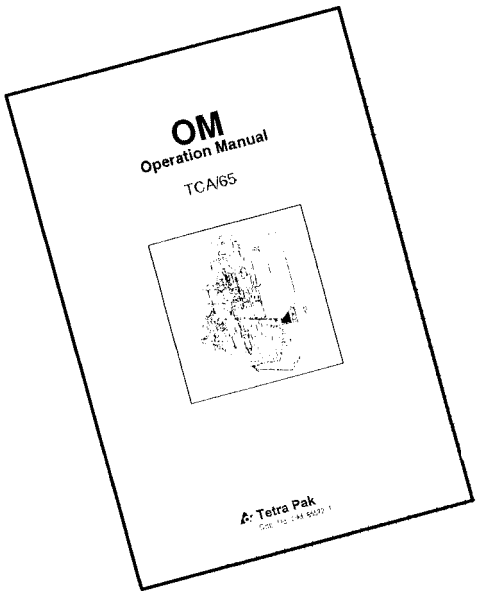

Use of hazard information

Hazard information in this document has the following significance:

DANGER!

Failure to observe this information results in immediate danger of life!

WARNING!

Failure to observe this information can result in personal injury!

CAUTION!

Failure to observe this information can result in damage to or destruction of equipment!

Machine operator

Only trained or instructed persons are allowed to operate the machine.

This Operation Manual (OM) describes the authorized way to use the machine, and it may only be used in accordance with these instructions. Tetra Laval Food will take no responsibility for injury or damage, if the machine is used in any other way.

Corrective maintenance, not described in the OM book, is to be carried out by trained technicians only.

If the safety precautions are not followed, there is risk of personal injury.

2.2IE000001.EN

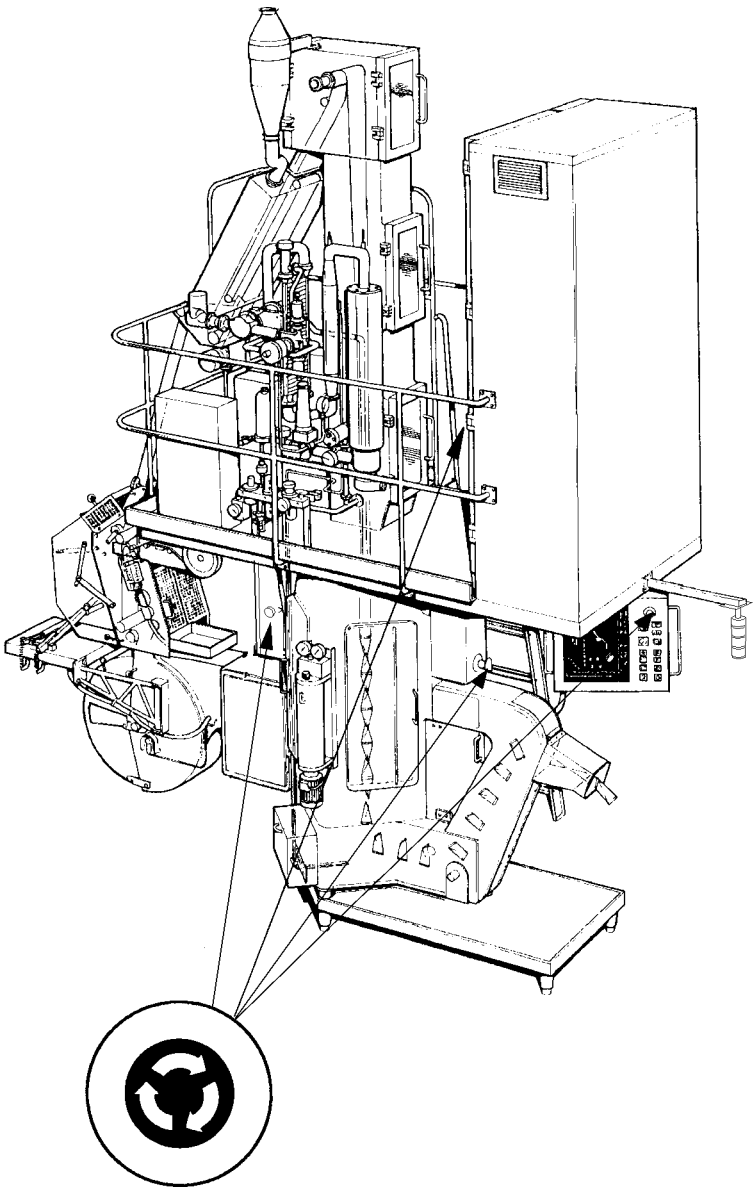

Emergency stop

In case of danger to people or machine, one of the **Emergency stop** buttons must immediately be depressed.

You must know the exact location of the Emergency stop buttons, to be able to stop the machine immediately in a situation involving risk of personal injury or da-mage to the machine.

Emergency stop must only be used in case of danger to people or machine. To stop production in the normal way, see ”Stop”, page 119.

The **Emergency stops** are located on the:

- Electrical cabinet
- Front of the machine
- Control panel
- Back of the machine (two buttons)

2.2IE000001.EN

Doors, hatches, and safety covers

WARNING!
Risk of injury!
Never inch or run the machine if any Safety switch is non-operational or any Safety cover is not fitted.

The doors and hatches shown in the picture are provided with safety switches. These switches form part of the safety system of the machine and **must under no circumstances be bridged or by-passed or otherwise made non-operational.**

Do not open doors or remove hatches during production. Never stop the machine by opening a door with a safety switch. The machine may perform a reciprocating movement during the first few seconds after an emergency stop**.** Also some machine parts will still be hot.

After maintenance, check that all safety covers are fitted to the machine before it is inched or run.

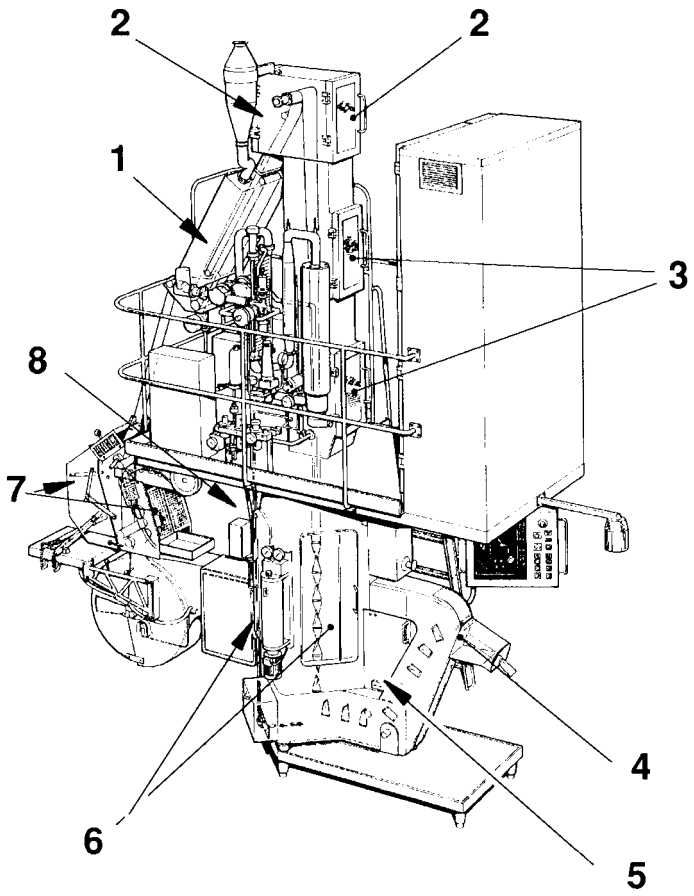

2.2IE000001.EN

1 Sterilization chamber
2 Upper house
3 Aseptic chamber
4 Elevator
5 Motor cover
6 Side doors (four doors)
7 Strip applicator (front, back)
8 Peroxide unit (side 4)

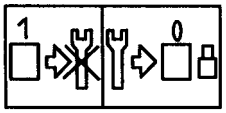

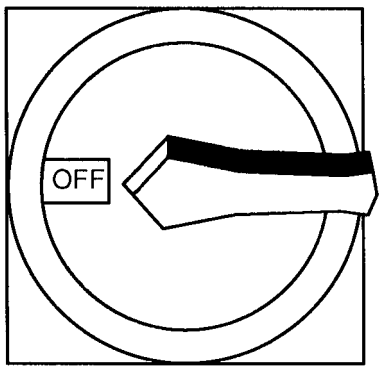



Electrical cabinet

Work inside the electrical cabinet must be performed by skilled or instructed persons only.

When working on electrical equipment the electrical power should be isolated by main switch or by removal of fuses. To prevent the equipment from being unintentionally or inadvertently reactivated the isolation arrangements should be locked or tagged.

WARNING!

The main switch must be turned Off. Risk of electroshock or serious injury. There is a voltage of 400 V in the electrical cabinet. In case of accident, immediately call for medical attention.

2.2IE000001.EN

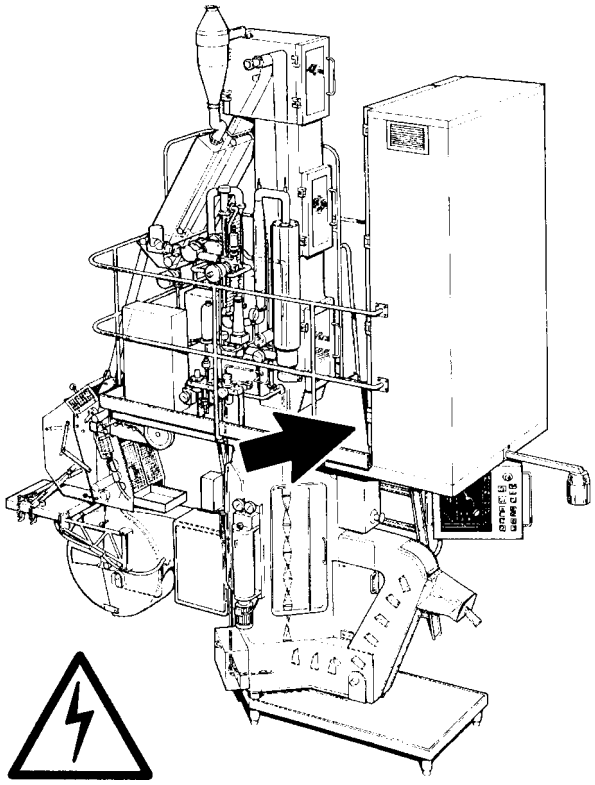

TPIH generator

Only authorized service personnel are allowed to carry out work on the TPIH generator.

DANGER!

High voltage!

The TPIH generator must NOT be opened. Will shock, burn, or cause death. In case of accident, immediately call for medical attention.

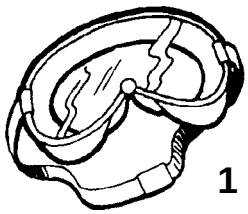
1

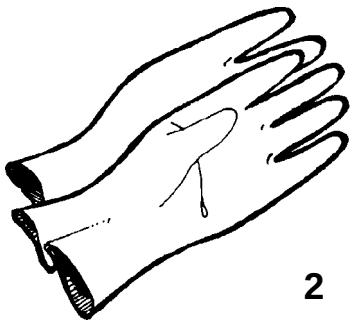
2

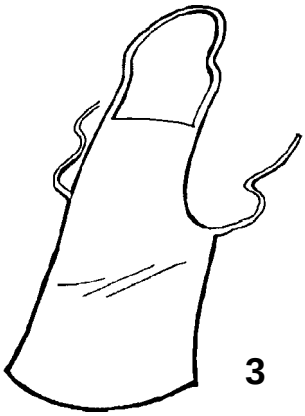
3

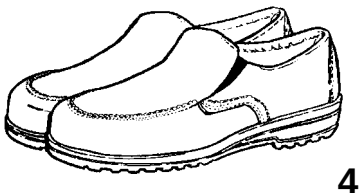
4

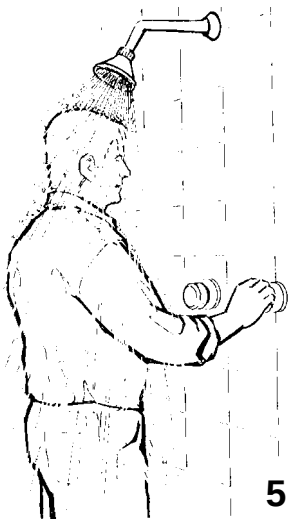
5

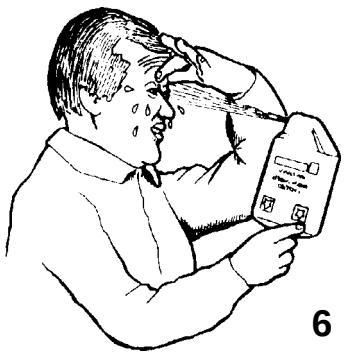
6

2.2IE000001.EN

Handling of sterilization liquid

The sterilization liquid used for sterilizing the packaging material consists of 35 % hydrogen peroxide (H_2O_2).

WARNING!
In both liquid and gas form, hydrogen peroxide may cause irritation or damage if in contact with skin, mucous membranes, eyes, or clothes.

Whenever there is risk of contact with sterilization liquid, always wear **safety glasses** (TP No 779130-102) (1), **protective gloves** (TP No 90303-4) (2), **apron** (TP No 90303-5) (3) and **shoes** (4) made of PVC or PE plastic, or rubber.

In case of accident involving hydrogen peroxide, the basic rule is to rinse as soon as possible with as much water as possible. For this reason, always make sure that the **showers** (5) work, that there are additional washing facilities, and that an **eyewash device** (TP No 90303-6) (6) is available at or near each machine site.

It is necessary to keep in mind:

- If you get splashes or vapour from hydrogen peroxide in your **eyes**, wash the eyes thoroughly with lukewarm water for 15 minutes (keep eyelids widely apart); then seek **medical attention immediately.**
- If you happen to **swallow** hydrogen peroxide, drink large amounts of lukewarm water (in order to dilute the peroxide); then seek **medical attention immediately.**

Cont′d overleaf

Cont´d

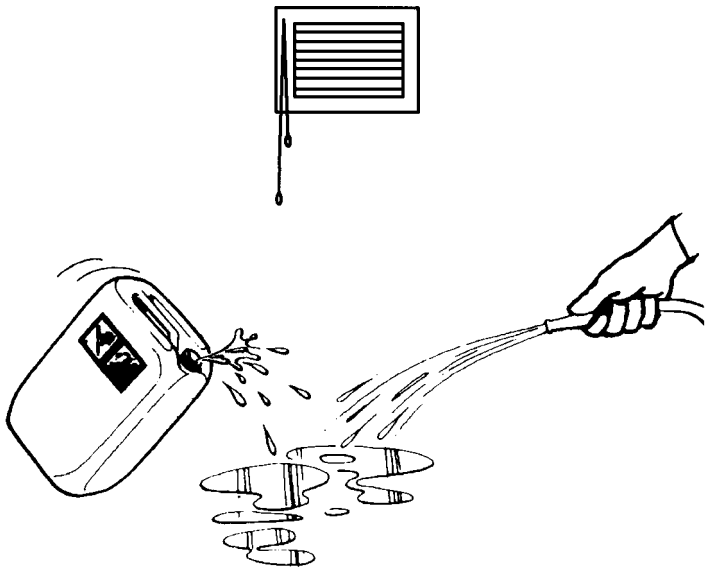

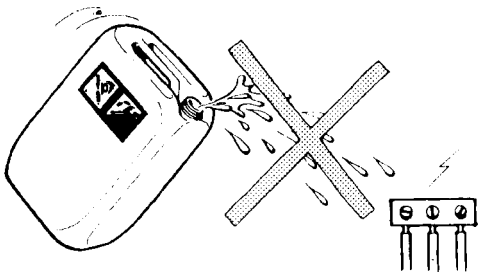

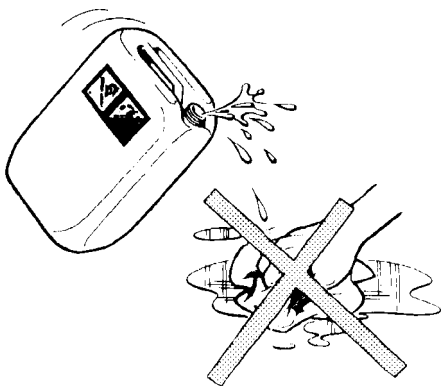

- If you experience irritation or pain due to having **inhaled** peroxide vapour, leave the affected area and get some fresh air. If the symptoms get worse, seek medical advice.
- If hydrogen peroxide gets in **contact** with skin or clothes, immediately rinse with plenty of water. Thoroughly wash your clothes before they are worn again. If skin burns appear, seek medical advice immediately.
- If peroxide is **spilt** on the floor or a table, dilute it with large amounts of water and flush it into the drain.

WARNING!
Never wipe with combustible material, such as rags or paper, as these may self-ignite.

WARNING!
Do not allow hydrogen peroxide to get in contact with live electrical parts. Risk of short-circuit.

- Make sure that areas or rooms used for handling or storing hydrogen peroxide are well **ventilated**.
- In case of fire, cool the peroxide containers by **hosing** with large quantities of water.

2.2IE000001.EN

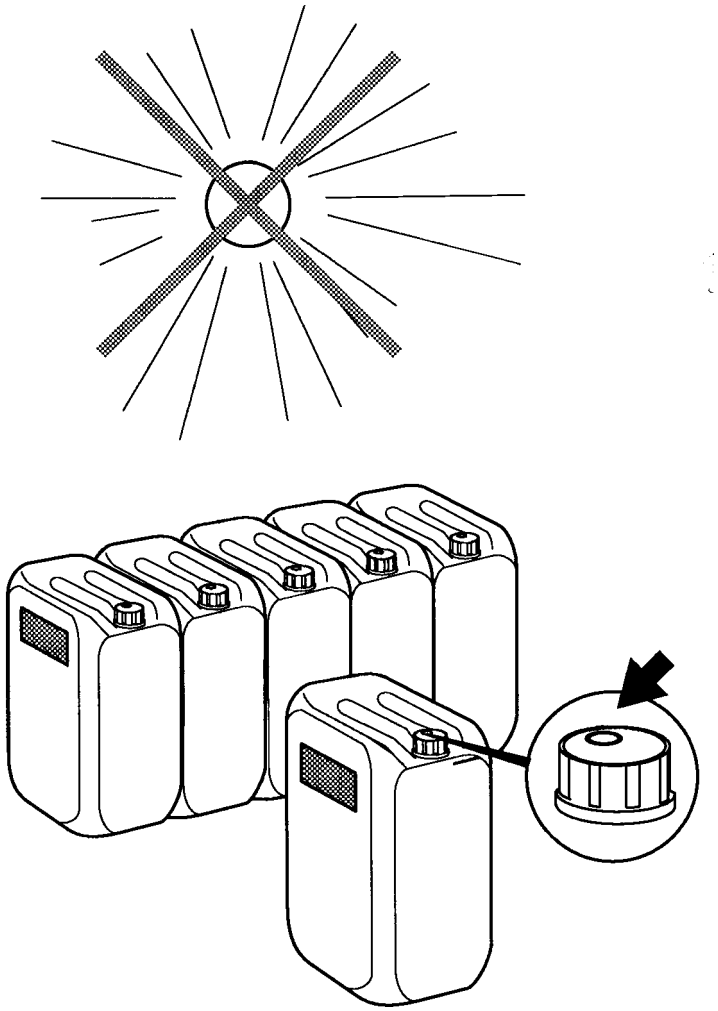

2.2IE000001.EN

Hydrogen peroxide storage

The hydrogen peroxide has been stabilized but may nevertheless decompose into oxygen and water, if exposed to heat, pollution, or strong sunlight. For this reason, it must be stored in a cool, clean, and well ventilated area or room, where it should be shielded from direct sunlight. Also, keep the room free from combustible materials.

WARNING!
Avoid contamination of hydrogen peroxide. It may react to, or form explosive products with, many organic substances (for instance acetone, cellulose, and ethanol).

Hydrogen peroxide must be stored only in the original container as delivered by the supplier.

WARNING!
Do not pour surplus hydrogen peroxide back into the original container. Risk of explosion. The container must be kept upright and must only be closed with a ventilation cap (arrow in picture), which allows oxygen to escape. If not, there may be an explosion if decomposition of the peroxide occurs violently.

Always make sure that the container is properly closed. Pumps or other facilities, used for hydrogen peroxide, must be used for this purpose only.

Disposal of hydrogen peroxide

The hydrogen peroxide should be sent for destruction, or be diluted with water to a concentration below 1 % and poured into drainage. Hydrogen peroxide with a concentration below 1 % is considered harmless when poured into the drain. Never put used hydrogen peroxide back into storage.

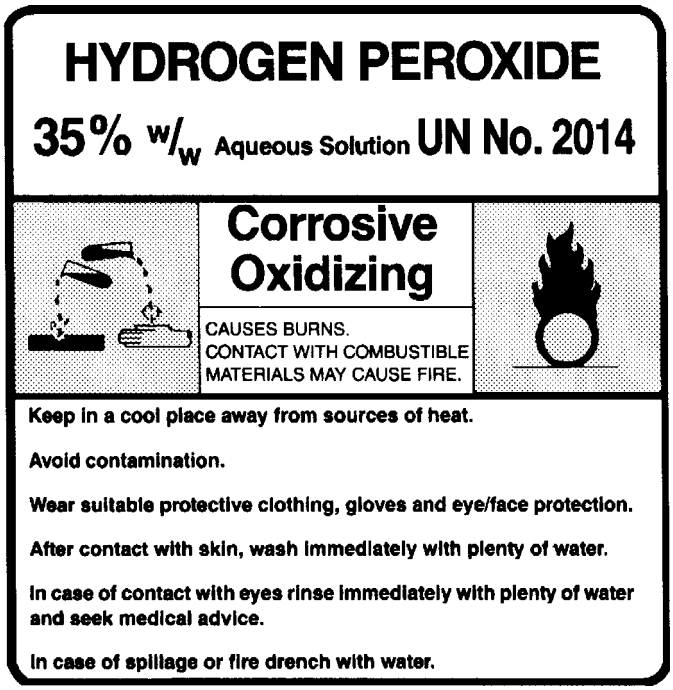

Example of warning text on hydrogen peroxide can

35 % w/w Aqueous solution UN No 2014

WARNING!
Corrosive.
Oxidizing.
Causes burns.
Contact with combustible materials may cause fire.

Keep in a cool place away from sources of heat.

Avoid contamination.

Wear suitable protective clothing, gloves, and eye/face protection.

After contact with skin, wash immediately with plenty of water.

In case of contact with eyes, rinse immediately with plenty of water and seek medical advice.

In case of spillage or fire, drench with water.

Reference:
TP document No M 1751.80

2.2IE000001.EN

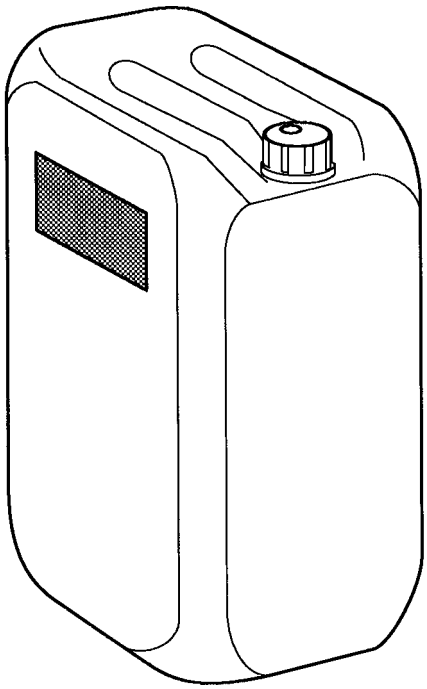

Hydraulic oil, lubricants, acids, alkalis, wetting agent, and cleaning solutions

When handling hydraulic oil, lubricants, acids, alkalis, wetting agent, and cleaning solutions, carefully follow the information in the material safety data sheets and warning texts on the container labels.

Always use the recommended personal protective equipment when handling the agents.

For disposal of agents follow the instructions in the material safety data sheets.

WARNING!
The agents can be flammable, oxidizing, irritating or otherwise hazardous to health. Always read the warning texts before handling the agents.

2.2IE000001.EN

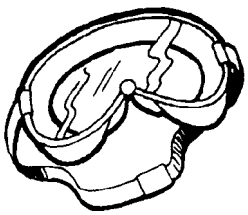

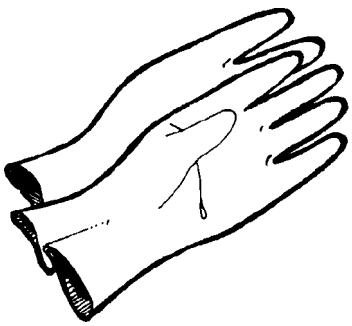

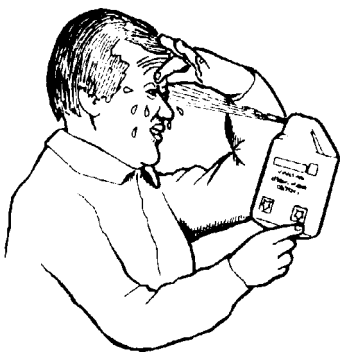

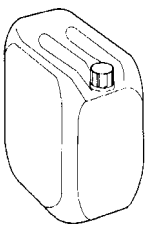

Wetting agent

WARNING!

Risk for eye irritation!

Splashes in the eyes can cause irritations. Contact with the skin for a long time may cause the skin to degrease.
Use recommended personal protective equipment.

Handling

When handling wetting agent wear suitable protective gloves and eye protective.

In case of accident

When contact with the skin, flush with water.

When contact with the eyes, flush with eyeflusher or a large amount of water.

2.2IE000001.EN

Ear Protectors

Always wear ear protectors while the machine is running.



WARNING!
Use ear protectors to minimize the risk of impaired hearing.

2.2IE000001.EN

This page intentionally left blank

2.2IE000001.EN

Introduction

Always read this section and “Safety precautions”, before starting the machine.

Numbering of sides

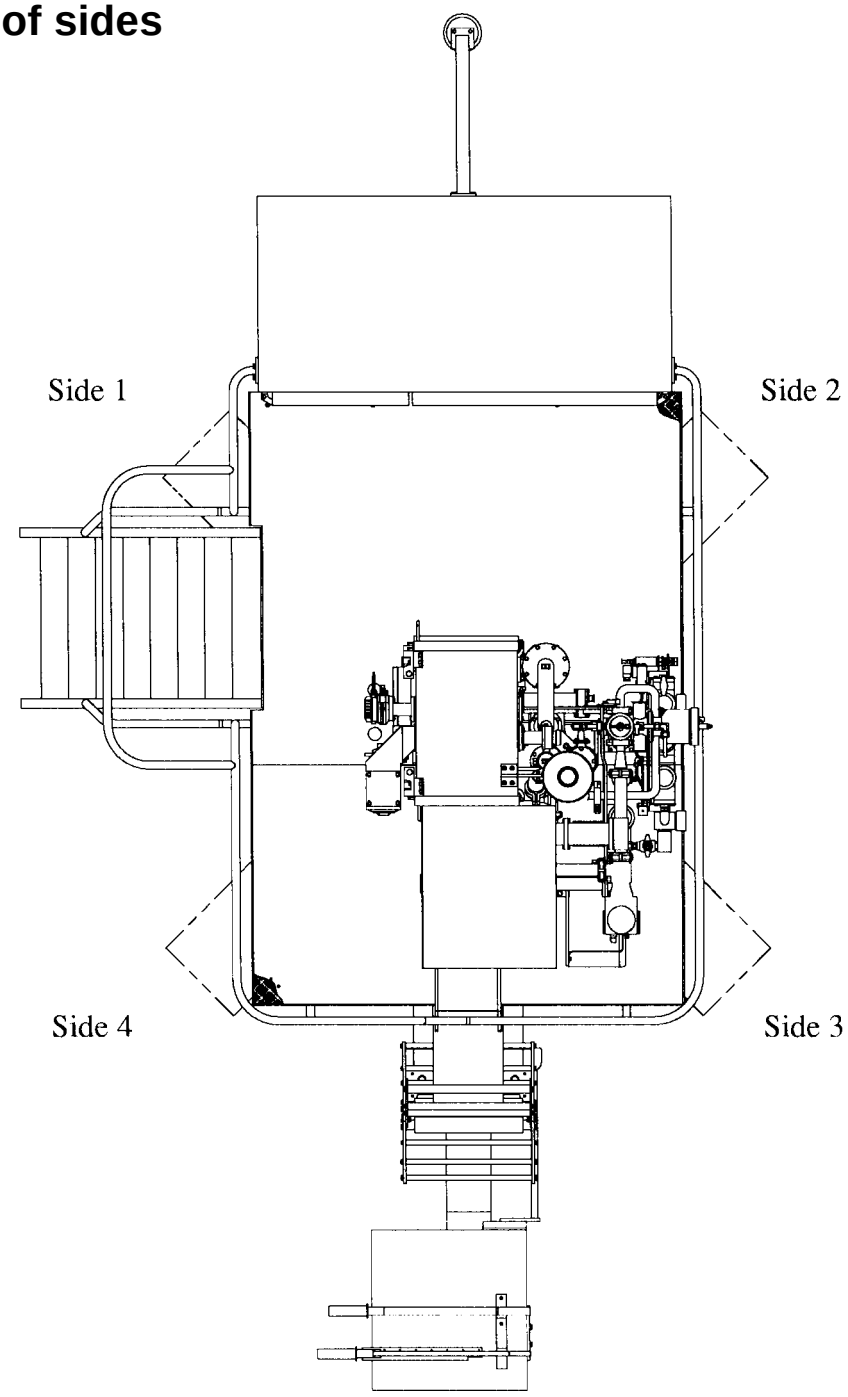

2.2IE000002.EN

Numbering of jaws and packages

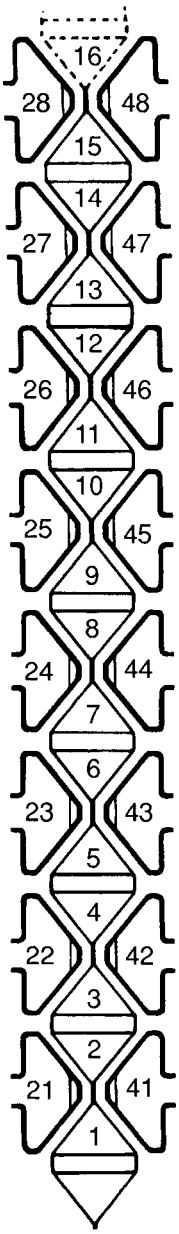

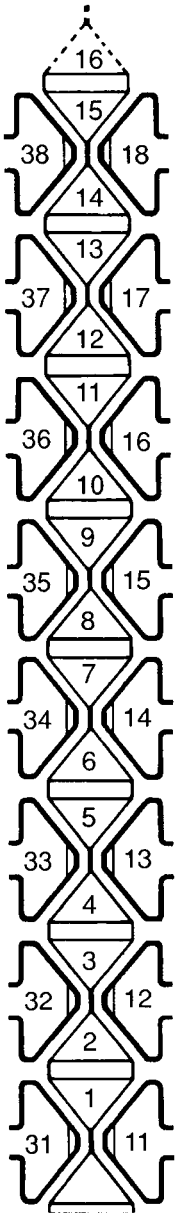

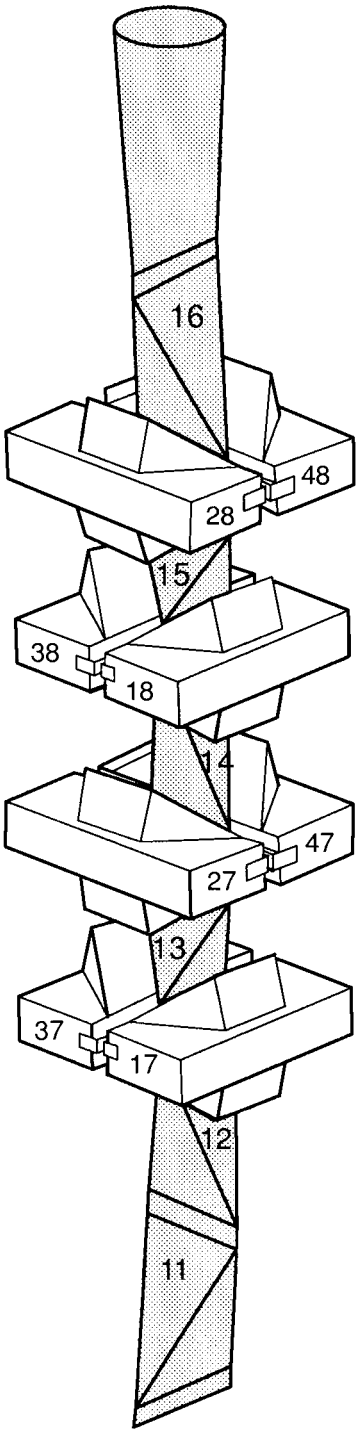

Side 2	Side 4	Side 3	Side 1
Heating jaws 21–28	Pressure jaws 41–48	Pressure jaws 31–38	Heating jaws 11–18

2.2IE000002.EN

Package terminology

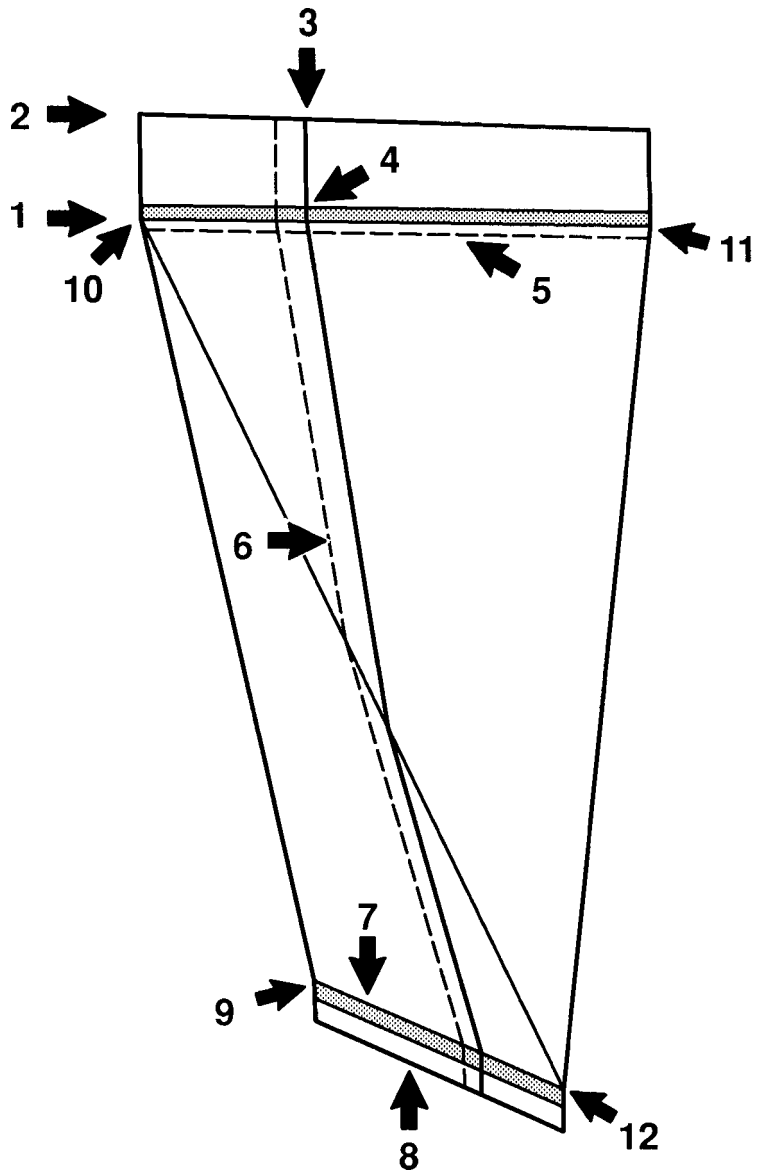

2.2IE000002.EN

1 Inner corner
2 Outer corner
3 Outer cross
4 Inner cross
5 Perforation
6 Longitudinal seal (LS)
7 Inner transversal seal (Inner TS)
8 Outer transversal seal (Outer TS)
9 Lower front corner
10 Upper rear corner
11 Upper front corner
12 Lower rear corner

Terminology

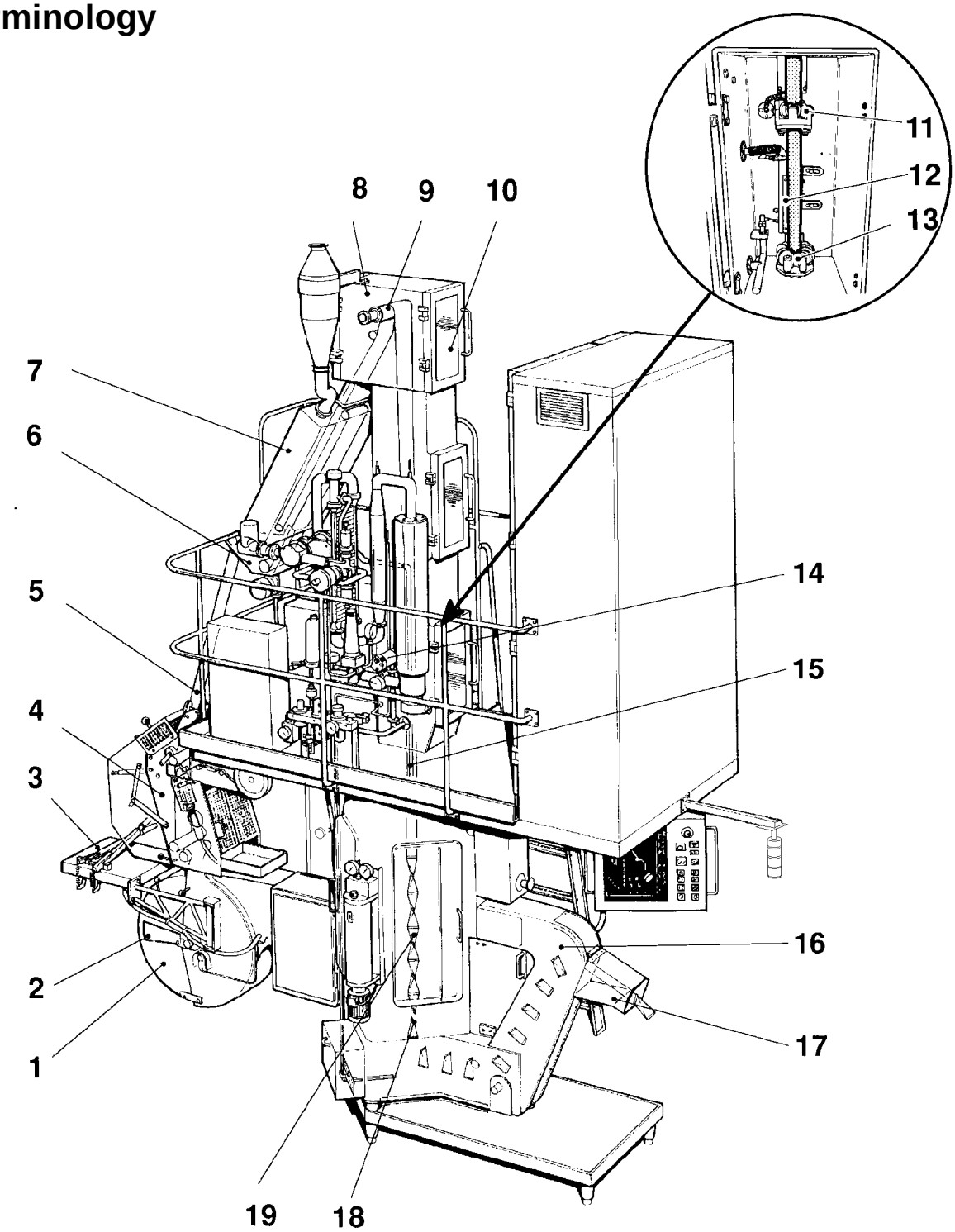

2.2IE000002.EN

1 Cassette
2 Material reel
3 Splicing table
4 Strip Applicator (SA4)
5 Material web
6 Peroxide bath
7 Sterilization chamber
8 Upper house
9 Upper bending roller
10 Aseptic chamber
11 Upper forming ring
12 Longitudinal sealing nozzle
13 Lower forming ring
14 Longitudinal sealing (LS) element
15 Filling pipe
16 Elevator E
17 Tilting tray
18 Cutting
19 Transversal sealing (TS)

Strip Applicator (SA4)

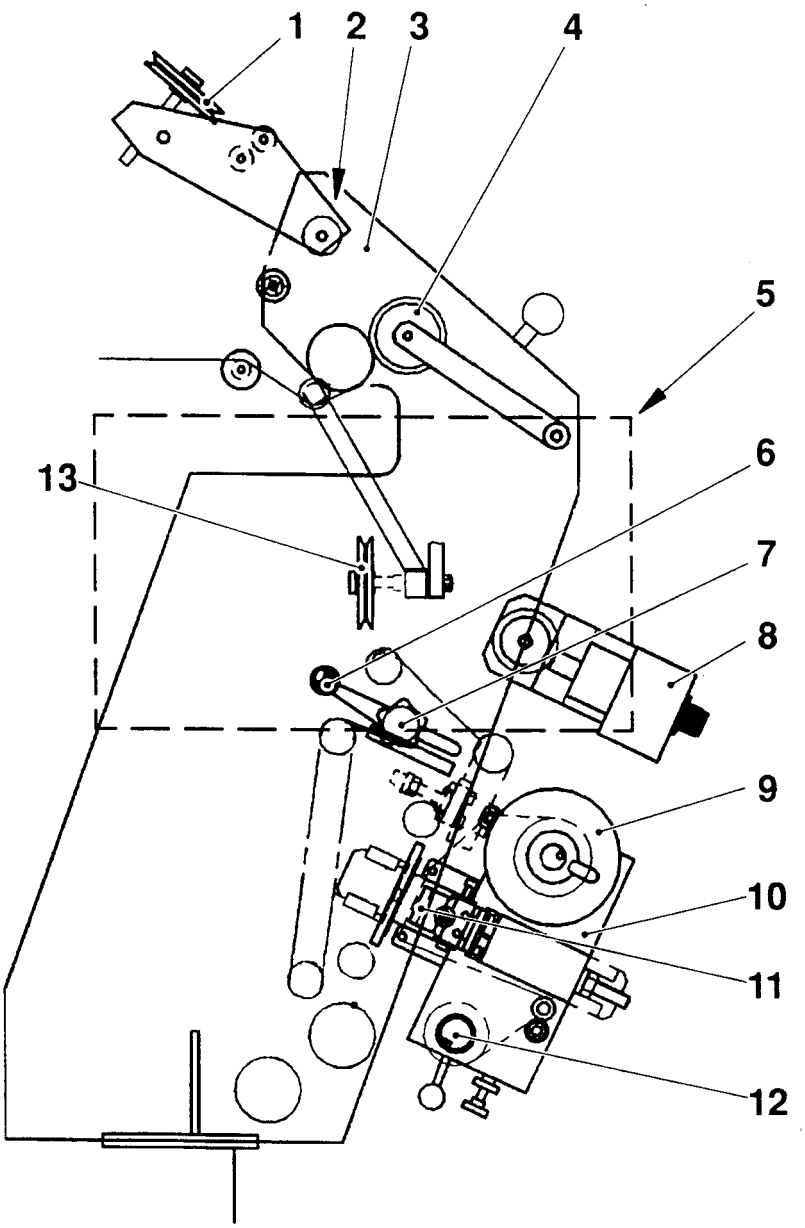

2.2IE000002.EN

1 Guide roller
2 Photocell sensor
3 Strip applicator
4 Strip applicator pressure roller
5 Electrical cabinet-zone heater/dating unit
6 Locking handle
7 Handle (date position adjustment)
8 Zone heater
9 Imprinting sheet
10 Dating unit
11 Type holder
12 Paper bobbin for used imprinting sheet
13 Guide roller

Electrical cabinet - zone heater/dating unit

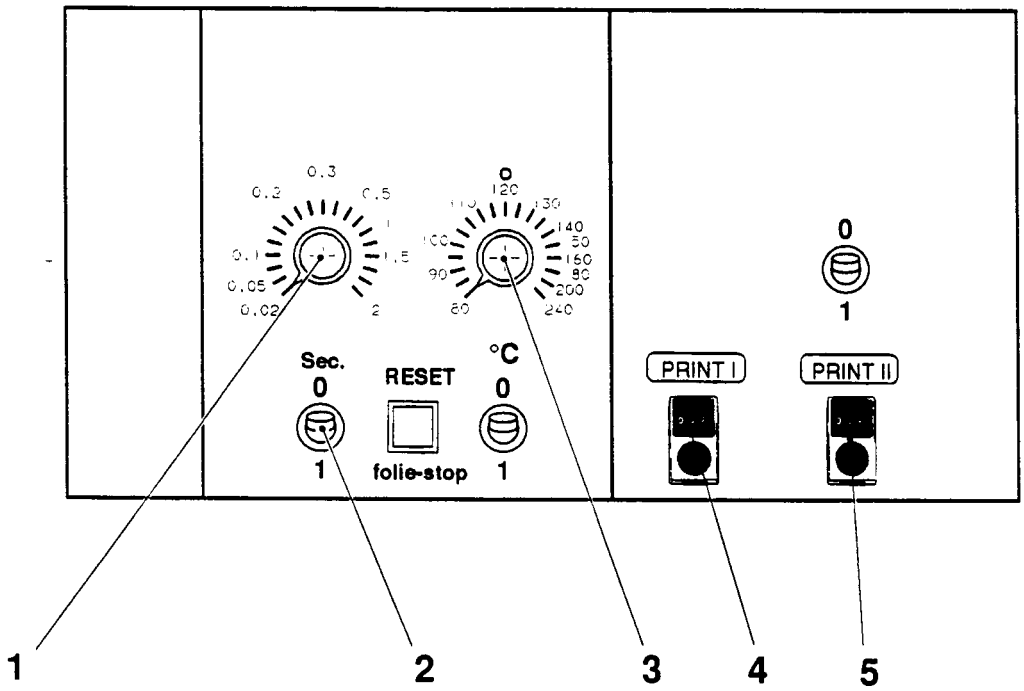

2.2IE000002.EN

1 Print duration
2 Activating switch
3 TEMP setting
4 PRINT I
5 PRINT II

TID I	**Hold time printing duration I and II**
TEMP	**Temperature-printing insert**
PRINT I	**Time delay for print I**
PRINT II	**Time delay for print II**

Control panel - Electrical cabinet

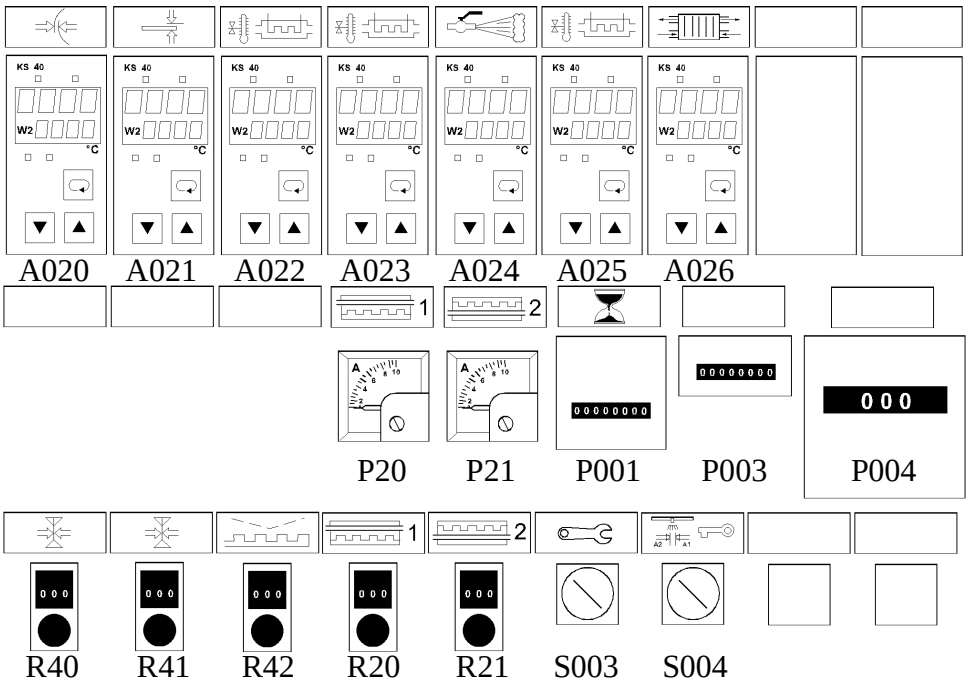

2.2IE000002.EN

A020	**Temperature control-LS element**	
A021	**Temperature control-LS strip element**	
A022	**Temperature control-air heater**	
A023	**Temperature control-air preheater**	
A024	**Temperature monitor-steam**	
A025	**Temperature monitor-sterilization house**	
A026	**Temperature monitor-heat exchanger**	
P20	**Ammeter-sterilization chamber heating element side 1-upper**	
P21	**Ammeter-sterilization chamber heating element side 2-lower**	
P001	**Hour meter**	
P003	**Package counter**	
P004	**Distributor counter**	Number of packages distributed to the right/ to the left. Setting acc to page 42.
R40	**Potentiometer-TS side 1**	
R41	**Potentiometer-TS side 2**	
R42	**Potentiometer-zone heater**	
R20	**Potentiometer-sterilization chamber heating element side 1-upper**	
R21	**Potentiometer-sterilization chamber heating element side 2-lower**	
S003	**Service switch**	**Caution!** The machine must **not** be used for production while the **service switch** is in test position.
S004	**Key switch-Final cleaning**	

Control panel/Push buttons

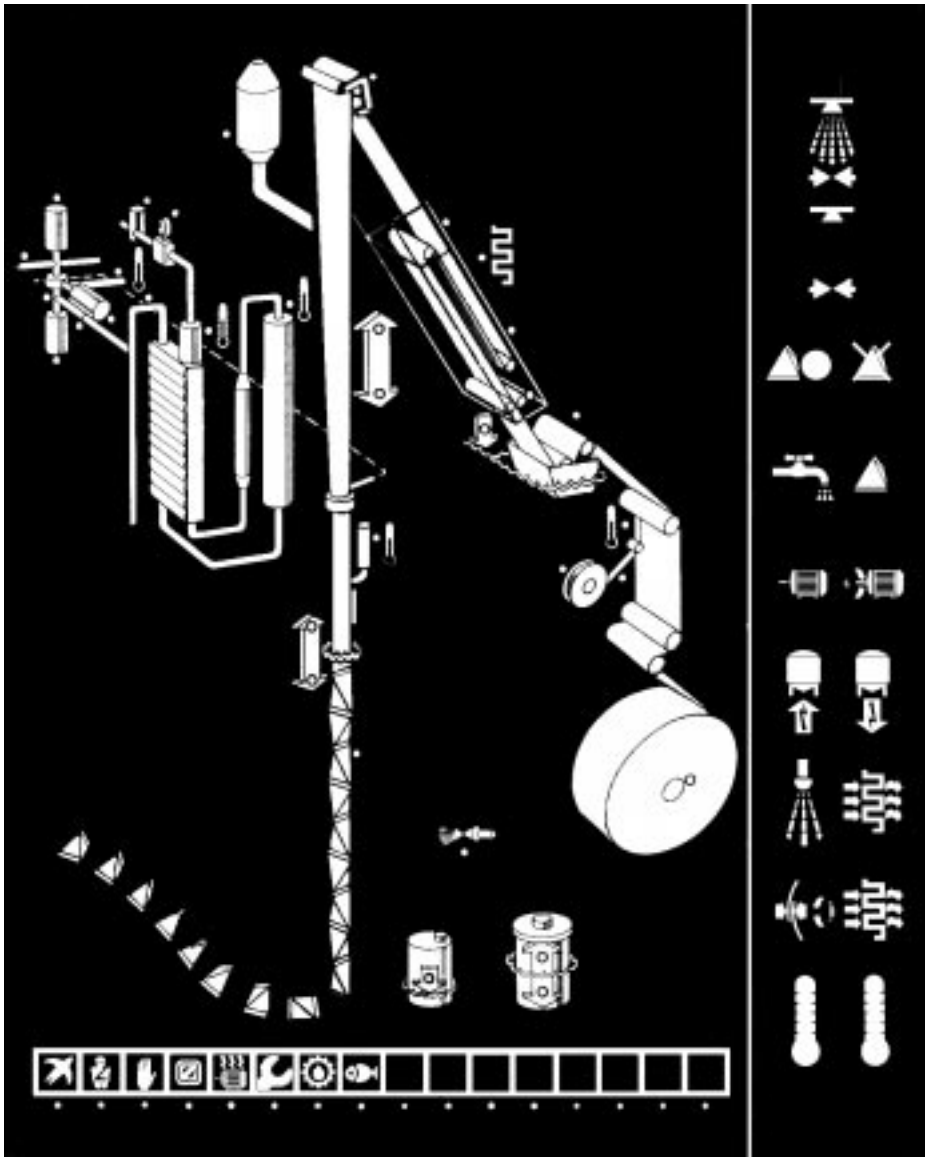

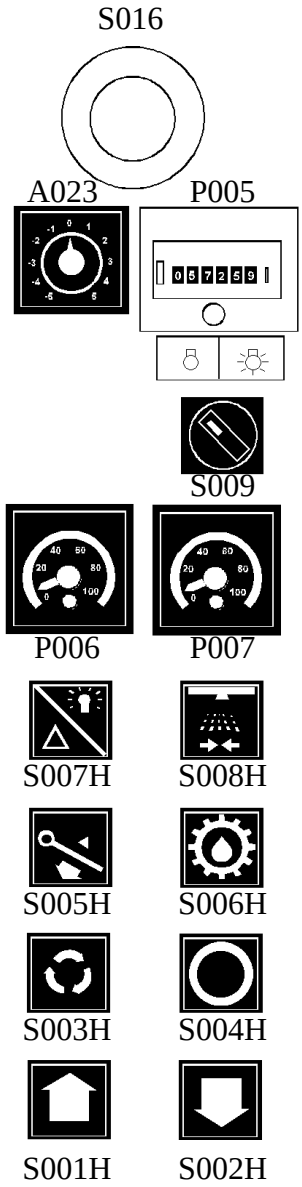

2.2IE000002.EN

Control panel/Push buttons			Function
S001H	**Step up**	Push number **1**	Programme step 1. Operating power on. Preheating of LS elements starts.
		Push number **2**	Programme step 2. Drive motor starts. Tube is sealed. Lubrication pulse. Drive motor stops. The B-valve opens. The filling system is preheated and then cooled.
		Push number **3**	Programme step 3. The peroxide circulation pump starts. Sterilization of aseptic chamber and sterilization chamber.
		Push number **4**	Programme step 4. Signal to sterilizer.
		Push number **5**	Programme step 5. With button depressed, drive motor starts after a time delay. The peroxide bath is filled with sterilization liquid.
		----------	The machine automatically steps up to programme step 6 “Production”. Product valve opens when register for the printed design is in correct position.
		Push number **6**	Programme step 7. Production finished. Product valve closes. Drive motor stops when tube is empty. LS and TS are switched off. Programme steps up to cleaning.
S002H	**Step down**		Step down machine programme.
S003H	**Inching**		Inching drive motor. **Inching** is also found on the Push button box.
S004H	**Short stop**		Temporary production stop acc to ”Short stop” page 120.
S005H	**Package discharge**		Changes the position of the tilting tray. At a short push two packages are distributed for testing. At a longer push 16 packages are distributed.
S006H	**Manual lubrication**		Oil pump starts. High-pressure lubrication programme activated.
S007H	**Lamp test/Alarm reset**		• Lamp test: Push button, keep it depressed for two seconds, to check function of signal lamps and monitoring system. Call a technician to replace any defective bulbs. • Alarm reset: Push button.
S008H	**Cleaning**		Cleaning demand - preparation cleaning. **Manual lubrication** flashes after cleaning.
S009	Machine lighting		Lighting in machine body. On/off.

2.2ie000003.en

Control panel/Push buttons

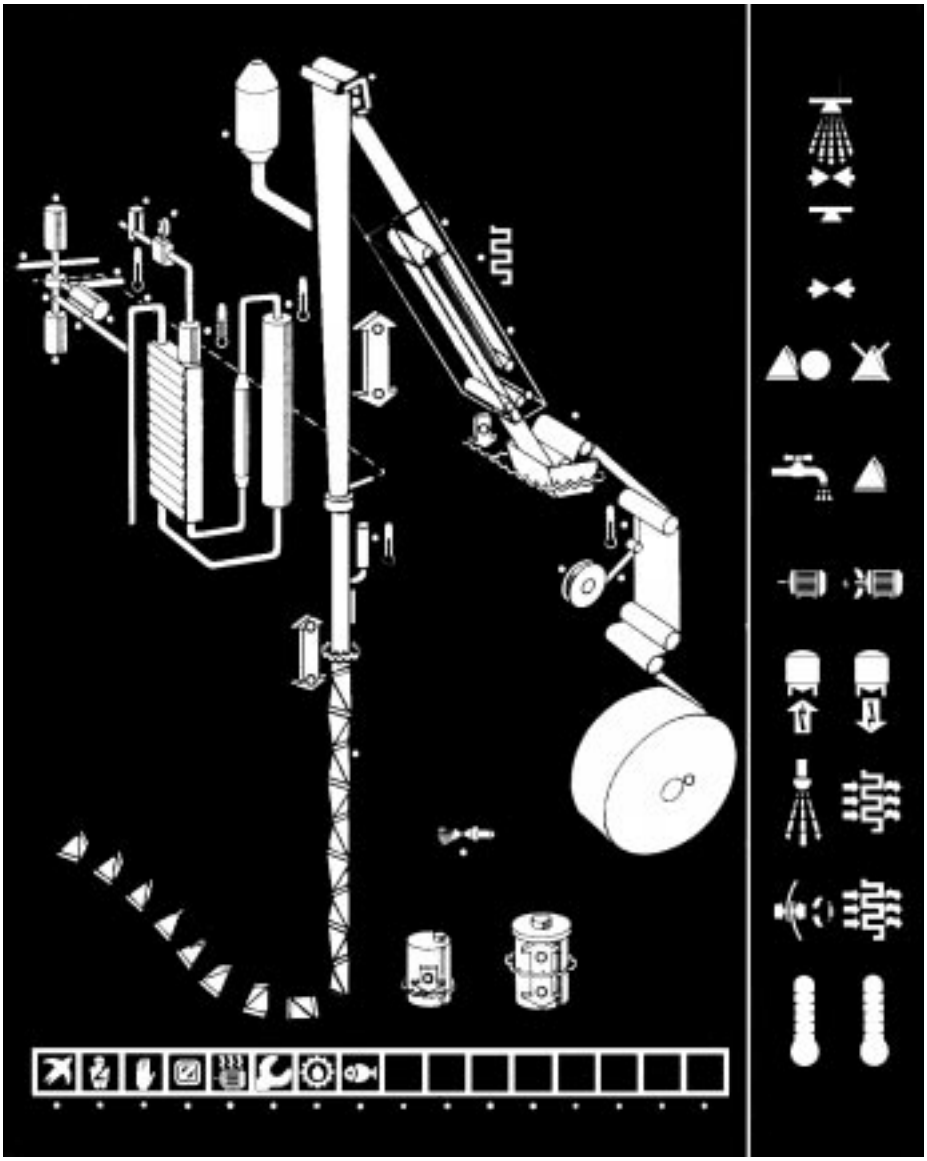

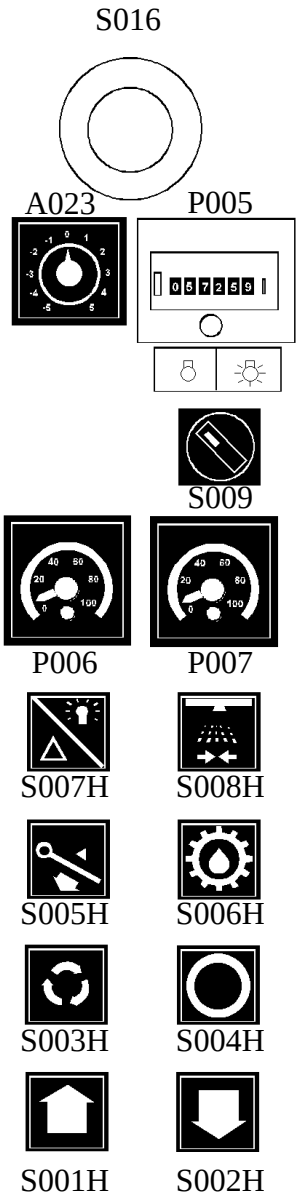

2.2ie000003.en

P005	Package counter	Resettable
P006	Motor Indicator	Drive action upper bending roller.
P007	Brake indicator	Brake action upper bending roller.
A023	Design correction	Adjustment register for the printed design position
S016	Emergency stop	Acc to ”Emergency stop” page 119. **Caution!** **Emergency stop** must only be used in case of danger to people or machine. **Emergency stop** is also found on the - electrical cabinet - front of the machine - back of the machine (two buttons)

2.2ie000003.en

Monitor panel

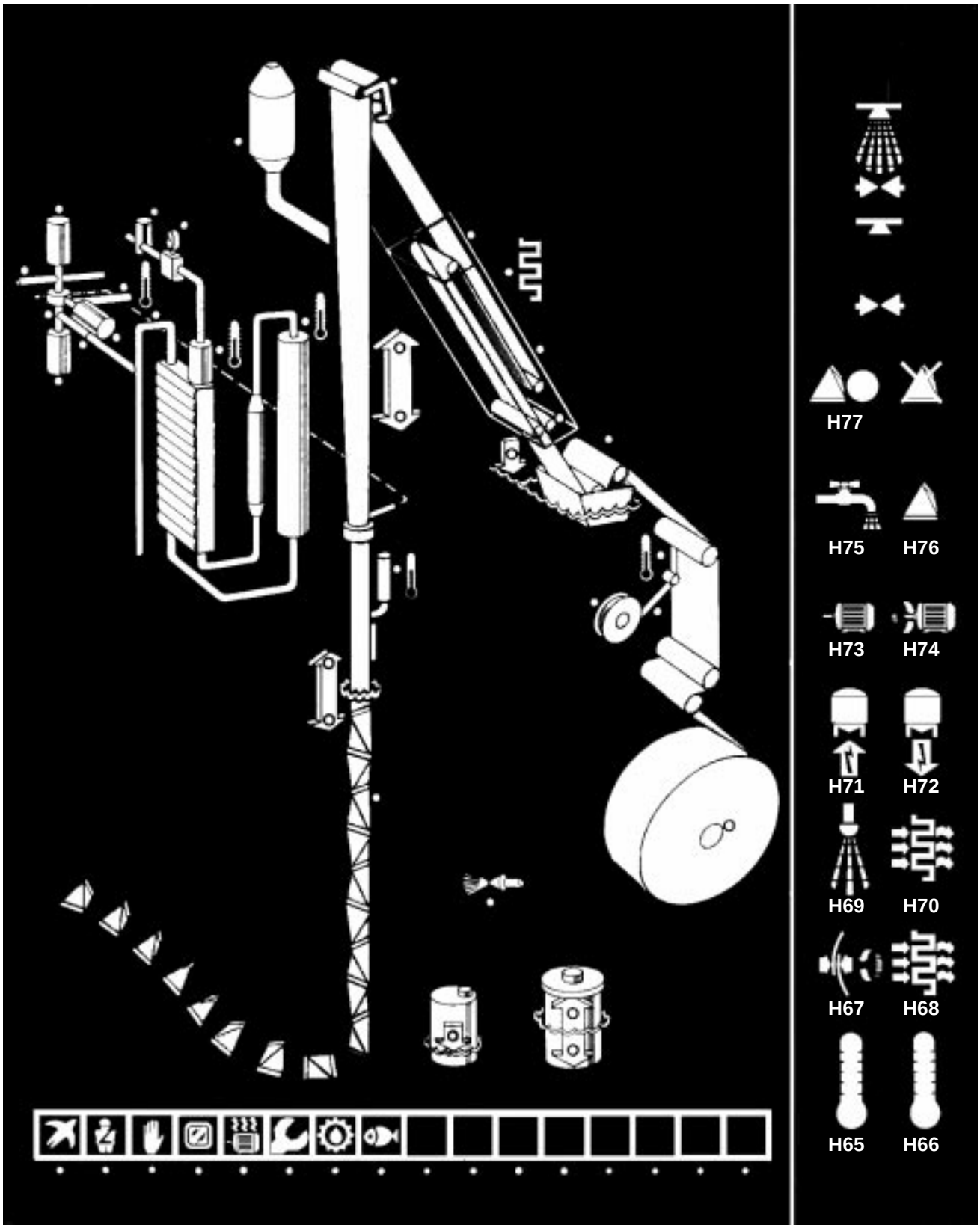

2.2ie000003.en

Monitor panel

If some form of action is required, the warning beacon and signal lamp on the monitor panel flash to indicate this fact. Check where the fault is, then push **Alarm reset**. When appropriate action has been taken, both the signal lamp and the warning beacon go out.

	Operation Condition	Function
H65	Preheating	Flashing: Programme step 0. Fixed light: Operating power on. Preheating.
H66	Preheating finished	Fixed light: Correct temperature is reached.
H67	Tube sealing	Flashing: Correct temperature is reached. Fixed light: The machine runs until the material tube has a properly sealed LS.
H68	Heating	Fixed light: Heating of the filling system.
H69	Spraying	Flashing: Machine ready for spraying. Fixed light: Spraying of the aseptic chamber and the sterilization chamber.
H70	Drying	Fixed light: Spraying is finished. Drying starts.
H71	Signal to sterilizer	Flashing: Drying is finished. Signal to sterilizer.
H72	Signal from sterilizer	Fixed light: Signal from sterilizer.
H73	Motor start	Flashing: Machine ready for production.
H74	Drive motor on	Fixed light: Drive motor on.
H75	Filling on	Flashing: LS and TS are activated. Fixed light: Product valve opens.
H76	Production	Fixed light: Production.
H77	Short stop	Fixed light: Acc to ”Short stop” page 120.

2.2ie000003.en

Monitor panel

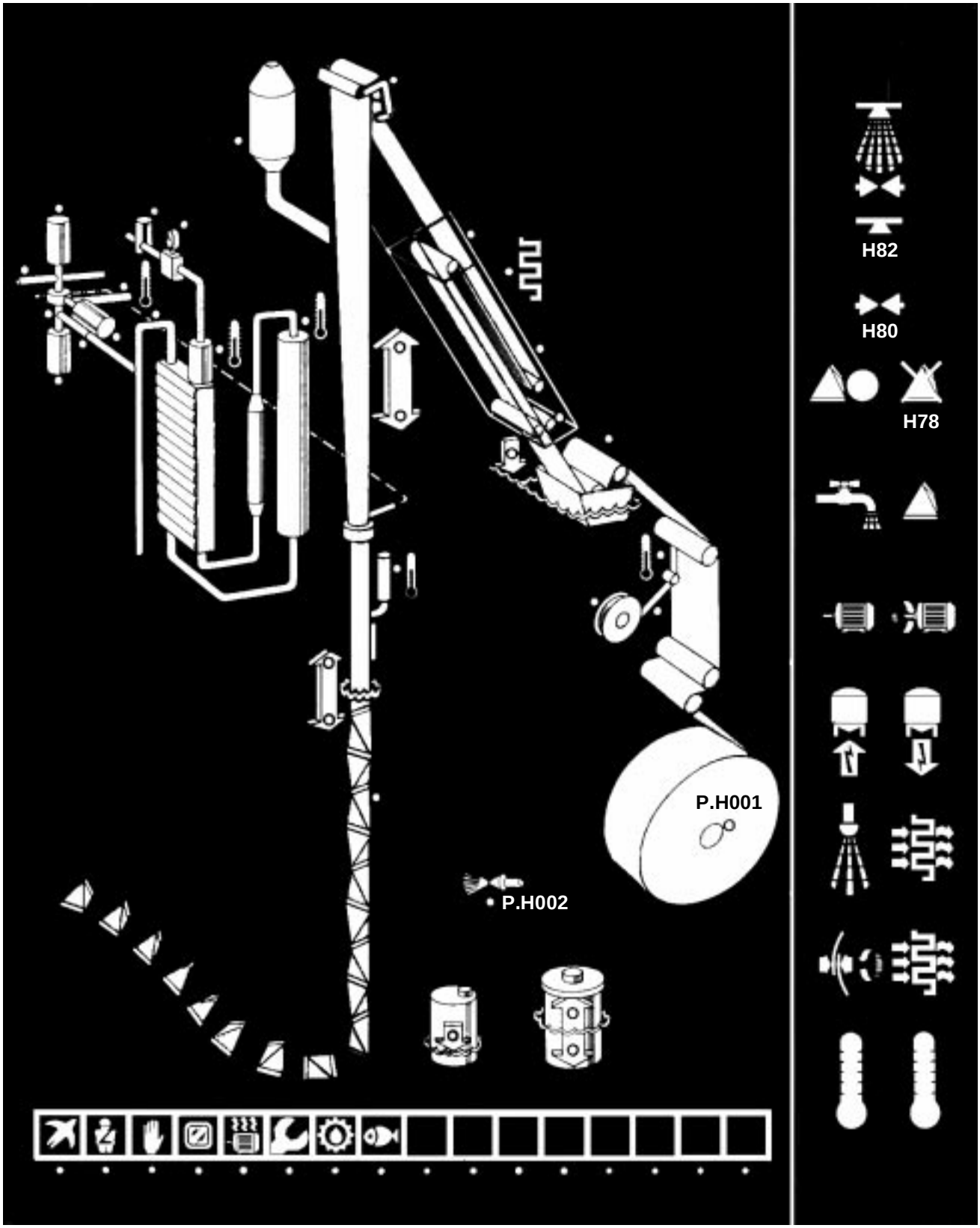

2.2ie000003.en

	Operation Condition	Function
H78	Production finished	Fixed light: Product valve closes. Drive motor stops.
H80	Ready for cleaning of filling system	Flashing: Production finished. Fixed light: Machine ready for cleaning.
H82	Cleaning of filling system	Flashing: Cleaning programme activated. Fixed light: Cleaning of the filling system.

	Alarm	Function
P.H001	Alarm-packaging material supply	Acknowledge the alarm. Splice the packaging material acc to”Packaging material splice” page 111. The machine will run until it runs out of packaging material. If the alarm is not acknowledged within fifteen minutes, the machine steps down to short stop. Make a splice and then restart by pushing **Programme up** and keep it depressed until the drive motor starts (time delay). If **Programme up** is not pushed, after fifteen minutes the machine steps down to programme step 0.
P.H002	Low level spray container	Can not happen during production, only during **Programme up**. Check the level in the peroxide container. **WARNING!** **Risk of personal injury by skin contact or inhalation.** Before handling sterilization liquid observe the Safety precautions, page 5. Replace the peroxide container with a fully filled one as required acc to ”Sterilization liquid”, page 153. If correct level, call a technician. Restart by pushing **Programme up** and keep it depressed until the drive motor starts (time delay). If **Programme up** is not pushed, after fifteen minutes the machine steps down to programme step 0.

2.2ie000003.en

Monitor panel

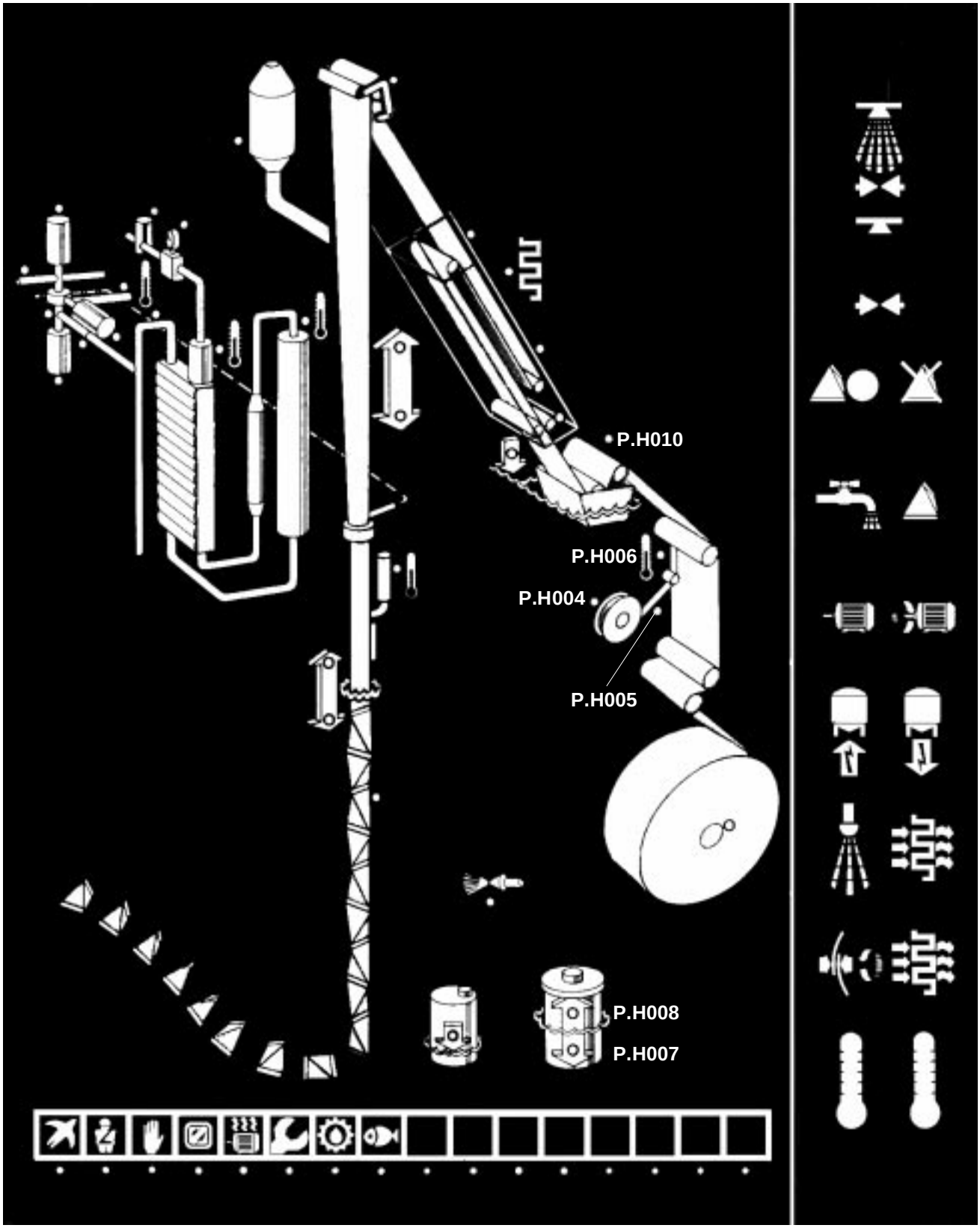

2.2ie000003.en

	Alarm	Function
P.H004	Alarm-LS strip supply	Splice the LS strip.
P.H005	Alarm-LS strip broken	The machine steps down to short stop. Apply strip to material edge. Restart by pushing **Programme up** and keep it depressed until the drive motor starts (time delay). If **Programme up** is not pushed, after fifteen minutes the machine steps down to programme step 0.
P.H006	Alarm-LS strip element temperature	The machine steps down to short stop. Check the LS strip element temperature fuse. Call a technician as required. Restart by pushing **Programme up** and keep it depressed until the drive motor starts (time delay). If **Programme up** is not pushed, after fifteen minutes the machine steps down to programme step 0.
P.H007	Low level mixing tank	**WARNING!** **Risk of personal injury by skin contact or inhalation.** Before handling sterilization liquid observe the Safety precautions page 5. Push short stop. Check the level in the peroxide container. Replace the container with a fully filled one, as required, acc to ”Sterilization liquid” page 156. Restart by pushing **Programme up** and keep it depressed until the drive motor starts (time delay). If **Programme up** is not pushed, after fifteen minutes the machine steps down to programme step 0.
P.H008	High level mixing tank	
P.H010	Alarm- material web broken	The machine steps down to short stop. Restart by pushing **Programme up** and keep it depressed until the drive motor starts (time delay). If **Programme up** is not pushed, after fifteen minutes the machine steps down to programme step 0.

2.2ie000003.en

Monitor panel

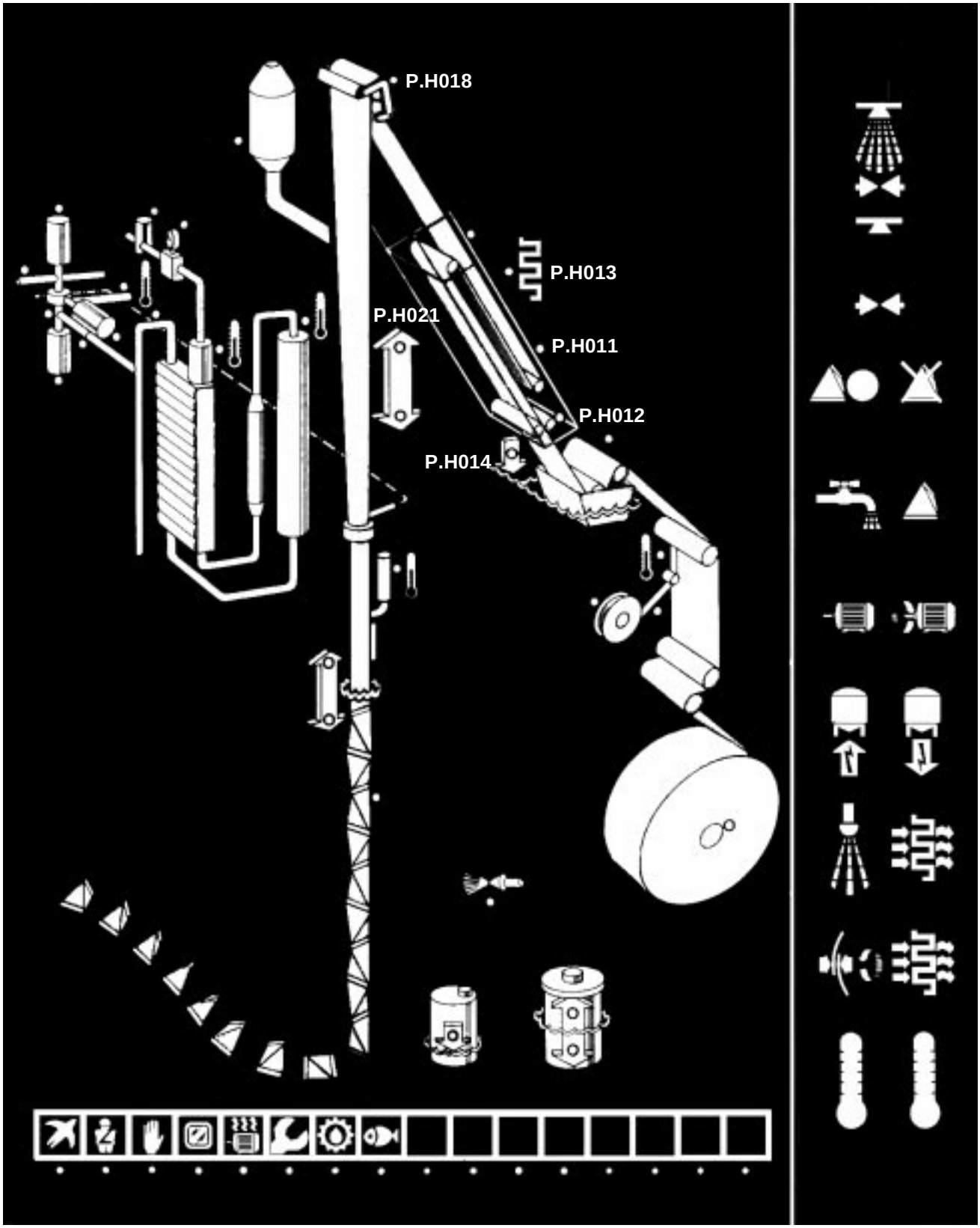

2.2ie000003.en

	Alarm	Function
P.H011	Alarm-broken membrane in CFV	The machine steps down to step 0. Call a technician. Restart with cleaning and preheating.
P.H012	Alarm-squee-gee rollers	Squee-gee rollers not in production position. Place the squee-gee rollers in production position (production position = squee-gee rollers lowered). If the machine is not in production: Restart by pushing **Programme up**. If the machine is in production it will step down to short stop. Restart by pushing **Programme up** and keep it depressed until the drive motor starts (time delay). If **Programme up** is not pushed, after fifteen minutes the machine steps down to programme step 0.
P.H013	Undercurrent sterilization house	The machine steps down to step 0. Call a technician. Restart with cleaning and preheating.
P.H014	Peroxide bath-low level	The machine steps down to short stop. The machine makes a refill. P.H 007 and P.H 008 light up. When refill is ready P.H 007 and P.H 008 go out. Restart by pushing **Programme up** and keep it depressed until the drive motor starts (time delay). If **Programme up** is not pushed, after fifteen minutes the machine steps down to programme step 0.
P.H018	Paper material guide out of position	Call a technican.
P.H021	Design in wrong position up	The machine steps down to short stop. Call a technican. Restart by pushing **Programme up** and keep it depressed until the drive motor starts (time delay). If **Programme up** is not pushed, after fifteen minutes the machine steps down to programme step 0.

2.2ie000003.en

Monitor panel

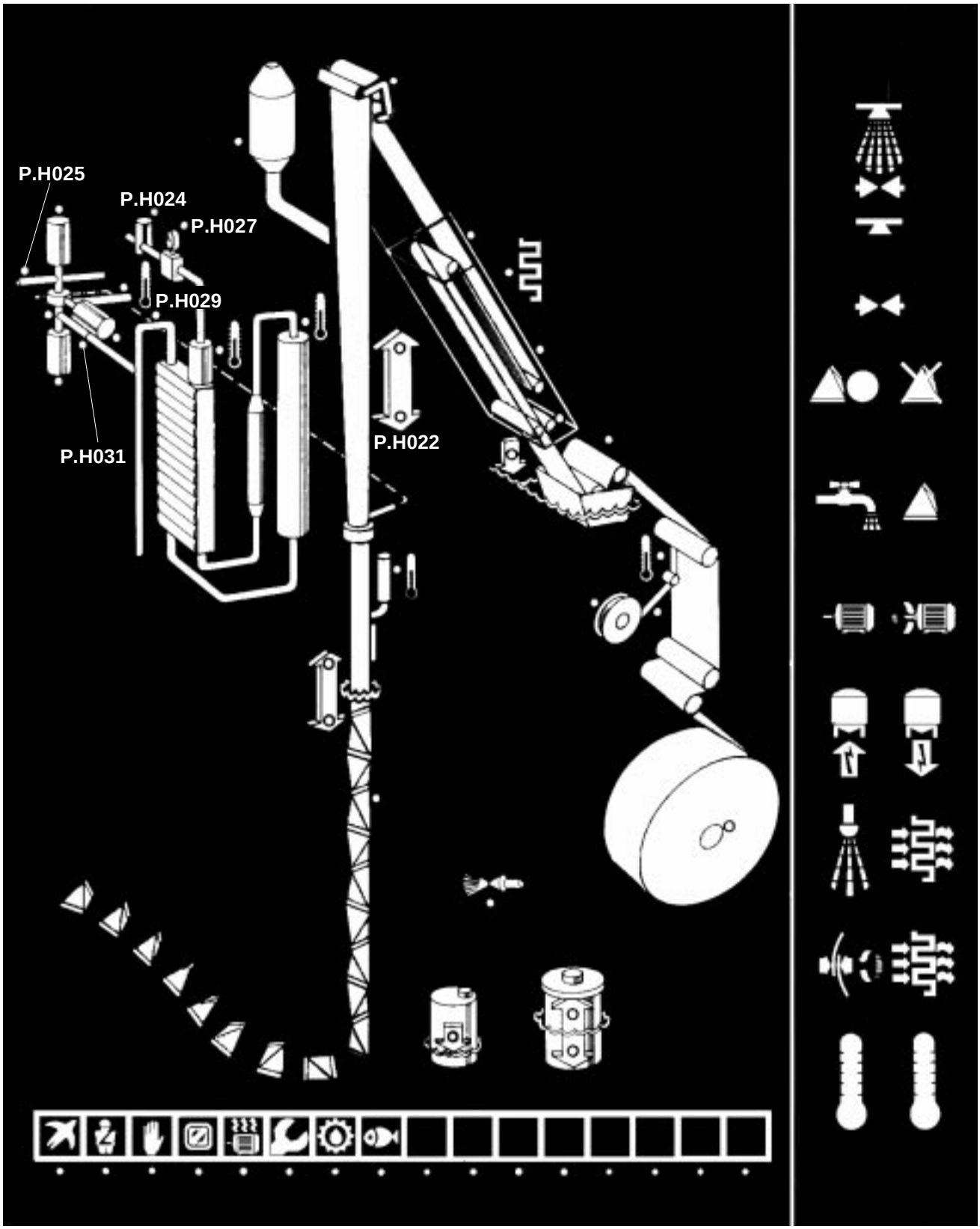

2.2ie000003.en

	Alarm	Function
P.H022	Design in wrong position down	The machine steps down to short stop. Call a technican. Restart by pushing **Programme up** and keep it depressed until the drive motor starts (time delay). If **Programme up** is not pushed, after fifteen minutes the machine steps down to programme step 0.
P.H024	Alarm-air filter	Call a technician.
P.H025	Temperature too low-steam	The machine steps down to short stop. Restart by pushing **Programme up** and keep it depressed until the drive motor starts (time delay). If **Programme up** is not pushed, after fifteen minutes the machine steps down to programme step 0.
P.H027	Low pressure-sterile air	Check the sterile air pressure. The machine steps down to step 0, where **Preheating** and **Programme up** flash. If the machine is **not** in production: Restart by pushing **Programme up**. If the machine is in production: Restart with cleaning and preheating.
P.H029	Temperature too low-heat exchanger	The machine steps down to short stop. Call a technican. Restart by pushing **Programme up** and keep it depressed until the drive motor starts (time delay). If **Programme up** is not pushed, after fifteen minutes the machine steps down to programme step 0.
P.H031	Air pipe out of position	The machine steps down to step 0, where **Preheating** and **Programme up** flash. Restart with intermediate cleaning and preheating.

2.2ie000003.en

Monitor panel

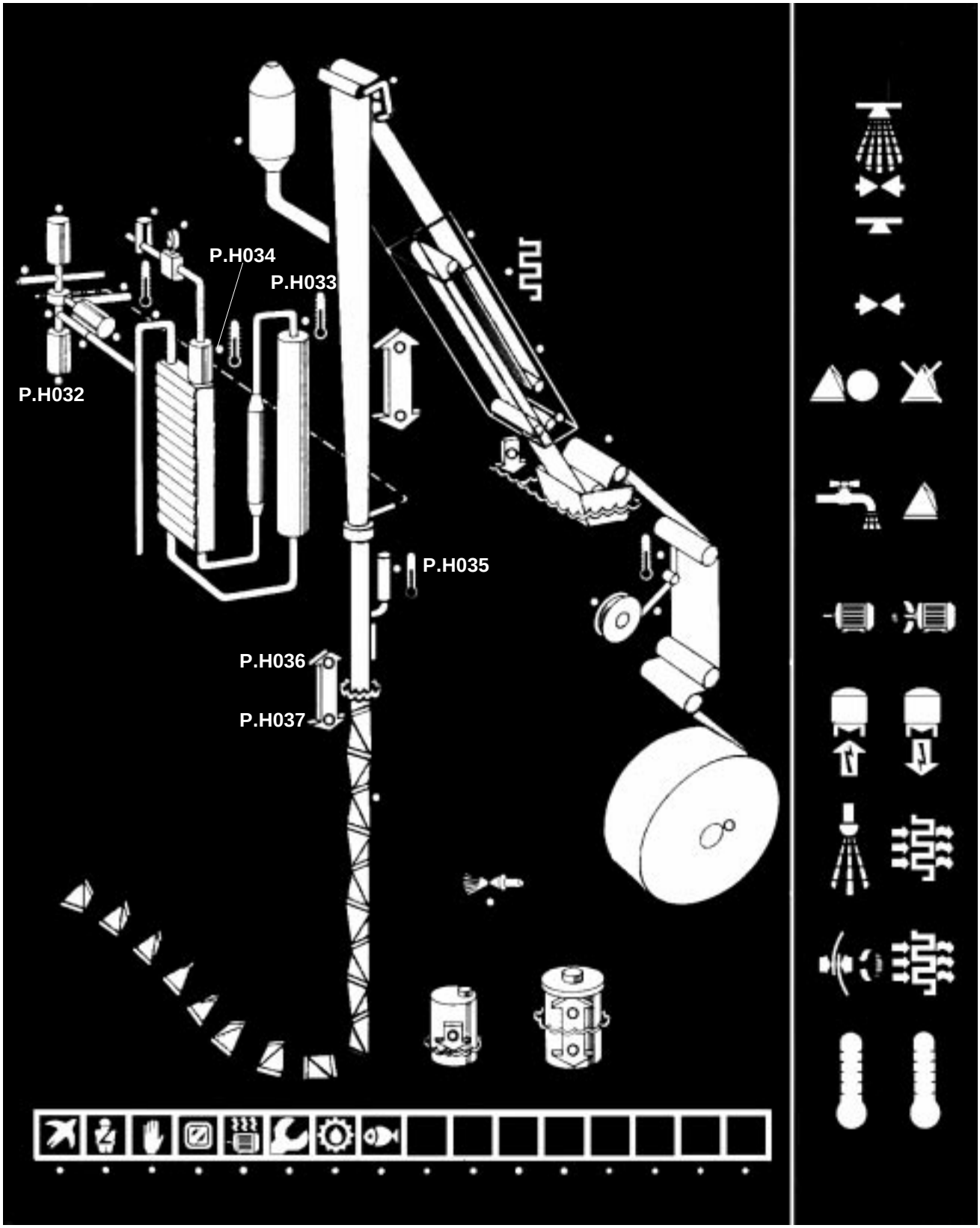

2.2ie000003.en

	Alarm	Function
P.H032	B-valve out of position	Call a technician.
P.H033	Temperature too low-air heater	The machine steps down to step 0, where **Preheating** and **Programme up** flash. Call a technician. Restart with cleaning and preheating.
P.H034	Temperature too low-preheating element	
P.H035	Temperature too low-LS element	The machine steps down to short stop. Call a technician. Restart by pushing **Programme up** and keep it depressed until the drive motor starts (time delay). If **Programme up** is not pushed, after fifteen minutes the machine steps down to programme step 0.
P.H036	Alarm-high product level	Adjust the flow on the flow controller card, acc to ”Introduction” page 44.
P.H037	Alarm-low product level	Adjust the flow on the flow controller card, acc to ”Introduction” page 44.

2.2ie000003.en

Monitor panel

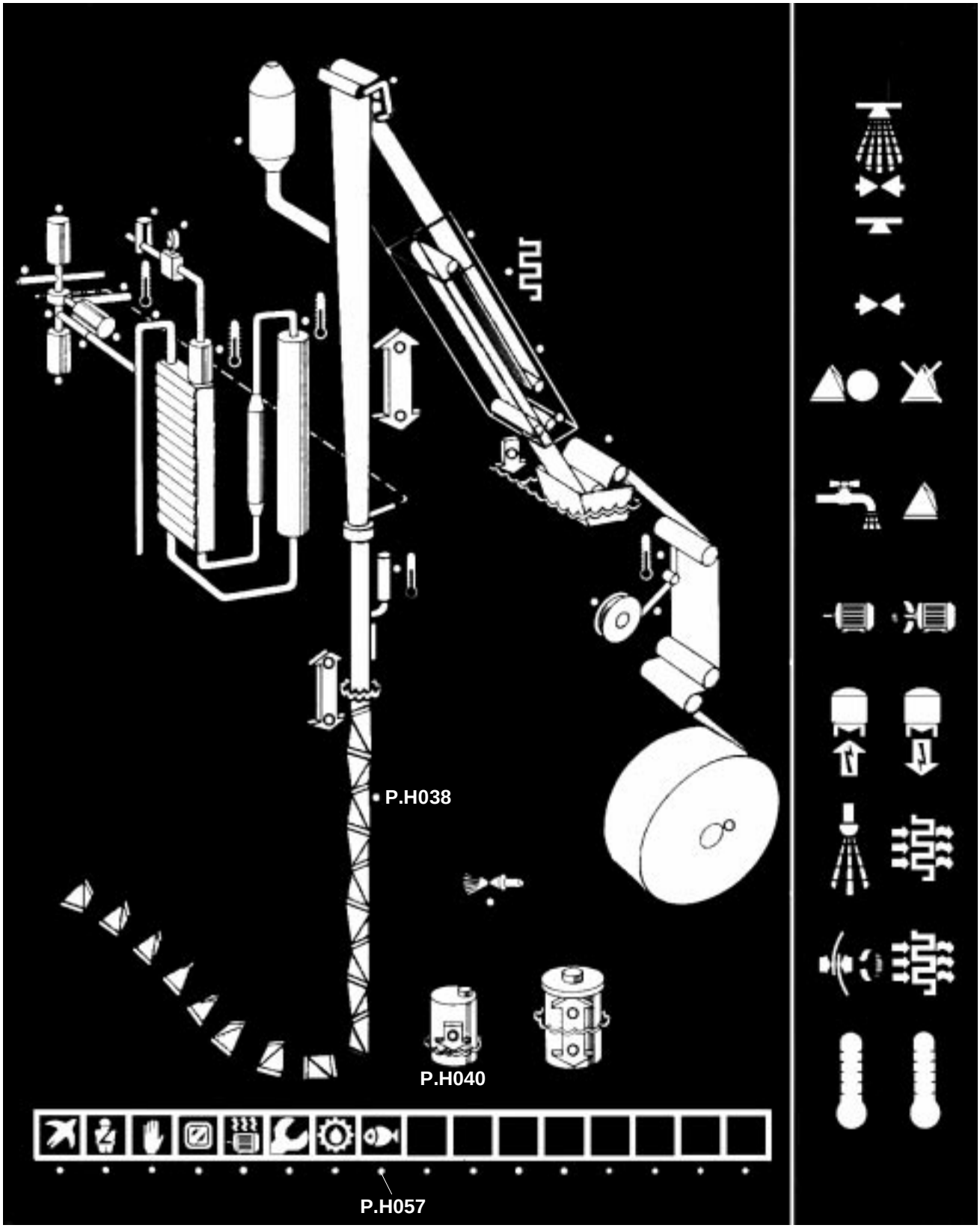

2.2ie000003.en

	Alarm	Function
P.H038	Alarm-fault IH units TS	Alarm on TPIH 2000, see page 41, ”Introduction” TPIH 2000. Call a technician. If the machine is not in production: Restart by pushing **Programme up**. If the machine is in production: Short stop. Restart by pushing **Programme up** and keep it depressed until the drive motor starts (time delay). If **Programme up** is not pushed, after fifteen minutes the machine steps down to programme step 0.
P.H040	Low level wetting agent	Can not happen during production, only during **Programme up.** Top up as required with wetting agent (PSM, TP No 90349-3). Restart by pushing **Programme up**.
P.H057	Alarm-water supply	The machine could not **Step up**. Check the water supply. If the machine is not in production Restart by pushing **Programme up**. If the machine is in production: Short stop. Restart by pushing **Programme up** and keep it depressed until the drive motor starts (time delay). If **Programme up** is not pushed, after fifteen minutes the machine steps down to programme step 0.

2.2ie000003.en

Monitor panel

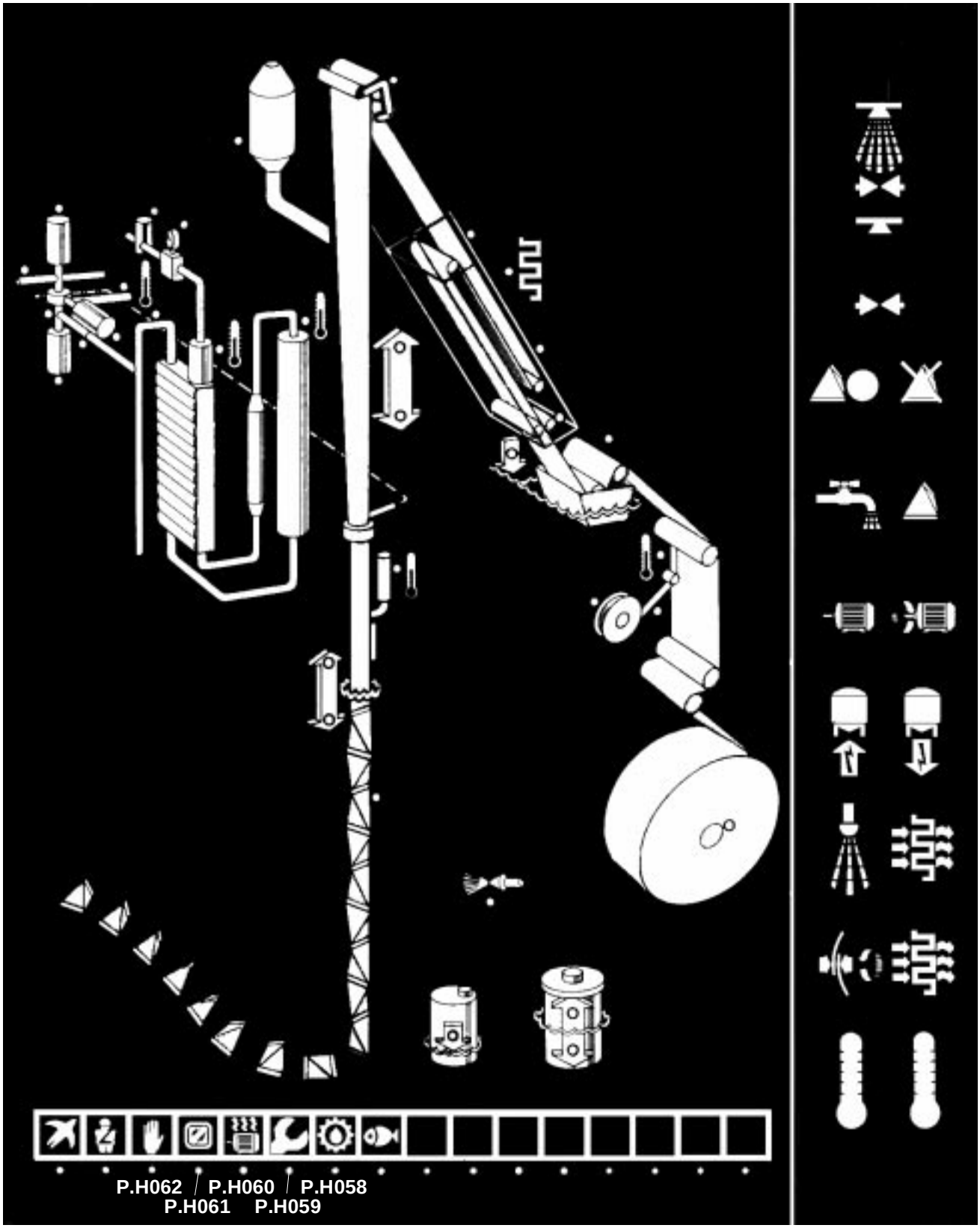

2.2ie000003.en

	Alarm	Function
P.H058	Alarm-oil pressure	Check the oil level. **WARNING!** **Risk of skin irritation.** Before handling oil, read the Safety precautions, page 9. Top up as required. Push **Manual lubrication**. Call a technician if fault reoccurs. If the machine is stopped, it cannot be restarted until appropriate action has been taken.
P.H059	Alarm-service switch on	Turn the service switch to production position **CAUTION!** The machine must **not** be used for production while the **service switch** is in test position.
P.H060	Alarm-motor overload protections	Call a technician. The machine steps down to step 0. Restart with intermediate cleaning and sterilization.
P.H061	Alarm-side protections	Side door open. If the machine is in production: Short stop If the machine is not in production: The machine could not **Step up**. **WARNING!** **Risk of injury.** Never inch or run the machine if any Safety switch is non-operational or any Safety cover not fitted.
P.H062	Emergency stop performed	The machine steps down to step 0, where **Preheating** and **Programme up** flash. Take appropriate action, and pull out the emergency stop button. If the machine is **not** in production: Restart by pushing **Programme up.** If the machine is in production: Restart with intermediate cleaning and preheating.

2.2ie000003.en

Monitor panel

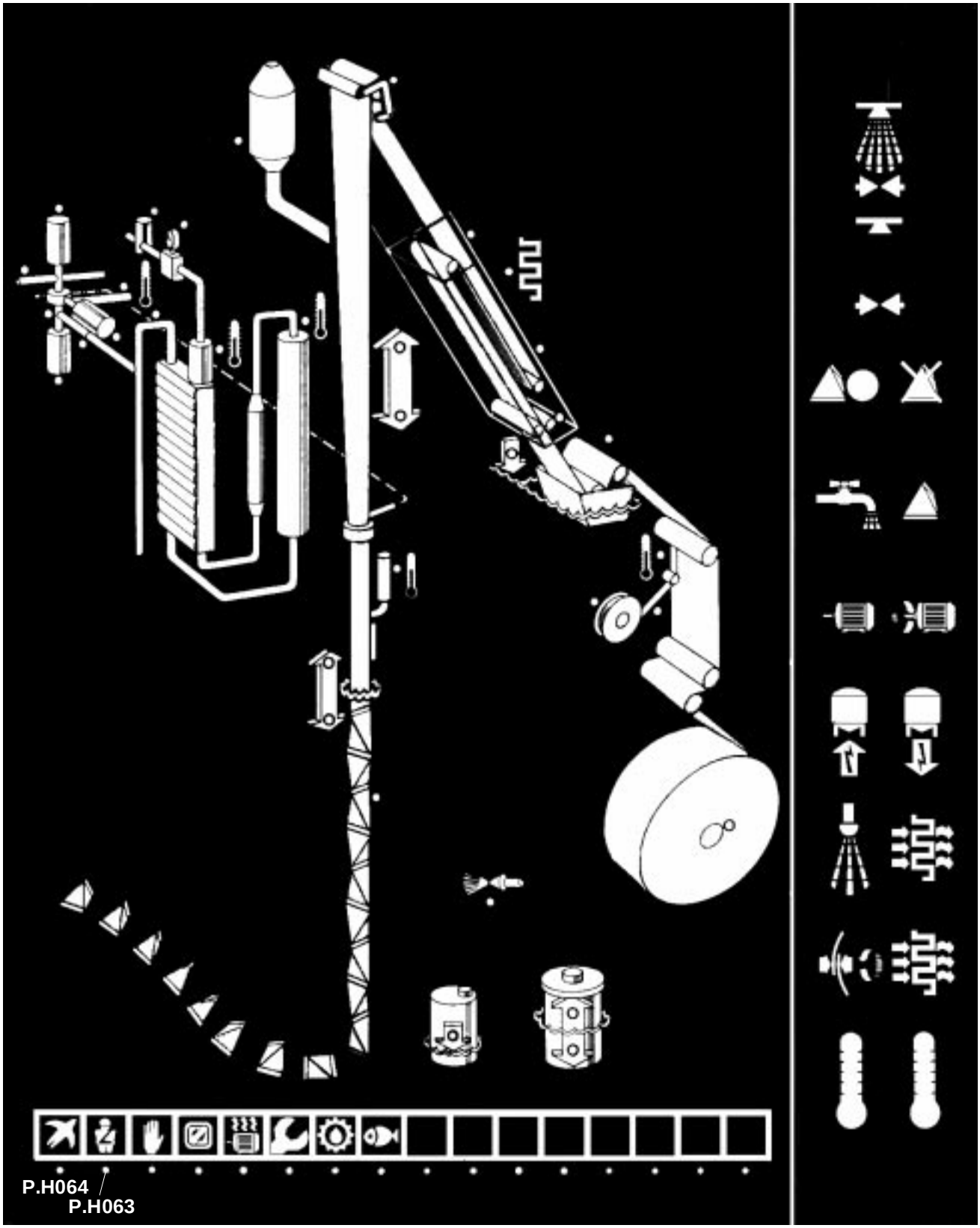

2.2ie000003.en

	Alarm	Function
P.H063	Alarm-door and crank monitor	Door or cover open on upper house, aseptic chamber, sterilization chamber or peroxide unit. The machine steps down to step 0. Call a technician. Restart with cleaning and preheating. **WARNING!** **Risk of injury.** Never inch or run the machine if any Safety switch is non-operational or any Safety cover not fitted.
P.H064	Alarm-main air pressure	Turn on the compressed air supply. If the machine is in production: Short stop If the machine is not in production: The machine could not **Step up**.

2.2ie000003.en

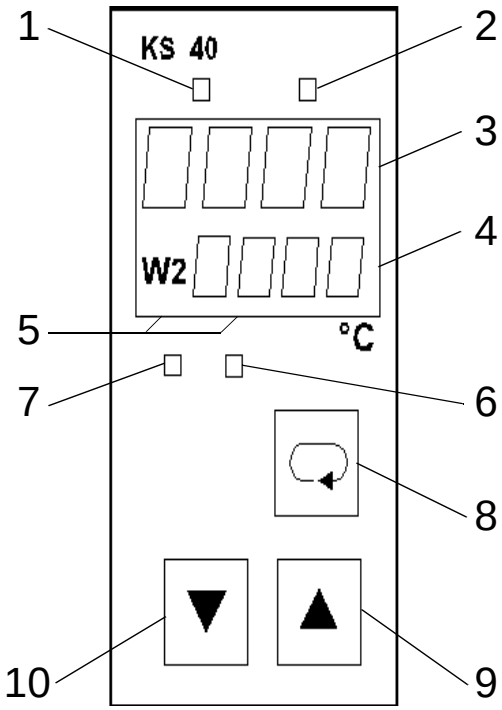

Temperature control

1 Heating (relay ON = yellow LED lit)

2 Without function

3 Process value

4 1st set point

5 Lit with 2nd set-point or programmer or remote

6 Heating current error (current<limit = red LED lit)

7 Limit contact (X within limits = green LED lit)

8 Selector key

9 Increase value

10 Decrease value

2.2ie000003.en

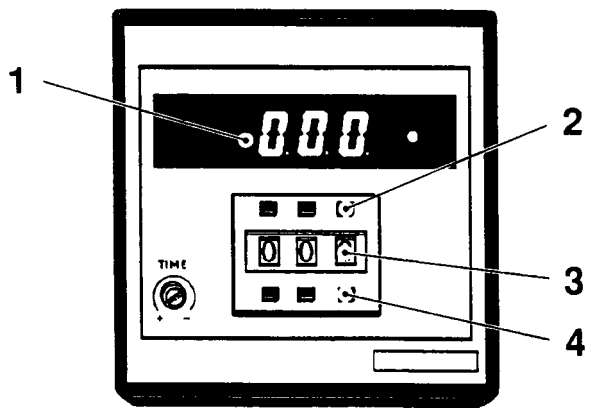

Distributor counter

1 Number of packages distributed to the right/to the left

2 **Down key**

3 Set packages amount

4 **Up key**

Setting:
Use the **Up/Down keys** to set the number of packages to be distributed alternately to the left and the right.

TPIH 2000

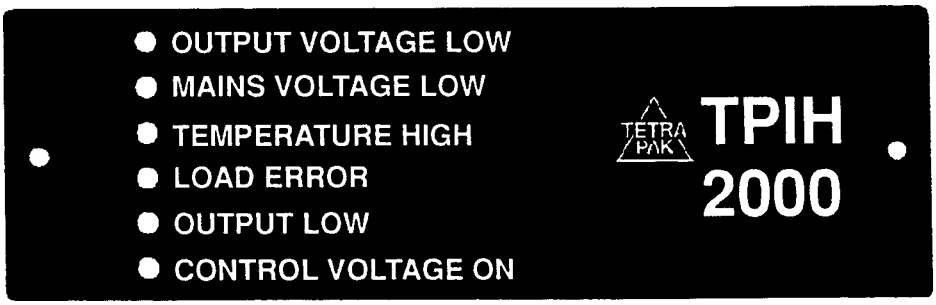

Alarm:
Indicates where the fault is located. **Malfunction of TS unit, Alarm reset,** and the warning beacon flash.

1 Push **Alarm reset. Malfunction of TS unit, Alarm reset,** and the warning beacon change to fixed light.

2 Call a technician.

Malfunction of TS unit, the alarm on TPIH 2000, and the warning beacon are to go out.

2.2ie000003.en

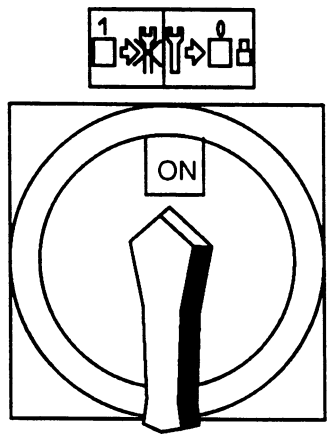

Main switch

WARNING!
Use the supplied padlock to secure the Main switch whenever it is Off.

The main switch is located on the electrical cabinet.

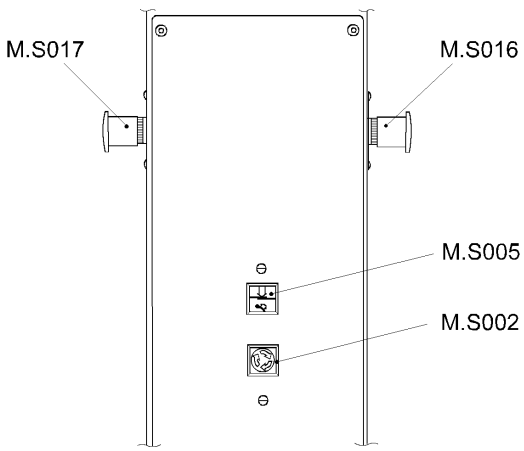

Push button box

M.S002 **Inching** Inching drive motor

M.S005 **Splice dumping**

M.S016 **Emergency stop**

M.S017 **Emergency stop**

Emergency stop must only be used in case of danger to people or machine.

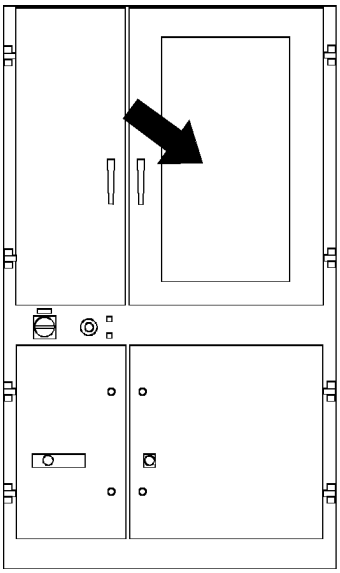

Flow controller card (located in the electrical cabinet)

Alarm-high product level or Alarm-low product level

If there is an **Alarm-high product level**, reduce the flow by turning the flow-knob scale (1) **down** (counterclockwise).

If there is an **Alarm-low product level**, increase the flow by turning the flow-knob scale (1) **up** (clockwise).

The LED bar reading (2), on the level meter card is to be 30–40**.**

1 Flow-knob scale
2 LED bar

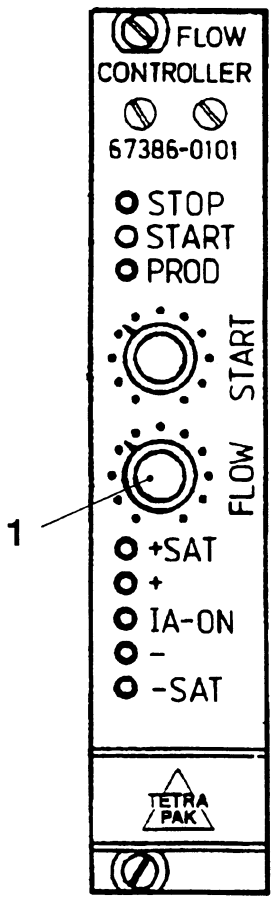

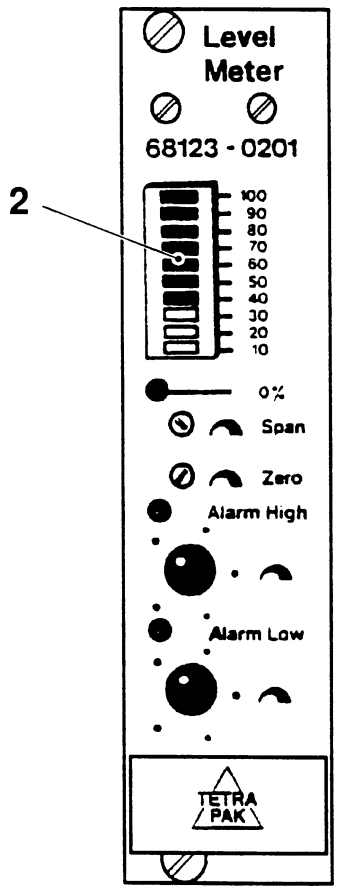

2.2ie000003.en

Fixed light indicates the current programme step.

Flashing light indicates that the machine is ready for the next programme step.

Push button	Operating schedule	Monitor panel
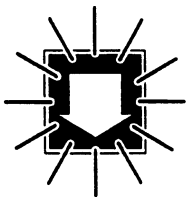	Main switch is on. Compressed air supply is off. Operating power is off. **Programme down** shows fixed light.	
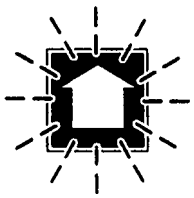	**Production** Compressed air supply is on. **Preheating** and **Programme up** flash.	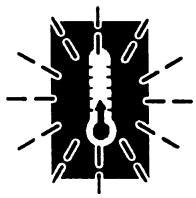
 	Push **Programme up.** First programme step; **Preheating** shows fixed light. Operating power is on. **Preheating** starts. Inch the machine with **Inching** to pull down the material web into the machine body.	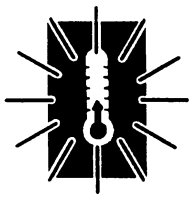
	When correct temperature of the LS element is reached, **Preheating finished** shows fixed light, **Tube sealing** and **Programme up** flash.	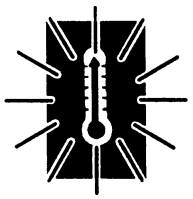 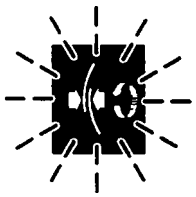

2.2ie000003.en

Push button	Operating schedule	Monitor panel
 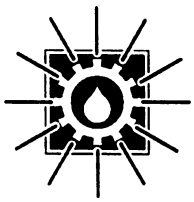	Push **Programme up. Tube sealing** shows fixed light for 20 seconds. Lubrication pulse. **Manual lubrication** shows fixed light during lubrication.	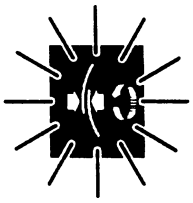
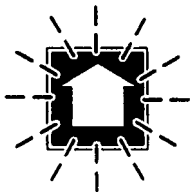  	**Tube sealing finished** and **Programme up flash**. Check that the material tube has a properly sealed LS. If not, inch the machine with **Inching** until a properly sealed LS is obtained. When the material tube has a properly sealed LS, push **Programme up**.	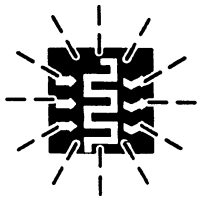
	Tube sealing finished shows fixed light. The B-valve opens. The AP-valve, the constant flow valve and the filling pipe is preheated, then cooled during 5 minutes.	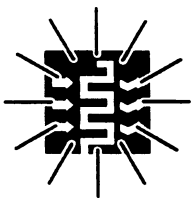
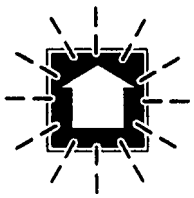 	**Spraying** and **Programme up** flash. Push **Programme up**. **Spraying** changes to fixed light. The spray container is filled. The sterilization liquid container is filled with peroxide. The peroxide circulation pump starts and wetting agent is added to the peroxide. Machine sterilization starts.	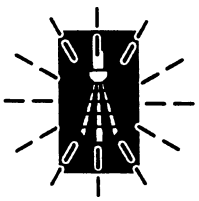 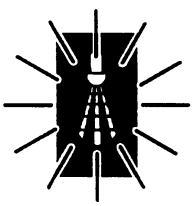

2.2ie000003.en

Push button	Operating schedule	Monitor panel
	Drying lights up with fixed light. Spraying is finished, drying starts and lasts for 30 minutes.	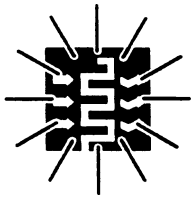
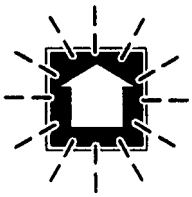	When drying is completed, **Signal to sterilizer** and **Programme up** flash. Push **Programme up**. **Signal from sterilizer** shows fixed light.	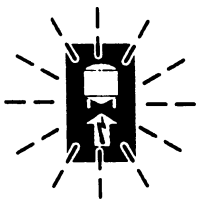 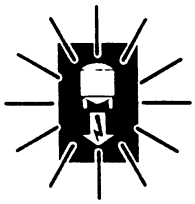 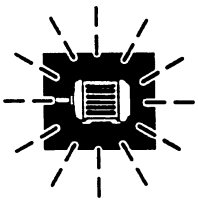
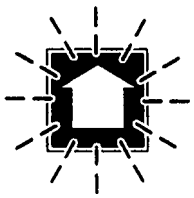	Push **Programme up** and keep it depressed until the drive motor starts (time delay). The peroxide bath drain valve closes and the peroxide bath is filled with sterilization liquid. **Drive motor on** lights up with fixed light. **Filling on** flashes.	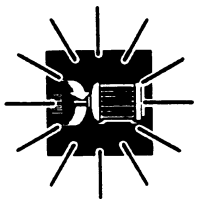 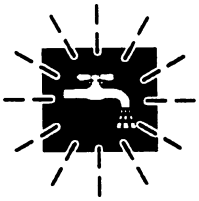
	LS and TS are activated. A number of packages go through the machine. When the register for the printed design is in correct position, the product valve opens, **Filling on** changes to fixed light and **Production** lights up with fixed light.	

2.2ie000003.en

Push button	Operating schedule	Monitor panel
	**Production finished** Push **Programme up**. The product valve closes. A number of packages go through the machine. The tube empties of product. The drive motor stops. LS and TS are switched off. **Production finished** lights up with fixed light. If there is a delay for more than 15 minutes, the machine automatically steps down to programme step 0 (where **Ready for cleaning** and **Programme up** flash).	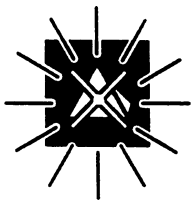
	Tear off the material tube. Inch the machine with **Inching** to discharge remaining packaging material.	
	**Cleaning** If **Ready for cleaning of filling system** is out, push **Cleaning**.	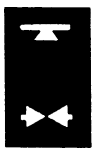
	Ready for cleaning of filling system flashes.	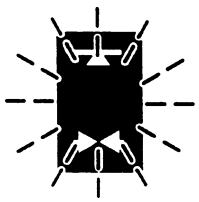
	Prepare the machine for cleaning acc to ”After production care” page 125 items 1–15.	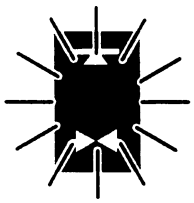
	Ready for cleaning of filling system changes to fixed light. **Cleaning of filling system** and **Programme up** flash. Select either internal cleaning or final cleaning acc to page 130, items 16a–16b.	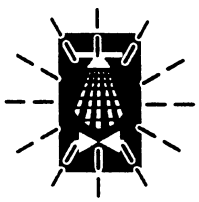
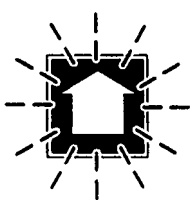	Push **Programme up** to open the B-valve. **Cleaning of filling system** changes to fixed light. Start CIP. The filling system is being cleaned.	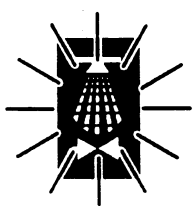

2.2ie000003.en

Push button	Operating schedule	Monitor panel
	When cleaning is finished, stop CIP. Push **Programme down**.	
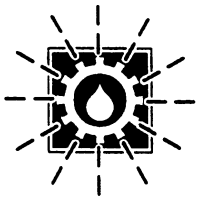	**Manual lubrication** flashes.	
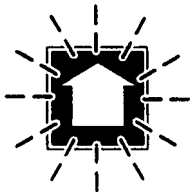	**Programme up** and **Preheating** flash.	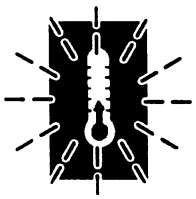
	**Lubrication** Push **Manual lubrication** to activate the lubrication programme.	
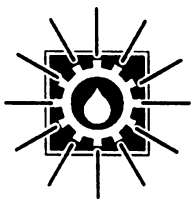	**Manual lubrication** shows fixed light. The drive motor starts (time delay).	
	The lubrication programme starts. **Drive motor on** lights up with fixed light. The machine runs during a preset time and is lubricated at the same time.	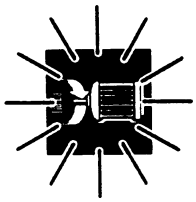
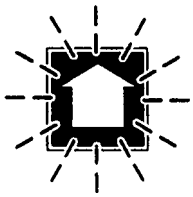	After lubrication, the machine programme steps down. **Preheating** and **Programme up** flash.	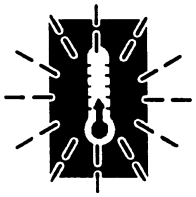

2.2ie000003.en

2.2ie000003.en

Package terminology

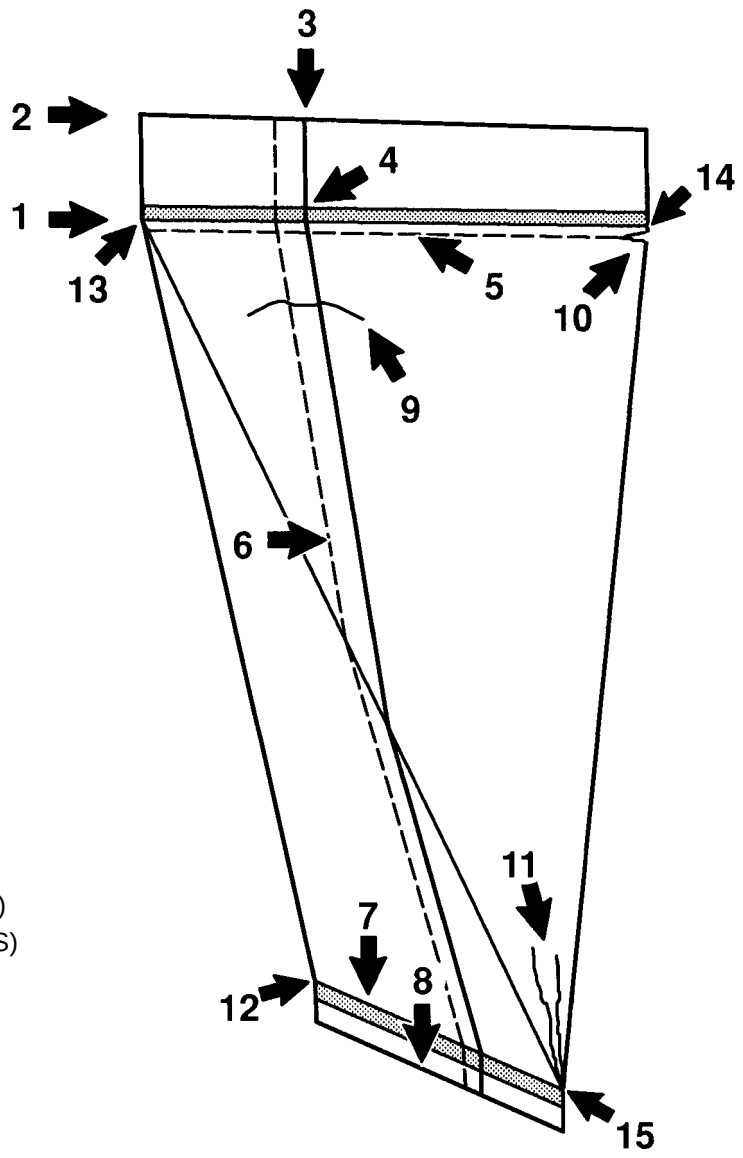

2.2IE000004.EN

1 Inner corner
2 Outer corner
3 Outer cross
4 Inner cross
5 Perforation
6 Longitudinal seal (LS)
7 Inner transversal seal (Inner TS)
8 Outer transversal seal (Outer TS)
9 Creases
10 Torn corner
11 Folded corner
12 Lower front corner
13 Upper rear corner
14 Upper front corner
15 Lower rear corner

Scrapings inside tube	—	Filling pipe not centered
	—	Pressure roller holder scraping
LS strip unsealed	—	LS element adjusted incorrectly
	—	LS element temperature too low
	—	LS strip element temperature too low
	—	Insufficient or no pressure between pressure and counter roller
LS strip edge melted	—	LS element temperature too high
	—	LS element adjusted incorrectly
	—	LS strip element adjusted incorrectly
Scrapings on LS strip	—	Plastic deposits on pressure roller
	—	Pressure roller not rotating
	—	Plastic deposits on LS element
	—	Filling pipe not centered (Float scraping strip)
	—	LS strip element adjusted incorrectly
Irregular air gap underneath LS strip	—	LS element incorrectly adjusted
	—	Pressure roller incorrectly adjusted
Bubbles or bursts in LS strip	—	Strip inadequately sealed in strip applicator
LS strip creasing	—	Guide roller in strip applicator adjusted incorrectly
LS strip in wrong position	—	Guide roller in strip applicator adjusted incorrectly
Narrow LS strip	—	Excessive strip drag in strip applicator
	—	Strip too narrow, manufacture fault
Air bubbles on inside of packaging material under LS strip	—	LS strip element temperature too high
Cold TS	—	Induction power too low
	—	Hydraulic system pressure too low
Occational packages without TS	—	Pressure rubber missing
	—	Inductor damaged
	—	Carbon contact defective or missing
Burnt TS	—	Induction power too high
	—	Deposits on inductor
	—	Hydraulic system pressure too low
Corner leakage TS	—	Induction power too low
	—	Induction power too high
	—	Hydraulic system pressure too low
	—	Pressure rubber worn

2.2IE000004.EN

Cross leakage TS	— LS incorrect — LS strip incorrect — Pressure rubber defective — Hydraulic system pressure too high
Corner-folding TS	— Filling pipe not centered — Low product level — High product level — Variations in product pressure
Torn corner	— Bending roller not moving or sluggish — Material web binding for other reasons

2.2IE000004.EN

2.2IE000004.EN

Preparation

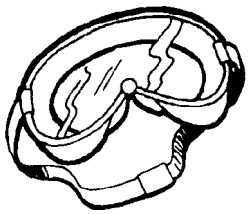

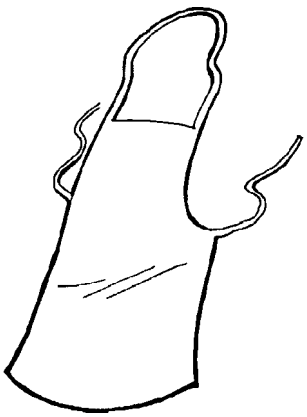

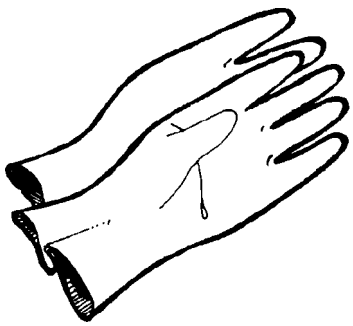

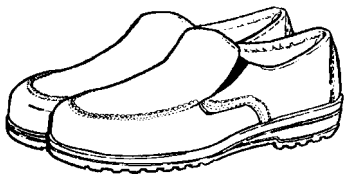

2.2IE000005.EN

1

WARNING!

Risk of personal injury by skin contact or inhalation. Before handling sterilization liquid read the ”Safety precautions”, on page 5.

Wear safety glasses, apron, rubber gloves and shoes of PVC or PE plastic acc to “Safety precautions”, page 5 when handling:

- sterilization liquid (hydrogen peroxide),
- packaging material which has passed through the peroxide bath,
- disinfected machine components which are or have been in contact with hydrogen peroxide.

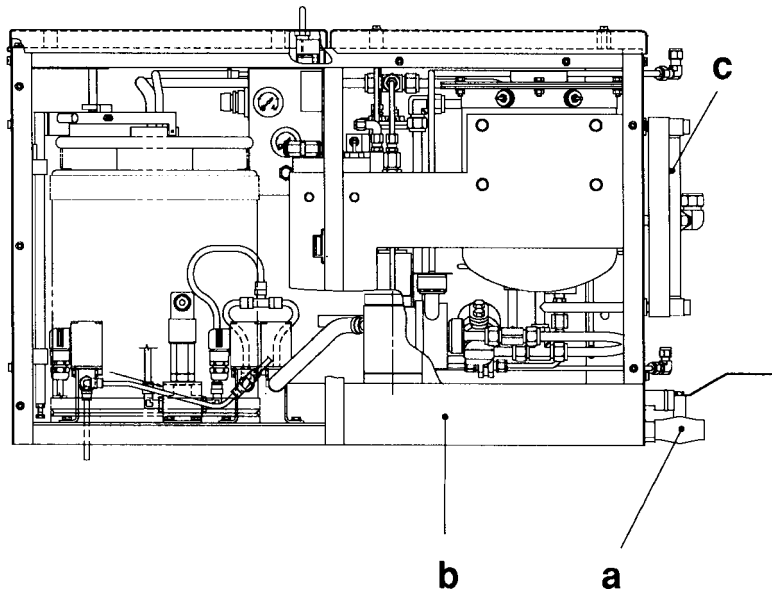

2

Draining the bottom tank

WARNING!
Risk of personal injury by skin contact or inhalation!
Before handling sterilization liquid read the ”Safety precautions”, acc to page 5.

Before production start, the bottom tank must be emptied.

Open the valve (a) and drain the bottom tank (b).

When the bottom tank is empty, close the valve (a).

During production, check the sterilization liquid level in the level glass (c).

2.2IE000005.EN

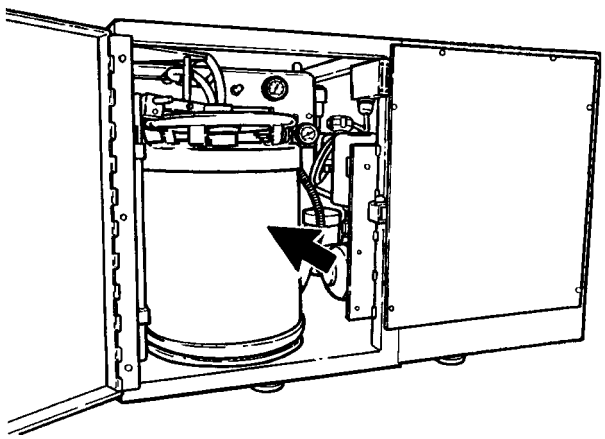

3a

WARNING!
Risk of personal injury by skin contact or inhalation!
Before handling sterilization liquid read the ”Safety precautions”, acc to page 5.

Check the level in the peroxide container. Replace the peroxide container with a fully filled one as required acc to ”Sterilization liquid”, page 156.

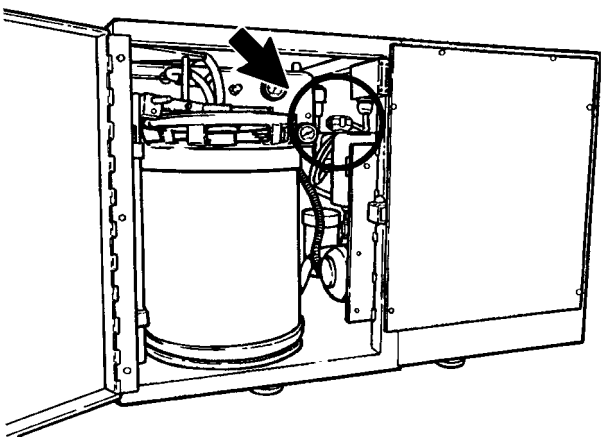

3b

Check the level in the wetting agent container. Top up as required with wetting agent (PSM, TP No 90349-3).

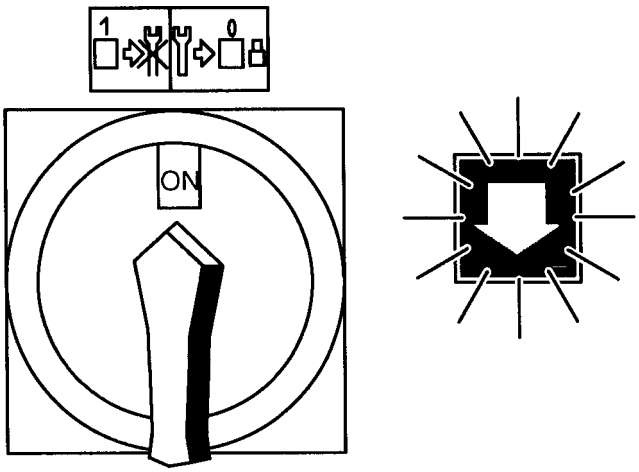

4

Check that the **Main switch** is **On**.
Programme down shows fixed light.

Operating power is off.

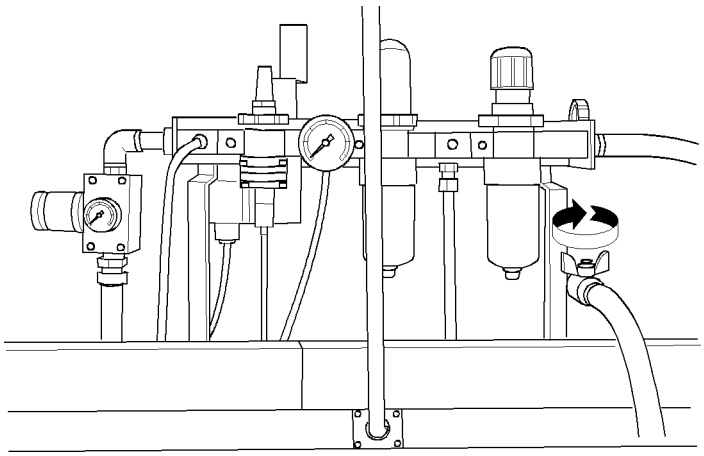

5

Turn on the water supply.

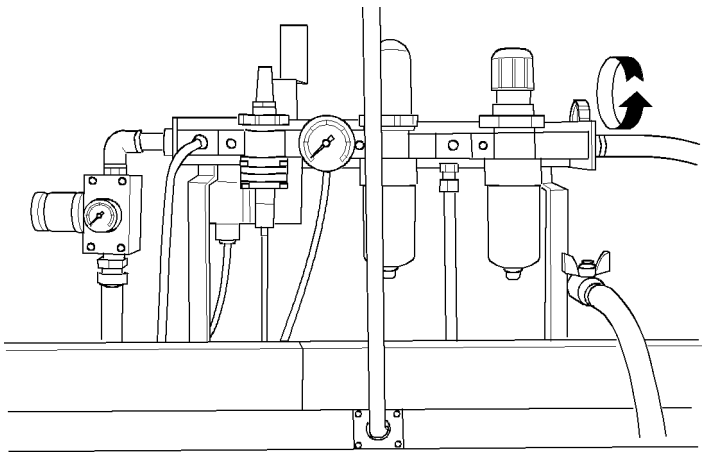

6a

Turn on the compressed air supply.

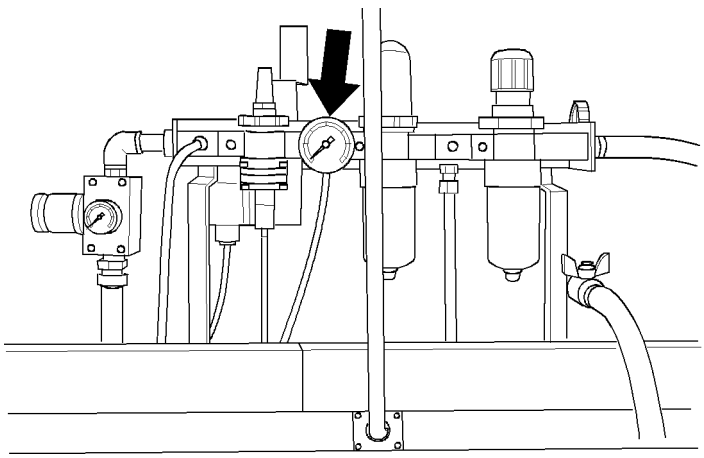

6b

Check that the air pressure is 600 kPa (6 bar).

2.2IE000005.EN

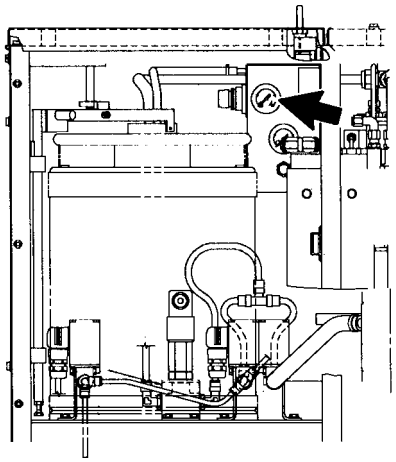

7a

Check that the sterilization liquid spray pressure is 400 kPa (4,0 bar).

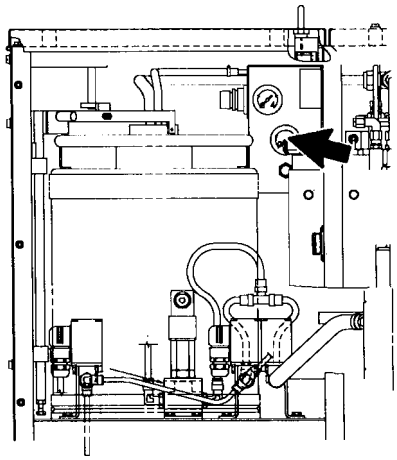

7b

Check that the pressure in the peroxide container is 20 kPa (0,2 bar).

2.2IE000005.EN

8

Preheating and **Programme up** flash.

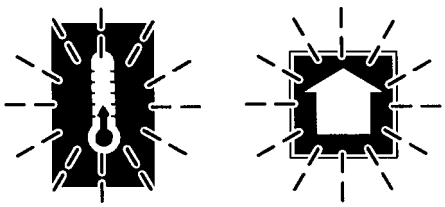

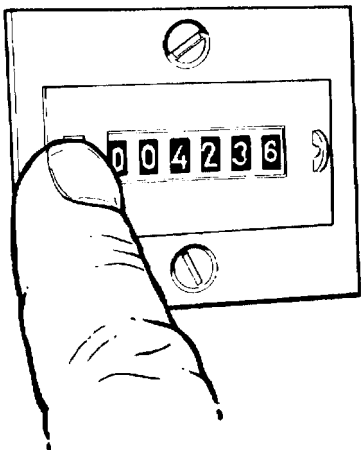

9

Reset the package counter on the control panel.

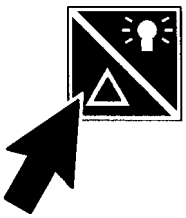

10a

Push **lamp test** and keep it depressed for a few seconds.

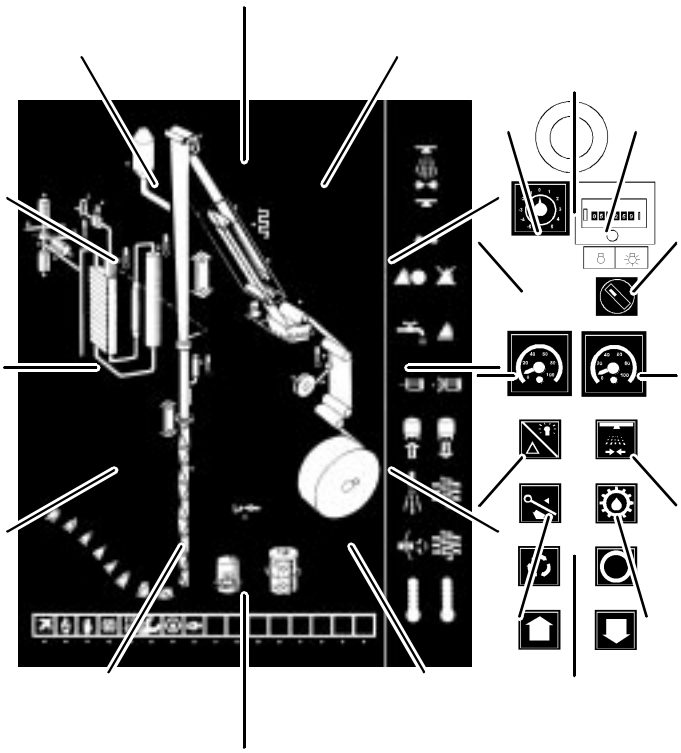

2.2IE000005.EN

10b

The monitor panel and push buttons light up.

Call a technician to replace any faulty bulbs

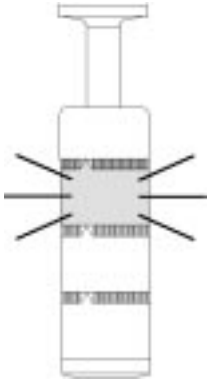

11

The warning beacon lights up.

This page intentionally left blank

Sterilization

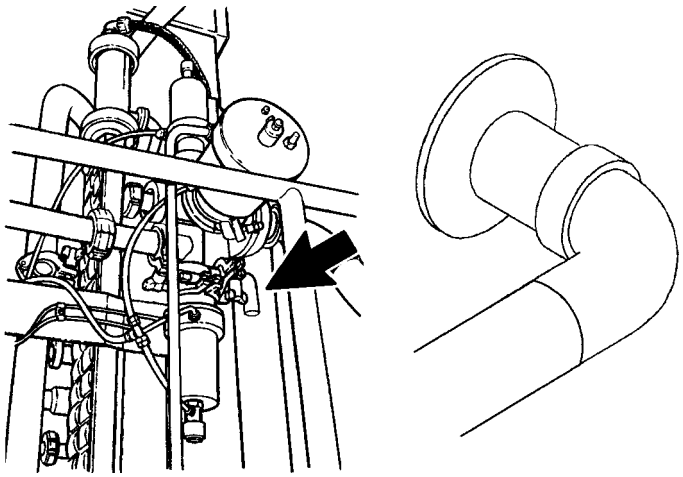

1

Remove the cleaning connection and the cleaning pipe from the B-valve.

2.2IE000006.EN

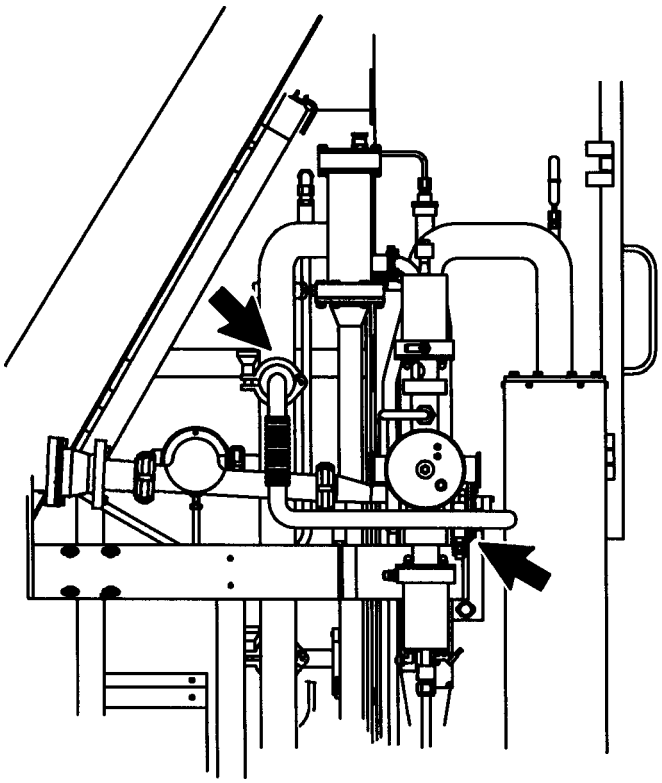

2

Connect the sterile air pipe to the B-valve.

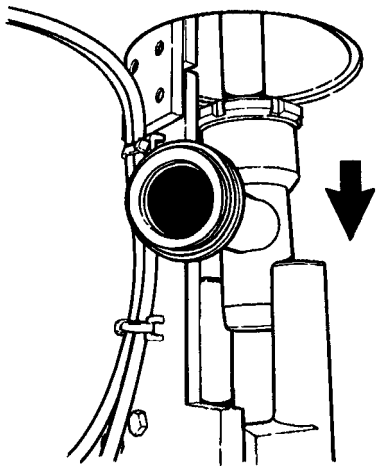

3a

Remove the cleaning cup from the upper filling pipe.

2.2IE000006.EN

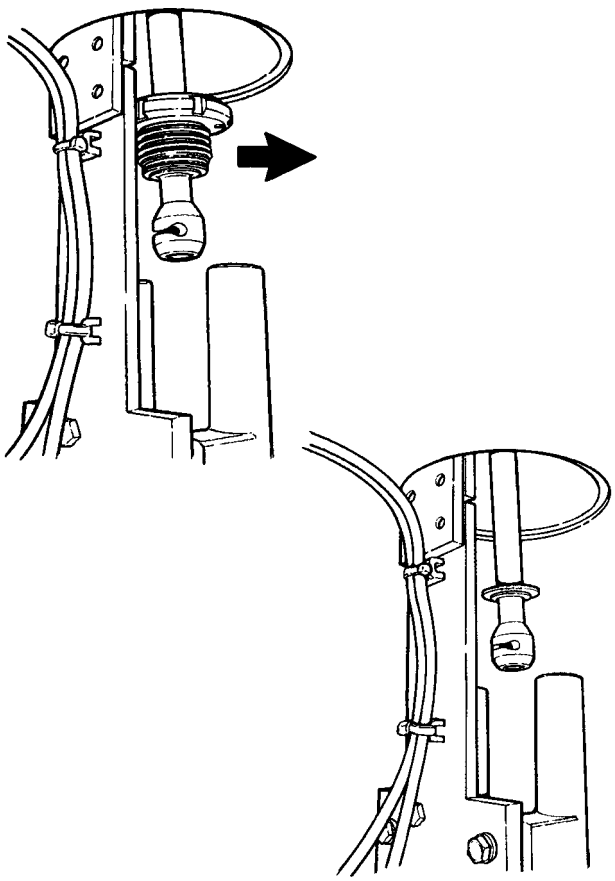

3b

Remove the cleaning cup connection from the upper filling pipe.

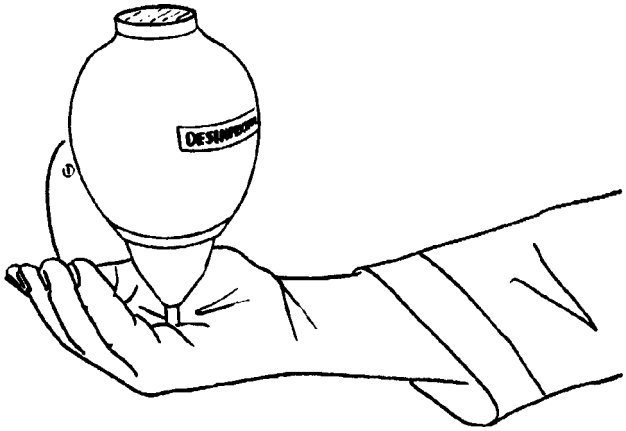

4

To avoid infection of the product, disinfect your hands/gloves before touching packaging material, strips, and machine parts that get in contact with product.

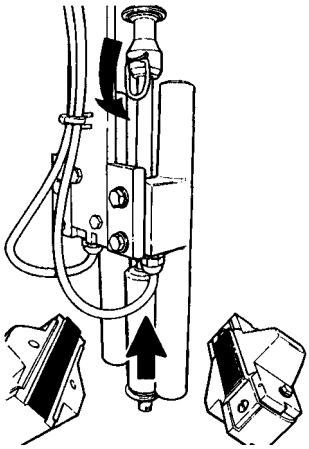

5

Connect the lower filling pipe with the float to the upper filling pipe.

Turn the locking pin to locked position.

2.2IE000006.EN

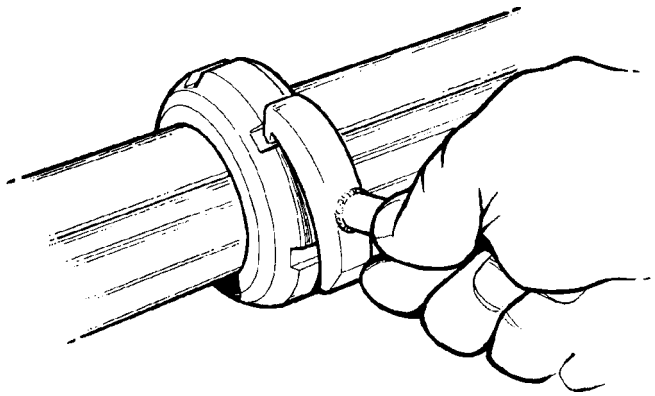

6

Tighten all unions in the product pipe-line.

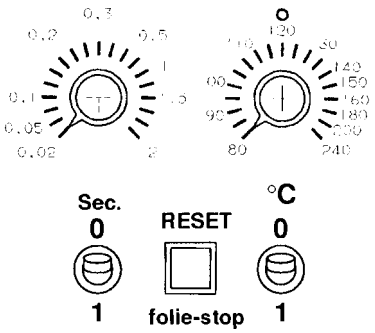

7

Check that the activating switch in the electrical cabinet of the dating unit is switched off (position 0).

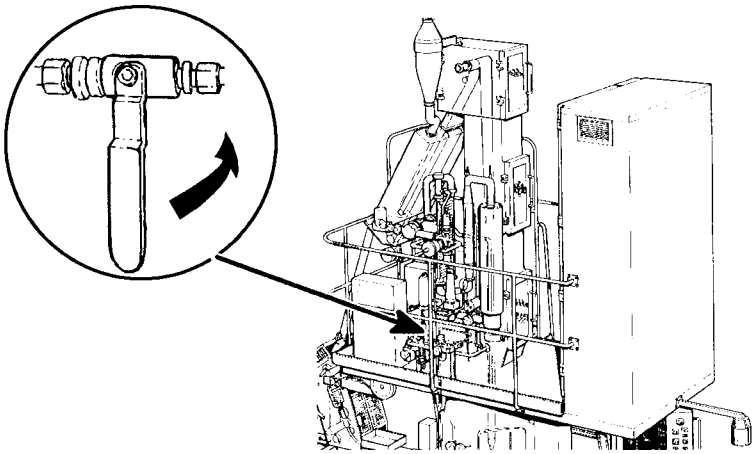

8

Turn on the steam.

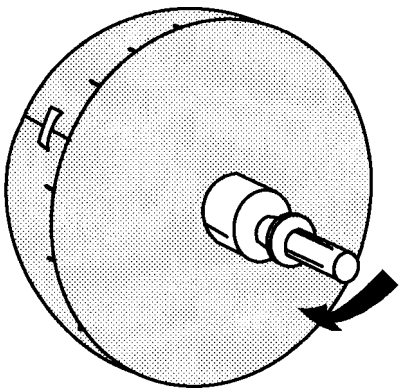

9

Insert a reel holder into the material reel and secure it.

2.2IE000006.EN

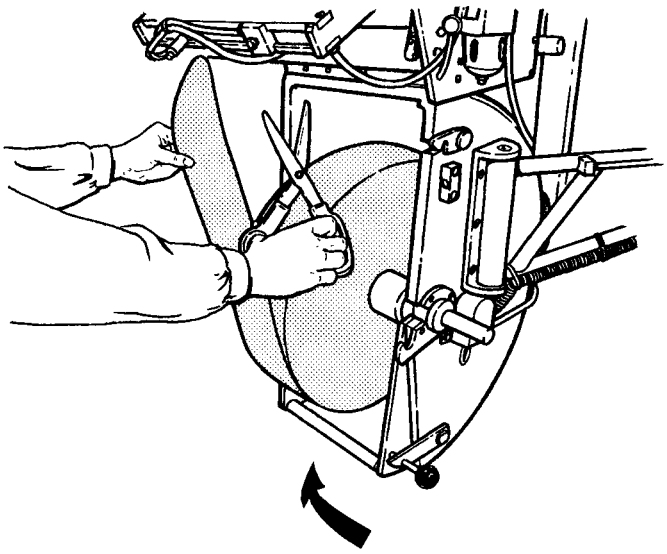

10

Place the material reel in the cassette.

Cut the end as illustrated

Restore the cover on the casette.

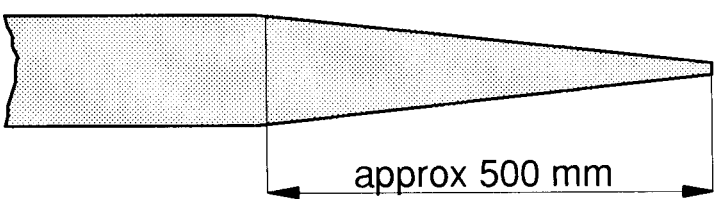

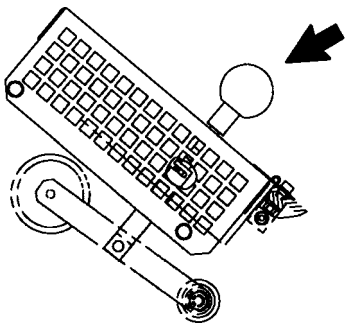

11

Raise the strip applicator pressure roller to lock it, by lifting the knob and turn 90°.

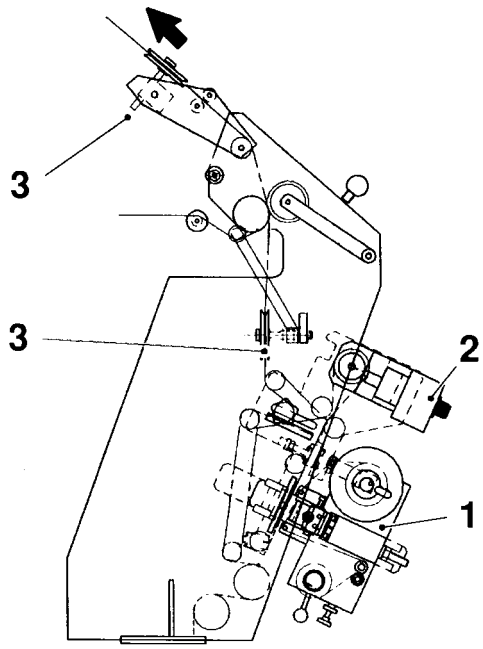

12

WARNING!
Risk of personal injury by skin contact or inhalation!
Before handling sterilization liquid read the "Safety precautions", acc to page 5.

Thread the material web via:

- the dating (1),
- the zone heater (2),
- the guide rollers (3),
- the peroxide bath (4).

Check that the bending rollers and the guide rollers are clean and rotate freely.

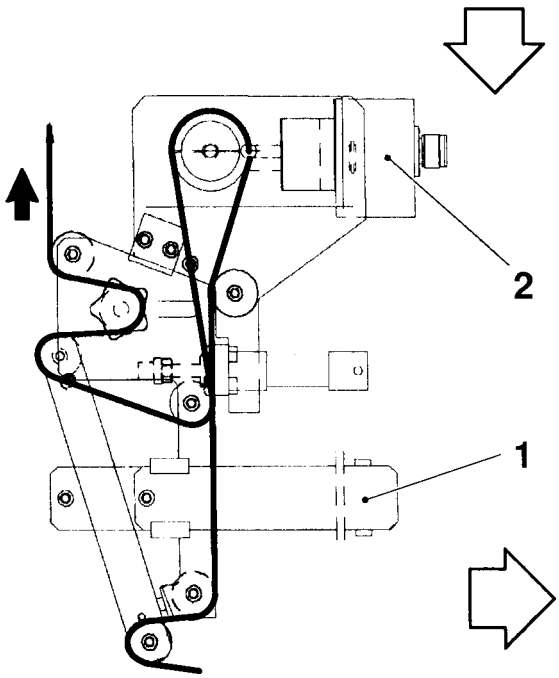

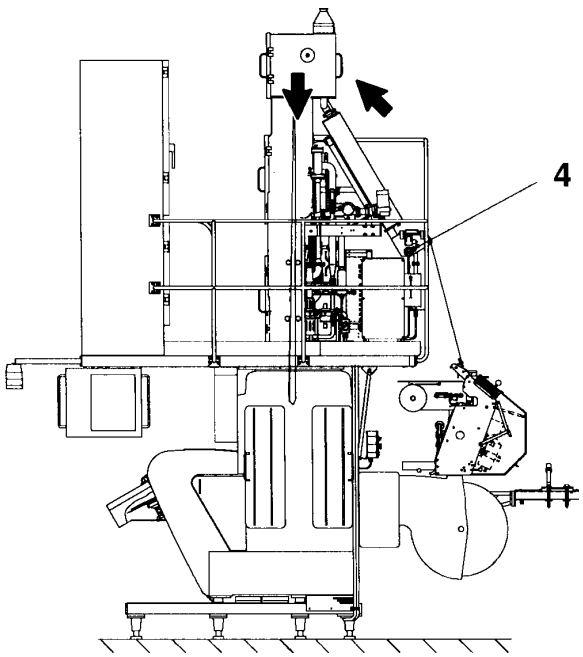

2.2IE000006.EN

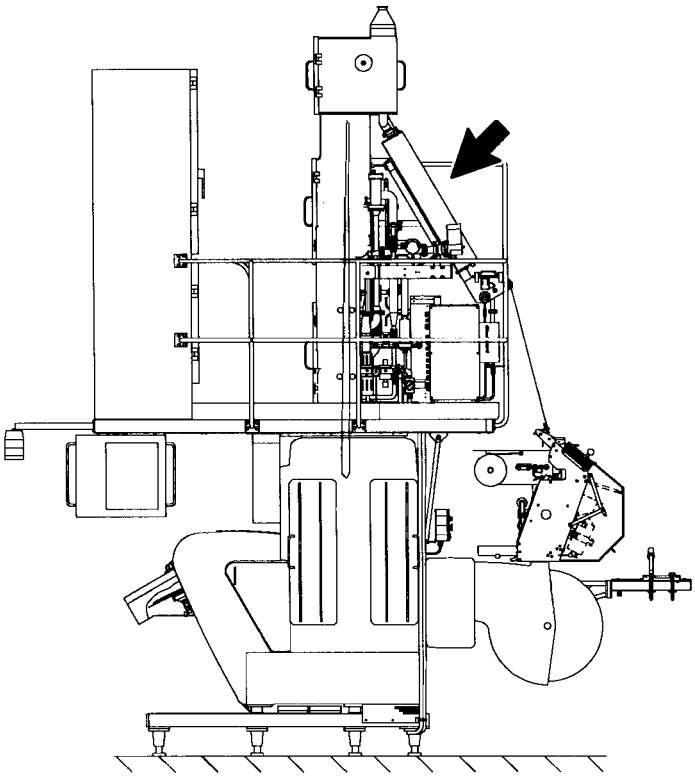

13a

Raise the two element groups (2) and (4) in the sterilization chamber.

- Thread the material web through the lower part of the sterilization chamber (1).
- Lower the lower element (2).
- Thread the material web above the lower element (3).
- Lower the upper element (4).
- Thread the material web above the upper element (5).

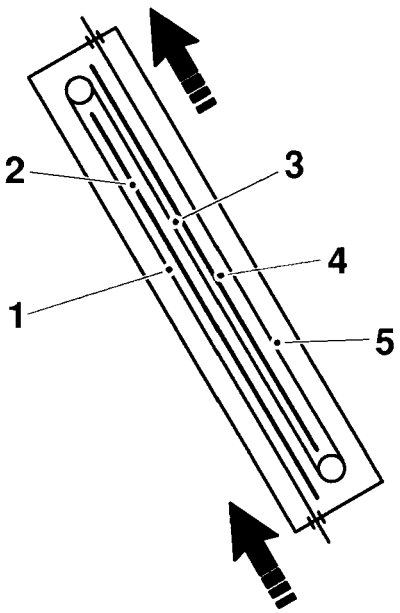

13b

Lower the two element groups.

2.2IE000006.EN

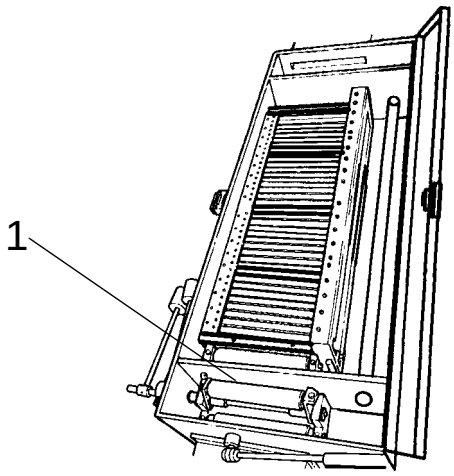

14

WARNING!
Risk of injury due to pinching or crushing!
The squee-gee rollers may rotate.

Check that the squee-gee rollers are clean and rotate freely (1).

Lower the squee-gee rollers and close the sterilization chamber hatch.

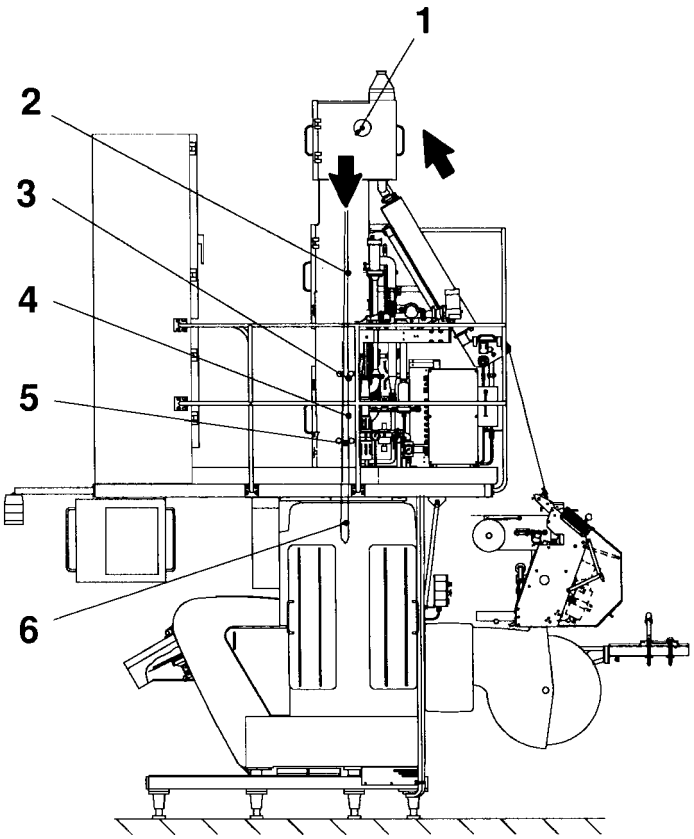

2.2IE000006.EN

15

Check that the upper bending rollers rotate freely.

Thread the material web:

- Over the upper bending roller (1).
- Down through the aseptic chamber (2).
- Down through the upper forming ring (3).
- Down through the LS element (4).
- Down through the lower forming ring (5).
- Down into the machine body (6).

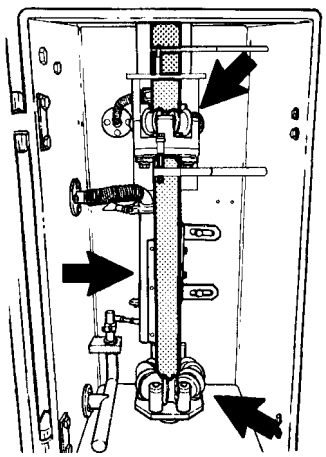

16

WARNING!

Risk of burns!

The LS element and adjacent components may be hot. If necessary, wear heat-resistant protective gloves.

Check that the material web runs correctly through the forming rings, and in the LS element.

Check that both edges of the material web runs between the lower forming ring and the pressure roller of the filling pipe.

2.2IE000006.EN

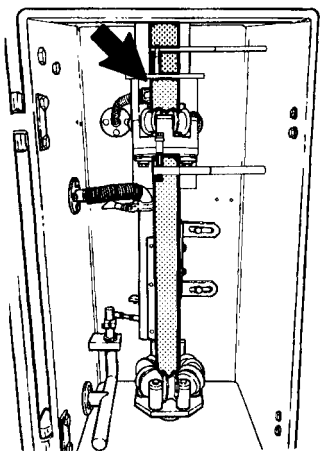

17

Check that the photocell sensor spot is distinct and falls on the edge of the material web, where the register for the printed design is.

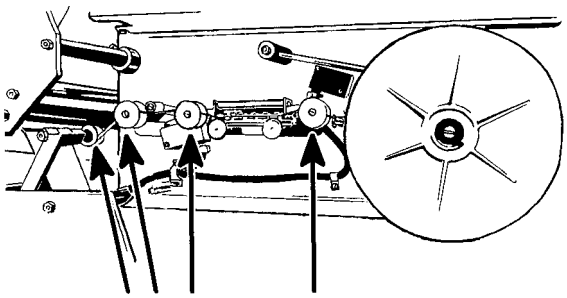

18

Put the LS strip reel in place.

Pull the strip through the brakes and over the guide rollers.

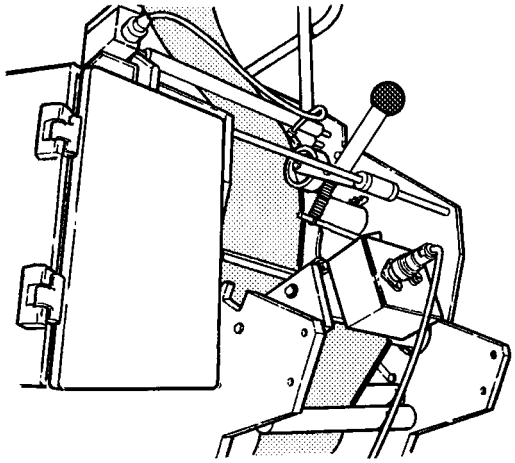

19

WARNING!
Risk of injury due to pinching or crushing!
The rollers may rotate.

Insert the LS strip under the material web, between the pressure and counter roller. Lower the pressure roller into production position.

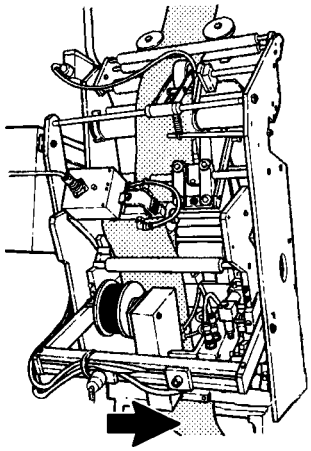

20

Check that the rubber plate is pressing **lightly** against the material web.

2.2IE000006.EN

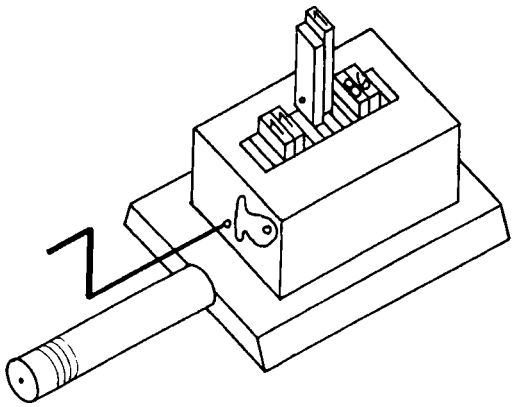

21

WARNING!
Risk of burns!
The printing inserts may be hot. Use heat-resistant protective gloves and a pair of tweezers.

Put printing inserts in the insert holder of the dating unit.

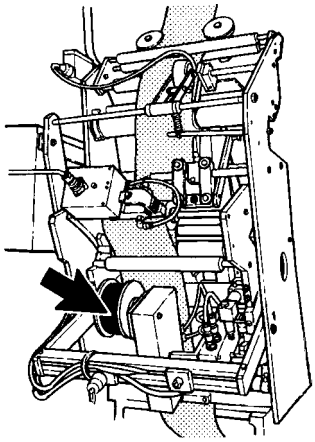

22

Check that there is imprinting sheet in the dating unit. Replace imprinting sheet, as required, acc to ”Production checks”, page 85.

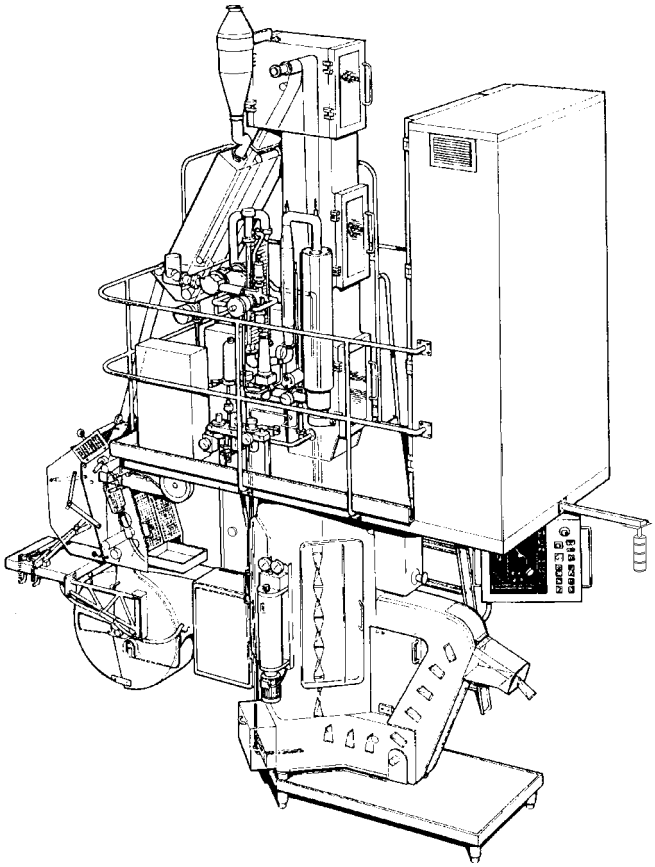

23

WARNING!

Risk of personal injury!

Never inch or run the machine if any Safety switch is non-operational or any Safety cover is not fitted.

Check that all doors, hatches and safety covers are closed, acc to ”Safety precautions” page 3.

2.2IE000006.EN

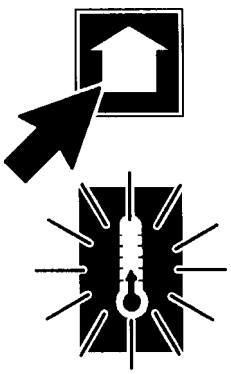

24

Push **Programme up**. **Preheating** shows fixed light. **Operating power** is on.

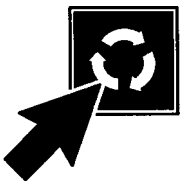

25

Inch the machine with **Inching** to pull down the material web into the machine body.

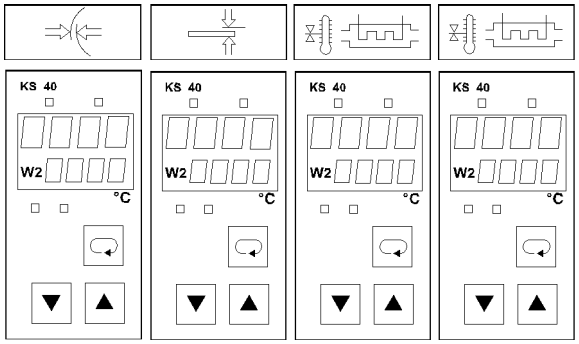

26

Check the following settings acc to ”Technical data”, page 159.

LS element temperature ..... ° C

LS strip element temperature ..... ° C

Air heater temperature ..... ° C

Air preheater temperature ..... ° C

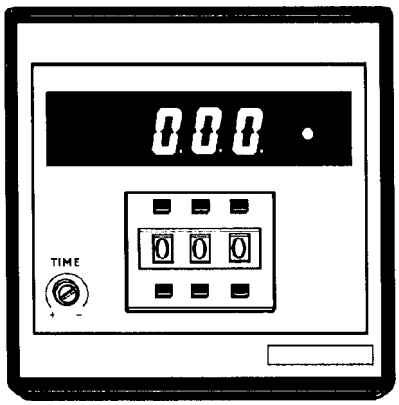

27

Check that the distributor counter is set acc to ”Introduction”, page 42.

2.2IE000006.EN

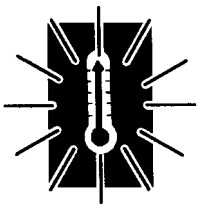

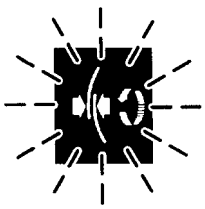

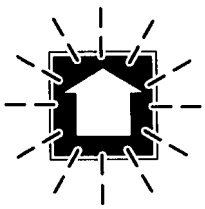

28

Preheating finished shows fixed light, **Tube sealing** and **Programme up** flash.

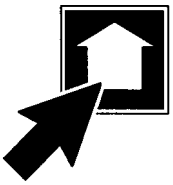

29

Push **Programme up**.

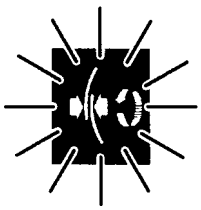

Tube sealing shows fixed light for 20 seconds.

2.2IE000006.EN

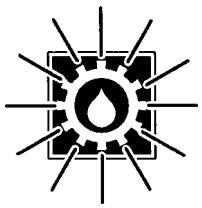

30

Lubrication pulse. **Manual lubrication** shows fixed light during lubrication.

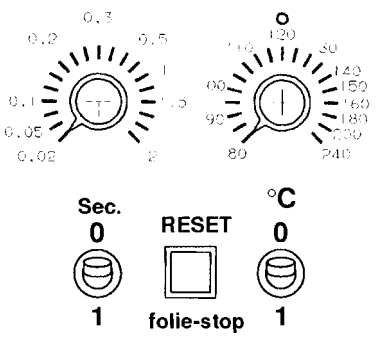

31

Check the following settings of the Zone heater/dating unit acc to ”Technical data”, page 159.

Print duration	.....	s
TEMP	.....	°C

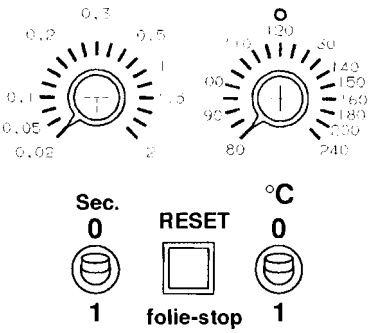

32

Turn on the activating switch in the electrical cabinet of the zone heater/dating unit.

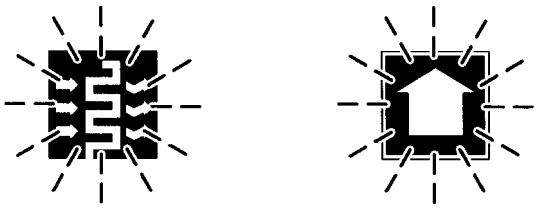

33

Tube sealing finished and **Programme up** flash.

2.2IE000006.EN

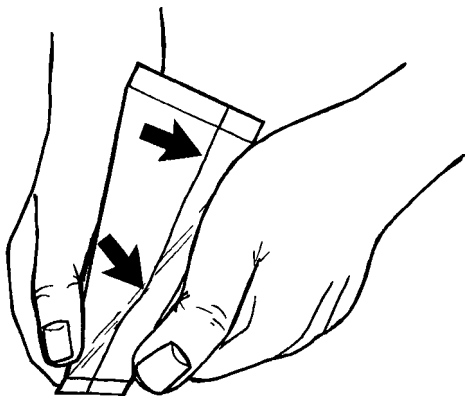

34

Check that the material tube has a properly sealed LS, by squeezing the packages.

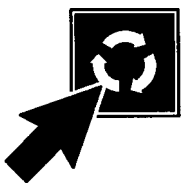

35

If the LS is not properly sealed, inch the machine with **Inching**, until a properly sealed LS is obtained. If it is impossible to obtain a properly sealed LS, call a technician.



36

When the material tube has a properly sealed LS, push **Programme up**.

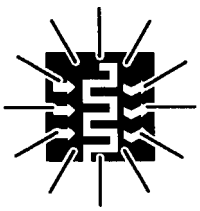

37

Tube sealing finished shows fixed light. The B-valve opens. The AP-valve, the constant flow valve and the filling pipe is preheated, then cooled.

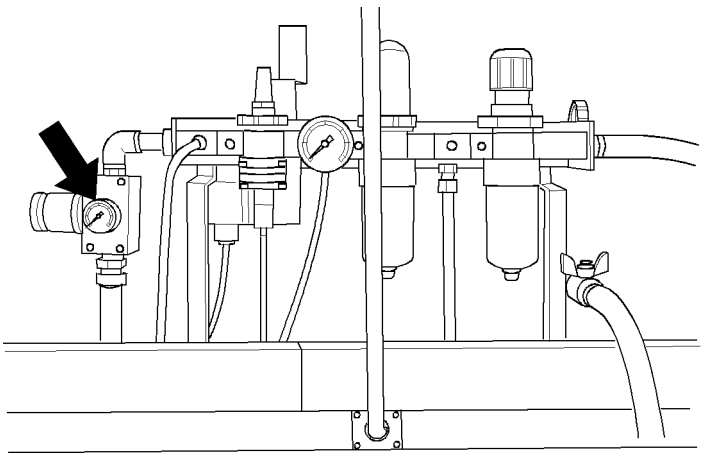

38

Check that the sterile air pressure is ..... kPa (..... bar) acc to ”Technical data”, page 159.

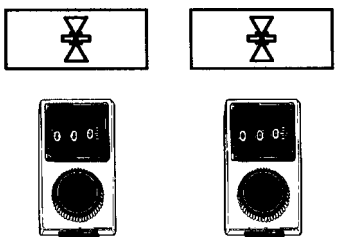

39

Check the following setting acc to ”Technical data”, page 159.

Potentiometer TS side 1 ..... units

Potentiometer TS side 2 ..... units

2.2IE000006.EN

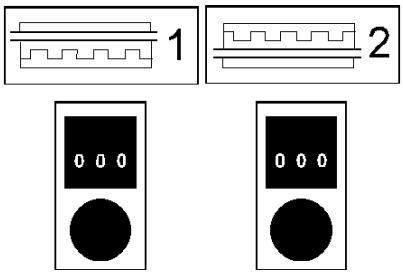

40

Check the following settings acc to ”Technical data”, page 159.

Sterilization chamber heating element side 1-upper..... units

Sterilization chamber heating element side 2-lower..... units

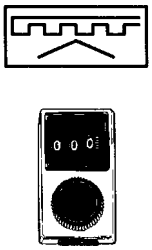

41

Check the following setting acc to ”Technical data”, page 159.

Zone heater..... units

2.2IE000006.EN

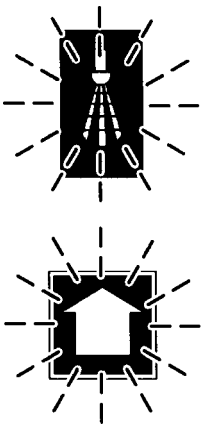

42

When preheating and cooling of the filling system is ready **Spraying** and **Programme up** flash.



43

Push **Programme up**.

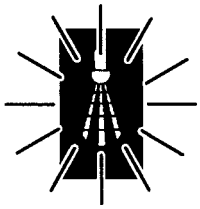

44

Spraying changes to fixed light.
Sterilization of the aseptic chamber and the sterilization chamber starts.

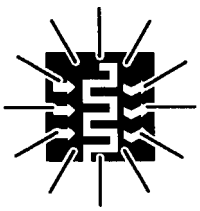

45

When spraying is finished, **Drying** lights up with fixed light.

2.2IE000006.EN

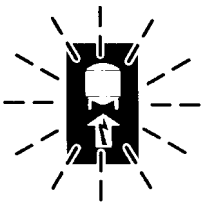

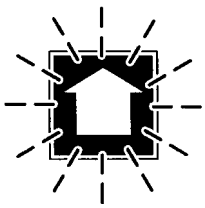

46

When drying is completed, **Signal to sterilizer** and **Programme up** flash.

Start

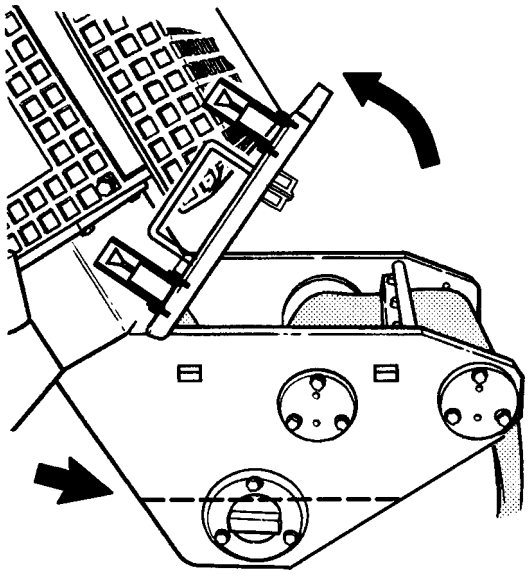

2.2IE000007.EN

1

WARNING!

Risk of personal injury caused by skin contact or inhalation.

Sterilization liquid is present in the peroxide bath. Observe the ”Safety precautions”, acc to page 5.

Check that sterilization liquid has reached the correct level in the peroxide bath.



2a

Push **Programme up**.

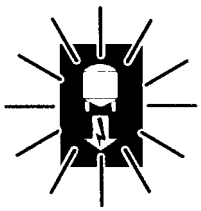

2b

Signal from sterilizer shows fixed light.

3

Intentionally left blank

2.2IE000007.EN

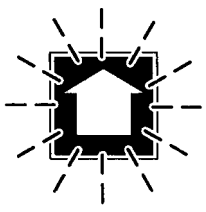

4

Programme up and **Motor start** flash.



5a

Push **Programme up** and keep the button depressed until the drive motor starts (time delay).

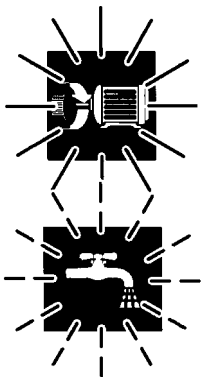

5b

Drive motor on lights up with fixed light.
Filling on flashes.

2.2IE000007.EN

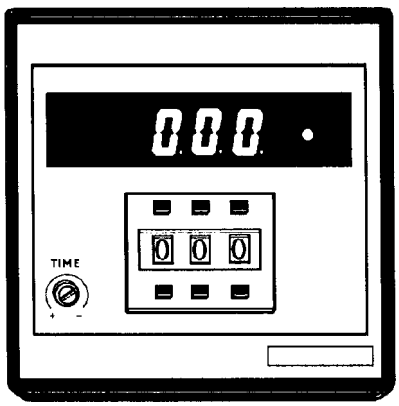

6

A number of packages go through the machine before the distributor counter starts.

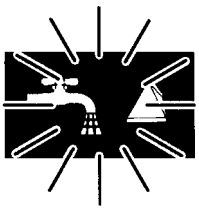

7

The product valve opens. **Filling on** changes to fixed light and **Production** lights up with fixed light when the register for printed design is in correct position.

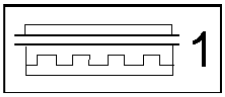

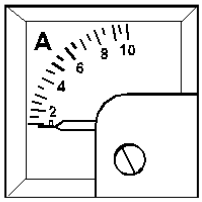

8

Check that the Ammeter-sterilization chamber heating element side 1-upper shows ..... A.

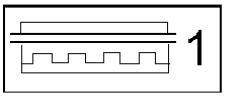

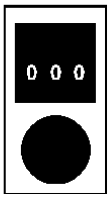

2.2IE000007.EN

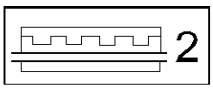

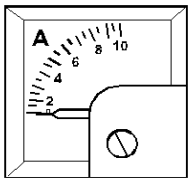

9

Check that the Ammeter-sterilization chamber heating element side 2-lower shows ..... A.

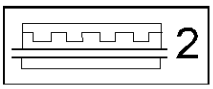

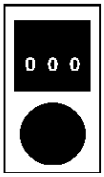

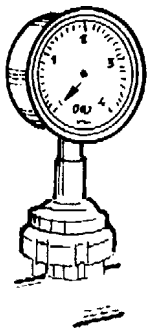

10

Check that the product pressure is ..... kPa (..... bar) acc to ”Technical data”, page 159.

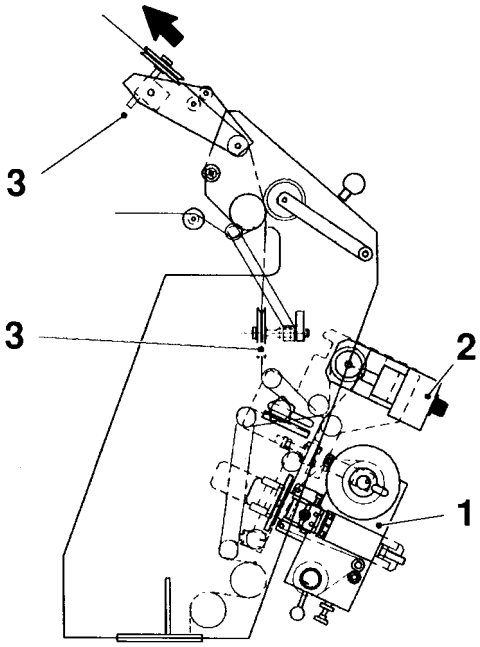

11

Check that the material web runs correctly via the dating unit, zone heater, pressure and counter rollers of the strip applicator, edge guide rollers, upper bending roller, upper forming ring, LS element, lower forming ring and down into the machine body.

CAUTION!

Do **not** open the doors to the aseptic chamber as this will cause a stop and the machine will step down to programme step 0. Then the machine has to be cleaned and preheated again.

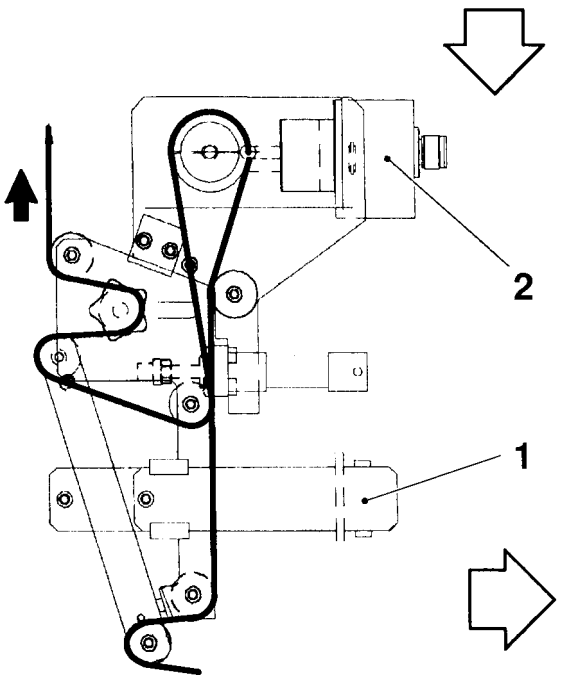

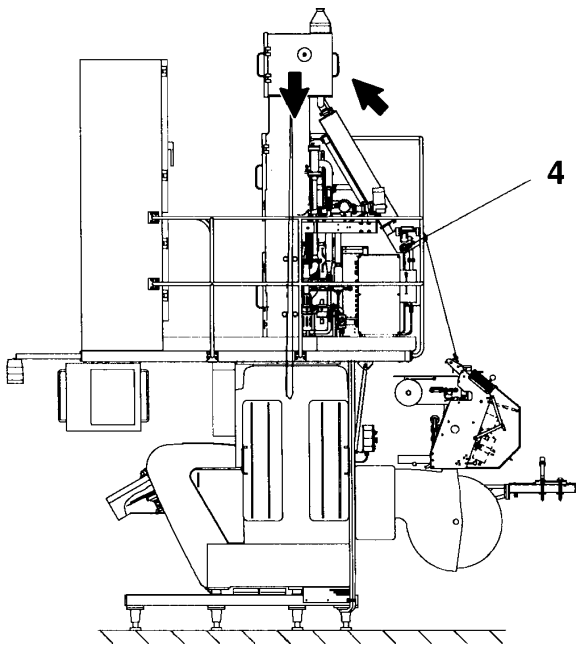

2.2IE000007.EN

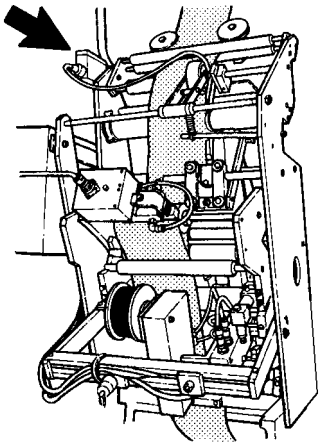

12

If the photocell is in use.

Check that the photocell sensor spot is distinct and falls on the edge of the material web, where the register for the printed design is.

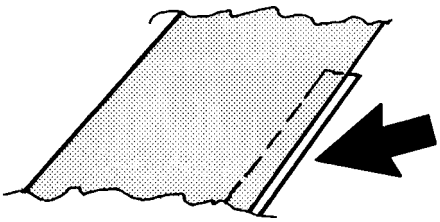

13

Check the LS strip position and sealing to the material web.

2.2IE000007.EN

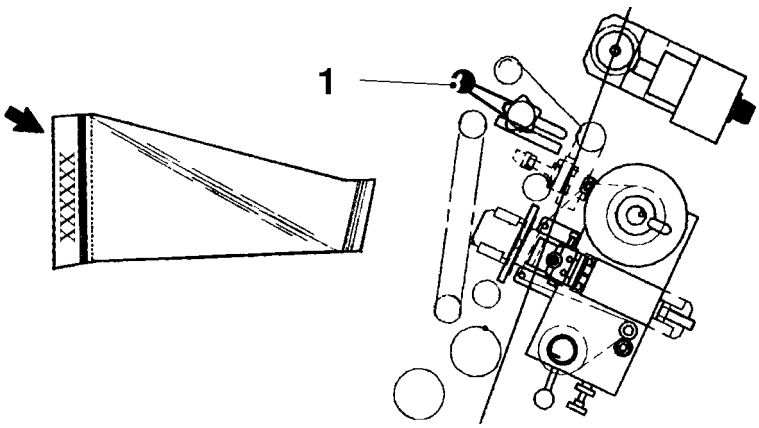

14a

Check the position of the date printing on two consecutive packages.

If the date is too close to the edge, turn the handle (1) counterclockwise.

If the date is too close to the TS, turn the handle clockwise.

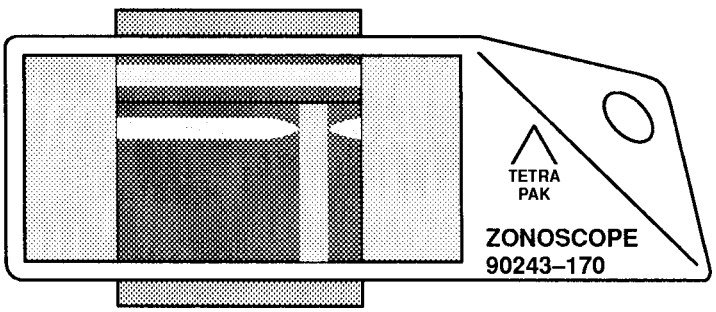

14b

Check the position of the zoneheated area by means of the zonoscope (TP No 90243-170).

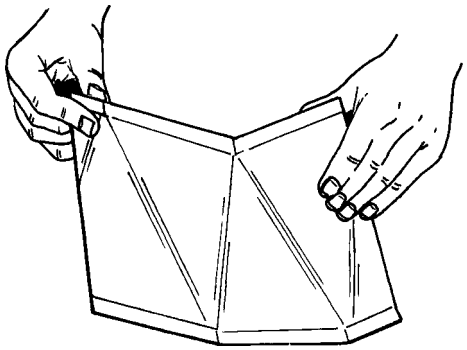

14c

Check the TS and LS on the same packages.

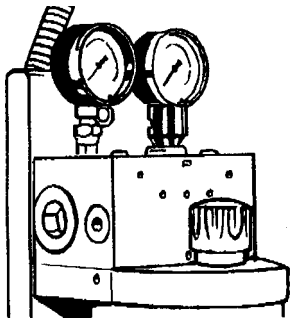

15

Check that the hydraulic system pressure is ..... MPa (..... bar) acc to ”Technical data”, page 159.

2.2IE000007.EN

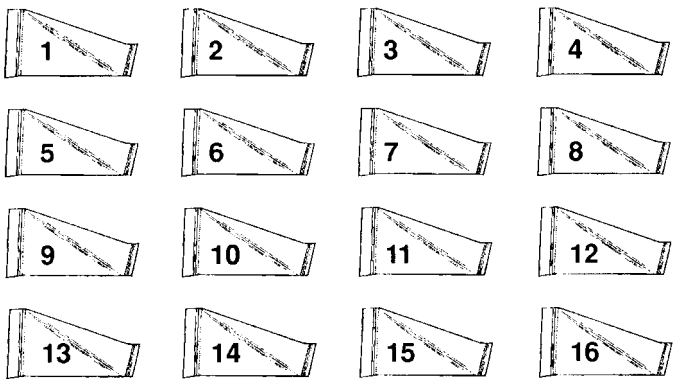

16

Remove 16 consecutive packages.
Number the packages in the order they come out of the machine.
Check the packages acc to ”Package checks”, page 93.

This page intentionally left blank

Production checks

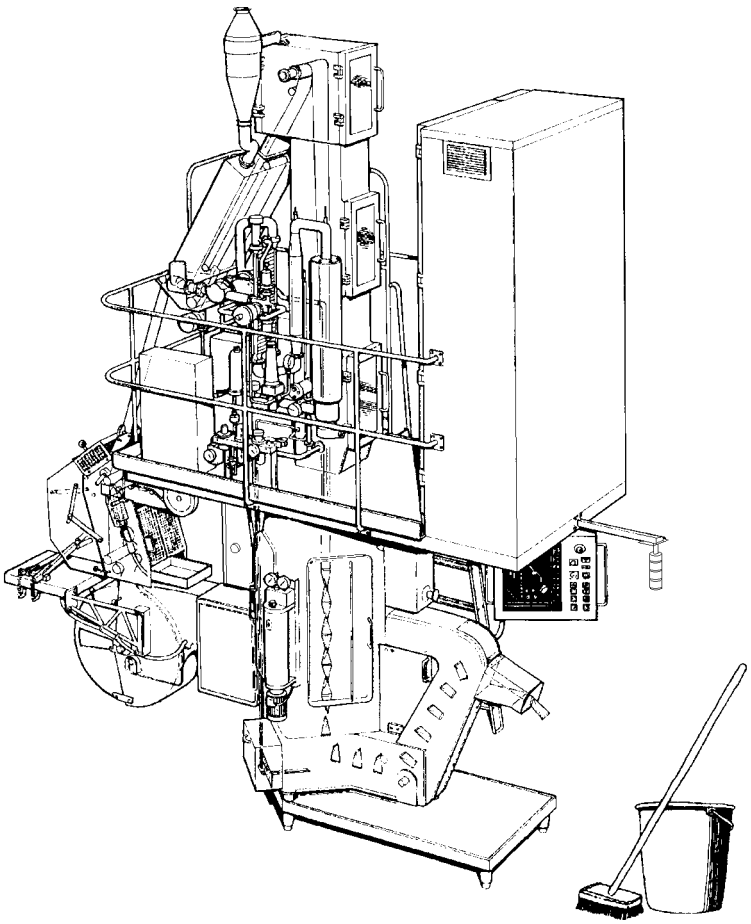

2.2IE000008.EN

1

During production, the operator must stay close to the machine.

Make sure that the machine and the machine site are clean and tidy.

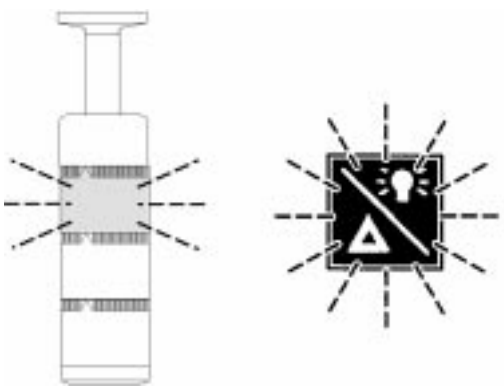

2

If the warning beacon starts to flash, check on the monitor panel where the fault is located.

Acknowledge the alarm and eliminate the fault.

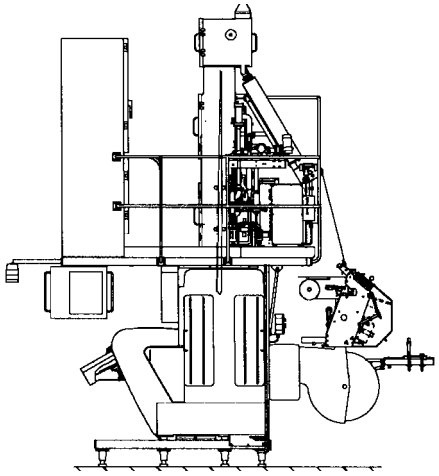

3

Always keep an eye on the passage of the material web through the machine.

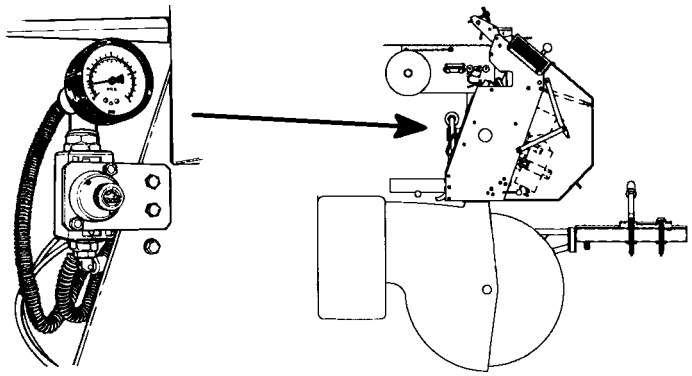

4

Check that the LS strip element air pressure is ..... kPa (..... bar) acc to ”Technical data”, page 159.

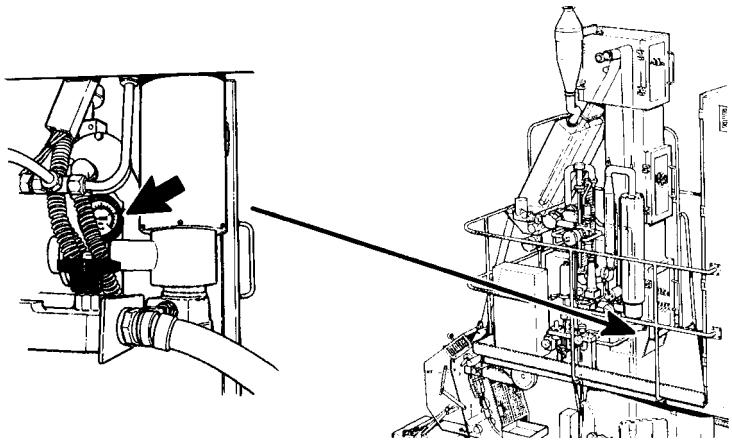

5

Check that the LS element air pressure is ..... kPa (..... bar) acc to ”Technical data”, page 159.

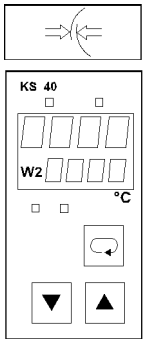

6

Check the following setting acc to ”Technical data”, page 159.

LS element temperature ..... ° C.

2.2IE000008.EN

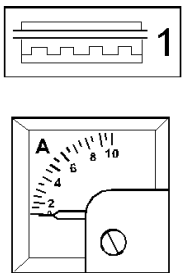

7

Check that the Ammeter-sterilization heating element side 1-upper shows ..... A, acc to ”Technical data”, page 159.

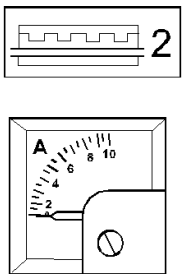

8

Check that the Ammeter-sterilization heating element side 2-lower shows ..... A, acc to ”Technical data”, page 159.

2.2IE000008.EN

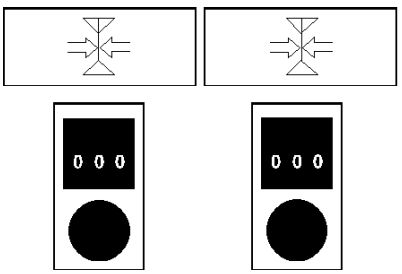

9

Check the following setting acc to ”Technical data”, page 159.

Potentiometer TS side 1..... units

Potentiometer TS side 2..... units

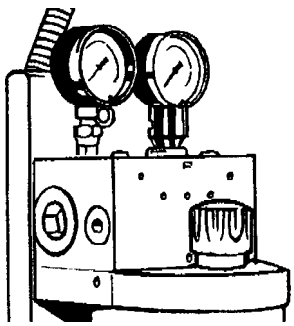

10

Check that the hydraulic system pressure is ..... MPa (..... bar) acc to ”Technical data”, page 159.

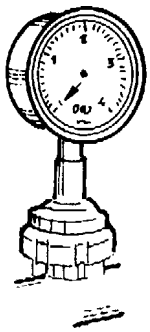

11

Check that the product pressure is ..... kPa (..... bar) acc to ”Technical data”, page 159.

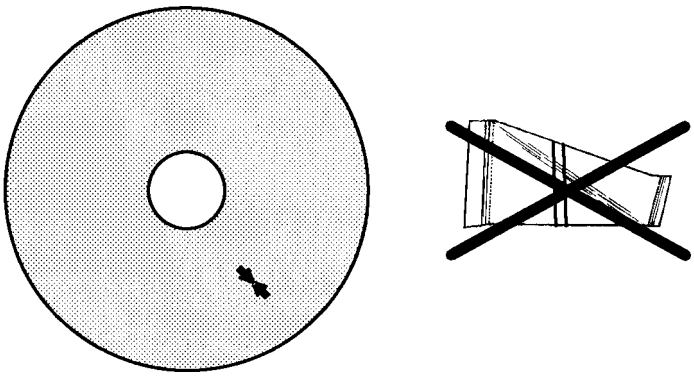

12a

Sometimes the packaging material has been spliced from the factory. The splice has been marked with arrows on the material web reel. Packages with such splices must be removed and discarded.

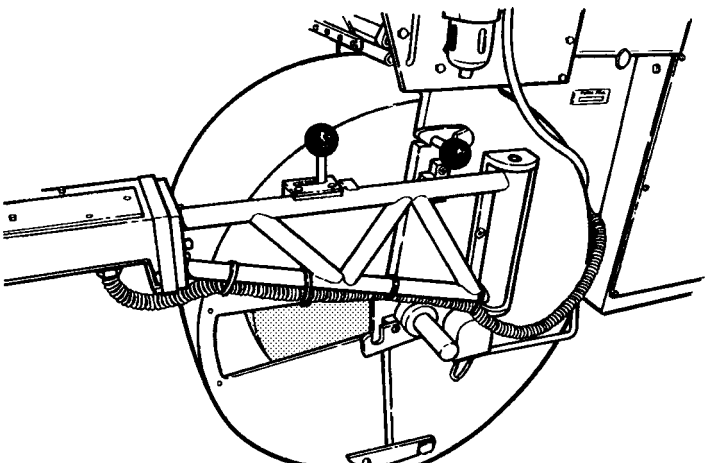

12b

Check continuously during production:

The cassette and if there are any factory splices in the material reel.

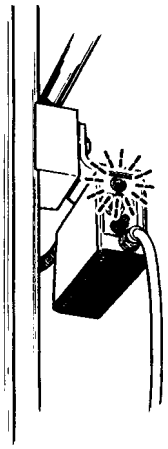

12c

That the photocell sensor on the aseptic chamber is reading on the photocell design marks. The light emitting diode should flash concurrently with the machine.

2.2IE000008.EN

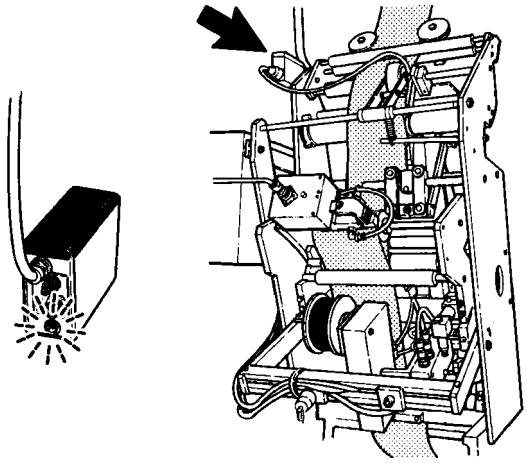

12d

That the photocell sensor on the zone heater is reading on the photocell design marks. The light emitting diode should flash concurrently with the machine.

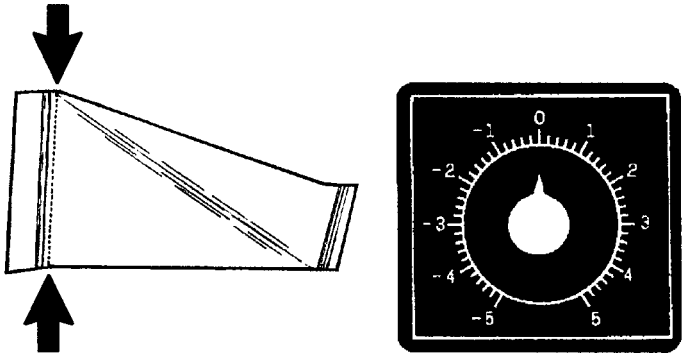

12e

That the printed design is correctly in register and that the tear-open perforation is correctly located.

If not, turn the knob on the control panel to counter clockwise to move the design **upwards** and to clockwise to move the design **downwards**.

2.2IE000008.EN

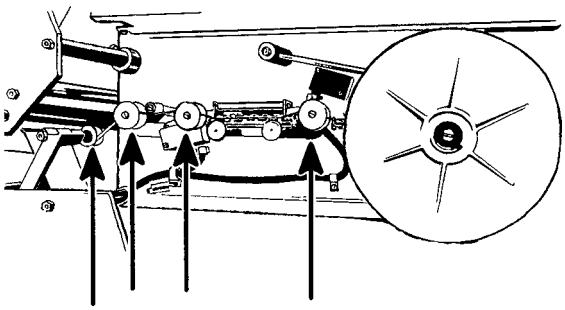

12f

The pressure and counter rollers of the strip applicator for plastic deposits.

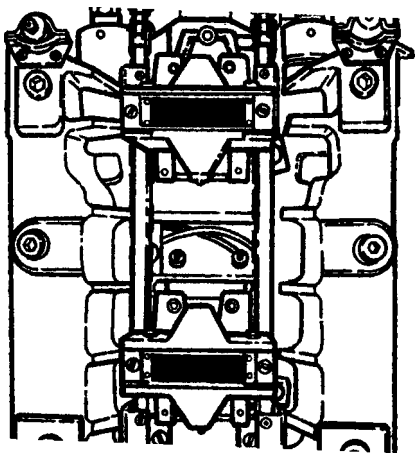

12g

The pressure jaws and the heating jaws for plastic deposits.

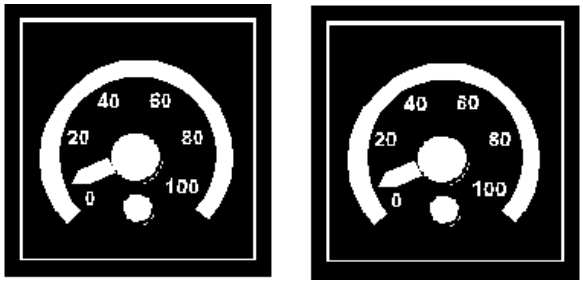

12 h

The motor and brake indicators.

If the motor indicator or the brake indicator is in one of its end positions continuously, call a technician.

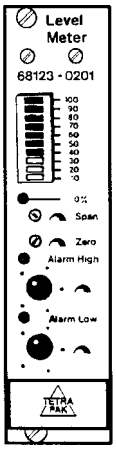

12 i

The level on the level meter card. The LED bar reading is to be 30–40**,** otherwise call a technician.

2.2IE000008.EN

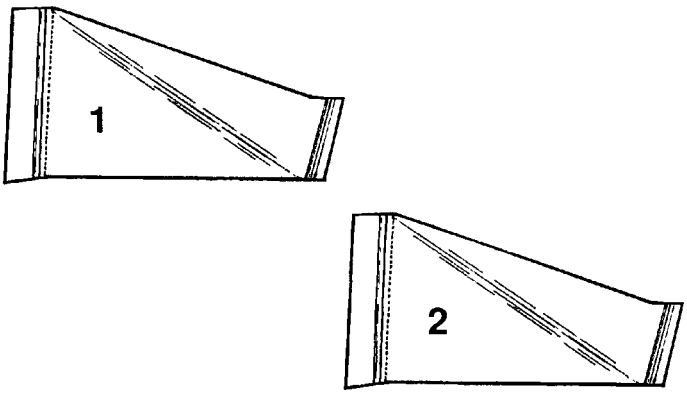

13

Every 15 minutes:

Remove two consecutive packages. Number the packages in the order they come out of the machine.
Check the packages acc to ”Package checks”, page 93.

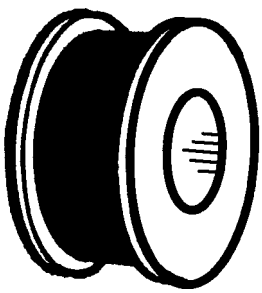

14

Check that there is printing ribbon in the dating unit.

If the printing ribbon needs changing, stop the machine with **Short stop**, acc to ”Stop”, page 119, and ”Changing of printing ribbon” page 107.

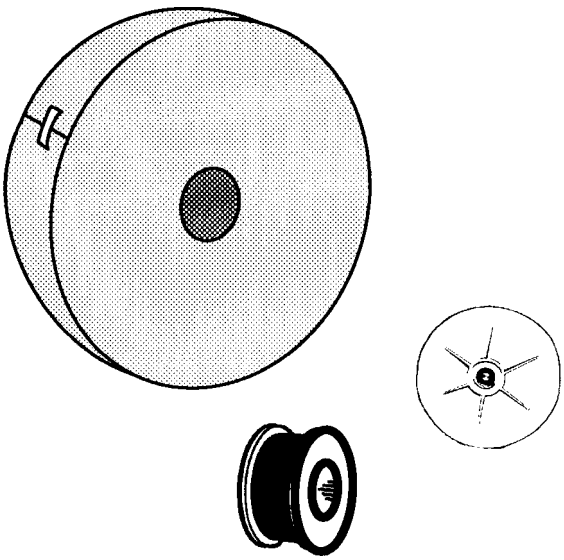

15

Prepare to change:

- material reel,
- LS strip.
- printing ribbon.

2.2IE000008.EN

This page intentionally left blank

Package checks

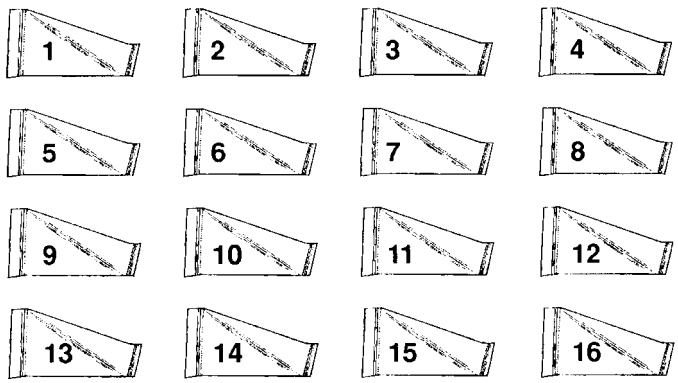

After start, check 16 packages in sequence.

a) Number the packages in the order they come out of the machine.

b) Check all packages acc to items No 1–12.

c) Check the first two packages acc to items No 13–18.

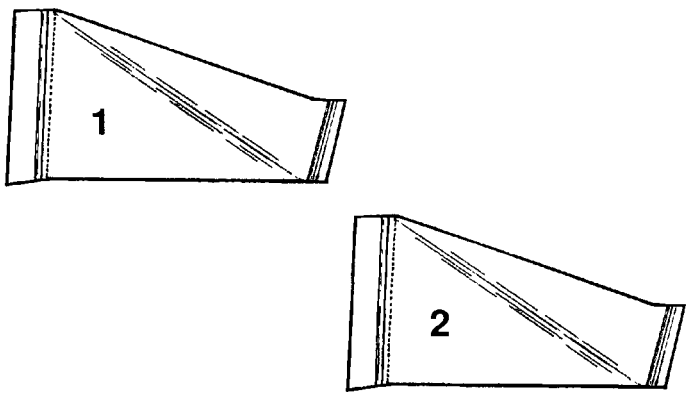

Every 15 minutes, during production and after splicing, check two packages in sequence.

a) Number the packages in the order they come out of the machine.

b) Check the two packages acc to items No 1–18.

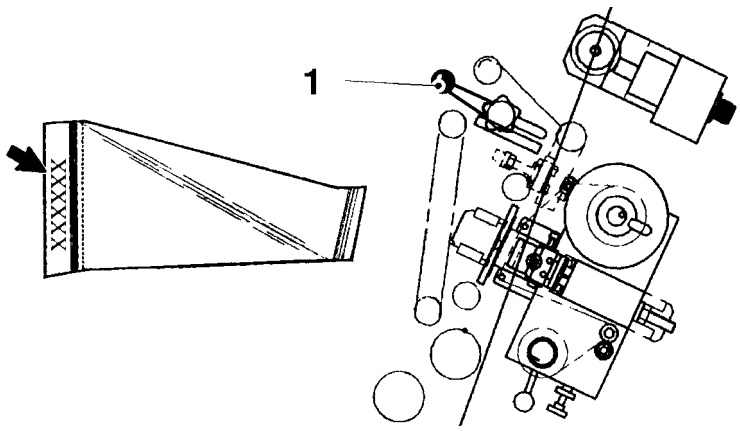

1a

Check the position of the date printing on two consecutive packages.

If the date is too close to the edge, turn the handle counterclockwise.

If the date is too close to the TS, turn the handle clockwise.

2.2IE000009.EN

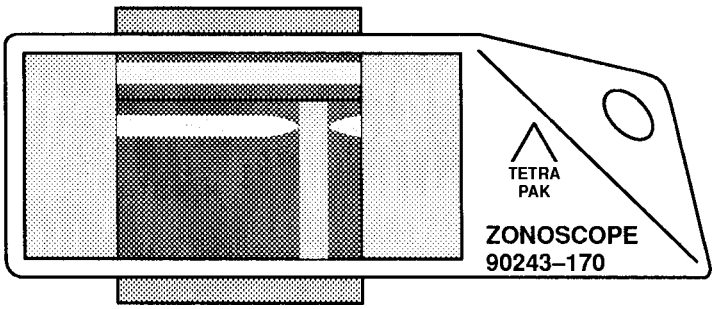

1b

If the position is adjusted, check the position of the zone heated area by means of a zonoscope (TP No 90243-170).

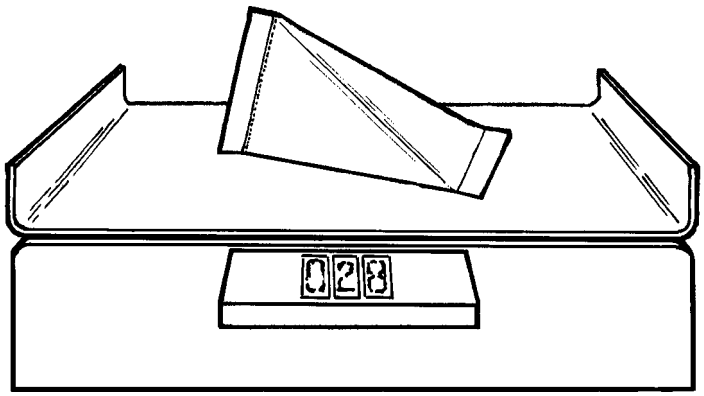

2

Check the weight of the package.

2.2IE000009.EN

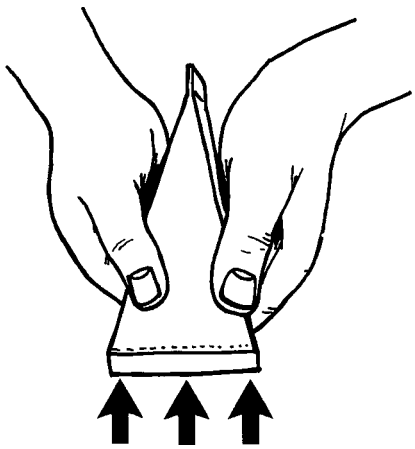

3

Squeeze the package to make sure that the transversal seals (TS) are tight.

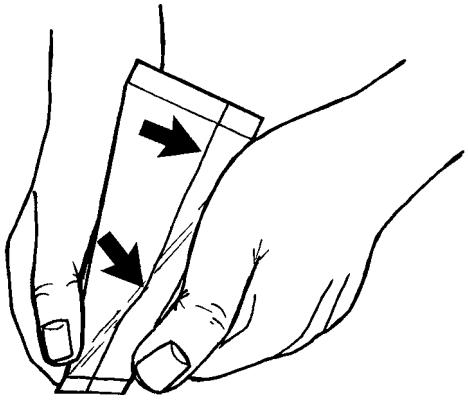

4

Squeeze the package to make sure that the longitudinal seal (LS) is tight.

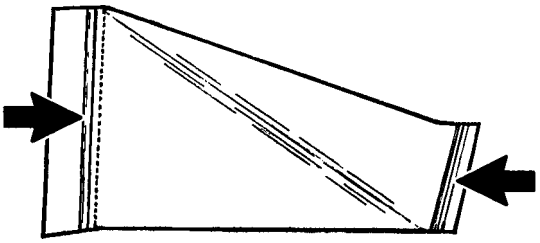

5

Look for external signs of burnt TS.

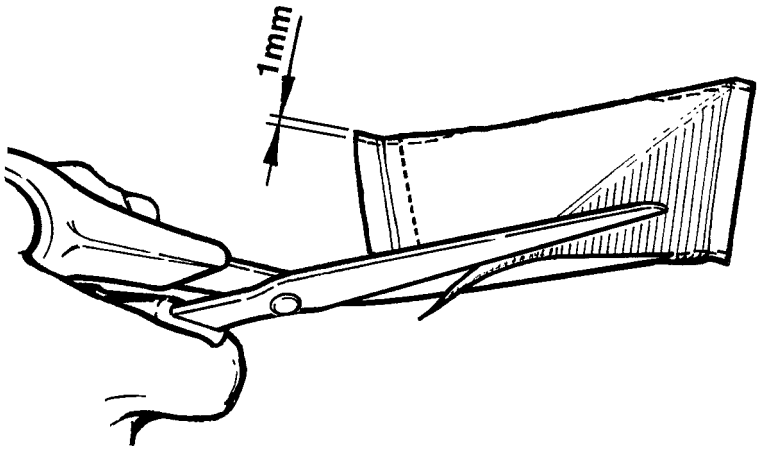

6

Cut 1 mm off the four corners.

2.2IE000009.EN

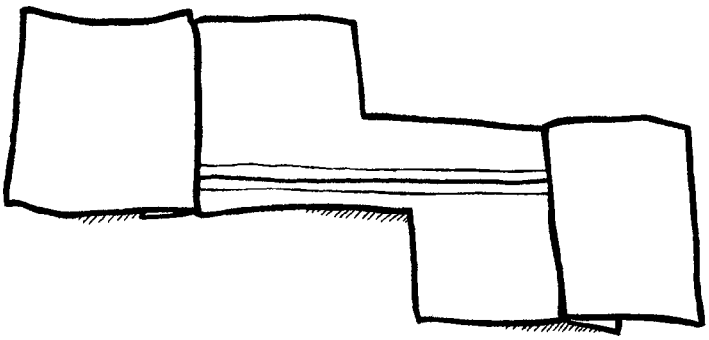

7

Cut open the package, as illustrated.

Note that the LS strip must be intact.

Check that the LS strip is correctly positioned.

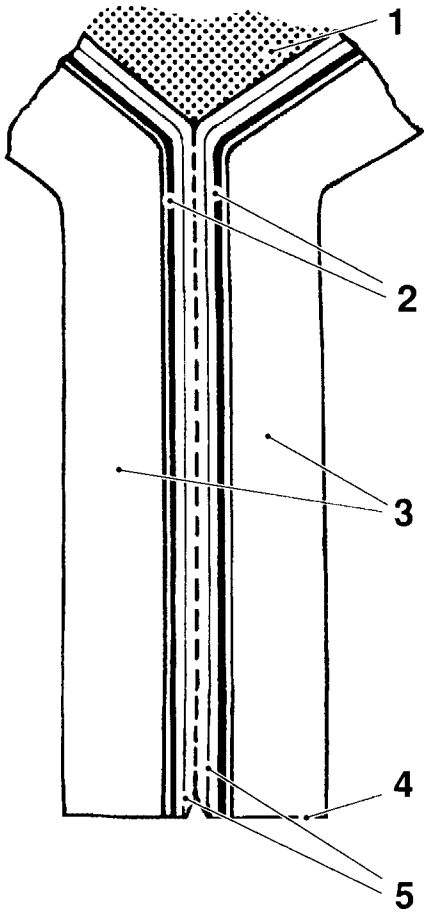

Transversal sealing (TS)

8

The sealing quality depends on heat, pressure, and cooling.

1 Product
2 Al-foil
3 Board
4 Cutting line
5 Double layers of plastic film

The weakest point of the joint must not be the sealing.

2.2IE000009.EN

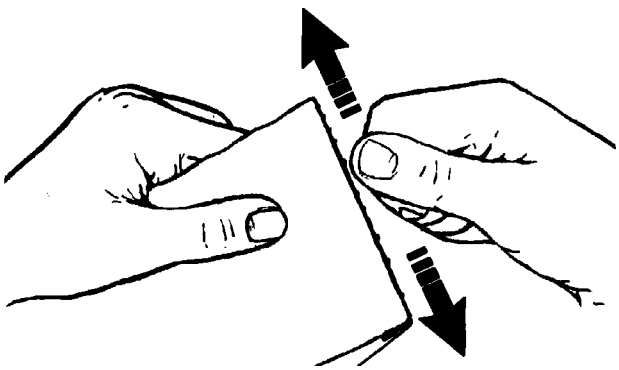

9a

Check that the TS is not sealed at too high a temperature. Use the edge of your fingernail to check that there are no plastic lumps.

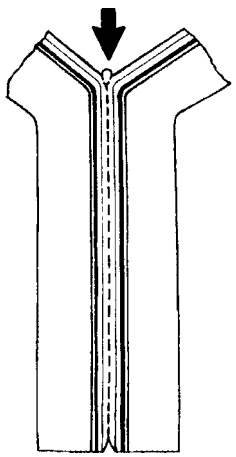

9b

The temperature and pressure must **not** be so high that ridges or peaks are formed.

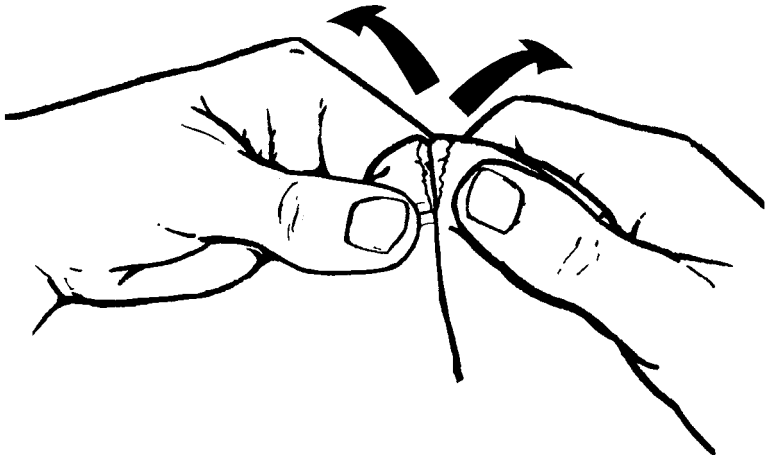

10a

Begin at one of the corners.

Hold the package between the thumbs and the index fingers and pull it apart in a rolling movement.

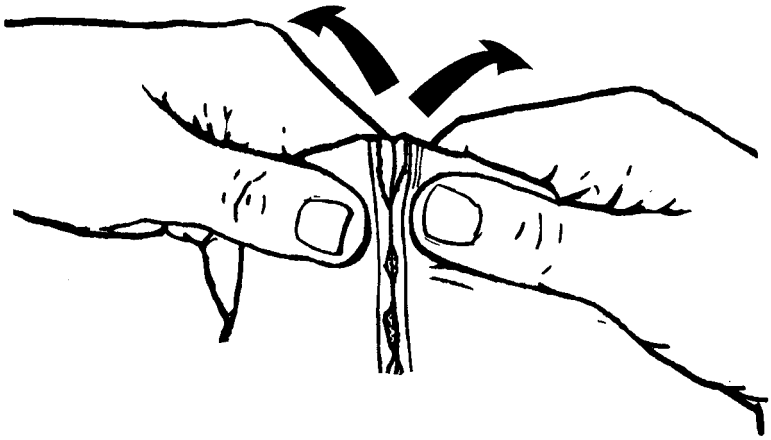

10b

Grasp the opposite corner and repeat the procedure.

2.2IE000009.EN

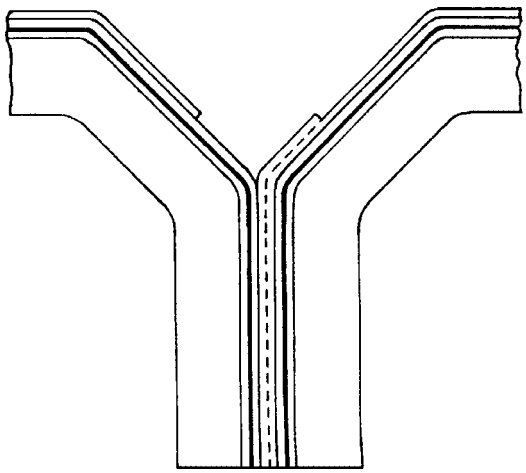

11a

If the seal remains intact when the joint is pulled apart, but delamination between the two inner coatings takes place, sealing is good.

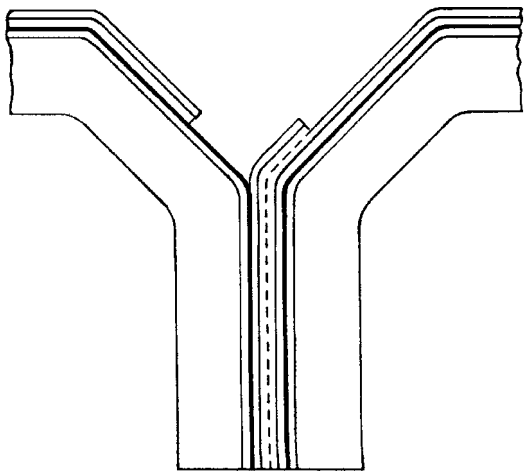

11b

If the seal remains intact when the joint is pulled apart, but comes off the Al-foil on one of the sides to present a shiny metal surface, sealing is good.

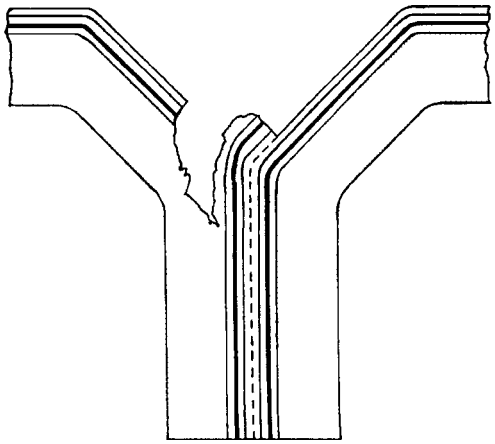

11c

If the seal remains intact when the joint is pulled apart, but the rupture takes place within the paper layer, sealing is good.

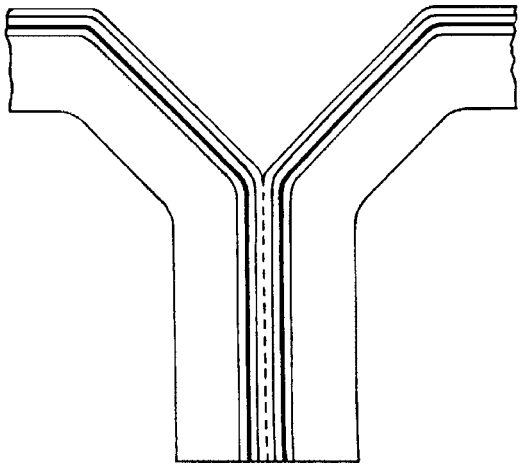

11d

The sealing must **not** be so weak that the two plastic layers separate without rupturing.

If what is described in items No 9–11 were to occur, first replace the pressure rubbers. If this does not help, call a technician.

2.2IE000009.EN

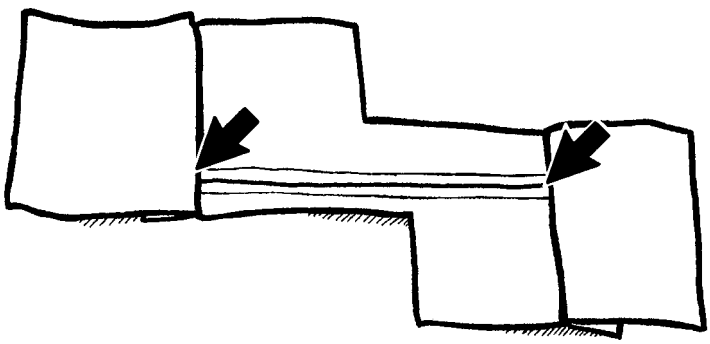

12a

What has been said about assessment of the TS also applies to the assessment of the cross, i e the point where the LS and TS intersect.

If rupturing occurs in any of the layers, sealing is considered good. If there is no rupturing, the sealing is inadequate.

The strip can be regarded as additional coating layers on the Al-foil.

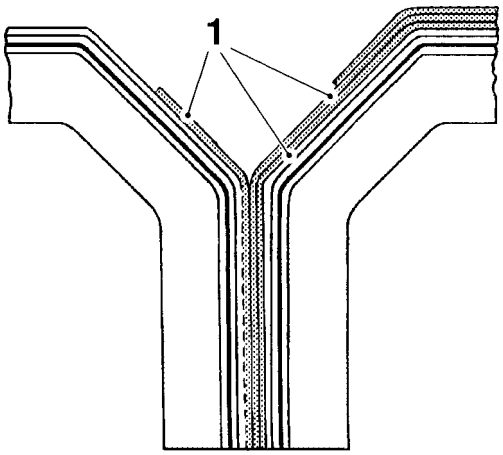

12b

If delamination of the strip takes place, sealing is good.

1 Strip

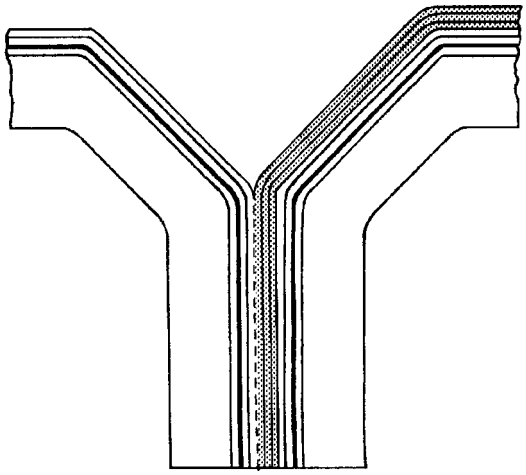

12c

The sealing must **not** be so weak that the strip separates from the packaging material, rupturing neither the strip nor the packaging material.

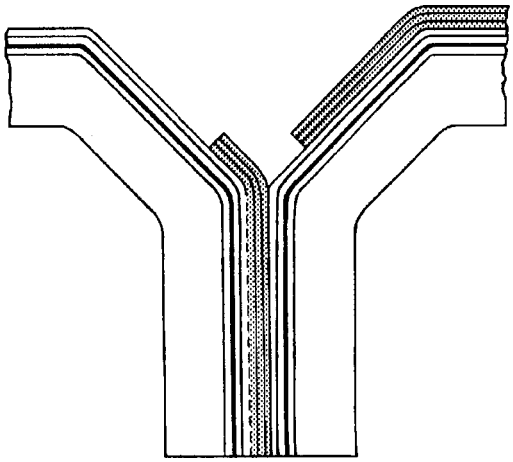

12d

If the strip breaks but sticks to the packaging material, as illustrated, sealing is good.

2.2IE000009.EN

Longitudinal sealing (LS)

13

Check that the LS strip is not sealed at too high a temperature. If that is the case blisters occur.

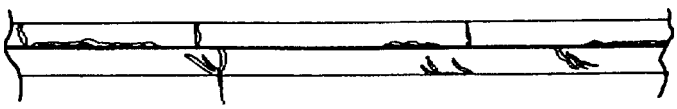

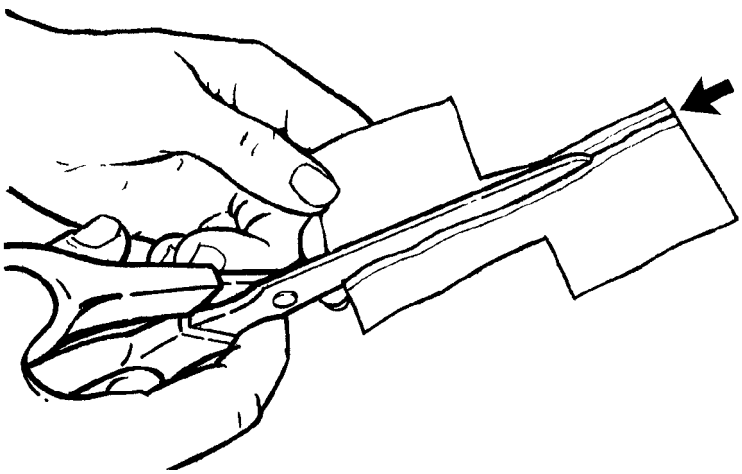

14

Place the package so that its inside faces upwards. Cut along the edge of the packaging material through the middle of the LS strip.

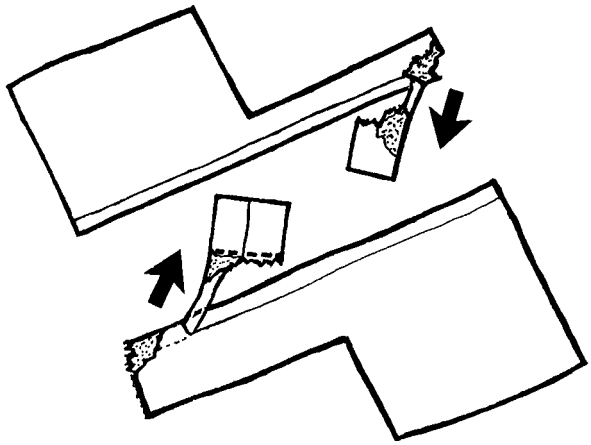

15

Tear off the edge of the LS strip on one of the cut-apart package halves. Do the same to the other half.

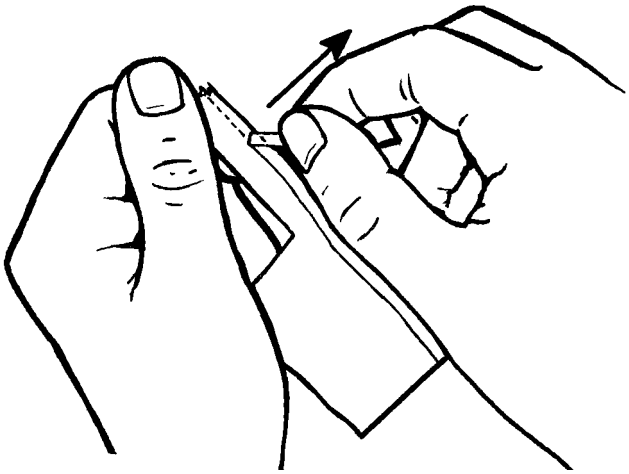

16

Pull the LS strip on one half outwards at an acute angle away from the packaging material and check the LS acc to item No 18.

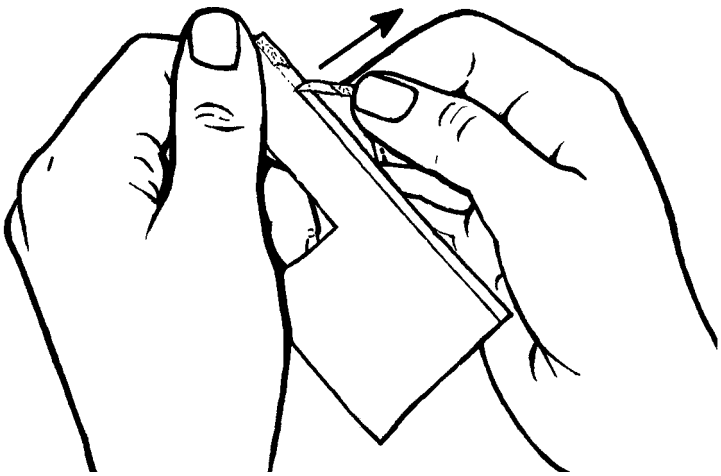

17

Pull the LS strip on the other half outwards at an acute angle away from the packaging material and check the sealing of the LS strip applicator acc to item No 18.

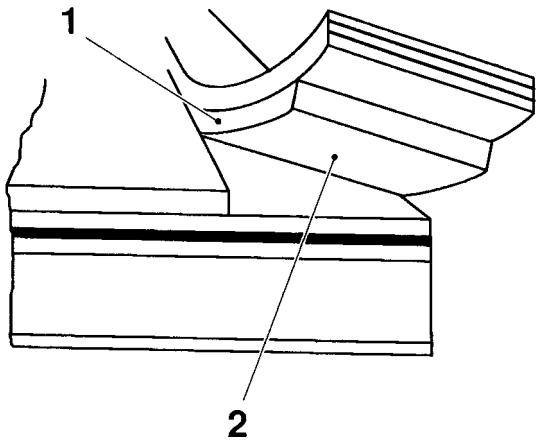

Assessment of LS 18 a

If, when the strip is pulled off, one of the two inner coatings comes off with the strip, leaving a ruptured edge along the seal, sealing is good.

1 Rupture
2 Delamination

2.2IE000009.EN

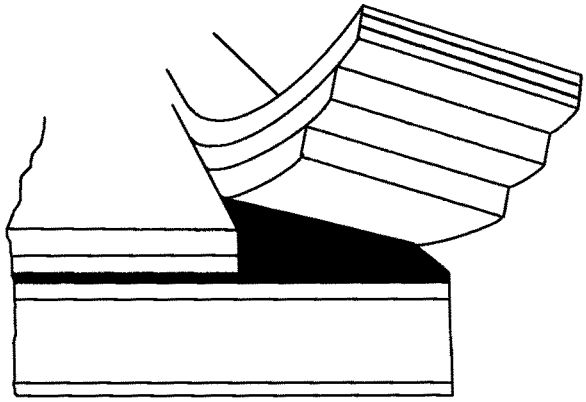

18b

If, when the strip is pulled off, both inner coatings come off with the strip, leaving the Al-foil laid bare, sealing is good.

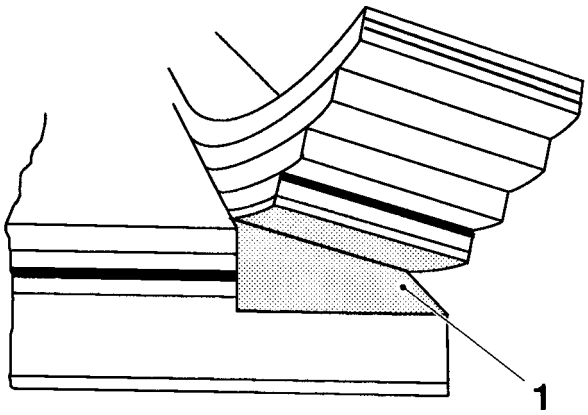

18c

If, when the strip is pulled off, all inner layers including the Al-foil are coming off with the strip, although possibly leaving paper fibres on the back of the pulled-off strip, sealing is good.

1 Paper fibres

2.2IE000009.EN

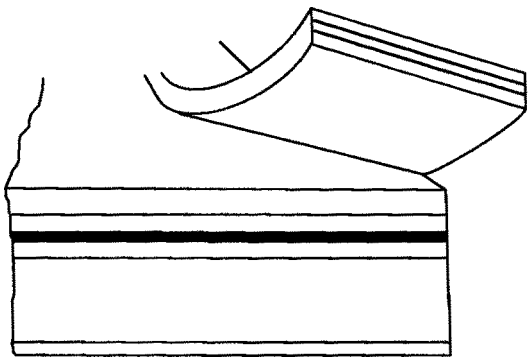

18d

If, when the strip is pulled off, it comes off leaving the surface of the inner layer of the material unaffected or greyish, sealing is **not** good.

If the sealing is consistently bad, make sure the basic settings of the strip applicator and LS element are correct. Then try to improve the sealing by adjusting the LS element temperature.

If the seal quality is uneven, check the strip applicators and the LS element pressure rollers.

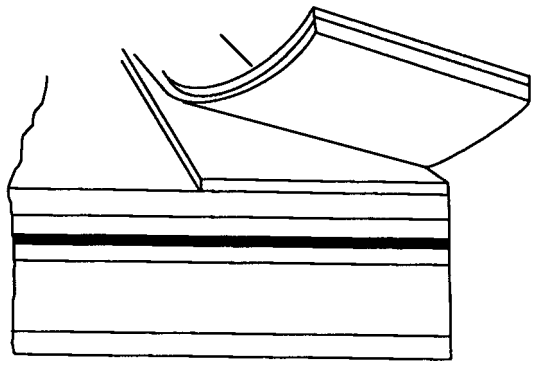

18e

If, when the strip is pulled off, the LS separates, sealing is good.

2.2IE000009.EN

Strip supply

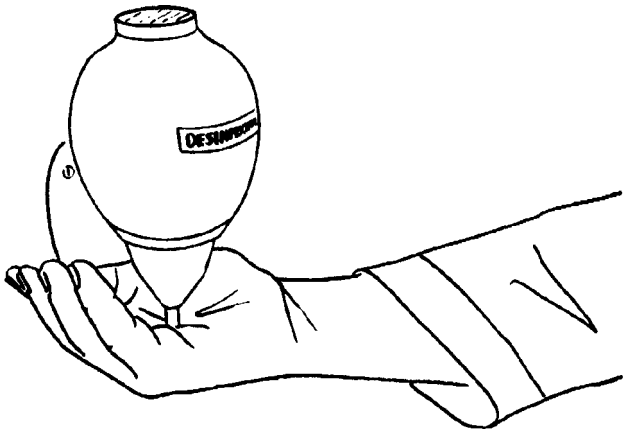

1

To avoid infection of the product, disinfect your hands/gloves before touching packaging material, strip, and machine parts that get in contact with product.

2.2IE000010.EN

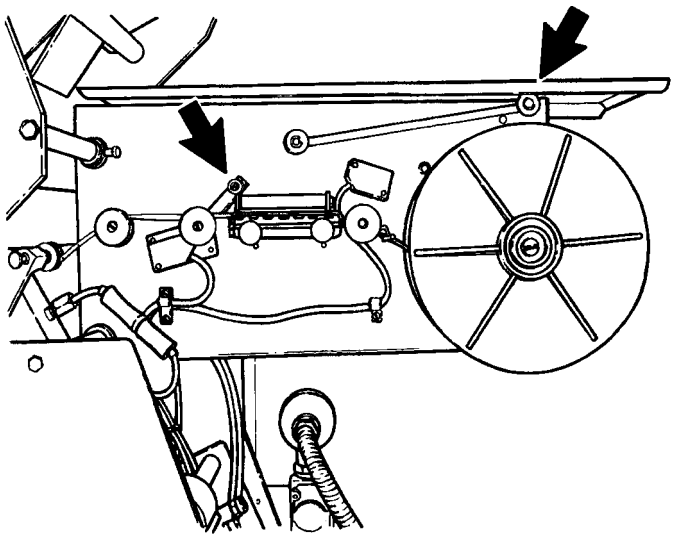

2

WARNING!

Risk of burns!

The LS element and adjacent components may be hot.

If necessary, wear heat-resistant protective gloves.

Raise the LS strip monitor arm and the strip supply monitor arm.

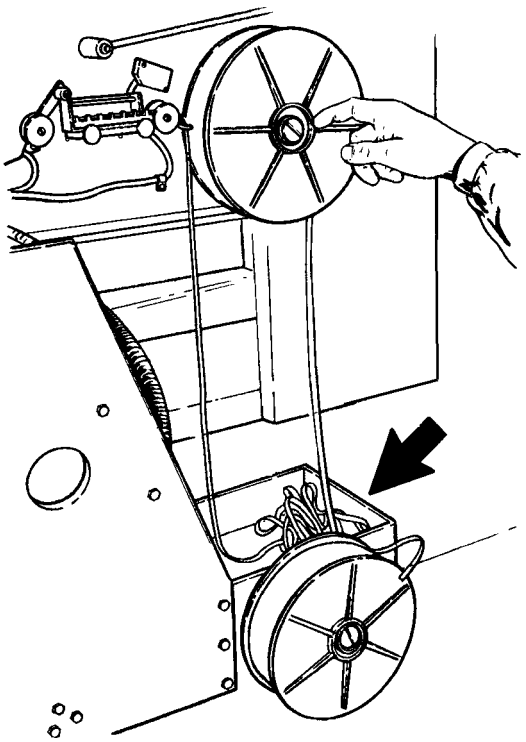

3a

WARNING!

Chlorine or iodine based disinfectant/ detergent must not be used for manual cleaning of parts in contact with peroxide.

Disinfect the stainless steel box.

2.2IE000010.EN

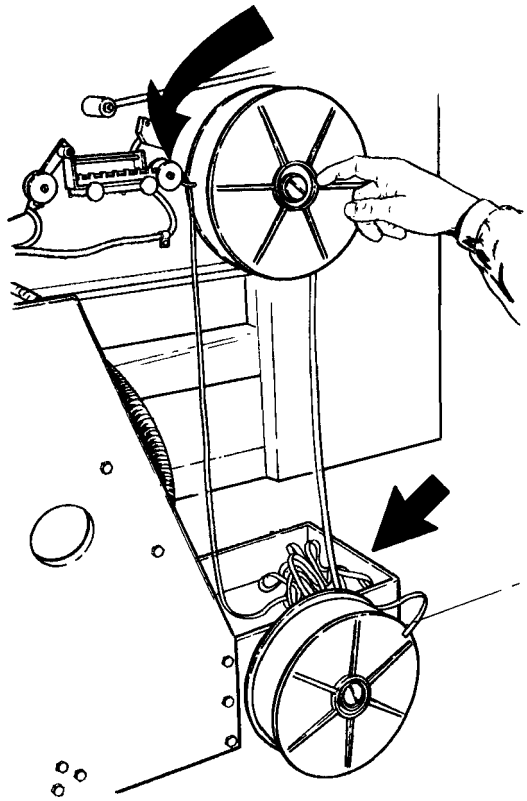

3b

Unreel the remaining strip from the old reel into the stainless steel box.

Cut the end at right angles, and make sure not to twist the strip.

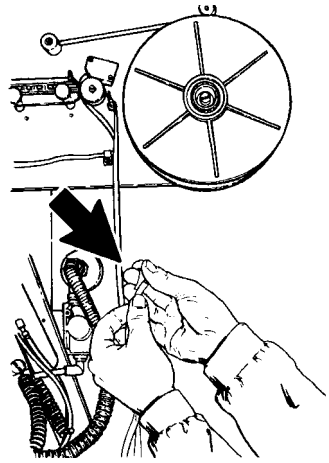

4

Tape the old strip end to the prepared new strip end.

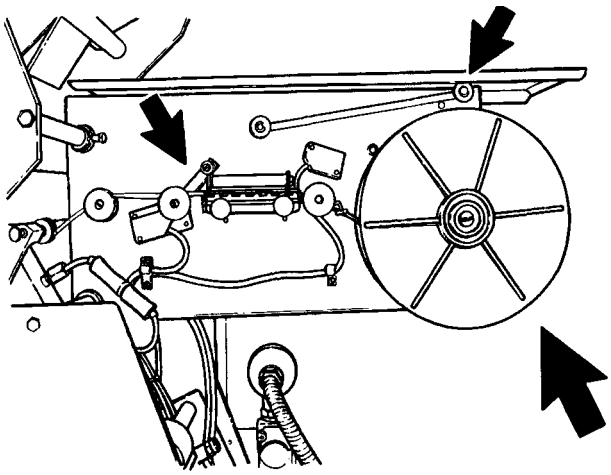

5

Remove the old reel and substitute the new one. Lower the strip supply monitor arm and the LS strip monitor.

Reel up the strip deposited in the stainless steel box.

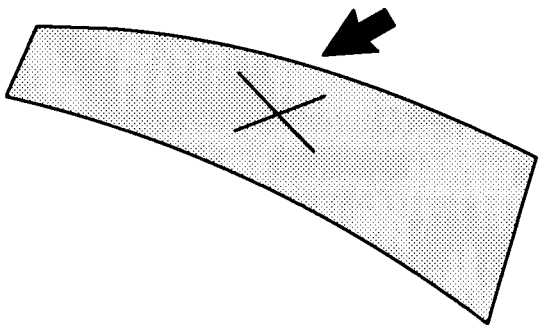

6

Mark the outside of the material web where the splice is located, using a marker pen.

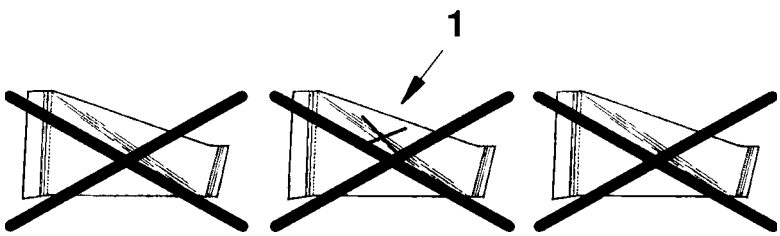

7a

Remove the package carrying the splice and the packages before and after.

Discard these three packages.

1 Splice

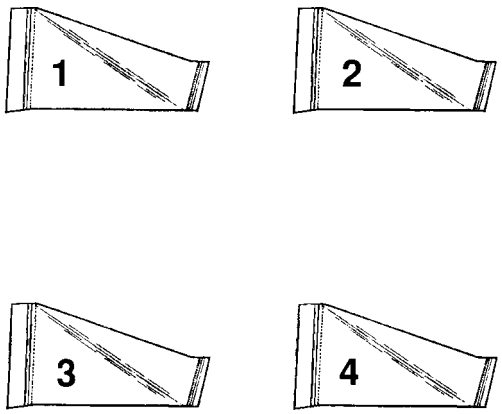

7b

Remove the following two packages.

Also remove the two packages thereafter.

Note!
Do not mix these with the first two. Number the packages in the order they come of the machine.

Check all four packages acc to ” Package checks”, page 93.

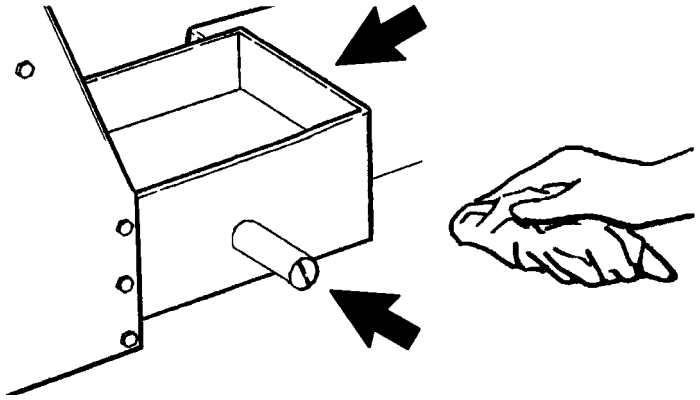

WARNING!
Risk of skin irritation.
If necessary, wear protective gloves.

Preparations for the next strip splice:

8a

Disinfect the stainless steel box and the extensible arm.

2.2IE000010.EN

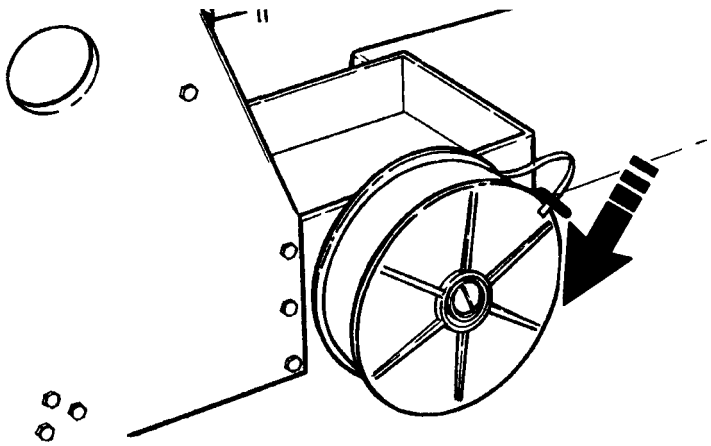

8b

Place the new reel of strip on the extensible arm.

Cut off the end at right angles and attach a piece of tape to the outside of the strip.

Changing of printing ribbon

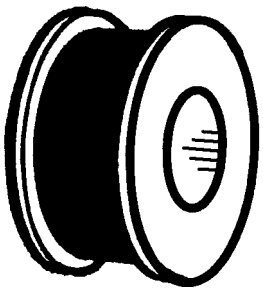

1

Check that there is printing ribbon in the dating unit.

If the printing ribbon needs changing, stop the machine with **Short stop**, acc to ”Stop”, page 119.

2.2IE000011.EN

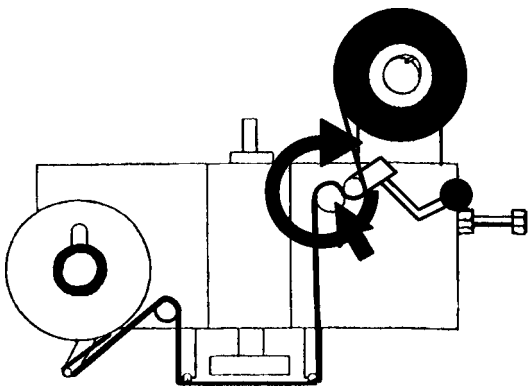

2a

WARNING!
Risk of burns!
The printing inserts may be hot. Use heat-resistant protective gloves and a pair of tweezers.

Turn the shaft clockwise until the reel of printing ribbon is empty.

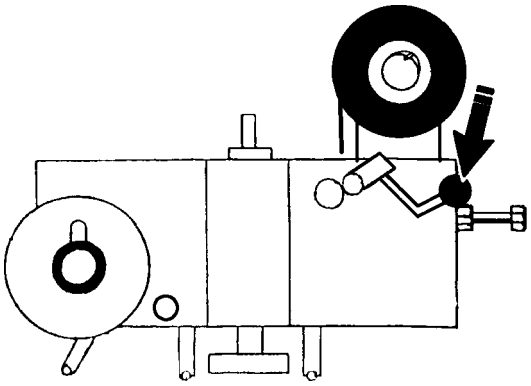

2b

WARNING!
Risk of burns!
The printing inserts may be hot. Use heat-resistant protective gloves and a pair of tweezers.

Push the handle downwards to release the drive unit.

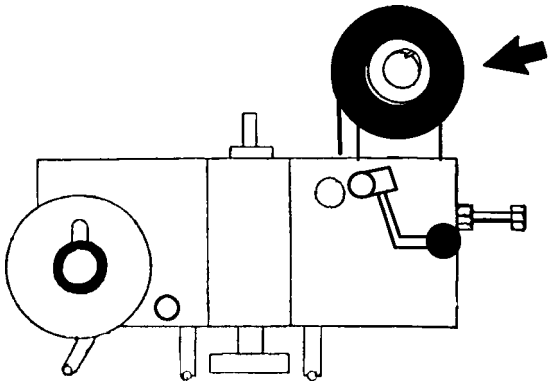

2c

WARNING!
Risk of burns!
The printing inserts may be hot. Use heat-resistant protective gloves and a pair of tweezers.

Remove the old printing ribbon from shaft.

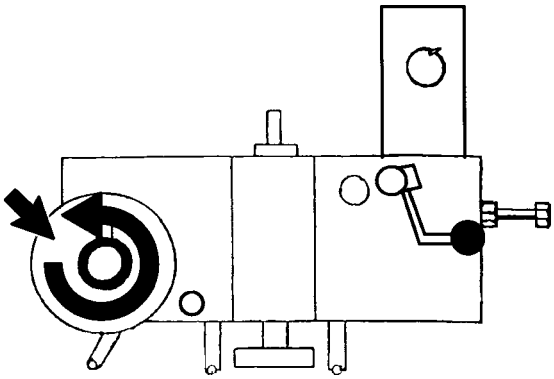

2d

WARNING!
Risk of burns!
The printing inserts may be hot. Use heat-resistant protective gloves and a pair of tweezers.

Undo the lock nut and disc.

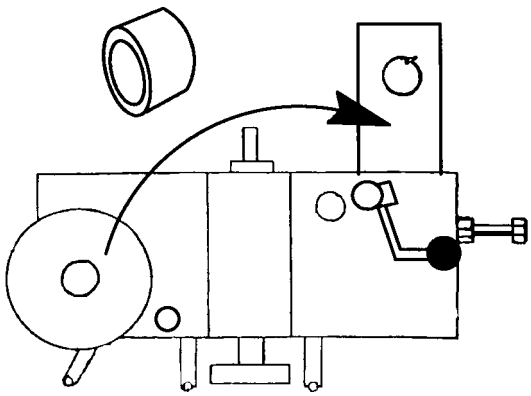

2e

WARNING!
Risk of burns!
The printing inserts may be hot. Use heat-resistant protective gloves and a pair of tweezers.

Change place on the empty ribbon reel.

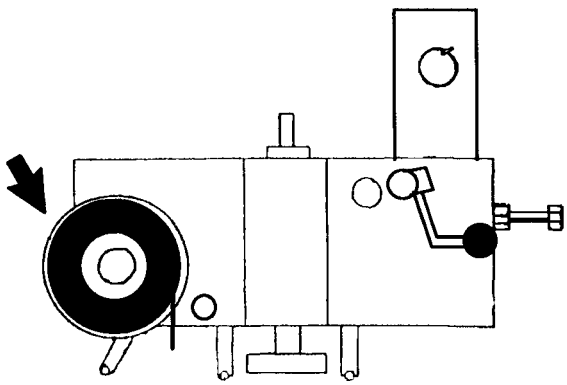

2f

WARNING!
Risk of burns!
The printing inserts may be hot. Use heat-resistant protective gloves and a pair of tweezers.

Put a new reel of imprinting on the shaft.

2.2IE000011.EN

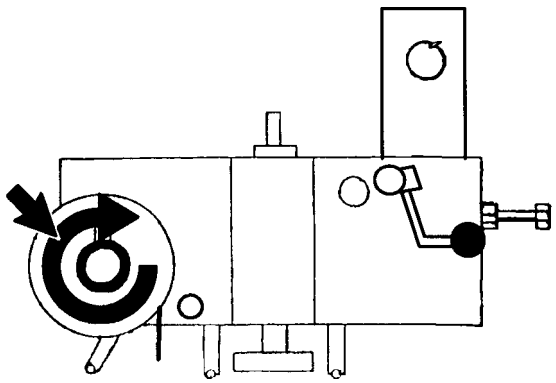

2g

WARNING!
Risk of burns!
The printing inserts may be hot. Use heat-resistant protective gloves and a pair of tweezers.

Fit the disc and lock nut and tighten the nut.

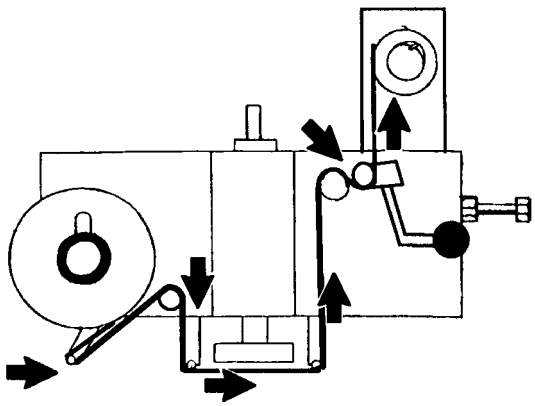

2h

WARNING!
Risk of burns!
The printing inserts may be hot. Use heat-resistant protective gloves and a pair of tweezers.

Thread the printing ribbon as illustrated.

2.2IE000011.EN

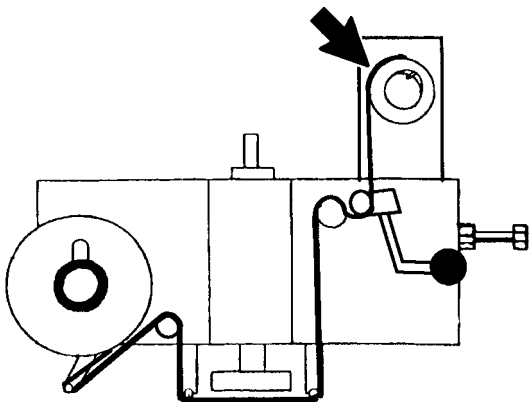

2i

WARNING!
Risk of burns!
The printing inserts may be hot. Use heat-resistant protective gloves and a pair of tweezers.

Attach the printing ribbon to the paper bobbin with adhesive tape.

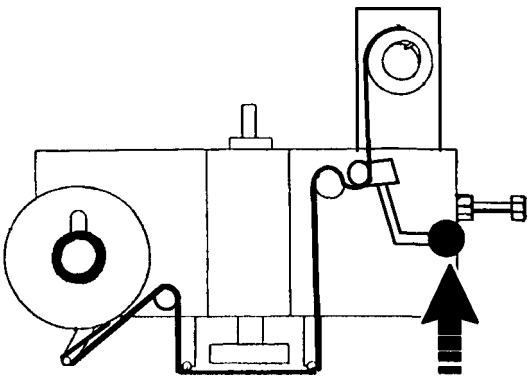

2j

WARNING!
Risk of burns!
The printing inserts may be hot. Use heat-resistant
protective gloves and a pair of tweezers.

Pull the handle upwards.

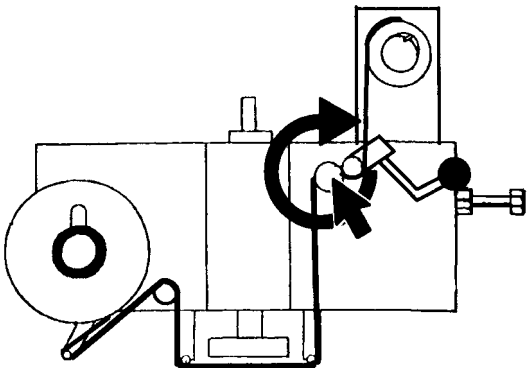

2k

WARNING!

Risk of burns!

The printing inserts may be hot. Use heat-resistant
protective gloves and a pair of tweezers.

Turn the shaft clockwise until the ribbon is taut and make sure that printing functions satisfactorily.

2.2IE000011.EN

Packaging material splice

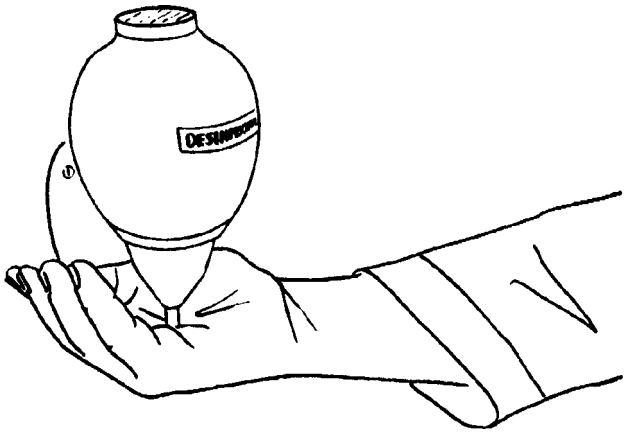

1

To avoid infection of the product, disinfect your hands/gloves before touching packaging material, strips, and machine parts that get in contact with product.

2.2IE000012.EN

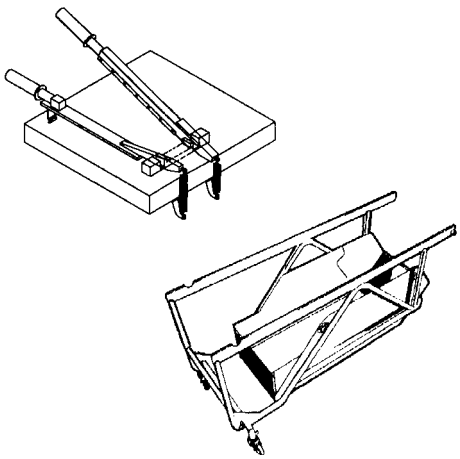

2

WARNING!

Risk of skin irritation!
If necessary, wear protective gloves.

Risk of injury due to cutting!
The serrated edges of the blades have sharp edges.

Risk of burns!
The sealing jaw and adjacent components are hot.
If necessary, wear heat-resistant protective gloves.

Disinfect the splicing table and the stainless steel box.

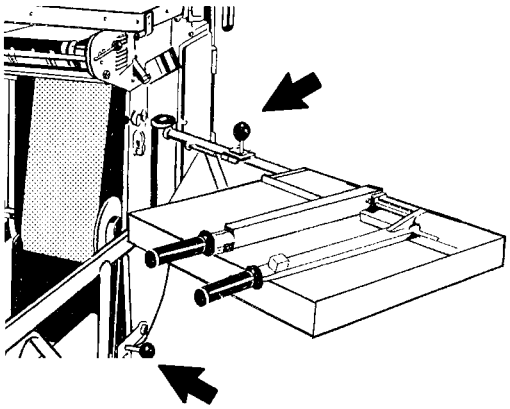

3

Place the new material reel on the splicing trolley. Check that the new reel is not damaged and whether it contains any material splices.

Swing the splicing table aside.

Lower the cassette cover and hook the splicing trolley to the cassette.

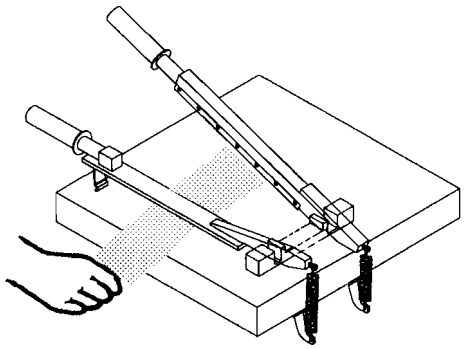

4

WARNING!

Risk of injury due to cutting!
The serrated edges of the blades have sharp edges.

Risk of burns!
The sealing jaw and adjacent components are hot.
If necessary, wear heat-resistant protective gloves.

Place the tail end of the new material reel over the heating jaw.

2.2IE000012.EN

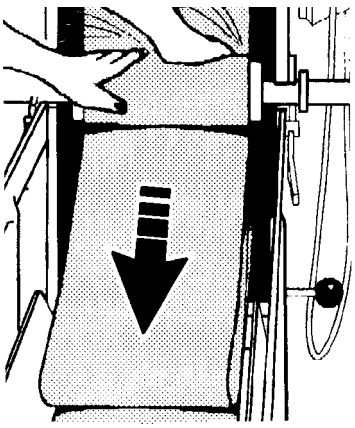

5

Unreel remaining packaging material into the stainless steel box.

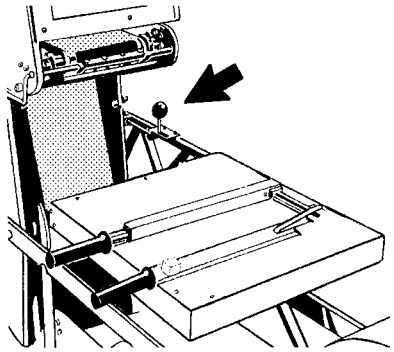

6

Move the splicing table into splicing position.

Engage the catch.

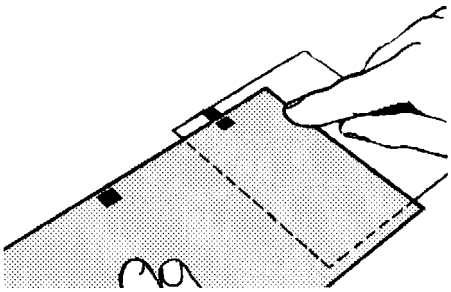

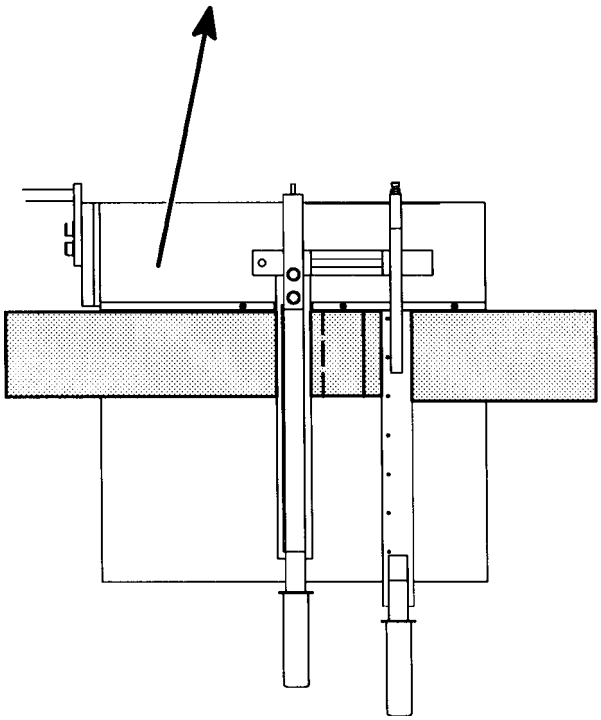

7

WARNING!

Risk of injury due to cutting!
The serrated edges of the blades have sharp edges.

Risk of burns!
The sealing jaw and adjacent components are hot.
If necessary, wear heat-resistant protective gloves.

Place the tail end of the old material reel on top of the new reel end.

Make sure that the register for printed design marks match each other.

2.2IE000012.EN

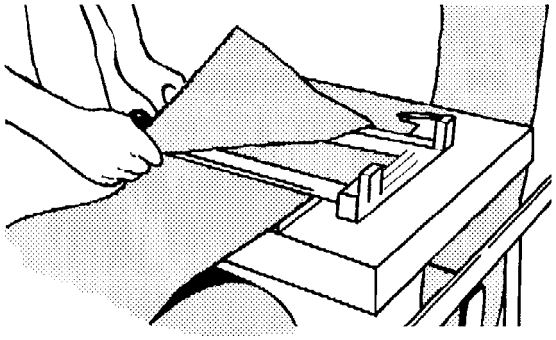

8

WARNING!
Risk of injury due to cutting!
The serrated edges of the blades have sharp edges.

Danger of burns!
The sealing jaw and adjacent components are hot.
If necessary, wear heat-resistant protective gloves.

Press down the sealing arm and keep it depressed for approximately five seconds.

Tear off the protruding piece of material.

Footnote
The splice must be given time to cool before it is subject to strain.

2.2IE000012.EN

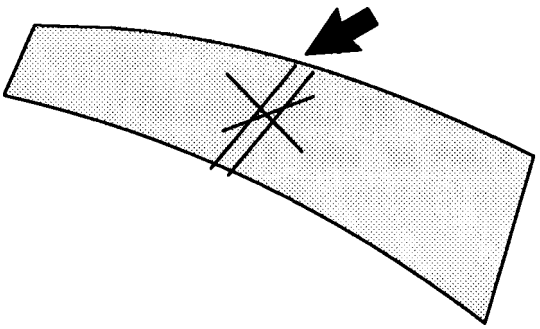

9

Mark the splice with a marker pen.



10

WARNING!
Risk of skin irritation!
If necessary, wear protective gloves.
Chlorine or iodine based disinfectant/ detergent must not be used for manual cleaning of parts in contact with peroxide.

Disinfect around the splice on both sides of the packaging material.

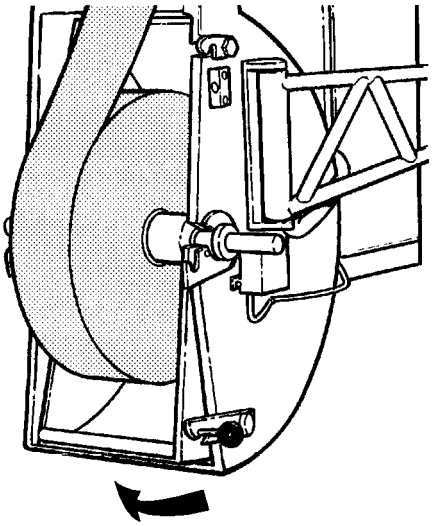

11

Remove the empty material reel holder.

Reel up the material on the new reel. Replace the old reel when the material is taut. Remove the trolley.

Restore the cover on the casette.

2.2IE000012.EN

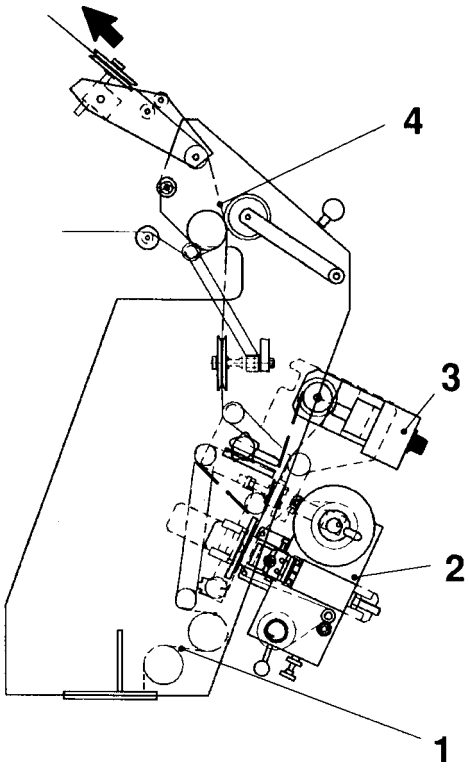

12

Check the passage of the splice:

- Around the lower bending rollers (1).
- Through the dating unit (2).
- Through the zone heater (3).
- Between the pressure and counter rollers of the strip applicators (4).
- Through the peroxide bath (5).
- Around the upper bending roller (6).
- Through the forming rings, and in the LS element (7).

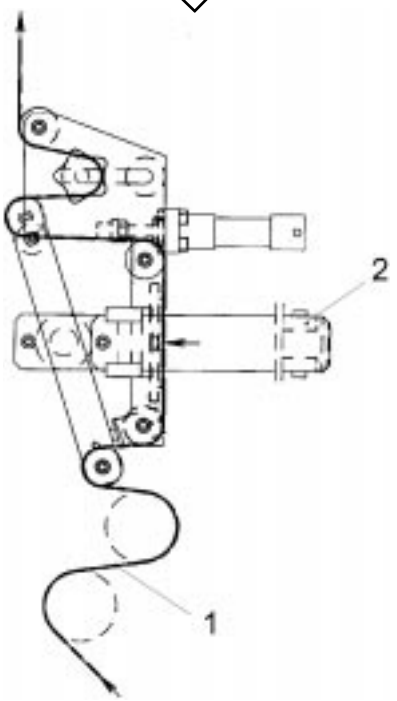

Without zone heater

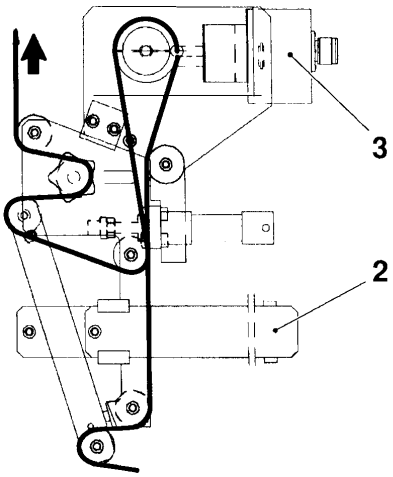

With zone heater

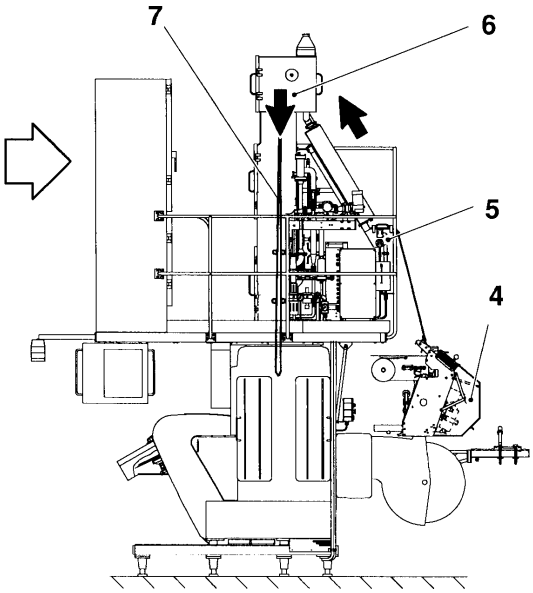

2.2IE000012.EN

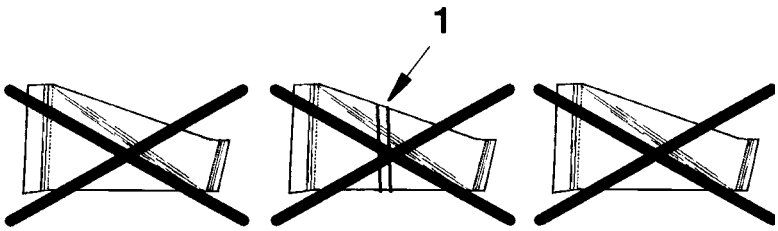

13a

Remove the package carrying the splice and the packages before and after.

Discard these three packages.

1 Splice

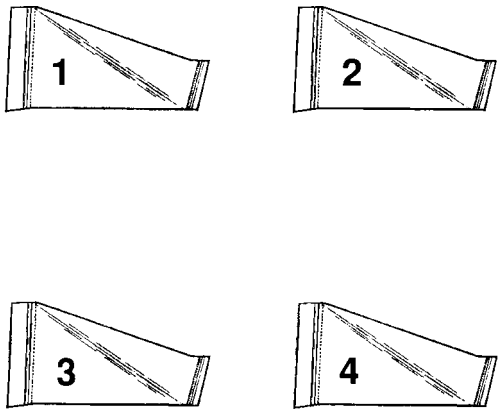

13b

Remove the following two packages.

Also remove the two packages thereafter.

Note!
Do not mix these with the first two. Number the packages in the order they come of the machine.

Check all four packages acc to ”Package checks” page 93.

2.2IE000012.EN

This page intentionally left blank

Stop

There are three ways to stop the machine:

1 Emergency stop
2 Short stop
3 Production finished

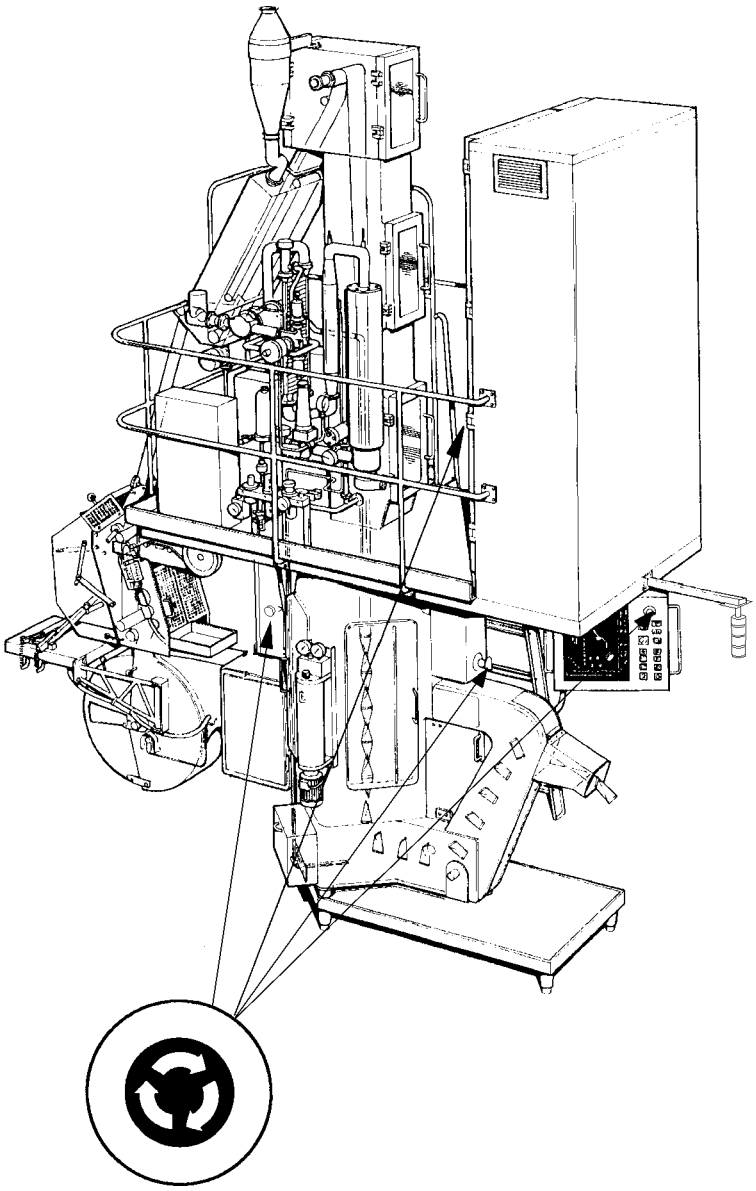

2.2IE000013.EN

1

Emergency stop

Push one of the **Emergency stop** buttons.

After having taken the required steps and measures, pull out the emergency stop button and restart acc to ”Start”, page 77.

CAUTION!
Note that the **Emergency stop** buttons must be used only in case of danger to people or machine.

The **Emergency stops** are located on the:
— Electrical cabinet
— Front of the machine
— Control panel
— Back of the machine (two buttons)

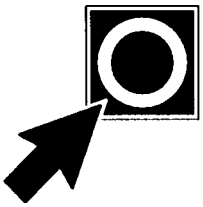

2

Short stop

(Not longer than fifteen minutes.)

After fifteen minutes, the machine steps down to programme step 0 (where **Preheating** and **Programme up** flash). Then restart with intermediate cleaning and preheating acc to ”After production care” page 125.

1

Push **Short stop**. The product supply stops. The drive motor stops. TS switches off. The sealing pressure switches off. The LS element and the LS strip element move out of production position.

2.2IE000013.EN

2

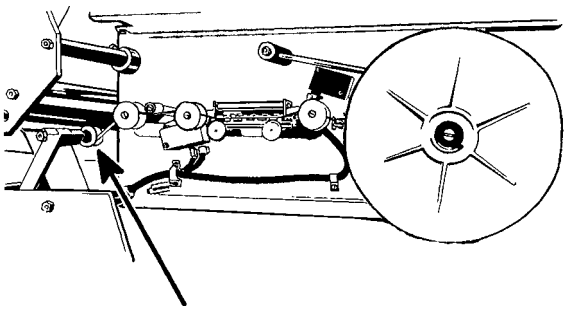

WARNING!

Risk of burns!

The strip element may be hot.
If necessary, wear heat-resistant protective gloves.

Check that the material web has not got stuck between the pressure and counter rollers of the strip applicator.

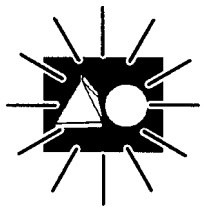

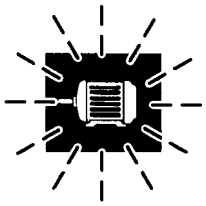

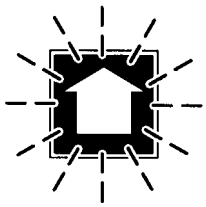

3

Restart by pushing **Programme up** and keep it depressed until the drive motor starts (time delay).

2.2IE000013.EN

Production finished

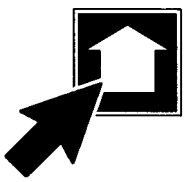

1

Push **Programme up**. The product valve closes. The drive motor stops when the tube is empty.

LS, TS, the air super-heater and the sterilization chamber heating element switch off.

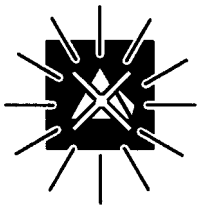

After fifteen minutes, the machine automatically steps down to programme step 0 (where **Preheating** and **Programme up** flash).

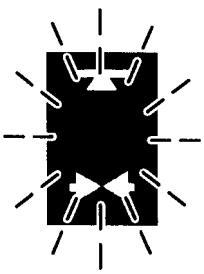

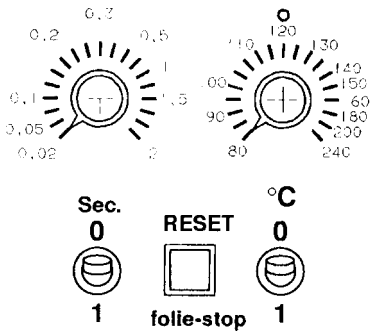

2

Switch off the activating switch in the electrical cabinet of the dating unit.

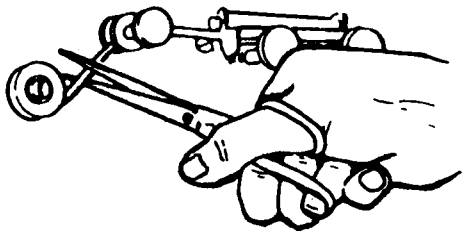

3

WARNING!

Risk of burns!

The strip element may be hot. If necessary, wear heat-resistant protective gloves.

Cut off the LS strip.

2.2IE000013.EN

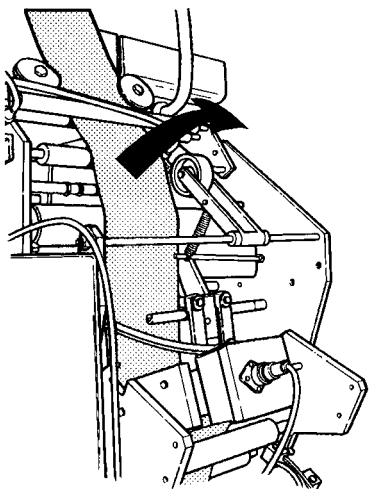

4

Raise the strip applicator pressure roller and lock it in that position.

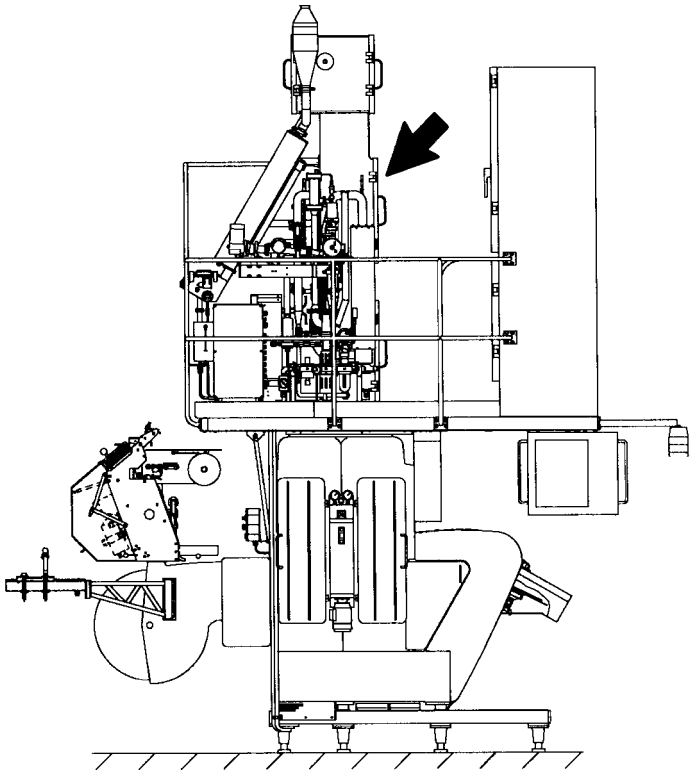

5

WARNING!
Risk of burns!
The LS element and adjacent components may be hot. If necessary, wear heat-resistant protective gloves.

Tear off the material web above the upper forming ring.

2.2IE000013.EN

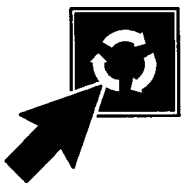

6

Restart with intermediate/final cleaning and preheating.

Inch the machine with **Inching** to discharge remaining packaging material.

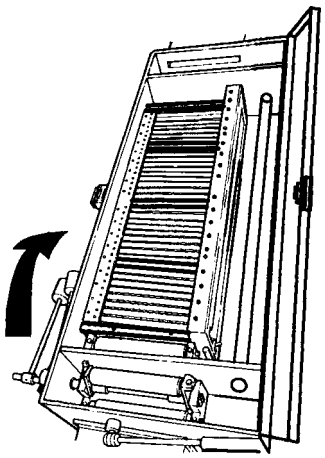

7

Raise the weights for the squeegee rollers.

This page intentionally left blank

2.2IE000013.EN

After production care

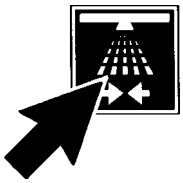

1

If **Ready for cleaning of filling system** is out, push **Cleaning**.

2.2IE000014.EN

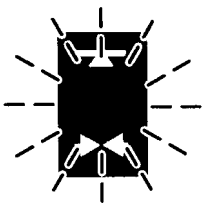

2

Ready for cleaning of filling system flashes.

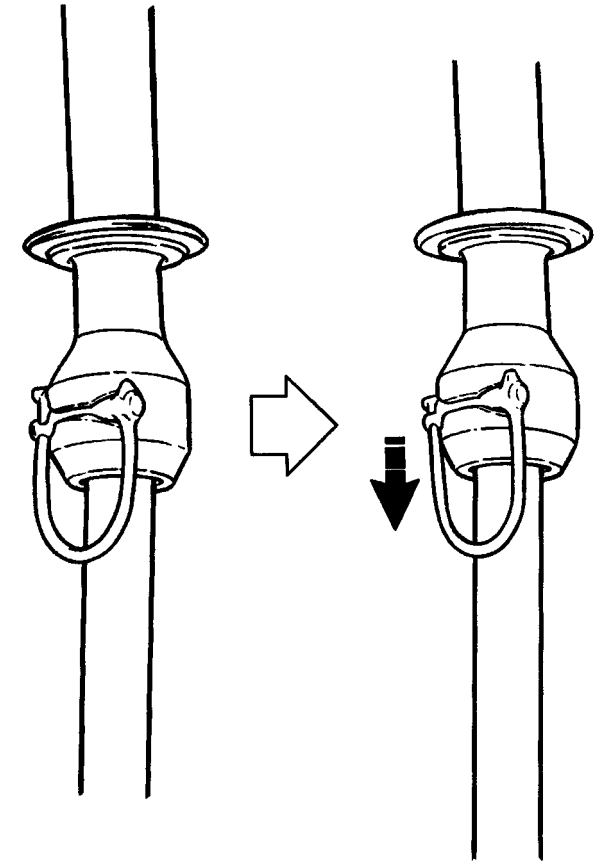

3

WARNING!
Risk of burns!
Adjacent components are hot.
Wear heat-resistant protective gloves

Disconnect the lower filling pipe with the float from the upper filling pipe.

- Pull the loop in the locking ring downwards.
- Turn the locking ring upwards 90°.
- Pull out the locking ring.

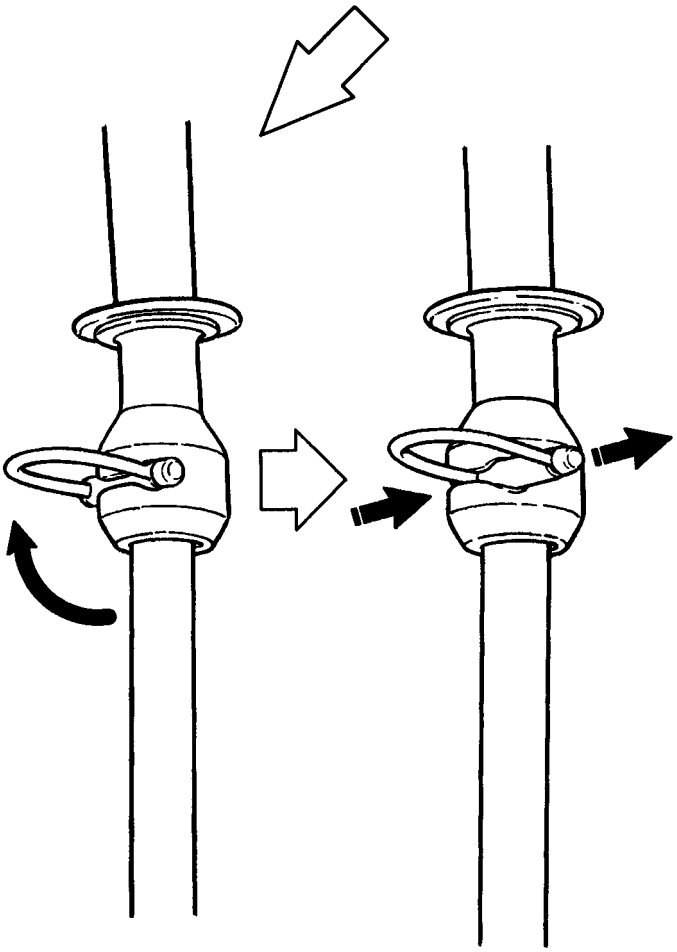

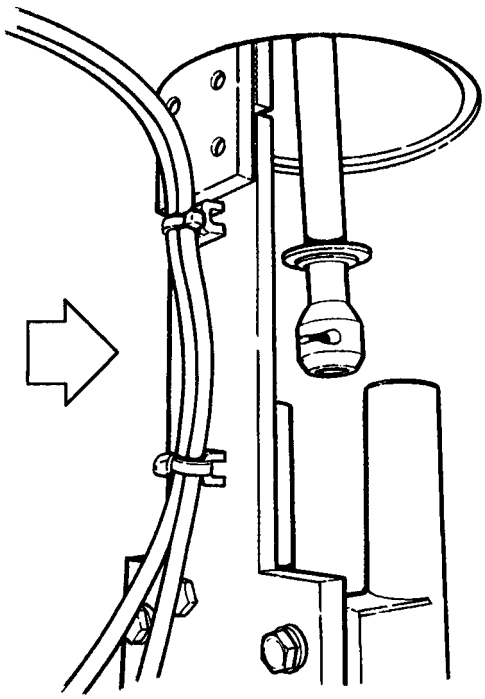

2.2IE000014.EN

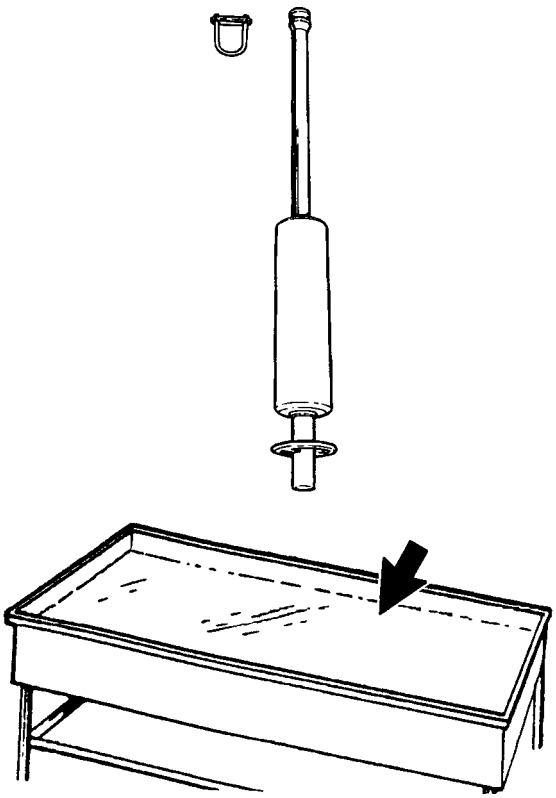

4

WARNING!
Risk of skin irritation!
If necessary, wear protective gloves.
Chlorine or iodine based disinfectant/ detergent must not be used for disinfection of the filling pipe or for manual cleaning of parts in contact with peroxide.

Clean the lower filling pipe with the float by hand.

Leave the lower filling pipe with the float in disinfectant until the next production run.

2.2IE000014.EN

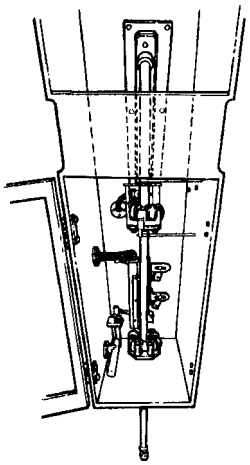

5

WARNING!
Risk of burns!
Adjacent components are hot.
Wear heat-resistant protective gloves.

Carefully examine the upper filling pipe. As required, clean it by hand to ensure that all remnants of product are removed. Burnt or charred product residue can be removed by means of a brass wire brush.

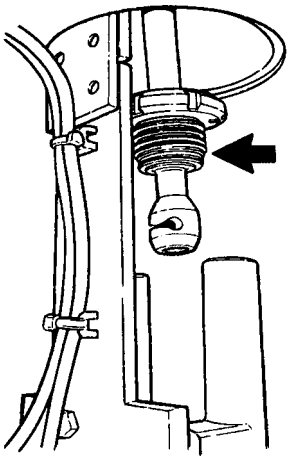

6

WARNING!
Risk of burns!
Adjacent components are hot.
Wear heat-resistant protective gloves.

Connect the cleaning cup connection to the upper filling pipe.

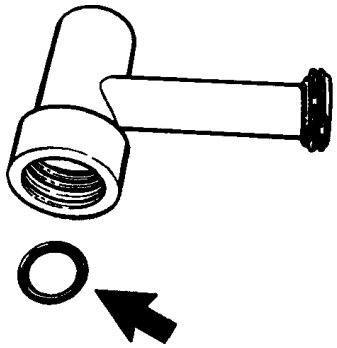

7

WARNING!
Risk of skin irritation!
Before handling lubricants, read the "Safety precautions" acc to page 9.

Check that the O-ring with silicone grease (TP no 90296-9).

Lubricate the O-ring with silicone grease (TP No 90296-9).

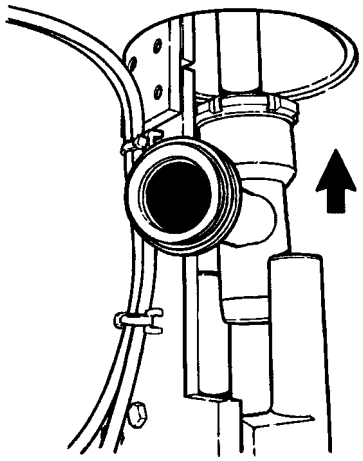

8

Connect the cleaning cup to the upper filling pipe, by means of the cleaning cup connection.

2.2IE000014.EN

9

Intentionally left blank

10

Intentionally left blank

11

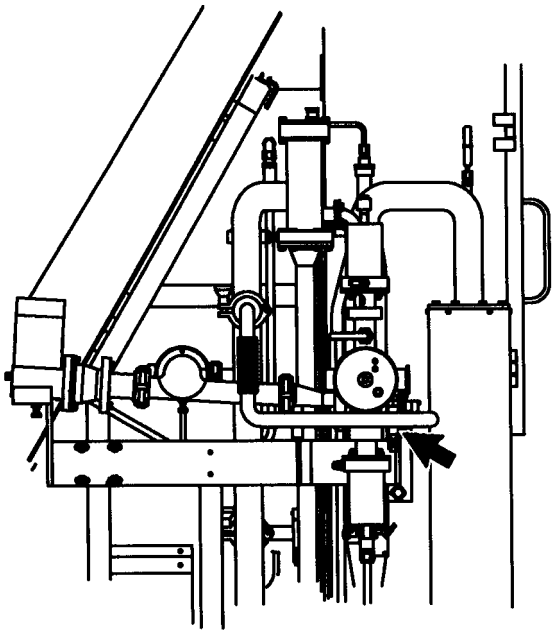

WARNING!
Risk of burns!
Adjacent components are hot.
Wear heat-resistant protective gloves.

Remove the sterile air pipe from the B-valve.

12

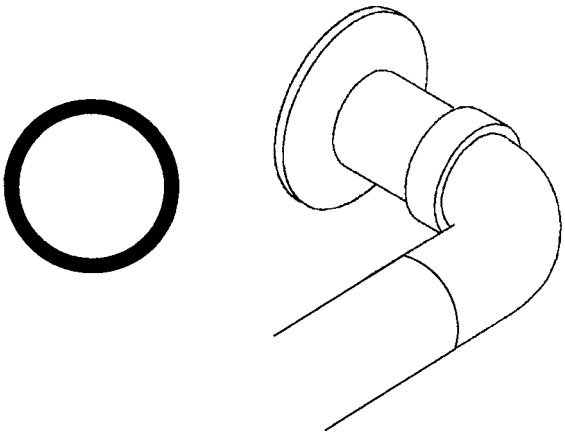

Check that the gasket in the cleaning connection is intact.

13

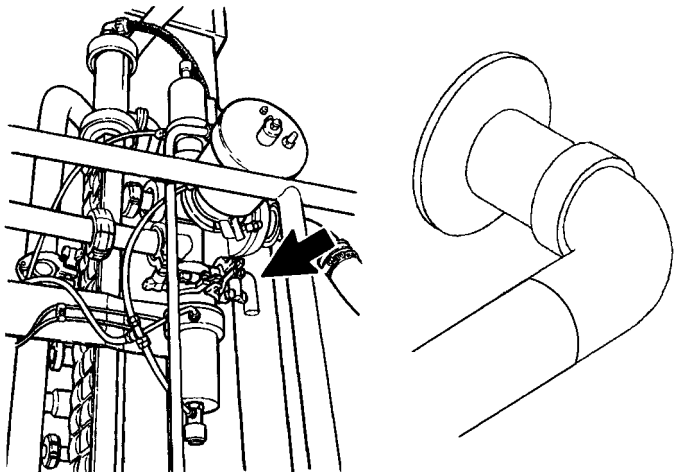

WARNING!
Risk of burns!
Adjacent components are hot.
Wear heat-resistant protective gloves.

Connect the cleaning connection and the cleaning pipe to the B-valve.

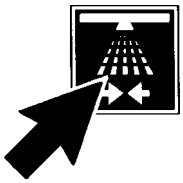

14

If **Ready for cleaning of filling system** is out, push **Cleaning**.

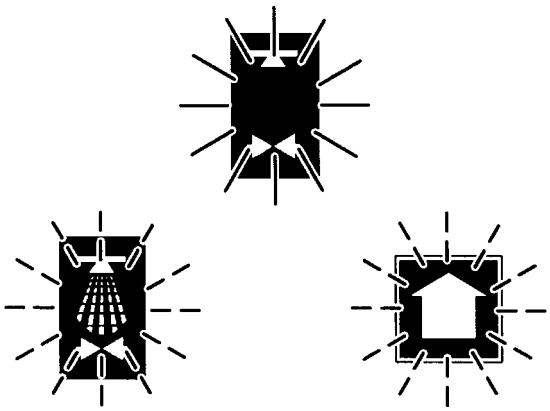

15

Ready for cleaning of filling system changes to fixed light. **Cleaning of filling system** and **Programme up** flash.

2.2IE000014.EN

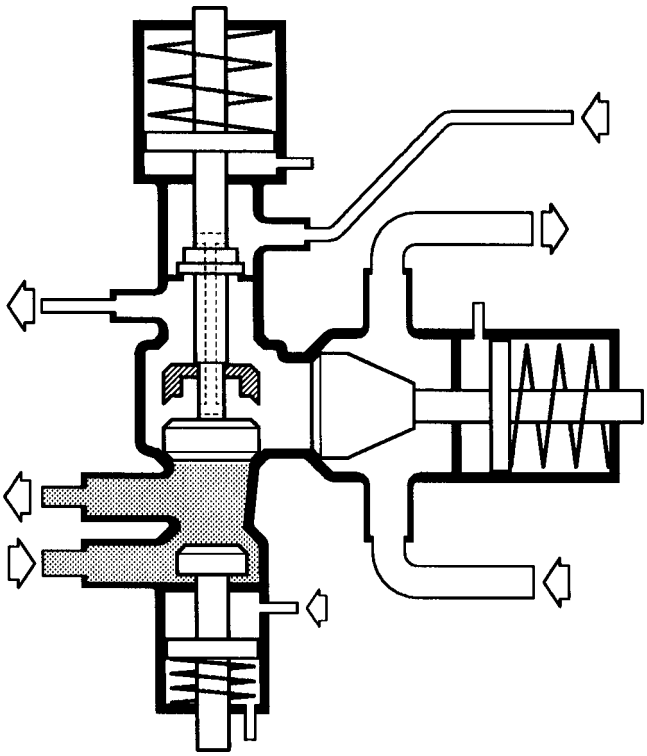

16a

Intermediate cleaning

Intermediate cleaning must be carried out whenever sterile product remains in the product line. There is a steam barrier between cleaning solution and product.

The valve is positioned as illustrated, when the programme is in the Cleaning in place (CIP) step acc to page 132, item 19.

Intermediate cleaning is to be carried out immediately after stop, except when final cleaning acc to item 16b, can be performed within one hour.

16 b

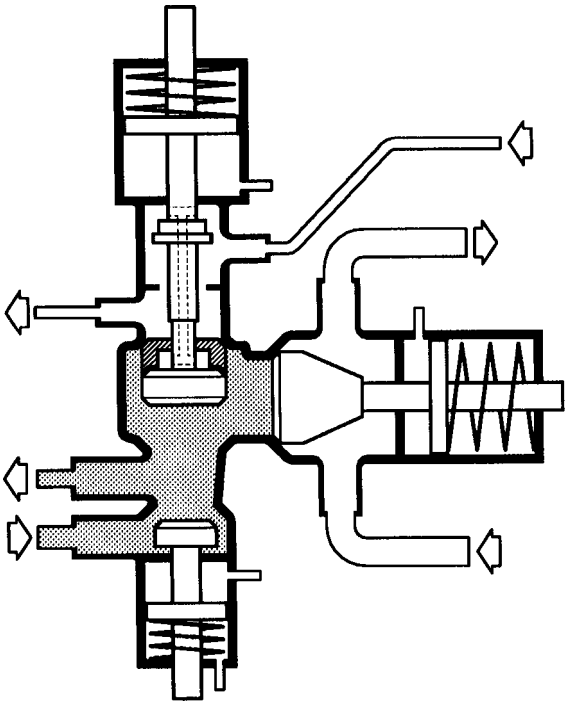

Final cleaning

In order to clean all parts in contact with product in the valve, cleaning must be carried out with the **key switch** in the position for cleaning the steam barrier space.

The valve is positioned as illustrated when the programme is in the Cleaning in place (CIP) step acc to page 132, item 19 and the **key switch** is activated.

Cleaning in this position must be performed at least every day and/or as soon as production is finished.

Remember never to clean with the **key switch** in the position for cleaning the steam barrier space, when product still remains in the product valve.

CAUTION!
Final cleaning must be performed by skilled or instructed persons only.

2.2IE000014.EN

17

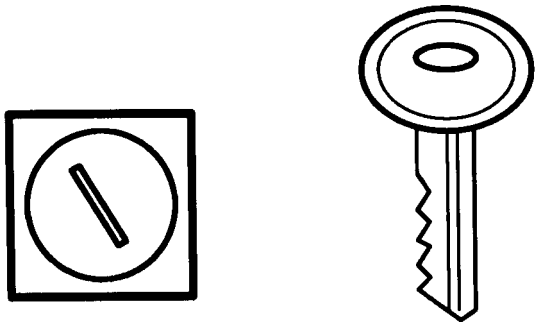

The machine is now ready for CIP. Select either ”Intermediate cleaning” or ”Final cleaning” acc to items 16a or 16b.

18



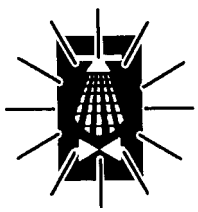

WARNING!
The cleaning cup connection, the cleaning cup and the cleaning hose must be connected or else acid/alkali cleaning solution will flush from the upper pipe during cleaning. Acid/alkali cleaning solution may cause burns.

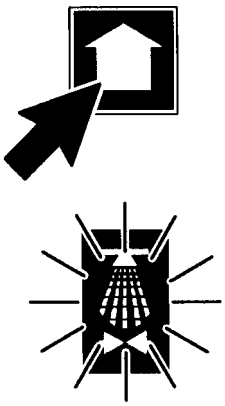

19

Push **Programme up**. **Cleaning of filling system** changes to fixed light.

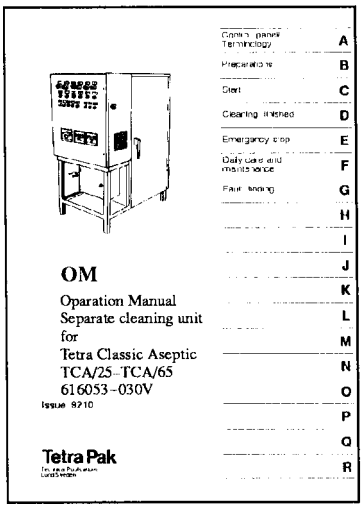

20

Alkali cleaning is used.

Start CIP acc to the OM book of the cleaning unit.

The filling system is being cleaned.

While CIP is in progress, carry out the manual cleaning of the machine, as follows.

Footnote
Once a week alkali/acid cleaning is to be used.

2.2IE000014.EN

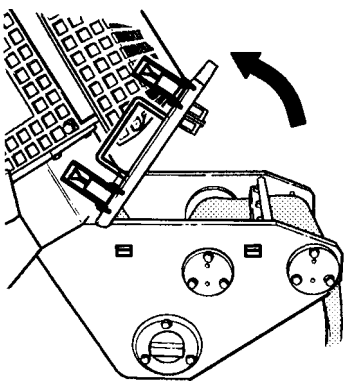

21

WARNING!
Risk of personal injury by skin contact or inhalation!
Before handling sterilization liquid observe the ”Safety precautions”, acc to page 5.

Rinse the peroxide bath with water.

22

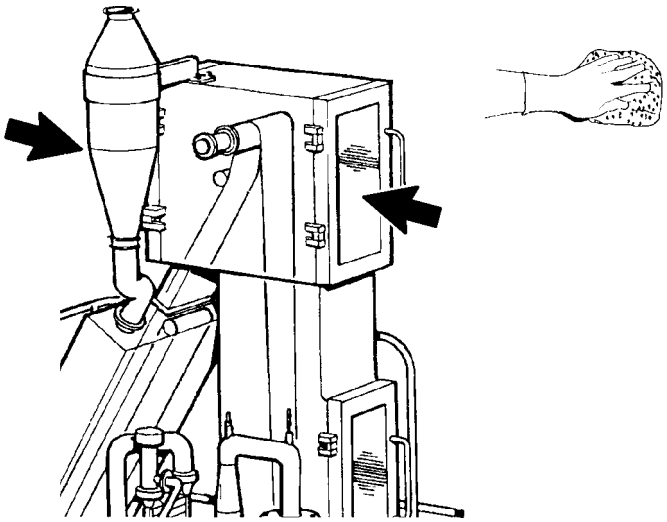

WARNING!
Risk of injury due to pinching or crushing.
The rollers may rotate.

Risk of skin irritation.
Before handling cleaning solutions, study the ”Safety precautions” acc to page 10.

Open the doors to the upper house.

Clean the upper bending rollers.

Make sure that the upper bending rollers rotate freely and smoothly.

2.2IE000014.EN

23

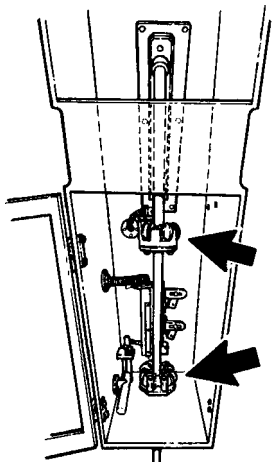

WARNING!
Risk of burns.
The LS element and adjacent components may be hot. If necessary, wear heat-resistant protective gloves.

Clean the forming rings. Remove remnants of packaging material. Check the guide rollers of the forming rings. Adjust or replace as required.

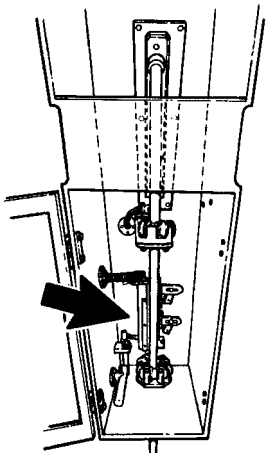

24

WARNING!
Risk of burns!
The LS element and adjacent components may be hot. If necessary,
Wear protective heat-resistant protective gloves.

Clean the LS element and the LS nozzle.

Check if there are any burnt deposits on the nozzle. Make sure that all air holes are open.

Remove the bar on the LS nozzle and clean the nozzle and the bar, as required.

2.2IE000014.EN

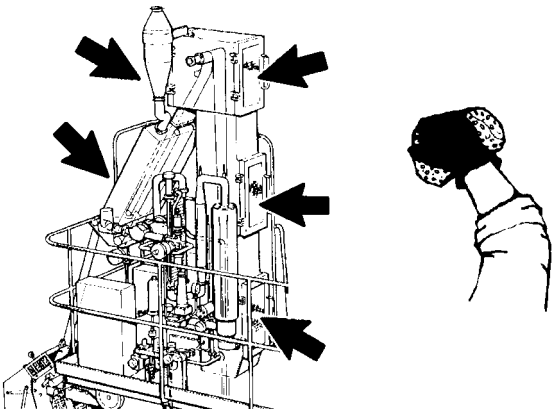

25

WARNING!
Risk of burns!
Adjacent components are hot.
Wear heat-resistant protective gloves.

Open the sterilization chamber hatch and the aseptic chamber doors.

Clean along the passage of the material web to the lower forming ring.

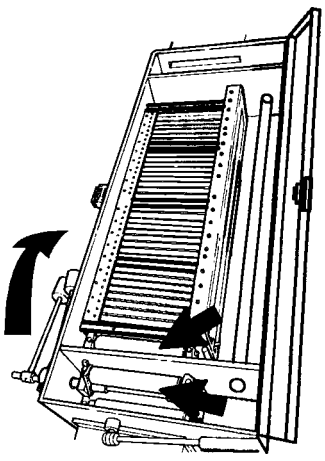

26

WARNING!
Risk of burns!
Adjacent components are hot.
Wear heat-resistant protective gloves.

Disengage the squee-gee rollers.

Check the rubber sleeves and make sure the rollers move freely and smoothly.

27

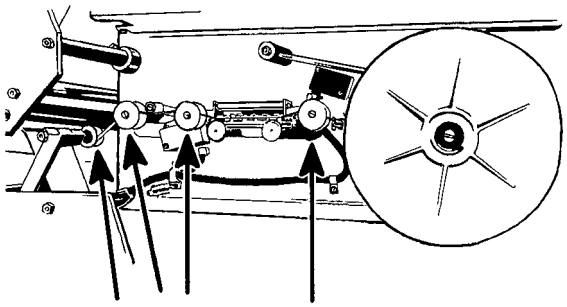

WARNING!
Risk of burns!
The strip element may be hot.
If necessary, wear heat-resistant protective gloves.

Remove the LS strip reel. Clean the strip applicator. Remove remnants of packaging material.

Check the pressure and counter roller of the strip applicator.

2.2IE000014.EN

28a

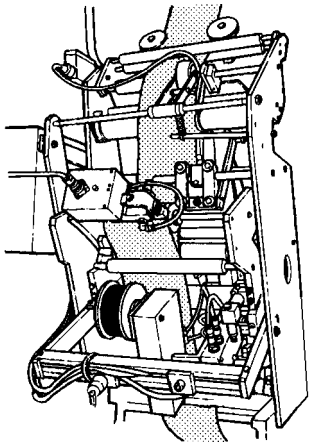

WARNING!
Risk of burns!
If necessary, wear heat-resistant protective gloves.

Clean the dating unit and the zone heater.

28b

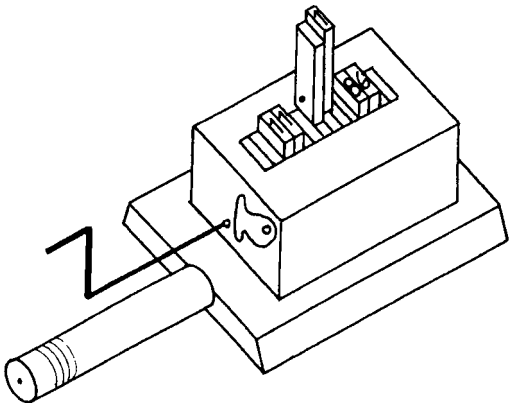

WARNING!
Risk of burns!
The printing inserts may be hot. Use heat-resistant protective gloves and a pair of tweezers.

Check that there are no plastic deposits on the printing insert.



29

Remove the material reel from the cassette.

Clean the cassette.

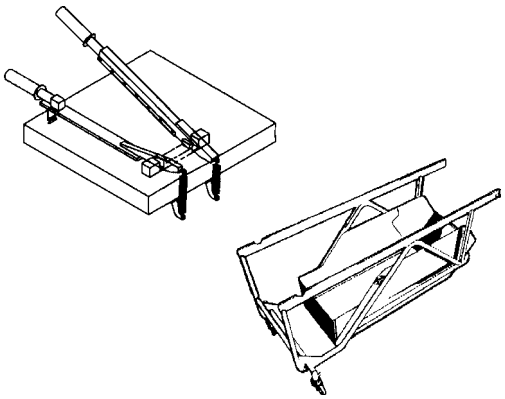

30

Clean the splicing table and stainless steel box.

2.2IE000014.EN

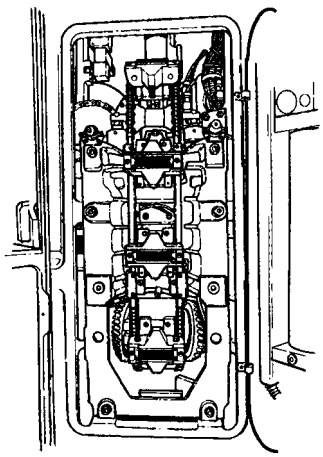

31

Flush the frame sides and the inside of the machine body with warm water.



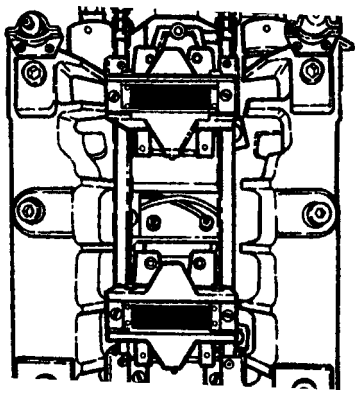

32

WARNING!

All doors and safety covers must be closed before the machine can be inched.

Inch the machine with **Inching** to clean all the jaws.

Check the pressure rubbers and inductors. Adjust or replace as required.

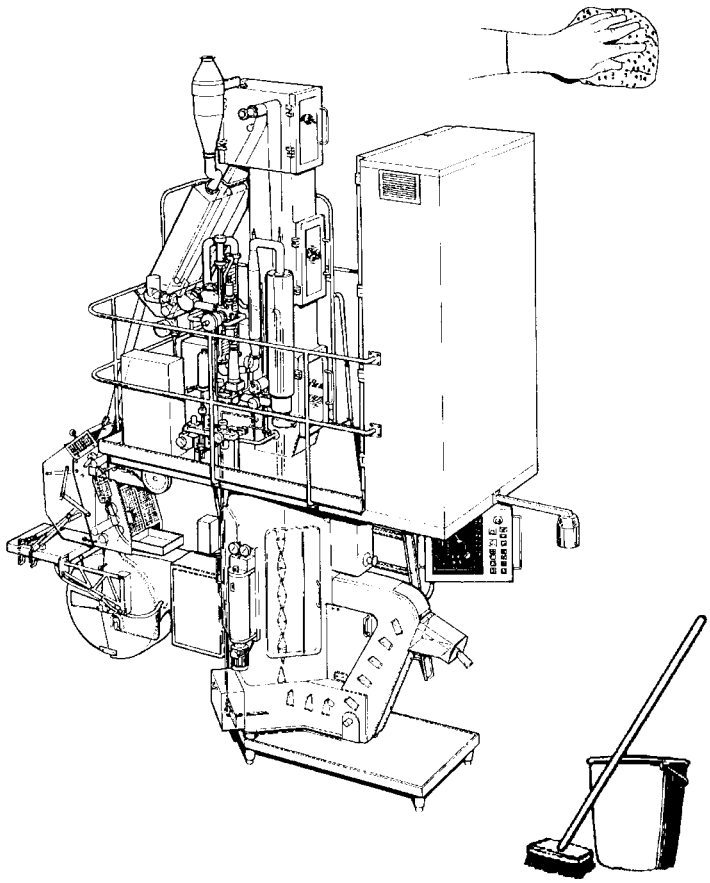

33

WARNING!

Risk of skin irritation!

If necessary, wear protective gloves. Chlorine or iodine based disinfectant/ detergent must not be used for disinfection of the filling pipe or for manual cleaning of parts in contact with peroxide.

Clean the machine with a sponge and detergent. Rinse with warm water.

Clean the floor underneath the machine.

2.2IE000014.EN

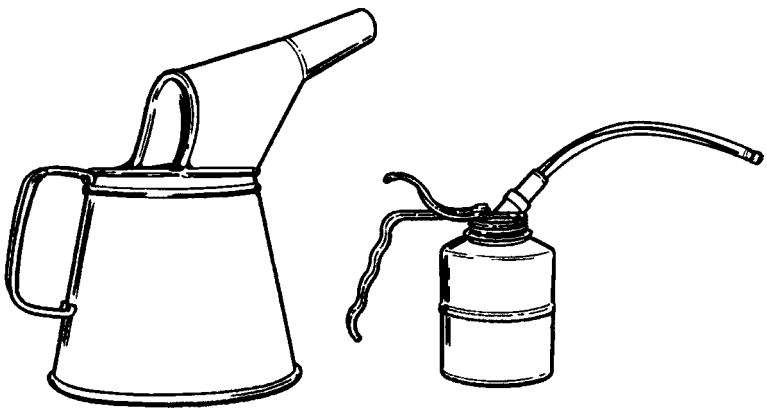

34

WARNING!

Risk of skin irritation!

Before handling oil, read the ”Safety precautions”, acc to page 9.

Lubricate acc to ”Lubrication”, page 152.

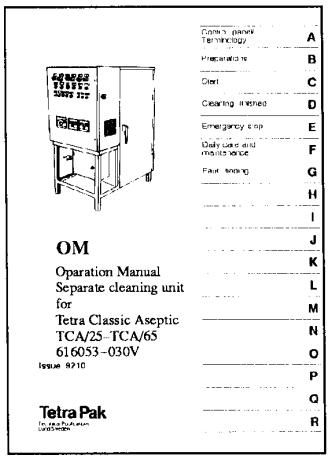

35

When cleaning is finished, stop CIP acc to the OM book of the cleaning unit.

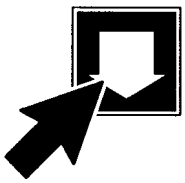

36

Push **Programme down.**

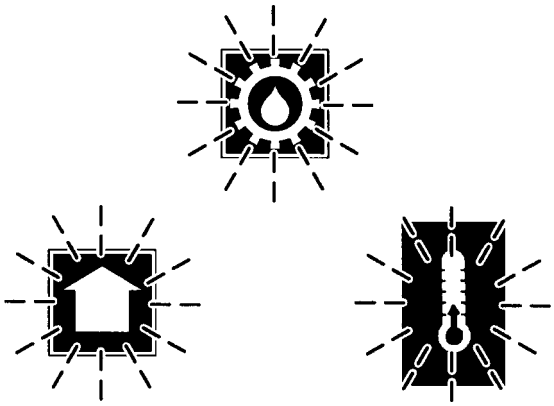

37

Manual lubrication flashes. **Programme up** and **Preheating** flash.

2.2IE000014.EN

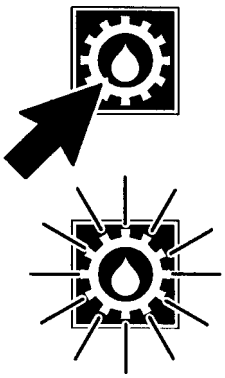

38a

Push **Manual lubrication** to activate the lubrication programme.

Manual lubrication shows fixed light.

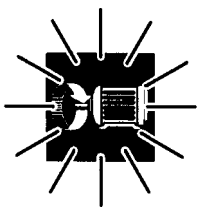

38b

Push **Programme up** and keep it depressed until the drive motor starts. (time delay).

The lubrication programme starts.

Drive motor on lights up with fixed light.

The machine runs during a preset time and is lubricated at the same time.

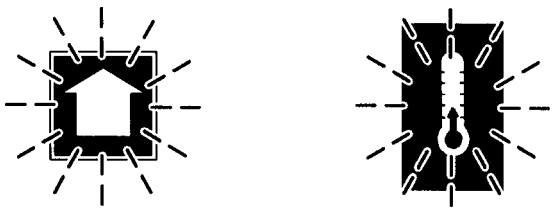

39

After lubrication, the machine programme steps down to programme step 0.
Preheating and **Programme up** flash.

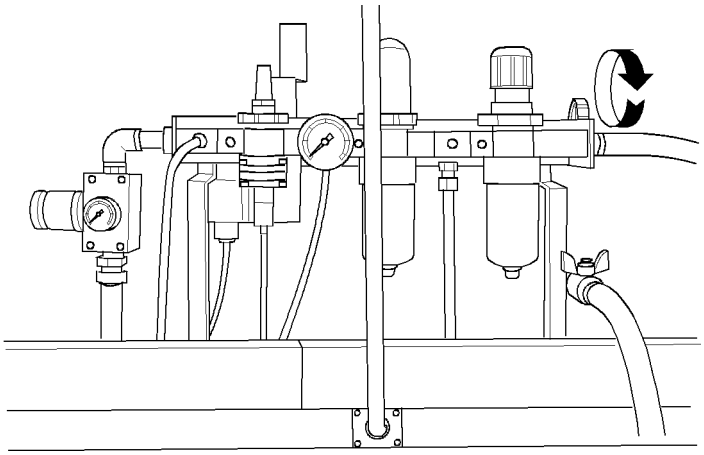

40

Turn off the compressed air supply.

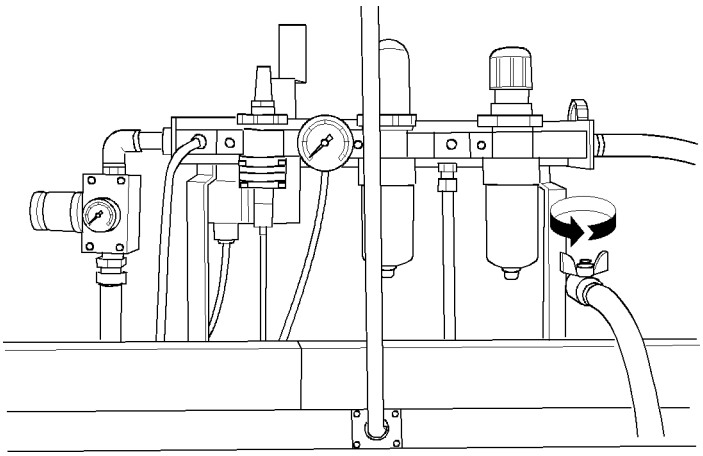

41

Turn off the water supply.

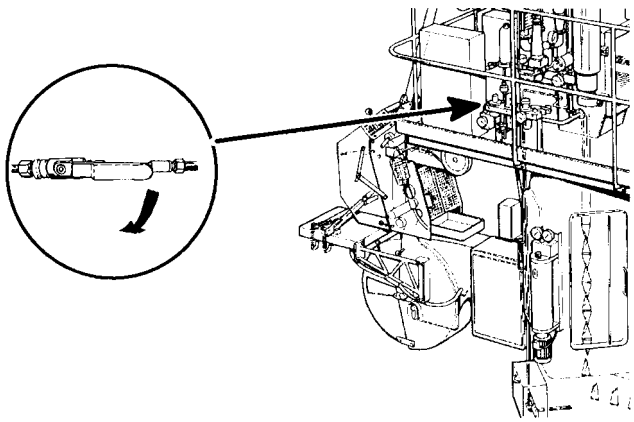

42

WARNING!
Risk of burns!
If necessary, wear heat-resistant protective gloves.

Turn off the steam.

2.2IE000014.EN

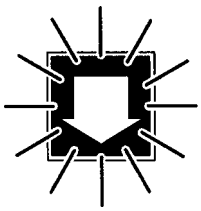

43

Programme down shows fixed light.

Operating power is off.

2.2IE000014.EN

Weekly care

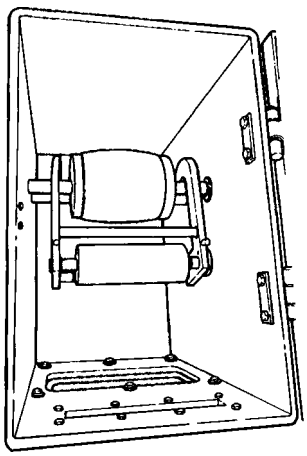

1

WARNING!
Risk of injury due to pinching or crushing!
The rollers may rotate.

Check the bearings and the rubber coating of the upper bending roller.

2.2IE000015.EN

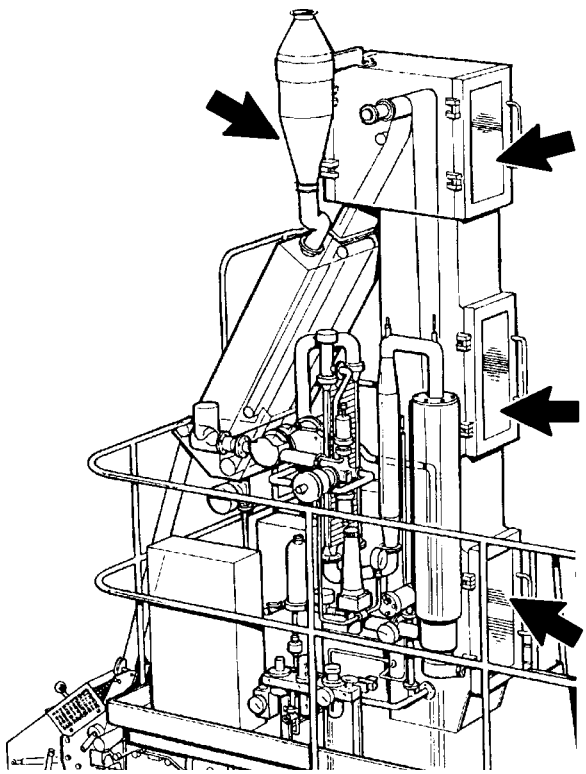

2

WARNING!
Risk of skin irritation!
If necessary, wear protective gloves.
Chlorine or iodine based disinfectant/ detergent must not be used for disinfection of the filling pipe or for manual cleaning of parts in contact with peroxide.

Risk of burns!
Adjacent components are hot.
Wear heat-resistant protective gloves.

Wash the inside of the upper house and aseptic chamber with detergent. Rinse with warm water.

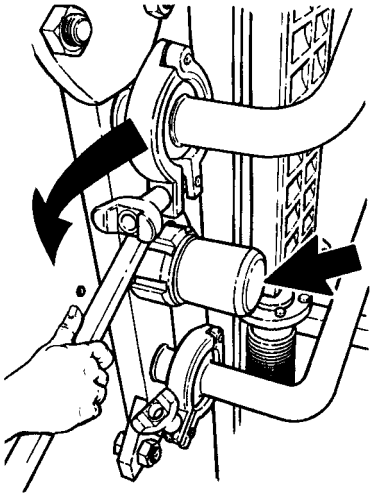

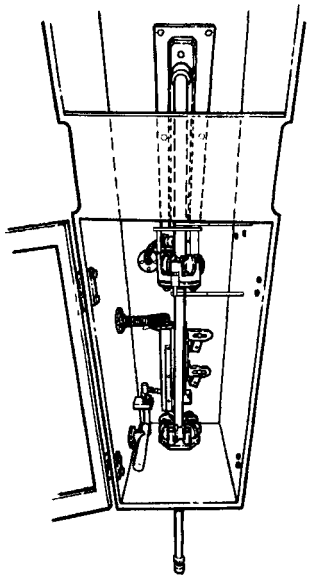

3

WARNING!

Risk of burns!

The LS element and adjacent components may be hot. If necessary, wear heat-resistant protective gloves.

Undo the nut for the upper filling pipe on the backside of the aseptic chamber. Remove the upper filling pipe.

2.2IE000015.EN

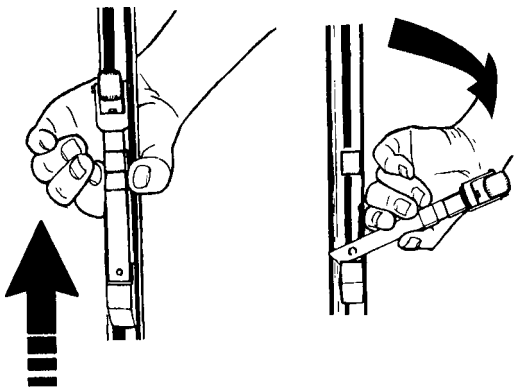

4

Detach the spring with the pressure roller from the filling pipe. Check and clean the pressure roller, spring, and circlip. Replace as required.

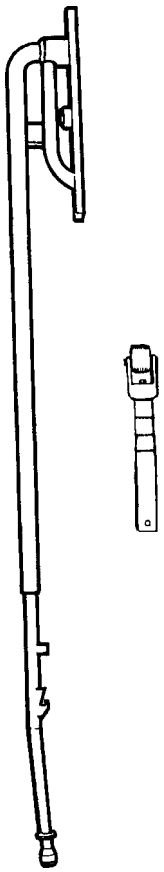

5

WARNING!
Risk of skin irritation!
If necessary, wear protective gloves. Chlorine or iodine based disinfectant/ detergent must not be used for disinfection of the filling pipe or for manual cleaning of parts in contact with peroxide.

Carefully clean the upper filling pipe and the pressure roller with detergent.

Refit the pressure roller to the upper filling pipe.

Rinse the upper filling pipe with water.

2.2IE000015.EN

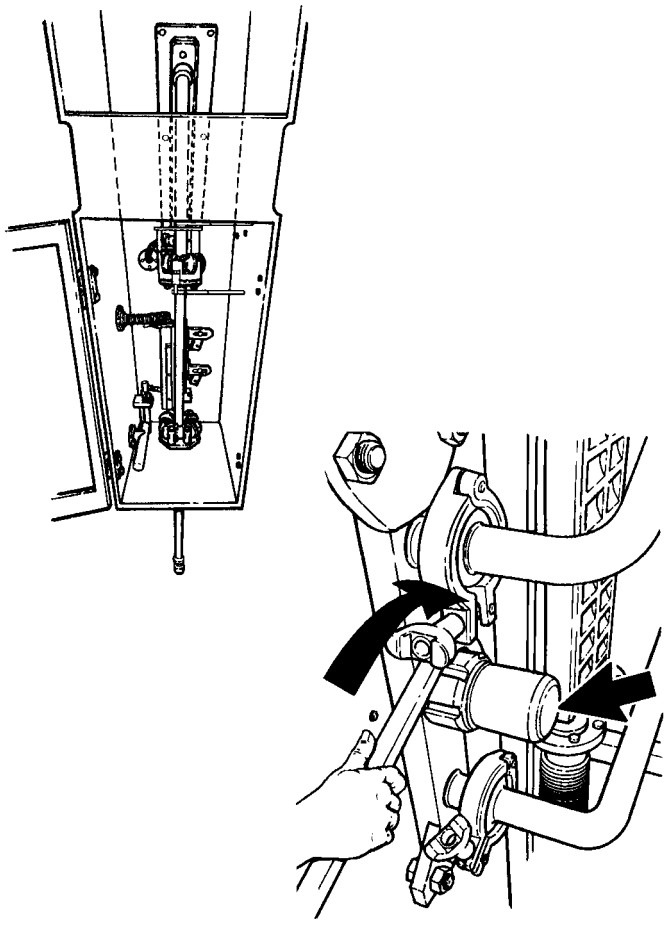

6

Fit the upper filling pipe into the machine. Refit and tighten the nut on the backside of the aseptic chamber.

CAUTION!
Do not damage the LS nozzle and the pressure roller or change their position.

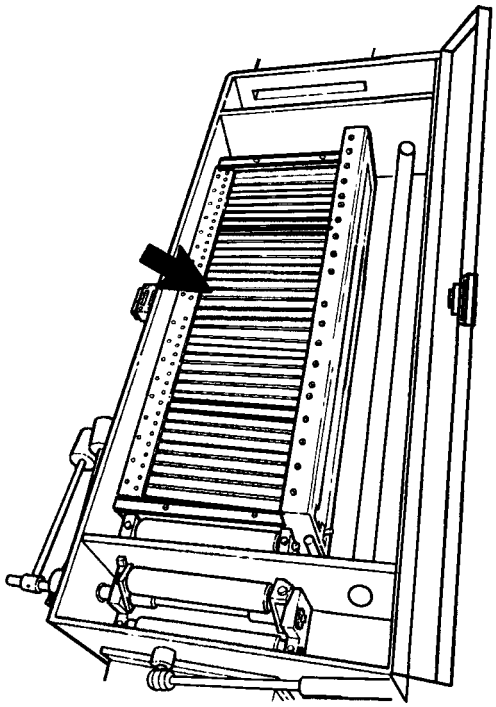

7

WARNING!
Risk of eye injury!
Wear protective eye glasses or eye shield when cleaning by means of compressed air.

Danger of burns!
Adjacent components are hot.
Wear heat-resistant protective gloves.

Raise and check the two heating elements in the sterilization chamber.

Clean the sterilization chamber by means of compressed air.

2.2IE000015.EN

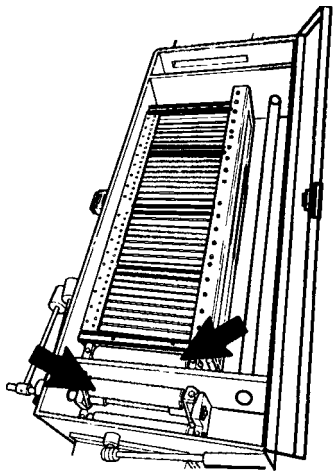

8a

WARNING!
Risk of injury due to pinching or crushing!
The rollers may rotate.

Remove and clean the squee-gee rollers.

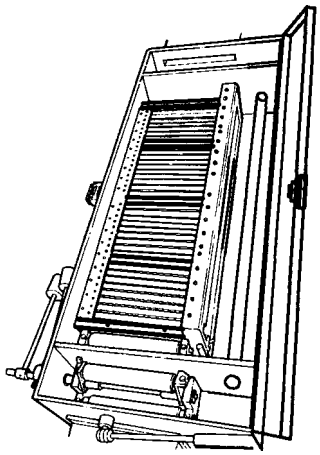

8b

WARNING!
Risk of injury due to pinching or crushing!
The rollers may rotate.

Refit the squee-gee rollers.

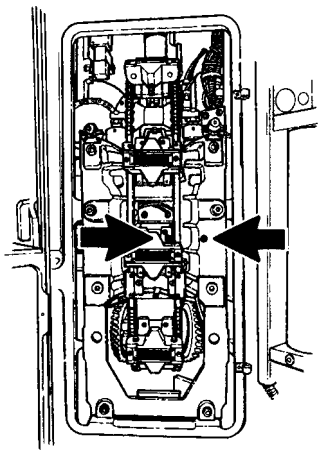

9a

WARNING!

Risk of injury due to pinching or crushing!

The rollers may rotate. The jaws are mowing when the machine is being cranked.

Crank the machine so that the pin in the jaw is level with the pin in the frame side

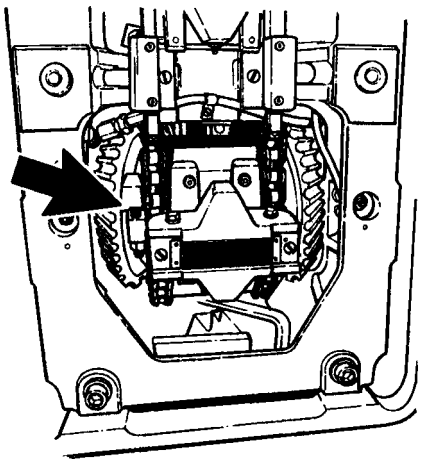

9b

Note the yoke position on the lower sprocket.

2.2IE000015.EN

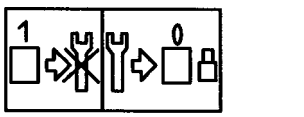

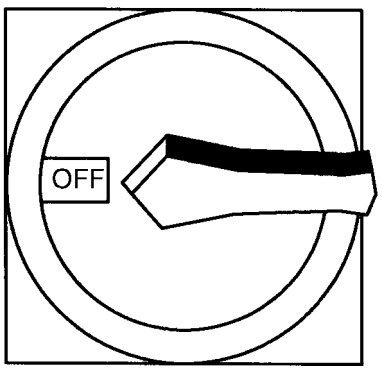

10a

WARNING!

Use the supplied padlock to secure the Main switch whenever it is Off.

Turn **Off** the **Main switch**.

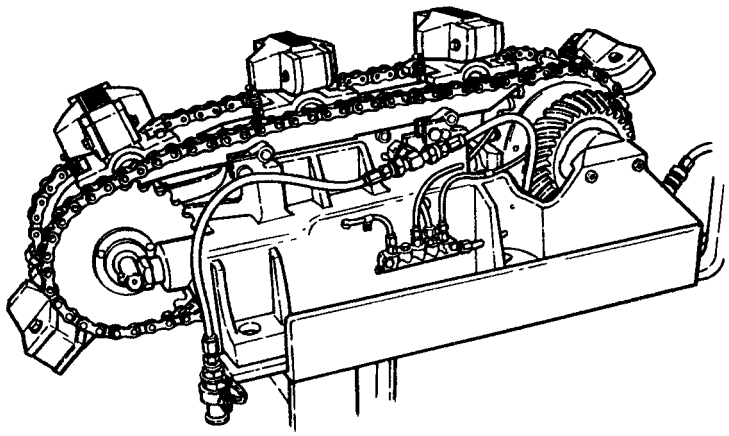

10 b

WARNING!

Risk of skin irritation!

If necessary, wear protective gloves. Chlorine or iodine based disinfectant/ detergent must not be used for manual cleaning of parts in contact with peroxide.

Lower the frame side and clean it. Also clean the inside of the machine, using a brush and detergent. Rinse with warm water.

Lower one of the frame sides No 2–4 each week. Avoid lowering side 1 because of the synchronizing. It can be cleaned in raised position when one of the other sides has been lowered.

2.2IE000015.EN

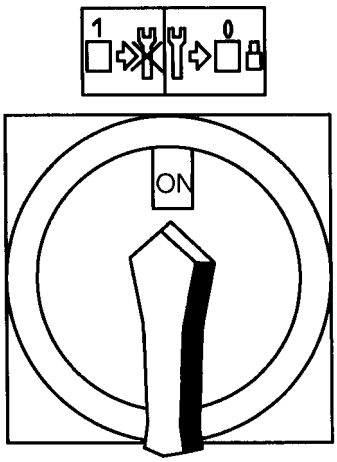

11

Turn **On** the **Main switch**.



12

Push **Manual lubrication**.

Check that oil reaches every lubrication point.

13a

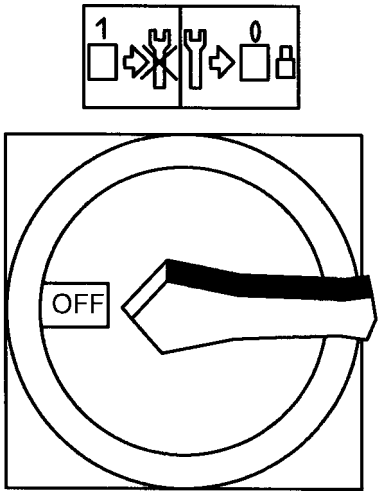

WARNING!
Use the supplied padlock to secure the Main switch whenever it is Off.

Turn **Off** the **Main switch**.

2.2IE000015.EN

13b

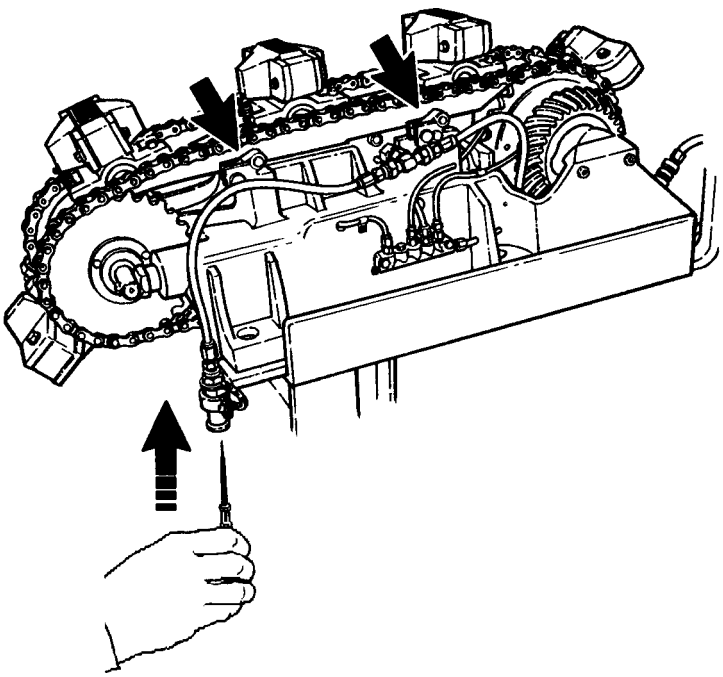

WARNING!
Risk of skin irritation!
Before handling oil, read the ”Safety precautions”, acc to page 9.

Check that the pressure roller holders in the pressure sides are in their lower positions. If this is not the case, push the cones in their respective bleed valves and move the roller holders down. Carry out this check even if the pressure sides are not lowered.

Lubricate the cutting unit acc to ”Lubrication”, page 161.

Raise the frame side.

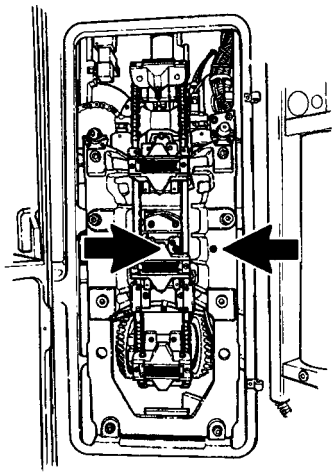

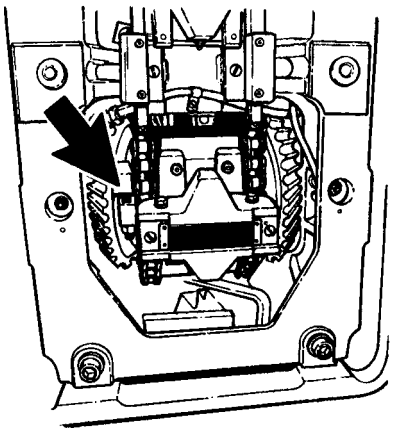

13c

Check that the pin in the jaw is level with the pin in the frame side, and that the yoke position is the same as before.

Note that if the yoke is not correctly positioned when the pins are level, the frame side must be lowered once more and the chain moved forward in multiples of complete turns until not only the pins but also the yoke are in the same position as before the frame side was lowered.

2.2IE000015.EN

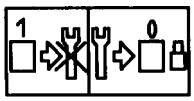

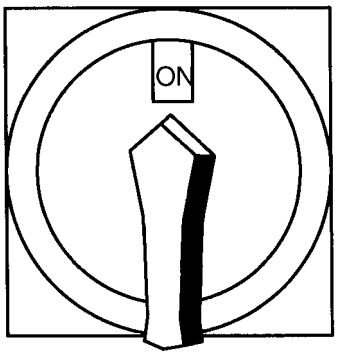

14

Turn **On** the **Main switch**.

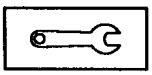



15

Turn the **Service switch** into test position.

CAUTION!
The machine must **not** be used for production while the **Service switch** is in test position.

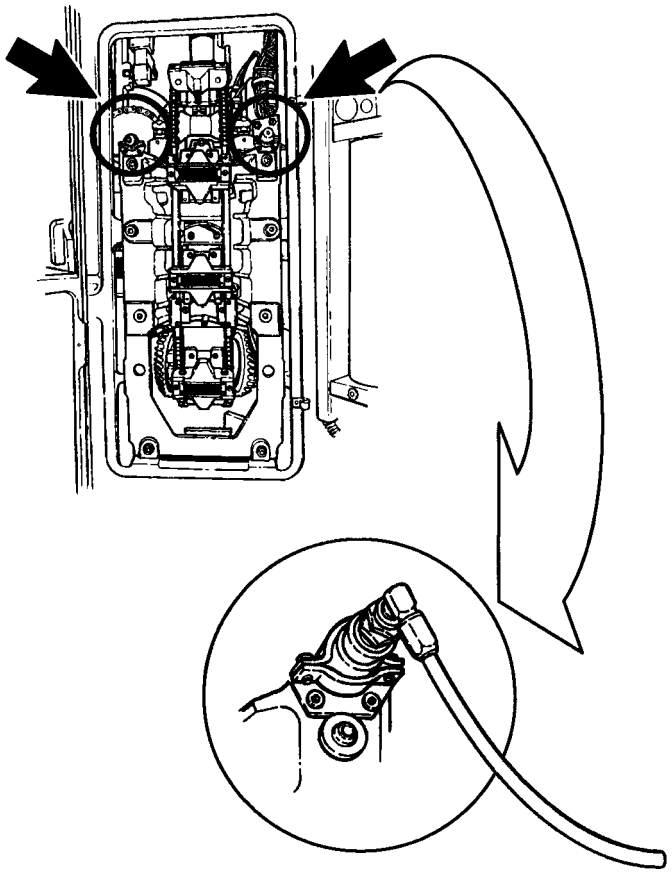

16

Bleed the hydraulic system for about ten seconds at each point.

There are two points on each of the pressure sides.

2.2IE000015.EN

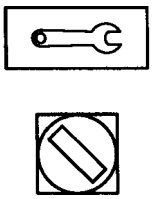

17

Turn the **Service switch** to production position.

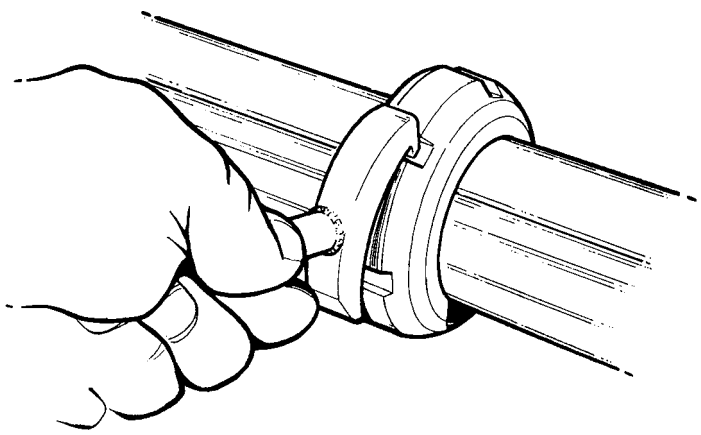

18

Undo all pipe unions on the machine.

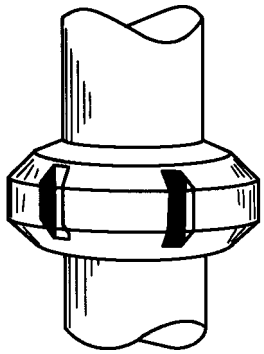

19

If required, replace all seal rings in the pipe unions of the filling system.

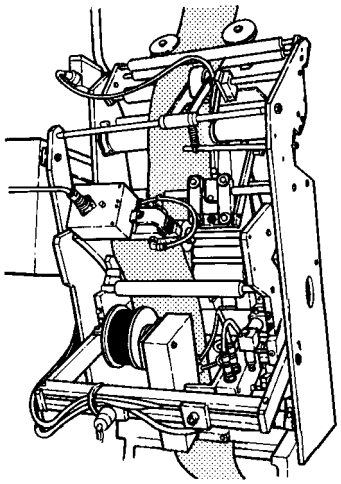

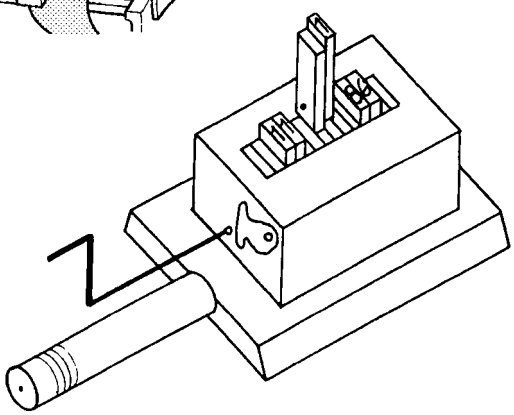

20

WARNING!

Risk of burns!

The printing inserts may be hot. Use heat-resistant protective gloves and a pair of tweezers.

Clean the dating unit and the zone heater.

Remove the printing inserts and clean them and the insert holder.

Check that the screws of the insert holder are tight.

21

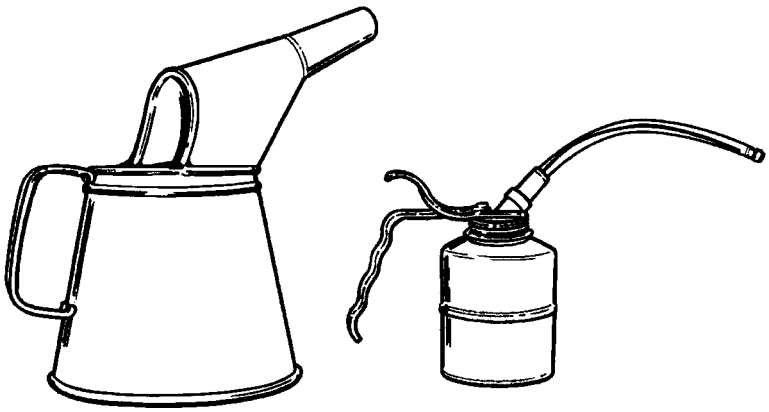

WARNING!

Risk of skin irritation!

Before handling oil, read the ”Safety precautions”, acc to page 9.

Lubricate acc to ”Lubrication”, page 152.

2.2IE000015.EN

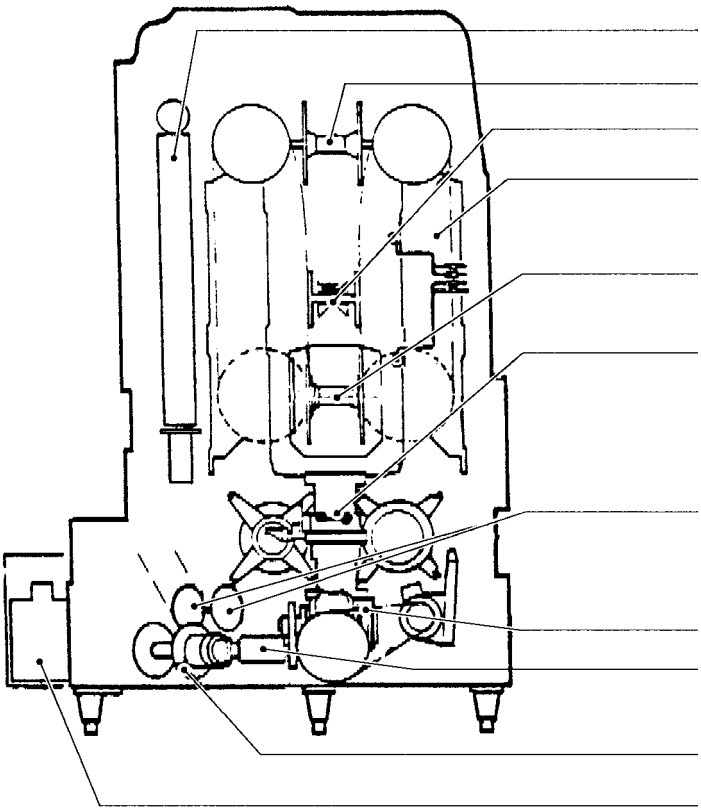

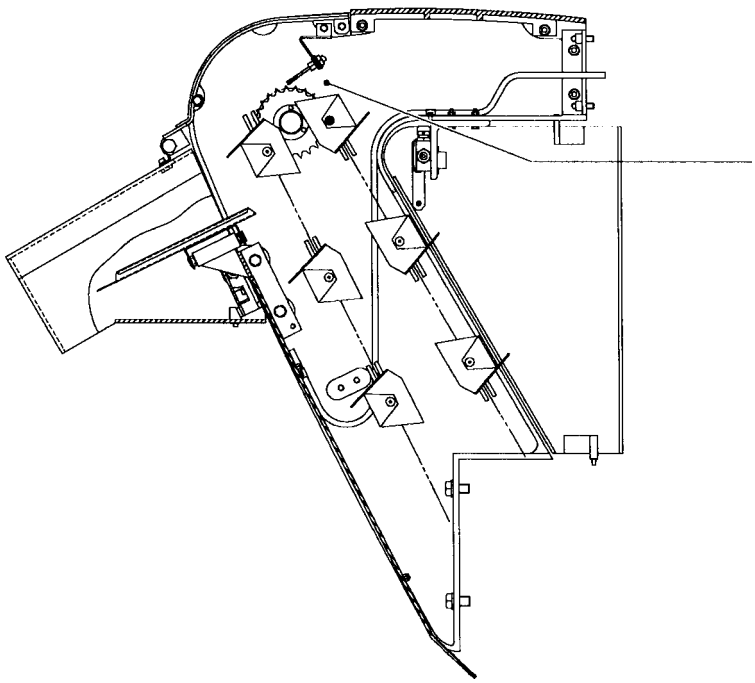

Lubric. point	Daily lubric	Weekly lubric.	No. of points
1		C	1
2		F	4
3		F	16
4		F	4
5		F	8
6		F	8
7		F	2
8		F	1
9		F	1
10		F	1
11	90296-94		1
12		F	2

2.2IE000015.EN

The letters above refers to “Lubrication” on page 161.

Sterilization liquid

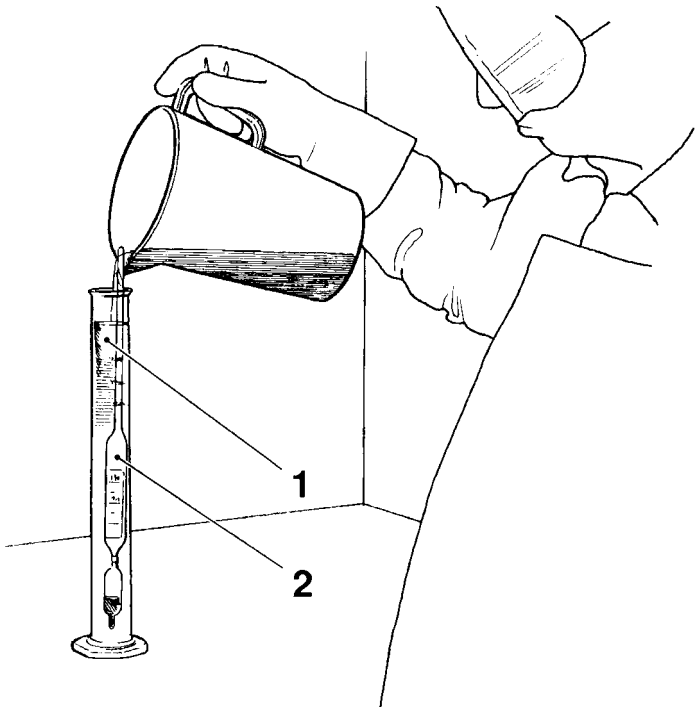

2.2IE000016.EN

Checking hydrogen peroxide concentration

WARNING!

Risk of personal injury by skin contact or inhalation!

Before handling sterilization liquid study the ”Safety precautions”, acc to page 5.

The following equipment is required:

- areometer with thermometer (TP No 90337-7) (2),
- graduated cylinder of plastic (TP No 90337-9, 250 ml) (1) with an inside diameter of 35–50 mm.

The equipment must be thoroughly cleaned.

Pour a small amount of peroxide into the graduated cylinder. Lower the areometer into the cylinder making sure it contains enough liquid to float the aerometer. If there are air bubbles adhering to the areometer, stir gently until the bubbles disappear. Read the density figure at the liquid level on the areometer and at the same time read the temperature.

The peroxide concentration in terms of per cent by weight can now be taken from the nomogram overleaf.

Nomogram, hydrogen peroxide concentration

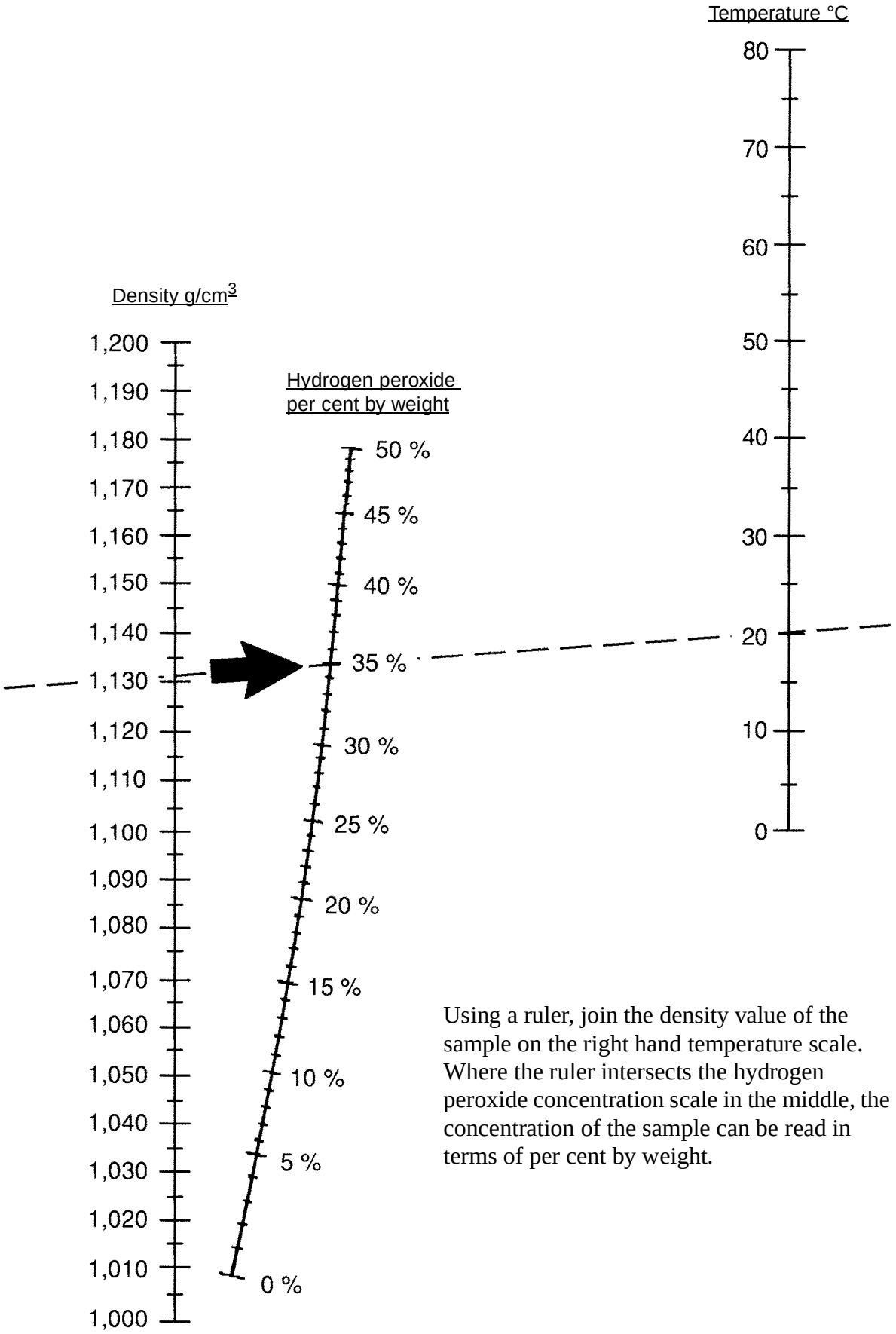

Using a ruler, join the density value of the sample on the right hand temperature scale. Where the ruler intersects the hydrogen peroxide concentration scale in the middle, the concentration of the sample can be read in terms of per cent by weight.

2.2IE000016.EN

Draining the bottom tank

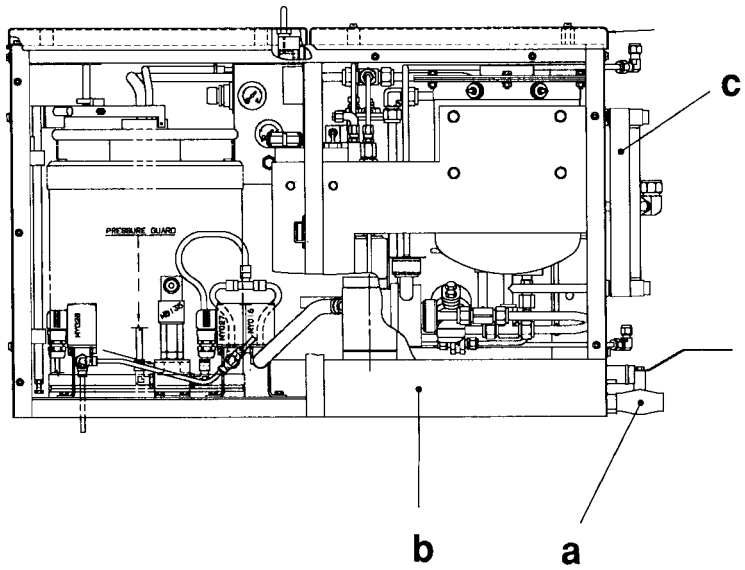

WARNING!

Risk of personal injury by skin contact or inhalation!

Before handling sterilization liquid read the ”Safety precautions”, page 5.

Before production start, the bottom tank must be emptied.

Open the valve (a) and drain the bottom tank (b).

When the bottom tank is empty, close the valve (a).

During production, check the level in the level glass (c).

2.2IE000016.EN

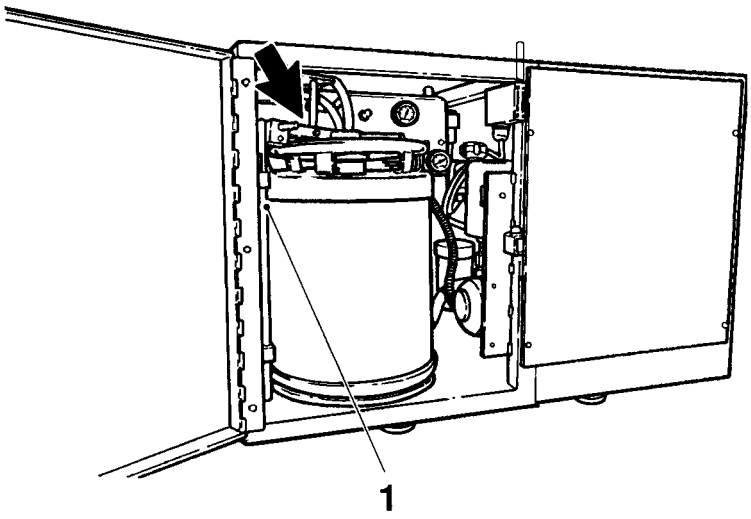

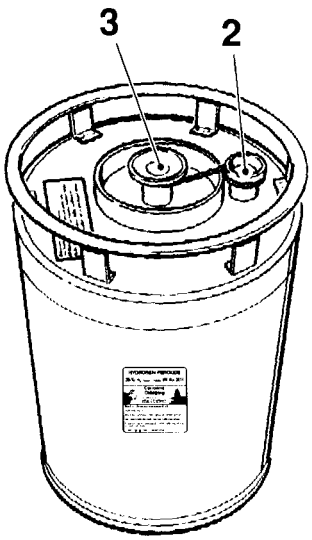

Replacement of peroxide container

WARNING!

Risk of personal injury by skin contact or inhalation!

Before handling sterilization liquid read the ”Safety precautions”, page 5.

Lift the arm.

Remove the container and put on the lid (3).

Take a full container (check on the level glass (2)). Undo the lid and put the container in the machine.

Press the catch (1) to release the arm.

Lower the arm. Make sure the lid stays in the correct position.

2.2IE000016.EN

Hydrogen peroxide

Selection of grades tested by Tetra Laval

The table below lists a selection of hydrogen peroxide grades tested by Tetra Laval. Hydrogen peroxide grades of comparable quality from other suppliers may be selected in compliance with the Hydrogen Peroxide Quality Specification or local legal requirements.

Hydrogen Peroxide Quality Specification (document No in table) may be ordered from Technical Standardization, Tetra Pak, R & D Services AB, Ruben Rausings gata, S-221 86 Lund, Sweden.

Sterilization in	Document No.	Material No. (internal TP designation for material type)	Part No. (used when ordering from Tetra Pak)	Example	
				Supplier	Grade
Hydrogen peroxide 35 % w/w	M1282.805	82805-10	90298-24	INTEROX (UK)	Aseptic packaging grade (APG 50)
				INTEROX (ITALY)	Aseptic grade
				INTEROX (NETHERLANDS)	Standard grade
				EKA (SWEDEN)	Aseptic grade (A35)

2.2IE000016.EN

Hydrogen peroxide (H_2O_2) is a clear, colourless liquid with a pH value of 2–4.
The concentration is 35 % in compliance with ”Checking hydrogen peroxide concentration” on the previous pages.

This page intentionally left blank

2.2IE000016.EN

Technical data

Technical data

It may be necessary to select settings that differ from the following basic settings in order to match variations in material, machines, products, and environment.

Temperature controllers

R20	Sterilization chamber heating element side 1-upper	400 units
R21	Sterilization chamber heating element side 2-lower	400 units
R40, R41	Potentiometer-TS	750 units
R42	Potentiometer-zone heater	700–800 units
A020	LS element temperature	270° C
A021	LS strip element temperature	475° C
A022	Air heater temperature	360° C
A023	Air preheater temperature	175° C
A024	Steam temperature	130° C
A025	Temperature sterilization house	125 ° C
A026	Temperature heat exchanger	° C

2.2IE000017.EN

Pressure gauges

Hydraulic system, pressure	800-1200 kPa (8-12 bar) (depending on product)
Compressed air supply	600 kPa (6 bar)
Steam pressure	170 kPa (1,7 bar)
Product pressure	60 - 300 kPa (0,6–3,0 bar) (depending on product)
Sterile air pressure	40 kPa (0,4 bar)
LS element, air pressure	1 kPa (10 mbar)
LS strip element	2,5 kPa (25 mbar)
Spraying	400 kPa (4,0 bar)
Peroxide filling	15 kPa (0,15 bar)
Central lubrication:	
Manual	1,5 MPa (15 bar)
Automatic	0,3 MPa (3 bar)

(cont´d)

Heating element

LS strip	10 units
Ammeter-sterilization chamber heating element side 1	5,0 A
Ammeter-sterilization chamber heating element side 2	5,0 A

Electrical cabinet—zone heater/dating unit

TEMP	Temperature printing inserts	approx 125° C
TID I	Holding time printing duration I and II	0,02–0,03 s
Estimated sterilization liquid consumption		0,3 l/h
Estimated water consumption		150 l/h
Estimated air consumption		60000 Nl/h (Normal litres/hour)
Electricity consumption		9,8 kW/h
Cleaning flow		4,5 m^3/h
Cleaning pressure		2,5–3,0 bar

Noise level

Noise level	75 dB (A)

2.2IE000017.EN

Lubrication

The table below lists only a selection of lubricants with their respective designations. Comparable lubricants from other suppliers may be selected with the aid of the lubricant specifications (document No in the table).

Lubricant specifications may be ordered from Technical Standardization, Tetra Pak P & S Services AB, Ruben Rausings gata, S-221 86 LUND, Sweden.

Lubricant code	Document No	Material No (internal TP designation for material type)	Part No (used when ordering from Tetra Pak)	Example	
				Supplier	Product designation (9303)
A Motor oil	M 1251.122	51122-85	90 296-28	BP Esso Statoil Mobil Shell Caltex/ Texaco Optimol	Vanellus FE 10W-30 Essolube XD-3 10W-30 PowerWay D2 10W-30 Delwac 1400 Super 10W-30 Myrina TX 10W-30 Ursa LA 10W-30 Non Plus Ultra 10W-40
B High-pressure oil	M 1254.322	54322-220	90 296-73 90 296-78	BP Esso Statoil Mobil Shell Caltex/ Texaco Imperial Kluber Optimol	Energol GR-XP 220 Spartan EP 220 LoadWay EP 220 Mobilgear 630 Omala oil 220 Meropa Lubricant 220 Tribol ET 280-220 Lamora 220 Optigear 5150 VG 220
		54322-150 For use in production plant with start temperature below 5°C.	90 296-72	BP Esso Statoil Mobil Shell Caltex/ Texaco Imperial Kluber Optimol	Energol GR-XP 150 Spartan EP 150 LoadWay EP 150 Mobilgear 629 Omala oil 150 Meropa Lubricant 150 Tribol ET 280-150 Lamora 150 Optigear 5120 VG 150

2.2IE000017.EN

Lubricant code	Document No	Material No (internal TP designation for material type)	Part No (used when ordering from Tetra Pak)	Example	
				Supplier	Product designation (9303)
C Hydraulic oil	M 1252.122	52122-32	90 296-53	BP Esso Statoil Mobil Shell	Bartran HV 32 Univis N 32 HydraWay HV 32 DTE Oil 13 Tellus T 32
D Mist lubrication oil	M 1251-822	51822-37	90 296-80	BP Esso Statoil Mobil Shell Caltex/ Texaco	Autran GM-MP ATF Dextron TransWay DX II ATF 220 ATF Dextron II Texamatic fluid (DEXTRON II)
E Comp-ounded cylinder oil	M 1254.922	54922-460	90 296-77 90 296-2	BP Esso Statoil Mobil Shell Caltex/ Texaco	Energol AC-C460 Cylesso TK 460 CylWay FZ 460 600W Super Cylinder Oil Valvata Oil J460 Vanguard Cylinder Oil
F Lithium grease, EP type	M 1255.115	55115-20	90 296-68	BP Esso Statoil Mobil Shell Kluber Optimol	Energrease LS EP 2 Esso MP Grease/ Beacon EP 2 UniWay EP 2 N Mobillux EP 2 Grease 1344 LiEP 2 Centoplex 2 EP Longtime PD 2
H High-pressure oil	M 1254.322	54322-320	90 296-75	BP Esso Statoil Mobil Shell Caltex/ Texaco Imperial Kluber Optimol	Energol GR-XP 320 Spartan EP 320 LoadWay EP 320 Mobilgear 632 Omala oil 320 Meropa Lubricant 320 Tribol ET 280-320 Lamora 320 Optigear 5180 VG 320

2.2IE000017.EN

Lubricant code	Document No	Material No (internal TP designation for material type)	Part No (used when ordering from Tetra Pak)	Example	
				Supplier	Product designation (9303)
H High-pressure oil	M 1254.322	54322-220 For use in production plant with start temperature below 5°C.	90 296-73 90 296-78	BP Esso Statoil Mobil Shell Caltex/ Texaco Imperial Kluber Optimol	Energol GR-XP 220 Spartan EP 220 LoadWay EP 220 Mobilgear 630 Omala oil 220 Meropa Lubricant 220 Tribol ET 280-220 Lamora 220 Optigear 5150 VG 220
K Circulation oil	M 1254.942	54942-100	90 296-15	BP Esso Statoil Mobil Shell Caltex/ Texaco Imperial Kluber	Energol CS 100 Turbesso 100 TurbWay 100 DTE OIl Heavy Tellu OIl 100 Regal Oil R & O 100 Tribol 775 Crucolan 100
L Silicon grease	M 1255.322	55322-30	90 296-9	Dow Kluber	Dow Corning 7 Compound Unisilikon L 250L
M Lithium grease, EP type	M 1255.112	55112-10	90 296-70	BP Esso Statoil Mobil Kluber Optimol	Energrease LS EP 1 Beacon EP 1 UniWay EP 1 Mobillux EP 1 Centoplex 1 EP Longtime PD 1
O Lithium complex grease	M 1255.122	55122-30	90 269-61	BP Esso Statoil Imperial	Energrease LS 3 Unirex N3 UniWay HT-63 Molub-Alloy ET 860-220
P Synthetic compressoroil	M 1254.632	54632-68	90 296-54	BP Esso Statoil Mobil Shell Caltex/ Texaco	Energol RC-R68 Compressor oil 68 CompWay 68 Rarus 427 Corena Oil H68 Compressor oil VDL 68

2.2IE000017.EN

This page intentionally left blank

This page intentionally left blank

Tetra Pak