SPC
Spare Parts Catalogue

TCA/65

633251-0500

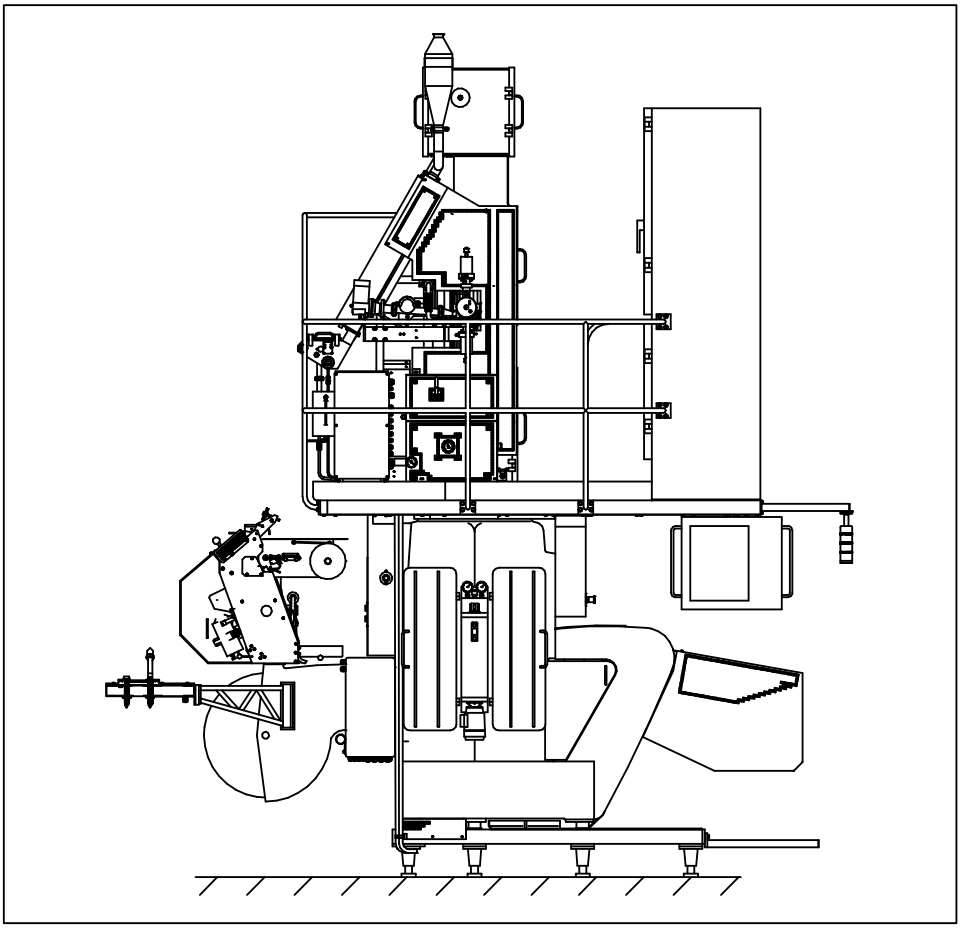

Tetra Pak

Doc. No: SPC-85578-0102

Main Groups of the Machine

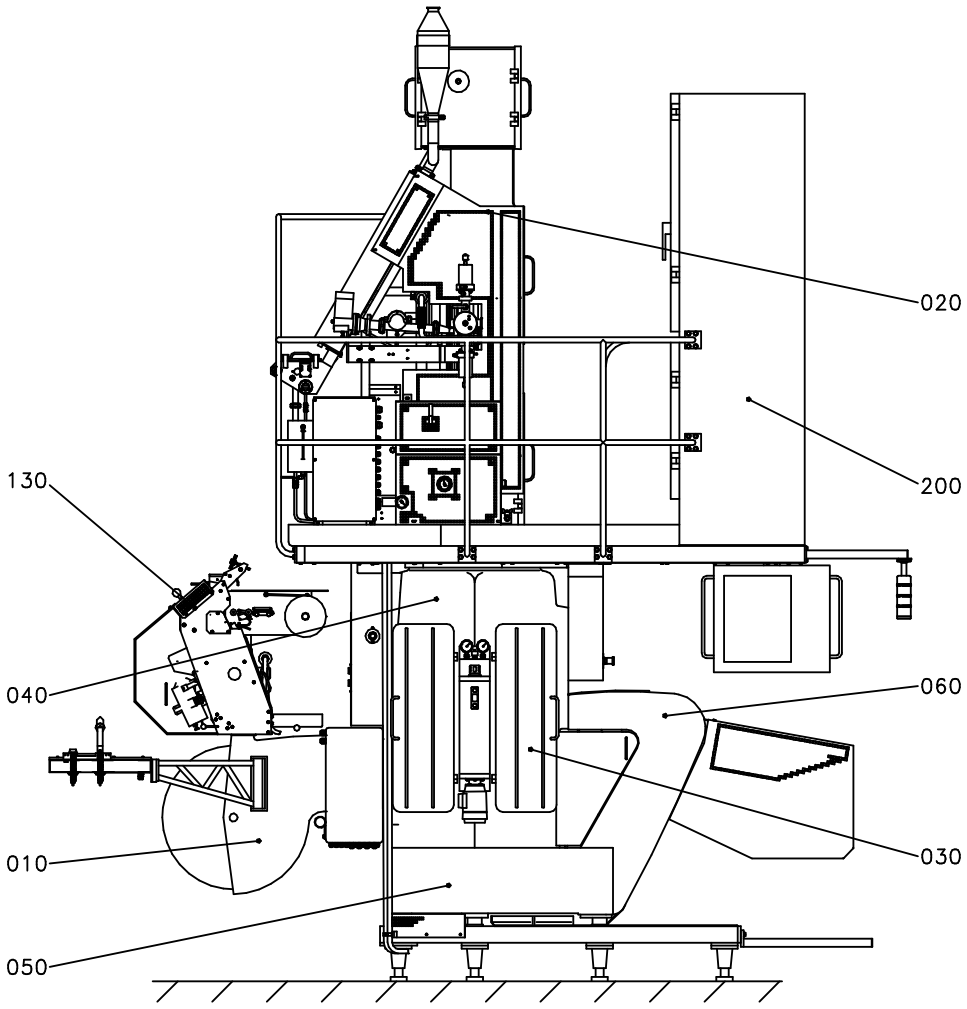

010 - Cassette
020 - Superstructure
030 - Side Frame
040 - Machine Body
050 - Cutting Device
060 - Elevator
130 - Strip Applicator
200 - Electric Equipment

For the correct machine data, check your machine specification, supplied with the machine!

This document is valid for:

Series No/Machine No Sign.

SPC
Spare Parts Catalogue

Tetra Classic Aseptic
TCA/65
633251-0500

Doc. No: SPC-85578-0102

Issue 2003-02-13

Tetra Pak

Tetra Pak Carton Ambient AB

Table of Content:

Introduction ..... , **5**

Cassette
B- 633231-0300 ..... , **9**

Superstructure
B- 633232-0400 ..... , **19**

Side Frame
B- 633233-0400 ..... , **121**

Side Frame
B- 633242-0100 ..... , **147**

Side Frame
B- 633243-0100 ..... , **173**

Side Frame
B- 633244-0100 ..... , **205**

Machine Body
B- 633234-0400 ..... , **237**

Cutting Device
B- 633235-0500 ..... , **295**

Elevator
B- 633236-0400 ..... , **367**

Regular Accessories
B- 633239-0400 ..... , **395**

Extra Equipment
B- 633241-0200 ..... , **427**

Extra Equipment
B- 633245-0100 ..... , **441**

Final Test Material
B- 633230-0100 ..... , **445**

Strip Applicator
B- 614101-0600 ..... , **451**

Electric Equipment
B- 639337-0500 ..... , **489**

Part Number Index ..... , **521**

General information

Manufacturer

This machine is produced by:
Tetra Pak Carton Ambient AB
Ruben Rausings gata
S-221 86 Lund
Sweden

Document producer

This document has been produced by:
Tetra Pak Carton Ambient AB
Technical Publications
Ruben Rausings gata
S-221 86 Lund
Sweden

Number of pages

This document contains totally **550 pages,** including the first **8** introduction pages.

Copyright © 2003 Tetra Pak Carton Ambient AB

All rights reserved. No parts of this document may be reproduced or copied in any forms or by any means, without written permission from Tetra Pak Carton Ambient AB.

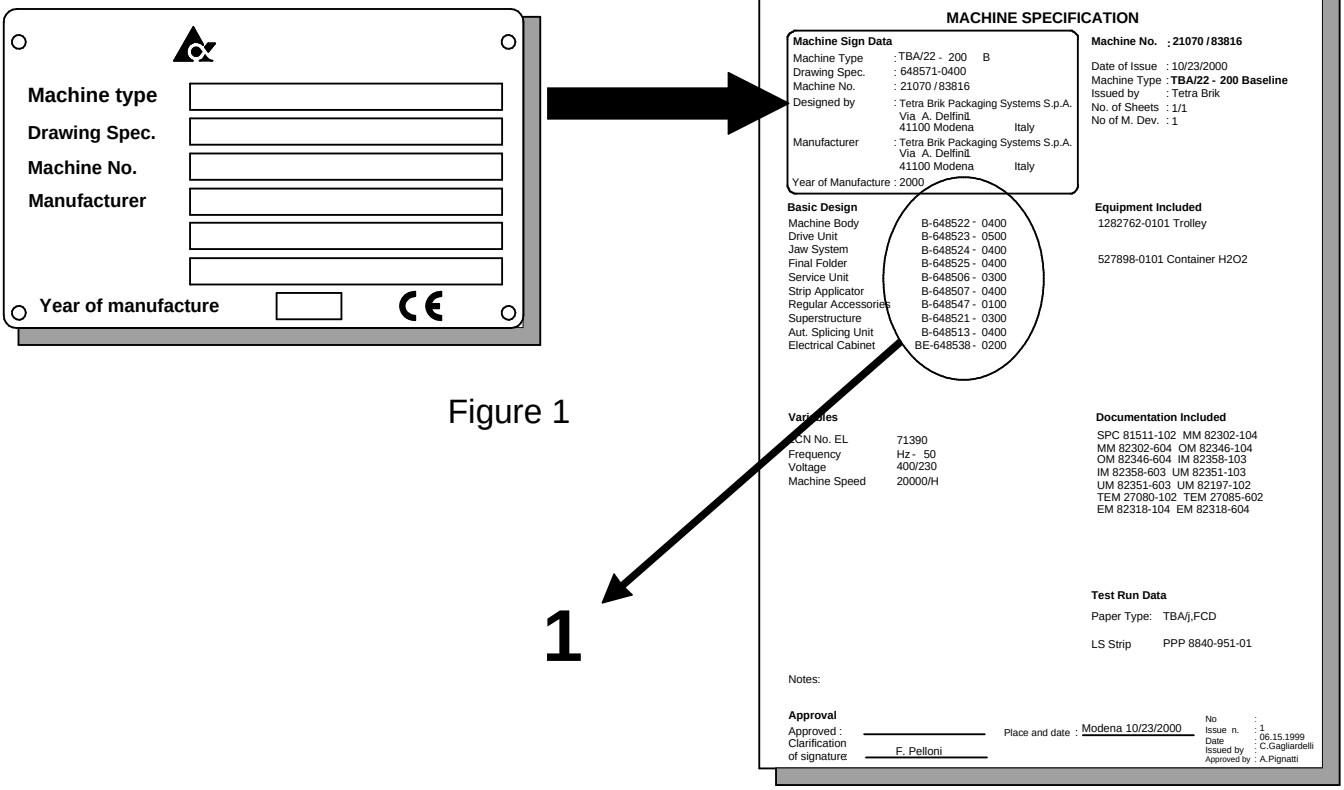

Figure 1

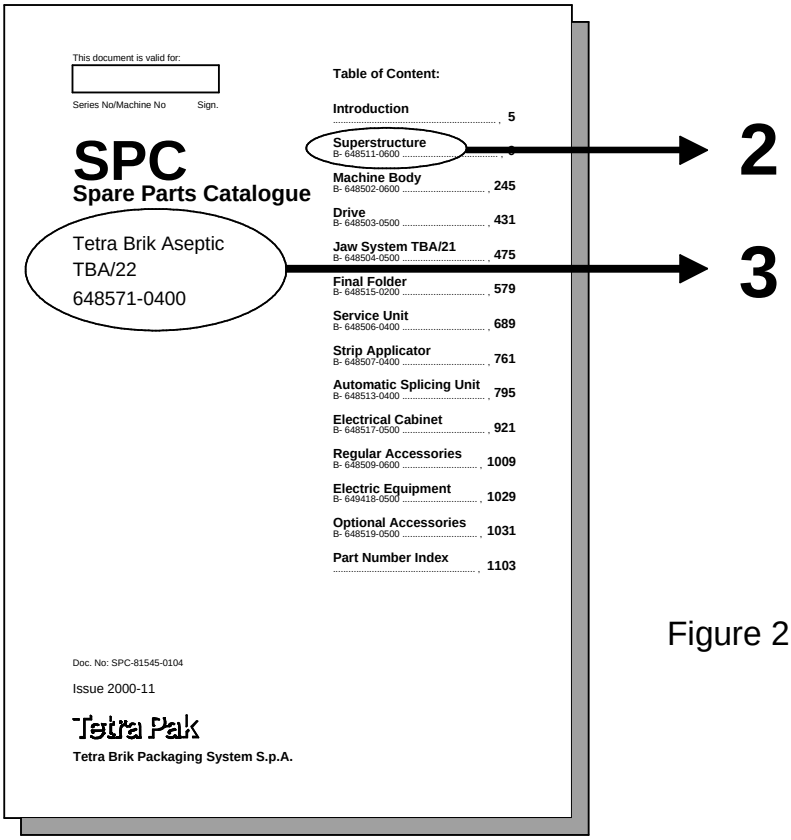

Figure 2

Figure 3 A-648571-0400

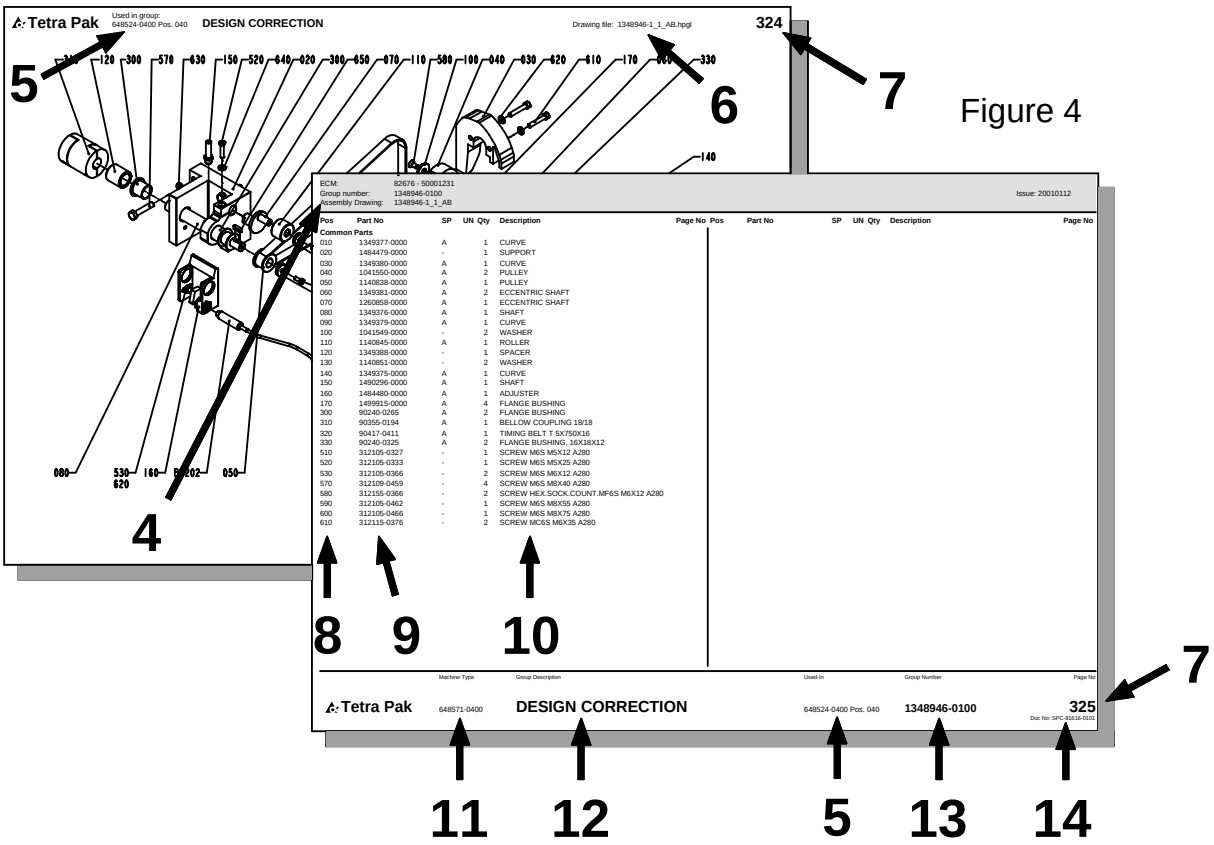

Figure 4

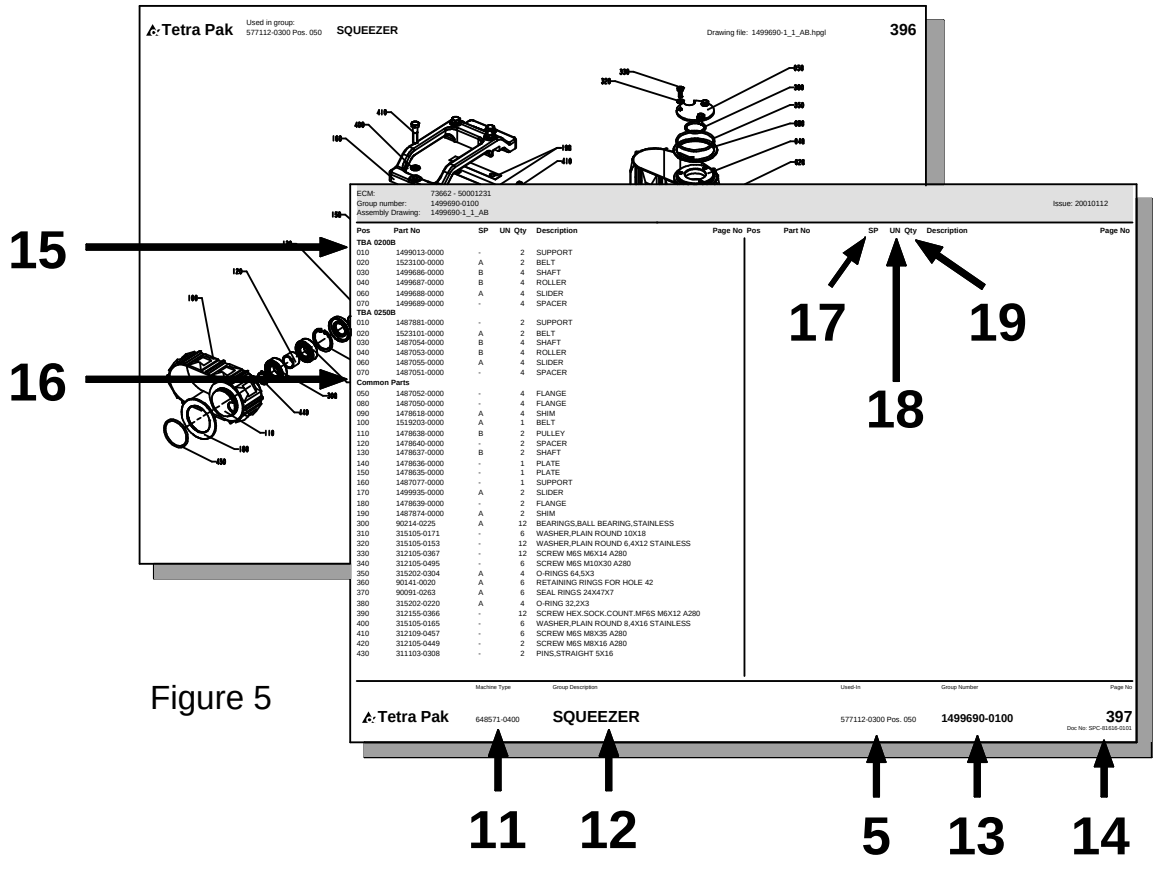

Figure 5

General information

Service

When ordering spare parts for your machine, contact the nearest Tetra Pak service station.

Machine identification

This machine plate is an example of the type of machine plate, attached to the machine frame. The plate carries data needed when contacting Tetra Pak concerning this particular machine **(see Figure 1).**

Purpose of the Spare Parts Catalogue

The purpose of the Spare Parts Catalogue (SPC) is to provide the technicians and contact personnel with information on how to find and order spare parts for maintenance and service of the machine.
For instructions of how to replace parts and adjust machine setup, see the Maintenance Manual (MM).

Delivered documentation

The technical documentation delivered with this machine is started in the Machine Specification.
Note! If any of these documents is missing, it must be reported in the document **Start Up Machine Quality Report**. For more information, see chapter 8 Preparation for Commissioning in the Installation Manual.
It is important that you keep these documents for the life of the equipment, and pass the documents on to any subsequent holder or user of the equipment.

Design modification

The content of this document is in accordance with the design and construction of the machine at the time it was delivered from the Tetra Pak machine production facility.

Further copies

Additional copies can be ordered from the nearst Tetra Pak service station. When ordering technical publications, always quote the document number printed on the front cover of the document concerned.

Tetra Pak Part numbering system

The third and forth digits in the sub-number, specify one unique group which can be ordered. If the forth digit is replaced by a "0", the number combination only points to a bill-of-material document.
The first and second digits in the sub-number, specify the development step (model) of the machine or group. **(see fig. 3)**
Main number of machine /group /article, depending on level.
Prefix, giving information about level, eg.
A = Machine
B = Main section (*)
C = Groups and subgroups
*) Customized distribution machines are registered as B-level as well.

How to find the correct Spare Part Number

A. Check that the data on yuor machine sign, and/or machine specification, corresponds with the catalogue. **(see fig.1)**

1) Main groups of the machine

B. The second catalogue sheet contains a table of content for the main groups, included in the catalogue. The information regarding machine and main group page status MUST correspond with your machine specification.
Locate and choose the main groups page number (1), in which you want to search for spare parts. **(see fig.2)**

2) Main group
3) Machine type

C. Search in the main group illustration, the item number, which may hold yuor wanted spare part. Go to the text page below and find the page number for the actual group. **(see fig. 4)**

4) Internal information, such as latest Engineering Change, Bill-of-Material included in the catalogue page and the Assembly Drawing required
5) Used-In reference to next higher level in the machine structure
6) Assembly drawing number including the archive file extension
7) Continuous page numbering through the document
8) Pos number corresponding to illustration
9) Group or article number
10) Group or article description. The letter "B" in front of some article numbers indicates that this article contains other parts, directly listed below the B-article. Letter "A" indicates a subgroup number with an own page directly after the actual page
11) Machine type including development status
12) Group description
13) Group number (bill-of-material) including development status
14) Document number

D. Continue to the found page number, and search in the illustration for your spare part. Go to the text row for the found item number, and read the part number. Take eventual variant headings in consideration; if you are unsure, read your machine specification. **(see fig. 5)**

15) Variant heading, eg volume, left/right etc.
16) Heading for common parts
17) SP = Code for articles, which are included into various spare part kits.
    A = Critical Spare Part
    B = Non Critical Spares Part
    C = Don't stop function, can bypassed
    D = Seldom break, long time production
18) UN = Short code for measure units, eg mm, kg etc.
19) Qty = Number of items needed in the complete assembly.

SPC
Spare Parts Catalogue

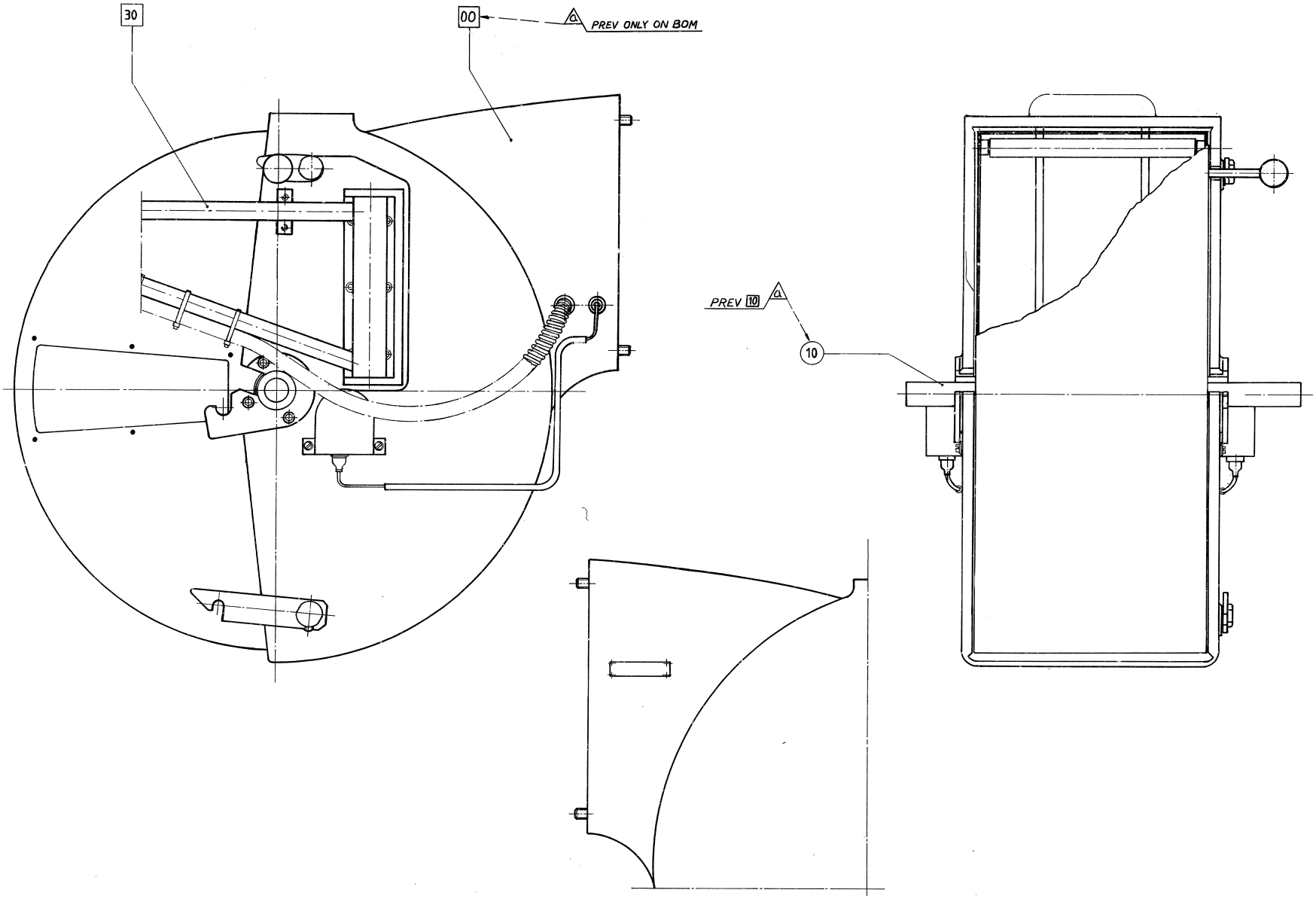
30
00
PREV ONLY ON BOM
PREV 10
10

ECM: 81903 - 20000814
Group number: 633231-0300
Assembly Drawing: 633231-1_1_AA

Issue: 20030213

Pos	Part No	SP	UN	Qty	Description	Page No
Common Parts						
010	1483114-0000	A		2	ROLLER SHAFT	
F000	A11040-0502	-		1	CASSETTE	**13**
F030	A33163-0401	-		1	SPLICING APPARATUS	**15**

Pos	Part No	SP	UN	Qty	Description	Page No

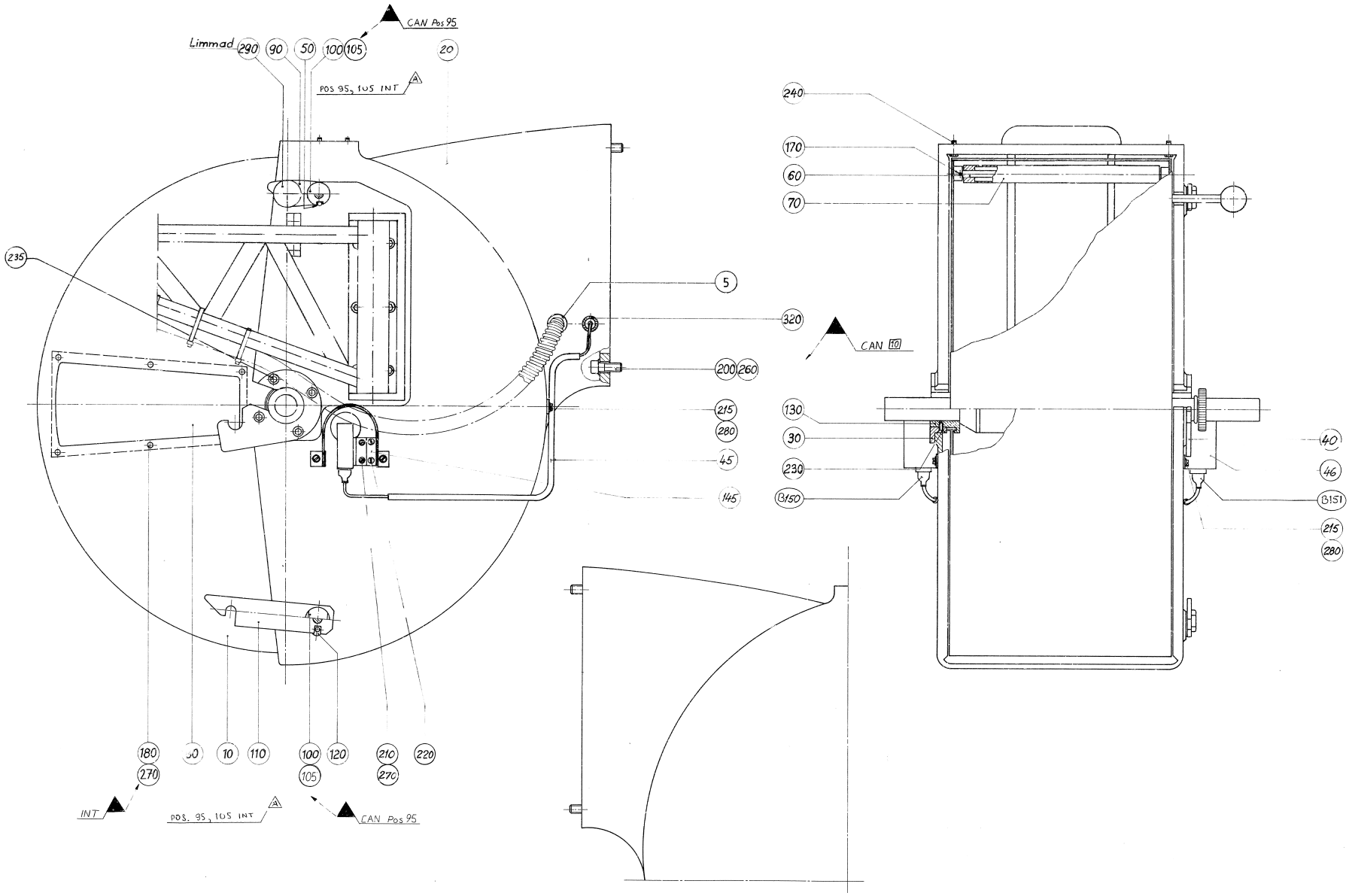
CAN Pos 95
Limmad
290
90
50
100
105
20
POS 95, 105 INT
A
235
5
320
200
260
215
280
45
145
240
170
60
70
CAN 10
130
30
230
B150
40
46
B151
215
280
180
270
10
110
100
105
120
210
270
220
INT
POS. 95, 105 INT
CAN Pos 95

ECM: 83458 - 20000925
Group number: 11040-0502
Assembly Drawing: 11040-4_1_AA

Issue: 20030213

Pos	Part No	SP	UN	Qty	Description	Page No
Common Parts						
005	352136-0127	-		1	GLAND FITTING PR 18,6	
010	445953-0002	-		1	HOOD	
020	19477-0000	-		1	CASSETTE	
030	13890-0001	A		1	HOLDER	
040	13890-0002	A		1	HOLDER	
045	294261-0000	-		2	PIPE	
046	1483162-0000	-		2	COVER	
050	311112-0310	-		1	SPRING PIN, ISO 8752 5X24-C	
060	4287-0004	-		1	SHAFT	
070	4288-0007	-		1	BENDING ROLLER	
080	4948-0000	-		2	WINDOW	
090	4961-0000	A		1	CATCH	
100	312105-0491	-		2	SCREW M6S ISO 4017 M10X20 A480	
105	594773-0000	-		2	SPACER SLEEVE	
110	10325-0000	A		1	CATCH	
120	311112-0377	-		1	SPRING PIN, ISO 8752 8X24-C	
130	13888-0000	B		2	BEARING	
145	294263-0000	A		2	LUG	
170	311305-0238	-		1	SLOTTED PIRPC3X20FZB	
180	311508-0416	-		12	RIVET, ROUND HEAD, KN, 4X10	
200	312111-0536	-		4	SCREW HEX.SOCK.HD.MC6S-TT 12X30 88 FZ	
210	312125-0289	-		4	SPåRSKRUV MCS 4X10 A480	
215	312125-0327	-		6	SCREW PAN HEAD MCS M5X12 SS	
220	312145-0331	-		4	SCREW COUNTERS.SLOT.HD. MFS 5X20 SS	
230	312145-0366	-		6	SCREW COUNTERS.SLOT.HD. MFS 6X12 SS	
235	312165-0368	-		8	SCREW SLOT.RAIS.COUNT.HD.MKFS 6X16 SS	
240	312306-0371	-		4	SCREW HEX.SOCK.SET FLAT P.MP6SS 6X22FZB	
260	315101-0178	-		4	WASHER PLAIN, BRB, 13/24 H=2	
270	315105-0136	-		16	WASHER ISO 7089-4-200 HV-A4	
280	315105-0146	-		6	WASHER ISO 7089-5-200 HV-A4	
290	318800-0106	-		1	HANDLE,SPHERICAL KNOB,INT.THRE,D.40-M10	
320	352101-0103	-		2	LEAD-IN, PR18,6/PG11, E-1457518	
B150	90232-0103	A		1	PH.CELL E3S-CT61-L-5M	
B151	90232-0104	A		1	PH.CELL E3S-CT61-D-5M	

Pos	Part No	SP	UN	Qty	Description	Page No

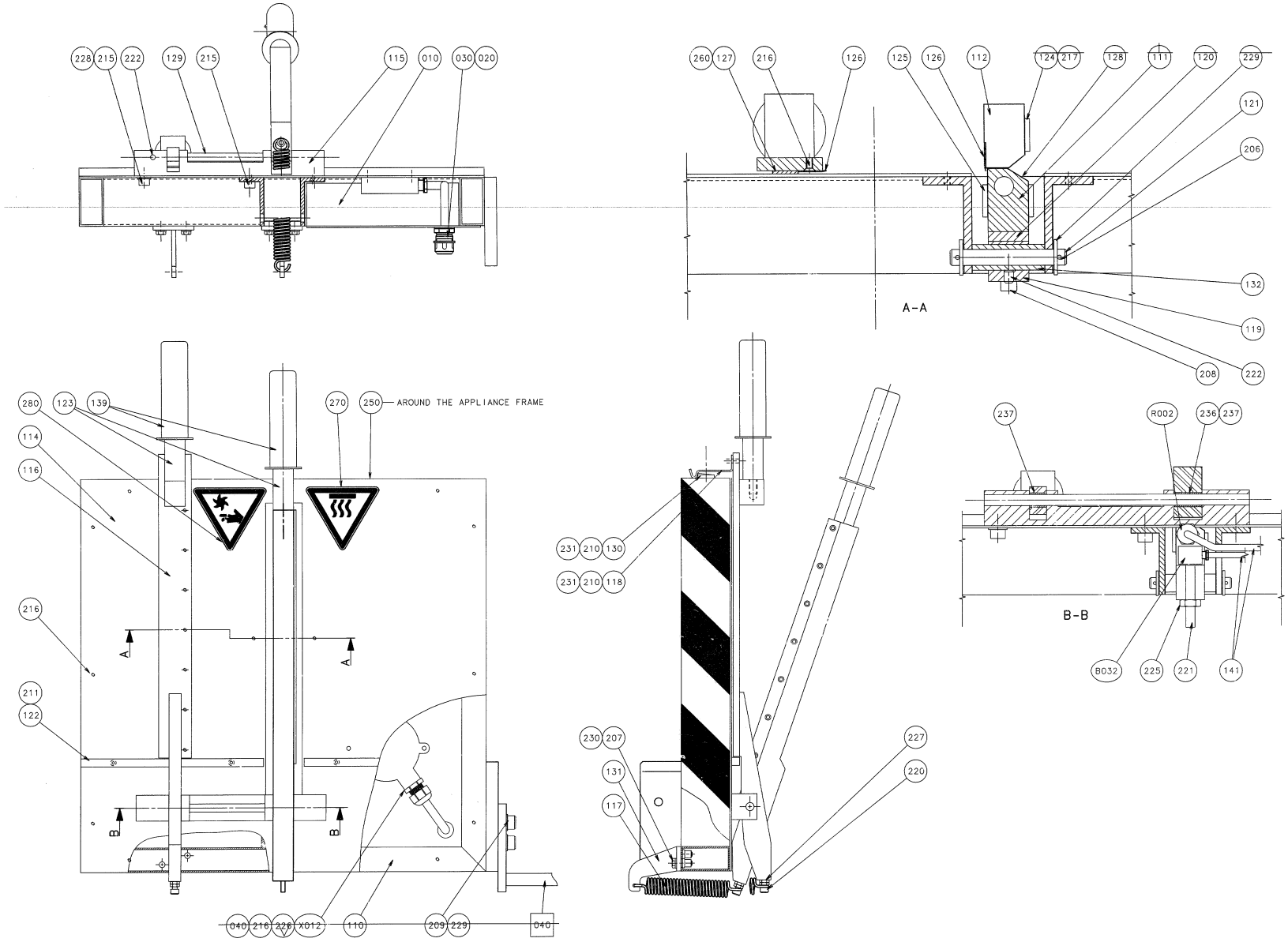
228 215 222 129 215 115 010 030 020
260 127 216 126 125 126 112 124 217 128 111 120 229
121
206
132
119
208 222
A-A
280 123 139 270 250 AROUND THE APPLIANCE FRAME
114
116
216
211
122
A
B
231 210 130
231 210 118
230 207
131
117
227
220
237 R002 236 237
B-B
B032 225 221 141
040 216 226 X012 110 209 229 040

ECM: 82135 - 20000925
Group number: 33163-0401
Assembly Drawing: 33163-5_1_AA

Issue: 20030213

Pos	Part No	SP	UN	Qty	Description	Page No
Common Parts						
010	1483059-0000	-		1	COVERING PLATE	
020	352135-0106	-	M	2	SPIRAL CONDUIT DI=16 MM	
030	352136-0127	-		1	GLAND FITTING PR 18,6	
040	352103-0105	-		3	CABLE GLAND, STR 11, PR 18,6/PG11	
110	33164-0000	-		1	APPLIANCE FRAME	
111	33165-0000	-		1	HEATING BLOCK	
112	1175851-0000	-		1	PRESSURE ARM	
114	1483066-0000	-		1	TABLE TOP PLATE	
115	33168-0000	-		1	BRACKET	
116	578768-0000	-		1	TEARING BAR	
117	37885-0000	A		2	TENSION SPRING	
118	206913-0000	B		1	LOCKING LOOP	
119	33170-0000	-		1	BRACKET	
120	33171-0000	-		1	INSULATING PLATE	
121	33172-0000	-		1	SHAFT	
122	33173-0000	-		2	HEAD RAIL	
123	33174-0000	-		2	SHAFT	
124	33175-0000	-		2	SIDE PLATE	
125	33176-0000	-		1	SIDE PLATE	
126	33177-0000	B		2	ABRASION SAW BLADE	
127	33178-0000	-		1	RUBBER SHIM	
128	33179-0000	B		2	TEFLON CLOTH	
129	33180-0000	-		1	SHAFT	
130	554218-0000	A		1	LOCKING LUG	
131	581591-0000	-		2	BRACKET	
132	33472-0000	-		1	BUSHING	
139	90017-0001	-		2	BIKE HANDLE	
141	90142-0005	-	MM	500	HOSE	
206	311411-0165	-		2	SPLIT PIN SP2,5X16RFR	
207	312105-0370	-		4	SCREW M6S ISO 4017 M6X20 A480	
208	312111-0378	-		2	SCREW HEX.SOCK.HD.MC6S-TT 6X40 88 FZB	
209	312111-0495	-		3	SCREW HEX.SOCK.HD.MC6S-TT 10X30 88 FZ	
210	312105-0327	-		4	SCREW M6S ISO 4017 M5X12 A480	
211	312115-0287	-		5	SCREW ISO4762 M4X8 A4	
215	312115-0447	-		3	SCREW ISO4762 M8X12 A4	
216	312145-0285	-		27	SCREW COUNTERS.SLOT.HD. MFS 4X6 SS	
217	312145-0287	-		22	SCREW COUNTERS.SLOT.HD. MFS 4X8 SS	
220	312115-0368	-		2	SCREW ISO4762 M6X16 A4	
221	312311-0459	-		2	SCREW ISO4028 M8X40 FZB	
222	312318-0360	-		2	SCREW ISO4029 M6X6 A4	
225	312601-0318	-		2	NUT M6M8FZB	
226	312605-0312	-		2	HEXAGON NUT, M6M M4 A280	
227	312625-0316	-		4	HEXAGON THIN NUT, EN 24035 ML6M M6 A4	
228	315105-0165	-		2	WASHER ISO 7089-8-200 HV-A4	
229	315105-0173	-		5	WASHER ISO 7089-10-200 HV-A4	
230	315105-0153	-		4	WASHER ISO 7089-6-200 HV-A4	
231	315105-0146	-		4	WASHER ISO 7089-5-200 HV-A4	
236	321120-0104	-		1	BEAR.BUSHING W/O FLANGE 10/12X10	
237	90240-0028	-		2	BEARING BUSHING WITHOUT FLANGE,10/12X15	
241	351175-0104	-	MM	300	KABEL AWM 1X15 MM2 YELLOW-GREEN	
243	351127-0144	-	MM	1500	CABLE RN-F 3X15 MM2 GREEN/YELLOW	
247	353101-0130	-		1	CABLE SHOE 1,5-2,5MM2 BLUE	
250	90144-0060	-	MM		TAPE	
260	90153-0017	-	G	150	ADHESIVE, 2963 TUBE 160G	
270	90194-0075	-		1	WARNING SIGN ISO, HOT SURFACE	
280	359705-0010	-		1	WARNING SIGN ISO, SHARP PART	
B032	90059-0001	A		1	THERMOSTAT	
F040	A33216-0101	-		1	CANTILEVER	**17**
R002	90206-0009	A		1	HEATING ELEMENT, 1000W 240V	
X012	352020-0105	-		1	TERMINAL BOX, UE5	

Machine Type | Group Description | Used-In | Group Number | Page No

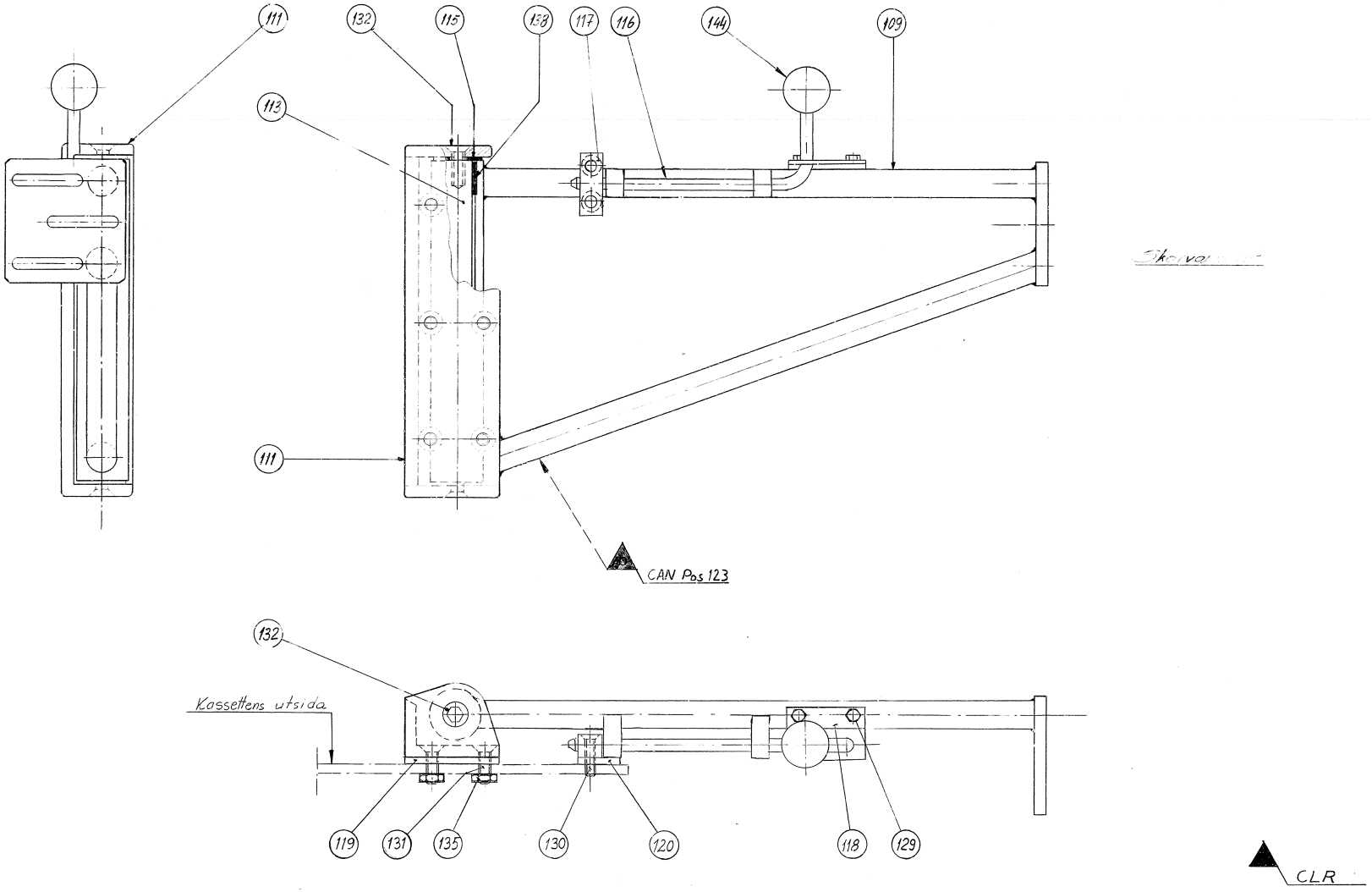

△a Pos. 119 och 120 utgår vid montering på kasett med gjutet pålägg.

ECM: - -
Group number: 33216-0101
Assembly Drawing: 33216-1_1_AA

Issue: 20030213

Pos	Part No	SP	UN	Qty	Description	Page No
Common Parts						
109	33217-0000	-		1	SUPPORTING ARM	
111	33218-0000	-		1	SUPPORTING ARM HOLDER	
113	27115-0000	-		1	SHAFT	
115	27118-0000	-		2	THRUST WASHER	
116	27729-0000	-		1	LATCH	
117	27730-0000	-		1	LOCKING COMPOUND	
118	27731-0000	-		1	SHEET	
129	312105-0362	-		2	SCREW M6S ISO 4017 M6X8 A480	
130	312151-0459	-		2	SCREW HEX.SOCK.COUNT.MF6S 8X40 FZB	
131	312151-0495	-		6	SCREW HEX.SOCK.COUNT.MF6S 10X30 FZB	
132	312151-0536	-		2	SCREW HEX.SOCK.COUNT.MF6S 12X30 FZB	
135	312621-0320	-		6	NUT ML6M10FZB	
144	318800-0106	-		1	HANDLE,SPHERICAL KNOB,INT.THRE,D.40-M10	

Pos	Part No	SP	UN	Qty	Description	Page No

Tetra Pak

SPC
Spare Parts Catalogue

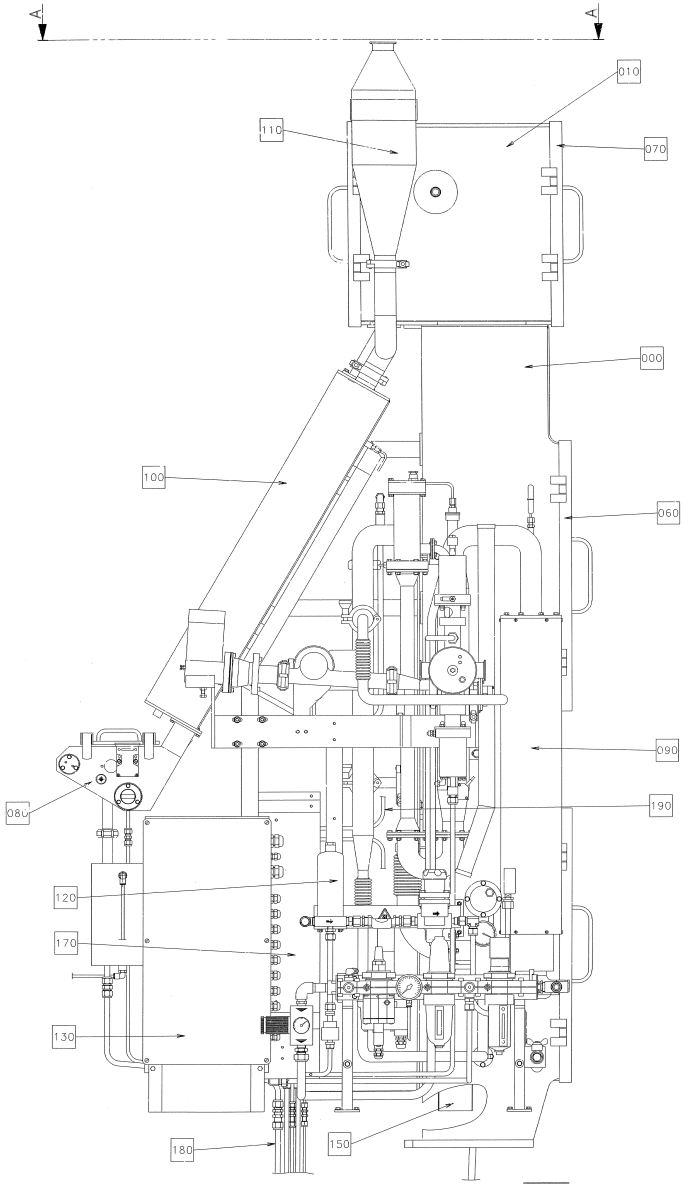
A
A
010
110
070
000
100
060
090
080
190
120
170
130
180
150

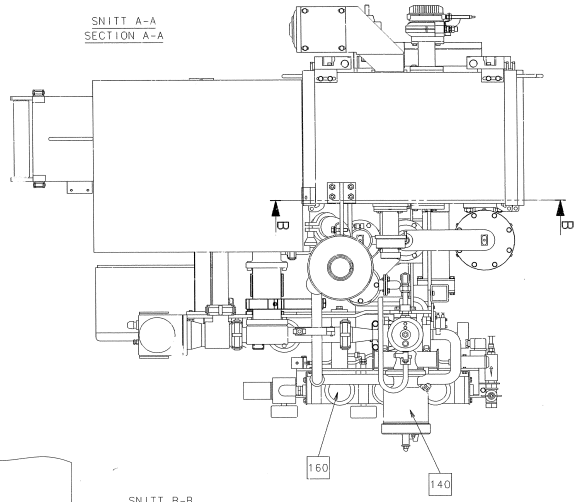
SNITT A-A
SECTION A-A
B
B
160
140

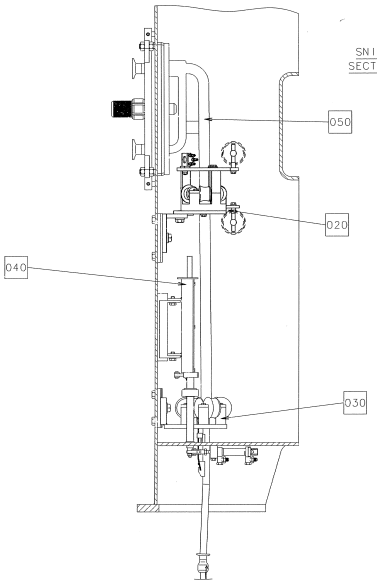
SNITT B-B
SECTION B-B
050
020
040
030

ECM: - -
Group number: 633232-0400
Assembly Drawing: 633232-3_1_AA

Issue: 20030213

Pos	Part No	SP	UN	Qty	Description	Page No
Common Parts						
F000	A566116-0401	-		1	SUPERSTRUCTURE	**23**
F010	A562853-0301	-		1	UPPER HOUSE	**29, 31**
F020	A563408-0101	-		1	UPPER FORMING RING	**35**
F030	A563400-0101	-		1	LOWER FORMING RING	**37**
F040	A1345130-0101	-		1	HEATING UNIT	**39**
F050	A566111-0101	-		1	FILLING PIPE	**41**
F060	A570808-0101	-		2	DOOR	**47**
F070	A570809-0101	-		2	DOOR	**49**
F080	A550060-0201	-		1	STERILIZATION BATH	**51, 53**
F090	A566130-0301	-		1	STERILE AIR SYSTEM	**55, 57**
F100	A567190-0201	-		1	STERILIZING HOUSE	**67**
F110	A568122-0101	-		1	OUTLET AIR SYSTEM	**79**
F120	A569580-0201	-		1	STEAM SYSTEM	**81, 83**
F130	A567113-0101	-		1	CONNECTION BOX	**85**
F140	A566160-0301	-		1	VALVE GROUP	**87, 89**
F150	A569590-0101	-		1	CABLE DUCT	**107**
F160	A568112-0301	-		1	AIR FILTER GROUP	**109, 111**
F170	A568118-0301	-		1	PNEUMATIC PANEL	**115**
F180	A569626-0101	-		1	PIPE SYSTEM	**117**
F190	A570814-0201	-		1	PNEUMATIC SYSTEM	**119**

Pos	Part No	SP	UN	Qty	Description	Page No

Machine Type | Group Description | Used-In | Group Number | Page No

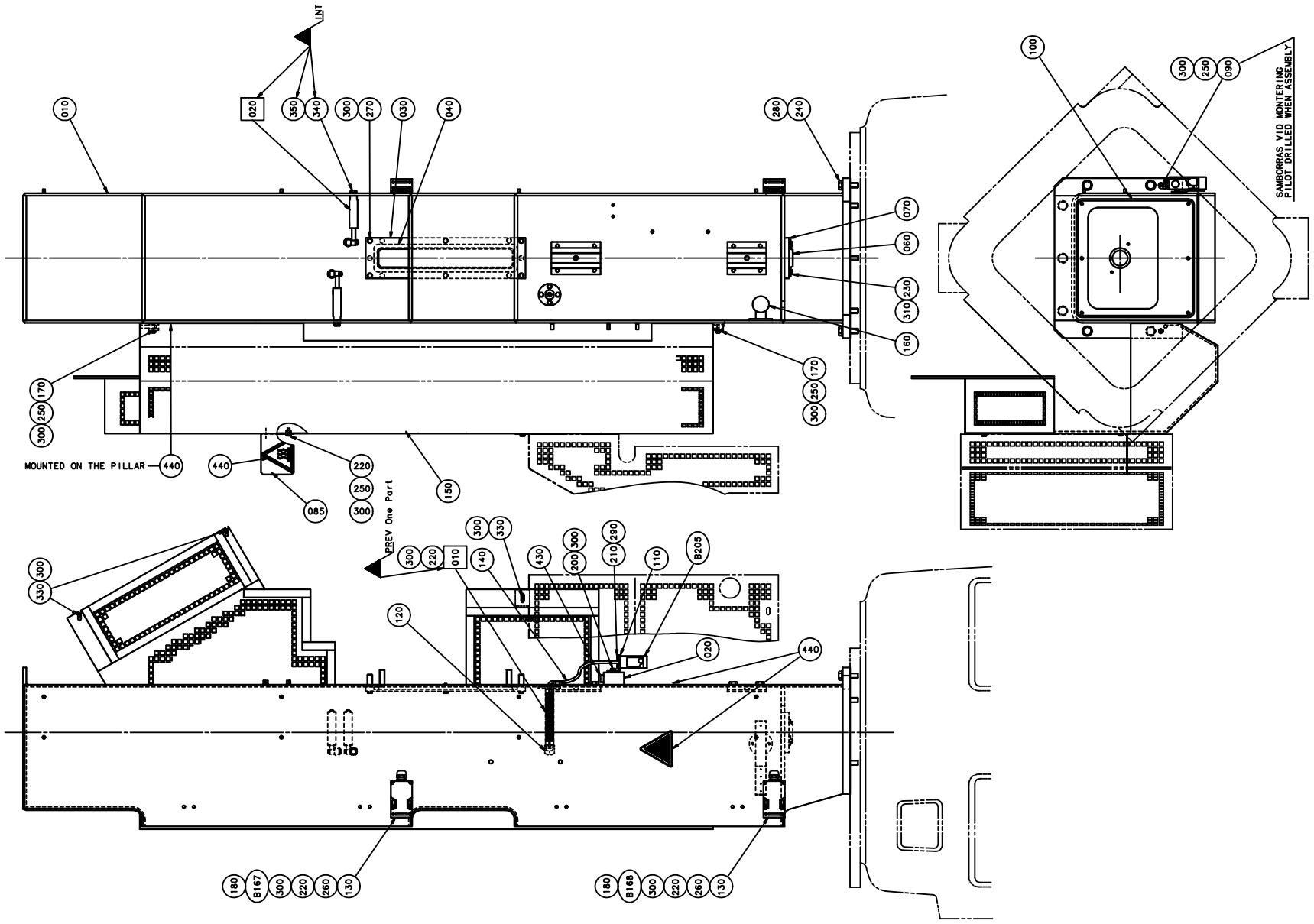
UNT
MOUNTED ON THE PILLAR
PREV One Part
SAMBORRAS VID MONTERING
PILOT DRILLED WHEN ASSEMBLY

ECM: 83466 - 20000925
Group number: 566116-0401
Assembly Drawing: 566116-3_1_AA

Issue: 20030213

Pos	Part No	SP	UN	Qty	Description	Page No
Common Parts						
010	1483071-0000	-		1	PILLAR	
020	568148-0000	-		1	BRACKET	
030	269717-0000	A		1	GASKET HOLDER	
040	269718-0000	A		1	GASKET	
060	563436-0000	A		1	SEALING RING	
070	563437-0000	-		1	RING	
085	1175097-0000	-		1	LABEL HOLDER	
090	B469159-0000	-		2	PIN	
	311103-0369	*-*		*1*	*PARALLELL PIN, M6, 6X60 MM*	
100	491418-0002	A		1	O-RING	
110	563433-0000	-		1	ANGLE BRACKET	
120	563438-0000	-		1	NUT	
130	978531-0000	-		2	BRACKET	
140	90232-0332	A		1	FIBRE LM 21-500	
150	570812-0000	-		1	TOUCH GUARD	
160	570816-0000	A		1	SPREADER	
170	267646-0000	A		2	BLOCKING PIECE	
180	352103-0106	-		2	CABLE GLAND, ST 11, PR18,6/PG11	
200	312105-0379	-		2	SCREW M6S ISO 4014 M6X45 A480	
210	312105-0323	-		4	SKRUV M6S ISO 4017 M5X8 A480	
220	312105-0367	-		10	SCREW M6S M6X14 A280	
230	312105-0372	-		2	SCREW M6S ISO 4017 M6X25 A480	
240	312105-0540	-		7	SCREW M6S ISO 4017 M12X40 A480	
250	312605-0316	-		8	HEXAGON NUT, M6M M6 A280	
260	312115-0329	-		4	SCREW ISO4762 M5X16 A4	
270	312105-0370	-		6	SCREW M6S ISO 4017 M6X20 A480	
280	315101-0178	-		7	WASHER PLAIN, BRB, 13/24 H=2	
290	315105-0146	-		4	WASHER ISO 7089-5-200 HV-A4	
300	315105-0153	-		28	WASHER ISO 7089-6-200 HV-A4	
310	315125-0153	-		2	WASHER TBRSB 6,4X22X4 A4	
330	312105-0364	-		4	SCREW M6S ISO 4017 M6X10 A480	
340 I	312105-0449	-		2	SCREW M6S ISO 4017 M8X16 A480	
350 I	315105-0165	-		2	WASHER ISO 7089-8-200 HV-A4	
430	90347-0007	A		1	VIBRATION DAMPER	
440	90194-0075	-		4	WARNING SIGN ISO, HOT SURFACE	
B167	90044-0139	A		1	KEY SAF.SW. AZ16-02 ZVR K-2254	
B168	90044-0139	A		1	KEY SAF.SW. AZ16-02 ZVR K-2254	
B205	B90232-0089	A		1	PH.CELL NTL6-P12-1011520	
	90232-0327	*-*		*1*	*CAPSULE 2-006-513*	
F010 I	A594707-0100	-		1	PROTECTIVE TUBE	**25**
F020 I	A594711-0100	-		2	TUBE SUPPORT	**27**

Pos	Part No	SP	UN	Qty	Description	Page No

Machine Type | Group Description | Used-In | Group Number | Page No

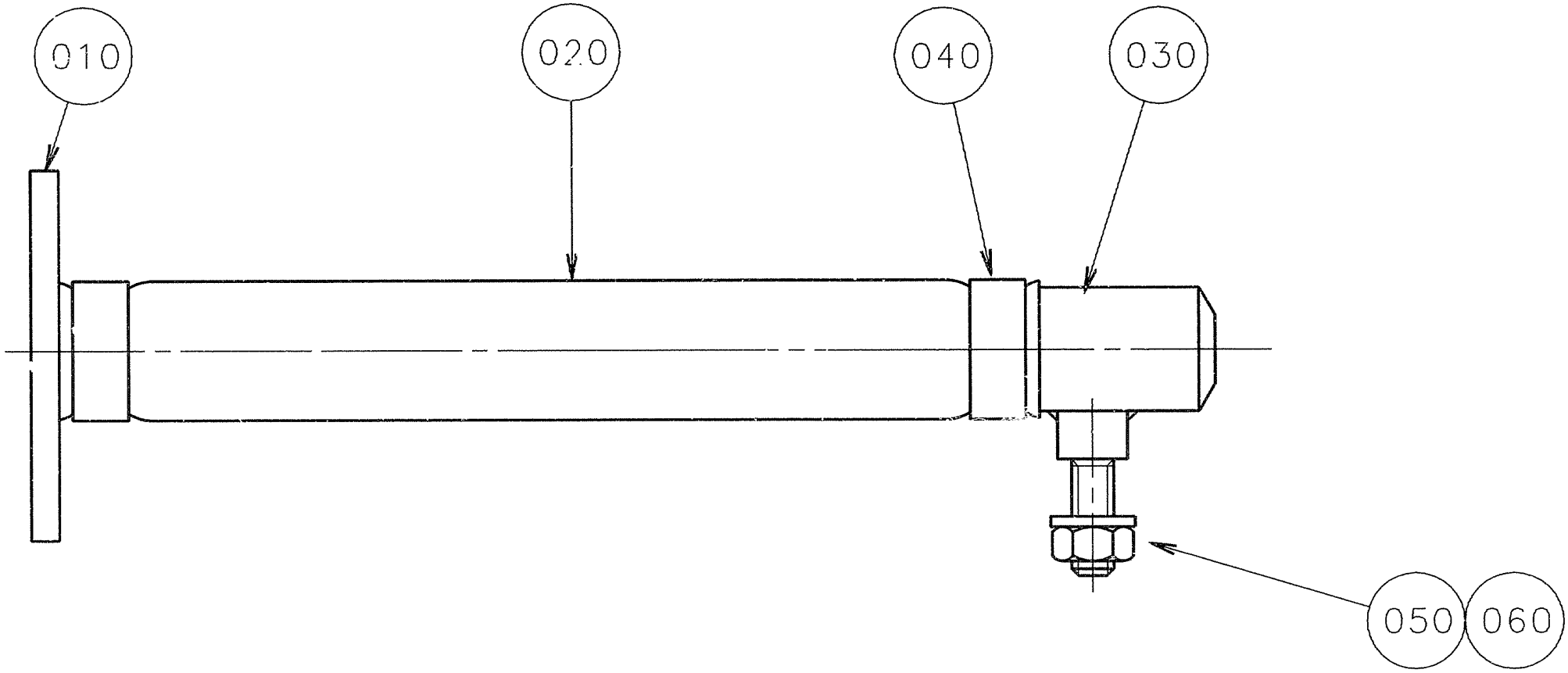
010
020
040
030
050
060

ECM: 81943 - 20000814
Group number: 594707-0100
Assembly Drawing: 594707-2_1_AA

Issue: 20030213

Pos	Part No	SP	UN	Qty	Description	Page No
Common Parts						
010 I	594708-0000	-		1	ATTACHMENT	
020 I	594710-0000	A		1	HOSE	
030 I	1483142-0000	-		1	HOLDER	
040 I	342991-0103	A		2	HOSE CLIP,WORM DRIVE TYPE (19)-23	
050	312605-0316	-		1	HEXAGON NUT, M6M M6 A280	
060	315115-0153	-		1	WASHER PLAIN, TBRB 6,4/12 H=3	

Pos	Part No	SP	UN	Qty	Description	Page No

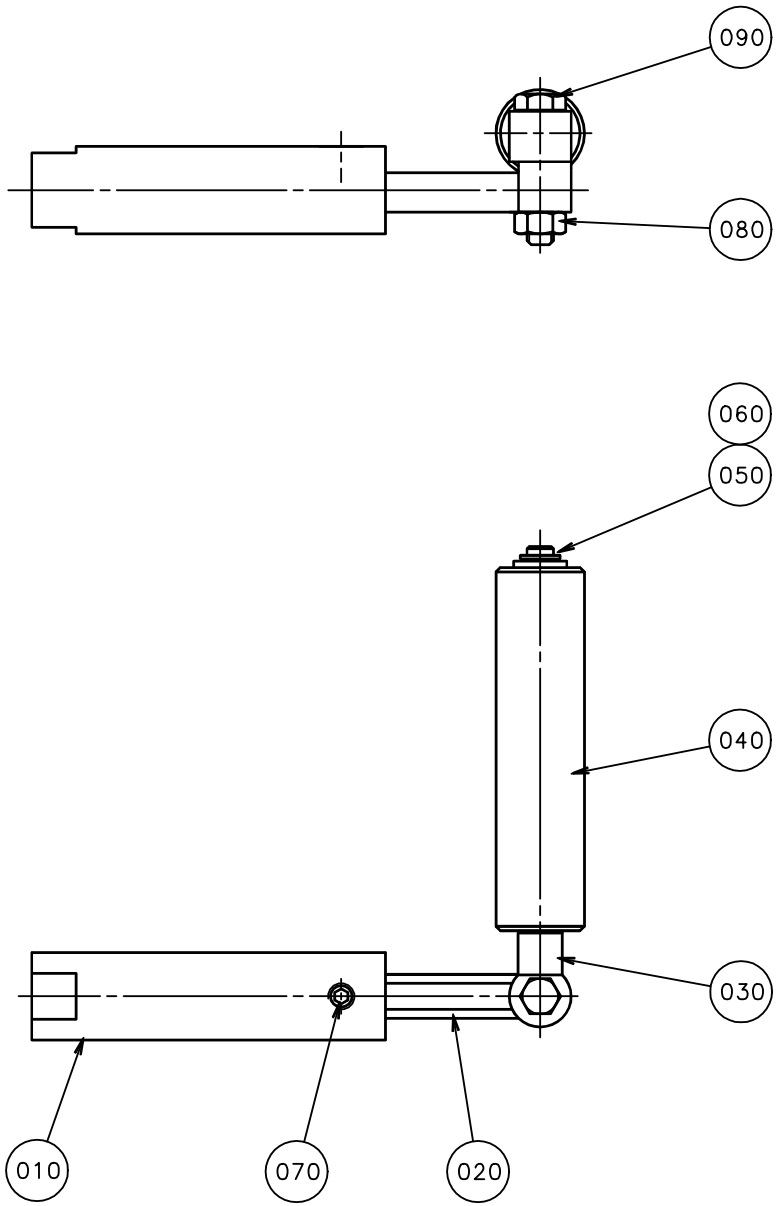
090
080
060
050
040
030
010
070
020

ECM: 81944 - 20000814
Group number: 594711-0100
Assembly Drawing: 594711-1_1_AA

Issue: 20030213

Pos	Part No	SP	UN	Qty	Description	Page No
Common Parts						
010 I	594713-0000	-		1	BRACKET	
020 I	594712-0000	-		1	ARM	
030 I	594715-0000	-		1	SHAFT	
040 I	594714-0000	A		1	ROLL	
050 I	315105-0153	-		1	WASHER ISO 7089-6-200 HV-A4	
060 I	315755-0106	-		1	LOCKING WASHER 4	
070 I	312318-0360	-		1	SCREW ISO4029 M6X6 A4	
080 I	312105-0374	-		1	SCREW M6S ISO 4014 M6X30 A480	
090 I	312605-0316	-		1	HEXAGON NUT, M6M M6 A280	

Pos	Part No	SP	UN	Qty	Description	Page No

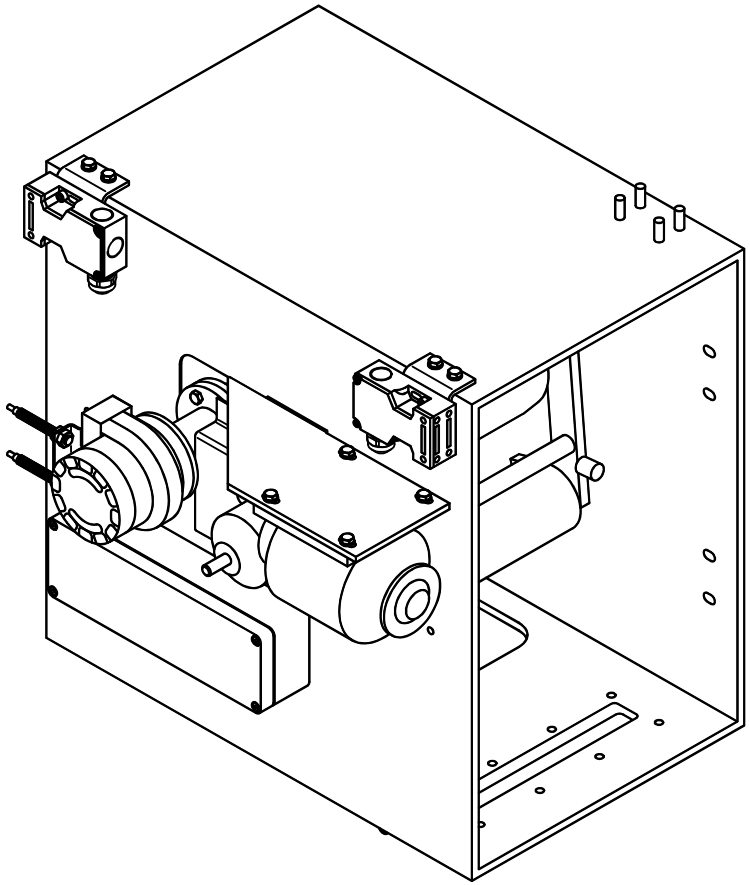

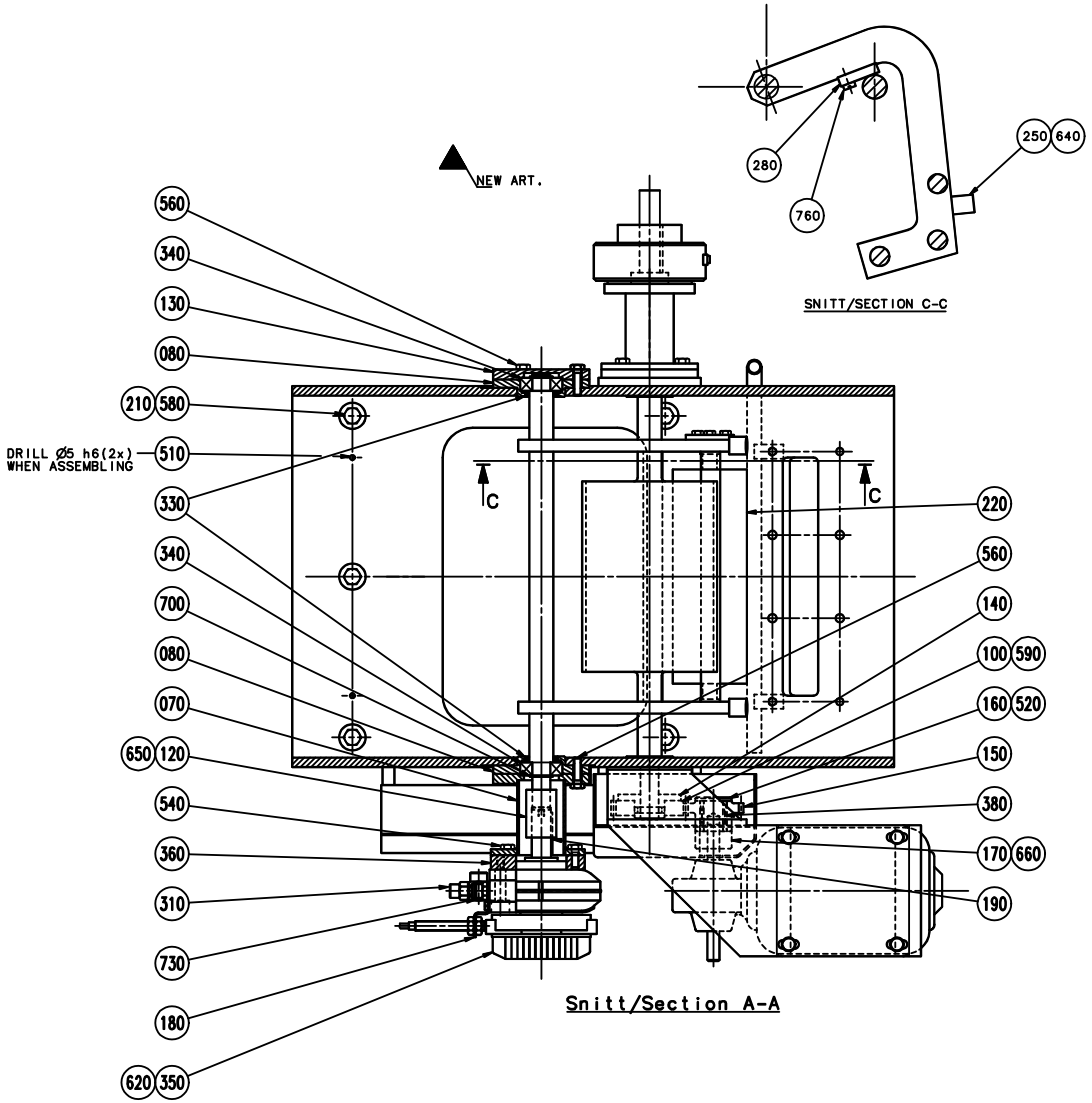
NEW ART.
SNITT/SECTION C-C
Snitt/Section A-A
DRILL Ø5 h6(2x) WHEN ASSEMBLING
560
340
130
080
210
580
510
330
340
700
080
070
650
120
540
360
310
730
180
620
350
280
760
250
640
C
C
220
560
140
100
590
160
520
150
380
170
660
190

ECM: 83461 - 20000925
Group number: 562853-0301
Assembly Drawing: 562853-5_1_AA

Issue: 20030213

Pos	Part No	SP	UN	Qty	Description	Page No
Common Parts						
010	562854-0000	-		1	UPPER HOUSE	
020	562855-0000	-		1	BEARING CONSOLE	
030	562856-0000	-		1	LIFTING ARM	
040	562857-0000	A		1	BENDING ROLLER	
050	562858-0000	-		1	INTERMEDIARY SECTION	
060	562859-0000	-		1	BEARING HOUSING	
070	562860-0000	-		1	INTERMEDIARY SECTION	
080	562861-0000	-		2	BEARING HOUSING	
090	562862-0000	-		2	BEARING COVER	
100	255897-0008	A		1	GEAR WHEEL	
110	562863-0000	-		1	PIVOT PIN	
120	562864-0000	-		1	JUNCTION SLEEVE	
130	562865-0000	-		1	BEARING COVER	
140	255898-0000	A		1	HUB	
150	209331-0001	A		1	GEAR WHEEL	
160	250592-0000	A		1	WASHER	
170	255899-0000	A		1	HUB	
180	570819-0000	-		1	BRACKET	
190	299324-0003	A		2	FLAT WEDGE	
200	978532-0000	-		2	BRACKET	
210	28036-0000	A		6	WASHER	
220	B562867-0000	A		1	BENDING ROLLER	
	90166-0056	*A*	*M*	*1*	*SHRINKABLE HOSE*	
230	594734-0000	-		1	SHAFT	
240	569630-0000	-		1	PROTECTION	
250	569593-0000	-		2	DAMPER	
270	570839-0000	-		1	PROTECTION	
280	567215-0000	A		2	STOP	
310	90235-0241	A		2	THROTTLE CHECK VALVE R1/8" MANUAL	
330	90091-0349	A		4	VARISEAL ROTO 12X24X3,9 MM	
340	90214-0098	A		4	BALL BEARING, 15X35X11 MM	
350	90450-0095	A		1	ROTARY ACTUATOR DSR 32-180-P	
360	90450-0720	-		1	BRACKET,FRONT,FLANGE 32	
370	90240-0184	A		2	FLANGE BUSHING,12X16X15 MM	
380	90348-0007	A		1	FREE WHEEL COUPLING	
390	90355-0164	A		1	FLEXIBLE COUPLING, 10X10 MM	
420	352135-0108	-	MM	4200	HOSE .020	
510	311103-0310	-		3	PARALLELL PIN, M6, 5X20 MM	
520	312105-0287	-		2	SCREW M6S ISO4017 M4X8 A480	
530	312105-0329	-		3	SCREW M6S ISO 4017 M5X16 A480	
540	312105-0368	-		19	SCREW M6S M6X16 A280	
550	312105-0370	-		3	SCREW M6S ISO 4017 M6X20 A480	
560	312105-0371	-		6	SCREW M6S ISO 4017 M6X22 A480	
570	312105-0372	-		4	SCREW M6S ISO 4017 M6X25 A480	
580	312105-0451	-		6	SCREW M6S ISO 4017 M8X20 A480	
590	312115-0327	-		3	SCREW ISO4762 M5X12 A4	
600	312115-0329	-		8	SCREW ISO4762 M5X16 A4	
610	312105-0364	-		2	SCREW M6S ISO 4017 M6X10 A480	
620	312125-0293	-		2	SCREW PAN HEAD MCS M4X16 SS	
650	312318-0321	-		2	SCREW ISO4029 M5X6 A4	
660	312318-0364	-		1	SCREW ISO4029 M6X10 A4	
670	312605-0316	-		4	HEXAGON NUT, M6M M6 A280	
690	315105-0153	-		28	WASHER ISO 7089-6-200 HV-A4	
700	315751-0112	-		2	RETAIN. RING, 15	
710	315701-0201	-		1	PARALLEL KEY W. ROUND ENDS 5X5X20 MM	
720	315751-0113	-		2	RETAIN. RING, 16	
730	342722-0202	-		2	PIPE COUPLING 1/8" D=6MM	
760	312125-0368	-		2	SCREW PAN HEAD MCS M6X16 SS	
765	352103-0106	-		2	CABLE GLAND, ST 11, PR18,6/PG11	
770	353247-0004	-		1	GLAND, PG16, 15354P18S08UL16	
B160	90044-0145	A		1	PROX.SW. 922 AAIY-A9P-050-LZ876	
B161	90044-0145	A		1	PROX.SW. 922 AAIY-A9P-050-LZ876	
B165	90044-0139	A		1	KEY SAF.SW. AZ16-02 ZVR K-2254	
B166	90044-0139	A		1	KEY SAF.SW. AZ16-02 ZVR K-2254	
F010	A570811-0101	-		1	CONNECTION BOX	**33**
L008	90432-0024	A		1	ELECTROMAG. POWDER BRAKE, FAT50/24 VDC	
M010	90069-0286	A		1	GEARS, WORM MOTOR WKM/DM90-60E2	

Machine Type | Group Description | Used-In | Group Number | Page No

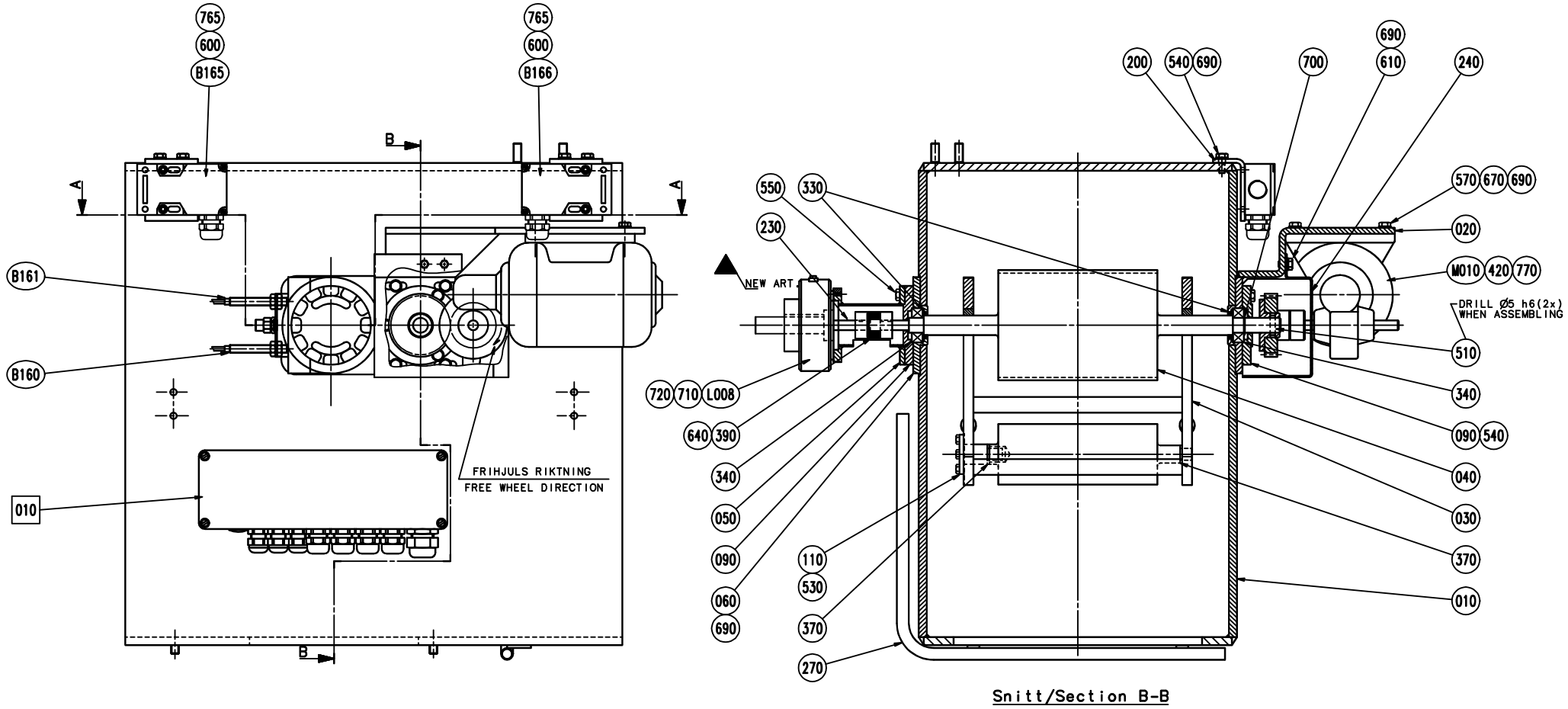

Snitt/Section B-B

ECM: 83461 - 20000925
Group number: 562853-0301
Assembly Drawing: 562853-6_1_AA

Issue: 20030213

Pos	Part No	SP	UN	Qty	Description	Page No
Common Parts						
010	562854-0000	-		1	UPPER HOUSE	
020	562855-0000	-		1	BEARING CONSOLE	
030	562856-0000	-		1	LIFTING ARM	
040	562857-0000	A		1	BENDING ROLLER	
050	562858-0000	-		1	INTERMEDIARY SECTION	
060	562859-0000	-		1	BEARING HOUSING	
070	562860-0000	-		1	INTERMEDIARY SECTION	
080	562861-0000	-		2	BEARING HOUSING	
090	562862-0000	-		2	BEARING COVER	
100	255897-0008	A		1	GEAR WHEEL	
110	562863-0000	-		1	PIVOT PIN	
120	562864-0000	-		1	JUNCTION SLEEVE	
130	562865-0000	-		1	BEARING COVER	
140	255898-0000	A		1	HUB	
150	209331-0001	A		1	GEAR WHEEL	
160	250592-0000	A		1	WASHER	
170	255899-0000	A		1	HUB	
180	570819-0000	-		1	BRACKET	
190	299324-0003	A		2	FLAT WEDGE	
200	978532-0000	-		2	BRACKET	
210	28036-0000	A		6	WASHER	
220	B562867-0000	A		1	BENDING ROLLER	
	90166-0056	*A*	*M*	*1*	*SHRINKABLE HOSE*	
230	594734-0000	-		1	SHAFT	
240	569630-0000	-		1	PROTECTION	
250	569593-0000	-		2	DAMPER	
270	570839-0000	-		1	PROTECTION	
280	567215-0000	A		2	STOP	
310	90235-0241	A		2	THROTTLE CHECK VALVE R1/8" MANUAL	
330	90091-0349	A		4	VARISEAL ROTO 12X24X3,9 MM	
340	90214-0098	A		4	BALL BEARING, 15X35X11 MM	
350	90450-0095	A		1	ROTARY ACTUATOR DSR 32-180-P	
360	90450-0720	-		1	BRACKET,FRONT,FLANGE 32	
370	90240-0184	A		2	FLANGE BUSHING,12X16X15 MM	
380	90348-0007	A		1	FREE WHEEL COUPLING	
390	90355-0164	A		1	FLEXIBLE COUPLING, 10X10 MM	
420	352135-0108	-	MM	4200	HOSE .020	
510	311103-0310	-		3	PARALLELL PIN, M6, 5X20 MM	
520	312105-0287	-		2	SCREW M6S ISO4017 M4X8 A480	
530	312105-0329	-		3	SCREW M6S ISO 4017 M5X16 A480	
540	312105-0368	-		19	SCREW M6S M6X16 A280	
550	312105-0370	-		3	SCREW M6S ISO 4017 M6X20 A480	
560	312105-0371	-		6	SCREW M6S ISO 4017 M6X22 A480	
570	312105-0372	-		4	SCREW M6S ISO 4017 M6X25 A480	
580	312105-0451	-		6	SCREW M6S ISO 4017 M8X20 A480	
590	312115-0327	-		3	SCREW ISO4762 M5X12 A4	
600	312115-0329	-		8	SCREW ISO4762 M5X16 A4	
610	312105-0364	-		2	SCREW M6S ISO 4017 M6X10 A480	
620	312125-0293	-		2	SCREW PAN HEAD MCS M4X16 SS	
650	312318-0321	-		2	SCREW ISO4029 M5X6 A4	
660	312318-0364	-		1	SCREW ISO4029 M6X10 A4	
670	312605-0316	-		4	HEXAGON NUT, M6M M6 A280	
690	315105-0153	-		28	WASHER ISO 7089-6-200 HV-A4	
700	315751-0112	-		2	RETAIN. RING, 15	
710	315701-0201	-		1	PARALLEL KEY W. ROUND ENDS 5X5X20 MM	
720	315751-0113	-		2	RETAIN. RING, 16	
730	342722-0202	-		2	PIPE COUPLING 1/8" D=6MM	
760	312125-0368	-		2	SCREW PAN HEAD MCS M6X16 SS	
765	352103-0106	-		2	CABLE GLAND, ST 11, PR18,6/PG11	
770	353247-0004	-		1	GLAND, PG16, 15354P18S08UL16	
B160	90044-0145	A		1	PROX.SW. 922 AAIY-A9P-050-LZ876	
B161	90044-0145	A		1	PROX.SW. 922 AAIY-A9P-050-LZ876	
B165	90044-0139	A		1	KEY SAF.SW. AZ16-02 ZVR K-2254	
B166	90044-0139	A		1	KEY SAF.SW. AZ16-02 ZVR K-2254	
F010	A570811-0101	-		1	CONNECTION BOX	**33**
L008	90432-0024	A		1	ELECTROMAG. POWDER BRAKE, FAT50/24 VDC	
M010	90069-0286	A		1	GEARS, WORM MOTOR WKM/DM90-60E2	

Machine Type | Group Description | Used-In | Group Number | Page No

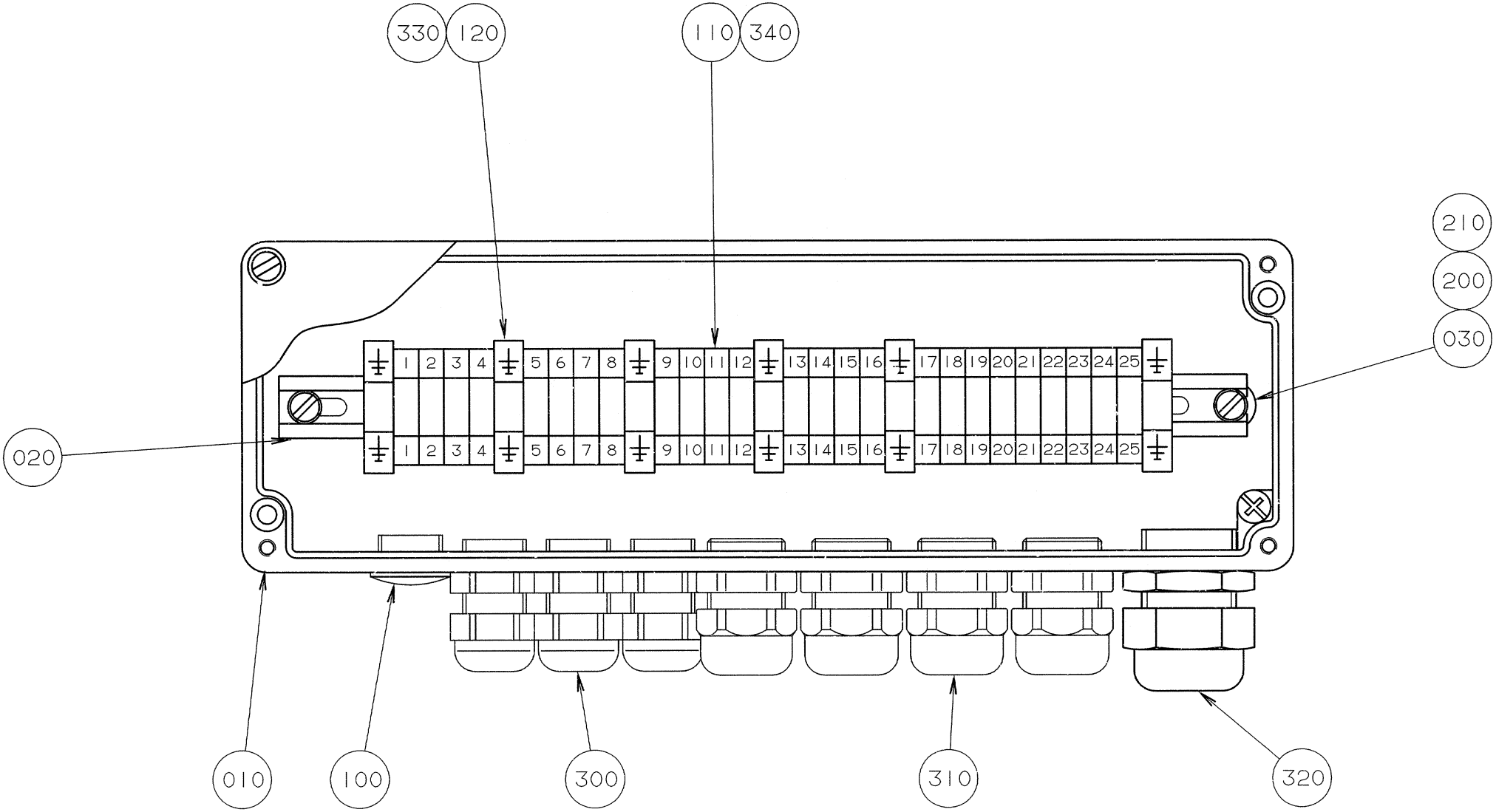
330
120
110
340
210
200
030
020
1 2 3 4 5 6 7 8 9 10 11 12 13 14 15 16 17 18 19 20 21 22 23 24 25
1 2 3 4 5 6 7 8 9 10 11 12 13 14 15 16 17 18 19 20 21 22 23 24 25
010
100
300
310
320

ECM: - -
Group number: 570811-0101
Assembly Drawing: 570811-1_1_AA

Issue: 20030213

Pos	Part No	SP	UN	Qty	Description	Page No
Common Parts						
010	B569597-0000	-		1	CONNECTION BOX	
	90265-0032	-		*1*	*APPLIANCE BOX ROSE 01082505*	
020	8490-0010	-		1	MOUNTING RAIL	
030	441754-0000	-		2	SPACER	
100	90002-0013	-		1	BLANK-OFF PLUG, PR 15,2 SKINDICHT-BLK9	
110	90077-0079	-		25	FEED THROUGH TERMINAL, 02943.6	
120	90135-0026	-		6	EARTH TERMINAL, 3802.6	
200	312121-0295	-		2	SCREW SLOT.PAN HD. MCS 4X20 FZB	
210	315101-0136	-		2	BRICKA, BRB, 4,3/8 H=0,8	
300	352103-0101	-		3	KABELFöRSKR. ST 9, PR15,2/PG9	
310	352103-0106	-		4	CABLE GLAND, ST 11, PR18,6/PG11	
320	352103-0111	-		1	CABLE GLAND, ST 16, PR22,5/PG16	
330	359011-0202	-		1	SIGN BOARD(GROUND)	
340	359011-0821	-		2	SET OF SIGNS 6-FW 1-50	

Pos	Part No	SP	UN	Qty	Description	Page No

Machine Type | Group Description | Used-In | Group Number | Page No

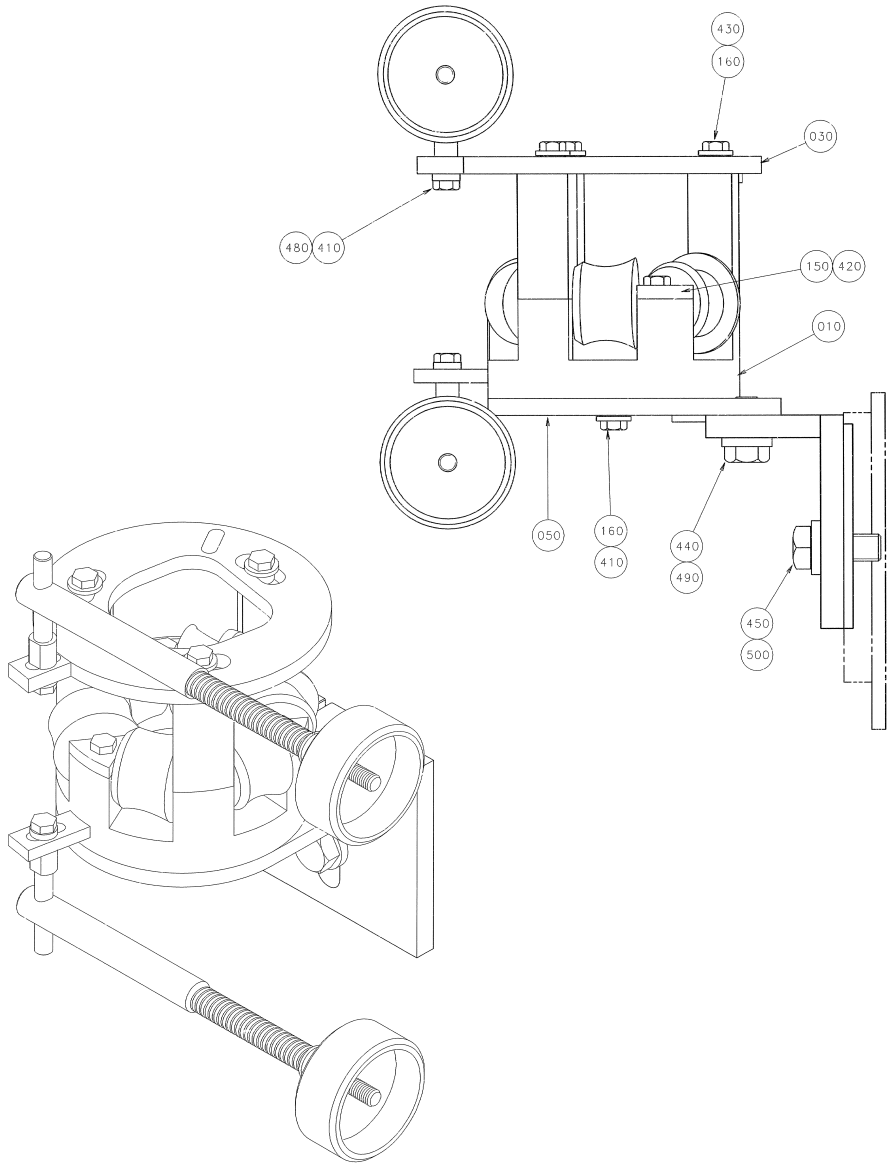
430
160
030
480
410
150
420
010
050
160
410
440
490
450
500

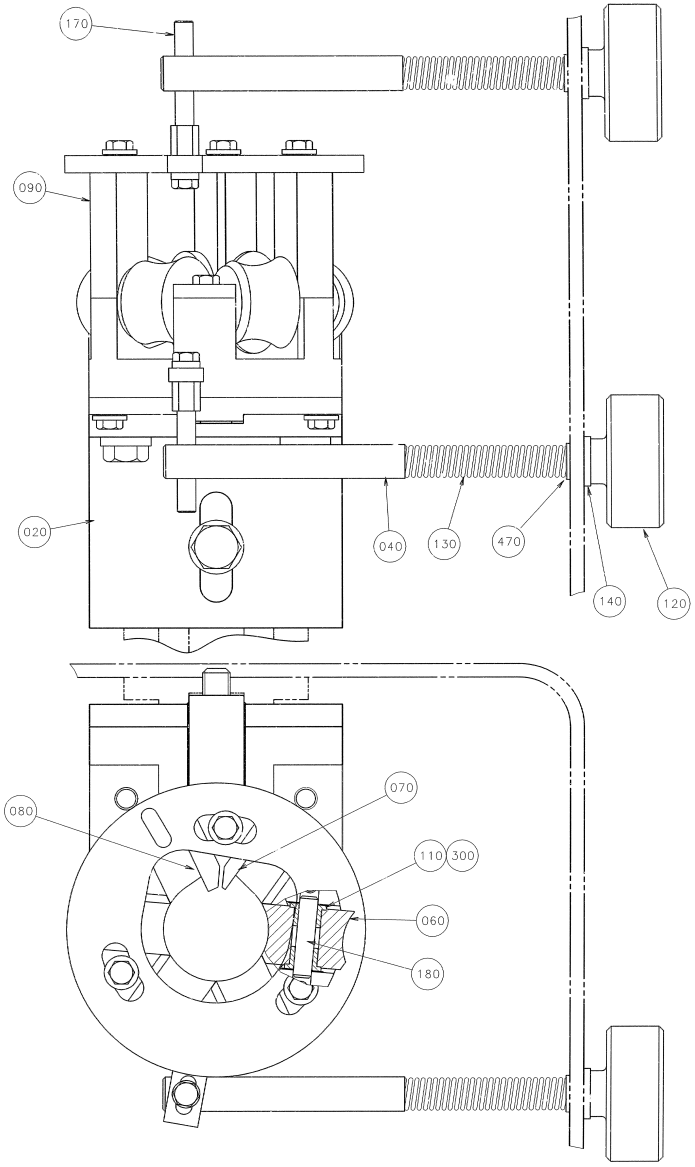
170
090
020
040
130
470
140
120
080
070
110
300
060
180

ECM: 83464 - 20000925
Group number: 563408-0101
Assembly Drawing: 563408-2_1_AA

Issue: 20030213

Pos	Part No	SP	UN	Qty	Description	Page No
Common Parts						
010	563409-0000	-		1	BRACKET	
020	563411-0000	-		1	ANGLE BRACKET	
030	566125-0000	-		1	RING	
040	493886-0000	A		2	SHAFT	
050	563410-0000	-		1	PLATE	
060	563412-0000	A		4	ROLLER	
070	563413-0000	A		1	ROLLER	
080	563414-0000	A		1	ROLLER	
090	563426-0000	-		3	SPACER	
110	2033-0011	-		12	WASHER	
120	257090-0000	A		2	SHIFTER HANDLE	
130	435778-0000	A		2	SPRING	
140	436403-0000	A		2	WASHER	
150	563415-0000	-		3	LOCK PLATE	
160	567207-0000	-		5	SPACER	
170	576149-0000	-		2	GUIDE STUD	
180	752186-0003	A		6	SHAFT	
300	90240-0172	A		12	FLANGE BUSHING 8X12X10	
410	312105-0368	-		4	SCREW M6S M6X16 A280	
420	312105-0370	-		3	SCREW M6S ISO 4017 M6X20 A480	
430	312105-0386	-		3	SCREW M6S ISO 4014 M6X80 A480	
440	312105-0492	-		2	SCREW M6S ISO 4017 M10X22 A480	
450	312105-0536	-		1	SCREW M6S ISO 4017 M12X30 A480	
470	315105-0165	-		2	WASHER ISO 7089-8-200 HV-A4	
480	315115-0153	-		2	WASHER PLAIN, TBRB 6,4/12 H=3	
490	315115-0173	-		2	WASHER PLAIN, TBRB 10,5/22 H=4	
500	315115-0178	-		1	WASHER PLAIN, TBRB 13/24 H=4	

Pos	Part No	SP	UN	Qty	Description	Page No

Machine Type | Group Description | Used-In | Group Number | Page No

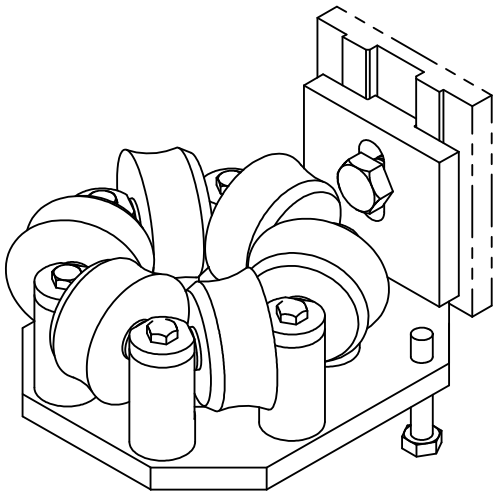

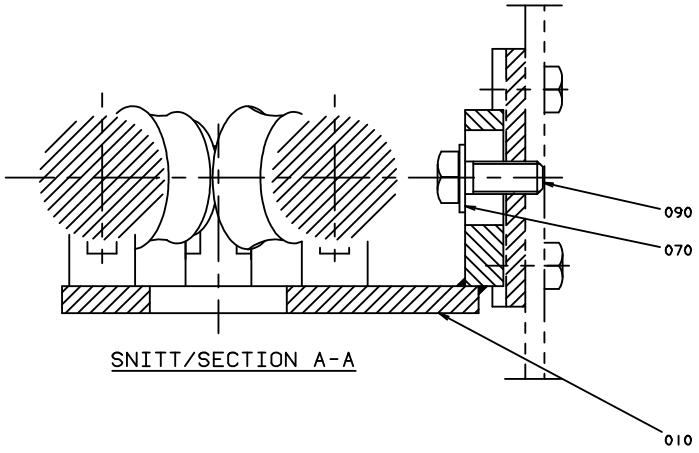

SNITT/SECTION A-A

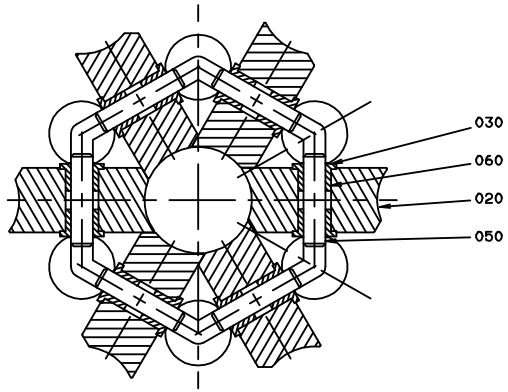

SNITT/SECTION B-B

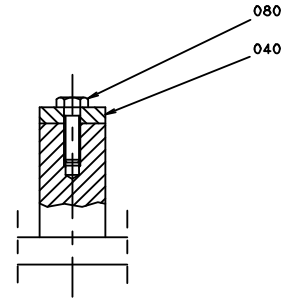

SNITT/SECTION C-C

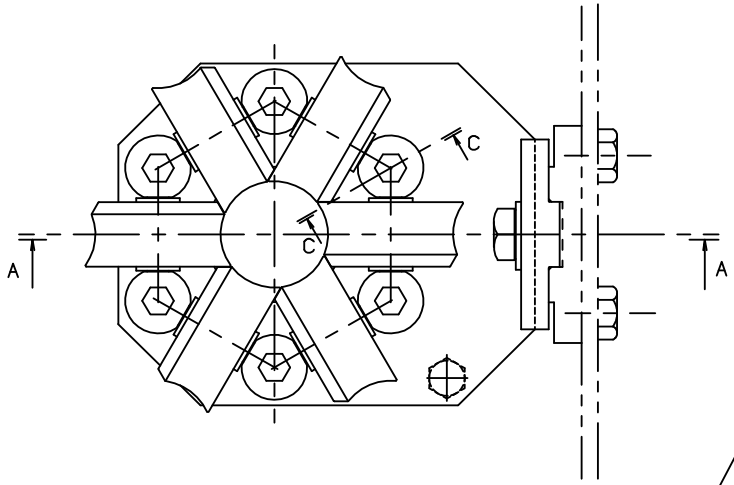

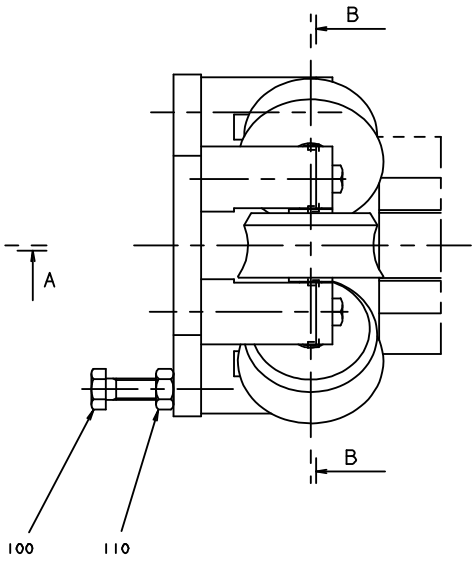

ECM: 83463 - 20000925
Group number: 563400-0101
Assembly Drawing: 563400-1_1_AB

Issue: 20030213

Pos	Part No	SP	UN	Qty	Description	Page No
Common Parts						
010	563401-0000	-		1	HOLDER	
020	563403-0000	A		6	ROLL	
030	2033-0011	-		12	WASHER	
040	563402-0000	A		6	LOCK PLATE	
050	752186-0003	A		6	SHAFT	
060	90240-0172	A		12	FLANGE BUSHING 8X12X10	
070	315115-0178	-		1	WASHER PLAIN, TBRB 13/24 H=4	
080	312105-0370	-		6	SCREW M6S ISO 4017 M6X20 A480	
090	312105-0536	-		1	SCREW M6S ISO 4017 M12X30 A480	
100	312109-0460	-		1	SCREW M6S ISO 4017 M8X45 A480	
110	312605-0318	-		1	HEXAGON NUT, M6M M8 A280	

Pos	Part No	SP	UN	Qty	Description	Page No

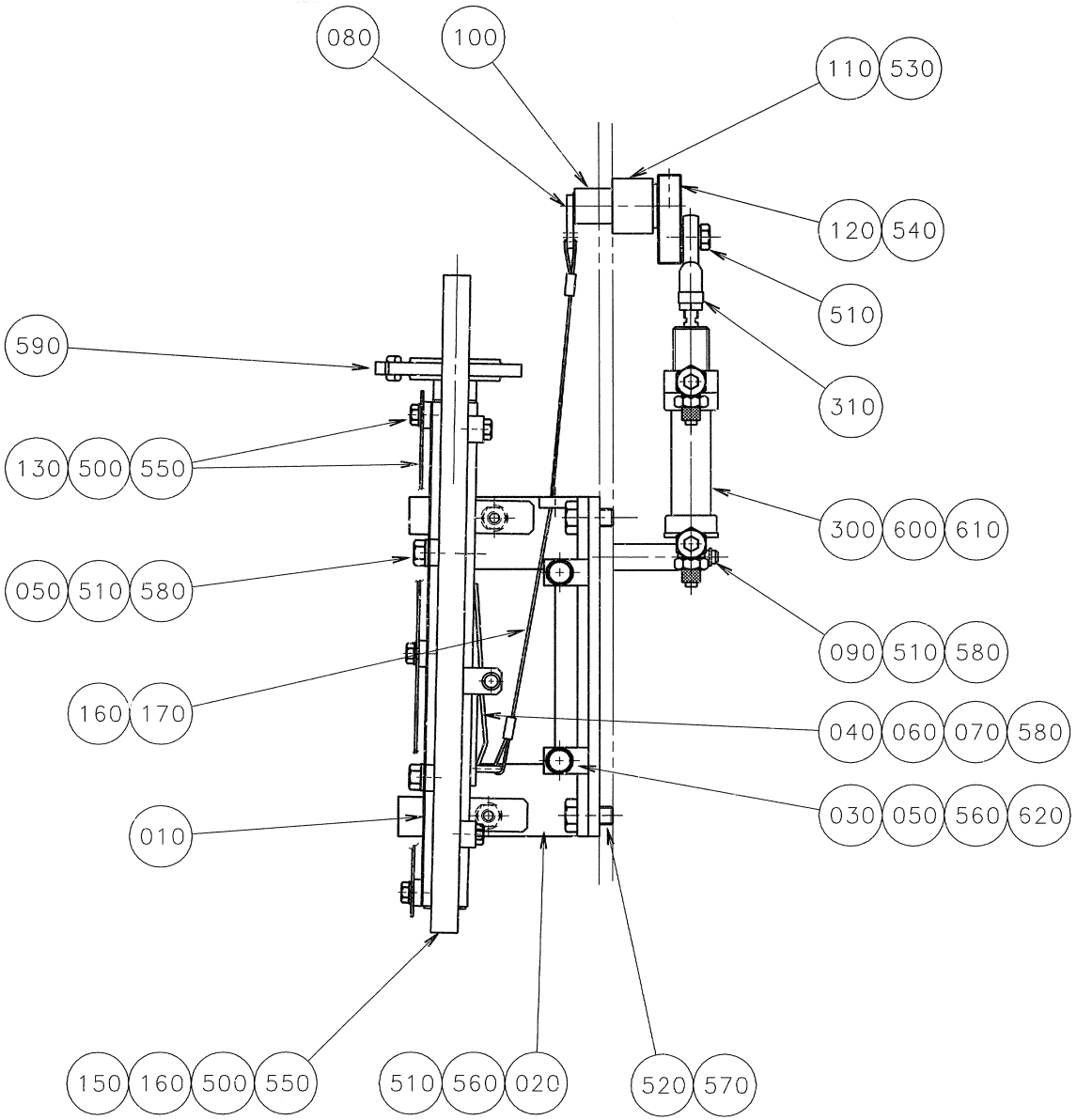
080
100
110
530
120
540
510
310
590
130
500
550
300
600
610
050
510
580
090
510
580
160
170
040
060
070
580
030
050
560
620
010
150
160
500
550
510
560
020
520
570

ECM: 83488 - 20000925
Group number: 1345130-0101
Assembly Drawing: 1345130-1_1_AA

Issue: 20030213

Pos	Part No	SP	UN	Qty	Description	Page No
Common Parts						
010	1345149-0000	A		1	NOZZLE	
020	1345152-0000	A		1	NOZZLE BRACKET	
030	1345153-0000	-		1	HOLDER	
040	1345154-0000	-		1	FLAP	
050	1345156-0000	A		4	SCREW	
060	1345157-0000	B		1	PIN	
070	1345158-0000	B		1	SPRING 7111 TYPE D	
080	1345166-0000	-		1	PIVOT ARM	
090	1345161-0000	A		1	PIN	
100	1345162-0000	A		1	BUSSNING	
110	1345163-0000	A		1	BEARING HOLDER	
120	1345164-0000	A		1	ARM	
130	1345167-0000	B		1	PROTECTIVE CLOTH	
140	547516-0000	A		1	ROD	
150	547517-0000	B		1	TEFLON PIPE	
160	1345199-0000	B	M	1	WIRE 3573	
170	1345201-0000	A		2	WIRE LOCK	
300	90239-0816	A		1	DOUBLE ACTING, MINI-ISO, CYL.16-25	
310	90239-0491	A		1	ROD END,BALL JOINT EYE,MINI-ISO M6	
500	312105-0327	-		5	SCREW M6S ISO 4017 M5X12 A480	
510	312105-0368	-		3	SCREW M6S M6X16 A280	
520	312105-0449	-		2	SCREW M6S ISO 4017 M8X16 A480	
530	312115-0370	-		2	SCREW ISO4762 M6X20 A4	
540	312311-0366	-		1	SCREW ISO4028 M6X12 FZB	
550	315105-0146	-		2	WASHER ISO 7089-5-200 HV-A4	
560	315105-0153	-		10	WASHER ISO 7089-6-200 HV-A4	
570	315105-0165	-		2	WASHER ISO 7089-8-200 HV-A4	
580	315755-0106	-		2	LOCKING WASHER 4	
590	342840-0101	-		1	CLAMP, 12,7 AND 19,1 MM 3-A PCS+PMCS	
600	342980-0111	-		2	BANJO-CONNECTION,RING 6/4-M5	
610	B342980-0301	-		2	BANJO-HOLLOW BOLT COUPL.,EXT.THREA.01-M5	
	315233-0101	*C*		*1*	*WASHER PL.RND.NYL.5,2/8,H=1*	
620	311411-0152	-		4	SPLIT PIN SP2X16RFR	

Pos	Part No	SP	UN	Qty	Description	Page No

Machine Type	Group Description	Used-In	Group Number	Page No

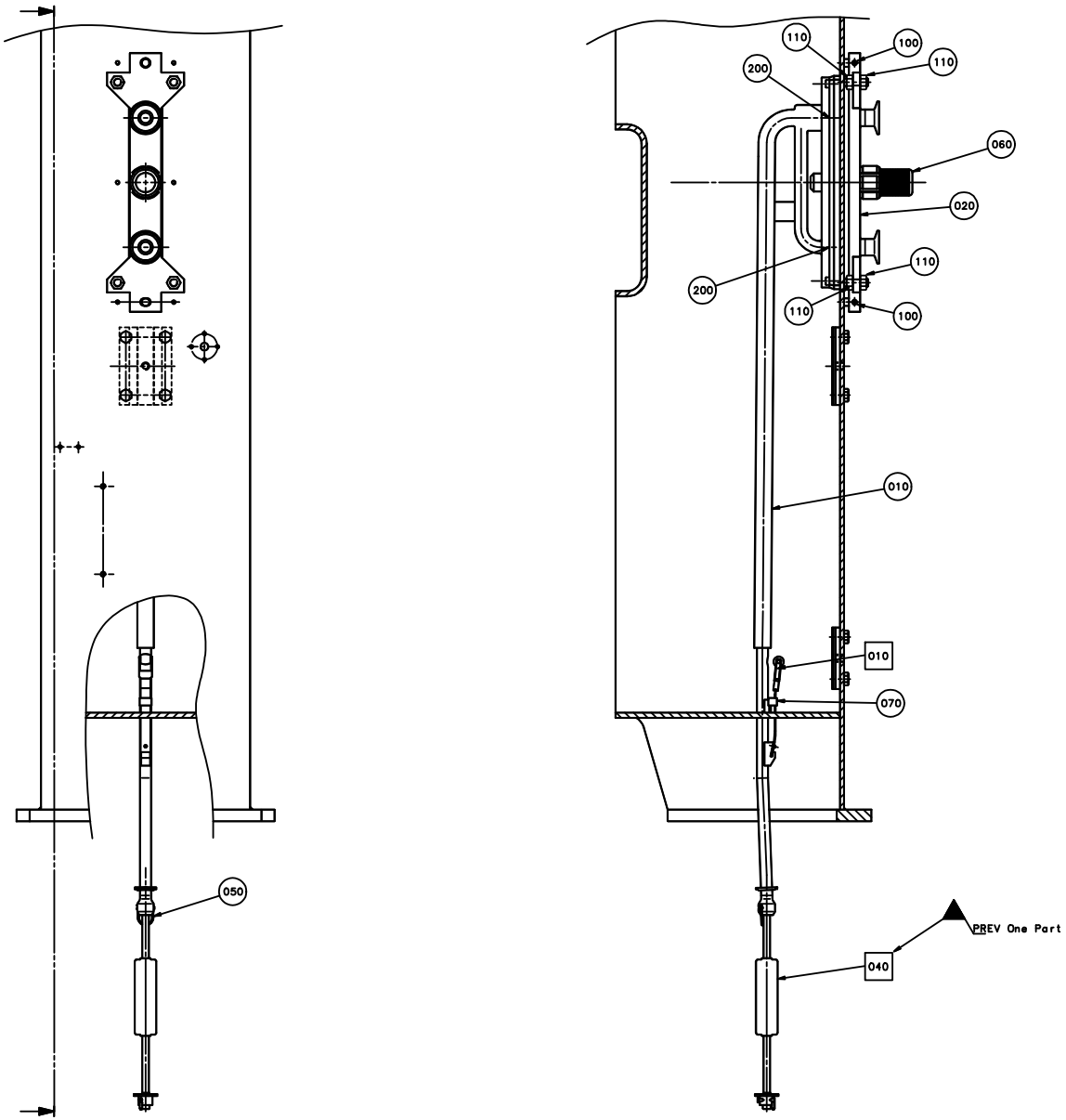
110
100
110
200
060
020
110
200
110
100
010
010
070
050
PREV One Part
040

ECM: 117494 - 20021016
Group number: 566111-0101
Assembly Drawing: 566111-1_1_AA

Issue: 20030213

Pos	Part No	SP	UN	Qty	Description	Page No
Common Parts						
010	566112-0000	A		1	FILLING PIPE	
020	566117-0000	-		1	FASTENING PLATE	
050	566114-0000	A		1	LOCKING FINGER	
060	566118-0000	A		1	SCREW	
070	476402-0000	A		1	HOOD	
100	312318-0451	-		4	SCREW ISO4029 M8X20 A4	
110	312605-0322	-		8	HEXAGON NUT, M6M M12 A280	
200	90030-0482	A		2	GASKET	
F010	A570823-0101	-		1	PRESSURE ROLLER	**43**
F040	A594700-0100	-		1	FILLING PIPE	**45**

Pos	Part No	SP	UN	Qty	Description	Page No

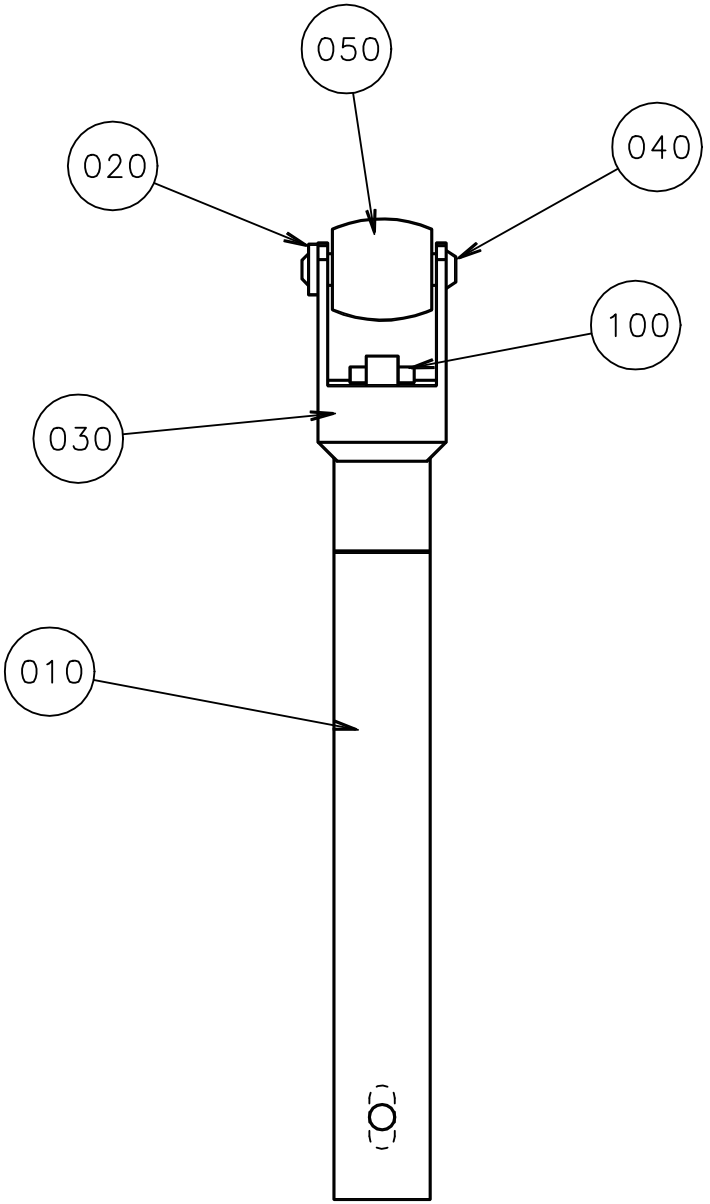
050
020
040
100
030
010

ECM: 83483 - 20000925
Group number: 570823-0101
Assembly Drawing: 570823-1_1_AA

Issue: 20030213

Pos	Part No	SP	UN	Qty	Description	Page No
Common Parts						
010	570822-0000	A		1	SPRING	
020	10593-0000	B		1	LOCKING RUBBER	
030	37190-0000	B		1	FORK	
040	37191-0000	B		1	SHAFT	
050	32197-0000	B		1	PRESSURE ROLLER	
100	311103-0207	-		1	PARALLELL PIN, CP, M6, 2,5X10 MM	

Pos	Part No	SP	UN	Qty	Description	Page No

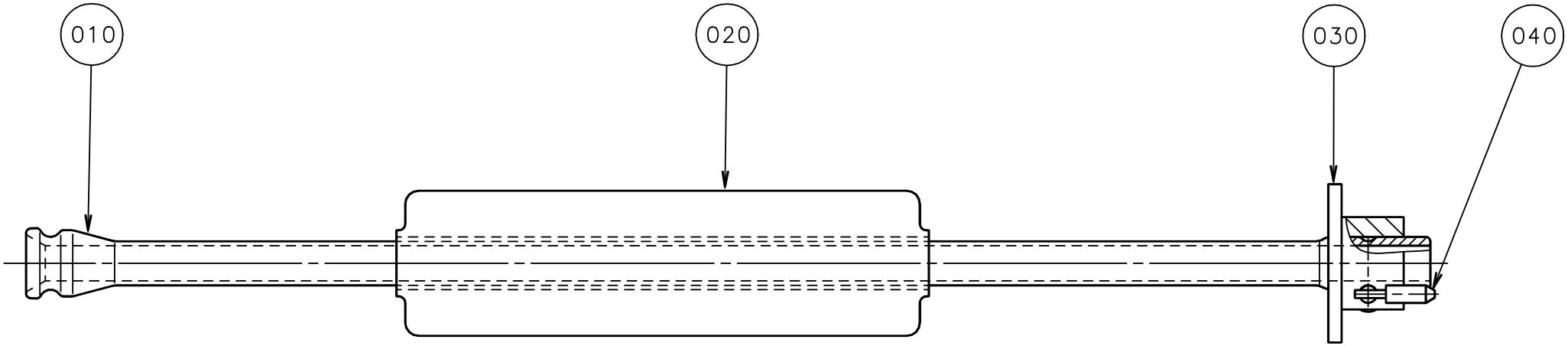
010
020
030
040

ECM: 110784 - 20021010
Group number: 594700-0100
Assembly Drawing: 594700-1_1_AA

Issue: 20030213

Pos	Part No	SP	UN	Qty	Description	Page No
Float Aggressive Products						
020	2551948-0000	A		1	FLOAT	
Float Normal Products						
020	594704-0000	A		1	FLOAT	
Common Parts						
010	594701-0000	A		1	PIPE	
030	594702-0000	A		1	STEERING	
040	594703-0000	A		1	SHEAR PIN	

Pos	Part No	SP	UN	Qty	Description	Page No

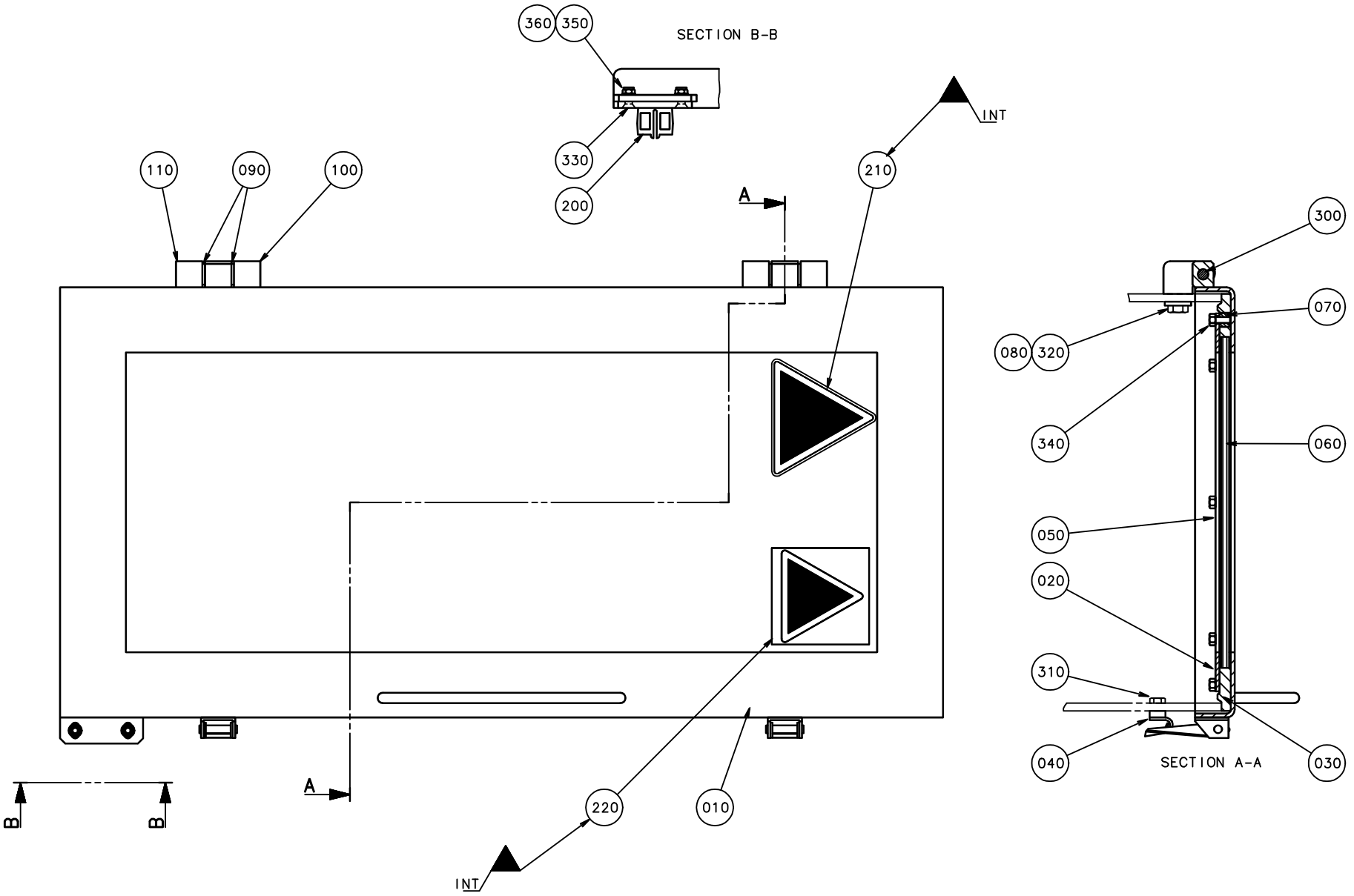
360
350
SECTION B-B
330
200
INT
210
110
090
100
A
300
070
080
320
340
060
050
020
310
040
030
SECTION A-A
B
B
A
220
010
INT

ECM: 83481 - 20000925
Group number: 570808-0101
Assembly Drawing: 570808-1_1_AA

Issue: 20030213

Pos	Part No	SP	UN	Qty	Description	Page No
Common Parts						
010	978542-0000	-		1	FRAME	
020	272780-0000	-		2	COVER SLIP	
030	272785-0000	A		1	RUBBER STRIP	
040	271860-0000	-		2	CLAMP BLOCK	
050	272782-0000	-		2	COVER SLIP	
060	272783-0003	-		1	GLASS PANE	
070	441718-0000	-		18	SPACER	
080	441737-0000	-		2	WASHER	
090	441739-0000	-		4	WASHER	
100	441740-0000	-		2	HINGE FLANGE	
110	441741-0000	-		2	HINGE FLANGE	
200	90044-0310	-		1	KEY FOR SAFETY SWITCH, AZ 15/16 B1	
210	90194-0075	-		1	WARNING SIGN ISO, HOT SURFACE	
220	90194-0141	-		1	CAUTION SIGN ISO, DANGEROUS CHEMICALS	
300	311103-0413	-		2	PARALLELL PIN, M6, 8X50 MM	
310	312105-0366	-		4	SCREW M6S M6X12 A280	
320	312105-0451	-		4	SCREW M6S ISO 4017 M8X20 A480	
330	312155-0329	-		2	SCREW EN 10642 MF6S M5X16 A480	
340	312605-0314	-		18	HEXAGON NUT, M6M M5 A280	
350	312812-0314	-		2	HEXAGON NUT, NY-LOCK M5 A480	
360	315105-0146	-		2	WASHER ISO 7089-5-200 HV-A4	

Pos	Part No	SP	UN	Qty	Description	Page No

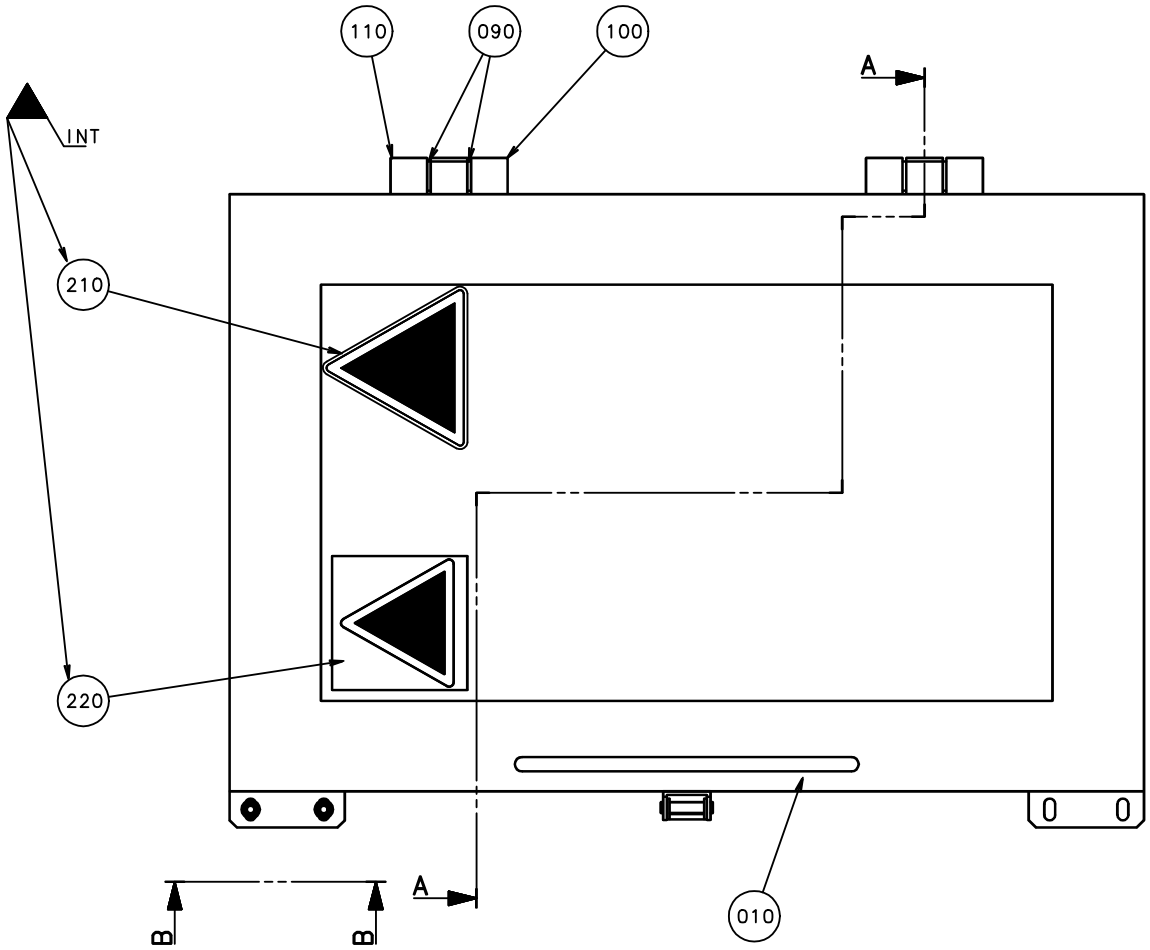

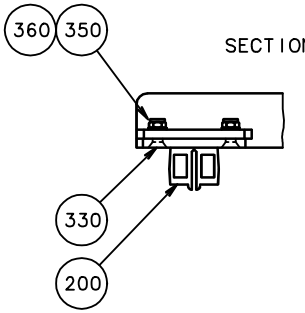

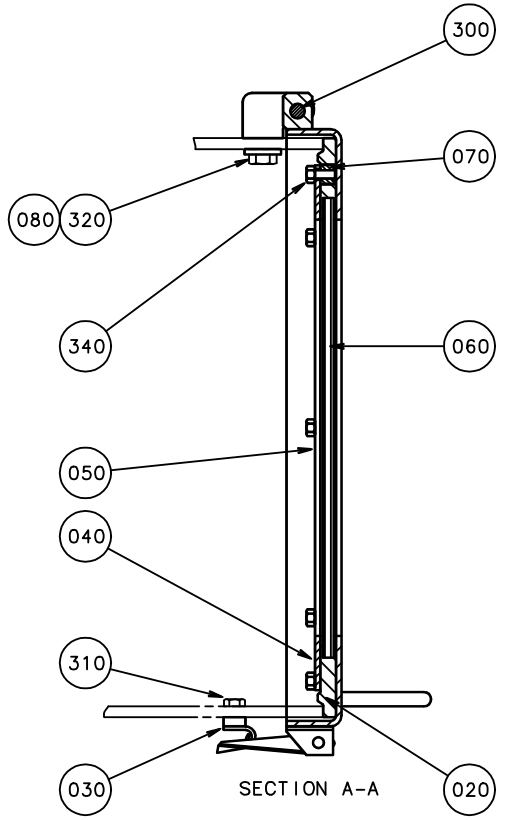

NOTE! MOUNT THE POS. 210 AND 220 AFTER THE DOORS HAS BEEN MOUNTED ON THE PILLAR

ECM: 83482 - 20000925
Group number: 570809-0101
Assembly Drawing: 570809-1_1_AA

Issue: 20030213

Pos	Part No	SP	UN	Qty	Description	Page No
Common Parts						
010	978543-0000	-		1	FRAME	
020	272784-0002	A		1	RUBBER STRIP	
030	271860-0000	-		1	CLAMP BLOCK	
040	272781-0002	-		2	COVER SLIP	
050	272782-0000	-		2	COVER SLIP	
060	272783-0002	-		1	GLASS PANE	
070	441718-0000	-		14	SPACER	
080	441737-0000	-		2	WASHER	
090	441739-0000	-		4	WASHER	
100	441740-0000	-		2	HINGE FLANGE	
110	441741-0000	-		2	HINGE FLANGE	
200	90044-0310	-		1	KEY FOR SAFETY SWITCH, AZ 15/16 B1	
210	90194-0075	-		1	WARNING SIGN ISO, HOT SURFACE	
220	90194-0141	-		1	CAUTION SIGN ISO, DANGEROUS CHEMICALS	
300	311103-0413	-		2	PARALLELL PIN, M6, 8X50 MM	
310	312105-0366	-		4	SCREW M6S M6X12 A280	
320	312105-0451	-		4	SCREW M6S ISO 4017 M8X20 A480	
330	312155-0329	-		2	SCREW EN 10642 MF6S M5X16 A480	
340	312605-0314	-		18	HEXAGON NUT, M6M M5 A280	
350	312812-0314	-		2	HEXAGON NUT, NY-LOCK M5 A480	
360	315105-0146	-		2	WASHER ISO 7089-5-200 HV-A4	

Pos	Part No	SP	UN	Qty	Description	Page No

HOW TO GLUE AND CUT PART 350

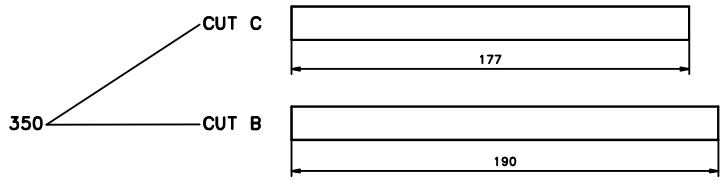

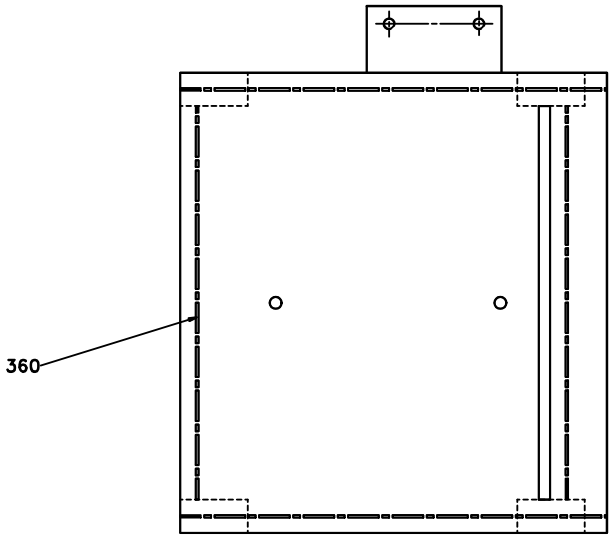

NOTE
SHOULD NOT BE COMPRESSED MORE THAN 25%

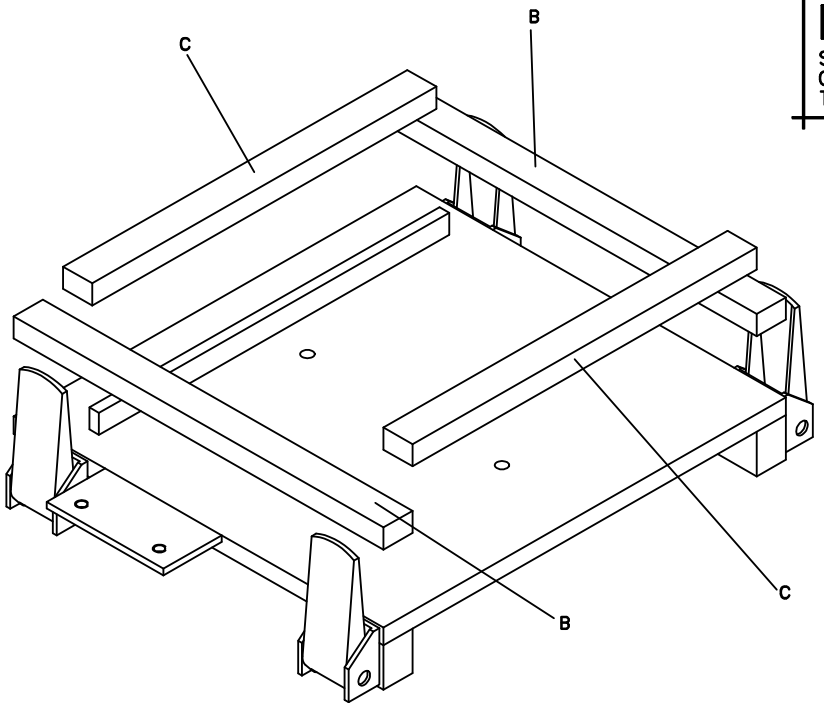

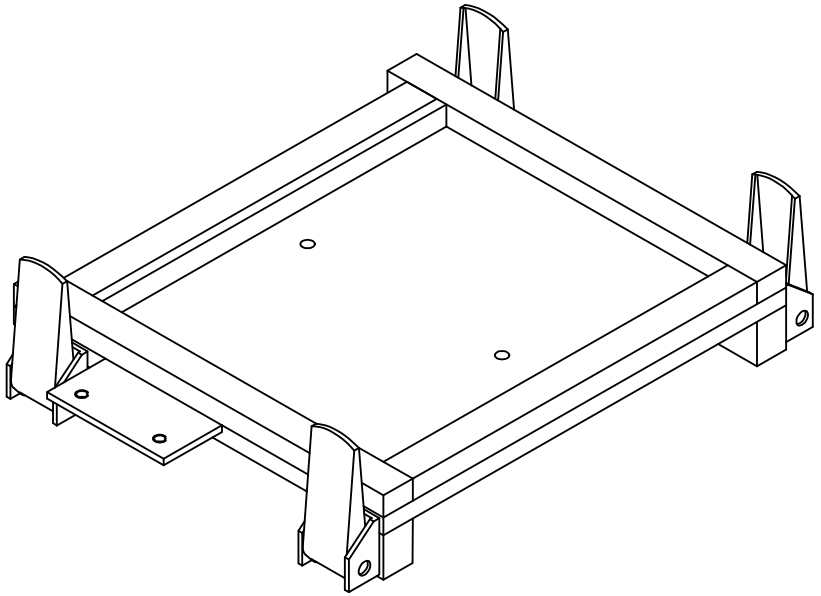

Pos	Part No	SP	UN	Qty	Description	Page No
Common Parts						
010	573635-0000	-		1	STERILIZATION BATH	
020	573164-0000	-		1	HATCH	
030	562873-0000	B		1	SEAL	
040	562874-0000	-		1	LID	
050	562875-0000	-		2	ECCENTRIC	
055	1175111-0000	A		2	BEARING	
060	1175113-0000	A		1	BENDING ROLLER	
070	562877-0000	A		2	BENDING ROLLER	
110	562881-0000	A		1	GASKET	
120	562882-0000	-		2	LOCKING CIRCLIP	
130	1175086-0000	-		2	BEARING HOUSING	
170	553114-0000	A		2	SEALING WASHER	
180	553115-0000	-		1	WASHER	
190	562883-0000	A		2	LID	
200	573637-0000	A		2	GASKET	
210	574180-0000	A		1	GLASS PANE	
220	573636-0000	-		1	SHEET	
300	90017-0024	-		1	HANDLE NO. VA-08.100.31	
310	90155-0016	-	MM	386	HANGER CHAIN, HL3-2	
320	90214-0040	A		2	BALL BEARING, 8X22X7 MM	
330	90240-0172	A		2	FLANGE BUSHING 8X12X10	
340	90237-0331	-		4	HOOK FOR 90237-68	
350	90143-0088	-	MM	1000	RUBBER STRIP	
360	90153-0016	-	L		ADHESIVE,TUBE 100G RHODORSIL CAF 3	
370	90194-0141	-		1	CAUTION SIGN ISO, DANGEROUS CHEMICALS	
520	315204-0220	A		2	O-RING 32,2X3 MM	
530	315105-0146	-		38	WASHER ISO 7089-5-200 HV-A4	
540	315105-0153	-		4	WASHER ISO 7089-6-200 HV-A4	
560	312605-0314	-		8	HEXAGON NUT, M6M M5 A280	
570	312145-0220	-		8	SCREW COUNTERS.SLOT.HD. MFS 3X6 SS	
575	312145-0323	-		2	SCREW COUNTERS.SLOT.HD. MFS 5X8 SS	
580	312105-0328	-		12	SCREW M6S ISO 4017 M5X14 A480	
585	312125-0329	-		2	SCREW PAN HEAD MCS M5X16 SS	
590	312105-0329	-		8	SCREW M6S ISO 4017 M5X16 A480	
600	312105-0327	-		16	SCREW M6S ISO 4017 M5X12 A480	
610	312105-0368	-		4	SCREW M6S M6X16 A280	
620	352103-0105	-		1	CABLE GLAND, STR 11, PR 18,6/PG11	
B169	B90044-0103	A		1	KEY SAFETY SWITCH AZ 15 ZVR	
	90044-0310	*A*		*1*	*KEY FOR SAFETY SWITCH, AZ 15/16 B1*	
B200	553113-0000	A		1	ELECTRODE	

Pos	Part No	SP	UN	Qty	Description	Page No

Machine Type | Group Description | Used-In | Group Number | Page No

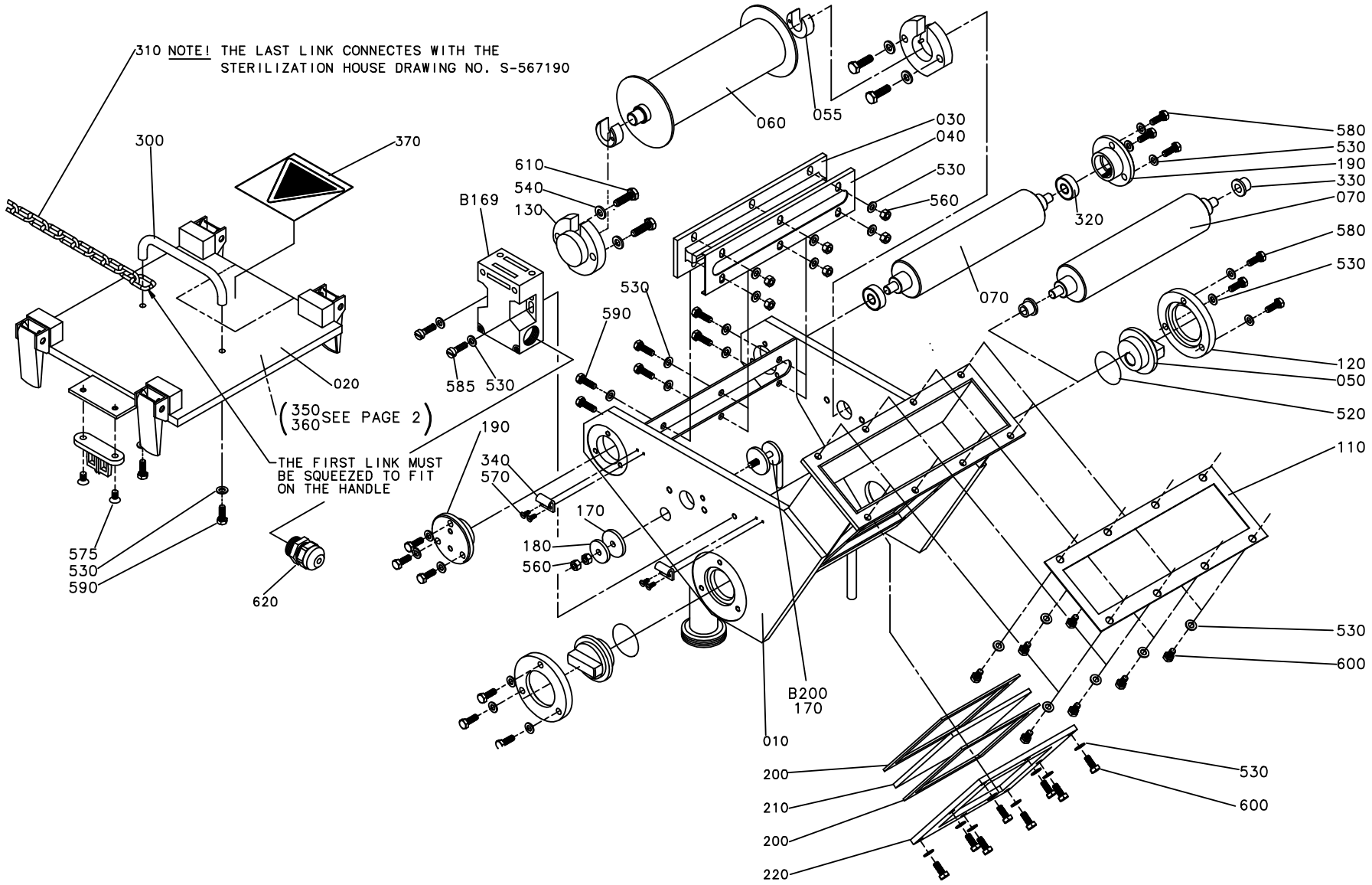
310 NOTE! THE LAST LINK CONNECTES WITH THE STERILIZATION HOUSE DRAWING NO. S-567190
300
370
020
575
530
590
620
THE FIRST LINK MUST BE SQUEEZED TO FIT ON THE HANDLE
(350 360 SEE PAGE 2)
610
540
130
B169
585
530
590
190
340
570
170
180
560
060
055
030
040
530
560
320
070
580
530
190
330
070
580
530
120
050
520
110
530
600
530
600
B200
170
010
200
210
200
220

ECN 23297

Pos	Part No	SP	UN	Qty	Description	Page No
Common Parts						
010	573635-0000	-		1	STERILIZATION BATH	
020	573164-0000	-		1	HATCH	
030	562873-0000	B		1	SEAL	
040	562874-0000	-		1	LID	
050	562875-0000	-		2	ECCENTRIC	
055	1175111-0000	A		2	BEARING	
060	1175113-0000	A		1	BENDING ROLLER	
070	562877-0000	A		2	BENDING ROLLER	
110	562881-0000	A		1	GASKET	
120	562882-0000	-		2	LOCKING CIRCLIP	
130	1175086-0000	-		2	BEARING HOUSING	
170	553114-0000	A		2	SEALING WASHER	
180	553115-0000	-		1	WASHER	
190	562883-0000	A		2	LID	
200	573637-0000	A		2	GASKET	
210	574180-0000	A		1	GLASS PANE	
220	573636-0000	-		1	SHEET	
300	90017-0024	-		1	HANDLE NO. VA-08.100.31	
310	90155-0016	-	MM	386	HANGER CHAIN, HL3-2	
320	90214-0040	A		2	BALL BEARING, 8X22X7 MM	
330	90240-0172	A		2	FLANGE BUSHING 8X12X10	
340	90237-0331	-		4	HOOK FOR 90237-68	
350	90143-0088	-	MM	1000	RUBBER STRIP	
360	90153-0016	-	L		ADHESIVE,TUBE 100G RHODORSIL CAF 3	
370	90194-0141	-		1	CAUTION SIGN ISO, DANGEROUS CHEMICALS	
520	315204-0220	A		2	O-RING 32,2X3 MM	
530	315105-0146	-		38	WASHER ISO 7089-5-200 HV-A4	
540	315105-0153	-		4	WASHER ISO 7089-6-200 HV-A4	
560	312605-0314	-		8	HEXAGON NUT, M6M M5 A280	
570	312145-0220	-		8	SCREW COUNTERS.SLOT.HD. MFS 3X6 SS	
575	312145-0323	-		2	SCREW COUNTERS.SLOT.HD. MFS 5X8 SS	
580	312105-0328	-		12	SCREW M6S ISO 4017 M5X14 A480	
585	312125-0329	-		2	SCREW PAN HEAD MCS M5X16 SS	
590	312105-0329	-		8	SCREW M6S ISO 4017 M5X16 A480	
600	312105-0327	-		16	SCREW M6S ISO 4017 M5X12 A480	
610	312105-0368	-		4	SCREW M6S M6X16 A280	
620	352103-0105	-		1	CABLE GLAND, STR 11, PR 18,6/PG11	
B169	B90044-0103	A		1	KEY SAFETY SWITCH AZ 15 ZVR	
	90044-0310	*A*		*1*	*KEY FOR SAFETY SWITCH, AZ 15/16 B1*	
B200	553113-0000	A		1	ELECTRODE	

Pos	Part No	SP	UN	Qty	Description	Page No

Machine Type | Group Description | Used-In | Group Number | Page No

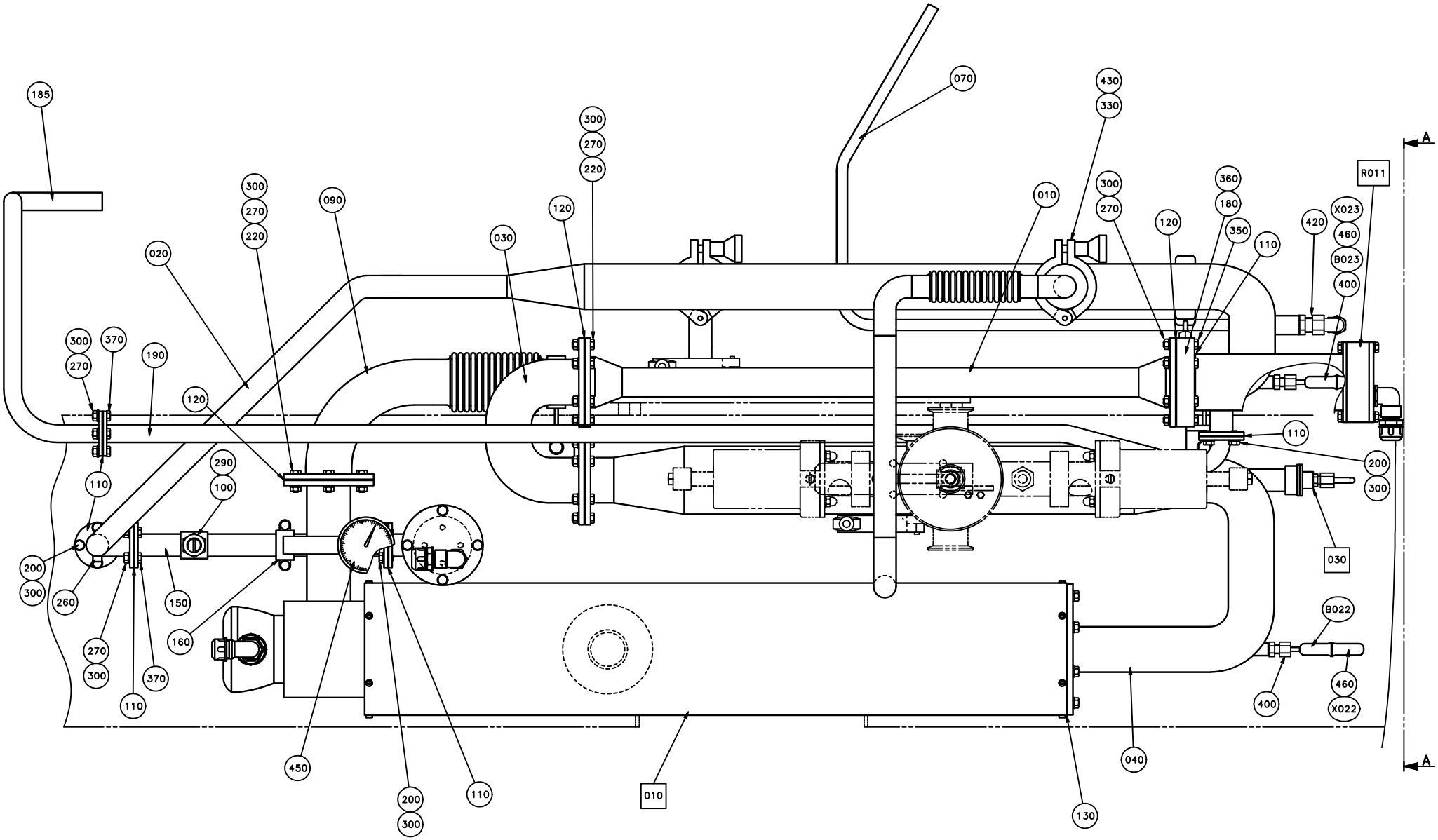
185
070
430
330
300
270
220
010
090
120
030
020
360
180
350
110
420
X023
460
B023
400
R011
A
190
370
100
290
200
300
260
150
160
450
040
130
B022
X022

ECM: 83467 - 20000925
Group number: 566130-0301
Assembly Drawing: 566130-3_1_AA

Issue: 20030213

Pos	Part No	SP	UN	Qty	Description	Page No
Common Parts						
010	522090-0000	A		1	HEAT EXCHANGER	
020	566131-0000	-		1	AIR PIPE	
030	566132-0000	-		1	PIPE BEND	
040	566133-0000	-		1	SPRAY PIPE	
045	1345151-0000	-		1	CONNECTION PIPE	
050	566136-0000	-		1	AIR PIPE	
060	566137-0000	-		1	AIR PIPE	
070	566139-0000	-		1	AIR PIPE	
080	566134-0000	-		2	PIPE HOLDER	
090	566135-0000	-		1	PIPE BEND	
100	32712-0000	-		1	SCREW	
110	33730-0001	A		9	GASKET	
120	531737-0000	A		6	GASKET	
130	535698-0000	A		1	GASKET	
140	566138-0000	-		1	SPACER	
150	569625-0000	-		1	INTERMEDIATE PIPE	
160	566141-0000	-		1	HOLDER	
170	566142-0000	-		1	PIPE	
180	568133-0000	-		1	ATTACHMENT	
185	573632-0000	-		1	AIR PIPE	
190	573631-0000	-		1	AIR PIPE	
195	273429-0000	A		1	WASHER	
200	312105-0366	-		8	SCREW M6S M6X12 A280	
210	312105-0370	-		12	SCREW M6S ISO 4017 M6X20 A480	
220	312105-0371	-		30	SCREW M6S ISO 4017 M6X22 A480	
230	312105-0378	-		4	SCREW M6S ISO 4014 M6X40 A480	
250	312105-0495	-		2	SCREW M6S ISO 4017 M10X30 A480	
260	312318-0321	-		1	SCREW ISO4029 M5X6 A4	
270	312605-0316	-		44	HEXAGON NUT, M6M M6 A280	
280	312605-0320	-		2	HEXAGON NUT, M6M M10 A280	
290	312605-0324	-		1	HEXAGON NUT, M6M M16 A280	
300	315105-0153	-		70	WASHER ISO 7089-6-200 HV-A4	
320	315105-0173	-		2	WASHER ISO 7089-10-200 HV-A4	
330	342850-0303	A		4	GASKET 22,7X49,1X5,2 MM 1" FDA	
340	342725-0103	-		1	CONN. STR. PIPE GI-8-G1/4	
350	312105-0376	-		6	SCREW M6S ISO 4014 M6X35 A480	
360	312115-0368	-		4	SCREW ISO4762 M6X16 A4	
370	312105-0368	-		8	SCREW M6S M6X16 A280	
380	312605-0318	-		4	HEXAGON NUT, M6M M8 A280	
390	352136-0113	-		2	GLAND FITTING PR18,6/PG11 DI=12MM	
400	90326-0017	-		4	GLAND 1/8".REPL.BY 90326-306	
420	90030-0136	-		1	ADJUSTABLE ELBOW CONNECTION,EXT 12-G3/8	
430	90217-0308	-		4	CLAMP, ISO2852 FOR PIPE 25,4 AND 38,1 MM	
440	90030-0290	-		1	CONN. STR., 8-R1/8, EXT. THREAD	
450	90043-0061	A		1	PRESSURE GAUGE, 2061 D=63 MM, THROTTLED	
460	90326-0012	-		4	PROTECTIVE COVER, T31A4618	
500	90012-0114	-		2	CABLE GLAND, PR18,6/PG11, ELBOW, 120377	
530	90326-0304	-		1	LEAD IN, 9041-15-KS-UB60	
B020	B90326-0048	-		1	THERMOCOUPLE, 12826-31	
	90326-0304	-		*1*	*LEAD IN, 9041-15-KS-UB60*	
B022	90326-0037	-		1	THERMOCOUPLE, CR-AL PREM.G	
B023	90326-0037	-		1	THERMOCOUPLE, CR-AL PREM.G	
B026	90326-0038	-		1	THERMOCOUPLE, CR-AL	
F010	A562868-0201	-		1	AIR SUPER-HEATER	**59**
F030	A566159-0101	-		1	SPREADER NOZZLE	**61**
R001	A207637-0301	-		1	ELEMENT	**63**
R011	A207637-0301	-		1	ELEMENT	**63**
X020	90326-0020	-		1	PLUG, FEMALE YELLOW CR-AL	
X022	90326-0020	-		1	PLUG, FEMALE YELLOW CR-AL	
X023	90326-0020	-		1	PLUG, FEMALE YELLOW CR-AL	
X026	90326-0020	-		1	PLUG, FEMALE YELLOW CR-AL	

Machine Type | Group Description | Used-In | Group Number | Page No

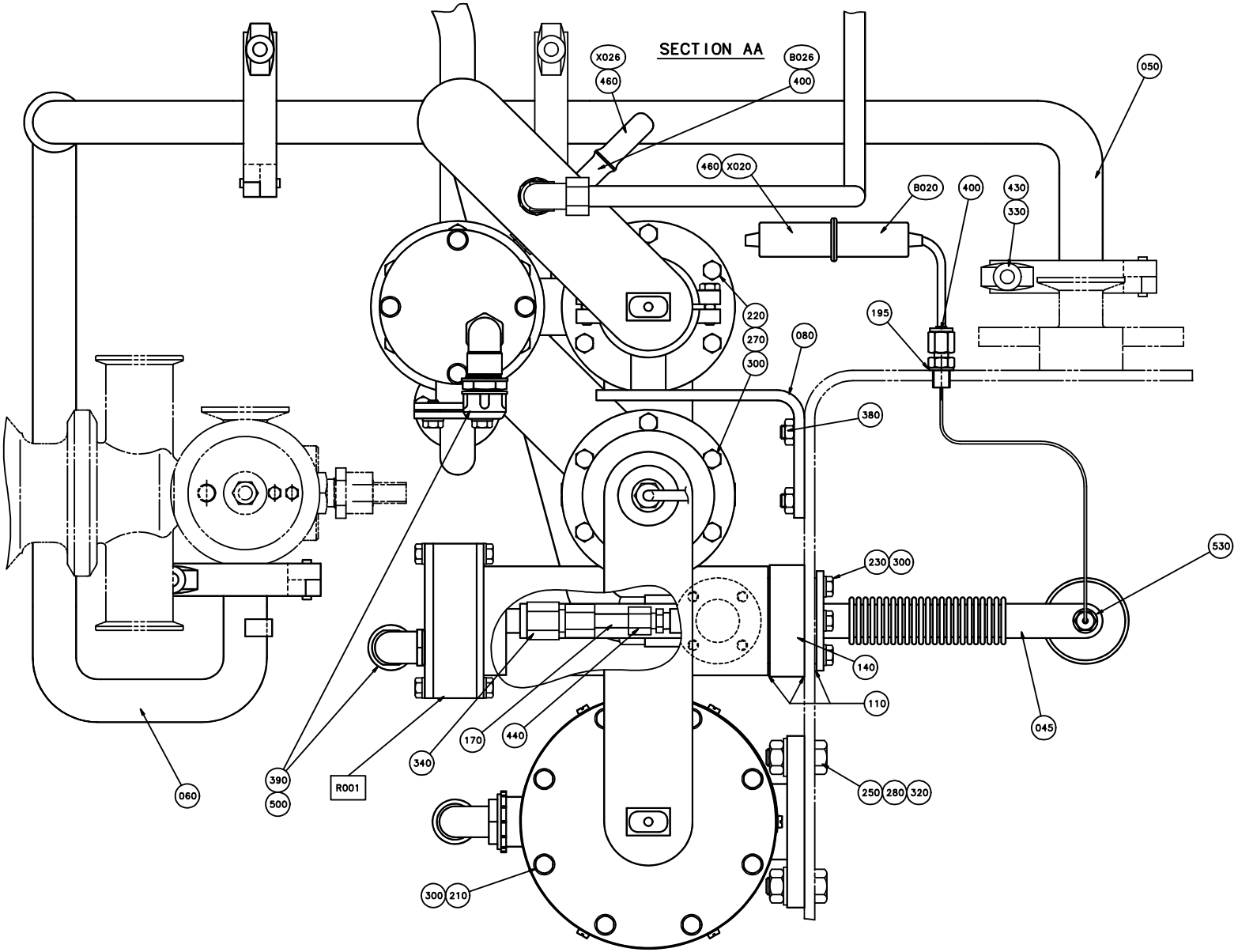
SECTION AA
X026
460
B026
400
050
460
X020
B020
400
430
330
220
270
300
080
195
380
230
300
530
140
110
045
170
440
340
390
500
R001
060
250
280
320
300
210

ECM: 83467 - 20000925
Group number: 566130-0301
Assembly Drawing: 566130-4_1_AA

Issue: 20030213

Pos	Part No	SP	UN	Qty	Description	Page No
Common Parts						
010	522090-0000	A		1	HEAT EXCHANGER	
020	566131-0000	-		1	AIR PIPE	
030	566132-0000	-		1	PIPE BEND	
040	566133-0000	-		1	SPRAY PIPE	
045	1345151-0000	-		1	CONNECTION PIPE	
050	566136-0000	-		1	AIR PIPE	
060	566137-0000	-		1	AIR PIPE	
070	566139-0000	-		1	AIR PIPE	
080	566134-0000	-		2	PIPE HOLDER	
090	566135-0000	-		1	PIPE BEND	
100	32712-0000	-		1	SCREW	
110	33730-0001	A		9	GASKET	
120	531737-0000	A		6	GASKET	
130	535698-0000	A		1	GASKET	
140	566138-0000	-		1	SPACER	
150	569625-0000	-		1	INTERMEDIATE PIPE	
160	566141-0000	-		1	HOLDER	
170	566142-0000	-		1	PIPE	
180	568133-0000	-		1	ATTACHMENT	
185	573632-0000	-		1	AIR PIPE	
190	573631-0000	-		1	AIR PIPE	
195	273429-0000	A		1	WASHER	
200	312105-0366	-		8	SCREW M6S M6X12 A280	
210	312105-0370	-		12	SCREW M6S ISO 4017 M6X20 A480	
220	312105-0371	-		30	SCREW M6S ISO 4017 M6X22 A480	
230	312105-0378	-		4	SCREW M6S ISO 4014 M6X40 A480	
250	312105-0495	-		2	SCREW M6S ISO 4017 M10X30 A480	
260	312318-0321	-		1	SCREW ISO4029 M5X6 A4	
270	312605-0316	-		44	HEXAGON NUT, M6M M6 A280	
280	312605-0320	-		2	HEXAGON NUT, M6M M10 A280	
290	312605-0324	-		1	HEXAGON NUT, M6M M16 A280	
300	315105-0153	-		70	WASHER ISO 7089-6-200 HV-A4	
320	315105-0173	-		2	WASHER ISO 7089-10-200 HV-A4	
330	342850-0303	A		4	GASKET 22,7X49,1X5,2 MM 1" FDA	
340	342725-0103	-		1	CONN. STR. PIPE GI-8-G1/4	
350	312105-0376	-		6	SCREW M6S ISO 4014 M6X35 A480	
360	312115-0368	-		4	SCREW ISO4762 M6X16 A4	
370	312105-0368	-		8	SCREW M6S M6X16 A280	
380	312605-0318	-		4	HEXAGON NUT, M6M M8 A280	
390	352136-0113	-		2	GLAND FITTING PR18,6/PG11 DI=12MM	
400	90326-0017	-		4	GLAND 1/8".REPL.BY 90326-306	
420	90030-0136	-		1	ADJUSTABLE ELBOW CONNECTION,EXT 12-G3/8	
430	90217-0308	-		4	CLAMP, ISO2852 FOR PIPE 25,4 AND 38,1 MM	
440	90030-0290	-		1	CONN. STR., 8-R1/8, EXT. THREAD	
450	90043-0061	A		1	PRESSURE GAUGE, 2061 D=63 MM, THROTTLED	
460	90326-0012	-		4	PROTECTIVE COVER, T31A4618	
500	90012-0114	-		2	CABLE GLAND, PR18,6/PG11, ELBOW, 120377	
530	90326-0304	-		1	LEAD IN, 9041-15-KS-UB60	
B020	B90326-0048	-		1	THERMOCOUPLE, 12826-31	
	90326-0304	-		*1*	*LEAD IN, 9041-15-KS-UB60*	
B022	90326-0037	-		1	THERMOCOUPLE, CR-AL PREM.G	
B023	90326-0037	-		1	THERMOCOUPLE, CR-AL PREM.G	
B026	90326-0038	-		1	THERMOCOUPLE, CR-AL	
F010	A562868-0201	-		1	AIR SUPER-HEATER	**59**
F030	A566159-0101	-		1	SPREADER NOZZLE	**61**
R001	A207637-0301	-		1	ELEMENT	**63**
R011	A207637-0301	-		1	ELEMENT	**63**
X020	90326-0020	-		1	PLUG, FEMALE YELLOW CR-AL	
X022	90326-0020	-		1	PLUG, FEMALE YELLOW CR-AL	
X023	90326-0020	-		1	PLUG, FEMALE YELLOW CR-AL	
X026	90326-0020	-		1	PLUG, FEMALE YELLOW CR-AL	

Machine Type | Group Description | Used-In | Group Number | Page No

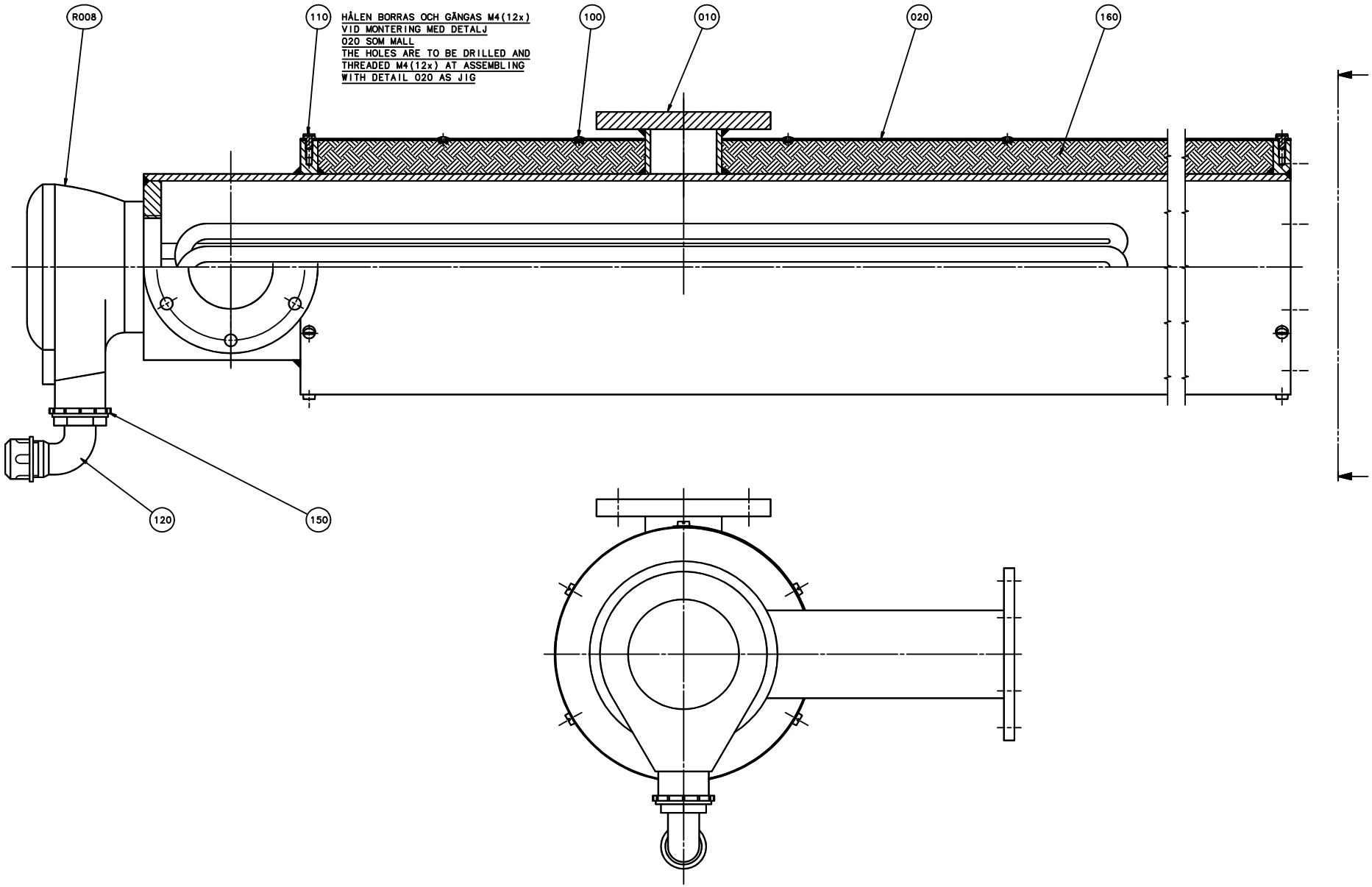
R008
110
HÅLEN BORRAS OCH GÄNGAS M4(12x)
VID MONTERING MED DETALJ
020 SOM MALL
THE HOLES ARE TO BE DRILLED AND
THREADED M4(12x) AT ASSEMBLING
WITH DETAIL 020 AS JIG
100
010
020
160
120
150

ECM: 83462 - 20000925
Group number: 562868-0201
Assembly Drawing: 562868-2_1_AA

Issue: 20030213

Pos	Part No	SP	UN	Qty	Description	Page No
Common Parts						
010	562869-0000	-		1	TUBE	
020	562870-0000	A		1	MANTLE	
100	311521-0142	-		6	BLANK RIVET 3,2X6	
110	312125-0285	-		12	SCREW SLOT.PAN HD. MCS 4X6 A480	
120	352137-0129	-		1	CABLE GLAND;PR22,5(PG16)	
150	90089-0024	-		1	REDUCTION SLEEVE	
160	90411-0001	-	MM	700	INSULATING MAT	
R008	19269-0002	A		1	ELEMENT	

Pos	Part No	SP	UN	Qty	Description	Page No

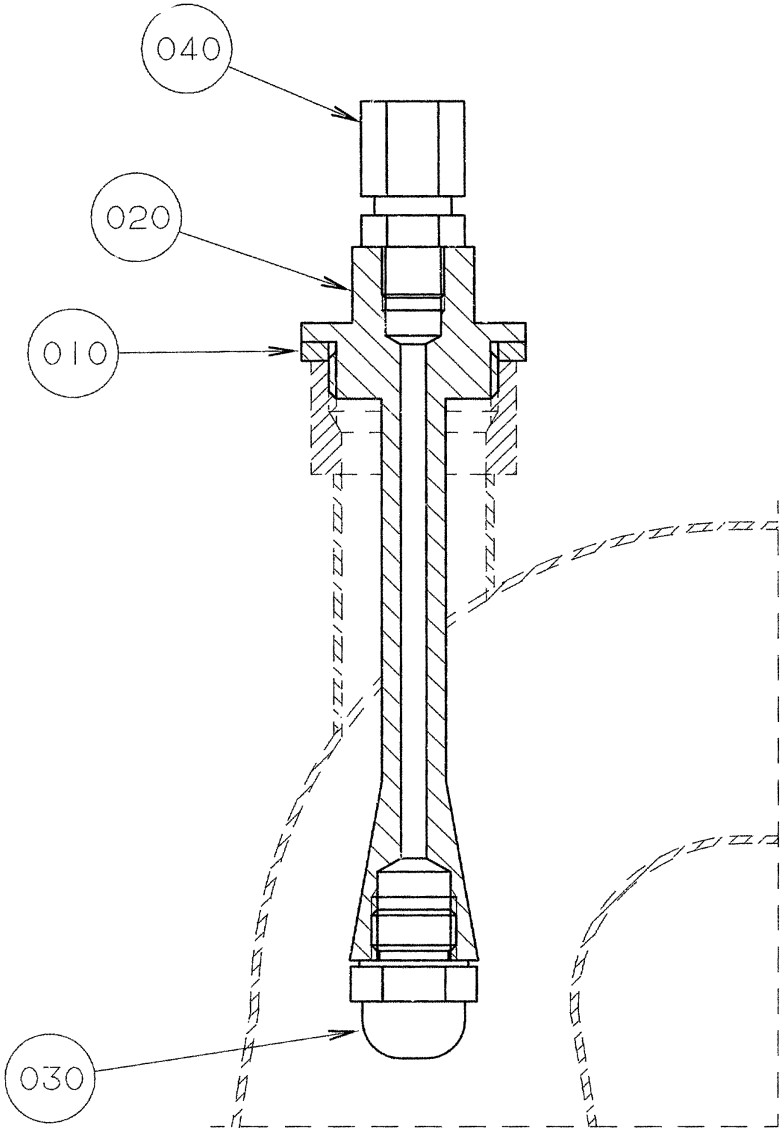
040
020
010
030

ECM: 83468 - 20000925
Group number: 566159-0101
Assembly Drawing: 566159-1_1_AA

Issue: 20030213

Pos	Part No	SP	UN	Qty	Description	Page No
Common Parts						
010	450022-0000	A		1	WASHER	
020	B540827-0000	A		1	BRACKET	
	450023-0000	-		*1*	*BRACKET*	
030	B544996-0000	A		1	SPREADER NOZZLE	
	90424-0031	-		*1*	*SPRAY NOZZLE 60 DEG*	
040	90030-0051	-		1	CONN. STR., 6-R1/8, EXT. THREAD	

Pos	Part No	SP	UN	Qty	Description	Page No

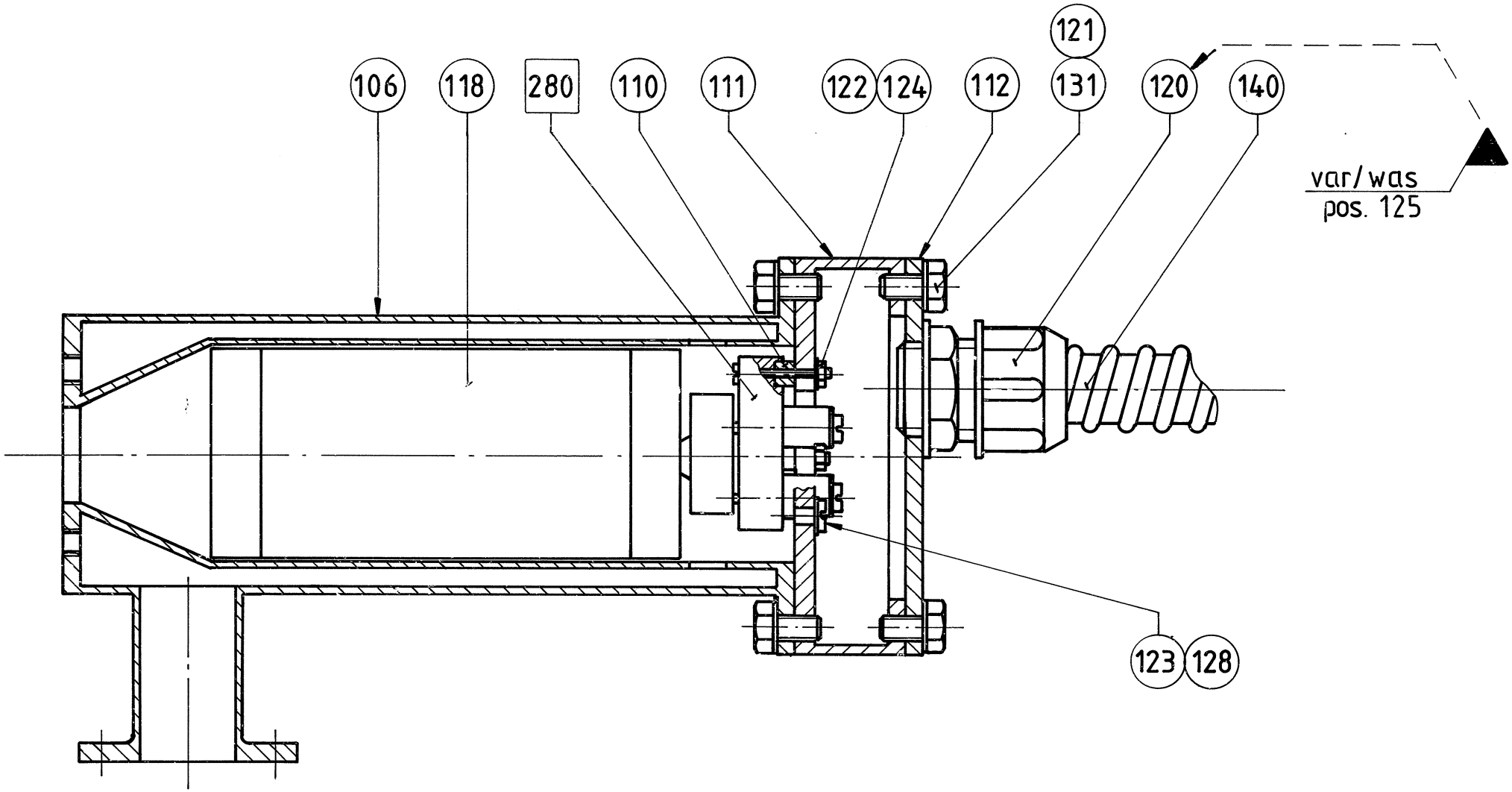
106
118
280
110
111
122
124
112
121
131
120
140
var/was
pos. 125
123
128

Pos	Part No	SP	UN	Qty	Description	Page No
Common Parts						
106	38960-0000	A		1	COIL HEATER	
110	19797-0000	A		3	BUSHING	
111	38962-0000	A		1	CLUTCH PIECE	
112	38963-0000	A		1	LID	
118	90206-0014	A		1	HEATING ELEMENT 2X1250W,220V	
121	312105-0366	-		8	SCREW M6S M6X12 A280	
122	312121-0230	-		3	SCREW SLOT.PAN HD. MCS 3X20 FZB	
123	312132-0287	-		1	SCREW SLOT. PAN HEAD MSCS M4X8	
124	312601-0310	-		3	NUT M6M3FZB	
125	352136-0127	-		1	GLAND FITTING PR 18,6	
128	353103-0130	-		1	CABLE SHOE	
131	315105-0153	-		8	WASHER ISO 7089-6-200 HV-A4	
140	352135-0106	-	M	2	SPIRAL CONDUIT DI=16 MM	
F280 1	A207638-0201	-		1	SLEEVE CONTACT	**65**

Pos	Part No	SP	UN	Qty	Description	Page No

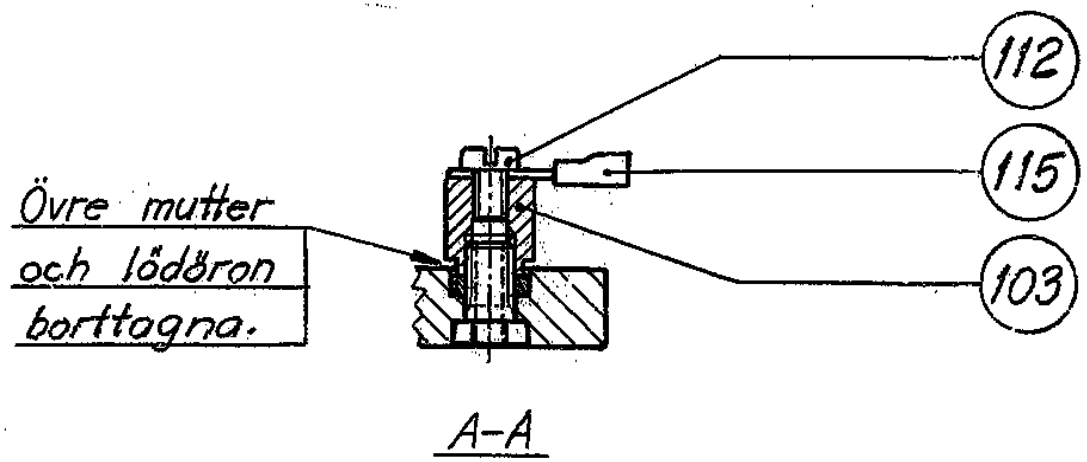
112
115
103
Övre mutter
och lödöron
borttagna.
A–A

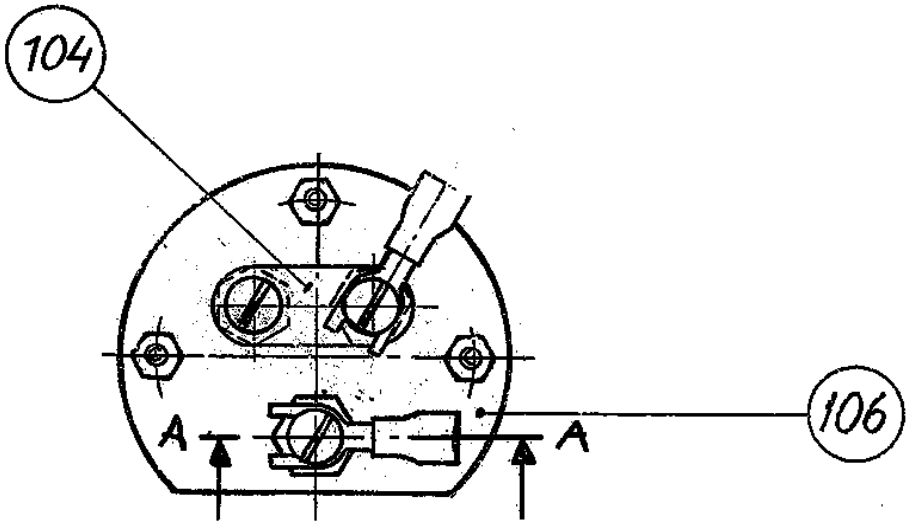
104
106
A
A

ECM: 82050 - 20000925
Group number: 207638-0201
Assembly Drawing: 207638-2_1_AA

Issue: 20030213

Pos	Part No	SP	UN	Qty	Description	Page No
Common Parts						
103	207639-0000	A		3	SPACER	
104	209283-0000	A		1	BRIDGE CONNECTOR	
106	B90125-0020	-		1	PLATE	
	294464-0000	*A*		*1*	*BASE PLATE*	
	270927-0000	*A*		*3*	*SCREW*	
	270926-0000	*A*		*6*	*NUT*	
112	312132-0287	-		3	SCREW SLOT. PAN HEAD MSCS M4X8	
115	353103-0130	-		2	CABLE SHOE	

Pos	Part No	SP	UN	Qty	Description	Page No

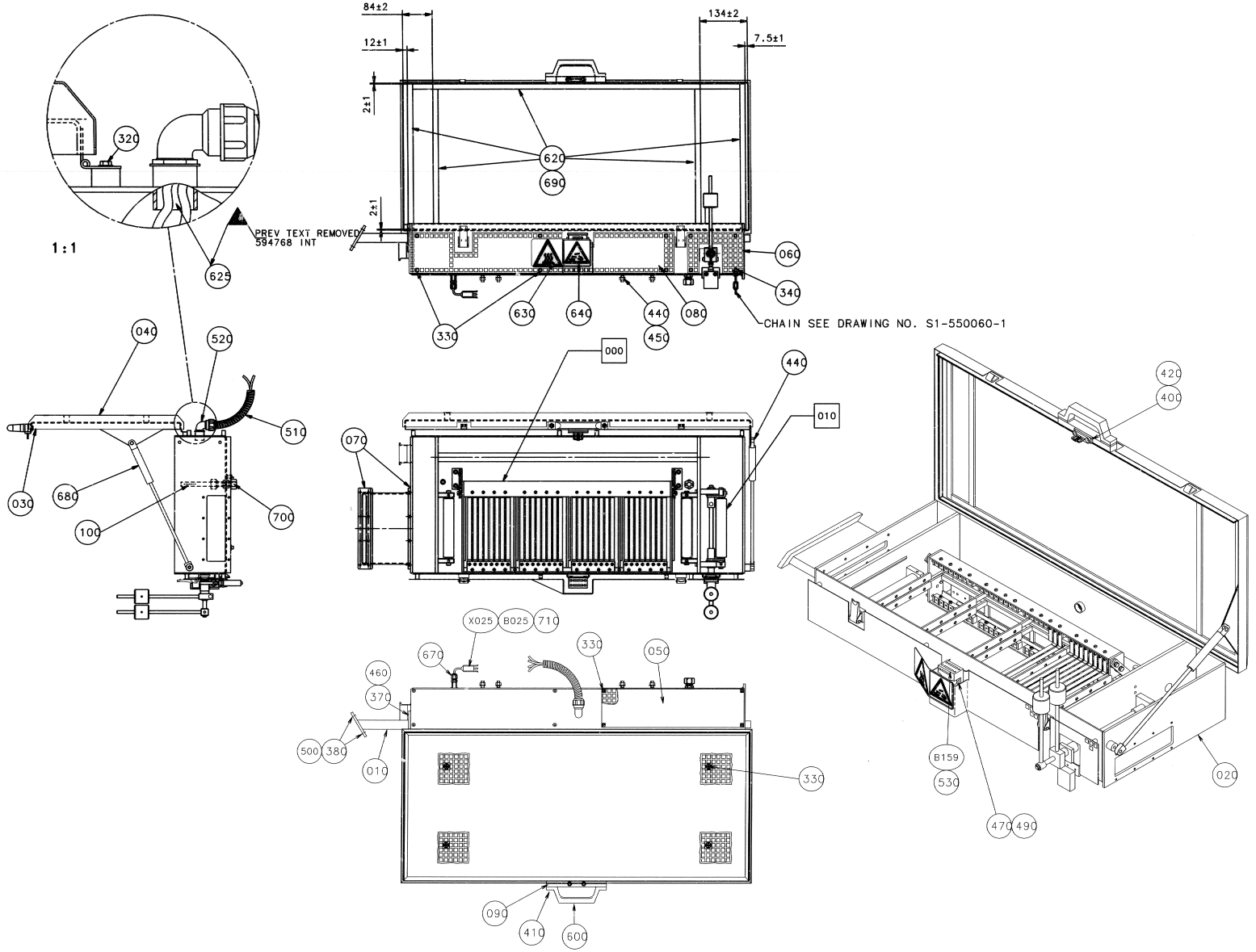
84±2
12±1
134±2
7.5±1
2±1
2±1
1:1
PREV TEXT REMOVED 594768 INT
CHAIN SEE DRAWING NO. S1-550060-1
320
620
690
625
060
340
630
640
440
080
330
450
040
520
510
030
680
100
700
000
440
010
070
420
400
X025
B025
710
330
050
670
460
370
500
380
010
330
090
410
600
B159
530
470
490
020

Pos	Part No	SP	UN	Qty	Description	Page No
Common Parts						
010	567191-0000	A		1	INTERMEDIATE PIPE	
020	567192-0000	-		1	BOX	
030	567193-0000	-		1	LID	
040	567194-0000	-		1	HEAT GUARD	
050	567199-0000	-		1	HEAT GUARD REAR	
060	567195-0000	-		1	HEAT GUARD FRONT	
070	567196-0000	A		2	GASKET	
080	567201-0000	-		1	HEAT GUARD FRONT	
090	567206-0000	-		1	SPACER	
100	570818-0000	A		1	SPREADER	
320	312105-0289	-		6	SCREW M6S ISO 4017 M4X10 A480	
330	312105-0323	-		19	SKRUV M6S ISO 4017 M5X8 A480	
340	312105-0327	-		1	SCREW M6S ISO 4017 M5X12 A480	
370	312105-0366	-		8	SCREW M6S M6X12 A280	
380	312105-0368	-		6	SCREW M6S M6X16 A280	
400	312145-0337	-		2	SCREW COUNTERS.SLOT.HD. MFS 5X35 SS	
410	312125-0374	-		2	SCREW PAN HEAD MCS M6X30 SS	
420	312705-0314	-		2	NUT HEX. DOMED CAP MHM-6 M5 A280	
440	312605-0318	-		5	HEXAGON NUT, M6M M8 A280	
450	315105-0165	-		4	WASHER ISO 7089-8-200 HV-A4	
460	315105-0153	-		8	WASHER ISO 7089-6-200 HV-A4	
470	312125-0293	-		2	SCREW PAN HEAD MCS M4X16 SS	
490	315105-0136	-		2	WASHER ISO 7089-4-200 HV-A4	
500	312105-0372	-		2	SCREW M6S ISO 4017 M6X25 A480	
510	352135-0109	-	M	3	HOSE .022	
520	352137-0142	-		1	GLAND FITTING	
530	352103-0105	-		1	CABLE GLAND, STR 11, PR 18,6/PG11	
600	90017-0023	-		1	HANDLE, NO. 87-7-2203	
620	90143-0088	-	MM	4100	RUBBER STRIP	
625	594768-0000	-		1	GASKET	
630	359705-0008	-		1	WARNING SIGN ISO, HOT SURFACE	
640	90194-0141	-		1	CAUTION SIGN ISO, DANGEROUS CHEMICALS	
670	90326-0306	-		1	GLAND FITTING 9041-45-KS-KR.1/8" D=4,5MM	
680	90347-0143	A		1	GAS SPRING	
690	90153-0016	-	L		ADHESIVE,TUBE 100G RHODORSIL CAF 3	
700	90030-0030	-		1	CONN. BULKHEAD SV 12-L/SY	
710	90326-0012	-		1	PROTECTIVE COVER, T31A4618	
B025	90326-0019	A		1	THERMOELEMENT	
B159	90044-0139	A		1	KEY SAF.SW. AZ16-02 ZVR K-2254	
F000	A1175362-0101	-		1	ELEMENT GROUP	**69, 71**
F010	A567249-0201	-		1	GROUP BENDINGROLLER	**77**
X025	90326-0020	A		1	PLUG, FEMALE YELLOW CR-AL	

Machine Type | Group Description | Used-In | Group Number | Page No

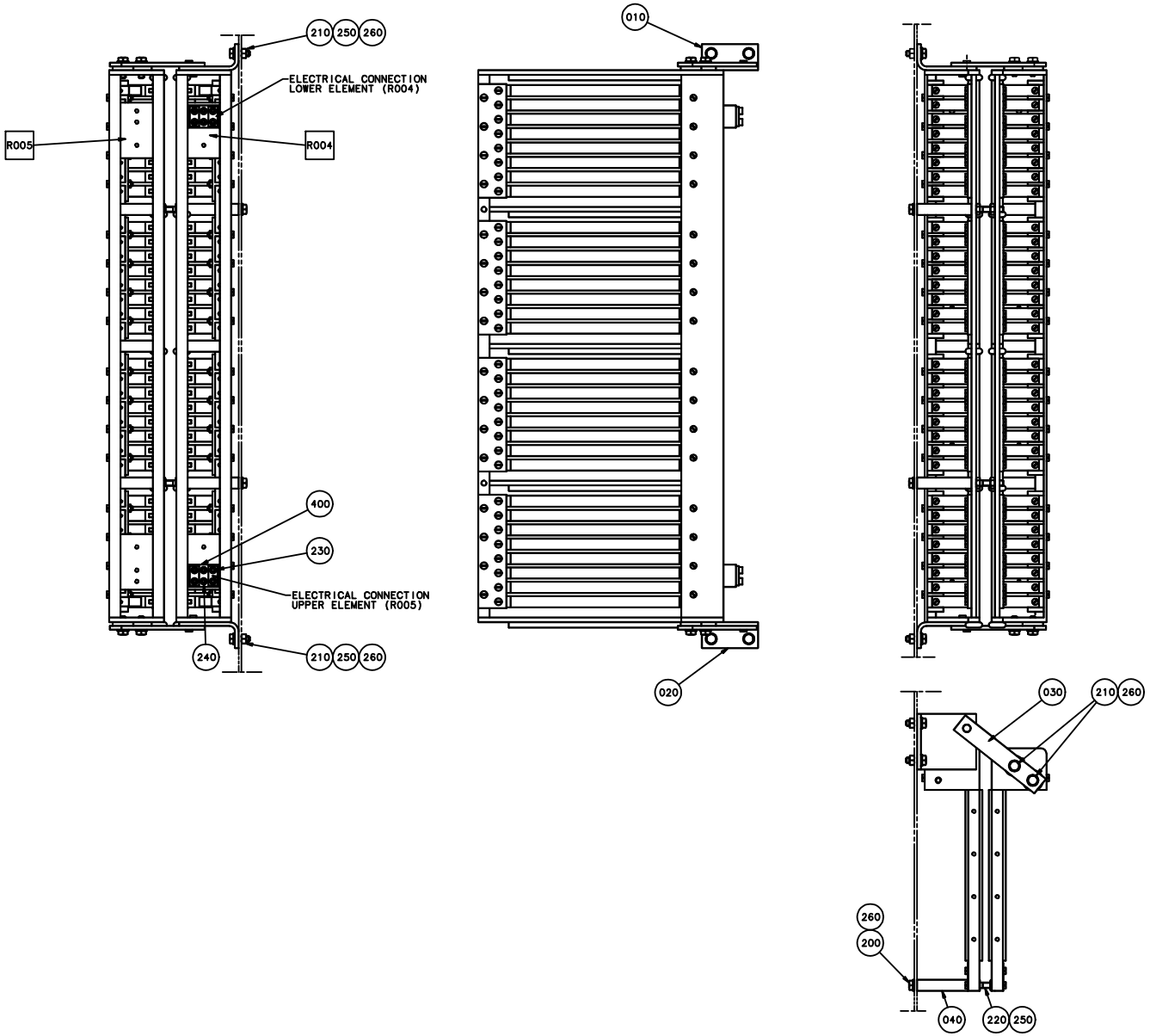
210
250
260
ELECTRICAL CONNECTION LOWER ELEMENT (R004)
R005
R004
400
230
ELECTRICAL CONNECTION UPPER ELEMENT (R005)
240
210
250
260
010
020
030
210
260
260
200
040
220
250

ECM: 83487 - 20000925
Group number: 1175362-0101
Assembly Drawing: 1175362-1_1_AA

Issue: 20030213

Pos	Part No	SP	UN	Qty	Description	Page No
Common Parts						
010	570841-0000	-		1	BRACKET	
020	570846-0000	-		1	BRACKET	
030	570847-0000	-		2	JOINTED ARM	
040	570850-0000	A		2	SUPPORT	
200	312105-0364	-		2	SCREW M6S ISO 4017 M6X10 A480	
210	312105-0368	-		8	SCREW M6S M6X16 A280	
220	312105-0372	-		2	SCREW M6S ISO 4017 M6X25 A480	
230	312115-0287	-		8	SCREW ISO4762 M4X8 A4	
240	312115-0291	-		4	SCREW ISO4762 M4X12 A4	
250	312605-0316	-		6	HEXAGON NUT, M6M M6 A280	
260	315105-0153	-		10	WASHER ISO 7089-6-200 HV-A4	
400	90077-0110	-		2	PLINTH, 6202	
R004	A1175361-0101	-		1	ELEMENT	**73, 75**
R005	A1175361-0101	-		1	ELEMENT	**73, 75**

Pos	Part No	SP	UN	Qty	Description	Page No

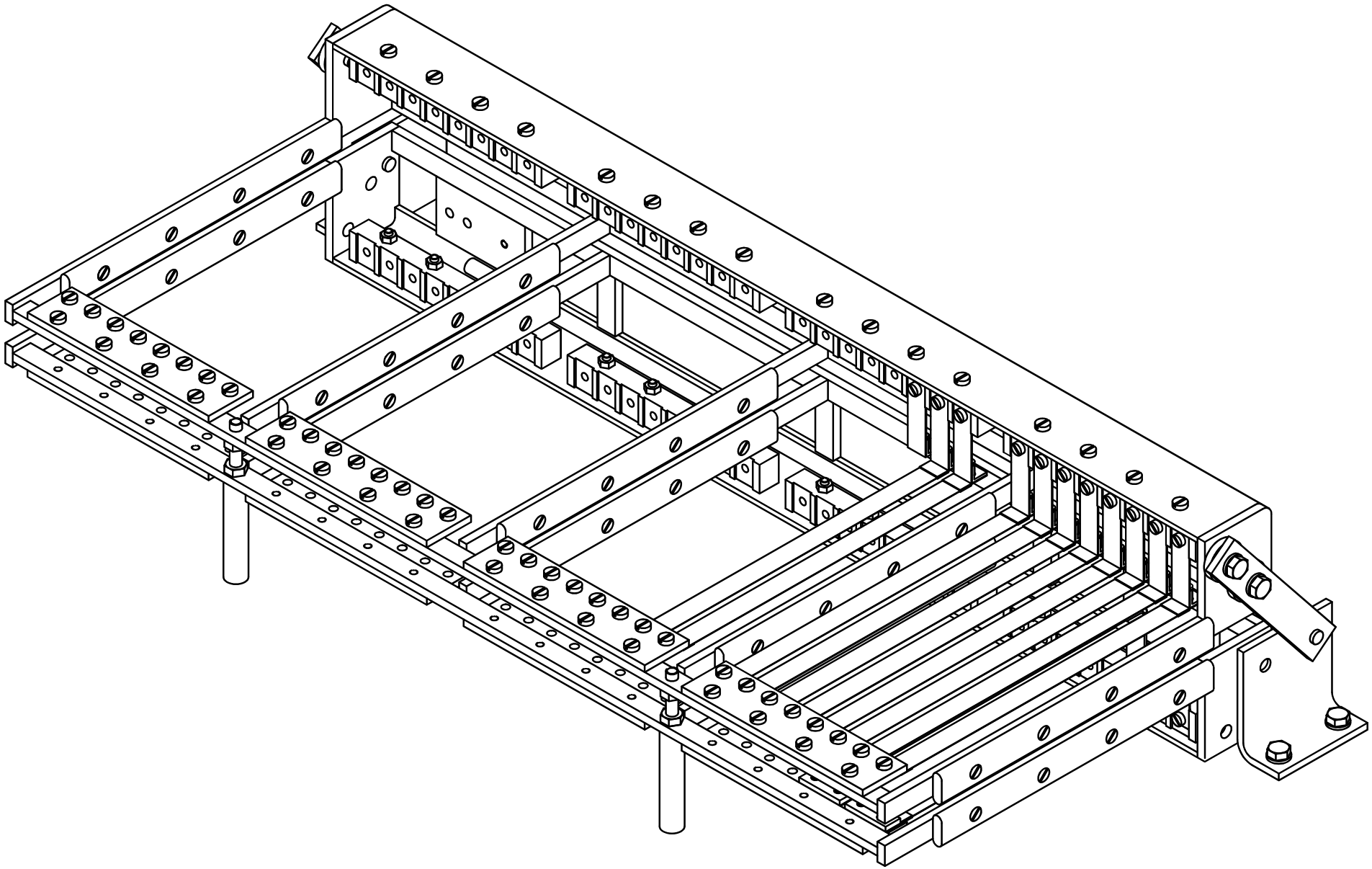

ECM: 83487 - 20000925
Group number: 1175362-0101
Assembly Drawing: 1175362-2_1_AA

Issue: 20030213

Pos	Part No	SP	UN	Qty	Description	Page No
Common Parts						
010	570841-0000	-		1	BRACKET	
020	570846-0000	-		1	BRACKET	
030	570847-0000	-		2	JOINTED ARM	
040	570850-0000	A		2	SUPPORT	
200	312105-0364	-		2	SCREW M6S ISO 4017 M6X10 A480	
210	312105-0368	-		8	SCREW M6S M6X16 A280	
220	312105-0372	-		2	SCREW M6S ISO 4017 M6X25 A480	
230	312115-0287	-		8	SCREW ISO4762 M4X8 A4	
240	312115-0291	-		4	SCREW ISO4762 M4X12 A4	
250	312605-0316	-		6	HEXAGON NUT, M6M M6 A280	
260	315105-0153	-		10	WASHER ISO 7089-6-200 HV-A4	
400	90077-0110	-		2	PLINTH, 6202	
R004	A1175361-0101	-		1	ELEMENT	**73, 75**
R005	A1175361-0101	-		1	ELEMENT	**73, 75**

Pos	Part No	SP	UN	Qty	Description	Page No

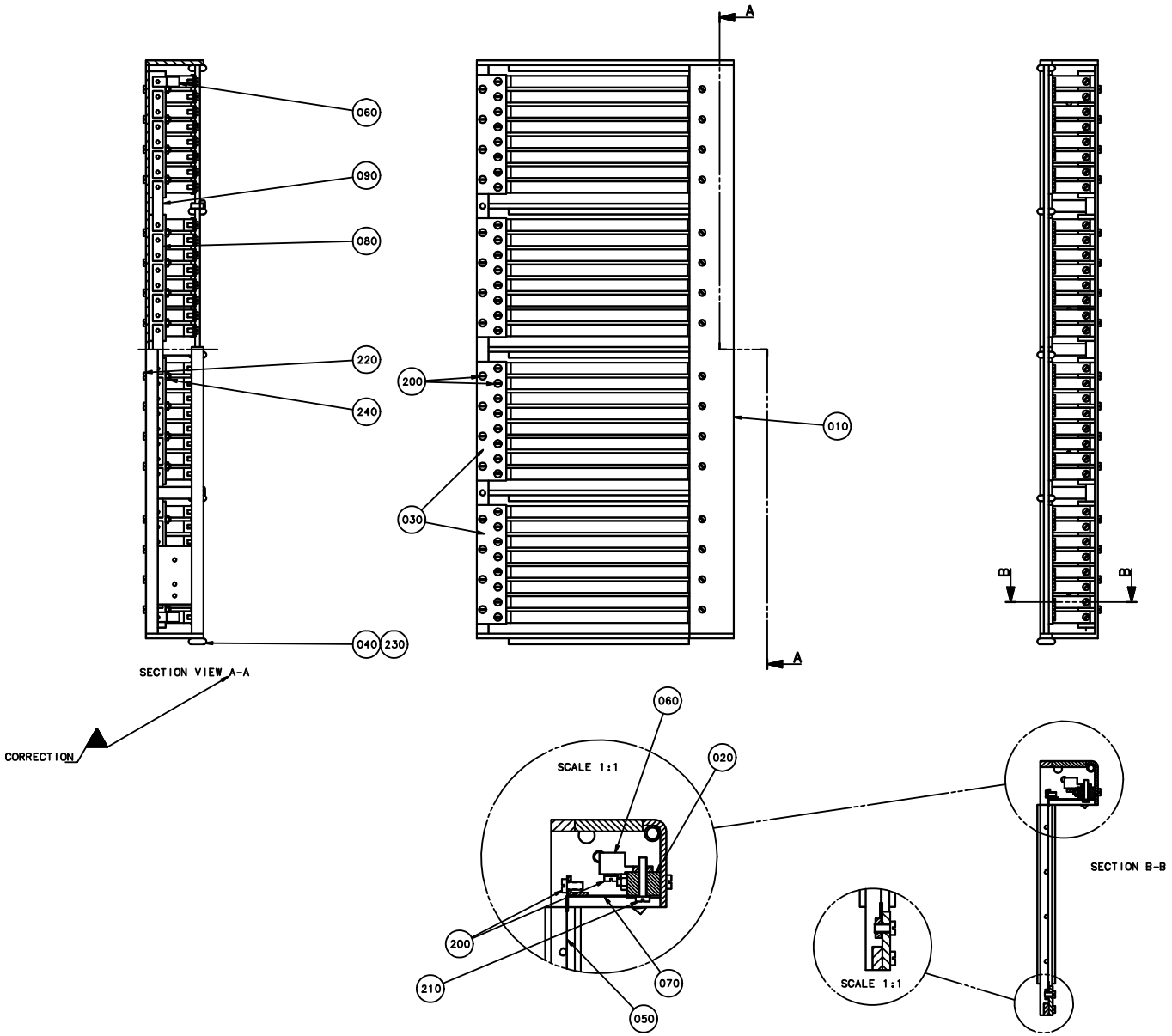
A
060
090
080
220
240
200
010
030
040
230
A
B
B
SECTION VIEW A-A
CORRECTION
060
020
SCALE 1:1
200
210
070
050
SECTION B-B
SCALE 1:1

ECM: 83486 - 20000925
Group number: 1175361-0101
Assembly Drawing: 1175361-1_1_AA

Issue: 20030213

Pos	Part No	SP	UN	Qty	Description	Page No
Common Parts						
010	566151-0000	-		1	ELEMENTKEEPER	
020	566155-0000	B		4	INSULATING RAIL	
030	566156-0000	B		4	INSULATING RAIL	
040	570810-0000	B		5	SLIDE RAIL	
050	566152-0000	B		32	HEATING ELEMENT	
060	566154-0000	A		2	CONNECTION	
070	269814-0000	B		32	SPRING	
080	566157-0000	A		28	CONNECTION	
090	566158-0000	A		3	CONNECTION	
200	312125-0287	-		82	SCREW PAN HEAD MCS M4X8 SS	
210	312125-0295	-		32	SCREW PAN HEAD MCS M4X20 SS	
220	312125-0297	-		16	SCREW PAN HEAD MCS M4X25 SS	
230	312145-0289	-		20	SCREW COUNTERS.SLOT.HD. MFS 4X10 SS	
240	312605-0312	-		16	HEXAGON NUT, M6M M4 A280	

Pos	Part No	SP	UN	Qty	Description	Page No

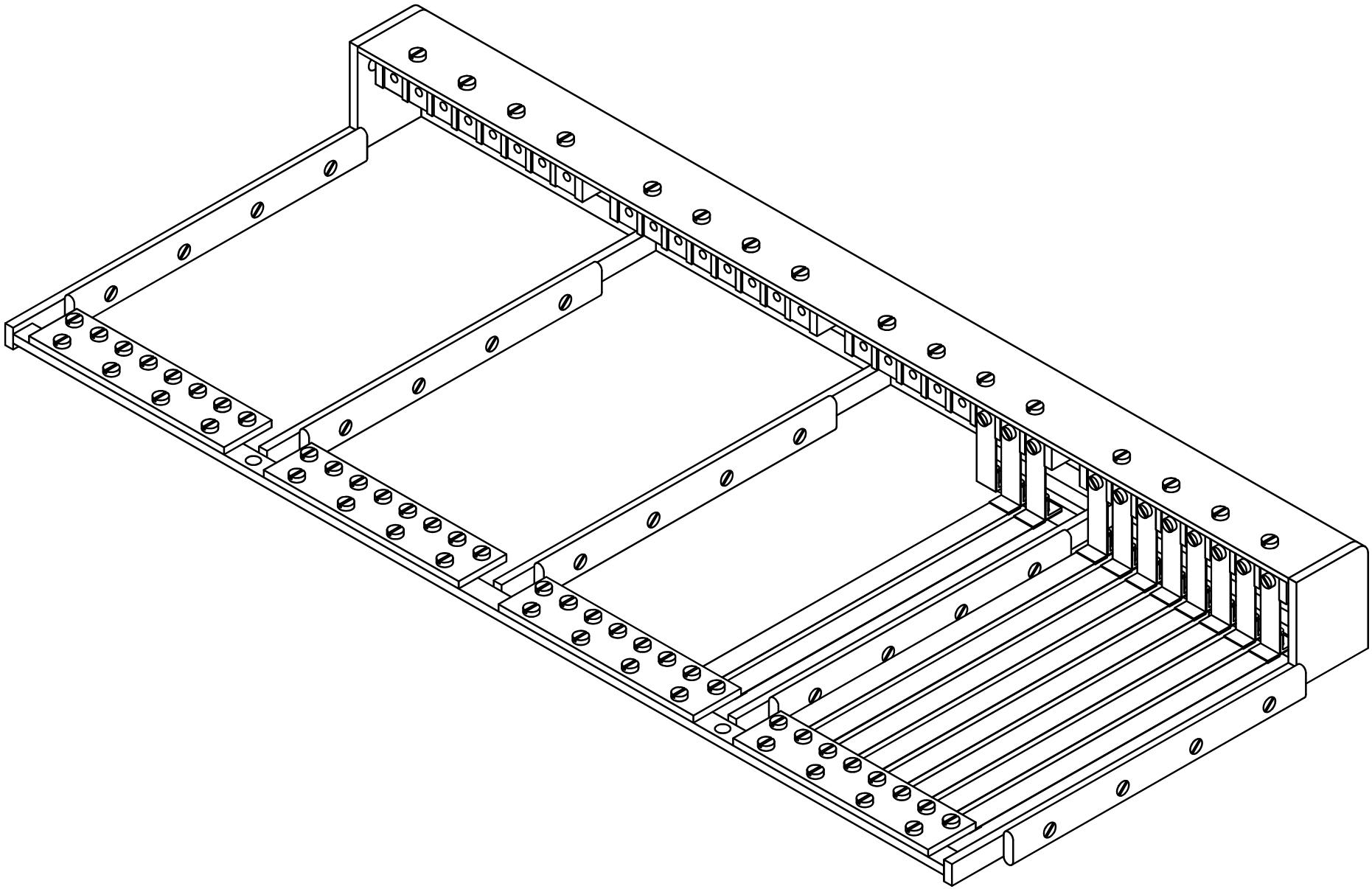

ECM: 83486 - 20000925
Group number: 1175361-0101
Assembly Drawing: 1175361-2_1_AA

Issue: 20030213

Pos	Part No	SP	UN	Qty	Description	Page No
Common Parts						
010	566151-0000	-		1	ELEMENTKEEPER	
020	566155-0000	B		4	INSULATING RAIL	
030	566156-0000	B		4	INSULATING RAIL	
040	570810-0000	B		5	SLIDE RAIL	
050	566152-0000	B		32	HEATING ELEMENT	
060	566154-0000	A		2	CONNECTION	
070	269814-0000	B		32	SPRING	
080	566157-0000	A		28	CONNECTION	
090	566158-0000	A		3	CONNECTION	
200	312125-0287	-		82	SCREW PAN HEAD MCS M4X8 SS	
210	312125-0295	-		32	SCREW PAN HEAD MCS M4X20 SS	
220	312125-0297	-		16	SCREW PAN HEAD MCS M4X25 SS	
230	312145-0289	-		20	SCREW COUNTERS.SLOT.HD. MFS 4X10 SS	
240	312605-0312	-		16	HEXAGON NUT, M6M M4 A280	

Pos	Part No	SP	UN	Qty	Description	Page No

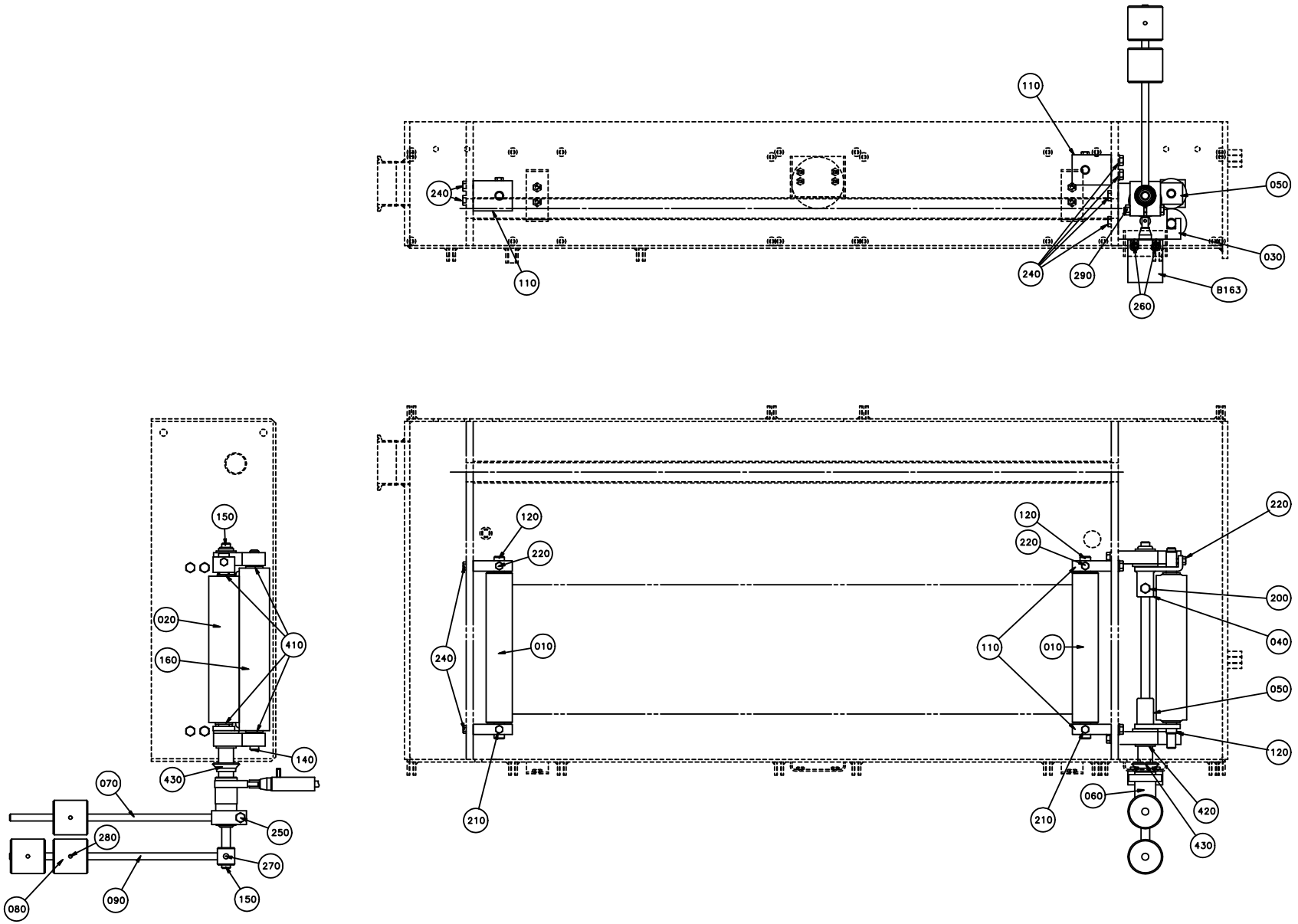
110
240
050
030
240
290
B163
260
110
150
020
160
410
140
430
070
280
250
270
090
150
080
120
220
240
010
210
120
220
110
010
220
200
040
050
120
060
420
430
210

ECM: 83475 - 20000925
Group number: 567249-0201
Assembly Drawing: 567249-2_1_AA

Issue: 20030213

Pos	Part No	SP	UN	Qty	Description	Page No
Common Parts						
010	581589-0000	A		2	BENDING ROLLER	
020	B567251-0000	A		1	CALENDER ROLLER	
	284891-0001	*B*		*1*	*RUBBER*	
020 2	284891-0001	-			RUBBER	
030	567252-0000	-		2	BEARING CONSOLE	
040	567253-0000	-		1	ARM	
050	567254-0000	-		1	ARM	
060	567255-0000	-		1	ECCENTRIC	
070	567256-0000	-		1	LEVER	
080	31338-0000	-		3	COUNTERWEIGHT	
090	31340-0000	-		1	PIN	
110	567257-0000	-		4	BEARING CONSOLE	
120	581590-0000	A		3	SHAFT	
140	567260-0000	A		1	SHAFT	
150	567261-0000	A		1	SHAFT	
160	B567214-0000	A		1	CALENDER ROLLER	
	284891-0001	*-*		*1*	*RUBBER*	
160 1	284891-0001	-			RUBBER	
200	312105-0325	-		1	SCREW M6S ISO 4017 M5X10 A480	
210	312105-0323	-		2	SKRUV M6S ISO 4017 M5X8 A480	
220	312105-0329	-		3	SCREW M6S ISO 4017 M5X16 A480	
240	312105-0368	-		12	SCREW M6S M6X16 A280	
250	312105-0379	-		1	SCREW M6S ISO 4014 M6X45 A480	
260	312125-0329	-		2	SCREW PAN HEAD MCS M5X16 SS	
270	312318-0360	-		2	SCREW ISO4029 M6X6 A4	
280	312318-0368	-		3	SCREW ISO4029 M6X16 A4	
290	312605-0316	-		1	HEXAGON NUT, M6M M6 A280	
410	90240-0184	B		4	FLANGE BUSHING,12X16X15 MM	
420	90240-0240	B		2	FLANGE BUSHING, 17X23X20 MM	
430	90091-0350	B		1	AXIAL LIP SEAL 14,2X27,2X9,4 MM	
B163	90044-0094	A		1	LIMIT SW. 924 CE31-Y20-X5	

Pos	Part No	SP	UN	Qty	Description	Page No

Machine Type | Group Description | Used-In | Group Number | Page No

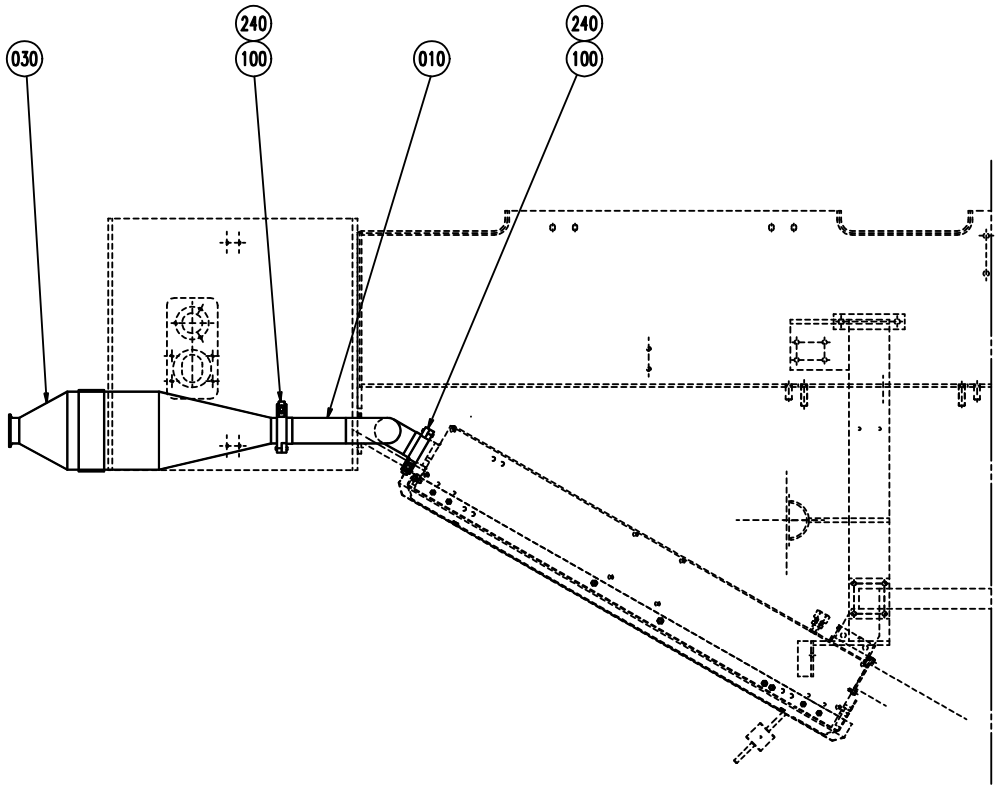
030
240
100
010
240
100

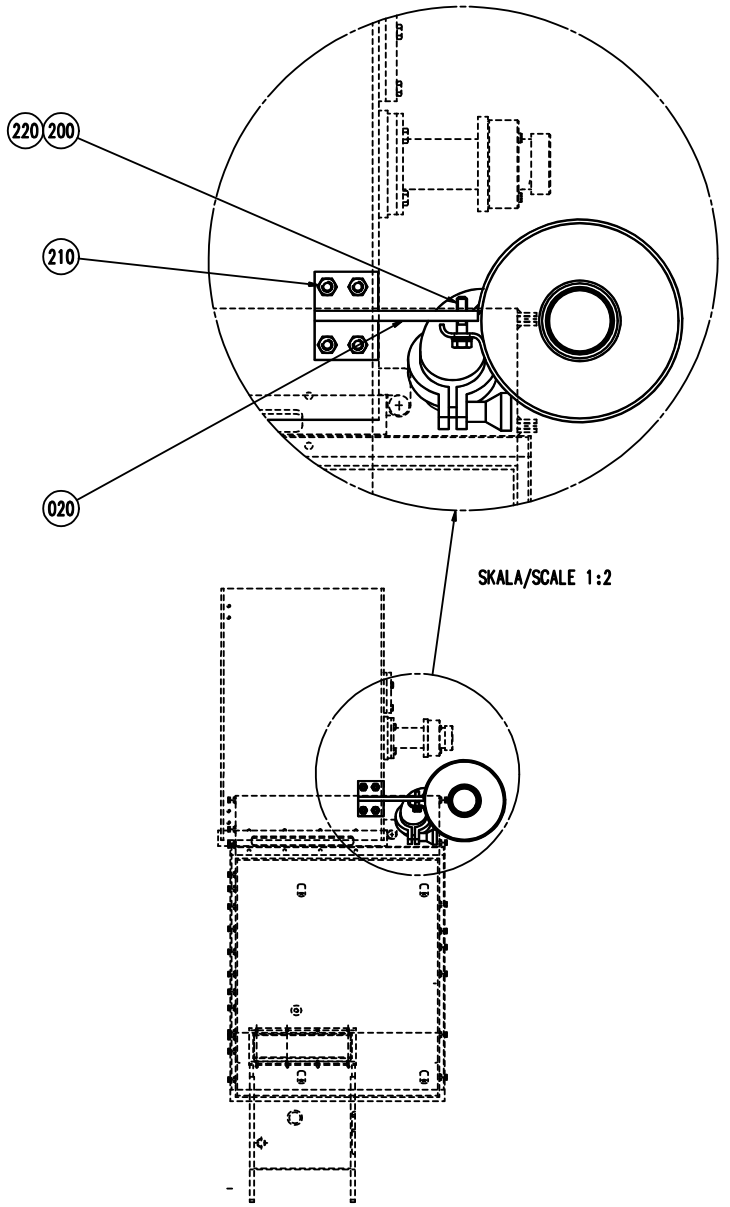
220
200
210
020
SKALA/SCALE 1:2

ECM: 83478 - 20000925
Group number: 568122-0101
Assembly Drawing: 568122-1_1_AA

Issue: 20030213

Pos	Part No	SP	UN	Qty	Description	Page No
Common Parts						
010	568117-0000	-		1	PIPE	
020	568121-0000	-		1	BRACKET	
030	566128-0000	A		1	CATALYZER	
100	90217-0304	-		2	CLAMP, ISO2852 FOR PIPE 50,8 MM	
200	312105-0376	-		1	SCREW M6S ISO 4014 M6X35 A480	
210	312605-0318	-		4	HEXAGON NUT, M6M M8 A280	
220	315115-0153	-		1	WASHER PLAIN, TBRB 6,4/12 H=3	
240	342850-0305	A		2	GASKET 47,8X62,6X5,2 MM 2" FDA	

Pos	Part No	SP	UN	Qty	Description	Page No

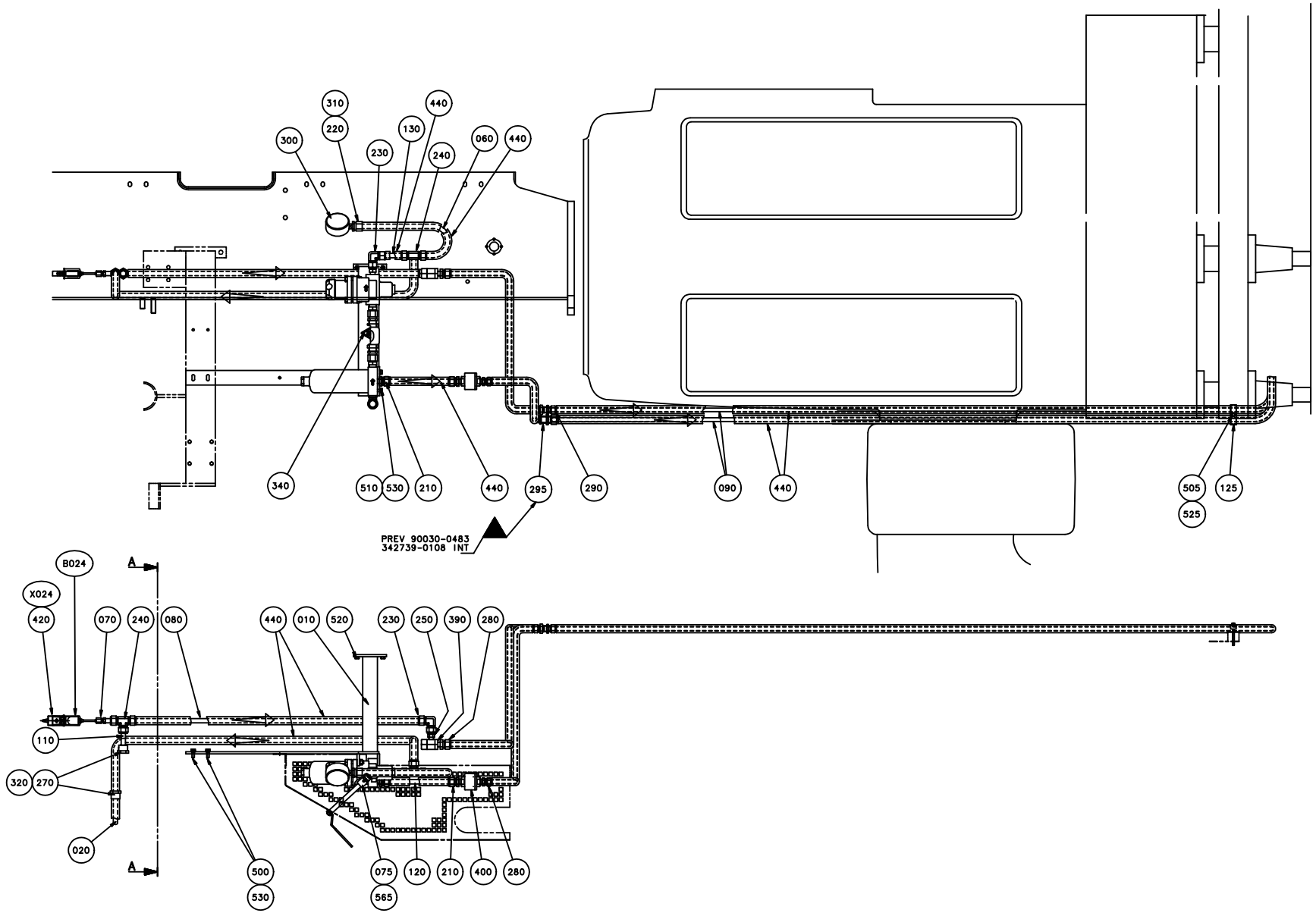
310
220
300
230
130
240
440
060
440
340
510
530
210
440
295
290
090
440
505
525
125
PREV 90030-0483
342739-0108 INT
B024
X024
420
070
240
080
440
010
520
230
250
390
280
110
320
270
020
A
A
500
530
075
565
120
210
400
280

ECM: 83479 - 20000925
Group number: 569580-0201
Assembly Drawing: 569580-3_1_AA

Issue: 20030213

Pos	Part No	SP	UN	Qty	Description	Page No
Common Parts						
010	1175860-0000	-		1	CANTILEVER	
020	569582-0000	-		1	STEAM PIPE	
030	569583-0000	-		1	PIPE	
050	569584-0000	-		1	PIPE	
060	569585-0000	-		1	PIPE BEND	
070	569586-0000	A		1	THERMO CONNECTION	
075	1175838-0000	A		1	VALVE SPINDLE	
080	569587-0000	-		1	PIPE	
090	568132-0000	-		2	PIPE	
110	569595-0000	-		1	GLAND FITTING	
120	569596-0000	-		1	PIPE	
125	569600-0000	-		1	CRAMP	
130	570837-0000	-		1	PIPE	
200	90030-0213	-		2	CONN. STR. M12 MSC1/2K-316 EXT. TAPPERED	
210	90030-0274	-		2	CONN. STR.12-1/4 NPT, EXT. TAPPERED	
220	90030-0278	-		1	CONN. STR., 12-G1/4, INT. THREAD	
230	90030-0280	-		2	CONN. ELBOW, 12	
240	90030-0281	-		2	CONN. T-PIPE 12	
250	90030-0286	-		1	PIPE SOCKET SS-12-MTA-1-4 RT	
260	90030-0287	-		3	TUBE ADAPTOR R 1/2-DIA. 12MM	
270	90030-0338	-		2	NUT, PIPE & CONNECTORS, SS-8-BVCO-4	
280	90030-0487	-		2	CONN. STR., 10-R1/4, EXT. THREAD	
290	90030-0483	-		1	CONN. BULKHEAD SV 10-	
295	342739-0108	-		1	CONN. ELBOW BULKHEAD WSV 10	
300	90043-0091	A		1	PRESSURE GAUGE, 2840, D=63 MM	
310	90043-0304	A		1	SEAL RING FOR GAUGE G1/4	
320	90091-0266	A		2	SEAL RING 10,4X16,3X2,5 MM	
325	90140-0012	-		1	ELBOW, 90 INT/EXT, 2020-1/2-1/2	
330	90187-0125	-		1	BALL VALVE G1/2	
340	90194-0143	-		1	WARNING SIGN ISO, HOT SURFACE	
370	90337-0315	A		1	FILTERINSERT / MCS 4463	
380	B90277-0055	-		1	FILTER HOUSING / MDS 4463 G 08 H	
	90277-0339	*-*		*1*	*O-RING, ACS0272 EU FOR PALL FILTER*	
390	90360-0009	A		1	STEAM TRAP / 1/4 BSP TD 18	
400	90360-0025	A		1	STEAM TRAP / MST 18,G 1/4; 6 DEGREE C	
410	90360-0014	-		1	REDUCING VALVE	
420	90326-0012	-		1	PROTECTIVE COVER, T31A4618	
440	90166-0231	-	M	10	SILICONE EXP RUBBER HOSE	
500	312105-0370	-		2	SCREW M6S ISO 4017 M6X20 A480	
505	312105-0343	-		1	SCREW M6S ISO 4014 M5X60 A480	
510	312205-0109	-		2	SCREW U6S1/4X16RFR	
520	312605-0316	-		2	HEXAGON NUT, M6M M6 A280	
525	315105-0146	-		1	WASHER ISO 7089-5-200 HV-A4	
530	315115-0153	-		4	WASHER PLAIN, TBRB 6,4/12 H=3	
540	315105-0165	-		2	WASHER ISO 7089-8-200 HV-A4	
560	312105-0460	-		2	SCREW M6S ISO 4014 M8X45 A480	
565	312318-0325	-		1	SCREW ISO4029 M5X10 A4	
570	312605-0318	-		2	HEXAGON NUT, M6M M8 A280	
B024	90326-0037	A		1	THERMOCOUPLE, CR-AL PREM.G	
X024	90326-0020	A		1	PLUG, FEMALE YELLOW CR-AL	

Machine Type	Group Description	Used-In	Group Number	Page No

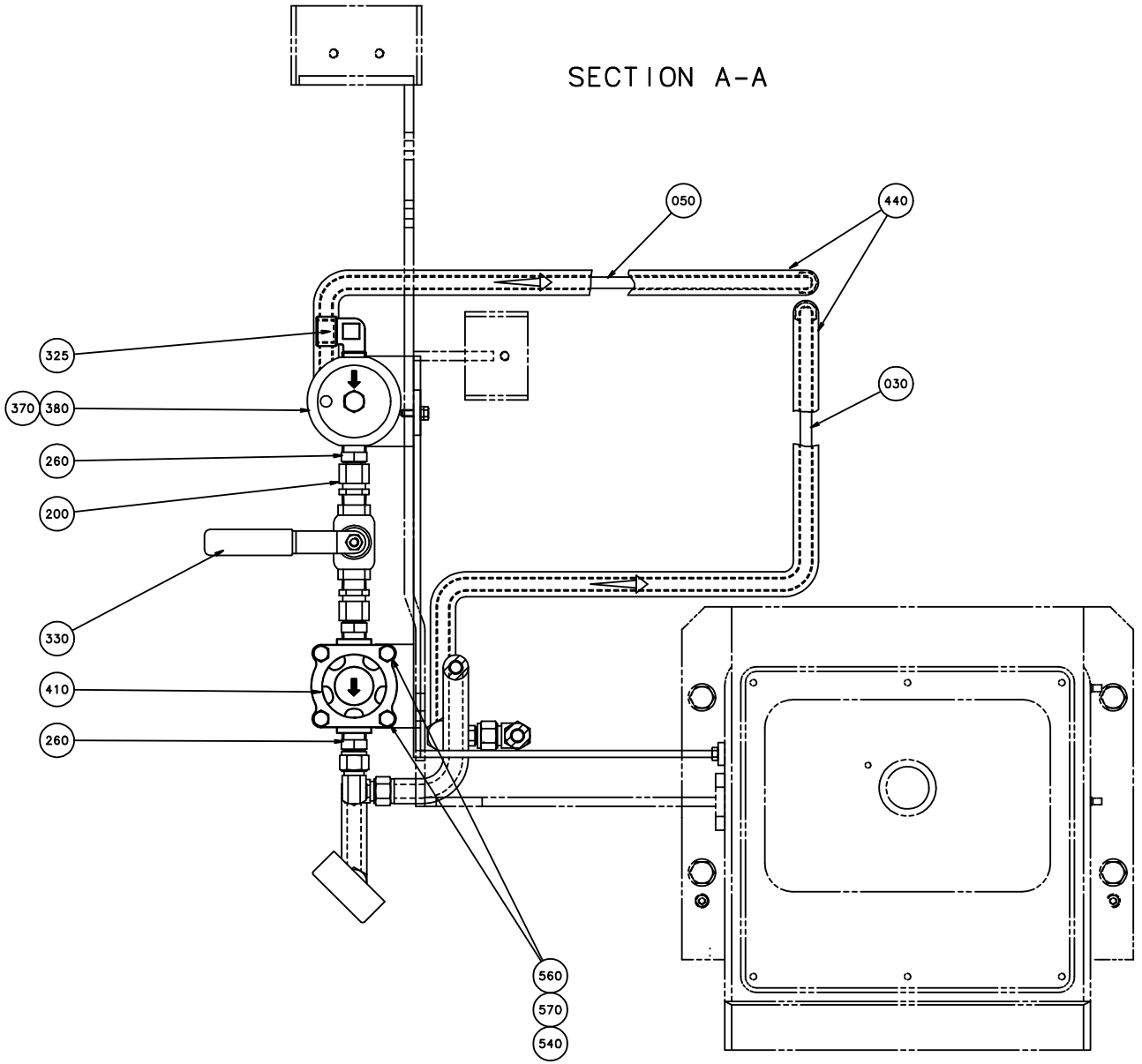
SECTION A-A
050
440
030
325
370
380
260
200
330
410
260
560
570
540

Pos	Part No	SP	UN	Qty	Description	Page No
Common Parts						
010	1175860-0000	-		1	CANTILEVER	
020	569582-0000	-		1	STEAM PIPE	
030	569583-0000	-		1	PIPE	
050	569584-0000	-		1	PIPE	
060	569585-0000	-		1	PIPE BEND	
070	569586-0000	A		1	THERMO CONNECTION	
075	1175838-0000	A		1	VALVE SPINDLE	
080	569587-0000	-		1	PIPE	
090	568132-0000	-		2	PIPE	
110	569595-0000	-		1	GLAND FITTING	
120	569596-0000	-		1	PIPE	
125	569600-0000	-		1	CRAMP	
130	570837-0000	-		1	PIPE	
200	90030-0213	-		2	CONN. STR. M12 MSC1/2K-316 EXT. TAPPERED	
210	90030-0274	-		2	CONN. STR.12-1/4 NPT, EXT. TAPPERED	
220	90030-0278	-		1	CONN. STR., 12-G1/4, INT. THREAD	
230	90030-0280	-		2	CONN. ELBOW, 12	
240	90030-0281	-		2	CONN. T-PIPE 12	
250	90030-0286	-		1	PIPE SOCKET SS-12-MTA-1-4 RT	
260	90030-0287	-		3	TUBE ADAPTOR R 1/2-DIA. 12MM	
270	90030-0338	-		2	NUT, PIPE & CONNECTORS, SS-8-BVCO-4	
280	90030-0487	-		2	CONN. STR., 10-R1/4, EXT. THREAD	
290	90030-0483	-		1	CONN. BULKHEAD SV 10-	
295	342739-0108	-		1	CONN. ELBOW BULKHEAD WSV 10	
300	90043-0091	A		1	PRESSURE GAUGE, 2840, D=63 MM	
310	90043-0304	A		1	SEAL RING FOR GAUGE G1/4	
320	90091-0266	A		2	SEAL RING 10,4X16,3X2,5 MM	
325	90140-0012	-		1	ELBOW, 90 INT/EXT, 2020-1/2-1/2	
330	90187-0125	-		1	BALL VALVE G1/2	
340	90194-0143	-		1	WARNING SIGN ISO, HOT SURFACE	
370	90337-0315	A		1	FILTERINSERT / MCS 4463	
380	B90277-0055	-		1	FILTER HOUSING / MDS 4463 G 08 H	
	90277-0339	*-*		*1*	*O-RING, ACS0272 EU FOR PALL FILTER*	
390	90360-0009	A		1	STEAM TRAP / 1/4 BSP TD 18	
400	90360-0025	A		1	STEAM TRAP / MST 18,G 1/4; 6 DEGREE C	
410	90360-0014	-		1	REDUCING VALVE	
420	90326-0012	-		1	PROTECTIVE COVER, T31A4618	
440	90166-0231	-	M	10	SILICONE EXP RUBBER HOSE	
500	312105-0370	-		2	SCREW M6S ISO 4017 M6X20 A480	
505	312105-0343	-		1	SCREW M6S ISO 4014 M5X60 A480	
510	312205-0109	-		2	SCREW U6S1/4X16RFR	
520	312605-0316	-		2	HEXAGON NUT, M6M M6 A280	
525	315105-0146	-		1	WASHER ISO 7089-5-200 HV-A4	
530	315115-0153	-		4	WASHER PLAIN, TBRB 6,4/12 H=3	
540	315105-0165	-		2	WASHER ISO 7089-8-200 HV-A4	
560	312105-0460	-		2	SCREW M6S ISO 4014 M8X45 A480	
565	312318-0325	-		1	SCREW ISO4029 M5X10 A4	
570	312605-0318	-		2	HEXAGON NUT, M6M M8 A280	
B024	90326-0037	A		1	THERMOCOUPLE, CR-AL PREM.G	
X024	90326-0020	A		1	PLUG, FEMALE YELLOW CR-AL	

Machine Type | Group Description | Used-In | Group Number | Page No

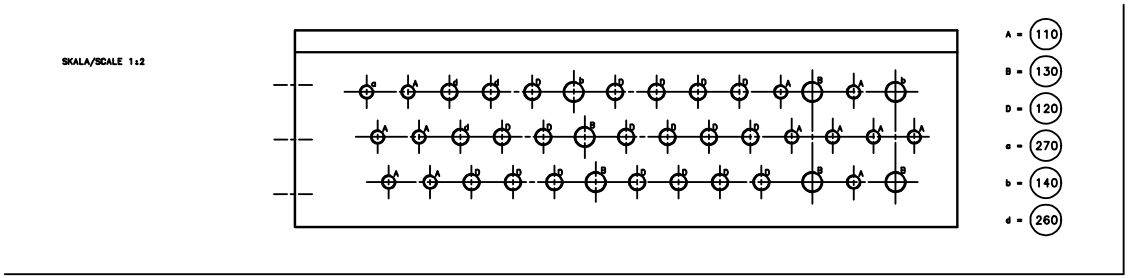
SKALA/SCALE 1:2
A = 110
B = 130
D = 120
c = 270
b = 140
d = 260

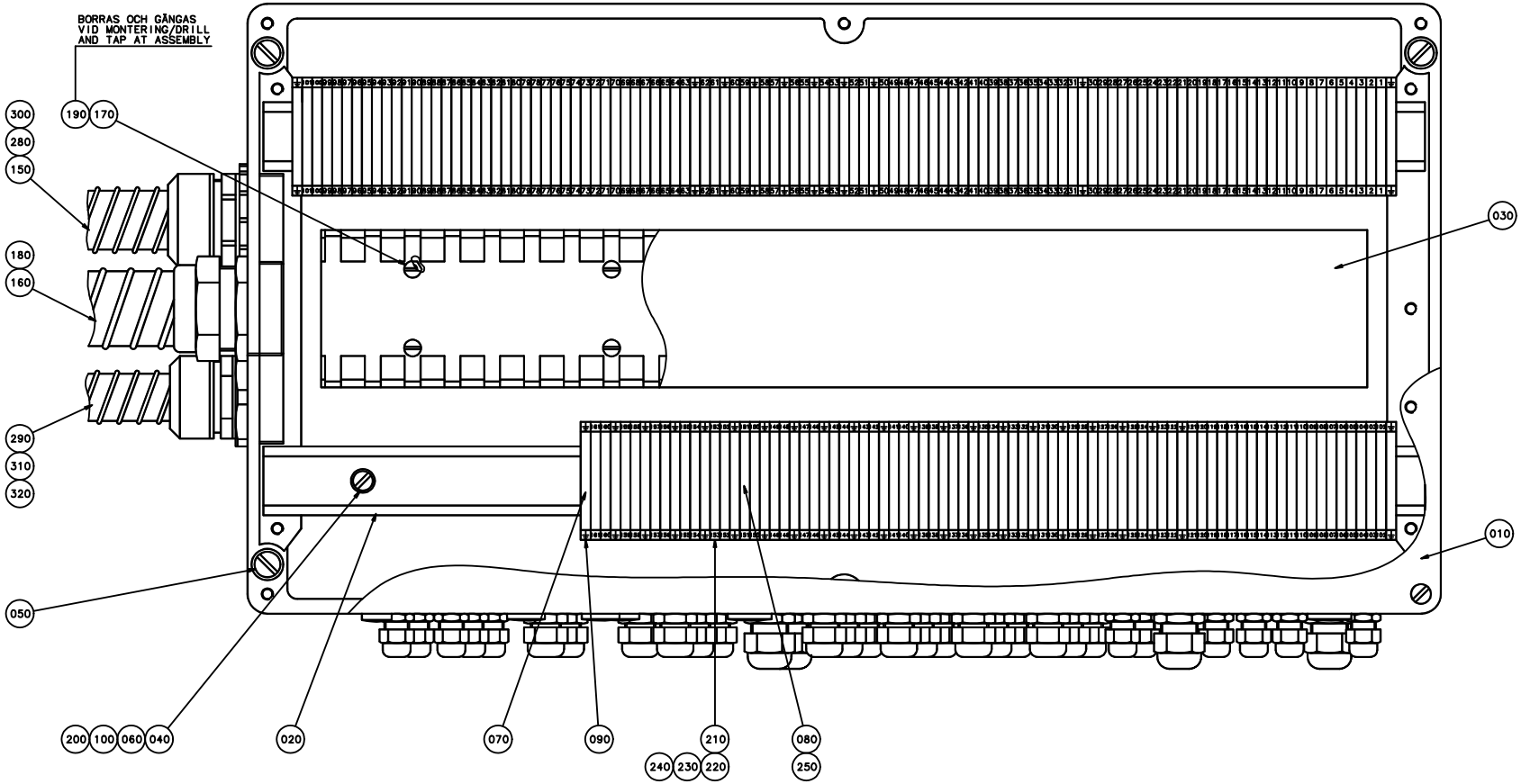
BORRAS OCH GÄNGAS
VID MONTERING/DRILL
AND TAP AT ASSEMBLY
300
280
150
190
170
180
160
290
310
320
050
200
100
060
040
020
070
090
210
240
230
220
080
250
030
010

ECM: - -
Group number: 567113-0101
Assembly Drawing: 567113-1_1_AA

Issue: 20030213

Pos	Part No	SP	UN	Qty	Description	Page No
Common Parts						
010	567115-0000	-		1	CONNECTION BOX	
020	567116-0000	-		2	RAIL	
030	90181-0055	-	MM	586	CABLE DUCT, 80X80MM	
040	281017-0000	-		6	PIN	
050	312121-0372	-		4	SCREW SLOT.PAN HD. MCS 6X25 FZB	
060	315101-0153	-		6	WASHER PLAIN, BRB, 6,4/12 H=1,5	
070	353024-0204	-		32	EARTH TERMINAL WPE 2,5	
080	353021-0212	-		161	FEED THROUGH TERMINAL, 10200.0	
090	359011-0202	-		64	SIGN BOARD(GROUND)	
100	312121-0364	-		6	SCREW SLOT.PAN HD. MCS 6X10 FZB	
110	352103-0096	-		12	CABLE GLAND, ST 7, PR 12,5/PG7	
120	352103-0101	-		18	KABELFöRSKR. ST 9, PR15,2/PG9	
130	352103-0106	-		5	CABLE GLAND, ST 11, PR18,6/PG11	
140	90002-0009	-		2	BLANK-OFF PLUG, PR 18.6 SKINDICHT-BLK11	
150	90012-0061	-		1	GLAND	
160	90012-0059	-		2	GLAND	
170	90316-0010	-		8	SPACER RITTAL SZ 2607	
180	90152-0029	-	MM	2000	HOSE 35/41	
190	312121-0325	-		8	SCREW SLOT.PAN HD. MCS 5X10 FZB	
200	312316-0370	-		6	SCREW HEX.SOCK.SET CUP P.MSK6SS6X20 FZB	
210	359011-0807	-		2	MARKING PLATES 5-FW 1-50	
220	359011-0808	-		2	MARKING PLATES 5-FW 51-100	
230	359011-0809	-		2	MARKING PLATES 5-FW 101-150	
240	359011-0810	-		2	MARKING PLATES 5-FW 151-200	
250	353034-0030	-		25	BRIDGE CONNECTOR WQV 2,5/10, 10544.6	
260	90002-0013	-		3	BLANK-OFF PLUG, PR 15,2 SKINDICHT-BLK9	
270	90002-0018	-		1	BLANK-OFF PLUG, PR 12,5 SKINDICHT-BLK7	
280	90089-0025	-		1	REDUCTION SLEEVE	
290	90089-0026	-		1	REDUCTION SLEEVE	
300	90152-0031	-	MM	4000	HOSE	
310	352135-0109	-	MM	4000	HOSE .022	
320	352136-0143	-		1	GLAND FITTING	

Pos	Part No	SP	UN	Qty	Description	Page No

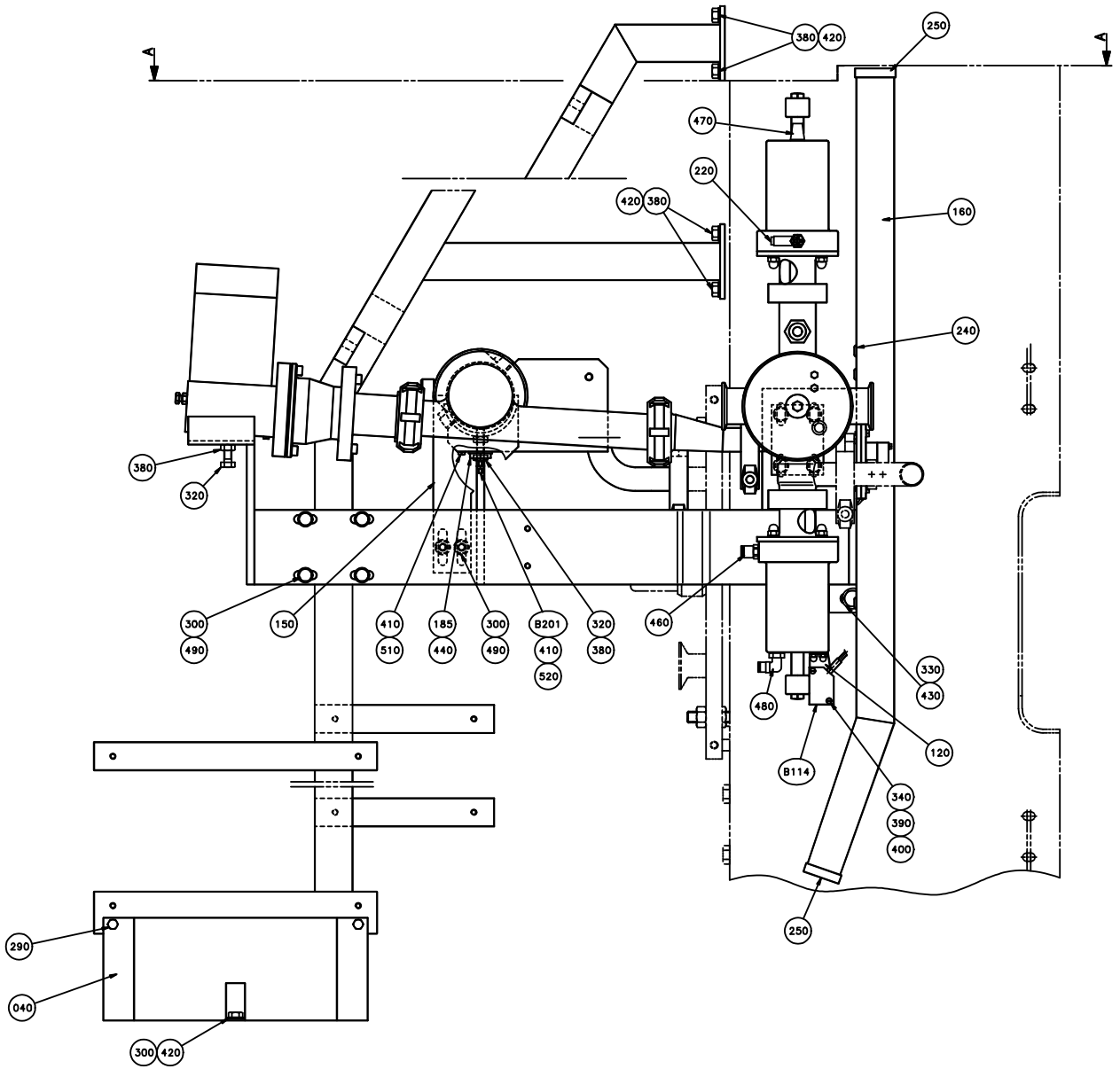
A
A
380
420
250
470
220
420
380
160
240
380
320
300
490
150
410
510
185
440
300
490
B201
410
520
320
380
460
330
430
480
B114
120
340
390
400
250
290
040
300
420

ECM: 102668 - 20020418
Group number: 566160-0301
Assembly Drawing: 566160-5_1_AA

Issue: 20030213

Pos	Part No	SP	UN	Qty	Description	Page No
Common Parts						
010	566115-0000	-		1	PRODUCT PIPE	
020	566119-0000	-		1	VALVE BRACKET	
030	573528-0000	-		1	FRAME	
040	574183-0000	-		1	PROTECTIVE CASING	
050	566121-0000	-		1	SPACER	
070	566123-0000	-		1	BRACKET	
080	566124-0000	-		1	BRACKET	
090	566140-0000	-		1	INTERMEDIATE PIPE	
100	12242-0001	-		1	GASKET 32X25X5,5	
110	12242-0003	A		1	GASKET 48X38X5,5	
120	566362-0000	-		1	MOUNTING SHEET	
130	924354-0000	-		1	CLAMP	
140	569615-0000	-		1	PROTECTION PLATE	
150	562879-0000	-		1	BRACKET	
160	570820-0000	-		1	CABLE DUCT	
165	924352-0000	-		1	BRACKET	
175	924518-0000	A		1	GASKET	
180	924519-0000	A		1	GASKET	
185	924703-0000	-		1	BRACKET	
210	90217-0308	-		2	CLAMP, ISO2852 FOR PIPE 25,4 AND 38,1 MM	
220	90235-0288	A		1	VALVE	
240	90015-0016	-		3	BUSHING 21X8MM; HOLE=13MM	
250	90143-0060	-	MM	500	EDGE STRIP 9,5X6,3MM BLACK PVC	
260	90330-0029	-		1	PLUG, EXT. G-THREAD, R-236R3/8	
280	312125-0234	-		2	SCREW PAN HEAD MCS M3X30 SS	
290	312125-0364	-		2	SCREW SLOT.PAN HD. MCS 6X10 A480	
300	312105-0451	-		12	SCREW M6S ISO 4017 M8X20 A480	
320	312109-0457	-		7	SCREW M6S ISO 4017 M8X35 A480	
330	312105-0491	-		2	SCREW M6S ISO 4017 M10X20 A480	
340	312125-0230	-		2	SPåRSKRUV MCS M3X20 SS	
350	312125-0291	-		4	SCREW PAN HEAD MCS M4X12 SS	
360	312115-0364	-		2	SCREW ISO4762 M6X10 A4	
370	315402-0128	-		2	LOCK WASHER FBB 3,6	
380	312605-0318	-		15	HEXAGON NUT, M6M M8 A280	
390	312812-0310	-		2	HEXAGON NUT, NY-LOCK M3 A480	
400	315105-0124	-		4	WASHER ISO 7089-3-200 HV-A4	
410	315105-0136	-		7	WASHER ISO 7089-4-200 HV-A4	
420	315105-0165	-		14	WASHER ISO 7089-8-200 HV-A4	
430	315115-0173	-		2	WASHER PLAIN, TBRB 10,5/22 H=4	
440	315204-0213	A		1	O-RING 15,2X2,4 MM	
445	315233-0111	A		1	WASHER PL.RND.NYL.17/22,H=1	
450	342850-0303	A		2	GASKET 22,7X49,1X5,2 MM 1" FDA	
460	342722-0202	-		2	PIPE COUPLING 1/8" D=6MM	
470	346800-0109	A		2	SILENCER FILTER R1/8"	
480	342732-0102	-		1	ELBOW PIPE JOINT, EXT.THREAD, D=6MM-G1/8	
490	315115-0165	-		10	WASHER PLAIN, TBRB 8,4/16 H=3	
500	312115-0331	-		2	SCREW ISO472 M5X20 A4	
510	312125-0285	-		1	SCREW SLOT.PAN HD. MCS 4X6 A480	
520	312605-0312	-		2	HEXAGON NUT, M6M M4 A280	
B114	90044-0194	A		1	PROX.SW. IN5329/IN3002-BPKG	
B180	90044-0194	A		1	PROX.SW. IN5329/IN3002-BPKG	
B201	567070-0013	A		1	ELECTRODE	
B219	90044-0194	A		1	PROX.SW. IN5329/IN3002-BPKG	
F010	A566373-0101	-		1	AP-VALVE 38/25	**91**
F020	A736620-0301	A		1	CONSTANT FLOW VALVE	**103, 105**

Machine Type | Group Description | Used-In | Group Number | Page No

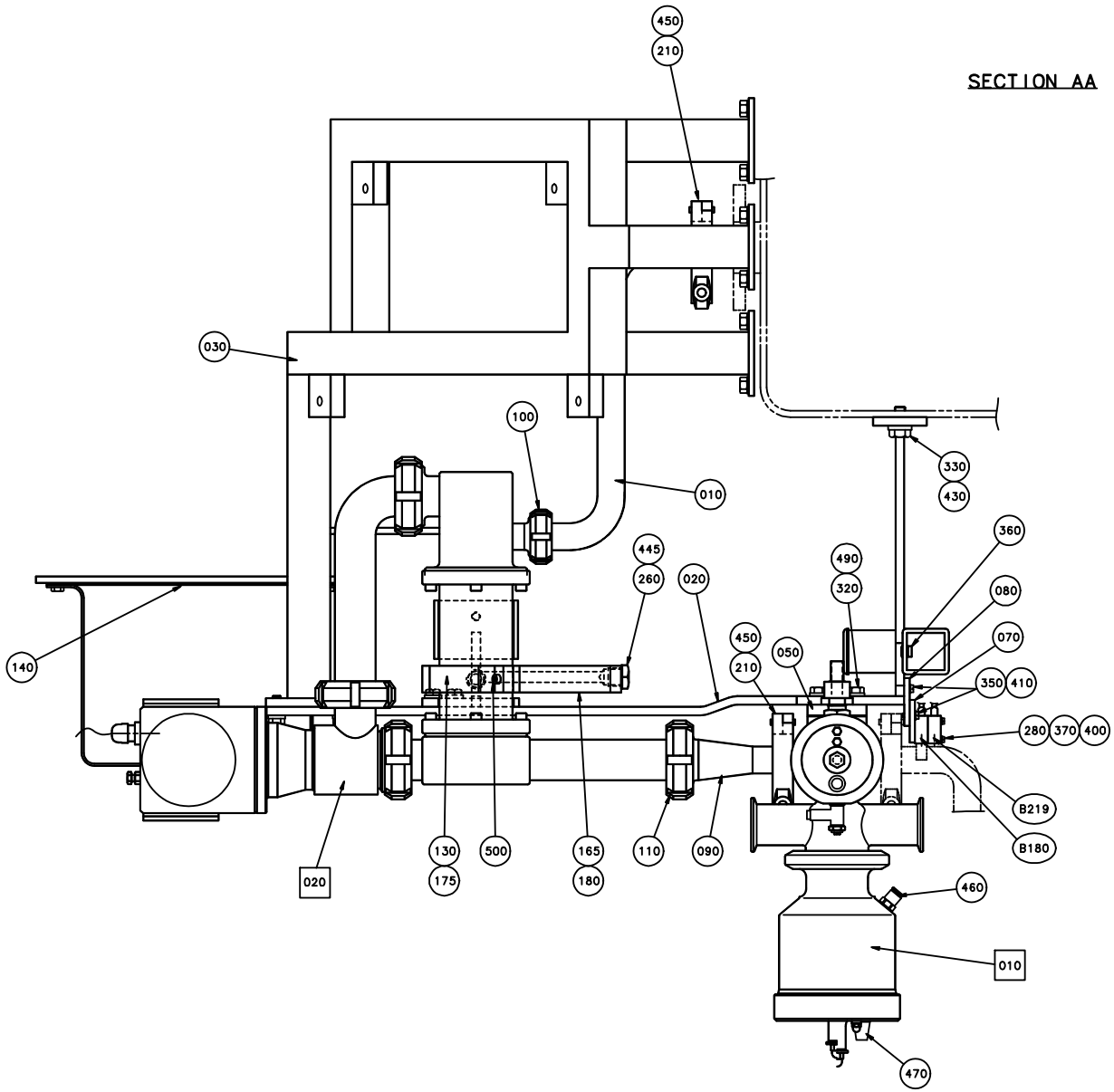
SECTION AA
450
210
030
100
010
330
430
360
490
320
080
070
350
410
280
370
400
B219
B180
460
010
470
445
260
020
140
450
210
050
130
175
500
165
180
110
090
020

ECM: 102668 - 20020418
Group number: 566160-0301
Assembly Drawing: 566160-6_1_AA

Issue: 20030213

Pos	Part No	SP	UN	Qty	Description	Page No
Common Parts						
010	566115-0000	-		1	PRODUCT PIPE	
020	566119-0000	-		1	VALVE BRACKET	
030	573528-0000	-		1	FRAME	
040	574183-0000	-		1	PROTECTIVE CASING	
050	566121-0000	-		1	SPACER	
070	566123-0000	-		1	BRACKET	
080	566124-0000	-		1	BRACKET	
090	566140-0000	-		1	INTERMEDIATE PIPE	
100	12242-0001	-		1	GASKET 32X25X5,5	
110	12242-0003	A		1	GASKET 48X38X5,5	
120	566362-0000	-		1	MOUNTING SHEET	
130	924354-0000	-		1	CLAMP	
140	569615-0000	-		1	PROTECTION PLATE	
150	562879-0000	-		1	BRACKET	
160	570820-0000	-		1	CABLE DUCT	
165	924352-0000	-		1	BRACKET	
175	924518-0000	A		1	GASKET	
180	924519-0000	A		1	GASKET	
185	924703-0000	-		1	BRACKET	
210	90217-0308	-		2	CLAMP, ISO2852 FOR PIPE 25,4 AND 38,1 MM	
220	90235-0288	A		1	VALVE	
240	90015-0016	-		3	BUSHING 21X8MM; HOLE=13MM	
250	90143-0060	-	MM	500	EDGE STRIP 9,5X6,3MM BLACK PVC	
260	90330-0029	-		1	PLUG, EXT. G-THREAD, R-236R3/8	
280	312125-0234	-		2	SCREW PAN HEAD MCS M3X30 SS	
290	312125-0364	-		2	SCREW SLOT.PAN HD. MCS 6X10 A480	
300	312105-0451	-		12	SCREW M6S ISO 4017 M8X20 A480	
320	312109-0457	-		7	SCREW M6S ISO 4017 M8X35 A480	
330	312105-0491	-		2	SCREW M6S ISO 4017 M10X20 A480	
340	312125-0230	-		2	SPåRSKRUV MCS M3X20 SS	
350	312125-0291	-		4	SCREW PAN HEAD MCS M4X12 SS	
360	312115-0364	-		2	SCREW ISO4762 M6X10 A4	
370	315402-0128	-		2	LOCK WASHER FBB 3,6	
380	312605-0318	-		15	HEXAGON NUT, M6M M8 A280	
390	312812-0310	-		2	HEXAGON NUT, NY-LOCK M3 A480	
400	315105-0124	-		4	WASHER ISO 7089-3-200 HV-A4	
410	315105-0136	-		7	WASHER ISO 7089-4-200 HV-A4	
420	315105-0165	-		14	WASHER ISO 7089-8-200 HV-A4	
430	315115-0173	-		2	WASHER PLAIN, TBRB 10,5/22 H=4	
440	315204-0213	A		1	O-RING 15,2X2,4 MM	
445	315233-0111	A		1	WASHER PL.RND.NYL.17/22,H=1	
450	342850-0303	A		2	GASKET 22,7X49,1X5,2 MM 1" FDA	
460	342722-0202	-		2	PIPE COUPLING 1/8" D=6MM	
470	346800-0109	A		2	SILENCER FILTER R1/8"	
480	342732-0102	-		1	ELBOW PIPE JOINT, EXT.THREAD, D=6MM-G1/8	
490	315115-0165	-		10	WASHER PLAIN, TBRB 8,4/16 H=3	
500	312115-0331	-		2	SCREW ISO472 M5X20 A4	
510	312125-0285	-		1	SCREW SLOT.PAN HD. MCS 4X6 A480	
520	312605-0312	-		2	HEXAGON NUT, M6M M4 A280	
B114	90044-0194	A		1	PROX.SW. IN5329/IN3002-BPKG	
B180	90044-0194	A		1	PROX.SW. IN5329/IN3002-BPKG	
B201	567070-0013	A		1	ELECTRODE	
B219	90044-0194	A		1	PROX.SW. IN5329/IN3002-BPKG	
F010	A566373-0101	-		1	AP-VALVE 38/25	**91**
F020	A736620-0301	A		1	CONSTANT FLOW VALVE	**103, 105**

Machine Type | Group Description | Used-In | Group Number | Page No

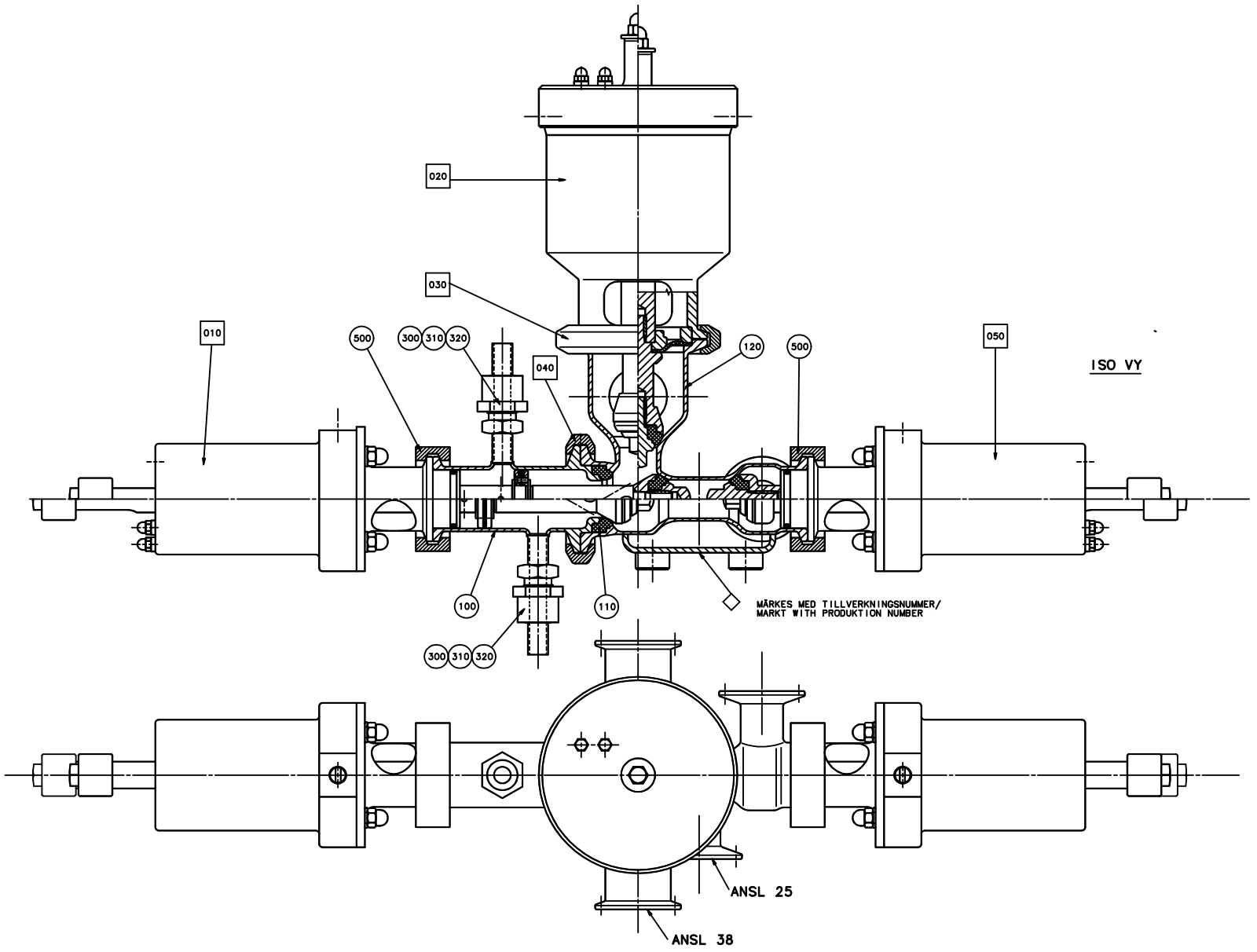
020
030
010
500
300
310
320
040
120
500
050
ISO VY
100
110
MÄRKES MED TILLVERKNINGSNUMMER/
MARKT WITH PRODUKTION NUMBER
300
310
320
ANSL 25
ANSL 38

ECM: 83472 - 20000925
Group number: 566373-0101
Assembly Drawing: 566373-1_1_AA

Issue: 20030213

Pos	Part No	SP	UN	Qty	Description	Page No
Common Parts						
100	566353-0000	-		1	STEAM HOUSE	
110	566356-0000	B		1	SEAL RING	
120	566352-0000	A		1	VALVE HOUSING	
300	90091-0266	B		2	SEAL RING 10,4X16,3X2,5 MM	
310	90030-0336	-		2	CONN. STRAIGHT, 316L-12M-BVCO-3	
320	90030-0338	-		2	NUT, PIPE & CONNECTORS, SS-8-BVCO-4	
500	342840-0103	-		2	CLAMPING PIECE	
F010	A566371-0101	-		1	C-CYLINDER 38/25	**93**
F020	A566374-0101	-		1	A-CYLINDER 25	**95**
F030	A541164-0201	-		1	CLAMP RING	**97**
F040	A566376-0101	-		1	CLAMP RING	**99**
F050	A566372-0101	-		1	B-CYLINDER 38/25	**101**

Pos	Part No	SP	UN	Qty	Description	Page No

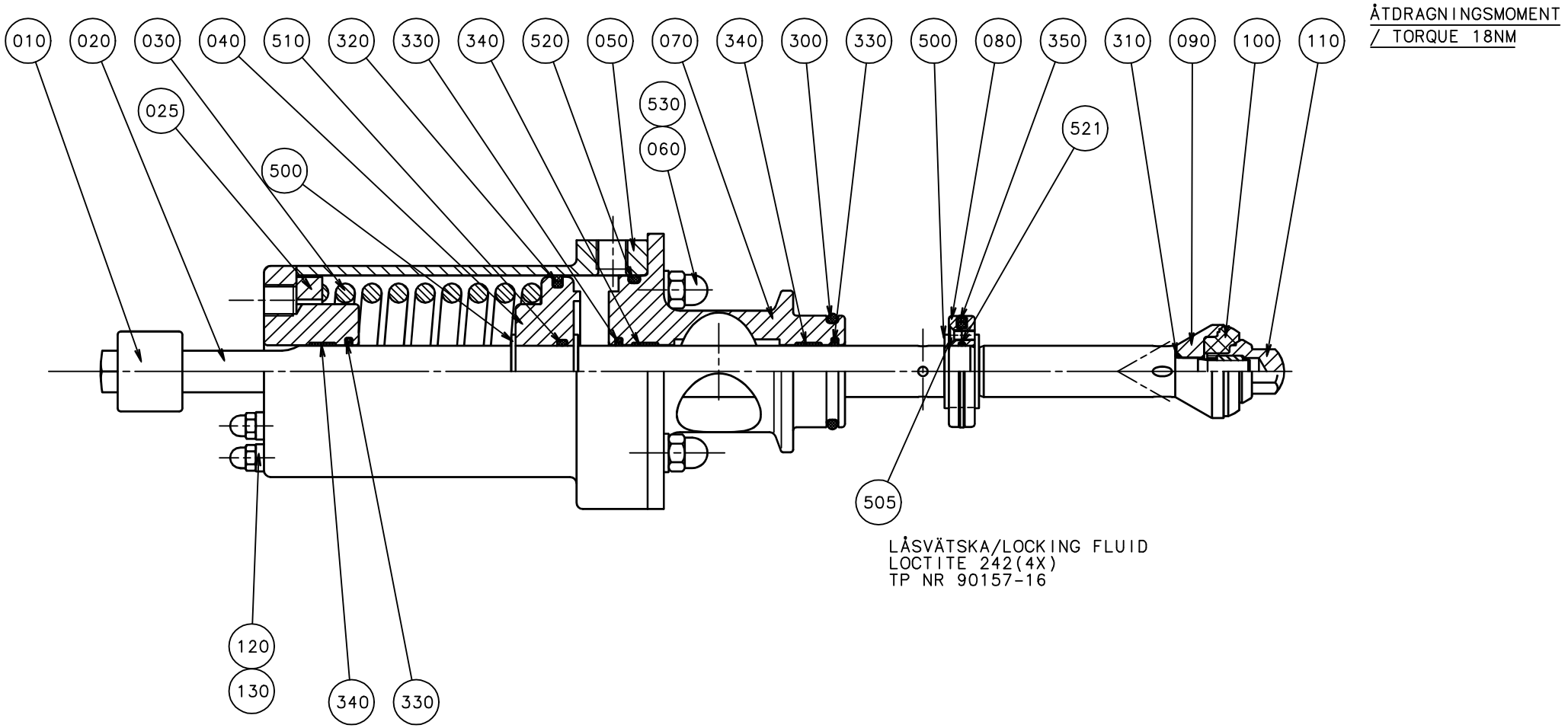
010
020
030
040
510
320
330
340
520
050
070
340
300
330
500
080
350
310
090
100
110
025
500
530
060
521
505
120
130
340
330
ÅTDRAGNINGSMOMENT / TORQUE 18NM
LÅSVÄTSKA/LOCKING FLUID
LOCTITE 242(4X)
TP NR 90157-16

ECM: 83470 - 20000925
Group number: 566371-0101
Assembly Drawing: 566371-1_1_AA

Issue: 20030213

Pos	Part No	SP	UN	Qty	Description	Page No
Common Parts						
010	566370-0000	A		1	LUG	
020	566359-0000	A		1	PISTON ROD	
025	566483-0000	A		1	SPACER	
030	566368-0000	A		1	SPRING	
040	566360-0000	A		1	PISTON	
050	566355-0000	A		1	AIR CYLINDER	
060	566367-0000	-		4	SCREW	
070	566354-0000	-		1	END SEKTION CYLINDER	
080	566485-0000	A		2	VALVE DISC	
090	566358-0000	A		1	COUNTER PLATE	
100	556118-0000	A		1	SEAL-RING (25)	
110	566357-0000	A		1	VALVE CONE	
120	554857-0000	-		1	SCREW	
130	554856-0000	-		1	WASHER	
300	90242-0110	B		1	O-RING 29,2X3,0 MM	
310	90242-0109	B		1	O-RING 7,1X1,6 MM	
320	90091-0269	B		1	PISTON SEAL, GLIDORING 52,5X60X3 MM	
330	90091-0268	B		3	ROD SEAL, GLIDORING 16X20,9X1,78 MM	
340	90091-0267	B		3	WEAR RING 16X18X8,1 MM	
350	90091-0282	B		1	PISTON SEAL 27X35X1,78 MM	
500	315755-0112	-		4	LOCKING WASHER 12	
505	312145-0220	-		4	SCREW COUNTERS.SLOT.HD. MFS 3X6 SS	
510	315204-0213	B		1	O-RING 15,2X2,4 MM	
520	315204-0302	B		1	O-RING 54,5X3 MM	
521	315204-0113	B		1	O-RING 15,1X1,6 MM	
530	315105-0153	-		4	WASHER ISO 7089-6-200 HV-A4	

Pos	Part No	SP	UN	Qty	Description	Page No

Machine Type | Group Description | Used-In | Group Number | Page No

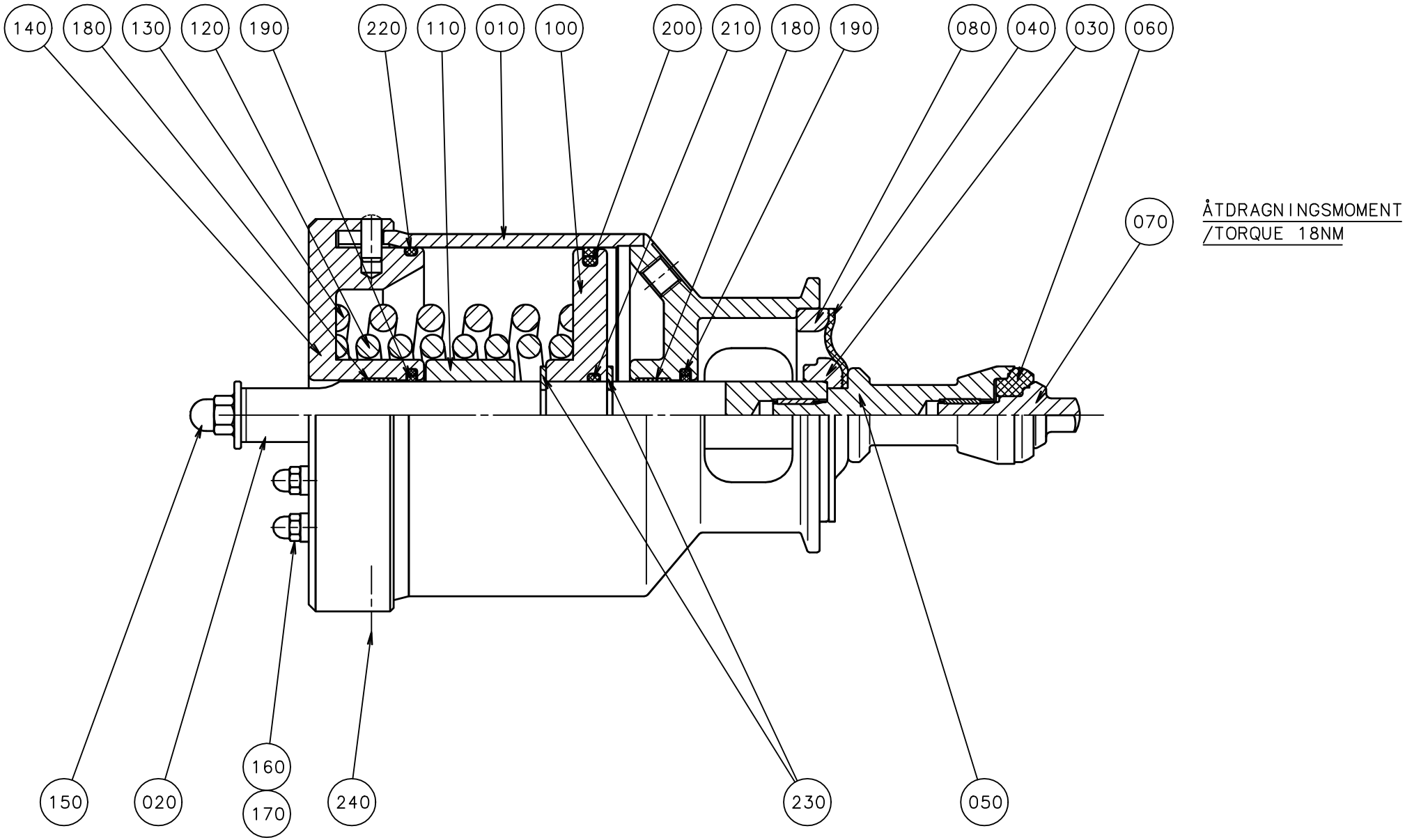
140
180
130
120
190
220
110
010
100
200
210
180
190
080
040
030
060
070
ÅTDRAGNINGSMOMENT
/TORQUE 18NM
150
020
160
170
240
230
050

ECM: 83473 - 20000925
Group number: 566374-0101
Assembly Drawing: 566374-1_1_AA

Issue: 20030213

Pos	Part No	SP	UN	Qty	Description	Page No
Common Parts						
010	556109-0000	-		1	CYLINDER HOUSING	
020	556117-0000	A		1	PISTON ROD	
030	556115-0000	A		1	WASHER	
040	794246-0000	B		1	DIAPHRAGM	
050	566363-0000	-		1	SEAL-RING HOLDER	
060	556118-0000	B		1	SEAL-RING (25)	
070	556113-0000	A		1	VALVE CONE	
080	556114-0000	A		1	RING	
100	556116-0000	A		1	PISTON	
110	556110-0000	-		1	SPACER	
120	556112-0000	A		1	COMPRESSION SPRING	
130	556120-0000	A		1	COMPRESSION SPRING	
140	556111-0000	-		1	END SECTION	
150	554855-0000	-		1	SCREW	
160	554856-0000	-		2	WASHER	
170	554857-0000	-		2	SCREW	
180	90091-0238	B		2	WEAR RING 20X22X10 MM	
190	90091-0237	B		2	ROD SEAL, GLIDORING 20X27,5X3 MM	
200	90091-0236	B		1	PISTON SEAL, GLIDORING 89X100X4 MM	
210	315204-0215	B		1	O-RING 19,2X3 MM	
220	315204-0310	B		1	O-RING 94,5X3 MM	
230	315754-0113	A		2	LOCKING WAE 15	
240	312125-0323	-		1	SCREW PAN HEAD MCS M5X8 SS	
245	315233-0101	B		1	WASHER PL.RND.NYL.5,2/8,H=1	

Pos	Part No	SP	UN	Qty	Description	Page No

Machine Type | Group Description | Used-In | Group Number | Page No

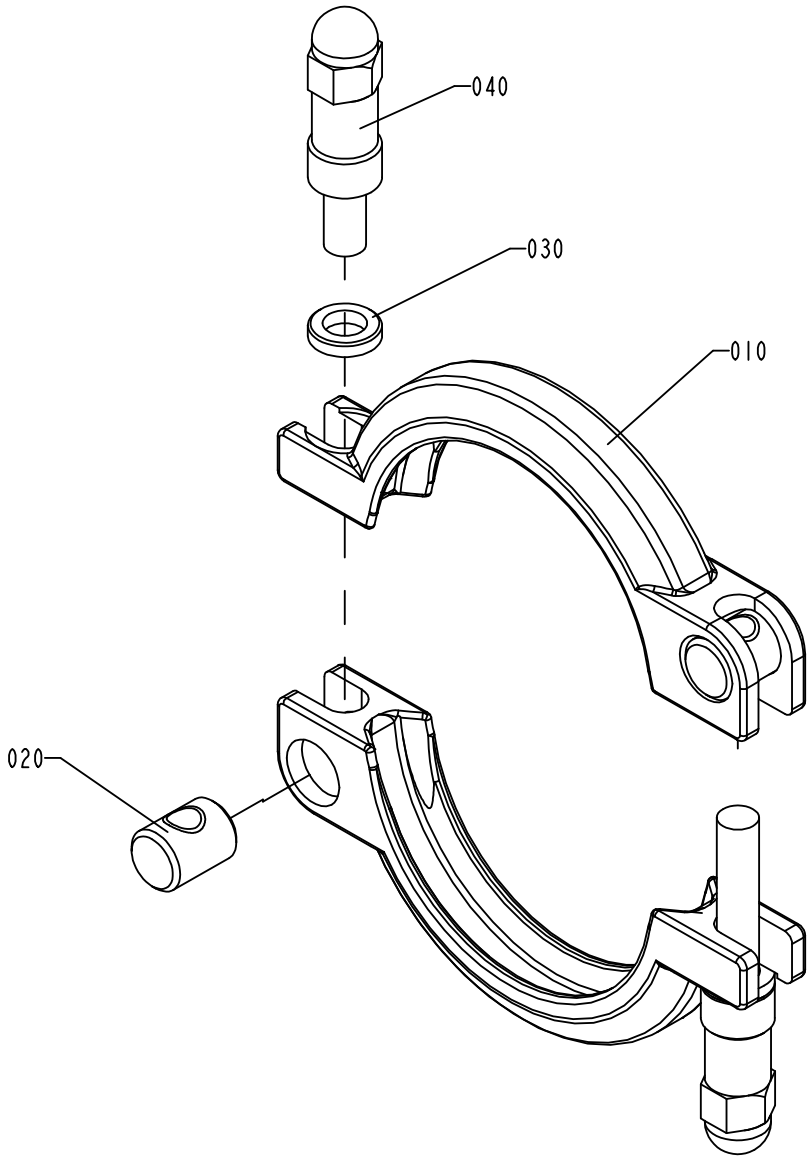

S-541164-2
ECN 71956

ECM: 83459 - 20000925
Group number: 541164-0201
Assembly Drawing: 541164-2_1_AB

Issue: 20030213

Pos	Part No	SP	UN	Qty	Description	Page No
Common Parts						
010	532118-0000	A		2	CLAMP RING	
020	497748-0000	A		2	PIN	
030	541165-0000	A		2	WASHER	
040	554162-0000	A		2	SCREW	

Pos	Part No	SP	UN	Qty	Description	Page No

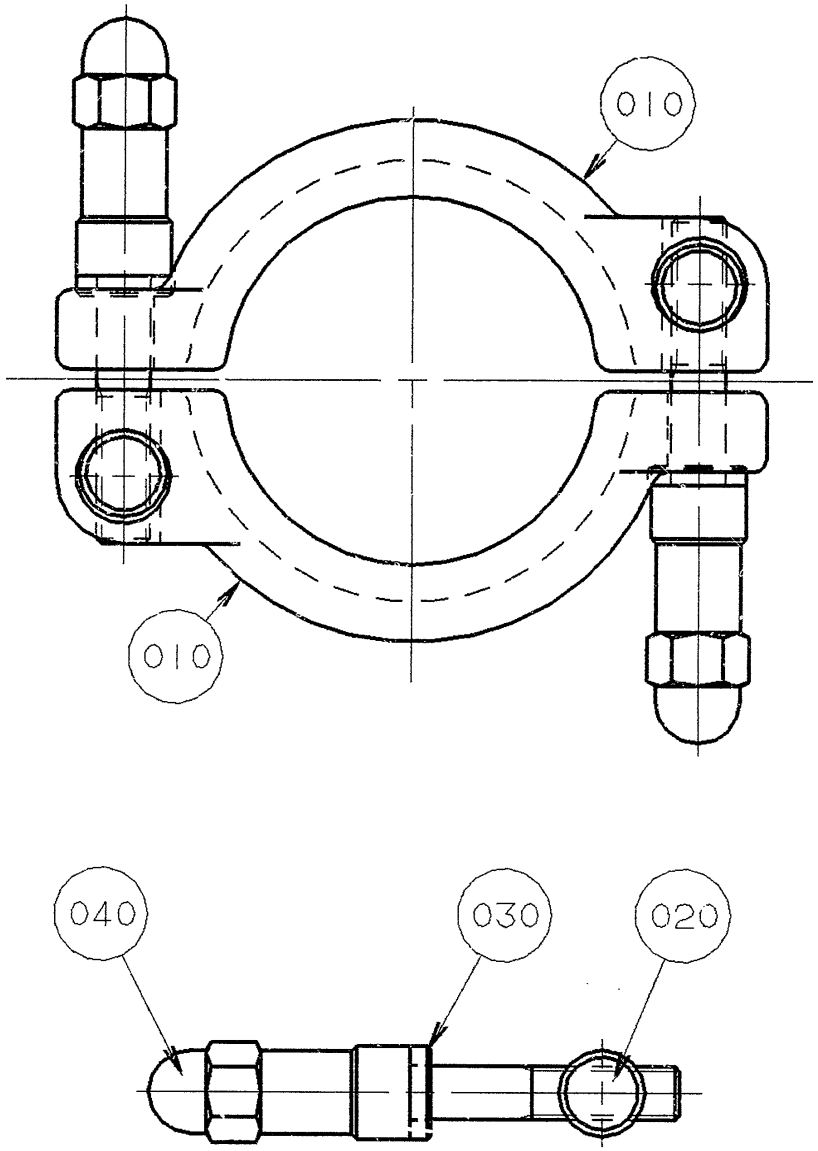
010
010
040
030
020

ECM: - -
Group number: 566376-0101
Assembly Drawing: 566376-1_1_AA

Issue: 20030213

Pos	Part No	SP	UN	Qty	Description	Page No
Common Parts						
010	566375-0000	-		2	CLAMP RING	
020	497748-0000	-		2	PIN	
030	541165-0000	-		2	WASHER	
040	554162-0000	-		2	SCREW	

Pos	Part No	SP	UN	Qty	Description	Page No

ÅTDRAGNINGSMOMENT
/TORQUE 18NM

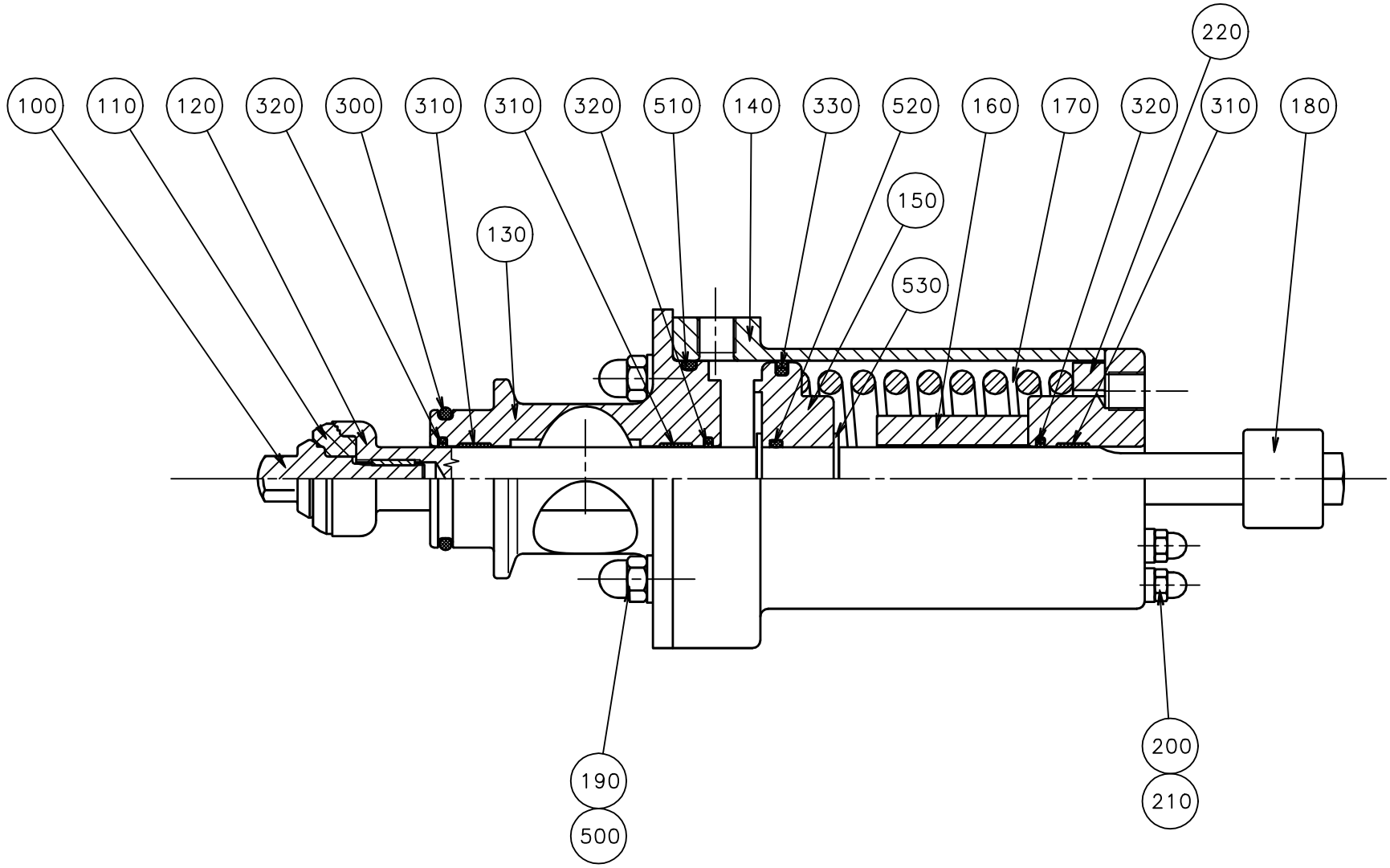

ECM: 83471 - 20000925
Group number: 566372-0101
Assembly Drawing: 566372-1_1_AA

Issue: 20030213

Pos	Part No	SP	UN	Qty	Description	Page No
Common Parts						
100	556113-0000	A		1	VALVE CONE	
110	556118-0000	B		1	SEAL-RING (25)	
120	566361-0000	A		1	PISTON ROD	
130	566354-0000	-		1	END SEKTION CYLINDER	
140	566355-0000	A		1	AIR CYLINDER	
150	566360-0000	A		1	PISTON	
160	566369-0000	-		1	STOP SLEEVE	
170	566368-0000	A		1	SPRING	
180	566370-0000	A		1	LUG	
190	566367-0000	-		4	SCREW	
200	554857-0000	-		2	SCREW	
210	554856-0000	-		2	WASHER	
220	566483-0000	A		1	SPACER	
300	90242-0110	B		1	O-RING 29,2X3,0 MM	
310	90091-0267	B		3	WEAR RING 16X18X8,1 MM	
320	90091-0268	B		3	ROD SEAL, GLIDORING 16X20,9X1,78 MM	
330	90091-0269	B		1	PISTON SEAL, GLIDORING 52,5X60X3 MM	
500	315105-0153	-		4	WASHER ISO 7089-6-200 HV-A4	
510	315204-0302	B		1	O-RING 54,5X3 MM	
520	315204-0213	B		1	O-RING 15,2X2,4 MM	
530	315755-0112	-		2	LOCKING WASHER 12	

Pos	Part No	SP	UN	Qty	Description	Page No

Machine Type | Group Description | Used-In | Group Number | Page No

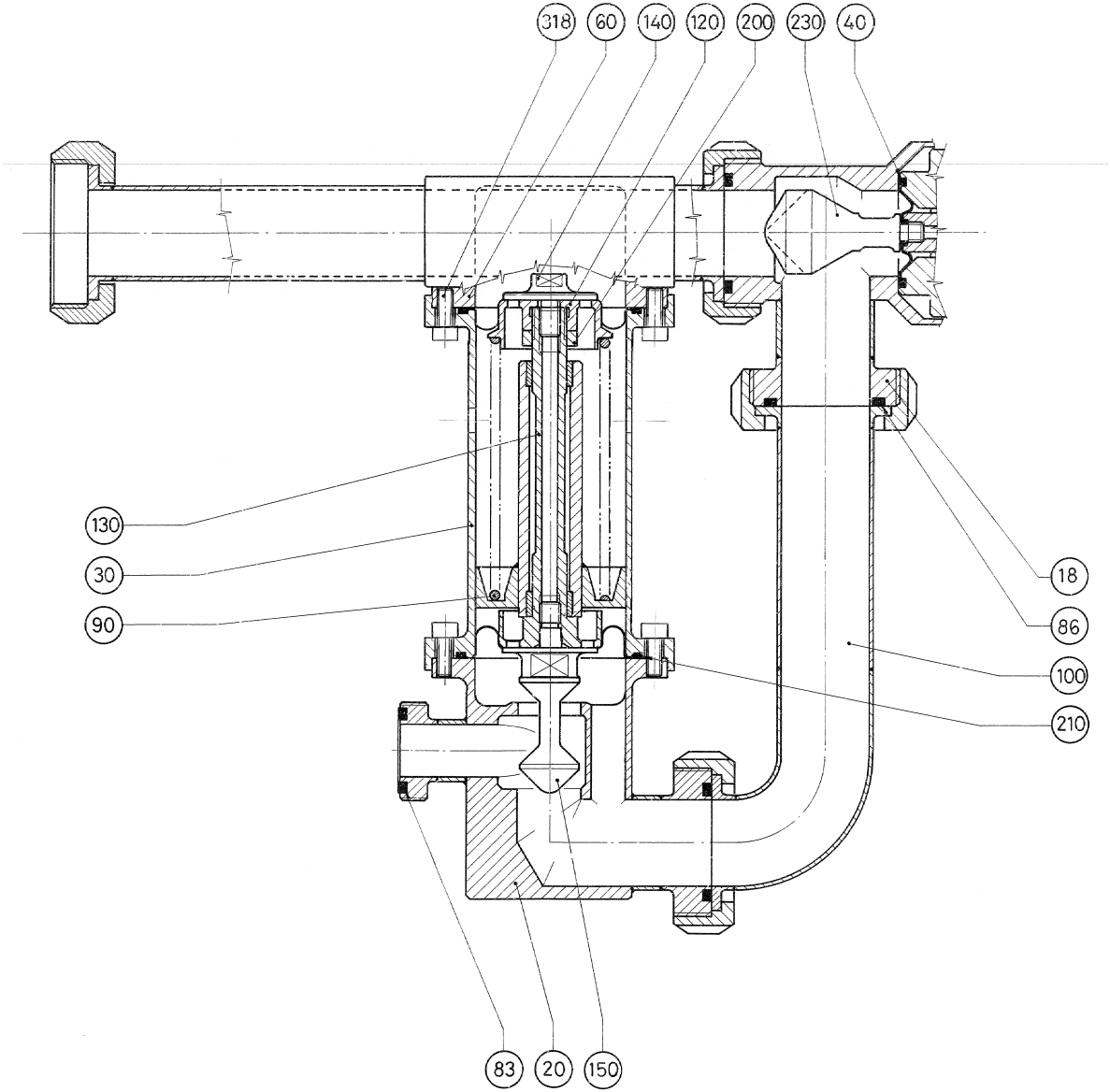
318
60
140
120
200
230
40
130
30
90
18
86
100
210
83
20
150

ECM: 83485 - 20000925
Group number: 736620-0301
Assembly Drawing: 736620-3_1_AA

Issue: 20030213

Pos	Part No	SP	UN	Qty	Description	Page No
Common Parts						
008	736621-0000	-		1	HOLDER	
018	736691-0000	-		1	VALVE HOUSING	
020	529916-0000	-		1	LATERAL BODY VALVE	
030	924361-0000	-		1	BODY CENTRAL VALVE	
035	736286-0000	-		1	FLANGE	
040	736508-0001	B		1	MEMBRANE	
060	736555-0000	-		1	LATERAL BODY	
068	736622-0000	-		1	BODY	
078	736623-0000	A		1	CAM	
083	12242-0001	B		1	GASKET 32X25X5,5	
086	12242-0003	B		3	GASKET 48X38X5,5	
090 1	439854-0000	A		1	COMPRESSION SPRING	
090 2	529657-0000	A		1	COMPRESSION SPRING	
090 3	529659-0000	A		1	COMPRESSION SPRING	
100	529895-0000	-		1	PIPE	
120	529908-0000	A		1	WASHER	
130	795930-0000	B		1	TIE ROD	
140	529910-0000	A		1	THRUST WASHER	
150	795931-0000	A		1	CLOSING DEVICE	
180	736288-0000	A		1	GASKET	
200	736514-0000	-		1	SHOCK ABSORBER	
210	925091-0000	B		2	DIAPHRAGM	
218	736619-0000	-		2	WASHER	
228	736624-0000	A		1	SPINDLE	
230 1	736716-0000	A		1	DOSING PISTON	
230 2	736717-0000	A		1	DOSING PISTON	
230 3	736715-0000	A		1	DOSING PISTON	
238	736625-0000	-		1	SHAFT	
248	736626-0000	-		1	FORK	
258	736627-0000	-		1	SCREW	
268	736629-0000	A		1	COMPRESSION SPRING	
298	312109-0374	-		1	SCREW M6S ISO 4017 M6X30 A480	
308	312115-0325	-		5	SCREW ISO4762 M5X10 A4	
318	312115-0366	-		4	SCREW ISO4762 M6X12 A4	
320	312115-0368	-		8	SCREW ISO4762 M6X16 A4	
328	312115-0374	-		4	SCREW ISO4762 M6X30 A4	
330	312125-0222	-		4	SPåRSKRUV MCS M3X8 SS	
335	312318-0364	-		2	SCREW ISO4029 M6X10 A4	
338	312318-0487	-		1	SCREW ISO4029 M10X12 A4	
348	312605-0316	-		1	HEXAGON NUT, M6M M6 A280	
358	312605-0320	-		1	HEXAGON NUT, M6M M10 A280	
364	315202-0118	-		1	O-RING 22,1X1,6 MM	
368	315751-0103	A		1	RETAIN. RING, 6	
378	321302-0296	B		1	BALL BEARING, 2 SEALS, 6X19X6 MM	
388	321308-0200	B		1	BALL BEARING, 2 SEALS, 10X26X8 MM	
390	90001-0004	-		1	CONNECTOR, MS 3108E-14S-2S	
394	90110-0003	-		1	PLUG, MS 3102E-14S-2P	
398	90141-0015	B		1	RETAIN. RING, 8	
M009	736630-0000	A		1	MOTOR	

Machine Type	Group Description	Used-In	Group Number	Page No

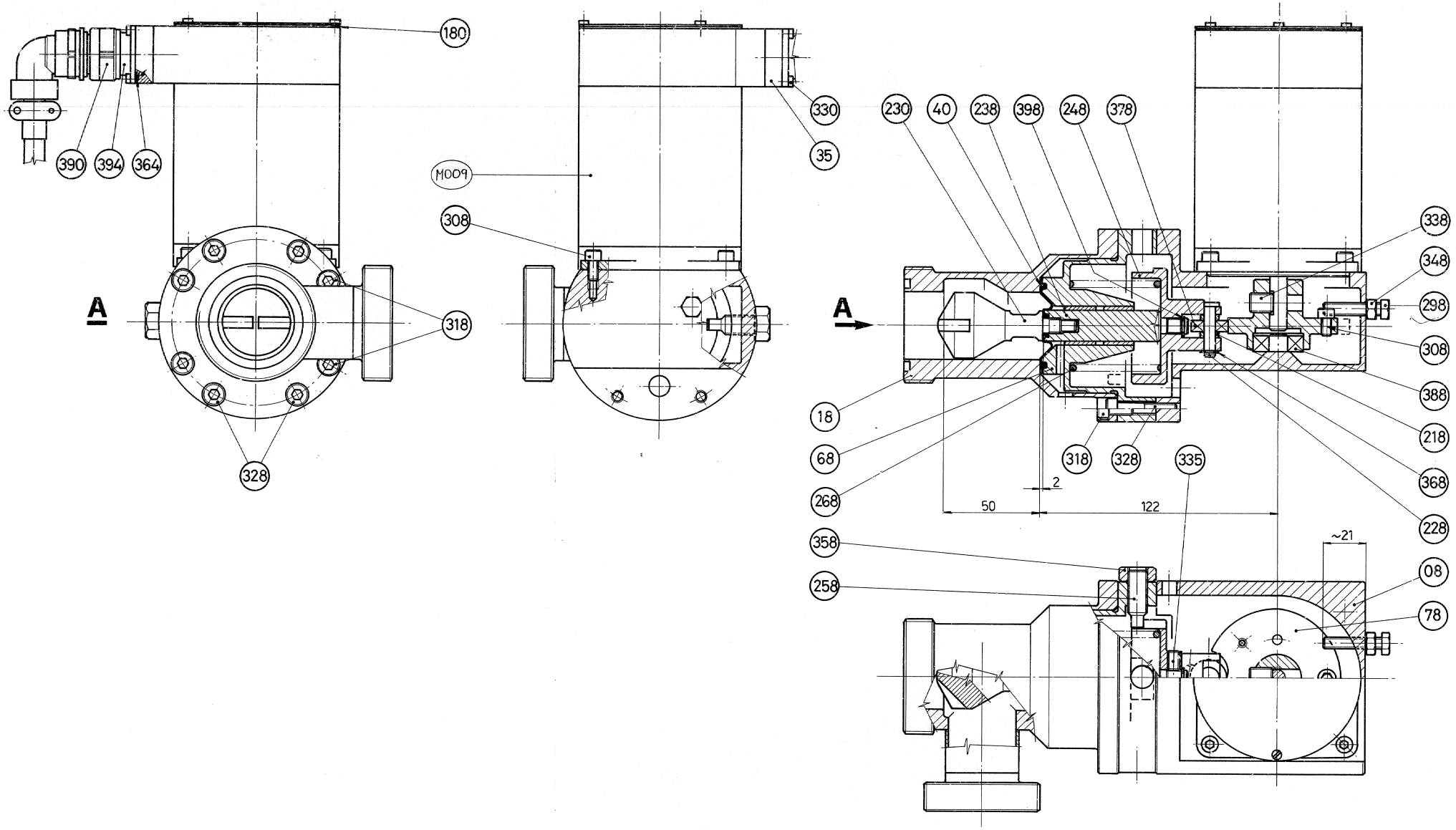
180
390
394
364
A
318
328
M009
308
330
35
230
40
238
398
248
378
338
348
298
308
388
218
368
228
18
68
268
318
328
335
2
50
122
358
258
~21
08
78

ECM: 83485 - 20000925
Group number: 736620-0301
Assembly Drawing: 736620-4_1_AA

Issue: 20030213

Pos	Part No	SP	UN	Qty	Description	Page No
Common Parts						
008	736621-0000	-		1	HOLDER	
018	736691-0000	-		1	VALVE HOUSING	
020	529916-0000	-		1	LATERAL BODY VALVE	
030	924361-0000	-		1	BODY CENTRAL VALVE	
035	736286-0000	-		1	FLANGE	
040	736508-0001	B		1	MEMBRANE	
060	736555-0000	-		1	LATERAL BODY	
068	736622-0000	-		1	BODY	
078	736623-0000	A		1	CAM	
083	12242-0001	B		1	GASKET 32X25X5,5	
086	12242-0003	B		3	GASKET 48X38X5,5	
090 1	439854-0000	A		1	COMPRESSION SPRING	
090 2	529657-0000	A		1	COMPRESSION SPRING	
090 3	529659-0000	A		1	COMPRESSION SPRING	
100	529895-0000	-		1	PIPE	
120	529908-0000	A		1	WASHER	
130	795930-0000	B		1	TIE ROD	
140	529910-0000	A		1	THRUST WASHER	
150	795931-0000	A		1	CLOSING DEVICE	
180	736288-0000	A		1	GASKET	
200	736514-0000	-		1	SHOCK ABSORBER	
210	925091-0000	B		2	DIAPHRAGM	
218	736619-0000	-		2	WASHER	
228	736624-0000	A		1	SPINDLE	
230 1	736716-0000	A		1	DOSING PISTON	
230 2	736717-0000	A		1	DOSING PISTON	
230 3	736715-0000	A		1	DOSING PISTON	
238	736625-0000	-		1	SHAFT	
248	736626-0000	-		1	FORK	
258	736627-0000	-		1	SCREW	
268	736629-0000	A		1	COMPRESSION SPRING	
298	312109-0374	-		1	SCREW M6S ISO 4017 M6X30 A480	
308	312115-0325	-		5	SCREW ISO4762 M5X10 A4	
318	312115-0366	-		4	SCREW ISO4762 M6X12 A4	
320	312115-0368	-		8	SCREW ISO4762 M6X16 A4	
328	312115-0374	-		4	SCREW ISO4762 M6X30 A4	
330	312125-0222	-		4	SPåRSKRUV MCS M3X8 SS	
335	312318-0364	-		2	SCREW ISO4029 M6X10 A4	
338	312318-0487	-		1	SCREW ISO4029 M10X12 A4	
348	312605-0316	-		1	HEXAGON NUT, M6M M6 A280	
358	312605-0320	-		1	HEXAGON NUT, M6M M10 A280	
364	315202-0118	-		1	O-RING 22,1X1,6 MM	
368	315751-0103	A		1	RETAIN. RING, 6	
378	321302-0296	B		1	BALL BEARING, 2 SEALS, 6X19X6 MM	
388	321308-0200	B		1	BALL BEARING, 2 SEALS, 10X26X8 MM	
390	90001-0004	-		1	CONNECTOR, MS 3108E-14S-2S	
394	90110-0003	-		1	PLUG, MS 3102E-14S-2P	
398	90141-0015	B		1	RETAIN. RING, 8	
M009	736630-0000	A		1	MOTOR	

Machine Type	Group Description	Used-In	Group Number	Page No

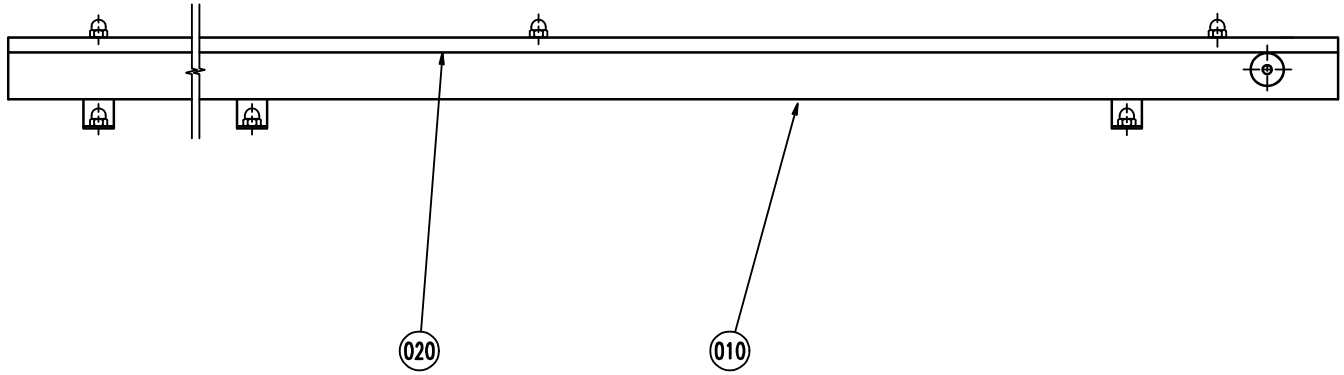
020
010

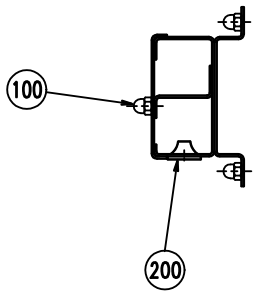
100
200

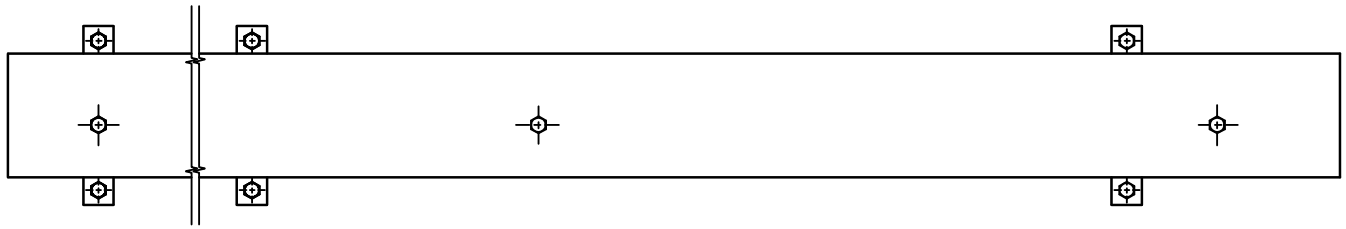

ECM: - -
Group number: 569590-0101
Assembly Drawing: 569590-1_1_AA

Issue: 20030213

Pos	Part No	SP	UN	Qty	Description	Page No
Common Parts						
010	569591-0000	-		1	CABLE DUCT	
020	569592-0000	-		1	LID	
100	312705-0316	-		9	NUT HEX. DOMED CAP MHM-6 M6 A280	
200	90015-0020	-		3	LEAD-IN, TET5-7, E-1458016	

Pos	Part No	SP	UN	Qty	Description	Page No

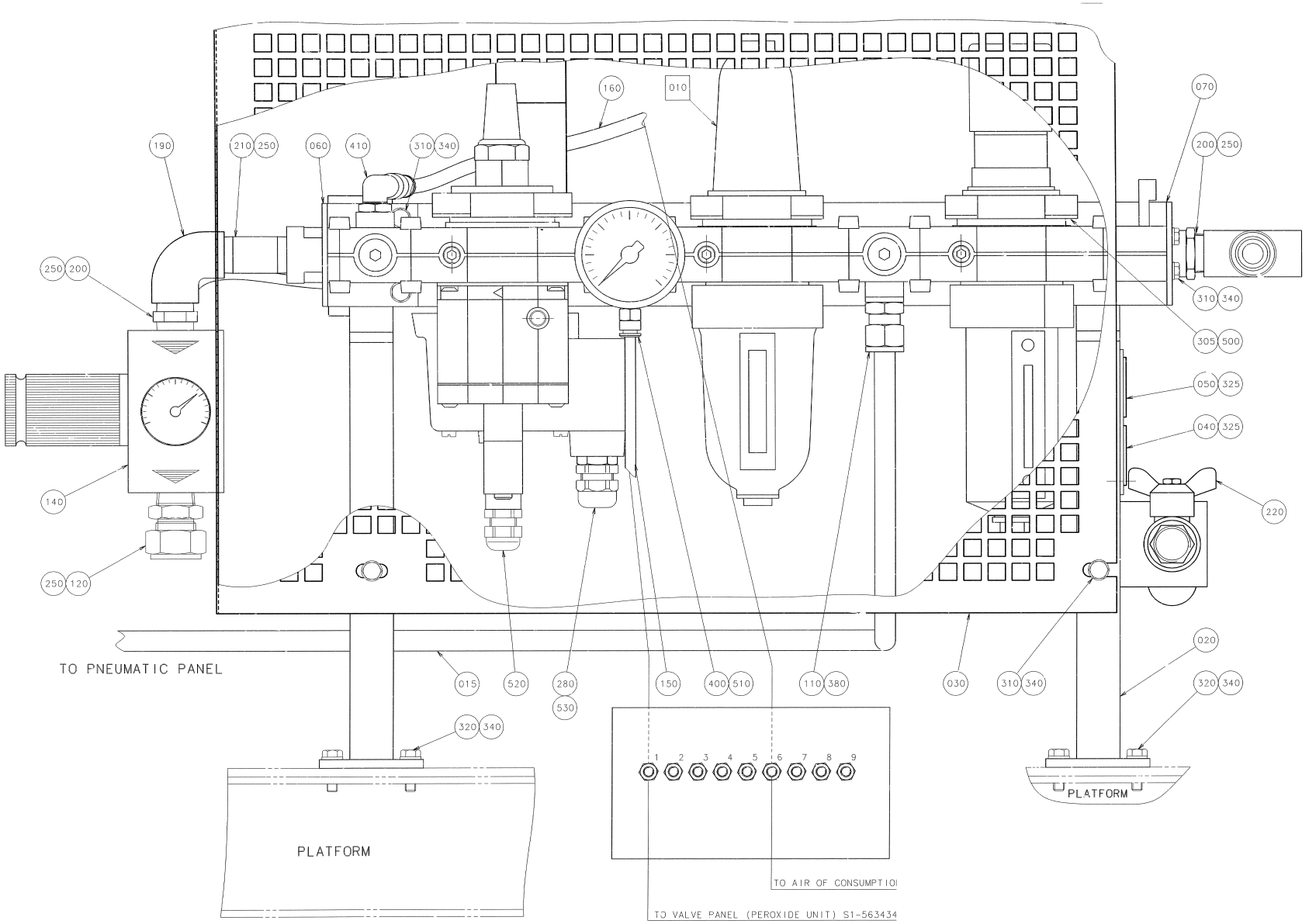
160
010
070
190
210 250
060
410
310 340
200 250
250 200
310 340
305 500
050 325
040 325
140
220
250 120
TO PNEUMATIC PANEL
020
015
520
280
530
150
400 510
110 380
030
310 340
320 340
320 340
1 2 3 4 5 6 7 8 9
PLATFORM
PLATFORM
TO AIR OF CONSUMPTIOI
TO VALVE PANEL (PEROXIDE UNIT) S1-563434

ECM: 83476 - 20000925
Group number: 568112-0301
Assembly Drawing: 568112-4_1_AA

Issue: 20030213

Pos	Part No	SP	UN	Qty	Description	Page No
Common Parts						
010	A570801-0301	-		1	FILTER GROUP	**113**
015	569599-0000	-		1	PIPE	
020	569624-0000	-		1	FRAME	
030	570838-0000	-		1	TOUCH GUARD	
035	1175242-0000	-		1	ANGLE STRUT	
040	273455-0000	-		1	LABEL (COLD WATER)	
050	273458-0000	-		1	LABEL (AIR)	
060	1175889-0000	-		1	BRACKET	
070	1175888-0000	-		1	BRACKET	
100	90030-0211	-		2	NIPPLES, REDUCING, INT. THR.ÿL=42	
110	90030-0486	-		1	CONN. STR., 12-R3/8, EXT. THREAD	
120	90030-0417	-		1	CONN. STR. 20-R1/2, EXT. TAPPERED	
130	90043-0021	A		1	PRESSURE GAUGE WIEGAND 0-1 BAR 1/8"	
140	90113-0130	A		1	REGULATOR	
150	90166-0081	-	M	5	TUBE 6 MM PA BLUE	
160	90166-0013	-	MM	3500	TUBE 8 MM PA BLUE	
190	90330-0020	-		1	ELBOW, 90 INT. THREAD, R-2221/2	
200	90330-0021	-		2	NIPPLES, EXT. THREAD. R-207R1/2	
210	90330-0100	-		1	NIPPLES, EXT. THREAD, R1/2	
220	90187-0029	-		1	BALL VALVE G1/2, NPBR	
230	90415-0019	A		1	FILTER / ART.NO. HH-M15-RG	
250	90144-0073	-	MM		TREBOFLON-TAPE W=13MM	
260	90163-0076	-		1	QUICK COUPLING, (F) LP-006-0-WR021	
270	90330-0049	-		1	T-PIPE, INT. THREAD, R-221R1/2	
280	90089-0006	-		1	REDUCING SLEEVE, G 1/2/PR18,6	
290	90166-0118	-	M	4	TUBE 8 MM PA BLACK	
300	312105-0301	-		4	SCREW M6S ISO 4017 M4X35 A480	
305	312105-0331	-		4	SCREW M6S ISO 4017 M5X20 A480	
310	312105-0366	-		6	SCREW M6S M6X12 A280	
315	312502-0169	-		2	DRIVE SCREW ROUND HEAD KDS 2X5	
320	312105-0370	-		4	SCREW M6S ISO 4017 M6X20 A480	
325	312502-0120	-		4	DRIVE SCREW ROUND HEAD KDS 0X5	
330	315105-0136	-		4	WASHER ISO 7089-4-200 HV-A4	
340	315105-0153	-		10	WASHER ISO 7089-6-200 HV-A4	
355	315115-0165	-		2	WASHER PLAIN, TBRB 8,4/16 H=3	
360	315233-0109	A		4	WASHER PL.RND.NYL.10,3/14,H=1	
380	315233-0111	A		1	WASHER PL.RND.NYL.17/22,H=1	
390	342722-0197	-		2	STRAIGHT COUPLING	
400	342722-0203	-		2	STRAIGHT COUPLING	
410	342732-0105	-		1	ELBOW PIPE D8-R3/8"	
420	342732-0102	-		1	ELBOW PIPE JOINT, EXT.THREAD, D=6MM-G1/8	
430	342742-0102	-		1	T-COUPLING,ADJUST,F.PLASTIC TUBE 6-G1/8"	
440	342701-0205	A		1	BUSHING,INT./EXT.G-THREAD G1/2"-G1/4"	
450	342722-0205	-		1	STRAIGHT COUPLING D=8-G1/4"	
460	342700-0113	-		1	NIPPLES,HEXAGON,EXT.G-THREAD G1/2"-G1/2"	
470	342722-0202	-		1	PIPE COUPLING 1/8" D=6MM	
480	342732-0103	-		1	ELBOW PIPE JOINT, EXT.THREAD, D=6MM-G1/4	
490	312125-0323	-		2	SCREW PAN HEAD MCS M5X8 SS	
500	315105-0146	-		6	WASHER ISO 7089-5-200 HV-A4	
510	342701-0203	A		1	BUSHING, INT/EXT. G-THREAD NO. 3/8-1/4	
520	352103-0101	-		2	KABELFöRSKR. ST 9, PR15,2/PG9	
530	352103-0106	-		1	CABLE GLAND, ST 11, PR18,6/PG11	
540	359240-0100	-		1	SIGN HOLDER FOR 359240-0001	
550	359241-0121	-		1	SIGN "STEAM"	
560	312105-0449	-		2	SCREW M6S ISO 4017 M8X16 A480	
B134	B90273-0006	A		1	PRESSURE GUARD, 21 KPA	
	90012-0121	*-*		*1*	*CABLE GLAND, S1112*	
B216	90274-0103	A		1	PRESSURE GUARD PEV-1/4-B (10773	
B217	90274-0089	A		1	PRESSURE TRANSDUCER, 25 - 800 KPA 24VDC	

Machine Type | Group Description | Used-In | Group Number | Page No

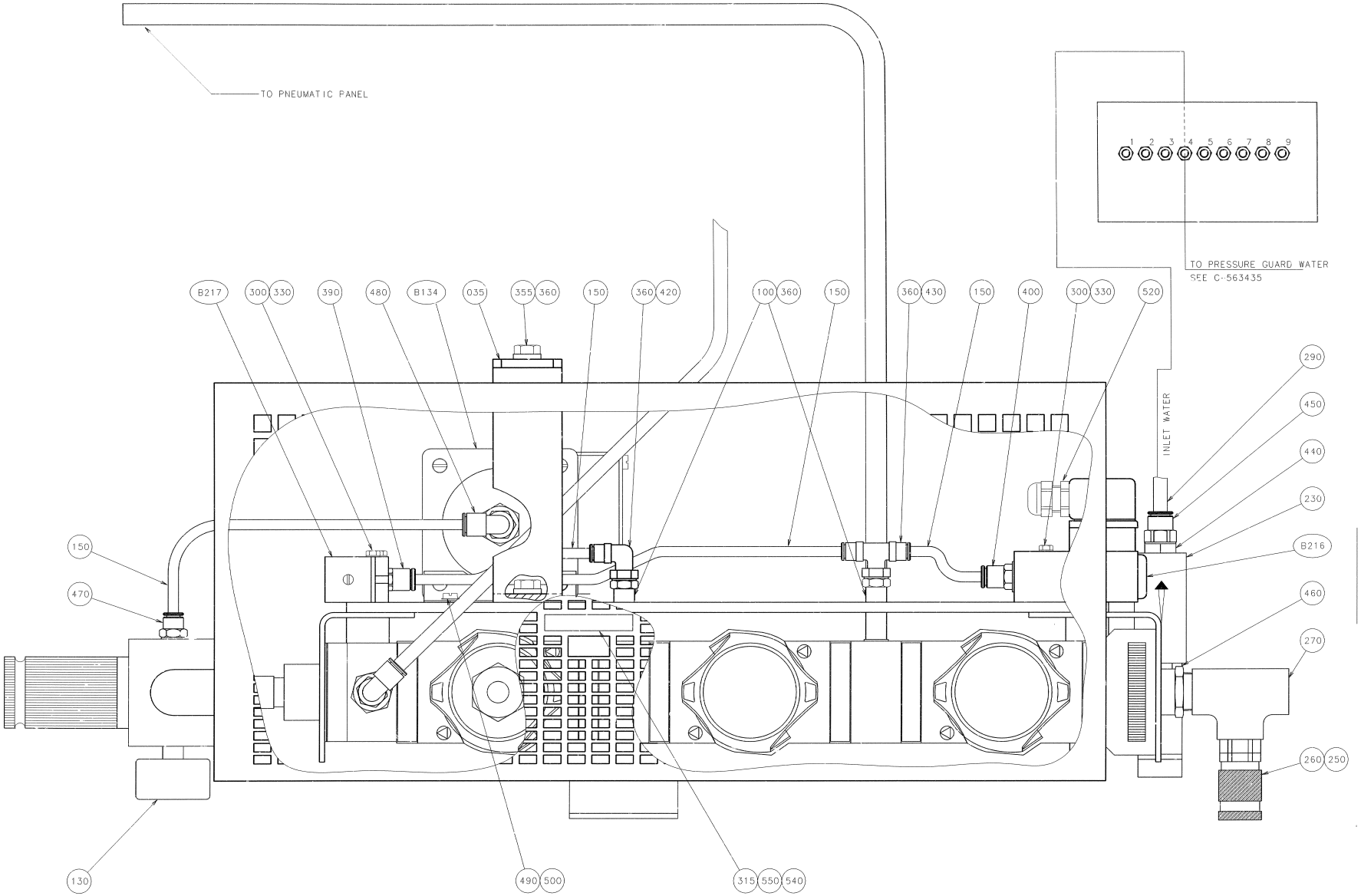
TO PNEUMATIC PANEL
1 2 3 4 5 6 7 8 9
TO PRESSURE GUARD WATER
SEE C-563435
INLET WATER
B217
300 330
390
480
B134
035
355 360
150
360 420
100 360
150
360 430
150
400
300 330
520
290
450
440
230
B216
460
270
260 250
150
470
130
490 500
315 550 540

ECM: 83476 - 20000925
Group number: 568112-0301
Assembly Drawing: 568112-5_1_AA

Issue: 20030213

Pos	Part No	SP	UN	Qty	Description	Page No
Common Parts						
010	A570801-0301	-		1	FILTER GROUP	**113**
015	569599-0000	-		1	PIPE	
020	569624-0000	-		1	FRAME	
030	570838-0000	-		1	TOUCH GUARD	
035	1175242-0000	-		1	ANGLE STRUT	
040	273455-0000	-		1	LABEL (COLD WATER)	
050	273458-0000	-		1	LABEL (AIR)	
060	1175889-0000	-		1	BRACKET	
070	1175888-0000	-		1	BRACKET	
100	90030-0211	-		2	NIPPLES, REDUCING, INT. THR.ÿL=42	
110	90030-0486	-		1	CONN. STR., 12-R3/8, EXT. THREAD	
120	90030-0417	-		1	CONN. STR. 20-R1/2, EXT. TAPPERED	
130	90043-0021	A		1	PRESSURE GAUGE WIEGAND 0-1 BAR 1/8"	
140	90113-0130	A		1	REGULATOR	
150	90166-0081	-	M	5	TUBE 6 MM PA BLUE	
160	90166-0013	-	MM	3500	TUBE 8 MM PA BLUE	
190	90330-0020	-		1	ELBOW, 90 INT. THREAD, R-2221/2	
200	90330-0021	-		2	NIPPLES, EXT. THREAD. R-207R1/2	
210	90330-0100	-		1	NIPPLES, EXT. THREAD, R1/2	
220	90187-0029	-		1	BALL VALVE G1/2, NPBR	
230	90415-0019	A		1	FILTER / ART.NO. HH-M15-RG	
250	90144-0073	-	MM		TREBOFLON-TAPE W=13MM	
260	90163-0076	-		1	QUICK COUPLING, (F) LP-006-0-WR021	
270	90330-0049	-		1	T-PIPE, INT. THREAD, R-221R1/2	
280	90089-0006	-		1	REDUCING SLEEVE, G 1/2/PR18,6	
290	90166-0118	-	M	4	TUBE 8 MM PA BLACK	
300	312105-0301	-		4	SCREW M6S ISO 4017 M4X35 A480	
305	312105-0331	-		4	SCREW M6S ISO 4017 M5X20 A480	
310	312105-0366	-		6	SCREW M6S M6X12 A280	
315	312502-0169	-		2	DRIVE SCREW ROUND HEAD KDS 2X5	
320	312105-0370	-		4	SCREW M6S ISO 4017 M6X20 A480	
325	312502-0120	-		4	DRIVE SCREW ROUND HEAD KDS 0X5	
330	315105-0136	-		4	WASHER ISO 7089-4-200 HV-A4	
340	315105-0153	-		10	WASHER ISO 7089-6-200 HV-A4	
355	315115-0165	-		2	WASHER PLAIN, TBRB 8,4/16 H=3	
360	315233-0109	A		4	WASHER PL.RND.NYL.10,3/14,H=1	
380	315233-0111	A		1	WASHER PL.RND.NYL.17/22,H=1	
390	342722-0197	-		2	STRAIGHT COUPLING	
400	342722-0203	-		2	STRAIGHT COUPLING	
410	342732-0105	-		1	ELBOW PIPE D8-R3/8"	
420	342732-0102	-		1	ELBOW PIPE JOINT, EXT.THREAD, D=6MM-G1/8	
430	342742-0102	-		1	T-COUPLING,ADJUST,F.PLASTIC TUBE 6-G1/8"	
440	342701-0205	A		1	BUSHING,INT./EXT.G-THREAD G1/2"-G1/4"	
450	342722-0205	-		1	STRAIGHT COUPLING D=8-G1/4"	
460	342700-0113	-		1	NIPPLES,HEXAGON,EXT.G-THREAD G1/2"-G1/2"	
470	342722-0202	-		1	PIPE COUPLING 1/8" D=6MM	
480	342732-0103	-		1	ELBOW PIPE JOINT, EXT.THREAD, D=6MM-G1/4	
490	312125-0323	-		2	SCREW PAN HEAD MCS M5X8 SS	
500	315105-0146	-		6	WASHER ISO 7089-5-200 HV-A4	
510	342701-0203	A		1	BUSHING, INT/EXT. G-THREAD NO. 3/8-1/4	
520	352103-0101	-		2	KABELFöRSKR. ST 9, PR15,2/PG9	
530	352103-0106	-		1	CABLE GLAND, ST 11, PR18,6/PG11	
540	359240-0100	-		1	SIGN HOLDER FOR 359240-0001	
550	359241-0121	-		1	SIGN "STEAM"	
560	312105-0449	-		2	SCREW M6S ISO 4017 M8X16 A480	
B134	B90273-0006	A		1	PRESSURE GUARD, 21 KPA	
	90012-0121	*-*		*1*	*CABLE GLAND, S1112*	
B216	90274-0103	A		1	PRESSURE GUARD PEV-1/4-B (10773	
B217	90274-0089	A		1	PRESSURE TRANSDUCER, 25 - 800 KPA 24VDC	

Machine Type | Group Description | Used-In | Group Number | Page No

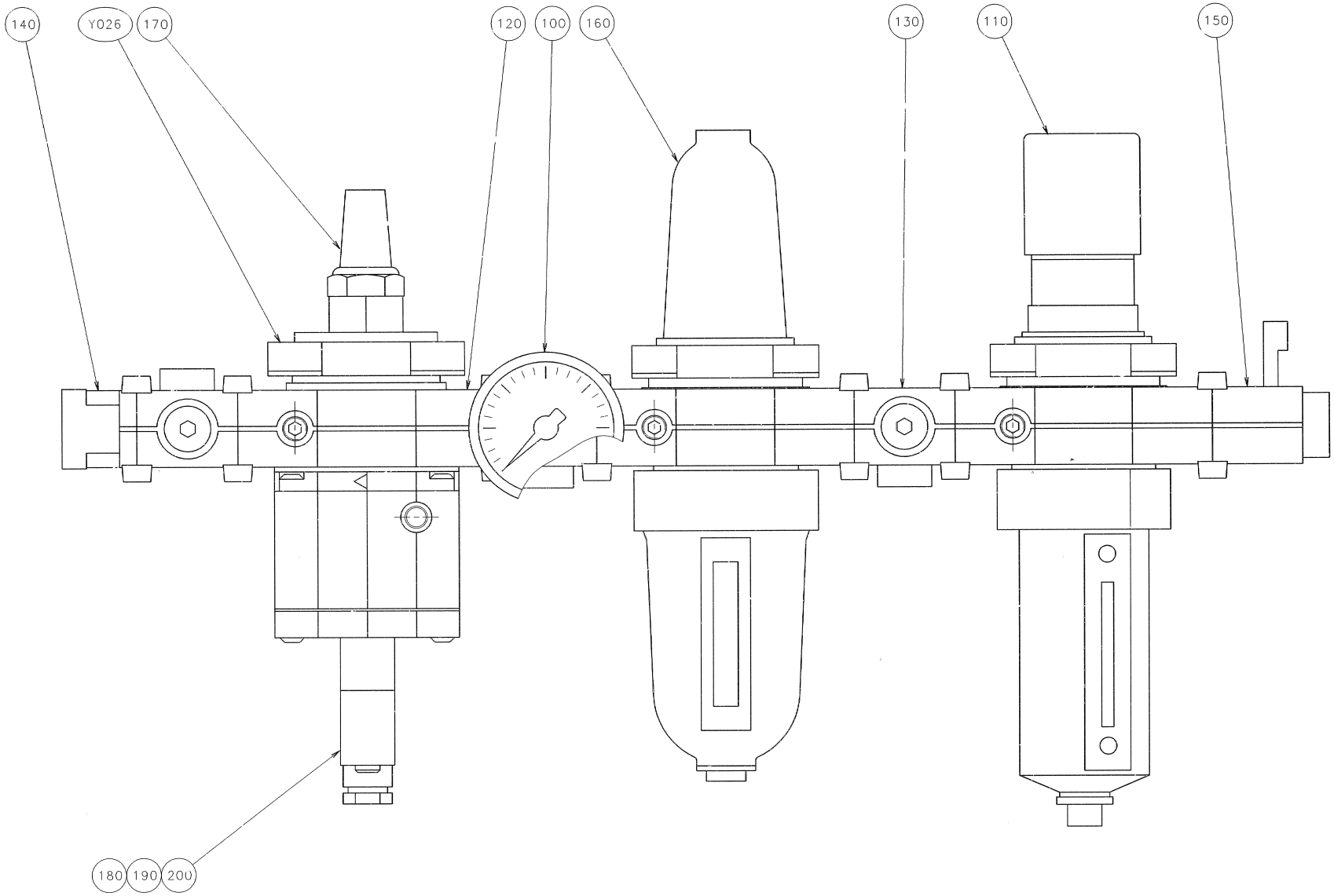
140
Y026
170
120
100
160
130
110
150
180
190
200

ECM: 83480 - 20000925
Group number: 570801-0301
Assembly Drawing: 570801-3_1_AA

Issue: 20030213

Pos	Part No	SP	UN	Qty	Description	Page No
Common Parts						
100	90043-0036	A		1	PRESSURE GAUGE, 2041 D=63 MM	
110	90113-0114	A		1	REGULATOR	
120	90113-0407	-		3	YOKE, SINGLE	
130	90113-0405	-		3	PORTING BLOCK	
140	90113-0439	-		1	END CONNECTOR	
150	90113-0408	A		1	SHUT-OFF VALVE 1/2"	
160	B90277-0104	A		1	FILTER F64B-NNN-ARO	
	90113-0457	*-*		*1*	*FILTER ELEMENTS*	
	90113-0458	*-*		*1*	*FILTER ELEMENTS*	
170	90328-0001	A		1	SILENCER	
180	90042-0582	A		1	SPUHL NORGREN QM/48/127/21	
190	90042-0563	A		1	INDICATOR FESTO 19143 MF-LD-12...24	
200	90042-0392	A		1	CONTACT 2 POLE + EARTH	
Y026	90113-0406	A		1	SOFT START/DUMP VALVE	

Pos	Part No	SP	UN	Qty	Description	Page No

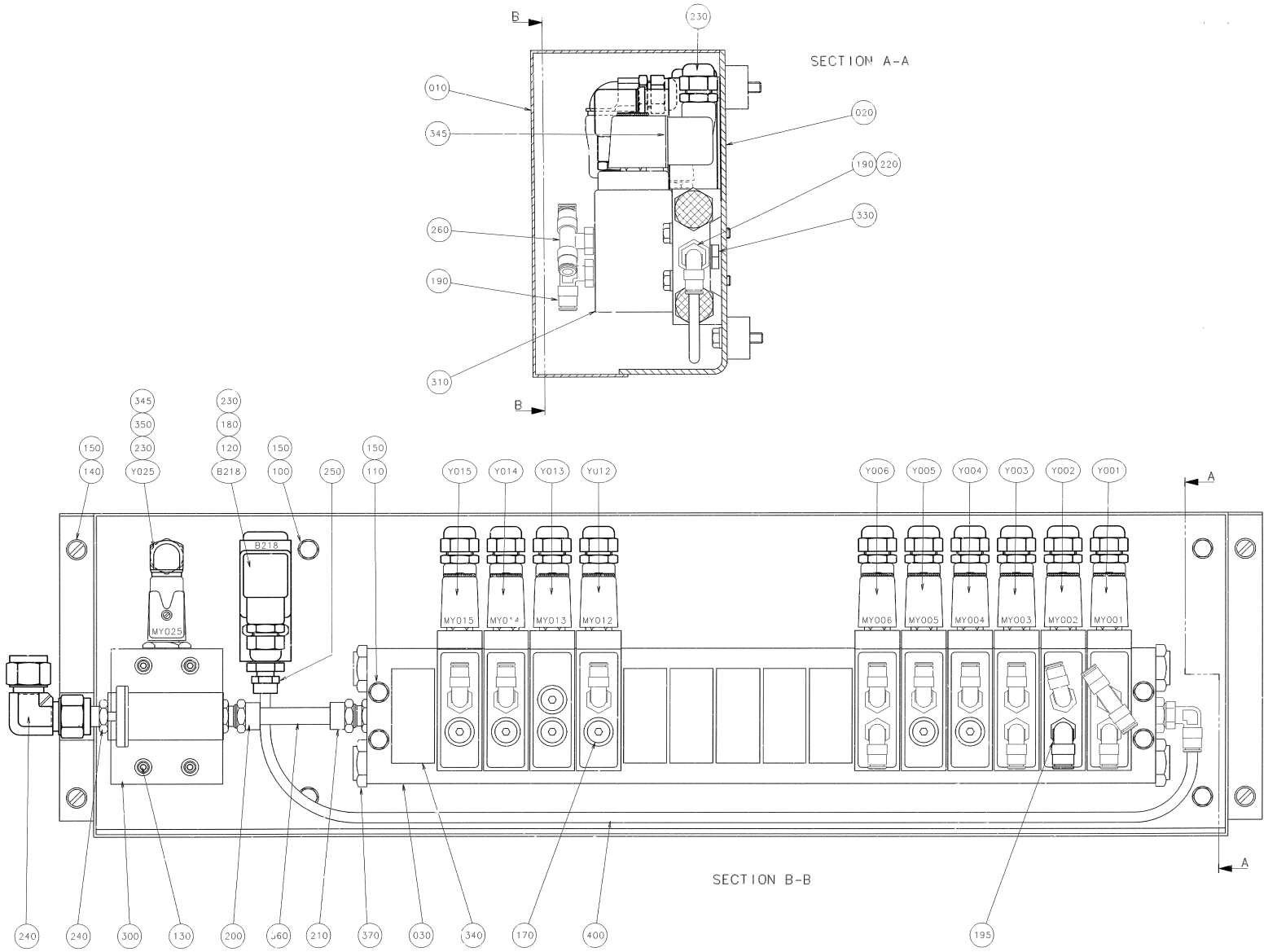
SECTION A-A
SECTION B-B
010
020
345
190
220
330
260
190
310
230
345
350
230
150
140
Y025
230
180
120
B218
150
100
250
150
110
Y015
Y014
Y013
YU12
Y006
Y005
Y004
Y003
Y002
Y001
MY025
B218
MY015
MY014
MY013
MY012
MY006
MY005
MY004
MY003
MY002
MY001
240
240
300
130
200
060
210
370
030
340
170
400
195

ECM: 83477 - 20000925
Group number: 568118-0301
Assembly Drawing: 568118-3_1_AA

Issue: 20030213

Pos	Part No	SP	UN	Qty	Description	Page No
Common Parts						
010	568119-0000	-		1	COVER	
020	568120-0000	-		1	MOUNTING SHEET	
030	577927-0000	-		1	CONNECTION BLOCK	
100	312105-0372	-		4	SCREW M6S ISO 4017 M6X25 A480	
110	312105-0376	-		4	SCREW M6S ISO 4014 M6X35 A480	
120	315105-0136	-		2	WASHER ISO 7089-4-200 HV-A4	
130	312111-0345	-		4	SCREW HEX.SOCK.HD.MC6S-TT 5X70 88 FZB	
140	312125-0364	-		4	SCREW SLOT.PAN HD. MCS 6X10 A480	
150	315105-0153	-		12	WASHER ISO 7089-6-200 HV-A4	
170	342713-0209	-		7	PLUG, EXT THREAD HEX SOCKET 8638-00-180	
180	312105-0301	-		2	SCREW M6S ISO 4017 M4X35 A480	
190	342732-0102	-		12	ELBOW PIPE JOINT, EXT.THREAD, D=6MM-G1/8	
195	342732-0801	-		1	ELBOW PIPE JOINT, EXT.THREAD, D=8MM-G1/8	
200	342921-0132	-		1	STRAIGHT COUPL.,EXT.THREADED 10/8-G1/4"	
210	342921-0133	-		1	STRAIGHT COUPL.,EXT.THREADED 10/8-G3/8"	
220	342701-0202	-		1	BUSHING,INT./EXT.G-THREAD G3/8"-G1/8"	
230	352103-0101	-		12	KABELFöRSKR. ST 9, PR15,2/PG9	
240	90030-0280	-		1	CONN. ELBOW, 12	
250	342722-0203	-		1	STRAIGHT COUPLING	
260	342742-0102	-		1	T-COUPLING,ADJUST,F.PLASTIC TUBE 6-G1/8"	
300	90042-0156	A		1	SOLENOID VALVE FESTO MFHE-3-1/4-B	
310	90042-0256	A		11	SOLENOID VALVE FESTO	
330	90042-0484	-		16	HOLLOW SCREW	
340	90042-0485	-		6	COVER PLATE PRSB-1/8 FESTO	
345	90042-0563	A		11	INDICATOR FESTO 19143 MF-LD-12...24	
350	90089-0027	-		1	ELBOW ADAPTOR	
360	90166-0160	-	MM	100	TUBE 10 MM PA BLUE	
370	90257-0006	-		4	FILTER PLUG PARTNO 8145-00-380 TYP F38	
390	90030-0286	-		1	PIPE SOCKET SS-12-MTA-1-4 RT	
400	90166-0081	-	M	1	TUBE 6 MM PA BLUE	
B218	90274-0103	A		1	PRESSURE GUARD PEV-1/4-B (10773	
Y001	90042-0455	A		1	COIL FESTO MSFG 24VDC	
Y002	90042-0455	A		1	COIL FESTO MSFG 24VDC	
Y003	90042-0455	A		1	COIL FESTO MSFG 24VDC	
Y004	90042-0455	A		1	COIL FESTO MSFG 24VDC	
Y005	90042-0455	A		1	COIL FESTO MSFG 24VDC	
Y006	90042-0455	A		1	COIL FESTO MSFG 24VDC	
Y012	90042-0455	A		1	COIL FESTO MSFG 24VDC	
Y013	90042-0455	A		1	COIL FESTO MSFG 24VDC	
Y014	90042-0455	A		1	COIL FESTO MSFG 24VDC	
Y015	90042-0455	A		1	COIL FESTO MSFG 24VDC	
Y025	90042-0455	A		1	COIL FESTO MSFG 24VDC	

Machine Type | Group Description | Used-In | Group Number | Page No

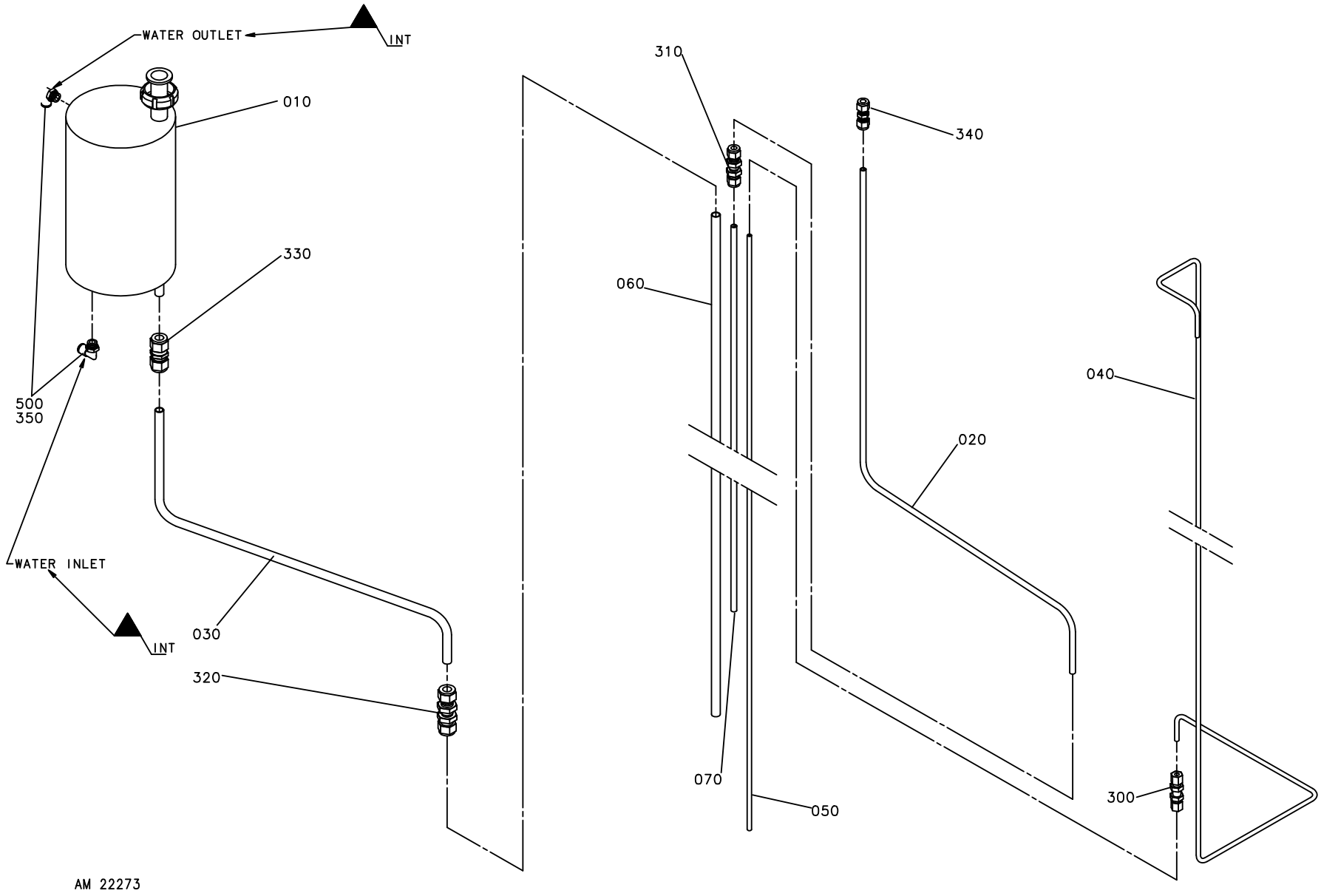
WATER OUTLET
INT
010
330
500
350
WATER INLET
INT
030
320
310
340
060
020
040
070
050
300
AM 22273

ECM: - -
Group number: 569626-0101
Assembly Drawing: 569626-1_1_AA

Issue: 20030213

Pos	Part No	SP	UN	Qty	Description	Page No
Common Parts						
010	573166-0000	-		1	COOLING PIPE COIL	
020	573606-0000	-		1	PEROXIDE PIPE	
030	573607-0000	-		1	RETURN PIPE	
040	574181-0000	-		1	PEROXIDE PIPE	
050	569611-0000	-		1	PEROXIDE PIPE	
060	569612-0000	-		1	RETURN PIPE	
070	569613-0000	-		1	PEROXIDE PIPE	
300	90030-0230	-		1	CONN. BULKHEAD SV 6-	
310	90030-0485	-		1	CONN. BULKHEAD SV 8-	
320	90030-0484	-		1	CONN. BULKHEAD SV 12-	
330	90030-0282	-		1	CONN. PIPE 12	
340	90030-0477	-		1	CONN. PIPE 8	
350	90166-0119	-	M	8	HOSE PUR 4/6 BLACK	
500	342732-0103	-		2	ELBOW PIPE JOINT, EXT.THREAD, D=6MM-G1/4	

Pos	Part No	SP	UN	Qty	Description	Page No

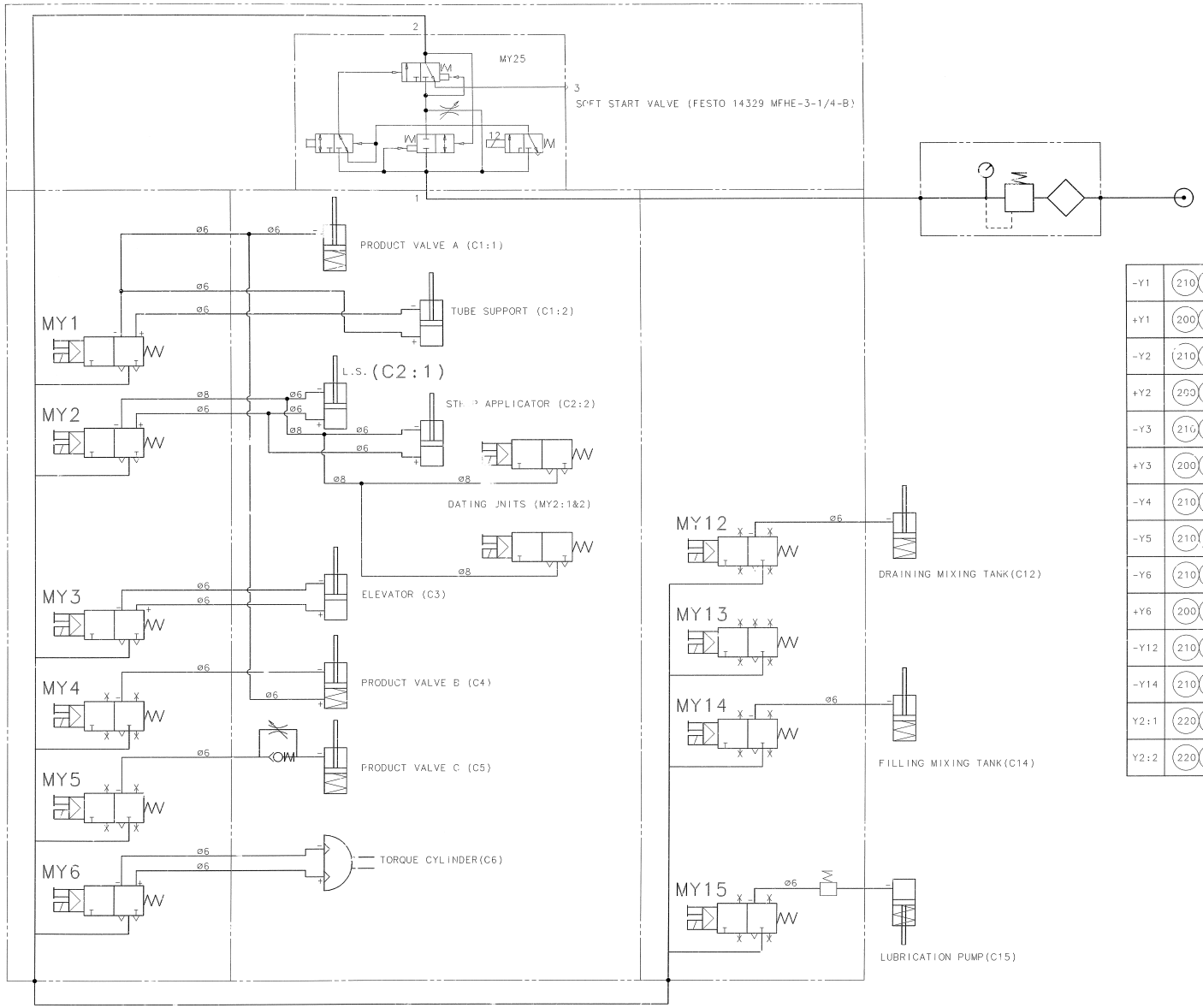

-Y1	210 240 410	-C1:1	210 220 240 400
+Y1	200 240 410	-C1:2	210 220 240 250 400
-Y2	210 250 410	+C1:2	200 220 240 250 400
+Y2	200 250 410	-C2:1	210 220 240 250 400
-Y3	210 260 410	+C2:1	200 220 240 250 400
+Y3	200 260 410	-C2:2	210 220 250 400
-Y4	210 270 410	+C2:2	200 220 250 400
-Y5	210 280 410	-C3	210 260 400
-Y6	210 290 410	+C3	200 260 400
+Y6	200 290 410	-C4	210 270 400
-Y12	210 240 250 410	+C4	200 270 400
-Y14	210 240 270 410	-C5	210 280 400
Y2:1	220 240 250 410	-C6	210 290 400
Y2:2	220 250 410	+C6	200 290 400
		-C12	210 240 250 400
		-C14	210 240 270 400
		-C15	210 240 280 400

ECM: - -
Group number: 570814-0201
Assembly Drawing: 570814-2_1_AA

Issue: 20030213

Pos	Part No	SP	UN	Qty	Description	Page No
Common Parts						
020	90055-0100	-		2	Y-CONNECTION, 6-6	
030	90055-0101	-		3	Y-CONNECTION, 8-8	
040	342716-0203	-		2	REDUCER 6-8	
100	90166-0081	-	M	39	TUBE 6 MM PA BLUE	
150	90166-0013	-	M	10	TUBE 8 MM PA BLUE	
200	359000-0014	-		10	MARKING CO2/4 "+"	
210	359000-0024	-		19	MARKING CO2/4 "-"	
220	359000-0054	-		7	MARKING CO2/4"PERIOD"	
240	359000-0401	-		16	MARKING COLLAR 2/4 "1" YELLOW	
250	359000-0402	-		15	MARKING COLLAR 2/4 "2" YELLOW	
260	359000-0403	-		4	MARKING COLLAR PA2/4 "3" YELLOW	
270	359000-0404	-		5	MARKING COLLAR PA2/4 "4" YELLOW	
280	359000-0405	-		4	MARKING CO2/4"5"	
290	359000-0406	-		4	MARKING COLLAR PA2/4 "6" YELLOW	
400	359000-0752	-		16	MARKING CO2/4"C"	
410	359000-0774	-		13	MARKING CO2/4"Y"	

Pos	Part No	SP	UN	Qty	Description	Page No

Machine Type | Group Description | Used-In | Group Number | Page No

Tetra Pak

SPC
Spare Parts Catalogue

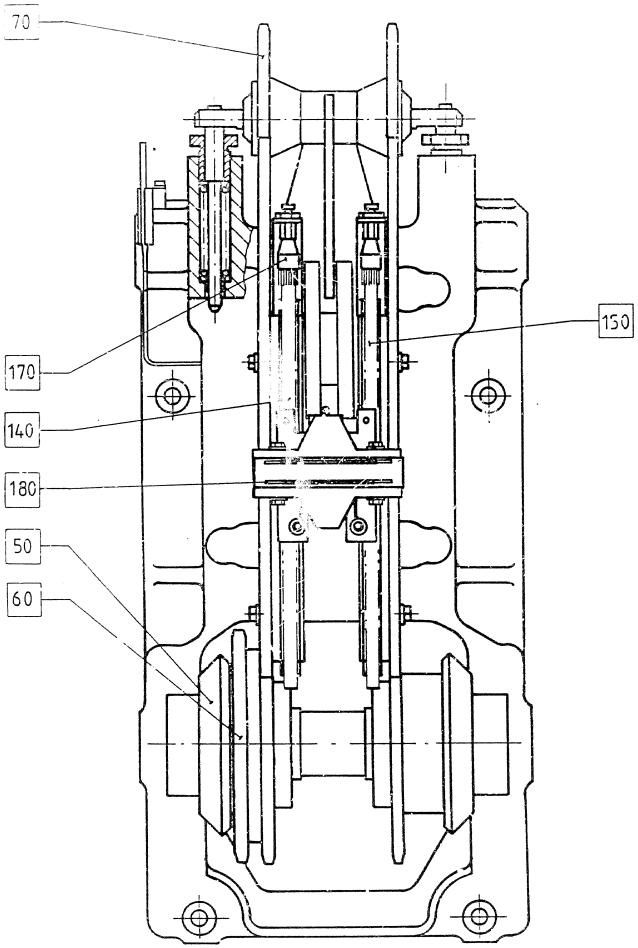
70
150
170
140
180
50
60

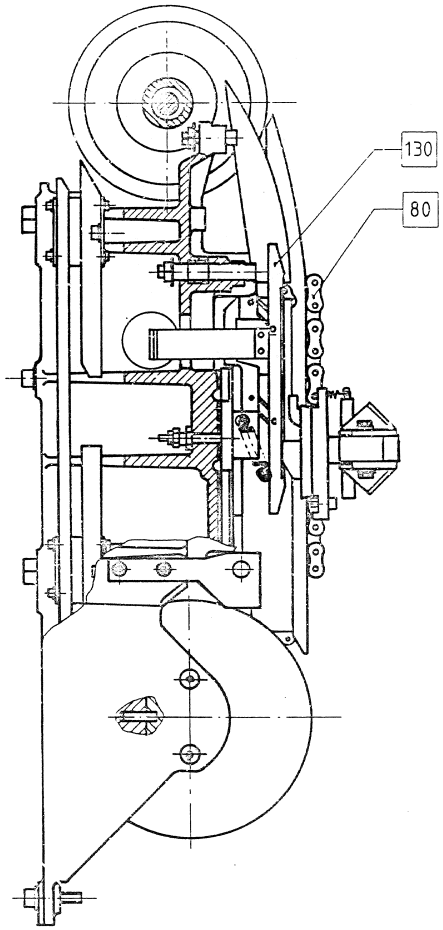
130
80

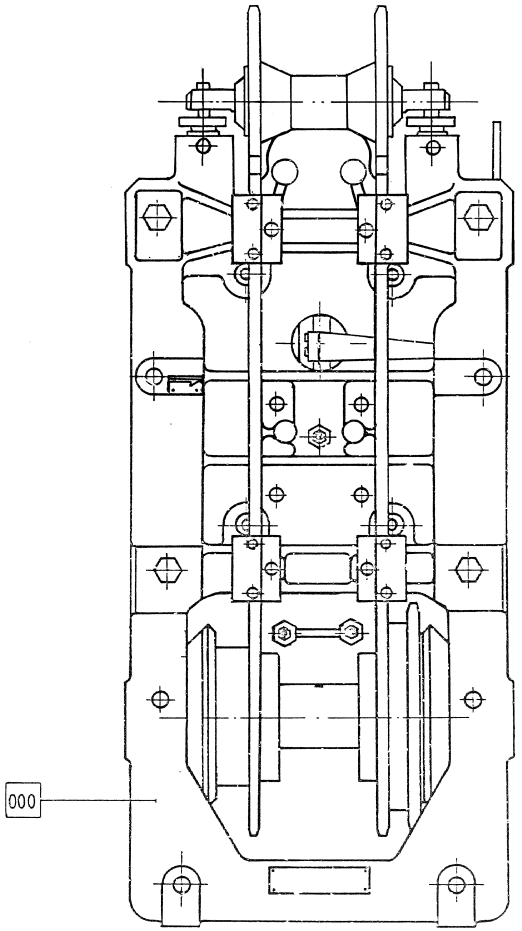
000

ECM: - -
Group number: 633233-0400
Assembly Drawing: 633233-1_1_AA

Issue: 20030213

Pos	Part No	SP	UN	Qty	Description	Page No
Common Parts						
F000 1	A536535-0301	-		1	MACHINE BODY SIDE	**125**
F050	A1345155-0101	-		1	SPROCKET	**127**
F070	A1345160-0101	-		1	LINK CHAIN WHEEL	**129, 155, 181, 213**
F080	A1345165-0101	-		1	CHAIN UNIT	**131, 157, 183, 215**
F130	A580178-0201	-		1	CONTACT UNIT	**133, 159**
F140	A1483010-0101	-		1	SUPPORT SEGMENT	**137, 163**
F150	A1483010-0102	-		1	SUPPORT SEGMENT	**139, 165**
F170	A536538-0201	-		1	CENTRALLUBR. HEATINGSIDE	**141, 167**
F180	A562894-0200	-		8	HEATING JAW	**143, 145, 169, 171**

Pos	Part No	SP	UN	Qty	Description	Page No

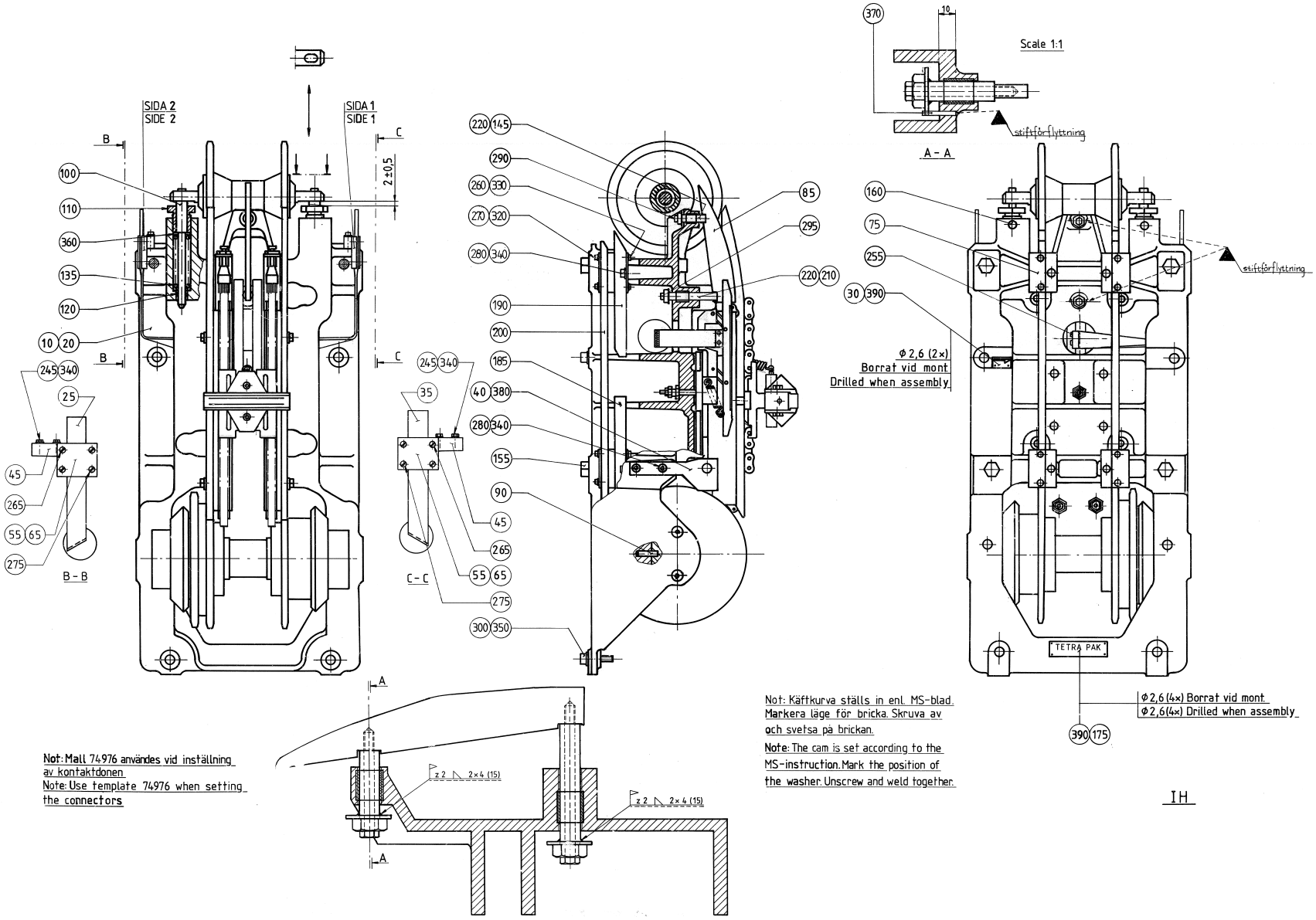

Not: Mall 74976 användes vid inställning av kontaktdonen
Note: Use template 74976 when setting the connectors

Not: Käftkurva ställs in enl. MS-blad. Markera läge för bricka. Skruva av och svetsa på brickan.
Note: The cam is set according to the MS-instruction. Mark the position of the washer. Unscrew and weld together.

IH

ECM: 83489 - 20000925
Group number: 536535-0301
Assembly Drawing: 536535-2_1_AA

Issue: 20030213

Pos	Part No	SP	UN	Qty	Description	Page No
Common Parts						
020	555063-0000	-		1	MACHINE BODY SIDE	
030	10816-0000	-		1	MARKING PLATE	
075	263217-0000	-		4	BOW CLAMP	
085	542230-0000	B		1	CURVE	
090	2481-0000	A		2	TACK	
100	555069-0000	A		2	HOLDER	
110	2864-0000	A		2	BUSHING	
120	2865-0000	A		2	BUSHING	
135	273545-0000	A		2	COMPRESSION SPRING	
145	543511-0000	A		1	ADJUSTMENT SLEEVE	
155	4660-0000	-		4	STRUT	
160	10182-0000	A		2	STOP SCREW	
185	263096-0000	B		2	TRANSMISSION RAIL	
190	263097-0000	B		2	TRANSMISSION RAIL	
200	263218-0000	B		2	RAIL	
210	543512-0000	A		1	ADJUSTMENT SLEEVE	
220	543513-0000	-		2	WASHER	
260	312101-0327	-		8	SCREW M6S M5X12 FZB	
270	312111-0287	-		8	SCREW HEX.SOCK.HD.MC6S-TT 4X8 88 FZB	
280	312111-0368	-		6	SCREW HEX.SOCK.HD.MC6S-TT 6X16 88 FZB	
290	312105-0381	-		1	SCREW M6S ISO 4014 M6X55 A480	
295	312105-0388	-		1	SCREW M6S ISO 4014 M6X90 A480	
300	312111-0540	-		4	SCREW HEX.SOCK.HD.MC6S-TT 12X40 88 FZ	
320	315101-0136	-		8	BRICKA, BRB, 4,3/8 H=0,8	
330	315101-0146	-		8	WASHER PLAIN, BRB, 5,3/10 H=1	
340	315101-0153	-		12	WASHER PLAIN, BRB, 6,4/12 H=1,5	
350	315101-0178	-		4	WASHER PLAIN, BRB, 13/24 H=2	
360	315105-0178	-		2	WASHER ISO 7089-12-200 HV-A4	
370	311303-0238	-		2	SLOTTED PIRPB3X20FZB	
380	13389-0002	B		1	SHEET	
390	312502-0221	-		2	DRIVE SCREW ROUND HEAD KDS 4X6	

Pos	Part No	SP	UN	Qty	Description	Page No

Machine Type | Group Description | Used-In | Group Number | Page No

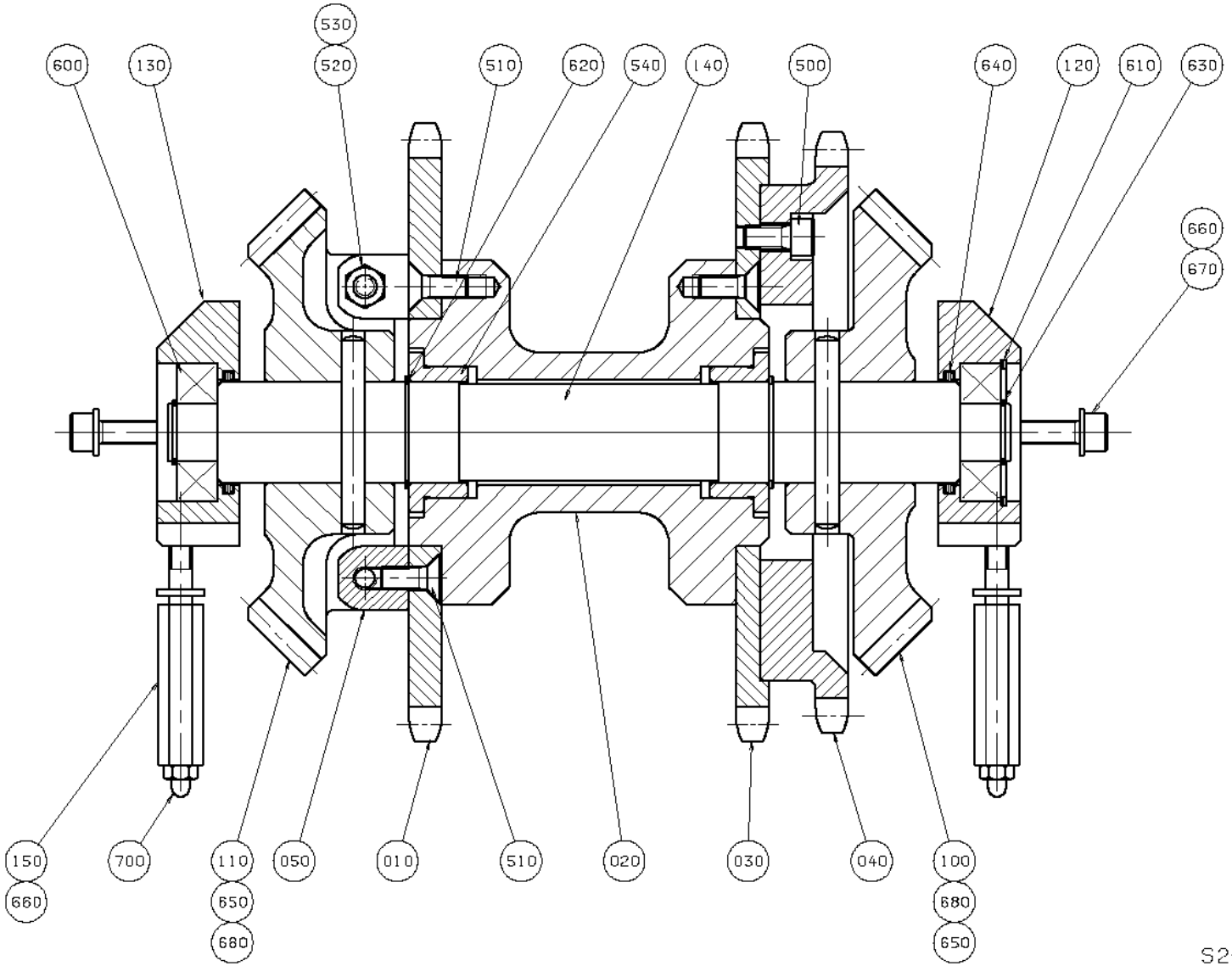

S2-1345155-1
ECN 25348

ECM: 83492 - 20000925
Group number: 1345155-0101
Assembly Drawing: 1345155-1_1_AA

Issue: 20030213

Pos	Part No	SP	UN	Qty	Description	Page No
Common Parts						
010	1345203-0000	A		1	SPROCKET	
020	1345204-0000	-		1	HUB	
030	1345207-0000	A		1	SPROCKET	
040	1345208-0000	A		1	SPROCKET	
050	1345212-0000	-		2	MOUNTING BLOCK	
100	1483047-0000	A		1	CONICAL GEAR	
110	1483048-0000	A		1	CONICAL GEAR	
120	4599-0000	A		1	BEARING HOUSING RIGHT	
130	4600-0000	A		1	BEARING HOUSING LEFT	
140	4627-0000	A		1	SHAFT	
150	6453-0001	-		2	LUBRICATING PIPE	
500	312115-0368	-		4	SCREW ISO4762 M6X16 A4	
510	312155-0451	-		16	SCREW EN 10642 MF6S M8X20 A480	
520	312306-0463	-		2	STOP SCREW P6SS8X60FZB	
530	312605-0318	-		2	HEXAGON NUT, M6M M8 A280	
540	321101-0282	B		2	FLANGE BUS 35F7X20	
600	321309-0104	B		2	BALL BEARING, 20X47X14 MM	
610	315752-0130	B		1	RETAIN. RING, 47	
620	315750-0124	B		2	RETAIN. RING, 35	
630	315750-0116	B		2	RETAIN. RING, 20	
640	315202-0528	B		2	O-RING 37,69X3,53 MM	
650	311201-0327	-		2	PIN, TAPERED, KP, 8X70 GROUND	
660	315401-0165	-		6	WASHER FBH8,2FZB	
670	312111-0455	-		4	SCREW HEX.SOCK.HD.MC6S-TT 8X30 88 FZB	
680	312316-0447	-		4	SCREW HEX.SOCK.SET CUP P.MSK6SS8X12 FZB	
690	312601-0318	-		2	NUT M6M8FZB	
700	344502-0026	-		2	GREASE NIPPLE STRAIGHT R1/8 CON.	

Pos	Part No	SP	UN	Qty	Description	Page No

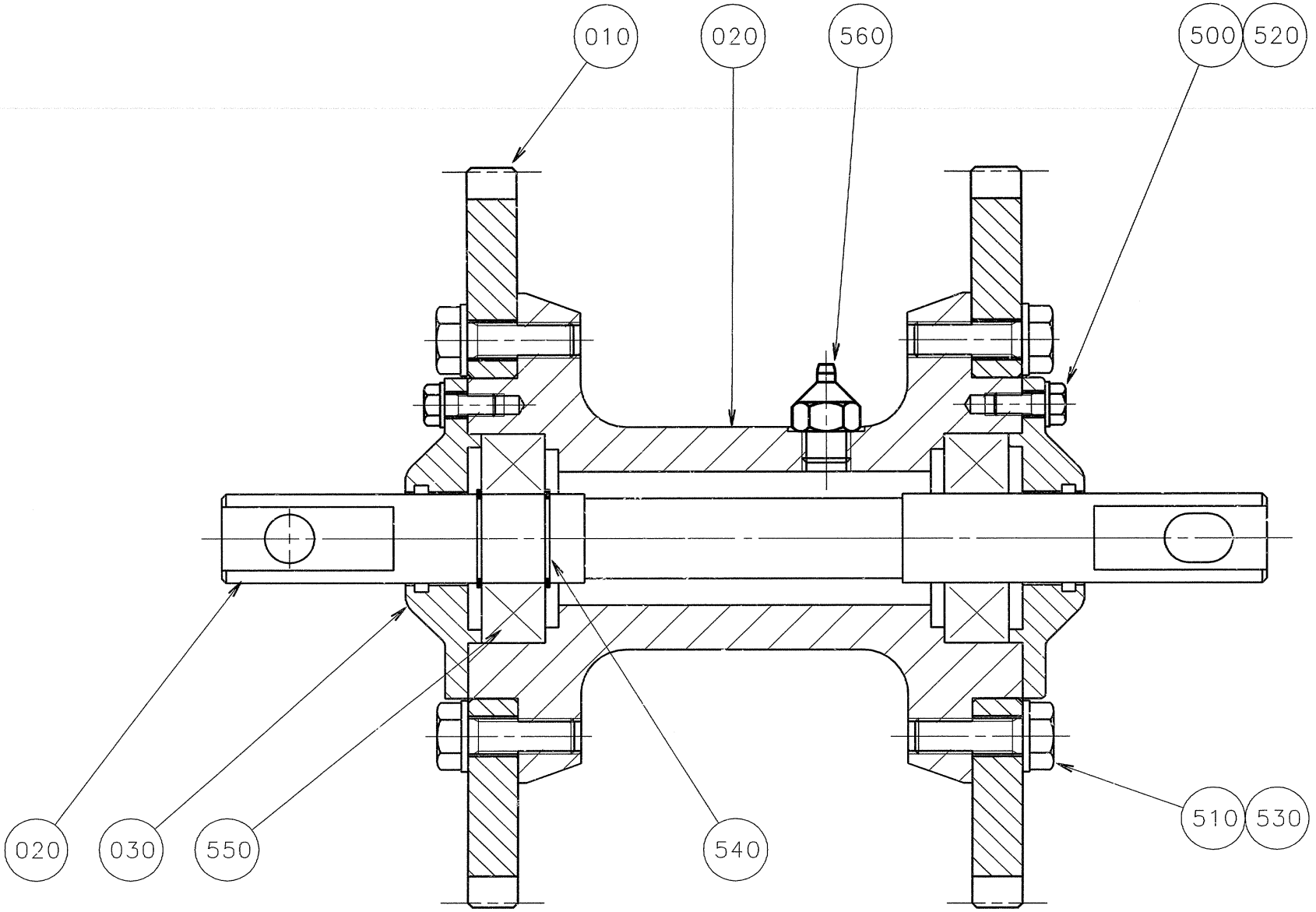
010
020
560
500
520
020
030
550
540
510
530

ECM: 83493 - 20000925
Group number: 1345160-0101
Assembly Drawing: 1345160-1_1_AA

Issue: 20030213

Pos	Part No	SP	UN	Qty	Description	Page No
Common Parts						
010	1345202-0000	A		2	SPROCKET	
020	1345206-0000	-		1	HUB	
030	4628-0000	A		1	SHAFT	
040	3749-0000	A		2	OIL SEAL (LÖVALOCK)	
500	312105-0327	-		6	SCREW M6S ISO 4017 M5X12 A480	
510	312105-0453	-		12	SCREW M6S ISO 4017 M8X25 A480	
520	315105-0146	-		6	WASHER ISO 7089-5-200 HV-A4	
530	315105-0165	-		12	WASHER ISO 7089-8-200 HV-A4	
540	315750-0116	B		2	RETAIN. RING, 20	
550	321309-0104	B		2	BALL BEARING, 20X47X14 MM	
560	344502-0026	-		1	GREASE NIPPLE STRAIGHT R1/8 CON.	

Pos	Part No	SP	UN	Qty	Description	Page No

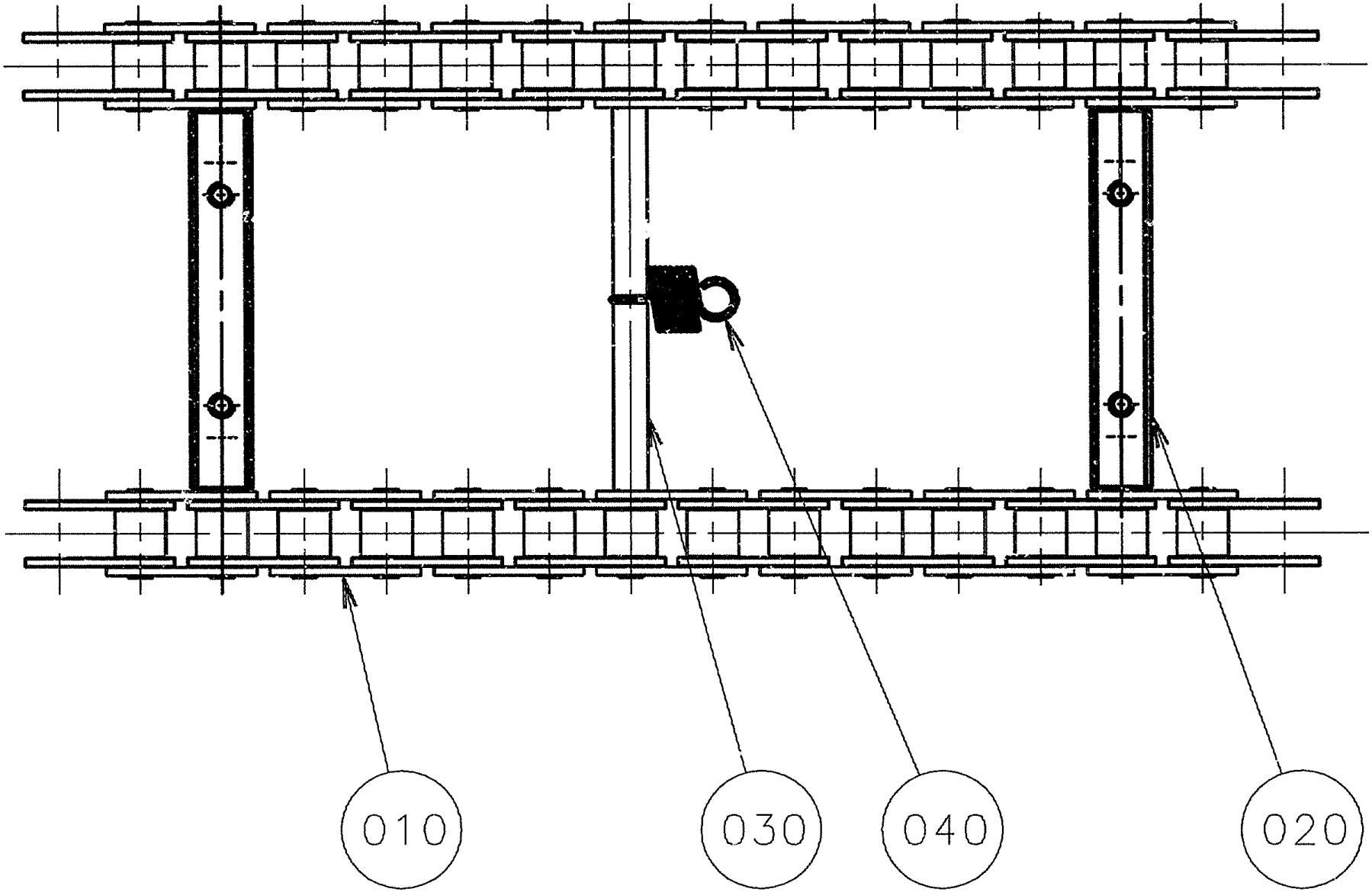
010
030
040
020

ECM: 83494 - 20000925
Group number: 1345165-0101
Assembly Drawing: 1345165-1_1_AA

Issue: 20030213

Pos	Part No	SP	UN	Qty	Description	Page No
Common Parts						
010	1345262-0000	B		2	CHAIN	
020	1345209-0000	B		8	SHAFT	
030	1345211-0000	B		8	PIN	
040	4623-0000	A		8	SPRING	
100	90296-0091	B		1	LUBRICATION GREASE	

Pos	Part No	SP	UN	Qty	Description	Page No

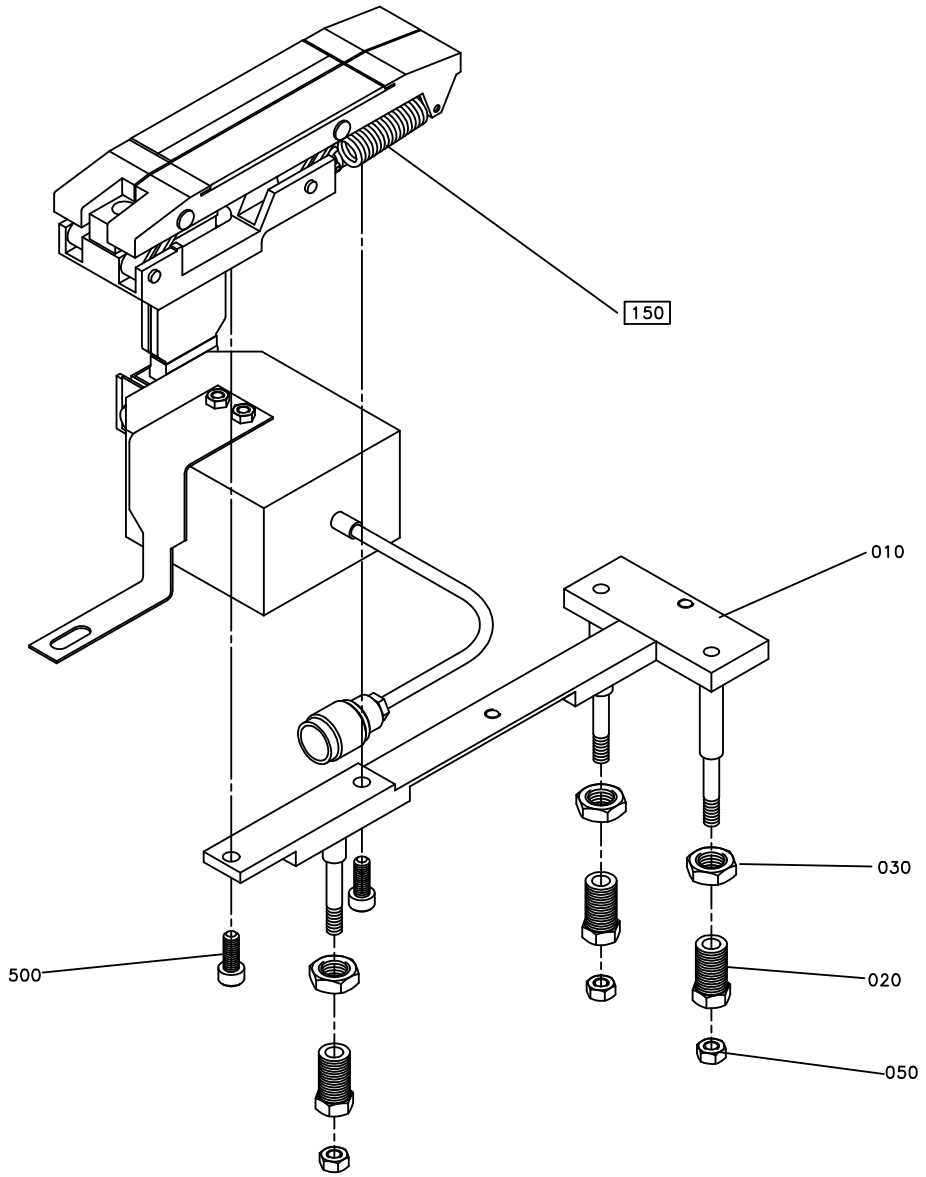

AM 21162

ECM: - -
Group number: 580178-0201
Assembly Drawing: 580178-1_1_AA

Issue: 20030213

Pos	Part No	SP	UN	Qty	Description	Page No
Common Parts						
010	580312-0000	-		1	MOUNTING BAR	
020	13172-0000	-		3	ADJUSTING SCREW	
030	13254-0000	-		3	NUT	
050	312605-0316	-		3	HEXAGON NUT, M6M M6 A280	
500	312111-0368	-		2	SCREW HEX.SOCK.HD.MC6S-TT 6X16 88 FZB	
F150	A568107-0200	-		1	CONTACT UNIT	**135, 161**

Pos	Part No	SP	UN	Qty	Description	Page No

Machine Type | Group Description | Used-In | Group Number | Page No

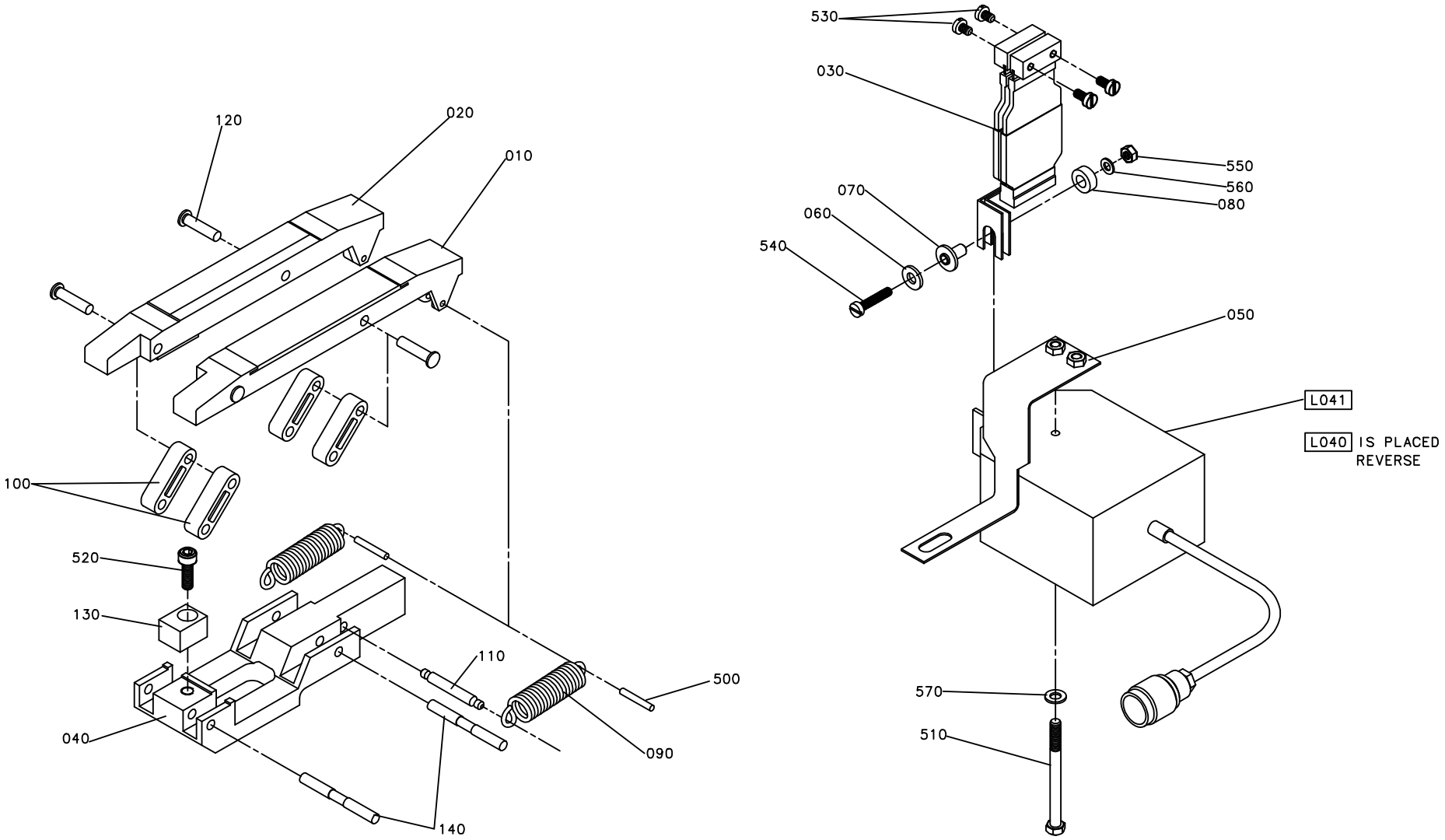
530
030
550
560
080
070
060
540
050
L041
L040 IS PLACED REVERSE
570
510
120
020
010
100
520
130
110
500
040
090
140

ECN 23297

Pos	Part No	SP	UN	Qty	Description	Page No
LVS						
L040	67379-0301	A		1	TRANSFORMER	
MVS						
L041	67379-0302	A		1	TRANSFORMER	
Common Parts						
010	580311-0000	B		1	CONTACT RAIL L	
020	580310-0000	B		1	CONTACT RAIL R	
030 1	B576124-0000	A		1	STRAND CABLE SIDE 1	
	90166-0173	-	*M*	*1*	*SHRINKABLE HOSE BLACK*	
	90203-0007	-	*M*	*1*	*COPPER BRAID 30X2,24MM*	
	90367-0008	-		*1*	*RIVET, BLANK 4X8*	
	90203-0007	-	*M*	*1*	*COPPER BRAID 30X2,24MM*	
	90166-0173	-	*M*	*1*	*SHRINKABLE HOSE BLACK*	
030 2	B576123-0000	A		1	STRAND CABLE SIDE 2	
	90367-0008	-		*1*	*RIVET, BLANK 4X8*	
	90203-0007	-	*M*	*1*	*COPPER BRAID 30X2,24MM*	
	90166-0173	-	*M*	*1*	*SHRINKABLE HOSE BLACK*	
	90367-0008	-		*1*	*RIVET, BLANK 4X8*	
	90203-0007	-	*M*	*1*	*COPPER BRAID 30X2,24MM*	
	90166-0173	-	*M*	*1*	*SHRINKABLE HOSE BLACK*	
040	580313-0000	A		1	BRACKET	
050	569589-0000	A		1	HOLDER	
060	28509-0000	A		1	BRICKA	
070	32544-0000	B		1	INSULATION NUT	
080	32644-0000	B		1	WASHER	
090	243989-0000	A		2	TENSION SPRING	
100	243990-0000	A		4	LINK ARM	
110	244588-0000	A		1	SHAFT	
120	246520-0000	A		4	SHAFT	
130	284047-0000	A		1	GUIDE LUG	
140	255256-0000	A		2	SHAFT	
500	311103-0238	-		2	CYLINDERPINNE M6, 3X20 MM	
510	312105-0343	-		1	SCREW M6S ISO 4014 M5X60 A480	
520	312115-0329	-		1	SCREW ISO4762 M5X16 A4	
530	312122-0287	-		4	SCREW PAN HEAD MCS M4X8 NL. PL.	
540	312122-0295	-		1	SCREW PAN HEAD MCS M4X20 NL. PL.	
550	312602-0312	-		1	HEXAGON NUT, EN 24032 M6M M4 NIPLBR	
560	315103-0136	-		1	WASHER PLAIN, BRB, 4,3/8,H=0,8 NI PL BR	
570	315105-0146	-		1	WASHER ISO 7089-5-200 HV-A4	

Pos	Part No	SP	UN	Qty	Description	Page No

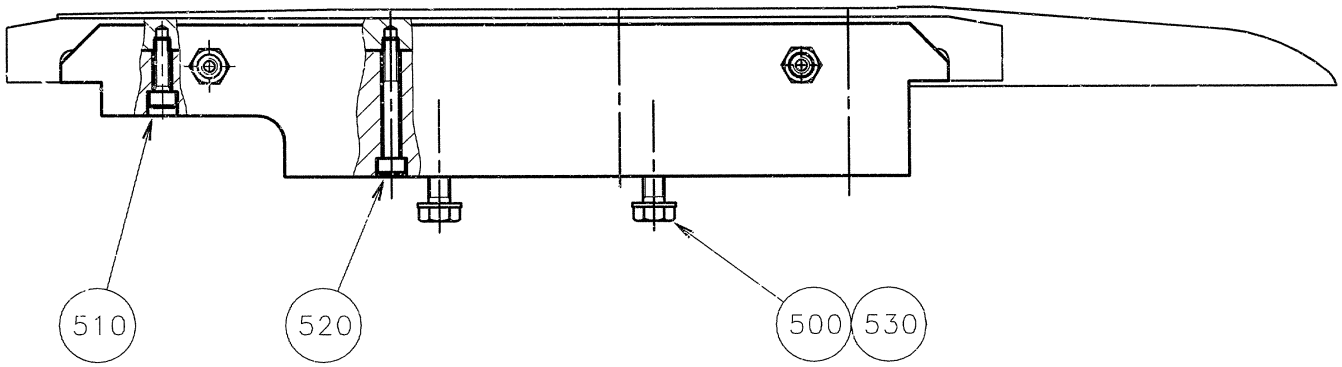
510
520
500
530

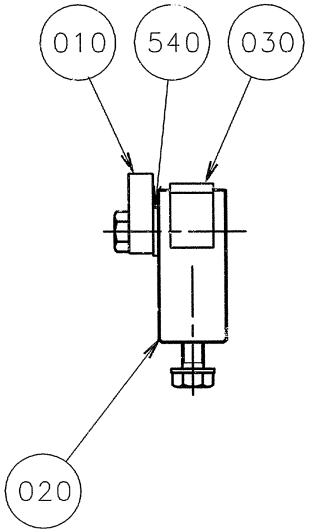
010
540
030
020

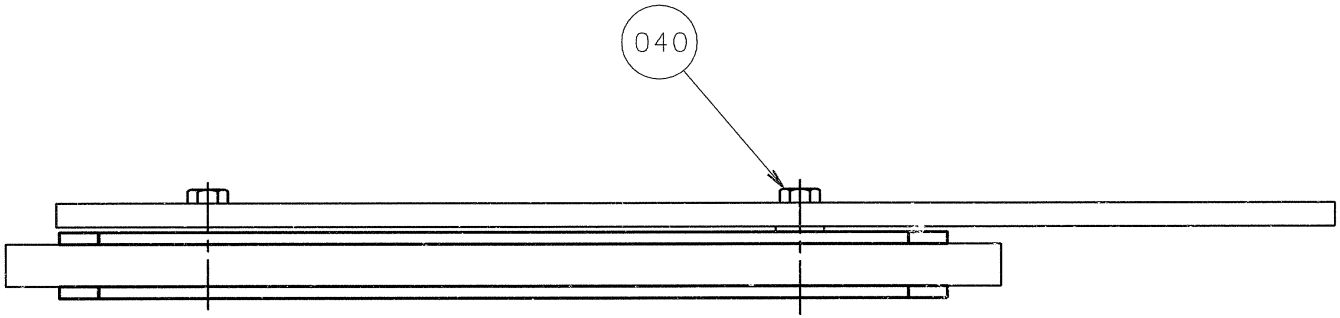
040

ECM: 83495 - 20000925
Group number: 1483010-0101
Assembly Drawing: 1483010-1_1_AA

Issue: 20030213

Pos	Part No	SP	UN	Qty	Description	Page No
Common Parts						
010	543517-0000	B		1	TRANSMISSION RAIL	
020	1483001-0000	A		1	BRACKET	
030	1483002-0000	B		1	SLIDING STRIP	
040	1483003-0000	A		2	SKRUV	
500	312111-0451	-		2	SCREW HEX.SOCK.HD.MC6S-TT 8X20 88 FZB	
510	312115-0372	-		1	SCREW ISO4762 M6X25 A4	
520	312115-0379	-		3	SCREW ISO4762 M6X45 A4	
530	315401-0165	-		2	WASHER FBH8,2FZB	
540	315105-0171	-		2	WASHER PLAIN, BRB, 10/18,H=2	

Pos	Part No	SP	UN	Qty	Description	Page No

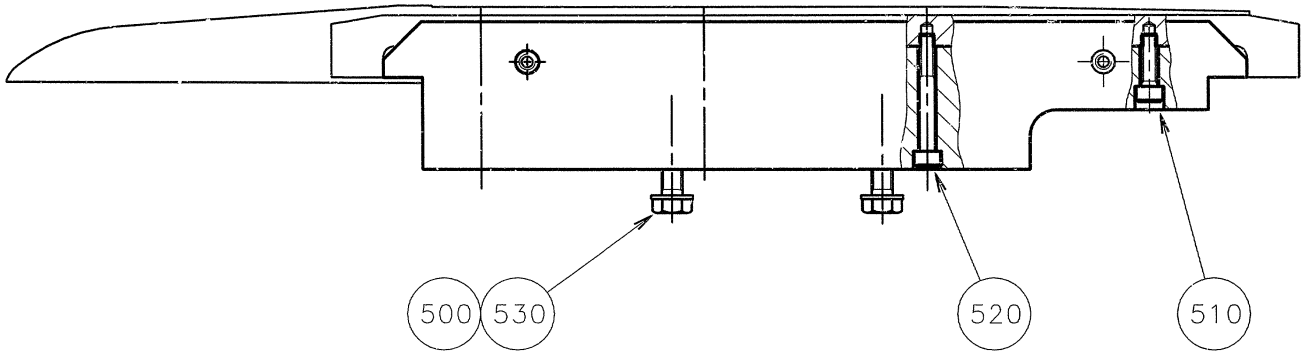
500
530
520
510

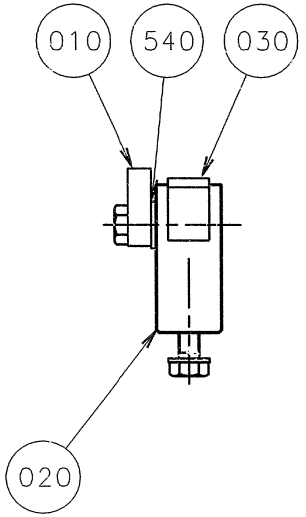
010
540
030
020

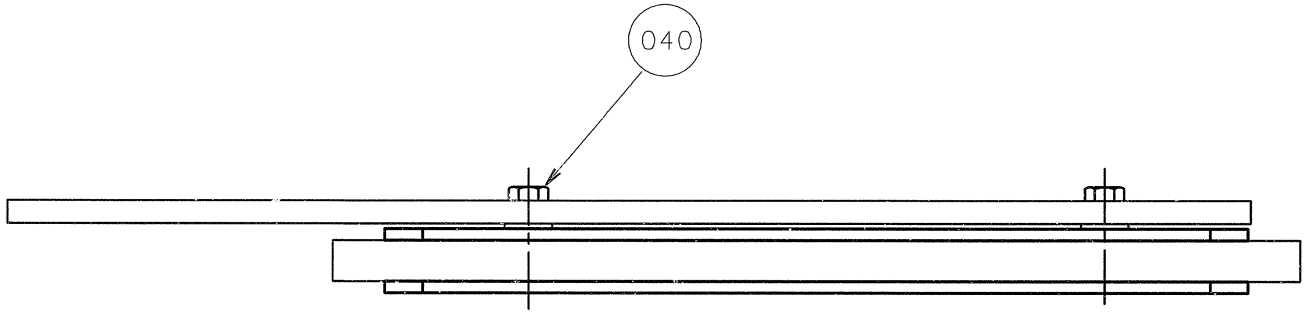
040

ECM: 83496 - 20000925
Group number: 1483010-0102
Assembly Drawing: 1483010-2_1_AA

Issue: 20030213

Pos	Part No	SP	UN	Qty	Description	Page No
Common Parts						
010	543517-0000	B		1	TRANSMISSION RAIL	
020	1483001-0000	A		1	BRACKET	
030	1483002-0000	B		1	SLIDING STRIP	
040	1483003-0000	A		2	SKRUV	
500	312111-0451	-		2	SCREW HEX.SOCK.HD.MC6S-TT 8X20 88 FZB	
510	312115-0372	-		1	SCREW ISO4762 M6X25 A4	
520	312115-0379	-		3	SCREW ISO4762 M6X45 A4	
530	315401-0165	-		2	WASHER FBH8,2FZB	
540	315105-0171	-		2	WASHER PLAIN, BRB, 10/18,H=2	

Pos	Part No	SP	UN	Qty	Description	Page No

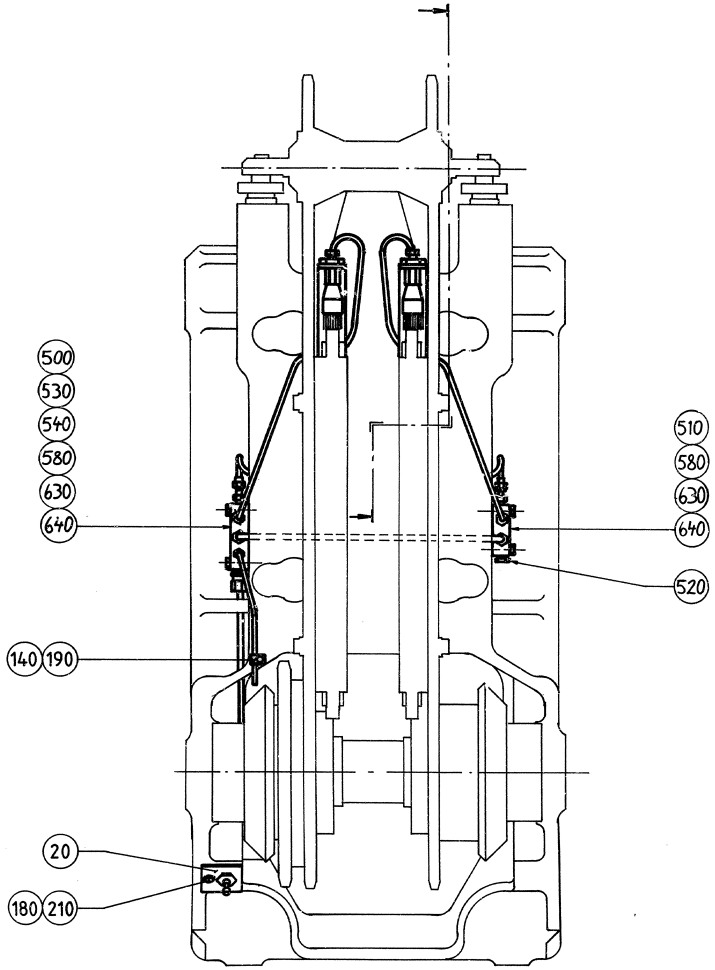
500
530
540
580
630
640
510
580
630
640
520
140
190
20
180
210

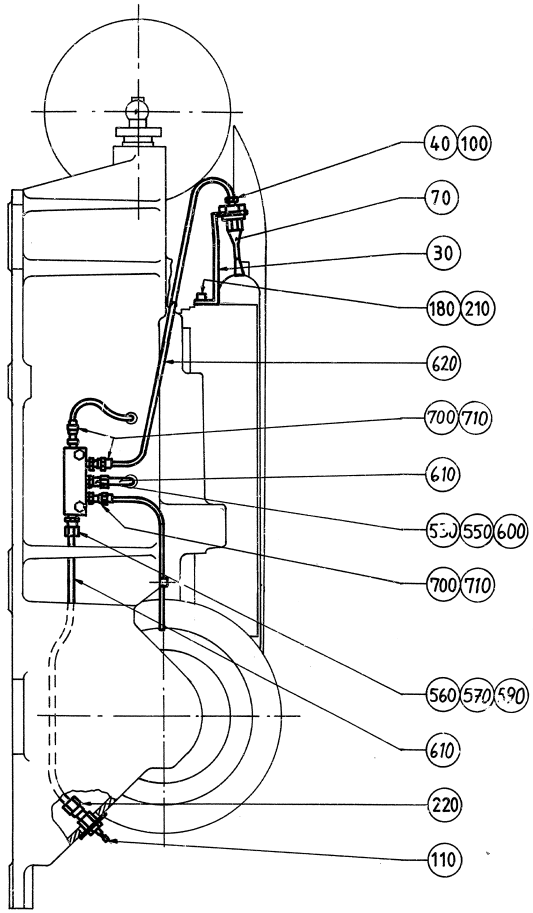
40
100
70
30
180
210
620
700
710
610
530
550
600
700
710
560
570
590
610
220
110

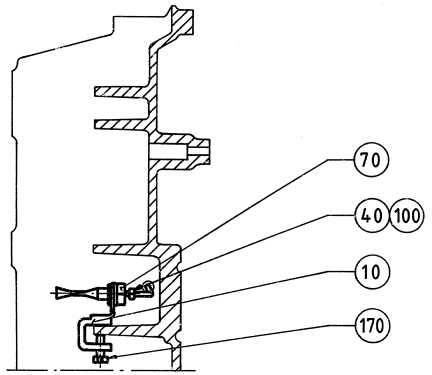
70
40
100
10
170

ECM: 83490 - 20000925
Group number: 536538-0201
Assembly Drawing: 536538-2_1_AA

Issue: 20030213

Pos	Part No	SP	UN	Qty	Description	Page No
Common Parts						
010	263106-0000	-		1	HOLDER	
020	259962-0002	-		1	PLATE	
030	1483056-0000	-		2	HOLDER	
040	90028-0001	B		4	CONE 5/32"	
070	90092-0048	B		4	OIL BRUSH, FLAT, 5/16-24 UNF	
100	90134-0003	A		4	BUSHING	
110	90134-0033	A		1	QUICK COUPLING, (M) LP-004-1-WR010	
140	90165-0003	-		5	PIPE CLIP FOR TUBE D=4 MM	
170	312101-0372	-		6	SCREW M6S M6X25 FZB	
180	312115-0327	-		3	SCREW ISO4762 M5X12 A4	
190	312121-0285	-		1	SCREW SLOT.PAN HD. MCS 4X6 FZB	
200	315101-0153	-		4	WASHER PLAIN, BRB, 6,4/12 H=1,5	
210	315105-0146	-		3	WASHER ISO 7089-5-200 HV-A4	
220	342724-0102	-		1	CONN. STR. PIPE GI 6-G1/8	
500	90032-0039	A		1	BLOCK 4 WAYS	
510	90032-0038	A		1	BLOCK 2 WAYS	
520	90087-0019	-		1	PLUG M10X1 STAINLESS	
530	90134-0040	A		5	BUSHING VALVE CONNECTION 4 MM	
540	90134-0052	A		1	PLUG DOSING BLOCK	
550	90028-0021	B		5	CONE TUBE 4 MM	
560	90028-0025	B		3	CONE TUBE 6 MM	
570	90134-0055	A		3	BUSHING/NUT INLET/OUTLET 6 MM	
580	90165-0005	-		2	PIPE CLIP FOR TUBE D=6 MM	
590	342706-0130	-		3	ACCESSORIES, INSERT SLEEVE 6 MM	
610	90166-0011	A	M	5	TUBE 6 MM PA,TRANSP.	
620	90166-0109	A	M	5	TUBE 4 MM PA,TRANSP.	
630	312155-0295	-		4	SCREW EN 10642 MF6S M4X20 A480	
640	312132-0287	-		3	SCREW SLOT. PAN HEAD MSCS M4X8	
700	90092-0054	A		2	METERING VALVE 50 MM3	
710	90092-0054	A		2	METERING VALVE 50 MM3	

Pos	Part No	SP	UN	Qty	Description	Page No

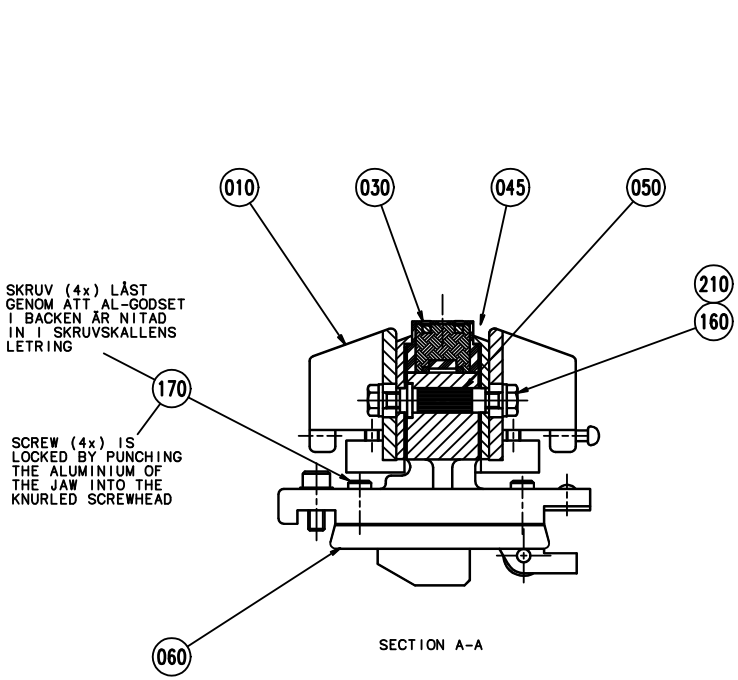
010
030
045
050
210
160
SKRUV (4x) LÅST GENOM ATT AL-GODSET I BACKEN ÄR NITAD IN I SKRUVSKALLENS LETRING
170
SCREW (4x) IS LOCKED BY PUNCHING THE ALUMINIUM OF THE JAW INTO THE KNURLED SCREWHEAD
060
SECTION A-A

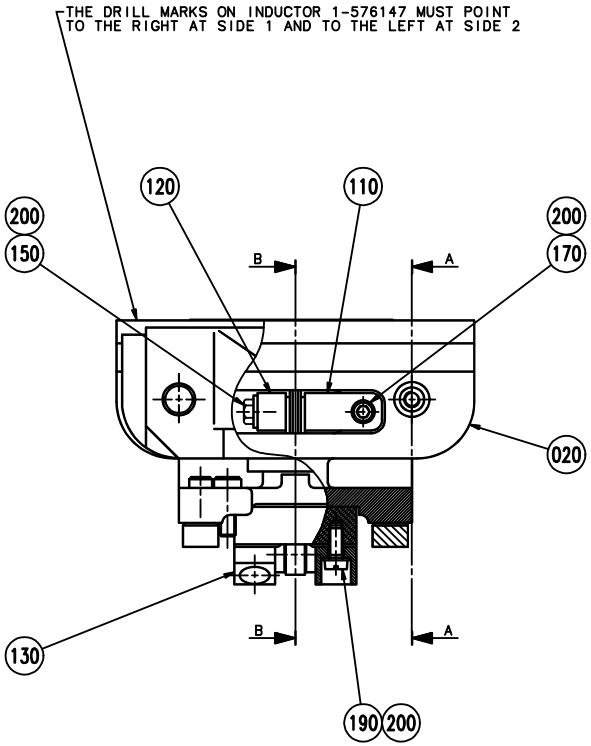
THE DRILL MARKS ON INDUCTOR 1-576147 MUST POINT TO THE RIGHT AT SIDE 1 AND TO THE LEFT AT SIDE 2
200
150
120
110
200
170
B
A
020
B
A
130
190
200

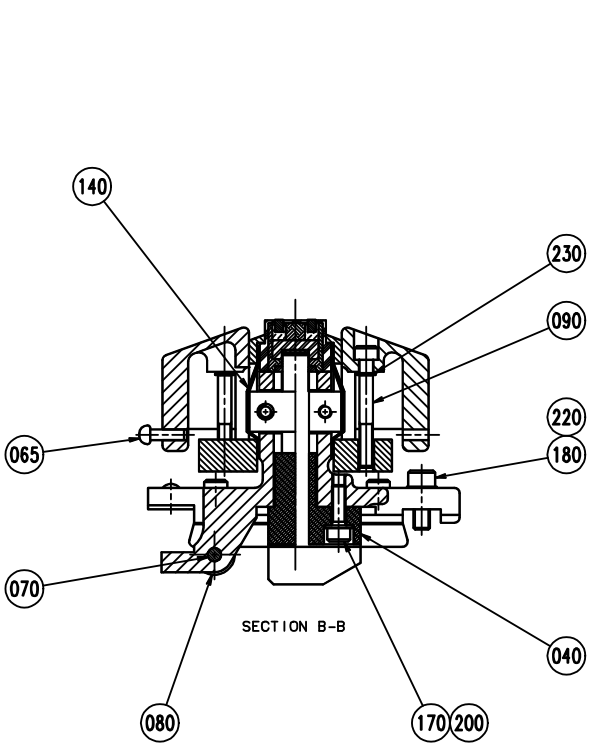
140
230
090
220
180
065
070
SECTION B-B
040
080
170
200

ECM: 82015 - 20000814
Group number: 562894-0200
Assembly Drawing: 562894-3_1_AA

Issue: 20030213

Pos	Part No	SP	UN	Qty	Description	Page No
LVS						
030 1	576147-0000	B		1	INDUCTOR	
045	562896-0000	A		1	MOUNTING SHEET	
MVS						
030 2	1175098-0000	B		1	INDUCTOR	
045-02	562896-0000	A		2	MOUNTING SHEET	
Common Parts						
010	1175288-0000	A		2	VOLUME FLAP	
020	278985-0000	A		1	HEATING JAW	
040	279233-0000	B		1	CARBON BRUSH HOLDER	
050	562898-0000	A		2	BUSHING	
060	4615-0000	B		2	ROLLER BAR	
065	5809-0000	A		1	TACK	
070	550193-0000	B		1	PIN	
080	543509-0000	B		1	ROLL	
090	562899-0000	A		2	SCREW	
110	535500-0000	A		1	BRACKET	
120	440419-0000	A		1	BRACKET	
130	279668-0000	B		2	CARBON BRUSH COMPLETE	
140	284046-0000	B		2	GASKET	
145	90157-0021	-	KG		LOCKING FLUID	
150	90287-0171	A		2	SCREW M6S M5X25 NI PL	
155	312105-0289	-		1	SCREW M6S ISO 4017 M4X10 A480	
160	312105-0368	-		4	SCREW M6S M6X16 A280	
170	312115-0329	-		6	SCREW ISO4762 M5X16 A4	
180	312115-0368	-		2	SCREW ISO4762 M6X16 A4	
190	312122-0327	A		2	SCREW PAN HEAD MCS M5X12 NL. PL.	
200	315103-0146	A		6	BRICKA, BRB, 5,3/10,H=1 NI PL BR	
210	315115-0153	-		4	WASHER PLAIN, TBRB 6,4/12 H=3	
220	315402-0156	-		2	LOCK WASHER FBB 6,5	
230	315754-0105	A		2	LOCKING WAE 3,2	

Pos	Part No	SP	UN	Qty	Description	Page No

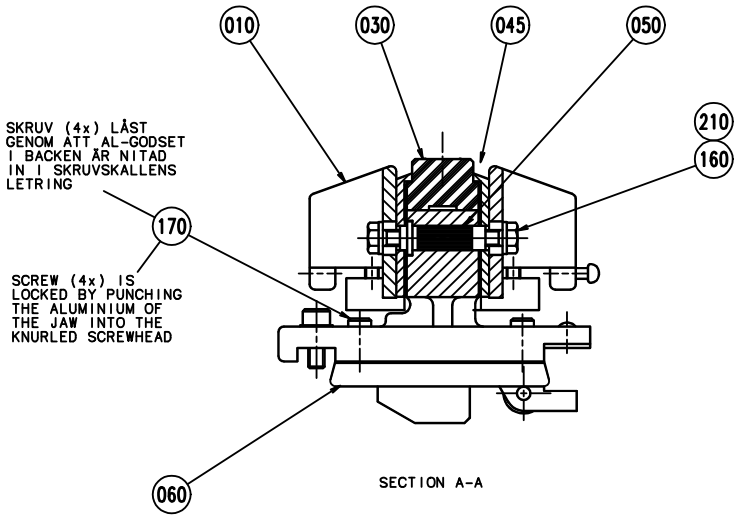
010
030
045
050
210
160
SKRUV (4x) LÅST GENOM ATT AL-GODSET I BACKEN ÄR NITAD IN I SKRUVSKALLENS LETRING
170
SCREW (4x) IS LOCKED BY PUNCHING THE ALUMINIUM OF THE JAW INTO THE KNURLED SCREWHEAD
060
SECTION A-A

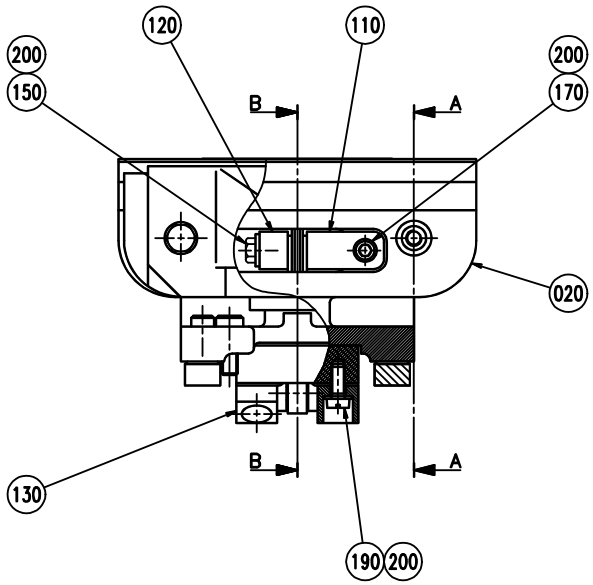
120
110
200
150
200
170
B
A
020
B
A
130
190
200

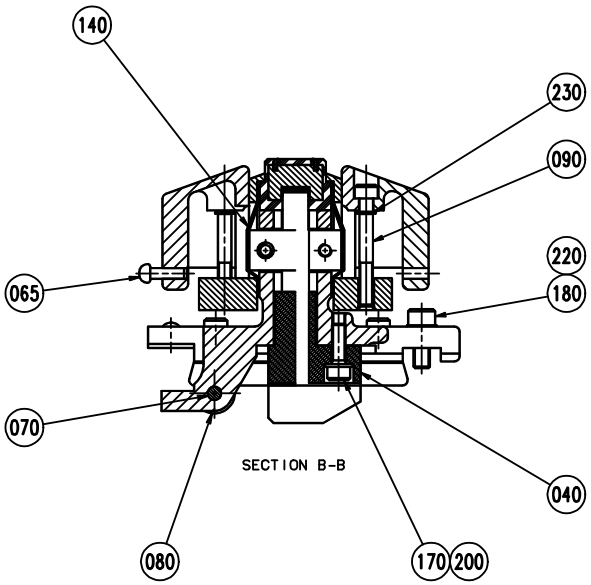
140
230
090
220
065
180
070
SECTION B-B
040
080
170
200

ECM: 82015 - 20000814
Group number: 562894-0200
Assembly Drawing: 562894-4_1_AA

Issue: 20030213

Pos	Part No	SP	UN	Qty	Description	Page No
LVS						
030 1	576147-0000	B		1	INDUCTOR	
045	562896-0000	A		1	MOUNTING SHEET	
MVS						
030 2	1175098-0000	B		1	INDUCTOR	
045-02	562896-0000	A		2	MOUNTING SHEET	
Common Parts						
010	1175288-0000	A		2	VOLUME FLAP	
020	278985-0000	A		1	HEATING JAW	
040	279233-0000	B		1	CARBON BRUSH HOLDER	
050	562898-0000	A		2	BUSHING	
060	4615-0000	B		2	ROLLER BAR	
065	5809-0000	A		1	TACK	
070	550193-0000	B		1	PIN	
080	543509-0000	B		1	ROLL	
090	562899-0000	A		2	SCREW	
110	535500-0000	A		1	BRACKET	
120	440419-0000	A		1	BRACKET	
130	279668-0000	B		2	CARBON BRUSH COMPLETE	
140	284046-0000	B		2	GASKET	
145	90157-0021	-	KG		LOCKING FLUID	
150	90287-0171	A		2	SCREW M6S M5X25 NI PL	
155	312105-0289	-		1	SCREW M6S ISO 4017 M4X10 A480	
160	312105-0368	-		4	SCREW M6S M6X16 A280	
170	312115-0329	-		6	SCREW ISO4762 M5X16 A4	
180	312115-0368	-		2	SCREW ISO4762 M6X16 A4	
190	312122-0327	A		2	SCREW PAN HEAD MCS M5X12 NL. PL.	
200	315103-0146	A		6	BRICKA, BRB, 5,3/10,H=1 NI PL BR	
210	315115-0153	-		4	WASHER PLAIN, TBRB 6,4/12 H=3	
220	315402-0156	-		2	LOCK WASHER FBB 6,5	
230	315754-0105	A		2	LOCKING WAE 3,2	

Pos	Part No	SP	UN	Qty	Description	Page No

Tetra Pak

SPC
Spare Parts Catalogue

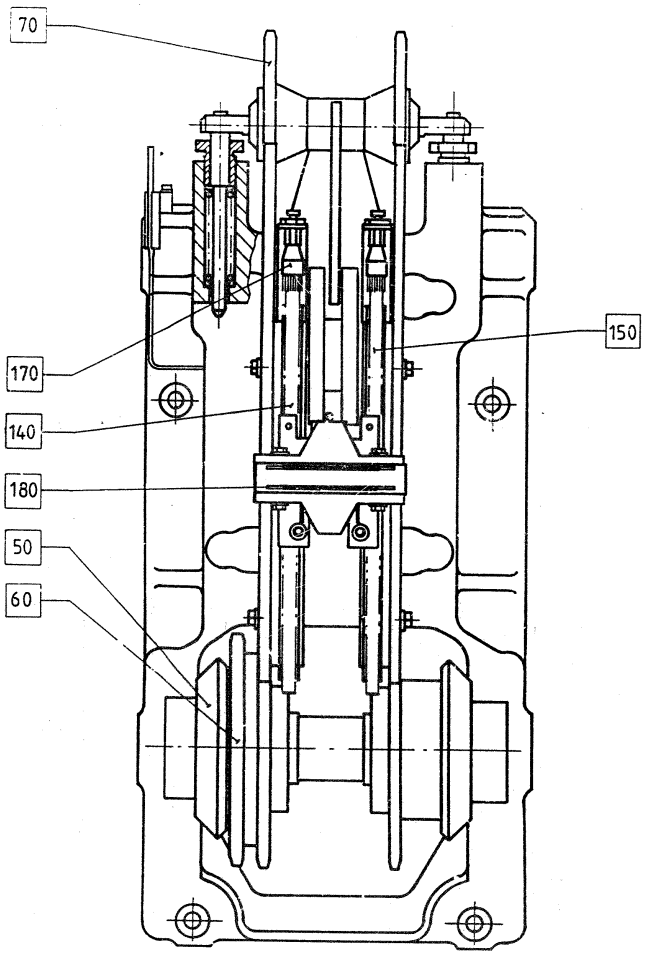
70
150
170
140
180
50
60

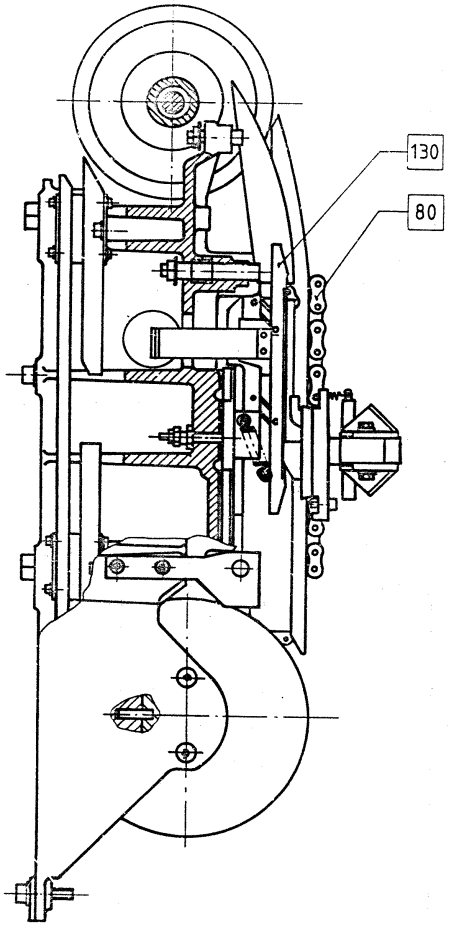
130
80

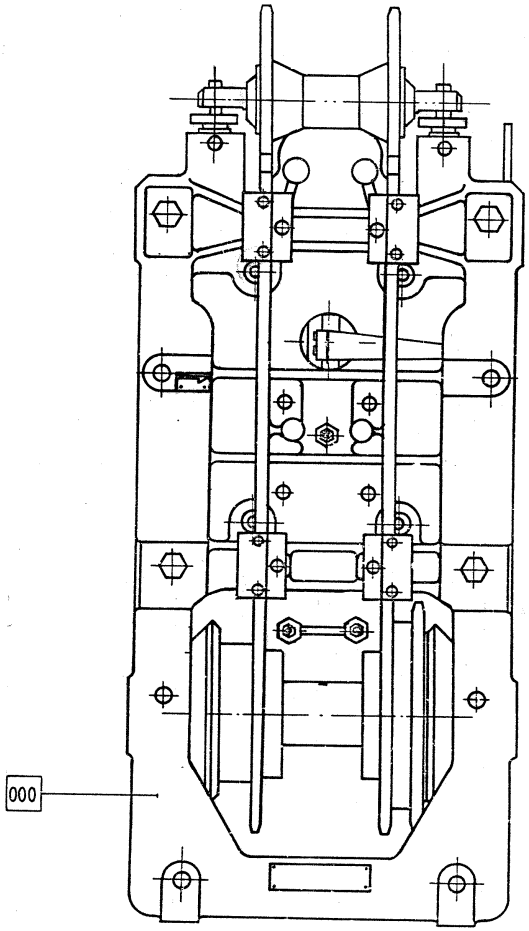
000

ECM: - -
Group number: 633242-0100
Assembly Drawing: 633242-1_1_AA

Issue: 20030213

Pos	Part No	SP	UN	Qty	Description	Page No
Common Parts						
F000 2	A536535-0302	-		1	MACHINE BODY SIDE	**151**
F060	A1345155-0102	-		1	SPROCKET	**153, 179, 211**
F070	A1345160-0101	-		1	LINK CHAIN WHEEL	**129, 155, 181, 213**
F080	A1345165-0101	-		1	CHAIN UNIT	**131, 157, 183, 215**
F130	A580178-0201	-		1	CONTACT UNIT	**133, 159**
F140	A1483010-0101	-		1	SUPPORT SEGMENT	**137, 163**
F150	A1483010-0102	-		1	SUPPORT SEGMENT	**139, 165**
F170	A536538-0201	-		1	CENTRALLUBR. HEATINGSIDE	**141, 167**
F180	A562894-0200	-		8	HEATING JAW	**143, 145, 169, 171**

Pos	Part No	SP	UN	Qty	Description	Page No

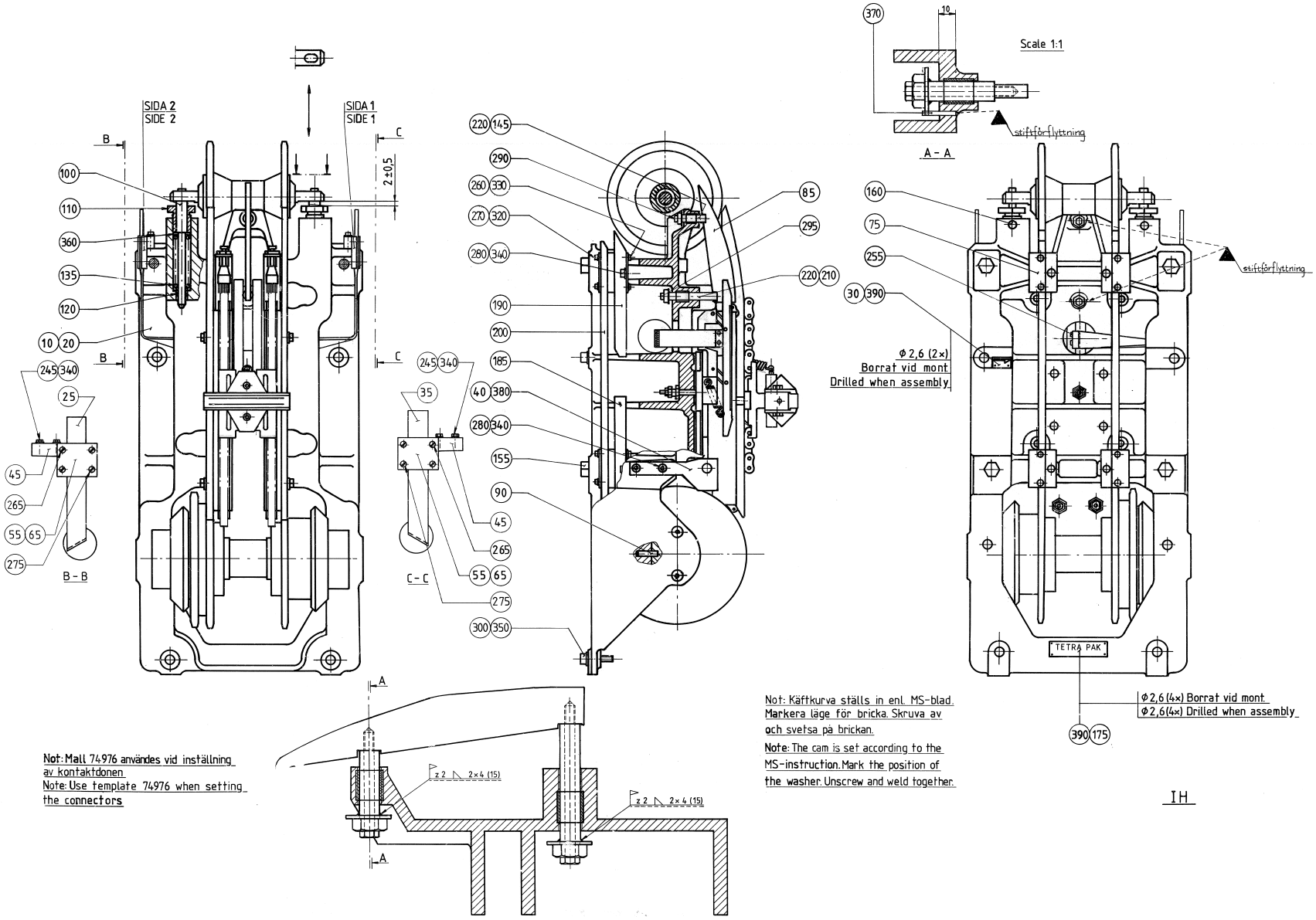

Not: Mall 74976 användes vid inställning av kontaktdonen
Note: Use template 74976 when setting the connectors

Not: Käftkurva ställs in enl. MS-blad. Markera läge för bricka. Skruva av och svetsa på brickan.
Note: The cam is set according to the MS-instruction. Mark the position of the washer. Unscrew and weld together.

IH

ECM: - -
Group number: 536535-0302
Assembly Drawing: 536535-2_1_AA

Issue: 20030213

Pos	Part No	SP	UN	Qty	Description	Page No
Common Parts						
010	555062-0000	-		1	MACHINE BODY SIDE	
040	13389-0001	-		1	SHEET	
075	263217-0000	-		4	BOW CLAMP	
085	542230-0000	-		1	CURVE	
090	2481-0000	-		2	TACK	
100	555069-0000	-		2	HOLDER	
110	2864-0000	-		2	BUSHING	
120	2865-0000	-		2	BUSHING	
135	273545-0000	-		2	COMPRESSION SPRING	
145	543511-0000	-		1	ADJUSTMENT SLEEVE	
155	4660-0000	-		4	STRUT	
160	10182-0000	-		2	STOP SCREW	
185	263096-0000	-		2	TRANSMISSION RAIL	
190	263097-0000	-		2	TRANSMISSION RAIL	
200	263218-0000	-		2	RAIL	
210	543512-0000	-		1	ADJUSTMENT SLEEVE	
220	543513-0000	-		2	WASHER	
260	312101-0327	-		8	SCREW M6S M5X12 FZB	
270	312111-0287	-		8	SCREW HEX.SOCK.HD.MC6S-TT 4X8 88 FZB	
280	312111-0368	-		6	SCREW HEX.SOCK.HD.MC6S-TT 6X16 88 FZB	
290	312105-0381	-		1	SCREW M6S ISO 4014 M6X55 A480	
295	312105-0388	-		1	SCREW M6S ISO 4014 M6X90 A480	
300	312111-0540	-		4	SCREW HEX.SOCK.HD.MC6S-TT 12X40 88 FZ	
320	315101-0136	-		8	BRICKA, BRB, 4,3/8 H=0,8	
330	315101-0146	-		8	WASHER PLAIN, BRB, 5,3/10 H=1	
340	315101-0153	-		12	WASHER PLAIN, BRB, 6,4/12 H=1,5	
350	315101-0178	-		4	WASHER PLAIN, BRB, 13/24 H=2	
360	315105-0178	-		2	WASHER ISO 7089-12-200 HV-A4	
370	311303-0238	-		2	SLOTTED PIRPB3X20FZB	
380	13389-0002	-		1	SHEET	

Pos	Part No	SP	UN	Qty	Description	Page No

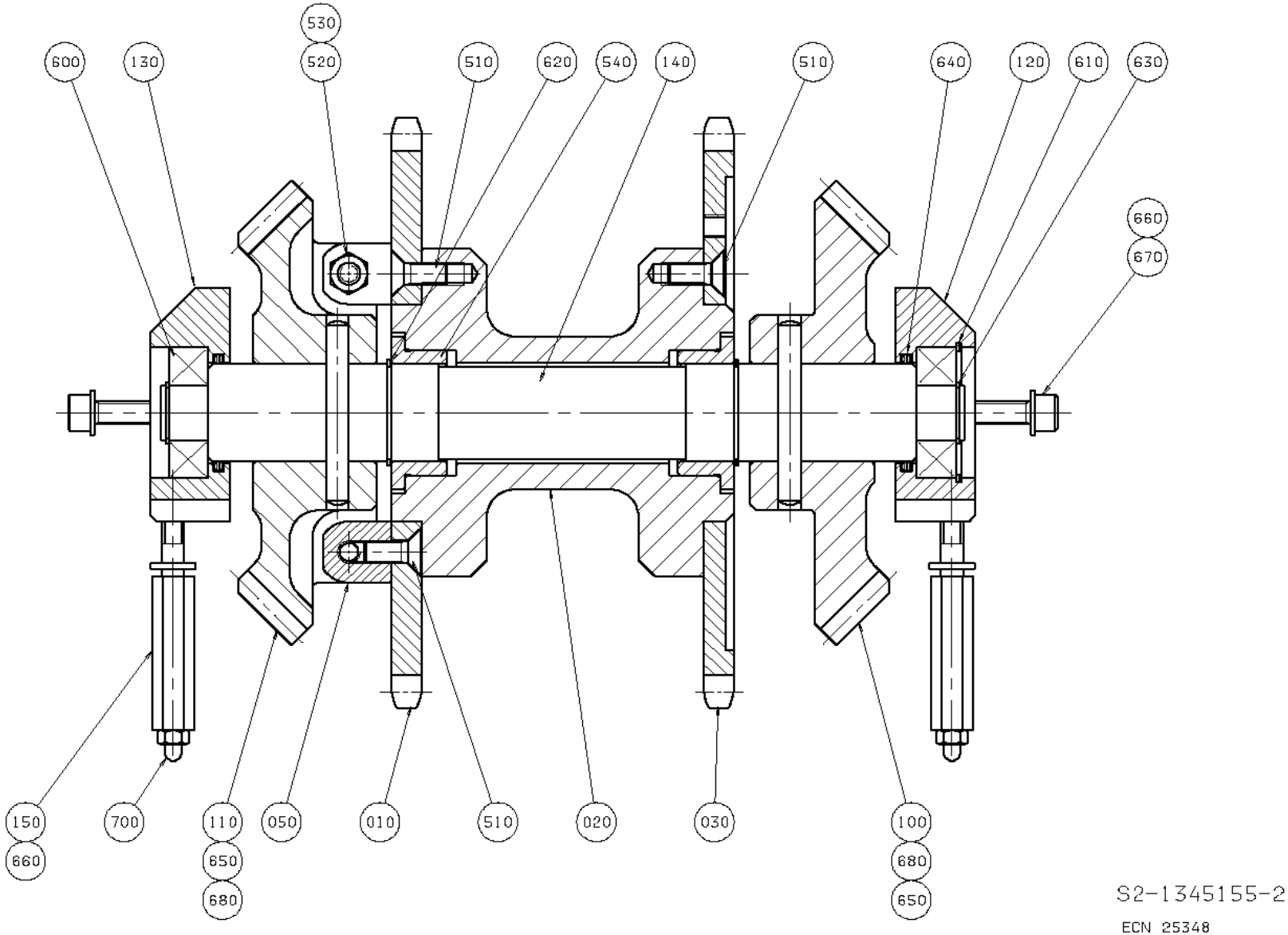
530
600
130
520
510
620
540
140
510
640
120
610
630
660
670
150
660
700
110
650
680
050
010
510
020
030
100
680
650
S2-1345155-2
ECN 25348

ECM: - -
Group number: 1345155-0102
Assembly Drawing: 1345155-2_1_AA

Issue: 20030213

Pos	Part No	SP	UN	Qty	Description	Page No
Common Parts						
010	1345203-0000	D		1	SPROCKET	
020	1345204-0000	-		1	HUB	
030	1345207-0000	D		1	SPROCKET	
050	1345212-0000	-		2	MOUNTING BLOCK	
100	1483047-0000	-		1	CONICAL GEAR	
110	1483048-0000	-		1	CONICAL GEAR	
120	4599-0000	-		1	BEARING HOUSING RIGHT	
130	4600-0000	-		1	BEARING HOUSING LEFT	
140	4627-0000	-		1	SHAFT	
150	6453-0001	-		2	LUBRICATING PIPE	
510	312155-0451	-		16	SCREW EN 10642 MF6S M8X20 A480	
520	312306-0463	-		2	STOP SCREW P6SS8X60FZB	
530	312605-0318	-		2	HEXAGON NUT, M6M M8 A280	
540	321101-0282	-		2	FLANGE BUS 35F7X20	
600	321309-0104	-		2	BALL BEARING, 20X47X14 MM	
610	315752-0130	-		1	RETAIN. RING, 47	
620	315750-0124	-		2	RETAIN. RING, 35	
630	315750-0116	-		2	RETAIN. RING, 20	
640	315202-0528	-		2	O-RING 37,69X3,53 MM	
650	311201-0327	-		2	PIN, TAPERED, KP, 8X70 GROUND	
660	315401-0165	-		6	WASHER FBH8,2FZB	
670	312111-0455	-		4	SCREW HEX.SOCK.HD.MC6S-TT 8X30 88 FZB	
680	312316-0447	-		4	SCREW HEX.SOCK.SET CUP P.MSK6SS8X12 FZB	
690	312601-0318	-		2	NUT M6M8FZB	
700	344502-0026	-		2	GREASE NIPPLE STRAIGHT R1/8 CON.	

Pos	Part No	SP	UN	Qty	Description	Page No

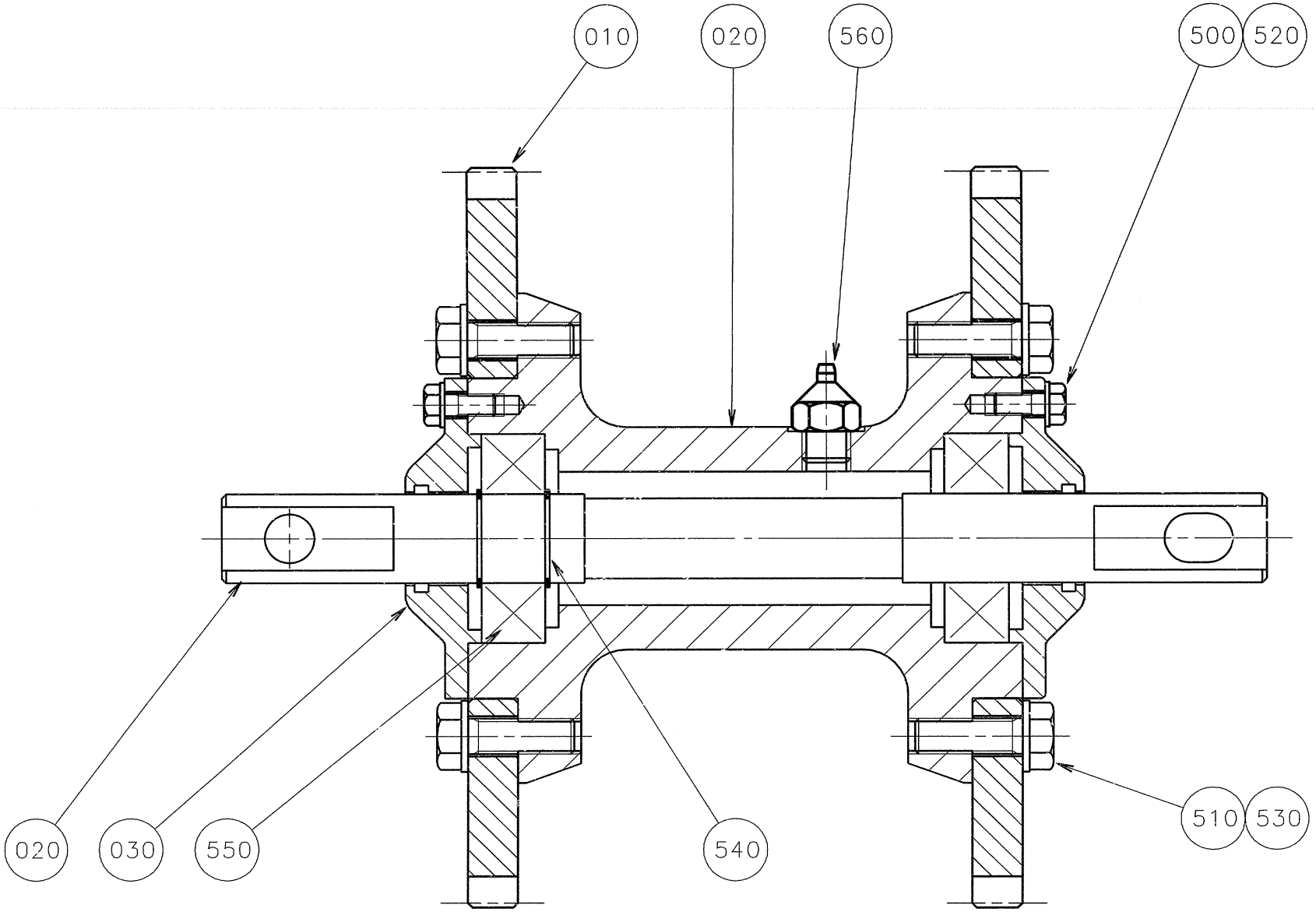
010
020
560
500
520
020
030
550
540
510
530

ECM: 83493 - 20000925
Group number: 1345160-0101
Assembly Drawing: 1345160-1_1_AA

Issue: 20030213

Pos	Part No	SP	UN	Qty	Description	Page No
Common Parts						
010	1345202-0000	A		2	SPROCKET	
020	1345206-0000	-		1	HUB	
030	4628-0000	A		1	SHAFT	
040	3749-0000	A		2	OIL SEAL (LÖVALOCK)	
500	312105-0327	-		6	SCREW M6S ISO 4017 M5X12 A480	
510	312105-0453	-		12	SCREW M6S ISO 4017 M8X25 A480	
520	315105-0146	-		6	WASHER ISO 7089-5-200 HV-A4	
530	315105-0165	-		12	WASHER ISO 7089-8-200 HV-A4	
540	315750-0116	B		2	RETAIN. RING, 20	
550	321309-0104	B		2	BALL BEARING, 20X47X14 MM	
560	344502-0026	-		1	GREASE NIPPLE STRAIGHT R1/8 CON.	

Pos	Part No	SP	UN	Qty	Description	Page No

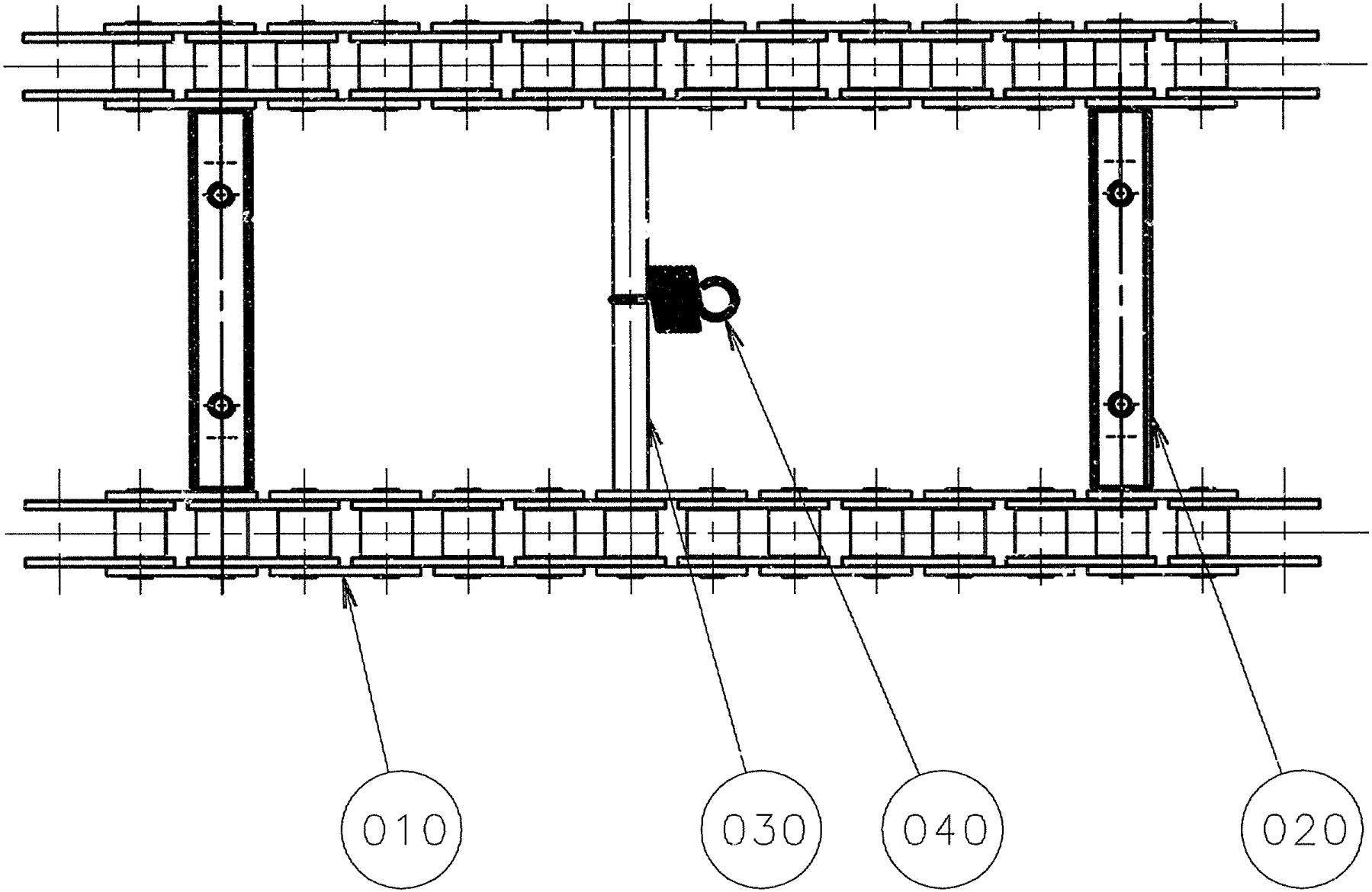
010
030
040
020

ECM: 83494 - 20000925
Group number: 1345165-0101
Assembly Drawing: 1345165-1_1_AA

Issue: 20030213

Pos	Part No	SP	UN	Qty	Description	Page No
Common Parts						
010	1345262-0000	B		2	CHAIN	
020	1345209-0000	B		8	SHAFT	
030	1345211-0000	B		8	PIN	
040	4623-0000	A		8	SPRING	
100	90296-0091	B		1	LUBRICATION GREASE	

Pos	Part No	SP	UN	Qty	Description	Page No

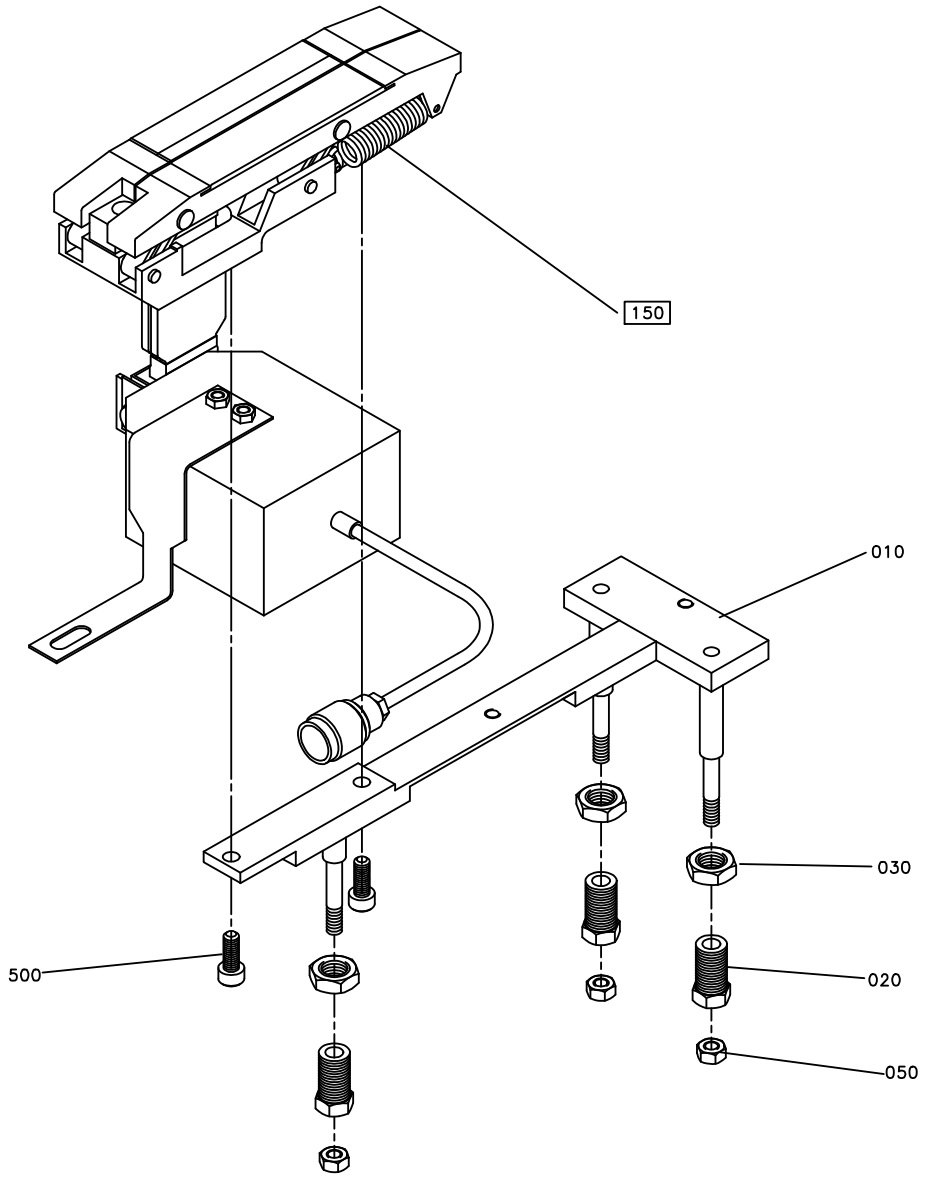

AM 21162

ECM: - -
Group number: 580178-0201
Assembly Drawing: 580178-1_1_AA

Issue: 20030213

Pos	Part No	SP	UN	Qty	Description	Page No
Common Parts						
010	580312-0000	-		1	MOUNTING BAR	
020	13172-0000	-		3	ADJUSTING SCREW	
030	13254-0000	-		3	NUT	
050	312605-0316	-		3	HEXAGON NUT, M6M M6 A280	
500	312111-0368	-		2	SCREW HEX.SOCK.HD.MC6S-TT 6X16 88 FZB	
F150	A568107-0200	-		1	CONTACT UNIT	**135, 161**

Pos	Part No	SP	UN	Qty	Description	Page No

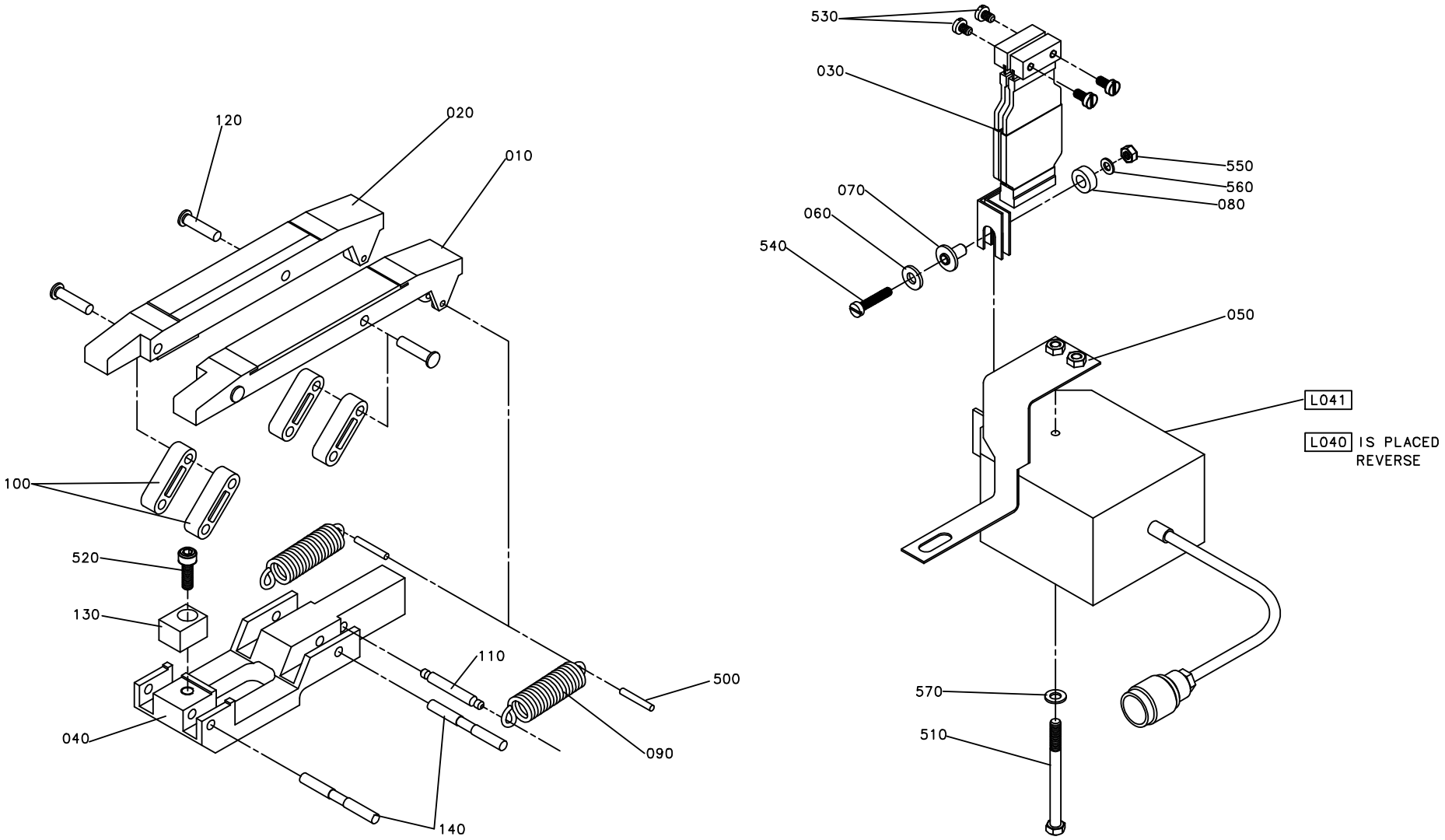
530
030
550
560
080
070
060
540
050
L041
L040 IS PLACED REVERSE
570
510
120
020
010
100
520
130
110
500
040
090
140

ECN 23297

Pos	Part No	SP	UN	Qty	Description	Page No
LVS						
L040	67379-0301	A		1	TRANSFORMER	
MVS						
L041	67379-0302	A		1	TRANSFORMER	
Common Parts						
010	580311-0000	B		1	CONTACT RAIL L	
020	580310-0000	B		1	CONTACT RAIL R	
030 1	B576124-0000	A		1	STRAND CABLE SIDE 1	
	90166-0173	-	*M*	*1*	*SHRINKABLE HOSE BLACK*	
	90203-0007	-	*M*	*1*	*COPPER BRAID 30X2,24MM*	
	90367-0008	-		*1*	*RIVET, BLANK 4X8*	
	90203-0007	-	*M*	*1*	*COPPER BRAID 30X2,24MM*	
	90166-0173	-	*M*	*1*	*SHRINKABLE HOSE BLACK*	
030 2	B576123-0000	A		1	STRAND CABLE SIDE 2	
	90367-0008	-		*1*	*RIVET, BLANK 4X8*	
	90203-0007	-	*M*	*1*	*COPPER BRAID 30X2,24MM*	
	90166-0173	-	*M*	*1*	*SHRINKABLE HOSE BLACK*	
	90367-0008	-		*1*	*RIVET, BLANK 4X8*	
	90203-0007	-	*M*	*1*	*COPPER BRAID 30X2,24MM*	
	90166-0173	-	*M*	*1*	*SHRINKABLE HOSE BLACK*	
040	580313-0000	A		1	BRACKET	
050	569589-0000	A		1	HOLDER	
060	28509-0000	A		1	BRICKA	
070	32544-0000	B		1	INSULATION NUT	
080	32644-0000	B		1	WASHER	
090	243989-0000	A		2	TENSION SPRING	
100	243990-0000	A		4	LINK ARM	
110	244588-0000	A		1	SHAFT	
120	246520-0000	A		4	SHAFT	
130	284047-0000	A		1	GUIDE LUG	
140	255256-0000	A		2	SHAFT	
500	311103-0238	-		2	CYLINDERPINNE M6, 3X20 MM	
510	312105-0343	-		1	SCREW M6S ISO 4014 M5X60 A480	
520	312115-0329	-		1	SCREW ISO4762 M5X16 A4	
530	312122-0287	-		4	SCREW PAN HEAD MCS M4X8 NL. PL.	
540	312122-0295	-		1	SCREW PAN HEAD MCS M4X20 NL. PL.	
550	312602-0312	-		1	HEXAGON NUT, EN 24032 M6M M4 NIPLBR	
560	315103-0136	-		1	WASHER PLAIN, BRB, 4,3/8,H=0,8 NI PL BR	
570	315105-0146	-		1	WASHER ISO 7089-5-200 HV-A4	

Pos	Part No	SP	UN	Qty	Description	Page No

Machine Type | Group Description | Used-In | Group Number | Page No

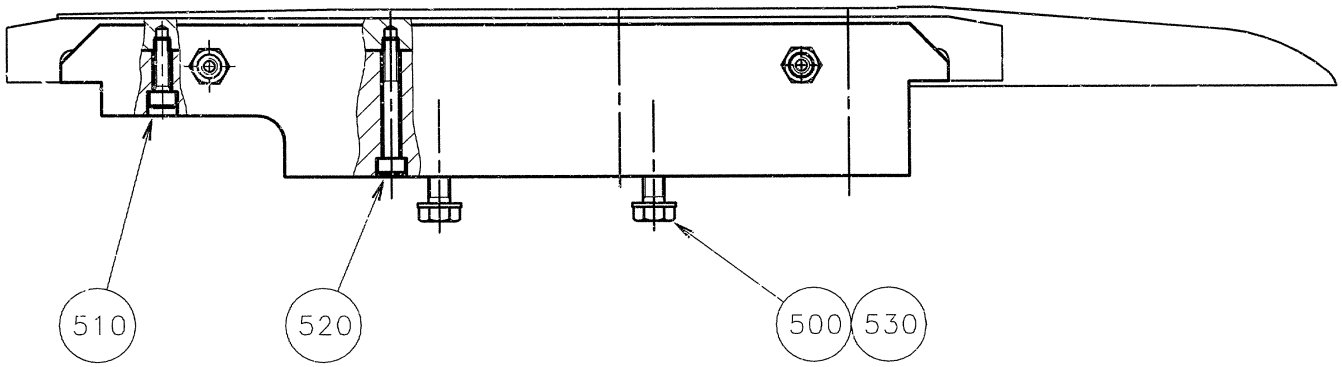
510
520
500
530

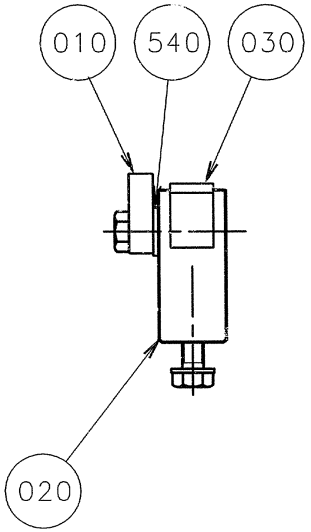
010
540
030
020

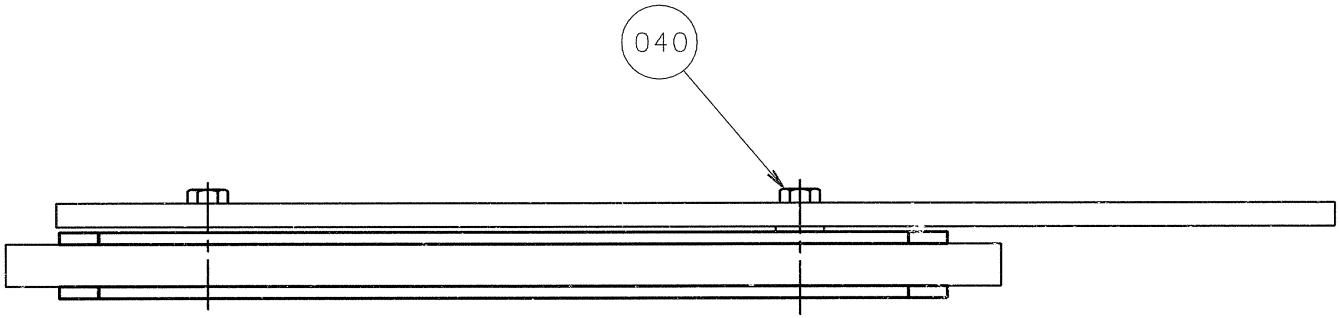
040

ECM: 83495 - 20000925
Group number: 1483010-0101
Assembly Drawing: 1483010-1_1_AA

Issue: 20030213

Pos	Part No	SP	UN	Qty	Description	Page No
Common Parts						
010	543517-0000	B		1	TRANSMISSION RAIL	
020	1483001-0000	A		1	BRACKET	
030	1483002-0000	B		1	SLIDING STRIP	
040	1483003-0000	A		2	SKRUV	
500	312111-0451	-		2	SCREW HEX.SOCK.HD.MC6S-TT 8X20 88 FZB	
510	312115-0372	-		1	SCREW ISO4762 M6X25 A4	
520	312115-0379	-		3	SCREW ISO4762 M6X45 A4	
530	315401-0165	-		2	WASHER FBH8,2FZB	
540	315105-0171	-		2	WASHER PLAIN, BRB, 10/18,H=2	

Pos	Part No	SP	UN	Qty	Description	Page No

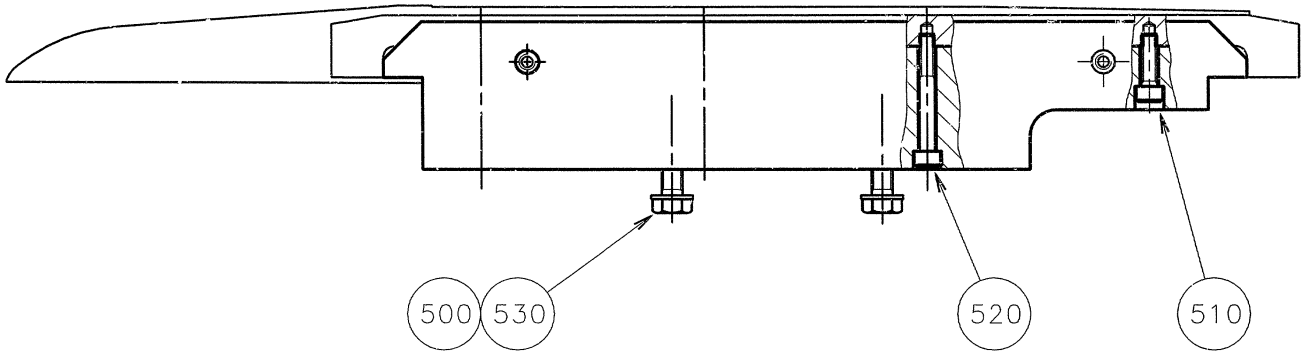
500
530
520
510

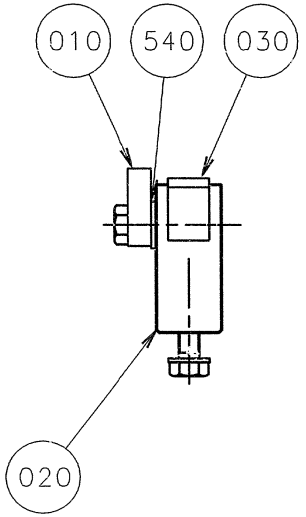
010
540
030
020

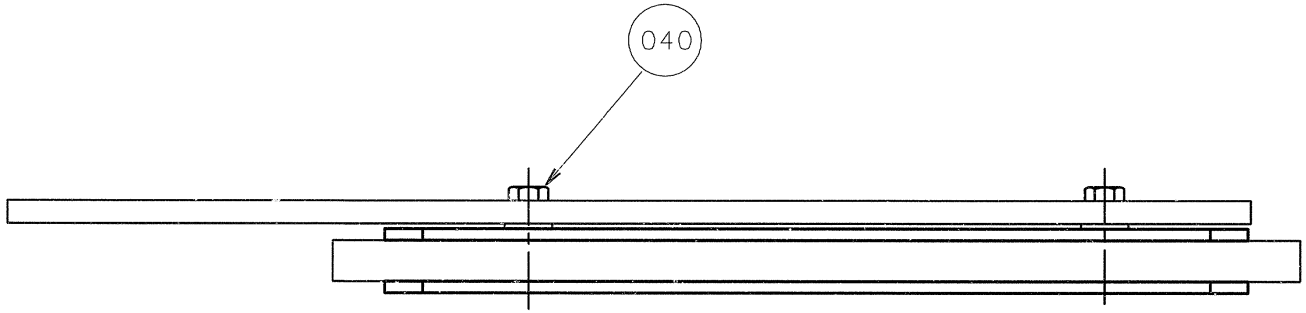
040

ECM: 83496 - 20000925
Group number: 1483010-0102
Assembly Drawing: 1483010-2_1_AA

Issue: 20030213

Pos	Part No	SP	UN	Qty	Description	Page No
Common Parts						
010	543517-0000	B		1	TRANSMISSION RAIL	
020	1483001-0000	A		1	BRACKET	
030	1483002-0000	B		1	SLIDING STRIP	
040	1483003-0000	A		2	SKRUV	
500	312111-0451	-		2	SCREW HEX.SOCK.HD.MC6S-TT 8X20 88 FZB	
510	312115-0372	-		1	SCREW ISO4762 M6X25 A4	
520	312115-0379	-		3	SCREW ISO4762 M6X45 A4	
530	315401-0165	-		2	WASHER FBH8,2FZB	
540	315105-0171	-		2	WASHER PLAIN, BRB, 10/18,H=2	

Pos	Part No	SP	UN	Qty	Description	Page No

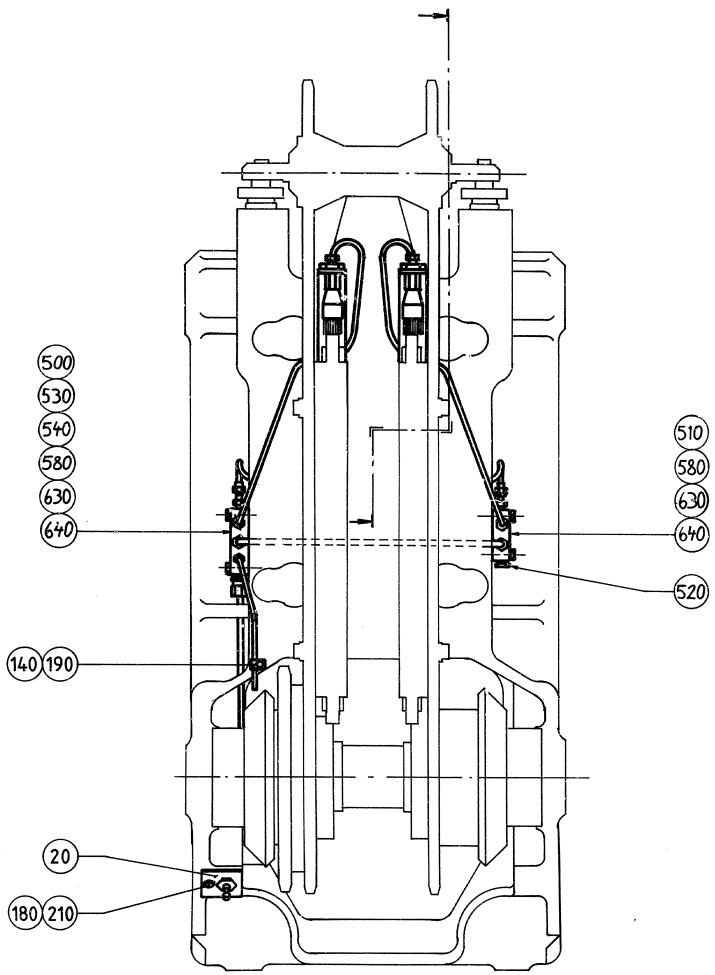
500
530
540
580
630
640
510
580
630
640
520
140
190
20
180
210

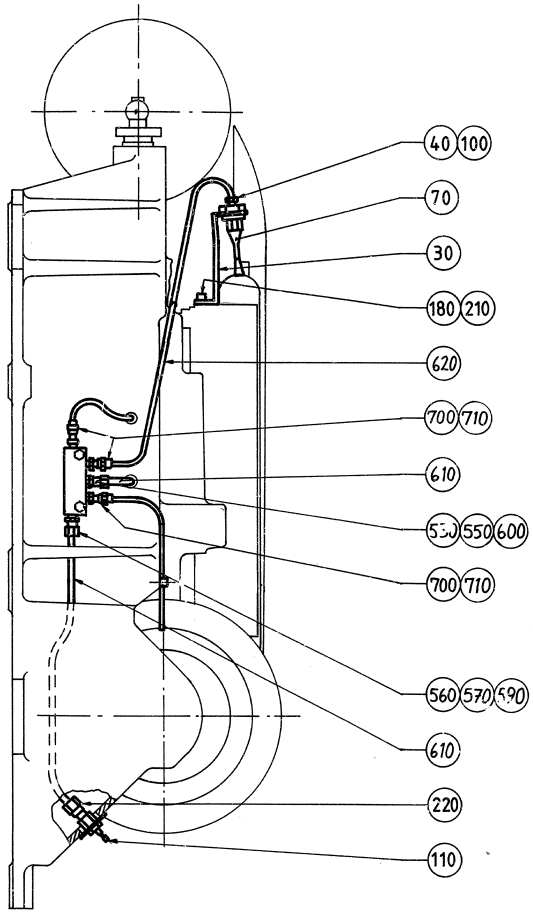
40
100
70
30
180
210
620
700
710
610
530
550
600
700
710
560
570
590
610
220
110

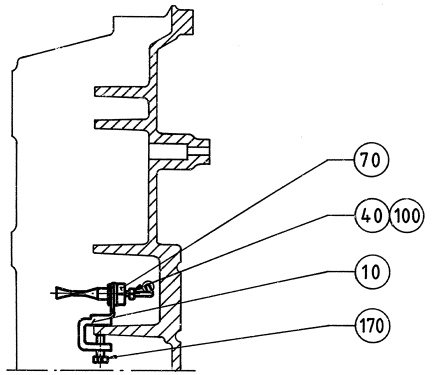
70
40
100
10
170

ECM: 83490 - 20000925
Group number: 536538-0201
Assembly Drawing: 536538-2_1_AA

Issue: 20030213

Pos	Part No	SP	UN	Qty	Description	Page No
Common Parts						
010	263106-0000	-		1	HOLDER	
020	259962-0002	-		1	PLATE	
030	1483056-0000	-		2	HOLDER	
040	90028-0001	B		4	CONE 5/32"	
070	90092-0048	B		4	OIL BRUSH, FLAT, 5/16-24 UNF	
100	90134-0003	A		4	BUSHING	
110	90134-0033	A		1	QUICK COUPLING, (M) LP-004-1-WR010	
140	90165-0003	-		5	PIPE CLIP FOR TUBE D=4 MM	
170	312101-0372	-		6	SCREW M6S M6X25 FZB	
180	312115-0327	-		3	SCREW ISO4762 M5X12 A4	
190	312121-0285	-		1	SCREW SLOT.PAN HD. MCS 4X6 FZB	
200	315101-0153	-		4	WASHER PLAIN, BRB, 6,4/12 H=1,5	
210	315105-0146	-		3	WASHER ISO 7089-5-200 HV-A4	
220	342724-0102	-		1	CONN. STR. PIPE GI 6-G1/8	
500	90032-0039	A		1	BLOCK 4 WAYS	
510	90032-0038	A		1	BLOCK 2 WAYS	
520	90087-0019	-		1	PLUG M10X1 STAINLESS	
530	90134-0040	A		5	BUSHING VALVE CONNECTION 4 MM	
540	90134-0052	A		1	PLUG DOSING BLOCK	
550	90028-0021	B		5	CONE TUBE 4 MM	
560	90028-0025	B		3	CONE TUBE 6 MM	
570	90134-0055	A		3	BUSHING/NUT INLET/OUTLET 6 MM	
580	90165-0005	-		2	PIPE CLIP FOR TUBE D=6 MM	
590	342706-0130	-		3	ACCESSORIES, INSERT SLEEVE 6 MM	
610	90166-0011	A	M	5	TUBE 6 MM PA,TRANSP.	
620	90166-0109	A	M	5	TUBE 4 MM PA,TRANSP.	
630	312155-0295	-		4	SCREW EN 10642 MF6S M4X20 A480	
640	312132-0287	-		3	SCREW SLOT. PAN HEAD MSCS M4X8	
700	90092-0054	A		2	METERING VALVE 50 MM3	
710	90092-0054	A		2	METERING VALVE 50 MM3	

Pos	Part No	SP	UN	Qty	Description	Page No

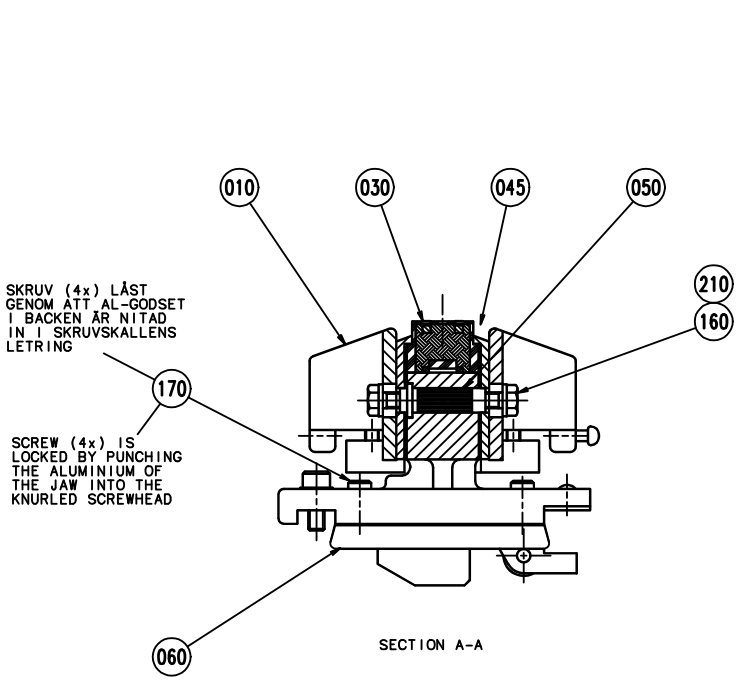
010
030
045
050
210
160
SKRUV (4x) LÅST GENOM ATT AL-GODSET I BACKEN ÄR NITAD IN I SKRUVSKALLENS LETRING
170
SCREW (4x) IS LOCKED BY PUNCHING THE ALUMINIUM OF THE JAW INTO THE KNURLED SCREWHEAD
060
SECTION A-A

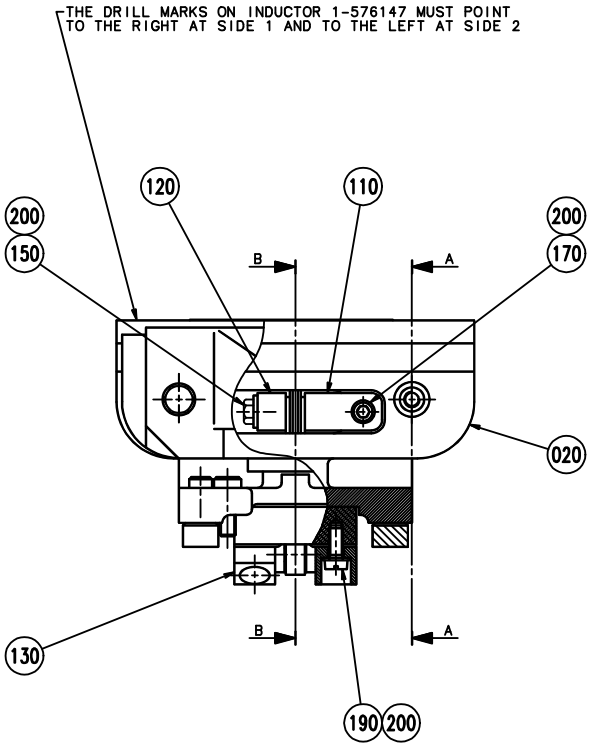
THE DRILL MARKS ON INDUCTOR 1-576147 MUST POINT TO THE RIGHT AT SIDE 1 AND TO THE LEFT AT SIDE 2
200
150
120
110
200
170
B
A
020
B
A
130
190
200

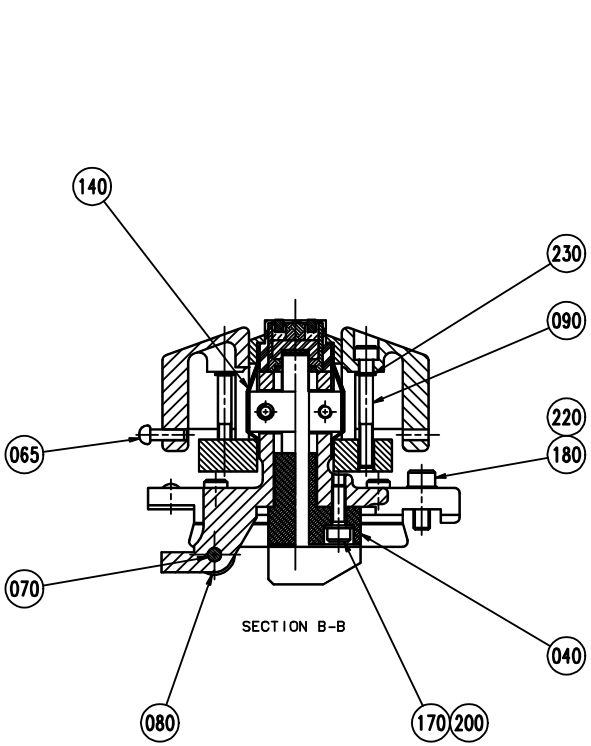
140
230
090
220
180
065
070
SECTION B-B
040
080
170
200

ECM: 82015 - 20000814
Group number: 562894-0200
Assembly Drawing: 562894-3_1_AA

Issue: 20030213

Pos	Part No	SP	UN	Qty	Description	Page No
LVS						
030 1	576147-0000	B		1	INDUCTOR	
045	562896-0000	A		1	MOUNTING SHEET	
MVS						
030 2	1175098-0000	B		1	INDUCTOR	
045-02	562896-0000	A		2	MOUNTING SHEET	
Common Parts						
010	1175288-0000	A		2	VOLUME FLAP	
020	278985-0000	A		1	HEATING JAW	
040	279233-0000	B		1	CARBON BRUSH HOLDER	
050	562898-0000	A		2	BUSHING	
060	4615-0000	B		2	ROLLER BAR	
065	5809-0000	A		1	TACK	
070	550193-0000	B		1	PIN	
080	543509-0000	B		1	ROLL	
090	562899-0000	A		2	SCREW	
110	535500-0000	A		1	BRACKET	
120	440419-0000	A		1	BRACKET	
130	279668-0000	B		2	CARBON BRUSH COMPLETE	
140	284046-0000	B		2	GASKET	
145	90157-0021	-	KG		LOCKING FLUID	
150	90287-0171	A		2	SCREW M6S M5X25 NI PL	
155	312105-0289	-		1	SCREW M6S ISO 4017 M4X10 A480	
160	312105-0368	-		4	SCREW M6S M6X16 A280	
170	312115-0329	-		6	SCREW ISO4762 M5X16 A4	
180	312115-0368	-		2	SCREW ISO4762 M6X16 A4	
190	312122-0327	A		2	SCREW PAN HEAD MCS M5X12 NL. PL.	
200	315103-0146	A		6	BRICKA, BRB, 5,3/10,H=1 NI PL BR	
210	315115-0153	-		4	WASHER PLAIN, TBRB 6,4/12 H=3	
220	315402-0156	-		2	LOCK WASHER FBB 6,5	
230	315754-0105	A		2	LOCKING WAE 3,2	

Pos	Part No	SP	UN	Qty	Description	Page No

Machine Type | Group Description | Used-In | Group Number | Page No

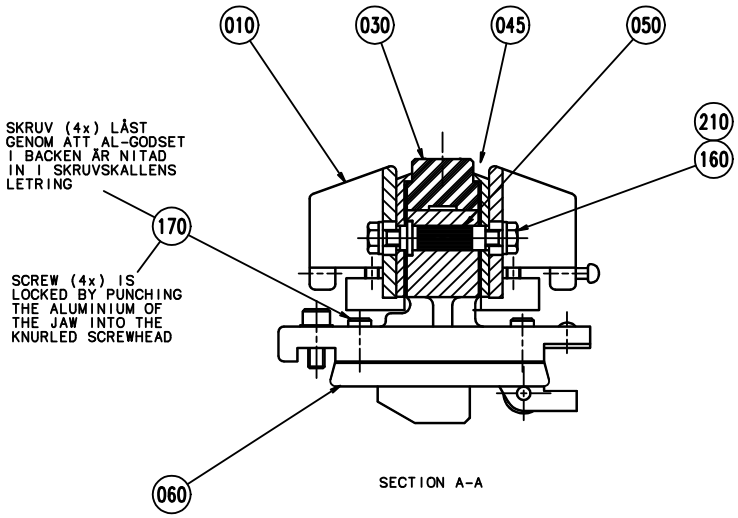
010
030
045
050
210
160
SKRUV (4x) LÅST GENOM ATT AL-GODSET I BACKEN ÄR NITAD IN I SKRUVSKALLENS LETRING
170
SCREW (4x) IS LOCKED BY PUNCHING THE ALUMINIUM OF THE JAW INTO THE KNURLED SCREWHEAD
060
SECTION A-A

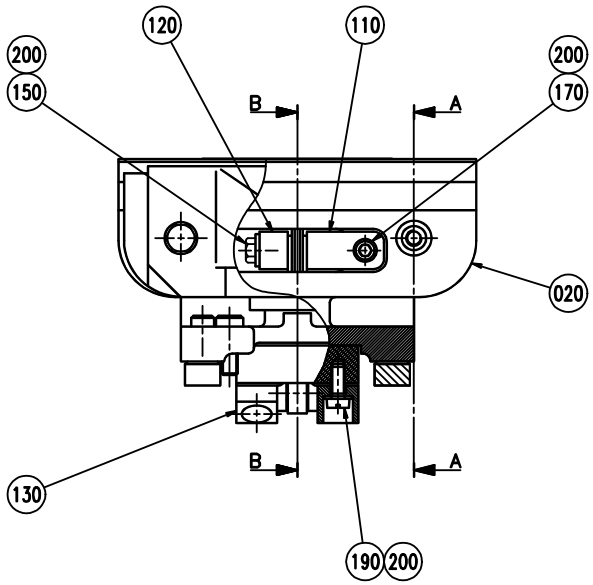
120
110
200
150
200
170
B
A
020
130
B
A
190
200

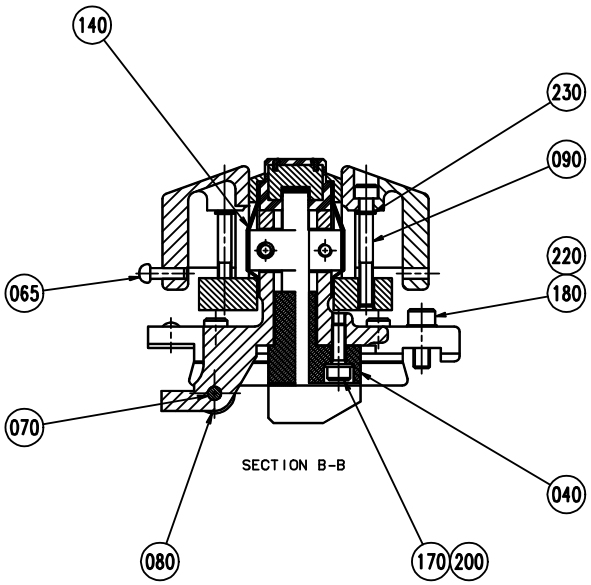
140
230
090
220
065
180
070
040
080
170
200
SECTION B-B

ECM: 82015 - 20000814
Group number: 562894-0200
Assembly Drawing: 562894-4_1_AA

Issue: 20030213

Pos	Part No	SP	UN	Qty	Description	Page No
LVS						
030 1	576147-0000	B		1	INDUCTOR	
045	562896-0000	A		1	MOUNTING SHEET	
MVS						
030 2	1175098-0000	B		1	INDUCTOR	
045-02	562896-0000	A		2	MOUNTING SHEET	
Common Parts						
010	1175288-0000	A		2	VOLUME FLAP	
020	278985-0000	A		1	HEATING JAW	
040	279233-0000	B		1	CARBON BRUSH HOLDER	
050	562898-0000	A		2	BUSHING	
060	4615-0000	B		2	ROLLER BAR	
065	5809-0000	A		1	TACK	
070	550193-0000	B		1	PIN	
080	543509-0000	B		1	ROLL	
090	562899-0000	A		2	SCREW	
110	535500-0000	A		1	BRACKET	
120	440419-0000	A		1	BRACKET	
130	279668-0000	B		2	CARBON BRUSH COMPLETE	
140	284046-0000	B		2	GASKET	
145	90157-0021	-	KG		LOCKING FLUID	
150	90287-0171	A		2	SCREW M6S M5X25 NI PL	
155	312105-0289	-		1	SCREW M6S ISO 4017 M4X10 A480	
160	312105-0368	-		4	SCREW M6S M6X16 A280	
170	312115-0329	-		6	SCREW ISO4762 M5X16 A4	
180	312115-0368	-		2	SCREW ISO4762 M6X16 A4	
190	312122-0327	A		2	SCREW PAN HEAD MCS M5X12 NL. PL.	
200	315103-0146	A		6	BRICKA, BRB, 5,3/10,H=1 NI PL BR	
210	315115-0153	-		4	WASHER PLAIN, TBRB 6,4/12 H=3	
220	315402-0156	-		2	LOCK WASHER FBB 6,5	
230	315754-0105	A		2	LOCKING WAE 3,2	

Pos	Part No	SP	UN	Qty	Description	Page No

Machine Type | Group Description | Used-In | Group Number | Page No

Tetra Pak

SPC
Spare Parts Catalogue

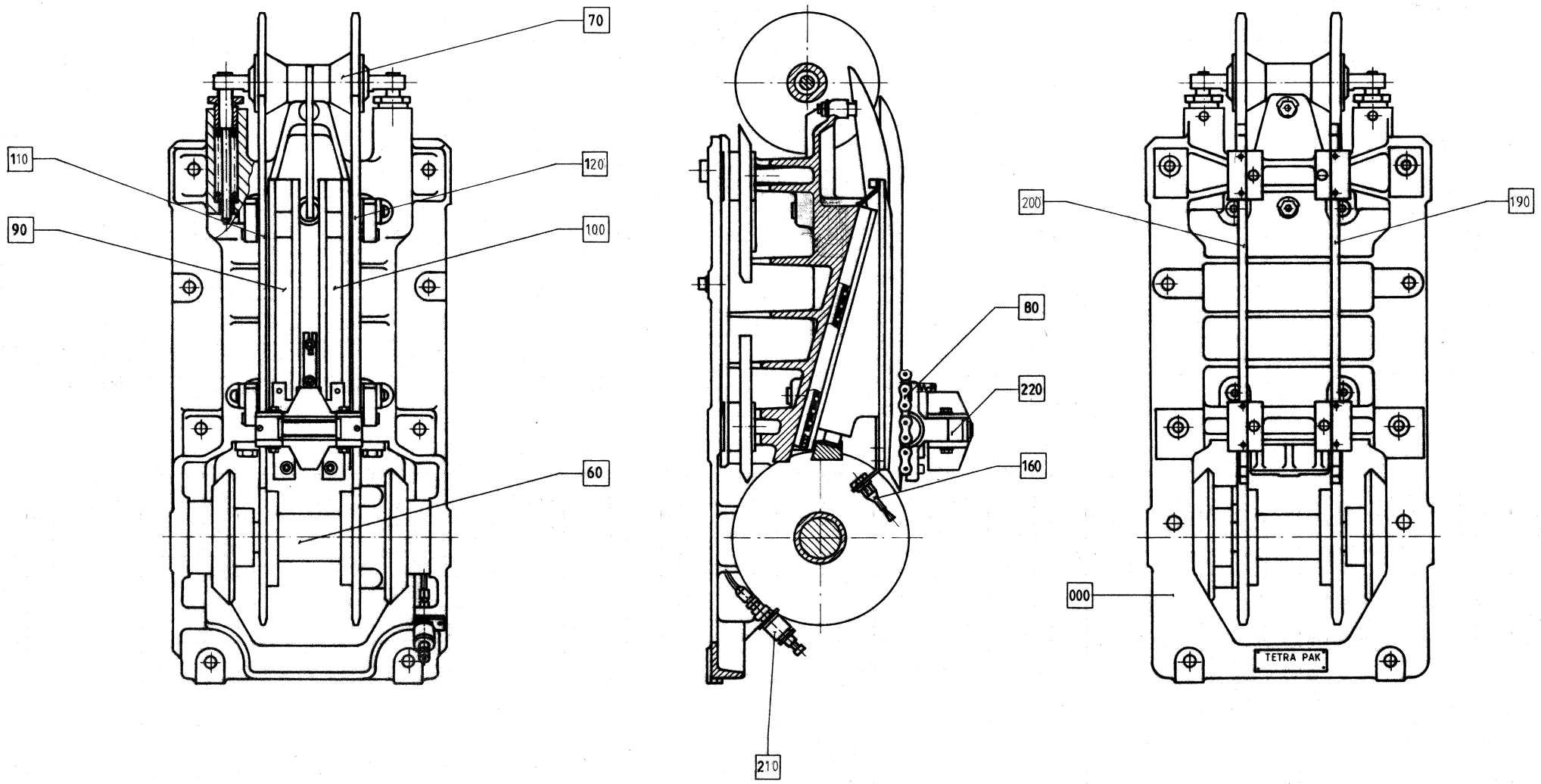
70
110
120
90
100
60
80
220
160
200
190
000
210
TETRA PAK

Pos	Part No	SP	UN	Qty	Description	Page No
Common Parts						
F000 3	A536536-0201	-		1	MACH. BODY PRESSURE SIDE	**177**
F060	A1345155-0102	-		1	SPROCKET	**153, 179, 211**
F070	A1345160-0101	-		1	LINK CHAIN WHEEL	**129, 155, 181, 213**
F080	A1345165-0101	-		1	CHAIN UNIT	**131, 157, 183, 215**
F090	A532007-0201	-		1	PLUNGER	**185, 217**
F100	A532007-0202	-		1	PLUNGER	**187, 219**
F110	A542226-0101	-		1	TRANSMISSION RAIL	**189, 221**
F120	A542226-0102	-		1	TRANSMISSION RAIL	**191, 223**
F160	A536537-0201	-		1	CENTRAL LUBRICATION	**193, 225**
F190	A532010-0101	-		1	TRANSMISSION RAIL	**195, 227**
F200	A532010-0102	-		1	TRANSMISSION RAIL	**197, 229**
F210	A532157-0101	-		1	HYDRAULIC SYSTEM SIDE	**199, 231**
F220	A532011-0100	-		8	PRESSURE JAW	**201, 203, 233, 235**

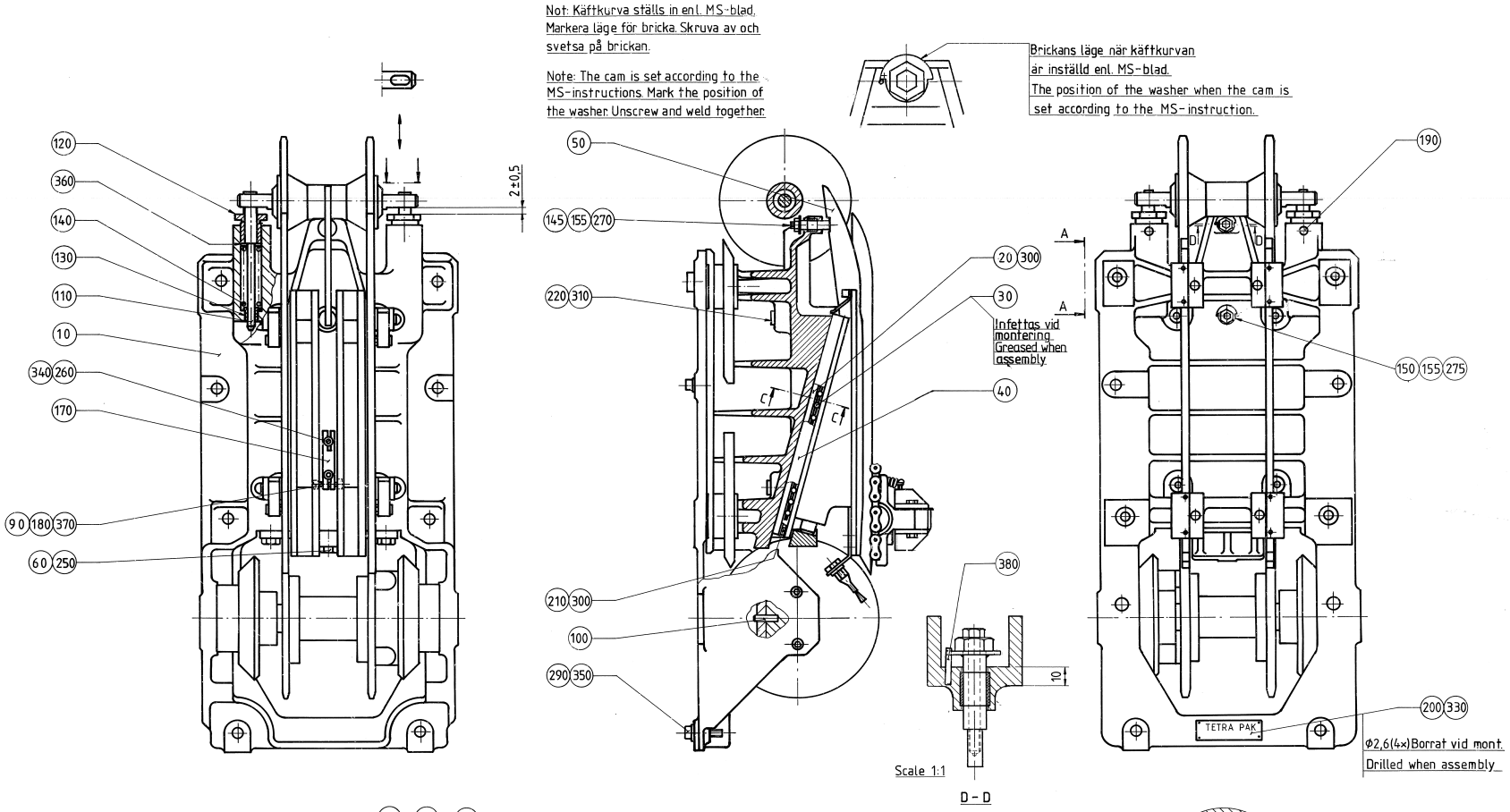

OBS! Mont. i samband med inställn. av stativ.
Monteringsföljd:

1. Mutter 160 indrives och låses med räffelpinne 235 (hål Φ6 djup 32 borras).
2. Efter injust. av "k-mått," mont. stativsidorna. Dragstag mont. och ansättes lätt.
3. Stoppskruv 320 inskruvas och fixeras med en mutter M12.
4. Stoppskruv 320 låses med räffelpinne 230 (borr Φ4) varefter muttern avlägsnas.

NOTE! To be mounted when setting the machine body.
Assembly instructions:

1. Drive in the nut 160 and lock with the grooved pin 235 (drill Φ6 deep 32).
2. After setting "the meassurement k" mount the side frames. Mount the struts and tighten them lightly.
3. Mount the set screw 320 and fix with a nut M12.
4. Lock the set screw with the grooved pin 230 (drill Φ4) and then remove the nut.

ECM: 83502 - 20000925
Group number: 536536-0201
Assembly Drawing: 536536-2_1_AA

Issue: 20030213

Pos	Part No	SP	UN	Qty	Description	Page No
Common Parts						
010 2	555067-0000	-		1	MACH. BODY PRESSURE SIDE	
020	543501-0000	B		2	ROLLER PLATE	
030	484671-0000	B		2	ROLLER BEARING	
040	499490-0000	A		2	PROTECTION	
050	542229-0000	B		1	CURVE	
060	484672-0000	-		1	YOKE	
090	2189-0000	B		2	SLEEVE	
100	2481-0000	A		2	TACK	
110	555069-0000	A		2	HOLDER	
120	2864-0000	A		2	BUSHING	
130	2865-0000	A		2	BUSHING	
140	273545-0000	A		2	COMPRESSION SPRING	
145	543511-0000	A		1	ADJUSTMENT SLEEVE	
150	543512-0000	A		1	ADJUSTMENT SLEEVE	
155	543513-0000	-		2	WASHER	
160	4666-0000	A		4	NUT	
170	4677-0000	-		1	BRACKET	
180	4678-0000	-		1	ECCENTRIC SHAFT	
190	10182-0000	A		2	STOP SCREW	
210	484680-0000	A		2	STOP LUG	
220	493718-0000	-		4	WASHER	
230	311305-0274	-		4	SLOTTED PIRPC4X25FZB	
235	311305-0356	-		4	SLOTTED PIRPC6X28FZB	
250	312101-0540	-		3	SCREW M6S M12X40 FZB	
260	312111-0374	-		2	SCREW HEX.SOCK.HD.MC6S-TT 6X30 88 FZB	
270	312105-0381	-		1	SCREW M6S ISO 4014 M6X55 A480	
275	312105-0388	-		1	SCREW M6S ISO 4014 M6X90 A480	
290	312111-0540	-		4	SCREW HEX.SOCK.HD.MC6S-TT 12X40 88 FZ	
300	312115-0287	C		20	SCREW ISO4762 M4X8 A4	
310	312151-0457	-		4	SCREW HEX.SOCK.COUNT.MF6S 8X35 FZB	
320	312311-0532	-		4	SCREW ISO4028 M12X20 FZB	
340	315101-0153	-		20	WASHER PLAIN, BRB, 6,4/12 H=1,5	
350	315101-0178	-		4	WASHER PLAIN, BRB, 13/24 H=2	
360	315105-0178	-		2	WASHER ISO 7089-12-200 HV-A4	
370	315750-0105	-		2	RETAIN. RING, 8	
380	311303-0238	-		2	SLOTTED PIRPB3X20FZB	

Pos	Part No	SP	UN	Qty	Description	Page No

Machine Type	Group Description	Used-In	Group Number	Page No

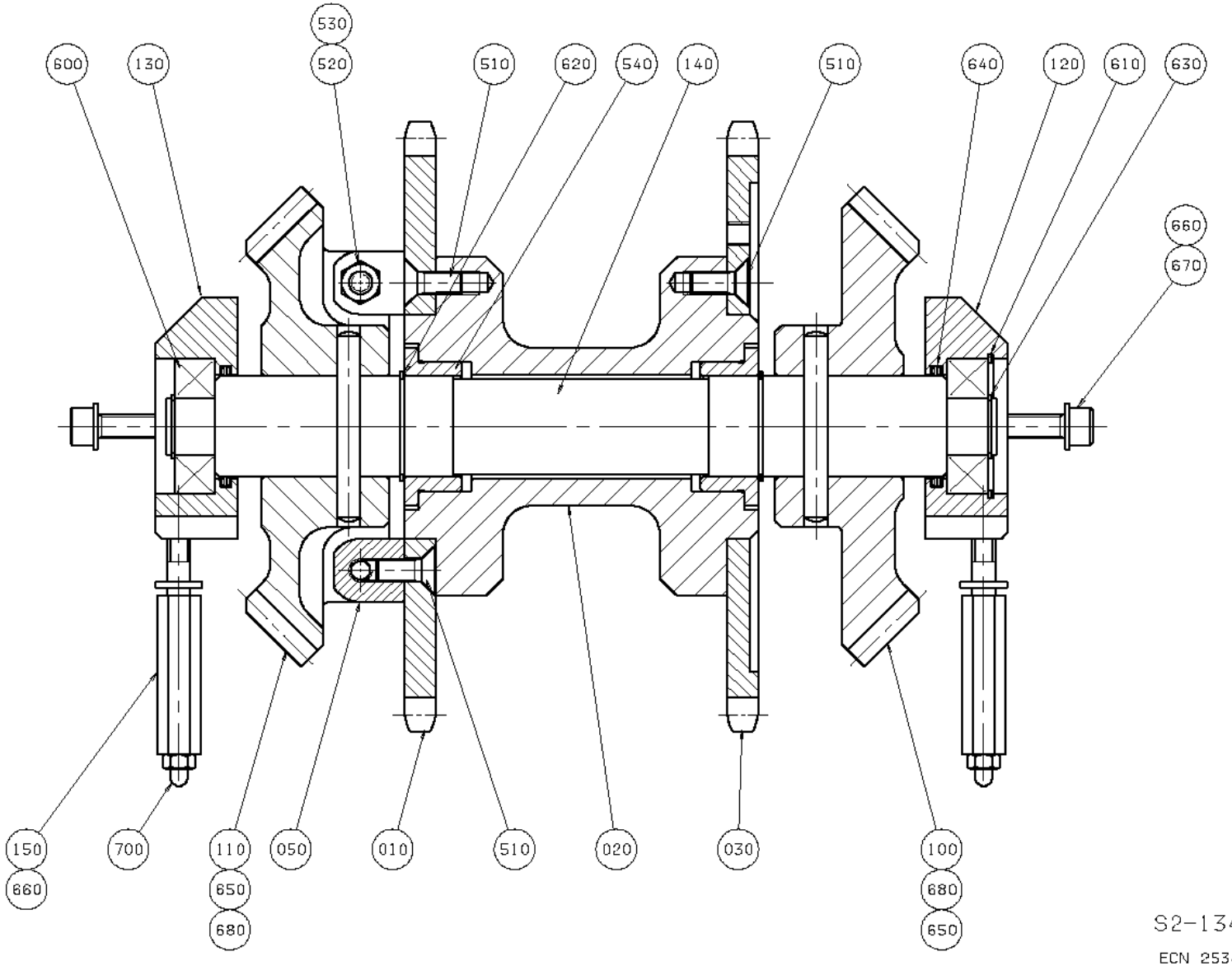

S2-1345155-2

ECN 25348

ECM: - -
Group number: 1345155-0102
Assembly Drawing: 1345155-2_1_AA

Issue: 20030213

Pos	Part No	SP	UN	Qty	Description	Page No
Common Parts						
010	1345203-0000	D		1	SPROCKET	
020	1345204-0000	-		1	HUB	
030	1345207-0000	D		1	SPROCKET	
050	1345212-0000	-		2	MOUNTING BLOCK	
100	1483047-0000	-		1	CONICAL GEAR	
110	1483048-0000	-		1	CONICAL GEAR	
120	4599-0000	-		1	BEARING HOUSING RIGHT	
130	4600-0000	-		1	BEARING HOUSING LEFT	
140	4627-0000	-		1	SHAFT	
150	6453-0001	-		2	LUBRICATING PIPE	
510	312155-0451	-		16	SCREW EN 10642 MF6S M8X20 A480	
520	312306-0463	-		2	STOP SCREW P6SS8X60FZB	
530	312605-0318	-		2	HEXAGON NUT, M6M M8 A280	
540	321101-0282	-		2	FLANGE BUS 35F7X20	
600	321309-0104	-		2	BALL BEARING, 20X47X14 MM	
610	315752-0130	-		1	RETAIN. RING, 47	
620	315750-0124	-		2	RETAIN. RING, 35	
630	315750-0116	-		2	RETAIN. RING, 20	
640	315202-0528	-		2	O-RING 37,69X3,53 MM	
650	311201-0327	-		2	PIN, TAPERED, KP, 8X70 GROUND	
660	315401-0165	-		6	WASHER FBH8,2FZB	
670	312111-0455	-		4	SCREW HEX.SOCK.HD.MC6S-TT 8X30 88 FZB	
680	312316-0447	-		4	SCREW HEX.SOCK.SET CUP P.MSK6SS8X12 FZB	
690	312601-0318	-		2	NUT M6M8FZB	
700	344502-0026	-		2	GREASE NIPPLE STRAIGHT R1/8 CON.	

Pos	Part No	SP	UN	Qty	Description	Page No

Machine Type | Group Description | Used-In | Group Number | Page No

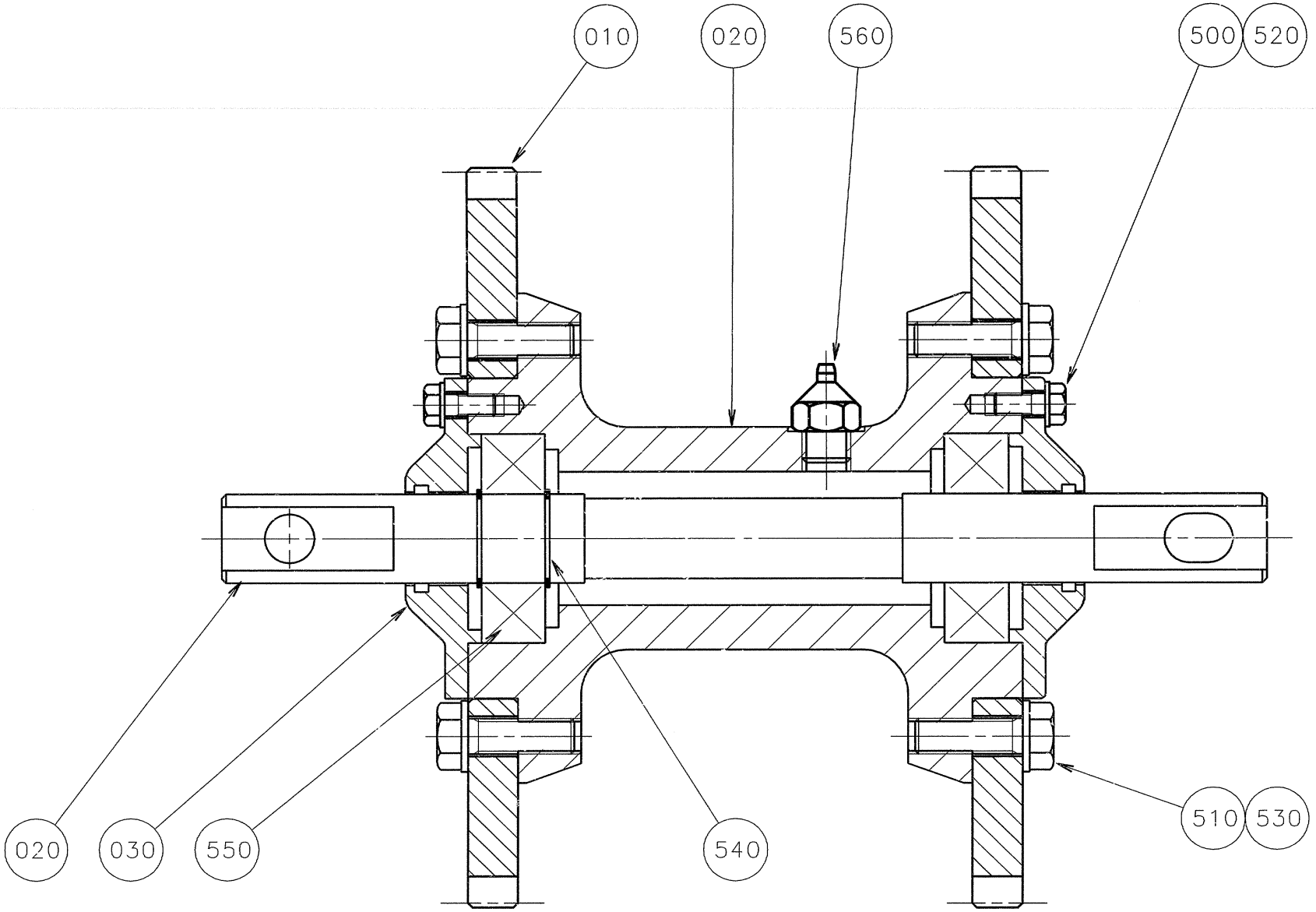
010
020
560
500
520
020
030
550
540
510
530

ECM: 83493 - 20000925
Group number: 1345160-0101
Assembly Drawing: 1345160-1_1_AA

Issue: 20030213

Pos	Part No	SP	UN	Qty	Description	Page No
Common Parts						
010	1345202-0000	A		2	SPROCKET	
020	1345206-0000	-		1	HUB	
030	4628-0000	A		1	SHAFT	
040	3749-0000	A		2	OIL SEAL (LÖVALOCK)	
500	312105-0327	-		6	SCREW M6S ISO 4017 M5X12 A480	
510	312105-0453	-		12	SCREW M6S ISO 4017 M8X25 A480	
520	315105-0146	-		6	WASHER ISO 7089-5-200 HV-A4	
530	315105-0165	-		12	WASHER ISO 7089-8-200 HV-A4	
540	315750-0116	B		2	RETAIN. RING, 20	
550	321309-0104	B		2	BALL BEARING, 20X47X14 MM	
560	344502-0026	-		1	GREASE NIPPLE STRAIGHT R1/8 CON.	

Pos	Part No	SP	UN	Qty	Description	Page No

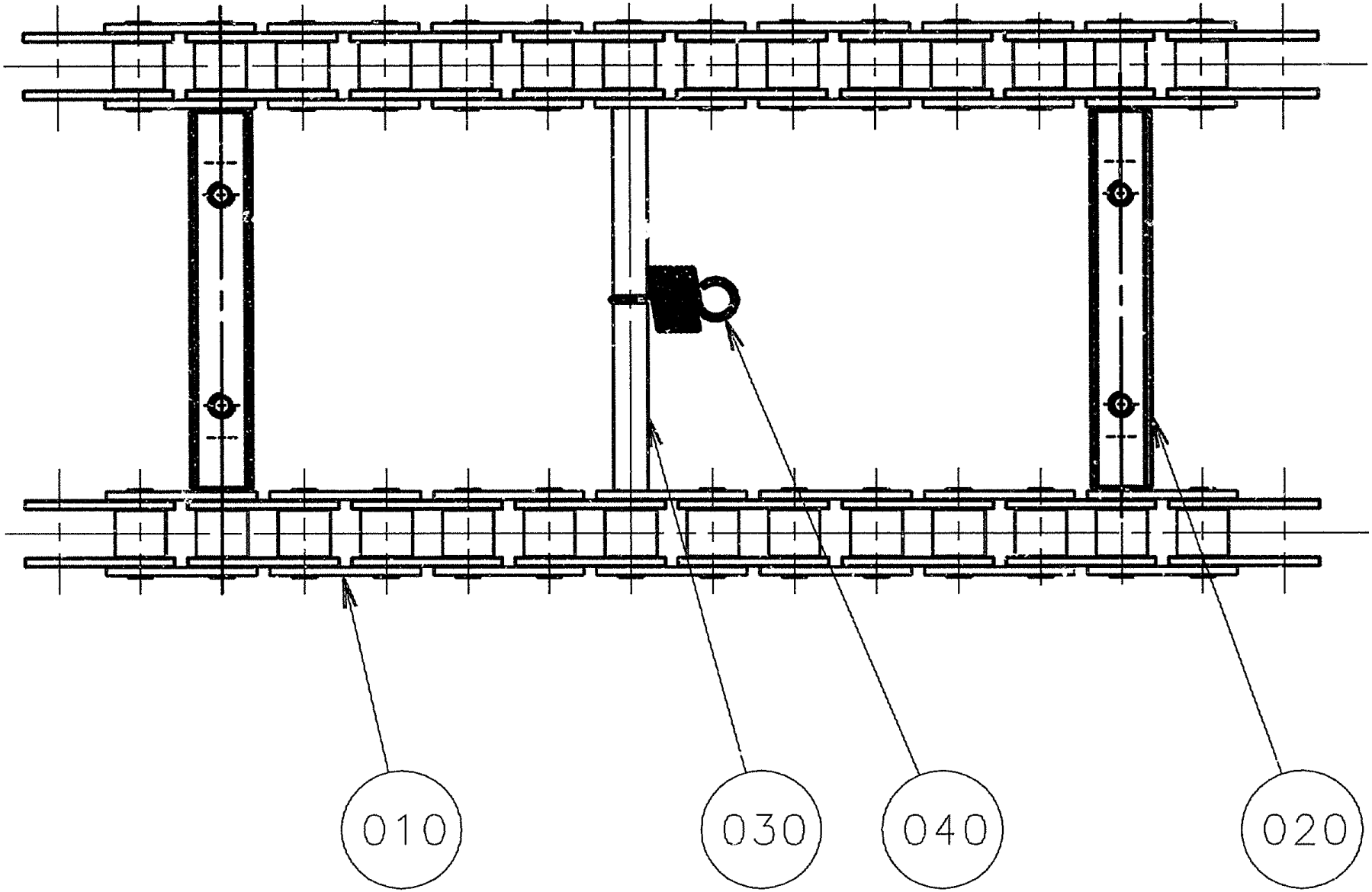
010
030
040
020

ECM: 83494 - 20000925
Group number: 1345165-0101
Assembly Drawing: 1345165-1_1_AA

Issue: 20030213

Pos	Part No	SP	UN	Qty	Description	Page No
Common Parts						
010	1345262-0000	B		2	CHAIN	
020	1345209-0000	B		8	SHAFT	
030	1345211-0000	B		8	PIN	
040	4623-0000	A		8	SPRING	
100	90296-0091	B		1	LUBRICATION GREASE	

Pos	Part No	SP	UN	Qty	Description	Page No

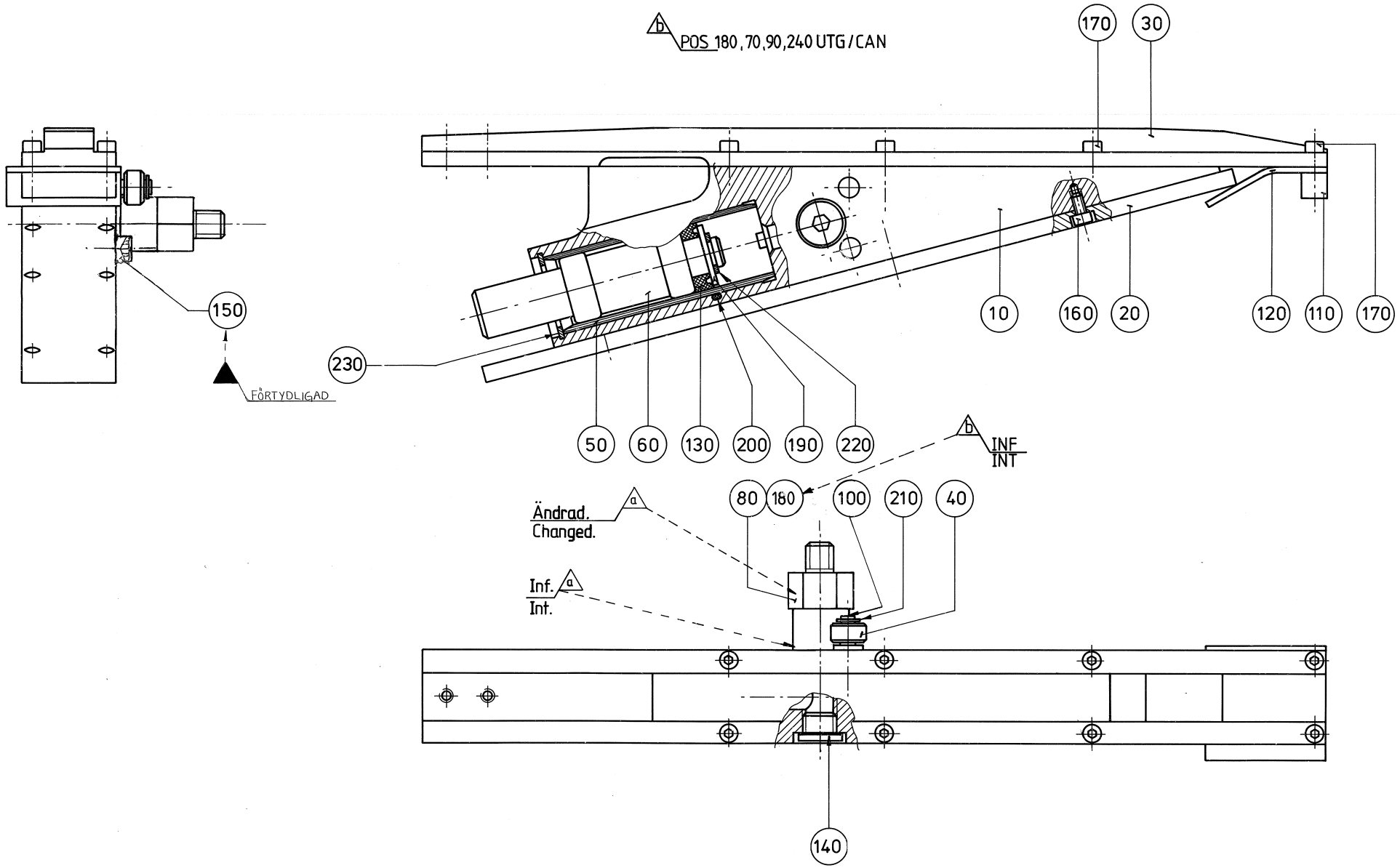
POS 180, 70, 90, 240 UTG/CAN
170
30
150
FÖRTYDLIGAD
230
10
160
20
120
110
170
50
60
130
200
190
220
INF
INT
80
180
100
210
40
Ändrad.
Changed.
Inf.
Int.
140

Pos	Part No	SP	UN	Qty	Description	Page No
Common Parts						
010	484668-0000	A		1	PLUNGER	
020	543501-0000	B		1	ROLLER PLATE	
030	541032-0000	B		1	ROLLER CONVEYOR	
040	2189-0000	B		1	SLEEVE	
050	37807-0000	B		1	LINING	
060	37808-0000	B		1	PISTON	
080	543502-0000	A		1	CONNECTION	
100	493719-0000	A		1	SHAFT	
110	529297-0000	D		1	WASHER	
120	529298-0000	B		1	RUBBER CLOTH	
130	90020-0020	C		1	SLEEVE	
140	342713-0210	-		1	PLUG, EXT THREAD HEX SOCKET 8638-00-140	
150	311103-0401	-		1	PARALLELL PIN, M6, 8X20 MM	
160	312115-0287	B		6	SCREW ISO4762 M4X8 A4	
170	312115-0293	B		8	SCREW ISO4762 M4X16 A4	
180	315211-0108	-		1	GASKET BOLT HEAD 13,7X20,6X2 MM G1/4	
190	315101-0178	-		1	WASHER PLAIN, BRB, 13/24 H=2	
200	315202-0219	B		1	O-RING 29,2X3 MM	
210	315750-0103	B		1	RETAIN. RING, 6	
220	315750-0109	B		1	RETAIN. RING, 12	
230	315752-0123	B		1	RETAIN. RING, 32	

Pos	Part No	SP	UN	Qty	Description	Page No

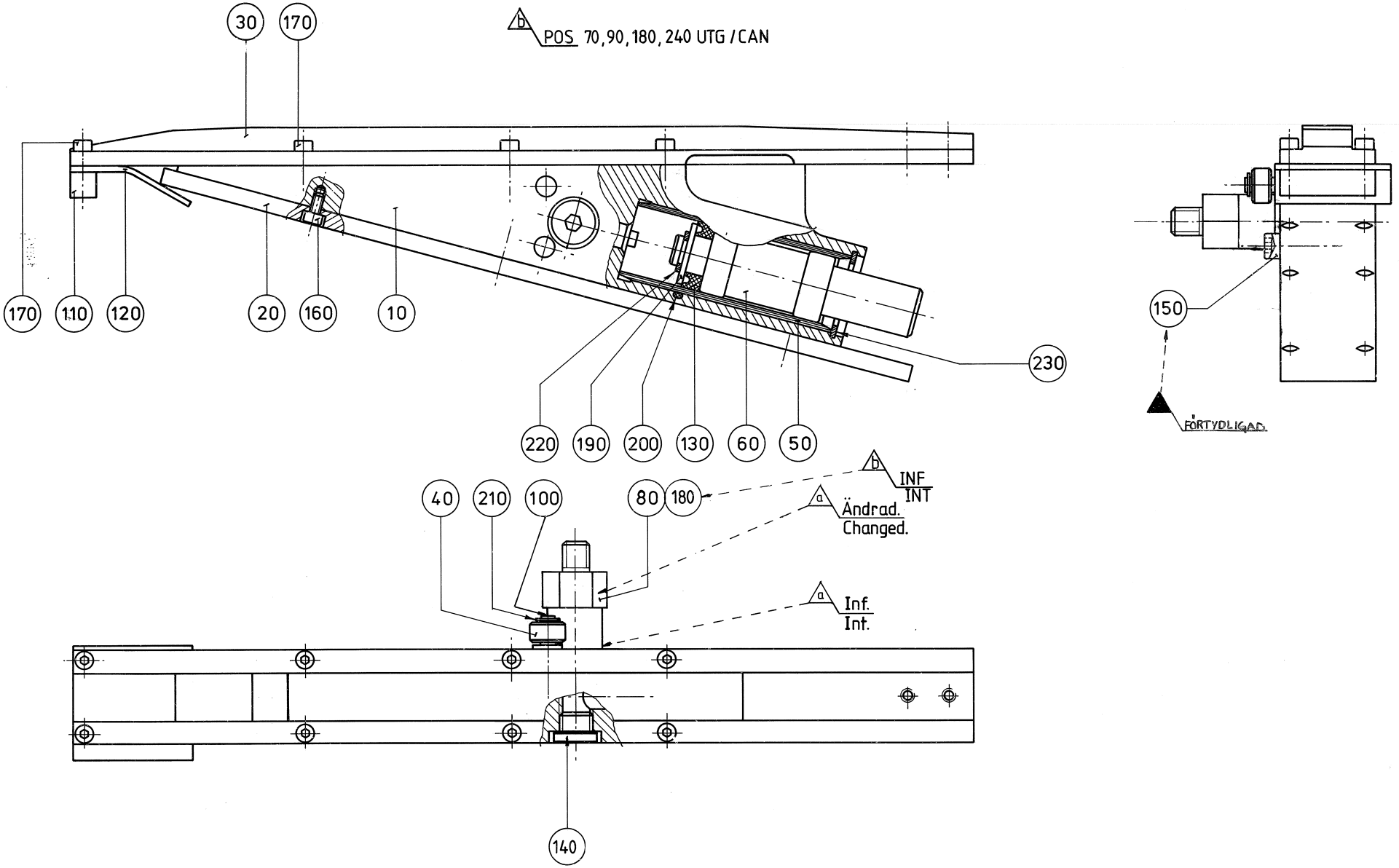
30
170
b
POS 70,90,180,240 UTG / CAN
170
110
120
20
160
10
230
220
190
200
130
60
50
150
FÖRTYDLIGAD.
40
210
100
80
180
b
INF
INT
a
Ändrad.
Changed.
a
Inf.
Int.
140

ECM: 83498 - 20000925
Group number: 532007-0202
Assembly Drawing: 532007-2_1_AA

Issue: 20030213

Pos	Part No	SP	UN	Qty	Description	Page No
Common Parts						
010	484668-0000	A		1	PLUNGER	
020	543501-0000	B		1	ROLLER PLATE	
030	541032-0000	B		1	ROLLER CONVEYOR	
040	2189-0000	B		1	SLEEVE	
050	37807-0000	B		1	LINING	
060	37808-0000	B		1	PISTON	
080	543502-0000	A		1	CONNECTION	
100	493719-0000	A		1	SHAFT	
110	529297-0000	D		1	WASHER	
120	529298-0000	B		1	RUBBER CLOTH	
130	90020-0020	C		1	SLEEVE	
140	342713-0210	-		1	PLUG, EXT THREAD HEX SOCKET 8638-00-140	
150	311103-0401	-		1	PARALLELL PIN, M6, 8X20 MM	
160	312115-0287	B		6	SCREW ISO4762 M4X8 A4	
170	312115-0293	B		8	SCREW ISO4762 M4X16 A4	
180	315211-0108	-		1	GASKET BOLT HEAD 13,7X20,6X2 MM G1/4	
190	315101-0178	-		1	WASHER PLAIN, BRB, 13/24 H=2	
200	315202-0219	B		1	O-RING 29,2X3 MM	
210	315750-0103	B		1	RETAIN. RING, 6	
220	315750-0109	B		1	RETAIN. RING, 12	
230	315752-0123	B		1	RETAIN. RING, 32	

Pos	Part No	SP	UN	Qty	Description	Page No

Machine Type | Group Description | Used-In | Group Number | Page No

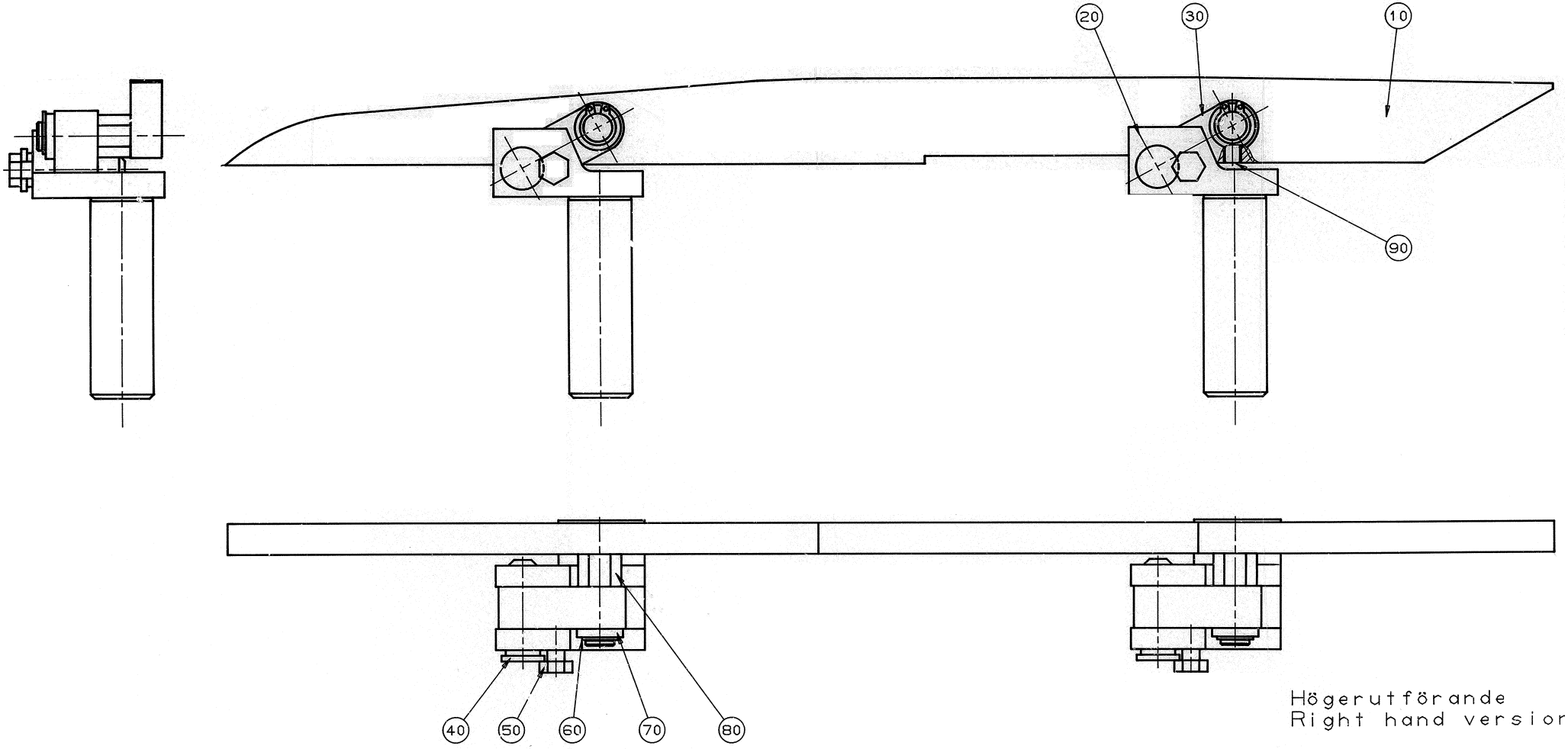
20
30
10
90
40
50
60
70
80
Högerutförande
Right hand versior

ECM: 83504 - 20000925
Group number: 542226-0101
Assembly Drawing: 542226-1_1_AA

Issue: 20030213

Pos	Part No	SP	UN	Qty	Description	Page No
Common Parts						
010	543518-0000	B		1	TRANSMISSION RAIL	
020 1	542223-0000	B		2	BRACKET RIGHT	
030	541036-0000	A		2	LINK	
040	542225-0000	A		2	SHAFT	
050	312105-0364	-		2	SCREW M6S ISO 4017 M6X10 A480	
060	315750-0107	B		2	RETAIN. RING, 10	
070	128593-0000	A		2	WASHER	
080	543507-0000	A		2	SHAFT	
090	312318-0362	C		2	SCREW ISO4029 M6X8 A4	

Pos	Part No	SP	UN	Qty	Description	Page No

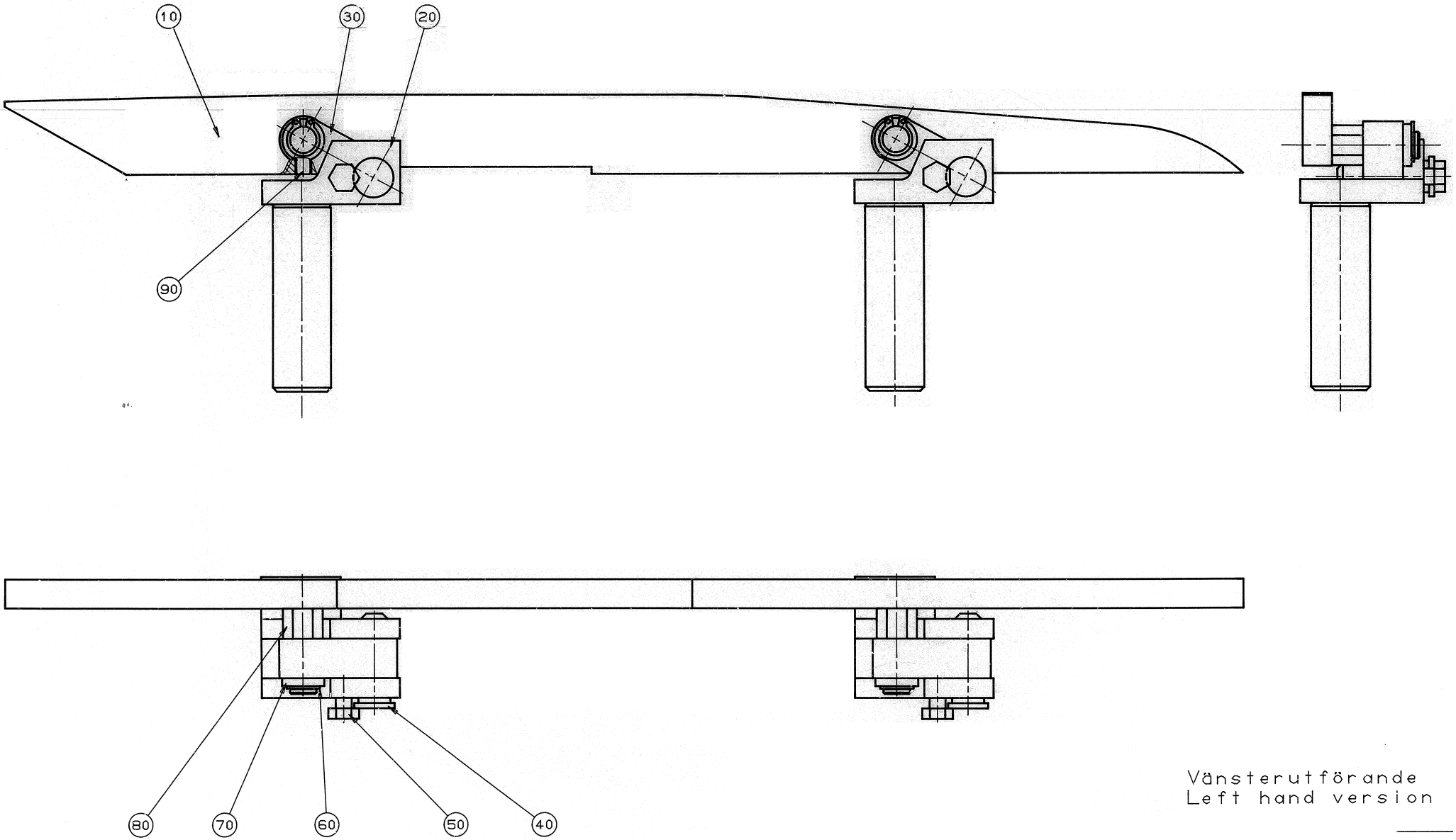

Vänsterutförande
Left hand version

ECM: 83505 - 20000925
Group number: 542226-0102
Assembly Drawing: 542226-2_1_AA

Issue: 20030213

Pos	Part No	SP	UN	Qty	Description	Page No
Common Parts						
010	543518-0000	B		1	TRANSMISSION RAIL	
020 2	542224-0000	B		2	BRACKET LEFT	
030	541036-0000	A		2	LINK	
040	542225-0000	A		2	SHAFT	
050	312105-0364	-		2	SCREW M6S ISO 4017 M6X10 A480	
060	315750-0107	B		2	RETAIN. RING, 10	
070	128593-0000	A		2	WASHER	
080	543507-0000	A		2	SHAFT	
090	312318-0362	C		2	SCREW ISO4029 M6X8 A4	

Pos	Part No	SP	UN	Qty	Description	Page No

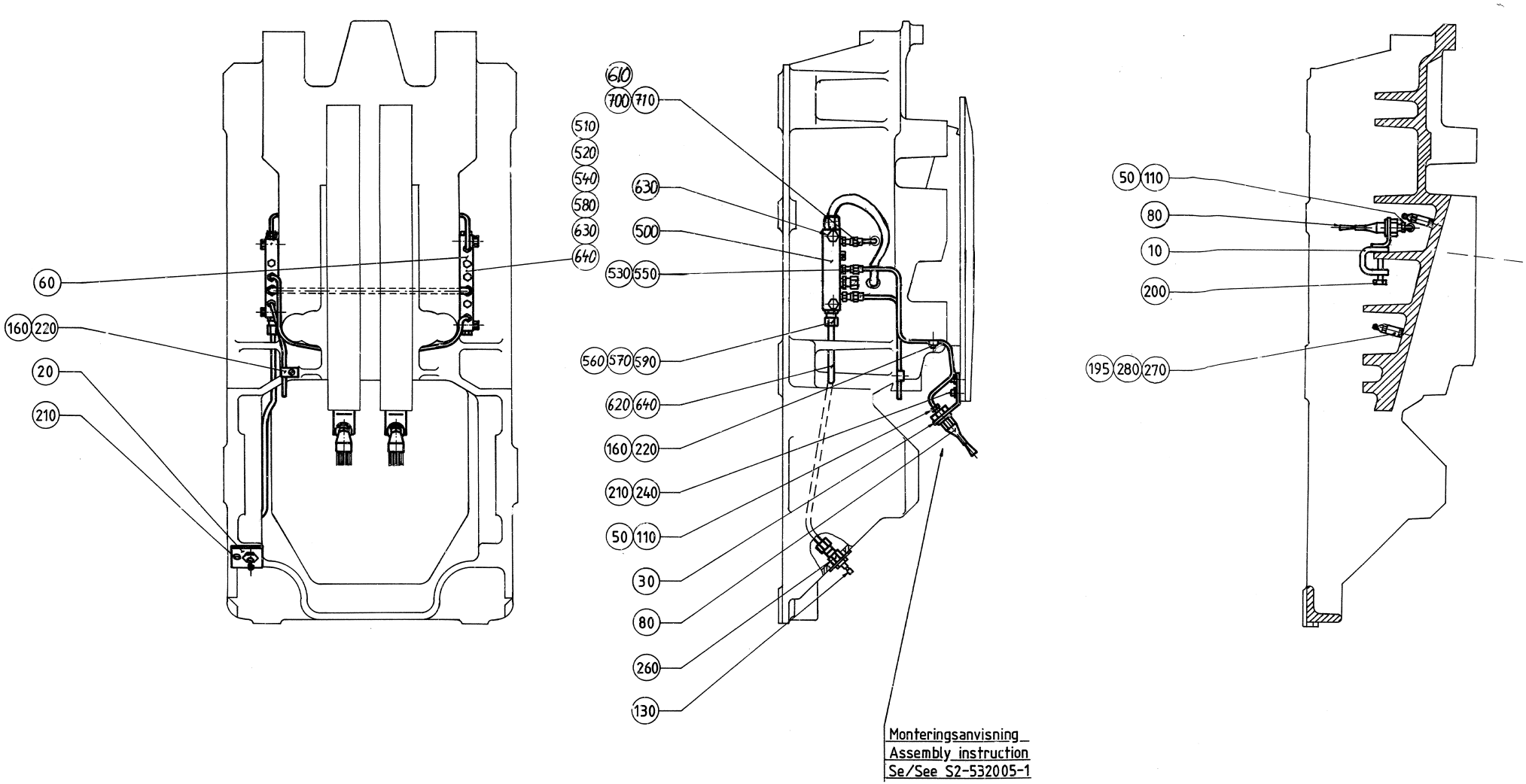
60
160 220
20
210
610
700 710
510
520
540
580
630
640
630
500
530 550
560 570 590
620 640
160 220
210 240
50 110
30
80
260
130
50 110
80
10
200
195 280 270
Monteringsanvisning
Assembly instruction
Se/See S2-532005-1

Pos	Part No	SP	UN	Qty	Description	Page No
Common Parts						
010	263106-0000	-		1	HOLDER	
020	259962-0002	-		1	PLATE	
030	484681-0000	-		2	HOLDER	
050	90028-0001	B		4	CONE 5/32"	
080	90092-0048	B		4	OIL BRUSH, FLAT, 5/16-24 UNF	
110	90134-0003	A		4	BUSHING	
130	90134-0033	A		1	QUICK COUPLING, (M) LP-004-1-WR010	
160	90165-0003	-		5	PIPE CLIP FOR TUBE D=4 MM	
195	90330-0032	B		4	NIPPLES, EXT. THREAD. ISO 7/1 R1/8-R1/8	
200	312101-0372	-		6	SCREW M6S M6X25 FZB	
210	312115-0327	-		5	SCREW ISO4762 M5X12 A4	
220	312121-0285	-		5	SCREW SLOT.PAN HD. MCS 4X6 FZB	
240	315105-0146	-		4	WASHER ISO 7089-5-200 HV-A4	
260	342724-0102	-		1	CONN. STR. PIPE GI 6-G1/8	
270	344502-0026	A		4	GREASE NIPPLE STRAIGHT R1/8 CON.	
280	342707-0109	-		4	SLEEVE, INT. THREAD, NO. 2543-1/8	
500	90032-0039	A		1	BLOCK 4 WAYS	
510	90032-0038	A		1	BLOCK 2 WAYS	
520	90087-0019	-		1	PLUG M10X1 STAINLESS	
530	90134-0040	A		5	BUSHING VALVE CONNECTION 4 MM	
540	90134-0052	A		1	PLUG DOSING BLOCK	
550	90028-0021	B		5	CONE TUBE 4 MM	
560	90028-0025	B		3	CONE TUBE 6 MM	
570	90134-0055	A		3	BUSHING/NUT INLET/OUTLET 6 MM	
580	90165-0005	-		2	PIPE CLIP FOR TUBE D=6 MM	
590	342706-0130	-		3	ACCESSORIES, INSERT SLEEVE 6 MM	
610	90166-0011	A	M	5	TUBE 6 MM PA,TRANSP.	
620	90166-0109	A	M	5	TUBE 4 MM PA,TRANSP.	
630	312155-0295	-		4	SCREW EN 10642 MF6S M4X20 A480	
640	312132-0287	-		2	SCREW SLOT. PAN HEAD MSCS M4X8	
700	90092-0054	A		2	METERING VALVE 50 MM3	
710	90092-0054	A		2	METERING VALVE 50 MM3	

Pos	Part No	SP	UN	Qty	Description	Page No

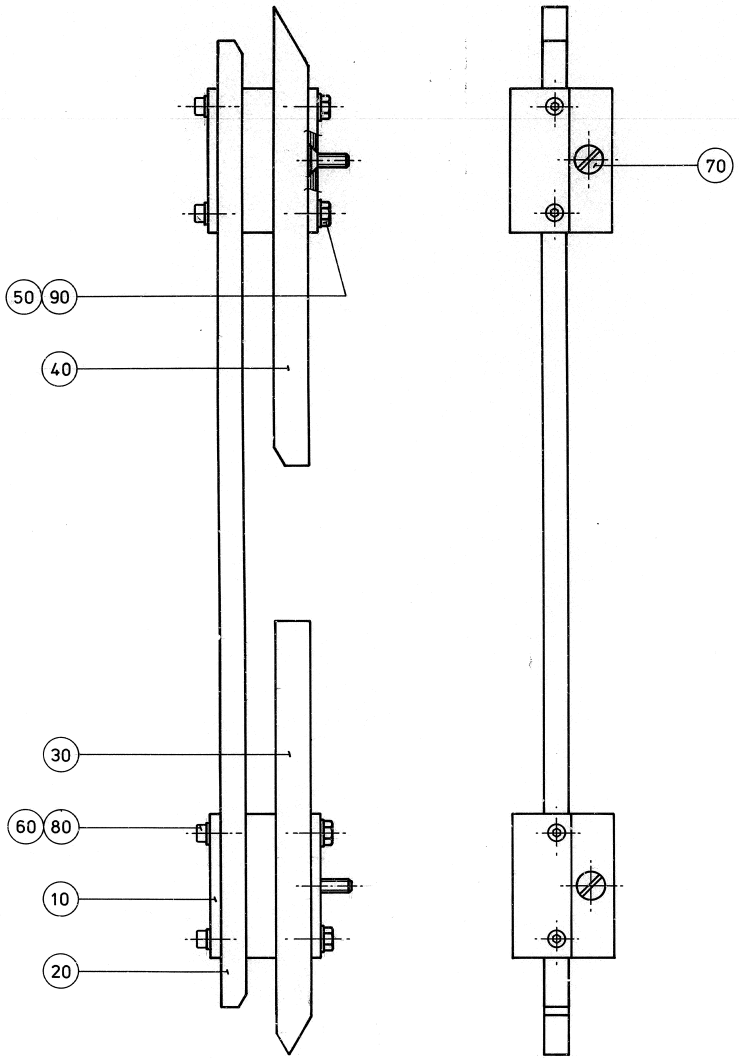

Vänsterutförande

Left hand version

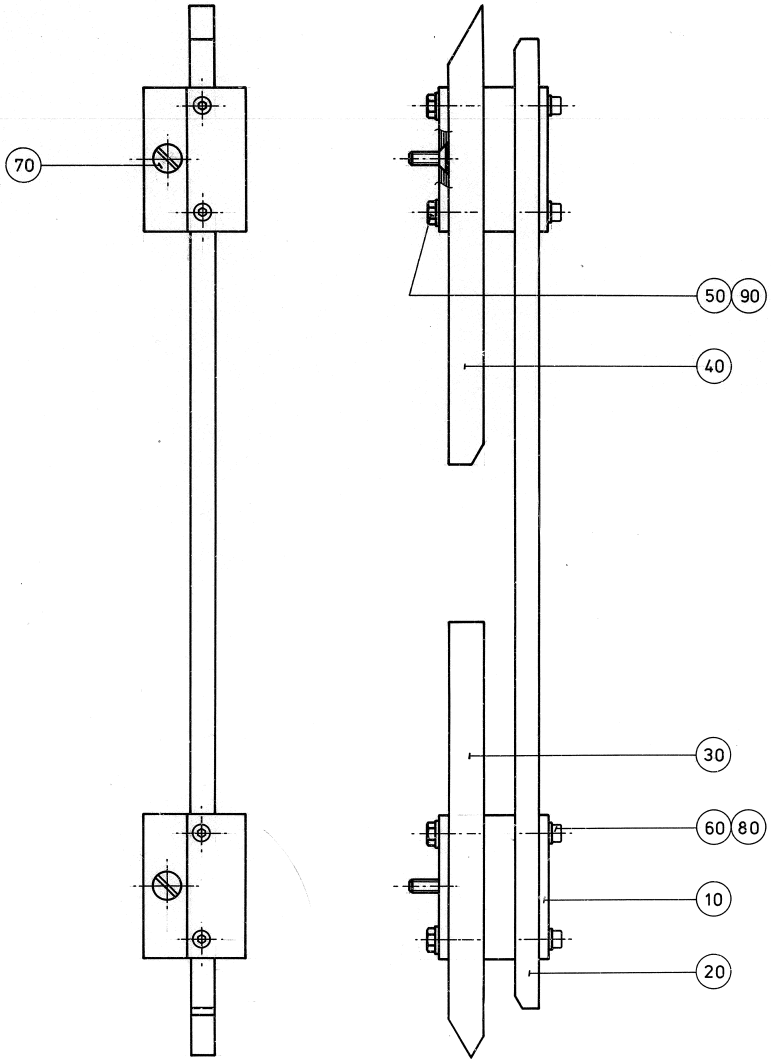

Högerutförande

Right hand version

ECM: 83499 - 20000925
Group number: 532010-0101
Assembly Drawing: 532010-1_1_AA

Issue: 20030213

Pos	Part No	SP	UN	Qty	Description	Page No
Common Parts						
010	484677-0000	-		2	BOW CLAMP	
020	263218-0000	-		1	RAIL	
030	484678-0000	B		1	TRANSMISSION RAIL	
040	484679-0000	B		1	TRANSMISSION RAIL	
050	312101-0327	-		4	SCREW M6S M5X12 FZB	
060	312111-0291	-		4	SCREW HEX.SOCK.HD.MC6S-TT 4X12 88 FZB	
070	312141-0368	-		2	SCREW COUNTERS.SLOT.HD. MFS 6X16 FZB	
080	315101-0136	-		4	BRICKA, BRB, 4,3/8 H=0,8	
090	315101-0146	-		4	WASHER PLAIN, BRB, 5,3/10 H=1	

Pos	Part No	SP	UN	Qty	Description	Page No

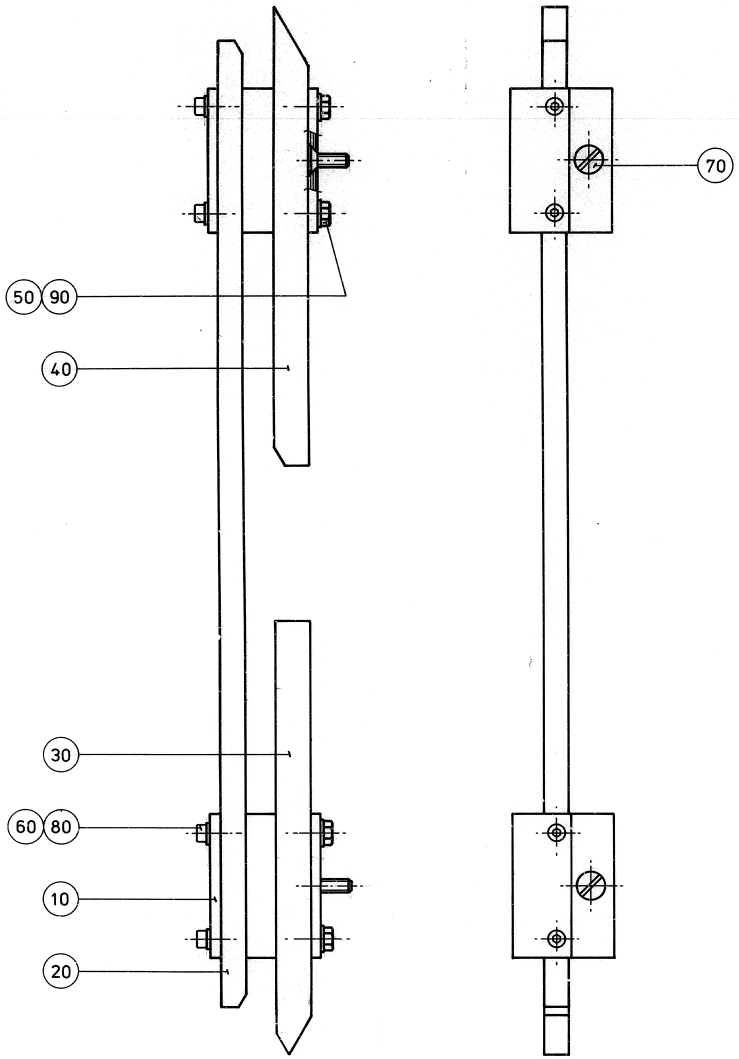

Vänsterutförande

Left hand version

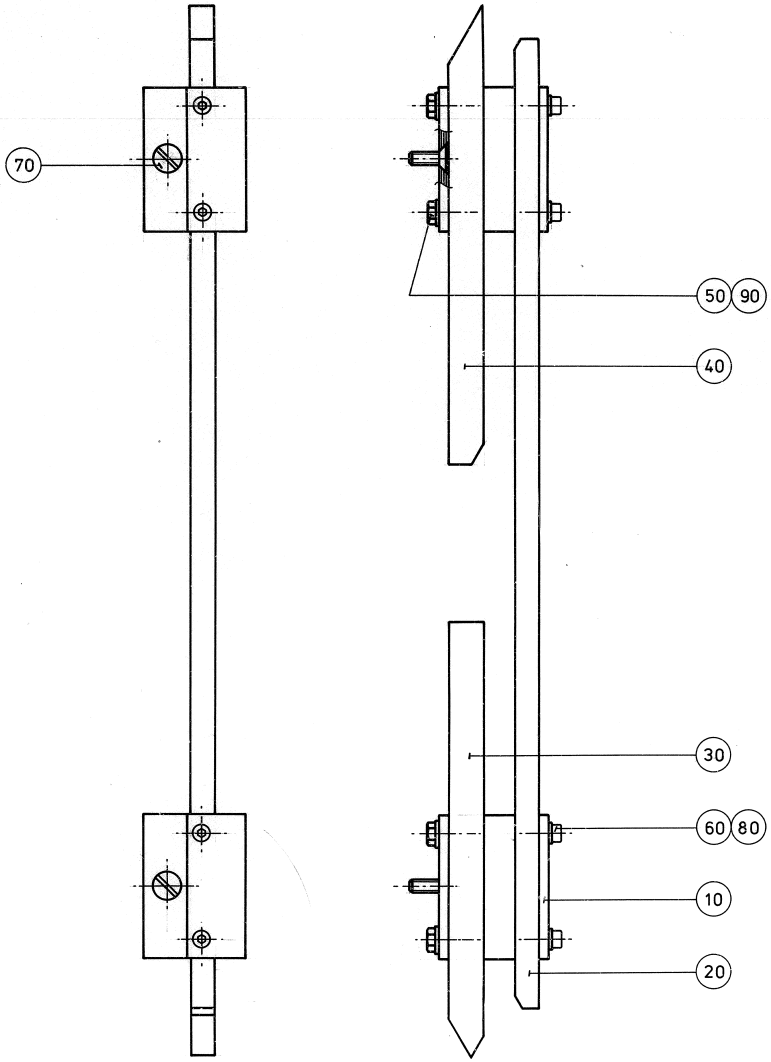

Högerutförande

Right hand version

Pos	Part No	SP	UN	Qty	Description	Page No
Common Parts						
010	484677-0000	-		2	BOW CLAMP	
020	263218-0000	-		1	RAIL	
030	484678-0000	B		1	TRANSMISSION RAIL	
040	484679-0000	B		1	TRANSMISSION RAIL	
050	312101-0327	-		4	SCREW M6S M5X12 FZB	
060	312111-0291	-		4	SCREW HEX.SOCK.HD.MC6S-TT 4X12 88 FZB	
070	312141-0368	-		2	SCREW COUNTERS.SLOT.HD. MFS 6X16 FZB	
080	315101-0136	-		4	BRICKA, BRB, 4,3/8 H=0,8	
090	315101-0146	-		4	WASHER PLAIN, BRB, 5,3/10 H=1	

Pos	Part No	SP	UN	Qty	Description	Page No

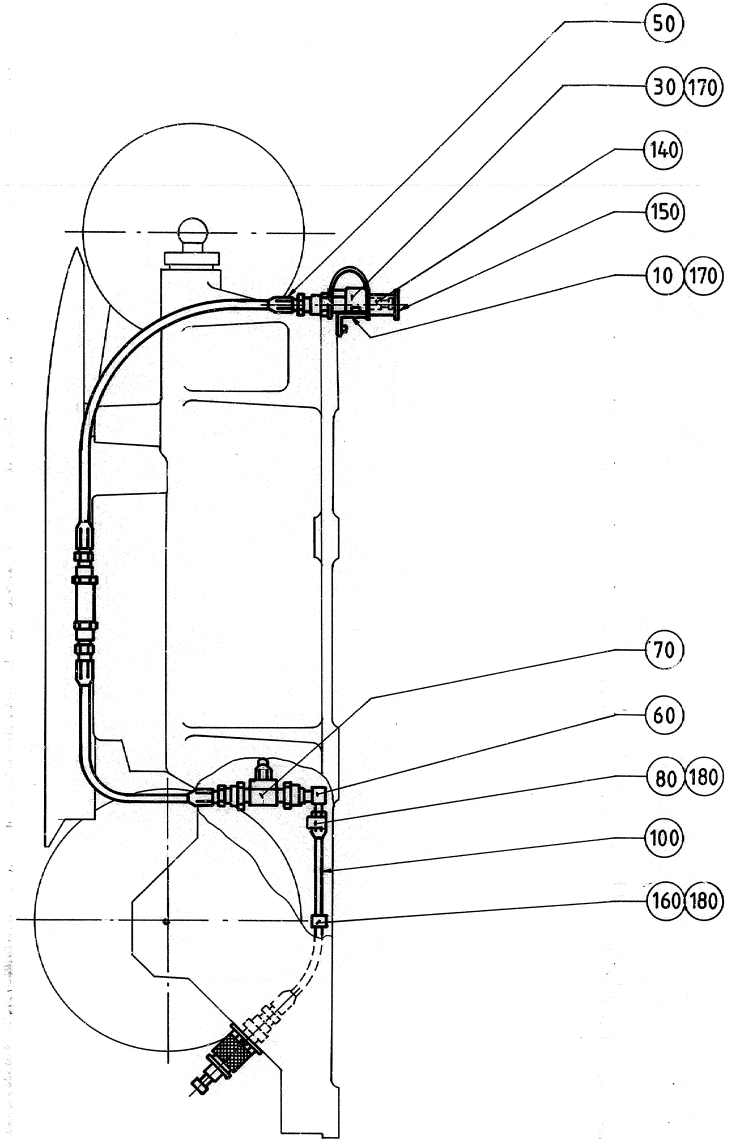
50
30 170
140
150
10 170
70
60
80 180
100
160 180

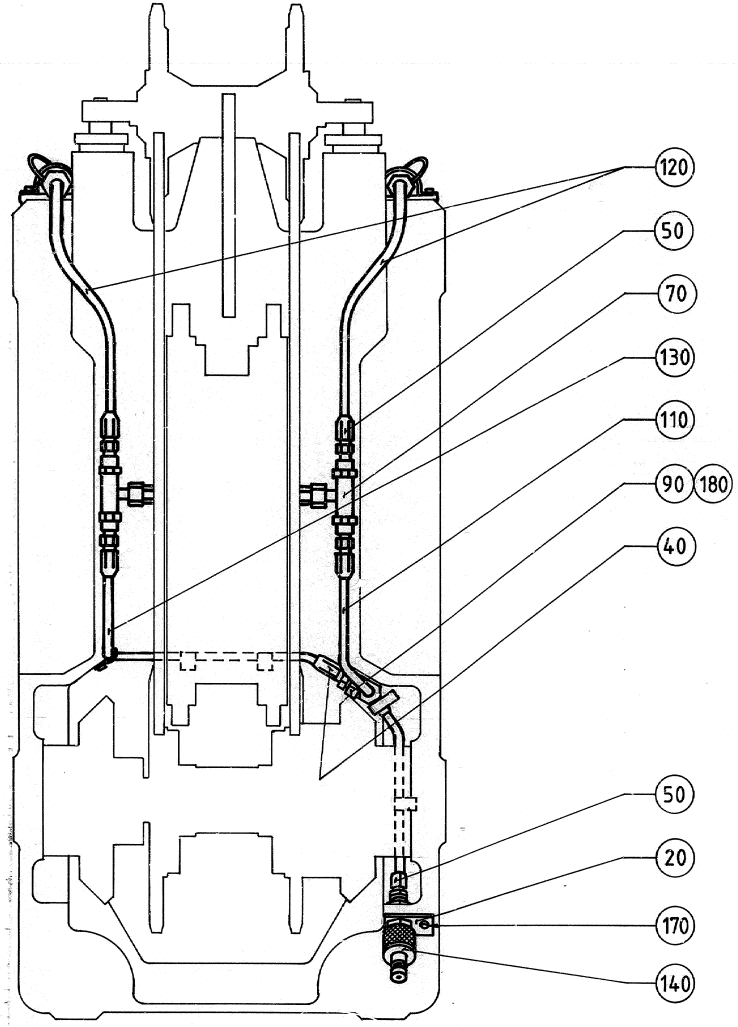
120
50
70
130
110
90 180
40
50
20
170
140

ECM: 83501 - 20000925
Group number: 532157-0101
Assembly Drawing: 532157-1_1_AA

Issue: 20030213

Pos	Part No	SP	UN	Qty	Description	Page No
Common Parts						
010	259961-0000	A		2	HOLDER	
020	259962-0001	-		1	PLATE	
030	284116-0000	A		2	CAP	
040	90055-0042	-		1	NIPPLES, EXT. THREAD, HEXAGON, NO. 6835-	
050	90055-0056	-		9	HOSE COUPLING	
060	90055-0057	-		1	HOSE COUPLING	
070	90055-0058	-		3	HOSE COUPLING	
080	90074-0003	-		1	CABLE CLIPS, D=12 MM	
090	90074-0015	-		1	CABLE CLIPS, D=15,2 MM	
100	90148-0010	-	MM	160	HOSE	
110	90148-0010	-	MM	190	HOSE	
120	90148-0010	-	MM	350	HOSE	
130	90148-0010	-	MM	420	HOSE	
140	90163-0044	B		3	QUICK COUPLING, (M) MD-006-2-WRD13	
150	90163-0306	B		2	QUICK COUPLING, MD-006-5-74-KU (DUST CAP	
160	90165-0007	-		4	PIPE CLIP FOR TUBE D=8 MM	
170	312111-0327	-		9	SCREW HEX.SOCK.HD.MC6S-TT 5X12 88 FZB	
180	312121-0323	-		7	SCREW SLOT.PAN HD. MCS 5X8 FZB	

Pos	Part No	SP	UN	Qty	Description	Page No

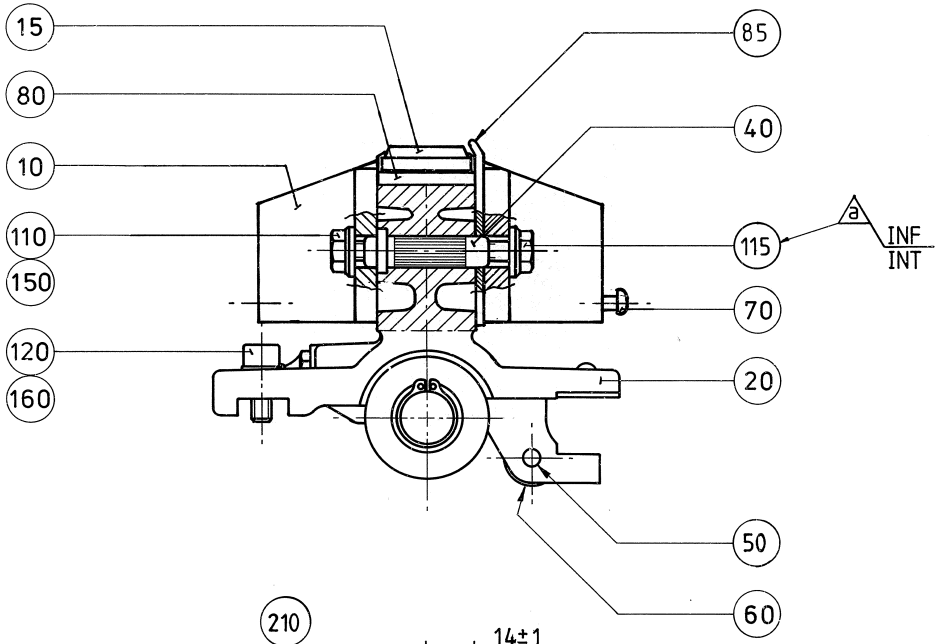
15
80
10
110
150
120
160
85
40
115
a
INF
INT
70
20
50
60

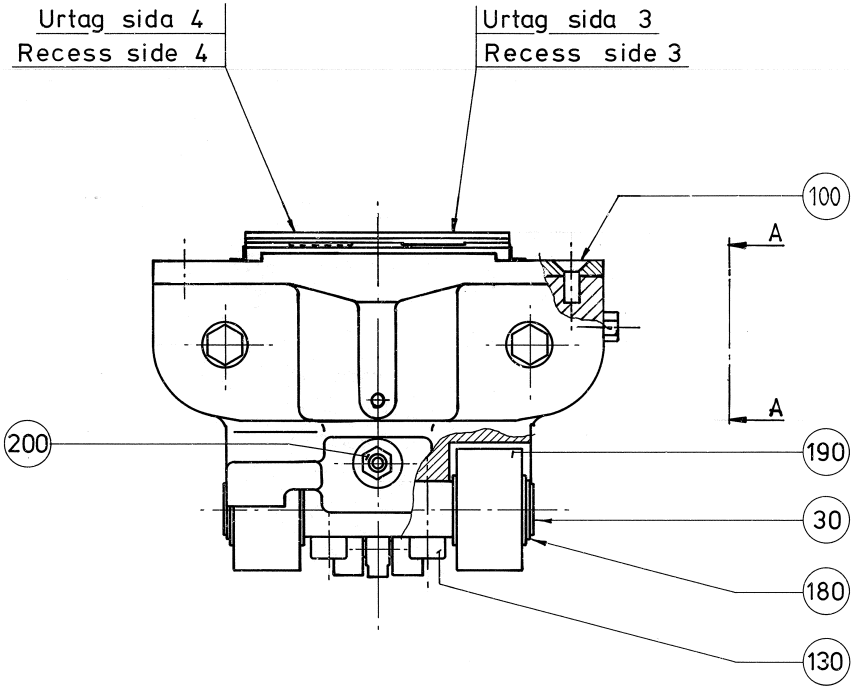
Urtag sida 4
Recess side 4
Urtag sida 3
Recess side 3
100
A
A
200
190
30
180
130

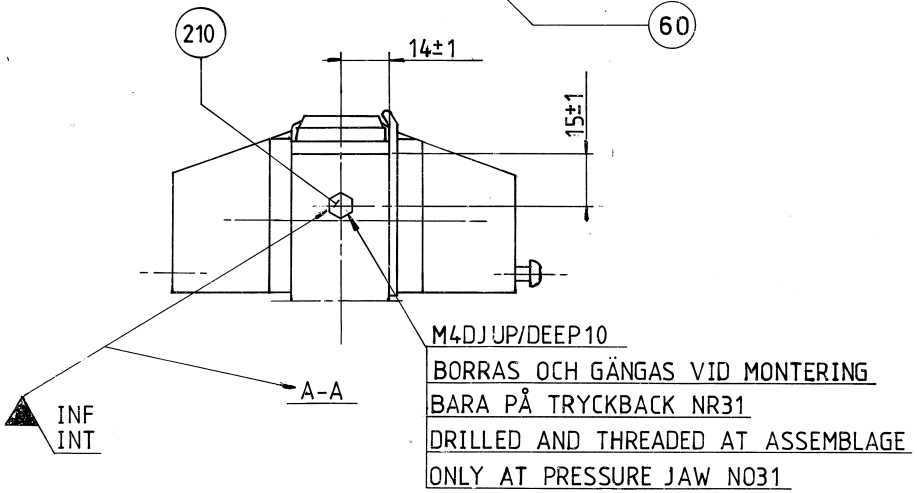
210
14±1
15±1
A-A
INF
INT
M4DJUP/DEEP10
BORRAS OCH GÄNGAS VID MONTERING
BARA PÅ TRYCKBACK NR31
DRILLED AND THREADED AT ASSEMBLAGE
ONLY AT PRESSURE JAW NO31

ECM: 108083 - 20020507
Group number: 532011-0100
Assembly Drawing: 532011-2_1_AA

Issue: 20030213

Pos	Part No	SP	UN	Qty	Description	Page No
V065 IH LVS						
010 4	533404-0000	A		2	FLAP	
015 4	1520560-0000	B		1	DOLLY	
080 2	541242-0000	A		1	RUBBER HOLDER	
085	544569-0003	B		1	RULER	
100	312145-0327	-		2	SCREW COUNTERS.SLOT.HD. MFS 5X12 SS	
110	312105-0367	-		2	SCREW M6S M6X14 A280	
115	312105-0368	-		2	SCREW M6S M6X16 A280	
V065 IH MVS						
010 4	533404-0000	A		2	FLAP	
015 5	1110377-0001	B		2	DOLLY	
025	594732-0000	B		1	TEFLON CLOTH (TILL MVS MASKIN)	
035	594731-0000	B		1	DOLLY	
080 3	1175042-0000	A		1	RUBBER HOLDER	
085	544569-0003	B		1	RULER	
095	576144-0000	A		2	STOP LUG	
105	312155-0329	-		2	SCREW EN 10642 MF6S M5X16 A480	
110	312105-0367	-		2	SCREW M6S M6X14 A280	
115	312105-0368	-		2	SCREW M6S M6X16 A280	
V065 TPC						
010 4	533404-0000	A		2	FLAP	
015 3	541243-0000	B		1	DOLLY	
080 2	541242-0000	A		1	RUBBER HOLDER	
085	544569-0003	B		1	RULER	
100	312145-0327	-		2	SCREW COUNTERS.SLOT.HD. MFS 5X12 SS	
110	312105-0367	-		2	SCREW M6S M6X14 A280	
115	312105-0368	-		2	SCREW M6S M6X16 A280	
Common Parts						
020	484673-0000	A		1	PRESSURE JAW	
030	484674-0000	A		1	SHAFT	
040	4613-0000	A		2	BUSHING	
050	550193-0000	B		1	PIN	
060	543509-0000	B		1	ROLL	
070	5809-0000	A		1	TACK	
120	312115-0368	-		2	SCREW ISO4762 M6X16 A4	
130	312115-0372	-		2	SCREW ISO4762 M6X25 A4	
150	315115-0153	-		4	WASHER PLAIN, TBRB 6,4/12 H=3	
160	315401-0153	-		2	WASHER FBH6,1FZB	
180	315750-0112	B		2	RETAIN. RING, 15	
190	321576-0197	B		2	BEARING ROLLER, 2 SEALS, 15X35X19 MM	
200	344502-0021	A		1	GREASE NIPPLE STRAIGHT M6	
210	312105-0362	-			SCREW M6S ISO 4017 M6X8 A480	

Machine Type | Group Description | Used-In | Group Number | Page No

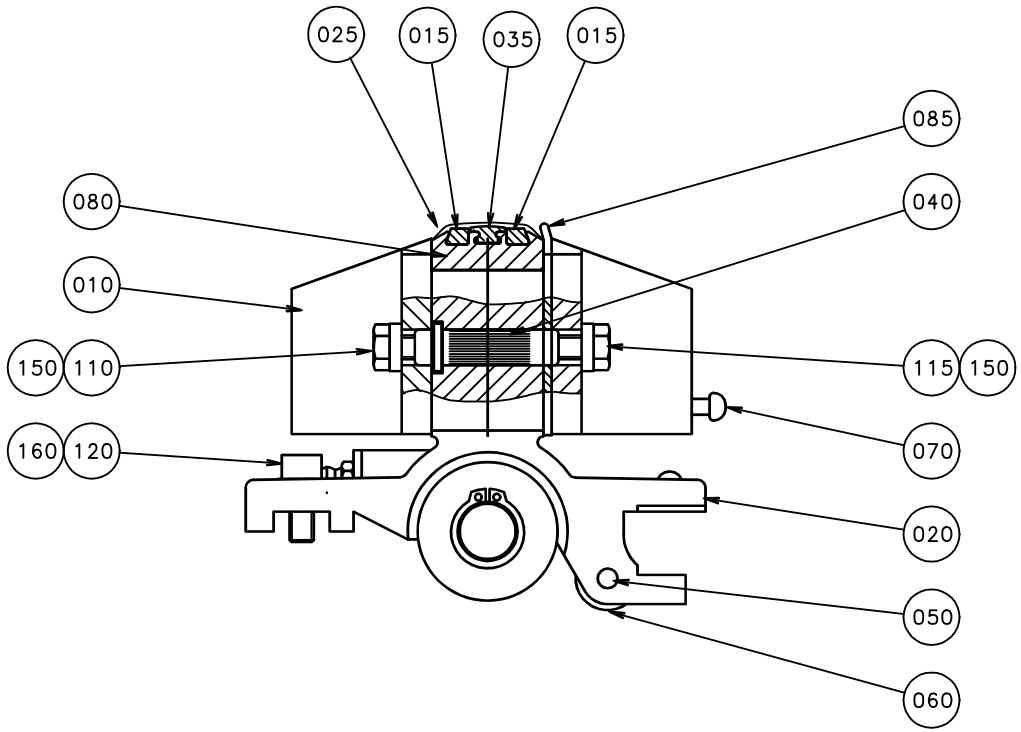
025
015
035
015
085
080
040
010
150
110
115
150
160
120
070
020
050
060

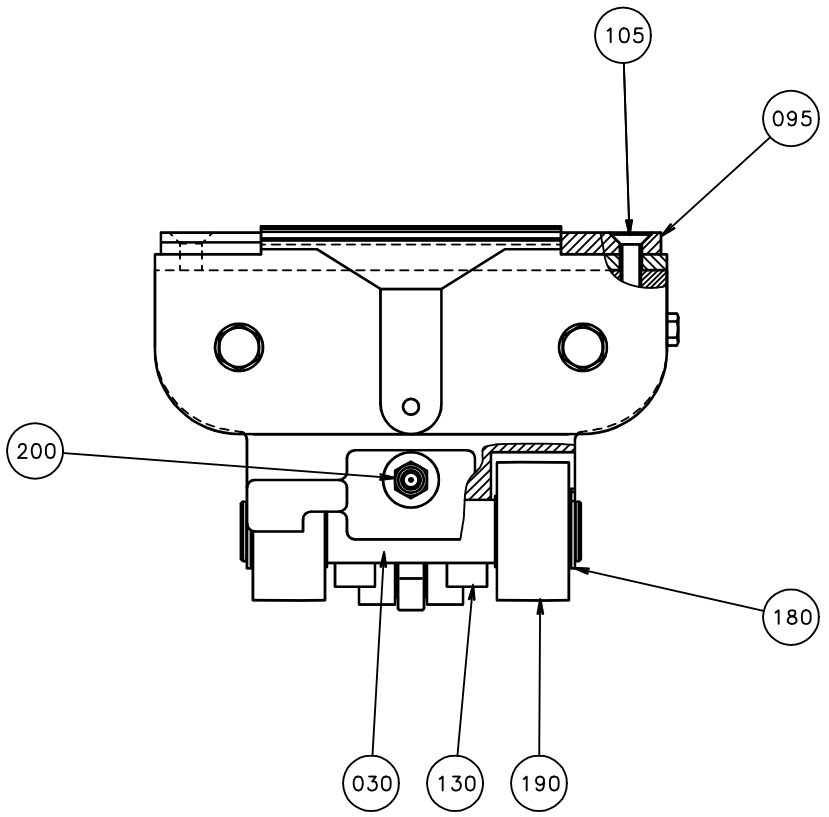
105
095
200
180
030
130
190

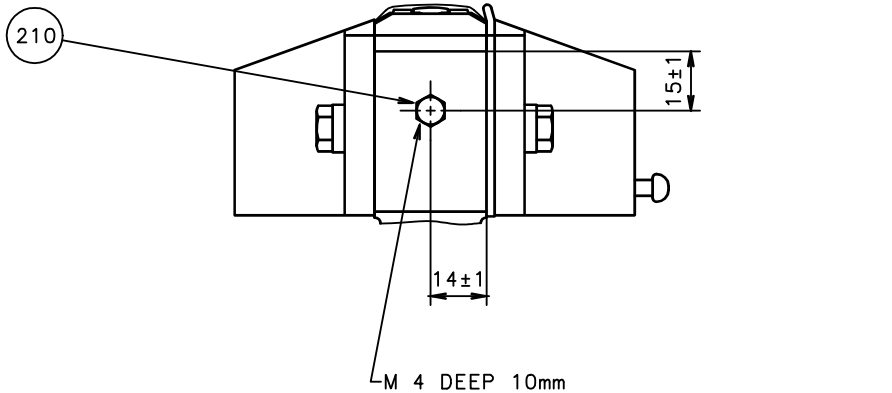
210
15±1
14±1
M 4 DEEP 10mm
DRILLED AND THREADED THEN ASSEMBLING
ONLY AT PRESSURE JAW NO31

ECM: 108083 - 20020507
Group number: 532011-0100
Assembly Drawing: 532011-3_1_AA

Issue: 20030213

Pos	Part No	SP	UN	Qty	Description	Page No
V065 IH LVS						
010 4	533404-0000	A		2	FLAP	
015 4	1520560-0000	B		1	DOLLY	
080 2	541242-0000	A		1	RUBBER HOLDER	
085	544569-0003	B		1	RULER	
100	312145-0327	-		2	SCREW COUNTERS.SLOT.HD. MFS 5X12 SS	
110	312105-0367	-		2	SCREW M6S M6X14 A280	
115	312105-0368	-		2	SCREW M6S M6X16 A280	
V065 IH MVS						
010 4	533404-0000	A		2	FLAP	
015 5	1110377-0001	B		2	DOLLY	
025	594732-0000	B		1	TEFLON CLOTH (TILL MVS MASKIN)	
035	594731-0000	B		1	DOLLY	
080 3	1175042-0000	A		1	RUBBER HOLDER	
085	544569-0003	B		1	RULER	
095	576144-0000	A		2	STOP LUG	
105	312155-0329	-		2	SCREW EN 10642 MF6S M5X16 A480	
110	312105-0367	-		2	SCREW M6S M6X14 A280	
115	312105-0368	-		2	SCREW M6S M6X16 A280	
V065 TPC						
010 4	533404-0000	A		2	FLAP	
015 3	541243-0000	B		1	DOLLY	
080 2	541242-0000	A		1	RUBBER HOLDER	
085	544569-0003	B		1	RULER	
100	312145-0327	-		2	SCREW COUNTERS.SLOT.HD. MFS 5X12 SS	
110	312105-0367	-		2	SCREW M6S M6X14 A280	
115	312105-0368	-		2	SCREW M6S M6X16 A280	
Common Parts						
020	484673-0000	A		1	PRESSURE JAW	
030	484674-0000	A		1	SHAFT	
040	4613-0000	A		2	BUSHING	
050	550193-0000	B		1	PIN	
060	543509-0000	B		1	ROLL	
070	5809-0000	A		1	TACK	
120	312115-0368	-		2	SCREW ISO4762 M6X16 A4	
130	312115-0372	-		2	SCREW ISO4762 M6X25 A4	
150	315115-0153	-		4	WASHER PLAIN, TBRB 6,4/12 H=3	
160	315401-0153	-		2	WASHER FBH6,1FZB	
180	315750-0112	B		2	RETAIN. RING, 15	
190	321576-0197	B		2	BEARING ROLLER, 2 SEALS, 15X35X19 MM	
200	344502-0021	A		1	GREASE NIPPLE STRAIGHT M6	
210	312105-0362	-			SCREW M6S ISO 4017 M6X8 A480	

Machine Type | Group Description | Used-In | Group Number | Page No

Tetra Pak

SPC
Spare Parts Catalogue

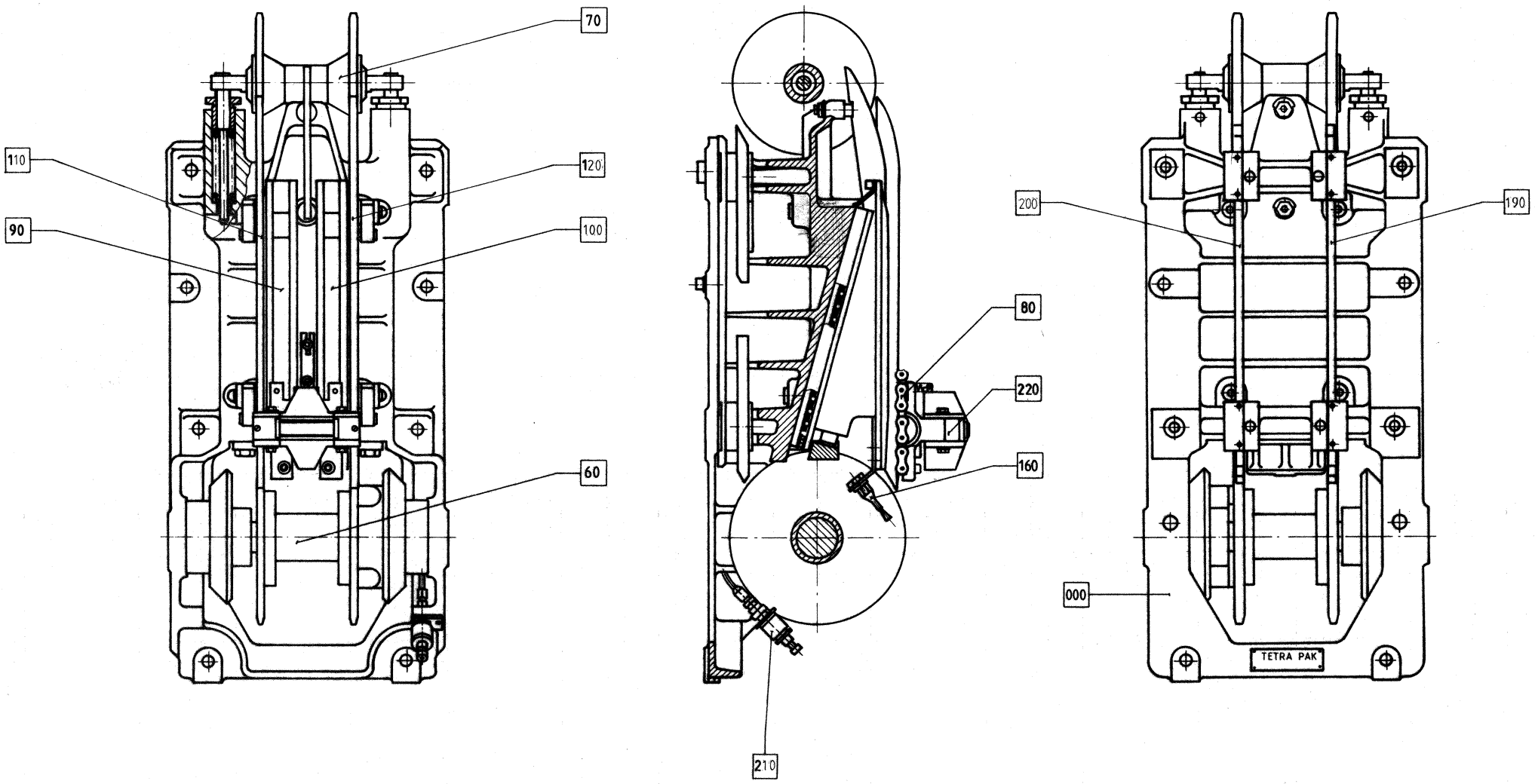
70
110
120
90
100
60
80
220
160
200
190
000
210
TETRA PAK

Pos	Part No	SP	UN	Qty	Description	Page No
Common Parts						
F000 4	A536536-0202	-		1	MACH. BODY PRESSURE SIDE	**209**
F060	A1345155-0102	-		1	SPROCKET	**153, 179, 211**
F070	A1345160-0101	-		1	LINK CHAIN WHEEL	**129, 155, 181, 213**
F080	A1345165-0101	-		1	CHAIN UNIT	**131, 157, 183, 215**
F090	A532007-0201	-		1	PLUNGER	**185, 217**
F100	A532007-0202	-		1	PLUNGER	**187, 219**
F110	A542226-0101	-		1	TRANSMISSION RAIL	**189, 221**
F120	A542226-0102	-		1	TRANSMISSION RAIL	**191, 223**
F160	A536537-0201	-		1	CENTRAL LUBRICATION	**193, 225**
F190	A532010-0101	-		1	TRANSMISSION RAIL	**195, 227**
F200	A532010-0102	-		1	TRANSMISSION RAIL	**197, 229**
F210	A532157-0101	-		1	HYDRAULIC SYSTEM SIDE	**199, 231**
F220	A532011-0100	-		8	PRESSURE JAW	**201, 203, 233, 235**

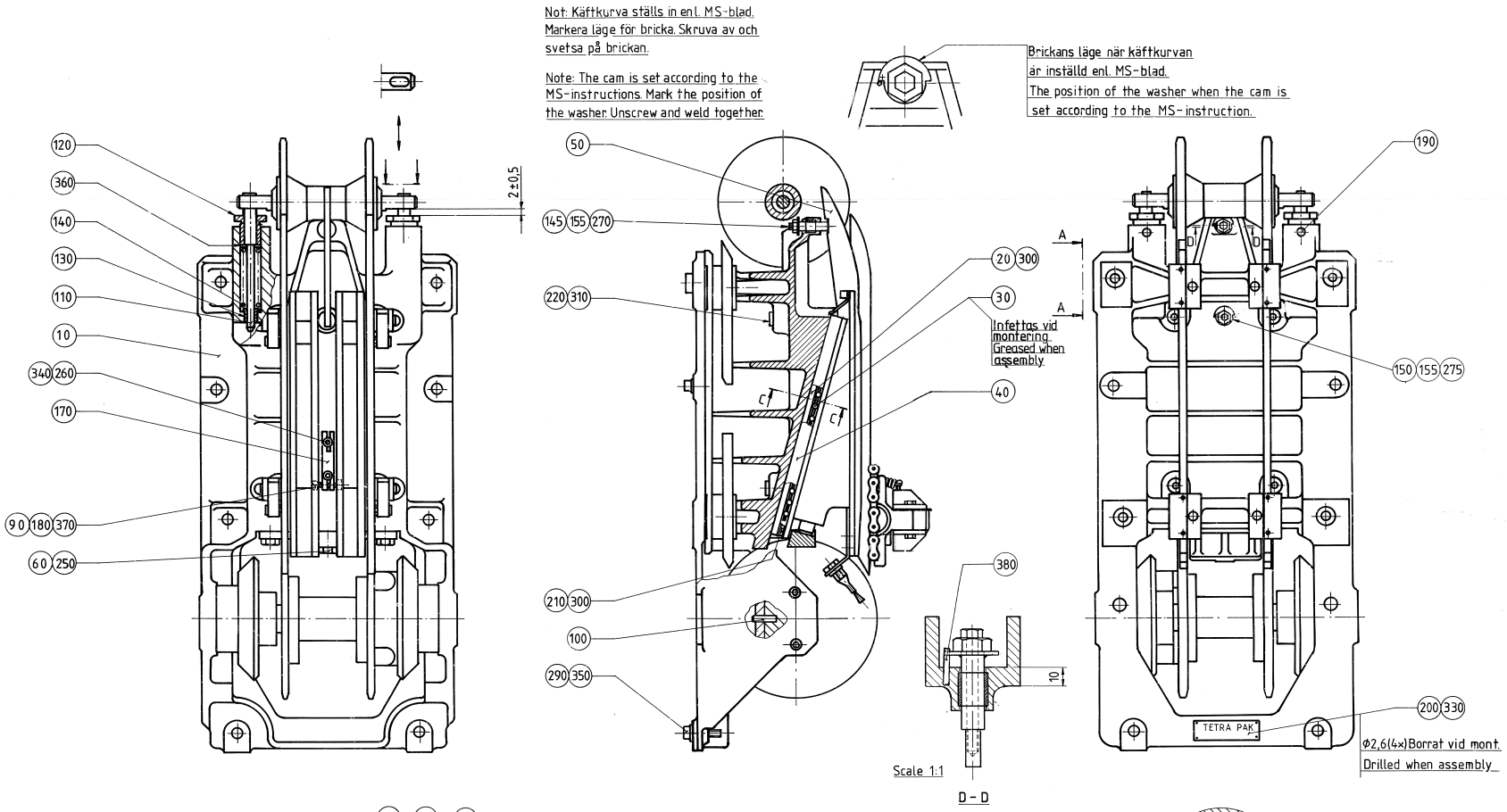

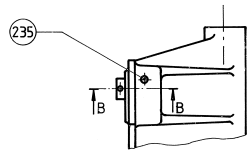

A — A

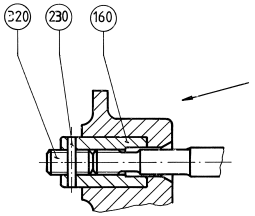

B — B
Skala/Scale 1:1

OBS! Mont. i samband med inställn. av stativ.
Monteringsföljd:
1. Mutter 160 indrives och låses med räffelpinne 235 (hål Φ6 djup 32 borras).
2. Efter injust. av "k-mått," mont. stativsidorna. Dragstag mont. och ansättes lätt.
3. Stoppskruv 320 inskruvas och fixeras med en mutter M12.
4. Stoppskruv 320 låses med räffelpinne 230 (borr Φ4) varefter muttern avlägsnas.

NOTE! To be mounted when setting the machine body.
Assembly instructions:
1. Drive in the nut 160 and lock with the grooved pin 235 (drill Φ6 deep 32).
2. After setting "the meassurement k" mount the side frames. Mount the struts and tighten them lightly.
3. Mount the set screw 320 and fix with a nut M12.
4. Lock the set screw with the grooved pin 230 (drill Φ4) and then remove the nut.

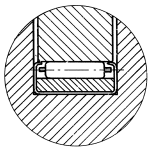

C — C
Skala/Scale 1:1

ECM: - -
Group number: 536536-0202
Assembly Drawing: 536536-2_1_AA

Issue: 20030213

Pos	Part No	SP	UN	Qty	Description	Page No
Common Parts						
010 1	555068-0000	-		1	MACH. BODY PRESSURE SIDE	
020	543501-0000	C		2	ROLLER PLATE	
030	484671-0000	C		2	ROLLER BEARING	
040	499490-0000	C		2	PROTECTION	
050	542229-0000	-		1	CURVE	
060	484672-0000	-		1	YOKE	
090	2189-0000	C		2	SLEEVE	
100	2481-0000	-		2	TACK	
110	555069-0000	-		2	HOLDER	
120	2864-0000	-		2	BUSHING	
130	2865-0000	-		2	BUSHING	
140	273545-0000	-		2	COMPRESSION SPRING	
145	543511-0000	-		1	ADJUSTMENT SLEEVE	
150	543512-0000	-		1	ADJUSTMENT SLEEVE	
155	543513-0000	-		2	WASHER	
160	4666-0000	-		4	NUT	
170	4677-0000	-		1	BRACKET	
180	4678-0000	-		1	ECCENTRIC SHAFT	
190	10182-0000	-		2	STOP SCREW	
210	484680-0000	-		2	STOP LUG	
220	493718-0000	-		4	WASHER	
230	311305-0274	-		4	SLOTTED PIRPC4X25FZB	
235	311305-0356	-		4	SLOTTED PIRPC6X28FZB	
250	312101-0540	-		3	SCREW M6S M12X40 FZB	
260	312111-0374	-		2	SCREW HEX.SOCK.HD.MC6S-TT 6X30 88 FZB	
270	312105-0381	-		1	SCREW M6S ISO 4014 M6X55 A480	
275	312105-0388	-		1	SCREW M6S ISO 4014 M6X90 A480	
290	312111-0540	-		4	SCREW HEX.SOCK.HD.MC6S-TT 12X40 88 FZ	
300	312115-0287	C		20	SCREW ISO4762 M4X8 A4	
310	312151-0457	-		4	SCREW HEX.SOCK.COUNT.MF6S 8X35 FZB	
320	312311-0532	-		4	SCREW ISO4028 M12X20 FZB	
340	315101-0153	-		20	WASHER PLAIN, BRB, 6,4/12 H=1,5	
350	315101-0178	-		4	WASHER PLAIN, BRB, 13/24 H=2	
360	315105-0178	-		2	WASHER ISO 7089-12-200 HV-A4	
370	315750-0105	-		2	RETAIN. RING, 8	
380	311303-0238	-		2	SLOTTED PIRPB3X20FZB	

Pos	Part No	SP	UN	Qty	Description	Page No

Machine Type	Group Description	Used-In	Group Number	Page No

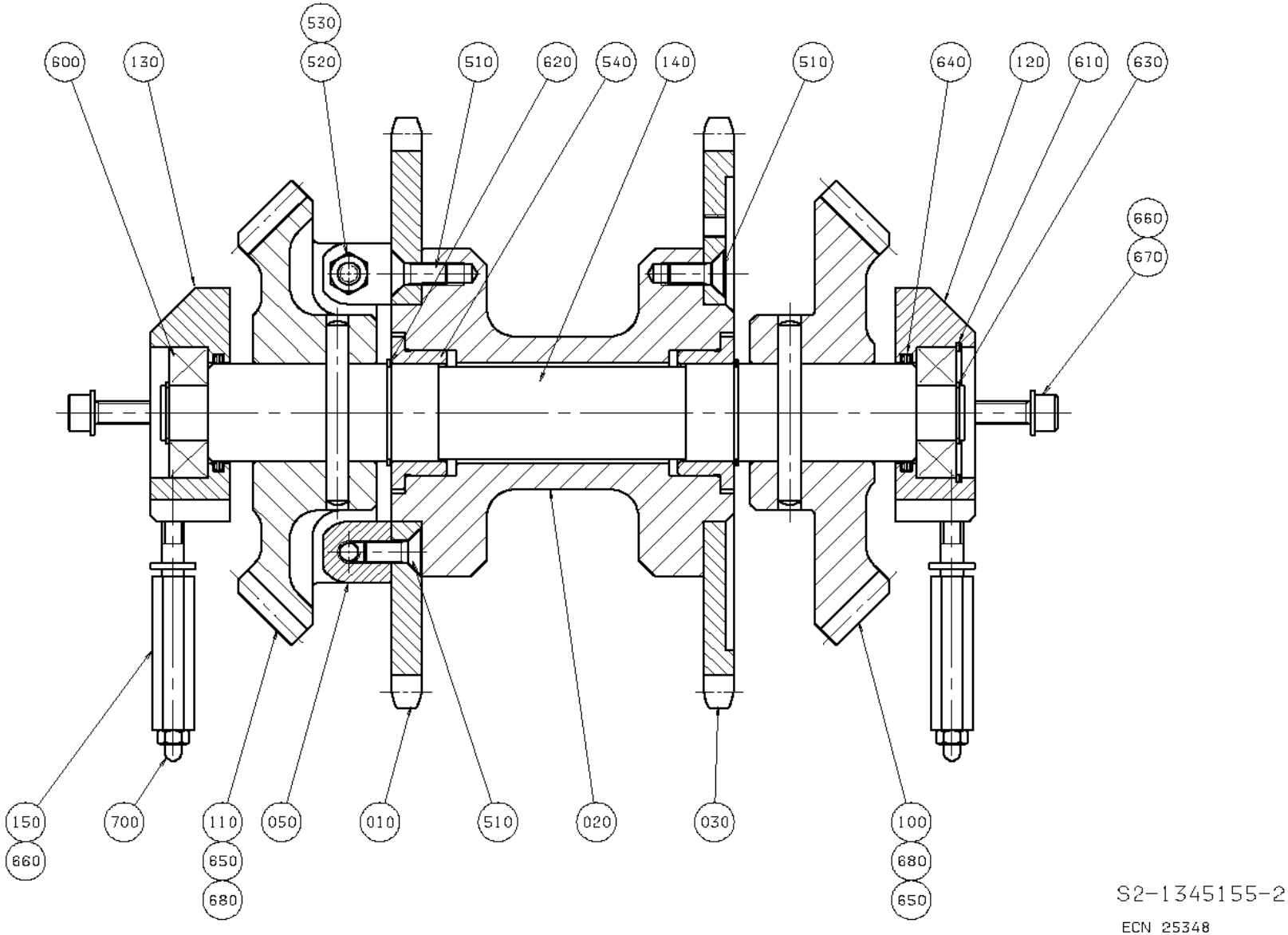
530
600
130
520
510
620
540
140
510
640
120
610
630
660
670
150
660
700
110
650
680
050
010
510
020
030
100
680
650
S2-1345155-2
ECN 25348

ECM: - -
Group number: 1345155-0102
Assembly Drawing: 1345155-2_1_AA

Issue: 20030213

Pos	Part No	SP	UN	Qty	Description	Page No
Common Parts						
010	1345203-0000	D		1	SPROCKET	
020	1345204-0000	-		1	HUB	
030	1345207-0000	D		1	SPROCKET	
050	1345212-0000	-		2	MOUNTING BLOCK	
100	1483047-0000	-		1	CONICAL GEAR	
110	1483048-0000	-		1	CONICAL GEAR	
120	4599-0000	-		1	BEARING HOUSING RIGHT	
130	4600-0000	-		1	BEARING HOUSING LEFT	
140	4627-0000	-		1	SHAFT	
150	6453-0001	-		2	LUBRICATING PIPE	
510	312155-0451	-		16	SCREW EN 10642 MF6S M8X20 A480	
520	312306-0463	-		2	STOP SCREW P6SS8X60FZB	
530	312605-0318	-		2	HEXAGON NUT, M6M M8 A280	
540	321101-0282	-		2	FLANGE BUS 35F7X20	
600	321309-0104	-		2	BALL BEARING, 20X47X14 MM	
610	315752-0130	-		1	RETAIN. RING, 47	
620	315750-0124	-		2	RETAIN. RING, 35	
630	315750-0116	-		2	RETAIN. RING, 20	
640	315202-0528	-		2	O-RING 37,69X3,53 MM	
650	311201-0327	-		2	PIN, TAPERED, KP, 8X70 GROUND	
660	315401-0165	-		6	WASHER FBH8,2FZB	
670	312111-0455	-		4	SCREW HEX.SOCK.HD.MC6S-TT 8X30 88 FZB	
680	312316-0447	-		4	SCREW HEX.SOCK.SET CUP P.MSK6SS8X12 FZB	
690	312601-0318	-		2	NUT M6M8FZB	
700	344502-0026	-		2	GREASE NIPPLE STRAIGHT R1/8 CON.	

Pos	Part No	SP	UN	Qty	Description	Page No

Machine Type | Group Description | Used-In | Group Number | Page No

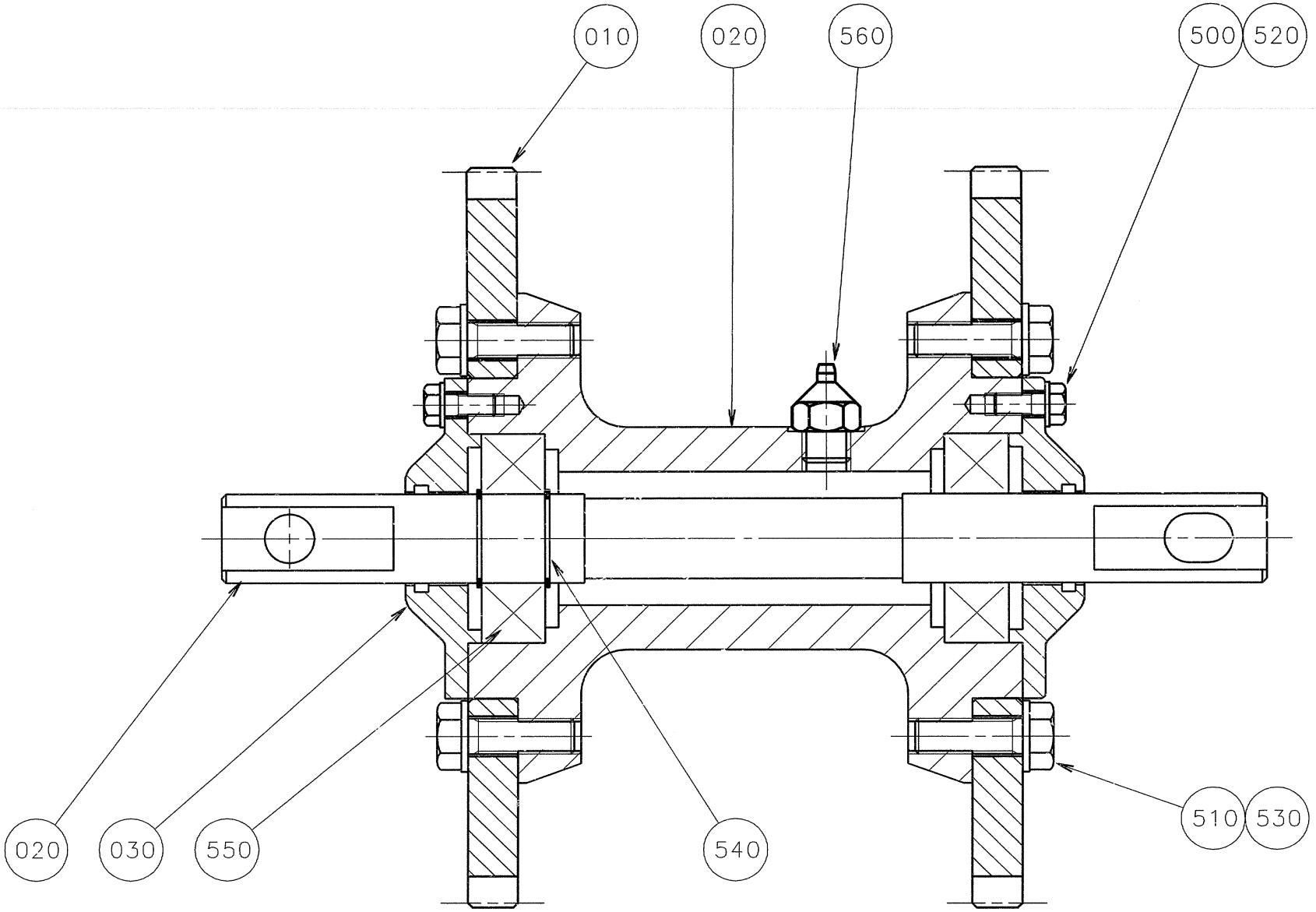
010
020
560
500
520
020
030
550
540
510
530

ECM: 83493 - 20000925
Group number: 1345160-0101
Assembly Drawing: 1345160-1_1_AA

Issue: 20030213

Pos	Part No	SP	UN	Qty	Description	Page No
Common Parts						
010	1345202-0000	A		2	SPROCKET	
020	1345206-0000	-		1	HUB	
030	4628-0000	A		1	SHAFT	
040	3749-0000	A		2	OIL SEAL (LÖVALOCK)	
500	312105-0327	-		6	SCREW M6S ISO 4017 M5X12 A480	
510	312105-0453	-		12	SCREW M6S ISO 4017 M8X25 A480	
520	315105-0146	-		6	WASHER ISO 7089-5-200 HV-A4	
530	315105-0165	-		12	WASHER ISO 7089-8-200 HV-A4	
540	315750-0116	B		2	RETAIN. RING, 20	
550	321309-0104	B		2	BALL BEARING, 20X47X14 MM	
560	344502-0026	-		1	GREASE NIPPLE STRAIGHT R1/8 CON.	

Pos	Part No	SP	UN	Qty	Description	Page No

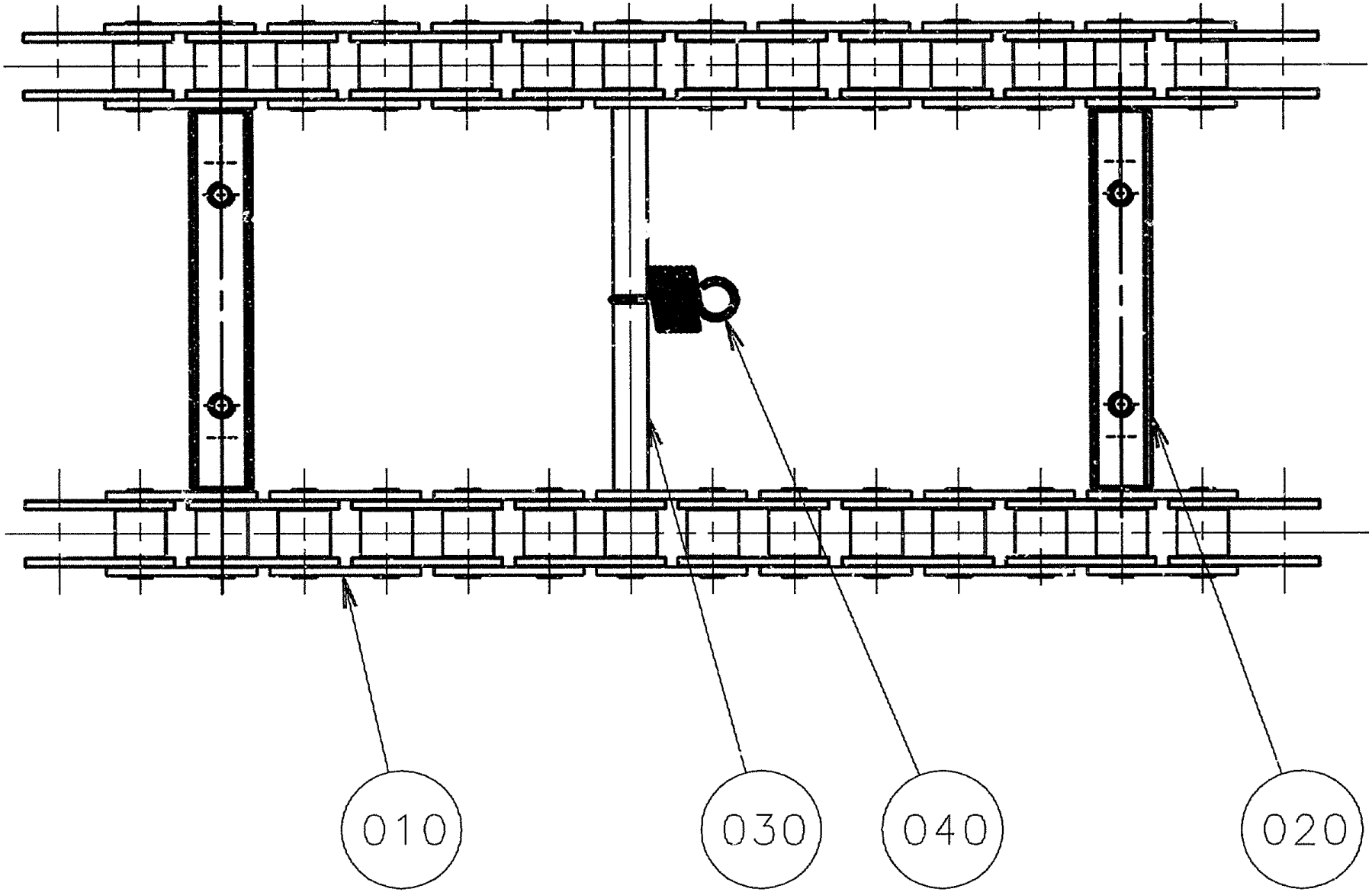
010
030
040
020

ECM: 83494 - 20000925
Group number: 1345165-0101
Assembly Drawing: 1345165-1_1_AA

Issue: 20030213

Pos	Part No	SP	UN	Qty	Description	Page No
Common Parts						
010	1345262-0000	B		2	CHAIN	
020	1345209-0000	B		8	SHAFT	
030	1345211-0000	B		8	PIN	
040	4623-0000	A		8	SPRING	
100	90296-0091	B		1	LUBRICATION GREASE	

Pos	Part No	SP	UN	Qty	Description	Page No

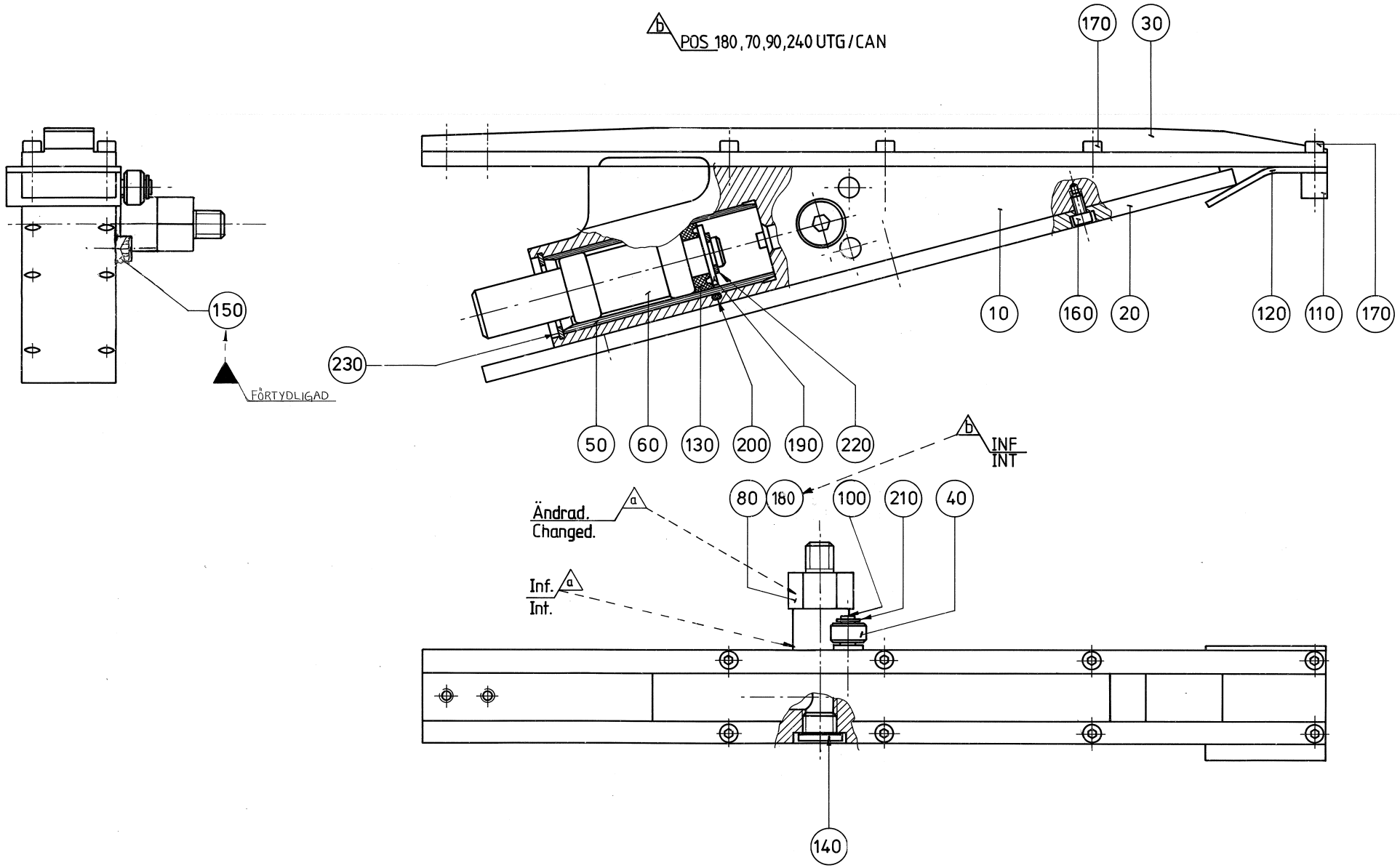
POS 180, 70, 90, 240 UTG/CAN
170
30
150
FÖRTYDLIGAD
230
10
160
20
120
110
170
50
60
130
200
190
220
INF
INT
80
180
100
210
40
Ändrad.
Changed.
Inf.
Int.
140

Pos	Part No	SP	UN	Qty	Description	Page No
Common Parts						
010	484668-0000	A		1	PLUNGER	
020	543501-0000	B		1	ROLLER PLATE	
030	541032-0000	B		1	ROLLER CONVEYOR	
040	2189-0000	B		1	SLEEVE	
050	37807-0000	B		1	LINING	
060	37808-0000	B		1	PISTON	
080	543502-0000	A		1	CONNECTION	
100	493719-0000	A		1	SHAFT	
110	529297-0000	D		1	WASHER	
120	529298-0000	B		1	RUBBER CLOTH	
130	90020-0020	C		1	SLEEVE	
140	342713-0210	-		1	PLUG, EXT THREAD HEX SOCKET 8638-00-140	
150	311103-0401	-		1	PARALLELL PIN, M6, 8X20 MM	
160	312115-0287	B		6	SCREW ISO4762 M4X8 A4	
170	312115-0293	B		8	SCREW ISO4762 M4X16 A4	
180	315211-0108	-		1	GASKET BOLT HEAD 13,7X20,6X2 MM G1/4	
190	315101-0178	-		1	WASHER PLAIN, BRB, 13/24 H=2	
200	315202-0219	B		1	O-RING 29,2X3 MM	
210	315750-0103	B		1	RETAIN. RING, 6	
220	315750-0109	B		1	RETAIN. RING, 12	
230	315752-0123	B		1	RETAIN. RING, 32	

Pos	Part No	SP	UN	Qty	Description	Page No

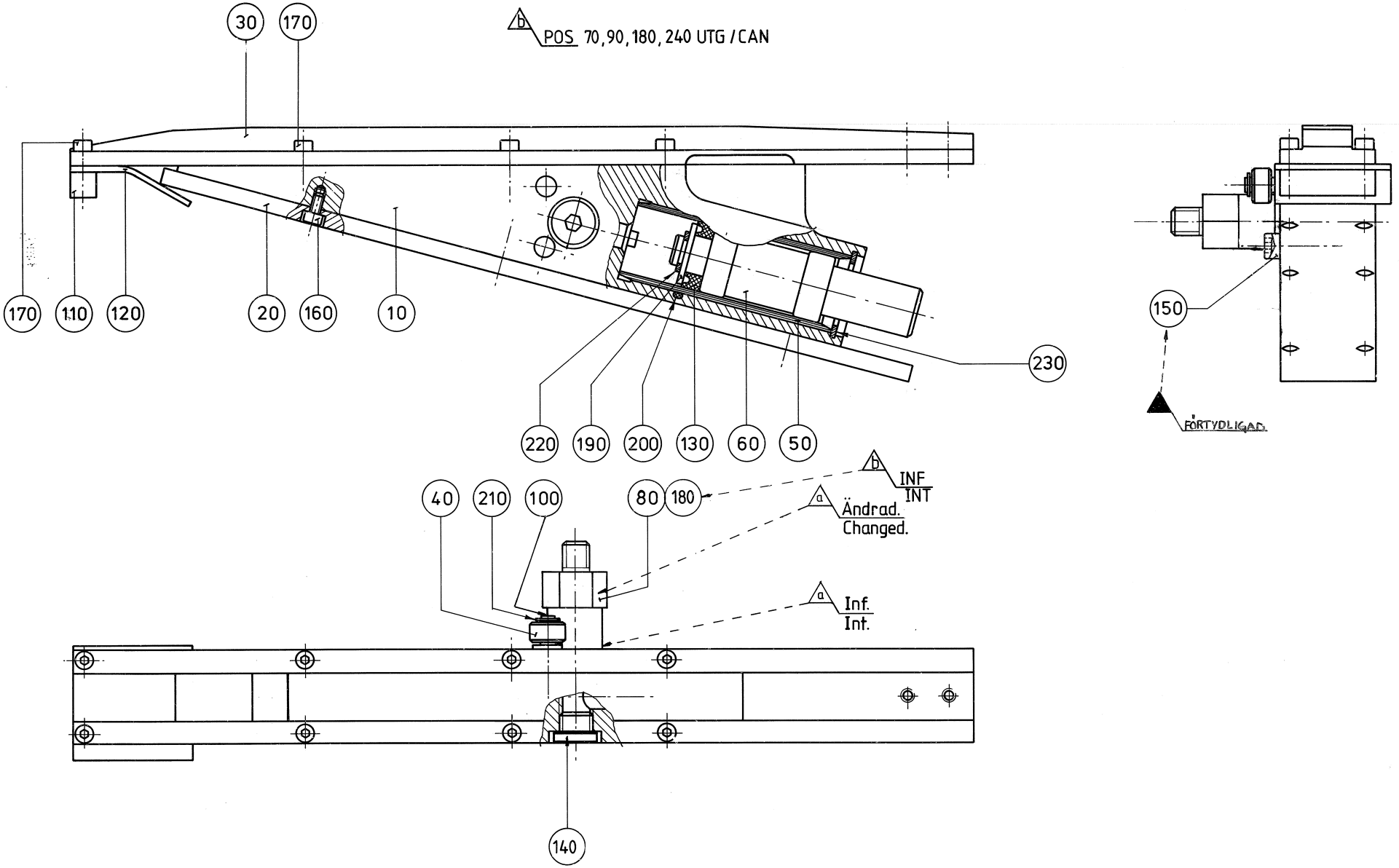
30
170
b
POS 70,90,180,240 UTG / CAN
170
110
120
20
160
10
230
220
190
200
130
60
50
150
FÖRTYDLIGAD.
40
210
100
80
180
b
INF
INT
a
Ändrad.
Changed.
a
Inf.
Int.
140

Pos	Part No	SP	UN	Qty	Description	Page No
Common Parts						
010	484668-0000	A		1	PLUNGER	
020	543501-0000	B		1	ROLLER PLATE	
030	541032-0000	B		1	ROLLER CONVEYOR	
040	2189-0000	B		1	SLEEVE	
050	37807-0000	B		1	LINING	
060	37808-0000	B		1	PISTON	
080	543502-0000	A		1	CONNECTION	
100	493719-0000	A		1	SHAFT	
110	529297-0000	D		1	WASHER	
120	529298-0000	B		1	RUBBER CLOTH	
130	90020-0020	C		1	SLEEVE	
140	342713-0210	-		1	PLUG, EXT THREAD HEX SOCKET 8638-00-140	
150	311103-0401	-		1	PARALLELL PIN, M6, 8X20 MM	
160	312115-0287	B		6	SCREW ISO4762 M4X8 A4	
170	312115-0293	B		8	SCREW ISO4762 M4X16 A4	
180	315211-0108	-		1	GASKET BOLT HEAD 13,7X20,6X2 MM G1/4	
190	315101-0178	-		1	WASHER PLAIN, BRB, 13/24 H=2	
200	315202-0219	B		1	O-RING 29,2X3 MM	
210	315750-0103	B		1	RETAIN. RING, 6	
220	315750-0109	B		1	RETAIN. RING, 12	
230	315752-0123	B		1	RETAIN. RING, 32	

Pos	Part No	SP	UN	Qty	Description	Page No

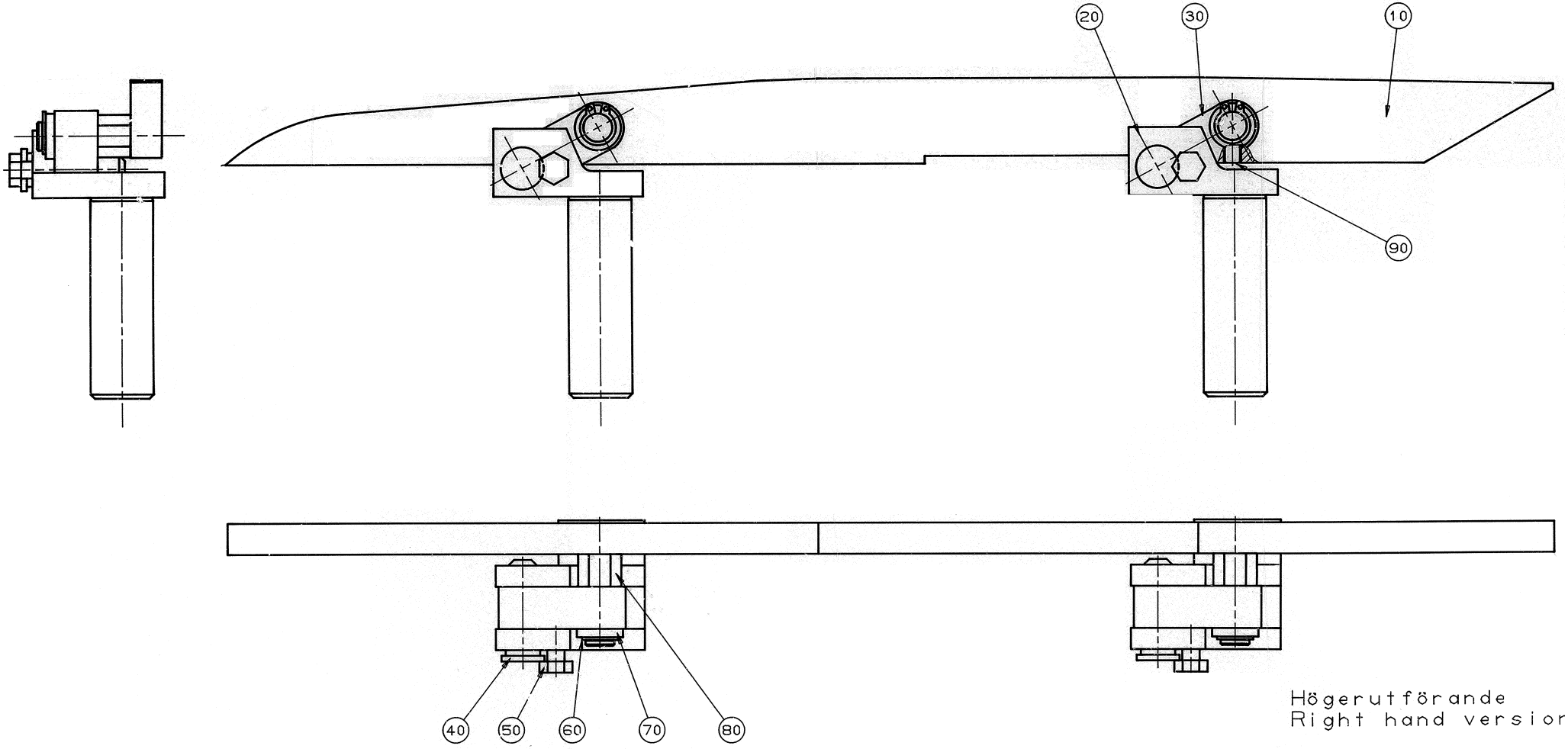
20
30
10
90
40
50
60
70
80
Högerutförande
Right hand version

ECM: 83504 - 20000925
Group number: 542226-0101
Assembly Drawing: 542226-1_1_AA

Issue: 20030213

Pos	Part No	SP	UN	Qty	Description	Page No
Common Parts						
010	543518-0000	B		1	TRANSMISSION RAIL	
020 1	542223-0000	B		2	BRACKET RIGHT	
030	541036-0000	A		2	LINK	
040	542225-0000	A		2	SHAFT	
050	312105-0364	-		2	SCREW M6S ISO 4017 M6X10 A480	
060	315750-0107	B		2	RETAIN. RING, 10	
070	128593-0000	A		2	WASHER	
080	543507-0000	A		2	SHAFT	
090	312318-0362	C		2	SCREW ISO4029 M6X8 A4	

Pos	Part No	SP	UN	Qty	Description	Page No

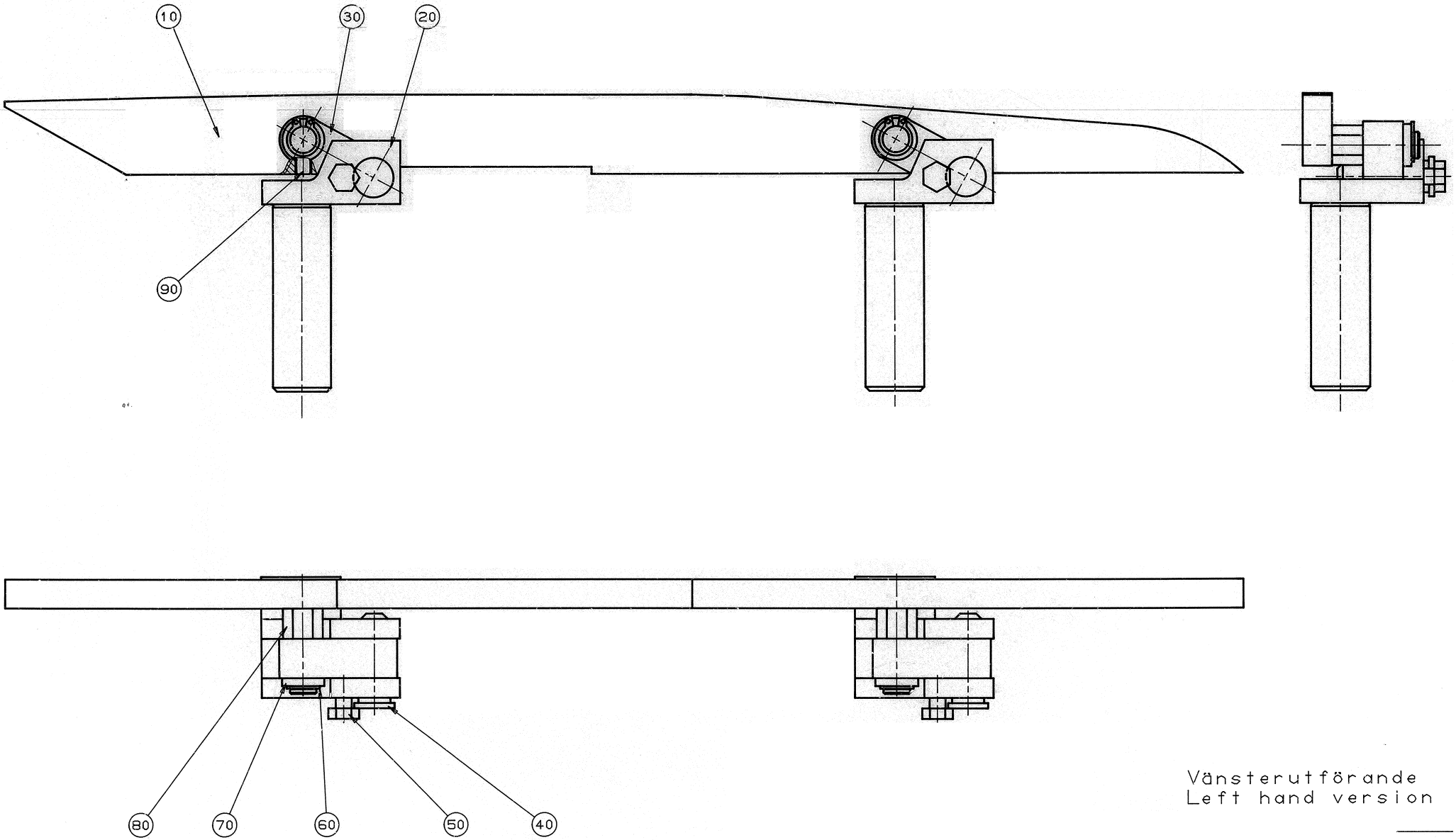

Vänsterutförande
Left hand version

ECM: 83505 - 20000925
Group number: 542226-0102
Assembly Drawing: 542226-2_1_AA

Issue: 20030213

Pos	Part No	SP	UN	Qty	Description	Page No
Common Parts						
010	543518-0000	B		1	TRANSMISSION RAIL	
020 2	542224-0000	B		2	BRACKET LEFT	
030	541036-0000	A		2	LINK	
040	542225-0000	A		2	SHAFT	
050	312105-0364	-		2	SCREW M6S ISO 4017 M6X10 A480	
060	315750-0107	B		2	RETAIN. RING, 10	
070	128593-0000	A		2	WASHER	
080	543507-0000	A		2	SHAFT	
090	312318-0362	C		2	SCREW ISO4029 M6X8 A4	

Pos	Part No	SP	UN	Qty	Description	Page No

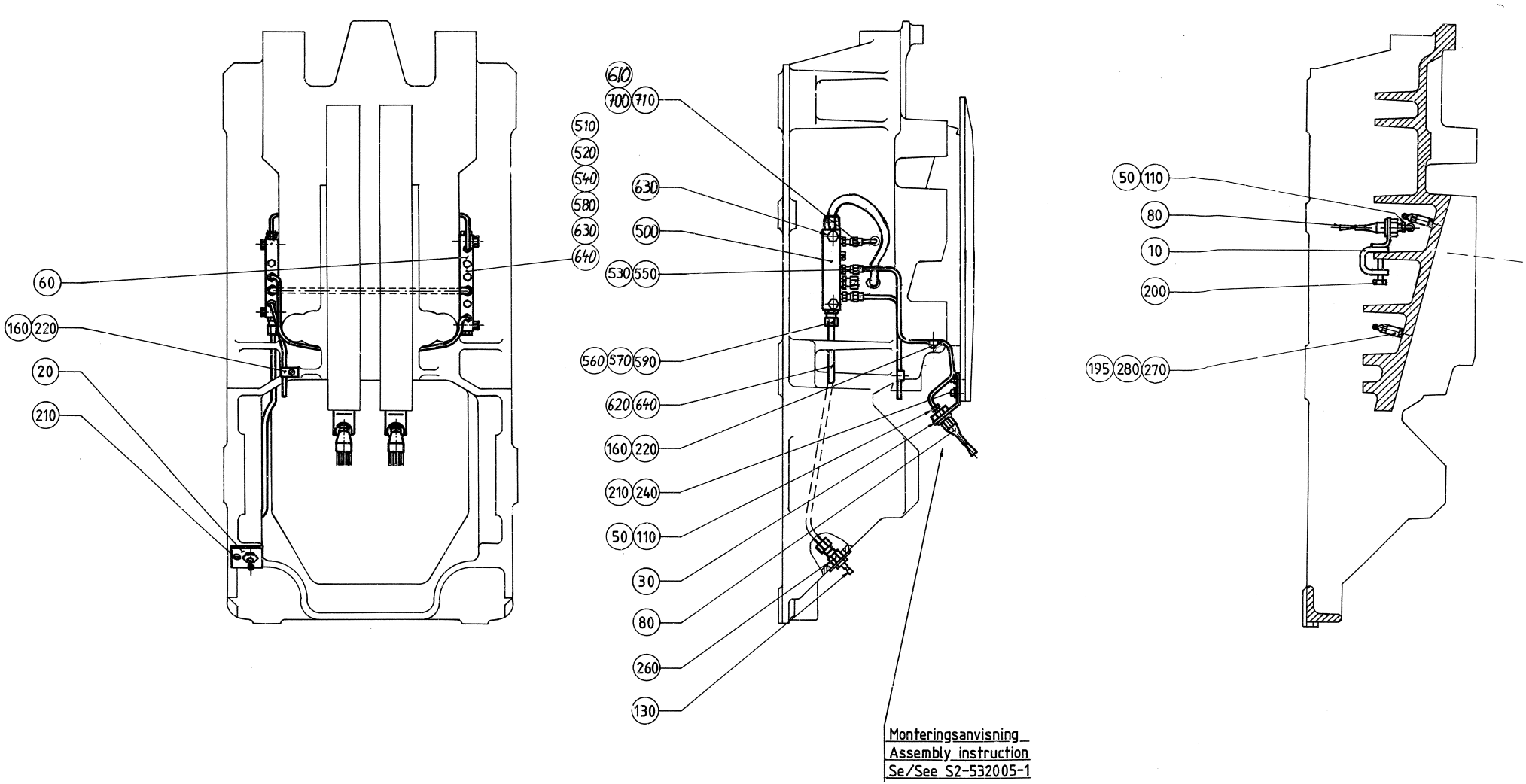
60
160 220
20
210
610
700 710
510
520
540
580
630
640
630
500
530 550
560 570 590
620 640
160 220
210 240
50 110
30
80
260
130
Monteringsanvisning
Assembly instruction
Se/See S2-532005-1
50 110
80
10
200
195 280 270

ECM: 83503 - 20000925
Group number: 536537-0201
Assembly Drawing: 536537-2_1_AA

Issue: 20030213

Pos	Part No	SP	UN	Qty	Description	Page No
Common Parts						
010	263106-0000	-		1	HOLDER	
020	259962-0002	-		1	PLATE	
030	484681-0000	-		2	HOLDER	
050	90028-0001	B		4	CONE 5/32"	
080	90092-0048	B		4	OIL BRUSH, FLAT, 5/16-24 UNF	
110	90134-0003	A		4	BUSHING	
130	90134-0033	A		1	QUICK COUPLING, (M) LP-004-1-WR010	
160	90165-0003	-		5	PIPE CLIP FOR TUBE D=4 MM	
195	90330-0032	B		4	NIPPLES, EXT. THREAD. ISO 7/1 R1/8-R1/8	
200	312101-0372	-		6	SCREW M6S M6X25 FZB	
210	312115-0327	-		5	SCREW ISO4762 M5X12 A4	
220	312121-0285	-		5	SCREW SLOT.PAN HD. MCS 4X6 FZB	
240	315105-0146	-		4	WASHER ISO 7089-5-200 HV-A4	
260	342724-0102	-		1	CONN. STR. PIPE GI 6-G1/8	
270	344502-0026	A		4	GREASE NIPPLE STRAIGHT R1/8 CON.	
280	342707-0109	-		4	SLEEVE, INT. THREAD, NO. 2543-1/8	
500	90032-0039	A		1	BLOCK 4 WAYS	
510	90032-0038	A		1	BLOCK 2 WAYS	
520	90087-0019	-		1	PLUG M10X1 STAINLESS	
530	90134-0040	A		5	BUSHING VALVE CONNECTION 4 MM	
540	90134-0052	A		1	PLUG DOSING BLOCK	
550	90028-0021	B		5	CONE TUBE 4 MM	
560	90028-0025	B		3	CONE TUBE 6 MM	
570	90134-0055	A		3	BUSHING/NUT INLET/OUTLET 6 MM	
580	90165-0005	-		2	PIPE CLIP FOR TUBE D=6 MM	
590	342706-0130	-		3	ACCESSORIES, INSERT SLEEVE 6 MM	
610	90166-0011	A	M	5	TUBE 6 MM PA,TRANSP.	
620	90166-0109	A	M	5	TUBE 4 MM PA,TRANSP.	
630	312155-0295	-		4	SCREW EN 10642 MF6S M4X20 A480	
640	312132-0287	-		2	SCREW SLOT. PAN HEAD MSCS M4X8	
700	90092-0054	A		2	METERING VALVE 50 MM3	
710	90092-0054	A		2	METERING VALVE 50 MM3	

Pos	Part No	SP	UN	Qty	Description	Page No

Machine Type | Group Description | Used-In | Group Number | Page No

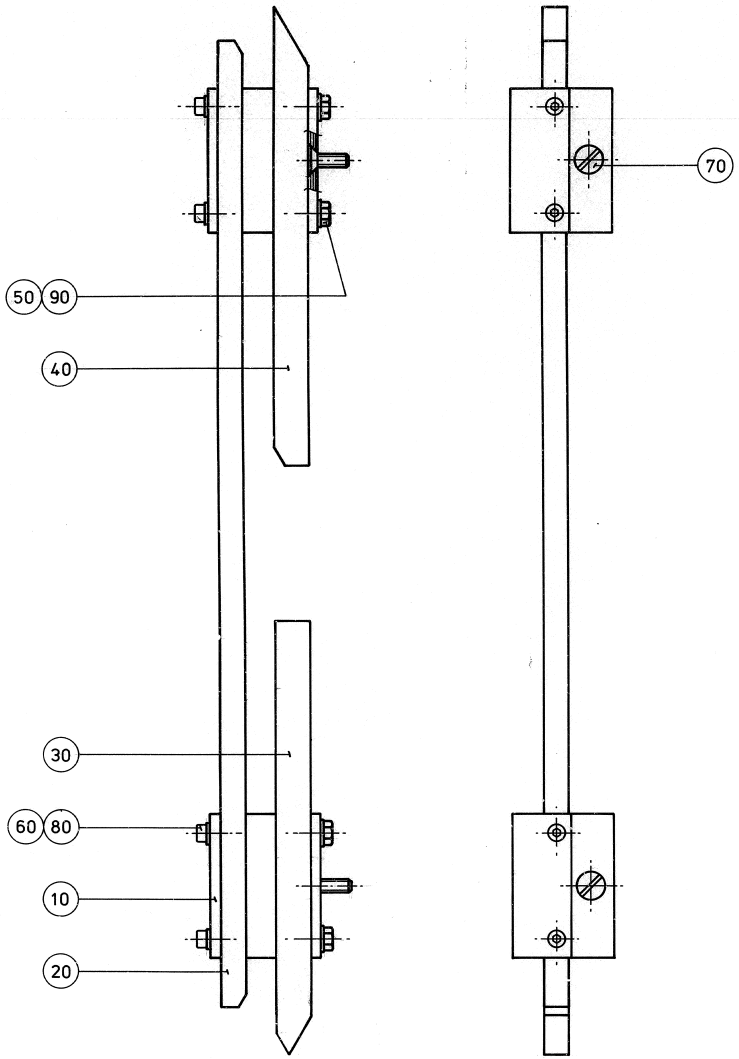

Vänsterutförande

Left hand version

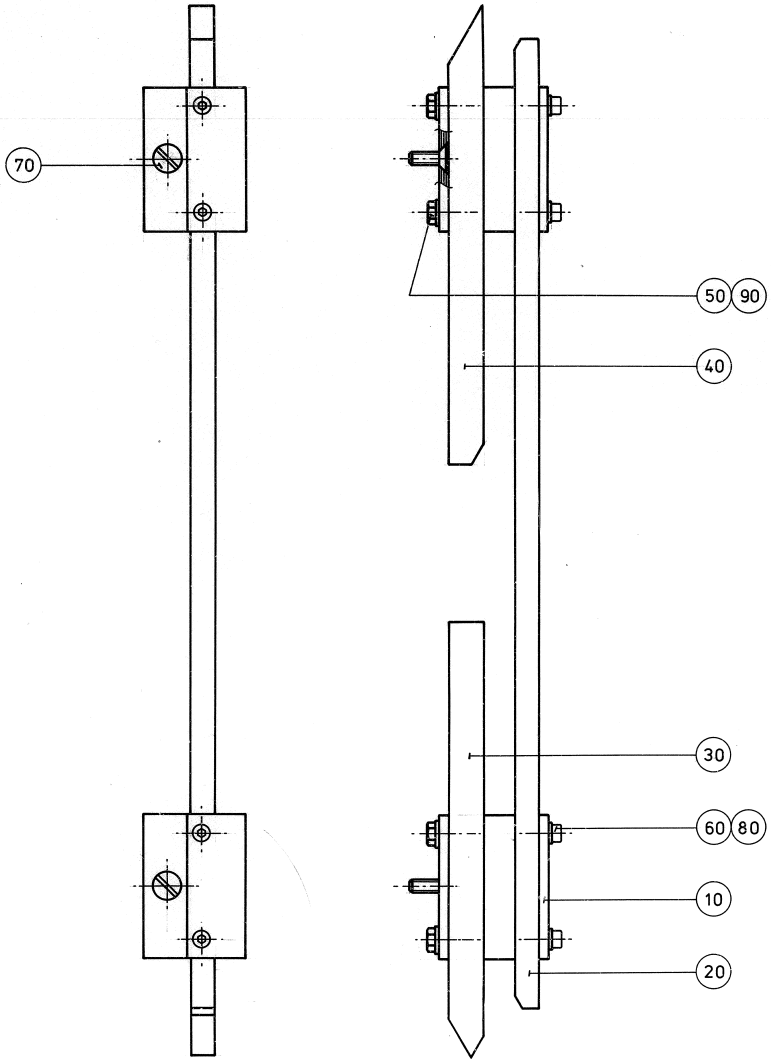

Högerutförande

Right hand version

ECM: 83499 - 20000925
Group number: 532010-0101
Assembly Drawing: 532010-1_1_AA

Issue: 20030213

Pos	Part No	SP	UN	Qty	Description	Page No
Common Parts						
010	484677-0000	-		2	BOW CLAMP	
020	263218-0000	-		1	RAIL	
030	484678-0000	B		1	TRANSMISSION RAIL	
040	484679-0000	B		1	TRANSMISSION RAIL	
050	312101-0327	-		4	SCREW M6S M5X12 FZB	
060	312111-0291	-		4	SCREW HEX.SOCK.HD.MC6S-TT 4X12 88 FZB	
070	312141-0368	-		2	SCREW COUNTERS.SLOT.HD. MFS 6X16 FZB	
080	315101-0136	-		4	BRICKA, BRB, 4,3/8 H=0,8	
090	315101-0146	-		4	WASHER PLAIN, BRB, 5,3/10 H=1	

Pos	Part No	SP	UN	Qty	Description	Page No

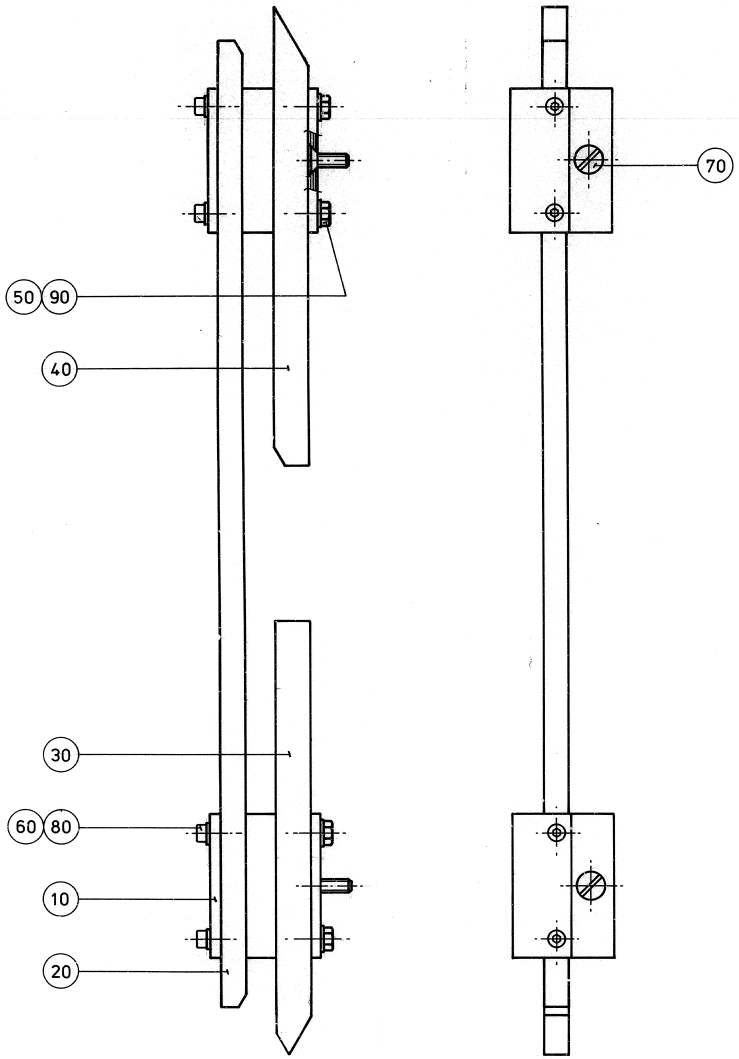

Vänsterutförande

Left hand version

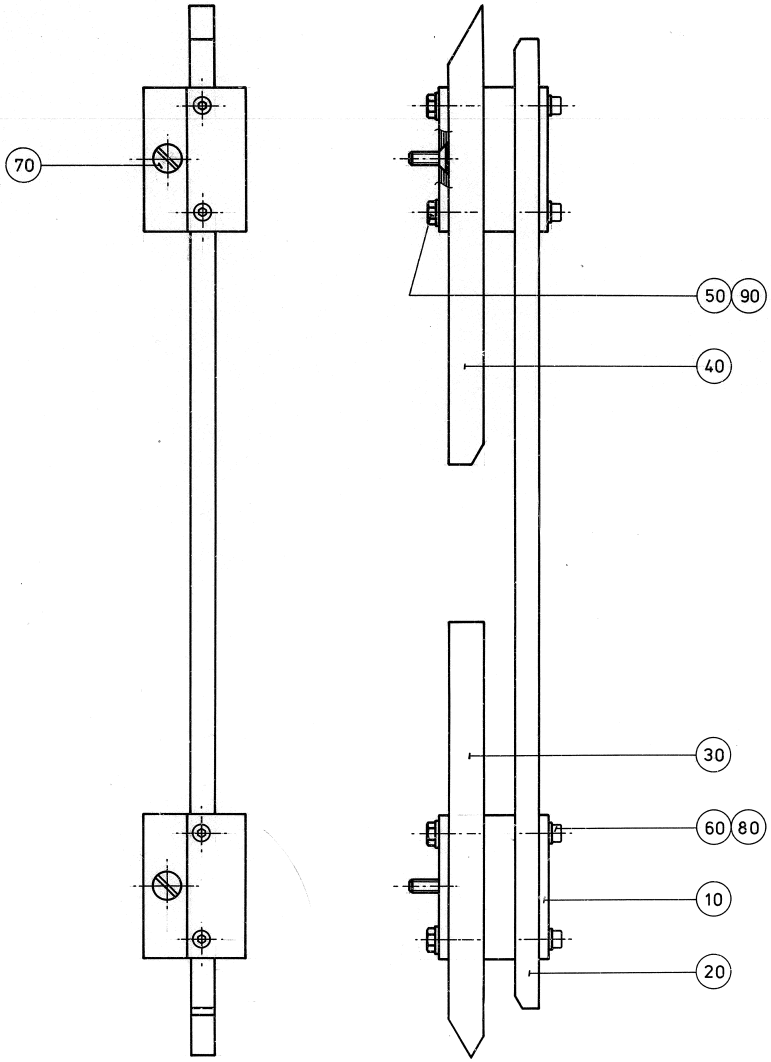

Högerutförande

Right hand version

Pos	Part No	SP	UN	Qty	Description	Page No
Common Parts						
010	484677-0000	-		2	BOW CLAMP	
020	263218-0000	-		1	RAIL	
030	484678-0000	B		1	TRANSMISSION RAIL	
040	484679-0000	B		1	TRANSMISSION RAIL	
050	312101-0327	-		4	SCREW M6S M5X12 FZB	
060	312111-0291	-		4	SCREW HEX.SOCK.HD.MC6S-TT 4X12 88 FZB	
070	312141-0368	-		2	SCREW COUNTERS.SLOT.HD. MFS 6X16 FZB	
080	315101-0136	-		4	BRICKA, BRB, 4,3/8 H=0,8	
090	315101-0146	-		4	WASHER PLAIN, BRB, 5,3/10 H=1	

Pos	Part No	SP	UN	Qty	Description	Page No

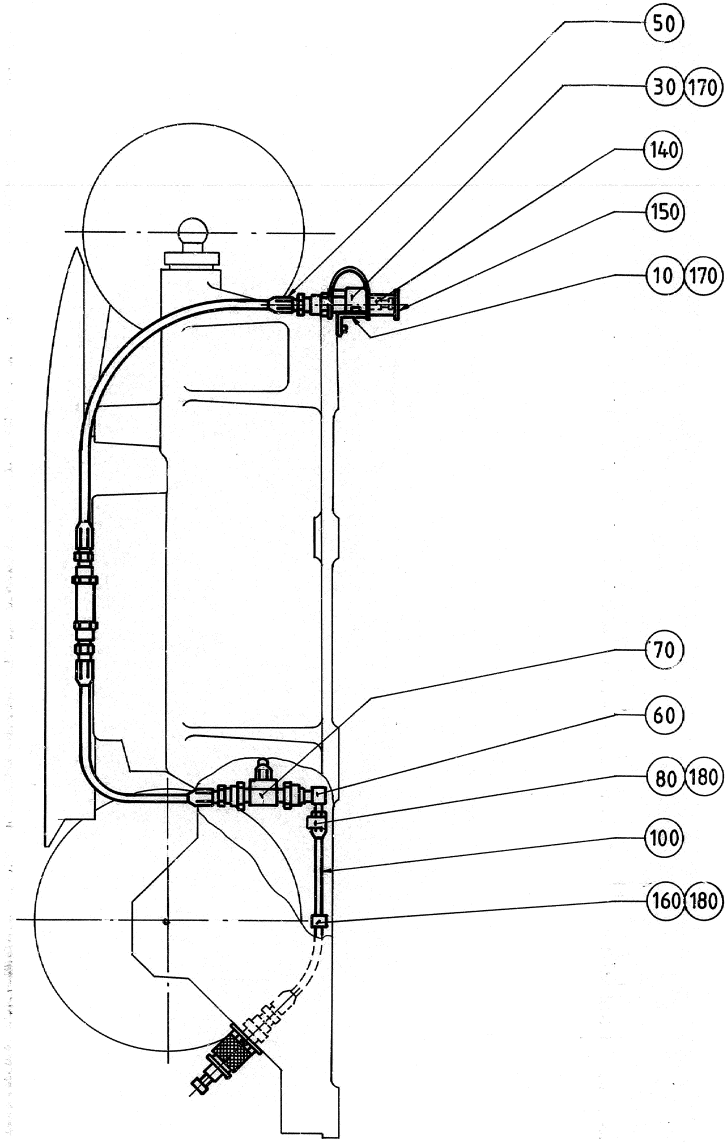
50
30 170
140
150
10 170
70
60
80 180
100
160 180

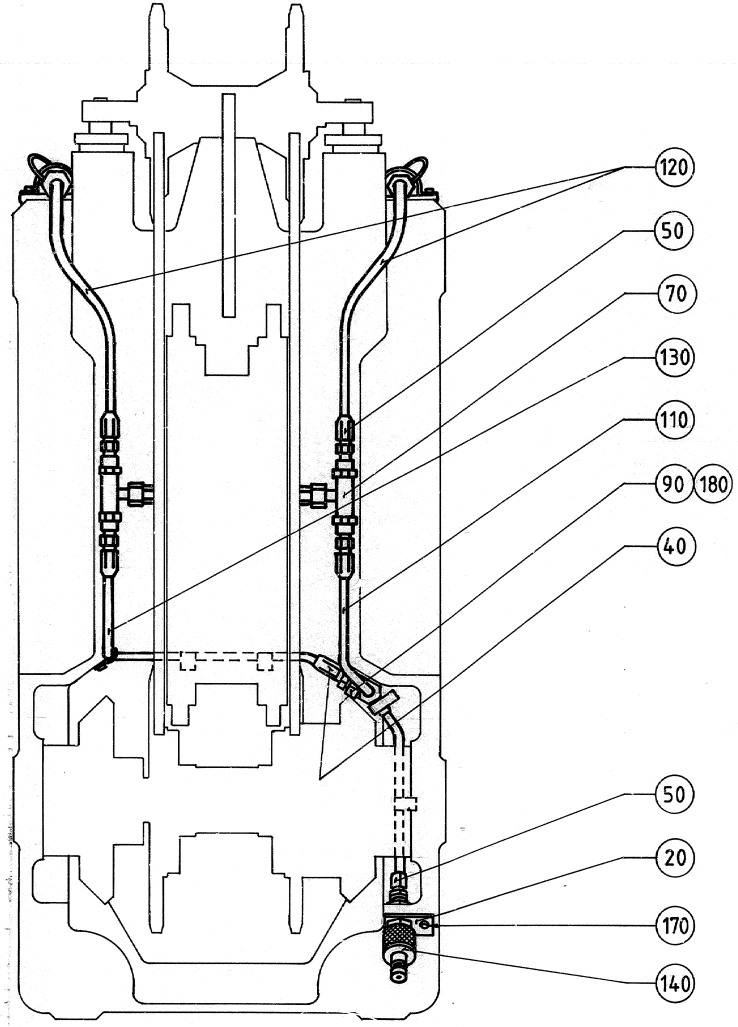
120
50
70
130
110
90 180
40
50
20
170
140

ECM: 83501 - 20000925
Group number: 532157-0101
Assembly Drawing: 532157-1_1_AA

Issue: 20030213

Pos	Part No	SP	UN	Qty	Description	Page No
Common Parts						
010	259961-0000	A		2	HOLDER	
020	259962-0001	-		1	PLATE	
030	284116-0000	A		2	CAP	
040	90055-0042	-		1	NIPPLES, EXT. THREAD, HEXAGON, NO. 6835-	
050	90055-0056	-		9	HOSE COUPLING	
060	90055-0057	-		1	HOSE COUPLING	
070	90055-0058	-		3	HOSE COUPLING	
080	90074-0003	-		1	CABLE CLIPS, D=12 MM	
090	90074-0015	-		1	CABLE CLIPS, D=15,2 MM	
100	90148-0010	-	MM	160	HOSE	
110	90148-0010	-	MM	190	HOSE	
120	90148-0010	-	MM	350	HOSE	
130	90148-0010	-	MM	420	HOSE	
140	90163-0044	B		3	QUICK COUPLING, (M) MD-006-2-WRD13	
150	90163-0306	B		2	QUICK COUPLING, MD-006-5-74-KU (DUST CAP	
160	90165-0007	-		4	PIPE CLIP FOR TUBE D=8 MM	
170	312111-0327	-		9	SCREW HEX.SOCK.HD.MC6S-TT 5X12 88 FZB	
180	312121-0323	-		7	SCREW SLOT.PAN HD. MCS 5X8 FZB	

Pos	Part No	SP	UN	Qty	Description	Page No

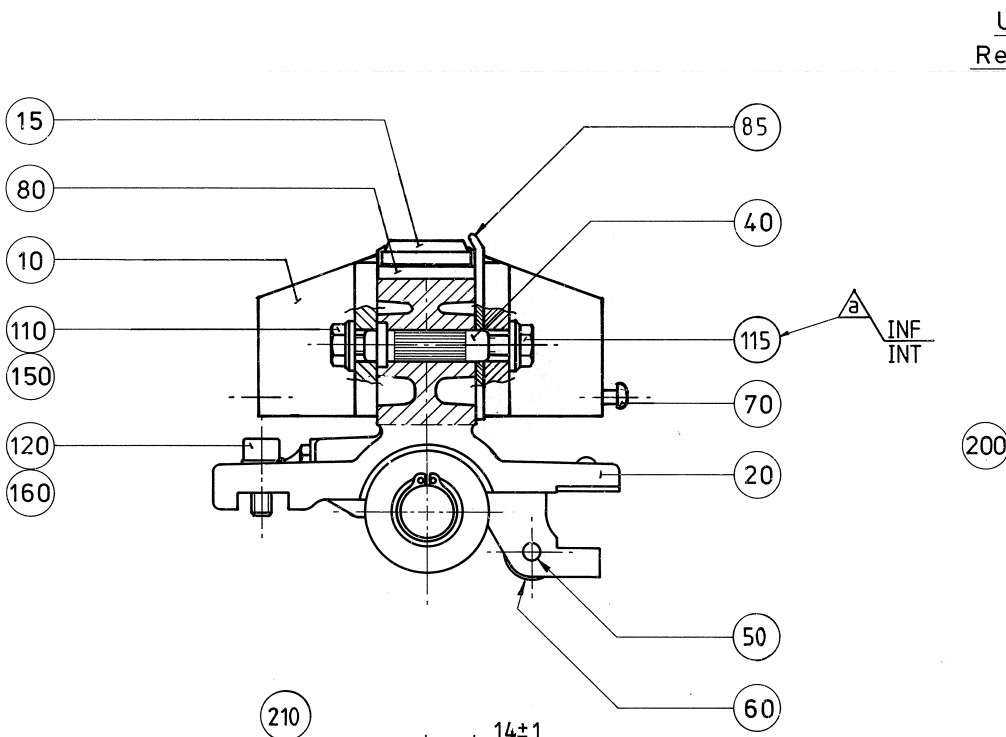
15
80
10
110
150
120
160
85
40
115
70
20
50
60
a
INF
INT

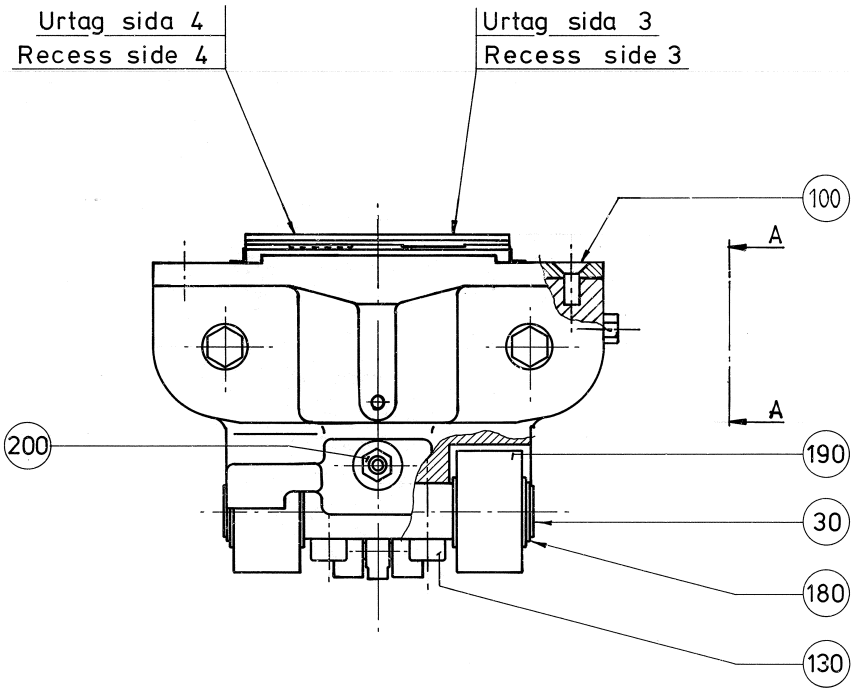
Urtag sida 4
Recess side 4
Urtag sida 3
Recess side 3
100
A
A
200
190
30
180
130

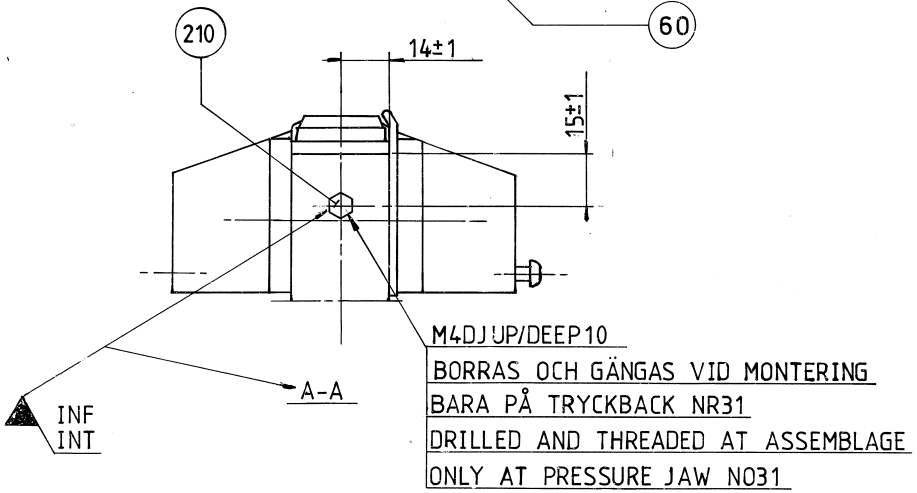
210
14±1
15±1
A-A
INF
INT
M4DJUP/DEEP10
BORRAS OCH GÄNGAS VID MONTERING
BARA PÅ TRYCKBACK NR31
DRILLED AND THREADED AT ASSEMBLAGE
ONLY AT PRESSURE JAW NO31

ECM: 108083 - 20020507
Group number: 532011-0100
Assembly Drawing: 532011-2_1_AA

Issue: 20030213

Pos	Part No	SP	UN	Qty	Description	Page No
V065 IH LVS						
010 4	533404-0000	A		2	FLAP	
015 4	1520560-0000	B		1	DOLLY	
080 2	541242-0000	A		1	RUBBER HOLDER	
085	544569-0003	B		1	RULER	
100	312145-0327	-		2	SCREW COUNTERS.SLOT.HD. MFS 5X12 SS	
110	312105-0367	-		2	SCREW M6S M6X14 A280	
115	312105-0368	-		2	SCREW M6S M6X16 A280	
V065 IH MVS						
010 4	533404-0000	A		2	FLAP	
015 5	1110377-0001	B		2	DOLLY	
025	594732-0000	B		1	TEFLON CLOTH (TILL MVS MASKIN)	
035	594731-0000	B		1	DOLLY	
080 3	1175042-0000	A		1	RUBBER HOLDER	
085	544569-0003	B		1	RULER	
095	576144-0000	A		2	STOP LUG	
105	312155-0329	-		2	SCREW EN 10642 MF6S M5X16 A480	
110	312105-0367	-		2	SCREW M6S M6X14 A280	
115	312105-0368	-		2	SCREW M6S M6X16 A280	
V065 TPC						
010 4	533404-0000	A		2	FLAP	
015 3	541243-0000	B		1	DOLLY	
080 2	541242-0000	A		1	RUBBER HOLDER	
085	544569-0003	B		1	RULER	
100	312145-0327	-		2	SCREW COUNTERS.SLOT.HD. MFS 5X12 SS	
110	312105-0367	-		2	SCREW M6S M6X14 A280	
115	312105-0368	-		2	SCREW M6S M6X16 A280	
Common Parts						
020	484673-0000	A		1	PRESSURE JAW	
030	484674-0000	A		1	SHAFT	
040	4613-0000	A		2	BUSHING	
050	550193-0000	B		1	PIN	
060	543509-0000	B		1	ROLL	
070	5809-0000	A		1	TACK	
120	312115-0368	-		2	SCREW ISO4762 M6X16 A4	
130	312115-0372	-		2	SCREW ISO4762 M6X25 A4	
150	315115-0153	-		4	WASHER PLAIN, TBRB 6,4/12 H=3	
160	315401-0153	-		2	WASHER FBH6,1FZB	
180	315750-0112	B		2	RETAIN. RING, 15	
190	321576-0197	B		2	BEARING ROLLER, 2 SEALS, 15X35X19 MM	
200	344502-0021	A		1	GREASE NIPPLE STRAIGHT M6	
210	312105-0362	-			SCREW M6S ISO 4017 M6X8 A480	

Machine Type | Group Description | Used-In | Group Number | Page No

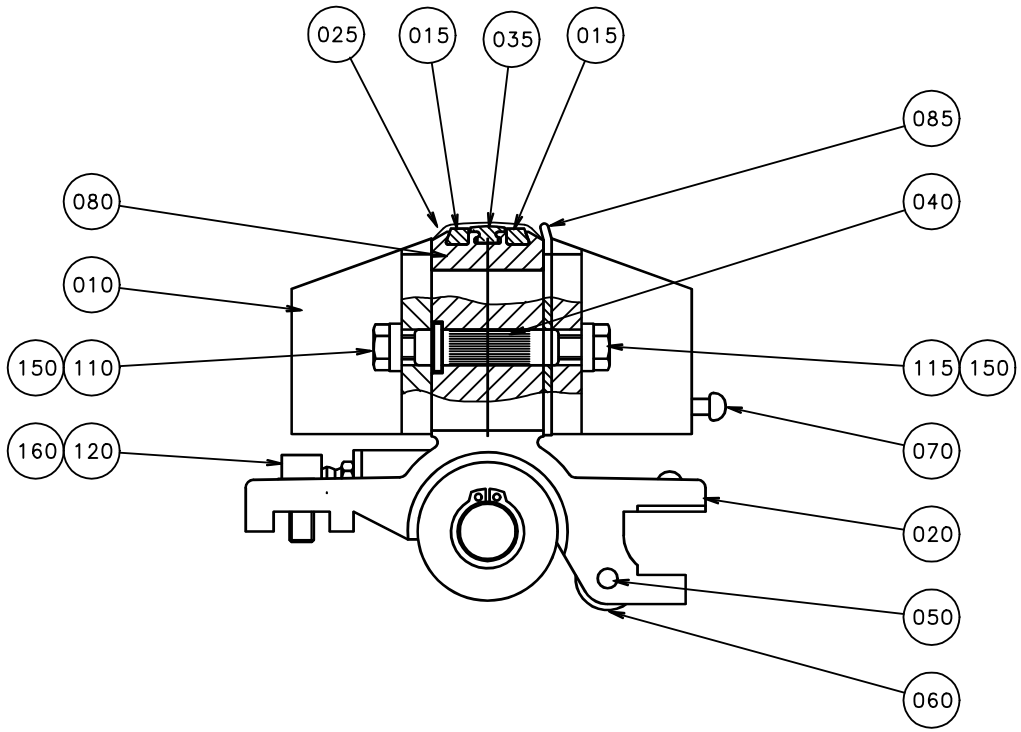
025
015
035
015
085
080
040
010
150
110
115
150
160
120
070
020
050
060

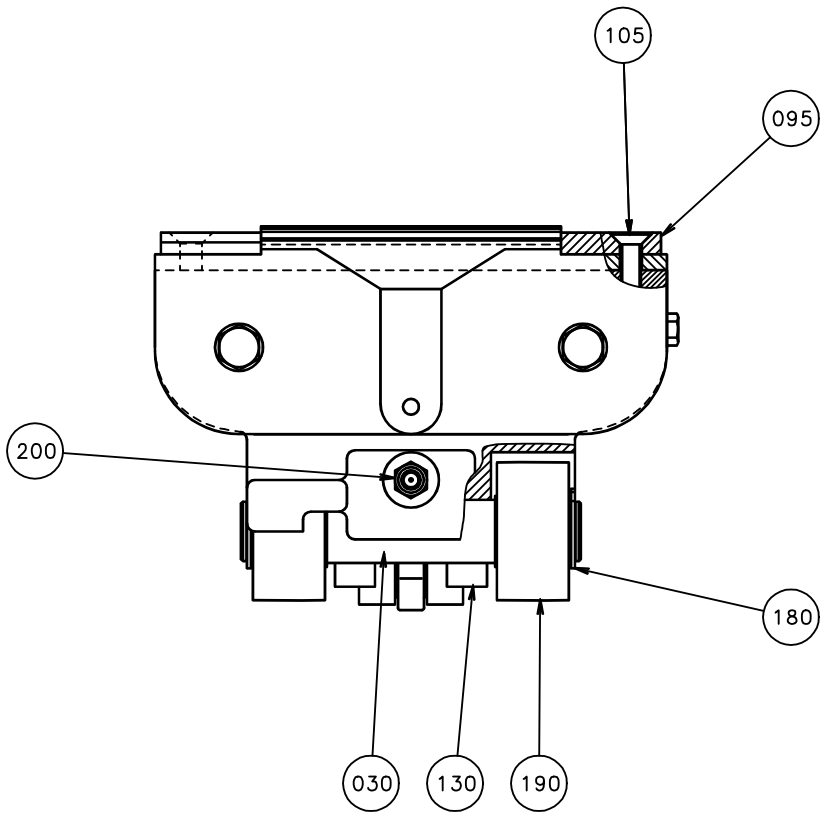
105
095
200
180
030
130
190

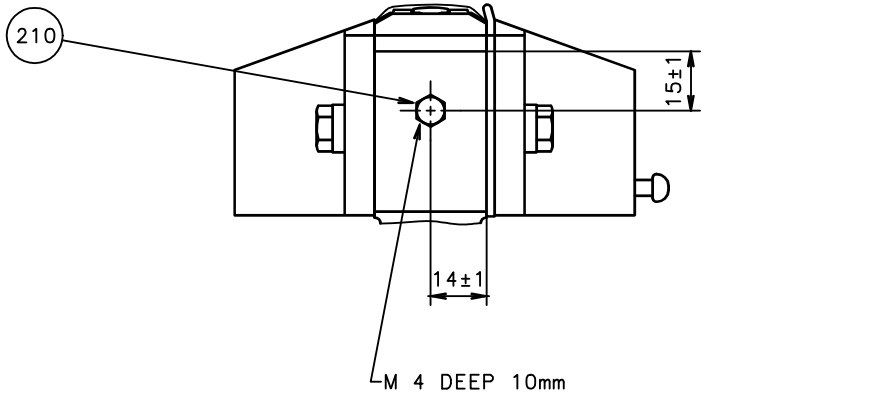
210
15±1
14±1
M 4 DEEP 10mm
DRILLED AND THREADED THEN ASSEMBLING
ONLY AT PRESSURE JAW NO31

ECM: 108083 - 20020507
Group number: 532011-0100
Assembly Drawing: 532011-3_1_AA

Issue: 20030213

Pos	Part No	SP	UN	Qty	Description	Page No
V065 IH LVS						
010 4	533404-0000	A		2	FLAP	
015 4	1520560-0000	B		1	DOLLY	
080 2	541242-0000	A		1	RUBBER HOLDER	
085	544569-0003	B		1	RULER	
100	312145-0327	-		2	SCREW COUNTERS.SLOT.HD. MFS 5X12 SS	
110	312105-0367	-		2	SCREW M6S M6X14 A280	
115	312105-0368	-		2	SCREW M6S M6X16 A280	
V065 IH MVS						
010 4	533404-0000	A		2	FLAP	
015 5	1110377-0001	B		2	DOLLY	
025	594732-0000	B		1	TEFLON CLOTH (TILL MVS MASKIN)	
035	594731-0000	B		1	DOLLY	
080 3	1175042-0000	A		1	RUBBER HOLDER	
085	544569-0003	B		1	RULER	
095	576144-0000	A		2	STOP LUG	
105	312155-0329	-		2	SCREW EN 10642 MF6S M5X16 A480	
110	312105-0367	-		2	SCREW M6S M6X14 A280	
115	312105-0368	-		2	SCREW M6S M6X16 A280	
V065 TPC						
010 4	533404-0000	A		2	FLAP	
015 3	541243-0000	B		1	DOLLY	
080 2	541242-0000	A		1	RUBBER HOLDER	
085	544569-0003	B		1	RULER	
100	312145-0327	-		2	SCREW COUNTERS.SLOT.HD. MFS 5X12 SS	
110	312105-0367	-		2	SCREW M6S M6X14 A280	
115	312105-0368	-		2	SCREW M6S M6X16 A280	
Common Parts						
020	484673-0000	A		1	PRESSURE JAW	
030	484674-0000	A		1	SHAFT	
040	4613-0000	A		2	BUSHING	
050	550193-0000	B		1	PIN	
060	543509-0000	B		1	ROLL	
070	5809-0000	A		1	TACK	
120	312115-0368	-		2	SCREW ISO4762 M6X16 A4	
130	312115-0372	-		2	SCREW ISO4762 M6X25 A4	
150	315115-0153	-		4	WASHER PLAIN, TBRB 6,4/12 H=3	
160	315401-0153	-		2	WASHER FBH6,1FZB	
180	315750-0112	B		2	RETAIN. RING, 15	
190	321576-0197	B		2	BEARING ROLLER, 2 SEALS, 15X35X19 MM	
200	344502-0021	A		1	GREASE NIPPLE STRAIGHT M6	
210	312105-0362	-			SCREW M6S ISO 4017 M6X8 A480	

Machine Type | Group Description | Used-In | Group Number | Page No

Tetra Pak

SPC
Spare Parts Catalogue

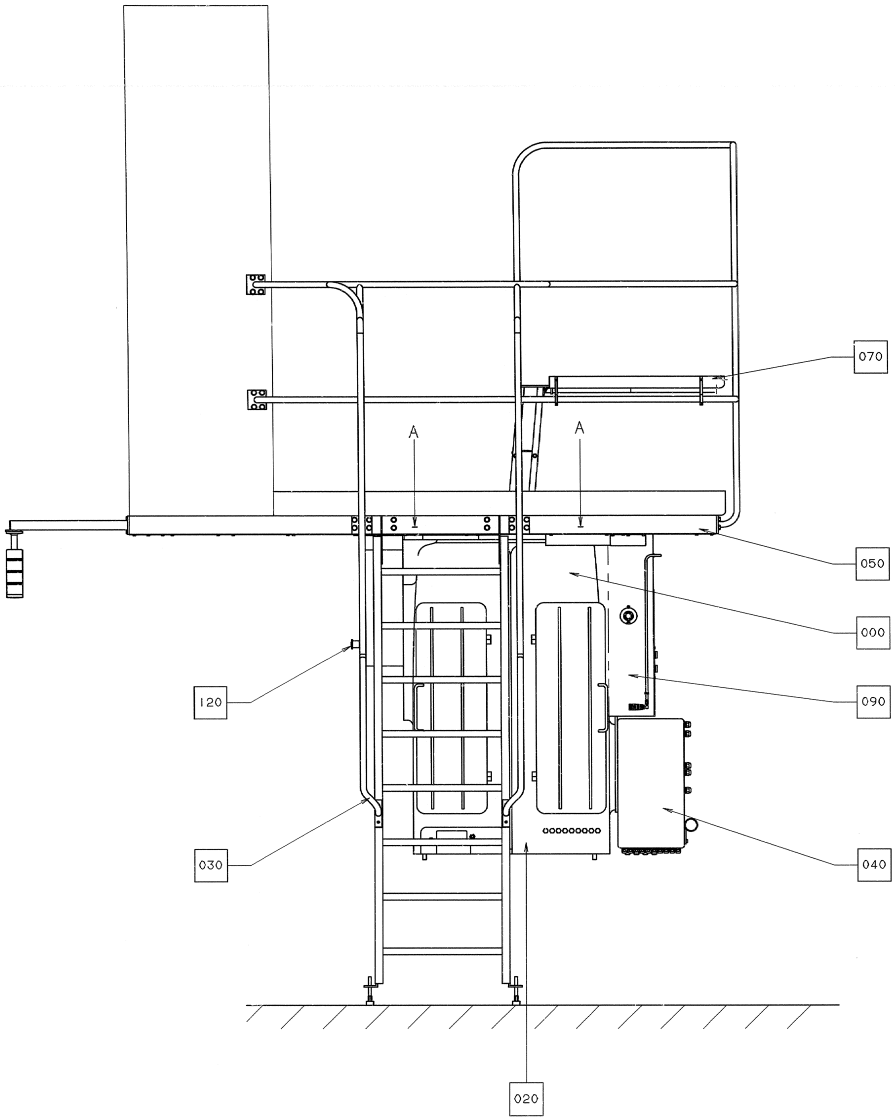

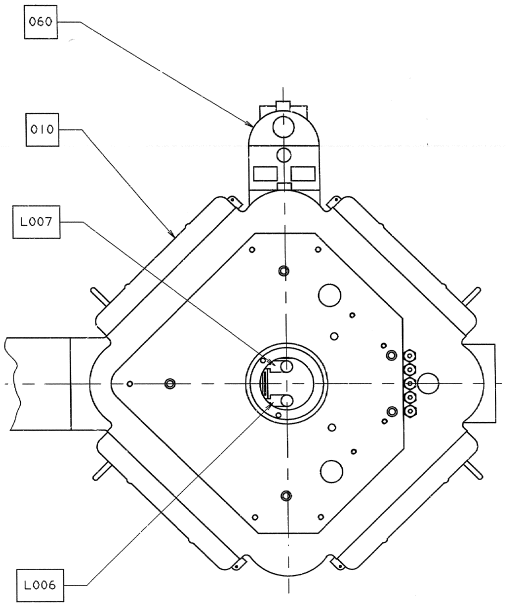

SECTION A-A
SCALE 1:5

Pos	Part No	SP	UN	Qty	Description	Page No
Common Parts						
F000	A536539-0303	-		1	MACHINE BODY	**241, 243**
F010 1	A548468-0201	-		1	MACHINEBODY DOOR	**249**
F010 2	A548468-0202	-		1	MACHINEBODY DOOR	**251**
F010 3	A548468-0203	-		1	MACHINEBODY DOOR	**253**
F010 4	A548468-0204	-		1	MACHINEBODY DOOR	**255**
F020	A263812-0201	-		1	CENTRAL LUBRICATION	**257**
F030	A567218-0101	-		1	LADDER	**265**
F040	A569628-0301	-		1	APPLIANCE BOX	**267**
F050	A562887-0301	-		1	PLATFORM	**269, 271**
F060	A532160-0301	-		1	HYDRAULIC SYSTEM	**275**
F070	A568143-0101	-		1	PLATFORM	**281**
F090	A1175393-0101	-		1	CABLE DUCT	**285**
F120	A568105-0201	-		1	CABLE DUCT	**287**
L006	A68161-0102	A		1	COIL ELEMENT	**293**
L007	A68161-0102	A		1	COIL ELEMENT	**293**

Pos	Part No	SP	UN	Qty	Description	Page No

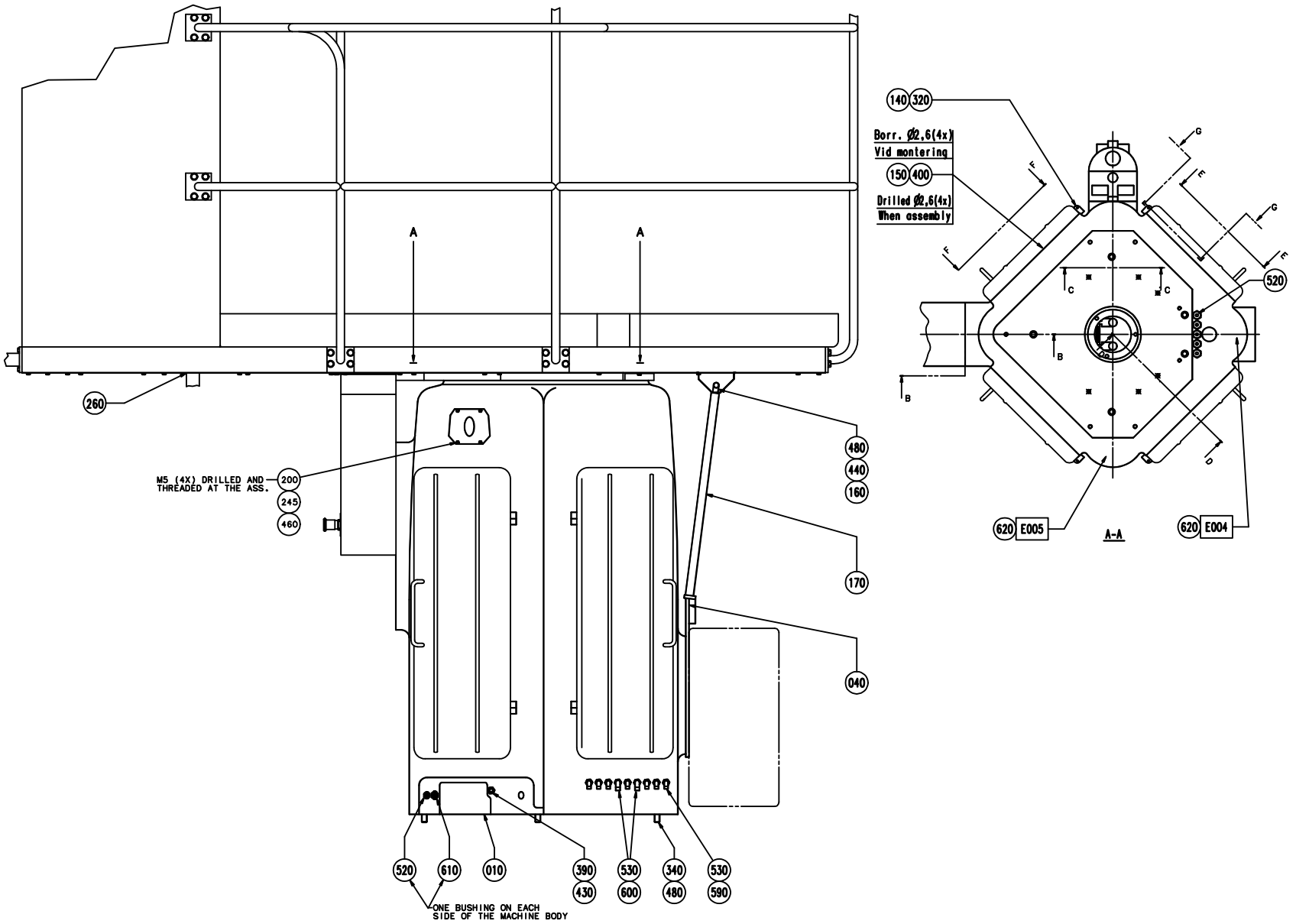
140 320
Borr. Ø2,6(4x)
Vid montering
150 400
Drilled Ø2,6(4x)
When assembly
520
620 E005
620 E004
A-A
260
M5 (4X) DRILLED AND THREADED AT THE ASS.
200
245
460
480
440
160
170
040
520 610 010 390 430 530 600 340 480 530 590
ONE BUSHING ON EACH SIDE OF THE MACHINE BODY

ECM: 83509 - 20000925
Group number: 536539-0303
Assembly Drawing: 536539-6_1_AA

Issue: 20030213

Pos	Part No	SP	UN	Qty	Description	Page No
Common Parts						
010	594725-0000	-		1	MACHINE BODY	
030 2	562891-0000	-		1	PLATE	
040	265952-0000	-		1	CANTILEVER	
055	555064-0000	-		1	HOLDER	
070 3	569606-0000	-		1	RING	
080	236651-0000	-		1	SHEET	
085	543494-0000	-		1	COIL HOLDER	
110	434466-0000	-		1	PLATE	
120 1	2612-0001	-			WASHER	
120 2	2612-0002	-			WASHER	
120 3	2612-0003	-			WASHER	
120 4	2612-0004	-			WASHER	
130	2613-0000	-		8	SCREW	
140	2965-0000	A		8	HINGE	
160	266043-0000	-		1	ROPE	
170	279372-0000	-		1	PROTECTION PIPE	
195	547960-0000	-		6	BRACKET	
200	1175088-0000	-		1	PROTECTION	
240	311305-0310	-		8	SLOTTED PIRPC5X20FZB	
245	312115-0323	-		4	SCREW ISO4762 M5X8 A4	
260	312105-0366	-		6	SCREW M6S M6X12 A280	
270	312105-0364	-		4	SCREW M6S ISO 4017 M6X10 A480	
280	312105-0447	-		4	SCREW M6S ISO 4017 M8X12 A480	
290	312105-0554	-		7	SCREW M6S ISO 4014 M12X110 A480	
320	312115-0366	-		8	SCREW ISO4762 M6X12 A4	
330	312115-0544	-		5	SCREW ISO4762 M12X60 A4	
340	312115-0630	-		4	SCREW ISO4762 M16X50 A4	
350	312105-0325	-		12	SCREW M6S ISO 4017 M5X10 A480	
360	312125-0287	-		30	SCREW PAN HEAD MCS M4X8 SS	
370	312165-0329	-		3	SCREW SLOT.RAIS.COUNT.HD.MKFS 5X16 SS	
380	312165-0368	-		4	SCREW SLOT.RAIS.COUNT.HD.MKFS 6X16 SS	
390	312311-0548	-		1	SCREW ISO4028 M12X80 FZB	
430	312605-0322	-		1	HEXAGON NUT, M6M M12 A280	
440	312605-0324	-		1	HEXAGON NUT, M6M M16 A280	
450	312810-0322	-		5	HEXAGON NUT, NY-LOCK M12 FZB	
460	315105-0146	-		16	WASHER ISO 7089-5-200 HV-A4	
470	315105-0153	-		12	WASHER ISO 7089-6-200 HV-A4	
475	315105-0165	-		4	WASHER ISO 7089-8-200 HV-A4	
480	315105-0186	-		5	WASHER ISO 7089-16-200 HV-A4	
510	315121-0178	-		12	WASHER PLAIN, TBRSB 13/36 H=6	
520	352101-0103	-		7	LEAD-IN, PR18,6/PG11, E-1457518	
530	342767-0104	-		9	CONN. BULKHEAD G1/4	
550	352112-0101	-	M	2	LOCATING STRIP, TUB 12	
560	352113-0102	-		2	CLIP-STRIP, BLACK 188X4,8 MM	
590	342732-0103	-		14	ELBOW PIPE JOINT, EXT.THREAD, D=6MM-G1/4	
600	342732-0104	-		4	ELBOW PIPE JOINT, EXT.THREAD, D=8MM-G1/4	
610	352101-0105	-		2	LEAD-IN, PR22,5/PG16, E-1457522	
620	90152-0033	-	M	12	SPIRAL CONDUIT FOR PR 15,2(PG 9)	
B140	90044-0121	A		1	PROX.SW. 922AB3XM-A9P-050-L	
E003	A1350005-0101	-		1	LIGHT FIXTURE	**245**
E004	A1350005-0101	-		1	LIGHT FIXTURE	**245**
E005	A1350005-0101	-		1	LIGHT FIXTURE	**245**
F100	A1483045-0101	-		1	TUBE FLUSHING	**247**

Machine Type Group Description Used-In Group Number Page No

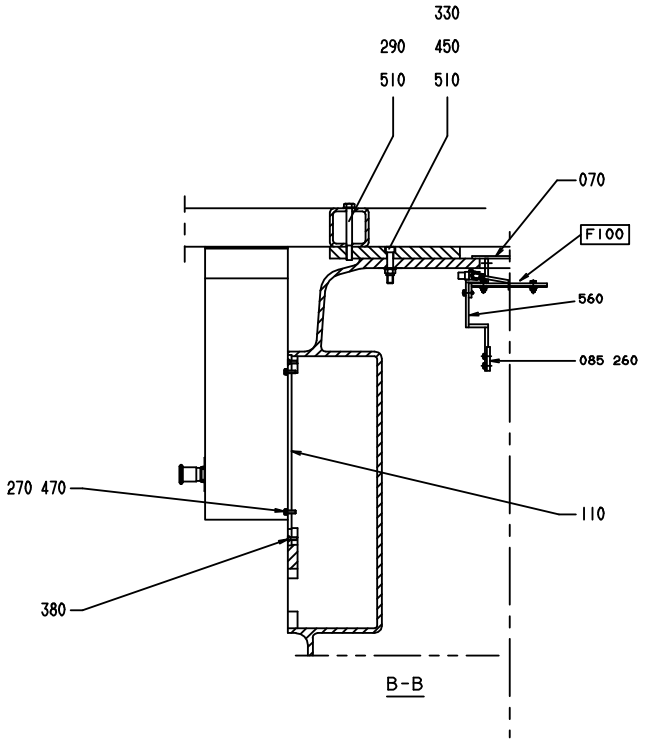
330
290
450
510
510
070
F100
560
085 260
270 470
110
380
B-B

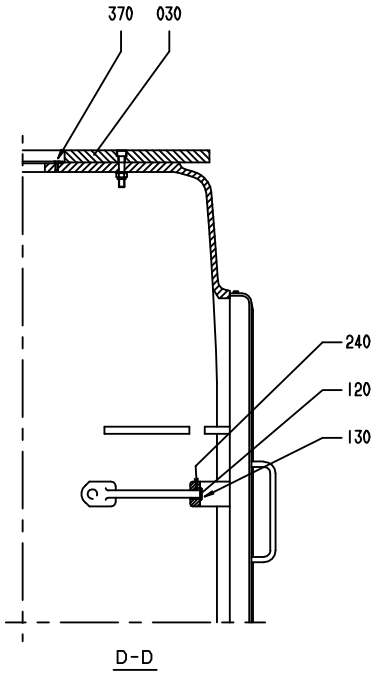
370
030
240
120
130
D-D

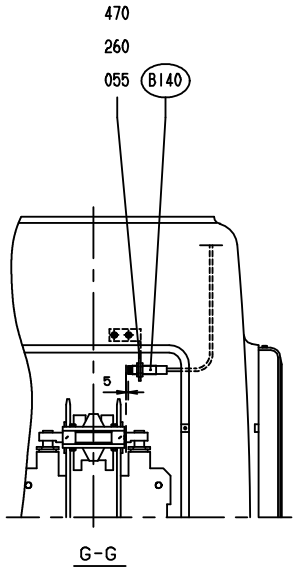
470
260
055
B140
5
G-G

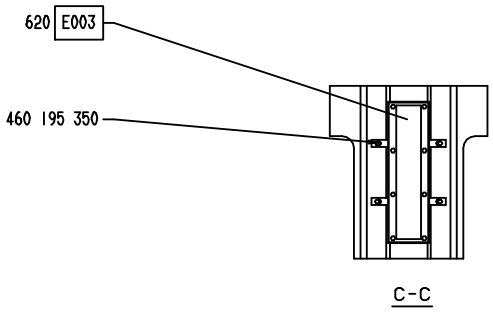
620
E003
460 195 350
C-C

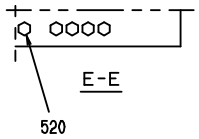
E-E
520

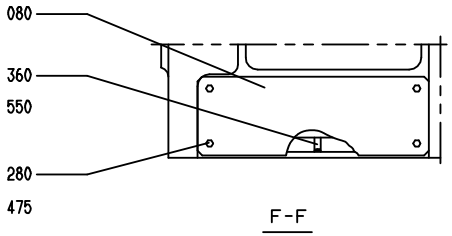
080
360
550
280
475
F-F

ECM: 83509 - 20000925
Group number: 536539-0303
Assembly Drawing: 536539-8_1_AB

Issue: 20030213

Pos	Part No	SP	UN	Qty	Description	Page No
Common Parts						
010	594725-0000	-		1	MACHINE BODY	
030 2	562891-0000	-		1	PLATE	
040	265952-0000	-		1	CANTILEVER	
055	555064-0000	-		1	HOLDER	
070 3	569606-0000	-		1	RING	
080	236651-0000	-		1	SHEET	
085	543494-0000	-		1	COIL HOLDER	
110	434466-0000	-		1	PLATE	
120 1	2612-0001	-			WASHER	
120 2	2612-0002	-			WASHER	
120 3	2612-0003	-			WASHER	
120 4	2612-0004	-			WASHER	
130	2613-0000	-		8	SCREW	
140	2965-0000	A		8	HINGE	
160	266043-0000	-		1	ROPE	
170	279372-0000	-		1	PROTECTION PIPE	
195	547960-0000	-		6	BRACKET	
200	1175088-0000	-		1	PROTECTION	
240	311305-0310	-		8	SLOTTED PIRPC5X20FZB	
245	312115-0323	-		4	SCREW ISO4762 M5X8 A4	
260	312105-0366	-		6	SCREW M6S M6X12 A280	
270	312105-0364	-		4	SCREW M6S ISO 4017 M6X10 A480	
280	312105-0447	-		4	SCREW M6S ISO 4017 M8X12 A480	
290	312105-0554	-		7	SCREW M6S ISO 4014 M12X110 A480	
320	312115-0366	-		8	SCREW ISO4762 M6X12 A4	
330	312115-0544	-		5	SCREW ISO4762 M12X60 A4	
340	312115-0630	-		4	SCREW ISO4762 M16X50 A4	
350	312105-0325	-		12	SCREW M6S ISO 4017 M5X10 A480	
360	312125-0287	-		30	SCREW PAN HEAD MCS M4X8 SS	
370	312165-0329	-		3	SCREW SLOT.RAIS.COUNT.HD.MKFS 5X16 SS	
380	312165-0368	-		4	SCREW SLOT.RAIS.COUNT.HD.MKFS 6X16 SS	
390	312311-0548	-		1	SCREW ISO4028 M12X80 FZB	
430	312605-0322	-		1	HEXAGON NUT, M6M M12 A280	
440	312605-0324	-		1	HEXAGON NUT, M6M M16 A280	
450	312810-0322	-		5	HEXAGON NUT, NY-LOCK M12 FZB	
460	315105-0146	-		16	WASHER ISO 7089-5-200 HV-A4	
470	315105-0153	-		12	WASHER ISO 7089-6-200 HV-A4	
475	315105-0165	-		4	WASHER ISO 7089-8-200 HV-A4	
480	315105-0186	-		5	WASHER ISO 7089-16-200 HV-A4	
510	315121-0178	-		12	WASHER PLAIN, TBRSB 13/36 H=6	
520	352101-0103	-		7	LEAD-IN, PR18,6/PG11, E-1457518	
530	342767-0104	-		9	CONN. BULKHEAD G1/4	
550	352112-0101	-	M	2	LOCATING STRIP, TUB 12	
560	352113-0102	-		2	CLIP-STRIP, BLACK 188X4,8 MM	
590	342732-0103	-		14	ELBOW PIPE JOINT, EXT.THREAD, D=6MM-G1/4	
600	342732-0104	-		4	ELBOW PIPE JOINT, EXT.THREAD, D=8MM-G1/4	
610	352101-0105	-		2	LEAD-IN, PR22,5/PG16, E-1457522	
620	90152-0033	-	M	12	SPIRAL CONDUIT FOR PR 15,2(PG 9)	
B140	90044-0121	A		1	PROX.SW. 922AB3XM-A9P-050-L	
E003	A1350005-0101	-		1	LIGHT FIXTURE	**245**
E004	A1350005-0101	-		1	LIGHT FIXTURE	**245**
E005	A1350005-0101	-		1	LIGHT FIXTURE	**245**
F100	A1483045-0101	-		1	TUBE FLUSHING	**247**

Machine Type | Group Description | Used-In | Group Number | Page No

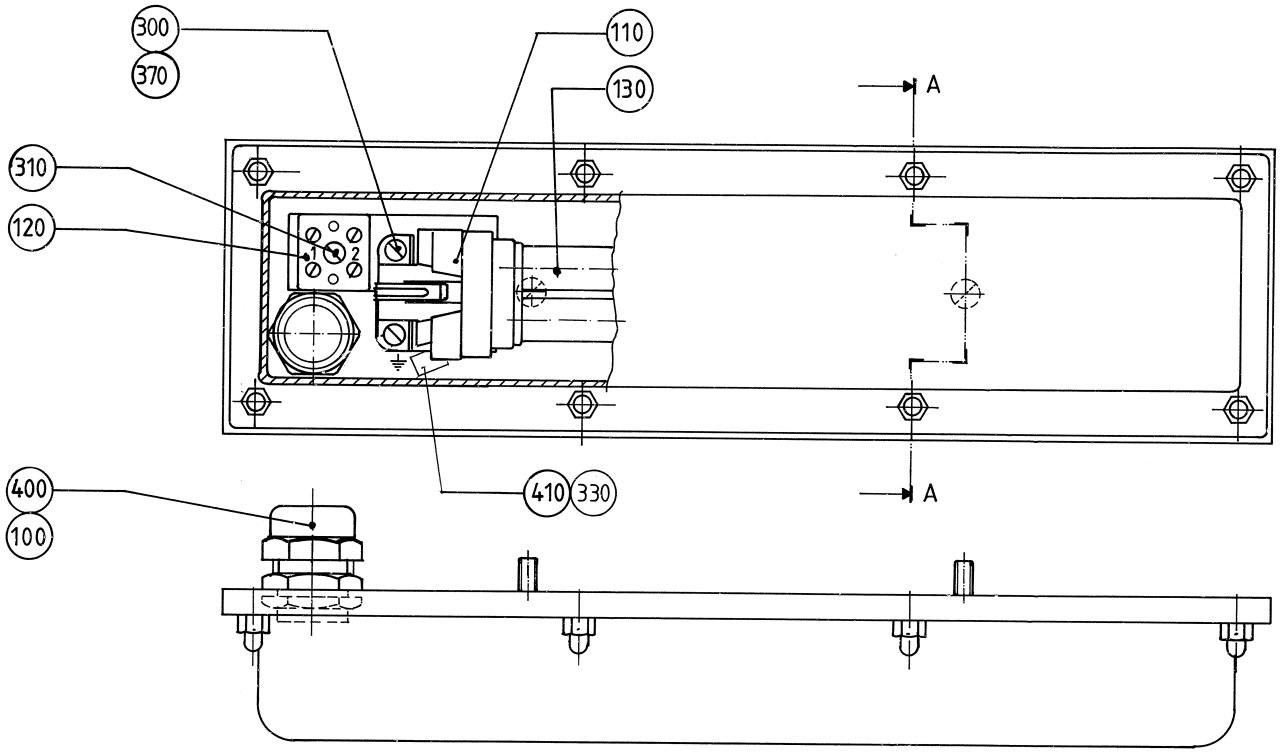
300
370
110
130
A
310
120
1
2
400
100
410
330
A

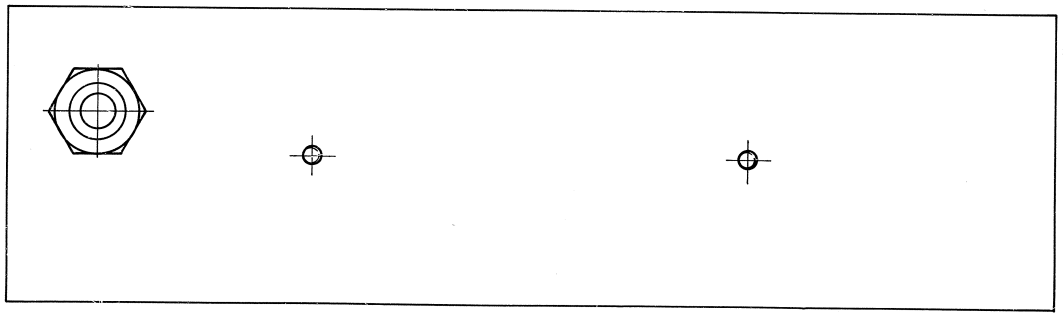

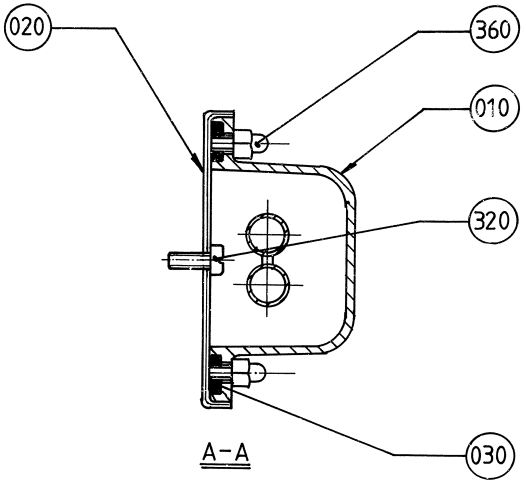
020
360
010
320
030
A–A

Pos	Part No	SP	UN	Qty	Description	Page No
Common Parts						
010	456260-0000	A		1	COVER	
020	456262-0000	A		1	SHEET	
030	441536-0000	A		1	GASKET	
100	90099-0087	-		1	NUT PR=20,4	
110	90164-0301	A		1	HOLDING FIXTURE	
120	90195-0020	-		1	TERMINAL BLOCK, 1977.2	
130	90297-0007	B		1	FLUORESCENT TUBE, PL11	
300	312125-0220	-		2	SKRUV SLOT.PAN HD. MCS 3X6 A480	
310	312125-0230	-		1	SPåRSKRUV MCS M3X20 SS	
320	312125-0327	-		2	SCREW PAN HEAD MCS M5X12 SS	
330	312132-0284	-		1	SCREW SLOT. PAN HEAD MSCS M4X5	
360	312705-0314	-		8	NUT HEX. DOMED CAP MHM-6 M5 A280	
370	315105-0124	-		2	WASHER ISO 7089-3-200 HV-A4	
400	352136-0114	-		1	GLAND FITTING	
410	353101-0129	-		1	CABLE SHOE	

Pos	Part No	SP	UN	Qty	Description	Page No

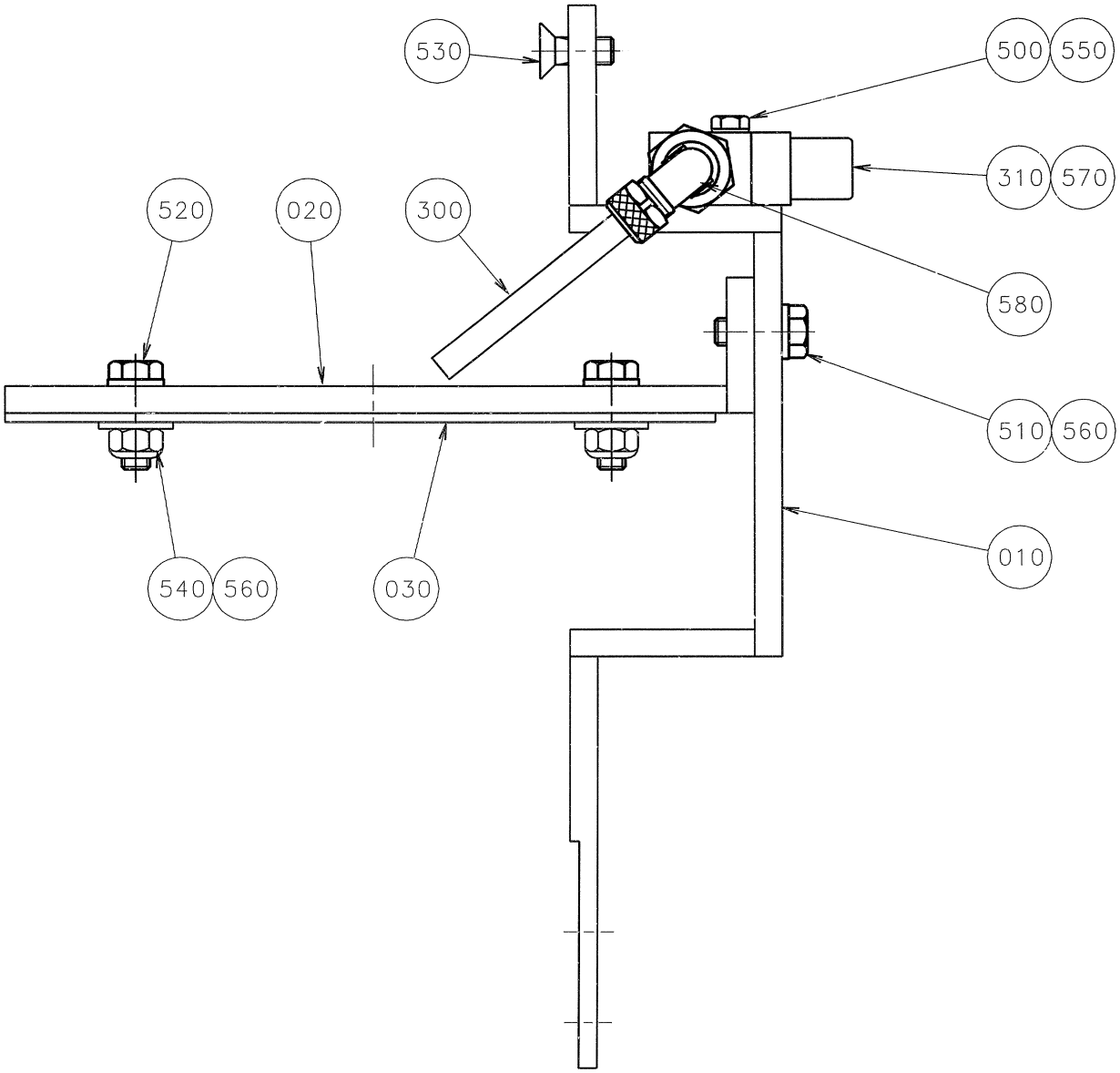
530
500
550
310
570
520
020
300
580
510
560
540
560
030
010

ECM: 83520 - 20000925
Group number: 1483045-0101
Assembly Drawing: 1483045-1_1_AA

Issue: 20030213

Pos	Part No	SP	UN	Qty	Description	Page No
Common Parts						
010	1345216-0000	-		1	BRACKET	
020	1345217-0000	-		1	BRACKET	
030	1483042-0000	B		1	DISTRIBUTOR	
300	90166-0119	-	MM	55	HOSE PUR 4/6 BLACK	
310	B90235-0250	A		1	THROTTLE CHECK VALVE, GR-1/8-B	
	90235-0401	*C*		*1*	*PROTECTIVE COVER*	
500	312105-0297	-		2	SCREW M6S ISO 4017 M4X25 A480	
510	312105-0368	-		2	SCREW M6S M6X16 A280	
520	312105-0370	-		4	SCREW M6S ISO 4017 M6X20 A480	
530	312155-0366	-		2	SCREW EN 10642 MF6S M6X12 A480	
540	312812-0316	-		4	HEXAGON NUT, NY-LOCK M6 A480	
550	315105-0136	-		2	WASHER ISO 7089-4-200 HV-A4	
560	315125-0153	-		10	WASHER TBRSB 6,4X22X4 A4	
570	342921-0113	-		1	STRAIGHT COUPLING,EXT.THREADED 6/4-G1/8"	
580	342931-0113	-		1	ELBOW 90 COUPL.,EXT.THREAD 6/4-G1/8"	

Pos	Part No	SP	UN	Qty	Description	Page No

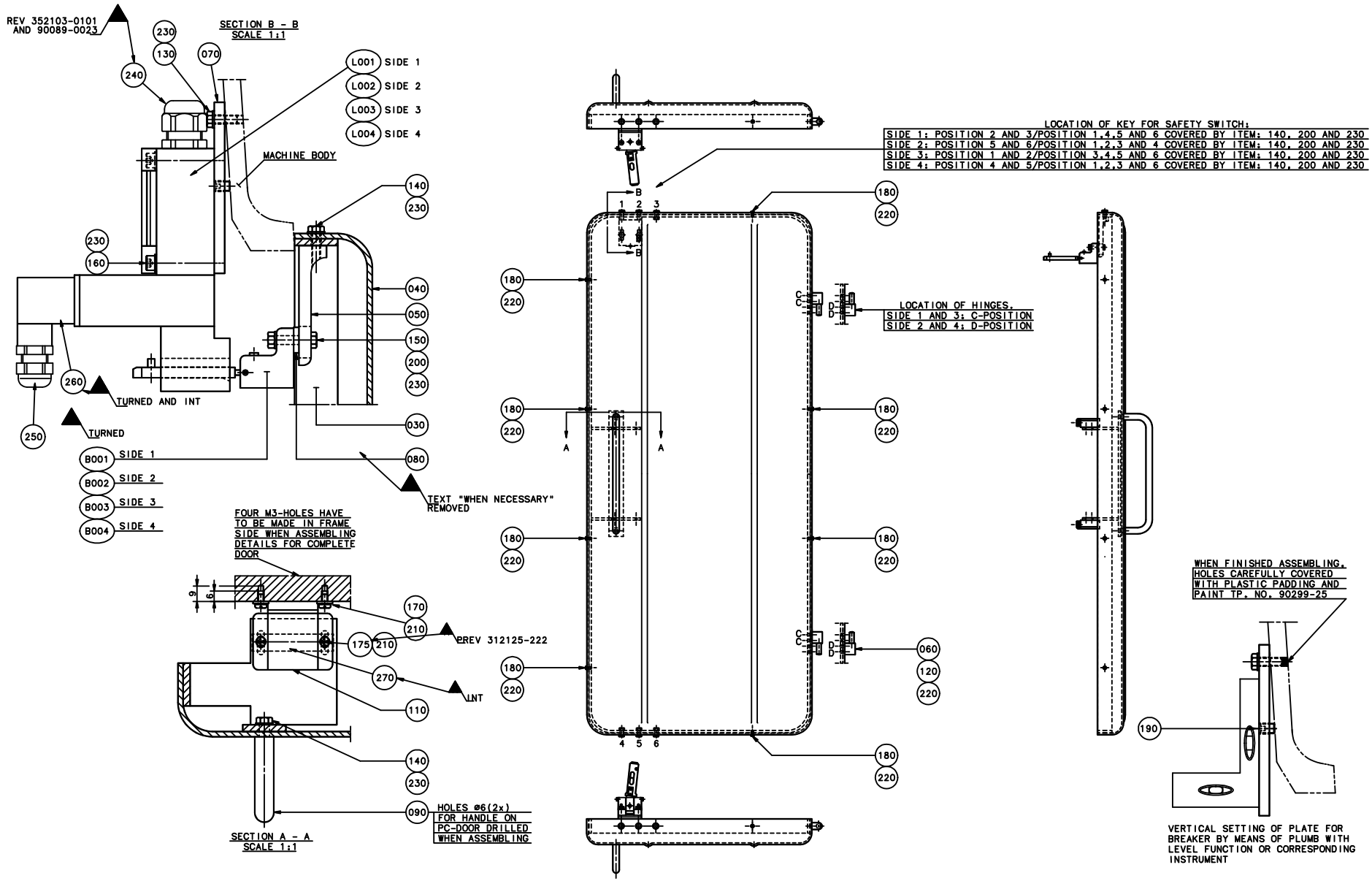
REV 352103-0101 AND 90089-0023
SECTION B - B SCALE 1:1
L001 SIDE 1
L002 SIDE 2
L003 SIDE 3
L004 SIDE 4
MACHINE BODY
TURNED AND INT
TURNED
B001 SIDE 1
B002 SIDE 2
B003 SIDE 3
B004 SIDE 4
TEXT "WHEN NECESSARY" REMOVED
FOUR M3-HOLES HAVE TO BE MADE IN FRAME SIDE WHEN ASSEMBLING DETAILS FOR COMPLETE DOOR
REV 312125-222
INT
HOLES ø6(2x) FOR HANDLE ON PC-DOOR DRILLED WHEN ASSEMBLING
SECTION A - A SCALE 1:1
LOCATION OF KEY FOR SAFETY SWITCH:
SIDE 1: POSITION 2 AND 3/POSITION 1,4,5 AND 6 COVERED BY ITEM: 140, 200 AND 230
SIDE 2: POSITION 5 AND 6/POSITION 1,2,3 AND 4 COVERED BY ITEM: 140, 200 AND 230
SIDE 3: POSITION 1 AND 2/POSITION 3,4,5 AND 6 COVERED BY ITEM: 140, 200 AND 230
SIDE 4: POSITION 4 AND 5/POSITION 1,2,3 AND 6 COVERED BY ITEM: 140, 200 AND 230
LOCATION OF HINGES.
SIDE 1 AND 3: C-POSITION
SIDE 2 AND 4: D-POSITION
WHEN FINISHED ASSEMBLING, HOLES CAREFULLY COVERED WITH PLASTIC PADDING AND PAINT TP. NO. 90299-25
VERTICAL SETTING OF PLATE FOR BREAKER BY MEANS OF PLUMB WITH LEVEL FUNCTION OR CORRESPONDING INSTRUMENT

ECM: 83511 - 20000925
Group number: 548468-0201
Assembly Drawing: 548468-2_1_AA

Issue: 20030213

Pos	Part No	SP	UN	Qty	Description	Page No
Common Parts						
030	547509-0000	-		1	FRAME	
040	547510-0000	-		1	DOOR	
050	550302-0000	-		1	HOLDER	
060	547508-0000	-		2	HINGE	
070	547655-0000	-		1	PLATE	
080	550313-0000	-		1	SPACER	
090	90017-0012	-		1	HANDLE 200MM, BLACK	
110	90237-0046	-		2	MAGNETIC LOCK, 46X33X15 MM	
120	312105-0291	-		4	SCREW M6S ISO 4017 M4X12 A480	
130	312105-0328	-		2	SCREW M6S ISO 4017 M5X14 A480	
140	312105-0329	-		8	SCREW M6S ISO 4017 M5X16 A480	
150	312105-0333	-		2	SCREW M6S ISO 4017 M5X25 A480	
160	312115-0339	-		2	SCREW ISO4762 M5X40 A4	
170	312125-0222	-		4	SPåRSKRUV MCS M3X8 SS	
175	312125-0226	-		4	SCREW PAN HEAD MCS M3X12 SS	
180	312125-0287	-		8	SCREW PAN HEAD MCS M4X8 SS	
190	312318-0323	-		1	SCREW ISO4029 M5X8 A4	
200	312605-0314	-		8	HEXAGON NUT, M6M M5 A280	
210	315105-0124	-		8	WASHER ISO 7089-3-200 HV-A4	
220	315105-0136	-		12	WASHER ISO 7089-4-200 HV-A4	
230	315105-0146	-		14	WASHER ISO 7089-5-200 HV-A4	
235	90005-0064	-		18	WASHER PL.RND.NYL.4,3/9, H=0,8	
240	352103-0108	-		1	CABLE GLAND, ST 13,5 , PR20,4/PG13,5	
250	352103-0101	-		1	KABELFöRSKR. ST 9, PR15,2/PG9	
260	90110-0095	-		1	CONNECTOR 3 POLE + EARTH	
270	594772-0000	-		2	NUT WASHER	
B001	90111-0334	A		1	ANGLE OPERATING DEVICE	
L001	90111-0151	A		1	SECURITY BREAKER	

Pos	Part No	SP	UN	Qty	Description	Page No

Machine Type	Group Description	Used-In	Group Number	Page No

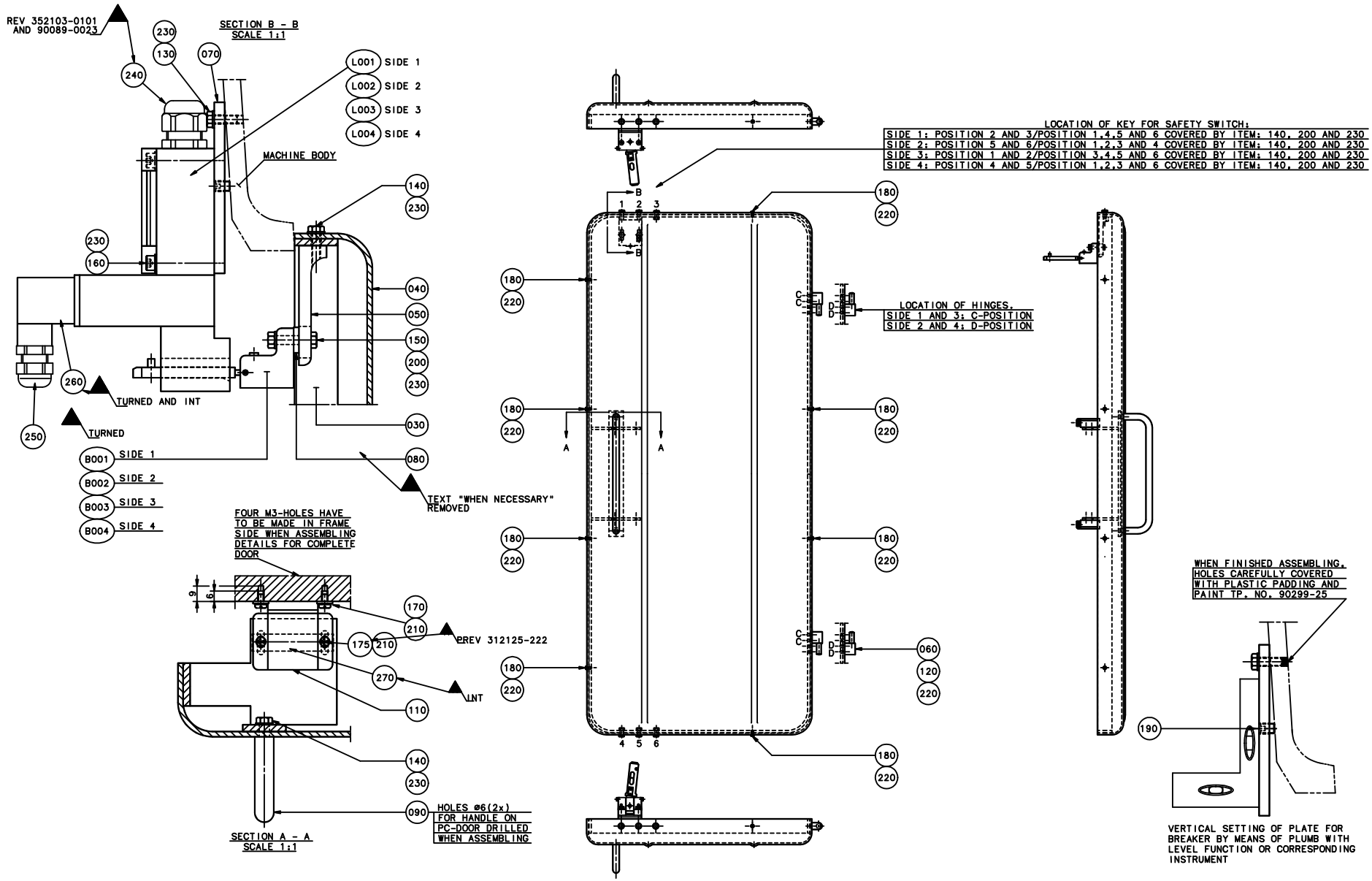
REV 352103-0101 AND 90089-0023
SECTION B - B SCALE 1:1
L001 SIDE 1
L002 SIDE 2
L003 SIDE 3
L004 SIDE 4
MACHINE BODY
TURNED AND INT
TURNED
B001 SIDE 1
B002 SIDE 2
B003 SIDE 3
B004 SIDE 4
TEXT "WHEN NECESSARY" REMOVED
FOUR M3-HOLES HAVE TO BE MADE IN FRAME SIDE WHEN ASSEMBLING DETAILS FOR COMPLETE DOOR
REV 312125-222
INT
HOLES ø6(2x) FOR HANDLE ON PC-DOOR DRILLED WHEN ASSEMBLING
SECTION A - A SCALE 1:1
LOCATION OF KEY FOR SAFETY SWITCH:
SIDE 1: POSITION 2 AND 3/POSITION 1,4,5 AND 6 COVERED BY ITEM: 140, 200 AND 230
SIDE 2: POSITION 5 AND 6/POSITION 1,2,3 AND 4 COVERED BY ITEM: 140, 200 AND 230
SIDE 3: POSITION 1 AND 2/POSITION 3,4,5 AND 6 COVERED BY ITEM: 140, 200 AND 230
SIDE 4: POSITION 4 AND 5/POSITION 1,2,3 AND 6 COVERED BY ITEM: 140, 200 AND 230
LOCATION OF HINGES.
SIDE 1 AND 3: C-POSITION
SIDE 2 AND 4: D-POSITION
WHEN FINISHED ASSEMBLING, HOLES CAREFULLY COVERED WITH PLASTIC PADDING AND PAINT TP. NO. 90299-25
VERTICAL SETTING OF PLATE FOR BREAKER BY MEANS OF PLUMB WITH LEVEL FUNCTION OR CORRESPONDING INSTRUMENT

ECM: 83512 - 20000925
Group number: 548468-0202
Assembly Drawing: 548468-2_1_AA

Issue: 20030213

Pos	Part No	SP	UN	Qty	Description	Page No
Common Parts						
030	547509-0000	-		1	FRAME	
040	547510-0000	-		1	DOOR	
050	550302-0000	-		1	HOLDER	
060	547508-0000	-		2	HINGE	
070	547655-0000	-		1	PLATE	
080	550313-0000	-		1	SPACER	
090	90017-0012	-		1	HANDLE 200MM, BLACK	
110	90237-0046	-		2	MAGNETIC LOCK, 46X33X15 MM	
120	312105-0291	-		4	SCREW M6S ISO 4017 M4X12 A480	
130	312105-0328	-		2	SCREW M6S ISO 4017 M5X14 A480	
140	312105-0329	-		8	SCREW M6S ISO 4017 M5X16 A480	
150	312105-0333	-		2	SCREW M6S ISO 4017 M5X25 A480	
160	312115-0339	-		2	SCREW ISO4762 M5X40 A4	
170	312125-0222	-		4	SPåRSKRUV MCS M3X8 SS	
175	312125-0226	-		4	SCREW PAN HEAD MCS M3X12 SS	
180	312125-0287	-		8	SCREW PAN HEAD MCS M4X8 SS	
190	312318-0323	-		1	SCREW ISO4029 M5X8 A4	
200	312605-0314	-		8	HEXAGON NUT, M6M M5 A280	
210	315105-0124	-		8	WASHER ISO 7089-3-200 HV-A4	
220	315105-0136	-		12	WASHER ISO 7089-4-200 HV-A4	
230	315105-0146	-		14	WASHER ISO 7089-5-200 HV-A4	
235	90005-0064	-		18	WASHER PL.RND.NYL.4,3/9, H=0,8	
240	352103-0108	-		1	CABLE GLAND, ST 13,5 , PR20,4/PG13,5	
250	352103-0101	-		1	KABELFöRSKR. ST 9, PR15,2/PG9	
260	90110-0095	-		1	CONNECTOR 3 POLE + EARTH	
270	594772-0000	-		2	NUT WASHER	
B002	90111-0333	A		1	ANGLE OPERATING DEVICE	
L002	90111-0151	A		1	SECURITY BREAKER	

Pos	Part No	SP	UN	Qty	Description	Page No

Machine Type | Group Description | Used-In | Group Number | Page No

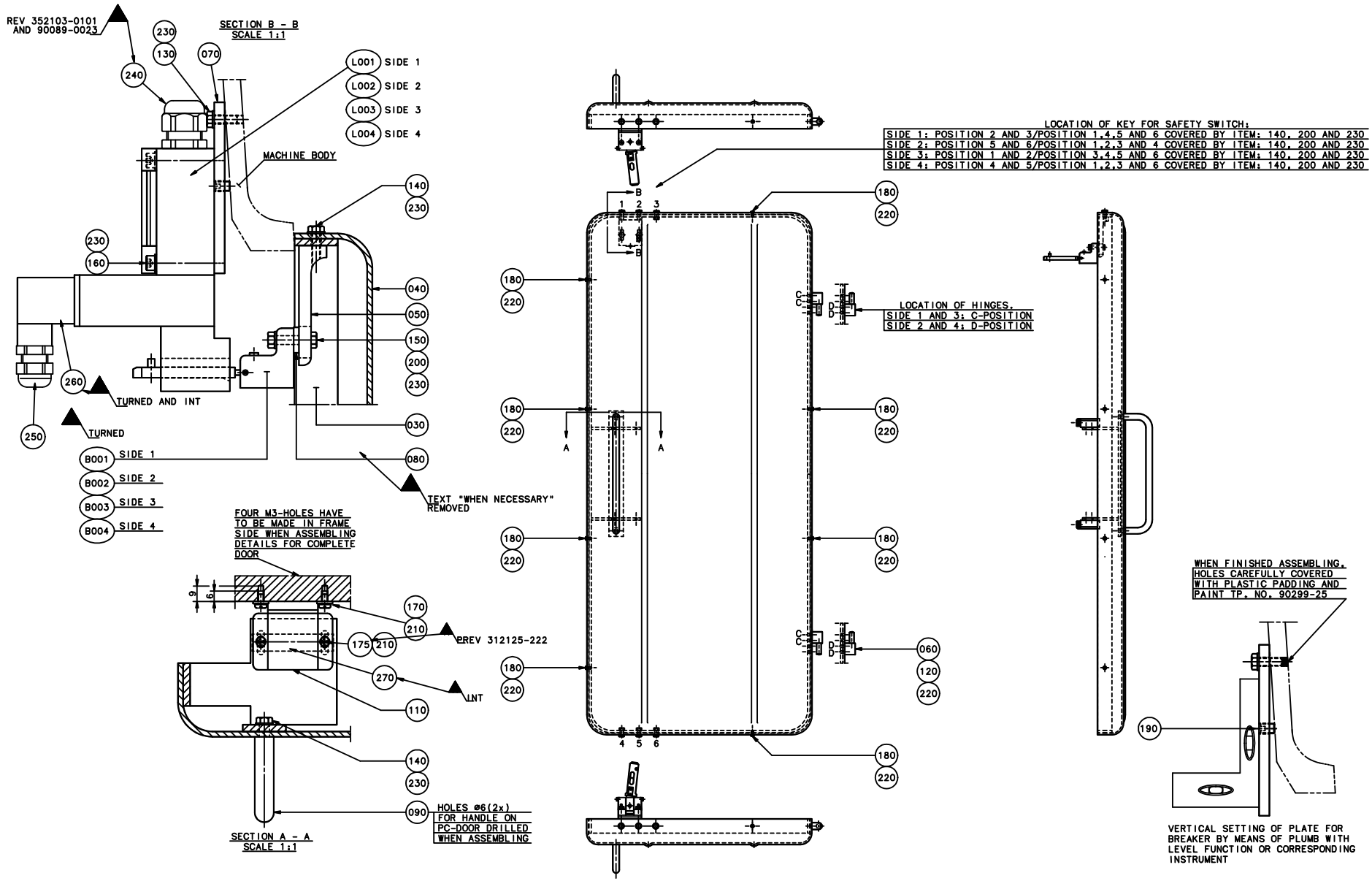
REV 352103-0101 AND 90089-0023
SECTION B - B SCALE 1:1
L001 SIDE 1
L002 SIDE 2
L003 SIDE 3
L004 SIDE 4
MACHINE BODY
TURNED AND INT
TURNED
B001 SIDE 1
B002 SIDE 2
B003 SIDE 3
B004 SIDE 4
TEXT "WHEN NECESSARY" REMOVED
LOCATION OF KEY FOR SAFETY SWITCH:
SIDE 1: POSITION 2 AND 3/POSITION 1,4,5 AND 6 COVERED BY ITEM: 140, 200 AND 230
SIDE 2: POSITION 5 AND 6/POSITION 1,2,3 AND 4 COVERED BY ITEM: 140, 200 AND 230
SIDE 3: POSITION 1 AND 2/POSITION 3,4,5 AND 6 COVERED BY ITEM: 140, 200 AND 230
SIDE 4: POSITION 4 AND 5/POSITION 1,2,3 AND 6 COVERED BY ITEM: 140, 200 AND 230
LOCATION OF HINGES.
SIDE 1 AND 3: C-POSITION
SIDE 2 AND 4: D-POSITION
FOUR M3-HOLES HAVE TO BE MADE IN FRAME SIDE WHEN ASSEMBLING DETAILS FOR COMPLETE DOOR
REV 312125-222
INT
HOLES ø6(2x) FOR HANDLE ON PC-DOOR DRILLED WHEN ASSEMBLING
SECTION A - A SCALE 1:1
WHEN FINISHED ASSEMBLING, HOLES CAREFULLY COVERED WITH PLASTIC PADDING AND PAINT TP. NO. 90299-25
VERTICAL SETTING OF PLATE FOR BREAKER BY MEANS OF PLUMB WITH LEVEL FUNCTION OR CORRESPONDING INSTRUMENT

ECM: 83513 - 20000925
Group number: 548468-0203
Assembly Drawing: 548468-2_1_AA

Issue: 20030213

Pos	Part No	SP	UN	Qty	Description	Page No
Common Parts						
030	547509-0000	-		1	FRAME	
040	547510-0000	-		1	DOOR	
050	550302-0000	-		1	HOLDER	
060	547508-0000	-		2	HINGE	
070	547655-0000	-		1	PLATE	
080	550313-0000	-		1	SPACER	
090	90017-0012	-		1	HANDLE 200MM, BLACK	
110	90237-0046	-		2	MAGNETIC LOCK, 46X33X15 MM	
120	312105-0291	-		4	SCREW M6S ISO 4017 M4X12 A480	
130	312105-0328	-		2	SCREW M6S ISO 4017 M5X14 A480	
140	312105-0329	-		8	SCREW M6S ISO 4017 M5X16 A480	
150	312105-0333	-		2	SCREW M6S ISO 4017 M5X25 A480	
160	312115-0339	-		2	SCREW ISO4762 M5X40 A4	
170	312125-0222	-		4	SPåRSKRUV MCS M3X8 SS	
175	312125-0226	-		4	SCREW PAN HEAD MCS M3X12 SS	
180	312125-0287	-		8	SCREW PAN HEAD MCS M4X8 SS	
190	312318-0323	-		1	SCREW ISO4029 M5X8 A4	
200	312605-0314	-		8	HEXAGON NUT, M6M M5 A280	
210	315105-0124	-		8	WASHER ISO 7089-3-200 HV-A4	
220	315105-0136	-		12	WASHER ISO 7089-4-200 HV-A4	
230	315105-0146	-		14	WASHER ISO 7089-5-200 HV-A4	
235	90005-0064	-		18	WASHER PL.RND.NYL.4,3/9, H=0,8	
240	352103-0108	-		1	CABLE GLAND, ST 13,5 , PR20,4/PG13,5	
250	352103-0101	-		1	KABELFöRSKR. ST 9, PR15,2/PG9	
260	90110-0095	-		1	CONNECTOR 3 POLE + EARTH	
270	594772-0000	-		2	NUT WASHER	
B003	90111-0334	A		1	ANGLE OPERATING DEVICE	
L003	90111-0151	A		1	SECURITY BREAKER	

Pos	Part No	SP	UN	Qty	Description	Page No

Machine Type | Group Description | Used-In | Group Number | Page No

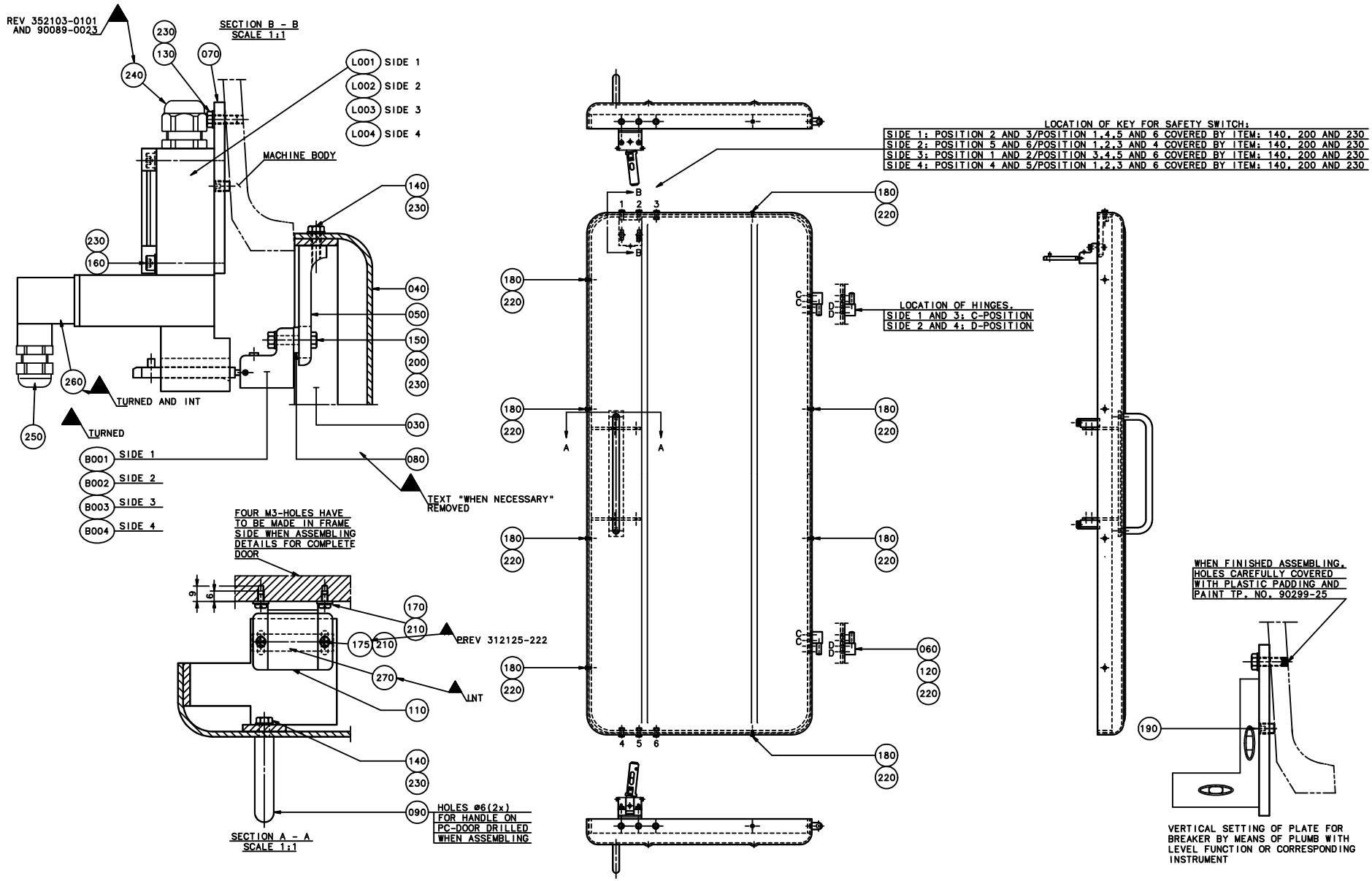
REV 352103-0101 AND 90089-0023
SECTION B - B SCALE 1:1
L001 SIDE 1
L002 SIDE 2
L003 SIDE 3
L004 SIDE 4
MACHINE BODY
TURNED AND INT
TURNED
B001 SIDE 1
B002 SIDE 2
B003 SIDE 3
B004 SIDE 4
TEXT "WHEN NECESSARY" REMOVED
LOCATION OF KEY FOR SAFETY SWITCH:
SIDE 1: POSITION 2 AND 3/POSITION 1,4,5 AND 6 COVERED BY ITEM: 140, 200 AND 230
SIDE 2: POSITION 5 AND 6/POSITION 1,2,3 AND 4 COVERED BY ITEM: 140, 200 AND 230
SIDE 3: POSITION 1 AND 2/POSITION 3,4,5 AND 6 COVERED BY ITEM: 140, 200 AND 230
SIDE 4: POSITION 4 AND 5/POSITION 1,2,3 AND 6 COVERED BY ITEM: 140, 200 AND 230
LOCATION OF HINGES.
SIDE 1 AND 3: C-POSITION
SIDE 2 AND 4: D-POSITION
FOUR M3-HOLES HAVE TO BE MADE IN FRAME SIDE WHEN ASSEMBLING DETAILS FOR COMPLETE DOOR
REV 312125-222
INT
HOLES ø6(2x) FOR HANDLE ON PC-DOOR DRILLED WHEN ASSEMBLING
SECTION A - A SCALE 1:1
WHEN FINISHED ASSEMBLING, HOLES CAREFULLY COVERED WITH PLASTIC PADDING AND PAINT TP. NO. 90299-25
VERTICAL SETTING OF PLATE FOR BREAKER BY MEANS OF PLUMB WITH LEVEL FUNCTION OR CORRESPONDING INSTRUMENT

ECM: 83491 - 20000925
Group number: 548468-0204
Assembly Drawing: 548468-2_1_AA

Issue: 20030213

Pos	Part No	SP	UN	Qty	Description	Page No
Common Parts						
030	547509-0000	-		1	FRAME	
040	547510-0000	-		1	DOOR	
050	550302-0000	-		1	HOLDER	
060	547508-0000	-		2	HINGE	
070	547655-0000	-		1	PLATE	
080	550313-0000	-		1	SPACER	
090	90017-0012	-		1	HANDLE 200MM, BLACK	
110	90237-0046	-		2	MAGNETIC LOCK, 46X33X15 MM	
120	312105-0291	-		4	SCREW M6S ISO 4017 M4X12 A480	
130	312105-0328	-		2	SCREW M6S ISO 4017 M5X14 A480	
140	312105-0329	-		8	SCREW M6S ISO 4017 M5X16 A480	
150	312105-0333	-		2	SCREW M6S ISO 4017 M5X25 A480	
160	312115-0339	-		2	SCREW ISO4762 M5X40 A4	
170	312125-0222	-		4	SPåRSKRUV MCS M3X8 SS	
175	312125-0226	-		4	SCREW PAN HEAD MCS M3X12 SS	
180	312125-0287	-		8	SCREW PAN HEAD MCS M4X8 SS	
190	312318-0323	-		1	SCREW ISO4029 M5X8 A4	
200	312605-0314	-		8	HEXAGON NUT, M6M M5 A280	
210	315105-0124	-		8	WASHER ISO 7089-3-200 HV-A4	
220	315105-0136	-		12	WASHER ISO 7089-4-200 HV-A4	
230	315105-0146	-		14	WASHER ISO 7089-5-200 HV-A4	
235	90005-0064	-		18	WASHER PL.RND.NYL.4,3/9, H=0,8	
240	352103-0108	-		1	CABLE GLAND, ST 13,5 , PR20,4/PG13,5	
250	352103-0101	-		1	KABELFöRSKR. ST 9, PR15,2/PG9	
260	90110-0095	-		1	CONNECTOR 3 POLE + EARTH	
270	594772-0000	-		2	NUT WASHER	
B004	90111-0333	A		1	ANGLE OPERATING DEVICE	
L004	90111-0151	A		1	SECURITY BREAKER	

Pos	Part No	SP	UN	Qty	Description	Page No

Machine Type | Group Description | Used-In | Group Number | Page No

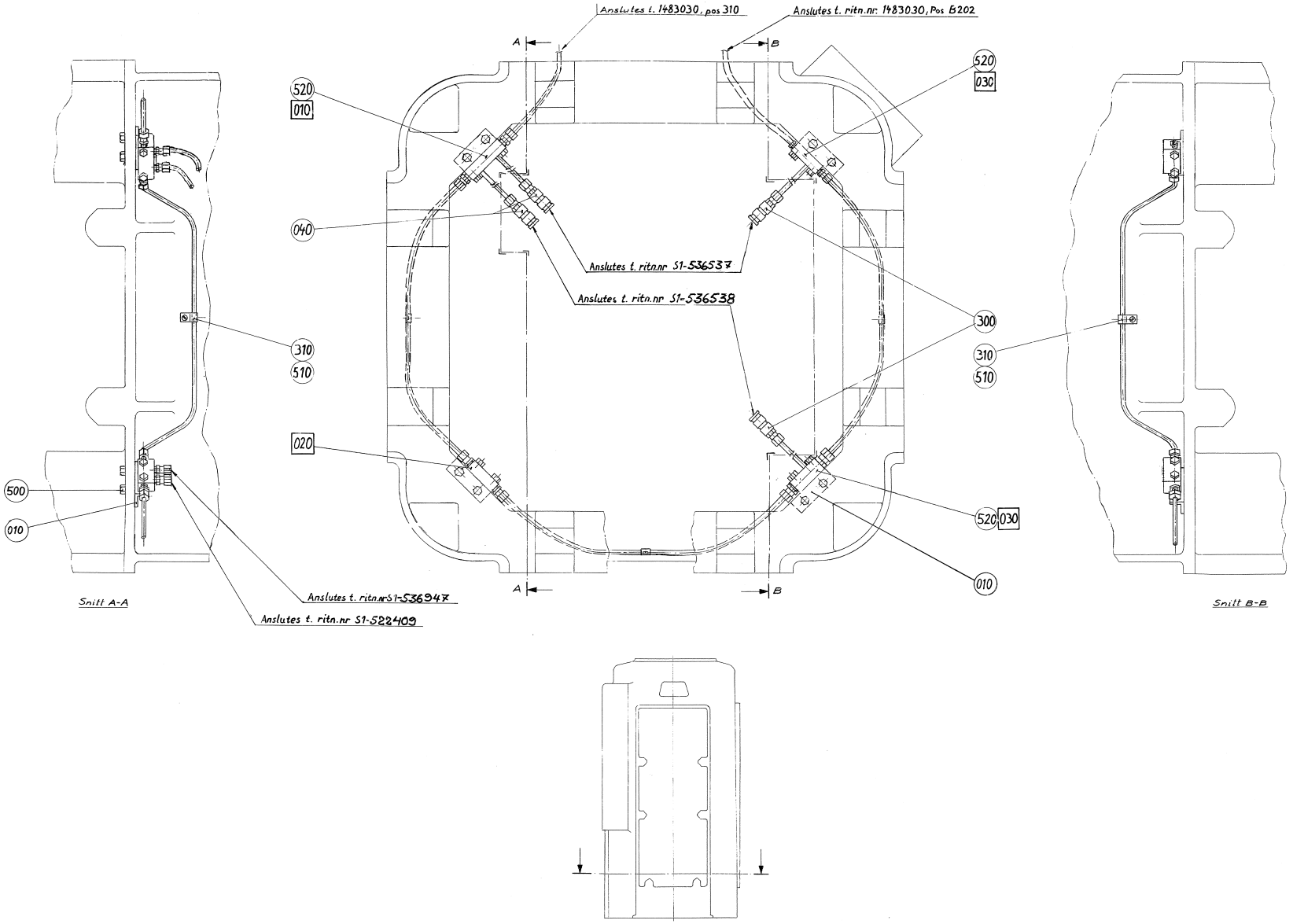
Anslutes t. 1483030, pos 310
Anslutes t. ritn.nr 1483030, Pos B202
A
B
520
010
520
030
040
Anslutes t. ritn.nr S1-536537
Anslutes t. ritn.nr S1-536538
300
310
510
310
510
020
500
010
520
030
010
Anslutes t. ritn.nr S1-536947
Anslutes t. ritn.nr S1-522409
Snitt A-A
Snitt B-B

Pos	Part No	SP	UN	Qty	Description	Page No
Common Parts						
010	1483038-0000	A		4	BRACKET	
300	90134-0032	-		4	QUICK COUPLING, (F) LP-004-0-SW-004	
310	90165-0005	-		3	PIPE CLIP FOR TUBE D=6 MM	
500	312101-0368	-		8	SCREW M6S M6X16 FZB	
510	312121-0285	-		3	SCREW SLOT.PAN HD. MCS 4X6 FZB	
520	312155-0295	-		8	SCREW EN 10642 MF6S M4X20 A480	
F010	A1483061-0101	-		1	SEPARATION BLOCK	**259**
F020	A1483062-0101	-		1	SEPARATION BLOCK	**261**
F030	A1483063-0101	-		2	SEPARATION BLOCK	**263**

Pos	Part No	SP	UN	Qty	Description	Page No

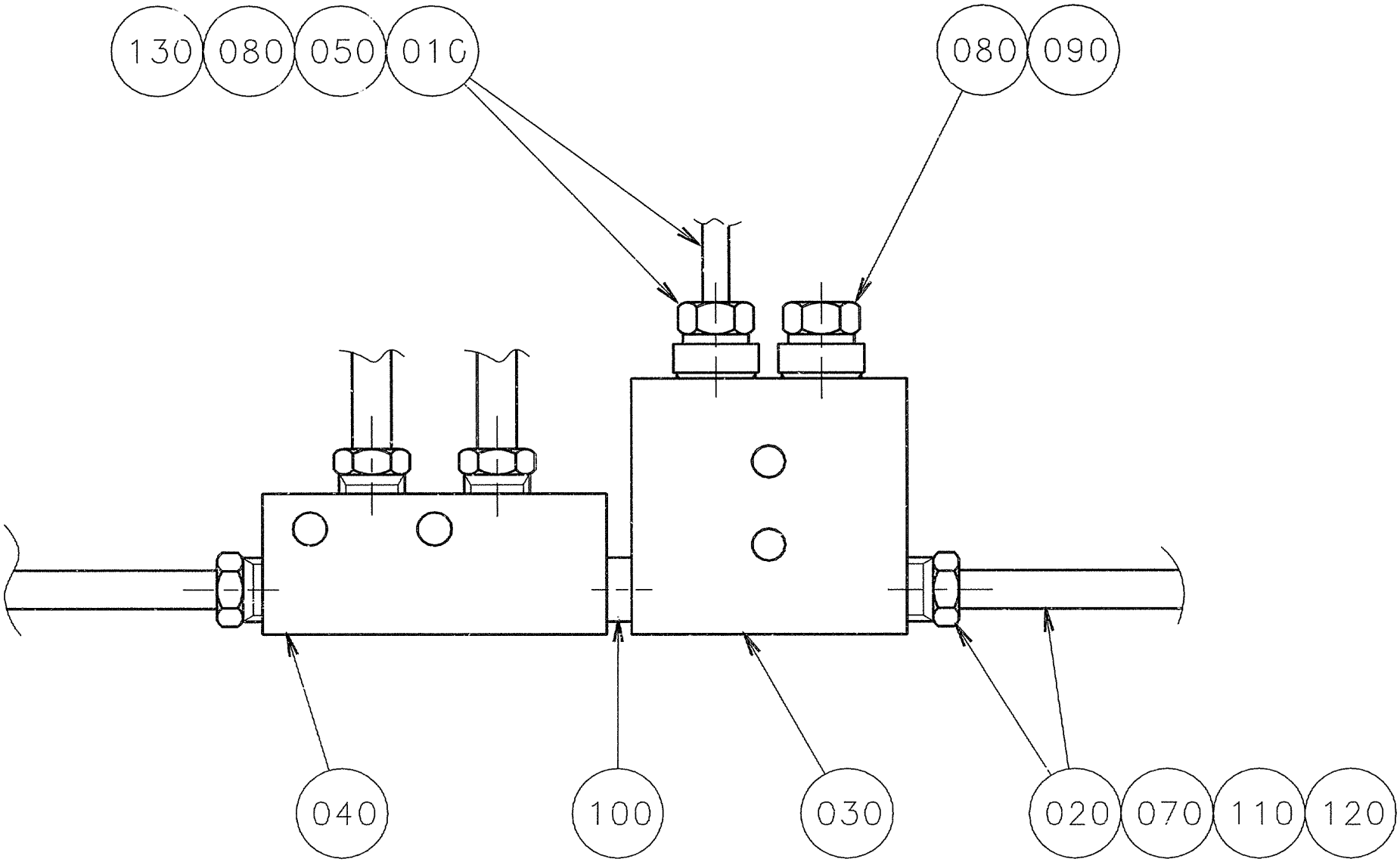
130
080
050
010
080
090
040
100
030
020
070
110
120

ECM: 83521 - 20000925
Group number: 1483061-0101
Assembly Drawing: 1483061-1_1_AA

Issue: 20030213

Pos	Part No	SP	UN	Qty	Description	Page No
Common Parts						
010	90028-0021	A		1	CONE TUBE 4 MM	
020	90028-0022	A		4	CONE TUBE 6 MM	
030	90032-0038	A		1	BLOCK 2 WAYS	
040	90032-0044	A		1	DISTRIBUTION BLOCK 4 WAYS	
050	90092-0054	A		1	METERING VALVE 50 MM3	
070	342706-0130	-		4	ACCESSORIES, INSERT SLEEVE 6 MM	
080	90134-0040	A		2	BUSHING VALVE CONNECTION 4 MM	
090	90134-0052	A		1	PLUG DOSING BLOCK	
100	90134-0054	A		1	BLOCK CONNECTION M10X1	
110	90134-0055	A		4	BUSHING/NUT INLET/OUTLET 6 MM	
120	90166-0011	-	M	1	TUBE 6 MM PA,TRANSP.	
130	90166-0109	-	M	1	TUBE 4 MM PA,TRANSP.	

Pos	Part No	SP	UN	Qty	Description	Page No

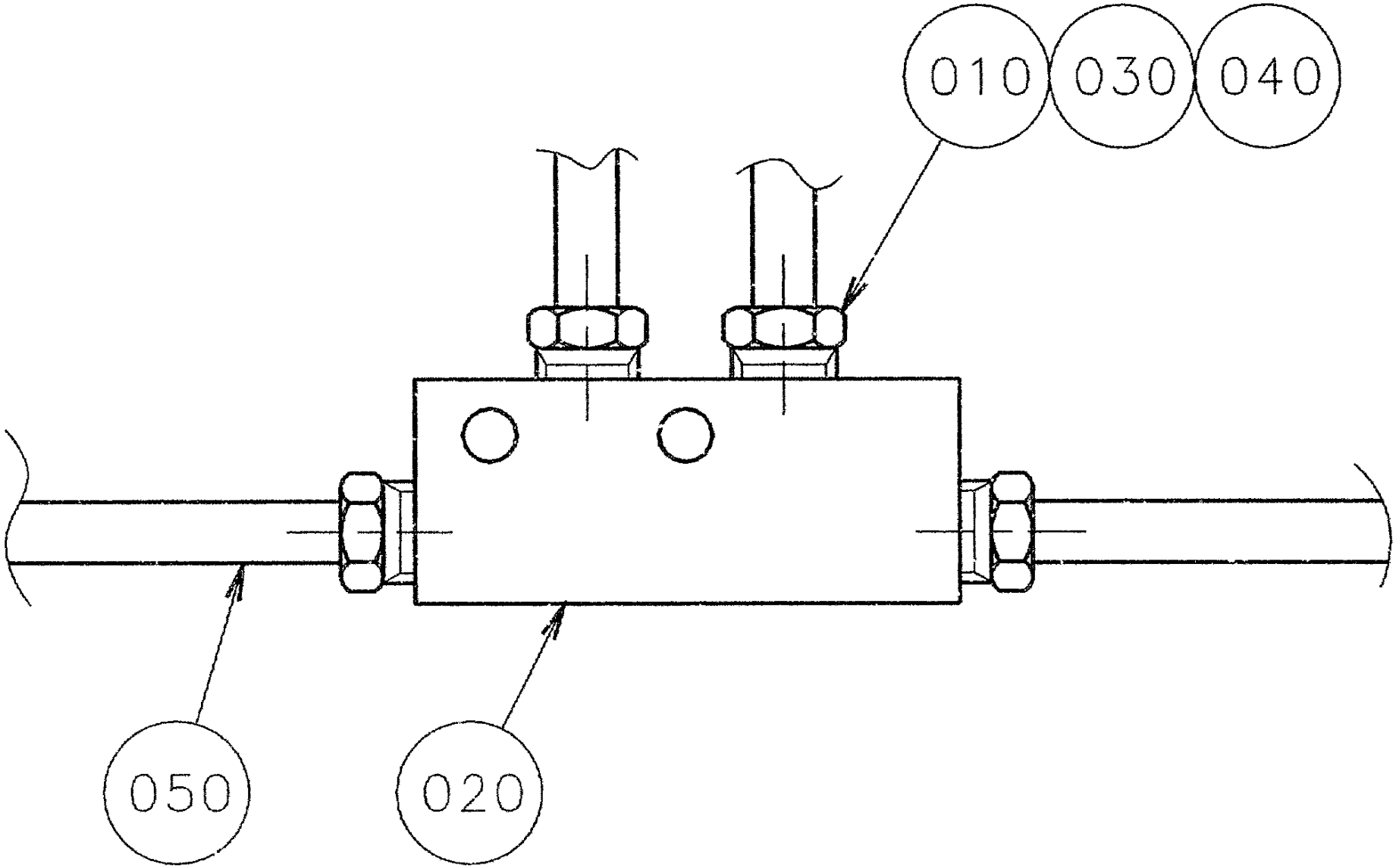
010
030
040
050
020

ECM: 83522 - 20000925
Group number: 1483062-0101
Assembly Drawing: 1483062-1_1_AA

Issue: 20030213

Pos	Part No	SP	UN	Qty	Description	Page No
Common Parts						
010	90028-0022	A		4	CONE TUBE 6 MM	
020	90032-0044	A		1	DISTRIBUTION BLOCK 4 WAYS	
030	90134-0055	A		4	BUSHING/NUT INLET/OUTLET 6 MM	
040	342706-0130	-		4	ACCESSORIES, INSERT SLEEVE 6 MM	
050	90166-0011	-	M	1	TUBE 6 MM PA,TRANSP.	

Pos	Part No	SP	UN	Qty	Description	Page No

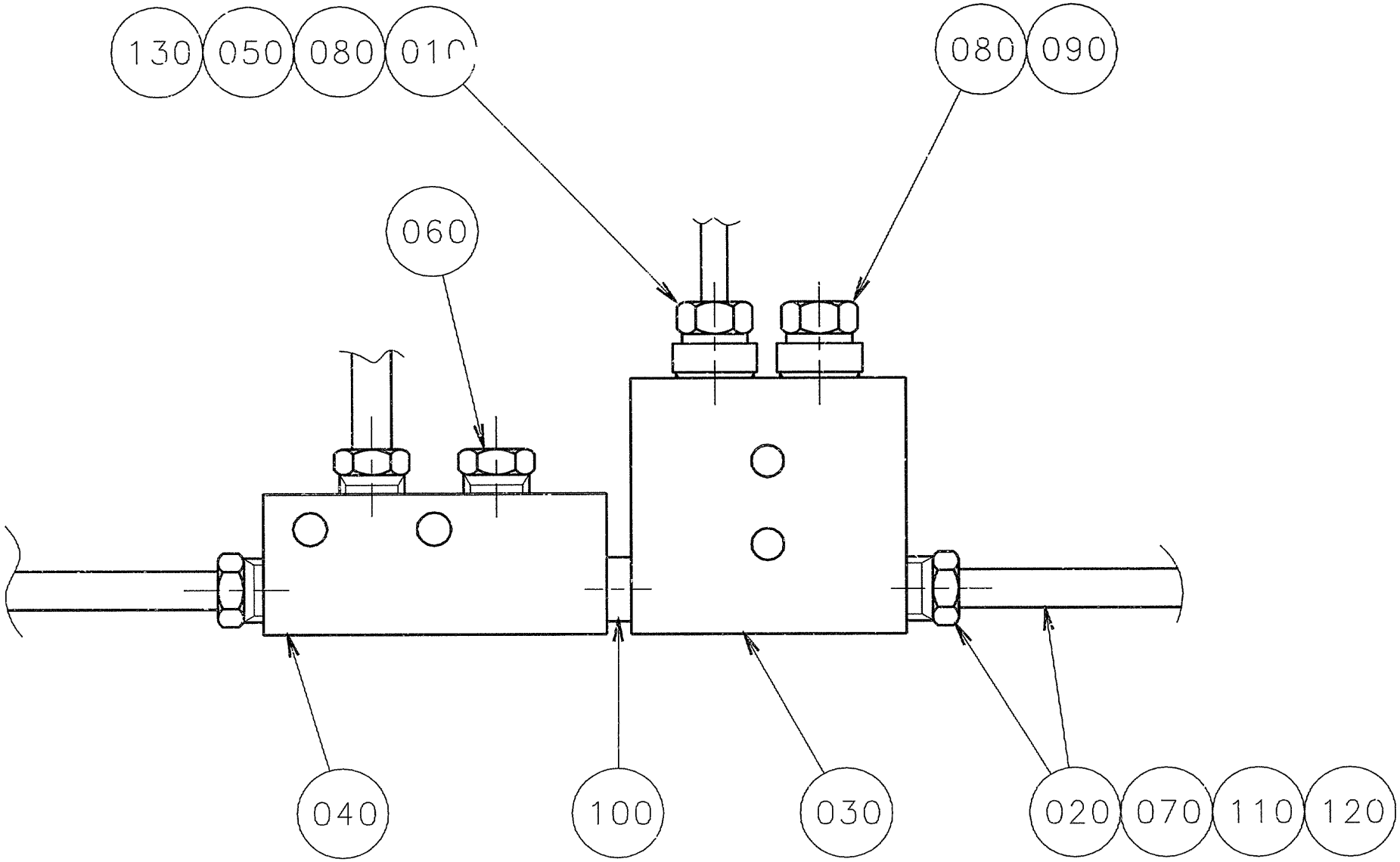
130
050
080
010
080
090
060
040
100
030
020
070
110
120

ECM: 83523 - 20000925
Group number: 1483063-0101
Assembly Drawing: 1483063-1_1_AA

Issue: 20030213

Pos	Part No	SP	UN	Qty	Description	Page No
Common Parts						
010	90028-0021	A		1	CONE TUBE 4 MM	
020	90028-0022	A		3	CONE TUBE 6 MM	
030	90032-0038	A		1	BLOCK 2 WAYS	
040	90032-0044	A		1	DISTRIBUTION BLOCK 4 WAYS	
050	90092-0054	A		1	METERING VALVE 50 MM3	
060	90087-0019	-		1	PLUG M10X1 STAINLESS	
070	342706-0130	-		3	ACCESSORIES, INSERT SLEEVE 6 MM	
080	90134-0040	A		2	BUSHING VALVE CONNECTION 4 MM	
090	90134-0052	A		1	PLUG DOSING BLOCK	
100	90134-0054	A		1	BLOCK CONNECTION M10X1	
110	90134-0055	A		3	BUSHING/NUT INLET/OUTLET 6 MM	
120	90166-0011	-	M	1	TUBE 6 MM PA,TRANSP.	
130	90166-0109	-	M	1	TUBE 4 MM PA,TRANSP.	

Pos	Part No	SP	UN	Qty	Description	Page No

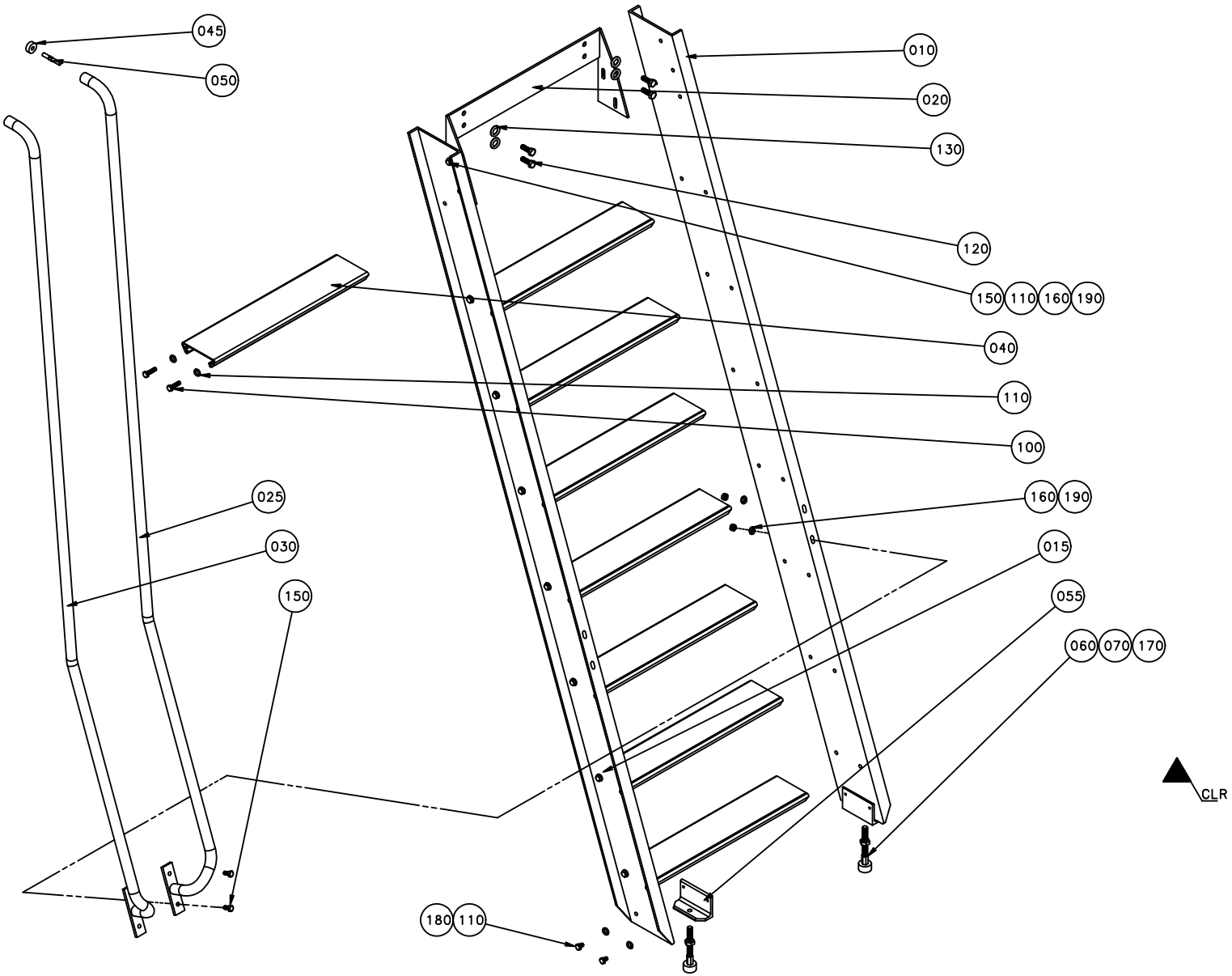
045
050
010
020
130
120
150
110
160
190
040
110
100
025
030
150
160
190
015
055
060
070
170
180
110
CLR

ECM: 83515 - 20000925
Group number: 567218-0101
Assembly Drawing: 567218-1_1_AA

Issue: 20030213

Pos	Part No	SP	UN	Qty	Description	Page No
Common Parts						
010	568145-0000	-		1	SIDE PIECE R	
015	568146-0000	-		1	SIDE PIECE L	
020	568147-0000	-		1	SPACER PIECE	
025	568103-0000	-		1	GUIDE BAR R	
030	568104-0000	-		1	GUIDE BAR L	
040	578635-0000	-		8	STAIR	
045	751484-0000	A		2	CLAMPING RING	
050	751485-0000	A		2	SCREW	
055	572305-0000	-		2	BRACKET	
060	B441905-0000	A		2	RETARD PIN	
	312911-0126	*-*		*1*	*HELI-COIL M8X1,5D*	
070	90347-0004	A		2	VIBRATION DAMPER D=30 TH=M8 H=17 H2=21MM	
100	312105-0455	-		32	SCREW M6S ISO 4017 M8X30 A480	
110	315105-0165	-		40	WASHER ISO 7089-8-200 HV-A4	
120	312105-0491	-		4	SCREW M6S ISO 4017 M10X20 A480	
130	315105-0173	-		4	WASHER ISO 7089-10-200 HV-A4	
150	312105-0452	-		8	SCREW M6S ISO 4017 M8X22 A480	
160	312605-0318	-		8	HEXAGON NUT, M6M M8 A280	
170	312605-0322	-		2	HEXAGON NUT, M6M M12 A280	
180	312105-0447	-		4	SCREW M6S ISO 4017 M8X12 A480	
190	315115-0165	-		8	WASHER PLAIN, TBRB 8,4/16 H=3	

Pos	Part No	SP	UN	Qty	Description	Page No

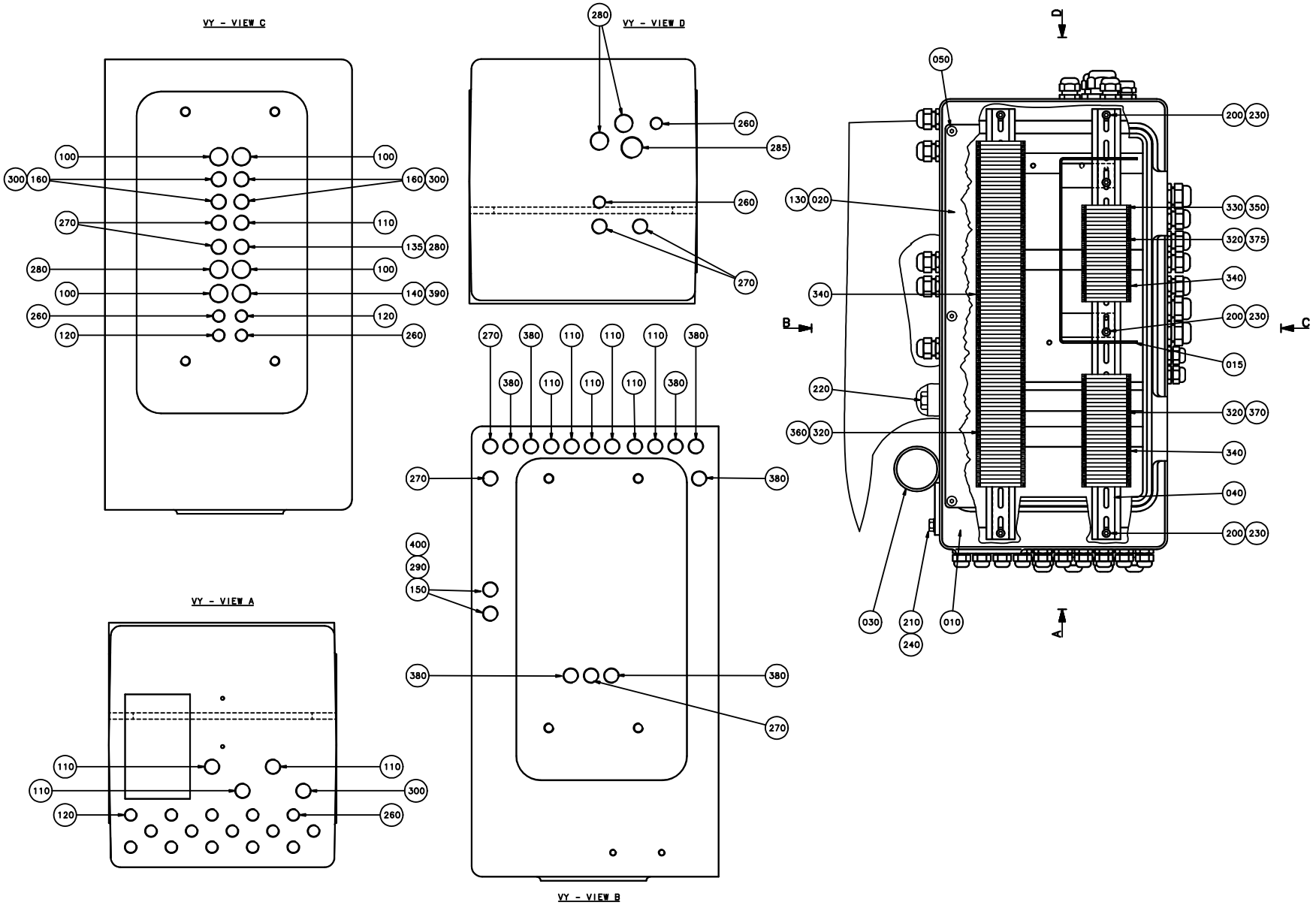
VY - VIEW C
VY - VIEW D
VY - VIEW A
VY - VIEW B
100
300
160
270
280
260
120
110
135
140
390
285
400
290
150
380
050
200
230
130
020
330
350
320
375
340
015
220
370
360
040
030
210
240
010
A
B
C
D

ECM: - -
Group number: 569628-0301
Assembly Drawing: 569628-2_1_AA

Issue: 20030213

Pos	Part No	SP	UN	Qty	Description	Page No
Common Parts						
010	436613-0000	-		1	BOX	
015	1175684-0000	-		1	SHIELD PLATE	
020	436614-0000	-		1	HATCH	
030	544750-0000	-		1	HOLDER	
040	569629-0000	-		2	RAIL	
050	21613-0000	-		5	SCREW	
100	90002-0004	-		4	BLANK-OFF PLUG, PR 22,5 SKINDICHT-BLK16	
110	90002-0009	-		10	BLANK-OFF PLUG, PR 18.6 SKINDICHT-BLK11	
120	90002-0013	-		3	BLANK-OFF PLUG, PR 15,2 SKINDICHT-BLK9	
130	90143-0012	-	MM	1400	STRIP	
135	90089-0002	-		1	REDUCING SLEEVE, PR22,5/PR15,2	
140	90089-0008	-		1	REDUCING SLEEVE, PR22,5/PR28,3	
150	90089-0022	-		2	REDUCTION SLEEVE U I LAPP	
160	90152-0033	-	M	13	SPIRAL CONDUIT FOR PR 15,2(PG 9)	
200	312115-0325	-		6	SCREW ISO4762 M5X10 A4	
210	312105-0451	-		2	SCREW M6S ISO 4017 M8X20 A480	
220	312115-0542	-		4	SCREW ISO4762 M12X50 A4	
230	315105-0146	-		6	WASHER ISO 7089-5-200 HV-A4	
240	315105-0165	-		2	WASHER ISO 7089-8-200 HV-A4	
260	352103-0101	-		18	KABELFöRSKR. ST 9, PR15,2/PG9	
270	352103-0106	-		7	CABLE GLAND, ST 11, PR18,6/PG11	
280	352103-0111	-		4	CABLE GLAND, ST 16, PR22,5/PG16	
285	352103-0115	-		1	CABLE GLAND, STR 21, PR28,3/PG21	
290	352136-0107	-		2	GLAND FITTING PR12,5 PG7 FOR HOSE	
300	352136-0113	-		5	GLAND FITTING PR18,6/PG11 DI=12MM	
320	353021-0212	-		110	FEED THROUGH TERMINAL, 10200.0	
330	353024-0204	-		28	EARTH TERMINAL WPE 2,5	
340	353034-0030	-		15	BRIDGE CONNECTOR WQV 2,5/10, 10544.6	
350	359011-0819	-		2	MARKING PLATES 5-GW (EARTH)	
360	359011-0807	-		2	MARKING PLATES 5-FW 1-50	
370	359011-0808	-		2	MARKING PLATES 5-FW 51-100	
375	359011-0809	-		2	MARKING PLATES 5-FW 101-150	
380	352103-0105	-		7	CABLE GLAND, STR 11, PR 18,6/PG11	
390	352103-0116	-		1	KABELFöRSKR. ST 21, PR28,3/PG21	
400	352135-0102	-	M	5	SPIRAL CONDUIT 155.010 DI=10MM;DO=14,7MM	

Pos	Part No	SP	UN	Qty	Description	Page No

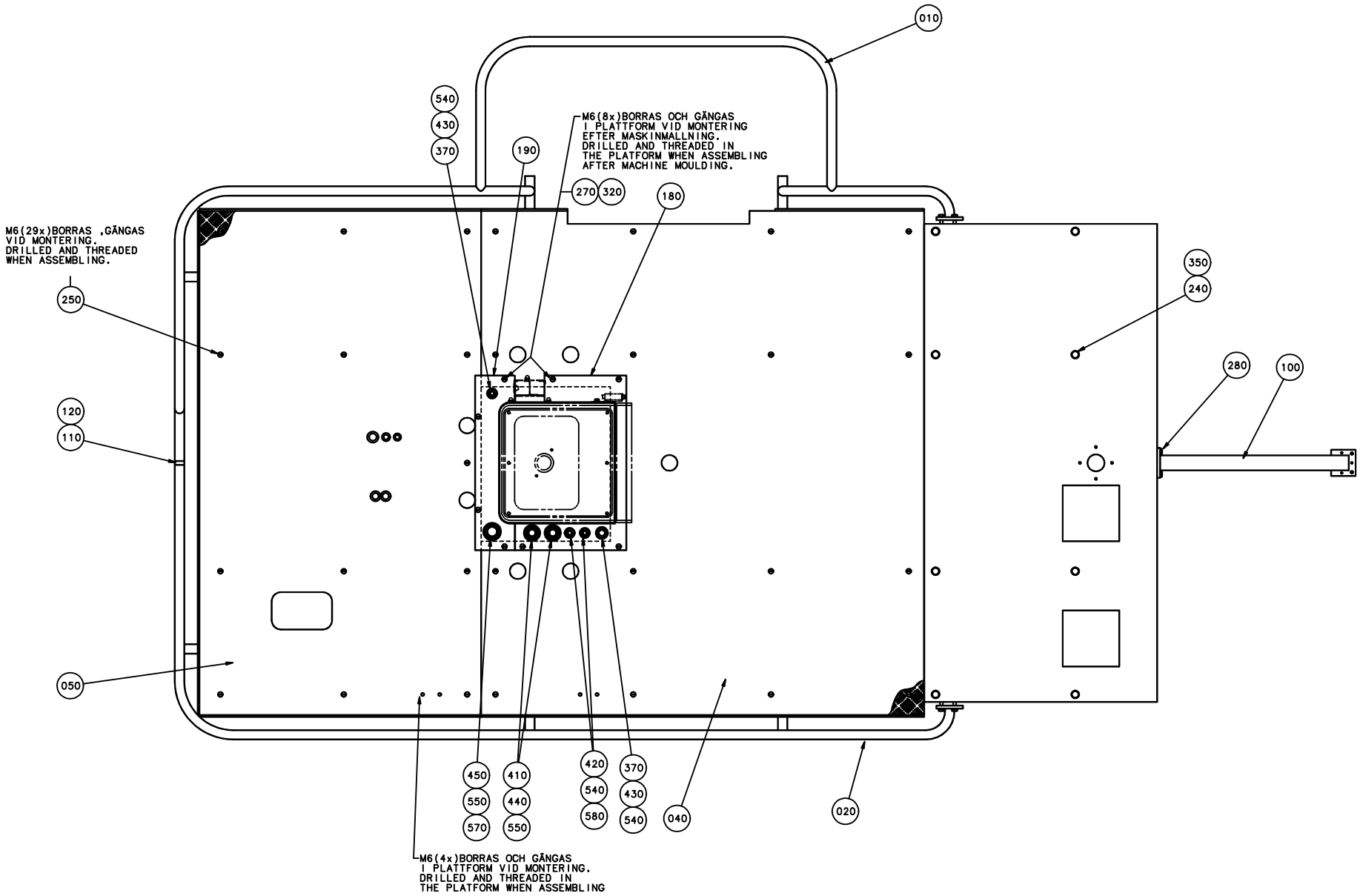
010
540
430
370
190
M6(8x)BORRAS OCH GÄNGAS
I PLATTFORM VID MONTERING
EFTER MASKINMALLNING.
DRILLED AND THREADED IN
THE PLATFORM WHEN ASSEMBLING
AFTER MACHINE MOULDING.
270
320
180
M6(29x)BORRAS ,GÄNGAS
VID MONTERING.
DRILLED AND THREADED
WHEN ASSEMBLING.
250
120
110
050
350
240
280
100
450
550
570
410
440
550
420
540
580
370
430
540
040
020
M6(4x)BORRAS OCH GÄNGAS
I PLATTFORM VID MONTERING.
DRILLED AND THREADED IN
THE PLATFORM WHEN ASSEMBLING

ECM: 83514 - 20000925
Group number: 562887-0301
Assembly Drawing: 562887-5_1_AA

Issue: 20030213

Pos	Part No	SP	UN	Qty	Description	Page No
Common Parts						
010	562893-0000	-		1	RAILING R	
020	562892-0000	-		1	RAILING L	
030	562888-0000	-		1	PLATFORM	
040	562889-0000	-		1	CHECKER PLATE	
050	562890-0000	-		1	CHECKER PLATE	
060	568140-0000	-		2	COVERING PLATE	
070	568141-0000	-		1	COVERING PLATE	
080	568142-0000	-		1	COVERING PLATE	
090	568127-0000	-		1	COVER PLATE L	
100	547888-0000	-		1	CANTILEVER	
110	751484-0000	A		2	CLAMPING RING	
120	751485-0000	A		2	SCREW	
130	568128-0000	-		1	COVER PLATE R	
160	569621-0000	-		1	COVER R	
170	569622-0000	-		1	COVER L	
180	1175850-0000	-		1	COVERING PLATE	
185	1483039-0000	-		1	COVERING PLATE	
190	570830-0000	-		1	COVERING PLATE	
200	1175811-0000	-		1	COVERING PLATE	
210	1175890-0000	-		1	COVERING PLATE	
230	312105-0364	-		72	SCREW M6S ISO 4017 M6X10 A480	
240	312105-0493	-		8	SCREW M6S ISO 4017 M10X25 A480	
250	312145-0366	-		29	SCREW COUNTERS.SLOT.HD. MFS 6X12 SS	
270	312105-0368	-		8	SCREW M6S M6X16 A280	
280	312105-0451	-		4	SCREW M6S ISO 4017 M8X20 A480	
300	312105-0491	-		40	SCREW M6S ISO 4017 M10X20 A480	
310	312115-0327	-		5	SCREW ISO4762 M5X12 A4	
315	90419-0311	-		1	GASKET	
320	315105-0153	-		80	WASHER ISO 7089-6-200 HV-A4	
330	315105-0165	-		16	WASHER ISO 7089-8-200 HV-A4	
350	315105-0173	-		48	WASHER ISO 7089-10-200 HV-A4	
400	352103-0106	-		1	CABLE GLAND, ST 11, PR18,6/PG11	
410	352135-0109	-	MM	3500	HOSE .022	
420	352136-0113	-		2	GLAND FITTING PR18,6/PG11 DI=12MM	
430	352136-0127	-		2	GLAND FITTING PR 18,6	
440	352136-0143	-		2	GLAND FITTING	
450	352136-0152	-		1	GLAND FITTING	
540	90099-0117	-		4	NUT, PR 18,6 (PG11)	
550	90099-0119	-		3	NUT, PR 28,3 (PG21)	
570	90152-0031	-	MM	700	HOSE	
580	90152-0033	-	MM	1500	SPIRAL CONDUIT FOR PR 15,2(PG 9)	
F010	A1175151-0101	-		1	WARNING BEACON	**273**
H004	90052-0011	A		1	HORN, YO3/BT 24-50VDC NO.654005	

Machine Type Group Description Used-In Group Number Page No

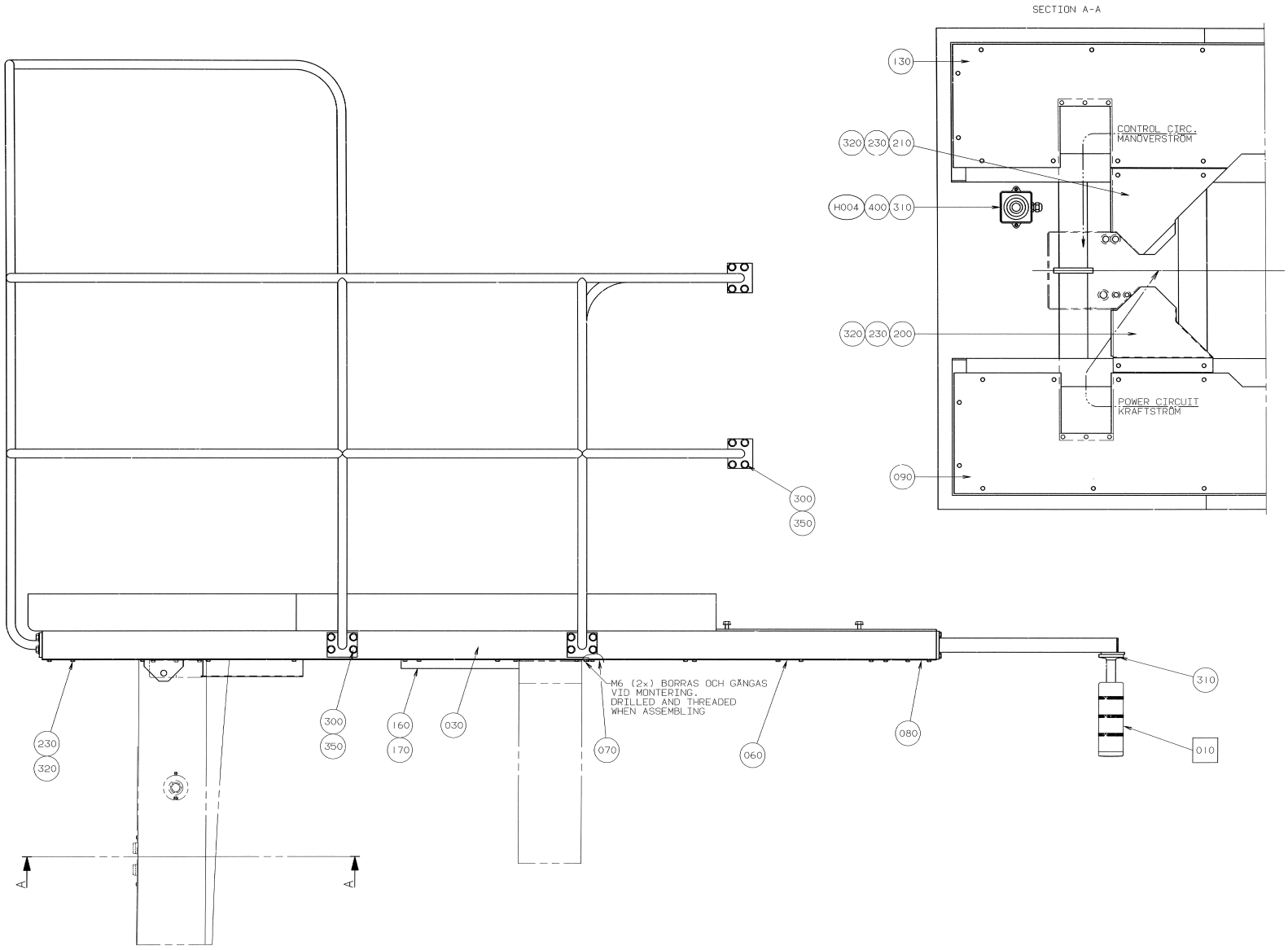
SECTION A-A
130
320
230
210
CONTROL CIRC.
MANÖVERSTRÖM
H004
400
310
320
230
200
POWER CIRCUIT
KRAFTSTRÖM
090
300
350
M6 (2x) BORRAS OCH GÄNGAS
VID MONTERING.
DRILLED AND THREADED
WHEN ASSEMBLING
310
010
230
320
300
350
160
170
030
070
060
080
A
A

ECM: 83514 - 20000925
Group number: 562887-0301
Assembly Drawing: 562887-6_1_AA

Issue: 20030213

Pos	Part No	SP	UN	Qty	Description	Page No
Common Parts						
010	562893-0000	-		1	RAILING R	
020	562892-0000	-		1	RAILING L	
030	562888-0000	-		1	PLATFORM	
040	562889-0000	-		1	CHECKER PLATE	
050	562890-0000	-		1	CHECKER PLATE	
060	568140-0000	-		2	COVERING PLATE	
070	568141-0000	-		1	COVERING PLATE	
080	568142-0000	-		1	COVERING PLATE	
090	568127-0000	-		1	COVER PLATE L	
100	547888-0000	-		1	CANTILEVER	
110	751484-0000	A		2	CLAMPING RING	
120	751485-0000	A		2	SCREW	
130	568128-0000	-		1	COVER PLATE R	
160	569621-0000	-		1	COVER R	
170	569622-0000	-		1	COVER L	
180	1175850-0000	-		1	COVERING PLATE	
185	1483039-0000	-		1	COVERING PLATE	
190	570830-0000	-		1	COVERING PLATE	
200	1175811-0000	-		1	COVERING PLATE	
210	1175890-0000	-		1	COVERING PLATE	
230	312105-0364	-		72	SCREW M6S ISO 4017 M6X10 A480	
240	312105-0493	-		8	SCREW M6S ISO 4017 M10X25 A480	
250	312145-0366	-		29	SCREW COUNTERS.SLOT.HD. MFS 6X12 SS	
270	312105-0368	-		8	SCREW M6S M6X16 A280	
280	312105-0451	-		4	SCREW M6S ISO 4017 M8X20 A480	
300	312105-0491	-		40	SCREW M6S ISO 4017 M10X20 A480	
310	312115-0327	-		5	SCREW ISO4762 M5X12 A4	
315	90419-0311	-		1	GASKET	
320	315105-0153	-		80	WASHER ISO 7089-6-200 HV-A4	
330	315105-0165	-		16	WASHER ISO 7089-8-200 HV-A4	
350	315105-0173	-		48	WASHER ISO 7089-10-200 HV-A4	
400	352103-0106	-		1	CABLE GLAND, ST 11, PR18,6/PG11	
410	352135-0109	-	MM	3500	HOSE .022	
420	352136-0113	-		2	GLAND FITTING PR18,6/PG11 DI=12MM	
430	352136-0127	-		2	GLAND FITTING PR 18,6	
440	352136-0143	-		2	GLAND FITTING	
450	352136-0152	-		1	GLAND FITTING	
540	90099-0117	-		4	NUT, PR 18,6 (PG11)	
550	90099-0119	-		3	NUT, PR 28,3 (PG21)	
570	90152-0031	-	MM	700	HOSE	
580	90152-0033	-	MM	1500	SPIRAL CONDUIT FOR PR 15,2(PG 9)	
F010	A1175151-0101	-		1	WARNING BEACON	**273**
H004	90052-0011	A		1	HORN, YO3/BT 24-50VDC NO.654005	

Machine Type | Group Description | Used-In | Group Number | Page No

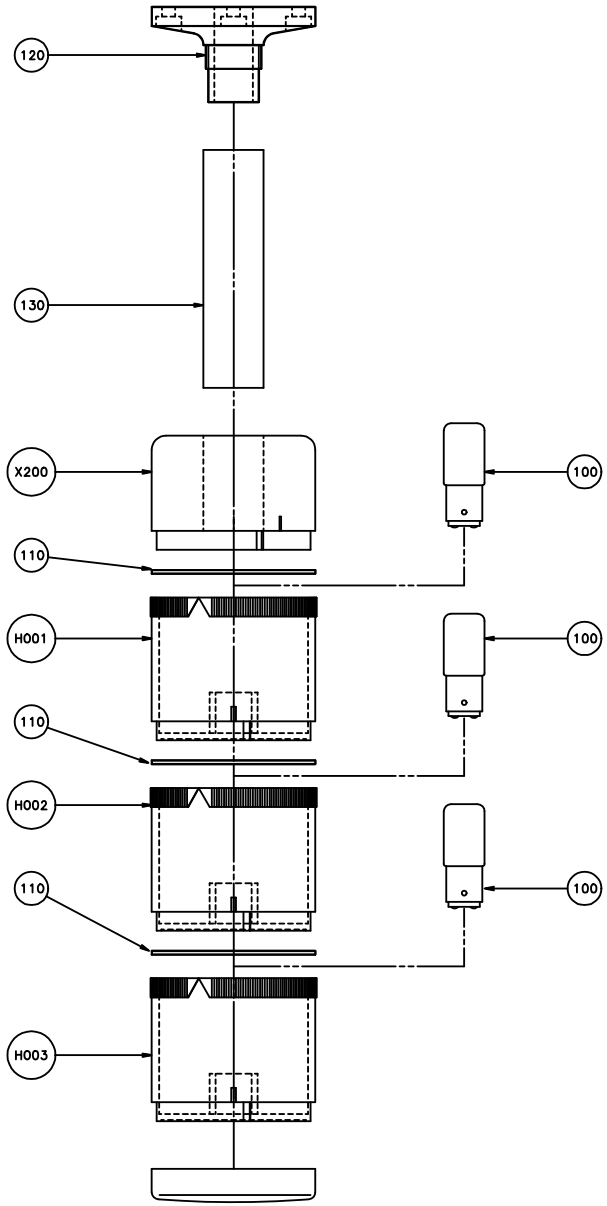
120
130
X200
110
H001
110
H002
110
H003
100
100
100

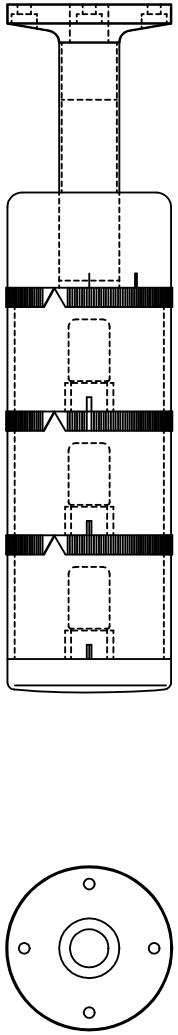

ECM: 83518 - 20000925
Group number: 1175151-0101
Assembly Drawing: 1175151-1_1_AA

Issue: 20030213

Pos	Part No	SP	UN	Qty	Description	Page No
Common Parts						
100	90036-0068	B		3	BULB 6.5W 24V	
110	90419-0307	A		3	GASKET	
120	90419-0308	-		1	BASE	
130	90419-0309	-		1	PIPE	
H001	90419-0013	A		1	LIGHT ELEMENT, BLUE	
H002	90419-0014	A		1	LIGHT ELEMENT, YELLOW	
H003	90419-0012	A		1	LIGHT ELEMENT, RED	
X200	90419-0016	A		1	BASE, XVA-C21	

Pos	Part No	SP	UN	Qty	Description	Page No

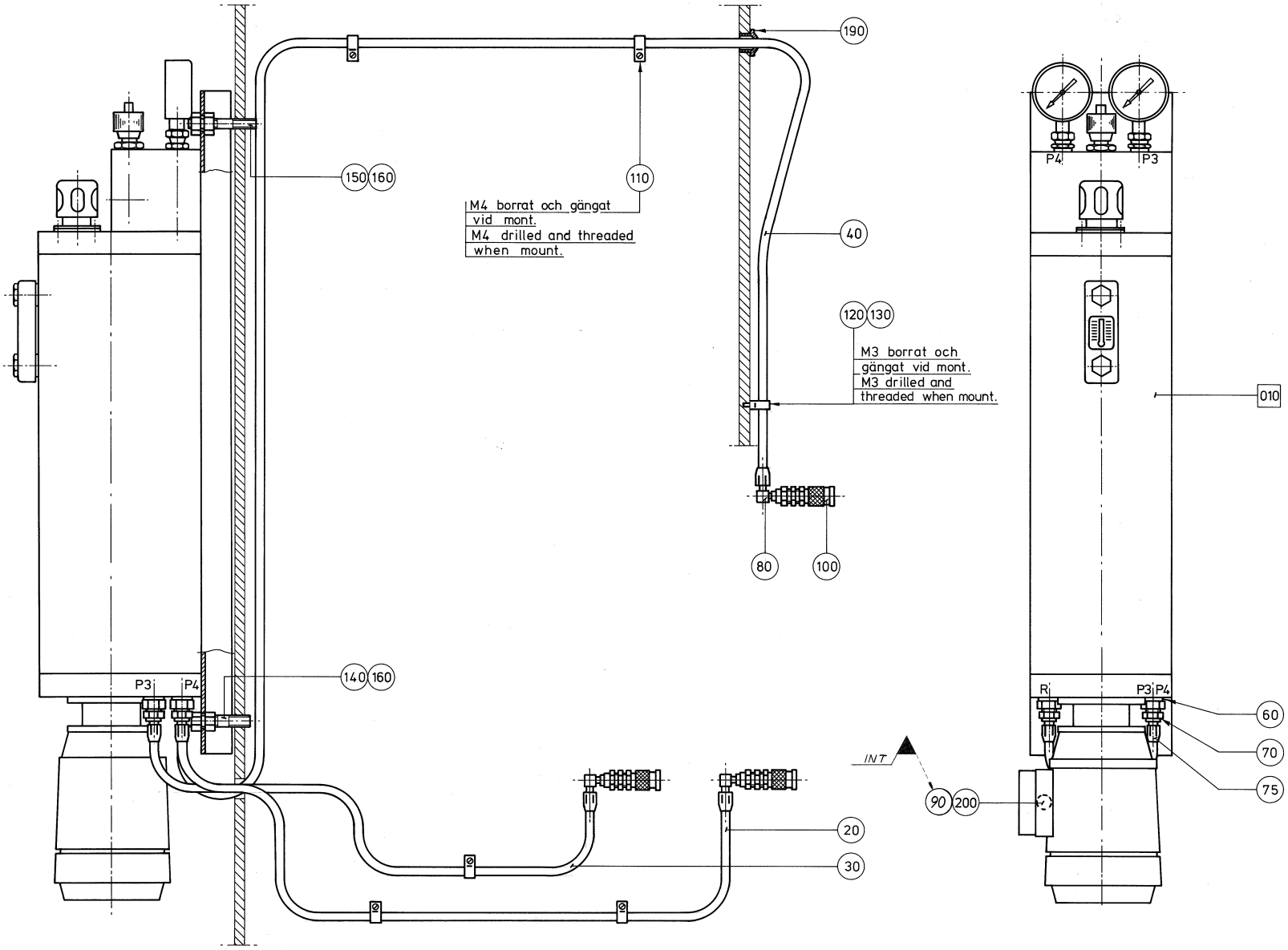
190
150
160
110
M4 borrat och gängat vid mont.
M4 drilled and threaded when mount.
40
120
130
M3 borrat och gängat vid mont.
M3 drilled and threaded when mount.
80
100
140
160
P3
P4
20
30
INT
90
200
010
P4
P3
R
P3
P4
60
70
75

ECM: 115176 - 20021010
Group number: 532160-0301
Assembly Drawing: 532160-2_1_AA

Issue: 20030213

Pos	Part No	SP	UN	Qty	Description	Page No
Common Parts						
020	90148-0010	-	MM	900	HOSE	
030	90148-0010	-	MM	1450	HOSE	
040	90148-0010	-	MM	3100	HOSE	
060	90005-0005	A		3	GASKET BOLT HEAD 13,7X20,6X2,1 MM G1/4"	
070	90055-0042	A		3	NIPPLES, EXT. THREAD, HEXAGON, NO. 6835-	
075	90055-0056	A		3	HOSE COUPLING	
080	90055-0057	A		3	HOSE COUPLING	
090	90152-0033	-	MM	5500	SPIRAL CONDUIT FOR PR 15,2(PG 9)	
100	90163-0043	A		3	QUICK COUPLING, (F) MD-006-0-WR013	
110	90165-0007	-		5	PIPE CLIP FOR TUBE D=8 MM	
120	90165-0013	-		1	CLIP	
130	312121-0220	-		1	SCREW SLOT.PAN HD. MCS 3X6 FZB	
140	312303-0541	-		1	SCREW DIN 938 PS M12X30 A4 80	
150	312303-0543	-		1	SCREW DIN 938 PS M12X40 A4 80	
160	312601-0322	-		4	NUT M6M 12-8 FZB	
190	352101-0103	-		1	LEAD-IN, PR18,6/PG11, E-1457518	
200	90012-0063	-		1	CABLE GLAND PR 15,2	
F010	A537961-0300	A		1	HYDRAULIC SYSTEM	**277**

Pos	Part No	SP	UN	Qty	Description	Page No

Machine Type | Group Description | Used-In | Group Number | Page No

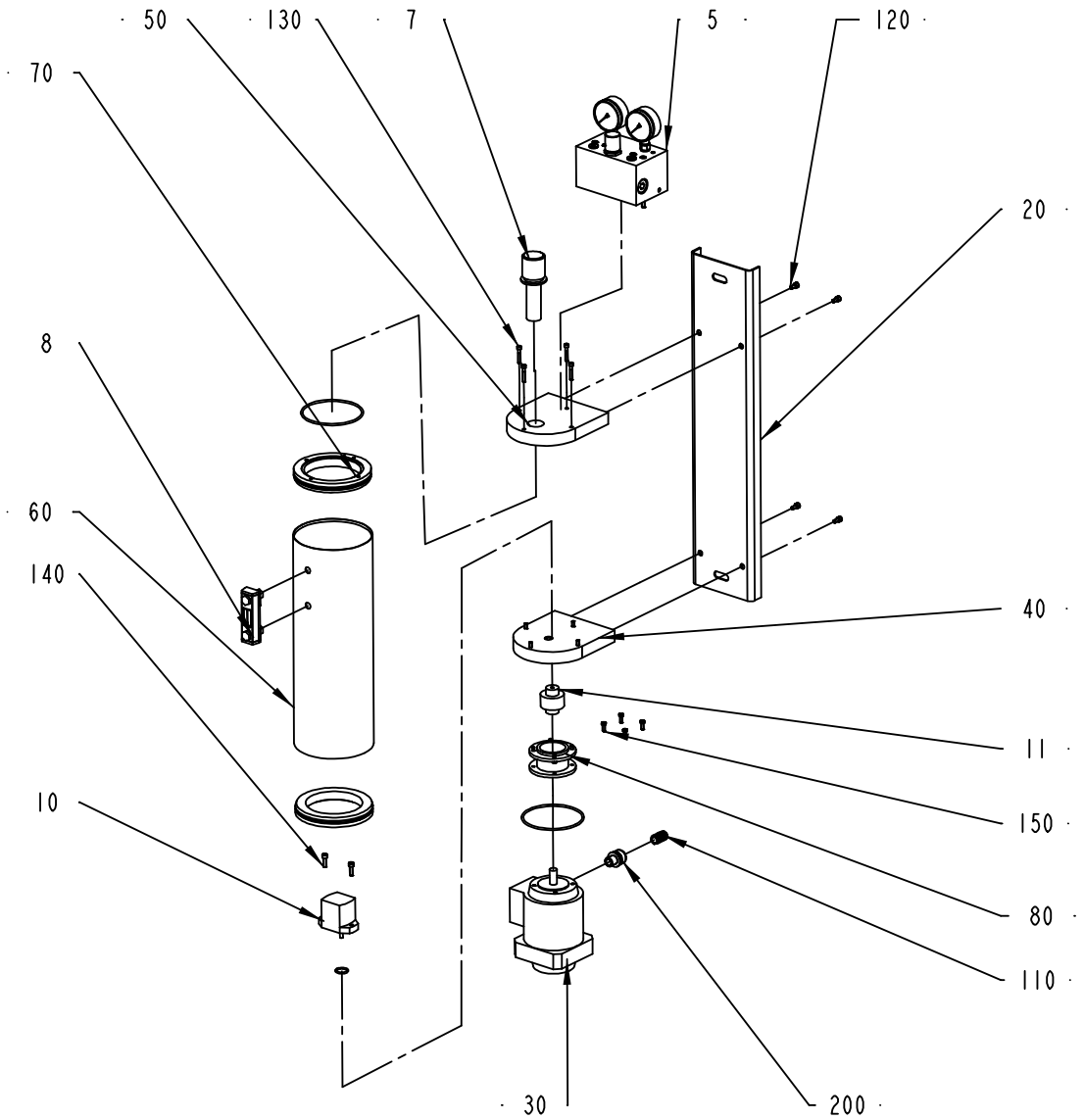

537961-3
ECM ----

Pos	Part No	SP	UN	Qty	Description	Page No
Common Parts						
005	A2530411-0100	A		1	HYDRAULIC VALVE	**279**
007	90415-0333	A		1	FILLER CAP	
008	90199-0020	A		1	LEVEL GLASS/THERMOM. FSA 76.1.1./T/12	
010	90321-0053	A		1	HYDR. GEAR PUMP 1/4 GAS X 2	
011	90321-0468	A		1	SHAFT COUPLING	
020	90459-0118	-		1	FASTENING BRACKET , 3-86-1038	
030	90458-2476	A		1	MOTOR 3GVA061142-CSB	
040	90459-0120	-		1	GABLE PLATE , LOWER 2-86-1035	
050	90459-0121	-		1	GABLE PLATE , UPPER 2-86-1034	
060	90459-0119	-		1	TANK , 2-86-1037	
070	90459-0142	-		2	RING FOR TANK 10331	
080	90459-0122	-		1	FLANGE , 4-86-1036	
110	90152-0033	B	MM	4500	SPIRAL CONDUIT FOR PR 15,2(PG 9)	
120	312115-0366	-		4	SCREW ISO4762 M6X12 A4	
130	312115-0335	-		8	SCREW ISO4762 M5X30 A4	
140	312115-0370	-		2	SCREW ISO4762 M6X20 A4	
150	312105-0328	-		8	SCREW M6S ISO 4017 M5X14 A480	
200	352136-0113	-		1	GLAND FITTING PR18,6/PG11 DI=12MM	

Pos	Part No	SP	UN	Qty	Description	Page No

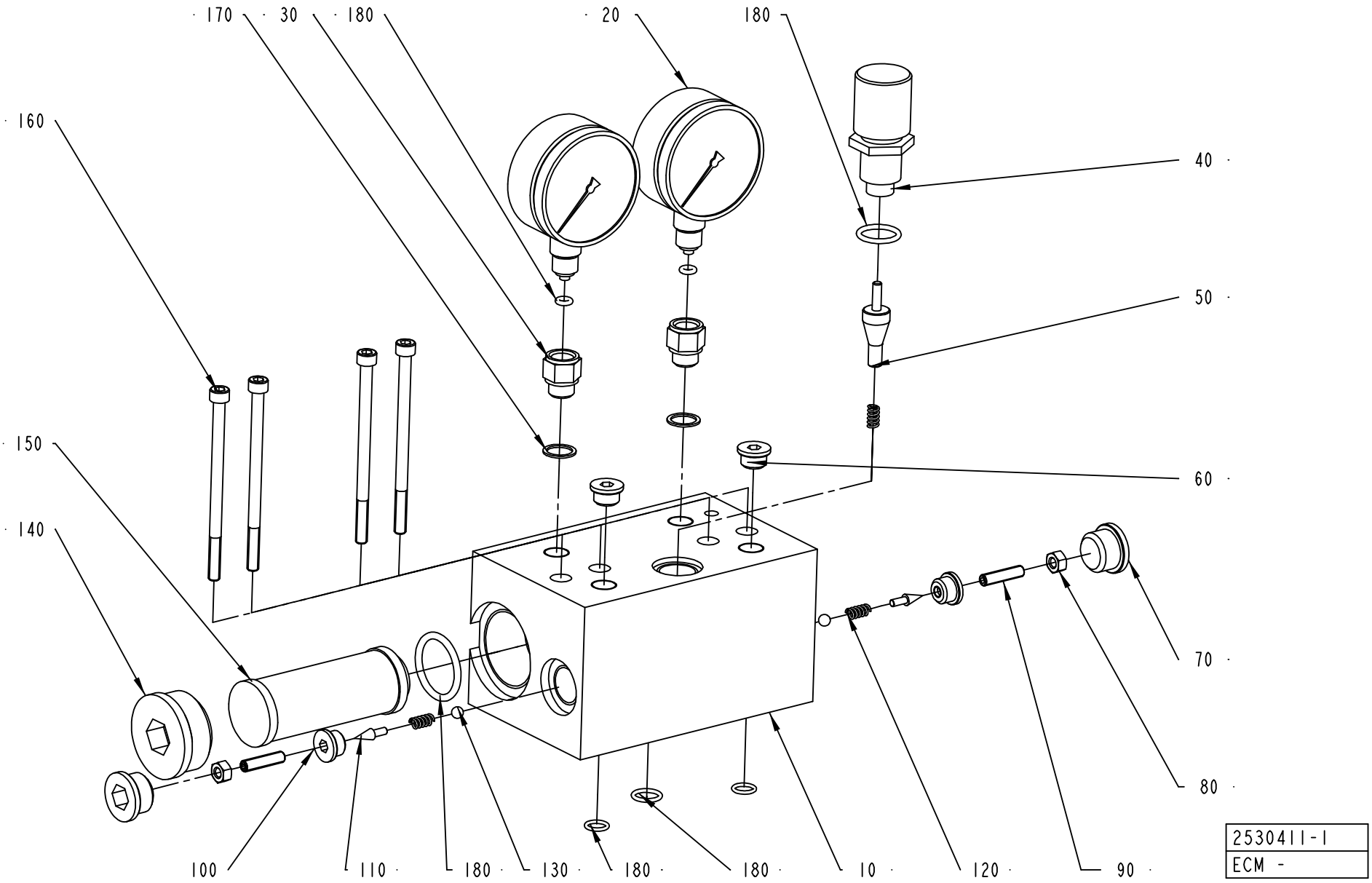
170
30
180
20
180
160
40
50
150
60
140
70
80
100
110
180
130
180
180
10
120
90
2530411-1
ECM -

Pos	Part No	SP	UN	Qty	Description	Page No
Common Parts						
010	90458-2934	-		1	VALVE HOUSING , 1-86-1031	
020	90043-0081	A		2	PRESSURE GAUGE, 2740, D=63 MM	
030	90030-0166	B		2	NIPPLE,REDUCING G1/4"-G1/4"	
040	90201-0027	B		1	SHUT-OFF VALVE, NO. DVE08-1.1/O-P	
050	90459-0047	A		1	PISTON , 4-87-1085	
060	342713-0210	-		2	PLUG, EXT THREAD HEX SOCKET 8638-00-140	
070	342713-0213	-		2	PLUG, EXT THREAD HEX SOCKET 8638-00-120	
080	312605-0316	-		2	HEXAGON NUT, M6M M6 A280	
090	90459-0051	A		2	SCREW , 4-87-1118	
100	90459-0053	-		2	PLUG , 4-87-1117	
110	90459-0052	A		2	VALVE CONE , 4-87-1084	
120	90458-2931	A		3	COMP. SPRING 11860, 1X6X12	
130	90090-0010	A		2	BALL, D=6 MM	
140	90459-0063	-		1	PLUG, VST G1 1/4"	
150	90415-0334	A		1	FILTER / 0030 D 020 BN	
160	312111-0390	-		4	SCREW HEX.SOCK.HD.MC6S-TT 6X100 88 FZ	
170	315233-0110	A		2	WASHER PL.RND.NYL.13,3/17,H=1	
180	90321-0469	A		7	O-RING SET	

Pos	Part No	SP	UN	Qty	Description	Page No

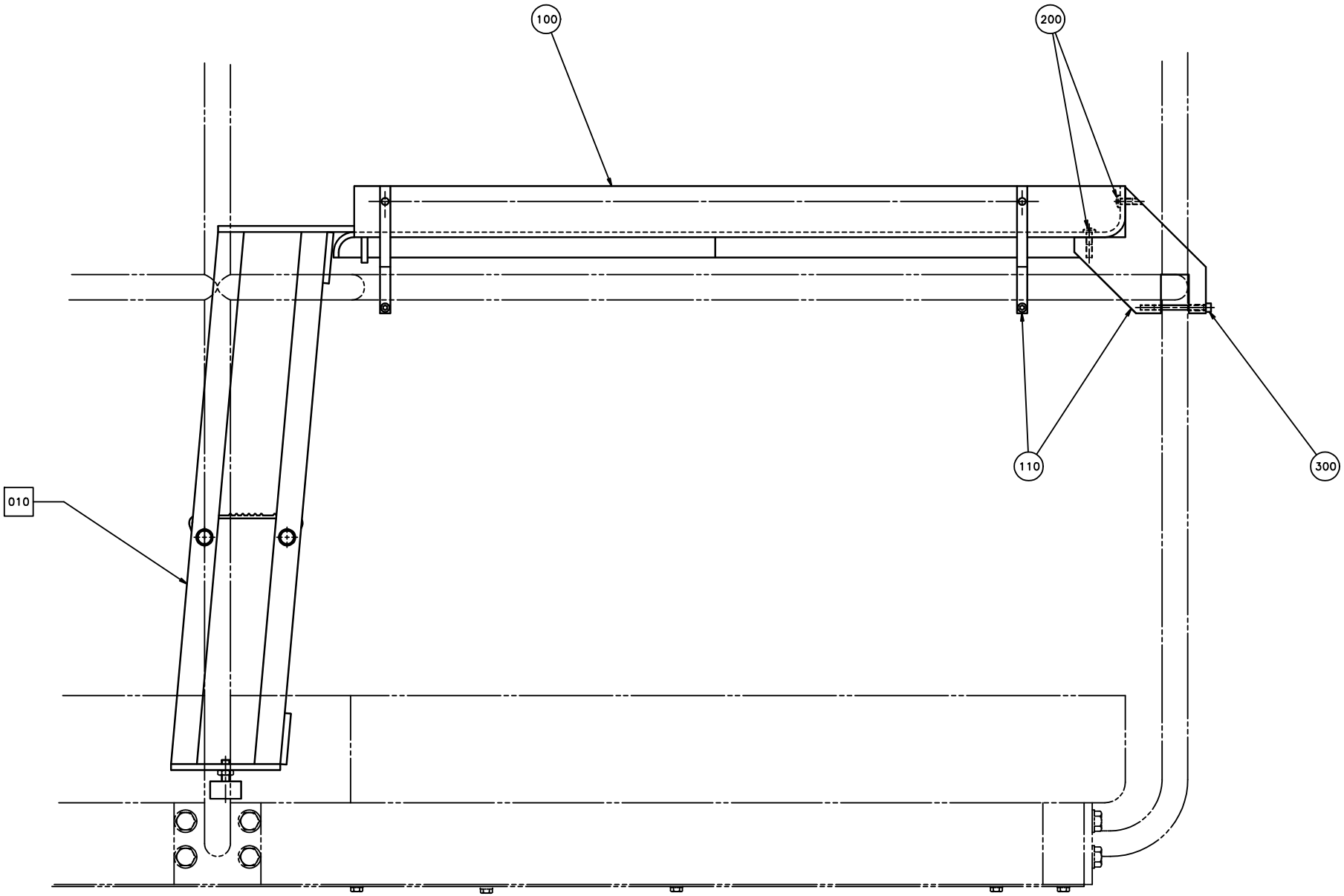
100
200
110
300
010

ECM: - -
Group number: 568143-0101
Assembly Drawing: 568143-1_1_AA

Issue: 20030213

Pos	Part No	SP	UN	Qty	Description	Page No
Common Parts						
100	568144-0000	-		1	SHEET	
110	570828-0000	-		4	CATCH	
200	90287-0075	-		8	SCREW SLOT. PAN HEAD LKCS M6X12	
300	312111-0341	-		4	SCREW HEX.SOCK.HD.MC6S-TT 5X50 88 FZB	
F010	A568149-0101	-		1	LADDER	**283**

Pos	Part No	SP	UN	Qty	Description	Page No

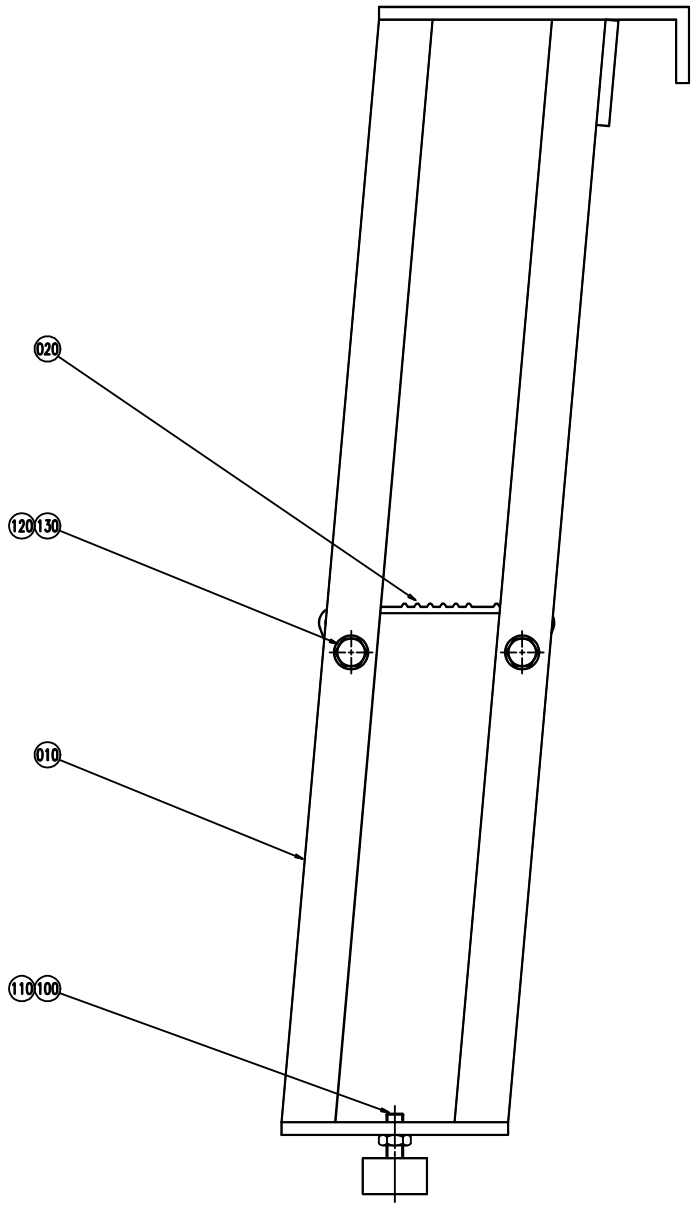
020
120
130
010
110
100

ECM: 83517 - 20000925
Group number: 568149-0101
Assembly Drawing: 568149-1_1_AA

Issue: 20030213

Pos	Part No	SP	UN	Qty	Description	Page No
Common Parts						
010	568126-0000	-		1	LADDER	
020	208361-0002	-		1	STAIR	
100	90347-0004	A		2	VIBRATION DAMPER D=30 TH=M8 H=17 H2=21MM	
110	312605-0318	-		2	HEXAGON NUT, M6M M8 A280	
120	312105-0459	-		2	SCREW M6S ISO 4014 M8X40 A480	
130	315105-0165	-		2	WASHER ISO 7089-8-200 HV-A4	

Pos	Part No	SP	UN	Qty	Description	Page No

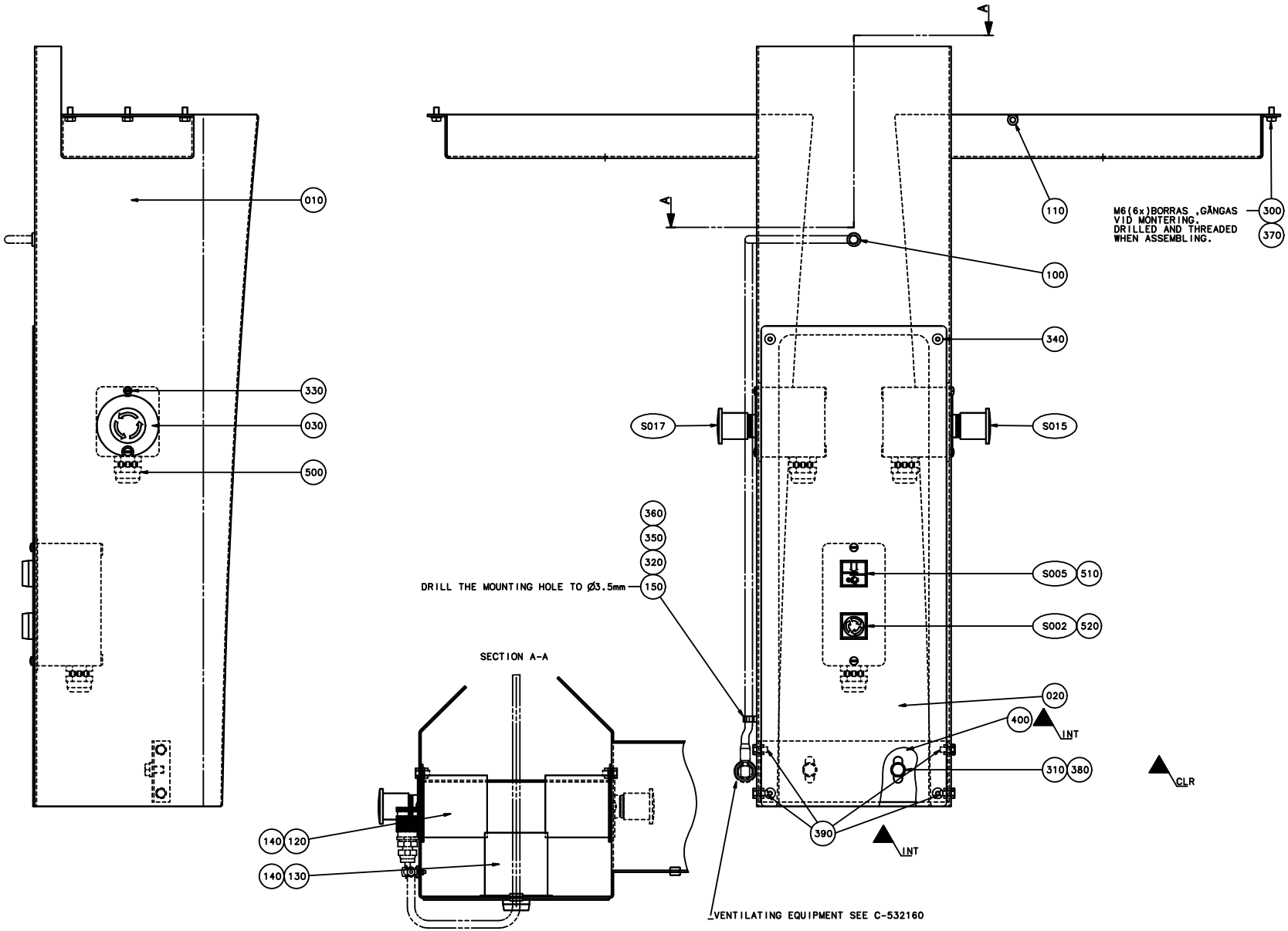
010
330
030
500
110
100
340
S017
S015
360
350
320
150
DRILL THE MOUNTING HOLE TO Ø3.5mm
M6(6x)BORRAS ,GÄNGAS VID MONTERING.
DRILLED AND THREADED WHEN ASSEMBLING.
300
370
S005
510
S002
520
020
400
INT
310
380
CLR
390
INT
SECTION A-A
140
120
140
130
VENTILATING EQUIPMENT SEE C-532160

ECM: 83519 - 20000925
Group number: 1175393-0101
Assembly Drawing: 1175393-1_1_AA

Issue: 20030213

Pos	Part No	SP	UN	Qty	Description	Page No
Common Parts						
010	1175854-0000	-		1	CABLE DUCT	
020	1175855-0000	-		1	CONTROL PANEL	
030	486826-0001	-		2	SIGN "EMERGENCY STOP"	
100	90015-0017	-		1	BUSHING	
110	90015-0027	-		1	RUBBER BUSHING DI=6MM	
120	90066-0013	-		2	PUSH BUTTON BOX XB2-SAS 11	
130	90066-0020	-		1	PUSH BUTTON BOX	
140	90143-0073	-	M	1	RUBBER STRIP	
150	90165-0013	-		1	CLIP	
300	312105-0325	-		6	SCREW M6S ISO 4017 M5X10 A480	
310	312115-0449	-		2	SCREW ISO4762 M8X16 A4	
320	312125-0222	-		1	SPåRSKRUV MCS M3X8 SS	
330	312125-0327	-		6	SCREW PAN HEAD MCS M5X12 SS	
340	312155-0366	-		4	SCREW EN 10642 MF6S M6X12 A480	
350	312605-0310	-		1	HEXAGON NUT, M6M M3 A280	
360	315105-0124	-		1	WASHER ISO 7089-3-200 HV-A4	
370	315105-0153	-		6	WASHER ISO 7089-6-200 HV-A4	
380	315115-0165	-		2	WASHER PLAIN, TBRB 8,4/16 H=3	
390	312105-0366	-		4	SCREW M6S M6X12 A280	
400	594766-0000	-		1	BRACKET	
500	352103-0110	-		3	CABLE GLAND, STR 16, PR22,5/PG16	
510	359301-0051	-		1	SIGN"STRIP SPLICE"	
520	359301-0090	-		1	SIGN "INCHING"	
S002	B90064-0093	A		1	PUSH BUTTON, GREEN	
	90036-0057	*C*		*1*	*LIGHT BULB, BA9S 28V*	
S005	90064-0084	A		1	PUSH BUTTON, YELLOW	
S015	90064-0124	A		1	SWITCH, EM. STOP, ZB2-BS844+ZB2-BZ1045	
S017	90064-0124	A		1	SWITCH, EM. STOP, ZB2-BS844+ZB2-BZ1045	

Pos	Part No	SP	UN	Qty	Description	Page No

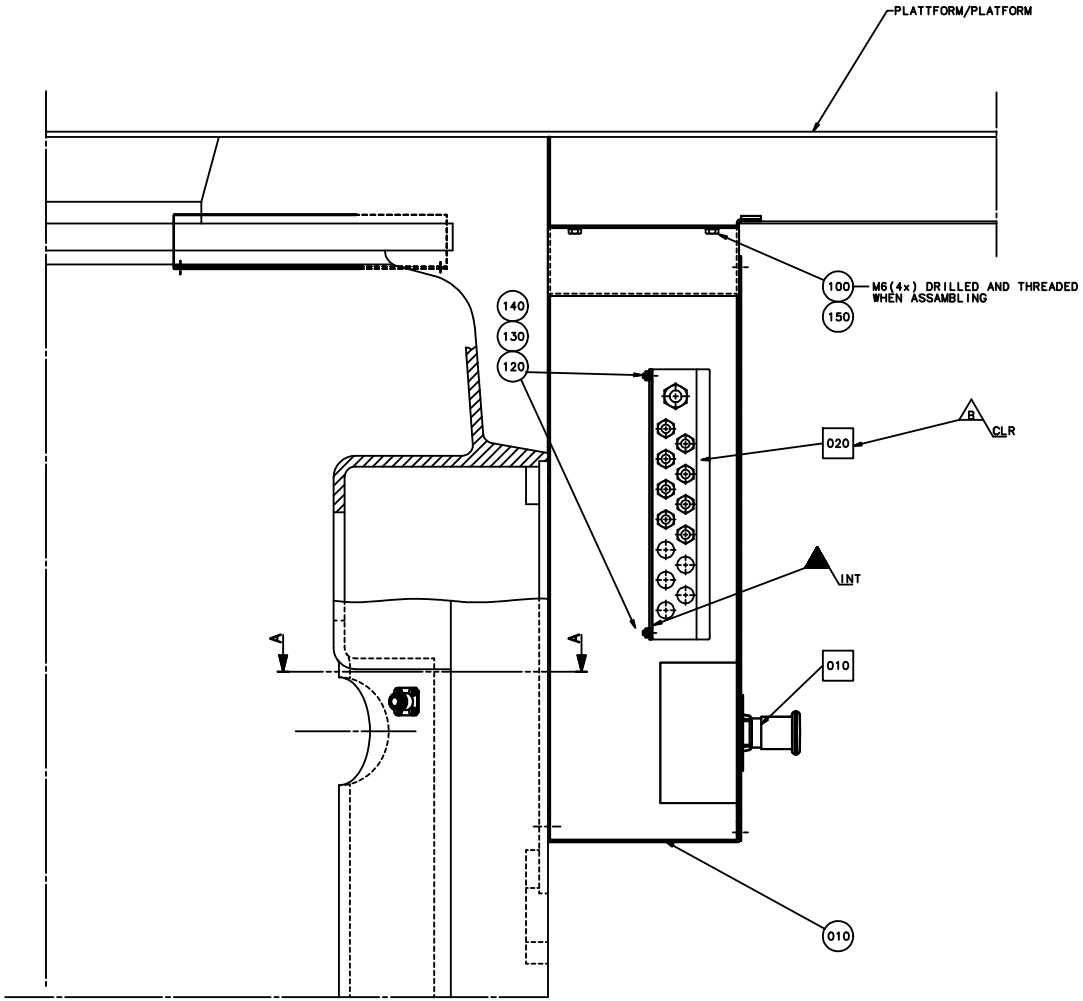
PLATTFORM/PLATFORM
100
150
M6(4x) DRILLED AND THREADED WHEN ASSAMBLING
140
130
120
020
B
CLR
INT
A
A
010
010

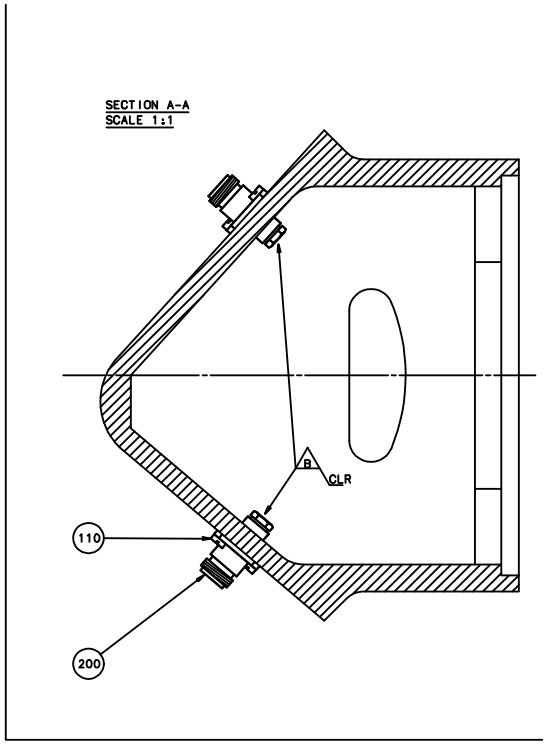
SECTION A-A
SCALE 1:1
B
CLR
110
200

ECM: 83516 - 20000925
Group number: 568105-0201
Assembly Drawing: 568105-1_1_AA

Issue: 20030213

Pos	Part No	SP	UN	Qty	Description	Page No
Common Parts						
010	568100-0000	-		1	CABLE DUCT	
100	312105-0362	-		4	SCREW M6S ISO 4017 M6X8 A480	
110	312125-0226	-		4	SCREW PAN HEAD MCS M3X12 SS	
120	312125-0293	-		2	SCREW PAN HEAD MCS M4X16 SS	
130	312605-0312	-		2	HEXAGON NUT, M6M M4 A280	
140	315105-0136	-		2	WASHER ISO 7089-4-200 HV-A4	
150	315105-0153	-		4	WASHER ISO 7089-6-200 HV-A4	
200	90110-0127	A		2	COAXIAL CONNECTOR, GE 15057C10HBN	
F010	A534730-0202	-		1	EMERGENCY STOP	**289**
F020	A594723-0100	-		1	CONNECTION BOX	**291**

Pos	Part No	SP	UN	Qty	Description	Page No

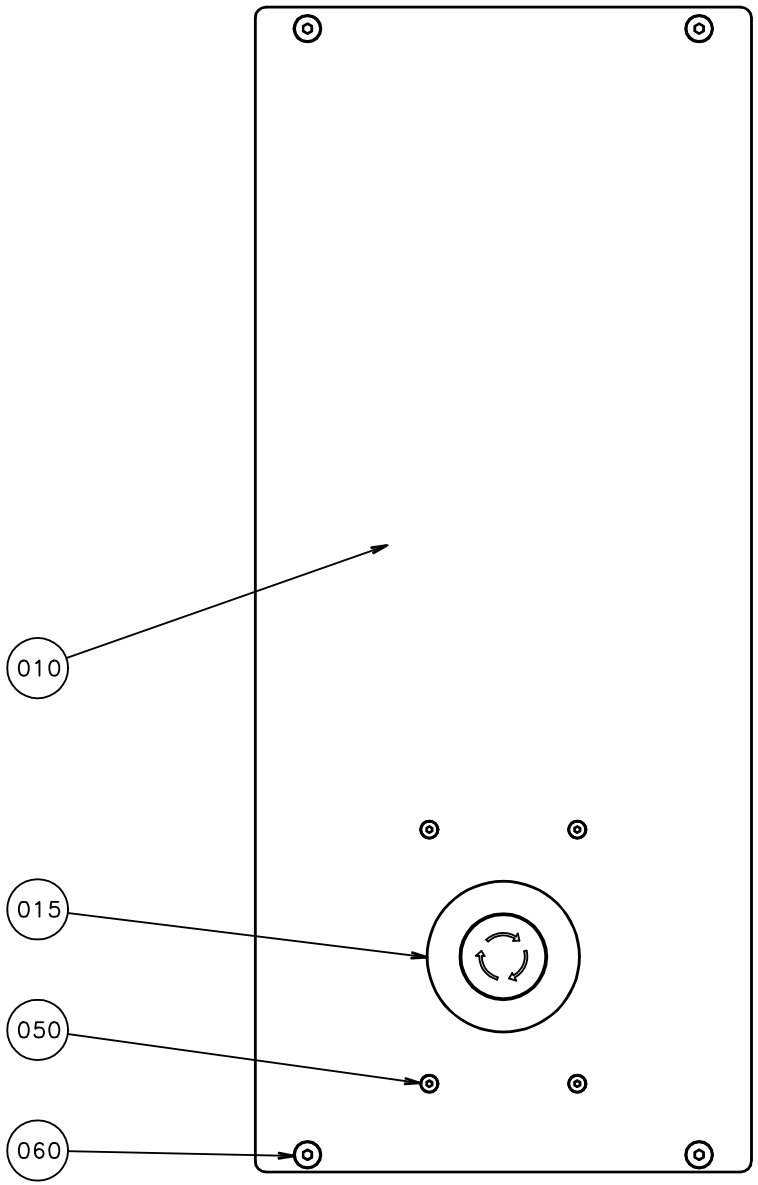
010
015
050
060

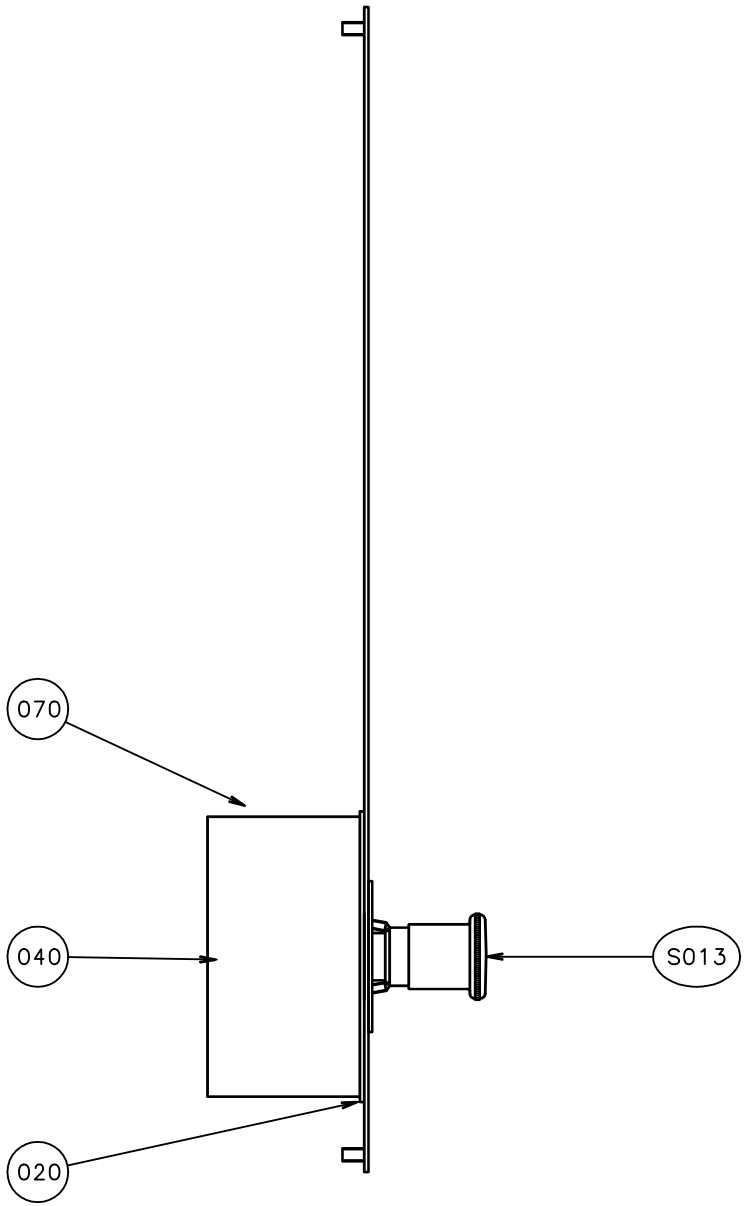
070
040
S013
020

ECM: 83508 - 20000925
Group number: 534730-0202
Assembly Drawing: 534730-3_1_AA

Issue: 20030213

Pos	Part No	SP	UN	Qty	Description	Page No
Common Parts						
010 2	568102-0000	-		1	CONTROL PANEL	
015	486826-0001	-		1	SIGN "EMERGENCY STOP"	
020	499385-0000	A		1	GASKET	
040	90066-0006	-		1	PUSH BUTTON BOX XAP-M2602	
050	312155-0301	-		4	SCREW EN 10642 MF6S M4X35 A480	
060	312155-0366	-		4	SCREW EN 10642 MF6S M6X12 A480	
070	352103-0110	-		1	CABLE GLAND, STR 16, PR22,5/PG16	
S013	90064-0124	A		1	SWITCH, EM. STOP, ZB2-BS844+ZB2-BZ1045	

Pos	Part No	SP	UN	Qty	Description	Page No

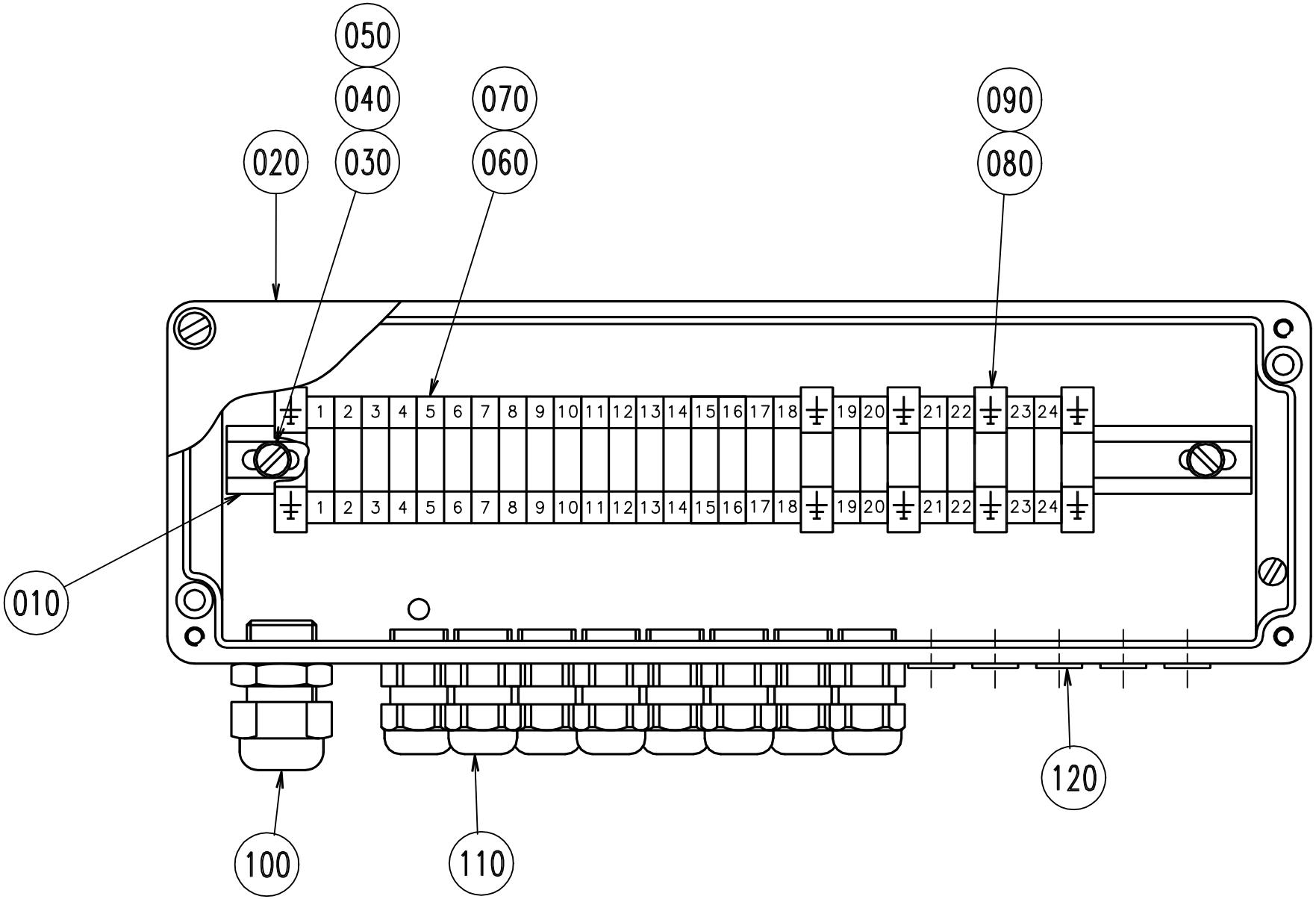
050
040
070
090
020
030
060
080
1 2 3 4 5 6 7 8 9 10 11 12 13 14 15 16 17 18 19 20 21 22 23 24
1 2 3 4 5 6 7 8 9 10 11 12 13 14 15 16 17 18 19 20 21 22 23 24
010
100
110
120

ECM: - -
Group number: 594723-0100
Assembly Drawing: 594723-1_1_AA

Issue: 20030213

Pos	Part No	SP	UN	Qty	Description	Page No
Common Parts						
010	8490-0010	-		1	MOUNTING RAIL	
020	594722-0000	-		1	CONNECTION BOX	
030	479110-0000	-		2	SPACER	
040	312121-0295	-		2	SCREW SLOT.PAN HD. MCS 4X20 FZB	
050	315101-0136	-		2	BRICKA, BRB, 4,3/8 H=0,8	
060	90077-0079	-		24	FEED THROUGH TERMINAL, 02943.6	
070	359011-0807	-		2	MARKING PLATES 5-FW 1-50	
080	90135-0026	-		5	EARTH TERMINAL, 3802.6	
090	359011-0202	-		10	SIGN BOARD(GROUND)	
100	352103-0111	-		1	CABLE GLAND, ST 16, PR22,5/PG16	
110	352103-0101	-		8	KABELFöRSKR. ST 9, PR15,2/PG9	
120 I	90002-0013	-		5	BLANK-OFF PLUG, PR 15,2 SKINDICHT-BLK9	

Pos	Part No	SP	UN	Qty	Description	Page No

This page is intentionally left blank.

ECM: - -
Group number: 68161-0102
Assembly Drawing:

Issue: 20030213

Pos	Part No	SP	UN	Qty	Description	Page No
Common Parts						
010	542039-0000	-		1	COIL FORMER: CYLINDER	
020	542031-0000	-		1	COIL FORMER: SECTION	
030	542040-0000	-		1	CONNECTION CABLE	
040	542041-0000	-		1	INSIDE CONNECTION CABLE	
050	541666-0000	-		1	CASING	
060	542029-0000	-		1	COIL CORE SHEET	
070	542028-0000	-		1	AIR GAP DISTANCE	
080	352103-0096	-		1	CABLE GLAND, ST 7, PR 12,5/PG7	
090	551930-0000	-		1	FLOAT	

Pos	Part No	SP	UN	Qty	Description	Page No

Tetra Pak

SPC
Spare Parts Catalogue

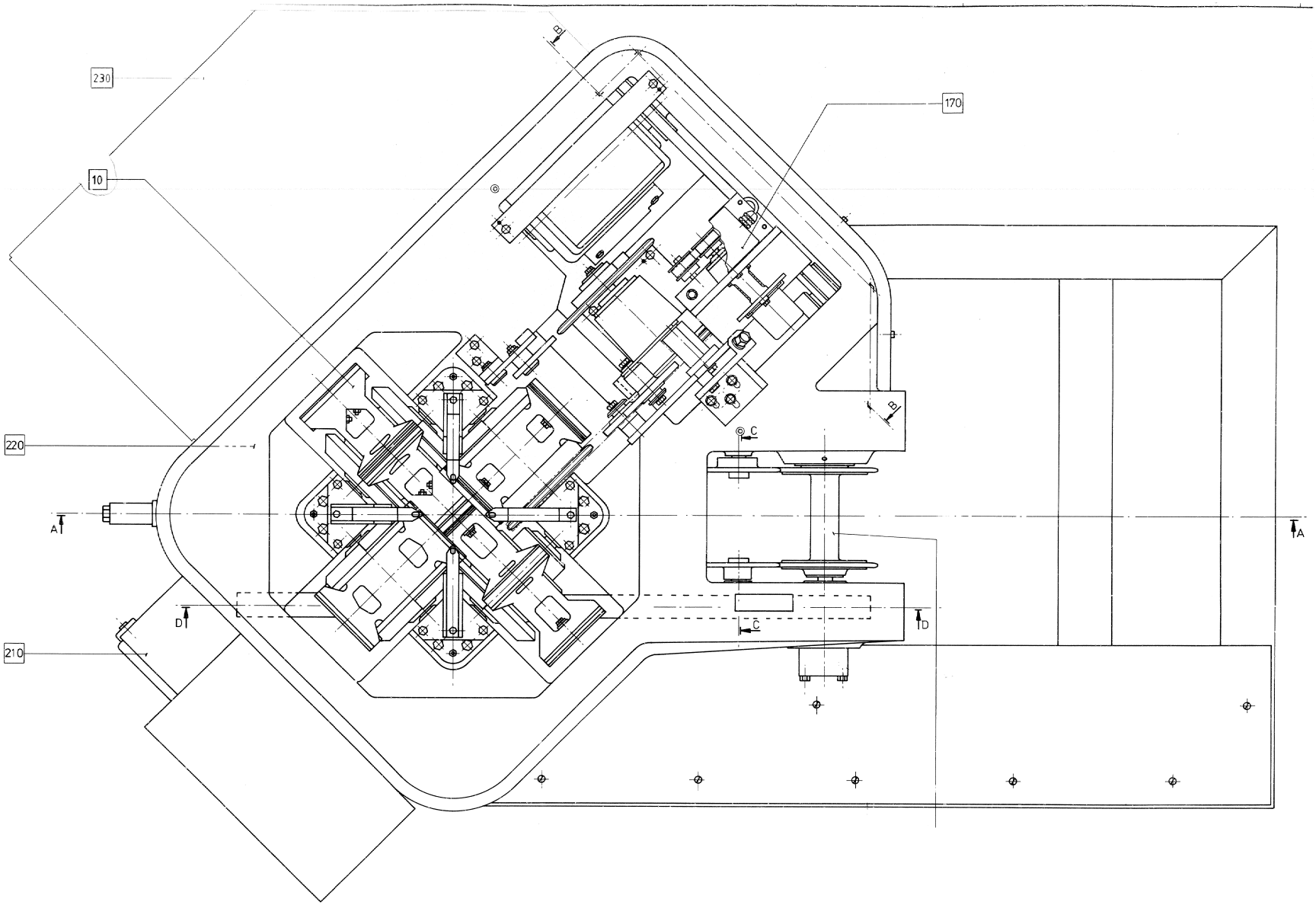
230
10
170
220
210
A
A
B
B
C
C
D
D

ECM: - -
Group number: 633235-0500
Assembly Drawing: 633235-1_1_AA

Issue: 20030213

Pos	Part No	SP	UN	Qty	Description	Page No
Common Parts						
F000 1	A536945-0400	-		1	CUTTING DEVICE	**301, 303**
F010 1	A434042-0204	-		1	SHEARING DEVICE	**305**
F050	A4866-0300	-		1	WORM GEAR	**315, 317**
F080	A4868-0101	-		1	INTERMEDIARY SHAFT	**325**
F090	A4869-0101	-		1	CHAIN TENSIONER	**327**
F100	A4870-0102	-		1	CHAIN TENSIONER	**329**
F110	A535052-0101	-		1	ADJUSTER	**331**
F120	A542811-0202	-		1	MOTOR CRADLE	**333**
F130	A6830-0101	-		1	EXPANSION BOLT	**337**
F160	A13372-0202	-		1	DRIVE SHAFT	**339**
F170	A535051-0201	-		1	ANGLE ENCODER	**341**
F210	A1483030-0101	-		1	CENTRAL LUBRICATION	**345**
F220	A536947-0201	-		1	CENTRAL LUBRICATION	**347**
F230	A563435-0301	-		1	PEROXIDE UNIT INKL, EL	**351**

Pos	Part No	SP	UN	Qty	Description	Page No

Machine Type | Group Description | Used-In | Group Number | Page No

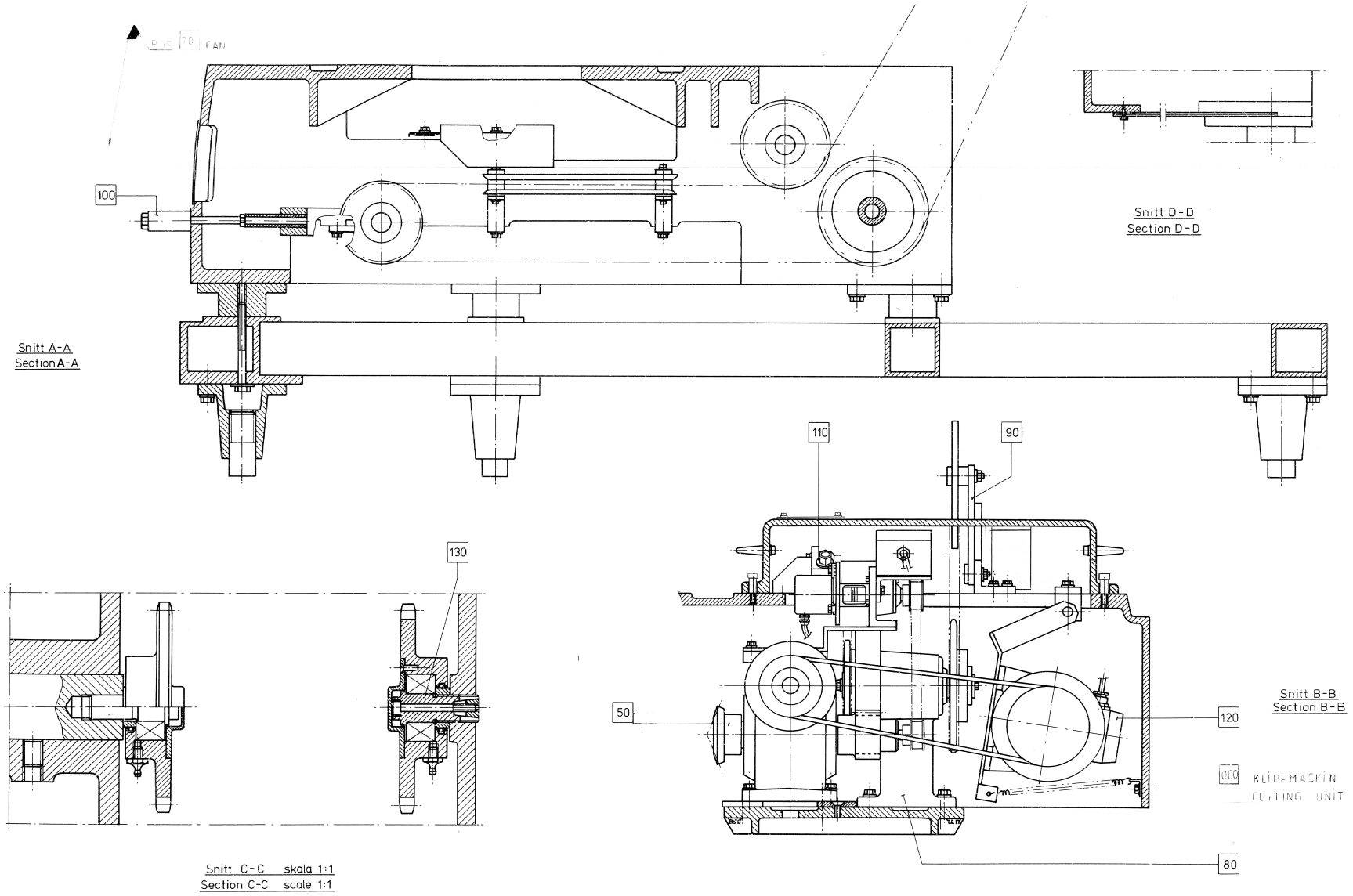
100
Snitt A-A
Section A-A
Snitt D-D
Section D-D
110
90
130
50
120
80
Snitt B-B
Section B-B
000 KLIPPMASKIN
CUTTING UNIT
Snitt C-C skala 1:1
Section C-C scale 1:1

ECM: - -
Group number: 633235-0500
Assembly Drawing: 633235-2_1_AA

Issue: 20030213

Pos	Part No	SP	UN	Qty	Description	Page No
Common Parts						
F000 1	A536945-0400	-		1	CUTTING DEVICE	**301, 303**
F010 1	A434042-0204	-		1	SHEARING DEVICE	**305**
F050	A4866-0300	-		1	WORM GEAR	**315, 317**
F080	A4868-0101	-		1	INTERMEDIARY SHAFT	**325**
F090	A4869-0101	-		1	CHAIN TENSIONER	**327**
F100	A4870-0102	-		1	CHAIN TENSIONER	**329**
F110	A535052-0101	-		1	ADJUSTER	**331**
F120	A542811-0202	-		1	MOTOR CRADLE	**333**
F130	A6830-0101	-		1	EXPANSION BOLT	**337**
F160	A13372-0202	-		1	DRIVE SHAFT	**339**
F170	A535051-0201	-		1	ANGLE ENCODER	**341**
F210	A1483030-0101	-		1	CENTRAL LUBRICATION	**345**
F220	A536947-0201	-		1	CENTRAL LUBRICATION	**347**
F230	A563435-0301	-		1	PEROXIDE UNIT INKL, EL	**351**

Pos	Part No	SP	UN	Qty	Description	Page No

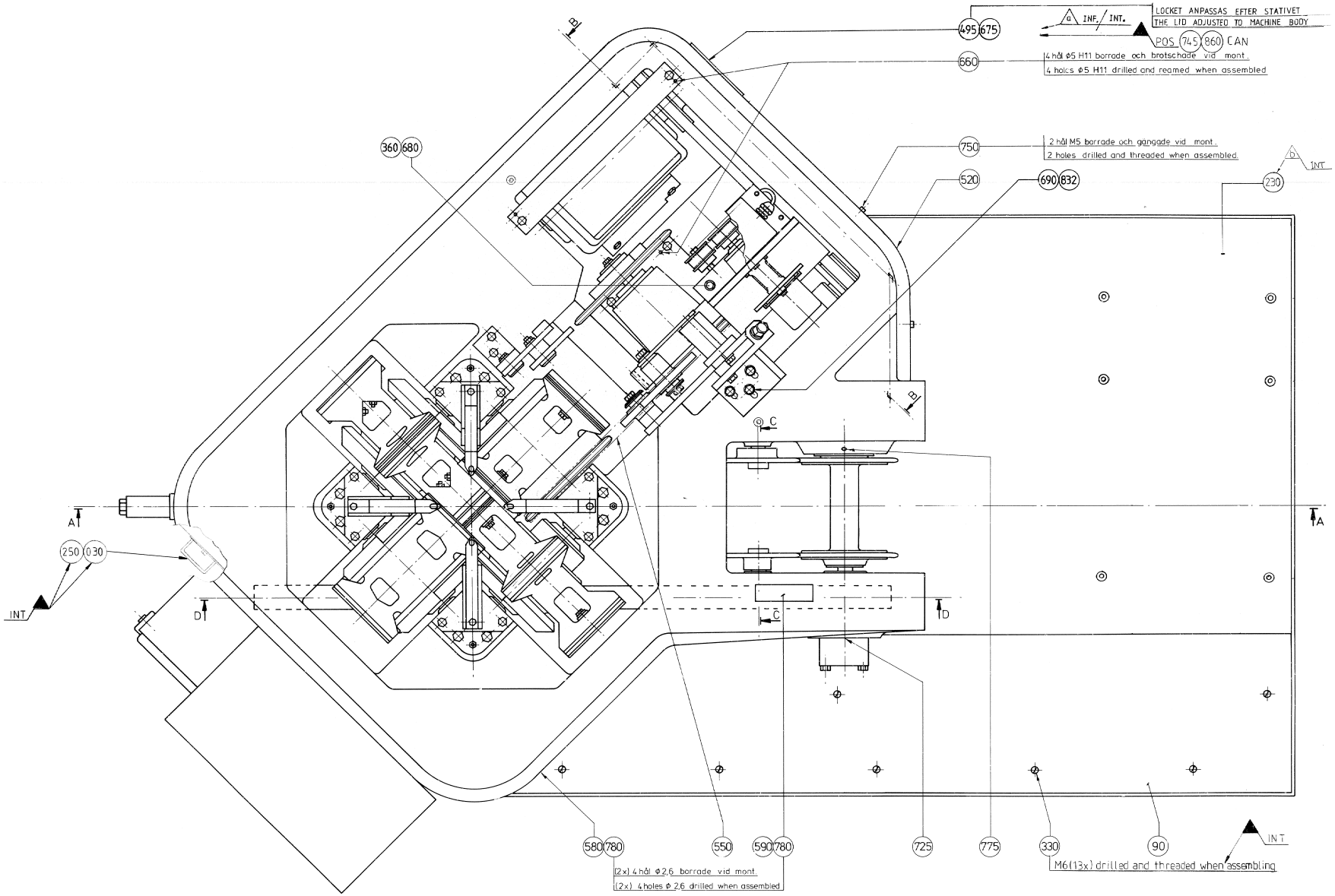
LOCKET ANPASSAS EFTER STATIVET
THE LID ADJUSTED TO MACHINE BODY
POS 745 860 CAN
INF. / INT.
495 675
660
4 hål Ø5 H11 borrade och brotschade vid mont.
4 holes Ø5 H11 drilled and reamed when assembled
750
2 hål M5 borrade och gängade vid mont.
2 holes drilled and threaded when assembled
520
690 832
230
360 680
250 030
INT
A
B
C
D
580 780
550
590 780
725
775
330
90
(2x) 4 hål Ø2,6 borrade vid mont.
(2x) 4 holes Ø 2,6 drilled when assembled
M6 (13x) drilled and threaded when assembling

ECM: 82068 - 20000814
Group number: 536945-0400
Assembly Drawing: 536945-1_1_AA

Issue: 20030213

Pos	Part No	SP	UN	Qty	Description	Page No
TCA/65 V065 BAGPACKER E						
600	440467-0000	-		1	CABLE HOLDER	
Common Parts						
010	263203-0000	-		1	FRAME	
020	257670-0000	A		1	LEAD PLATE	
030	567213-0000	A		1	SHEET	
040	1175122-0000	A		1	PROTECTION	
045	581592-0000	-		1	COVER PLATE	
050	3271-0000	A		6	BRACKET	
090	567212-0000	-		1	CHECKER PLATE	
100	263267-0000	-		3	SPACER	
110	263268-0000	-		1	SPACER	
120	263269-0000	-		1	SPACER	
130	3274-0001	A		1	BOLT	
140	3311-0000	-		1	DOWEL PIN	
150	3329-0000	-		2	STEERING RAIL	
160	4830-0000	-		2	LID	
170	4899-0000	-		4	HOLDER	
180	4900-0000	A		4	SUPPORT BAR	
190	4902-0000	A		2	SPROCKET	
200	4904-0000	A		2	SPACER RING	
230	543692-0000	-		1	CHECKER PLATE	
240	567259-0000	-		1	PROTECTION	
250	312105-0327	-		11	SCREW M6S ISO 4017 M5X12 A480	
260	312101-0453	-		4	SCREW M6S M8X25 FZB	
270	312101-0495	-		22	SCREW M6S M10X30 FZB	
275	312101-0497	-		16	SCREW M6S M10X35 FZB	
280	312101-0556	-		2	SCREW M6S M12X120 FZB	
290	312101-0559	-		3	SCREW M6S M12X140 FZB	
310	312151-0287	-		6	SCREW HEX.SOCK.COUNT.MF6S 4X8 FZB	
330	312165-0366	-		13	SCREW SLOT.RAIS.COUNT.HD.MKFS 6X12 SS	
340	312316-0530	-		2	SCREW HEX.SOCK.SET CUP P.MSK6SS12X16 FZB	
350	315105-0146	-		2	WASHER ISO 7089-5-200 HV-A4	
360	315101-0165	-		24	WASHER PLAIN, BRB, 8,4/16 H=1,5	
370	315101-0173	-		42	WASHER PLAIN, BRB, 10,5/22 H=2	
380	315121-0178	-		5	WASHER PLAIN, TBRSB 13/36 H=6	
390	315203-0520	B		2	O-RING 26,57X3,53 MM	
400	321330-0103	B		2	ANG. BALL BEAR, 17X40X17,5 MM	
410	344502-0021	-		2	GREASE NIPPLE STRAIGHT M6	
420	312115-0329	-		2	SCREW ISO4762 M5X16 A4	
430	312155-0327	-		2	SCREW EN 10642 MF6S M5X12 A480	
450	4907-0000	-		1	CUTTING MECHANISM BODY	
460	4909-0000	-		1	MOTOR COVER	
470	4905-0000	-		1	GEARBOX SHELF	
480	284541-0000	-		2	CUSHION	
490	440059-0000	-		1	CANTILEVER	
495	544751-0000	-		1	LID	
500	3318-0000	-		6	LEG	
510	4488-0000	-		1	ANGLE	
520	7018-0000	-		1	COVERING PLATE	
530	7309-0000	-		2	HANDLE	
540	7470-0006	A		1	CHAIN	
550	7470-0007	A		1	CHAIN	
560	10920-0000	A		1	TENSION SPRING	
620	538740-0004	-		2	SPACER	
630	90417-0201	B		1	TIMING BELT 9,53X571,5X12,7	
650	311211-0296	-		2	PIN, THREADED AND TAPER. GKP, M6X6X40	
660	311305-0312	-		2	SLOTTED PIRPC5X25FZB	
670	312101-0366	-		3	SCREW M6S M6X12 FZB	
675	312105-0366	-		2	SCREW M6S M6X12 A280	
680	312101-0451	-		6	SCREW M6S M8X20 FZB	
690	312101-0455	-		13	SCREW M6S M8X30 FZB	
700	312101-0499	-		3	SCREW M6S M10X40 FZB	
710	312101-0501	-		1	SCREW M6S M10X50 FZB	
720	312111-0293	-		8	SCREW HEX.SOCK.HD.MC6S-TT 4X16 88 FZB	
725	312111-0368	-		2	SCREW HEX.SOCK.HD.MC6S-TT 6X16 88 FZB	
730	312111-0371	-		4	SCREW HEX.SOCK.HD.MC6S-TT 6X22 88 FZB	
740	312115-0457	-		2	SCREW ISO4762 M8X35 A4	
750	312115-0323	-		2	SCREW ISO4762 M5X8 A4	
770	312151-0493	-		4	SCREW HEX.SOCK.COUNT.MF6S 10X25 FZB	
775	312311-0370	-		2	SCREW ISO4028 M6X20 FZB	
800	312601-0320	-		1	NUT M6M 10-8 FZB	
820	315101-0136	-		16	BRICKA, BRB, 4,3/8 H=0,8	
830	315101-0153	-		9	WASHER PLAIN, BRB, 6,4/12 H=1,5	
832	315111-0165	-		3	WASHER PLAIN, TBRB 8,4/16 H=3	
835	315121-0153	-		1	WASHER PLAIN, TBRSB 6,4/22 H=4	
840	315401-0165	-		4	WASHER FBH8,2FZB	
850	315401-0173	-		8	WASHER FBH10,2FZB	
860	352103-0106	-		1	CABLE GLAND, ST 11, PR18,6/PG11	
910	90044-0310	A		1	KEY FOR SAFETY SWITCH, AZ 15/16 B1	
B006	90044-0139	A		1	KEY SAF.SW. AZ16-02 ZVR K-2254	

Machine Type	Group Description	Used-In	Group Number	Page No

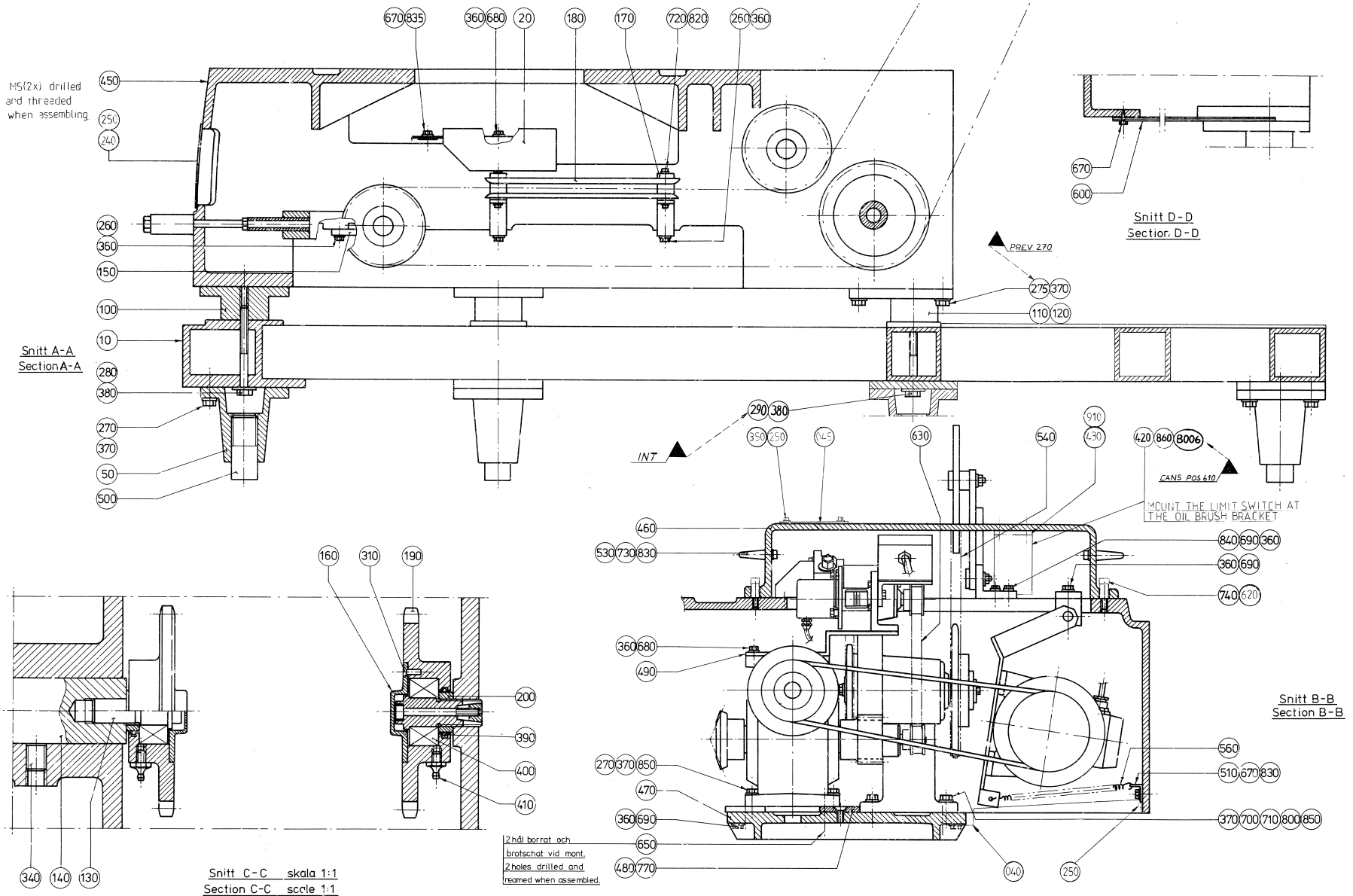
M5(2x) drilled and threaded when assembling
Snitt A-A
Section A-A
Snitt D-D
Section D-D
PREV 270
INT
CANS POS 610
MOUNT THE LIMIT SWITCH AT THE OIL BRUSH BRACKET
Snitt B-B
Section B-B
Snitt C-C skala 1:1
Section C-C scale 1:1
2 hål borrat och brotschat vid mont.
2 holes drilled and reamed when assembled.

ECM: 82068 - 20000814
Group number: 536945-0400
Assembly Drawing: 536945-4_1_AA

Issue: 20030213

Pos	Part No	SP	UN	Qty	Description	Page No
TCA/65 V065 BAGPACKER E						
600	440467-0000	-		1	CABLE HOLDER	
Common Parts						
010	263203-0000	-		1	FRAME	
020	257670-0000	A		1	LEAD PLATE	
030	567213-0000	A		1	SHEET	
040	1175122-0000	A		1	PROTECTION	
045	581592-0000	-		1	COVER PLATE	
050	3271-0000	A		6	BRACKET	
090	567212-0000	-		1	CHECKER PLATE	
100	263267-0000	-		3	SPACER	
110	263268-0000	-		1	SPACER	
120	263269-0000	-		1	SPACER	
130	3274-0001	A		1	BOLT	
140	3311-0000	-		1	DOWEL PIN	
150	3329-0000	-		2	STEERING RAIL	
160	4830-0000	-		2	LID	
170	4899-0000	-		4	HOLDER	
180	4900-0000	A		4	SUPPORT BAR	
190	4902-0000	A		2	SPROCKET	
200	4904-0000	A		2	SPACER RING	
230	543692-0000	-		1	CHECKER PLATE	
240	567259-0000	-		1	PROTECTION	
250	312105-0327	-		11	SCREW M6S ISO 4017 M5X12 A480	
260	312101-0453	-		4	SCREW M6S M8X25 FZB	
270	312101-0495	-		22	SCREW M6S M10X30 FZB	
275	312101-0497	-		16	SCREW M6S M10X35 FZB	
280	312101-0556	-		2	SCREW M6S M12X120 FZB	
290	312101-0559	-		3	SCREW M6S M12X140 FZB	
310	312151-0287	-		6	SCREW HEX.SOCK.COUNT.MF6S 4X8 FZB	
330	312165-0366	-		13	SCREW SLOT.RAIS.COUNT.HD.MKFS 6X12 SS	
340	312316-0530	-		2	SCREW HEX.SOCK.SET CUP P.MSK6SS12X16 FZB	
350	315105-0146	-		2	WASHER ISO 7089-5-200 HV-A4	
360	315101-0165	-		24	WASHER PLAIN, BRB, 8,4/16 H=1,5	
370	315101-0173	-		42	WASHER PLAIN, BRB, 10,5/22 H=2	
380	315121-0178	-		5	WASHER PLAIN, TBRSB 13/36 H=6	
390	315203-0520	B		2	O-RING 26,57X3,53 MM	
400	321330-0103	B		2	ANG. BALL BEAR, 17X40X17,5 MM	
410	344502-0021	-		2	GREASE NIPPLE STRAIGHT M6	
420	312115-0329	-		2	SCREW ISO4762 M5X16 A4	
430	312155-0327	-		2	SCREW EN 10642 MF6S M5X12 A480	
450	4907-0000	-		1	CUTTING MECHANISM BODY	
460	4909-0000	-		1	MOTOR COVER	
470	4905-0000	-		1	GEARBOX SHELF	
480	284541-0000	-		2	CUSHION	
490	440059-0000	-		1	CANTILEVER	
495	544751-0000	-		1	LID	
500	3318-0000	-		6	LEG	
510	4488-0000	-		1	ANGLE	
520	7018-0000	-		1	COVERING PLATE	
530	7309-0000	-		2	HANDLE	
540	7470-0006	A		1	CHAIN	
550	7470-0007	A		1	CHAIN	
560	10920-0000	A		1	TENSION SPRING	
620	538740-0004	-		2	SPACER	
630	90417-0201	B		1	TIMING BELT 9,53X571,5X12,7	
650	311211-0296	-		2	PIN, THREADED AND TAPER. GKP, M6X6X40	
660	311305-0312	-		2	SLOTTED PIRPC5X25FZB	
670	312101-0366	-		3	SCREW M6S M6X12 FZB	
675	312105-0366	-		2	SCREW M6S M6X12 A280	
680	312101-0451	-		6	SCREW M6S M8X20 FZB	
690	312101-0455	-		13	SCREW M6S M8X30 FZB	
700	312101-0499	-		3	SCREW M6S M10X40 FZB	
710	312101-0501	-		1	SCREW M6S M10X50 FZB	
720	312111-0293	-		8	SCREW HEX.SOCK.HD.MC6S-TT 4X16 88 FZB	
725	312111-0368	-		2	SCREW HEX.SOCK.HD.MC6S-TT 6X16 88 FZB	
730	312111-0371	-		4	SCREW HEX.SOCK.HD.MC6S-TT 6X22 88 FZB	
740	312115-0457	-		2	SCREW ISO4762 M8X35 A4	
750	312115-0323	-		2	SCREW ISO4762 M5X8 A4	
770	312151-0493	-		4	SCREW HEX.SOCK.COUNT.MF6S 10X25 FZB	
775	312311-0370	-		2	SCREW ISO4028 M6X20 FZB	
800	312601-0320	-		1	NUT M6M 10-8 FZB	
820	315101-0136	-		16	BRICKA, BRB, 4,3/8 H=0,8	
830	315101-0153	-		9	WASHER PLAIN, BRB, 6,4/12 H=1,5	
832	315111-0165	-		3	WASHER PLAIN, TBRB 8,4/16 H=3	
835	315121-0153	-		1	WASHER PLAIN, TBRSB 6,4/22 H=4	
840	315401-0165	-		4	WASHER FBH8,2FZB	
850	315401-0173	-		8	WASHER FBH10,2FZB	
860	352103-0106	-		1	CABLE GLAND, ST 11, PR18,6/PG11	
910	90044-0310	A		1	KEY FOR SAFETY SWITCH, AZ 15/16 B1	
B006	90044-0139	A		1	KEY SAF.SW. AZ16-02 ZVR K-2254	

Machine Type	Group Description	Used-In	Group Number	Page No

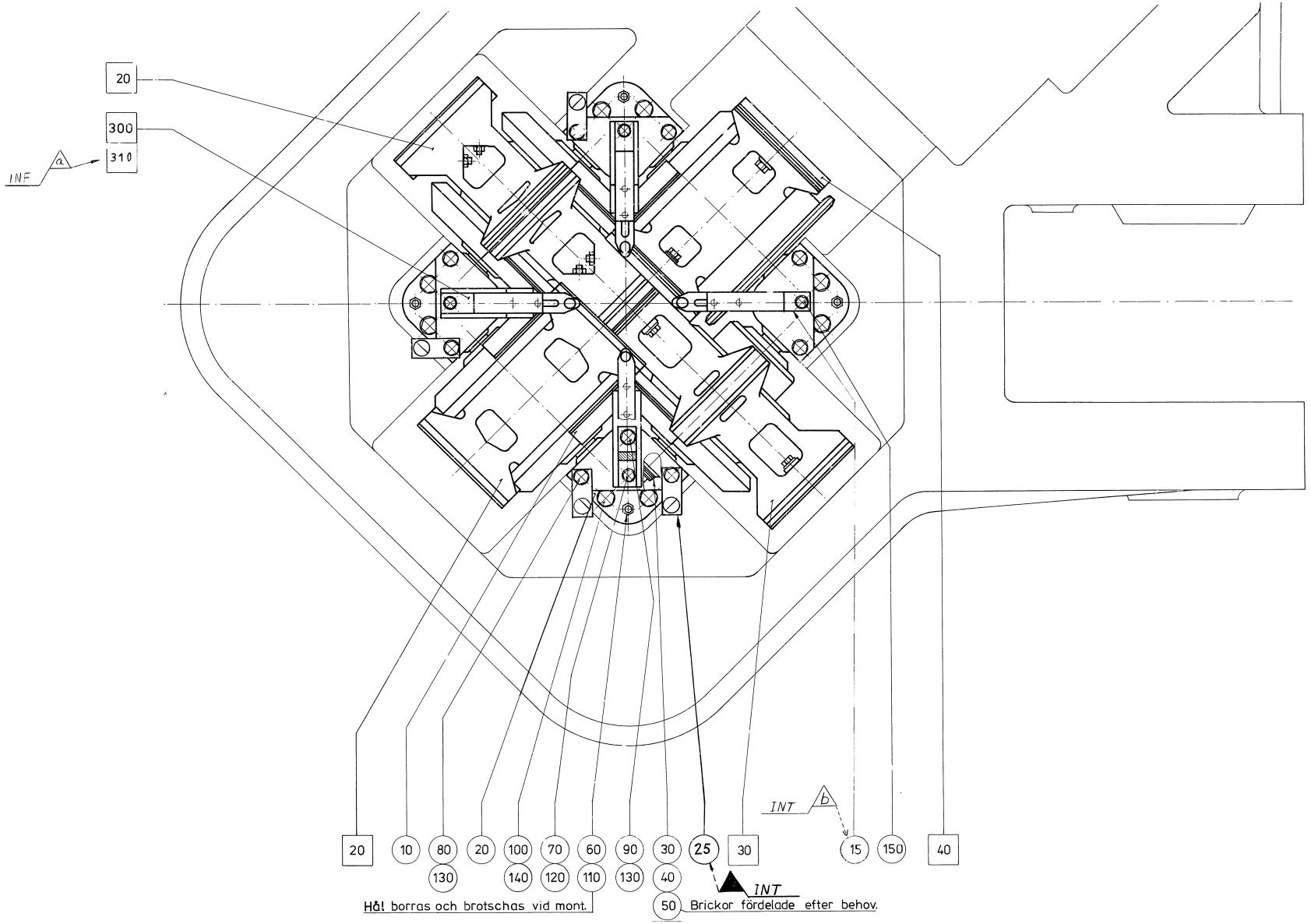
20
300
310
INF
a
INT
b
20
10
80
130
20
100
140
70
120
60
110
90
130
30
40
25
30
15
150
40
50
INT
Hål borras och brotschas vid mont.
Brickor fördelade efter behov.

Pos	Part No	SP	UN	Qty	Description	Page No
Common Parts						
010	4910-0000	A		3	PROTECTION	
015	1483037-0000	A		1	SPACER	
020	4895-0000	A		4	BEARING BRACKET	
025	1483073-0000	A		4	BRACKET	
030	1755-0005	A		16	WASHER	
040	1755-0006	A		32	WASHER	
050	1755-0007	A		16	WASHER	
060	311211-0299	-		4	PIN, THREADED AND TAPER. GKP, M6X6X55	
070	312101-0366	-		4	SCREW M6S M6X12 FZB	
080	312101-0461	-		8	SCREW M6S M8X50 FZB	
090	312101-0463	-		4	SCREW M6S M8X60 FZB	
100	312101-0499	-		8	SCREW M6S M10X40 FZB	
110	312601-0316	-		4	NUT M6M 6-8 FZB	
120	315101-0153	-		4	WASHER PLAIN, BRB, 6,4/12 H=1,5	
130	315101-0165	-		12	WASHER PLAIN, BRB, 8,4/16 H=1,5	
140	315101-0173	-		8	WASHER PLAIN, BRB, 10,5/22 H=2	
150	315111-0173	-		2	WASHER PLAIN, TBRB 10,5/22 H=4	
F020 4	A1483035-0200	-		2	WHEEL	**307**
F030	A4865-0301	-		1	COUNTER WHEEL	**309**
F040	A4865-0302	-		1	COUNTER WHEEL	**311**
F310	A576134-0101	-		1	TUBE SUPPORT	**313**

Pos	Part No	SP	UN	Qty	Description	Page No

Machine Type | Group Description | Used-In | Group Number | Page No

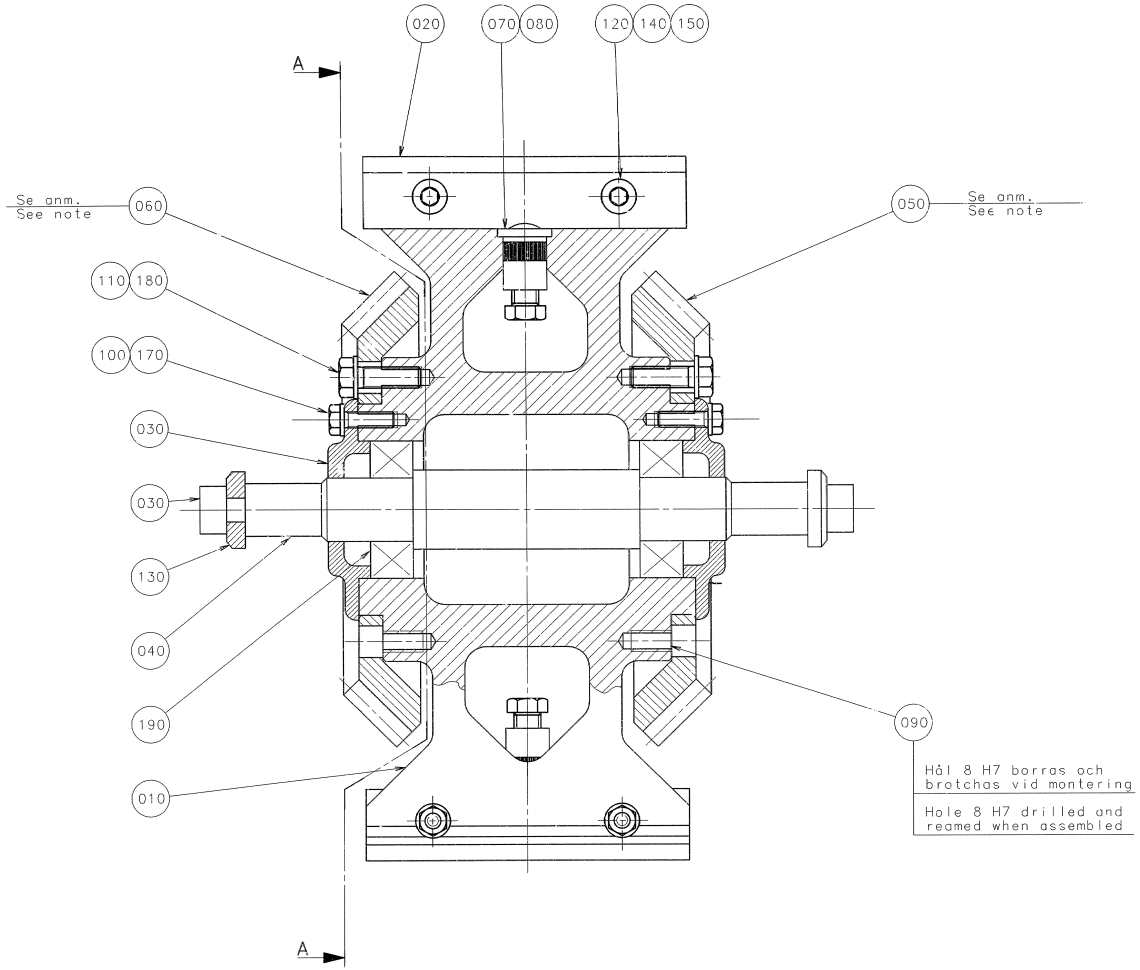

Anm: Märkt hål på kugghjul placeras här
Note: Marked hole on the wheel must be placed here.

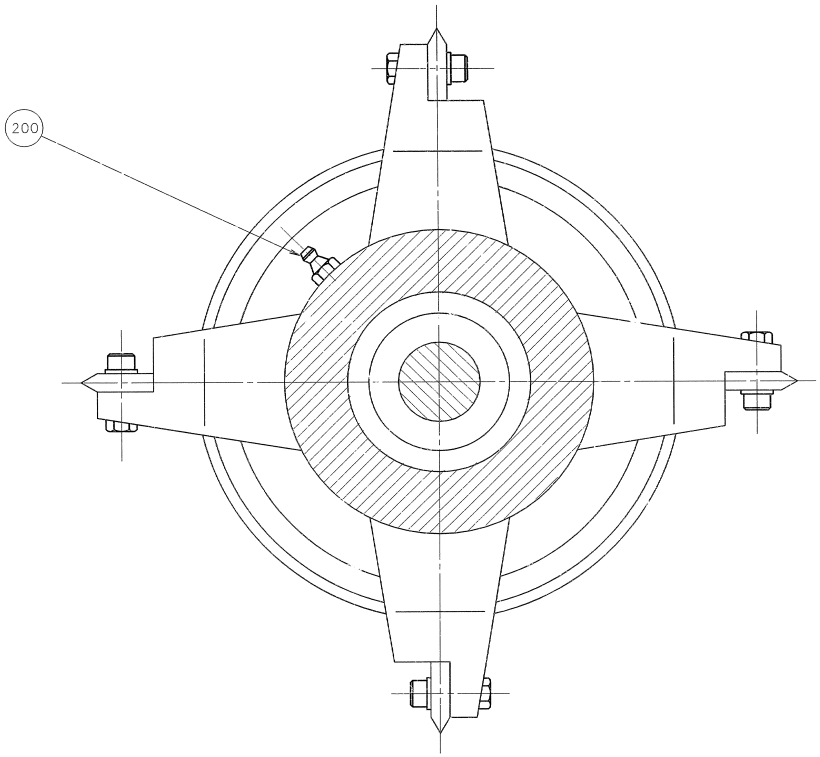

A - A

Pos	Part No	SP	UN	Qty	Description	Page No
LARGEOPNG						
020 4	594729-0000	A		2	NOTCH KNIFE (INDO)	
020 5	594730-0000	A		2	NOTCH KNIFE (INDO)	
SMALLOPNG						
020 2	594735-0000	A		2	NOTCH KNIFE SIDE 3 (FRAN)	
020 3	594736-0000	A		2	NOTCH KNIFE SIDE 4 (FRAN)	
STRAIGHTCUT						
020 1	484815-0000	A		4	KNIFE	
Straightcut with lugs						
020 8	2537121-0000	A		4	KNIFE	
TEARWINGY1						
020 6	1483143-0000	A		2	Z-KNIFE	
020 7	1483144-0000	A		2	Z-KNIFE	
Common Parts						
010	529317-0000	-		1	WHEEL	
030	2467-0000	A		2	OIL SEAL (LÖVALOCK)	
040	4884-0000	A		1	SHAFT	
050	1483049-0000	A		1	GEAR WHEEL	
060	1483051-0000	A		1	GEAR WHEEL	
070	529293-0000	A		4	SCREW	
080	529294-0000	A		4	NUT	
090	311101-0406	-		2	CYLINDRICACP8H6X32	
100	312101-0368	-		6	SCREW M6S M6X16 FZB	
110	312101-0453	-		8	SCREW M6S M8X25 FZB	
120	312111-0371	-		8	SCREW HEX.SOCK.HD.MC6S-TT 6X22 88 FZB	
130	312111-0492	-		2	SCREW HEX.SOCK.HD.MC6S-TT 10X22 88 FZ	
140	312601-0316	-		8	NUT M6M 6-8 FZB	
150	315111-0153	-		8	WASHER PLAIN, TBRB 6,4/12 H=3	
160	315121-0173	-		2	WASHER PLAIN, TBRSB 10,5/28 H=6	
170	315401-0153	-		6	WASHER FBH6,1FZB	
180	315401-0165	-		8	WASHER FBH8,2FZB	
190	321312-0105	A		2	BALL BEARING, 1 SEAL, 25X52X15 MM	
200	344502-0026	-		2	GREASE NIPPLE STRAIGHT R1/8 CON.	

Pos	Part No	SP	UN	Qty	Description	Page No

Machine Type Group Description Used-In Group Number Page No

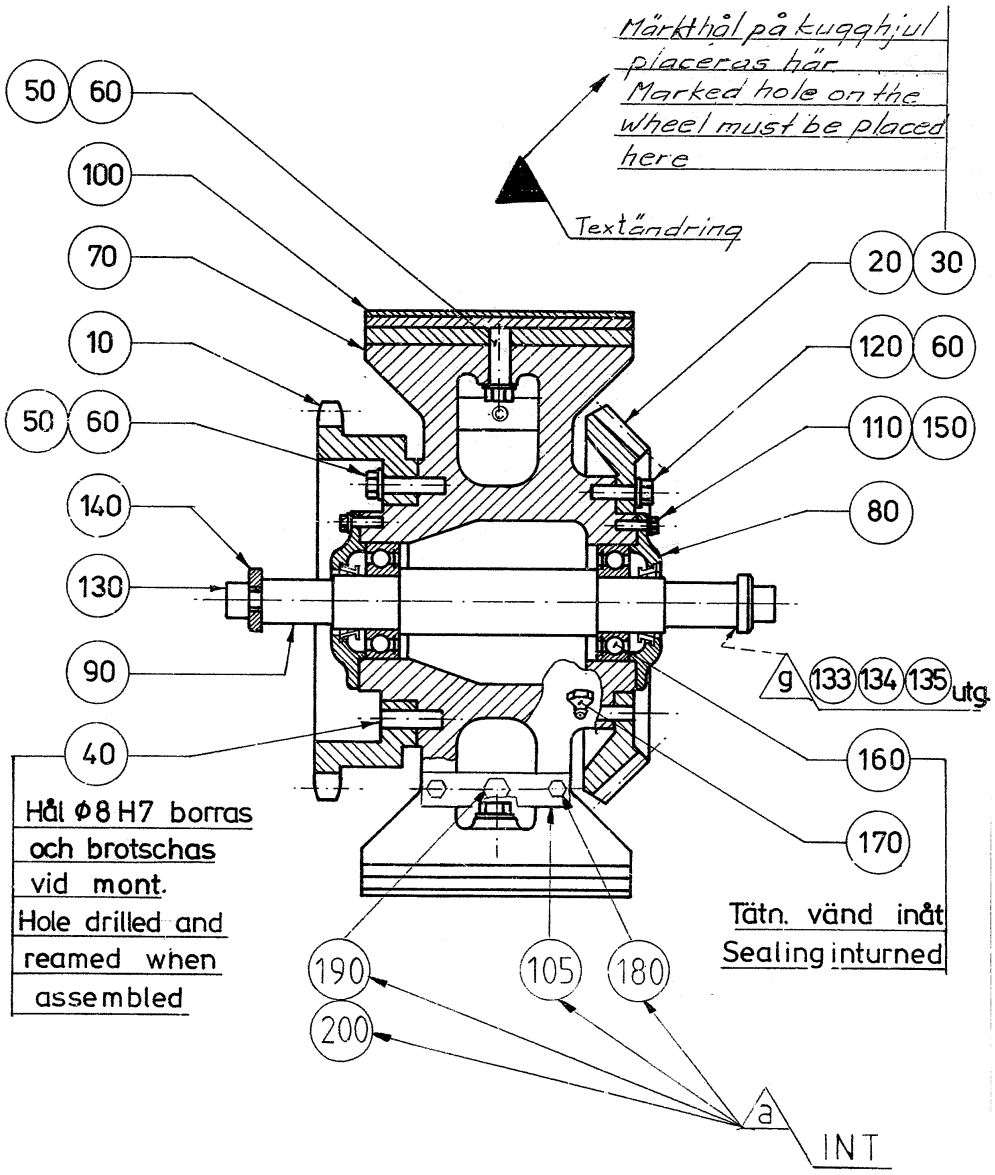
Märkthål på kugghjul placeras här
Marked hole on the wheel must be placed here
Textändring
50
60
100
70
10
50
60
140
130
90
40
Hål ⌀8 H7 borras och brotschas vid mont.
Hole drilled and reamed when assembled
20
30
120
60
110
150
80
g 133 134 135 utg.
160
170
Tätn. vänd inåt
Sealing inturned
190
200
105
180
a
INT

Pos	Part No	SP	UN	Qty	Description	Page No
Common Parts						
030	1483051-0000	A		1	GEAR WHEEL	
040	311101-0406	-		1	CYLINDRICACP8H6X32	
050	312101-0455	-		4	SCREW M6S M8X30 FZB	
060	315401-0165	-		8	WASHER FBH8,2FZB	
070	4887-0000	-		1	COUNTER WHEEL	
080	2467-0000	B		2	OIL SEAL (LÖVALOCK)	
090	4884-0000	A		1	SHAFT	
100	209972-0000	B		4	RAIL	
105	577540-0000	-		4	SCREW HOLDER	
110	312101-0368	-		6	SCREW M6S M6X16 FZB	
120	312101-0453	-		4	SCREW M6S M8X25 FZB	
130	312111-0492	-		2	SCREW HEX.SOCK.HD.MC6S-TT 10X22 88 FZ	
140	315121-0173	-		2	WASHER PLAIN, TBRSB 10,5/28 H=6	
150	315401-0153	-		6	WASHER FBH6,1FZB	
160	321312-0105	B		2	BALL BEARING, 1 SEAL, 25X52X15 MM	
170	344502-0026	-		2	GREASE NIPPLE STRAIGHT R1/8 CON.	
180	312105-0327	-		8	SCREW M6S ISO 4017 M5X12 A480	
190	312109-0378	-		4	SCREW M6S ISO4017 M6X40 A480	
200	312605-0316	-		4	HEXAGON NUT, M6M M6 A280	

Pos	Part No	SP	UN	Qty	Description	Page No

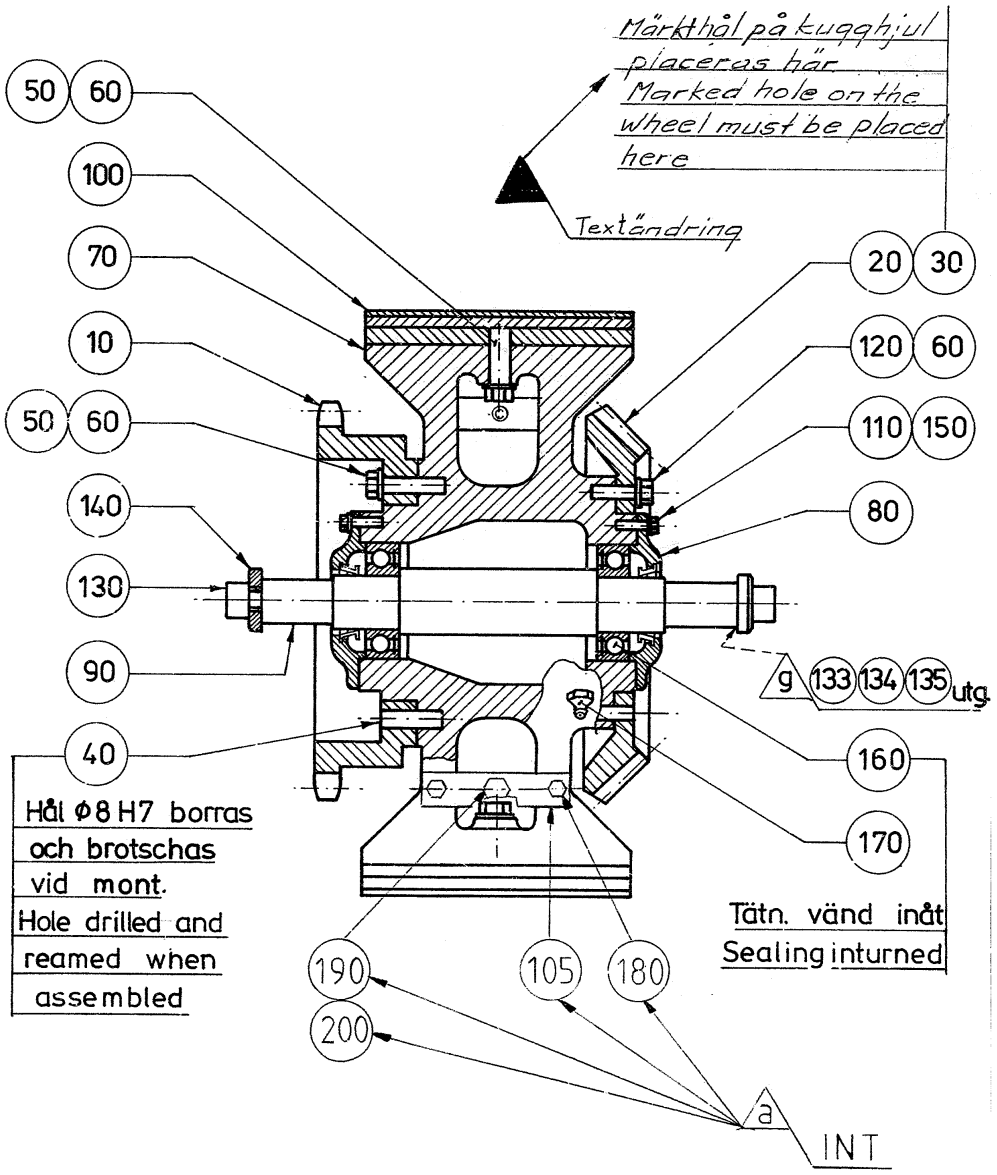
Märkthål på kugghjul placeras här
Marked hole on the wheel must be placed here
Textändring
50
60
100
70
10
50
60
140
130
90
40
Hål ø8 H7 borras och brotschas vid mont.
Hole drilled and reamed when assembled
20
30
120
60
110
150
80
g
133
134
135
utg.
160
170
Tätn. vänd inåt
Sealing inturned
190
200
105
180
a
INT

ECM: 83526 - 20000925
Group number: 4865-0302
Assembly Drawing: 4865-2_1_AA

Issue: 20030213

Pos	Part No	SP	UN	Qty	Description	Page No
Common Parts						
010	4888-0000	A		1	SPROCKET	
020	1483049-0000	A		1	GEAR WHEEL	
040-02	311101-0406	-		2	CYLINDRICACP8H6X32	
050-02	312101-0455	-		8	SCREW M6S M8X30 FZB	
060-02	315401-0165	-		12	WASHER FBH8,2FZB	
070	4887-0000	-		1	COUNTER WHEEL	
080	2467-0000	B		2	OIL SEAL (LÖVALOCK)	
090	4884-0000	A		1	SHAFT	
100	209972-0000	B		4	RAIL	
105	577540-0000	-		4	SCREW HOLDER	
110	312101-0368	-		6	SCREW M6S M6X16 FZB	
120	312101-0453	-		4	SCREW M6S M8X25 FZB	
130	312111-0492	-		2	SCREW HEX.SOCK.HD.MC6S-TT 10X22 88 FZ	
140	315121-0173	-		2	WASHER PLAIN, TBRSB 10,5/28 H=6	
150	315401-0153	-		6	WASHER FBH6,1FZB	
160	321312-0105	B		2	BALL BEARING, 1 SEAL, 25X52X15 MM	
170	344502-0026	-		2	GREASE NIPPLE STRAIGHT R1/8 CON.	
180	312105-0327	-		8	SCREW M6S ISO 4017 M5X12 A480	
190	312109-0378	-		4	SCREW M6S ISO4017 M6X40 A480	
200	312605-0316	-		4	HEXAGON NUT, M6M M6 A280	

Pos	Part No	SP	UN	Qty	Description	Page No

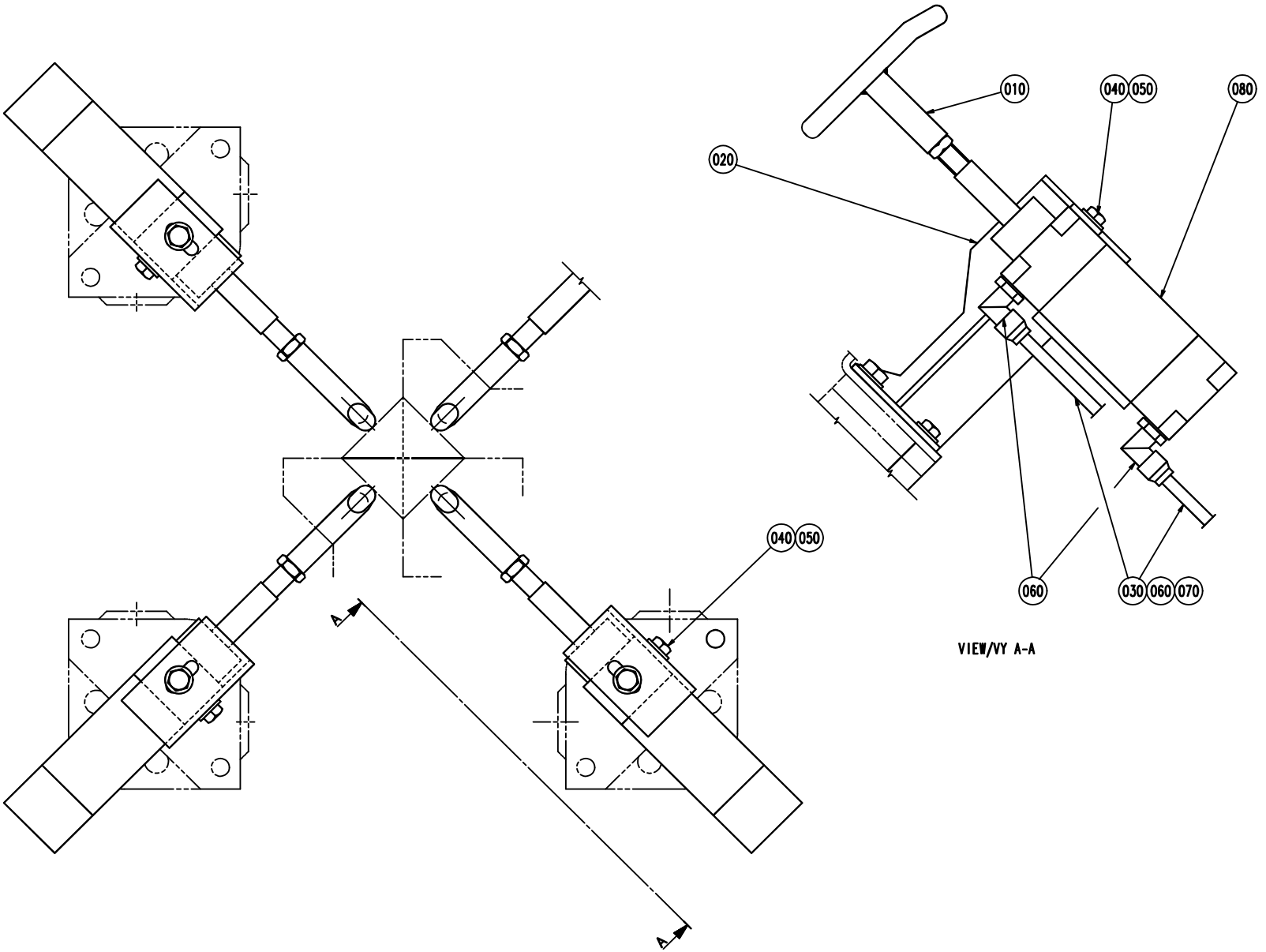
010
040 050
080
020
040 050
060
030 060 070
VIEW/VY A-A

ECM: 83543 - 20000925
Group number: 576134-0101
Assembly Drawing: 576134-1_1_AA

Issue: 20030213

Pos	Part No	SP	UN	Qty	Description	Page No
Common Parts						
010	552855-0000	-		4	TUBE SUPPORT	
020	552864-0000	-		4	CANTILEVER	
030	90166-0081	-	M	10	TUBE 6 MM PA BLUE	
040	312115-0366	-		12	SCREW ISO4762 M6X12 A4	
050	315105-0153	-		12	WASHER ISO 7089-6-200 HV-A4	
060	342732-0102	-		8	ELBOW PIPE JOINT, EXT.THREAD, D=6MM-G1/8	
070	342748-0102	-		6	T-CONNECTION 6MM	
080	90450-0279	A		4	CYLINDER	

Pos	Part No	SP	UN	Qty	Description	Page No

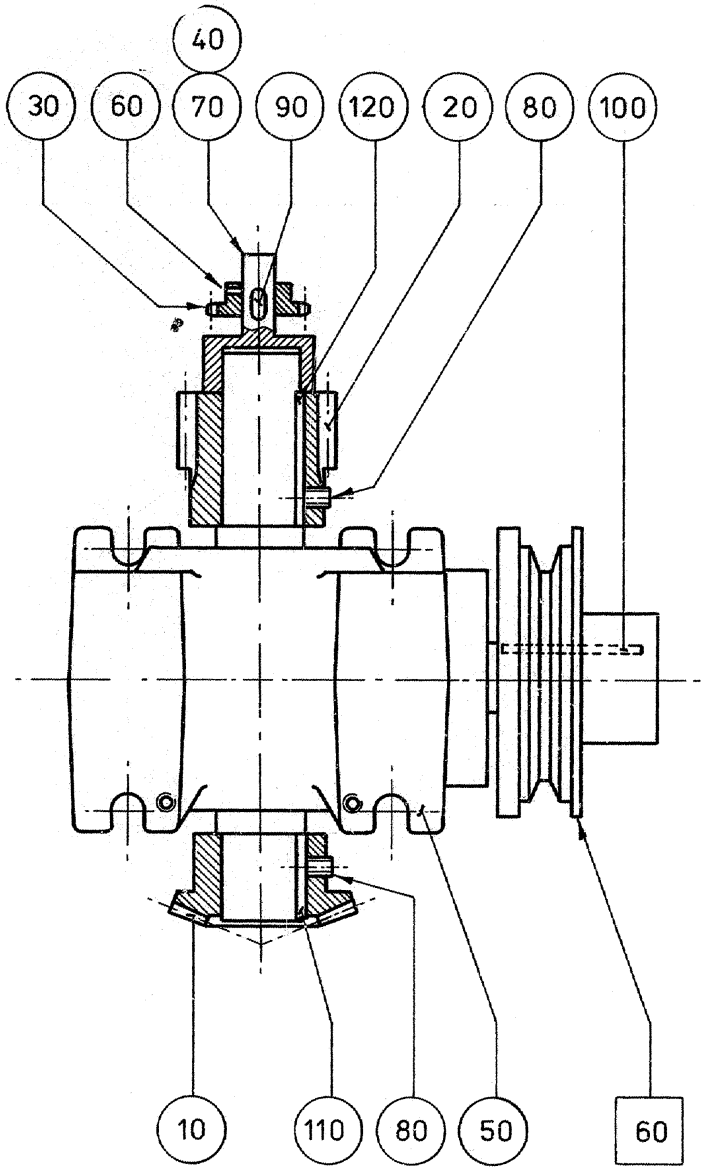
40
30
60
70
90
120
20
80
100
10
110
80
50
60

Pos	Part No	SP	UN	Qty	Description	Page No
50HZ						
030 2	534728-0000	A		1	TOOTHED PULLEY	
065 2	312316-0321	-		1	SCREW HEX.SOCK.SET CUP P.MSK6SS5X6 FZB	
F060 2	A4438-0311	-		1	SLIP DISC	**319**
60HZ						
030 2	534728-0000	A		1	TOOTHED PULLEY	
065 2	312316-0321	-		1	SCREW HEX.SOCK.SET CUP P.MSK6SS5X6 FZB	
F060 3	A4438-0312	-		1	SLIP DISC	**321**
RELAY						
030 1	6216-0000	A		1	SPROCKET	
065 1	312306-0287	-		1	SCREW HEX.SOCK.SET FLAT P.MP6SS 4X8 FZB	
F060 1	A4438-0300	-		1	SLIP DISC	**323**
Common Parts						
010	4881-0000	A		1	GEAR WHEEL	
020	4882-0000	A		1	GEAR WHEEL	
040	6849-0000	A		1	AXLE PIN	
050	B90056-0075	A		1	WORM GEAR UCA 145	
	321314-0106	*C*		*1*	*BALL BEARING, 30X72X19 MM*	
	321314-0103	*C*		*1*	*BALL BEARING, 17X47X14 MM*	
	321309-0108	*C*		*2*	*BALL BEARING, 40X80X18 MM*	
	315221-0185	*C*		*2*	*RADIAL SEAL 40X62X7 MM*	
	90056-0514	*C*		*1*	*WORM WHEEL*	
	90056-0515	*C*		*1*	*WORM SHAFT*	
	90091-0262	*C*		*1*	*SEAL RINGS TYPE AS*	
	315202-0316	*C*		*1*	*O-RING 124,5X3 MM*	
070	312316-0323	-		4	SCREW HEX.SOCK.SET CUP P.MSK6SS5X8 FZB	
080	312316-0447	A		4	SCREW HEX.SOCK.SET CUP P.MSK6SS8X12 FZB	
090	315701-0198	A		1	PARALLEL KEY W. ROUND ENDS 5X5X14 MM	
100	315701-0276	A		1	PARALLEL KEY W. ROUND ENDS 8X7X70 MM	
110	315701-0300	A		1	PARALLEL KEY W. ROUND ENDS 10X8X35 MM	
120	315701-0305	A		1	PARALLEL KEY W. ROUND ENDS 10X8X60 MM	

Pos	Part No	SP	UN	Qty	Description	Page No

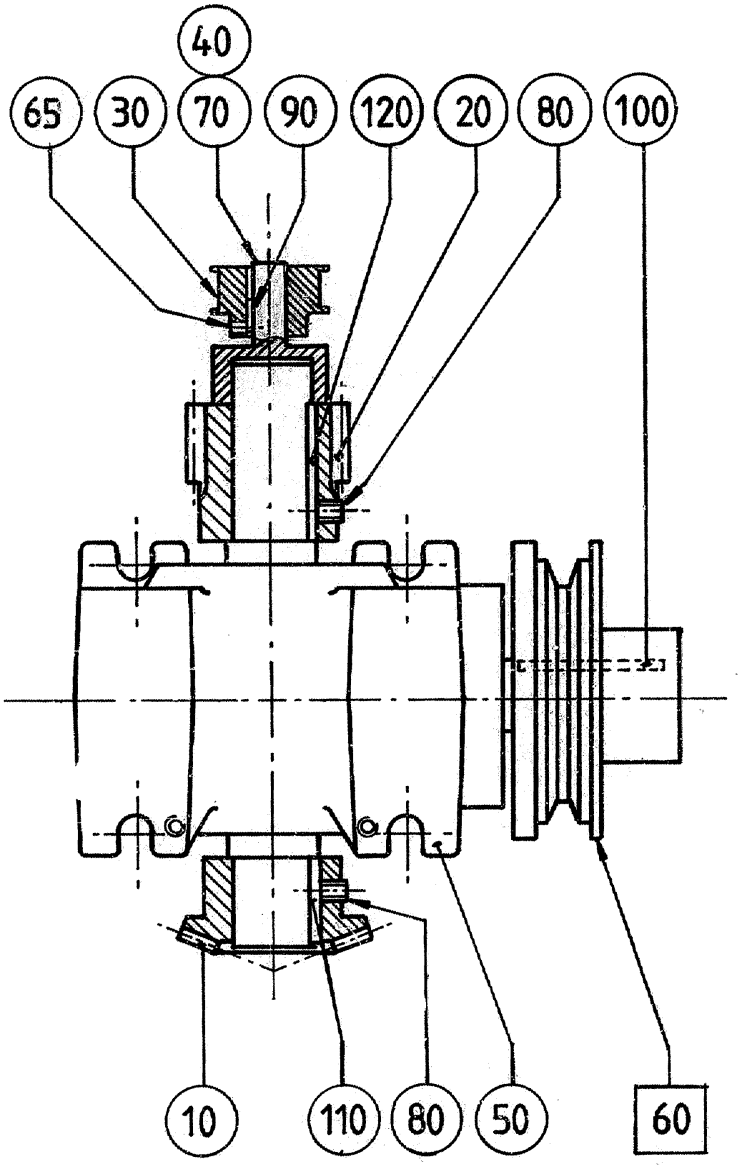
40
65
30
70
90
120
20
80
100
10
110
80
50
60

Pos	Part No	SP	UN	Qty	Description	Page No
50HZ						
030 2	534728-0000	A		1	TOOTHED PULLEY	
065 2	312316-0321	-		1	SCREW HEX.SOCK.SET CUP P.MSK6SS5X6 FZB	
F060 2	A4438-0311	-		1	SLIP DISC	**319**
60HZ						
030 2	534728-0000	A		1	TOOTHED PULLEY	
065 2	312316-0321	-		1	SCREW HEX.SOCK.SET CUP P.MSK6SS5X6 FZB	
F060 3	A4438-0312	-		1	SLIP DISC	**321**
RELAY						
030 1	6216-0000	A		1	SPROCKET	
065 1	312306-0287	-		1	SCREW HEX.SOCK.SET FLAT P.MP6SS 4X8 FZB	
F060 1	A4438-0300	-		1	SLIP DISC	**323**
Common Parts						
010	4881-0000	A		1	GEAR WHEEL	
020	4882-0000	A		1	GEAR WHEEL	
040	6849-0000	A		1	AXLE PIN	
050	B90056-0075	A		1	WORM GEAR UCA 145	
	321314-0106	*C*		*1*	*BALL BEARING, 30X72X19 MM*	
	321314-0103	*C*		*1*	*BALL BEARING, 17X47X14 MM*	
	321309-0108	*C*		*2*	*BALL BEARING, 40X80X18 MM*	
	315221-0185	*C*		*2*	*RADIAL SEAL 40X62X7 MM*	
	90056-0514	*C*		*1*	*WORM WHEEL*	
	90056-0515	*C*		*1*	*WORM SHAFT*	
	90091-0262	*C*		*1*	*SEAL RINGS TYPE AS*	
	315202-0316	*C*		*1*	*O-RING 124,5X3 MM*	
070	312316-0323	-		4	SCREW HEX.SOCK.SET CUP P.MSK6SS5X8 FZB	
080	312316-0447	A		4	SCREW HEX.SOCK.SET CUP P.MSK6SS8X12 FZB	
090	315701-0198	A		1	PARALLEL KEY W. ROUND ENDS 5X5X14 MM	
100	315701-0276	A		1	PARALLEL KEY W. ROUND ENDS 8X7X70 MM	
110	315701-0300	A		1	PARALLEL KEY W. ROUND ENDS 10X8X35 MM	
120	315701-0305	A		1	PARALLEL KEY W. ROUND ENDS 10X8X60 MM	

Pos	Part No	SP	UN	Qty	Description	Page No

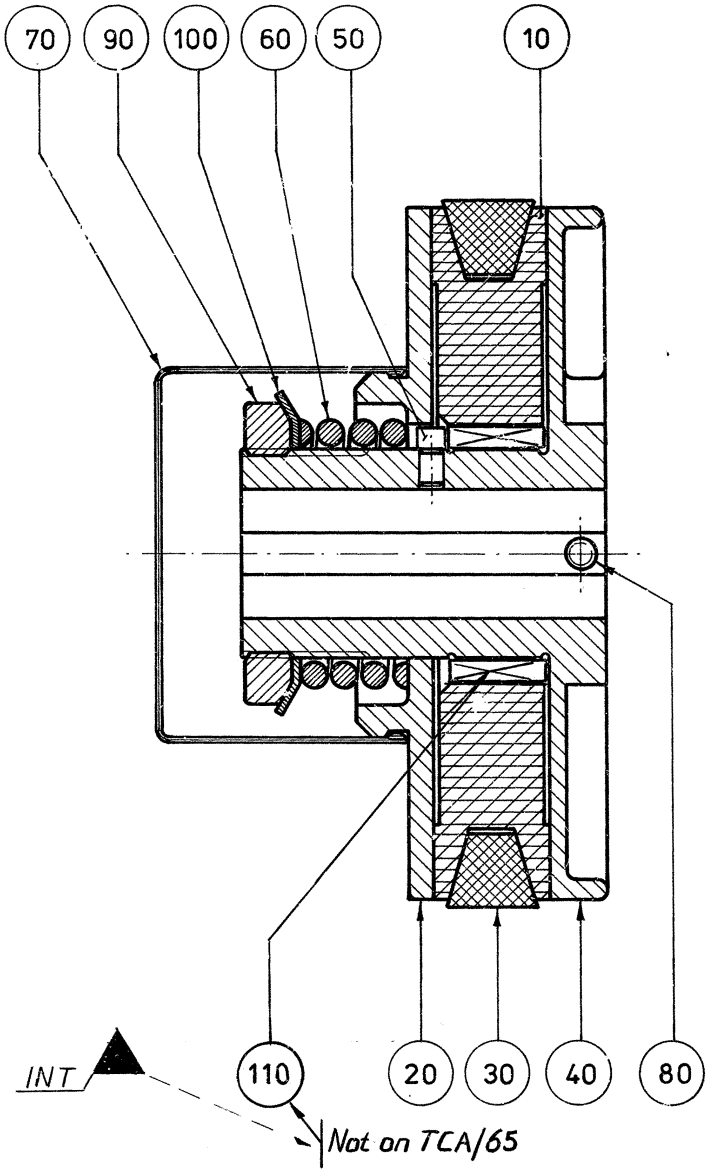
70
90
100
60
50
10
INT
110
20
30
40
80
Not on TCA/65

ECM: - -
Group number: 4438-0311
Assembly Drawing: 4438-2_1_AA

Issue: 20030213

Pos	Part No	SP	UN	Qty	Description	Page No
Common Parts						
010 2	4465-0002	-		1	PULLEY	
010 5	1175043-0000	-		1	PULLEY	
020 1	4466-0001	-		1	FLANGE	
020 2	4466-0002	-		1	FLANGE	
030 7	318101-0043	-		1	V-BELT B43 1135X17	
040	4467-0000	-		1	HUB	
050	4468-0000	-		1	DOWEL	
060	4469-0000	-		1	SPRING	
070	5450-0001	-		1	CARTON	
080	312316-0362	-		2	SCREW HEX.SOCK.SET CUP P.MSK6SS6X8 FZB	
090	312805-0108	-		1	NUT ROUND WITH SLOTS M40X1,5 FE	
100	315410-0108	-		1	LOCK WASHER MB 8 D=40 H=1,25	

Pos	Part No	SP	UN	Qty	Description	Page No

This page is intentionally left blank.

ECM: - -
Group number: 4438-0312
Assembly Drawing:

Issue: 20030213

Pos	Part No	SP	UN	Qty	Description	Page No
Common Parts						
010 6	1483058-0000	-		1	PULLEY	
020 1	4466-0001	-		1	FLANGE	
030 8	318101-0044	-		1	V-BELT B44	
040	4467-0000	-		1	HUB	
050	4468-0000	-		1	DOWEL	
060	4469-0000	-		1	SPRING	
070	5450-0001	-		1	CARTON	
080	312316-0362	-		2	SCREW HEX.SOCK.SET CUP P.MSK6SS6X8 FZB	
090	312805-0108	-		1	NUT ROUND WITH SLOTS M40X1,5 FE	
100	315410-0108	-		1	LOCK WASHER MB 8 D=40 H=1,25	

Pos	Part No	SP	UN	Qty	Description	Page No

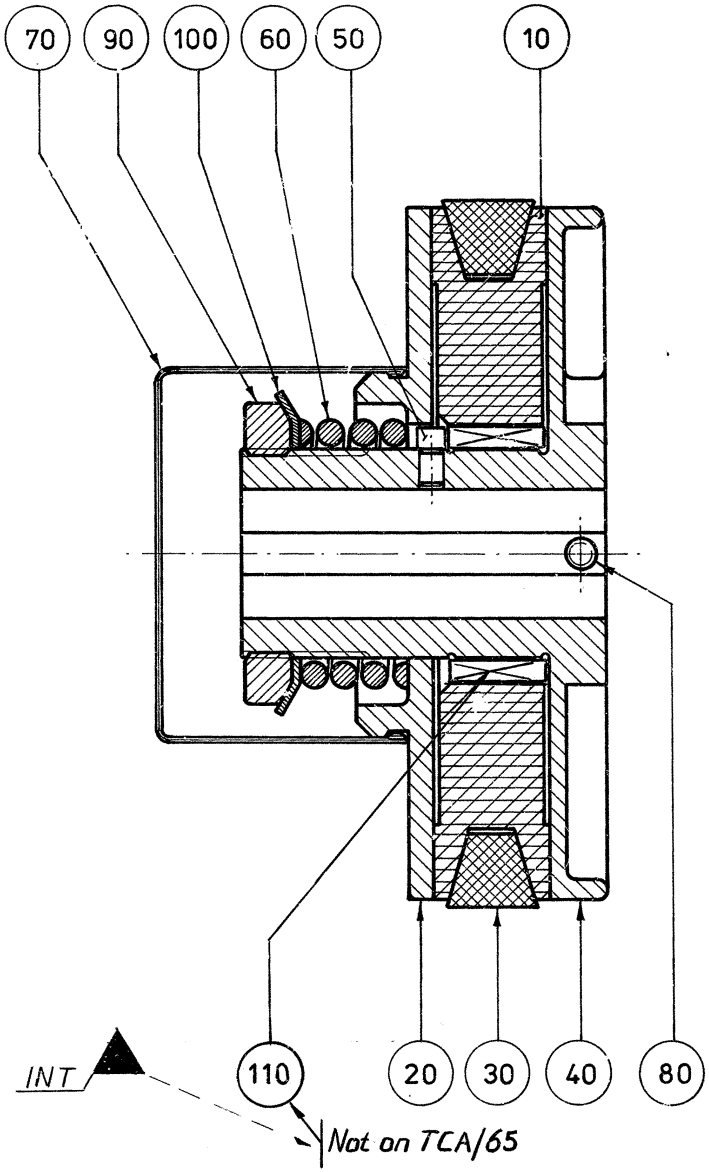
70
90
100
60
50
10
110
20
30
40
80
INT
Not on TCA/65

ECM: 82052 - 20000814
Group number: 4438-0300
Assembly Drawing: 4438-2_1_AA

Issue: 20030213

Pos	Part No	SP	UN	Qty	Description	Page No
TCA/65 150/M 50HZ						
010 5	1175043-0000	A		1	PULLEY	
020 1	4466-0001	A		1	FLANGE	
030 7	318101-0043	B		1	V-BELT B43 1135X17	
TCA/65 150/M 60HZ						
010 6	1483058-0000	A		1	PULLEY	
020 1	4466-0001	A		1	FLANGE	
030 8	318101-0044	B		1	V-BELT B44	
Common Parts						
040	4467-0000	A		1	HUB	
050	4468-0000	A		1	DOWEL	
060	4469-0000	A		1	SPRING	
070	5450-0001	-		1	CARTON	
080	312316-0362	-		2	SCREW HEX.SOCK.SET CUP P.MSK6SS6X8 FZB	
090	312805-0108	-		1	NUT ROUND WITH SLOTS M40X1,5 FE	
100	315410-0108	A		1	LOCK WASHER MB 8 D=40 H=1,25	

Pos	Part No	SP	UN	Qty	Description	Page No

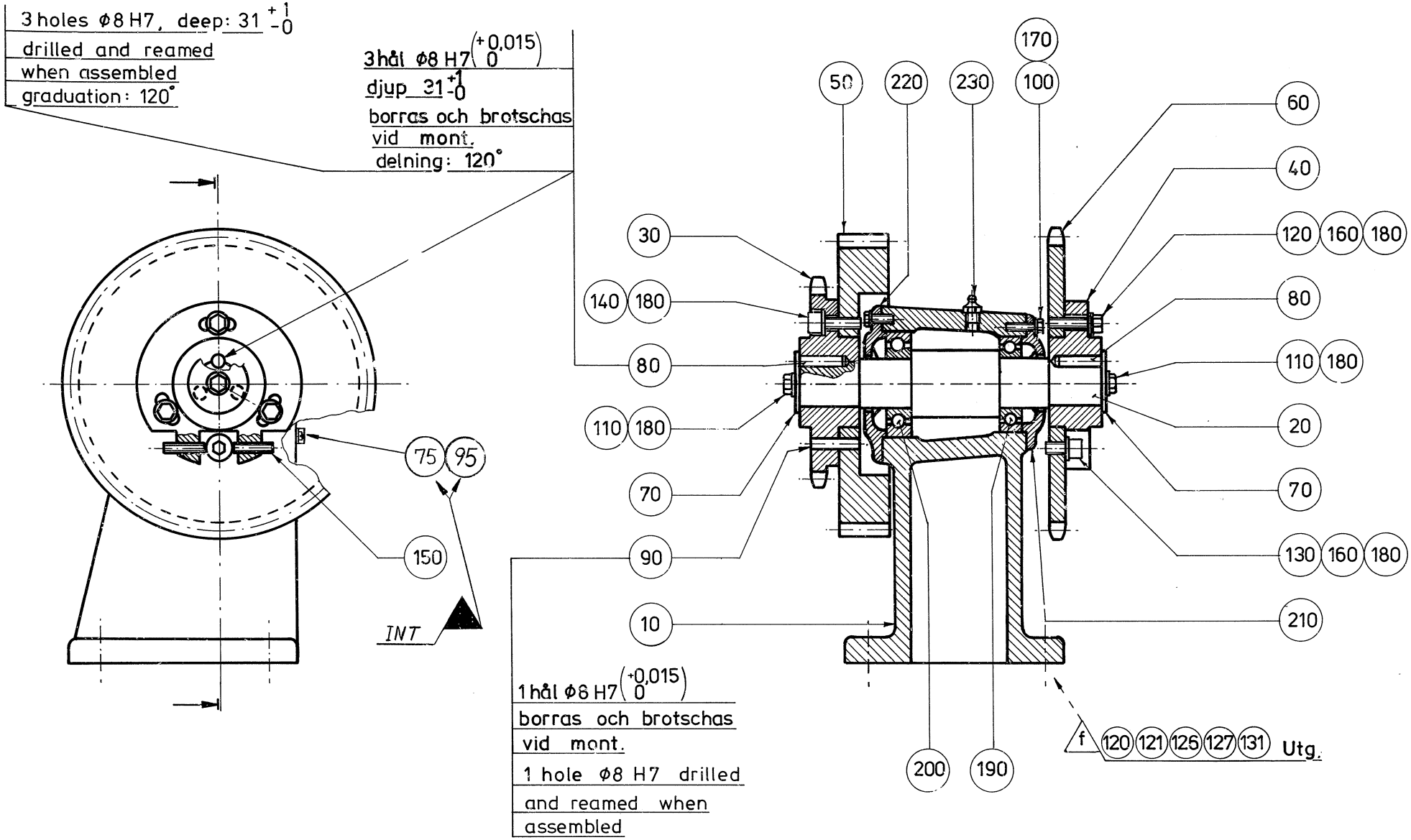
3 holes ø8 H7, deep: 31 +1 -0
drilled and reamed when assembled
graduation: 120°
3 hål ø8 H7 (+0,015 0)
djup 31 +1 -0
borras och brotschas vid mont.
delning: 120°
1 hål ø8 H7 (+0,015 0)
borras och brotschas vid mont.
1 hole ø8 H7 drilled and reamed when assembled
INT
f
Utg.
50
220
230
170
100
60
40
120
160
180
80
110
180
20
70
130
160
180
210
30
140
180
80
110
180
70
90
10
75
95
150
200
190
120
121
125
127
131

Pos	Part No	SP	UN	Qty	Description	Page No
Common Parts						
010	4874-0000	-		1	CANTILEVER	
020	4875-0000	A		1	SHAFT	
030	4876-0000	A		1	SPROCKET	
040	4878-0000	A		1	CARRIER FLANGE	
050	4877-0000	A		1	GEAR WHEEL	
060	4879-0000	A		1	SPROCKET	
070	4880-0000	A		2	WASHER	
075	90165-0014	-		1	CLIP	
080	311102-0404	-		6	CYLINDRICACP M6 8X28	
090	311102-0406	-		1	CYLINDRICACP M6 8X32	
095	312125-0289	-		2	SPåRSKRUV MCS 4X10 A480	
100	312101-0368	-		6	SCREW M6S M6X16 FZB	
110	312101-0453	-		2	SCREW M6S M8X25 FZB	
120	312101-0455	-		4	SCREW M6S M8X30 FZB	
130	312111-0447	-		1	SCREW HEX.SOCK.HD.MC6S-TT 8X12 88 FZB	
140	312111-0452	-		4	SCREW HEX.SOCK.HD.MC6S-TT 8X22 88 FZB	
150	312306-0455	-		2	SCREW HEX.SOCK.SET FLAT P.MP6SS 8X30FZB	
160	315101-0165	-		4	WASHER PLAIN, BRB, 8,4/16 H=1,5	
170	315401-0153	-		6	WASHER FBH6,1FZB	
180	315401-0165	-		11	WASHER FBH8,2FZB	
190	321306-0107	B		1	BALL BEARING, 35X62X14 MM	
200	321309-0107	B		1	BALL BEARING, 35X72X17 MM	
210	321600-0120	A		1	OIL SEAL (LL3562	
220	321600-0124	A		1	OIL SEAL (LL3572	
230	344502-0026	-		1	GREASE NIPPLE STRAIGHT R1/8 CON.	

Pos	Part No	SP	UN	Qty	Description	Page No

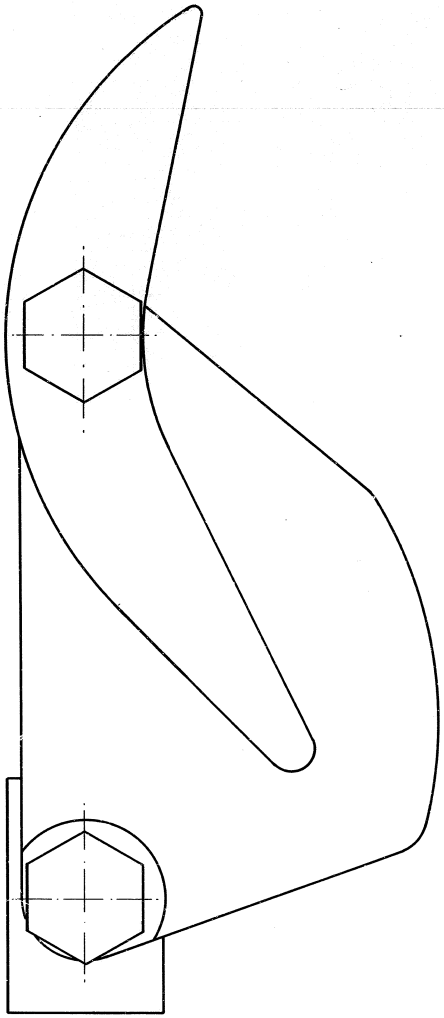

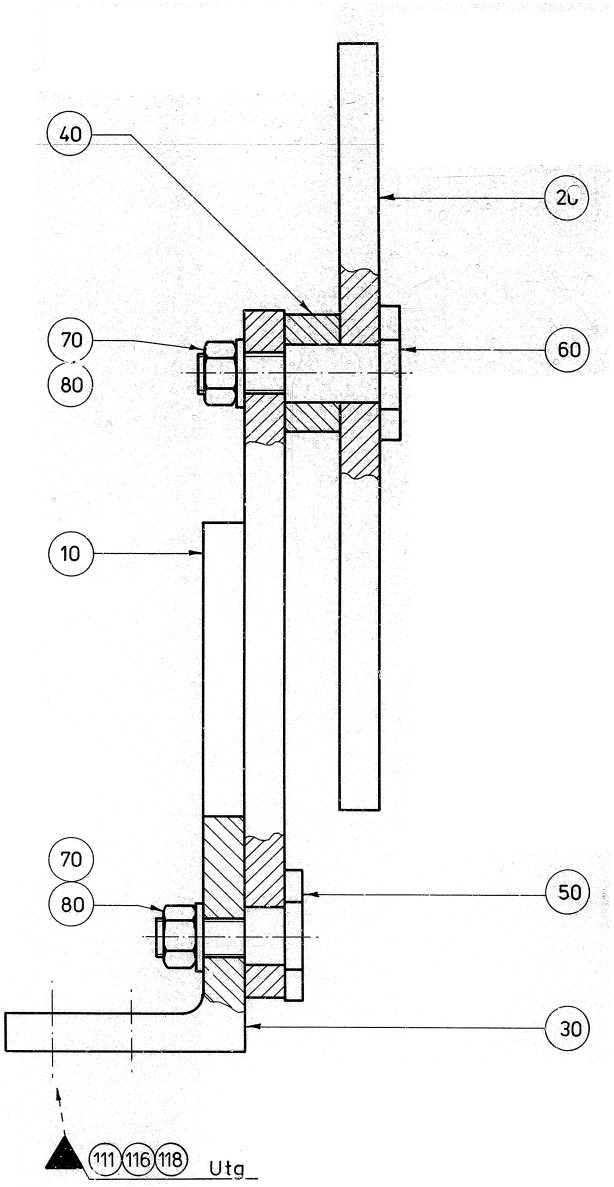
40
20
70
80
60
10
70
80
50
30
111
116
118
Utg

ECM: 83528 - 20000925
Group number: 4869-0101
Assembly Drawing: 4869-1_1_AA

Issue: 20030213

Pos	Part No	SP	UN	Qty	Description	Page No
Common Parts						
010	4891-0000	A		1	TENSION ARM	
020	4892-0000	A		1	CURVE	
030	4890-0000	-		1	ANGLE	
040	4893-0000	A		1	SPACER SLEEVE	
050	4894-0001	B		1	BOLT	
060	4894-0002	B		1	BOLT	
070	312601-0320	-		2	NUT M6M 10-8 FZB	
080	315401-0173	-		2	WASHER FBH10,2FZB	

Pos	Part No	SP	UN	Qty	Description	Page No

Machine Type | Group Description | Used-In | Group Number | Page No

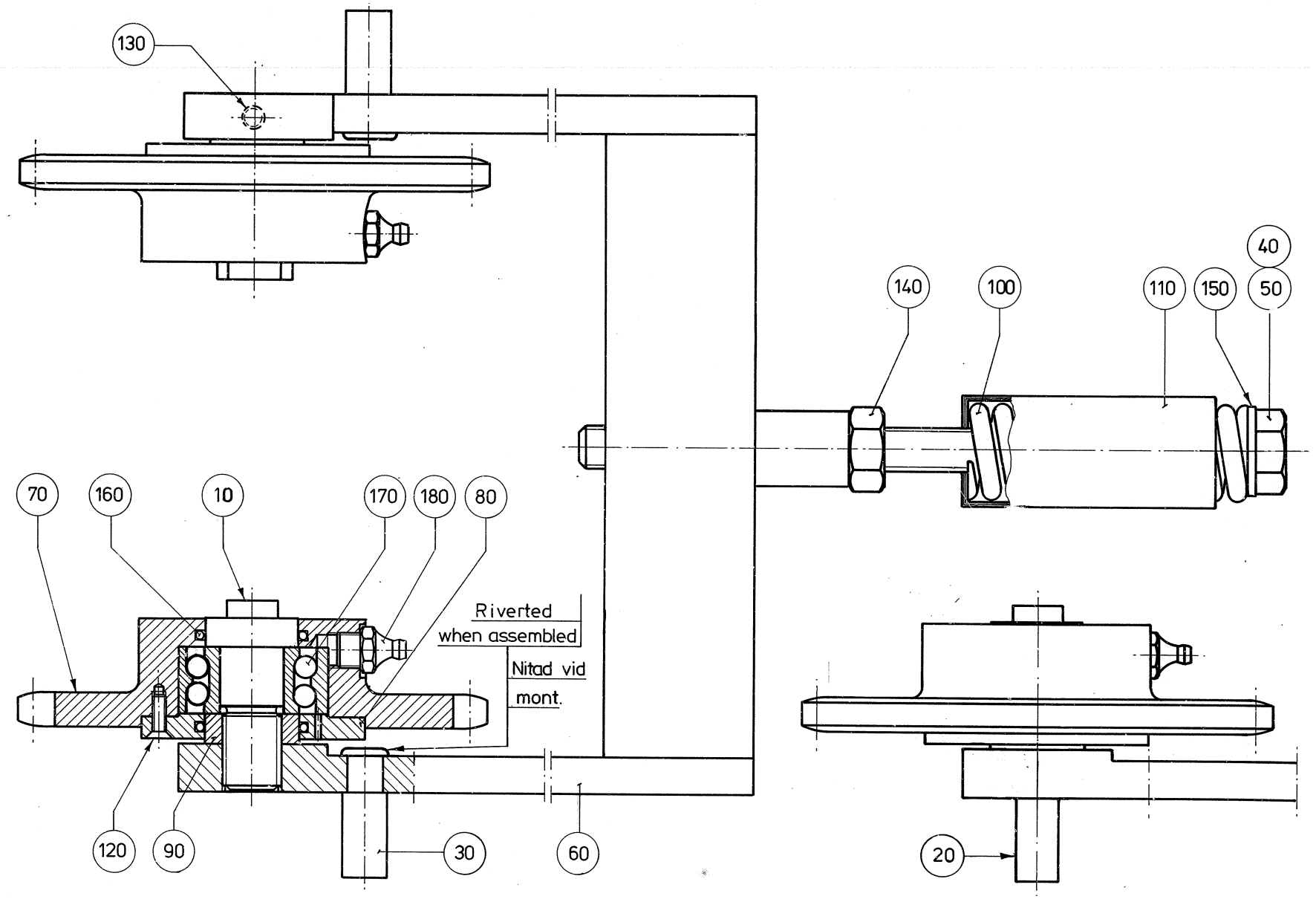
130
140
100
110
150
40
50
70
160
10
170
180
80
Riverted
when assembled
Nitad vid
mont.
120
90
30
60
20

ECM: 83529 - 20000925
Group number: 4870-0102
Assembly Drawing: 4870-1_1_AA

Issue: 20030213

Pos	Part No	SP	UN	Qty	Description	Page No
Common Parts						
010	4831-0001	A		2	BOLT	
020	4832-0000	A		2	BOLT	
040	7354-0001	A		1	SCREW	
060	4901-0000	A		1	TENSION ARM	
070	4902-0000	A		2	SPROCKET	
080	4903-0000	A		2	SEAL COVER	
090	4904-0000	A		2	SPACER RING	
100	7352-0000	-		1	COMPRESSION SPRING	
110	7353-0000	-		1	COVER	
120	312151-0291	-		6	SCREW HEX.SOCK.COUNT.MF6S 4X12 FZB	
130	312316-0366	-		1	SCREW HEX.SOCK.SET CUP P.MSK6SS6X12 FZB	
140	312601-0322	-		1	NUT M6M 12-8 FZB	
150	315101-0178	-		1	WASHER PLAIN, BRB, 13/24 H=2	
160	315202-0520	B		4	O-RING 26,58X3,53 MM	
170	321330-0103	B		2	ANG. BALL BEAR, 17X40X17,5 MM	
180	344502-0021	-		2	GREASE NIPPLE STRAIGHT M6	

Pos	Part No	SP	UN	Qty	Description	Page No

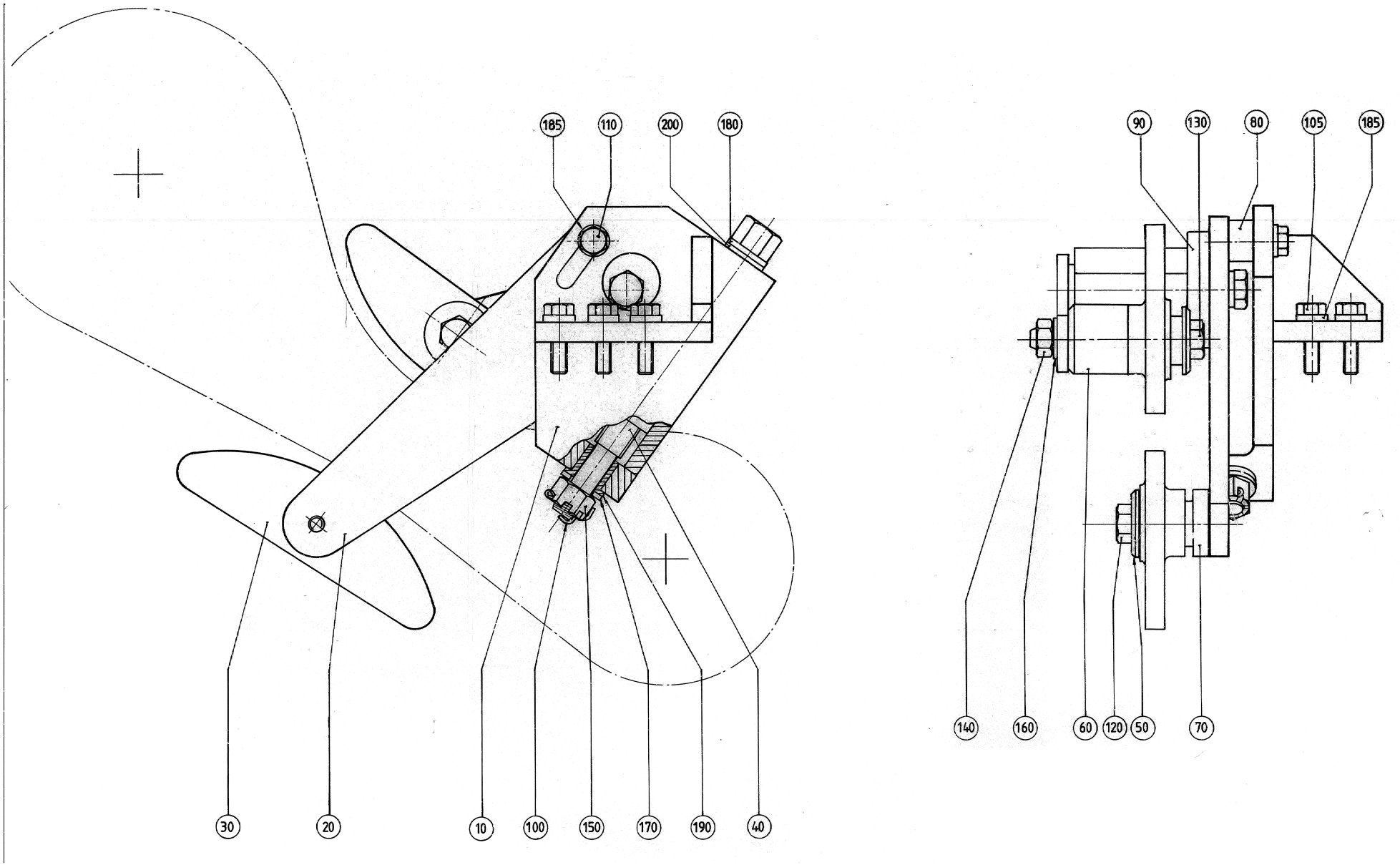
185
110
200
180
30
20
10
100
150
170
190
40
90
130
80
105
185
140
160
60
120
50
70

ECM: 83534 - 20000925
Group number: 535052-0101
Assembly Drawing: 535052-1_1_AA

Issue: 20030213

Pos	Part No	SP	UN	Qty	Description	Page No
Common Parts						
010	536918-0000	-		1	CURVE ARM GUIDE	
020	536919-0000	-		1	CURVE ARM	
030	457648-0000	A		2	CURVE	
040	536920-0000	A		1	SETTING SCREW	
050	536921-0000	A		2	CURVE HUB	
060	536922-0000	A		1	SPACER	
070	536923-0000	A		1	SPACER DISC	
080	536924-0000	-		1	SPACER	
090	90344-0042	B		1	BELT STRETCHER	
100	311401-0182	A		1	SPLIT PIN SP3,2X22FZB	
105	312101-0455	-		3	SCREW M6S M8X30 FZB	
110	312101-0457	-		1	SCREW M6S M8X35 FZB	
120	312101-0501	-		1	SCREW M6S M10X50 FZB	
130	312101-0507	-		1	SCREW M6S M10X80 FZB	
140	312601-0320	-		1	NUT M6M 10-8 FZB	
150	312801-0322	-		1	NUT MKM12FZB	
160	315101-0173	-		1	WASHER PLAIN, BRB, 10,5/22 H=2	
170	315105-0178	-		1	WASHER ISO 7089-12-200 HV-A4	
180	315105-0186	-		1	WASHER ISO 7089-16-200 HV-A4	
185	315111-0165	-		4	WASHER PLAIN, TBRB 8,4/16 H=3	
190	321111-0163	A		1	BEAR.BUSHING WITH FLANGE, 12/18X20 MM	
200	321111-0241	A		1	BEAR.BUSHING WITH FLANGE, 16/22X16 MM	

Pos	Part No	SP	UN	Qty	Description	Page No

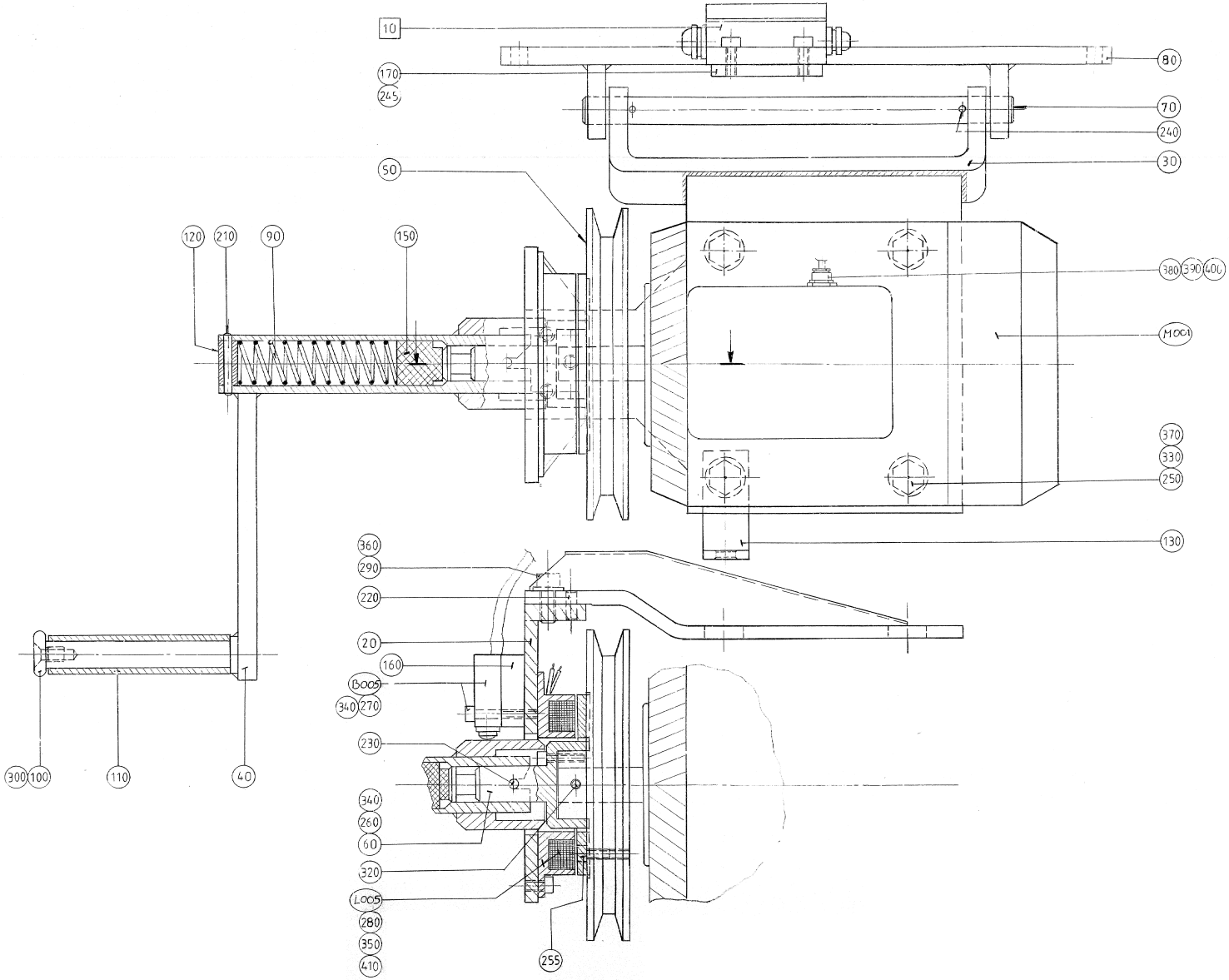
10
170
245
50
120
210
90
150
80
70
240
30
380
390
400
MOC1
370
330
250
130
360
290
220
20
160
B005
340
270
230
300
100
110
40
340
260
60
320
L005
280
350
410
255

Pos	Part No	SP	UN	Qty	Description	Page No
Common Parts						
020	541682-0000	-		1	CANTILEVER	
030	541683-0000	-		1	MOTOR SHELF	
040	541977-0000	-		1	CRANK	
050	560678-0000	A		1	PULLEY	
060	541978-0000	A		1	FLANGED SHAFT	
070	4897-0000	A		1	SHAFT	
080	4898-0000	-		1	FASTENING IRON	
090	6183-0000	-		1	SPRING	
100	256814-0000	-		1	WASHER	
110	256816-0000	-		1	PIPE	
120	257328-0000	-		1	END PIECE	
130	541740-0000	-		1	ANGLE	
150	541979-0000	-		1	SLIDER	
160	541986-0000	-		1	SPACER	
170	541996-0000	-		1	SHEET	
210	311103-0277	-		1	PIN,STRAIGHT CP M6 4X32 RFR	
220	311103-0350	-		2	PARALLELL PIN, CP, M6, 6X14 MM	
230	311103-0359	-		1	PARALLELL PIN, M6, 6X35 MM	
240	311401-0199	-		2	SPLIT PIN SP4X32FZB	
245	312101-0368	-		2	SCREW M6S M6X16 FZB	
250	312105-0499	-		4	SCREW M6S ISO 4014 M10X40 A480	
255	312115-0327	-		3	SCREW ISO4762 M5X12 A4	
260	312115-0331	-		3	SCREW ISO472 M5X20 A4	
270	312115-0335	-		2	SCREW ISO4762 M5X30 A4	
280	312115-0366	-		4	SCREW ISO4762 M6X12 A4	
290	312115-0451	-		3	SCREW ISO4762 M8X20 A4	
300	312155-0368	-		1	SCREW EN 10642 MF6S M6X16 A480	
320	312318-0321	-		3	SCREW ISO4029 M5X6 A4	
330	312605-0320	-		4	HEXAGON NUT, M6M M10 A280	
340	315105-0146	-		5	WASHER ISO 7089-5-200 HV-A4	
350	315105-0153	-		4	WASHER ISO 7089-6-200 HV-A4	
360	315105-0165	-		3	WASHER ISO 7089-8-200 HV-A4	
370	315115-0173	-		8	WASHER PLAIN, TBRB 10,5/22 H=4	
380	352136-0113	-		1	GLAND FITTING PR18,6/PG11 DI=12MM	
390	90089-0021	-		1	REDUCTION SLEEVE,PLASTIC GREY	
400	90152-0033	-	MM	5000	SPIRAL CONDUIT FOR PR 15,2(PG 9)	
410	90166-0211	-	MM	1000	TUBE 8 MM PUR BLACK	
B005	90044-0101	A		1	LIMIT SW. 924 CE1-Y20-X5	
F010	A542756-0101	-		1	EL.CONNECTION BOX	**335**
L005	90432-0014	A		1	ELECTROMAG. BRAKE, 24 VDC	
M001	90045-0076	A		1	MOTOR 3GAA 081002-ASA MT80B	

Pos	Part No	SP	UN	Qty	Description	Page No

Machine Type	Group Description	Used-In	Group Number	Page No

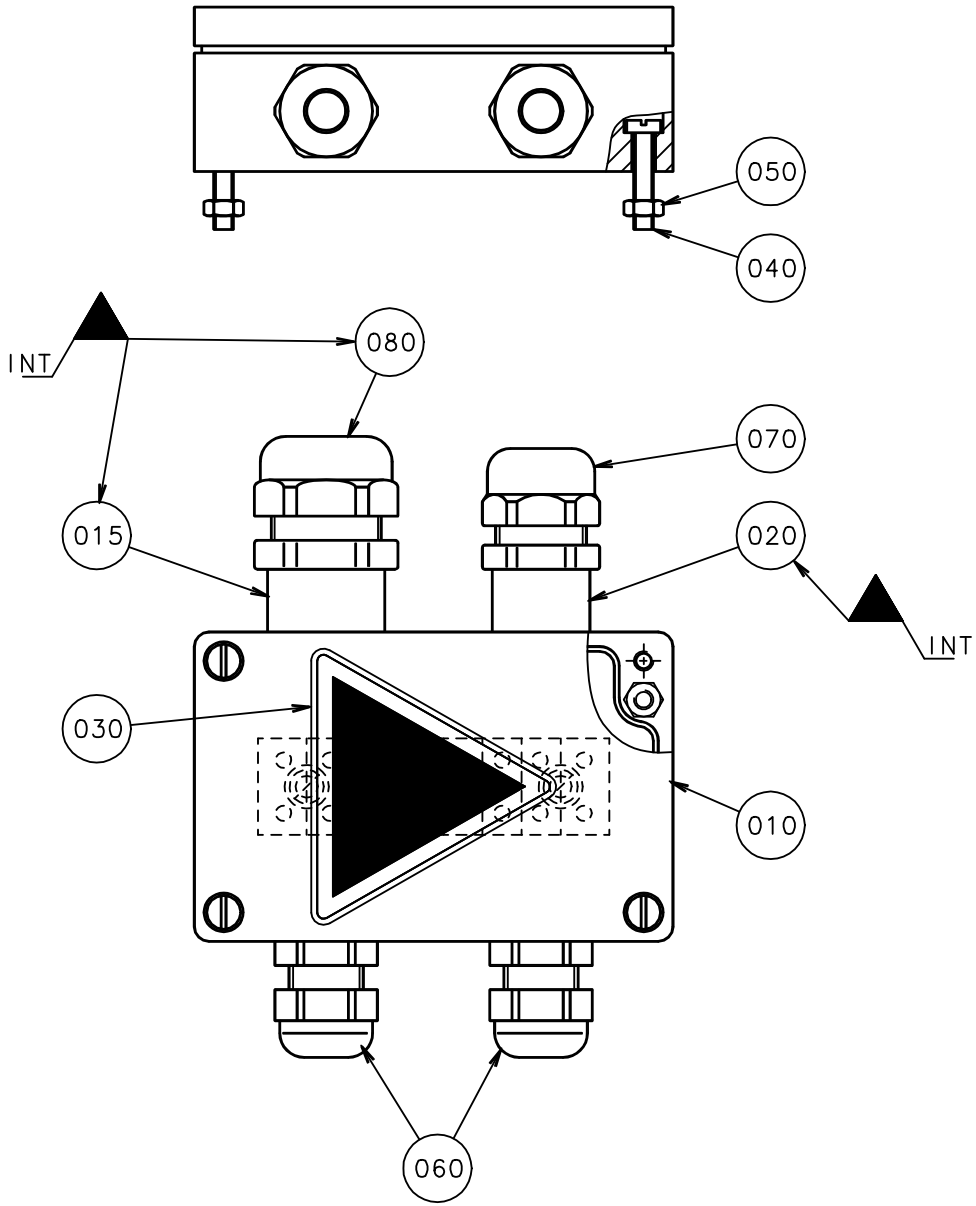
050
040
INT
080
070
015
020
INT
030
010
060

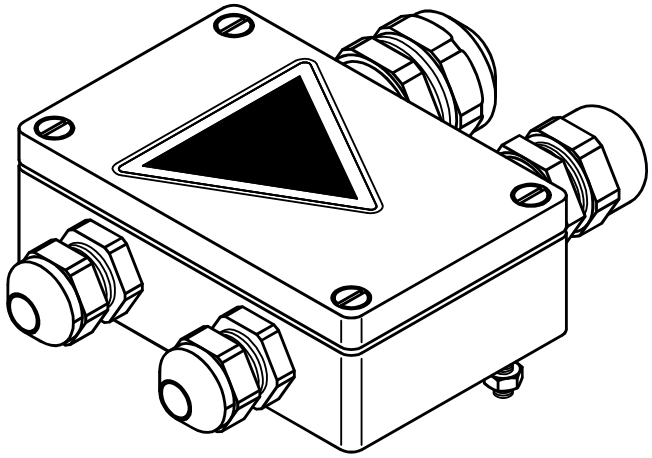

ECM: - -
Group number: 542756-0101
Assembly Drawing: 542756-1_1_AA

Issue: 20030213

Pos	Part No	SP	UN	Qty	Description	Page No
Common Parts						
010	295840-0000	-		1	CONNECTION BOX	
015	90089-0007	-		1	REDUCING SLEEVE, PR18,6/PR22,5	
020	90089-0009	-		2	REDUCING SLEEVE, PR15,2/PR18,6	
030	90194-0016	-		1	ETIKETT	
040	312125-0295	-		2	SCREW PAN HEAD MCS M4X20 SS	
050	312605-0312	-		2	HEXAGON NUT, M6M M4 A280	
060	352103-0101	-		1	KABELFöRSKR. ST 9, PR15,2/PG9	
070	352103-0106	-		2	CABLE GLAND, ST 11, PR18,6/PG11	
080	352103-0111	-		1	CABLE GLAND, ST 16, PR22,5/PG16	

Pos	Part No	SP	UN	Qty	Description	Page No

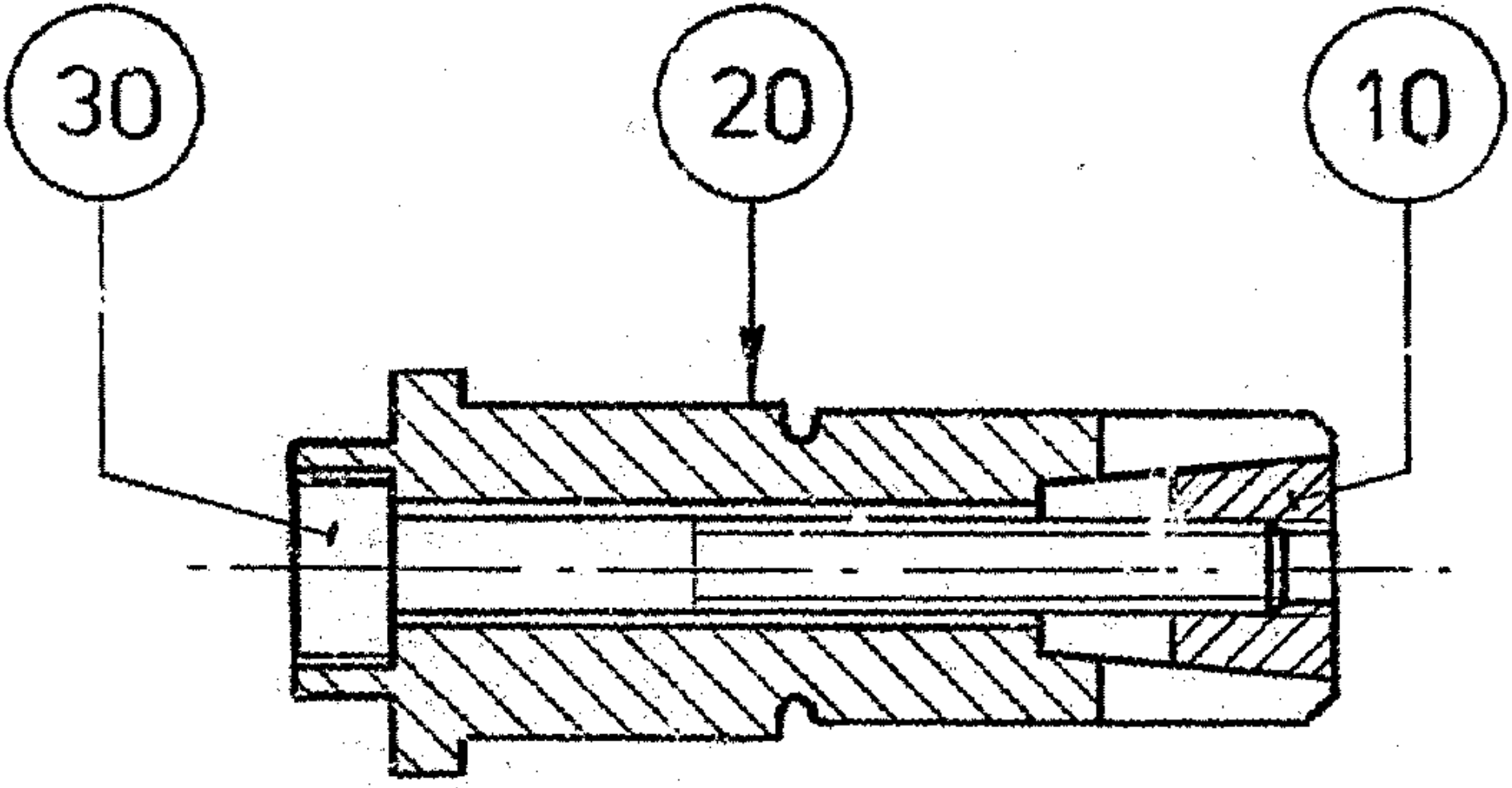
30
20
10

ECM: 83530 - 20000925
Group number: 6830-0101
Assembly Drawing: 6830-1_1_AA

Issue: 20030213

Pos	Part No	SP	UN	Qty	Description	Page No
Common Parts						
010	6827-0000	A		1	TAPER	
020	6831-0000	A		1	BOLT	
030	312111-0340	-		1	SCREW HEX.SOCK.HD.MC6S-TT 5X45 88 FZB	

Pos	Part No	SP	UN	Qty	Description	Page No

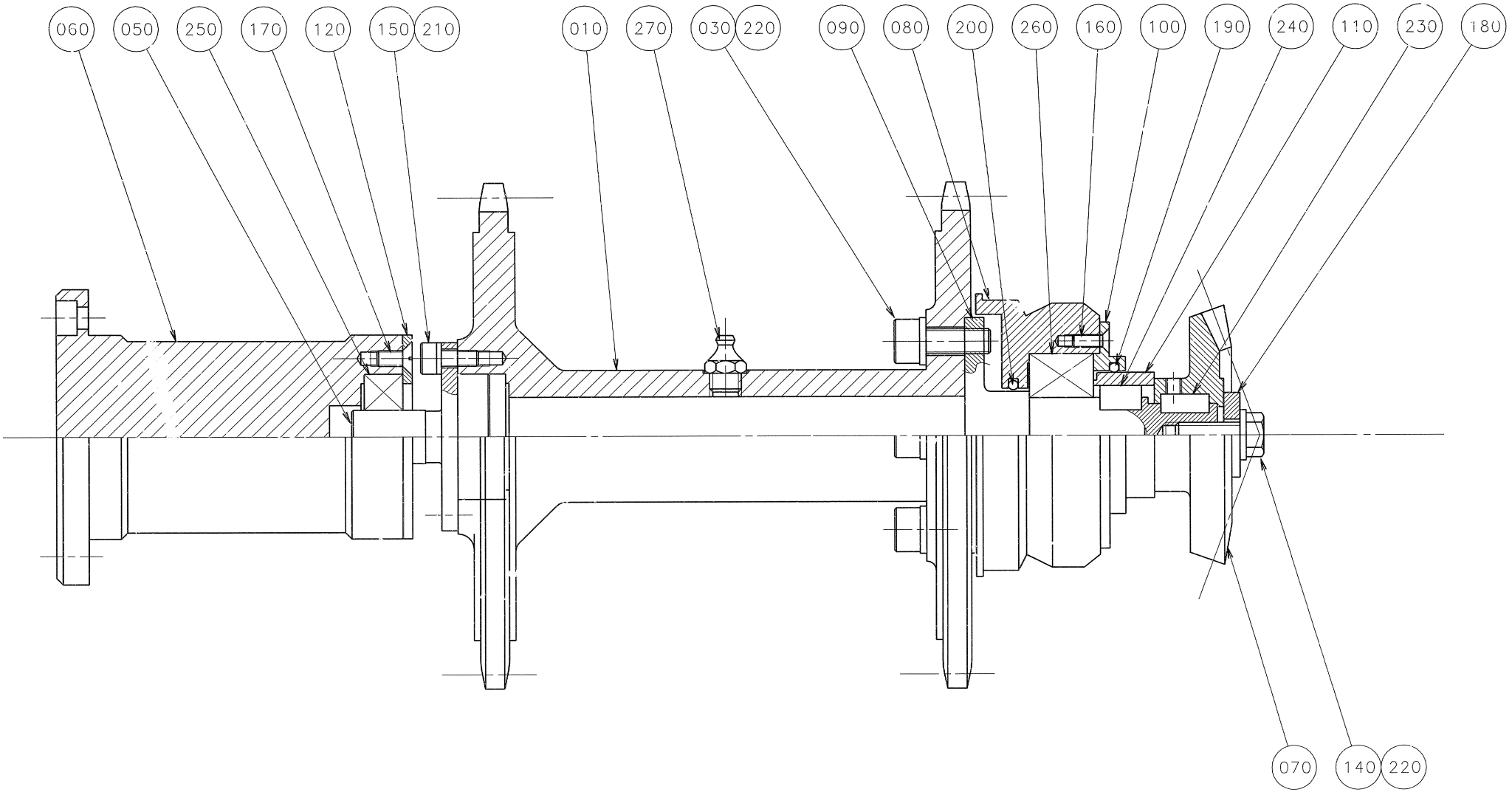
060
050
250
170
120
150
210
010
270
030
220
090
080
200
260
160
100
190
240
110
230
180
070
140
220

ECM: 83531 - 20000925
Group number: 13372-0202
Assembly Drawing: 13372-2_1_AA

Issue: 20030213

Pos	Part No	SP	UN	Qty	Description	Page No
Common Parts						
010	4460-0000	A		1	DOUBLE SPROCKET	
030	312111-0451	-		4	SCREW HEX.SOCK.HD.MC6S-TT 8X20 88 FZB	
050 2	1483068-0000	A		1	SHAFT	
060 2	1483069-0000	A		1	AXLE SUPPORT	
070	3303-0000	A		1	GEAR WHEEL	
080	5056-0000	A		1	BEARING HOUSING	
090	5057-0000	A		1	FLANGED SHAFT	
100	5058-0000	A		1	LID	
110 2	1483067-0000	-		1	SPACER SLEEVE	
120	11460-0000	-		1	WASHER	
140	312101-0453	-		1	SCREW M6S M8X25 FZB	
150	312111-0329	-		3	SCREW HEX.SOCK.HD.MC6S-TT 5X16 88 FZB	
160	312151-0291	-		3	SCREW HEX.SOCK.COUNT.MF6S 4X12 FZB	
170	312151-0327	-		3	SCREW HEX.SOCK.COUNT.MF6S 5X12 FZB	
180	315121-0165	-		1	WASHER PLAIN, TBRSB 8,4/26 H=5	
190	315202-0224	B		1	O-RING 42,2X3 MM	
200	315202-0523	B		1	O-RING 31,34X3,53 MM	
210	315401-0146	-		3	WASHER FBH 5,1 FZB	
220	315401-0165	-		5	WASHER FBH8,2FZB	
230	315701-0230	-		1	PARALLEL KEY W. ROUND ENDS 6X6X16 MM	
240	315701-0260	-		1	PARALLEL KEY W. ROUND ENDS 8X7X14 MM	
250	321313-0103	B		1	BALL BEAR. 2 SEALS 17X40X12MM	
260	321330-0105	B		1	ANG. BALL BEAR, 25X52X20,6 MM	
270	344502-0026	-		1	GREASE NIPPLE STRAIGHT R1/8 CON.	

Pos	Part No	SP	UN	Qty	Description	Page No

Machine Type | Group Description | Used-In | Group Number | Page No

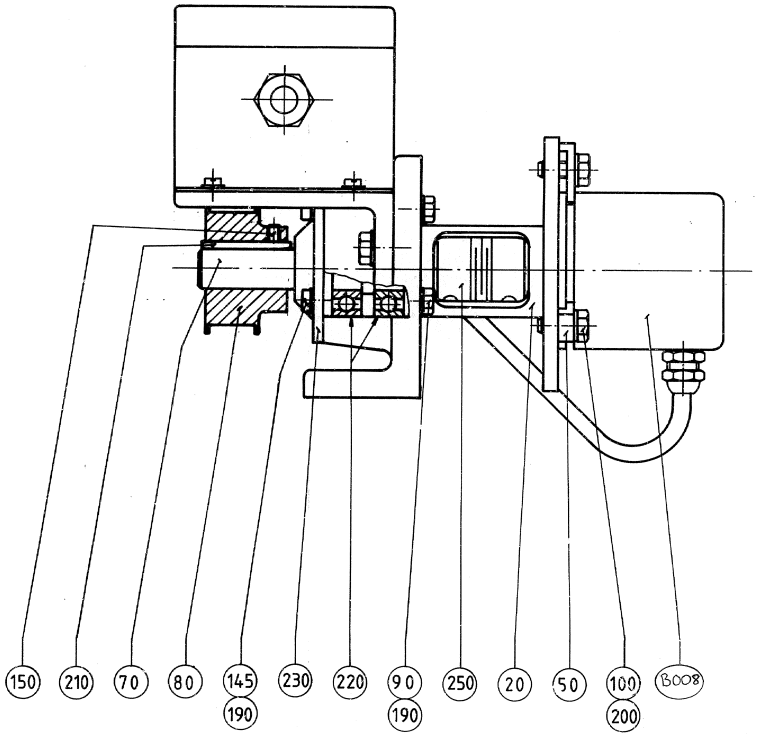
150
210
70
80
145
190
230
220
90
190
250
20
50
100
200
B008

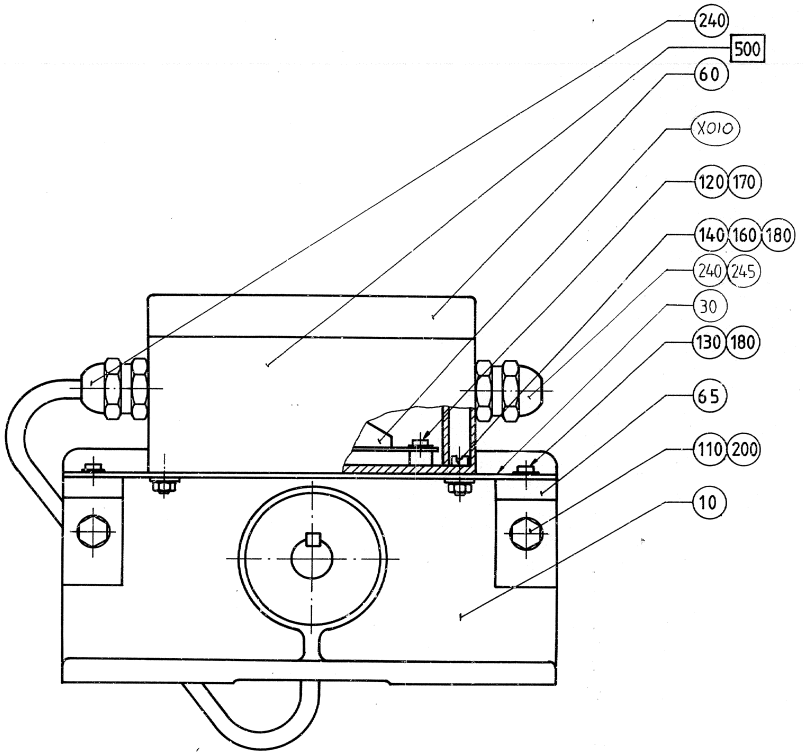
240
500
60
X010
120
170
140
160
180
240
245
30
130
180
65
110
200
10

ECM: 83533 - 20000925
Group number: 535051-0201
Assembly Drawing: 535051-2_1_AA

Issue: 20030213

Pos	Part No	SP	UN	Qty	Description	Page No
Common Parts						
010	236644-0000	-		1	MACHINE BODY	
020	534725-0000	-		1	BRACKET	
030	534726-0000	-		1	MOUNTING SHEET	
050	456529-0000	A		3	CLAMP HOLDER	
060	464297-0000	A		1	CONNECTION BOX	
065	522159-0000	-		2	CANTILEVER	
070	534727-0000	A		1	SHAFT	
080	534728-0000	A		1	TOOTHED PULLEY	
090	312101-0327	-		3	SCREW M6S M5X12 FZB	
100	312101-0367	-		3	SCREW M6S M6X14 FZB	
110	312101-0368	-		3	SCREW M6S M6X16 FZB	
120	312504-0221	-		4	SCREW CROSS RECES.RND.HD.TAPP. B4X6,5 SS	
130	312121-0285	-		4	SCREW SLOT.PAN HD. MCS 4X6 FZB	
140	312121-0287	-		4	SCREW SLOT.PAN HD. MCS 4X8 FZB	
145	312121-0327	-		3	SCREW SLOT.PAN HD. MCS 5X12 FZB	
150	312316-0321	-		1	SCREW HEX.SOCK.SET CUP P.MSK6SS5X6 FZB	
160	312601-0312	-		4	NUT M6M 4-8 FZB	
170	315101-0124	-		4	WASHER PLAIN, BRB, 3,2/6 H=0,5	
180	315101-0136	-		8	BRICKA, BRB, 4,3/8 H=0,8	
190	315101-0146	-		6	WASHER PLAIN, BRB, 5,3/10 H=1	
200	315101-0153	-		5	WASHER PLAIN, BRB, 6,4/12 H=1,5	
210	315701-0206	-		1	PARALLEL KEY W. ROUND ENDS 5X5X32 MM	
220	321313-0102	A		2	BALL BEARING, 2 SEALS, 15X35X11 MM	
230	321600-0102	A		1	OIL SEAL (LL1535	
240	90089-0007	-		1	REDUCING SLEEVE, PR18,6/PR22,5	
245	352103-0111	-		1	CABLE GLAND, ST 16, PR22,5/PG16	
250	90355-0031	A		1	TORQUE RIGID COUPLING, 10X10 MM	
B008	90061-0018	A		1	ANGLE ENC 8BIT GRAY (REPL BY 90061-27)	
F500	A68917-0101	A		1	CIRC.BOARD DISPLAY ANGLE INDICATOR	**343**
X010	451423-0000	A		1	CIRCUIT BOARD	

Pos	Part No	SP	UN	Qty	Description	Page No

Machine Type	Group Description	Used-In	Group Number	Page No

This page is intentionally left blank.

ECM: - -
Group number: 68917-0101
Assembly Drawing:

Issue: 20030213

Pos	Part No	SP	UN	Qty	Description	Page No
Common Parts						
010	540306-0001	-		1	COMPONENTS WITHOUT TP-NO	
020	540307-0000	-		1	PRINTED CIRCUIT BOARD	

Pos	Part No	SP	UN	Qty	Description	Page No

Machine Type	Group Description	Used-In	Group Number	Page No

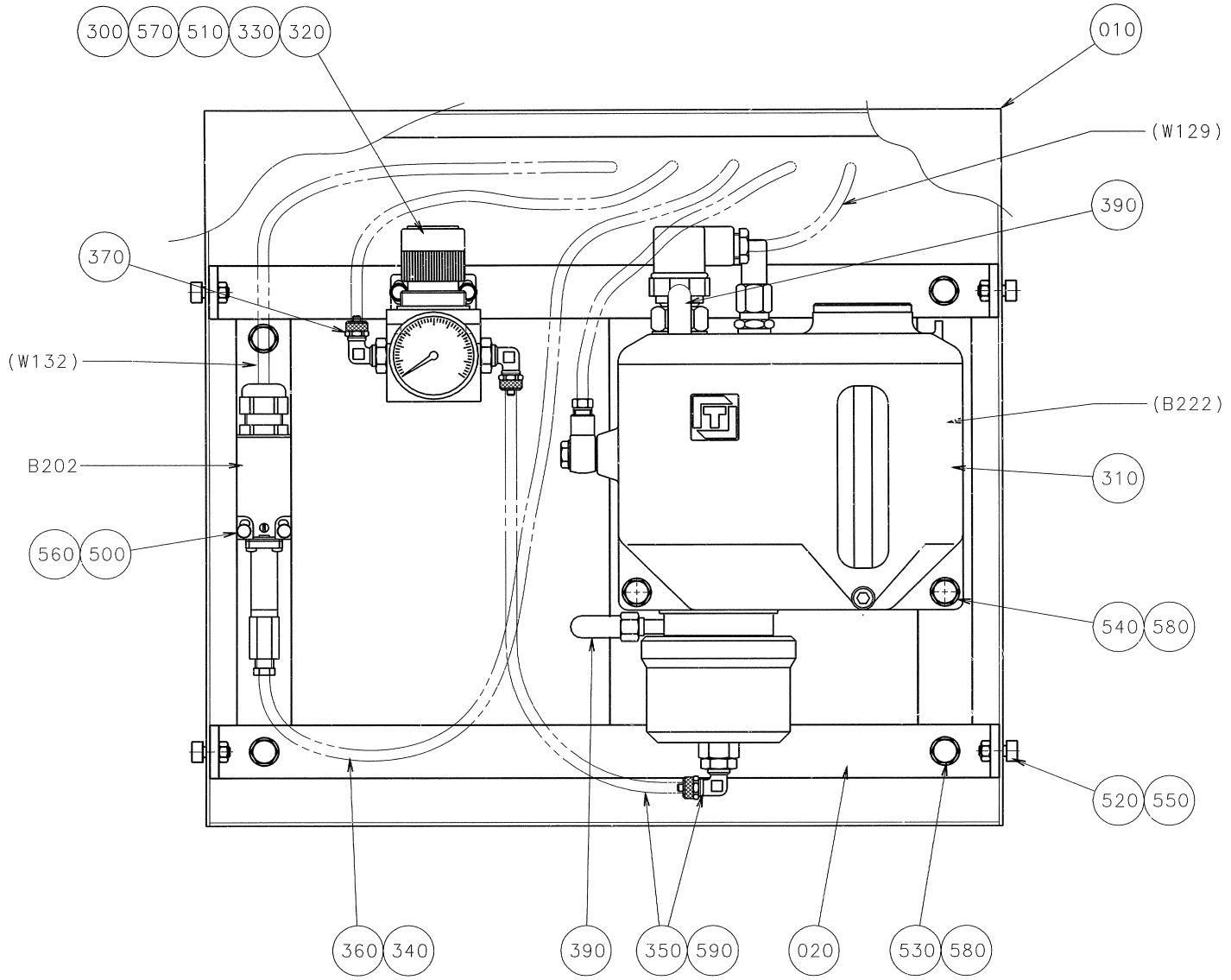
300
570
510
330
320
010
(W129)
390
370
(W132)
(B222)
B202
310
560
500
540
580
520
550
360
340
390
350
590
020
530
580

ECM: 83544 - 20000925
Group number: 1483030-0101
Assembly Drawing: 1483030-1_1_AA

Issue: 20030213

Pos	Part No	SP	UN	Qty	Description	Page No
Common Parts						
010	1483033-0000	-		1	BOX	
020	1483034-0000	-		1	BRACKET	
300	90043-0107	A		1	PRESSURE GAUGE	
310	B90048-0032	A		1	OIL PUMP INCL. CONTAINER 1,5 L	
	90048-0452	*B*		*1*	*SEALING KIT*	
320	90113-0105	A		1	PRESSURE REGULATOR	
330	90113-0372	-		1	BRACKET	
340	342706-0130	-		5	ACCESSORIES, INSERT SLEEVE 6 MM	
350	90166-0089	-	M	4	HOSE 4/6.2 PE BLUE	
360	90166-0011	-	M	1	TUBE 6 MM PA,TRANSP.	
370	90224-0329	-		2	ELBOW 90 COUPL.,EXT.THREAD 6/4-G1/4"	
390	90328-0047	A		2	SILENCER G1/8	
500	312105-0297	-		2	SCREW M6S ISO 4017 M4X25 A480	
510	312105-0327	-		2	SCREW M6S ISO 4017 M5X12 A480	
520	312115-0368	-		4	SCREW ISO4762 M6X16 A4	
530	312105-0453	-		4	SCREW M6S ISO 4017 M8X25 A480	
540	312105-0463	-		2	SCREW M6S ISO 4014 M8X60 A480	
550	312605-0316	-		4	HEXAGON NUT, M6M M6 A280	
560	315105-0136	-		2	WASHER ISO 7089-4-200 HV-A4	
570	315105-0146	-		2	WASHER ISO 7089-5-200 HV-A4	
580	315105-0165	-		6	WASHER ISO 7089-8-200 HV-A4	
590	342931-0113	-		1	ELBOW 90 COUPL.,EXT.THREAD 6/4-G1/8"	
B202	90274-0084	A		1	PRESSURE GUARD, 1800 KPA	

Pos	Part No	SP	UN	Qty	Description	Page No

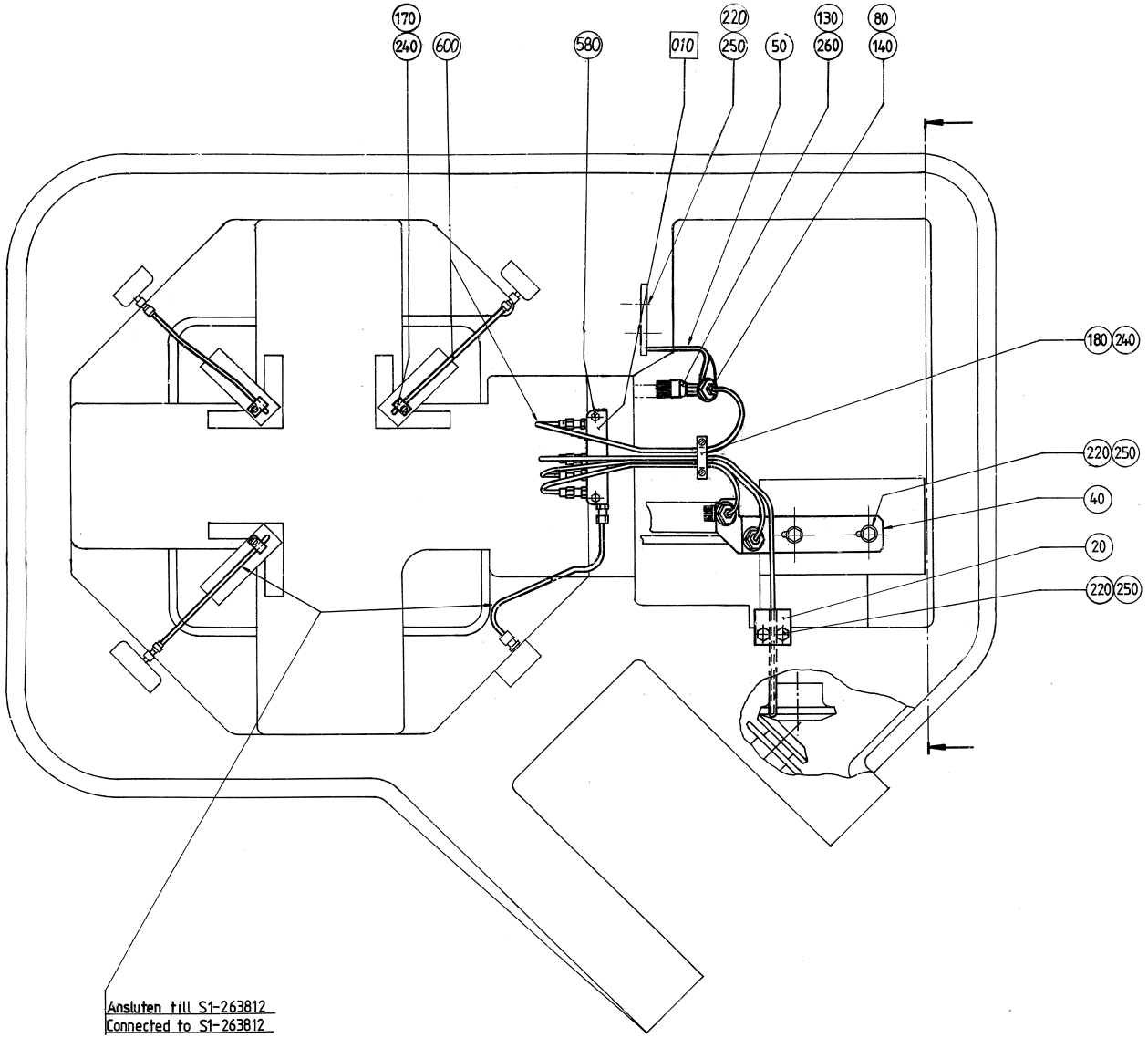
170
240
600
580
010
220
250
50
130
260
80
140
180
240
220
250
40
20
220
250
Ansluten till S1-263812
Connected to S1-263812

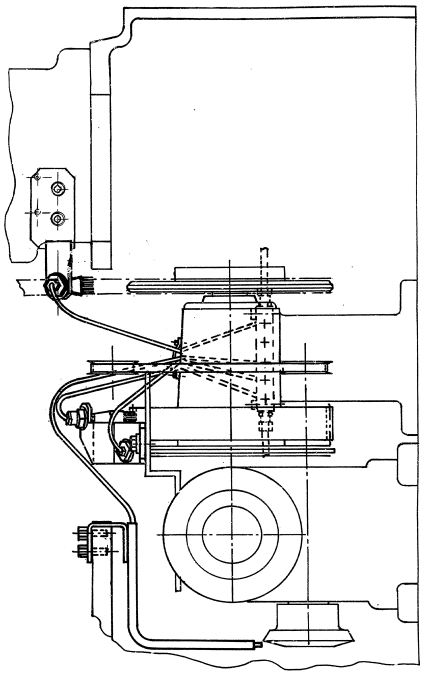

Pos	Part No	SP	UN	Qty	Description	Page No
Common Parts						
020	259923-0000	-		1	GUIDE PIPE	
040	535083-0000	A		1	BRACKET OIL BRUSHES	
050	535084-0000	A		1	BRACKET OIL BRUSH	
080	90028-0001	A		3	CONE 5/32"	
130	90092-0048	A		3	OIL BRUSH, FLAT, 5/16-24 UNF	
140	90134-0003	A		3	BUSHING	
170	90165-0003	-		4	PIPE CLIP FOR TUBE D=4 MM	
180	90165-0014	-		1	CLIP	
220	312101-0366	-		4	SCREW M6S M6X12 FZB	
240	312121-0285	-		5	SCREW SLOT.PAN HD. MCS 4X6 FZB	
245	312155-0368	-		2	SCREW EN 10642 MF6S M6X16 A480	
250	315101-0153	-		4	WASHER PLAIN, BRB, 6,4/12 H=1,5	
260	315101-0182	-		3	WASHER PLAIN, BRB, 15/26 H=2	
580	312155-0295	-		2	SCREW EN 10642 MF6S M4X20 A480	
600	90166-0109	-	M	4	TUBE 4 MM PA,TRANSP.	
F010	A1483064-0101	-		1	SEPARATION BLOCK	**349**

Pos	Part No	SP	UN	Qty	Description	Page No

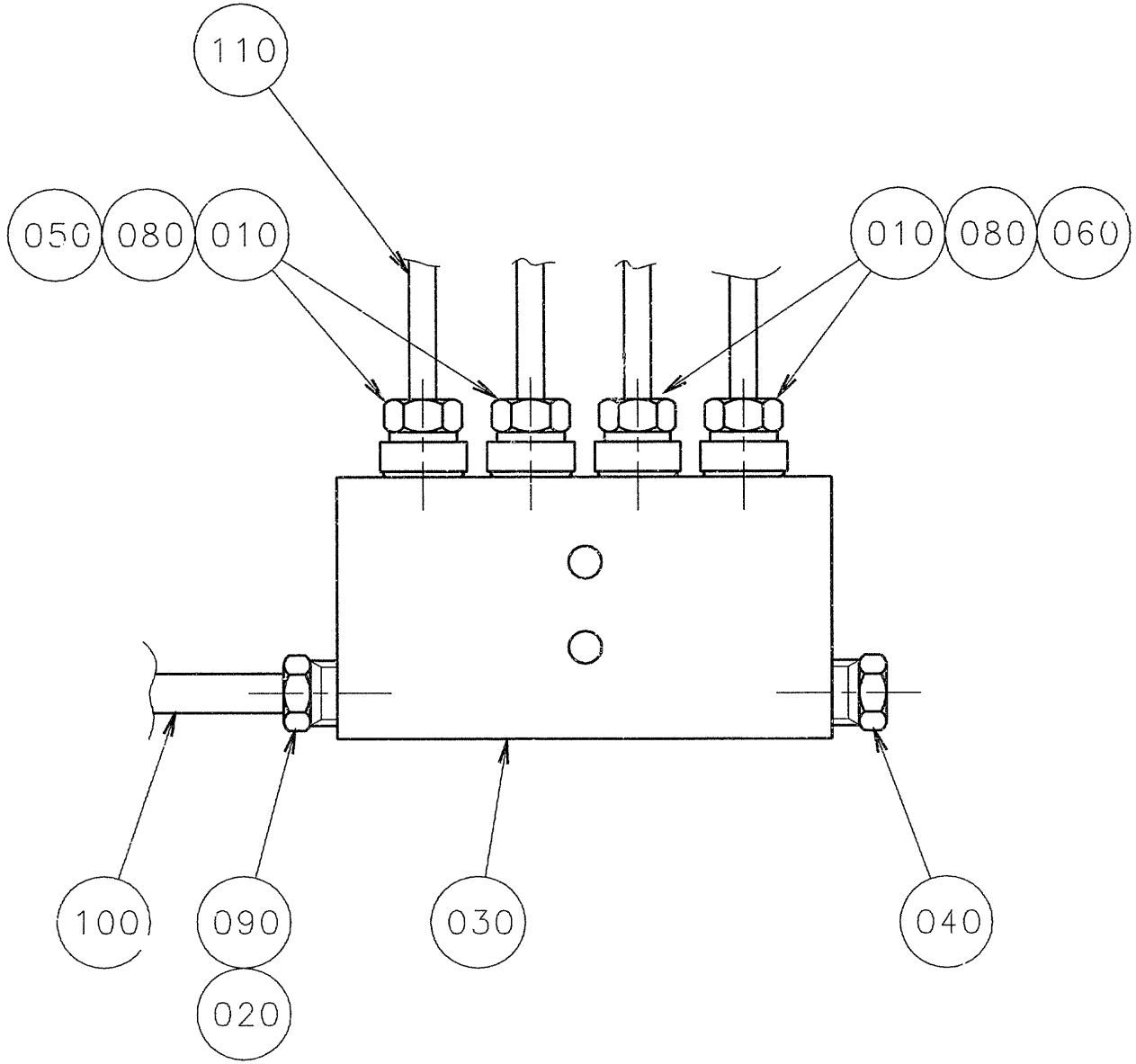
110
050
080
010
010
080
060
100
090
020
030
040

ECM: 83545 - 20000925
Group number: 1483064-0101
Assembly Drawing: 1483064-1_1_AA

Issue: 20030213

Pos	Part No	SP	UN	Qty	Description	Page No
Common Parts						
010	90028-0021	A		4	CONE TUBE 4 MM	
020	90028-0025	A		1	CONE TUBE 6 MM	
030	90032-0039	A		1	BLOCK 4 WAYS	
040	90087-0019	A		1	PLUG M10X1 STAINLESS	
050	90092-0054	A		2	METERING VALVE 50 MM3	
060	90092-0054	A		2	METERING VALVE 50 MM3	
070	342706-0130	-		1	ACCESSORIES, INSERT SLEEVE 6 MM	
080	90134-0040	A		4	BUSHING VALVE CONNECTION 4 MM	
090	90134-0055	A		1	BUSHING/NUT INLET/OUTLET 6 MM	
100	90166-0011	-	M	1	TUBE 6 MM PA,TRANSP.	
110	90166-0109	-	M	1	TUBE 4 MM PA,TRANSP.	

Pos	Part No	SP	UN	Qty	Description	Page No

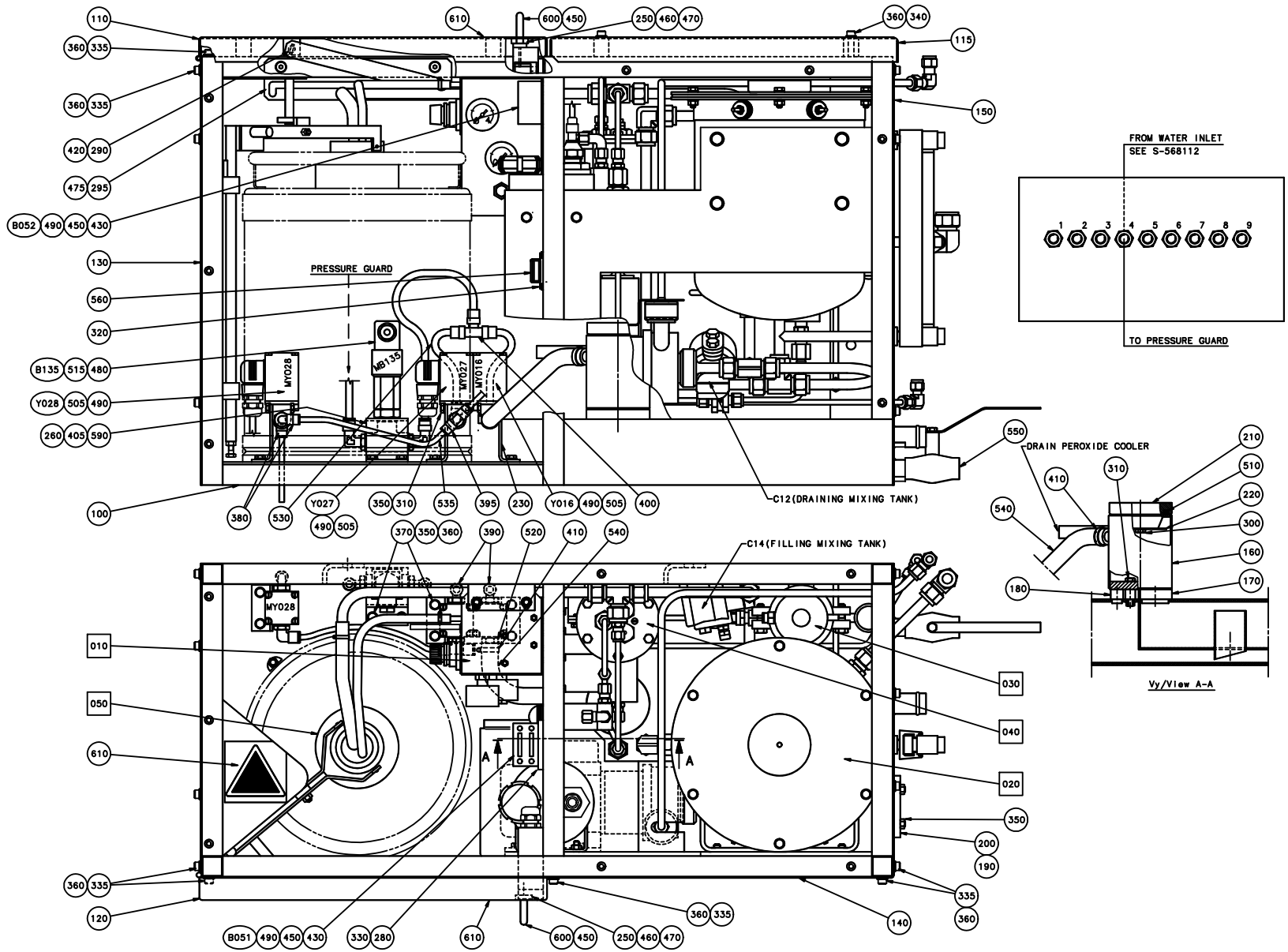
PRESSURE GUARD
C12(DRAINING MIXING TANK)
C14(FILLING MIXING TANK)
FROM WATER INLET
SEE S-568112
TO PRESSURE GUARD
DRAIN PEROXIDE COOLER
Vy/View A-A
MY028
MB135
MY027
MY016

ECM: 83538 - 20000925
Group number: 563435-0301
Assembly Drawing: 563435-5_1_AA

Issue: 20030213

Pos	Part No	SP	UN	Qty	Description	Page No
Common Parts						
100	563430-0000	-		1	FRAME	
110	562876-0000	-		1	HATCH	
115	562878-0000	-		1	LID	
120	569608-0000	-		1	DOOR	
130	563432-0000	-		1	COVERING PLATE	
140	563442-0000	-		1	COVERING PLATE	
150	568129-0000	-		1	COVERING PLATE	
160	752810-0000	A		1	METERING DEVICE	
170	527905-0000	A		1	GASKET	
180	527906-0000	A		1	GASKET	
190	532205-0000	-		1	LID	
200	532206-0000	-		1	GASKET	
210	566147-0000	A		1	SAFETY VALVE	
220	568116-0000	A		1	CUP SPRING	
230	570817-0000	-		3	HOLDER	
250	570842-0000	-		2	FASTENING IRON	
260	578225-0000	-		1	BRACKET	
280	562872-0000	-		1	BRACKET	
290	1175087-0000	A		1	SUPPORT ARM	
295	1175112-0000	A		1	GUIDE FLANGE	
300	312105-0368	-		1	SCREW M6S M6X16 A280	
310	312105-0374	-		7	SCREW M6S ISO 4014 M6X30 A480	
320	312125-0220	-		2	SKRUV SLOT.PAN HD. MCS 3X6 A480	
330	312125-0368	-		2	SCREW PAN HEAD MCS M6X16 SS	
335	312115-0368	-		24	SCREW ISO4762 M6X16 A4	
340	312115-0378	-		4	SCREW ISO4762 M6X40 A4	
350	312605-0316	-		18	HEXAGON NUT, M6M M6 A280	
360	315105-0153	-		36	WASHER ISO 7089-6-200 HV-A4	
370	312105-0367	-		8	SCREW M6S M6X14 A280	
380	342732-0103	-		2	ELBOW PIPE JOINT, EXT.THREAD, D=6MM-G1/4	
390	342732-0104	-		2	ELBOW PIPE JOINT, EXT.THREAD, D=8MM-G1/4	
395	342742-0103	-		1	T-COUPLING,ADJUST,F.PLASTIC TUBE 6-G1/4"	
400	342748-0103	-		1	T-CONNECTION 8MM	
405	342732-0105	-		2	ELBOW PIPE D8-R3/8"	
410	342991-0103	-		2	HOSE CLIP,WORM DRIVE TYPE (19)-23	
420	311112-0206	-		1	SPRING PIN, ISO 8752 3X12-C	
430	315105-0146	-		4	WASHER ISO 7089-5-200 HV-A4	
450	312115-0329	-		6	SCREW ISO4762 M5X16 A4	
460	312155-0325	-		2	SCREW EN 10642 MF6S M5X10 A480	
470	312155-0331	-		2	SCREW EN 10642 MF6S M5X20 A480	
475	312155-0366	-		2	SCREW EN 10642 MF6S M6X12 A480	
480	315233-0111	A		2	WASHER PL.RND.NYL.17/22,H=1	
490	352103-0105	-		5	CABLE GLAND, STR 11, PR 18,6/PG11	
505	90042-0564	A		3	INDICATOR 19145 FESTO	
510	90143-0020	-	MM	200	STRIP	
515	90110-0095	A		1	CONNECTOR 3 POLE + EARTH	
520	90163-0052	-		1	HOSE NIPPLE, EXT.THR. 1/4-12 MM	
530	90166-0118	-	MM	4000	TUBE 8 MM PA BLACK	
535	90166-0119	-	MM	500	HOSE PUR 4/6 BLACK	
540	90166-0121	-	MM	200	HOSE	
550	90187-0125	A		1	BALL VALVE G1/2	
560	90237-0046	-		1	MAGNETIC LOCK, 46X33X15 MM	
590	90330-0067	-		1	T-PIPE, INT. THREAD, R-221R3/8	
600	90017-0024	-		2	HANDLE NO. VA-08.100.31	
610	90194-0141	-		3	CAUTION SIGN ISO, DANGEROUS CHEMICALS	
B051	B90044-0103	A		1	KEY SAFETY SWITCH AZ 15 ZVR	
	90044-0310	*A*		*1*	*KEY FOR SAFETY SWITCH, AZ 15/16 B1*	
B052	B90044-0103	A		1	KEY SAFETY SWITCH AZ 15 ZVR	
	90044-0310	*A*		*1*	*KEY FOR SAFETY SWITCH, AZ 15/16 B1*	
B135	90274-0042	A		1	PRESSURE GUARD, 200 KPA	
F010	A563434-0201	-		1	VALVE PANEL	**353**
F020	A563450-0201	-		1	MIXING TANK	**355**
F030	A566143-0201	-		1	METERING DEVICE	**357**
F040	A566149-0201	-		1	SPRAY SYSTEM	**359**
F050	A569616-0101	-		1	CONNECTION	**365**
Y016	90042-0107	A		1	SOL.VALVE BURKERT 24VDC	
Y027	90042-0107	A		1	SOL.VALVE BURKERT 24VDC	
Y028	90042-0107	A		1	SOL.VALVE BURKERT 24VDC	

Machine Type | Group Description | Used-In | Group Number | Page No

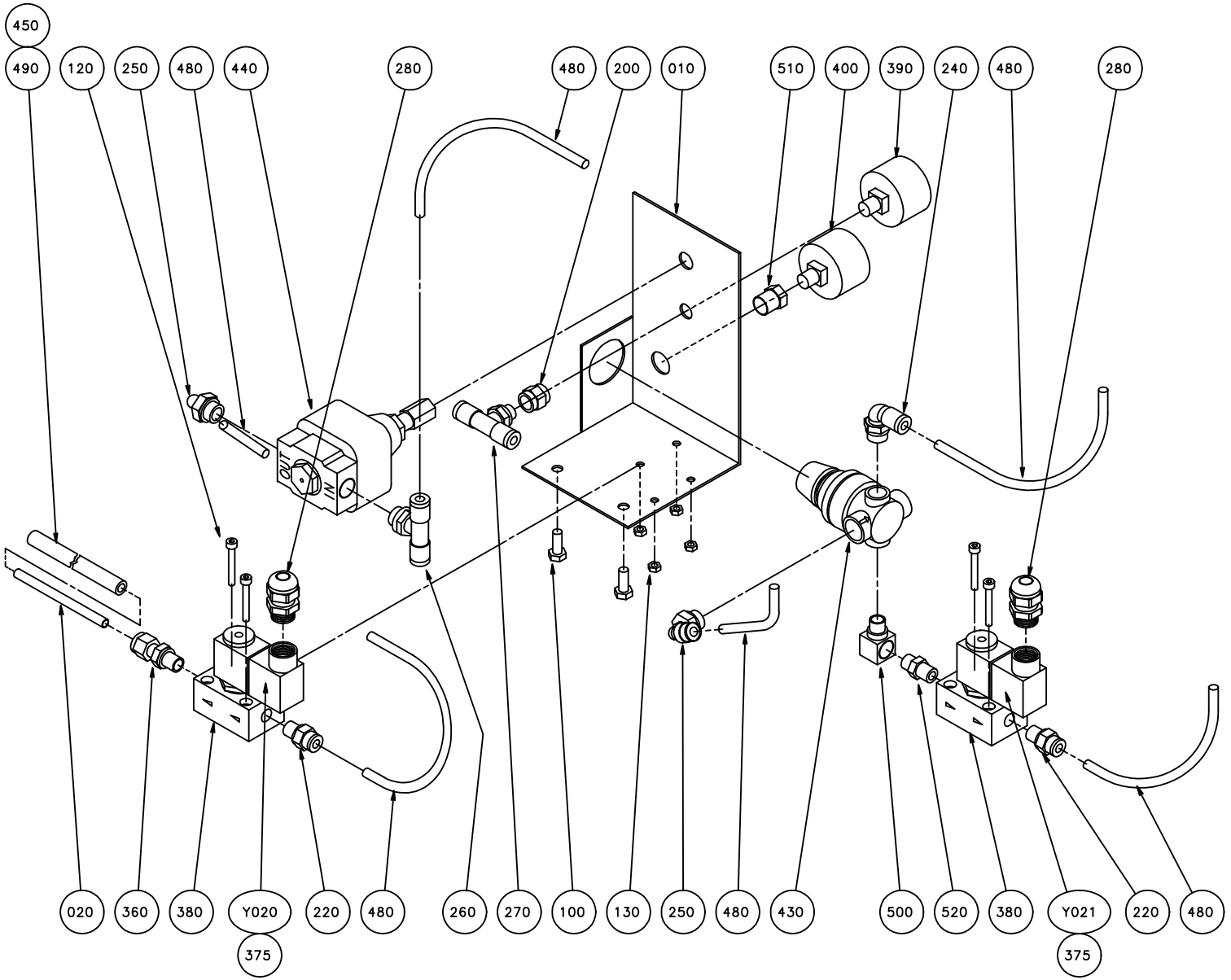
450
490
120
250
480
440
280
480
200
010
510
400
390
240
480
280
020
360
380
Y020
375
220
480
260
270
100
130
250
480
430
500
520
380
Y021
375
220
480

ECM: 83537 - 20000925
Group number: 563434-0201
Assembly Drawing: 563434-3_1_AA

Issue: 20030213

Pos	Part No	SP	UN	Qty	Description	Page No
Common Parts						
010	563431-0000	-		1	HOLDER	
020	569617-0000	-		1	PIPE	
100	312105-0366	-		2	SCREW M6S M6X12 A280	
120	312115-0299	-		4	SCREW ISO4762 M4X30 A4	
130	312605-0312	-		4	HEXAGON NUT, M6M M4 A280	
200	342707-0109	-		1	SLEEVE, INT. THREAD, NO. 2543-1/8	
220	342722-0202	-		4	PIPE COUPLING 1/8" D=6MM	
240	342732-0102	-		1	ELBOW PIPE JOINT, EXT.THREAD, D=6MM-G1/8	
250	342732-0103	-		2	ELBOW PIPE JOINT, EXT.THREAD, D=6MM-G1/4	
260	342742-0103	-		1	T-COUPLING,ADJUST,F.PLASTIC TUBE 6-G1/4"	
270	342742-0102	-		1	T-COUPLING,ADJUST,F.PLASTIC TUBE 6-G1/8"	
280	352103-0101	-		2	KABELFöRSKR. ST 9, PR15,2/PG9	
360	90030-0233	-		1	CONN. STR., 6-G1/8, EXT. THREAD	
375	90042-0563	A		2	INDICATOR FESTO 19143 MF-LD-12...24	
380	90235-0788	A		2	BASIC VALVE	
390	90043-0021	A		1	PRESSURE GAUGE WIEGAND 0-1 BAR 1/8"	
400	90043-0069	A		1	PRESSURE GAUGE 0-4BAR WIEGAND 2040	
430	90113-0021	A		1	AIR PRESSURE REGULATOR	
440	90113-0056	A		1	REGULATOR	
450	90132-0021	-		2	HOSE CLIP 6-10MM	
460	90144-0004	-	MM		TREBOFLON-TAPE W=13MM	
480	90166-0081	-	MM	1100	TUBE 6 MM PA BLUE	
490	90166-0101	-	MM	300	HOSE, SILICONE, 60 SHORE, 6/10 MM	
500	90224-0031	A		1	CONN. ELBOW, ART.NO 3814	
510	90330-0025	-		1	BUSHING, INT/EXT. THR. R1/4-RP1/8	
520	90330-0032	-		1	NIPPLES, EXT. THREAD. ISO 7/1 R1/8-R1/8	
Y020	90042-0237	A		1	SOLENOID ACTUATOR FESTO	
Y021	90042-0237	A		1	SOLENOID ACTUATOR FESTO	

Pos	Part No	SP	UN	Qty	Description	Page No

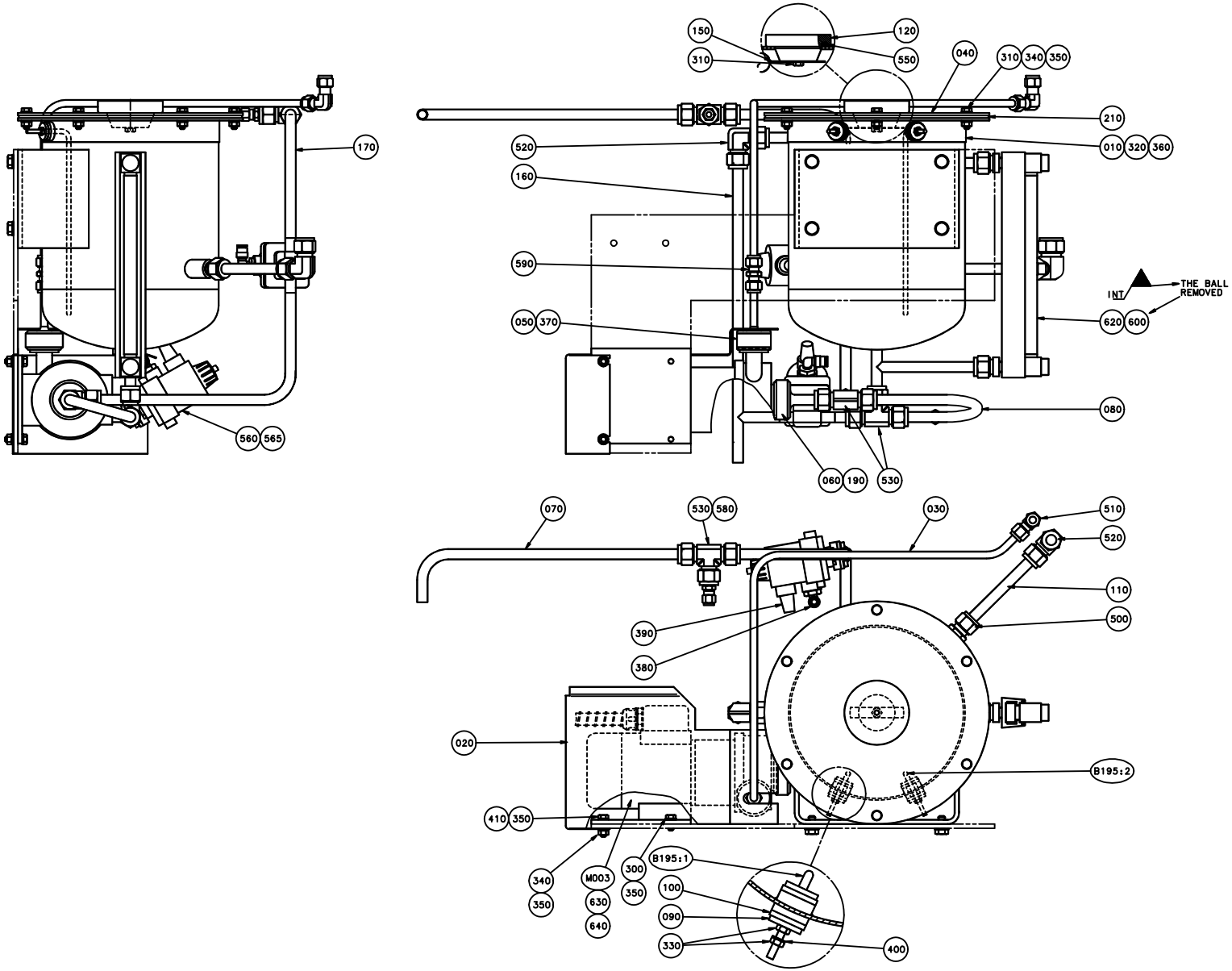
150
120
310
550
040
310
340
350
210
520
010
320
360
160
590
INT
THE BALL REMOVED
050
370
620
600
080
060
190
530
170
560
565
070
530
580
030
510
520
110
500
390
380
020
B195:2
410
350
340
350
M003
630
640
300
350
B195:1
100
090
330
400

ECM: 83539 - 20000925
Group number: 563450-0201
Assembly Drawing: 563450-3_1_AA

Issue: 20030213

Pos	Part No	SP	UN	Qty	Description	Page No
Common Parts						
010	563443-0000	-		1	CONTAINER	
020	576148-0000	-		1	COVER PLATE	
030	568134-0000	-		1	PEROXIDE PIPE	
040	563444-0000	-		1	LID	
050	563445-0000	A		1	ATTACHMENT	
060	563446-0000	A		1	ATTACHMENT	
070	566145-0000	-		1	PEROXIDE PIPE	
080	568136-0000	-		1	PEROXIDE PIPE	
090	263311-0000	-		2	WASHER	
100	553114-0000	A		4	SEALING WASHER	
110	563448-0000	-		1	PEROXIDE PIPE	
120	566147-0000	A		1	SAFETY VALVE	
150	568116-0000	-		1	CUP SPRING	
160	568131-0000	-		1	DRAIN PIPE	
170	568138-0000	-		1	PEROXIDE PIPE	
190	12242-0001	A		1	GASKET 32X25X5,5	
210	570835-0000	A		1	GASKET	
300	312105-0367	-		2	SCREW M6S M6X14 A280	
310	312105-0368	-		7	SCREW M6S M6X16 A280	
320	312105-0449	-		4	SCREW M6S ISO 4017 M8X16 A480	
330	312605-0312	-		4	HEXAGON NUT, M6M M4 A280	
340	312605-0316	-		8	HEXAGON NUT, M6M M6 A280	
350	315105-0153	-		18	WASHER ISO 7089-6-200 HV-A4	
360	315105-0165	-		4	WASHER ISO 7089-8-200 HV-A4	
370	315204-0215	A		1	O-RING 19,2X3 MM	
380	342732-0103	-		2	ELBOW PIPE JOINT, EXT.THREAD, D=6MM-G1/4	
390	346800-0110	A		2	SILENCER FILTER R1/4"	
400	315105-0136	-		2	WASHER ISO 7089-4-200 HV-A4	
410	312105-0371	-		2	SCREW M6S ISO 4017 M6X22 A480	
500	90030-0275	-		1	CONN. STR.12-3/8 NPT, EXT. TAPPERED	
510	90030-0279	-		1	CONN. ELBOW, 8	
520	90030-0280	-		2	CONN. ELBOW, 12	
530	90030-0281	-		3	CONN. T-PIPE 12	
550	90143-0020	-	MM	200	STRIP	
560	90235-0805	A		2	ACTUATOR 605, 9605 000 Z A1	
565	90235-0475	A		2	DIAPHRAGM	
580	90030-0481	-		1	REDUCER M12TURM6-316	
590	90030-0477	-		1	CONN. PIPE 8	
600	90030-0379	-		2	CONN. STR. 12-1/4 NPT, EXT. TAPPERED	
620	567197-0000	A		1	FLOW METER	
630	90012-0063	-		1	CABLE GLAND PR 15,2	
640	90152-0033	-	MM	1000	SPIRAL CONDUIT FOR PR 15,2(PG 9)	
B195 :1	566148-0001	A		1	ELECTRODE	
B195 :2	566148-0002	A		1	ELECTRODE	
M003	90321-0097	A		1	MAGNET PUMP	

Machine Type	Group Description	Used-In	Group Number	Page No

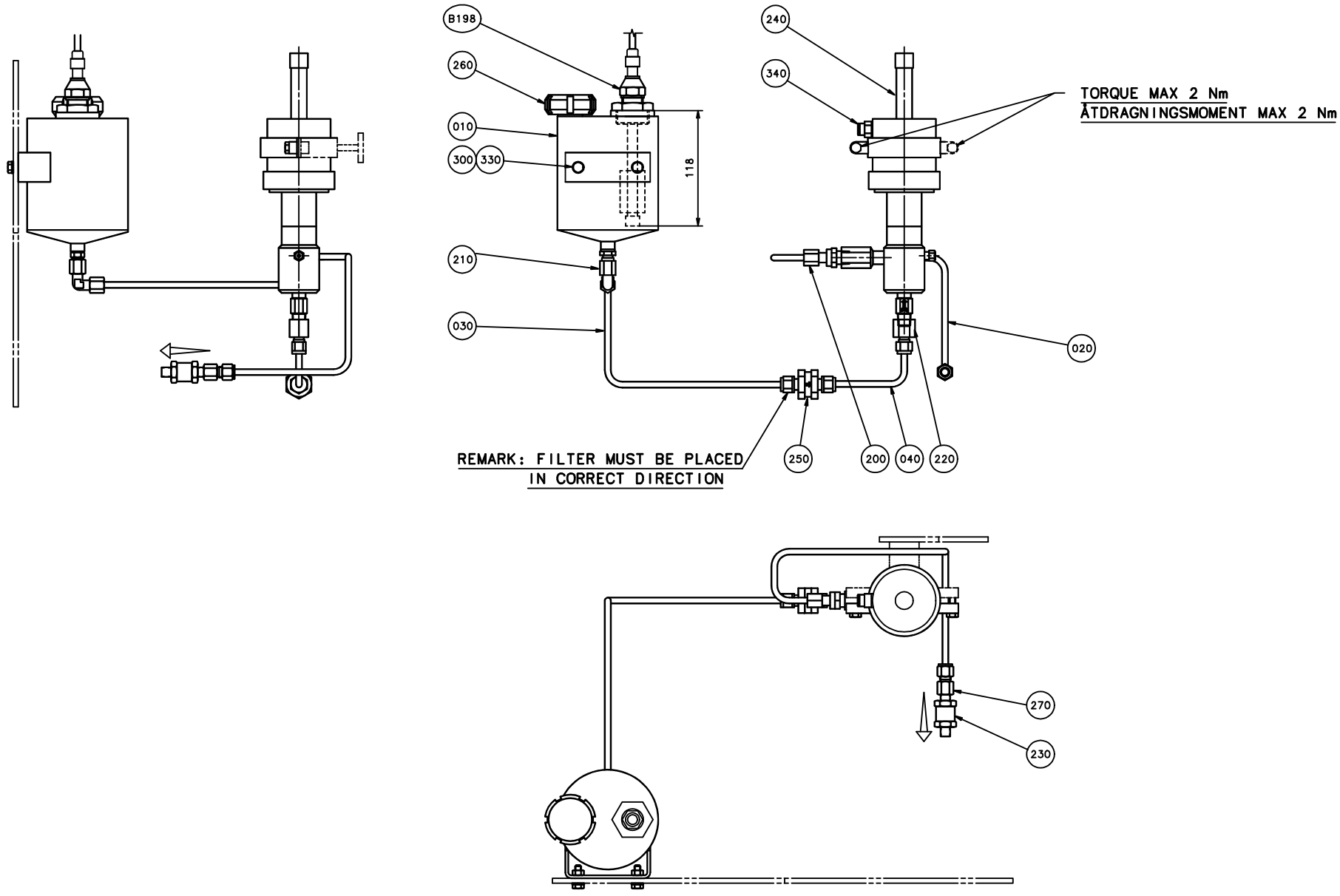
B198
260
010
300
330
118
210
030
240
340
TORQUE MAX 2 Nm
ÅTDRAGNINGSMOMENT MAX 2 Nm
020
REMARK: FILTER MUST BE PLACED
IN CORRECT DIRECTION
250
200
040
220
270
230

Pos	Part No	SP	UN	Qty	Description	Page No
Common Parts						
010	1175118-0000	-		1	CONTAINER	
020	568135-0000	-		1	WETTING PIPE	
030	568137-0000	-		1	WETTING PIPE	
040	566146-0000	-		1	WETTING PIPE	
200	90030-0062	-		1	CONN. STR. GE 6-1/4-18 NPTF	
210	90030-0171	-		1	ADJUSTABLE ELBOW CONNECTION,EXT 6-G1/8	
220	90030-0479	-		1	CONN. STR., 6-1/4 NPT, INT. THREAD	
230	90230-0047	A		1	NON-RETURN VALVE 2M-C4L-1-SS	
240	90321-0098	A		1	METERING PUMP WILLIAMS	
250	90415-0017	A		1	FILTER	
260	90217-0026	-		1	NUT	
270	90030-0478	-		1	CONN. STR., 6-1/8 NPT, INT. THREAD	
300	312105-0368	-		2	SCREW M6S M6X16 A280	
330	315105-0153	-		2	WASHER ISO 7089-6-200 HV-A4	
340	342722-0202	-		1	PIPE COUPLING 1/8" D=6MM	
B198	1175119-0000	A		1	FLOAT	

Pos	Part No	SP	UN	Qty	Description	Page No

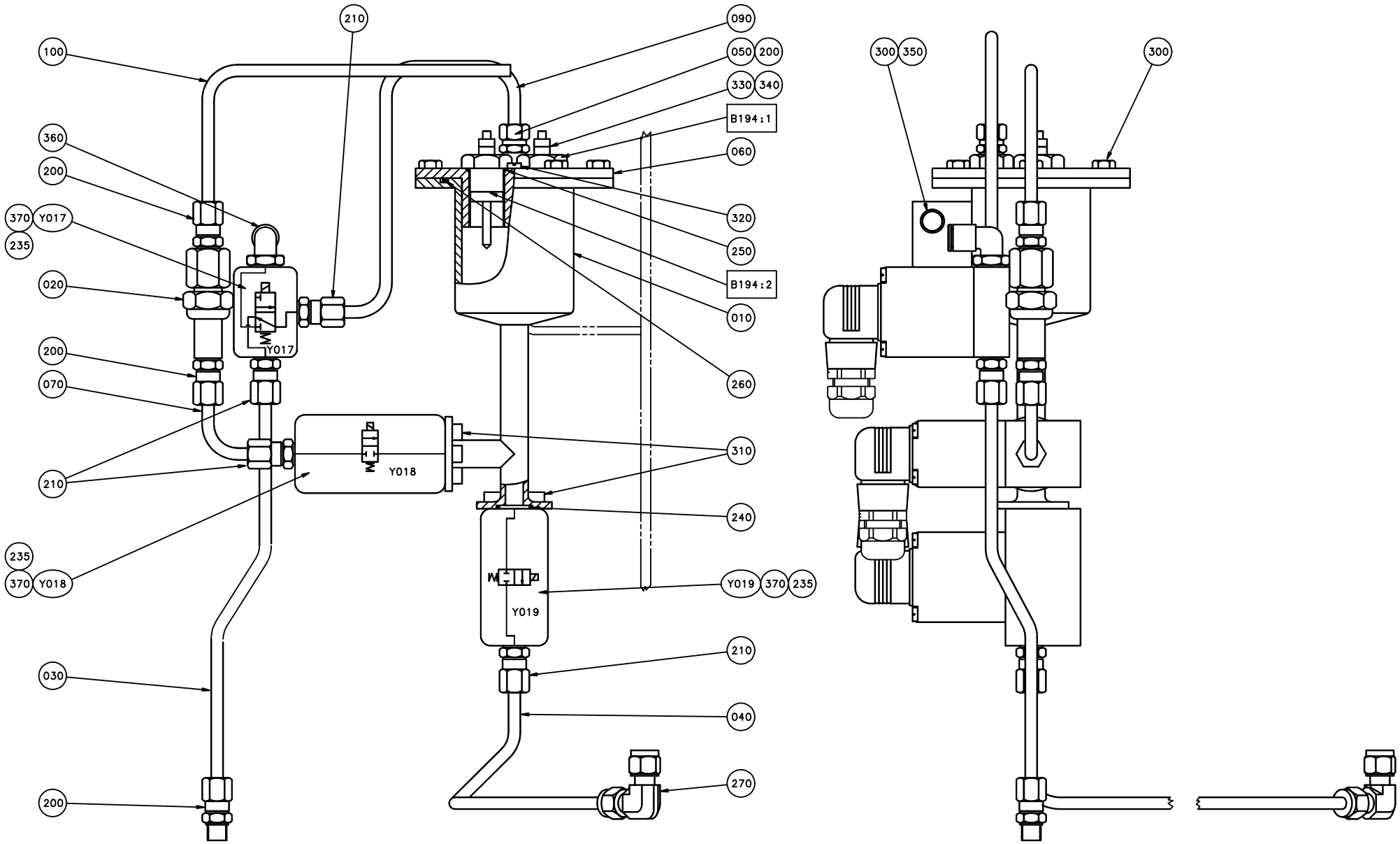
100
210
090
050
200
330
340
B194:1
060
360
200
370
Y017
235
320
250
B194:2
020
010
Y017
200
070
260
310
Y018
210
240
235
370
Y018
Y019
370
235
Y019
210
030
040
200
270
300
350
300

ECM: 83541 - 20000925
Group number: 566149-0201
Assembly Drawing: 566149-2_1_AA

Issue: 20030213

Pos	Part No	SP	UN	Qty	Description	Page No
Common Parts						
010	752576-0000	-		1	CONTAINER	
020	B484196-0000	A		1	FILTER	
	484197-0000	*-*		*1*	*FILTER*	
030	568114-0000	-		1	DRAINING PIPE	
040	568115-0000	-		1	PEROXIDE PIPE	
050	450833-0000	A		1	FILTER	
060	563441-0000	-		1	LID	
070	456900-0000	-		1	PIPE	
090	563447-0000	-		1	PEROXIDE PIPE	
100	563449-0000	-		1	PEROXIDE PIPE	
200	90030-0233	-		4	CONN. STR., 6-G1/8, EXT. THREAD	
210	90030-0232	-		4	CONN. PIPE SS-6MO-1-4RP	
235	90042-0564	A		3	INDICATOR 19145 FESTO	
240	315204-0211	A		2	O-RING 13,3X2,4 MM	
250	315204-0213	A		3	O-RING 15,2X2,4 MM	
260	315204-0305	A		1	O-RING 69,5X3 MM	
270	90030-0480	-		1	CONN. ELBOW, 6	
300	312105-0366	-		8	SCREW M6S M6X12 A280	
310	312115-0323	-		6	SCREW ISO4762 M5X8 A4	
320	312125-0285	-		1	SCREW SLOT.PAN HD. MCS 4X6 A480	
330	312605-0312	-		4	HEXAGON NUT, M6M M4 A280	
340	315105-0136	-		4	WASHER ISO 7089-4-200 HV-A4	
350	315115-0153	-		2	WASHER PLAIN, TBRB 6,4/12 H=3	
360	342732-0103	-		1	ELBOW PIPE JOINT, EXT.THREAD, D=6MM-G1/4	
370	352103-0105	-		3	CABLE GLAND, STR 11, PR 18,6/PG11	
B194 :1	A567189-0110	A		1	ELECTRODE	**361**
B194 :2	A567189-0101	A		1	ELECTRODE	**363**
Y017	B90042-0171	A		1	SOLENOID VALVE BUERKERT	
	90042-0466	*C*		*1*	*DIAPHRAGM 330.95.2 VITON*	
Y018	B544906-0000	A		1	SOLENOID VALVE	
	90042-0465	*-*		*1*	*O-RING VITON 17,17X1,78*	
	90042-0464	*-*		*1*	*DIAPHRAGM VITON 1211321*	
Y019	B544906-0000	A		1	SOLENOID VALVE	
	90042-0465	*-*		*1*	*O-RING VITON 17,17X1,78*	
	90042-0464	*-*		*1*	*DIAPHRAGM VITON 1211321*	

Pos	Part No	SP	UN	Qty	Description	Page No

Machine Type | Group Description | Used-In | Group Number | Page No

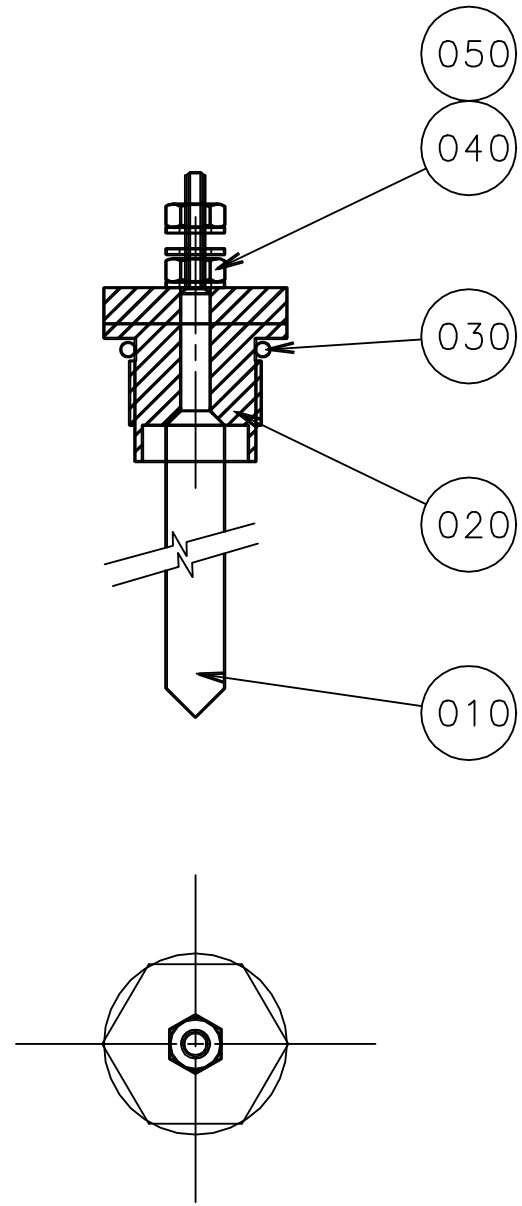
050
040
030
020
010

ECM: - -
Group number: 567189-0110
Assembly Drawing: 567189-1_1_AA

Issue: 20030213

Pos	Part No	SP	UN	Qty	Description	Page No
Common Parts						
010 10	567070-0010	-		1	ELECTRODE	
010 11	567070-0001	-		1	ELECTRODE	
020	560931-0000	-		1	BRACKET	
030	90242-0168	-		1	O-RING	
040	312605-0312	-		2	HEXAGON NUT, M6M M4 A280	
050	315105-0136	-		3	WASHER ISO 7089-4-200 HV-A4	

Pos	Part No	SP	UN	Qty	Description	Page No

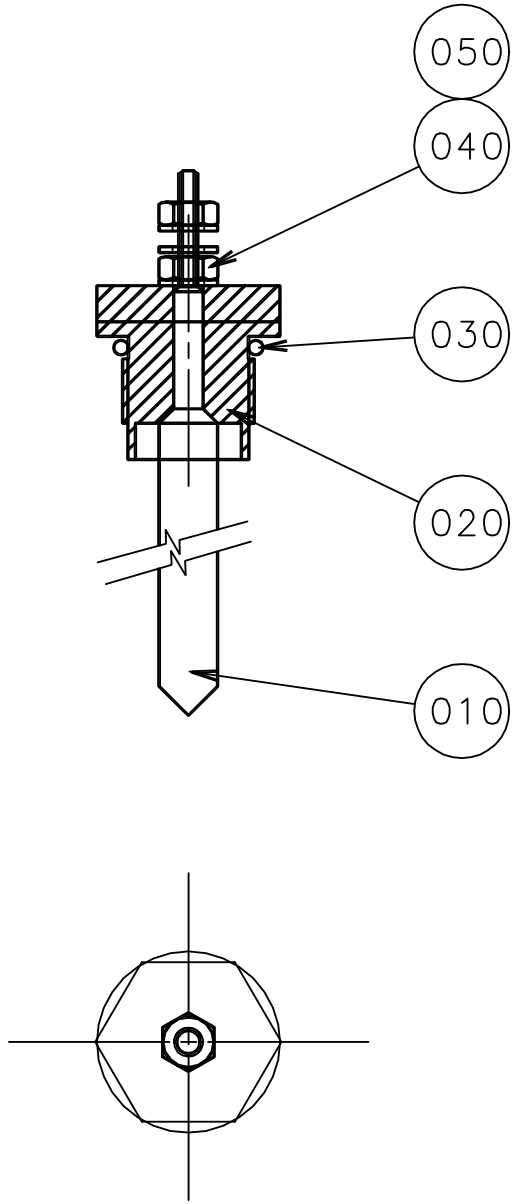
050
040
030
020
010

ECM: - -
Group number: 567189-0101
Assembly Drawing: 567189-1_1_AA

Issue: 20030213

Pos	Part No	SP	UN	Qty	Description	Page No
Common Parts						
010 1	567070-0012	-		1	ELECTRODE	
010 11	567070-0001	-		1	ELECTRODE	
020	560931-0000	-		1	BRACKET	
030	90242-0168	-		1	O-RING	
040	312605-0312	-		2	HEXAGON NUT, M6M M4 A280	
050	315105-0136	-		3	WASHER ISO 7089-4-200 HV-A4	

Pos	Part No	SP	UN	Qty	Description	Page No

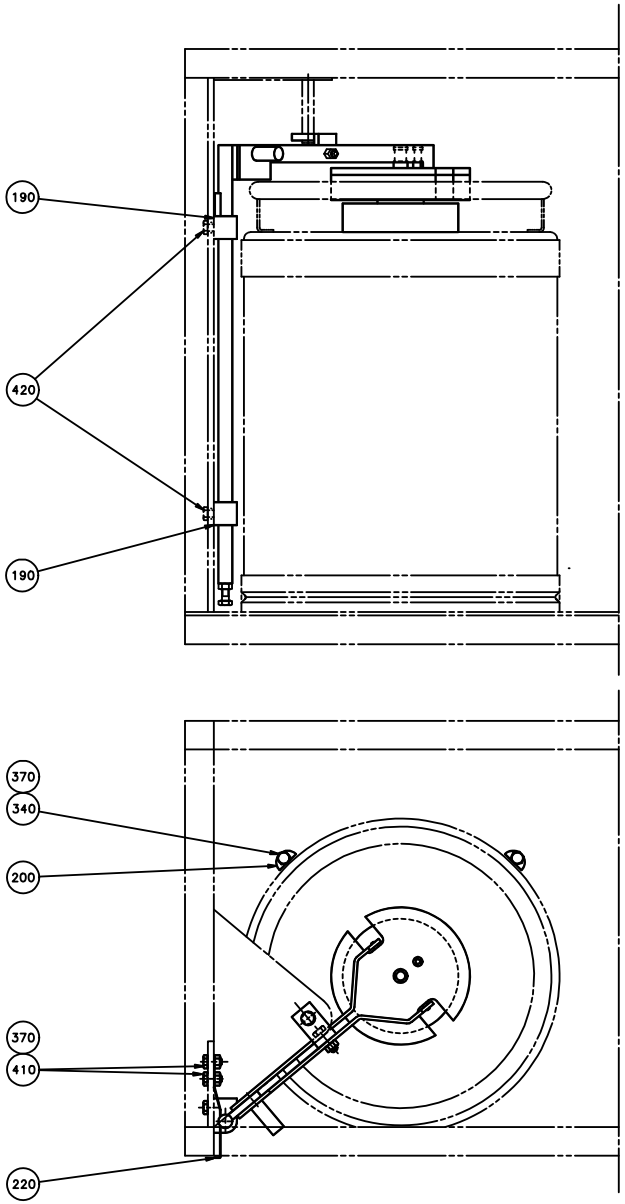
190
420
190
370
340
200
370
410
220

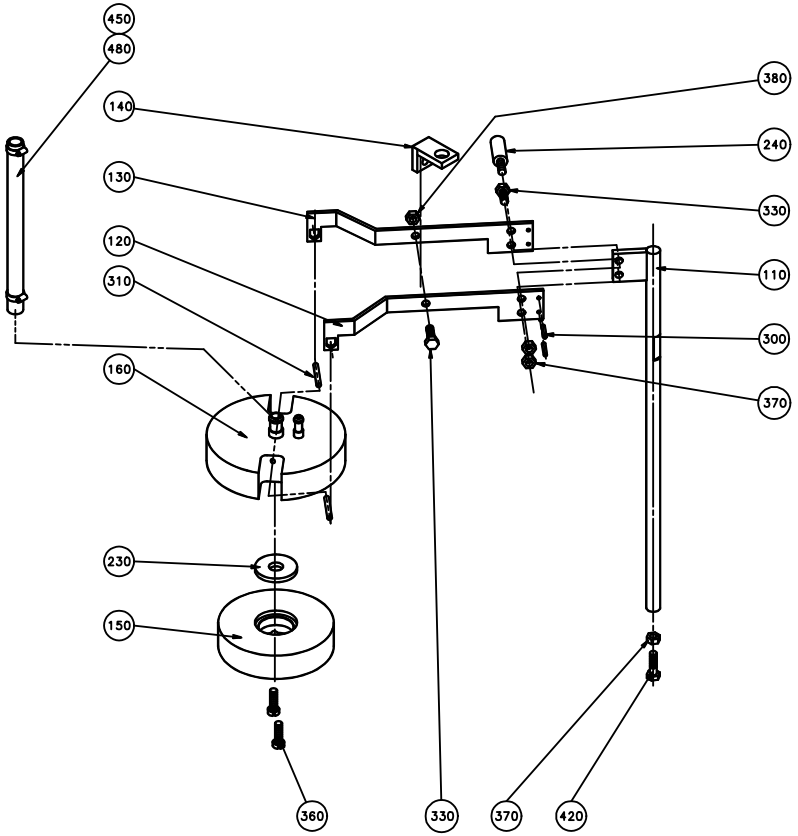
450
480
140
130
120
310
160
230
150
360
330
370
420
380
240
330
110
300
370

ECM: 83542 - 20000925
Group number: 569616-0101
Assembly Drawing: 569616-1_1_AA

Issue: 20030213

Pos	Part No	SP	UN	Qty	Description	Page No
Common Parts						
110	569618-0000	-		1	STEERING	
120	527121-0001	A		1	BOW CLAMP	
130	527121-0002	A		1	BOW CLAMP	
140	570844-0000	-		1	GUIDE FLANGE	
150	273982-0000	-		1	WEIGHT	
160	919706-0000	-		1	ATTACHMENT	
190	527124-0000	A		2	BEARING	
200	527125-0000	A		2	STEERING	
220	915996-0000	-		1	LEAF SPRING	
230	273981-0000	A		1	GASKET	
240	527127-0000	-		1	DOWEL	
300	311103-0234	-		2	PARALLELL PIN, M6, 3X12 MM	
310	311103-0273	-		2	PIN,STRAIGHT M6 4X22 RFR	
330	312105-0370	-		2	SCREW M6S ISO 4017 M6X20 A480	
340	312105-0378	-		2	SCREW M6S ISO 4014 M6X40 A480	
360	312125-0370	-		2	SCREW PAN HEAD MCS M6X20 SS	
370	312605-0316	-		7	HEXAGON NUT, M6M M6 A280	
380	312811-0316	-		1	NUT HEX.LOCK HELI COIL MID GRIP M6 SS	
410	312105-0366	-		2	SCREW M6S M6X12 A280	
420	312105-0372	-		2	SCREW M6S ISO 4017 M6X25 A480	
450	342991-0101	-		2	HOSE CLIP,WORM DRIVE TYPE (13)-16	
480	90166-0138	-	MM	400	HOSE	

Pos	Part No	SP	UN	Qty	Description	Page No

Tetra Pak

SPC
Spare Parts Catalogue

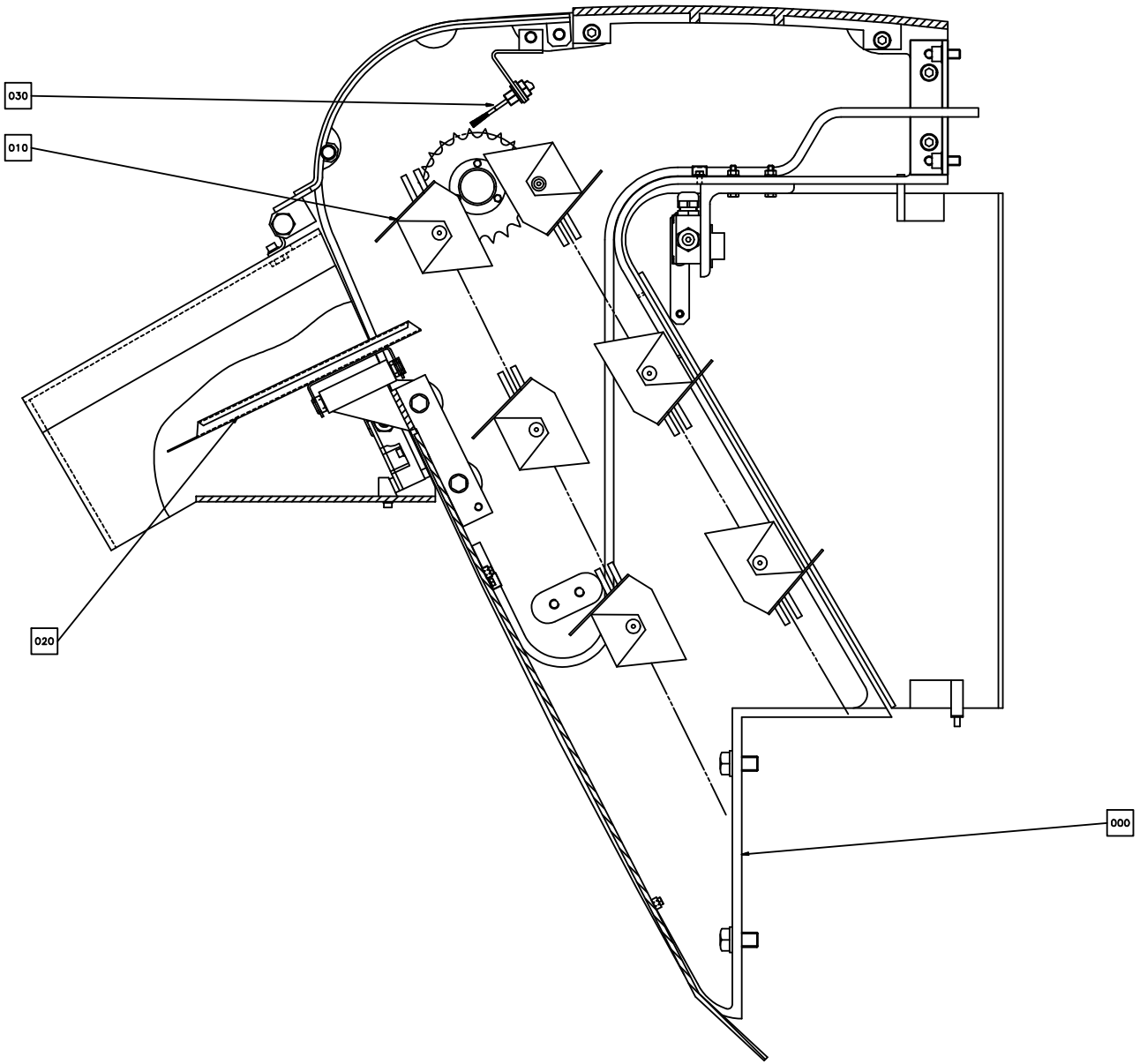
030
010
020
000

ECM: - -
Group number: 633236-0400
Assembly Drawing: 633236-2_1_AA

Issue: 20030213

Pos	Part No	SP	UN	Qty	Description	Page No
TCA/65 BAGPACKER						
F000 2	A5332-0602	-		1	ELEVATOR	**373**
F020 2	A581635-0101	-		1	TILTING TRAY	**377**
F040	A581637-0101	-		1	PROTECTION FOR BAG PACKER	**379**
TCA/65 NOBAGPACKER						
F000 1	A5332-0700	-		1	ELEVATOR	**383, 385**
F020 1	A497873-0101	-		1	TILTING TRAY	**389**
Common Parts						
F010	A5333-0204	-		1	CHAIN	**391**
F030	A522409-0201	-		1	CENTRAL LUBRICATION	**393**

Pos	Part No	SP	UN	Qty	Description	Page No

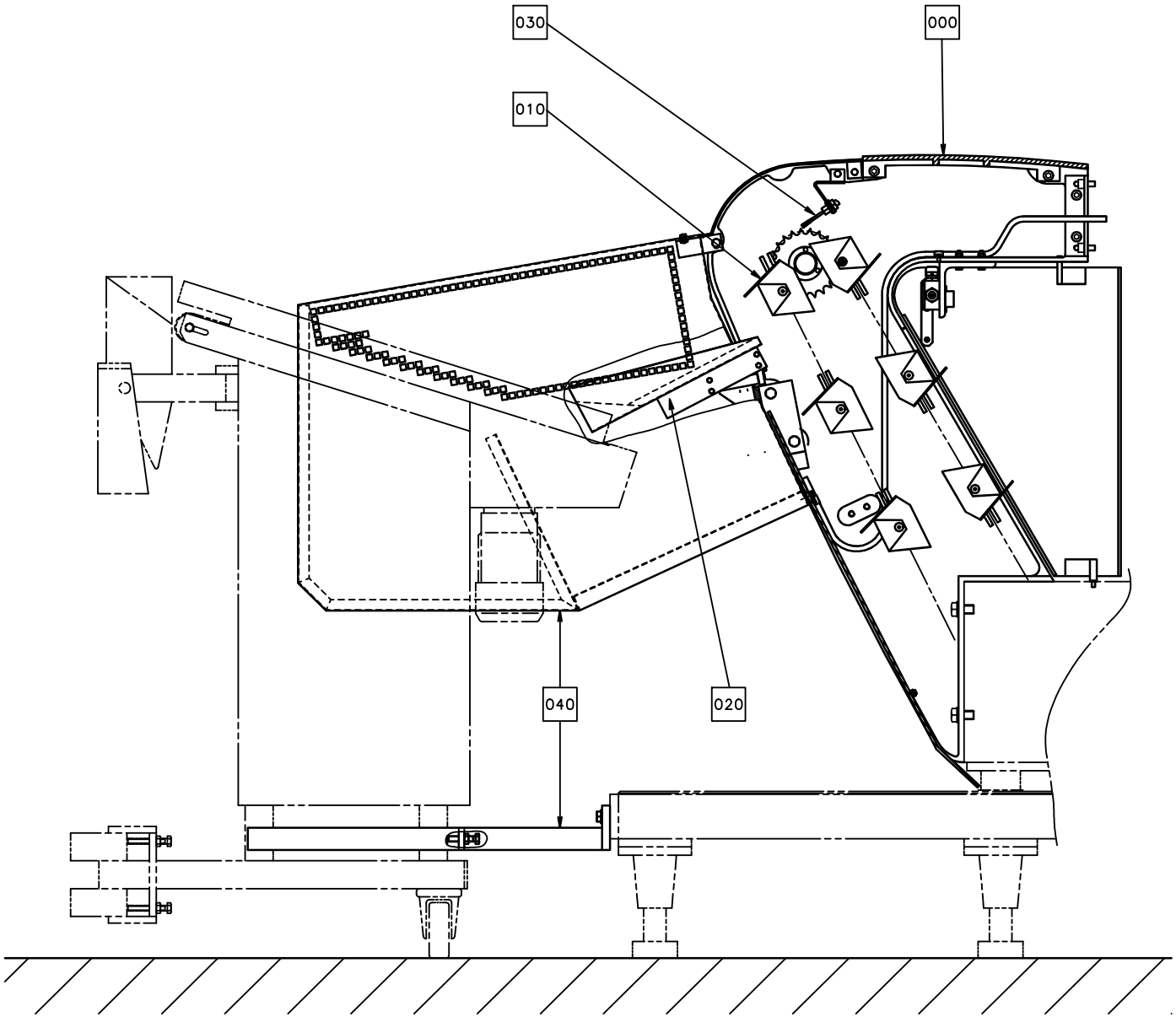
030
000
010
040
020

ECM: - -
Group number: 633236-0400
Assembly Drawing: 633236-3_1_AA

Issue: 20030213

Pos	Part No	SP	UN	Qty	Description	Page No
TCA/65 BAGPACKER						
F000 2	A5332-0602	-		1	ELEVATOR	**373**
F020 2	A581635-0101	-		1	TILTING TRAY	**377**
F040	A581637-0101	-		1	PROTECTION FOR BAG PACKER	**379**
TCA/65 NOBAGPACKER						
F000 1	A5332-0700	-		1	ELEVATOR	**383, 385**
F020 1	A497873-0101	-		1	TILTING TRAY	**389**
Common Parts						
F010	A5333-0204	-		1	CHAIN	**391**
F030	A522409-0201	-		1	CENTRAL LUBRICATION	**393**

Pos	Part No	SP	UN	Qty	Description	Page No

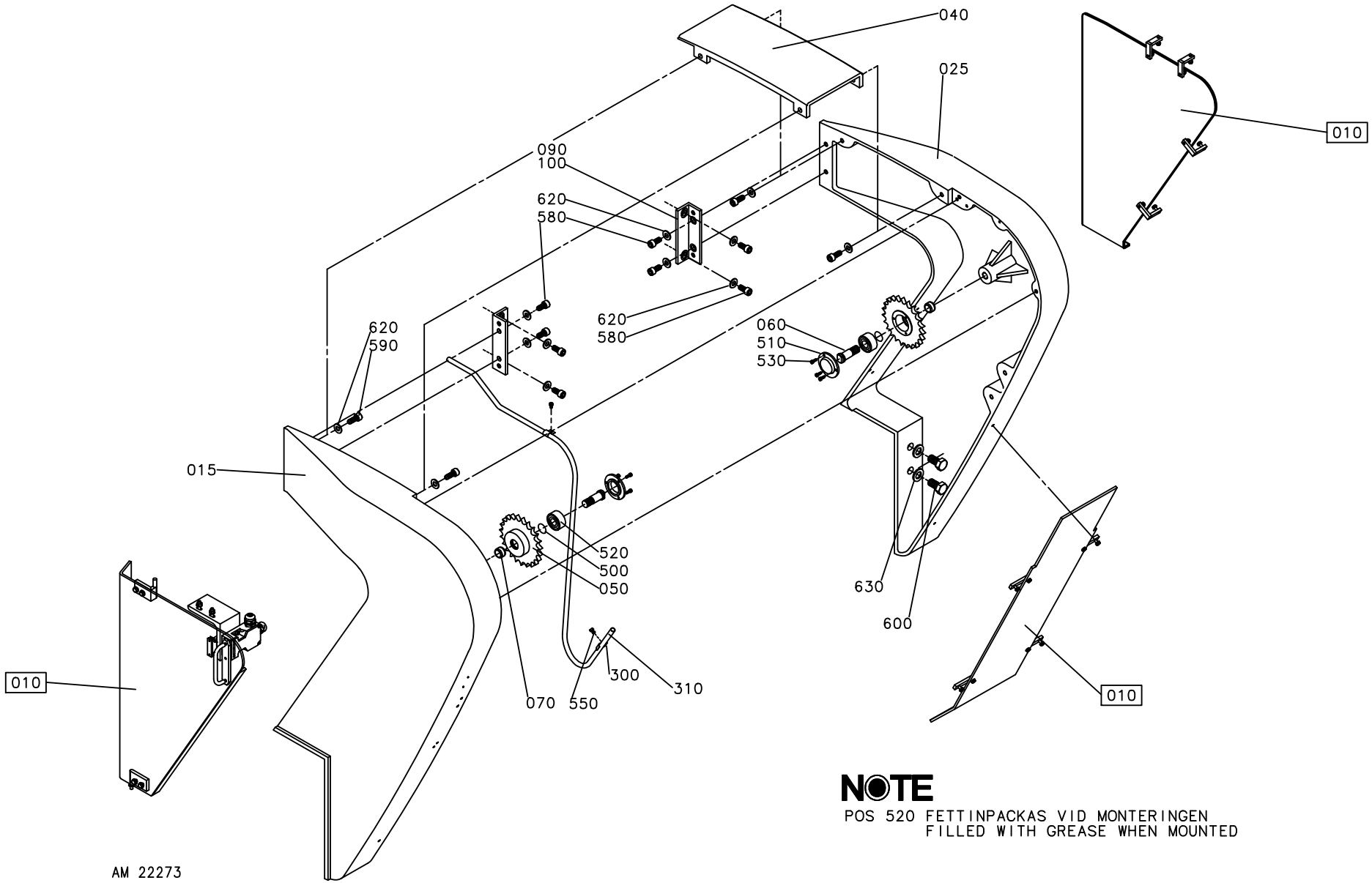

NOTE

POS 520 FETTINPACKAS VID MONTERINGEN
FILLED WITH GREASE WHEN MOUNTED

ECM: - -
Group number: 5332-0602
Assembly Drawing: 5332-7_1_AA

Issue: 20030213

Pos	Part No	SP	UN	Qty	Description	Page No
Common Parts						
015	B570843-0000	-		1	ELEVATOR SIDE L	
	5336-0000	-		*1*	*ELEVATOR FRAME LEFT*	
025	B570845-0000	-		1	ELEVATOR SIDE R	
	5337-0000	-		*1*	*ELEVATOR FRAME RIGHT*	
040	5338-0000	-		1	PLATE	
050	4554-0000	-		2	SPROCKET	
060	3274-0002	-		2	BOLT	
070	4569-0000	-		2	SPACER RING	
100	1483072-0000	-		2	FASTENING IRON	
300	90074-0018	-		2	CABLE CLIPS, D=2X10 MM	
310	90166-0089	-	M	7	HOSE 4/6.2 PE BLUE	
500	315202-0518	-		2	O-RING 23,40X3,53 MM	
510	321601-0103	-		2	OIL SEAL (LL40	
520	321330-0103	-		2	ANG. BALL BEAR, 17X40X17,5 MM	
530	312111-0291	-		6	SCREW HEX.SOCK.HD.MC6S-TT 4X12 88 FZB	
540	344502-0026	-		2	GREASE NIPPLE STRAIGHT R1/8 CON.	
550	312125-0323	-		2	SCREW PAN HEAD MCS M5X8 SS	
580	312115-0491	-		8	SCREW ISO4762 M10X20 A4	
590	312111-0493	-		4	SCREW HEX.SOCK.HD.MC6S-TT 10X25 88 FZ	
600	312101-0624	-		4	SCREW M6S M16X30 FZB	
620	315401-0173	-		8	WASHER FBH10,2FZB	
630	315401-0186	-		4	WASHER FBH16,2FZB	
F010	A574224-0301	-		1	ELEVATOR PROTECTION	**375**

Pos	Part No	SP	UN	Qty	Description	Page No

Machine Type | Group Description | Used-In | Group Number | Page No

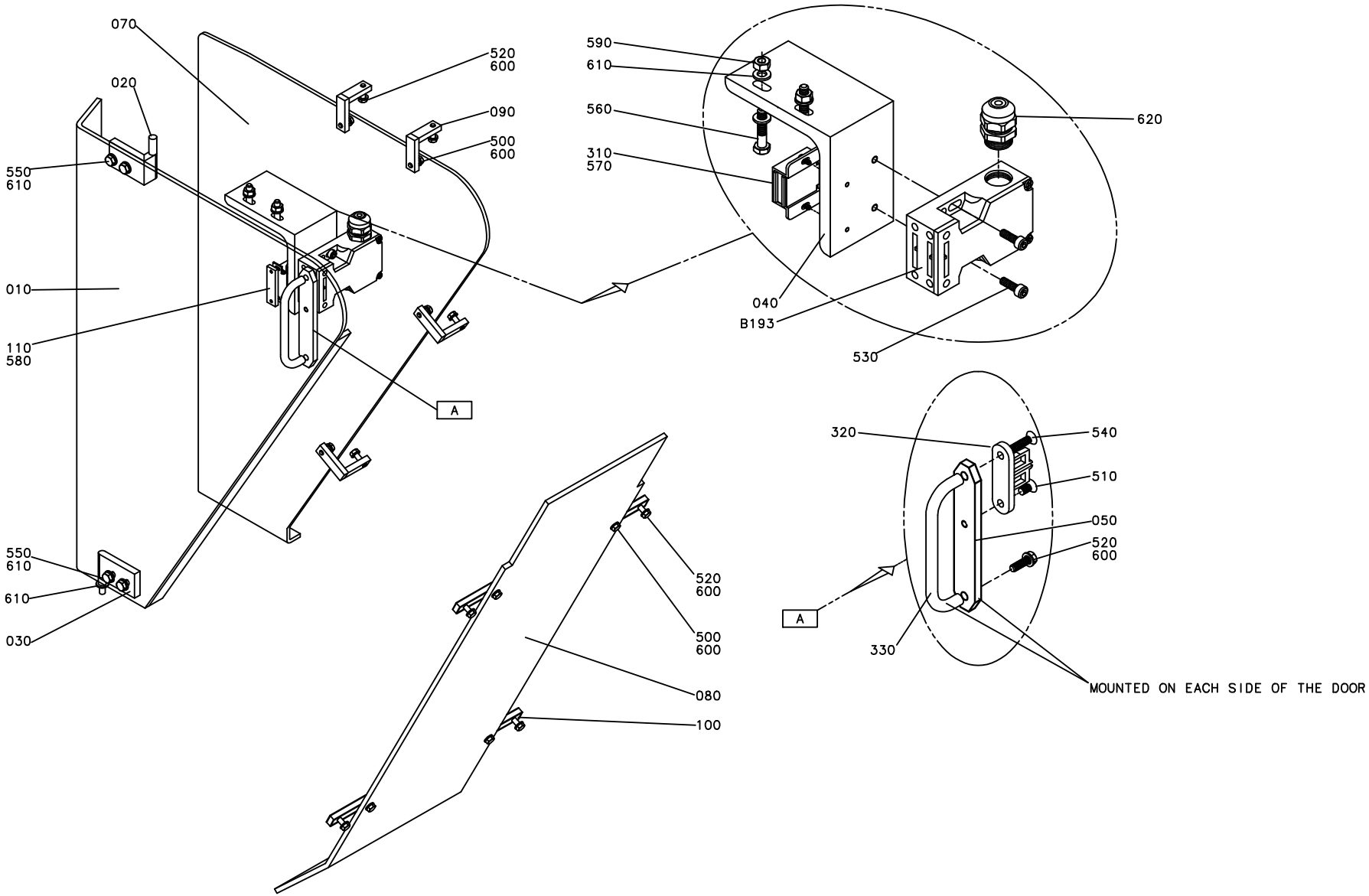
070
020
520
600
090
500
600
550
610
010
110
580
A
550
610
610
030
590
610
560
310
570
620
040
B193
530
320
540
510
050
520
600
A
330
520
600
500
600
080
100
MOUNTED ON EACH SIDE OF THE DOOR

ECN 23297

ECM: 83554 - 20000925
Group number: 574224-0301
Assembly Drawing: 574224-3_1_AA

Issue: 20030213

Pos	Part No	SP	UN	Qty	Description	Page No
Common Parts						
010	566120-0000	A		1	DOOR	
020	573525-0000	A		1	HINGE	
030	573526-0000	A		1	HINGE	
040	573524-0000	-		1	BRACKET	
050	570842-0000	-		1	FASTENING IRON	
070	548763-0000	A		1	PROTECTION	
080	566129-0000	A		1	GUARD PLATE	
090	548764-0000	-		4	FASTENING BRACKET	
100	548766-0000	-		4	PLATE	
110	573527-0000	-		1	BRACKET	
310	90237-0046	-		1	MAGNETIC LOCK, 46X33X15 MM	
320	90044-0310	A		1	KEY FOR SAFETY SWITCH, AZ 15/16 B1	
330	90017-0024	-		1	HANDLE NO. VA-08.100.31	
500	312105-0327	-		8	SCREW M6S ISO 4017 M5X12 A480	
510	312155-0325	-		1	SCREW EN 10642 MF6S M5X10 A480	
520	312105-0329	-		9	SCREW M6S ISO 4017 M5X16 A480	
530	312115-0329	-		2	SCREW ISO4762 M5X16 A4	
540	312155-0333	-		1	SCREW EN 10642 MF6S M5X25 A480	
550	312105-0366	-		4	SCREW M6S M6X12 A280	
560	312105-0374	-		2	SCREW M6S ISO 4014 M6X30 A480	
570	312115-0220	-		2	SCREW ISO4762 M3X6 A4 80	
580	312115-0224	-		2	SCREW ISO4762 M3X10 A4	
590	312605-0316	-		2	HEXAGON NUT, M6M M6 A280	
600	315105-0146	-		18	WASHER ISO 7089-5-200 HV-A4	
610	315105-0153	-		9	WASHER ISO 7089-6-200 HV-A4	
620	352103-0106	-		1	CABLE GLAND, ST 11, PR18,6/PG11	
B193	90044-0139	A		1	KEY SAF.SW. AZ16-02 ZVR K-2254	

Pos	Part No	SP	UN	Qty	Description	Page No

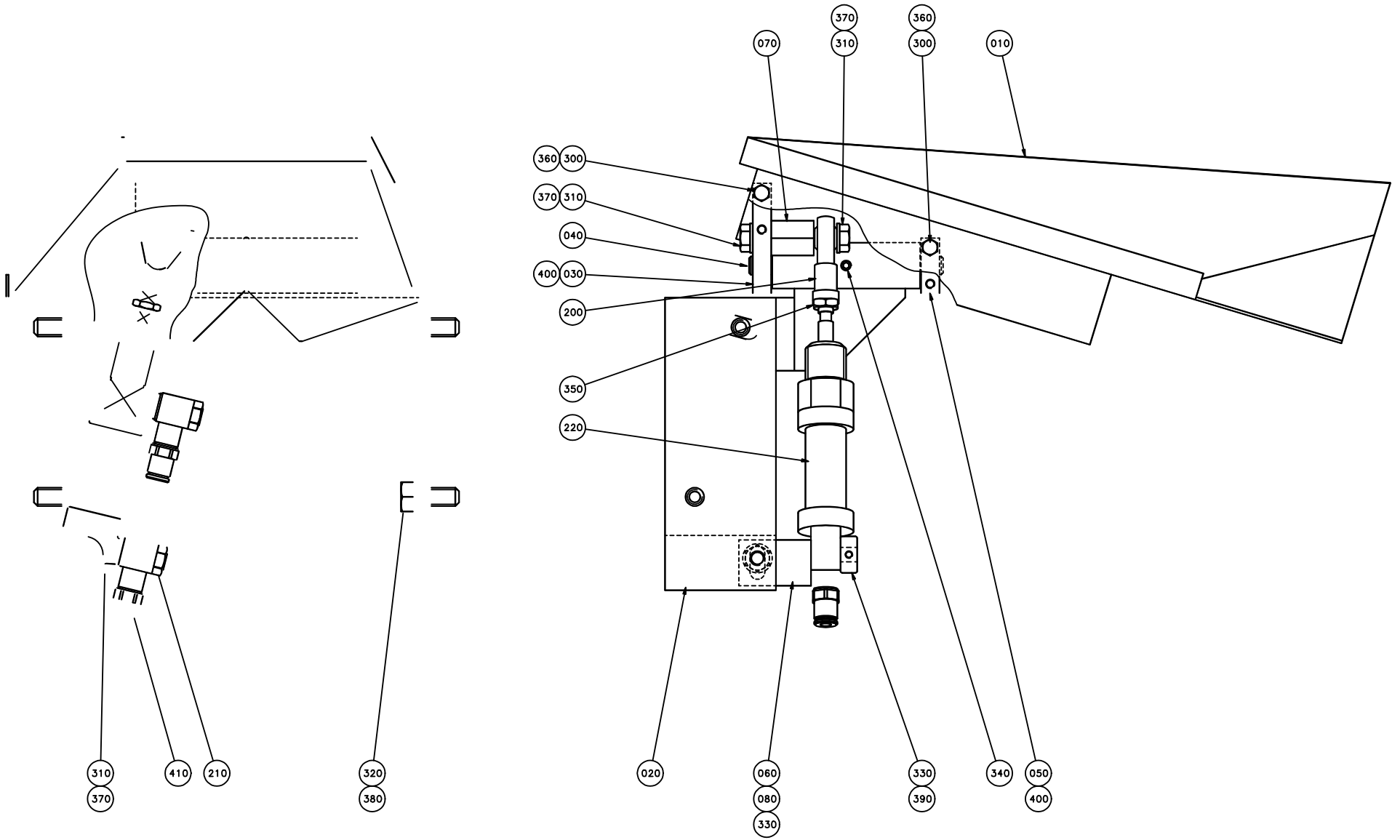
370
360
070
310
300
010
360
300
370
310
040
400
030
200
350
220
310
370
410
210
320
380
020
060
080
330
330
390
340
050
400

ECM: - -
Group number: 581635-0101
Assembly Drawing: 581635-1_1_AA

Issue: 20030213

Pos	Part No	SP	UN	Qty	Description	Page No
Common Parts						
010	581636-0000	-		1	CHUTE	
020	581638-0000	-		1	BRACKET	
030	581640-0000	-		1	BEARING PLATE	
040	5310-0000	-		1	SHAFT	
050	581639-0000	-		1	BEARING PLATE	
060	581641-0000	-		1	CYLINDER BRACKET	
070	581642-0000	-		1	SPACER	
080	581643-0000	-		1	AXLE PIN	
200	90115-0008	-		1	ROD END, ID=8 MM, M8X1,25	
210	90235-0241	-		2	THROTTLE CHECK VALVE R1/8" MANUAL	
220	90239-0821	-		1	DOUBLE ACTING, MINI-ISO, CYL.20-25	
300	312105-0325	-		8	SCREW M6S ISO 4017 M5X10 A480	
310	312105-0451	-		3	SCREW M6S ISO 4017 M8X20 A480	
320	312105-0493	-		4	SCREW M6S ISO 4017 M10X25 A480	
330	312318-0285	-		2	SCREW ISO4029 M4X6 A4	
340	312318-0366	-		1	SCREW ISO4029 M6X12 A4	
350	312625-0318	-		1	HEXAGON THIN NUT, EN 24035 ML6M M8 A4	
360	315105-0146	-		8	WASHER ISO 7089-5-200 HV-A4	
370	315105-0165	-		3	WASHER ISO 7089-8-200 HV-A4	
380	315105-0173	-		4	WASHER ISO 7089-10-200 HV-A4	
390	315742-0104	-		1	COLLAR, 8/20, H=9	
400	321120-0104	-		2	BEAR.BUSHING W/O FLANGE 10/12X10	
410	342722-0202	-		2	PIPE COUPLING 1/8" D=6MM	

Pos	Part No	SP	UN	Qty	Description	Page No

Machine Type | Group Description | Used-In | Group Number | Page No

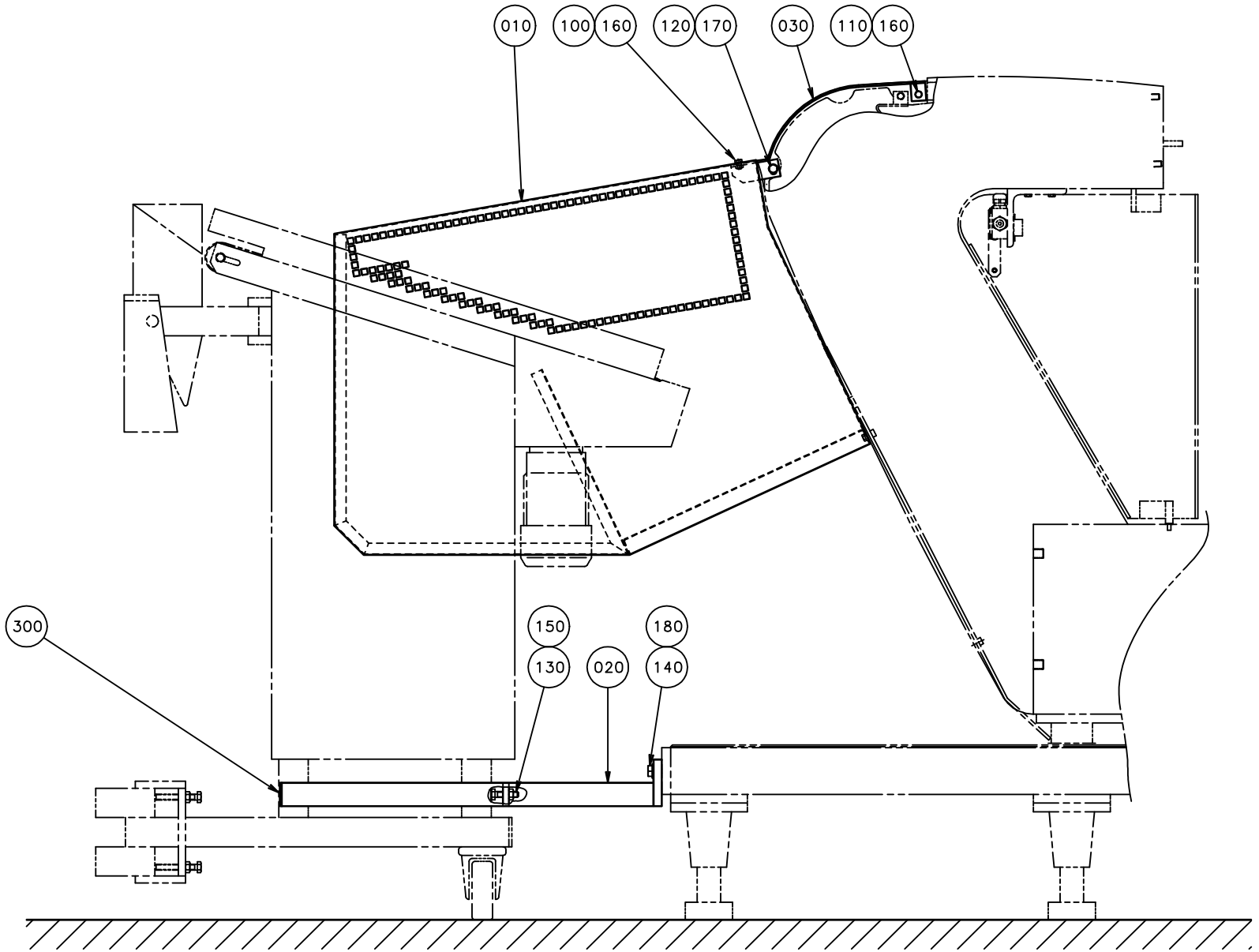
010
100
160
120
170
030
110
160
300
150
130
020
180
140

ECM: - -
Group number: 581637-0101
Assembly Drawing: 581637-1_1_AA

Issue: 20030213

Pos	Part No	SP	UN	Qty	Description	Page No
Common Parts						
010	581633-0000	-		1	PROTECTIVE COVER	
020	581632-0000	-		1	RULING GUIDE	
030	581634-0000	-		1	PROTECTION PLATE	
100	312105-0366	-		3	SCREW M6S M6X12 A280	
110	312105-0368	-		2	SCREW M6S M6X16 A280	
120	312105-0449	-		2	SCREW M6S ISO 4017 M8X16 A480	
130	312105-0495	-		1	SCREW M6S ISO 4017 M10X30 A480	
140	312105-0536	-		2	SCREW M6S ISO 4017 M12X30 A480	
150	312605-0320	-		1	HEXAGON NUT, M6M M10 A280	
160	315105-0153	-		5	WASHER ISO 7089-6-200 HV-A4	
170	315105-0165	-		2	WASHER ISO 7089-8-200 HV-A4	
180	315105-0178	-		2	WASHER ISO 7089-12-200 HV-A4	
300	A542596-0101	-		2	PLUG	**381**

Pos	Part No	SP	UN	Qty	Description	Page No

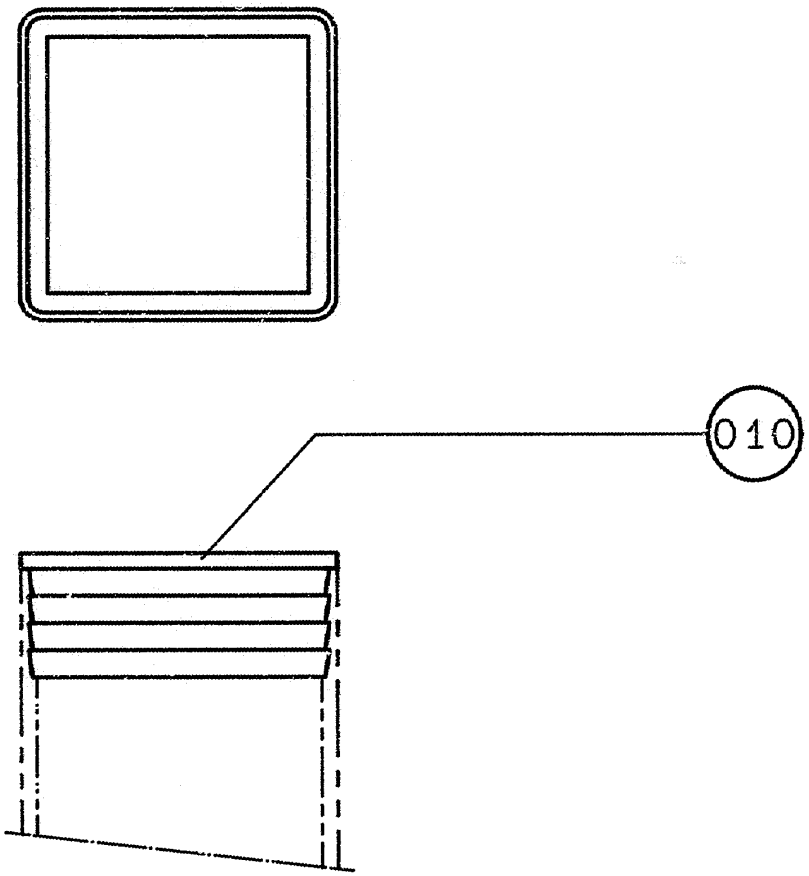

STOPPAD I MÄRKT PLASTPÅSE
PUT IN A MARKED PLASTIC BAG

ECM: - -
Group number: 542596-0101
Assembly Drawing: 542596-1_1_AA

Issue: 20030213

Pos	Part No	SP	UN	Qty	Description	Page No
Common Parts						
010 1	90261-0046	-		10	SQUARE PLUG GPN 260/Q4040	

Pos	Part No	SP	UN	Qty	Description	Page No

S-5332-6

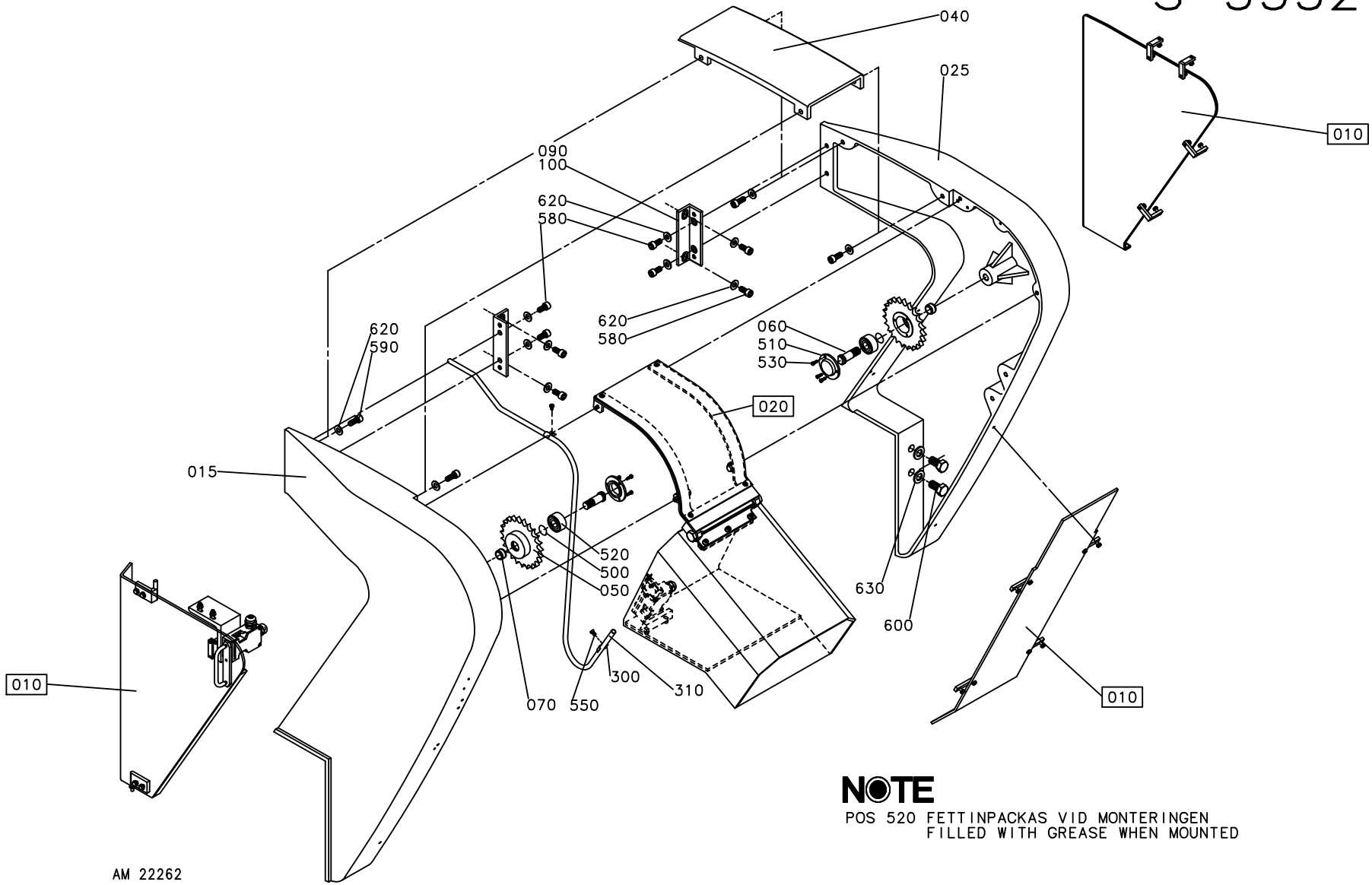

NOTE

POS 520 FETTINPACKAS VID MONTERINGEN
FILLED WITH GREASE WHEN MOUNTED

Pos	Part No	SP	UN	Qty	Description	Page No
NOBAGPACKER						
F020	A574225-0301	-		1	UPPER ELEVATOR PROTECTION	**387**
Common Parts						
015	B570843-0000	-		1	ELEVATOR SIDE L	
	5336-0000	-		*1*	*ELEVATOR FRAME LEFT*	
025	B570845-0000	-		1	ELEVATOR SIDE R	
	5337-0000	-		*1*	*ELEVATOR FRAME RIGHT*	
040	5338-0000	-		1	PLATE	
050	4554-0000	A		2	SPROCKET	
060	3274-0002	A		2	BOLT	
070	4569-0000	A		2	SPACER RING	
100	1483072-0000	-		2	FASTENING IRON	
300	90074-0018	-		2	CABLE CLIPS, D=2X10 MM	
310	90166-0089	-	M	7	HOSE 4/6.2 PE BLUE	
500	315202-0518	B		2	O-RING 23,40X3,53 MM	
510	321601-0103	A		2	OIL SEAL (LL40	
520	321330-0103	B		2	ANG. BALL BEAR, 17X40X17,5 MM	
530	312111-0291	-		6	SCREW HEX.SOCK.HD.MC6S-TT 4X12 88 FZB	
540	344502-0026	-		2	GREASE NIPPLE STRAIGHT R1/8 CON.	
550	312125-0323	-		2	SCREW PAN HEAD MCS M5X8 SS	
580	312115-0491	-		8	SCREW ISO4762 M10X20 A4	
590	312111-0493	-		4	SCREW HEX.SOCK.HD.MC6S-TT 10X25 88 FZ	
600	312101-0624	-		4	SCREW M6S M16X30 FZB	
620	315401-0173	-		8	WASHER FBH10,2FZB	
630	315401-0186	-		4	WASHER FBH16,2FZB	
F010	A574224-0301	-		1	ELEVATOR PROTECTION	**375**

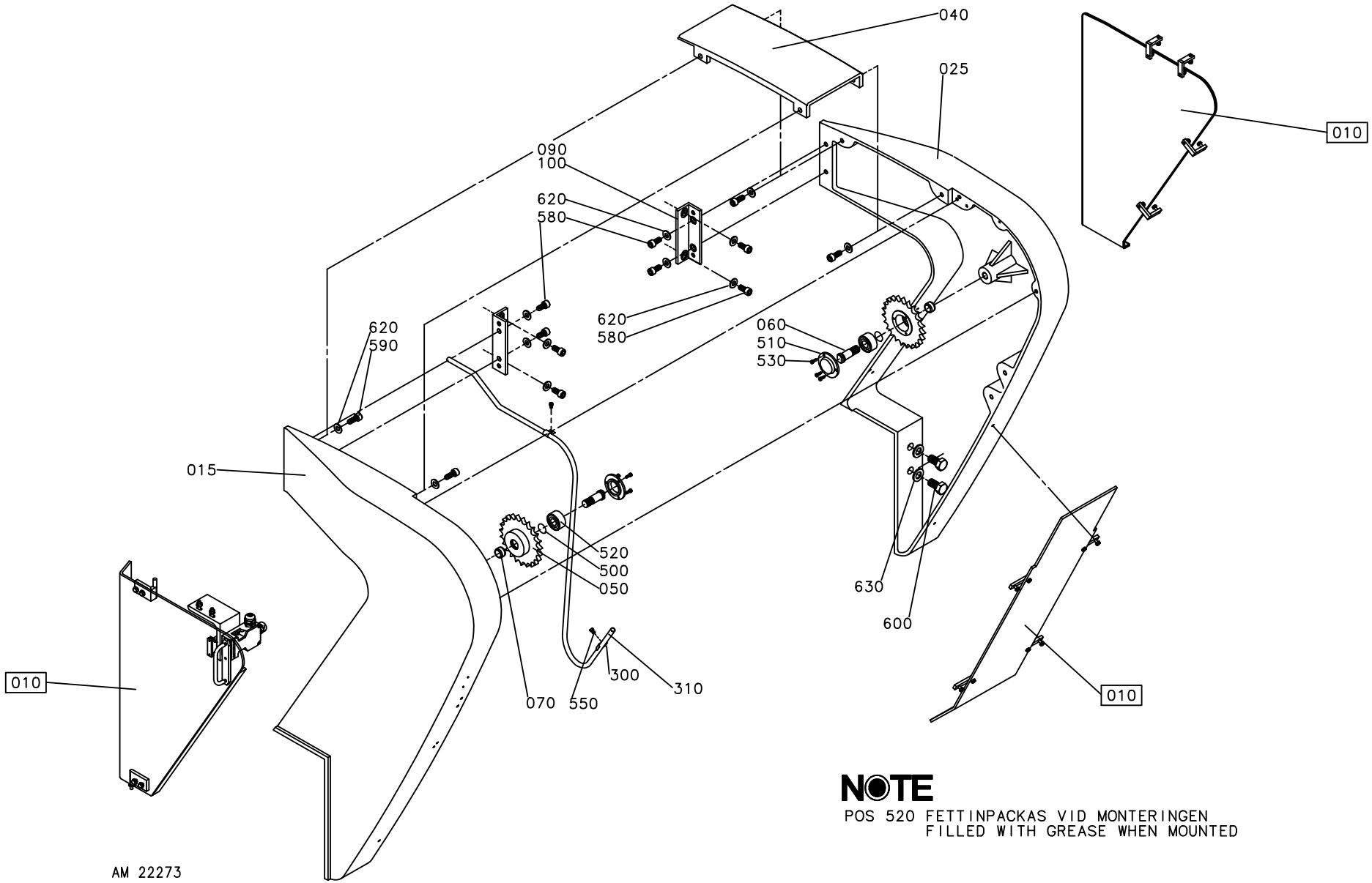

NOTE

POS 520 FETTINPACKAS VID MONTERINGEN
FILLED WITH GREASE WHEN MOUNTED

Pos	Part No	SP	UN	Qty	Description	Page No
NOBAGPACKER						
F020	A574225-0301	-		1	UPPER ELEVATOR PROTECTION	**387**
Common Parts						
015	B570843-0000	-		1	ELEVATOR SIDE L	
	5336-0000	-		*1*	*ELEVATOR FRAME LEFT*	
025	B570845-0000	-		1	ELEVATOR SIDE R	
	5337-0000	-		*1*	*ELEVATOR FRAME RIGHT*	
040	5338-0000	-		1	PLATE	
050	4554-0000	A		2	SPROCKET	
060	3274-0002	A		2	BOLT	
070	4569-0000	A		2	SPACER RING	
100	1483072-0000	-		2	FASTENING IRON	
300	90074-0018	-		2	CABLE CLIPS, D=2X10 MM	
310	90166-0089	-	M	7	HOSE 4/6.2 PE BLUE	
500	315202-0518	B		2	O-RING 23,40X3,53 MM	
510	321601-0103	A		2	OIL SEAL (LL40	
520	321330-0103	B		2	ANG. BALL BEAR, 17X40X17,5 MM	
530	312111-0291	-		6	SCREW HEX.SOCK.HD.MC6S-TT 4X12 88 FZB	
540	344502-0026	-		2	GREASE NIPPLE STRAIGHT R1/8 CON.	
550	312125-0323	-		2	SCREW PAN HEAD MCS M5X8 SS	
580	312115-0491	-		8	SCREW ISO4762 M10X20 A4	
590	312111-0493	-		4	SCREW HEX.SOCK.HD.MC6S-TT 10X25 88 FZ	
600	312101-0624	-		4	SCREW M6S M16X30 FZB	
620	315401-0173	-		8	WASHER FBH10,2FZB	
630	315401-0186	-		4	WASHER FBH16,2FZB	
F010	A574224-0301	-		1	ELEVATOR PROTECTION	**375**

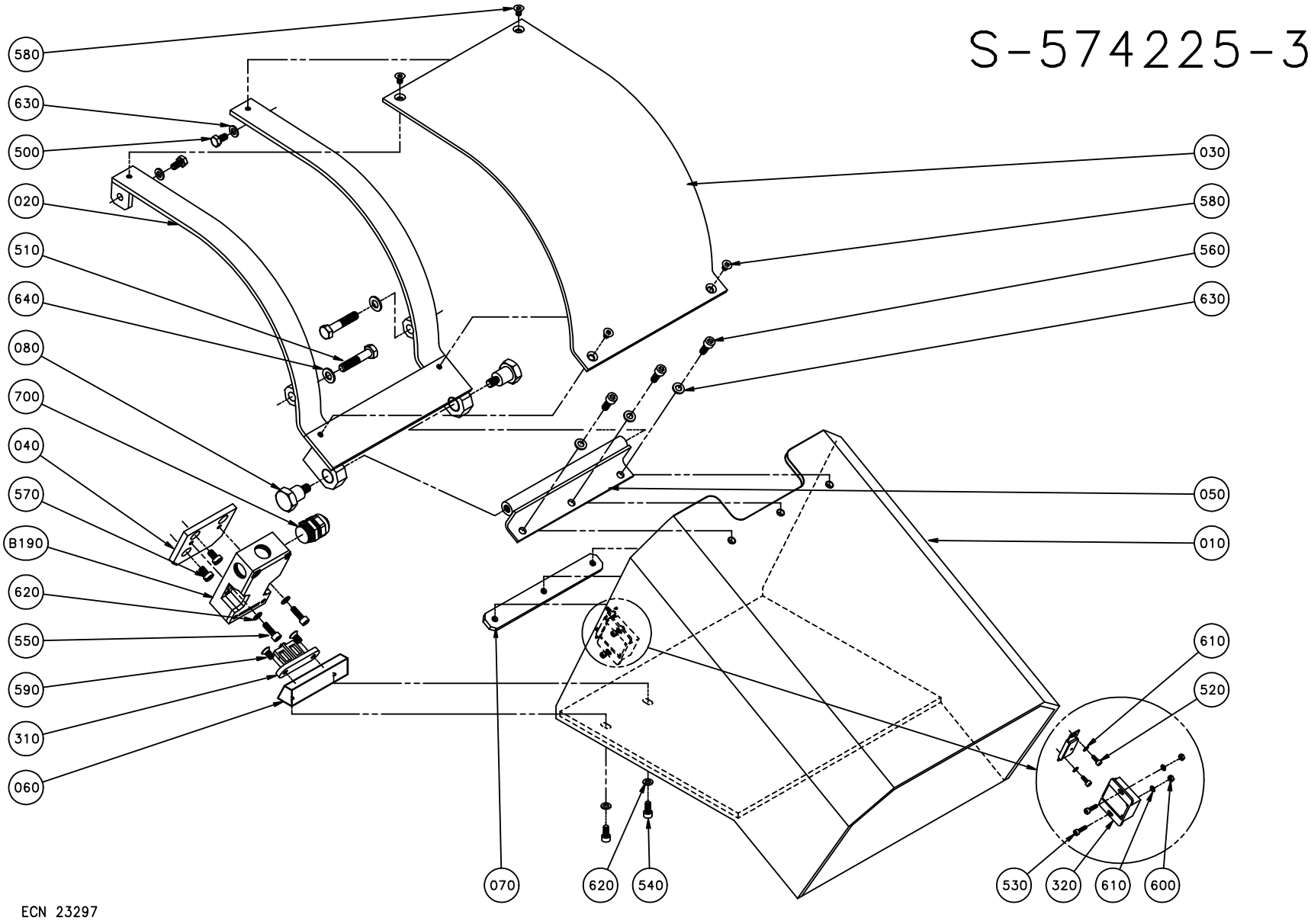
S-574225-3
580
630
500
020
510
640
080
700
040
570
B190
620
550
590
310
060
030
580
560
630
050
010
610
520
070
620
540
530
320
610
600
ECN 23297

ECM: 83555 - 20000925
Group number: 574225-0301
Assembly Drawing: 574225-3_1_AA

Issue: 20030213

Pos	Part No	SP	UN	Qty	Description	Page No
Common Parts						
010	566153-0000	-		1	PROTECTIVE COVER	
020	569594-0000	-		1	BRACKET	
030	566127-0000	A		1	PLASTIC COVER	
040	562872-0000	-		1	BRACKET	
050	562880-0000	-		1	HINGE FLANGE	
060	567119-0000	-		1	BRACKET	
070	568125-0000	-		1	FASTENING IRON	
080	525317-0000	-		2	FITTING BOLT	
310	90044-0310	A		1	KEY FOR SAFETY SWITCH, AZ 15/16 B1	
320	90237-0046	-		1	MAGNETIC LOCK, 46X33X15 MM	
500	312105-0368	-		2	SCREW M6S M6X16 A280	
510	312105-0459	-		2	SCREW M6S ISO 4014 M8X40 A480	
520	312115-0222	-		2	SCREW ISO4762 M3X8 A4	
530	312115-0226	-		2	SCREW ISO4762 M3X12 A4	
540	312115-0327	-		2	SCREW ISO4762 M5X12 A4	
550	312115-0329	-		2	SCREW ISO4762 M5X16 A4	
560	312115-0368	-		3	SCREW ISO4762 M6X16 A4	
570	312125-0364	-		2	SCREW SLOT.PAN HD. MCS 6X10 A480	
580	312155-0323	-		4	SCREW EN 10642 MF6S M5X8 A480	
590	312155-0325	-		2	SCREW EN 10642 MF6S M5X10 A480	
600	312605-0310	-		2	HEXAGON NUT, M6M M3 A280	
610	315105-0124	-		4	WASHER ISO 7089-3-200 HV-A4	
620	315105-0146	-		4	WASHER ISO 7089-5-200 HV-A4	
630	315105-0153	-		5	WASHER ISO 7089-6-200 HV-A4	
640	315105-0165	-		2	WASHER ISO 7089-8-200 HV-A4	
700	352103-0106	-		1	CABLE GLAND, ST 11, PR18,6/PG11	
B190	90044-0139	A		1	KEY SAF.SW. AZ16-02 ZVR K-2254	

Pos	Part No	SP	UN	Qty	Description	Page No

Machine Type | Group Description | Used-In | Group Number | Page No

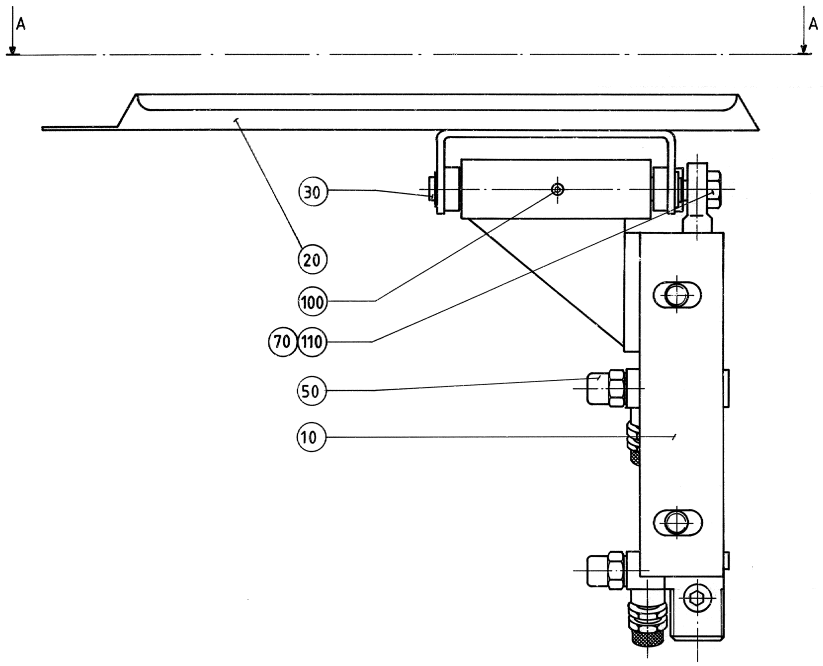

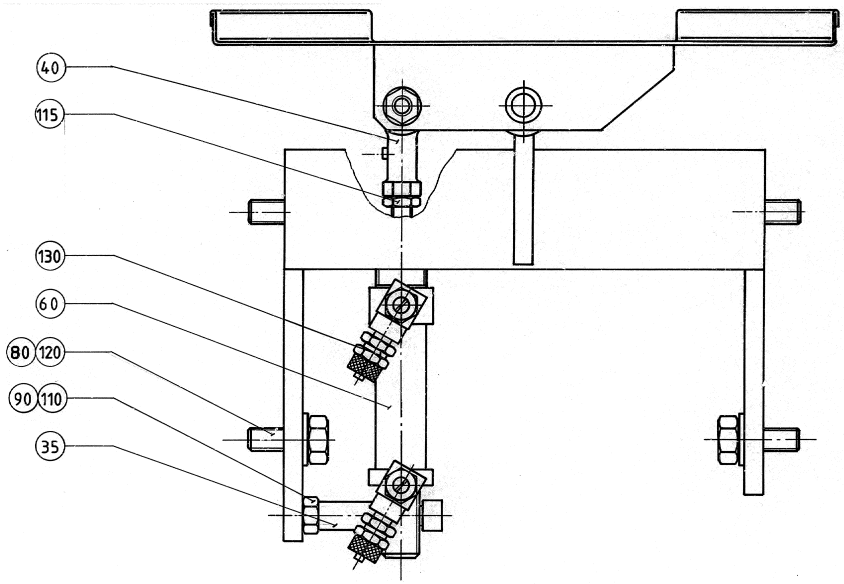

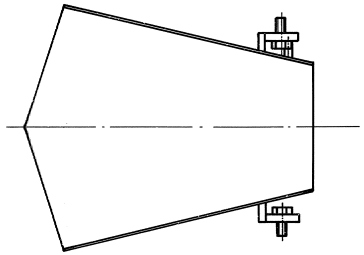

Vy A-A
skala 1:2,5
View A-A
scale 1:2,5

ECM: 83552 - 20000925
Group number: 497873-0101
Assembly Drawing: 497873-1_1_AA

Issue: 20030213

Pos	Part No	SP	UN	Qty	Description	Page No
Common Parts						
010	466014-0000	-		1	CANTILEVER	
020	522160-0000	A		1	CHUTE	
030	5310-0000	A		1	SHAFT	
035	522303-0000	-		1	SPACER PIPE	
040	90115-0008	A		1	ROD END, ID=8 MM, M8X1,25	
050	90235-0241	A		2	THROTTLE CHECK VALVE R1/8" MANUAL	
060	90239-0821	A		1	DOUBLE ACTING, MINI-ISO, CYL.20-25	
070	312105-0455	-		1	SCREW M6S ISO 4017 M8X30 A480	
080	312105-0493	-		4	SCREW M6S ISO 4017 M10X25 A480	
090	312115-0463	-		1	SCREW ISO4762 M8X60 A4	
100	312306-0366	-		1	SCREW HEX.SOCK.SET FLAT P.MP6SS 6X12FZB	
110	312605-0318	-		2	HEXAGON NUT, M6M M8 A280	
115	312621-0318	-		1	ROD END,NUT M8	
120	315105-0173	-		4	WASHER ISO 7089-10-200 HV-A4	
130	342920-0113	-		2	STRAIGHT COUPLING,EXT.THREADED 6/4-R1/8"	

Pos	Part No	SP	UN	Qty	Description	Page No

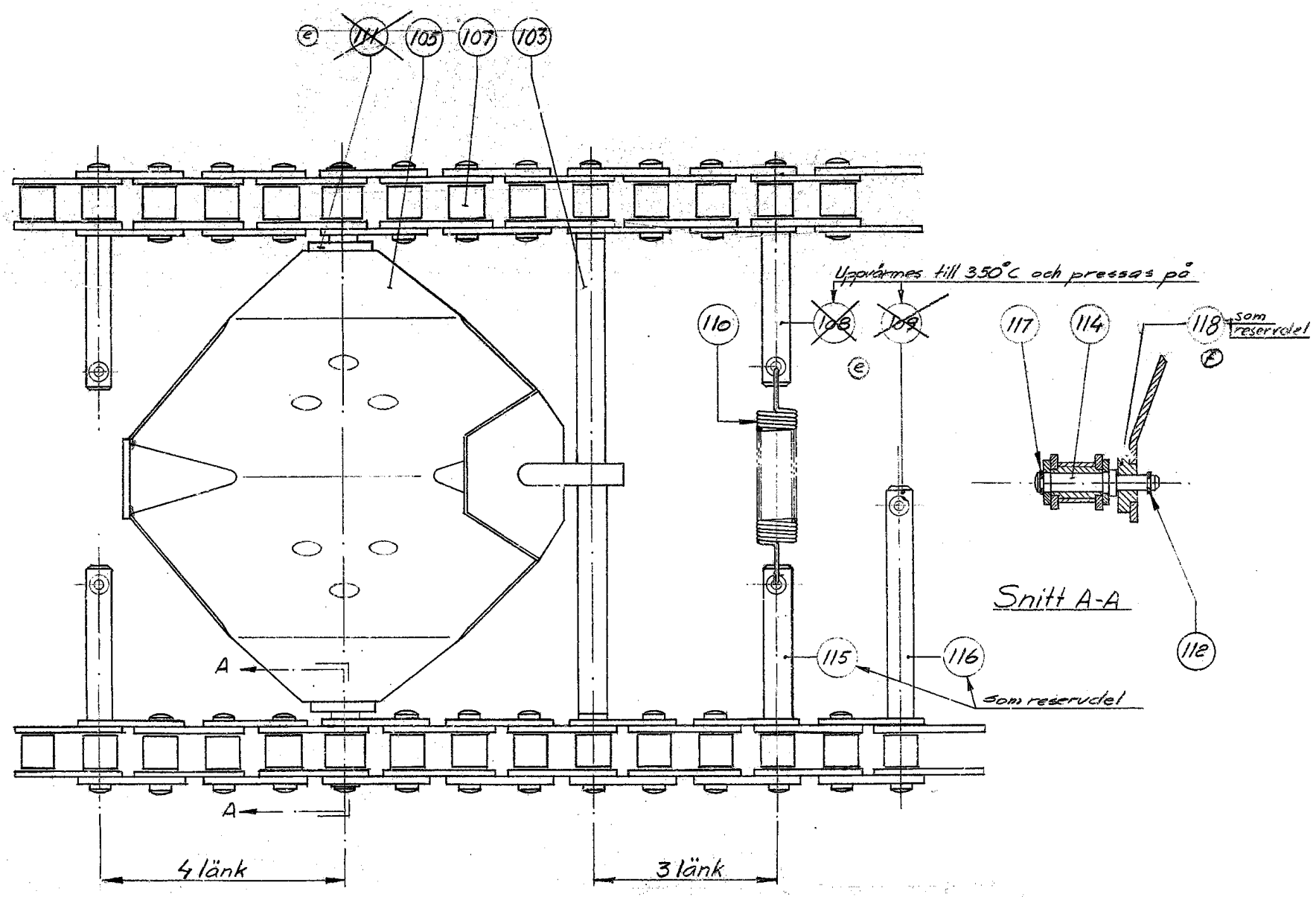
104
105
107
103
Upphärmes till 350°C och pressas på
110
108
109
117
114
118
som reservdel
112
Snitt A-A
115
116
som reservdel
A
A
4 länk
3 länk

ECM: 83551 - 20000925
Group number: 5333-0204
Assembly Drawing: 5333-1_1_AA

Issue: 20030213

Pos	Part No	SP	UN	Qty	Description	Page No
Common Parts						
103	4374-0000	A		15	SHAFT	
105 4	B567118-0000	A		15	SCOOP	
	2526560-0000	*A*		*48*	*BUSHING*	
	5926-0000	*B*		*30*	*BEARING*	
107 1	B5344-0002	A		2	CONVEYING CHAIN EQUIP.	
	5850-0000	*B*		*1*	*SHAFT FOR SCOOP*	
110	6116-0002	B		15	TENSION SPRING	
112	315754-0105	B		30	LOCKING WAE 3,2	

Pos	Part No	SP	UN	Qty	Description	Page No

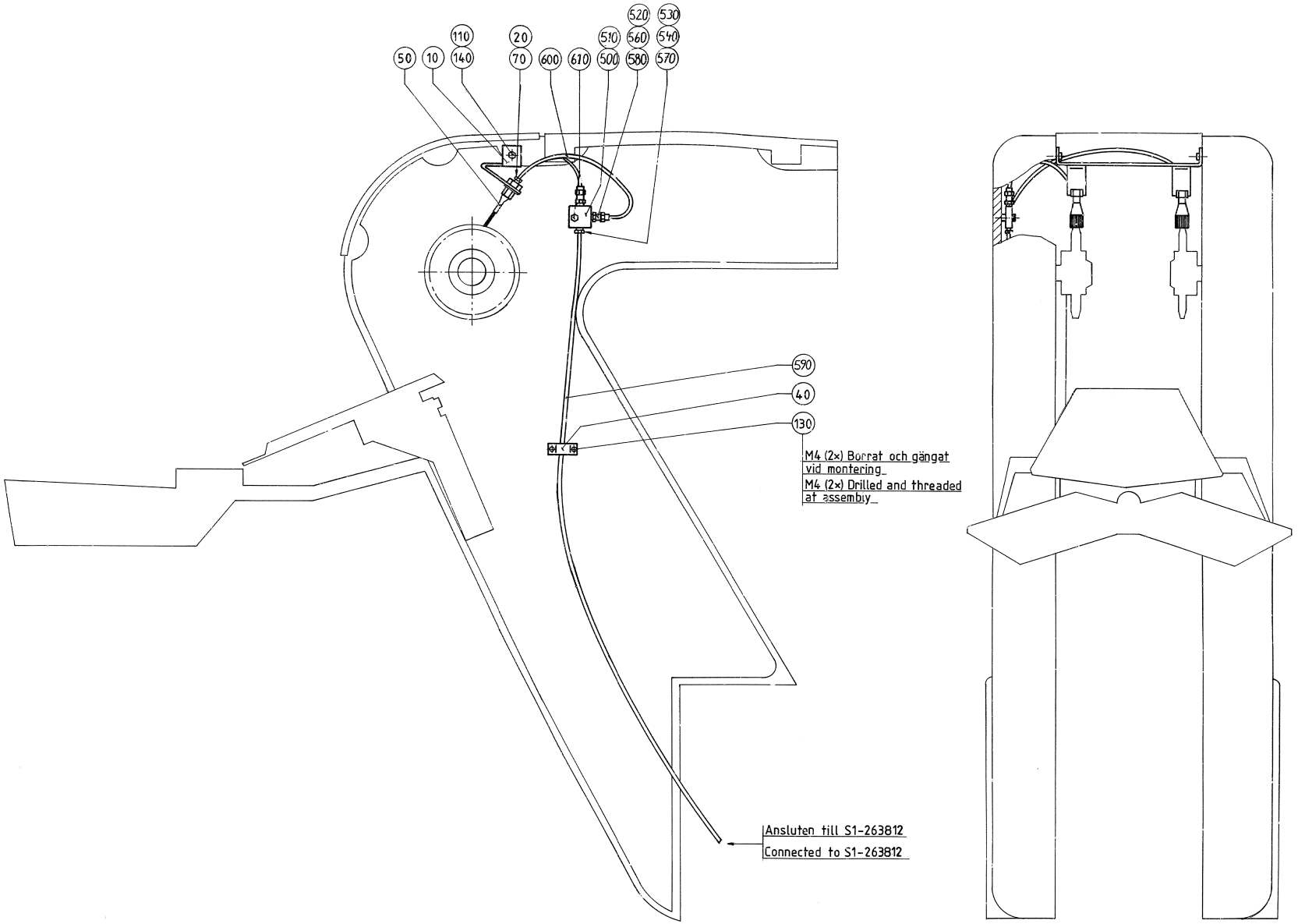
520
530
110
20
510
560
540
50
10
140
70
600
610
500
580
570
590
40
130
M4 (2×) Borrat och gängat vid montering
M4 (2×) Drilled and threaded at assembly
Ansluten till S1-263812
Connected to S1-263812

ECM: 83553 - 20000925
Group number: 522409-0201
Assembly Drawing: 522409-2_1_AA

Issue: 20030213

Pos	Part No	SP	UN	Qty	Description	Page No
Common Parts						
010	522021-0000	-		1	HOLDER	
020	90028-0001	A		2	CONE 5/32"	
040	90074-0018	-		1	CABLE CLIPS, D=2X10 MM	
050	90092-0048	A		2	OIL BRUSH, FLAT, 5/16-24 UNF	
070	90134-0003	A		2	BUSHING	
110	312105-0366	-		2	SCREW M6S M6X12 A280	
130	312125-0287	-		2	SCREW PAN HEAD MCS M4X8 SS	
140	315105-0153	-		1	WASHER ISO 7089-6-200 HV-A4	
500	90032-0038	A		1	BLOCK 2 WAYS	
510	90087-0019	-		1	PLUG M10X1 STAINLESS	
520	90028-0021	A		2	CONE TUBE 4 MM	
530	90028-0022	A		1	CONE TUBE 6 MM	
540	342706-0130	-		1	ACCESSORIES, INSERT SLEEVE 6 MM	
560	90134-0040	A		2	BUSHING VALVE CONNECTION 4 MM	
570	90134-0055	A		1	BUSHING/NUT INLET/OUTLET 6 MM	
580	90092-0054	A		2	METERING VALVE 50 MM3	
590	90166-0011	-	M	2	TUBE 6 MM PA,TRANSP.	
600	90166-0109	-	M	2	TUBE 4 MM PA,TRANSP.	
610	312155-0295	-		2	SCREW EN 10642 MF6S M4X20 A480	

Pos	Part No	SP	UN	Qty	Description	Page No

Tetra Pak

SPC
Spare Parts Catalogue

This page is intentionally left blank.

ECM: 82093 - 20000814
Group number: 633239-0400
Assembly Drawing:

Issue: 20030213

Pos	Part No	SP	UN	Qty	Description	Page No
Common Parts						
200	266504-0000	-		1	WORKMAN'S TROLLEY	
F010	A499134-0204	-		1	ROLLER STAND	**399**
F030	A569602-0101	-		1	CLEANING EQUIPMENT	**401**
F040	A544536-0110	A		1	SET OF SIGNS TCA	**403**
F050	A570825-0101	-		1	TOOL	**405**
F060	A570826-0101	-		1	INSTALLATION MATERIAL	**413**
F070	A527898-0101	A		1	CONTAINER H2O2	**415, 431**
F080	A570831-0100	-		1	START-UP KIT	**417, 419**
F090	A570836-0101	-		1	LIFTING UNIT	**421, 423**
F110	A1483145-0101	-		1	MANUALS	**425**

Pos	Part No	SP	UN	Qty	Description	Page No

Machine Type | Group Description | Used-In | Group Number | Page No

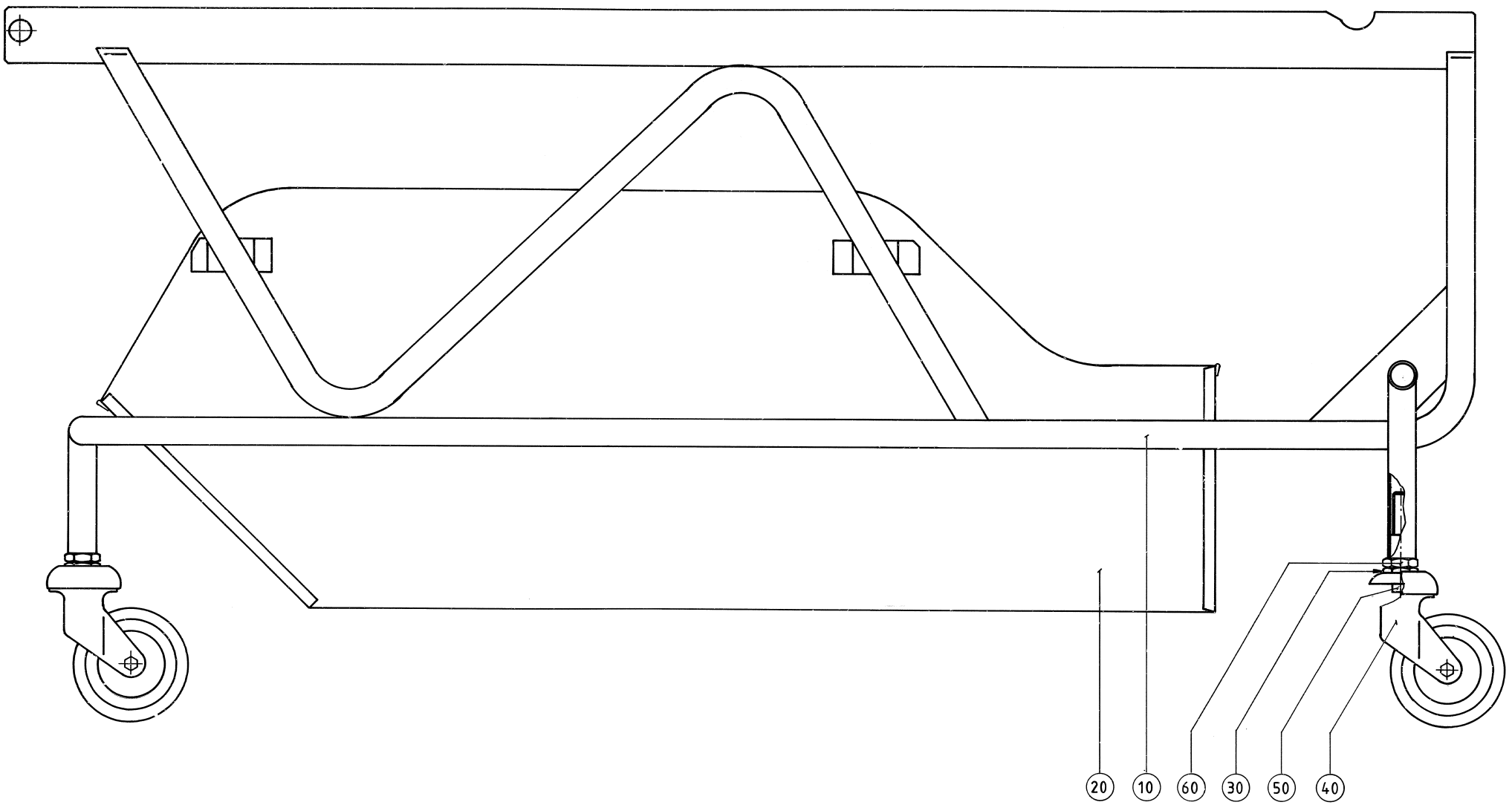
20
10
60
30
50
40

ECM: - -
Group number: 499134-0204
Assembly Drawing: 499134-1_1_AA

Issue: 20030213

Pos	Part No	SP	UN	Qty	Description	Page No
Common Parts						
010 4	499047-0001	-		1	MACHINE BODY	
010 6	499046-0001	-		1	MACHINE BODY	
020 3	263640-0000	-		1	VAT	
030	499048-0000	-		3	DOWEL	
040	90191-0045	-		3	WHEEL	
050	312111-0495	-		3	SCREW HEX.SOCK.HD.MC6S-TT 10X30 88 FZ	
060	312621-0324	-		3	NUT ML6M16FZB	

Pos	Part No	SP	UN	Qty	Description	Page No

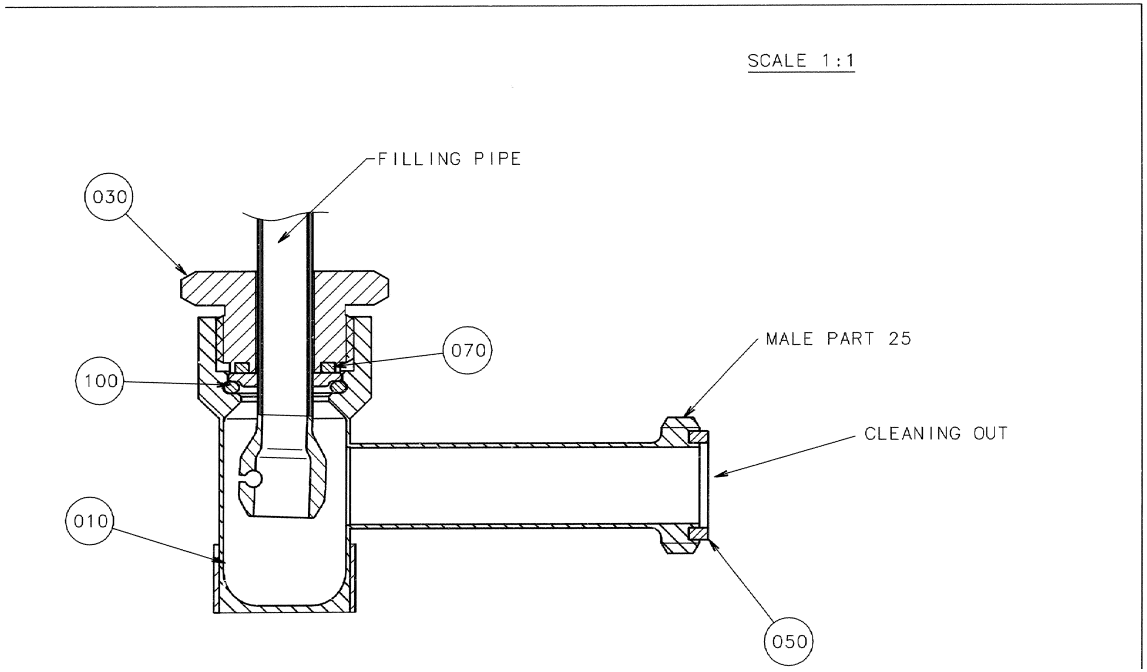
SCALE 1:1
FILLING PIPE
030
070
100
MALE PART 25
CLEANING OUT
010
050

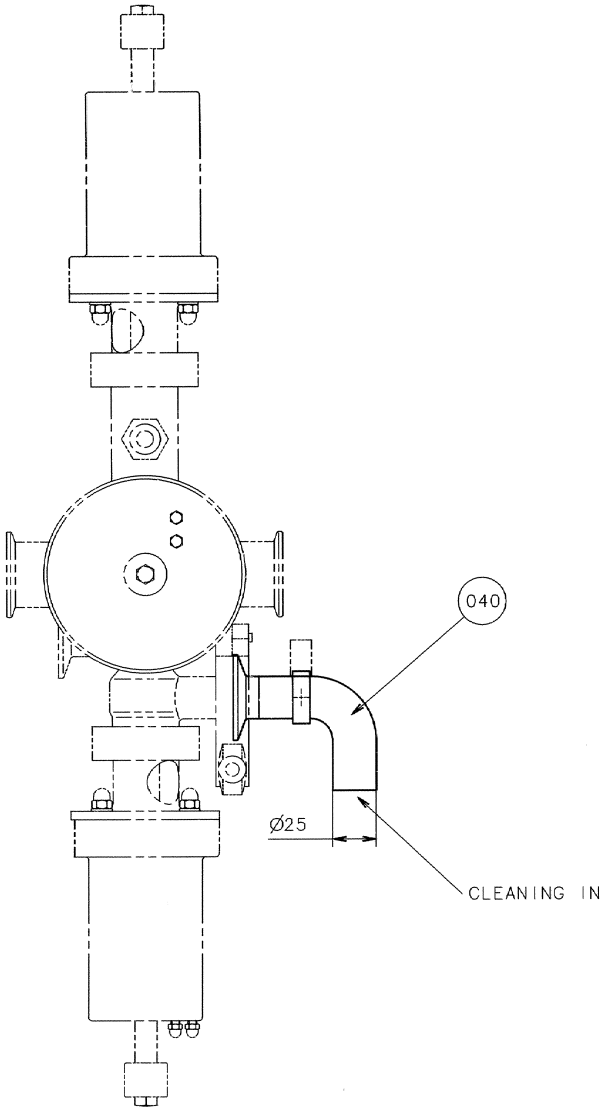
040
Ø25
CLEANING IN

ECM: 83557 - 20000925
Group number: 569602-0101
Assembly Drawing: 569602-1_1_AA

Issue: 20030213

Pos	Part No	SP	UN	Qty	Description	Page No
Common Parts						
010	569603-0000	-		1	CLEANING PIPE	
030	569604-0000	-		1	SCREW	
040	570824-0000	-		1	CLEANING PIPE	
050	12242-0001	A		1	GASKET 32X25X5,5	
070	569605-0000	A		1	GASKET	
100	90242-0220	A		1	O-RING 26X5 MM	

Pos	Part No	SP	UN	Qty	Description	Page No

This page is intentionally left blank.

ECM: - -
Group number: 544536-0110
Assembly Drawing:

Issue: 20030213

Pos	Part No	SP	UN	Qty	Description	Page No
Common Parts						
010 10	551613-0000	-		1	MACHINE PLATE TCA	
050	545818-0000	-		2	HOLDER FOR SIGN	
060	544533-0000	-		2	PLASTIC PEHD 21172-10	
200	312155-0370	-		4	SCREW EN 10642 MF6S M6X20 A480	
210	312812-0316	-		4	HEXAGON NUT, NY-LOCK M6 A480	

Pos	Part No	SP	UN	Qty	Description	Page No

This page is intentionally left blank.

ECM: 83558 - 20000925
Group number: 570825-0101
Assembly Drawing:

Issue: 20030213

Pos	Part No	SP	UN	Qty	Description	Page No
Common Parts						
100	72947-0000	-		1	HOOK SPANNER	
110	36430-0000	-		1	BRUSH	
210	90303-0013	A		1	APRON	
220	90337-0001	-		1	AEROMETER	
230	90337-0002	-		1	MEASURING CYLINDER	
240	90243-0164	-		2	HOOK SPANNER ADJUST.DIA.4	
250	90243-0203	-		1	MEASURING INSTRUMENT	
300	777510-0101	-		1	SCISSORS	
310	90303-0012	A		1	PROTECTIVE GLOVES	
320	90303-0011	A		1	PROTECTIVE GOGGLES	
330	779905-0101	-		1	INSPECTION LAMP	
340	A230922-0101	A		1	AIR JET GUN	**407**
F010	A566480-0101	-		1	TOOL	**409**
F020	A449969-0101	-		1	TOOL	**411**

Pos	Part No	SP	UN	Qty	Description	Page No

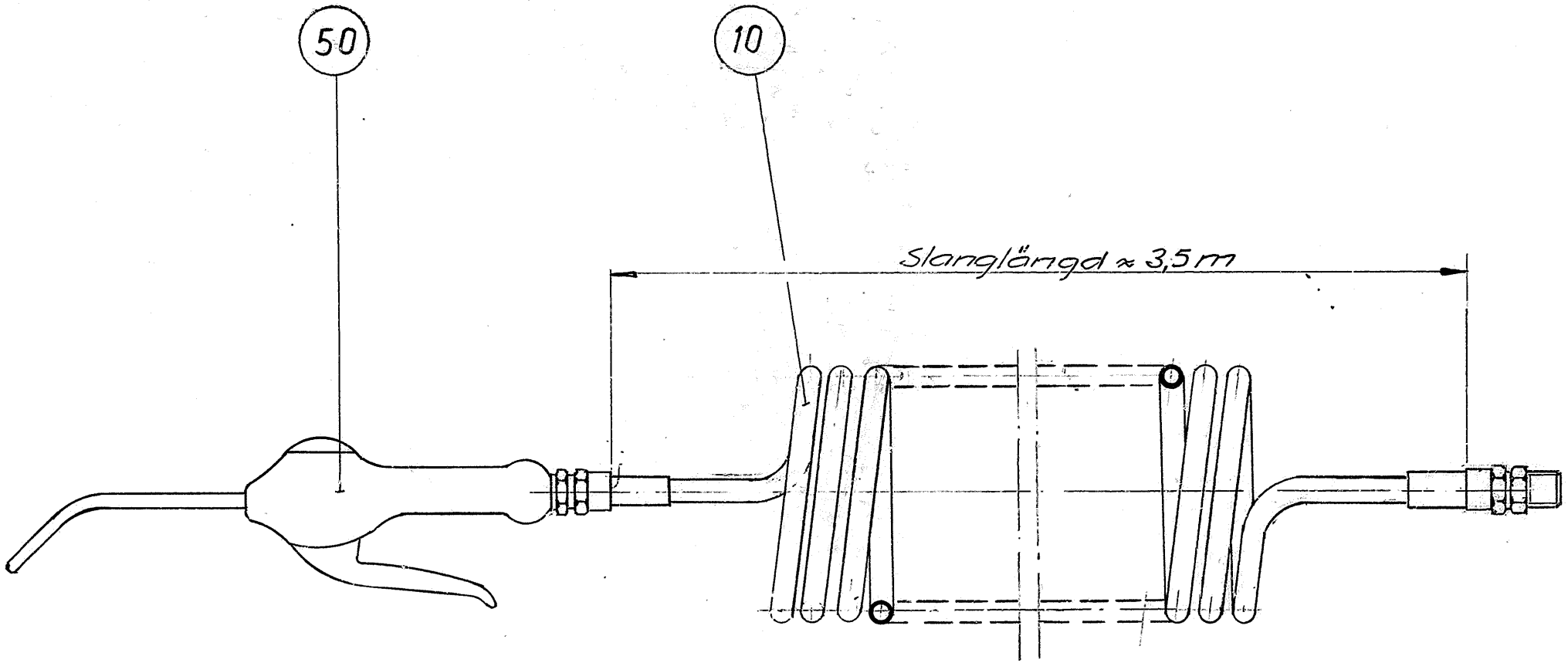
50
10
Slanglängd ≈ 3,5 m

ECM: - -
Group number: 230922-0101
Assembly Drawing: 230922-1_1_AA

Issue: 20030213

Pos	Part No	SP	UN	Qty	Description	Page No
Common Parts						
010	90152-0016	C		1	HOSE (SPIRAL)	
050	90243-0061	C		1	AIR GUN, CEJN SERIE 204 ED: 90459-0173	

Pos	Part No	SP	UN	Qty	Description	Page No

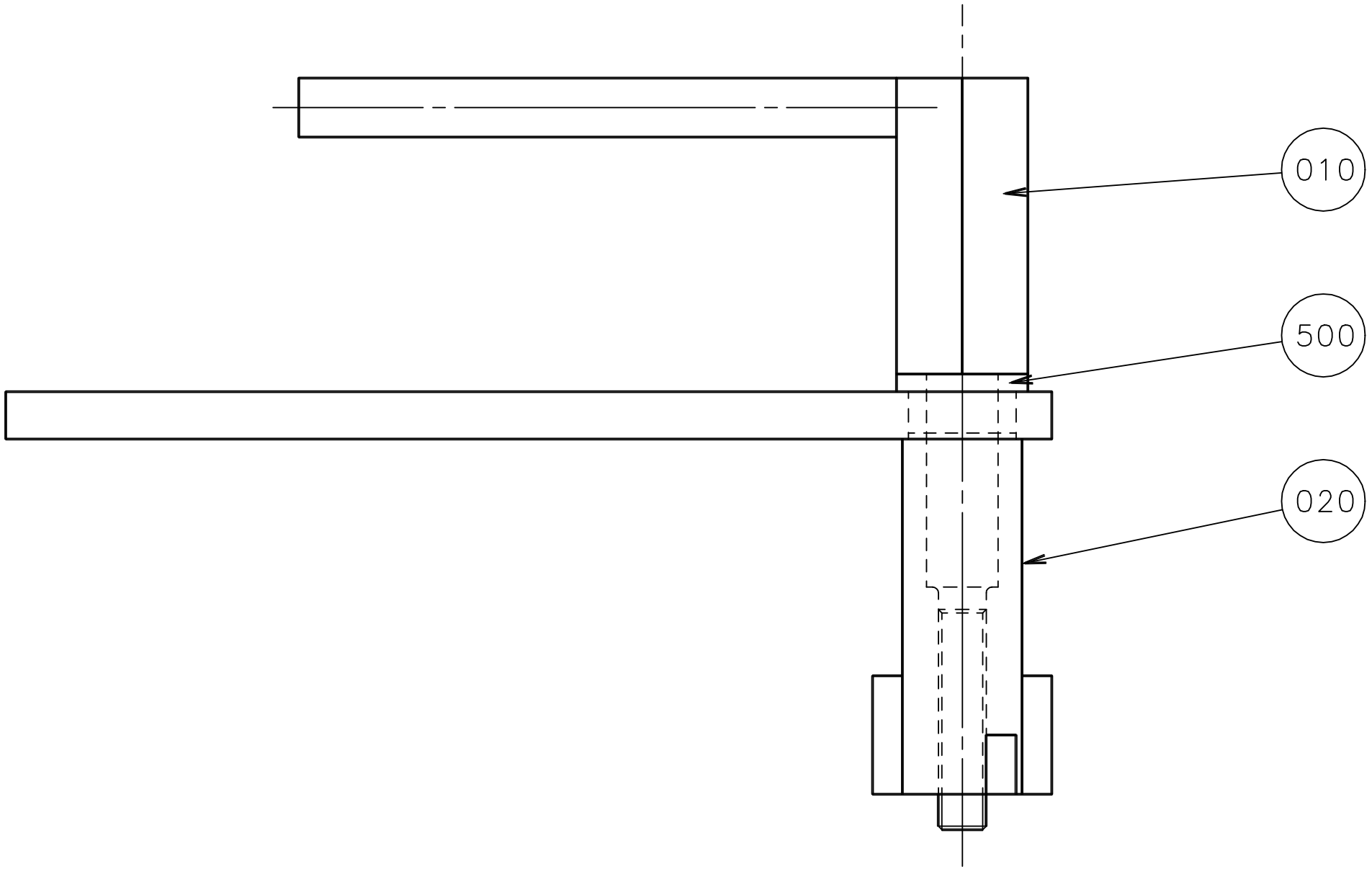
010
500
020

ECM: - -
Group number: 566480-0101
Assembly Drawing: 566480-1_1_AA

Issue: 20030213

Pos	Part No	SP	UN	Qty	Description	Page No
Common Parts						
010	566478-0000	-		1	SPINDLE	
020	566479-0000	-		1	HOLDER	
500	321101-0172	-		1	FLANGE BUS 12F7X10	

Pos	Part No	SP	UN	Qty	Description	Page No

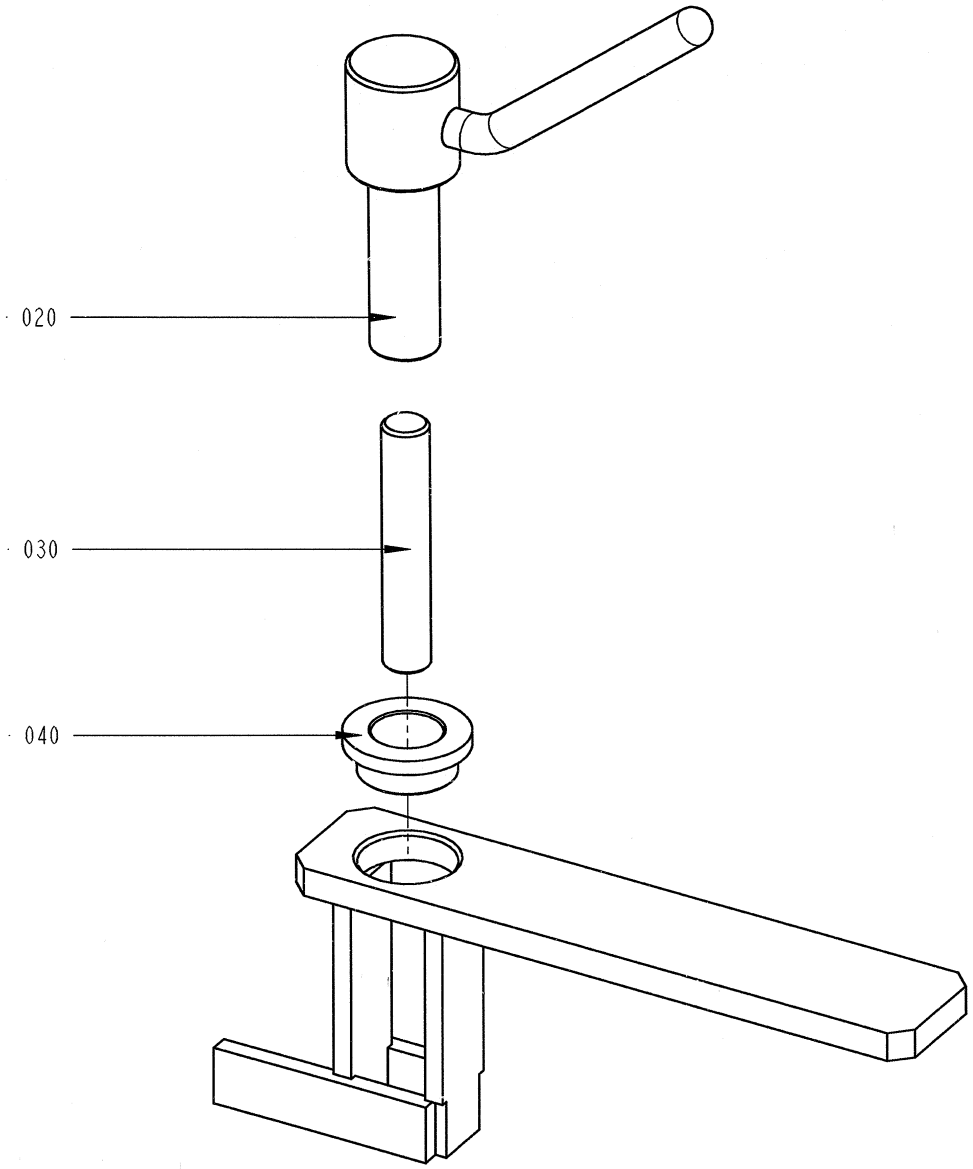

449969-1
ECN 93294

ECM: - -
Group number: 449969-0101
Assembly Drawing: 449969-1_1_AA

Issue: 20030213

Pos	Part No	SP	UN	Qty	Description	Page No
Common Parts						
010	449970-0000	-		1	HOLDER	
020	449971-0000	-		1	SPINDLE	
030	312306-0546	-		1	SCREW HEX.SOCK.SET FLAT P.MP6SS 12X70FZB	
040	321101-0222	-		1	BEAR.BUSHING W.FLANGE 18/25X12	

Pos	Part No	SP	UN	Qty	Description	Page No

This page is intentionally left blank.

ECM: - -
Group number: 570826-0101
Assembly Drawing:

Issue: 20030213

Pos	Part No	SP	UN	Qty	Description	Page No
Common Parts						
010	90347-0080	-		6	DAMPER TFE 1201	
020	90217-0308	-		2	CLAMP, ISO2852 FOR PIPE 25,4 AND 38,1 MM	
030	342850-0303	-		2	GASKET 22,7X49,1X5,2 MM 1" FDA	
040	90157-0022	-	L	1	SEALING COMPOUND	
100	342830-0203	-		2	FERRULE, SMS 1145, 2343, NO.9611-31-0200	

Pos	Part No	SP	UN	Qty	Description	Page No

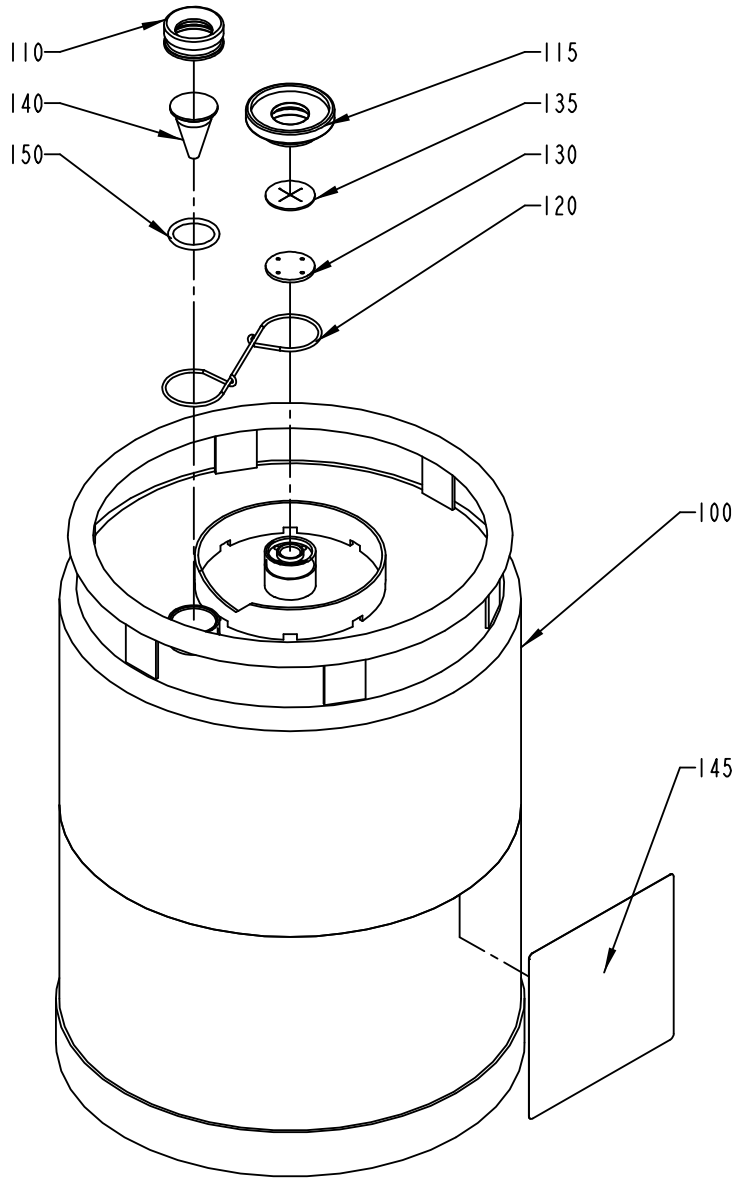

S-527898-I
ECN 72802

ECM: - -
Group number: 527898-0101
Assembly Drawing: 527898-1_1_AB

Issue: 20030213

Pos	Part No	SP	UN	Qty	Description	Page No
Common Parts						
100	561427-0000	D		1	CONTAINER	
110	273977-0000	D		1	NUT	
115	273996-0000	D		1	NUT	
120	273980-0000	D		1	SPRING	
130	565250-0000	C		1	WASHER	
135	565251-0000	C		1	VALVE	
140	273978-0000	D		1	LEVEL GLASS	
145	532655-0000	D		1	CAUTION SIGN	
150	927422-0003	-		1	O.RING 24.2X3 SILICON	

Pos	Part No	SP	UN	Qty	Description	Page No

This page is intentionally left blank.

ECM: 108084 - 20020507
Group number: 570831-0100
Assembly Drawing:
Issue: 20030213

Pos	Part No	SP	UN	Qty	Description	Page No
LARGEOPNG LVS						
190	576147-0000	-		1	INDUCTOR	
210	1520560-0000	-		16	DOLLY	
240 2	594729-0000	-		4	NOTCH KNIFE (INDO)	
250 2	594730-0000	-		4	NOTCH KNIFE (INDO)	
LARGEOPNG MVS						
200	1175098-0000	-		1	INDUCTOR	
220	1110377-0001	-		32	DOLLY	
230	594731-0000	-		16	DOLLY	
235	594732-0000	-		16	TEFLON CLOTH (TILL MVS MASKIN)	
240 2	594729-0000	-		4	NOTCH KNIFE (INDO)	
250 2	594730-0000	-		4	NOTCH KNIFE (INDO)	
LVS						
	67379-0301	-		1	TRANSFORMER	
MVS						
	67379-0302	-		1	TRANSFORMER	
SMALLOPNG LVS						
190	576147-0000	-		1	INDUCTOR	
210	1520560-0000	-		16	DOLLY	
240 1	594735-0000	-		4	NOTCH KNIFE SIDE 3 (FRAN)	
250 1	594736-0000	-		4	NOTCH KNIFE SIDE 4 (FRAN)	
SMALLOPNG MVS						
200	1175098-0000	-		1	INDUCTOR	
220	1110377-0001	-		32	DOLLY	
230	594731-0000	-		16	DOLLY	
235	594732-0000	-		16	TEFLON CLOTH (TILL MVS MASKIN)	
240 1	594735-0000	-		4	NOTCH KNIFE SIDE 3 (FRAN)	
250 1	594736-0000	-		4	NOTCH KNIFE SIDE 4 (FRAN)	
STRAIGHTCUT LVS						
160	484815-0000	-		4	KNIFE	
190	576147-0000	-		1	INDUCTOR	
210	1520560-0000	-		16	DOLLY	
STRAIGHTCUT MVS						
160	484815-0000	-		4	KNIFE	
200	1175098-0000	-		1	INDUCTOR	
220	1110377-0001	-		32	DOLLY	
230	594731-0000	-		16	DOLLY	
235	594732-0000	-		16	TEFLON CLOTH (TILL MVS MASKIN)	
Straightcut with lugs LVS						
170	2537121-0000	-		4	KNIFE	
Straightcut with lugs MVS						
170	2537121-0000	-		4	KNIFE	
TEARWINGY1 LVS						
190	576147-0000	-		1	INDUCTOR	
255 1	1483144-0000	-		4	Z-KNIFE	
255 2	1483143-0000	-		4	Z-KNIFE	
TEARWINGY1 MVS						
200	1175098-0000	-		1	INDUCTOR	
220	1110377-0001	-		32	DOLLY	
230	594731-0000	-		16	DOLLY	
235	594732-0000	-		16	TEFLON CLOTH (TILL MVS MASKIN)	
255 1	1483144-0000	-		4	Z-KNIFE	
255 2	1483143-0000	-		4	Z-KNIFE	
Common Parts						
	566152-0000	-		2	HEATING ELEMENT	
	1483042-0000	-		2	DISTRIBUTOR	
	1483002-0000	-		4	SLIDING STRIP	
	1345199-0000	-	M	2	WIRE 3573	
	1345158-0000	-		2	SPRING 7111 TYPE D	
	736514-0000	-		5	SHOCK ABSORBER	
	90347-0080	-		6	DAMPER TFE 1201	
	90413-0421	-		2	STAMP	
	90413-0422	-		2	STAMP	
	90413-0430	-		2	STAMP	
	90413-0431	-		3	CODE INSERT SET	
	90413-0457	-		1	CODE INSERT SET	
	90413-0465	-		12	STAMP	
	90413-0466	-		6	STAMP	
	90413-0467	-		6	STAMP	
	90233-0028	-		3	TUBE FUSE, 10A	
	36430-0000	-		1	BRUSH	
	90036-0057	-		5	LIGHT BULB, BA9S 28V	

Machine Type | Group Description | Used-In | Group Number | Page No

This page is intentionally left blank.

Pos	Part No	SP	UN	Qty	Description	Page No
Common Parts (Cont'd)						
	90064-0315	-		1	LAMP REMOVER, NO:700	
	90091-0282	-		5	PISTON SEAL 27X35X1,78 MM	
	90119-0067	-		1	SOLID-STATE RELAY, H12WD4850	
	90157-0022	-		1	SEALING COMPOUND	
	90166-0053	-	M	1	SHRINKABLE HOSE 43-53 MM (2")	
	90217-0308	-		2	CLAMP, ISO2852 FOR PIPE 25,4 AND 38,1 MM	
	B90233-0027	-		2	TUBE FUSE, 16A	
	90233-0305	*C*		*1*	*INDICATOR*	
	90427-0510	-		2	COUNTER RUBBER	
	544569-0006	-		16	RULER	
	544569-0005	-		16	RULER	
	544569-0004	-		16	RULER	
	544569-0003	-		16	RULER	
	544569-0002	-		16	RULER	
	563428-0000	-		3	TRIMMING ROLLER MINUS	
	563427-0000	-		3	TRIMMING ROLLER PLUS	
	563403-0000	-		3	ROLL	
	550193-0000	-		5	PIN	
	547517-0000	-		2	TEFLON PIPE	
	90427-0552	-		2	COUNTER PLATE	
	90427-0532	-		2	INK ROLLER	
	269814-0000	-		2	SPRING	
	342850-0303	-		2	GASKET 22,7X49,1X5,2 MM 1" FDA	
	543509-0000	-		5	ROLL	
	279668-0000	-		8	CARBON BRUSH COMPLETE	
010	556118-0000	-		3	SEAL-RING (25)	
020	566356-0000	-		1	SEAL RING	
030	794246-0000	-		1	DIAPHRAGM	
100	10593-0000	-		5	LOCKING RUBBER	
110	209972-0000	-		8	RAIL	
140	12242-0001	-		10	GASKET 32X25X5,5	
150	12242-0003	-		10	GASKET 48X38X5,5	
170	32197-0000	-		5	PRESSURE ROLLER	
180	1345167-0000	-		2	PROTECTIVE CLOTH	
260	736508-0001	-		1	MEMBRANE	
270	925091-0000	-		2	DIAPHRAGM	
690	90206-0324	-		1	HEATING CARTRIDGE 1400W 220V	

Pos	Part No	SP	UN	Qty	Description	Page No

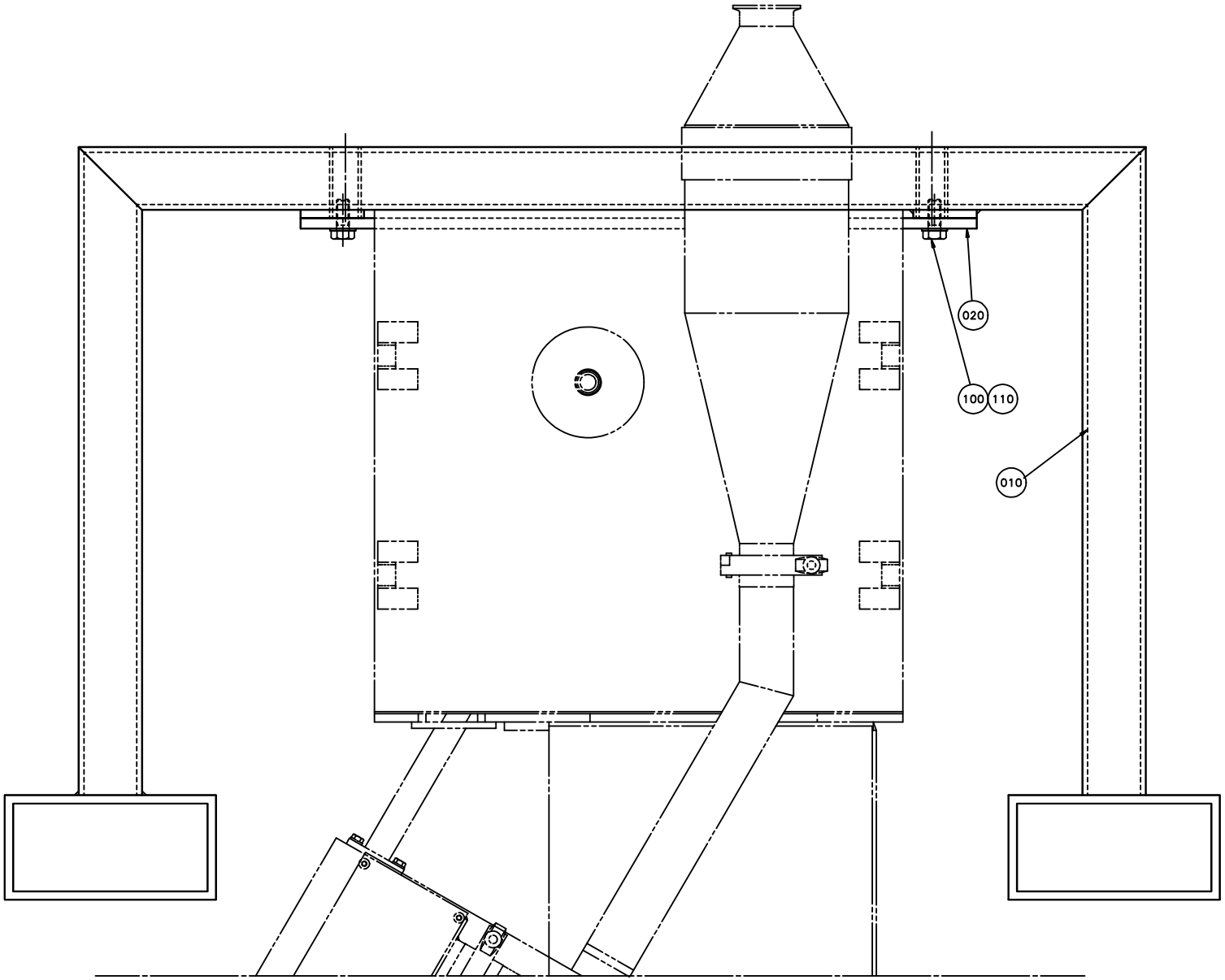
020
100
110
010

ECM: - -
Group number: 570836-0101
Assembly Drawing: 570836-1_1_AA

Issue: 20030213

Pos	Part No	SP	UN	Qty	Description	Page No
Common Parts						
010	570833-0000	-		2	LIFTING UNIT	
020	570834-0000	-		1	CRAMP	
100	312105-0536	-		4	SCREW M6S ISO 4017 M12X30 A480	
105	312105-0684	-		4	SCREW M6S ISO 4014 M20X100 A480	
110	315105-0178	-		4	WASHER ISO 7089-12-200 HV-A4	
120	315105-0192	-		4	WASHER ISO 7089-20-200 HV-A4	

Pos	Part No	SP	UN	Qty	Description	Page No

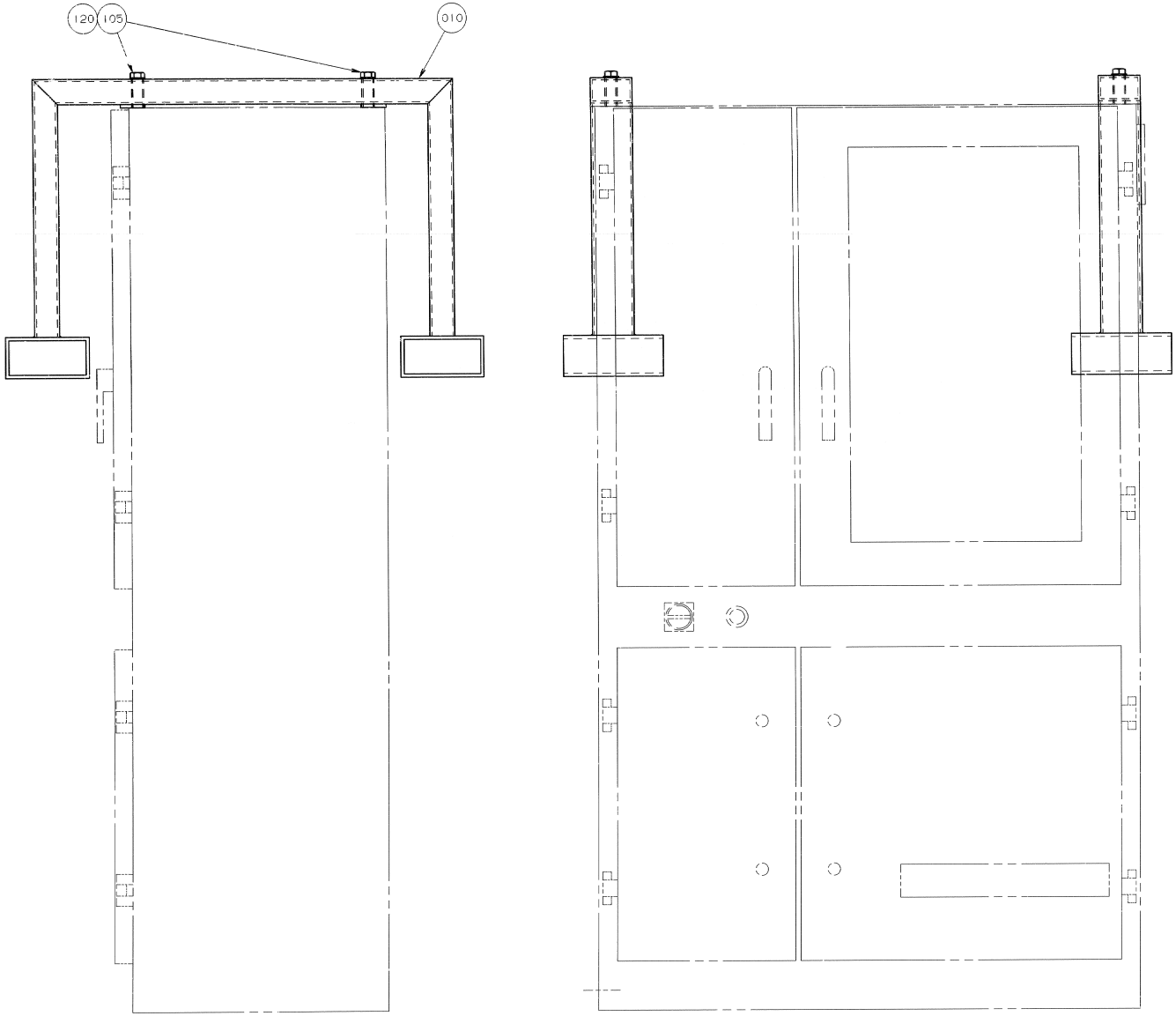
120
105
010

ECM: - -
Group number: 570836-0101
Assembly Drawing: 570836-2_1_AA

Issue: 20030213

Pos	Part No	SP	UN	Qty	Description	Page No
Common Parts						
010	570833-0000	-		2	LIFTING UNIT	
020	570834-0000	-		1	CRAMP	
100	312105-0536	-		4	SCREW M6S ISO 4017 M12X30 A480	
105	312105-0684	-		4	SCREW M6S ISO 4014 M20X100 A480	
110	315105-0178	-		4	WASHER ISO 7089-12-200 HV-A4	
120	315105-0192	-		4	WASHER ISO 7089-20-200 HV-A4	

Pos	Part No	SP	UN	Qty	Description	Page No

This page is intentionally left blank.

ECM: 86438 - 20001114
Group number: 1483145-0101
Assembly Drawing:

Issue: 20030213

Pos	Part No	SP	UN	Qty	Description	Page No
Common Parts						
010	85575-0101	-		1	INSTALLATION MANUAL	
020	85576-0101	-		1	OPERATION MANUAL	
030	85577-0101	-		1	ELECTRICAL MANUAL	
040	85578-0101	-		1	SPARE PARTS CATALOGUE	
050	85579-0101	-		1	MAINTENANCE MANUAL	

Pos	Part No	SP	UN	Qty	Description	Page No

Tetra Pak

SPC
Spare Parts Catalogue

This page is intentionally left blank.

Pos	Part No	SP	UN	Qty	Description	Page No
CONTH2O2						
F020	A527898-0101	A		1	CONTAINER H2O2	**415, 431**
FRAMESTRUCT						
F060	A1175241-0101	-		1	FRAME SUPERSTRUCTURE	**433**
SETTCAMS						
F030	A544061-0201	A		1	JIG	**435**
SETTROLL						
F010	A566126-0101	A		1	JIG	**437**
TROLLEYH2O2						
F050	A532210-0101	-		1	PEROXIDE CONTAINER TROLLEY	**439**
eye_wash_device						
F070	90303-0006	-		1	EYE WASH DEVICE	

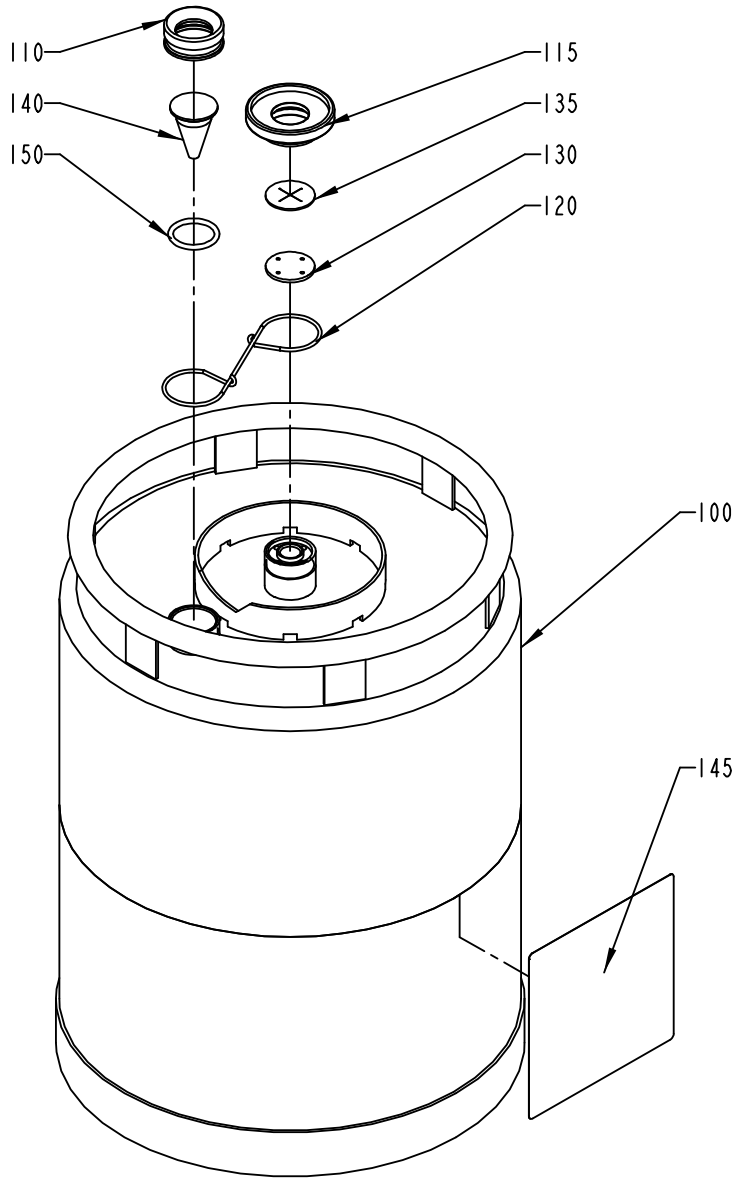

S-527898-I
ECN 72802

ECM: - -
Group number: 527898-0101
Assembly Drawing: 527898-1_1_AB

Issue: 20030213

Pos	Part No	SP	UN	Qty	Description	Page No
Common Parts						
100	561427-0000	D		1	CONTAINER	
110	273977-0000	D		1	NUT	
115	273996-0000	D		1	NUT	
120	273980-0000	D		1	SPRING	
130	565250-0000	C		1	WASHER	
135	565251-0000	C		1	VALVE	
140	273978-0000	D		1	LEVEL GLASS	
145	532655-0000	D		1	CAUTION SIGN	
150	927422-0003	-		1	O.RING 24.2X3 SILICON	

Pos	Part No	SP	UN	Qty	Description	Page No

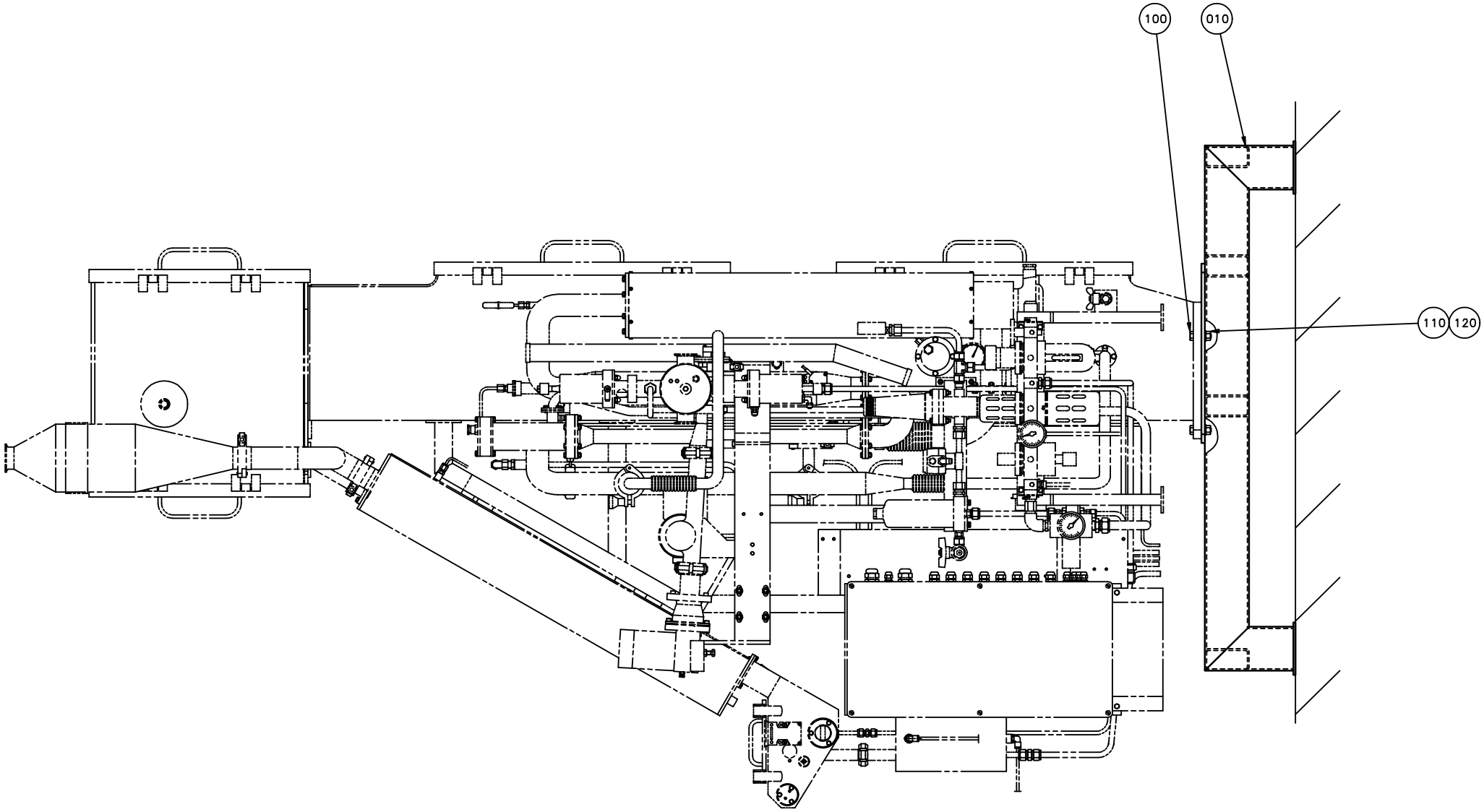
100
010
110
120

ECM: - -
Group number: 1175241-0101
Assembly Drawing: 1175241-1_1_AA

Issue: 20030213

Pos	Part No	SP	UN	Qty	Description	Page No
Common Parts						
010	1175125-0000	-		1	FRAME SUPERSTRUCTURE	
100	312105-0540	-		3	SCREW M6S ISO 4017 M12X40 A480	
110	312605-0322	-		3	HEXAGON NUT, M6M M12 A280	
120	315105-0178	-		3	WASHER ISO 7089-12-200 HV-A4	

Pos	Part No	SP	UN	Qty	Description	Page No

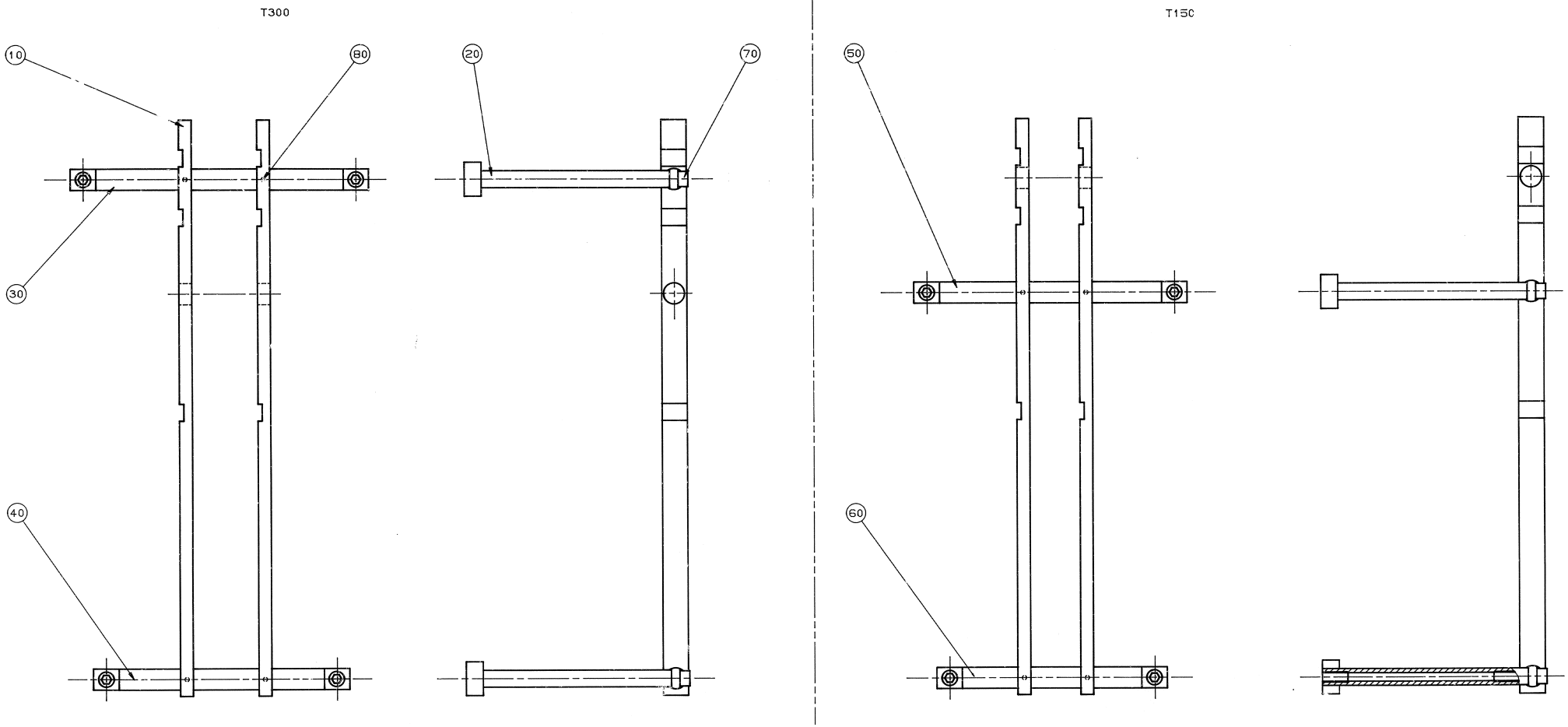
T300
10
80
30
40
20
70
T150
50
60

ECM: - -
Group number: 544061-0201
Assembly Drawing: 544061-1_1_AA

Issue: 20030213

Pos	Part No	SP	UN	Qty	Description	Page No
Common Parts						
010	544062-0000	-		2	RULER	
020	544067-0000	-		4	SHAFT	
050	544065-0000	-		1	SHAFT	
060	544066-0000	-		1	SHAFT	
070	312111-0540	-		4	SCREW HEX.SOCK.HD.MC6S-TT 12X40 88 FZ	
080	312311-0219	-		4	SCREW ISO4028 M3X5 FZB	

Pos	Part No	SP	UN	Qty	Description	Page No

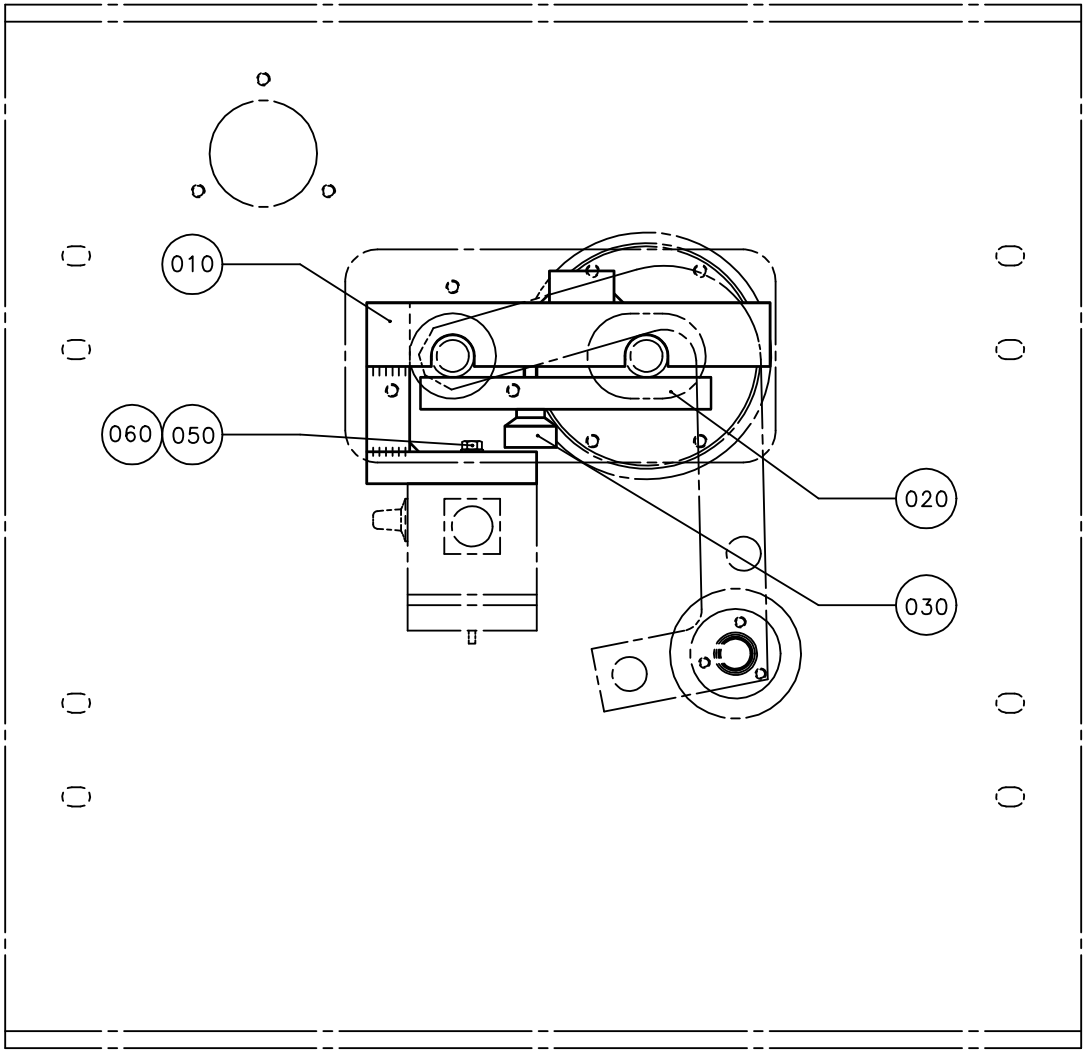
010
060
050
020
030

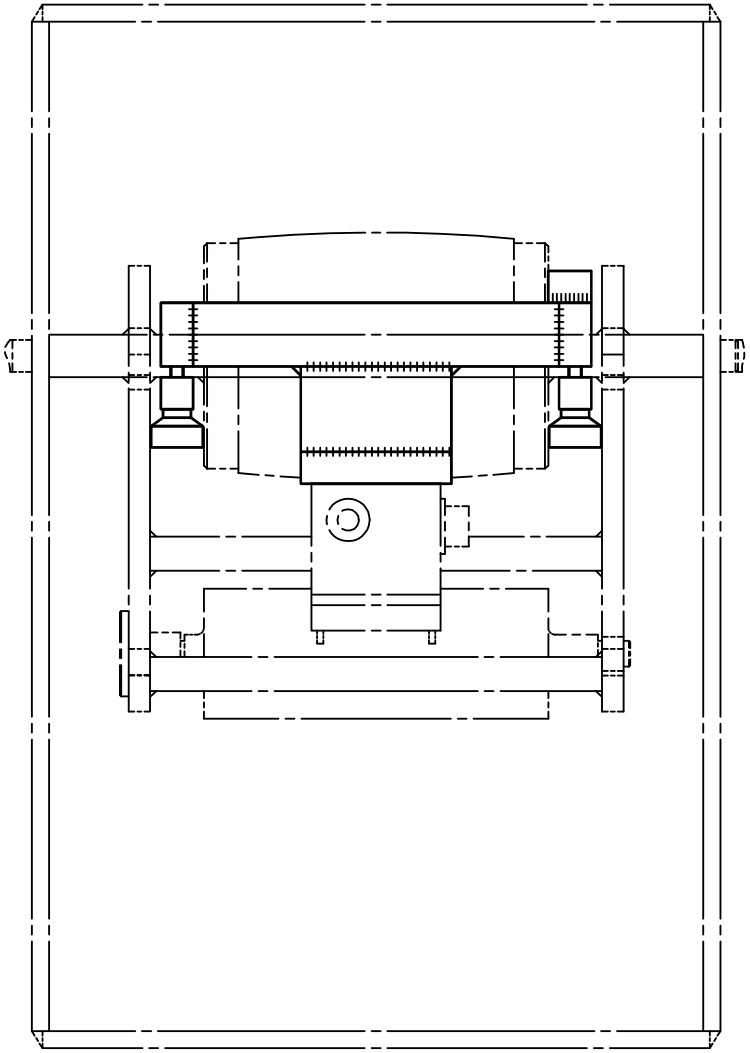

ECM: - -
Group number: 566126-0101
Assembly Drawing: 566126-1_1_AA

Issue: 20030213

Pos	Part No	SP	UN	Qty	Description	Page No
Common Parts						
010	567120-0000	-		1	JIG	
020	567121-0000	-		2	BRACKET	
030	90051-0084	-		2	KNOB, EXTERNAL THREAD. NO. 8308-1534	
050	312105-0372	-		1	SCREW M6S ISO 4017 M6X25 A480	
060	315105-0153	-		1	WASHER ISO 7089-6-200 HV-A4	

Pos	Part No	SP	UN	Qty	Description	Page No

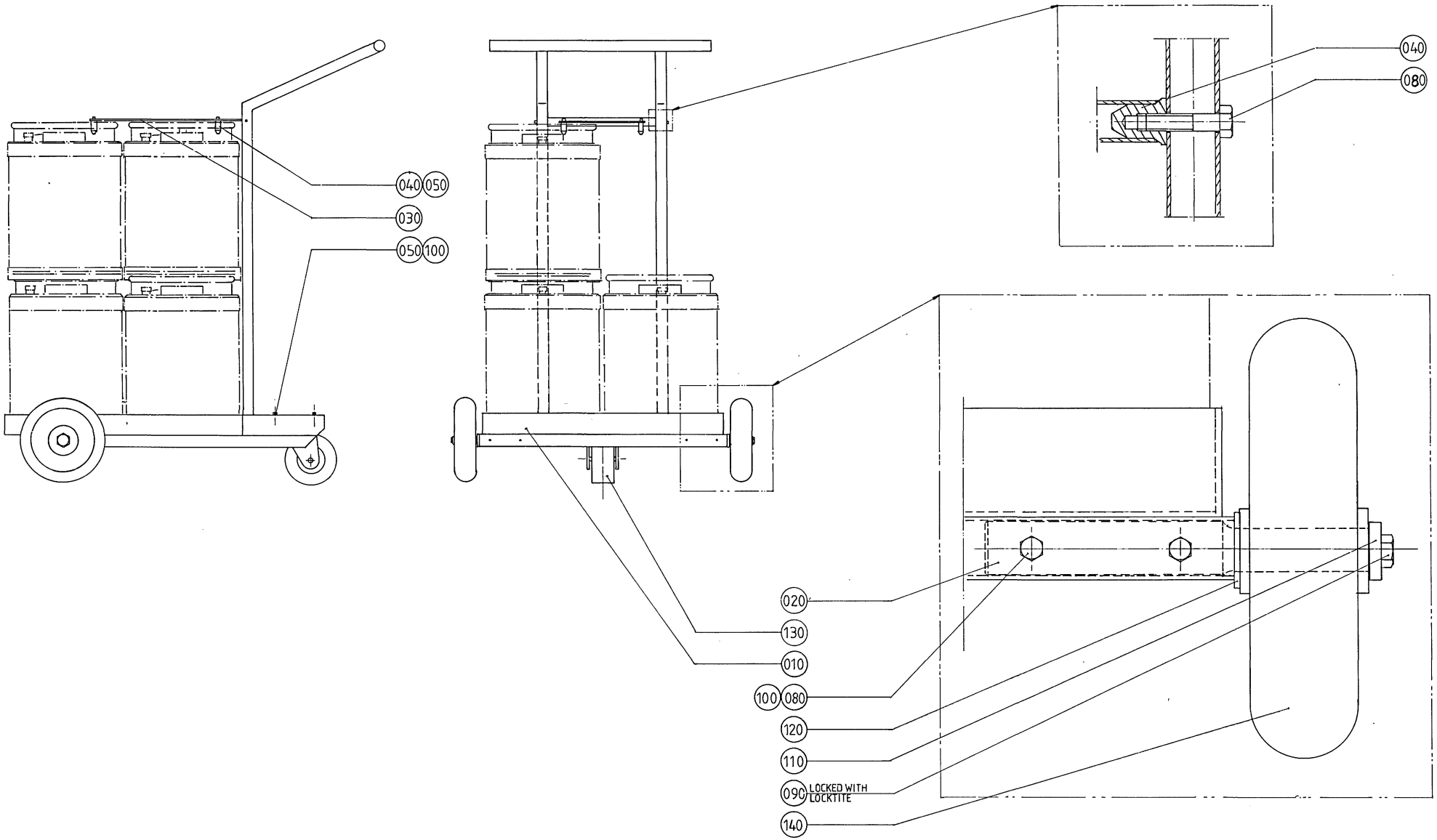
040
050
030
050
100
040
080
020
130
010
100
080
120
110
090
LOCKED WITH LOCKTITE
140

ECM: - -
Group number: 532210-0101
Assembly Drawing: 532210-1_1_AA

Issue: 20030213

Pos	Part No	SP	UN	Qty	Description	Page No
Common Parts						
010	273985-0000	-		1	CARRIAGE	
020	532208-0000	-		2	SHAFT	
030	532209-0000	-		1	SHEET	
040	532211-0000	-		6	DOWEL	
050	312105-0449	-		8	SCREW M6S ISO 4017 M8X16 A480	
080	312105-0459	-		6	SCREW M6S ISO 4014 M8X40 A480	
090	312105-0491	-		2	SCREW M6S ISO 4017 M10X20 A480	
100	312605-0318	-		4	HEXAGON NUT, M6M M8 A280	
110	315115-0173	-		2	WASHER PLAIN, TBRB 10,5/22 H=4	
120	315105-0192	-		2	WASHER ISO 7089-20-200 HV-A4	
130	90191-0060	-		1	CASTOR WHEEL, NO. 1599PRT	
140	90191-0047	-		2	WHEEL, NO. 442-200-113	

Pos	Part No	SP	UN	Qty	Description	Page No

Tetra Pak

SPC
Spare Parts Catalogue

This page is intentionally left blank.

ECM: 82095 - 20000814
Group number: 633245-0100
Assembly Drawing:

Issue: 20030213

Pos	Part No	SP	UN	Qty	Description	Page No
PAPRTROLLEY						
050	451170-0000	A		1	PAPER TROLLEY	
SETTFORM						
030	567122-0000	A		1	BRACKET	
SETTSIDES						
020	76548-0000	A		1	DEPTH GAUGE	
TEMPCONNECT						
010	74976-0000	A		1	TEMPLATE FOR CONNECTOR	
TOOLCAB						
040	90226-0004	A		1	CABINET	

Pos	Part No	SP	UN	Qty	Description	Page No

Tetra Pak

SPC
Spare Parts Catalogue

This page is intentionally left blank.

ECM: 82108 - 20000814
Group number: 633230-0100
Assembly Drawing:

Issue: 20030213

Pos	Part No	SP	UN	Qty	Description	Page No
Common Parts						
110	90296-0094	-			LUBRICANT REPL BY 90296-104 , -105	
200	311103-0272	-		2	PARALLELL PIN, M6, 4X20 MM	
210	311103-0318	-		2	PARALLELL PIN, M6, 5X40 MM	
220	1175666-0000	-		6	CONVEYOR FRAME	
F010	A1175114-0101	-		1	SIGN PLACEMENT DWG.TCA/65	**449**

Pos	Part No	SP	UN	Qty	Description	Page No

Machine Type | Group Description | Used-In | Group Number | Page No

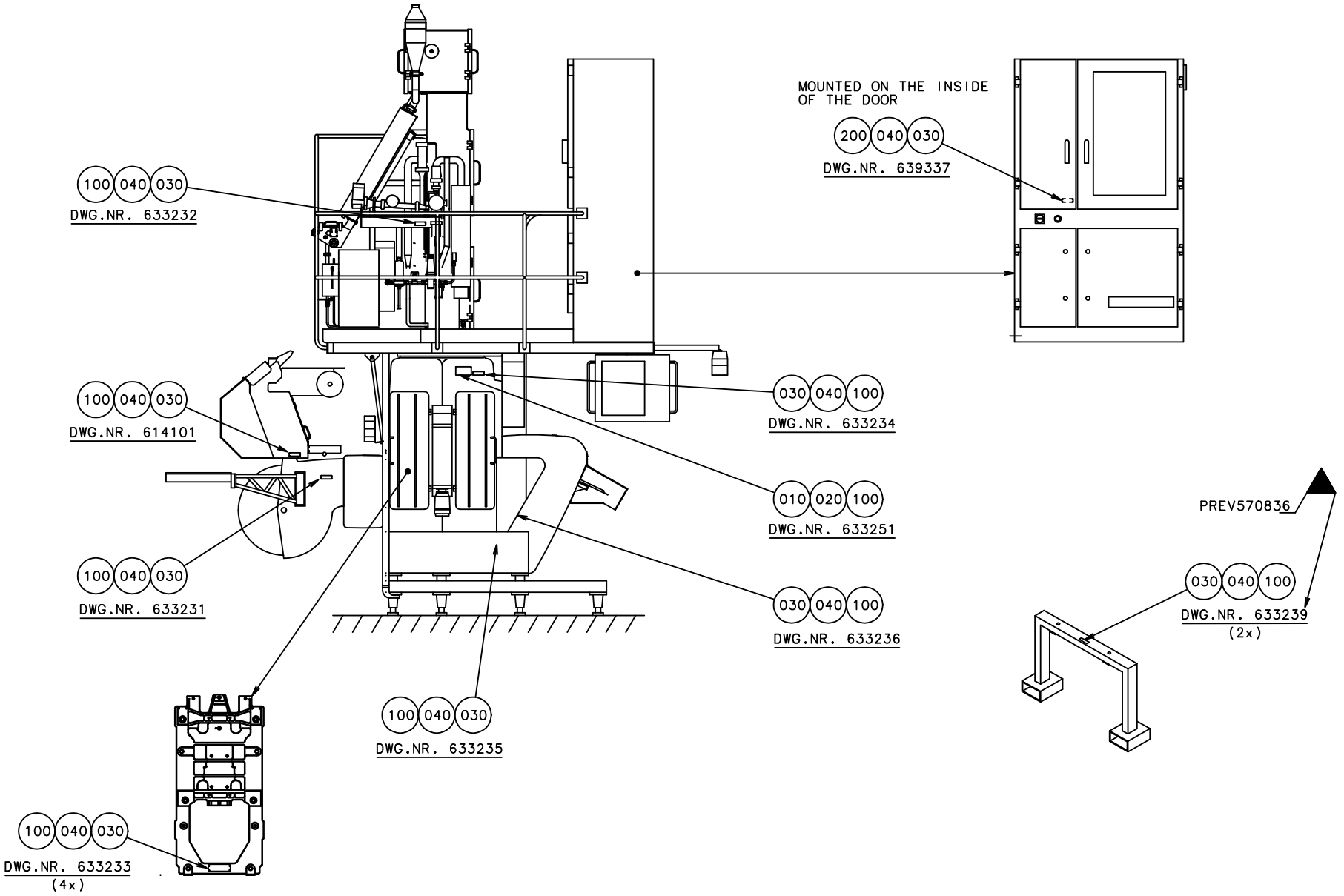
MOUNTED ON THE INSIDE OF THE DOOR
200 040 030
DWG.NR. 639337
100 040 030
DWG.NR. 633232
100 040 030
DWG.NR. 614101
100 040 030
DWG.NR. 633231
100 040 030
DWG.NR. 633233
(4x)
100 040 030
DWG.NR. 633235
030 040 100
DWG.NR. 633234
010 020 100
DWG.NR. 633251
030 040 100
DWG.NR. 633236
PREV570836
030 040 100
DWG.NR. 633239
(2x)

ECM: - -
Group number: 1175114-0101
Assembly Drawing: 1175114-1_1_AA

Issue: 20030213

Pos	Part No	SP	UN	Qty	Description	Page No
Common Parts						
010	593682-0000	-		1	MACHINE SIGN EEA(CE-MARK)	
020	580856-0000	-		1	MACHINE SIGN CE	
030	581003-0000	-		13	MACHINE PLATE	
040	979548-0000	-		13	MACHINE PLATE	
100	312502-0221	-		52	DRIVE SCREW ROUND HEAD KDS 4X6	
200	90153-0001	-	KG		ADHESIVE, BOSTIK CONTACT 100ML	

Pos	Part No	SP	UN	Qty	Description	Page No

Tetra Pak

SPC
Spare Parts Catalogue

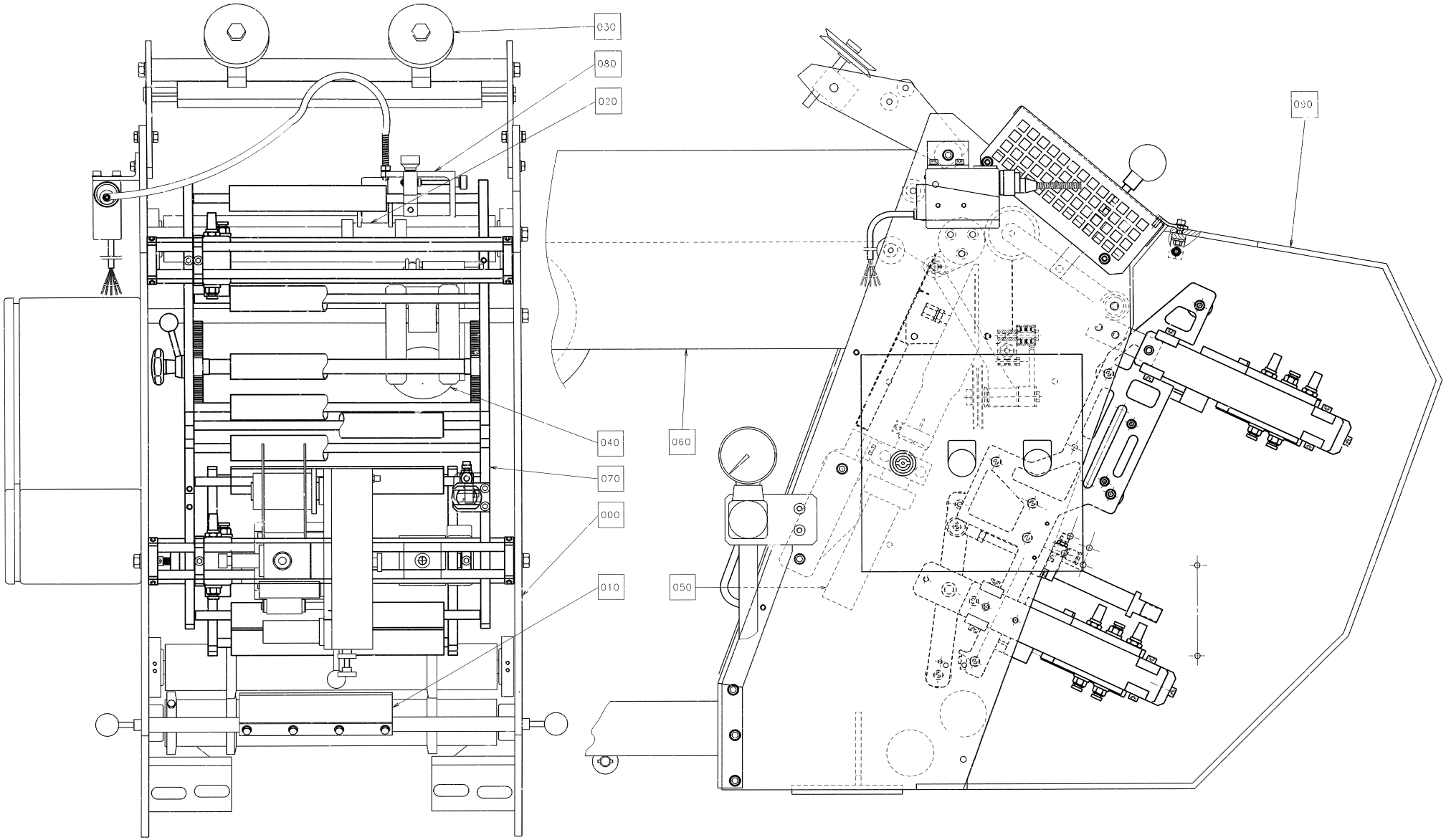
030
080
020
040
070
000
010
060
050
090

ECM: - -
Group number: 614101-0600
Assembly Drawing: 614101-8_1_AA

Issue: 20030213

Pos	Part No	SP	UN	Qty	Description	Page No
Common Parts						
000	A268788-0502	-		1	STRIP APPLICATOR SA4	**455, 457**
010	A20036-0203	-		1	HOSE CLAMP	**459**
020	A573298-0201	-		1	PRESSURE ROLLER	**461**
030	A268554-0101	-		1	PAPER GUIDE	**463**
040	A283455-0201	-		1	STRIP GUIDE	**465**
050	A283768-0401	-		1	ELEMENT GROUP	**467**
060	A568524-0301	-		1	STRIP MAGAZINE	**469**
070	A1483020-0100	-		1	DOUBLE DATING UNIT M40	**475**
080	A1483025-0101	-		1	PHOTOCELL SENSOR DBL M-40	**483**
090	A573165-0202	-		1	TOUCH GUARD SA4	**487**

Pos	Part No	SP	UN	Qty	Description	Page No

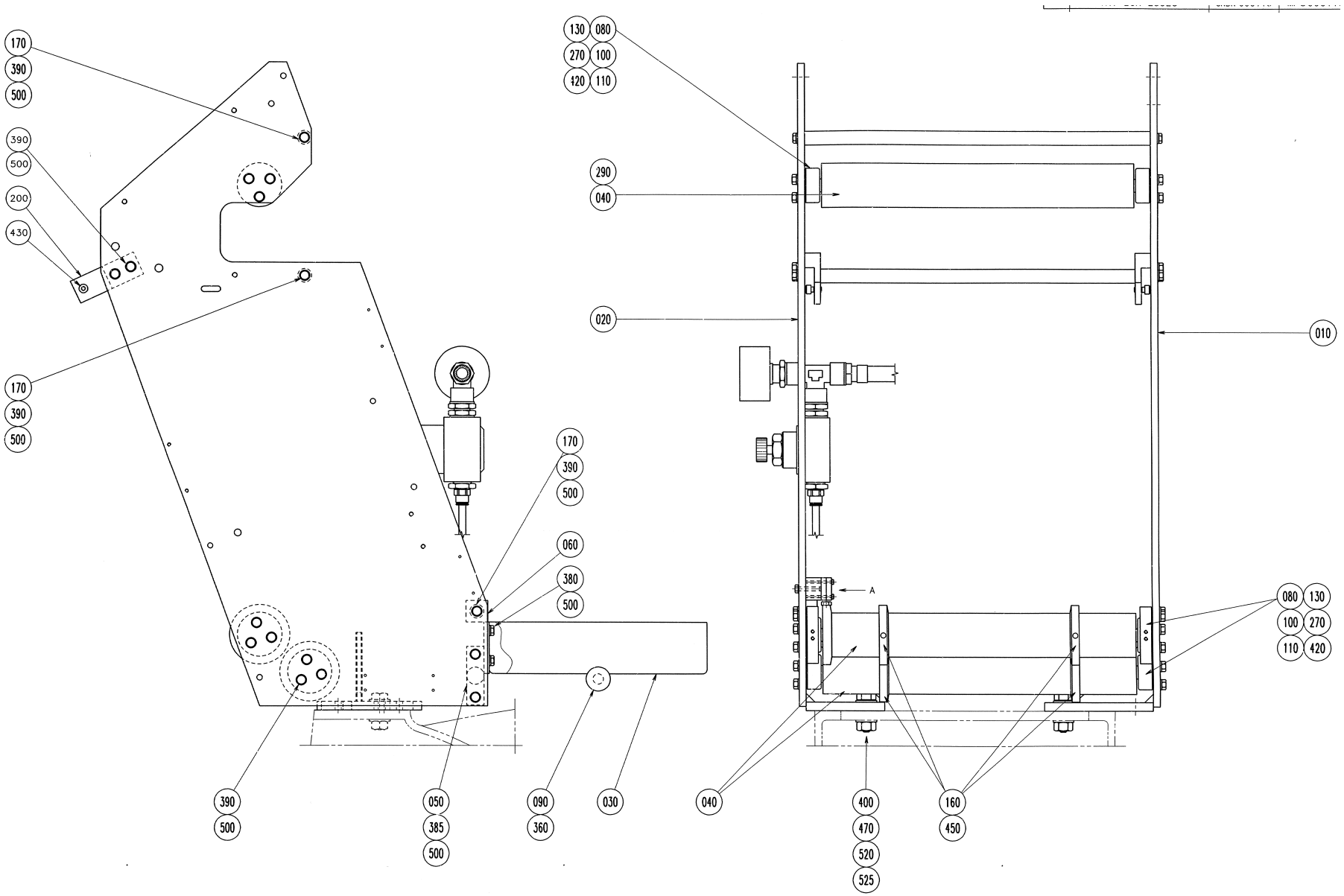
170
390
500
390
500
200
430
170
390
500
130
080
270
100
120
110
290
040
020
010
170
390
500
060
380
500
A
080
130
100
270
110
420
390
500
050
385
500
090
360
030
040
400
470
520
525
160
450

ECM: 83564 - 20000925
Group number: 268788-0502
Assembly Drawing: 268788-9_1_AA

Issue: 20030213

Pos	Part No	SP	UN	Qty	Description	Page No
Common Parts						
010 2	1483027-0000	-		1	END SECTION	
020 2	1483028-0000	-		1	END SECTION	
030	284119-0000	-		1	BOX	
040	259973-0002	A		3	BENDING ROLLER	
050	259987-0002	A		1	SHAFT	
060	259998-0000	-		1	BRACKET	
080	4317-0000	A		6	BEARING	
090	10677-0000	D		1	SHAFT	
100	13120-0001	A		12	SPACING WASHER	
110	13120-0002	A		6	SPACING WASHER	
130	21229-0000	A		6	SPACER	
160	239011-0000	A		5	FLANGE	
170	259977-0002	D		3	SHAFT	
180	497715-0000	-		1	BRACKET	
200	1483029-0000	-		2	BRACKET	
230	90043-0061	A		1	PRESSURE GAUGE, 2061 D=63 MM, THROTTLED	
240	90235-0291	A		1	THROTTLE CHECK VALVE	
250	90140-0010	-		1	T-PIPE, INT. THREAD, 20031/2	
260	90163-0067	-		1	HOSE NIPPLE N-1/2-P13	
270	90165-0015	-		6	CLIP	
290	90166-0053	B	MM	400	SHRINKABLE HOSE 43-53 MM (2")	
300	90224-0037	-		1	CONN. STRAIGHT, ART.NO. 8632-12-120	
320	90224-0122	-		1	REDUCER, ART. NO RMM 1214	
360	311305-0210	-		1	SLOTTED PIRPC2,5X16FZB	
380	312105-0366	-		8	SCREW M6S M6X12 A280	
385	312105-0368	-		8	SCREW M6S M6X16 A280	
390-02	312105-0370	-		28	SCREW M6S ISO 4017 M6X20 A480	
400	312105-0538	-		2	SCREW M6S ISO 4017 M12X35 A480	
420	312115-0291	-		12	SCREW ISO4762 M4X12 A4	
430	312115-0366	-		2	SCREW ISO4762 M6X12 A4	
450	312318-0362	-		14	SCREW ISO4029 M6X8 A4	
470	312605-0322	-		2	HEXAGON NUT, M6M M12 A280	
500-02	315105-0153	-		40	WASHER ISO 7089-6-200 HV-A4	
520	315105-0178	-		2	WASHER ISO 7089-12-200 HV-A4	
525	315115-0178	-		2	WASHER PLAIN, TBRB 13/24 H=4	
530	342701-0205	-		1	BUSHING,INT./EXT.G-THREAD G1/2"-G1/4"	
540	342722-0205	-		1	STRAIGHT COUPLING D=8-G1/4"	
580	312105-0328	-		2	SCREW M6S ISO 4017 M5X14 A480	
590	315105-0146	-		2	WASHER ISO 7089-5-200 HV-A4	
600	312105-0362	-		1	SCREW M6S ISO 4017 M6X8 A480	
610	574667-0000	-		1	SPACER	
620	312125-0228	-		2	SCREW PAN HEAD MCS M3X16 A480	
630	315105-0124	-		2	WASHER ISO 7089-3-200 HV-A4	
650	342991-0102	-		1	HOSE CLIP,WORM DRIVE TYPE (16)-19	
B141	90044-0104	A		1	PROX.SWITCH IFM IN 3002	

Machine Type | Group Description | Used-In | Group Number | Page No

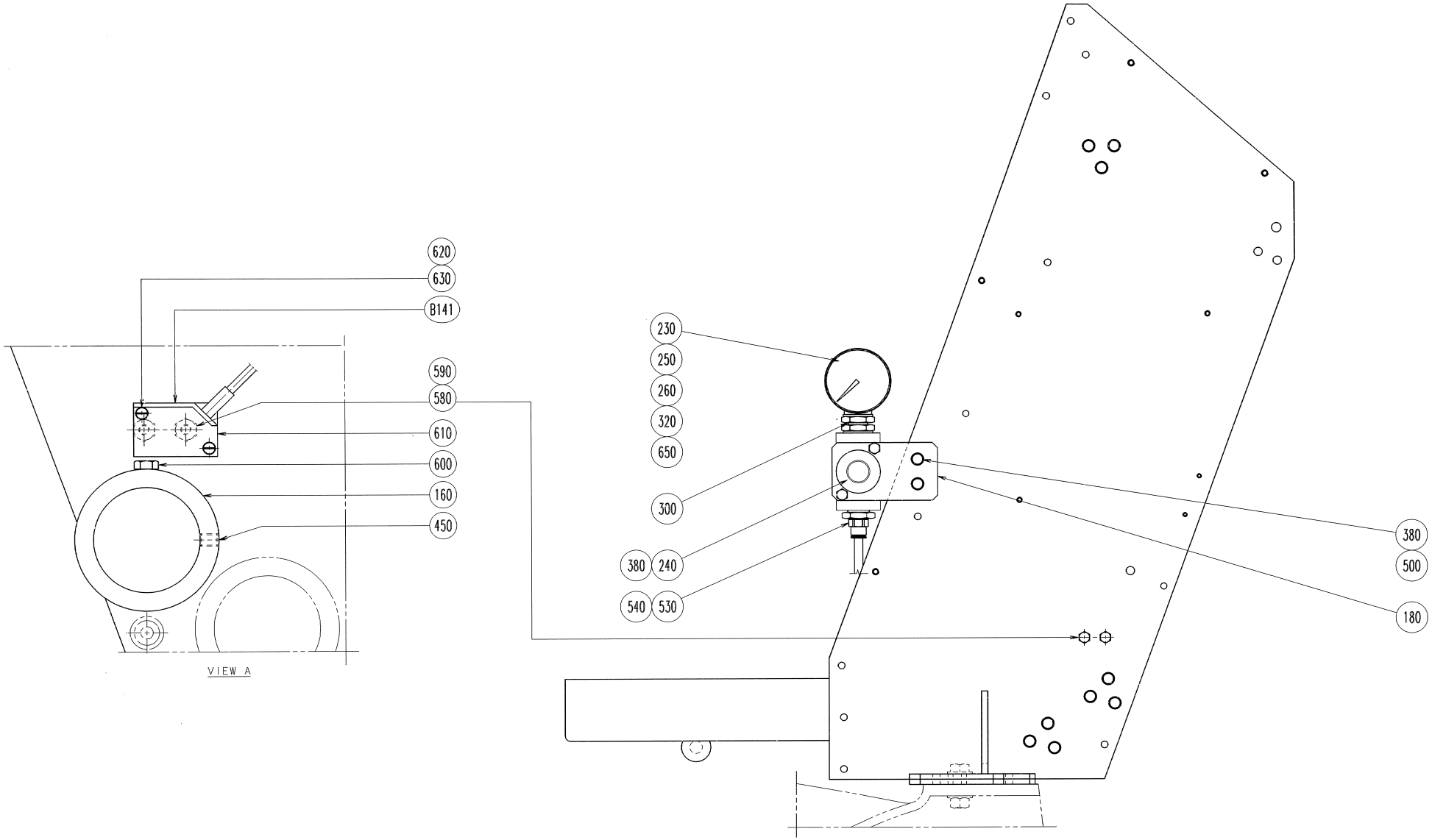
620
630
B141
590
580
610
600
160
450
VIEW A
230
250
260
320
650
300
380
240
540
530
380
500
180

ECM: 83564 - 20000925
Group number: 268788-0502
Assembly Drawing: 268788-9_2_AA

Issue: 20030213

Pos	Part No	SP	UN	Qty	Description	Page No
Common Parts						
010 2	1483027-0000	-		1	END SECTION	
020 2	1483028-0000	-		1	END SECTION	
030	284119-0000	-		1	BOX	
040	259973-0002	A		3	BENDING ROLLER	
050	259987-0002	A		1	SHAFT	
060	259998-0000	-		1	BRACKET	
080	4317-0000	A		6	BEARING	
090	10677-0000	D		1	SHAFT	
100	13120-0001	A		12	SPACING WASHER	
110	13120-0002	A		6	SPACING WASHER	
130	21229-0000	A		6	SPACER	
160	239011-0000	A		5	FLANGE	
170	259977-0002	D		3	SHAFT	
180	497715-0000	-		1	BRACKET	
200	1483029-0000	-		2	BRACKET	
230	90043-0061	A		1	PRESSURE GAUGE, 2061 D=63 MM, THROTTLED	
240	90235-0291	A		1	THROTTLE CHECK VALVE	
250	90140-0010	-		1	T-PIPE, INT. THREAD, 20031/2	
260	90163-0067	-		1	HOSE NIPPLE N-1/2-P13	
270	90165-0015	-		6	CLIP	
290	90166-0053	B	MM	400	SHRINKABLE HOSE 43-53 MM (2")	
300	90224-0037	-		1	CONN. STRAIGHT, ART.NO. 8632-12-120	
320	90224-0122	-		1	REDUCER, ART. NO RMM 1214	
360	311305-0210	-		1	SLOTTED PIRPC2,5X16FZB	
380	312105-0366	-		8	SCREW M6S M6X12 A280	
385	312105-0368	-		8	SCREW M6S M6X16 A280	
390-02	312105-0370	-		28	SCREW M6S ISO 4017 M6X20 A480	
400	312105-0538	-		2	SCREW M6S ISO 4017 M12X35 A480	
420	312115-0291	-		12	SCREW ISO4762 M4X12 A4	
430	312115-0366	-		2	SCREW ISO4762 M6X12 A4	
450	312318-0362	-		14	SCREW ISO4029 M6X8 A4	
470	312605-0322	-		2	HEXAGON NUT, M6M M12 A280	
500-02	315105-0153	-		40	WASHER ISO 7089-6-200 HV-A4	
520	315105-0178	-		2	WASHER ISO 7089-12-200 HV-A4	
525	315115-0178	-		2	WASHER PLAIN, TBRB 13/24 H=4	
530	342701-0205	-		1	BUSHING,INT./EXT.G-THREAD G1/2"-G1/4"	
540	342722-0205	-		1	STRAIGHT COUPLING D=8-G1/4"	
580	312105-0328	-		2	SCREW M6S ISO 4017 M5X14 A480	
590	315105-0146	-		2	WASHER ISO 7089-5-200 HV-A4	
600	312105-0362	-		1	SCREW M6S ISO 4017 M6X8 A480	
610	574667-0000	-		1	SPACER	
620	312125-0228	-		2	SCREW PAN HEAD MCS M3X16 A480	
630	315105-0124	-		2	WASHER ISO 7089-3-200 HV-A4	
650	342991-0102	-		1	HOSE CLIP,WORM DRIVE TYPE (16)-19	
B141	90044-0104	A		1	PROX.SWITCH IFM IN 3002	

Machine Type | Group Description | Used-In | Group Number | Page No

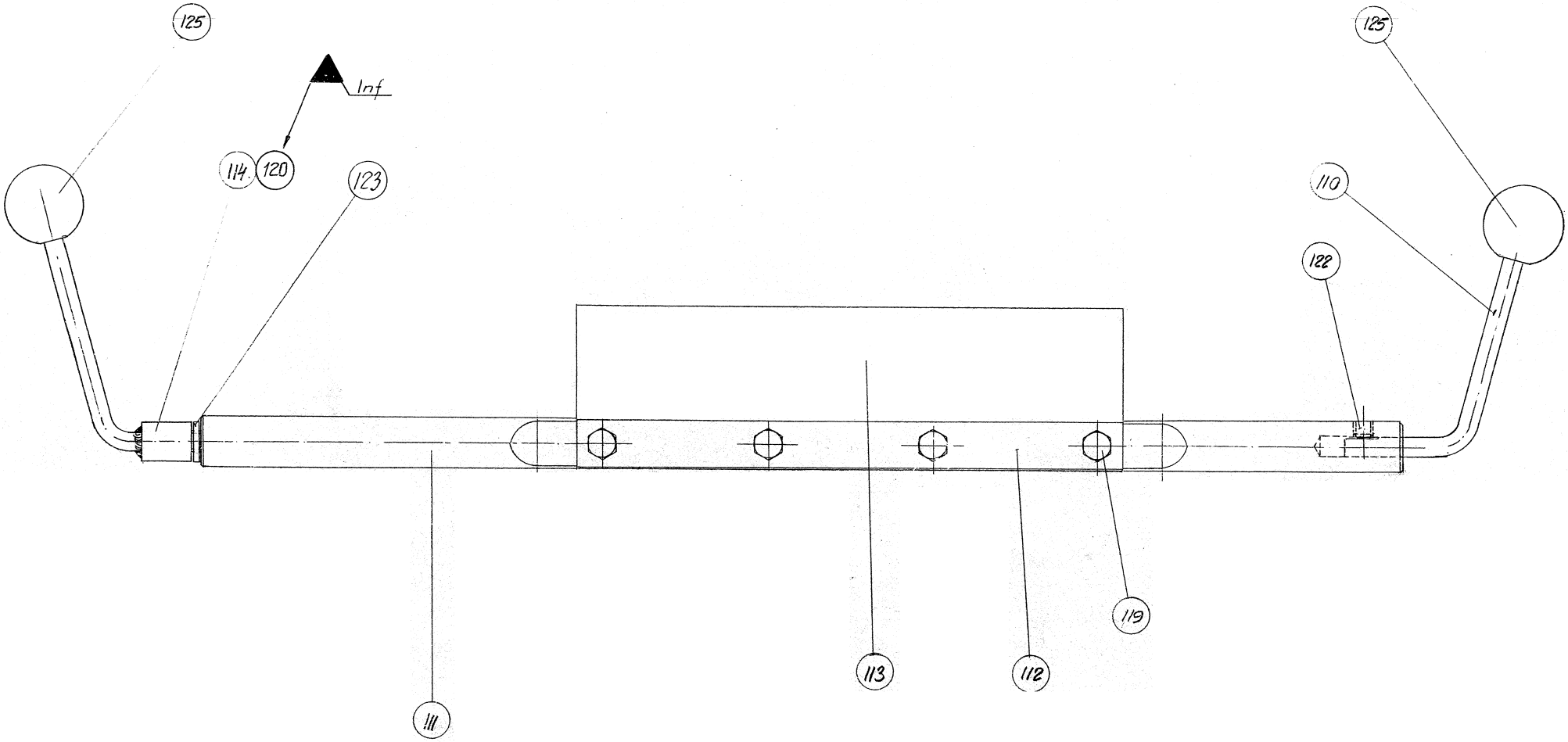
125
Inf
114
120
123
125
110
122
119
113
112
111

ECM: 83559 - 20000925
Group number: 20036-0203
Assembly Drawing: 20036-1_1_AA

Issue: 20030213

Pos	Part No	SP	UN	Qty	Description	Page No
Common Parts						
110	4292-0000	-		1	HANDSPIKE	
111 2	268815-0000	-		1	SHAFT	
112	20038-0000	-		1	CLAMP PLATE	
113	20039-0000	A		1	RUBBER STRIP	
114	20040-0000	-		1	HANDSPIKE	
119	312105-0329	-		4	SCREW M6S ISO 4017 M5X16 A480	
122	312316-0360	-		1	STOP SCREW SK6SS6X6FZB	
123	315105-0153	-		1	WASHER ISO 7089-6-200 HV-A4	
125-02	318800-0103	-		2	HANDLES,SPHERICAL KNOB,INT.THRE.,D.25-M6	

Pos	Part No	SP	UN	Qty	Description	Page No

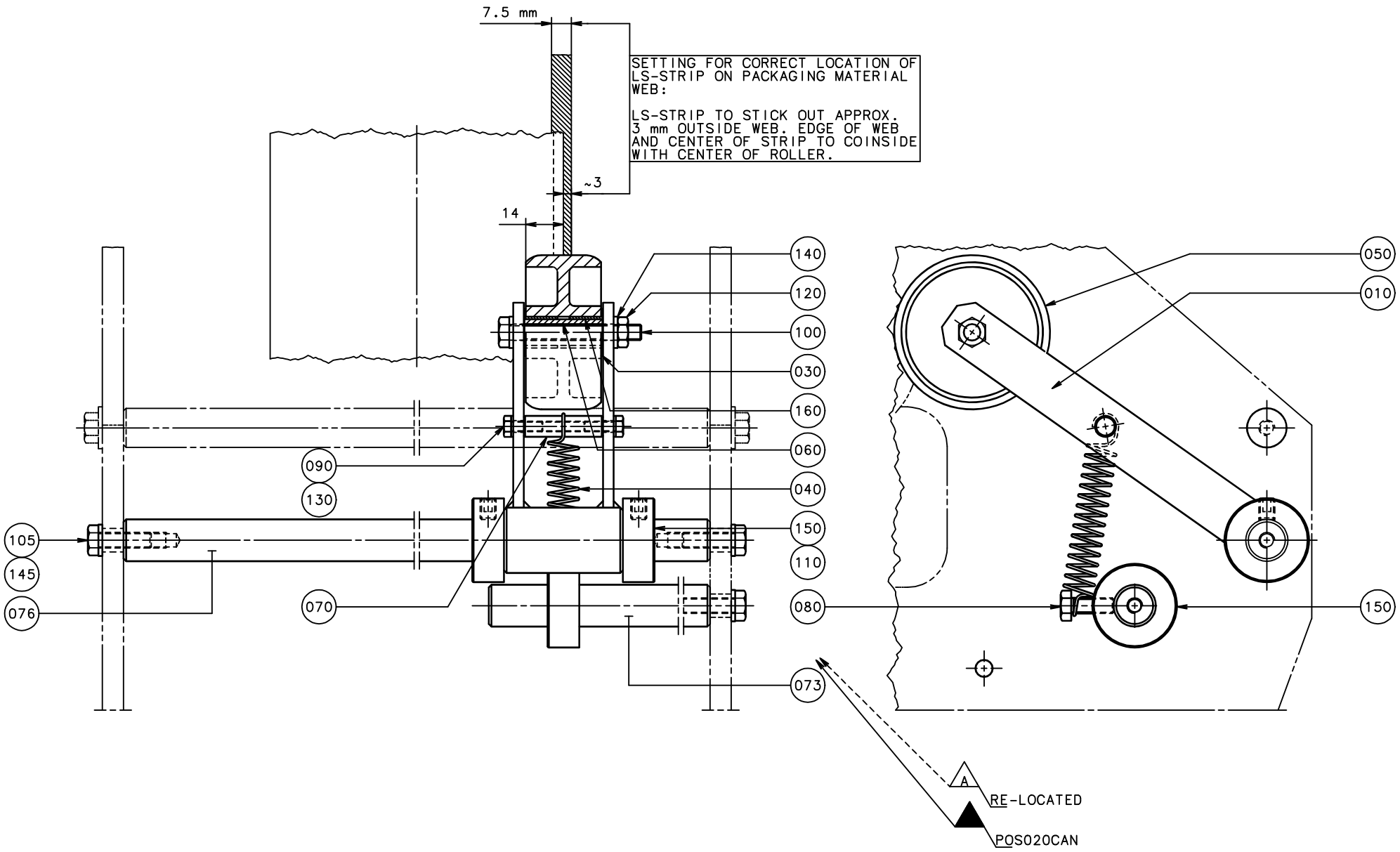
7.5 mm
SETTING FOR CORRECT LOCATION OF LS-STRIP ON PACKAGING MATERIAL WEB:
LS-STRIP TO STICK OUT APPROX. 3 mm OUTSIDE WEB. EDGE OF WEB AND CENTER OF STRIP TO COINSIDE WITH CENTER OF ROLLER.
~3
14
140
120
100
030
160
060
040
150
110
080
073
090
130
070
105
145
076
050
010
150
A
RE-LOCATED
POS020CAN

ECM: 83569 - 20000925
Group number: 573298-0201
Assembly Drawing: 573298-2_1_AA

Issue: 20030213

Pos	Part No	SP	UN	Qty	Description	Page No
Common Parts						
010	572816-0000	-		1	FORK	
025	570802-0000	-		1	LOCKING CATCH	
030	2033-0009	A		2	WASHER	
035	318800-0106	-		1	HANDLE,SPHERICAL KNOB,INT.THRE,D.40-M10	
040	12379-0000	A		1	SPRING	
045	569614-0000	-		1	LOCK STUD	
050	21903-0000	B		1	ROLL	
060	21904-0000	A		1	SHAFT	
070	22501-0000	-		1	SPACER	
073	259977-0001	-		1	SHAFT	
076	259977-0002	-		1	SHAFT	
080	312105-0368	-		1	SCREW M6S M6X16 A280	
090	312105-0291	-		2	SCREW M6S ISO 4017 M4X12 A480	
100	312105-0380	-		1	SCREW M6S ISO 4014 M6X50 A480	
105	312105-0370	-		3	SCREW M6S ISO 4017 M6X20 A480	
110	312318-0362	-		2	SCREW ISO4029 M6X8 A4	
115	311112-0206	-		1	SPRING PIN, ISO 8752 3X12-C	
120	312605-0316	-		1	HEXAGON NUT, M6M M6 A280	
130	315401-0136	-		2	WASHER FBH 4,1 FZB	
140	315401-0153	-		2	WASHER FBH6,1FZB	
145	315105-0153	-		3	WASHER ISO 7089-6-200 HV-A4	
150	315742-0112	-		3	COLLAR, 16/32, H=12	
160	321120-0104	B		2	BEAR.BUSHING W/O FLANGE 10/12X10	

Pos	Part No	SP	UN	Qty	Description	Page No

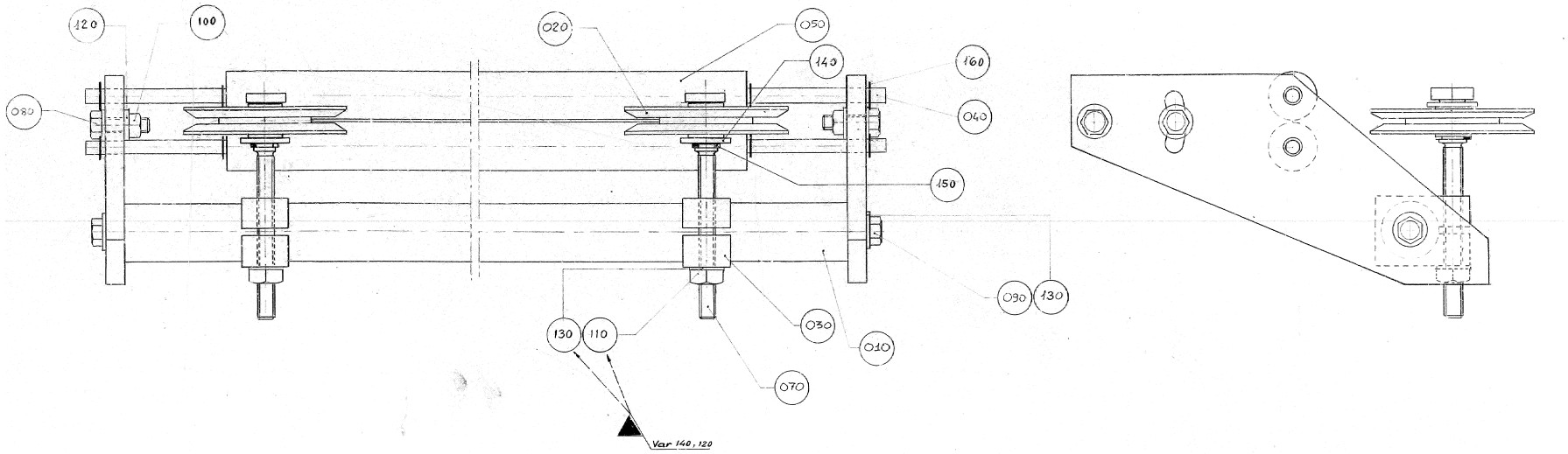
120
100
020
050
140
160
080
040
150
090
130
130
110
030
010
070
Var 140, 120

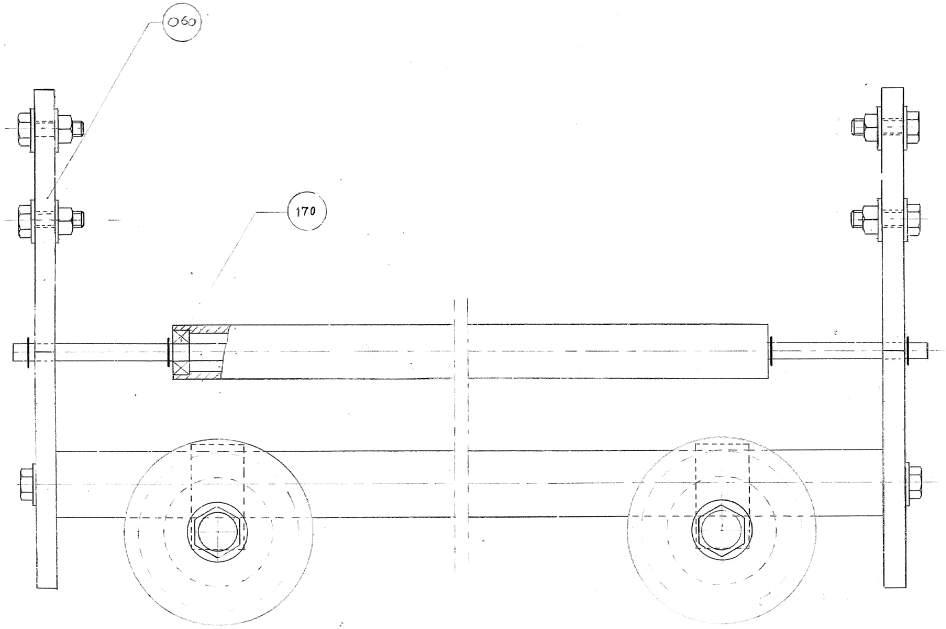
060
170

ECM: 83563 - 20000925
Group number: 268554-0101
Assembly Drawing: 268554-1_1_AA

Issue: 20030213

Pos	Part No	SP	UN	Qty	Description	Page No
Common Parts						
010	267488-0000	-		1	SHAFT	
020	31425-0000	A		2	GUIDE WHEEL	
030	267491-0000	-		2	CRAMP	
040	267805-0000	-		2	SHAFT	
050	267806-0000	A		2	ROLL	
060	268557-0000	-		2	FORK	
070	268558-0000	-		2	SHAFT	
080	312105-0370	-		4	SCREW M6S ISO 4017 M6X20 A480	
090	312105-0453	-		2	SCREW M6S ISO 4017 M8X25 A480	
100	312605-0316	-		4	HEXAGON NUT, M6M M6 A280	
110	312605-0318	-		2	HEXAGON NUT, M6M M8 A280	
120	315105-0153	-		8	WASHER ISO 7089-6-200 HV-A4	
130	315105-0165	-		4	WASHER ISO 7089-8-200 HV-A4	
140	315105-0173	-		2	WASHER ISO 7089-10-200 HV-A4	
150	315754-0110	A		2	LOCKING WAE 9	
160	315755-0107	A		8	LOCKING WASHER 5	
170	321302-0296	A		4	BALL BEARING, 2 SEALS, 6X19X6 MM	

Pos	Part No	SP	UN	Qty	Description	Page No

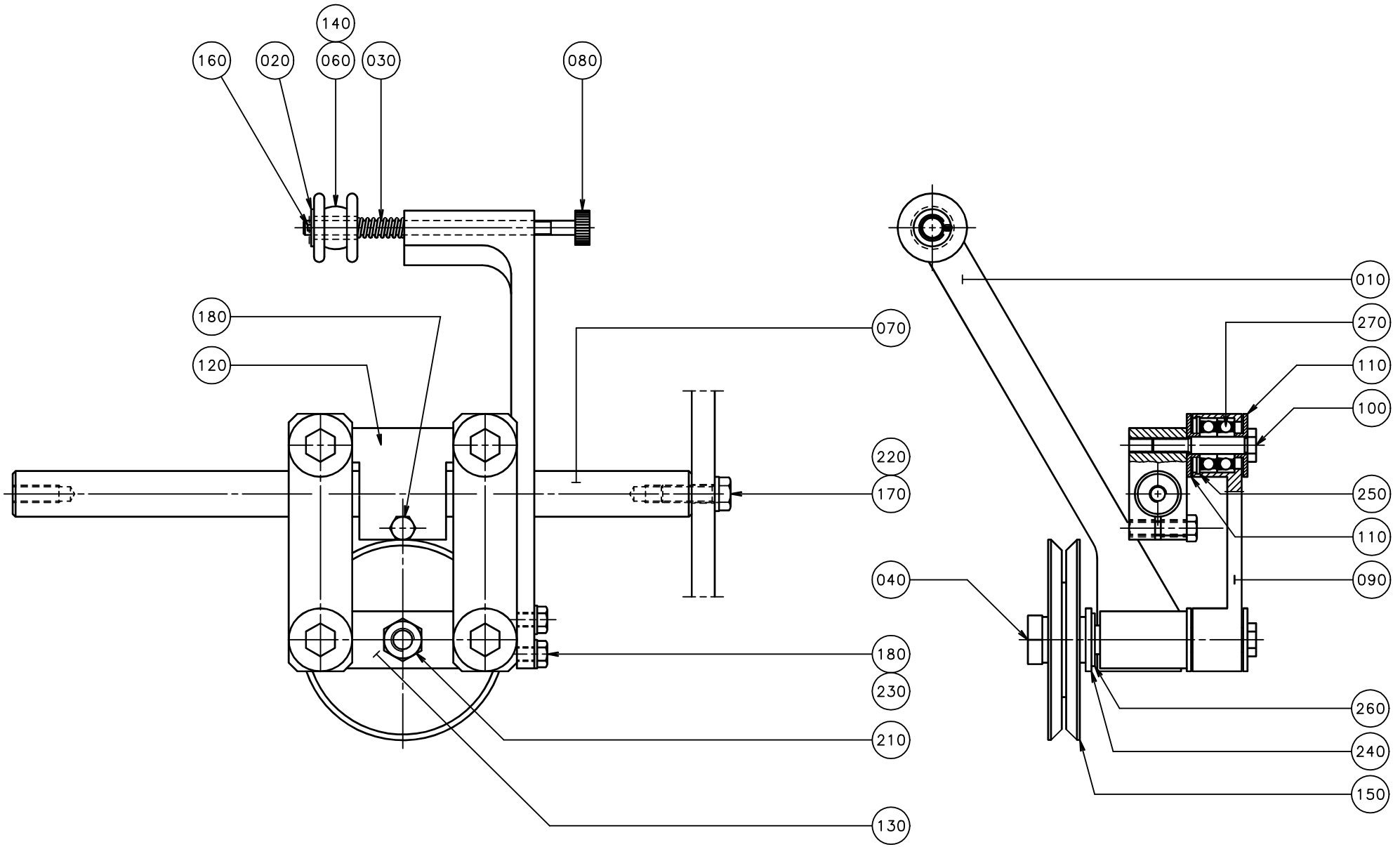
140
160
020
060
030
080
180
120
070
220
170
180
230
210
130
010
270
110
100
250
110
090
040
260
240
150

ECM: 83565 - 20000925
Group number: 283455-0201
Assembly Drawing: 283455-3_1_AA

Issue: 20030213

Pos	Part No	SP	UN	Qty	Description	Page No
Common Parts						
010	284609-0000	-		1	BRACKET	
020	2033-0005	-		3	WASHER	
030	19795-0000	A		1	COMPRESSION SPRING	
040	31418-0000	A		1	SHAFT	
060	257923-0000	A		1	GUIDE WHEEL	
070	259977-0001	-		1	SHAFT	
080	267651-0000	A		1	SCREW	
090	575802-0000	-		2	LINK	
100	575803-0000	-		4	SCREW	
110	283255-0000	-		8	WASHER	
120	283387-0000	A		1	CLAMPING PART	
130	283388-0000	-		1	BRACKET	
140	283417-0000	A		1	BUSHING	
150	284126-0000	A		1	GUIDE WHEEL	
160	311411-0126	-		1	SPLIT PIN SP1,2X10RFR	
170	312101-0370	-		1	SCREW M6S M6X20 FZB	
180	312105-0331	-		3	SCREW M6S ISO 4017 M5X20 A480	
210	312605-0318	-		1	HEXAGON NUT, M6M M8 A280	
220	315101-0153	-		1	WASHER PLAIN, BRB, 6,4/12 H=1,5	
230	315105-0146	-		2	WASHER ISO 7089-5-200 HV-A4	
240	315105-0173	-		1	WASHER ISO 7089-10-200 HV-A4	
250	315752-0115	A		4	RETAINING RING FOR HOLE, 19X1 MM	
260	315754-0110	A		1	LOCKING WAE 9	
270	321302-0296	A		8	BALL BEARING, 2 SEALS, 6X19X6 MM	

Pos	Part No	SP	UN	Qty	Description	Page No

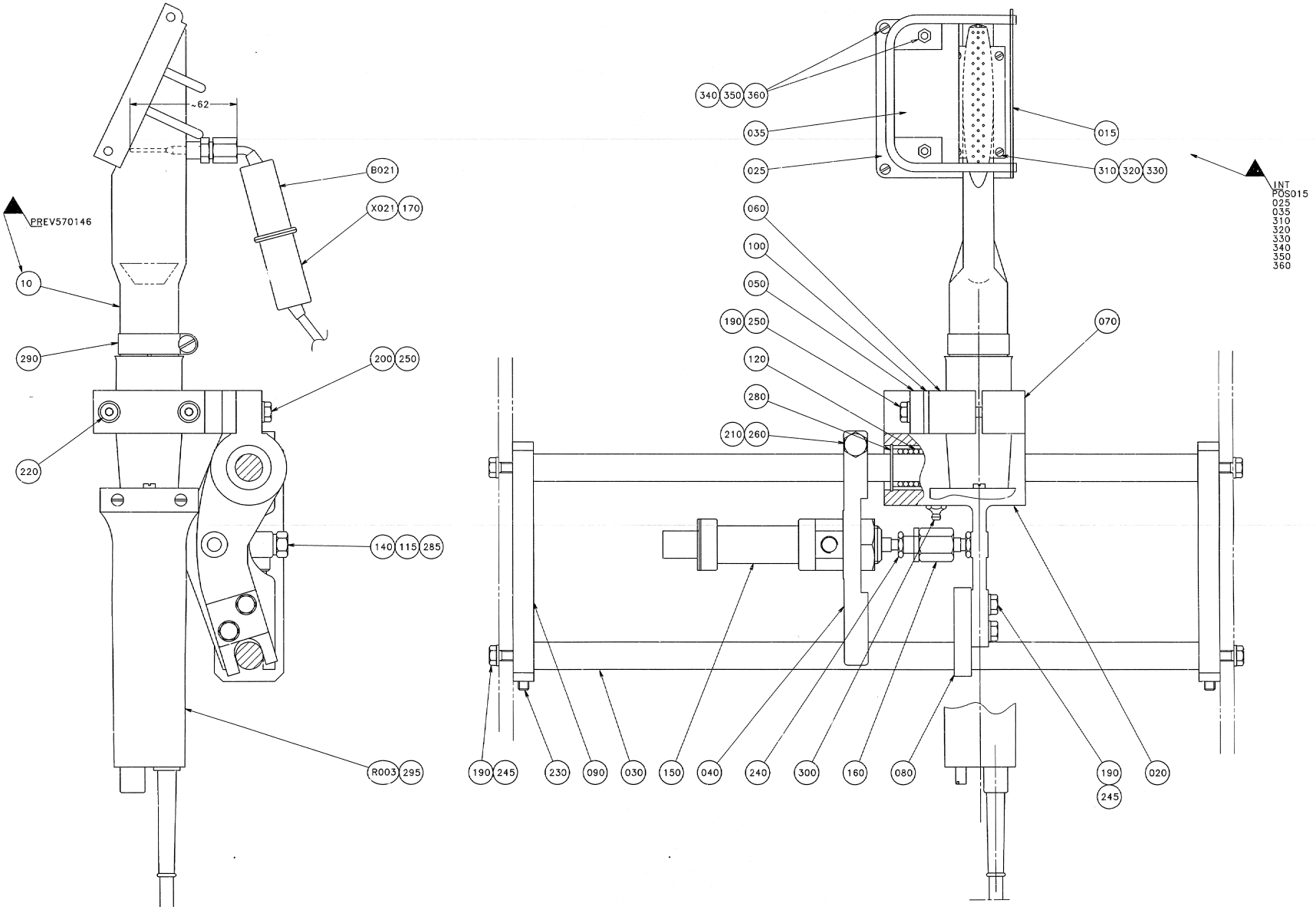
~62
B021
X021
170
PREV570146
10
290
200
250
220
140
115
285
R003
295
340
350
360
035
025
015
310
320
330
060
100
050
190
250
120
280
210
260
070
190
245
230
090
030
150
040
240
300
160
080
190
245
020
INT
POS015
025
035
310
320
330
340
350
360

ECM: 83566 - 20000925
Group number: 283768-0401
Assembly Drawing: 283768-4_1_AA

Issue: 20030213

Pos	Part No	SP	UN	Qty	Description	Page No
Common Parts						
010 I	594716-0000	-		1	NOZZLE	
015 I	594717-0000	A		1	STEERING	
020	283468-0000	-		1	BEARING CONSOLE	
025 I	594719-0000	A		1	HEAT GUARD	
030	259977-0002	-		2	SHAFT	
035 I	594720-0000	A		1	HEAT GUARD	
040	283470-0000	-		1	YOKE	
050	283471-0000	-		1	BRACKET	
060	1483031-0000	-		1	BRACKET	
070	1483032-0000	-		1	CRAMP	
080	283474-0000	A		1	STEERING	
090	283769-0000	-		2	PLATE	
100	294498-0000	A		1	INSULATING PLATE	
115	90166-0081	A	M	5	TUBE 6 MM PA BLUE	
120	90189-0011	A		2	BALL BUSHING, 16X26X36 MM	
140	90235-0241	A		2	THROTTLE CHECK VALVE R1/8" MANUAL	
150	90239-0821	A		1	DOUBLE ACTING, MINI-ISO, CYL.20-25	
160	90239-0370	A		1	CONNECTION	
170	90326-0012	-		1	PROTECTIVE COVER, T31A4618	
190	312105-0370	-		8	SCREW M6S ISO 4017 M6X20 A480	
200	312105-0372	-		2	SCREW M6S ISO 4017 M6X25 A480	
210	312105-0455	-		1	SCREW M6S ISO 4017 M8X30 A480	
220	312115-0378	-		2	SCREW ISO4762 M6X40 A4	
230	312318-0366	-		2	SCREW ISO4029 M6X12 A4	
240	312621-0318	-		1	ROD END,NUT M8	
245	315105-0153	-		6	WASHER ISO 7089-6-200 HV-A4	
250	315115-0153	-		4	WASHER PLAIN, TBRB 6,4/12 H=3	
260	315115-0165	-		1	WASHER PLAIN, TBRB 8,4/16 H=3	
280	315752-0120	A		2	RETAIN. RING, 26	
285	342722-0202	-		2	PIPE COUPLING 1/8" D=6MM	
290	342991-0106	-		1	HOSE CLIP,WORM DRIVE TYPE (30)-36	
295	342991-0102	-		1	HOSE CLIP,WORM DRIVE TYPE (16)-19	
300	344502-0021	-		1	GREASE NIPPLE STRAIGHT M6	
310 I	312145-0224	-		4	SCREW COUNTERS.SLOT.HD. MFS 3X10 SS	
320 I	312605-0310	-		4	HEXAGON NUT, M6M M3 A280	
330 I	315105-0124	-		4	WASHER ISO 7089-3-200 HV-A4	
340 I	312155-0289	-		4	SCREW EN 10642 MF6S M4X10 A480	
350 I	312605-0312	-		4	HEXAGON NUT, M6M M4 A280	
360 I	315105-0136	-		4	WASHER ISO 7089-4-200 HV-A4	
B021	90326-0043	A		1	THERMOCOUPLE, CR-ALPREM.G	
R003	B90206-0052	A		1	HOT AIR GUN; 1400W 230V	
	90206-0324	*C*		*1*	*HEATING CARTRIDGE 1400W 220V*	
	90166-0190	*C*	*M*	*1*	*PLASTIC HOSE*	
X021	90326-0020	A		1	PLUG, FEMALE YELLOW CR-AL	

Machine Type | Group Description | Used-In | Group Number | Page No

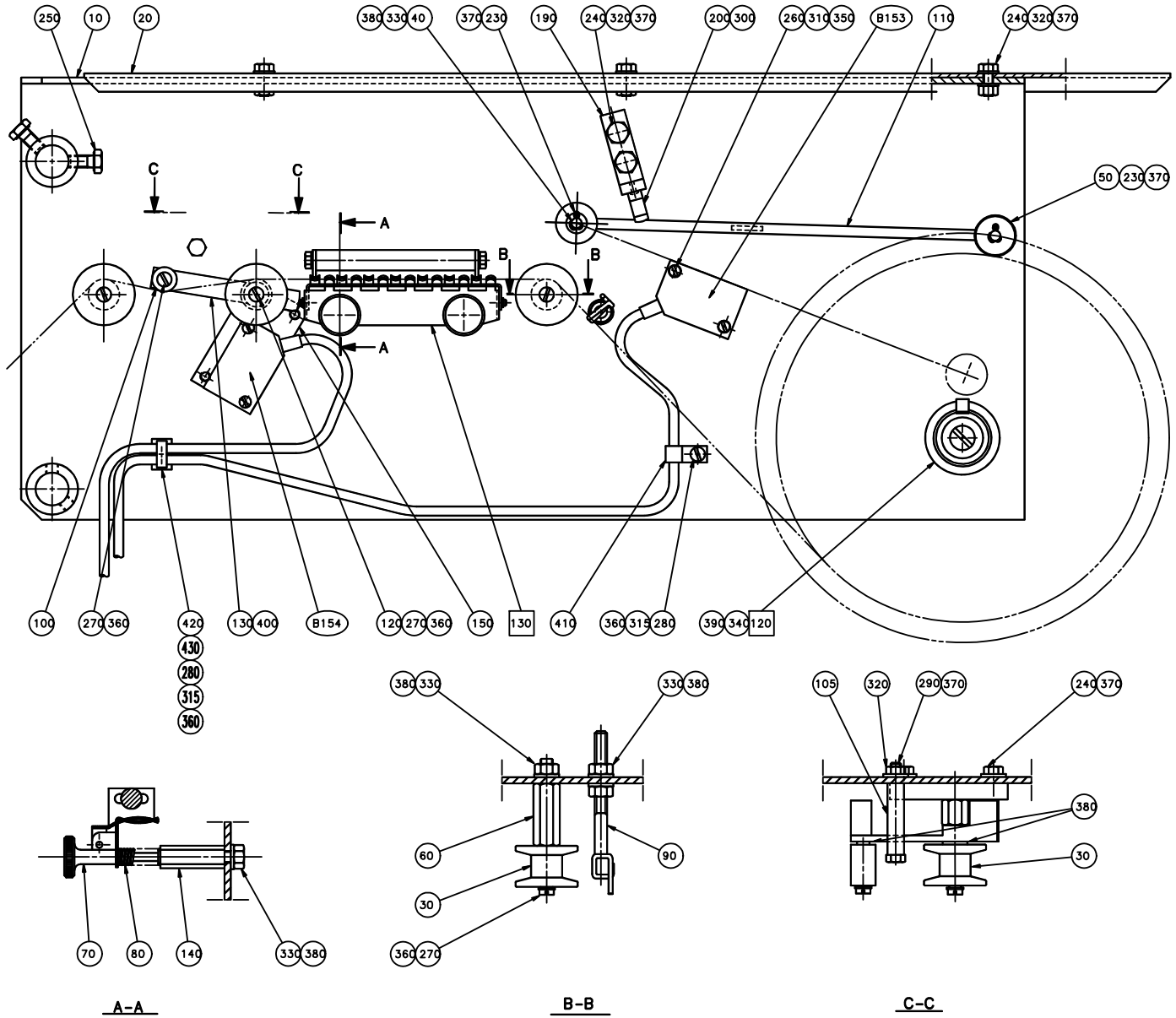
250 10 20
380 330 40
370 230
190
240 320 370
200 300
260 310 350
B153
110
240 320 370
50 230 370
C
C
A
B
B
A
100
270 360
420
430
280
315
360
130 400
B154
120 270 360
150
130
410
360 315 280
390 340 120
380 330
330 380
60
90
30
360 270
105
320
290 370
240 370
380
30
70
80
140
330 380
A-A
B-B
C-C

ECM: 83567 - 20000925
Group number: 568524-0301
Assembly Drawing: 568524-3_1_AA

Issue: 20030213

Pos	Part No	SP	UN	Qty	Description	Page No
Common Parts						
010	581618-0000	-		1	FASTENING PLATE	
020	567031-0000	-		1	HOOD	
030	6695-0000	A		3	ROLL	
040	14964-0002	-		1	SHAFT	
050	14966-0000	A		1	ROLL	
060	18880-0000	A		2	AXLE PIN	
070	19217-0000	A		2	KNURLED SCREW	
080	19223-0000	A		2	COMPRESSION SPRING	
090	19515-0000	A		1	EYELET	
100	249298-0000	A		1	ROLL	
105	259880-0000	-		1	SPACER	
110	269051-0000	-		1	ARM	
120	269053-0002	A		1	SHAFT	
130	573618-0000	-		1	ARM	
140	276060-0000	A		2	STUD SCREW	
150	283499-0000	-		1	SPACER	
190	567032-0000	-		1	HOLDER	
200	90165-0013	-		2	CLIP	
230	311411-0137	-		3	SS 2343 SP1,6X10RFR	
240	312105-0327	-		7	SCREW M6S ISO 4017 M5X12 A480	
250	312105-0366	-		4	SCREW M6S M6X12 A280	
260	312125-0230	-		4	SPåRSKRUV MCS M3X20 SS	
270	312125-0285	-		4	SCREW SLOT.PAN HD. MCS 4X6 A480	
280	312125-0291	-		2	SCREW PAN HEAD MCS M4X12 SS	
290	312105-0340	-		1	SCREW M6S ISO 4014 M5X45 A480	
300	312502-0171	-		1	DRIVE SCREW ROUND HEAD KDS 2X6	
310	312605-0310	-		2	HEXAGON NUT, M6M M3 A280	
315	312605-0312	-		2	HEXAGON NUT, M6M M4 A280	
320	312605-0314	-		6	HEXAGON NUT, M6M M5 A280	
330	312605-0316	-		7	HEXAGON NUT, M6M M6 A280	
340	312605-0318	-		1	HEXAGON NUT, M6M M8 A280	
350	315105-0124	-		6	WASHER ISO 7089-3-200 HV-A4	
360	315105-0136	-		6	WASHER ISO 7089-4-200 HV-A4	
370	315105-0146	-		17	WASHER ISO 7089-5-200 HV-A4	
380	315105-0153	-		10	WASHER ISO 7089-6-200 HV-A4	
390	315105-0165	-		1	WASHER ISO 7089-8-200 HV-A4	
400	321120-0101	-		1	BEARING BUSHING WITHOUT FLANGE,6/8X6	
410	352110-0100	-		3	CABLE CLIPS, D=5-7 MM	
B152	90044-0194	A		1	PROX.SW. IN5329/IN3002-BPKG	
B153	90044-0194	A		1	PROX.SW. IN5329/IN3002-BPKG	
F120	A20387-0101	-		1	BOBBIN	**471**
F130	A20389-0101	-		1	BRAKE	**473**

Machine Type	Group Description	Used-In	Group Number	Page No

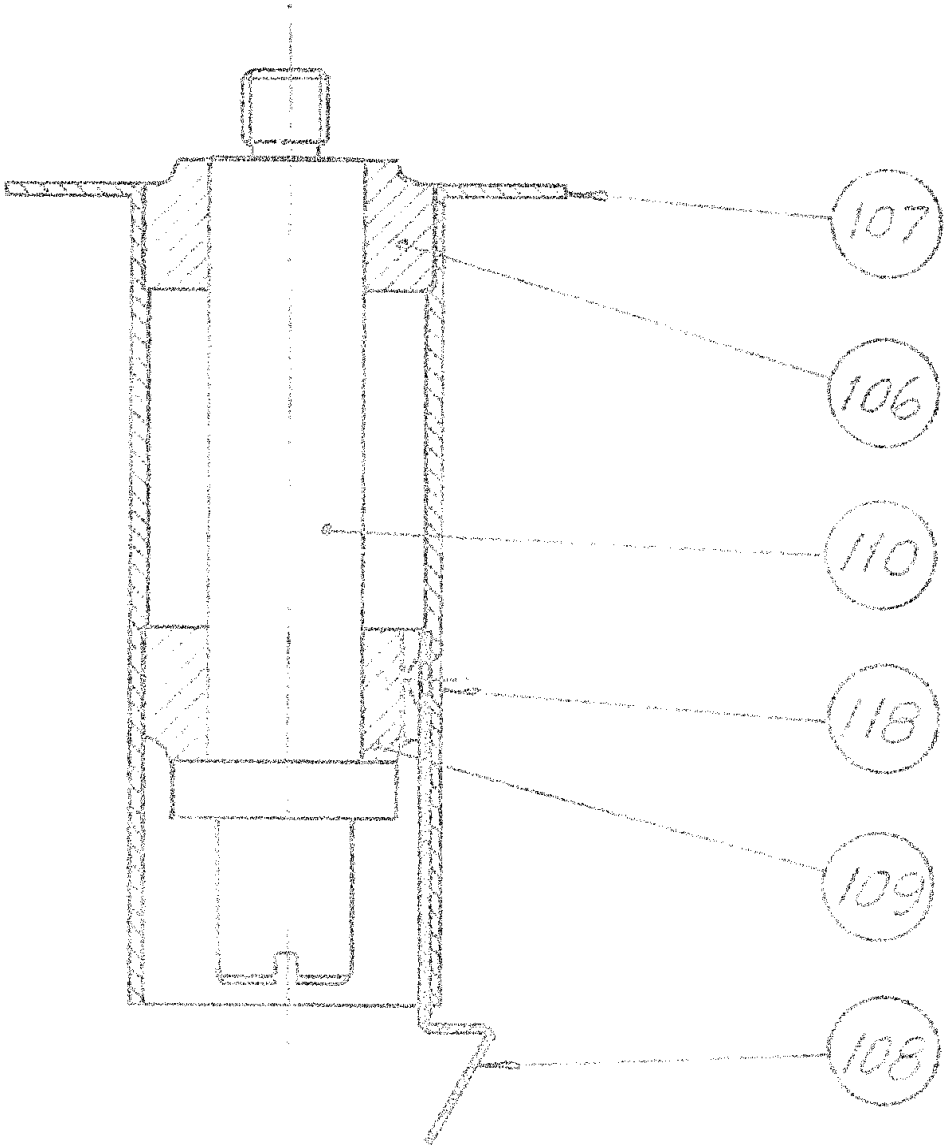
107
106
110
118
109
103

ECM: 83560 - 20000925
Group number: 20387-0101
Assembly Drawing: 20387-1_1_AA

Issue: 20030213

Pos	Part No	SP	UN	Qty	Description	Page No
Common Parts						
106	5486-0000	A		1	BEARING	
107	6157-0000	A		1	BOBBIN	
108	6158-0000	A		1	SPRING	
109	6159-0000	A		1	BEARING	
110	19784-0000	A		1	SHAFT	
118	311506-0278	-		1	RIVET, ROUND HEAD, KN, 2,6X6	

Pos	Part No	SP	UN	Qty	Description	Page No

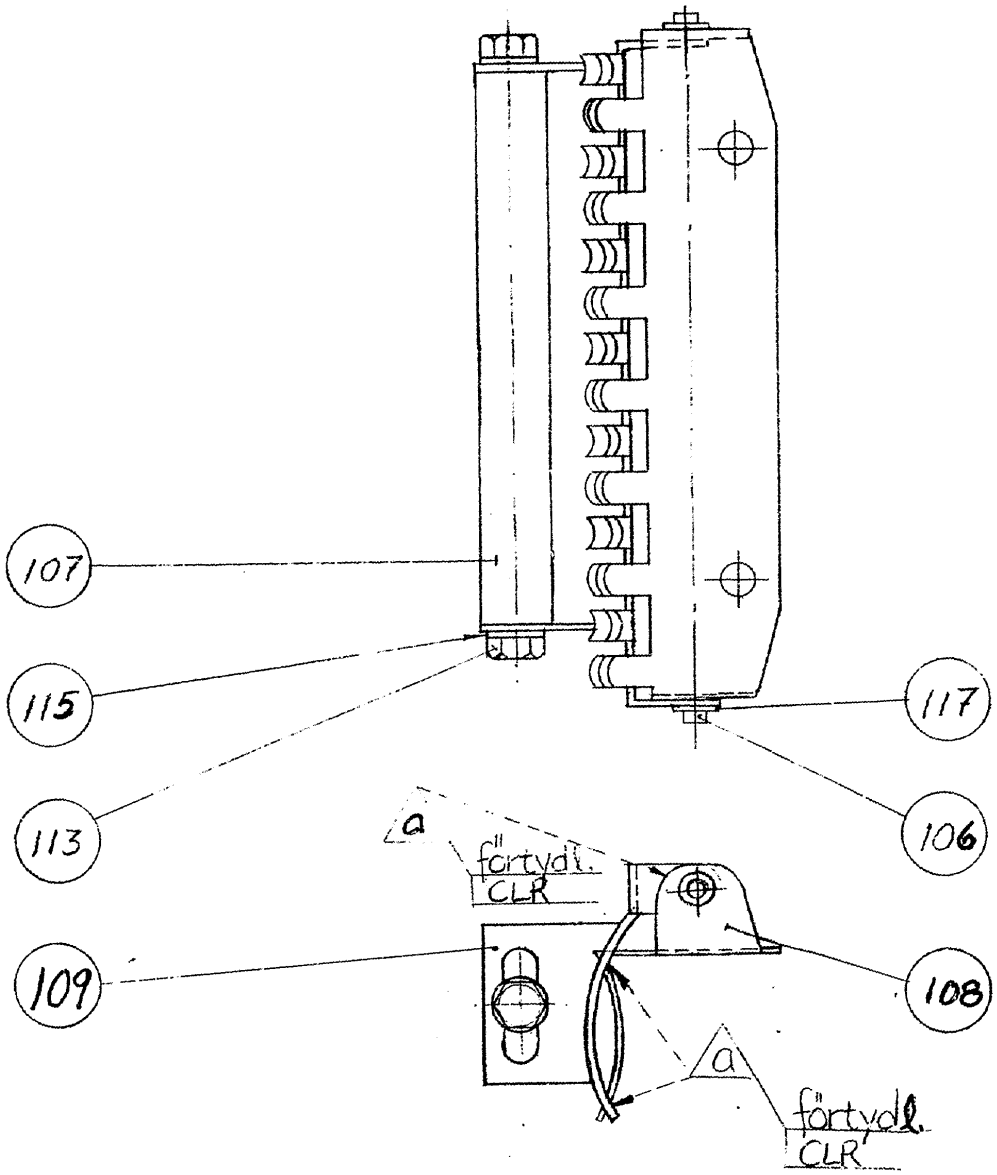
107
115
113
117
106
109
108
a
förtydl.
CLR
a
förtydl.
CLR

Pos	Part No	SP	UN	Qty	Description	Page No
Common Parts						
106	5778-0000	A		1	SHAFT	
107	19083-0000	-		1	WEIGHT	
108	21071-0000	A		1	BRAKE	
109	21072-0000	A		1	BRAKE	
113	312101-0291	-		2	SCREW M6S M4X12 FZB	
115	315105-0136	-		2	WASHER ISO 7089-4-200 HV-A4	
117	315754-0103	A		2	RET. RING FOR RAD. ASSEMBLY, 1,9X0,5 MM	

Pos	Part No	SP	UN	Qty	Description	Page No

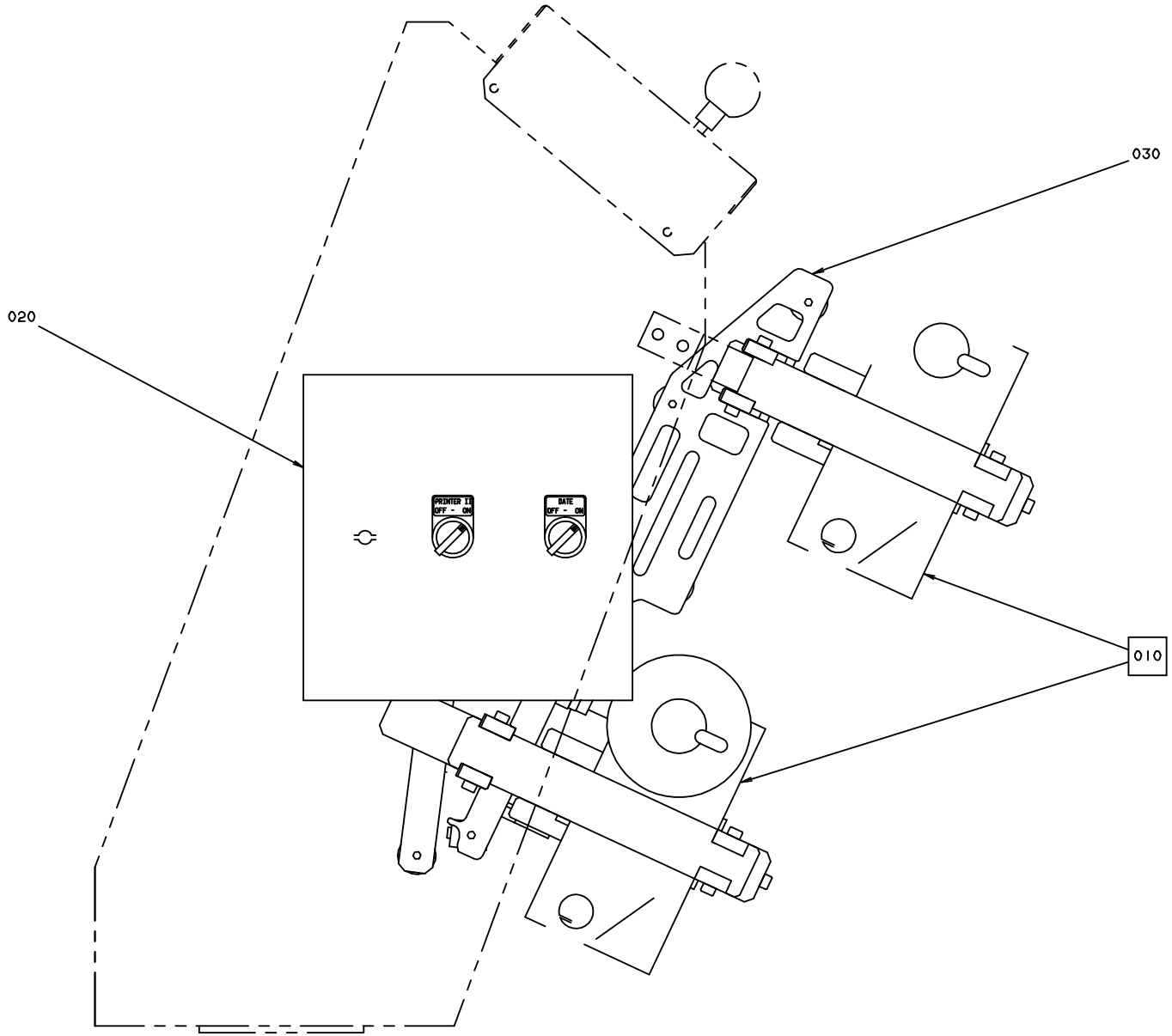
030
020
PRINTER 1
OFF - ON
DATE
OFF - ON
010

ECM: 86035 - 20001110
Group number: 1483020-0100
Assembly Drawing: 1483020-1_1_AA

Issue: 20030213

Pos	Part No	SP	UN	Qty	Description	Page No
Common Parts						
010	A575620-0300	-		2	DATING UNIT ELMOPRINT M40	**477**
020	B1483026-0000	-		1	ELECTRICAL CABINET M-40	
	90024-0032	*-*		*1*	*POWER LINE FILTER, 4 A 600 VAC*	
030	1483024-0000	-		1	MACHINE BODY, DOUBLE M-40	
040	A1483270-0100	-		1	SPARE PARTS	**481**

Pos	Part No	SP	UN	Qty	Description	Page No

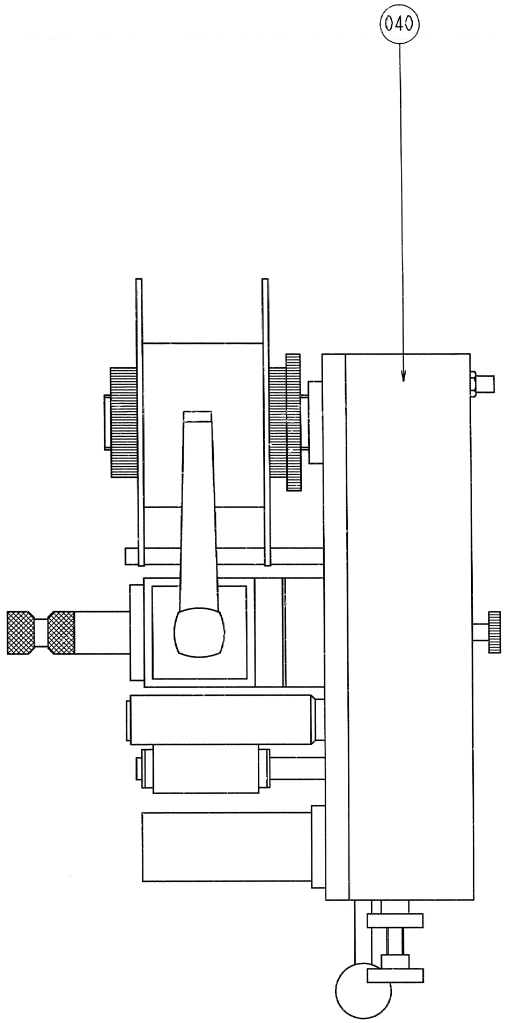

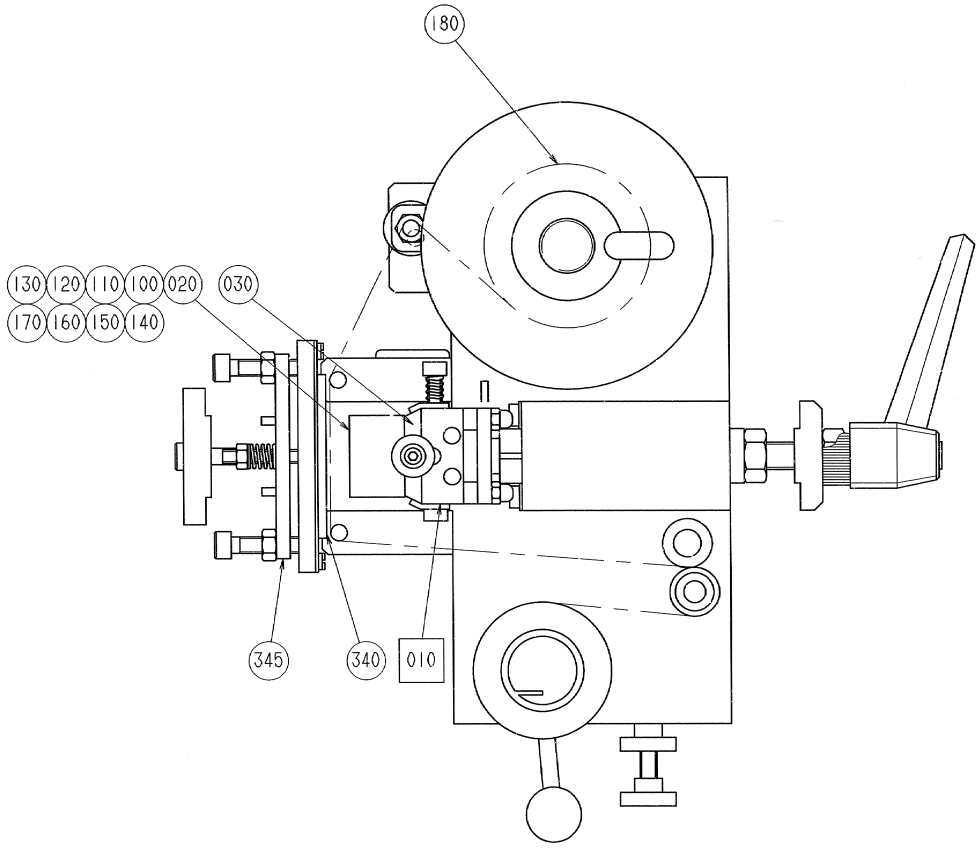

For spare parts not covered
by the SPC, please refer to
ELMOPRINT's "Maunual for M 40-10 on TCA-65"

Pos	Part No	SP	UN	Qty	Description	Page No
Common Parts						
010	A581644-0101	-			HEATING BLOCK COMPL. M-40	**479**
020	581627-0000	A		1	TYPE HOLDER	
030	575626-0000	-		1	LOCKING PLATE M-40	
040	581629-0000	A		1	HOT FOIL PRINTER	
100	90413-0421	A		2	STAMP	
110	90413-0422	A		2	STAMP	
120	90413-0430	A		2	STAMP	
130	90413-0431	A		3	CODE INSERT SET	
140	90413-0457	A		1	CODE INSERT SET	
150	90413-0465	A		12	STAMP	
160	90413-0466	A		6	STAMP	
170	90413-0467	A		6	STAMP	
180	90427-0532	A		1	INK ROLLER	
340	90427-0510	A		2	COUNTER RUBBER	
345	90427-0552	A		2	COUNTER PLATE	

Pos	Part No	SP	UN	Qty	Description	Page No

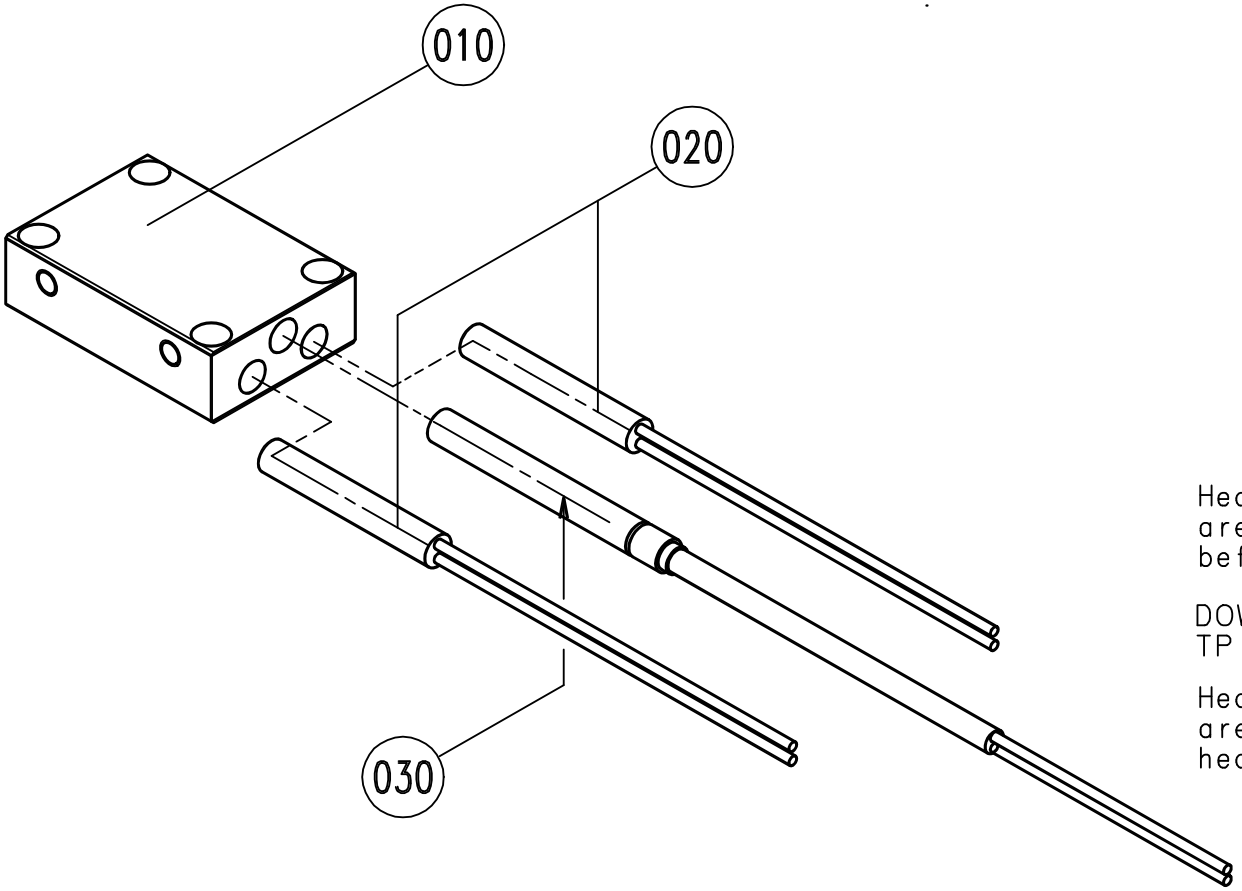

Heating elements and temperature sensor are to be treated with heat transfer paste before fitting:

DOW Corning 7 Compound, silicone paste 340
TP no 90296-51

Heating elements and temperature sensor are to be fixed with centre punch in the heating block.

ECM: 83561 - 20000925
Group number: 581644-0101
Assembly Drawing: 581644-1_1_AA

Issue: 20030213

Pos	Part No	SP	UN	Qty	Description	Page No
Common Parts						
010	581645-0000	A		1	HEATING BLOCK	
020	581646-0000	A		2	HEATING CARTRIDGE	
030	581647-0000	A		1	TEMPERATURE SENSOR	

Pos	Part No	SP	UN	Qty	Description	Page No

This page is intentionally left blank.

ECM: 117808 - 20021023
Group number: 1483270-0100
Assembly Drawing:

Issue: 20030213

Pos	Part No	SP	UN	Qty	Description	Page No
Common Parts						
010	1483231-0000	B		1	EDGE RAIL	
020	1483232-0000	B		1	EDGE RAIL	
030	1483233-0000	B		1	GASKET	
040	1483234-0000	B		1	TENSION SPRING	
050	1483236-0000	B		1	MAIN CYLINDER	
060	1483237-0000	B		1	EMBOSSING ANVIL	
070	1483238-0000	B		1	SHAFT	
080	1483239-0000	B		1	SHAFT	
090	1483241-0000	B		1	FEEDING ROLLER	
100	1483242-0000	B		1	PRESSURE ROLLER	
110	1483243-0000	B		1	GUIDE	
120	1483244-0000	B		1	BEARING	
130	1483246-0000	B		1	COMPRESSION SPRING	
140	1483247-0000	B		1	BRAKE DISC	
150	1483248-0000	B		1	ARM	
160	1483249-0000	B		1	BRAKE ARM	
170	1483256-0000	B		1	COMPRESSION SPRING	
180	1483257-0000	B		1	COUPLING	
190	1483258-0000	B		1	TYPE HOLDER	
200	1483259-0000	B		1	O-RING	
210	1483260-0000	B		1	O-RING	
220	1483261-0000	B		1	CUFF	
230	1483262-0000	B		1	CUFF	
240	1483263-0000	B		1	BUSHING	
250	1483264-0000	B		1	BUSHING	
260	1483271-0000	B		1	TOOTHED WHEEL	
270	1483272-0000	B		1	SEAL	
280	1483273-0000	B		1	GASKET	
290	1483274-0000	B		1	CYLINDER SHELL	
300	1483275-0000	B		1	CUFF	
310	1483276-0000	B		1	GASKETS	
320	1483277-0000	B		1	CYLINDER	
330	2573739-0000	B		1	PRINTED CIRCUIT BOARD	

Pos	Part No	SP	UN	Qty	Description	Page No

Machine Type	Group Description	Used-In	Group Number	Page No

PHOTOCELL SENSOR DBL M-40

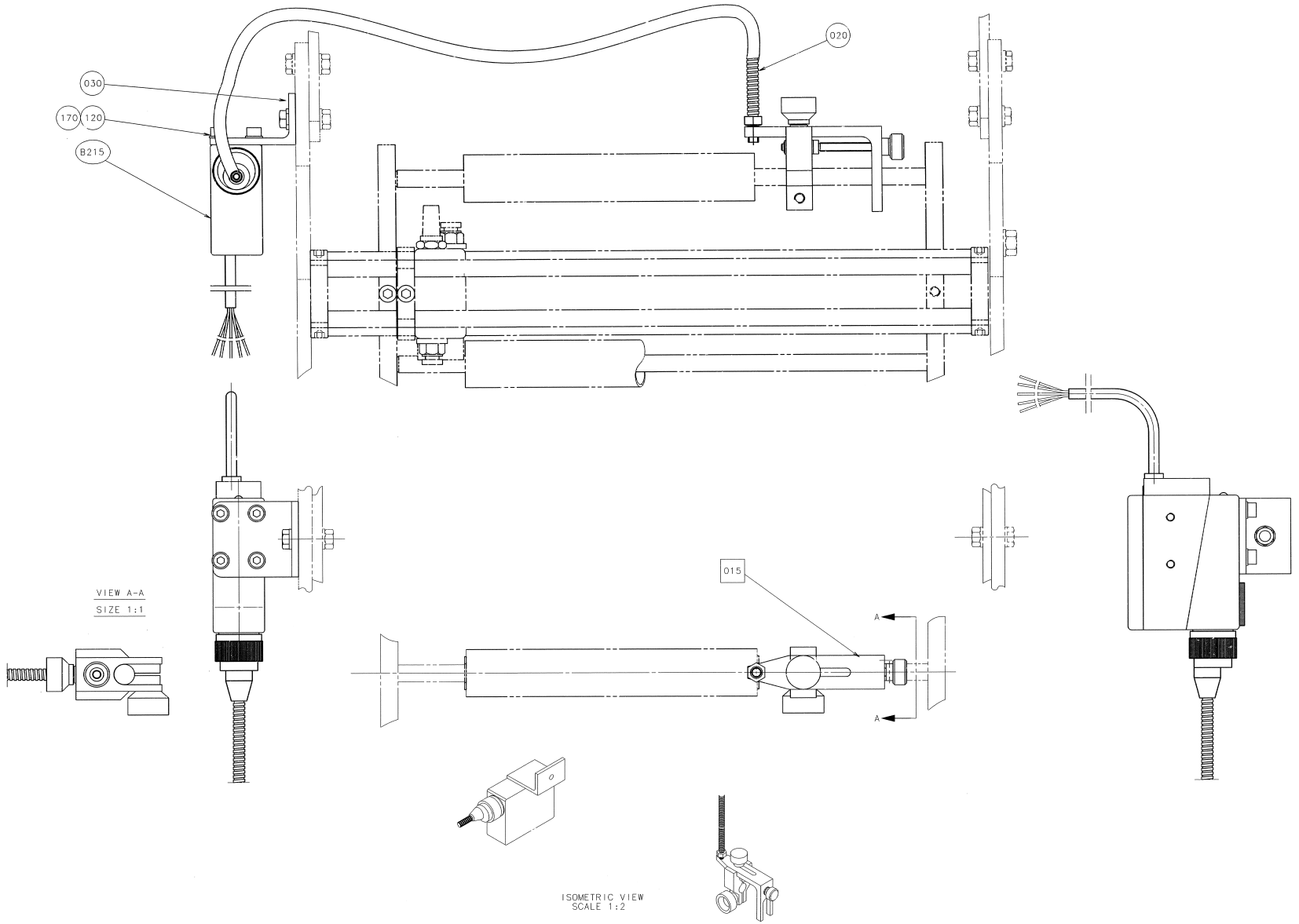

ECM: 83570 - 20000925
Group number: 1483025-0101
Assembly Drawing: 1483025-1_1_AA

Issue: 20030213

Pos	Part No	SP	UN	Qty	Description	Page No
Common Parts						
020	90232-0332	A		1	FIBRE LM 21-500	
030	565210-0000	-		1	BRACKET	
120	312115-0325	-		4	SCREW ISO4762 M5X10 A4	
170	315105-0146	-		4	WASHER ISO 7089-5-200 HV-A4	
B215	B90232-0089	A		1	PH.CELL NTL6-P12-1011520	
	90232-0327	*-*		*1*	*CAPSULE 2-006-513*	
F010	A575804-0102	-		1	PHOTOCELL BRACKET	**485**

Pos	Part No	SP	UN	Qty	Description	Page No

Machine Type | Group Description | Used-In | Group Number | Page No

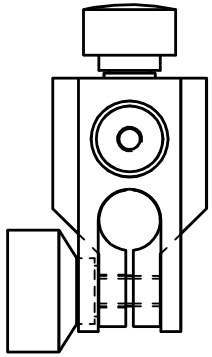

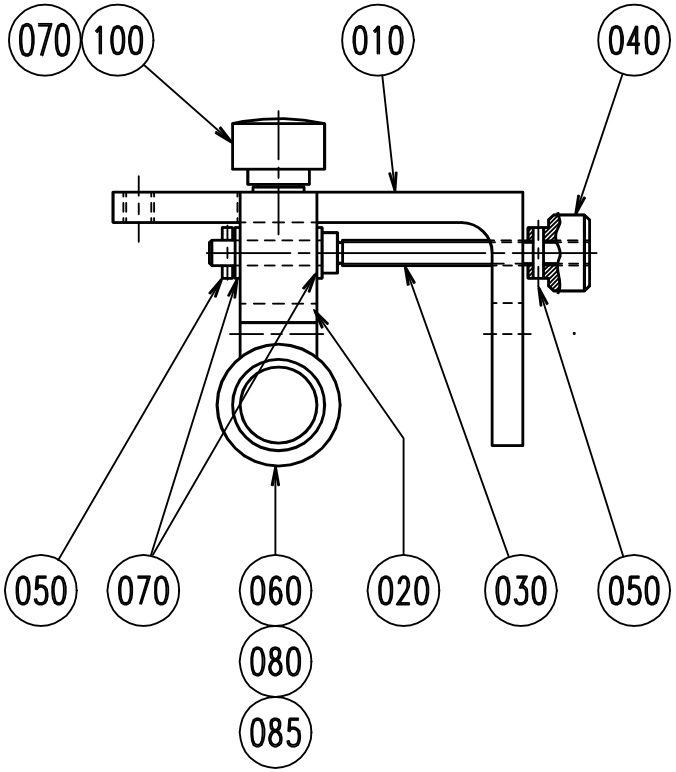
070
100
010
040
050
070
060
020
030
050
080
085

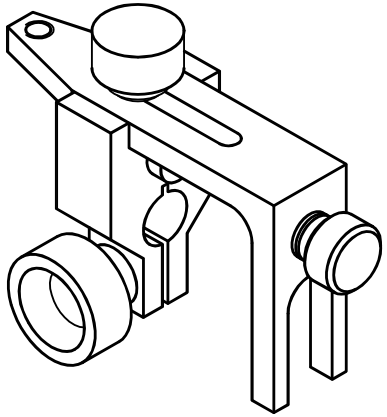

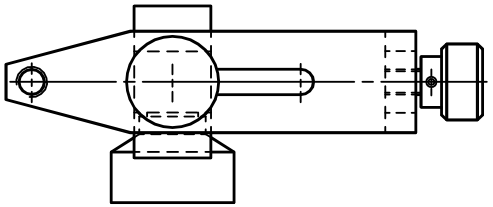

ECM: - -
Group number: 575804-0102
Assembly Drawing: 575804-2_1_AA

Issue: 20030213

Pos	Part No	SP	UN	Qty	Description	Page No
Common Parts						
010 2	1483022-0000	-		1	HOLDER	
020 2	1483023-0000	-		1	CLAMP HOLDER	
030	581626-0000	-		1	SCREW	
040	575808-0000	-		1	KNOB	
050	311112-0165	-		2	SPRING PIN, ISO 8752 2X10-C	
060	90051-0083	-		1	KNOB, EXTERNAL THREAD. NO. 8308-1321	
070	315105-0146	-		3	WASHER ISO 7089-5-200 HV-A4	
080	315105-0153	-		1	WASHER ISO 7089-6-200 HV-A4	
085	315402-0156	-		1	LOCK WASHER FBB 6,5	
100	318856-0102	-		1	KNOB, EXTERNAL THREAD. NO. 8308-1127	

Pos	Part No	SP	UN	Qty	Description	Page No

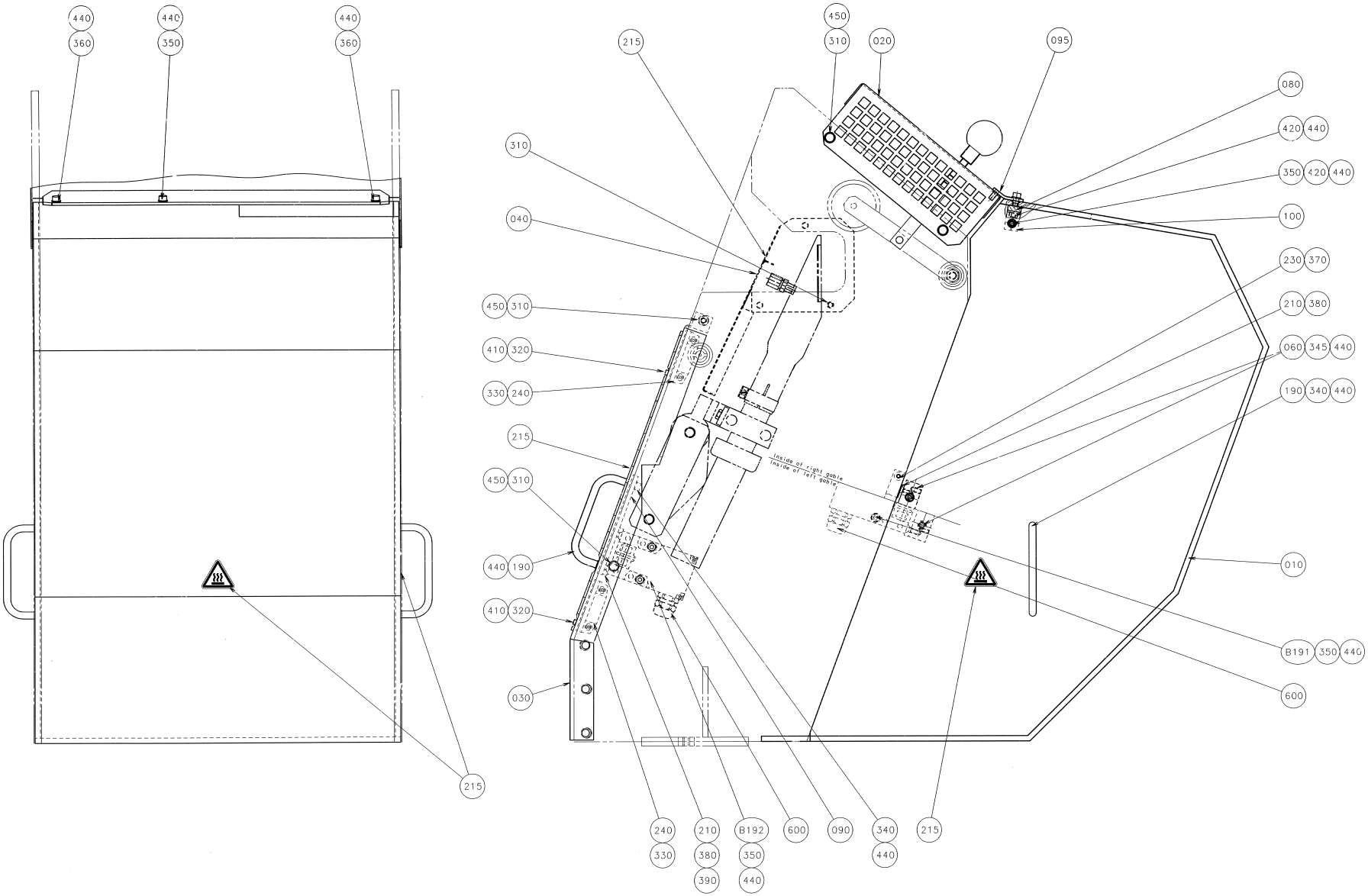
440
360
440
350
440
360
215
450
310
020
095
215
080
420
440
350
420
440
100
310
040
230
370
210
380
060
345
440
190
340
440
450
310
410
320
330
240
215
450
310
Inside of right gable
Inside of left gable
440
190
410
320
010
B191
350
440
600
030
240
330
210
380
390
B192
350
440
600
090
340
440
215

ECM: 83568 - 20000925
Group number: 573165-0202
Assembly Drawing: 573165-3_1_AA

Issue: 20030213

Pos	Part No	SP	UN	Qty	Description	Page No
Common Parts						
010 2	1483019-0000	-		1	PROTECTIVE COVER	
020	569609-0000	-		1	PROTECTION PLATE	
030	569610-0000	-		1	PROTECTION PLATE	
040	1175099-0000	-		1	HEAT GUARD	
060	569627-0000	-		2	BRACKET	
080	570840-0000	-		1	BRACKET	
090	570842-0000	-		1	FASTENING IRON	
095 2	1483021-0000	-		1	HOLDER	
100	568139-0000	-		2	ANGLE IRON	
190	90017-0024	-		3	HANDLE NO. VA-08.100.31	
210	90044-0310	A		2	KEY FOR SAFETY SWITCH, AZ 15/16 B1	
215	90194-0143	-		5	WARNING SIGN ISO, HOT SURFACE	
230	90237-0070	A		1	SNAP-IN BALL LOCK, 69X19 MM	
240	90237-0115	A		2	MAGNETIC LOCK, 62X18X17 MM	
310	312105-0364	-		7	SCREW M6S ISO 4017 M6X10 A480	
320	312115-0222	-		4	SCREW ISO4762 M3X8 A4	
330	312115-0226	-		4	SCREW ISO4762 M3X12 A4	
340	312115-0327	-		6	SCREW ISO4762 M5X12 A4	
345	312105-0327	-		4	SCREW M6S ISO 4017 M5X12 A480	
350	312115-0331	-		8	SCREW ISO472 M5X20 A4	
360	312115-0333	-		2	SCREW ISO4762 M5X25 A4	
370	312155-0289	-		4	SCREW EN 10642 MF6S M4X10 A480	
380	312155-0327	-		5	SCREW EN 10642 MF6S M5X12 A480	
390	312155-0329	-		1	SCREW EN 10642 MF6S M5X16 A480	
410	312605-0310	-		4	HEXAGON NUT, M6M M3 A280	
420	312605-0314	-		4	HEXAGON NUT, M6M M5 A280	
440-02	315105-0146	-		26	WASHER ISO 7089-5-200 HV-A4	
450	315105-0153	-		6	WASHER ISO 7089-6-200 HV-A4	
600	352103-0106	-		2	CABLE GLAND, ST 11, PR18,6/PG11	
B191	90044-0139	A		1	KEY SAF.SW. AZ16-02 ZVR K-2254	
B192	90044-0139	A		1	KEY SAF.SW. AZ16-02 ZVR K-2254	

Pos	Part No	SP	UN	Qty	Description	Page No

Machine Type | Group Description | Used-In | Group Number | Page No

Tetra Pak

SPC
Spare Parts Catalogue

This page is intentionally left blank.

ECM: - -
Group number: 639337-0500
Assembly Drawing:

Issue: 20030213

Pos	Part No	SP	UN	Qty	Description	Page No
Common Parts						
0010	A42051-0500	-		1	EL.CABINET TCA-65	**493, 495, 497, 499, 501, 503, 505, 507**
0020	A42052-0500	-		1	CABLE DIAGRAM	**509, 511**
0030	A42053-0500	-		1	PANEL	**513**
0040	A42054-0500	-		1	STANDARD EQUIPMENT	
0050	A42055-0500	-		1	EXTRA EQUIPMENT	**515**
0060	A42056-0500	-		1	ELECTRICAL DOCUMENT	**517**
0070	A42057-0500	-		1	SPARE PART	**519**

Pos	Part No	SP	UN	Qty	Description	Page No

Machine Type | Group Description | Used-In | Group Number | Page No

This page is intentionally left blank.

Pos	Part No	SP	UN	Qty	Description	Page No
Common Parts						
0004	90194-0016	-		2	ETIKETT	
0010	90135-0035	A		3	EARTH WIRE, L=250 MM 16 MM2	
0020	353042-0012	-		18	ADJUSTMENTPLATTA	
0021	353042-0016	-		2	CONNECTIONSADAPTER	
0022	353042-0011	-		3	BUSBAR	
0023	353042-0014	-		19	BUSBAR ADA ADAPTER	
0024	353042-0010	-		6	BUSBAR HÅLLARE	
0025	353042-0019	-		4	SIDE GUARD	
A001	B67388-0102	A		1	RACK FRONTMOUNTED 84TE	
020 2	*542038-0002*	-		*1*	*COMPONENTS WITHOUT TP-NO*	
A001 :1	B68445-0106	-		1	FRONT PLATE 2TE	
010 6	*543921-0006*	-		*1*	*COMPONENTS WITHOUT TP-NO*	
110	*556514-0000*	-		*1*	*MEASURE DRAWING*	
A001 :2	B68445-0102	-		1	FRONT PLATE 5TE	
010 2	*543921-0002*	-		*1*	*COMPONENTS WITHOUT TP-NO*	
A001 :3	B68445-0103	-		1	FRONT PLATE 6TE	
010 3	*543921-0003*	-		*1*	*COMPONENTS WITHOUT TP-NO*	
A001 :4	B68445-0104	-		1	FRONT PLATE 8 TE	
010 4	*543921-0004*	-		*1*	*COMPONENTS WITHOUT TP-NO*	
A003	B68471-0101	-		1	PRINTED DESIGN CORR.LOGIC	
080	*556524-0001*	-			*COMPONENTS WITHOUT TP-NO*	
090	*556525-0000*	-			*FRONT PANEL 8TE*	
230	*543924-0000*	-			*COVER PLATE:HANDLE 8TE*	
260	*556523-0000*	-			*DISCETTE FOR LAYOUTS*	
300	*564246-0000*	-			*COVERING PLATE*	
A003 :1	B68262-0101	A		1	BACKPLANE FRONT RACK 8TE	
100	*543371-0000*	-		*1*	*CIRCUIT BOARD 8TE*	
110	*551927-0001*	-		*1*	*COMPONENTS WITHOUT TP-NO*	
120	*551928-0000*	-		*1*	*TERMINAL LABELS 8TE*	
A004	B67058-0301	-		1	CIRCUIT BOARD, CODE CARD "BETA CARD"	
010	*543926-0001*	-		*1*	*COMPONENTS WITHOUT TP-NO*	
020	*479909-0000*	-		*1*	*PRINTED CIRCUIT BOARD*	
030	*479910-0000*	-		*1*	*SCREENPRINTING PANEL*	
040	*479911-0000*	-		*1*	*DRILLING PATTERN PANEL*	
050	*479921-0000*	-		*1*	*CIRCUIT BOARD PROTECTION*	
A004 :1	B68262-0101	A		1	BACKPLANE FRONT RACK 8TE	
100	*543371-0000*	-		*1*	*CIRCUIT BOARD 8TE*	
110	*551927-0001*	-		*1*	*COMPONENTS WITHOUT TP-NO*	
120	*551928-0000*	-		*1*	*TERMINAL LABELS 8TE*	
A005	B68443-0101	A		1	BRAKE REGULATOR ANALOGIO	
010	*542043-0000*	-		*1*	*PRINTED CIRCUIT BOARD*	
020	*543366-0001*	-		*1*	*COMPONENTS WITHOUT TP-NO*	
040	*540294-0000*	-		*1*	*COVER PLATE HANDLE 6TE*	
050	*537019-0000*	-		*1*	*CIRCUIT BOARD PROT. FRONT*	
060	*537022-0000*	-		*1*	*COOLING DISTANCE*	
070	*537023-0000*	-		*1*	*DRILLING PATTERN PANEL*	
080	*556515-0000*	-		*1*	*DISCETTE FOR LAYOUTS*	
A005 :1	B68262-0101	A		1	BACKPLANE FRONT RACK 8TE	
100	*543371-0000*	-		*1*	*CIRCUIT BOARD 8TE*	
110	*551927-0001*	-		*1*	*COMPONENTS WITHOUT TP-NO*	
120	*551928-0000*	-		*1*	*TERMINAL LABELS 8TE*	
A006	B68123-0301	A		1	LEVEL METERIND.2 COILS	
200	*540294-0000*	-			*COVER PLATE HANDLE 6TE*	
210	*564237-0001*	-			*COMPONENTS WITHOUT TP-NO*	
220	*564238-0000*	-			*DISCETTE FOR LAYOUTS*	
230	*564239-0000*	-			*FRONT PLATE 6TE*	
240	*564240-0000*	-			*COVER PLATE CIRCUIT CARD*	
F010	*A68256-0100*	-		*1*	*CIRCUIT BOARD*	
A006 :1	B68263-0101	A		1	BACKPLANE FRONT RACK 6TE	
100	*543372-0000*	-		*1*	*CIRCUIT BOARD 6TE*	
110	*551925-0001*	-		*1*	*COMPONENTS WITHOUT TP-NO*	
120	*551926-0000*	-		*1*	*TERMINAL LABELS 6TE*	
A007	B67386-0101	A		1	FLOW CONTROLLERCIRC.B	
010	*543324-0001*	-		*1*	*COMPONENTS WITHOUT TP-NO*	
020	*543325-0000*	-		*1*	*FRONT PANEL 5TE*	
030	*543326-0000*	-		*1*	*COVERPLATE HANDLE 5TE*	
040	*543327-0000*	-		*1*	*COVER PLATE CIRCUIT CARD*	
050	*556506-0000*	-		*1*	*LAYOUTS:PLATES AND LABLES*	
F100	*A67389-0100*	-		*1*	*CIRCUIT BOARD*	
A007 :1	B68264-0101	A		1	BACKPLANE FRONT RACK 5TE	
100	*543373-0000*	-		*1*	*CIRCUIT BOARD 5TE*	
110	*551923-0001*	-		*1*	*COMPONENTS WITHOUT TP-NO*	
120	*551924-0000*	-		*1*	*TERMINAL LABLES 5TE*	
A008	B68447-0201	-		1	VALVE POS: ASSEMBLY	
200	*543932-0001*	-		*1*	*COMPONENTS WITHOUT TP-NO*	
210	*543933-0000*	-		*1*	*FRONT PANEL 8TE*	
220	*543924-0000*	-		*1*	*COVER PLATE:HANDLE 8TE*	
230	*543874-0000*	-		*1*	*COVER PLATE:CIRCUIT CARD*	
250	*556504-0000*	-		*1*	*LAYOUTS:PLATES AND LABELS*	
F100	*A68448-0200*	-		*1*	*VALVE POS.: MAIN CARD*	
F110	*A68449-0200*	-		*1*	*VALVE POS.: AUX. CARD I*	
F120	*A68473-0200*	-		*1*	*VALVE POS.: AUX. CARD II*	
A008 :1	B68262-0101	A		1	BACKPLANE FRONT RACK 8TE	

Machine Type | Group Description | Used-In | Group Number | Page No

This page is intentionally left blank.

Pos	Part No	SP	UN	Qty	Description	Page No
Common Parts (Cont'd)						
A009	B68450-0101	A		1	STEPPER MOTOR DRIVER	
040	*543326-0000*	-		*1*	*COVERPLATE HANDLE 5TE*	
700	*543897-0001*	-		*1*	*COMPONENTS WITHOUT TP-NO*	
710	*543898-0000*	-		*1*	*FRONT PANEL 14TE*	
720	*543899-0000*	-		*1*	*COOLING FLANGE*	
730	*543900-0000*	-		*1*	*COOLING FLANGE DISTANCE*	
740	*543901-0000*	-		*1*	*COOLING BLOCK*	
750	*543902-0000*	-		*1*	*SIGN BOARD*	
760	*556502-0000*	-		*1*	*LAYOUTS FOR PLATES,LABLES*	
F100	*B68451-0101*	-		*1*	*STEP. MOT. DR. MAIN CARD*	
400	*543903-0001*	-		*1*	*COMPONENTS WITHOUT TP-NO*	
410	*543880-0000*	-		*1*	*PRINTED CIRCUIT BOARD*	
F110	*B68452-0101*	-		*1*	*STEP. MOT. DR. AUX. CARD*	
600	*551913-0001*	-		*1*	*COMPONENTS WITHOUT TP-NO*	
610	*543881-0000*	-		*1*	*PRINTED CIRCUIT BOARD*	
620	*551914-0000*	-		*1*	*MACHINING OF DRIVER MODUL*	
A009 :1	B68262-0101	A		1	BACKPLANE FRONT RACK 8TE	
100	*543371-0000*	-		*1*	*CIRCUIT BOARD 8TE*	
110	*551927-0001*	-		*1*	*COMPONENTS WITHOUT TP-NO*	
120	*551928-0000*	-		*1*	*TERMINAL LABELS 8TE*	
A011	B558230-0301	A		1	TMCC CONTROLLER	
100	*B558370-0301*	-		*1*	*TMCC, MAIN PCB*	
110	*596751-0000*	-		*1*	*PRINTED CIRCUIT BOARD*	
A011 :1	B68262-0101	A		1	BACKPLANE FRONT RACK 8TE	
100	*543371-0000*	-		*1*	*CIRCUIT BOARD 8TE*	
110	*551927-0001*	-		*1*	*COMPONENTS WITHOUT TP-NO*	
120	*551928-0000*	-		*1*	*TERMINAL LABELS 8TE*	
A020	90410-0051	-		1	TEMPERATURE CONTROLLER, KS 40	
A020 :1	359241-0131	-		1	SIGN, TEMP. LS HEATER	
A020 :2	359240-0100	-		1	SIGN HOLDER FOR 359240-0001	
A021	90410-0051	A		1	TEMPERATURE CONTROLLER, KS 40	
A021 :1	359241-0132	-		1	SIGN, TEMP. STRIP APPLICATOR	
A021 :2	359240-0100	-		1	SIGN HOLDER FOR 359240-0001	
A022	90410-0051	A		1	TEMPERATURE CONTROLLER, KS 40	
A022 :1	359241-0228	-		3	SIGN KYLT	
A022 :2	359240-0100	-		1	SIGN HOLDER FOR 359240-0001	
A023	90410-0051	A		1	TEMPERATURE CONTROLLER, KS 40	
A023 :1	359241-0228	-		1	SIGN KYLT	
A023 :2	359240-0100	-		1	SIGN HOLDER FOR 359240-0001	
A024	90410-0051	A		1	TEMPERATURE CONTROLLER, KS 40	
A024 :1	359241-0121	-		1	SIGN "STEAM"	
A024 :2	359240-0100	-		1	SIGN HOLDER FOR 359240-0001	
A025	90410-0051	A		1	TEMPERATURE CONTROLLER, KS 40	
A025 :1	359241-0228	-		1	SIGN KYLT	
A025 :2	359240-0100	-		1	SIGN HOLDER FOR 359240-0001	
A026	90410-0051	A		1	TEMPERATURE CONTROLLER, KS 40	
A026 :1	359241-0486	-		1	HEAT EXCHANGER	
A026 :2	359240-0100	-		1	SIGN HOLDER FOR 359240-0001	
A027 :4	359240-0100	-		1	SIGN HOLDER FOR 359240-0001	
A028 :4	359240-0100	-		1	SIGN HOLDER FOR 359240-0001	
A030	90314-0038	A		1	LEVEL CONTROL RELAY, RM3 220-240VAC	
A031	90314-0038	A		1	LEVEL CONTROL RELAY, RM3 220-240VAC	
A032	90314-0038	A		1	LEVEL CONTROL RELAY, RM3 220-240VAC	
A033	90314-0038	A		1	LEVEL CONTROL RELAY, RM3 220-240VAC	
A040	B67600-0501	A		1	TPIH GENERATOR	
10	*542036-0000*	-			*ETIKETT "PART NO" 84X140MM*	
500	*565140-0001*	-			*COMPONENTS WITHOUT TP-NO*	
510	*565144-0000*	-			*LABEL LED*	
520	*565145-0000*	-			*LABEL X1/X2*	
530	*565146-0000*	-			*INSULATION SPACER*	
540	*565147-0000*	-			*GUIDE RAIL LEFT*	
550	*565148-0000*	-			*GUIDE RAIL RIGHT*	
560	*565149-0000*	-			*GUIDE RAIL BACK*	
570	*565150-0000*	-			*FRONT HANDLE*	
580	*565151-0000*	-			*BOX BOTTOM*	
590	*565152-0000*	-			*FRAME*	
600	*565153-0000*	-			*COMPLETE BOX*	
610	*565154-0000*	-			*BOX UPPER PART*	
F100	*B67577-0501*	-			*POWER CARD*	
130	*573137-0001*	-			*COMPONENTS WITHOUT TP-NO*	
140	*565299-0000*	-			*SORTING INSTRUCTION*	
150	*543112-0000*	-			*MODIFYING EUROPECONNECTOR*	
160	*573138-0000*	-		*3*	*HEAT SINK L*	
180	*565301-0000*	-			*CAPACITOR CABLE RED*	
190	*565300-0000*	-			*CAPACITOR CABLE BLACK*	
200	*575980-0000*	-			*CIRCUIT DIAGRAM*	
F101	*B67564-0101*	-			*THIH TOROID COIL 1*	
100	*564253-0001*	-			*COMPONENTS WITHOUT TP-NO*	
110	*532687-0000*	-			*TOROID COIL 1*	
F102	*B67565-0101*	-			*TPIH TOROID COIL 2*	
100	*564254-0001*	-			*COMPONENTS WITHOUT TP-NO*	
110	*532688-0000*	-			*TOROID COIL 2*	
F103	*B67566-0101*	-			*TPIH TOROID COIL 3*	

Machine Type | Group Description | Used-In | Group Number | Page No

This page is intentionally left blank.

Pos	Part No	SP	UN	Qty	Description	Page No
Common Parts (Cont'd)						
A040	B67600-0501	A		1	TPIH GENERATOR	
10	*542036-0000*	-			*ETIKETT "PART NO" 84X140MM*	
500	*565140-0001*	-			*COMPONENTS WITHOUT TP-NO*	
510	*565144-0000*	-			*LABEL LED*	
520	*565145-0000*	-			*LABEL X1/X2*	
530	*565146-0000*	-			*INSULATION SPACER*	
540	*565147-0000*	-			*GUIDE RAIL LEFT*	
550	*565148-0000*	-			*GUIDE RAIL RIGHT*	
560	*565149-0000*	-			*GUIDE RAIL BACK*	
570	*565150-0000*	-			*FRONT HANDLE*	
580	*565151-0000*	-			*BOX BOTTOM*	
590	*565152-0000*	-			*FRAME*	
600	*565153-0000*	-			*COMPLETE BOX*	
610	*565154-0000*	-			*BOX UPPER PART*	
F100	*B67577-0501*	-			*POWER CARD*	
130	*573137-0001*	-			*COMPONENTS WITHOUT TP-NO*	
140	*565299-0000*	-			*SORTING INSTRUCTION*	
150	*543112-0000*	-			*MODIFYING EUROPECONNECTOR*	
160	*573138-0000*	-		*3*	*HEAT SINK L*	
180	*565301-0000*	-			*CAPACITOR CABLE RED*	
190	*565300-0000*	-			*CAPACITOR CABLE BLACK*	
200	*575980-0000*	-			*CIRCUIT DIAGRAM*	
F101	*B67564-0101*	-			*THIH TOROID COIL 1*	
100	*564253-0001*	-			*COMPONENTS WITHOUT TP-NO*	
110	*532687-0000*	-			*TOROID COIL 1*	
F102	*B67565-0101*	-			*TPIH TOROID COIL 2*	
100	*564254-0001*	-			*COMPONENTS WITHOUT TP-NO*	
110	*532688-0000*	-			*TOROID COIL 2*	
F103	*B67566-0101*	-			*TPIH TOROID COIL 3*	
100	*564255-0001*	-			*COMPONENTS WITHOUT TP-NO*	
110	*532689-0000*	-			*TOROID COIL 3*	
F104	*B67567-0101*	-			*TPIH THERMOSTAT CABLE*	
100	*564256-0001*	-			*COMPONENTS WITHOUT TP-NO*	
110	*532690-0000*	-			*THERMOSTAT CABLE*	
F105	*B67568-0101*	-			*TPIH COIL SINGLE LAYER*	
100	*564257-0001*	-			*COMPONENTS WITHOUT TP-NO*	
110	*532692-0000*	-			*COIL SINGLE LAYER*	
120	*532691-0000*	-			*COIL FORMER*	
F106	*B67569-0101*	-			*TPIH TANK COIL*	
100	*564260-0001*	-			*COMPONENTS WITHOUT TP-NO*	
110	*532693-0000*	-			*BOTTOM GABLE*	
120	*532695-0000*	-			*GABLE*	
130	*532696-0000*	-			*RING SPRING*	
140	*532697-0000*	-			*WINDING HOLDER*	
150	*565286-0000*	-			*WINDING HOLDER*	
160	*565287-0000*	-			*SPACER*	
170	*532694-0000*	-			*TANK COIL*	
F107	*B67570-0101*	-			*TPIH CAPACITOR CARD*	
100	*564261-0001*	-			*COMPONENTS WITHOUT TP-NO*	
120	*484995-0000*	-			*PRINTED CIRCUIT BOARD*	
130	*565289-0000*	-			*COMPONENT REFERENCE*	
F108	*B67582-0101*	-			*TPIH HEATSINK PREREGULATO*	
100	*573134-0001*	-			*COMPONENTS WITHOUT TP-NO*	
110	*565290-0000*	-			*HEAT SINK V1*	
120	*532703-0000*	-			*HEAT SINK V2*	
130	*565291-0000*	-			*HEAT SINK V3*	
140	*573135-0000*	-			*HEAT SINK PREREGULATOR*	
F110	*B67573-0101*	-			*TPIH TRANSISTOR PACKAGE R*	
100	*564264-0001*	-			*COMPONENTS WITHOUT TP-NO*	
110	*565295-0000*	-			*GABLE LEFT*	
120	*532709-0000*	-			*GABLE RIGHT*	
130	*532710-0000*	-			*STUDSCREW*	
140	*532711-0000*	-			*HEAT SINK PLATE PLANE*	
150	*532712-0000*	-			*DISTANCE PLATE*	
160	*565296-0000*	-			*WASHER*	
170	*565297-0000*	-			*TRANSISTOR PACKAGE R*	
F111	*B67581-0101*	-			*TPIH TRANSISTOR PACKAGE L*	
100	*565312-0001*	-			*COMPONENTS WITHOUT TP-NO*	
110	*565295-0000*	-			*GABLE LEFT*	
120	*532709-0000*	-			*GABLE RIGHT*	
130	*532710-0000*	-			*STUDSCREW*	
140	*532711-0000*	-			*HEAT SINK PLATE PLANE*	
150	*532712-0000*	-			*DISTANCE PLATE*	
160	*565296-0000*	-			*WASHER*	
180	*565298-0000*	-			*TRANSISTOR PACKAGE L*	
F112	*B67574-0401*	-			*OUTPUT TRANSFORMER*	
100	*565134-0001*	-			*COMPONENTS WITHOUT TP-NO*	
110	*532716-0000*	-			*OUTPUT TRANSFORMER*	
F200	*B67578-0101*	-			*TPIH FAN HOLDER*	
202	*565136-0001*	-			*COMPONENTS WITHOUT TP-NO*	
203	*543120-0000*	-			*PARTITION WALL*	
204	*533839-0000*	-			*FILTER*	
205	*533840-0000*	-			*GASKET*	

Machine Type | Group Description | Used-In | Group Number | Page No

This page is intentionally left blank.

Pos	Part No	SP	UN	Qty	Description	Page No
Common Parts (Cont'd)						
A040 :3	548770-0007	A		1	COAXIAL CABLE L=3000 MM	
A041	B67600-0501	A		1	TPIH GENERATOR	
10	*542036-0000*	-			*ETIKETT "PART NO" 84X140MM*	
500	*565140-0001*	-			*COMPONENTS WITHOUT TP-NO*	
510	*565144-0000*	-			*LABEL LED*	
520	*565145-0000*	-			*LABEL X1/X2*	
530	*565146-0000*	-			*INSULATION SPACER*	
540	*565147-0000*	-			*GUIDE RAIL LEFT*	
550	*565148-0000*	-			*GUIDE RAIL RIGHT*	
560	*565149-0000*	-			*GUIDE RAIL BACK*	
570	*565150-0000*	-			*FRONT HANDLE*	
580	*565151-0000*	-			*BOX BOTTOM*	
590	*565152-0000*	-			*FRAME*	
600	*565153-0000*	-			*COMPLETE BOX*	
610	*565154-0000*	-			*BOX UPPER PART*	
F100	*B67577-0501*	-			*POWER CARD*	
130	*573137-0001*	-			*COMPONENTS WITHOUT TP-NO*	
140	*565299-0000*	-			*SORTING INSTRUCTION*	
150	*543112-0000*	-			*MODIFYING EUROPECONNECTOR*	
160	*573138-0000*	-		*3*	*HEAT SINK L*	
180	*565301-0000*	-			*CAPACITOR CABLE RED*	
190	*565300-0000*	-			*CAPACITOR CABLE BLACK*	
200	*575980-0000*	-			*CIRCUIT DIAGRAM*	
F101	*B67564-0101*	-			*THIH TOROID COIL 1*	
100	*564253-0001*	-			*COMPONENTS WITHOUT TP-NO*	
110	*532687-0000*	-			*TOROID COIL 1*	
F102	*B67565-0101*	-			*TPIH TOROID COIL 2*	
100	*564254-0001*	-			*COMPONENTS WITHOUT TP-NO*	
110	*532688-0000*	-			*TOROID COIL 2*	
F103	*B67566-0101*	-			*TPIH TOROID COIL 3*	
100	*564255-0001*	-			*COMPONENTS WITHOUT TP-NO*	
110	*532689-0000*	-			*TOROID COIL 3*	
F104	*B67567-0101*	-			*TPIH THERMOSTAT CABLE*	
100	*564256-0001*	-			*COMPONENTS WITHOUT TP-NO*	
110	*532690-0000*	-			*THERMOSTAT CABLE*	
F105	*B67568-0101*	-			*TPIH COIL SINGLE LAYER*	
100	*564257-0001*	-			*COMPONENTS WITHOUT TP-NO*	
110	*532692-0000*	-			*COIL SINGLE LAYER*	
120	*532691-0000*	-			*COIL FORMER*	
F106	*B67569-0101*	-			*TPIH TANK COIL*	
100	*564260-0001*	-			*COMPONENTS WITHOUT TP-NO*	
110	*532693-0000*	-			*BOTTOM GABLE*	
120	*532695-0000*	-			*GABLE*	
130	*532696-0000*	-			*RING SPRING*	
140	*532697-0000*	-			*WINDING HOLDER*	
150	*565286-0000*	-			*WINDING HOLDER*	
160	*565287-0000*	-			*SPACER*	
170	*532694-0000*	-			*TANK COIL*	
F107	*B67570-0101*	-			*TPIH CAPACITOR CARD*	
100	*564261-0001*	-			*COMPONENTS WITHOUT TP-NO*	
120	*484995-0000*	-			*PRINTED CIRCUIT BOARD*	
130	*565289-0000*	-			*COMPONENT REFERENCE*	
F108	*B67582-0101*	-			*TPIH HEATSINK PREREGULATO*	
100	*573134-0001*	-			*COMPONENTS WITHOUT TP-NO*	
110	*565290-0000*	-			*HEAT SINK V1*	
120	*532703-0000*	-			*HEAT SINK V2*	
130	*565291-0000*	-			*HEAT SINK V3*	
140	*573135-0000*	-			*HEAT SINK PREREGULATOR*	
F110	*B67573-0101*	-			*TPIH TRANSISTOR PACKAGE R*	
100	*564264-0001*	-			*COMPONENTS WITHOUT TP-NO*	
110	*565295-0000*	-			*GABLE LEFT*	
120	*532709-0000*	-			*GABLE RIGHT*	
130	*532710-0000*	-			*STUDSCREW*	
140	*532711-0000*	-			*HEAT SINK PLATE PLANE*	
150	*532712-0000*	-			*DISTANCE PLATE*	
160	*565296-0000*	-			*WASHER*	
170	*565297-0000*	-			*TRANSISTOR PACKAGE R*	
F111	*B67581-0101*	-			*TPIH TRANSISTOR PACKAGE L*	
100	*565312-0001*	-			*COMPONENTS WITHOUT TP-NO*	
110	*565295-0000*	-			*GABLE LEFT*	
120	*532709-0000*	-			*GABLE RIGHT*	
130	*532710-0000*	-			*STUDSCREW*	
140	*532711-0000*	-			*HEAT SINK PLATE PLANE*	
150	*532712-0000*	-			*DISTANCE PLATE*	
160	*565296-0000*	-			*WASHER*	
180	*565298-0000*	-			*TRANSISTOR PACKAGE L*	
F112	*B67574-0401*	-			*OUTPUT TRANSFORMER*	
100	*565134-0001*	-			*COMPONENTS WITHOUT TP-NO*	
110	*532716-0000*	-			*OUTPUT TRANSFORMER*	
F200	*B67578-0101*	-			*TPIH FAN HOLDER*	
202	*565136-0001*	-			*COMPONENTS WITHOUT TP-NO*	
203	*543120-0000*	-			*PARTITION WALL*	
204	*533839-0000*	-			*FILTER*	

Machine Type | Group Description | Used-In | Group Number | Page No

This page is intentionally left blank.

Pos	Part No	SP	UN	Qty	Description	Page No
Common Parts (Cont'd)						
K021	B90075-0124	A		1	CONTACTOR, 4KW 24VDC	
	90075-0313	*A*		*1*	*AUXILIARY CONTACT K&M 22 DILM.2NO;2NC*	
K022	B90075-0124	A		1	CONTACTOR, 4KW 24VDC	
	90075-0313	*A*		*1*	*AUXILIARY CONTACT K&M 22 DILM.2NO;2NC*	
K023	B90075-0124	A		1	CONTACTOR, 4KW 24VDC	
	90075-0313	*A*		*1*	*AUXILIARY CONTACT K&M 22 DILM.2NO;2NC*	
K024	B90075-0124	A		1	CONTACTOR, 4KW 24VDC	
	90075-0313	*A*		*1*	*AUXILIARY CONTACT K&M 22 DILM.2NO;2NC*	
K026	B90075-0124	A		1	CONTACTOR, 4KW 24VDC	
	90075-0313	*A*		*1*	*AUXILIARY CONTACT K&M 22 DILM.2NO;2NC*	
K027	B90075-0124	A		1	CONTACTOR, 4KW 24VDC	
	90075-0313	*A*		*1*	*AUXILIARY CONTACT K&M 22 DILM.2NO;2NC*	
K031	90119-0056	A		1	RELAY, AUXILIARY MK3P5-S 24VDC	
K031 :1	90129-0006	A		1	BASE, S3-B	
K032	90119-0056	A		1	RELAY, AUXILIARY MK3P5-S 24VDC	
K032 :1	90129-0006	A		1	BASE, S3-B	
K033	90119-0056	A		1	RELAY, AUXILIARY MK3P5-S 24VDC	
K033 :1	90129-0006	A		1	BASE, S3-B	
K034	90119-0056	A		1	RELAY, AUXILIARY MK3P5-S 24VDC	
K034 :1	90129-0006	A		1	BASE, S3-B	
K035	90119-0056	A		1	RELAY, AUXILIARY MK3P5-S 24VDC	
K035 :1	90129-0006	A		1	BASE, S3-B	
K036	90119-0056	A		1	RELAY, AUXILIARY MK3P5-S 24VDC	
K036 :1	90129-0006	A		1	BASE, S3-B	
K037	90119-0056	A		1	RELAY, AUXILIARY MK3P5-S 24VDC	
K037 :1	90129-0006	A		1	BASE, S3-B	
K038	90119-0056	A		1	RELAY, AUXILIARY MK3P5-S 24VDC	
K038 :1	90129-0006	A		1	BASE, S3-B	
K047	90119-0056	A		1	RELAY, AUXILIARY MK3P5-S 24VDC	
K047 :1	90129-0006	A		1	BASE, S3-B	
K049	90119-0056	A		1	RELAY, AUXILIARY MK3P5-S 24VDC	
K049 :1	90129-0006	A		1	BASE, S3-B	
K050	90119-0056	A		1	RELAY, AUXILIARY MK3P5-S 24VDC	
K050 :1	90129-0006	A		1	BASE, S3-B	
K051	90119-0056	A		1	RELAY, AUXILIARY MK3P5-S 24VDC	
K051 :1	90129-0006	A		1	BASE, S3-B	
K052	90119-0056	A		1	RELAY, AUXILIARY MK3P5-S 24VDC	
K052 :1	90129-0006	A		1	BASE, S3-B	
K053	90119-0056	-		1	RELAY, AUXILIARY MK3P5-S 24VDC	
K053 :1	90129-0006	A		1	BASE, S3-B	
K056	90119-0056	A		1	RELAY, AUXILIARY MK3P5-S 24VDC	
K056 :1	90129-0006	A		1	BASE, S3-B	
K057	90119-0056	A		1	RELAY, AUXILIARY MK3P5-S 24VDC	
K057 :1	90129-0006	A		1	BASE, S3-B	
K061	90119-0082	A		1	SSR 90119-67 + HEAT SINK	
K062	90119-0082	A		1	SSR 90119-67 + HEAT SINK	
K063	90119-0082	A		1	SSR 90119-67 + HEAT SINK	
K064	90119-0082	A		1	SSR 90119-67 + HEAT SINK	
K065	90119-0082	A		1	SSR 90119-67 + HEAT SINK	
K070	90119-0077	A		1	CURRENT RELAY SYRELEC DIRT2 230	
K071	90119-0077	A		1	CURRENT RELAY SYRELEC DIRT2 230	
K300	B90075-0126	A		1	CONTACTOR, 22KW 24VDC	
	90075-0313	*A*		*1*	*AUXILIARY CONTACT K&M 22 DILM.2NO;2NC*	
L001	90297-0306	A		1	BALLAST COIL 50/60 HZ	
L003	90297-0306	A		1	BALLAST COIL 50/60 HZ	
L004	90297-0306	A		1	BALLAST COIL 50/60 HZ	
L005	90297-0306	A		1	BALLAST COIL 50/60 HZ	
M010	90264-0082	A		1	FILTER FAN LV 400 P15 / 500 S	
M010 :1	90264-0355	A		1	FILTER GV400-500	
P001	90178-0007	A		1	HOUR COUNTER, BG 40,17-1 12-48VDC	
P001 :1	359240-0100	-		1	SIGN HOLDER FOR 359240-0001	
P001 :2	359241-0201	-		1	SIGN "HOUR GLASS"	
P003	90053-0029	A		1	COUNTER, F524.800FA3C 24VDC	
P003 :1	359240-0100	-		1	SIGN HOLDER FOR 359240-0001	
P003 :2	359240-0001	-		1	SIGN, NOT ENGRAVED	
P020	90000-0024	A		1	AMMETER, IQ48 15-100HZ	
P020 :1	359241-0294	-		2	SIGN	
P020 :2	359240-0100	-		1	SIGN HOLDER FOR 359240-0001	
P021	90000-0024	A		1	AMMETER, IQ48 15-100HZ	
P021 :1	359241-0295	-		2	SIGN	
P021 :2	359240-0100	-		1	SIGN HOLDER FOR 359240-0001	
Q001	90095-0074	A		1	OVERLOAD PROTECTION, PKZM 2,5 A	
Q001 :1	90259-0313	A		1	AUX. CONTACT K&M NHI21-PKZM0	
Q003	90095-0070	A		1	OVERLOAD PROTECTION, PKZM 0,4 A	
Q003 :1	90259-0313	A		1	AUX. CONTACT K&M NHI21-PKZM0	
Q006	90095-0072	A		1	OVERLOAD PROTECTION, PKZM 1,0 A	
Q006 :1	90259-0313	A		1	AUX. CONTACT K&M NHI21-PKZM0	
Q007	90095-0072	A		1	OVERLOAD PROTECTION, PKZM 1,0 A	
Q007 :1	90259-0313	A		1	AUX. CONTACT K&M NHI21-PKZM0	
Q015	90095-0077	A		1	OVERLOAD PROTECTION, PKZM 6-10 A	
Q017	90111-0172	A		1	EARTH FAULT BREAKER, F 362-25/0.03	
Q021	90259-0039	A		1	OVERLOAD RELAY 25-40A	
Q021 :1	359241-0124	-		1	SIGN, MAIN SWITCH	

This page is intentionally left blank.

Pos	Part No	SP	UN	Qty	Description	Page No
Common Parts (Cont'd)						
R002	90121-0120	A		1	RESISTANCE FIXED, 0,25 KOHM, 0,125 W	
R020	90130-0017	A		1	POTENTIOMETER, 10 KOHM	
R020 :1	359241-0294	-		1	SIGN	
R020 :2	359240-0100	-		1	SIGN HOLDER FOR 359240-0001	
R020 :3	90130-0301	A		1	ADJUSTING KNOB WITH DIAL	
R021	90130-0017	A		1	POTENTIOMETER, 10 KOHM	
R021 :1	359241-0295	-		1	SIGN	
R021 :2	359240-0100	-		1	SIGN HOLDER FOR 359240-0001	
R021 :3	90130-0301	A		1	ADJUSTING KNOB WITH DIAL	
R040	90130-0017	A		1	POTENTIOMETER, 10 KOHM	
R040 :1	90130-0301	A		1	ADJUSTING KNOB WITH DIAL	
R040 :2	359241-0193	-		1	SIGN"TRANSSKARVSFÖRSEG.S1	
R040 :3	359240-0100	-		1	SIGN HOLDER FOR 359240-0001	
R041	90130-0017	A		1	POTENTIOMETER, 10 KOHM	
R041 :1	90130-0301	A		1	ADJUSTING KNOB WITH DIAL	
R041 :2	359241-0194	-		1	SIGN"TRANSSKARVSÖRSEGL.S2	
R041 :3	359240-0100	-		1	SIGN HOLDER FOR 359240-0001	
S001	90064-0085	A		1	PUSH BUTTON, RED	
S001 :1	359301-0110	-		1	SIGN "SHORT STOP"	
S002	B90064-0093	A		1	PUSH BUTTON, GREEN	
	90036-0057	*C*		*1*	*LIGHT BULB, BA9S 28V*	
S002 :1	359301-0090	-		1	SIGN "INCHING"	
S003	90111-0122	A		1	KEY SWITCH, 2 NO CONTACTS	
S003 :1	359241-0133	-		1	SIGN, SERVICE SWITCH	
S003 :2	359240-0100	-		1	SIGN HOLDER FOR 359240-0001	
S004 :1	359241-0250	-		1	SIGN "CLEANING OF STEAM BARRIER"	
S004 :2	359240-0100	-		1	SIGN HOLDER FOR 359240-0001	
S004 0	90111-0122	A		1	KEY SWITCH, 2 NO CONTACTS	
S011	90064-0124	A		1	SWITCH, EM. STOP, ZB2-BS844+ZB2-BZ1045	
S011 :1	486826-0001	-		1	SIGN "EMERGENCY STOP"	
S014	90111-0149	A		1	STEP SWITCH, CG4 A241- 600EF/FS2	
S014 :1	359240-0100	-		1	SIGN HOLDER FOR 359240-0001	
S014 :2	359240-0001	-		1	SIGN, NOT ENGRAVED	
T001	529259-0000	A		1	TRANSFORMER	
T002	567871-0000	A		1	TRANSF. 1 PH;2,5 KVA	
T003	567871-0000	A		1	TRANSF. 1 PH;2,5 KVA	
V001	90038-0025	A		1	RECTIFIER, 6,5/15A SKD 30/04A1	
V002	90430-0032	A		1	THYRISTOR UNIT, 425A/25A	
V003	90430-0032	A		1	THYRISTOR UNIT, 425A/25A	
W001	90220-0104	-	M	2	SCR. CABLE 4X1,5MM2	
W005	90220-0036	-	M	3	SCR. CABLE 4X0,4 MM2	
W006	90220-0036	-	M	3	SCR. CABLE 4X0,4 MM2	
W010	90220-0059	-	M	3	THERMOCOUPLE CABLE K/ 2X0,81MM2	
W011	578874-0000	-		1	HF BRAIDED WIRE 1,6 MM2	
W012	90220-0059	-	M	3	THERMOCOUPLE CABLE K/ 2X0,81MM2	
W013	578874-0000	-		1	HF BRAIDED WIRE 1,6 MM2	
W014	90220-0059	-	M	3	THERMOCOUPLE CABLE K/ 2X0,81MM2	
W015	578874-0000	-		1	HF BRAIDED WIRE 1,6 MM2	
W016	90220-0059	-	M	3	THERMOCOUPLE CABLE K/ 2X0,81MM2	
W017	578874-0000	-		1	HF BRAIDED WIRE 1,6 MM2	
W018	90220-0059	-	M	3	THERMOCOUPLE CABLE K/ 2X0,81MM2	
W019	578874-0000	-		1	HF BRAIDED WIRE 1,6 MM2	
W020	90220-0059	-	M	3	THERMOCOUPLE CABLE K/ 2X0,81MM2	
W021	578874-0000	-		1	HF BRAIDED WIRE 1,6 MM2	
W022	90220-0059	-	M	3	THERMOCOUPLE CABLE K/ 2X0,81MM2	
W023	578874-0000	-		1	HF BRAIDED WIRE 1,6 MM2	
W900	90031-0308	-		1	PLC,CABLES,I/O EXPANSION CABLE	
W901	90031-0302	A		1	I/O BUS TERMINATION PLUG	
X002	1365921-0000	-		1	GROUND TERMINAL	
X003	1365922-0000	-		1	NEUTRAL TERMINAL	
X005	90077-0102	-		1	TERMINAL BLOCK, 1952.2	
X006	90195-0010	-		1	TERMINAL BLOCK, 1989.2	
X020	353024-0208	A		2	EARTH TERMINAL, 1010.4	
X020 :1	359011-0834	-		1	SET OF SIGNS 6-GW(EARTH)	
X021	90001-0033	-		1	WALL SOCKET OUTLET	
X101	90110-0057	A		1	FEMALE INSERT HAN 24 E 09 33 002 4201	
X101 :1	90110-0128	A		1	MALE INSERT, HAN 24 E-M 933 024 2631	
X101 :2	90110-0334	-		4	SCREW HARTING	
X101 :3	90110-0335	-		2	SCREW	
X102	90110-0057	A		1	FEMALE INSERT HAN 24 E 09 33 002 4201	
X102 :1	90110-0128	A		1	MALE INSERT, HAN 24 E-M 933 024 2631	
X102 :2	90110-0334	-		4	SCREW HARTING	
X102 :3	90110-0335	-		2	SCREW	
X103	90110-0057	A		1	FEMALE INSERT HAN 24 E 09 33 002 4201	
X103 :1	90110-0128	A		1	MALE INSERT, HAN 24 E-M 933 024 2631	
X103 :2	90110-0334	-		4	SCREW HARTING	
X103 :3	90110-0335	-		2	SCREW	
X104	90110-0057	A		1	FEMALE INSERT HAN 24 E 09 33 002 4201	
X104 :1	90110-0128	A		1	MALE INSERT, HAN 24 E-M 933 024 2631	
X104 :2	90110-0334	-		4	SCREW HARTING	
X104 :3	90110-0335	-		2	SCREW	
X106	90110-0057	A		1	FEMALE INSERT HAN 24 E 09 33 002 4201	
X106 :1	90110-0128	A		1	MALE INSERT, HAN 24 E-M 933 024 2631	

This page is intentionally left blank.

Pos	Part No	SP	UN	Qty	Description	Page No
Common Parts (Cont'd)						
X106 :2	90110-0334	-		4	SCREW HARTING	
X106 :3	90110-0335	-		2	SCREW	
X107	90110-0057	A		1	FEMALE INSERT HAN 24 E 09 33 002 4201	
X107 :1	90110-0128	A		1	MALE INSERT, HAN 24 E-M 933 024 2631	
X107 :2	90110-0334	-		4	SCREW HARTING	
X107 :3	90110-0335	-		2	SCREW	
X108	90110-0057	A		1	FEMALE INSERT HAN 24 E 09 33 002 4201	
X108 :1	90110-0128	A		1	MALE INSERT, HAN 24 E-M 933 024 2631	
X108 :2	90110-0334	-		4	SCREW HARTING	
X108 :3	90110-0335	-		2	SCREW	
X109	90110-0057	A		1	FEMALE INSERT HAN 24 E 09 33 002 4201	
X109 :1	90110-0128	A		1	MALE INSERT, HAN 24 E-M 933 024 2631	
X109 :2	90110-0334	-		4	SCREW HARTING	
X109 :3	90110-0335	-		2	SCREW	
X111	90110-0057	A		1	FEMALE INSERT HAN 24 E 09 33 002 4201	
X111 :1	90110-0128	A		1	MALE INSERT, HAN 24 E-M 933 024 2631	
X111 :2	90110-0334	-		4	SCREW HARTING	
X111 :3	90110-0335	-		2	SCREW	
X112	90110-0057	A		1	FEMALE INSERT HAN 24 E 09 33 002 4201	
X112 :1	90110-0128	A		1	MALE INSERT, HAN 24 E-M 933 024 2631	
X112 :2	90110-0334	-		4	SCREW HARTING	
X112 :3	90110-0335	-		2	SCREW	
X113	90110-0057	A		1	FEMALE INSERT HAN 24 E 09 33 002 4201	
X113 :1	90110-0128	A		1	MALE INSERT, HAN 24 E-M 933 024 2631	
X113 :2	90110-0334	-		4	SCREW HARTING	
X113 :3	90110-0335	-		2	SCREW	
X114	90110-0057	A		1	FEMALE INSERT HAN 24 E 09 33 002 4201	
X114 :1	90110-0128	A		1	MALE INSERT, HAN 24 E-M 933 024 2631	
X114 :2	90110-0334	-		4	SCREW HARTING	
X114 :3	90110-0335	-		2	SCREW	
X115	90110-0057	A		1	FEMALE INSERT HAN 24 E 09 33 002 4201	
X115 :1	90110-0128	A		1	MALE INSERT, HAN 24 E-M 933 024 2631	
X115 :2	90110-0334	-		4	SCREW HARTING	
X115 :3	90110-0335	-		2	SCREW	
X116	90110-0057	A		1	FEMALE INSERT HAN 24 E 09 33 002 4201	
X116 :1	90110-0128	A		1	MALE INSERT, HAN 24 E-M 933 024 2631	
X116 :2	90110-0334	-		4	SCREW HARTING	
X116 :3	90110-0335	-		2	SCREW	
X117	90110-0057	A		1	FEMALE INSERT HAN 24 E 09 33 002 4201	
X117 :1	90110-0128	A		1	MALE INSERT, HAN 24 E-M 933 024 2631	
X117 :2	90110-0334	-		4	SCREW HARTING	
X117 :3	90110-0335	-		2	SCREW	
X200	90110-0161	A		1	FEMALE INSERT 70 105 0653 0	
X200 :1	90110-0159	A		1	MALE INSERT 70.310.0640.0	
X200 :2	90110-0157	A		1	CABLE HOOD 6-POL 70.352.0628.1	
X200 :3	90110-0166	A		1	CHASSIS HOUSING 310144-33	
X201	90110-0161	A		1	FEMALE INSERT 70 105 0653 0	
X201 :1	90110-0159	A		1	MALE INSERT 70.310.0640.0	
X201 :2	90110-0157	A		1	CABLE HOOD 6-POL 70.352.0628.1	
X201 :3	90110-0166	A		1	CHASSIS HOUSING 310144-33	
X202	90110-0161	A		1	FEMALE INSERT 70 105 0653 0	
X202 :1	90110-0159	A		1	MALE INSERT 70.310.0640.0	
X202 :2	90110-0157	A		1	CABLE HOOD 6-POL 70.352.0628.1	
X202 :3	90110-0166	A		1	CHASSIS HOUSING 310144-33	
X203	90110-0161	A		1	FEMALE INSERT 70 105 0653 0	
X203 :1	90110-0159	A		1	MALE INSERT 70.310.0640.0	
X203 :2	90110-0157	A		1	CABLE HOOD 6-POL 70.352.0628.1	
X203 :3	90110-0166	A		1	CHASSIS HOUSING 310144-33	
X204	90110-0161	A		1	FEMALE INSERT 70 105 0653 0	
X204 :1	90110-0159	A		1	MALE INSERT 70.310.0640.0	
X204 :2	90110-0157	A		1	CABLE HOOD 6-POL 70.352.0628.1	
X204 :3	90110-0166	A		1	CHASSIS HOUSING 310144-33	
X205	90110-0161	A		1	FEMALE INSERT 70 105 0653 0	
X205 :1	90110-0159	A		1	MALE INSERT 70.310.0640.0	
X205 :2	90110-0157	A		1	CABLE HOOD 6-POL 70.352.0628.1	
X205 :3	90110-0166	A		1	CHASSIS HOUSING 310144-33	
X206	90110-0161	A		1	FEMALE INSERT 70 105 0653 0	
X206 :1	90110-0159	A		1	MALE INSERT 70.310.0640.0	
X206 :2	90110-0157	A		1	CABLE HOOD 6-POL 70.352.0628.1	
X206 :3	90110-0166	A		1	CHASSIS HOUSING 310144-33	
X207	90110-0161	A		1	FEMALE INSERT 70 105 0653 0	
X207 :1	90110-0159	A		1	MALE INSERT 70.310.0640.0	
X207 :2	90110-0157	A		1	CABLE HOOD 6-POL 70.352.0628.1	
X207 :3	90110-0166	A		1	CHASSIS HOUSING 310144-33	
X208	90110-0161	A		1	FEMALE INSERT 70 105 0653 0	
X208 :1	90110-0159	A		1	MALE INSERT 70.310.0640.0	
X208 :2	90110-0157	A		1	CABLE HOOD 6-POL 70.352.0628.1	
X208 :3	90110-0166	A		1	CHASSIS HOUSING 310144-33	
X209	90110-0161	A		1	FEMALE INSERT 70 105 0653 0	
X209 :1	90110-0159	A		1	MALE INSERT 70.310.0640.0	
X209 :2	90110-0157	A		1	CABLE HOOD 6-POL 70.352.0628.1	
X209 :3	90110-0166	A		1	CHASSIS HOUSING 310144-33	
X211	90110-0161	A		1	FEMALE INSERT 70 105 0653 0	

Machine Type | Group Description | Used-In | Group Number | Page No

This page is intentionally left blank.

Pos	Part No	SP	UN	Qty	Description	Page No
Common Parts (Cont'd)						
X211 :1	90110-0159	A		1	MALE INSERT 70.310.0640.0	
X211 :2	90110-0157	A		1	CABLE HOOD 6-POL 70.352.0628.1	
X211 :3	90110-0166	A		1	CHASSIS HOUSING 310144-33	
X213	90110-0161	A		1	FEMALE INSERT 70 105 0653 0	
X213 :1	90110-0159	A		1	MALE INSERT 70.310.0640.0	
X213 :2	90110-0157	A		1	CABLE HOOD 6-POL 70.352.0628.1	
X213 :3	90110-0166	A		1	CHASSIS HOUSING 310144-33	
XL10	1365923-0000	-		1	DISTR. TERMINAL24VDC	
XL50	1365924-0000	-		1	DISTR. TERMINAL220VAC	
Z100	90024-0060	A		1	POWER LINE FILTER, 80 A 250/440 VAC	
Z101	B90082-0013	A		1	OVERVOLTAGE PROTECTOR	
	90082-0301	*A*		*3*	*OVERVOLTOLTAGE PROTECTOR*	
Z102	90024-0036	A		1	FILTERED TERMINAL BLOCK	
Z103	90430-0325	A		1	FILTER 6SE3290-0BA87-0FB0	
Z104	90024-0047	A		1	EMI SUPPRESSION FERRITE	
Z105	90430-0335	A		1	FILTER LA174936U025	
Z106	90024-0047	A		1	EMI SUPPRESSION FERRITE	

Pos	Part No	SP	UN	Qty	Description	Page No

This page is intentionally left blank.

ECM: 82827 - 20001017
Group number: 42052-0500
Assembly Drawing:
Issue: 20030213

Pos	Part No	SP	UN	Qty	Description	Page No
Common Parts						
100	351150-0406	-	MM	3500	CABLE OLFLEX 7X0,75 MM2 LIGHT/GREY	
101	351150-0424	-	MM	6000	CABLE OLFLEX 18X0,75 MM2 LIGHT/GREY	
102	351150-0424	-	MM	6000	CABLE OLFLEX 18X0,75 MM2 LIGHT/GREY	
103	351150-0424	-	MM	6000	CABLE OLFLEX 18X0,75 MM2 LIGHT/GREY	
104	351150-0425	-	MM	6000	CABLE OLFLEX 25X0,75 MM2 LIGHT/GREY	
105	90220-0059	-	MM	6000	THERMOCOUPLE CABLE K/ 2X0,81MM2	
106	351150-0425	-	MM	5000	CABLE OLFLEX 25X0,75 MM2 LIGHT/GREY	
107	351150-0425	-	MM	5000	CABLE OLFLEX 25X0,75 MM2 LIGHT/GREY	
108	90220-0059	-	MM	4500	THERMOCOUPLE CABLE K/ 2X0,81MM2	
109	90220-0059	-	MM	4500	THERMOCOUPLE CABLE K/ 2X0,81MM2	
110	90220-0059	-	MM	4500	THERMOCOUPLE CABLE K/ 2X0,81MM2	
111	90220-0059	-	MM	4500	THERMOCOUPLE CABLE K/ 2X0,81MM2	
112	90220-0059	-	MM	4500	THERMOCOUPLE CABLE K/ 2X0,81MM2	
113	90220-0059	-	MM	4500	THERMOCOUPLE CABLE K/ 2X0,81MM2	
114	351150-0403	-	MM	5000	CABLE OLFLEX 3X0,75 MM2 LIGHT/GREY	
115	351150-0425	-	MM	5000	CABLE OLFLEX 25X0,75 MM2 LIGHT/GREY	
116	351150-0407	-	MM	6500	CABLE OLFLEX 12X0,75 MM2 LIGHT/GREY	
120	351150-0424	-	MM	3000	CABLE OLFLEX 18X0,75 MM2 LIGHT/GREY	
121	351150-0425	-	MM	3000	CABLE OLFLEX 25X0,75 MM2 LIGHT/GREY	
122	351150-0407	-	MM	4000	CABLE OLFLEX 12X0,75 MM2 LIGHT/GREY	
123	351150-0407	-	MM	4000	CABLE OLFLEX 12X0,75 MM2 LIGHT/GREY	
124	351150-0406	-	MM	4000	CABLE OLFLEX 7X0,75 MM2 LIGHT/GREY	
125	351150-0405	-	MM	4000	CABLE OLFLEX 5X0,75 MM2 LIGHT/GREY	
126	351150-0407	-	MM	5200	CABLE OLFLEX 12X0,75 MM2 LIGHT/GREY	
127	351150-0406	-	MM	3300	CABLE OLFLEX 7X0,75 MM2 LIGHT/GREY	
128	351150-0407	-	MM	6500	CABLE OLFLEX 12X0,75 MM2 LIGHT/GREY	
129	351150-0403	-	MM	6500	CABLE OLFLEX 3X0,75 MM2 LIGHT/GREY	
132	351150-0403	-	MM	2000	CABLE OLFLEX 3X0,75 MM2 LIGHT/GREY	
133	351150-0403	-	MM	5200	CABLE OLFLEX 3X0,75 MM2 LIGHT/GREY	
134	351150-0403	-	MM	5200	CABLE OLFLEX 3X0,75 MM2 LIGHT/GREY	
135	351150-0403	-	MM	800	CABLE OLFLEX 3X0,75 MM2 LIGHT/GREY	
200	351150-0412	-	MM	5000	CABLE OLFLEX 3X1,5 MM2 LIGHT/GREY	
201	351150-0412	-	MM	5000	CABLE OLFLEX 3X1,5 MM2 LIGHT/GREY	
202	351150-0412	-	MM	5000	CABLE OLFLEX 3X1,5 MM2 LIGHT/GREY	
203	351150-0413	-	MM	7000	CABLE OLFLEX 4X1,5 MM2 LIGHT/GREY	
205	351150-0413	-	MM	6500	CABLE OLFLEX 4X1,5 MM2 LIGHT/GREY	
206	351150-0413	-	MM	4000	CABLE OLFLEX 4X1,5 MM2 LIGHT/GREY	
207	351150-0413	-	MM	6500	CABLE OLFLEX 4X1,5 MM2 LIGHT/GREY	
209	351150-0414	-	MM	6500	CABLE OLFLEX 5X1,5 MM2 LIGHT/GREY	
210	351120-0145	-	MM	5000	CABLE SIHF 3X2,5MM2 GREEN/YELLOW	
211	351120-0165	-	MM	5000	CABLE SIHF 4X2,5MM2 GREEN/YELLOW	
212	351150-0413	-	MM	6500	CABLE OLFLEX 4X1,5 MM2 LIGHT/GREY	
214	351150-0413	-	MM	6000	CABLE OLFLEX 4X1,5 MM2 LIGHT/GREY	
217	351120-0144	-	MM	5500	CABLE SIHF 3X1,5MM2 GREEN/YELLOW	
219	351120-0144	-	MM	6500	CABLE SIHF 3X1,5MM2 GREEN/YELLOW	
220	351120-0144	-	MM	6500	CABLE SIHF 3X1,5MM2 GREEN/YELLOW	
221	351150-0412	-	MM	6500	CABLE OLFLEX 3X1,5 MM2 LIGHT/GREY	
222	90220-0104	-	MM	7000	SCR. CABLE 4X1,5MM2	
223	351127-0144	-	MM	4000	CABLE RN-F 3X15 MM2 GREEN/YELLOW	
301	351150-0405	-	MM	700	CABLE OLFLEX 5X0,75 MM2 LIGHT/GREY	
600	351150-0405	-	MM	2500	CABLE OLFLEX 5X0,75 MM2 LIGHT/GREY	
601	351150-0405	-	MM	2500	CABLE OLFLEX 5X0,75 MM2 LIGHT/GREY	
602	351150-0405	-	MM	2500	CABLE OLFLEX 5X0,75 MM2 LIGHT/GREY	
603	351150-0405	-	MM	2500	CABLE OLFLEX 5X0,75 MM2 LIGHT/GREY	
604	351150-0403	-	MM	2500	CABLE OLFLEX 3X0,75 MM2 LIGHT/GREY	
605	351150-0403	-	MM	2500	CABLE OLFLEX 3X0,75 MM2 LIGHT/GREY	
606	351150-0403	-	MM	2500	CABLE OLFLEX 3X0,75 MM2 LIGHT/GREY	
607	351150-0403	-	MM	2500	CABLE OLFLEX 3X0,75 MM2 LIGHT/GREY	
700	351150-0405	-	MM	900	CABLE OLFLEX 5X0,75 MM2 LIGHT/GREY	
701	351150-0405	-	MM	1200	CABLE OLFLEX 5X0,75 MM2 LIGHT/GREY	
702	351150-0405	-	MM	1600	CABLE OLFLEX 5X0,75 MM2 LIGHT/GREY	
703	351150-0405	-	MM	2500	CABLE OLFLEX 5X0,75 MM2 LIGHT/GREY	
707	351150-0403	-	MM	4500	CABLE OLFLEX 3X0,75 MM2 LIGHT/GREY	
807	351150-0403	-	MM	2000	CABLE OLFLEX 3X0,75 MM2 LIGHT/GREY	
808	351150-0403	-	MM	4500	CABLE OLFLEX 3X0,75 MM2 LIGHT/GREY	
809	351150-0403	-	MM	2000	CABLE OLFLEX 3X0,75 MM2 LIGHT/GREY	
810	351150-0403	-	MM	4500	CABLE OLFLEX 3X0,75 MM2 LIGHT/GREY	
811	351150-0403	-	MM	4500	CABLE OLFLEX 3X0,75 MM2 LIGHT/GREY	
812	351150-0403	-	MM	4500	CABLE OLFLEX 3X0,75 MM2 LIGHT/GREY	
813	351150-0403	-	MM	4500	CABLE OLFLEX 3X0,75 MM2 LIGHT/GREY	
814	351150-0403	-	MM	4500	CABLE OLFLEX 3X0,75 MM2 LIGHT/GREY	
815	351150-0403	-	MM	4500	CABLE OLFLEX 3X0,75 MM2 LIGHT/GREY	
816	351150-0403	-	MM	4500	CABLE OLFLEX 3X0,75 MM2 LIGHT/GREY	
817	351150-0403	-	MM	4500	CABLE OLFLEX 3X0,75 MM2 LIGHT/GREY	
823	351150-0405	-	MM	5000	CABLE OLFLEX 5X0,75 MM2 LIGHT/GREY	
826	351150-0405	-	MM	5000	CABLE OLFLEX 5X0,75 MM2 LIGHT/GREY	
827	351150-0405	-	MM	2000	CABLE OLFLEX 5X0,75 MM2 LIGHT/GREY	
828	351150-0405	-	MM	2300	CABLE OLFLEX 5X0,75 MM2 LIGHT/GREY	
831	351150-0403	-	MM	4000	CABLE OLFLEX 3X0,75 MM2 LIGHT/GREY	
833	351150-0403	-	MM	4000	CABLE OLFLEX 3X0,75 MM2 LIGHT/GREY	
834	351150-0403	-	MM	4000	CABLE OLFLEX 3X0,75 MM2 LIGHT/GREY	
835	351150-0404	-	MM	6000	CABLE OLFLEX 4X0,75 MM2 LIGHT/GREY	
836	351150-0404	-	MM	6000	CABLE OLFLEX 4X0,75 MM2 LIGHT/GREY	

Machine Type | Group Description | Used-In | Group Number | Page No

This page is intentionally left blank.

Pos	Part No	SP	UN	Qty	Description	Page No
Common Parts (Cont'd)						
837	90220-0059	-	MM	2300	THERMOCOUPLE CABLE K/ 2X0,81MM2	
840	351150-0412	-	MM	4000	CABLE OLFLEX 3X1,5 MM2 LIGHT/GREY	
843	351150-0403	-	MM	2200	CABLE OLFLEX 3X0,75 MM2 LIGHT/GREY	
908	351150-0403	-	MM	2500	CABLE OLFLEX 3X0,75 MM2 LIGHT/GREY	
909	351150-0403	-	MM	3500	CABLE OLFLEX 3X0,75 MM2 LIGHT/GREY	
910	351150-0403	-	MM	2500	CABLE OLFLEX 3X0,75 MM2 LIGHT/GREY	
913	351150-0403	-	MM	2000	CABLE OLFLEX 3X0,75 MM2 LIGHT/GREY	
914	351150-0403	-	MM	2000	CABLE OLFLEX 3X0,75 MM2 LIGHT/GREY	
915	351150-0403	-	MM	2000	CABLE OLFLEX 3X0,75 MM2 LIGHT/GREY	
916	351150-0403	-	MM	2000	CABLE OLFLEX 3X0,75 MM2 LIGHT/GREY	
917	351150-0403	-	MM	2000	CABLE OLFLEX 3X0,75 MM2 LIGHT/GREY	
918	351150-0403	-	MM	2000	CABLE OLFLEX 3X0,75 MM2 LIGHT/GREY	
919	351150-0403	-	MM	2000	CABLE OLFLEX 3X0,75 MM2 LIGHT/GREY	
920	351150-0403	-	MM	2000	CABLE OLFLEX 3X0,75 MM2 LIGHT/GREY	
921	351150-0403	-	MM	2000	CABLE OLFLEX 3X0,75 MM2 LIGHT/GREY	
922	351150-0403	-	MM	2000	CABLE OLFLEX 3X0,75 MM2 LIGHT/GREY	
923	351150-0403	-	MM	2000	CABLE OLFLEX 3X0,75 MM2 LIGHT/GREY	
928	351150-0403	-	MM	2000	CABLE OLFLEX 3X0,75 MM2 LIGHT/GREY	
929	351150-0403	-	MM	2500	CABLE OLFLEX 3X0,75 MM2 LIGHT/GREY	
930	90220-0059	-	MM	1500	THERMOCOUPLE CABLE K/ 2X0,81MM2	
931	90220-0059	-	MM	3500	THERMOCOUPLE CABLE K/ 2X0,81MM2	
932	90220-0059	-	MM	3500	THERMOCOUPLE CABLE K/ 2X0,81MM2	
933	90220-0059	-	MM	3500	THERMOCOUPLE CABLE K/ 2X0,81MM2	
934	90220-0059	-	MM	3500	THERMOCOUPLE CABLE K/ 2X0,81MM2	
935	90220-0059	-	MM	3500	THERMOCOUPLE CABLE K/ 2X0,81MM2	
937	351150-0405	-	MM	2700	CABLE OLFLEX 5X0,75 MM2 LIGHT/GREY	
938	351150-0403	-	MM	1000	CABLE OLFLEX 3X0,75 MM2 LIGHT/GREY	
948	90220-0107	-	MM	8500	SCR. CABLE 5X0,75MM2	

Pos	Part No	SP	UN	Qty	Description	Page No

This page is intentionally left blank.

ECM: 82828 - 20001017
Group number: 42053-0500
Assembly Drawing:
Issue: 20030213

Pos	Part No	SP	UN	Qty	Description	Page No
Common Parts						
0001	359240-0100	-		1	SIGN HOLDER FOR 359240-0001	
A023	B68465-0101	A		1	DESIGN CORRECTION POT.	
110	*551937-0000*	*-*		*1*	*BOX FOR POT.68456-101*	
120	*551939-0000*	*-*		*1*	*CABLE 800MM FOR POT.68456*	
130	*551936-0001*	*-*		*1*	*COMPONENTS WITHOUT TP-NO*	
A023 :1	551922-0000	-		1	LABEL,POTENTIOMETER DESIGN CORR.	
A024	1365455-0000	A		1	CIRCUIT BOARD	
A024 :1	1365933-0000	-		1	CONTROL PANEL DISPLAY	
A025	B68699-0101	A		1	MULTIPLEXER CARD 56LED	
010	*578860-0000*	*-*		*1*	*CIRCUIT BOARD*	
020	*578861-0001*	*-*			*COMPONENTS WITHOUT TP-NO*	
A026	B68699-0101	A		1	MULTIPLEXER CARD 56LED	
010	*578860-0000*	*-*		*1*	*CIRCUIT BOARD*	
020	*578861-0001*	*-*			*COMPONENTS WITHOUT TP-NO*	
H65	90036-0057	A		1	LIGHT BULB, BA9S 28V	
H65 :1	90124-0027	A		1	LAMP HOLDER BA9S	
H66	90036-0057	A		1	LIGHT BULB, BA9S 28V	
H66 :1	90124-0027	A		1	LAMP HOLDER BA9S	
H67	90036-0057	A		1	LIGHT BULB, BA9S 28V	
H67 :1	90124-0027	A		1	LAMP HOLDER BA9S	
H68	90036-0057	A		1	LIGHT BULB, BA9S 28V	
H68 :1	90124-0027	A		1	LAMP HOLDER BA9S	
H69	90036-0057	A		1	LIGHT BULB, BA9S 28V	
H69 :1	90124-0027	A		1	LAMP HOLDER BA9S	
H70	90036-0057	A		1	LIGHT BULB, BA9S 28V	
H70 :1	90124-0027	A		1	LAMP HOLDER BA9S	
H71	90036-0057	A		1	LIGHT BULB, BA9S 28V	
H71 :1	90124-0027	A		1	LAMP HOLDER BA9S	
H72	90036-0057	A		1	LIGHT BULB, BA9S 28V	
H72 :1	90124-0027	A		1	LAMP HOLDER BA9S	
H73	90036-0057	A		1	LIGHT BULB, BA9S 28V	
H73 :1	90124-0027	A		1	LAMP HOLDER BA9S	
H74	90036-0057	A		1	LIGHT BULB, BA9S 28V	
H74 :1	90124-0027	A		1	LAMP HOLDER BA9S	
H75	90036-0057	A		1	LIGHT BULB, BA9S 28V	
H75 :1	90124-0027	A		1	LAMP HOLDER BA9S	
H76	90036-0057	A		1	LIGHT BULB, BA9S 28V	
H76 :1	90124-0027	A		1	LAMP HOLDER BA9S	
H77	90036-0057	A		1	LIGHT BULB, BA9S 28V	
H77 :1	90124-0027	A		1	LAMP HOLDER BA9S	
H78	90036-0057	A		1	LIGHT BULB, BA9S 28V	
H78 :1	90124-0027	A		1	LAMP HOLDER BA9S	
H79	90036-0057	A		1	LIGHT BULB, BA9S 28V	
H79 :1	90124-0027	A		1	LAMP HOLDER BA9S	
H80	90036-0057	A		1	LIGHT BULB, BA9S 28V	
H80 :1	90124-0027	A		1	LAMP HOLDER BA9S	
H81	90036-0057	A		1	LIGHT BULB, BA9S 28V	
H81 :1	90124-0027	A		1	LAMP HOLDER BA9S	
H82	90036-0057	A		1	LIGHT BULB, BA9S 28V	
H82 :1	90124-0027	A		1	LAMP HOLDER BA9S	
P.X1	1365925-0000	-		1	P.X001	
P5	90053-0024	A		1	COUNTER 24VDC 6 DIGITS	
P5 :1	90053-0311	A		1	BASE 916	
P5 :2	90053-0305	-		1	FRAME F 1 DV	
P6	90018-0008	A		1	VOLTMETER, 10 VDC	
P7	90018-0007	A		1	VOLTMETER, 25 VDC	
S11	90110-0120	A		1	CONTACT FEMALE 10PHARTREPBY 0090110-0183	
S16	90064-0124	-		1	SWITCH, EM. STOP, ZB2-BS844+ZB2-BZ1045	
S16 :1	486826-0001	-		1	SIGN "EMERGENCY STOP"	
S1H	B90064-0093	A		1	PUSH BUTTON, GREEN	
	90036-0057	*C*		*1*	*LIGHT BULB, BA9S 28V*	
S1H :1	359301-0001	-		1	SIGN "UP"	
S2H	B90064-0082	A		1	PUSH BUTTON, WHITE	
	90036-0057	*B*		*1*	*LIGHT BULB, BA9S 28V*	
S2H :1	359301-0005	-		1	SIGN "DOWN"	
S3H	B90064-0093	A		1	PUSH BUTTON, GREEN	
	90036-0057	*C*		*1*	*LIGHT BULB, BA9S 28V*	
S3H :1	359301-0090	-		1	SIGN "INCHING"	
S4H	90064-0085	A		1	PUSH BUTTON, RED	
S4H :1	359301-0110	-		1	SIGN "SHORT STOP"	
S5H	90064-0084	A		1	PUSH BUTTON, YELLOW	
S5H :1	359301-0456	-		1	BUTTON SIGN, PACKAGE DISPOSAL	
S6H	90064-0084	A		1	PUSH BUTTON, YELLOW	
S6H :1	359301-0125	-		1	SIGN "LUBRICATION"	
S7H	90064-0084	A		1	PUSH BUTTON, YELLOW	
S7H :1	359301-0131	-		1	BUTTON SIGN, LAMP TEST / ALARM RES.	
S8H	90064-0084	A		1	PUSH BUTTON, YELLOW	
S8H :1	359301-0215	-		1	SIGN "WASH PRODUCT VALVE"	
S9	90111-0120	A		1	SWITCH, 2 POS.704.510 .0A+704.901.5/A	
S9 :1	359241-0140	-		1	SIGN "LIGHTING MACHINE"	

Machine Type | Group Description | Used-In | Group Number | Page No

This page is intentionally left blank.

Pos	Part No	SP	UN	Qty	Description	Page No
Common Parts						
0010	90245-0022	A		1	MATCHING TRANSF. 18 KVA	
0037	351150-0407	-	M		CABLE OLFLEX 12X0,75 MM2 LIGHT/GREY	
0038	351150-0407	-	M		CABLE OLFLEX 12X0,75 MM2 LIGHT/GREY	
0039	351150-0405	-	M		CABLE OLFLEX 5X0,75 MM2 LIGHT/GREY	

Pos	Part No	SP	UN	Qty	Description	Page No

This page is intentionally left blank.

Pos	Part No	SP	UN	Qty	Description	Page No
Common Parts						
0010	A42051-0500	-		1	EL.CABINET TCA-65	**493, 495, 497, 499, 501, 503, 505, 507**
0020	A42052-0500	-		1	CABLE DIAGRAM	**509, 511**
0030	A42053-0500	-		1	PANEL	**513**
0040	A42054-0500	-		1	STANDARD EQUIPMENT	
0050	A42055-0500	-		1	EXTRA EQUIPMENT	**515**
0060	A42057-0500	-		1	SPARE PART	**519**
6000	1365921-0000	-		1	GROUND TERMINAL	
6020	1365922-0000	-		1	NEUTRAL TERMINAL	
6030	1365923-0000	-		1	DISTR. TERMINAL24VDC	
6040	1365924-0000	-		1	DISTR. TERMINAL220VAC	
6050	1365925-0000	-		1	P.X001	
6080	1365928-0000	-		1	SIGN	

Pos	Part No	SP	UN	Qty	Description	Page No

This page is intentionally left blank.

ECM: 82134 - 20000814
Group number: 42057-0500
Assembly Drawing:

Issue: 20030213

Pos	Part No	SP	UN	Qty	Description	Page No
Common Parts						
0010	90036-0057	A		5	LIGHT BULB, BA9S 28V	
0020	90119-0067	A		1	SOLID-STATE RELAY, H12WD4850	
0030	90064-0315	A		1	LAMP REMOVER, NO:700	
0040	90233-0028	A		3	TUBE FUSE, 10A	
0050	B90233-0027	A		2	TUBE FUSE, 16A	
	90233-0305	*C*		*1*	*INDICATOR*	

Pos	Part No	SP	UN	Qty	Description	Page No

Machine Type | Group Description | Used-In | Group Number | Page No

Tetra Pak

SPC
Spare Parts Catalogue

Part No	Description	Page No
1755-0005	WASHER	305
1755-0006	WASHER	305
1755-0007	WASHER	305
2033-0005	WASHER	465
2033-0009	WASHER	461
2033-0011	WASHER	35, 37
2189-0000	SLEEVE	177, 185, 187, 209, 217, 219
2467-0000	OIL SEAL (LÖVALOCK)	307, 309, 311
2481-0000	TACK	125, 151, 177, 209
2612-0001	WASHER	241, 243
2612-0002	WASHER	241, 243
2612-0003	WASHER	241, 243
2612-0004	WASHER	241, 243
2613-0000	SCREW	241, 243
2864-0000	BUSHING	125, 151, 177, 209
2865-0000	BUSHING	125, 151, 177, 209
2965-0000	HINGE	241, 243
3271-0000	BRACKET	301, 303
3274-0001	BOLT	301, 303
3274-0002	BOLT	373, 383, 385
3303-0000	GEAR WHEEL	339
3311-0000	DOWEL PIN	301, 303
3318-0000	LEG	301, 303
3329-0000	STEERING RAIL	301, 303
3749-0000	OIL SEAL (LÖVALOCK)	129, 155, 181, 213
4287-0004	SHAFT	13
4288-0007	BENDING ROLLER	13
4292-0000	HANDSPIKE	459
4317-0000	BEARING	455, 457
4374-0000	SHAFT	391
4438-0300	SLIP DISC	315, 317
4438-0311	SLIP DISC	315, 317
4438-0312	SLIP DISC	315, 317
4460-0000	DOUBLE SPROCKET	339
4465-0002	PULLEY	319
4466-0001	FLANGE	319, 321, 323
4466-0002	FLANGE	319
4467-0000	HUB	319, 321, 323
4468-0000	DOWEL	319, 321, 323
4469-0000	SPRING	319, 321, 323
4488-0000	ANGLE	301, 303
4554-0000	SPROCKET	373, 383, 385
4569-0000	SPACER RING	373, 383, 385
4599-0000	BEARING HOUSING RIGHT	127, 153, 179, 211
4600-0000	BEARING HOUSING LEFT	127, 153, 179, 211
4613-0000	BUSHING	201, 203, 233, 235
4615-0000	ROLLER BAR	143, 145, 169, 171
4623-0000	SPRING	131, 157, 183, 215
4627-0000	SHAFT	127, 153, 179, 211
4628-0000	SHAFT	129, 155, 181, 213
4660-0000	STRUT	125, 151
4666-0000	NUT	177, 209
4677-0000	BRACKET	177, 209
4678-0000	ECCENTRIC SHAFT	177, 209
4830-0000	LID	301, 303
4831-0001	BOLT	329
4832-0000	BOLT	329
4865-0301	COUNTER WHEEL	305
4865-0302	COUNTER WHEEL	305
4866-0300	WORM GEAR	297, 299
4868-0101	INTERMEDIARY SHAFT	297, 299
4869-0101	CHAIN TENSIONER	297, 299
4870-0102	CHAIN TENSIONER	297, 299
4874-0000	CANTILEVER	325
4875-0000	SHAFT	325
4876-0000	SPROCKET	325
4877-0000	GEAR WHEEL	325
4878-0000	CARRIER FLANGE	325
4879-0000	SPROCKET	325
4880-0000	WASHER	325
4881-0000	GEAR WHEEL	315, 317
4882-0000	GEAR WHEEL	315, 317
4884-0000	SHAFT	307, 309, 311
4887-0000	COUNTER WHEEL	309, 311
4888-0000	SPROCKET	311
4890-0000	ANGLE	327
4891-0000	TENSION ARM	327
4892-0000	CURVE	327
4893-0000	SPACER SLEEVE	327
4894-0001	BOLT	327
4894-0002	BOLT	327
4895-0000	BEARING BRACKET	305
4897-0000	SHAFT	333
4898-0000	FASTENING IRON	333

Part No	Description	Page No
4899-0000	HOLDER	301, 303
4900-0000	SUPPORT BAR	301, 303
4901-0000	TENSION ARM	329
4902-0000	SPROCKET	301, 303, 329
4903-0000	SEAL COVER	329
4904-0000	SPACER RING	301, 303, 329
4905-0000	GEARBOX SHELF	301, 303
4907-0000	CUTTING MECHANISM BODY	301, 303
4909-0000	MOTOR COVER	301, 303
4910-0000	PROTECTION	305
4948-0000	WINDOW	13
4961-0000	CATCH	13
5056-0000	BEARING HOUSING	339
5057-0000	FLANGED SHAFT	339
5058-0000	LID	339
5310-0000	SHAFT	377, 389
5332-0602	ELEVATOR	369, 371
5332-0700	ELEVATOR	369, 371
5333-0204	CHAIN	369, 371
5338-0000	PLATE	373, 383, 385
5344-0002	CONVEYING CHAIN EQUIP.	391
5450-0001	CARTON	319, 321, 323
5486-0000	BEARING	471
5778-0000	SHAFT	473
5809-0000	TACK	143, 145, 169, 171, 201, 203, 233, 235
6116-0002	TENSION SPRING	391
6157-0000	BOBBIN	471
6158-0000	SPRING	471
6159-0000	BEARING	471
6183-0000	SPRING	333
6216-0000	SPROCKET	315, 317
6453-0001	LUBRICATING PIPE	127, 153, 179, 211
6695-0000	ROLL	469
6827-0000	TAPER	337
6830-0101	EXPANSION BOLT	297, 299
6831-0000	BOLT	337
6849-0000	AXLE PIN	315, 317
7018-0000	COVERING PLATE	301, 303
7309-0000	HANDLE	301, 303
7352-0000	COMPRESSION SPRING	329
7353-0000	COVER	329
7354-0001	SCREW	329
7470-0006	CHAIN	301, 303
7470-0007	CHAIN	301, 303
8490-0010	MOUNTING RAIL	33, 291
10182-0000	STOP SCREW	125, 151, 177, 209
10325-0000	CATCH	13
10593-0000	LOCKING RUBBER	43, 417, 419
10677-0000	SHAFT	455, 457
10816-0000	MARKING PLATE	125
10920-0000	TENSION SPRING	301, 303
11040-0502	CASSETTE	11
11460-0000	WASHER	339
12242-0001	GASKET 32X25X5,5	87, 89, 103, 105, 355, 401, 417, 419
12242-0003	GASKET 48X38X5,5	87, 89, 103, 105, 417, 419
12379-0000	SPRING	461
13120-0001	SPACING WASHER	455, 457
13120-0002	SPACING WASHER	455, 457
13172-0000	ADJUSTING SCREW	133, 159
13254-0000	NUT	133, 159
13372-0202	DRIVE SHAFT	297, 299
13389-0001	SHEET	151
13389-0002	SHEET	125, 151
13888-0000	BEARING	13
13890-0001	HOLDER	13
13890-0002	HOLDER	13
14964-0002	SHAFT	469
14966-0000	ROLL	469
18880-0000	AXLE PIN	469
19083-0000	WEIGHT	473
19217-0000	KNURLED SCREW	469
19223-0000	COMPRESSION SPRING	469
19269-0002	ELEMENT	59
19477-0000	CASSETTE	13
19515-0000	EYELET	469
19784-0000	SHAFT	471
19795-0000	COMPRESSION SPRING	465
19797-0000	BUSHING	63
20036-0203	HOSE CLAMP	453
20038-0000	CLAMP PLATE	459
20039-0000	RUBBER STRIP	459
20040-0000	HANDSPIKE	459
20387-0101	BOBBIN	469
20389-0101	BRAKE	469

Part No	Description	Page No
21071-0000	BRAKE	473
21072-0000	BRAKE	473
21229-0000	SPACER	455, 457
21613-0000	SCREW	267
21903-0000	ROLL	461
21904-0000	SHAFT	461
22501-0000	SPACER	461
27115-0000	SHAFT	17
27118-0000	THRUST WASHER	17
27729-0000	LATCH	17
27730-0000	LOCKING COMPOUND	17
27731-0000	SHEET	17
28036-0000	WASHER	29, 31
28509-0000	BRICKA	135, 161
31338-0000	COUNTERWEIGHT	77
31340-0000	PIN	77
31418-0000	SHAFT	465
31425-0000	GUIDE WHEEL	463
32197-0000	PRESSURE ROLLER	43, 417, 419
32544-0000	INSULATION NUT	135, 161
32644-0000	WASHER	135, 161
32712-0000	SCREW	55, 57
33163-0401	SPLICING APPARATUS	11
33164-0000	APPLIANCE FRAME	15
33165-0000	HEATING BLOCK	15
33168-0000	BRACKET	15
33170-0000	BRACKET	15
33171-0000	INSULATING PLATE	15
33172-0000	SHAFT	15
33173-0000	HEAD RAIL	15
33174-0000	SHAFT	15
33175-0000	SIDE PLATE	15
33176-0000	SIDE PLATE	15
33177-0000	ABRASION SAW BLADE	15
33178-0000	RUBBER SHIM	15
33179-0000	TEFLON CLOTH	15
33180-0000	SHAFT	15
33216-0101	CANTILEVER	15
33217-0000	SUPPORTING ARM	17
33218-0000	SUPPORTING ARM HOLDER	17
33472-0000	BUSHING	15
33730-0001	GASKET	55, 57
36430-0000	BRUSH	405, 417, 419
37190-0000	FORK	43
37191-0000	SHAFT	43
37807-0000	LINING	185, 187, 217, 219
37808-0000	PISTON	185, 187, 217, 219
37885-0000	TENSION SPRING	15
38960-0000	COIL HEATER	63
38962-0000	CLUTCH PIECE	63
38963-0000	LID	63
42051-0500	EL.CABINET TCA-65	491, 517
42052-0500	CABLE DIAGRAM	491, 517
42053-0500	PANEL	491, 517
42054-0500	STANDARD EQUIPMENT	491, 517
42055-0500	EXTRA EQUIPMENT	491, 517
42056-0500	ELECTRICAL DOCUMENT	491
42057-0500	SPARE PART	491, 517
67058-0301	CIRCUIT BOARD, CODE CARD "BETA CARD"	493, 495, 497, 499, 501, 503, 505, 507
67379-0301	TRANSFORMER	135, 161, 417, 419
67379-0302	TRANSFORMER	135, 161, 417, 419
67386-0101	FLOW CONTROLLERCIRC.B	493, 495, 497, 499, 501, 503, 505, 507
67388-0102	RACK FRONTMOUNTED 84TE	493, 495, 497, 499, 501, 503, 505, 507
67600-0501	TPIH GENERATOR	493, 495, 497, 499, 501, 503, 505, 507
68123-0301	LEVEL METERIND.2 COILS	493, 495, 497, 499, 501, 503, 505, 507
68161-0102	COIL ELEMENT	239
68262-0101	BACKPLANE FRONT RACK 8TE	493, 495, 497, 499, 501, 503, 505, 507
68263-0101	BACKPLANE FRONT RACK 6TE	493, 495, 497, 499, 501, 503, 505, 507
68264-0101	BACKPLANE FRONT RACK 5TE	493, 495, 497, 499, 501, 503, 505, 507
68443-0101	BRAKE REGULATOR ANALOGIO	493, 495, 497, 499, 501, 503, 505, 507
68445-0102	FRONT PLATE 5TE	493, 495, 497, 499, 501, 503, 505, 507
68445-0103	FRONT PLATE 6TE	493, 495, 497, 499, 501, 503, 505, 507
68445-0104	FRONT PLATE 8 TE	493, 495, 497, 499, 501, 503, 505, 507
68445-0106	FRONT PLATE 2TE	493, 495, 497, 499, 501, 503, 505, 507
68447-0201	VALVE POS: ASSEMBLY	493, 495, 497, 499, 501, 503, 505, 507
68450-0101	STEPPER MOTOR DRIVER	493, 495, 497, 499, 501, 503, 505, 507
68465-0101	DESIGN CORRECTION POT.	513
68471-0101	PRINTED DESIGN CORR.LOGIC	493, 495, 497, 499, 501, 503, 505, 507
68699-0101	MULTIPLEXER CARD 56LED	513
68917-0101	CIRC.BOARD DISPLAY ANGLE INDICATOR	341
72947-0000	HOOK SPANNER	405
74976-0000	TEMPLATE FOR CONNECTOR	443
76548-0000	DEPTH GAUGE	443
85575-0101	INSTALLATION MANUAL	425

Part No	Description	Page No
85576-0101	OPERATION MANUAL	425
85577-0101	ELECTRICAL MANUAL	425
85578-0101	SPARE PARTS CATALOGUE	425
85579-0101	MAINTENANCE MANUAL	425
90000-0024	AMMETER, IQ48 15-100HZ	493, 495, 497, 499, 501, 503, 505, 507
90001-0004	CONNECTOR, MS 3108E-14S-2S	103, 105
90001-0033	WALL SOCKET OUTLET	493, 495, 497, 499, 501, 503, 505, 507
90002-0004	BLANK-OFF PLUG, PR 22,5 SKINDICHT-BLK16	267
90002-0009	BLANK-OFF PLUG, PR 18.6 SKINDICHT-BLK11	85, 267
90002-0013	BLANK-OFF PLUG, PR 15,2 SKINDICHT-BLK9	33, 85, 267, 291
90002-0018	BLANK-OFF PLUG, PR 12,5 SKINDICHT-BLK7	85
90005-0005	GASKET BOLT HEAD 13,7X20,6X2,1 MM G1/4"	275
90005-0064	WASHER PL.RND.NYL.4,3/9, H=0,8	249, 251, 253, 255
90007-0129	CIRCUIT BREAKER, 1P 10 A K	493, 495, 497, 499, 501, 503, 505, 507
90007-0138	CIRCUIT BREAKER, 2P 10 A K	493, 495, 497, 499, 501, 503, 505, 507
90012-0059	GLAND	85
90012-0061	GLAND	85
90012-0063	CABLE GLAND PR 15,2	275, 355
90012-0114	CABLE GLAND, PR18,6/PG11, ELBOW, 120377	55, 57
90015-0016	BUSHING 21X8MM; HOLE=13MM	87, 89
90015-0017	BUSHING	285
90015-0020	LEAD-IN, TET5-7, E-1458016	107
90015-0027	RUBBER BUSHING DI=6MM	285
90017-0001	BIKE HANDLE	15
90017-0012	HANDLE 200MM, BLACK	249, 251, 253, 255
90017-0023	HANDLE, NO. 87-7-2203	67
90017-0024	HANDLE NO. VA-08.100.31	51, 53, 351, 375, 487
90018-0007	VOLTMETER, 25 VDC	513
90018-0008	VOLTMETER, 10 VDC	513
90020-0020	SLEEVE	185, 187, 217, 219
90024-0036	FILTERED TERMINAL BLOCK	493, 495, 497, 499, 501, 503, 505, 507
90024-0047	EMI SUPPRESSION FERRITE	493, 495, 497, 499, 501, 503, 505, 507
90024-0060	POWER LINE FILTER, 80 A 250/440 VAC	493, 495, 497, 499, 501, 503, 505, 507
90028-0001	CONE 5/32"	141, 167, 193, 225, 347, 393
90028-0021	CONE TUBE 4 MM	141, 167, 193, 225, 259, 263, 349, 393
90028-0022	CONE TUBE 6 MM	259, 261, 263, 393
90028-0025	CONE TUBE 6 MM	141, 167, 193, 225, 349
90030-0030	CONN. BULKHEAD SV 12-L/SY	67
90030-0051	CONN. STR., 6-R1/8, EXT. THREAD	61
90030-0062	CONN. STR. GE 6-1/4-18 NPTF	357
90030-0136	ADJUSTABLE ELBOW CONNECTION,EXT 12-G3/8	55, 57
90030-0166	NIPPLE,REDUCING G1/4"-G1/4"	279
90030-0171	ADJUSTABLE ELBOW CONNECTION,EXT 6-G1/8	357
90030-0211	NIPPLES, REDUCING, INT. THR.ÿL=42	109, 111
90030-0213	CONN. STR. M12 MSC1/2K-316 EXT. TAPPERED	81, 83
90030-0230	CONN. BULKHEAD SV 6-	117
90030-0232	CONN. PIPE SS-6MO-1-4RP	359
90030-0233	CONN. STR., 6-G1/8, EXT. THREAD	353, 359
90030-0274	CONN. STR.12-1/4 NPT, EXT. TAPPERED	81, 83
90030-0275	CONN. STR.12-3/8 NPT, EXT. TAPPERED	355
90030-0278	CONN. STR., 12-G1/4, INT. THREAD	81, 83
90030-0279	CONN. ELBOW, 8	355
90030-0280	CONN. ELBOW, 12	81, 83, 115, 355
90030-0281	CONN. T-PIPE 12	81, 83, 355
90030-0282	CONN. PIPE 12	117
90030-0286	PIPE SOCKET SS-12-MTA-1-4 RT	81, 83, 115
90030-0287	TUBE ADAPTOR R 1/2-DIA. 12MM	81, 83
90030-0290	CONN. STR., 8-R1/8, EXT. THREAD	55, 57
90030-0336	CONN. STRAIGHT, 316L-12M-BVCO-3	91
90030-0338	NUT, PIPE & CONNECTORS, SS-8-BVCO-4	81, 83, 91
90030-0379	CONN. STR. 12-1/4 NPT, EXT. TAPPERED	355
90030-0417	CONN. STR. 20-R1/2, EXT. TAPPERED	109, 111
90030-0477	CONN. PIPE 8	117, 355
90030-0478	CONN. STR., 6-1/8 NPT, INT. THREAD	357
90030-0479	CONN. STR., 6-1/4 NPT, INT. THREAD	357
90030-0480	CONN. ELBOW, 6	359
90030-0481	REDUCER M12TURM6-316	355
90030-0482	GASKET	41
90030-0483	CONN. BULKHEAD SV 10-	81, 83
90030-0484	CONN. BULKHEAD SV 12-	117
90030-0485	CONN. BULKHEAD SV 8-	117
90030-0486	CONN. STR., 12-R3/8, EXT. THREAD	109, 111
90030-0487	CONN. STR., 10-R1/4, EXT. THREAD	81, 83
90031-0051	BASEPLATE, 10-SLOT	493, 495, 497, 499, 501, 503, 505, 507
90031-0053	BASEPLATE,10-SLOT	493, 495, 497, 499, 501, 503, 505, 507
90031-0057	PLC, DIGITAL INPUT MODULE	493, 495, 497, 499, 501, 503, 505, 507
90031-0058	PLC, DIGITAL INPUT MODULE	493, 495, 497, 499, 501, 503, 505, 507
90031-0059	PLC, DIGITAL OUTPUT MODULE	493, 495, 497, 499, 501, 503, 505, 507
90031-0068	PLC, POWER SUPPLY	493, 495, 497, 499, 501, 503, 505, 507
90031-0075	CPU363, SERIAL COMMUNICATION	493, 495, 497, 499, 501, 503, 505, 507
90031-0302	I/O BUS TERMINATION PLUG	493, 495, 497, 499, 501, 503, 505, 507
90031-0308	PLC,CABLES,I/O EXPANSION CABLE	493, 495, 497, 499, 501, 503, 505, 507
90032-0038	BLOCK 2 WAYS	141, 167, 193, 225, 259, 263, 393
90032-0039	BLOCK 4 WAYS	141, 167, 193, 225, 349

Part No	Description	Page No
90032-0044	DISTRIBUTION BLOCK 4 WAYS	259, 261, 263
90036-0057	LIGHT BULB, BA9S 28V	417, 419, 513, 519
90036-0068	BULB 6.5W 24V	273
90038-0025	RECTIFIER, 6,5/15A SKD 30/04A1	493, 495, 497, 499, 501, 503, 505, 507
90042-0107	SOL.VALVE BURKERT 24VDC	351
90042-0156	SOLENOID VALVE FESTO MFHE-3-1/4-B	115
90042-0171	SOLENOID VALVE BUERKERT	359
90042-0237	SOLENOID ACTUATOR FESTO	353
90042-0256	SOLENOID VALVE FESTO	115
90042-0392	CONTACT 2 POLE + EARTH	113
90042-0455	COIL FESTO MSFG 24VDC	115
90042-0484	HOLLOW SCREW	115
90042-0485	COVER PLATE PRSB-1/8 FESTO	115
90042-0563	INDICATOR FESTO 19143 MF-LD-12...24	113, 115, 353
90042-0564	INDICATOR 19145 FESTO	351, 359
90042-0582	SPUHL NORGREN QM/48/127/21	113
90043-0021	PRESSURE GAUGE WIEGAND 0-1 BAR 1/8"	109, 111, 353
90043-0036	PRESSURE GAUGE, 2041 D=63 MM	113
90043-0061	PRESSURE GAUGE, 2061 D=63 MM, THROTTLED	55, 57, 455, 457
90043-0069	PRESSURE GAUGE 0-4BAR WIEGAND 2040	353
90043-0081	PRESSURE GAUGE, 2740, D=63 MM	279
90043-0091	PRESSURE GAUGE, 2840, D=63 MM	81, 83
90043-0107	PRESSURE GAUGE	345
90043-0304	SEAL RING FOR GAUGE G1/4	81, 83
90044-0094	LIMIT SW. 924 CE31-Y20-X5	77
90044-0101	LIMIT SW. 924 CE1-Y20-X5	333
90044-0103	KEY SAFETY SWITCH AZ 15 ZVR	51, 53, 351
90044-0104	PROX.SWITCH IFM IN 3002	455, 457
90044-0121	PROX.SW. 922AB3XM-A9P-050-L	241, 243
90044-0139	KEY SAF.SW. AZ16-02 ZVR K-2254	23, 29, 31, 67, 301, 303, 375, 387, 487
90044-0145	PROX.SW. 922 AAIY-A9P-050-LZ876	29, 31
90044-0194	PROX.SW. IN5329/IN3002-BPKG	87, 89, 469
90044-0310	KEY FOR SAFETY SWITCH, AZ 15/16 B1	47, 49, 301, 303, 375, 387, 487
90045-0076	MOTOR 3GAA 081002-ASA MT80B	333
90048-0032	OIL PUMP INCL. CONTAINER 1,5 L	345
90051-0083	KNOB, EXTERNAL THREAD. NO. 8308-1321	485
90051-0084	KNOB, EXTERNAL THREAD. NO. 8308-1534	437
90052-0011	HORN, YO3/BT 24-50VDC NO.654005	269, 271
90053-0024	COUNTER 24VDC 6 DIGITS	513
90053-0029	COUNTER, F524.800FA3C 24VDC	493, 495, 497, 499, 501, 503, 505, 507
90053-0305	FRAME F 1 DV	513
90053-0311	BASE 916	513
90055-0042	NIPPLES, EXT. THREAD, HEXAGON, NO. 6835-	199, 231, 275
90055-0056	HOSE COUPLING	199, 231, 275
90055-0057	HOSE COUPLING	199, 231, 275
90055-0058	HOSE COUPLING	199, 231
90055-0100	Y-CONNECTION, 6-6	119
90055-0101	Y-CONNECTION, 8-8	119
90056-0075	WORM GEAR UCA 145	315, 317
90059-0001	THERMOSTAT	15
90061-0018	ANGLE ENC 8BIT GRAY (REPL BY 90061-27)	341
90064-0082	PUSH BUTTON, WHITE	513
90064-0084	PUSH BUTTON, YELLOW	285, 513
90064-0085	PUSH BUTTON, RED	493, 495, 497, 499, 501, 503, 505, 507, 513
90064-0093	PUSH BUTTON, GREEN	285, 493, 495, 497, 499, 501, 503, 505, 507, 513
90064-0124	SWITCH, EM. STOP, ZB2-BS844+ZB2-BZ1045	285, 289, 493, 495, 497, 499, 501, 503, 505 507, 513
90064-0315	LAMP REMOVER, NO:700	417, 419, 519
90066-0006	PUSH BUTTON BOX XAP-M2602	289
90066-0013	PUSH BUTTON BOX XB2-SAS 11	285
90066-0020	PUSH BUTTON BOX	285
90069-0286	GEARS, WORM MOTOR WKM/DM90-60E2	29, 31
90074-0003	CABLE CLIPS, D=12 MM	199, 231
90074-0015	CABLE CLIPS, D=15,2 MM	199, 231
90074-0018	CABLE CLIPS, D=2X10 MM	373, 383, 385, 393
90075-0124	CONTACTOR, 4KW 24VDC	493, 495, 497, 499, 501, 503, 505, 507
90075-0126	CONTACTOR, 22KW 24VDC	493, 495, 497, 499, 501, 503, 505, 507
90077-0079	FEED THROUGH TERMINAL, 02943.6	33, 291
90077-0102	TERMINAL BLOCK, 1952.2	493, 495, 497, 499, 501, 503, 505, 507
90077-0110	PLINTH, 6202	69, 71
90082-0013	OVERVOLTAGE PROTECTOR	493, 495, 497, 499, 501, 503, 505, 507
90087-0019	PLUG M10X1 STAINLESS	141, 167, 193, 225, 263, 349, 393
90089-0002	REDUCING SLEEVE, PR22,5/PR15,2	267
90089-0006	REDUCING SLEEVE, G 1/2/PR18,6	109, 111
90089-0007	REDUCING SLEEVE, PR18,6/PR22,5	335, 341
90089-0008	REDUCING SLEEVE, PR22,5/PR28,3	267
90089-0009	REDUCING SLEEVE, PR15,2/PR18,6	335
90089-0021	REDUCTION SLEEVE,PLASTIC GREY	333
90089-0022	REDUCTION SLEEVE U I LAPP	267
90089-0024	REDUCTION SLEEVE	59
90089-0025	REDUCTION SLEEVE	85
90089-0026	REDUCTION SLEEVE	85
90089-0027	ELBOW ADAPTOR	115
90090-0010	BALL, D=6 MM	279

Part No	Description	Page No
90091-0236	PISTON SEAL, GLIDORING 89X100X4 MM	95
90091-0237	ROD SEAL, GLIDORING 20X27,5X3 MM	95
90091-0238	WEAR RING 20X22X10 MM	95
90091-0266	SEAL RING 10,4X16,3X2,5 MM	81, 83, 91
90091-0267	WEAR RING 16X18X8,1 MM	93, 101
90091-0268	ROD SEAL, GLIDORING 16X20,9X1,78 MM	93, 101
90091-0269	PISTON SEAL, GLIDORING 52,5X60X3 MM	93, 101
90091-0282	PISTON SEAL 27X35X1,78 MM	93, 417, 419
90091-0349	VARISEAL ROTO 12X24X3,9 MM	29, 31
90091-0350	AXIAL LIP SEAL 14,2X27,2X9,4 MM	77
90092-0048	OIL BRUSH, FLAT, 5/16-24 UNF	141, 167, 193, 225, 347, 393
90092-0054	METERING VALVE 50 MM3	141, 167, 193, 225, 259, 263, 349, 393
90095-0070	OVERLOAD PROTECTION, PKZM 0,4 A	493, 495, 497, 499, 501, 503, 505, 507
90095-0072	OVERLOAD PROTECTION, PKZM 1,0 A	493, 495, 497, 499, 501, 503, 505, 507
90095-0074	OVERLOAD PROTECTION, PKZM 2,5 A	493, 495, 497, 499, 501, 503, 505, 507
90095-0077	OVERLOAD PROTECTION, PKZM 6-10 A	493, 495, 497, 499, 501, 503, 505, 507
90099-0087	NUT PR=20,4	245
90099-0117	NUT, PR 18,6 (PG11)	269, 271
90099-0119	NUT, PR 28,3 (PG21)	269, 271
90110-0003	PLUG, MS 3102E-14S-2P	103, 105
90110-0057	FEMALE INSERT HAN 24 E 09 33 002 4201	493, 495, 497, 499, 501, 503, 505, 507
90110-0095	CONNECTOR 3 POLE + EARTH	249, 251, 253, 255, 351
90110-0120	CONTACT FEMALE 10PHARTREPBY 0090110-0183	513
90110-0121	FEMALE INSERT GDS A-H 09 06 215 2811	493, 495, 497, 499, 501, 503, 505, 507
90110-0122	COVER, 09 06 000 9957	493, 495, 497, 499, 501, 503, 505, 507
90110-0127	COAXIAL CONNECTOR, GE 15057C10HBN	287
90110-0128	MALE INSERT, HAN 24 E-M 933 024 2631	493, 495, 497, 499, 501, 503, 505, 507
90110-0157	CABLE HOOD 6-POL 70.352.0628.1	493, 495, 497, 499, 501, 503, 505, 507
90110-0159	MALE INSERT 70.310.0640.0	493, 495, 497, 499, 501, 503, 505, 507
90110-0161	FEMALE INSERT 70 105 0653 0	493, 495, 497, 499, 501, 503, 505, 507
90110-0166	CHASSIS HOUSING 310144-33	493, 495, 497, 499, 501, 503, 505, 507
90110-0334	SCREW HARTING	493, 495, 497, 499, 501, 503, 505, 507
90110-0335	SCREW	493, 495, 497, 499, 501, 503, 505, 507
90111-0120	SWITCH, 2 POS.704.510 .0A+704.901.5/A	513
90111-0122	KEY SWITCH, 2 NO CONTACTS	493, 495, 497, 499, 501, 503, 505, 507
90111-0149	STEP SWITCH, CG4 A241- 600EF/FS2	493, 495, 497, 499, 501, 503, 505, 507
90111-0151	SECURITY BREAKER	249, 251, 253, 255
90111-0172	EARTH FAULT BREAKER, F 362-25/0.03	493, 495, 497, 499, 501, 503, 505, 507
90111-0333	ANGLE OPERATING DEVICE	251, 255
90111-0334	ANGLE OPERATING DEVICE	249, 253
90113-0021	AIR PRESSURE REGULATOR	353
90113-0056	REGULATOR	353
90113-0105	PRESSURE REGULATOR	345
90113-0114	REGULATOR	113
90113-0130	REGULATOR	109, 111
90113-0372	BRACKET	345
90113-0405	PORTING BLOCK	113
90113-0406	SOFT START/DUMP VALVE	113
90113-0407	YOKE, SINGLE	113
90113-0408	SHUT-OFF VALVE 1/2"	113
90113-0439	END CONNECTOR	113
90115-0008	ROD END, ID=8 MM, M8X1,25	377, 389
90119-0056	RELAY, AUXILIARY MK3P5-S 24VDC	493, 495, 497, 499, 501, 503, 505, 507
90119-0063	OPTO-RELAY, DC/DC AMMS-10-1/30VDC	493, 495, 497, 499, 501, 503, 505, 507
90119-0067	SOLID-STATE RELAY, H12WD4850	417, 419, 519
90119-0077	CURRENT RELAY SYRELEC DIRT2 230	493, 495, 497, 499, 501, 503, 505, 507
90119-0082	SSR 90119-67 + HEAT SINK	493, 495, 497, 499, 501, 503, 505, 507
90119-0106	SAFETY RELAY JOKAB RT 6	493, 495, 497, 499, 501, 503, 505, 507
90121-0120	RESISTANCE FIXED, 0,25 KOHM, 0,125 W	493, 495, 497, 499, 501, 503, 505, 507
90124-0027	LAMP HOLDER BA9S	513
90125-0020	PLATE	65
90129-0006	BASE, S3-B	493, 495, 497, 499, 501, 503, 505, 507
90130-0017	POTENTIOMETER, 10 KOHM	493, 495, 497, 499, 501, 503, 505, 507
90130-0301	ADJUSTING KNOB WITH DIAL	493, 495, 497, 499, 501, 503, 505, 507
90132-0021	HOSE CLIP 6-10MM	353
90134-0003	BUSHING	141, 167, 193, 225, 347, 393
90134-0032	QUICK COUPLING, (F) LP-004-0-SW-004	257
90134-0033	QUICK COUPLING, (M) LP-004-1-WR010	141, 167, 193, 225
90134-0040	BUSHING VALVE CONNECTION 4 MM	141, 167, 193, 225, 259, 263, 349, 393
90134-0052	PLUG DOSING BLOCK	141, 167, 193, 225, 259, 263
90134-0054	BLOCK CONNECTION M10X1	259, 263
90134-0055	BUSHING/NUT INLET/OUTLET 6 MM	141, 167, 193, 225, 259, 261, 263, 349, 393
90135-0026	EARTH TERMINAL, 3802.6	33, 291
90135-0035	EARTH WIRE, L=250 MM 16 MM2	493, 495, 497, 499, 501, 503, 505, 507
90135-0039	SHIELD CLIP KLBU 4-13.5	493, 495, 497, 499, 501, 503, 505, 507
90140-0010	T-PIPE, INT. THREAD, 20031/2	455, 457
90140-0012	ELBOW, 90 INT/EXT, 2020-1/2-1/2	81, 83
90141-0015	RETAIN. RING, 8	103, 105
90142-0005	HOSE	15
90143-0012	STRIP	267
90143-0020	STRIP	351, 355
90143-0060	EDGE STRIP 9,5X6,3MM BLACK PVC	87, 89
90143-0073	RUBBER STRIP	285
90143-0088	RUBBER STRIP	51, 53, 67

Part No	Description	Page No
90144-0004	TREBOFLON-TAPE W=13MM	353
90144-0060	TAPE	15
90144-0073	TREBOFLON-TAPE W=13MM	109, 111
90148-0010	HOSE	199, 231, 275
90152-0016	HOSE (SPIRAL)	407
90152-0029	HOSE 35/41	85
90152-0031	HOSE	85, 269, 271
90152-0033	SPIRAL CONDUIT FOR PR 15,2(PG 9)	241, 243, 267, 269, 271, 275, 277, 333, 355
90153-0001	ADHESIVE, BOSTIK CONTACT 100ML	449
90153-0016	ADHESIVE,TUBE 100G RHODORSIL CAF 3	51, 53, 67
90153-0017	ADHESIVE, 2963 TUBE 160G	15
90155-0016	HANGER CHAIN, HL3-2	51, 53
90157-0021	LOCKING FLUID	143, 145, 169, 171
90157-0022	SEALING COMPOUND	413, 417, 419
90163-0043	QUICK COUPLING, (F) MD-006-0-WR013	275
90163-0044	QUICK COUPLING, (M) MD-006-2-WRD13	199, 231
90163-0052	HOSE NIPPLE, EXT.THR. 1/4-12 MM	351
90163-0067	HOSE NIPPLE N-1/2-P13	455, 457
90163-0076	QUICK COUPLING, (F) LP-006-0-WR021	109, 111
90163-0306	QUICK COUPLING, MD-006-5-74-KU (DUST CAP	199, 231
90164-0301	HOLDING FIXTURE	245, 493, 495, 497, 499, 501, 503, 505, 507
90165-0003	PIPE CLIP FOR TUBE D=4 MM	141, 167, 193, 225, 347
90165-0005	PIPE CLIP FOR TUBE D=6 MM	141, 167, 193, 225, 257
90165-0007	PIPE CLIP FOR TUBE D=8 MM	199, 231, 275
90165-0013	CLIP	275, 285, 469
90165-0014	CLIP	325, 347
90165-0015	CLIP	455, 457
90166-0011	TUBE 6 MM PA,TRANSP.	141, 167, 193, 225, 259, 261, 263, 345, 349, 393
90166-0013	TUBE 8 MM PA BLUE	109, 111, 119
90166-0053	SHRINKABLE HOSE 43-53 MM (2")	417, 419, 455, 457
90166-0081	TUBE 6 MM PA BLUE	109, 111, 115, 119, 313, 353, 467
90166-0089	HOSE 4/6.2 PE BLUE	345, 373, 383, 385
90166-0101	HOSE, SILICONE, 60 SHORE, 6/10 MM	353
90166-0109	TUBE 4 MM PA,TRANSP.	141, 167, 193, 225, 259, 263, 347, 349, 393
90166-0118	TUBE 8 MM PA BLACK	109, 111, 351
90166-0119	HOSE PUR 4/6 BLACK	117, 247, 351
90166-0121	HOSE	351
90166-0138	HOSE	365
90166-0160	TUBE 10 MM PA BLUE	115
90166-0211	TUBE 8 MM PUR BLACK	333
90166-0231	SILICONE EXP RUBBER HOSE	81, 83
90178-0007	HOUR COUNTER, BG 40,17-1 12-48VDC	493, 495, 497, 499, 501, 503, 505, 507
90181-0055	CABLE DUCT, 80X80MM	85
90187-0029	BALL VALVE G1/2, NPBR	109, 111
90187-0125	BALL VALVE G1/2	81, 83, 351
90189-0011	BALL BUSHING, 16X26X36 MM	467
90191-0045	WHEEL	399
90191-0047	WHEEL, NO. 442-200-113	439
90191-0060	CASTOR WHEEL, NO. 1599PRT	439
90194-0016	ETIKETT	335, 493, 495, 497, 499, 501, 503, 505, 507
90194-0075	WARNING SIGN ISO, HOT SURFACE	15, 23, 47, 49
90194-0141	CAUTION SIGN ISO, DANGEROUS CHEMICALS	47, 49, 51, 53, 67, 351
90194-0143	WARNING SIGN ISO, HOT SURFACE	81, 83, 487
90195-0010	TERMINAL BLOCK, 1989.2	493, 495, 497, 499, 501, 503, 505, 507
90195-0020	TERMINAL BLOCK, 1977.2	245
90199-0020	LEVEL GLASS/THERMOM. FSA 76.1.1./T/12	277
90201-0027	SHUT-OFF VALVE, NO. DVE08-1.1/O-P	279
90206-0009	HEATING ELEMENT, 1000W 240V	15
90206-0014	HEATING ELEMENT 2X1250W,220V	63
90206-0052	HOT AIR GUN; 1400W 230V	467
90206-0324	HEATING CARTRIDGE 1400W 220V	417, 419
90214-0040	BALL BEARING, 8X22X7 MM	51, 53
90214-0098	BALL BEARING, 15X35X11 MM	29, 31
90217-0026	NUT	357
90217-0304	CLAMP, ISO2852 FOR PIPE 50,8 MM	79
90217-0308	CLAMP, ISO2852 FOR PIPE 25,4 AND 38,1 MM	55, 57, 87, 89, 413, 417, 419
90220-0036	SCR. CABLE 4X0,4 MM2	493, 495, 497, 499, 501, 503, 505, 507
90220-0059	THERMOCOUPLE CABLE K/ 2X0,81MM2	493, 495, 497, 499, 501, 503, 505, 507, 509, 511
90220-0104	SCR. CABLE 4X1,5MM2	493, 495, 497, 499, 501, 503, 505, 507, 509, 511
90220-0107	SCR. CABLE 5X0,75MM2	509, 511
90224-0031	CONN. ELBOW, ART.NO 3814	353
90224-0037	CONN. STRAIGHT, ART.NO. 8632-12-120	455, 457
90224-0122	REDUCER, ART. NO RMM 1214	455, 457
90224-0329	ELBOW 90 COUPL.,EXT.THREAD 6/4-G1/4"	345
90226-0004	CABINET	443
90230-0047	NON-RETURN VALVE 2M-C4L-1-SS	357
90232-0089	PH.CELL NTL6-P12-1011520	23, 483
90232-0103	PH.CELL E3S-CT61-L-5M	13
90232-0104	PH.CELL E3S-CT61-D-5M	13
90232-0332	FIBRE LM 21-500	23, 483
90233-0027	TUBE FUSE, 16A	417, 419, 493, 495, 497, 499, 501, 503, 505, 507, 519
90233-0028	TUBE FUSE, 10A	417, 419, 493, 495, 497, 499, 501, 503, 505, 507, 519
90233-0303	FUSE HOLDER, ST10	493, 495, 497, 499, 501, 503, 505, 507
90235-0241	THROTTLE CHECK VALVE R1/8" MANUAL	29, 31, 377, 389, 467

Part No	Description	Page No
90235-0250	THROTTLE CHECK VALVE, GR-1/8-B	247
90235-0288	VALVE	87, 89
90235-0291	THROTTLE CHECK VALVE	455, 457
90235-0475	DIAPHRAGM	355
90235-0788	BASIC VALVE	353
90235-0805	ACTUATOR 605, 9605 000 Z A1	355
90237-0046	MAGNETIC LOCK, 46X33X15 MM	249, 251, 253, 255, 351, 375, 387
90237-0070	SNAP-IN BALL LOCK, 69X19 MM	487
90237-0115	MAGNETIC LOCK, 62X18X17 MM	487
90237-0331	HOOK FOR 90237-68	51, 53
90239-0370	CONNECTION	467
90239-0491	ROD END,BALL JOINT EYE,MINI-ISO M6	39
90239-0816	DOUBLE ACTING, MINI-ISO, CYL.16-25	39
90239-0821	DOUBLE ACTING, MINI-ISO, CYL.20-25	377, 389, 467
90240-0028	BEARING BUSHING WITHOUT FLANGE,10/12X15	15
90240-0172	FLANGE BUSHING 8X12X10	35, 37, 51, 53
90240-0184	FLANGE BUSHING,12X16X15 MM	29, 31, 77
90240-0240	FLANGE BUSHING, 17X23X20 MM	77
90242-0109	O-RING 7,1X1,6 MM	93
90242-0110	O-RING 29,2X3,0 MM	93, 101
90242-0168	O-RING	361, 363
90242-0220	O-RING 26X5 MM	401
90243-0061	AIR GUN, CEJN SERIE 204 ED: 90459-0173	407
90243-0164	HOOK SPANNER ADJUST.DIA.4	405
90243-0203	MEASURING INSTRUMENT	405
90245-0022	MATCHING TRANSF. 18 KVA	515
90257-0006	FILTER PLUG PARTNO 8145-00-380 TYP F38	115
90259-0039	OVERLOAD RELAY 25-40A	493, 495, 497, 499, 501, 503, 505, 507
90259-0313	AUX. CONTACT K&M NHI21-PKZM0	493, 495, 497, 499, 501, 503, 505, 507
90261-0046	SQUARE PLUG GPN 260/Q4040	381
90264-0082	FILTER FAN LV 400 P15 / 500 S	493, 495, 497, 499, 501, 503, 505, 507
90264-0355	FILTER GV400-500	493, 495, 497, 499, 501, 503, 505, 507
90273-0006	PRESSURE GUARD, 21 KPA	109, 111
90274-0042	PRESSURE GUARD, 200 KPA	351
90274-0084	PRESSURE GUARD, 1800 KPA	345
90274-0089	PRESSURE TRANSDUCER, 25 - 800 KPA 24VDC	109, 111
90274-0103	PRESSURE GUARD PEV-1/4-B (10773	109, 111, 115
90277-0055	FILTER HOUSING / MDS 4463 G 08 H	81, 83
90277-0104	FILTER F64B-NNN-ARO	113
90287-0075	SCREW SLOT. PAN HEAD LKCS M6X12	281
90287-0171	SCREW M6S M5X25 NI PL	143, 145, 169, 171
90296-0091	LUBRICATION GREASE	131, 157, 183, 215
90296-0094	LUBRICANT REPL BY 90296-104 , -105	447
90297-0006	FLUORESCENT TUBE, PL9	493, 495, 497, 499, 501, 503, 505, 507
90297-0007	FLUORESCENT TUBE, PL11	245
90297-0306	BALLAST COIL 50/60 HZ	493, 495, 497, 499, 501, 503, 505, 507
90303-0006	EYE WASH DEVICE	429
90303-0011	PROTECTIVE GOGGLES	405
90303-0012	PROTECTIVE GLOVES	405
90303-0013	APRON	405
90314-0038	LEVEL CONTROL RELAY, RM3 220-240VAC	493, 495, 497, 499, 501, 503, 505, 507
90316-0010	SPACER RITTAL SZ 2607	85
90321-0053	HYDR. GEAR PUMP 1/4 GAS X 2	277
90321-0097	MAGNET PUMP	355
90321-0098	METERING PUMP WILLIAMS	357
90321-0468	SHAFT COUPLING	277
90321-0469	O-RING SET	279
90326-0012	PROTECTIVE COVER, T31A4618	55, 57, 67, 81, 83, 467
90326-0017	GLAND 1/8".REPL.BY 90326-306	55, 57
90326-0019	THERMOELEMENT	67
90326-0020	PLUG, FEMALE YELLOW CR-AL	55, 57, 67, 81, 83, 467
90326-0037	THERMOCOUPLE, CR-AL PREM.G	55, 57, 81, 83
90326-0038	THERMOCOUPLE, CR-AL	55, 57
90326-0043	THERMOCOUPLE, CR-ALPREM.G	467
90326-0048	THERMOCOUPLE, 12826-31	55, 57
90326-0304	LEAD IN, 9041-15-KS-UB60	55, 57
90326-0306	GLAND FITTING 9041-45-KS-KR.1/8" D=4,5MM	67
90328-0001	SILENCER	113
90328-0047	SILENCER G1/8	345
90330-0020	ELBOW, 90 INT. THREAD, R-2221/2	109, 111
90330-0021	NIPPLES, EXT. THREAD. R-207R1/2	109, 111
90330-0025	BUSHING, INT/EXT. THR. R1/4-RP1/8	353
90330-0029	PLUG, EXT. G-THREAD, R-236R3/8	87, 89
90330-0032	NIPPLES, EXT. THREAD. ISO 7/1 R1/8-R1/8	193, 225, 353
90330-0049	T-PIPE, INT. THREAD, R-221R1/2	109, 111
90330-0067	T-PIPE, INT. THREAD, R-221R3/8	351
90330-0100	NIPPLES, EXT. THREAD, R1/2	109, 111
90337-0001	AEROMETER	405
90337-0002	MEASURING CYLINDER	405
90337-0315	FILTERINSERT / MCS 4463	81, 83
90344-0042	BELT STRETCHER	331
90347-0004	VIBRATION DAMPER D=30 TH=M8 H=17 H2=21MM	265, 283
90347-0007	VIBRATION DAMPER	23
90347-0080	DAMPER TFE 1201	413, 417, 419

Part No	Description	Page No
90347-0143	GAS SPRING	67
90348-0007	FREE WHEEL COUPLING	29, 31
90355-0031	TORQUE RIGID COUPLING, 10X10 MM	341
90355-0164	FLEXIBLE COUPLING, 10X10 MM	29, 31
90360-0009	STEAM TRAP / 1/4 BSP TD 18	81, 83
90360-0014	REDUCING VALVE	81, 83
90360-0025	STEAM TRAP / MST 18,G 1/4; 6 DEGREE C	81, 83
90410-0051	TEMPERATURE CONTROLLER, KS 40	493, 495, 497, 499, 501, 503, 505, 507
90411-0001	INSULATING MAT	59
90413-0421	STAMP	417, 419, 477
90413-0422	STAMP	417, 419, 477
90413-0430	STAMP	417, 419, 477
90413-0431	CODE INSERT SET	417, 419, 477
90413-0457	CODE INSERT SET	417, 419, 477
90413-0465	STAMP	417, 419, 477
90413-0466	STAMP	417, 419, 477
90413-0467	STAMP	417, 419, 477
90415-0017	FILTER	357
90415-0019	FILTER / ART.NO. HH-M15-RG	109, 111
90415-0333	FILLER CAP	277
90415-0334	FILTER / 0030 D 020 BN	279
90417-0201	TIMING BELT 9,53X571,5X12,7	301, 303
90419-0012	LIGHT ELEMENT, RED	273
90419-0013	LIGHT ELEMENT, BLUE	273
90419-0014	LIGHT ELEMENT, YELLOW	273
90419-0016	BASE, XVA-C21	273
90419-0307	GASKET	273
90419-0308	BASE	273
90419-0309	PIPE	273
90419-0311	GASKET	269, 271
90427-0510	COUNTER RUBBER	417, 419, 477
90427-0532	INK ROLLER	417, 419, 477
90427-0552	COUNTER PLATE	417, 419, 477
90430-0032	THYRISTOR UNIT, 425A/25A	493, 495, 497, 499, 501, 503, 505, 507
90430-0068	FREQ.CONV. 6SE3210-7CA40	493, 495, 497, 499, 501, 503, 505, 507
90430-0325	FILTER 6SE3290-0BA87-0FB0	493, 495, 497, 499, 501, 503, 505, 507
90430-0335	FILTER LA174936U025	493, 495, 497, 499, 501, 503, 505, 507
90432-0014	ELECTROMAG. BRAKE, 24 VDC	333
90432-0024	ELECTROMAG. POWDER BRAKE, FAT50/24 VDC	29, 31
90450-0095	ROTARY ACTUATOR DSR 32-180-P	29, 31
90450-0279	CYLINDER	313
90450-0720	BRACKET,FRONT,FLANGE 32	29, 31
90458-2476	MOTOR 3GVA061142-CSB	277
90458-2931	COMP. SPRING 11860, 1X6X12	279
90458-2934	VALVE HOUSING , 1-86-1031	279
90459-0047	PISTON , 4-87-1085	279
90459-0051	SCREW , 4-87-1118	279
90459-0052	VALVE CONE , 4-87-1084	279
90459-0053	PLUG , 4-87-1117	279
90459-0063	PLUG, VST G1 1/4"	279
90459-0118	FASTENING BRACKET , 3-86-1038	277
90459-0119	TANK , 2-86-1037	277
90459-0120	GABLE PLATE , LOWER 2-86-1035	277
90459-0121	GABLE PLATE , UPPER 2-86-1034	277
90459-0122	FLANGE , 4-86-1036	277
90459-0142	RING FOR TANK 10331	277
128593-0000	WASHER	189, 191, 221, 223
206913-0000	LOCKING LOOP	15
207637-0301	ELEMENT	55, 57
207638-0201	SLEEVE CONTACT	63
207639-0000	SPACER	65
208361-0002	STAIR	283
209283-0000	BRIDGE CONNECTOR	65
209331-0001	GEAR WHEEL	29, 31
209972-0000	RAIL	309, 311, 417, 419
230922-0101	AIR JET GUN	405
236644-0000	MACHINE BODY	341
236651-0000	SHEET	241, 243
239011-0000	FLANGE	455, 457
243989-0000	TENSION SPRING	135, 161
243990-0000	LINK ARM	135, 161
244588-0000	SHAFT	135, 161
246520-0000	SHAFT	135, 161
249298-0000	ROLL	469
250592-0000	WASHER	29, 31
255256-0000	SHAFT	135, 161
255897-0008	GEAR WHEEL	29, 31
255898-0000	HUB	29, 31
255899-0000	HUB	29, 31
256814-0000	WASHER	333
256816-0000	PIPE	333
257090-0000	SHIFTER HANDLE	35
257328-0000	END PIECE	333
257670-0000	LEAD PLATE	301, 303

Part No	Description	Page No
257923-0000 ..	GUIDE WHEEL	465
259880-0000 ..	SPACER	469
259923-0000 ..	GUIDE PIPE	347
259961-0000 ..	HOLDER	199, 231
259962-0001 ..	PLATE	199, 231
259962-0002 ..	PLATE	141, 167, 193, 225
259973-0002 ..	BENDING ROLLER	455, 457
259977-0001 ..	SHAFT	461, 465
259977-0002 ..	SHAFT	455, 457, 461, 467
259987-0002 ..	SHAFT	455, 457
259998-0000 ..	BRACKET	455, 457
263096-0000 ..	TRANSMISSION RAIL	125, 151
263097-0000 ..	TRANSMISSION RAIL	125, 151
263106-0000 ..	HOLDER	141, 167, 193, 225
263203-0000 ..	FRAME	301, 303
263217-0000 ..	BOW CLAMP	125, 151
263218-0000 ..	RAIL	125, 151, 195, 197, 227, 229
263267-0000 ..	SPACER	301, 303
263268-0000 ..	SPACER	301, 303
263269-0000 ..	SPACER	301, 303
263311-0000 ..	WASHER	355
263640-0000 ..	VAT	399
263812-0201 ..	CENTRAL LUBRICATION	239
265952-0000 ..	CANTILEVER	241, 243
266043-0000 ..	ROPE	241, 243
266504-0000 ..	WORKMAN'S TROLLEY	397
267488-0000 ..	SHAFT	463
267491-0000 ..	CRAMP	463
267646-0000 ..	BLOCKING PIECE	23
267651-0000 ..	SCREW	465
267805-0000 ..	SHAFT	463
267806-0000 ..	ROLL	463
268554-0101 ..	PAPER GUIDE	453
268557-0000 ..	FORK	463
268558-0000 ..	SHAFT	463
268788-0502 ..	STRIP APPLICATOR SA4	453
268815-0000 ..	SHAFT	459
269051-0000 ..	ARM	469
269053-0002 ..	SHAFT	469
269717-0000 ..	GASKET HOLDER	23
269718-0000 ..	GASKET	23
269814-0000 ..	SPRING	73, 75, 417, 419
271860-0000 ..	CLAMP BLOCK	47, 49
272780-0000 ..	COVER SLIP	47
272781-0002 ..	COVER SLIP	49
272782-0000 ..	COVER SLIP	47, 49
272783-0002 ..	GLASS PANE	49
272783-0003 ..	GLASS PANE	47
272784-0002 ..	RUBBER STRIP	49
272785-0000 ..	RUBBER STRIP	47
273429-0000 ..	WASHER	55, 57
273455-0000 ..	LABEL (COLD WATER)	109, 111
273458-0000 ..	LABEL (AIR)	109, 111
273545-0000 ..	COMPRESSION SPRING	125, 151, 177, 209
273977-0000 ..	NUT	415, 431
273978-0000 ..	LEVEL GLASS	415, 431
273980-0000 ..	SPRING	415, 431
273981-0000 ..	GASKET	365
273982-0000 ..	WEIGHT	365
273985-0000 ..	CARRIAGE	439
273996-0000 ..	NUT	415, 431
276060-0000 ..	STUD SCREW	469
278985-0000 ..	HEATING JAW	143, 145, 169, 171
279233-0000 ..	CARBON BRUSH HOLDER	143, 145, 169, 171
279372-0000 ..	PROTECTION PIPE	241, 243
279668-0000 ..	CARBON BRUSH COMPLETE	143, 145, 169, 171, 417, 419
281017-0000 ..	PIN	85
283255-0000 ..	WASHER	465
283387-0000 ..	CLAMPING PART	465
283388-0000 ..	BRACKET	465
283417-0000 ..	BUSHING	465
283455-0201 ..	STRIP GUIDE	453
283468-0000 ..	BEARING CONSOLE	467
283470-0000 ..	YOKE	467
283471-0000 ..	BRACKET	467
283474-0000 ..	STEERING	467
283499-0000 ..	SPACER	469
283768-0401 ..	ELEMENT GROUP	453
283769-0000 ..	PLATE	467
284046-0000 ..	GASKET	143, 145, 169, 171
284047-0000 ..	GUIDE LUG	135, 161
284116-0000 ..	CAP	199, 231
284119-0000 ..	BOX	455, 457
284126-0000 ..	GUIDE WHEEL	465

Part No	Description	Page No
284541-0000 ..	CUSHION	301, 303
284609-0000 ..	BRACKET	465
284891-0001 ..	RUBBER	77
294261-0000 ..	PIPE	13
294263-0000 ..	LUG	13
294498-0000 ..	INSULATING PLATE	467
295840-0000 ..	CONNECTION BOX	335
299324-0003 ..	FLAT WEDGE	29, 31
311101-0406 ..	CYLINDRICACP8H6X32	307, 309, 311
311102-0404 ..	CYLINDRICACP M6 8X28	325
311102-0406 ..	CYLINDRICACP M6 8X32	325
311103-0207 ..	PARALLELL PIN, CP, M6, 2,5X10 MM	43
311103-0234 ..	PARALLELL PIN, M6, 3X12 MM	365
311103-0238 ..	CYLINDERPINNE M6, 3X20 MM	135, 161
311103-0272 ..	PARALLELL PIN, M6, 4X20 MM	447
311103-0273 ..	PIN,STRAIGHT M6 4X22 RFR	365
311103-0277 ..	PIN,STRAIGHT CP M6 4X32 RFR	333
311103-0310 ..	PARALLELL PIN, M6, 5X20 MM	29, 31
311103-0318 ..	PARALLELL PIN, M6, 5X40 MM	447
311103-0350 ..	PARALLELL PIN, CP, M6, 6X14 MM	333
311103-0359 ..	PARALLELL PIN, M6, 6X35 MM	333
311103-0401 ..	PARALLELL PIN, M6, 8X20 MM	185, 187, 217, 219
311103-0413 ..	PARALLELL PIN, M6, 8X50 MM	47, 49
311112-0165 ..	SPRING PIN, ISO 8752 2X10-C	485
311112-0206 ..	SPRING PIN, ISO 8752 3X12-C	351, 461
311112-0310 ..	SPRING PIN, ISO 8752 5X24-C	13
311112-0377 ..	SPRING PIN, ISO 8752 8X24-C	13
311201-0327 ..	PIN, TAPERED, KP, 8X70 GROUND	127, 153, 179, 211
311211-0296 ..	PIN, THREADED AND TAPER. GKP, M6X6X40	301, 303
311211-0299 ..	PIN, THREADED AND TAPER. GKP, M6X6X55	305
311303-0238 ..	SLOTTED PIRPB3X20FZB	125, 151, 177, 209
311305-0210 ..	SLOTTED PIRPC2,5X16FZB	455, 457
311305-0238 ..	SLOTTED PIRPC3X20FZB	13
311305-0274 ..	SLOTTED PIRPC4X25FZB	177, 209
311305-0310 ..	SLOTTED PIRPC5X20FZB	241, 243
311305-0312 ..	SLOTTED PIRPC5X25FZB	301, 303
311305-0356 ..	SLOTTED PIRPC6X28FZB	177, 209
311401-0182 ..	SPLIT PIN SP3,2X22FZB	331
311401-0199 ..	SPLIT PIN SP4X32FZB	333
311411-0126 ..	SPLIT PIN SP1,2X10RFR	465
311411-0137 ..	SS 2343 SP1,6X10RFR	469
311411-0152 ..	SPLIT PIN SP2X16RFR	39
311411-0165 ..	SPLIT PIN SP2,5X16RFR	15
311506-0278 ..	RIVET, ROUND HEAD, KN, 2,6X6	471
311508-0416 ..	RIVET, ROUND HEAD, KN, 4X10	13
311521-0142 ..	BLANK RIVET 3,2X6	59
312101-0291 ..	SCREW M6S M4X12 FZB	473
312101-0327 ..	SCREW M6S M5X12 FZB	125, 151, 195, 197, 227, 229, 341
312101-0366 ..	SCREW M6S M6X12 FZB	301, 303, 305, 347
312101-0367 ..	SCREW M6S M6X14 FZB	341
312101-0368 ..	SCREW M6S M6X16 FZB	257, 307, 309, 311, 325, 333, 341
312101-0370 ..	SCREW M6S M6X20 FZB	465
312101-0372 ..	SCREW M6S M6X25 FZB	141, 167, 193, 225
312101-0451 ..	SCREW M6S M8X20 FZB	301, 303
312101-0453 ..	SCREW M6S M8X25 FZB	301, 303, 307, 309, 311, 325, 339
312101-0455 ..	SCREW M6S M8X30 FZB	301, 303, 309, 311, 325, 331
312101-0457 ..	SCREW M6S M8X35 FZB	331
312101-0461 ..	SCREW M6S M8X50 FZB	305
312101-0463 ..	SCREW M6S M8X60 FZB	305
312101-0495 ..	SCREW M6S M10X30 FZB	301, 303
312101-0497 ..	SCREW M6S M10X35 FZB	301, 303
312101-0499 ..	SCREW M6S M10X40 FZB	301, 303, 305
312101-0501 ..	SCREW M6S M10X50 FZB	301, 303, 331
312101-0507 ..	SCREW M6S M10X80 FZB	331
312101-0540 ..	SCREW M6S M12X40 FZB	177, 209
312101-0556 ..	SCREW M6S M12X120 FZB	301, 303
312101-0559 ..	SCREW M6S M12X140 FZB	301, 303
312101-0624 ..	SCREW M6S M16X30 FZB	373, 383, 385
312105-0287 ..	SCREW M6S ISO4017 M4X8 A480	29, 31
312105-0289 ..	SCREW M6S ISO 4017 M4X10 A480	67, 143, 145, 169, 171
312105-0291 ..	SCREW M6S ISO 4017 M4X12 A480	249, 251, 253, 255, 461
312105-0297 ..	SCREW M6S ISO 4017 M4X25 A480	247, 345
312105-0301 ..	SCREW M6S ISO 4017 M4X35 A480	109, 111, 115
312105-0323 ..	SKRUV M6S ISO 4017 M5X8 A480	23, 67, 77
312105-0325 ..	SCREW M6S ISO 4017 M5X10 A480	77, 241, 243, 285, 377
312105-0327 ..	SCREW M6S ISO 4017 M5X12 A480	15, 39, 51, 53, 67, 129, 155, 181, 213, 301, 303, 309, 311, 345, 375, 469, 487
312105-0328 ..	SCREW M6S ISO 4017 M5X14 A480	51, 53, 249, 251, 253, 255, 277, 455, 457
312105-0329 ..	SCREW M6S ISO 4017 M5X16 A480	29, 31, 51, 53, 77, 249, 251, 253, 255, 375, 459
312105-0331 ..	SCREW M6S ISO 4017 M5X20 A480	109, 111, 465
312105-0333 ..	SCREW M6S ISO 4017 M5X25 A480	249, 251, 253, 255
312105-0340 ..	SCREW M6S ISO 4014 M5X45 A480	469
312105-0343 ..	SCREW M6S ISO 4014 M5X60 A480	81, 83, 135, 161
312105-0362 ..	SCREW M6S ISO 4017 M6X8 A480	17, 201, 203, 233, 235, 287, 455, 457

Part No	Description	Page No
312105-0364 ..	SCREW M6S ISO 4017 M6X10 A480	23, 29, 31, 69, 71, 189, 191, 221, 223, 241, 243, 269, 271, 487
312105-0366 ..	SCREW M6S M6X12 A280	47, 49, 55, 57, 63, 67, 109, 111, 241, 243, 285, 301, 303, 353, 359, 365, 375, 379, 393, 455, 457, 469
312105-0367 ..	SCREW M6S M6X14 A280	23, 201, 203, 233, 235, 351, 355
312105-0368 ..	SCREW M6S M6X16 A280	29, 31, 35, 39, 51, 53, 55, 57, 67, 69, 71, 77, 143, 145, 169, 171, 201, 203, 233, 235, 247, 269, 271, 351, 355, 357, 379, 387, 455, 457, 461
312105-0370 ..	SCREW M6S ISO 4017 M6X20 A480	15, 23, 29, 31, 35, 37, 55, 57, 81, 83, 109, 111, 247, 365, 455, 457, 461, 463, 467
312105-0371 ..	SCREW M6S ISO 4017 M6X22 A480	29, 31, 55, 57, 355
312105-0372 ..	SCREW M6S ISO 4017 M6X25 A480	23, 29, 31, 67, 69, 71, 115, 365, 437, 467
312105-0374 ..	SCREW M6S ISO 4014 M6X30 A480	27, 351, 375
312105-0376 ..	SCREW M6S ISO 4014 M6X35 A480	55, 57, 79, 115
312105-0378 ..	SCREW M6S ISO 4014 M6X40 A480	55, 57, 365
312105-0379 ..	SCREW M6S ISO 4014 M6X45 A480	23, 77
312105-0380 ..	SCREW M6S ISO 4014 M6X50 A480	461
312105-0381 ..	SCREW M6S ISO 4014 M6X55 A480	125, 151, 177, 209
312105-0386 ..	SCREW M6S ISO 4014 M6X80 A480	35
312105-0388 ..	SCREW M6S ISO 4014 M6X90 A480	125, 151, 177, 209
312105-0447 ..	SCREW M6S ISO 4017 M8X12 A480	241, 243, 265
312105-0449 ..	SCREW M6S ISO 4017 M8X16 A480	23, 39, 109, 111, 355, 379, 439
312105-0451 ..	SCREW M6S ISO 4017 M8X20 A480	29, 31, 47, 49, 87, 89, 267, 269, 271, 377
312105-0452 ..	SCREW M6S ISO 4017 M8X22 A480	265
312105-0453 ..	SCREW M6S ISO 4017 M8X25 A480	129, 155, 181, 213, 345, 463
312105-0455 ..	SCREW M6S ISO 4017 M8X30 A480	265, 389, 467
312105-0459 ..	SCREW M6S ISO 4014 M8X40 A480	283, 387, 439
312105-0460 ..	SCREW M6S ISO 4014 M8X45 A480	81, 83
312105-0463 ..	SCREW M6S ISO 4014 M8X60 A480	345
312105-0491 ..	SCREW M6S ISO 4017 M10X20 A480	13, 87, 89, 265, 269, 271, 439
312105-0492 ..	SCREW M6S ISO 4017 M10X22 A480	35
312105-0493 ..	SCREW M6S ISO 4017 M10X25 A480	269, 271, 377, 389
312105-0495 ..	SCREW M6S ISO 4017 M10X30 A480	55, 57, 379
312105-0499 ..	SCREW M6S ISO 4014 M10X40 A480	333
312105-0536 ..	SCREW M6S ISO 4017 M12X30 A480	35, 37, 379, 421, 423
312105-0538 ..	SCREW M6S ISO 4017 M12X35 A480	455, 457
312105-0540 ..	SCREW M6S ISO 4017 M12X40 A480	23, 433
312105-0554 ..	SCREW M6S ISO 4014 M12X110 A480	241, 243
312105-0684 ..	SCREW M6S ISO 4014 M20X100 A480	421, 423
312109-0374 ..	SCREW M6S ISO 4017 M6X30 A480	103, 105
312109-0378 ..	SCREW M6S ISO4017 M6X40 A480	309, 311
312109-0457 ..	SCREW M6S ISO 4017 M8X35 A480	87, 89
312109-0460 ..	SCREW M6S ISO 4017 M8X45 A480	37
312111-0287 ..	SCREW HEX.SOCK.HD.MC6S-TT 4X8 88 FZB	125, 151
312111-0291 ..	SCREW HEX.SOCK.HD.MC6S-TT 4X12 88 FZB	195, 197, 227, 229, 373, 383, 385
312111-0293 ..	SCREW HEX.SOCK.HD.MC6S-TT 4X16 88 FZB	301, 303
312111-0327 ..	SCREW HEX.SOCK.HD.MC6S-TT 5X12 88 FZB	199, 231
312111-0329 ..	SCREW HEX.SOCK.HD.MC6S-TT 5X16 88 FZB	339
312111-0340 ..	SCREW HEX.SOCK.HD.MC6S-TT 5X45 88 FZB	337
312111-0341 ..	SCREW HEX.SOCK.HD.MC6S-TT 5X50 88 FZB	281
312111-0345 ..	SCREW HEX.SOCK.HD.MC6S-TT 5X70 88 FZB	115
312111-0368 ..	SCREW HEX.SOCK.HD.MC6S-TT 6X16 88 FZB	125, 133, 151, 159, 301, 303
312111-0371 ..	SCREW HEX.SOCK.HD.MC6S-TT 6X22 88 FZB	301, 303, 307
312111-0374 ..	SCREW HEX.SOCK.HD.MC6S-TT 6X30 88 FZB	177, 209
312111-0378 ..	SCREW HEX.SOCK.HD.MC6S-TT 6X40 88 FZB	15
312111-0390 ..	SCREW HEX.SOCK.HD.MC6S-TT 6X100 88 FZ	279
312111-0447 ..	SCREW HEX.SOCK.HD.MC6S-TT 8X12 88 FZB	325
312111-0451 ..	SCREW HEX.SOCK.HD.MC6S-TT 8X20 88 FZB	137, 139, 163, 165, 339
312111-0452 ..	SCREW HEX.SOCK.HD.MC6S-TT 8X22 88 FZB	325
312111-0455 ..	SCREW HEX.SOCK.HD.MC6S-TT 8X30 88 FZB	127, 153, 179, 211
312111-0492 ..	SCREW HEX.SOCK.HD.MC6S-TT 10X22 88 FZ	307, 309, 311
312111-0493 ..	SCREW HEX.SOCK.HD.MC6S-TT 10X25 88 FZ	373, 383, 385
312111-0495 ..	SCREW HEX.SOCK.HD.MC6S-TT 10X30 88 FZ	15, 399
312111-0536 ..	SCREW HEX.SOCK.HD.MC6S-TT 12X30 88 FZ	13
312111-0540 ..	SCREW HEX.SOCK.HD.MC6S-TT 12X40 88 FZ	125, 151, 177, 209, 435
312115-0220 ..	SCREW ISO4762 M3X6 A4 80	375
312115-0222 ..	SCREW ISO4762 M3X8 A4	387, 487
312115-0224 ..	SCREW ISO4762 M3X10 A4	375
312115-0226 ..	SCREW ISO4762 M3X12 A4	387, 487
312115-0287 ..	SCREW ISO4762 M4X8 A4	15, 69, 71, 177, 185, 187, 209, 217, 219
312115-0291 ..	SCREW ISO4762 M4X12 A4	69, 71, 455, 457
312115-0293 ..	SCREW ISO4762 M4X16 A4	185, 187, 217, 219
312115-0299 ..	SCREW ISO4762 M4X30 A4	353
312115-0323 ..	SCREW ISO4762 M5X8 A4	241, 243, 301, 303, 359
312115-0325 ..	SCREW ISO4762 M5X10 A4	103, 105, 267, 483
312115-0327 ..	SCREW ISO4762 M5X12 A4	29, 31, 141, 167, 193, 225, 269, 271, 333, 387, 487
312115-0329 ..	SCREW ISO4762 M5X16 A4	23, 29, 31, 135, 143, 145, 161, 169, 171, 301, 303, 351, 375, 387
312115-0331 ..	SCREW ISO472 M5X20 A4	87, 89, 333, 487
312115-0333 ..	SCREW ISO4762 M5X25 A4	487
312115-0335 ..	SCREW ISO4762 M5X30 A4	277, 333
312115-0339 ..	SCREW ISO4762 M5X40 A4	249, 251, 253, 255
312115-0364 ..	SCREW ISO4762 M6X10 A4	87, 89
312115-0366 ..	SCREW ISO4762 M6X12 A4	103, 105, 241, 243, 277, 313, 333, 455, 457
312115-0368 ..	SCREW ISO4762 M6X16 A4	15, 55, 57, 103, 105, 127, 143, 145, 169, 171, 201, 203, 233, 235, 345, 351, 387
312115-0370 ..	SCREW ISO4762 M6X20 A4	39, 277

Part No	Description	Page No
312115-0372 ..	SCREW ISO4762 M6X25 A4	137, 139, 163, 165, 201, 203, 233, 235
312115-0374 ..	SCREW ISO4762 M6X30 A4	103, 105
312115-0378 ..	SCREW ISO4762 M6X40 A4	351, 467
312115-0379 ..	SCREW ISO4762 M6X45 A4	137, 139, 163, 165
312115-0447 ..	SCREW ISO4762 M8X12 A4	15
312115-0449 ..	SCREW ISO4762 M8X16 A4	285
312115-0451 ..	SCREW ISO4762 M8X20 A4	333
312115-0457 ..	SCREW ISO4762 M8X35 A4	301, 303
312115-0463 ..	SCREW ISO4762 M8X60 A4	389
312115-0491 ..	SCREW ISO4762 M10X20 A4	373, 383, 385
312115-0542 ..	SCREW ISO4762 M12X50 A4	267
312115-0544 ..	SCREW ISO4762 M12X60 A4	241, 243
312115-0630 ..	SCREW ISO4762 M16X50 A4	241, 243
312121-0220 ..	SCREW SLOT.PAN HD. MCS 3X6 FZB	275
312121-0230 ..	SCREW SLOT.PAN HD. MCS 3X20 FZB	63
312121-0285 ..	SCREW SLOT.PAN HD. MCS 4X6 FZB	141, 167, 193, 225, 257, 341, 347
312121-0287 ..	SCREW SLOT.PAN HD. MCS 4X8 FZB	341
312121-0295 ..	SCREW SLOT.PAN HD. MCS 4X20 FZB	33, 291
312121-0323 ..	SCREW SLOT.PAN HD. MCS 5X8 FZB	199, 231
312121-0325 ..	SCREW SLOT.PAN HD. MCS 5X10 FZB	85
312121-0327 ..	SCREW SLOT.PAN HD. MCS 5X12 FZB	341
312121-0364 ..	SCREW SLOT.PAN HD. MCS 6X10 FZB	85
312121-0372 ..	SCREW SLOT.PAN HD. MCS 6X25 FZB	85
312122-0287 ..	SCREW PAN HEAD MCS M4X8 NL. PL.	135, 161
312122-0295 ..	SCREW PAN HEAD MCS M4X20 NL. PL.	135, 161
312122-0327 ..	SCREW PAN HEAD MCS M5X12 NL. PL.	143, 145, 169, 171
312125-0220 ..	SKRUV SLOT.PAN HD. MCS 3X6 A480	245, 351
312125-0222 ..	SPåRSKRUV MCS M3X8 SS	103, 105, 249, 251, 253, 255, 285
312125-0226 ..	SCREW PAN HEAD MCS M3X12 SS	249, 251, 253, 255, 287
312125-0228 ..	SCREW PAN HEAD MCS M3X16 A480	455, 457
312125-0230 ..	SPåRSKRUV MCS M3X20 SS	87, 89, 245, 469
312125-0234 ..	SCREW PAN HEAD MCS M3X30 SS	87, 89
312125-0285 ..	SCREW SLOT.PAN HD. MCS 4X6 A480	59, 87, 89, 359, 469
312125-0287 ..	SCREW PAN HEAD MCS M4X8 SS	73, 75, 241, 243, 249, 251, 253, 255, 393
312125-0289 ..	SPåRSKRUV MCS 4X10 A480	13, 325
312125-0291 ..	SCREW PAN HEAD MCS M4X12 SS	87, 89, 469
312125-0293 ..	SCREW PAN HEAD MCS M4X16 SS	29, 31, 67, 287
312125-0295 ..	SCREW PAN HEAD MCS M4X20 SS	73, 75, 335
312125-0297 ..	SCREW PAN HEAD MCS M4X25 SS	73, 75
312125-0323 ..	SCREW PAN HEAD MCS M5X8 SS	95, 109, 111, 373, 383, 385
312125-0327 ..	SCREW PAN HEAD MCS M5X12 SS	13, 245, 285
312125-0329 ..	SCREW PAN HEAD MCS M5X16 SS	51, 53, 77
312125-0364 ..	SCREW SLOT.PAN HD. MCS 6X10 A480	87, 89, 115, 387
312125-0368 ..	SCREW PAN HEAD MCS M6X16 SS	29, 31, 351
312125-0370 ..	SCREW PAN HEAD MCS M6X20 SS	365
312125-0374 ..	SCREW PAN HEAD MCS M6X30 SS	67
312132-0284 ..	SCREW SLOT. PAN HEAD MSCS M4X5	245
312132-0287 ..	SCREW SLOT. PAN HEAD MSCS M4X8	63, 65, 141, 167, 193, 225
312141-0368 ..	SCREW COUNTERS.SLOT.HD. MFS 6X16 FZB	195, 197, 227, 229
312145-0220 ..	SCREW COUNTERS.SLOT.HD. MFS 3X6 SS	51, 53, 93
312145-0224 ..	SCREW COUNTERS.SLOT.HD. MFS 3X10 SS	467
312145-0285 ..	SCREW COUNTERS.SLOT.HD. MFS 4X6 SS	15
312145-0287 ..	SCREW COUNTERS.SLOT.HD. MFS 4X8 SS	15
312145-0289 ..	SCREW COUNTERS.SLOT.HD. MFS 4X10 SS	73, 75
312145-0323 ..	SCREW COUNTERS.SLOT.HD. MFS 5X8 SS	51, 53
312145-0327 ..	SCREW COUNTERS.SLOT.HD. MFS 5X12 SS	201, 203, 233, 235
312145-0331 ..	SCREW COUNTERS.SLOT.HD. MFS 5X20 SS	13
312145-0337 ..	SCREW COUNTERS.SLOT.HD. MFS 5X35 SS	67
312145-0366 ..	SCREW COUNTERS.SLOT.HD. MFS 6X12 SS	13, 269, 271
312151-0287 ..	SCREW HEX.SOCK.COUNT.MF6S 4X8 FZB	301, 303
312151-0291 ..	SCREW HEX.SOCK.COUNT.MF6S 4X12 FZB	329, 339
312151-0327 ..	SCREW HEX.SOCK.COUNT.MF6S 5X12 FZB	339
312151-0457 ..	SCREW HEX.SOCK.COUNT.MF6S 8X35 FZB	177, 209
312151-0459 ..	SCREW HEX.SOCK.COUNT.MF6S 8X40 FZB	17
312151-0493 ..	SCREW HEX.SOCK.COUNT.MF6S 10X25 FZB	301, 303
312151-0495 ..	SCREW HEX.SOCK.COUNT.MF6S 10X30 FZB	17
312151-0536 ..	SCREW HEX.SOCK.COUNT.MF6S 12X30 FZB	17
312155-0289 ..	SCREW EN 10642 MF6S M4X10 A480	467, 487
312155-0295 ..	SCREW EN 10642 MF6S M4X20 A480	141, 167, 193, 225, 257, 347, 393
312155-0301 ..	SCREW EN 10642 MF6S M4X35 A480	289
312155-0323 ..	SCREW EN 10642 MF6S M5X8 A480	387
312155-0325 ..	SCREW EN 10642 MF6S M5X10 A480	351, 375, 387
312155-0327 ..	SCREW EN 10642 MF6S M5X12 A480	301, 303, 487
312155-0329 ..	SCREW EN 10642 MF6S M5X16 A480	47, 49, 201, 203, 233, 235, 487
312155-0331 ..	SCREW EN 10642 MF6S M5X20 A480	351
312155-0333 ..	SCREW EN 10642 MF6S M5X25 A480	375
312155-0366 ..	SCREW EN 10642 MF6S M6X12 A480	247, 285, 289, 351
312155-0368 ..	SCREW EN 10642 MF6S M6X16 A480	333, 347
312155-0370 ..	SCREW EN 10642 MF6S M6X20 A480	403
312155-0451 ..	SCREW EN 10642 MF6S M8X20 A480	127, 153, 179, 211
312165-0329 ..	SCREW SLOT.RAIS.COUNT.HD.MKFS 5X16 SS	241, 243
312165-0366 ..	SCREW SLOT.RAIS.COUNT.HD.MKFS 6X12 SS	301, 303
312165-0368 ..	SCREW SLOT.RAIS.COUNT.HD.MKFS 6X16 SS	13, 241, 243
312205-0109 ..	SCREW U6S1/4X16RFR	81, 83

Part No	Description	Page No
312303-0541 ..	SCREW DIN 938 PS M12X30 A4 80	275
312303-0543 ..	SCREW DIN 938 PS M12X40 A4 80	275
312306-0287 ..	SCREW HEX.SOCK.SET FLAT P.MP6SS 4X8 FZB	315, 317
312306-0366 ..	SCREW HEX.SOCK.SET FLAT P.MP6SS 6X12FZB	389
312306-0371 ..	SCREW HEX.SOCK.SET FLAT P.MP6SS 6X22FZB	13
312306-0455 ..	SCREW HEX.SOCK.SET FLAT P.MP6SS 8X30FZB	325
312306-0463 ..	STOP SCREW P6SS8X60FZB	127, 153, 179, 211
312306-0546 ..	SCREW HEX.SOCK.SET FLAT P.MP6SS 12X70FZB	411
312311-0219 ..	SCREW ISO4028 M3X5 FZB	435
312311-0366 ..	SCREW ISO4028 M6X12 FZB	39
312311-0370 ..	SCREW ISO4028 M6X20 FZB	301, 303
312311-0459 ..	SCREW ISO4028 M8X40 FZB	15
312311-0532 ..	SCREW ISO4028 M12X20 FZB	177, 209
312311-0548 ..	SCREW ISO4028 M12X80 FZB	241, 243
312316-0321 ..	SCREW HEX.SOCK.SET CUP P.MSK6SS5X6 FZB	315, 317, 341
312316-0323 ..	SCREW HEX.SOCK.SET CUP P.MSK6SS5X8 FZB	315, 317
312316-0360 ..	STOP SCREW SK6SS6X6FZB	459
312316-0362 ..	SCREW HEX.SOCK.SET CUP P.MSK6SS6X8 FZB	319, 321, 323
312316-0366 ..	SCREW HEX.SOCK.SET CUP P.MSK6SS6X12 FZB	329
312316-0370 ..	SCREW HEX.SOCK.SET CUP P.MSK6SS6X20 FZB	85
312316-0447 ..	SCREW HEX.SOCK.SET CUP P.MSK6SS8X12 FZB	127, 153, 179, 211, 315, 317
312316-0530 ..	SCREW HEX.SOCK.SET CUP P.MSK6SS12X16 FZB	301, 303
312318-0285 ..	SCREW ISO4029 M4X6 A4	377
312318-0321 ..	SCREW ISO4029 M5X6 A4	29, 31, 55, 57, 333
312318-0323 ..	SCREW ISO4029 M5X8 A4	249, 251, 253, 255
312318-0325 ..	SCREW ISO4029 M5X10 A4	81, 83
312318-0360 ..	SCREW ISO4029 M6X6 A4	15, 27, 77
312318-0362 ..	SCREW ISO4029 M6X8 A4	189, 191, 221, 223, 455, 457, 461
312318-0364 ..	SCREW ISO4029 M6X10 A4	29, 31, 103, 105
312318-0366 ..	SCREW ISO4029 M6X12 A4	377, 467
312318-0368 ..	SCREW ISO4029 M6X16 A4	77
312318-0451 ..	SCREW ISO4029 M8X20 A4	41
312318-0487 ..	SCREW ISO4029 M10X12 A4	103, 105
312502-0120 ..	DRIVE SCREW ROUND HEAD KDS 0X5	109, 111
312502-0169 ..	DRIVE SCREW ROUND HEAD KDS 2X5	109, 111
312502-0171 ..	DRIVE SCREW ROUND HEAD KDS 2X6	469
312502-0221 ..	DRIVE SCREW ROUND HEAD KDS 4X6	125, 449
312504-0221 ..	SCREW CROSS RECES.RND.HD.TAPP. B4X6,5 SS	341
312601-0310 ..	NUT M6M3FZB	63
312601-0312 ..	NUT M6M 4-8 FZB	341
312601-0316 ..	NUT M6M 6-8 FZB	305, 307
312601-0318 ..	NUT M6M8FZB	15, 127, 153, 179, 211
312601-0320 ..	NUT M6M 10-8 FZB	301, 303, 327, 331
312601-0322 ..	NUT M6M 12-8 FZB	275, 329
312602-0312 ..	HEXAGON NUT, EN 24032 M6M M4 NIPLBR	135, 161
312605-0310 ..	HEXAGON NUT, M6M M3 A280	285, 387, 467, 469, 487
312605-0312 ..	HEXAGON NUT, M6M M4 A280	15, 73, 75, 87, 89, 287, 335, 353, 355, 359, 361, 363, 467, 469
312605-0314 ..	HEXAGON NUT, M6M M5 A280	47, 49, 51, 53, 249, 251, 253, 255, 469, 487
312605-0316 ..	HEXAGON NUT, M6M M6 A280	23, 25, 27, 29, 31, 55, 57, 69, 71, 77, 81, 83, 103, 105, 133, 159, 279, 309, 311, 345, 351, 355, 365, 375, 461, 463, 469
312605-0318 ..	HEXAGON NUT, M6M M8 A280	37, 55, 57, 67, 79, 81, 83, 87, 89, 127, 153, 179, 211, 265, 283, 389, 439, 463, 465, 469
312605-0320 ..	HEXAGON NUT, M6M M10 A280	55, 57, 103, 105, 333, 379
312605-0322 ..	HEXAGON NUT, M6M M12 A280	41, 241, 243, 265, 433, 455, 457
312605-0324 ..	HEXAGON NUT, M6M M16 A280	55, 57, 241, 243
312621-0318 ..	ROD END,NUT M8	389, 467
312621-0320 ..	NUT ML6M10FZB	17
312621-0324 ..	NUT ML6M16FZB	399
312625-0316 ..	HEXAGON THIN NUT, EN 24035 ML6M M6 A4	15
312625-0318 ..	HEXAGON THIN NUT, EN 24035 ML6M M8 A4	377
312705-0314 ..	NUT HEX. DOMED CAP MHM-6 M5 A280	67, 245
312705-0316 ..	NUT HEX. DOMED CAP MHM-6 M6 A280	107
312801-0322 ..	NUT MKM12FZB	331
312805-0108 ..	NUT ROUND WITH SLOTS M40X1,5 FE	319, 321, 323
312810-0322 ..	HEXAGON NUT, NY-LOCK M12 FZB	241, 243
312811-0316 ..	NUT HEX.LOCK HELI COIL MID GRIP M6 SS	365
312812-0310 ..	HEXAGON NUT, NY-LOCK M3 A480	87, 89
312812-0314 ..	HEXAGON NUT, NY-LOCK M5 A480	47, 49
312812-0316 ..	HEXAGON NUT, NY-LOCK M6 A480	247, 403
315101-0124 ..	WASHER PLAIN, BRB, 3,2/6 H=0,5	341
315101-0136 ..	BRICKA, BRB, 4,3/8 H=0,8	33, 125, 151, 195, 197, 227, 229, 291, 301, 303, 341
315101-0146 ..	WASHER PLAIN, BRB, 5,3/10 H=1	125, 151, 195, 197, 227, 229, 341
315101-0153 ..	WASHER PLAIN, BRB, 6,4/12 H=1,5	35, 125, 141, 151, 167, 177, 209, 301, 303, 305, 341, 347, 465
315101-0165 ..	WASHER PLAIN, BRB, 8,4/16 H=1,5	301, 303, 305, 325
315101-0173 ..	WASHER PLAIN, BRB, 10,5/22 H=2	301, 303, 305, 331
315101-0178 ..	WASHER PLAIN, BRB, 13/24 H=2	13, 23, 125, 151, 177, 185, 187, 209, 217, 219, 329
315101-0182 ..	WASHER PLAIN, BRB, 15/26 H=2	347
315103-0136 ..	WASHER PLAIN, BRB, 4,3/8,H=0,8 NI PL BR	135, 161
315103-0146 ..	BRICKA, BRB, 5,3/10,H=1 NI PL BR	143, 145, 169, 171
315105-0124 ..	WASHER ISO 7089-3-200 HV-A4	87, 89, 245, 249, 251, 253, 255, 285, 387, 455, 457, 467, 469
315105-0136 ..	WASHER ISO 7089-4-200 HV-A4	13, 67, 87, 89, 109, 111, 115, 247, 249, 251, 253, 255, 287, 345, 355, 359, 361, 363, 467, 469, 473
315105-0146 ..	WASHER ISO 7089-5-200 HV-A4	13, 15, 23, 39, 47, 49, 51, 53, 81, 83, 109, 111, 129, 135, 141, 155, 161, 167, 181, 193, 213, 225, 241, 243, 249, 251, 253, 255, 267, 301, 303, 333, 345, 351, 375

Part No	Description	Page No
		377, 387, 455, 457, 465, 469, 483, 485, 487
315105-0153 ..	WASHER ISO 7089-6-200 HV-A4	15, 23, 27, 29, 31, 39, 51, 53, 55, 57, 63, 67, 69, 71, 93, 101
		109, 111, 115, 241, 243, 269, 271, 285, 287, 313, 333, 351, 355, 357, 375, 379, 387, 393, 437, 455
		457, 459, 461, 463, 467, 469, 485, 487
315105-0165 ..	WASHER ISO 7089-8-200 HV-A4	15, 23, 35, 39, 67, 81, 83, 87, 89, 129, 155, 181, 213, 241, 243
		265, 267, 269, 271, 283, 333, 345, 355, 377, 379, 387, 463, 469
315105-0171 ..	WASHER PLAIN, BRB, 10/18,H=2	137, 139, 163, 165
315105-0173 ..	WASHER ISO 7089-10-200 HV-A4	15, 55, 57, 265, 269, 271, 377, 389, 463, 465
315105-0178 ..	WASHER ISO 7089-12-200 HV-A4	125, 151, 177, 209, 331, 379, 421, 423, 433, 455, 457
315105-0186 ..	WASHER ISO 7089-16-200 HV-A4	241, 243, 331
315105-0192 ..	WASHER ISO 7089-20-200 HV-A4	421, 423, 439
315111-0153 ..	WASHER PLAIN, TBRB 6,4/12 H=3	307
315111-0165 ..	WASHER PLAIN, TBRB 8,4/16 H=3	301, 303, 331
315111-0173 ..	WASHER PLAIN, TBRB 10,5/22 H=4	305
315115-0153 ..	WASHER PLAIN, TBRB 6,4/12 H=3	25, 35, 79, 81, 83, 143, 145, 169, 171, 201, 203, 233, 235
		359, 467
315115-0165 ..	WASHER PLAIN, TBRB 8,4/16 H=3	87, 89, 109, 111, 265, 285, 467
315115-0173 ..	WASHER PLAIN, TBRB 10,5/22 H=4	35, 87, 89, 333, 439
315115-0178 ..	WASHER PLAIN, TBRB 13/24 H=4	35, 37, 455, 457
315121-0153 ..	WASHER PLAIN, TBRSB 6,4/22 H=4	301, 303
315121-0165 ..	WASHER PLAIN, TBRSB 8,4/26 H=5	339
315121-0173 ..	WASHER PLAIN, TBRSB 10,5/28 H=6	307, 309, 311
315121-0178 ..	WASHER PLAIN, TBRSB 13/36 H=6	241, 243, 301, 303
315125-0153 ..	WASHER TBRSB 6,4X22X4 A4	23, 247
315202-0118 ..	O-RING 22,1X1,6 MM	103, 105
315202-0219 ..	O-RING 29,2X3 MM	185, 187, 217, 219
315202-0224 ..	O-RING 42,2X3 MM	339
315202-0518 ..	O-RING 23,40X3,53 MM	373, 383, 385
315202-0520 ..	O-RING 26,58X3,53 MM	329
315202-0523 ..	O-RING 31,34X3,53 MM	339
315202-0528 ..	O-RING 37,69X3,53 MM	127, 153, 179, 211
315203-0520 ..	O-RING 26,57X3,53 MM	301, 303
315204-0113 ..	O-RING 15,1X1,6 MM	93
315204-0211 ..	O-RING 13,3X2,4 MM	359
315204-0213 ..	O-RING 15,2X2,4 MM	87, 89, 93, 101, 359
315204-0215 ..	O-RING 19,2X3 MM	95, 355
315204-0220 ..	O-RING 32,2X3 MM	51, 53
315204-0302 ..	O-RING 54,5X3 MM	93, 101
315204-0305 ..	O-RING 69,5X3 MM	359
315204-0310 ..	O-RING 94,5X3 MM	95
315211-0108 ..	GASKET BOLT HEAD 13,7X20,6X2 MM G1/4	185, 187, 217, 219
315233-0101 ..	WASHER PL.RND.NYL.5,2/8,H=1	95
315233-0109 ..	WASHER PL.RND.NYL.10,3/14,H=1	109, 111
315233-0110 ..	WASHER PL.RND.NYL.13,3/17,H=1	279
315233-0111 ..	WASHER PL.RND.NYL.17/22,H=1	87, 89, 109, 111, 351
315401-0136 ..	WASHER FBH 4,1 FZB	461
315401-0146 ..	WASHER FBH 5,1 FZB	339
315401-0153 ..	WASHER FBH6,1FZB	201, 203, 233, 235, 307, 309, 311, 325, 461
315401-0165 ..	WASHER FBH8,2FZB	127, 137, 139, 153, 163, 165, 179, 211, 301, 303, 307, 309, 311, 325, 339
315401-0173 ..	WASHER FBH10,2FZB	301, 303, 327, 373, 383, 385
315401-0186 ..	WASHER FBH16,2FZB	373, 383, 385
315402-0128 ..	LOCK WASHER FBB 3,6	87, 89
315402-0156 ..	LOCK WASHER FBB 6,5	143, 145, 169, 171, 485
315410-0108 ..	LOCK WASHER MB 8 D=40 H=1,25	319, 321, 323
315701-0198 ..	PARALLEL KEY W. ROUND ENDS 5X5X14 MM	315, 317
315701-0201 ..	PARALLEL KEY W. ROUND ENDS 5X5X20 MM	29, 31
315701-0206 ..	PARALLEL KEY W. ROUND ENDS 5X5X32 MM	341
315701-0230 ..	PARALLEL KEY W. ROUND ENDS 6X6X16 MM	339
315701-0260 ..	PARALLEL KEY W. ROUND ENDS 8X7X14 MM	339
315701-0276 ..	PARALLEL KEY W. ROUND ENDS 8X7X70 MM	315, 317
315701-0300 ..	PARALLEL KEY W. ROUND ENDS 10X8X35 MM	315, 317
315701-0305 ..	PARALLEL KEY W. ROUND ENDS 10X8X60 MM	315, 317
315742-0104 ..	COLLAR, 8/20, H=9	377
315742-0112 ..	COLLAR, 16/32, H=12	461
315750-0103 ..	RETAIN. RING, 6	185, 187, 217, 219
315750-0105 ..	RETAIN. RING, 8	177, 209
315750-0107 ..	RETAIN. RING, 10	189, 191, 221, 223
315750-0109 ..	RETAIN. RING, 12	185, 187, 217, 219
315750-0112 ..	RETAIN. RING, 15	201, 203, 233, 235
315750-0116 ..	RETAIN. RING, 20	127, 129, 153, 155, 179, 181, 211, 213
315750-0124 ..	RETAIN. RING, 35	127, 153, 179, 211
315751-0103 ..	RETAIN. RING, 6	103, 105
315751-0112 ..	RETAIN. RING, 15	29, 31
315751-0113 ..	RETAIN. RING, 16	29, 31
315752-0115 ..	RETAINING RING FOR HOLE, 19X1 MM	465
315752-0120 ..	RETAIN. RING, 26	467
315752-0123 ..	RETAIN. RING, 32	185, 187, 217, 219
315752-0130 ..	RETAIN. RING, 47	127, 153, 179, 211
315754-0103 ..	RET. RING FOR RAD. ASSEMBLY, 1,9X0,5 MM	473
315754-0105 ..	LOCKING WAE 3,2	143, 145, 169, 171, 391
315754-0110 ..	LOCKING WAE 9	463, 465
315754-0113 ..	LOCKING WAE 15	95
315755-0106 ..	LOCKING WASHER 4	27, 39
315755-0107 ..	LOCKING WASHER 5	463

Part No	Description	Page No
315755-0112 ..	LOCKING WASHER 12	93, 101
318101-0043 ..	V-BELT B43 1135X17	319, 323
318101-0044 ..	V-BELT B44	321, 323
318800-0103 ..	HANDLES,SPHERICAL KNOB,INT.THRE.,D.25-M6	459
318800-0106 ..	HANDLE,SPHERICAL KNOB,INT.THRE,D.40-M10	13, 17, 461
318856-0102 ..	KNOB, EXTERNAL THREAD. NO. 8308-1127	485
321101-0172 ..	FLANGE BUS 12F7X10	409
321101-0222 ..	BEAR.BUSHING W.FLANGE 18/25X12	411
321101-0282 ..	FLANGE BUS 35F7X20	127, 153, 179, 211
321111-0163 ..	BEAR.BUSHING WITH FLANGE, 12/18X20 MM	331
321111-0241 ..	BEAR.BUSHING WITH FLANGE, 16/22X16 MM	331
321120-0101 ..	BEARING BUSHING WITHOUT FLANGE,6/8X6	469
321120-0104 ..	BEAR.BUSHING W/O FLANGE 10/12X10	15, 377, 461
321302-0296 ..	BALL BEARING, 2 SEALS, 6X19X6 MM	103, 105, 463, 465
321306-0107 ..	BALL BEARING, 35X62X14 MM	325
321308-0200 ..	BALL BEARING, 2 SEALS, 10X26X8 MM	103, 105
321309-0104 ..	BALL BEARING, 20X47X14 MM	127, 129, 153, 155, 179, 181, 211, 213
321309-0107 ..	BALL BEARING, 35X72X17 MM	325
321312-0105 ..	BALL BEARING, 1 SEAL, 25X52X15 MM	307, 309, 311
321313-0102 ..	BALL BEARING, 2 SEALS, 15X35X11 MM	341
321313-0103 ..	BALL BEAR. 2 SEALS 17X40X12MM	339
321330-0103 ..	ANG. BALL BEAR, 17X40X17,5 MM	301, 303, 329, 373, 383, 385
321330-0105 ..	ANG. BALL BEAR, 25X52X20,6 MM	339
321576-0197 ..	BEARING ROLLER, 2 SEALS, 15X35X19 MM	201, 203, 233, 235
321600-0102 ..	OIL SEAL (LL1535	341
321600-0120 ..	OIL SEAL (LL3562	325
321600-0124 ..	OIL SEAL (LL3572	325
321601-0103 ..	OIL SEAL (LL40	373, 383, 385
342700-0113 ..	NIPPLES,HEXAGON,EXT.G-THREAD G1/2"-G1/2"	109, 111
342701-0202 ..	BUSHING,INT./EXT.G-THREAD G3/8"-G1/8"	115
342701-0203 ..	BUSHING, INT/EXT. G-THREAD NO. 3/8-1/4	109, 111
342701-0205 ..	BUSHING,INT./EXT.G-THREAD G1/2"-G1/4"	109, 111, 455, 457
342706-0130 ..	ACCESSORIES, INSERT SLEEVE 6 MM	141, 167, 193, 225, 259, 261, 263, 345, 349, 393
342707-0109 ..	SLEEVE, INT. THREAD, NO. 2543-1/8	193, 225, 353
342713-0209 ..	PLUG, EXT THREAD HEX SOCKET 8638-00-180	115
342713-0210 ..	PLUG, EXT THREAD HEX SOCKET 8638-00-140	185, 187, 217, 219, 279
342713-0213 ..	PLUG, EXT THREAD HEX SOCKET 8638-00-120	279
342716-0203 ..	REDUCER 6-8	119
342722-0197 ..	STRAIGHT COUPLING	109, 111
342722-0202 ..	PIPE COUPLING 1/8" D=6MM	29, 31, 87, 89, 109, 111, 353, 357, 377, 467
342722-0203 ..	STRAIGHT COUPLING	109, 111, 115
342722-0205 ..	STRAIGHT COUPLING D=8-G1/4"	109, 111, 455, 457
342724-0102 ..	CONN. STR. PIPE GI 6-G1/8	141, 167, 193, 225
342725-0103 ..	CONN. STR. PIPE GI-8-G1/4	55, 57
342732-0102 ..	ELBOW PIPE JOINT, EXT.THREAD, D=6MM-G1/8	87, 89, 109, 111, 115, 313, 353
342732-0103 ..	ELBOW PIPE JOINT, EXT.THREAD, D=6MM-G1/4	109, 111, 117, 241, 243, 351, 353, 355, 359
342732-0104 ..	ELBOW PIPE JOINT, EXT.THREAD, D=8MM-G1/4	241, 243, 351
342732-0105 ..	ELBOW PIPE D8-R3/8"	109, 111, 351
342732-0801 ..	ELBOW PIPE JOINT, EXT.THREAD, D=8MM-G1/8	115
342739-0108 ..	CONN. ELBOW BULKHEAD WSV 10	81, 83
342742-0102 ..	T-COUPLING,ADJUST,F.PLASTIC TUBE 6-G1/8"	109, 111, 115, 353
342742-0103 ..	T-COUPLING,ADJUST,F.PLASTIC TUBE 6-G1/4"	351, 353
342748-0102 ..	T-CONNECTION 6MM	313
342748-0103 ..	T-CONNECTION 8MM	351
342767-0104 ..	CONN. BULKHEAD G1/4	241, 243
342830-0203 ..	FERRULE, SMS 1145, 2343, NO.9611-31-0200	413
342840-0101 ..	CLAMP, 12,7 AND 19,1 MM 3-A PCS+PMCS	39
342840-0103 ..	CLAMPING PIECE	91
342850-0303 ..	GASKET 22,7X49,1X5,2 MM 1" FDA	55, 57, 87, 89, 413, 417, 419
342850-0305 ..	GASKET 47,8X62,6X5,2 MM 2" FDA	79
342920-0113 ..	STRAIGHT COUPLING,EXT.THREADED 6/4-R1/8"	389
342921-0113 ..	STRAIGHT COUPLING,EXT.THREADED 6/4-G1/8"	247
342921-0132 ..	STRAIGHT COUPL.,EXT.THREADED 10/8-G1/4"	115
342921-0133 ..	STRAIGHT COUPL.,EXT.THREADED 10/8-G3/8"	115
342931-0113 ..	ELBOW 90 COUPL.,EXT.THREAD 6/4-G1/8"	247, 345
342980-0111 ..	BANJO-CONNECTION,RING 6/4-M5	39
342980-0301 ..	BANJO-HOLLOW BOLT COUPL.,EXT.THREA.01-M5	39
342991-0101 ..	HOSE CLIP,WORM DRIVE TYPE (13)-16	365
342991-0102 ..	HOSE CLIP,WORM DRIVE TYPE (16)-19	455, 457, 467
342991-0103 ..	HOSE CLIP,WORM DRIVE TYPE (19)-23	25, 351
342991-0106 ..	HOSE CLIP,WORM DRIVE TYPE (30)-36	467
344502-0021 ..	GREASE NIPPLE STRAIGHT M6	201, 203, 233, 235, 301, 303, 329, 467
344502-0026 ..	GREASE NIPPLE STRAIGHT R1/8 CON.	127, 129, 153, 155, 179, 181, 193, 211, 213, 225, 307, 309, 311, 325, 339, 373, 383, 385
346800-0109 ..	SILENCER FILTER R1/8"	87, 89
346800-0110 ..	SILENCER FILTER R1/4"	355
351120-0144 ..	CABLE SIHF 3X1,5MM2 GREEN/YELLOW	509, 511
351120-0145 ..	CABLE SIHF 3X2,5MM2 GREEN/YELLOW	509, 511
351120-0165 ..	CABLE SIHF 4X2,5MM2 GREEN/YELLOW	509, 511
351127-0144 ..	CABLE RN-F 3X15 MM2 GREEN/YELLOW	15, 509, 511
351150-0403 ..	CABLE OLFLEX 3X0,75 MM2 LIGHT/GREY	509, 511
351150-0404 ..	CABLE OLFLEX 4X0,75 MM2 LIGHT/GREY	509, 511
351150-0405 ..	CABLE OLFLEX 5X0,75 MM2 LIGHT/GREY	509, 511, 515
351150-0406 ..	CABLE OLFLEX 7X0,75 MM2 LIGHT/GREY	509, 511

Part No	Description	Page No
351150-0407 ..	CABLE OLFLEX 12X0,75 MM2 LIGHT/GREY	509, 511, 515
351150-0412 ..	CABLE OLFLEX 3X1,5 MM2 LIGHT/GREY	509, 511
351150-0413 ..	CABLE OLFLEX 4X1,5 MM2 LIGHT/GREY	509, 511
351150-0414 ..	CABLE OLFLEX 5X1,5 MM2 LIGHT/GREY	509, 511
351150-0424 ..	CABLE OLFLEX 18X0,75 MM2 LIGHT/GREY	509, 511
351150-0425 ..	CABLE OLFLEX 25X0,75 MM2 LIGHT/GREY	509, 511
351175-0104 ..	KABEL AWM 1X15 MM2 YELLOW-GREEN	15
352020-0105 ..	TERMINAL BOX, UE5	15
352101-0103 ..	LEAD-IN, PR18,6/PG11, E-1457518	13, 241, 243, 275
352101-0105 ..	LEAD-IN, PR22,5/PG16, E-1457522	241, 243
352103-0096 ..	CABLE GLAND, ST 7, PR 12,5/PG7	85, 293
352103-0101 ..	KABELFöRSKR. ST 9, PR15,2/PG9	33, 85, 109, 111, 115, 249, 251, 253, 255, 267, 291, 335, 353
352103-0105 ..	CABLE GLAND, STR 11, PR 18,6/PG11	15, 51, 53, 67, 267, 351, 359
352103-0106 ..	CABLE GLAND, ST 11, PR18,6/PG11	23, 29, 31, 33, 85, 109, 111, 267, 269, 271, 301, 303, 335, 375, 387, 487
352103-0108 ..	CABLE GLAND, ST 13,5 , PR20,4/PG13,5	249, 251, 253, 255
352103-0110 ..	CABLE GLAND, STR 16, PR22,5/PG16	285, 289
352103-0111 ..	CABLE GLAND, ST 16, PR22,5/PG16	33, 267, 291, 335, 341
352103-0115 ..	CABLE GLAND, STR 21, PR28,3/PG21	267
352103-0116 ..	KABELFöRSKR. ST 21, PR28,3/PG21	267
352110-0100 ..	CABLE CLIPS, D=5-7 MM	469
352112-0101 ..	LOCATING STRIP, TUB 12	241, 243
352113-0102 ..	CLIP-STRIP, BLACK 188X4,8 MM	241, 243
352135-0102 ..	SPIRAL CONDUIT 155.010 DI=10MM;DO=14,7MM	267
352135-0106 ..	SPIRAL CONDUIT DI=16 MM	15, 63
352135-0108 ..	HOSE .020	29, 31
352135-0109 ..	HOSE .022	67, 85, 269, 271
352136-0107 ..	GLAND FITTING PR12,5 PG7 FOR HOSE	267
352136-0113 ..	GLAND FITTING PR18,6/PG11 DI=12MM	55, 57, 267, 269, 271, 277, 333
352136-0114 ..	GLAND FITTING	245
352136-0127 ..	GLAND FITTING PR 18,6	13, 15, 63, 269, 271
352136-0143 ..	GLAND FITTING	85, 269, 271
352136-0152 ..	GLAND FITTING	269, 271
352137-0129 ..	CABLE GLAND;PR22,5(PG16)	59
352137-0142 ..	GLAND FITTING	67
353021-0212 ..	FEED THROUGH TERMINAL, 10200.0	85, 267
353024-0204 ..	EARTH TERMINAL WPE 2,5	85, 267
353024-0208 ..	EARTH TERMINAL, 1010.4	493, 495, 497, 499, 501, 503, 505, 507
353034-0030 ..	BRIDGE CONNECTOR WQV 2,5/10, 10544.6	85, 267
353042-0010 ..	BUSBAR HÅLLARE	493, 495, 497, 499, 501, 503, 505, 507
353042-0011 ..	BUSBAR	493, 495, 497, 499, 501, 503, 505, 507
353042-0012 ..	ADJUSTMENTPLATTA	493, 495, 497, 499, 501, 503, 505, 507
353042-0014 ..	BUSBAR ADA ADAPTER	493, 495, 497, 499, 501, 503, 505, 507
353042-0016 ..	CONNECTIONSADAPTER	493, 495, 497, 499, 501, 503, 505, 507
353042-0019 ..	SIDE GUARD	493, 495, 497, 499, 501, 503, 505, 507
353101-0129 ..	CABLE SHOE	245
353101-0130 ..	CABLE SHOE 1,5-2,5MM2 BLUE	15
353103-0130 ..	CABLE SHOE	63, 65
353247-0004 ..	GLAND, PG16, 15354P18S08UL16	29, 31
359000-0014 ..	MARKING CO2/4 "+"	119
359000-0024 ..	MARKING CO2/4 "-"	119
359000-0054 ..	MARKING CO2/4"PERIOD"	119
359000-0401 ..	MARKING COLLAR 2/4 "1" YELLOW	119
359000-0402 ..	MARKING COLLAR 2/4 "2" YELLOW	119
359000-0403 ..	MARKING COLLAR PA2/4 "3" YELLOW	119
359000-0404 ..	MARKING COLLAR PA2/4 "4" YELLOW	119
359000-0405 ..	MARKING CO2/4"5"	119
359000-0406 ..	MARKING COLLAR PA2/4 "6" YELLOW	119
359000-0752 ..	MARKING CO2/4"C"	119
359000-0774 ..	MARKING CO2/4"Y"	119
359011-0202 ..	SIGN BOARD(GROUND)	33, 85, 291
359011-0807 ..	MARKING PLATES 5-FW 1-50	85, 267, 291
359011-0808 ..	MARKING PLATES 5-FW 51-100	85, 267
359011-0809 ..	MARKING PLATES 5-FW 101-150	85, 267
359011-0810 ..	MARKING PLATES 5-FW 151-200	85
359011-0819 ..	MARKING PLATES 5-GW (EARTH)	267
359011-0821 ..	SET OF SIGNS 6-FW 1-50	33
359011-0834 ..	SET OF SIGNS 6-GW(EARTH)	493, 495, 497, 499, 501, 503, 505, 507
359240-0001 ..	SIGN, NOT ENGRAVED	493, 495, 497, 499, 501, 503, 505, 507
359240-0100 ..	SIGN HOLDER FOR 359240-0001	109, 111, 493, 495, 497, 499, 501, 503, 505, 507, 513
359241-0121 ..	SIGN "STEAM"	109, 111, 493, 495, 497, 499, 501, 503, 505, 507
359241-0124 ..	SIGN, MAIN SWITCH	493, 495, 497, 499, 501, 503, 505, 507
359241-0131 ..	SIGN, TEMP. LS HEATER	493, 495, 497, 499, 501, 503, 505, 507
359241-0132 ..	SIGN, TEMP. STRIP APPLICATOR	493, 495, 497, 499, 501, 503, 505, 507
359241-0133 ..	SIGN, SERVICE SWITCH	493, 495, 497, 499, 501, 503, 505, 507
359241-0140 ..	SIGN "LIGHTING MACHINE"	513
359241-0193 ..	SIGN"TRANSSKARVSFÖRSEG.S1	493, 495, 497, 499, 501, 503, 505, 507
359241-0194 ..	SIGN"TRANSSKARVSÖRSEGL.S2	493, 495, 497, 499, 501, 503, 505, 507
359241-0201 ..	SIGN "HOUR GLASS"	493, 495, 497, 499, 501, 503, 505, 507
359241-0228 ..	SIGN KYLT	493, 495, 497, 499, 501, 503, 505, 507
359241-0250 ..	SIGN "CLEANING OF STEAM BARRIER"	493, 495, 497, 499, 501, 503, 505, 507
359241-0294 ..	SIGN	493, 495, 497, 499, 501, 503, 505, 507
359241-0295 ..	SIGN	493, 495, 497, 499, 501, 503, 505, 507
359241-0486 ..	HEAT EXCHANGER	493, 495, 497, 499, 501, 503, 505, 507

Part No	Description	Page No
359301-0001 ..	SIGN "UP"	513
359301-0005 ..	SIGN "DOWN"	513
359301-0051 ..	SIGN"STRIP SPLICE"	285
359301-0090 ..	SIGN "INCHING"	285, 493, 495, 497, 499, 501, 503, 505, 507, 513
359301-0110 ..	SIGN "SHORT STOP"	493, 495, 497, 499, 501, 503, 505, 507, 513
359301-0125 ..	SIGN "LUBRICATION"	513
359301-0131 ..	BUTTON SIGN, LAMP TEST / ALARM RES.	513
359301-0215 ..	SIGN "WASH PRODUCT VALVE"	513
359301-0456 ..	BUTTON SIGN, PACKAGE DISPOSAL	513
359705-0008 ..	WARNING SIGN ISO, HOT SURFACE	67
359705-0010 ..	WARNING SIGN ISO, SHARP PART	15
434042-0204 ..	SHEARING DEVICE	297, 299
434466-0000 ..	PLATE	241, 243
435778-0000 ..	SPRING	35
436403-0000 ..	WASHER	35
436613-0000 ..	BOX	267
436614-0000 ..	HATCH	267
439854-0000 ..	COMPRESSION SPRING	103, 105
440059-0000 ..	CANTILEVER	301, 303
440419-0000 ..	BRACKET	143, 145, 169, 171
440467-0000 ..	CABLE HOLDER	301, 303
441536-0000 ..	GASKET	245
441718-0000 ..	SPACER	47, 49
441737-0000 ..	WASHER	47, 49
441739-0000 ..	WASHER	47, 49
441740-0000 ..	HINGE FLANGE	47, 49
441741-0000 ..	HINGE FLANGE	47, 49
441754-0000 ..	SPACER	33
441905-0000 ..	RETARD PIN	265
445953-0002 ..	HOOD	13
449969-0101 ..	TOOL	405
449970-0000 ..	HOLDER	411
449971-0000 ..	SPINDLE	411
450022-0000 ..	WASHER	61
450833-0000 ..	FILTER	359
451170-0000 ..	PAPER TROLLEY	443
451423-0000 ..	CIRCUIT BOARD	341
456260-0000 ..	COVER	245
456262-0000 ..	SHEET	245
456529-0000 ..	CLAMP HOLDER	341
456900-0000 ..	PIPE	359
457648-0000 ..	CURVE	331
464297-0000 ..	CONNECTION BOX	341
466014-0000 ..	CANTILEVER	389
469159-0000 ..	PIN	23
476402-0000 ..	HOOD	41
479110-0000 ..	SPACER	291
484196-0000 ..	FILTER	359
484668-0000 ..	PLUNGER	185, 187, 217, 219
484671-0000 ..	ROLLER BEARING	177, 209
484672-0000 ..	YOKE	177, 209
484673-0000 ..	PRESSURE JAW	201, 203, 233, 235
484674-0000 ..	SHAFT	201, 203, 233, 235
484677-0000 ..	BOW CLAMP	195, 197, 227, 229
484678-0000 ..	TRANSMISSION RAIL	195, 197, 227, 229
484679-0000 ..	TRANSMISSION RAIL	195, 197, 227, 229
484680-0000 ..	STOP LUG	177, 209
484681-0000 ..	HOLDER	193, 225
484815-0000 ..	KNIFE	307, 417, 419
486826-0001 ..	SIGN "EMERGENCY STOP"	285, 289, 493, 495, 497, 499, 501, 503, 505, 507, 513
491418-0002 ..	O-RING	23
493718-0000 ..	WASHER	177, 209
493719-0000 ..	SHAFT	185, 187, 217, 219
493886-0000 ..	SHAFT	35
497715-0000 ..	BRACKET	455, 457
497748-0000 ..	PIN	97, 99
497873-0101 ..	TILTING TRAY	369, 371
499046-0001 ..	MACHINE BODY	399
499047-0001 ..	MACHINE BODY	399
499048-0000 ..	DOWEL	399
499134-0204 ..	ROLLER STAND	397
499385-0000 ..	GASKET	289
499490-0000 ..	PROTECTION	177, 209
522021-0000 ..	HOLDER	393
522090-0000 ..	HEAT EXCHANGER	55, 57
522159-0000 ..	CANTILEVER	341
522160-0000 ..	CHUTE	389
522303-0000 ..	SPACER PIPE	389
522409-0201 ..	CENTRAL LUBRICATION	369, 371
525317-0000 ..	FITTING BOLT	387
527121-0001 ..	BOW CLAMP	365
527121-0002 ..	BOW CLAMP	365
527124-0000 ..	BEARING	365
527125-0000 ..	STEERING	365

Part No	Description	Page No
527127-0000 ..	DOWEL	365
527898-0101 ..	CONTAINER H2O2	397, 429
527905-0000 ..	GASKET	351
527906-0000 ..	GASKET	351
529259-0000 ..	TRANSFORMER	493, 495, 497, 499, 501, 503, 505, 507
529293-0000 ..	SCREW	307
529294-0000 ..	NUT	307
529297-0000 ..	WASHER	185, 187, 217, 219
529298-0000 ..	RUBBER CLOTH	185, 187, 217, 219
529317-0000 ..	WHEEL	307
529657-0000 ..	COMPRESSION SPRING	103, 105
529659-0000 ..	COMPRESSION SPRING	103, 105
529895-0000 ..	PIPE	103, 105
529908-0000 ..	WASHER	103, 105
529910-0000 ..	THRUST WASHER	103, 105
529916-0000 ..	LATERAL BODY VALVE	103, 105
531737-0000 ..	GASKET	55, 57
532007-0201 ..	PLUNGER	175, 207
532007-0202 ..	PLUNGER	175, 207
532010-0101 ..	TRANSMISSION RAIL	175, 207
532010-0102 ..	TRANSMISSION RAIL	175, 207
532011-0100 ..	PRESSURE JAW	175, 207
532118-0000 ..	CLAMP RING	97
532157-0101 ..	HYDRAULIC SYSTEM SIDE	175, 207
532160-0301 ..	HYDRAULIC SYSTEM	239
532205-0000 ..	LID	351
532206-0000 ..	GASKET	351
532208-0000 ..	SHAFT	439
532209-0000 ..	SHEET	439
532210-0101 ..	PEROXIDE CONTAINER TROLLEY	429
532211-0000 ..	DOWEL	439
532655-0000 ..	CAUTION SIGN	415, 431
533404-0000 ..	FLAP	201, 203, 233, 235
534725-0000 ..	BRACKET	341
534726-0000 ..	MOUNTING SHEET	341
534727-0000 ..	SHAFT	341
534728-0000 ..	TOOTHED PULLEY	315, 317, 341
534730-0202 ..	EMERGENCY STOP	287
535051-0201 ..	ANGLE ENCODER	297, 299
535052-0101 ..	ADJUSTER	297, 299
535083-0000 ..	BRACKET OIL BRUSHES	347
535084-0000 ..	BRACKET OIL BRUSH	347
535500-0000 ..	BRACKET	143, 145, 169, 171
535698-0000 ..	GASKET	55, 57
536535-0301 ..	MACHINE BODY SIDE	123
536535-0302 ..	MACHINE BODY SIDE	149
536536-0201 ..	MACH. BODY PRESSURE SIDE	175
536536-0202 ..	MACH. BODY PRESSURE SIDE	207
536537-0201 ..	CENTRAL LUBRICATION	175, 207
536538-0201 ..	CENTRALLUBR. HEATINGSIDE	123, 149
536539-0303 ..	MACHINE BODY	239
536918-0000 ..	CURVE ARM GUIDE	331
536919-0000 ..	CURVE ARM	331
536920-0000 ..	SETTING SCREW	331
536921-0000 ..	CURVE HUB	331
536922-0000 ..	SPACER	331
536923-0000 ..	SPACER DISC	331
536924-0000 ..	SPACER	331
536945-0400 ..	CUTTING DEVICE	297, 299
536947-0201 ..	CENTRAL LUBRICATION	297, 299
537961-0300 ..	HYDRAULIC SYSTEM	275
538740-0004 ..	SPACER	301, 303
540306-0001 ..	COMPONENTS WITHOUT TP-NO	343
540307-0000 ..	PRINTED CIRCUIT BOARD	343
540827-0000 ..	BRACKET	61
541032-0000 ..	ROLLER CONVEYOR	185, 187, 217, 219
541036-0000 ..	LINK	189, 191, 221, 223
541164-0201 ..	CLAMP RING	91
541165-0000 ..	WASHER	97, 99
541242-0000 ..	RUBBER HOLDER	201, 203, 233, 235
541243-0000 ..	DOLLY	201, 203, 233, 235
541666-0000 ..	CASING	293
541682-0000 ..	CANTILEVER	333
541683-0000 ..	MOTOR SHELF	333
541740-0000 ..	ANGLE	333
541977-0000 ..	CRANK	333
541978-0000 ..	FLANGED SHAFT	333
541979-0000 ..	SLIDER	333
541986-0000 ..	SPACER	333
541996-0000 ..	SHEET	333
542028-0000 ..	AIR GAP DISTANCE	293
542029-0000 ..	COIL CORE SHEET	293
542031-0000 ..	COIL FORMER: SECTION	293
542039-0000 ..	COIL FORMER: CYLINDER	293

Part No	Description	Page No
542040-0000 ..	CONNECTION CABLE	293
542041-0000 ..	INSIDE CONNECTION CABLE	293
542223-0000 ..	BRACKET RIGHT	189, 221
542224-0000 ..	BRACKET LEFT	191, 223
542225-0000 ..	SHAFT	189, 191, 221, 223
542226-0101 ..	TRANSMISSION RAIL	175, 207
542226-0102 ..	TRANSMISSION RAIL	175, 207
542229-0000 ..	CURVE	177, 209
542230-0000 ..	CURVE	125, 151
542596-0101 ..	PLUG	379
542756-0101 ..	EL.CONNECTION BOX	333
542811-0202 ..	MOTOR CRADLE	297, 299
543494-0000 ..	COIL HOLDER	241, 243
543501-0000 ..	ROLLER PLATE	177, 185, 187, 209, 217, 219
543502-0000 ..	CONNECTION	185, 187, 217, 219
543507-0000 ..	SHAFT	189, 191, 221, 223
543509-0000 ..	ROLL	143, 145, 169, 171, 201, 203, 233, 235, 417, 419
543511-0000 ..	ADJUSTMENT SLEEVE	125, 151, 177, 209
543512-0000 ..	ADJUSTMENT SLEEVE	125, 151, 177, 209
543513-0000 ..	WASHER	125, 151, 177, 209
543517-0000 ..	TRANSMISSION RAIL	137, 139, 163, 165
543518-0000 ..	TRANSMISSION RAIL	189, 191, 221, 223
543692-0000 ..	CHECKER PLATE	301, 303
544061-0201 ..	JIG	429
544062-0000 ..	RULER	435
544065-0000 ..	SHAFT	435
544066-0000 ..	SHAFT	435
544067-0000 ..	SHAFT	435
544533-0000 ..	PLASTIC PEHD 21172-10	403
544536-0110 ..	SET OF SIGNS TCA	397
544569-0002 ..	RULER	417, 419
544569-0003 ..	RULER	201, 203, 233, 235, 417, 419
544569-0004 ..	RULER	417, 419
544569-0005 ..	RULER	417, 419
544569-0006 ..	RULER	417, 419
544750-0000 ..	HOLDER	267
544751-0000 ..	LID	301, 303
544906-0000 ..	SOLENOID VALVE	359
544996-0000 ..	SPREADER NOZZLE	61
545818-0000 ..	HOLDER FOR SIGN	403
547508-0000 ..	HINGE	249, 251, 253, 255
547509-0000 ..	FRAME	249, 251, 253, 255
547510-0000 ..	DOOR	249, 251, 253, 255
547516-0000 ..	ROD	39
547517-0000 ..	TEFLON PIPE	39, 417, 419
547655-0000 ..	PLATE	249, 251, 253, 255
547888-0000 ..	CANTILEVER	269, 271
547960-0000 ..	BRACKET	241, 243
548468-0201 ..	MACHINEBODY DOOR	239
548468-0202 ..	MACHINEBODY DOOR	239
548468-0203 ..	MACHINEBODY DOOR	239
548468-0204 ..	MACHINEBODY DOOR	239
548763-0000 ..	PROTECTION	375
548764-0000 ..	FASTENING BRACKET	375
548766-0000 ..	PLATE	375
548770-0007 ..	COAXIAL CABLE L=3000 MM	493, 495, 497, 499, 501, 503, 505, 507
550060-0201 ..	STERILIZATION BATH	21
550193-0000 ..	PIN	143, 145, 169, 171, 201, 203, 233, 235, 417, 419
550302-0000 ..	HOLDER	249, 251, 253, 255
550313-0000 ..	SPACER	249, 251, 253, 255
551613-0000 ..	MACHINE PLATE TCA	403
551922-0000 ..	LABEL,POTENTIOMETER DESIGN CORR.	513
551930-0000 ..	FLOAT	293
552855-0000 ..	TUBE SUPPORT	313
552864-0000 ..	CANTILEVER	313
553113-0000 ..	ELECTRODE	51, 53
553114-0000 ..	SEALING WASHER	51, 53, 355
553115-0000 ..	WASHER	51, 53
554162-0000 ..	SCREW	97, 99
554218-0000 ..	LOCKING LUG	15
554855-0000 ..	SCREW	95
554856-0000 ..	WASHER	93, 95, 101
554857-0000 ..	SCREW	93, 95, 101
555062-0000 ..	MACHINE BODY SIDE	151
555063-0000 ..	MACHINE BODY SIDE	125
555064-0000 ..	HOLDER	241, 243
555067-0000 ..	MACH. BODY PRESSURE SIDE	177
555068-0000 ..	MACH. BODY PRESSURE SIDE	209
555069-0000 ..	HOLDER	125, 151, 177, 209
556109-0000 ..	CYLINDER HOUSING	95
556110-0000 ..	SPACER	95
556111-0000 ..	END SECTION	95
556112-0000 ..	COMPRESSION SPRING	95
556113-0000 ..	VALVE CONE	95, 101

Part No	Description	Page No
556114-0000 ..	RING	95
556115-0000 ..	WASHER	95
556116-0000 ..	PISTON	95
556117-0000 ..	PISTON ROD	95
556118-0000 ..	SEAL-RING (25)	93, 95, 101, 417, 419
556120-0000 ..	COMPRESSION SPRING	95
558230-0301 ..	TMCC CONTROLLER	493, 495, 497, 499, 501, 503, 505, 507
560678-0000 ..	PULLEY	333
560931-0000 ..	BRACKET	361, 363
561427-0000 ..	CONTAINER	415, 431
562853-0301 ..	UPPER HOUSE	21
562854-0000 ..	UPPER HOUSE	29, 31
562855-0000 ..	BEARING CONSOLE	29, 31
562856-0000 ..	LIFTING ARM	29, 31
562857-0000 ..	BENDING ROLLER	29, 31
562858-0000 ..	INTERMEDIARY SECTION	29, 31
562859-0000 ..	BEARING HOUSING	29, 31
562860-0000 ..	INTERMEDIARY SECTION	29, 31
562861-0000 ..	BEARING HOUSING	29, 31
562862-0000 ..	BEARING COVER	29, 31
562863-0000 ..	PIVOT PIN	29, 31
562864-0000 ..	JUNCTION SLEEVE	29, 31
562865-0000 ..	BEARING COVER	29, 31
562867-0000 ..	BENDING ROLLER	29, 31
562868-0201 ..	AIR SUPER-HEATER	55, 57
562869-0000 ..	TUBE	59
562870-0000 ..	MANTLE	59
562872-0000 ..	BRACKET	351, 387
562873-0000 ..	SEAL	51, 53
562874-0000 ..	LID	51, 53
562875-0000 ..	ECCENTRIC	51, 53
562876-0000 ..	HATCH	351
562877-0000 ..	BENDING ROLLER	51, 53
562878-0000 ..	LID	351
562879-0000 ..	BRACKET	87, 89
562880-0000 ..	HINGE FLANGE	387
562881-0000 ..	GASKET	51, 53
562882-0000 ..	LOCKING CIRCLIP	51, 53
562883-0000 ..	LID	51, 53
562887-0301 ..	PLATFORM	239
562888-0000 ..	PLATFORM	269, 271
562889-0000 ..	CHECKER PLATE	269, 271
562890-0000 ..	CHECKER PLATE	269, 271
562891-0000 ..	PLATE	241, 243
562892-0000 ..	RAILING L	269, 271
562893-0000 ..	RAILING R	269, 271
562894-0200 ..	HEATING JAW	123, 149
562896-0000 ..	MOUNTING SHEET	143, 145, 169, 171
562898-0000 ..	BUSHING	143, 145, 169, 171
562899-0000 ..	SCREW	143, 145, 169, 171
563400-0101 ..	LOWER FORMING RING	21
563401-0000 ..	HOLDER	37
563402-0000 ..	LOCK PLATE	37
563403-0000 ..	ROLL	37, 417, 419
563408-0101 ..	UPPER FORMING RING	21
563409-0000 ..	BRACKET	35
563410-0000 ..	PLATE	35
563411-0000 ..	ANGLE BRACKET	35
563412-0000 ..	ROLLER	35
563413-0000 ..	ROLLER	35
563414-0000 ..	ROLLER	35
563415-0000 ..	LOCK PLATE	35
563426-0000 ..	SPACER	35
563427-0000 ..	TRIMMING ROLLER PLUS	417, 419
563428-0000 ..	TRIMMING ROLLER MINUS	417, 419
563430-0000 ..	FRAME	351
563431-0000 ..	HOLDER	353
563432-0000 ..	COVERING PLATE	351
563433-0000 ..	ANGLE BRACKET	23
563434-0201 ..	VALVE PANEL	351
563435-0301 ..	PEROXIDE UNIT INKL, EL	297, 299
563436-0000 ..	SEALING RING	23
563437-0000 ..	RING	23
563438-0000 ..	NUT	23
563441-0000 ..	LID	359
563442-0000 ..	COVERING PLATE	351
563443-0000 ..	CONTAINER	355
563444-0000 ..	LID	355
563445-0000 ..	ATTACHMENT	355
563446-0000 ..	ATTACHMENT	355
563447-0000 ..	PEROXIDE PIPE	359
563448-0000 ..	PEROXIDE PIPE	355
563449-0000 ..	PEROXIDE PIPE	359
563450-0201 ..	MIXING TANK	351

Part No	Description	Page No
565210-0000 ..	BRACKET	483
565250-0000 ..	WASHER	415, 431
565251-0000 ..	VALVE	415, 431
566111-0101 ..	FILLING PIPE	21
566112-0000 ..	FILLING PIPE	41
566114-0000 ..	LOCKING FINGER	41
566115-0000 ..	PRODUCT PIPE	87, 89
566116-0401 ..	SUPERSTRUCTURE	21
566117-0000 ..	FASTENING PLATE	41
566118-0000 ..	SCREW	41
566119-0000 ..	VALVE BRACKET	87, 89
566120-0000 ..	DOOR	375
566121-0000 ..	SPACER	87, 89
566123-0000 ..	BRACKET	87, 89
566124-0000 ..	BRACKET	87, 89
566125-0000 ..	RING	35
566126-0101 ..	JIG	429
566127-0000 ..	PLASTIC COVER	387
566128-0000 ..	CATALYZER	79
566129-0000 ..	GUARD PLATE	375
566130-0301 ..	STERILE AIR SYSTEM	21
566131-0000 ..	AIR PIPE	55, 57
566132-0000 ..	PIPE BEND	55, 57
566133-0000 ..	SPRAY PIPE	55, 57
566134-0000 ..	PIPE HOLDER	55, 57
566135-0000 ..	PIPE BEND	55, 57
566136-0000 ..	AIR PIPE	55, 57
566137-0000 ..	AIR PIPE	55, 57
566138-0000 ..	SPACER	55, 57
566139-0000 ..	AIR PIPE	55, 57
566140-0000 ..	INTERMEDIATE PIPE	87, 89
566141-0000 ..	HOLDER	55, 57
566142-0000 ..	PIPE	55, 57
566143-0201 ..	METERING DEVICE	351
566145-0000 ..	PEROXIDE PIPE	355
566146-0000 ..	WETTING PIPE	357
566147-0000 ..	SAFETY VALVE	351, 355
566148-0001 ..	ELECTRODE	355
566148-0002 ..	ELECTRODE	355
566149-0201 ..	SPRAY SYSTEM	351
566151-0000 ..	ELEMENTKEEPER	73, 75
566152-0000 ..	HEATING ELEMENT	73, 75, 417, 419
566153-0000 ..	PROTECTIVE COVER	387
566154-0000 ..	CONNECTION	73, 75
566155-0000 ..	INSULATING RAIL	73, 75
566156-0000 ..	INSULATING RAIL	73, 75
566157-0000 ..	CONNECTION	73, 75
566158-0000 ..	CONNECTION	73, 75
566159-0101 ..	SPREADER NOZZLE	55, 57
566160-0301 ..	VALVE GROUP	21
566352-0000 ..	VALVE HOUSING	91
566353-0000 ..	STEAM HOUSE	91
566354-0000 ..	END SEKTION CYLINDER	93, 101
566355-0000 ..	AIR CYLINDER	93, 101
566356-0000 ..	SEAL RING	91, 417, 419
566357-0000 ..	VALVE CONE	93
566358-0000 ..	COUNTER PLATE	93
566359-0000 ..	PISTON ROD	93
566360-0000 ..	PISTON	93, 101
566361-0000 ..	PISTON ROD	101
566362-0000 ..	MOUNTING SHEET	87, 89
566363-0000 ..	SEAL-RING HOLDER	95
566367-0000 ..	SCREW	93, 101
566368-0000 ..	SPRING	93, 101
566369-0000 ..	STOP SLEEVE	101
566370-0000 ..	LUG	93, 101
566371-0101 ..	C-CYLINDER 38/25	91
566372-0101 ..	B-CYLINDER 38/25	91
566373-0101 ..	AP-VALVE 38/25	87, 89
566374-0101 ..	A-CYLINDER 25	91
566375-0000 ..	CLAMP RING	99
566376-0101 ..	CLAMP RING	91
566478-0000 ..	SPINDLE	409
566479-0000 ..	HOLDER	409
566480-0101 ..	TOOL	405
566483-0000 ..	SPACER	93, 101
566485-0000 ..	VALVE DISC	93
567031-0000 ..	HOOD	469
567032-0000 ..	HOLDER	469
567070-0001 ..	ELECTRODE	361, 363
567070-0010 ..	ELECTRODE	361
567070-0012 ..	ELECTRODE	363
567070-0013 ..	ELECTRODE	87, 89
567113-0101 ..	CONNECTION BOX	21

Part No	Description	Page No
567115-0000 ..	CONNECTION BOX	85
567116-0000 ..	RAIL	85
567118-0000 ..	SCOOP	391
567119-0000 ..	BRACKET	387
567120-0000 ..	JIG	437
567121-0000 ..	BRACKET	437
567122-0000 ..	BRACKET	443
567189-0101 ..	ELECTRODE	359
567189-0110 ..	ELECTRODE	359
567190-0201 ..	STERILIZING HOUSE	21
567191-0000 ..	INTERMEDIATE PIPE	67
567192-0000 ..	BOX	67
567193-0000 ..	LID	67
567194-0000 ..	HEAT GUARD	67
567195-0000 ..	HEAT GUARD FRONT	67
567196-0000 ..	GASKET	67
567197-0000 ..	FLOW METER	355
567199-0000 ..	HEAT GUARD REAR	67
567201-0000 ..	HEAT GUARD FRONT	67
567206-0000 ..	SPACER	67
567207-0000 ..	SPACER	35
567212-0000 ..	CHECKER PLATE	301, 303
567213-0000 ..	SHEET	301, 303
567214-0000 ..	CALENDER ROLLER	77
567215-0000 ..	STOP	29, 31
567218-0101 ..	LADDER	239
567249-0201 ..	GROUP BENDINGROLLER	67
567251-0000 ..	CALENDER ROLLER	77
567252-0000 ..	BEARING CONSOLE	77
567253-0000 ..	ARM	77
567254-0000 ..	ARM	77
567255-0000 ..	ECCENTRIC	77
567256-0000 ..	LEVER	77
567257-0000 ..	BEARING CONSOLE	77
567259-0000 ..	PROTECTION	301, 303
567260-0000 ..	SHAFT	77
567261-0000 ..	SHAFT	77
567871-0000 ..	TRANSF. 1 PH;2,5 KVA	493, 495, 497, 499, 501, 503, 505, 507
568100-0000 ..	CABLE DUCT	287
568102-0000 ..	CONTROL PANEL	289
568103-0000 ..	GUIDE BAR R	265
568104-0000 ..	GUIDE BAR L	265
568105-0201 ..	CABLE DUCT	239
568107-0200 ..	CONTACT UNIT	133, 159
568112-0301 ..	AIR FILTER GROUP	21
568114-0000 ..	DRAINING PIPE	359
568115-0000 ..	PEROXIDE PIPE	359
568116-0000 ..	CUP SPRING	351, 355
568117-0000 ..	PIPE	79
568118-0301 ..	PNEUMATIC PANEL	21
568119-0000 ..	COVER	115
568120-0000 ..	MOUNTING SHEET	115
568121-0000 ..	BRACKET	79
568122-0101 ..	OUTLET AIR SYSTEM	21
568125-0000 ..	FASTENING IRON	387
568126-0000 ..	LADDER	283
568127-0000 ..	COVER PLATE L	269, 271
568128-0000 ..	COVER PLATE R	269, 271
568129-0000 ..	COVERING PLATE	351
568131-0000 ..	DRAIN PIPE	355
568132-0000 ..	PIPE	81, 83
568133-0000 ..	ATTACHMENT	55, 57
568134-0000 ..	PEROXIDE PIPE	355
568135-0000 ..	WETTING PIPE	357
568136-0000 ..	PEROXIDE PIPE	355
568137-0000 ..	WETTING PIPE	357
568138-0000 ..	PEROXIDE PIPE	355
568139-0000 ..	ANGLE IRON	487
568140-0000 ..	COVERING PLATE	269, 271
568141-0000 ..	COVERING PLATE	269, 271
568142-0000 ..	COVERING PLATE	269, 271
568143-0101 ..	PLATFORM	239
568144-0000 ..	SHEET	281
568145-0000 ..	SIDE PIECE R	265
568146-0000 ..	SIDE PIECE L	265
568147-0000 ..	SPACER PIECE	265
568148-0000 ..	BRACKET	23
568149-0101 ..	LADDER	281
568524-0301 ..	STRIP MAGAZINE	453
569580-0201 ..	STEAM SYSTEM	21
569582-0000 ..	STEAM PIPE	81, 83
569583-0000 ..	PIPE	81, 83
569584-0000 ..	PIPE	81, 83
569585-0000 ..	PIPE BEND	81, 83

Part No	Description	Page No
569586-0000 ..	THERMO CONNECTION	81, 83
569587-0000 ..	PIPE	81, 83
569589-0000 ..	HOLDER	135, 161
569590-0101 ..	CABLE DUCT	21
569591-0000 ..	CABLE DUCT	107
569592-0000 ..	LID	107
569593-0000 ..	DAMPER	29, 31
569594-0000 ..	BRACKET	387
569595-0000 ..	GLAND FITTING	81, 83
569596-0000 ..	PIPE	81, 83
569597-0000 ..	CONNECTION BOX	33
569599-0000 ..	PIPE	109, 111
569600-0000 ..	CRAMP	81, 83
569602-0101 ..	CLEANING EQUIPMENT	397
569603-0000 ..	CLEANING PIPE	401
569604-0000 ..	SCREW	401
569605-0000 ..	GASKET	401
569606-0000 ..	RING	241, 243
569608-0000 ..	DOOR	351
569609-0000 ..	PROTECTION PLATE	487
569610-0000 ..	PROTECTION PLATE	487
569611-0000 ..	PEROXIDE PIPE	117
569612-0000 ..	RETURN PIPE	117
569613-0000 ..	PEROXIDE PIPE	117
569614-0000 ..	LOCK STUD	461
569615-0000 ..	PROTECTION PLATE	87, 89
569616-0101 ..	CONNECTION	351
569617-0000 ..	PIPE	353
569618-0000 ..	STEERING	365
569621-0000 ..	COVER R	269, 271
569622-0000 ..	COVER L	269, 271
569624-0000 ..	FRAME	109, 111
569625-0000 ..	INTERMEDIATE PIPE	55, 57
569626-0101 ..	PIPE SYSTEM	21
569627-0000 ..	BRACKET	487
569628-0301 ..	APPLIANCE BOX	239
569629-0000 ..	RAIL	267
569630-0000 ..	PROTECTION	29, 31
570801-0301 ..	FILTER GROUP	109, 111
570802-0000 ..	LOCKING CATCH	461
570808-0101 ..	DOOR	21
570809-0101 ..	DOOR	21
570810-0000 ..	SLIDE RAIL	73, 75
570811-0101 ..	CONNECTION BOX	29, 31
570812-0000 ..	TOUCH GUARD	23
570814-0201 ..	PNEUMATIC SYSTEM	21
570816-0000 ..	SPREADER	23
570817-0000 ..	HOLDER	351
570818-0000 ..	SPREADER	67
570819-0000 ..	BRACKET	29, 31
570820-0000 ..	CABLE DUCT	87, 89
570822-0000 ..	SPRING	43
570823-0101 ..	PRESSURE ROLLER	41
570824-0000 ..	CLEANING PIPE	401
570825-0101 ..	TOOL	397
570826-0101 ..	INSTALLATION MATERIAL	397
570828-0000 ..	CATCH	281
570830-0000 ..	COVERING PLATE	269, 271
570831-0100 ..	START-UP KIT	397
570833-0000 ..	LIFTING UNIT	421, 423
570834-0000 ..	CRAMP	421, 423
570835-0000 ..	GASKET	355
570836-0101 ..	LIFTING UNIT	397
570837-0000 ..	PIPE	81, 83
570838-0000 ..	TOUCH GUARD	109, 111
570839-0000 ..	PROTECTION	29, 31
570840-0000 ..	BRACKET	487
570841-0000 ..	BRACKET	69, 71
570842-0000 ..	FASTENING IRON	351, 375, 487
570843-0000 ..	ELEVATOR SIDE L	373, 383, 385
570844-0000 ..	GUIDE FLANGE	365
570845-0000 ..	ELEVATOR SIDE R	373, 383, 385
570846-0000 ..	BRACKET	69, 71
570847-0000 ..	JOINTED ARM	69, 71
570850-0000 ..	SUPPORT	69, 71
572305-0000 ..	BRACKET	265
572816-0000 ..	FORK	461
573164-0000 ..	HATCH	51, 53
573165-0202 ..	TOUCH GUARD SA4	453
573166-0000 ..	COOLING PIPE COIL	117
573298-0201 ..	PRESSURE ROLLER	453
573524-0000 ..	BRACKET	375
573525-0000 ..	HINGE	375
573526-0000 ..	HINGE	375

Part No	Description	Page No
573527-0000 ..	BRACKET	375
573528-0000 ..	FRAME	87, 89
573606-0000 ..	PEROXIDE PIPE	117
573607-0000 ..	RETURN PIPE	117
573618-0000 ..	ARM	469
573631-0000 ..	AIR PIPE	55, 57
573632-0000 ..	AIR PIPE	55, 57
573635-0000 ..	STERILIZATION BATH	51, 53
573636-0000 ..	SHEET	51, 53
573637-0000 ..	GASKET	51, 53
574180-0000 ..	GLASS PANE	51, 53
574181-0000 ..	PEROXIDE PIPE	117
574183-0000 ..	PROTECTIVE CASING	87, 89
574224-0301 ..	ELEVATOR PROTECTION	373, 383, 385
574225-0301 ..	UPPER ELEVATOR PROTECTION	383, 385
574667-0000 ..	SPACER	455, 457
575620-0300 ..	DATING UNIT ELMOPRINT M40	475
575626-0000 ..	LOCKING PLATE M-40	477
575802-0000 ..	LINK	465
575803-0000 ..	SCREW	465
575804-0102 ..	PHOTOCELL BRACKET	483
575808-0000 ..	KNOB	485
576123-0000 ..	STRAND CABLE SIDE 2	135, 161
576124-0000 ..	STRAND CABLE SIDE 1	135, 161
576134-0101 ..	TUBE SUPPORT	305
576144-0000 ..	STOP LUG	201, 203, 233, 235
576147-0000 ..	INDUCTOR	143, 145, 169, 171, 417, 419
576148-0000 ..	COVER PLATE	355
576149-0000 ..	GUIDE STUD	35
577540-0000 ..	SCREW HOLDER	309, 311
577927-0000 ..	CONNECTION BLOCK	115
578225-0000 ..	BRACKET	351
578635-0000 ..	STAIR	265
578768-0000 ..	TEARING BAR	15
578874-0000 ..	HF BRAIDED WIRE 1,6 MM2	493, 495, 497, 499, 501, 503, 505, 507
580178-0201 ..	CONTACT UNIT	123, 149
580310-0000 ..	CONTACT RAIL R	135, 161
580311-0000 ..	CONTACT RAIL L	135, 161
580312-0000 ..	MOUNTING BAR	133, 159
580313-0000 ..	BRACKET	135, 161
580856-0000 ..	MACHINE SIGN CE	449
581003-0000 ..	MACHINE PLATE	449
581589-0000 ..	BENDING ROLLER	77
581590-0000 ..	SHAFT	77
581591-0000 ..	BRACKET	15
581592-0000 ..	COVER PLATE	301, 303
581618-0000 ..	FASTENING PLATE	469
581626-0000 ..	SCREW	485
581627-0000 ..	TYPE HOLDER	477
581629-0000 ..	HOT FOIL PRINTER	477
581632-0000 ..	RULING GUIDE	379
581633-0000 ..	PROTECTIVE COVER	379
581634-0000 ..	PROTECTION PLATE	379
581635-0101 ..	TILTING TRAY	369, 371
581636-0000 ..	CHUTE	377
581637-0101 ..	PROTECTION FOR BAG PACKER	369, 371
581638-0000 ..	BRACKET	377
581639-0000 ..	BEARING PLATE	377
581640-0000 ..	BEARING PLATE	377
581641-0000 ..	CYLINDER BRACKET	377
581642-0000 ..	SPACER	377
581643-0000 ..	AXLE PIN	377
581644-0101 ..	HEATING BLOCK COMPL. M-40	477
581645-0000 ..	HEATING BLOCK	479
581646-0000 ..	HEATING CARTRIDGE	479
581647-0000 ..	TEMPERATURE SENSOR	479
593682-0000 ..	MACHINE SIGN EEA(CE-MARK)	449
594700-0100 ..	FILLING PIPE	41
594701-0000 ..	PIPE	45
594702-0000 ..	STEERING	45
594703-0000 ..	SHEAR PIN	45
594704-0000 ..	FLOAT	45
594707-0100 ..	PROTECTIVE TUBE	23
594708-0000 ..	ATTACHMENT	25
594710-0000 ..	HOSE	25
594711-0100 ..	TUBE SUPPORT	23
594712-0000 ..	ARM	27
594713-0000 ..	BRACKET	27
594714-0000 ..	ROLL	27
594715-0000 ..	SHAFT	27
594716-0000 ..	NOZZLE	467
594717-0000 ..	STEERING	467
594719-0000 ..	HEAT GUARD	467
594720-0000 ..	HEAT GUARD	467

Part No	Description	Page No
594722-0000 ..	CONNECTION BOX	291
594723-0100 ..	CONNECTION BOX	287
594725-0000 ..	MACHINE BODY	241, 243
594729-0000 ..	NOTCH KNIFE (INDO)	307, 417, 419
594730-0000 ..	NOTCH KNIFE (INDO)	307, 417, 419
594731-0000 ..	DOLLY	201, 203, 233, 235, 417, 419
594732-0000 ..	TEFLON CLOTH (TILL MVS MASKIN)	201, 203, 233, 235, 417, 419
594734-0000 ..	SHAFT	29, 31
594735-0000 ..	NOTCH KNIFE SIDE 3 (FRAN)	307, 417, 419
594736-0000 ..	NOTCH KNIFE SIDE 4 (FRAN)	307, 417, 419
594766-0000 ..	BRACKET	285
594768-0000 ..	GASKET	67
594772-0000 ..	NUT WASHER	249, 251, 253, 255
594773-0000 ..	SPACER SLEEVE	13
736286-0000 ..	FLANGE	103, 105
736288-0000 ..	GASKET	103, 105
736508-0001 ..	MEMBRANE	103, 105, 417, 419
736514-0000 ..	SHOCK ABSORBER	103, 105, 417, 419
736555-0000 ..	LATERAL BODY	103, 105
736619-0000 ..	WASHER	103, 105
736620-0301 ..	CONSTANT FLOW VALVE	87, 89
736621-0000 ..	HOLDER	103, 105
736622-0000 ..	BODY	103, 105
736623-0000 ..	CAM	103, 105
736624-0000 ..	SPINDLE	103, 105
736625-0000 ..	SHAFT	103, 105
736626-0000 ..	FORK	103, 105
736627-0000 ..	SCREW	103, 105
736629-0000 ..	COMPRESSION SPRING	103, 105
736630-0000 ..	MOTOR	103, 105
736691-0000 ..	VALVE HOUSING	103, 105
736715-0000 ..	DOSING PISTON	103, 105
736716-0000 ..	DOSING PISTON	103, 105
736717-0000 ..	DOSING PISTON	103, 105
751484-0000 ..	CLAMPING RING	265, 269, 271
751485-0000 ..	SCREW	265, 269, 271
752186-0003 ..	SHAFT	35, 37
752576-0000 ..	CONTAINER	359
752810-0000 ..	METERING DEVICE	351
777510-0101 ..	SCISSORS	405
779905-0101 ..	INSPECTION LAMP	405
794246-0000 ..	DIAPHRAGM	95, 417, 419
795930-0000 ..	TIE ROD	103, 105
795931-0000 ..	CLOSING DEVICE	103, 105
915996-0000 ..	LEAF SPRING	365
919706-0000 ..	ATTACHMENT	365
924352-0000 ..	BRACKET	87, 89
924354-0000 ..	CLAMP	87, 89
924361-0000 ..	BODY CENTRAL VALVE	103, 105
924518-0000 ..	GASKET	87, 89
924519-0000 ..	GASKET	87, 89
924703-0000 ..	BRACKET	87, 89
925091-0000 ..	DIAPHRAGM	103, 105, 417, 419
927422-0003 ..	O.RING 24.2X3 SILICON	415, 431
978531-0000 ..	BRACKET	23
978532-0000 ..	BRACKET	29, 31
978542-0000 ..	FRAME	47
978543-0000 ..	FRAME	49
979548-0000 ..	MACHINE PLATE	449
1110377-0001 .	DOLLY	201, 203, 233, 235, 417, 419
1175042-0000 .	RUBBER HOLDER	201, 203, 233, 235
1175043-0000 .	PULLEY	319, 323
1175086-0000 .	BEARING HOUSING	51, 53
1175087-0000 .	SUPPORT ARM	351
1175088-0000 .	PROTECTION	241, 243
1175097-0000 .	LABEL HOLDER	23
1175098-0000 .	INDUCTOR	143, 145, 169, 171, 417, 419
1175099-0000 .	HEAT GUARD	487
1175111-0000 .	BEARING	51, 53
1175112-0000 .	GUIDE FLANGE	351
1175113-0000 .	BENDING ROLLER	51, 53
1175114-0101 .	SIGN PLACEMENT DWG.TCA/65	447
1175118-0000 .	CONTAINER	357
1175119-0000 .	FLOAT	357
1175122-0000 .	PROTECTION	301, 303
1175125-0000 .	FRAME SUPERSTRUCTURE	433
1175151-0101 .	WARNING BEACON	269, 271
1175241-0101 .	FRAME SUPERSTRUCTURE	429
1175242-0000 .	ANGLE STRUT	109, 111
1175288-0000 .	VOLUME FLAP	143, 145, 169, 171
1175361-0101 .	ELEMENT	69, 71
1175362-0101 .	ELEMENT GROUP	67
1175393-0101 .	CABLE DUCT	239
1175666-0000 .	CONVEYOR FRAME	447

Part No	Description	Page No
1175684-0000	.SHIELD PLATE	267
1175811-0000	.COVERING PLATE	269, 271
1175838-0000	.VALVE SPINDLE	81, 83
1175850-0000	.COVERING PLATE	269, 271
1175851-0000	.PRESSURE ARM	15
1175854-0000	.CABLE DUCT	285
1175855-0000	.CONTROL PANEL	285
1175860-0000	.CANTILEVER	81, 83
1175888-0000	.BRACKET	109, 111
1175889-0000	.BRACKET	109, 111
1175890-0000	.COVERING PLATE	269, 271
1345130-0101	.HEATING UNIT	21
1345149-0000	.NOZZLE	39
1345151-0000	.CONNECTION PIPE	55, 57
1345152-0000	.NOZZLE BRACKET	39
1345153-0000	.HOLDER	39
1345154-0000	.FLAP	39
1345155-0101	.SPROCKET	123
1345155-0102	.SPROCKET	149, 175, 207
1345156-0000	.SCREW	39
1345157-0000	.PIN	39
1345158-0000	.SPRING 7111 TYPE D	39, 417, 419
1345160-0101	.LINK CHAIN WHEEL	123, 149, 175, 207
1345161-0000	.PIN	39
1345162-0000	.BUSSNING	39
1345163-0000	.BEARING HOLDER	39
1345164-0000	.ARM	39
1345165-0101	.CHAIN UNIT	123, 149, 175, 207
1345166-0000	.PIVOT ARM	39
1345167-0000	.PROTECTIVE CLOTH	39, 417, 419
1345199-0000	.WIRE 3573	39, 417, 419
1345201-0000	.WIRE LOCK	39
1345202-0000	.SPROCKET	129, 155, 181, 213
1345203-0000	.SPROCKET	127, 153, 179, 211
1345204-0000	.HUB	127, 153, 179, 211
1345206-0000	.HUB	129, 155, 181, 213
1345207-0000	.SPROCKET	127, 153, 179, 211
1345208-0000	.SPROCKET	127
1345209-0000	.SHAFT	131, 157, 183, 215
1345211-0000	.PIN	131, 157, 183, 215
1345212-0000	.MOUNTING BLOCK	127, 153, 179, 211
1345216-0000	.BRACKET	247
1345217-0000	.BRACKET	247
1345262-0000	.CHAIN	131, 157, 183, 215
1350005-0101	.LIGHT FIXTURE	241, 243
1365455-0000	.CIRCUIT BOARD	513
1365921-0000	.GROUND TERMINAL	493, 495, 497, 499, 501, 503, 505, 507, 517
1365922-0000	.NEUTRAL TERMINAL	493, 495, 497, 499, 501, 503, 505, 507, 517
1365923-0000	.DISTR. TERMINAL24VDC	493, 495, 497, 499, 501, 503, 505, 507, 517
1365924-0000	.DISTR. TERMINAL220VAC	493, 495, 497, 499, 501, 503, 505, 507, 517
1365925-0000	.P.X001	513, 517
1365928-0000	.SIGN	517
1365933-0000	.CONTROL PANEL DISPLAY	513
1483001-0000	.BRACKET	137, 139, 163, 165
1483002-0000	.SLIDING STRIP	137, 139, 163, 165, 417, 419
1483003-0000	.SKRUV	137, 139, 163, 165
1483010-0101	.SUPPORT SEGMENT	123, 149
1483010-0102	.SUPPORT SEGMENT	123, 149
1483019-0000	.PROTECTIVE COVER	487
1483020-0100	.DOUBLE DATING UNIT M40	453
1483021-0000	.HOLDER	487
1483022-0000	.HOLDER	485
1483023-0000	.CLAMP HOLDER	485
1483024-0000	.MACHINE BODY, DOUBLE M-40	475
1483025-0101	.PHOTOCELL SENSOR DBL M-40	453
1483026-0000	.ELECTRICAL CABINET M-40	475
1483027-0000	.END SECTION	455, 457
1483028-0000	.END SECTION	455, 457
1483029-0000	.BRACKET	455, 457
1483030-0101	.CENTRAL LUBRICATION	297, 299
1483031-0000	.BRACKET	467
1483032-0000	.CRAMP	467
1483033-0000	.BOX	345
1483034-0000	.BRACKET	345
1483035-0200	.WHEEL	305
1483037-0000	.SPACER	305
1483038-0000	.BRACKET	257
1483039-0000	.COVERING PLATE	269, 271
1483042-0000	.DISTRIBUTOR	247, 417, 419
1483045-0101	.TUBE FLUSHING	241, 243
1483047-0000	.CONICAL GEAR	127, 153, 179, 211
1483048-0000	.CONICAL GEAR	127, 153, 179, 211
1483049-0000	.GEAR WHEEL	307, 311
1483051-0000	.GEAR WHEEL	307, 309

Part No	Description	Page No
1483056-0000	.HOLDER	141, 167
1483058-0000	.PULLEY	321, 323
1483059-0000	.COVERING PLATE	15
1483061-0101	.SEPARATION BLOCK	257
1483062-0101	.SEPARATION BLOCK	257
1483063-0101	.SEPARATION BLOCK	257
1483064-0101	.SEPARATION BLOCK	347
1483066-0000	.TABLE TOP PLATE	15
1483067-0000	.SPACER SLEEVE	339
1483068-0000	.SHAFT	339
1483069-0000	.AXLE SUPPORT	339
1483071-0000	.PILLAR	23
1483072-0000	.FASTENING IRON	373, 383, 385
1483073-0000	.BRACKET	305
1483114-0000	.ROLLER SHAFT	11
1483142-0000	.HOLDER	25
1483143-0000	.Z-KNIFE	307, 417, 419
1483144-0000	.Z-KNIFE	307, 417, 419
1483145-0101	.MANUALS	397
1483162-0000	.COVER	13
1483231-0000	.EDGE RAIL	481
1483232-0000	.EDGE RAIL	481
1483233-0000	.GASKET	481
1483234-0000	.TENSION SPRING	481
1483236-0000	.MAIN CYLINDER	481
1483237-0000	.EMBOSSING ANVIL	481
1483238-0000	.SHAFT	481
1483239-0000	.SHAFT	481
1483241-0000	.FEEDING ROLLER	481
1483242-0000	.PRESSURE ROLLER	481
1483243-0000	.GUIDE	481
1483244-0000	.BEARING	481
1483246-0000	.COMPRESSION SPRING	481
1483247-0000	.BRAKE DISC	481
1483248-0000	.ARM	481
1483249-0000	.BRAKE ARM	481
1483256-0000	.COMPRESSION SPRING	481
1483257-0000	.COUPLING	481
1483258-0000	.TYPE HOLDER	481
1483259-0000	.O-RING	481
1483260-0000	.O-RING	481
1483261-0000	.CUFF	481
1483262-0000	.CUFF	481
1483263-0000	.BUSHING	481
1483264-0000	.BUSHING	481
1483270-0100	.SPARE PARTS	475
1483271-0000	.TOOTHED WHEEL	481
1483272-0000	.SEAL	481
1483273-0000	.GASKET	481
1483274-0000	.CYLINDER SHELL	481
1483275-0000	.CUFF	481
1483276-0000	.GASKETS	481
1483277-0000	.CYLINDER	481
1520560-0000	.DOLLY	201, 203, 233, 235, 417, 419
2530411-0100	.HYDRAULIC VALVE	277
2537121-0000	.KNIFE	307, 417, 419
2551948-0000	.FLOAT	45
2573739-0000	.PRINTED CIRCUIT BOARD	481

Tetra Pak

SPC binder labels. 40 mm Full width *Note! This page is generated* **automatically.**
using the **variable definitions** *made in the* **front page** *file!!*

TCA/65
633251-0500
Issue: 2003-02-13 Doc No: SPC-85578-0102

TCA/65
633251-0500
Issue: 2003-02-13 Doc No: SPC-85578-0102

TCA/65
633251-0500
Issue: 2003-02-13 Doc No: SPC-85578-0102

TCA/65
633251-0500
Issue: 2003-02-13 Doc No: SPC-85578-0102

TCA/65
633251-0500
Issue: 2003-02-13 Doc No: SPC-85578-0102

TCA/65
633251-0500
Issue: 2003-02-13 Doc No: SPC-85578-0102

TCA/65
633251-0500
Issue: 2003-02-13 Doc No: SPC-85578-0102

TCA/65
633251-0500
Issue: 2003-02-13 Doc No: SPC-85578-0102

TCA/65
633251-0500
Issue: 2003-02-13 Doc No: SPC-85578-0102

TCA/65
633251-0500
Issue: 2003-02-13 Doc No: SPC-85578-0102

TCA/65
633251-0500
Issue: 2003-02-13 Doc No: SPC-85578-0102