Machine description

Machine Description Straw Applicator 30 TCA

General description

Straw Applicator 30 is used to attach drinking straws to Tetra Brik, Tetra Prisma, Tetra Wedge and Tetra Classic portion packages.

The capacity is 17 500 packages per hour.

This machine description is valid for Tetra Classic variant.

Brief functional description

Control system
The straw applicator is controlled by a Rockwell Automation control system. The applicator unit is driven by two servo motors.

HMI
The operator panel is a Rockwell Automation TPOP.

Feed
The packages are transported from the filling machine to the straw applicator on the infeed conveyor.

As the packages are fed into the machine they are aligned with the edge of the main conveyor.

The main conveyor transports the packages and the package support guides them through the straw applicator. After leaving the straw applicator the packages are further transported on the discharge conveyor.

Straw application
The ladder band is fed and cut and the foiled straws are applied to the package by the applicator unit.

The feed wheel rotates moving the ladder band to the cutting unit where the ladder band is cut into sections containing one foiled straw. The straw is then moved by the feed wheel to the application position where the straw is attached to the package by the squeezer. Hot melt is applied as a string on the packaged by the holt melt gun located before the application position.

By-pass mode
It is possible to run the Straw Applicator in by-pass mode by selecting a recipe in which no straw is applied.

Feed

The packages are transported from the filling machine by means of a conveyor.

On the conveyor before the straw applicator a package trap consisting of pair of photo cells and a pneumatic ejector. The package trap identifies and ejects packages with the wrong orientation.

In front of the machine is an external reject gate wich will send packages on the conveyor to waste in case of an unplanned stop of the straw applicator.

Infeed photocells
Mounted on the infeed a pair of photocells are located, which are actuated by the packages. Should they be actuated for too long, the straw applicator will give activate an alarm on the TPOP and stop the conveyor.

Main conveyor
The main conveyor has an elevated edge along one side. This edge act as a support for the packages and aligns them with the applicator unit.

Package support
The package support is running at the same speed as the main conveyor and keeps the packages steady on the conveyor.

The packages support can be moved away from the applicator unit by means of a leaver to simplify manual clearing of packages from the straw applicator.

Drive
The drive unit that drives the main conveyor, package support and infeed is located at the out feed of the straw applicator and powered by a frequency converter.

Drinking straw and straw magazine

Straw application

The applicator unit feeds the ladder band, cuts it and attaches the straws to the packages. It consists of the feed wheel, the cutting unit and the squeezer.

Photocells
When moving towards the application position the package will actuate a pair of photocells mounted on the package support. The signal from the photocells is used to control the start of hot melt application.

Straw detection
One sensor supervises movement of the ladder band and a second sensor is used to detect if a straw remains in the feedwheel after application position.

Feed wheel and cutting unit
The feed wheel indexes feeding the ladder band and the cutting unit enters a slot in the feed wheel to cut off one section of the ladder band. The drive for both feed wheel and cutting unit comes from the same servo motor.

Hot melt application
The hot melt gun applies the hot melt on the package in the shape of a string. The hot melt string can be adjusted in length and position.
The with of the string depends on the pressure of the hot melt. The pressure is adjusted on the hot melt unit.

The position of the hot melt string can be adjusted horizontally and vertically. The horizontal position is adjusted on the TPOP. The vertical position is adjusted by raising or lowering the gun block.

Squeezer
The Squeezer arms pushes the foiled straw out of the feed wheel and on to the package. As the package moves at a constant speed, the squeezer has to follow the package, at the same speed, and hold the straw while the hot melt solidifies. Since the string is flattened, and spread over a larger area, it will quickly solidify and the straw is firmly attached to the package.

Straw position
The position of the straw on the package can be adjusted.

The horizontal position of the straw is adjusted on the TPOP while the vertical position is adjusted mechanically by raising or lowering the whole applicator unit.

Drive
The applicator unit is driven by two servo motors.

One of them controls the feed wheel and the cutting unit by means of a toothed belt. The back and forth movement is controlled by an eccentric. A photocell is used as trigger pulse for hot melt application.

The other servo motor drives the squeezer arms through a small gearbox.

The two servo motors are synchronised when the squeezer arms pick the straw from the feed wheel (pick position). Proximity switches keep track of home positions.

Hot melt equipment

HMI

Applicator unit

SA 30 TCA

Applicator Unit

Applicator Wheel side

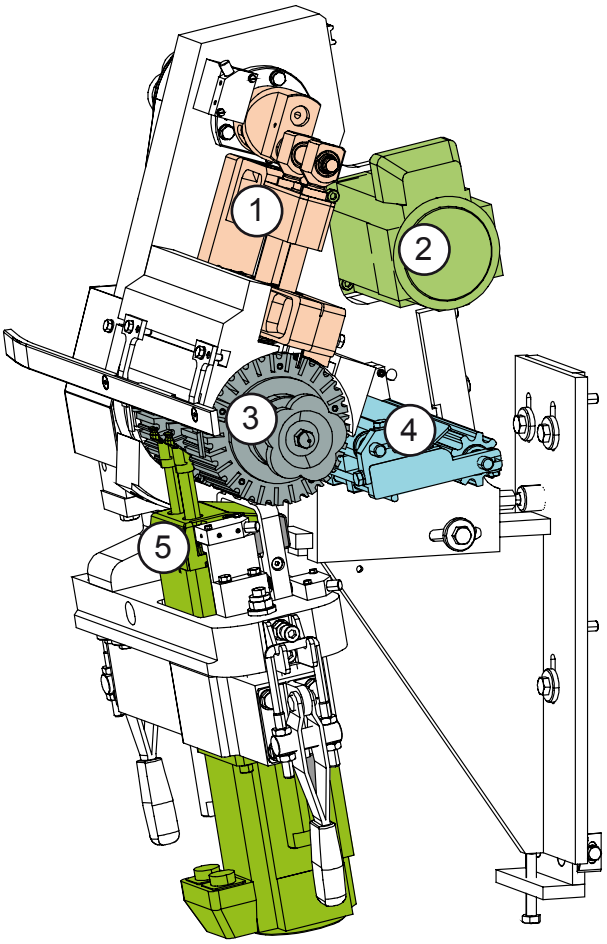

Drive Belt side

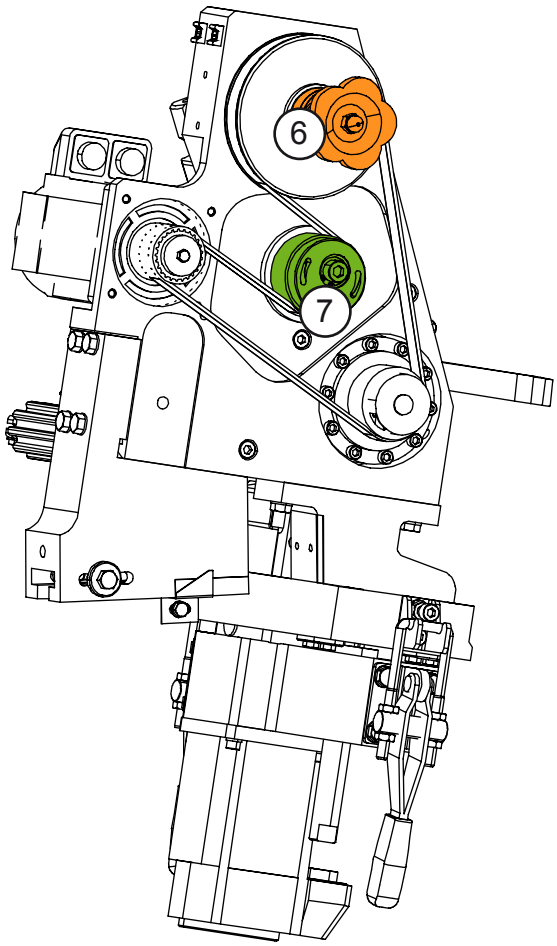

1. Cutting Unit
2. Applicator Unit Drive Motor
3. Feed Wheel
4. Ladder Band Guide
5. Squeezer
6. Cutting Unit Stellar knob
7. Belt Tensioner

Conveyor section

SA 30 TCA

Conveyor Section

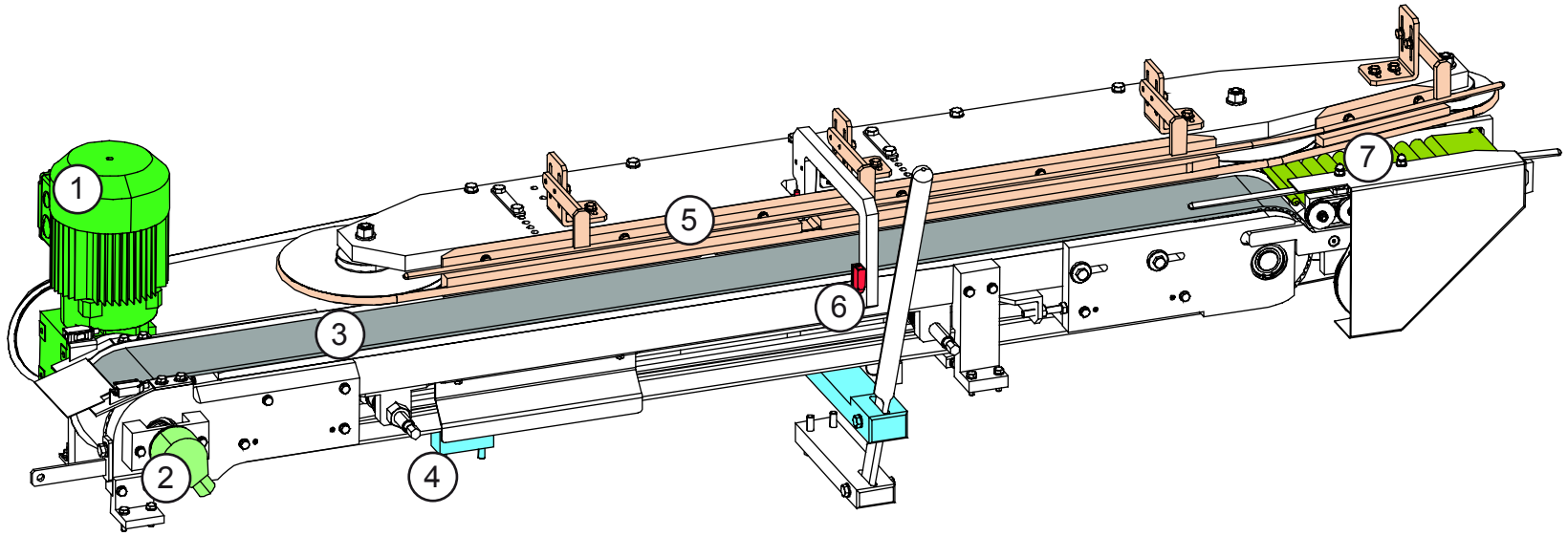

1. Drive Unit
2. Encoder
3. Conveyor
4. Adjustment plate
5. Package support
6. Photo Cell
7. Infeed

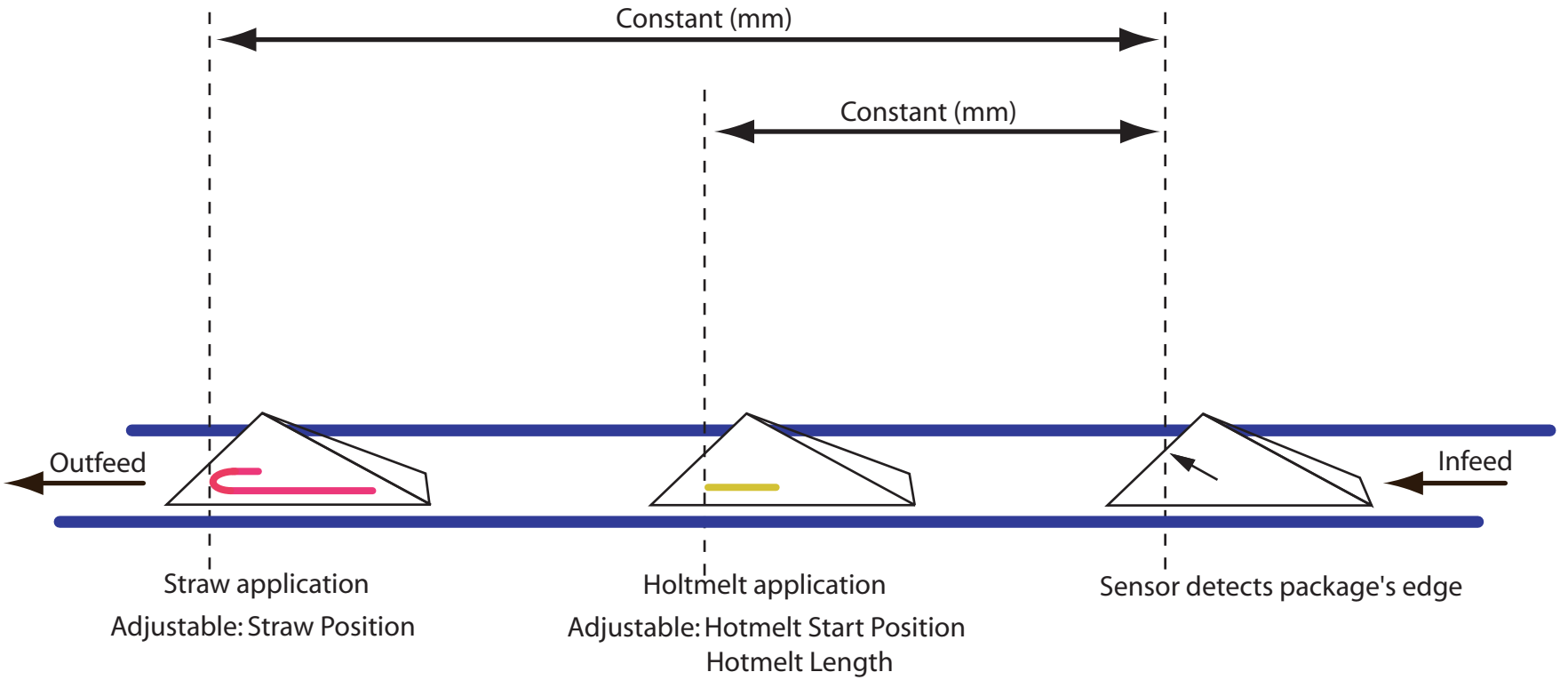
Constant (mm)
Constant (mm)
Outfeed
Infeed
Straw application
Adjustable: Straw Position
Holtmelt application
Adjustable: Hotmelt Start Position
Hotmelt Length
Sensor detects package's edge

Settings

Changing of straw type

	Feed wheel	Check squeezers position	Crank shaft eccentric position	Belt tightener position	Shaft attaching cutting knife	Ladder band guide position	HMI input (straw type)	Free wheel pulley
S-straw to T-straw								
S-straw to U-straw	X	X	X	X	X	X	X	X
T-straw to U-straw								

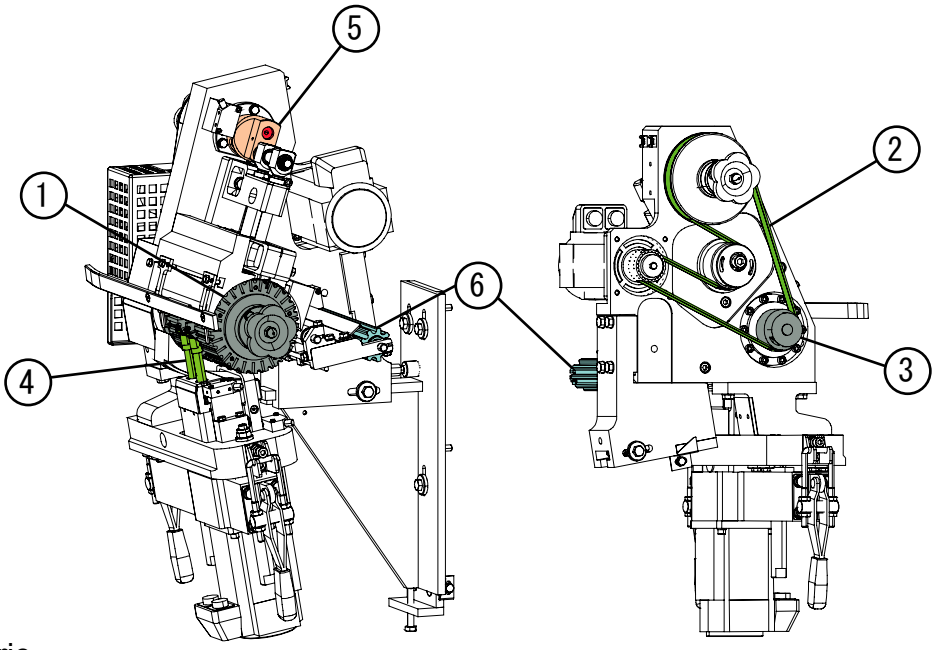

1 Feed wheel
2 Timing belt
3 Feed wheel pulley
4 Squeezers
5 Crank shaft eccentric
6 Ladder band guide

Electrical

SA 30 TCA

Electrical Cabinet Overview

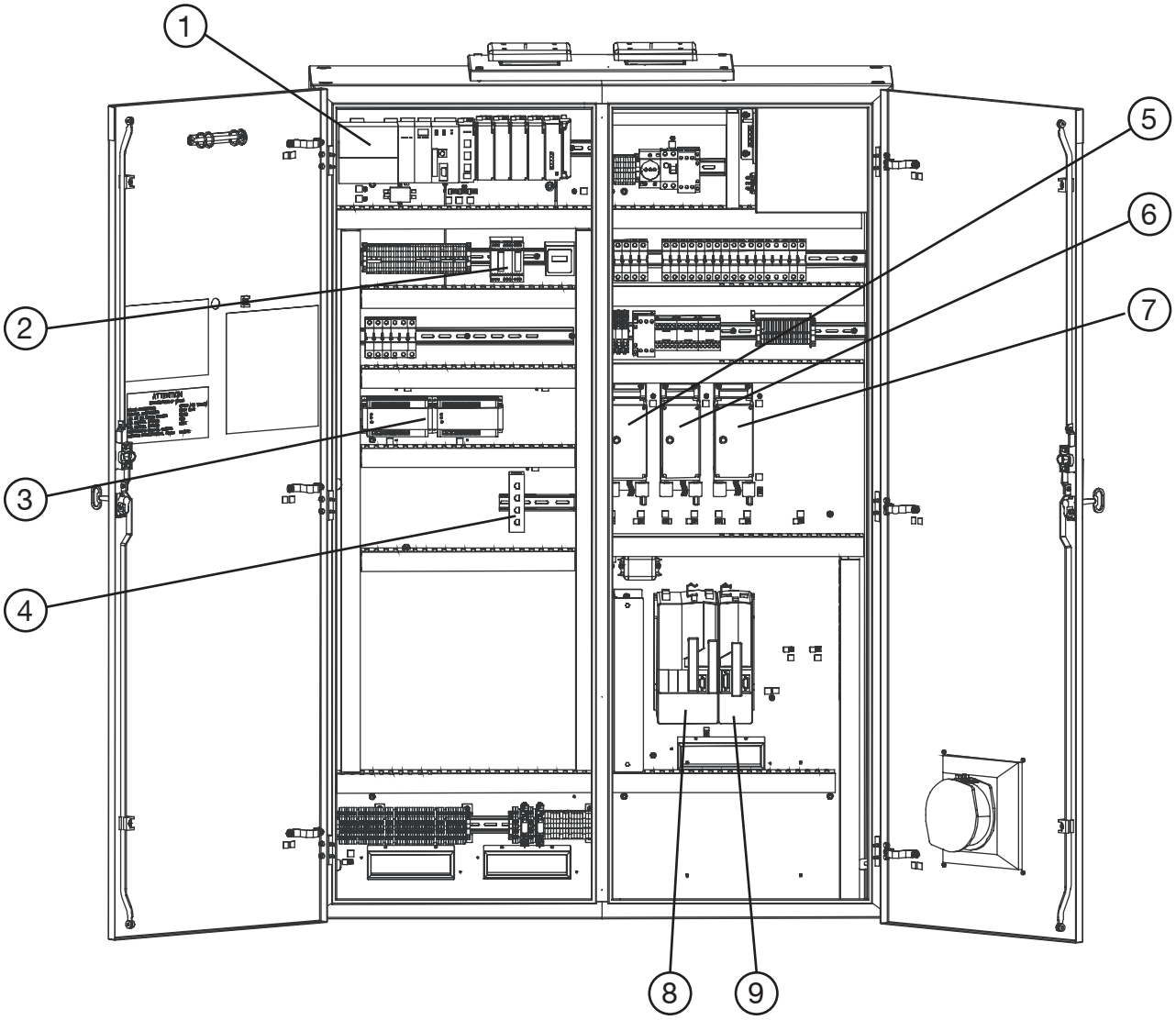

1 PLC
2 Pluto Safety PLC
3 24 VDC Power supplies
4 Ethernet switch
5 Frequency inverter Infeed
6 Frequency inverter Conveyor
7 Frequency inverter Outfeed
8 Servo drive Applicator Unit
9 Servo drive Squeezer

SA 30 TCA

PLC Configuration

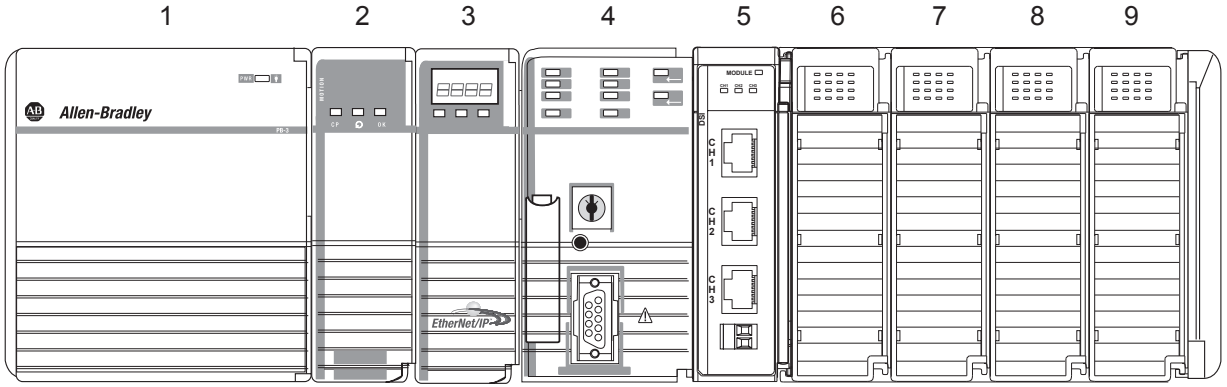

Position	Module type
1	Power supply
2	Sercos - Servo systems communication
3	Ethernet - PLC, TPOP communication
4	Controller (CPU)
5	DSI communication - Frequency inverters
6	DC Input
7	DC Input
8	DC Output
9	DC Output

SA 30 TCA

PLC Hardware Address

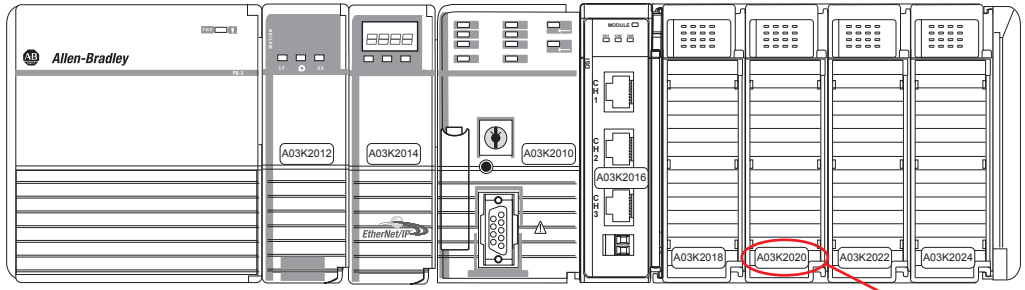

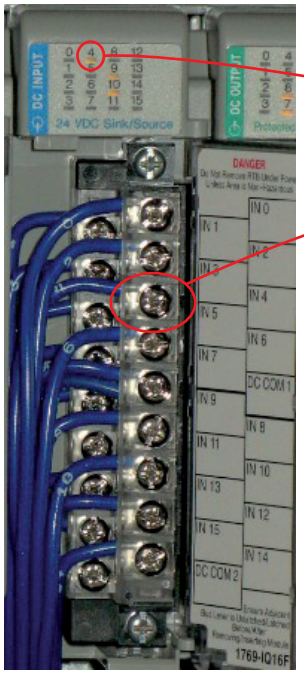

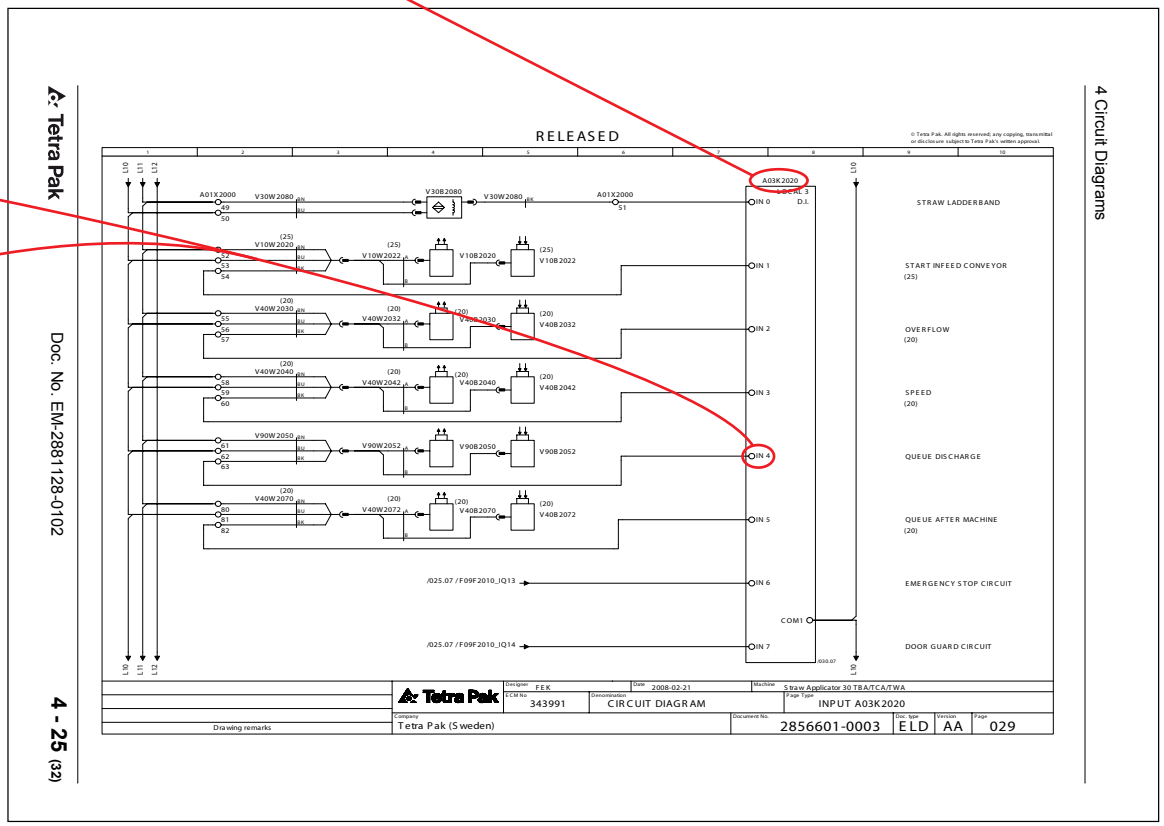

TPOP Control Panel

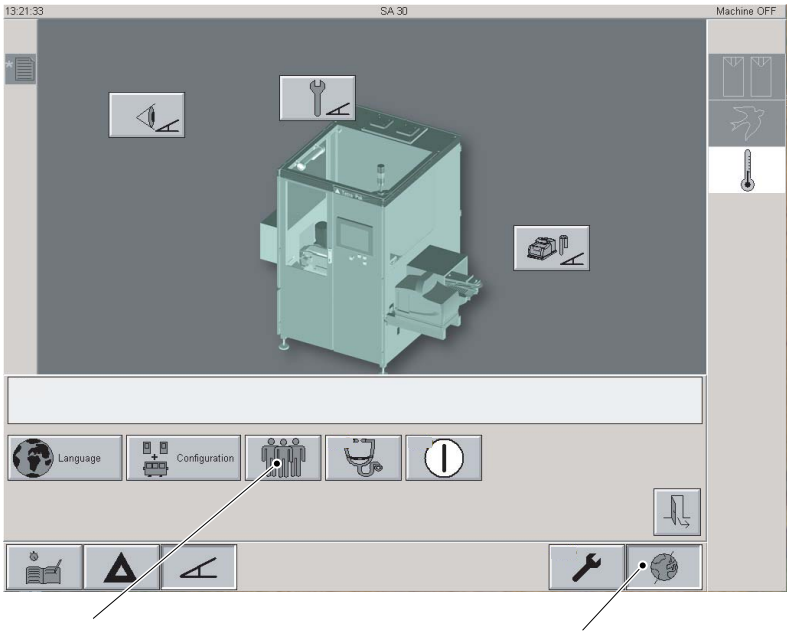

Safety System
PLUTO Safety PLC

General

General function

PLUTO is a programmable safety system designed with integral redundancy and monitoring. Unlike ordinary PLC systems, PLUTO uses two micro-processors, both controlling and monitoring each safety function, for correct operation. The inputs to the system are separately connected to both processors, each having their own memory and executing their own program. The two processors continuously compare their results with each other to ensure integrity of data. The safety outputs are also connected to both processors and can not be set without both checking that the logic conditions in the application program are fulfilled.

Connections

On the PLUTO unit there are a number of fixed inputs and outputs that are fail-safe, and also I/O that can be configured as either fail-safe inputs or non fail-safe outputs. A PLUTO unit also has connections for CAN-bus and can be interconnected with other units. The degree of safety is the same over the bus as within each unit.

Software

The software used to program a PLUTO unit is called PLUTO manager and is available from JOKAB SAFETY. The application itself is in ladder logic.

Standard

PLUTO is primarily designed for fulfilling the demands of the EU Machinery Directive (98/37/EG) regarding safety of control systems, and category 4 according to the harmonised standard EN 954-1 and type 4 according to EN 61 496-1.

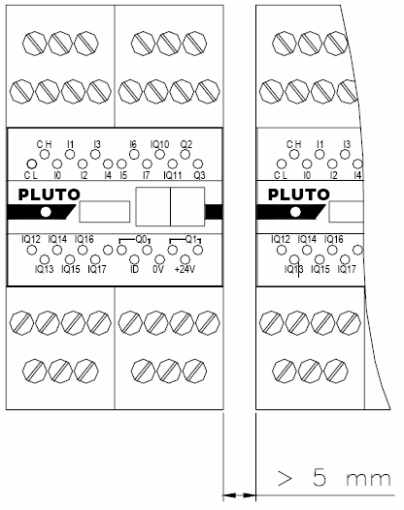

Figure 1. Minimum distance between two units is 5 millimetre

Installation

The system is powered by 24V DC and has an internal over current protection (PTC) but should be protected by an external fuse of maximum 6A

Troubleshooting

Description of the safety relay LED's

PLUTO front panel	Position	Function
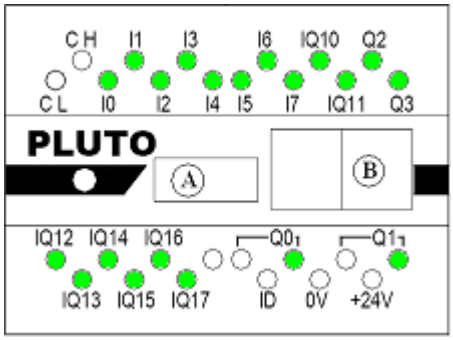	A	Connector for PLUTO communication cable.
	B	Display for station number and fault messages. • Normal status: Display node (station) number. • Firmware errors: Display Er##. See PLUTO hardware manual for error codes. • User errors: Display UE##. See user error code list for each machine.
	I0 – I7	Status LED's for fail-safe inputs. • Solid: Correct signal (+24V or A/B/C pulse). • Flash: Dual channel fault. • Fast flash: Input connected but not configured.
	IQ10 – IQ17 configured as inputs	Status LED's for configurable I/O. • Solid: Correct signal (+24V or A/B/C pulse). • Flash: Dual channel fault. • Fast flash: Input connected but not configured.
	IQ10 – IQ17 configured as outputs	Status LED's for configurable I/O. • Solid: IQ configured as pulse output and transmitting pulse, or IQ configured as static and activated. • Flash: Short circuit on output.
	Q0, Q1	Status LED's for relay outputs. • Solid: Output activated. • Flash: Internal feedback error, relay not responding.
	Q2, Q3	Status LED's for solid state outputs. • Solid: Output activated.

Dual channel circuits

PLUTO	Safety circuit closed; no e-stop is pressed; doors closed
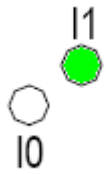	Interrupted circuit between 24VDC and I0.
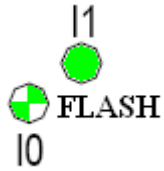	Intermittent contact between 24VDC and I0.
	Fast flash = input connected but not configured.

PLUTO	Safety circuit closed; e-stop is pressed/doors open
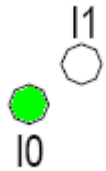	Actuated switch is defect.

Sensor	Status	Info output
Off	No power.	0
RED	Sensor interrupted or dynamic input connected to 24 VDC.	0
Flash RED/GREEN	Sensor OK, missing input dynamic signal.	1 (TINA2: 0)
Fast Flash RED/GREEN (EDEN)	ADAM – EVA almost out of range.	1
GREEN	Sensor OK, dynamic signal OK.	1

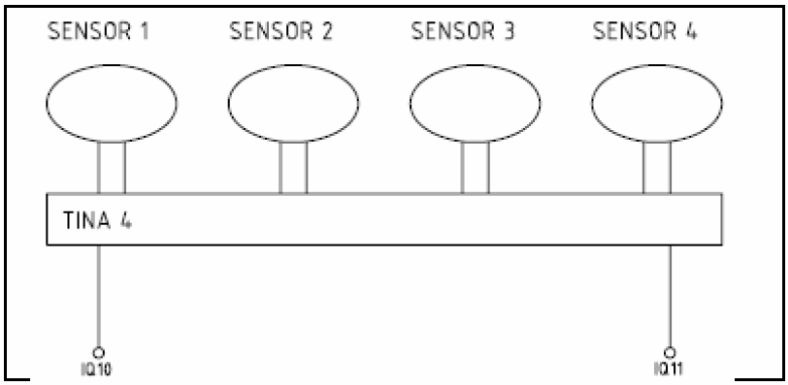

Figure 14. Sensors connected to a TINA connection block. For troubleshooting purposes the indications on the sensors are the same also without the TINA connection block.

Figure 14. Sensors connected to TINA connection block. For trouble shooting purposes the indications on the sensors are the same also without TINA connection block.

PLUTO	Sensors				Possible fault
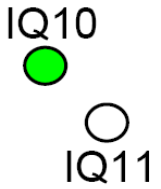	G	G	G	G	Incorrect number of sensors.
					Interrupted dynamic signal between sensor 4 and PLUTO.
					Sensor 4 not connected to 0VDC.
					Short circuit between output sensor 4 and 0VDC.
	G	R	RG	RG	Sensor 2 open, out of range (EDEN).
					Short circuit between +24VDC and input sensor 2.
	G	RG	RG	RG	Sensor 2 interrupted dynamic input signal.
					Short circuit between 0V and input sensor 2.
	RG	RG	RG	RG	Sensor 1 interrupted dynamic input signal.
					Short circuit between 0V and input sensor 1.