CM

Conversion Manual

Tetra Pak A1

630451-0200

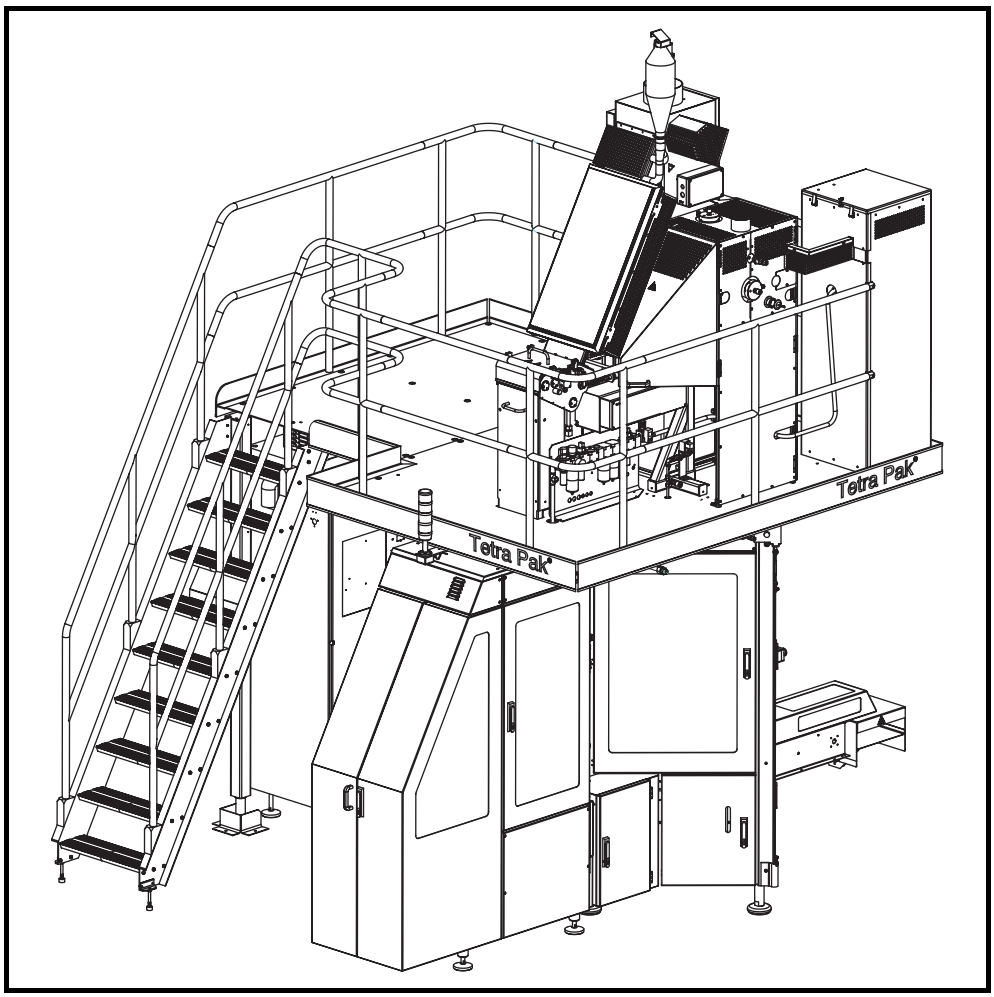

WARNING

Read and follow all safety precautions before working on or near this equipment.

Read all safety precautions throughout this manual and on safety signs attached to this equipment. Failure to follow all safety precautions could result in death or serious injury.

Tetra Pak

Doc. No. CM-80379-0101

Copyright © 2004 Tetra Pak Group

All rights reserved. No part of this document may be reproduced or copied in any form or by any means without written permission from Tetra Pak Carton Ambient AB.

Tetra Pak and all Tetra Pak products are trademarks belonging to the Tetra Pak Group.

The content of this manual is in accordance with the design and construction of the machine or equipment at the time of publishing. Tetra Pak reserves the right to introduce design modifications without prior notice.

This document was produced by:

Tetra Pak Carton Ambient AB
Ruben Rausings gata
SE-221 86 LUND
Sweden

Additional copies can be ordered from Tetra Pak Parts or the nearest Tetra Pak office. When ordering additional copies, always provide the document number. This can be found in the machine specification document. It is also printed on the front cover and in the footer on each page of the manual.

Doc. No. CM-80379-0101

Issue 2004-09-09

This manual is valid for:

Series No./ Machine No. Sign.

CM
Conversion Manual

Tetra Pak A1
630451-0200

A list of all optional equipment, optional kits, and rebuilding kits that this manual is valid for is found on the next page.

Doc. No. CM-80379-0101

Issue 2004-09-09

Tetra Pak

Tetra Pak Carton Ambient AB

Valid for:

Volume Conversion Kit
630414-0200
volumes: 65, 150S, 200B, and 200S

Optional Kits

Launch Kit	2592387-0100
Guide Rail	2579770-0100
Paper Trolley	1538186-0100 576739-0200

Rebuilding Kits

RK Connection	2599801-0100
RK Infeed Safety	2629041-0100
RK Strip Applicator	2599799-0100
RK Longitudinal Element	2637844-0100
RK Drive Unit	2643120-0100
RK Tube Flushing	2643122-0100
RK Filling Pipe	2643124-0100
RK Sterile Unit	2637831-0100
RK Sterilization Bath	2637791-0100
RK Cleaning System	2643128-0100
RK Photocells	2643130-0100
RK Splicing Table Latch	2637853-0100
RK Platform	2637856-0100
RK Aseptic System Upgrade	2661246-0100

Update Log for Doc. No. CM-80379-0101

This table shows all changes made to this manual, such as kits installed and pages added or removed.

Date	Installed Kit	Added Pages (Doc. No.)	Removed Pages	Signature

Date	Installed Kit	Added Pages (Doc. No.)	Removed Pages	Signature

i Introduction

About the Introduction Chapter

This chapter contains basic information about this manual and related Tetra Pak equipment.

Manual Information . . . . . i - 5
Delivered Manuals . . . . . i - 5
Page Layout . . . . . i - 6
Page Numbering. . . . . i - 7
Typographical Conventions . . . . . i - 7
Symbols . . . . . i - 7
Machine Introduction . . . . . i - 8
Intended Use of the Equipment . . . . . i - 8
Manufacturer . . . . . i - 8
Service . . . . . i - 8
Identification . . . . . i - 9
CE Classification . . . . . i - 9
Machine Plate . . . . . i - 9
Orientation . . . . . i - 10
Hygiene. . . . . i - 11
Abbreviations and Terminology . . . . . i - 12

This page intentionally left blank

Manual Information

Tetra Pak recommends reading all delivered manuals carefully. Make sure that the delivered manuals are available to personnel who operate or maintain the equipment.

It is important to keep this manual for the lifetime of the equipment and to pass the manual on to any subsequent holder or user.

Tetra Pak will not be held responsible for any damage to the equipment caused by not following the instructions given in this manual.

Delivered Manuals

The manuals delivered with this equipment include

- Conversion Manual (CM)
  This manual provides technicians with information on converting the equipment between different production modes.

Page Layout

Every main page in a manual contains a header and a footer. The page header contains the section name (1) and the chapter name (2). The page footer contains the manual's document number (3), and the page number (4). See also the Page Numbering section.

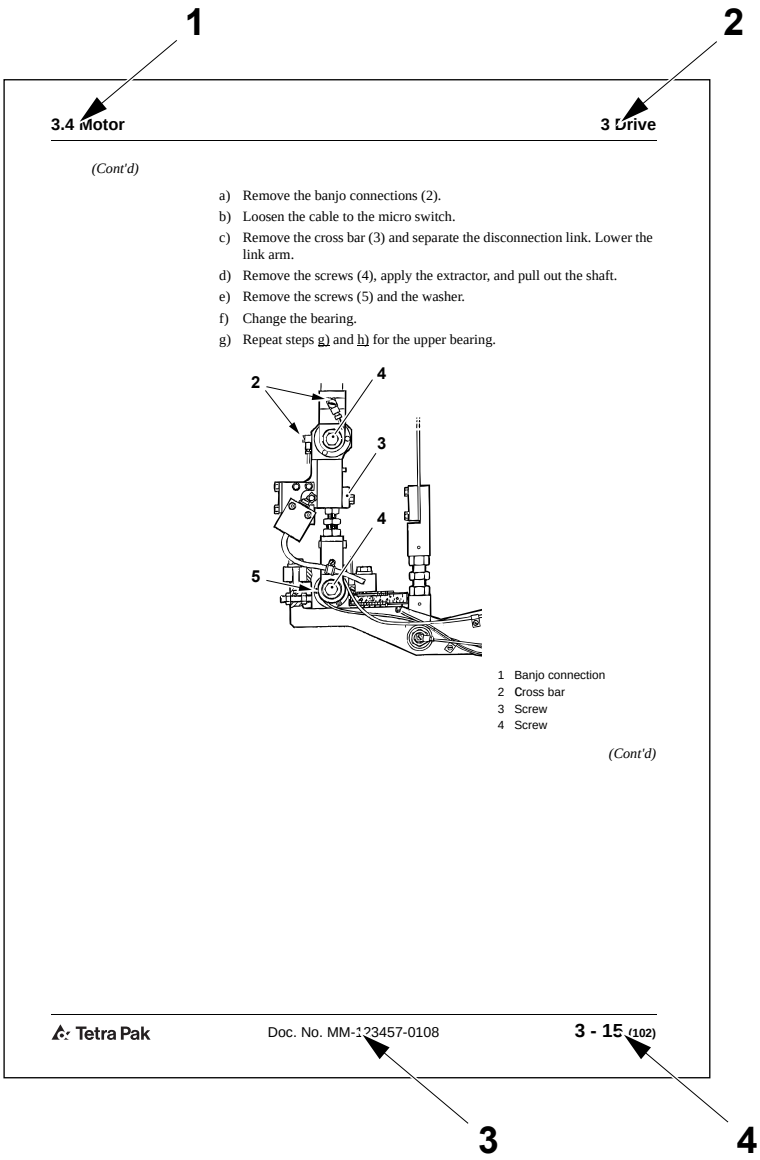

1 Section name
2 Chapter name
3 Document number
4 Page number

Page Numbering

A page number has three parts:

- chapter number (1)
- consecutive page number (2) within the chapter
- total number of pages (3) in the chapter.

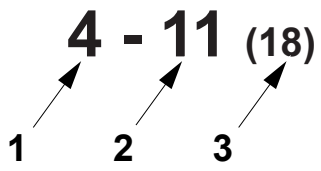

1 Chapter number
2 Consecutive page number
3 Total number of pages

Typographical Conventions

Controls on the operator panel, emergency stop devices, and program steps are printed in CAPITAL LETTERS.

Cross-references are underlined.

Symbols

The following symbols are used in illustrations:

- A pointer arrow (1) indicates the position of an object.
- A zoom arrow (2) indicates that an object view is enlarged. The arrow points towards the enlarged view of the object.
- A rotation movement arrow (3) indicates rotational movement of an object. The arrow points in the direction of rotation.
- A straight movement arrow (4) indicates movement of an object. The arrow points in the direction of movement.

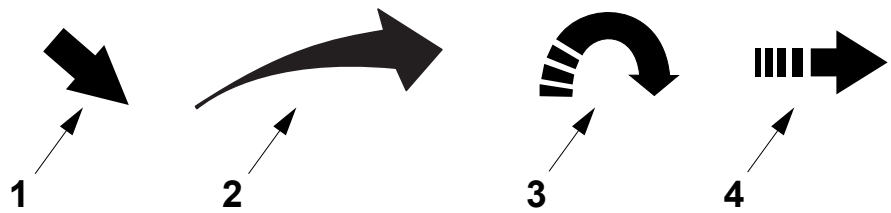

1 Pointer arrow
2 Zoom arrow
3 Rotation movement arrow
4 Straight movement arrow

Machine Introduction

Intended Use of the Equipment

The intended use of this Tetra Pak equipment is to pack liquid food products.

All other use is prohibited. Tetra Pak will not be held responsible for injury or damage if the equipment is used for any other purpose.

Manufacturer

This Tetra Pak equipment has been manufactured by

Tetra Pak Carton Ambient AB
Ruben Rausings gata
SE-221 86 LUND
Sweden

Service

If you encounter problems when operating this equipment, contact the nearest Tetra Pak office.

Contact the Liaison with other inquiries, comments, or suggestions for improvement regarding the equipment and its documentation.

Identification

CE Classification

This equipment complies with the basic health and safety regulations of the European Economic Area (EEA).

Machine Plate

The illustration below shows an example of the machine plate and its location on the equipment. The machine plate carries data needed when contacting Tetra Pak concerning this specific equipment.

Make sure that the equipment data in the front pages of this manual corresponds to the machine plate data and the machine specification.

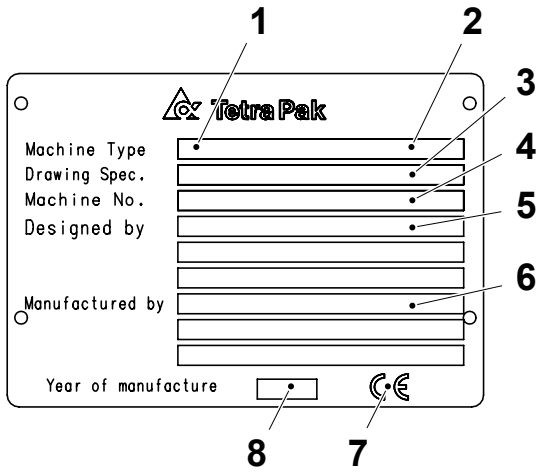

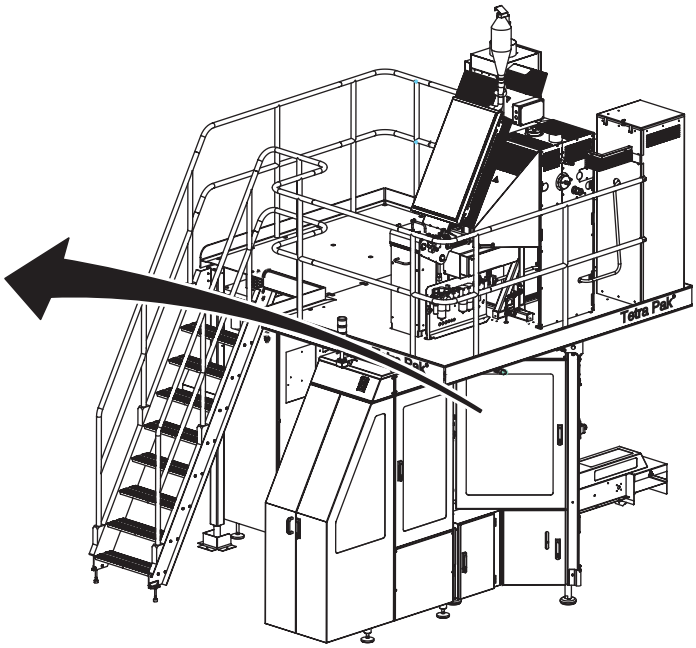

1 Machine type
2 Volume
3 Drawing specifications
4 Machine serial number
5 Designed by
6 Manufacturer
7 CE mark
8 Year of manufacture

Orientation

The illustration below shows the orientation of the equipment. This orientation information will be used throughout this manual.

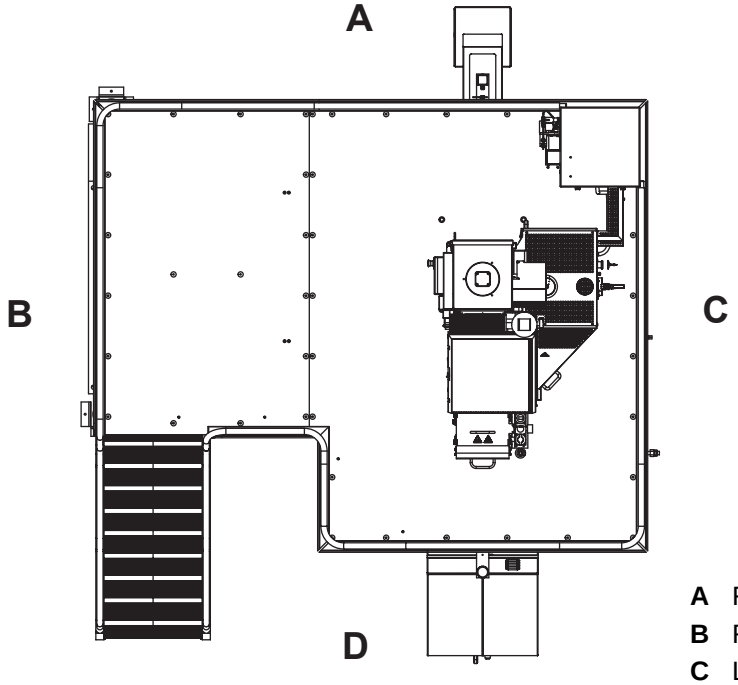

A Front
B Right-hand side
C Left-hand side
D Back

Hygiene

Avoid microbiological pollution of the packaging material:

- Always keep the doors to the filling room (area) closed. To prevent contamination via air streams, never open a window when the equipment is in production.
- Never clean the floors or the equipment in the filling room (area) when the equipment is in production.
- Compressed air used for cleaning purposes is to be used only for cleaning filters and should only be used outside of the filling room (area) or in the final folder compartment of the filling machine.
- Prepare the splicing of the packaging material as late as possible.
- Disinfect your hands before touching anything that may come into contact with the product. Use disinfectant code H. See the Technical Data chapter.
- Keep your hands and gloves clean.
- Always wear some type of hair protection (cap or hairnet) and clean clothes (preferably white).
- Do not wear a watch, ring, necklace, earrings, or any other exposed jewellery.

Abbreviations and Terminology

Abbreviation/ Terminology	Meaning	Translation
approx.	approximately	
CIP	Cleaning In Place	
CM	Conversion Manual	
EM	Electrical Manual	
IM	Installation Manual	
LED	Light Emitting Diode	
LH	Left Hand	
LS	Longitudinal Seal(ing)	
max	Maximum	
min	Minimum	
MM	Maintenance Manual	
OE	Optional Equipment	
OM	Operation Manual	
p/h	packages per hour	
PLC	Programmable Logic Controller	
PLMS	Packaging Line Monitoring System	
RH	Right Hand	
RK	Rebuilding Kit	
SA	Strip Applicator	
SPC	Spare Parts Catalogue	
TP	Tetra Pak	
TPIH	Tetra Pak Induction Heater	
TS	Transversal Seal(ing)	

ii Safety Precautions

Read the Safety Precautions

WARNING

Read and follow all safety precautions before working on or near this equipment.

Read all safety precautions throughout this manual and on safety signs attached to this equipment. Failure to follow all safety precautions could result in death or serious injury.

Definitions

Energy Isolating Device. A mechanical device that physically prevents transmission or release of energy.

Power Supply Disconnector. The energy isolating device for the electrical power supply to the equipment.

Lockout. The use of a device, such as a padlock, to make sure that an energy isolating device, such as a power supply disconnector, cannot be operated.

Lockout Procedure. A procedure to put each necessary energy isolating device in its safe position to prevent the energising of the equipment, such as when a maintenance procedure should be carried out.

Safety Messages Description . . . . . ii - 5
Personnel Requirements . . . . . ii - 6
Skilled Person . . . . . ii - 6
Instructed Person. . . . . ii - 6
Safety Signs . . . . . ii - 7
Locations of Safety Signs . . . . . ii - 10
Safety Devices . . . . . ii - 11
Emergency Stop . . . . . ii - 11
Emergency Stop Push-Buttons . . . . . ii - 12
Emergency Stop Wires . . . . . ii - 13
Safeguards . . . . . ii - 14
Warning Lamp . . . . . ii - 15
Audible Alarm . . . . . ii - 15
Personal Protection. . . . . ii - 16
Noise Hazard . . . . . ii - 16
Entanglement Hazard . . . . . ii - 16
Hazardous Materials . . . . . ii - 17
Hydrogen Peroxide (H_2O_2) . . . . . ii - 18
Emergency Procedures. . . . . ii - 18
Personal Protective Equipment . . . . . ii - 19
Handling . . . . . ii - 20
Storage . . . . . ii - 21
Disposal . . . . . ii - 22
Manual Emptying of the Peroxide Bath . . . . . ii - 23
Supply Systems . . . . . ii - 24
Electrical Cabinet . . . . . ii - 24
Socket Outlet . . . . . ii - 25
Power Supply . . . . . ii - 26

Air Supply . . . . . ii - 27
Steam Supply. . . . . ii - 28
Water Supply . . . . . ii - 30

Safety Messages Description

A safety message is always accompanied by a safety alert symbol and a signal word.



This is the **safety alert symbol**. It is used to alert about potential personal injury hazards. To avoid hazards, obey all safety messages that follow this symbol.

The following safety alert symbols and **signal words** are used in this manual to inform the user of hazards.

 **DANGER**

Danger indicates an imminently hazardous situation which, if not avoided, will result in death or serious injury.

 **WARNING**

Warning indicates a potentially hazardous situation which, if not avoided, **could** result in **death or serious injury**.

 **CAUTION**

Caution indicates a potentially hazardous situation which, if not avoided, **may** result in **minor or moderate injury.** It may also be used to alert against unsafe practices.

CAUTION

Caution without the safety alert symbol indicates a potentially hazardous situation which, if not avoided, **may** result in **property damage**.

Personnel Requirements

Note! Personnel includes all persons working on or near this equipment.

Only skilled or instructed persons are allowed to work with this equipment.

Skilled Person

A skilled person must have relevant education and experience to enable him or her to identify hazards, analyse risks, and avoid hazards which electricity, machinery, chemicals, other energies, and supply systems on this equipment can create.

Skilled persons must meet local regulations, such as certifications and qualifications for working with electricity, mechanical systems, and so on.

Instructed Person

An instructed person must be adequately advised or supervised by a skilled person. The skilled person enables the instructed person to identify hazards, analyse risks, and avoid hazards which electricity, machinery, chemicals, other energies, and supply systems on this equipment can create.

Safety Signs

WARNING

Damaged or missing safety signs increase the risk of death or serious injury.

Replace all missing or damaged safety signs immediately.

There are two types of safety sign

- ISO signs are used worldwide
- ANSI signs are used in the United States only

The table shows all safety signs that are located on this equipment.

Note! The position numbers (Pos.) in the table refer to the positions in the illustration(s) in the Locations of Safety Signs section.

Pos.	ISO sign
	 **Read Operation Manual (OM) before using this equipment.** Failure to do so could result in death or serious injury.
	 **Hazardous voltage.** Can shock, burn, or cause death. Read Maintenance Manual before using this socket outlet.
	 **Hazardous noise.** Risk of impaired hearing. Wear hearing protection.
	 **Risk of eye injury.** Wear eye protection.

Pos.	ISO sign
1	 **Moving part can crush and cut.** Do not operate with guard removed. Follow lockout procedure before maintenance.
2	 **Hazardous voltage.** Will shock, burn, or cause death. Follow lockout procedure before maintenance.
3	 **Chemical burn hazard.** Wear personal protective equipment.
4	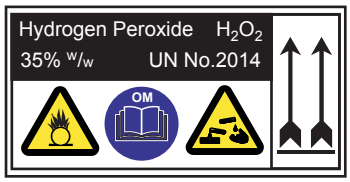 **Chemical hazard.** Corrosive and oxidising chemical. Could cause death or serious injury. Read Safety Precautions in Operation Manual (OM) before handling hydrogen peroxide.
5	 **Hot surface.** Do not touch. Follow lockout procedure before maintenance.

Pos.	ISO sign
6	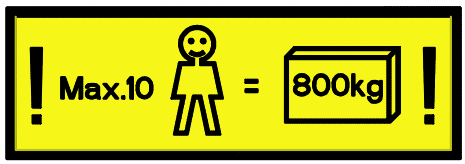 **Max load sign.** No more than 10 persons or 800 kg load may be present on the platform at the same time.
7	 **Harmful vapour.**

Locations of Safety Signs

Note! Make sure that each safety sign is undamaged and in its correct position after installation and maintenance. Replace all missing or damaged safety signs immediately.

The illustration shows where the safety signs are located. The position numbers refer to the table in the Safety Signs section.

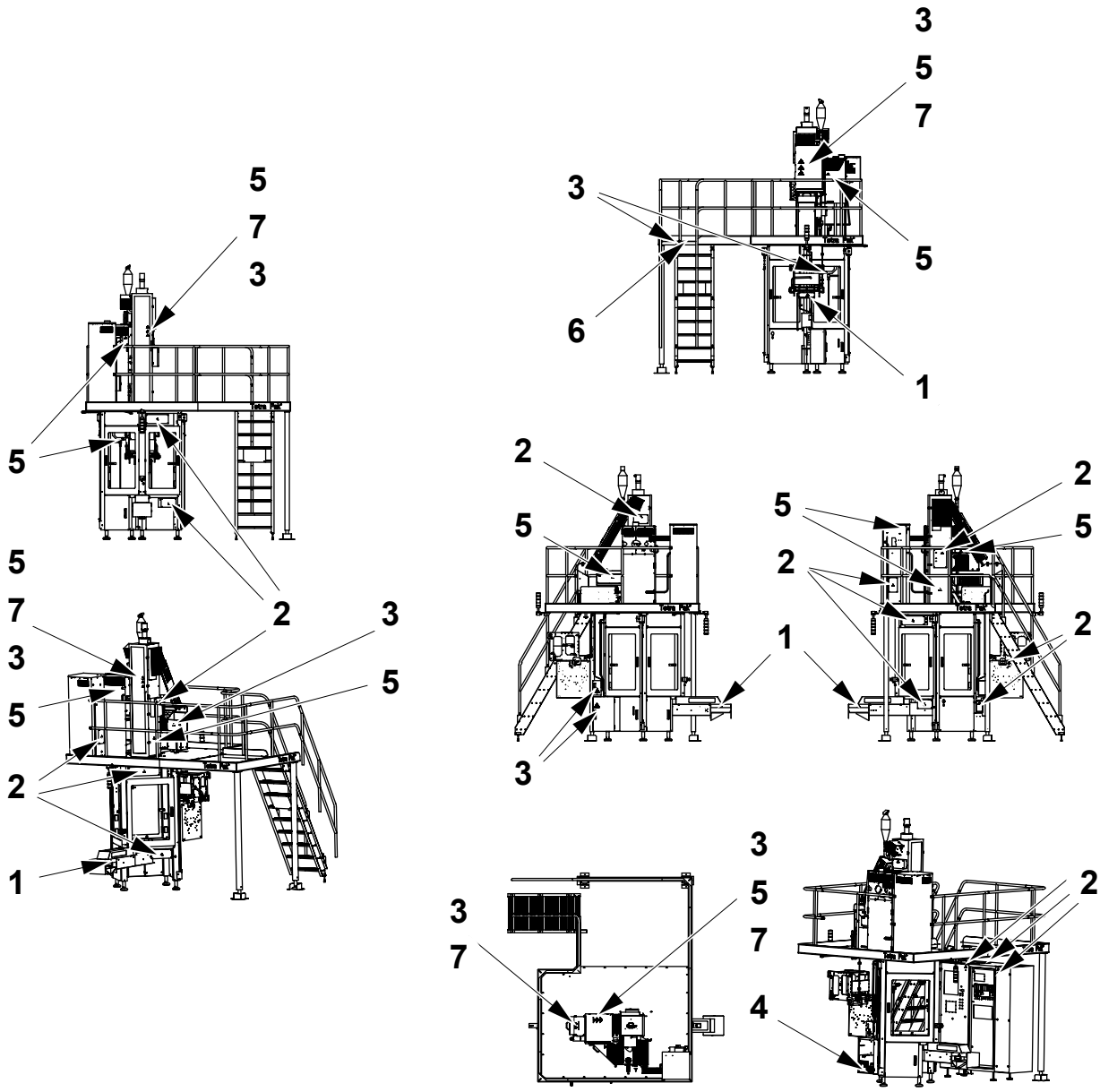

Safety Devices

WARNING
Unshielded hazards.
Never inch or run this equipment if any safety device is inoperative.

Change inoperative components of the safety system immediately.

WARNING
Hazardous Voltage.
Activating a safety device, such as pressing an EMERGENCY STOP push-button or opening a door, does not disconnect the power supply from this equipment.

Emergency Stop

Emergency stop devices are used to stop this equipment immediately in an emergency. Learn the positions of all emergency stop devices and how to use them.

Instructions for a normal production stop are included in the Stop chapter of the Operation Manual.

Emergency Stop Push-Buttons

Push one of the EMERGENCY STOP push-buttons to stop this equipment immediately.

Empty the peroxide bath. See Manual Emptying of the Peroxide Bath on page ii-23.

The illustration shows an EMERGENCY STOP push-button. The location of each EMERGENCY STOP push-button is shown by an arrow.

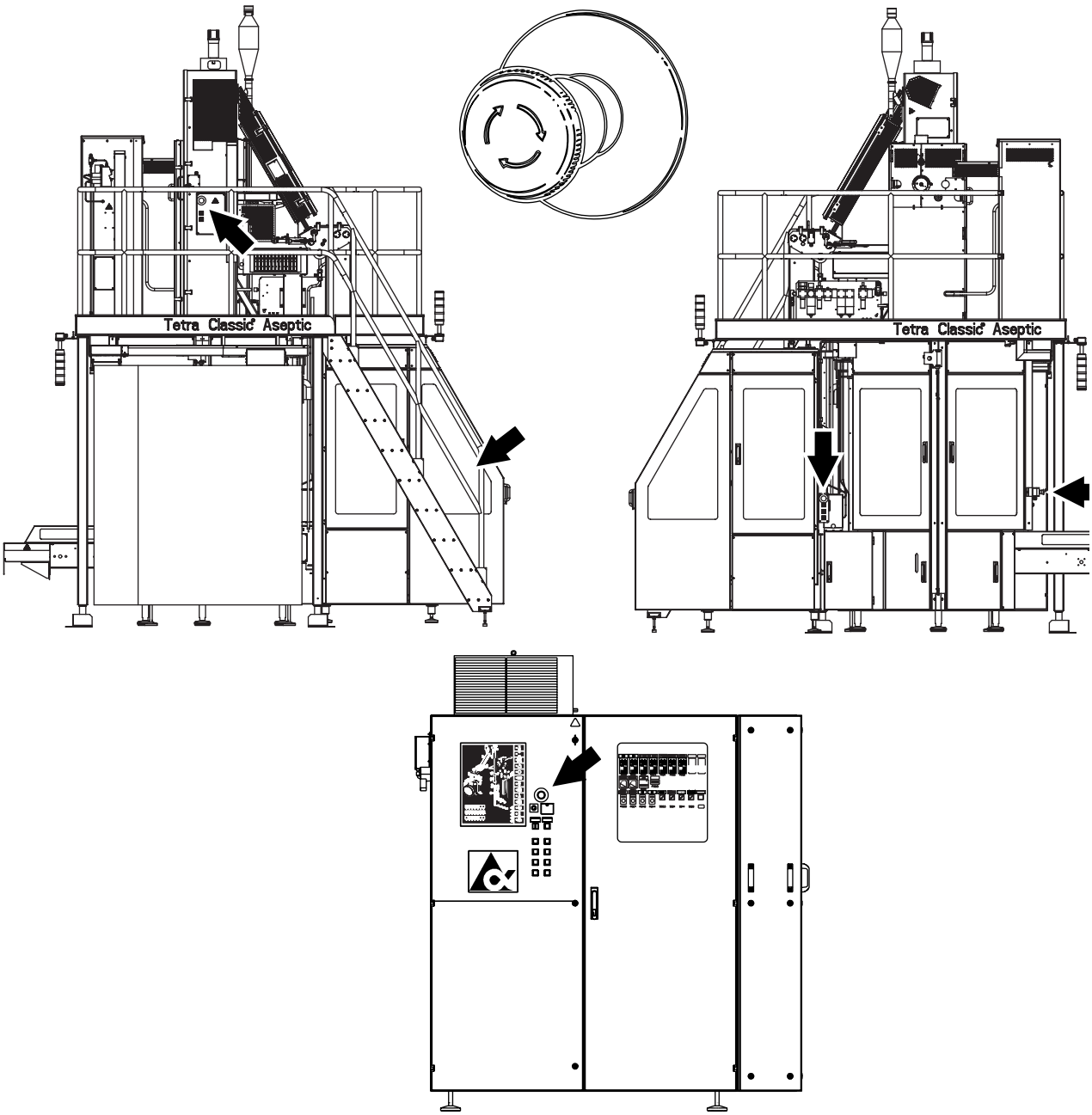

Emergency Stop Wires

Pull one of the EMERGENCY STOP wires (1) to stop this equipment immediately.

Empty the peroxide bath. See Manual Emptying of the Peroxide Bath on page ii-23.

The illustration shows an EMERGENCY STOP wire. The location of each EMERGENCY STOP wire is shown by an arrow.

Press the button (2) on the emergency stop wire module before resetting the emergency stop.

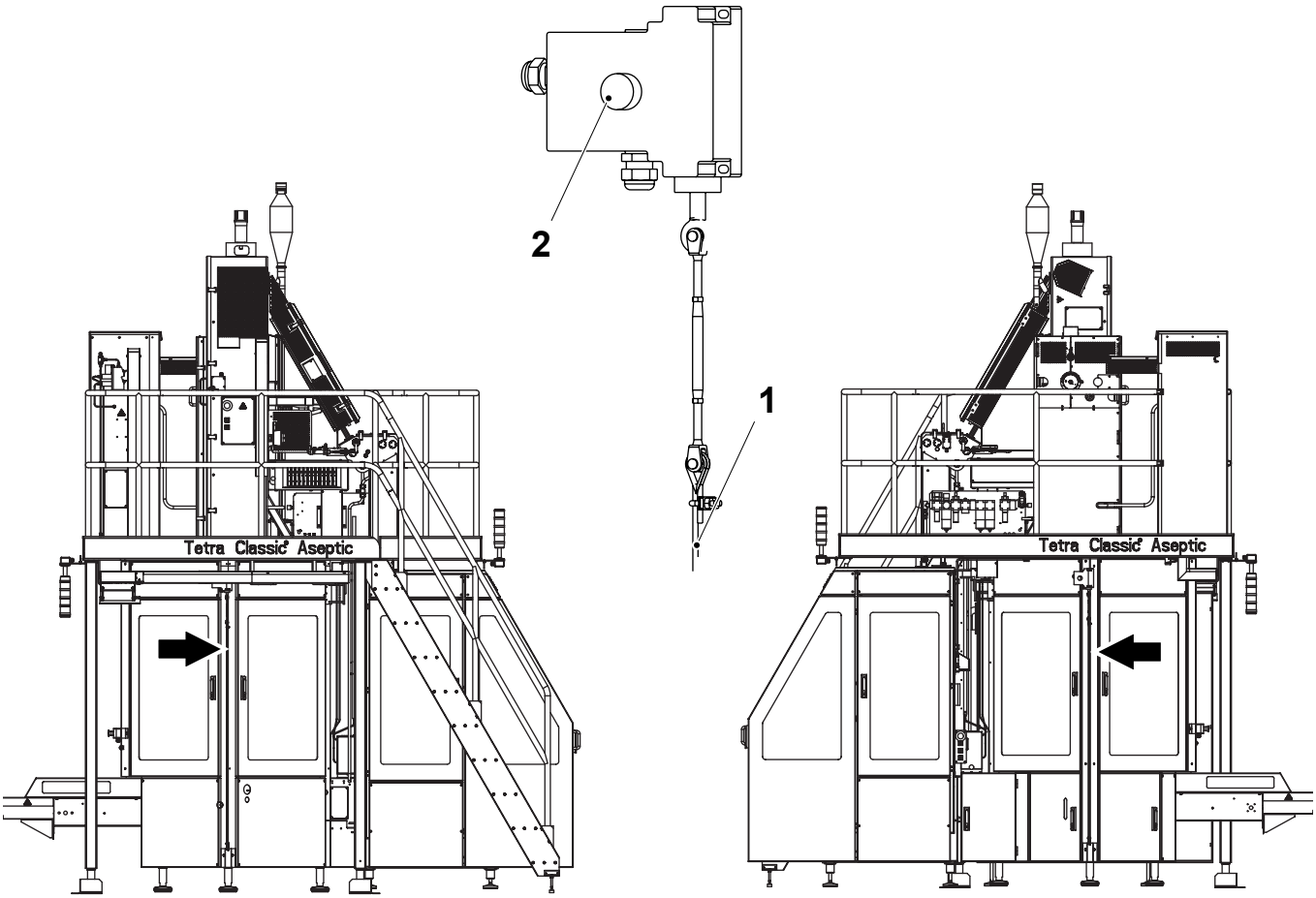

1 EMERGENCY STOP wire
2 Button

Safeguards

WARNING
Moving machinery.
Never defeat or bypass the interlocking devices.

All movable guards, such as doors and covers, leading to hazardous areas are fitted with interlocking devices, usually electric safety switches. These devices are part of the safety system and must never be defeated, bypassed, or otherwise made inoperative.

CAUTION
Burn hazard.
Parts of this equipment protected by safeguards may be thermally hot after operation.

After installation and maintenance, and before this equipment is inched or run, check that all safeguards are in place and that they operate correctly.

CAUTION
Equipment damage.
Never stop this equipment by opening a movable guard.

The location of each movable guard is shown by an arrow.

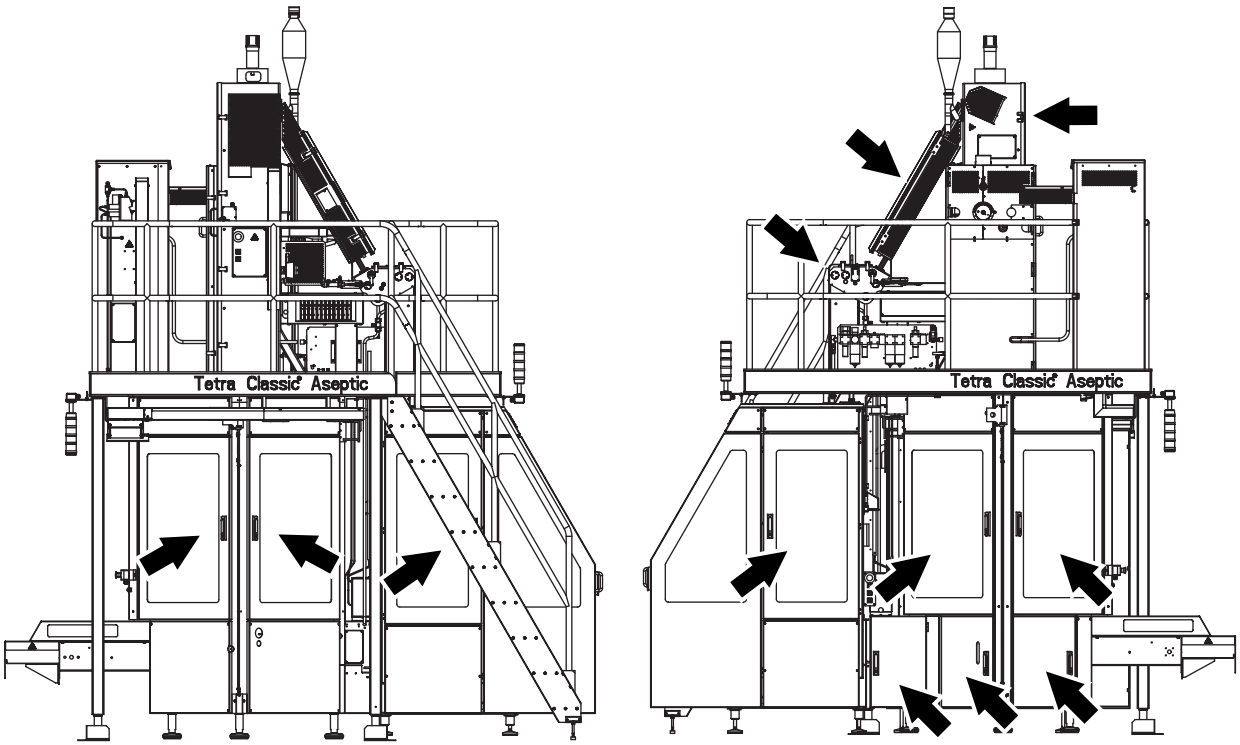

Warning Lamp

A warning lamp is a column of warning lights:

- A red light (1) indicates a hazardous condition. This is an emergency situation that requires immediate action.
- A yellow light (2) indicates an abnormal condition. This is an impending critical condition calling for action by the operator.
- A blue light (3) indicates that operator action is required.

The top section of the warning lamp consists of an audible alarm (1), described below.

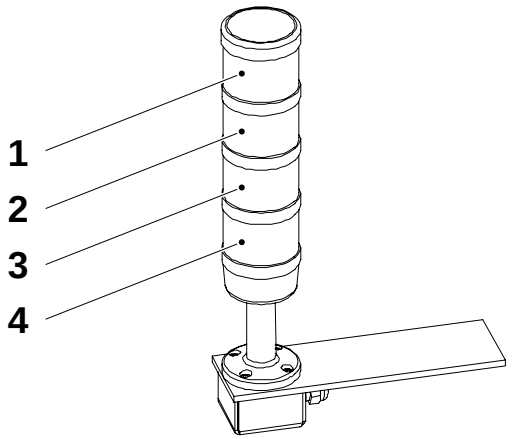

1 Audible alarm
2 Red light
3 Yellow light
4 Blue light

A warning light flashes when operator action is required. The light stops flashing and remains lit when the alarm is acknowledged. After the fault is corrected or the operator takes the appropriate action, the warning light goes off.

Audible Alarm

The audible alarm (1) produces a warning signal every time this equipment is about to start. The warning signal sounds for approximately three seconds prior to starting to alert personnel.

Personal Protection

This section applies to all personnel at all times when this equipment is in operation. For special personal protection required when handling hazardous materials, see the Hazardous Materials section.

Noise Hazard

WARNING
Hazardous noise.
Risk of impaired hearing.
Wear hearing protection whenever this equipment is in operation.

CAUTION
Hazardous noise.
Risk of impaired hearing.
Hearing protection is recommended whenever this equipment is in operation.

Entanglement Hazard

WARNING
Risk of entanglement.
Do not wear jewellery or loose clothing when working on or near this equipment. Long hair may not be loose.

Hazardous Materials

WARNING

Contact with chemicals can cause death, serious injury, and illness.

Always follow the chemical manufacturer's instructions when handling chemicals.

Make sure that

- the showers work
- an eyewash device, movable or wall-mounted, is available and operational
- additional washing facilities are nearby

Note! Learn the locations of all washing facilities in order to act immediately in case of an accident.





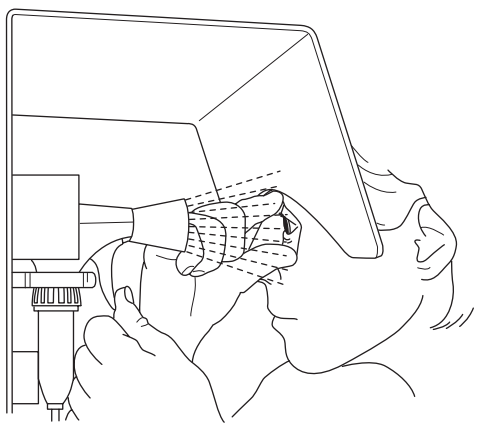

Hydrogen Peroxide (H_2O_2)

WARNING
Corrosive chemical.
Wear personal protective equipment.

In both liquid and gas states, hydrogen peroxide may cause irritation or damage if it comes into contact with skin, mucous membranes, eyes, or clothes. Call for medical attention immediately if there is an accident.

Liquid hydrogen peroxide in concentrations of less than 1% is generally considered harmless to humans.

Consult the instructions on the label of the tank or container.

Emergency Procedures

If there is an accident involving hydrogen peroxide, rinse the affected area as soon as possible with large amounts of water.

If hydrogen peroxide is swallowed

- do not attempt to cause vomiting
- drink large amounts of lukewarm water to dilute the peroxide
- call for medical attention immediately

If splashes or vapour from hydrogen peroxide come in contact with the eyes

- wash the eyes thoroughly with lukewarm water for 15 minutes (keep eyelids wide apart)
- call for medical attention immediately

If hydrogen peroxide comes into contact with skin or clothes

- rinse immediately with plenty of water
- call for medical attention immediately if skin burns appear
- thoroughly wash the clothes before wearing them again

If irritation or pain is experienced due to having inhaled hydrogen peroxide vapour

- leave the affected area and get some fresh air
- call for medical attention if the symptoms get worse

Personal Protective Equipment

The personal protective equipment for hydrogen peroxide is

- safety goggles (TP No 90303-11)
- protective gloves made of neoprene (TP No.90303-12)
- apron (TP No. 90303-13)
- shoes made of PVC, PE plastic, or rubber

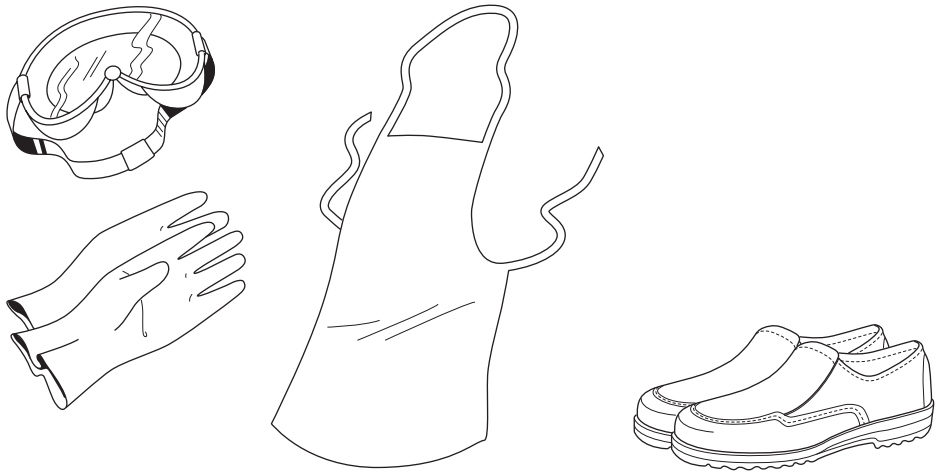

Handling

WARNING
Sudden and violent chemical reaction.
Avoid any contamination of hydrogen peroxide.

Hydrogen peroxide reacts suddenly and violently with many compounds or if it is contaminated. The reaction is a violent decomposition liberating oxygen and heat, with a big increase in volume due to the oxygen produced by the peroxide decomposition.

Never pour surplus hydrogen peroxide back into the original container if it contains fresh hydrogen peroxide. There is a risk of explosion when hydrogen peroxide is in a closed container.

Ensure that equipment used for handling and diluting hydrogen peroxide is clean before it comes in contact with hydrogen peroxide. Pumps or other equipment used for handling hydrogen peroxide must be used for this purpose only and must be manufactured from appropriate materials, such as stainless steel 316 L, glass, polyethylene, or teflon. After use, make sure that all peroxide residue is rinsed away.

If hydrogen peroxide is spilled, dilute it with large amounts of water and flush it into a drain.



WARNING
Self-ignition.
Never wipe up hydrogen peroxide with materials such as rags or paper as these may self-ignite several hours after contact.
If there is a fire, spray with large quantities of water.

Storage

DANGER

Containers will explode if not properly ventilated.
Keep the container upright and fitted with its proper ventilation cap. If there is a fire, cool all containers by spraying them with large quantities of water.

Hydrogen peroxide decomposes much faster with increasing temperature. There is a risk of explosion at high temperatures, since the ventilation cap cannot release the gases produced quickly enough.

Hydrogen peroxide must be stored in the original container delivered by the supplier. Keep the container upright and fitted with its proper ventilation cap, which allows oxygen to escape. Otherwise, there can be an explosion if decomposition of the peroxide occurs violently.

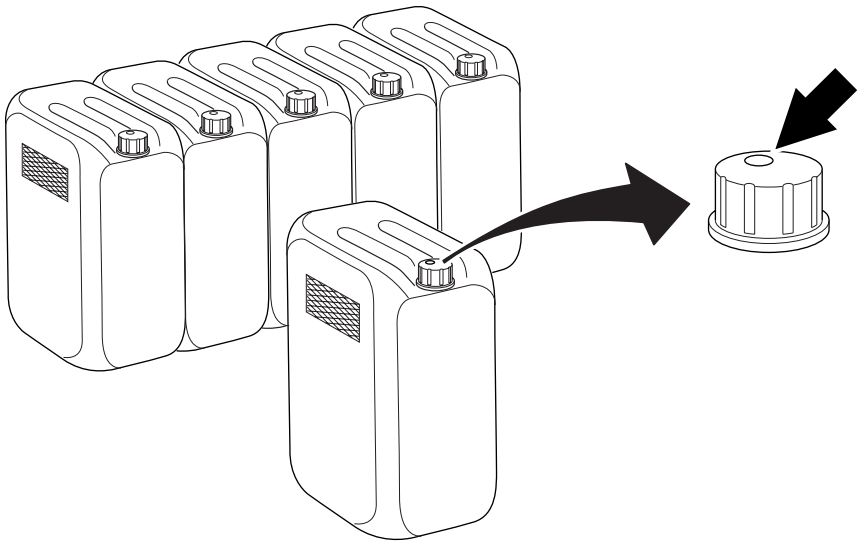

Make sure that the container is always properly closed.

(Cont'd)

(Cont'd)

Commercial food-grade hydrogen peroxide has been stabilized to inhibit the catalytic decomposition effects of metals and other impurities, but it can decompose into oxygen and water if it is exposed to heat or contaminated.

Make sure that the area used for storage of hydrogen peroxide is

- cool, clean, and well ventilated
- shielded from direct sunlight
- kept free from combustible materials

Disposal

Hydrogen peroxide should be sent to an approved facility for destruction. Some countries allow it to be diluted with water to a concentration of less than 1% and poured into the drain.

Manual Emptying of the Peroxide Bath

If this equipment is stopped by an emergency stop device or by power failure, the peroxide bath must be manually emptied.

WARNING
Corrosive chemical.
Follow the instructions for Emergency Procedures, Personal Protective Equipment, Handling, Storage, and Disposal in this Hydrogen Peroxide (H_2O_2) section.

a) Open the drainage valve (2) to empty the peroxide bath.

b) Make sure that the peroxide bath is completely empty before closing the drainage valve.

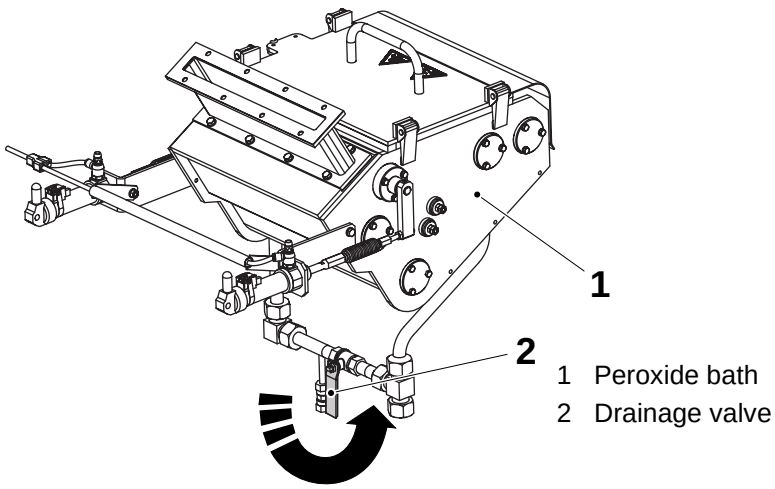

1 Peroxide bath
2 Drainage valve

Supply Systems

Electrical Cabinet

DANGER

Hazardous voltage.
Will shock, burn, or cause death.
The power supply disconnector must be switched off and secured with a lock before maintenance inside the electrical cabinet.

Note! The key to the lock must be removed by the technician and retained in his/her possession until all work is completed.

Make sure that the electrical cabinet doors are closed after working inside the electrical cabinet. Doors with lock must be locked.

The location of each electrical cabinet is shown by an arrow.

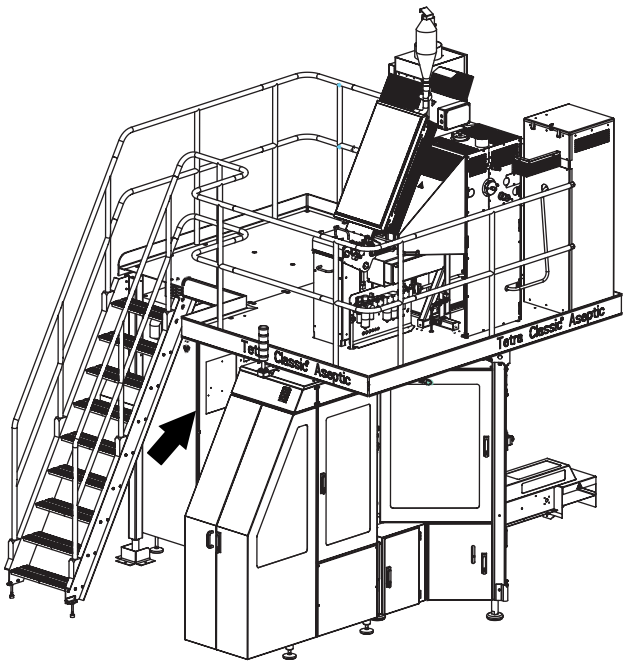

Socket Outlet

WARNING
Hazardous voltage.
Can shock, burn, or cause death. Read the Maintenance Manual before using this socket outlet.

The illustrations show the socket outlet (1) and the residual current device (2). Their locations in the electrical cabinet (3) are shown by arrows.

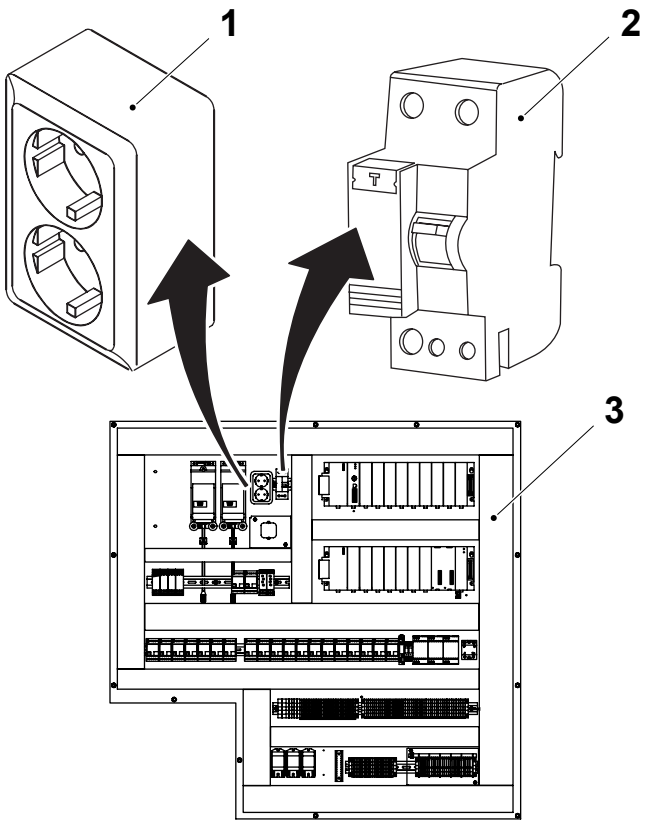

1 Socket outlet
2 Residual current device
3 Electrical cabinet

Power Supply

DANGER

Hazardous voltage and moving machinery.
The power supply disconnector must be switched off and secured with a lock before any maintenance.

Note! The key to the lock must be removed by the technician and retained in his/her possession until all work is completed.

Certain maintenance procedures may require power supply systems to be on. These exceptions are clearly stated in the Maintenance Manual.

The illustration shows the power supply disconnector. The arrow shows its location on this equipment.

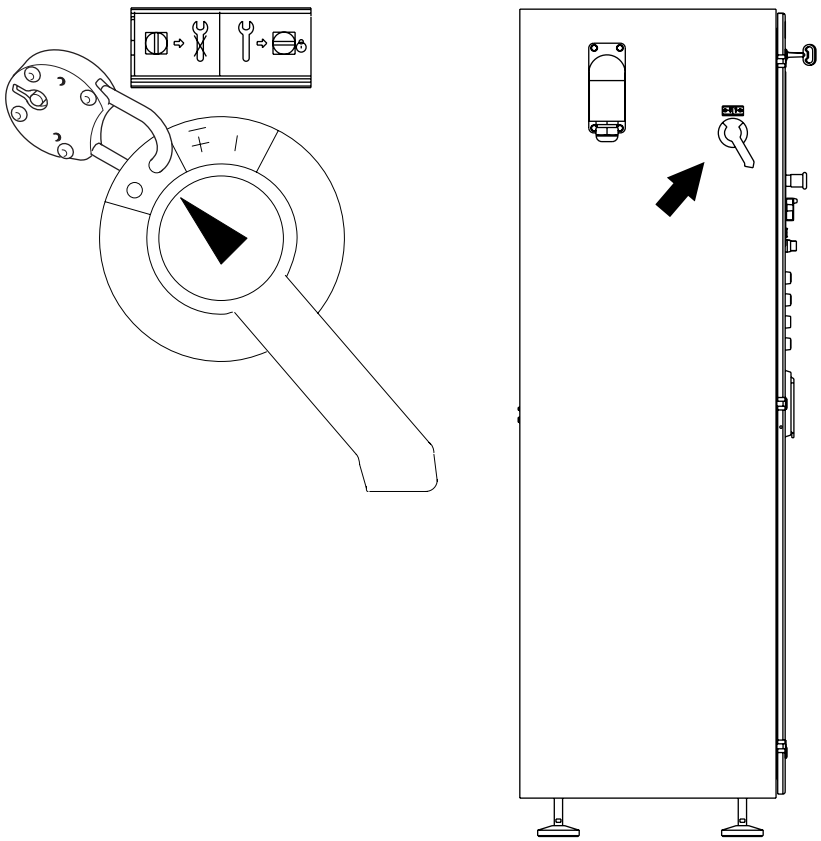

Air Supply

WARNING

Compressed air and moving machinery.
Close the main air valve and secure it with a lock before any maintenance.

Note! The key to the lock must be removed by the technician and retained in his/her possession until all work is completed.

Certain maintenance procedures may require air supply systems to be on. These exceptions are clearly stated in the Maintenance Manual.

The illustrations show the main air valve (1) and the lock (2). Their locations are shown by arrows.

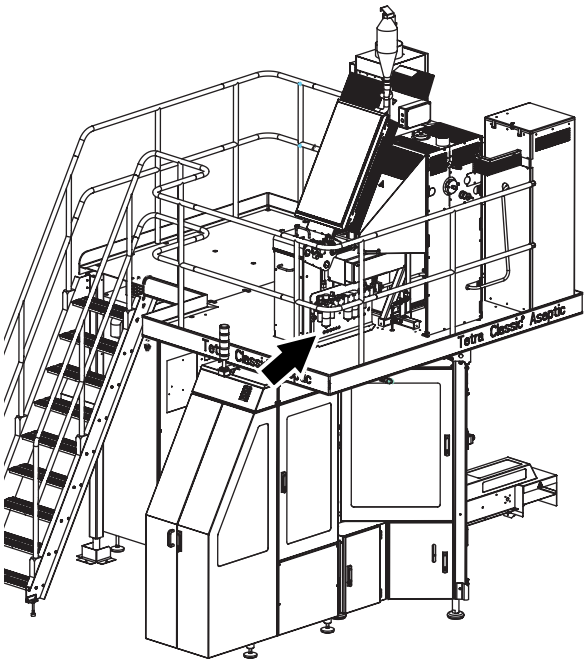

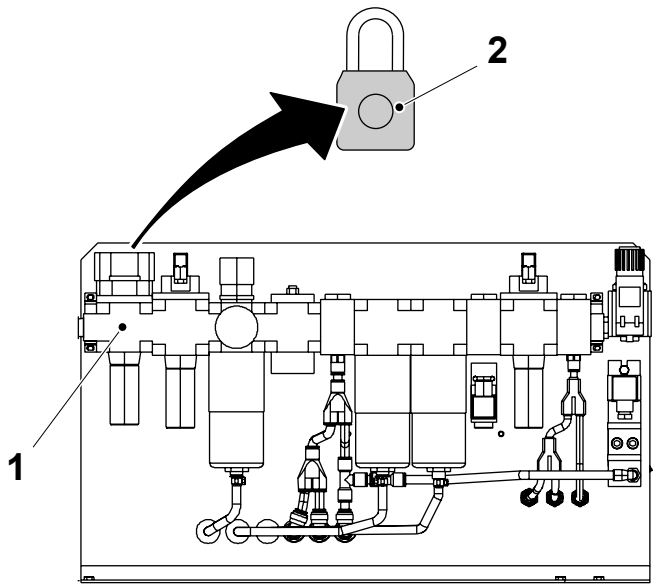

1 Main air valve
2 Padlock

Steam Supply

WARNING

Hot steam can cause scalds.

Pressurized steam can be discharged unexpectedly.
Close the steam supply valve and secure it with a lock, depressurize and vent all steam safely before any maintenance on parts with steam, such as pipes and valves.

Note! The key to the lock must be removed by the technician and retained in his/her possession until all work is completed.

Certain maintenance procedures may require steam supply systems to be on. These exceptions are clearly stated in the Maintenance Manual.

The illustration shows the steam supply valve (1) and its location.

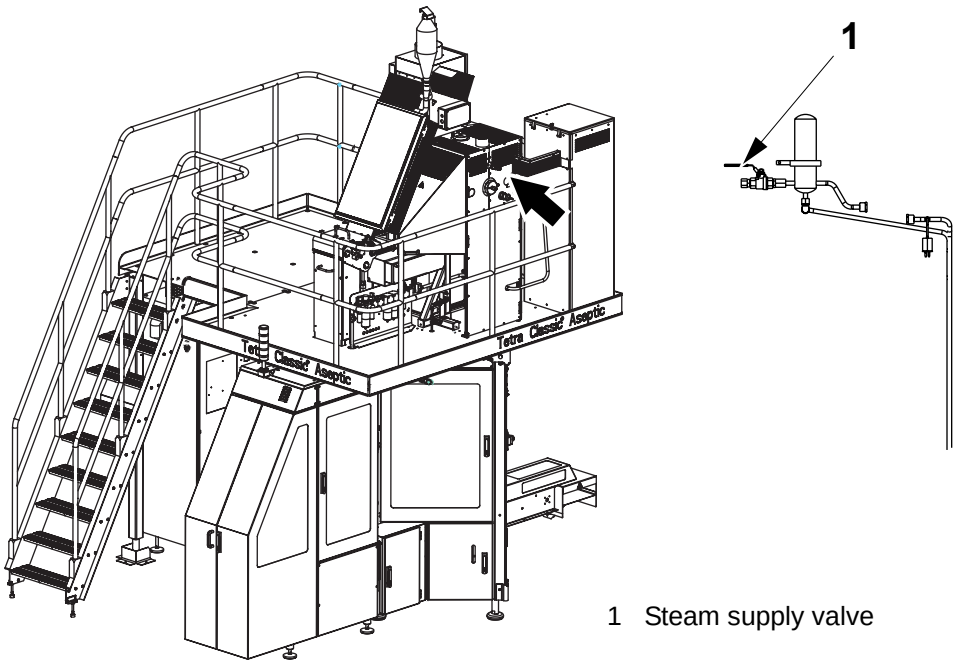

1 Steam supply valve

(Cont'd)

(Cont'd)

WARNING

Hot parts can cause severe burns.

Pipes, valves, and other parts containing steam can be extremely hot. Do not touch hot parts.

Arrows in the illustration below shows hot parts of this equipment.

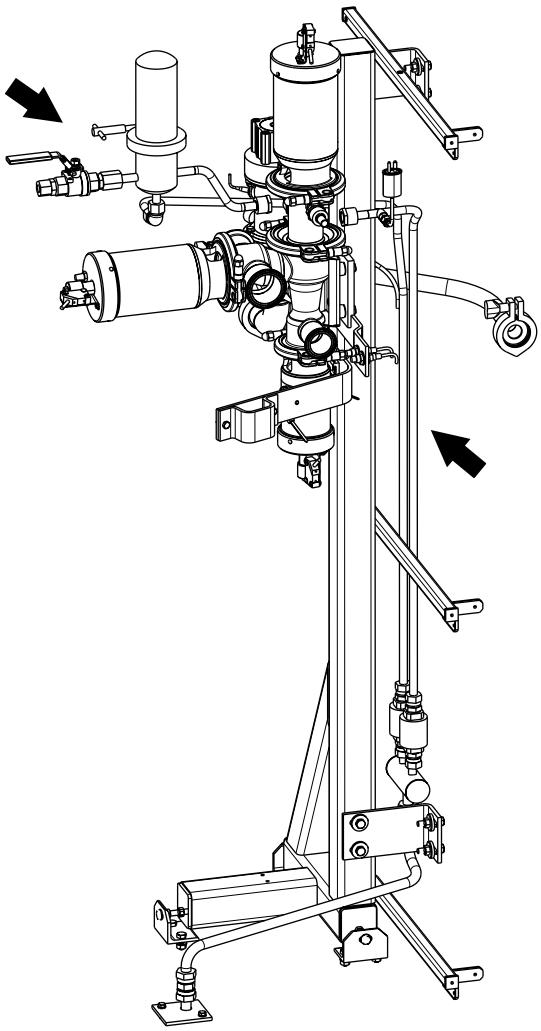

Water Supply

WARNING
Water under pressure.
Close the water supply valves before any maintenance.

Certain maintenance procedures may require water supply systems to be on. These exceptions are clearly stated in the Maintenance Manual.

The illustration shows the water supply valves (1) and their locations.

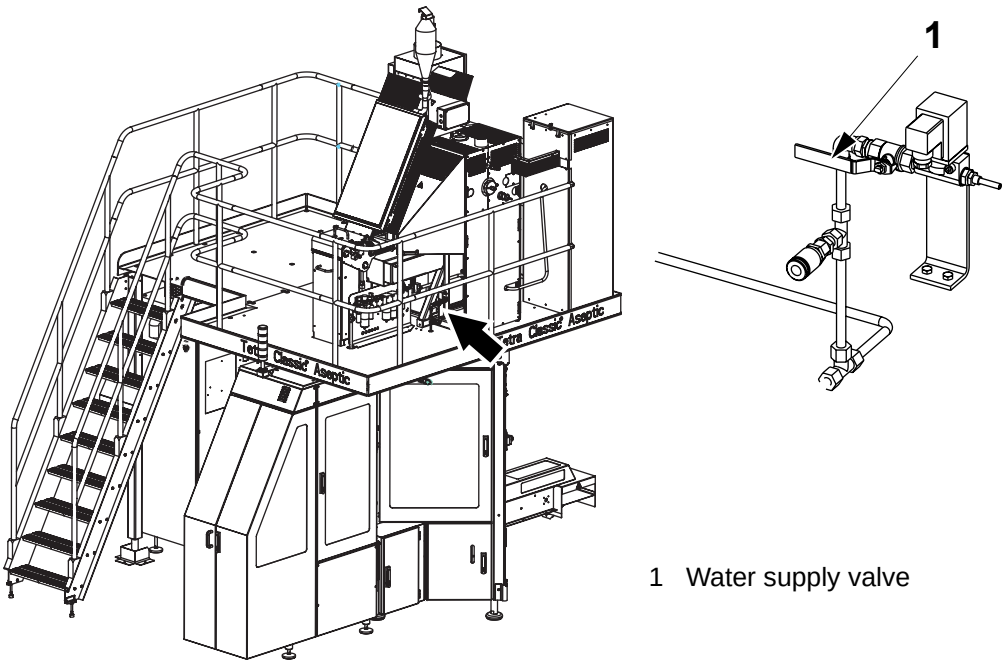

1 Water supply valve

1 General

Description

This chapter contains a general description of the conversion. It describes the kit content and the working method of the conversion.

1.1 Kit Content . . . . . 1 - 5
1.2 Working Method. . . . . 1 - 6

This page intentionally left blank

1.1 Kit Content

The kit consists of two boxes. See illustrations for box content. For information of the spare parts, see SPC-85603-xxxx.

Box 1, two views

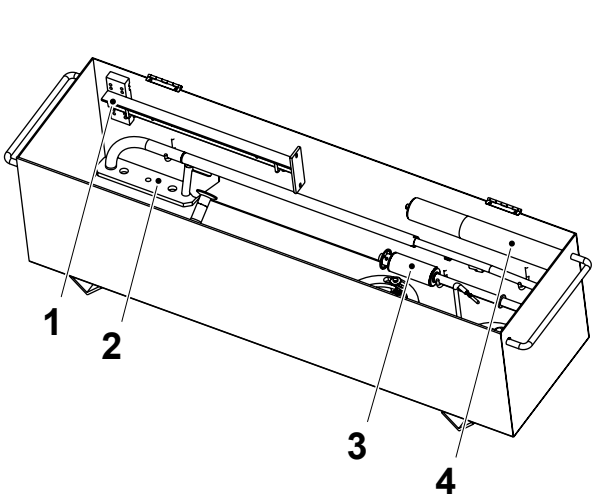

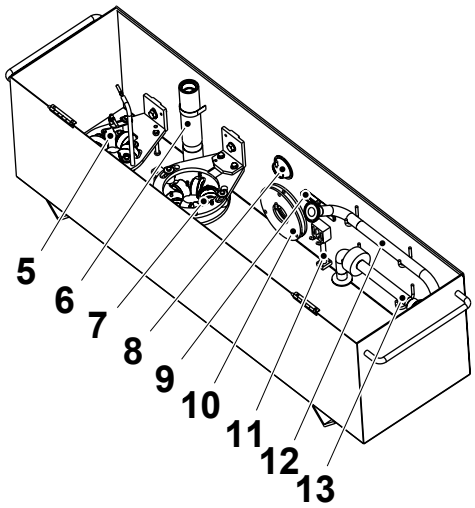

Box 2

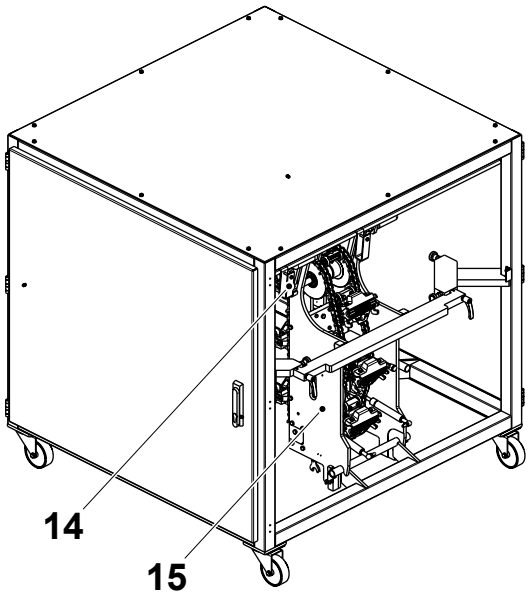

1 Coil holder
2 Upper filling pipe
3 Lower filling pipe
4 Roller
5 Lower forming ring
6 Roller
7 Upper forming ring
8 Seal
9 Nozzle
10 Clamp ring
11 Air knife
12 Pipe connection 2
13 Pipe connection 1
14 Lifting devices
15 Machine side

All references to other manuals, aim to the manuals delivered with the Tetra Pak A1 filling machine.

1.2 Working Method

The first time volume conversion for a standard Tetra Pak A1 machine without extra equipment takes approximately 24 hours for two technicians. The first conversion involves pinning and extra settings of the machine. A Tetra Pak technician must participate in this conversion.

An in production volume conversion for a standard Tetra Pak A1 machine without extra equipment takes approximately 8 hours for two technicians (without cleaning and sterilisation). One of the technicians must be a skilled technician.

The working order is as follows:

Conversion between 65 and 150S:

- Infeed
  - 3.1-1 Bobbin - Change on page 3-5
  - 3.1-2 Bending Roller - Change on page 3-6
- Superstructure
  - 3.2-1 Air Knife - Change on page 3-7
  - 3.2-2 Pendulum Roller - Change on page 3-8
  - 3.2-3 Filling pipe - Remove on page 3-9
  - 3.2-4 Upper Forming Ring - Change on page 3-10
  - 3.2-5 Lower Forming Ring - Remove on page 3-11
  - 3.2-6 Seal Ring - Change on page 3-12
  - 3.2-7 Lower Forming Ring - Assemble on page 3-13
  - 3.2-8 Longitudinal Element Nozzle - Change on page 3-14
  - 3.2-10 Filling Pipe - Assemble on page 3-16
- Main body
  - 3.3-1 Heating Side - Remove on page 3-19
  - 3.3-2 Pressure Side - Remove on page 3-22
  - 3.3-3 Chain Tensioner Spacer Block - Change on page 3-25
  - 3.3-4 Pressure Side - Assemble on page 3-26
  - 3.3-5 Heating Side - Assemble on page 3-29
- Cleaning system
  - 3.4-1 Pipe Connection 1 - Change on page 3-32
  - 3.4-2 Pipe Connection 2 - Change on page 3-33
- Electrical equipment
  - 3.5-1 PLC Program - Set on page 3-34
  - 3.5-2 Frequency Converter - Set on page 3-35
- Setting
  - 3.6 Setting on page 3-36

(Cont'd)

(Cont'd)

Conversion between 65 and 200S:

- Infeed
  - 3.1-1 Bobbin - Change on page 3-5
  - 3.1-2 Bending Roller - Change on page 3-6
- Superstructure
  - 3.2-1 Air Knife - Change on page 3-7
  - 3.2-2 Pendulum Roller - Change on page 3-8
  - 3.2-3 Filling pipe - Remove on page 3-9
  - 3.2-4 Upper Forming Ring - Change on page 3-10
  - 3.2-5 Lower Forming Ring - Remove on page 3-11
  - 3.2-6 Seal Ring - Change on page 3-12
  - 3.2-7 Lower Forming Ring - Assemble on page 3-13
  - 3.2-8 Longitudinal Element Nozzle - Change on page 3-14
  - 3.2-10 Filling Pipe - Assemble on page 3-16
  - 3.2-11 Coil Holder Bracket - Change on page 3-17
- Main body
  - 3.3-1 Heating Side - Remove on page 3-19
  - 3.3-2 Pressure Side - Remove on page 3-22
  - 3.3-3 Chain Tensioner Spacer Block - Change on page 3-25
  - 3.3-4 Pressure Side - Assemble on page 3-26
  - 3.3-5 Heating Side - Assemble on page 3-29
- Cleaning system
  - 3.4-1 Pipe Connection 1 - Change on page 3-32
  - 3.4-2 Pipe Connection 2 - Change on page 3-33
- Electrical equipment
  - 3.5-1 PLC Program - Set on page 3-34
  - 3.5-2 Frequency Converter - Set on page 3-35
- Setting
  - 3.6 Setting on page 3-36

(Cont'd)

(Cont'd)

Conversion between 65 and 200B:

- Infeed
  - 3.1-1 Bobbin - Change on page 3-5
  - 3.1-2 Bending Roller - Change on page 3-6
- Superstructure
  - 3.2-1 Air Knife - Change on page 3-7
  - 3.2-2 Pendulum Roller - Change on page 3-8
  - 3.2-3 Filling pipe - Remove on page 3-9
  - 3.2-4 Upper Forming Ring - Change on page 3-10
  - 3.2-5 Lower Forming Ring - Remove on page 3-11
  - 3.2-6 Seal Ring - Change on page 3-12
  - 3.2-7 Lower Forming Ring - Assemble on page 3-13
  - 3.2-8 Longitudinal Element Nozzle - Change on page 3-14
  - 3.2-10 Filling Pipe - Assemble on page 3-16
  - 3.2-12 Edge Roller - Assemble on page 3-18
- Main body
  - 3.3-1 Heating Side - Remove on page 3-19
  - 3.3-2 Pressure Side - Remove on page 3-22
  - 3.3-4 Pressure Side - Assemble on page 3-26
  - 3.3-5 Heating Side - Assemble on page 3-29
- Cleaning system
  - 3.4-1 Pipe Connection 1 - Change on page 3-32
  - 3.4-2 Pipe Connection 2 - Change on page 3-33
- Electrical equipment
  - 3.5-1 PLC Program - Set on page 3-34
  - 3.5-2 Frequency Converter - Set on page 3-35
- Setting
  - 3.6 Setting on page 3-36

(Cont'd)

(Cont'd)

Conversion between 150S and 200S:

- Infeed
  - 3.1-2 Bending Roller - Change on page 3-6
- Superstructure
  - 3.2-1 Air Knife - Change on page 3-7
  - 3.2-2 Pendulum Roller - Change on page 3-8
  - 3.2-3 Filling pipe - Remove on page 3-9
  - 3.2-4 Upper Forming Ring - Change on page 3-10
  - 3.2-5 Lower Forming Ring - Remove on page 3-11
  - 3.2-6 Seal Ring - Change on page 3-12
  - 3.2-7 Lower Forming Ring - Assemble on page 3-13
  - 3.2-9 Filling Pipe Pressure Roller- Assemble on page 3-15
  - 3.2-10 Filling Pipe - Assemble on page 3-16
  - 3.2-11 Coil Holder Bracket - Change on page 3-17
- Main body
  - 3.3-1 Heating Side - Remove on page 3-19
  - 3.3-2 Pressure Side - Remove on page 3-22
  - 3.3-3 Chain Tensioner Spacer Block - Change on page 3-25
  - 3.3-4 Pressure Side - Assemble on page 3-26
  - 3.3-5 Heating Side - Assemble on page 3-29
- Cleaning system
  - 3.4-1 Pipe Connection 1 - Change on page 3-32
- Electrical equipment
  - 3.5-1 PLC Program - Set on page 3-34
  - 3.5-2 Frequency Converter - Set on page 3-35
- Setting
  - 3.6 Setting on page 3-36

(Cont'd)

(Cont'd)

Conversion between 150S and 200B:

- Infeed
  - 3.1-2 Bending Roller - Change on page 3-6
- Superstructure
  - 3.2-1 Air Knife - Change on page 3-7
  - 3.2-2 Pendulum Roller - Change on page 3-8
  - 3.2-3 Filling pipe - Remove on page 3-9
  - 3.2-4 Upper Forming Ring - Change on page 3-10
  - 3.2-5 Lower Forming Ring - Remove on page 3-11
  - 3.2-6 Seal Ring - Change on page 3-12
  - 3.2-7 Lower Forming Ring - Assemble on page 3-13
  - 3.2-8 Longitudinal Element Nozzle - Change on page 3-14
  - 3.2-9 Filling Pipe Pressure Roller- Assemble on page 3-15
  - 3.2-10 Filling Pipe - Assemble on page 3-16
  - 3.2-12 Edge Roller - Assemble on page 3-18
- Main body
  - 3.3-1 Heating Side - Remove on page 3-19
  - 3.3-2 Pressure Side - Remove on page 3-22
  - 3.3-3 Chain Tensioner Spacer Block - Change on page 3-25
  - 3.3-4 Pressure Side - Assemble on page 3-26
  - 3.3-5 Heating Side - Assemble on page 3-29
- Electrical equipment
  - 3.5-1 PLC Program - Set on page 3-34
  - 3.5-2 Frequency Converter - Set on page 3-35
- Setting
  - 3.6 Setting on page 3-36

(Cont'd)

(Cont'd)

Conversion between 200S and 200B:

- Infeed
  - 3.1-2 Bending Roller - Change on page 3-6
- Superstructure
  - 3.2-1 Air Knife - Change on page 3-7
  - 3.2-2 Pendulum Roller - Change on page 3-8
  - 3.2-3 Filling pipe - Remove on page 3-9
  - 3.2-4 Upper Forming Ring - Change on page 3-10
  - 3.2-5 Lower Forming Ring - Remove on page 3-11
  - 3.2-6 Seal Ring - Change on page 3-12
  - 3.2-7 Lower Forming Ring - Assemble on page 3-13
  - 3.2-8 Longitudinal Element Nozzle - Change on page 3-14
  - 3.2-9 Filling Pipe Pressure Roller- Assemble on page 3-15
  - 3.2-10 Filling Pipe - Assemble on page 3-16
  - 3.2-11 Coil Holder Bracket - Change on page 3-17
  - 3.2-12 Edge Roller - Assemble on page 3-18
- Main body
  - 3.3-1 Heating Side - Remove on page 3-19
  - 3.3-2 Pressure Side - Remove on page 3-22
  - 3.3-3 Chain Tensioner Spacer Block - Change on page 3-25
  - 3.3-4 Pressure Side - Assemble on page 3-26
  - 3.3-5 Heating Side - Assemble on page 3-29
- Cleaning system
  - 3.4-1 Pipe Connection 1 - Change on page 3-32
- Electrical equipment
  - 3.5-1 PLC Program - Set on page 3-34
  - 3.5-2 Frequency Converter - Set on page 3-35
- Setting
  - 3.6 Setting on page 3-36

This page intentionally left blank

2 Preparation Work

Description

This chapter describe procedures to perform before the conversion starts.

2.1 Checks . . . . . 1 - 5
2.2 Daily and Weekly Care . . . . . 1 - 6

This page intentionally left blank

2.1 Checks

Bring the volume kit boxes close to the machine. Check that the kit is complete. See 1.1 Kit Content on page 1-5.

2.2 Daily and Weekly Care

The operations in the Daily Care and the Weekly Care sections in the OM-85600-XXXX must be performed before the conversion work starts in order to clean all parts before storage, and to remove the packaging material and the strip from the machine.

3 Conversion

Description

This chapter describes the conversion of the filling machine.

3.1 Infeed . . . . . 3 - 5

3.1-1 Bobbin - Change . . . . . 3 - 5

3.1-2 Bending Roller - Change . . . . . 3 - 6

3.2 Superstructure . . . . . 3 - 7

3.2-1 Air Knife - Change . . . . . 3 - 7

3.2-2 Pendulum Roller - Change . . . . . 3 - 8

3.2-3 Filling pipe - Remove . . . . . 3 - 9

3.2-4 Upper Forming Ring - Change . . . . . 3 - 10

3.2-5 Lower Forming Ring - Remove . . . . . 3 - 11

3.2-6 Seal Ring - Change . . . . . 3 - 12

3.2-7 Lower Forming Ring - Assemble . . . . . 3 - 13

3.2-8 Longitudinal Element Nozzle - Change . . . . . 3 - 14

3.2-9 Filling Pipe Pressure Roller- Assemble . . . . . 3 - 15

3.2-10 Filling Pipe - Assemble . . . . . 3 - 16

3.2-11 Coil Holder Bracket - Change . . . . . 3 - 17

3.2-12 Edge Roller - Assemble . . . . . 3 - 18

3.3 Main Body . . . . . 3 - 19

3.3-1 Heating Side - Remove . . . . . 3 - 19

3.3-2 Pressure Side - Remove . . . . . 3 - 22

3.3-3 Chain Tensioner Spacer Block - Change . . . . . 3 - 25

3.3-4 Pressure Side - Assemble . . . . . 3 - 26

3.3-5 Heating Side - Assemble . . . . . 3 - 29

3.4 Cleaning System . . . . . 3 - 32

3.4-1 Pipe Connection 1 - Change . . . . . 3 - 32

3.4-2 Pipe Connection 2 - Change . . . . . 3 - 33

3.5 Electrical Equipment . . . . . 3 - 34

3.5-1 PLC Program - Set . . . . . 3 - 34

3.5-2 Frequency Converter - Set . . . . . 3 - 35

3.6 Setting . . . . . 3 - 36

This page intentionally left blank

3.1 Infeed

3.1-1 Bobbin - Change

Machine Status	Power supply disconnector OFF Air valve OFF
SPC Reference	2524120-0100

Note! Valid for volume conversions 65-150S, 65-200S, and 65-200B.

a) Replace the old bobbin (1) with the new bobbin.

b) Set the bobbin. See Bobbin - Set in the MM-85599-XXXX.

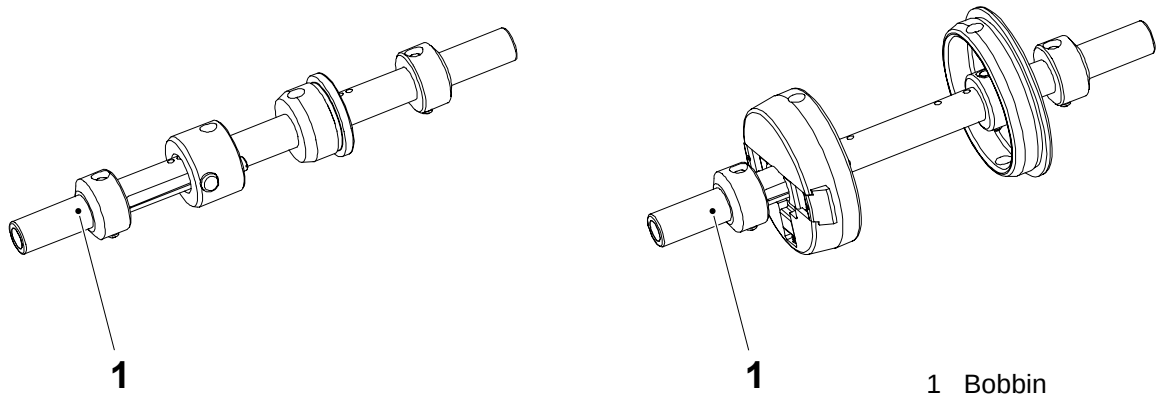

1 Bobbin

3.1-2 Bending Roller - Change

Machine Status	Power supply disconnector OFF Air valve OFF
SPC Reference	2599800-0100

Note! Valid for all volume conversion.

a) Unscrew the screws (1).

b) Pull out the housing (2) and remove the bending roller (3).

c) Assemble in the reverse order with the new bending roller.

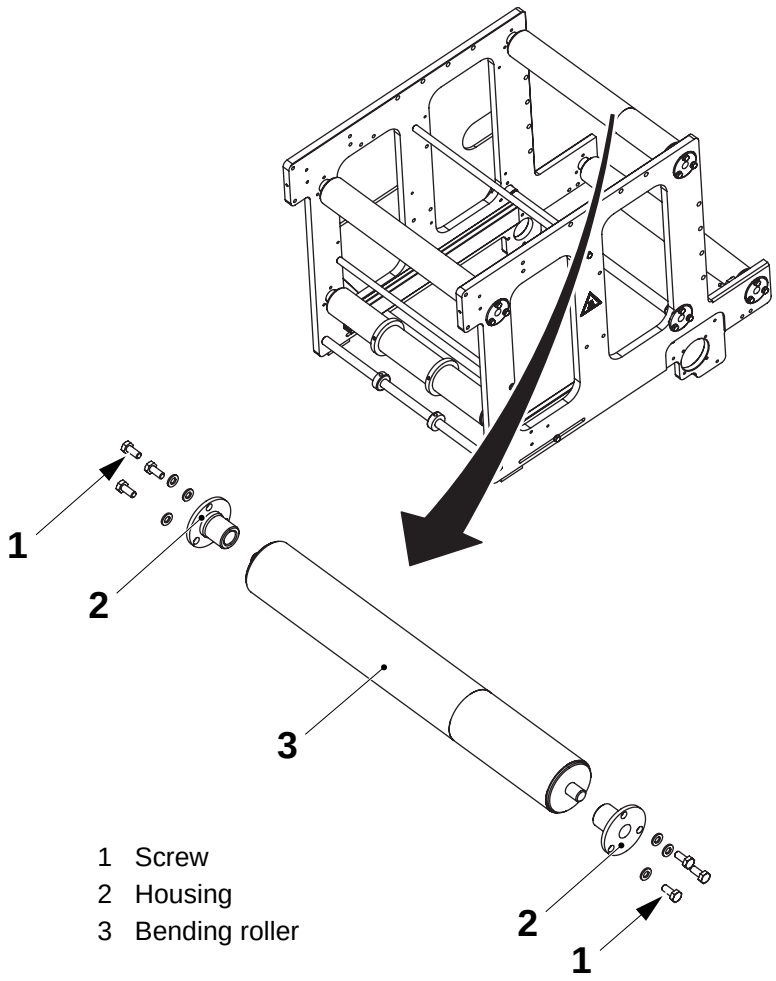

1 Screw
2 Housing
3 Bending roller

3.2 Superstructure

3.2-1 Air Knife - Change

Machine Status	Power supply disconnector OFF Air valve OFF
SPC Reference	2569695-0100

Note! Valid for all volume conversions.

Note! This instruction is not valid if the filling machine is rebuilt with RK 2661246-0100.

a) Open the hatch to the heating chamber.
b) Remove the screws (1) and the washers (2).
c) Remove the air knife (3).
d) Assemble in reverse order with the new air knife.
e) Set the air knife. See Air Knife - Set in the MM-85599-XXXX.

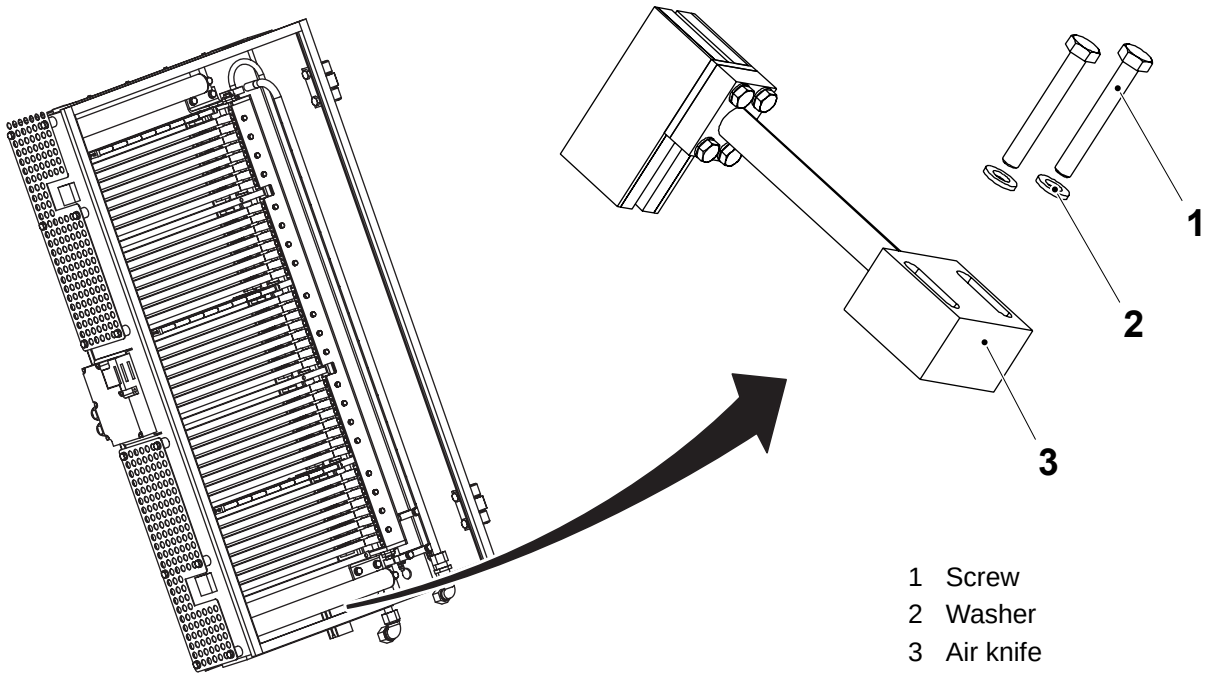

1 Screw
2 Washer
3 Air knife

3.2-2 Pendulum Roller - Change

Machine Status	Power supply disconnector OFF Air valve OFF
SPC Reference	2523930-0100

Note! Valid for all volume conversions.

a) Loosen the screw (1) and move the arm (2) sideways.

b) Remove the roller (3).

c) Assemble in reverse order with the new roller.

Note! Check that the roller is assembled with the groove (4) to the left. See the illustration below.

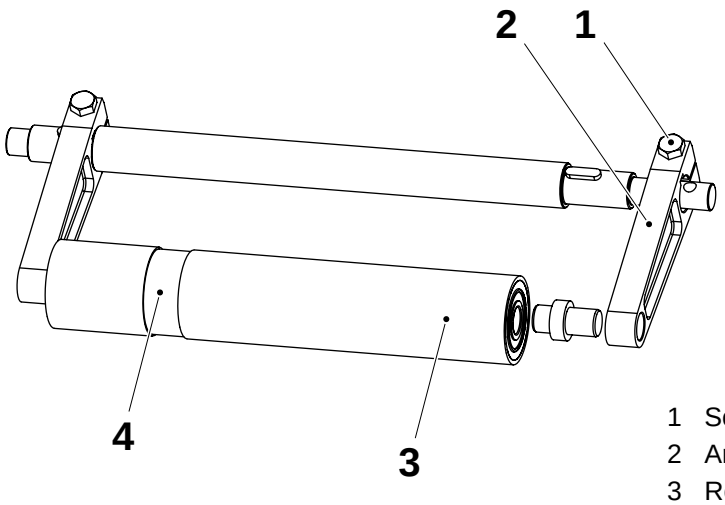

1 Screw
2 Arm
3 Roller
4 Groove

3.2-3 Filling pipe - Remove

Machine Status	Power supply disconnector OFF Air valve OFF
SPC Reference	2524289-0100

Note! Valid for all volume conversions.

a) Remove the shear pin (2).
b) Remove thew lower filling pipe (1).
c) Remove the screw (4).
d) Remove the upper filling pipe (3).

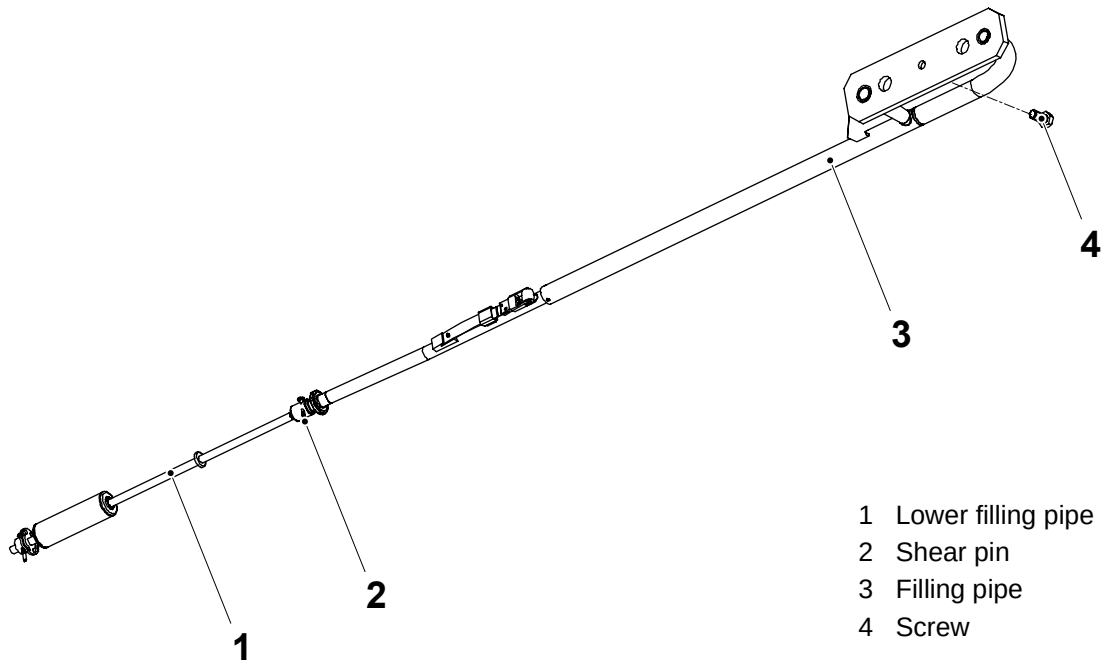

1 Lower filling pipe
2 Shear pin
3 Filling pipe
4 Screw

3.2-4 Upper Forming Ring - Change

Machine Status	Power supply disconnector OFF Air valve OFF
SPC Reference	2524195-0100

Note! Valid for all volume conversions.

a) Remove the screws (1) and washers (2).

b) Remove the screw (3) and nut (4).

c) Remove the screw (5) and washer (6).

d) Remove the upper forming ring (7).

e) Assemble in reverse order with the new upper forming ring. Check that the upper forming ring is in level.

f) Set the upper forming ring. See Upper Forming Ring - Set Paper Tube Alignment in the MM-85599-XXXX.

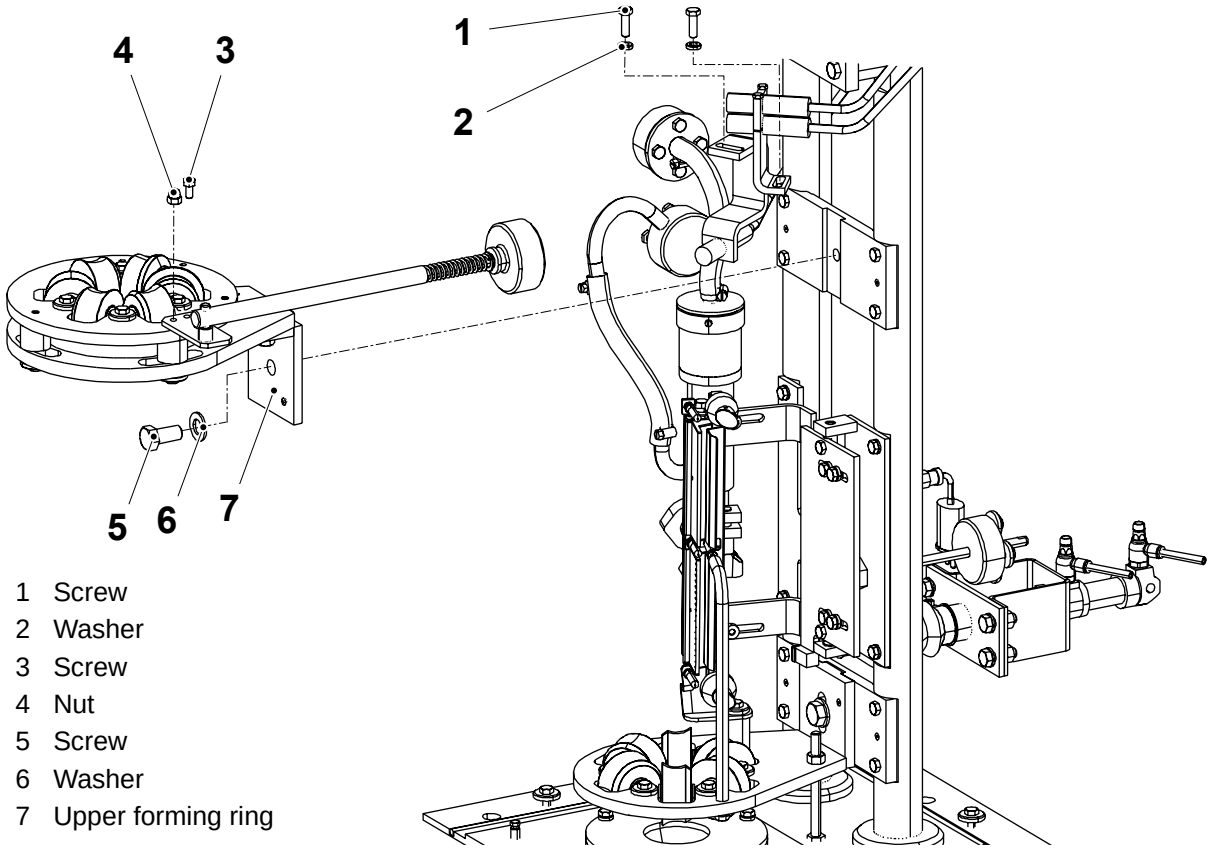

1 Screw
2 Washer
3 Screw
4 Nut
5 Screw
6 Washer
7 Upper forming ring

CAUTION
This instruction is only valid for the first time conversion.

g) Pin the forming ring.

3.2-5 Lower Forming Ring - Remove

Machine Status	Power supply disconnector OFF Air valve OFF
SPC Reference	2523960-0100

Note! Valid for all volume conversions.

a) Remove the screw (1), the washer (2), and the pin (3).

b) Remove the lower forming ring (4).

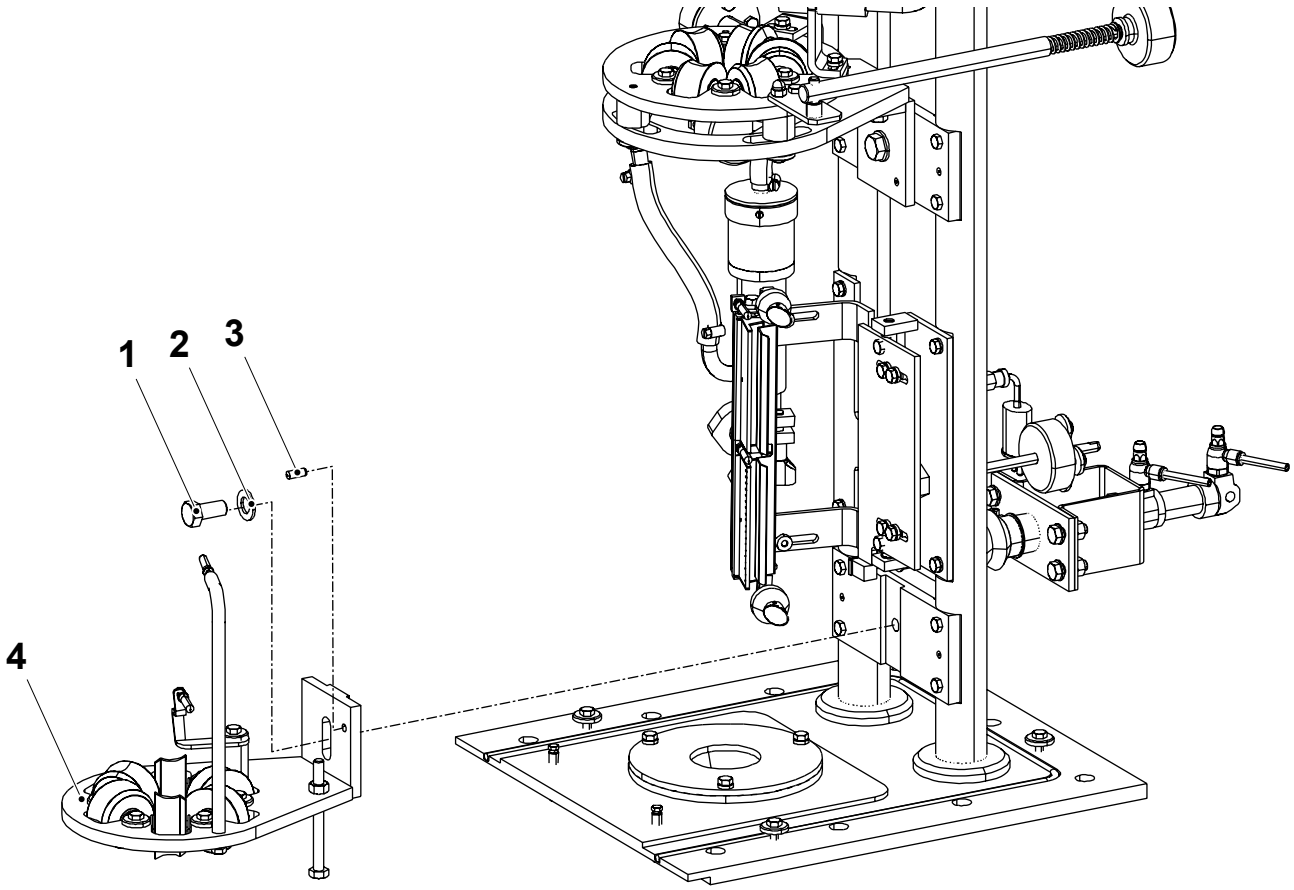

1 Screw
2 Washer
3 Pin
4 Lower forming ring

3.2-6 Seal Ring - Change

Machine Status	Power supply disconnector OFF Air valve OFF
SPC Reference	2524185-0100

Note! Valid for all volume conversions.

a) Remove the screws (1) and the washers (2).

b) Remove the clamp rings (3) and (5), and the seal ring (4).

c) Assemble in reverse order with new clamp rings and seal ring, and with hand tighten screws.

d) Set the seal ring. See Cantilever - Change Seal Ring in the MM-85599-XXXX.

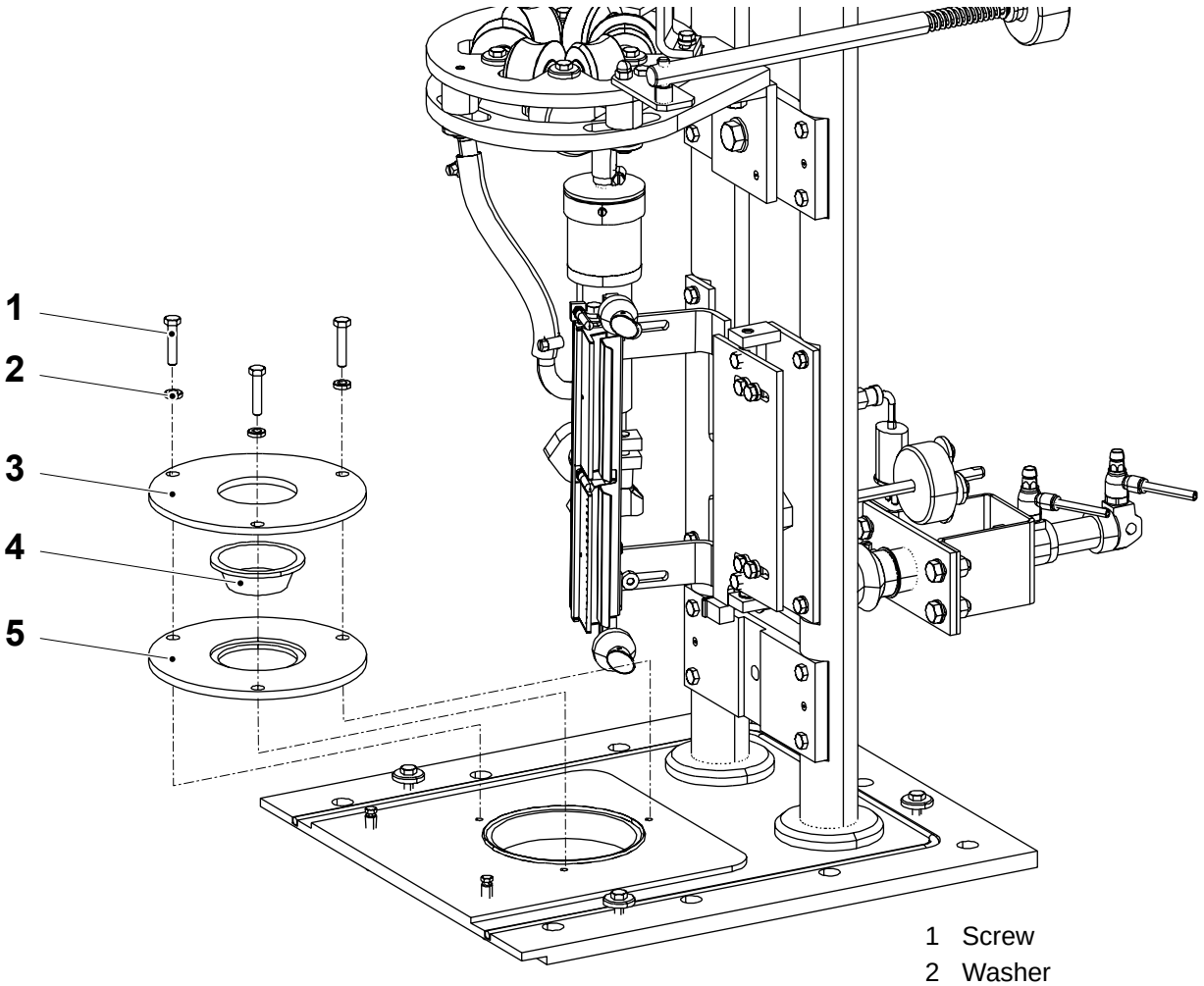

1 Screw
2 Washer
3 Clamp ring
4 Seal ring
5 Clamp ring

3.2-7 Lower Forming Ring - Assemble

Machine Status	Power supply disconnector OFF Air valve OFF
SPC Reference	2523960-0100

Note! Valid for all volume conversions.

a) Install the new forming ring (3) with the screw (1) and the washer (2).

b) Set the lower forming ring. See Lower Forming Ring - Set Height, Lower Forming Ring - Set Guide Rollers, and Lower Forming Ring - Set Overlap in the MM-85599-XXXX.

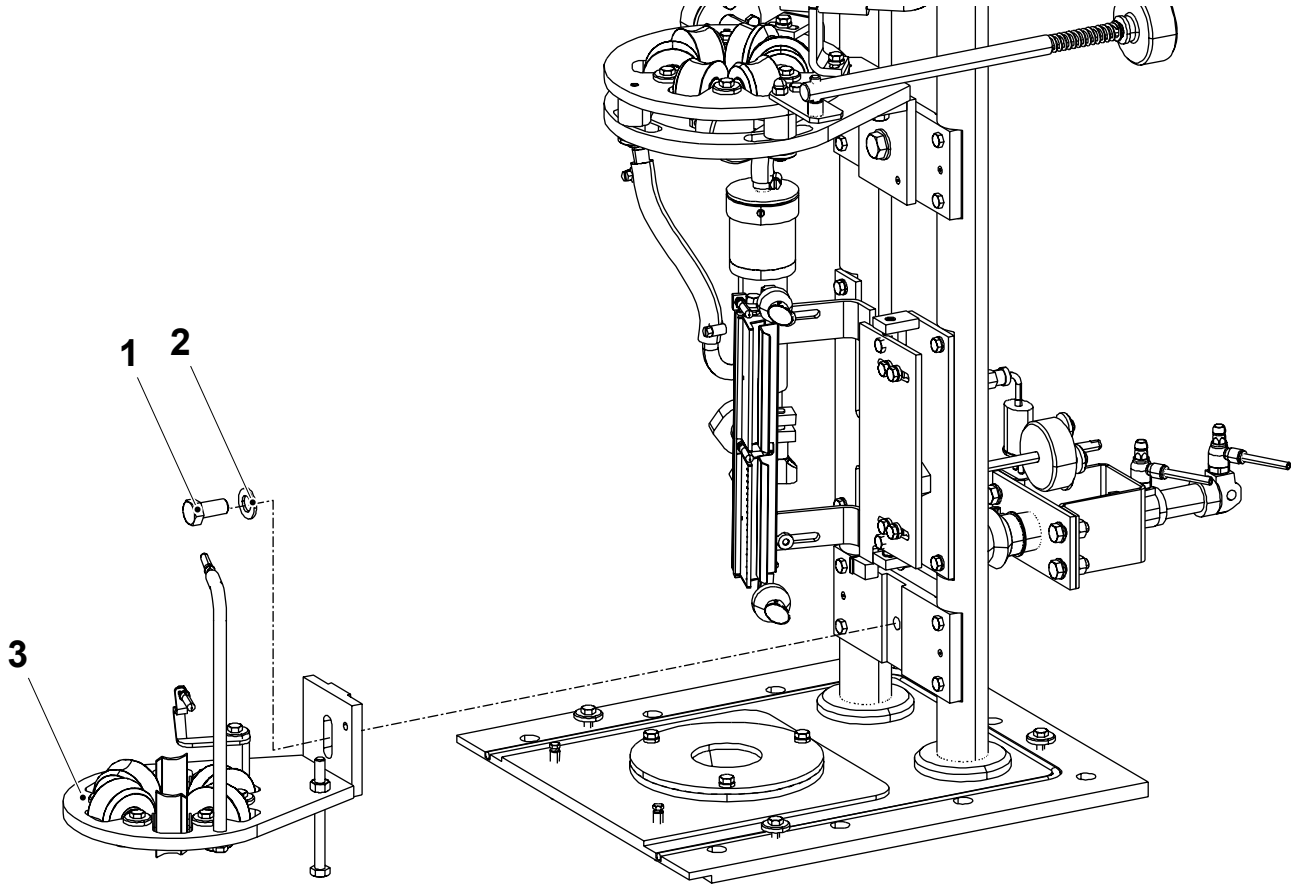

1 Screw
2 Washer
3 Lower forming ring

CAUTION
This instruction is only valid for the first time conversion.

c) Pin the forming ring.

3.2-8 Longitudinal Element Nozzle - Change

Machine Status	Power supply disconnector OFF Air valve OFF
SPC Reference	2524080-0100

Note! Valid for volume conversions 65-150S, 65-200S, 65-200B, 150B-200S, and 200S-200B.

a) Remove the clamp (2)

b) Remove the lead in (3).

c) Remove the screws (1) and the washers.

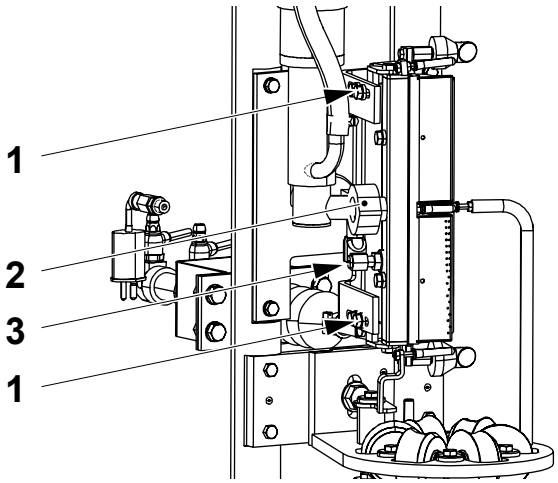

1 Screw
2 Clamp
3 Lead in

d) Remove the screw (4) and the washer (5).

e) Remove the nozzle (6).

f) Assemble in reverse order with the new nozzle.

g) Set the longitudinal element. See Longitudinal Element - Set in the MM-85599-XXXX.

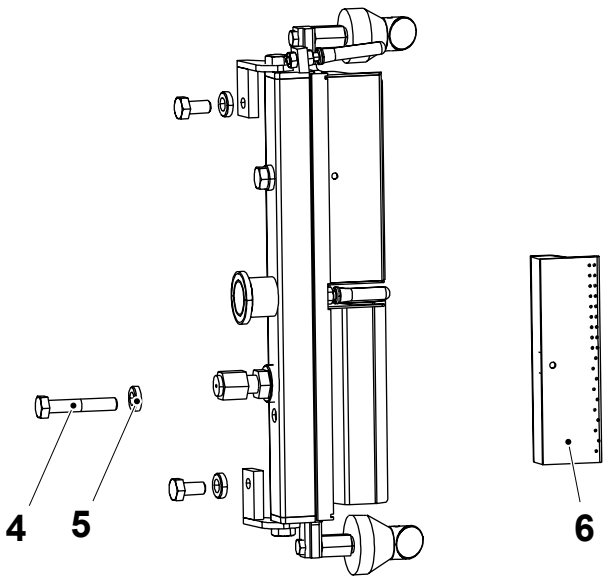

4 Screw
5 Washer
6 Nozzle

3.2-9 Filling Pipe Pressure Roller- Assemble

Machine Status	Power supply disconnector OFF Air valve OFF
SPC Reference	2524289-0100

Note! Valid for volume conversions 150S-200S, 150S-200B and 200S-200B.

a) Assemble the new roller (1), the new shaft (5), and the new o-ring (6) with the new fork (2).

b) Put the hood (4) to the leaf spring (3).

c) Assemble the leaf spring (3) and the upper filling tube (7).

Note! The fork (5) for the 200 ml is not symmetric, make sure to turn it correct. See Preparation in the OM-85600-XXXX.

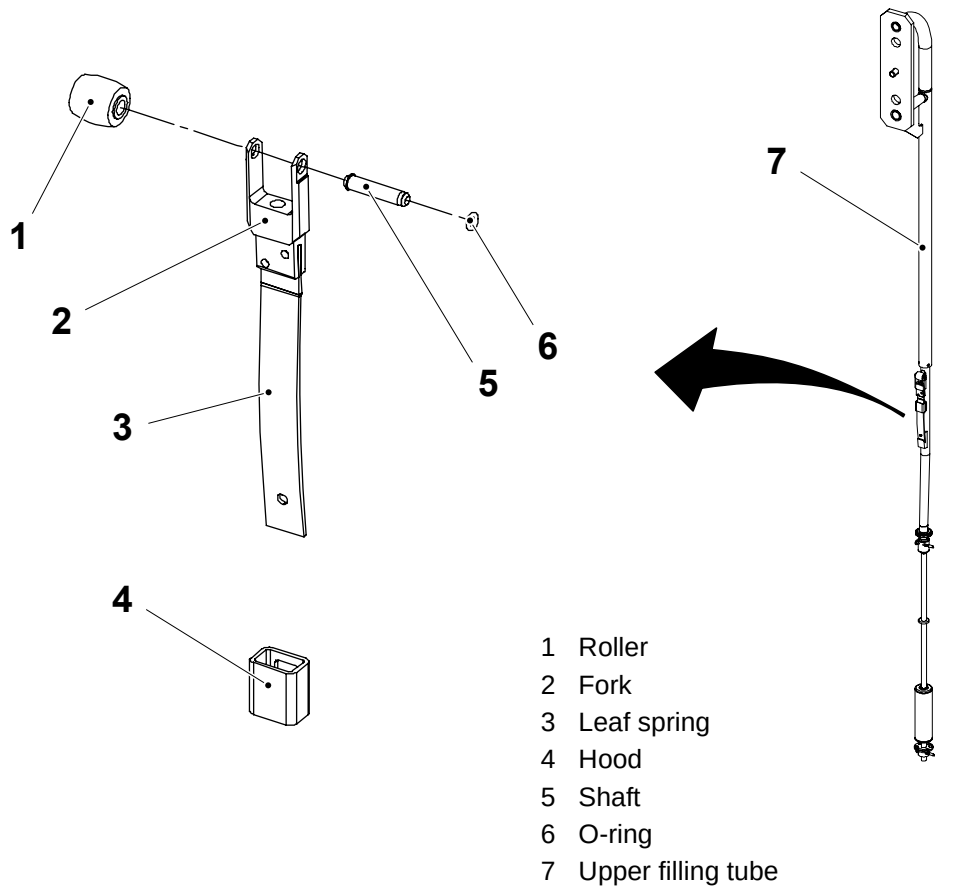

1 Roller
2 Fork
3 Leaf spring
4 Hood
5 Shaft
6 O-ring
7 Upper filling tube

3.2-10 Filling Pipe - Assemble

Machine Status	Power supply disconnector OFF Air valve OFF
SPC Reference	2524289-0100

Note! Valid for all volume conversions.

Note! New upper filling pipe for volume conversions 65-150S, 65-200S, and 65-200B.

a) Install the upper filling pipe (7) on the filling machine with the screw (8).

Note! New tube for volume conversions 150S-200S and 200S-200B.

b) Assemble the shear pin (1), the guide (2), the float (3), and the tube (4).

c) Assemble the tube (4), the shear pin (5), the o-ring (6), and the upper filling tube (7).

d) Set the filling pipe. See Filling Pipe - Set and Filling Pipe - Set Pressure Roller in the MM-85599-XXXX.

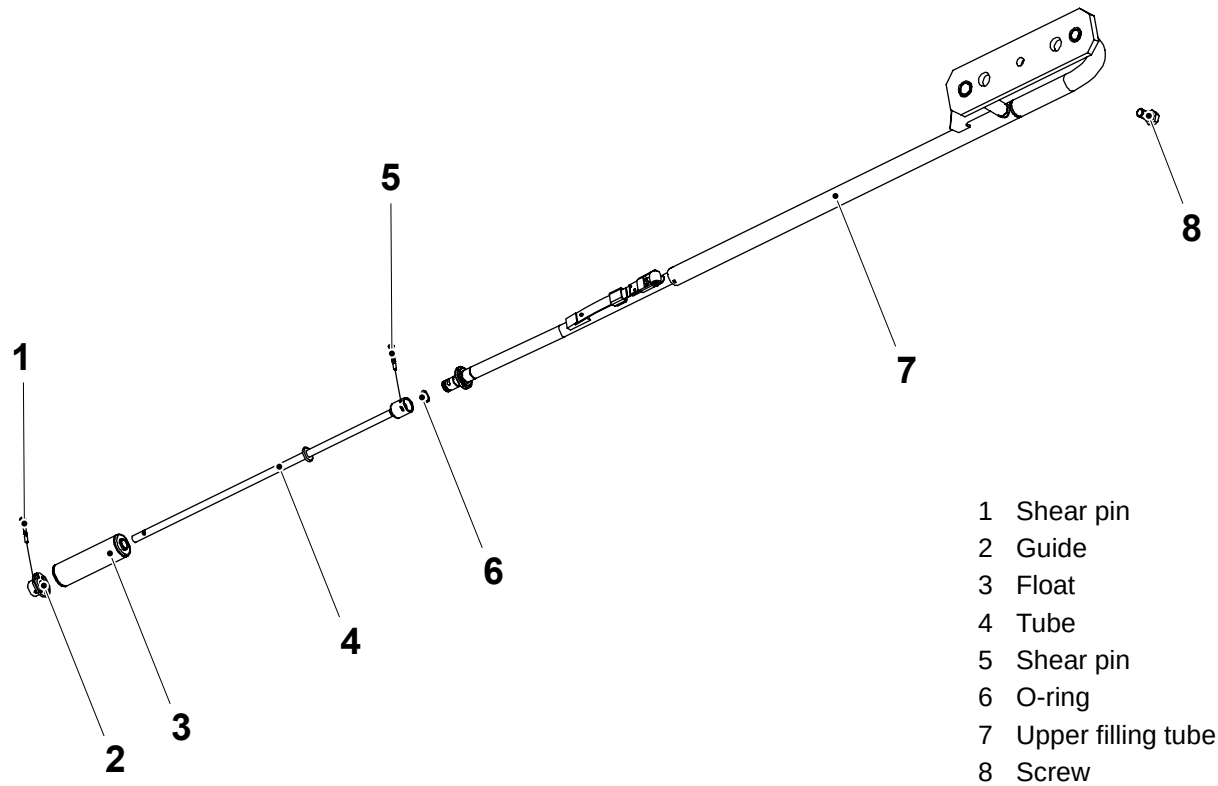

1 Shear pin
2 Guide
3 Float
4 Tube
5 Shear pin
6 O-ring
7 Upper filling tube
8 Screw

3.2-11 Coil Holder Bracket - Change

Machine Status	Power supply disconnector OFF Air valve OFF
SPC Reference	2543075-0100

Note! Valid for volume conversions 65-200S, 150-200S, and 200B-200S.

a) Remove the screws (1).
b) Remove the coil elements (2).
c) Remove the screws (4) and the nuts (5).
d) Remove the tube flushing device (3).
e) Remove the screws (6) and the anchor plates (7).
f) Remove the screw (9).
g) Remove the bracket (8).
h) Assemble in reverse order with new bracket. See Coil - Assemble in the MM-85599-XXXX.

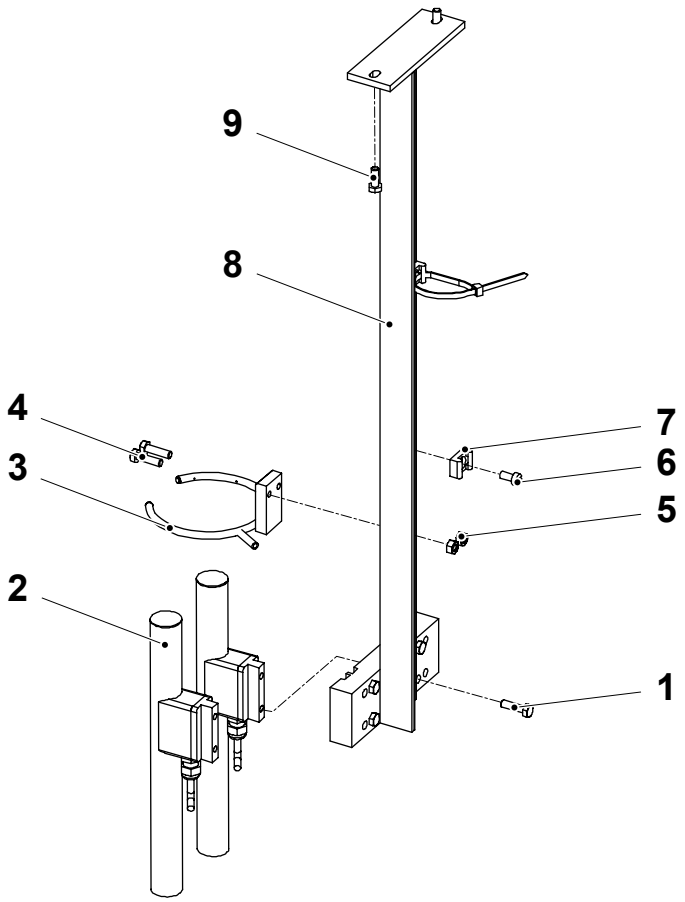

1 Screw
2 Coil element
3 Tube flushing device
4 Screw
5 Nuts
6 Screw
7 Anchor plate
8 Bracket
9 Screw

3.2-12 Edge Roller - Assemble

Machine Status	Power supply disconnector OFF Air valve OFF
SPC Reference	2542730-0100

Note! Valid for volume conversion to 200B.

a) Remove the screws (1), washers (2), and nuts (3).
b) Install the edge roller (4) with the screws (1), washers (2), and nuts (3).
c) Set the edge roller. See Edge roller - Set in the MM-85599-XXXX.

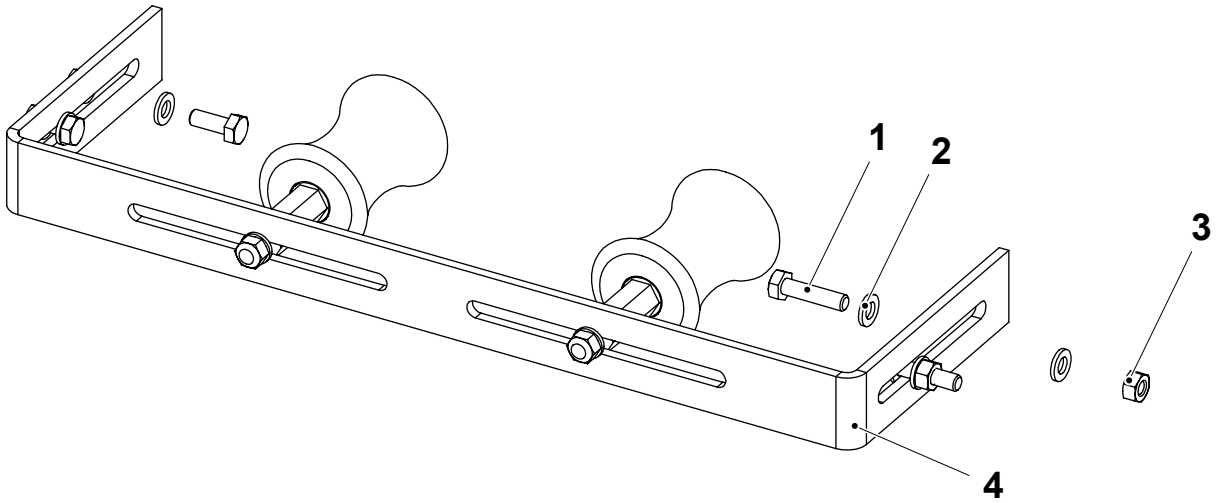

1 Screw
2 Washer
3 Nut
4 Edge roller

3.3 Main Body

3.3-1 Heating Side - Remove

Machine Status	Power supply disconnector OFF Air valve OFF
SPC Reference	2524102-0100 2524105-0100

Note! Valid for all volume conversions.

DANGER

Risk of blocking the evacuation way in case of an emergency.
Never fold down the frame section for pressure side 4 or heating side 1 if the door to the electrical cabinet is open.

WARNING

Risk of crushing.
Always remove the gas dampers before lifting out the side frames. If the fastening for the side is loosened with the gas dampers connected, the side will jump out of its brackets due to the force of the gas dampers.

a) Disconnect the gas dampers from the main body.

b) Fix the gas dampers to the side frames, for example with a piece of adhesive. The gas dampers must not be damaged during the handling and transport of the side frames.

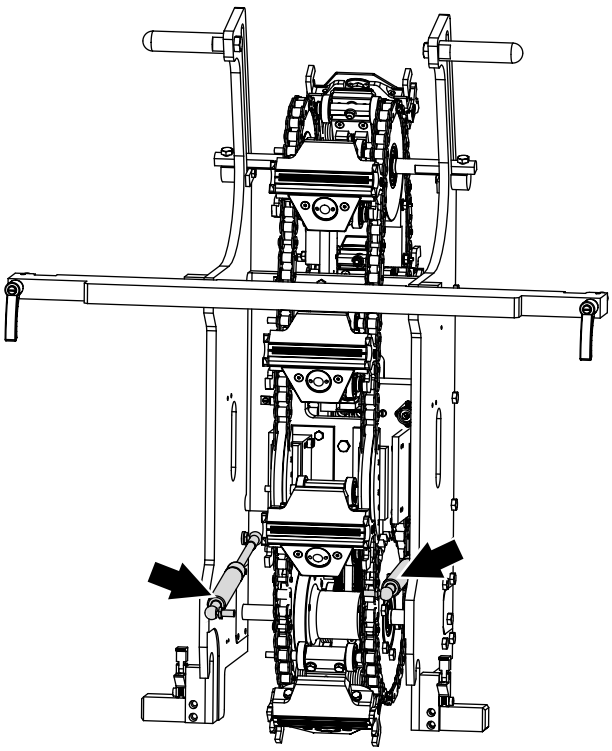

(Cont'd)

(Cont'd)

WARNING
Risk of crushing.
During rotation of the chains with the sides folded down, there is a risk of crushing fingers and hands. Take great care.

WARNING
Risk of crushing.
The side frames are heavy to fell and raise when the gas dampers are disconnected. Always hold both hands on the handles.

c) For one heating jaw (1), make a note of which pressure jaw it faces and which heating jaws of the other heating side it is between.

d) Unscrew the two locking levers (2), grip both handles (3) and lower the side.

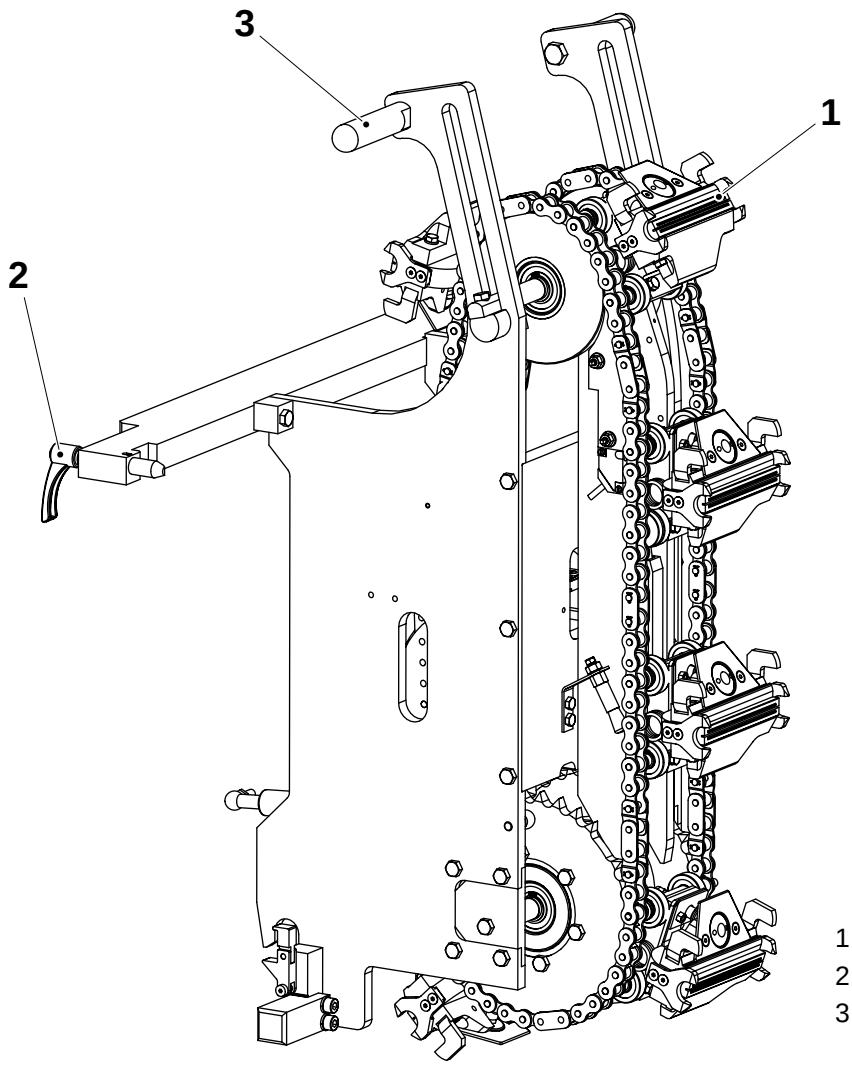

1 Heating jaw
2 Locking lever
3 Handle

(Cont'd)

(Cont'd)

e) For heating side 1, remove the screws (4) and washers (5) for the synchronizer proximity switch (6).

f) Disconnect the lubrication hoses (7) and the IH cable (8).

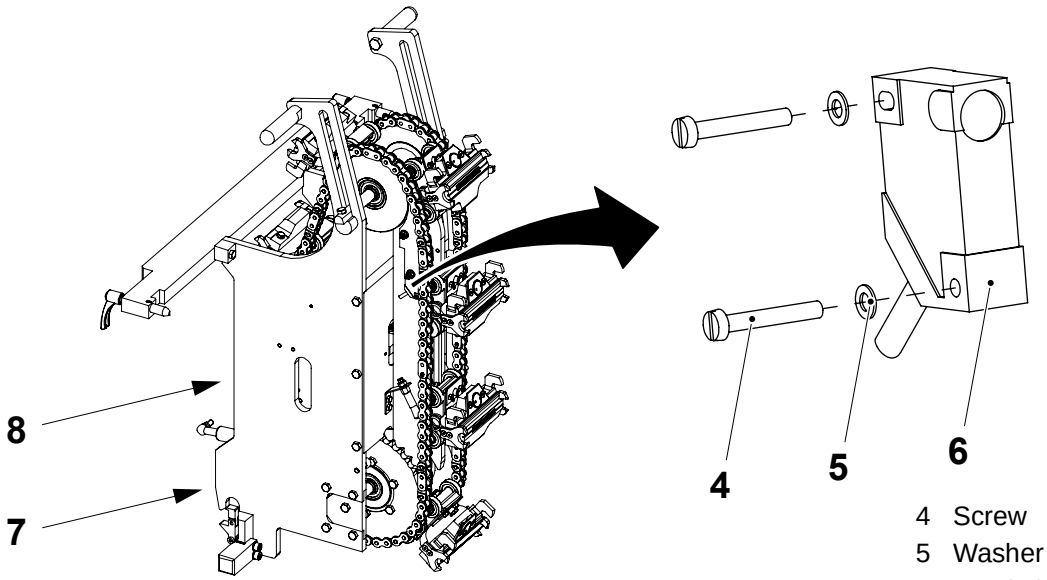

4 Screw
5 Washer
6 Proximity switch
7 Lubrication hose
8 IH cable

WARNING
Risk of crushing.
During transport of the machine side with the trolley, the machine side can jump off the bobbin holders. To prevent this risk, the trolley arm must always be in its upper position during transport of the machine side.

g) Remove the heating side from the main body. See 5.1 Remove Machine Side from Main Body on page 5-5 for instructions.

h) Place the heating side on the floor or in the box. See 5.3 Move Machine Side from Trolley to Floor on page 5-18 or 5.5 Move Machine Side from Trolley to Box on page 5-28 for instructions.

i) Repeat for the other heating side.

3.3-2 Pressure Side - Remove

Machine Status	Power supply disconnector OFF Air valve OFF
SPC Reference	2524107-0100 2524108-0100

Note! Valid for all volume conversions.

DANGER

Risk of blocking the evacuation way in case of an emergency.
Never fold down the frame section for pressure side 4 or heating side 1 if the door to the electrical cabinet is open.

WARNING

Risk of crushing.
Always remove the gas dampers before lifting out the side frames. If the fastening for the side is loosened with the gas dampers connected, the side will jump out of its brackets due to the force of the gas dampers.

a) Disconnect the gas dampers from main body.

b) Fix the gas dampers to the side frames, for example with a piece of adhesive. The gas dampers must not be damaged during the handling and transport of the side frames.

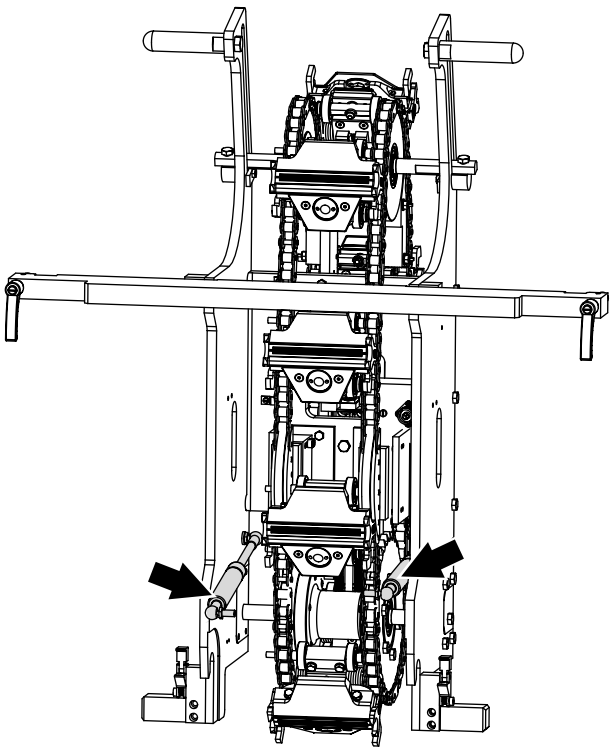

(Cont'd)

(Cont'd)

WARNING
Risk of crushing.
During rotation of the chains with the sides folded down, there is a risk of crushing fingers and hands. Take great care.

WARNING
Risk of crushing.
The side frames are heavy to fell and raise when the gas dampers are disconnected. Always hold both hands on the handles.

a) Make reference marks (1) and (3) on the sprockets and note their positions so the drive chain (2) can be re-assembled with the same relation between the sprockets.

b) Remove the drive chain (2).

c) Unscrew the two locking levers (5), grip both handles (4) and lower the side.

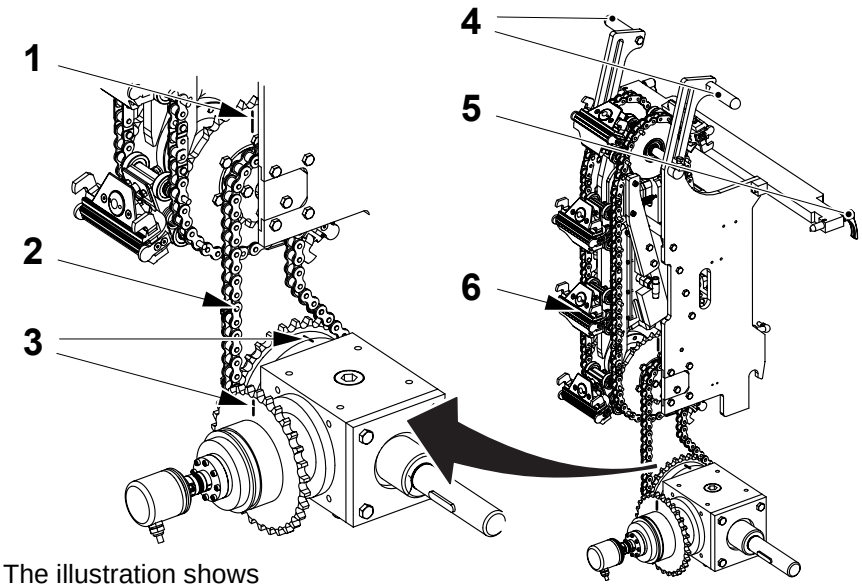

The illustration shows pressure side, side 3.

1 Reference mark
2 Drive chain
3 Reference mark
4 Handle
5 Locking lever
6 Pressure jaw

(Cont'd)

(Cont'd)

d) Disconnect the lubrication hoses (7) and the hydraulic hoses (8).

e) Disconnect the air hoses to the design correction.

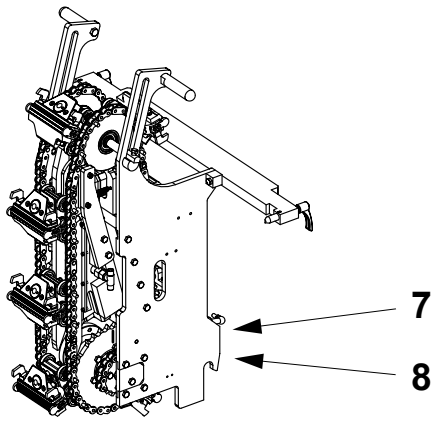

7 Lubrication hose
8 Hydraulic hose

WARNING

Risk of crushing.

During transport of the machine side with the trolley, the machine side can jump off the bobbin holders. To prevent this risk, the trolley arm must always be in its upper position during transport of the machine side.

f) Remove the pressure side from the main body. See 5.1 Remove Machine Side from Main Body on page 5-5 for instructions.

g) Place the pressure side on the floor or in the box. See 5.3 Move Machine Side from Trolley to Floor on page 5-18 or 5.5 Move Machine Side from Trolley to Box on page 5-28 for instructions.

h) Repeat for the other pressure side.

3.3-3 Chain Tensioner Spacer Block - Change

Machine Status	Power supply disconnector OFF Air valve OFF
SPC Reference	2523913-0100

Note! Valid for volume conversions 65-150S, 65-200S, 150-200S, 150-200B, and 200S-200B.

a) Remove the screws (1).
b) Remove the chain tensioners (2).
c) Remove the screws (3).
d) Remove the spacer blocks (4).
e) Assemble in reverse order with the new spacer blocks and the new screws.

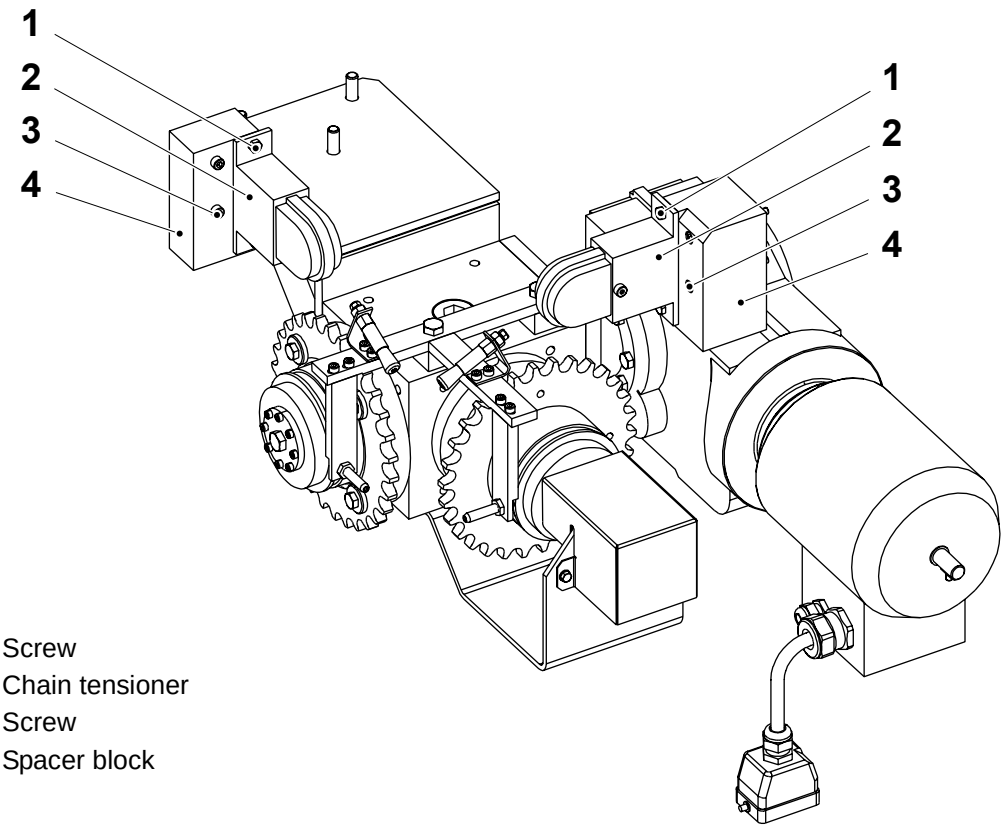

1 Screw
2 Chain tensioner
3 Screw
4 Spacer block

3.3-4 Pressure Side - Assemble

Machine Status	Power supply disconnector OFF Air valve OFF
SPC Reference	2524107-0100 2524108-0100

Note! Valid for all volume conversions.

DANGER

Risk of blocking the evacuation way in case of an emergency.
Never fold down the frame section for pressure side 4 or heating side 1 if the door to the electrical cabinet is open.

WARNING

Risk of crushing.
During rotation of the chains with the sides folded down, there is a risk of crushing fingers and hands. Take great care.

WARNING

Risk of crushing.
During transport of the machine side with the trolley, the machine side can jump off the bobbin holders. To prevent this risk, the trolley arm must always be in its upper position during transport of the machine side.

a) Pick up the pressure side from the box or the floor and place it on the trolley. See 5.4 Move Machine Side from Floor to Trolley on page 5-23 or 5.6 Move Machine Side from Box to Trolley on page 5-23 for instructions.

b) Assemble the pressure side with the main body. See 5.2 Assemble Machine Side and Main Body on page 5-12 for instructions.

(Cont'd)

(Cont'd)

c) Check that the gear box sprockets are at the same position as before removing the drive chain. Check the reference marks (1).
If there are no references, the relation between the sprockets is unknown, see Sprocket - Change Sprockets in the MM-85599-XXXX.

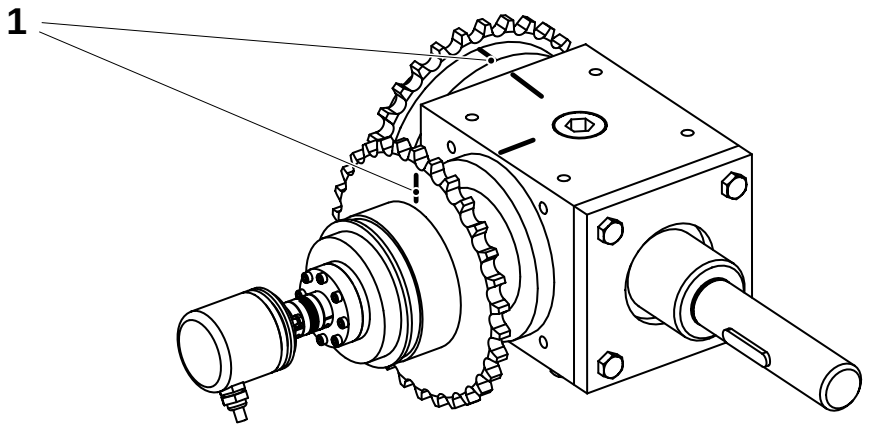

1 Reference mark, sprocket - gearbox

(Cont'd)

(Cont'd)

WARNING
Risk of crushing.
The side frames are heavy to fell and raise when the gas dampers are disconnected. Always hold both hands on the handles.

d) Connect the lubrication hoses (2) and the hydraulic hoses (3)

e) Connect the air hoses to the design correction.

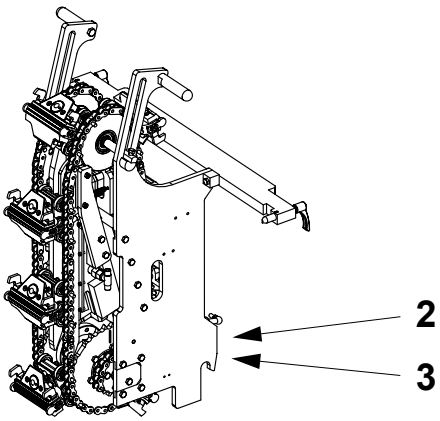

2 Lubrication hose
3 Hydraulic hose

f) Grip both handles (4) and raise the side.

g) Tighten the locking levers (5).

h) Install the new drive chain (7).

Note! Use the old drive chain if the conversion is between 65-150S or 200S-200B.

i) Assemble the gas dampers (6) with the main body.

j) Repeat for the other pressure side.

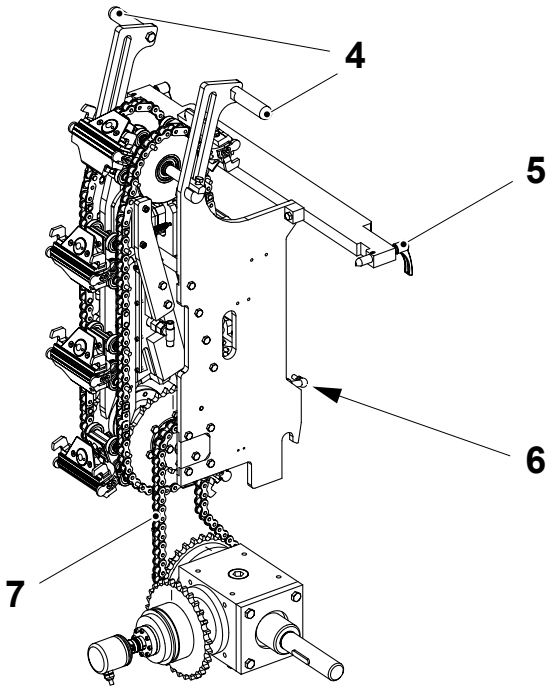

The illustration shows pressure side, side 3.

4 Handle
5 Locking lever
6 Gas damper
7 Drive chain

3.3-5 Heating Side - Assemble

Machine Status	Power supply disconnector OFF Air valve OFF
SPC Reference	2524102-0100 2524105-0100

Note! Valid for all volume conversions.

DANGER

Risk of blocking the evacuation way in case of an emergency.
Never fold down the frame section for pressure side 4 or heating side 1 if the door to the electrical cabinet is open.

WARNING

Risk of crushing.
During rotation of the chains with the sides folded down, there is a risk of crushing fingers and hands. Take great care.

WARNING

Risk of crushing.
During transport of the machine side with the trolley, the machine side can jump off the bobbin holders. To prevent this risk, the trolley arm must always be in its upper position during transport of the machine side.

a) Pick up the heating side from the box or the floor and place it on the trolley. See 5.4 Move Machine Side from Floor to Trolley on page 5-23 or 5.6 Move Machine Side from Box to Trolley on page 5-23 for instructions.

b) Assemble the heating side with the main body. See 5.2 Assemble Machine Side and Main Body on page 5-12 for instructions.

(Cont'd)

(Cont'd)

c) Connect the lubrication hoses (2) and the IH cable (1).

d) For heating side 1, mount the synchronizer proximity switch (5) with the screws (3) and washers (4).

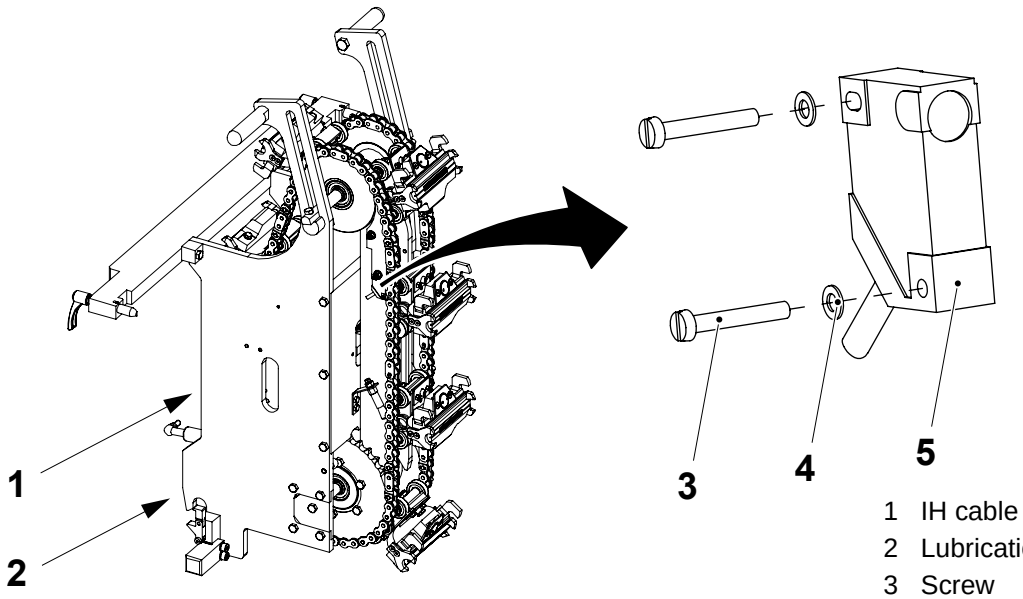

1 IH cable
2 Lubrication hose
3 Screw
4 Washer
5 Proximity switch

(Cont'd)

(Cont'd)

WARNING
Risk of crushing.
The side frames are heavy to fell and raise when the gas dampers are disconnected. Always hold both hands on the handles.

e) Grip both handles (6) and raise the side.

f) Make sure that the heating jaw meets its corresponding pressure jaw and that the relation with the other pressure side jaws is correct. Make sure that the guides (7) get in contact with the guides (8) without force, turn the sides slightly when connecting.

g) Tighten the locking levers (9).

h) Assemble the gas dampers (10) with the main body.

i) Repeat for the other heating side.

j) Set according to Drive unit - Set Package Length and Synchronizer - Check in the MM-85599-XXXX.

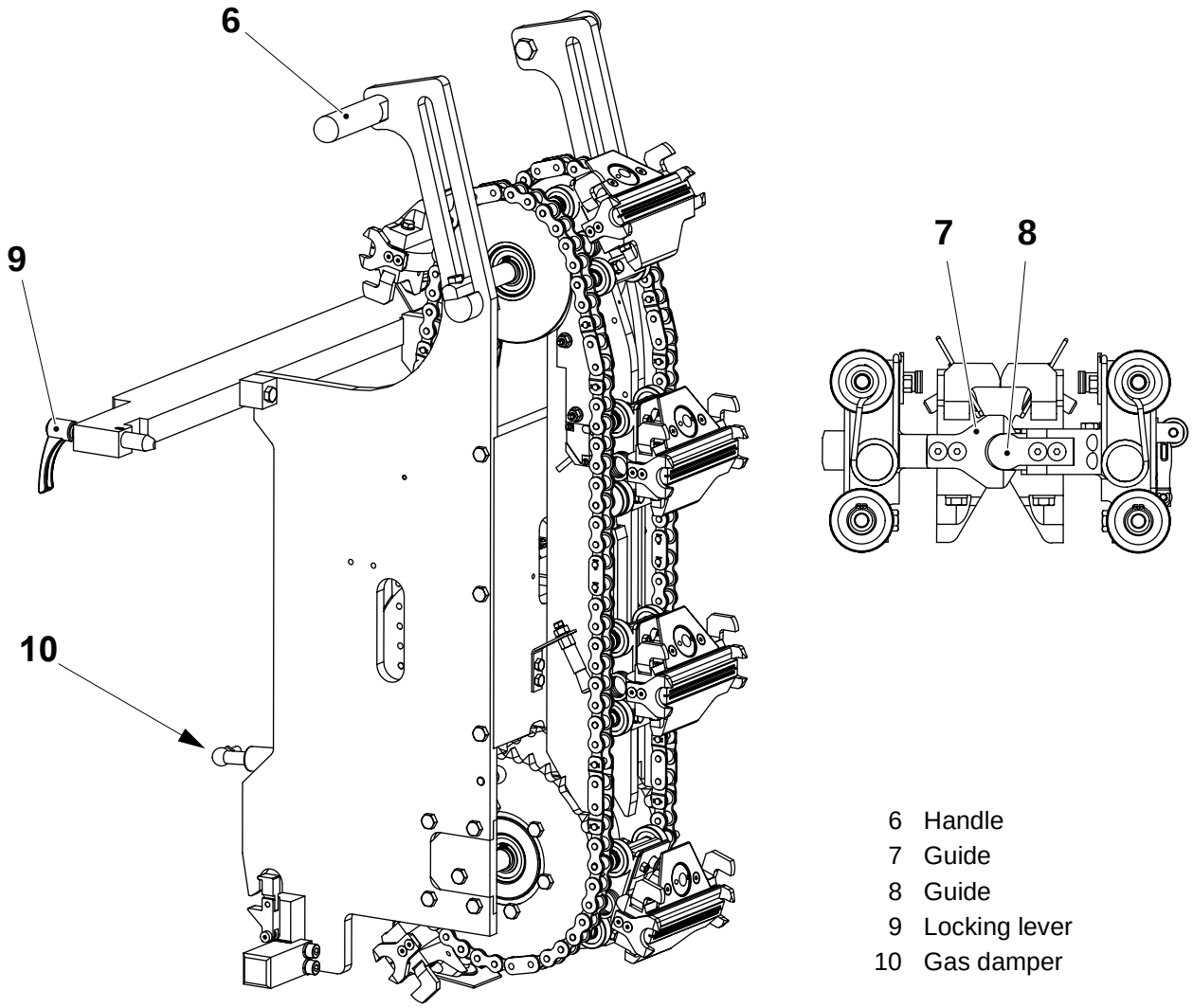

6 Handle
7 Guide
8 Guide
9 Locking lever
10 Gas damper

3.4 Cleaning System

3.4-1 Pipe Connection 1 - Change

Machine Status	Power supply disconnector OFF Air valve OFF
SPC Reference	2543005-0100

Note! Valid for volume conversions 65-150S, 65-200S, 65-200B, 150-200S, and 200S-200B.

a) Replace the old pipe connection (1), the old o-ring (2), the old nut (3), and the old gasket (4) with the new parts.

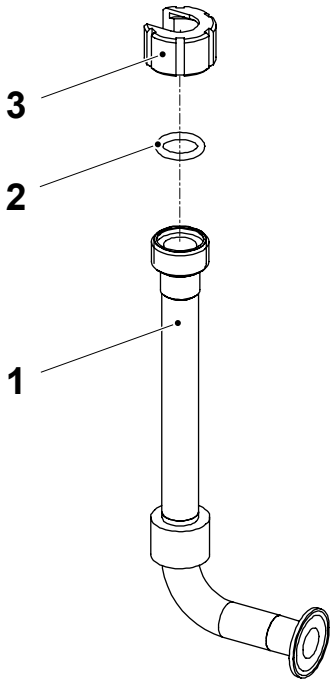

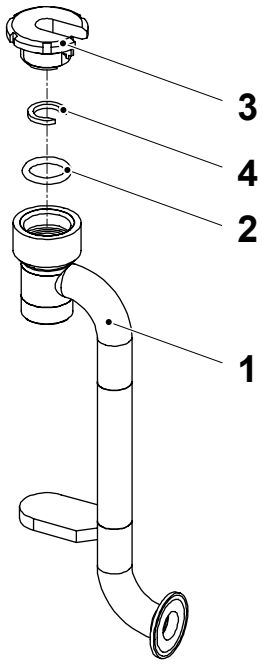

1 Pipe connection
2 O-ring
3 Nut
4 Gasket

3.4-2 Pipe Connection 2 - Change

Machine Status	Power supply disconnector OFF Air valve OFF
SPC Reference	2543005-0100

Note! Valid for volume conversions 65-150S, 65-200S, and 65-200B.

a) Replace the old pipe connection (1) with the new pipe connection.

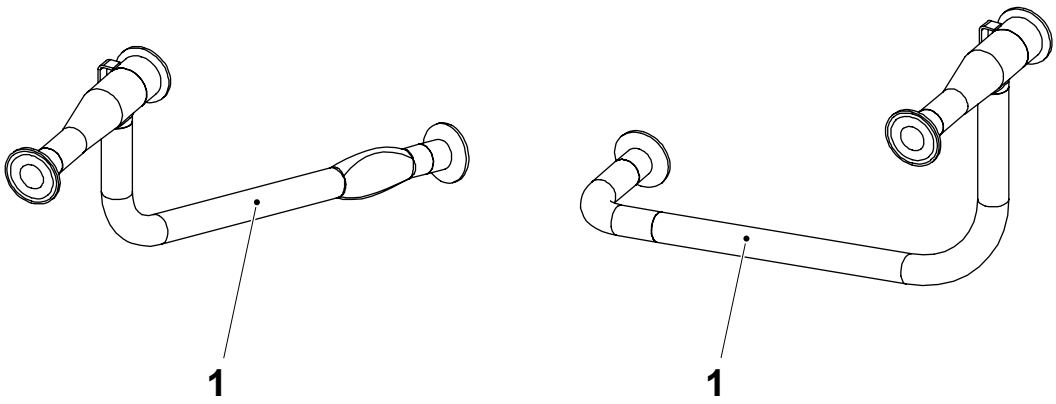

1 Pipe connection

3.5 Electrical Equipment

3.5-1 PLC Program - Set

Machine Status	Power supply disconnector ON
SPC Reference	2562325-0100

Note! Valid for all volume conversions.

In the PLC program.

a) Change status for the correct volume to ALW_ON and set all other volumes to ALW_OFF (see example below).
   - Search output %M0917.
   - To set status ALW_OFF: type 8S in the headline, press ENTER, type Y, and press ENTER.
   - To set status ALW_ON: type 7S in the headline, press ENTER, type Y, and press ENTER.

Subroutine MACH_AD

```
ƒALW_OFF                                                          VOL65   << RUNG 5  STEP #0003 >>
ƒ%S0008                                                          %M0917
+--ƒ +-----------------------------------------------------------------( )-- (* Volume adaption, 65 ml           *)
ƒ
ƒALW_ON                                                          VOL150S  << RUNG 6  STEP #0005 >>
ƒ%S0007                                                          %M0918
+--ƒ +-----------------------------------------------------------------( )-- (* Volume adaption, 150 ml Slim     *)
ƒ
ƒALW_OFF                                                         VOL200B  << RUNG 7  STEP #0007 >>
ƒ%S0008                                                          %M0919
+--ƒ +-----------------------------------------------------------------( )-- (* Volume adaption, 200 ml Base     *)
ƒ
ƒALW_OFF                                                         VOL200S  << RUNG 8  STEP #0009 >>
ƒ%S0008                                                          %M0920
+--ƒ +-----------------------------------------------------------------( )-- (* Volume adaption, 200 ml Slim     *)
ƒ
```

b) Perform a factory setting:
   - Press SHIFT + F1 and then F4.
   - The **SEARCH MENU** is displayed.
   - Type 1965M, change SCOPE from Local to Global.
   - Press ENTER.
   - Press F11.
   - Press F12.
   - Press F11.
   - Press ESC four times and type Y to answer “Exit Logicmaster 90 Programmer Package? (Y/N)”.
   - Press ESC**.**
   - Turn off the power supply disconnector and leave the machine off for at least 20 s.

3.5-2 Frequency Converter - Set

Machine Status	PREPARATION
SPC Reference	2562325-0100

Note! Valid for all volume conversions.

a) Change settings on frequency converters according to Frequency Converter - Set in the MM-85599-XXXX.

3.6 Setting

Machine Status	According to the instructions
SPC Reference	According to the instructions

Note! Valid for all volume conversions.

After the volume conversion, check the following settings according to the MM-85599-XXXX:

Infeed

- Bobbin, see Bobbin - Set.
- Flanges, see Strip Applicator - Set Flange and Bending Roller - Set.
- Strip guide, see Strip Guide - Set.
- Heating device, see Heating Device - Set.
- Indicators, see Indicators - Set.
- Splicing device, see Splicing Device - Set Register Mark.

Superstructure

- Air knife, see Air knife - Set.
- Lower forming ring, see Lower Forming Ring - Set Height.
- Filling pipe, see Filling Pipe - Set Pressure Roller.
- Upper forming ring, see Upper Forming Ring - Set Clearance.
- Photocells, see Photocells - Set and Photocell Unit- Set.
- Longitudinal sealing, see Longitudinal Element - Set.
- Cantilever, see Cantilever - Change Seal Ring.
- Pipe, see Pipe - Set Sterile Air Flow to Heating Chamber.

Main body

- Central lubrication, see Central Lubrication - Bleed.
- Hydraulic system, see Hydraulic System - Bleed.
- Coil, see Coil - Assemble.
- Design correction, see Design Correction - Set.

Electrical equipment

- Frequency converters, see Frequency Converter - Set.
- Level meter card, see Level Meter Card - Set.

4 Completion Work

Description

This chapter describes the work with the volume conversion and the storage of the volume kits.

4.1 Cleaning . . . . . 1 - 5
4.2 Test Run . . . . . 1 - 6
4.3 Storage . . . . . 1 - 7

This page intentionally left blank

4.1 Cleaning

When the conversion of the machine is completed, the machine must be cleaned following the intermediate cleaning procedure. See the OM-85600-XXXX for further information.

4.2 Test Run

Perform a test run of the filling machine and perform package checks. See the OM-85600-XXXX for further information.

During the test run, perform necessary fine adjustments. See the MM-85599-XXXX and the OM-85600-XXXX for further information.

4.3 Storage

Pack the removed parts into the kit boxes according to the 1.1 Kit Content on page 1-5. See 5 Lifting Instruction how to lift and transport the machine sides.

Make sure that the storage environment for the boxes respects the following conditions:

Characteristics	Value	Notes
Temperature	5 - 40°C (40 - 105°F)	
Max relative humidity	80%	Non-condensing

This page intentionally left blank

5 Lifting Instruction

Description

This chapter describes how to lift and move the machine sides with the two trolleys that exist for Tetra Pak A1. The lifting equipment from the volume conversion kit is used.

Pos no	Tetra Pak no	Description
1	2666348-0000	Support
2	2685932-0100	Support
3	2685927-000 2685940-0000	Cramp
4	2685929-0000 2685930-0000	Shaft
5	2685937-0100 2685939-0100	Extension

Lifting tool to be used with trolley 576739-0200 (6).

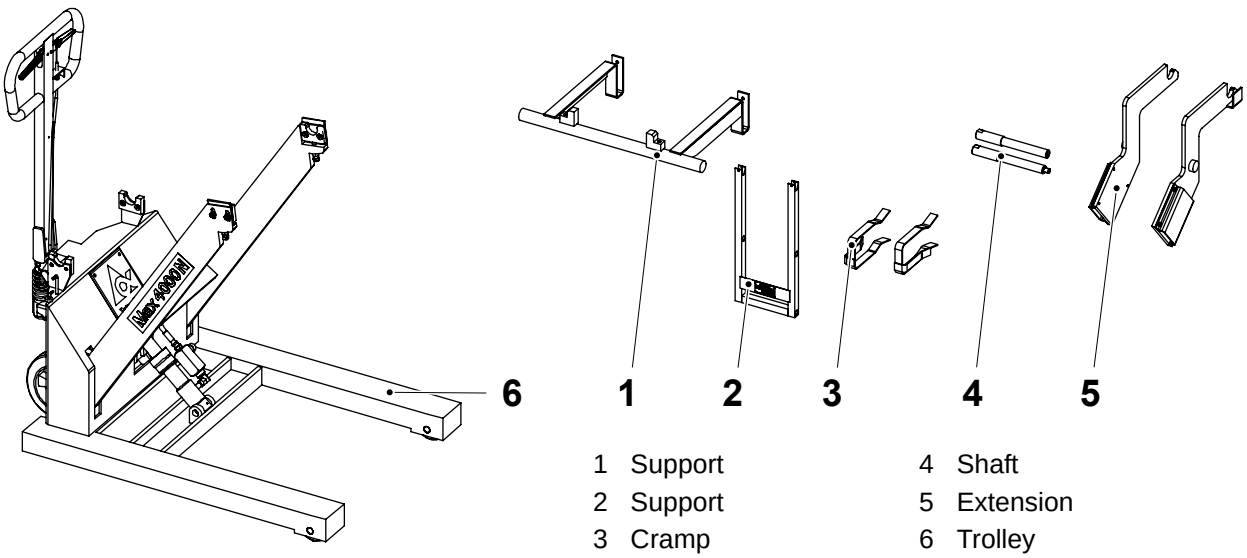

1 Support
2 Support
3 Cramp
4 Shaft
5 Extension
6 Trolley

Lifting tool to be used with trolley 1538186-0100 (7).

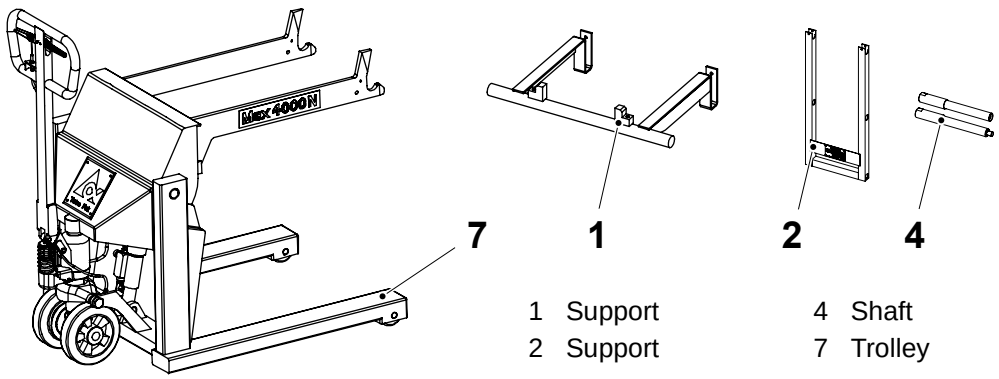

1 Support
2 Support
4 Shaft
7 Trolley

5.1 Remove Machine Side from Main Body . . . . . 3 - 5
5.1-1 Trolley 576739-0200 . . . . . 3 - 5
5.1-2 Trolley 1538186-0100 . . . . . 3 - 10
5.2 Assemble Machine Side and Main Body . . . . . 3 - 12
5.2-1 Trolley 576739-0200 . . . . . 3 - 12
5.2-2 Trolley 1538186-0100 . . . . . 3 - 16
5.3 Move Machine Side from Trolley to Floor . . . . 3 - 18
5.3-1 Trolley 576739-0200 . . . . . 3 - 18
5.3-2 Trolley 1538186-0100 . . . . . 3 - 21
5.4 Move Machine Side from Floor to Trolley . . . . 3 - 23
5.4-1 Trolley 576739-0200 . . . . . 3 - 23
5.4-2 Trolley 1538186-0100 . . . . . 3 - 26
5.5 Move Machine Side from Trolley to Box . . . . . 3 - 28
5.5-1 Trolley 576739-0200 . . . . . 3 - 28
5.5-2 Trolley 1538186-0100 . . . . . 3 - 31
5.6 Move Machine Side from Box to Trolley . . . . . 3 - 34
5.6-1 Trolley 576739-0200 . . . . . 3 - 34
5.6-2 Trolley 1538186-0100 . . . . . 3 - 37

This page intentionally left blank

5.1 Remove Machine Side from Main Body

WARNING
Risk of crushing.
During transport of the machine side with the trolley, the machine side can jump off the bobbin holders. To prevent this risk, the trolley arm must always be in its upper position during transport of the machine side.

5.1-1 Trolley 576739-0200

Machine Status	Power supply disconnector OFF Air valve OFF
Special Equipment	Lifting equipment 630414-0200 (Volume conversion kit)

a) Fit the support (1) to the beam (2).
b) Secure with the screws (3).
c) Fit the support (6) to the handles (4).
d) Secure with the screws (5).
e) Fit the shaft (7) to the support (6).

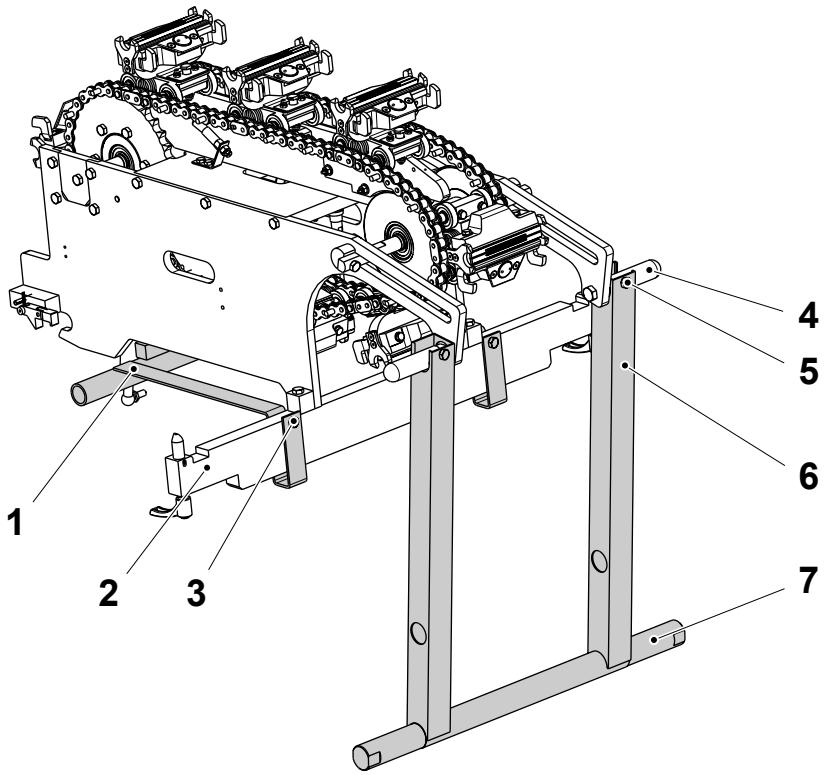

1 Support
2 Beam
3 Screw
4 Handle
5 Screw
6 Support
7 Shaft

(Cont'd)

(Cont'd)

This instruction is valid for machine sides 1, 2, and 4.

WARNING
Risk of crushing.
Always remove the gas dampers before lifting out the side frames. If the fastening for the side is loosened with the gas dampers connected, the side will jump out of its brackets due to the force of the gas dampers.

f) Make sure that the machine side is folded down and that all connections and the gas dampers are disconnected.

g) Assemble the extensions (8) with the trolley arms (9).

h) Place the trolley under the machine side.

i) Pump up the trolley arm (9) and fit support (1) into the extension (8).

j) Lift the machine side in the handles (4) and fit the support (6) to the bobbin holder (11).

k) Secure the support (6) with the cramps (10).

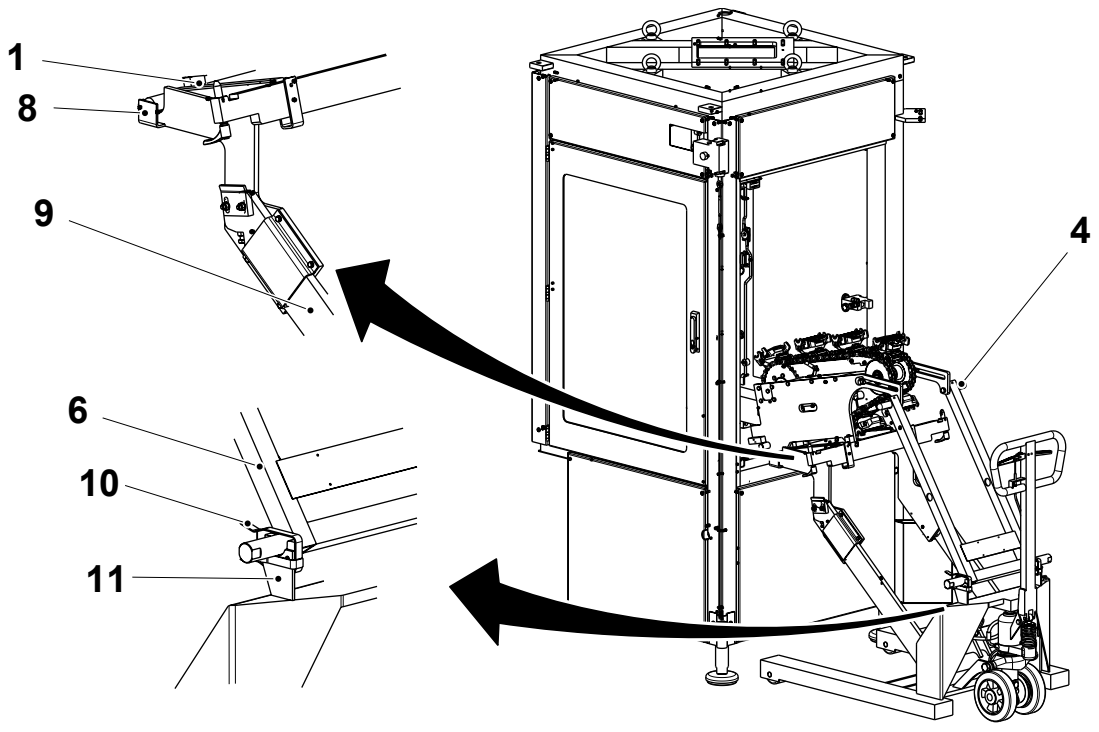

1 Support
4 Handle
6 Support
8 Extension
9 Trolley arm
10 Cramp
11 Bobbin holder

(Cont'd)

(Cont'd)

This instruction is valid for machine side 3.

WARNING
Risk of crushing.
Always remove the gas dampers before lifting out the side frames. If the fastening for the side is loosened with the gas dampers connected, the side will jump out of its brackets due to the force of the gas dampers.

l) Make sure that the machine side is raised up and that all connections and the gas dampers are disconnected.

m) Assemble the extensions (13) with the trolley arms (14).

n) Place the trolley in front of the machine side, with the extensions distance A from the main body frame (12).

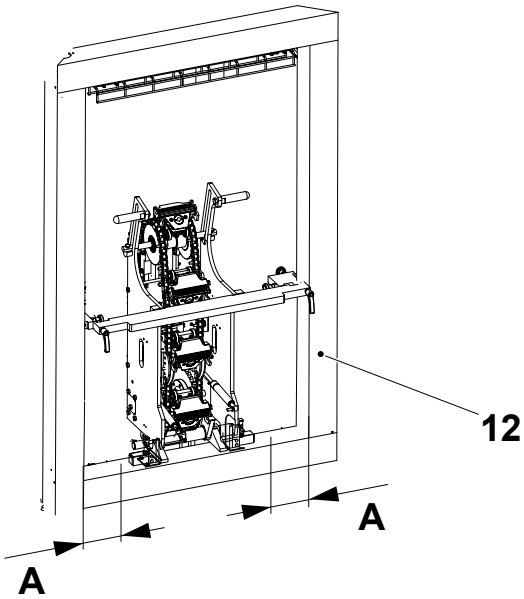

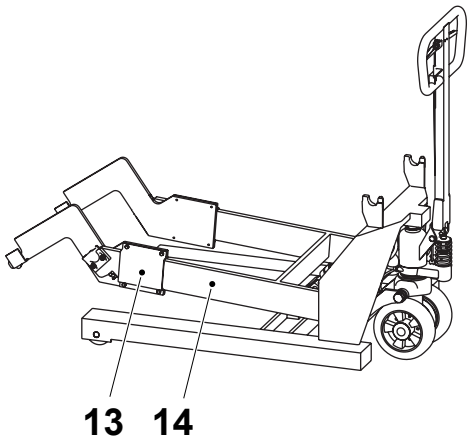

A	160 ± 5mm

12 Frame
13 Extension
14 Trolley arm

(Cont'd)

(Cont'd)

WARNING
Risk of crushing.
The machine sides are heavy. Two persons are needed to lift and handle the machine sides.

o) Release the locking devices and the levers (17).

p) Grip the handles (4) and fell down the machine side onto the trolley. The support (1) must fit into the extensions (13) and the support (6) to the bobbin holder (16).

q) Secure the support (6) with the cramps (15).

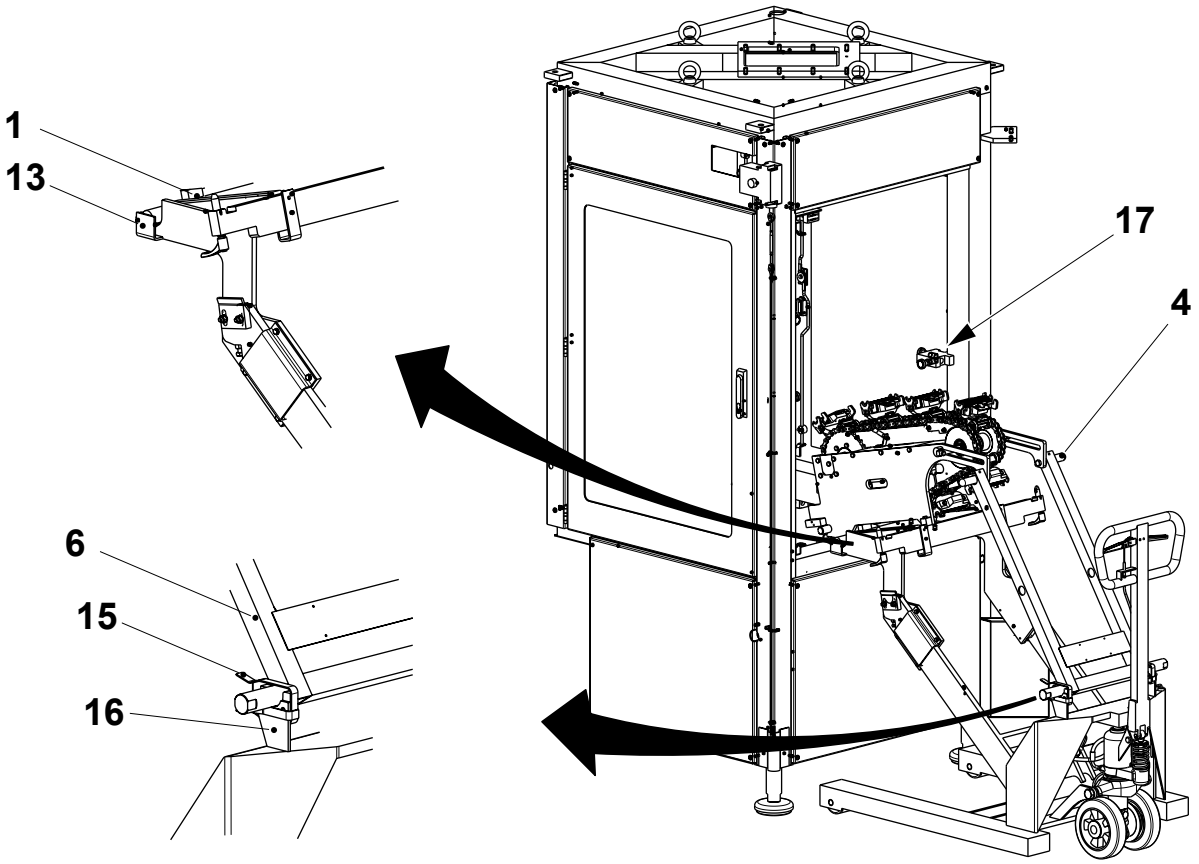

1 Support
4 Handle
6 Support
13 Extension
15 Cramp
16 Bobbin holder
17 Lever

(Cont'd)

(Cont'd)

This instruction is valid for all machine sides.

CAUTION
Risk of crushing and equipment damage.
Pump up and release the trolley arm carefully.

r) Lift the flaps (12).

s) Pump up the trolley arm and pull the trolley carefully until the machine side releases from the main body and remove the side with support of the trolley.

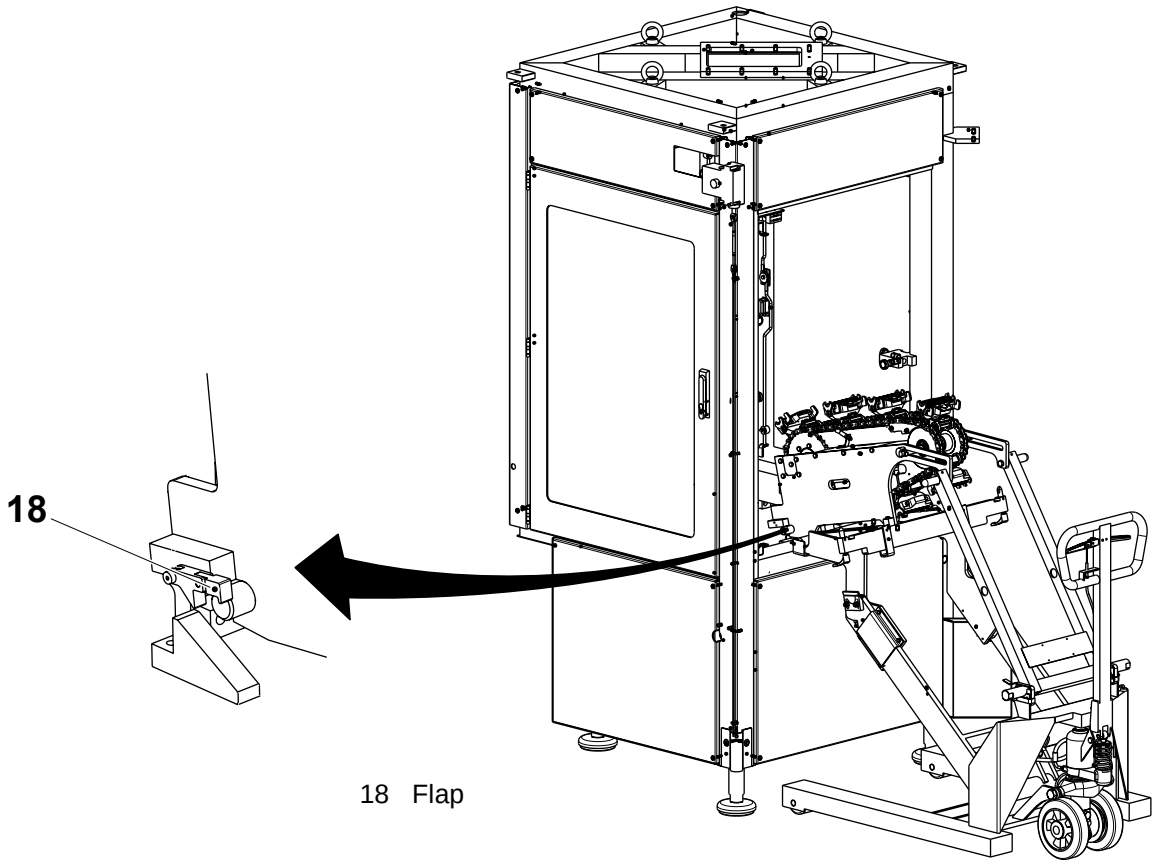

18 Flap

5.1-2 Trolley 1538186-0100

Machine Status	Power supply disconnector OFF Air valve OFF
Special Equipment	Lifting equipment 630414-0200 (Volume conversion kit)

a) Make sure that the machine side is folded down and that all connections and the gas dampers are disconnected.

b) Fit the support (1) to the beam (2).

c) Secure with the screws (3).

d) Fit the support (6) to the handles (4).

e) Secure with the screws (5).

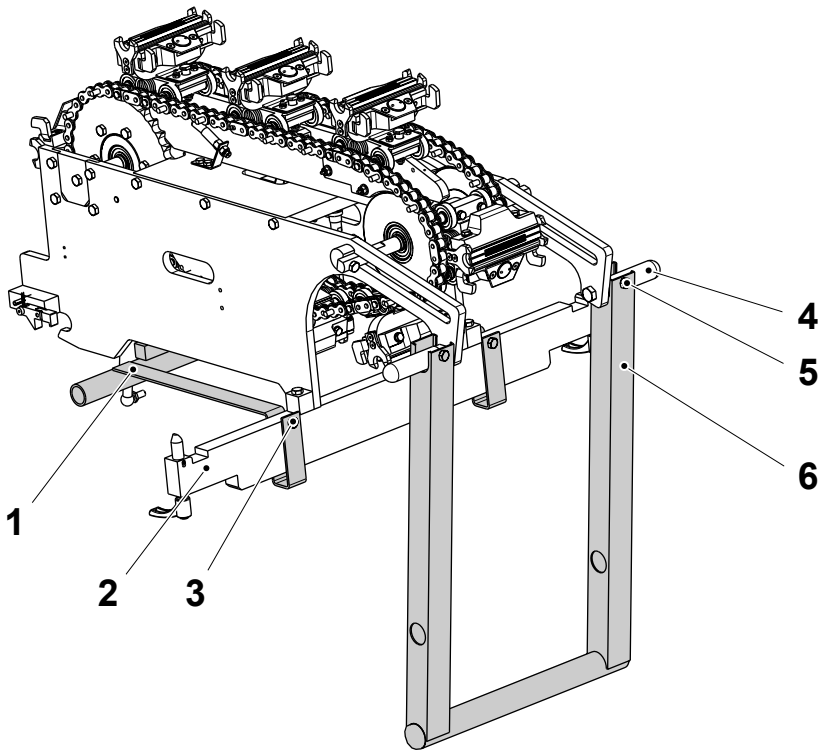

1 Support
2 Beam
3 Screw
4 Handle
5 Screw
6 Support

(Cont'd)

(Cont'd)

f) Place the trolley under the machine side.

g) Place the support (6) between the trolley arms (9).

h) Pump up the trolley arm (9) and fit support (1) into the bobbin holder (8). The beam (2) must rest on the trolley arm.

i) Fit the shaft (10) to the support (6), according to illustration below.

CAUTION
Risk of crushing and equipment damage.
Pump up and release the trolley arm carefully.

j) Lift the flaps (7).

k) Pump up the trolley arm and pull the trolley carefully until the machine side releases from the main body and remove the side with support of the trolley.

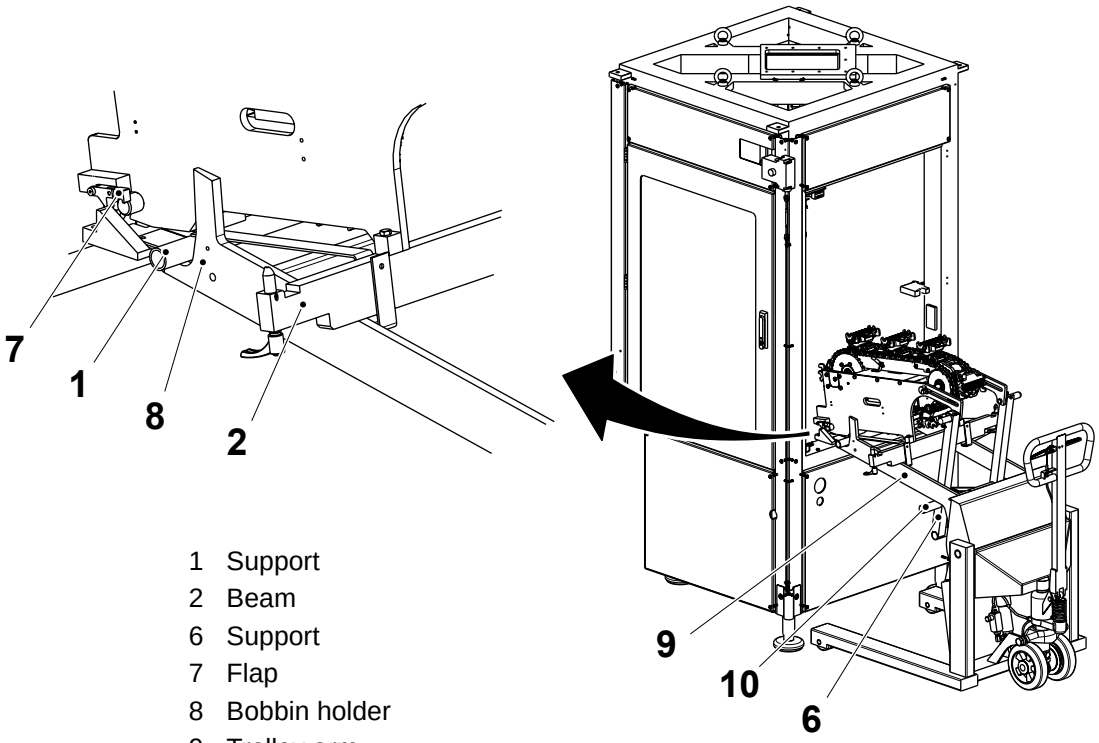

1 Support
2 Beam
6 Support
7 Flap
8 Bobbin holder
9 Trolley arm
10 Shaft

5.2 Assemble Machine Side and Main Body

5.2-1 Trolley 576739-0200

Machine Status	Power supply disconnector OFF Air valve OFF
Special Equipment	Lifting equipment 630414-0200 (Volume conversion kit)

CAUTION
Risk of crushing and equipment damage.
Pump up and release the trolley arm carefully.

a) Place the trolley with the machine side next to the main body.

b) Adjust the trolley arm (6) and the trolley until the machine side is placed just above the shaft (2).

c) Check that the machine side is horizontally aligned with the shaft. The machine side on the trolley can be adjusted with the screw (4).

d) Let down the trolley arm (6) carefully until the machine side fits to the shaft (2) and the support (5) releases from the extensions (3).

e) Make sure that the machine side is correctly positioned at the shaft and that the flaps (1) lock around the shaft (2).

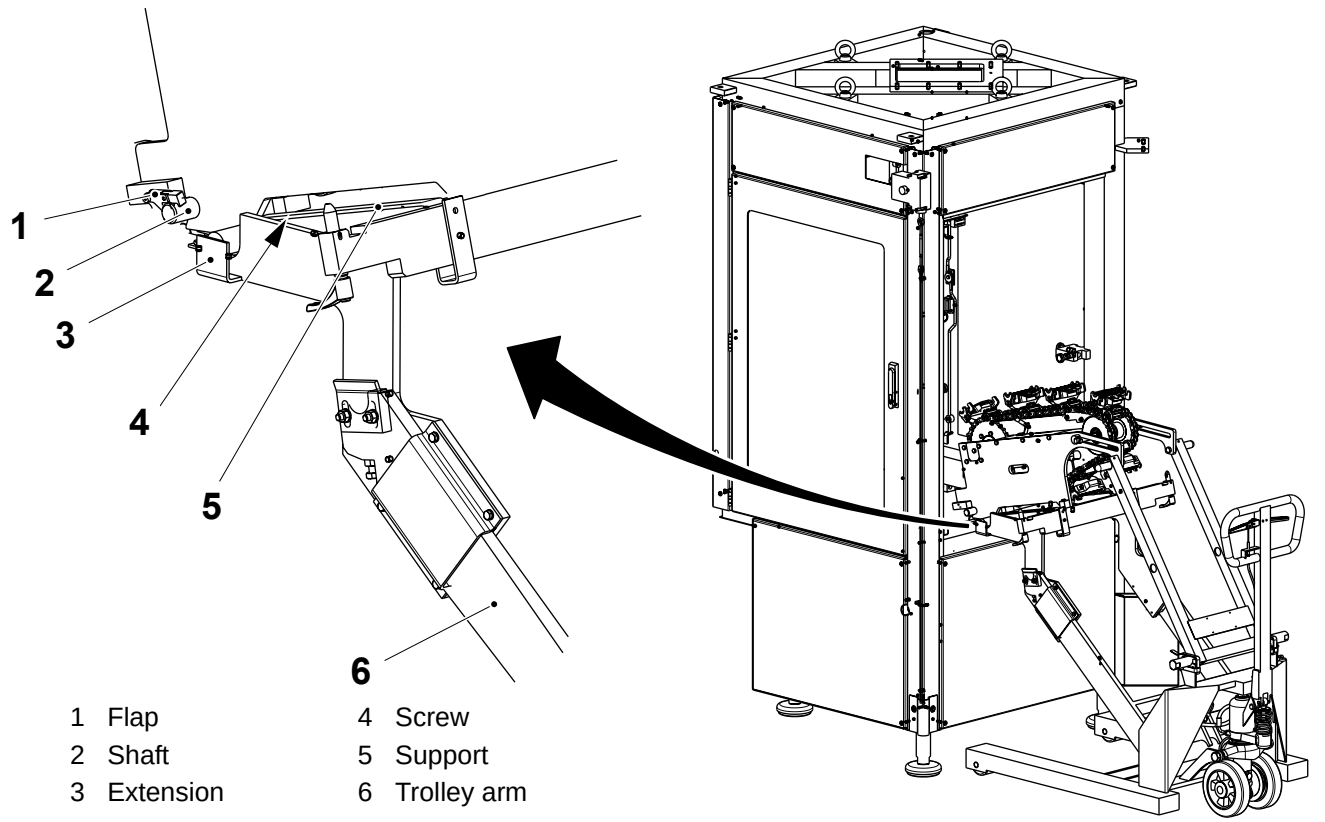

1 Flap
2 Shaft
3 Extension
4 Screw
5 Support
6 Trolley arm

(Cont'd)

(Cont'd)

This instruction is valid for machine side 1, 2, and 4.

f) Remove the cramps (8).

g) Lift the machine side in the handles (10) and remove the support (7) from the bobbin holder (9).

h) Remove the trolley.

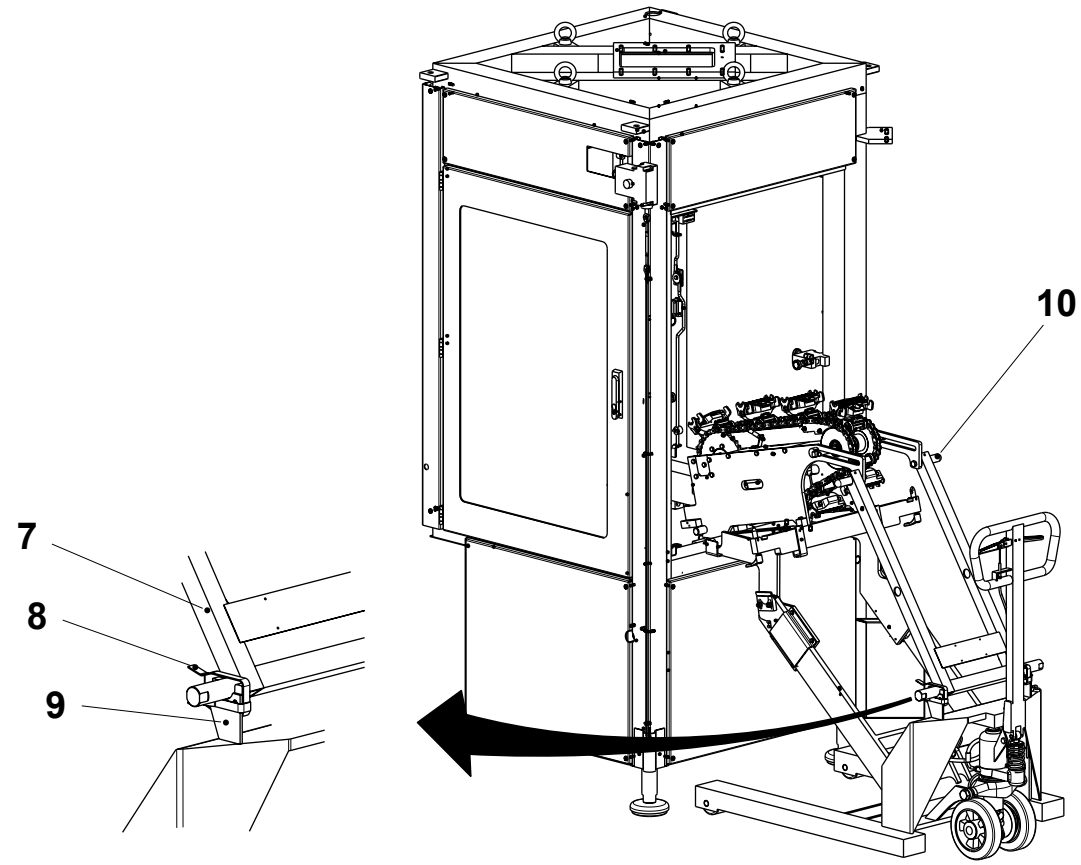

7 Support
8 Cramp
9 Bobbin holder
10 Handle

(Cont'd)

(Cont'd)

This instruction is valid for machine side 3.

WARNING
Risk of crushing.
The machine sides are heavy. Two persons are needed to lift and handle the machine sides.

i) Remove the cramps (8).

j) Lift the machine side in the handles (10) and remove the support (7) from the bobbin holder (9). Raise the machine side into the main body.

k) Make sure that the machine side locks to the main body and secure the machine side with the levers (11).

l) Remove the trolley.

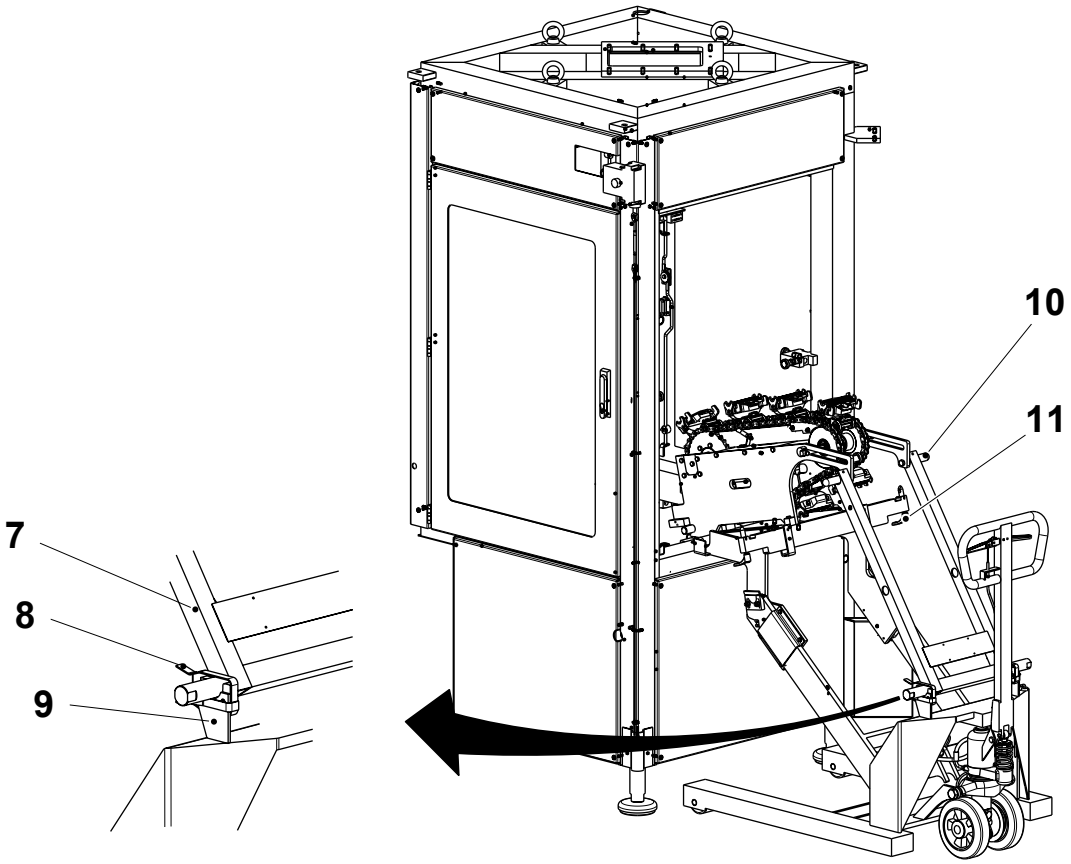

7 Support
8 Cramp
9 Bobbin holder
10 Handle
11 Lever

(Cont'd)

This instruction is valid for all machine sides.

m) Remove the screws (11) and (12).

n) Remove the supports (5) and (7).

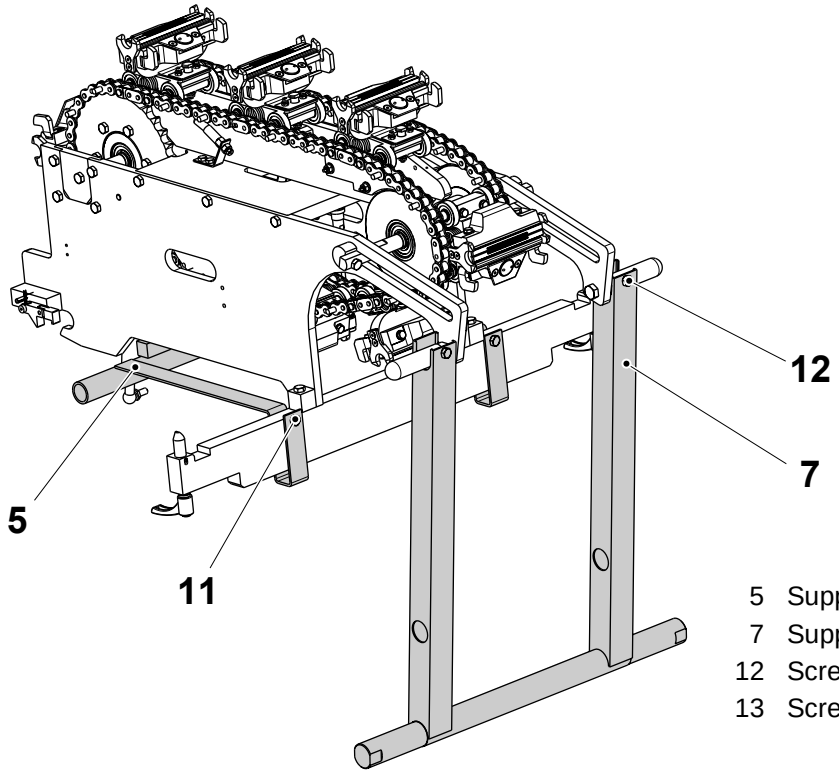

5 Support
7 Support
12 Screw
13 Screw

5.2-2 Trolley 1538186-0100

Machine Status	Power supply disconnector OFF Air valve OFF
Special Equipment	Lifting equipment 630414-0200 (Volume conversion kit)

CAUTION
Risk of crushing and equipment damage.
Pump up and release the trolley arm carefully.

a) Place the trolley with the machine side next to the main body.
b) Adjust the trolley arm (6) and the trolley until the machine side is placed just above the shaft (2).
c) Check that the machine side is horizontally aligned with the shaft. The machine side on the trolley can be adjusted with screw (4).
d) Remove the shaft (7).
e) Let down the trolley arm (6) carefully until the machine side fits to the shaft (2) and the support (5) releases from the bobbin holder (3).
f) Make sure that the machine side is correctly positioned at the shaft (2) and that the flaps (1) lock around the shaft (2).
g) Remove the trolley.

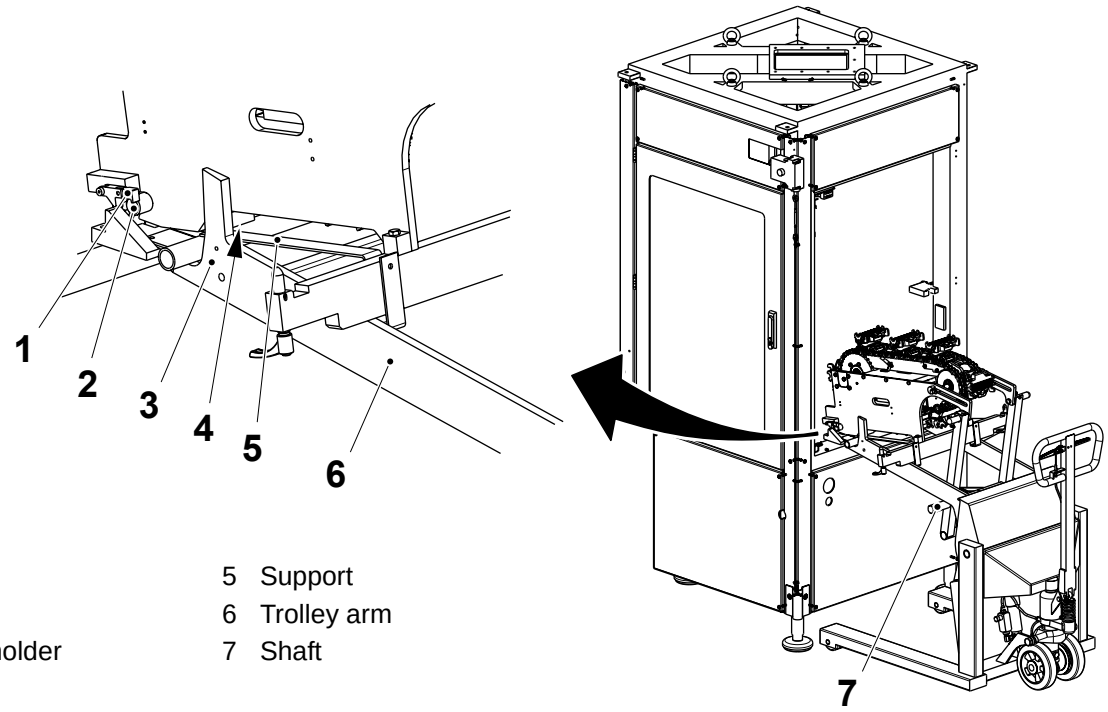

1 Flap
2 Shaft
3 Bobbin holder
4 Screw
5 Support
6 Trolley arm
7 Shaft

(Cont'd)

(Cont'd)

h) Remove the screws (8), and (9).

i) Remove the supports (5) and (10).

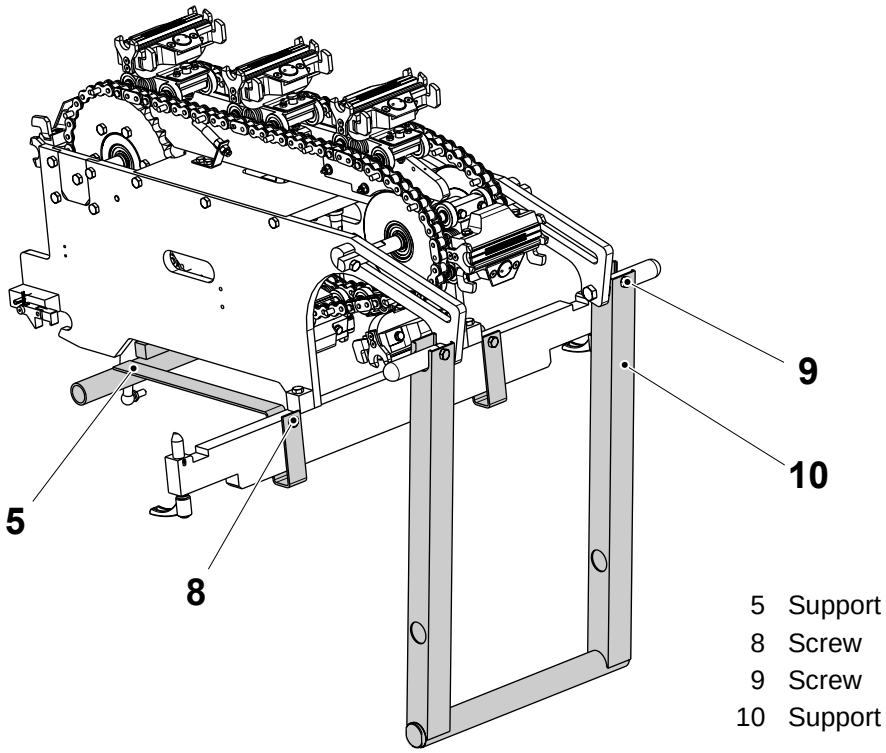

5 Support
8 Screw
9 Screw
10 Support

5.3 Move Machine Side from Trolley to Floor

5.3-1 Trolley 576739-0200

Machine Status	Power supply disconnector OFF Air valve OFF
Special Equipment	Lifting equipment 630414-0200 (Volume conversion kit)

WARNING
Risk of crushing.
The machine sides are heavy. Two persons are needed to lift and handle the machine sides.

a) Lower the trolley arm to its lowest position.

b) Remove the cramp (4).

c) Lift the machine side in the handles (2) and remove the support (3) from the bobbin holder (5). Put down the machine side on the trolley.

d) Remove the screws (1).

e) Remove the support (3).

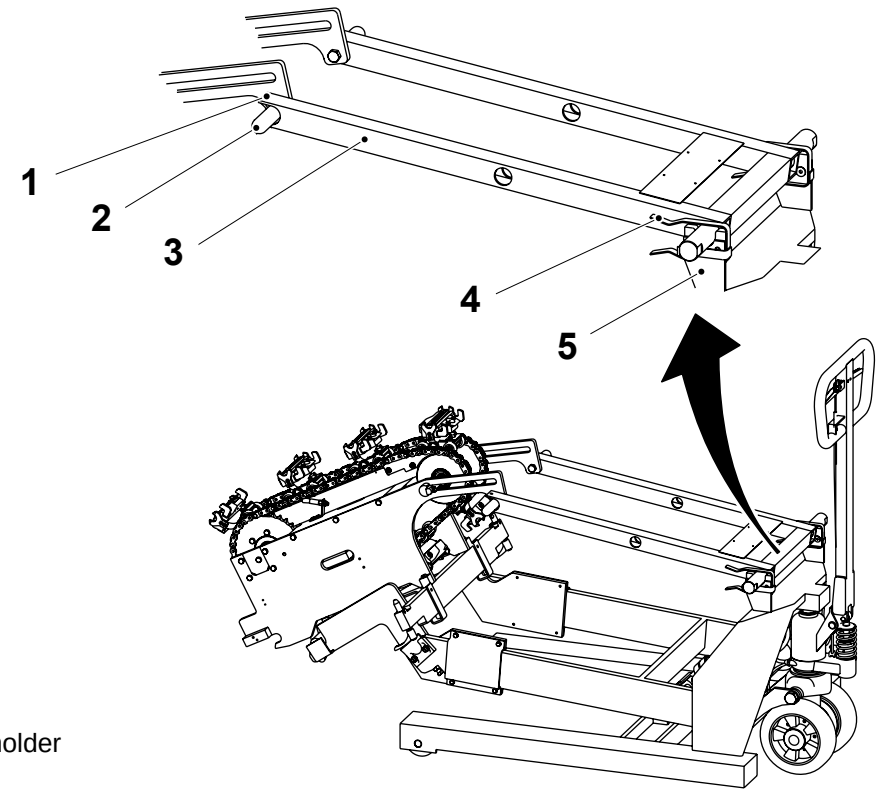

1 Screw
2 Handle
3 Support
4 Cramp
5 Bobbin holder

(Cont'd)

(Cont'd)

CAUTION
Risk of crushing.
One person must always support the machine side while it is standing.

WARNING
Risk of crushing.
The machine sides are heavy. Two persons are needed to lift and handle the machine sides.

f) Remove the machine side from the trolley by tilting it forward. Lift in the handles (2). Make sure that the jaws (6) are positioned according to the illustration.

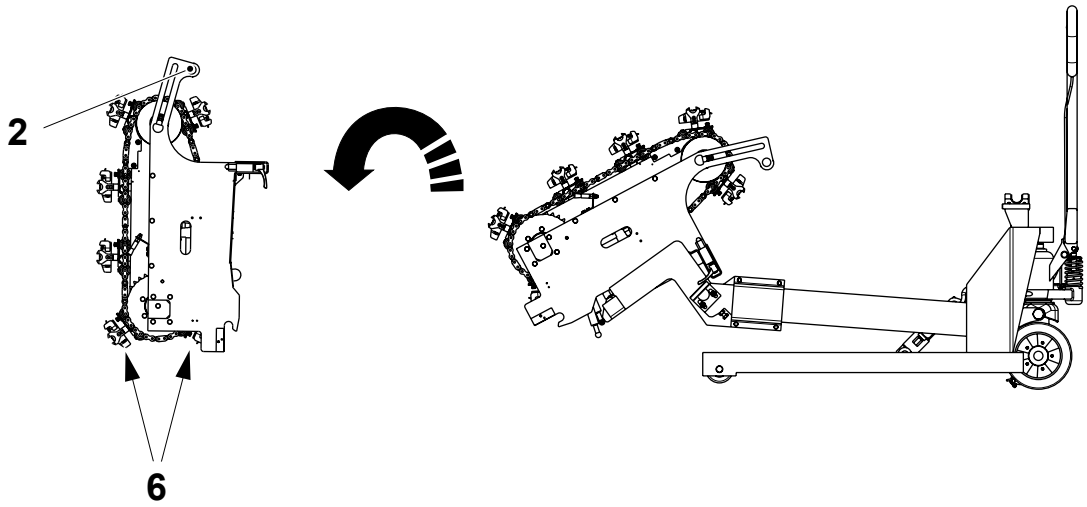

2 Handle
6 Jaw

(Cont'd)

(Cont'd)

g) Remove the screws (7).

h) Remove the support (8).

i) Hold in the handles (2) and put down the machine side on a support (9) on the floor.

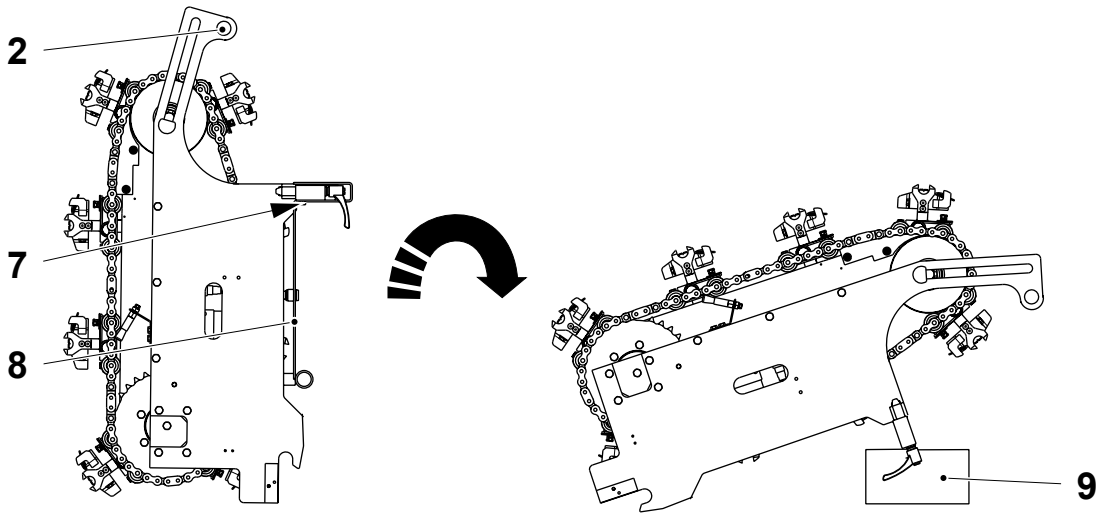

2 Handle
7 Screw
8 Support
9 Support

5.3-2 Trolley 1538186-0100

Machine Status	Power supply disconnector OFF Air valve OFF
Special Equipment	Lifting equipment 630414-0200 (Volume conversion kit)

WARNING

Risk of crushing.

The machine sides are heavy. Two persons are needed to lift and handle the machine sides.

a) Lower the trolley arm to its lowest position.

b) Remove the shaft (3).

c) Remove the screws (1).

d) Remove the support (2).

e) Remove the machine side from the trolley by tilting it forward. Lift in the handles (4). Make sure that the jaws (5) are positioned according to the illustration.

1 Screw
2 Support
3 Shaft
4 Handle
5 Jaw

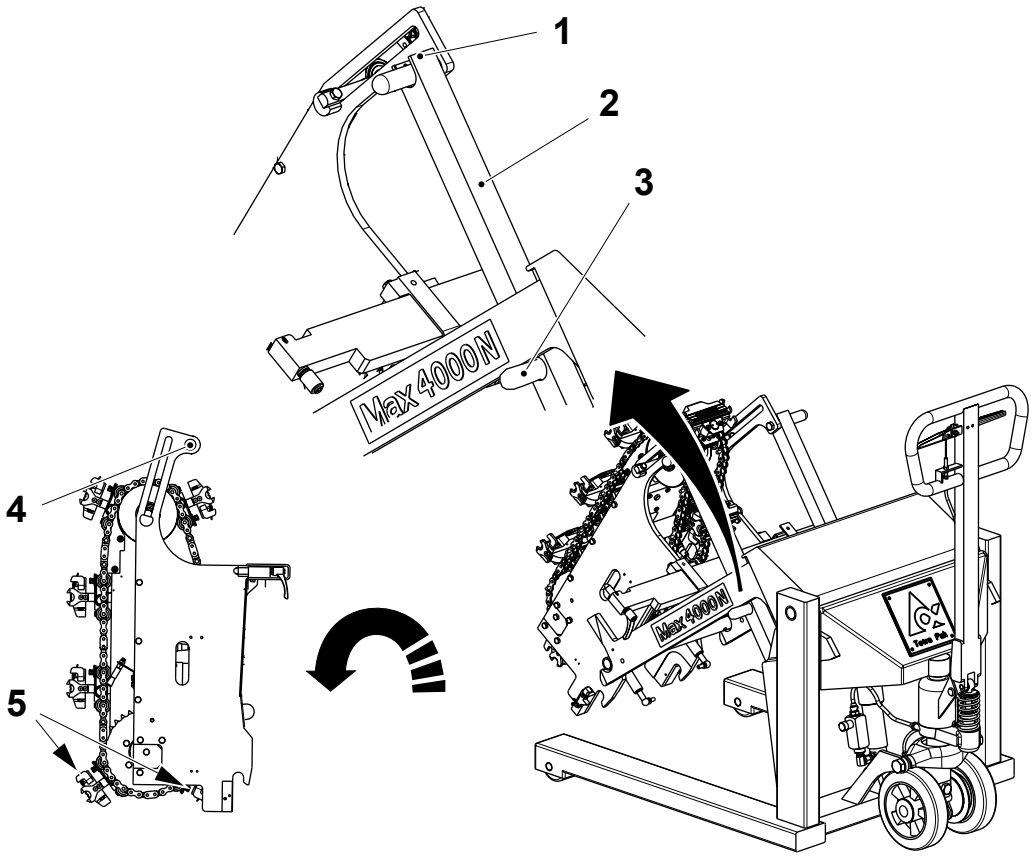

(Cont'd)

(Cont'd)

CAUTION
Risk of crushing.
One person must always support the machine side while it is standing.

f) Remove the screws (6).

g) Remove the support (7).

h) Hold in the handles (4) and put down the machine side on a support (8) on the floor.

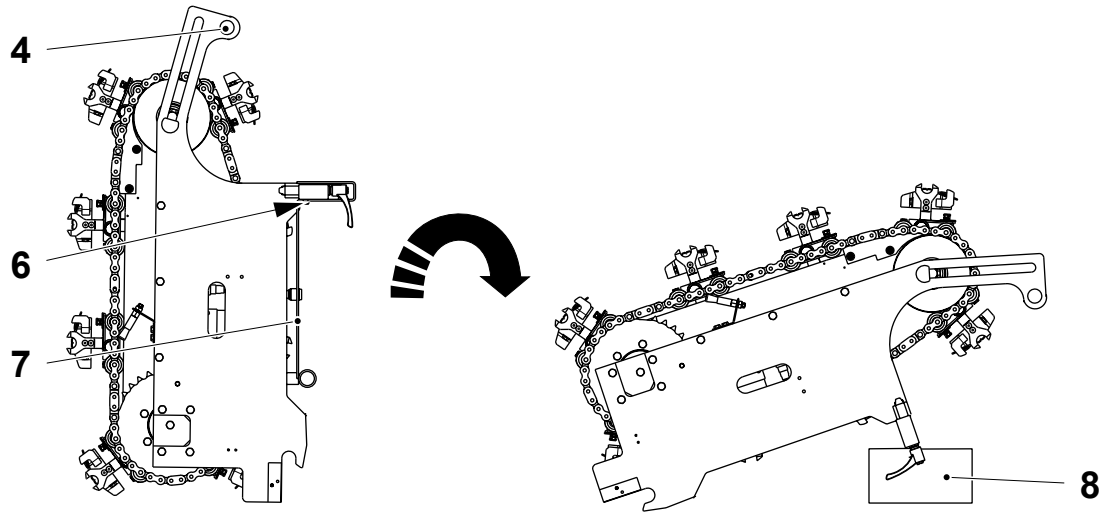

4 Handle
6 Screw
7 Support
8 Support

5.4 Move Machine Side from Floor to Trolley

5.4-1 Trolley 576739-0200

Machine Status	Power supply disconnector OFF Air valve OFF
Special Equipment	Lifting equipment 630414-0200 (Volume conversion kit)

CAUTION
Risk of crushing.
One person must always support the machine side while it is standing.

WARNING
Risk of crushing.
The machine sides are heavy. Two persons are needed to lift and handle the machine sides.

a) Lift in the handles (1) and raise the machine side. Make sure that the jaws (5) are positioned according to the illustration.
b) Fit the support (4) to the beam (2).
c) Secure with the screws (3).

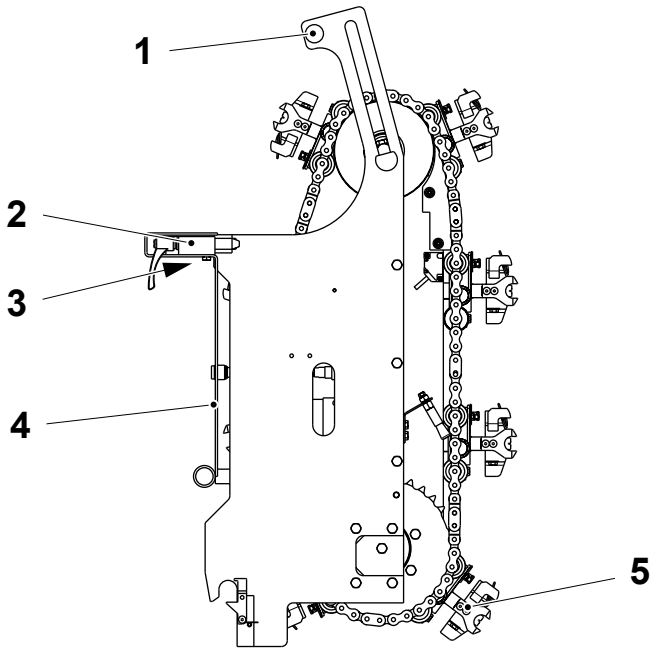

1 Handle
2 Beam
3 Screw
4 Support
5 Jaw

(Cont'd)

(Cont'd)

d) Place the trolley next to the machine side and make sure that the trolley arm is in its lowest position.

e) Hold in the handles (1) and tilt the machine side upon the trolley with the support (4) fitted in the extensions (6).

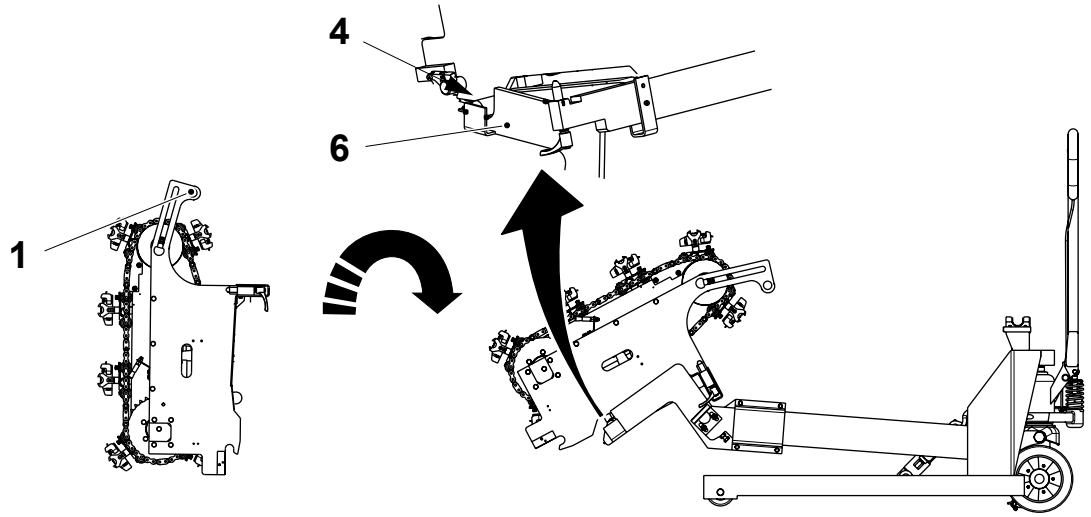

1 Handle
4 Support
6 Extension

(Cont'd)

(Cont'd)

f) Fit the support (8) to the handles (1).

g) Secure with the screws (7).

h) Lift the machine side in the handles (1) and fit the support (8) to the bobbin holders (10).

i) Secure with the cramps (9).

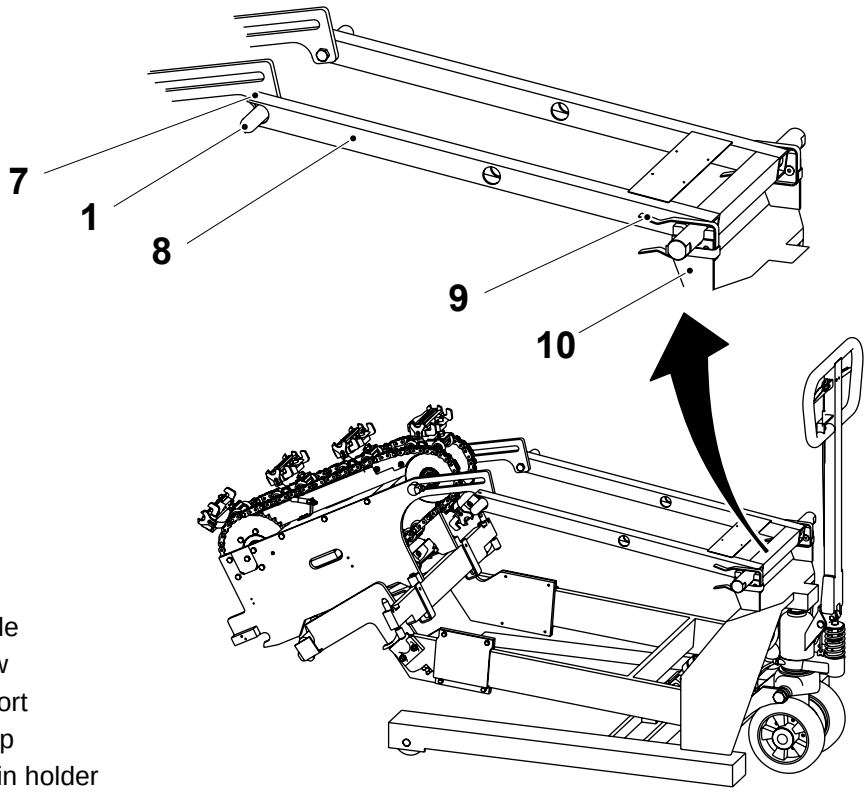

1 Handle
7 Screw
8 Support
9 Cramp
10 Bobbin holder

j) Pump up the trolley arm.

5.4-2 Trolley 1538186-0100

Machine Status	Power supply disconnector OFF Air valve OFF
Special Equipment	Lifting equipment 630414-0200 (Volume conversion kit)

CAUTION
Risk of crushing.
One person must always support the machine side while it is standing.

WARNING
Risk of crushing.
The machine sides are heavy. Two persons are needed to lift and handle the machine sides.

a) Lift in the handles (1) and raise the machine side. Make sure that the jaws (5) are positioned according to the illustration.
b) Fit the support (4) to the beam (2).
c) Secure with the screws (3).

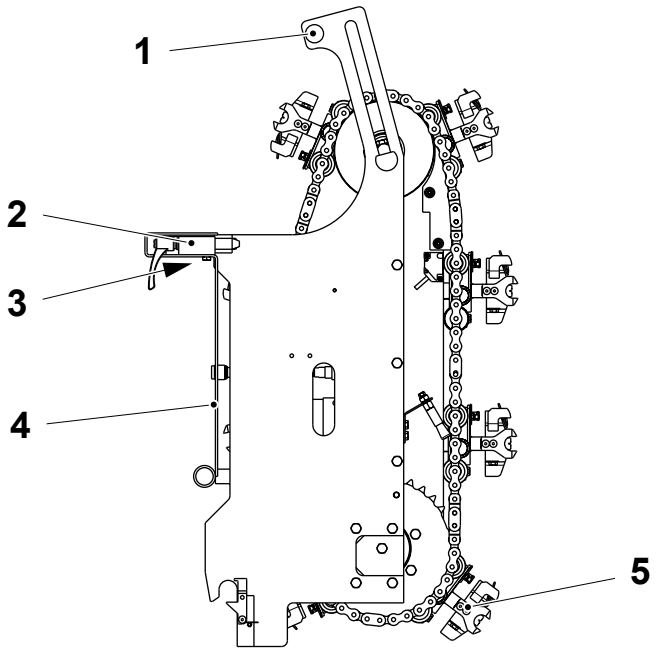

1 Handle
2 Beam
3 Screw
4 Support
5 Jaw

(Cont'd)

(Cont'd)

d) Place the trolley next to the machine side and make sure that the trolley arm is in its lowest position.

e) Hold in the handles (1) and tilt the machine side upon the trolley with the support (4) fitted in the bobbin holders (6).

f) Fit the support (8) to the handles (1).

g) Secure with the screws (7).

h) Fit the shaft (9) to the support (8) according to the illustration below.

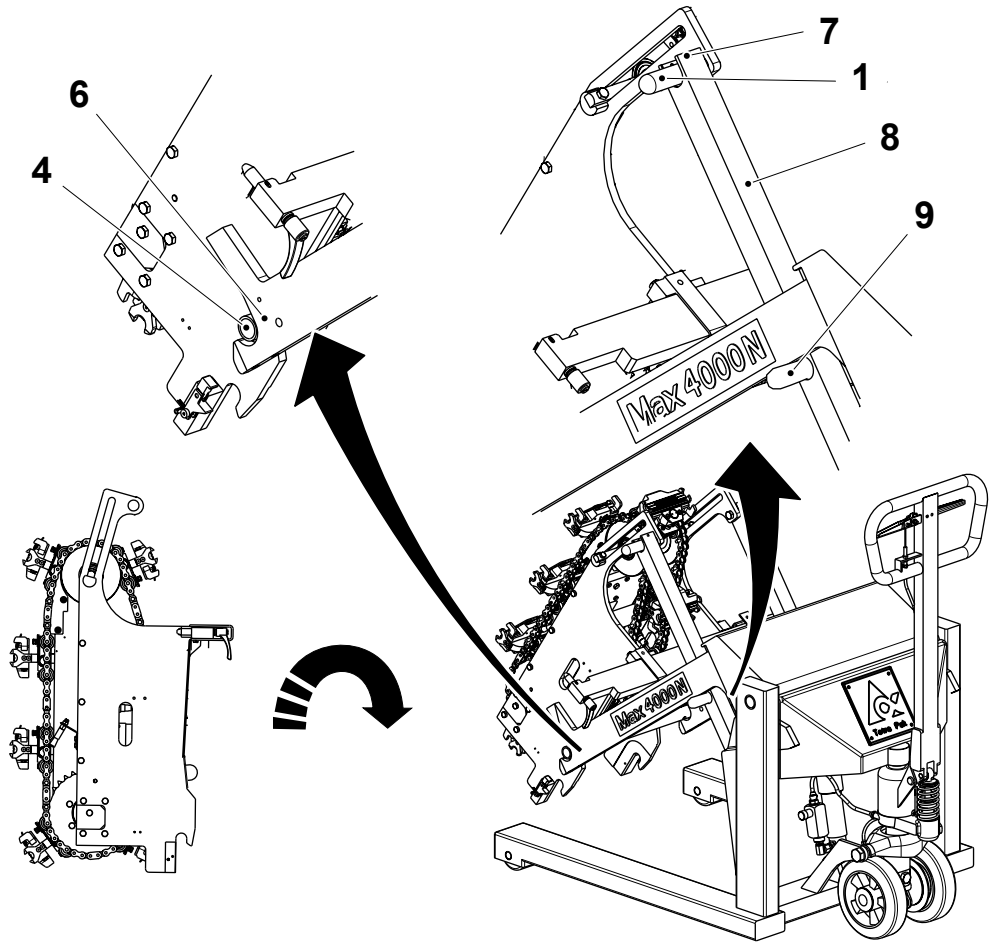

1 Handle
4 Support
6 Bobbin holder
7 Screw
8 Support
9 Shaft

i) Pump up the trolley arm.

5.5 Move Machine Side from Trolley to Box

5.5-1 Trolley 576739-0200

Machine Status	Power supply disconnector OFF Air valve OFF
Special Equipment	Lifting equipment 630414-0200 (Volume conversion kit)

CAUTION
Risk of crushing and equipment damage.
Pump up and release the trolley arm carefully.

a) Place the trolley with the machine side next to the box.

b) Lower the trolley arm (3) until the machine side is placed centred and just above the shaft (4).

c) Let down the trolley arm (3) carefully until the machine side fits to the shaft (4) and the support (1) releases from the extensions (2).

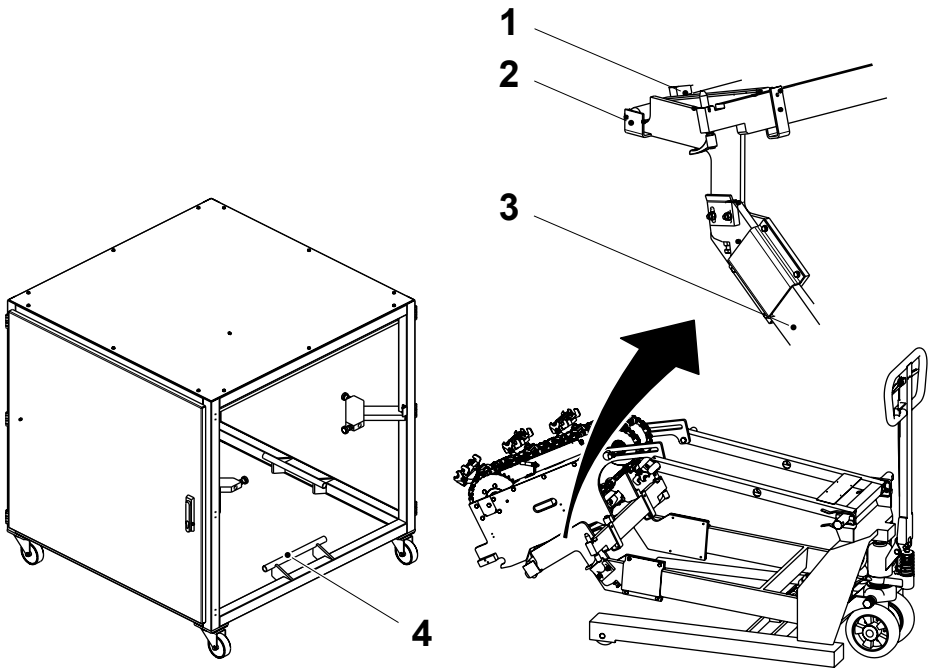

1 Support
2 Extension
3 Trolley arm
4 Shaft

(Cont'd)

(Cont'd)

WARNING
Risk of crushing.
The machine sides are heavy. Two persons are needed to lift and handle the machine sides.

d) Make sure that the machine side (5) is correctly positioned at the shaft (4) and that the flaps (6) lock around the shaft.

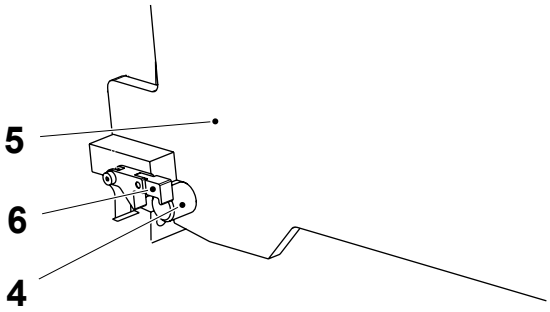

4 Shaft
5 Machine side
6 Flap

e) Remove the cramp (7).

f) Lift the machine side in the handles (1) and raise the machine side into the box.

g) Make sure that the machine side locks to the box and secure the machine side with the levers (8).

h) Remove the trolley.

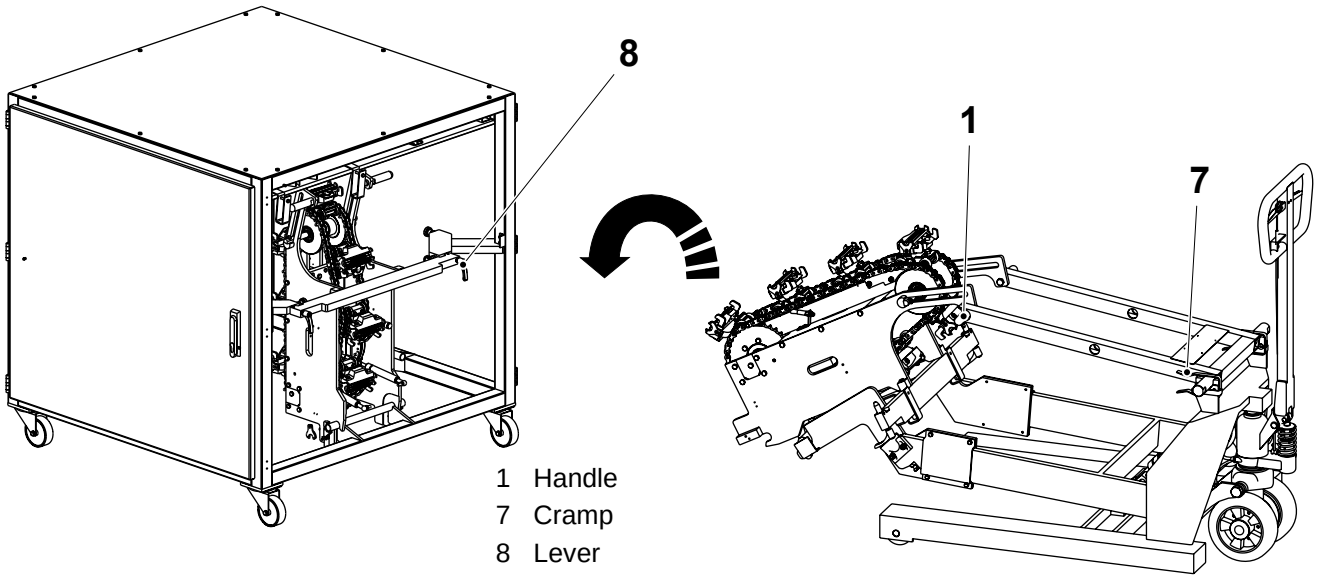

1 Handle
7 Cramp
8 Lever

(Cont'd)

(Cont'd)

i) Remove the screws (9) and (10).

j) Remove the supports (1) and (11).

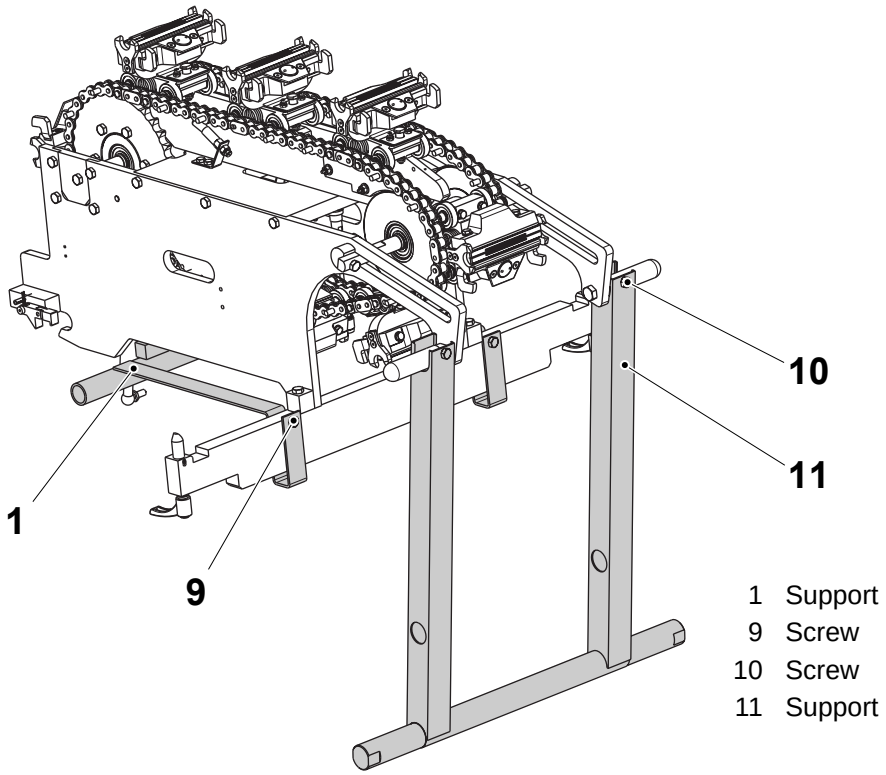

1 Support
9 Screw
10 Screw
11 Support

5.5-2 Trolley 1538186-0100

Machine Status	Power supply disconnector OFF Air valve OFF
Special Equipment	Lifting equipment 630414-0200 (Volume conversion kit)

CAUTION
Risk of crushing and equipment damage.
Pump up and release the trolley arm carefully.

a) Place the trolley with the machine side next to the box.

b) Lower the trolley arm (3) until the machine side is placed centred and just above the shaft (4).

c) Let down the trolley arm (3) carefully until the machine side fits to the shaft (4) and the support (1) releases from the bobbin holder (2).

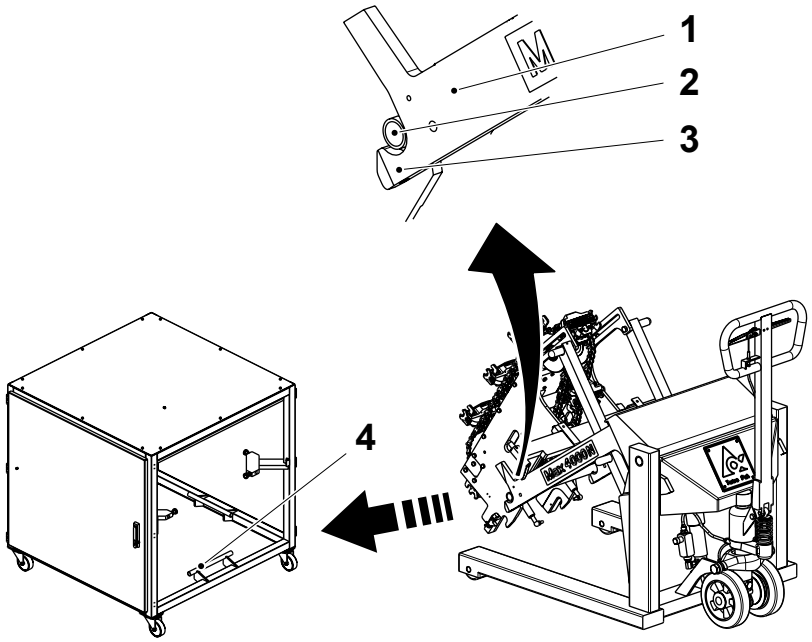

1 Support
2 Bobbin holder
3 Trolley arm
4 Shaft

(Cont'd)

(Cont'd)

WARNING
Risk of crushing.
The machine sides are heavy. Two persons are needed to lift and handle the machine sides.

d) Make sure that the machine side (5) is correctly positioned at the shaft (4) and that the flaps (6) lock around the shaft.

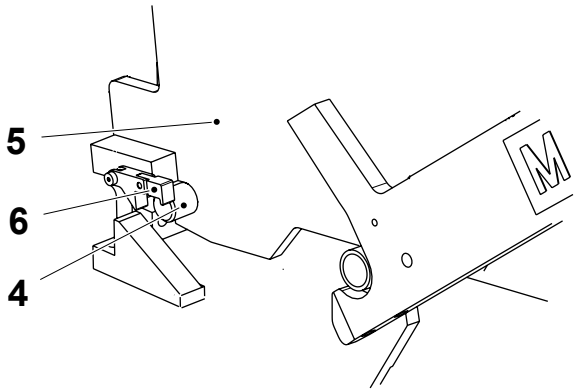

4 Shaft
5 Machine side
6 Flap

e) Remove the shaft (8).

f) Lift the machine side in the handles (7) and raise the machine side into the box.

g) Make sure that the side locks to the box and secure the machine side with the levers (9).

h) Remove the trolley.

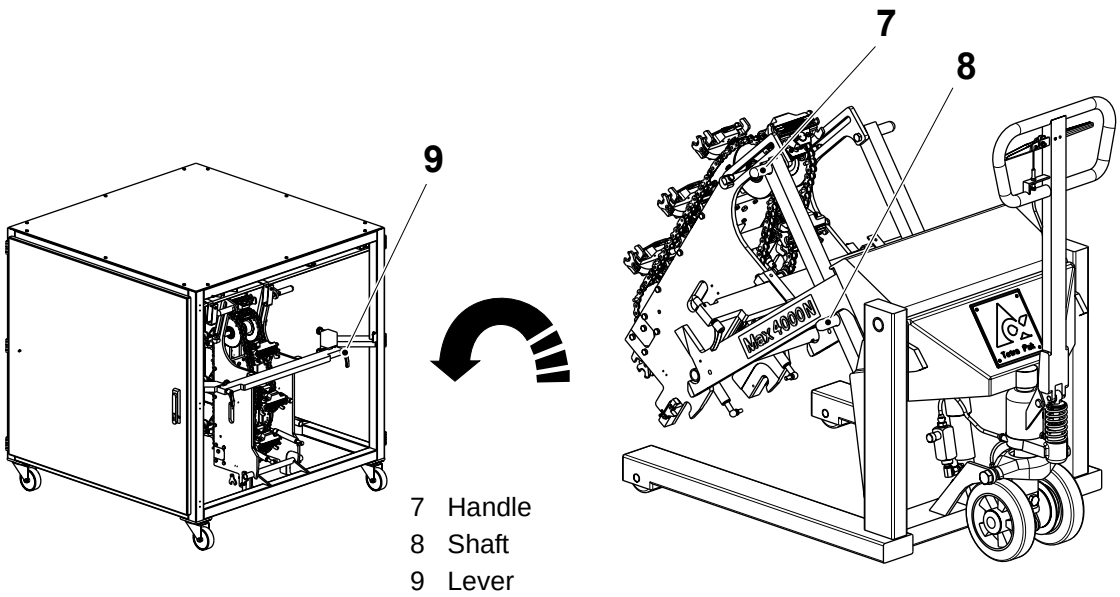

7 Handle
8 Shaft
9 Lever

(Cont'd)

(Cont'd)

i) Remove the screws (10), and (11).

j) Remove the supports (2) and (12).

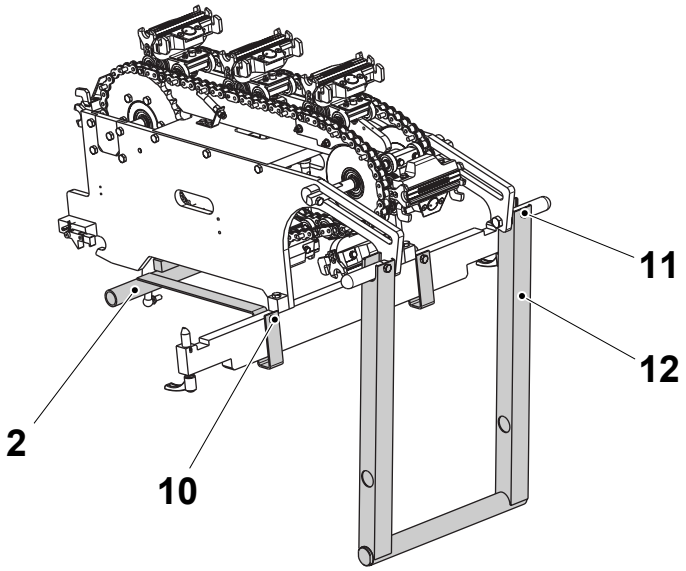

2 Support
10 Screw
11 Screw
12 Support

5.6 Move Machine Side from Box to Trolley

5.6-1 Trolley 576739-0200

Machine Status	Power supply disconnector OFF Air valve OFF
Special Equipment	Lifting equipment 630414-0200 (Volume conversion kit)

a) Fit the support (1) to the beam (2).

b) Secure with the screws (3).

c) Fit the support (6) to the handles (4).

d) Secure with the screws (5).

e) Fit the shaft (7) to the support (6).

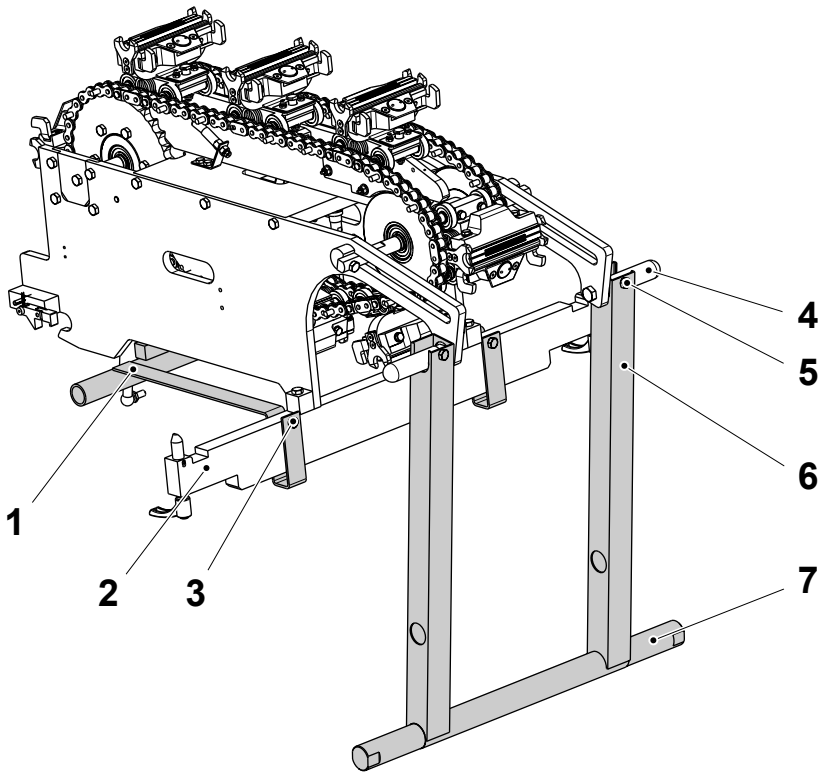

1 Support
2 Beam
3 Screw
4 Handle
5 Screw
6 Support
7 Shaft

(Cont'd)

(Cont'd)

CAUTION
Risk of crushing and equipment damage.
Pump up and release the trolley arm carefully.

f) Place the trolley next to the box with the extensions (8) distance A and B from the box beam (9). See illustration below.

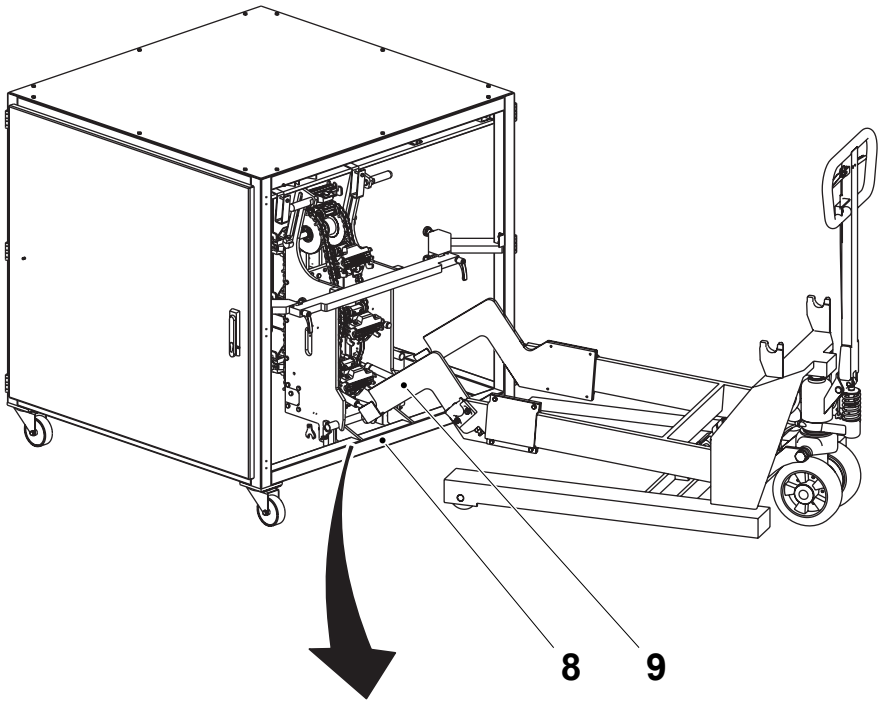

8 Extension
9 Beam

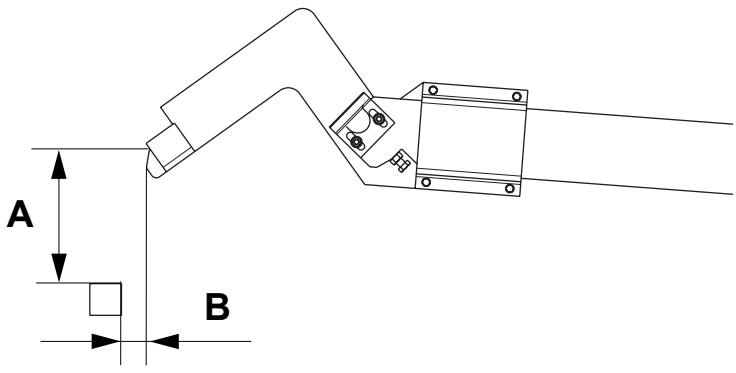

A	80 ± 5mm
B	20 ± 5mm

(Cont'd)

(Cont'd)

WARNING
Risk of crushing.
The machine sides are heavy. Two persons are needed to lift and handle the machine sides.

g) Release the locking devices and the levers (14).

h) Grip the handles (4) and fell down the machine side onto the trolley. The support (1) must fit into the extensions (8) and the support (6) to the bobbin holder (12).

i) Secure the support (6) with the cramps (11).

j) Lift the flaps (13).

k) Pump up the trolley arm (10) and pull the trolley carefully until the machine side releases from the main body and remove the side with support of the trolley.

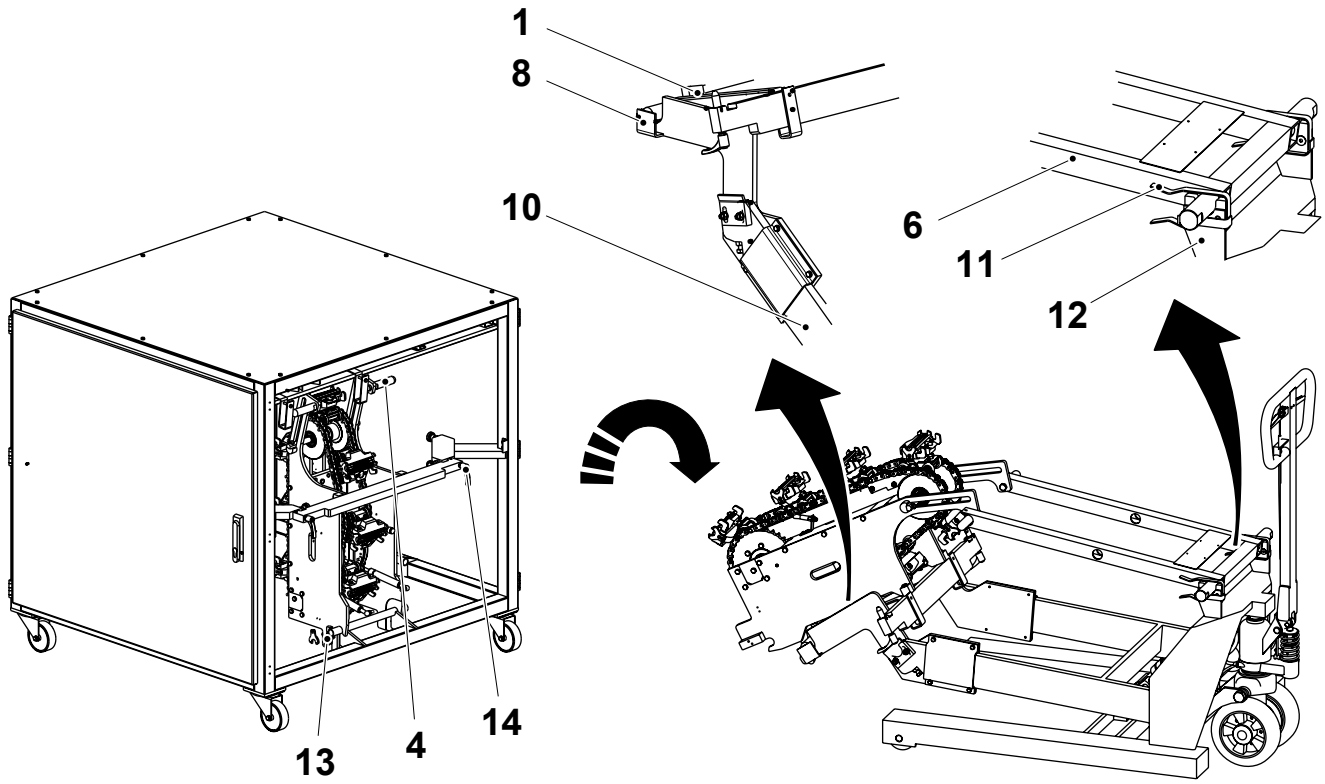

1	Support	8	Extension	12	Bobbin holder
4	Handle	10	Trolley arm	13	Flap
6	Support	11	Cramp	14	Lever

l) Pump up the trolley arm to its highest position.

5.6-2 Trolley 1538186-0100

Machine Status	Power supply disconnector OFF Air valve OFF
Special Equipment	Lifting equipment 630414-0200 (Volume conversion kit)

a) Fit the support (1) to the beam (2).

b) Secure with the screws (3).

c) Fit the support (6) to the handles (4).

d) Secure with the screw (5).

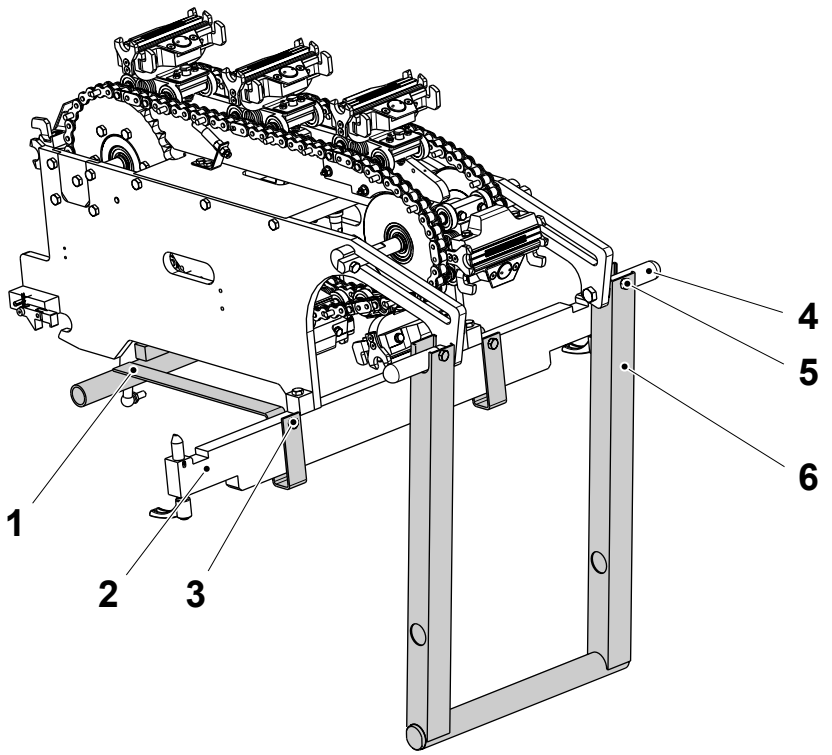

1 Support
2 Beam
3 Screw
4 Handle
5 Screw
6 Support

(Cont'd)

(Cont'd)

CAUTION
Risk of crushing and equipment damage.
Pump up and release the trolley arm carefully.

e) Place the trolley next to the box with the machine side with the bobbin holders (7) distance A and B from the box beam (8). See illustration below.

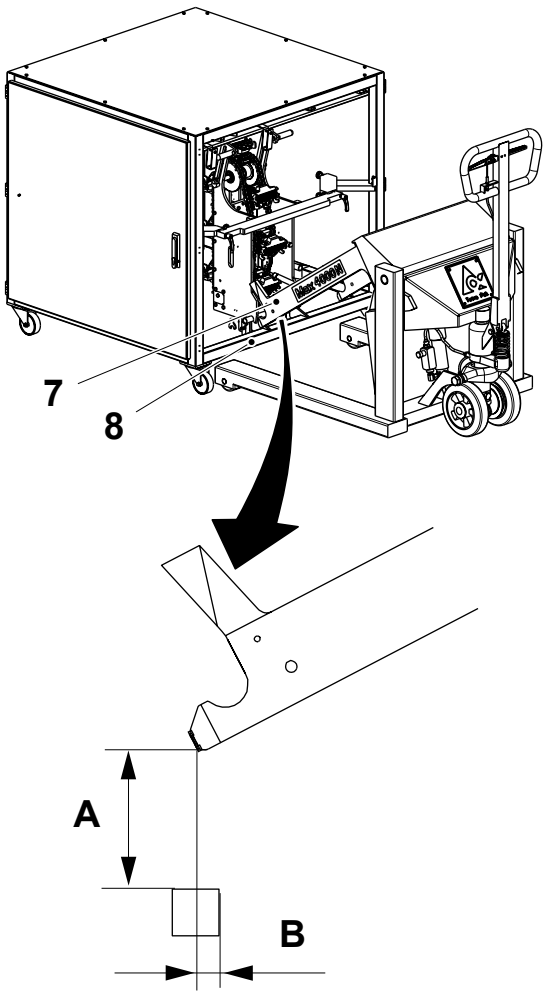

7 Bobbin holder
8 Beam

A	80 ± 5mm
B	10 ± 5mm

(Cont'd)

(Cont'd)

WARNING
Risk of crushing.
The machine sides are heavy. Two persons are needed to lift and handle the machine sides.

f) Release the locking devices and the locking levers (10).

g) Grip the handles (4) and fell down the machine side. The support (1) must fit into the bobbin holder (7) and the beam (12) must rest on the trolley arm (11).

h) Secure the support (6) with the shaft (13) according to the illustration below.

i) Lift the flaps (9).

j) Pump up the trolley arm and pull the trolley carefully until the machine side releases from the box and remove the side with support of the trolley.

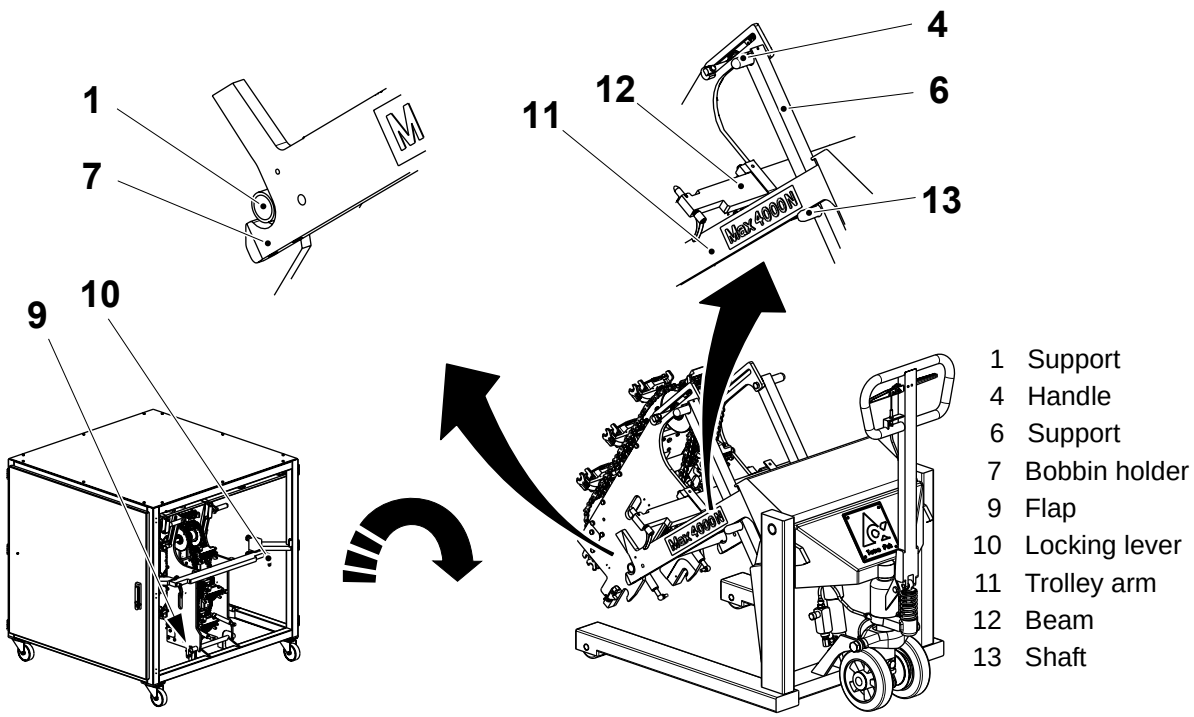

1 Support
4 Handle
6 Support
7 Bobbin holder
9 Flap
10 Locking lever
11 Trolley arm
12 Beam
13 Shaft

k) Pump up the trolley arm to its highest position.

This page intentionally left blank

Tetra Pak

Note! *This page is generated* ***automatically****.*
using the ***variable definitions*** *made in the* ***front page*** *file!*

Tetra Pak A1
630451-0200
Issue 2004-09-09 Doc. No. CM-80379-0101

Tetra Pak A1 1(2)
630451-0200
Issue 2004-09-09 Doc. No. CM-80379-0101

Tetra Pak A1
630451-0200
Issue 2004-09-09 Doc. No. CM-80379-0101

Tetra Pak A1 1(2)
630451-0200
Issue 2004-09-09 Doc. No. CM-80379-0101

Tetra Pak A1
630451-0200
Issue 2004-09-09 Doc. No. CM-80379-0101

Tetra Pak A1 1(2)
630451-0200
Issue 2004-09-09 Doc. No. CM-80379-0101

Tetra Pak A1
630451-0200
Issue 2004-09-09 Doc. No. CM-80379-0101

Tetra Pak A1 1(2)
630451-0200
Issue 2004-09-09 Doc. No. CM-80379-0101

Tetra Pak A1
630451-0200
Issue 2004-09-09 Doc. No. CM-80379-0101

Tetra Pak A1 2(2)
630451-0200
Issue 2004-09-09 Doc. No. CM-80379-0101

Tetra Pak A1
630451-0200
Issue 2004-09-09 Doc. No. CM-80379-0101

Tetra Pak A1 2(2)
630451-0200
Issue 2004-09-09 Doc. No. CM-80379-0101

Tetra Pak A1
630451-0200
Issue 2004-09-09 Doc. No. CM-80379-0101

Tetra Pak A1 2(2)
630451-0200
Issue 2004-09-09 Doc. No. CM-80379-0101

Tetra Pak A1
630451-0200
Issue 2004-09-09 Doc. No. CM-80379-0101

Tetra Pak A1 2(2)
630451-0200
Issue 2004-09-09 Doc. No. CM-80379-0101

40 mm Full width ***Note!*** *This page is generated* ***automatically****.*
using the ***variable definitions*** *made in the* ***front page*** *file!*

Tetra Pak A1
630451-0200

Issue 2004-09-09 Doc. No. CM-80379-0101

Tetra Pak A1 1(2)
630451-0200

Issue 2004-09-09 Doc. No. CM-80379-0101

Tetra Pak A1
630451-0200

Issue 2004-09-09 Doc. No. CM-80379-0101

Tetra Pak A1 1(2)
630451-0200

Issue 2004-09-09 Doc. No. CM-80379-0101

Tetra Pak A1
630451-0200

Issue 2004-09-09 Doc. No. CM-80379-0101

Tetra Pak A1 1(2)
630451-0200

Issue 2004-09-09 Doc. No. CM-80379-0101

Tetra Pak A1
630451-0200

Issue 2004-09-09 Doc. No. CM-80379-0101

Tetra Pak A1 2(2)
630451-0200

Issue 2004-09-09 Doc. No. CM-80379-0101

Tetra Pak A1
630451-0200

Issue 2004-09-09 Doc. No. CM-80379-0101

Tetra Pak A1 2(2)
630451-0200

Issue 2004-09-09 Doc. No. CM-80379-0101

Tetra Pak A1
630451-0200

Issue 2004-09-09 Doc. No. CM-80379-0101

Tetra Pak A1 2(2)
630451-0200

Issue 2004-09-09 Doc. No. CM-80379-0101