IM

Installation Manual

Tetra Pak A1

630451-0200

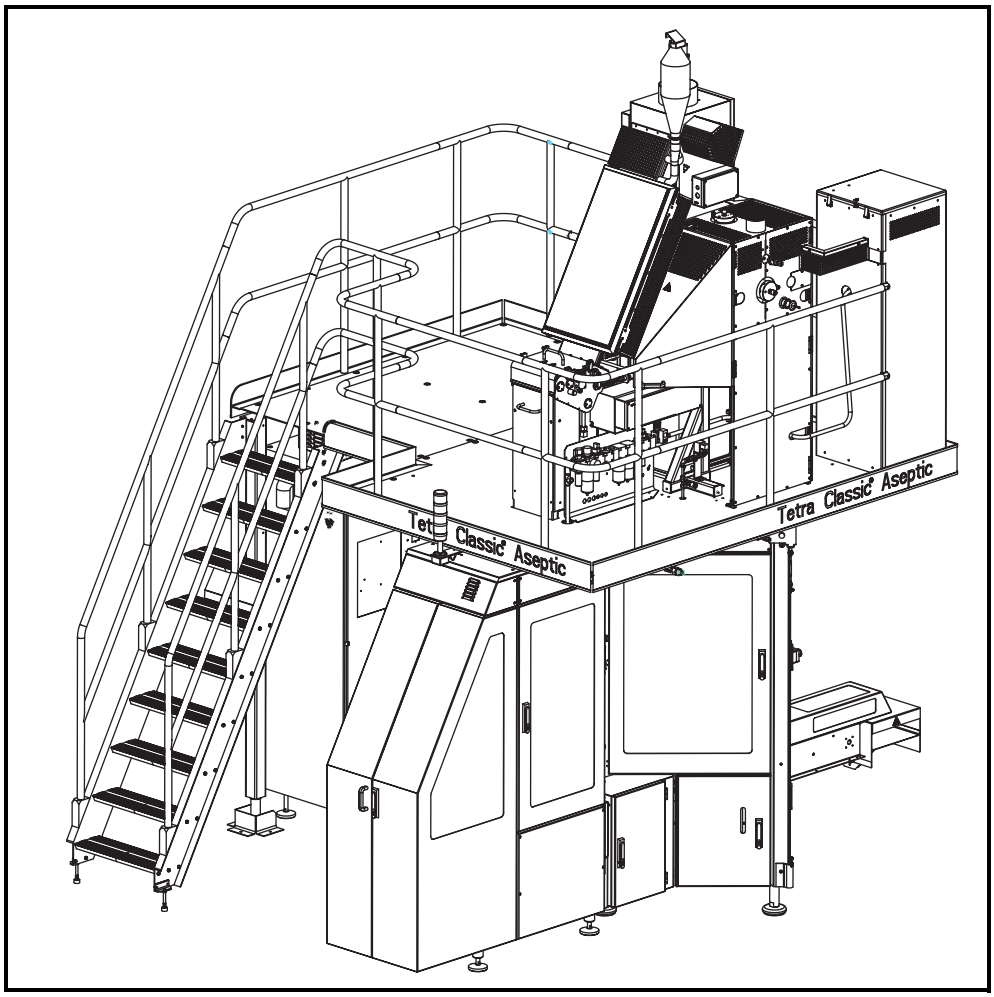

IM1.185601012fro.fm

Tetra Pak

Doc No. IM-85601-0102

This document is valid for:

Series No/ Machine No Sign.

Tetra Pak A1
630451-0200

Equipment included:

2592400-0100

IM1.185601012fro.fm

Issue 2003-03-01

Doc No. IM-85601-0102

Tetra Pak

Tetra Pak Carton Ambient AB

Introduction

About the Introduction Chapter 1
Document Information. 2
Delivered Documentation 2
Typographical Conventions 2
Machine Introduction. 3
Intended Use of the Machine or Equipment 3
Manufacturer 3
Service 3
Copyright ©. 2003
Tetra Pak Carton Ambient 3
Identification 4
CE Classification 4
Machine Plate 4
Orientation 5
Hygiene. 6
Abbreviations Used in this Manual 7

IM1.0b856010102TOC.fm

Safety Precautions

Read the Safety Precautions 9
Hazard Information 10
Requirements on personnel 11
Safety Signs 13
Location of Safety Signs 15
Safety Devices 16
Emergency Stop 16
Safeguards 19
Warning Lamp 20
Horn Alarm 20
Personal Protection. 21
Hearing Protection 21
Jewellery 21
Hazardous Materials. 22

Hydrogen Peroxide (H_2O_2) 22
Manual emptying of peroxide bath 28
Supply Systems 29
Electrical Cabinet 29
Power Supply 31
Air Supply 32
Steam Supply 33
Water Supply 34

3 Technical data & drawings

3.1 Installation drawings 35
General dimensions - overview 35
Right hand view 36
Top view 37
Machine feet position (Top view) 38
Door positions and dimensions (Top view) 39
Side dimensions 40
3.2 Mass / weight 41
3.3 Connections 42
3.4 Noise 46
3.5 Emissions and thermal load 47
3.6 Utility connection data 48
Electrical power specifications 48
Compressed air specifications 48
Water 49
Steam 49
3.7 Product connection data 50
3.8 Cleaning 51
3.9 Ambient temperature 51
3.10 Out feed conveyor 51

IM1.0b8556010102TOC.fm

4 Site preparation

4.1 General requirements 53
4.2 Specific construction details 54
4.3 Storage and Handling Recommendation 55

5 Machine handling

5.1 Crate data 57
5.1.1 Weight and dimensions 57
5.1.2 Contents 58
5.2 Lifting equipment. 59
5.3 Unloading 60
5.3.1 Inspection 61
5.3.2 Using an overhead gantry or mobile crane 61
5.3.3 Using a forklift 62
5.4 Moving and storage 62
5.4.1 Moving 62
5.4.2 Storage 63
5.5 Unpacking and inspection. 64
5.5.1 Tools and auxiliary equipment 64
5.5.2 Uncrating sequence 65
5.5.3 Inspection documentation 66
5.5.4 Disposal / reuse 66
5.6 Machine transport 67
5.6-1 Moving the main body 67
5.6-2 Moving the assembled sterile unit and tube forming module . 68
5.6-3 Moving the infeed 69
5.6-4 Moving the platform 69
5.6-5 Moving other machine parts 70

IM1.0b856010102TOC.fm

6 Position and assembly

6.1 General requirements 71
6.2 Space requirements 71
6.3 Positioning. 72
6.4 Levelling 72
6.5 Assembly. 74
6.5-1 Platform 74
6.5-2 Infeed 75
6.5-3 Ladder and railings 76
6.5-4 Sterile unit and tube forming module 77
6.5-5 Sterile air system 79
6.5-6 Electrical cabinet 80
6.5-7 Cable trays and cables 81
6.5-8 Pipes 82
6.5-9 Filling pipe 84
6.5-10 Hoods, doors, and protection plates 84
6.6 Utility and product connections 85
6.6.1 Electrical connection 85
6.6.2 Utility connections 85
6.6.3 Product connections 85
6.7 Signal exchange 86
6.7.1 CIP unit signal exchange 86
6.7.2 Process unit signal exchange 86
6.8 Optional equipment 87

7 Installation check

7.1 Checks before test run 89
7.1.1 Filling machine check 89
7.1.2 Electrical connections checks 90
7.1.3 Miscellaneous checks 90
7.1.4 Lubricant level checks 91
7.2 Valve checks 91
7.3 Safety checks 91

IM1.0b8560101102TOC.fm

8 Preparation for commissioning

8.1 Presence and correctness checks 93
8.2 Product and utility value checks 94
8.3 Function checks 95
8.3.1 Preparation 95
8.3.2 Changing PLC parameters 96
8.4 Health and safety checks 96
8.5 Documentation 97

9 Disassembly and removal

9.1 Preparation 99
9.2 Disconnect utilities 100
9.3 Disassemble machine 100
9.4 Storage preparation 101
9.5 Re-crating 102
9.6 Moving 102

IM1.0b856010102TOC.fm

Table of contents

This page intentionally left blank

IM1.0b8556010102TOC.fm

Introduction

About the Introduction Chapter

WARNING! **Risk of serious personal injury.**
To ensure maximum safety, always read the Safety Precautions chapter before operating or servicing the machine or equipment.

This chapter contains basic information about this manual and related Tetra Pak equipment.

IM1.1185601012int.fm

Document Information

Tetra Pak recommends that the delivered information is studied carefully, and above all, ensure its availability to those who will be operating the machine or equipment.

It is important to keep the manual for the life of the machine or equipment and pass the manual on to any subsequent holder or user.

Tetra Pak will not be held responsible for any damage to the machine or equipment caused by not following the instructions given in this manual.

Delivered Documentation

The documents delivered with this machine or equipment include:

- Electrical Manual (EM)
  The purpose of this manual is to provide the service technicians and electricians with information required for service and maintenance
- Installation Manual (IM)
  The purpose of this manual is to provide installation personnel with the information required for installation
- Maintenance Manual (MM)
  The purpose of this manual is to provide the service technicians with information required for maintenance and service
- Operation Manual (OM)
  The purpose of this manual is to provide the operator with information on how to handle and operate the machine or equipment before, during, and after production
- Spare Parts Catalogue (SPC)
  The purpose of this manual is to provide necessary information for ordering spare parts from Tetra Pak

Typographical Conventions

Buttons, TPOP screens, and program steps are printed in CAPITAL LETTERS.

References are underlined.

IM1.1185601012int.fm

Machine Introduction

Intended Use of the Machine or Equipment

The intended use of this Tetra Pak machine is to pack liquid food products.

All other use is prohibited! Tetra Pak will not be held responsible for injury or damage if the machine or equipment is used for any other purpose.

Manufacturer

This Tetra Pak machine or equipment has been manufactured by:

Tetra Pak Carton Ambient AB
Ruben Rausings gata
SE-221 86 LUND
Sweden

Service

If problems are encountered when operating this machine or equipment, contact the nearest Tetra Pak service station or market company.

Contact the liaison responsible with other inquiries, comments or suggestions for improvement regarding the machine or equipment and its documentation.

IM1.1185601012int.fm

Copyright ©. 2003
Tetra Pak Carton Ambient
All rights reserved. No parts of this document may be reproduced or copied in any form or by any means without written permission from Tetra Pak Carton Ambient.

Identification

CE Classification

This equipment complies with the basic health and safety regulations of the European Economic Area (EEA).

Machine Plate

The below illustration shows an example of the machine plate and its location on the machine or equipment. The machine plate carries data needed when contacting Tetra Pak concerning this specific machine or equipment.

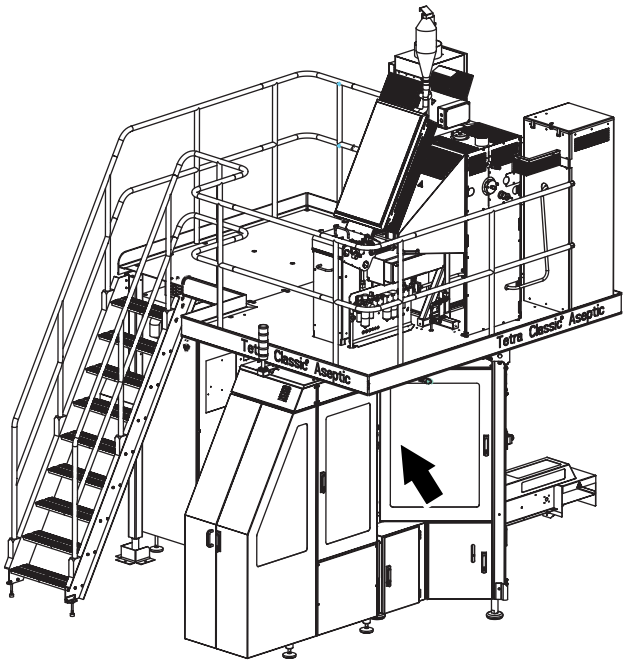

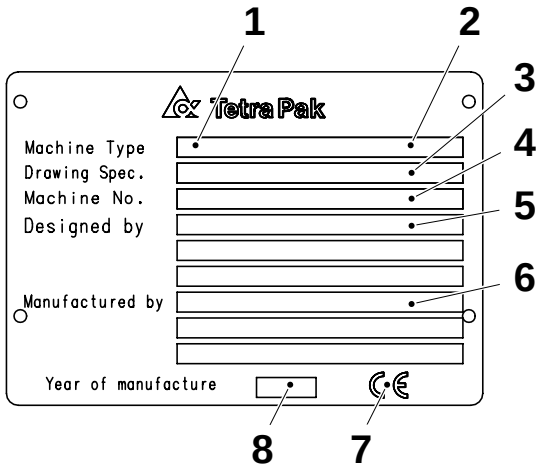

1 Machine type
2 Volume
3 Drawing specifications
4 Machine serial number
5 Designed by
6 Manufacturer
7 CE mark
8 Year of manufacture

IM1.1185601012int.fm

Orientation

The below illustration shows the orientation of the machine or equipment. This directional information will be used throughout this manual.

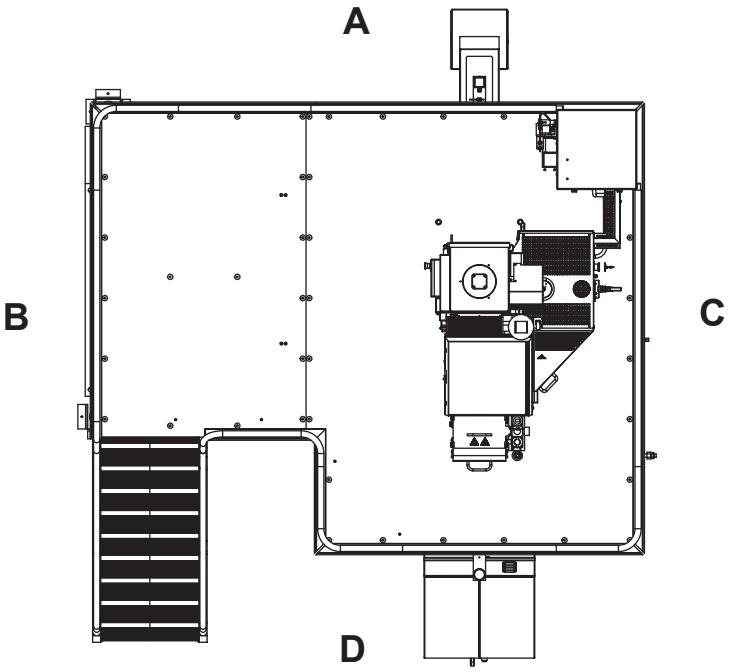

A Front
B Right Hand side
C Left Hand side
D Back

IM1.1185601012int.fm

Hygiene

To avoid microbiological pollution of the packaging material:

- always keep the doors in the filling room (area) closed and never open any windows when the equipment is in production to prevent contamination via air streams
- never clean the floors or the equipment in the filling room (area) when the equipment is in production
- compressed air used for cleaning purposes is to be used only for cleaning filters and should only be used outside of the filling room (area) or in the final folder compartment of the filling machine
- prepare the splicing of the packaging material as late as possible
- disinfect hands before touching the packaging material, the strip(s), or any other equipment part that may come into contact with the product.Use disinfectant (code H), see 3 Technical data & drawings on page 35.
- keep hands and gloves clean
- always wear some type of hair protection (cap or hairnet) and clean clothes (preferably white)
- do not wear a watch, ring, necklace, earrings or any other visible jewellery
- clean the platforms, the ladder and the area around the equipment when the equipment is not in production

IM1.1185601012int.fm

Abbreviations Used in this Manual

Abbreviation	Meaning	Translation
approx.	approximately	
CIP	Cleaning In Place	
EM	Electrical Manual	
IM	Installation Manual	
LED	Light Emitting Diode	
LH	Left Hand	
LS	Longitudinal Seal(ing)	
min	Minimum	
max	Maximum	
MM	Maintenance Manual	
OE	Optional Equipment	
OM	Operation Manual	
p/h	packages per hour	
PLC	Programmable Logic Controller	
RH	Right Hand	
RK	Rebuilding Kit	
SA	Strip Applicator	
SPC	Spare Parts Catalogue	
TP	Tetra Pak	
TPMS	Tetra Pak Maintenance System	
TS	Transversal Seal(ing)	

IM1.1185601012int.fm

This page intentionally left blank

IM1.1185601012int.fm

Safety Precautions

Read the Safety Precautions

All persons operating, servicing, adjusting or otherwise working with or near this machine must carefully read and follow all safety instructions in this manual and warning signs on the machine itself. Failure to do so could result in death, serious injury and / or damage to machine.

In case of accident, always call for medical attention immediately.

IM1.1185601012sp.fm

Hazard Information



This is the **"safety alert" symbol**. Obey all safety messages that follow this symbol to avoid death or injury.

The following safety alert symbols and signal words are used in this manual and on the machine itself to inform about hazards:



DANGER! indicates an imminently hazardous situation which, if not avoided, **will** result in **death or serious injury.**



WARNING! indicates a potentially hazardous situation which, if not avoided, **could** result in **death or serious injury.**

CAUTION! indicates a potentially hazardous situation which, if not avoided, **may** result in **minor or moderate injury.** It may also be used to alert against unsafe practices.

IMPORTANT! indicates a potentially hazardous situation which, if not avoided, **may** result in **property damage**.

IM1.1185601012sp.fm

Requirements on personnel

DANGER!

Risk of immediate danger to life!
Failure to obey the Safety precautions will put your life in danger.
All personnel must regard all electrical equipment as live.

The work is to be carried out in such a way that there is no risk of injury to personnel.

General

During maintenance or service work, the service technician and the electrician are responsible not only for the machine, but for the safety of the personnel in the vicinity of the machine as well!

It is also the responsibility of the service technician and the electrician to ensure that the machine safety devices are fully operational before he/she finishes the maintenance or service work.

Service technician

Only trained or instructed service technicians are allowed to work on the machine.

Service technicians may be:

- technicians employed by **Tetra Pak**

  Tetra Pak technicians are Tetra Pak employees who have completed training courses at the Tetra Pak Technical Training Centres or have equivalent knowledge.
- technicians employed by the **customer**

  Technicians employed by the customer must have the following skills:
  - capable of reading (English or native) technical information
  - able to understand technical drawings
  - basic knowledge of mechanics and electronics
  - basic knowledge of mathematics
  - capable of handling (special) tools

(Cont'd)

IM1.1185601012sp.fm

(Cont'd)

Electrician

Electricians should:

- be certified according to local regulations
- have experience of similar types of installations
- have proven skills in reading and working from drawings and cable lists
- have knowledge of local safety regulations for power and automation

Work with the electrical equipment in the machine must be performed by **skilled persons only.**

According to EN 60204-1:1997 clause 3.52 a skilled person is:

– *a person with relevant education and experience to enable him or her to perceive risks and to avoid hazards which electricity can create.*

Machine operator

Only trained or instructed persons are allowed to operate the machine.

The machine operator is an individual that has enough training and/or knowledge to run the equipment in the correct way.

Fork lift driver

Fork lift driver should be certified according to local regulations.

The fork lift driver's role during installation is:

- to unload transport vehicle
- to plan and transport the machine or machine parts within the plant in a safe and smooth way
- to assist when assembling Tetra Pak equipment

IM1.1185601012sp.fm

Safety Signs

SPC	2592385-0100

WARNING! **Hazards without safety signs drastically increase the risk of death or serious injury.**
Replace all missing or damaged safety signs immediately.

The table below contains all safety signs that are located on this machine.

Note! The position numbers (Pos) within the table refer to the positions in the illustration(s) in the Location of Safety Signs on page 15.

Pos	ISO signs	Pos	ISO signs
	 **Mandatory action.** Wear eye protection.	020/ 030	 **Dangerous Chemicals.** Wear protective equipment.
	 **Mandatory action.** Hearing protection recommended.	070/ 080	 **Harmful vapour.**
	 **Hazardous voltage.** Read Maintenance Manual BEFORE using this socket outlet. Failure to follow maintenance instruction could result in death or serious injury.	090	 **Hazardous voltage.** Will cause death or serious injury. Disconnect power before servicing. Lockout machine.

IM1.1185601012sp.fm

Pos	ISO signs	Pos	ISO signs
010/ 050/ 060	 **Hot surface.** Do not touch. Allow to cool before servicing.	040	 **Moving part can crush and cut.** Do not operate with guard removed. Follow lockout procedure before servicing.
100	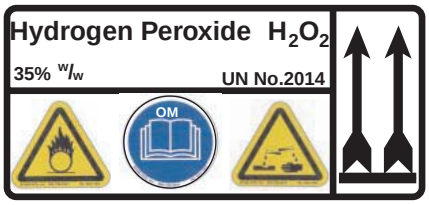 **Hydrogen peroxide.** Corrosive chemical. Can cause serious injury in both liquid and gas form. Hydrogen peroxide may cause irritation or damage if contact with skin, mucous membranes, eyes, or clothes. Wear personal protective.	110	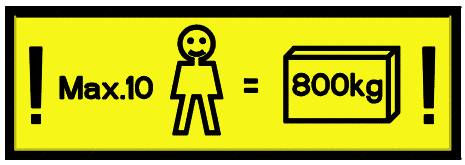 **Max load sign** No more than 10 persons or 800 kg load may be present on the platform at the same time.

IM1.1185601012sp.fm

Location of Safety Signs

SPC	2592385-0100

Note! Always ensure that all safety signs on the machine are undamaged and in it's correct position, after installation and maintenance.

The illustration below indicates where the safety signs are located on the machine. The position numbers refer to the table in section Safety Signs on page 13.

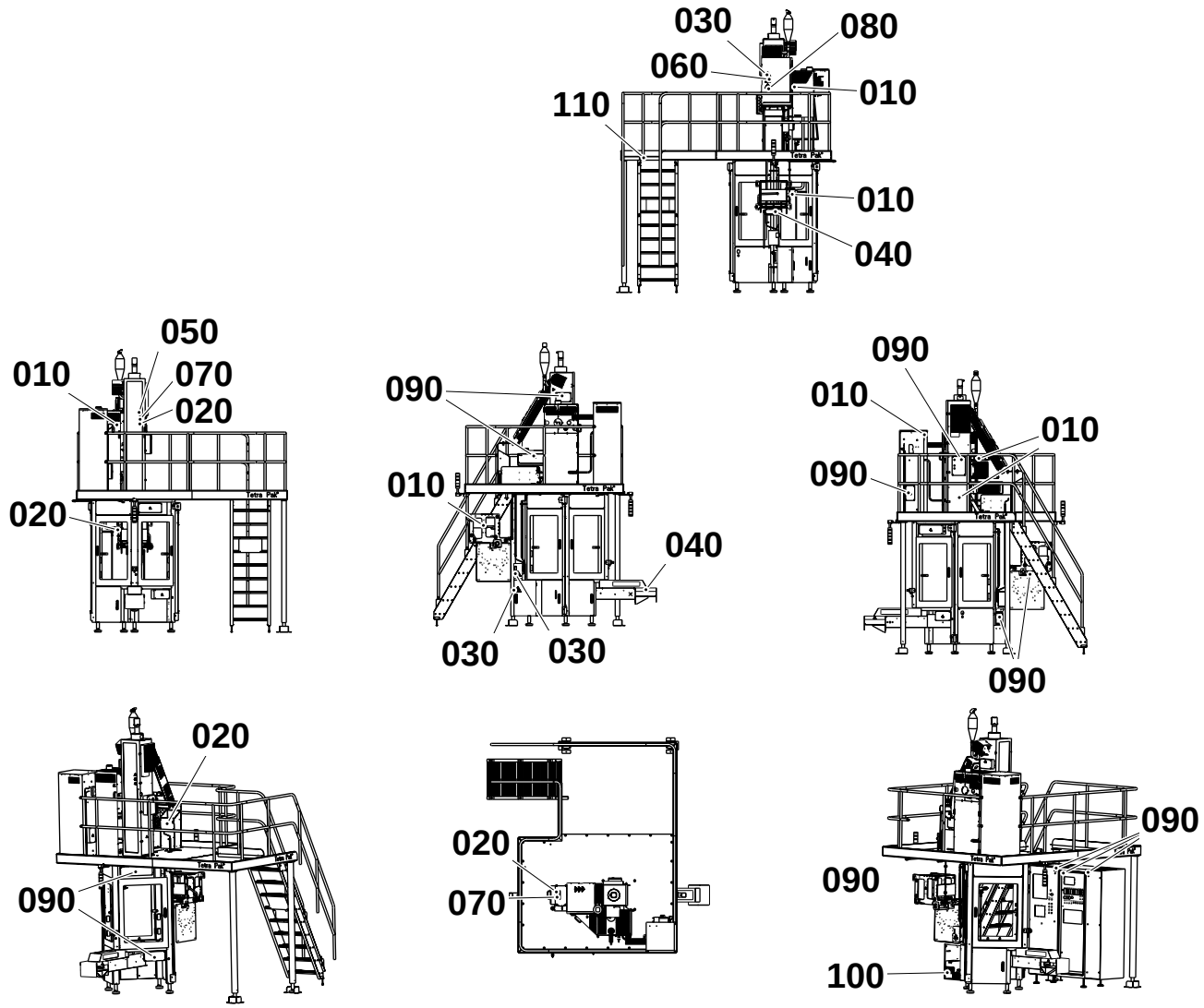

IM1.1185601012sp.fm

Safety Devices

DANGER! **Unshielded hazards.**
Never inch or run the machine if any component of the safety system is inoperative.

All inoperative components of the safety system must be changed immediately.

Note! Activating a safety device, such as an EMERGENCY STOP or opening an interlocked safe guard, does not switch off the power supply to the machine.

Emergency Stop

CAUTION! **Risk of minor personal injury!**
The perioxide bath is not automatically emptied if an EMERGENCY STOP is pushed. This has to be done manually.

Learn the positions of the EMERGENCY STOP devices in order to stop the machine immediately in case of an emergency situation.

To stop production the normal way, see chapter Stop in the Operation Manual.

(Cont'd)

IM1.1185601012sp.fm

(Cont'd)

Emergency Stop Push Buttons

Push one of the EMERGENCY STOP push buttons to stop the machine immediately.

Empty the peroxide bath, see Manual emptying of peroxide bath on page 28.

The illustrations below show an emergency stop push button and the arrows indicate the locations on the machine.

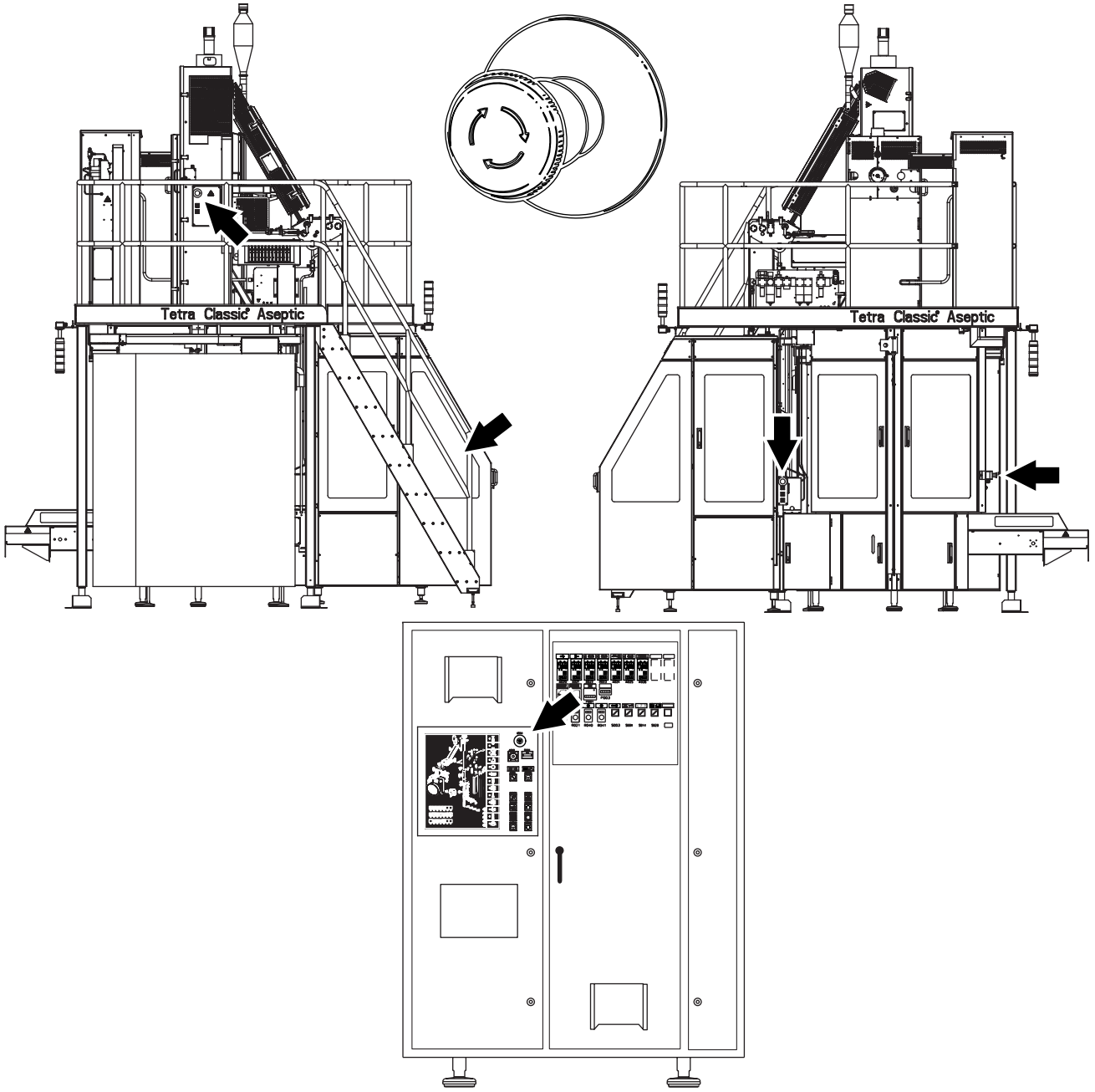

IM1.1185601012sp.fm

(Cont'd)

(Cont'd)

Emergency Stop Wires

Pull one of the EMERGENCY STOP wires to stop the machine immediately.

Empty the peroxide bath, see Manual emptying of peroxide bath on page 28.

The illustrations below show an emergency stop wire and the arrows indicate the locations on the machine.

Before reseting the emergencystop press the button on the emergency stop wire module, see figure below.

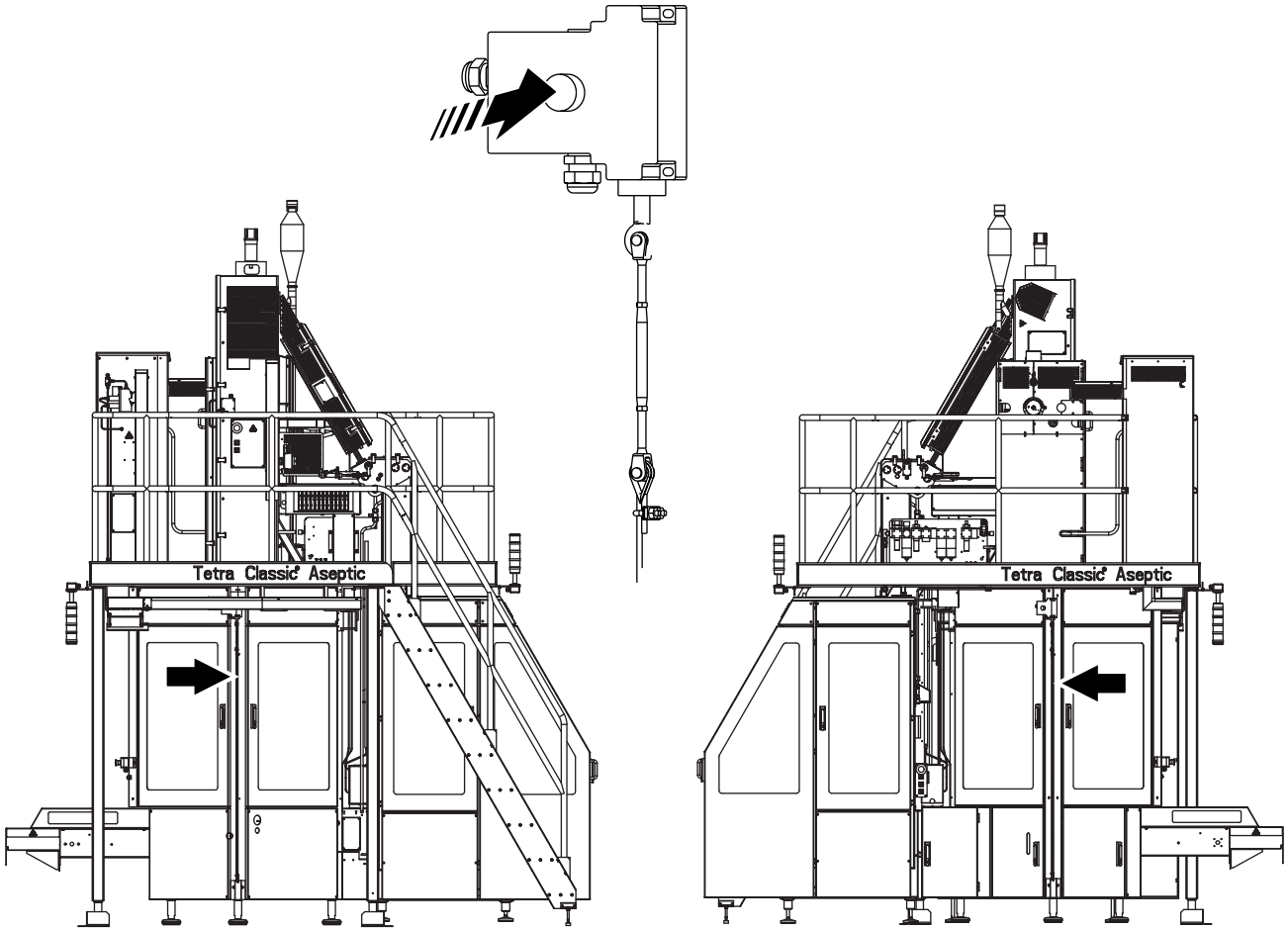

IM1.1185601012sp.fm

Location of Emergency stop wires

Safeguards

DANGER! **Moving machinery.**
Never defeat safety switches.

All movable guards, such as doors and covers, leading to hazardous areas are fitted with interlocking devices, usually electric safety switches. These devices are part of the safety system of the machine, and must never be defeated, bypassed or otherwise made inoperative

Safeguarded components may be thermally hot after operation.

After installation and maintenance, check that all safeguards are fitted and in correct operation before the machine is inched or run.

CAUTION! **Machine damage.**
Never stop the machine by opening a movable guard, except in case of emergency.

The illustrations below show all movable guards; locations indicated by arrows.

IM1.1185601012sp.fm

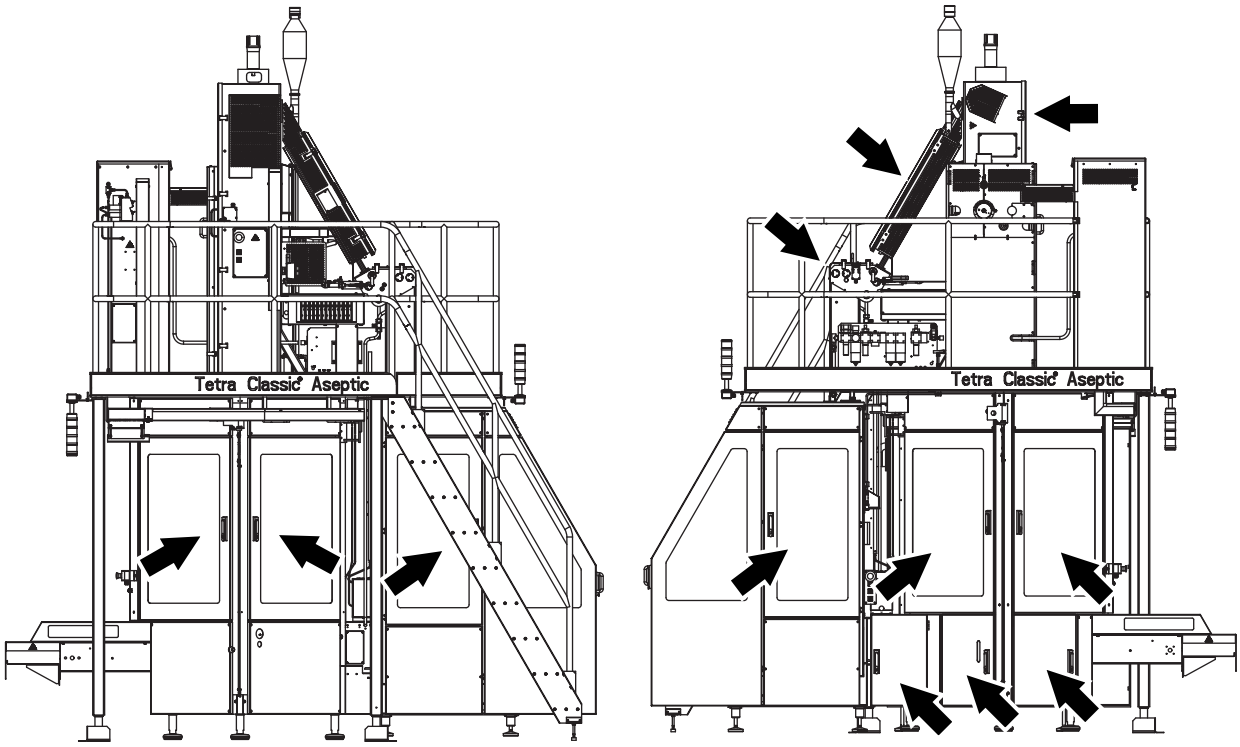

Warning Lamp

The machine is fitted with a column of one or several warning lamps.

The red light flashes when a **hazardous condition** has occurred, such as an **emergency stop** having been activated.

The yellow light flashes when an condition has occurred which requires action by the operator, such as a door or cover having been opened.

The blue light flashes when operator action is required, such as refilling a magazine.

Note! For a complete list of alarms, see the Operation Manual.

The light stops flashing and remain lit when the ALARM RESET button is pressed. After the fault is corrected or the operator takes the appropriate action, the warning light goes off.

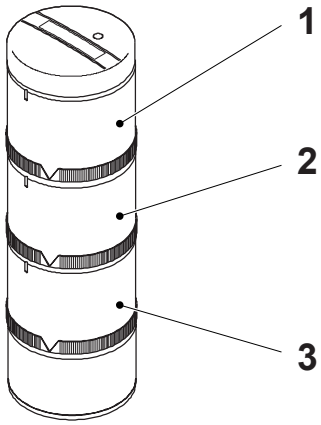

1 Red light
2 Yellow light
3 Blue light

IM1.1185601012sp.fm

Horn Alarm

The horn alarm produces a **sonic warning signal** every time the main motor is about to start.

The warning signal sounds for approximately 3 seconds prior to motor ignition and is intended to alert personnel that **the machine is about to start**.

Personal Protection

Note! Information about personal protection regarding chemical products can be found in the section describing each specific chemical.

Hearing Protection

CAUTION! **Hazardous noise level.**
Risk of impaired hearing.
Hearing protection is recommended.

Jewellery



WARNING! **Risk of entanglement.**
No personal jewellery such as rings, watches, bracelets or necklaces may be worn when performing work on or near the machine.

IM1.1185601012sp.fm

Hazardous Materials

Hydrogen Peroxide (H_2O_2)

WARNING! **Corrosive chemical.**
Always wear personal protective equipment.

In both liquid and gas form, hydrogen peroxide may cause irritation or damage if in contact with skin, mucous membranes, eyes, or clothes. In case of accident call for medical attention immediately.

Liquid hydrogen peroxide in concentrations lower than 1% is normally considered harmless to humans.

Consult the instructions on the label of the tank or container.

Handling

DANGER! **Explosion.**
Do NOT pour surplus hydrogen peroxide back into the original container.

If contaminated hydrogen peroxide is poured back in the original container with fresh peroxide, or if hydrogen peroxide is allowed to decompose, there is a risk of explosion. Avoid contamination of hydrogen peroxide. It may react with or **form explosive products** with many organic substances such as acetone, cellulose, and ethanol.

CAUTION! **Rapid decomposition.**
Ensure that equipment used for handling and diluting hydrogen peroxide is clean before coming in contact with hydrogen peroxide and neutralized with water after.

Pumps or other **equipment** used for hydrogen peroxide **must be** used **for this purpose only** and must be manufactured from appropriate materials such as stainless steel 316 L, glass, polyethylene, or teflon.

(Cont'd)

IM1.1185601012sp.fm

(Cont'd)

If hydrogen peroxide is spilled, dilute it with large amounts of water and flush it into a drain.

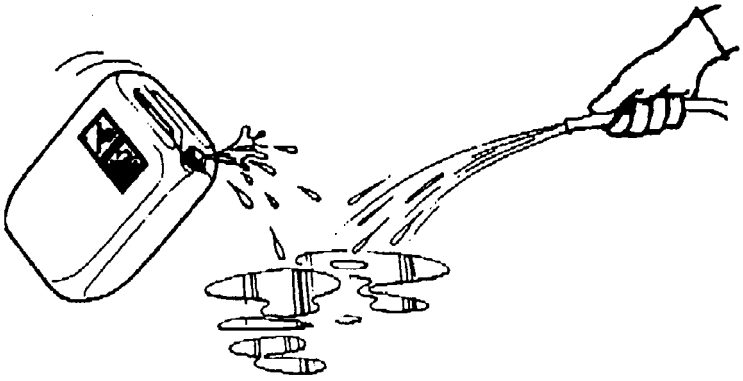

WARNING! **Self-ignition.**
Never wipe with combustible materials, such as rags or paper, as these may self-ignite. In case of fire, cool by using a hose and spray with large quantities of water.

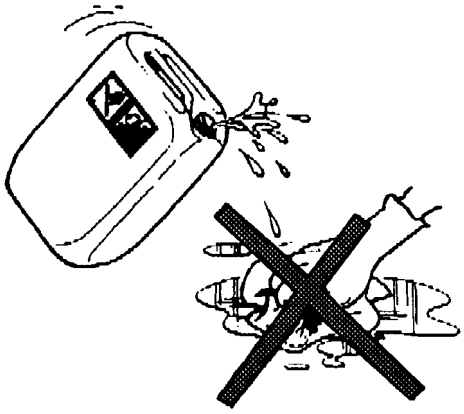

IM1.1185601012sp.fm

Disposal

The hydrogen peroxide should be sent for destruction. Some countries allow it to be diluted with water to a concentration below 1% and poured into the drain.

(Cont'd)

(Cont'd)

Storage

WARNING! **Emission of oxygen supports fire.**
In case of fire, cool the peroxide containers by spraying with large quantities of water.

The commercial food grade hydrogen peroxide has been stabilized, but it may decompose into oxygen and water if it is exposed to heat or contaminated by contact with incompatible materials. The decomposition of hydrogen peroxide increases drastically with temperature.

Make sure that the room or area used for storage is

- cool, clean, and well ventilated
- shielded from direct sunlight
- kept free from combustible materials.

Note! Hydrogen peroxide **must** only be stored in the **original container** as delivered by the supplier. Keep the container upright and closed with its **proper ventilation cap**, that allows oxygen to escape. If not, there may be an explosion if decomposition of the peroxide occurs violently. Always make sure that the container is properly closed.

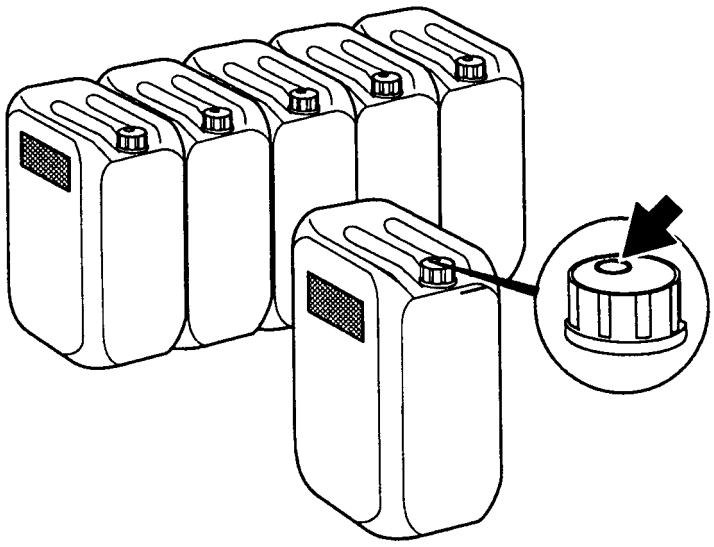

IM1.1185601012sp.fm

(Cont'd)

(Cont'd)

Personal Protective Equipment

Whenever there is a risk of contact with hydrogen peroxide, wear

- safety goggles (1)
- protective gloves (2) of neoprene
- shoes (3) made of PVC or PE plastic, or rubber
- apron (4).

Always make sure that

- the showers (5) work
- an eyewash device, movable (6) or wall-mounted (7) is available at or near each machine site
- there are additional washing facilities.

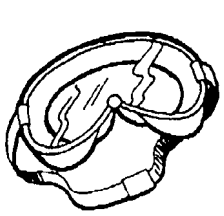

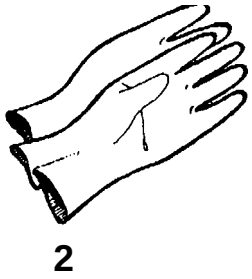

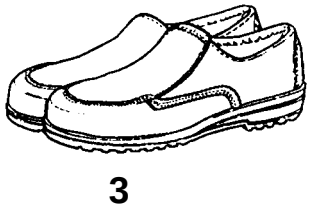

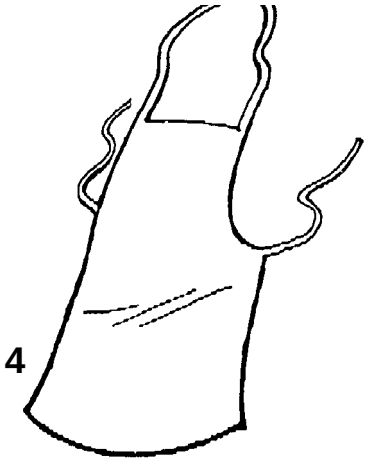

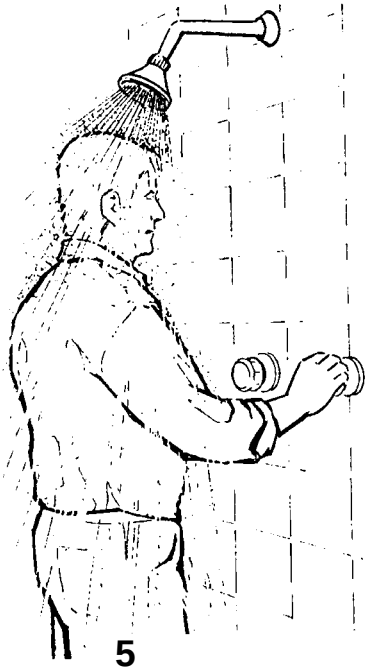



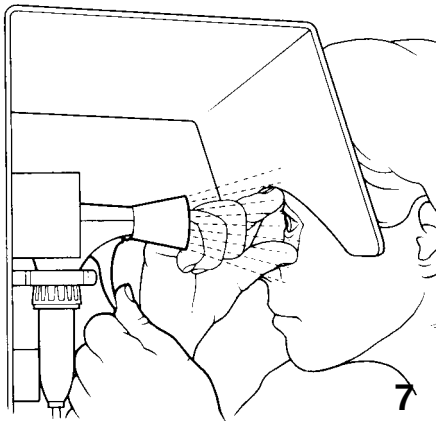

1 Safety goggles (TP No 90303-11)
2 Protective gloves (TP No.90303-12)
3 Shoes
4 Apron (TP No. 90303-13)
5 Shower
6 Eyewash device (TP No. 90303-6)
7 Eyewash device

(Cont'd)

IM1.1185601012sp.fm

(Cont'd)

Emergency Procedures

In case of an accident involving hydrogen peroxide, it is very important to rinse the affected area as soon as possible with as much water as possible.

If hydrogen peroxide is swallowed

- drink large amounts of lukewarm water (in order to dilute the peroxide)
- call for medical attention immediately.

If splashes or vapour from hydrogen peroxide come in contact with the eyes

- wash the eyes thoroughly with lukewarm water for 15 minutes (keep eyelids wide apart)
- call for medical attention immediately.



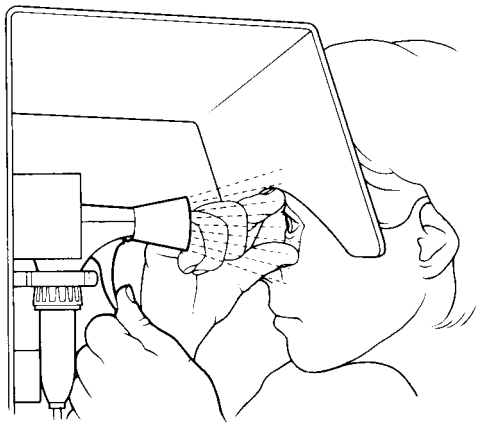

IM1.1185601012sp.fm

(Cont'd)

(Cont'd)

If hydrogen peroxide comes into contact with skin or clothes

- rinse immediately with plenty of water
- if skin burns appear call for medical attention immediately
- thoroughly wash the clothes before wearing them again.

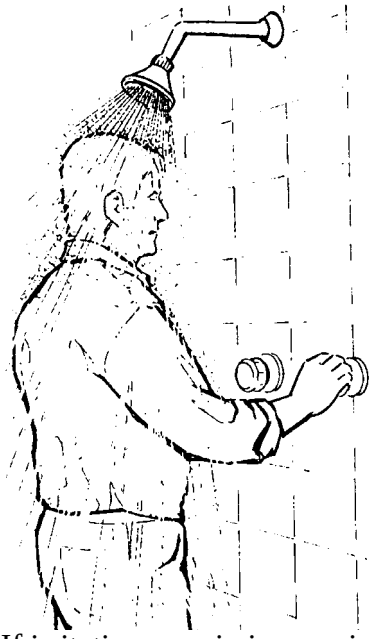

If irritation or pain is experienced due to having **inhaled** hydrogen peroxide vapour

- leave the affected area and get some fresh air
- if the symptoms get worse, call for medical attention.

IM1.1185601012sp.fm

Manual emptying of peroxide bath

If the machine has been stopped by the emergency stop system, or by main power failure, the peroxide bath has to be emptied manually.

WARNING! Make sure to be familiar with the information regarding Hydrogen Peroxide (H2O2) before emptying the peroxide bath.

a) Empty the peroxide bath (1) by opening the drainage valve (2).

b) Make sure that the peroxide bath is empty before closing the drainage valve.

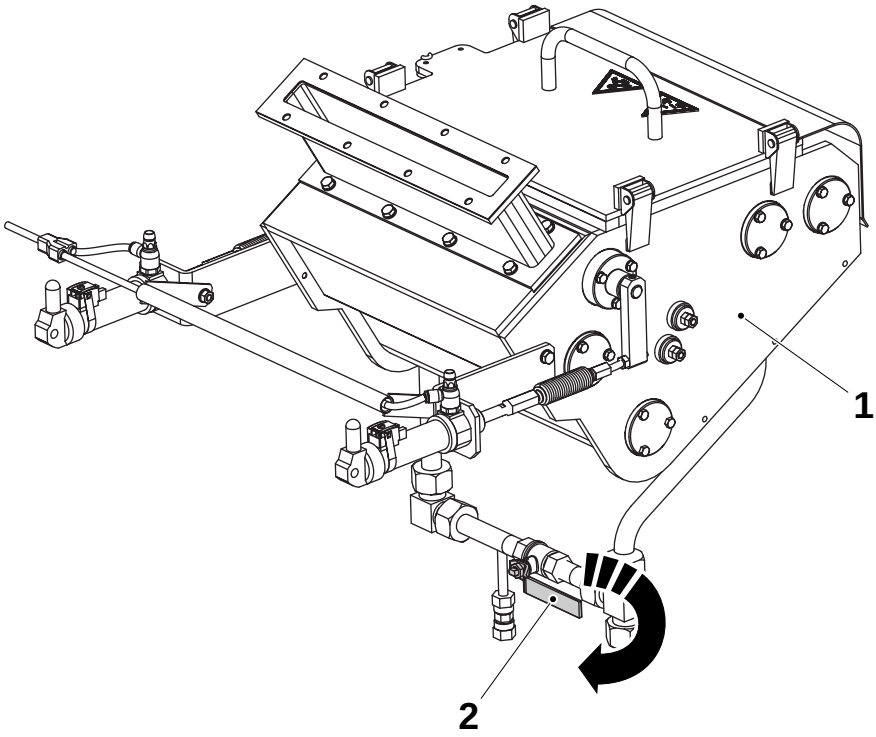

1 Peroxide bath
2 Drainage valve

IM1.1185601012sp.fm

Supply Systems

Electrical Cabinet

DANGER!

Hazardous voltage.
Electric shock will cause death or serious injury.
The **Power Supply Disconnecting Device** must be turned **OFF** and secured with a lock, before any service is carried out inside the electrical cabinet.

Note! The key to the lock must be removed by the service technician or the electrician, and retained in his/her possession until all work is completed.

Make sure that the electrical cabinet doors are locked after performing any kind of work in the electrical cabinet.

The illustration below shows the electrical cabinet; location indicated by arrow.

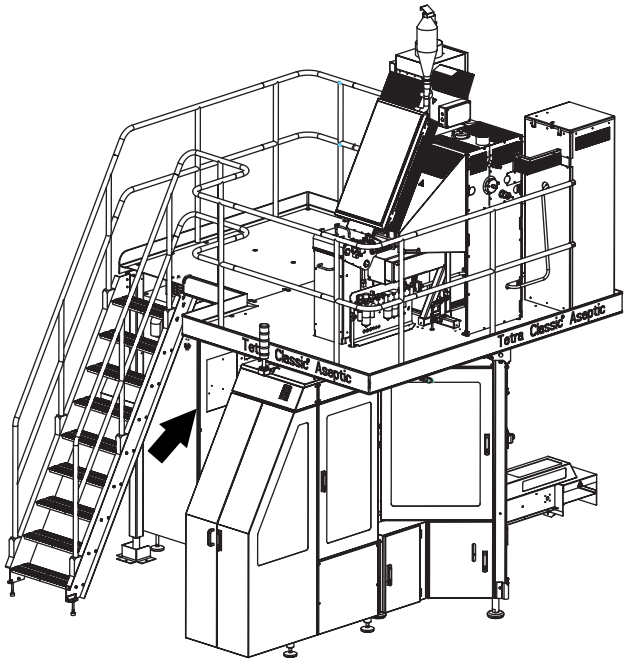

(Cont'd)

IM1.1185601012sp.fm

(Cont'd)

Socket Outlet

WARNING! **Hazardous voltage.**
Read Maintenance Manual BEFORE using this socket outlet. Failure to follow maintenance instruction could result in death or serious injury.

The illustrations below shows the socket outlet (1) and residual current device (2), and their locations in the electrical cabinet (3).

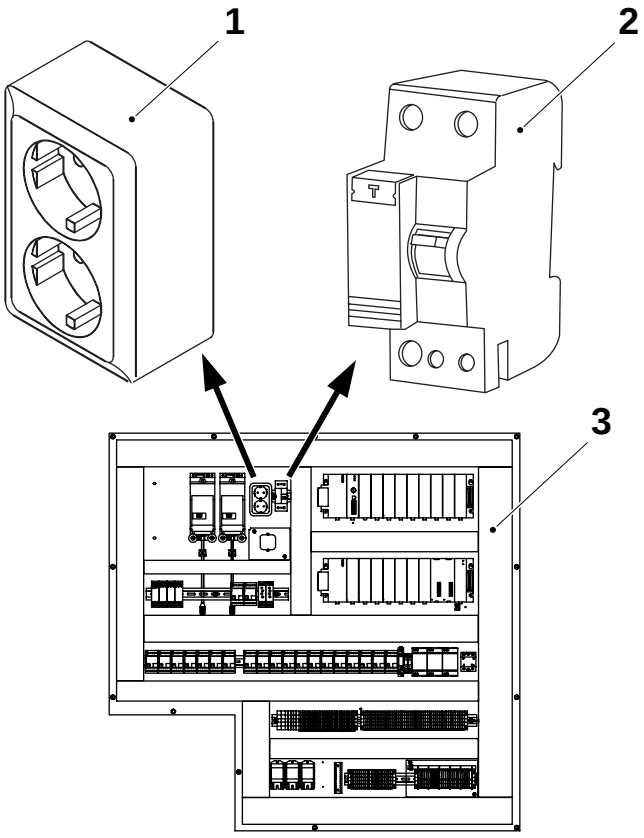

1 Socket outlet
2 Residual current device
3 Electrical cabinet

IM1.1185601012sp.fm

Power Supply

DANGER!

Hazardous voltage and moving machinery.
The **Power Supply Disconnecting Device** must be turned **OFF** and secured with a lock, before any service is carried out.

Note! The key to the lock must be removed by the service technician or the electrician, and retained in his/her possession until all work is completed.

Certain maintenance procedures require supply systems to be turned on. These exceptions are clearly stated in the maintenance manual.

The illustration below shows the power supply disconnecting device and the arrow indicates the location on the machine.

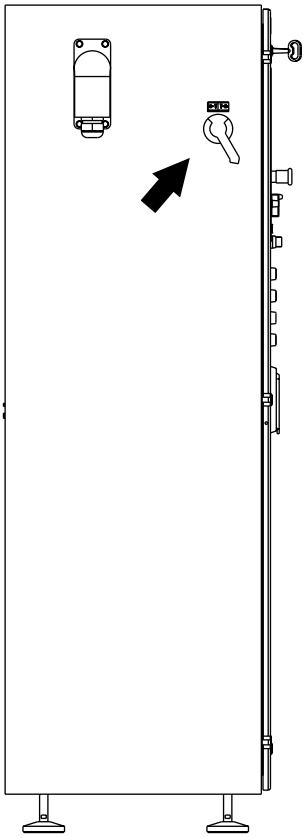

IM1.1185601012sp.fm

Air Supply

WARNING! **Compressed air and moving machinery.**
The **Main Air Valve** must be turned **OFF** and secured with a lock, before any service is carried out.

Note! The key to the lock must be removed by the service technician and retained in his/her possession until all work is completed.

Certain maintenance procedures require supply systems to be turned on. These exceptions are clearly stated in the maintenance manual.

The illustrations below shows the main air valve (1), the lock (2), and the arrow indicates the location on the machine.

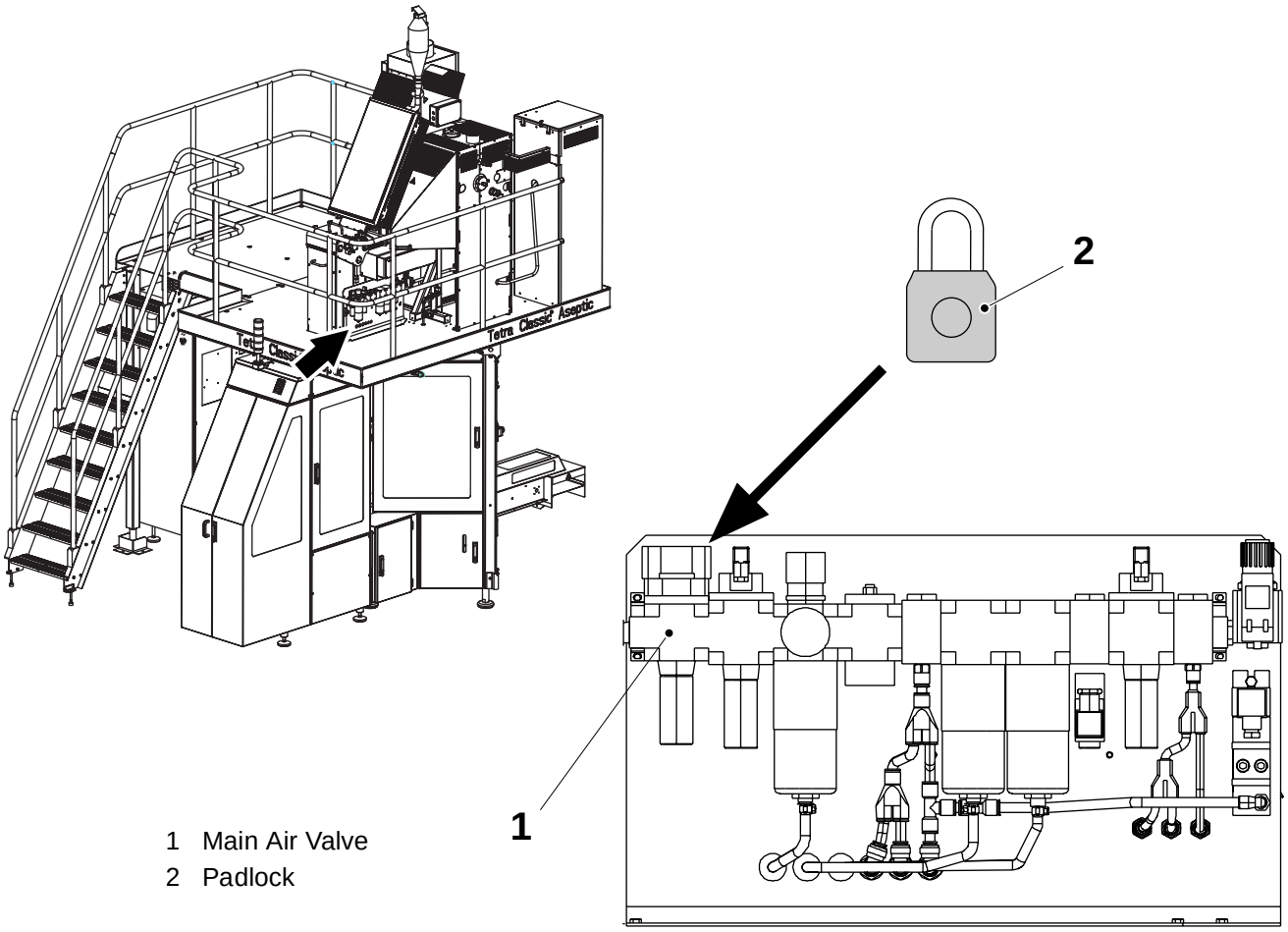

1 Main Air Valve
2 Padlock

IM1.1185601012sp.fm

Steam Supply

WARNING! **Hot steam may cause severe burns.**
The **Supply Valve** must be turned **OFF**, the equipment depressurized, and vent all steam safely, before any service is carried out.

Pressurized steam can be discharged unexpectedly. Pipes and components can be extremely hot.

Certain maintenance procedures require supply systems to be turned on. These exceptions are clearly stated in the maintenance manual.

The illustration below shows the steam supply valve (1) and the location on the machine.

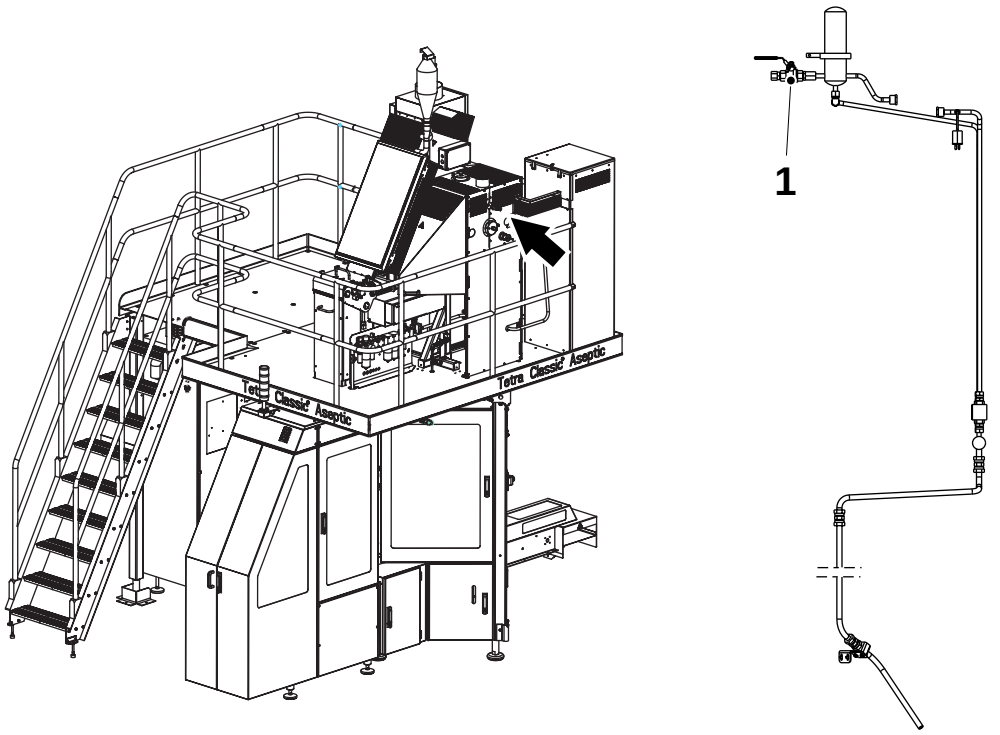

1 Steam Supply Valve

IM1.1185601012sp.fm

Water Supply

WARNING! **Water under pressure.**
The **Water Supply Valves** must be turned **OFF**, before any service is carried out.

Certain maintenance procedures require supply systems to be turned on. These exceptions are clearly stated in the maintenance manual.

The illustration below shows the water supply valves (1) and the location on the machine.

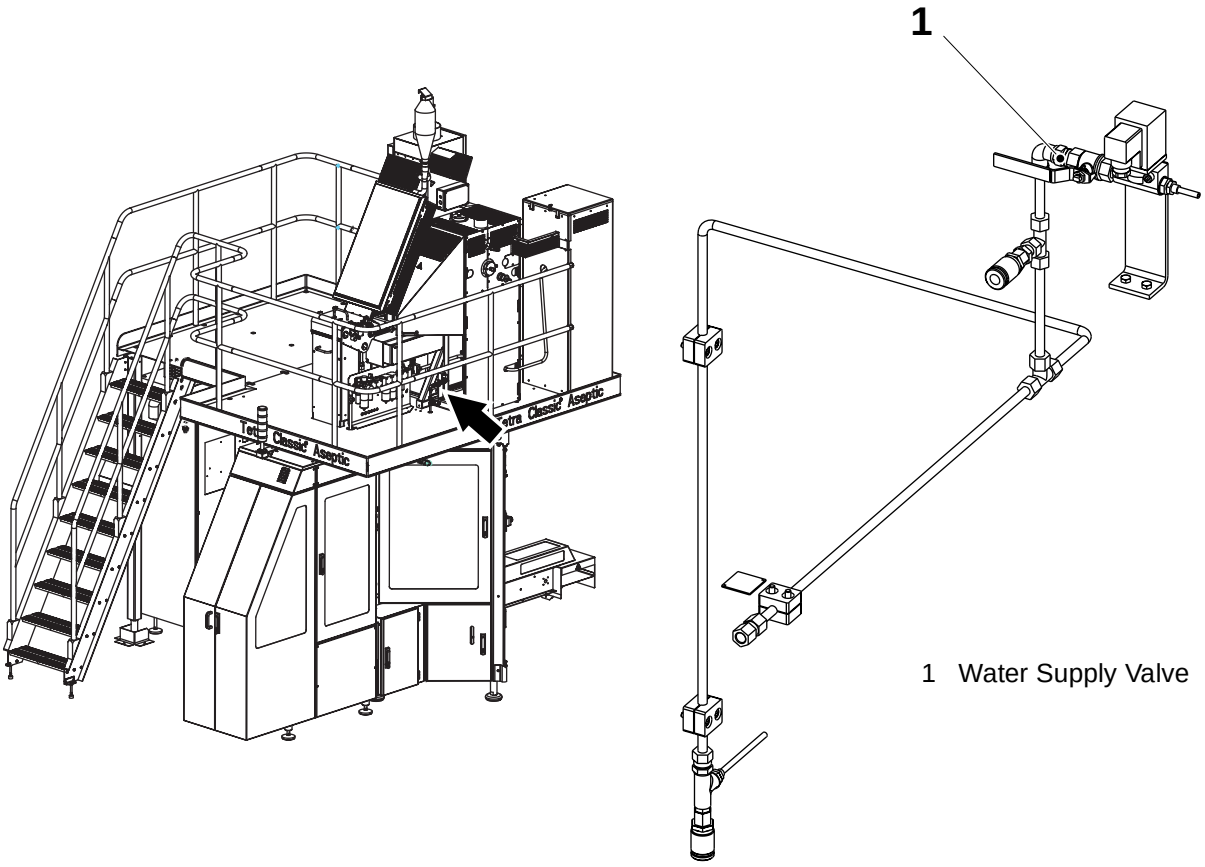

1 Water Supply Valve

IM1.1185601012sp.fm

3 Technical data & drawings

3.1 Installation drawings

The following drawings provide the dimensions of the machine and the dimensions for access around the machine. These dimensions must be respected. All dimensions are in millimetres unless otherwise stated.

General dimensions - overview

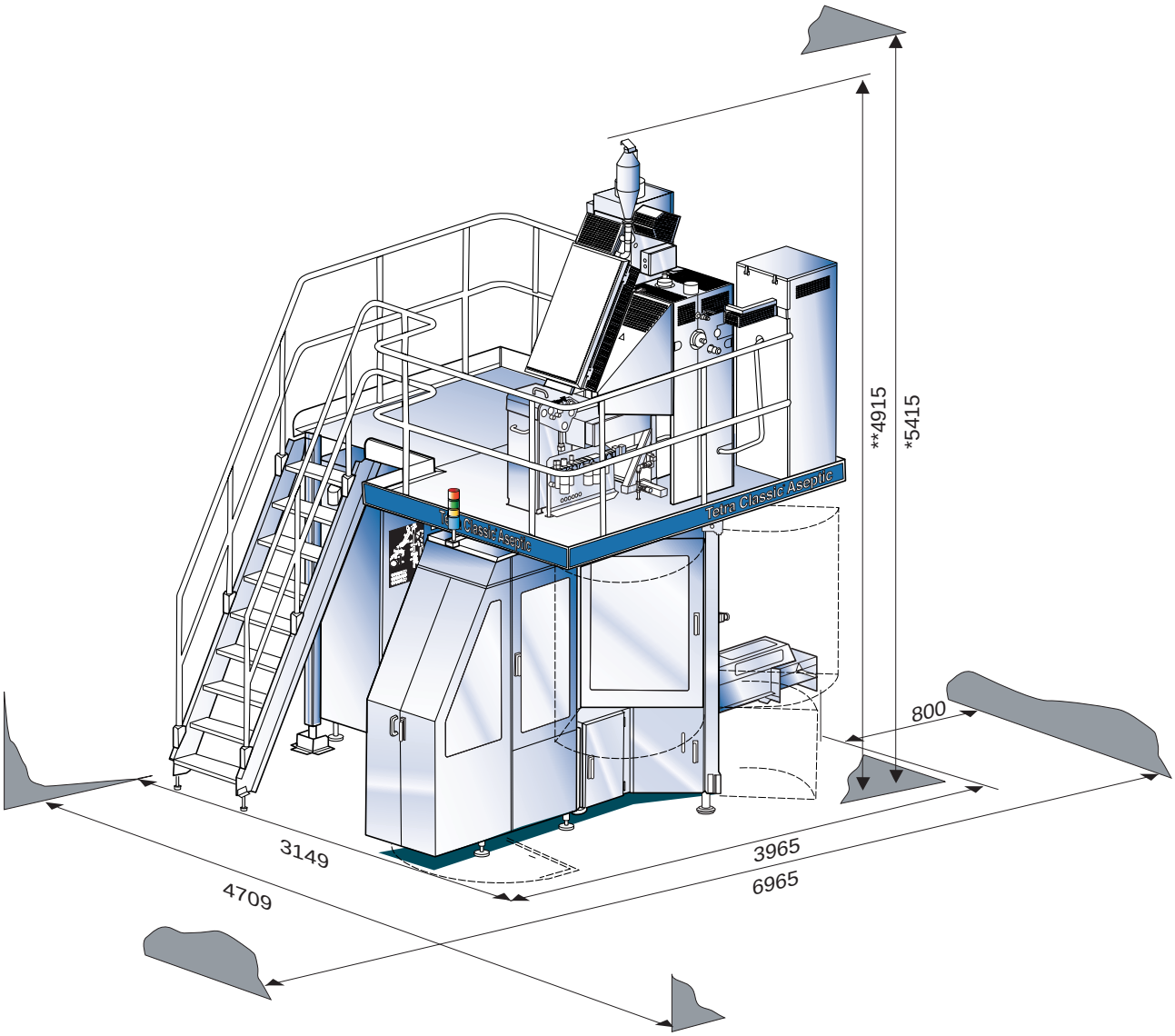

IM1.11TB036012.fm

* Minimum clearance to ceiling

** Variation in height (± 15), due to adjustable legs on the machine

Right hand view

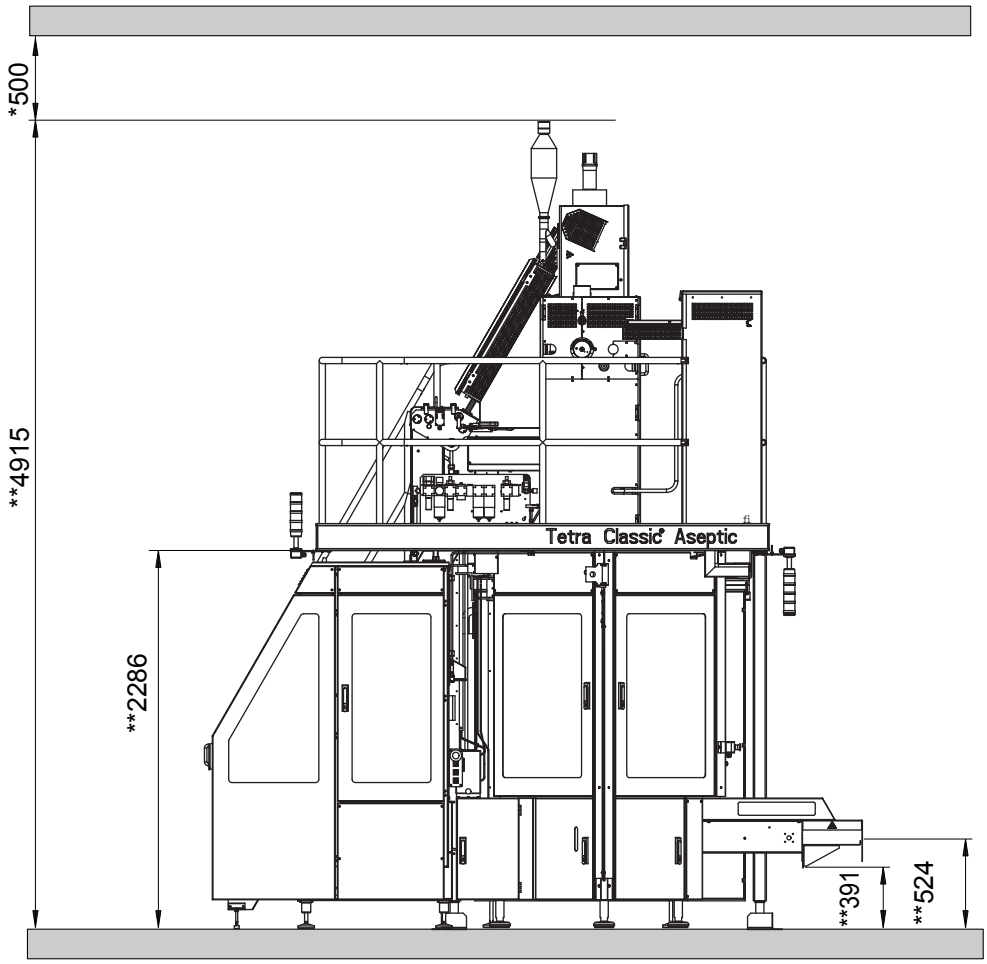

IM1.11TB036012.fm

* Minimum clearance to ceiling
** Variation in height (± 15), due to adjustable legs on the machine

Top view

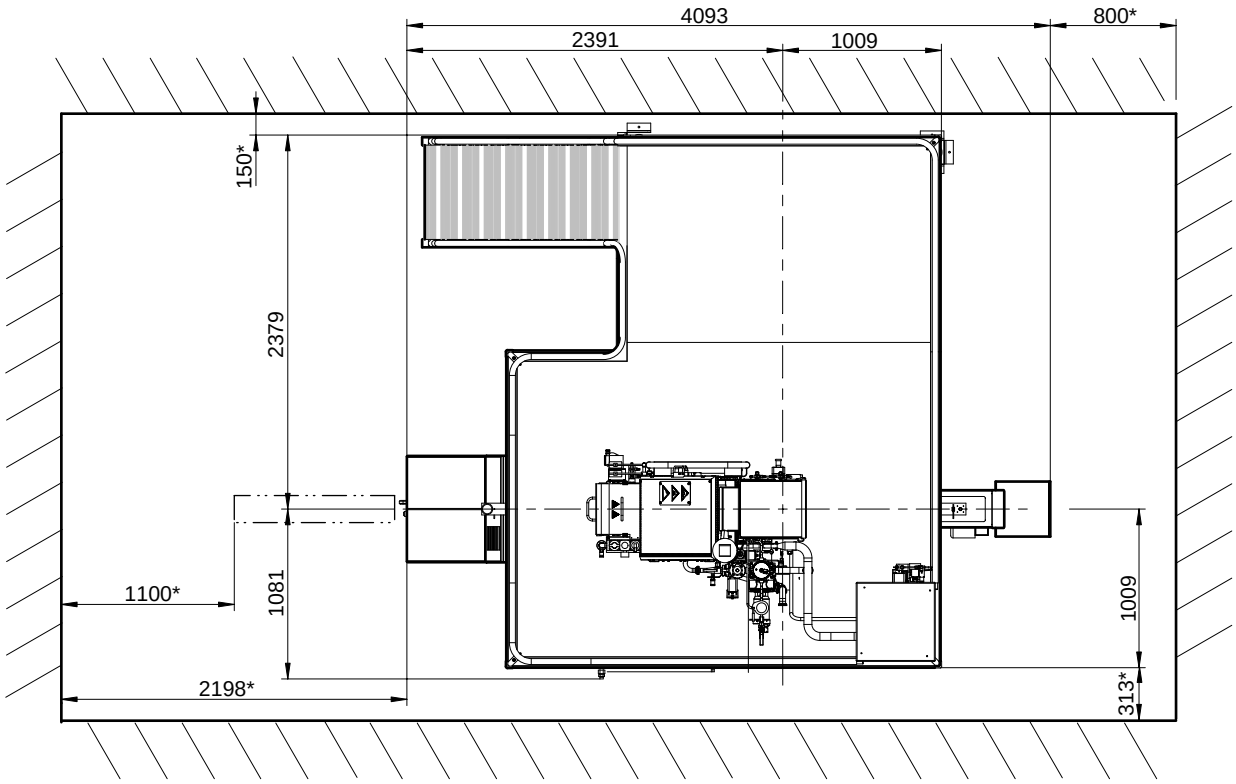

* Minimum clearance to walls

IM1.11TB036012.fm

Machine feet position (Top view)

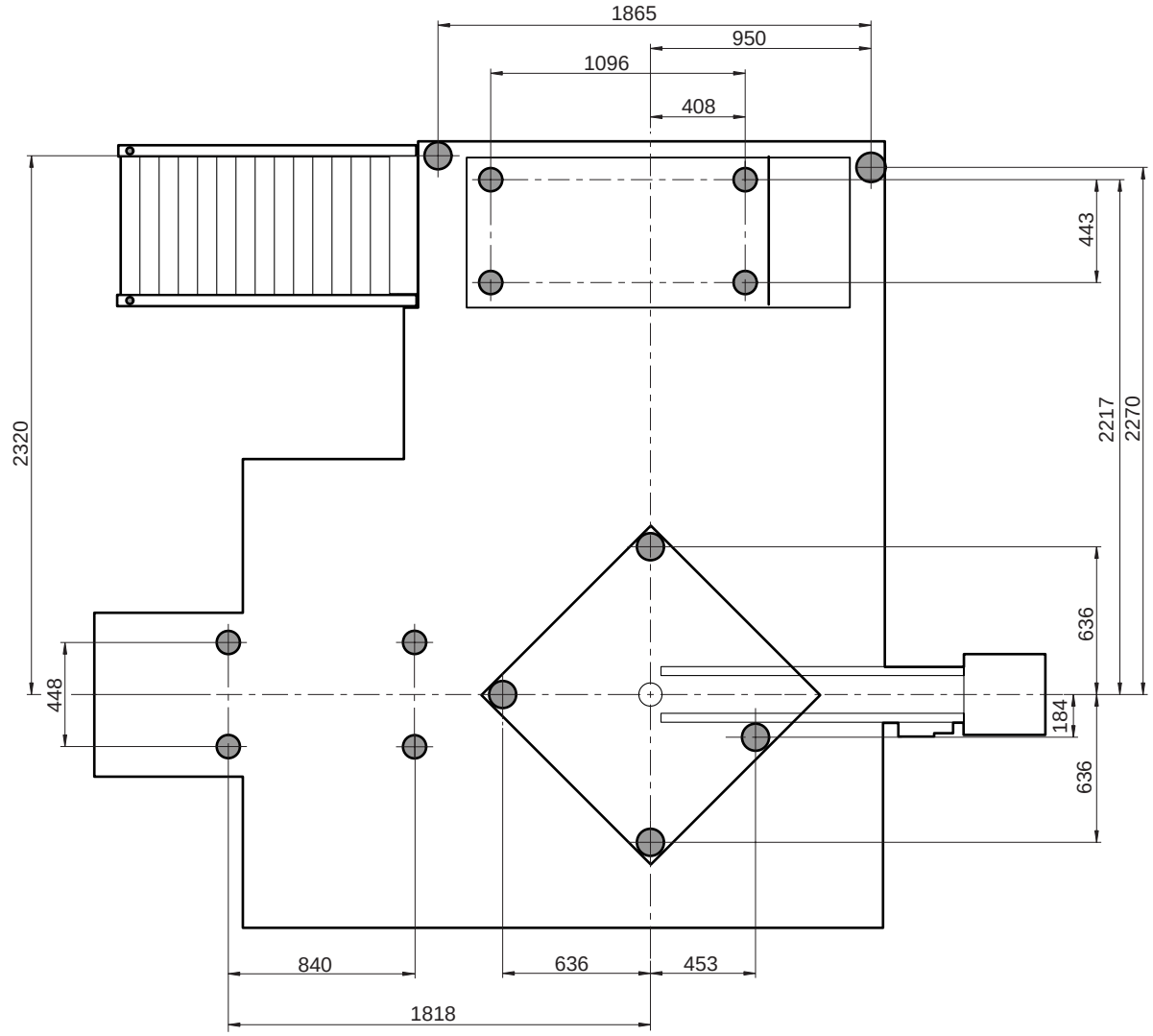

IM1.11TB036012.fm

Door positions and dimensions (Top view)

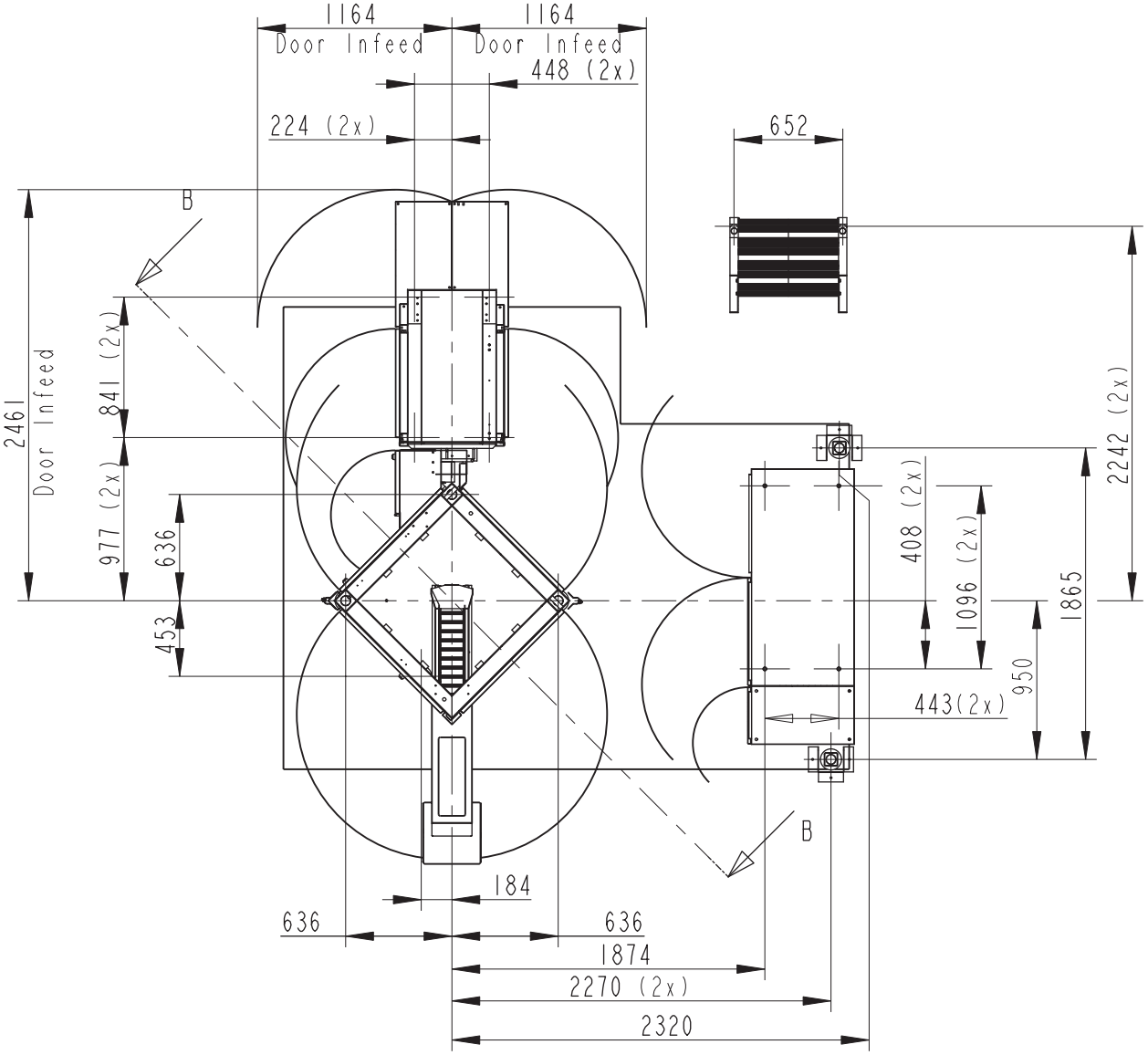

IM1.11TB036012.fm

Side dimensions

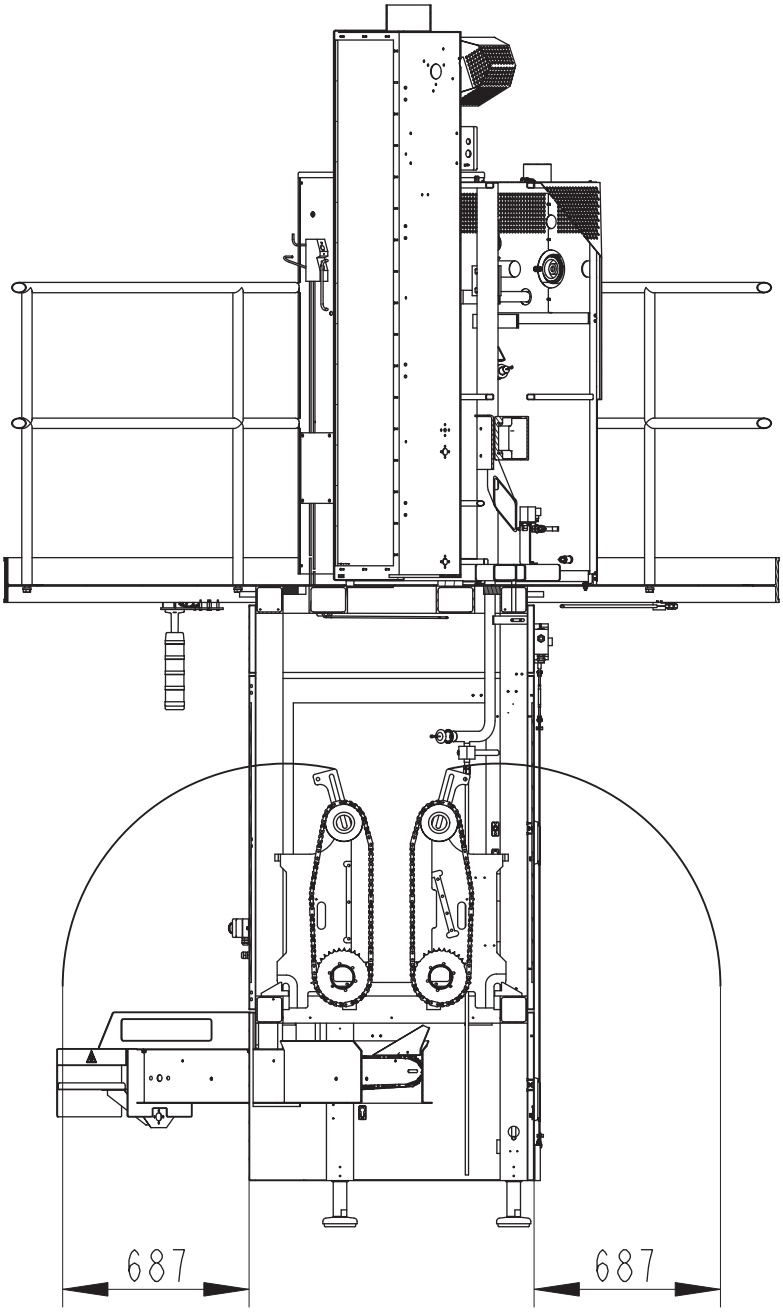

IM1.11TB036012.fm

3.2 Mass / weight

	Mass (appr.)	Notes
Tetra Pak A1 complete machine	3690 kg	
Machine parts		
Main body with platform	1400	
Supply system, tube forming unit, sterile unit	750 kg	
Electrical cabinet	520 kg	
Infeed	720 kg	
Platform (with ladder)	300 kg	

IM1.11TB036012.fm

3.3 Connections

The following table and drawings provide the dimensions and positions of the connections to the machine.

Position	Connection
1	Product connection inlet 2”
2	Product connection outlet 2”
3	Electrical connection Pr 47
4	Air connection 20 mm
7	Steam connection 12 mm
8	Cip connection inlet 1 ½”
9	Cip connection outlet 1 ½”
10	Water inlet 10 mm

(Cont'd)

IM1.11TB036012.fm

(Cont'd)

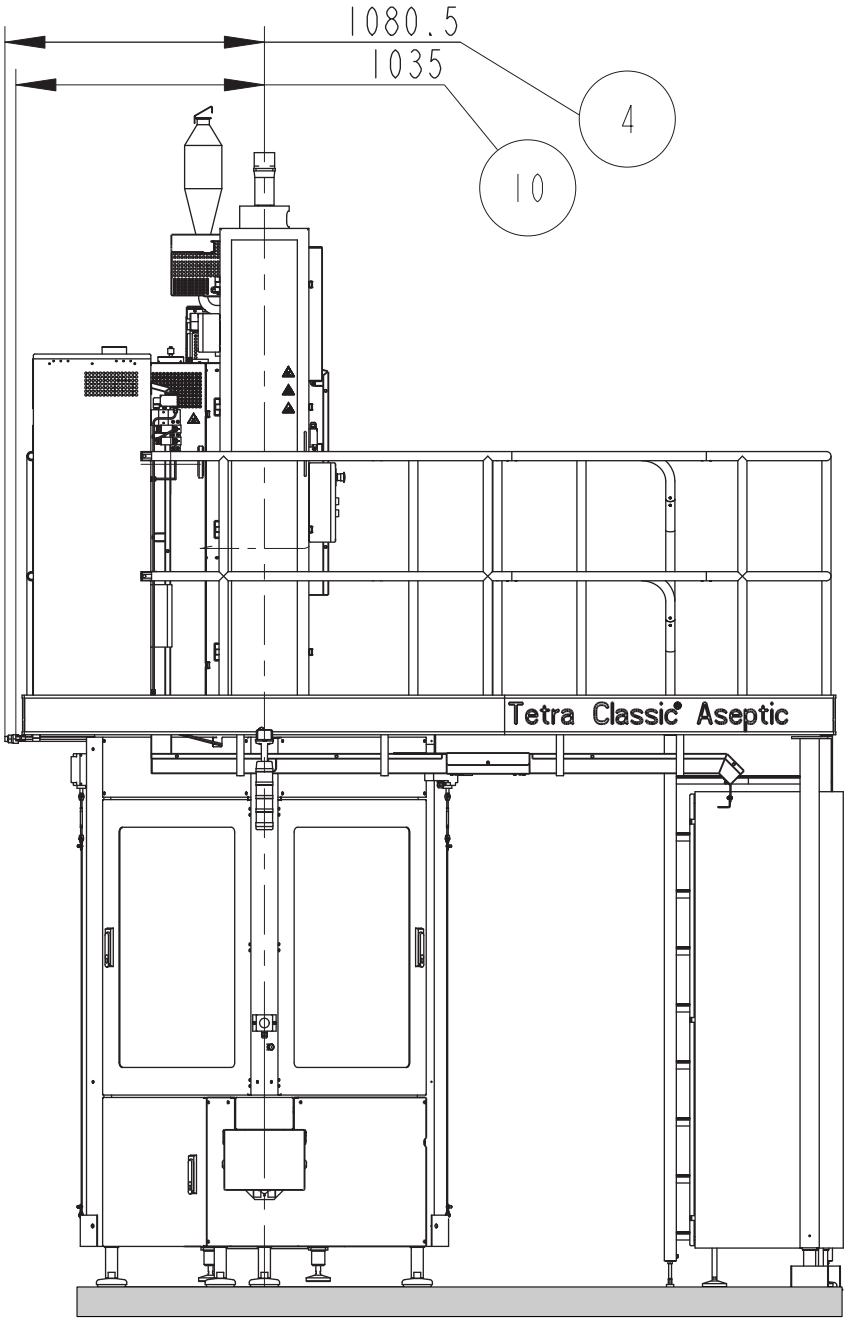

1 Product connection inlet
2 Product connection outlet
3 Electrical connection
4 Air connection
7 Steam connection
8 Cip connection inlet
9 Cip connection outlet
10 Water inlet

(Cont'd)

IM1.11TB036012.fm

(Cont'd)

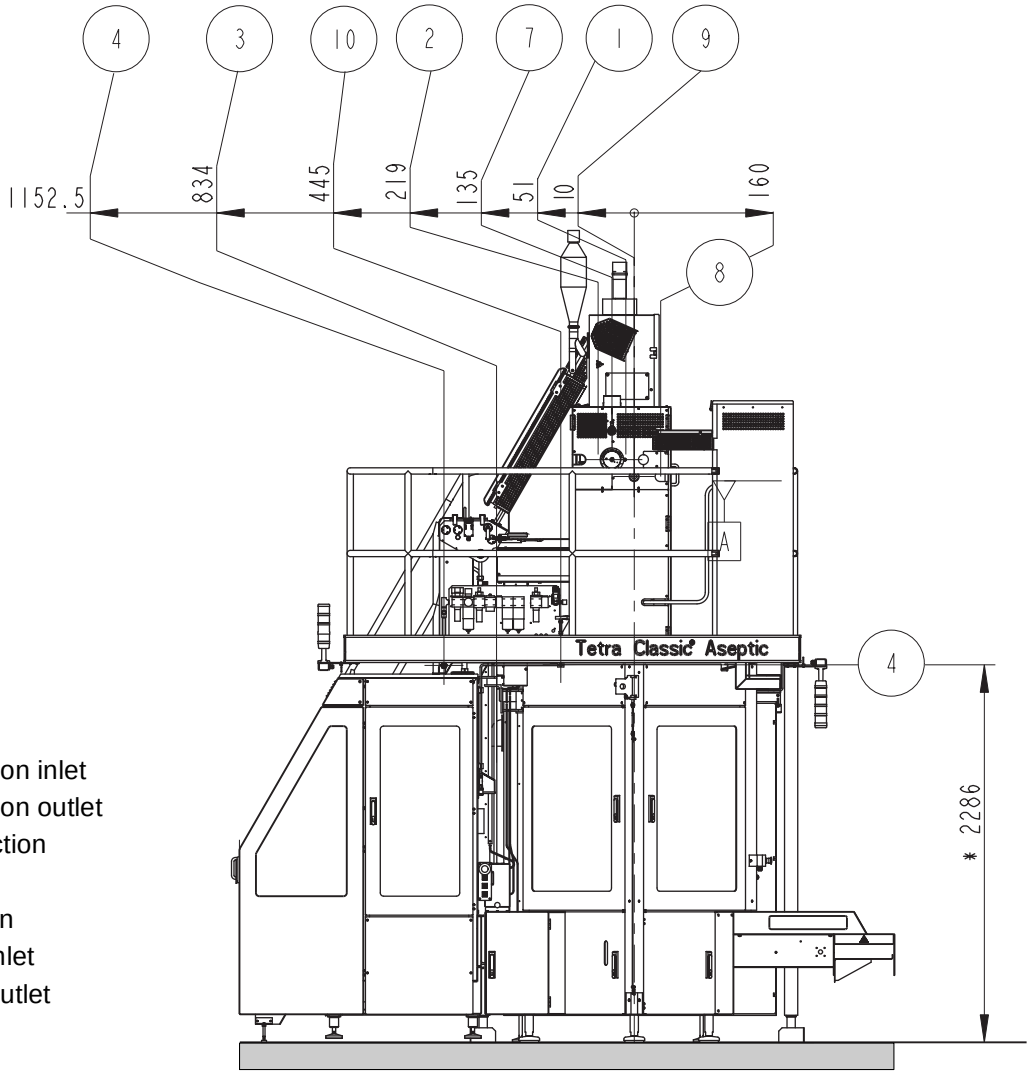

IM1.11TB036012.fm

1 Product connection inlet
2 Product connection outlet
3 Electrical connection
4 Air connection
7 Steam connection
8 Cip connection inlet
9 Cip connection outlet
10 Water inlet

* Variation in height (± 15), due to adjustable legs on the machine

(Cont'd)

(Cont'd)

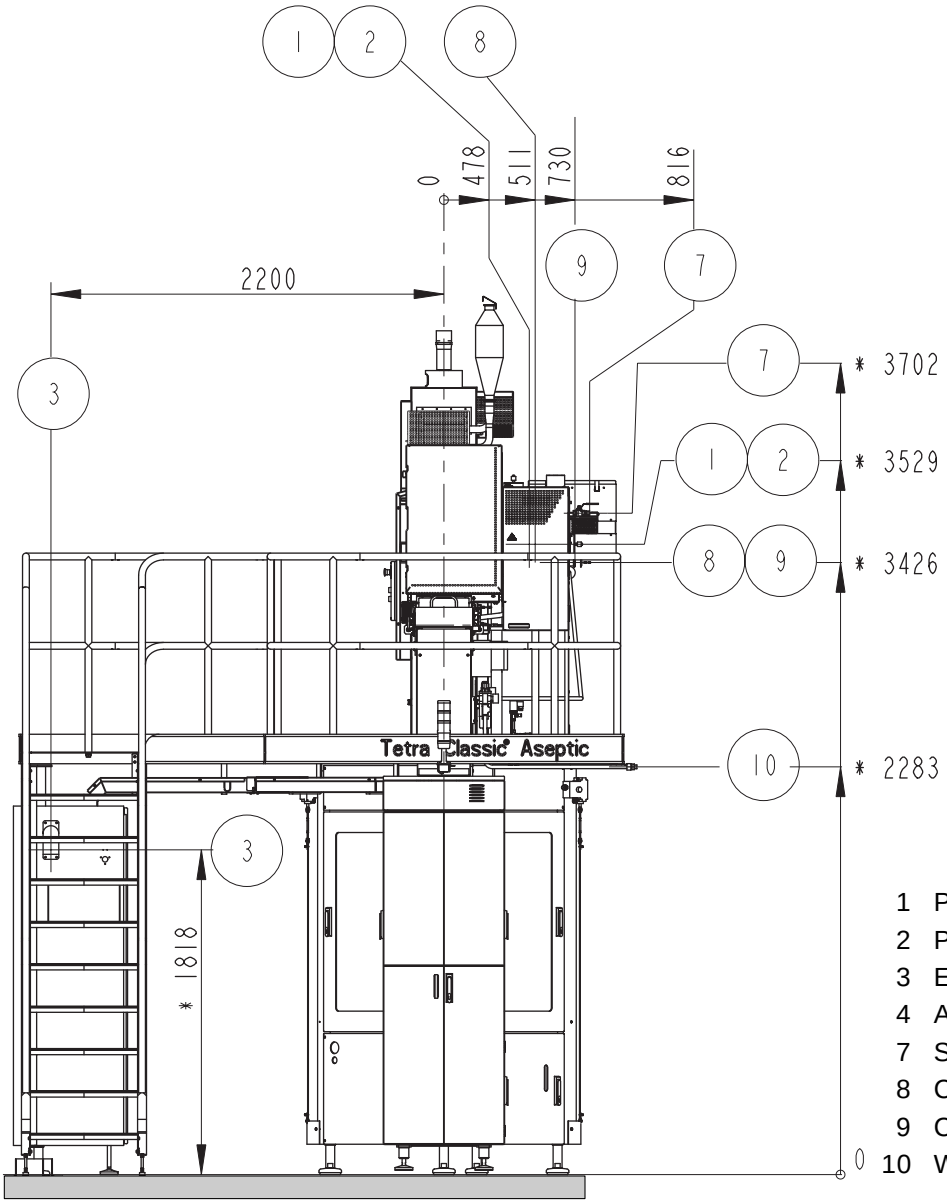

1 Product connection inlet
2 Product connection outlet
3 Electrical connection
4 Air connection
7 Steam connection
8 Cip connection inlet
9 Cip connection outlet
10 Water inlet

* Variation in height (± 15), due to adjustable legs on the machine

IM1.11TB036012.fm

3.4 Noise

CAUTION! **Risk of impaired hearing!**
Wear hearing protection while the equipment is running.

The following tables give the noise level measurements for Tetra Pak A1machines under the following conditions:

- machine on a concrete floor supported by standard feet
- production under normal operating conditions.

Values declared in accordance with ISO 48731			
Symbol	Definition	Declared value	Notes
L_{WA}	Measured A-weighted sound power level	83 dB(A)	Values determined using the basic standard ISO 3744 (Engineering method)
K_{WA}	Uncertainty factor	2.5 dB(A)	
L_{pA}	Emission sound pressure level, operator position	71.5 dB(A)	Values determined using the basic standard ISO 11204 (Engineering method)
K_{WA}	Uncertainty factor	2.5 dB(A)	

IM1.11TB036012.fm

3.5 Emissions and thermal load

Emissions

Characteristic	Value	Notes
Hydrogen peroxide fumes in operator‘s environment	0.0 - 0.2 ppm	Measured with Dräger Pac III during production
Hydrogen peroxide outlet to drain	< 1%	See OM
Oil fumes in the operator‘s environment	None	
Oil spillages	0.013 l/h	During production
Oil spillages	0.0013 l	After cleaning
Detergent spillages	None	Except during external cleaning
Water spillages	1 l/min	Except during external cleaning
Product spillages	None	

Thermal load

The thermal load is approximately 16,2 ± 1,6kW

IM1.11TB036012.fm

3.6 Utility connection data

Electrical power specifications

Characteristic	Value	Notes
Supply voltage to machine	400/230 VAC, 3 phase +N +earth	Other voltages available to order with transformer
Max voltage fluctuation	+10% - 15%	
Frequency	50/60 ± 2%	To be specified on order.
Recommended main fuse	64 A	Value for optimum selectivity at 400/230 VAC.
Control circuits voltage	24 VDC	

Electrical power consumption

Consumption during:	150ml
Preheating	12.7 kW
Tube sealing	8.3 kW
Preheating + filling system	4.5 kW
Spraying	4.9 kW
Drying	4.7 kW
Coding	5.6 kW
Production	7.3 kW

Compressed air specifications

Characteristics	Value	Notes
Supply Pressure	630 - 1000 kPa (6.3 - 10 bar)	
Max particle size	20 µm	
Max particle content	25 mg/m³	
Dew point	2°C (35.6°F)	
Oil content	0.01 mg/m³	

Compressed air consumption

Characteristic	Value
Consumption	900 Nl/min (31.8 N cu ft/min)

(Cont'd)

IM1.11TB036012.fm

(Cont'd)

Water

Characteristic	Value	Notes
Water quality	EEC 80/778/ EWG	See M1282.812
Supply pressure	300 - 450 kPa (3 - 4.5 bar)	
Max inlet temperature	+20°C	Due to peroxide cooling
pH	5 - 8	
Consumption	1 l/min	Peroxide cooling and tube flushing

Steam

Characteristic	Value	Notes
Water quality	EEC 80/778/ EWG	See M1282.812
Manometer setting	170 kPa (1.7 bar)	130ºC (Over pressure)
Max pressure fluctuation	± 30 kPa (± 0.3 bar)	
Inlet temperature	126 - 134°C (259 - 273°F)	Measured after APV.
Consumption	Ca 2.4 kg/h (Ca 5.3lbs/h)	

IM1.11TB036012.fm

Hydrogen peroxide

Characteristic	65	150S	200S	200B	Notes
Quality	Aseptic grade	Aseptic grade	Aseptic grade	Aseptic grade	
Concentration	35%	35%	35%	35%	
Consumption	Min 340 ml/h Max 420 ml/h	Min 450 ml/h Max 560 ml/h	Min 505 ml/h Max 630 ml/h	Min 560 ml/h Max700 ml/h	

Wetting agent

Characteristic	Value	Notes
Quality	Aseptic grade	
Concentration	0.3%	

3.7 Product connection data

Characteristic	Value	Notes
Supply pressure	50 - 250 kPa (0.5 - 2.5 bar)	Range from minimum permitted to maximum permitted supply pressure
Max pressure fluctuation	50 kPa (0.5 bar)	Pressure may fluctuate by max. 50 kPa within the range 50 - 250 kPa
Product temperature	10 - 40°C (41 - 122°F)	Varies from inlet temperature by + 1 - 2°C (34 - 36°F)
Hard particles	Absent	Product must leave no hard residue on a 600 µm mesh
Citrus fibres	Absent	Measured as fibre residue on a 600 µm mesh
pH	2.5 - 8	

IM1.11TB036012.fm

3.8 Cleaning

Cleaning in place (CIP)*

Characteristic	65	150S / 200B	Notes
Max inlet pressure	350 kPa (3.5 bar)	350 kPa (3.5 bar)	
Min. flow	8 m³/h	8 m³/h	
Pressure drop	0.85 bar	0.95 bar	Measured at a flow of 8 m³/h

* Soft start equipment is suggested

3.9 Ambient temperature

Characteristic	Value	Notes
Recommended ambient temperature	15°C - 30°C (59°F - 86°F)	

3.10 Out feed conveyor

Characteristic	Value 50HZ	Value 60HZ	Notes
Tetra Pak A1 Outfeed conveyor speed	47.8 m/min	57.4 m/min	
Recommended conveyor speed	Min 47.8 m/min	Min 57.4 m/min	

IM1.11TB036012.fm

This page intentionally left blank

IM1.11TB036012.fm

4 Site preparation

4.1 General requirements

Introduction of aseptic packaging

Aseptic packaging has a specify dimension in the sphere of food processing and must be treated accordingly.

Aseptic installation policy

It is the policy of Tetra Pak Carton Ambient AB that aseptic packaging machines should be installed in a separate packaging room. Doing so effectively reduces the quantity of airborne bacteria.

Areas and activities where the infection risks are particularly serious:

- Processing machines for various products etc.
- Bottle and crate washer etc.
- Rooms with strong air currents.
- Rooms with traffic to and from other plant areas.
- Rooms with high humidity, such as the room where the steriliser is installed and where there are discharges of steam or hot water during presterilization and/or production periods.
- All unnecessary activities especially those producing or stirring up dust, such as the erection of paper crates, wrapping, etc.
- Under no circumstances should unsterile packages be handled in the filling area.

Note! By complying with our installation policy, you minimize the risks for infection mentioned above.

IM1.11TB046012.fm

4.2 Specific construction details

Packaging room over pressure

In addition to siting the packaging machine in a separate packaging room, over pressure by means of filtered air is to be maintained in the room in order to prevent unfiltered air from entering the room. The reason for this is that usually areas and spaces where food is produces or stored contain airborne bacteria in quantities well above average.

- Over pressure is obtained by controlling the air intake and exhaust in the packaging room through forced ventilation incorporation air-conditioning, if required.
- The exhaust system is basically under-dimensioned in comparison with the air intake system, forcing thus exhaust air to seal off possible inlets, such as doors and hatches.
- In designing the system for over pressure in the packaging room, facilities to filter the incoming air must be included.
- As well as controlling the air flow in the packaging room, its temperature and humidity should be controlled.

Note! During installation, extra space is needed around the packaging machine while it is being assembled, especially when the superstructure is lifted up on the machine.

The packaging material and strips supplied with the machine are to be kept in a dry place.

IM1.11TB046012.fm

4.3 Storage and Handling Recommendation

Introduction

To ensure that the properties of the material is not changed it is vital to follow the storage and handling recommendation of the packing material and additional material.

Delivery

The packaging material will be delivered in “small” or “jumbo” reels on one way pallets. Normally the packaging material reel is wrapped in protective shrink film. The individually wrapped reels are stacked on pallets. A hood of shrink film or a stretch film is protecting the reel stack on a pallet against moisture and dirt. In this way the reels are also secured to the pallet. With customer agreements the reels can be delivered without the protective films.

Pallets can be stacked on top of each other, up to three pallets height. A protection sheet must be used between the pallets. Be careful when lifting the pallets and reels. Do not scratch the other reels.

The additional material is delivered in boxes.

Storage of material

Recommendations:

- Use the material on first in - first out basis.
- The storage premises must be kept clean.
- The material must be stored completely separate from other goods, such as milk powder, essences, animal food, chemicals, detergents, etc.There is a great risk that the packaging material is absorbing vapours which could result in taste problems.
- Store the material on pallets only! The space to nearest wall should be kept min. 100mm.
- The material must not be exposed to direct moisture, such as condensation dripping from pipe etc. neither exposed in direct sunlight.
- If the material is stored longer then recommended, see specification, reliable production check should be initiated.
- Partly used material shall be labelled with its identification and wrapped with a protected film. The reels shall be stored in accordance with this recommendation.

Storage conditions:

Packaging Material

Temperature	min. 0°C (32°F) max. 40°C (104°F)
Humidity (RH)	min. 30% max. 70%

IM1.11TB046012.fm

Additional Material

LS.strips, IS-strips, OS-strips, Tab-strips and FlexiCap material:

Temperature	min. 0°C (32°F) max. 40°C (104°F)
Humidity (RH)	min. 30% max. 70%

ReCaps, UniCaps and SpinCaps:

Temperature	min.10°C (50°F) max. 30°C (86°F)
Humidity (RH)	< 80%

Variation from recommended humidity during short period (4 to 5 days) have no noteworthy effect on the humidity of the materials.

Storage time

Storage time limit which guarantees the function of the material is specified for each material and additional material types. The storage time is counted from the manufacturing date of the material up till the time when it will be applied in filling machine.

Storage conditions in prior to packing

The material must be allowed to reach the same temperature as the temperature prevailing in the packing premises. If the packing material is protected with protective plastic film, this should be kept on until the reel will be used.

Handling of packaging material

Use a special lifting/turning truck to handle the reels.

IM1.11TB046012.fm

5 Machine handling

5.1 Crate data

The filling machine is delivered in two crates.

5.1.1 Weight and dimensions

Machine type	Gross weight kg (lbs)	Net weight kg (lbs)	Length mm	Width mm	Height mm
Tetra Pak A1 Crate 1	2800	2300	3600	2300	2550
Tetra Pak A1 Crate 2	3350	2700	4200	2300	2550

Note! Crate weight can increase significantly if the crate becomes wet.

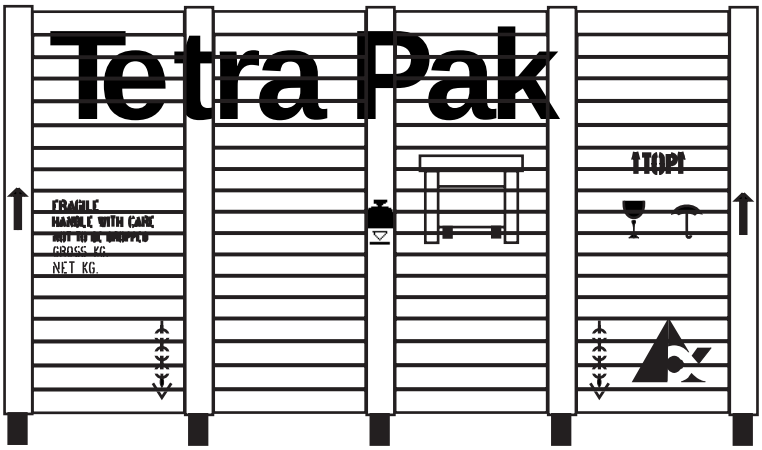

IM1.11TB056012.fm

5.1.2 Contents

Machine type	Contents
Tetra Pak A1 Crate 1	Machine Tube forming module and sterile unit Platform Filling pipe Cover Pipe Tools Trolley for packaging material reel Lists Machine documents (box) Transport beam Leg Air super-heater Ladder Dating unit TPIH

Machine type	Contents
Tetra Pak A1 Crate 2	Electrical cabinet Packaging material reel Hand rail LS-strip (box) Accessories (box) Plates Spare parts Leg Infeed Paper reel holder Tool box

IM1.11TB056012.fm

5.2 Lifting equipment

Types of lifting equipment

The following types of equipment can be used to lift and move the crate:

- overhead gantry
- mobile crane
- forklift

Equipment specifications

Make sure that the lifting equipment comply with the specifications given in the following table.

Equipment or tackle	Lifting capacity kg (lbs)	Notes
Overhead gantry	5 000 (11 100)	7 000 kg (15 500 lbs) required if gantry does not have gradual acceleration deceleration ramps.
Mobile crane	5 000 (11 100)	7 000 kg (15 500lbs) required if crane does not have gradual acceleration deceleration ramps.
Forklift	6 000 (13 200)	Higher capacity allows for reach to centre of gravity of 1 000 - 1 500 mm (3’3” to 4’10”)
Lifting forks	6 000 (13 200)	Min.length: -2 000 mm (6’6”) Recommended setting width: -2 000 mm (6’6”)
Lifting chains, cables, ropes or hoist slings	5000 (11 100)	

IM1.11TB056012.fm

5.3 Unloading

Labels, symbols and warning placards are located on the external surfaces of the transit crate and outline the handling principles which must be observed.

- The crate should not be subjected to sudden shocks or movement.
- The crate is not load bearing and must not be stacked or have other items placed on it.
- The transit crate should be kept in the indicated upright position.

Labels may be installed to indicate that the crate have been tipped over or exposed to extremes of humidity

Symbol	Meaning
	Centre of gravity
	Lifting points for chains, cables, ropes or slings.
	This way up
	Fragile
	Keep dry
↑TOP↑	Top of crate
FRAGILE	“Fragile” warning
HANDLE WITH CARE	“Handle with care” warning
NOT TO BE DROPPED	“Not to be dropped” warning
GROSS KG.	“Gross weight” value
NET KG.	“Net weight” value

IM1.11TB056012.fm

5.3.1 Inspection

a) Examine the outside of the crate before starting to unload, and record any damage. This information must later be recorded on the **Transport Damage Report** (a section of the Start-up machine Quality report).

b) Record the readings of the humidity indicators and the tipping indicators attached to the outside of the crate (if present). This information must later be recorded on the **Transport Damage Report** (a section of the Start-up Machine Quality report

5.3.2 Using an overhead gantry or mobile crane

The crate is marked with lifting tackle symbols.

The lifting tackle must be passed under and fixed at these points when lifting the crate.

For capacity and length of the lifting tackle, see 5.2 Lifting equipment on page 59.

Use ropes or poles to steady and manoeuvre loads. Do **not** use hands or feet.

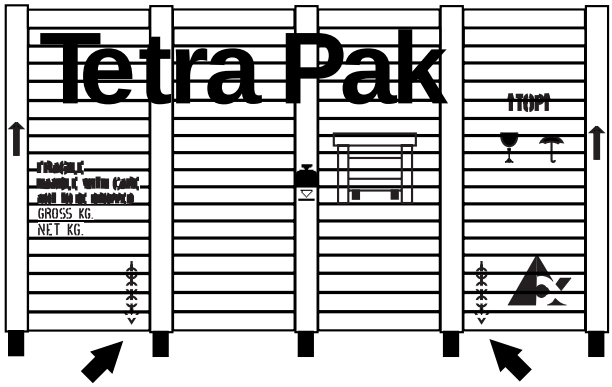

IM1.11TB056012.fm

5.3.3 Using a forklift

The crate is marked with centre of gravity symbols.

The lifting forks must be positioned at equal distances from the symbol when lifting crate

For the capacity, length and setting width of the lifting forks, see 5.2 Lifting equipment on page 59.

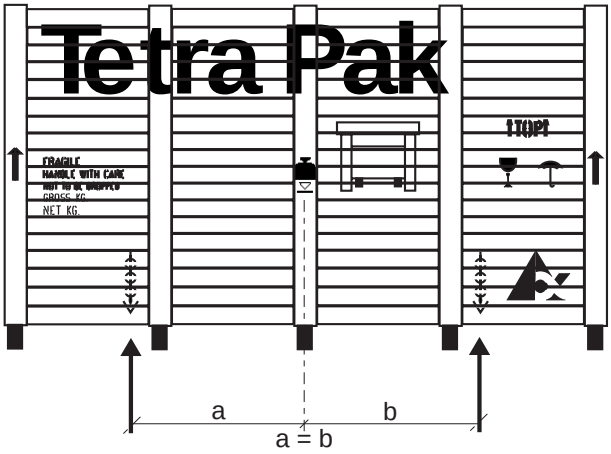

5.4 Moving and storage

Make sure that storage areas comply with specifications, see 5.4.2 Storage on page 63.

If installation is to start immediately, check whether it is possible to move the crate to the installation site. Uncrating and installation can then be performed together.

IM1.11TB056012.fm

5.4.1 Moving

a) Lift the crate as instructed in 5.3 Unloading on page 60. **Lift only enough to clear the floor.**

b) Make sure that the crate remains stable on the lifting equipment.

CAUTION! **Risk of minor personal injury!**
Move the crate slowly and gently.

c) Move the crate to its destination.

d) Lower the crate **gently** to the floor, leaving enough room around it for easy access to all sides.

e) Make sure that the crate is firmly supported. Place blocks or plates under it, if necessary

5.4.2 Storage

CAUTION! **Risk of serious equipment damages!**
Do **not** stack any item on top of the crate.

Characteristics	Value	Notes
Min and Max °C (°F)	-20 - +70 (-4 - 158)	If the water system is drained, the equipment can withstand freezing conditions.
Max.relative humidity %	80	Non-condensing

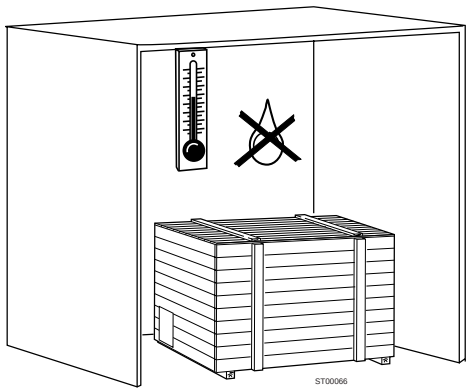

5.5 Unpacking and inspection

5.5.1 Tools and auxiliary equipment

Tools and auxiliary equipments needed to unpack the crates. The equipment used for lifting and moving the crate can also be used for unpacking the crate.

Figure	Equipment	Minimum capacity (Kg)	Quantity
1	Forklift truck	6 000	1
2	Pallet truck	2 000	1
3	Lifting device TP no: 2524259-0100		1 set
4	Elongated forks fitted to forklift truck	6 000	1 set
5	Lifting slings	5 000	2

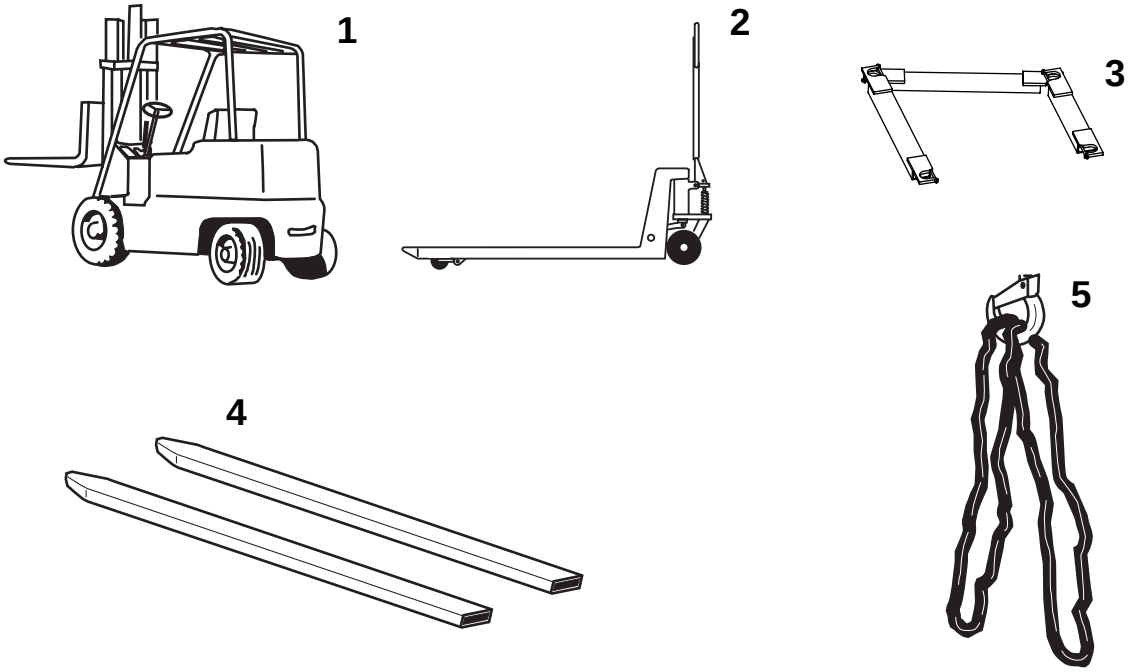

IM1.11TB056012.fm

Also use appropriate hand tools to open the crate, such as crow bar, hammer, socket wrench, etc.

5.5.2 Uncrating sequence

Unpacking area

The **minimum** unpacking area must be at least twice the size of the crate.

Minimum area: 9000 x 5000 x 4000 mm high (30 x 17 x 14 ft high)

WARNING!

Risk of serious personal injury or machine damage!
Be sure to use the right equipment with the required capacity, during uncrating and lifting. Follow local regulations regarding lifting.

Remove all the wood screws from the top/lid on the crate.

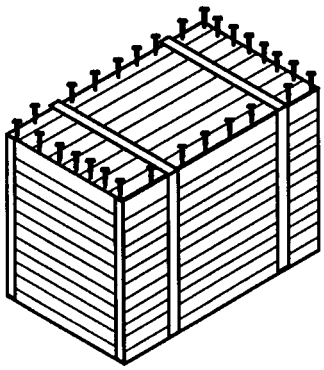

Remove the top/lid from the crate with assistance of a forklift truck.

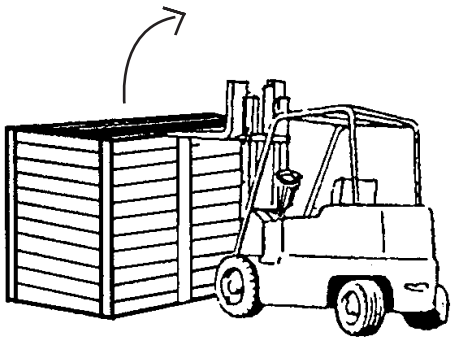

Determine which side is free of parts. This side must be removed first.

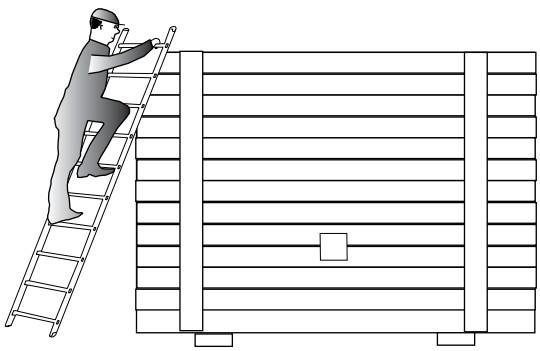

(Cont'd)

IM1.11TB056012.fm

(Cont'd)

Remove all the wood screws from the side, except the two screws at the top of the side.

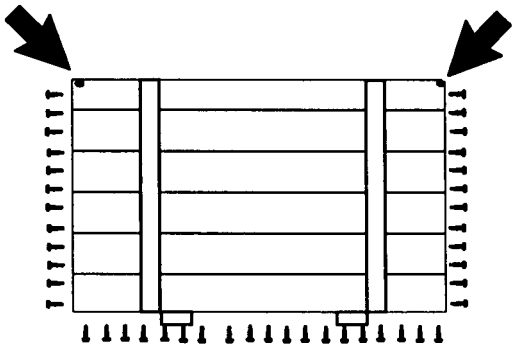

With the assistance of a forklift truck to hold the side against the crate, remove the two wood screws on the top of the side. Remove the side from the crate with the assistance of the forklift truck.

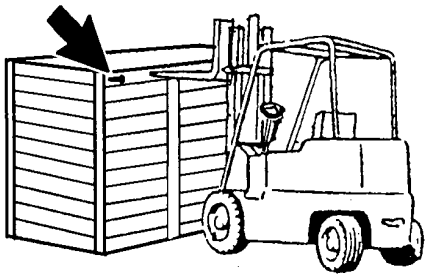

IM1.11TB056012.fm

5.5.3 Inspection documentation

Carry out inspection by following the description in the SUMQR (Start-Up Machine Quality Report).

5.5.4 Disposal / reuse

Crates and wrapping material delivered with the filling machine are to be recycled according to local regulations in the receiving country.

5.6 Machine transport

WARNING!

Risk of serious personal injury or machine damage!
Be sure to use the right equipment with the required capacity, during uncrating and lifting. Follow local regulations regarding lifting.

Before moving the machine and machine parts, see section 3.2 Mass / weight on page 41 regarding mass and centre of gravity, and see 5.5.1 Tools and auxiliary equipment on page 64 for lifting equipment.

5.6-1 Moving the main body

With a forklift truck

Place the lifting device (1) under the main body (2). Lift the main body a few centimetres above the floor with a forklift truck and move it.

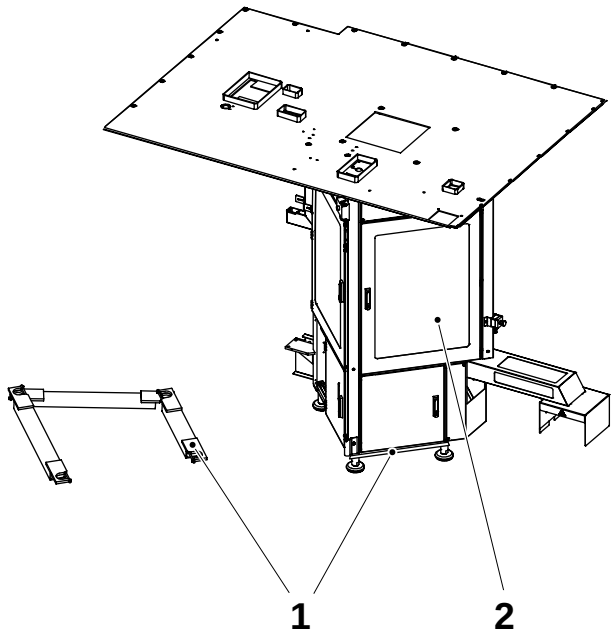

1 Lifting device
2 Main body

(Cont'd)

IM1.11TB056012.fm

(Cont'd)

With a overhead gantry or mobile crane

Mount the four lifting eye bolts (1) to the main body (2). Fix the lifting slings (3) to the lifting eye bolts (1), lift the main body (2) a few centimetres above the floor with a crane, and move it.

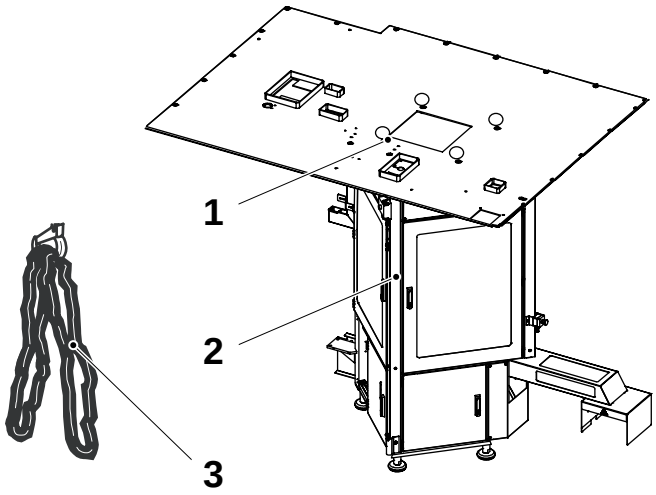

1 Lifting eye bolt
2 Main body
3 Lifting sling

5.6-2 Moving the assembled sterile unit and tube forming module

Fix the lifting sling (1) around the sterile unit. Lift the machine parts in the lifting sling with a crane or a forklift truck. Stabilize the machine parts while moving them.

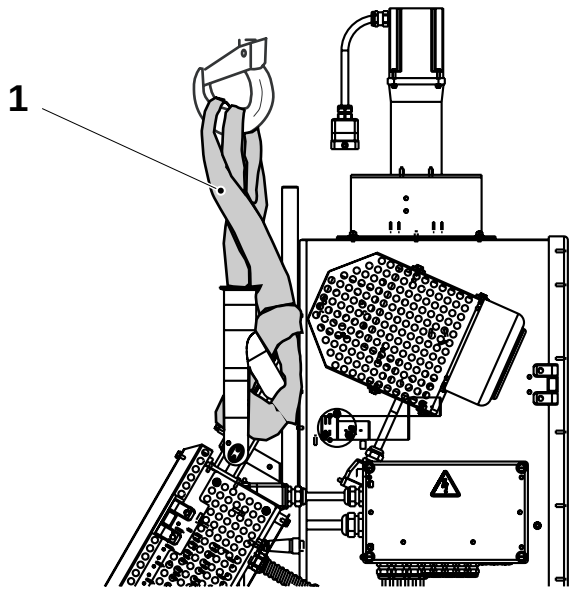

1 Lifting sling

IM1.11TB056012.fm

5.6-3 Moving the infeed

Place the forks or lifting slings under the infeed (1) between the legs (2) and lift the infeed (1).

Note! Never lift the infeed in the doors (3).

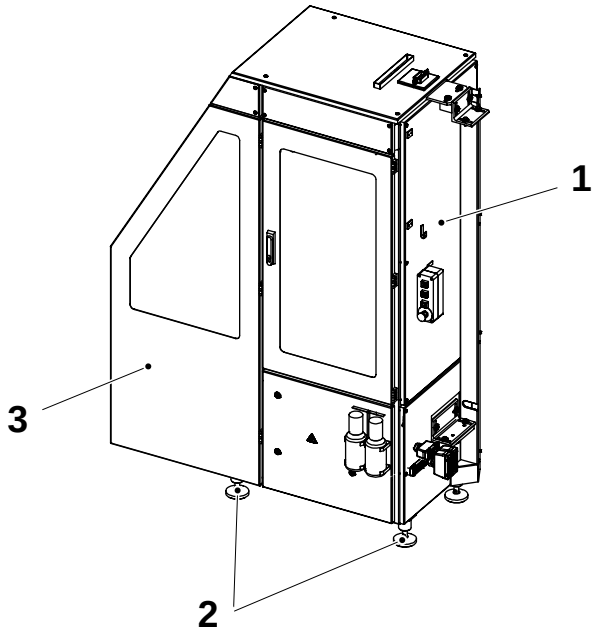

1 Infeed
2 Leg
3 Door

IM1.11TB056012.fm

5.6-4 Moving the platform

With a forklift truck

Place the forks under the platform (1) and lift it. Make sure that the platform is in balance.

With a overhead gantry or mobile crane

Mount at least three lifting eye bolts (2) at the platform (1). Fix the lifting slings at the lifting eye bolts (2), and lift the platform (1). Make sure that the platform (1) is in balance.

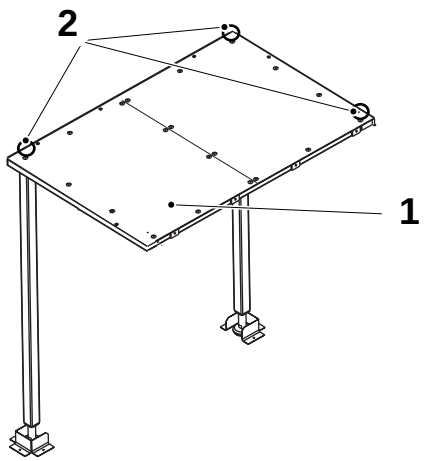

1 Platform
2 Lifting eye bolt

5.6-5 Moving other machine parts

The other machine parts weigh up to 500 kg. They can be moved with a crane or forklift truck with adequate lifting capacity. If a crane is used, fix the lifting slings at appropriate places and secure them carefully.

IM1.11TB056012.fm

6 Position and assembly

6.1 General requirements

Personnel

Only skilled or instructed Tetra Pak installation personnel are allowed to assemble the machine

Personnel must know how to use the portable PC computer programs for modifying PLC program parameters and down loading the GeFanuc program.

Lifting equipment

The equipment used for lifting and moving the crate can also be used for installing the equipment. See section 5.2 Lifting equipment on page 59 for further details.

Installation area

a) Make sure that all customer preparation work has been completed to prepare the site for the machine.

b) Make sure that necessary utility supplies are available, see chapter 3 Technical data & drawings on page 35.

c) Clear all obstacles away from the installation site and, if necessary, clean the floor of the site before starting to install the machine.

d) Make sure there is sufficient room to move safely around the installation site. If machines around the site can not be stopped, place guards around them to prevent accidental contact.

e) Leave the protective packing on parts until they are required during the machine assembly procedure.

f) Make sure that lighting is adequate. Arrange additional portable lights if necessary, making sure that cables are routed safely.

6.2 Space requirements

Take into account the extra space needed to lift the sterile unit and tube forming module on to the machine. This space may vary due to different lifting devices. Make sure there is enough space around and above the filling machine.

IM1.11TB066012.fm

6.3 Positioning

WARNING! **Risk of serious personal injury!**
Do not lift the filling machine more than 20 mm above the floor while it is being moved.

Check that preparation of the site has been completed according to chapter 4 Site preparation on page 53.

Move the main body to its place of production and position it, taking into account the measurements given in chapter 3.1 Installation drawings on page 35.

Adjust the main body's legs until the legs, with the rubber buffers, are appr. 170 mm . This length may vary due to an uneven floor.

6.4 Levelling

Check that there are rubber buffers underneath all legs.

The legs of the complete machine are placed as shown in the illustration below. Consider this when the machine is positioned to its place of production and if the floor is not in level. If you encounter problems in levelling the machine due to an uneven or sloping floor, place plates under the legs to assist the levelling.

IM1.11TB066012.fm

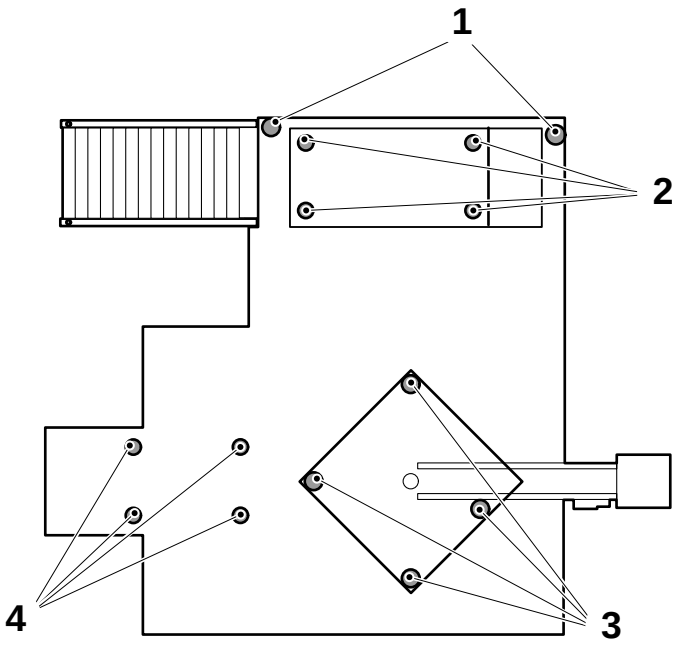

1 Legs platform
2 Legs electrical cabinet
3 Legs main body
4 Legs infeed

(Cont'd)

(Cont'd)

Level the main body by means of the four adjustable legs (7). Use a spirit level and check that the plate (5) on the top of the main body (6) is horizontal.

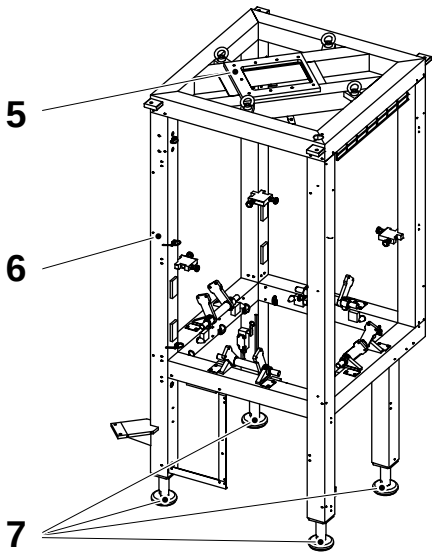

5 Plate
6 Main body
7 Leg

IM1.11TB066012.fm

6.5 Assembly

DANGER! **Immediate danger to life!**
Do not enter the platform until the two halves are mounted together. The platform can easily tip over**!**

6.5-1 Platform

a) Lift the platform (1) in position with a truck or a crane.

b) Assemble the legs (2) with the platform (1).

WARNING! **Risk of serious personal injury!**
The platform can easily fall until it is completely assembled. Mount the screws immediately and never put load on the platform before it is completely assembled.

c) Mount the four screws that fix the platforms (1) and (4) to each other while holding the platform by truck or crane.

d) Level the platform by adjusting the feet (3).

e) Assemble the air supply pipe (5).

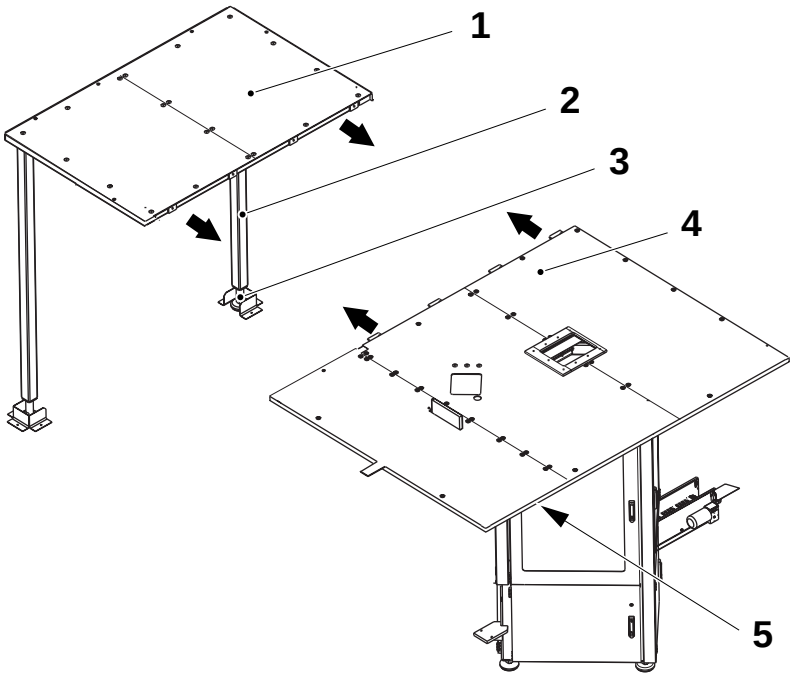

1 Platform
2 Leg
3 Foot
4 Platform
5 Air supply pipe

IM1.11TB066012.fm

6.5-2 Infeed

a) Assemble the infeed (3) with the main body (1) by means of the two brackets (2).

b) Level the infeed by putting a spirit level (6) on the paper reel holder (5) and adjusting the feet (4).

c) Pin the brackets (2) in the pin holes.

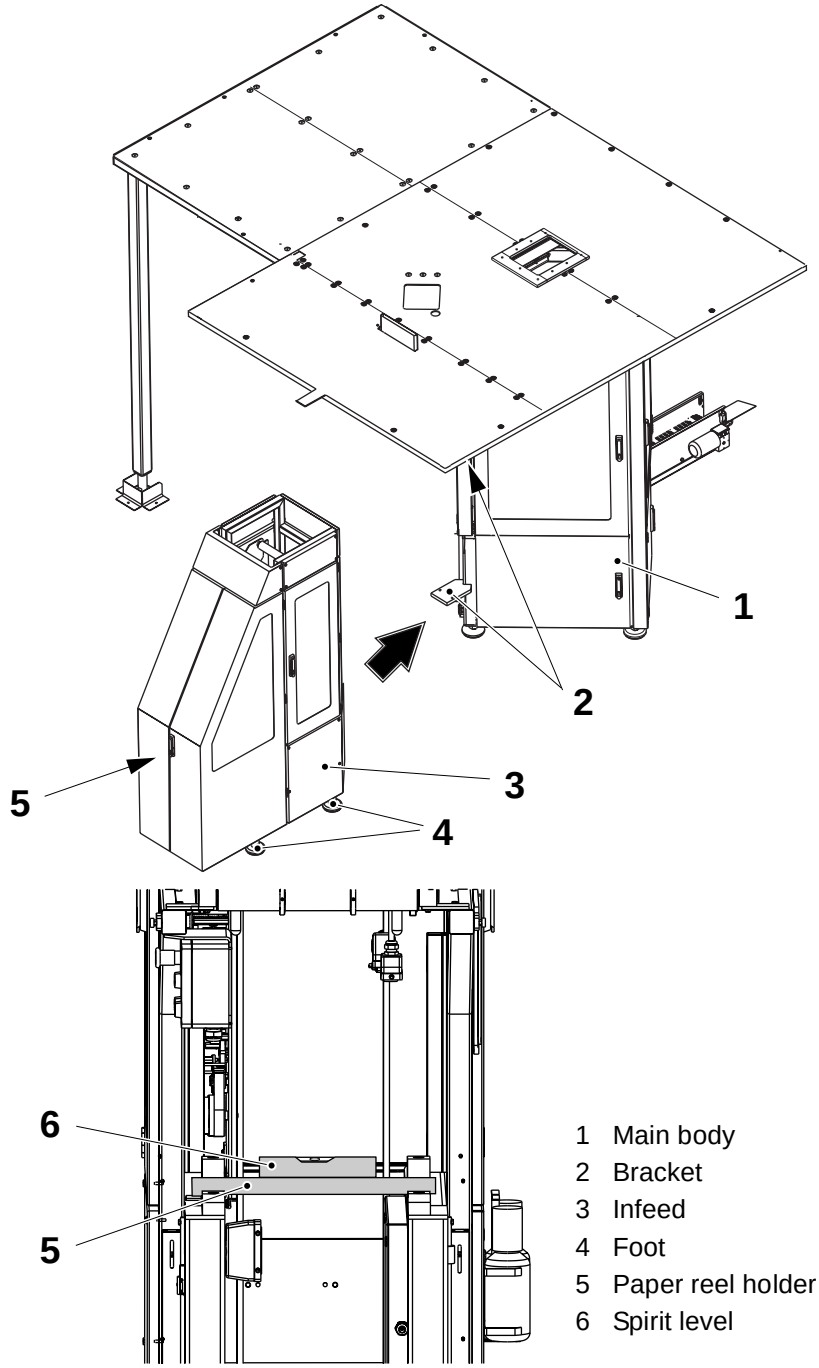

1 Main body
2 Bracket
3 Infeed
4 Foot
5 Paper reel holder
6 Spirit level

IM1.11TB066012.fm

6.5-3 Ladder and railings

WARNING! **Risk of serious personal injury!**
It is dangerous to work on the platform when the railings are not in place. Take great care.

a) Assemble the ladder (4) with the platform (5) and level the ladder by adjusting the feet.

b) Assemble the railings (7) and footplates (6). Leave an opening to be able to lift up the sterile unit, tube forming module, and the sterile air system to the platform.

c) Assemble the sterile unit and tube forming module, according to 6.5-4 Sterile unit and tube forming module on page 77.

d) Assemble the sterile air system, according to 6.5-5 Sterile air system on page 79.

e) Assemble the warning beacon (2) to the front side of the platform (1).

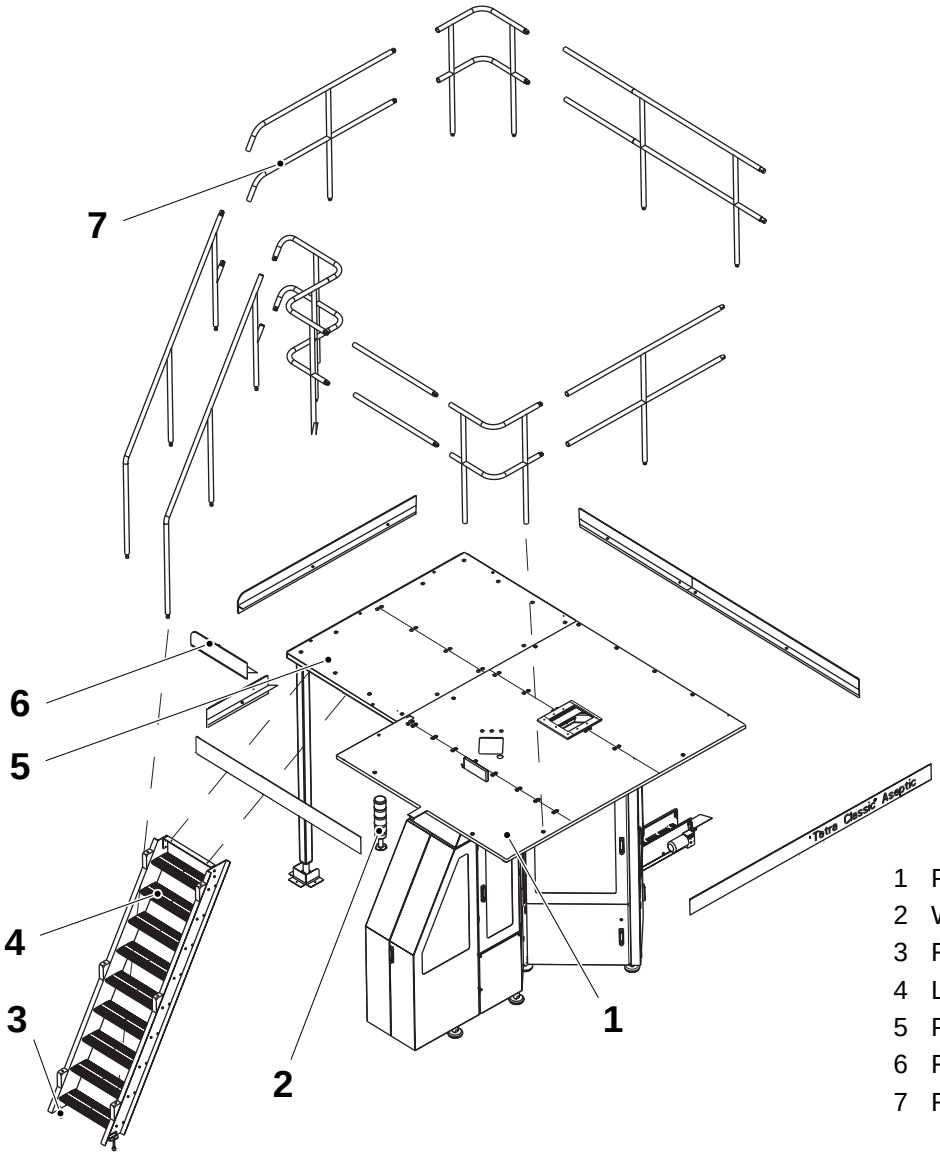

1 Platform
2 Warning beacon
3 Foot
4 Ladder
5 Platform
6 Foot plate
7 Railing

IM1.11TB066012.fm

6.5-4 Sterile unit and tube forming module

a) Lift up the assembled sterile unit and tube forming module to the platform, see 5.6-2 Moving the assembled sterile unit and tube forming module on page 68 for lifting instructions.

b) Assemble the tube forming module with the main body by means of the eight screws inside (1) and the screw behind the cantilever.

c) Pin (2) the tube forming module.

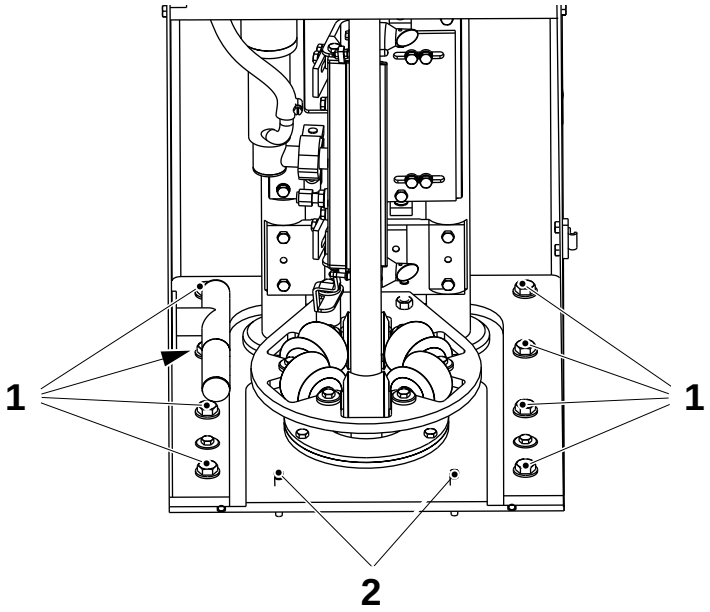

1 Screw
2 Pin

IM1.11TB066012.fm

d) Assemble the sterile unit with the infeed by means of the bracket (4) and screws (3) from the outside of the sterile unit.

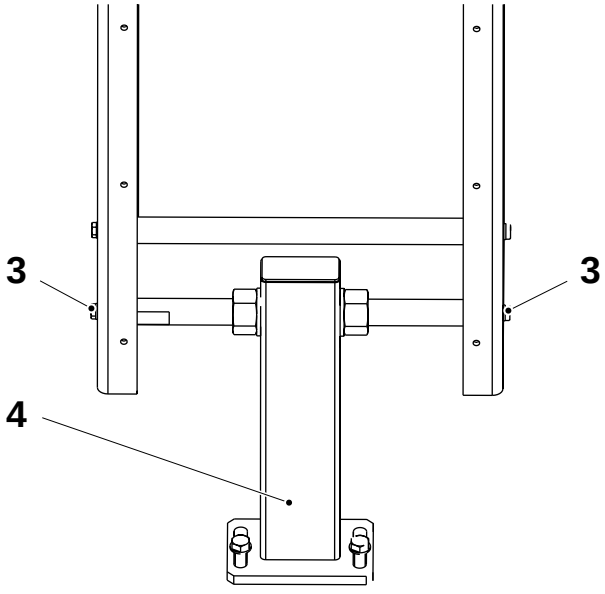

3 Screw
4 Bracket

(Cont'd)

(Cont'd)

e) Assemble the filling unit frame (7) with the platform by means of the brackets (8).

f) Assemble the air panel (5) with the platform by means of the screws (6).

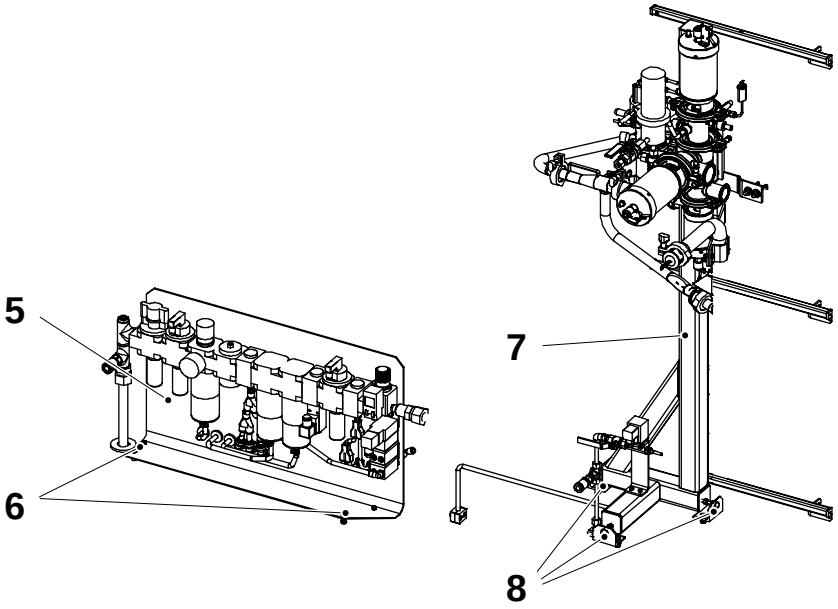

5 Air panel
6 Screw
7 Filling unit frame
8 Bracket

g) Assemble the coil holder (9) inside the main body (10).

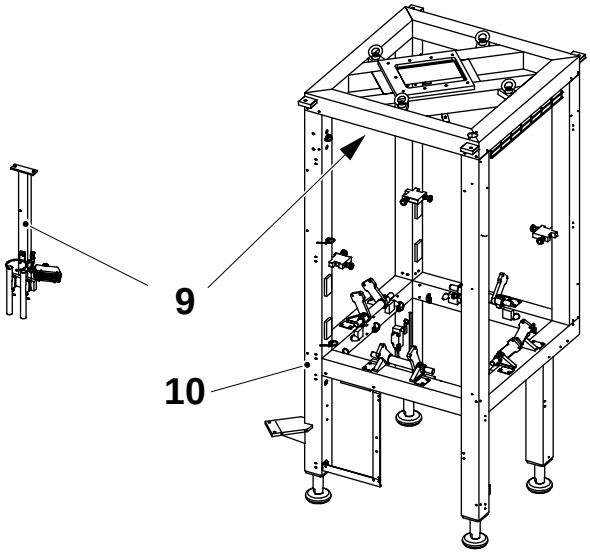

9 Coil holder
10 Main body

IM1.11TB066012.fm

6.5-5 Sterile air system

a) Lift up the sterile air system to the platform, see 5.6-5 Moving other machine parts on page 70 for lifting instructions.

b) Position the sterile air system (1) and assemble it with the platform, with four screws (3) from underneath the platform.

c) Assemble the remaining railings (2) and fix the railings to the sterile air system by means of the screws.

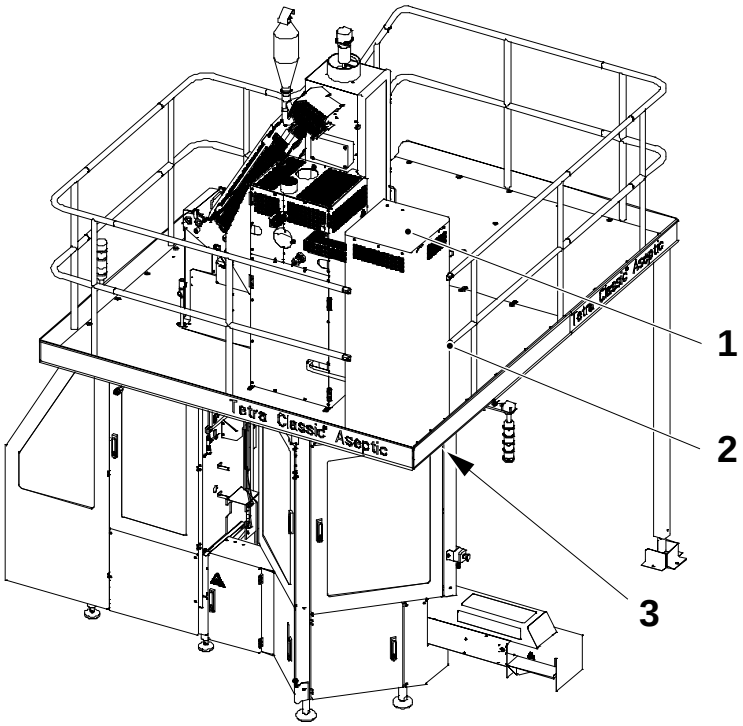

1 Sterile air system
2 Railing
3 Screw

IM1.11TB066012.fm

6.5-6 Electrical cabinet

a) Move the electrical cabinet (1) to its place, see 3.1 Installation drawings on page 35.

b) Level the electrical cabinet (1) by adjusting the feet (2).

Note! To make room for the Domino ink jet printer, the right side of the electrical cabinet must be placed close to the platform's right leg. Make also sure that the electrical cabinet's left door can be fully opened after the Domino ink jet printer is installed.

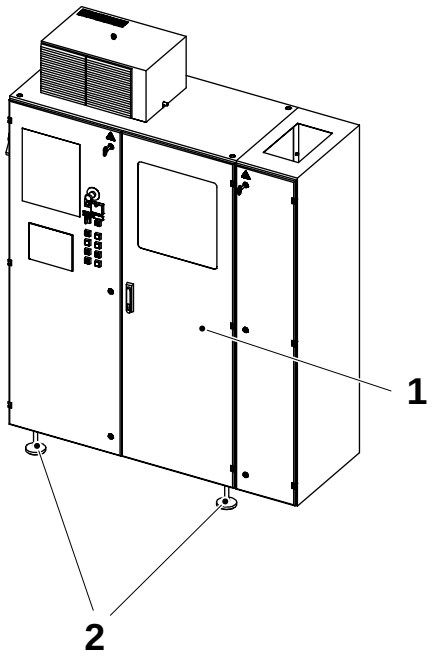

1 Electrical cabinet
2 Foot

IM1.11TB066012.fm

6.5-7 Cable trays and cables

a) Assemble the cable trays (2) under the platform.

b) Drill mounting holes at the electrical cabinet and mount the bracket (3) to the electrical cabinet.

Note! The bracket is important to ensure the earthing of the main body. Risk of electrical shock if not mounted!

c) Assemble the bracket (3) and the cable tray (1) between the platform and the electrical cabinet.

d) Pull the cables and connect them according to the EM. Take care to keep signal cables in one half and power cables in the other.

Note! IH cables from electrical cabinet to main body to be laid in the special, middle compartment in the main cable trays, and to have a separate pipe in the main body cable ducts.

e) Assemble the light fixture (1) under the platform.

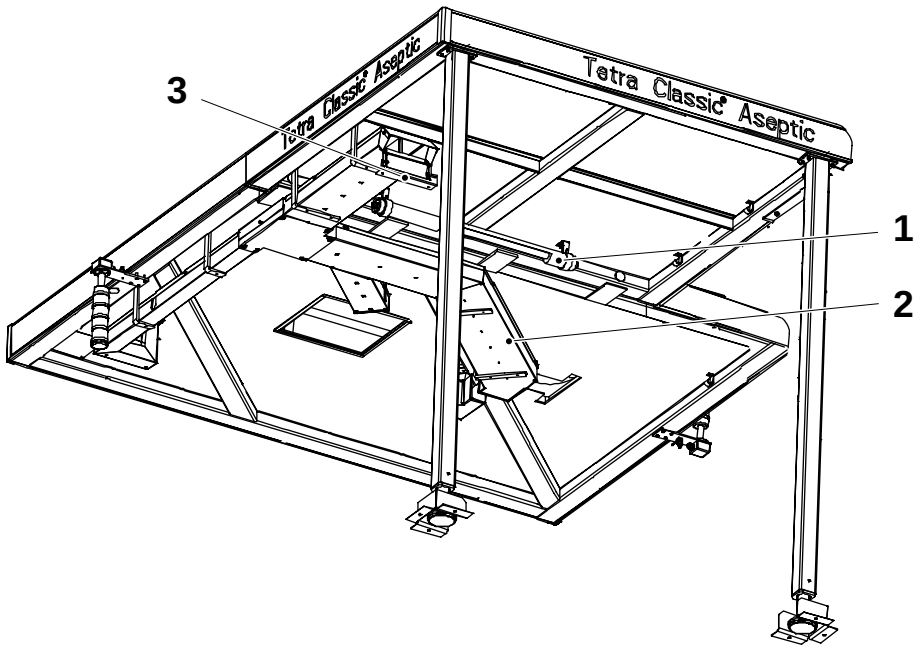

1 Light fixture
2 Cable tray
3 Bracket

IM1.11TB066012.fm

6.5-8 Pipes

Note! Use correct seals for the pipe connections.

a) Connect the clean air pipe (1) between the air panel (2) and the sterile air unit.

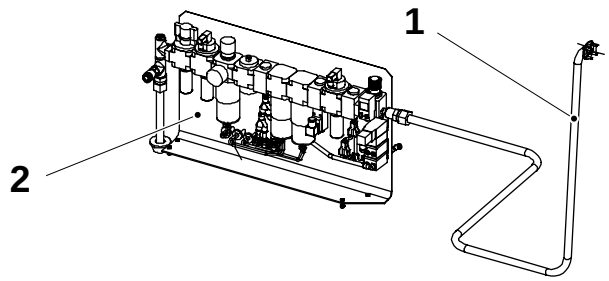

1 Clean air pipe
2 Air panel

b) Connect the two peroxide pipes (3) between the peroxide system (5) and the sterile unit.

c) Connect the two peroxide pipes (4) to the pipes for the spray container on sterile air unit.

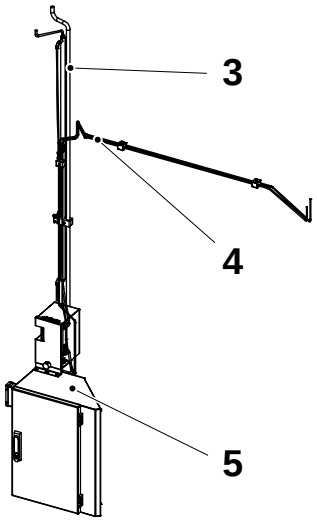

3 Pipe sterile unit
4 Pipe sterile air unit
5 Peroxide system

d) Assemble the drain pipe (6) from the steam trap (7) through the frame of the main body.

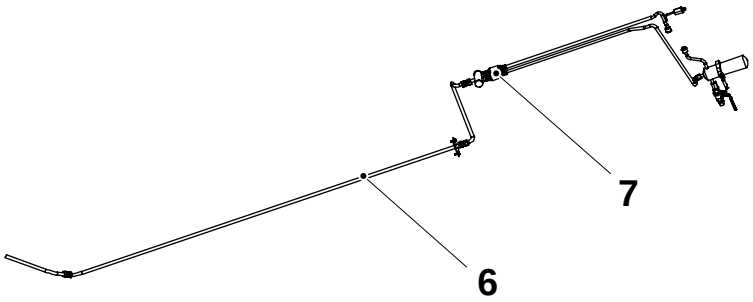

6 Drain pipe
7 Steam trap

(Cont'd)

IM1.11TB066012.fm

(Cont'd)

e) Assemble the sterile air pipe (8) between the sterile air unit and B-valve, heating chamber, filling pipe, and heating element.

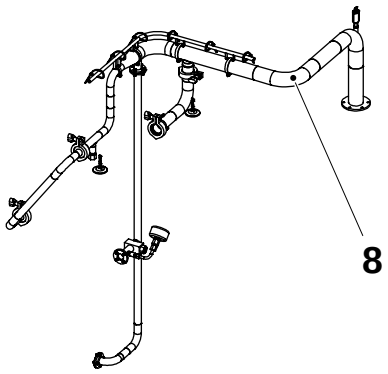

8 Sterile air pipe

f) Assemble the cleaning system pipe (9).

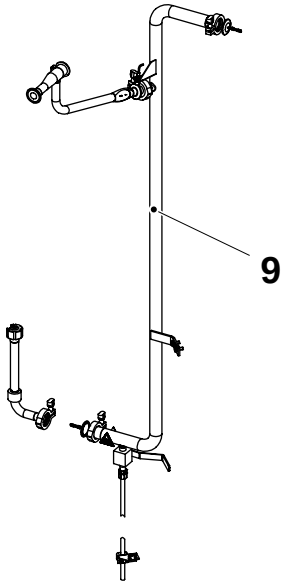

9 Cleaning system pipe

g) Assemble the water hose for the tube flushing.

h) Assemble the inlet water pipe for the tube flushing and peroxide cooler.

i) Assemble the three water hoses for the peroxide cooler:
   - from the inlet pipe to the valve
   - from the valve to the restrictor
   - from the return connection of the cooler.

IM1.11TB066012.fm

6.5-9 Filling pipe

Note! The filling pipe should only be mounted during production.

a) Fit the filling pipe (1) and the seal (3) to the tube forming module (2).

b) Set the filling pipe (1) according to MM section Filling Pipe - set position.

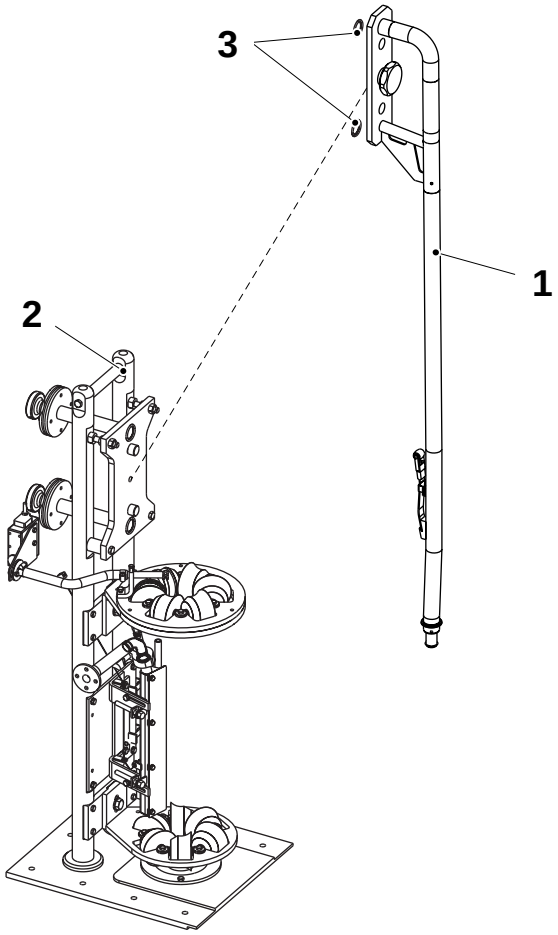

1 Filling pipe
2 Tube forming module
3 Seal

IM1.11TB066012.fm

6.5-10 Hoods, doors, and protection plates

a) Assemble all the hoods, doors, and protection plates with the filling machine.

6.6 Utility and product connections

For positions of all inlets and outlets, see 3.3 Connections on page 42.

6.6.1 Electrical connection

DANGER! **Immediate danger to life!**
Make sure that power is switched off upstream before performing any work on cables and electrical components.

a) Make sure that power is switched off.
b) Pass the power cable through the cable guide.
c) Connect the wires of the power cable to the power terminal board inside the electrical cabinet, according to the EM.

Note! The power cable must be pulled straight up or straight out from the machine. The power cable must not be pulled through the machine.

6.6.2 Utility connections

a) Connect the tap water pipe to the tap water inlet.
b) Connect the compressed air pipe to the compressed air inlet.
c) Connect the steam pipe to the steam inlet.
d) Connect pneumatic connections according to the pneumatic diagram.
e) Connect the CIP inlet pipe to the CIP inlet.
f) Connect the CIP outlet pipe to the CIP outlet.
g) Assemble the upper filling pipe, if not already done.
h) Prepare the pipes in the main body for CIP, according to the OM.
i) Adjust the CIP pipes in the main body. Make sure that there are no tensions in the pipes.

6.6.3 Product connections

a) Connect the product supply pipe to the product inlet.
b) Connect the product outlet pipe to the product outlet.

IM1.11TB066012.fm

6.7 Signal exchange

6.7.1 CIP unit signal exchange

Two signals are needed:

a) Tetra Pak A1 ready for CIP (from Tetra Pak A1 to CIP unit)

This signal allows the CIP unit to start the CIP (to be connected to connector X117).

b) CIP done (from CIP unit to Tetra Pak A1)

This signal must be high (24 Volts) when the CIP is finished (to be connected to connector X117).

Connect the cables according to circuit diagram 2578566-3 sheet 23.

In case the machine is connected to a Tetra Pak SCU/4 cleaning unit, see the SCU/4 EM pages circuit diagram 44882-15:01/16:01 and connection diagram 61930-13:01/14:01 (cables W22, W23, and W36) for the wire connection.

6.7.2 Process unit signal exchange

Three signals are needed:

a) External product signal, **PROCESS** to Tetra Pak A1 (to be connected to connector X117).

b) Ready for production, Tetra Pak A1 to **PROCESS** (to be connected to connector X117).

c) Machine in **PRODUCTION**, Tetra Pak A1 to **PROCESS** (to be connected to connector X117).

Connect the cables according to circuit diagram 2578566-3 sheet 23.

IM1.11TB066012.fm

6.8 Optional equipment

Note! Ignore this section if the filling machine is not equipped with the optional equipment. Connect the external dating unit according to the suppliers's own documentation.

a) Assemble the guide rail (1) underneath the platform (3) by means of the existing mounting holes (2).

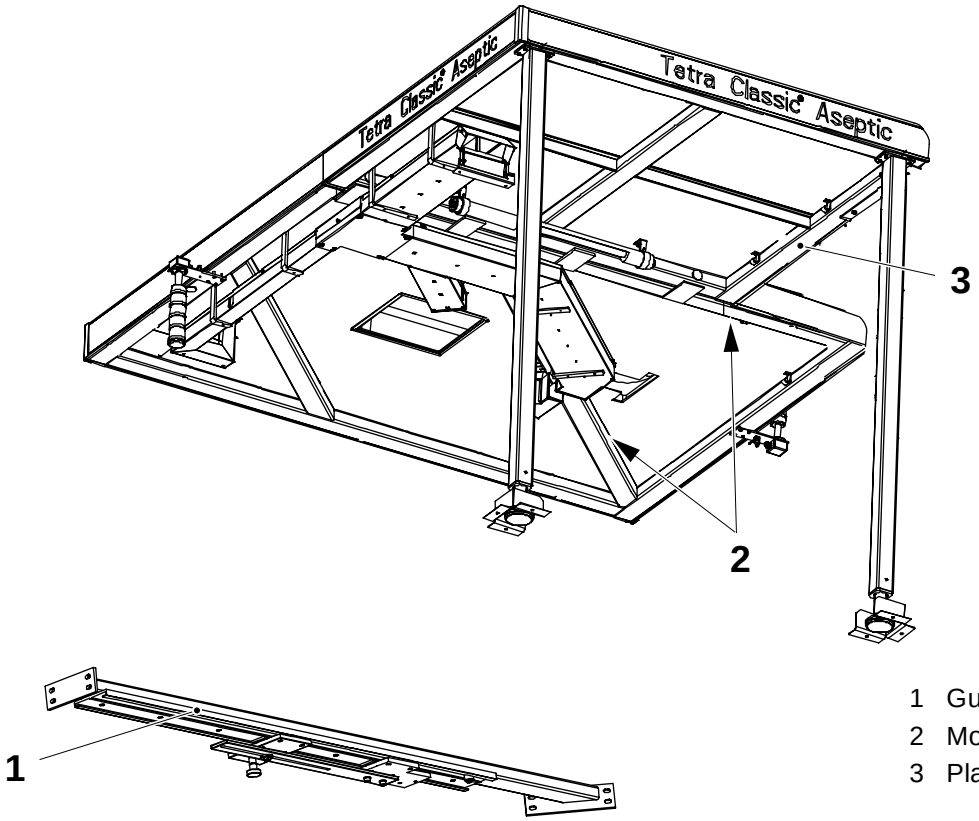

1 Guide rail
2 Mounting hole
3 Platform

IM1.11TB066012.fm

This page intentionally left blank

IM1.11TB066012.fm

7 Installation check

7.1 Checks before test run

IMPORTANT! This is the first time the filling machine is being run since its final testing at the factory.

It is recommended that water is packaged instead of the actual product during final installation checks.

Verify the installation work by following the checklist below.

See section 6 Position and assembly on page 71 for further details.

7.1.1 Filling machine check

No	Check	Done
1.1	Remove the drive chain. Crank the machine by hand in order to check that everything moves easily and freely. Observe the direction of rotation for the drive motor. Before placing the drive chain back see point 2 in this checklist.	
2	Inch the filling machine by means of the inching button at it lowest speed and check that the direction of rotation for the drive motor is correct.	

IM1.11TB076012.fm

7.1.2 Electrical connections checks

DANGER!

Risk of electrocution!
Make sure that power is switched off before performing any work on cables and electrical components.

No	Check	Done
1	The electrical power cables are correctly connected: - in the main switch cabinet. - between the main switch and the electrical cabinet. - in the electrical cabinet.	
2	The protective earthing (grounding): - in the electrical cabinet - on the filling machine - in the customer´s terminal box	

7.1.3 Miscellaneous checks

No.	Check	Done
1	The machine is level transversally and longitudinally.	
2	All railings have been fitted.	
3	The utility connections work is done.	
4	The conveyor equipment is connected.	
5	The connection work to the service unit is finished.	
6	The connection work to the superstructure is finished.	
7	All covers are fitted.	
8	The filling pipe and the seal ring are fitted.	
9	The protective cover for the outfeed is fitted.	
10	The peroxide container is in place.	
11	The detergent container/containers are installed and filled with the correct detergent, see OM.	
12	The transport securing devices are removed.	
13	The eject conveyor/bin is connected/positioned.	
14	Upstream valves/switches are open/on: - electrical power - compressed air - steam.	
15	There are no leakages from the utility connections.	
16	The production line is flushed with water to eliminate welding residues, and to detect any leakages.	
17	The machine crates and other packing have been taken care of as agreed with the customer.	

IM1.11TB076012.fm

7.1.4 Lubricant level checks

See the MM for further details on the following level checks.

No.	Check	Done
1	Machine body - Hydraulic system	
2	Machine body - Lubrication system	

7.2 Valve checks

No.	Check	Done
1	The air valve.	

7.3 Safety checks

No	Check	Done
1	All doors open and close correctly.	
2	All hatches and safety covers are secured.	
3	All the **Emergency stop** buttons. See the Safety Precautions section for further details. Press each emergency stop button and make sure that the machine steps down to **OFF**.	
4	All the doors, covers and guards. See the Safety Precautions section for further details. Open each door, cover or guard and make sure that the controlpanel displays the correct message.	
5	The filling machine and the area around the machine are free from remaining installation packing and wrapping.	

IM1.11TB076012.fm

This page intentionally left blank

IM1.11TB076012.fm

8 Preparation for commissioning

Note! Commissioning covers only the functioning of the individual machine. A line performance test is required to check the functioning of the machine as part of a complete line. Check with the local service organisation what arrangements have been made for a line performance test.

8.1 Presence and correctness checks

No	Check	Done
1	The TP No. on the program diskette corresponds to the No. in the EM	
2	The spare parts have been deposited in the spare parts stores.	
3	The accessories are available to the operator: - apron. - gloves. - goggles.	
4	All the documents correspond to the specific machine. - EM - IM - OM - MM - SPC - System drawings - Machine Specification Document - Final Inspection Report - Machine Deviation Report (if relevant)	
5	A packaging material trolley must be available.	
6	The supply and quality of product is sufficient for the purpose of the commissioning.	
7	All supplies are of the correct type and are available in sufficient quantities for the purpose of the commissioning: - Packaging material - LS strip - Hydrogen peroxide - Detergent	

IM1.11TB086012.fm

8.2 Product and utility value checks

Make sure that the product and utility values are correct. Ask for the assistance of the customer´s technical personnel if necessary. If values are incorrect, inform the customer´s technical personnel.

See 3 Technical data & drawings on page 35.

No.	Check	Done
1	Product supply: - pressure - max pressure fluctuation - inlet temperature - max particle size	
2	Electrical power supply: - voltage - max voltage fluctuation - frequency - fuse rating	
3	Compressed air supply: - pressure - max particle size - max particle content - dew point - oil content	
4	Steam supply: - water quality - pressure - max pressure fluctuation -inlet temperature	
5	Detergent: - correct type (specifications) - ph	
6	Hydrogen peroxide supply: - aseptic (food) grade - concentration (35%)	

IM1.11TB086012.fm

8.3 Function checks

8.3.1 Preparation

No.	Check	Done
1	Make sure that the PLC program on the diskette corresponds with that in the machine PLC. See the EM for further details.	
2	Connect a cold water supply to the product inlet connection. (If the product pipes have been welded have them flushed thoroughly before using).	
3	Switch on the mains power switch. (Make absolutely sure that the rotation directions of the electrical motors are correct. See the EM for further details).	
4	Perform CIP. See the OM for further details.	
5	Prepare the machine for production. See the OM for further details.	
6	Make sure that the starting up from cold takes less than 35 minutes at an ambient temperature of no less than 20°C (68°F).	
7	Start up the package outfeed conveyor.	
8	Put the machine into **Production** according to the OM.	
9	Finished packages are correct in terms of: - size and shape - longitudinal and transversal sealing - date code printing - filled package weight/volume See the OM for further details.	
10	Production capacity is as specified (count the packages produced in ten minutes and multiply by six.	
11	All pressures remain within tolerance. See the MM for further details.	
12	There are no fluid leaks.	
13	There are no unusual noises which could indicate loose or misaligned parts.	
14	There are no unusual smells which could indicate internal leaks or burning of electrical circuits.	
15	The peroxide concentration continuously to detect any sign of degradation.	
16	Defective packages are ejected (start up, short stop, material splice, strip splice, production stop).	
17	Perform strip splice to verify the function. See the OM for further details Three packages shall be discarded, the package before the splice, the package with the splice, and the following package.	
18	Packaging material trolley function.	
19	Perform package material splice to verify the function. See the OM for further details. Three packages shall be discarded, the package before the splice, the package with the splice, and the following package.	

IM1.11TB086012.fm

20	Stop methods. Stop the machine according to the OM to verify the different stop functions.	
21	Perform external cleaning.	

8.3.2 Changing PLC parameters

IMPORTANT! Do not change the PLC parameters unless absolutely necessary. Make a copy of the existing parameters before modifying them. Also keep a copy of the new parameters for future reference.

GE Fanuc

Only skilled or instructed persons are allowed to make changes to the PLC parameters.

8.4 Health and safety checks

No.	Check	Done
1	All the **Emergency stop** buttons See the Safety Precautions for further details. Press each emergency stop button and make sure that the machine steps down to **Off**.	
2	All the doors, covers and guards. See the Safety Precautions for further details. Open each door, cover or guard and make sure that there is a signal on the Control Panel.	
3	Filled packages and outlet water samples have the correct hydrogen peroxide residue/content as measured using: - Test kit 90298-31 for packages - Test kit 90298-30 for outlet water.	

IM1.11TB086012.fm

8.5 Documentation

Note! No claims will be accepted for machines in commercial production if the **Start-Up Machine Quality Report** (SUMQR) has not been returned to the manufacturer.

a) Compile the **Transport Damage Repor**t (a section of the SUMQR). If no damage has occurred during transport, state “NO TRANSPORT DAMAGE”

b) Compile the **Feedback from MC** form **only in case of claims on the equipment**

For further information about claims see the **Claim and Complaint Handling procedure**, available from the local Service Organisation

c) Compile the Start-up Machine Quality Report.

List all work, besides the installation work, performed to ensure correct functioning.

IM1.11TB086012.fm

This page intentionally left blank

IM1.11TB086012.fm

9 Disassembly and removal

CAUTION! **If the equipment is going to stand or travel in freezing conditions, the product circuits and the peroxide bath tank and circuits must be drained to avoid damage from freezing.**

Sterilization bath water pump

Open the pump house to drain the water. Close the pump house.

IMPORTANT! The equipment can be moved **for short distances** without being drained or dissembled, but **only if no freezing conditions will be encountered.**

The equipment must be drained before long distance moves or long term storage. If draining is necessary, perform the draining procedure before disconnecting the equipment from the mains power supply.

Only skilled or instructed installation technicians are allowed to disassemble the equipment for moving to other installation positions.

9.1 Preparation

IM1.11TB096012.fm

Risk of personal injury or machine damage.

Be sure to use the right equipment with the required capacity, during unloading and lifting.

Follow local regulations regarding lifting

Machine transport

CAUTION! Do not lift the filling machine more than 20 mm off the floor while it is being moved

9.2 Disconnect utilities

a) Turn off and padlock the mains power switch.

b) Shut off all the utility and product supplies upstream.

- electrical power
- cold water
- compressed air
- product
- steam
- CIP
- communication cables (when used)

c) Released pressure from the water and air circuits by operating the water and air guns. Close the following valves:

- compressed air valve
- cold water valve
- steam valve

d) Disconnect the power, utility, drain and product lines:

- electrical power (disconnect at power terminal and remove the cable)
- communication cables (when used)
- cold water
- compressed air
- product
- steam
- CIP lines
- drainage

e) Plug or protect all open connections

f) Make sure that cables are put away safely

IM1.11TB096012.fm

9.3 Disassemble machine

Disassemble the machine in reverse order to the assembly instructions in chapter 6 Position and assembly on page 71.

WARNING! **Risk of burning to skin and eyes.**
Make sure to carefully drain pipes containing chemicals.

9.4 Storage preparation

Make sure that the storage environment respects the following conditions:

Characteristics	Value	Notes
Min and Max °C (°F)	5 - 40 (40 - 105)	If the water system is drained, the equipment can withstand freezing conditions.
Max.relative humidity %	80	Non-condensing

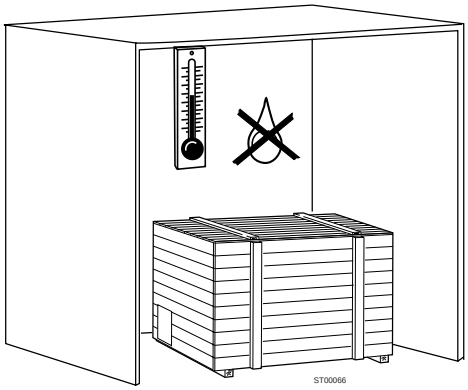

IM1.11TB096012.fm

9.5 Re-crating

a) Fit transport devices in the same locations from which they were removed from when the machine was assembled. The purpose is to prevent movement during transport.

b) Lubricate all sliding components such as rods, cams, etc.

c) Wrap small components in bubble wrapping or similar to prevent damage.

d) The equipment must be packed in suitable crates to ensure safe transport and the correct storage conditions. Use the original crate and packing if available. Make sure that the parts are adequately protected from transport damage. All parts must be fixed to the crate with proper bolts or similar equipment. Fix any loose sub-crates or boxes to the floor or walls of the crate to prevent them from moving during transport. The crate must also be protected from weather to prevent rain, snow, sand, etc. from entering the crate.

9.6 Moving

See 5.2 Lifting equipment on page 59.

IM1.11TB096012.fm

Tetra Pak

*IM binder labels. 40 mm Full width Note! This page is generated **automatically**. using the **variable definitions** made in the **front page** file!!*

Tetra Pak A1
630451-0200

Issue 2003-03-01 Doc No. IM-85601-0102

Tetra Pak A1
630451-0200

Issue 2003-03-01 Doc No. IM-85601-0102

Tetra Pak A1
630451-0200

Issue 2003-03-01 Doc No. IM-85601-0102

Tetra Pak A1
630451-0200

Issue 2003-03-01 Doc No. IM-85601-0102

Tetra Pak A1
630451-0200

Issue 2003-03-01 Doc No. IM-85601-0102

Tetra Pak A1
630451-0200

Issue 2003-03-01 Doc No. IM-85601-0102

Tetra Pak A1
630451-0200

Issue 2003-03-01 Doc No. IM-85601-0102

Tetra Pak A1
630451-0200

Issue 2003-03-01 Doc No. IM-85601-0102

Tetra Pak A1
630451-0200

Issue 2003-03-01 Doc No. IM-85601-0102

Tetra Pak A1
630451-0200

Issue 2003-03-01 Doc No. IM-85601-0102

Tetra Pak A1
630451-0200

Issue 2003-03-01 Doc No. IM-85601-0102

! If the text does not fit; **change the font on "B TitleFull" to min 18 p, and the left indent to 0.5 cm** (**on all three components**). **Make "Update All"**

*IM binder labels. 30mm Halfwidth Note! This page is generated **automatically**. using the **variable definitions** made in the **front page** file!!*

Tetra Pak A1
630451-0200

Issue 2003-03-01 Doc No. IM-85601-0102

Tetra Pak A1
630451-0200

Issue 2003-03-01 Doc No. IM-85601-0102

Tetra Pak A1
630451-0200

Issue 2003-03-01 Doc No. IM-85601-0102

Tetra Pak A1
630451-0200

Issue 2003-03-01 Doc No. IM-85601-0102

Tetra Pak A1
630451-0200

Issue 2003-03-01 Doc No. IM-85601-0102

Tetra Pak A1
630451-0200

Issue 2003-03-01 Doc No. IM-85601-0102

Tetra Pak A1
630451-0200

Issue 2003-03-01 Doc No. IM-85601-0102

Tetra Pak A1
630451-0200

Issue 2003-03-01 Doc No. IM-85601-0102

Tetra Pak A1
630451-0200

Issue 2003-03-01 Doc No. IM-85601-0102

Tetra Pak A1
630451-0200

Issue 2003-03-01 Doc No. IM-85601-0102

Tetra Pak A1
630451-0200

Issue 2003-03-01 Doc No. IM-85601-0102

Tetra Pak A1
630451-0200

Issue 2003-03-01 Doc No. IM-85601-0102

Tetra Pak A1
630451-0200

Issue 2003-03-01 Doc No. IM-85601-0102

Tetra Pak A1
630451-0200

Issue 2003-03-01 Doc No. IM-85601-0102

! If the text does not fit; **change the font on "B TitleHalf" to min 18 p, and the left indent to 0.5 cm (on all three components)**. **Make "Update All"**