IM

Installation Manual

Tetra Pak A1

630451-0200

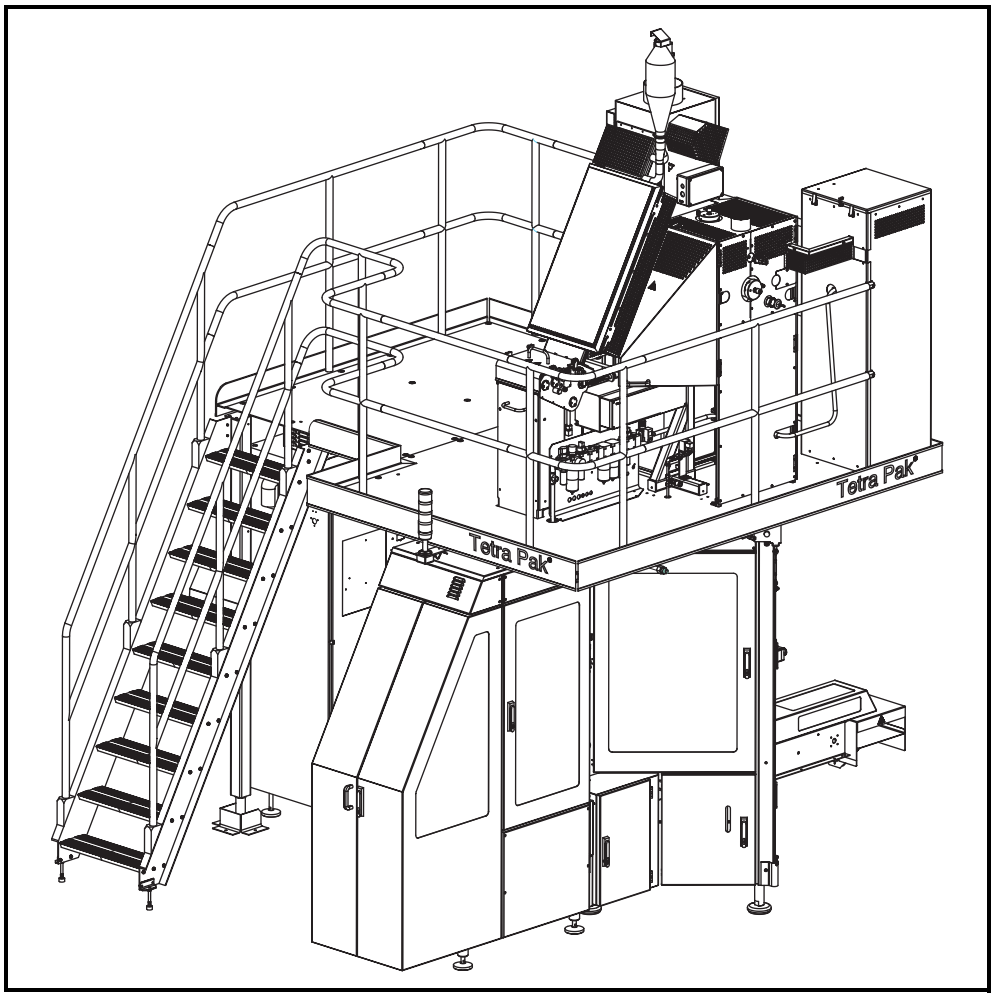

WARNING

Read and follow all safety precautions before working on or near this equipment.

Read all safety precautions throughout this manual and on safety signs attached to this equipment. Failure to follow all safety precautions could result in death or serious injury.

Tetra Pak

Doc. No. IM-85601-0104

Copyright © 2003 Tetra Pak Group

All rights reserved. No part of this document may be reproduced or copied in any form or by any means without written permission from Tetra Pak Carton Ambient AB

Tetra Pak and all Tetra Pak products are trademarks belonging to the Tetra Pak Group.

The content of this manual is in accordance with the design and construction of the machine or equipment at the time of publishing. Tetra Pak reserves the right to introduce design modifications without prior notice.

This document was produced by:

Tetra Pak Carton Ambient AB
Ruben Rausings gata
SE-221 86 LUND
Sweden

Additional copies can be ordered from Tetra Pak Parts or the nearest Tetra Pak office. When ordering additional copies, always provide the document number. This can be found in the machine specification document. It is also printed on the front cover and in the footer on each page of the manual.

Doc. No. IM-85601-0104

Issue 2003-07-01

This manual is valid for:

Series No./ Machine No. Sign.

IM
Installation Manual

Tetra Pak A1
630451-0200

i Introduction

ii Safety Precautions

1 Technical Data and Drawings

2 Site Preparation

3 Moving and Unpacking the Equipment

4 Positioning, Assembly, and Connections

5 Final Installation Check

6 Preparation for Commissioning

7 Disassembly and Removal

A list of all optional equipment, optional kits, and rebuilding kits that this manual is valid for is found on the next page.

Doc. No. IM-85601-0104

Issue 2003-07-01

Tetra Pak

Tetra Pak Carton Ambient AB

Valid for:

Launch Kit
2592387-0100

Guide Rail
2579770-0100

Paper Trolley
1538186-0100

Update Log for Doc. No. IM-85601-0104

This table shows all changes made to this manual, such as kits installed and pages added or removed.

Date	Installed Kit	Added Pages (Doc. No.)	Removed Pages	Signature

Date	Installed Kit	Added Pages (Doc. No.)	Removed Pages	Signature

i Introduction

About the Introduction Chapter

This chapter contains basic information about this manual and related Tetra Pak equipment.

Manual Information

Tetra Pak recommends reading all delivered manuals carefully. Make sure that the delivered manuals are available to personnel who operate or maintain the equipment.

It is important to keep this manual for the lifetime of the equipment and to pass the manual on to any subsequent holder or user.

Tetra Pak will not be held responsible for any damage to the equipment caused by not following the instructions given in this manual.

Delivered Manuals

The manuals delivered with this equipment include

- Electrical Manual (EM)
  This manual provides technicians with information about the equipment's electrical system.
- Installation Manual (IM)
  This manual provides technicians with information required to safely install the equipment.
- Maintenance Manual (MM)
  This manual provides technicians with information on maintaining the equipment.
- Operation Manual (OM)
  This manual provides the operator with information on handling and operating the equipment before, during, and after production.
- Spare Parts Catalogue (SPC)
  This manual provides the information necessary to order spare parts from Tetra Pak

Page Layout

Every main page in a manual contains a header and a footer. The page header contains the section name (1) and the chapter name (2). The page footer contains the manual's document number (3), and the page number (4). See also Section Page Numbering.

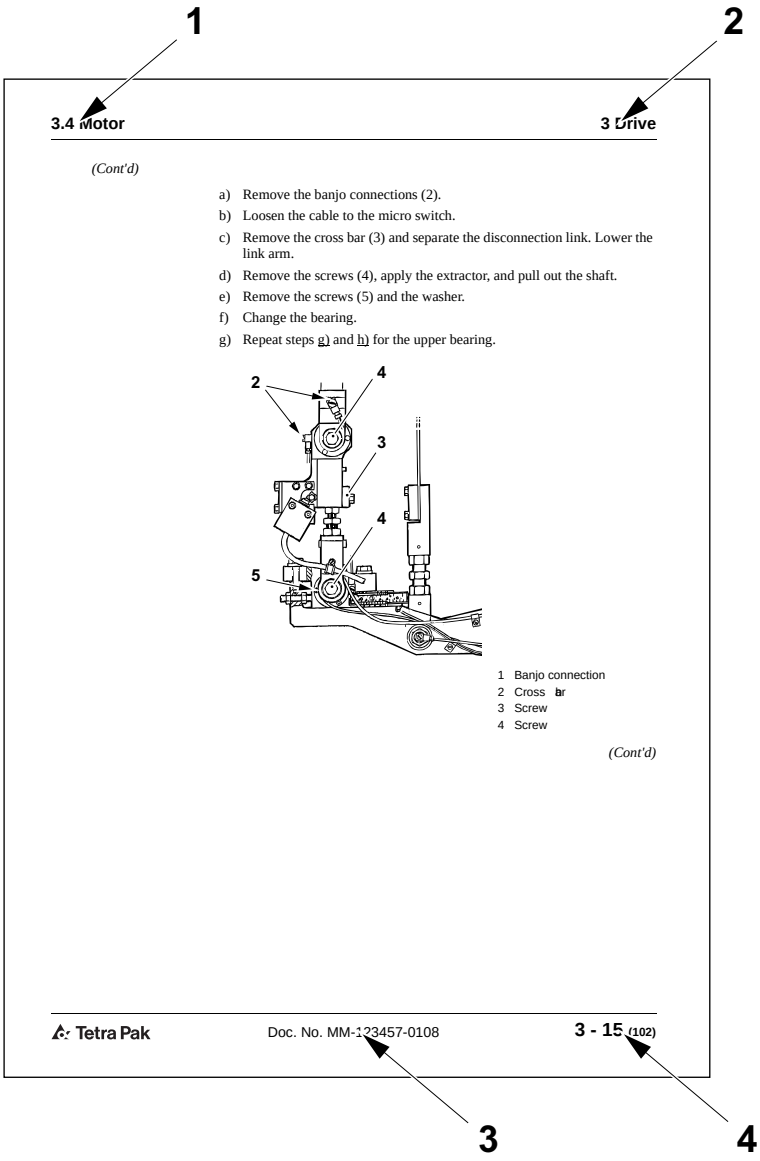

1 Section name
2 Chapter name
3 Document number
4 Page number

Page Numbering

A page number has three parts:

- chapter number (1)
- consecutive page number (2) within the chapter
- total number of pages (3) in the chapter.

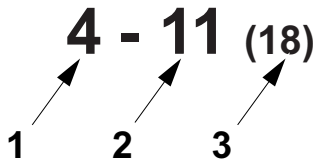

1 Chapter number
2 Consecutive page number
3 Total number of pages

Typographical Conventions

Controls on the operator panel, emergency stop devices, and program steps are printed in CAPITAL LETTERS.

Cross-references are underlined.

Symbols

The following symbols are used in illustrations:

- A pointer arrow (1) indicates the position of an object.
- A zoom arrow (2) indicates that an object view is enlarged. The arrow points towards the enlarged view of the object.
- A rotation movement arrow (3) indicates rotational movement of an object. The arrow points in the direction of rotation.
- A straight movement arrow (4) indicates movement of an object. The arrow points in the direction of movement.

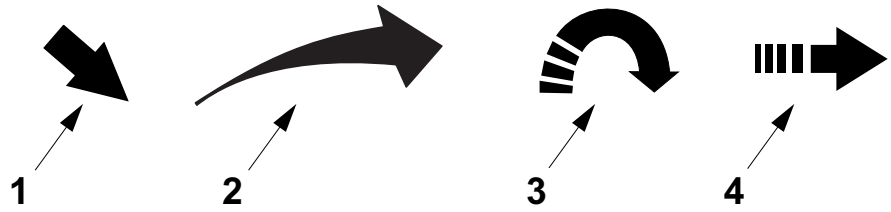

1 Pointer arrow
2 Zoom arrow
3 Rotation movement arrow
4 Straight movement arrow

Machine Introduction

Intended Use of the Equipment

The intended use of this Tetra Pak equipment is to pack liquid food products.

All other use is prohibited. Tetra Pak will not be held responsible for injury or damage if the equipment is used for any other purpose.

Manufacturer

This Tetra Pak equipment has been manufactured by

Tetra Pak Carton Ambient AB
Ruben Rausings gata
SE-221 86 LUND
Sweden

Service

If you encounter problems when operating this equipment, contact the nearest Tetra Pak office.

Contact the Liaison with other inquiries, comments, or suggestions for improvement regarding the equipment and its documentation.

Identification

CE Classification

This equipment complies with the basic health and safety regulations of the European Economic Area (EEA).

Machine Plate

The illustration below shows an example of the machine plate and its location on the equipment. The machine plate carries data needed when contacting Tetra Pak concerning this specific equipment.

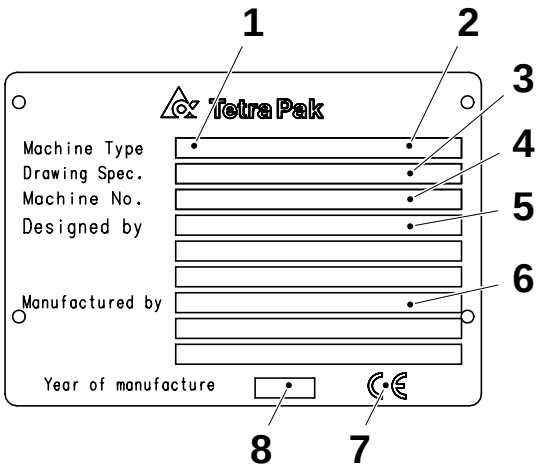

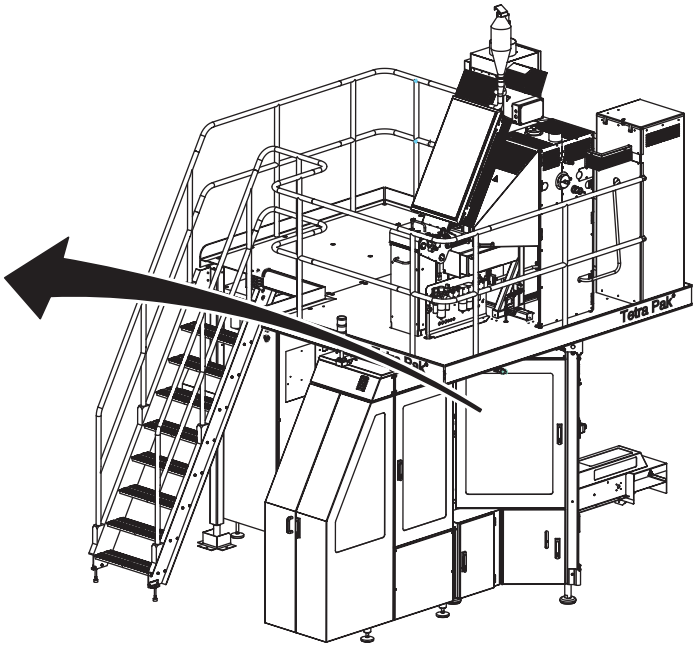

1 Machine type
2 Volume
3 Drawing specifications
4 Machine serial number
5 Designed by
6 Manufacturer
7 CE mark
8 Year of manufacture

Orientation

The illustration below shows the orientation of the equipment. This orientation information will be used throughout this manual.

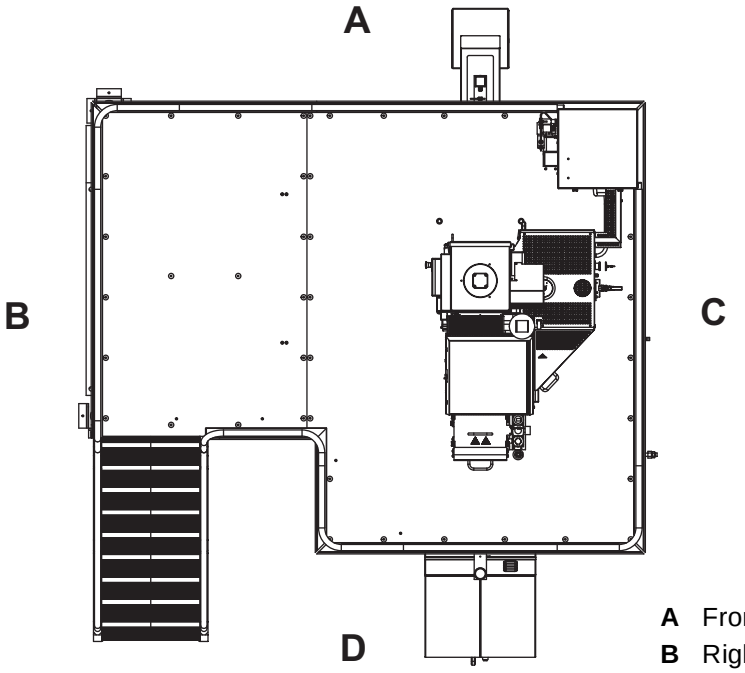

A Front
B Right-hand side
C Left-hand side
D Back

Hygiene

Avoid microbiological pollution of the packaging material:

- Always keep the doors to the filling room (area) closed. To prevent contamination via air streams, never open a window when the equipment is in production.
- Never clean the floors or the equipment in the filling room (area) when the equipment is in production.
- Compressed air used for cleaning purposes is to be used only for cleaning filters and should only be used outside of the filling room (area) or in the final folder compartment of the filling machine.
- Prepare the splicing of the packaging material as late as possible.
- Disinfect your hands before touching anything that may come into contact with the product. Use disinfectant code H. See Chapter Technical Data.
- Keep your hands and gloves clean.
- Always wear some type of hair protection (cap or hairnet) and clean clothes (preferably white).
- Do not wear a watch, ring, necklace, earrings, or any other exposed jewellery.

Abbreviations and Terminology

Abbreviation/ Terminology	Meaning	Translation
approx.	approximately	
CIP	Cleaning In Place	
EM	Electrical Manual	
IH	Inductive Heating	
IM	Installation Manual	
LED	Light Emitting Diode	
LH	Left Hand	
LS	Longitudinal Seal(ing)	
max	Maximum	
min	Minimum	
MM	Maintenance Manual	
OE	Optional Equipment	
OM	Operation Manual	
p/h	packages per hour	
PLC	Programmable Logic Controller	
RH	Right Hand	
RK	Rebuilding Kit	
SA	Strip Applicator	
SPC	Spare Parts Catalogue	
TP	Tetra Pak	
TPMS	Tetra Pak Maintenance System	
TS	Transversal Seal(ing)	

ii Safety Precautions

Read the Safety Precautions

WARNING

Read and follow all safety precautions before working on or near this equipment.

Read all safety precautions throughout this manual and on safety signs attached to this equipment. Failure to follow all safety precautions could result in death or serious injury.

Definitions

Energy Isolating Device. A mechanical device that physically prevents transmission or release of energy.

Power Supply Disconnector. The energy isolating device for the electrical power supply to the equipment.

Lockout. The use of a device, such as a padlock, to make sure that an energy isolating device, such as a power supply disconnector, cannot be operated.

Lockout Procedure. A procedure to put each necessary energy isolating device in its safe position to prevent the energising of the equipment, such as when a maintenance procedure should be carried out.

Safety Messages Description

A safety message is always accompanied by a safety alert symbol and a signal word.



This is the **safety alert symbol**. It is used to alert about potential personal injury hazards. To avoid hazards, obey all safety messages that follow this symbol.

The following safety alert symbols and **signal words** are used in this manual to inform the user of hazards.

 **DANGER**

Danger indicates an imminently hazardous situation which, if not avoided, **will** result in **death or serious injury**.

 **WARNING**

Warning indicates a potentially hazardous situation which, if not avoided, **could** result in **death or serious injury**.

 **CAUTION**

Caution indicates a potentially hazardous situation which, if not avoided, **may** result in **minor or moderate injury.** It may also be used to alert against unsafe practices.

CAUTION

Caution without the safety alert symbol indicates a potentially hazardous situation which, if not avoided, **may** result in **property damage**.

Personnel Requirements

Note! Personnel includes all persons working on or near this equipment.

Only skilled or instructed persons are allowed to work with this equipment.

Skilled Person

A skilled person must have relevant education and experience to enable him or her to identify hazards, analyse risks, and avoid hazards which electricity, machinery, chemicals, other energies, and supply systems on this equipment can create.

Skilled persons must meet local regulations, such as certifications and qualifications for working with electricity, mechanical systems, and so on.

Instructed Person

An instructed person must be adequately advised or supervised by a skilled person. The skilled person enables the instructed person to identify hazards, analyse risks, and avoid hazards which electricity, machinery, chemicals, other energies, and supply systems on this equipment can create.

Safety Signs

WARNING

Damaged or missing safety signs increase the risk of death or serious injury.

Replace all missing or damaged safety signs immediately.

There are two types of safety sign

- ISO signs are used worldwide
- ANSI signs are used in the United States only

The table shows all safety signs that are located on this equipment.

Note! The position numbers (Pos.) in the table refer to the positions in the illustration(s) in the Locations of Safety Signs section.

Pos.	ISO sign
	 **Read Operation Manual (OM) before using this equipment.** Failure to do so could result in death or serious injury.
	 **Hazardous voltage.** Can shock, burn, or cause death. Read Maintenance Manual before using this socket outlet.
	 **Hazardous noise.** Risk of impaired hearing. Wear hearing protection.
	 **Risk of eye injury.** **Wear eye protection.**

Pos.	ISO sign
1	 **Moving part can crush and cut.** Do not operate with guard removed. Follow lockout procedure before maintenance.
2	 **Hazardous voltage.** Will shock, burn, or cause death. Follow lockout procedure before maintenance.
3	 **Chemical burn hazard.** Wear personal protective equipment.
4	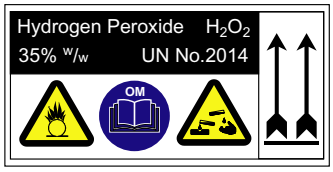 **Chemical hazard.** Corrosive and oxidising chemical. Could cause death or serious injury. Read Safety Precautions in Operation Manual (OM) before handling hydrogen peroxide.
5	 **Hot surface.** Do not touch. Follow lockout procedure before maintenance.

Pos.	ISO sign
6	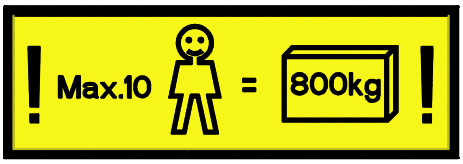 **Max load sign.** No more than 10 persons or 800 kg load may be present on the platform at the same time.
7	 **Harmful vapour.**

Locations of Safety Signs

Note! Make sure that each safety sign is undamaged and in its correct position after installation and maintenance. Replace all missing or damaged safety signs immediately.

The illustration shows where the safety signs are located. The position numbers refer to the table in the Safety Signs section.

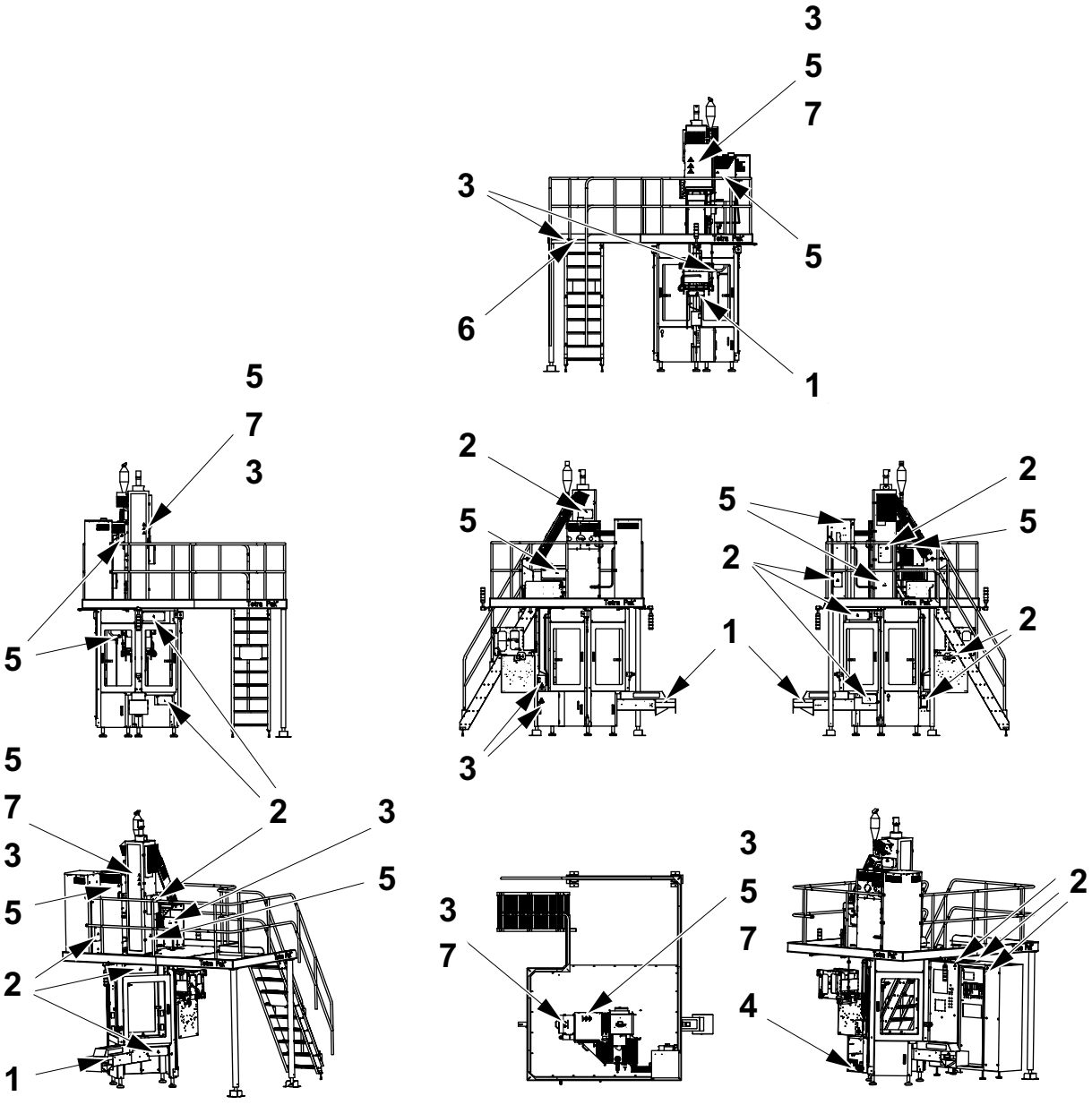

Safety Devices

WARNING
Unshielded hazards.
Never inch or run this equipment if any safety device is inoperative.

Change inoperative components of the safety system immediately.

WARNING
Hazardous Voltage.
Activating a safety device, such as pressing an EMERGENCY STOP push-button or opening a door, does not disconnect the power supply from this equipment.

Emergency Stop

Emergency stop devices are used to stop this equipment immediately in an emergency. Learn the positions of all emergency stop devices and how to use them.

Instructions for a normal production stop are included in the Stop chapter of the Operation Manual.

EMERGENCY STOP Push-Buttons

Push one of the EMERGENCY STOP push-buttons to stop this equipment immediately.

The illustration shows an EMERGENCY STOP push-button. The location of each EMERGENCY STOP push-button is shown by an arrow.

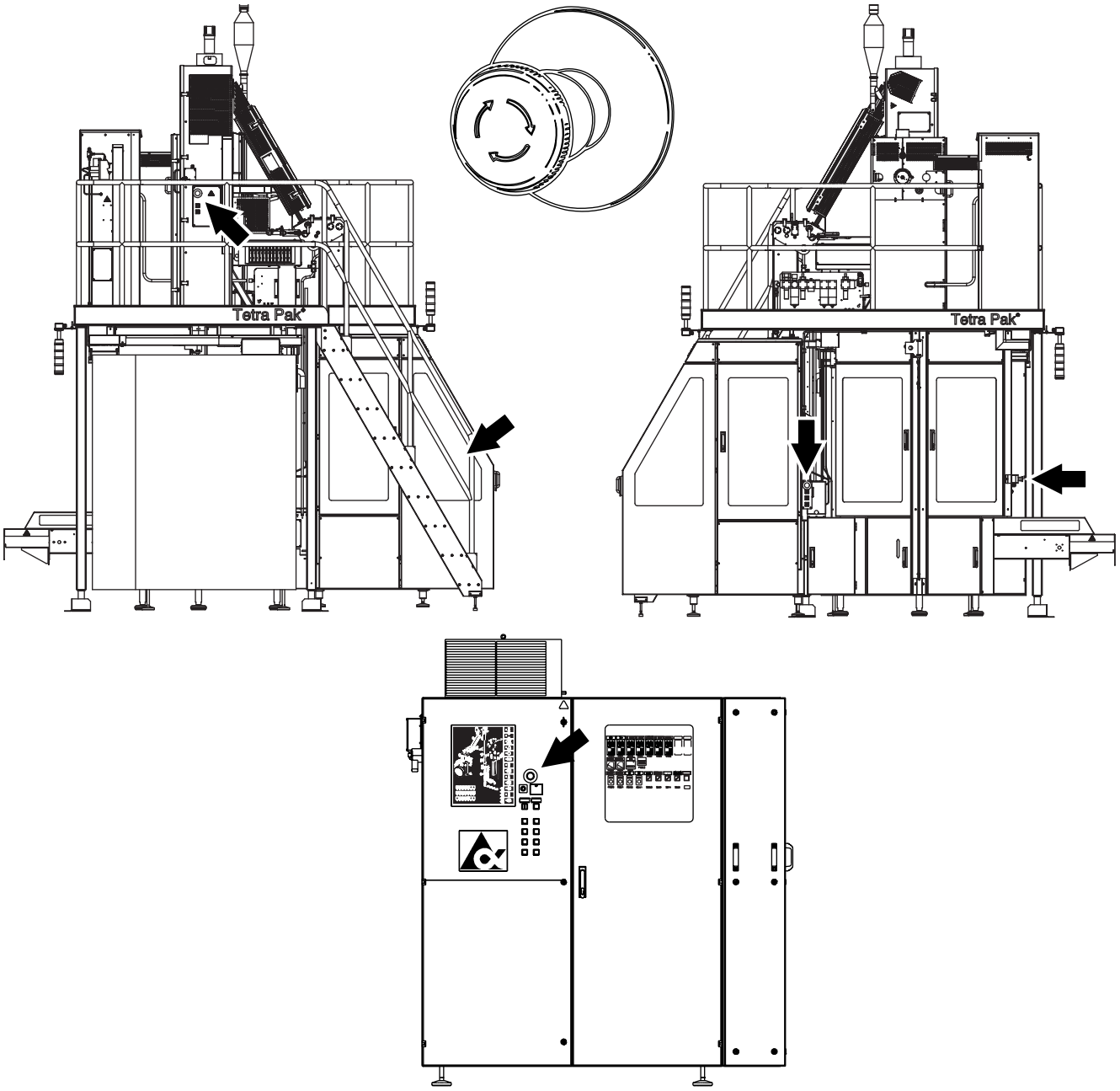

EMERGENCY STOP Wires

Pull one of the EMERGENCY STOP wires (1) to stop this equipment immediately.

Empty the peroxide bath. See Manual Emptying of the Peroxide Bath on page ii-21.

The illustration shows an EMERGENCY STOP wire. The location of each EMERGENCY STOP wire is shown by an arrow.

Press the button (2) on the emergency stop wire module before resetting the emergency stop.

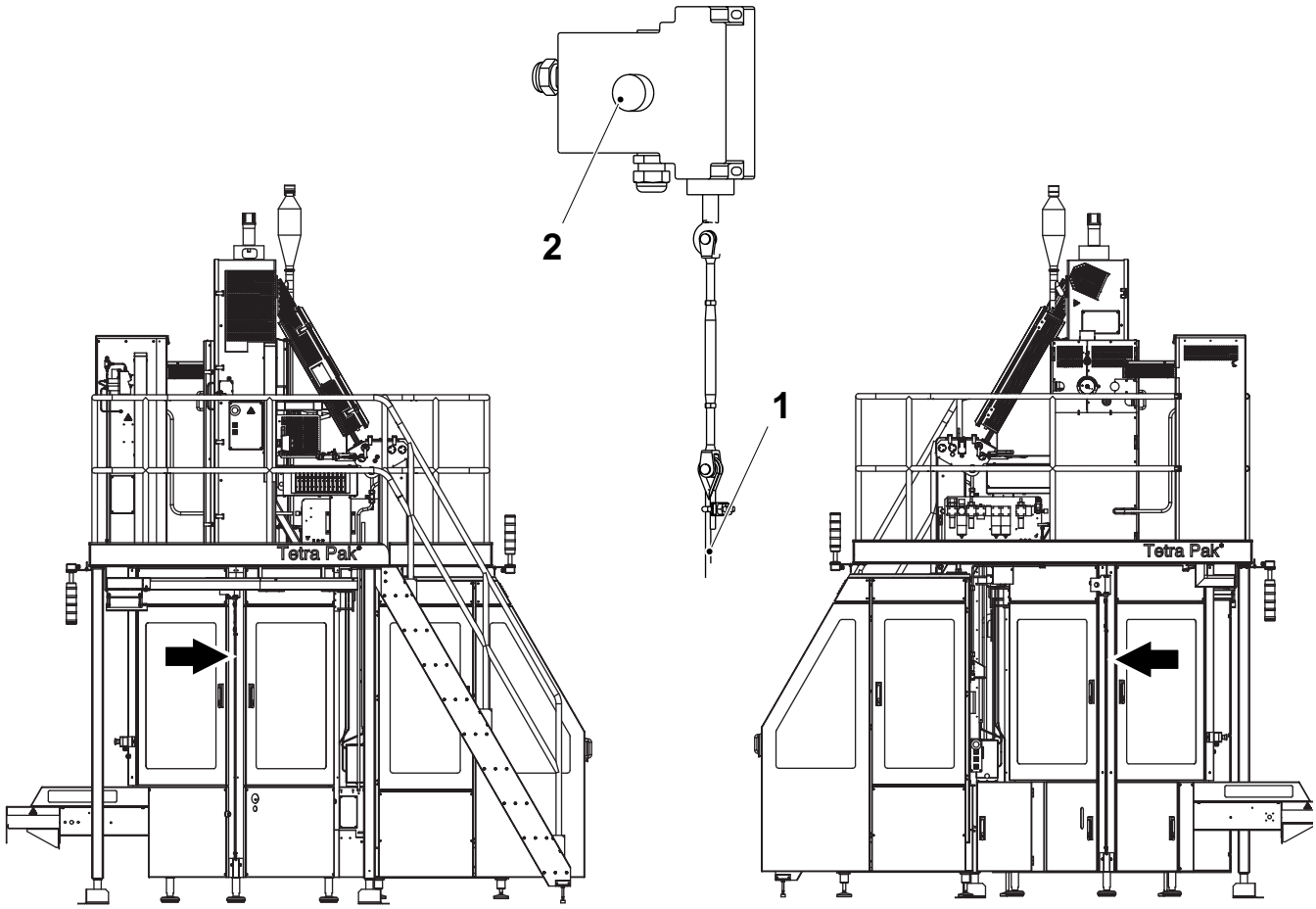

1 EMERGENCY STOP wire
2 Button

Safeguards

WARNING
Moving machinery.
Never defeat or bypass the interlocking devices.

All movable guards, such as doors and covers, leading to hazardous areas are fitted with interlocking devices, usually electric safety switches. These devices are part of the safety system and must never be defeated, bypassed, or otherwise made inoperative.

CAUTION
Burn hazard.
Parts of this equipment protected by safeguards may be thermally hot after operation.

After installation and maintenance, and before this equipment is inched or run, check that all safeguards are in place and that they operate correctly.

CAUTION
Equipment damage.
Never stop this equipment by opening a movable guard.

The location of each movable guard is shown by an arrow.

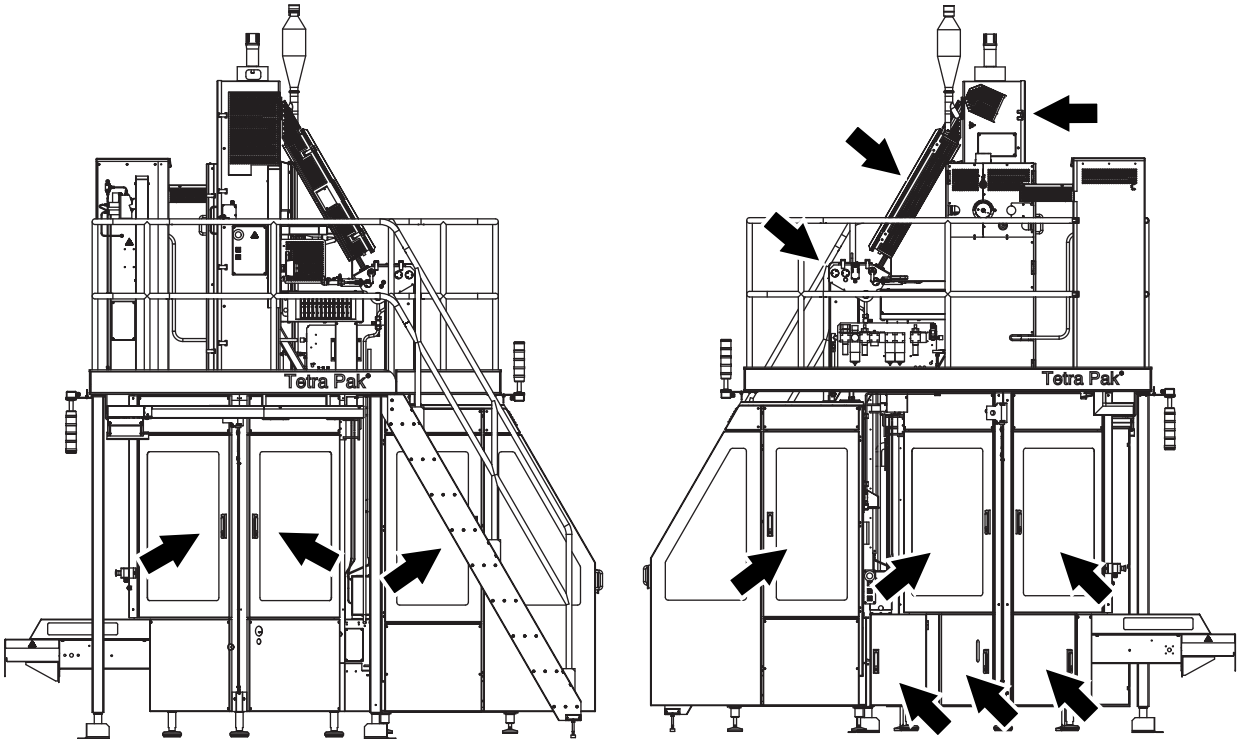

Warning Lamp

A warning lamp is a column of warning lights:

- A red light (2) indicates a hazardous condition. This is an emergency situation that requires immediate action.
- A yellow light (3) indicates an abnormal condition. This is an impending critical condition calling for action by the operator.
- A blue light (4) indicates that operator action is required.

The top section of the warning lamp consists of an audible alarm (1), described below.

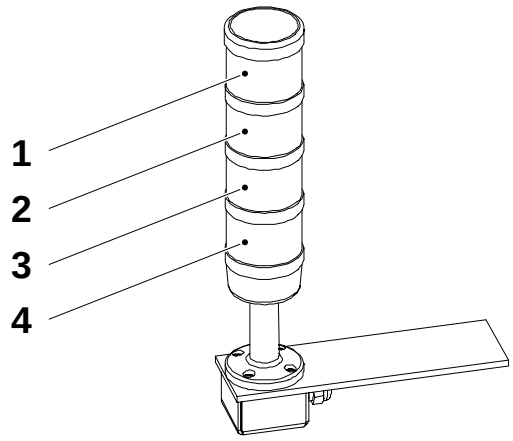

1 Audible alarm
2 Red light
3 Yellow light
4 Blue light

A warning light flashes when operator action is required. The light stops flashing and remains lit when the alarm is acknowledged. After the fault is corrected or the operator takes the appropriate action, the warning light goes off.

Audible Alarm

The audible alarm produces a warning signal every time this equipment is about to start. The warning signal sounds for approximately three seconds prior to starting to alert personnel.

Personal Protection

This section applies to all personnel at all times when this equipment is in operation. For special personal protection required when handling hazardous materials, see the Hazardous Materials section.

Noise Hazard

CAUTION
Hazardous noise.
Risk of impaired hearing.
Hearing protection is recommended whenever this equipment is in operation.

Entanglement Hazard

WARNING
Risk of entanglement.
Do not wear jewellery or loose clothing when working on or near this equipment. Long hair may not be loose.

Hazardous Materials

WARNING

Contact with chemicals can cause death, serious injury, and illness.

Always follow the chemical manufacturer's instructions when handling chemicals.

Make sure that

- the showers work
- an eyewash device, movable or wall-mounted, is available and operational
- additional washing facilities are nearby

Note! Learn the locations of all washing facilities in order to act immediately in case of an accident.





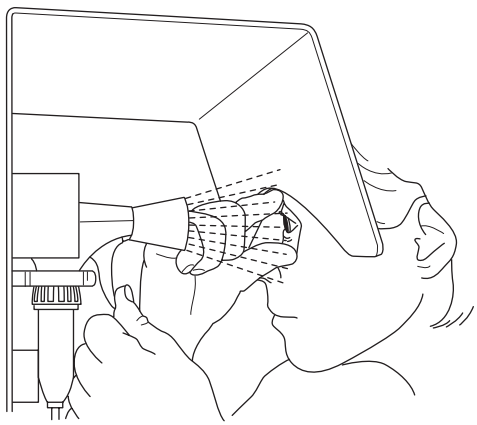

Hydrogen Peroxide (H_2O_2)

WARNING
Corrosive chemical.
Wear personal protective equipment.

In both liquid and gas states, hydrogen peroxide may cause irritation or damage if it comes into contact with skin, mucous membranes, eyes, or clothes. Call for medical attention immediately if there is an accident.

Liquid hydrogen peroxide in concentrations of less than 1% is generally considered harmless to humans.

Consult the instructions on the label of the tank or container.

Emergency Procedures

If there is an accident involving hydrogen peroxide, rinse the affected area as soon as possible with large amounts of water.

If hydrogen peroxide is swallowed

- do not attempt to cause vomiting
- drink large amounts of lukewarm water to dilute the peroxide
- call for medical attention immediately

If splashes or vapour from hydrogen peroxide come in contact with the eyes

- wash the eyes thoroughly with lukewarm water for 15 minutes (keep eyelids wide apart)
- call for medical attention immediately

If hydrogen peroxide comes into contact with skin or clothes

- rinse immediately with plenty of water
- call for medical attention immediately if skin burns appear
- thoroughly wash the clothes before wearing them again

If irritation or pain is experienced due to having inhaled hydrogen peroxide vapour

- leave the affected area and get some fresh air
- call for medical attention if the symptoms get worse

Personal Protective Equipment

The personal protective equipment for hydrogen peroxide is

- safety goggles (TP No 90303-11)
- protective gloves made of neoprene (TP No.90303-12)
- apron (TP No. 90303-13)
- shoes made of PVC, PE plastic, or rubber

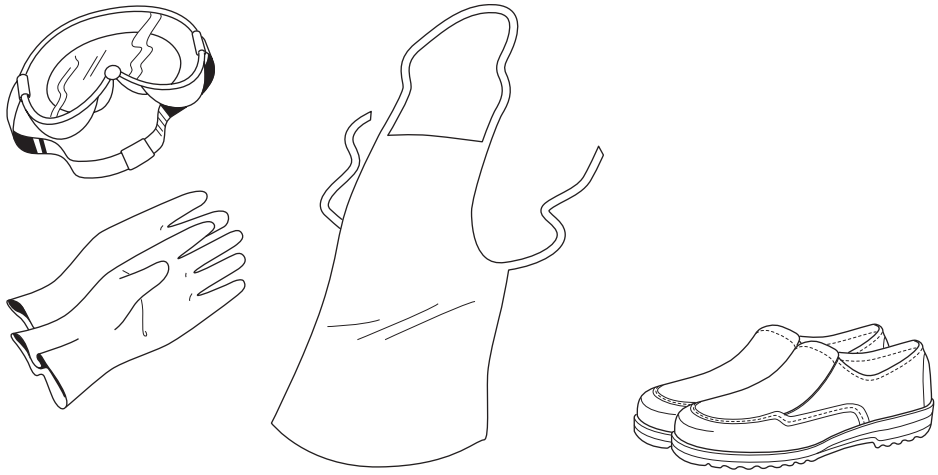

Handling

WARNING
Sudden and violent chemical reaction.
Avoid any contamination of hydrogen peroxide.

Hydrogen peroxide reacts suddenly and violently with many compounds or if it is contaminated. The reaction is a violent decomposition liberating oxygen and heat, with a big increase in volume due to the oxygen produced by the peroxide decomposition.

Never pour surplus hydrogen peroxide back into the original container if it contains fresh hydrogen peroxide. There is a risk of explosion when hydrogen peroxide is in a closed container.

Ensure that equipment used for handling and diluting hydrogen peroxide is clean before it comes in contact with hydrogen peroxide. Pumps or other equipment used for handling hydrogen peroxide must be used for this purpose only and must be manufactured from appropriate materials, such as stainless steel 316 L, glass, polyethylene, or teflon. After use, make sure that all peroxide residue is rinsed away.

If hydrogen peroxide is spilled, dilute it with large amounts of water and flush it into a drain.



WARNING
Self-ignition.
Never wipe up hydrogen peroxide with materials such as rags or paper as these may self-ignite several hours after contact.
If there is a fire, spray with large quantities of water.

Storage

DANGER

Containers will explode if not properly ventilated

Keep the container upright and fitted with its proper ventilation cap. If there is a fire, cool all containers by spraying them with large quantities of water.

Hydrogen peroxide decomposes much faster with increasing temperature. There is a risk of explosion at high temperatures, since the ventilation cap cannot release the gases produced quickly enough.

Hydrogen peroxide must be stored in the original container delivered by the supplier. Keep the container upright and fitted with its proper ventilation cap, which allows oxygen to escape. Otherwise, there can be an explosion if decomposition of the peroxide occurs violently.

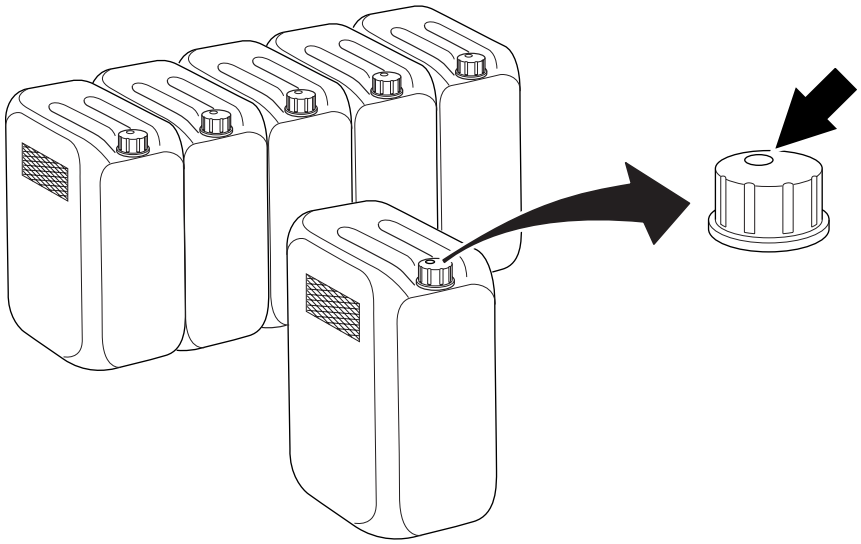

Make sure that the container is always properly closed.

(Cont'd)

(Cont'd)

Commercial food-grade hydrogen peroxide has been stabilized to inhibit the catalytic decomposition effects of metals and other impurities, but it can decompose into oxygen and water if it is exposed to heat or contaminated.

Make sure that the area used for storage of hydrogen peroxide is

- cool, clean, and well ventilated
- shielded from direct sunlight
- kept free from combustible materials

Disposal

Hydrogen peroxide should be sent to an approved facility for destruction. Some countries allow it to be diluted with water to a concentration of less than 1% and poured into the drain.

Manual Emptying of the Peroxide Bath

If this equipment is stopped by an emergency stop device or by power failure, the peroxide bath must be manually emptied.

WARNING

Corrosive chemical.

Follow the instructions for Emergency Procedures, Personal Protective Equipment, Handling, Storage, and Disposal in this Hydrogen Peroxide (H_2O_2) section.

a) Open the drainage valve (2) to empty the peroxide bath.

b) Make sure that the peroxide bath is completely empty before closing the drainage valve.

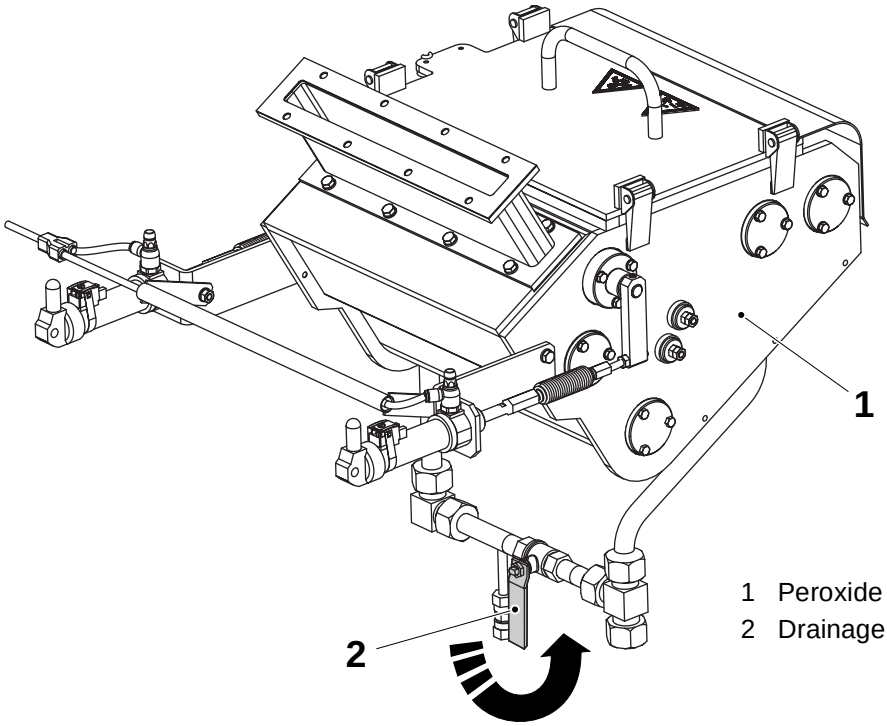

1 Peroxide bath
2 Drainage valve

Supply Systems

Electrical Cabinet

DANGER

Hazardous voltage.
Will shock, burn, or cause death.
The power supply disconnector must be switched off and secured with a lock before maintenance inside the electrical cabinet.

Note! The key to the lock must be removed by the technician and retained in his/her possession until all work is completed.

Make sure that the electrical cabinet doors are closed after working inside the electrical cabinet. Doors with lock must be locked.

The location of the electrical cabinet is shown by an arrow.

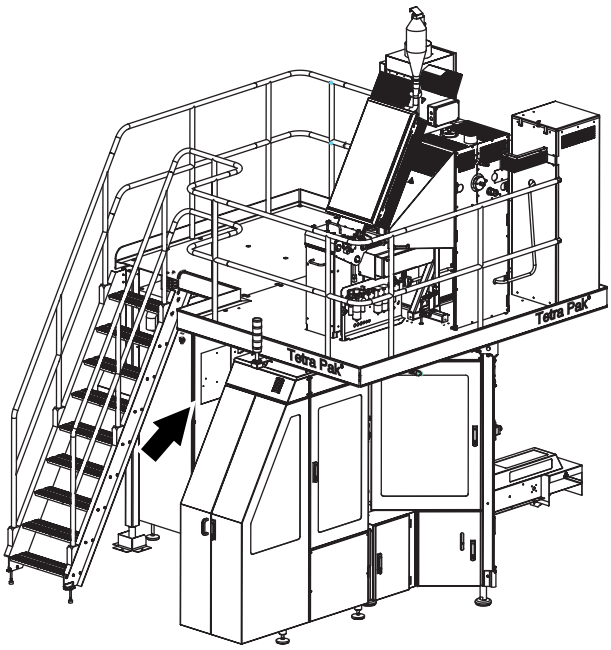

Socket Outlet

WARNING
Hazardous voltage.
Can shock, burn, or cause death.
Read the Maintenance Manual before using this socket outlet.

The illustrations show the socket outlet (1) and the residual current device (2). Their locations in the electrical cabinet (3) are shown by arrows.

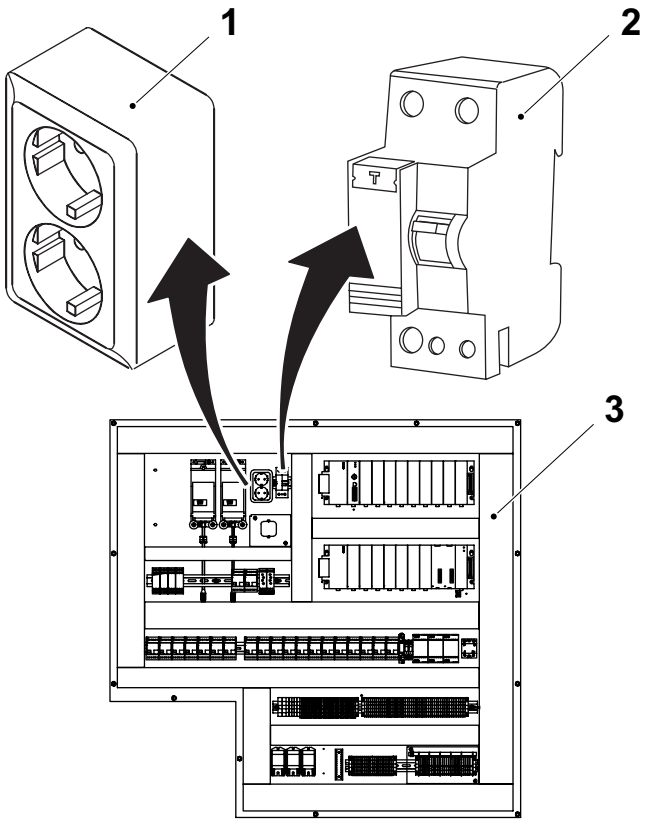

1 Socket outlet
2 Residual current device F024
3 Electrical cabinet

Power Supply

DANGER

Hazardous voltage and moving machinery.
The power supply disconnector must be switched off and secured with a lock before any maintenance.

Note! The key to the lock must be removed by the technician and retained in his/her possession until all work is completed.

Certain maintenance procedures may require power supply systems to be on. These exceptions are clearly stated in the Maintenance Manual.

The illustration shows the power supply disconnector. The arrow shows its location on this equipment.

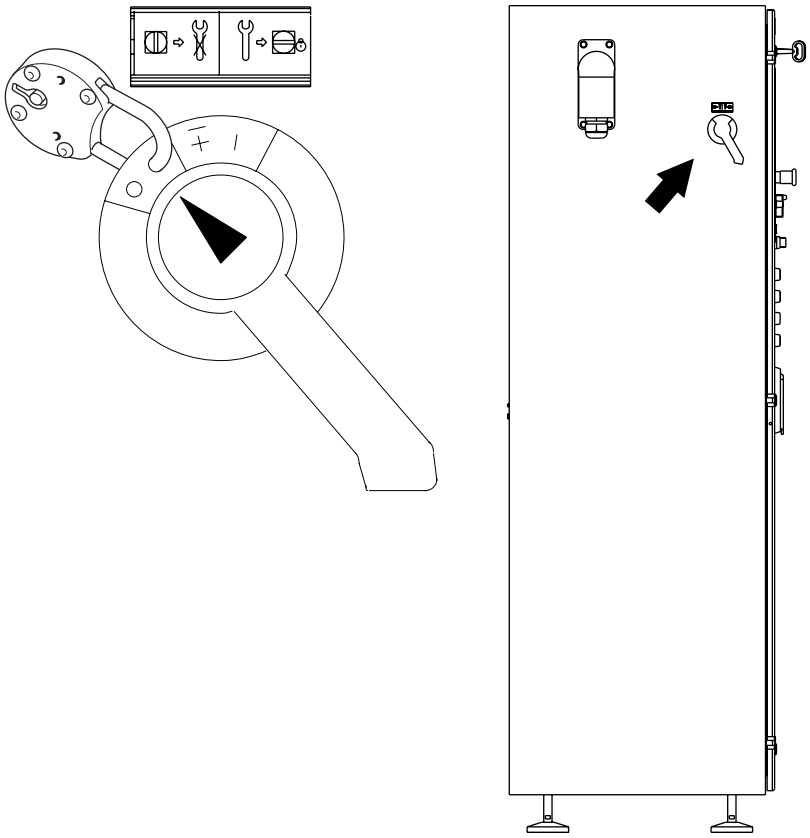

Air Supply

WARNING

Compressed air and moving machinery.
Close the main air valve and secure it with a lock before any maintenance.

Note! The key to the lock must be removed by the technician and retained in his/her possession until all work is completed.

Certain maintenance procedures may require air supply systems to be on. These exceptions are clearly stated in the Maintenance Manual.

The illustrations show the main air valve (1) and the lock (2). Its location is shown by an arrow.

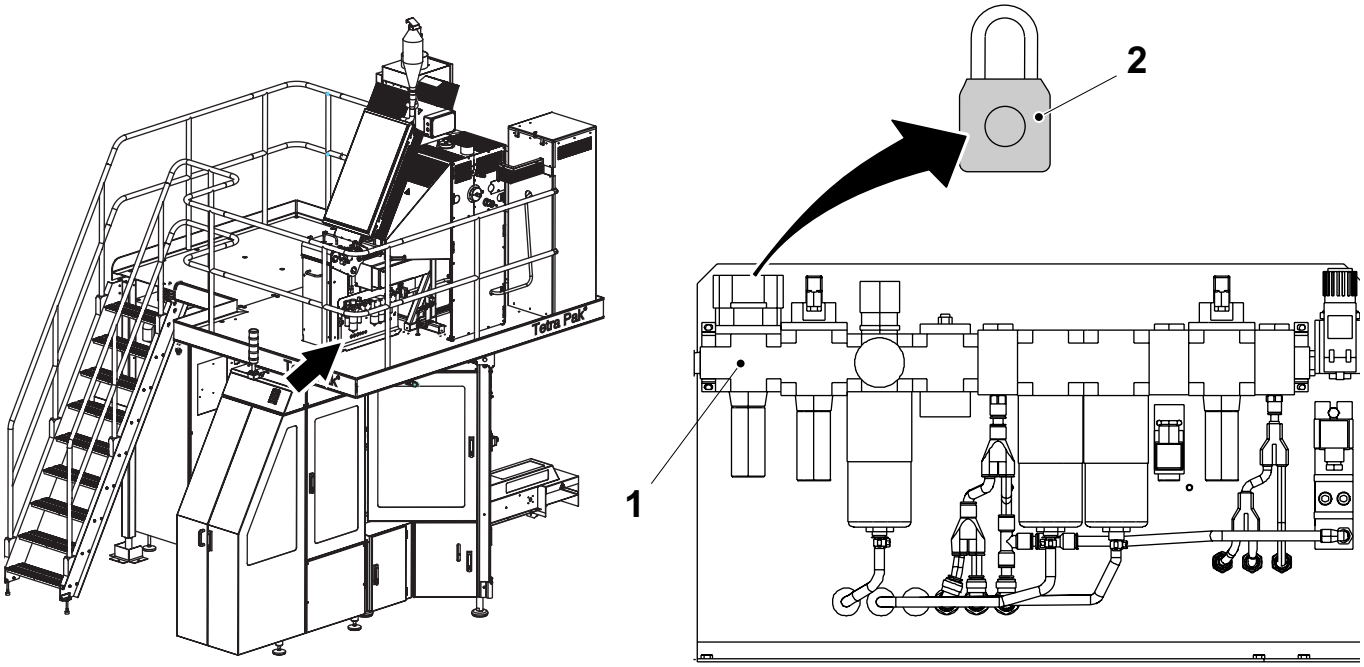

1 Main air valve
2 Padlock

Steam Supply

WARNING

Hot steam can cause scalds.

Pressurized steam can be discharged unexpectedly.
Close the steam supply valve and secure it with a lock, depressurize and vent all steam safely before any maintenance on parts with steam, such as pipes and valves.

Note! The key to the lock must be removed by the technician and retained in his/her possession until all work is completed.

Certain maintenance procedures may require steam supply systems to be on. These exceptions are clearly stated in the Maintenance Manual.

The illustration shows the steam supply valve (1) and its location.

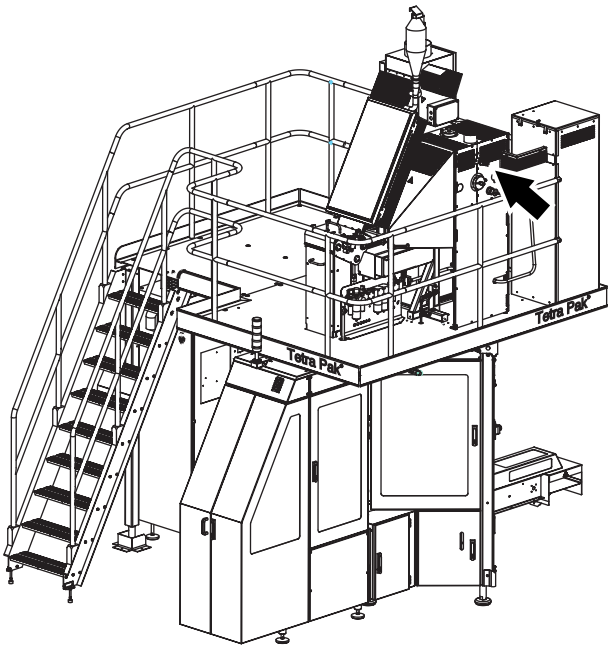

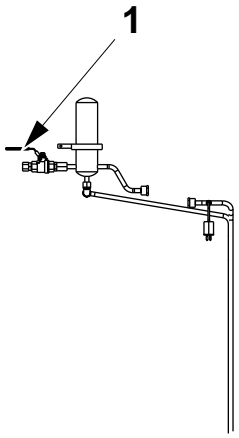

1 Steam supply valve

(Cont'd)

(Cont'd)

WARNING

Hot parts can cause severe burns.

Pipes, valves, and other parts containing steam can be extremely hot. Do not touch hot parts.

Arrows in the illustration below shows hot parts of this equipment.

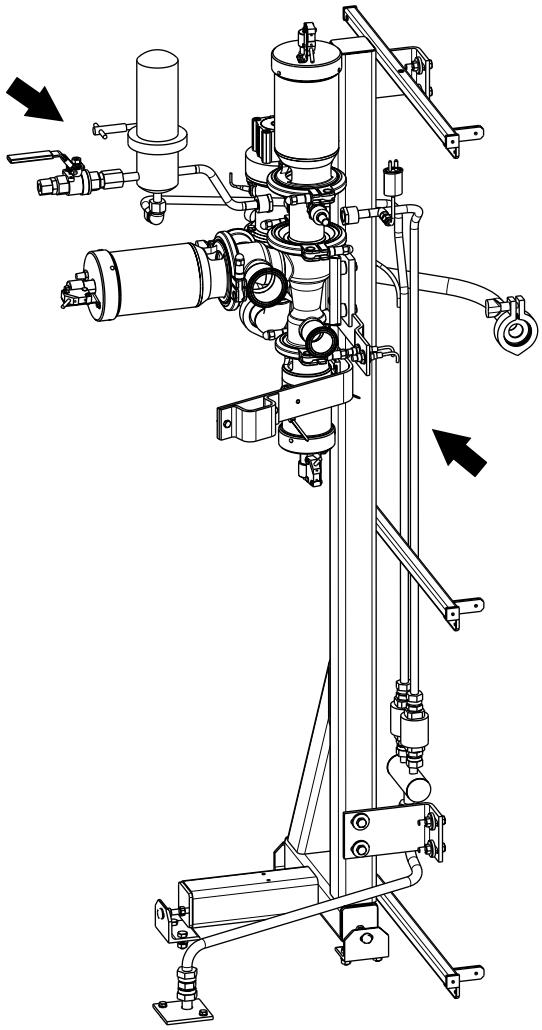

Water Supply

WARNING
Water under pressure.
Close the water supply valves before any maintenance.

Certain maintenance procedures may require water supply systems to be on. These exceptions are clearly stated in the Maintenance Manual.

The illustration shows the water supply valve (1) and its location.

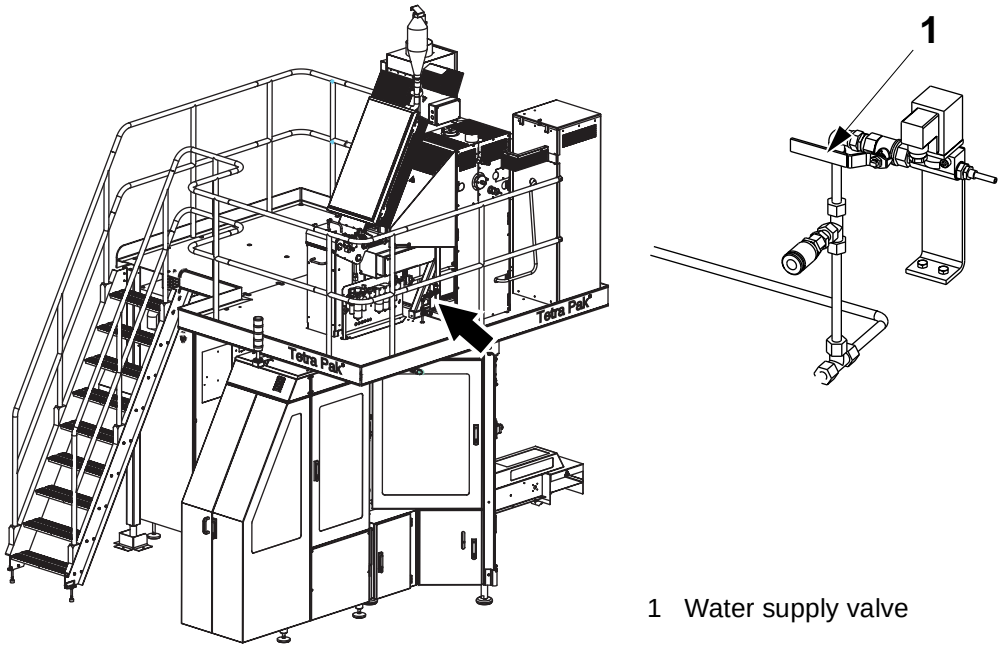

1 Water supply valve

1 Technical Data and Drawings

1.1 Installation Drawings

The following drawings provide the dimensions of the machine and the dimensions for access around the machine. These dimensions must be respected. All dimensions are in millimetres unless otherwise stated.

Right Hand View

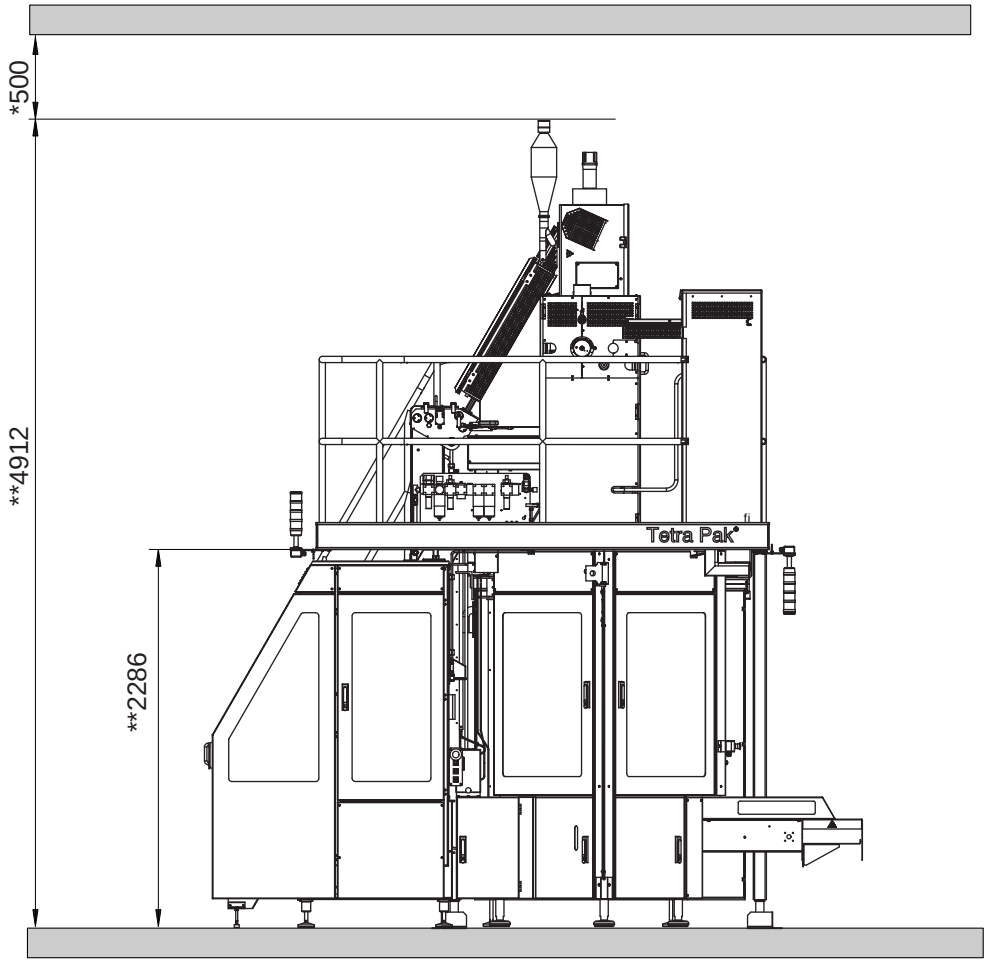

*Minimum clearance to ceiling
**Variation in height (± 15), due to adjustable legs on the machine

Top View

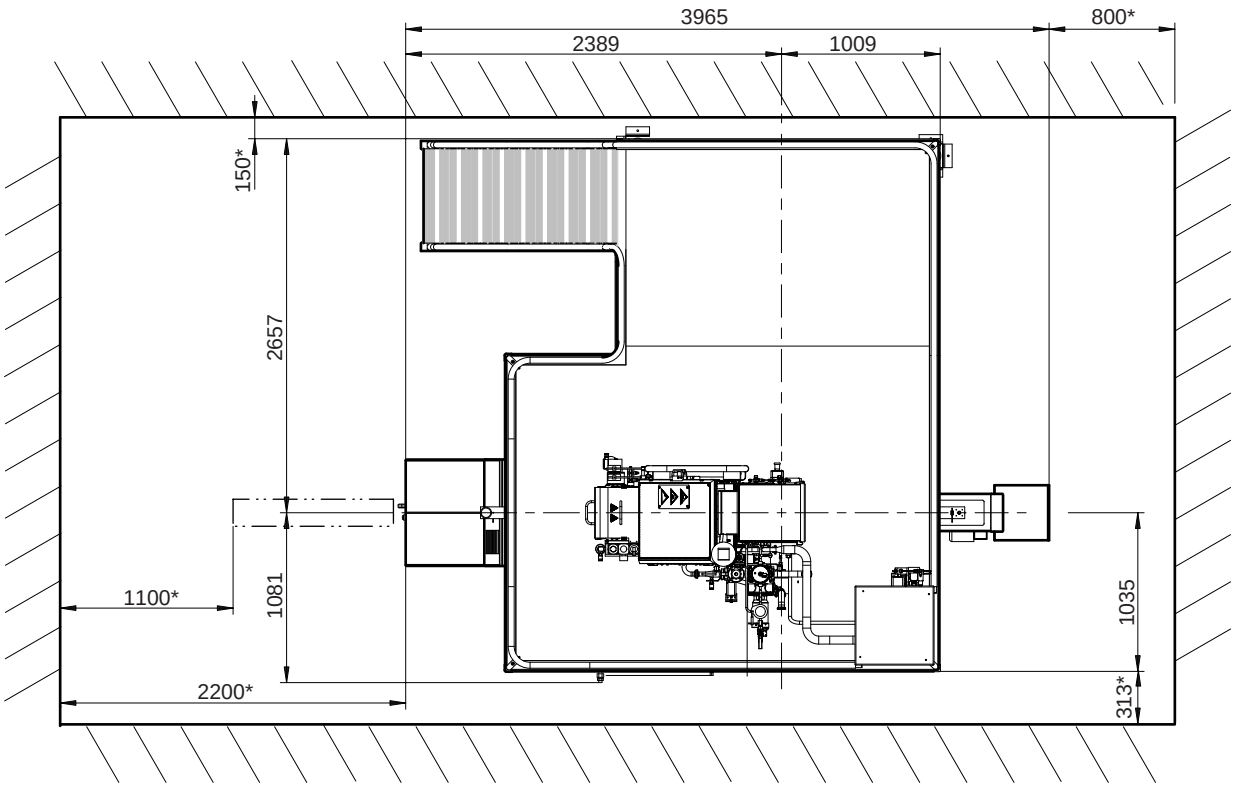

*Minimum clearance to walls

Machine Feet Position (Top View)

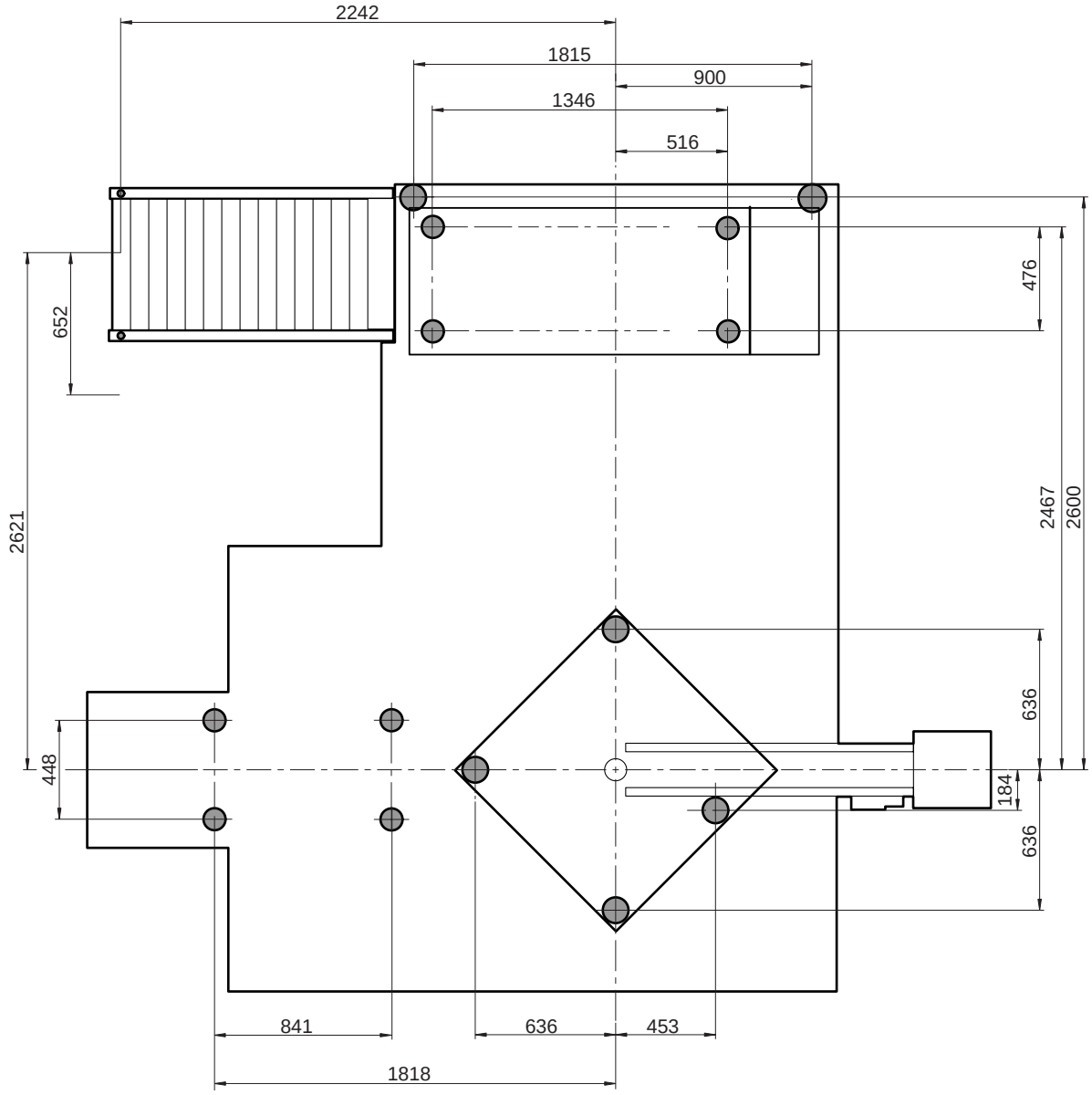

Door Positions And Dimensions (Top View)

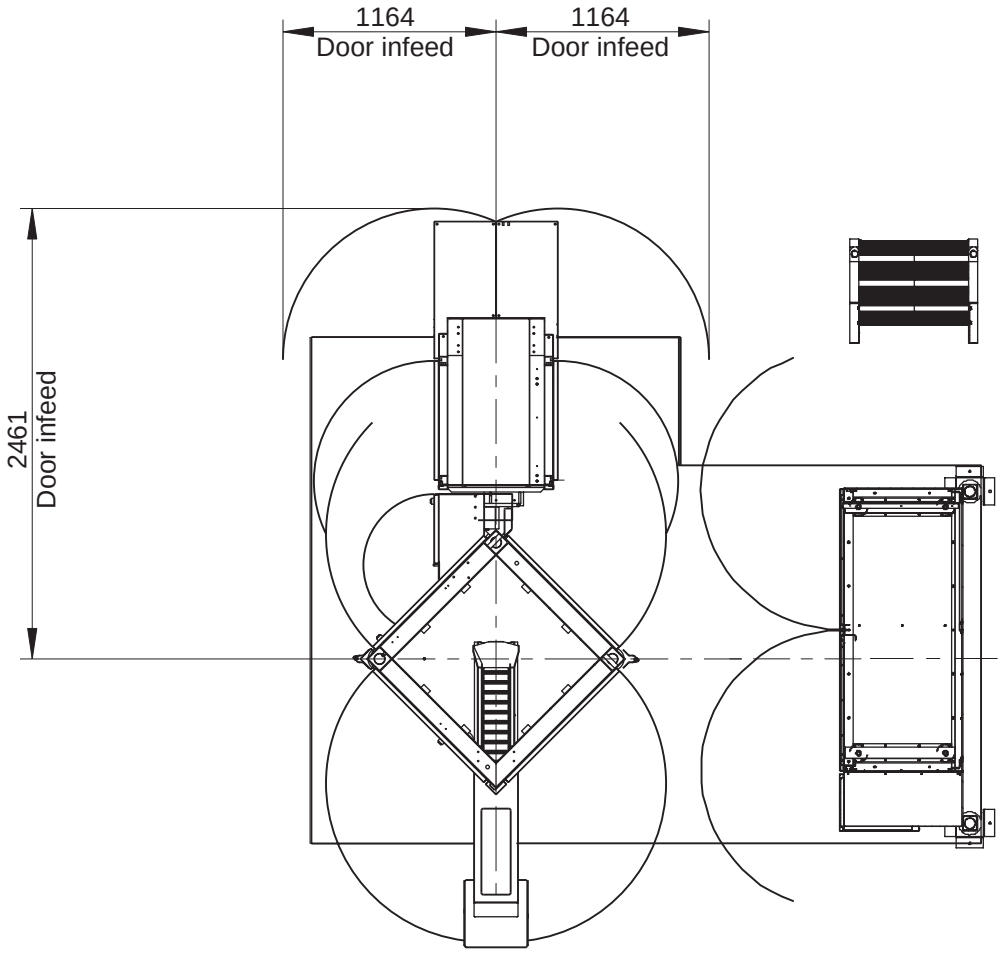

Side Dimensions

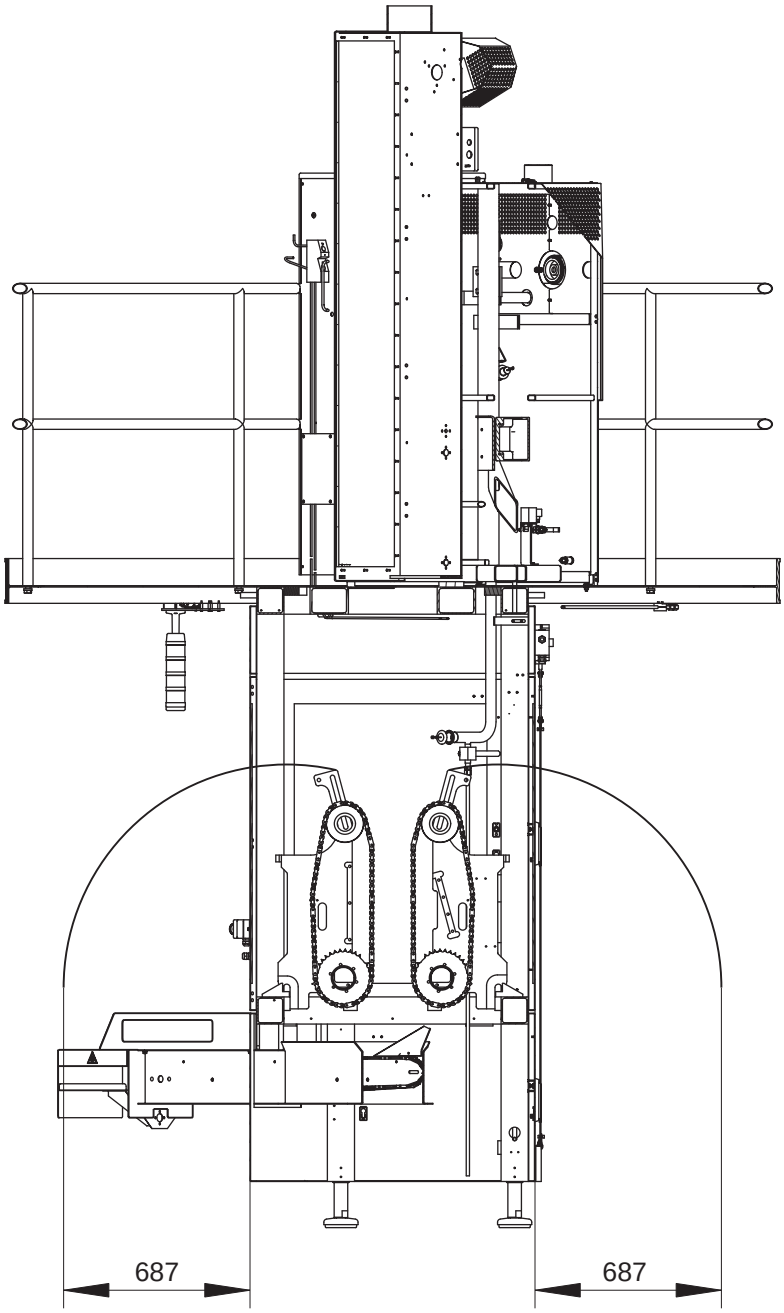

Connections

The following table and drawings provide the dimensions and positions of the connections to the machine.

Position	Connection
1	Product connection inlet 2”
2	Product connection outlet 2”
3	Electrical connection Pr 47
4	Air connection 20 mm
7	Steam connection 12 mm
8	Cip connection inlet 1 ½”
9	Cip connection outlet 1 ½”
10	Water inlet 10 mm

(Cont'd)

(Cont'd)

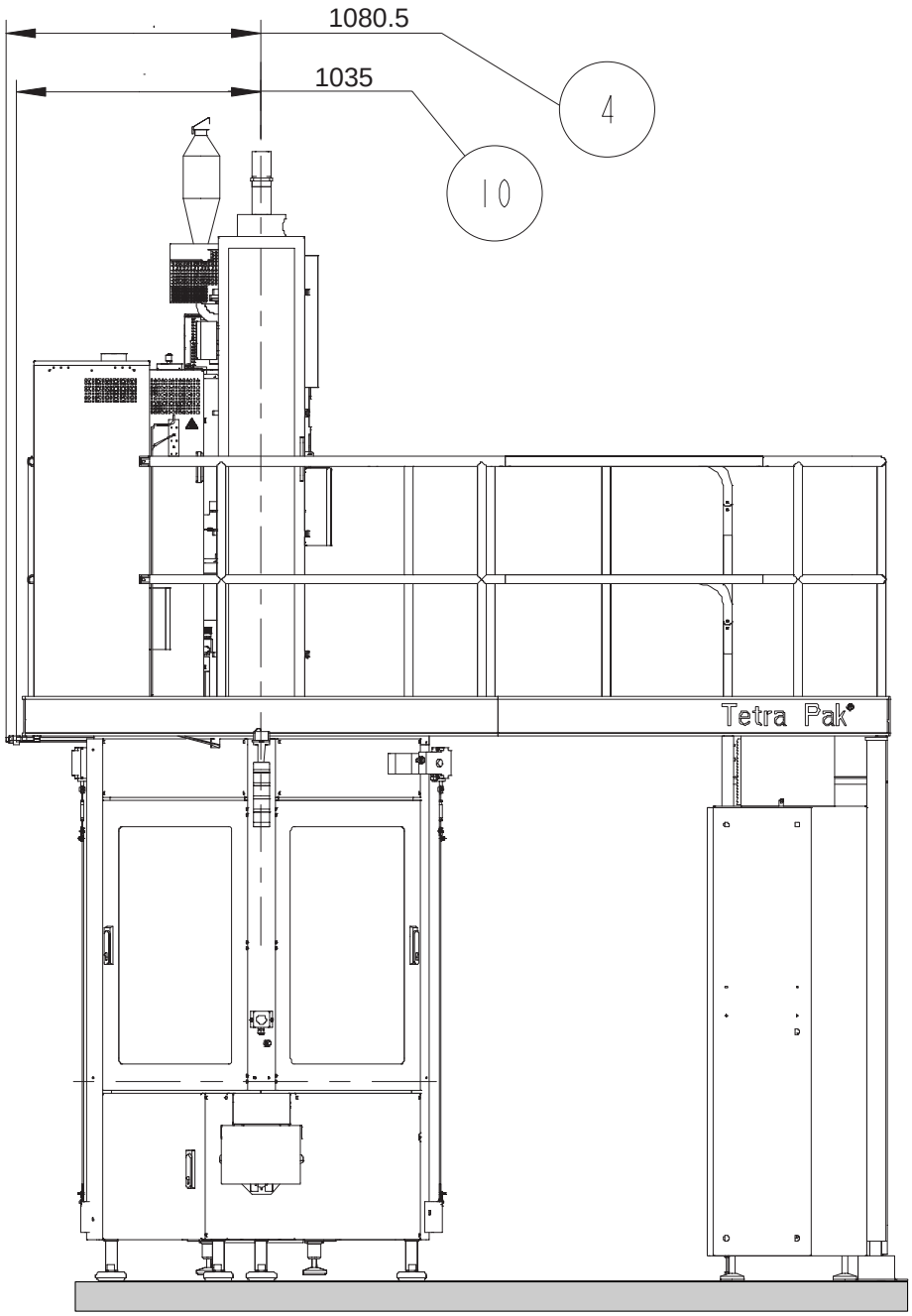

1 Product connection inlet
2 Product connection outlet
3 Electrical connection
4 Air connection
7 Steam connection
8 Cip connection inlet
9 Cip connection outlet
10 Water inlet

(Cont'd)

(Cont'd)

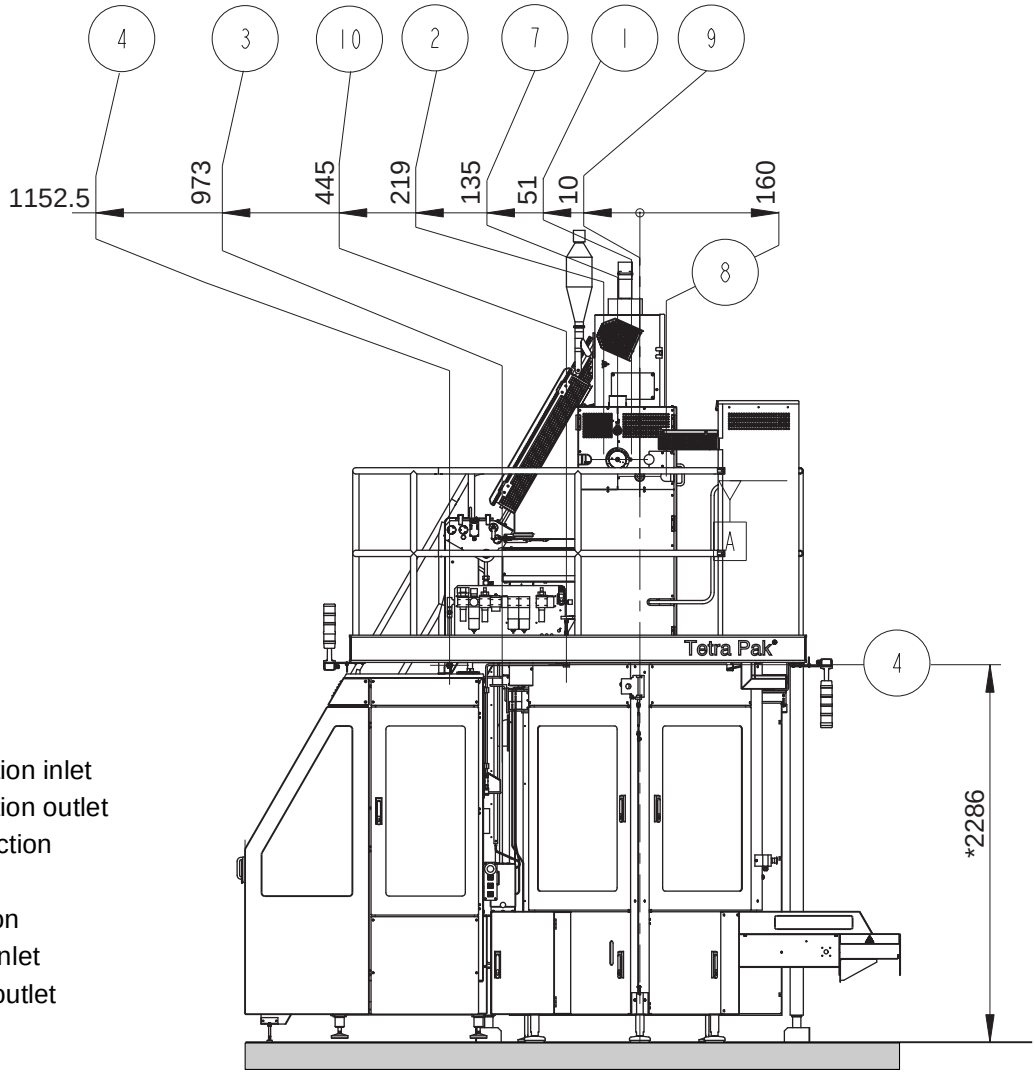

1 Product connection inlet
2 Product connection outlet
3 Electrical connection
4 Air connection
7 Steam connection
8 Cip connection inlet
9 Cip connection outlet
10 Water inlet

*Variation in height (± 15), due to adjustable legs on the machine

(Cont'd)

(Cont'd)

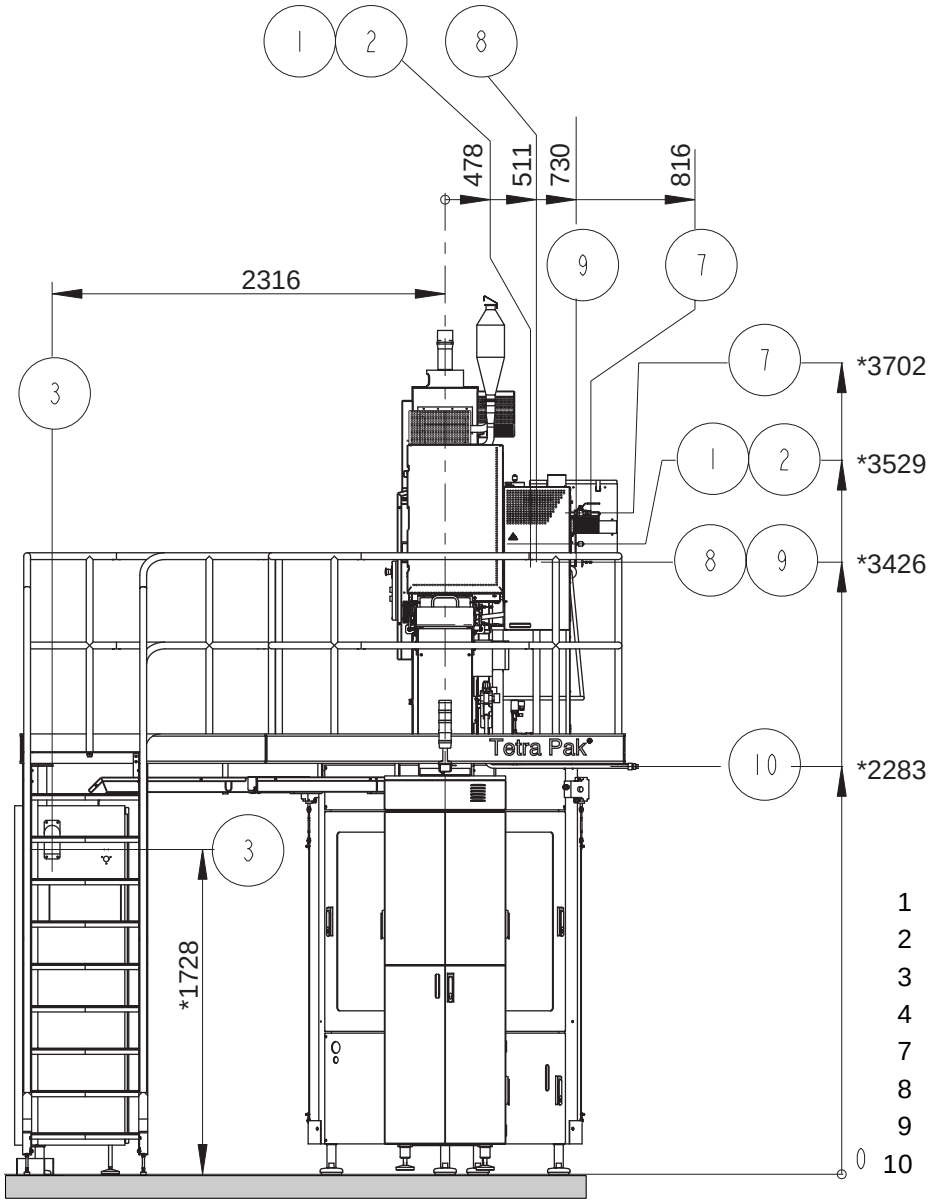

1 Product connection inlet
2 Product connection outlet
3 Electrical connection
4 Air connection
7 Steam connection
8 Cip connection inlet
9 Cip connection outlet
10 Water inlet

*Variation in height (± 15), due to adjustable legs on the machine.

1.2 Mass / Weight

	Mass (approx.)	Notes
Tetra Pak A1 complete machine	3690 kg	
Machine parts		
Main body with platform	1400 kg	
Supply system, tube forming unit, sterile unit	750 kg	
Electrical cabinet	520 kg	
Infeed	720 kg	
Platform (with ladder)	300 kg	

1.3 Utility Connection Data

Electrical Power Specifications

Characteristic	Value	Notes
Supply voltage to machine	400/230 VAC, 3 phase +N +earth	Other voltages available to order with transformer
Max voltage fluctuation	+10% - 15%	
Frequency	50/60 ± 2%	To be specified on order.
Recommended main fuse	63 A	Value for optimum selectivity at 400/230 VAC.
Control circuits voltage	24 VDC	

Electrical Power Consumption

Consumption during:	
Preheating	12.7 kW
Tube sealing	8.3 kW
Preheating + filling system	4.5 kW
Spraying	4.9 kW
Drying	4.7 kW
Coding	5.6 kW
Production	7.3 kW

Compressed Air Specifications

Characteristics	Value	Notes
Supply Pressure	630 - 1000 kPa (6.3 - 10 bar)	
Max particle size	20 µm	
Max particle content	25 mg/m³	
Dew point	2°C (35.6°F)	
Oil content	0.01 mg/m³	

Compressed Air Consumption

Characteristic	Value
Consumption	900 Nl/min (31.8 N cu ft/min)

(Cont'd)

(Cont'd)

Water

Characteristic	Value	Notes
Water quality	EEC 80/778/ EWG	See M1282.812
Supply pressure	300 - 450 kPa (3 - 4.5 bar)	
Max inlet temperature	+20°C	Due to peroxide cooling
pH	5 - 8	
Consumption	1 l/min	Peroxide cooling and tube flushing

Steam

Characteristic	Value	Notes
Water quality	EEC 80/778/ EWG	See M1282.812
Manometer setting	170 kPa (1.7 bar)	130ºC (Overpressure)
Max pressure fluctuation	± 30 kPa (± 0.3 bar)	
Inlet temperature	126 - 134°C (259 - 273°F)	Measured after APV.
Consumption	Ca 2.4 kg/h (Ca 5.3lbs/h)	

Hydrogen Peroxide

Characteristic	65	150S	200S	200B	Notes
Quality	Aseptic grade	Aseptic grade	Aseptic grade	Aseptic grade	
Concentration	35%	35%	35%	35%	
Consumption	Min 340 ml/h Max 420 ml/h	Min 450 ml/h Max 560 ml/h	Min 505 ml/h Max 630 ml/h	Min 560 ml/h Max700 ml/h	

Wetting Agent

Characteristic	Value	Notes
Quality	Aseptic grade	
Concentration	0.3%	

(Cont'd)

(Cont'd)

Cleaning in Place (CIP)*

Characteristic	65	150S / 200B	Notes
Max inlet pressure	350 kPa (3.5 bar)	350 kPa (3.5 bar)	
Min. flow	8 m³/h	8 m³/h	
Pressure drop	0.85 bar	0.95 bar	Measured at a flow of 8 m³/h

* Soft start equipment is suggested

Outfeed Conveyor

Characteristic	Value 50HZ	Value 60HZ	Notes
Tetra Pak A1 Outfeed conveyor speed	47.8 m/min	57.4 m/min	
Recommended conveyor speed	Min 47.8 m/min	Min 57.4 m/min	

1.4 Noise

WARNING

Risk of impaired hearing!

Wear hearing protection while the equipment is running.

The following tables give the noise level measurements for Tetra Pak A1machines under the following conditions:

- machine on a concrete floor supported by standard feet
- production under normal operating conditions.

Values declared in accordance with ISO 48731			
Symbol	**Definition**	**Declared value**	**Notes**
L_{WA}	Measured A-weighted sound power level	83 dB(A)	Values determined using the basic standard ISO 3744 (Engineering method)
K_{WA}	Uncertainty factor	2.5 dB(A)	
L_{pA}	Emission sound pressure level, operator position	71.5 dB(A)	Values determined using the basic standard ISO 11204 (Engineering method)
K_{WA}	Uncertainty factor	2.5 dB(A)	

1.5 Emissions and Thermal Load

Emissions

Characteristic	Value	Notes
Hydrogen peroxide fumes in operator‘s environment	0.0 - 0.2 ppm	Measured with Dräger Pac III during production
Hydrogen peroxide outlet to drain	< 1%	See OM
Oil fumes in the operator‘s environment	None	
Oil spillages	0.013 l/h	During production
Oil spillages	0.0013 l	After cleaning
Detergent spillages	None	Except during external cleaning
Water spillages	1 l/min	Except during external cleaning
Product spillages	None	

Thermal Load

The thermal load is approximately 16.2 ± 1.6kW.

1.6 Product Connection Data

Characteristic	Value	Notes
Supply pressure	50 - 250 kPa (0.5 - 2.5 bar)	Range from minimum permitted to maximum permitted supply pressure
Max pressure fluctuation	50 kPa (0.5 bar)	Pressure may fluctuate by max. 50 kPa within the range 50 - 250 kPa
Product temperature	5 - 50°C (41 - 122°F)	Varies from inlet temperature by + 1 - 2°C (2 - 4°F)
Hard particles	Absent	Product must leave no hard residue on a 600 µm mesh
Citrus fibres	Absent	Measured as fibre residue on a 600 µm mesh
pH	2.5 - 8	

This page intentionally left blank

2 Site Preparation

2.1 General Requirements on Site

Ambient Temperature

Characteristic	Value	Notes
Recommended ambient temperature	15°C - 30°C (59°F - 86°F)	

Aseptic Packaging

Introduction of Aseptic Packaging

Aseptic packaging has a specify dimension in the sphere of food processing and must be treated accordingly.

Aseptic Installation Policy

It is the policy of Tetra Pak Carton Ambient AB that aseptic packaging machines should be installed in a separate packaging room. Doing so effectively reduces the quantity of airborne bacteria.

Areas and Activities Where the Infection Risks are Particularly Serious:

- Processing machine areas for certain products
- Bottle, crate washer, and similar equipment areas
- Rooms with strong air currents
- Rooms with traffic to and from other plant areas
- Rooms with high humidity, such as the room where the steriliser is installed and where there are discharges of steam or hot water during pre-sterilisation and/or production periods
- All unnecessary activities especially those producing or stirring up dust, such as the erection of paper crates, wrapping, and so on
- Under no circumstances should unsterile packages be handled in the filling area

Note! By complying with our installation policy, you minimize the risks for infection mentioned above.

2.2 Specific Construction Details

Packaging Room Overpressure

In addition to siting the packaging machine in a separate packaging room, overpressure by means of filtered air is to be maintained in the room in order to prevent unfiltered air from entering the room. The reason for this is that areas and spaces where food is produced or stored usually contain airborne bacteria in quantities well above average.

- Overpressure is obtained by controlling the air intake and exhaust in the packaging room through forced ventilation, including the incorporation air-conditioning, if required.
- The exhaust system is basically under-dimensioned in comparison with the air intake system, thus forcing exhaust air to seal off possible inlets, such as doors and hatches.
- In designing the system for overpressure in the packaging room, facilities to filter the incoming air must be included.
- As well as controlling the air flow in the packaging room, its temperature and humidity should be controlled.

Note! During installation, extra space is needed around the packaging machine while it is being assembled, especially when the superstructure is lifted up on the machine.

Keep the packaging material and strip supplied with the machine in a dry place.

2.3 Storage and Handling Recommendation

Introduction

To ensure that the properties of the material involved in packaging is not changed, it is vital to follow the storage and handling recommendations for the packing material and additional material, such as strip.

Delivery

The packaging material will be delivered in “small” or “jumbo” reels on one way pallets. Normally the packaging material reel is wrapped in protective shrink film. The individually wrapped reels are stacked on pallets. A hood of shrink film or a stretch film is protecting the reel stack on a pallet against moisture and dirt. In this way the reels are also secured to the pallet. With customer agreements the reels can be delivered without the protective films.

Pallets can be stacked on top of each other, up to three pallets height. A protection sheet must be used between the pallets. Be careful when lifting the pallets and reels. Do not scratch the other reels.

Material in addition to packaging material, such as strip, is delivered in boxes.

Storage of Material

Recommendations:

- Use the material on first in - first out basis.
- Keep the storage premises clean.
- Store the material completely separate from other goods, such as milk powder, essences, animal food, chemicals, detergents, and so on. There is a great risk that the packaging material absorbs vapours, which can result in taste problems.
- Store the material on pallets only. The space to the nearest wall should be kept min. 100 mm.
- The material must not be exposed to direct moisture, such as condensation dripping from pipes. Also, it should not be exposed to direct sunlight.
- If the material is stored longer then recommended, see specification, reliable production check should be initiated.
- Partly used material shall be labelled with its identification and wrapped with a protected film. The reels shall be stored in accordance with this recommendation.

(Cont'd)

(Cont'd)

Storage conditions:

Packaging Material

Temperature	min. 0°C (32°F) max. 40°C (104°F)
Humidity (RH)	min. 30% max. 70%

Additional Material

LS.strips, IS-strips, OS-strips, Tab-strips and FlexiCap material:

Temperature	min. 0°C (32°F) max. 40°C (104°F)
Humidity (RH)	min. 30% max. 70%

ReCaps, UniCaps and SpinCaps:

Temperature	min.10°C (50°F) max. 30°C (86°F)
Humidity (RH)	< 80%

Variation from recommended humidity during short periods (4 to 5 days) have no noteworthy effect on the humidity of the materials.

Storage Time

Storage time limit which guarantees the function of the material is specified for each material and additional material types. The storage time is counted from the manufacturing date of the material up till the time when it will be applied in filling machine.

Storage Conditions in Prior to Packing

The material must be allowed to reach the same temperature as the temperature prevailing in the packing premises. If the packing material is protected with protective plastic film, this should be kept on until the reel will be used.

Handling of Packaging Material

Use a special lifting/turning truck to handle the reels.

This page intentionally left blank

3 Moving and Unpacking the Equipment

3.1 Crate Handling

The filling machine is delivered in two crates.

3.1.1 Data

Machine type	Gross weight kg (lbs)	Net weight kg (lbs)	Length mm	Width mm	Height mm
Tetra Pak A1 Crate 1	2800 (6173)	2300 (5071)	3600	2300	2550
Tetra Pak A1 Crate 2	3350 (7386)	2700 (5953)	4200	2300	2550

Note! Crate weight can increase significantly if the crate becomes wet.

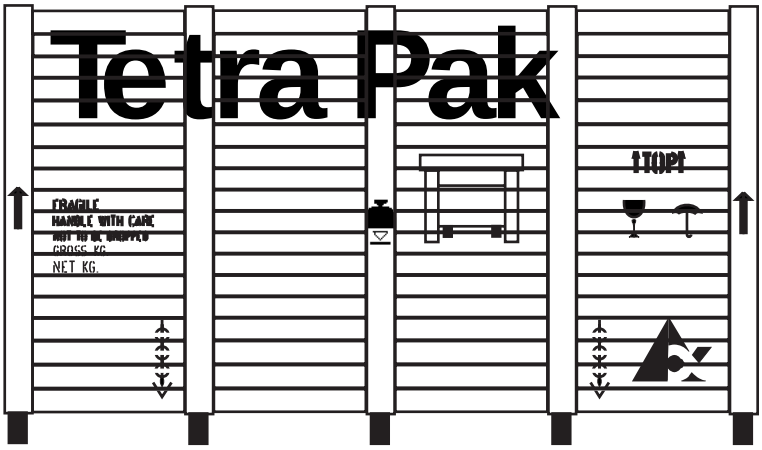

3.1.2 Contents

Machine Type	Contents
Tetra Pak A1 Crate 1	Machine Tube forming module and sterile unit Platform Filling pipe Cover Pipe Tools Trolley for packaging material reel Lists Machine documents (box) Transport beam Leg Air super-heater Ladder Dating unit TPIH

Machine Type	Contents
Tetra Pak A1 Crate 2	Electrical cabinet Packaging material reel Hand rail LS-strip (box) Accessories (box) Plates Spare parts Leg Infeed Paper reel holder Tool box

3.1.3 Lifting Equipment

Types of Lifting Equipment

The following types of equipment can be used to lift and move the crate:

- overhead gantry
- mobile crane
- forklift

Equipment Specifications

Make sure that the lifting equipment complies with the specifications given in the following table.

Equipment or Tackle	**Lifting Capacity kg (lbs)**	**Notes**
Overhead gantry	5 000 (11 100)	7 000 kg (15 500 lbs) required if gantry does not have gradual acceleration deceleration ramps.
Mobile crane	5 000 (11 100)	7 000 kg (15 500lbs) required if crane does not have gradual acceleration deceleration ramps.
Forklift	6 000 (13 200)	Higher capacity allows for reach to centre of gravity of 1 000 - 1 500 mm (3’3” to 4’10”)
Lifting forks	6 000 (13 200)	Min.length: -2 000 mm (6’6”) Recommended setting width: -2 000 mm (6’6”)
Lifting chains, cables, ropes or hoist slings	5000 (11 100)	

3.2 Lifting and Unloading

Labels, symbols, and warning placards are located on the external surfaces of the transit crate and outline the handling principles which must be observed.

- The crate should not be subjected to sudden shocks or movement.
- The crate is not load bearing and must not be stacked or have other items placed on it.
- The transit crate should be kept in the indicated upright position.

Labels may be installed to indicate that the crate has been tipped over or exposed to extremes of humidity.

Symbol	Meaning
	Centre of gravity
	Lifting points for chains, cables, ropes or slings.
	This way up
	Fragile
	Keep dry
↑TOP↑	Top of crate
FRAGILE	“Fragile” warning
HANDLE WITH CARE	“Handle with care” warning
NOT TO BE DROPPED	“Not to be dropped” warning
GROSS KG.	“Gross weight” value
NET KG.	“Net weight” value

3.2.1 Inspection

a) Examine the outside of the crate before starting to unload, and record any damage. This information must later be recorded on the **Transport Damage Report** (a section of the Start-up machine Quality report).

b) Record the readings of the humidity indicators and the tipping indicators attached to the outside of the crate (if present). This information must later be recorded on the **Transport Damage Report** (a section of the Start-up Machine Quality report.

3.2.2 Using an Overhead Gantry or Mobile Crane

The crate is marked with lifting tackle symbols.

The lifting tackle must be passed under and fixed at these points when lifting the crate.

For capacity and length of the lifting tackle, see 3.1.3 Lifting Equipment on page 3-4.

Use ropes or poles to steady and manoeuvre loads. Do **not** use hands or feet.

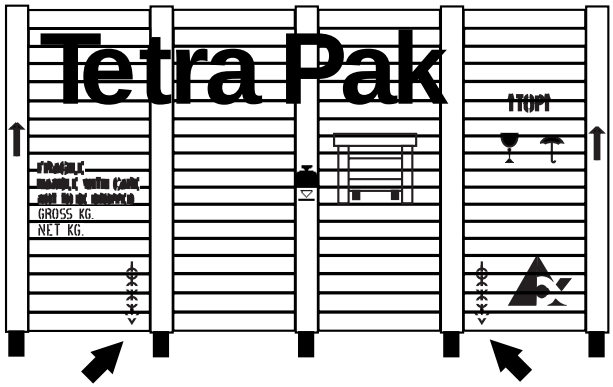

3.2.3 Using a Forklift

The crate is marked with centre of gravity symbols.

The lifting forks must be positioned at equal distances from the symbol when lifting crate.

For the capacity, length, and setting width of the lifting forks, see 3.1.3 Lifting Equipment on page 3-4.

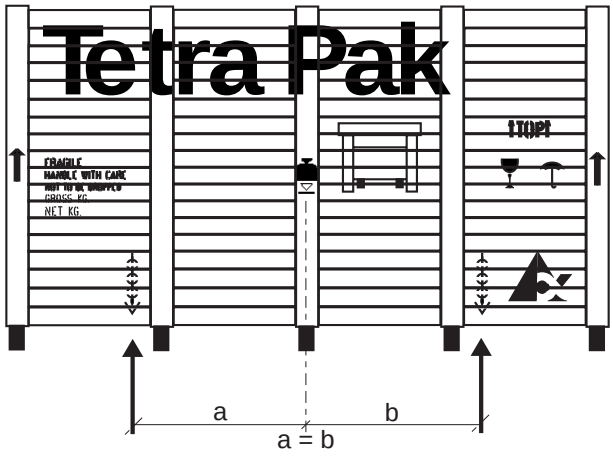

3.3 Storage

Make sure that storage areas comply with specifications, see 3.3.2 Storage on page 3-9.

If installation is to start immediately, check whether it is possible to move the crate to the installation site. Uncrating and installation can then be performed together.

3.3.1 Moving

a) Lift the crate as instructed in 3.2 Lifting and Unloading on page 3-5. **Lift only enough to clear the floor.**

b) Make sure that the crate remains stable on the lifting equipment.

WARNING
Risk of minor personal injury!
Move the crate slowly and gently.

c) Move the crate to its destination.

d) Lower the crate **gently** to the floor, leaving enough room around it for easy access to all sides.

e) Make sure that the crate is firmly supported. Place blocks or plates under it, if necessary.

3.3.2 Storage

WARNING

Risk of serious equipment damages!

Do **not** stack any item on top of the crate.

Characteristics	Value	Notes
Min and Max °C (°F)	 -20 - +70 (-4 - 158)	If the water system is drained, the equipment can withstand freezing conditions.
Max.relative humidity%	80	Non-condensing

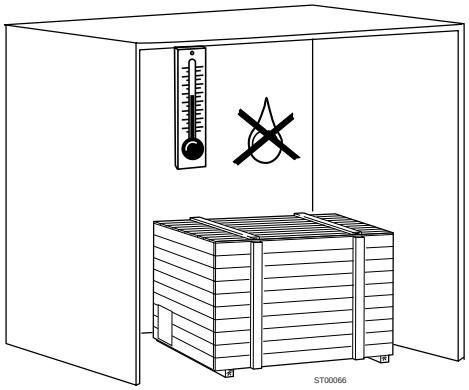

3.4 Unpacking and Inspection

Unpacking Area

The **minimum** unpacking area must be at least twice the size of the crate.

Minimum area: 9000 x 5000 x 4000 mm high (30 x 17 x 14 ft high).

Inspection

Check the two crates:

- for damage
- that all documentation is delivered
- that everything looks alright.

3.5 Auxiliary Equipment

Tools and auxiliary equipments needed to unpack the crates. The equipment used for lifting and moving the crate can also be used for unpacking the crate.

Figure	Equipment	Minimum Capacity (Kg)	Quantity
1	Forklift truck	6 000	1
2	Pallet truck	2 000	1
3	Elongated forks fitted to forklift truck	6 000	1 set
4	Lifting slings	5 000	2
5	Lifting device TP no: 2599757-0100		1 set
6	Lifting device TP no: 2599750-0100		1 set

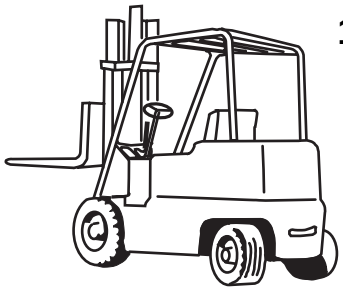

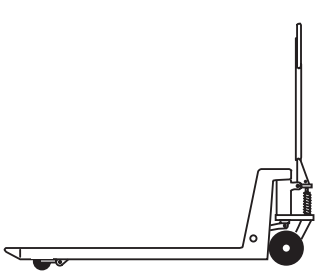

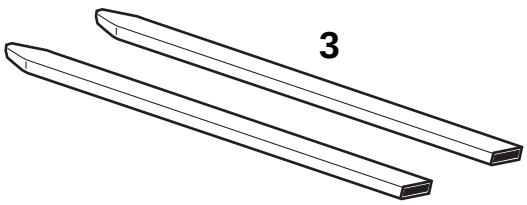

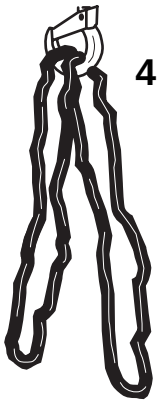

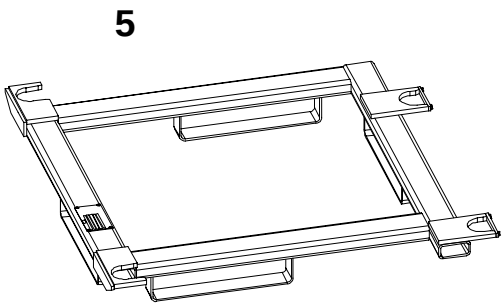

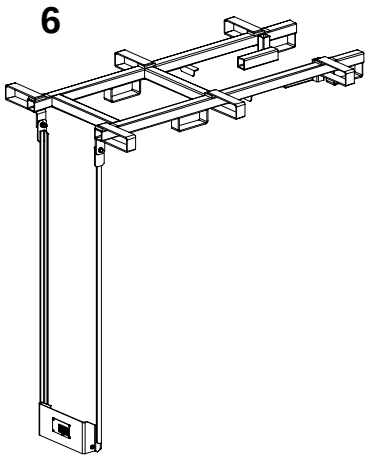

Also use appropriate hand tools to open the crate, such as crow bar, hammer, and socket wrench.

3.6 Unpacking Sequence

WARNING

Risk of serious personal injury or machine damage!

Be sure to use the right equipment with the required capacity, during uncrating and lifting. Follow local regulations regarding lifting.

Remove all the wood screws from the top/lid on the crate.

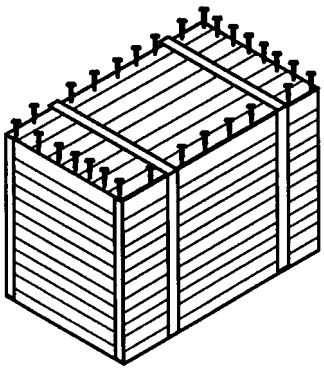

Remove the top/lid from the crate with assistance of a forklift truck.

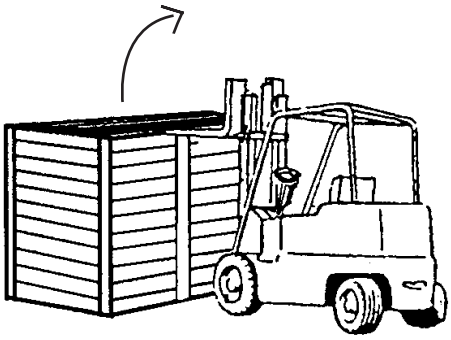

(Cont'd)

(Cont'd)

Determine which side is free of parts. This side must be removed first.

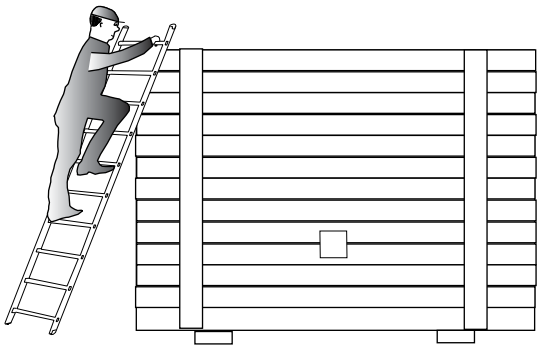

Remove all the wood screws from the side, except the two screws at the top of the side.

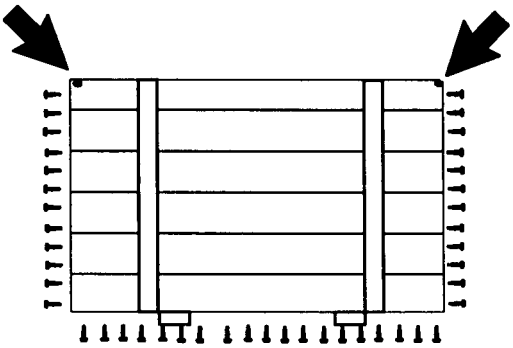

With the assistance of a forklift truck to hold the side against the crate, remove the two wood screws on the top of the side. Remove the side from the crate with the assistance of the forklift truck.

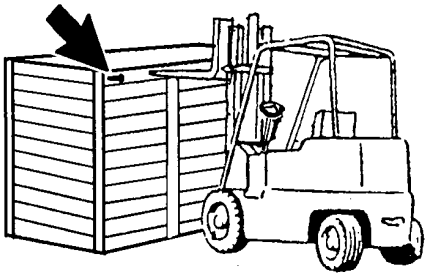

3.7 Inspection Documentation

Carry out inspection by following the description in the SUMQR (Start-Up Machine Quality Report).

3.8 Disposal / Reuse

Crates and wrapping material delivered with the filling machine are to be recycled according to local regulations in the receiving country.

3.9 Machine Transport

WARNING

Risk of serious personal injury or machine damage!

Be sure to use the right equipment with the required capacity, during uncrating and lifting. Follow local regulations regarding lifting.

Before moving the machine and machine parts, see section 1.2 Mass / Weight on page 1-11 regarding mass and centre of gravity, and see 3.5 Auxiliary Equipment on page 3-11 for lifting equipment.

3.9-1 Moving the Main Body

Mounting and Removing the Lifting Tool

To be able to fit the lifting tool, the main body's legs must be unscrewed 160 mm.

Remove the screws and the bars (3). Fit the lifting tool (1) under the main body by pushing it in from the right hand side of the main body, see arrows in illustrations. The lifting tool's hooks (2) must be fitted around the main body's legs. Secure the lifting tool with the screws and the bars (3).

To remove the lifting tool, follow the instructions in reverse order.

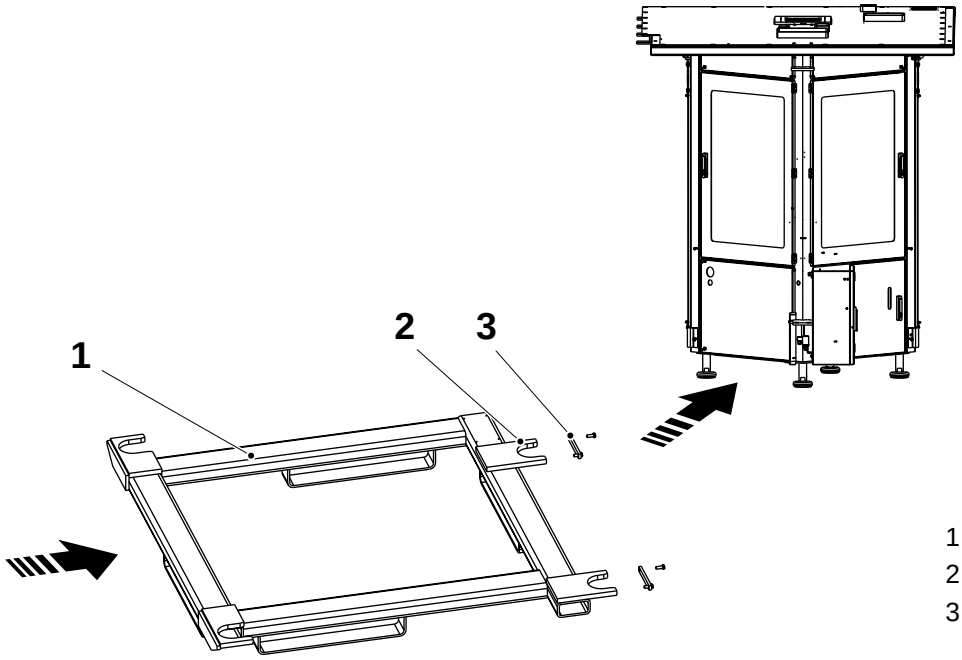

1 Lifting tool
2 Hook
3 Bar

(Cont'd)

(Cont'd)

Lifting With a Forklift Truck

To lift the main body from the left hand side, place the forklift's forks **in** the fork holders, see the arrows in the illustration. Lift the main body.

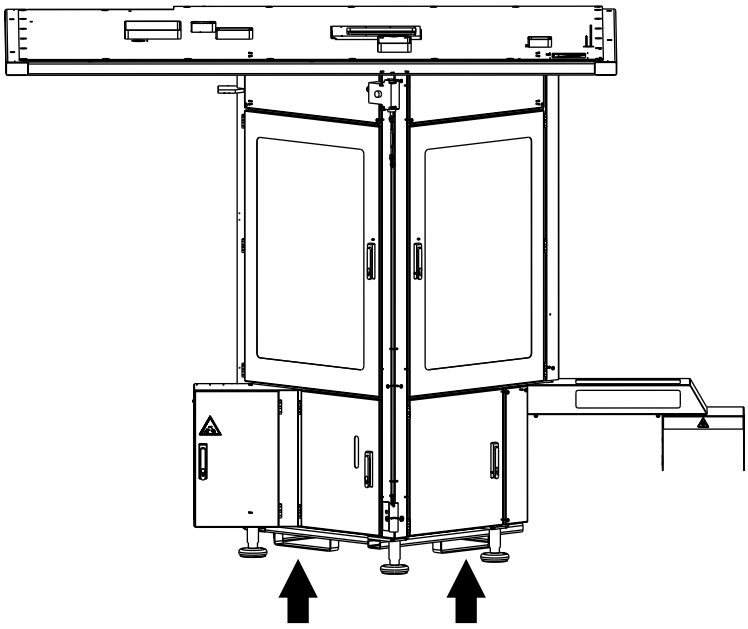

To lift the main body from the back (infeed) side, place the forklift's forks **outside** the fork holders, see the arrows in the illustration. Lift the main body.

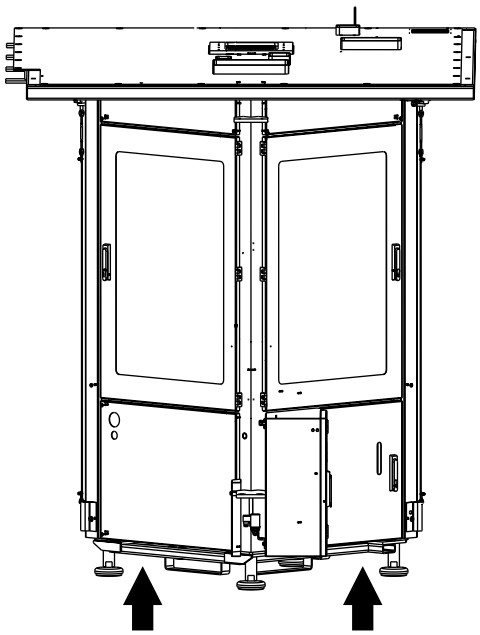

(Cont'd)

(Cont'd)

With a Overhead Gantry or Mobile Crane

Mount the four lifting eye bolts (1) to the main body (2). Fix the lifting slings (3) to the lifting eye bolts, lift the main body a few centimetres above the floor with a crane, and move it.

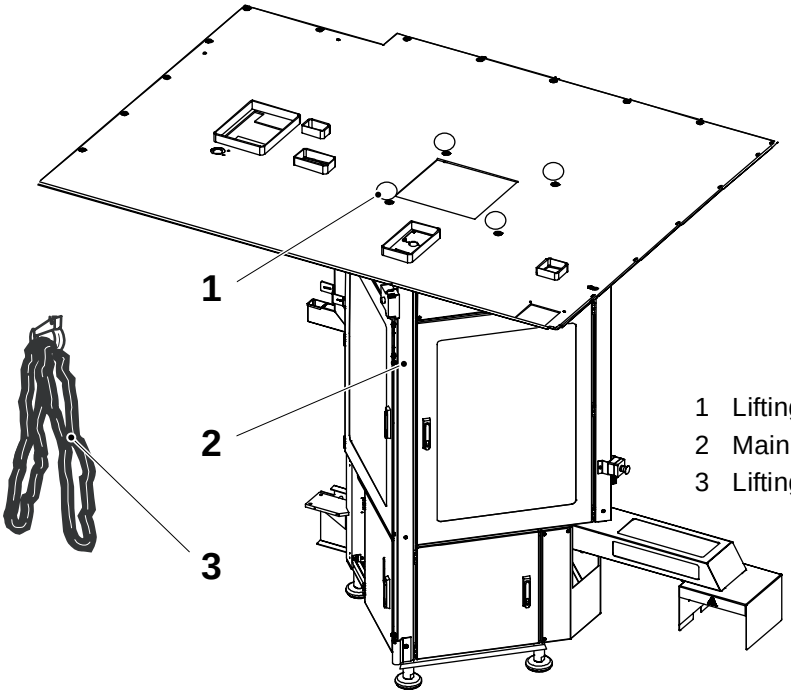

3.9-2 Moving the Assembled Sterile Unit and Tube Forming Module

Mounting and Removing the Lifting Tool

Note! The lifting tool weighs 36 kg. Two persons are needed to mount and remove the lifting tool.

Remove the door (1) from the tube forming module. Remove the cover plate (2) from the paper feed and remove the screws and snap-in locks (3).

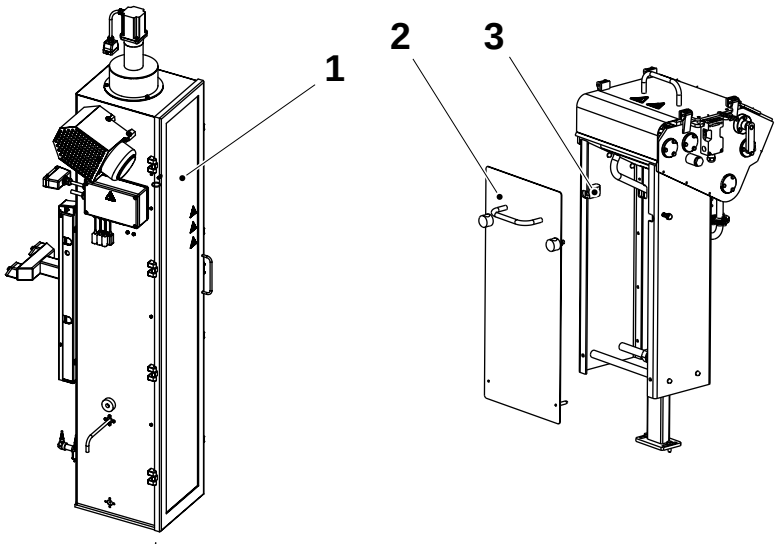

1 Door
2 Cover plate
3 Snap-in lock

(Cont'd)

(Cont'd)

Fit the lifting tool (4) by putting it on the top of the tube forming module and pushing it in place. Then, fit it to the paper feed. Secure the lifting tool to the paper feed with the screws and the snap-in locks (5).

To remove the lifting tool, follow the instructions in reverse order.

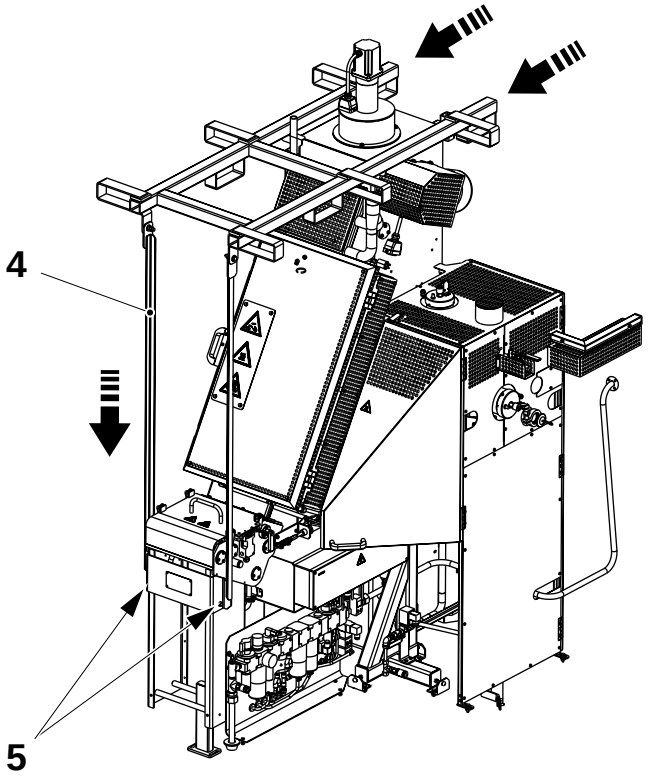

4 Lifting tool
5 Screws

(Cont'd)

(Cont'd)

Lifting with a Forklift Truck

Make sure that all parts of the assembled sterile unit and tube forming module are secured to each other. Place each fork in at least two of the fork holders (1) on the lifting tool (2) and lift the sterile unit and tube forming module. The sterile unit and tube forming module can be lifted from all four sides.

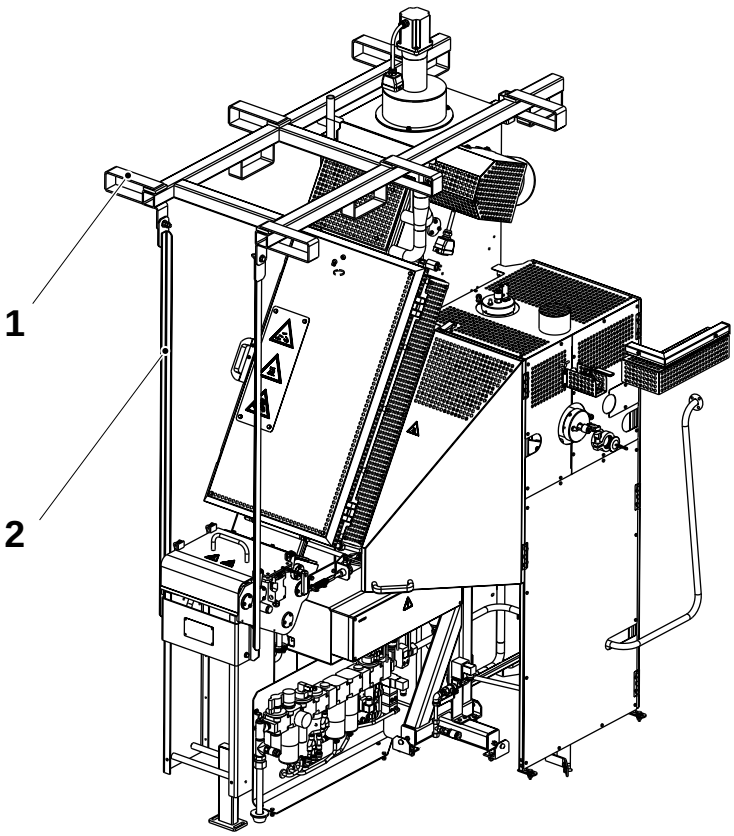

1 Fork holder
2 Lifting tool

(Cont'd)

(Cont'd)

Lifting with a Overhead Gantry or Mobile Crane

Make sure that all parts of the assembled sterile unit and tube forming module are secured to each other. Fit the four lifting slings (1) and (2) to the lifting tool (3), according to the illustration below. The two lifting slings (2) must be 100 mm shorter than lifting slings (1). If all lifting slings are the same length, wind the two lifting slings (2) more than one turn around the crane's hook.

Lift the sterile unit and tube forming module carefully and make sure that the unit is balanced.

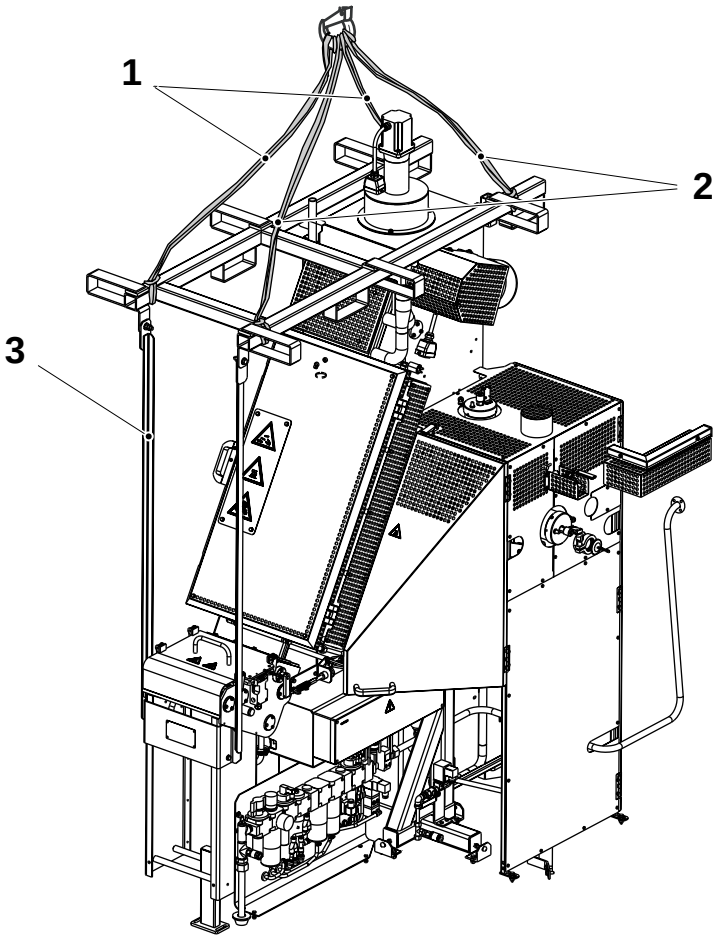

1 Lifting sling
2 Lifting sling
3 Lifting tool

3.9-3 Moving the Infeed

Place the forks or lifting slings under the infeed (1) between the legs (2) and lift the infeed (1).

Note! Never lift the infeed in the doors (3).

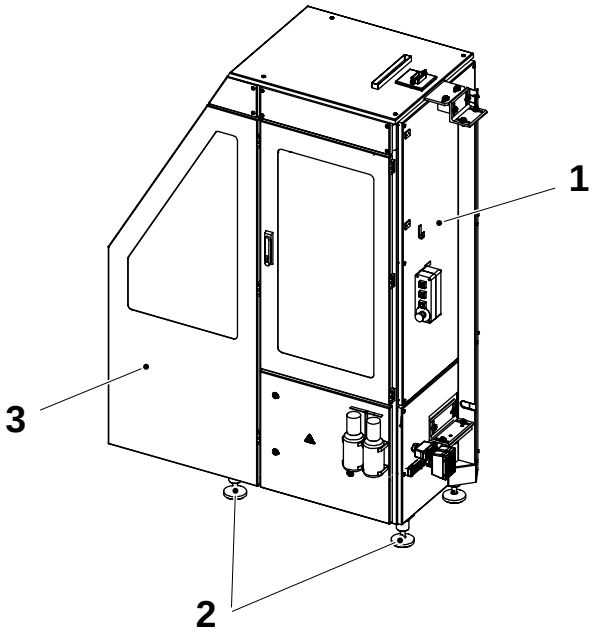

1 Infeed
2 Leg
3 Door

3.9-4 Moving the Platform

With a Forklift Truck

Place the forks under the platform (1) and lift it. Make sure that the platform is balanced.

With a Overhead Gantry or Mobile Crane

Mount at least three lifting eye bolts (2) to the platform (1). Fix the lifting slings to the lifting eye bolts (2), and lift the platform (1). Make sure that the platform (1) is balanced.

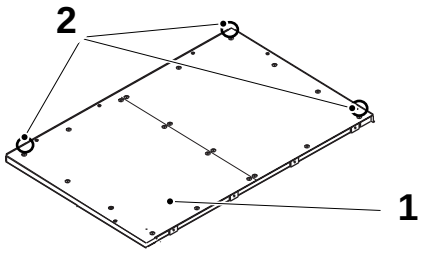

1 Platform
2 Lifting eye bolt

3.9-5 Moving the Electrical Cabinet

With a Forklift Truck

Place the forks under the electrical cabinet (1) between the legs and lift it. Make sure that the cabinet is balanced.

With a Overhead Gantry or Mobile Crane

Mount four lifting eye bolts (2) on the electrical cabinet (1). Fix lifting slings in the lifting eye bolts (2) and lift the cabinet (1).

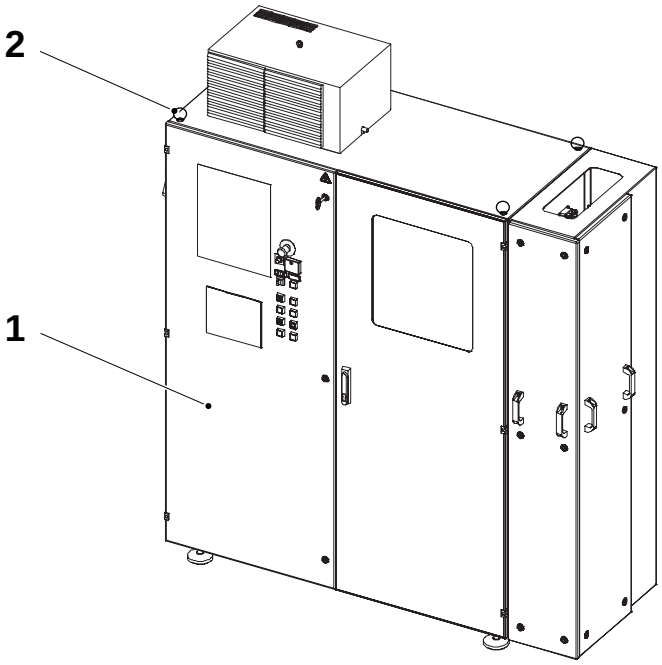

1 Electrical cabinet
2 Lifting eye bolt

3.9-6 Moving other Machine Parts

The other machine parts weigh up to 500 kg. They can be moved with a crane or forklift truck with adequate lifting capacity. If a crane is used, fix the lifting slings at appropriate places and secure them carefully.

3.9-7 Moving the Assembled Filling Machine

WARNING

Risk of serious personal injury and machine damage!

If moved, an assembled filling machine can break or tip over and injure personnel.

Never lift or move an assembled filling machine. If an assembled filling machine needs to be lifted and moved, disassemble the machine and follow the lift instructions for the machine parts.

To lift or move an assembled filling machine, disassemble the machine and follow the lift instructions for the machine parts in this chapter.

The main body should never be moved if the sterile unit and tube forming module are mounted to it.

This page intentionally left blank

4 Positioning, Assembly, and Connections

4.1 Space Requirements

Installation Area

a) Make sure that all customer preparation work has been completed to prepare the site for the machine.

b) Make sure that necessary utility supplies are available. See chapter 1 Technical Data and Drawings on page 1-1.

c) Clear all obstacles away from the installation site and, if necessary, clean the floor of the site before starting to install the machine.

d) Make sure there is sufficient room to move safely around the installation site. If machines around the site can not be stopped, place guards around them to prevent accidental contact.

e) Leave the protective packing on parts until the parts are needed during the machine assembly procedure.

f) Make sure that the lighting is adequate. Arrange additional portable lights if necessary, making sure that cables are routed safely.

g) Take into account the extra space needed to lift the sterile unit and tube forming module on to the machine. This space may vary due to different lifting devices. Make sure there is enough space around and above the filling machine.

4.2 Positioning

WARNING

Risk of serious personal injury!

Do not lift the filling machine more than 20 mm above the floor while it is being moved.

Personnel

Only skilled or instructed Tetra Pak installation personnel are allowed to assemble the machine.

Personnel must know how to use the portable PC computer programs for modifying PLC program parameters and down loading the GeFanuc program.

Lifting Equipment

The equipment used for lifting and moving the crate can also be used for installing the equipment. See section 3.1.3 Lifting Equipment on page 3-4 for further details.

Positioning

Check that preparation of the site has been completed according to Chapter 2 Site Preparation on page 2-1.

Move the main body to its place of production and position it, taking into account the measurements given in chapter 1.1 Installation Drawings on page 1-2.

Adjust the main body’s legs until the legs with the rubber buffers are approximately 170 mm long. This length may vary if the floor is uneven.

4.3 Levelling

Check that there are rubber buffers underneath all legs.

The legs of the complete machine are placed as shown in the illustration below. Consider this when the machine is positioned to its place of production and if the floor is not level. If you encounter problems in levelling the machine due to an uneven or sloping floor, place plates under the legs to assist the levelling.

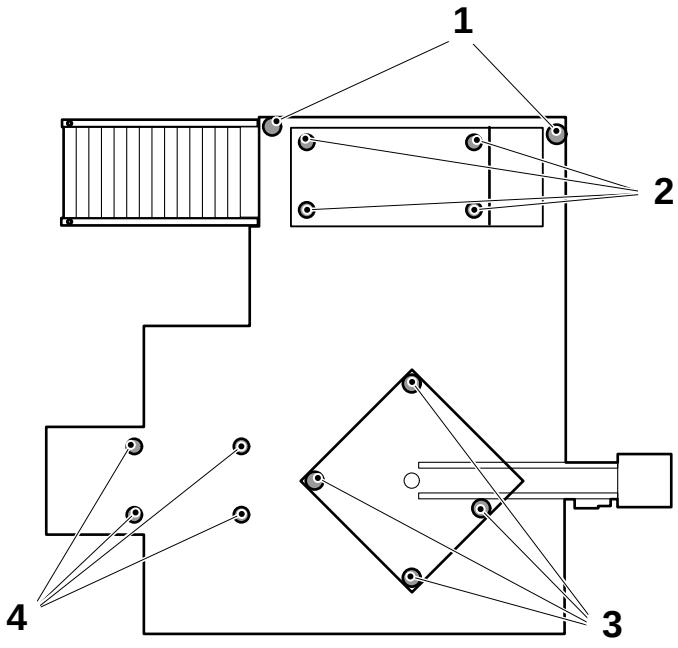

1 Legs platform
2 Legs electrical cabinet
3 Legs main body
4 Legs infeed

(Cont'd)

(Cont'd)

Level the main body by means of the four adjustable legs (7). Use a spirit level and check that the plate (5) on the top of the main body (6) is horizontal.

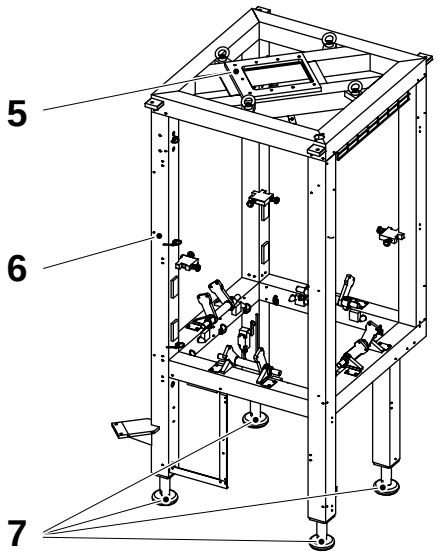

5 Plate
6 Main body
7 Leg

4.4 Assembly

WARNING

Immediate danger to life!

Do not enter the platform until the two halves are mounted together and the legs are in place. The platform can easily tip over!

4.4.1-1 Platform

a) Lift the platform (1) in position with a truck or a crane.
See 3.9-4 Moving the Platform on page 3-23 for lifting instructions.

b) Assemble the legs (2) with the platform (1).

WARNING

Risk of serious personal injury!

The platform can easily fall until it is completely assembled. Mount the screws immediately and never put load on the platform before it is completely assembled.

c) Mount the four screws that fix the platforms (1) and (4) to each other while holding the platform by truck or crane.

d) Level the platform by adjusting the feet (3).

e) Mount the protections around the feet (3).

f) Assemble the air supply pipe (5).

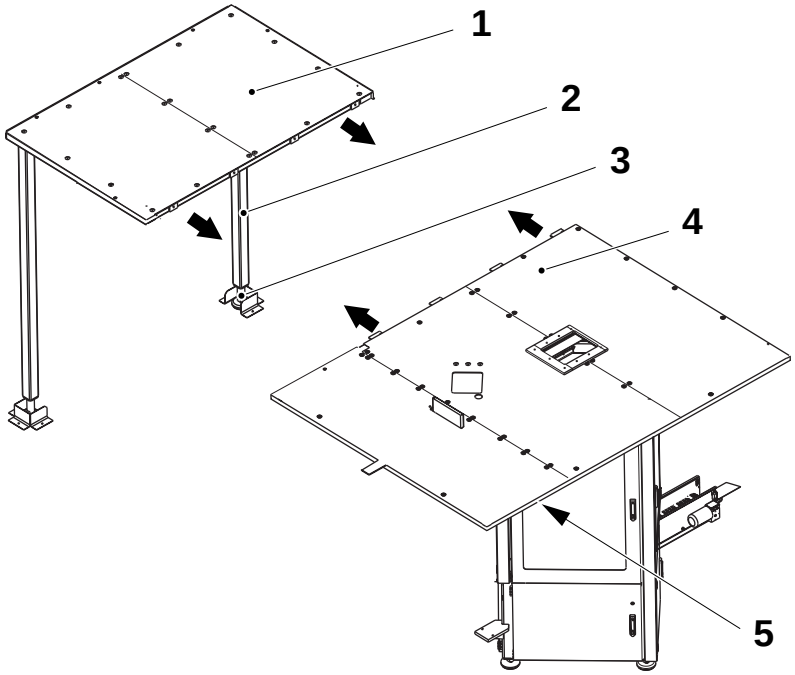

1 Platform
2 Leg
3 Foot with protection
4 Platform
5 Air supply pipe

4.4.1-2 Infeed

a) Assemble the infeed (3) with the main body (1) by means of the two brackets (2). See 3.9-3 Moving the Infeed on page 3-23 for lifting instructions.

b) Level the infeed by putting a spirit level (6) on the paper reel holder (5) and adjusting the feet (4).

c) Pin the brackets (2) in the pin holes.

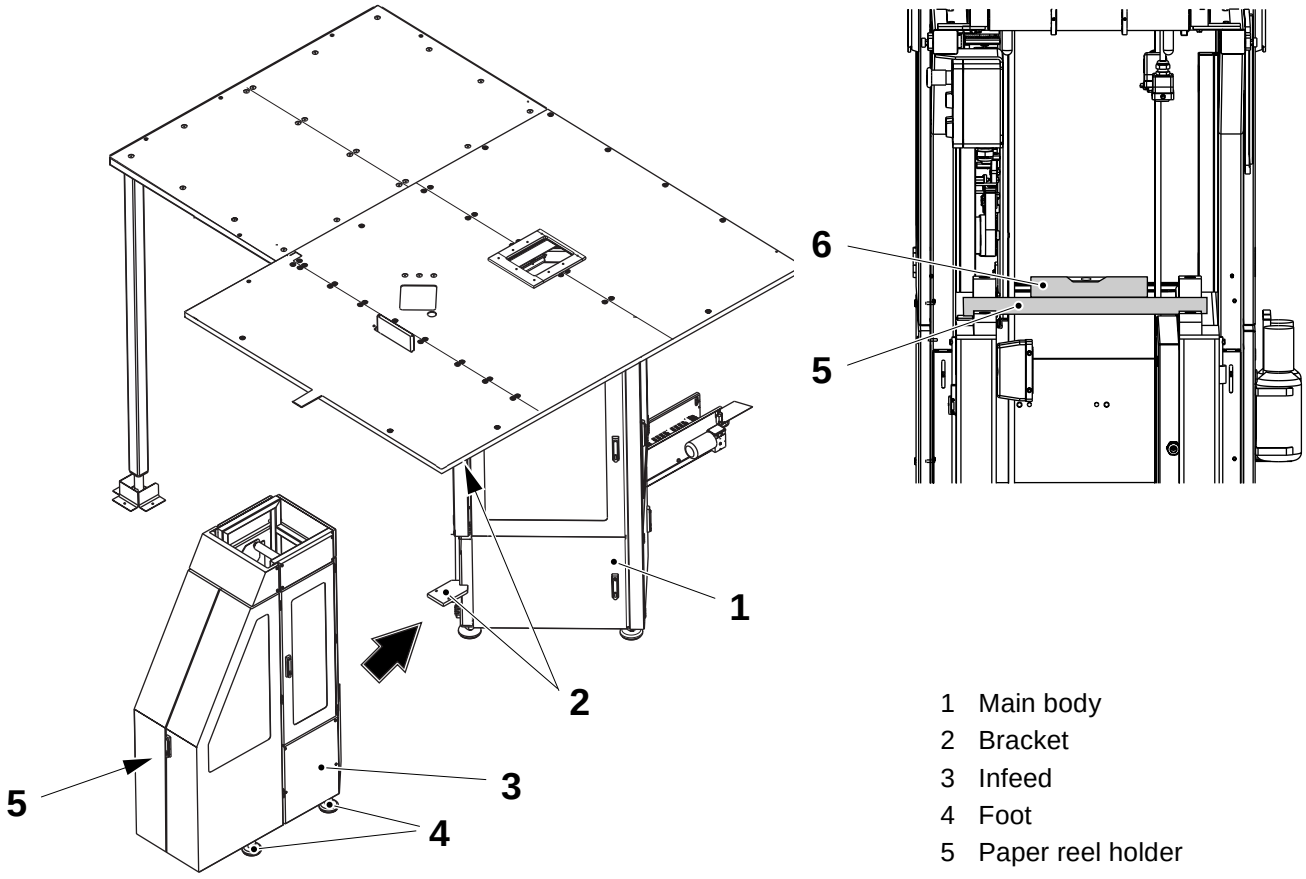

1 Main body
2 Bracket
3 Infeed
4 Foot
5 Paper reel holder
6 Spirit level

4.4.1-3 Ladder and Railings

WARNING

Risk of falling off the platform!

If work is performed on the platform before the railings are mounted, a shoulder harness must be used.

Note! During the assembling of the railings and the foot plates, two persons working together or support of a truck is recommended.

a) Assemble the ladder (4) with the platform (5) and level the ladder by adjusting the feet.

b) Assemble the railings (7) and footplates (6). Leave an opening to be able to lift up the sterile unit, tube forming module, and the sterile air system to the platform.

c) Assemble the sterile unit and tube forming module, according to 4.4.1-4 Sterile Unit and Tube Forming Module on page 4-9.

d) Assemble the sterile air system, according to 4.4.1-5 Sterile Air System on page 4-11.

e) Assemble the warning beacon (2) to the front side of the platform (1).

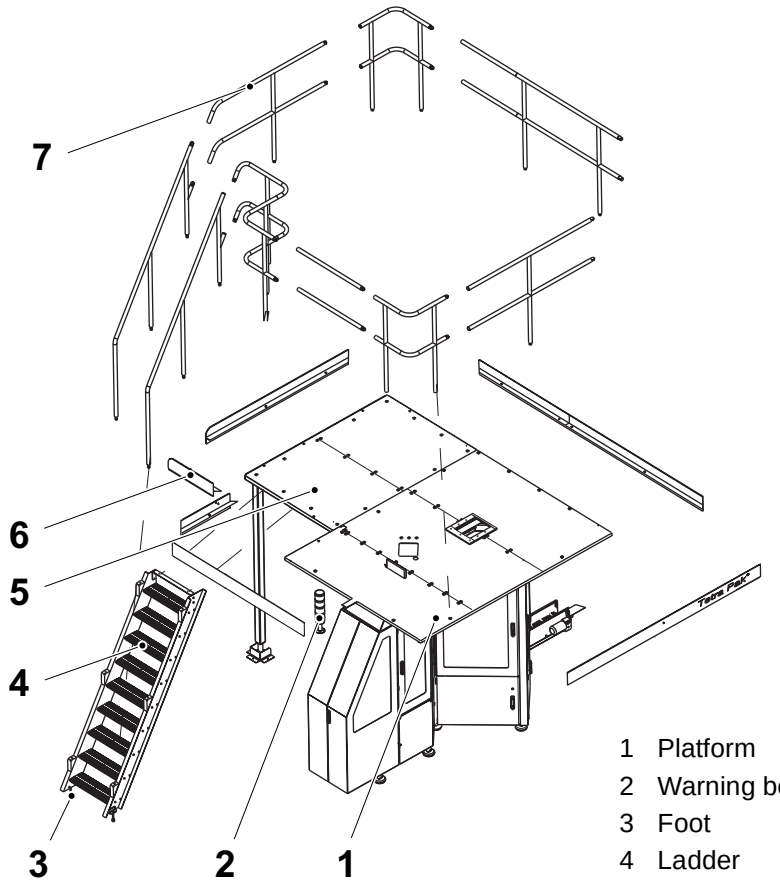

1 Platform
2 Warning beacon
3 Foot
4 Ladder
5 Platform
6 Foot plate
7 Railing

4.4.1-4 Sterile Unit and Tube Forming Module

a) Lift up the assembled sterile unit and tube forming module to the platform. See 3.9-2 Moving the Assembled Sterile Unit and Tube Forming Module on page 3-19 for lifting instructions.

b) Assemble the tube forming module with the main body by means of the eight screws inside (1) and the screw behind the cantilever.

c) Pin (2) the tube forming module.

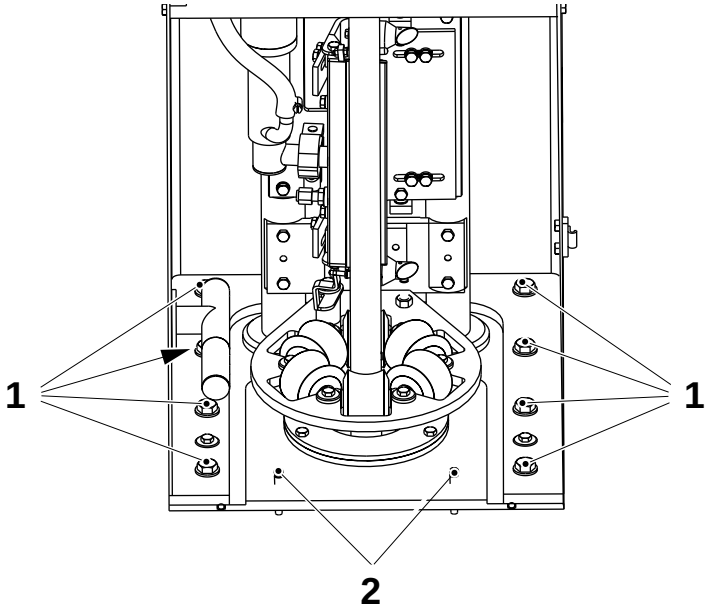

1 Screw
2 Pin

d) Assemble the sterile unit with the infeed by means of the bracket (4) and screws (3) from the outside of the sterile unit.

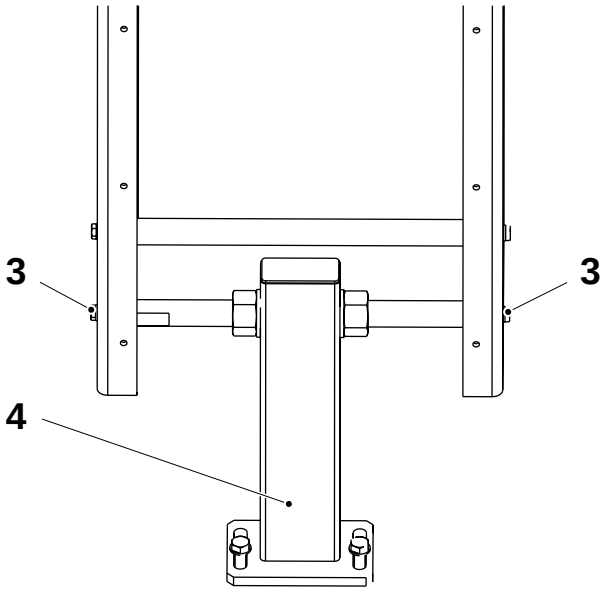

3 Screw
4 Bracket

(Cont'd)

(Cont'd)

e) Assemble the filling unit frame (7) with the platform by means of the brackets (8).

f) Assemble the air panel (5) with the platform by means of the screws (6).

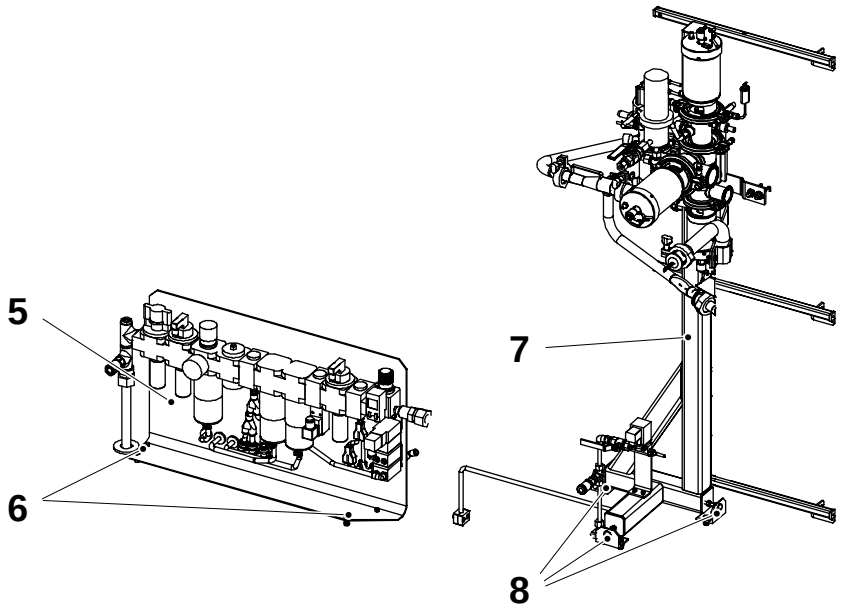

5 Air panel
6 Screw
7 Filling unit frame
8 Bracket

g) Assemble the coil holder (9) inside the main body (10).

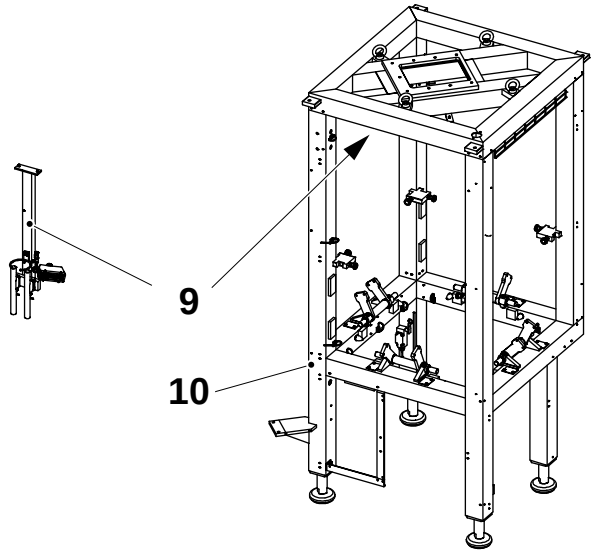

9 Coil holder
10 Main body

4.4.1-5 Sterile Air System

a) Lift up the sterile air system to the platform. See 3.9-6 Moving other Machine Parts on page 3-25 for lifting instructions.

b) Position the sterile air system (1) and assemble it with the platform, with four screws (3) from underneath the platform.

c) Assemble the remaining railings (2) and fix the railings to the sterile air system by means of the screws.

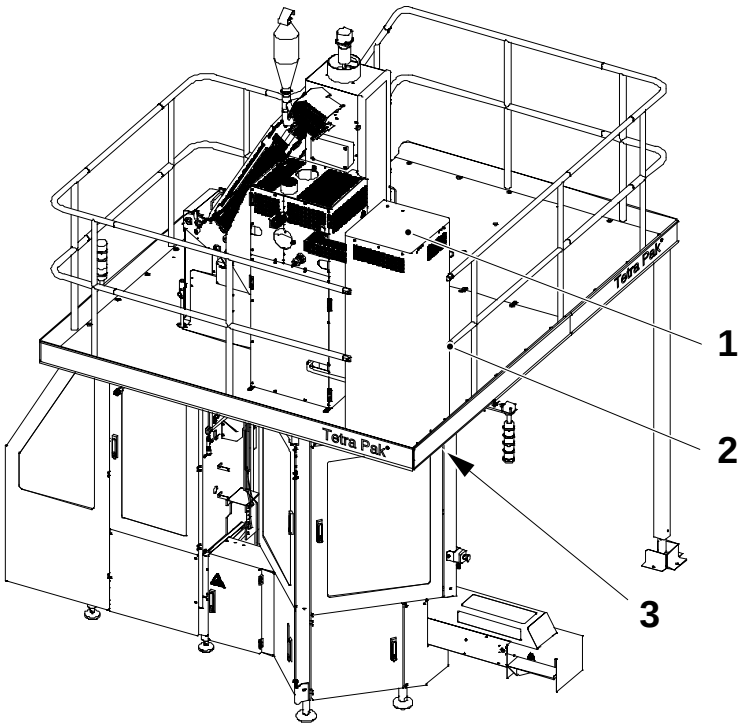

1 Sterile air system
2 Railing
3 Screw

4.4.1-6 Electrical Cabinet

a) Move the electrical cabinet (1) to its place, see 1.1 Installation Drawings on page 1-2.

b) Level the electrical cabinet (1) by adjusting the feet (2).

Note! To make room for the Domino ink jet printer, the right side of the electrical cabinet must be placed close to the platform's front right leg. Make also sure that the electrical cabinet's left door can be fully opened after the Domino ink jet printer is installed.

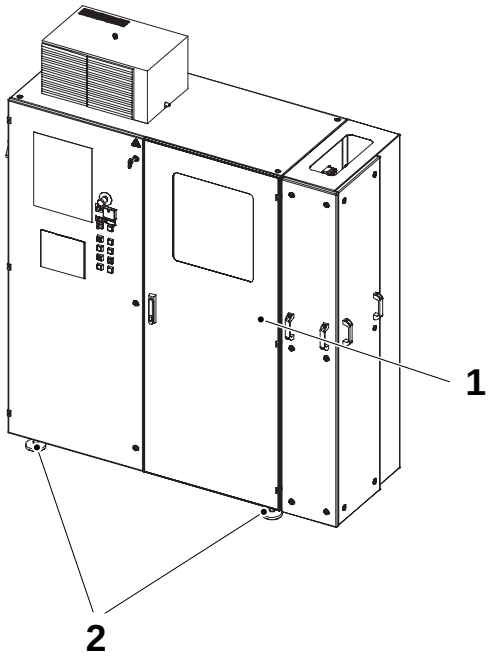

1 Electrical cabinet
2 Foot

4.4.1-7 Cable Trays and Cables

a) Assemble the cable trays (2) under the platform.

b) Drill mounting holes in the electrical cabinet and mount the bracket (3) to the electrical cabinet.

Note! The bracket is important to ensure the earthing of the cable trays. Risk of electromagnetic disturbances if not mounted.

c) Assemble the bracket (3) and the cable tray (1) between the platform and the electrical cabinet.

d) Pull the cables and connect them according to the Electrical Manual. Take care to keep signal cables in one half and power cables in the other.

Note! IH cables from electrical cabinet to main body are to be placed in the special, middle compartment in the main cable trays, and to have a separate pipe in the main body cable ducts.

e) Assemble the light fixture (1) under the platform.

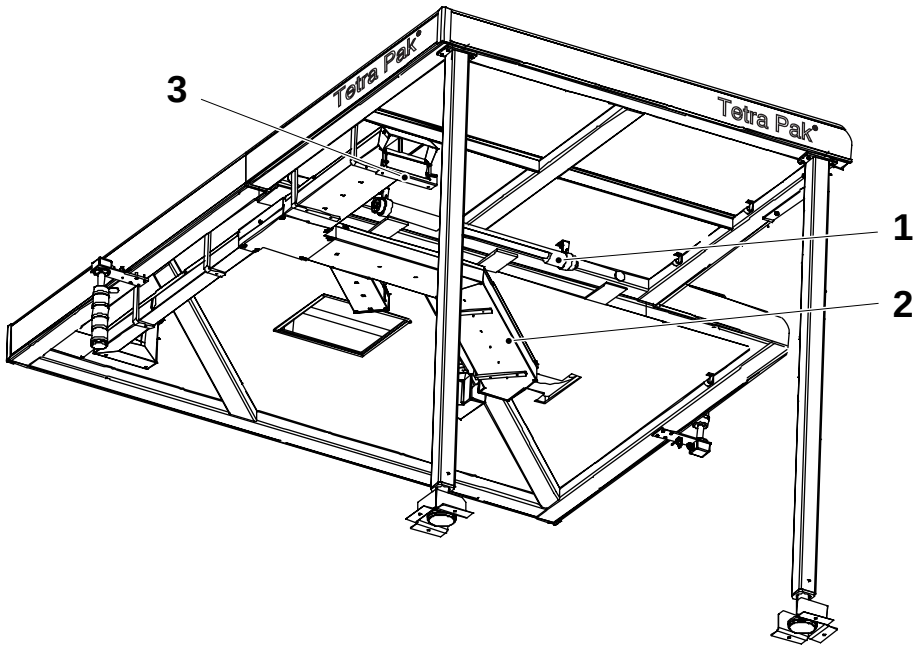

1 Light fixture
2 Cable tray
3 Bracket

4.4.1-8 Pipes

Note! Use correct seals for the pipe connections.

a) Connect the clean air pipe (1) between the air panel (2) and the sterile air unit.

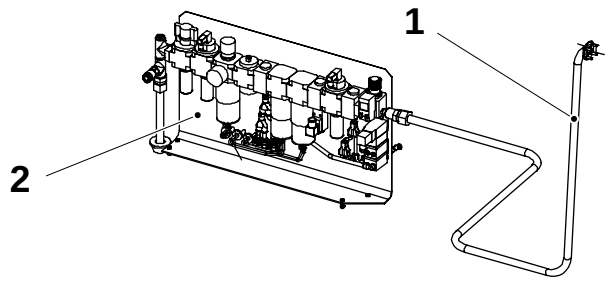

1 Clean air pipe
2 Air panel

b) Connect the two peroxide pipes (3) between the peroxide system (5) and the sterile unit.

c) Connect the two peroxide pipes (4) to the pipes for the spray container on sterile air unit.

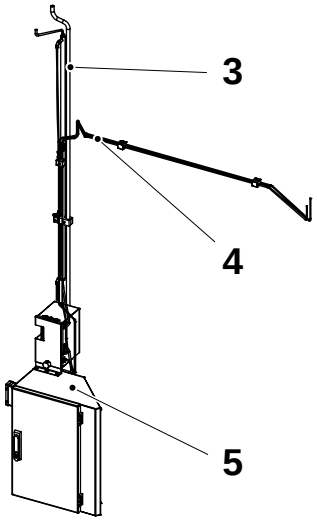

3 Pipe sterile unit
4 Pipe sterile air unit
5 Peroxide system

d) Assemble the drain pipe (6) from the steam trap (7) through the frame of the main body.

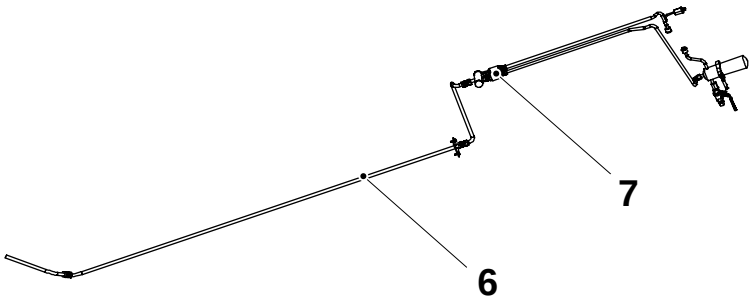

6 Drain pipe
7 Steam trap

(Cont'd)

(Cont'd)

e) Assemble the sterile air pipe (8) between the sterile air unit and B-valve, heating chamber, filling pipe, and heating element.

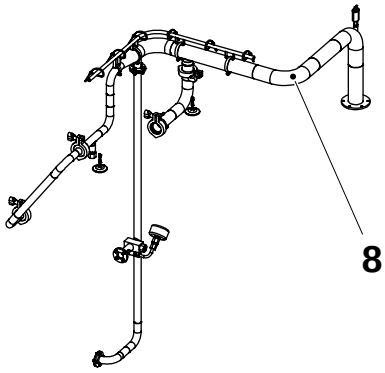

8 Sterile air pipe

f) Assemble the CIP return pipe (9).

Note! It is very important that the CIP pipes are correctly installed without any tension in the system.

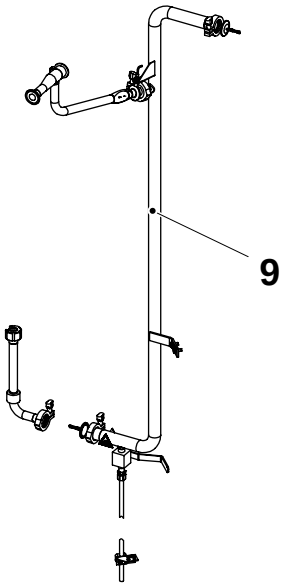

9 CIP return pipe

g) Assemble the water hose for the tube flushing.

h) Assemble the inlet water pipe for the tube flushing and peroxide cooler.

i) Assemble the three water hoses for the peroxide cooler:
   - from the inlet pipe to the valve
   - from the valve to the restrictor
   - from the return connection of the cooler.

4.4.1-9 Filling Pipe

Note! The filling pipe should only be mounted during production.

a) Fit the filling pipe (1) and the seal (3) to the tube forming module (2).

b) Set the filling pipe (1) according to the Maintenance Manual, section Filling Pipe - set position.

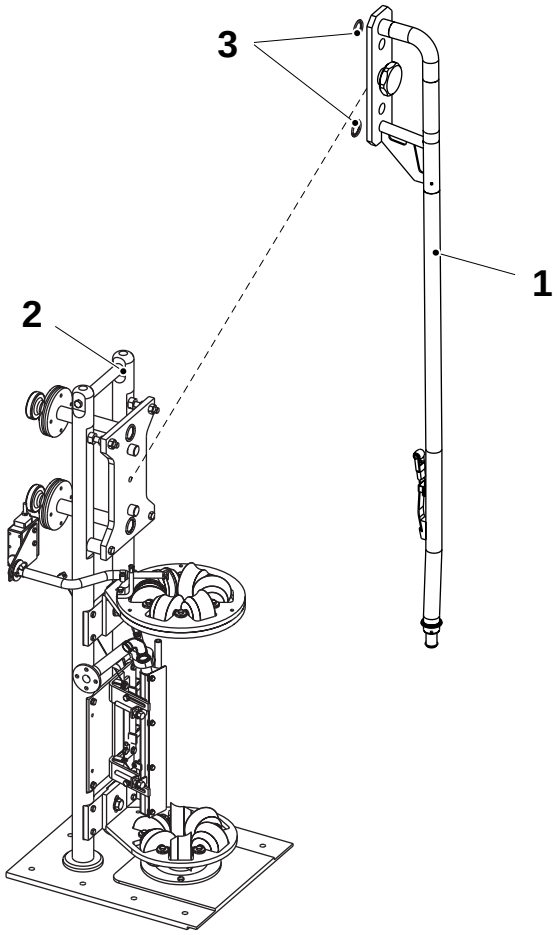

1 Filling pipe
2 Tube forming module
3 Seal

4.4.1-10 Hoods, Doors, and Protection Plates

Assemble all the hoods, doors, and protection plates with the filling machine.

4.4.1-11 Optional Equipment

Note! Ignore this section if the filling machine is not equipped with the optional equipment. Connect the external dating unit according to the suppliers's own documentation.

Assemble the guide rail (1) underneath the platform (3) by means of the existing mounting holes (2).

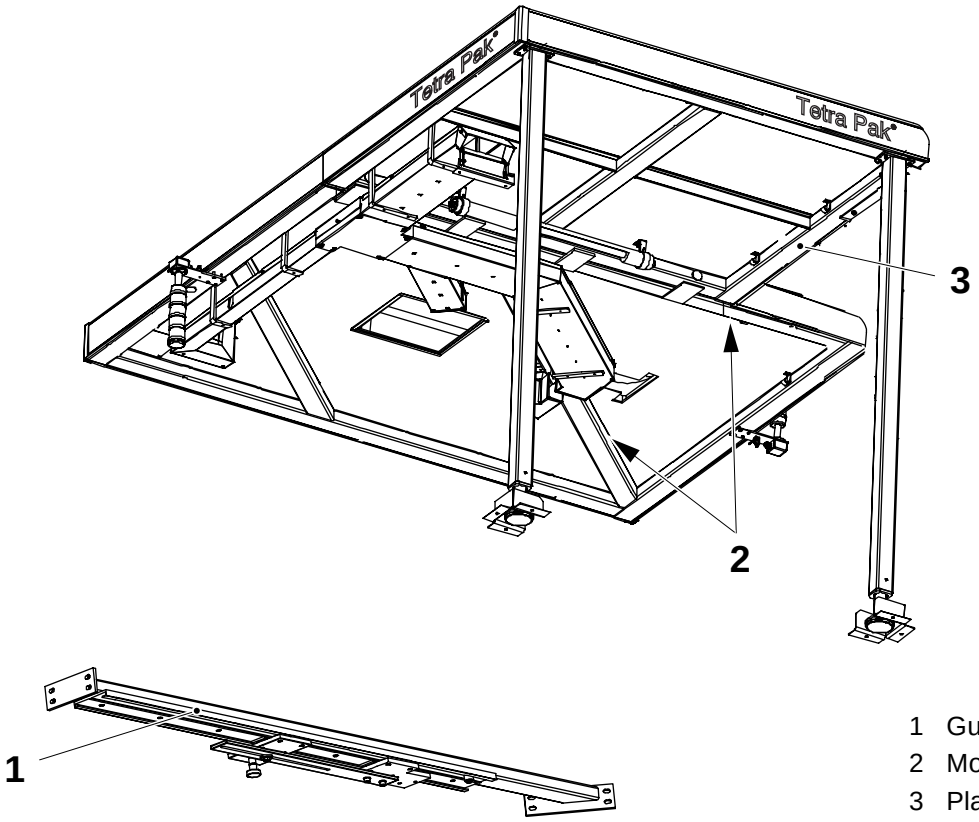

1 Guide rail
2 Mounting hole
3 Platform

4.5 Connections

For positions of all inlets and outlets, see 1.3 Utility Connection Data on page 1-12.

4.5.1 Electrical Connection

WARNING

Immediate danger to life!

Make sure that power is switched off upstream before performing any work on cables and electrical components.

a) Make sure that power is switched off.

b) Pass the power cable through the cable guide.

c) Connect the wires of the power cable to the power terminal board inside the electrical cabinet, according to the Electrical Manual.

Note! The power cable must be pulled straight up or straight out from the machine. The power cable must not be pulled through the machine.

4.5.2 Utility Connections

a) Connect the tap water pipe to the tap water inlet.

b) Connect the compressed air pipe to the compressed air inlet.

Note! Before the compressed air is connected, make sure that the pipes on the filling machine are clean by gently blowing them with compressed air.

c) Connect the steam pipe to the steam inlet.

d) Connect pneumatic connections according to the pneumatic diagram.

e) Connect the CIP inlet pipe to the CIP inlet.

f) Connect the CIP outlet pipe to the CIP outlet.

g) Assemble the upper filling pipe, if not already done.

h) Prepare the pipes in the main body for CIP, according to the Operation Manual.

i) Adjust the CIP pipes in the main body. Make sure that there are no tensions in the pipes.

4.5.3 Product Connections

a) Connect the product supply pipe to the product inlet.

b) Connect the product outlet pipe to the product outlet.

4.5.4 Signal Exchange

4.5.4-1 CIP Unit Signal Exchange

Two signals are needed:

- Tetra Pak A1 ready for CIP (from Tetra Pak A1 to CIP unit):
  This signal allows the CIP unit to start the CIP (to be connected to connector X117).
- CIP done (from CIP unit to Tetra Pak A1):
  This signal must be high (24 Volts) when the CIP is finished (to be connected to connector X117).

Connect the cables according to circuit diagram 2578566-3, sheet 23.

If the machine is connected to a Tetra Pak SCU/4 cleaning unit, see the SCU/4 EM pages circuit diagram 44882-15:01/16:01 and connection diagram 61930-13:01/14:01 (cables W22, W23, and W36) for the wire connection.

4.5.4-2 Process Unit Signal Exchange

Three signals are needed:

- External product signal, **PROCESS** to Tetra Pak A1 (to be connected to connector X117).
- Ready for production, Tetra Pak A1 to **PROCESS** (to be connected to connector X117).
- Machine in **PRODUCTION**, Tetra Pak A1 to **PROCESS** (to be connected to connector X117).

Connect the cables according to circuit diagram 2578566-3, sheet 23.

This page intentionally left blank

5 Final Installation Check

5.1 Checks Before Test Run

Note! This is the first time the filling machine is being run since its final testing at the factory.

It is recommended that water is packaged instead of the actual product during final installation checks.

Verify the installation work by following the checklist below.

See Chapter 4 Positioning, Assembly, and Connections on page 4-1 for further details.

5.1.1 Filling Machine Check

No	Check	Done
1.1	Remove the drive chain. Crank the machine by hand in order to check that everything moves easily and freely. Observe the direction of rotation for the drive motor. Before placing the drive chain back see point 2 in this checklist.	
2	Inch the filling machine by means of the inching button at it lowest speed and check that the direction of rotation for the drive motor is correct.	

5.1.2 Electrical Connections Checks

WARNING

Risk of electrocution!

Make sure that power is switched off before performing any work on cables and electrical components.

No	Check	Done
1	The electrical power cables are correctly connected: - in the main switch cabinet. - between the main switch and the electrical cabinet. - in the electrical cabinet.	
2	The protective earthing (grounding): - in the electrical cabinet - on the filling machine - in the customer´s terminal box	

5.1.3 Miscellaneous Checks

No.	Check	Done
1	The machine is level transversally and longitudinally.	
2	All railings have been fitted.	
3	The utility connections work is done.	
4	The conveyor equipment is connected.	
5	The connection work to the service unit is finished.	
6	The connection work to the superstructure is finished.	
7	All covers are fitted.	
8	The filling pipe and the seal ring are fitted.	
9	The protective cover for the outfeed is fitted.	
10	The peroxide container is in place.	
11	The detergent container/containers are installed and filled with the correct detergent, see OM.	
12	The transport securing devices are removed.	
13	The eject conveyor/bin is connected/positioned.	
14	Upstream valves/switches are open/on: - electrical power - compressed air - steam.	
15	There are no leakages from the utility connections.	
16	The production line is flushed with water to eliminate welding residues, and to detect any leakages.	
17	The machine crates and other packing have been taken care of as agreed with the customer.	

5.1.4 Lubricant Level Checks

See the Maintenance Manual for further details on the following level checks.

No.	Check	Done
1	Machine body - Hydraulic system	
2	Machine body - Lubrication system	

5.2 Valve Checks

No.	Check	Done
1	The air valve.	

5.3 Safety Checks

No	Check	Done
1	All doors open and close correctly.	
2	All hatches and safety covers are secured.	
3	All the **Emergency stop** buttons. See the Safety Precautions chapter for further details. Press each emergency stop button and make sure that the machine steps down to **OFF**.	
4	All the doors, covers and guards. See the Safety Precautions chapter for further details. Open each door, cover or guard and make sure that the controlpanel displays the correct message.	
5	The filling machine and the area around the machine are free from remaining installation packing and wrapping.	

6 Preparation for Commissioning

Note! Commissioning covers only the functioning of the individual machine. A line performance test is required to check the functioning of the machine as part of a complete line. Check with the local service organisation what arrangements have been made for a line performance test.

6.1 Presence and Correctness Checks

No	Check	Done
1	The TP No. on the program diskette corresponds to the No. in the Electrical Manual	
2	The spare parts have been deposited in the spare parts stores.	
3	The accessories are available to the operator: - apron. - gloves. - goggles.	
4	All the documents correspond to the specific machine. - EM - IM - OM - MM - SPC - System drawings - Machine Specification Document - Final Inspection Report - Machine Deviation Report (if relevant)	
5	A packaging material trolley must be available.	
6	The supply and quality of product is sufficient for the purpose of the commissioning.	
7	All supplies are of the correct type and are available in sufficient quantities for the purpose of the commissioning: - Packaging material - LS strip - Hydrogen peroxide - Detergent	

6.2 Product and Utility Value Checks

Make sure that the product and utility values are correct. Ask for the assistance of the customer´s technical personnel if necessary. If values are incorrect, inform the customer´s technical personnel.

See 1 Technical Data and Drawings on page 1-1.

No.	Check	Done
1	Product supply: - pressure - max pressure fluctuation - inlet temperature - max particle size	
2	Electrical power supply: - voltage - max voltage fluctuation - frequency - fuse rating	
3	Compressed air supply: - pressure - max particle size - max particle content - dew point - oil content	
4	Steam supply: - water quality - pressure - max pressure fluctuation -inlet temperature	
5	Detergent: - correct type (specifications) - ph	
6	Hydrogen peroxide supply: - aseptic (food) grade - concentration (35%)	

6.3 Function Checks

6.3.1 Preparation

No.	Check	Done
1	Make sure that the PLC program on the diskette corresponds with that in the machine PLC. See the Electrical Manual for further details.	
2	Connect a cold water supply to the product inlet connection. (If the product pipes have been welded have them flushed thoroughly before using).	
3	Switch on the mains power switch. (Make absolutely sure that the rotation directions of the electrical motors are correct. See the Electrical Manual for further details).	
4	Perform CIP. See the Operation Manual for further details.	
5	Prepare the machine for production. See the Operation Manual for further details.	
6	Make sure that the starting up from cold takes less than 35 minutes at an ambient temperature of no less than 20°C (68°F).	
7	Start up the package outfeed conveyor.	
8	Put the machine into **Production** according to the Operation Manual.	
9	Finished packages are correct in terms of: - size and shape - longitudinal and transversal sealing - date code printing - filled package weight/volume See the Operation Manual for further details.	
10	Production capacity is as specified (count the packages produced in ten minutes and multiply by six.	
11	All pressures remain within tolerance. See the Maintenance Manual for further details.	
12	There are no fluid leaks.	
13	There are no unusual noises which could indicate loose or misaligned parts.	
14	There are no unusual smells which could indicate internal leaks or burning of electrical circuits.	
15	The peroxide concentration continuously to detect any sign of degradation.	
16	Defective packages are ejected (start up, short stop, material splice, strip splice, production stop).	
17	Perform strip splice to verify the function. See the Operation Manual for further details Three packages shall be discarded, the package before the splice, the package with the splice, and the following package.	
18	Packaging material trolley function.	
19	Perform package material splice to verify the function. See the Operation Manual for further details. Three packages shall be discarded, the package before the splice, the package with the splice, and the following package.	

20	Stop methods. Stop the machine according to the Operation Manual to verify the different stop functions.	
21	Perform external cleaning.	

6.3.2 Changing PLC Parameters

WARNING
Only skilled or instructed persons are allowed to make changes to the PLC parameters.

CAUTION
Do not change the PLC parameters unless absolutely necessary. Make a copy of the existing parameters before modifying them. Also keep a copy of the new parameters for future reference.

6.4 Health and Safety Checks

No.	Check	Done
1	All the **Emergency stop** buttons See the Safety Precautions for further details. Press each emergency stop button and make sure that the machine steps down to **Off**.	
2	All the doors, covers and guards. See the Safety Precautions for further details. Open each door, cover or guard and make sure that there is a signal on the Control Panel.	
3	Filled packages and outlet water samples have the correct hydrogen peroxide residue/content as measured using: - Test kit 90298-31 for packages - Test kit 90298-30 for outlet water.	

6.5 Documentation

Note! No claims will be accepted for machines in commercial production if the **Start-Up Machine Quality Report** (SUMQR) has not been returned to the manufacturer.

a) Compile the **Transport Damage Repor**t (a section of the SUMQR). If no damage has occurred during transport, state “NO TRANSPORT DAMAGE”

b) Compile the **Feedback from MC** form **only in case of claims on the equipment.**
For further information about claims see the **Claim and Complaint Handling procedure**, available from the local Service Organisation

c) Compile the Start-up Machine Quality Report.
List all work, besides the installation work, performed to ensure correct functioning.

This page intentionally left blank

7 Disassembly and Removal

CAUTION
If the equipment is going to stand or travel in freezing conditions, the product circuits and the peroxide bath tank and circuits must be drained to avoid damage from freezing.

Sterilization bath water pump:
Open the pump house to drain the water. Close the pump house.

CAUTION
The equipment can be moved **for short distances** without being drained, but **only if no freezing conditions will be encountered.**

The equipment must be drained before long distance moves or long term storage. If draining is necessary, perform the draining procedure before disconnecting the equipment from the mains power supply.

Only skilled or instructed installation technicians are allowed to disassemble the equipment for moving to other installation positions.

7.1 Preparation

WARNING
Risk of personal injury or machine damage.

Be sure to use the right equipment with the required capacity, during unloading and lifting.

Follow local regulations regarding lifting.

Machine Transport

WARNING
Do not lift the filling machine more than 20 mm off the floor while it is being moved.

7.2 Disconnect Utilities

a) Turn off and padlock the mains power switch.

b) Shut off all the utility and product supplies upstream:
   - electrical power
   - cold water
   - compressed air
   - product
   - steam
   - CIP
   - communication cables (when used)

c) Released pressure from the water and air circuits by operating the water and air guns. Close the following valves:
   - compressed air valve
   - cold water valve
   - steam valve

d) Disconnect the power, utility, drain and product lines:
   - electrical power (disconnect at power terminal and remove the cable)
   - communication cables (when used)
   - cold water
   - compressed air
   - product
   - steam
   - CIP lines
   - drainage

e) Plug or protect all open connections.

f) Make sure that cables are put away safely.

7.3 Disassemble Machine

Disassemble the machine in reverse order to the assembly instructions in Chapter 4 Positioning, Assembly, and Connections on page 4-1.

WARNING

Risk of burning to skin and eyes.

Make sure to carefully drain pipes containing chemicals.

7.4 Storage Preparation

Make sure that the storage environment respects the following conditions:

Characteristics	Value	Notes
Min and Max °C (°F)	5 - 40 (40 - 105)	If the water system is drained, the equipment can withstand freezing conditions.
Max.relative humidity%	80	Non-condensing

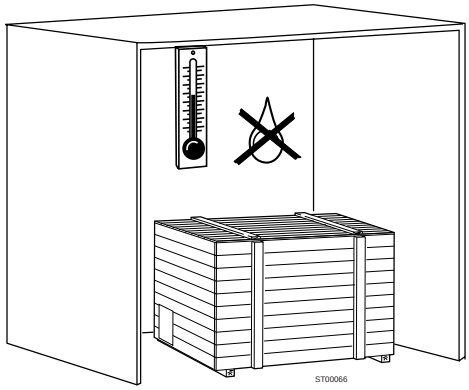

7.5 Re-Crating

a) Fit transport devices in the same locations from which they were removed from when the machine was assembled. The purpose is to prevent movement during transport.

b) Lubricate all sliding components such as rods, cams, and so on.

c) Wrap small components in bubble wrapping or similar to prevent damage.

d) The equipment must be packed in suitable crates to ensure safe transport and the correct storage conditions. Use the original crate and packing if available. Make sure that the parts are adequately protected from transport damage. All parts must be fixed to the crate with proper bolts or similar equipment. Fix any loose sub-crates or boxes to the floor or walls of the crate to prevent them from moving during transport. The crate must also be protected from weather to prevent rain, snow, sand, and so on from entering the crate.

7.6 Moving

See 3.1.3 Lifting Equipment on page 3-4.

Tetra Pak

Note! *This page is generated* ***automatically****.*
using the ***variable definitions*** *made in the* ***front page*** *file!*

Tetra Pak A1
630451-0200
Issue 2003-07-01 Doc. No. IM-85601-0104

Tetra Pak A1 1(2)
630451-0200
Issue 2003-07-01 Doc. No. IM-85601-0104

Tetra Pak A1
630451-0200
Issue 2003-07-01 Doc. No. IM-85601-0104

Tetra Pak A1 1(2)
630451-0200
Issue 2003-07-01 Doc. No. IM-85601-0104

Tetra Pak A1
630451-0200
Issue 2003-07-01 Doc. No. IM-85601-0104

Tetra Pak A1 1(2)
630451-0200
Issue 2003-07-01 Doc. No. IM-85601-0104

Tetra Pak A1
630451-0200
Issue 2003-07-01 Doc. No. IM-85601-0104

Tetra Pak A1 1(2)
630451-0200
Issue 2003-07-01 Doc. No. IM-85601-0104

Tetra Pak A1
630451-0200
Issue 2003-07-01 Doc. No. IM-85601-0104

Tetra Pak A1 2(2)
630451-0200
Issue 2003-07-01 Doc. No. IM-85601-0104

Tetra Pak A1
630451-0200
Issue 2003-07-01 Doc. No. IM-85601-0104

Tetra Pak A1 2(2)
630451-0200
Issue 2003-07-01 Doc. No. IM-85601-0104

Tetra Pak A1
630451-0200
Issue 2003-07-01 Doc. No. IM-85601-0104

Tetra Pak A1 2(2)
630451-0200
Issue 2003-07-01 Doc. No. IM-85601-0104

40 mm Full width ***Note!*** *This page is generated* ***automatically****.*
using the ***variable definitions*** *made in the* ***front page*** *file!*

Tetra Pak A1
630451-0200

Issue 2003-07-01 Doc. No. IM-85601-0104

Tetra Pak A1 1(2)
630451-0200

Issue 2003-07-01 Doc. No. IM-85601-0104

Tetra Pak A1
630451-0200

Issue 2003-07-01 Doc. No. IM-85601-0104

Tetra Pak A1 1(2)
630451-0200

Issue 2003-07-01 Doc. No. IM-85601-0104

Tetra Pak A1
630451-0200

Issue 2003-07-01 Doc. No. IM-85601-0104

Tetra Pak A1 1(2)
630451-0200

Issue 2003-07-01 Doc. No. IM-85601-0104

Tetra Pak A1
630451-0200

Issue 2003-07-01 Doc. No. IM-85601-0104

Tetra Pak A1 2(2)
630451-0200

Issue 2003-07-01 Doc. No. IM-85601-0104

Tetra Pak A1
630451-0200

Issue 2003-07-01 Doc. No. IM-85601-0104

Tetra Pak A1 2(2)
630451-0200

Issue 2003-07-01 Doc. No. IM-85601-0104

Tetra Pak A1
630451-0200

Issue 2003-07-01 Doc. No. IM-85601-0104

Tetra Pak A1 2(2)
630451-0200

Issue 2003-07-01 Doc. No. IM-85601-0104