MM

Maintenance Manual

Tetra Pak A1

630451-0200

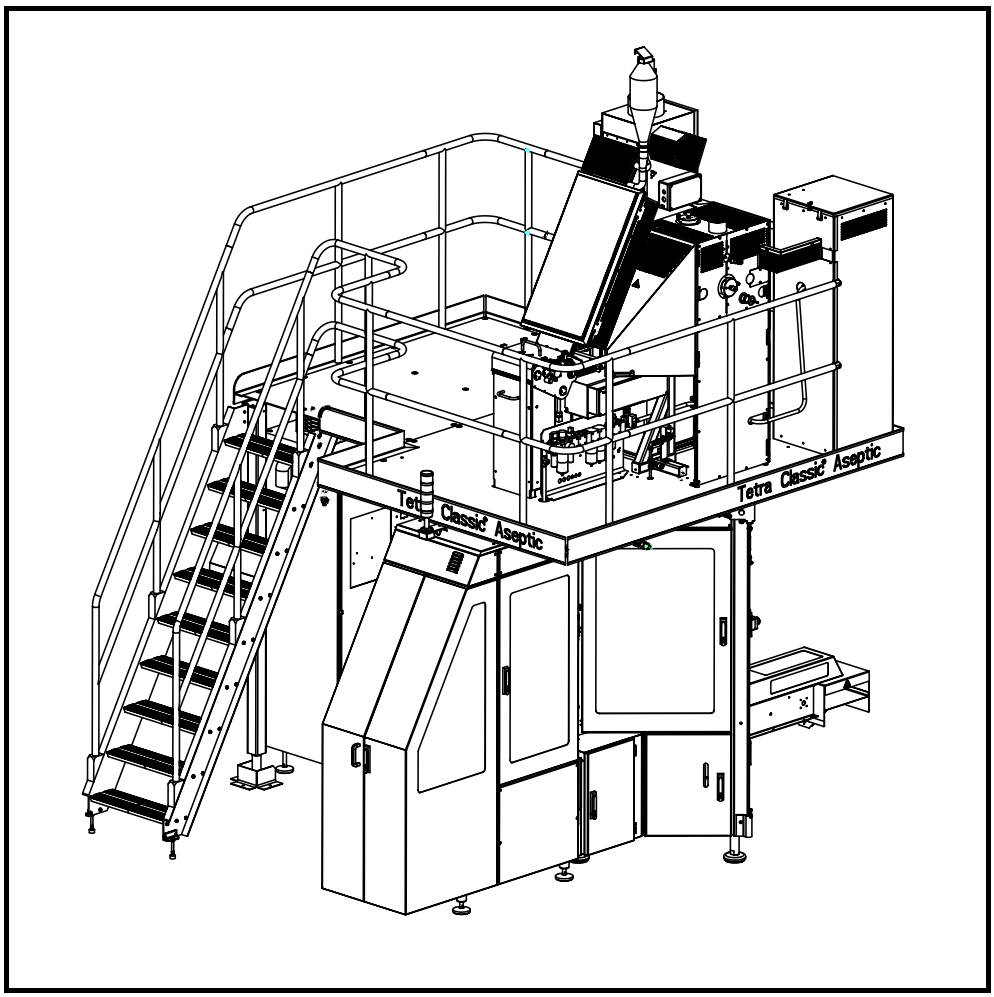

IM1.1855990102fro.fm

Tetra Pak

Doc No. MM-85599-0102

This document is valid for:

Series No/ Machine No Sign.

Tetra Pak A1
630451-0200

Equipment included:

2592400-0100

IM1.1855990102fro.fm

Issue 2003-03-01

Doc No. MM-85599-0102

Tetra Pak

Tetra Pak Carton Ambient AB

Introduction 1
About the Introduction Chapter 1
Document Information 2
Machine Introduction 3
Intended Use of the Machine or Equipment 3
Manufacturer 3
Service 3
Identification 4
CE Classification 4
Machine Plate 4
Orientation 5
Hygiene 6
Abbreviations Used in this Manual 7
Safety Precautions 9
Read the Safety Precautions 9
Hazard Information 10
Requirements on personnel 11
Safety Signs 13
Location of Safety Signs 15
Safety Devices 16
Emergency Stop 16
Safeguards 19
Warning Lamp 20
Horn Alarm 20
Personal Protection 21
Hearing Protection 21
Jewellery 21
Hazardous Materials 22
Hydrogen Peroxide (H_2O_2) 22
Manual emptying of peroxide bath 28
Supply Systems 29
Electrical Cabinet 29
Power Supply 31
Air Supply 32
Steam Supply 33

MM2.21855990102TOC.fm

Water Supply 34

1 Infeed

1-1 Infeed - description 36
1-2 Infeed - setting sequence 37
1-3 Bobbin - set 38

1.1 Valve ramp, infeed 39
1.1-1 Valve ramp, infeed - description 39

1.2 Strip magazine 41
1.2-1 Strip magazine - description 41
1.2.1 Hub 42
1.2.1-1 Hub - check 42
1.2.1-2 Hub - change bearings 43
1.2.1 Heating device 44
1.2.1-1 No procedure described 44
1.2.3 Cutting table 45
1.2.3-1 Cutting table - check 45
1.2.3-2 Cutting table - change 46
1.2.4 Mounting plate 47
1.2.4-1 Mounting plate - check rollers 47
1.2.4-2 Mounting plate - change rollers 48
1.2.5 Magazine 49
1.2.5-1 Magazine - check rollers 49
1.2.5-2 Magazine - change rollers 50
1.2.7 Bobbin brake 51
1.2.7-1 Bobbin brake - check 51
1.2.7-2 Bobbin brake - change belt 52
1.2.7-3 Bobbin brake - change roller 53
1.2.7-4 Bobbin brake - set 54

1.3 Strip applicator 55
1.3-1 Strip applicator - description 55
1.3-2 Strip applicator - set flange 56

MM2.21855990102TOC.fm

1.3.1 Strip guide 57
1.3.1-1 Strip guide - change rollers 57
1.3.1-2 Strip guide - change rollers 58
1.3.1-3 Strip guide - set 59
1.3.1-4 Strip guide - set knob 61
1.3.3 Drive roller 62
1.3.3-1 Drive roller - check 62
1.3.3-2 Drive roller - change flange bushing 63
1.3.4 Pressure roller 64
1.3.4-1 Pressure roller - check 64
1.3.4-2 Pressure roller - change 65
1.3.4-3 Pressure roller - set 66
1.3.5 Heating device 67
1.3.5-1 Heating device - set 67
1.3.6 Bending roller 71
1.3.6-1 Bending roller - check 71
1.3.6-2 Bending roller - change flange bushings 72
1.3.7 Bending roller 73
1.3.7-1 Bending roller - check 73
1.3.7-2 Bending roller - change flange bushings 74
1.3.8 Indicator 75
1.3.8-1 Indicator - set 75
1.3.8-1 Contrast scanner - set 76
1.3.9 Bending roller 77
1.3.9-1 Bending roller - check 77
1.3.9-2 Bending roller - change flange bushings 78
1.3.9-3 Bending roller - set proximity switch 79
1.3.11 Pressure roller 80
1.3.11-1 Pressure roller - check 80
1.3.11-2 Pressure roller - change flange bushings 81
1.3.12 Splice detector 82
1.3.12-1 Splice detector - change bearing bushing 82
1.3.12-2 Splice detector - set 83
1.4 Paper magazine 84
1.4-1 Paper magazine - check 84

MM2.21855990102TOC.fm

1.4-2 Paper magazine - set photocell. 85

1.5 Frame. 86

1.5-1 Frame - change bearing block 86

1.5-2 Frame - set bearing block. 87

1.5-3 Frame - set photocell 88

1.5-4 Frame - set photocell sensitivity 89

1.5.1 Bending roller. 90

1.5.1-1 Bending roller - check 90

1.5.1-2 Bending roller - change flange bushing 91

1.5.1-3 Bending roller - set. 92

1.6 Doors and covers 93

1.6-1 Doors and covers - check 93

1.6-2 Doors and covers - Set safety switch 94

1.7 Splicing device 95

1.7-1 Splicing device - description 95

1.7-2 Splicing device - set Register mark 96

1.7.1 Pressure jaw. 101

1.7.1-1 Pressure jaw - check. 101

1.7.1-2 Pressure jaw - change cylinder. 102

1.7.1-3 Pressure jaw - change rubber strip 103

1.7.1-4 Pressure jaw - change knife 104

1.7.1-5 Pressure jaw - set knife 105

1.7.1-6 Pressure jaw - set roller 106

1.7.1.1 Paper guide. 107

1.7.1.1-1 Paper guide - check cylinder 107

1.7.1.1-2 Paper guide - change cylinder 108

1.7.1.1-3 Paper guide - set table 109

1.7.2 Splicing table 110

1.7.2-1 Splicing table - check teflon tape 110

1.7.2-2 Splicing table - change teflon tape. 111

1.7.2-3 Splicing table - check. 112

1.7.2-4 Splicing table - overhaul 113

1.7.2-5 Splicing table - change TPC bar 115

1.7.2-6 Splicing table - change knife 116

MM2.21855990102TOC.fm

1.7.2-7 Splicing table - set knife 117

2 Sterile unit

2-1 Sterile unit - description 120

2.1 Catalyzer 121

2.1-1 Catalyzer - clean 121

2.2 Heating chamber. 122

2.2-1 Heating chamber - description 122

2.2.1 Element group 123

2.2.1-1 Element group - check 123

2.2.1-2 Element group - set parallel 125

2.2.1-3 Element group - change rollers 126

2.2.2 Hatch. 127

2.2.2-1 Hatch - check rubber strip 127

2.2.3 Box 128

2.2.3-1 Box - check 128

2.2.3-2 Box - change bending rollers 130

2.2.4 Connection pipe. 133

2.2.4-1 Connection pipe- clean 133

2.2.5 Air knife 134

2.2.5-1 Air knife - check 134

2.2.5-2 Air knife - set 135

2.3 Sterilization bath. 136

2.3-1 Sterilization bath - description 136

2.3-2 Sterilization bath - check bending rollers 137

2.3-3 Sterilization bath - change bearings 138

2.3-4 Sterilization bath - check squee-gee rollers 139

2.3-5 Sterilization bath - change silicon rubber hose . . 140

2.3-6 Sterilization bath - change ball bearings 143

2.3-7 Sterilization bath - set squee-gee rollers pressure 144

2.3.6 Sterilization bath 145

2.3.6-1 Sterilization bath - check level sensors 145

2.3.6-2 Sterilization bath - change seal 146

MM2.21855990102TOC.fm

2.3.7 Lid 147
2.3.7-1 Lid - check 147

3 Tube forming module

3-1 Tube forming module - description 150
3-2 Tube forming module - setting sequence 151

3.1 Web guide 152
3.1-1 Web guide - check 152
3.1-2 Web guide - change bearings 153
3.1-3 Web guide - set clamping ring 154
3.1-4 Web guide - set proximity switches 155
3.1-5 Web guide - set roller 156

3.2 Pendulum roller 157
3.2-1 Pendulum roller - check 157
3.2-2 Pendulum roller - remove 158
3.2-3 Pendulum roller - change bearings 159
3.2-4 Pendulum roller - change cylinder 160
3.2-5 Pendulum roller - set 161

3.3 Clamp 162
3.3-1 Clamp - change flange bushing 162
3.3-2 Clamp - change cylinders 163
3.3-3 Clamp - set stroke 164
3.3-4 Clamp - set cylinders 165

3.4 Drive unit 166
3.4-1 Drive unit - check 166
3.4-2 Drive unit - overhaul 167
3.4-3 Drive unit - set 168

3.5 Filling pipe 169
3.5-1 Filling pipe - set 169
3.5.1-1 Filling pipe - set pressure roller 170

3.7 Forming mandrel bracket 171

MM2.21855990102TOC.fm

3.7.1 Lower forming ring 172
3.7.1-1 Lower forming ring - check 172
3.7.1-2 Lower forming ring - change flange bushings . . 173
3.7.1-3 Lower forming ring - change rollers 174
3.7.1-4 Lower forming ring - set height 175
3.7.1-5 Lower forming ring - set guide rollers 176
3.7.1-6 Lower forming ring - set clearance 177
3.7.1-7 Lower forming ring - set overlap 178
3.7.2 Photocells. 179
3.7.2-1 Photocells - set 179
3.7.3 Longitudinal element. 182
3.7.3-1 Longitudinal element - check 182
3.7.3-2 Longitudinal element - change rollers 183
3.7.3-3 Longitudinal element - set 184
3.7.3-4 Longitudinal element - check heating zone 189
3.7.4 Heating element. 190
3.7.4-1 Heating element - check 190
3.7.4-2 Heating element - change 191
3.7.5 Cantilever 192
3.7.5-1 Cantilever - change seal ring 192
3.7.6 Upper forming ring 193
3.7.6-1 Upper forming ring - check 193
3.7.6-2 Upper forming ring - change flange bushings. . . 194
3.7.6-3 Upper forming ring - change rollers 195
3.7.6-4 Upper forming ring - set clearance 196
3.7.6-5 Upper forming ring - set paper tube alignment . 197
3.7.7 Photocell unit. 198
3.7.7-1 Photocell unit- set 198
3.8 Edge roller. 201
3.8-1 Edge roller - check 201
3.8-2 Edge roller - change flange bushings 202
3.8-3 Edge roller - change rollers 203
3.8-4 Edge roller - set 204

MM2.21855990102TOC.fm

4 Platform

4-1 Platform - description 206

4.1 Railing 207

4.1.1-1 Railing - no procedure described 207

4.2 Ladder 208

4.2.1-1 Ladder - no procedure described 208

4.3 Warning beacon 209

4.3.1-1 Warning beacon - set signal 209

4.4 Platform 210

4.4.1-1 Platform - no procedure described 210

5 Main body

5-1 Main body - description 212

5.1 Doors and covers 214

5.1-1 Doors and covers - check emergency stops 214

5.1-2 Doors and covers - set emergency stop 215

5.1-3 Doors and covers - check door guards 216

5.2 Frame 217

5.2-1 Frame - description 217

5.2.1 Drive unit 218

5.2.1-1 Drive unit - check lubrication 218

5.2.1-2 Drive unit - check chains, sprockets and chain tensioners 219

5.2.1-3 Drive unit - check crank 220

5.2.1-4 Drive unit - change bevel gear oil 221

5.2.1-5 Drive unit - change chain tensioner 222

5.2.1-6 Drive unit - change sprockets and chains 223

5.2.1-7 Drive unit - check safety clutch 228

5.2.1-8 Drive unit - set package length 230

5.2.2 Central lubrication 235

5.2.2-1 Central lubrication - functional description 235

5.2.2-2 Central lubrication - check lubricant distribution 236

5.2.2-3 Central lubrication - bleed 239

5.2.2-4 Central lubrication - check level switch 240

MM2.21855990102TOC.fm

5.2.2-5 Central lubrication - check pressure switch 241
5.2.2-6 Central lubrication - clean oil tank 242
5.2.2-7 Central lubrication - change oil tank..... 243
5.2.2-8 Central lubrication - fault finding 244
5.2.3 Hydraulic system 245
5.2.3-1 Hydraulic system - description 245
5.2.3-2 Hydraulic system - check 246
5.2.3-3 Hydraulic system - bleed 246
5.3 Pressure side 247
5.3-1 Pressure side - description 247
5.3.1 Spacer piece..... 248
5.3.1-1 Spacer piece - check chain tensioner 248
5.3.1-2 Spacer piece - change chain tensioner 249
5.3.1-3 Spacer piece - check rollers 250
5.3.1-4 Spacer piece - check oil brushes 251
5.3.1-5 Spacer piece - check chain guide-..... 252
5.3.1-6 Spacer piece - change rollers 253
5.3.1-7 Spacer piece - change glide bearings 254
5.3.1-8 Spacer piece - set chain guide..... 255
5.3.2 Sprocket..... 256
5.3.2-1 Sprocket - check chain length..... 256
5.3.2-2 Sprocket - remove chains 257
5.3.2-3 Sprocket - install chains 259
5.3.2-4 Sprocket - change sprockets and bearings 261
5.3.3 Plunger..... 264
5.3.3-1 Plunger - remove 264
5.3.3-2 Plunger - check roller bar 266
5.3.3-3 Plunger - change roller bar 267
5.3.3-4 Plunger - change x-seal 268
5.3.4 Frame section 269
5.3.4-1 Frame section - fold down to service position .. 269
5.3.4-2 Frame section - raise to production position ... 271
5.3.5 Design correction 273
5.3.5-1 Design correction - description 273
5.3.5-2 Design correction - check 275

MM2.21855990102TOC.fm

5.3.5-3 Design correction - change cylinders 276
5.3.5-4 Design correction - set 278
5.3.6 Pressure jaw 279
5.3.6-1 Pressure jaw - check 279
5.3.6-2 Pressure jaw - remove 280
5.3.6-3 Pressure jaw - disassemble 281
5.3.6-3 Pressure jaw - set volume adjuster 287
5.3.7 Guide sprocket 288
5.3.7-1 Guide sprocket - check 288
5.3.7-2 Guide sprocket - change bearings 289
5.4 Heating side 292
5.4-1 Heating side - description 292
5.4.1 Sprocket 293
5.4.1-1 Sprocket - check chain length 293
5.4.1-2 Sprocket - remove chains 294
5.4.1-3 Sprocket - install chains 295
5.4.1-4 Sprocket - change sprockets and bearings 297
5.4.2 Frame section 300
5.4.2-1 Frame section - fold down to service position . . 300
5.4.2-2 Frame section - raise to production position 302
5.4.2-3 Frame section - check oil brushes 303
5.4.2-4 Frame section - check roller bar 304
5.4.2-5 Frame section - remove roller bar 305
5.4.2-6 Frame section - check chain guide 306
5.4.2-6 Frame section - set chain guide 307
5.4.3 Guide sprocket 308
5.3.7-1 Guide sprocket - check 308
5.4.3-1 Guide sprocket - change bearings 309
5.4.4 Heating jaw 312
5.4.4-1 Heating jaw - check 312
5.4.4-2 Heating jaw - remove 314
5.4.4-3 Heating jaw - change bearing rollers 315
5.4.4-4 Heating jaw - change carbon brushes and inductor 316
5.4.4-5 Heating jaw - set volume adjuster 318

MM2.21855990102TOC.fm

5.4.5 Synchronizer 319
5.4.5-1 Synchronizer - check 319
5.4.6 Contact rail 320
5.4.6-1 Contact rail - check 320
5.4.6-2 Contact rail - remove 321
5.4.6-3 Contact rail - change transformer 322
5.5 Valve ramp 323

7 Package outfeed

7-1 Package outfeed - description 326
7-2 Package outfeed - check 327
7.1 Torque cylinder 328
7.1-1 Torque cylinder - change 328
7.1-2 Torque cylinder - set 329
7.2 Conveyor belt 330
7.2-1 Conveyor belt - change 330
7.2-2 Conveyor belt - set 332
7.3 Motor and flange bearing 333
7.3-1 Motor and flange bearing - change 333

8 Electrical equipment

8.1 Electrical components 337
8.1.1 Temperature regulators 337
8.1.1-1 Temperature regulators - set 337
8.1.1-2 Temperature regulator - error signal 341
8.1.1-3 Temperature regulators - change 342
8.1.1-4 Temperature regulators - calibrate 343
8.1.2 Thermocouple 348
8.1.2-1 Thermocouple - check 348
8.1.3 Frequency converter 350
8.1.3-1 Frequency converter - description 350
8.1.3-2 Frequency inverter - set 352

MM2.21855990102TOC.fm

8.1.3-3 Frequency inverter - fault codes 369
8.1.3-4 Frequency inverter - warning codes 371
8.1.4 Level meter card 372
8.1.4-1 Level meter card - configuration 372
8.1.4-2 Level meter card - set 373
8.1.5 Level regulator relay 375
8.1.5-1 Level regulator relay - description 375
8.1.5-2 Level regulator relay - set 376
8.1.6 Fuse board 377
8.1.6-1 Fuse board - description 377
8.1.7 Over voltage protector 380
8.1.7-1 Over voltage protector - check/change 380
8.1.8 Residual current device 381
8.1.8-1 Residual current device - check 381
8.1.9 Web tension drives 383
8.1.9-1 Web tension drives - check 383
8.1.10 Paper web element supervision 387
8.1.10-1 Paper web element supervision - set 387
8.2 TPIH 388
8.2-1 TPIH - description 388
8.2.1 TPIH generator 389
8.2.1-1 TPIH generator - alarm description 389
8.2.1-2 TPIH generator - fault finding 391
8.2.1-3 TPIH generator - change 393
8.2.2 TPIH cables 394
8.2.2-1 TPIH cables - check condition 394
8.2.2-2 Litz cables - check 395
8.2.2-3 TPIH cables - change impedance transformer . . . 396
8.2.4 TPIH TS power 397
8.2.4-1 TPIH TS power - set 397
8.2.5 TPIH test instrument 398
8.2.5-1 TPIH test instrument - description 398
8.3 PLC 399
8.3-1 PLC - change battery 399

MM2.21855990102TOC.fm

8.3-2 PLC - change module 402
8.3-3 PLC - change terminal 403
8.3-4 PLC - load program 404
8.3-5 PLC - print program 408

8.4 PLMS 410

8.4-1 PLMS - function description 410
8.4-2 PLMS - copy data 411

9 Supply system

9-1 Supply system - description 420

9.1 Peroxide system 421

9.1.1 Pump unit 421

9.1.1-1 Pump unit - check 421
9.1.1-2 Peroxide unit - change hoses 422

9.1.2 Peroxide system 423

9.1.2-1 Peroxide system - check 423
9.1.2-2 Peroxide system - set cooling water 424

9.2 Sterile air system 425

9.2-1 Sterile air system - check 425
9.2-2 Sterile air system - check pressure 426
9.2-3 Spray system - check filter 427
9.2-4 Nozzle - clean 428
9.2-5 LS pressure - set 429

9.2.2 Heat exchanger 430

9.2.2.1 Heat exchanger - check tightness 430
9.2.2-2 Heat exchanger - clean 434

9.3 Air processing unit 435

9.3-1 Air processing unit - description 435
9.3-2 Air processing unit - set main air pressure guard 436
9.3-3 Air processing unit - set sterile air pressure guard 437
9.3-4 IP-transducer - set 438
9.3-5 Air filter-change 439
9.3-6 Filter regulator-set 440

MM2.21855990102TOC.fm

9.3-7 Soft start valve -set. 441
9.3-8 Pneumatic chart 442

9.4 Filling unit 445

9.4-1 Filling unit - function description 445
9.4-2 Filling system - set proximity sensor 448

9.4.1 Filling unit 449

9.4.1-1 AP-valve - remove 449
9.4.1-2 AP valve - change seals and diaphragm 451
9.4.1-3 AP valve - change A- and B-cylinder seals 454
9.4.1-4 AP valve - change C-cylinder seals 458
9.4.1-4 C-cylinder- set movement 460

9.4.2 Regulating valve 461

9.4.2-1 Regulating valve - description 461
9.4.2-3 Regulating valve - overhaul 462
9.4.2-2 Regulating valve - set proximity switch. 465

9.4.4 Steam unit 466

9.4.4-1 Steam unit - check filter 466
9.4.4-2 Steam unit - clean steam trap 467
9.4.4-3 Steam unit- clean filter 468
9.4.4-3 Steam unit - change filter insert 472

9.5-1 Air unit 473

9.5.1-1 No procedures described 473

9.6-1 Cable Trays Supply System. 474

9.6.1-1 No procedures described 474

9.7-1 Cover 475

9.7.1-1 No procedures described 475

9.8-1 Connection Box 476

9.8.1-1 No procedures described 476

10 Reel trolley

10-1 Reel trolley - check 478
10-2 Reel trolley - change pump cylinder 479
10-3 Reel trolley - set regulating valve 481

MM2.21855990102TOC.fm

10-4 Reel trolley - change sink valve 482
10-5 Reel trolley - overhaul lifting cylinder 484
10-6 Reel trolley - remove fork wheel 485
10-7 Reel trolley - remove guide wheel 486
10-8 Reel trolley - set brake 487

11 General

11.1 Consumables 490
11.1-1 Lubricants 490
11.1-2 Cleaning and Disinfecting Agents 494

12 Checklist overview

12.1 Checklist overview - description. 498
12.2 TPMS - description 498
12.3 Checklist overview 499

MM2.21855990102TOC.fm

This page intentionally left blank

MM2.21855990102TOC.fm

Introduction

About the Introduction Chapter

WARNING! **Risk of serious personal injury.**
To ensure maximum safety, always read the Safety Precautions chapter before operating or servicing the machine or equipment.

This chapter contains basic information about this manual and related Tetra Pak equipment.

MM2.21TS100438en.fm

Document Information

Tetra Pak recommends that the delivered information is studied carefully, and above all, ensure its availability to those who will be operating the machine or equipment.

It is important to keep the manual for the life of the machine or equipment and pass the manual on to any subsequent holder or user.

Tetra Pak will not be held responsible for any damage to the machine or equipment caused by not following the instructions given in this manual.

Delivered Documentation

The documents delivered with this machine or equipment include:

- Electrical Manual (EM)
  The purpose of this manual is to provide the service technicians and electricians with information required for service and maintenance
- Installation Manual (IM)
  The purpose of this manual is to provide installation personnel with the information required for installation
- Maintenance Manual (MM)
  The purpose of this manual is to provide the service technicians with information required for maintenance and service
- Operation Manual (OM)
  The purpose of this manual is to provide the operator with information on how to handle and operate the machine or equipment before, during, and after production
- Spare Parts Catalogue (SPC)
  The purpose of this manual is to provide necessary information for ordering spare parts from Tetra Pak

Typographical Conventions

Buttons, TPOP screens, and program steps are printed in CAPITAL LETTERS.

References are underlined.

MM2.21TS100438en.fm

Machine Introduction

Intended Use of the Machine or Equipment

The intended use of this Tetra Pak machine is to pack liquid food products.

All other use is prohibited! Tetra Pak will not be held responsible for injury or damage if the machine or equipment is used for any other purpose.

Manufacturer

This Tetra Pak machine or equipment has been manufactured by:

Tetra Pak Carton Ambient AB
Ruben Rausings gata
SE-221 86 LUND
Sweden

Service

If problems are encountered when operating this machine or equipment, contact the nearest Tetra Pak service station or market company.

Contact the liaison responsible with other inquiries, comments or suggestions for improvement regarding the machine or equipment and its documentation.

Copyright © 2003
Tetra Pak Carton Ambient AB
All rights reserved. No parts of this document may be reproduced or copied in any form or by any means without written permission from Tetra Pak Carton Ambient AB.

MM2.21TS100438en.fm

Identification

CE Classification

This equipment complies with the basic health and safety regulations of the European Economic Area (EEA).

Machine Plate

The below illustration shows an example of the machine plate and its location on the machine or equipment. The machine plate carries data needed when contacting Tetra Pak concerning this specific machine or equipment.

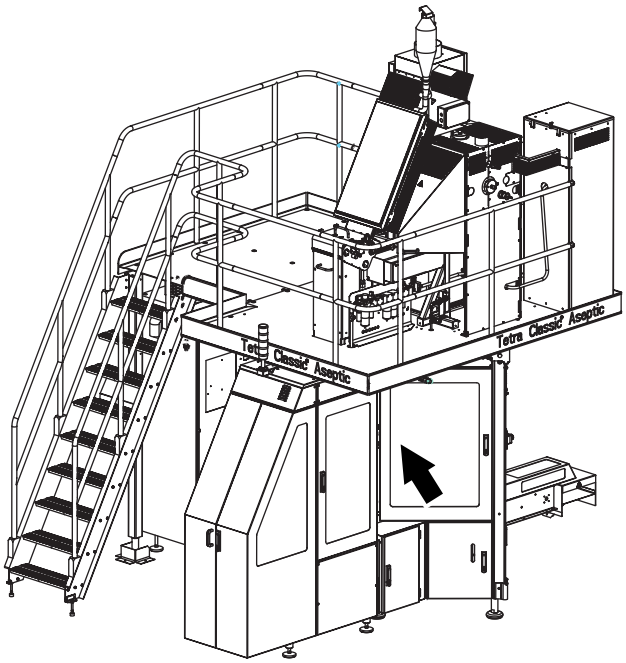

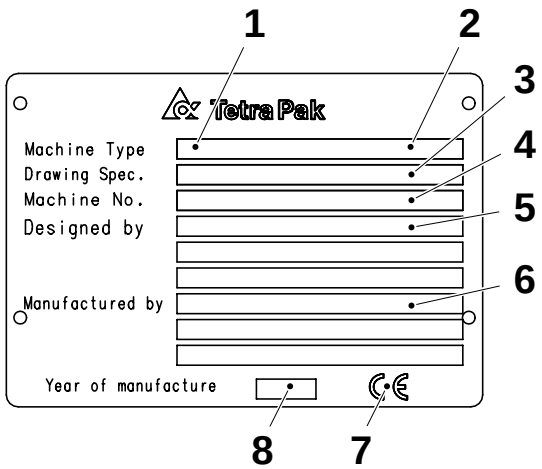

1 Machine type
2 Volume
3 Drawing specifications
4 Machine serial number
5 Designed by
6 Manufacturer
7 CE mark
8 Year of manufacture

MM2.21TS100438en.fm

Orientation

The below illustration shows the orientation of the machine or equipment. This directional information will be used throughout this manual.

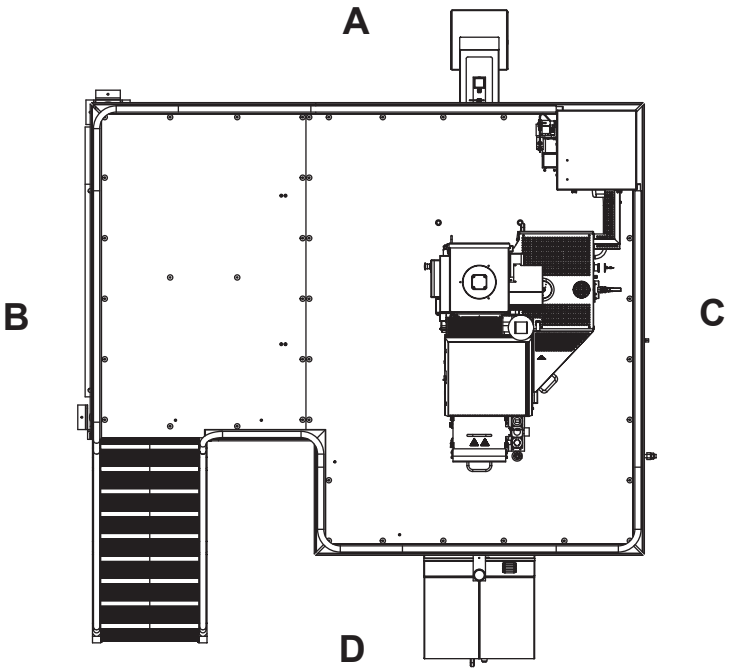

A Front
B Right Hand side
C Left Hand side
D Back

MM2.21TS100438en.fm

Hygiene

To avoid microbiological pollution of the packaging material:

- always keep the doors in the filling room (area) closed and never open any windows when the equipment is in production to prevent contamination via air streams
- never clean the floors or the equipment in the filling room (area) when the equipment is in production
- compressed air used for cleaning purposes is to be used only for cleaning filters and should only be used outside of the filling room (area) or in the final folder compartment of the filling machine
- prepare the splicing of the packaging material as late as possible
- disinfect hands before touching the packaging material, the strip(s), or any other equipment part that may come into contact with the product.Use disinfectant (code H).
- keep hands and gloves clean
- always wear some type of hair protection (cap or hairnet) and clean clothes (preferably white)
- do not wear a watch, ring, necklace, earrings or any other visible jewelry
- clean the platforms, the ladder and the area around the equipment when the equipment is not in production

MM2.21TS100438en.fm

Abbreviations Used in this Manual

Abbreviation	Meaning	Translation
approx.	approximately	
CIP	Cleaning In Place	
EM	Electrical Manual	
IM	Installation Manual	
LED	Light Emitting Diode	
LH	Left Hand	
LS	Longitudinal Seal(ing)	
min	Minimum	
max	Maximum	
MM	Maintenance Manual	
OE	Optional Equipment	
OM	Operation Manual	
p/h	packages per hour	
PLC	Programmable Logic Controller	
RH	Right Hand	
RK	Rebuilding Kit	
SA	Strip Applicator	
SPC	Spare Parts Catalogue	
TP	Tetra Pak	
TPMS	Tetra Pak Maintenance System	
TS	Transversal Seal(ing)	

MM2.21TS100438en.fm

This page intentionally left blank

MM2.21TS100438en.fm

Safety Precautions

Read the Safety Precautions

All persons operating, servicing, adjusting or otherwise working with or near this machine must carefully read and follow all safety instructions in this manual and warning signs on the machine itself. Failure to do so could result in death, serious injury and / or damage to machine.

In case of accident, always call for medical attention immediately.

MM2.21TS100439en.fm

Hazard Information



This is the **“safety alert” symbol**. Obey all safety messages that follow this symbol to avoid death or injury.

The following safety alert symbols and signal words are used in this manual and on the machine itself to inform about hazards:



DANGER! indicates an imminently hazardous situation which, if not avoided, **will** result in **death or serious injury.**



WARNING! indicates a potentially hazardous situation which, if not avoided, **could** result in **death or serious injury.**

CAUTION! indicates a potentially hazardous situation which, if not avoided, **may** result in **minor or moderate injury.** It may also be used to alert against unsafe practices.

IMPORTANT! indicates a potentially hazardous situation which, if not avoided, **may** result in **property damage**.

MM2.21TS100439en.fm

Requirements on personnel

DANGER!

Risk of immediate danger to life!
Failure to obey the Safety precautions will put your life in danger.
All personnel must regard all electrical equipment as live.

The work is to be carried out in such a way that there is no risk of injury to personnel.

General

During maintenance or service work, the service technician and the electrician are responsible not only for the machine, but for the safety of the personnel in the vicinity of the machine as well!

It is also the responsibility of the service technician and the electrician to ensure that the machine safety devices are fully operational before he/she finishes the maintenance or service work.

Service technician

Only trained or instructed service technicians are allowed to work on the machine.

Service technicians may be:

- technicians employed by **Tetra Pak**

  Tetra Pak technicians are Tetra Pak employees who have completed training courses at the Tetra Pak Technical Training Centres or have equivalent knowledge.
- technicians employed by the **customer**

  Technicians employed by the customer must have the following skills:
  - capable of reading (English or native) technical information
  - able to understand technical drawings
  - basic knowledge of mechanics and electronics
  - basic knowledge of mathematics
  - capable of handling (special) tools

(Cont'd)

MM2.21TS100439en.fm

(Cont'd)

Electrician

Electricians should:

- be certified according to local regulations
- have experience of similar types of installations
- have proven skills in reading and working from drawings and cable lists
- have knowledge of local safety regulations for power and automation

Work with the electrical equipment in the machine must be performed by **skilled persons only.**

According to EN 60204-1:1997 clause 3.52 a skilled person is:

– *a person with relevant education and experience to enable him or her to perceive risks and to avoid hazards which electricity can create.*

Machine operator

Only trained or instructed persons are allowed to operate the machine.

The machine operator is an individual that has enough training and/or knowledge to run the equipment in the correct way.

MM2.21TS100439en.fm

Safety Signs

SPC	2592385-0100

WARNING! **Hazards without safety signs drastically increase the risk of death or serious injury.**
Replace all missing or damaged safety signs immediately.

The table below contains all safety signs that are located on this machine.

Note! The position numbers (Pos) within the table refer to the positions in the illustration(s) in the Location of Safety Signs on page 15.

Pos	ISO signs	Pos	ISO signs
	 **Mandatory action.** Wear eye protection.	020/ 030	 **Dangerous Chemicals.** Wear protective equipment.
	 **Mandatory action.** Hearing protection recommended.	070/ 080	 **Harmful vapour.**
	 **Hazardous voltage.** Read Maintenance Manual BEFORE using this socket outlet. Failure to follow maintenance instruction could result in death or serious injury.	090	 **Hazardous voltage.** Will cause death or serious injury. Disconnect power before servicing. Lockout machine.

MM2.21TS100439en.fm

Pos	ISO signs	Pos	ISO signs
010/ 050/ 060	 **Hot surface.** Do not touch. Allow to cool before servicing.	040	 **Moving part can crush and cut.** Do not operate with guard removed. Follow lockout procedure before servicing.
100	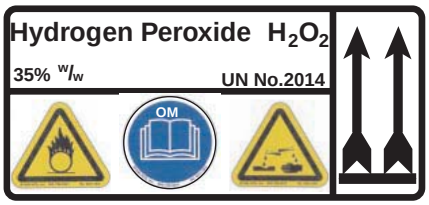 **Hydrogen peroxide.** Corrosive chemical. Can cause serious injury in both liquid and gas form. Hydrogen peroxide may cause irritation or damage if contact with skin, mucous membranes, eyes, or clothes. Wear personal protective.	110	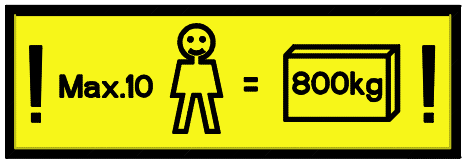 **Max load sign.** No more than 10 persons or 800 kg load may be present on the platform at the same time.

MM2.21TS100439en.fm

Location of Safety Signs

SPC	2592385-0100

Note! Always ensure that all safety signs on the machine are undamaged and in it's correct position, after installation and maintenance.

The illustration below indicates where the safety signs are located on the machine. The position numbers refer to the table in section Safety Signs.

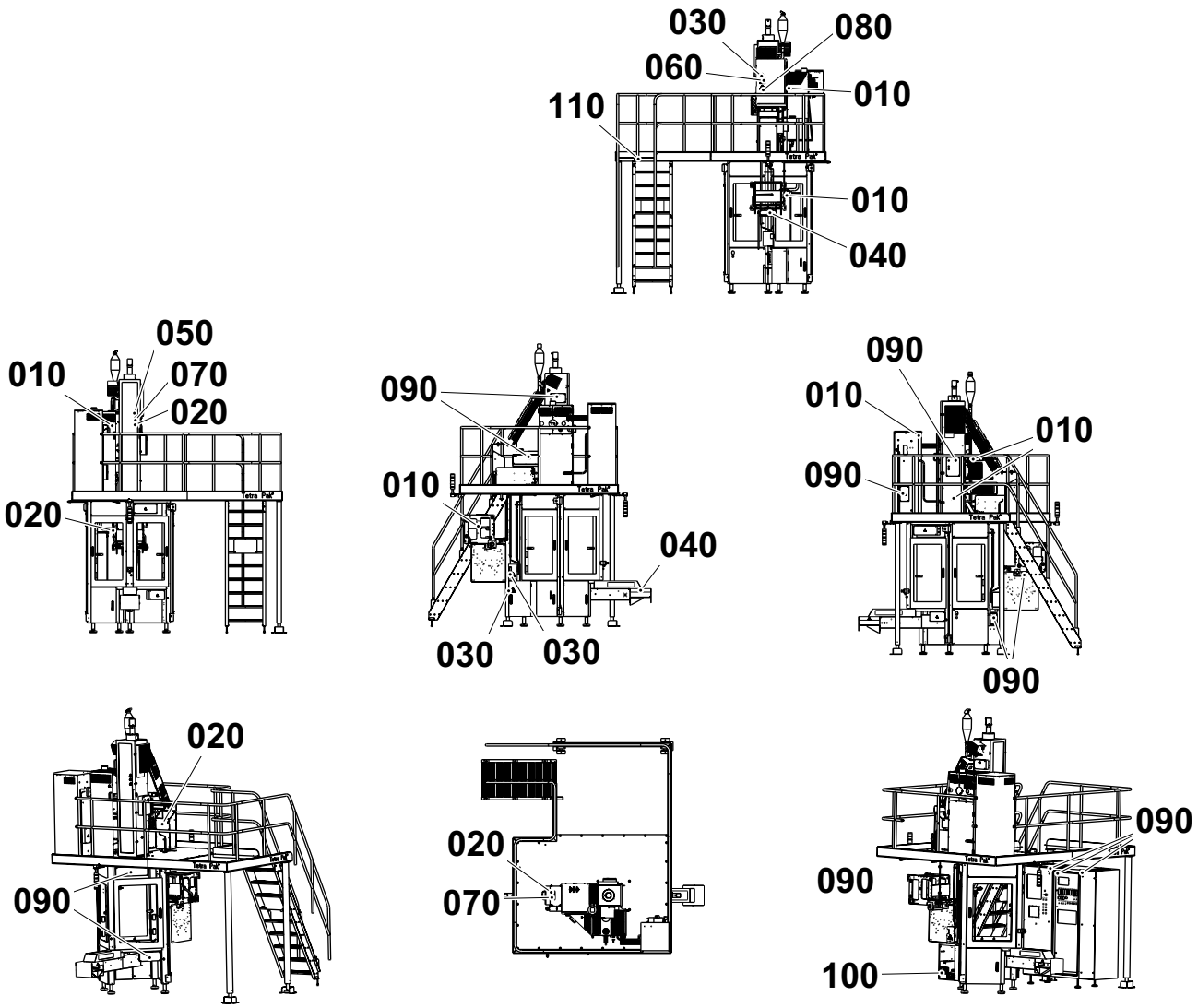

MM2.21TS100439en.fm

Safety Devices

DANGER! **Unshielded hazards.**
Never inch or run the machine if any component of the safety system is inoperative.

All inoperative components of the safety system must be changed immediately.

Note! Activating a safety device, such as an EMERGENCY STOP or opening an interlocked safe guard, does not switch off the power supply to the machine.

Emergency Stop

CAUTION! **Risk of minor personal injury!**
The perioxide bath is not automatically emptied if an EMERGENCY STOP is pushed. This has to be done manually.

Learn the positions of the EMERGENCY STOP devices in order to stop the machine immediately in case of an emergency situation.

To stop production the normal way, see chapter Stop in the Operation Manual.

(Cont'd)

MM2.21TS100439en.fm

(Cont'd)

Emergency Stop Push Buttons

Push one of the EMERGENCY STOP push buttons to stop the machine immediately.

Empty the peroxide bath, see Manual emptying of peroxide bath on page 28.

The illustrations below show an emergency stop push button and the arrows indicate the locations on the machine.

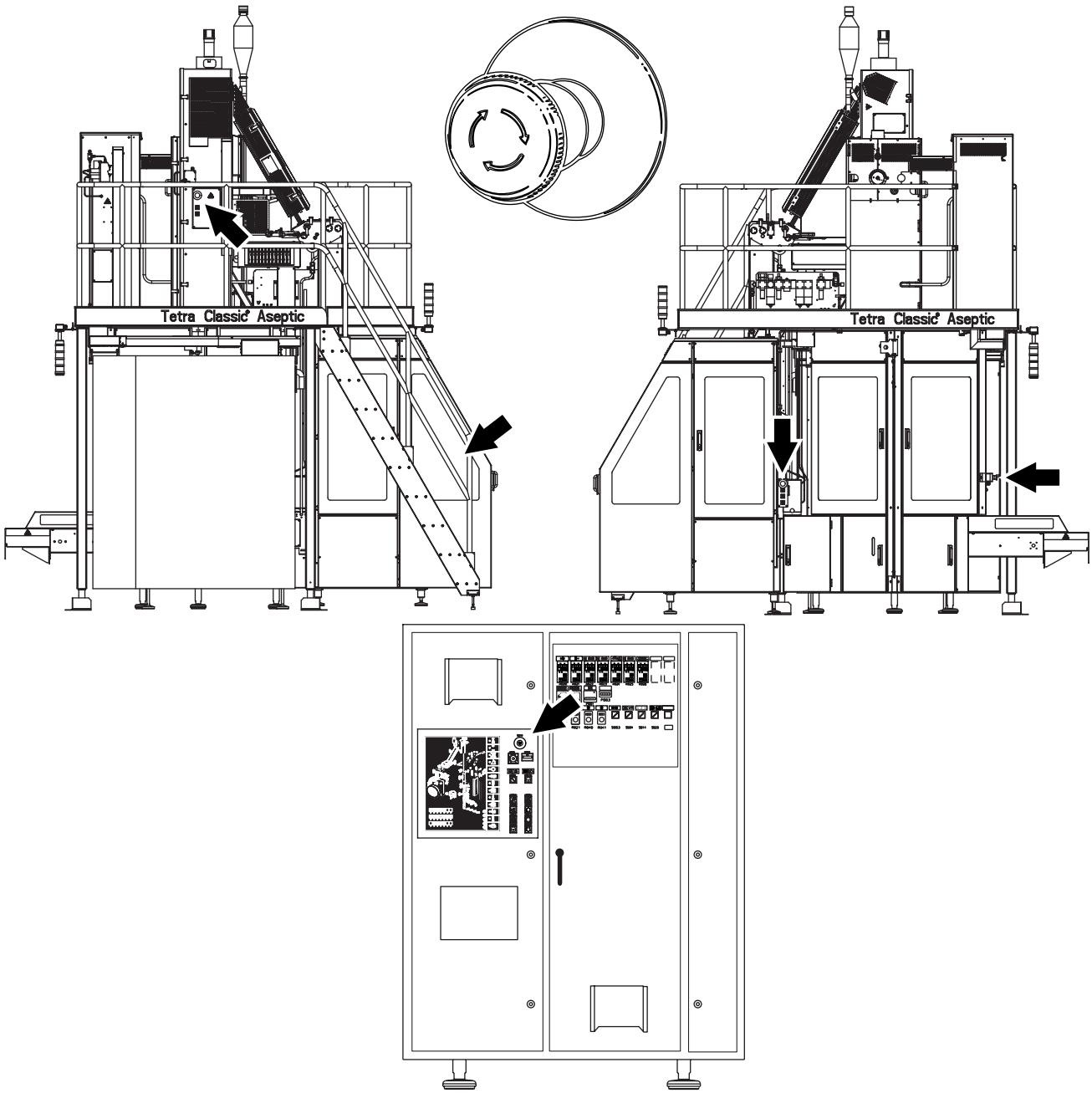

MM2.21TS100439en.fm

(Cont'd)

(Cont'd)

Emergency Stop Wires

Pull one of the EMERGENCY STOP wires to stop the machine immediately.

Empty the peroxide bath, see Manual emptying of peroxide bath on page 28.

The illustrations below show an emergency stop wire and the arrows indicate the locations on the machine.

Before reseting the emergencystop press the button on the emergency stop wire module, see figure below.

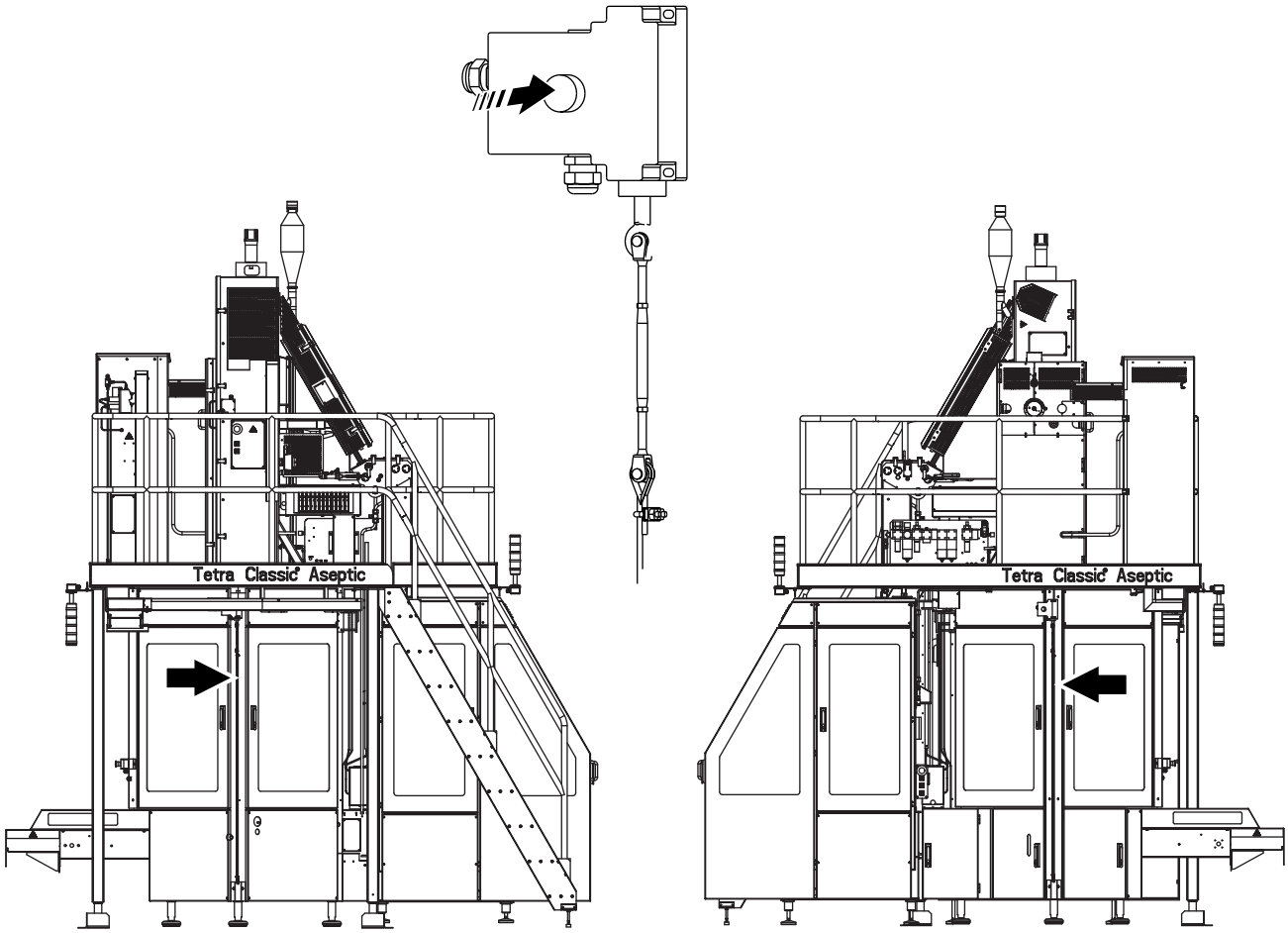

MM2.21TS100439en.fm

Location of Emergency stop wires

Safeguards

DANGER! **Moving machinery.**
Never defeat safety switches.

All movable guards, such as doors and covers, leading to hazardous areas are fitted with interlocking devices, usually electric safety switches. These devices are part of the safety system of the machine, and must never be defeated, bypassed or otherwise made inoperative

Safeguarded components may be thermally hot after operation.

After installation and maintenance, check that all safeguards are fitted and in correct operation before the machine is inched or run.

CAUTION! **Machine damage.**
Never stop the machine by opening a movable guard, except in case of emergency.

The illustrations below show all movable guards; locations indicated by arrows.

MM2.21TS100439en.fm

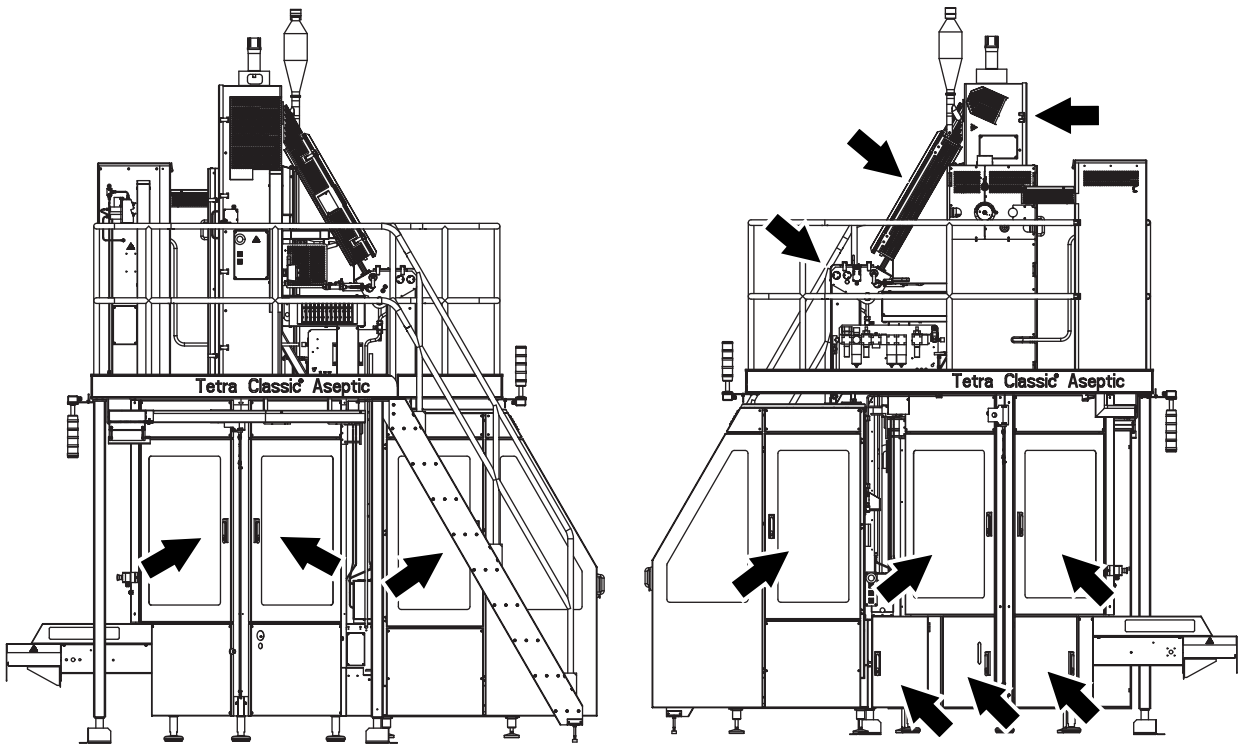

Warning Lamp

The machine is fitted with a column of one or several warning lamps.

The red light flashes when a **hazardous condition** has occurred, such as an **emergency stop** having been activated.

The yellow light flashes when an condition has occurred which requires action by the operator, such as a door or cover having been opened.

The blue light flashes when operator action is required, such as refilling a magazine.

Note! For a complete list of alarms, see the Operation Manual.

The light stops flashing and remain lit when the ALARM RESET button is pressed. After the fault is corrected or the operator takes the appropriate action, the warning light goes off.

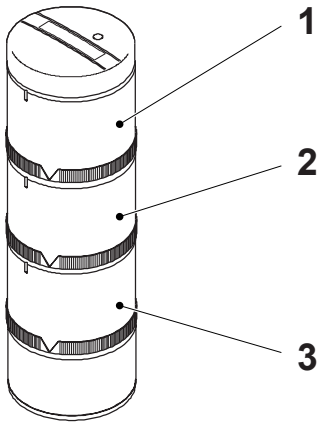

1 Red light
2 Yellow light
3 Blue light

MM2.21TS100439en.fm

Horn Alarm

The horn alarm produces a **sonic warning signal** every time the main motor is about to start.

The warning signal sounds for approximately 3 seconds prior to motor ignition and is intended to alert personnel that **the machine is about to start**.

Personal Protection

Note! Information about personal protection regarding chemical products can be found in the section describing each specific chemical.

Hearing Protection

CAUTION! **Hazardous noise level.**
Risk of impaired hearing.
Hearing protection is recommended.

Jewellery



WARNING! **Risk of entanglement.**
No personal jewellery such as rings, watches, bracelets or necklaces may be worn when performing work on or near the machine.

MM2.21TS100439en.fm

Hazardous Materials

Hydrogen Peroxide (H_2O_2)

WARNING! **Corrosive chemical.**
Always wear personal protective equipment.

In both liquid and gas form, hydrogen peroxide may cause irritation or damage if in contact with skin, mucous membranes, eyes, or clothes. In case of accident call for medical attention immediately.

Liquid hydrogen peroxide in concentrations lower than 1% is normally considered harmless to humans.

Consult the instructions on the label of the tank or container.

Handling

DANGER! **Explosion.**
Do NOT pour surplus hydrogen peroxide back into the original container.

If contaminated hydrogen peroxide is poured back in the original container with fresh peroxide, or if hydrogen peroxide is allowed to decompose, there is a risk of explosion. Avoid contamination of hydrogen peroxide. It may react with or **form explosive products** with many organic substances such as acetone, cellulose, and ethanol.

CAUTION! **Rapid decomposition.**
Ensure that equipment used for handling and diluting hydrogen peroxide is clean before coming in contact with hydrogen peroxide and neutralized with water after.

Pumps or other **equipment** used for hydrogen peroxide **must be** used **for this purpose only** and must be manufactured from appropriate materials such as stainless steel 316 L, glass, polyethylene, or teflon.

(Cont'd)

MM2.21TS100439en.fm

(Cont'd)

If hydrogen peroxide is spilled, dilute it with large amounts of water and flush it into a drain.

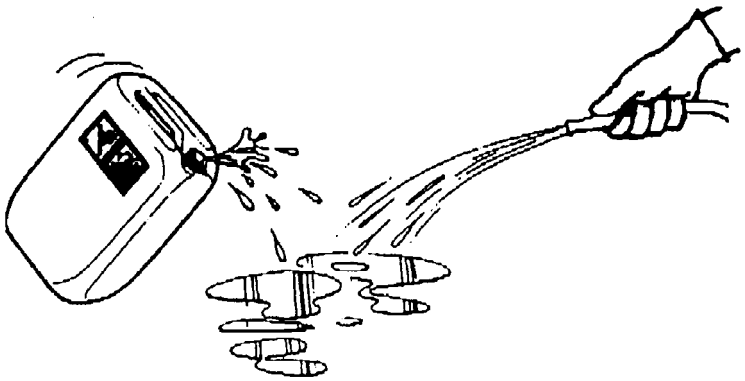

WARNING! **Self-ignition.**
Never wipe with combustible materials, such as rags or paper, as these may self-ignite. In case of fire, cool by using a hose and spray with large quantities of water.

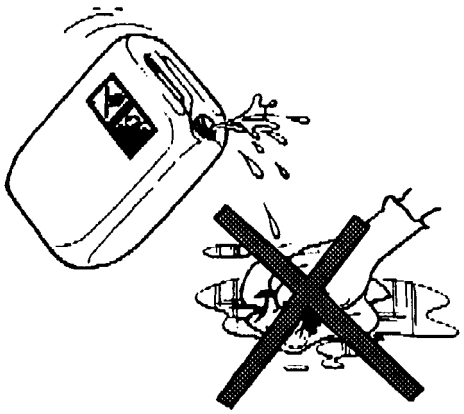

MM2.21TS100439en.fm

Disposal

The hydrogen peroxide should be sent for destruction. Some countries allow it to be diluted with water to a concentration below 1% and poured into the drain.

(Cont'd)

(Cont'd)

Storage

WARNING! **Emission of oxygen supports fire.**
In case of fire, cool the peroxide containers by spraying with large quantities of water.

The commercial food grade hydrogen peroxide has been stabilized, but it may decompose into oxygen and water if it is exposed to heat or contaminated by contact with incompatible materials. The decomposition of hydrogen peroxide increases drastically with temperature.

Make sure that the room or area used for storage is

- cool, clean, and well ventilated
- shielded from direct sunlight
- kept free from combustible materials.

Note! Hydrogen peroxide **must** only be stored in the **original container** as delivered by the supplier. Keep the container upright and closed with its **proper ventilation cap**, that allows oxygen to escape. If not, there may be an explosion if decomposition of the peroxide occurs violently. Always make sure that the container is properly closed.

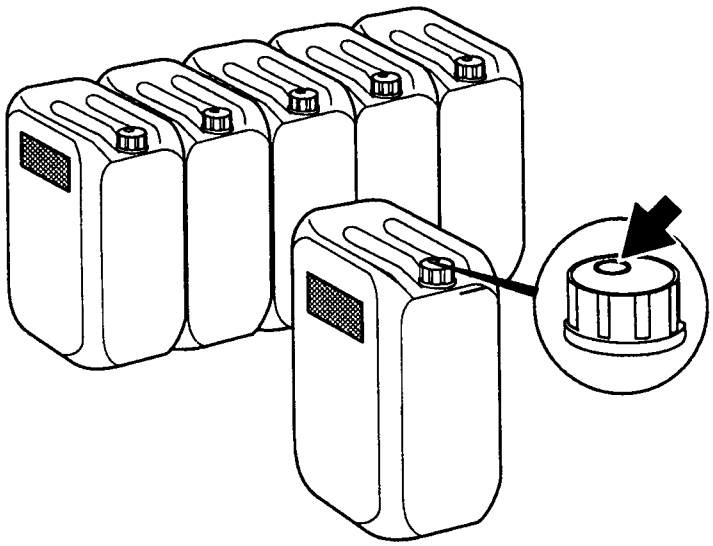

MM2.21TS100439en.fm

(Cont'd)

(Cont'd)

Personal Protective Equipment

Whenever there is a risk of contact with hydrogen peroxide, wear

- safety goggles (1)
- protective gloves (2) of neoprene
- shoes (3) made of PVC or PE plastic, or rubber
- apron (4).

Always make sure that

- the showers (5) work
- an eyewash device, movable (6) or wall-mounted (7) is available at or near each machine site
- there are additional washing facilities.

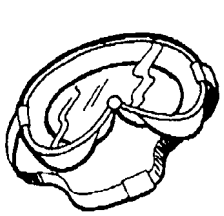

1

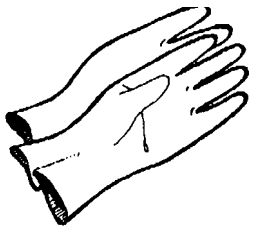

2

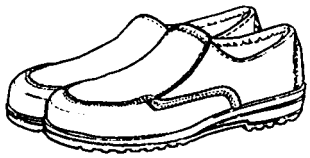

3

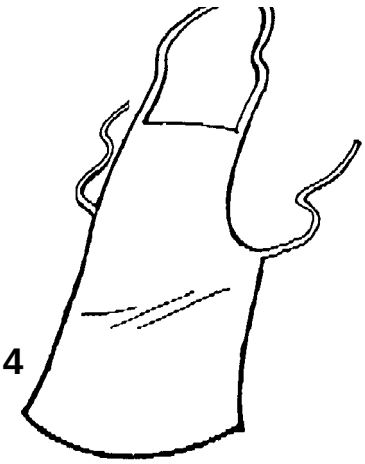

4

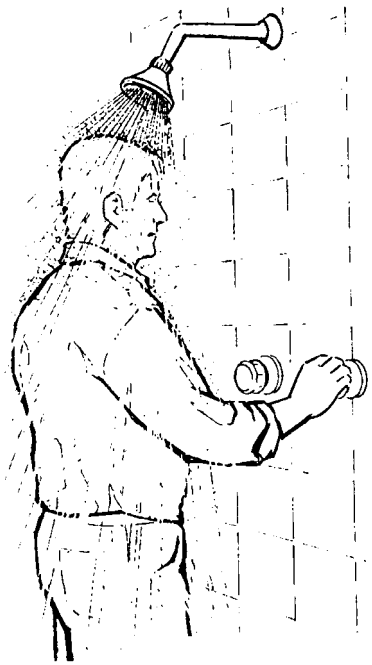

5



6

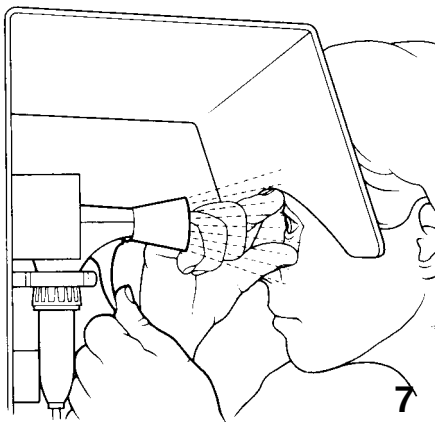

7

1 Safety goggles (TP No 90303-11)
2 Protective gloves (TP No.90303-12)
3 Shoes
4 Apron (TP No. 90303-13)
5 Shower
6 Eyewash device (TP No. 90303-6)
7 Eyewash device

(Cont'd)

MM2.21TS100439en.fm

(Cont'd)

Emergency Procedures

In case of an accident involving hydrogen peroxide, it is very important to rinse the affected area as soon as possible with as much water as possible.

If hydrogen peroxide is swallowed

- drink large amounts of lukewarm water (in order to dilute the peroxide)
- call for medical attention immediately.

If splashes or vapour from hydrogen peroxide come in contact with the eyes

- wash the eyes thoroughly with lukewarm water for 15 minutes (keep eyelids wide apart)
- call for medical attention immediately.



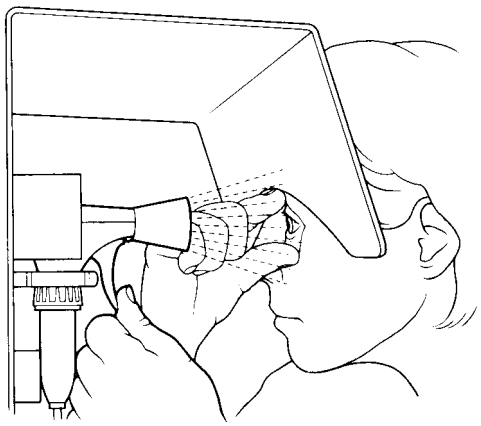

MM2.21TS100439en.fm

(Cont'd)

(Cont'd)

If hydrogen peroxide comes into contact with skin or clothes

- rinse immediately with plenty of water
- if skin burns appear call for medical attention immediately
- thoroughly wash the clothes before wearing them again.



If irritation or pain is experienced due to having **inhaled** hydrogen peroxide vapour

- leave the affected area and get some fresh air
- if the symptoms get worse, call for medical attention.

MM2.21TS100439en.fm

Manual emptying of peroxide bath

If the machine has been stopped by the emergency stop system, or by main power failure, the peroxide bath has to be emptied manually.

WARNING! Make sure to be familiar with the information regarding Hydrogen Peroxide (H2O2) before emptying the peroxide bath.

a) Empty the peroxide bath (1) by opening the drainage valve (2).

b) Make sure that the peroxide bath is empty before closing the drainage valve.

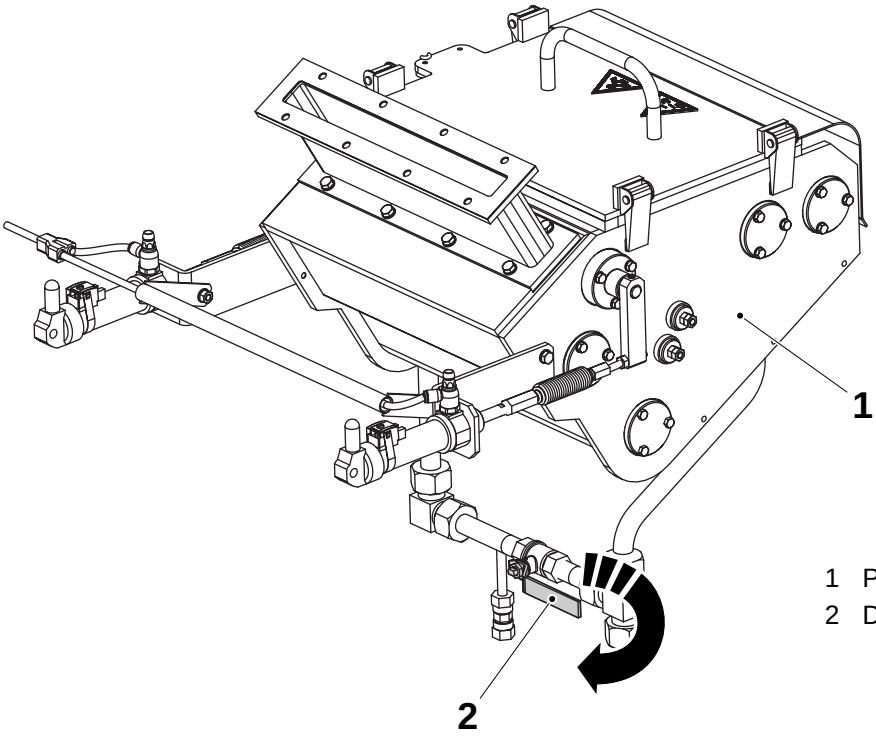

1 Peroxide bath
2 Drainage valve

MM2.21TS100439en.fm

Supply Systems

Electrical Cabinet

DANGER! **Hazardous voltage.**
Electric shock will cause death or serious injury.
The **Power Supply Disconnecting Device** must be turned **OFF** and secured with a lock, before any service is carried out inside the electrical cabinet.

Note! The key to the lock must be removed by the service technician or the electrician, and retained in his/her possession until all work is completed.

Make sure that the electrical cabinet doors are locked after performing any kind of work in the electrical cabinet.

The illustration below shows the electrical cabinet; location indicated by arrow.

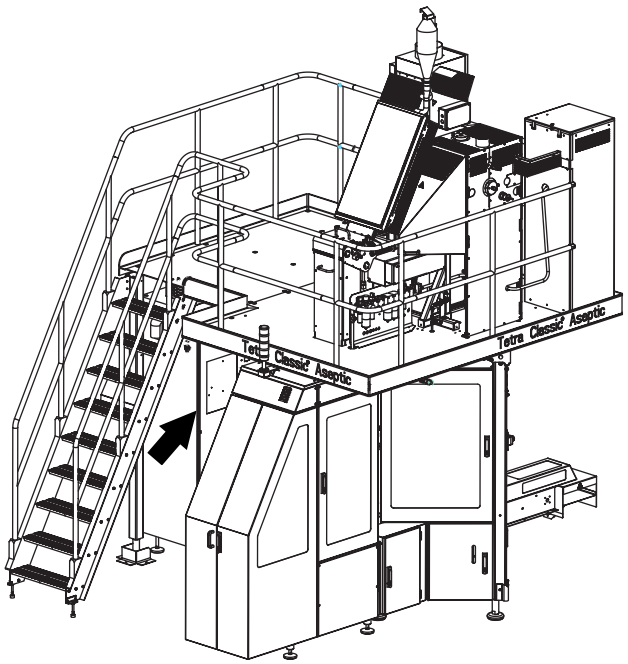

(Cont'd)

MM2.21TS100439en.fm

(Cont'd)

Socket Outlet

WARNING! **Hazardous voltage.**
Read Maintenance Manual BEFORE using this socket outlet. Failure to follow maintenance instruction could result in death or serious injury.

The illustrations below shows the socket outlet (1) and residual current device (2), and their locations in the electrical cabinet (3).

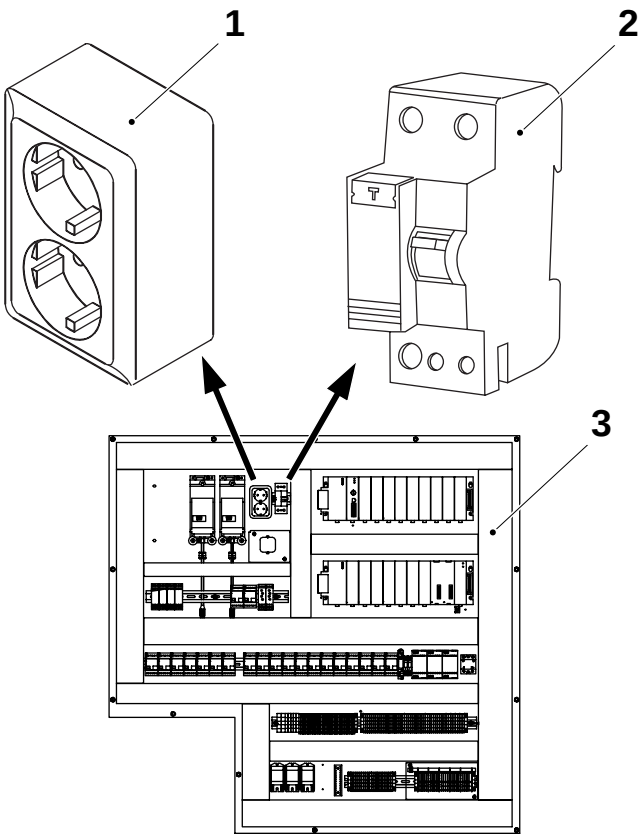

1 Socket outlet
2 Residual current device
3 Electrical cabinet

MM2.21TS100439en.fm

Power Supply

DANGER!

Hazardous voltage and moving machinery.
The **Power Supply Disconnecting Device** must be turned **OFF** and secured with a lock, before any service is carried out.

Note! The key to the lock must be removed by the service technician or the electrician, and retained in his/her possession until all work is completed.

Certain maintenance procedures require supply systems to be turned on. These exceptions are clearly stated in the maintenance manual.

The illustration below shows the power supply disconnecting device and the arrow indicates the location on the machine.

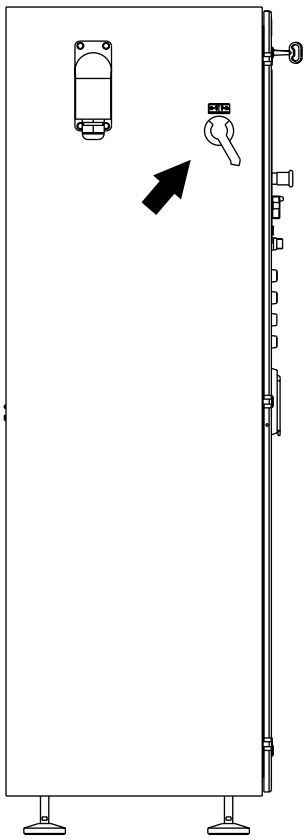

MM2.21TS100439en.fm

Air Supply

WARNING! **Compressed air and moving machinery.**
The **Main Air Valve** must be turned **OFF** and secured with a lock, before any service is carried out.

Note! The key to the lock must be removed by the service technician and retained in his/her possession until all work is completed.

Certain maintenance procedures require supply systems to be turned on. These exceptions are clearly stated in the maintenance manual.

The illustrations below shows the main air valve (1), the lock (2), and the arrow indicates the location on the machine.

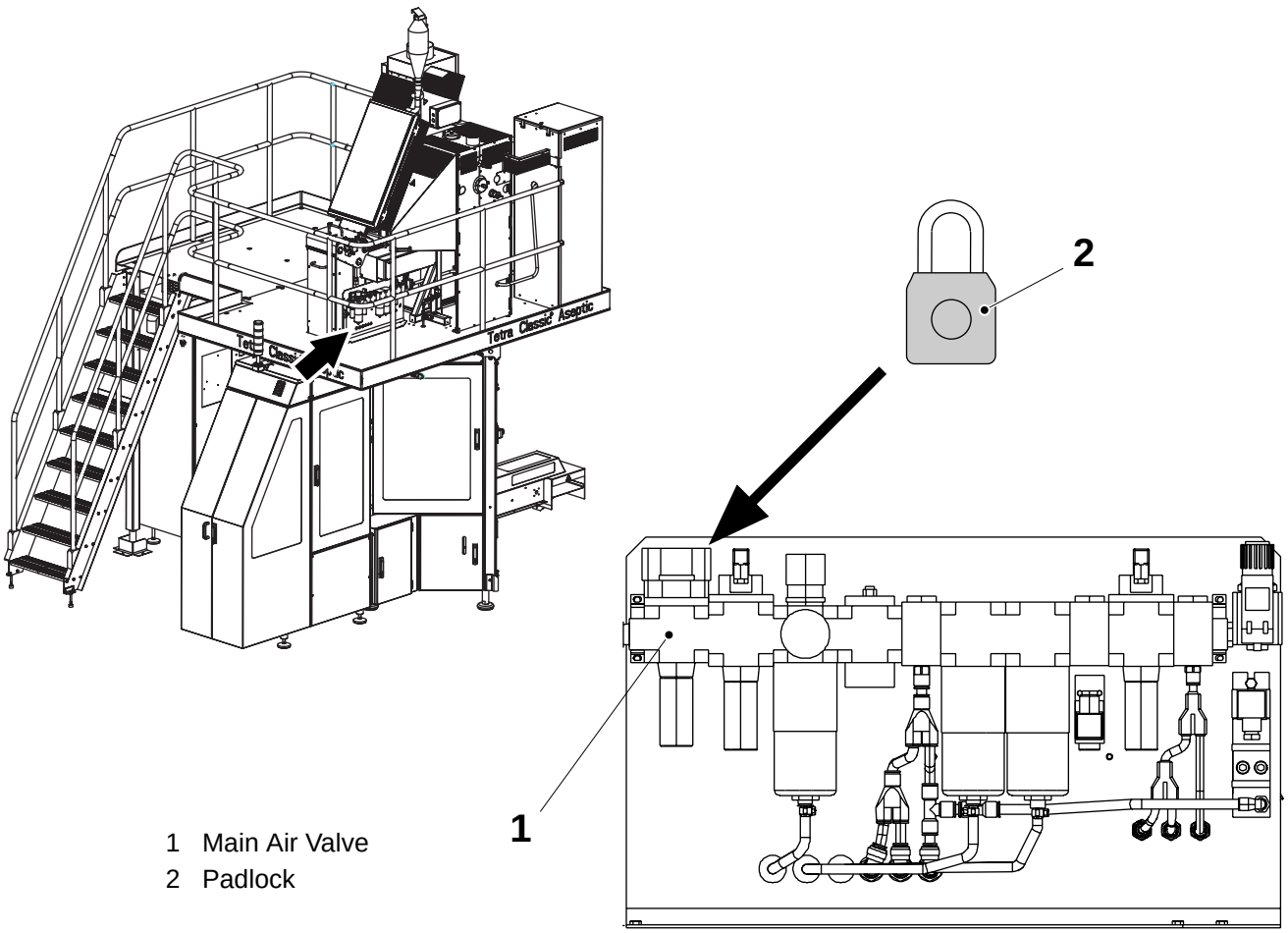

1 Main Air Valve
2 Padlock

MM2.21TS100439en.fm

Steam Supply

WARNING! **Hot steam may cause severe burns.**
The **Supply Valve** must be turned **OFF**, the equipment depressurized, and vent all steam safely, before any service is carried out.

Pressurized steam can be discharged unexpectedly. Pipes and components can be extremely hot.

Certain maintenance procedures require supply systems to be turned on. These exceptions are clearly stated in the maintenance manual.

The illustration below shows the steam supply valve (1) and the location on the machine.

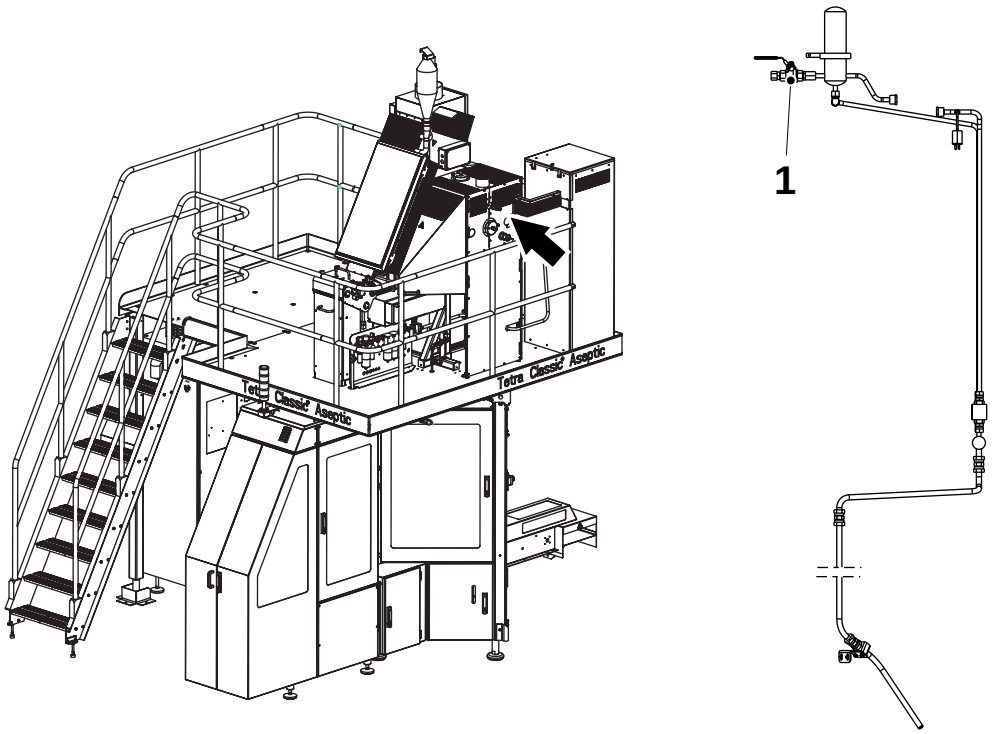

1 Steam Supply Valve

MM2.21TS100439en.fm

Water Supply

WARNING! **Water under pressure.**
The **Water Supply Valves** must be turned **OFF**, before any service is carried out.

Certain maintenance procedures require supply systems to be turned on. These exceptions are clearly stated in the maintenance manual.

The illustration below shows the water supply valves (1) and the location on the machine.

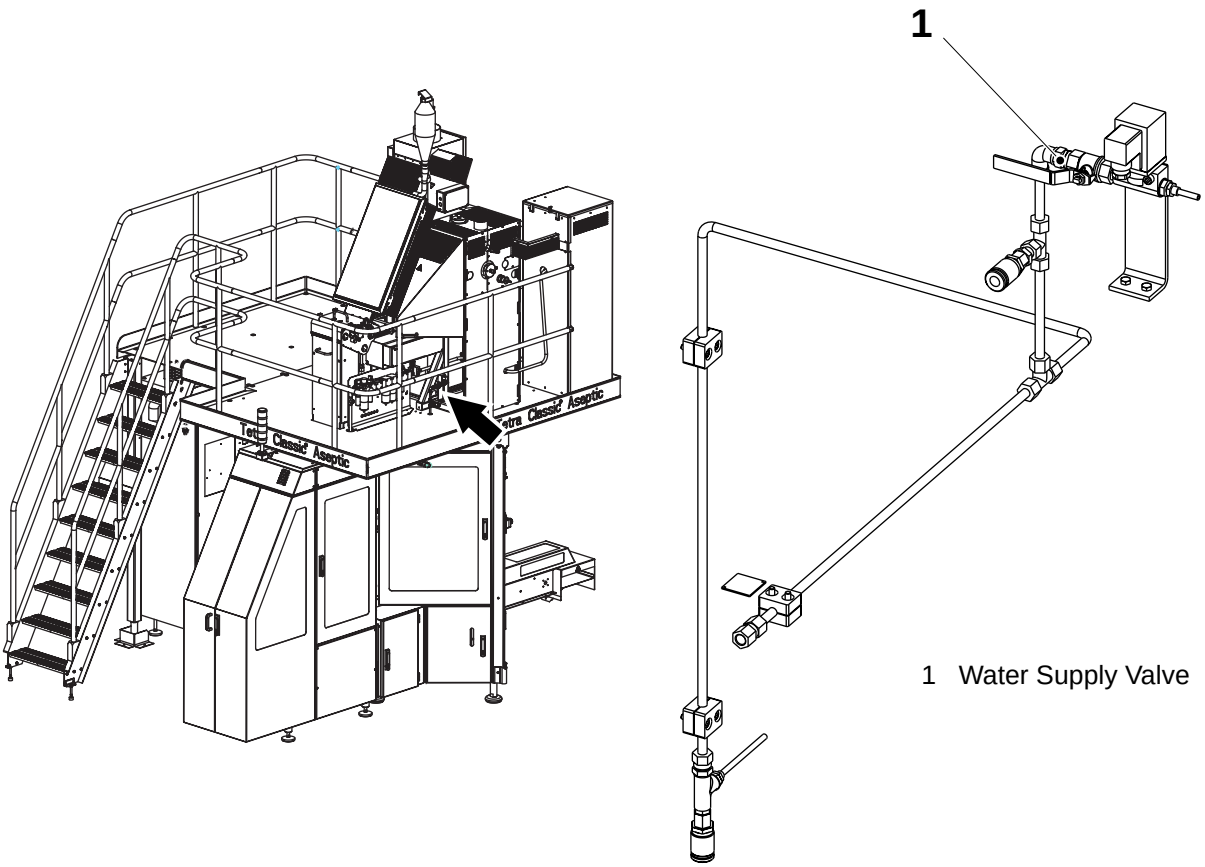

1 Water Supply Valve

MM2.21TS100439en.fm

1 Infeed

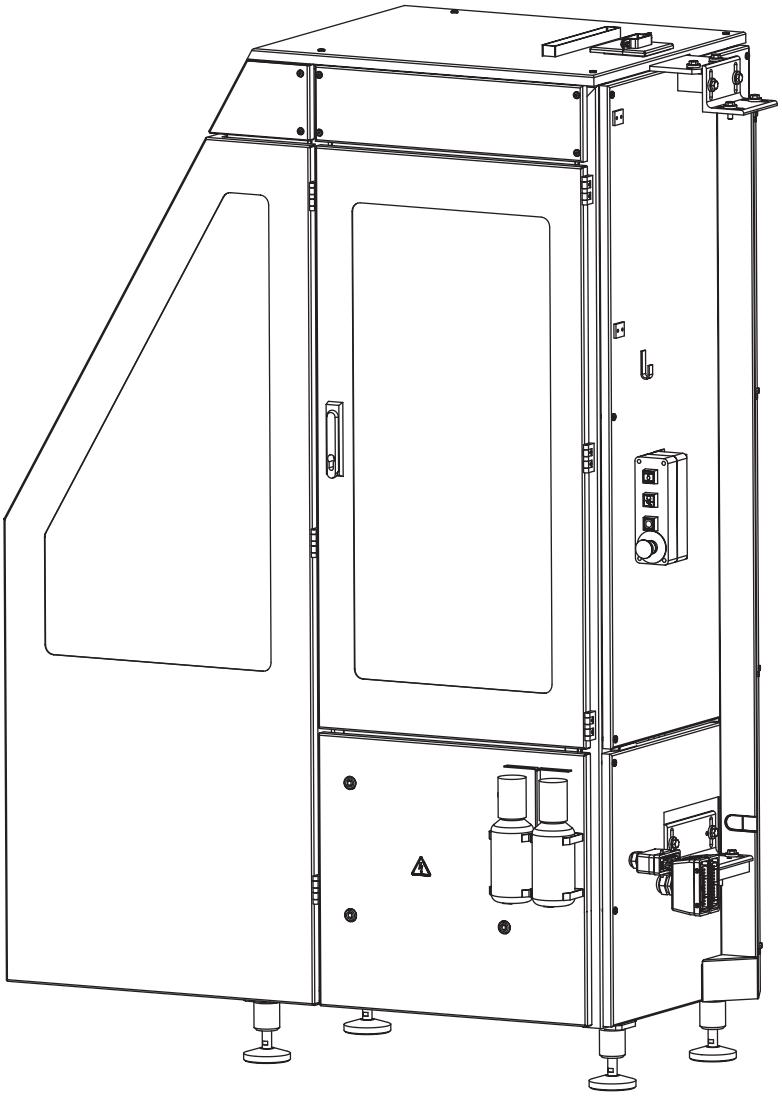

MM2.21TS100440en.fm

1-1 Infeed - description

SPC reference	630401-0100

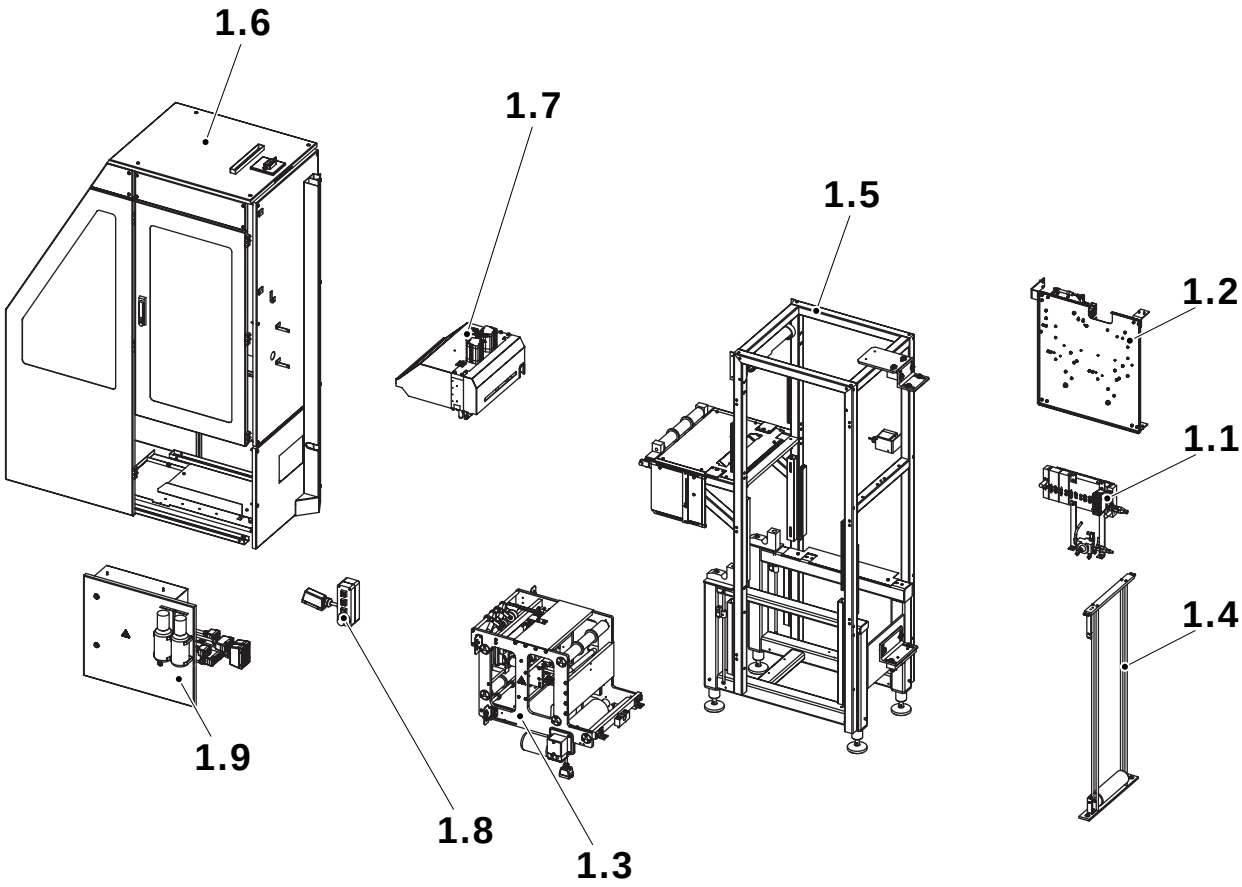

MM2.21TS100440en.fm

1.1 Valve ramp, infeed
1.2 Strip magazine
1.3 Strip applicator
1.4 Paper magazine
1.5 Frame
1.6 Doors and covers
1.7 Splicing device
1.8 Push button box (No procedure described)
1.9 Connection box (No procedure described)

1-2 Infeed - setting sequence

	Settings	Reference
1	Infeed frame unit position relative the mainbody	No procedure described
2	Strip applicator frame - bending rollers parallel with material bobbin	No procedure described
3	Bending roller web guides	No procedure described
4	Strip guide	MM - page 59
5	Strip element - side ways - distance to web material - power - air pressure	MM - page 67
6	Cutting table	MM - page 97
7	Splicing table	MM - page 98
8	Register mark reader (Photo cell)	MM - page 99

MM2.21TS100440en.fm

1-3 Bobbin - set

Machine Status	
SPC reference -Regular accessories	2524120-0100

Set the sleeves (1) to the right position depending of volume according to the illustrations below. Loosen the screws (2) to adjust.

Note! Two different sizes of bobbins exist for TCA 65, depending of the packaging material reel centre.

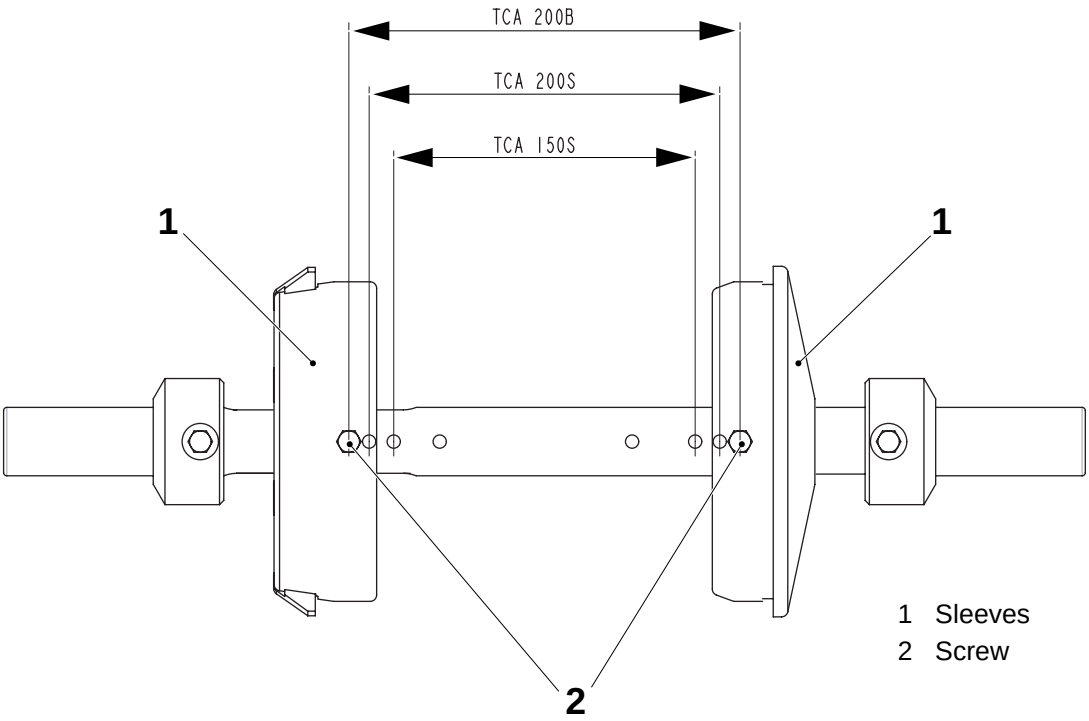

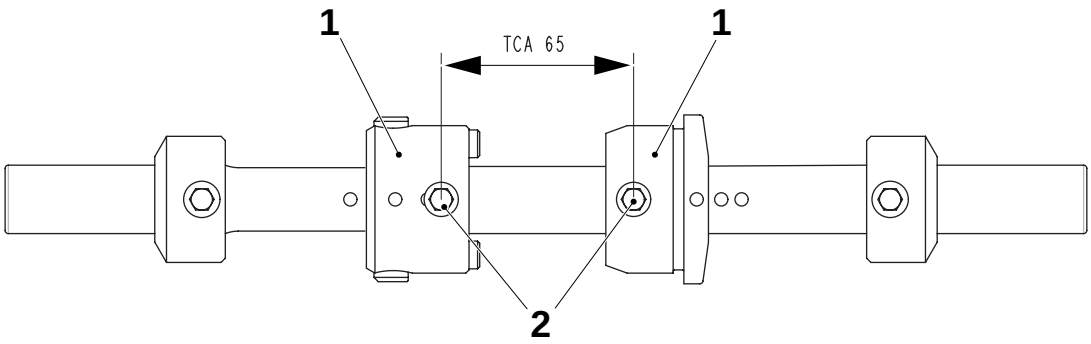

MM2.21TS100440en.fm

1.1 Valve ramp, infeed

1.1-1 Valve ramp, infeed - description

Machine Status	
SPC reference	1515495-0100

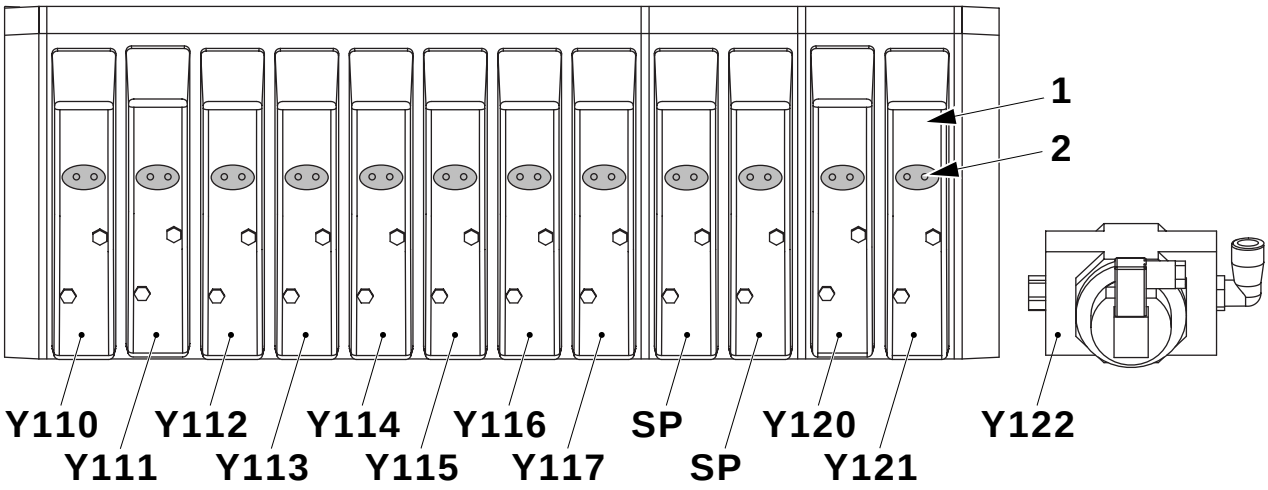

1 LED indication, valve status
2 Manual override

Valve	Cylinder	Function	Valves	Cylinder	Function
Y110	C	Strip element (Used with manual i	Y117	C	
Y111	C	External package counter (Option)	SP (spare)	C	
Y112	C	Package waste	SP (spare)	C	
Y113		Central lubrication	Y120	C	
Y114	C		Y121	C	
Y115	C		Y122		
Y116	C				

(Cont'd)

MM2.21TS100440en.fm

(Cont'd)

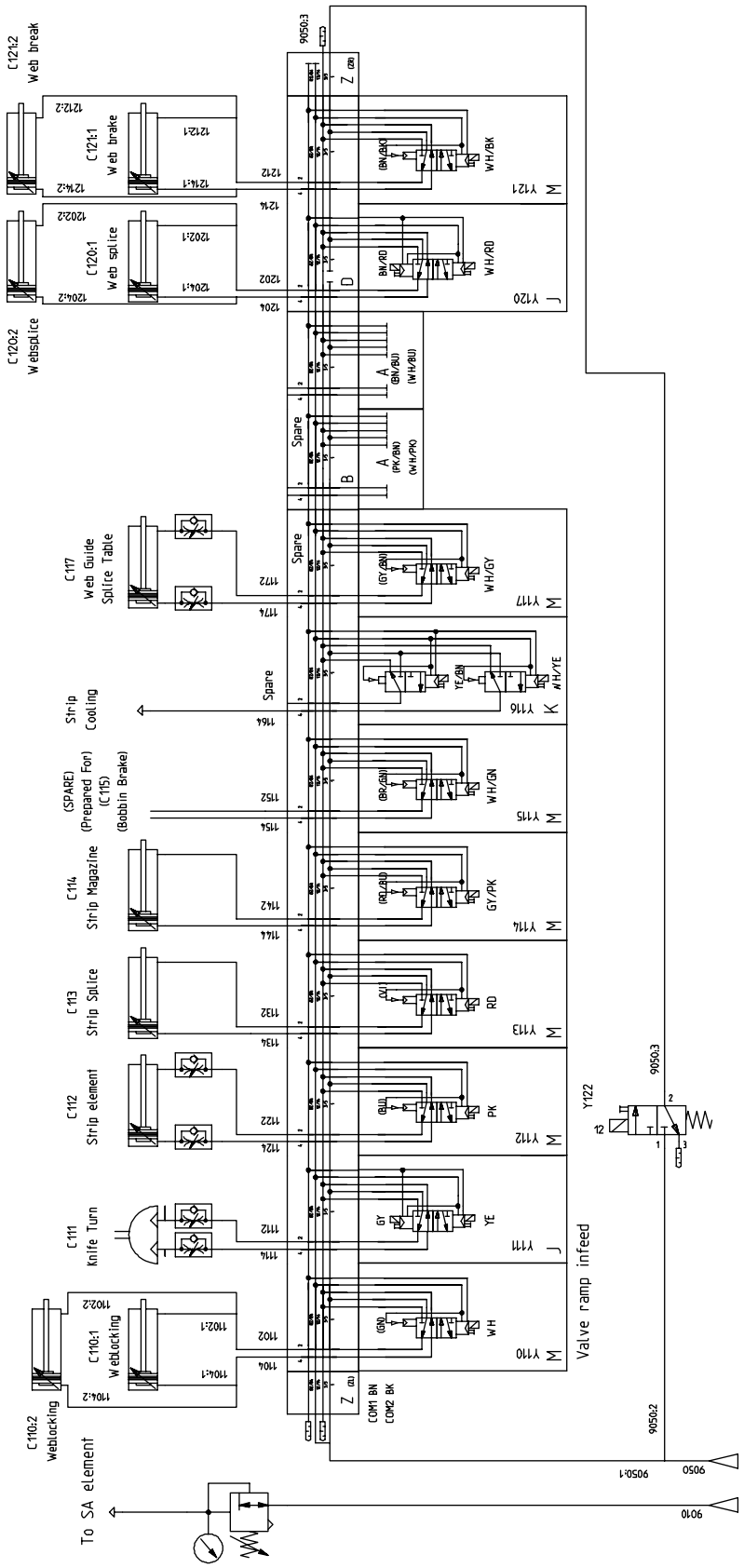

MM2.21TS100440en.fm

1.2 Strip magazine

1.2-1 Strip magazine - description

SPC reference	1515495-0100

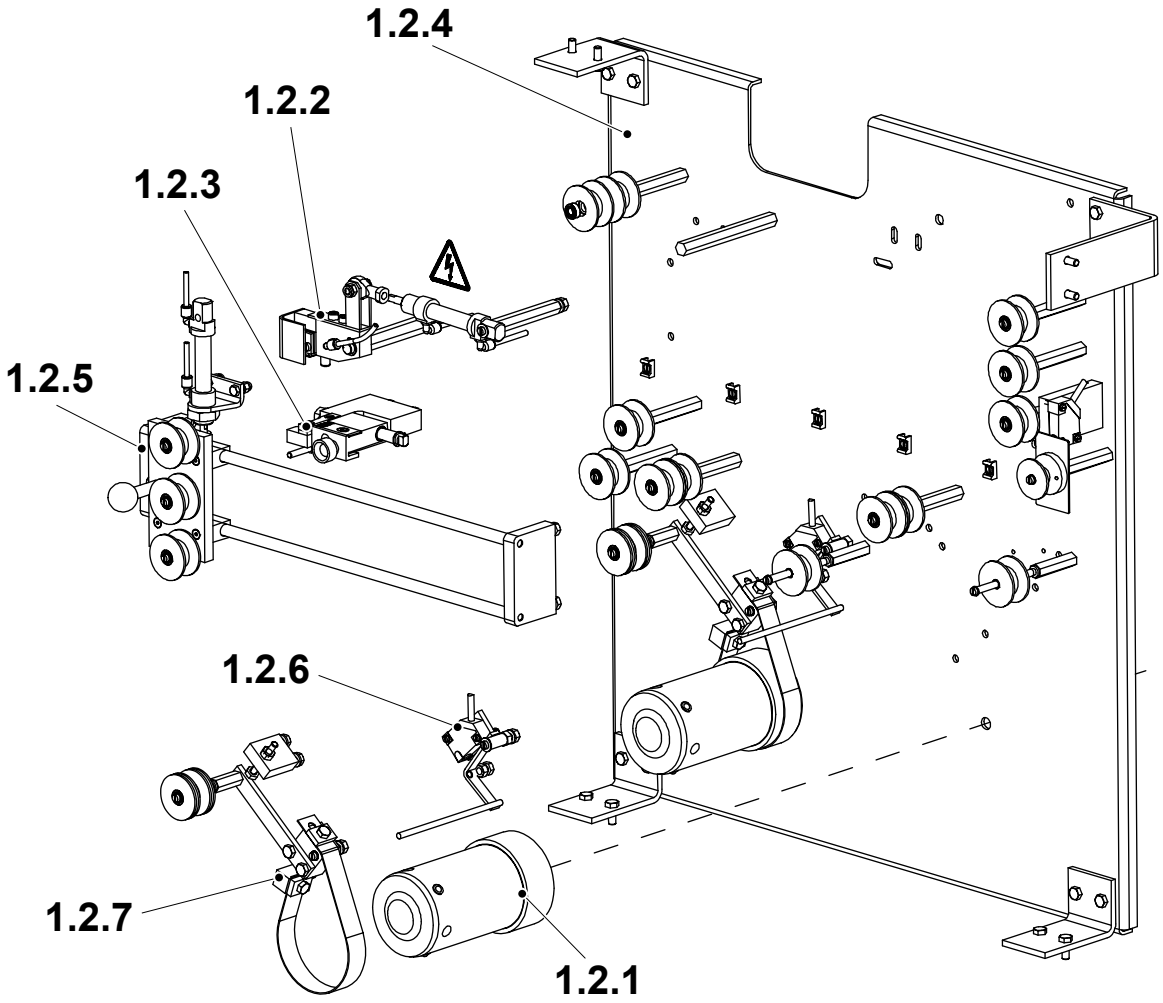

1.2.1 Hub
1.2.2 Heating device - No procedure described
1.2.3 Cutting table
1.2.4 Mounting plate
1.2.5 Magazine
1.2.6 Proximity switch
1.2.7 Bobbin brake

MM2.21TS100440en.fm

1.2.1 Hub

1.2.1-1 Hub - check

Machine Status	
SPC reference	1095815-0100

Check the following parts for wear and/or damage:

- the ball bearings (1),
- the screws with spring loaded balls (2).

Change any worn or damaged parts.

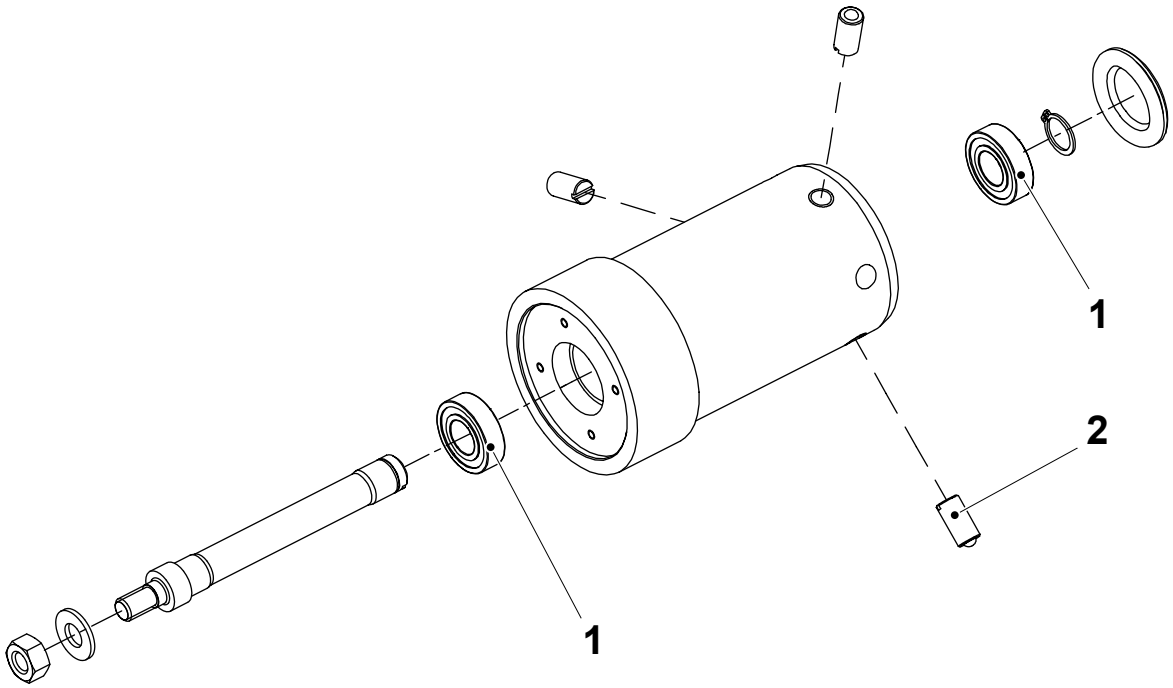

MM2.21TS100440en.fm

1 Ball bearing
2 Screw with spring-loaded ball

1.2.1-2 Hub - change bearings

Machine Status	
SPC reference	1095815-0100

Change the ball bearings (3) as follows:

a) Remove the plastic plug (1).

b) Remove the circlip (2).

c) Pull off the bobbin (4).

d) Press out the ball bearings (3).

Assemble in the reverse order with new ball bearings (3).

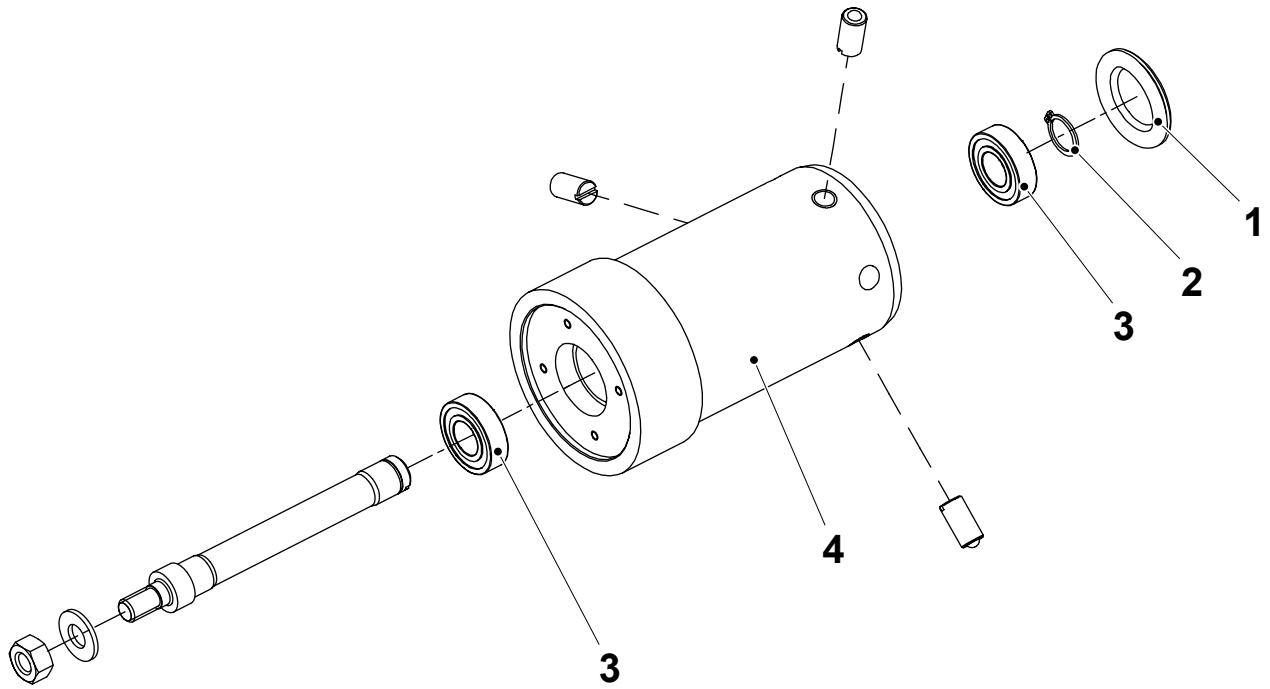

1 Plastic plug
2 Circlip
3 Ball bearing
4 Bobbin

MM2.21TS100440en.fm

1.2.1 Heating device

1.2.1-1 No procedure described

Machine Status	
SPC reference	2524020-0100

MM2.21TS100440en.fm

1.2.3 Cutting table

1.2.3-1 Cutting table - check

Machine Status	
SPC reference	1515320-0100

WARNING! **Sharp edges!**
The knife is very sharp. Use protective gloves when handling the knife.

Check the following parts for wear and/or damage:

- the knife (1)
- the pad (2)

Change the knife and/or the pad if required.

See 1.2.3-2 Cutting table - change

Assemble in the reverse order.

MM2.21TS100440en.fm

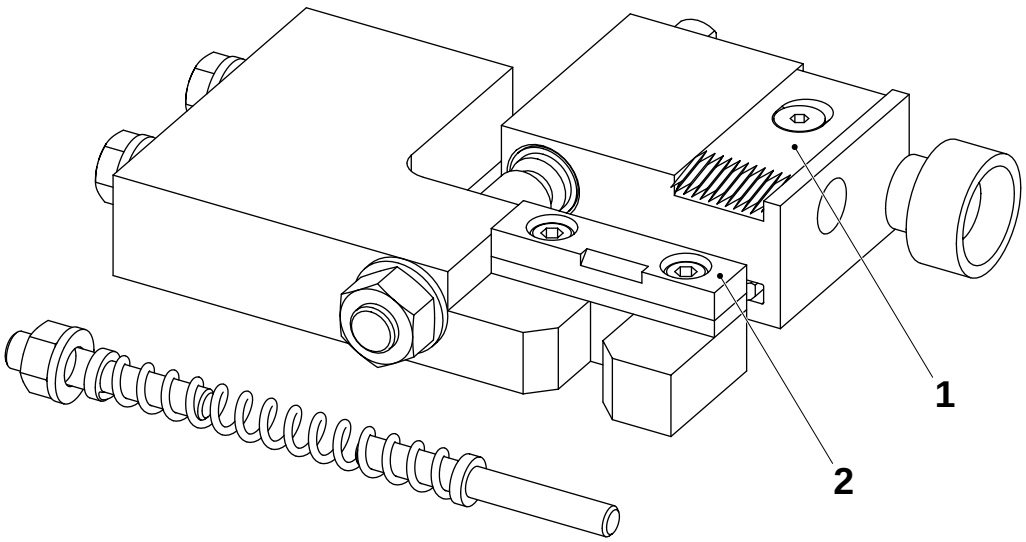

1 Knife
2 Pad

1.2.3-2 Cutting table - change

Machine Status	
SPC reference	1515320-0100

WARNING! **Sharp edges!**
The knife is very sharp. Use protective gloves when handling the knife.

Change the cutting knife (2) as follows:

a) Unscrew the screw (1).

b) Remove the knife (2).

Change the pad (4) as follows:

a) Unscrew the screw (3).

b) Remove the pad (4).

Assemble in the reverse order.

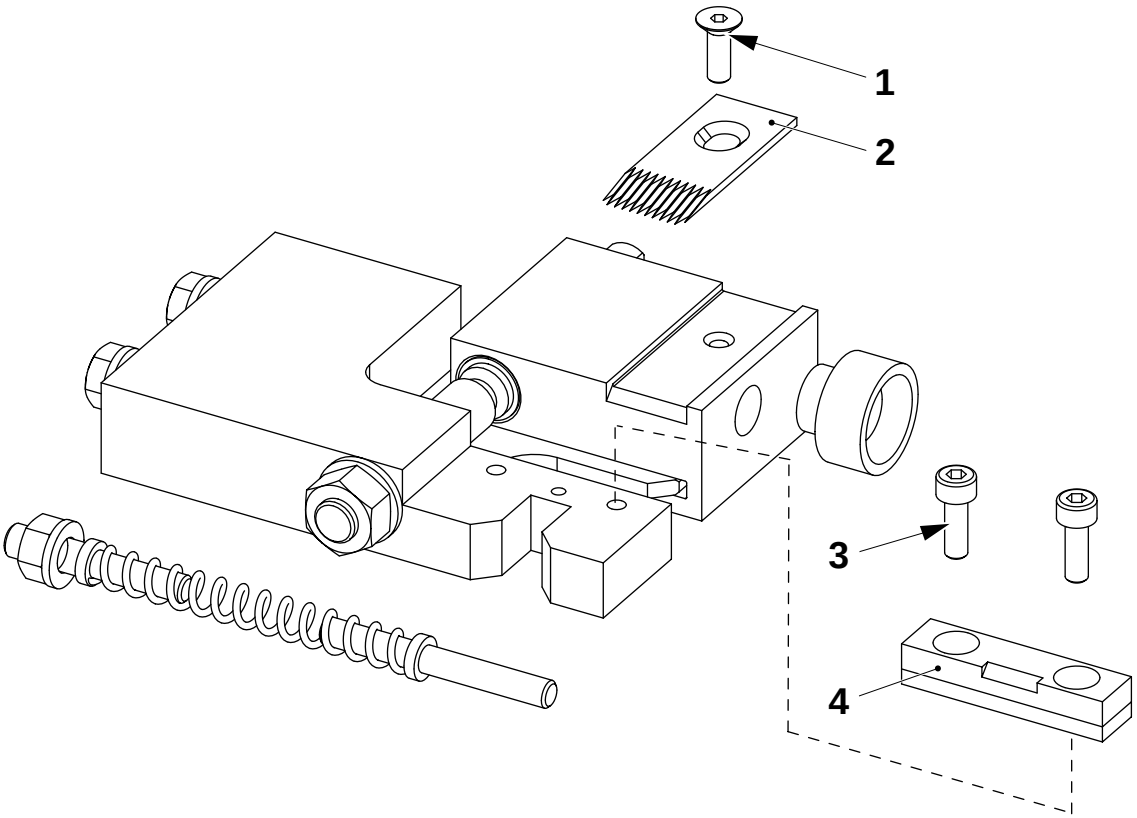

1 Screw
2 Knife
3 Screw
4 Pad

MM2.21TS100440en.fm

1.2.4 Mounting plate

1.2.4-1 Mounting plate - check rollers

Machine Status	
SPC reference	2523982-0100

Check the rollers for wear and/or damage and that they rotate smoothly.
Change any worn or damaged parts.

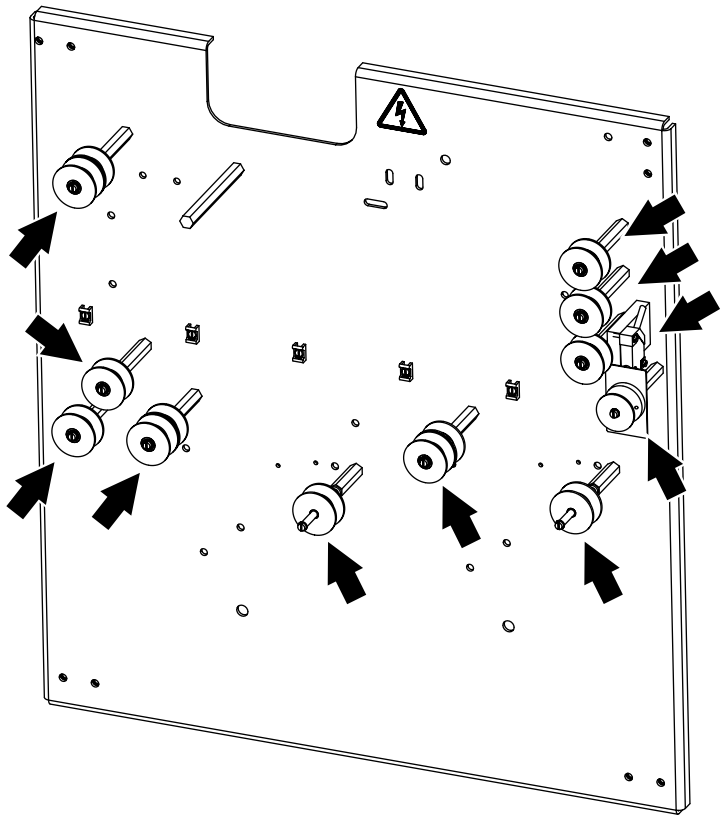

MM2.21TS100440en.fm

1.2.4-2 Mounting plate - change rollers

Machine Status	
SPC reference	2523982-0100

The three different kinds of roller applications are described below.

Application one, change the rolls as follows:

a) Unscrew the screw (1) and remove the outer roll (2).

b) Remove the retaining ring (3) and remove the inner roll (4).

Application two, change the rolls as follows:

Unscrew the screw (5) and remove the roll (6).

Application three, change the rolls as follows:

a) Unscrew the screw (7) and remove the roll (8).

b) Unscrew the screws (10) and remove the flag (9).

Assemble in the reverse order with new rolls/roller.

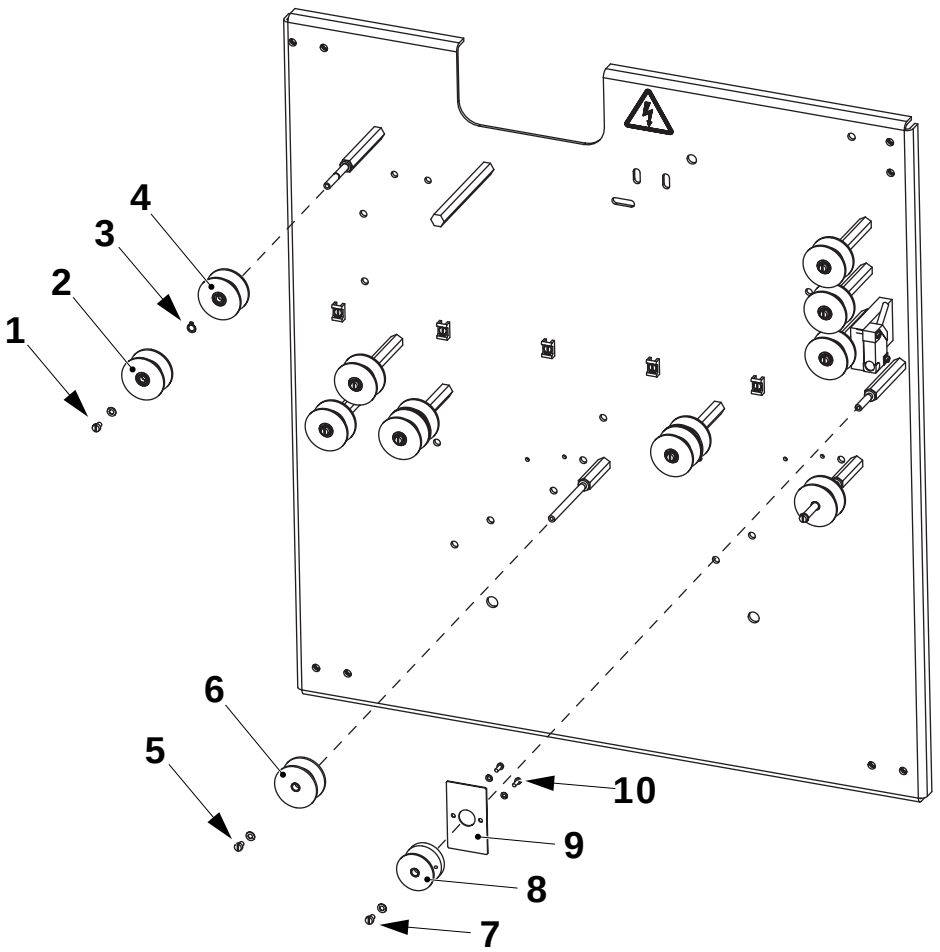

1 Screw
2 Inner roller
3 Retaining ring
4 Outer roller
5 Screw
6 Roller
7 Screw
8 Roller
9 Flag
10 Screw

MM2.21TS100440en.fm

1.2.5 Magazine

1.2.5-1 Magazine - check rollers

Machine Status	
SPC reference	2523990-0100

Check the rollers for wear and/or damage and that they rotate smoothly.
Change any worn or damaged parts.

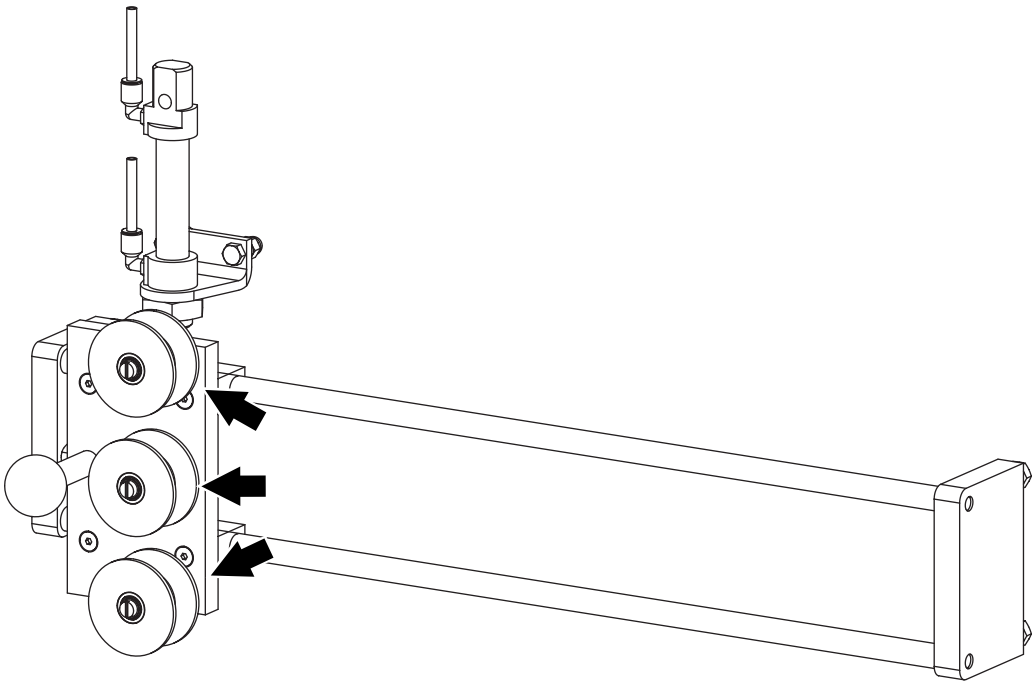

MM2.21TS100440en.fm

1.2.5-2 Magazine - change rollers

Machine Status	
SPC reference	2523990-0100

Change the rolls as follows:

Unscrew the screws (1) and remove the rolls (2).

Assemble in the reverse order with new rolls/roller.

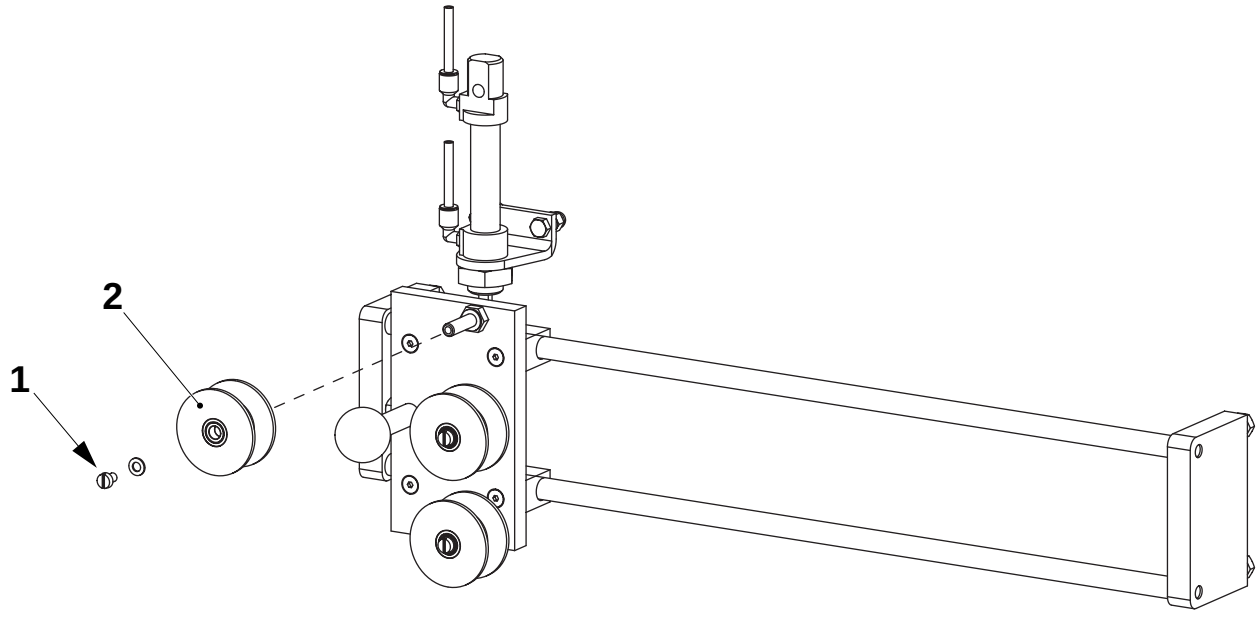

MM2.21TS100440en.fm

1 Screw
2 Roller

1.2.7 Bobbin brake

1.2.7-1 Bobbin brake - check

Machine Status	
SPC reference	2542630-0100

Check the following parts for wear and/or damage:

- the belt (1),
- the rolls (2),

Change any worn or damaged parts.

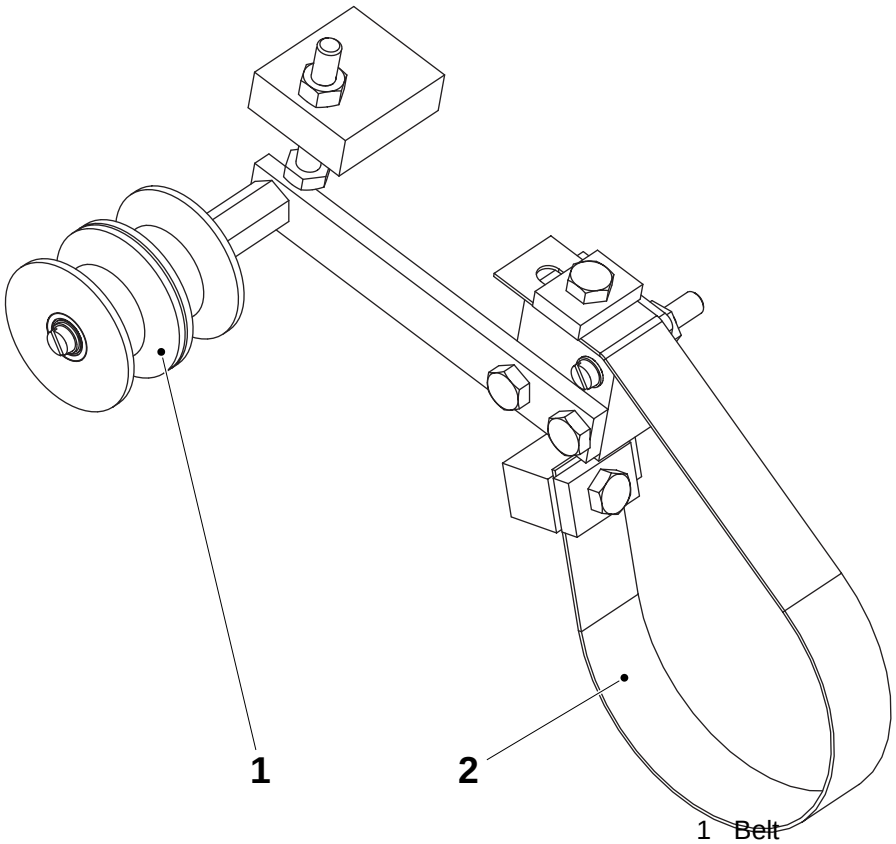

1 Belt
2 Roll
3 Bushing

MM2.21TS100440en.fm

1.2.7-2 Bobbin brake - change belt

Machine Status	
SPC reference	2542630-0100

Change the belt (1) as follows:

a) Unscrew the screw (1).

b) Unscrew the screw (3) and remove the belt (2).

Assemble in the reverse order with a new belt (2).

Set the belt, see 1.2.7-4 Bobbin brake - set

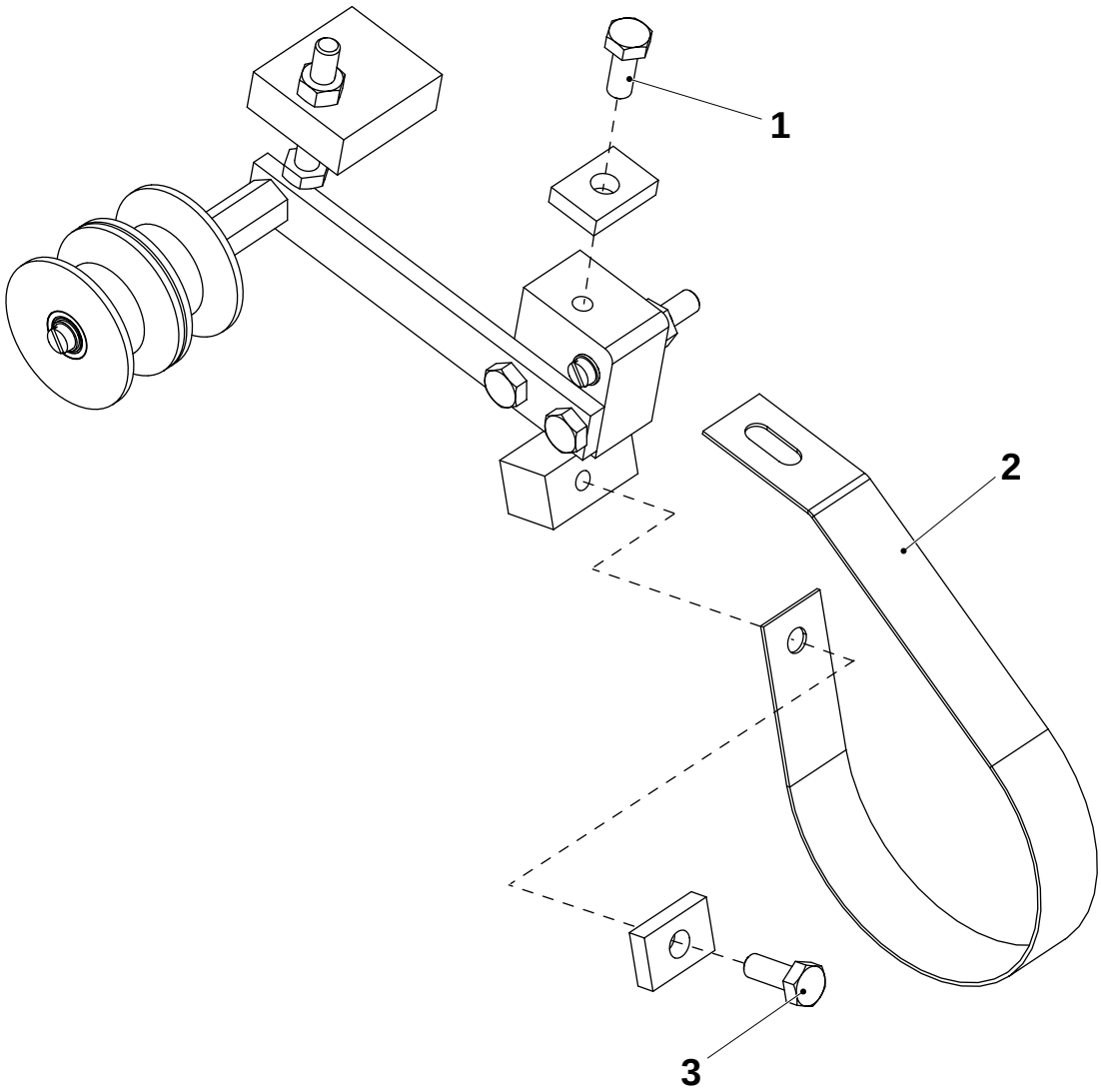

1 Screw
2 Belt
3 Screw

MM2.21TS100440en.fm

1.2.7-3 Bobbin brake - change roller

Machine Status	
SPC reference	2542630-0100

Change the rollers as follows:

a) Unscrew the screw (1) and remove the outer roll (2).

b) Remove the retaining ring (3) and remove the inner roll (4).

Assemble in the reverse order with a new belt (5).

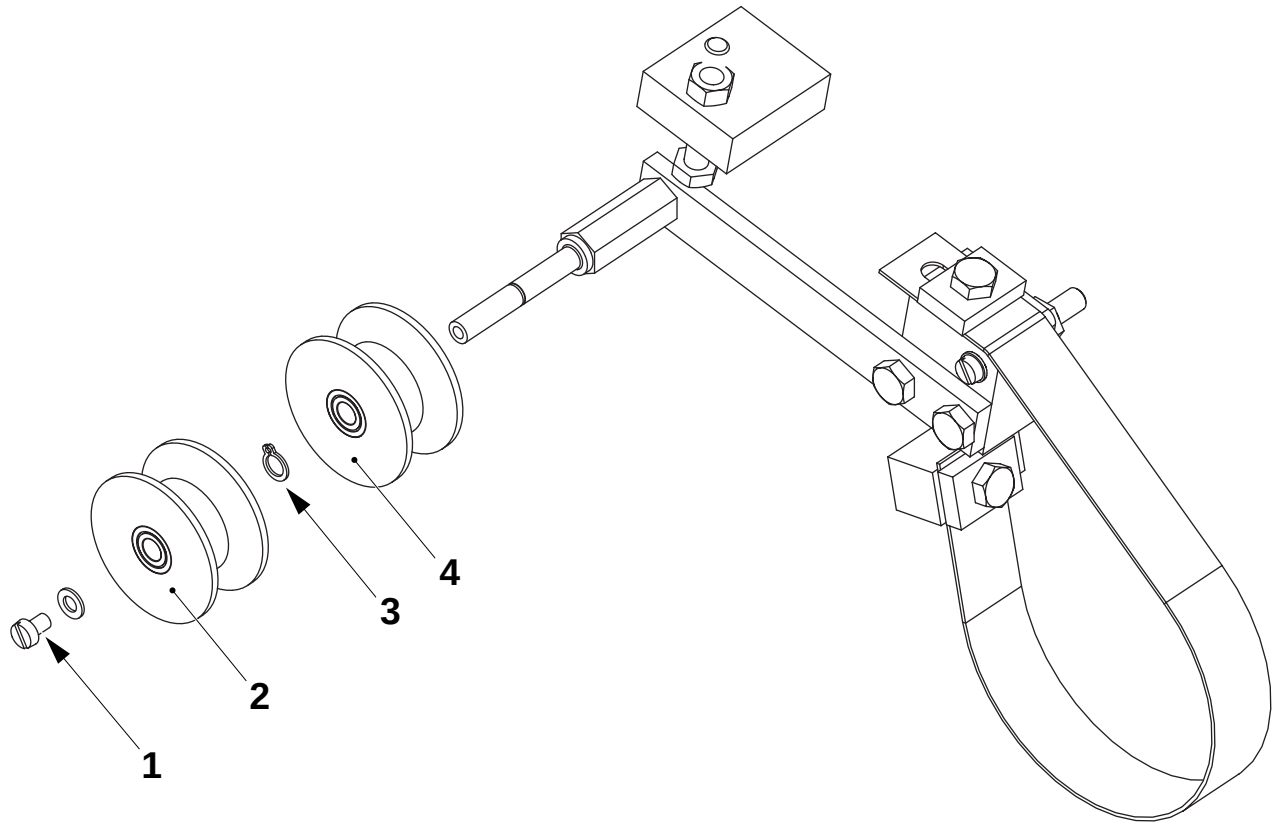

1 Screw
2 Outer roller
3 retaining ring
4 Inner roller

MM2.21TS100440en.fm

1.2.7-4 Bobbin brake - set

Machine Status	
SPC reference	2542630-0100

Adjust **A** by loosening the screw (3) and adjust on the belt (4) until **A** is reached, tighten the screw.

Adjust **B** by loosening the nut (2), adjust on the screw (1) until **B** is reached, tighten the nut.

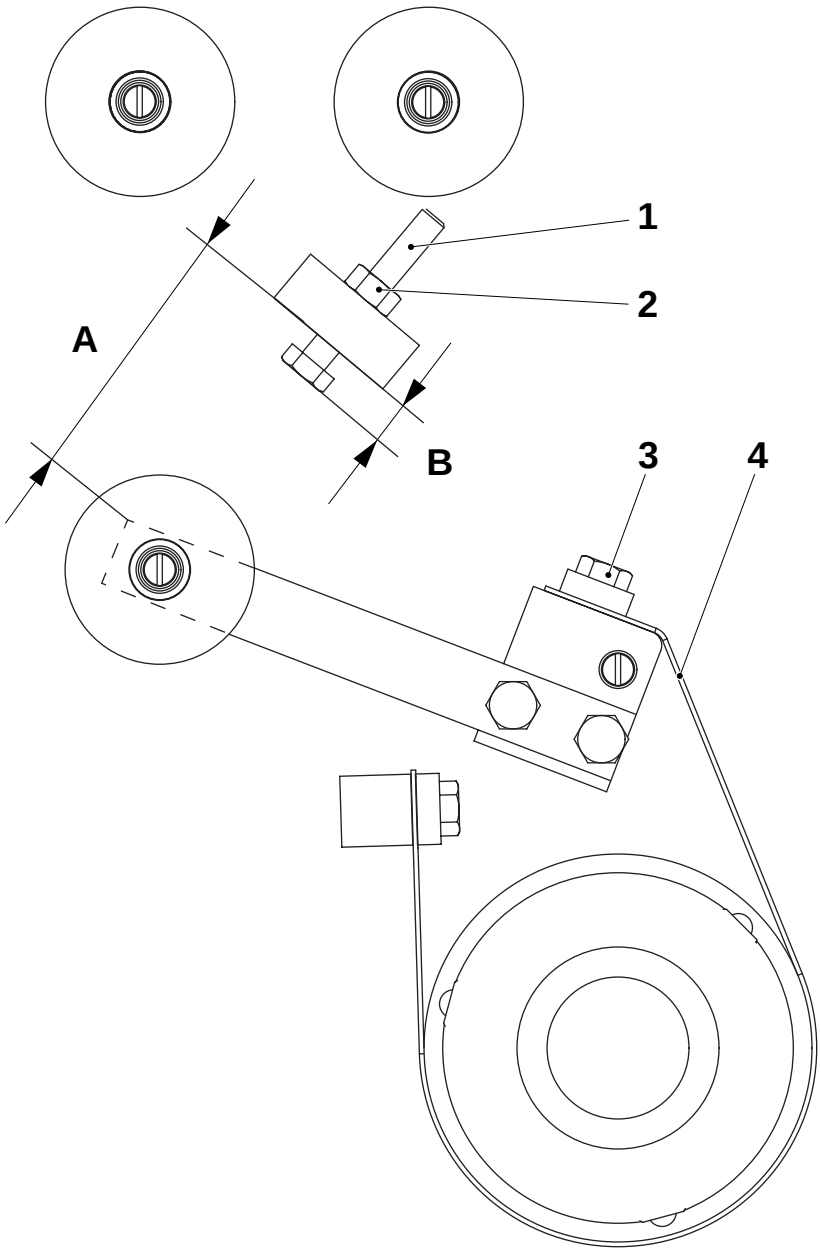

A = 55 ±5 mm
B = 10 ±2 mm

1 Screw
2 Nut
3 Screw
4 Belt

MM2.21TS100440en.fm

1.3 Strip applicator

1.3-1 Strip applicator - description

SPC reference	2524060-0100

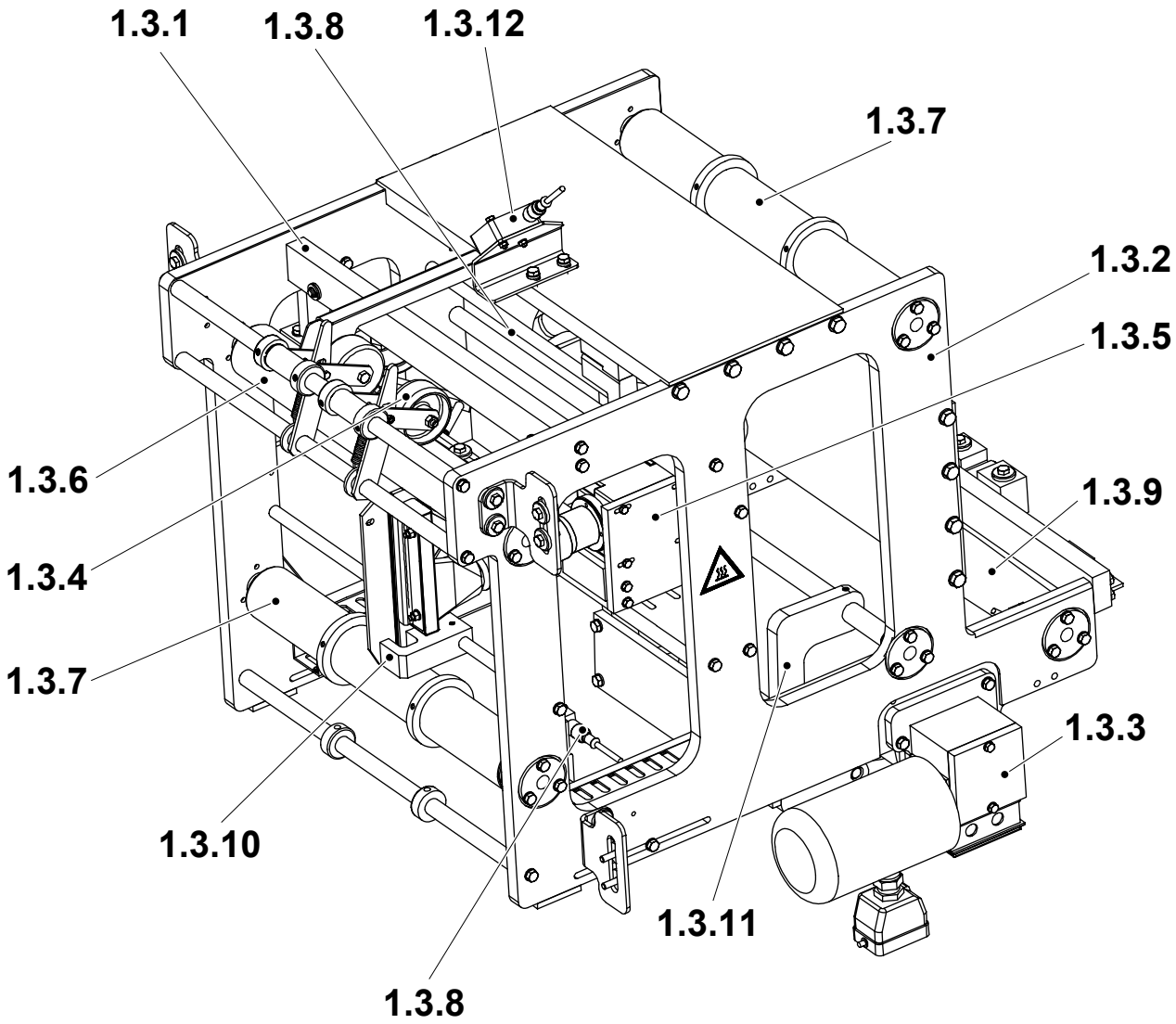

1.3.1Strip guide
1.3.2Frame
1.3.3Drive roller
1.3.4Pressure roller
1.3.5Heating device
1.3.6Bending roller
1.3.7Bending roller
1.3.8Indicator
1.3.9Bending roller
1.3.10Paper guide
1.3.11Pressure roller
1.3.12Splice detector

MM2.21TS100440en.fm

1.3-2 Strip applicator - set flange

Machine Status	
SPC reference	2524060-0100 2523890-0100 2524040-0100

Set the flanges (1) as follow:

a) Set value **A** and **B** between the flanges (1) and the packaging material (2).

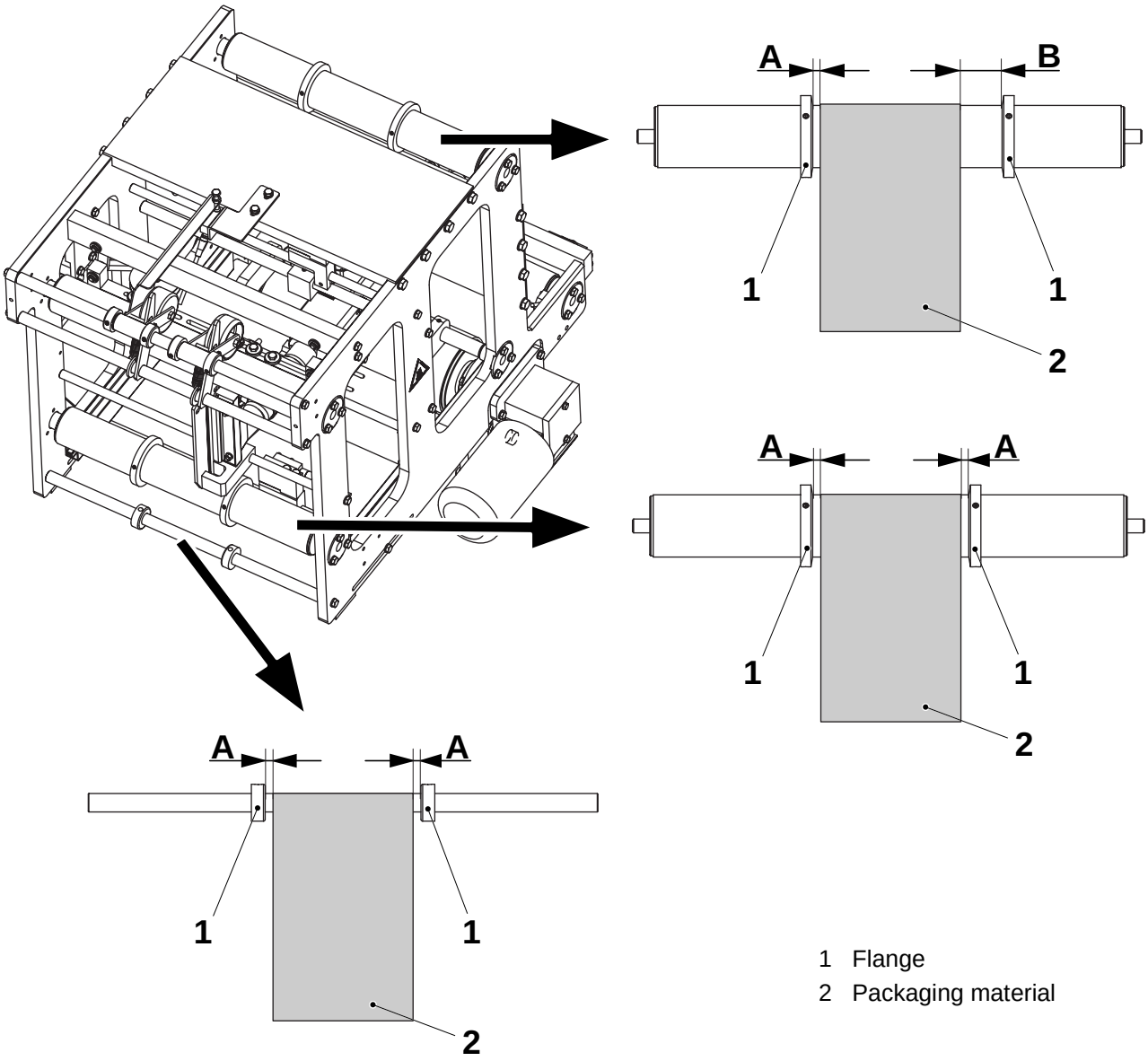

1 Flange
2 Packaging material

A = 1 ±0 mm B = 20 ±2 mm

MM2.21TS100440en.fm

1.3.1 Strip guide

1.3.1-1 Strip guide - change rollers

Machine Status	
SPC reference	2523885-0100

Change the rollers and wheels as follows:

a) Loosen the nut (1) and unscrew the shaft (2), change the roll (3).

b) Unscrew the adjusting screw (9) taking care of the spring (4) and change the guide wheel (5).

c) Remove the nut (6) and lift out the wheel. Remove the retaining ring (7) and change the wheel (8).

Assemble in the reverse order with new rollers.

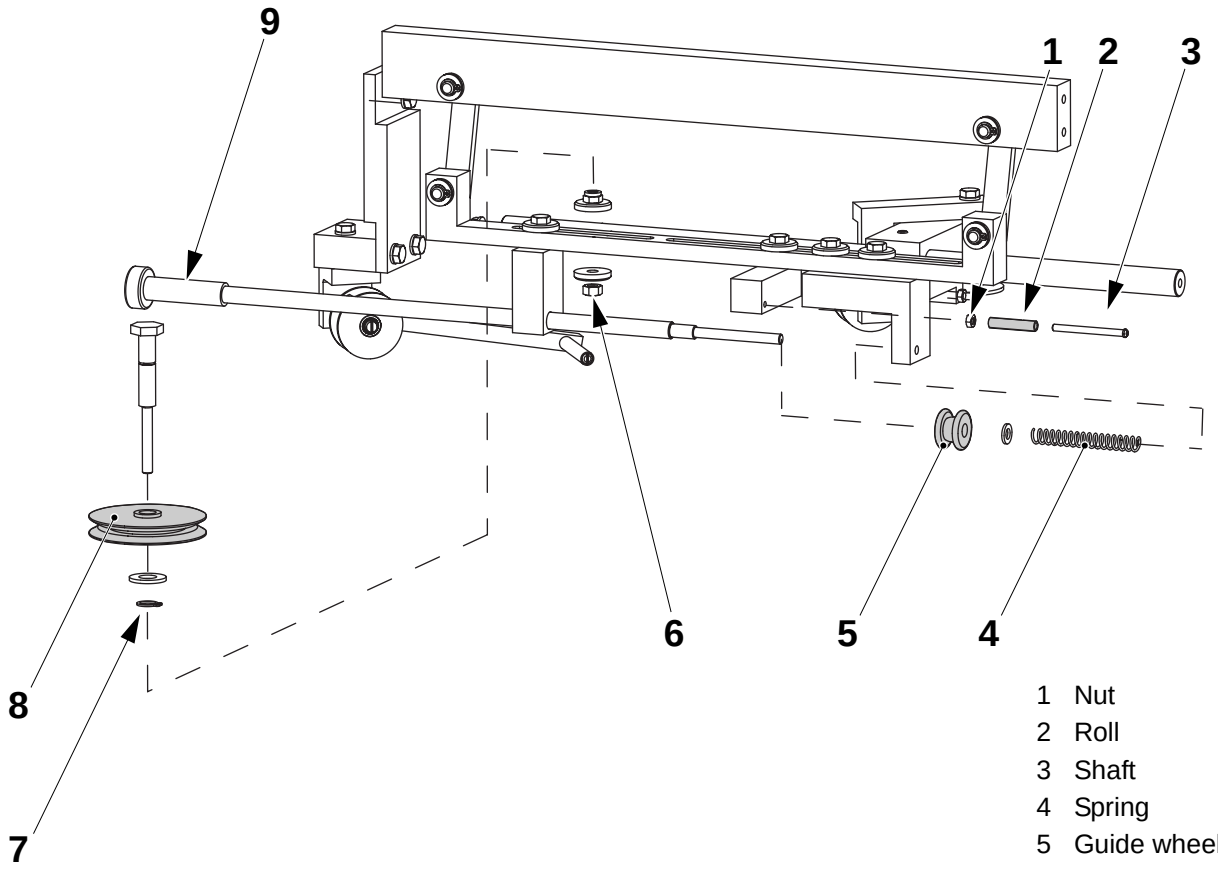

1 Nut
2 Roll
3 Shaft
4 Spring
5 Guide wheel
6 Nut
7 Retaining ring
8 Wheel
9 Adjusting screw

MM2.21TS100440en.fm

1.3.1-2 Strip guide - change rollers

Machine Status	
SPC reference	2523885-0100

Change the rollers and as follows:

a) Unscrew the screws (1) and remove the rolls (2).

b) Unscrew the shaft (4) and remove the roller (3).

Assemble in the reverse order with new rollers.

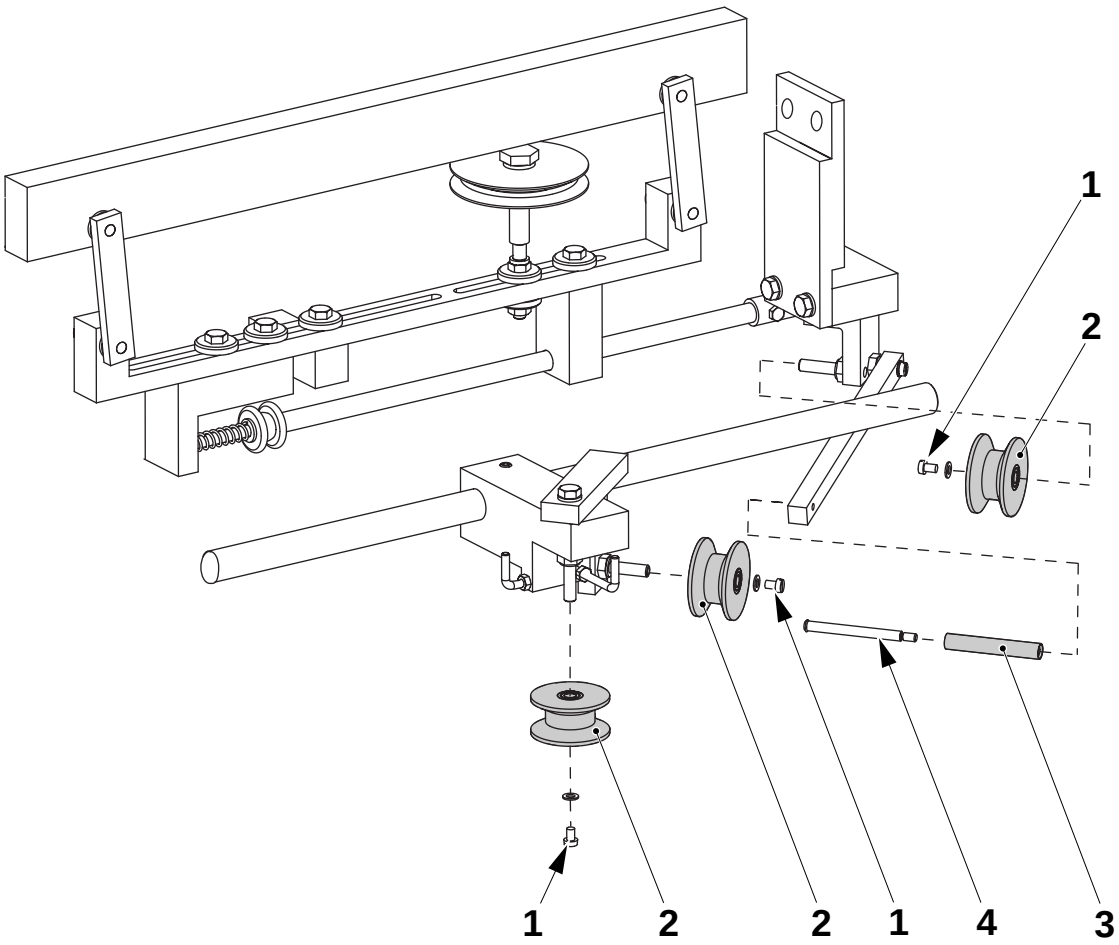

MM2.21TS100440en.fm

1 Screw
2 Roll
3 Roller
4 shaft

1.3.1-3 Strip guide - set

Machine Status	
SPC reference	2523885-0100

WARNING! **Hot surfaces!**
The heating nozzle may be hot.
If necessary, wear heat resistant protections gloves.

The correct weight of the web guide roller (1) towards the packaging material web (2) is obtained when **A** = 28 mm.

- Adjust by loosening the nuts (5), distance **B**.

The strip guide roller (3) shall be centred to the edge of the packaging material web (2).

- Larger adjustments are done by loosening the screws (3), distance **C**.
- Fine adjust by help of the adjustment knob (6); distance **D**.

Volume	**A** (mm)	**B** (mm)	**C** (mm)	**D** (mm)
65	28	78	313	40
150S	28	56	334	40
200B	28	35	355	40
200S	28	46	345	40

MM2.21TS100440en.fm

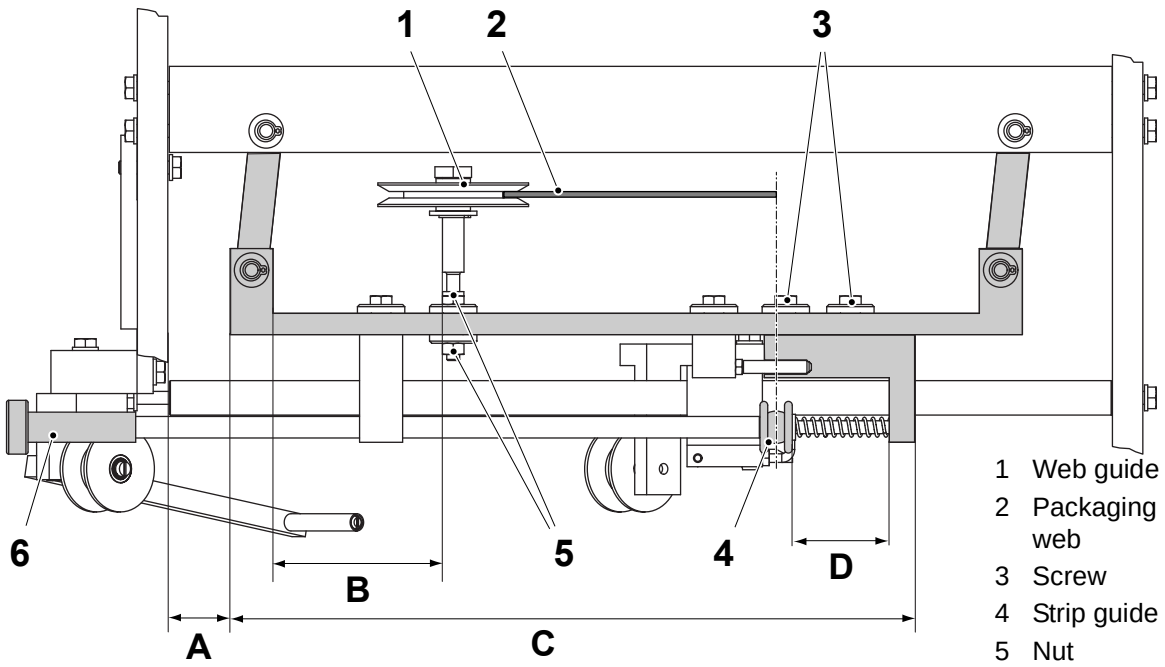

1 Web guide roller
2 Packaging material web
3 Screw
4 Strip guide roller
5 Nut
6 Adjustment knob

(Cont'd)

(Cont'd)

Loosen the screw (12), move the bracket (11) sideways to make the strip parallel to the plate (7).

Loosen the screws (10) and (14), turn the brackets (9) and (15) to make the rollers (8) and (13) aligned.

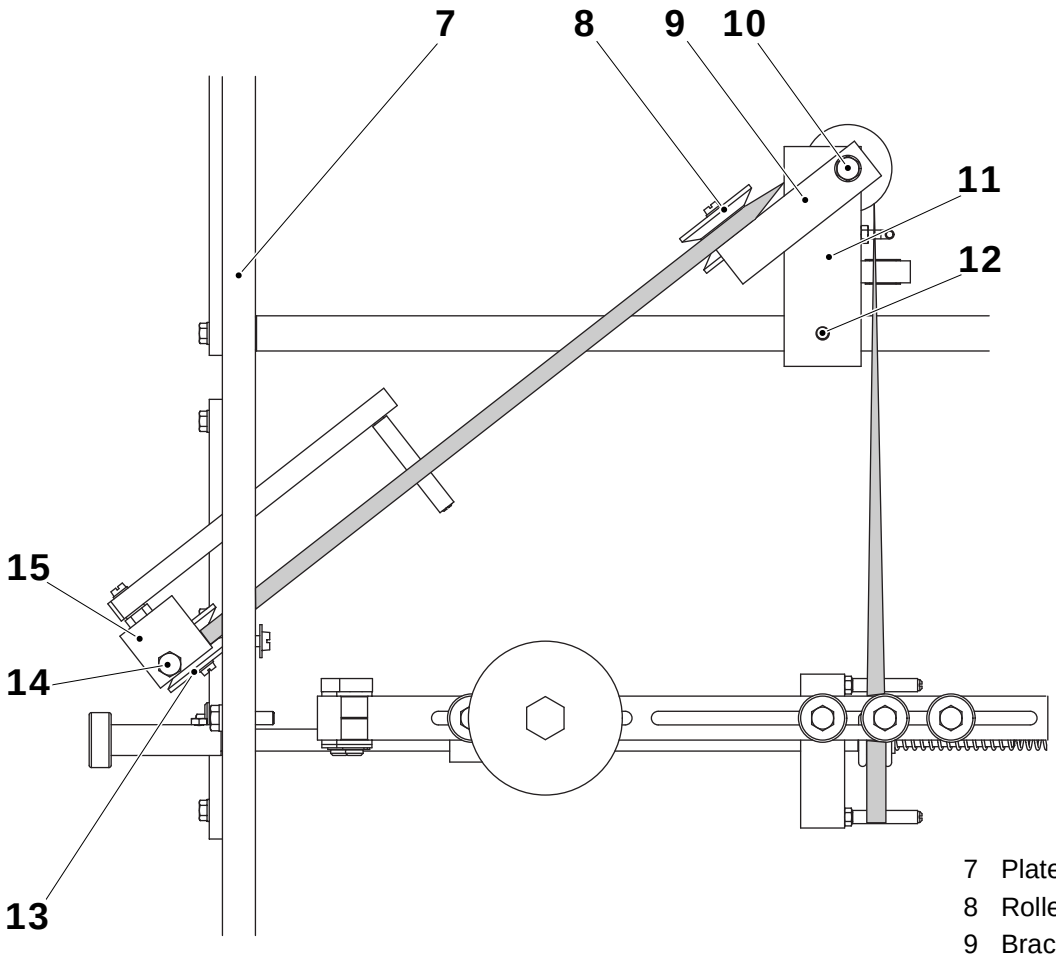

7 Plate
8 Roller
9 Bracket
10 Screw
11 Bracket
12 Screw
13 Roller
14 Screw
15 Bracket

MM2.21TS100440en.fm

1.3.1-4 Strip guide - set knob

Machine Status	
SPC reference	2523885-0100

WARNING! **Hot surfaces!**
The heating nozzle may be hot.
If necessary, wear heat resistant protections gloves.

Set the position of the knob (1) depending of volume according to the table below.

Volume	65	150S	200B	200S
Position	C	B	B	A

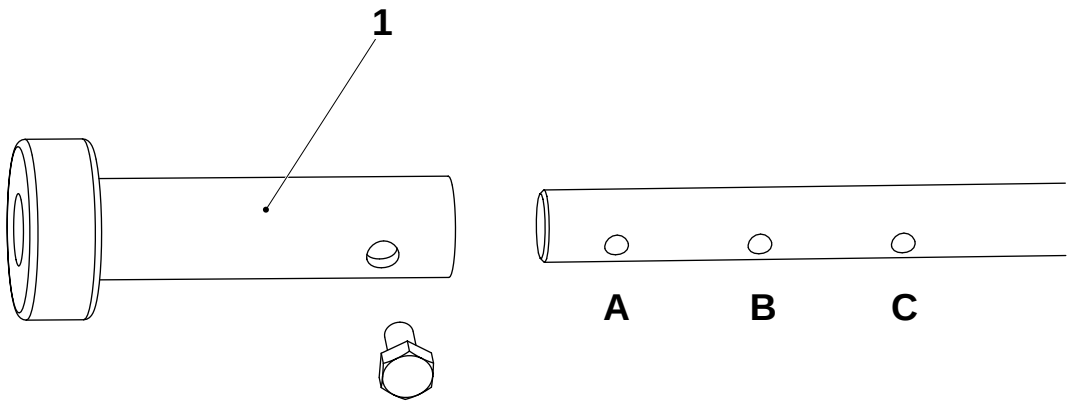

1 Knob

MM2.21TS100440en.fm

1.3.3 Drive roller

1.3.3-1 Drive roller - check

Machine Status	
SPC reference	2523900-0100

Check the following parts for wear and/or damage:

- the flange bushings (1).

Change any worn or damaged parts.

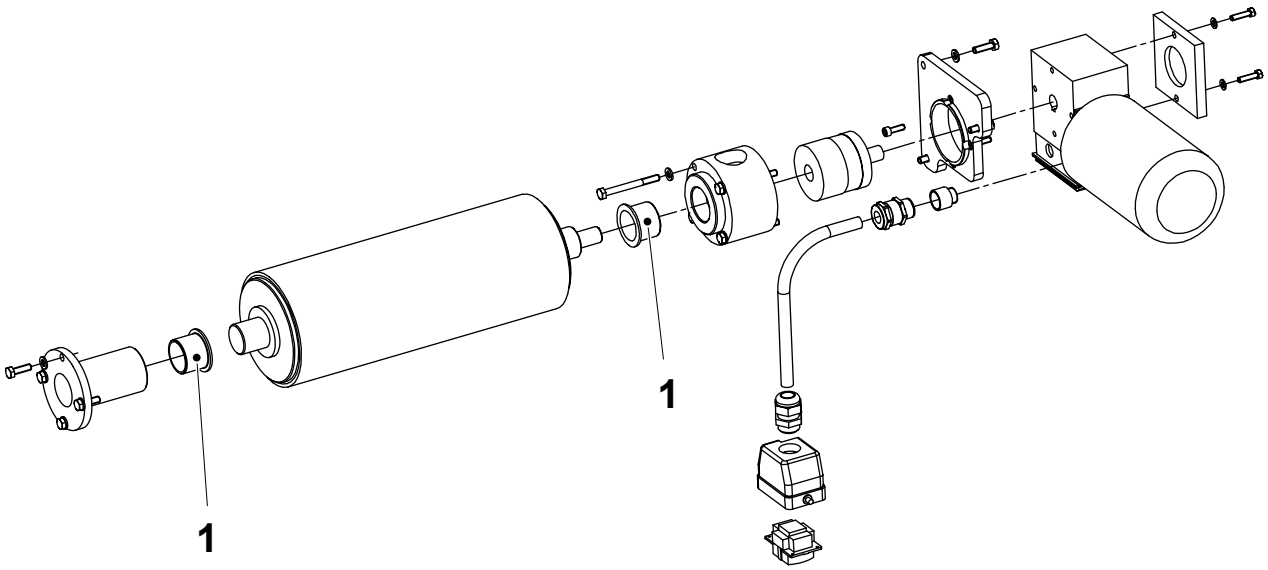

MM2.21TS100440en.fm

1 Flange bushing

1.3.3-2 Drive roller - change flange bushing

Machine Status	
SPC reference	2523900-0100

Change the flange bushings as follows:

a) Unscrew the screws (1) and remove the housing (2).

b) Remove the bending roller (3).

c) Remove the flange bushings (4).

Assemble in the reverse order with new flange bushings (4).

Note! If the bellows coupling (5) has been removed or changed, the bellows coupling screws should be tighten to 14 Nm.

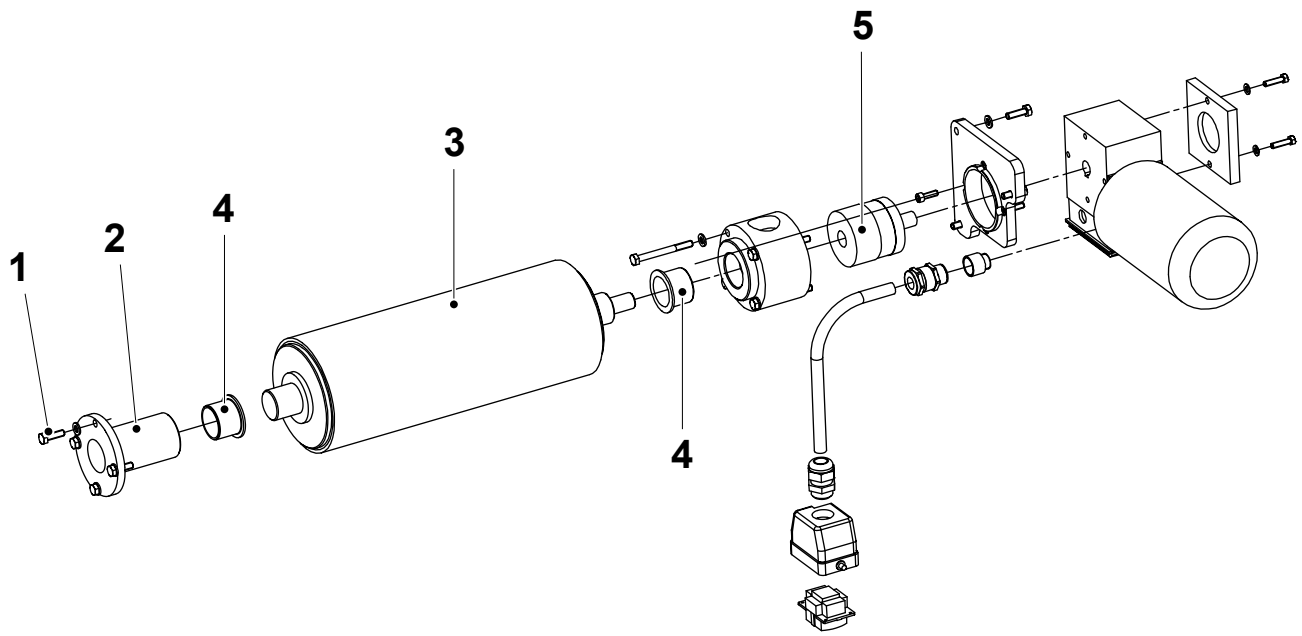

1 Screw
2 Housing
3 Bending roller
4 Flange bushing
5 Bellows coupling

MM2.21TS100440en.fm

1.3.4 Pressure roller

1.3.4-1 Pressure roller - check

Machine Status	
SPC reference	2524015-0100

Check that the pressure roller (1) rotate smothly, and for wear and/or damage.

Change if damaged.

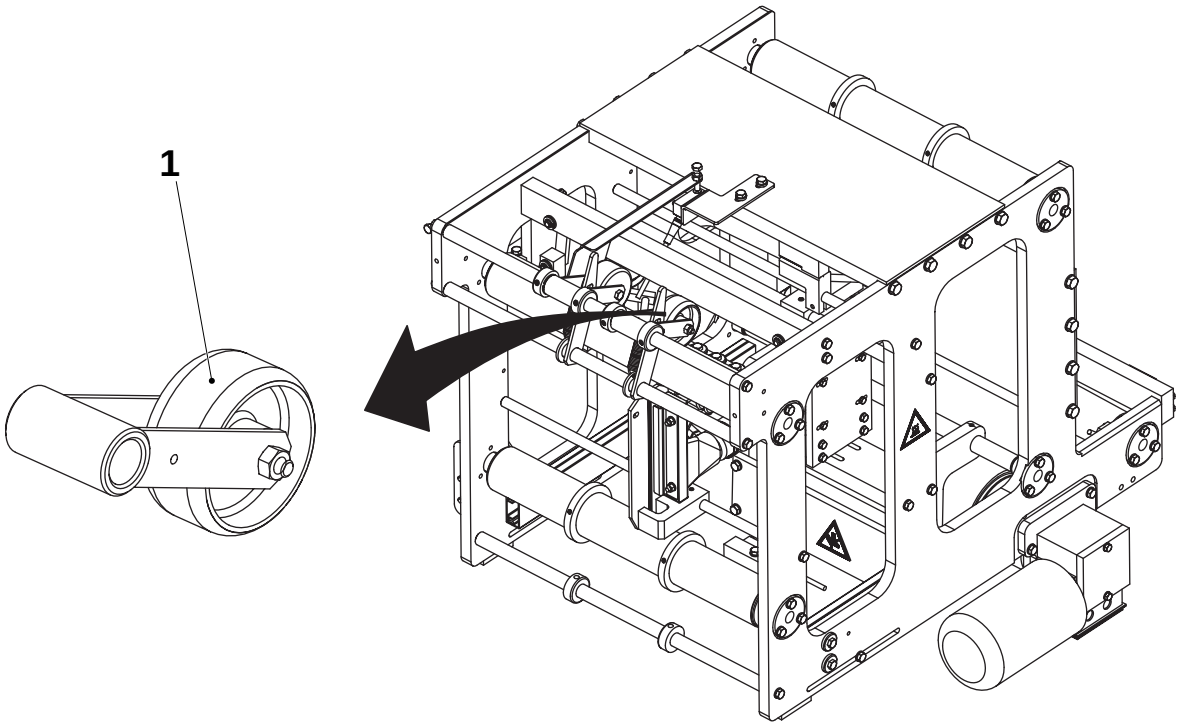

1 Pressure roller

MM2.21TS100440en.fm

1.3.4-2 Pressure roller - change

Machine Status	
SPC reference	2524015-0100

Change the pressure roller as follows:

a) Unscrew the nut (1) and pull out the screw (2).

b) Pull out the shaft (3).

c) Remove the bearing bushings (4)

d) Change the pressure roller (5) if required.

Assemble in the reverse order with a new pressure roller.

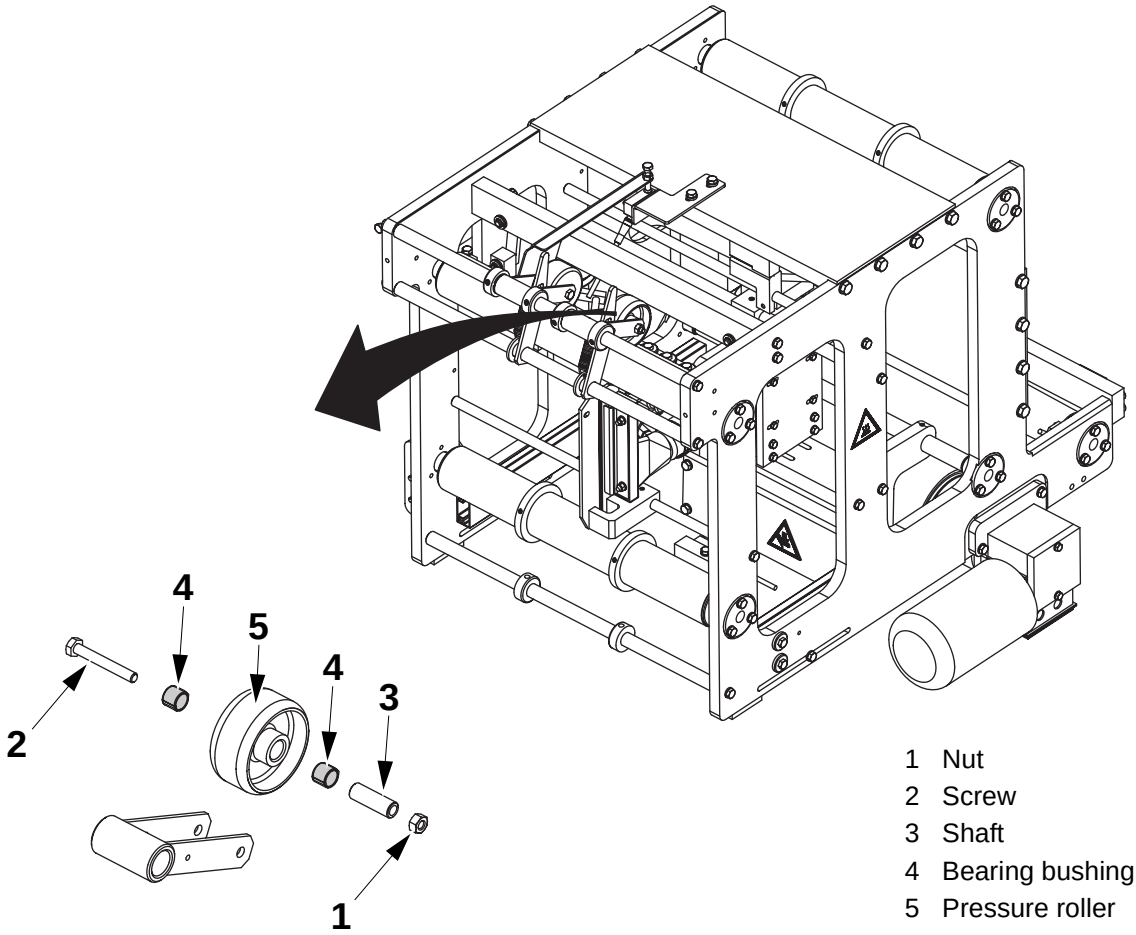

1 Nut
2 Screw
3 Shaft
4 Bearing bushing
5 Pressure roller

MM2.21TS100440en.fm

1.3.4-3 Pressure roller - set

Machine Status	
SPC reference	2524015-0100

Centre the pressure roller (2) above the packaging material edge (3).

– Adjust sideways by loosening the grub screws (1).

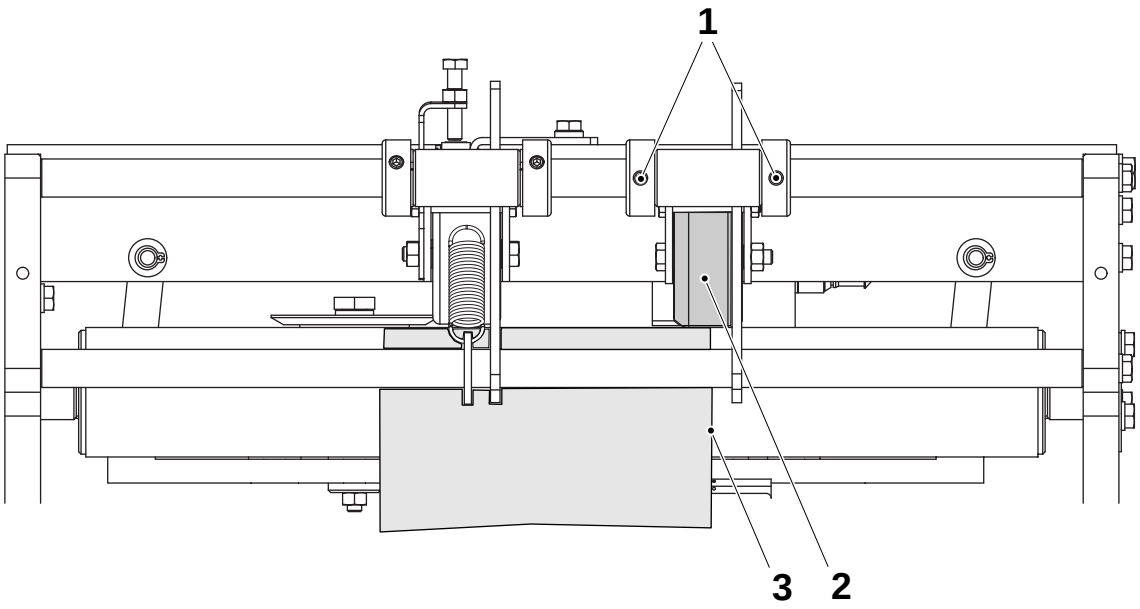

1 grup screw
2 Pressure roller
3 Packaging material

MM2.21TS100440en.fm

1.3.5 Heating device

1.3.5-1 Heating device - set

Machine Status	
SPC reference	2524020-0100

WARNING! **Hot surfaces!**
The heating nozzle may be hot.
If necessary, wear heat resistant protections gloves.

a) With the cylinder (4) in its minus position, adjust the heating nozzle (6) sideways by loosening the screws (5). The edge (1) of the packaging material web (2) shall just cover the holes (3).

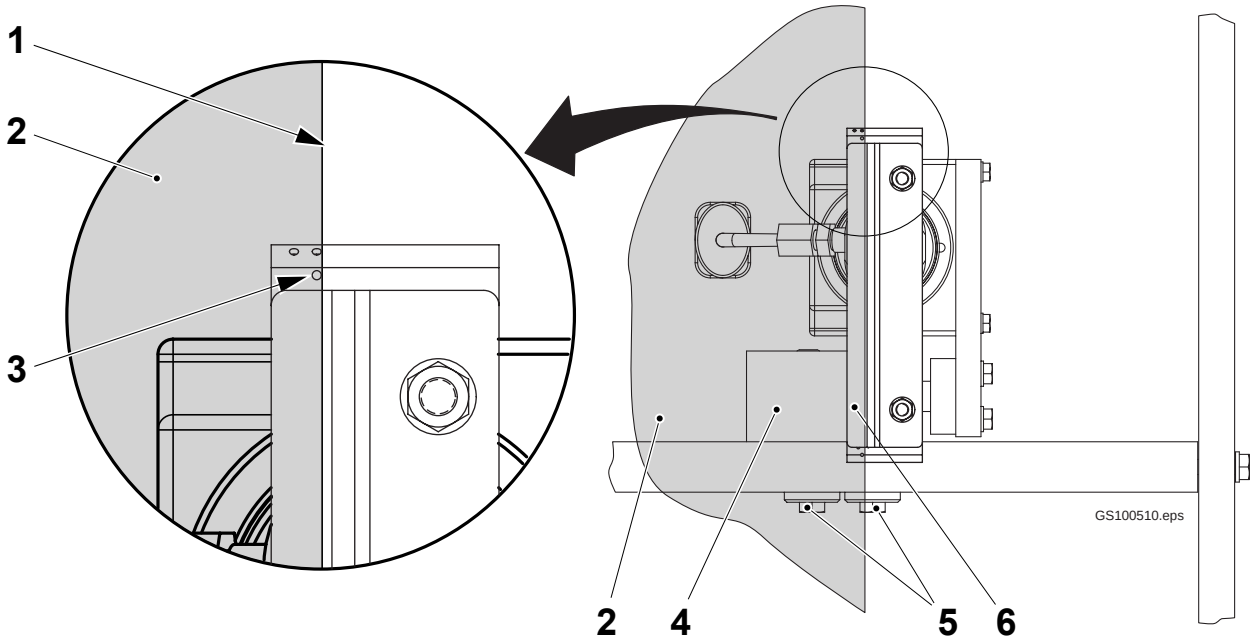

1 Edge of packaging material web
2 Packaging material web (shown as transparent)
3 Heating nozzle hole
4 Cylinder
5 Screw
6 Heating nozzle

(Cont'd)

(Cont'd)

b) Set the guide (7) side ways close to the heating nozzle (6).

c) Loosen the grub screws in the bracket (9) to adjust.

d) Check that the guide does not interfere with the heating device (8) in its movement.

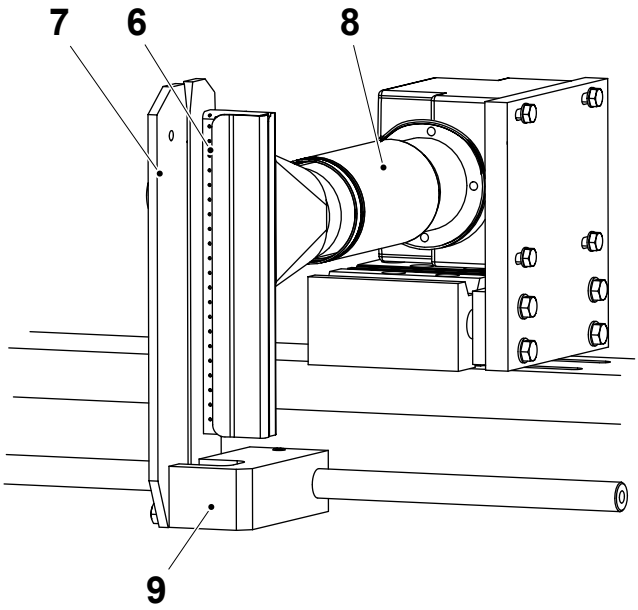

6 Heating nozzle
7 Guide
8 Heating device
9 Bracket

e) Adjust the distance A between the heating nozzle (6) and the packaging material web (2). Loosen the screws (10) to adjust.

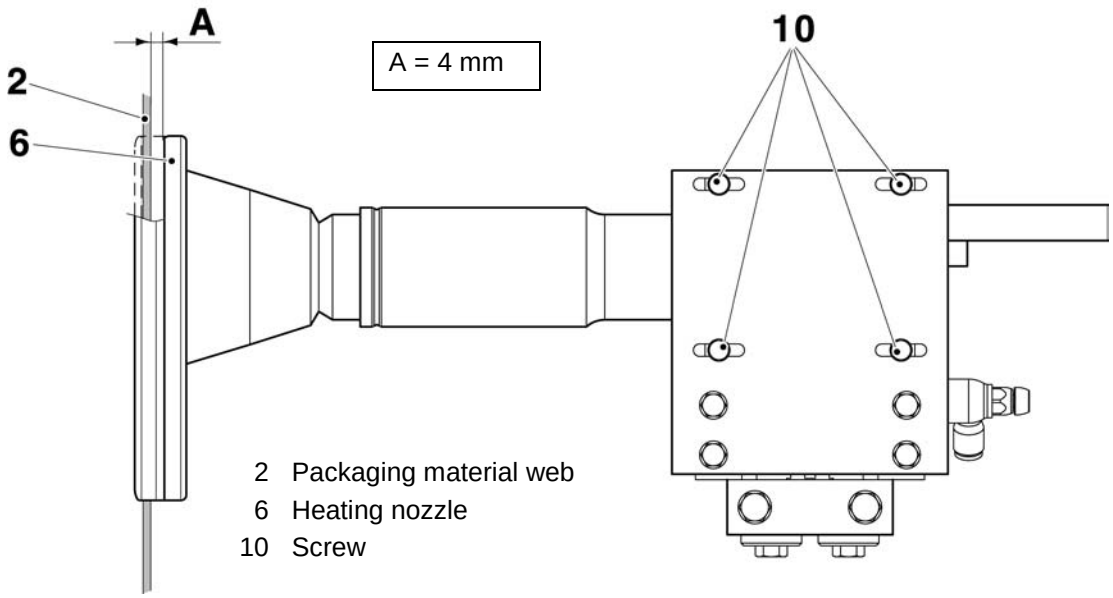

2 Packaging material web
6 Heating nozzle
10 Screw

(Cont'd)

MM2.21TS100440en.fm

(Cont'd)

f) Adjust the outer guide (11) for distance B = 0 mm to the packaging material web.

g) Adjust the inner guide (12) for distance C = 1,5 mm to the outer guide (11).

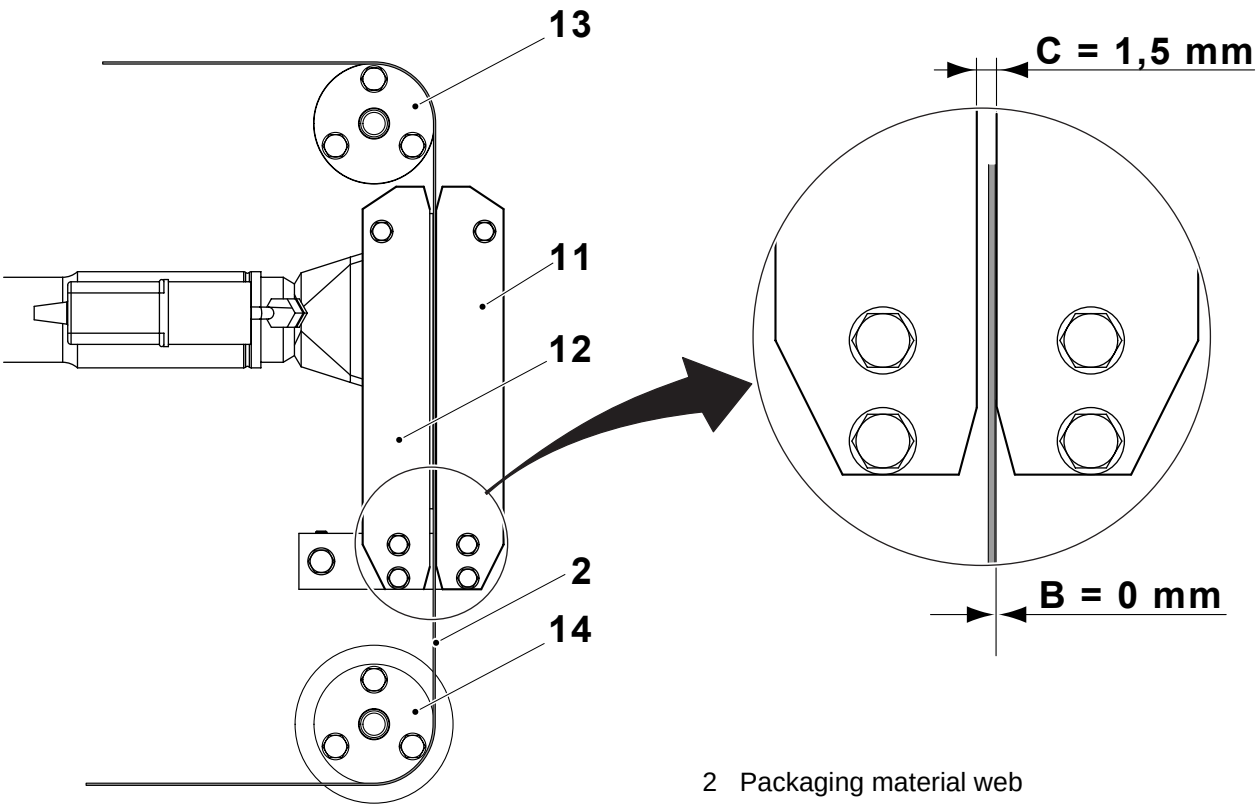

2 Packaging material web
11 Guide, outer
12 Guide, inner
13 Bending roller, upper
14 Bending roller, lower

(Cont'd)

MM2.21TS100440en.fm

(Cont'd)

h) At the back of the heating element:
   – Set the air throttle (15) to position 3 (fully open)
   – Set the power adjustment knob (16) at max.

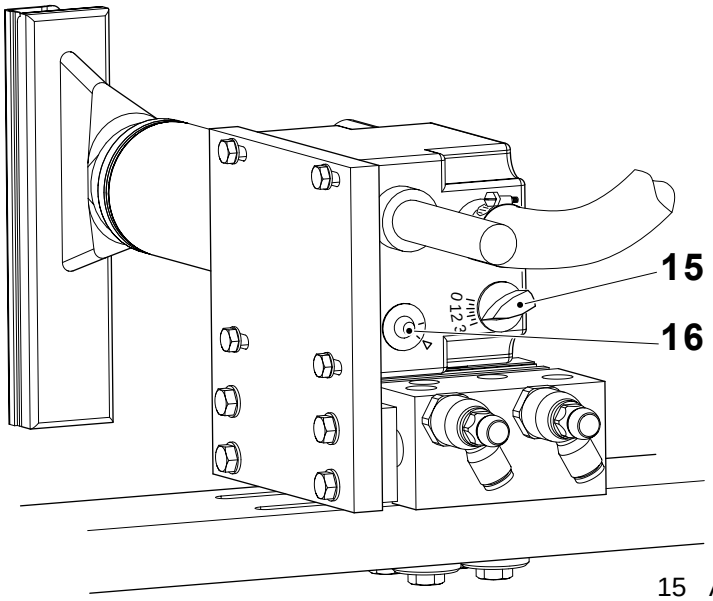

15 Air throttle
16 Power adjustment knob
17 Pressure regulater

i) Set the pressure regulator (17) according to *technical data* in OM.

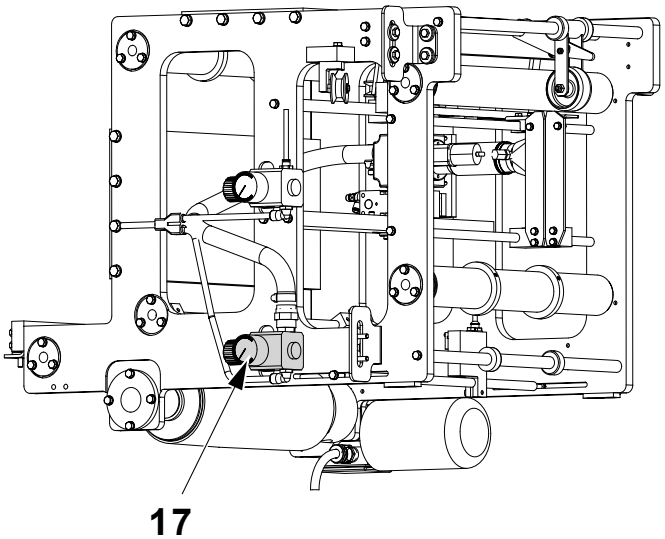

MM2.21TS100440en.fm

1.3.6 Bending roller

1.3.6-1 Bending roller - check

Machine Status	
SPC reference	2524035-0100

Check the bending roller marked with arrow as follow:

- the bending rollers rotate smoothly,
- the bending rollers are undamaged,
- there is no axial play in the flange bushings.

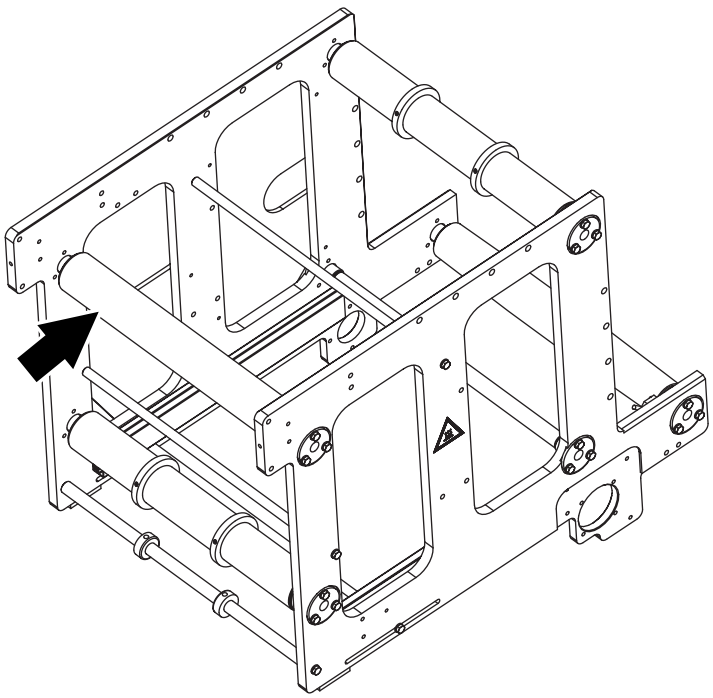

MM2.21TS100440en.fm

1.3.6-2 Bending roller - change flange bushings

Machine Status	
SPC reference	2524035-0100

Change the flange bushings as follows:

a) Unscrew the screws (1).

b) Pull out the housing (2) and remove the bending roller (4).

c) Remove the flange bushings (3).

Assemble in the reverse order with new flange bushings (3).

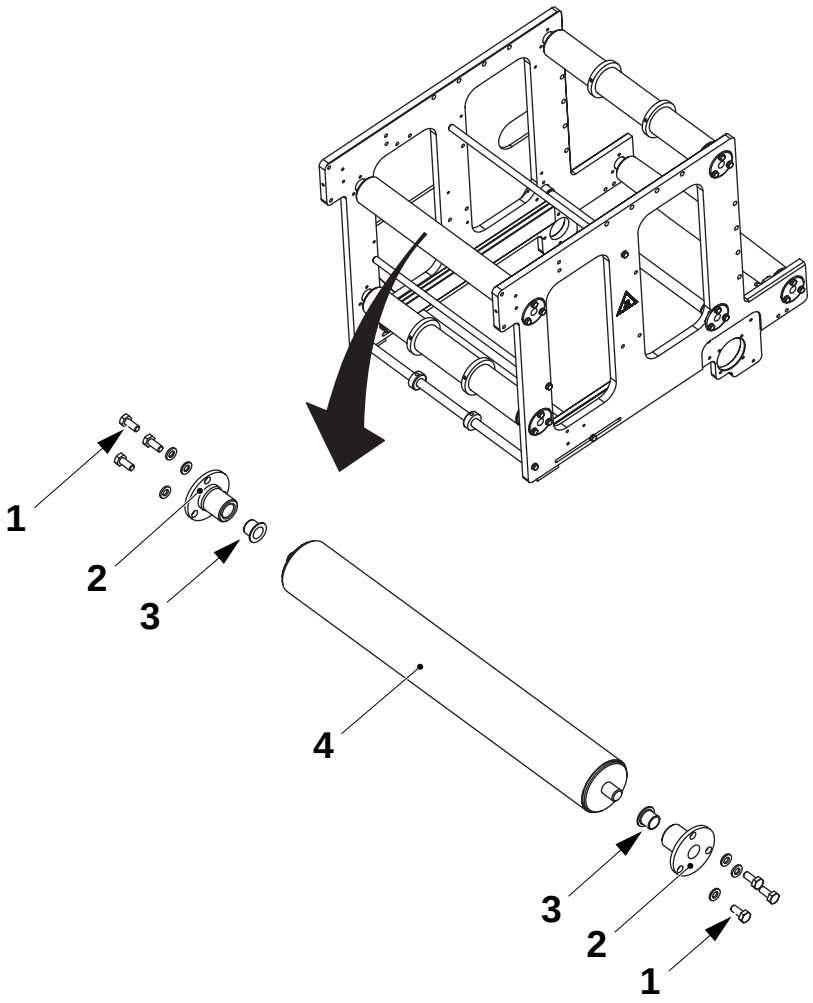

1 Screw
2 Housing
3 Flange bushing
4 Bending roller

MM2.21TS100440en.fm

1.3.7 Bending roller

1.3.7-1 Bending roller - check

Machine Status	
SPC reference	2524040-0100

Check the bending rollers marked with arrows as follow:

- the bending rollers rotate smoothly,
- the bending rollers are undamaged,
- there is no axial play in the flange bushings.

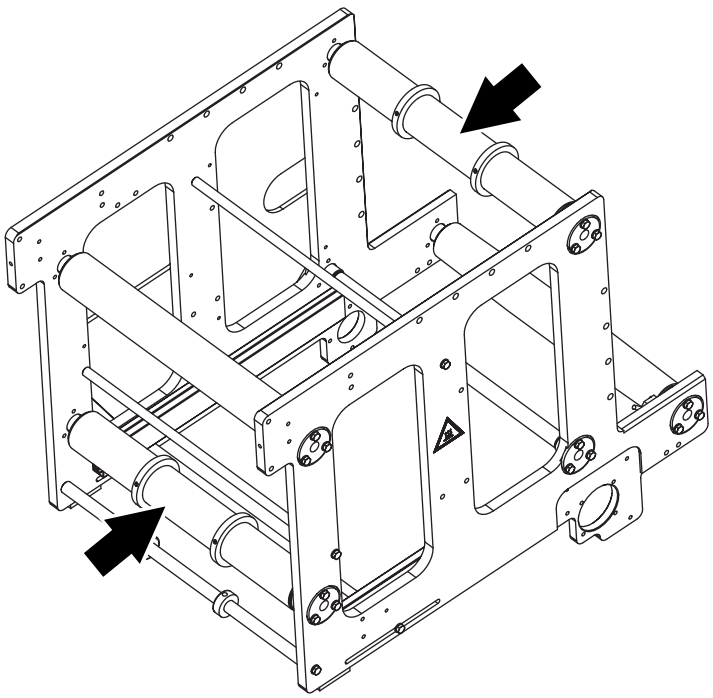

MM2.21TS100440en.fm

1.3.7-2 Bending roller - change flange bushings

Machine Status	
SPC reference	2524040-0100

Change the flange bushings as follows:

a) Unscrew the screws (1).

b) Pull out the housing (2) and remove the bending roller (4).

c) Remove the flange bushings (3).

Assemble in the reverse order with new flange bushings (3).

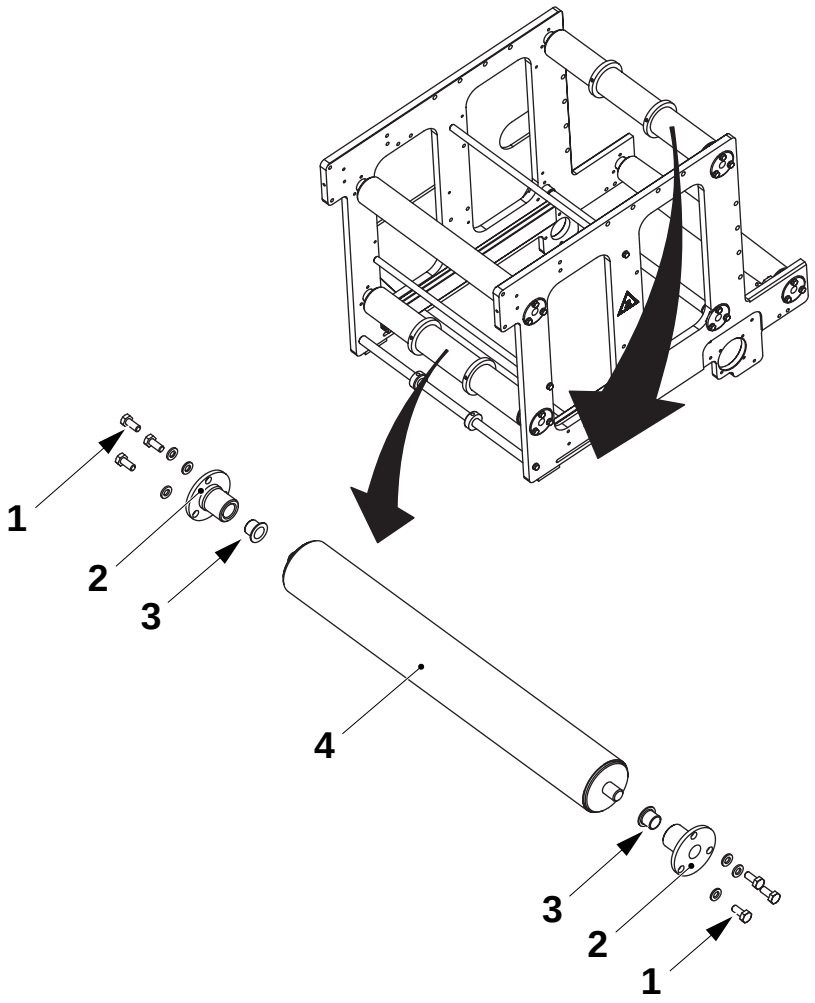

1 Screw
2 Housing
3 Flange bushing
4 Bending roller

MM2.21TS100440en.fm

1.3.8 Indicator

1.3.8-1 Indicator - set

Machine Status	
SPC reference	2524045-0100

Set the angle **A** between the bracket (1) and the package material (2), loosen the screw (3) for adjustment.

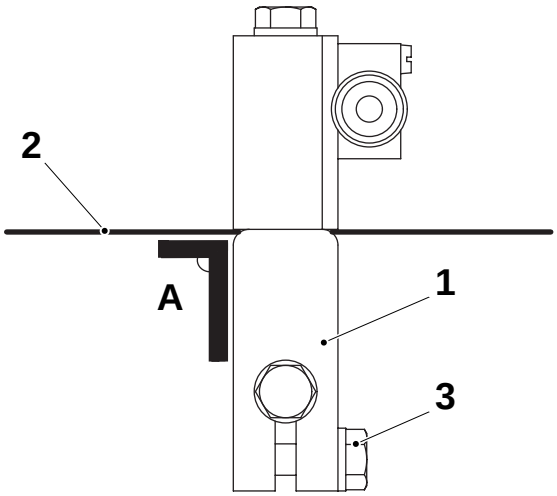

A = 90°

1 Bracket
2 Packaging material
3 Screw

Set the contrast scanner (4) side ways by loosening the screw (3). Adjust the bracket (1) side ways until the contrast scanner spot (5) is centred over the register mark (6).

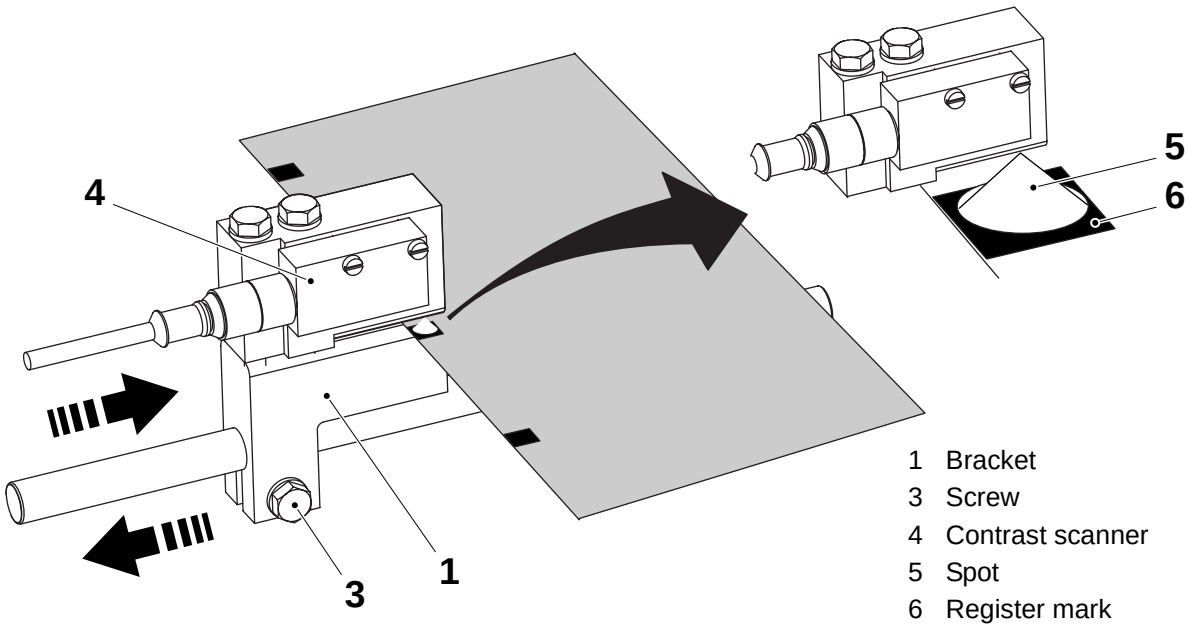

1 Bracket
3 Screw
4 Contrast scanner
5 Spot
6 Register mark

MM2.21TS100440en.fm

1.3.8-1 Contrast scanner - set

Machine Status	
SPC reference	2524045-0100

Position the packaging material below the contrast scanner (1) make sure that the spot (3) reads on the register mark (4). Push the button (2) once.

Move the packaging material until the spot (3) reads on one another single coloured surface (5). Push the button (2) once.

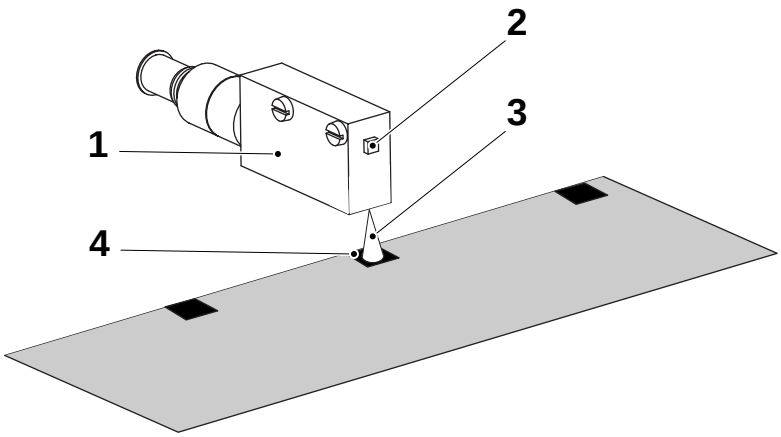

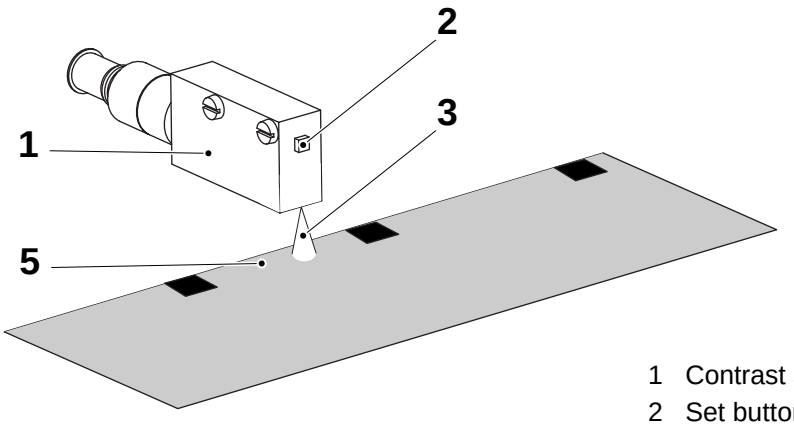

1 Contrast scanner
2 Set button
3 Spot
4 Register mark
5 Packaging material

MM2.21TS100440en.fm

1.3.9 Bending roller

1.3.9-1 Bending roller - check

Machine Status	
SPC reference	2524065-0100

Check the bending roller marked with arrow as follow:

- the bending rollers rotate smoothly,
- the bending rollers are undamaged,
- there is no axial play in the flange bushings.

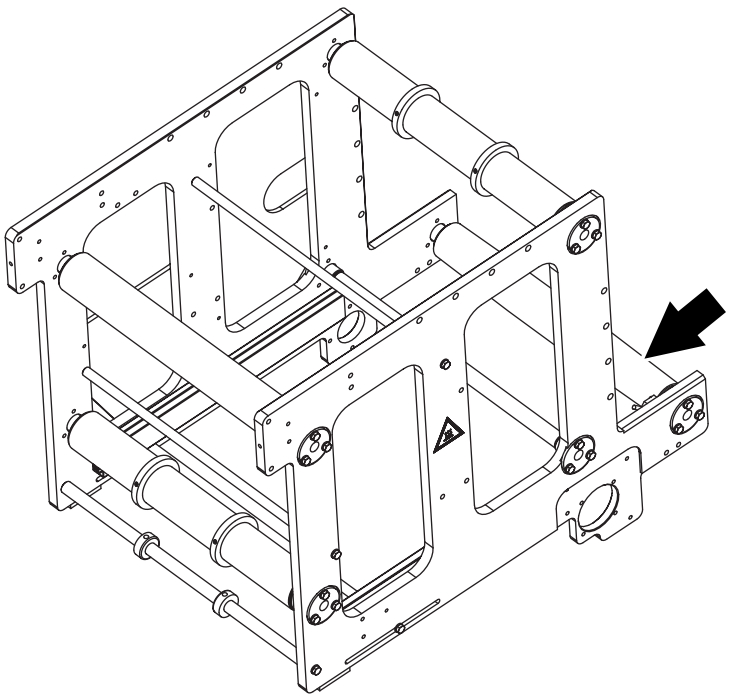

MM2.21TS100440en.fm

1.3.9-2 Bending roller - change flange bushings

Machine Status	
SPC reference	2524065-0100

Change the flange bushings as follows:

a) Unscrew the screws (1).

b) Pull out the housing (2) and remove the bending roller (4).

c) Remove the flange bushings (3).

Assemble in the reverse order with new flange bushings (3).

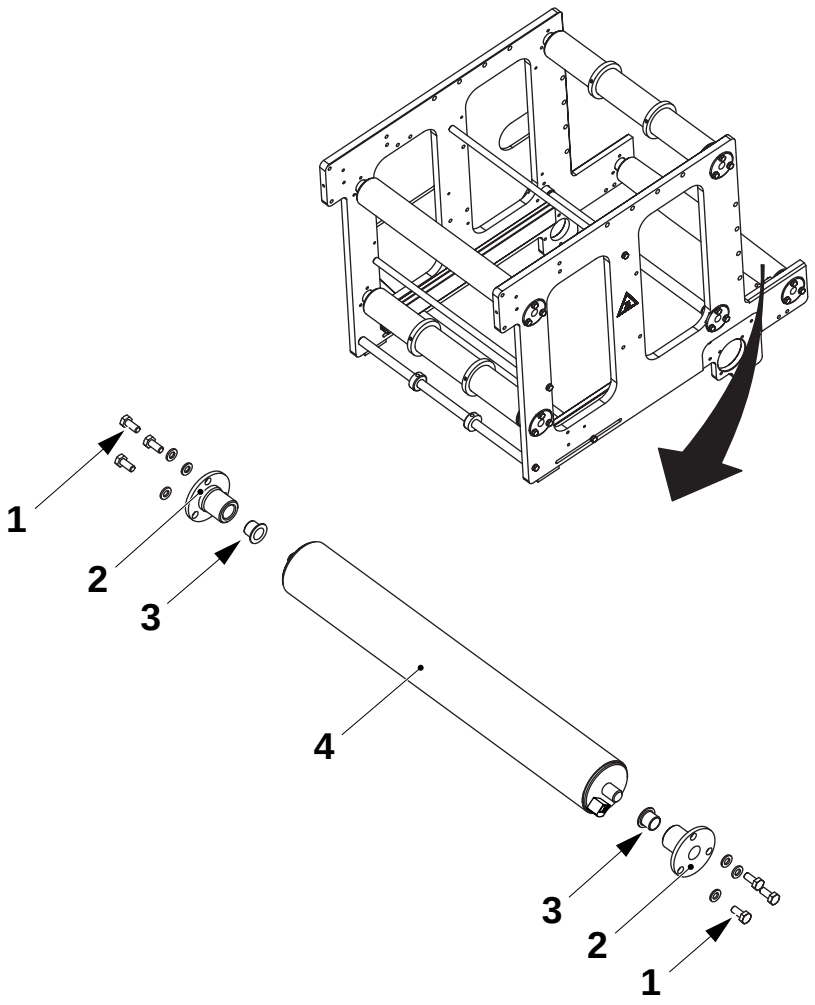

1 Screw
2 Housing
3 Flange bushing
4 Bending roller

MM2.21TS100440en.fm

1.3.9-3 Bending roller - set proximity switch

Machine Status	
SPC reference	2524065-0100

Set the proximity switch (3) as follows:

a) Loosen the screw (2).

b) Set value **A** between the indicator (1) and the proximity switch (3).

c) Tighten the screws and check value **A**.

Check that proximity switch (3) indicate the indicator (1).

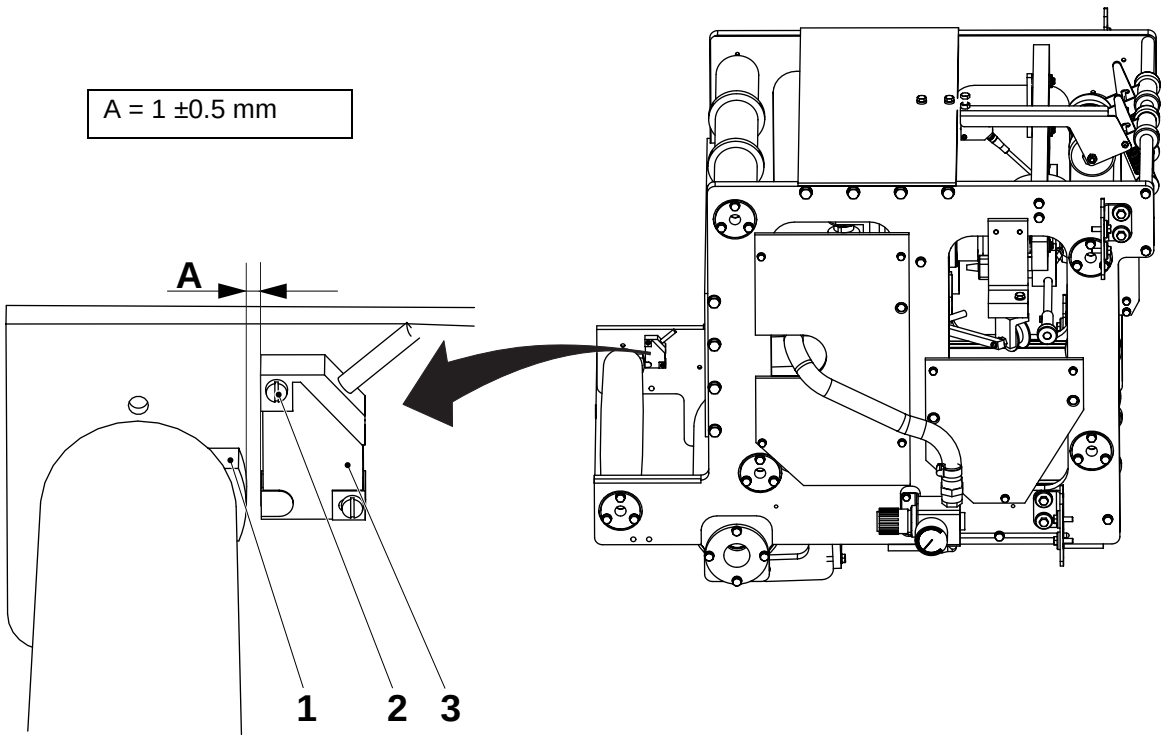

1 Indicator
2 Screw
3 Proximity switch

MM2.21TS100440en.fm

1.3.11 Pressure roller

1.3.11-1 Pressure roller - check

Machine Status	
SPC reference	2542627-0100

Check the following:

- that the arm easily swing,
- that the pressure roller rotate smoothly (2).

Change any worn or damaged parts.

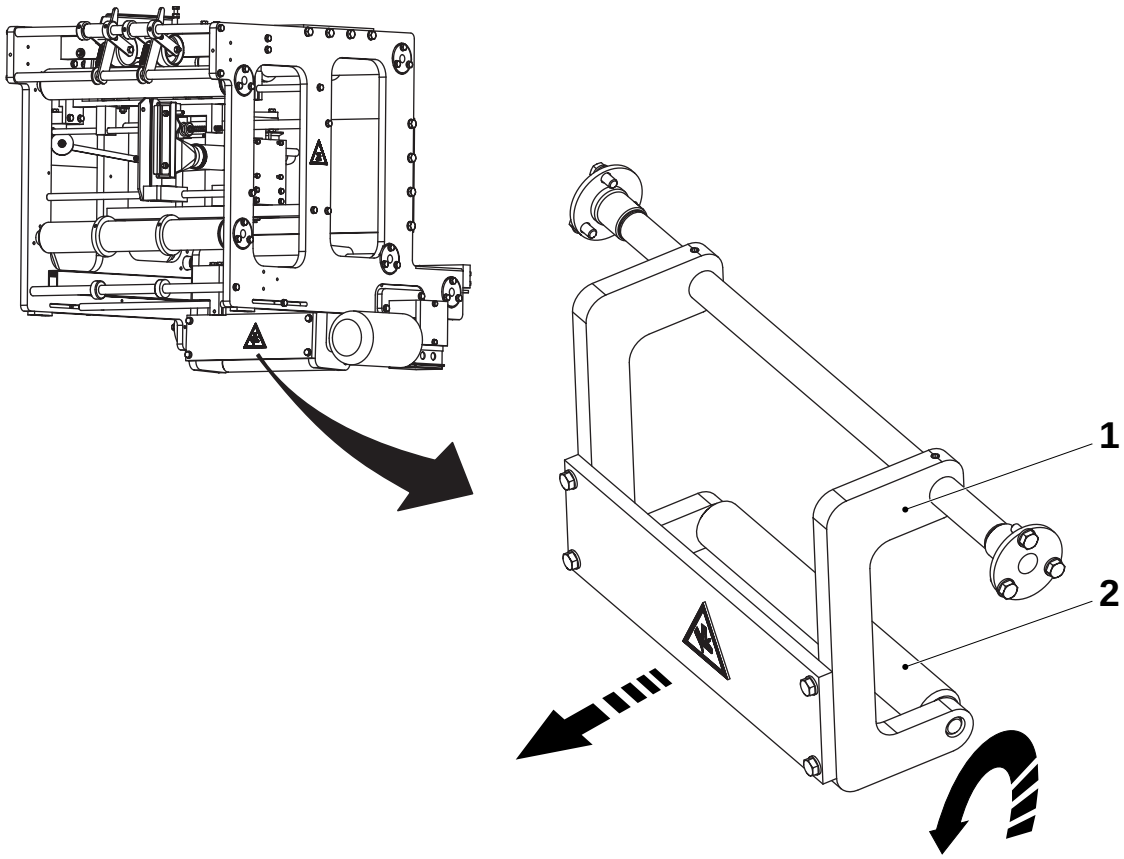

1 Arm
2 Pressure roller

MM2.21TS100440en.fm

1.3.11-2 Pressure roller - change flange bushings

Machine Status	
SPC reference	2542627-0100

Change the flange bushings as follows:

a) Unscrew the screws (1) and pull out the housings (2).

b) Remove the flange bushings (3).

c) Unscrew the screw (4) and the screws (8).

d) Move the arm (7) side ways and remove the bending roller (6).

e) Pull out the flange bushings (5).

Assemble in the reverse order with new flange bushings (3) and (5).

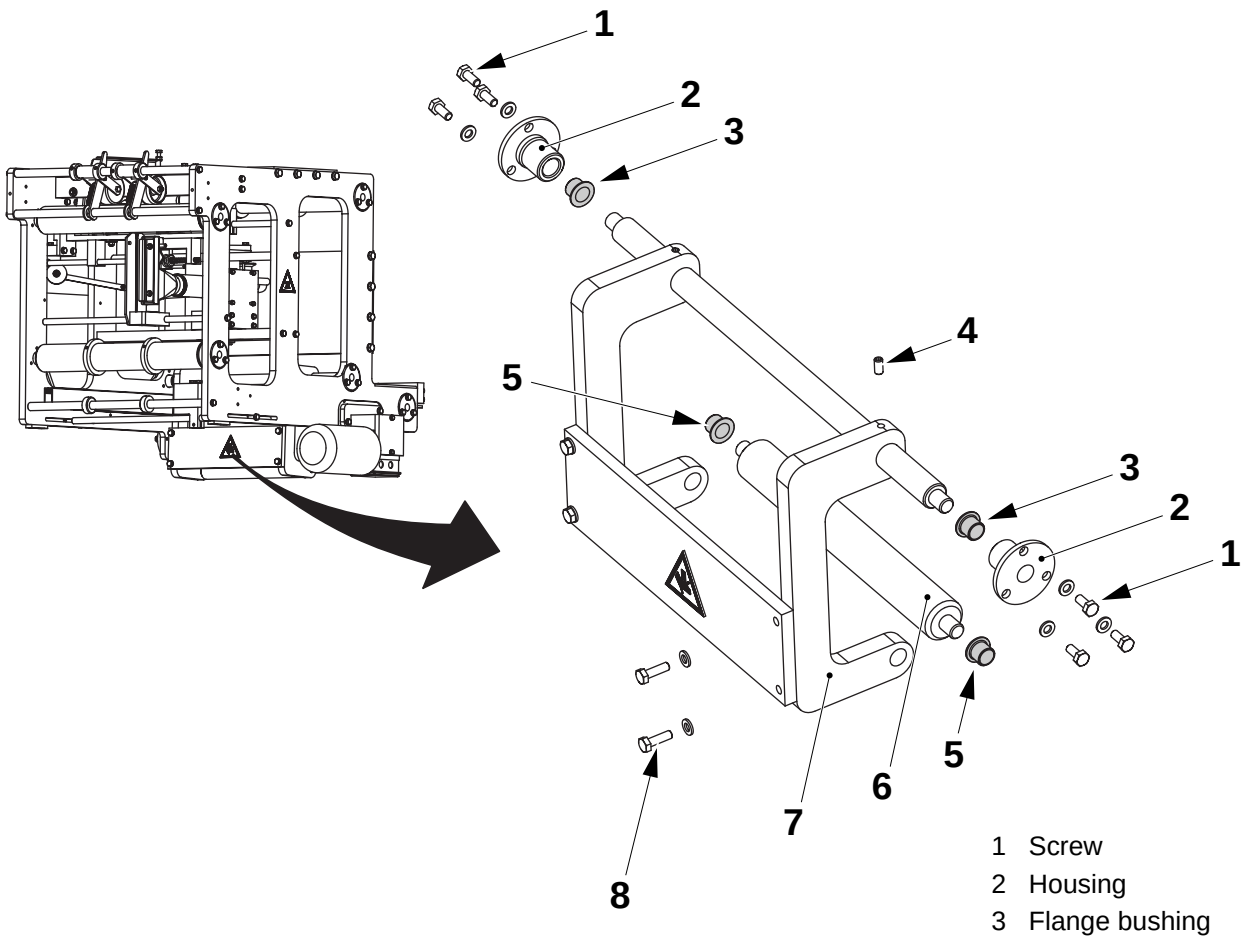

1 Screw
2 Housing
3 Flange bushing
4 Screw
5 Flange bushing
6 Bending roller
7 Arm
8 Screw

MM2.21TS100440en.fm

1.3.12 Splice detector

1.3.12-1 Splice detector - change bearing bushing

Machine Status	
SPC reference	2556810-0100

Change the bearing bushings as follows:

a) Loosen the nut (1) and pull out the screw (3).

b) Remove the bearing bushings (2).

Assemble in the reverse order with new flange bushings (2).

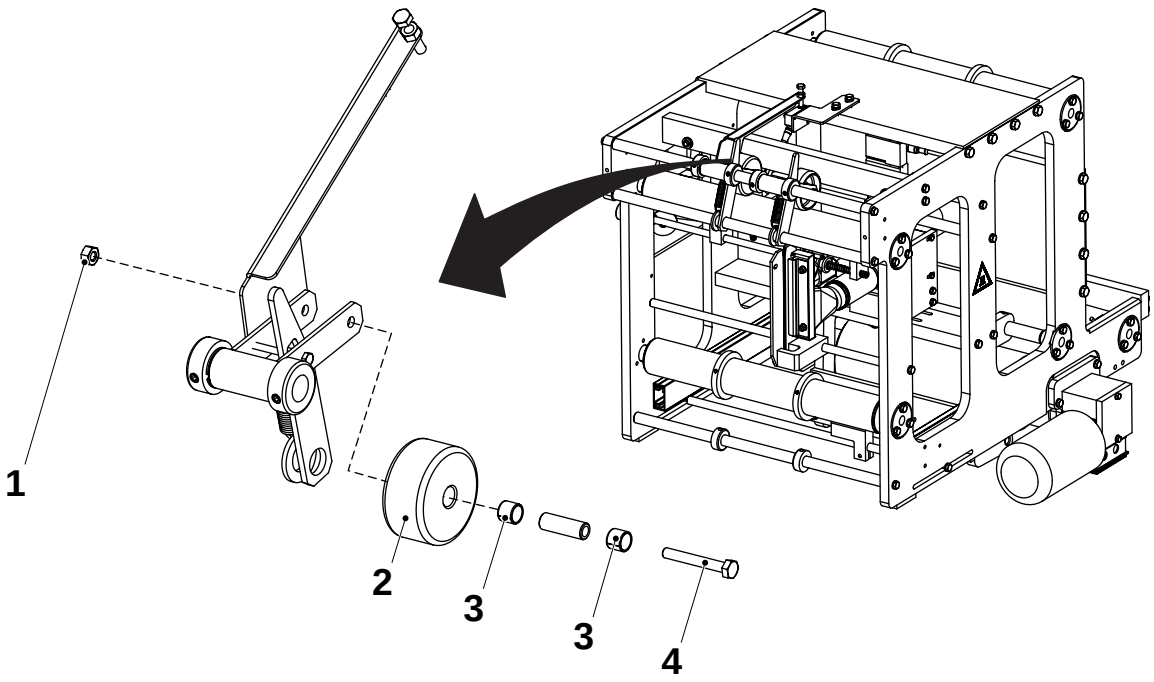

MM2.21TS100440en.fm

1 Nut
2 Bearing bushings
3 Screw

1.3.12-2 Splice detector - set

Machine Status	
SPC reference	2556810-0100

Centre the indicator screw (1) above the reading mark of the proximity switch (2).

- Adjust sideways by loosening the grub screws (5).
- Adjust length ways by loosening the screws (3).

Check that the proximity switch is:

- de-activated when double layers of packaging material (splice) is placed between the pressure roller (4) and the bending roller (6)
- activated with a single layer of packaging material between the rollers.

To adjust; loosen the counter nut for the indicator screw (1) and adjust the height for the indicator screw.

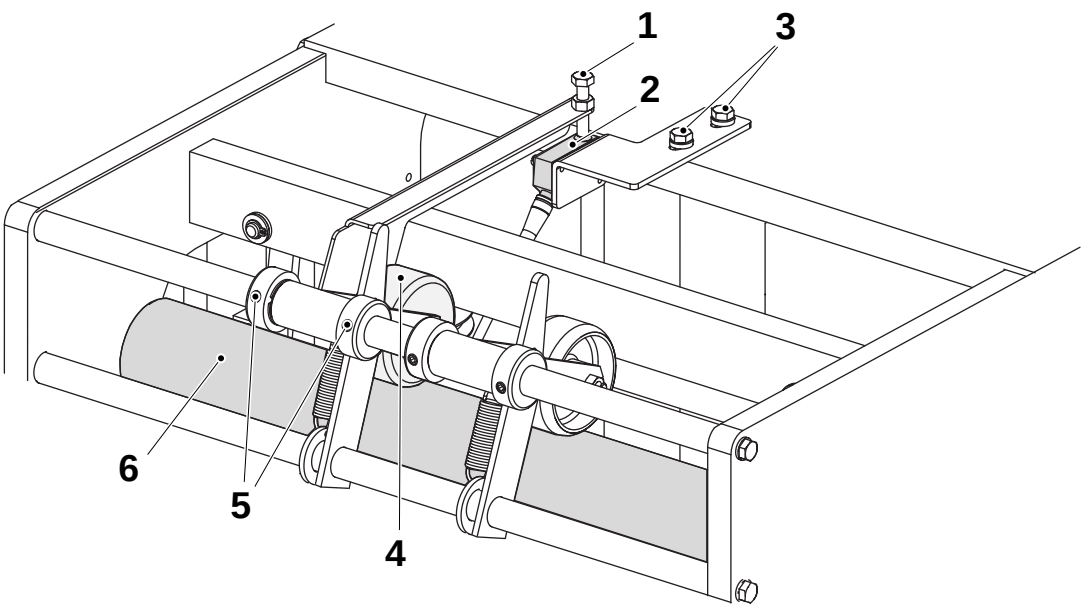

1 Indicator screw
2 Proximity switch
3 Screw
4 Pressure roller
5 Screw
6 Bending roller

MM2.21TS100440en.fm

1.4 Paper magazine

1.4-1 Paper magazine - check

Machine Status	
SPC reference	2524070-0100

Check the following parts for wear and/or damage:

- the photocells (1) and (the 2) both for reading and condition.
- the dancer roller (3).
- the spacer (4).

Change any worn or damaged parts.

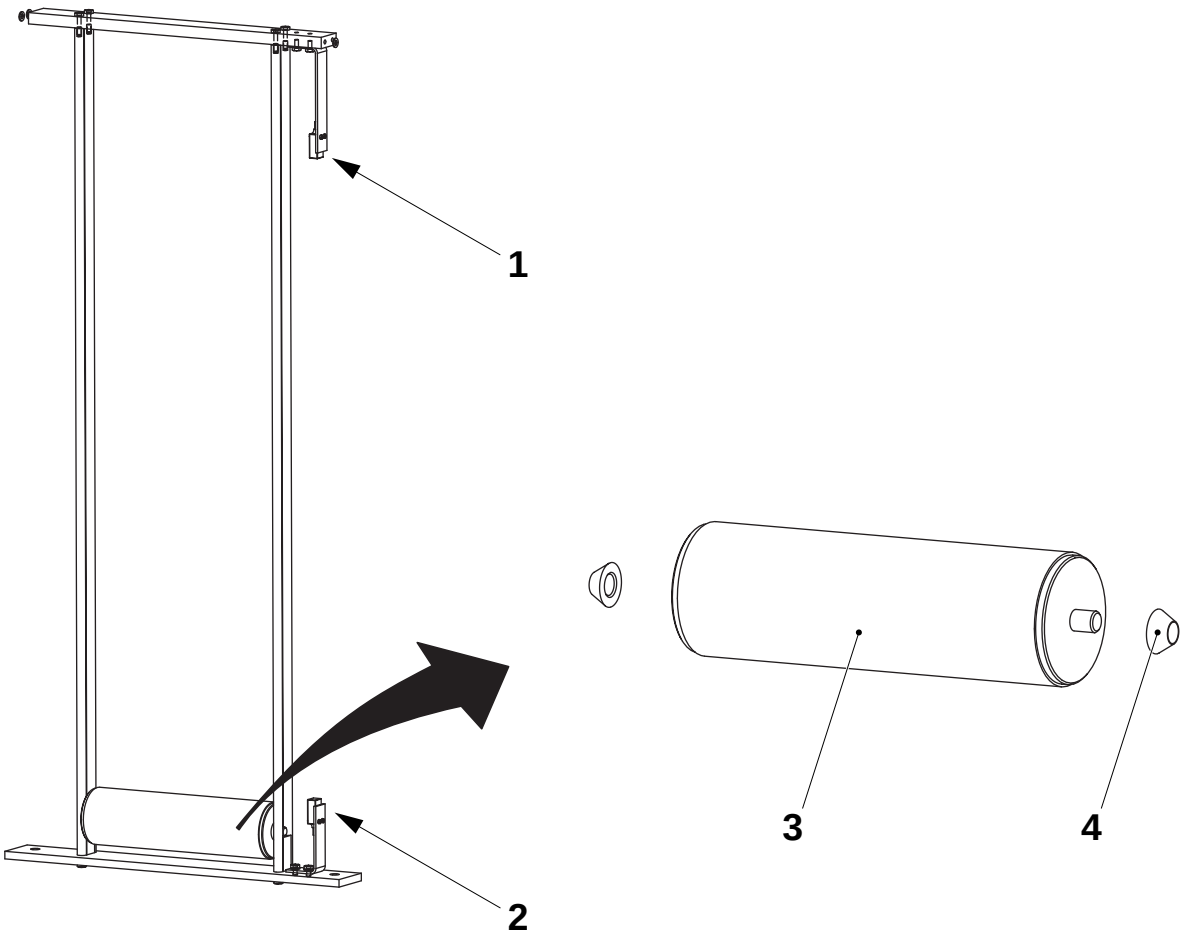

1 Photocell B133
2 Photocell B134
3 Dancer roller
4 spacer

MM2.21TS100440en.fm

1.4-2 Paper magazine - set photocell

Machine Status	
SPC reference	2524070-0100

Loosen the screws (3). Set the photocell (1) so that the photocell is activated when the dancer roller (2) is in the lowest position.

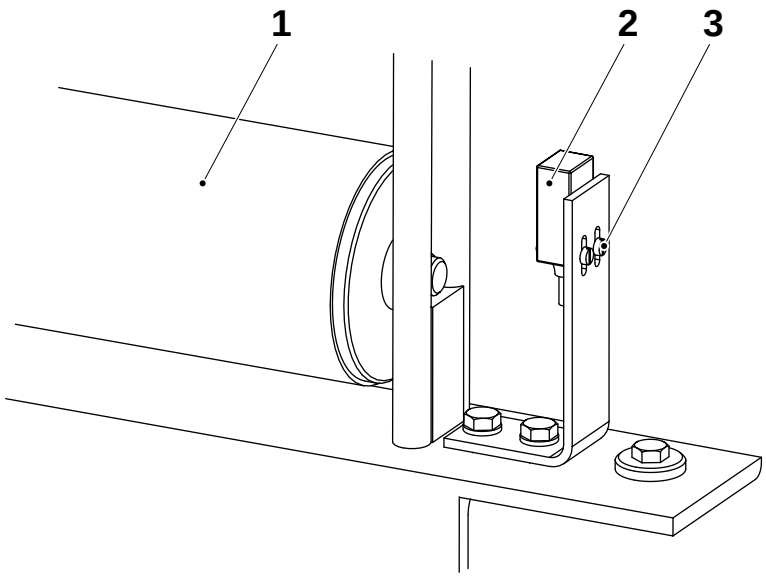

1 Photocell
2 Dancer roller
3 Screw

MM2.21TS100440en.fm

1.5 Frame

1.5-1 Frame - change bearing block

Machine Status	
SPC reference	2592430-0100

Change the bearing blocks as follow:

Unscrew the screws (1) to remove the bearing blocks (2).

Note! Assemble the bearing blocks but do not tighten the screws (2).

Set the bearing blocks according to 1.5-2 Frame - set bearing block

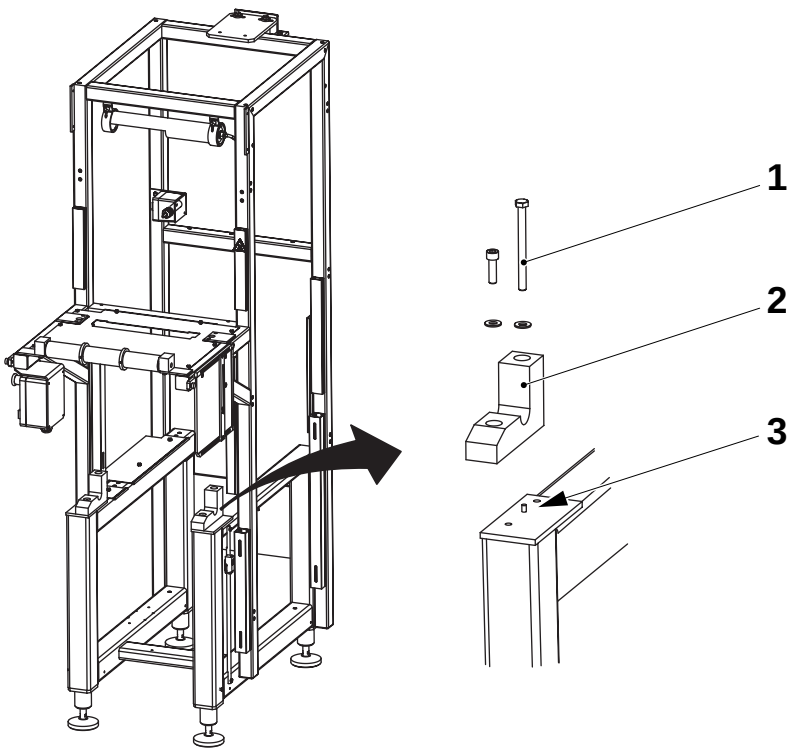

MM2.21TS100440en.fm

1 Screw
2 Bearing block
3 Pin

1.5-2 Frame - set bearing block

Machine Status	
SPC reference	2592430-0100

Add a bobbin (1) to the bearing blocks (3). The bearing blocks will center around the stering pins.

Tighten the screws (2), (four screws).

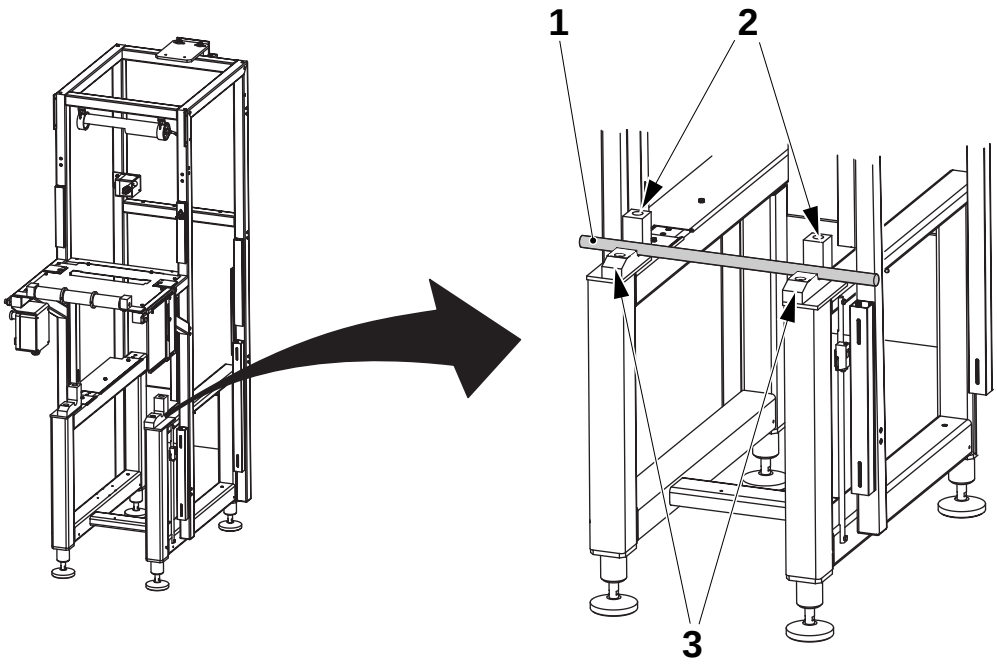

1 Bobbin
2 Screw
3 Bearing block

MM2.21TS100440en.fm

1.5-3 Frame - set photocell

Machine Status	
SPC reference	2592430-0100

Adjust the photocell (1) position by loosening the screw (2), set the basic value **A**.

Adjust the height of the photocell (3) until both leds (4) and (5) are lit on the photocell (1).

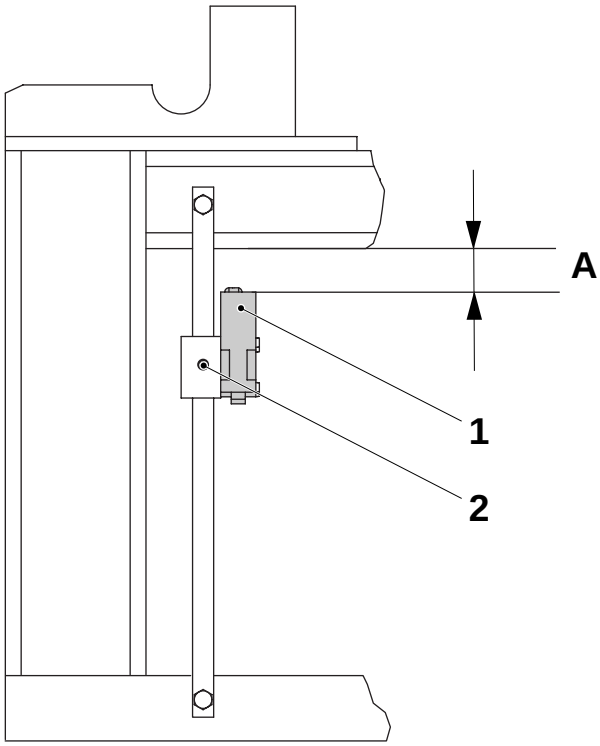

A = 5 mm

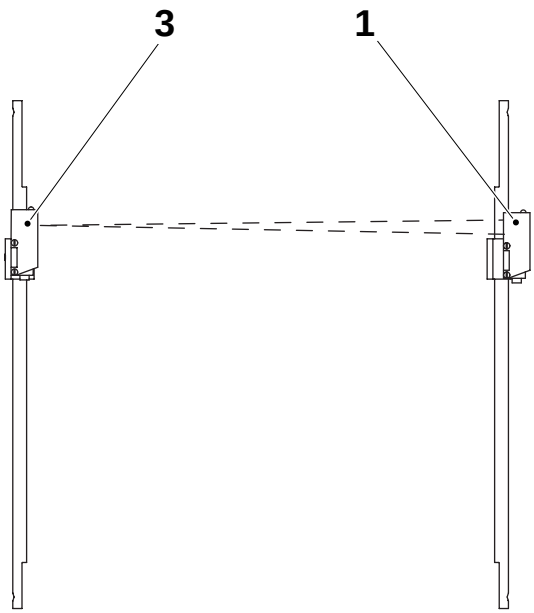

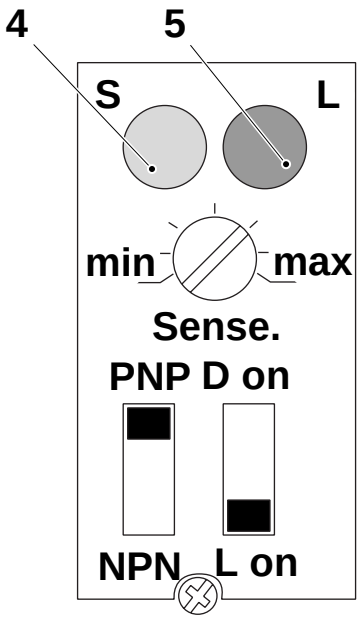

1 Photocell
2 Screw
3 Photocell
4 Led
5 Led

MM2.21TS100440en.fm

1.5-4 Frame - set photocell sensitivity

Machine Status	
SPC reference	2592430-0100

Set switch (5) to PNP and switch (4) to L on. Turn screw (3) fully to the right and then 1/2 turn to the left.

The green led (1) indicates the power is on. The red led (2) indicates the signal is received form the reflector on opposite photocell.

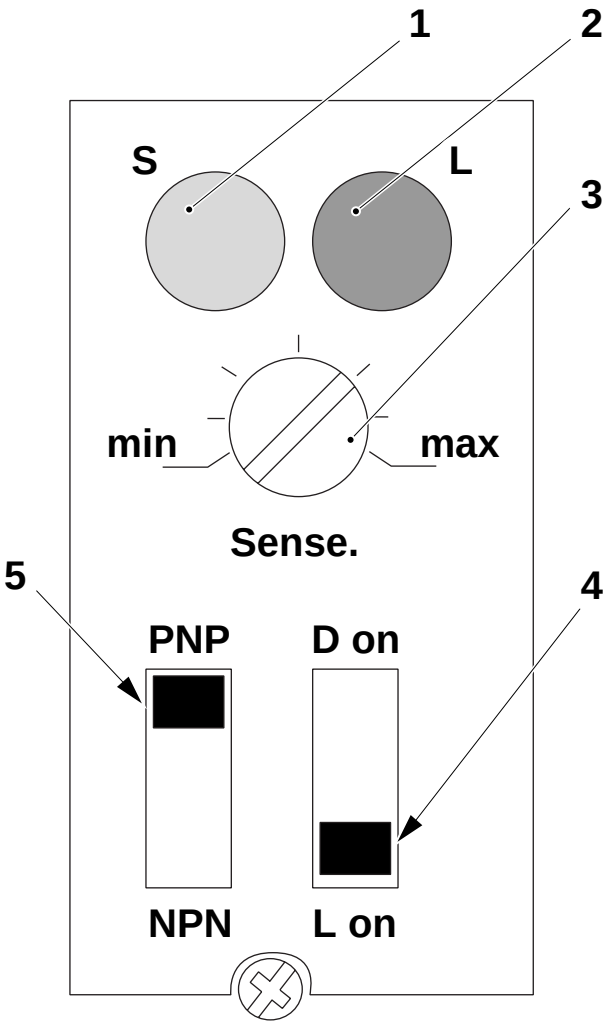

1 Green led
2 Red led
3 Screw
4 Switch
5 Switch

MM2.21TS100440en.fm

1.5.1 Bending roller

1.5.1-1 Bending roller - check

Machine Status	
SPC reference	2592415-0100

Check the following parts for wear and/or damage:

- the flanges (1).
- the bending roller (2),
- Bearing blocks (3).
- Check for radial and axial play.

Change any worn or damaged parts.

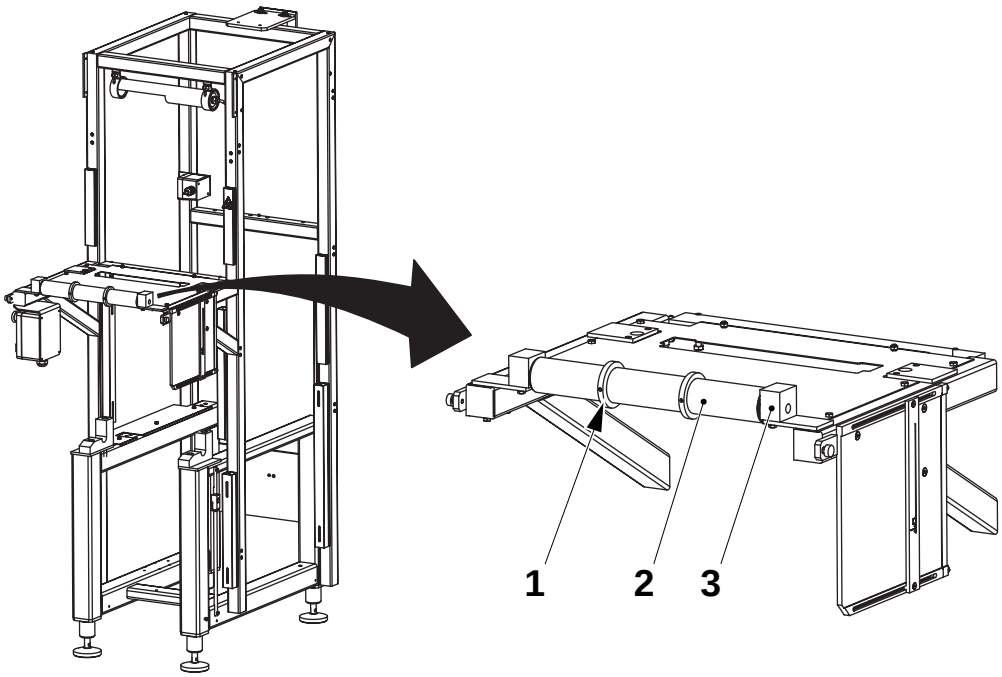

1 Flange
2 Bending roller
3 Bearing block

MM2.21TS100440en.fm

1.5.1-2 Bending roller - change flange bushing

Machine Status	
SPC reference	2592415-0100

Loosen the screws (4) remove the bearing bloch (3) and the bending roller (2).

Change the flange bearings (1).

Assembly in the reverse order.

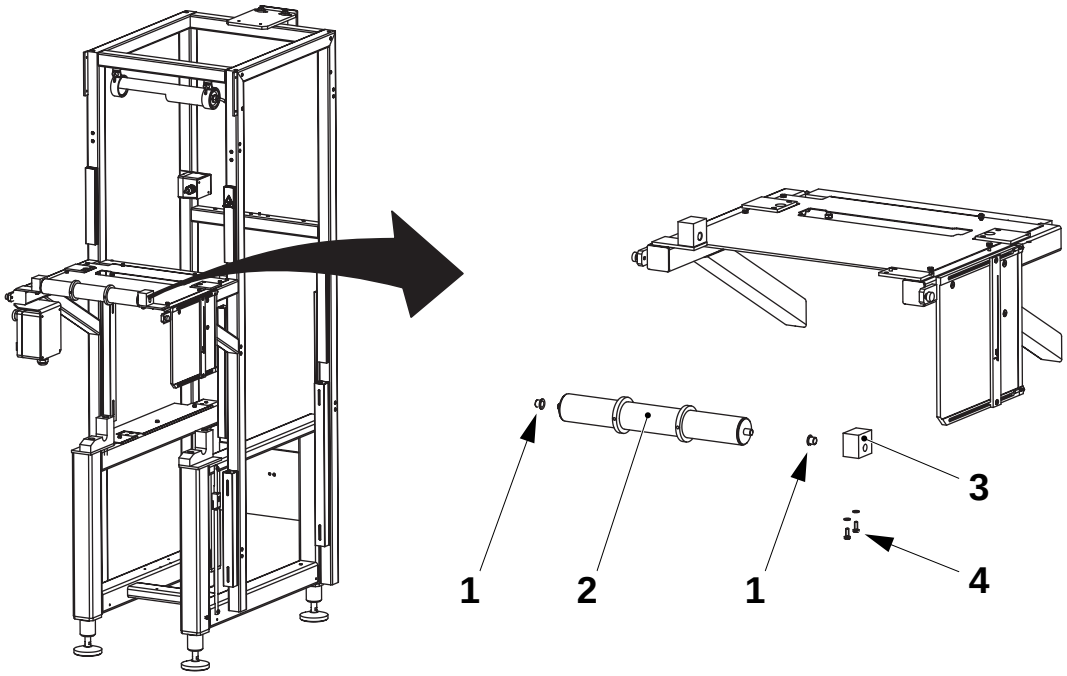

1 Flange bushing
2 Bending roller
3 Bearing block
4 Screw

MM2.21TS100440en.fm

1.5.1-3 Bending roller - set

Machine Status	
SPC reference	2592415-0100

Set the cantilever as follow:

a) Set value **A** between the flanges (1) and the packaging material (2).

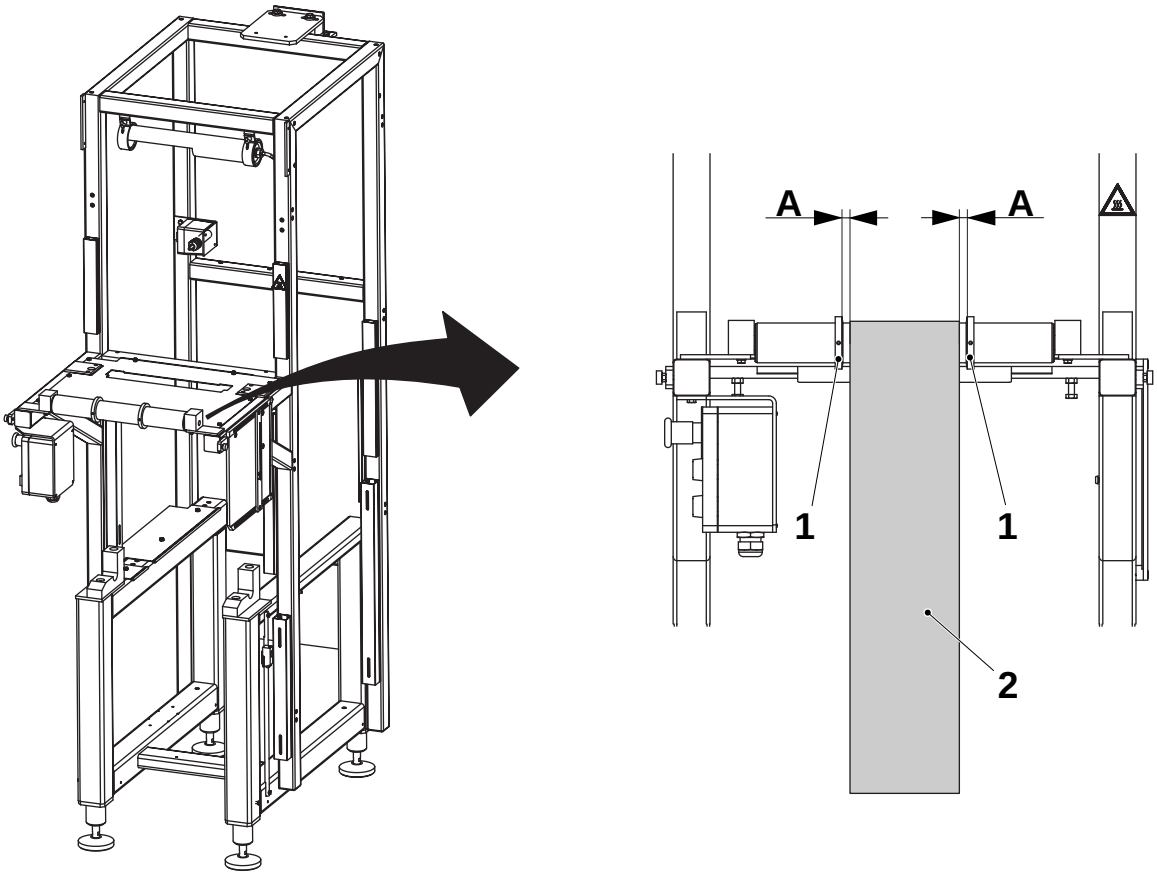

A = 1 ±0 mm

1 Flanges
2 Packaging material

MM2.21TS100440en.fm

1.6 Doors and covers

1.6-1 Doors and covers - check

Machine Status	
SPC reference	2592440-0100

Check that:

- the safety switches operate when the doors are opened. If not, change the defective switch and set it, see 1.6-2 Doors and covers - Set safety switch

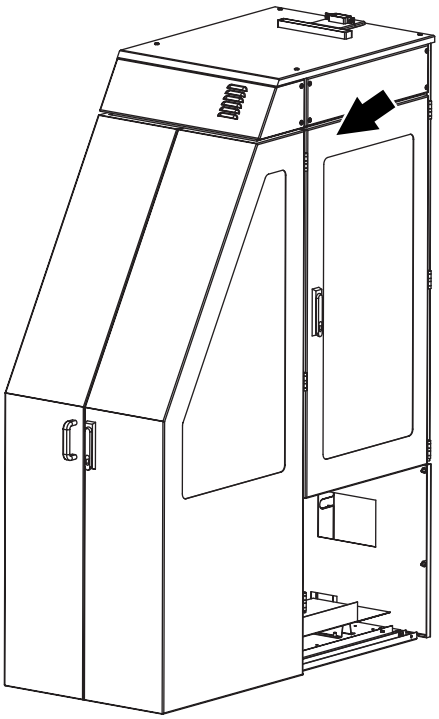

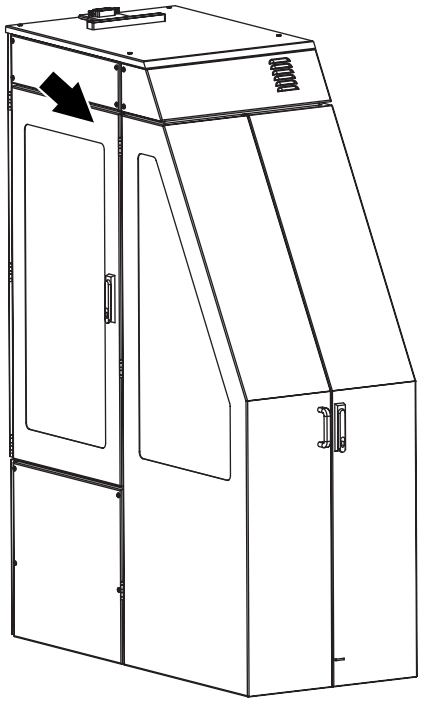

1 Screw
2 Switch
3 Key

MM2.21TS100440en.fm

1.6-2 Doors and covers - Set safety switch

Machine Status	
SPC reference	2592440-0100

Loosen the screws (1) to adjust the height of the switch.

Loosen the nuts (2) and set distance **A** between the switch (3) and the key (4). Check if the sign for open door is lit on the panel.

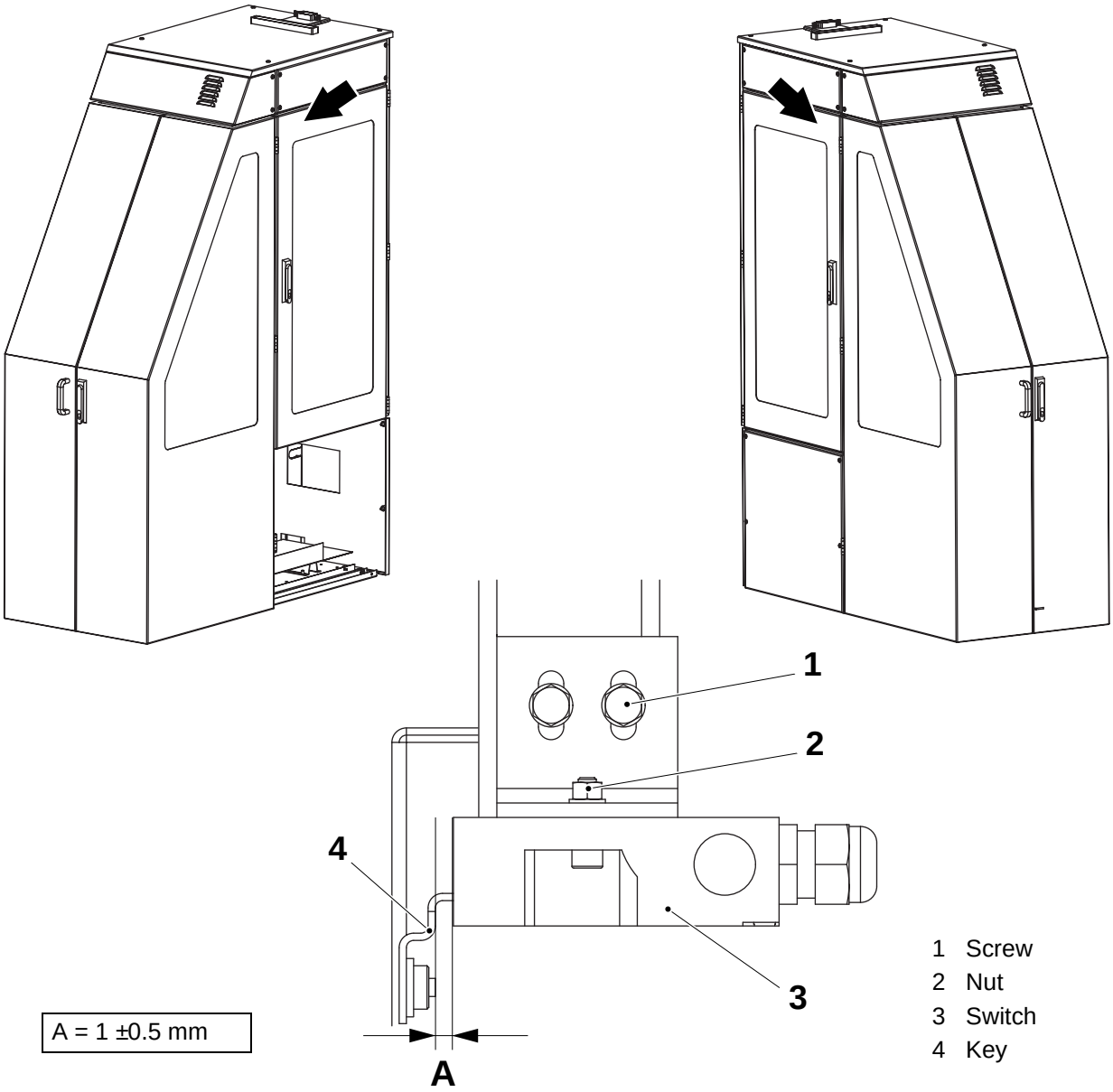

MM2.21TS100440en.fm

1.7 Splicing device

1.7-1 Splicing device - description

Machine Status	
SPC reference	2592435-0100

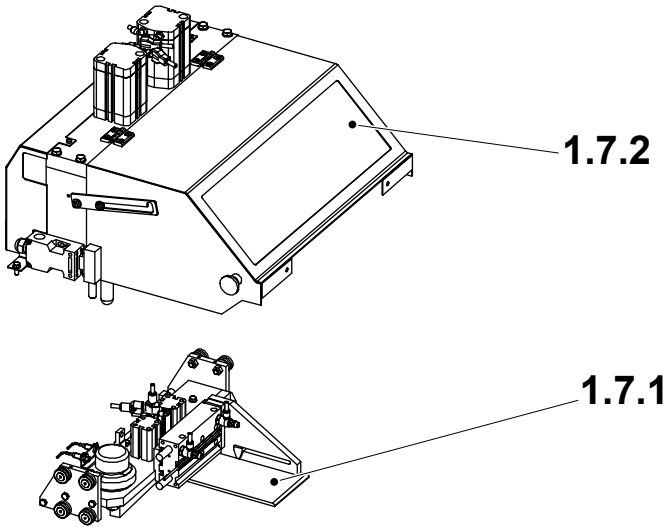

1.7.1 Pressure jaw
1.7.2 Splicing table

MM2.21TS100440en.fm

1.7-2 Splicing device - set Register mark

Machine Status	
SPC reference	2592435-0100

References

To achieve the splice at correct position (between the register marks) and with correct package length, adjust the:

a) cutting table (1), see page 97

b) splicing table (2), see page 98

c) photocell (3), see page 99

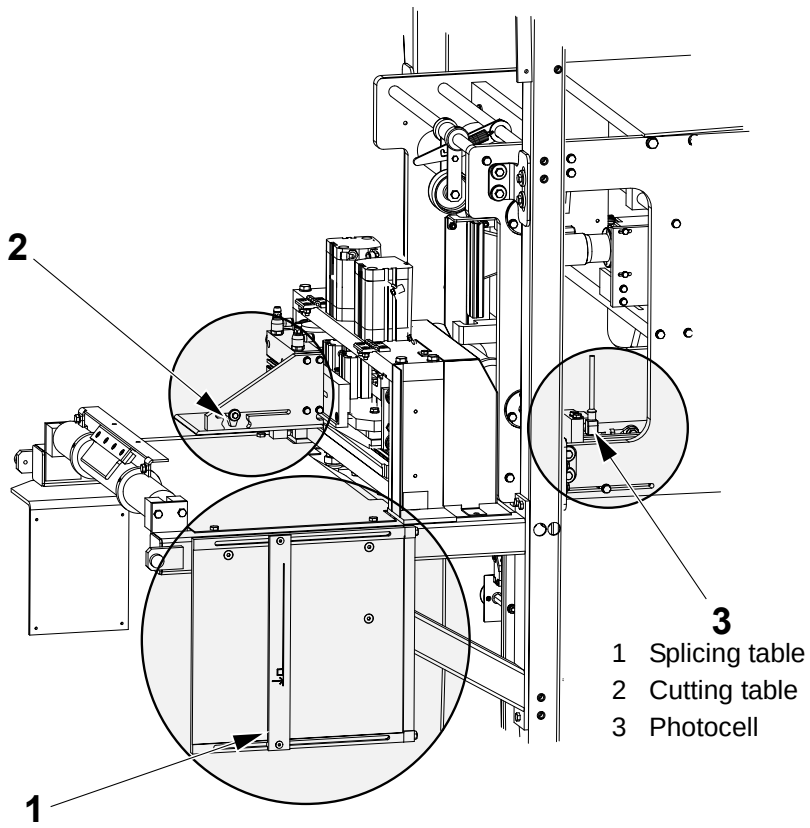

MM2.21TS100440en.fm

(Cont'd)

(Cont'd)

Cutting table

Adjust the ruler (2) for distance **A** to the slot (4).

The register mark (3) is to be placed as illustrated when cutting the packaging material (1) at the slot (4).

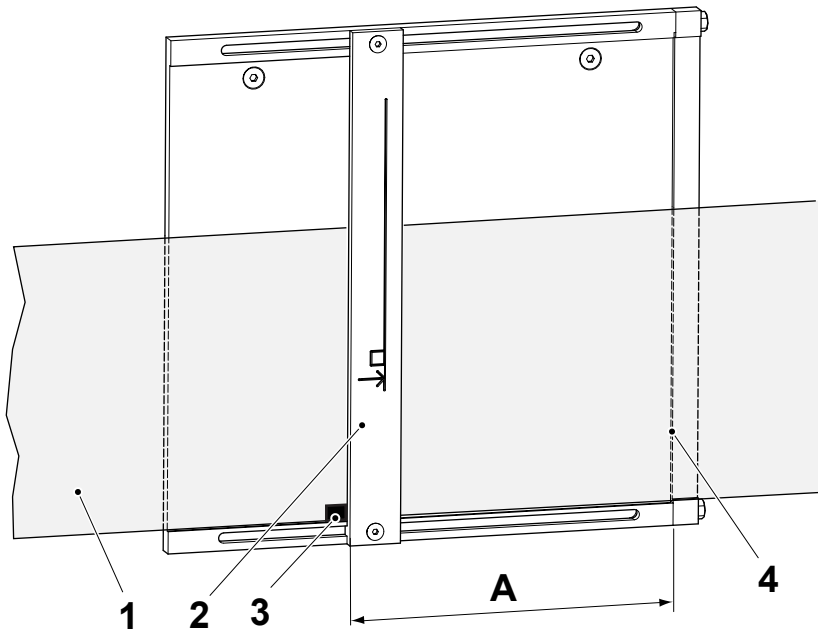

1 Packaging material
2 Ruler, reference for register mark
3 Register mark
4 Slot for knife

	65	150S	200B	200S
A (mm)	170	205	187	220

(Cont'd)

MM2.21TS100440en.fm

(Cont'd)

Splicing table

To get the splice with correct overlap, the register mark (2) shall be placed under the piece (1) for the new packaging material (3).

Adjust the piece (1) for distance **B**.

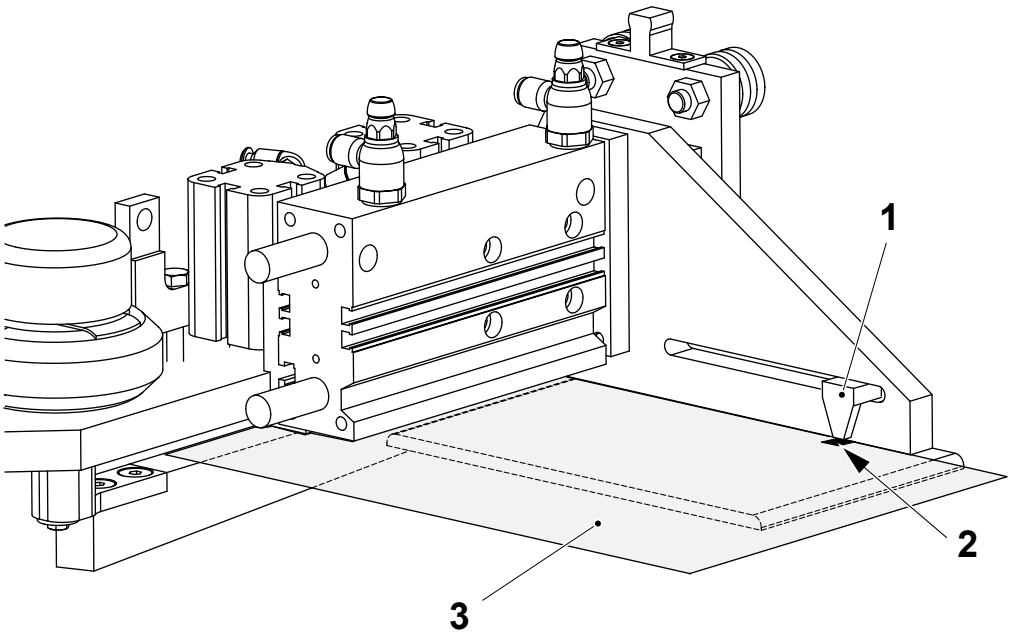

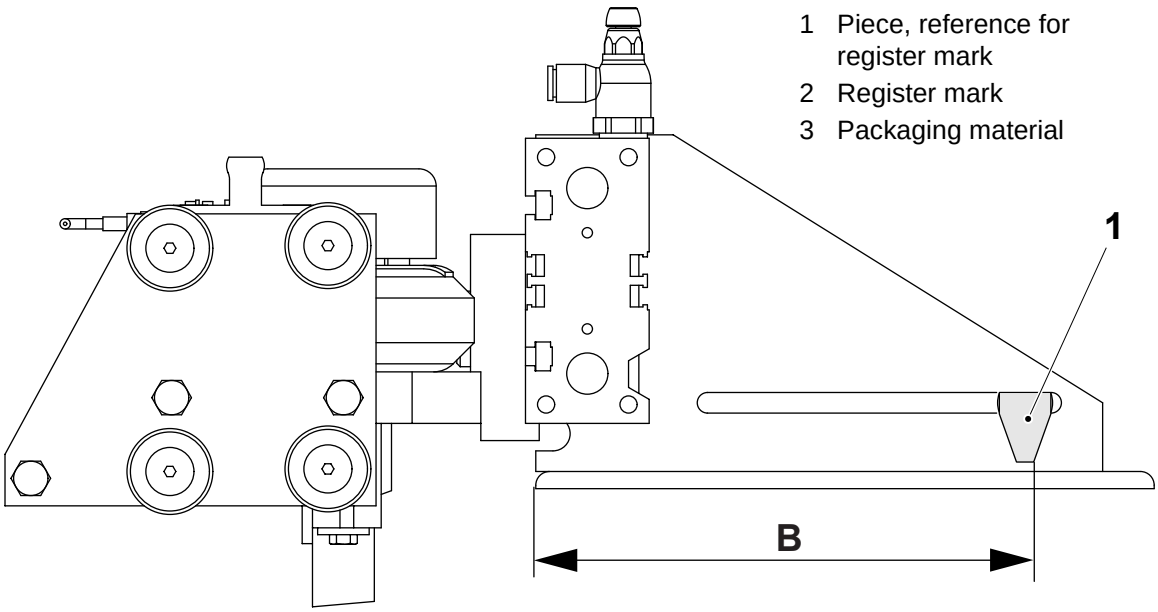

1 Piece, reference for register mark
2 Register mark
3 Packaging material

MM2.21TS100440en.fm

	65	150S	200B	200S
B (mm)	81	116	98	131

(Cont'd)

(Cont'd)

Photo cell

The position of the photocell (1) sensing the register mark (3), determines where the packaging material (4) will be cut.

Set as a basic setting, the distance **C**

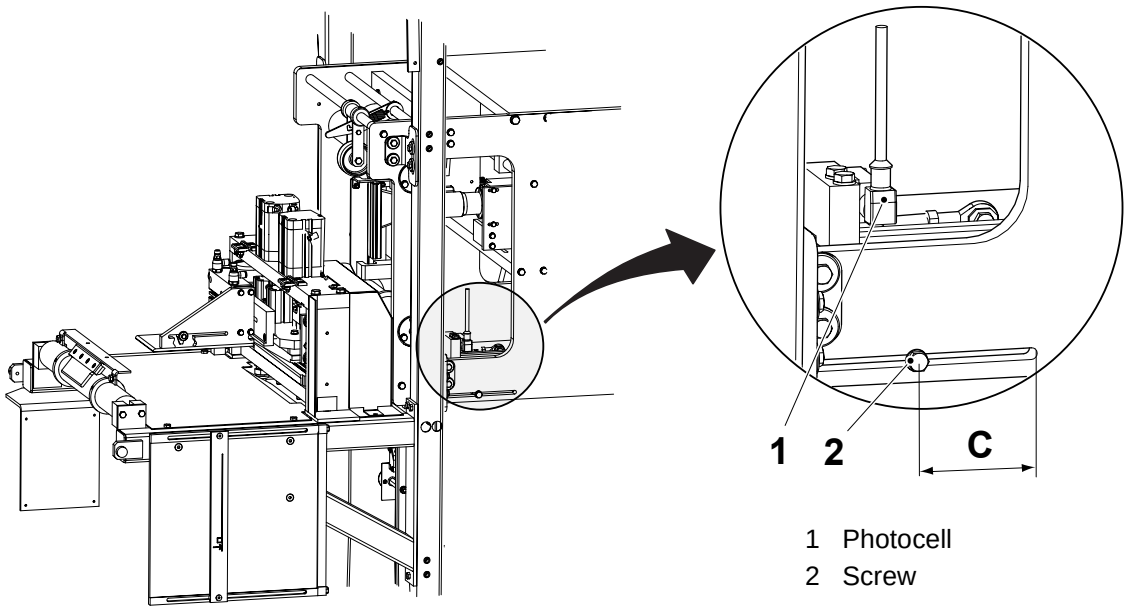

1 Photocell
2 Screw

Perform a splice and readjust if needed.

The distance between the register marks is value **D**.
When setting, adjust to get the distance between the register marks at the splice within **D** minus 0-5mm (The design correction would take longer time to correct for a splice above value **D**).

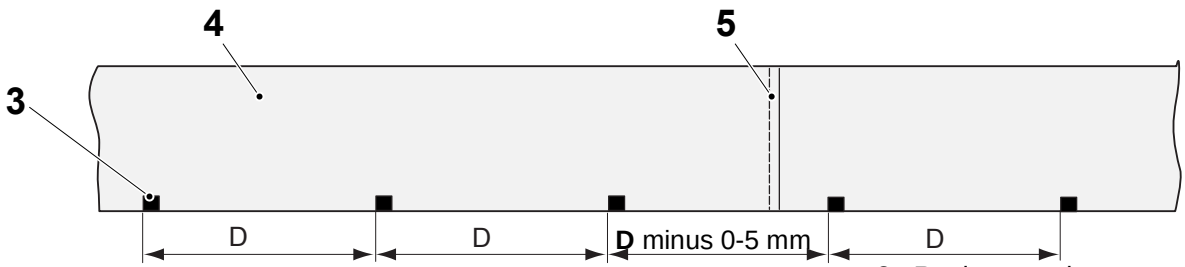

3 Register mark
4 Packaging material
5 Splice

	65	150S	200B	200S
C (mm)	92	33	65	8
D (mm)	223	270	245	290

(Cont'd)

MM2.21TS100440en.fm

(Cont'd)

Note! If the photocell (1) has been changed, it has to be calibrated in order to read the register mark correctly.

Calibration:

a) Push the knob (2) with the photo cell above the register mark (black colour)

b) Push the knob (2) with the photo cell outside the register mark (white colour)

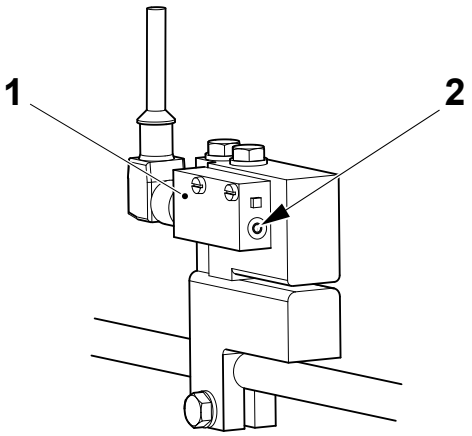

1 Photocell
2 Knob for calibration

MM2.21TS100440en.fm

1.7.1 Pressure jaw

1.7.1-1 Pressure jaw - check

Machine Status	
SPC reference	2523971

Check the following parts for wear and/or damage:

- the cylinders (1) and (2)

Change if required, see 1.7.1-2 Pressure jaw - change cylinder.

- the eccentric rollers (5) and the rollers (6)

Change if required, for setting see 1.7.1-6 Pressure jaw - set roller

- the knife (3)

Change if required, see 1.7.1-4 Pressure jaw - change knife

- the rubber strip (4)

Change if required, see 1.7.1-3 Pressure jaw - change rubber strip

MM2.21TS100440en.fm

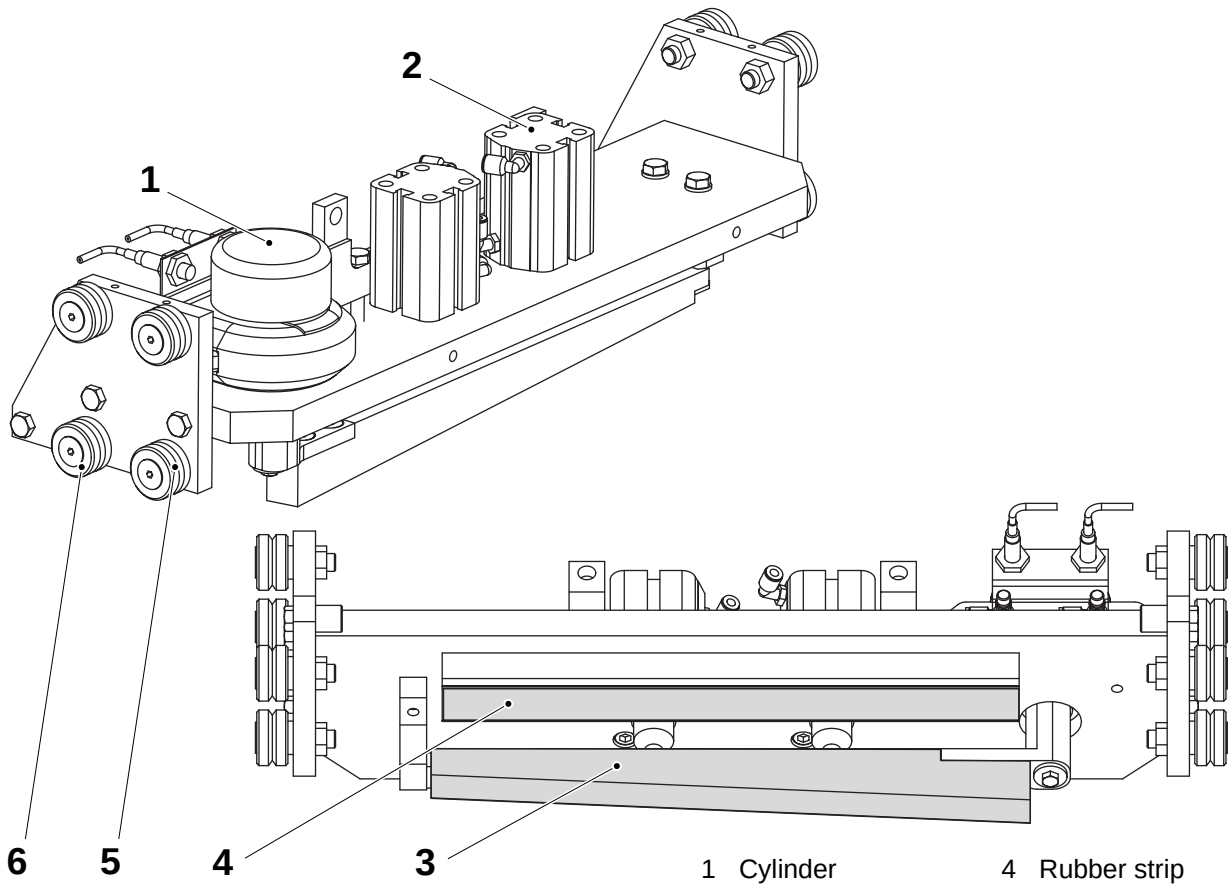

1 Cylinder
2 Rotating cylinder
3 Knife
4 Rubber strip
5 Eccentric roller
6 Roller

1.7.1-2 Pressure jaw - change cylinder

Machine Status	
SPC reference	2523971-0100

Rotating cylinder

a) Loosen the screw (10) and remove the knife (11).

b) Remove the screws (2), lift up the rotating cylinder (1).

c) Disconnect the throttle valves (5) and the bracket (3) by loosening the screws (4).

d) Change the cylinder, assembly in the reverse order.

For setting see 1.7.1-5 Pressure jaw - set knife

Cylinder

a) Loosen the screws (9) an lift up the cylinder (7).

b) Disconnect the hose couplings (6) and the piece (8).

c) Change the cylinder, assembly in the reverse order.

d) Repeat on next cylinder.

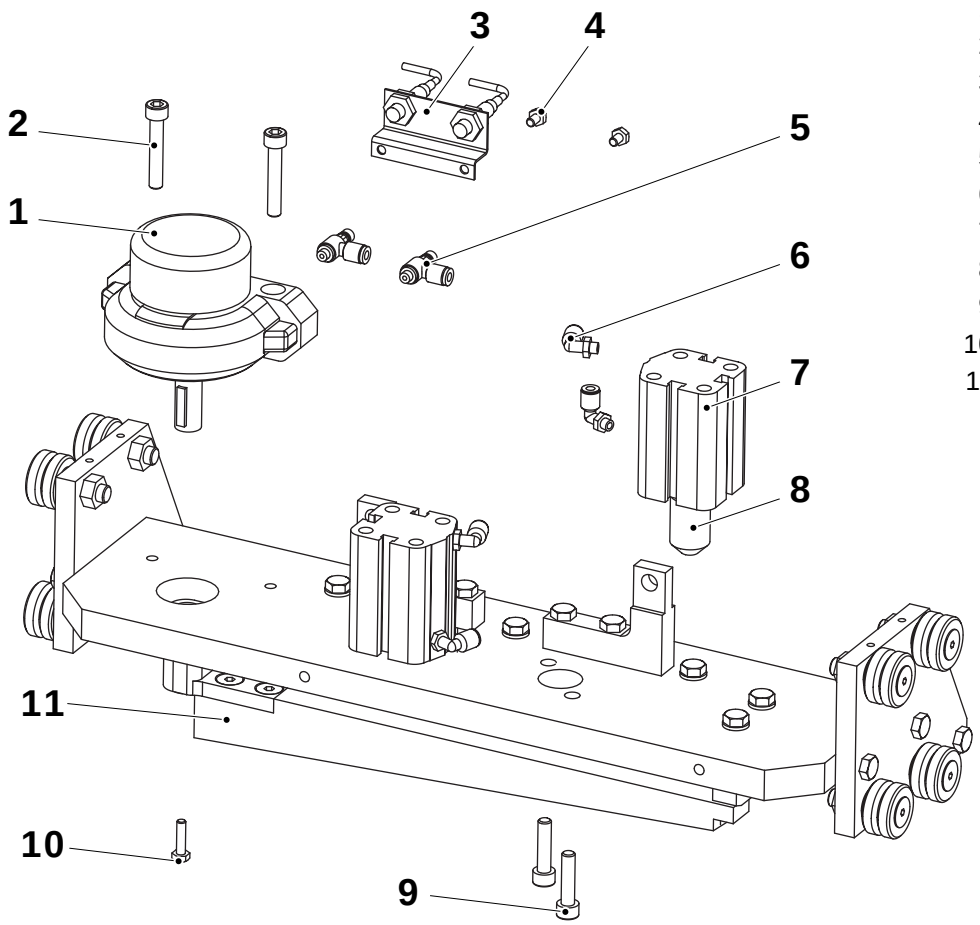

1 Rotating cylinder
2 Screw
3 Bracket
4 Screw
5 Throttle valve
6 Hose couple
7 Cylinder
8 Piece
9 Screw
10 Screw
11 Knife

MM2.21TS100440en.fm

1.7.1-3 Pressure jaw - change rubber strip

Machine Status	
SPC reference	2523971-0100

Loosen the screws (1) and remove the holder (2).

Change the rubber strip (3).

Assembly in the reverse order.

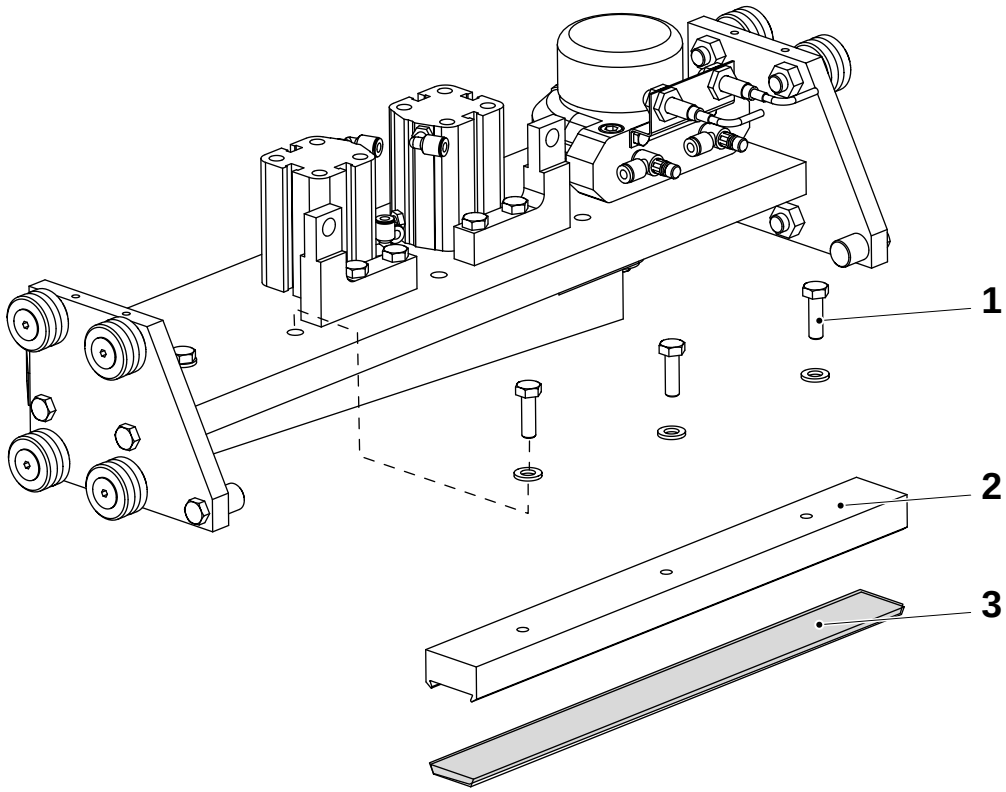

1 Screw
2 Holder
3 Rubber strip

MM2.21TS100440en.fm

1.7.1-4 Pressure jaw - change knife

Machine Status	
SPC reference	2523971-0100

Remove the screws (1) and change the knife (2).
For setting see 1.7.1-5 Pressure jaw - set knife.

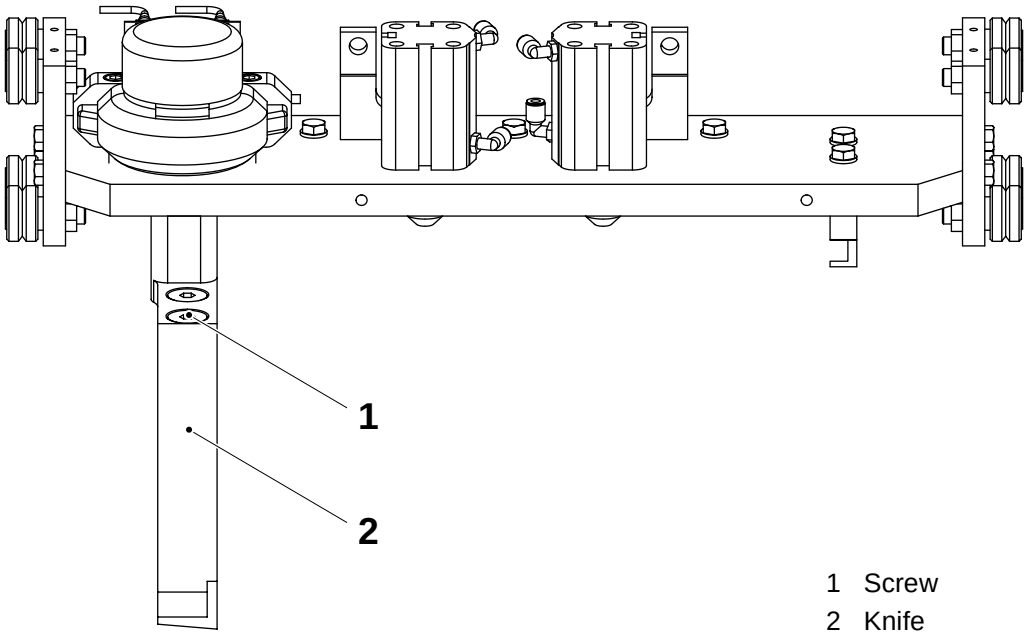

1 Screw
2 Knife

MM2.21TS100440en.fm

1.7.1-5 Pressure jaw - set knife

Machine Status	
SPC reference	2523971-0100

Make sure that the knife (4) returns fully to its home position, against the fork (5), after the splice.
If needed, adjust the cylinders (1) movement with the throttles (2) and (3).

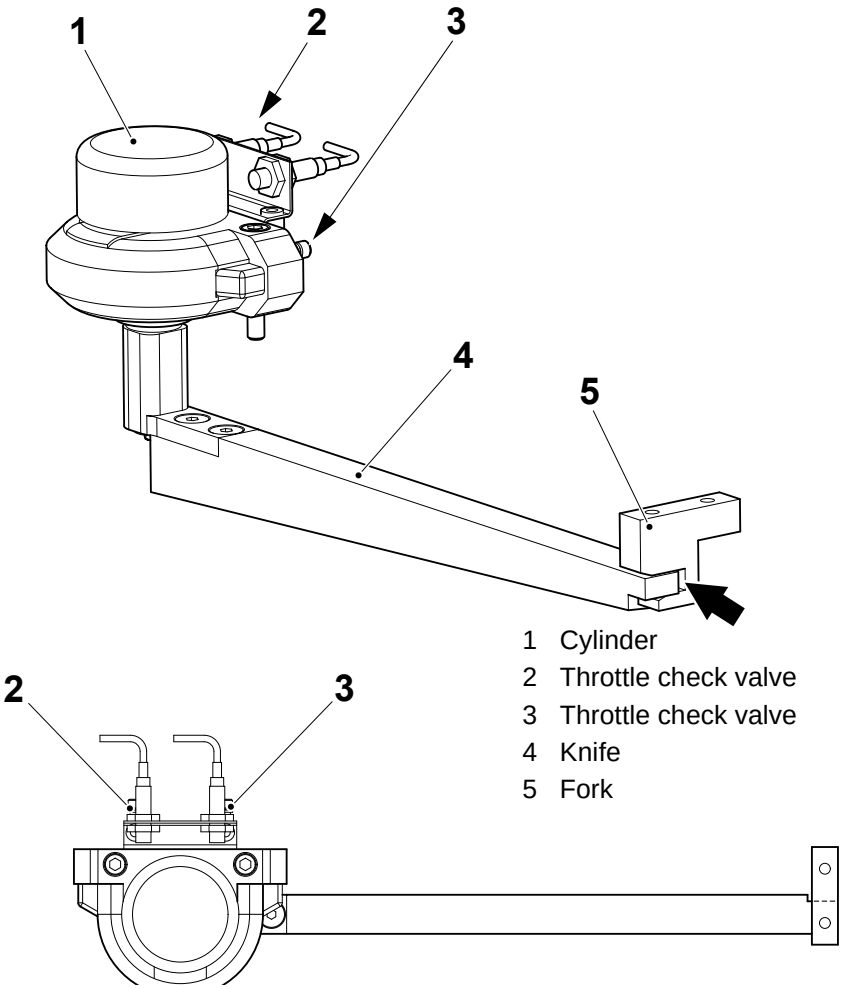

1 Cylinder
2 Throttle check valve
3 Throttle check valve
4 Knife
5 Fork

MM2.21TS100440en.fm

1.7.1-6 Pressure jaw - set roller

Machine Status	
SPC reference	2523971-0100

Adjust the eccentric rollers (1) so that the whole unit runs smoothly up and down without play.

Set the roller so it is possible to spin the rollers by hand with a gently resistance.

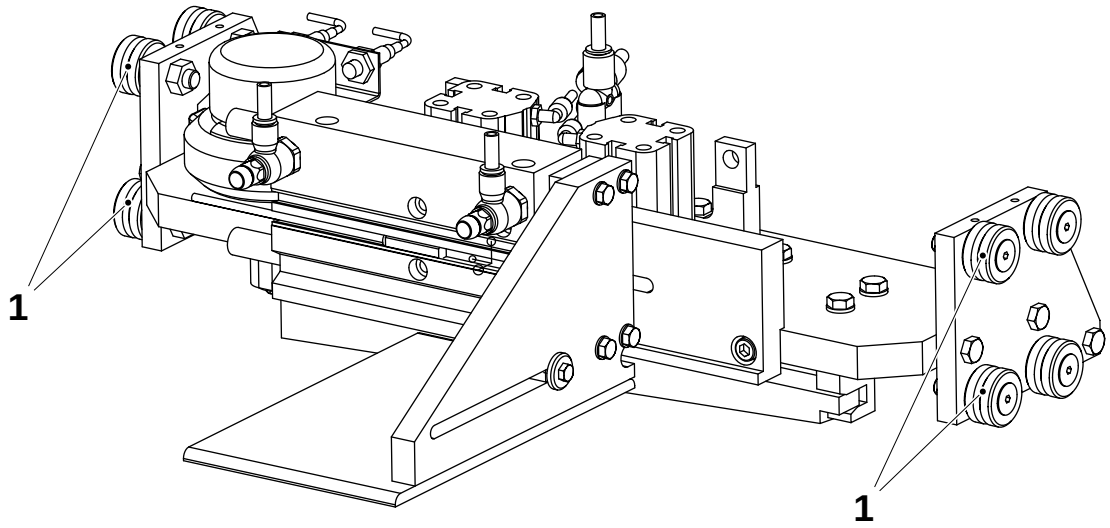

1 Roller

MM2.21TS100440en.fm

1.7.1.1 Paper guide

1.7.1.1-1 Paper guide - check cylinder

Machine Status	
SPC reference	2523973-0100

Check that the cylinder table (2) move smoothly when running the cylinder (2).

If required change the cylinder, see 1.7.1.1-2 Paper guide - change cylinder

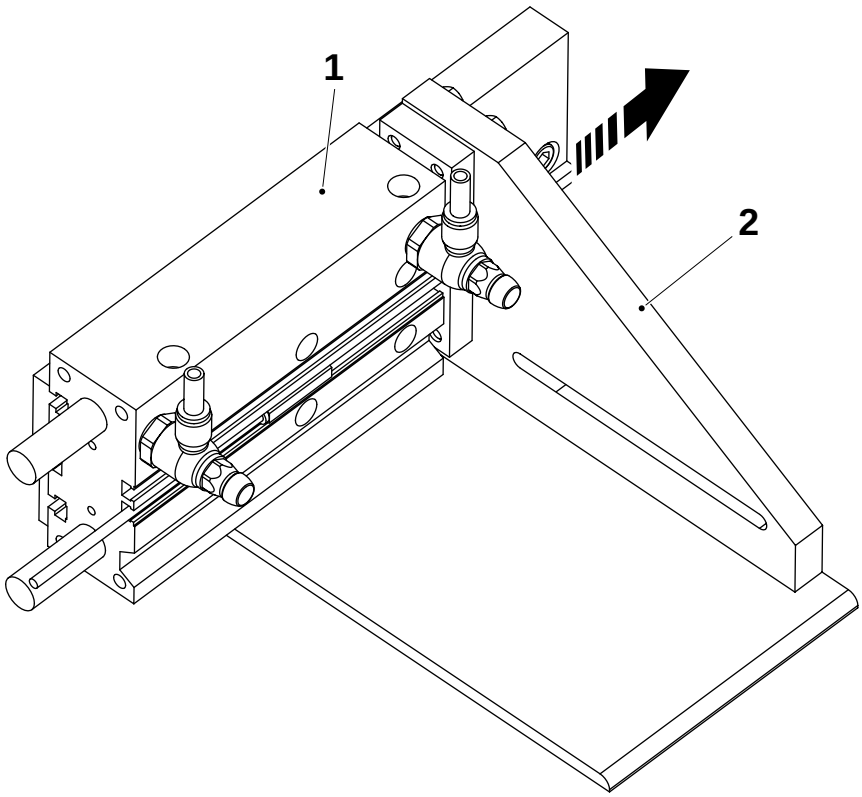

1 Cylinder C117

MM2.21TS100440en.fm

1.7.1.1-2 Paper guide - change cylinder

Machine Status	
SPC reference	2523973-0100

Change the cylinder as follows:

a) Remove the screws (1) and (3).

b) Disconnect the throttle valves (5) and the proximity switch (6)

c) Change the cylinder (1).

d) Assembly the throttle valve and the proximity switch on the new cylinder.

Set the table position, see 1.7.1.1-3 Paper guide - set table

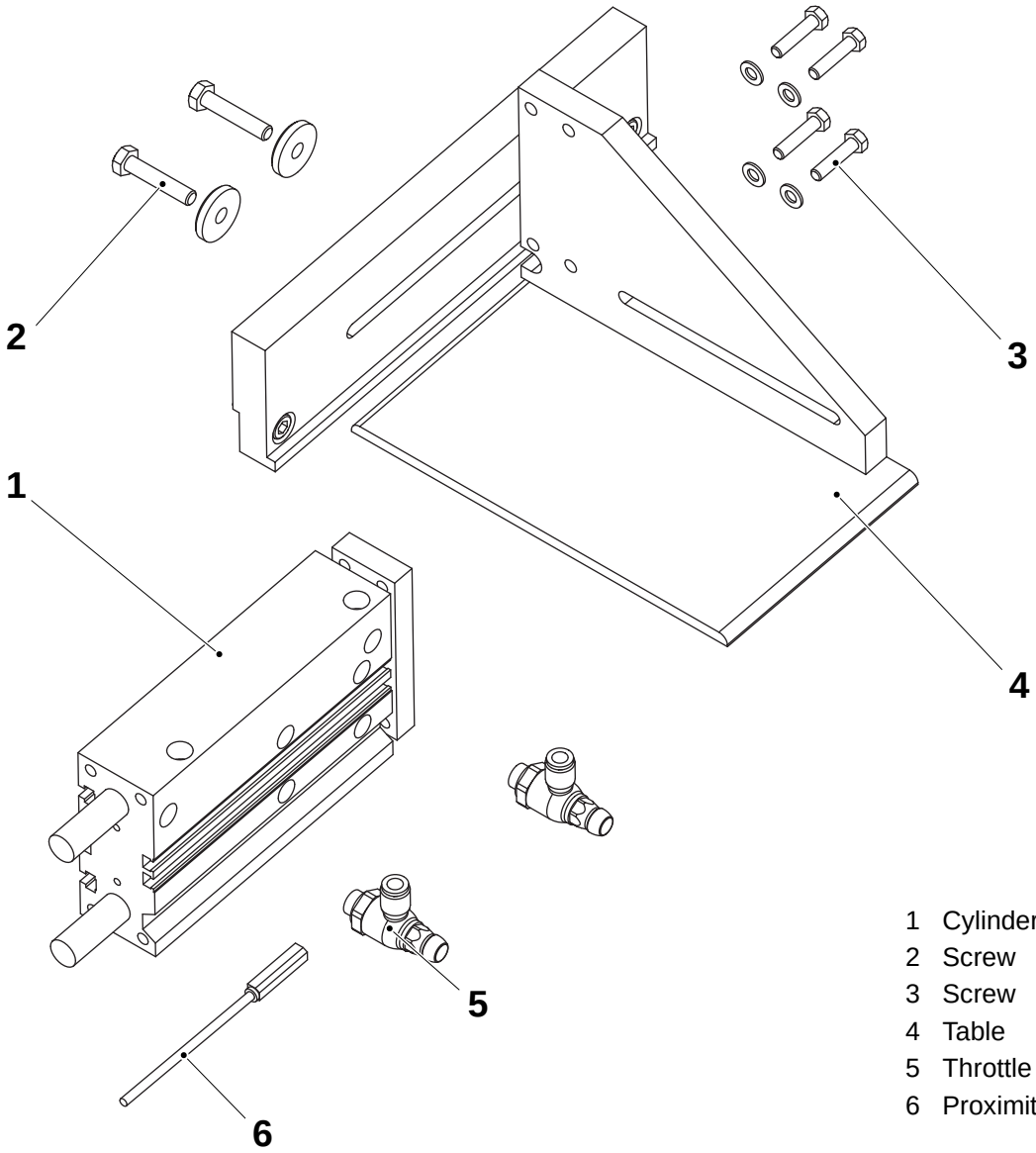

1 Cylinder
2 Screw
3 Screw
4 Table
5 Throttle valve
6 Proximity switch

MM2.21TS100440en.fm

1.7.1.1-3 Paper guide - set table

Machine Status	
SPC reference	2523973-0100

Set the table as follow:

a) Positioning the packaging material (3) in the right position.

b) Loosen the screws (1).

c) When the table is in it's inner position, align the table edge (2) right over the packaging material web edge (3).

d) Tighten the screws (1) and check the table position.

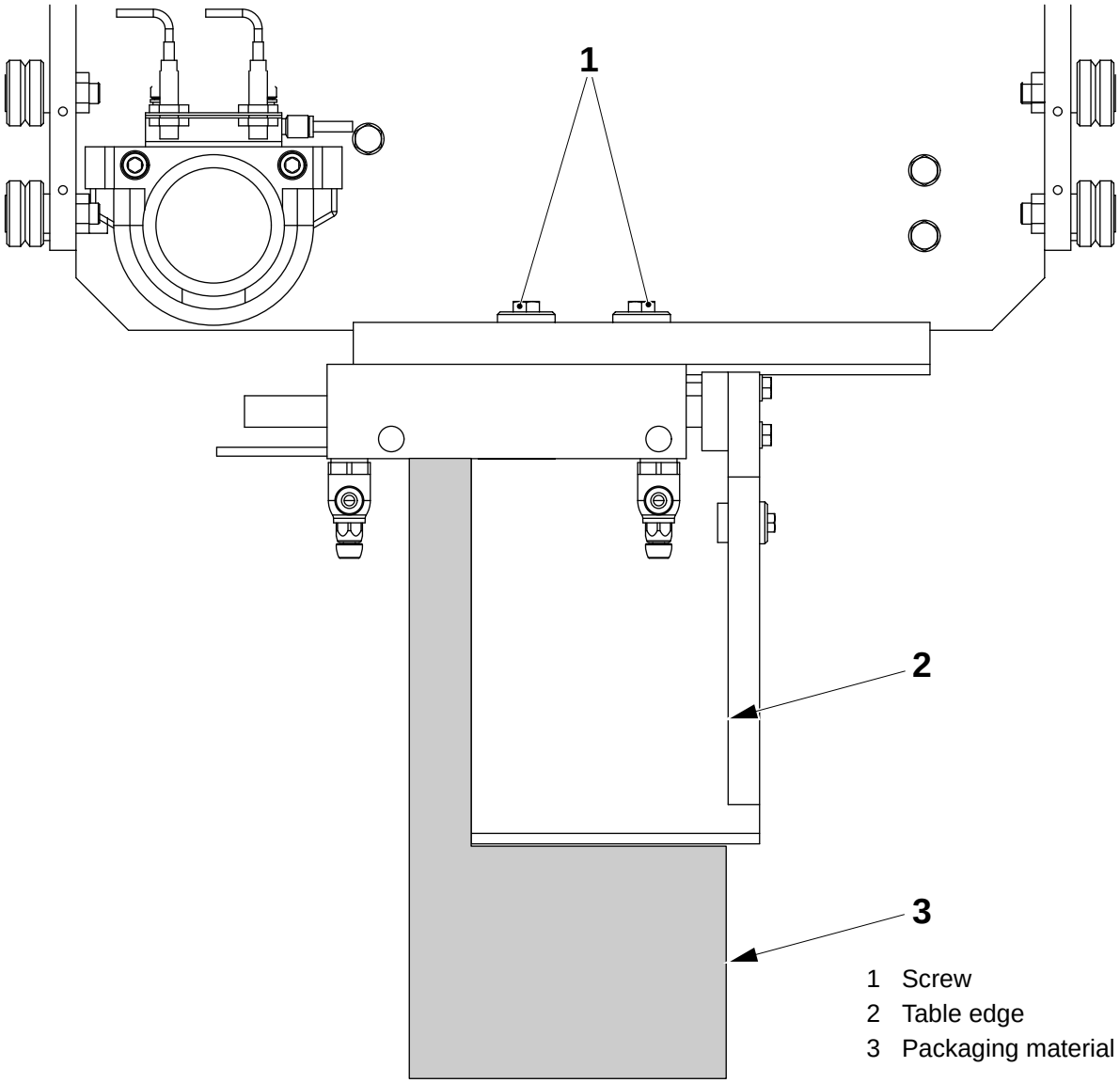

1 Screw
2 Table edge
3 Packaging material edge

MM2.21TS100440en.fm

1.7.2 Splicing table

1.7.2-1 Splicing table - check teflon tape

Machine Status	
SPC reference	2542690-0100

Check that the teflon tape (see arrow) on the TPC bar (1) not is worn or damage.
If required change the teflon tape.

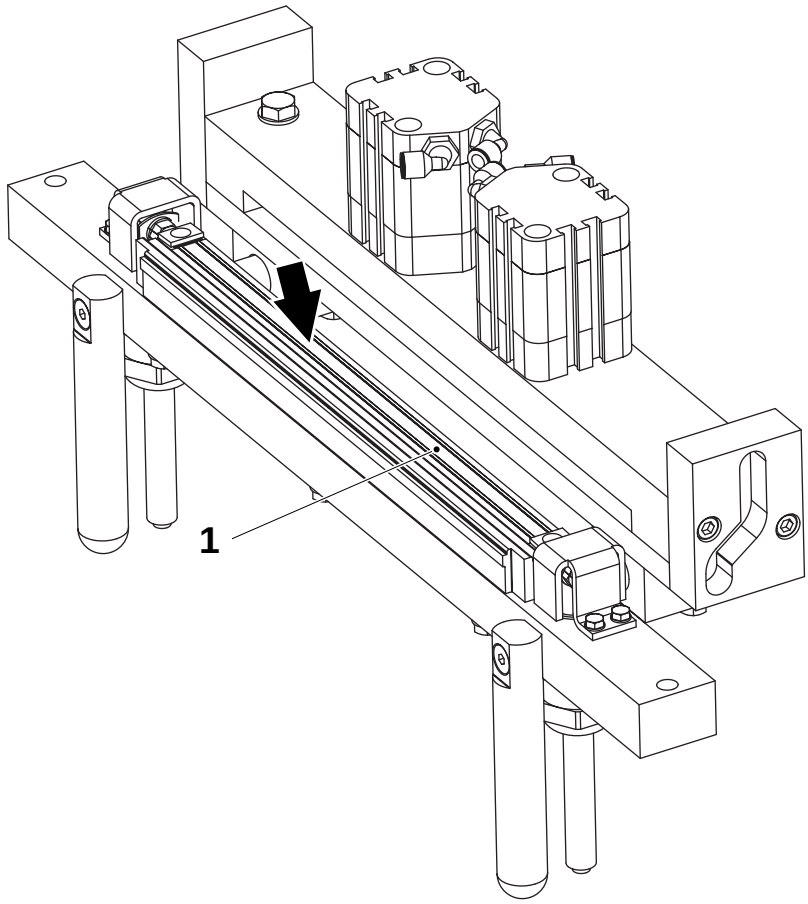

1 TPC bar

MM2.21TS100440en.fm

1.7.2-2 Splicing table - change teflon tape

Machine Status	
SPC reference	2542690-0100

Change the teflon tape, make sure that the teflon tape is well glued on the TPC bar (1).

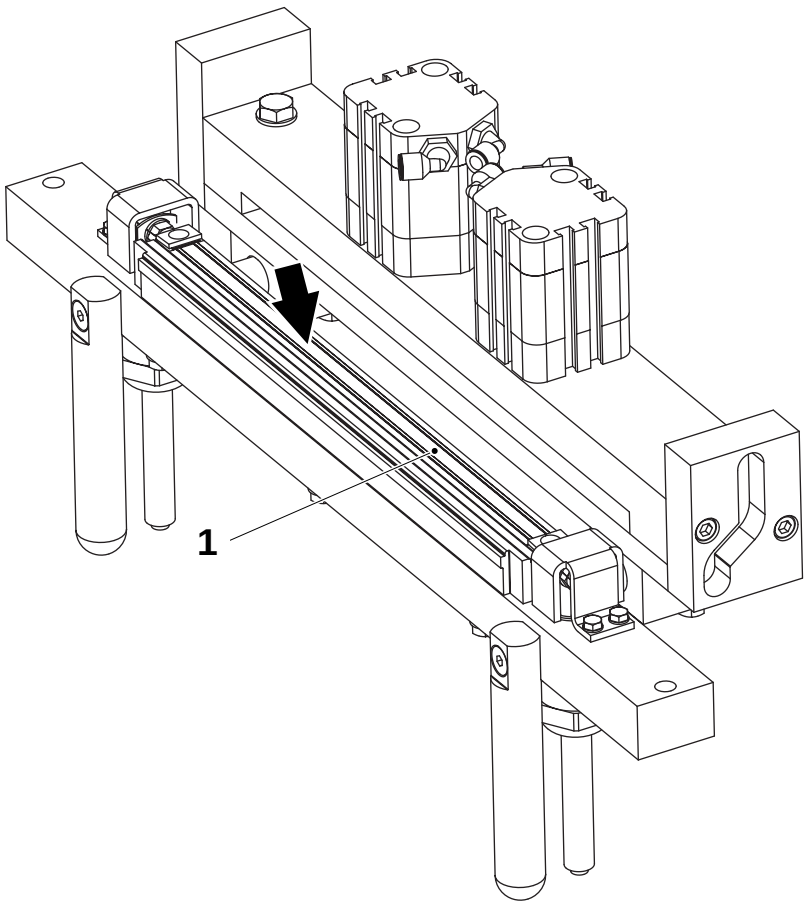

1 TPC bar

MM2.21TS100440en.fm

1.7.2-3 Splicing table - check

Machine Status	
SPC reference	2542690-0100

Check the following parts for wear and/or damage:

- the cylinders (1) and (6),
- the guide (4),
- the curve (7),
- The guide pins (5),

Change any worn or damaged parts. See 1.7.2-4 Splicing table - overhaul.

- TPC bar (2),

Change if rquired. See 1.7.2-5 Splicing table - change TPC bar.

- the knife (3),

Change if rquired. See 1.7.2-6 Splicing table - change knife.

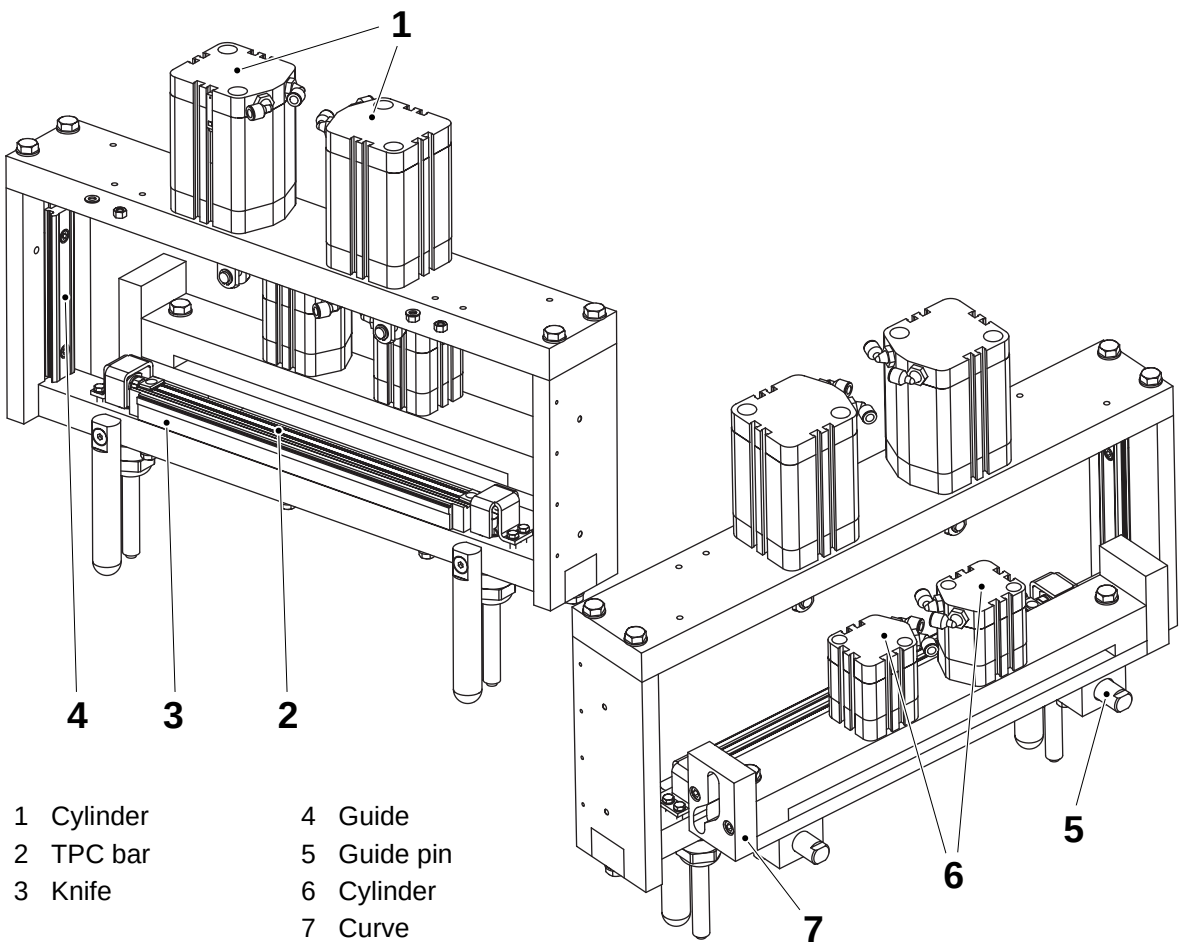

1 Cylinder
2 TPC bar
3 Knife
4 Guide
5 Guide pin
6 Cylinder
7 Curve

MM2.21TS100440en.fm

1.7.2-4 Splicing table - overhaul

Machine Status	
SPC reference	2542690-0100

Sealing cylinders

Disconnect the air hoses and remove the link head pins (2). Remove the screws (4) and lift out the cylinders (1). Remove the link heads and fit it to the new cylinder. Install the new cylinders in the reverse order.

Guides

Remove the screws (6) and replace the guides (5). The play must be set by help of the eccentric guide rollers. See 1.7.1-6 Pressure jaw - set roller

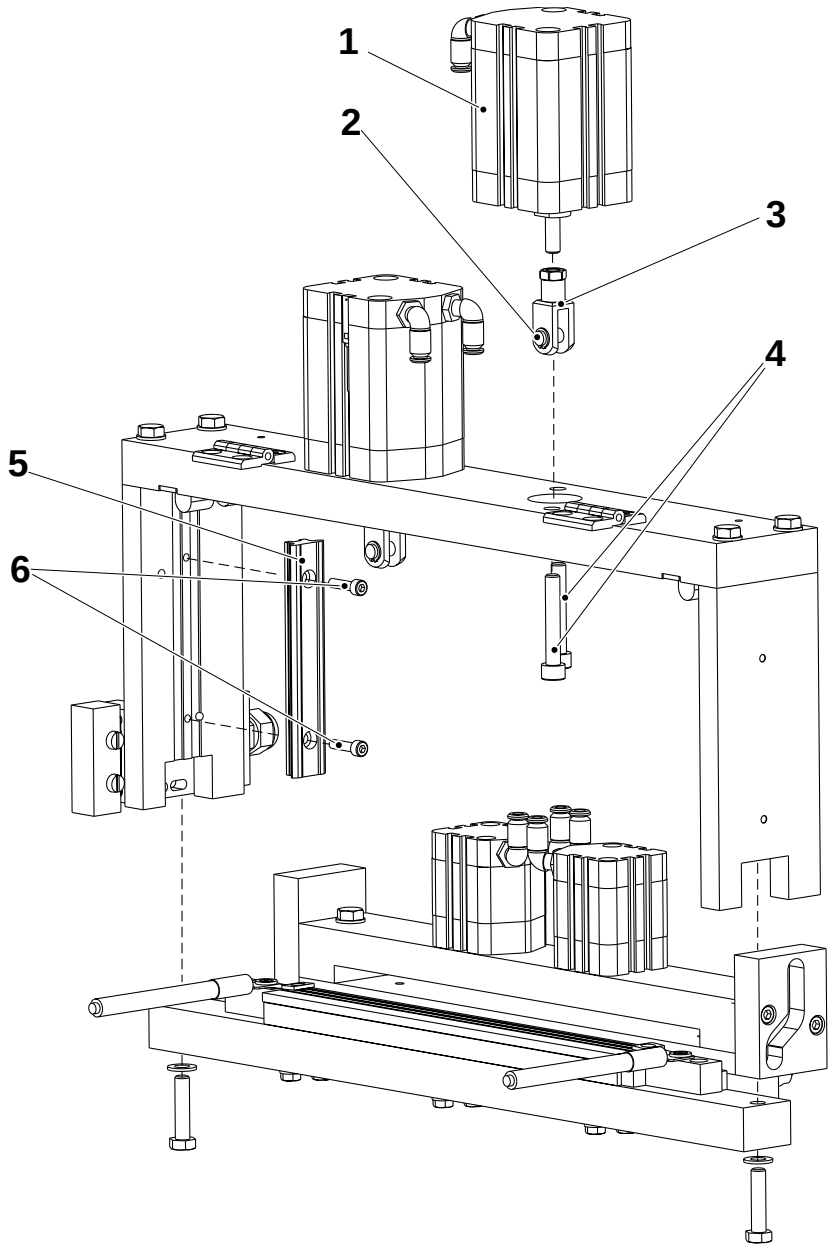

1 Cylinder
2 Link head pin
3 Link head
4 Screw
5 Guide
6 Screw

(Cont'd)

MM2.21TS100440en.fm

(Cont'd)

Cutting cylinders

Disconnect the hoses.

Remove the screws (20) and the bar (19).

Remove the screws (15) and lift out the cylinders (14).

Install the new cylinders in the reverse order.

Curve

Remove the screws (18) and replace the curves (17).

Guide pin

Check condition of the guide pins (21), replace if needed. Apply some grease (Molycote Grey) on the guide pins before assembling.

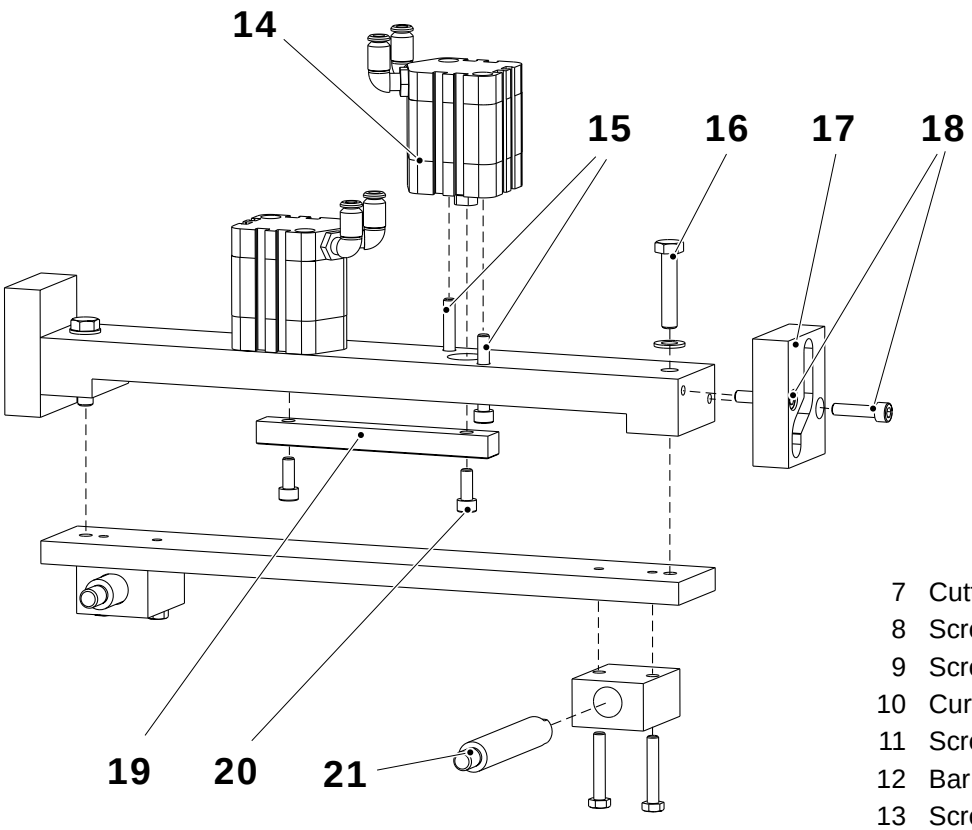

7 Cutting cylinder
8 Screw
9 Screw
10 Curve
11 Screw
12 Bar
13 Screw
14 Guide pin

MM2.21TS100440en.fm

1.7.2-5 Splicing table - change TPC bar

Machine Status	
SPC reference	2542690-0100

Remove the covers (4) by loosening the screws (3). Remove the cables from the TPC bar (5) by loosening the screws (1). Loosen the screws (6) to release the TPC bar (5).

Note! Take care of the springs (2).

Push the TPC bar (5) against the knife while fitting the screws (6).

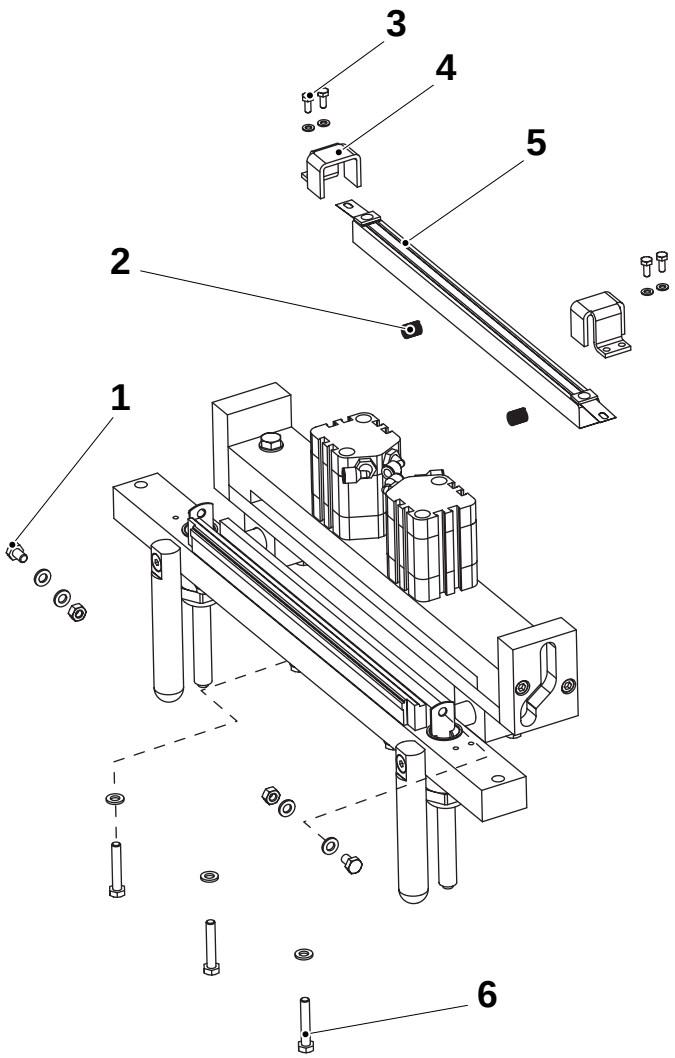

1 Screw
2 Spring
3 Screw
4 Cover
5 TPC bar
6 Screw

MM2.21TS100440en.fm

1.7.2-6 Splicing table - change knife

Machine Status	
SPC reference	2542690-0100

Remove the screws (3), lift out and replace the knife (1). Check condition of the springs (2) and replace if needed.

Note! Before tightening the screw (3) for the knife, the unit must be in cutting position. Take care not to damage the knives!
See 1.7.2-7 Splicing table - set knife.

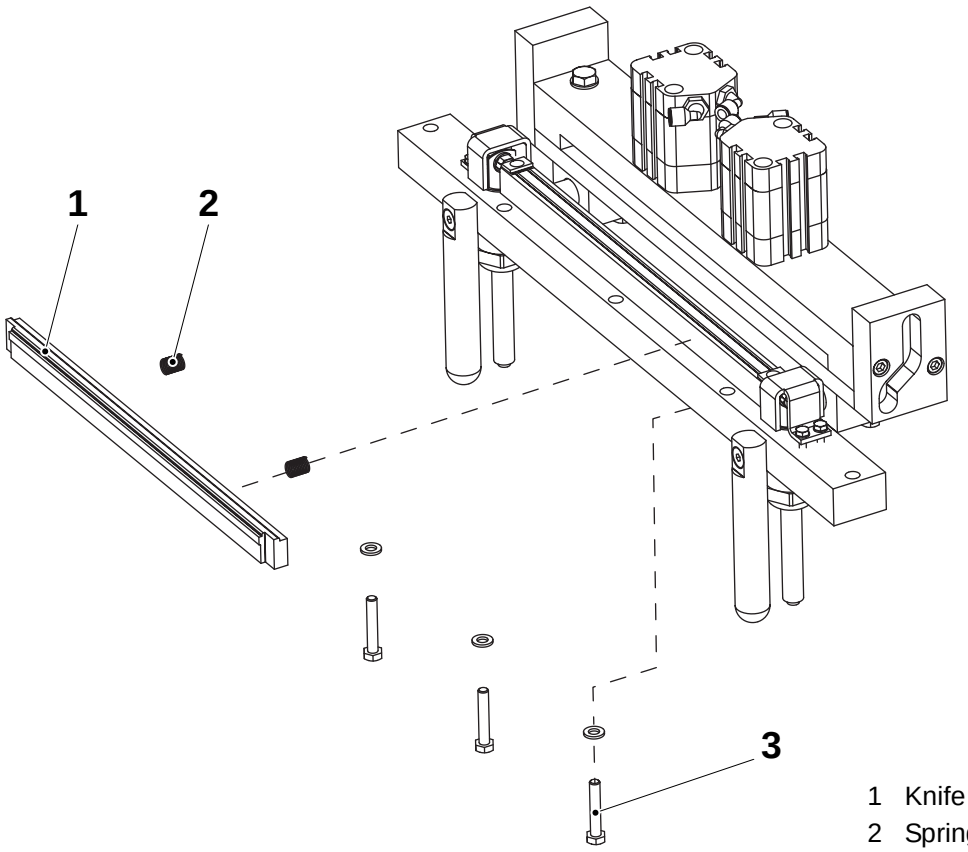

1 Knife
2 Spring
3 Screw

MM2.21TS100440en.fm

1.7.2-7 Splicing table - set knife

Machine Status	
SPC reference	2542690-0100

Set the knife (3) as follow:

a) Make sure that the knife (2) is in the inner position during the hole setting.

b) Press the splicing table half ways down, see arrow.

c) Loosen the screws (4) and let the built-in springs (6), force the knife (3) against the upper knife (2)

d) Tighten the screws (4).

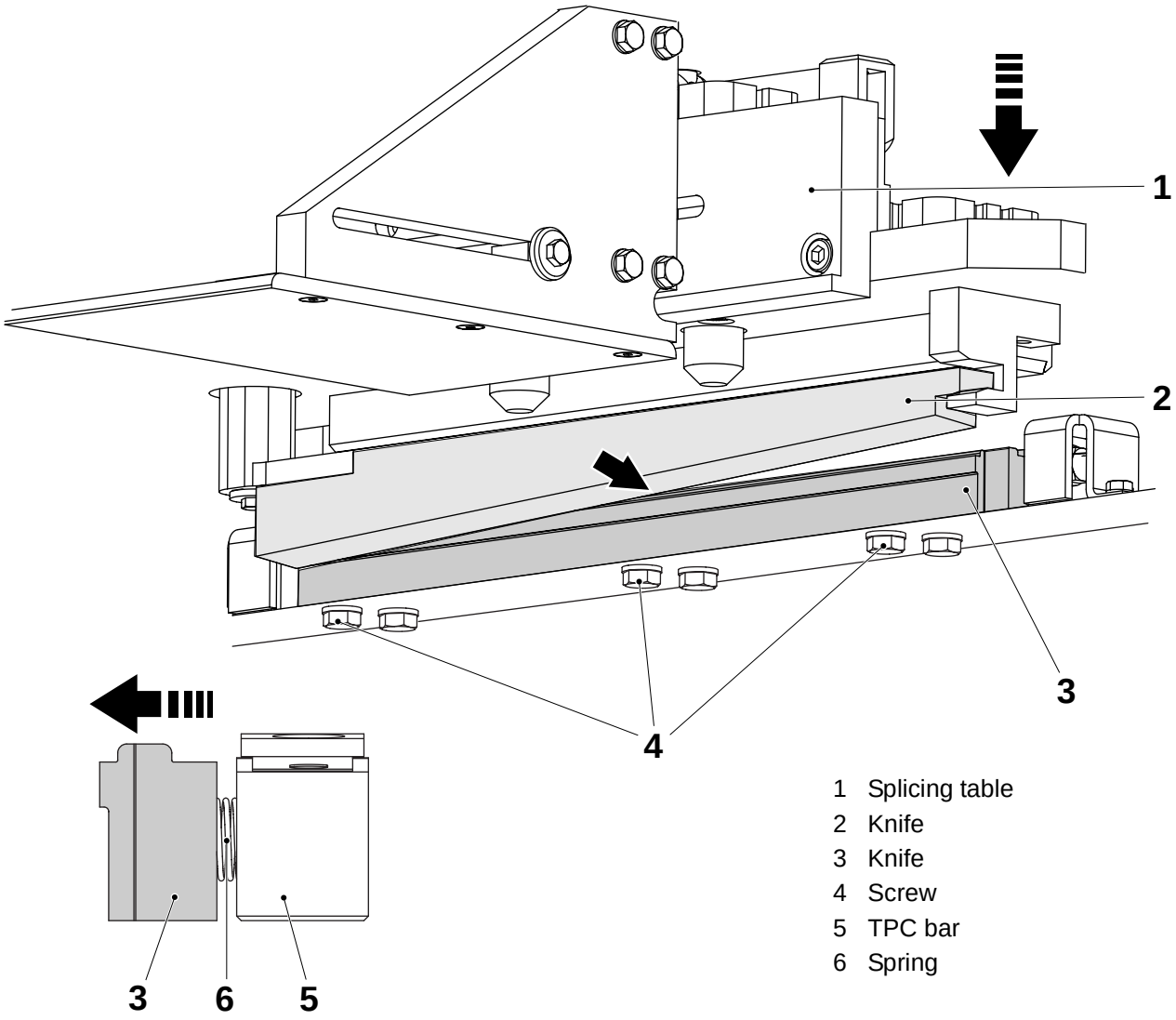

1 Splicing table
2 Knife
3 Knife
4 Screw
5 TPC bar
6 Spring

MM2.21TS100440en.fm

This page intentionally left blank

MM2.21TS100440en.fm

2 Sterile unit

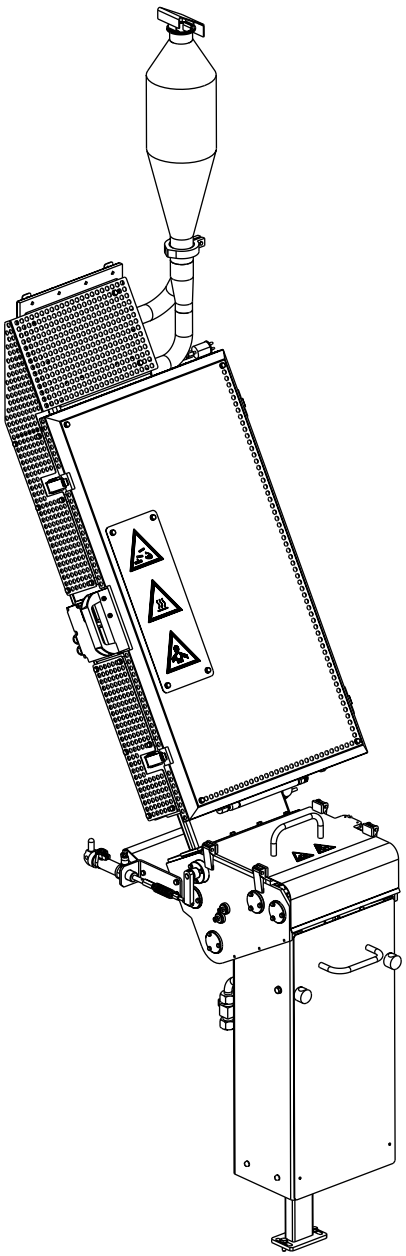

MM2.21TS100441en.fm

2-1 Sterile unit - description

Machine Status	
SPC reference	630402-0200

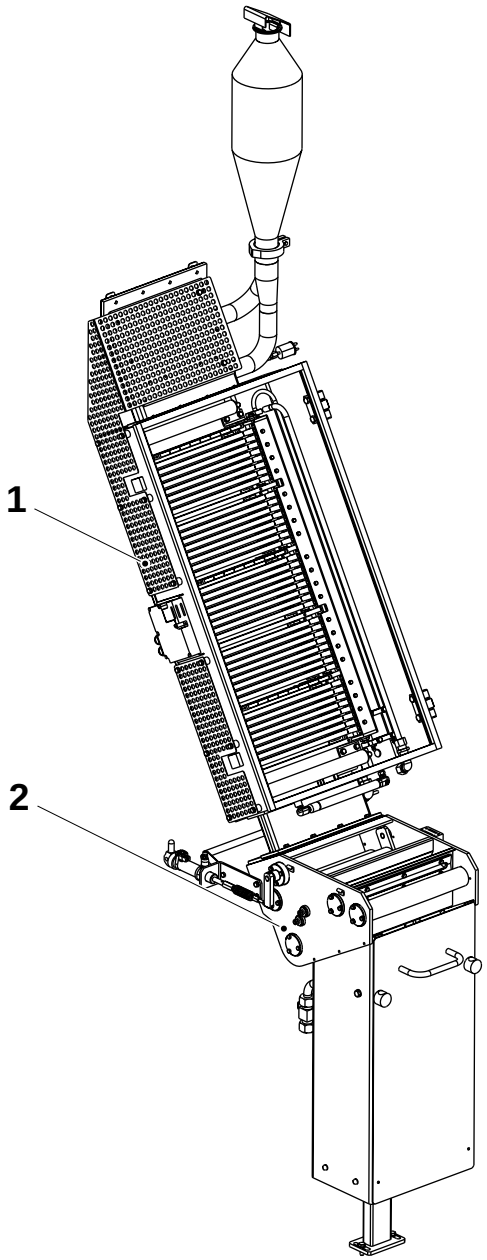

2.1 Catalyzer
2.2 Heating chamber
2.3 Sterilization bath
2.4 Paper feed

MM2.21TS100441en.fm

2.1 Catalyzer

2.1-1 Catalyzer - clean

Machine Status	
SPC reference	1515220

WARNING! **Risk of corrosion.**
Hydrogen peroxide. Follow the *Safety Precautions*.

WARNING! **Chemical products!**
Acids. Follow the *Safety precautions*.

Note! The catalyzer (1) is heavy.

Remove the clamp (2) lift down the catalyzer (1). Put the catalyzer in Nitric acid (5% aq) for 30 minutes, rinse the catalyzer with distilled water.

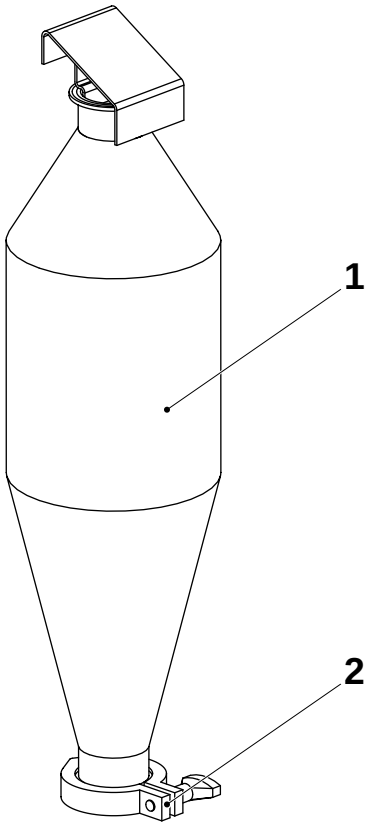

1 Catalyzer
2 Clamp

MM2.21TS100441en.fm

2.2 Heating chamber

2.2-1 Heating chamber - description

SPC reference	2542770

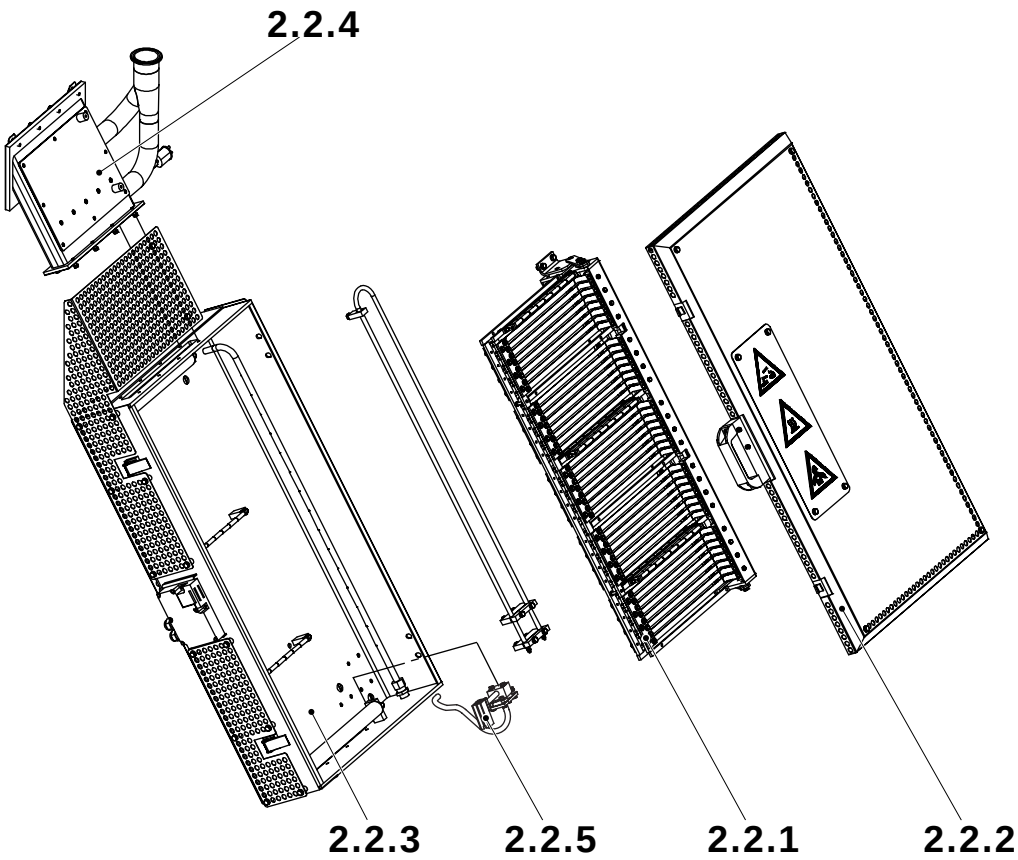

2.2.1 Element group
2.2.2 Hatch
2.2.3 Box
2.2.4 Connection pipe
2.2.5 Air knife
2.2.6 Pre-heating element

MM2.21TS100441en.fm

2.2.1 Element group

2.2.1-1 Element group - check

Machine Status	
SPC reference	2523845

WARNING! **Risk of corrosion and intoxication.**
Hydrogen peroxide. Follow the *Safety Precautions*.

WARNING! **Risk of electrical shock.**
Make sure that the power supply is off.

- Check that the cables are properly connected to the connections (1).
- Check the cables for wear and damage. Change any defective cable.

1 Electrical connection

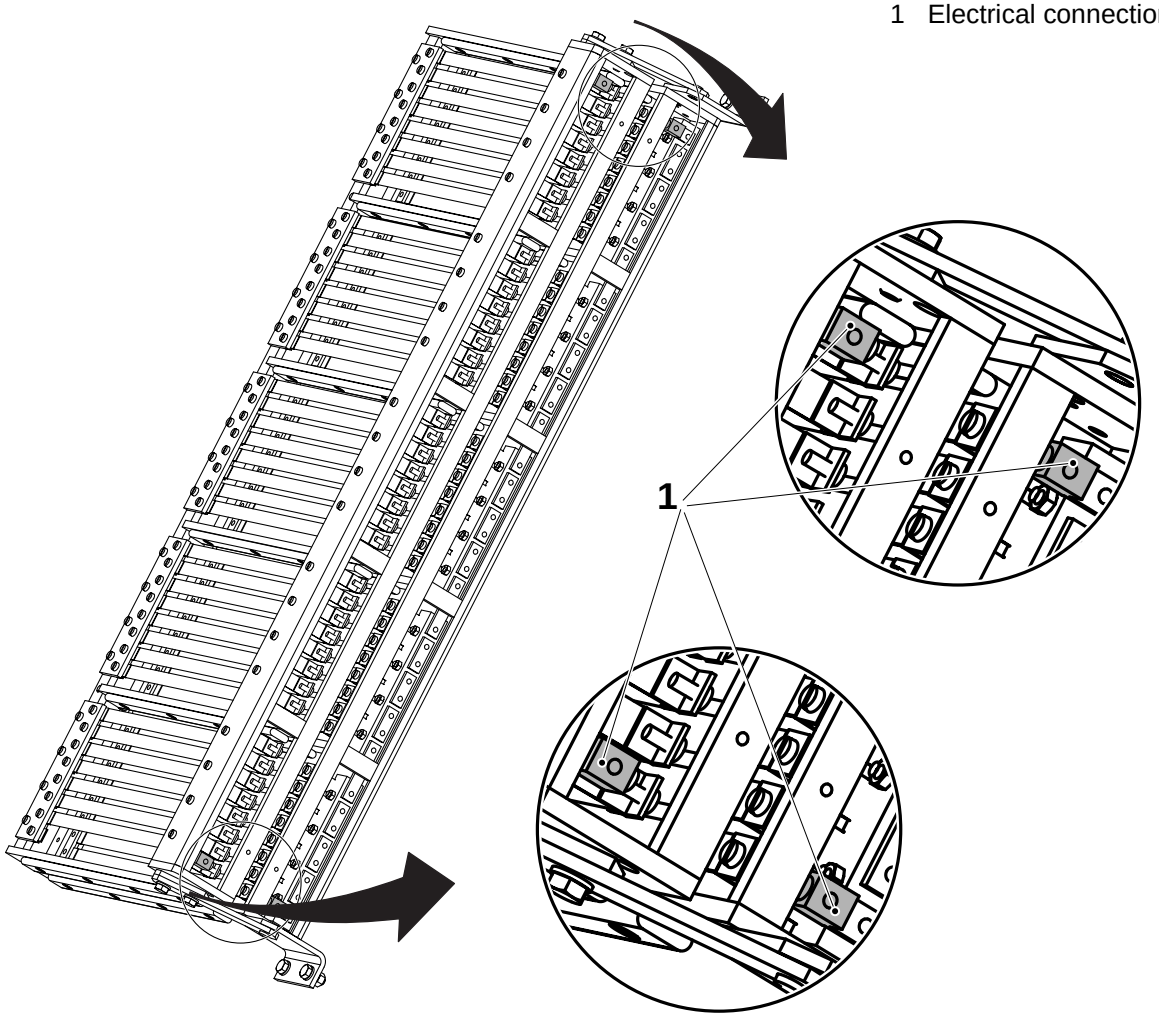

(Cont'd)

(Cont'd)

- Check that the heating elements (2) are not damaged, change if required.
- Loosen the two screws (by the arrows) to remove the heating element/s.

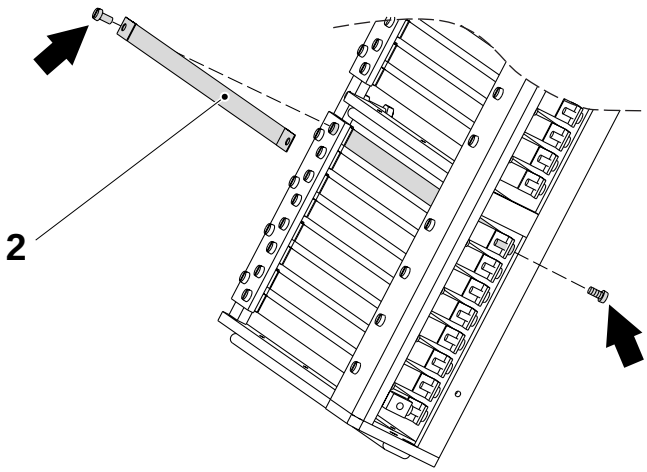

2 Heating element

MM2.21TS100441en.fm

2.2.1-2 Element group - set parallel

Machine Status	
SPC reference	2523845

WARNING! **Risk of electric shock.**
Make sure that the power supply is off.

Check that the upper element group (1) is parallelled with the lower element group (3).

If required, adjust on the screws (2) until the upper element group is parallelled with the lower element group (3).

Check also that the element group still is parallel to the opposite side

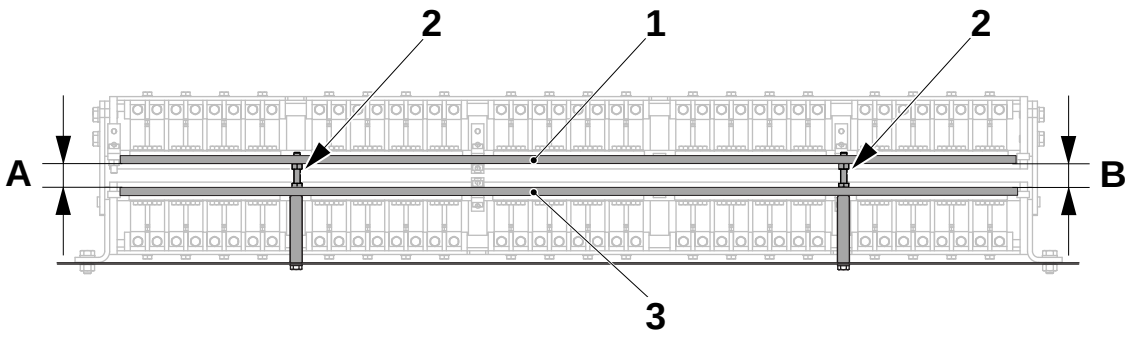

1 Upper element group
2 Screw
3 Lower element group

A = B

MM2.21TS100441en.fm

2.2.1-3 Element group - change rollers

Machine Status	
SPC reference	2523845

WARNING! **Risk of electric shock.**
Make sure that the power supply is off.

a) Remove the screws (3), and unscrew the nut (2).
b) Un screw the shaft (5).
c) Unscrew the bracket (4), remove the rollers (1).
d) Change the rollers and assemble in reverse order.

Note! Check that the assembled rollers rotate smoothly.

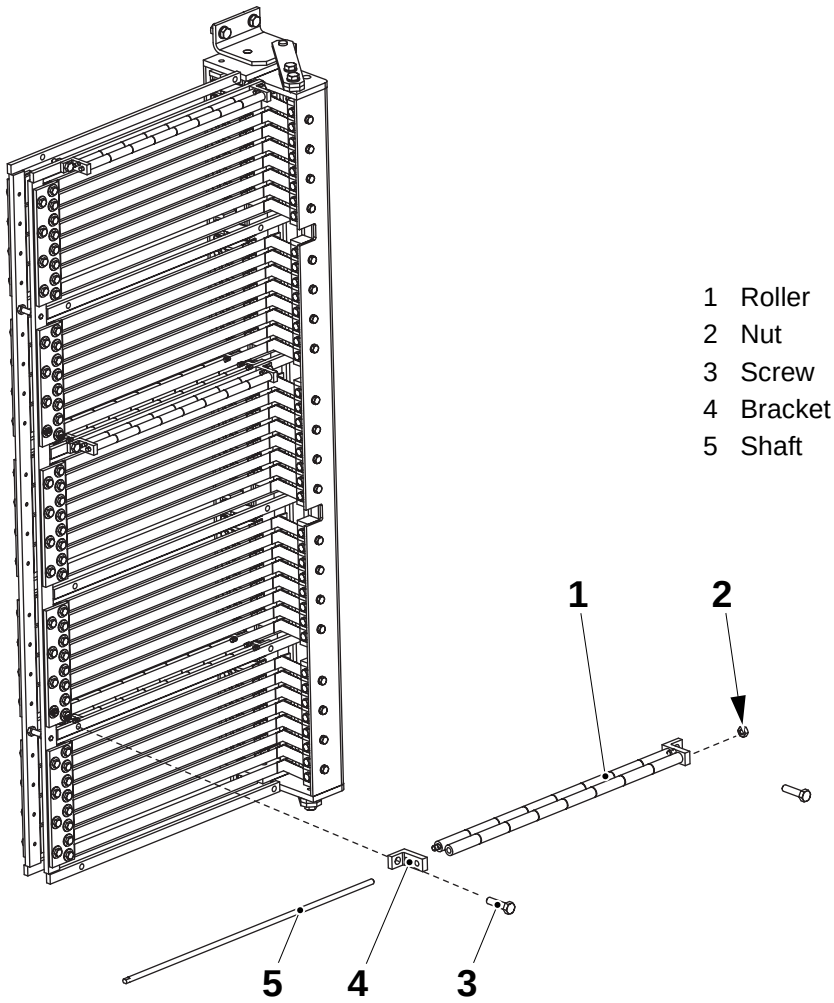

1 Roller
2 Nut
3 Screw
4 Bracket
5 Shaft

MM2.21TS100441en.fm

2.2.2 Hatch

2.2.2-1 Hatch - check rubber strip

Machine Status	
SPC reference	2523870
Consumable -Adhesive	90153-0016

WARNING! **Risk of corrosion and intoxication.**
Hydrogen peroxide. Follow the *Safety Precautions*

WARNING! **Risk of electric shock.**
Make sure that the power supply is off.

- Open up the hatch (1) and check the sealing strip (2). Replace if required.

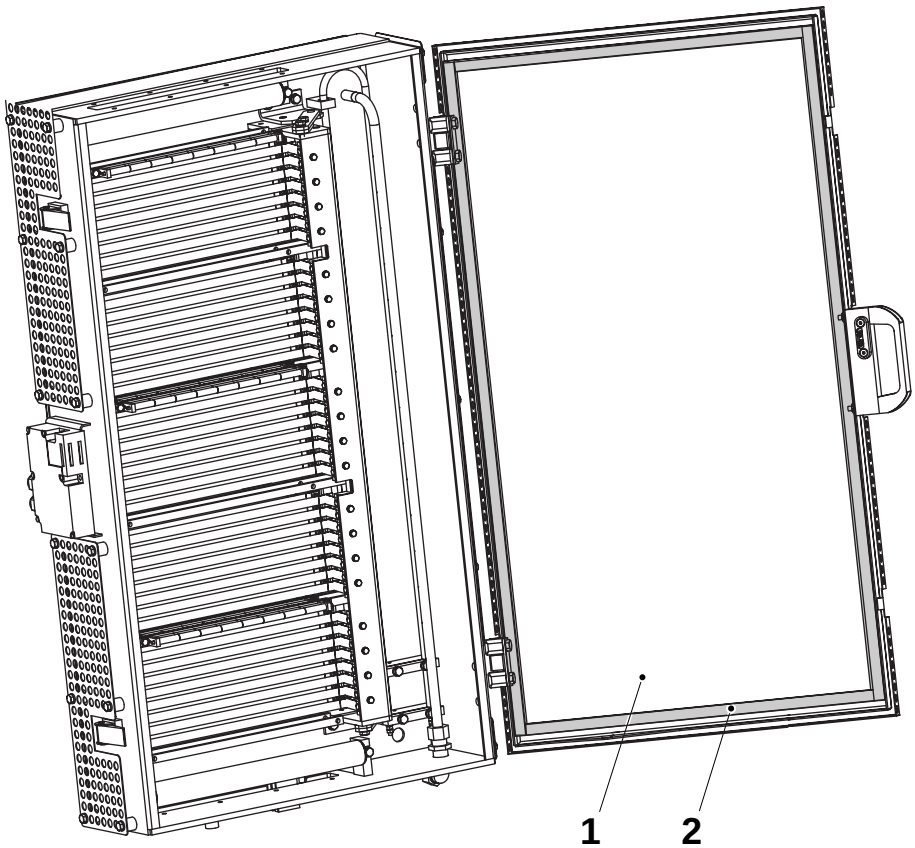

1 Hatch
2 Rubber strip

MM2.21TS100441en.fm

2.2.3 Box

2.2.3-1 Box - check

Machine Status	
SPC reference	2542765

WARNING! **Risk of corrosion and intoxication.**
Hydrogen peroxide. Follow the *Safety Precautions*

WARNING! **Risk of electric shock.**
Make sure that the power supply is off.

- Check that the bending rollers (1) rotate smoothly and that the surfaces are not damaged. Change bending roller rubbers or bushings if required. See 2.2.3-2 Box - change bending rollers
- Check that the rollers (2) are not damaged and that they rotate smoothly. Also, there are rollers between the elements layers. Change bending roller(s) if required. See 2.2.1-3 Element group - change rollers

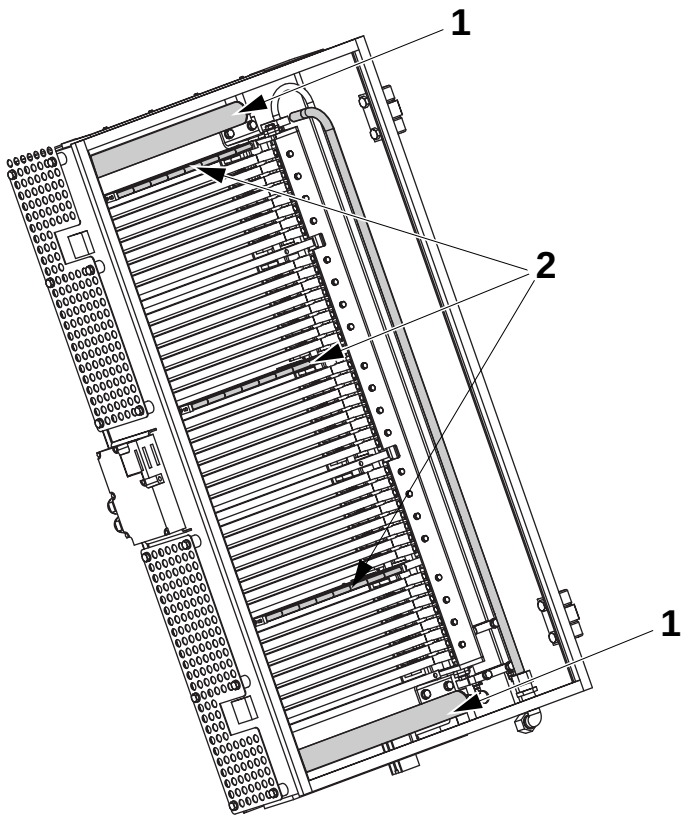

1 Bending roller
2 Roller

(Cont'd)

MM2.21TS100441en.fm

(Cont'd)

- Check that the air nozzle (3) is intact and that the air holes are not clogged.
  Clean if required.

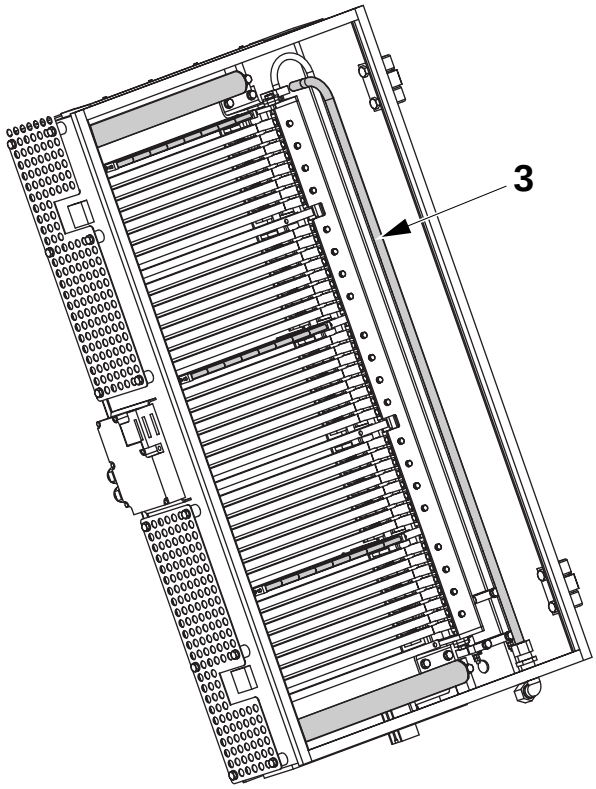

3 Bending roller

MM2.21TS100441en.fm

2.2.3-2 Box - change bending rollers

Machine Status	
SPC reference	2542765

WARNING! **Risk of corrosion and intoxication.**
Hydrogen peroxide. Follow the *Safety Precautions*

WARNING! **Risk of electric shock.**
Make sure that the power supply is off.

a) Unscrew the screws (1).
b) Lift out the bending roller (2), remove the shaft (3).
c) Change the flange bushings (4).

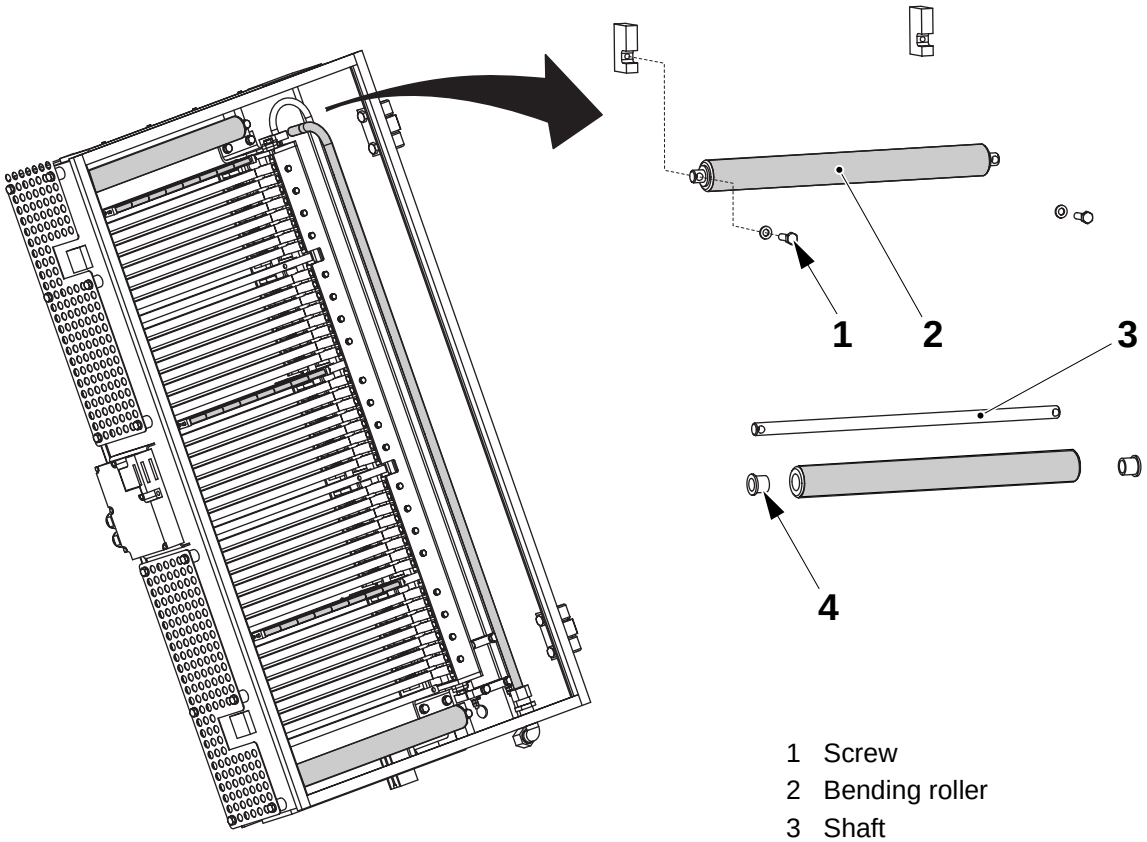

MM2.21TS100441en.fm

1 Screw
2 Bending roller
3 Shaft
4 Flange bushing

(Cont'd)

(Cont'd)

d) Use a knife to make a slit in the hose (5), remove the hose.

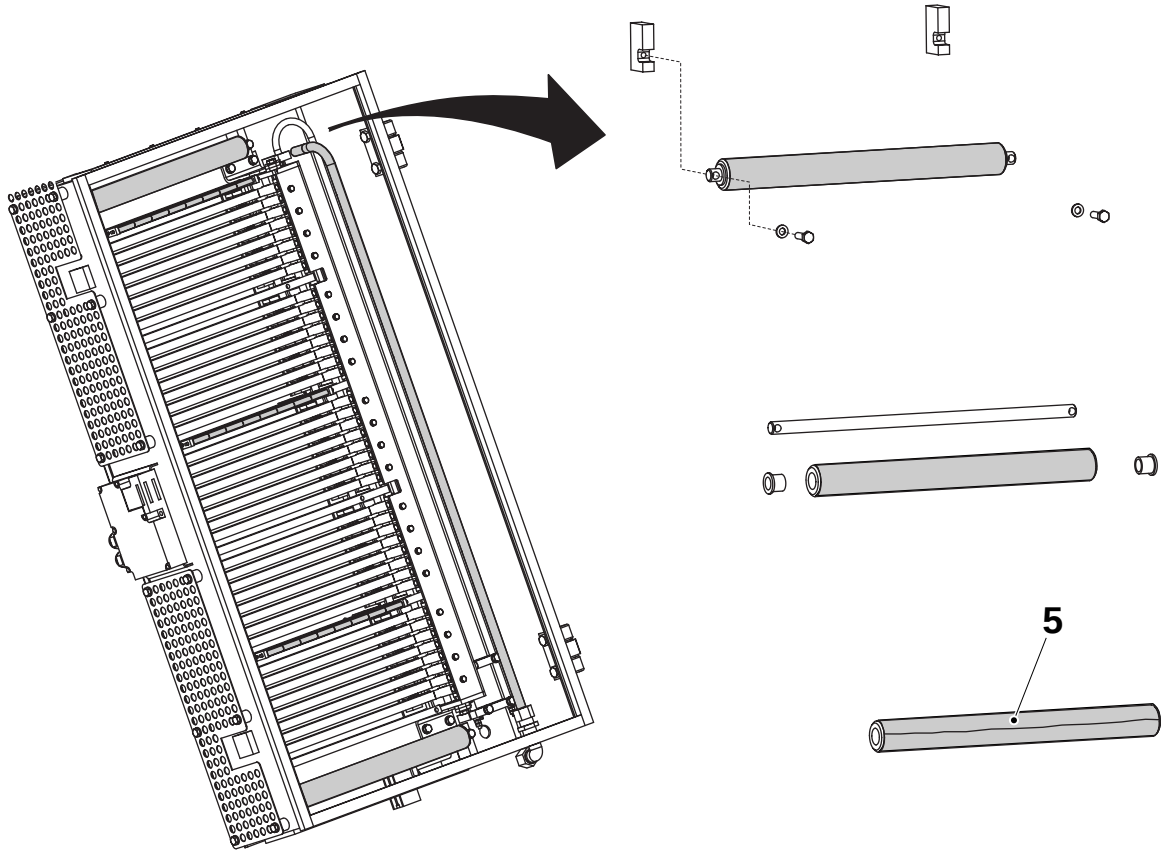

5 Hose

(Cont'd)

(Cont'd)

WARNING! **Risk of burns!**
The air from the hot air gun is hot. If necessary, wear heat-resistant protective gloves.

e) Use a hot-air gun (or oven) (6). Temperature 260 - 400 °C.

f) Clean the roller (7) from grease or other deposits. Sandpaper the surface by hand to get a somewhat rougher surface.

g) Put the roller on a shaft where it can be rotated, preferably a lathe.

h) Cut off a suitable length of shrink hose (8) (roller width +5 mm).

i) If required, clean the inside of the hose with a lint-free cloth.

j) Slide the hose onto the roller and rotate the roller at a fairly even speed.

k) Aim the hot-air gun at the middle of the roller at a distance of 50 - 80 mm. Heat this area until the hose shrinks evenly against the roller (fig 1). When the hose shrinks firmly against the roller, reduce the distance to about 25 mm, then move the air gun towards the ends and make sure that the free ends (fig 2) of the hose are shrunk to their minimum diameter.

l) After shrinking-on, shave off with a sharp knife, leaving about 1 mm extending outside the roller edges.

m) Assemble the bending rollers in reverse order.

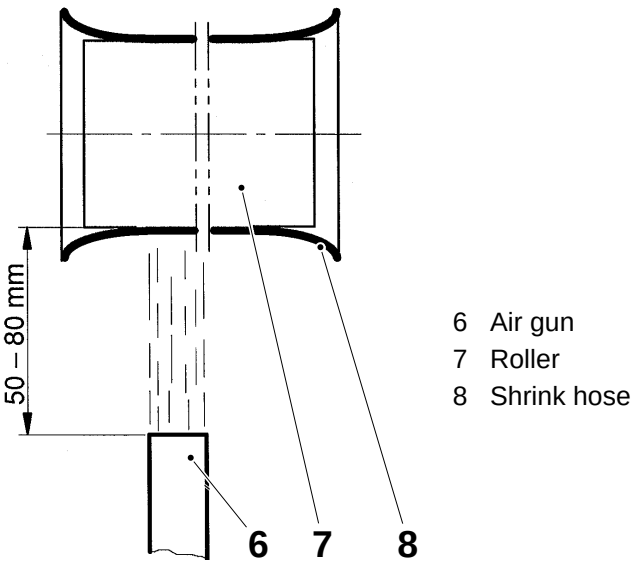

6 Air gun
7 Roller
8 Shrink hose

Fig 1

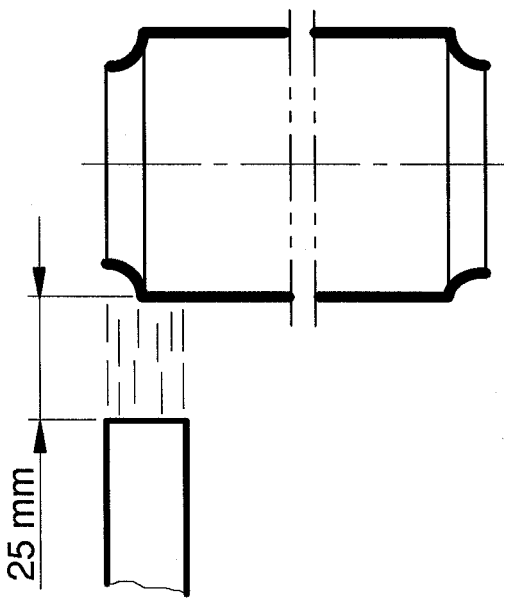

Fig 2

MM2.21TS100441en.fm

2.2.4 Connection pipe

2.2.4-1 Connection pipe- clean

Machine Status	
SPC reference	2542790

WARNING! **Risk of corrosion and intoxication.**
Hydrogen peroxide. Follow the *Safety Precautions*

Loosen the screws (5) and remove the heat guard (1), unscrew the screws (6) and remove the lid (4). Remove the gasket (3).

Clean the connection pipe (2). Change the gasket (3) if required.

Assembly in the reverse order.

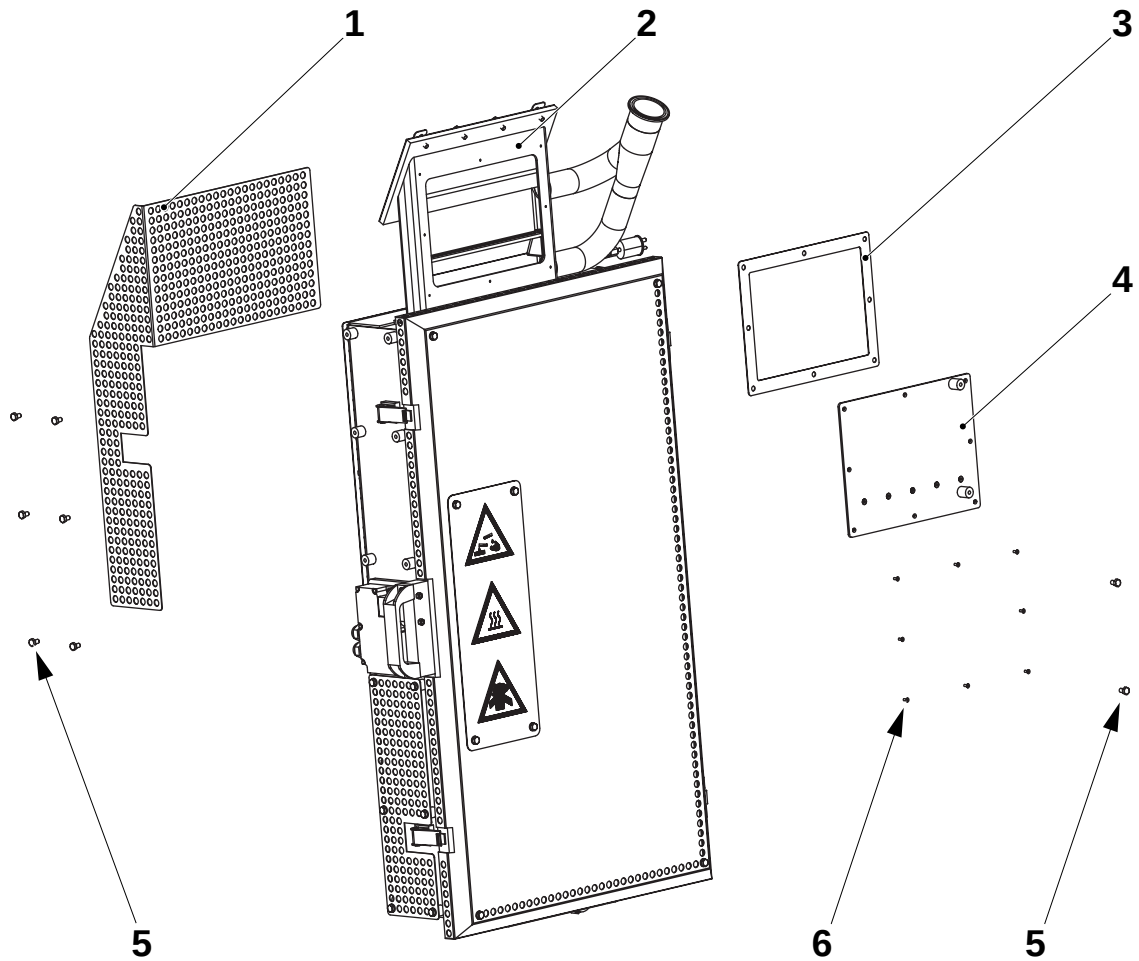

1 Heat guard
2 Connection pipe
3 Gasket
4 Lid
5 Screw
6 Screw

MM2.21TS100441en.fm

2.2.5 Air knife

2.2.5-1 Air knife - check

Machine Status	
SPC reference	2569695

WARNING! **Risk of corrosion and intoxication.**
Hydrogen peroxide. Follow the *Safety Precautions*

WARNING! **Risk of electric shock.**
Make sure that the power supply is off.

- Check that the packaging material (2) is centred in the air knife (1). Adjust if required.
- Check that the air holes in the air knife (1) are not clogged.

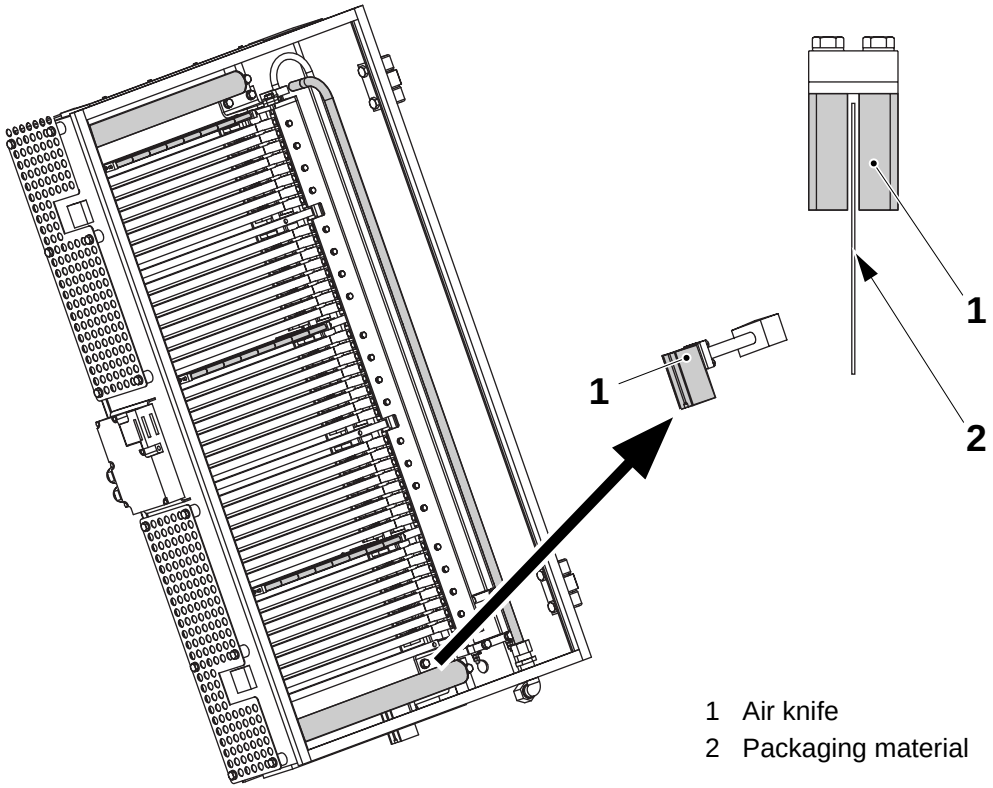

1 Air knife
2 Packaging material

MM2.21TS100441en.fm

2.2.5-2 Air knife - set

Machine Status	
SPC reference	2569695

WARNING! **Risk of corrosion and intoxication.**
Hydrogen peroxide. Follow the *Safety Precautions*

WARNING! **Risk of electric shock.**
Make sure that the power supply is off.

Loosen the screws (1) set distance **A** between the strip (3) edge and the air nozzle knife (2).

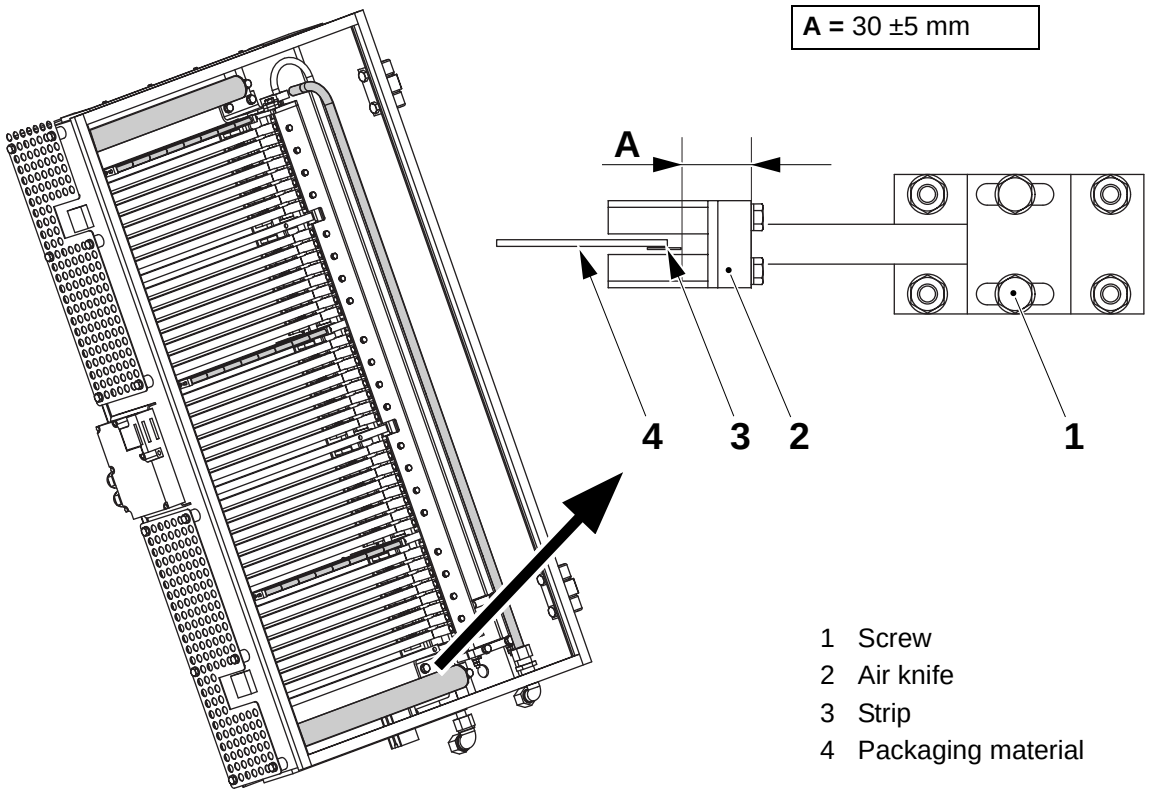

1 Screw
2 Air knife
3 Strip
4 Packaging material

MM2.21TS100441en.fm

2.3 Sterilization bath

2.3-1 Sterilization bath - description

Machine Status	
SPC reference	2542840

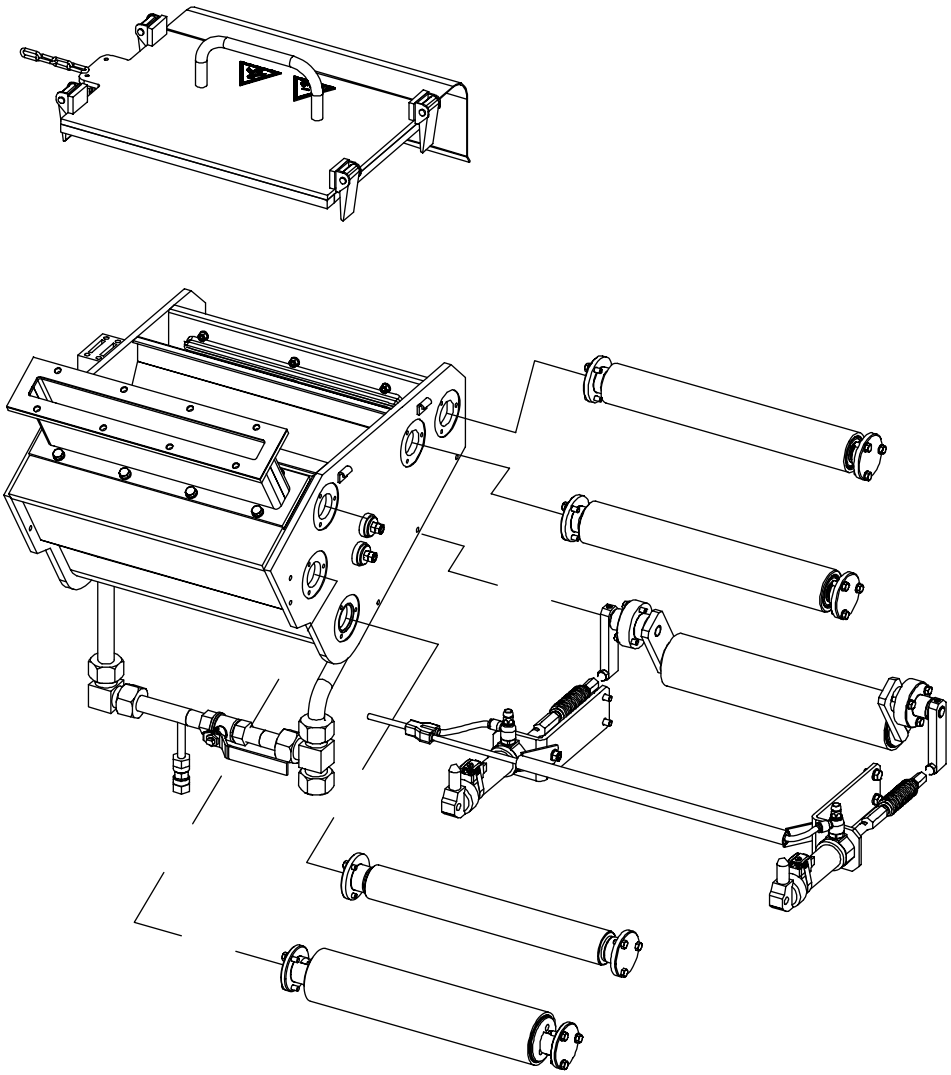

MM2.21TS100441en.fm

2.3.1 Roller
2.3.2 Pressure roller
2.3.3 Roller
2.3.4 Roller
2.3.5 Bending roller
2.3.6 Sterilization bath
2.3.7 Lid

2.3-2 Sterilization bath - check bending rollers

SPC reference	2523875 2542645 2542760

WARNING! **Risk of corrosion and intoxication.**
Hydrogen peroxide. Follow the *Safety Precautions*.

Check:

- that the surfaces of the bending rollers (1), (2) and (3) are not damaged. Replace bending rollers if required.
- that the bending rollers rotate smoothly.
  Replace bending roller bearings if required. See 2.3-3 Sterilization bath - change bearings

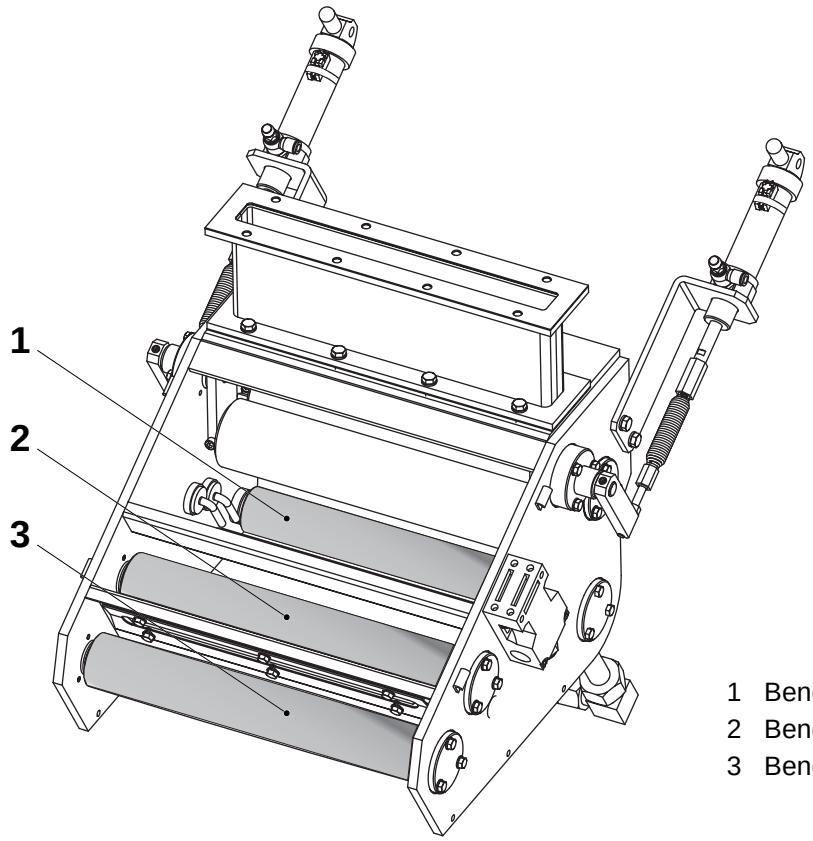

1 Bending roller
2 Bending roller
3 Bending roller

MM2.21TS100441en.fm

2.3-3 Sterilization bath - change bearings

SPC reference	2523875 2542645 2542760

WARNING! **Risk of corrosion and intoxication.**
Hydrogen peroxide. Follow the *Safety Precautions*.

a) For bending roller (1):
Remove the screws (5), lift out the bearing house (4).
Replace the flange bearings (2) and the O-ring (3)

b) For bending rollers (8):
Remove the screws (6), lift out the bearing houses (7).
Replace the ball bearings (9)

c) Re-assemble in reverse order.

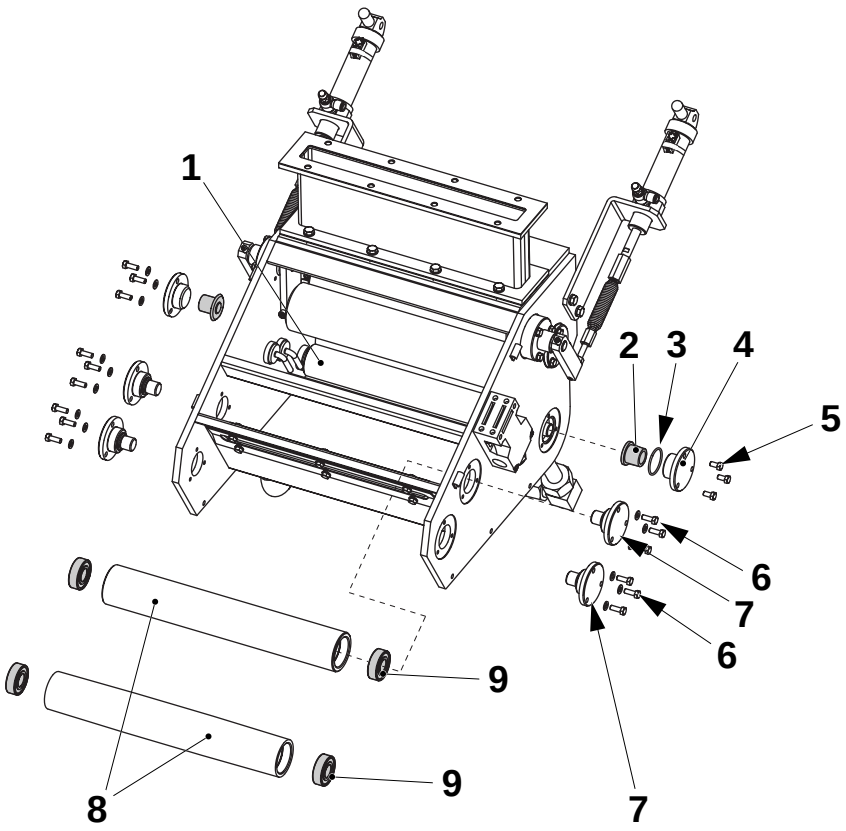

1 Bending roller
2 Flange bearing
3 O-ring
4 Bearing house
5 Screw
6 Screw
7 Bearing house
8 Bending roller
9 Ball bearing

MM2.21TS100441en.fm

2.3-4 Sterilization bath - check squee-gee rollers

SPC reference	2524300 2542640

WARNING! **Risk of corrosion and intoxication.**
Hydrogen peroxide. Follow the *Safety Precautions*.

Check:

- that the rubbers on the squee-gee rollers (1) are clean and not damaged
- that the squee-gee rollers rotate smoothly
- change if required

See 2.3-5 Sterilization bath - change silicon rubber hose or 2.3-6 Sterilization bath - change ball bearings.

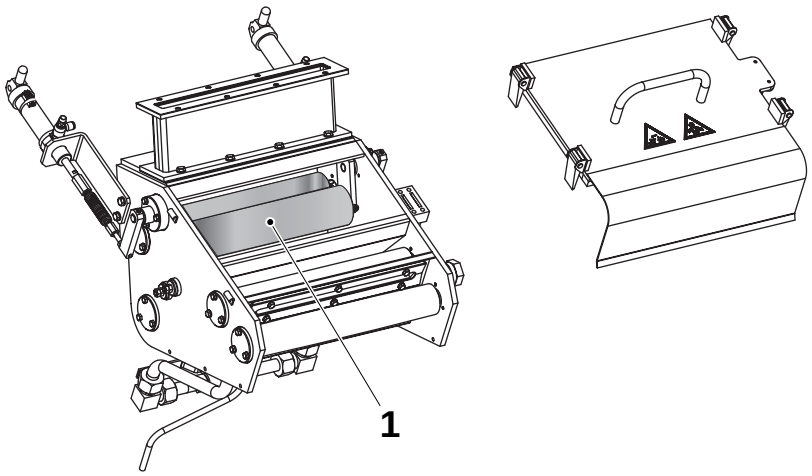

1 Squee-gee roller

MM2.21TS100441en.fm

2.3-5 Sterilization bath - change silicon rubber hose

SPC reference	2524300 2542640

WARNING! **Risk of corrosion and intoxication.**
Hydrogen peroxide. Follow the *Safety Precautions*.

a) Remove the screws (2).
b) Lift out the rollers (1).
c) Use a knife to make a slit (4) in the silicon rubber hose (3).
d) Remove the silicon rubber hose.

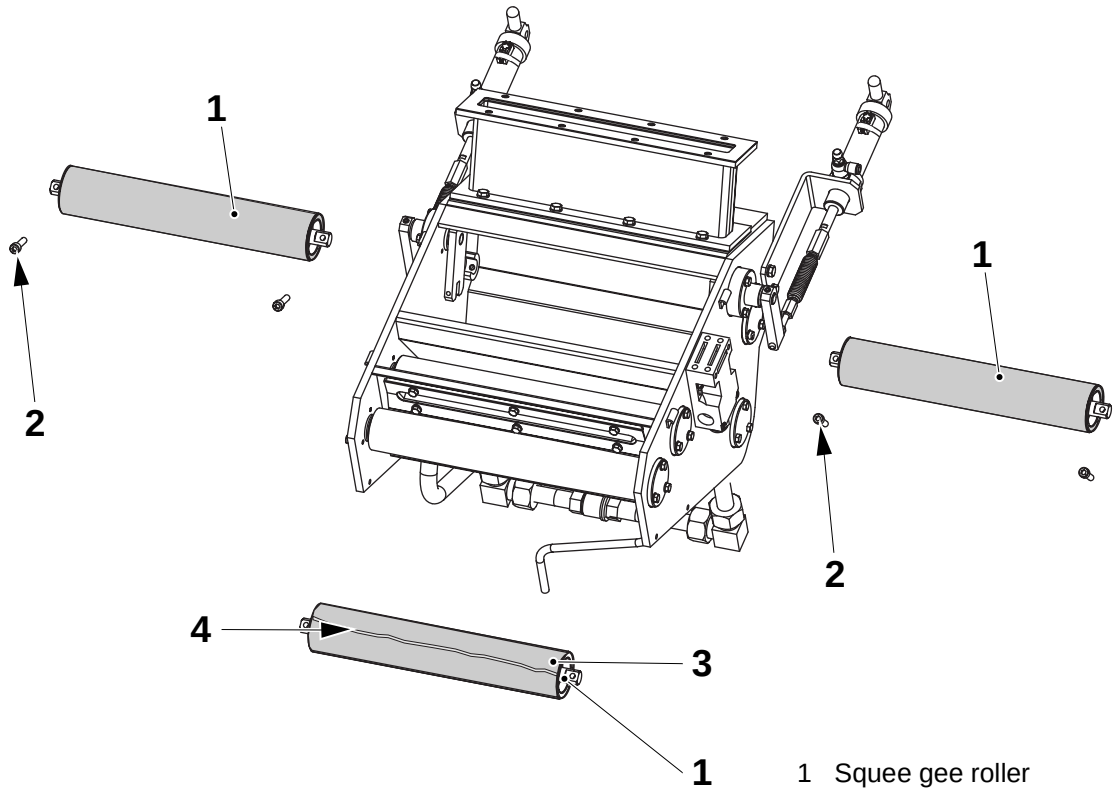

1 Squee gee roller
2 Screw
3 Silicon rubber hose
4 Slit

MM2.21TS100441en.fm

(Cont'd)

(Cont'd)

Silicon Rubber Hose-Assembly

Remove the old silicon rubber sleeves. The new sleeves is to be fitted turned inside out so that the smooth inside will be in contact with the material web. A simple way of fitting the sleeves and turning it inside out at the same time is described below:

a) Fold in one end of the sleeves and apply talcum powder to its inside.

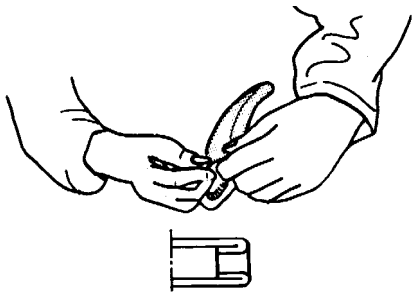

b) Slide the folded end of the sleeving over the squee-gee roller.

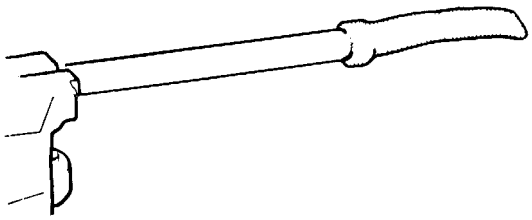

c) Wrap a piece of textile fabric around the nozzle of a compressed air gun and insert the latter into the open end of the sleeving.

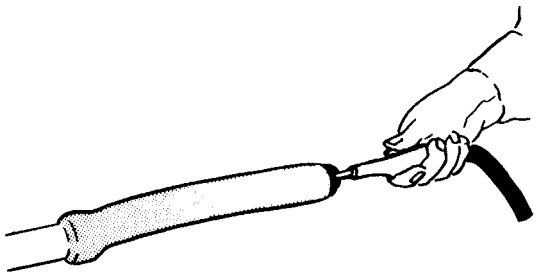

d) Slide the sleeving as far as possible onto the squee-gee roller by means of the compressed air.

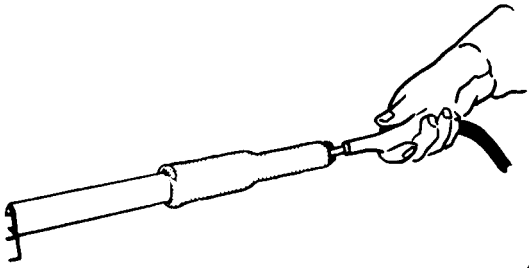

e) Remove the piece of fabric and continue to slide the sleeving over the squee-gee roller while blowing air into the sleeving.

MM2.21TS100441en.fm

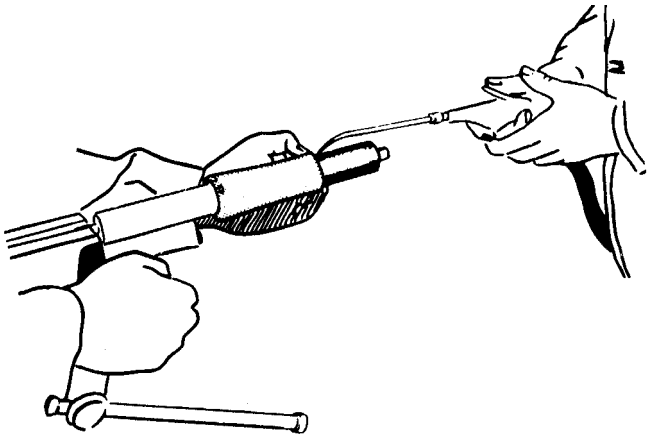

f) Blow air between the sleeving and the squee-gee roller to make the sleeving hug the roller evenly.



g) Cut off the sleeving level with the roller ends.



h) Check that there is no air bubbles between the roller and the rubber. Squeeze them out by hand if necessary.

MM2.21TS100441en.fm

2.3-6 Sterilization bath - change ball bearings

SPC reference	2524300 2542640
Tool -Hook spanner	90459-2208

WARNING! **Risk of corrosion and intoxication.**
Hydrogen peroxide. Follow the *Safety Precautions*.

a) Remove the screws (8) and (10).
b) Lift out the squee-gee rollers (1) and (4).
c) Use the hook spanner to remove the bearing cover (3) and (6).
d) Change the ball bearings (5) and the seals (7) and (9).

Assemble in reverse order.

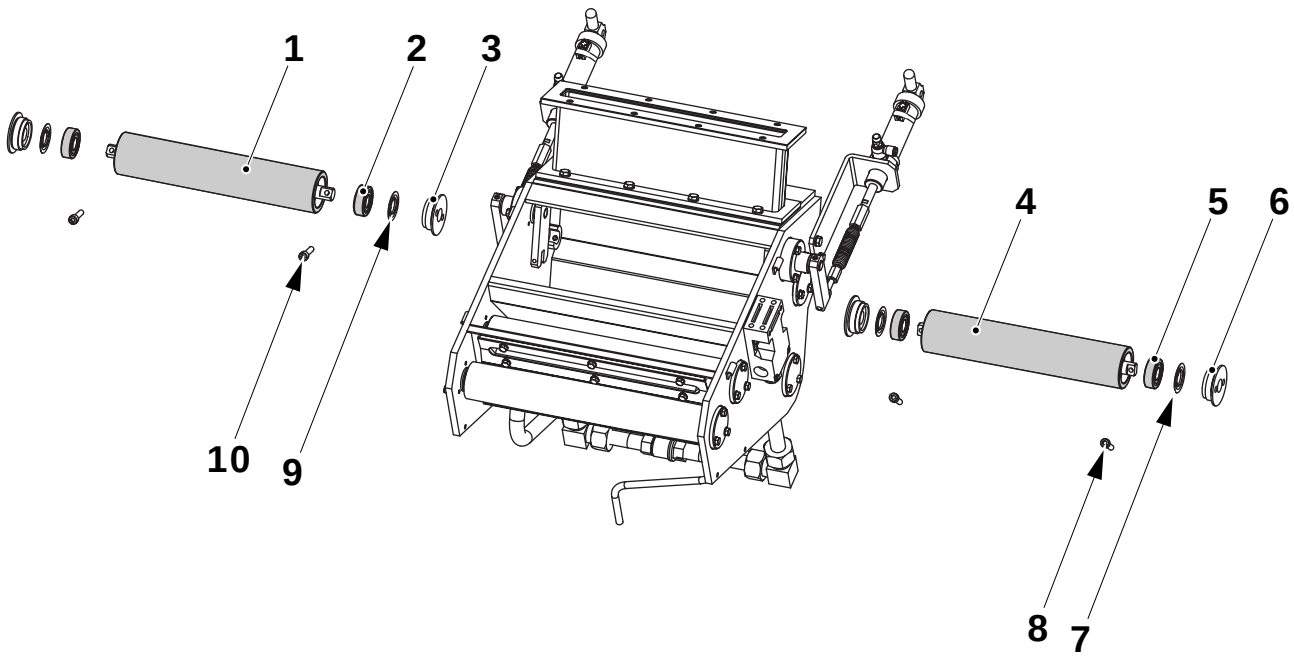

1 Squee-gee roller
2 Ball bearing
3 Bearing cover
4 Squee-gee roller
5 Ball bearing
6 Bearing cover
7 Seal
8 Screw
9 Seal
10 Screw

MM2.21TS100441en.fm

2.3-7 Sterilization bath - set squee-gee rollers pressure

SPC reference	2524300

WARNING! **Risk of corrosion and intoxication.**
Hydrogen peroxide. Follow the *Safety Precautions*.

Too set the spring pressure:

- Activate the cylinder (4) by activating the valve **Y202**.
- Adjust value **A** by loosening the nut (2), adjusting screw (3), until **A** is reached.
- Tighten the nut (2).

Repeat on the other side.

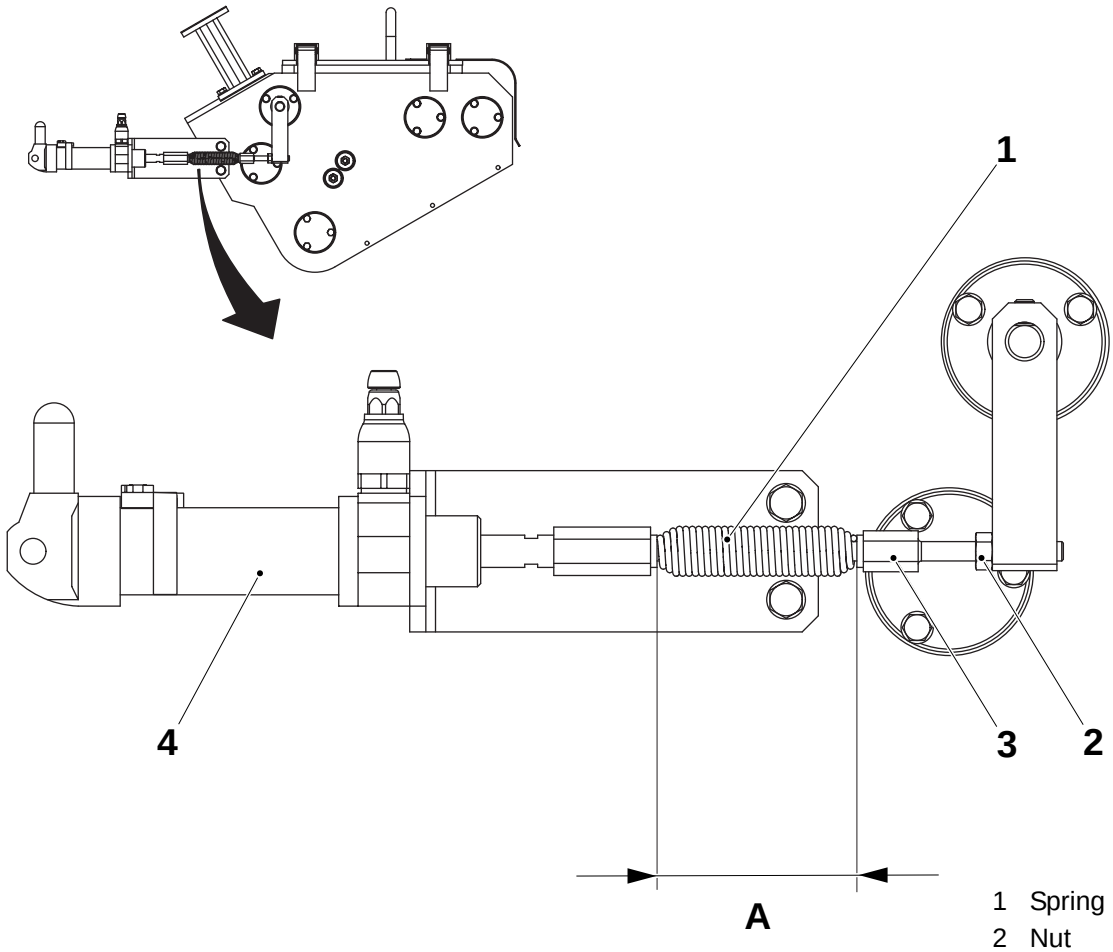

A = 95 ±0,2 mm

1 Spring
2 Nut
3 Screw
4 Cylinder

MM2.21TS100441en.fm

2.3.6 Sterilization bath

2.3.6-1 Sterilization bath - check level sensors

SPC reference	2542835

Check that the high level probe (2) and the production level probe (3) are intact and clean.

Check the function of the level sensors.

- Activate the high level sensor (2) by connecting the circle between the screw (5) and the sterilization bath side (1). For example use a screw driver. Check that the LED (6) is lit up on level relay A030.
- Activate the production level sensor (3) by connecting the circle between the screw (4) and the sterilization bath side (1). For example use a screw driver. Check that the LED (7) is lit up on level relay A031.

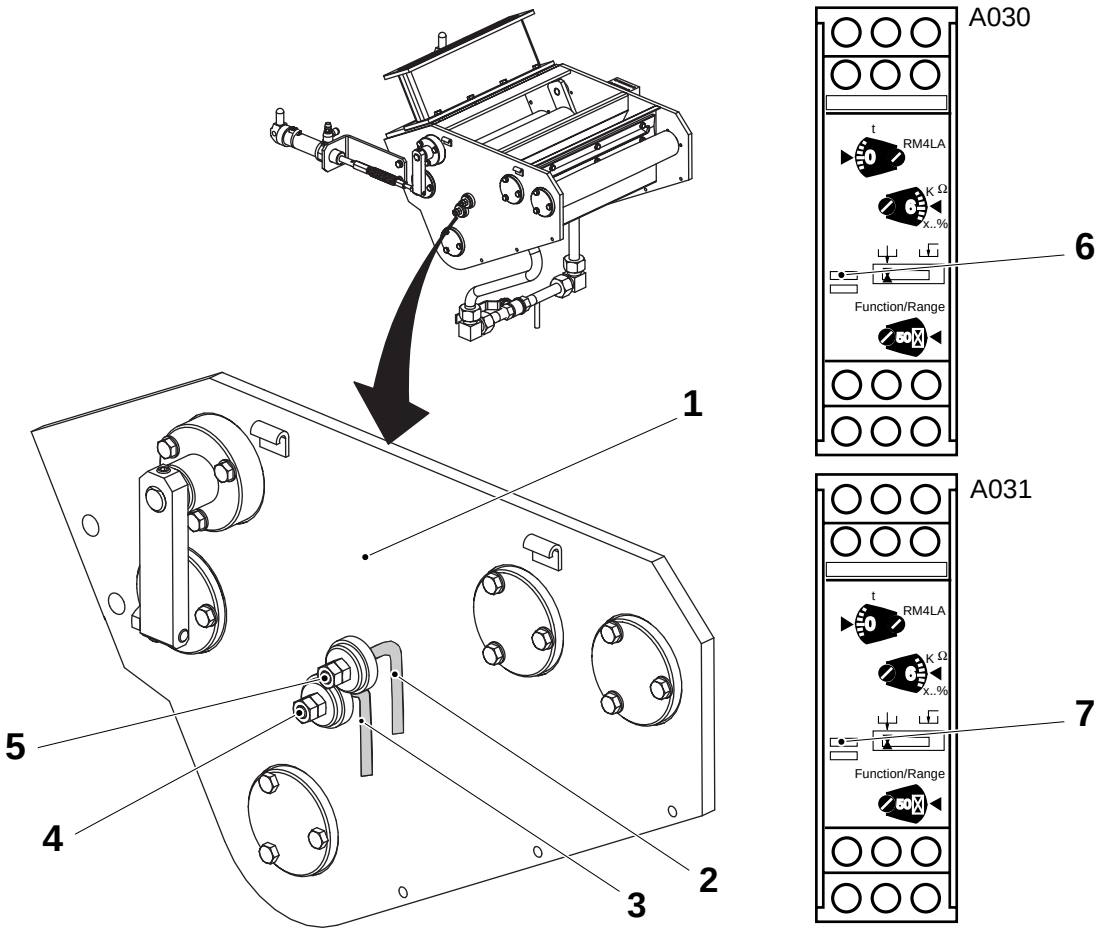

1 Peroxide bath side
2 High level
3 Production level
4 Screw
5 Screw
6 LED
7 LED

MM2.21TS100441en.fm

2.3.6-2 Sterilization bath - change seal

SPC reference	2542835

WARNING! **Risk of corrosion and intoxication.**
Hydrogen peroxide. Follow the *Safety Precautions*.

a) Loosen the screws (4)

b) Remove the lid (3) and change the seal (2).

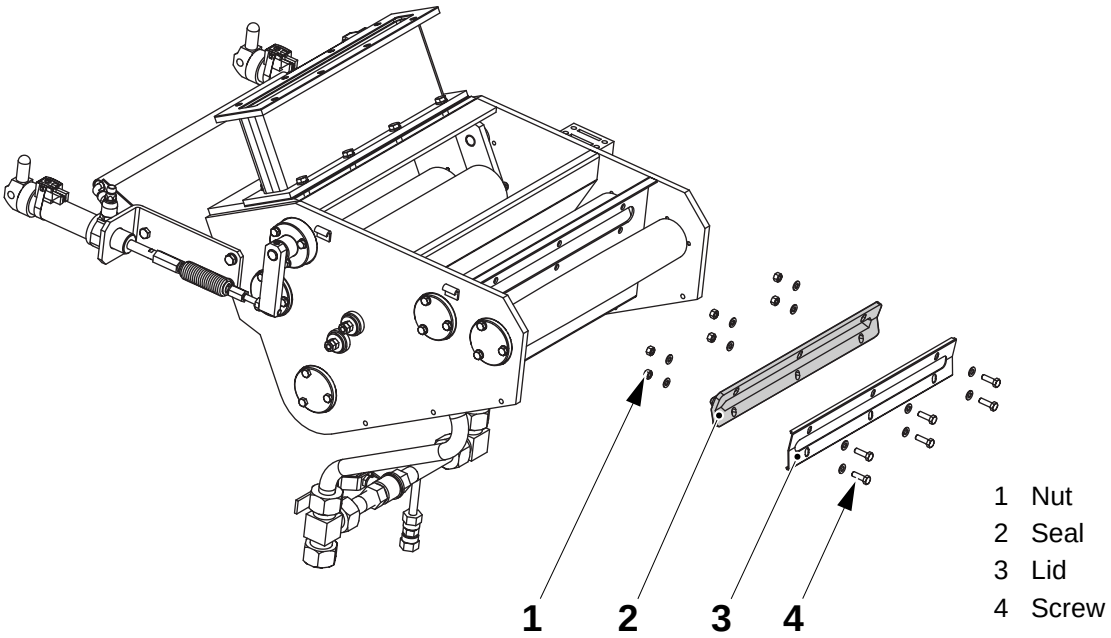

1 Nut
2 Seal
3 Lid
4 Screw

MM2.21TS100441en.fm

Note! It is important that the packaging material (5) is centred in the seal (2), adjust the height of the seal by loosening the screws (4) and setting the seal position if required.

Note! If the screws to the seal are tightened to hard the seal can be deformed and the function of the seal will be lost.

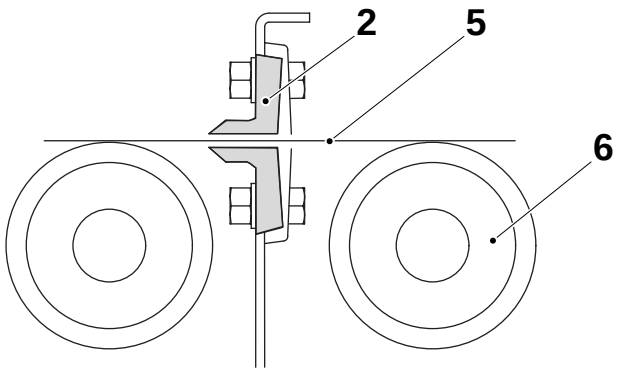

5 Packaging material
6 Bending roller

2.3.7 Lid

2.3.7-1 Lid - check

SPC reference	2542845
Consumable -Adhesive	90153-0016

WARNING! **Risk of corrosion and intoxication.**
Hydrogen peroxide. Follow the *Safety Precautions*.

- Lift off the lid (2) and check the sealing strip (1). Replace if required.
- Clean the sterilization bath with a dry and clean cloth.

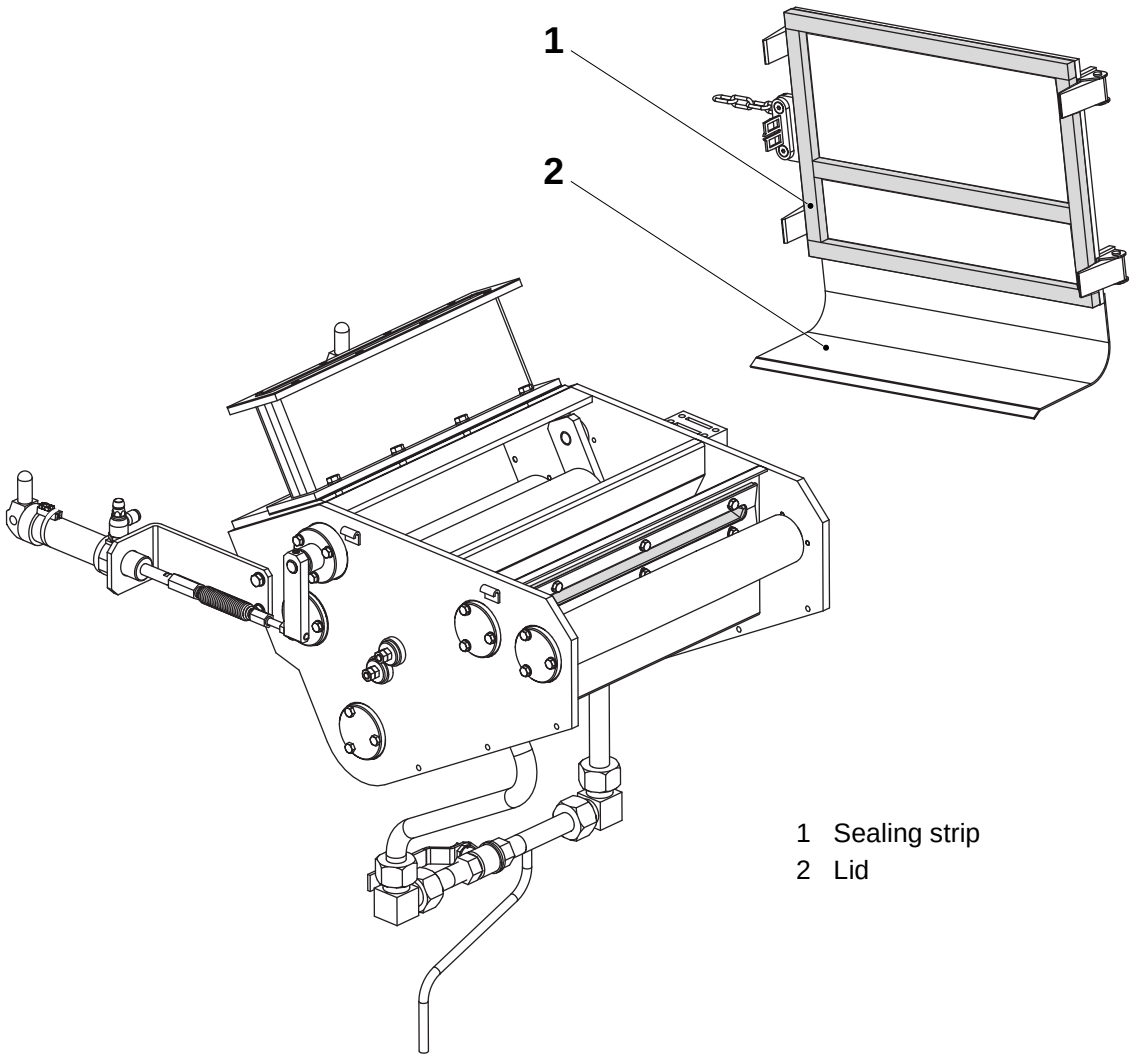

1 Sealing strip
2 Lid

MM2.21TS100441en.fm

This page intentionally left blank

MM2.21TS100441en.fm

3 Tube forming module

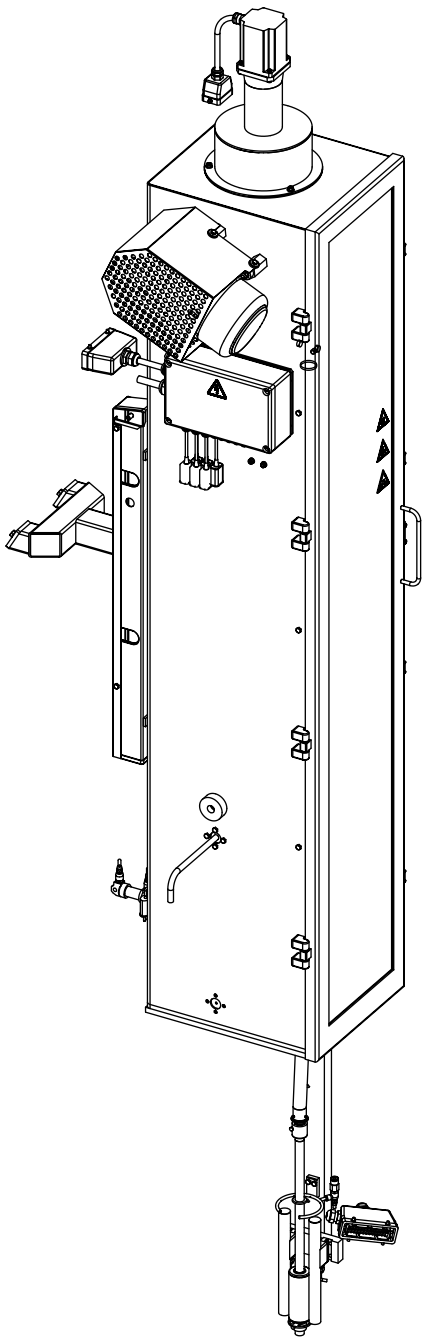

MM2.21TS100442en.fm

3-1 Tube forming module - description

SPC reference	630403-0200

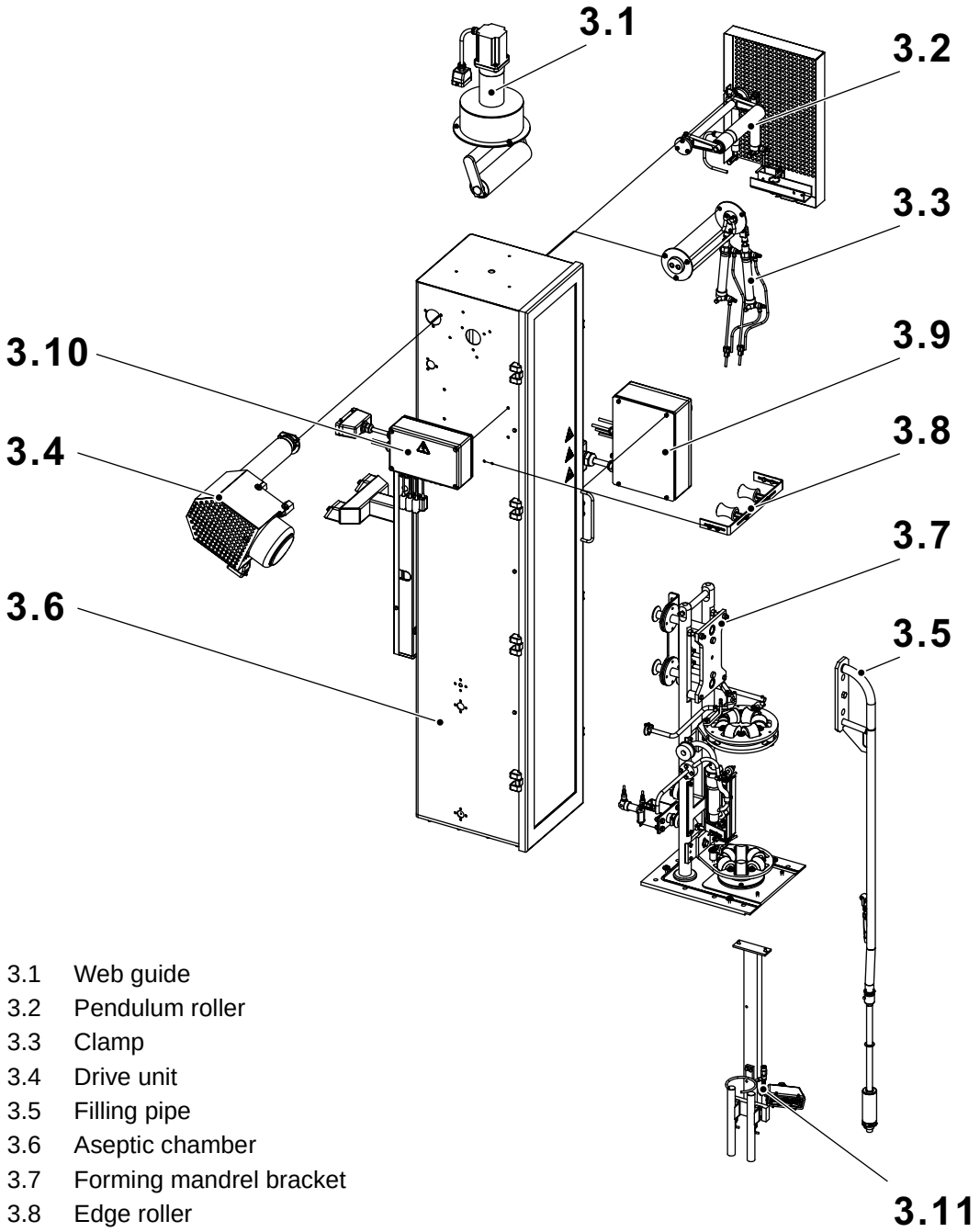

3.1 Web guide
3.2 Pendulum roller
3.3 Clamp
3.4 Drive unit
3.5 Filling pipe
3.6 Aseptic chamber
3.7 Forming mandrel bracket
3.8 Edge roller
3.9 Push button box - no description
3.10 Connection box - no description
3.11 Coil

MM2.21TS100442en.fm

3-2 Tube forming module - setting sequence

	Settings	Reference
1	Filling pipe	MM - page 169
2	Lower forming ring - height	MM - page 175
3	Drive unit	MM - page 168
4	Pendulum roller	MM - page 161
5	Sterilisation clamps	MM - page 164
6	Web guide	MM - page 154
7	LS-Element - basic setting	MM - page 184
7	Edge roller	MM - page 204
8	Upper forming ring	MM - page 196
9	Photocells	MM - page 179
10	Photocell unit	MM - page 198
11	LS-Element - fine adjustment	MM - page 185

MM2.21TS100442en.fm

3.1 Web guide

3.1-1 Web guide - check

Machine Status	
SPC reference	2523920-0100

Check the following parts for wear and damages:

- the ball bearings (1),
- the roller (2).

Change any worn or damaged parts, see 3.1-2 Web guide - change bearings on page 153.

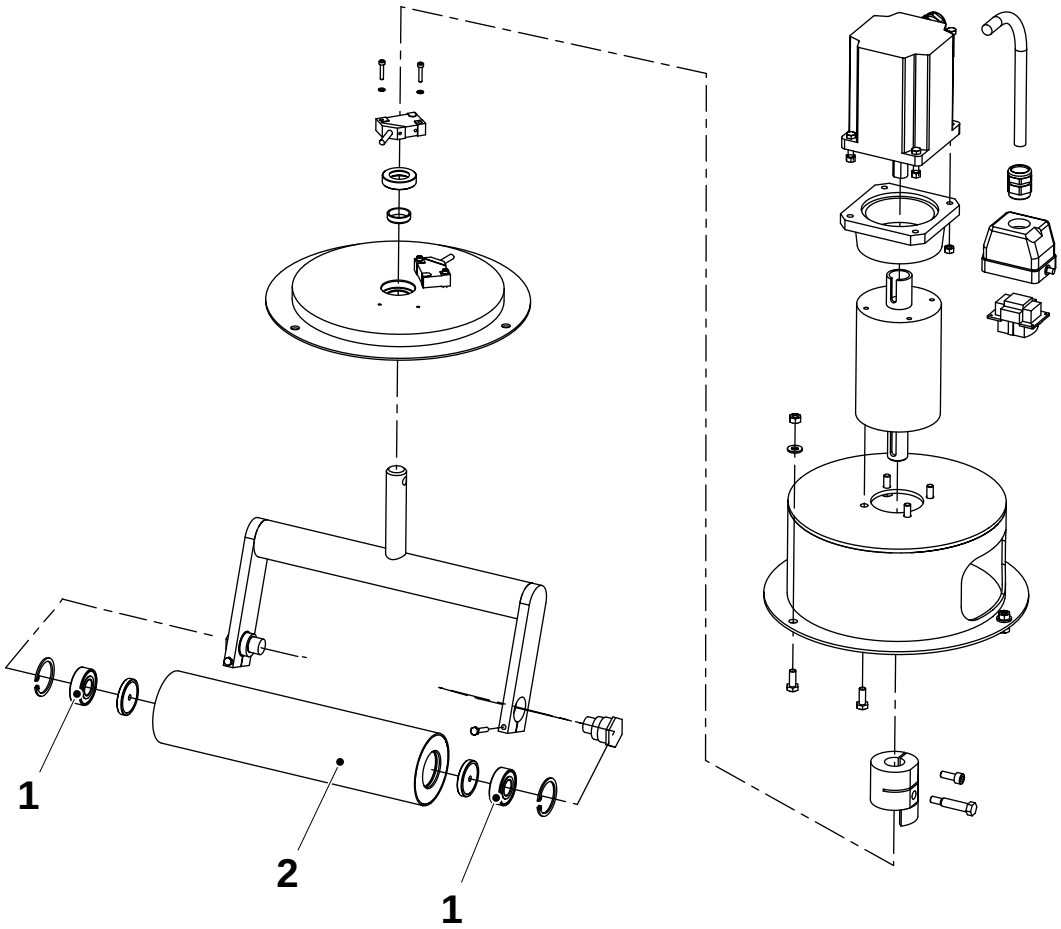

MM2.21TS100442en.fm

1 Ball bearing
2 Roller

3.1-2 Web guide - change bearings

Machine Status	
SPC reference	2523920-0100

Change the bearings as follows:

a) Loosen the screws (1) and remove the eccentric screws (2).

b) Take out the roller (3).

c) Remove the retaining rings (4) and take out the ball bearings (5).

Assemble in the reverse order with new ball bearings.

Level the roller, see 3.1-5 Web guide - set roller on page 156.

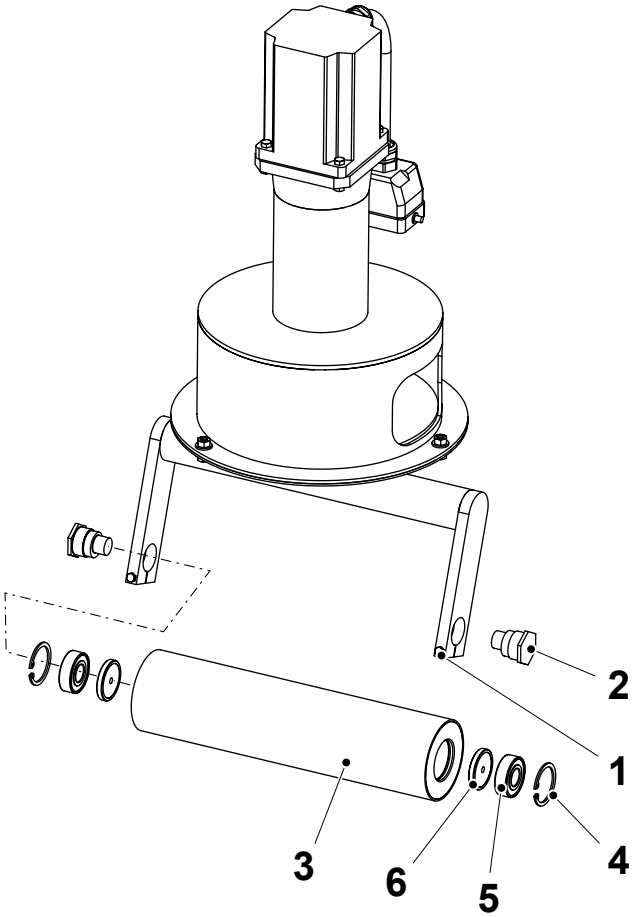

1 Screw
2 Eccentric screw
3 Roller
4 Retaining ring
5 Ball bearing

MM2.21TS100442en.fm

3.1-3 Web guide - set clamping ring

Machine Status	
SPC reference	2523920-0100

Set the distance **A** between the clamping ring (2) and the guiding plate (3).

To adjust, loosen the two screws (1).

Check that the shaft (5) has clearance in its hole through the aseptic chamber.

If needed, loosen the three screws (6) and adjust the position of the web guide.

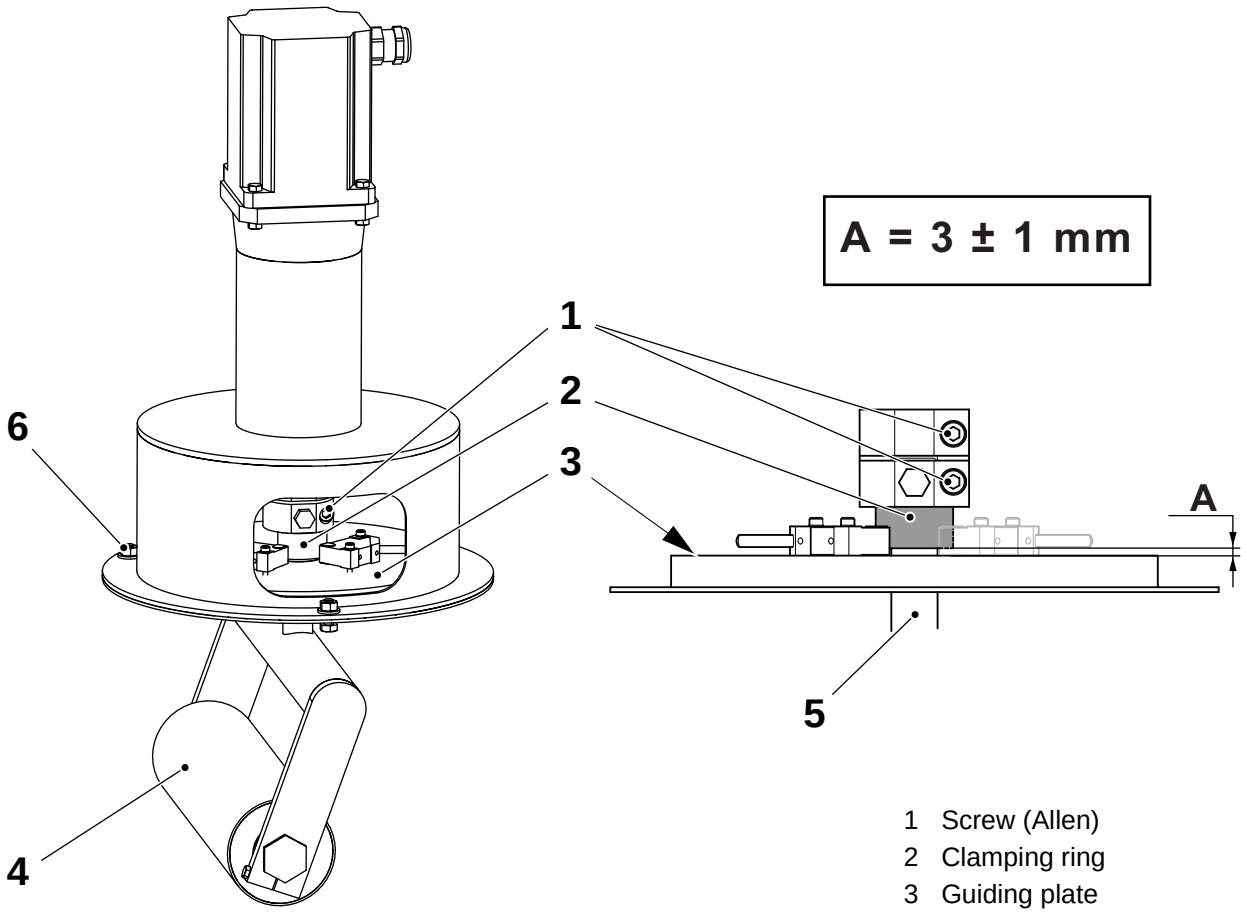

1 Screw (Allen)
2 Clamping ring
3 Guiding plate
4 Roller

MM2.21TS100442en.fm

3.1-4 Web guide - set proximity switches

Machine Status	
SPC reference	2523920-0100

Set the distance **B** between the proximity switches (2) and (3), and the clamping ring (1).

To adjust, loosen the screws (4) and (5).

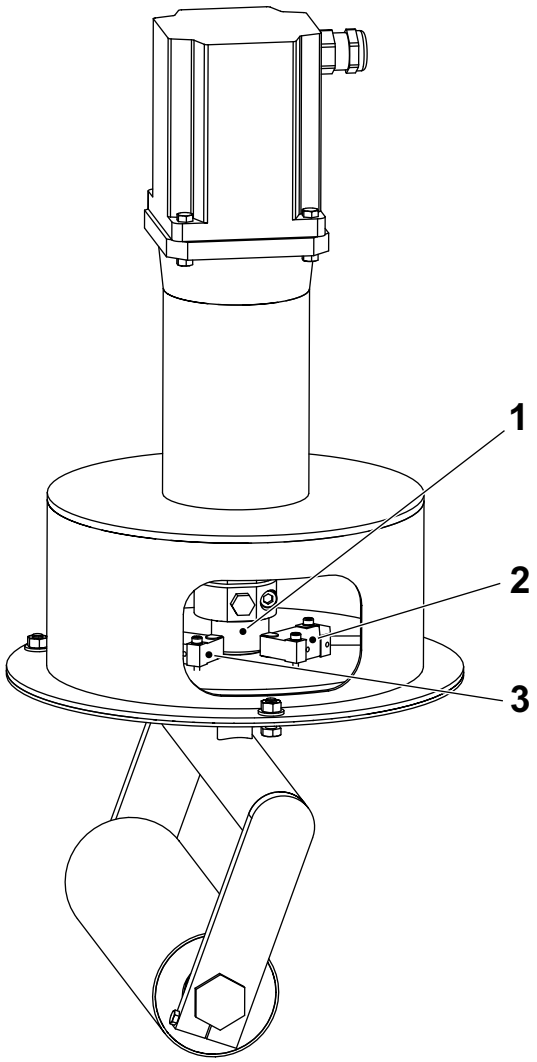

B = 0,2 ± 0,2 mm

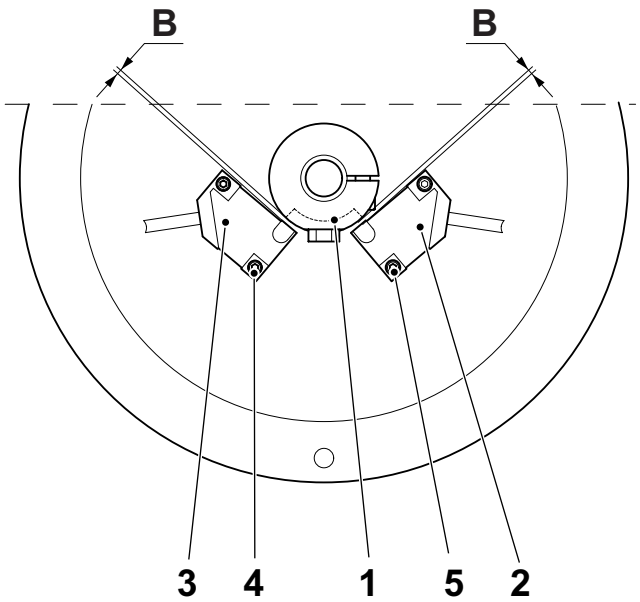

1 Clamping ring
2 Proximity switch
3 Proximity switch
4 Screw
5 Screw

MM2.21TS100442en.fm

3.1-5 Web guide - set roller

Machine Status	
SPC reference	2523920-0100

Level the roller (1) horizontally, check with a machinists level.

To adjust, loosen the screw (2) and turn the eccentric screw (3). If needed, adjust at both sides.

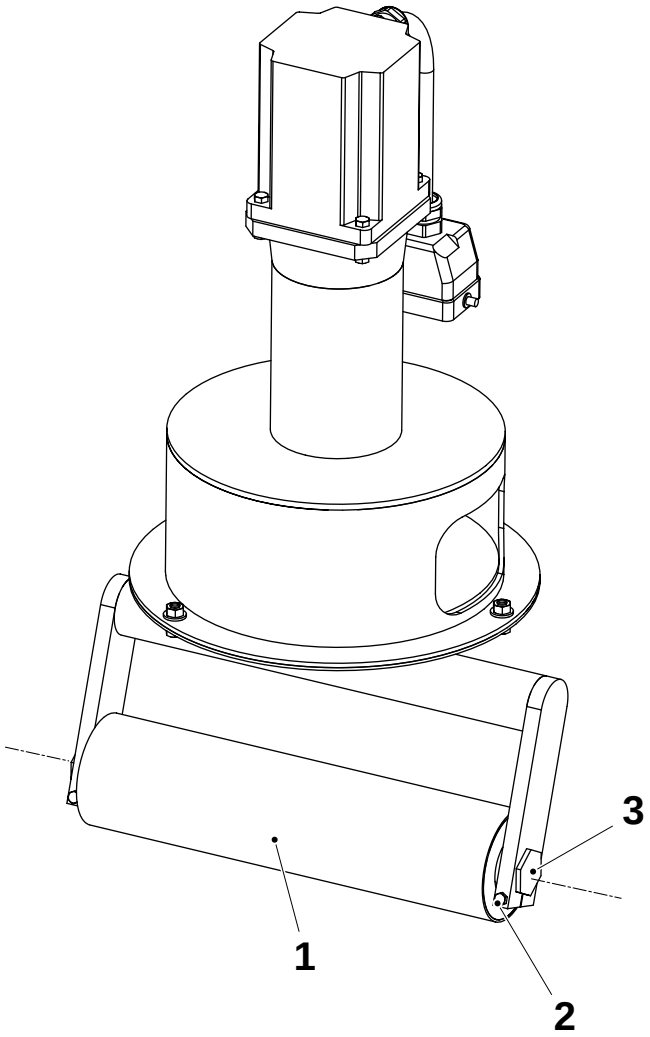

1 Roller
2 Screw
3 Eccentric screw

MM2.21TS100442en.fm

3.2 Pendulum roller

3.2-1 Pendulum roller - check

Machine Status	
SPC reference	2523930-0100

Check the following parts for wear and function:

- the cylinder (1),
- the ball bearings (2) for the roller (3),
- the flange bushings (2) for the shaft (5).

Change any worn or damaged parts.

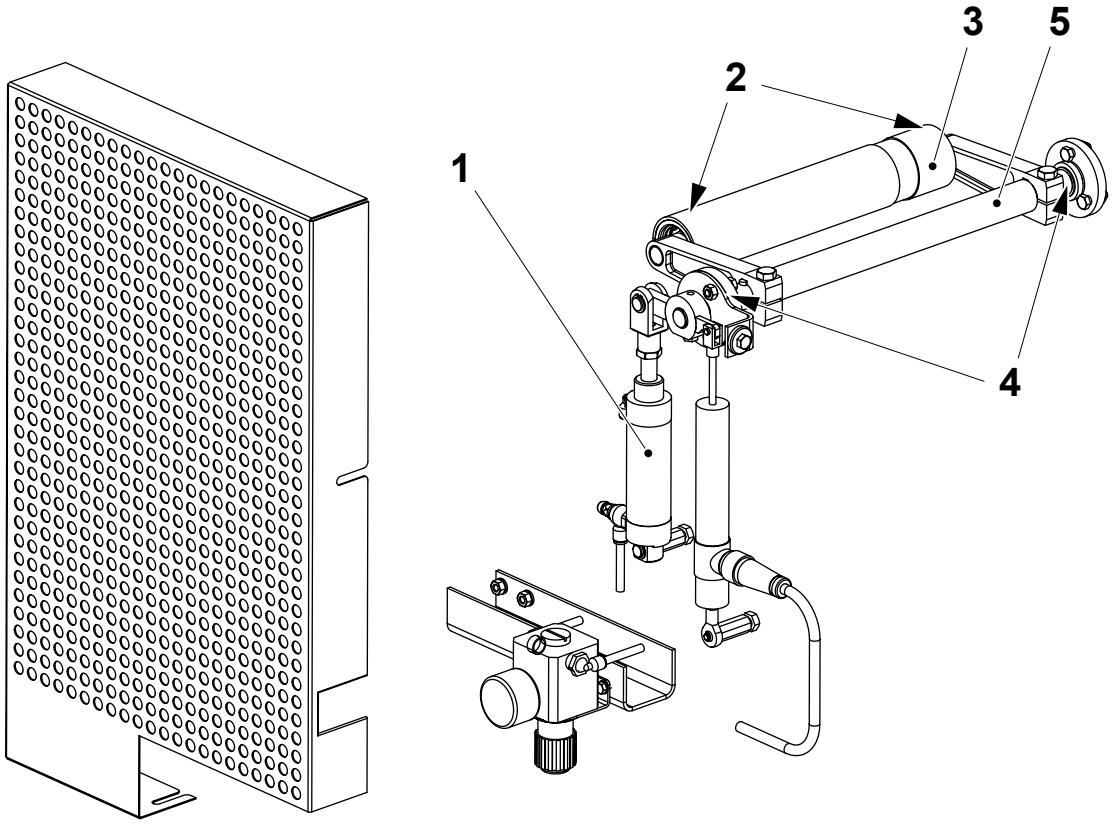

1 Cylinder C205
2 Ball bearing
3 Roller
4 Flange bushing
5 Shaft

MM2.21TS100442en.fm

3.2-2 Pendulum roller - remove

Machine Status	
SPC reference	2523930-0100

Remove:

a) the cover (1),

b) the screw (2),

c) the retaining rings (3) and (4) and lift out the air cylinder and the analog transducer,

d) remove the nuts (5) for both sides,

e) remove the bearing cover (6) and the lid for the other side, lift out the unit.

Install in the reverse order and set according to 3.2-5 Pendulum roller - set on page 161.

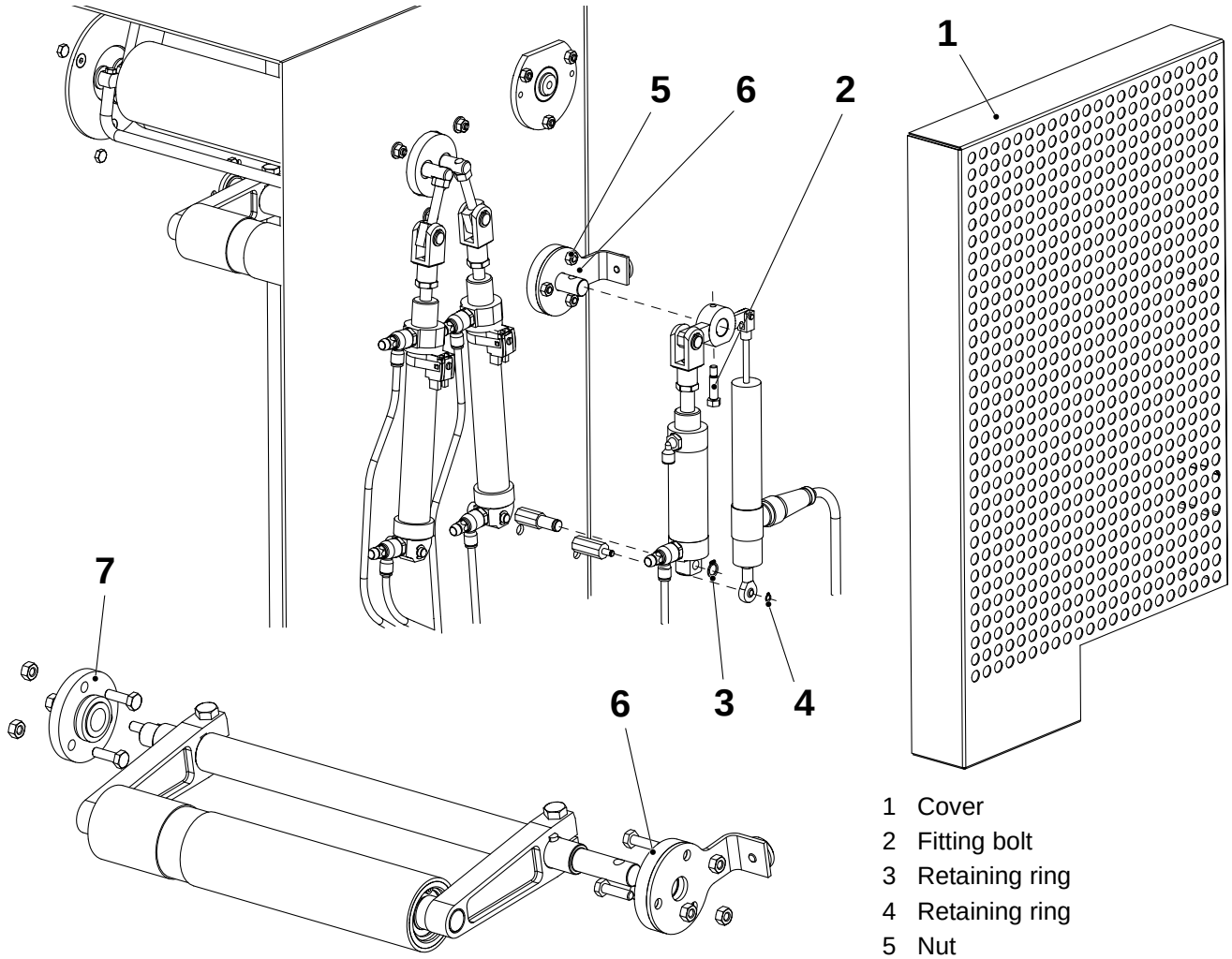

MM2.21TS100442en.fm

1 Cover
2 Fitting bolt
3 Retaining ring
4 Retaining ring
5 Nut
6 Bearing cover
7 Lid

3.2-3 Pendulum roller - change bearings

Machine Status	
SPC reference	2523930-0100

a) Remove the unit, see 3.2-2 Pendulum roller - remove on page 158.

b) Pull out the flange bushing (1) from the lid (2).

c) Pull out the flange bushing (3) and the seal (4) from the bearing cover (5).

d) Loosen the screw (6) and pull out the arm (7) from the shaft (8) and key (9).

e) Remove the retaining ring (10) and pull out the roller bearing (11).

f) Remove the roller (12) and remove the roller bearing for the other side.

Assemble in the reverse order with new:

- flange bushings (1) and (3),
- seal (4),
- roller bearings (11).

Install the unit in the reverse order to item a) and set according to 3.2-5 Pendulum roller - set on page 161.

MM2.21TS100442en.fm

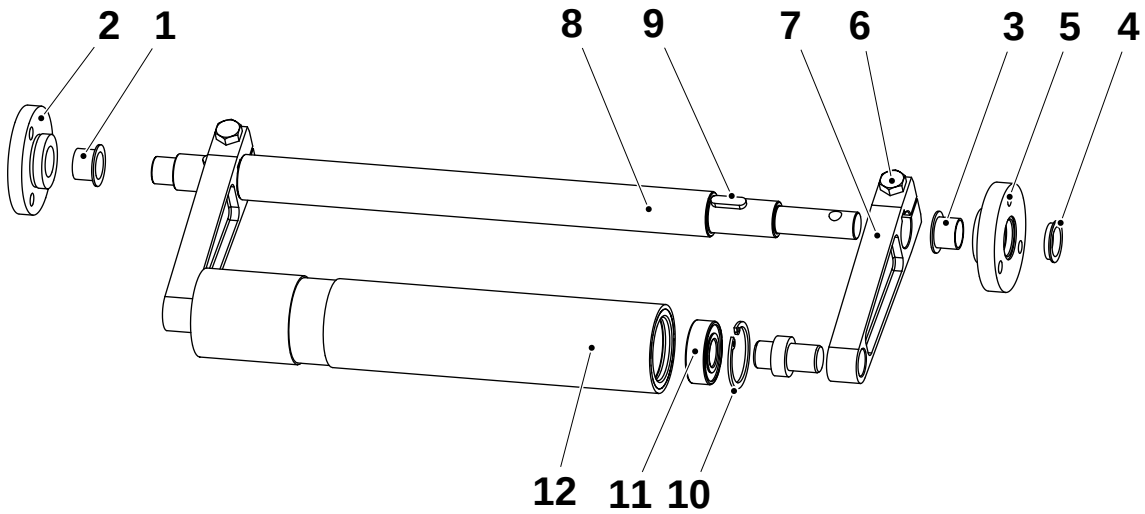

1	Flange bushing	7	Arm
2	Lid	8	Shaft
3	Flange bushing	9	Key
4	Seal	10	Retaining ring
5	Bearing cover	11	Roller bearing
6	Screw	12	Roller

3.2-4 Pendulum roller - change cylinder

Machine Status	
SPC reference	2523930-0100

Change the cylinder as follows:

a) Loosen the screws (1) and (2) and remove the cover (3).

b) Disconnect the hoses (4).

c) Remove the retaining ring (6). Turn the cylinder (7) and pull out the shaft (8).

d) Unscrew the cylinder from the rod end (9).

Assemble in the reverse order with new cylinder.

Adjust the rod end, see 3.2-5 Pendulum roller - set on page 161.

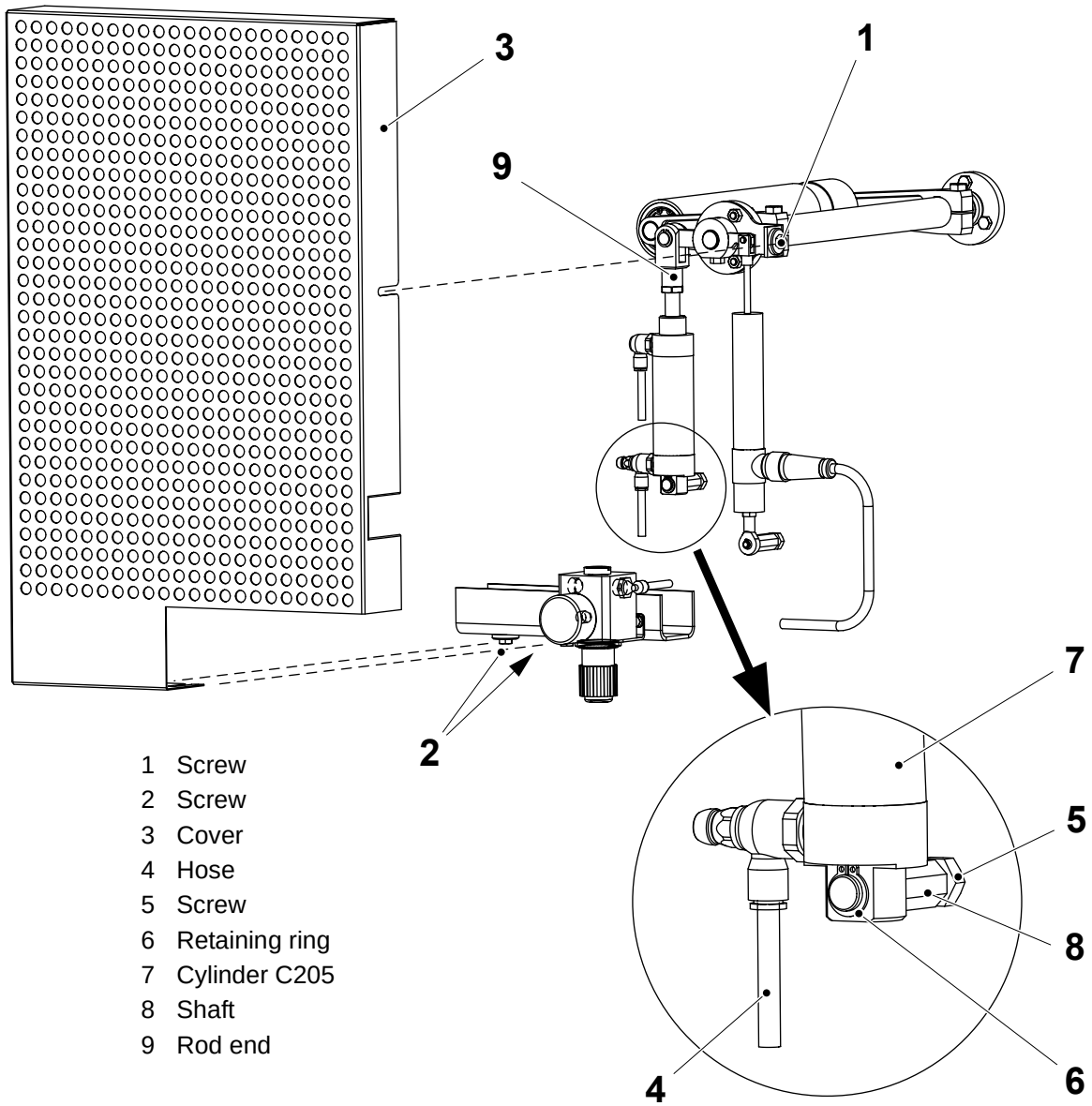

1 Screw
2 Screw
3 Cover
4 Hose
5 Screw
6 Retaining ring
7 Cylinder C205
8 Shaft
9 Rod end

MM2.21TS100442en.fm

3.2-5 Pendulum roller - set

Machine Status	
SPC reference	2523930-0100

Level the roller (1) horizontally, check with a machinists level. Set also the roller parallel to the aseptic chamber, measure distance **A** between the roller and to the inside of the housing.

– To adjust, loosen the fastening screws/nuts for the lids (5) and (6).

While the machine is running, adjust distance **B** until the roller arm for the roller (1) is horizontal.

– Adjust with the link head (7).

Set the speed for the cylinder (2), close the throttle valve (2) fully and then open two turns.

For setting of the air pressure regulator, se Technical Data in the OM.

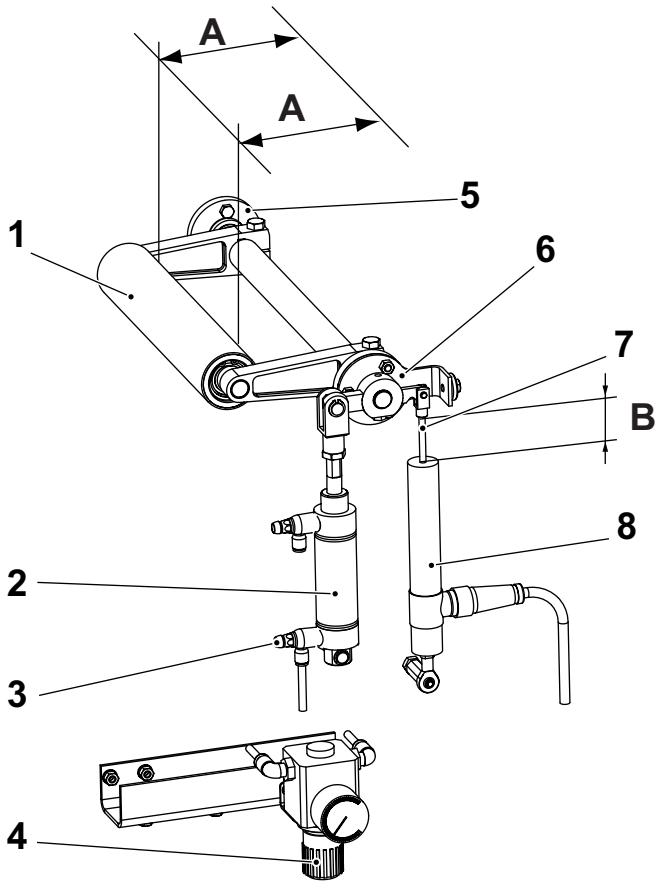

1 Roller
2 Cylinder C205
3 Throttle valve
4 Air pressure regulator
5 Lid
6 Lid
7 Link head
8 Analog transducer

MM2.21TS100442en.fm

3.3 Clamp

3.3-1 Clamp - change flange bushing

Machine Status	
SPC reference	2523935-0100

Change the flange bushing as follows:

a) Remove the retaining ring (1) and pull out the pin (2).

b) Loosen the nut (3) and unscrew the bracket (4) from the shaft (5). Fold down the cylinder. Fold down the other cylinder in the same way.

c) Remove the screws (6) and lift out the bow clamps (7).

d) Remove the flanges (8) and pull out the shafts (5) and the flange bushings (9).

Assemble in the reverse order with new flange bushings.

Set according to 3.3-3 Clamp - set stroke on page 164.

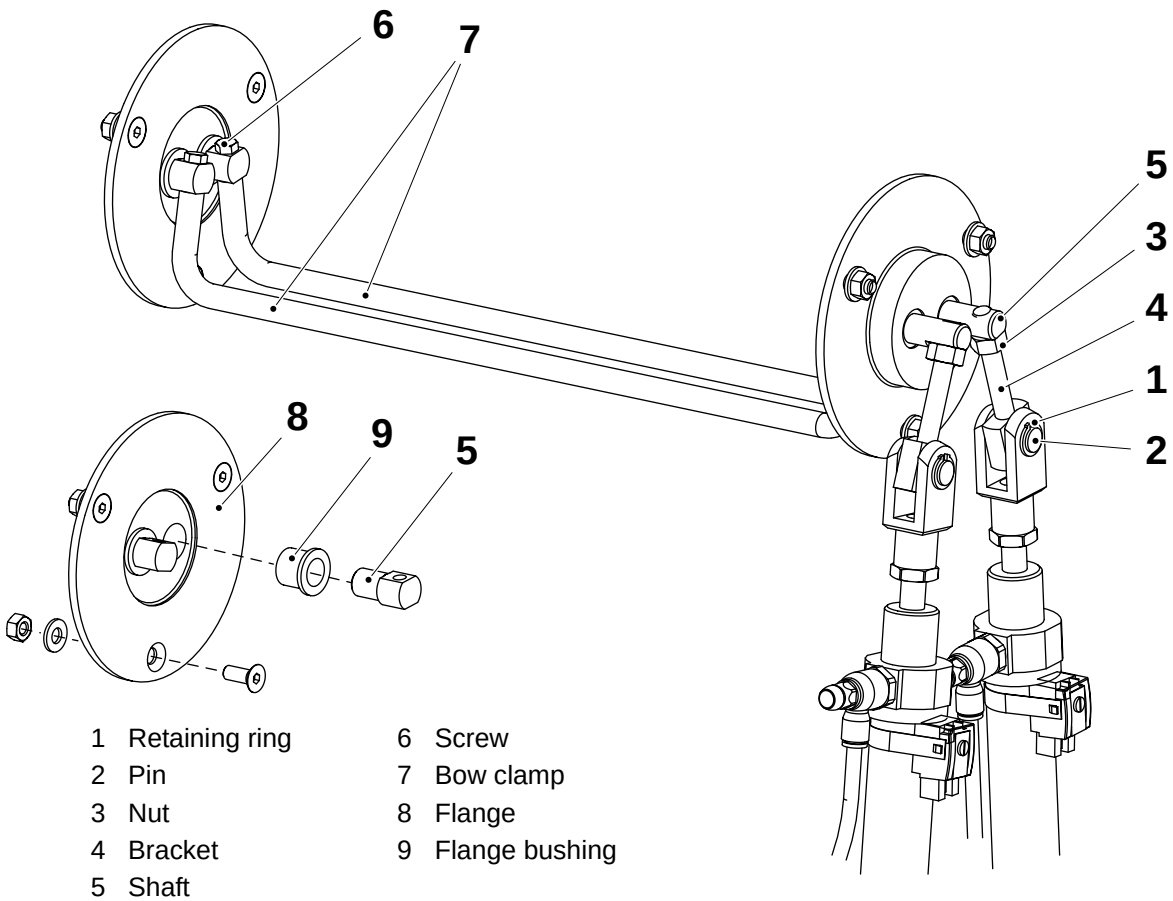

1 Retaining ring
2 Pin
3 Nut
4 Bracket
5 Shaft
6 Screw
7 Bow clamp
8 Flange
9 Flange bushing

MM2.21TS100442en.fm

3.3-2 Clamp - change cylinders

Machine Status	
SPC reference	2523935-0100

Change the cylinders as follows:

a) Disconnect the air hoses (1).

b) Remove the sensors MB208 (2) and MB207 (3) from the cylinders.

c) Disconnect and unscrew the rod ends (4) from the cylinders.

d) Take out the cylinders C201:2 (5) and C201:1 (6).

Assemble in the reverse order with new cylinders.

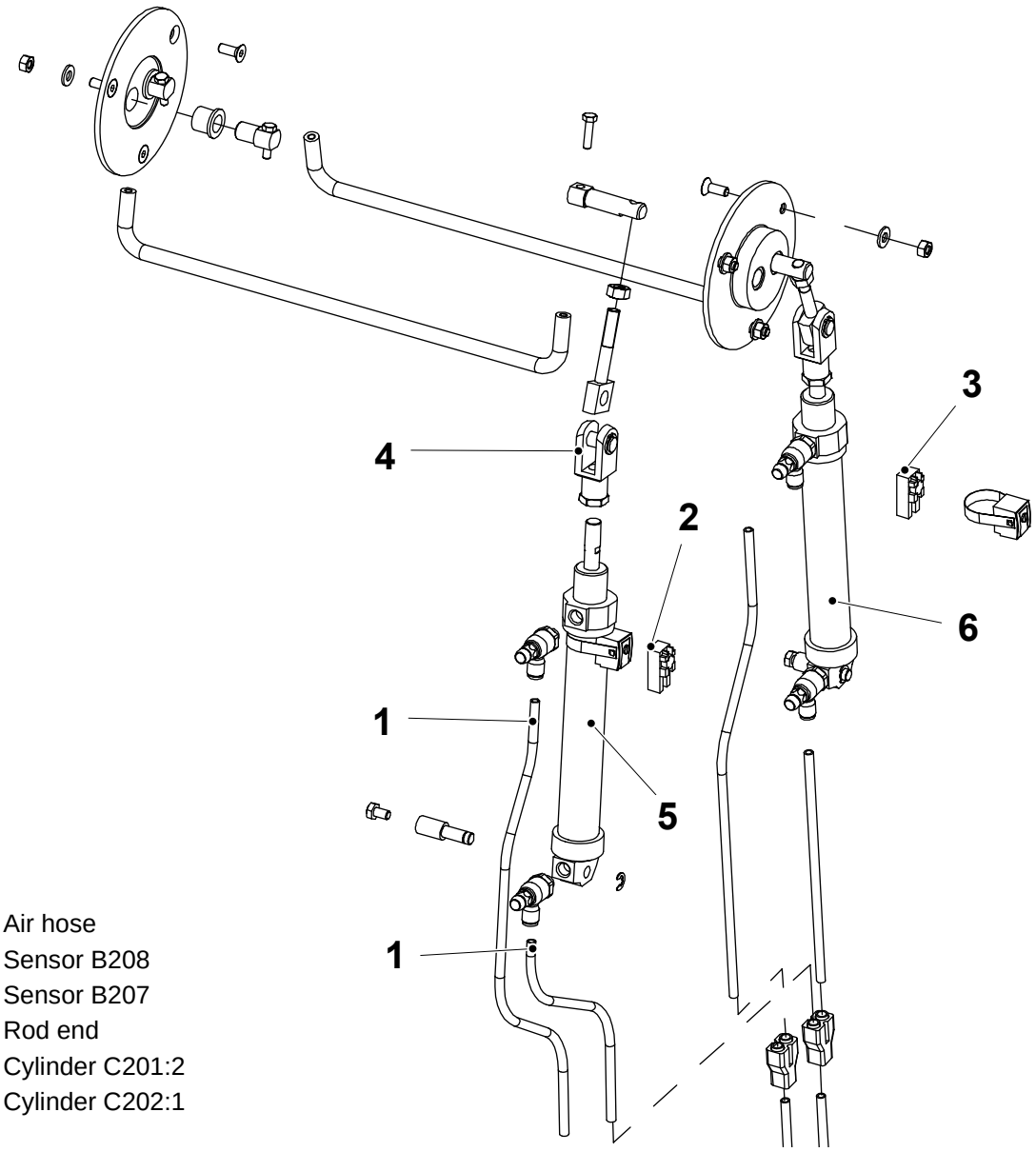

1 Air hose
2 Sensor B208
3 Sensor B207
4 Rod end
5 Cylinder C201:2
6 Cylinder C202:1

MM2.21TS100442en.fm

3.3-3 Clamp - set stroke

Machine Status	
SPC reference	2523935-0100

Adjust distance **A** for both link rods (3).

Check with the clamps (3) in lower position (as illustrated):

- that the packaging material not touches the clamps.

Check with the clamps in upper position:

- that the packaging material not touches the bending roller (1).

Note! The web guide will turn the bending roller (1) between its end positions at start up. Check with the clamps in their upper position, that the bracket for the roller (1) does not touch the clamps while turning between its end positions. If so, loosen the screws (5) and re-adjust the clamp assembly position.

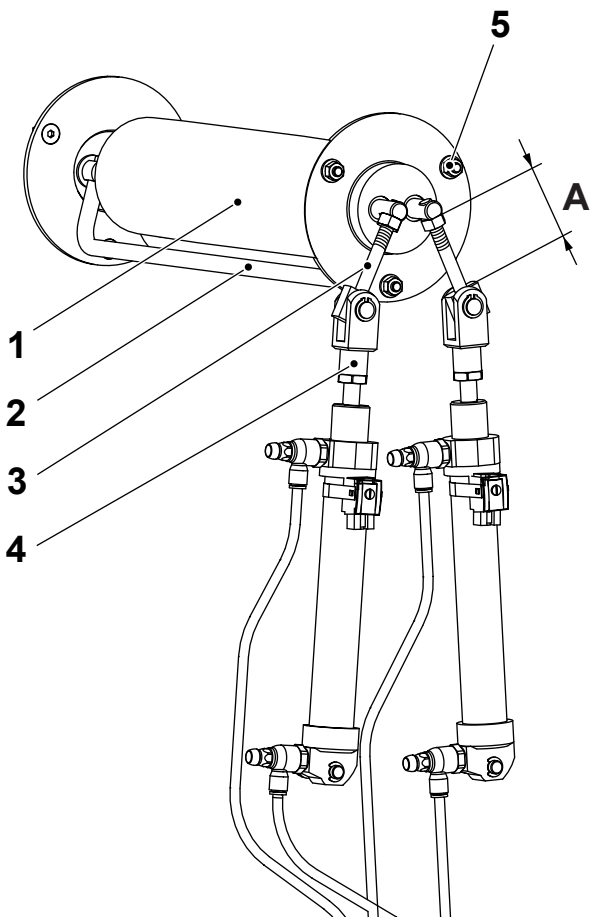

A = 42 mm

1 Bending roller, web guide
2 Clamp
3 Link rod
4 Link head
5 Screw

MM2.21TS100442en.fm

3.3-4 Clamp - set cylinders

Machine Status	Main Power ON Air ON
SPC reference	2523935-0100

Close the throttle valves (1) and (5) fully and then:

- open the throttle valve (1) 4 turns
- open the throttle valve (5) 2.5 turns

The cylinders are controlled by valve Y 201.

Check for both cylinders, that the proximity switch LED lights when the cylinder is fully extended. If not, loosen the screw (2) and adjust the position for the proximity switch (3).

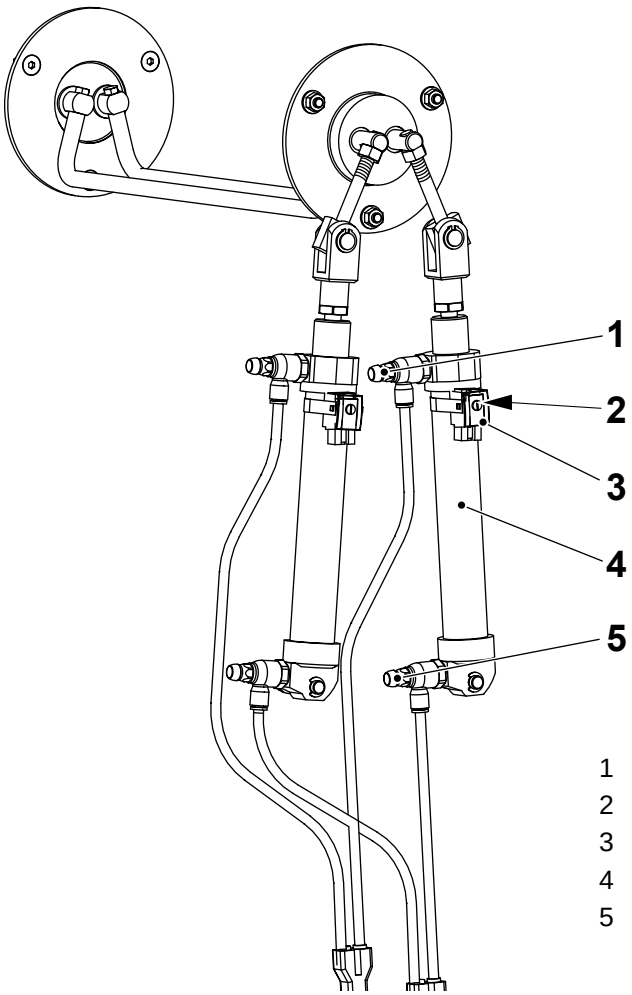

1 Throttle valve
2 Screw
3 Proximity switch
4 Cylinder C201:1/2
5 Throttle valve

MM2.21TS100442en.fm

3.4 Drive unit

3.4-1 Drive unit - check

Machine Status	
SPC reference	2523965-0100

Check the following parts for wear and/or damage:

- the ball bearings (1),
- the roller (2).

Change any worn or damaged parts, see 3.4-2 Drive unit - overhaul on page 167.

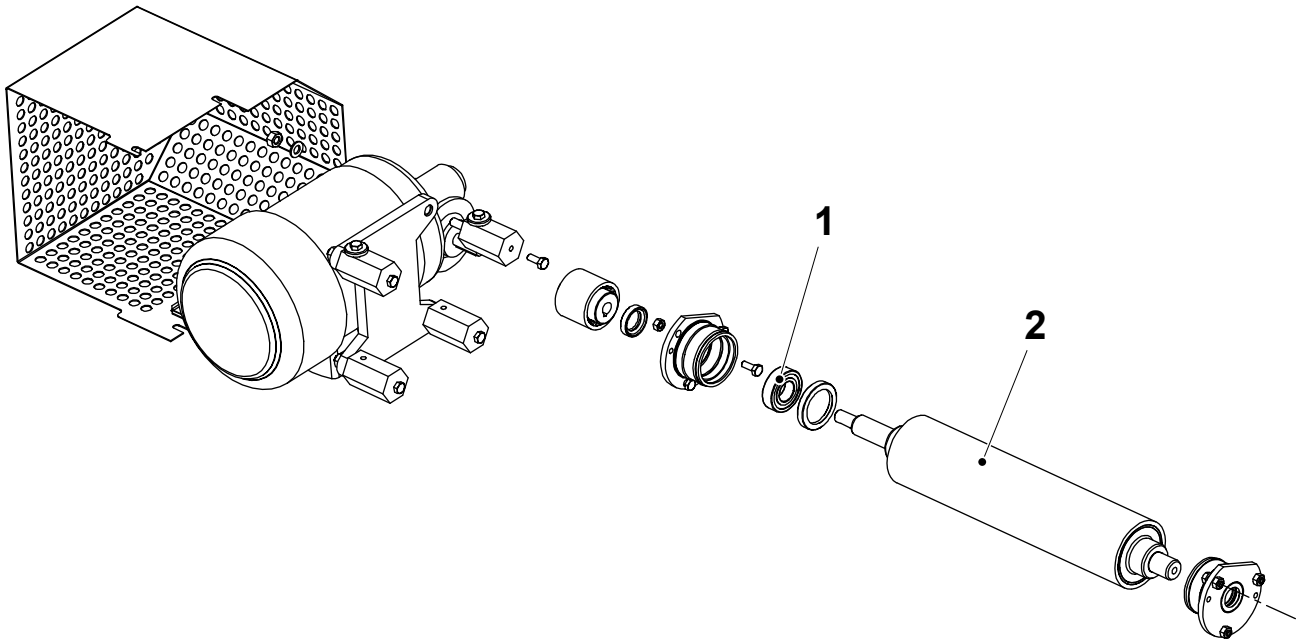

MM2.21TS100442en.fm

1 Ball bearing
2 Roller

3.4-2 Drive unit - overhaul

Machine Status	
SPC reference	2523965-0100

a) Remove the cover (1).

b) Loosen the grub screw (2) for the shaft coupling (3).

c) Disconnect the cable for the motor (4), remove the screws (5) and remove the motor. Take care not to bend the shaft coupling (3)!

d) Remove the screws (6) and the nuts (7) for the housings (8).

e) Remove and replace the seals (9), ball bearings (10) and the seals (11).

f) Assemble in the reverse order. Make sure that the shaft coupling (3) has an axial play when the screws for the housings are tightened. See also 3.4-3 Drive unit - set on page 168.

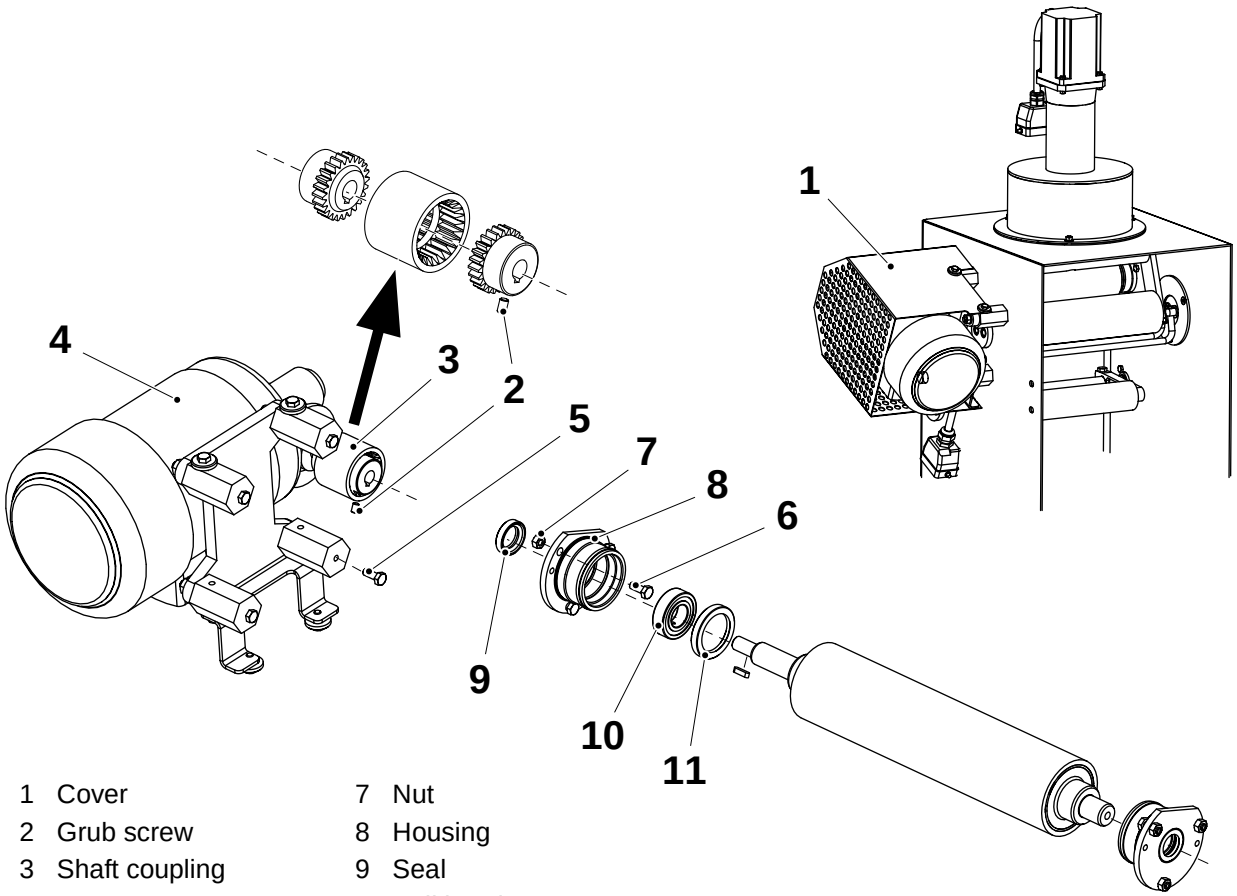

1 Cover
2 Grub screw
3 Shaft coupling
4 Motor
5 Screw
6 Screw
7 Nut
8 Housing
9 Seal
10 Ball bearing
11 Seal

MM2.21TS100442en.fm

3.4-3 Drive unit - set

Machine Status	
SPC reference	2523965-0100

Level the roller (3) horizontally, check with a machinists level. Set also the roller parallel to the aseptic chamber, measure distance A between the roller and the chamber.

To adjust, loosen the fastening screws/nuts for the housings (2).

Note! Make sure that the coupling (5), connecting the roller to the motor unit, has an axial play when the screws for the housings are tightened. If not, loosen the screws (4) for the motor unit and re-adjust its position.

For setting frequency converter for the motor, see 8.1.3 Frequency converter.

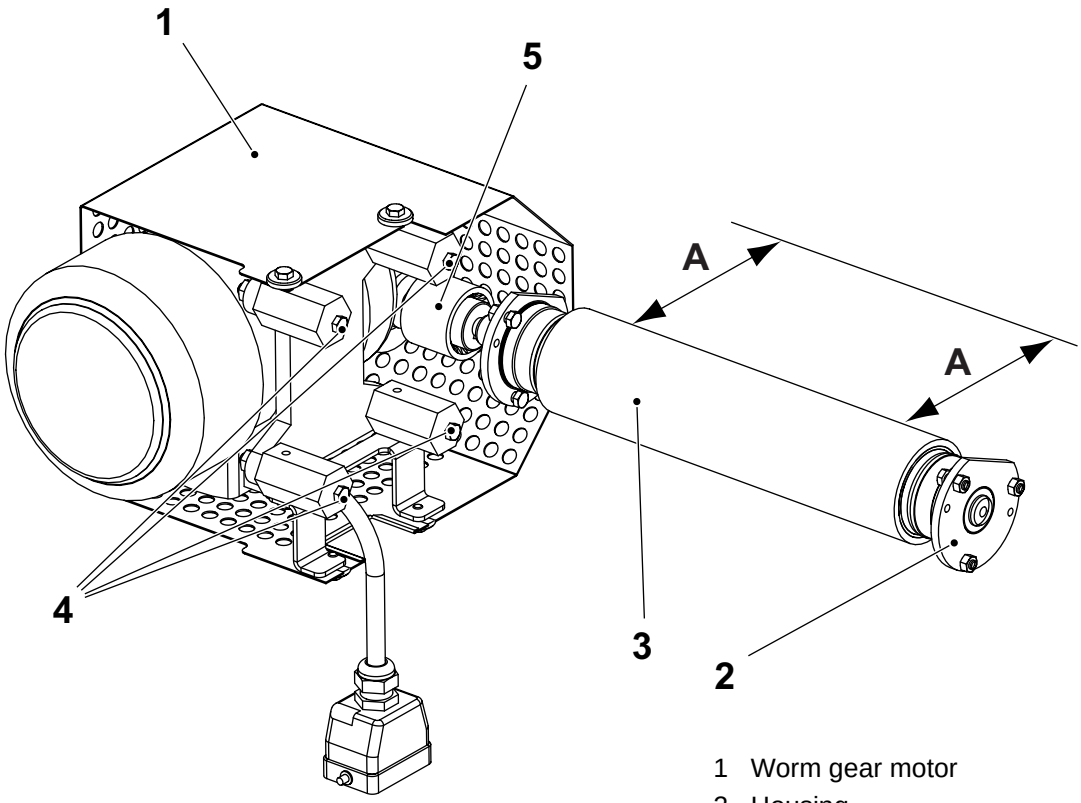

1 Worm gear motor
2 Housing
3 Roller
4 Screw
5 Coupling

MM2.21TS100442en.fm

3.5 Filling pipe

3.5-1 Filling pipe - set

Machine Status	
SPC reference	2524289-0100

Set distance **A** between the filling pipe (3) and the bracket for the lower forming ring (4).

- Loosen the nuts (1) to adjust.

Centre the filling pipe side ways.

- Loosen the upper nut (2) to adjust.

Volume (ml)	A (mm)
65	165.8 ± 0.5
150S	167.0 ± 0.5
200B	167.0 ± 0.5
200S	

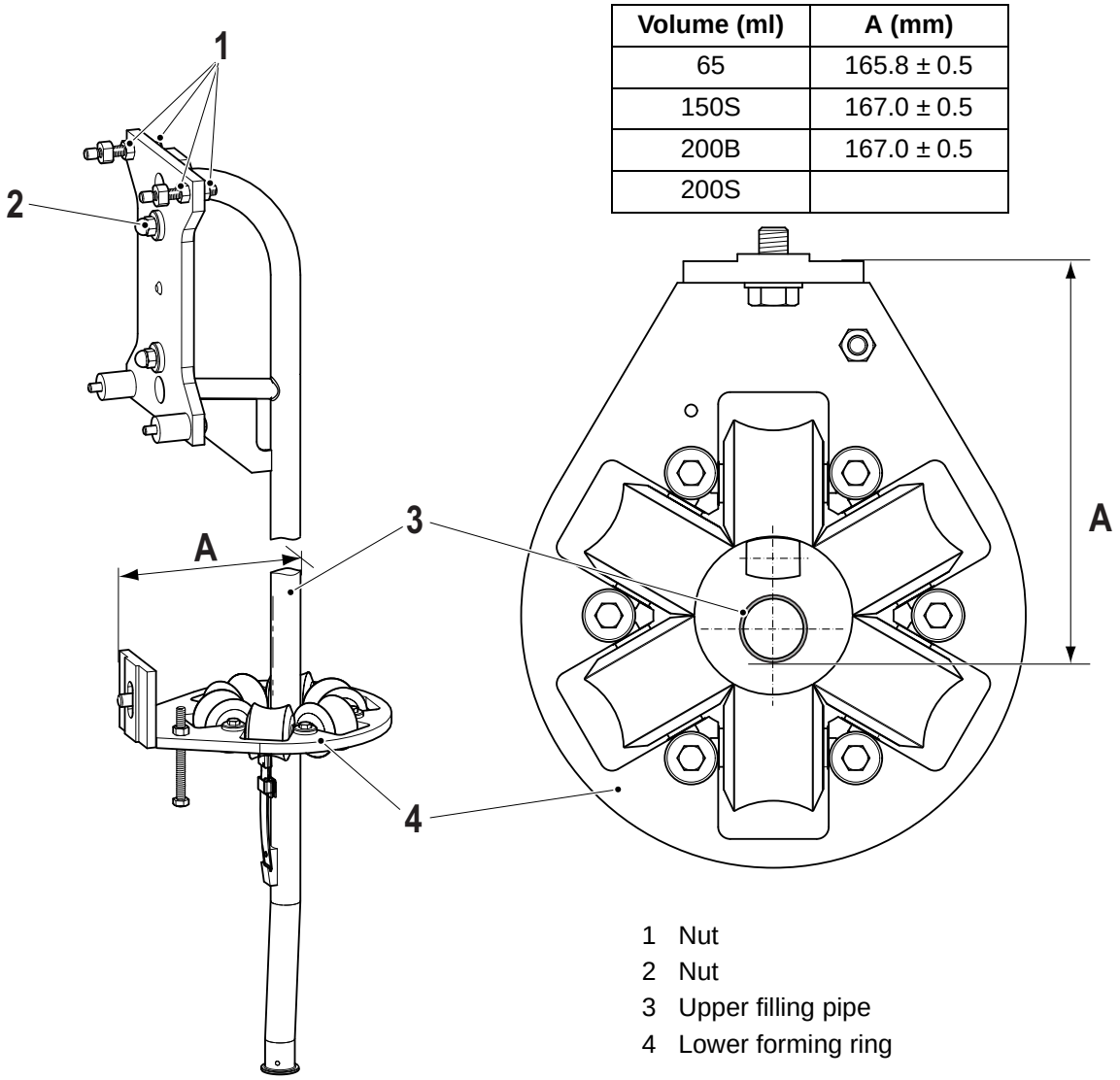

1 Nut
2 Nut
3 Upper filling pipe
4 Lower forming ring

MM2.21TS100442en.fm

3.5.1-1 Filling pipe - set pressure roller

Machine Status	
Tools - dynamo meter	 TP No. 74767-102
SPC reference	2524289-0100

Note! Before performing this setting, read the *3-2 Tube forming module - setting sequence*, for the right setting sequence.

a) Fold a double piece of packaging material (5) and put it between the pressure roller (1) and the counter roller (2).

b) Press the dynamo meter (4) tool against the spring (3). Take an accurate reading when the packaging material slips down, see table below. (A mirror is needed when reading the dynamo meter value).

c) Adjust by bending or changing the spring (3) until the correct force is obtained.

d) Check the filling pipe position, see *3.5-1 Filling pipe - set*.

Spring force (N)
25 - 30

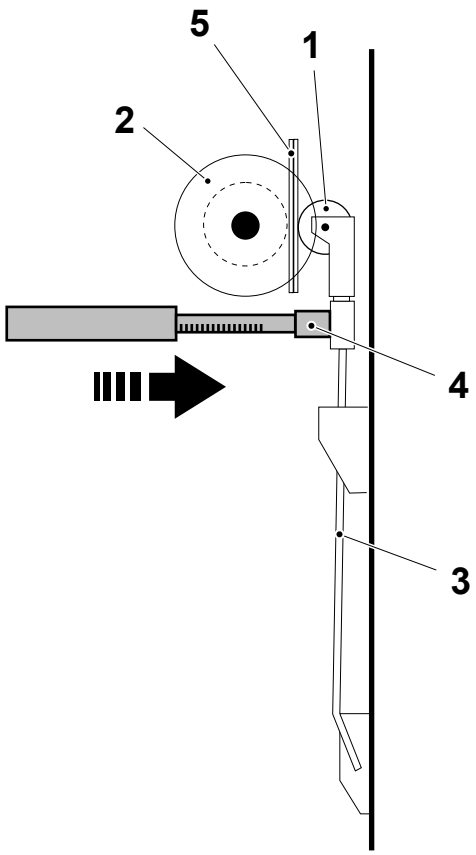

1 Pressure roller
2 Counter roller
3 Spring
4 Dynamo meter tool
5 Packaging material

MM2.21TS100442en.fm

3.7 Forming mandrel bracket

SPC reference	2542725

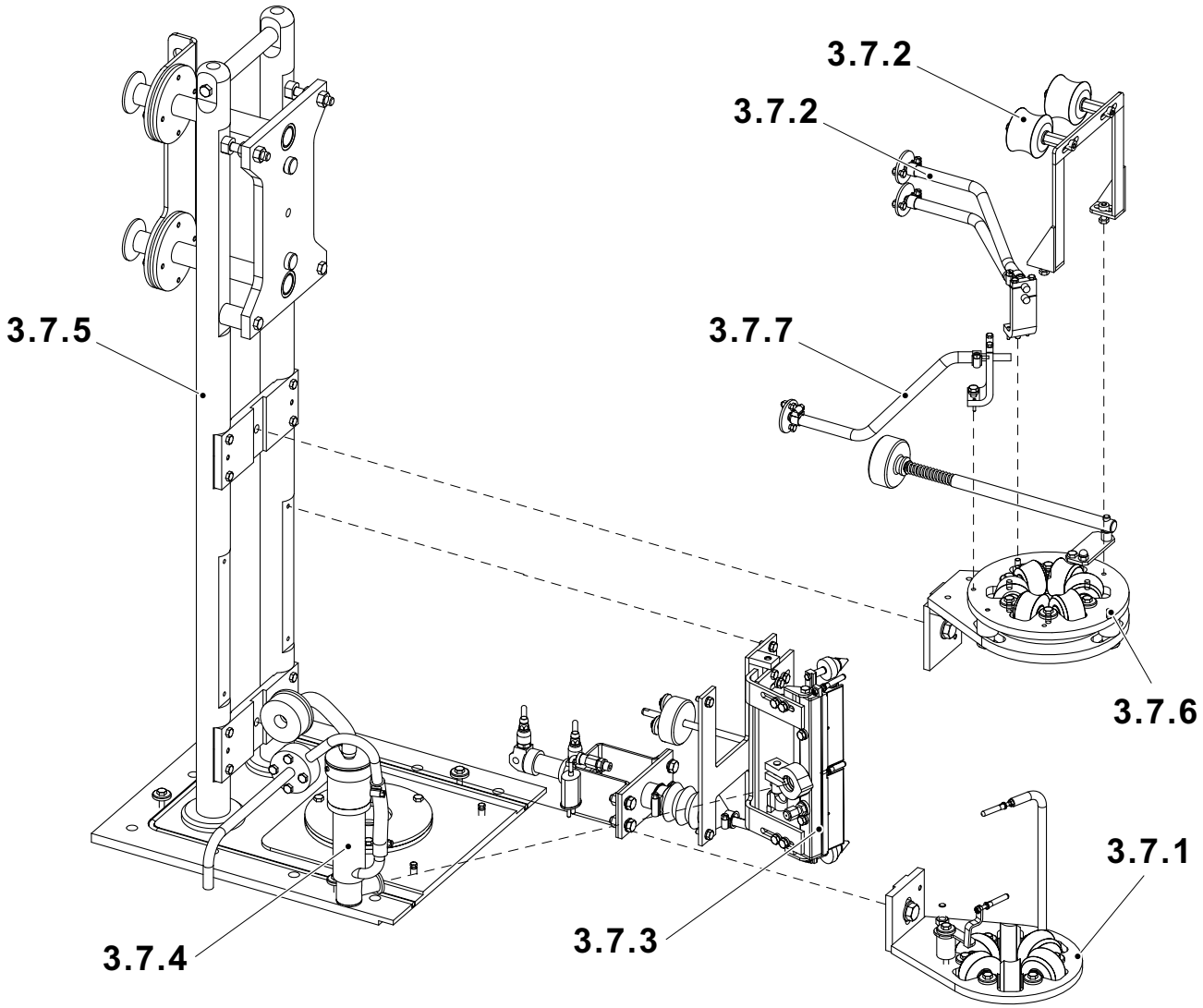

3.7.1 Lower forming ring
3.7.2 Photocells
3.7.3 Longitudinal element
3.7.4 Heating element
3.7.5 Cantilever
3.7.6 Upper forming ring
3.7.7 Photocell unit
3.7.8 Edge roller (Variant 65 only)

MM2.21TS100442en.fm

3.7.1 Lower forming ring

3.7.1-1 Lower forming ring - check

Machine Status	
SPC reference	2523960-0100

Check the following parts for wear and/or damage:

- the flange bushings (1),
- the rollers (2),
- the roll(s) (3).

Change any worn or damaged parts.

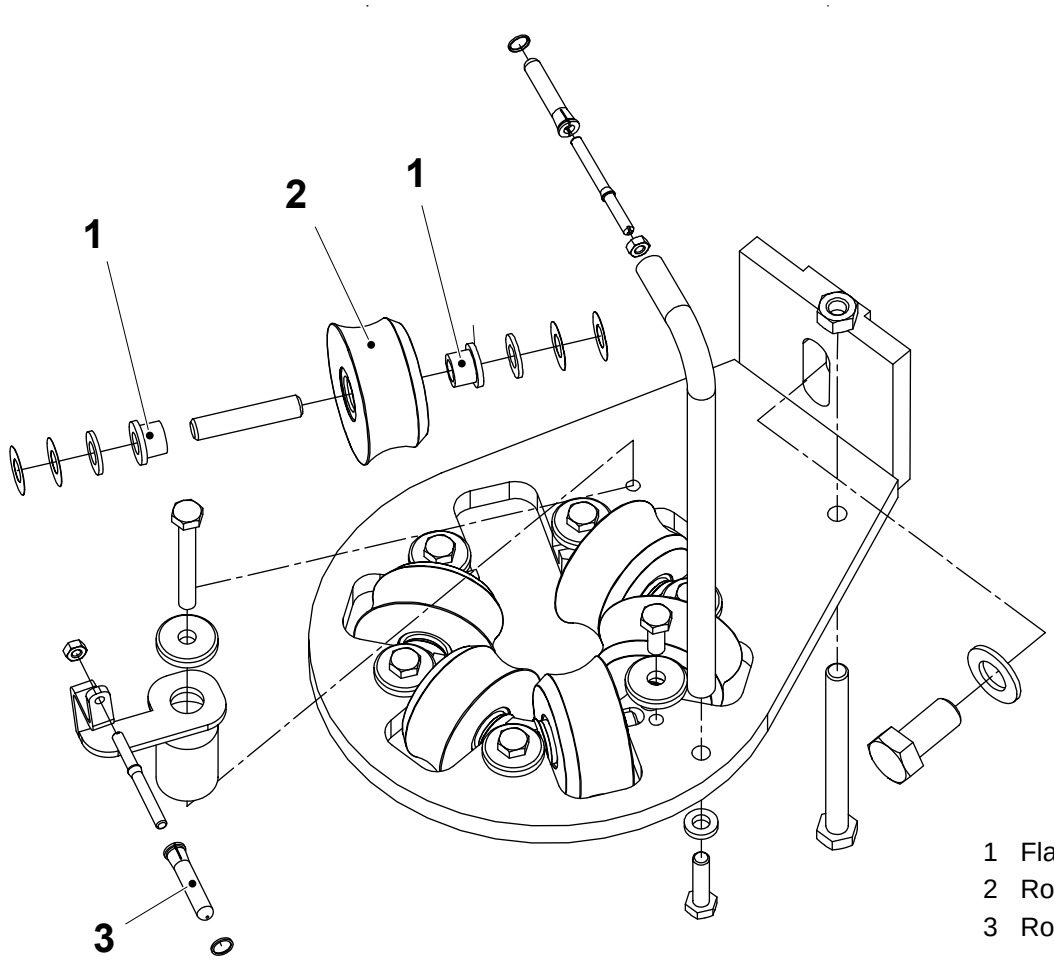

1 Flange bushing
2 Roller
3 Roll

MM2.21TS100442en.fm

3.7.1-2 Lower forming ring - change flange bushings

Machine Status	
SPC reference	2523960-0100

Change the flange bushings as follows:

a) Unscrew the screws (1) and remove the washers (2).

b) Lift out the rollers (3).

c) Remove the flange bushings (4) from the rollers.

Assemble in the reverse order with new flange bushings.

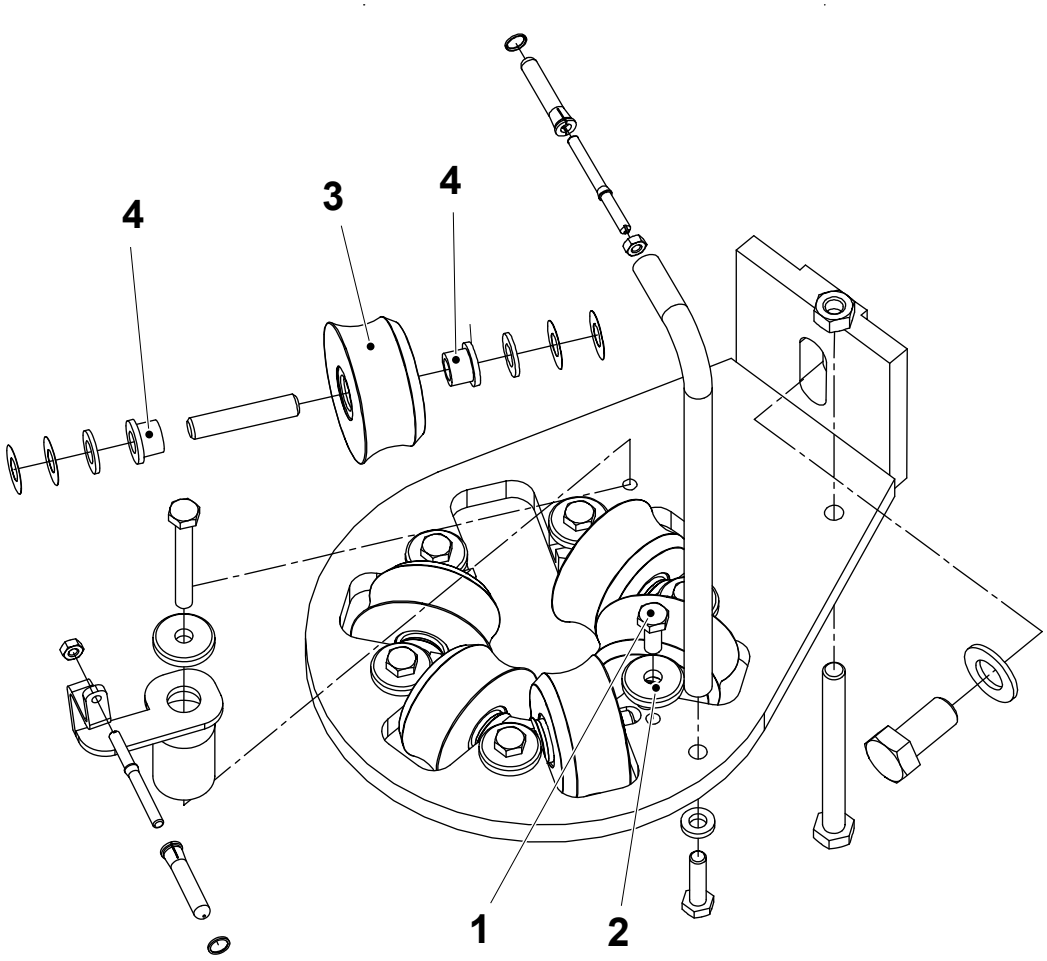

1 Screw
2 Washer
3 Roller
4 Flange bushing

MM2.21TS100442en.fm

3.7.1-3 Lower forming ring - change rollers

Machine Status	
SPC reference	2523960-0100

Change the rollers as follows:

a) Unscrew the screws (1) and remove the washers (2).

b) Lift out the rollers (3).

c) Remove the flange bushings (4) from the rollers.

Assemble in the reverse order with new rollers.

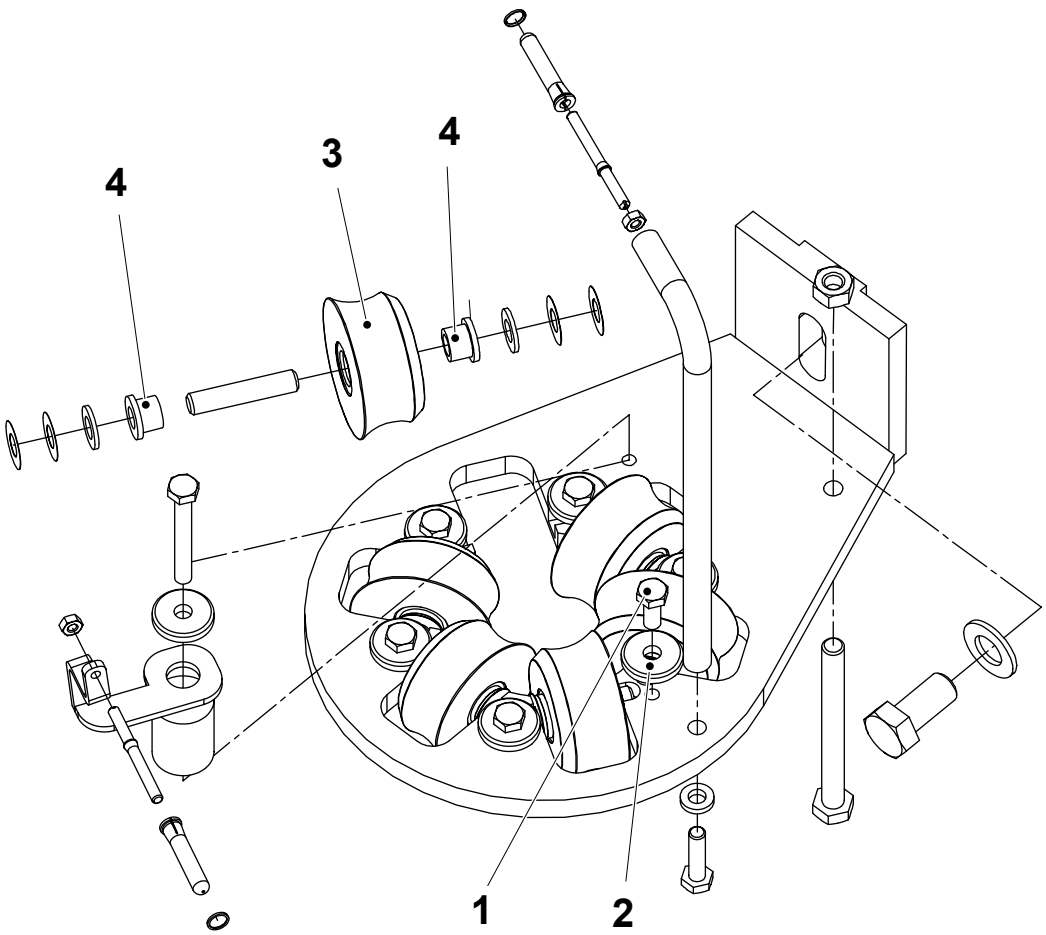

MM2.21TS100442en.fm

1 Screw
2 Washer
3 Roller
4 Flange bushing

3.7.1-4 Lower forming ring - set height

Machine Status	
SPC reference	2523960-0100

The forming ring is correctly set when the centre of the pressure roller (5) is **1.0 mm** below the centre of the forming ring roller (4). This is achieved when **A** is in accordance with the table below.

Fit a plate (2) on top of the forming ring rollers (4) and measure the distance **B**. Then calculate **A**; **A=B-C**.

Loosen the fastening screw (1), loosen the counter nut for the setting screw (3) to adjust the height.

Re-check distance **B** when the screw (1) and the counter nut for the setting screw (3) are tightened.

Volume (ml)	A (mm)
65	19 ± 0.3
150S	25 ± 0.3
200B	18 ± 0.3
200S	

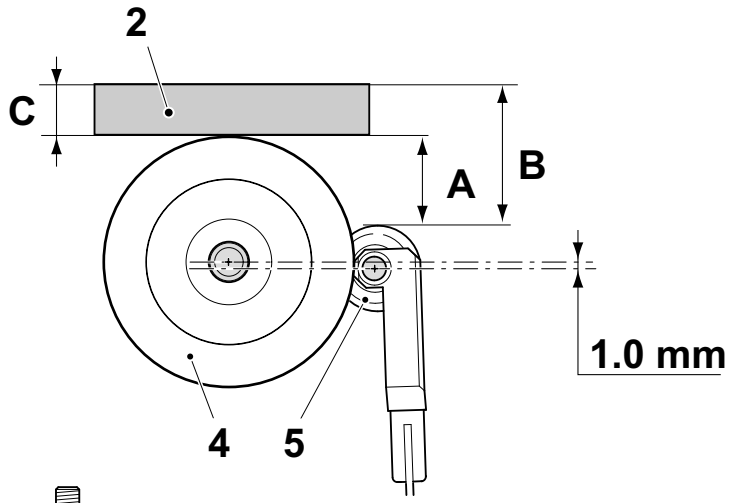

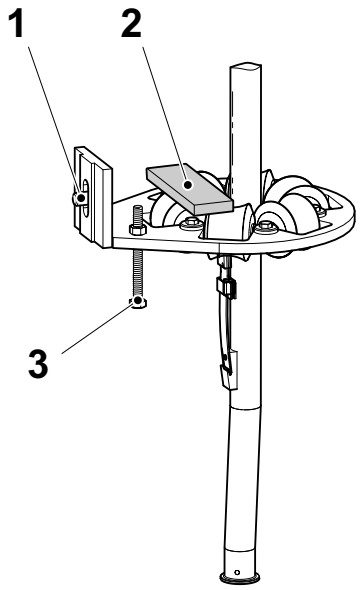

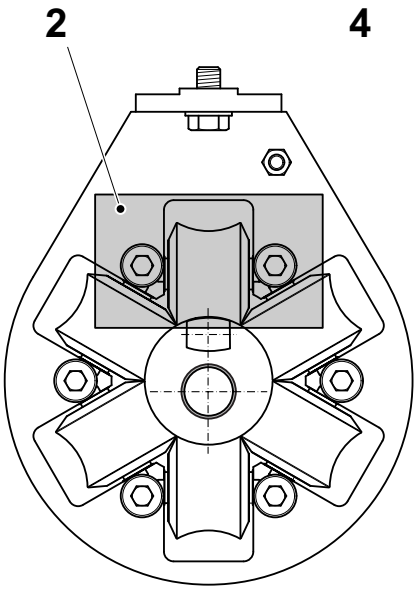

1 Screw
2 Plate
3 Setting screw
4 Forming ring roller
5 Pressure roller

(Cont'd)

MM2.21TS100442en.fm

3.7.1-5 Lower forming ring - set guide rollers

Machine Status	
SPC reference	2523960-0100

Guide rollers (1) and (2), see 3.7.3-3 Longitudinal element - set at page 186.

(Guide roller (2), only valid for volume 65 ml).

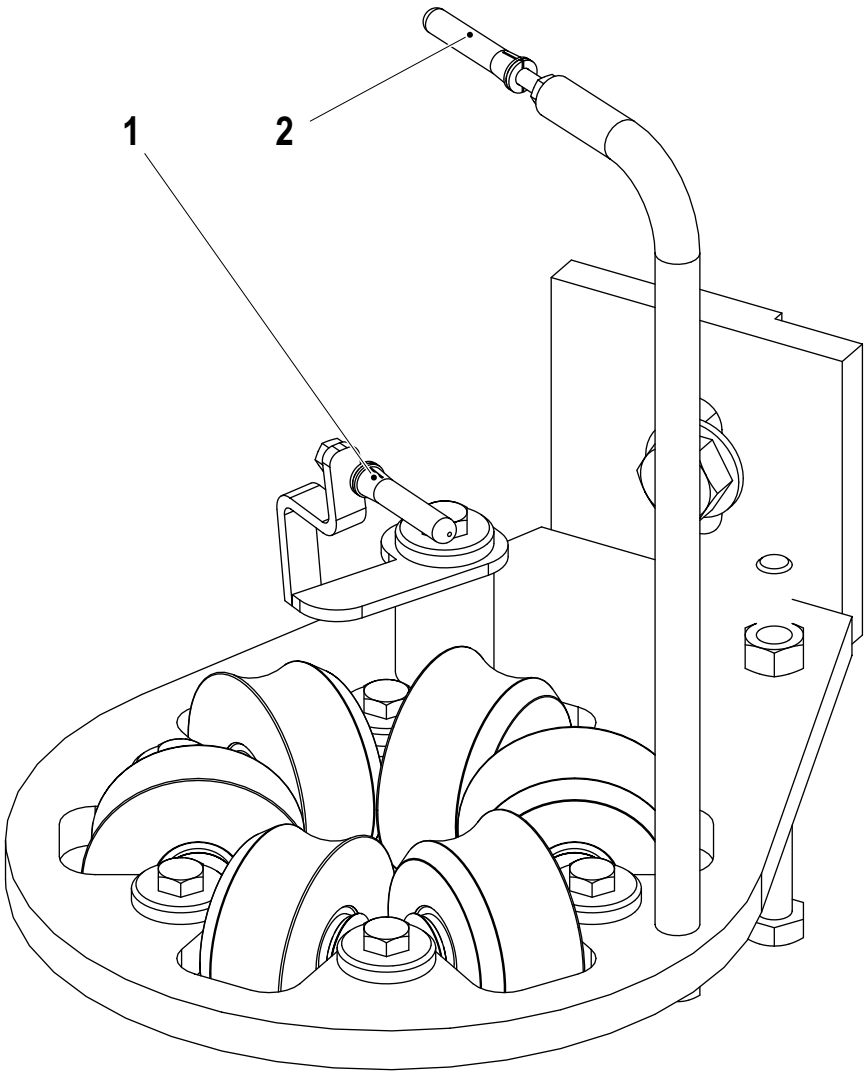

1 Guide roller
2 Guide roller (65 ml)

MM2.21TS100442en.fm

3.7.1-6 Lower forming ring - set clearance

Machine Status	
SPC reference	2523960-0100

Set the distance **A** between the rollers by adding or removing the shimming washers (7).

Note! Always follow the setting position order: 1-2-3-4-5-6.

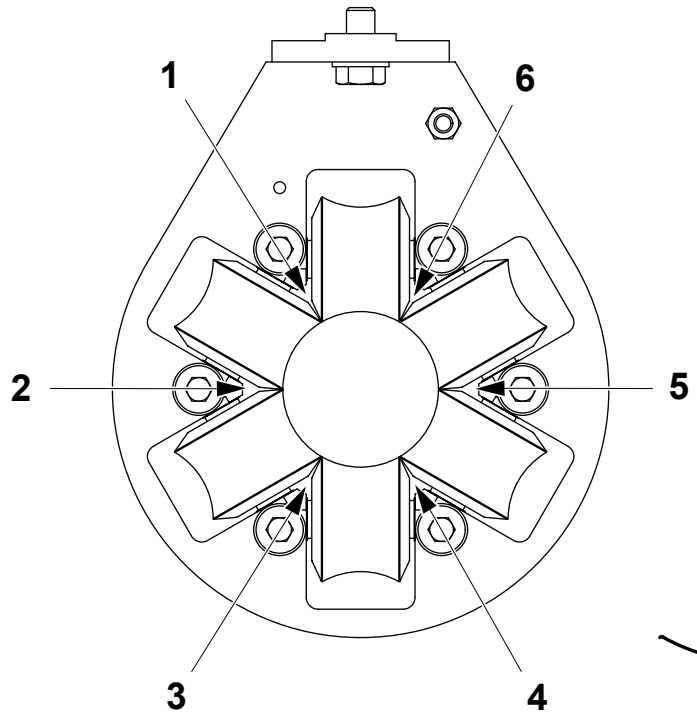

1 Position n.1
2 Position n.2
3 Position n.3
4 Position n.4
5 Position n.5
6 Position n.6
7 Shimming washer (0,1 mm)

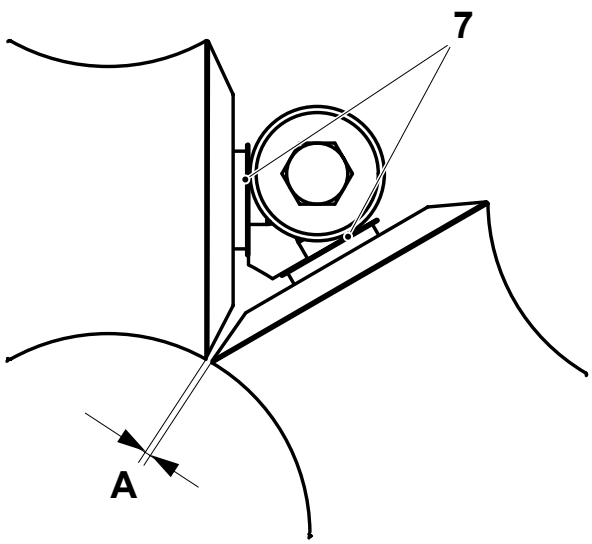

A = 0.05 - 0.15 mm

MM2.21TS100442en.fm

3.7.1-7 Lower forming ring - set overlap

Machine Status	
SPC reference	2523960-0100

Set the overlap **A** as follow:

- to **increase** the overlap **A** change one to three standard rollers for minus trimming rollers
- to **decrease** the overlap **A** change one to three standard rollers for plus trimming rollers

Volume (ml)	Standard roller	Minus roller	Plus roller
65	2542782	2542729	2542731
150S	2523939	2542727	2542728
200B	2542783	2542720	2542719
200S	2524302	2543079	2543089

Note! The value of the overlap **A** may vary within **±1 mm.**

Trimming rollers **must** always be fitted symmetrically with respect to the counter roller (4). Plus and minus trimming rollers **must** never be fitted at the same time.

MM2.21TS100442en.fm

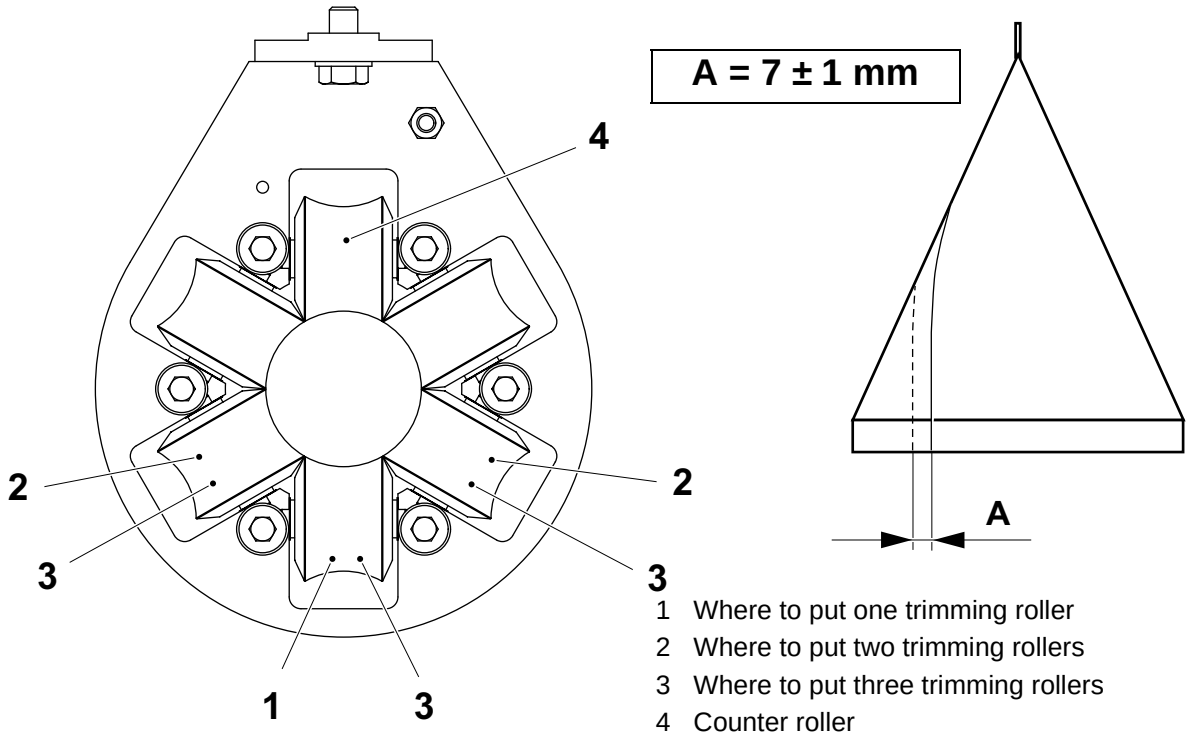

1 Where to put one trimming roller
2 Where to put two trimming rollers
3 Where to put three trimming rollers
4 Counter roller

3.7.2 Photocells

3.7.2-1 Photocells - set

Machine Status	
SPC reference	2523970-0100

a) Screw two lock nuts (3) (without any washers) onto each fibre (4) until distance **A** of the threads are visible.

b) Thighten the lock nuts (3).

c) Screw the focusing devices (2) onto the fibre (4) until the lock nuts are reached.

d) Assemble the fibres (4) and focusing devices (2) with the hoses (5).

e) Fit the focusing devices (2) to the bracket (1).

A = 4 mm

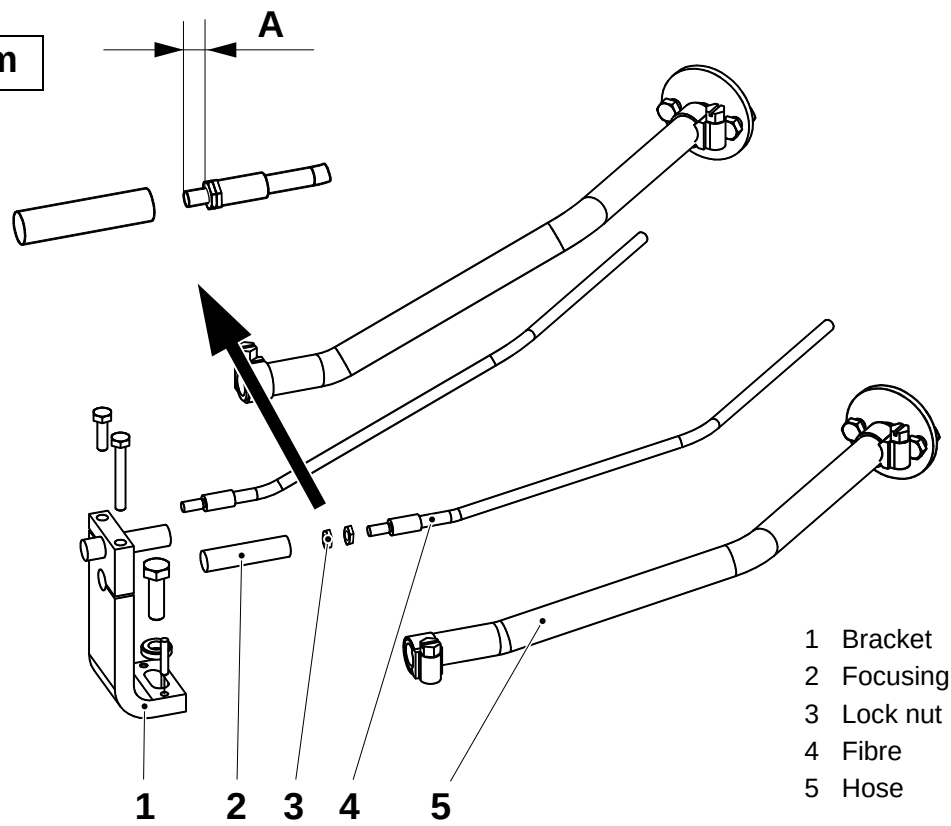

1 Bracket
2 Focusing device
3 Lock nut
4 Fibre
5 Hose

(Cont'd)

MM2.21TS100442en.fm

(Cont'd)

f) Centre the forming ring in the prolonged hole (8).
Turn the shifter handle (9) to adjust.

g) Adjust distance **B** between the focusing device (2) and the packaging material tube (6). Loosen screws (7) to adjust.
(The focus of the light beam can be adjusted on the lens housing).

See also 3.7.6-5 Upper forming ring - set paper tube alignment on page 197.

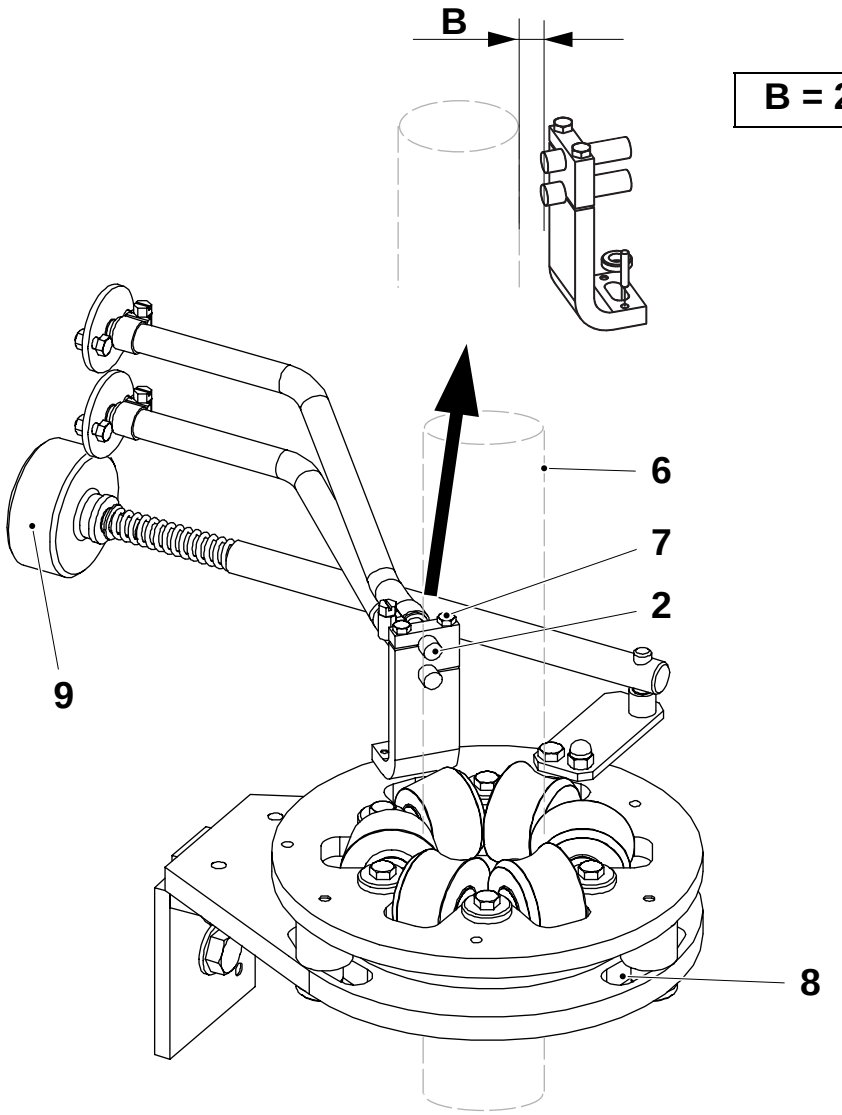

2 Focusing device
6 Material tube
7 Screw
8 Prolonged hole
9 Shifter handle

MM2.21TS100442en.fm

(Cont'd)

(Cont'd)

The photocells are located in the connection box MX020.

DANGER!

Hazardous voltage.
Electric shock will cause death or serious injury.
Make sure to touch only the photocells**.**

Calibrate:

a) Remove the lid for the connection box MX020.

b) Check that the switches (4) and (6) are set as illustrated.

c) Push the switch (7) to position **SET**.

d) Push the knob (8) with the photo cell lens above the packaging material.

e) Push the knob (8) with the photo cell lens outside the packaging material.

f) Push the switch (7) to position **RUN**.

g) Fit the lid for the connection box MX020.

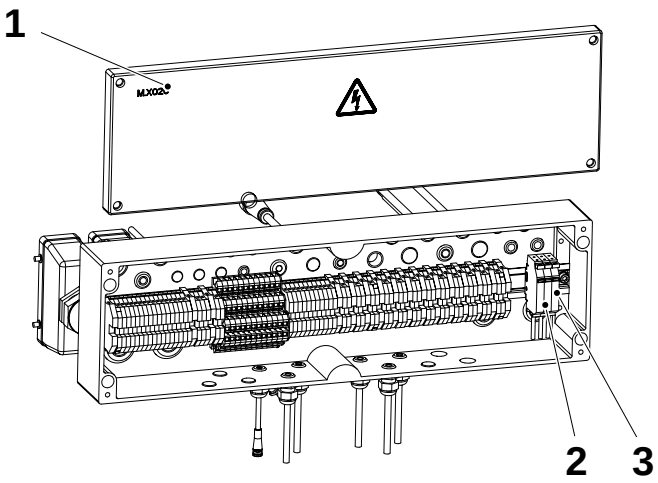

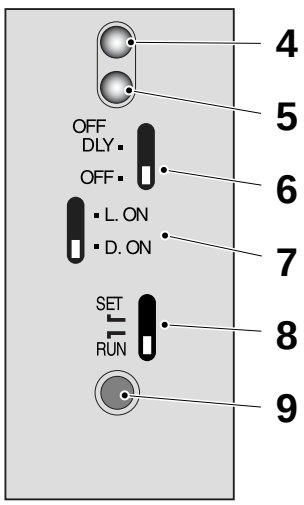

1 Connection box MX020
2 Photocell MB216
3 Photocell MB217
4 LED/Purple - Lit when activated
5 LED/Green - Normally lit
6 Switch = OFF
7 Switch = D.ON
8 Switch - SET/RUN
9 Knob - Teach In

MM2.21TS100442en.fm

3.7.3 Longitudinal element

3.7.3-1 Longitudinal element - check

Machine Status	
SPC reference	2524080-0100

CAUTION! **Risk of burns.**
Let the element cool down before touching it.

•

Check the following parts for wear and/or damage:

- the rollers (1),
- the roller (2)
- the cylinder C200 (3)
- the spring (4)

Change any worn or damaged parts.

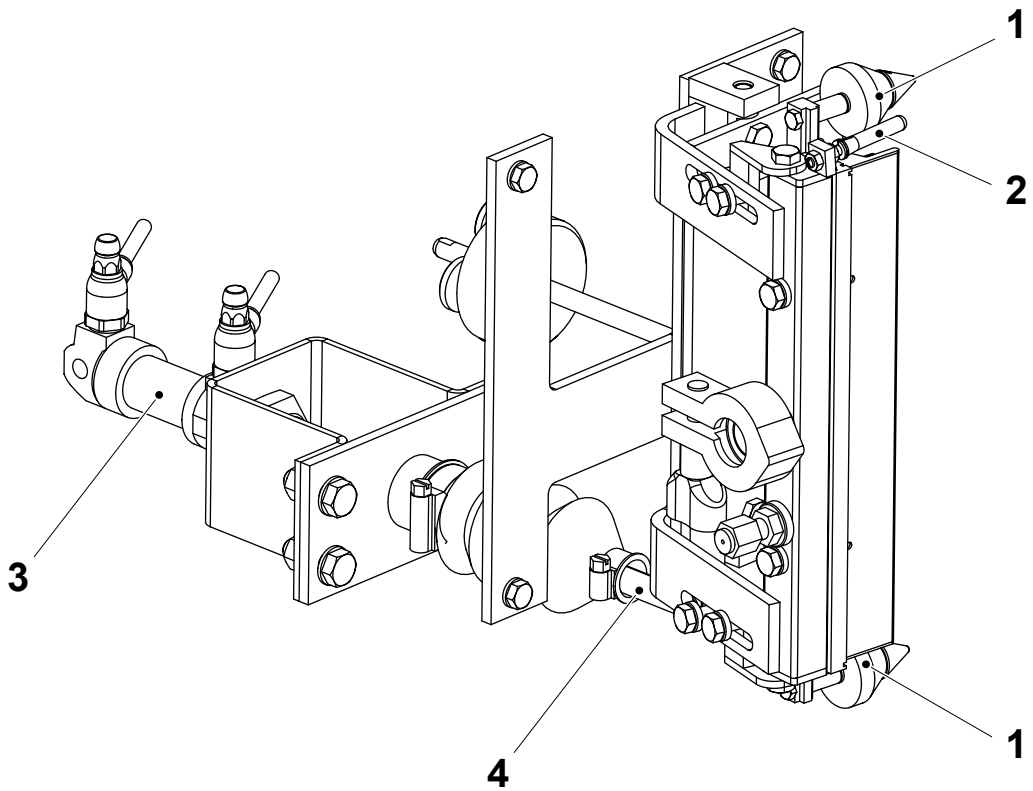

MM2.21TS100442en.fm

1 Roller
2 Roller
3 Cylinder C20
4 Spring

3.7.3-2 Longitudinal element - change rollers

Machine Status	
SPC reference	2524080-0100

CAUTION! **Risk of burns.**
Let the element cool down before touching it.

•

Change the rollers as follows:

a) Unscrew the screws (1).

b) Remove the rollers (2).

c) Pull out the shaft (3) and take care of the spacer (4).

Assemble in the reverse order with new rollers.

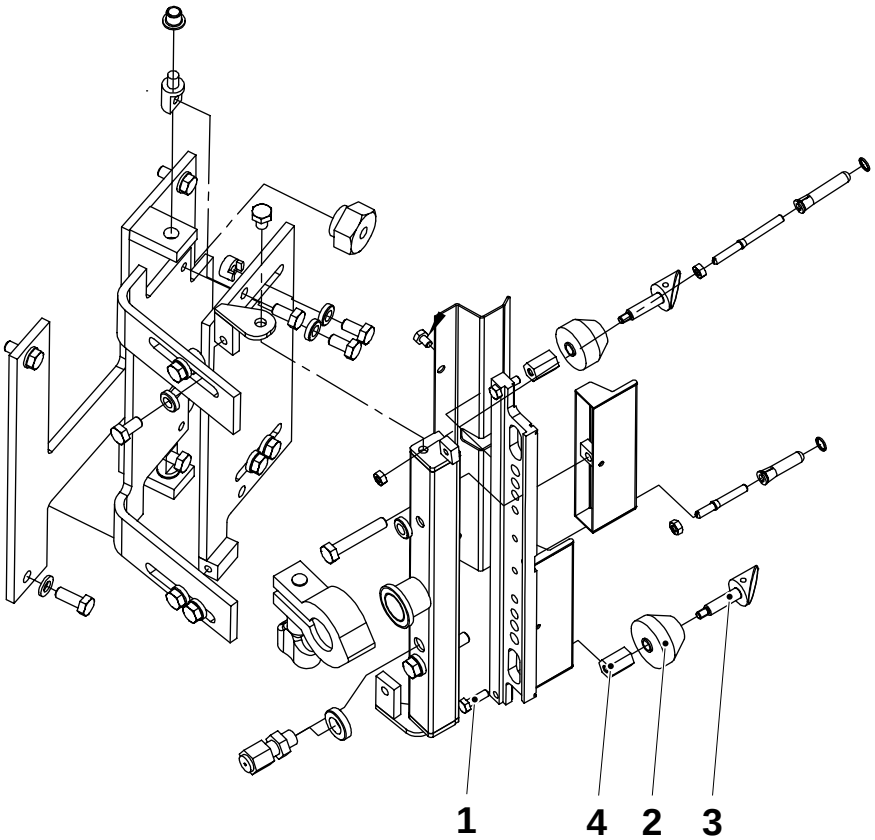

1 Screw
2 Roller
3 Shaft
4 Spacer

MM2.21TS100442en.fm

3.7.3-3 Longitudinal element - set

Machine Status	
SPC reference	2524080-0100

CAUTION! **Risk of burns.**
Let the element cool down before touching it.

Basic settings

a) Loosen the screws (1) and set the heating nozzle (3) set α to the brackets (2).

b) Loosen the screws (4) and set the distances **A** and **B**.
Lock the stop lugs (5) against the brackets.

c) Set the distances **C** and **D** for the stop lugs (7). Loosen the screws (6) and tighten them against the stop lugs.

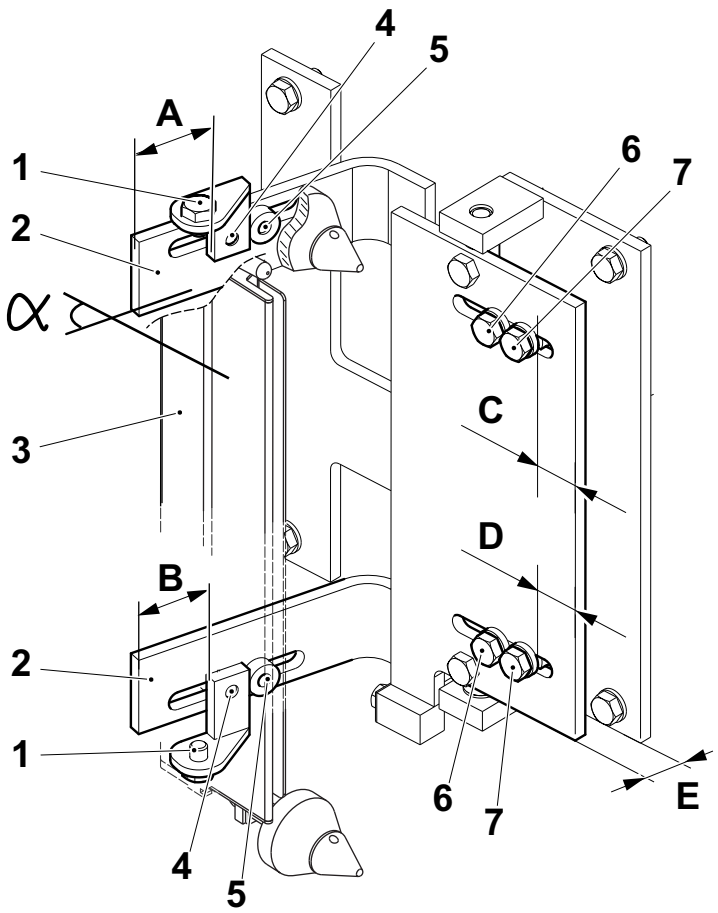

Distance (mm)	Volume (ml)			
	65	150	200B	200S
A	22	14.5	29.5	
B	21	14.5	26.5	
C	21	20	23	
D	23	22	25	
E	27	30	27	
α	98	88	90	

1 Screw, nozzle angle
2 Bracket
3 Nozzle
4 Screw
5 Stop lug
6 Screw
7 Stop lug

(Cont'd)

MM2.21TS100442en.fm

(Cont'd)

Fine adjustments against packaging material tube

a) Loosen the stop lugs (5) and the screws (4). Push the nozzle towards the packaging material tube (9) until the upper and lower rollers (8) just touches the tube, distance 0 mm in figure.

b) Tighten the screws (4), push the stop lugs (5) against the screws and lock them.

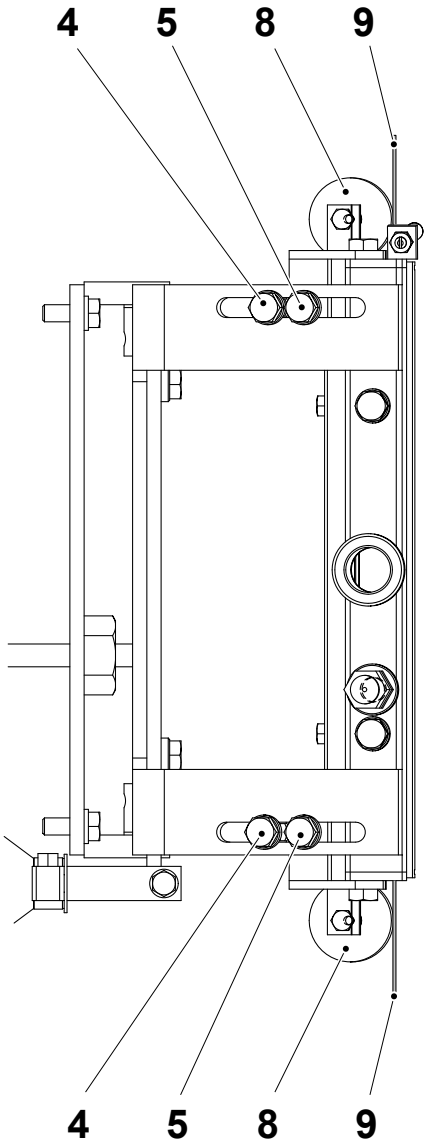

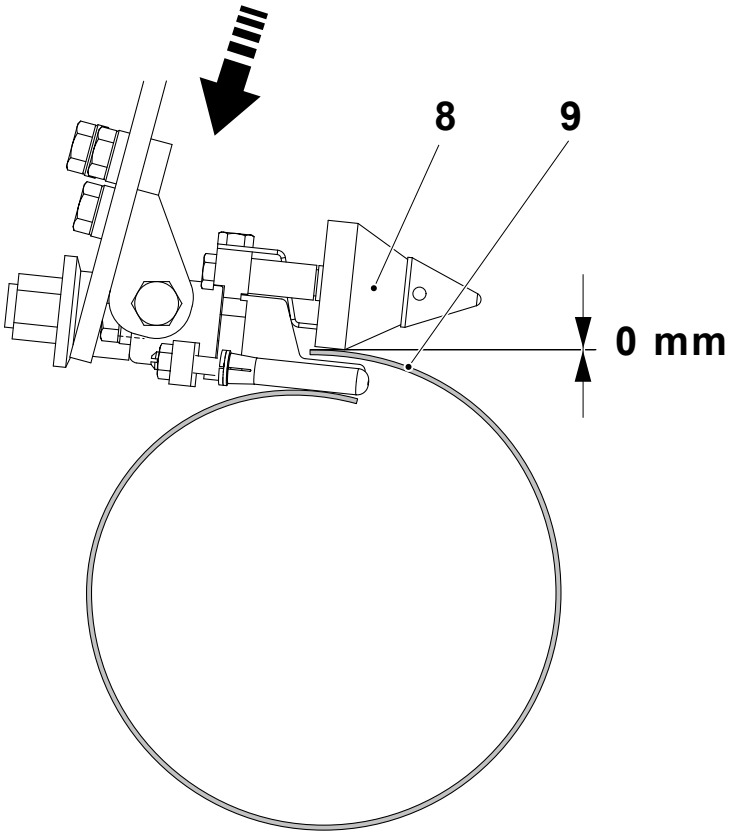

4 Screw
5 Stop lug
8 Roller
9 Packaging material tube

(Cont'd)

MM2.21TS100442en.fm

(Cont'd)

c) Adjust the position for the lower roller (11) to be parallel with the nozzle (3) and to hold the packaging material (9) including the strip (12) with a clearance of 1,5- 2,0 mm to the nozzle. Check that the strip at no point touches the nozzle. Cut an opening in the tube to check (at arrow).

d) Loosen the nut (10) and adjust the roller to cover the edge of the strip; E>0.
Make sure that the end of the roller does not bear against the inside of the tube; F>0.

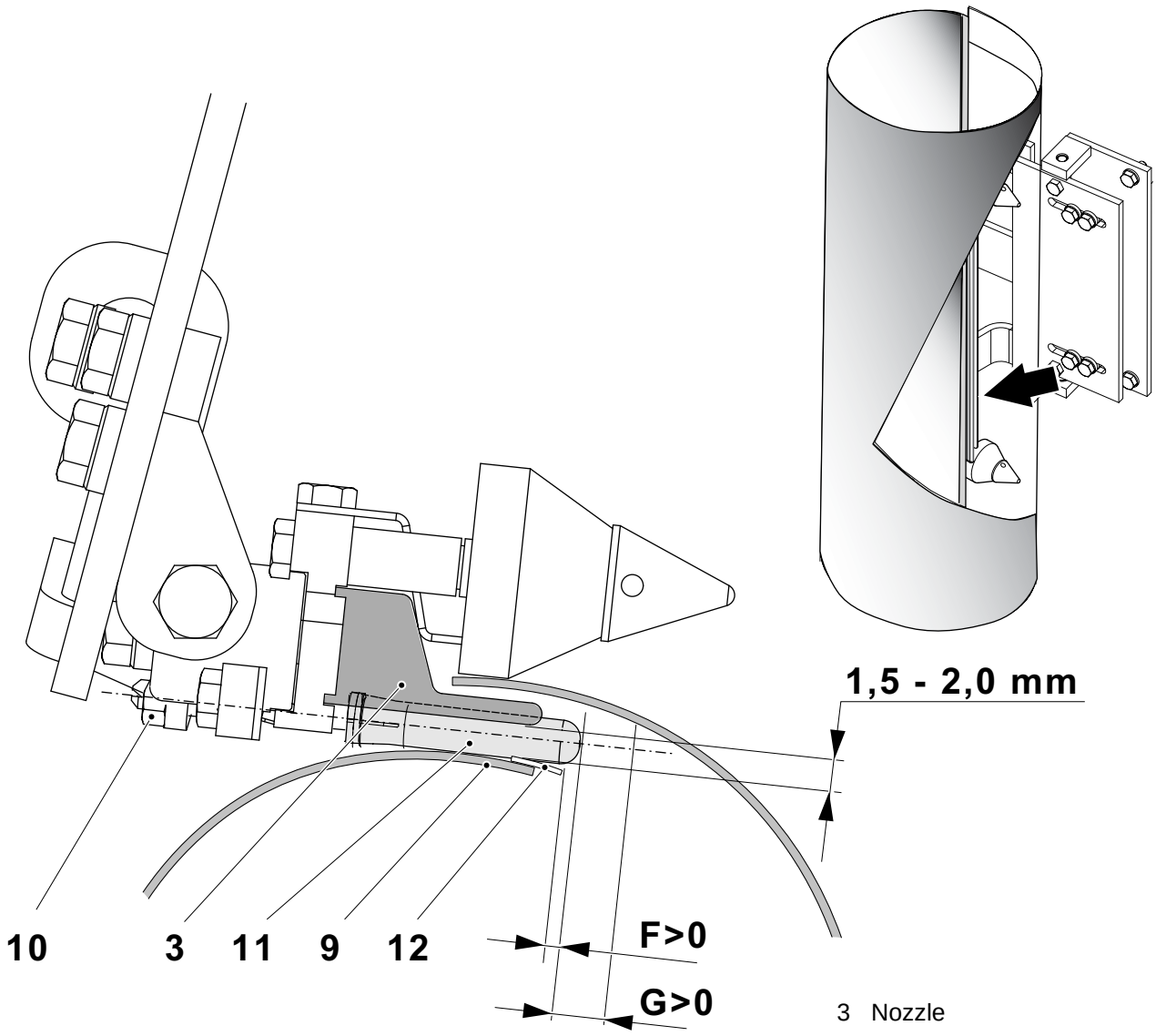

MM2.21TS100442en.fm

3 Nozzle
9 Packaging material
10 Nut
11 Roller, lower
12 Strip

(Cont'd)

(Cont'd)

e) Adjust the inner stop position for the nozzle (3). Use a spanner at the end of the rod (13) to adjust.
The edge of the packaging material (9) shall cover the centre of the inner hole row. Check at the upper and lower hole, visible at the arrows.

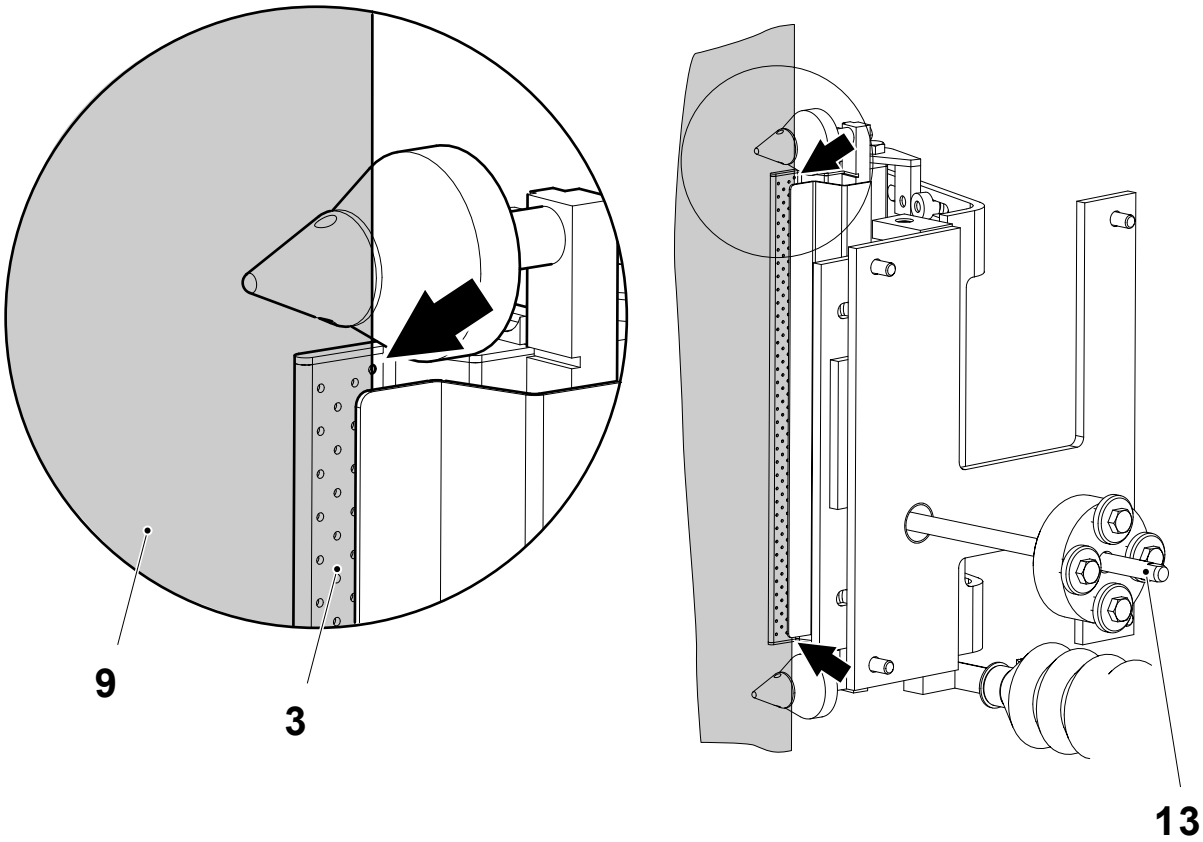

3 Nozzle
9 Packaging material
13 Rod

(Cont'd)

MM2.21TS100442en.fm

(Cont'd)

Set the speed for the air cylinder (14).

Close the throttle valves (15) and (16) fully and then:

- open the throttle valve (15) 4 turns
- open the throttle valve (16) 4 turns

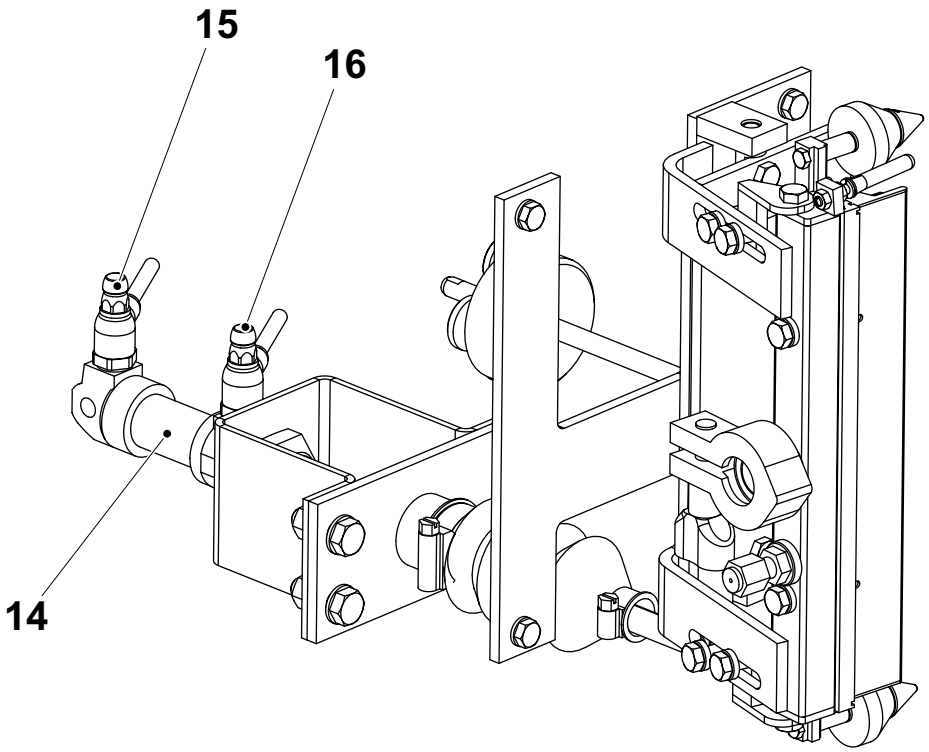

14 Cylinder C200
15 Throttle valve
16 Throttle valve

MM2.21TS100442en.fm

3.7.3-4 Longitudinal element - check heating zone

Machine Status	
SPC Reference	

CAUTION! **Risk of burns.**
Let the element cool down before touching it.

Insert packaging material in the machine and run it according to the OM until a tube is formed.

With normal settings of the temperature and air pressure, the heating zone position should be as illustrated below.

The packaging material overlap A = 7±1 mm.

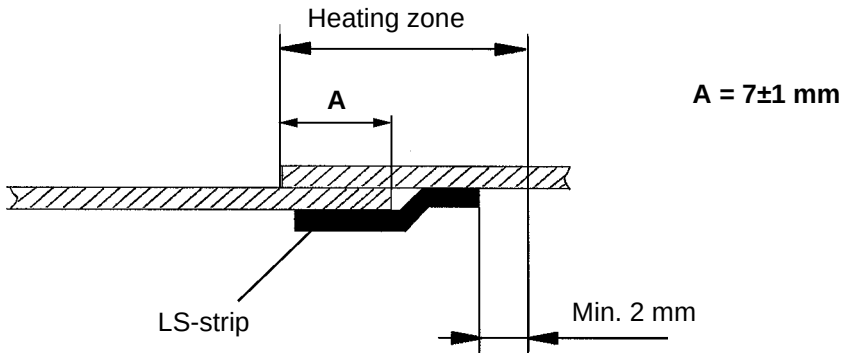

MM2.21TS100442en.fm

3.7.4 Heating element

3.7.4-1 Heating element - check

Machine Status	
SPC reference	2524140-0100

CAUTION! **Risk of burns**

Let the element cool down before touching it.

Move the LS-heating device (3) between its end positions and check that the hose (1) for the heating element (2) bends in a smooth way (no sharp bends).

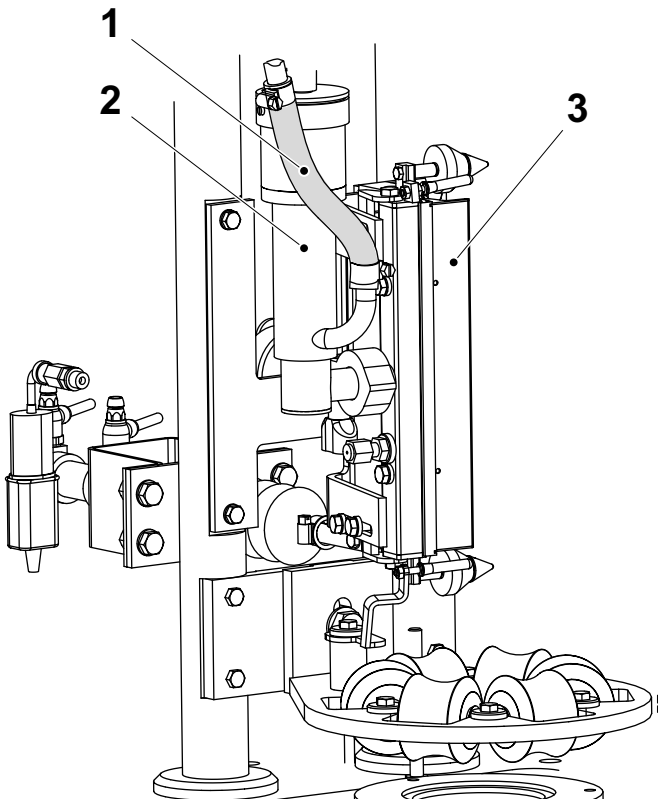

1 Hose
2 Heating element
3 LS-heating device

MM2.21TS100442en.fm

3.7.4-2 Heating element - change

Machine Status	
SPC reference	2524140
Grease	90296-91

DANGER! **Hazardous voltage.**
Electric shock will cause death or serious injury.
Make sure the power supply is turned **OFF.**

CAUTION! **Risk of burns.**
Let the element cool down before touching it.

a) Loosen the hose clip (1) and remove the clamp (2).

b) Remove the two screws (3) and gently lower the jacket (4).

c) Pull down the heating element (5).

Assemble in the reverse order with new heating element. Apply some grease at the O-ring (6) before fitting the jacket (4).

MM2.21TS100442en.fm

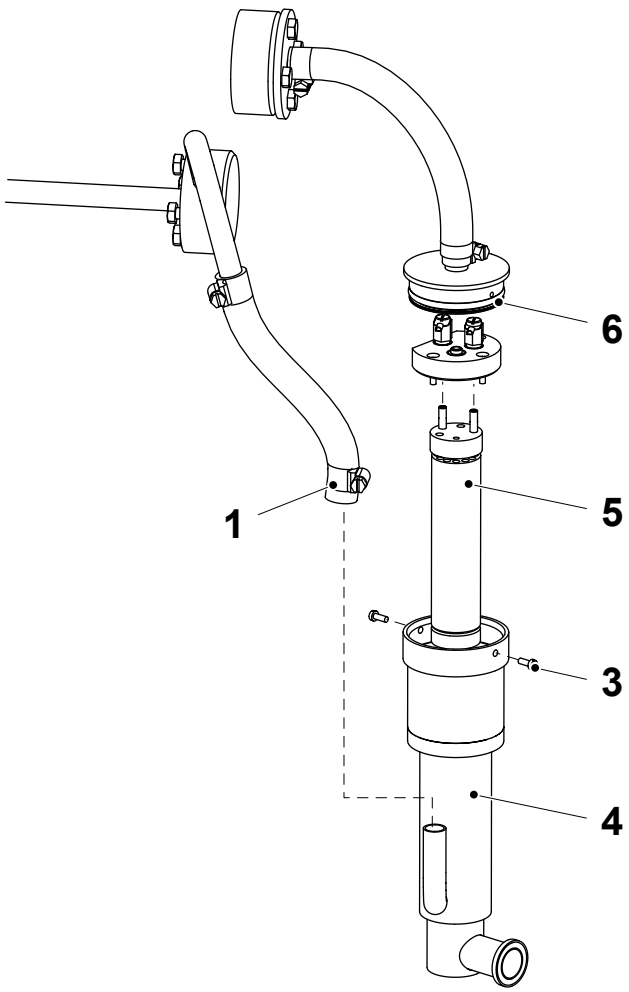

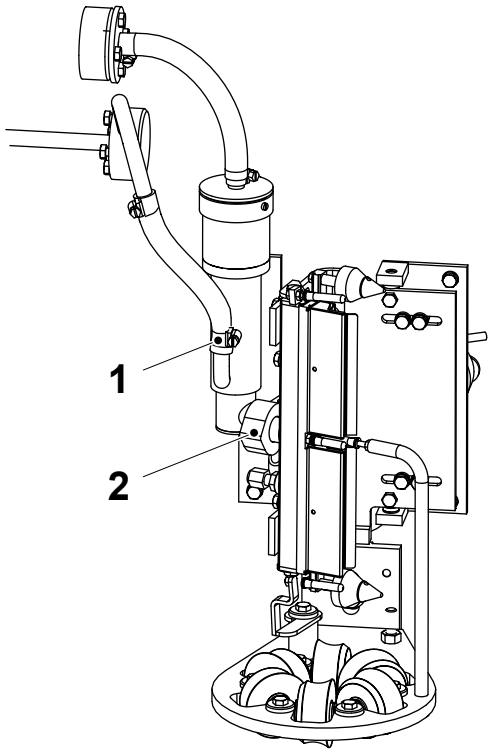

1 Hose clip
2 Clamp
3 Screw (2 pcs)
4 Jacket
5 Heating element
6 O-ring

3.7.5 Cantilever

3.7.5-1 Cantilever - change seal ring

Machine Status	
SPC reference	2524185-0100

Change the sealing ring as follows:

a) Remove the filling pipe.

b) Remove the three screws (1).

c) Lift out the flange (2) and the seal ring (3).

Assemble in the reverse order with new seal ring.

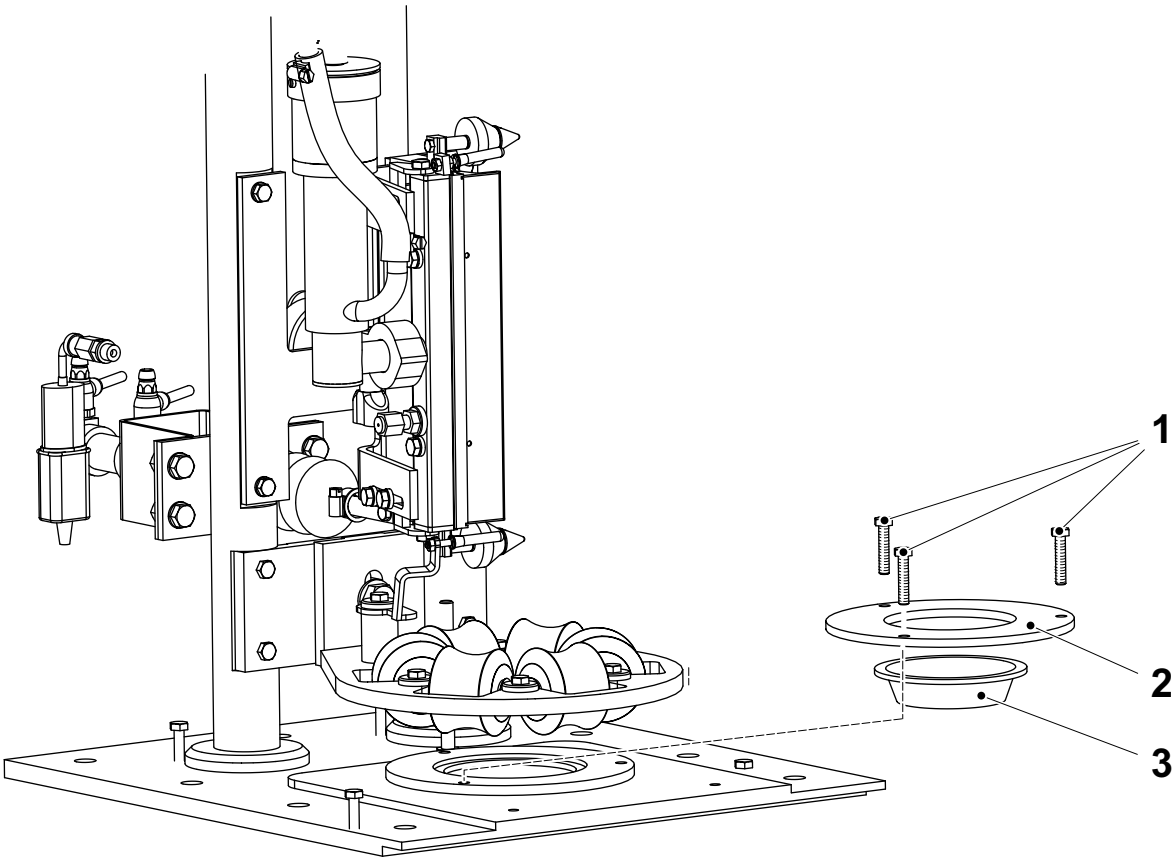

1 Screw
2 Flange
3 Seal ring

MM2.21TS100442en.fm

3.7.6 Upper forming ring

3.7.6-1 Upper forming ring - check

Machine Status	
SPC reference	2524195-0100

Check the following parts for wear and/or damage:

- the rollers (1),
- the flange bushings (2).

Change any worn or damaged parts.

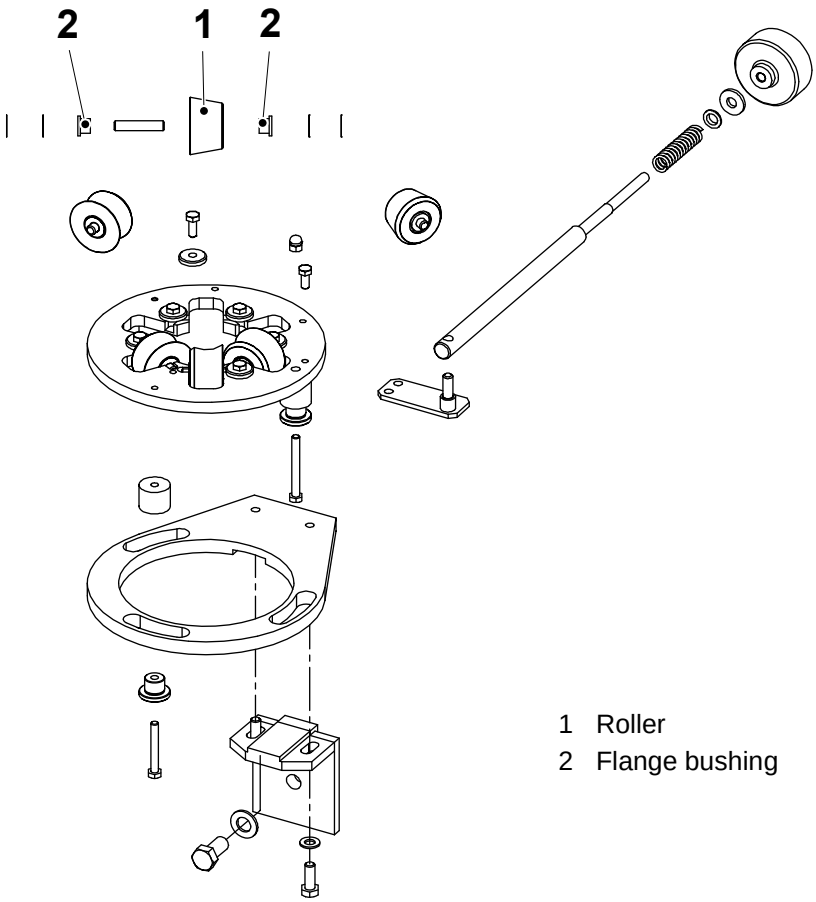

1 Roller
2 Flange bushing

MM2.21TS100442en.fm

3.7.6-2 Upper forming ring - change flange bushings

Machine Status	
SPC reference	2524195-0100

Change the flange bushings as follows:

a) Unscrew the screws (1) and remove the washers (2).

b) Lift out the roller (3).

c) Pull out the shaft (4) and remove the flange bushings (5).

Assemble in the reverse order with new flange bushings.

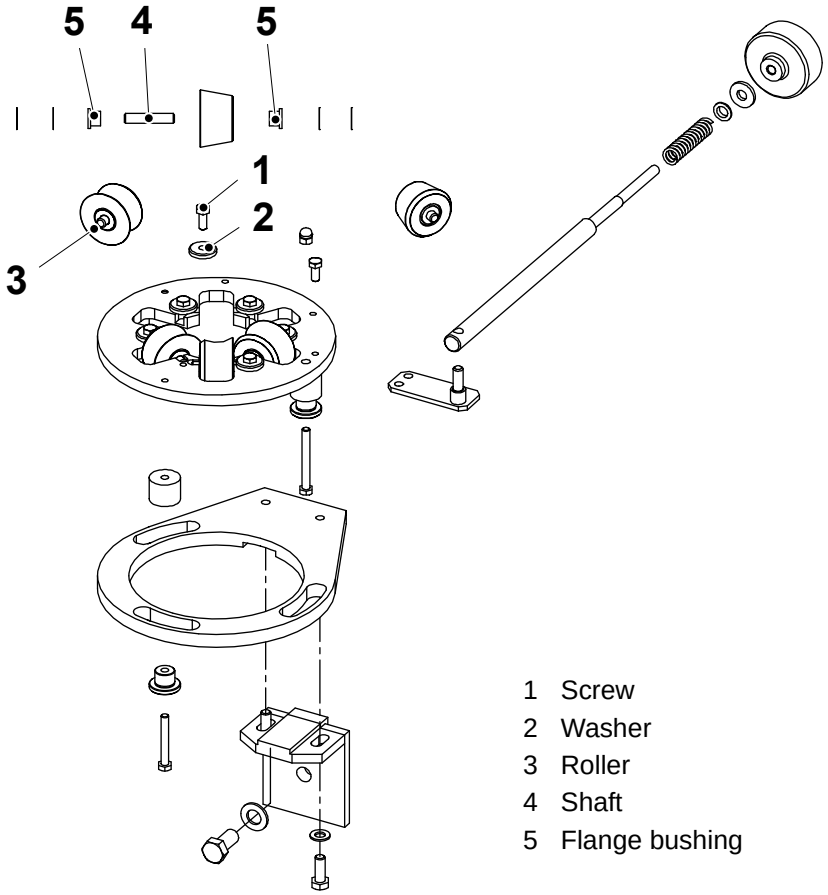

1 Screw
2 Washer
3 Roller
4 Shaft
5 Flange bushing

MM2.21TS100442en.fm

3.7.6-3 Upper forming ring - change rollers

Machine Status	
SPC reference	2524195-0100

Change the rollers as follows:

a) Unscrew the screws (1) and remove the washers (2).

b) Lift out the roller (3).

c) Pull out the shaft (4) and remove the flange bushings (5).

Assemble in the reverse order with new rollers.

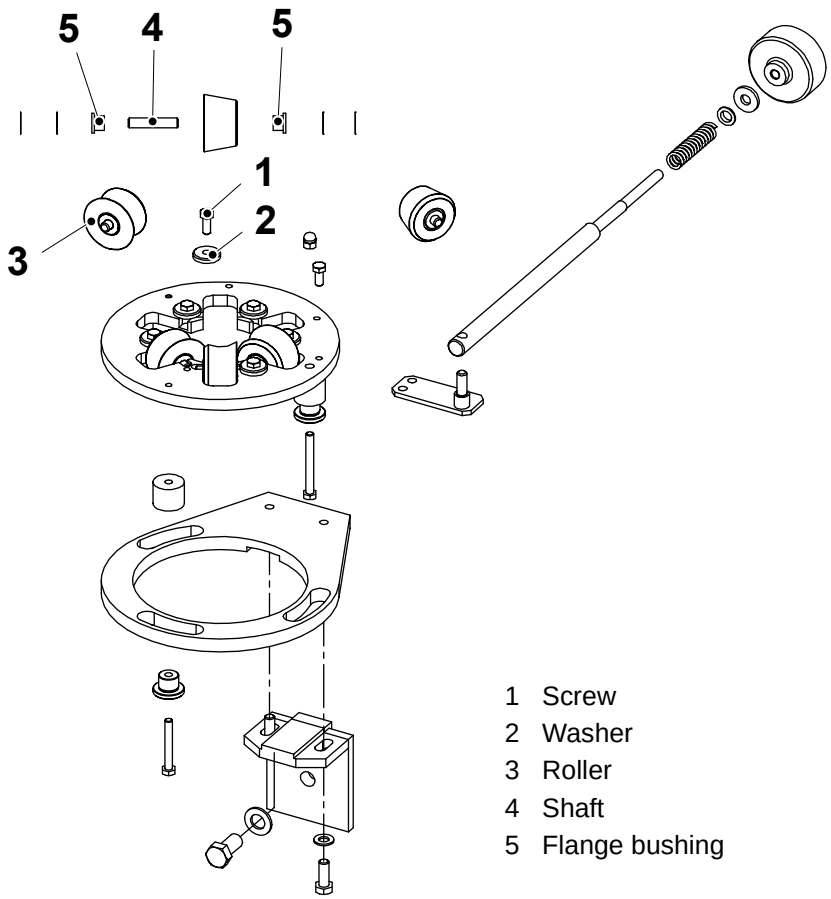

1 Screw
2 Washer
3 Roller
4 Shaft
5 Flange bushing

MM2.21TS100442en.fm

3.7.6-4 Upper forming ring - set clearance

Machine Status	
SPC reference	2524195-0100

Set the distance **A** between the rollers by adding or removing the shimming washers (6).

Note! Always follow the setting position order: 1-2-3-4-5.

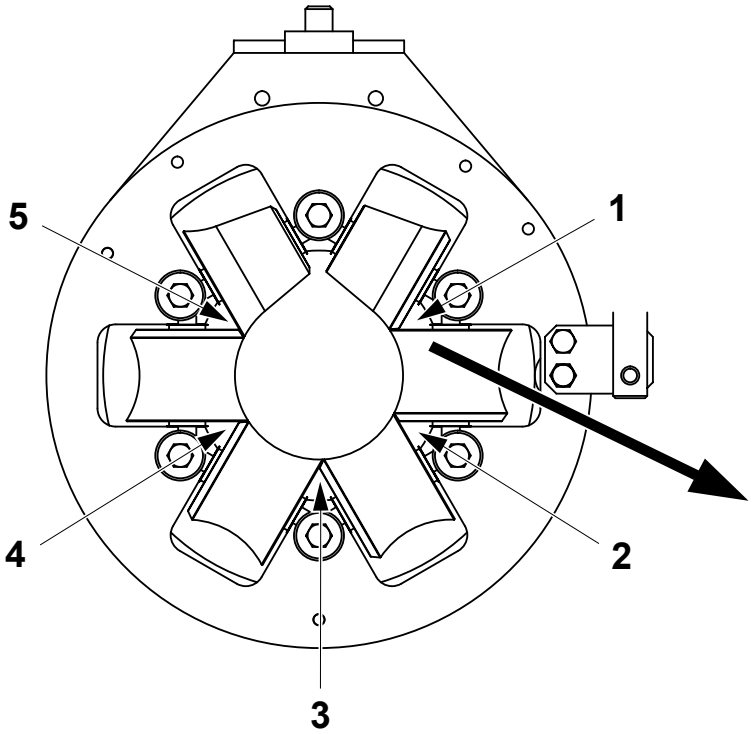

1 Position n.1
2 Position n.2
3 Position n.3
4 Position n.4
5 Position n.5
6 Shimming washer (0,1 mm)

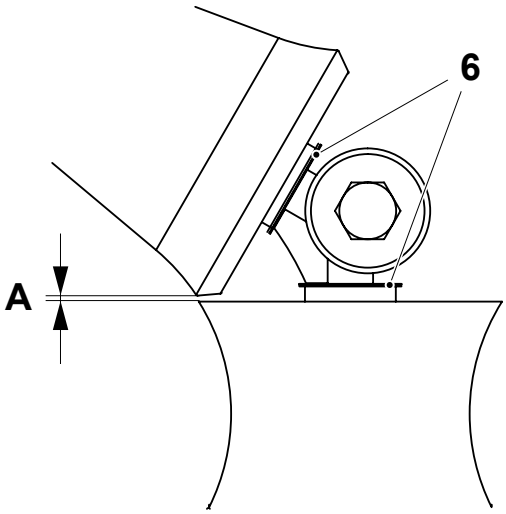

A = 0.05 - 0.15 mm

MM2.21TS100442en.fm

3.7.6-5 Upper forming ring - set paper tube alignment

Machine status	**Production**
SPC reference	2524195-0100

The photocells (1) must be correctly set, see 3.7.2-1 Photocells - set on page 179

a) Pick out two packages, turn one package 90° and check that the crease lines (3) on the packages are opposite one another.

b) If required, set the tube alignment by means of the shifter handle (2).

Note! Turning the shifter handle (2) clockwise moves the paper tube and the crease position in the direction indicated by the arrows.

c) Pick out some new packages and check the crease position.

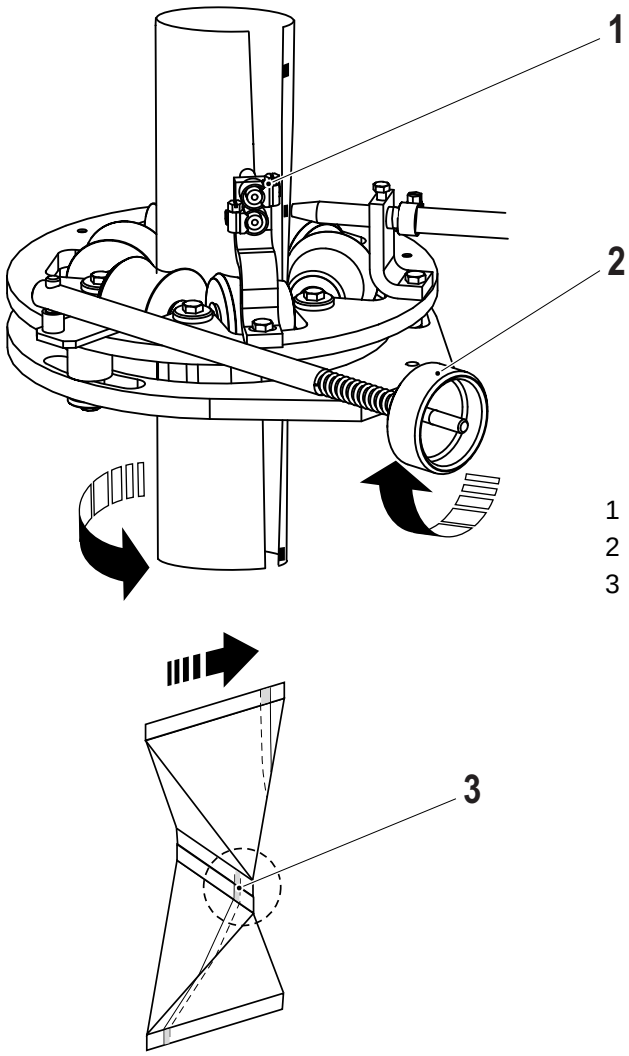

1 Photocells
2 Shifter handle
3 Crease

MM2.21TS100442en.fm

3.7.7 Photocell unit

3.7.7-1 Photocell unit- set

Machine Status	
SPC reference	2569686-0100

a) Screw two lock nuts (3) (without any washers) onto the fibre (4) until distance **A** of the threads are visible.

b) Thighten the lock nuts (3).

c) Screw the focusing device (2) onto the fibre (4) until the lock nuts are reached.

d) Assemble the fibre (4) and focusing device (2) with the hoses (5).

e) Fit the focusing device (2) to the bracket (1).

A = 4 mm

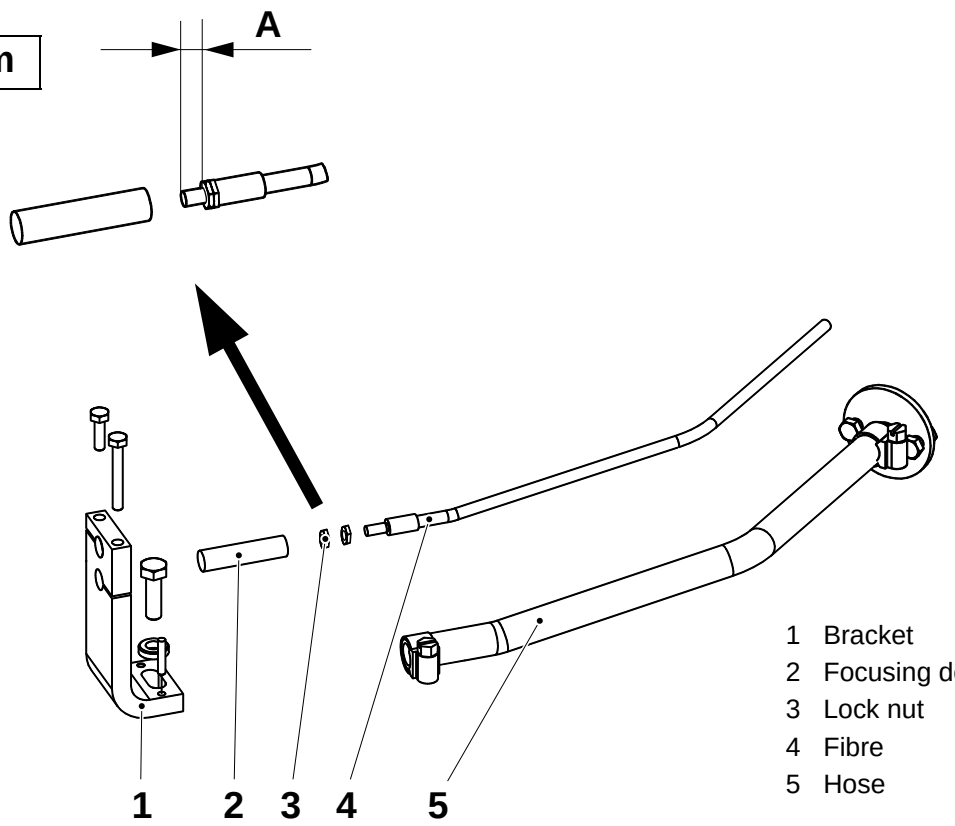

1 Bracket
2 Focusing device
3 Lock nut
4 Fibre
5 Hose

(Cont'd)

MM2.21TS100442en.fm

(Cont'd)

f) Centre the forming ring in the prolonged hole (8).
Turn the shifter handle (9) to adjust.

g) Adjust distance **B** between the focusing device (2) and the packaging material tube (6). Loosen screw (7) to adjust.
(The focus of the light beam can be adjusted on the lens housing).

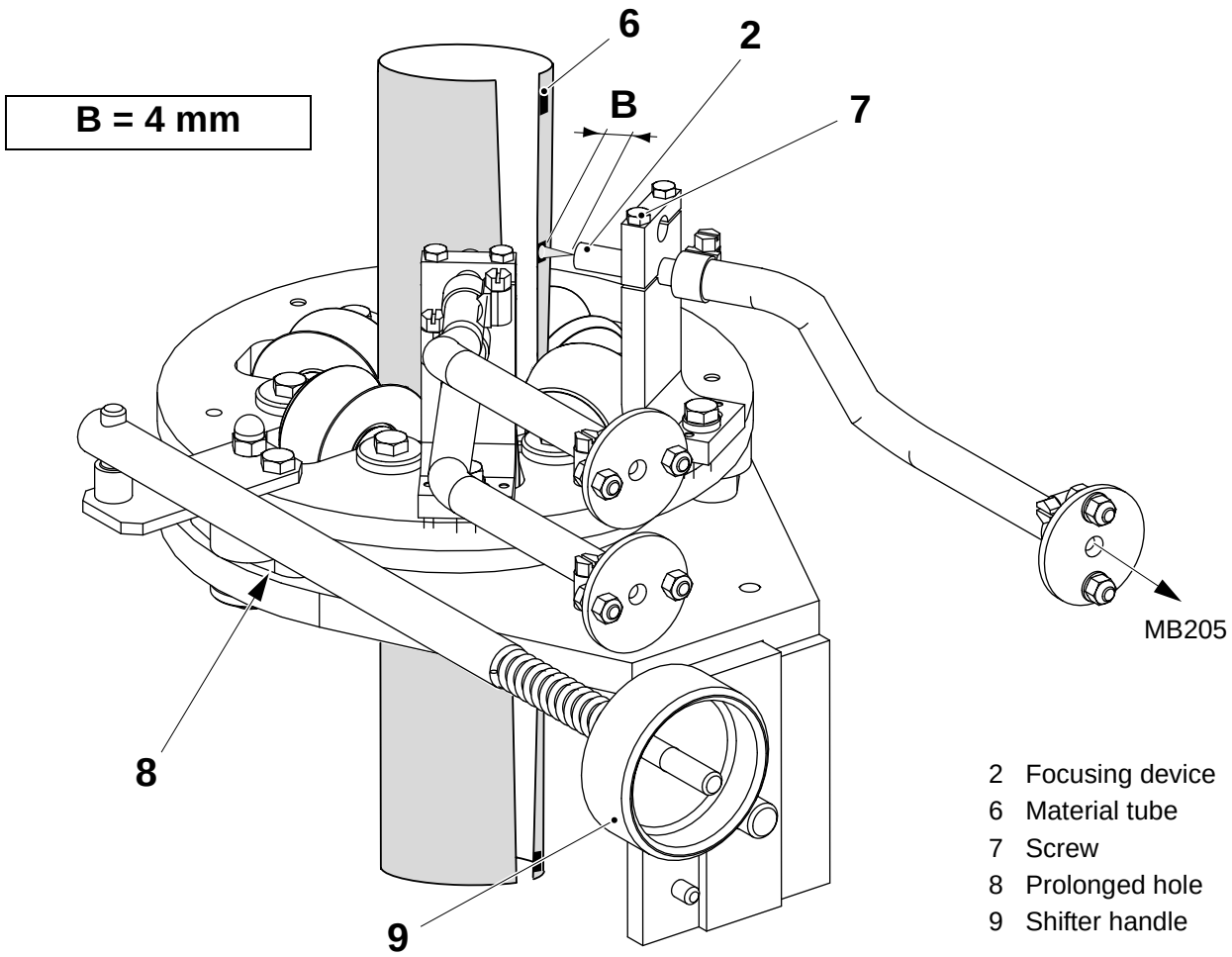

2 Focusing device
6 Material tube
7 Screw
8 Prolonged hole
9 Shifter handle

(Cont'd)

(Cont'd)

The photocells are located in the connection box MX020.

DANGER!

Hazardous voltage.
Electric shock will cause death or serious injury.
Make sure to touch only the photocells**.**

Calibrate:

a) Remove the lid for the connection box MX020.

b) Check that the switches (4) and (6) are set as illustrated.

c) Push the switch (7) to position **SET**.

d) Push the knob (8) with the photo cell lens above the register mark (black colour).

e) Push the knob (8) with the photo cell lens outside the register mark (white colour).

f) Push the switch (7) to position **RUN**.

g) Fit the lid for the connection box MX020.

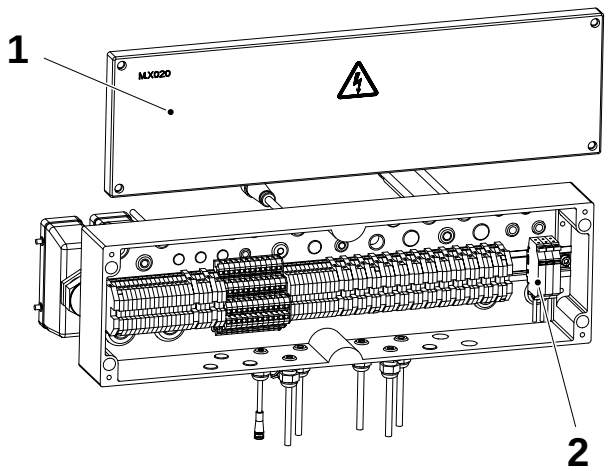

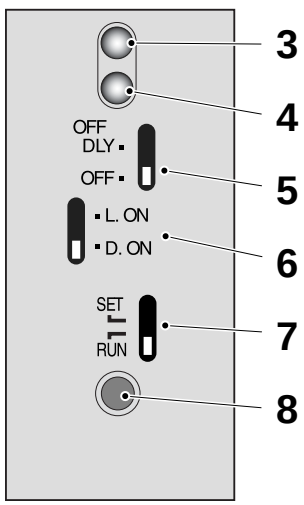

1 Connection box MX020
2 Photocell MB205
3 LED/Purple - Lit when activated
4 LED/Green - Normally lit
5 Switch = OFF
6 Switch = D.ON
7 Switch - SET/RUN
8 Knob - Teach In

MM2.21TS100442en.fm

3.8 Edge roller

3.8-1 Edge roller - check

Machine Status	
SPC reference	2542730-0100

Note! This instruction is only valid for volume 200B.

Check the following parts for wear and/or damage:

- the rollers (1),
- the flange bushings (2).

Change any worn or damaged parts.

MM2.21TS100442en.fm

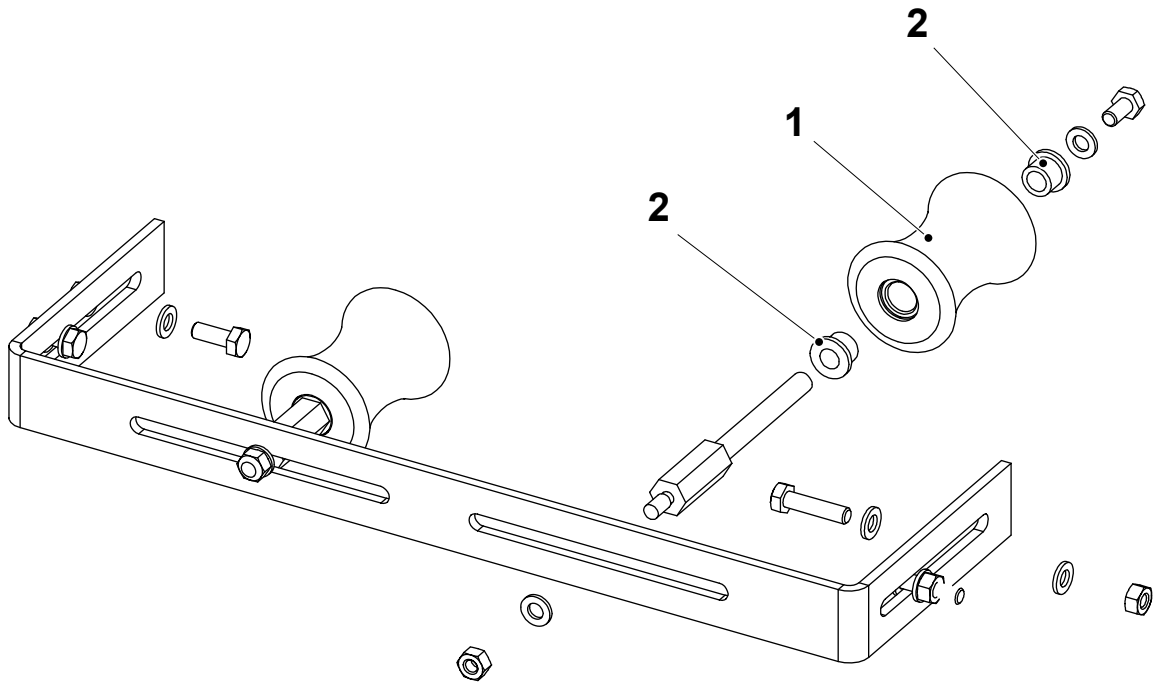

1 Roller
2 Flange bushing

3.8-2 Edge roller - change flange bushings

Machine Status	
SPC reference	2542730-0100

Note! This instruction is only valid for volume 200B.

Change the flange bushings as follows:

a) Unscrew the screw (1) and take care of the washer (2).

b) Pull the roller (3) off the shaft.

c) Remove the flange bushings (4) from the roller.

Assemble in the reverse order with new flange bushings.

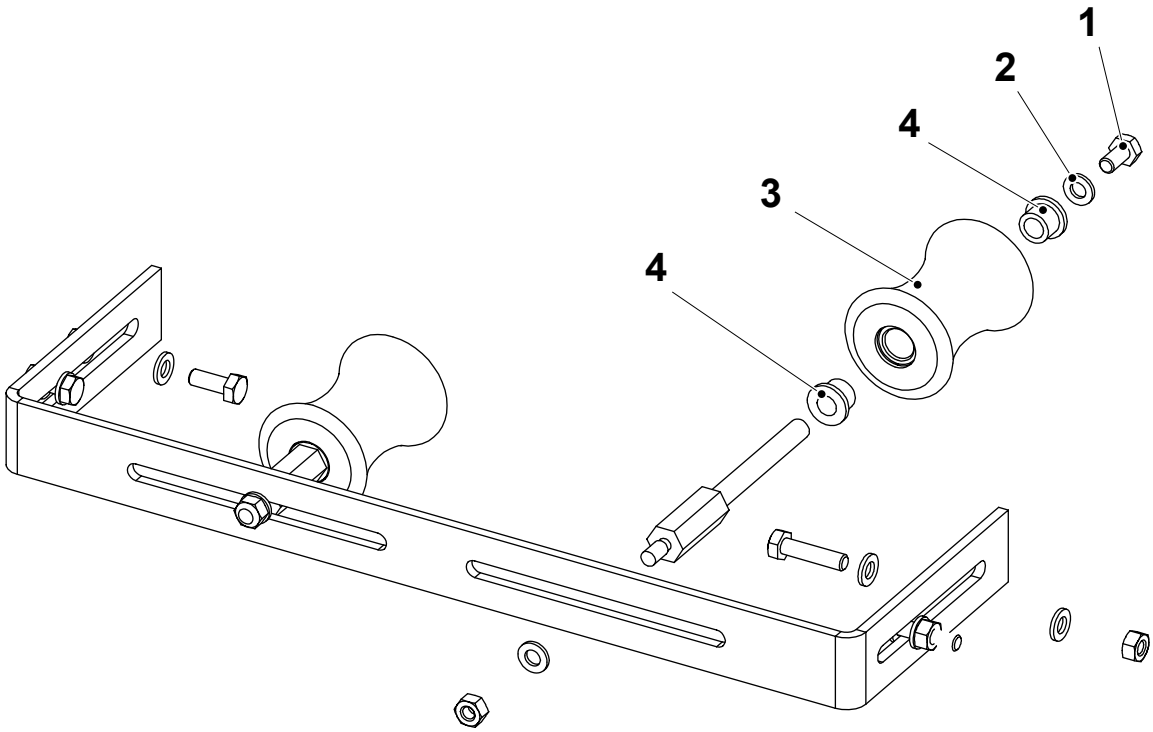

MM2.21TS100442en.fm

1 Screw
2 Washer
3 Roller
4 Flange bushing

3.8-3 Edge roller - change rollers

Machine Status	
SPC reference	2542730-0100

Note! This instruction is only valid for volume 200B.

Change the rollers as follows:

a) Unscrew the screw (1) and take care of the washer (2).

b) Pull the roller (3) off the shaft.

c) Remove the flange bushings (4) from the roller.

Assemble in the reverse order with new rollers.

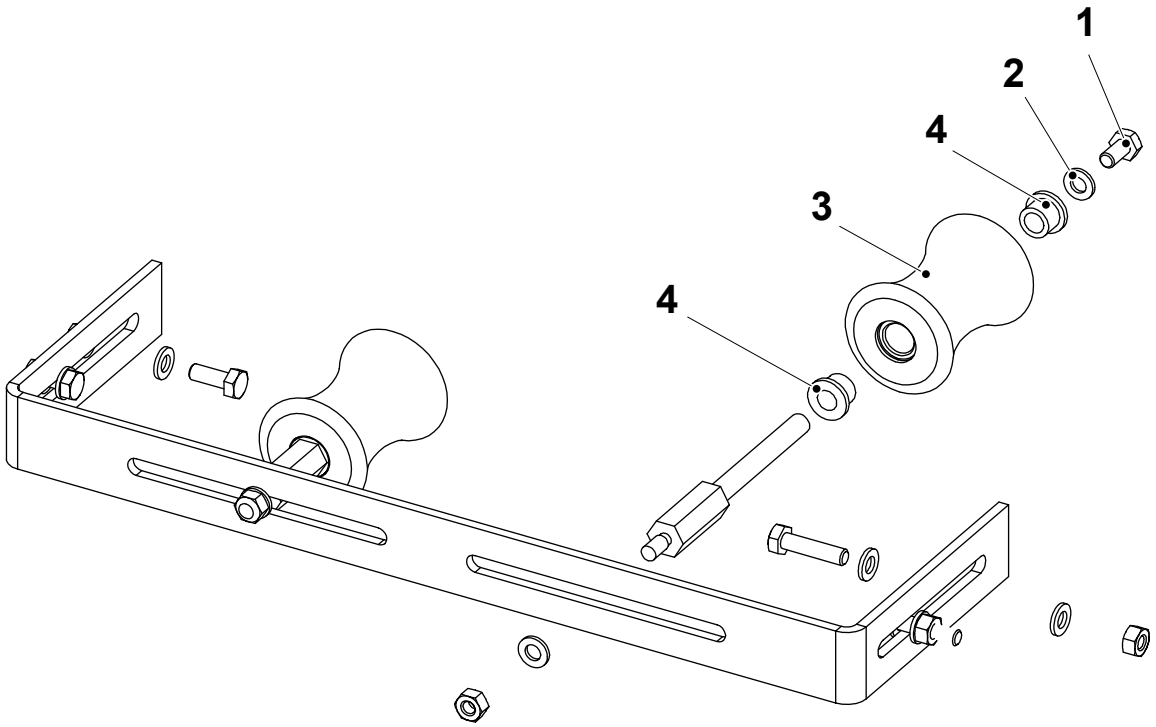

1 Screw
2 Washer
3 Roller
4 Flange bushing

MM2.21TS100442en.fm

3.8-4 Edge roller - set

Machine Status	
SPC reference	2542730-0100

Note! This instruction is only valid for volume 200B.

Basic setting

Adjust the distance A.

- Loosen the screws/nuts (3) to adjust

Adjust the distance B.

- Loosen the nuts (2) to adjust

Fine adjustment

Set the two edge rollers (1) in such a way that the packaging material web is in contact with the central area of the rollers.

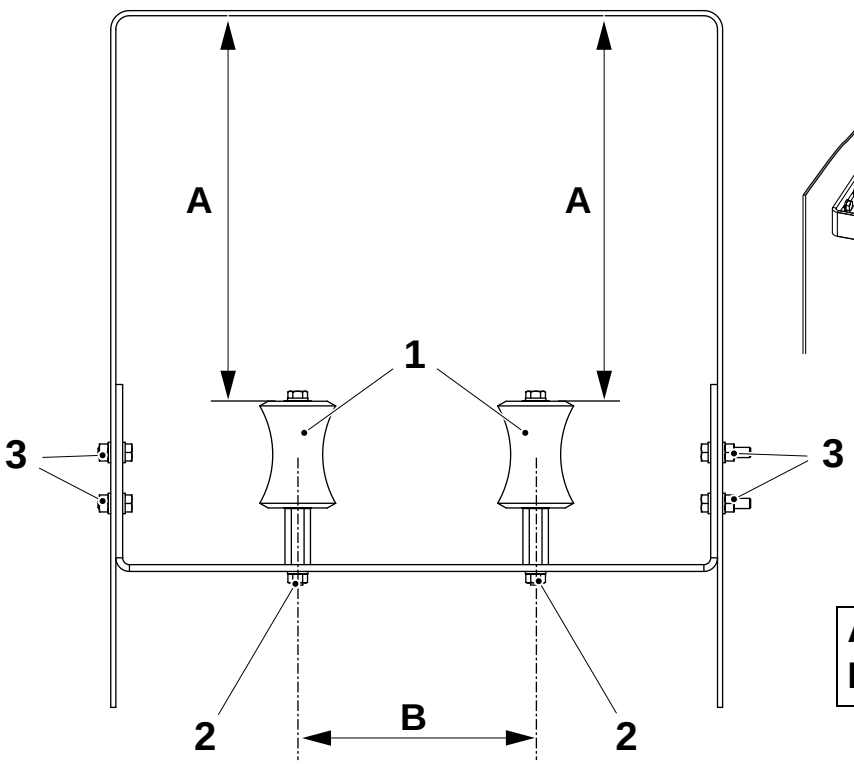

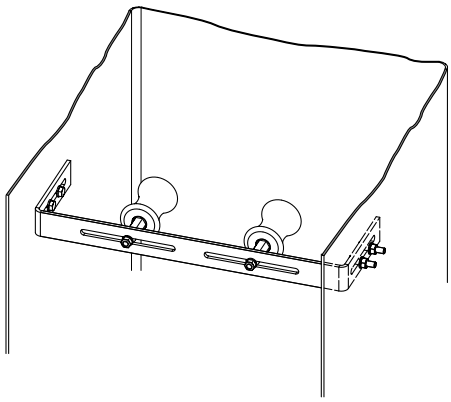

A = 216 mm
B = 170 mm

1 Edge roller
2 Nut
3 Screw/nut

MM2.21TS100442en.fm

4 Platform

MM2.21TS100443en.fm

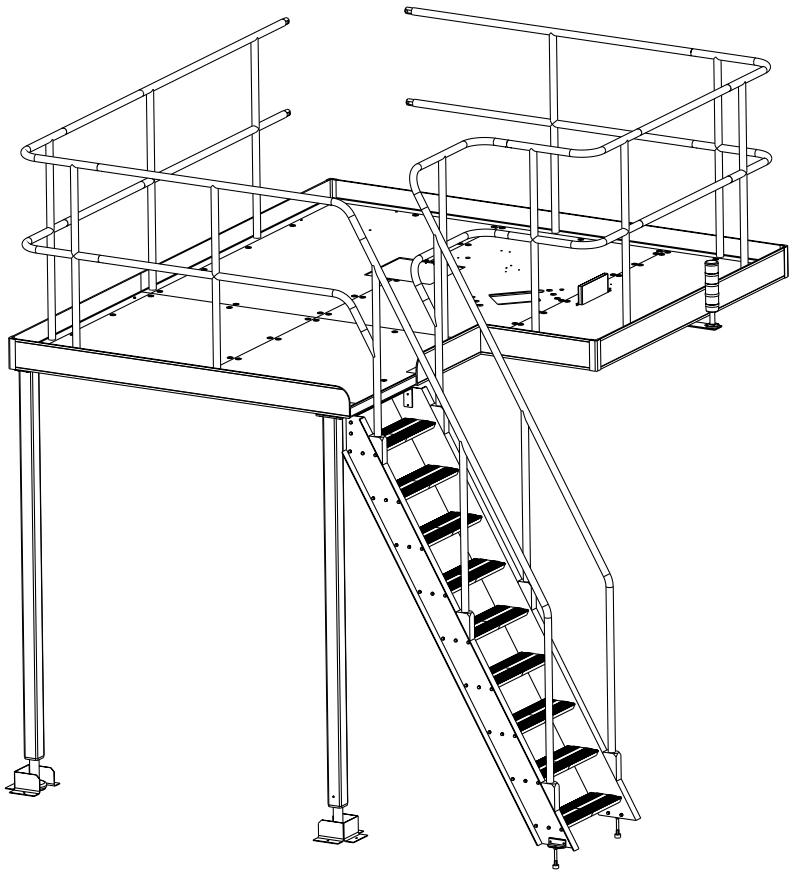

4-1 Platform - description

SPC reference	630404-0100

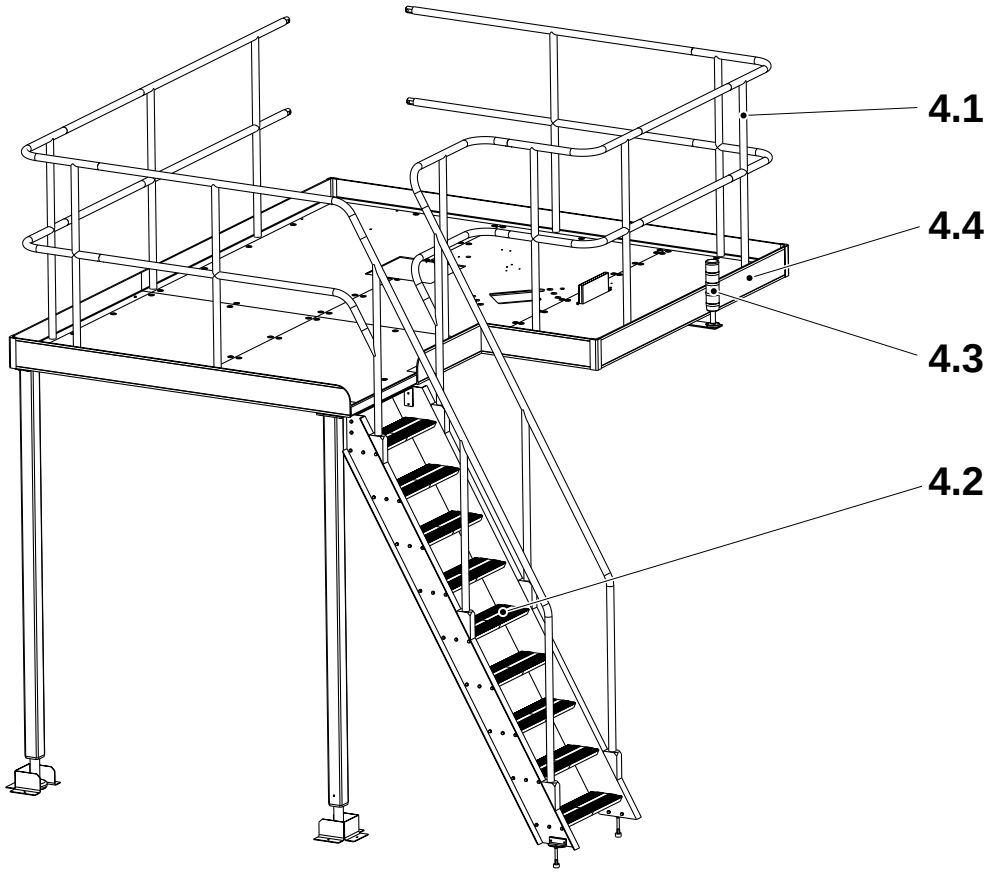

4.1 Railing - no procedure described
4.2 Ladder - no procedure described
4.3 Warning beacon
4.4 Platform - no procedure described

MM2.21TS100443en.fm

4.1 Railing

4.1.1-1 Railing - no procedure described

Machine Status	
SPC reference	1514420-0100

MM2.21TS100443en.fm

4.2 Ladder

4.2.1-1 Ladder - no procedure described

Machine Status	
SPC reference	2524170-0100

MM2.21TS100443en.fm

4.3 Warning beacon

4.3.1-1 Warning beacon - set signal

Machine Status	
SPC reference	2542870 2542875

a) Remove the alarm part from the warning beacon.

b) Set the dip switches (1) as shown.

c) Set the potentiometer screw (2) to maximum clockwise.

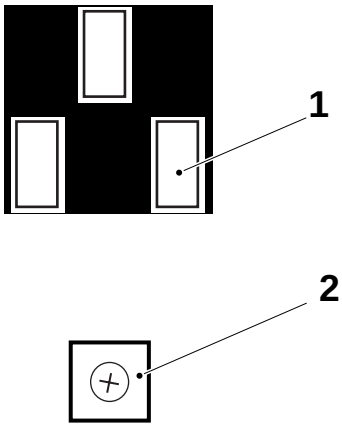

1 Switch
2 Potentiometer screw

MM2.21TS100443en.fm

4.4 Platform

4.4.1-1 Platform - no procedure described

Machine Status	
SPC reference	2524165-0100

MM2.21TS100443en.fm

5 Main body

MM2.21TS100444en.fm

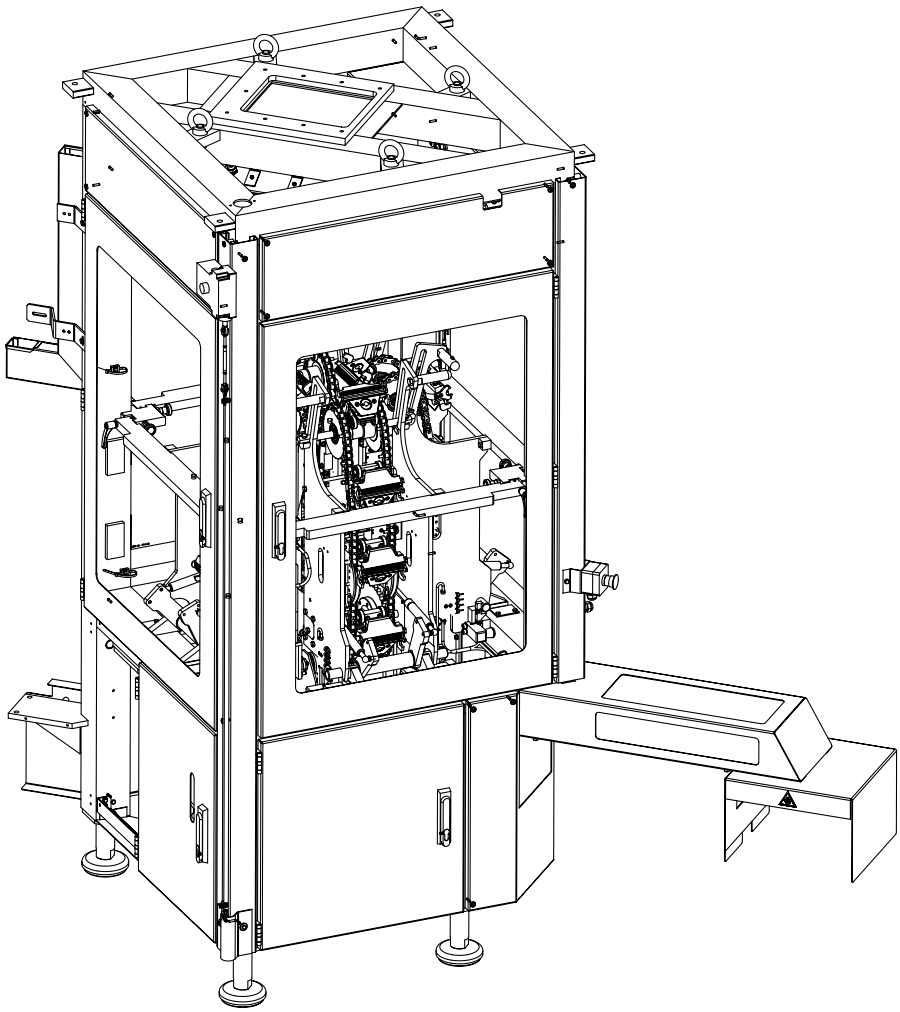

5-1 Main body - description

SPC reference	630405-0200

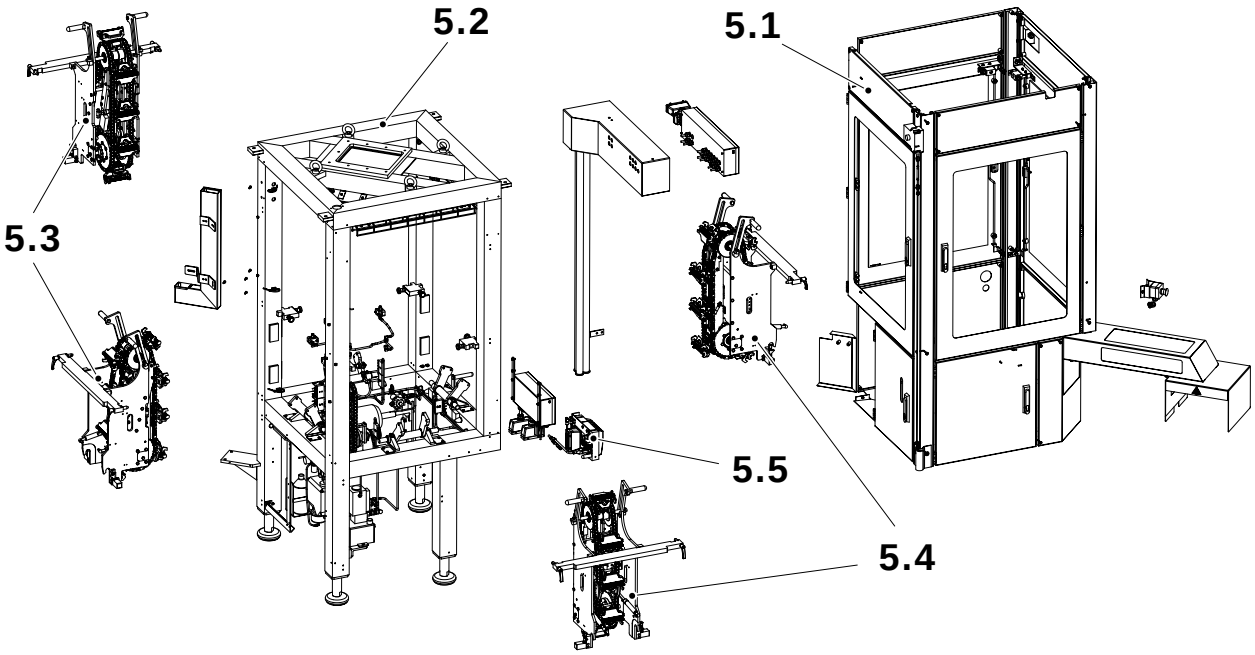

5.1 Doors and Covers
5.2 Frame
5.3 Pressure sides 3 & 4
5.4 Heating sides 1 & 2
5.5 Valve ramp

MM2.21TS100444en.fm

(Cont'd)

(Cont'd)

The function of the main body is to form the material tube to packages and to perform transversal sealing and cutting.

Sealing and cutting is performed by the pressure and heating jaws.

The pressure jaws contain knifes for cutting and rulers for design correction. To create sealing pressure for the transversal seal, the pressure jaws are forced towards the heating jaws with hydraulic pressure created by a pressure header.

The heating jaws contain inductors, creating inductive heating for the transversal seal. Contact rail transfers the power from the transformer to carbon brushes connected to the inductors. The sealing time is controlled by values from the PLC.

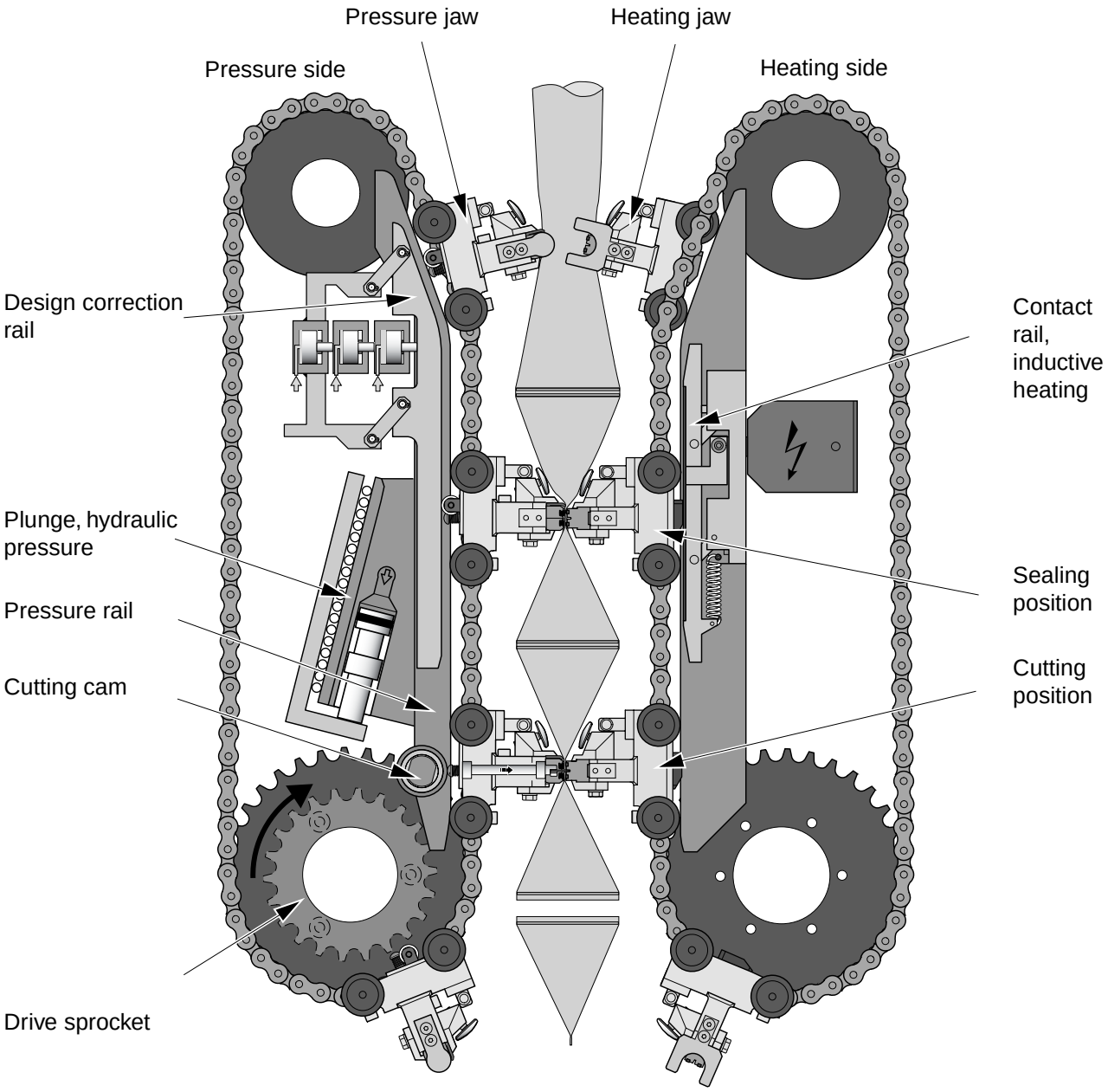

MM2.21TS100444en.fm

5.1 Doors and covers

5.1-1 Doors and covers - check emergency stops

Machine Status	
SPC reference	2524104-0100

The main body is equipped with three emergency stops, two emergency cords and one emergency stop button.

With the machine running, check that it stops immediately if any of the emergency stops is activated.

WARNING! **Risk of serious personal injury!**
Mal-function of the emergency stops **could result in death or serious personal injury!**

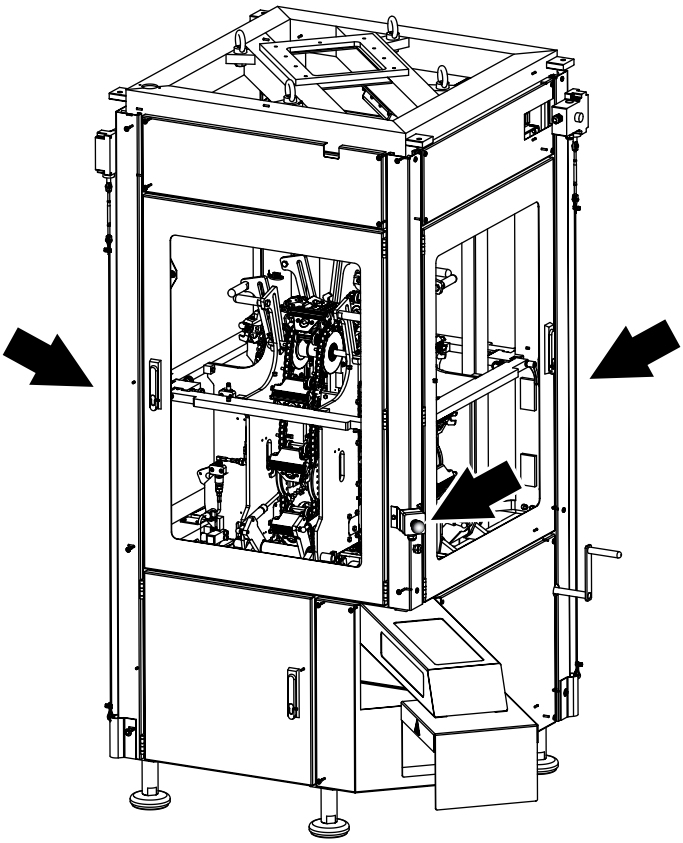

MM2.21TS100444en.fm

5.1-2 Doors and covers - set emergency stop

Machine Status	
SPC reference	2523950-0100

Remove the cover (1) to adjust the limit switch. Adjust the rigging screw until the level mark is approx. 5 mm above the maximum of the scale.



1 Cover, emergency stop

MM2.21TS100444en.fm

5.1-3 Doors and covers - check door guards

Machine Status	
SPC reference	2524104-0100

Check that the machine can not be started and stops immediately if running, if any of the doors marked with arrows is opened.

Check also that the motor can not be started with the crank (1) fitted.

WARNING! **Risk of serious personal injury!**
The door guards must under no circumstances be over-bridged.

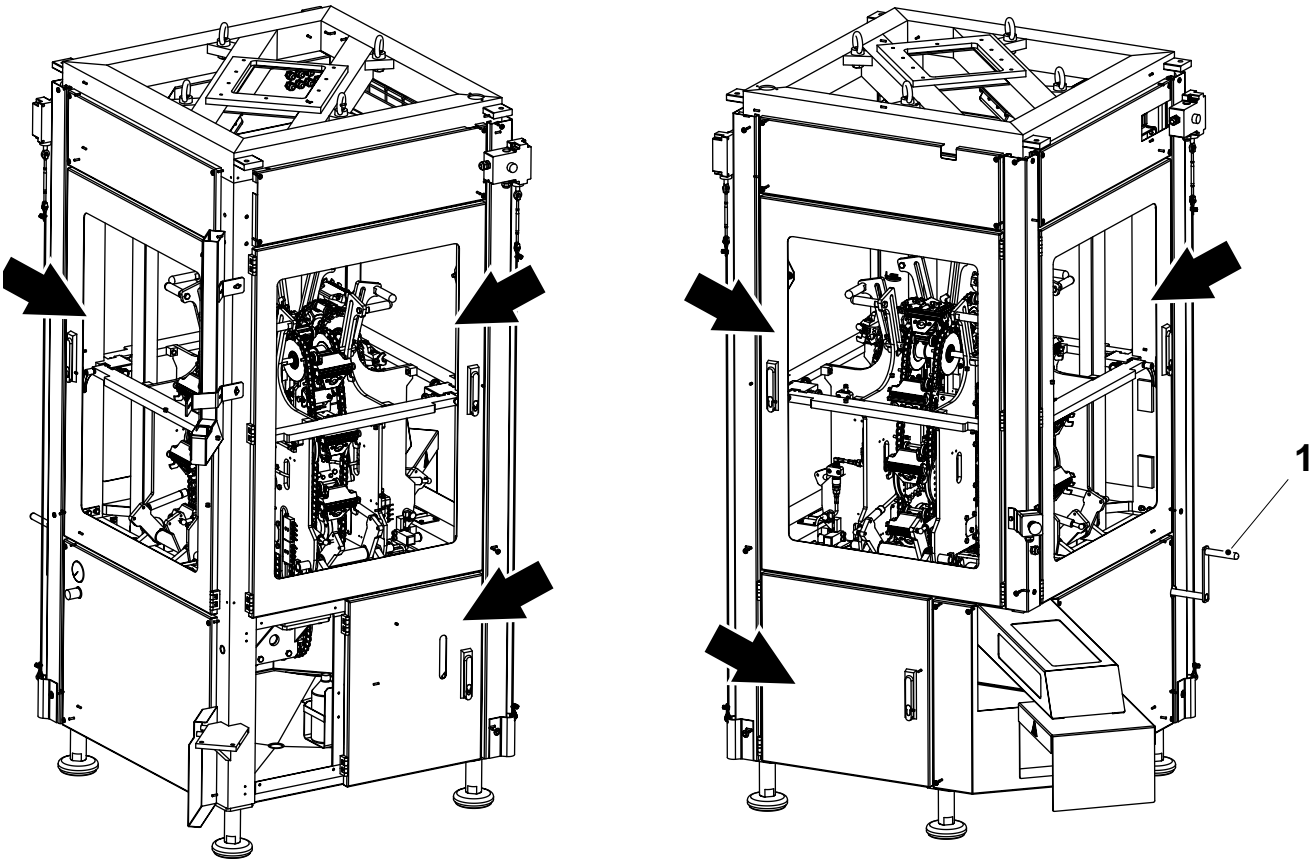

MM2.21TS100444en.fm

1 Crank

5.2 Frame

SPC reference	2524101-0100

5.2-1 Frame - description

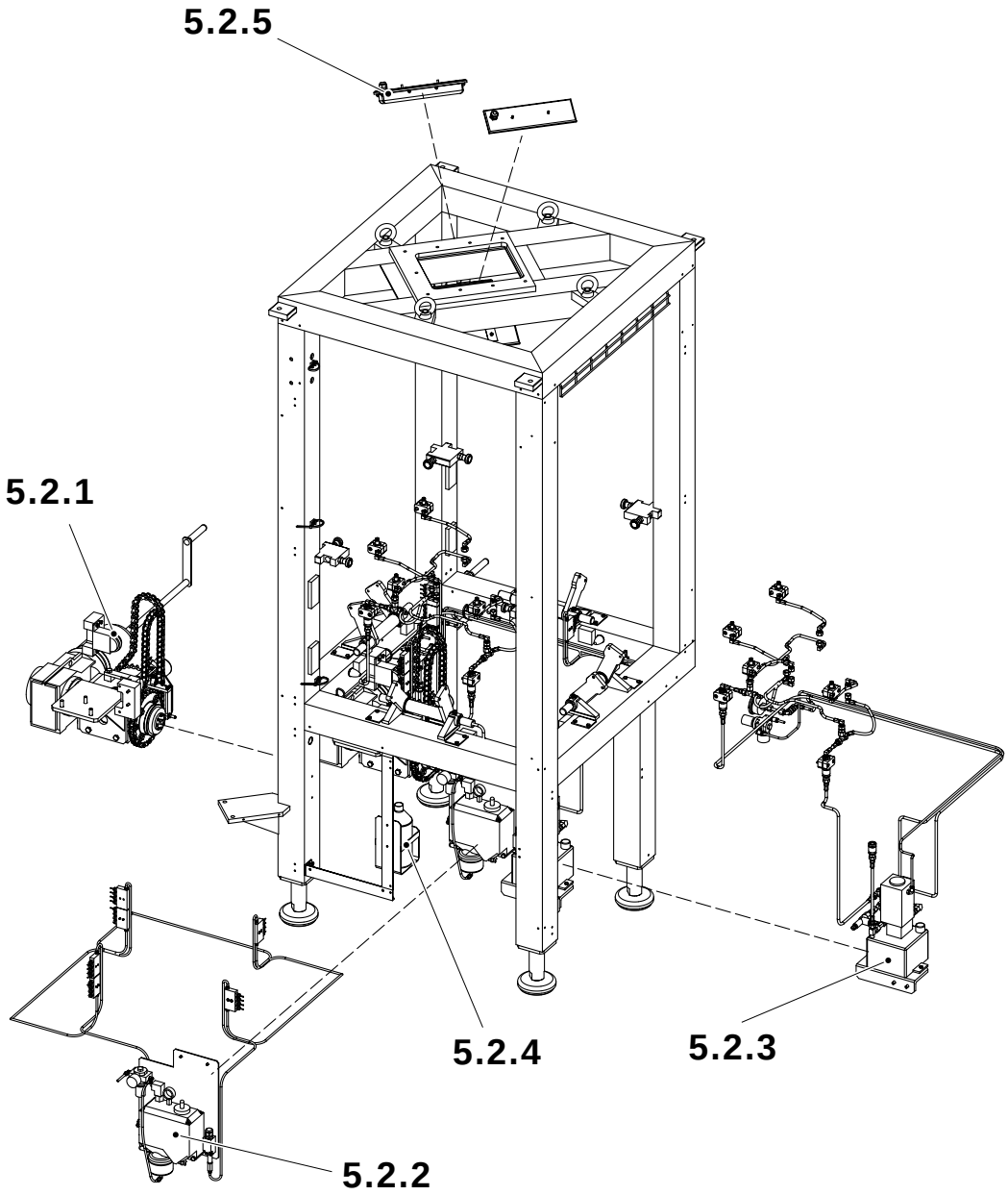

5.2.1 Drive unit
5.2.2 Central lubrication
5.2.3 Hydraulic system
5.2.4 Filter drain
5.2.5 Light fixture - No description

MM2.21TS100444en.fm

5.2.1 Drive unit

SPC reference	2523913-0100

5.2.1-1 Drive unit - check lubrication

Machine Status	
SPC reference	

Check that the oil distributor brushes (2) bear correctly against the chains and that oil is delivered.

Check the oil level in the bevel gear (1), the oil level shall be visible in the sight glass (3). Top up with oil if needed, see **Lubricants** for oil type.

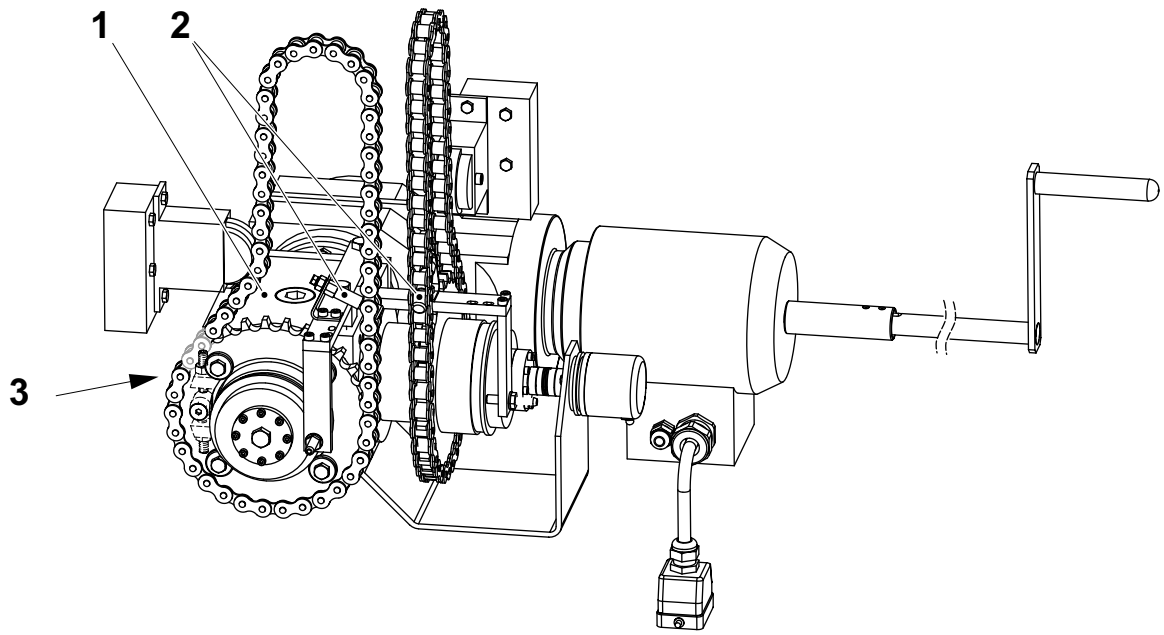

MM2.21TS100444en.fm

1 Bevel gear
2 Oil distributor brush
3 Sight glass

5.2.1-2 Drive unit - check chains, sprockets and chain tensioners

Machine Status	
SPC reference	2523913-0100

Check the:

- chains (2)
- sprockets (6)
- chain tensioner (1)

for wear.

Change as required, see 5.2.1-5 Drive unit - change chain tensioner and 5.2.1-6 Drive unit - change sprockets and chains.

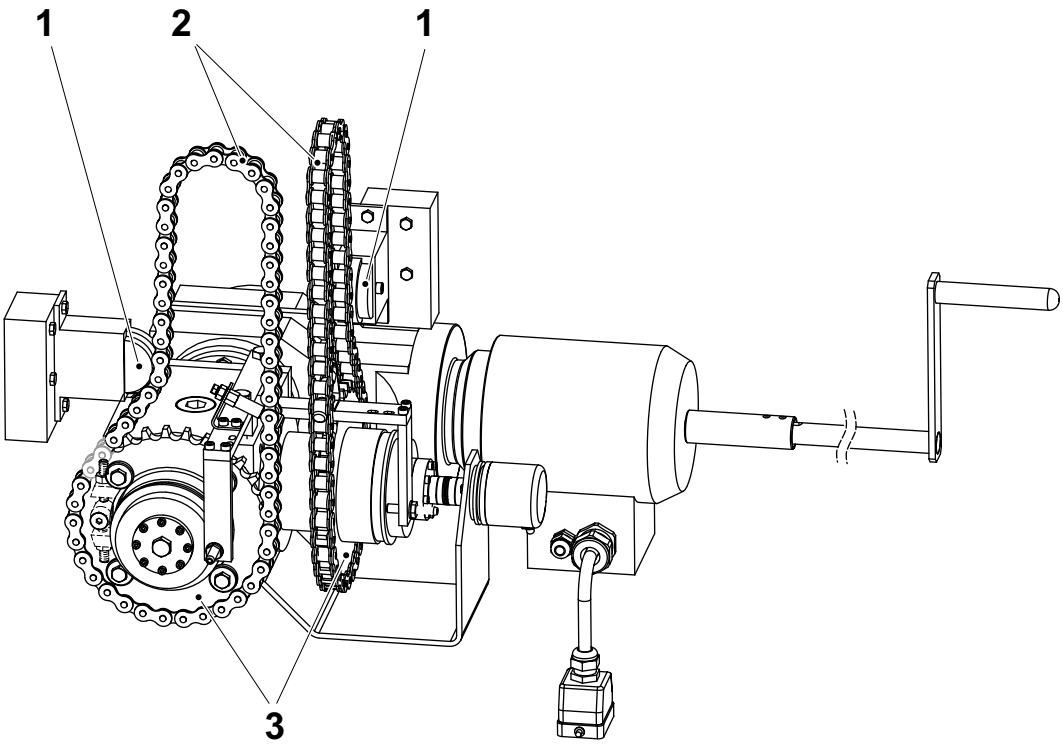

1 Chain tensioner
2 Chain
3 Sprocket

MM2.21TS100444en.fm

5.2.1-3 Drive unit - check crank

Machine Status	
SPC reference	2523913-0100

Check that the alarm panel indicates that the crank (1) is inserted.

If not, check/set the proximity switch and change if fault.

Check function of the push out spring (2).

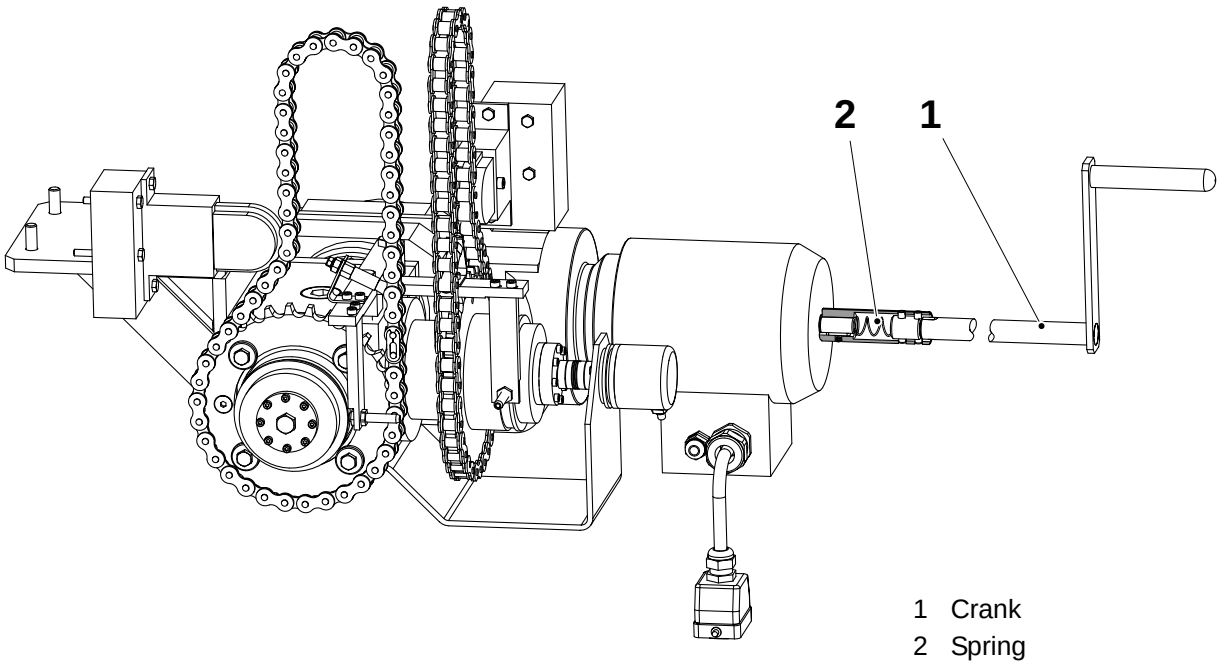

1 Crank
2 Spring

MM2.21TS100444en.fm

5.2.1-4 Drive unit - change bevel gear oil

Machine Status	
SPC reference	2523913-0100

Remove the oil plug (2). Remove the oil drain plug (4) at the bottom of the bevel gear (3) and drain the oil into a can.

The oil level shall be in the middle of the sight glass (1).

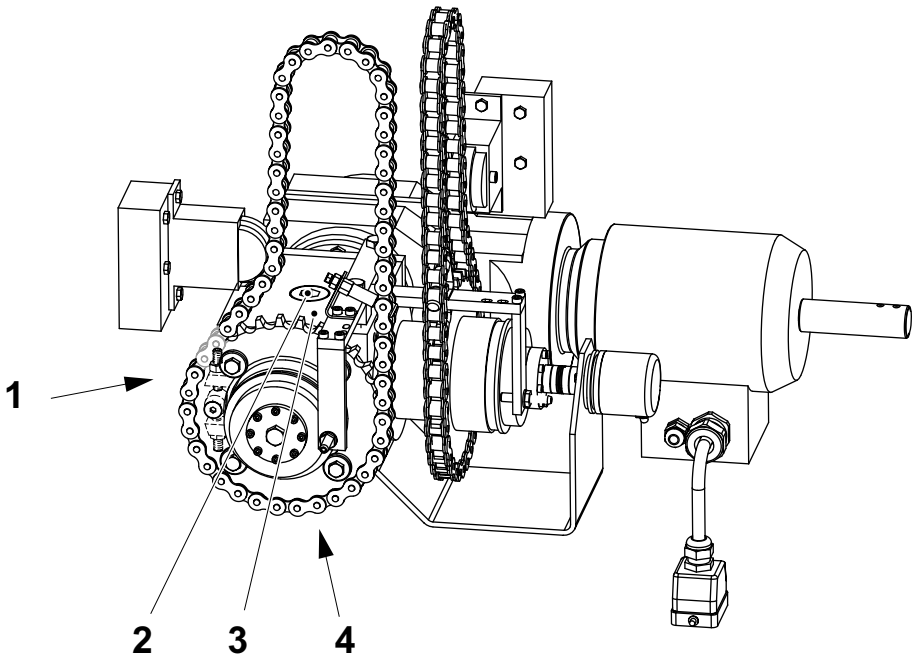

1 Sight glass
2 Oil plug
3 Bevel gear
4 Drain plug

MM2.21TS100444en.fm

5.2.1-5 Drive unit - change chain tensioner

Machine Status	
SPC reference	2523913-0100

Remove the screws (1) holding the chain tensioner (2).

Note! Before installing the new chain tensioner, remove the three lock screws (3). Each screw is compressing one spring, by removing the screw, the spring is activated.

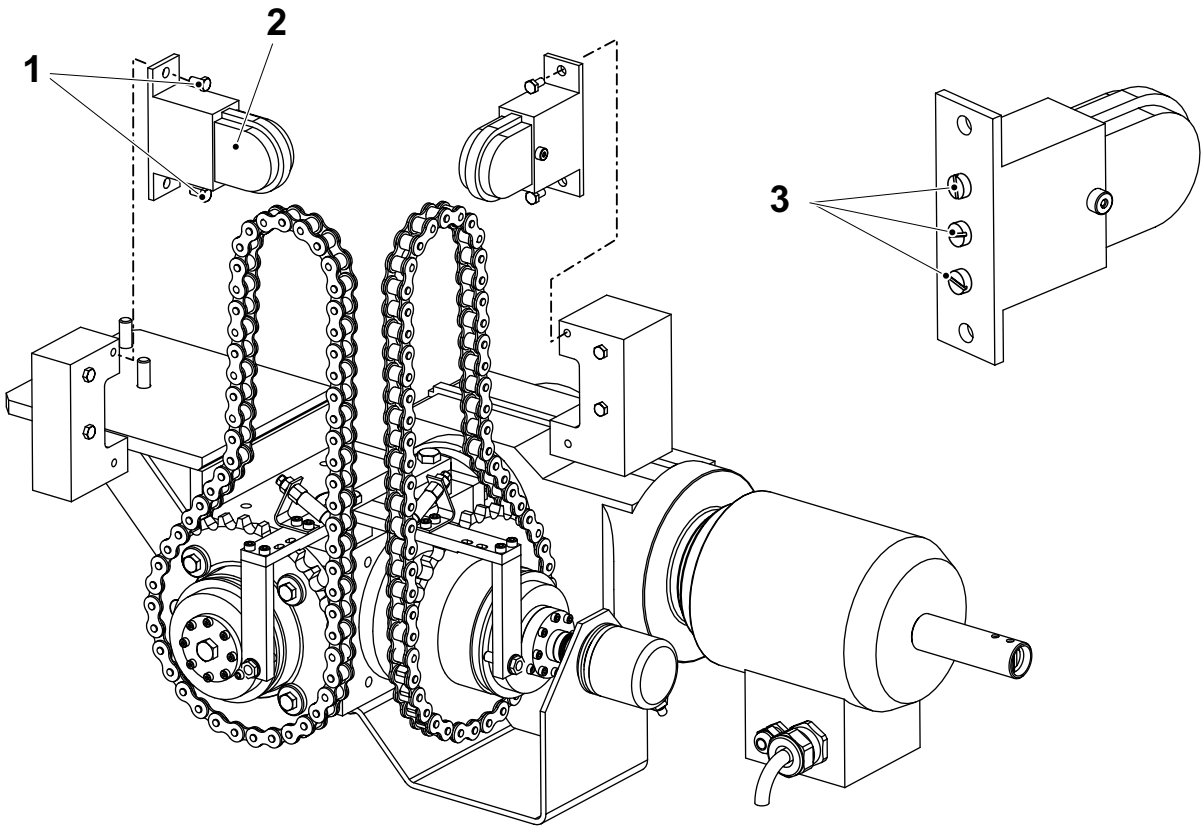

MM2.21TS100444en.fm

1 Screw
2 Chain tensioner
3 Lock screw

5.2.1-6 Drive unit - change sprockets and chains

Machine Status	
SPC reference	2523913-0100

Pressure side, side 4

a) Before removing the drive chains, crank the machine until the reference marks (1) for the sprockets are opposite the marks on the bevel gear and the reference mark (2) for the pressure side sprocket. If there are no reference marks, make them.

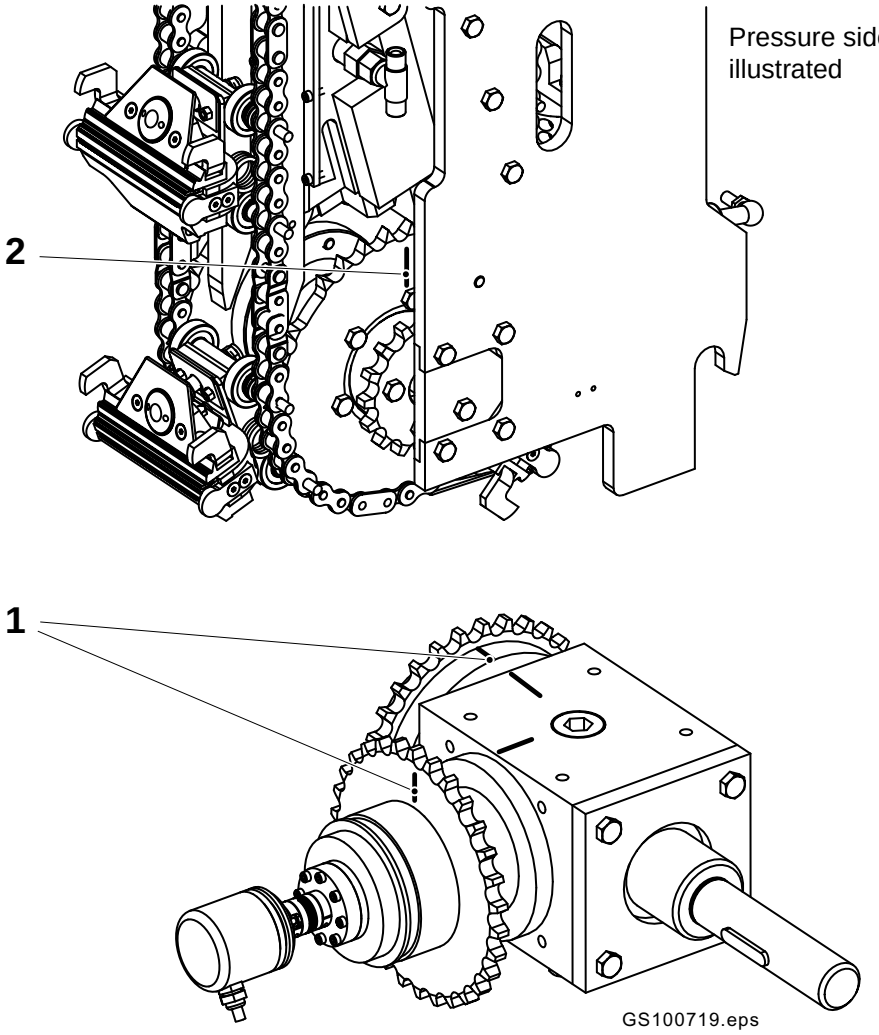

1 Reference mark, sprockets - gearbox
2 Reference mark, sprocket - side frame

(Cont'd)

MM2.21TS100444en.fm

(Cont'd)

b) Remove the grub screw in the coupling (6). Remove the three screws (5) and pull out the angle encoder (7).

c) Remove the bracket (3).

d) Remove the bracket (4) with the proximity switch.

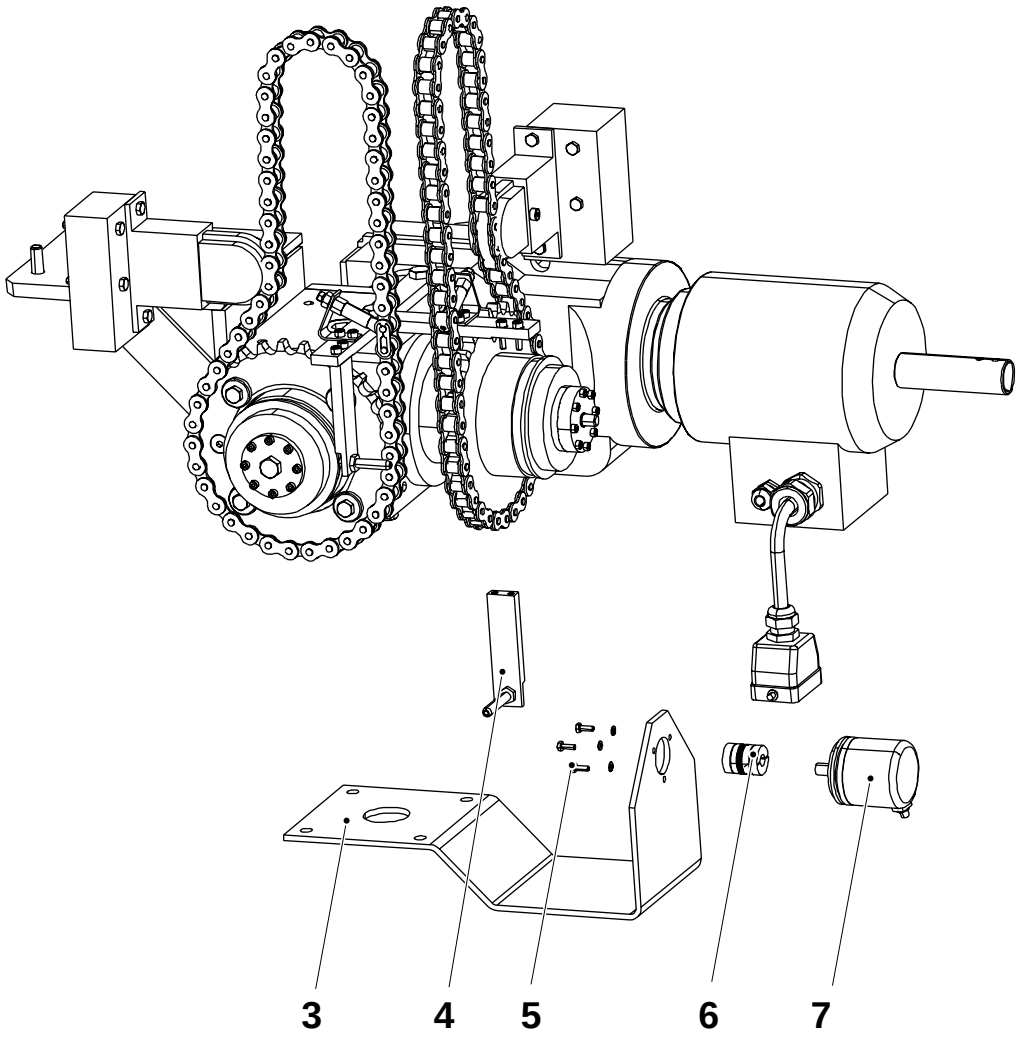

3 Bracket
4 Bracket, proximity switch
5 Screw
6 Coupling
7 Angle encoder

MM2.21TS100444en.fm

(Cont'd)

(Cont'd)

e) Remove the chain lock and remove the chain (8).

f) Remove the screws (14) and remove the adapter (13).

g) Remove the screw (12) and pull out the safety clutch (11) with sprocket (10).

h) Remove the screws (9) attaching the sprocket (10) to the safety clutch (11).

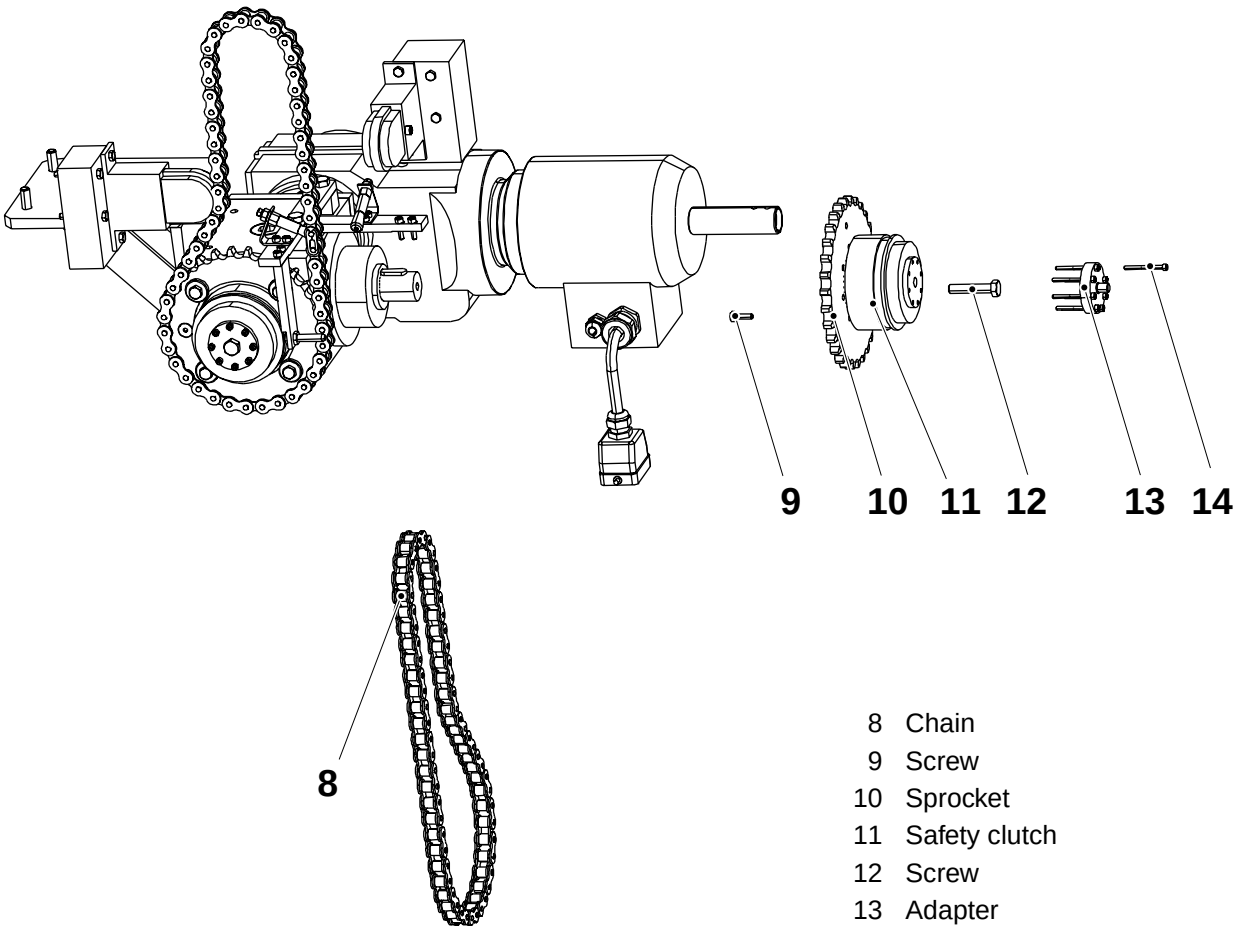

8 Chain
9 Screw
10 Sprocket
11 Safety clutch
12 Screw
13 Adapter
14 Screw

(Cont'd)

MM2.21TS100444en.fm

(Cont'd)

Pressure side, side 3

a) Remove the bracket (19) with the proximity switch.

b) Remove the chain lock and remove the chain (15).

c) Remove the screw (16) for the tensioner, the four screws (17) with washers and lift out the sprocket (18).

d) With the old sprocket as a template, make a reference mark on the new sprocket.

e) Install the new sprockets observing the reference marks.

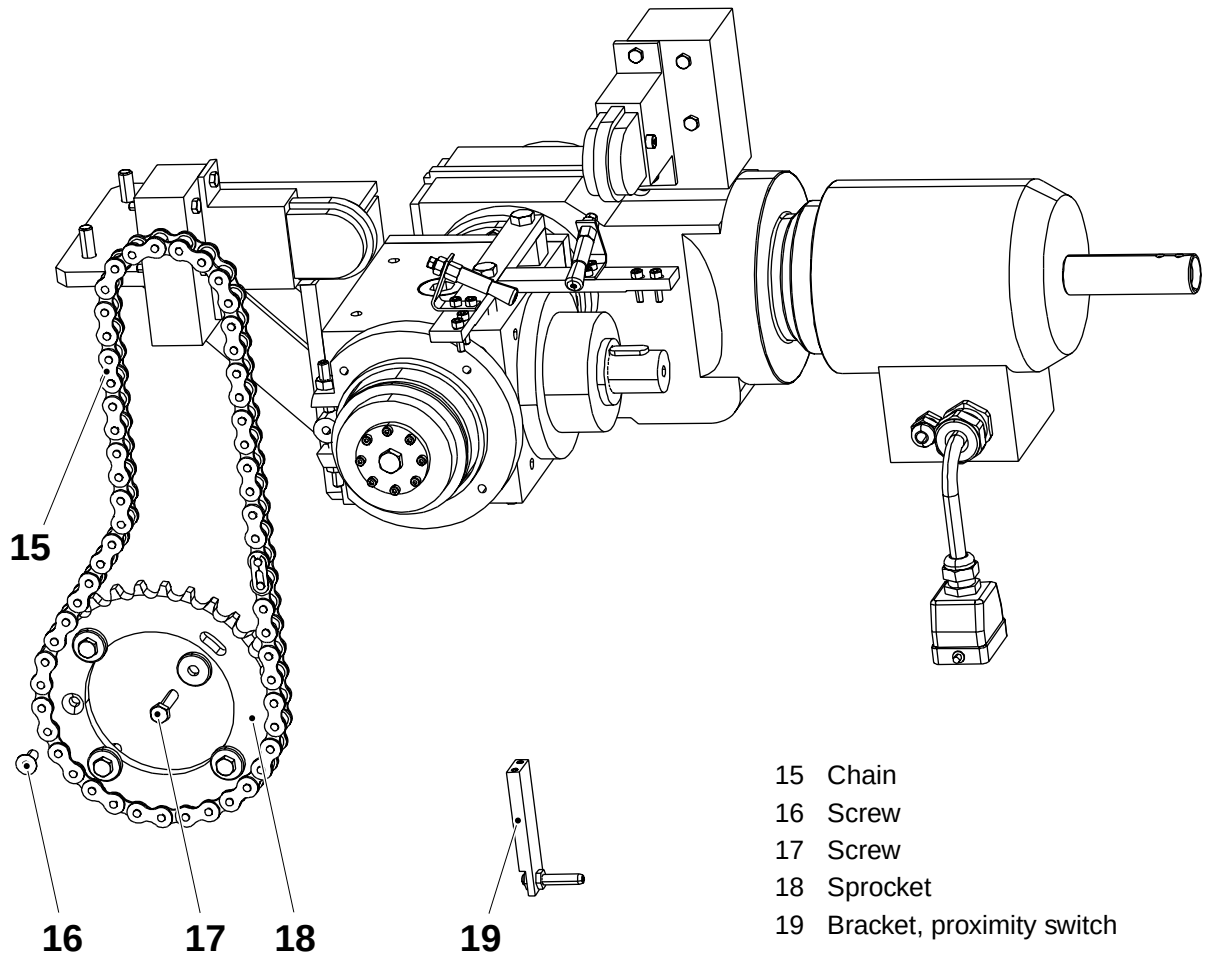

15 Chain
16 Screw
17 Screw
18 Sprocket
19 Bracket, proximity switch

MM2.21TS100444en.fm

(Cont'd)

(Cont'd)

f) When installing the drive chains, observe the reference marks (2) for both pressure sides and the reference marks (1).
Use new split pin for the chain lock.

g) Set according 5.2.1-8 Drive unit - set package length.

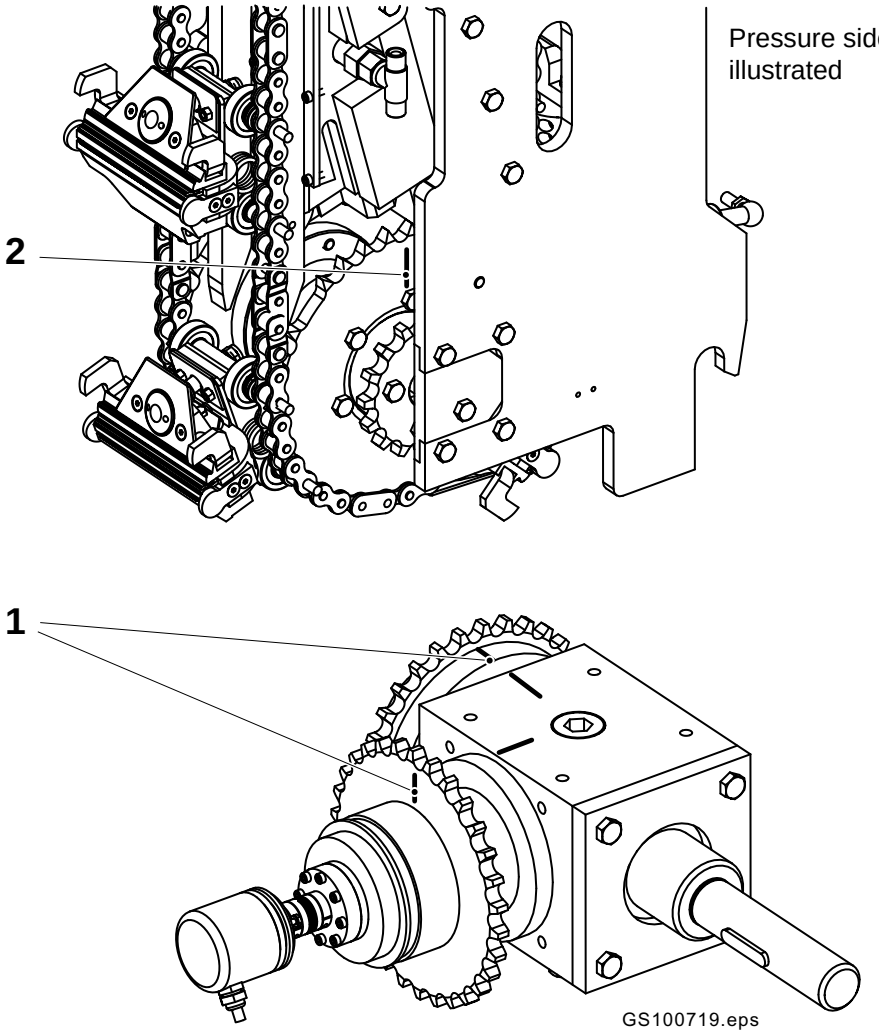

1 Reference mark, sprockets - gearbox
2 Reference mark, sprocket - side frame

MM2.21TS100444en.fm

5.2.1-7 Drive unit - check safety clutch

Machine Status	
SPC reference	2523913-0100
Template	

Remove the drive chains.

Fit the template (1) with the screws (2) as illustrated.

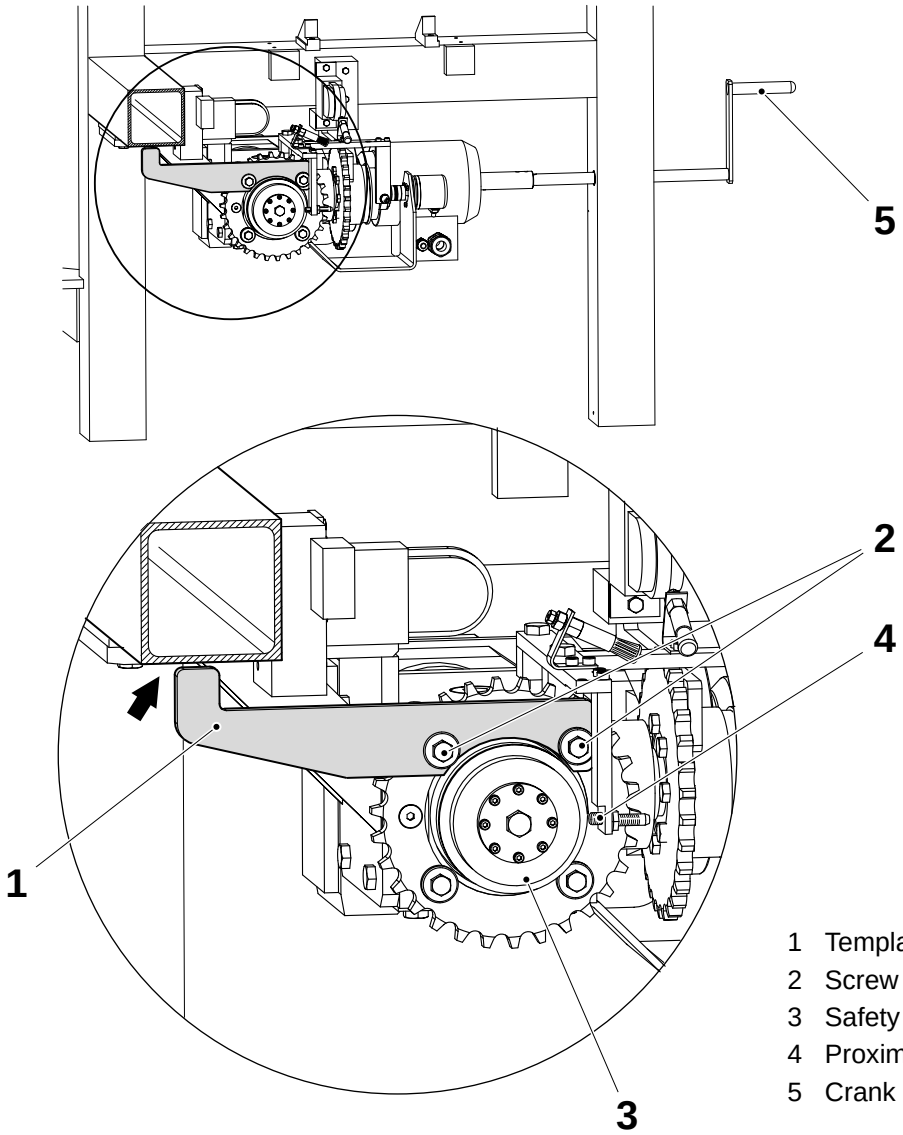

1 Template
2 Screw
3 Safety clutch
4 Proximity switch
5 Crank

MM2.21TS100444en.fm

(Cont'd)

(Cont'd)

Use the crank (5) to turn the sprockets until the template faces the surface of the beam (at arrow). Crank gently further, and check that the safety clutch releases. The safety clutch (3) will move out 1.8 mm when released. Check for indication on the alarm panel, if none, adjust the position of the proximity switch to be 0.5 mm from the safety clutch.

Turn the sprocket backwards to reset the safety clutch. Reset the alarm and check that the alarm indication is gone. If not, readjust the proximity switch.

Remove the tempalate, install the screws (2) and remove the crank.

Install the drive chains, see 5.2.1-6 Drive unit - change sprockets and chains.

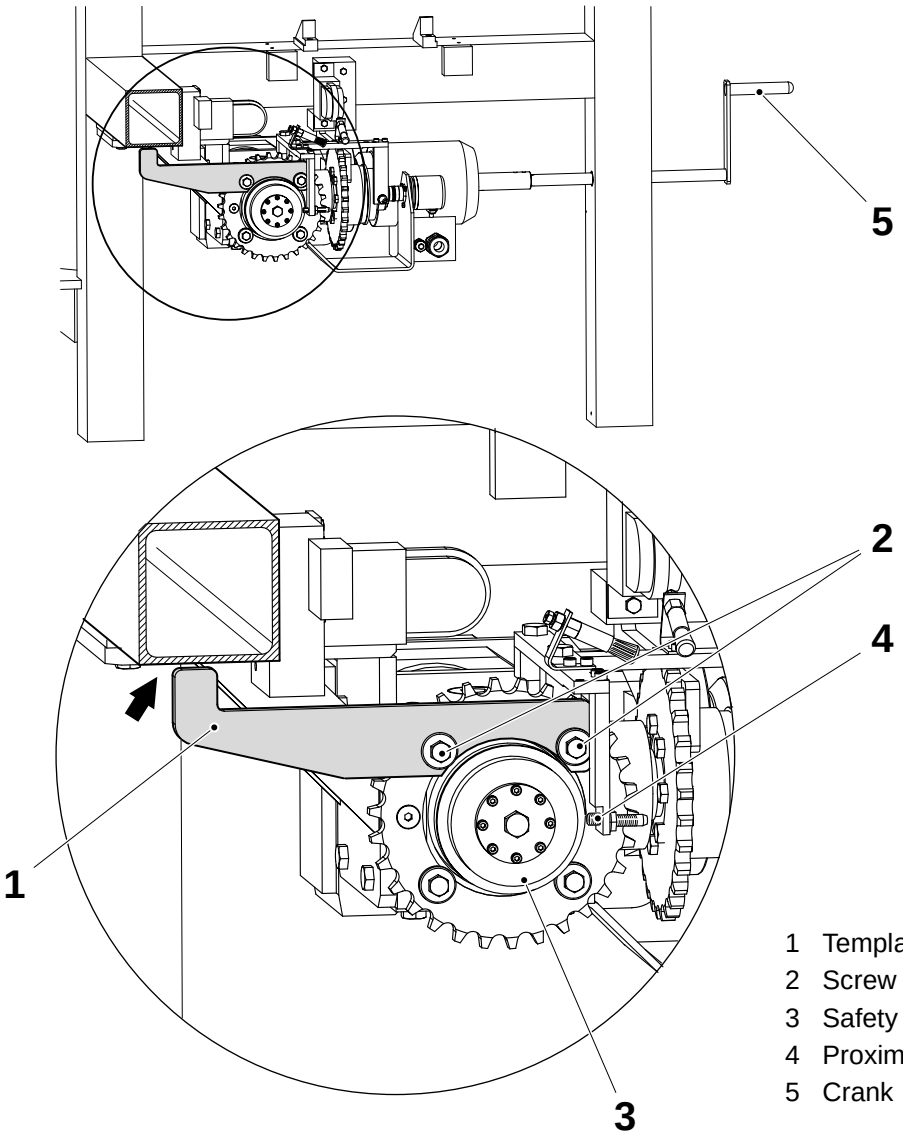

1 Template
2 Screw
3 Safety clutch
4 Proximity switch
5 Crank

MM2.21TS100444en.fm

5.2.1-8 Drive unit - set package length

SPC reference	2523913-0100
Template	2569692-0100

Setting against packages

The setting below is made to fine adjust the package length, to get **A** = **B** (± 1 mm).

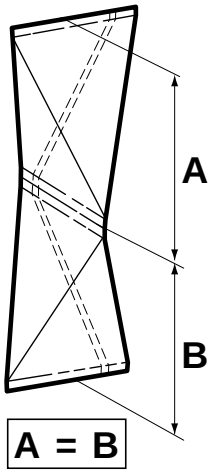

Note! When producing packages for test measuring, the design correction cylinders shall be forced off (0, 0, 0).

a) Loosen the four screws (5) for the sprocket.

b) Loosen the lock nuts (2) and (3) and turn the sprocket by turning the set screws (1) and (4).

c) Adjust until **A = B** (± 1 mm).
If the prolonged holes in the sprocket are out of adjusting range, move the chain one link relative the sprocket or change the relation between the drive sprocket according to Relation between sprockets on page 232.

d) Tighten the screws (4).

Angle encoder

The angle encoder (6) does not need any timing adjustments. When the machine has been powered up, the angle encoder will automatically be set to correct value during slow inch.

MM2.21TS100444en.fm

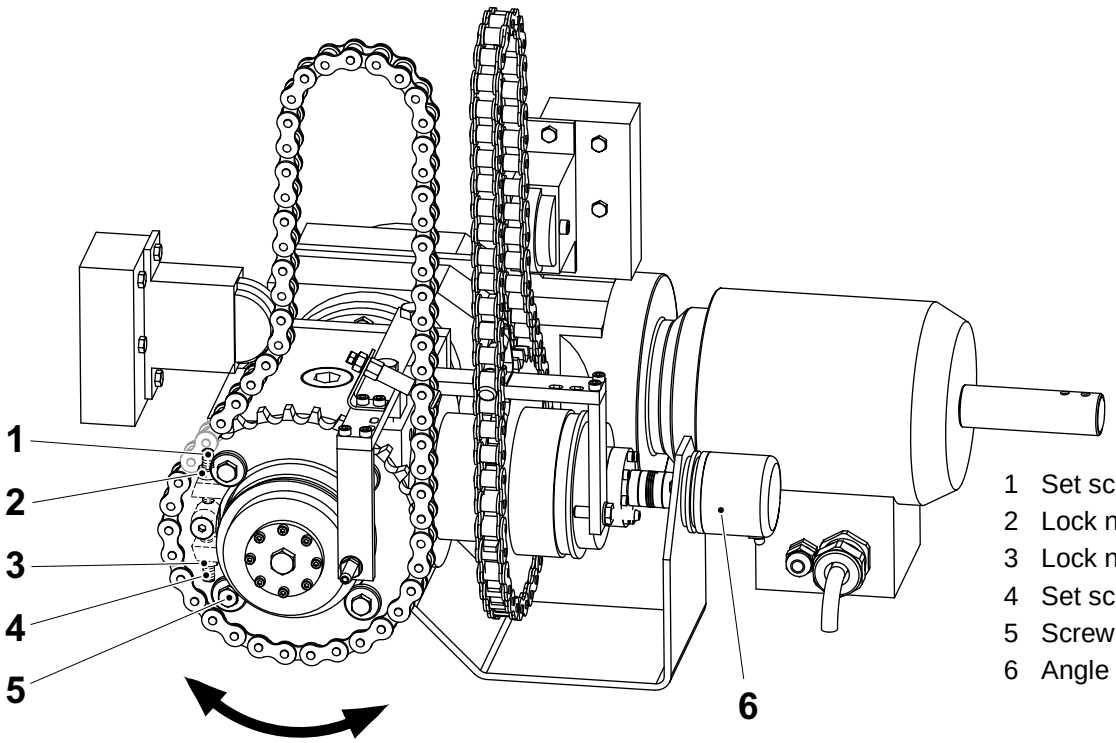

1 Set screw
2 Lock nut
3 Lock nut
4 Set screw
5 Screw
6 Angle encoder

Setting with templates

The correct package length is achieved when the bearing rollers (2) and (4) for the pressure jaws touches the templates (1) and (3) at the same time. Do as follows:

a) Fit the template (1) for pressure side 3 as illustrated.

b) Turn the sides until the bearing roller (2) just touches the template (1).

c) Fit the template (3) for pressure side 4.

d) Adjust the sprocket (5) (as described on previous page) until the bearing roller (4) just touches the template (3).

e) Tighten the screws for the sprocket.

f) Re-check the bearing rollers position relative the templates before removing the templates.

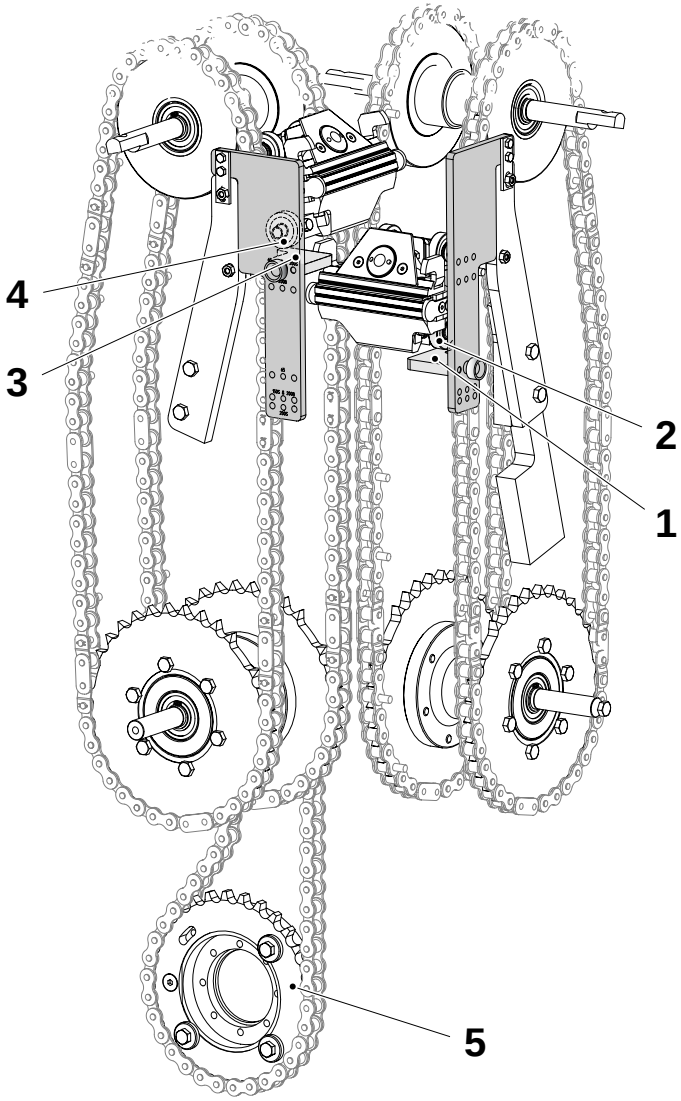

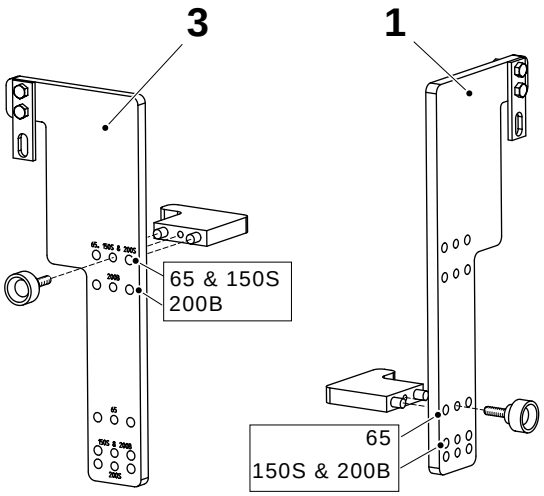

1 Template, pressure side 3
2 Bearing roller
3 Template, pressure side 4
4 Bearing roller
5 Sprocket

MM2.21TS100444en.fm

Relation between sprockets

Turning the set screw (9) one turn moves the jaw (1) approximately:

- 2.8 mm for 65 & 200B
- mm for 200S
- 2,2 mm for 150S

The drive sprocket (7) can be adjusted 12° within the long-holes (8). This is also the tooth pitch (360°/30 teeth=12°/tooth). If the adjustment is not reached within the long-hole; move the drive chain (6) one link, or, for the 65 & 200 variants, move the jaw chains (2) one fully turn (see description on next page).

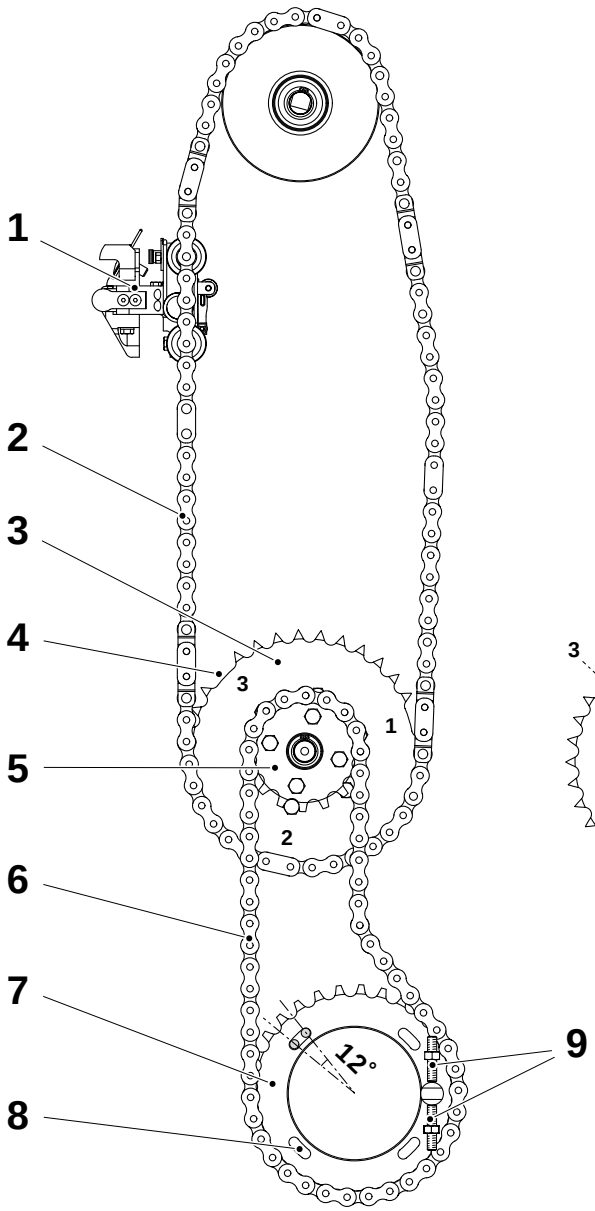

1 Pressure jaw
2 Jaw chain
3 Sprocket
4 Long tooth
5 Drive sprocket, upper
6 Drive chain
7 Drive sprocket
8 Long hole (side 3)
9 Set screw (side 3)

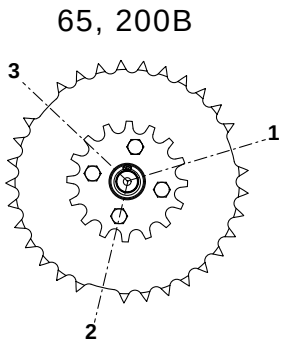

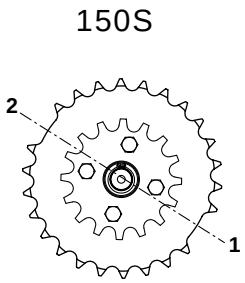

MM2.21TS100444en.fm

65, 200S & 200B

If the drive chain is removed and the jaw chains are rotated one fully turn, the jaw height will change with approx. 13 mm when the drive chain is fitted.

- For these volumes, the sprockets have three long teeth and the jaw chains eigth jaws. Each long tooth transports one jaw one station, and to move jaw no. 1 one cycle, the sprocket movement is 8/3 = 2 $^{2}/_{3}$ turns (120° for each jaw).
- The small drive sprocket has 16 teeth, and this tooth pitch (360°/16 teeth=22.5°/tooth) will change the relation towards the gear box sprocket for each turn of the jaw chains (drive chain removed). Each turn of the jaw chain displaces the sprocket with 1/3 tooth, so it will match the gear box sprocket every third turn.

Note! The jaw sprocket and the small drive sprocket are assembled on the same hub. If removed and re-assembled, fit the jaw sprocket to the hub using the same holes it was removed from. If not, the relation between the hub sprockets will change.

The illsutration below shows (in the shadowed circles) the tooth displacement for each turn (180°) of the jaw chain (drive chain removed).

65, 200S & 200B
Jaw chain rotated in steps of one turn (8 jaws)
(drive chain removed)

0	1	2	3
Sprocket turns: 0 Tooth displacement: 0	Sprocket turns: 2 $^{2}/_{3}$ Tooth displacement: 1/3	Sprocket turns: 5 $^{1}/_{3}$ Tooth displacement: 2/3	Sprocket turns: 8 Tooth displacement: 0

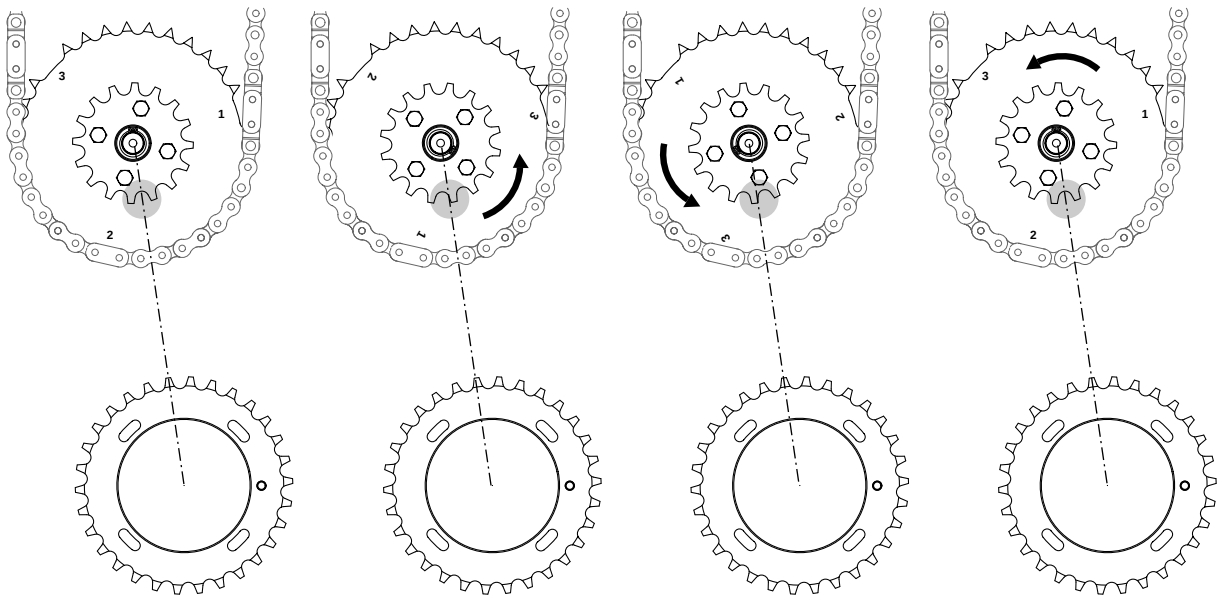

150S

- For this volume, the sprockets have two long teeth and the jaw chains seven jaws. Each long tooth transports one jaw one station, and to move jaw no. 1 one cycle, the sprocket movement is 7/2 = 3 $^{1}/_{2}$ turns (180° for each jaw).
- The small drive sprocket is the same for all variants, and the 16 teeth is evenly divided with 180°, so there will be no change in relation towards the gear box sprocket.
- To change the relation, move the drive chain relative the sprocket.

150S

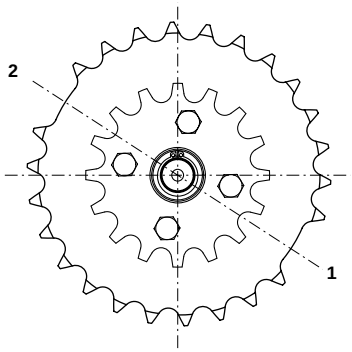

MM2.21TS100444en.fm

5.2.2 Central lubrication

5.2.2-1 Central lubrication - functional description

SPC reference	2556718-0100

The central lubrication system is a one-way system and works like a hydraulic system. This means that the system must be bled to achieve a function free from interference.

The oil is fed from the central lubrication pump through the main line distribution block to the dosing valves. The oil is dosed with a set quantity independent of each other to respective lubrication point connected.

To secure the lubrication, the pump keeps the oil under a certain pressure for a short while. The system is decompressed to a pressure of approximately 0..4 MPa (4 bar).

The remaining pressure is important for the function of the system.
A remaining pressure that is too high does not give any refilling of the dosing valves. If there is no remaining pressure, air might enter the system through leaks etc.

The time needed for the compression, depends on the viscosity of the lubricant, running temperature and the size of the system.

The next lubrication pulse must not start until the dosing valves have been refilled (the system is decompressed).

The lubrication sequence is one lubrication pulse lasting 8 seconds every fifth minute during production.

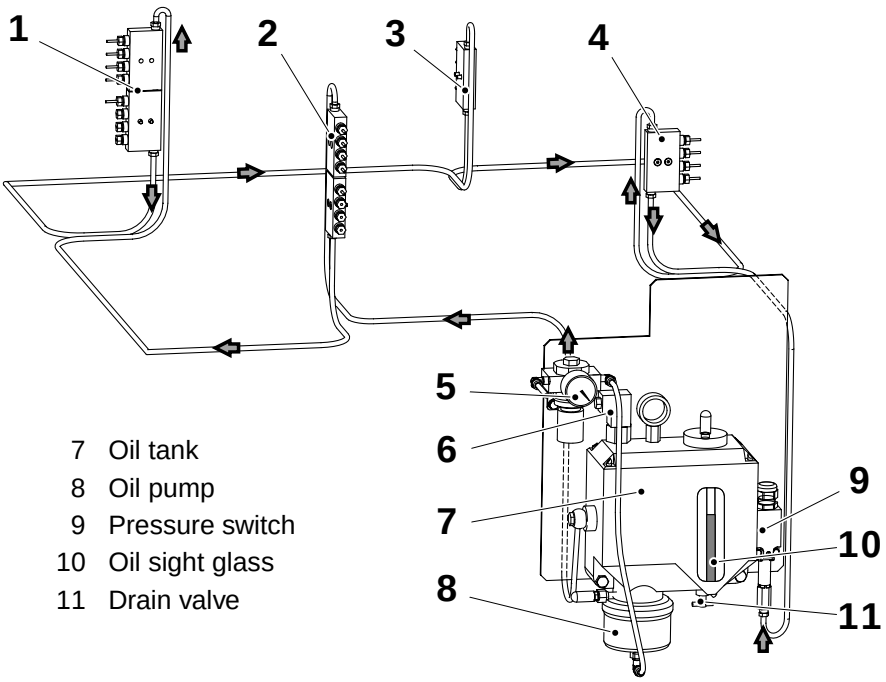

1 Pressure side 3
2 Heating side 2
3 Heating side 1
4 Pressure side 4
5 Air pressure regulator
6 Level switch
7 Oil tank
8 Oil pump
9 Pressure switch
10 Oil sight glass
11 Drain valve

MM2.21TS100444en.fm

5.2.2-2 Central lubrication - check lubricant distribution

Machine Status	
SPC reference	2556718-0100

Start the central lubrication and check:

- for oil leakage at all hose connections
- that oil is distributed to all lubrication points

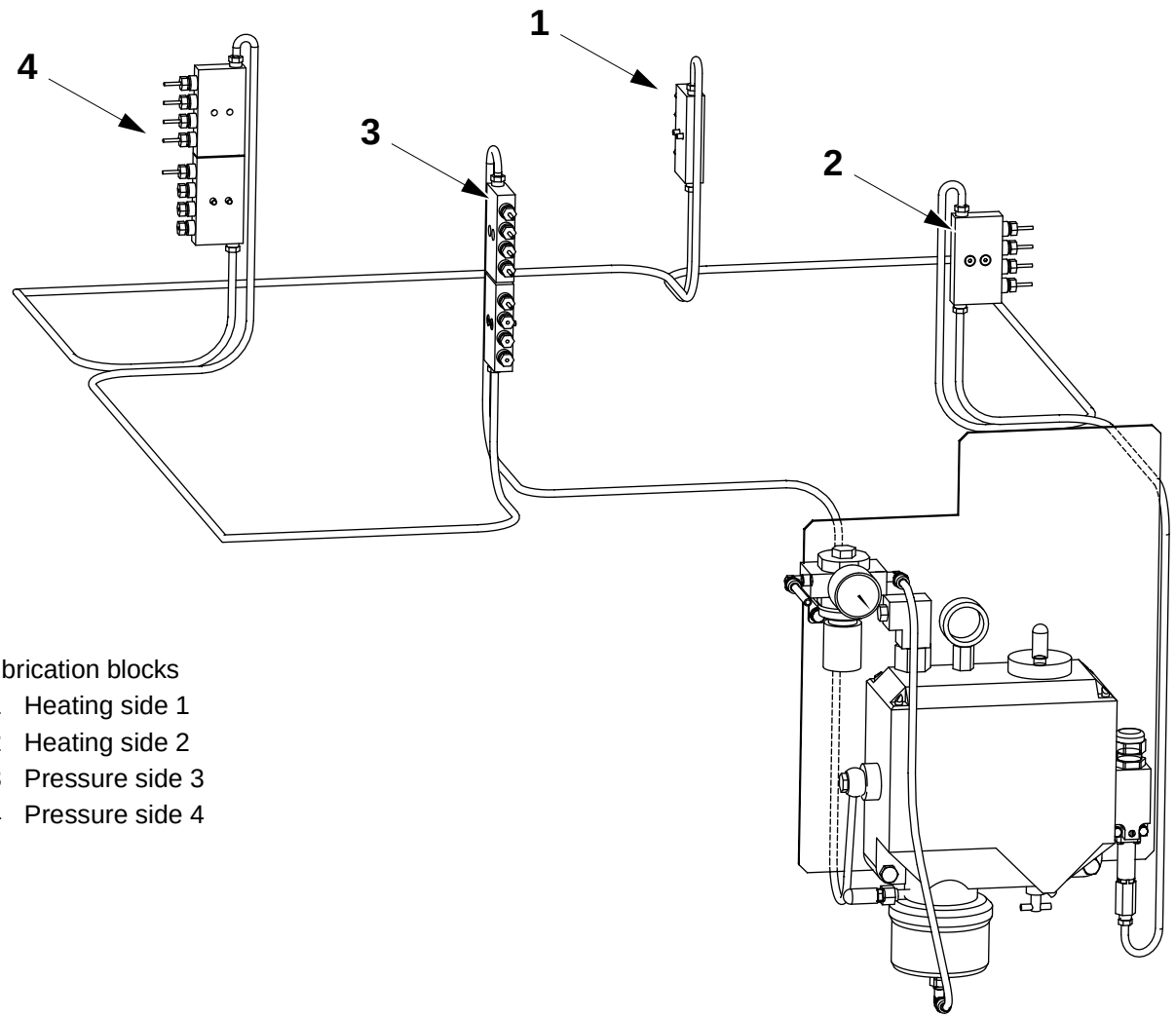

MM2.21TS100444en.fm

Lubrication blocks

1 Heating side 1
2 Heating side 2
3 Pressure side 3
4 Pressure side 4

(Cont'd)

(Cont'd)

Lubrication blocks

Fitting of cone and plugs:

a) Lubricate the parts and tighten the bushings finger-tight.

b) Tighten the bushing for:
- the metering valves one turn (360°) but no more.
- the plugs 1/4 turn (90°) but no more.

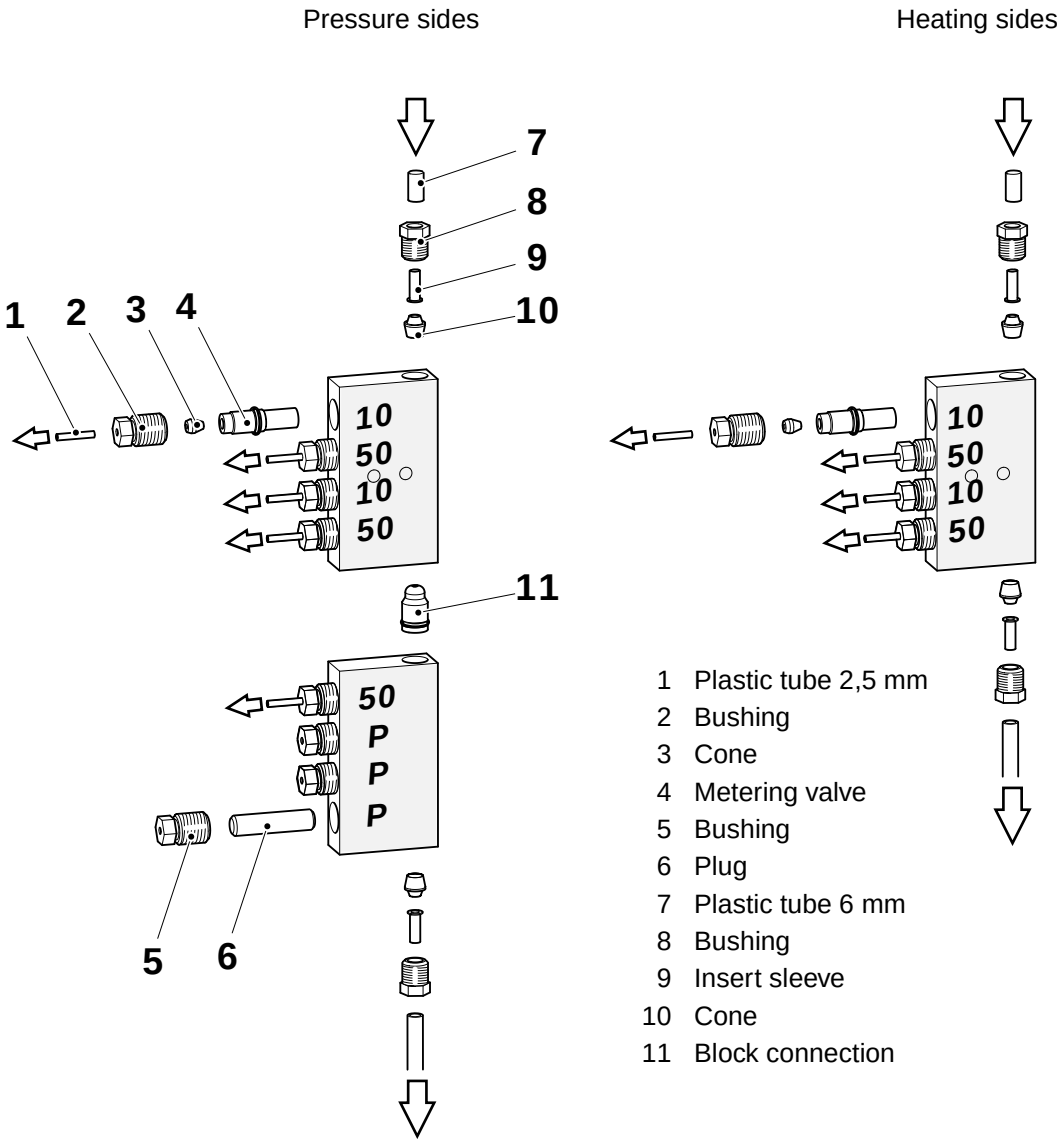

1 Plastic tube 2,5 mm
2 Bushing
3 Cone
4 Metering valve
5 Bushing
6 Plug
7 Plastic tube 6 mm
8 Bushing
9 Insert sleeve
10 Cone
11 Block connection

(Cont'd)

MM2.21TS100444en.fm

(Cont'd)

Lubrication points

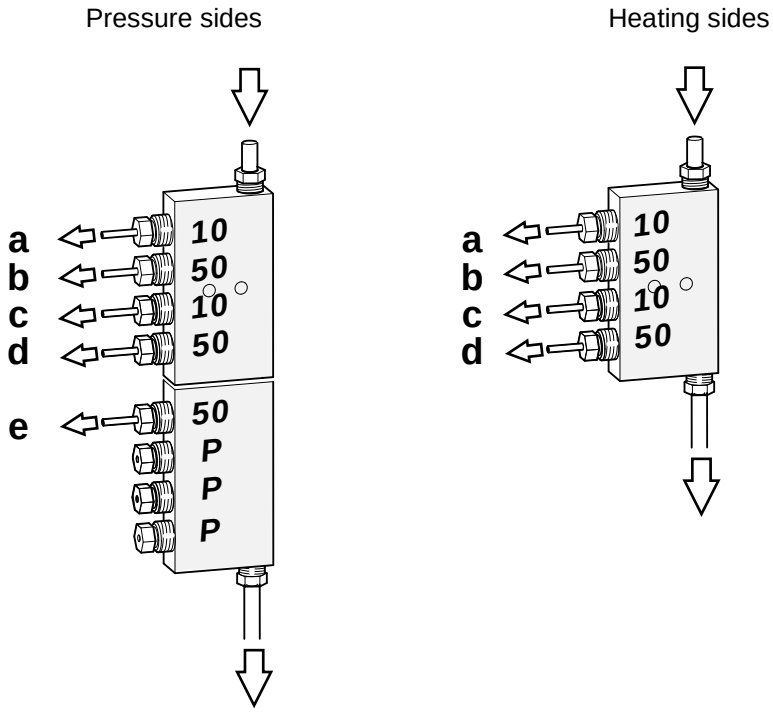

	Pressure sides	Heating sides
a	Roller bar	Roller bar
b	Jaw chain	Jaw chain
c	Roller bar	Roller bar
d	Jaw chain	Jaw chain
e	Drive chain	

MM2.21TS100444en.fm

5.2.2-3 Central lubrication - bleed

Machine Status	
SPC reference	2556718-0100

Start the lubrication pump.

Loosen the bushing (2) at the pressure switch (1) to bleed the system.

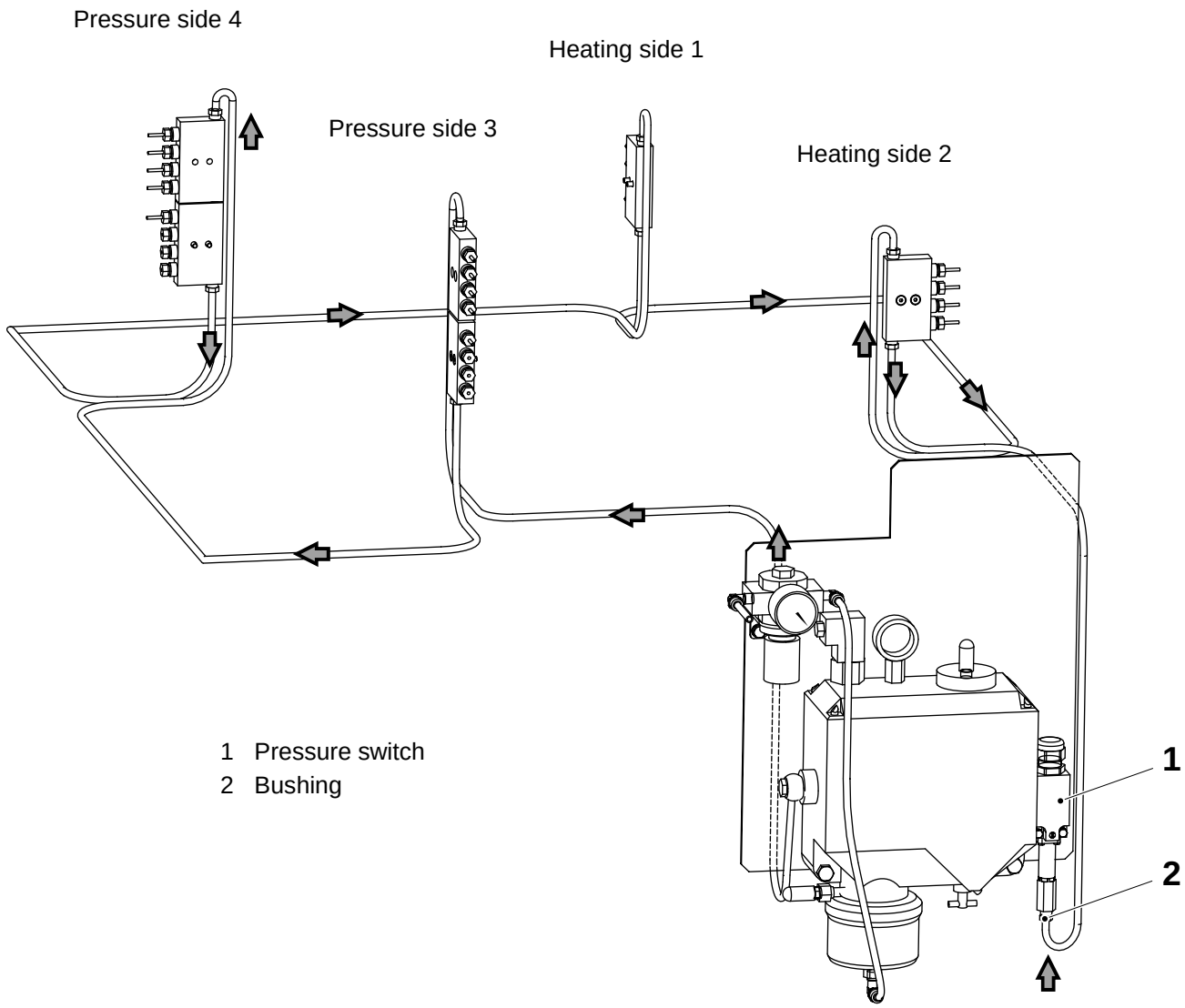

1 Pressure switch
2 Bushing

MM2.21TS100444en.fm

5.2.2-4 Central lubrication - check level switch

Machine Status	
SPC reference	1514495-0100

To check the level switch (1) do the following:

a) Loosen the nut (2) below the level switch.

b) Push up the level switch magnetic float (3) to its top position. Make sure the recessed section is uppermost.

c) With a wiring tester, check continuity between contacts (4) and (5); if there is no continuity, change the level switch.

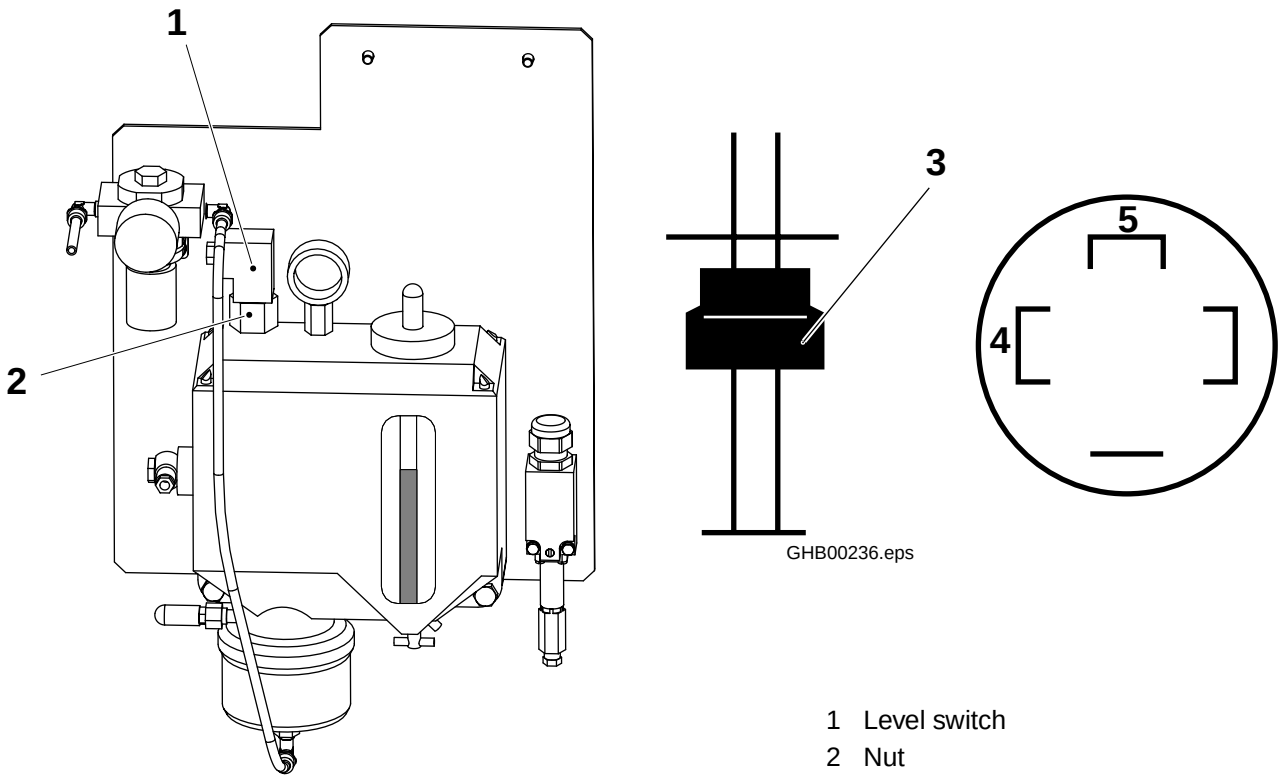

MM2.21TS100444en.fm

1 Level switch
2 Nut
3 Magnetic float
4 Contact
5 Contact

(Cont'd)

5.2.2-5 Central lubrication - check pressure switch

Machine status	Production
SPC reference	1514495-0100

Pressure switch (1)

Unscrew the cap and check that the pin (3) moves when the solenoid valve for the lubrication pump is actuated and the connection of the switch (2) is closed.

Note! To bleed the system unscrew the bushing (4).

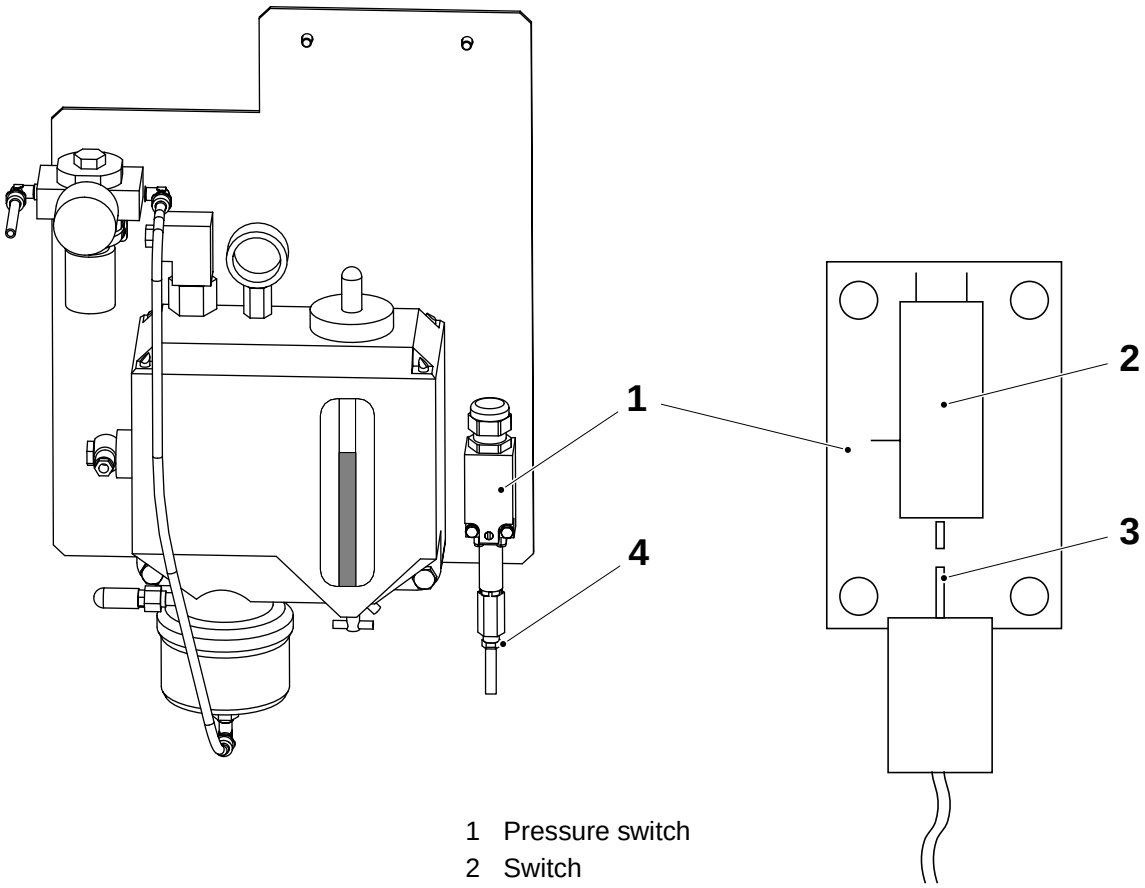

1 Pressure switch
2 Switch
3 Pin
4 Bushing

MM2.21TS100444en.fm

5.2.2-6 Central lubrication - clean oil tank

Machine Status	
Consumables	Lubricant: - oil code V or X
SPC reference	1514495

To clean the oil tank, do the following:

a) Open the drain valve (1) and drain any pollutants into a vessel underneath the machine.

b) Close the drain valve when clean oil comes out.

c) Check the oil level.

If necessary, top up with oil.

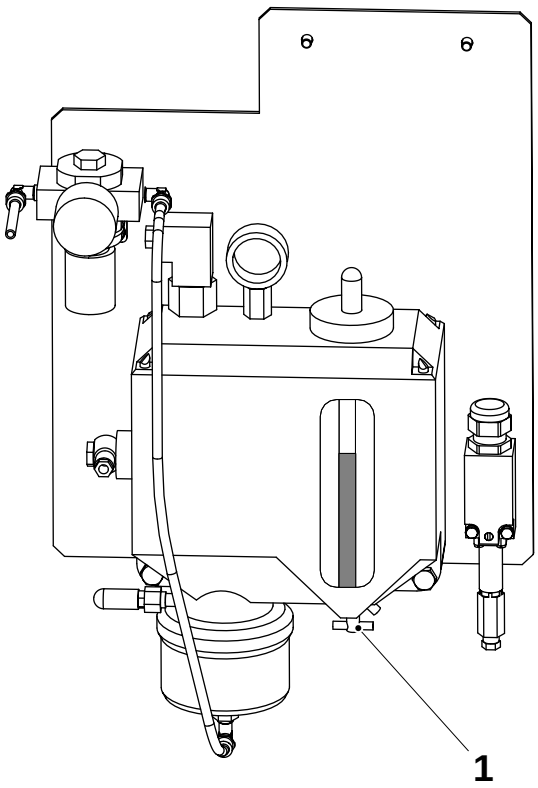

1 Drain valve

MM2.21TS100444en.fm

5.2.2-7 Central lubrication - change oil tank

Machine Status	
Consumables	Lubricant: - oil code V or X
SPC reference	1514495-0100

To change the oil tank and pump do the following:

a) Disconnect the electric contact (1), the oil hose (2), and the air hose (3).

b) Empty the oil tank (4) through the drain valve (5) into a vessel underneath the machine.

c) Remove the screws (6).

d) Remove the oil tank (4), and the oil pump (7).

Assemble in reverse order.

Fill the tank with oil.

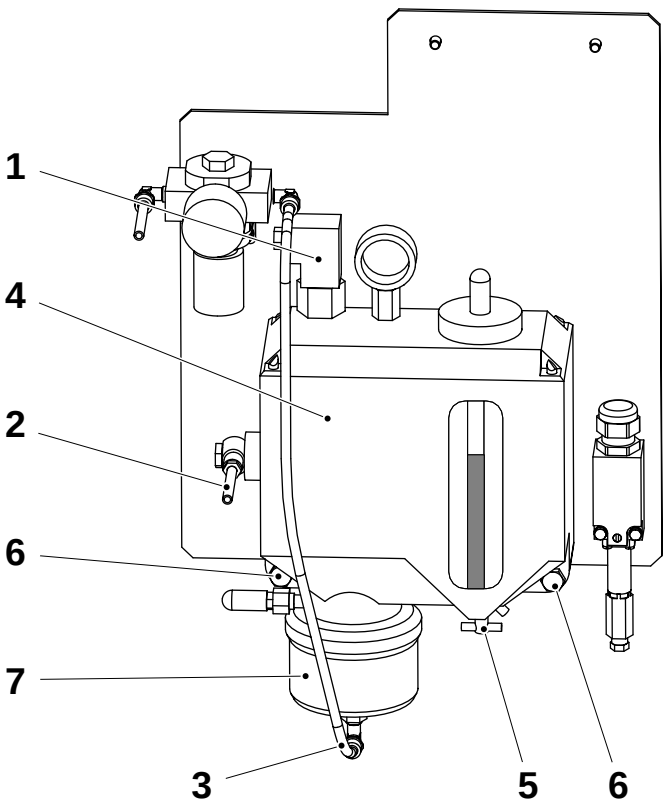

1 Electric contact
2 Oil hose
3 Air hose
4 Oil tank
5 Drain valve
6 Screw
7 Oil pump

MM2.21TS100444en.fm

5.2.2-8 Central lubrication - fault finding

Machine status	Production
SPC reference	2556718-0100

If no pressure builds up in the system

To find the fault do the following:

a) Check the oil level.

b) Disconnect one oil hose and check if there is oil pressure in the hose when the solenoid valve is opened.

c) If there is still no pressure, disconnect the air hose at the pump and check if there is air pressure in the hose when the solenoid valve is opened. Use a pressure gauge (range 0 - 10 bar). Check that the air pressure to the pump is 4-10 bar.

d) Check all pressure lines and manifolds (distribution blocks) for leakage.

e) If all these checks have been carried out without finding any fault, replace the pump. Vent the lubrication system after replacing the pump.

If oil is not delivered to one or more of the lubrication points

To find the fault, do the following:

a) Vent the main oil line concerned.

b) Check the capacity of the pump with the aid of a pressure gauge in accordance with the directives on periodical maintenance.

c) Replace the metering cartridge if all these checks have been carried out without finding any fault.

MM2.21TS100444en.fm

5.2.3 Hydraulic system

SPC reference	1514505

5.2.3-1 Hydraulic system - description

Machine Status	
SPC reference	

The pressure header (1) builds up and maintain a constant hydraulic pressure for the plunger (4).

The plunger moves downwards and presses against the bracket (2), which is attached to the frame. This will make the pressure rail (3) move in the direction of the arrow in the illustration, and the small horizontal movement creates the required pressure between the pressure- and the heating jaws.

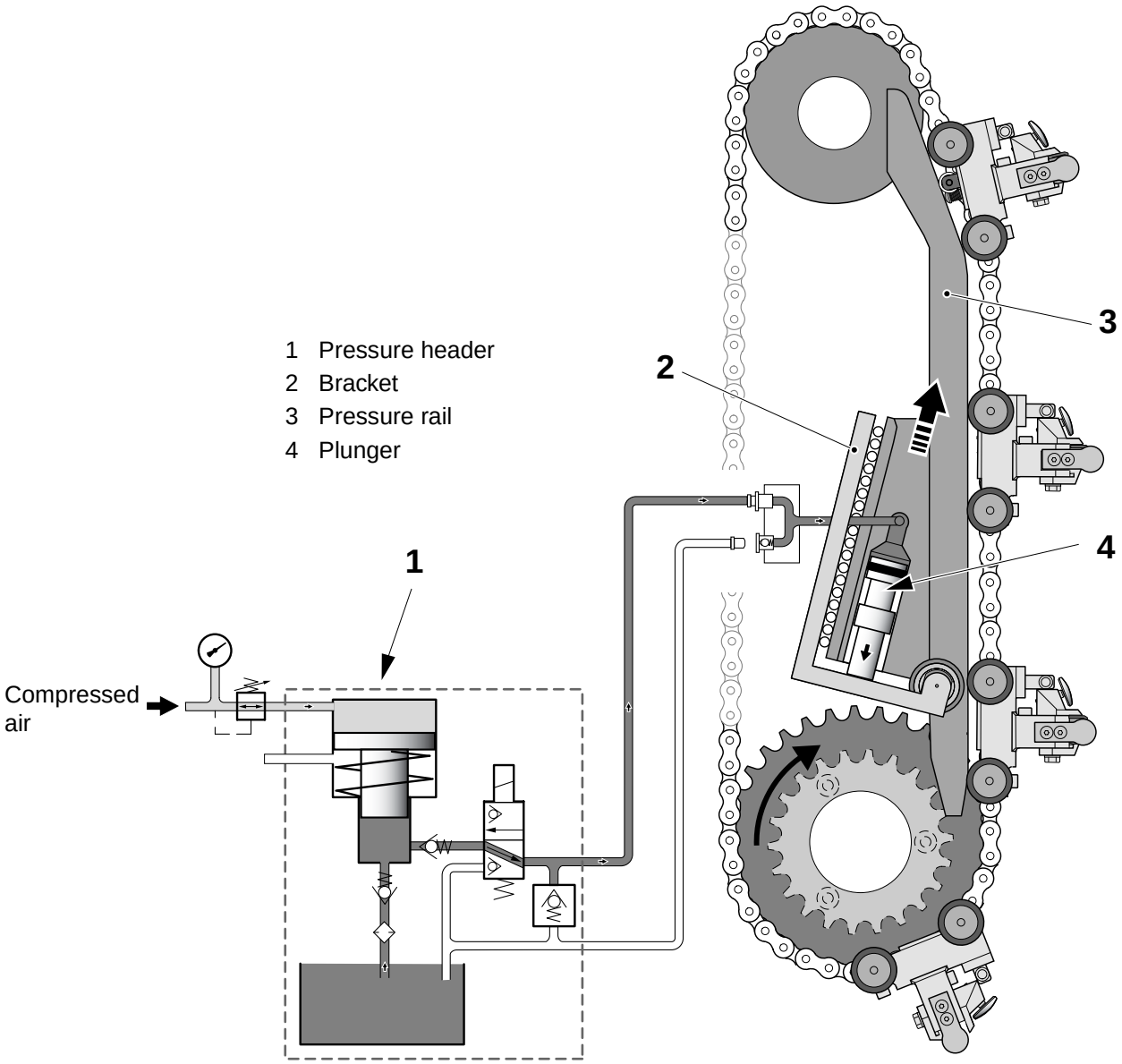

MM2.21TS100444en.fm

5.2.3-2 Hydraulic system - check

Machine Status	
SPC reference	1514505-0100

Check all connections for leakage.

If the jaw pressure not is achieved, bleed the system.

5.2.3-3 Hydraulic system - bleed

Machine Status	
SPC reference	1514505-0100

Connect the bleeding hose (1) and run the pressure header.

Repeat for all plungers.

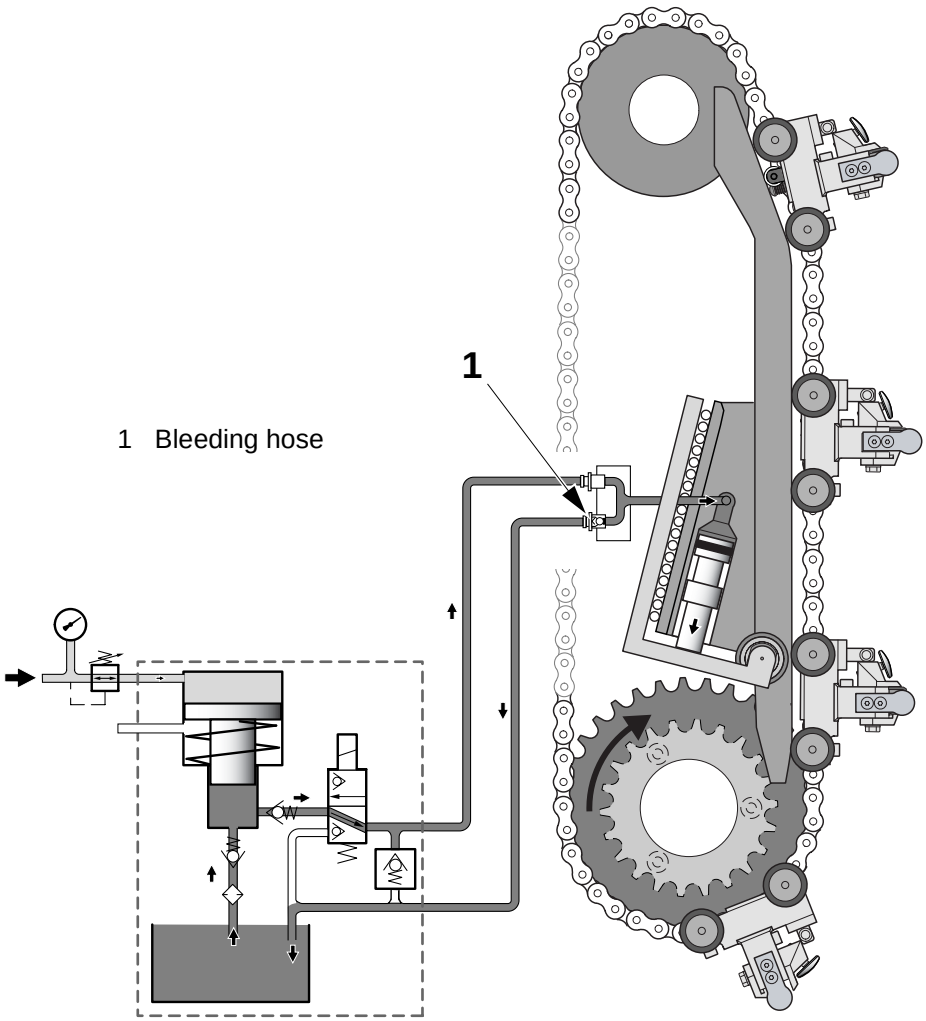

1 Bleeding hose

MM2.21TS100444en.fm

5.3 Pressure side

5.3-1 Pressure side - description

SPC reference	2524107 (side 3) 2524108 (side 4)

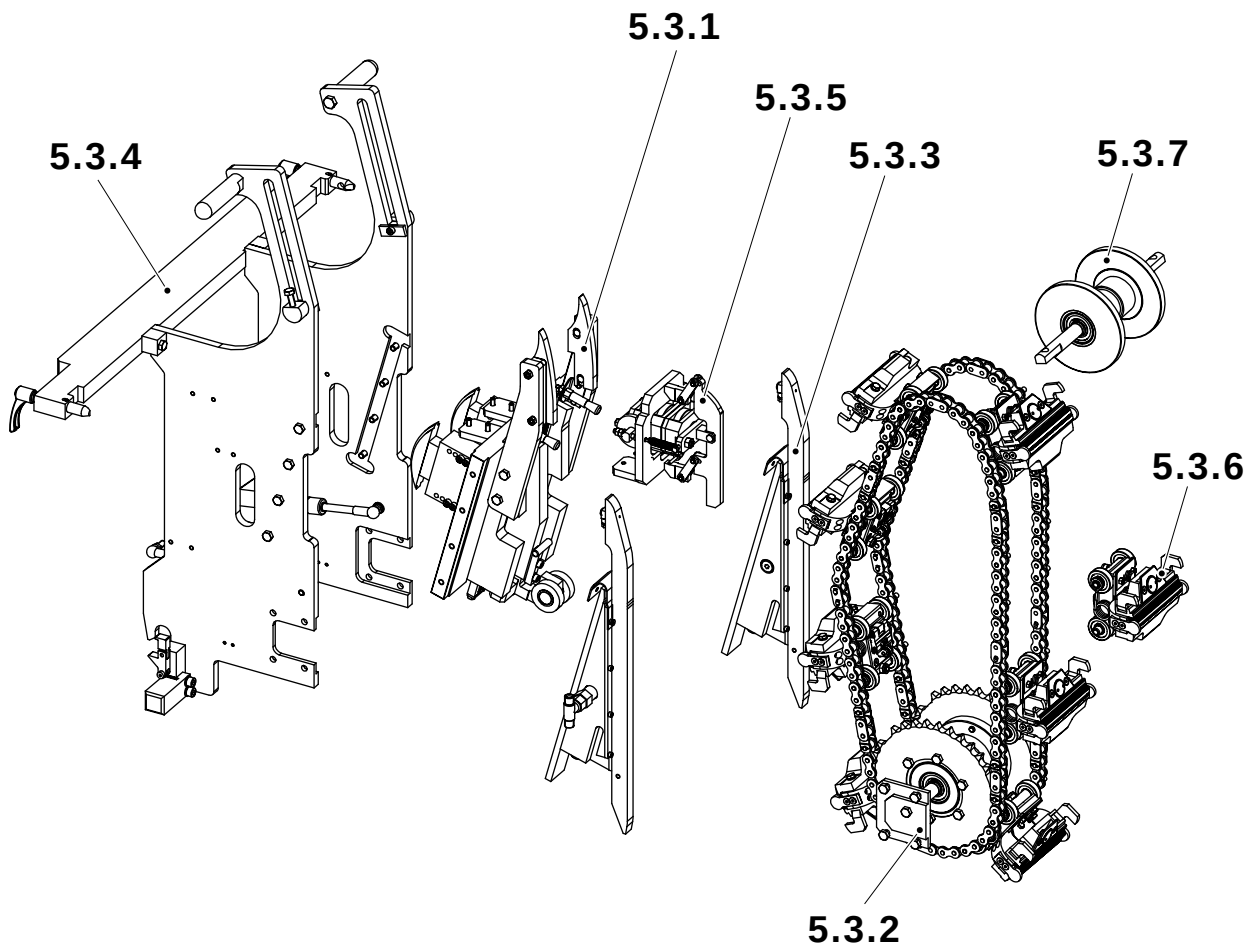

5.3.1 Spacer piece
5.3.2 Sprocket
5.3.3 Plunger
5.3.4 Frame section
5.3.5 Design correction
5.3.6 Pressure jaw
5.3.7 Guide sprocket

MM2.21TS100444en.fm

5.3.1 Spacer piece

5.3.1-1 Spacer piece - check chain tensioner

Machine Status	
SPC reference	2523915-0100

Check the chain tensioner (1) for wear.

Replace if worn, see 5.3.1-2 Spacer piece - change chain tensioner.

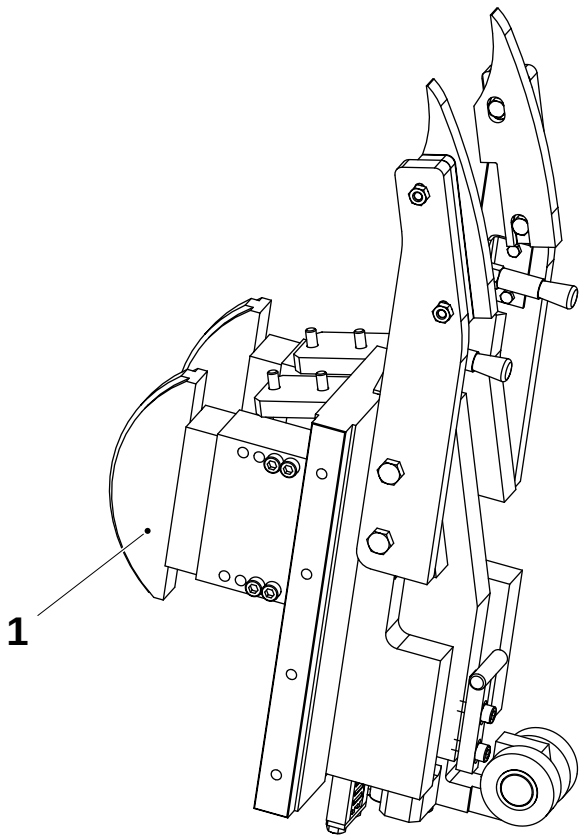

1 Chain tensioner

MM2.21TS100444en.fm

5.3.1-2 Spacer piece - change chain tensioner

Machine Status	
SPC reference	2523915-0100

Remove the screws (1) holding the chain tensioner (2). Note which holes the screws are fitted into.

Always change both chain tensioner at the same time!

Note! Before installing the new chain tensioner, remove two of the three lock screws (3). Each screw is compressing one spring, by removing the screw, the spring is activated.

Always change both chain tensioner at the same time!

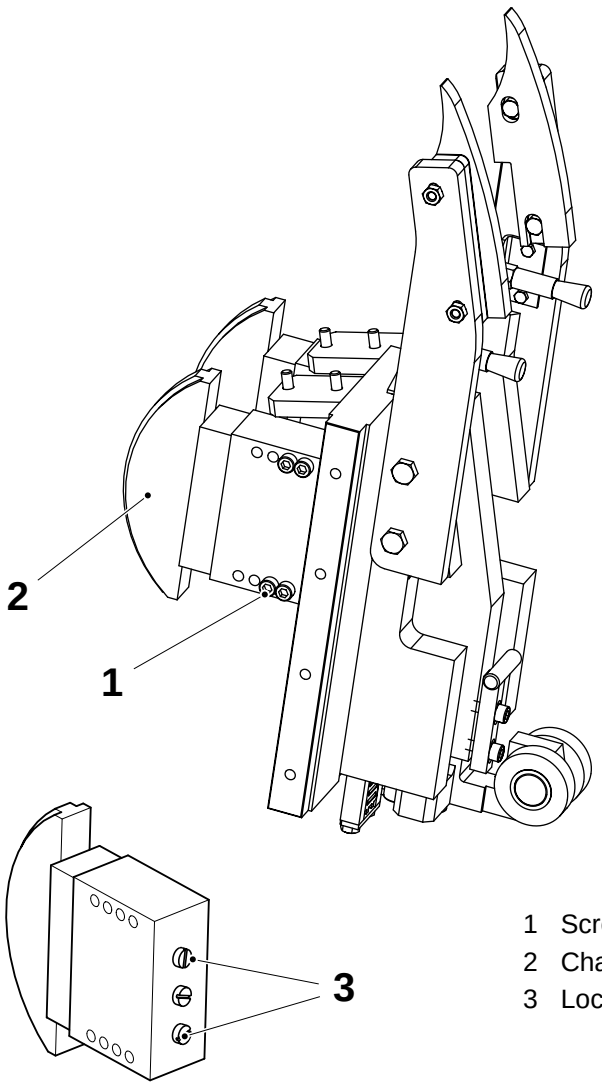

1 Screw
2 Chain tensioner
3 Lock screw

MM2.21TS100444en.fm

5.3.1-3 Spacer piece - check rollers

Machine Status	
SPC reference	2523915-0100

Check the rollers (1) for wear and damages.

Replaceas required, see 5.3.1-2 Spacer piece - change chain tensioner.

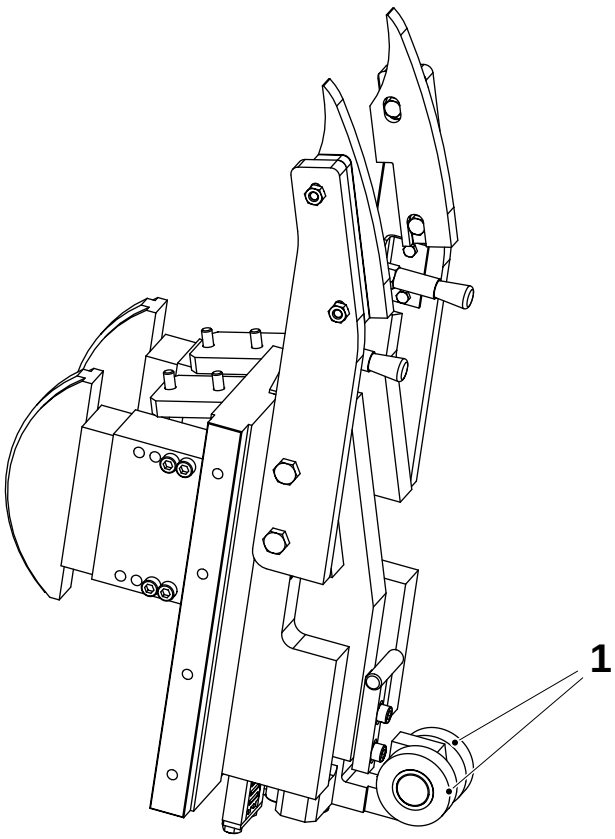

1 Roller

MM2.21TS100444en.fm

5.3.1-4 Spacer piece - check oil brushes

Machine Status	
SPC reference	2523915-0100

Check:

- the oil brushes (1) for wear and damages
- that the oil brushes (1) bear correctly against the chains
- that oil is delivered.

Adjust the position for the oil brushes if needed and replace if worn.

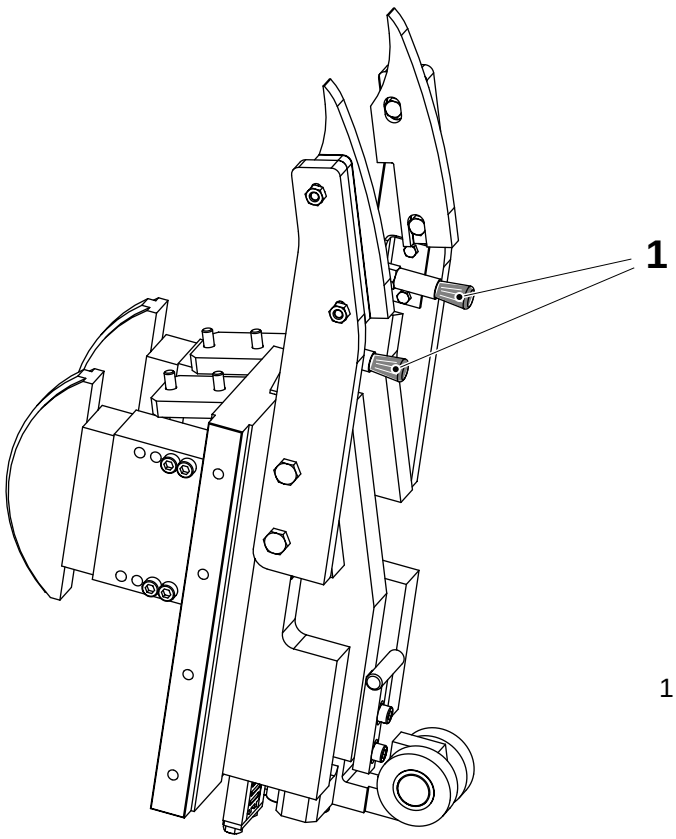

1 Oil brush

MM2.21TS100444en.fm

5.3.1-5 Spacer piece - check chain guide-

Machine Status	
SPC reference	2523915-0100

Check the chain guides (1) for wear.

Change as required.

Set according 5.3.1-8 Spacer piece - set chain guide.

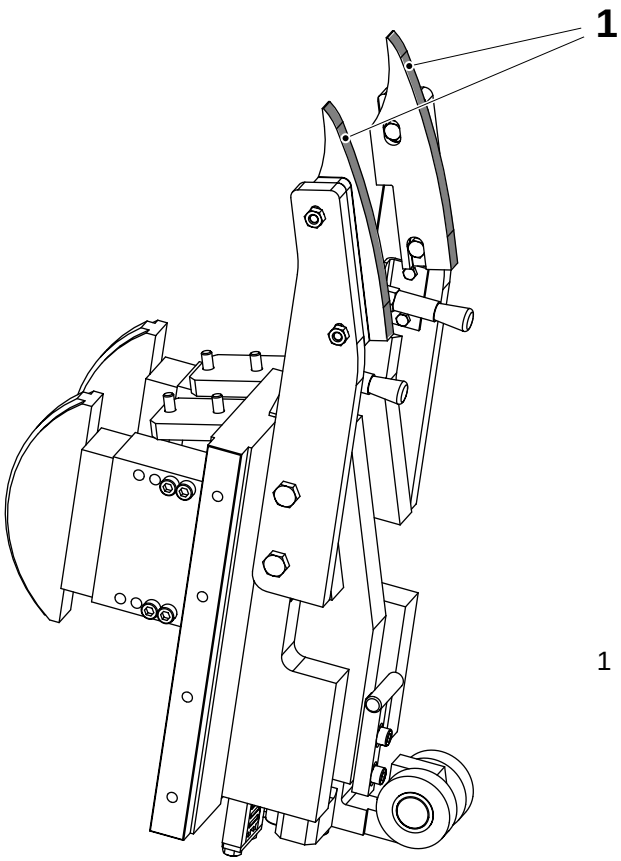

1 Chain guide

MM2.21TS100444en.fm

5.3.1-6 Spacer piece - change rollers

Machine Status	
SPC reference	2523915-0100

Remove the screws (1) and remove the holder (2).

Install new rollers (3).

Note! Shim (at arrow) may be added in order to increase the cutting depth for the knife in the pressure jaw. The thickness of the shim must not exceed 0.4 mm!

Check the cut with the new rollers before adding shim.

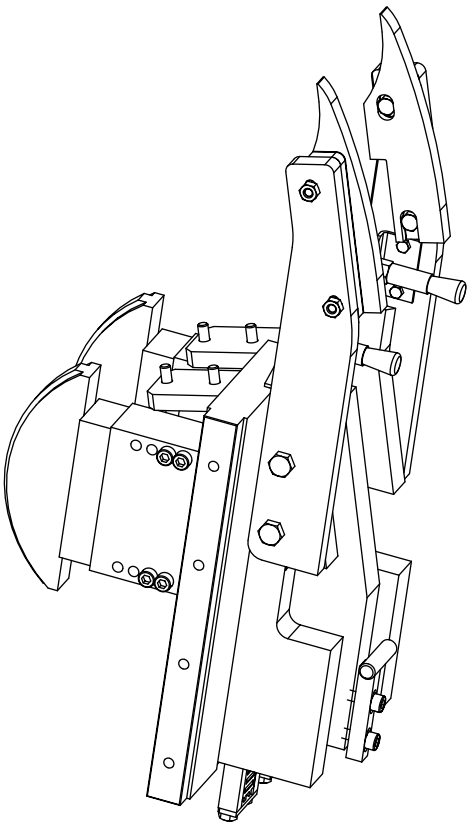

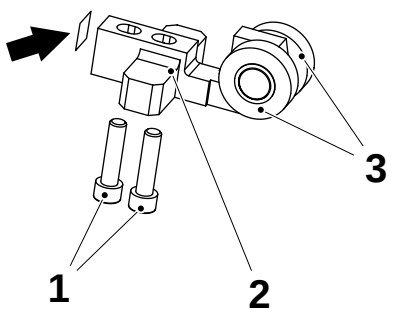

1 Screw
2 Holder
3 Roller

MM2.21TS100444en.fm

5.3.1-7 Spacer piece - change glide bearings

Machine Status	
SPC reference	2523915-0100

Remove the plungers, see 5.3.3-1 Plunger - remove.

Remove all glide bearing elements (1).

Clean the area for the glide bearing elements and check that the grease lubrication holeas not are clogged.

Note! Fit grease to all glide bearings elements before assembling.

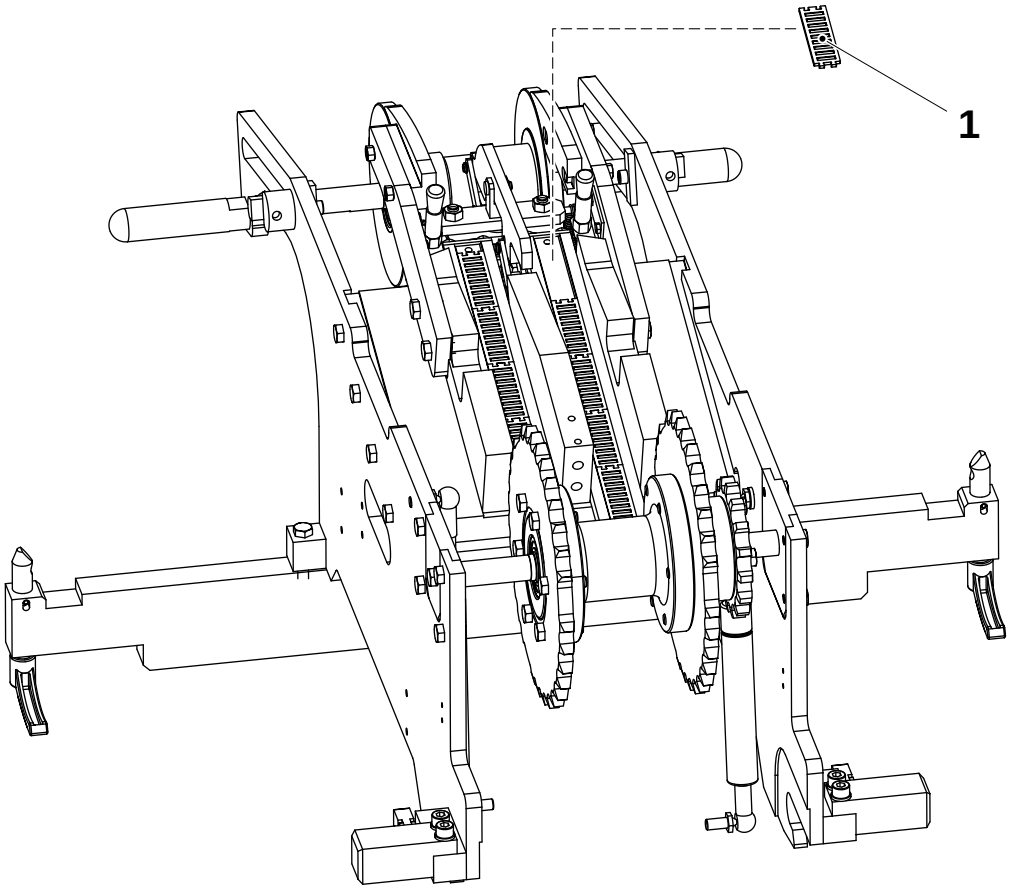

1 Glide bearing element

MM2.21TS100444en.fm

5.3.1-8 Spacer piece - set chain guide

Machine Status	
SPC reference	2523915-0100

Loosen the nuts (1) and adjust the chain guides (2) to be in level with the vertical holders (3).

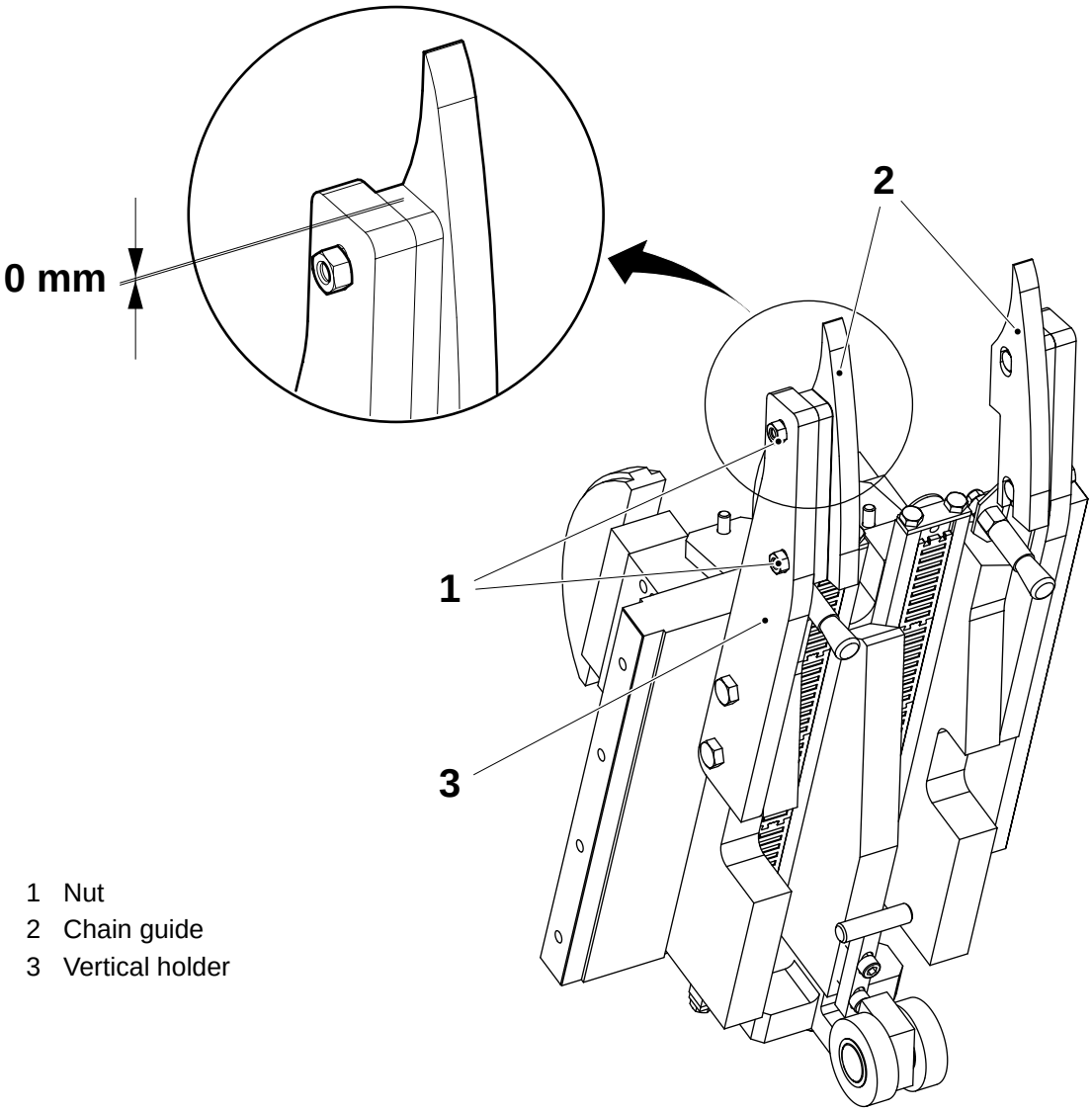

1 Nut
2 Chain guide
3 Vertical holder

MM2.21TS100444en.fm

5.3.2 Sprocket

5.3.2-1 Sprocket - check chain length

Machine Status	
SPC reference	2523912-0100 (side 3) 2524257-0100 (side 4)

Remove the chains, see 5.3.2-2 Sprocket - remove chains.

With the chain hanging vertically, measure the total length **A**.

Change the chain if out of tolerances. See table below.

When the chains are to long due to wear, the design correction can not compensate enough to keep the packages within the design.

Note! Always change all four chains for the pressure side and the corresponding heating side at the same time.

Volume (ml)	Max. chain length (mm)
65	1669.2
150S	1758.2
200B	1705.2
200S	

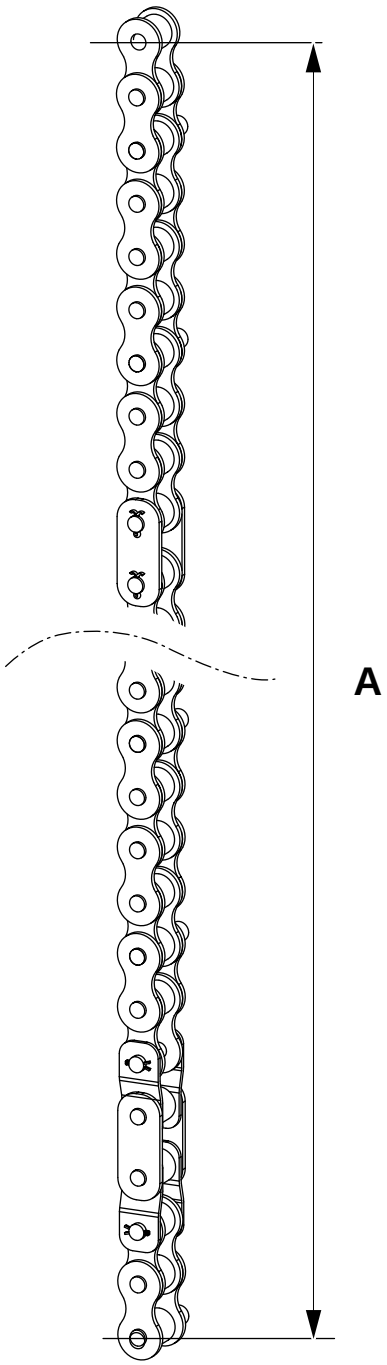

MM2.21TS100444en.fm

5.3.2-2 Sprocket - remove chains

Machine Status	
SPC reference	2524107-0100 (side 3) 2524108-0100 (side 4)

a) Fold down the pressure side, see 5.3.4-1 Frame section - fold down to service position on page 269.

Note! Before removing the chains, make a reference mark at at one of the prolonged sprockets and note which chain link it faces.

The relation between the drive chain sprockets must also be observed. (Described in item a).

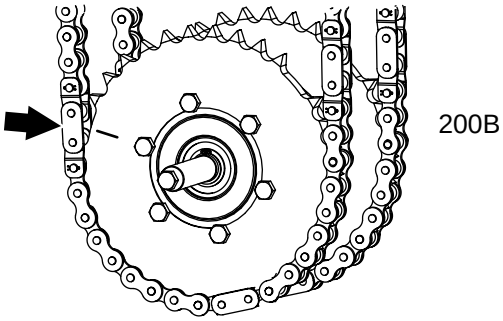

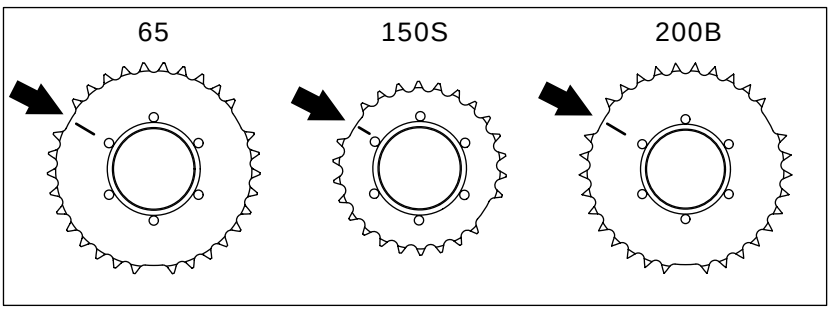

(Cont'd)

MM2.21TS100444en.fm

(Cont'd)

b) Fit the tool (1) to the chains (2) as illustrated.

c) Tighten the wingnuts (3) to release the tension for the chain locks (4).

d) Remove the chain locks and lift out the chains (2) with the jaws (5).

Note! Take care not to drop the jaws.
The jaws are numbered, and if removed, they must be fitted to the chain at the same position. Make a note of which link one jaw is fitted to before removing the jaws.

e) If needed, remove the jaws.

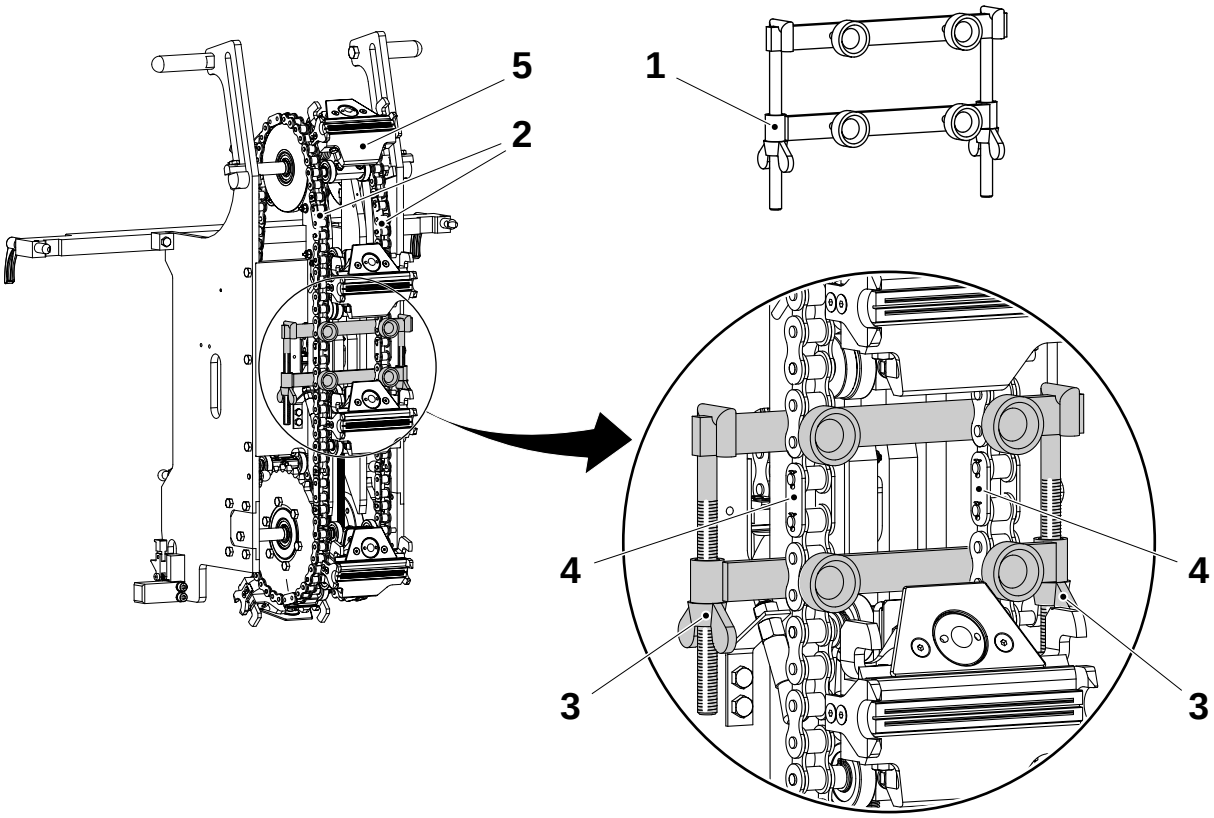

1 Tool
2 Chain
3 Wingnut
4 Chain lock
5 Jaw

MM2.21TS100444en.fm

5.3.2-3 Sprocket - install chains

Machine Status	
SPC reference	2524107-0100 (side 3) 2524108-0100 (side 4)

a) If removed, fit all the jaws (1) to the chains.

Note! The jaws are numbered, and they must be fitted to the chain at the same position as they had before removing.

b) Fit the tool (2) to the chain ends.

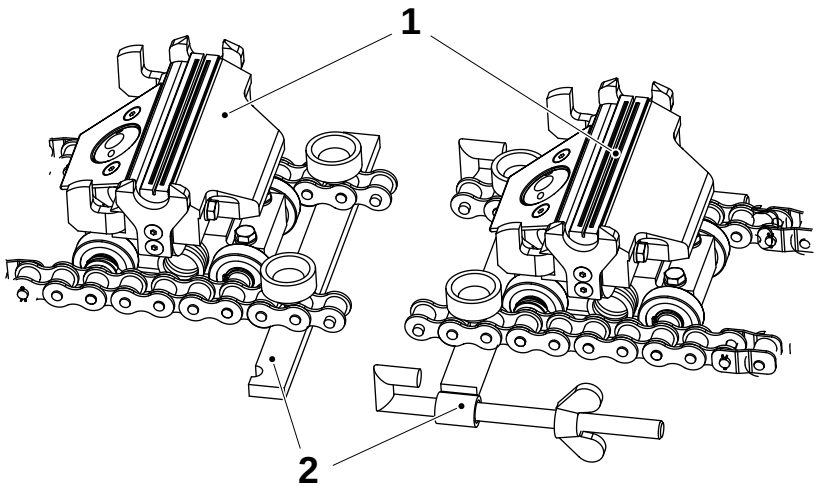

1 Jaw
2 Tool

c) When installing the chains, fit the correct link to the reference mark.

Note! If the relation between the sprocket and chain is lost, make sure to fit the prolonged links facing the prolonged sprockets.

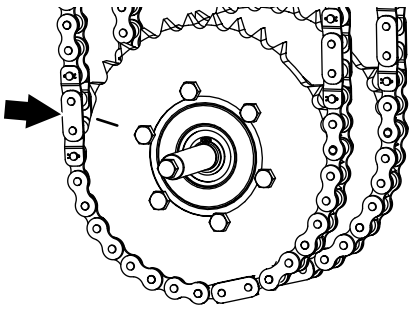

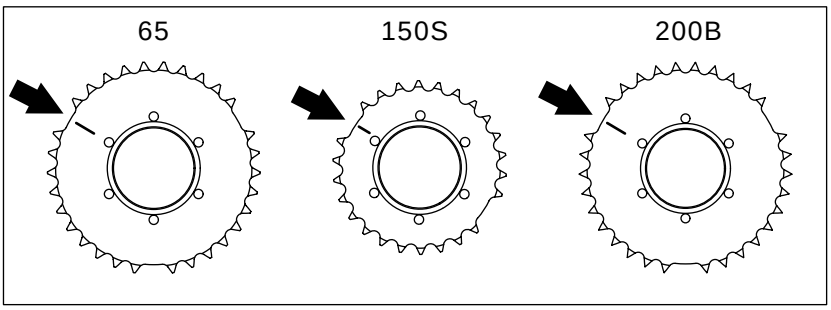

(Cont'd)

MM2.21TS100444en.fm

(Cont'd)

d) Connect the tool (2) and tighten the wingnuts (3) until the chain locks (4) can be fitted.

e) Fit the chain locks with new split pins (5) and remove the tool.

f) Raise the side according to 5.3.4-2 Frame section - raise to production position on page 271.

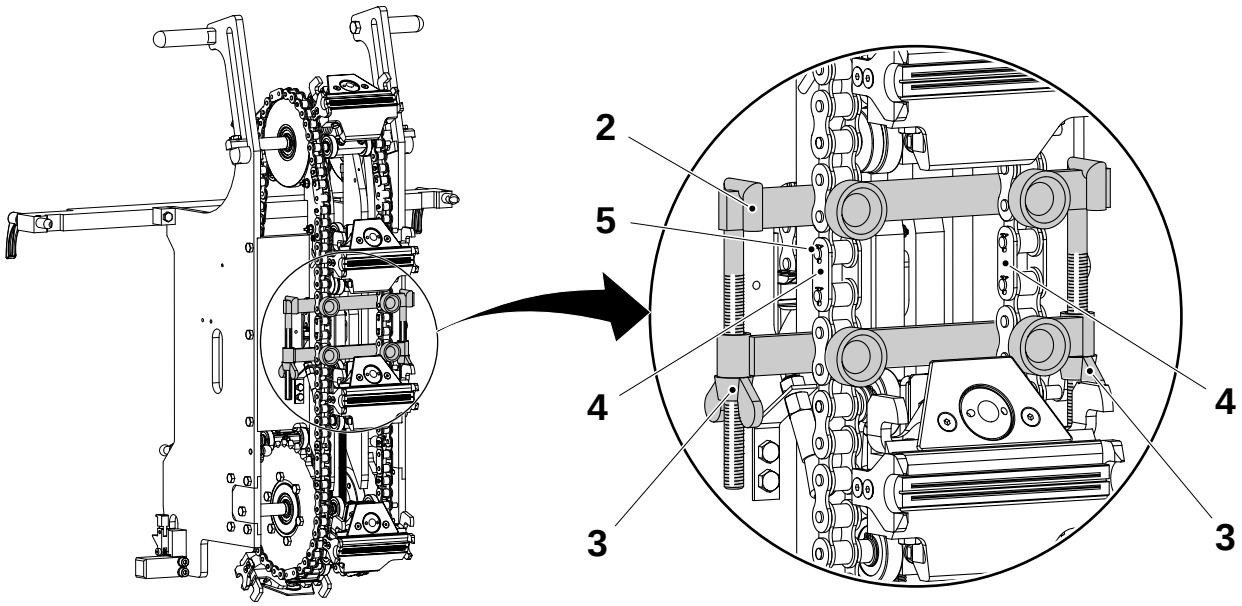

2 Tool
3 Wingnut
4 Chain lock
5 Split pin

MM2.21TS100444en.fm

5.3.2-4 Sprocket - change sprockets and bearings

Machine Status	
SPC reference	2523912-0100

Disassemble

a) Fold down the pressure side, see 5.3.4-1 Frame section - fold down to service position on page 269.

b) Remove the pressure jaws and chains, see 5.3.2-2 Sprocket - remove chains on page 257.

c) Remove the plunger, see 5.3.3-1 Plunger - remove on page 264

d) Remove the screws (1) and lift out the sprocket unit (2).

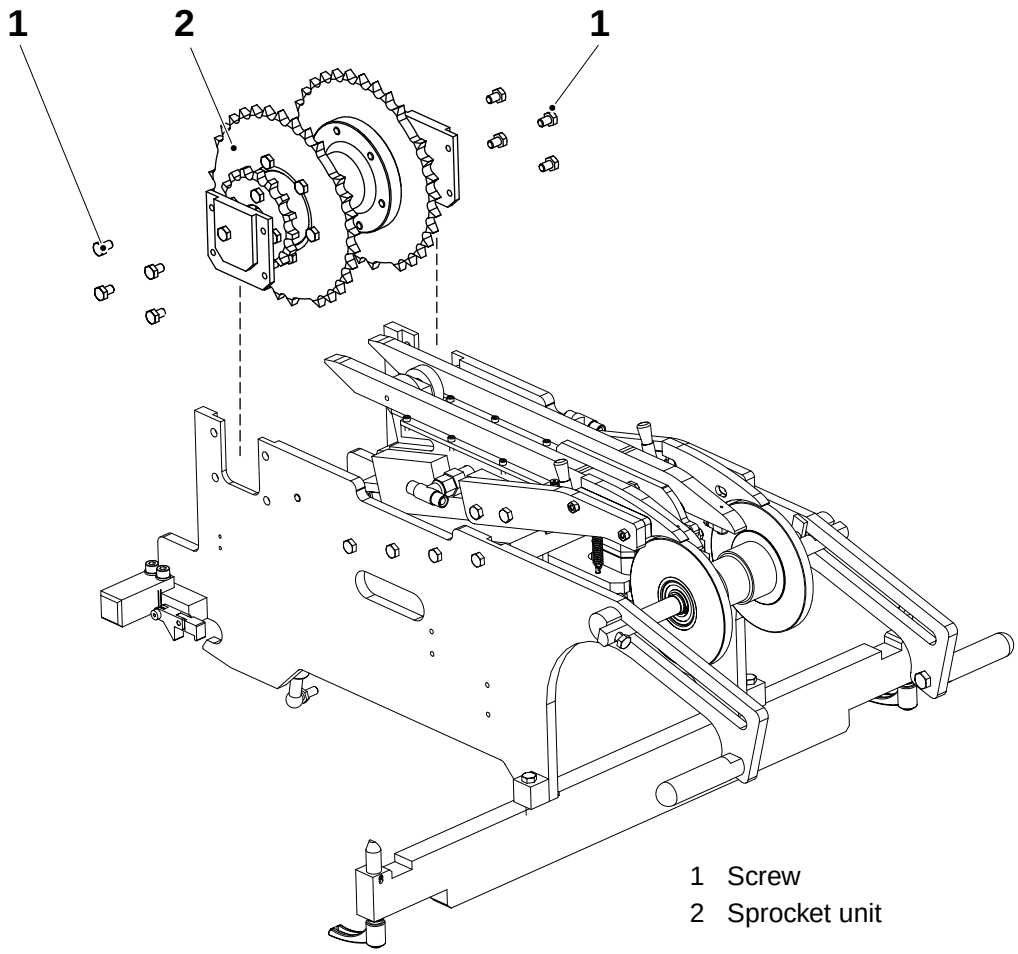

1 Screw
2 Sprocket unit

(Cont'd)

MM2.21TS100444en.fm

(Cont'd)

e) Remove the screws (3) and the support plates (4) for both sides.

f) Remove the screws (5) for the drive sprocket (6).

Note! Mark one screw hole for one of the sprockets (8) and the corresponding threaded hole for the hub. If re-assembled at other angle, loss of jaw synchronisation will follow.

g) Remove the screws (7) for both sprockets (8).

h) Remove the retaining rings (9) for both sides and push out the shaft (11).

i) Remove the bearings (10).

j) With the old sprocket as a template, make a reference mark on the new sprocket (see lower figure).

k) Replace the sprockets, retaining rings and bearings.

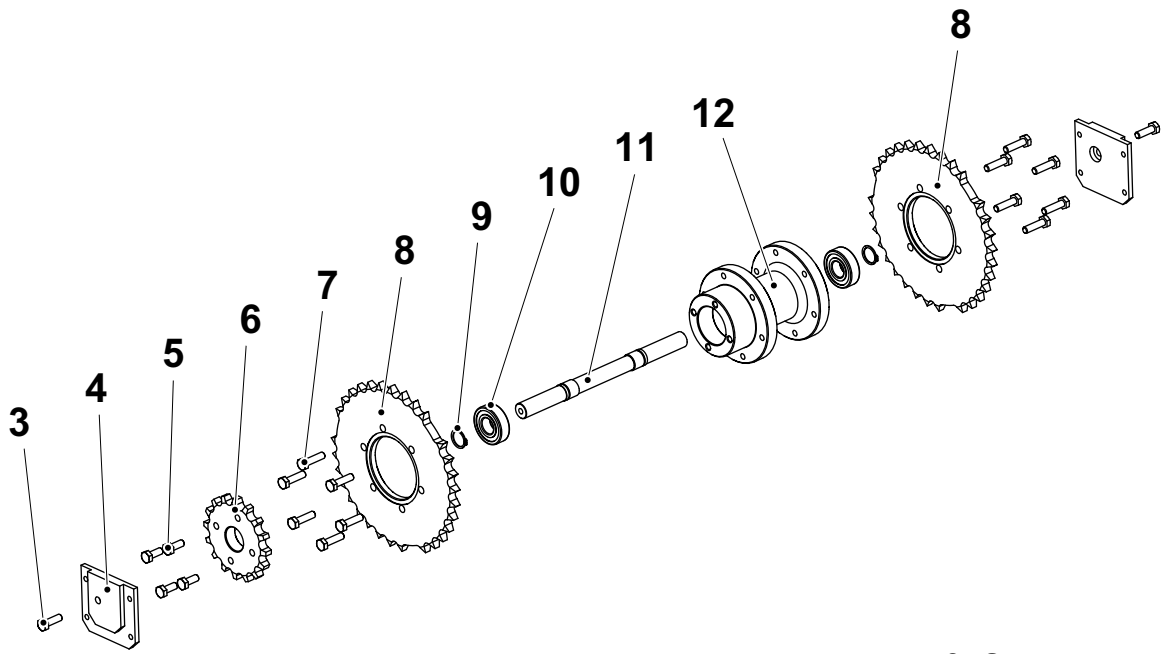

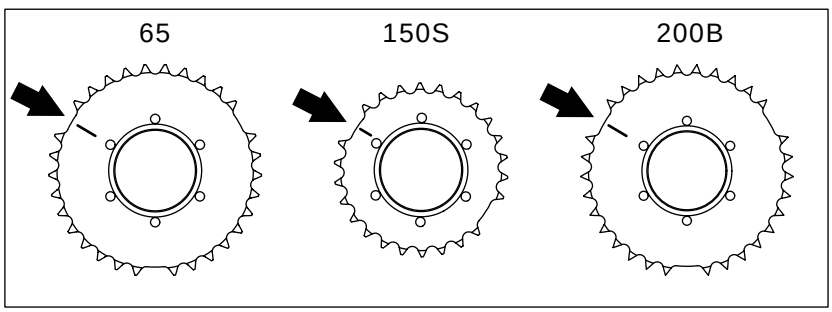

3 Screw
4 Support plate
5 Screw
6 Sprocket, drive
7 Screw
8 Sprocket
9 Retaining ring
10 Bearing
11 Shaft
12 Hub

MM2.21TS100444en.fm

(Cont'd)

(Cont'd)

Assemble

Note! When assembling the sprockets (8) to the hub (12), observe that the area where the distance between the sprockets are longer (indicated with arrows), are at the same position for both sprockets. Make also sure to assemble the sprockets at the hub at the same angle, see the note on previous page.

Use the tool (13) and a composing stick (14) when aligning the sprockets (8).

(The drive sprocket teeth is symmetric with the four fastening holes. No need to keep track of its angle when assembling).

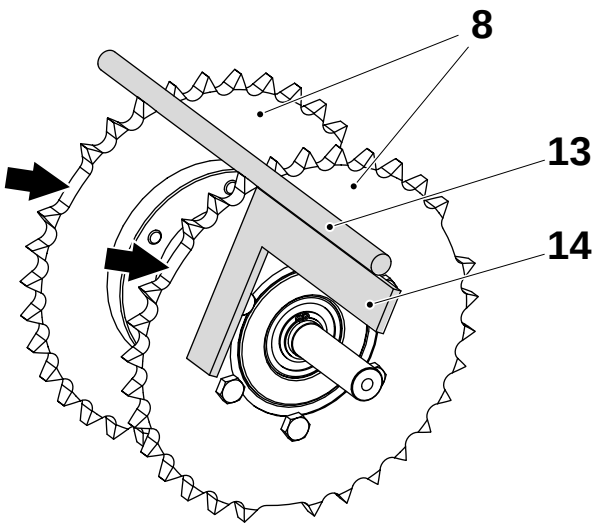

8 Sprocket
12 Hub
13 Tool
14 Composing stick

MM2.21TS100444en.fm

5.3.3 Plunger

5.3.3-1 Plunger - remove

Machine Status	
SPC reference	2524109-0100 2524110-0100

a) Fold down the pressure side, see 5.3.4-1 Frame section - fold down to service position.

b) Remove the chains and jaws, see 5.3.2-2 Sprocket - remove chains.

c) Disconnect the hydraulic pressure hoses (1) for the plunges.

d) Disconnect the lubrication hoses for the chain oil brushes (2).

e) Remove the two screws (3) and remove the bracket (4) for the cutting roller.

Note! Shim (5) may be fitted to increase the cutting pressure. Take care of the shim.

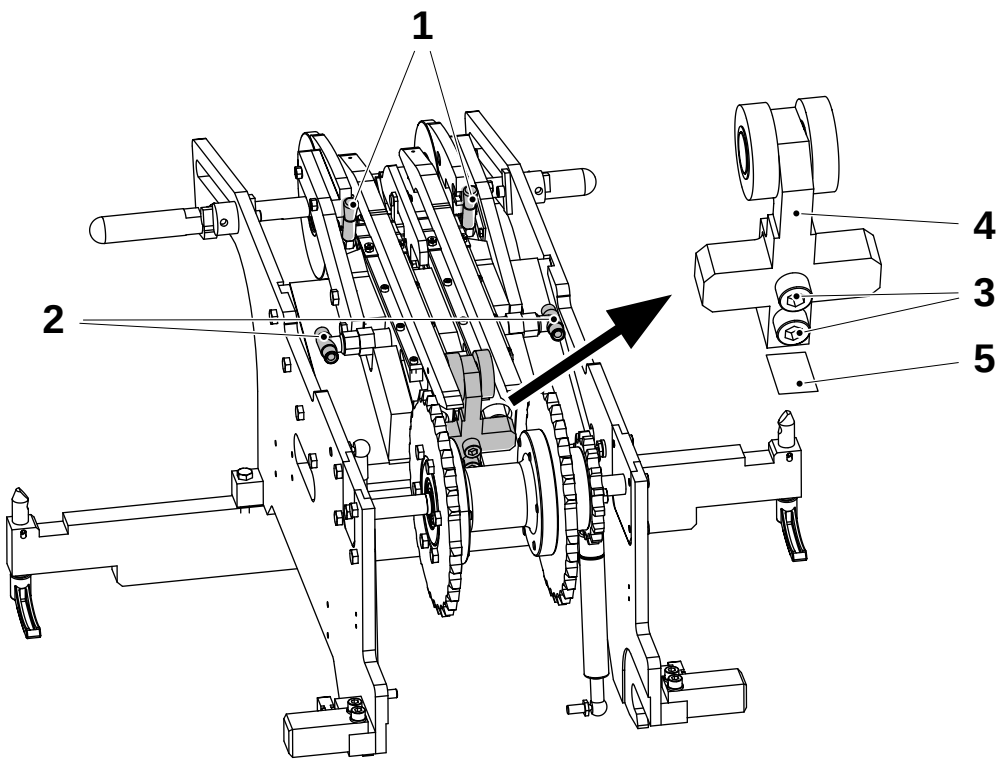

MM2.21TS100444en.fm

1 Oil brush
2 Hydraulic pressure pipe
3 Screw
4 Bracket, cutting roller
5 Shim

(Cont'd)

(Cont'd)

f) Remove the two screws (6) and remove the stop arm (7).
(Re-install the stop arm with the screws (6) in the top position for volume 150S and in the centre of the prolonged holes for other volumes, no further setting required).

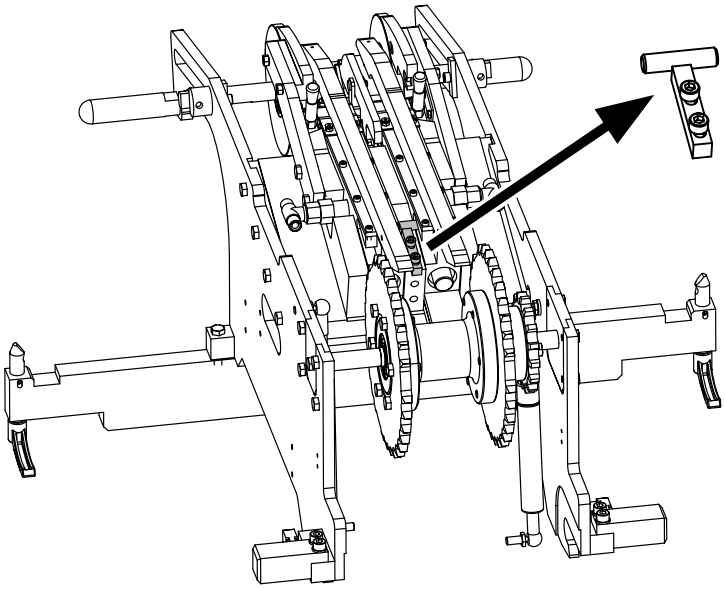

6 Screw
7 Stop arm

g) Loosen the rubber covers (8) from the covers and lift out the plungers (9).

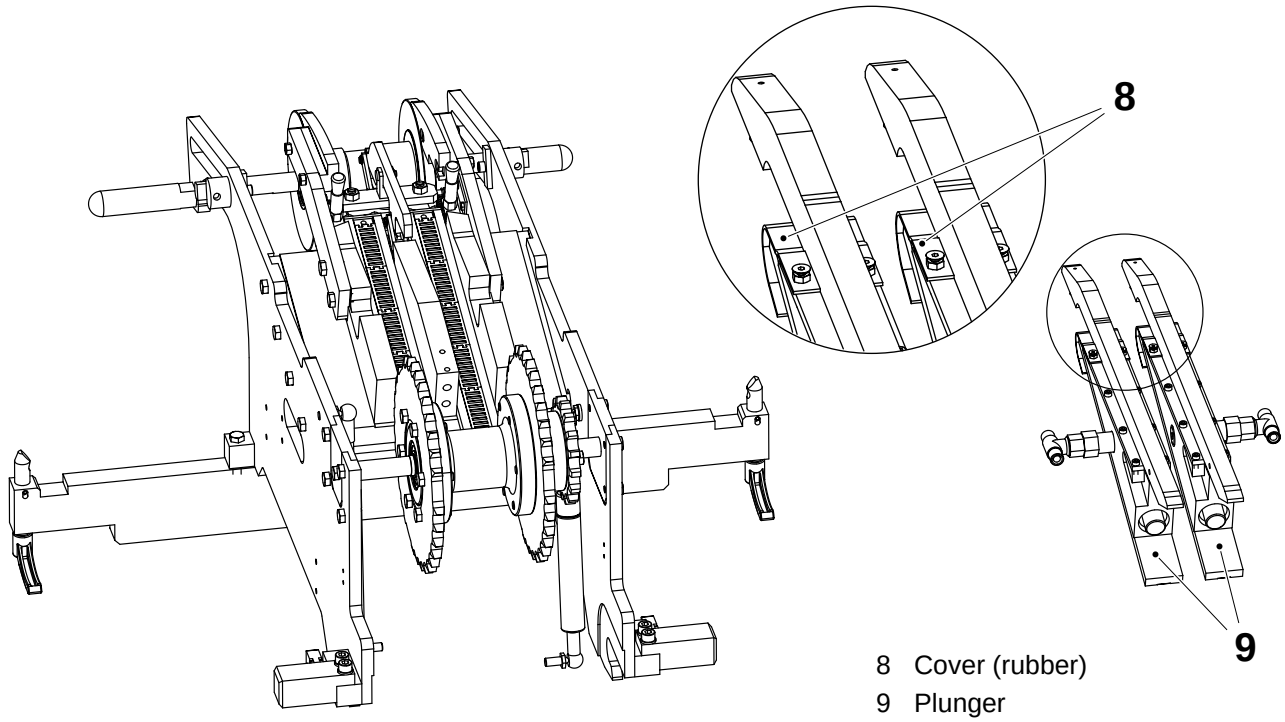

8 Cover (rubber)
9 Plunger

MM2.21TS100444en.fm

5.3.3-2 Plunger - check roller bar

Machine Status	
SPC reference	2524109-0100 2524110-0100

Check the roller bar (1) for wear and damages.

Change as required, see 5.3.3-3 Plunger - change roller bar

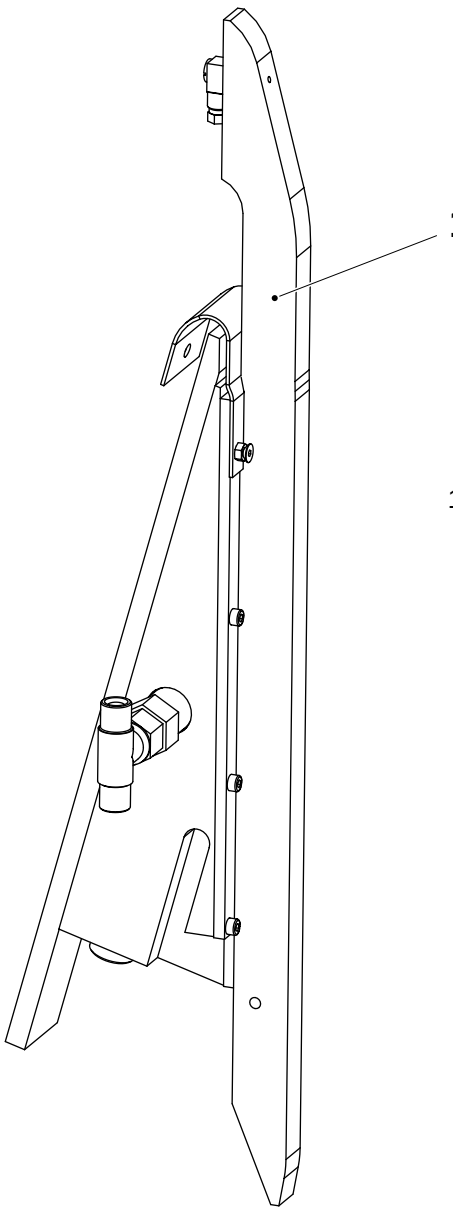

1 Roller bar

MM2.21TS100444en.fm

5.3.3-3 Plunger - change roller bar

Machine Status	
SPC reference	2524109-0100 2524110-0100

a) Remove the plunger according to 5.3.3-1 Plunger - remove.

b) Remove the six screws (1) and remove the plate (2).

c) Remove the four screws (3) and remove the roller bar (4).

d) Remove and fit the connection (5) to the new roller bar.

e) Assemble/install in the revers order and bleed the system, see 5.2.3-3 Hydraulic system - bleed.

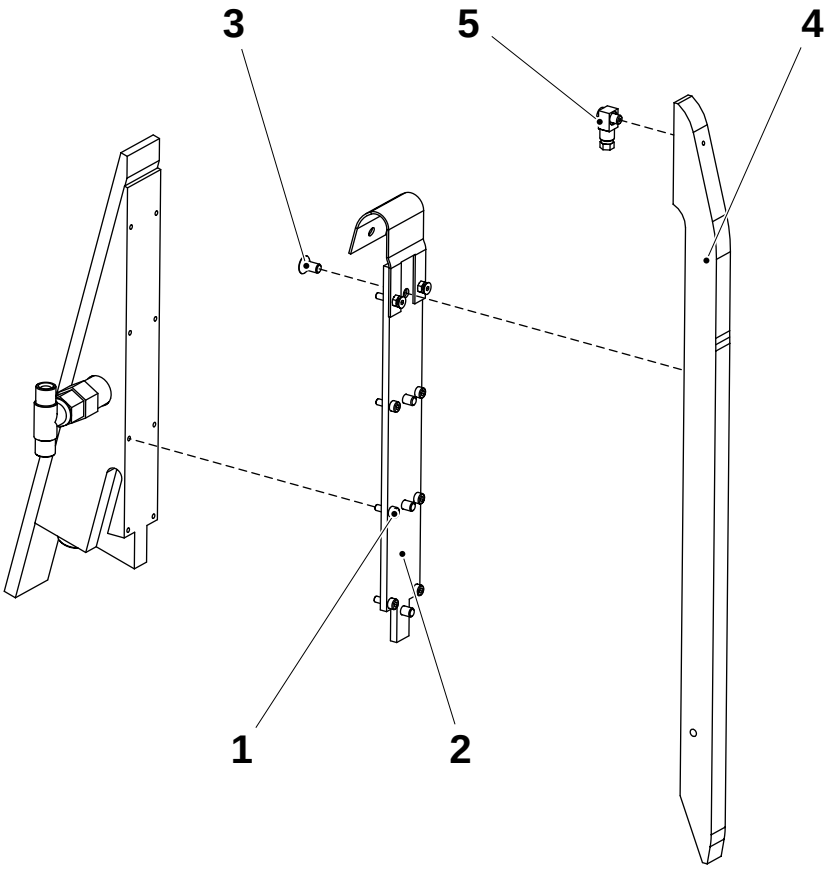

1 Screw (6 pcs)
2 Plate
3 Screw (4 pcs)
4 Roller bar
5 Connection

MM2.21TS100444en.fm

5.3.3-4 Plunger - change x-seal

Machine Status	
SPC reference	2524109-0100 2524110-0100

Remove the plunger according to 5.3.3-1 Plunger - remove.

a) Remove the piston (1) and replace the x-sael (2).

b) Assemble/install in the revers order and bleed the system, see 5.2.3-3 Hydraulic system - bleed.

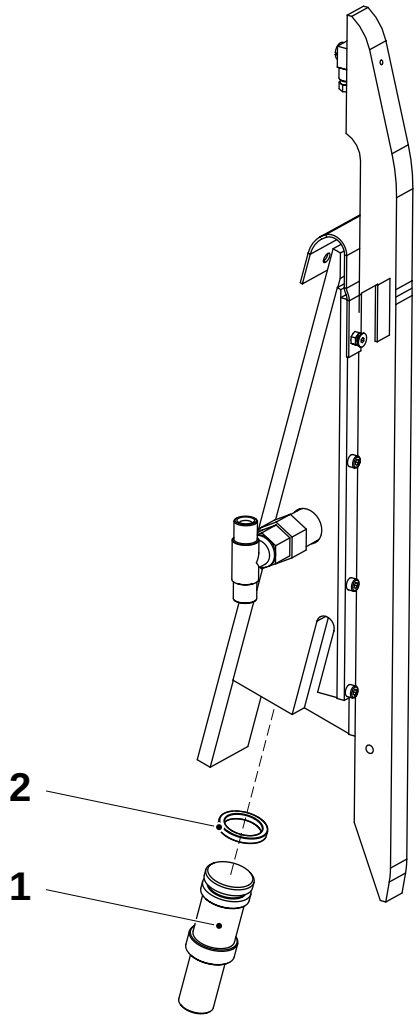

1 Piston
2 X-seal

MM2.21TS100444en.fm

5.3.4 Frame section

5.3.4-1 Frame section - fold down to service position

Machine Status	
SPC reference	2524112-0100

DANGER! **Immediate danger to life!**
Risk of blocking the evacuation way in case of an emergency.
Never fold down the frame section for pressure side 4 or heating side 1 if the door to the electrical cabinet is open.

WARNING! **Risk of crushing!**
Always remove the gas dampers before lifting out the side frames.

If the side is to be lifted out, remove the gas dampers **before** folding down the side. Disconnecting the gas dampers with the side folded down may cause both personal injuries and damage to the dampers.

If the fastening for the side is loosened with the gas dampers connected, the side will jump out of its brackets due to the force of the gas dampers.

MM2.21TS100444en.fm

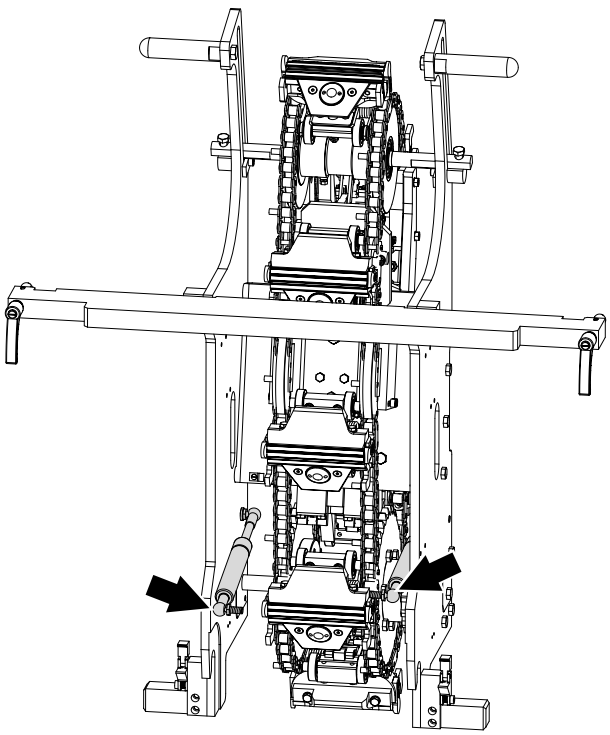

(Cont'd)

(Cont'd)

a) For one pressure jaw (1), make a note of which heating jaw it faces.

b) Make reference marks (2) and (3) on the sprockets and note their positions so the drive chain (4) can be re-assembled keeping the same relation between the sprockets.

c) Remove the drive chain (2).

d) Unscrew the two locking levers (3), grip both handles (4) and lower the side.

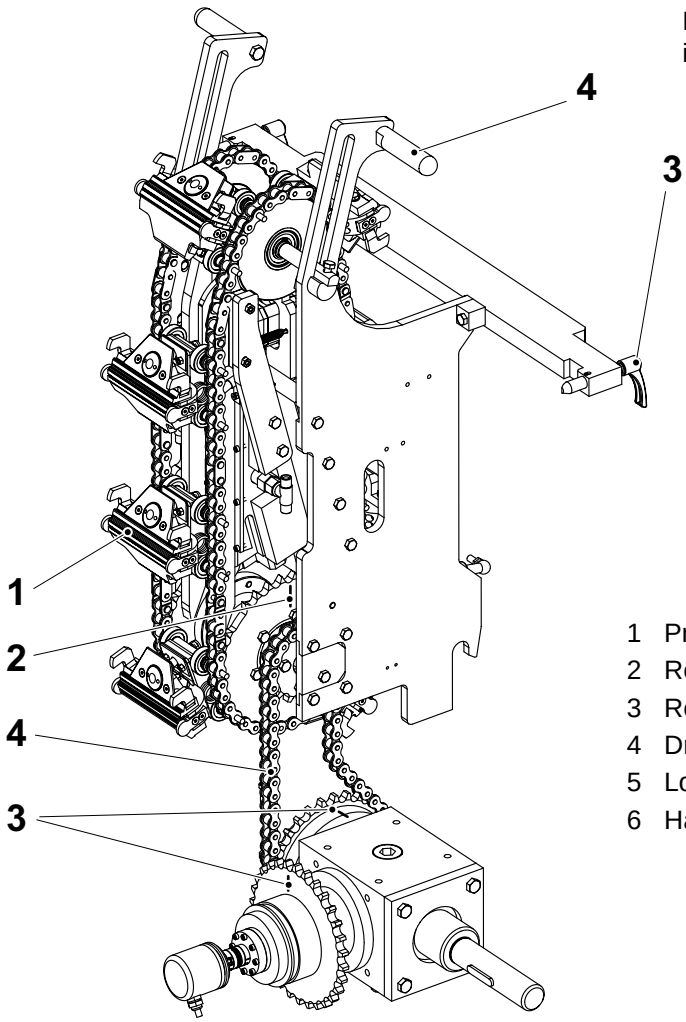

MM2.21TS100444en.fm

5.3.4-2 Frame section - raise to production position

Machine Status	
SPC reference	2524112-0100

a) Check that the gear box sprockets are at the same position as before removing the drive chain. Check the reference marks (1).
If there are no references, relation between the sprockets are unknown, see 5.3.2-4 Sprocket - change sprockets and bearings.

b) Rotate the chains until the reference mark (2) for the sprocket is at the position it had before the frame section was folded down.

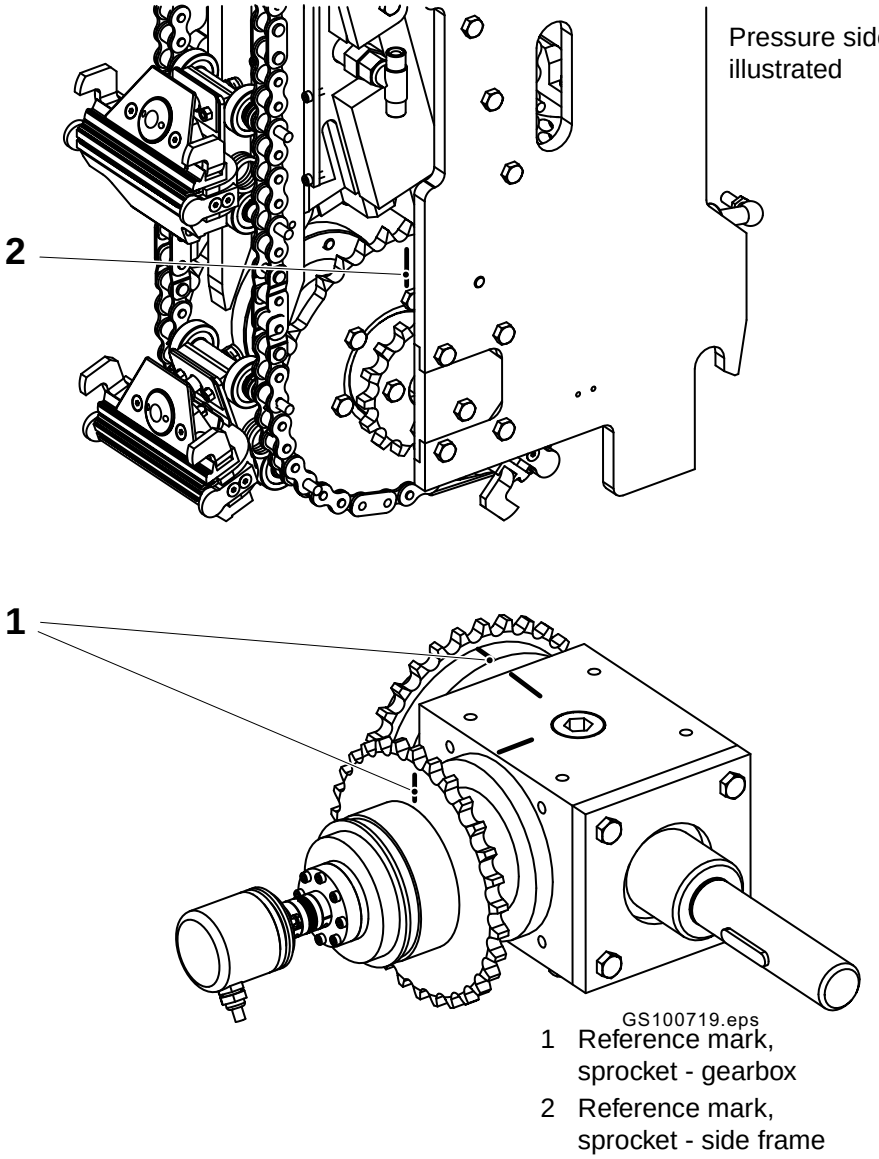

1 Reference mark, sprocket - gearbox
2 Reference mark, sprocket - side frame

(Cont'd)

MM2.21TS100444en.fm

(Cont'd)

a) Grip both handles (3) and raise the side.

b) Make sure that the guides (4) get in contact with the guides (5) without force, turn the chains slightly when connecting.

c) Tighten the locking levers (6).

d) Install the drive chain (7).

e) Check the package length, see 5.2.1-8 Drive unit - set package length on page 230.

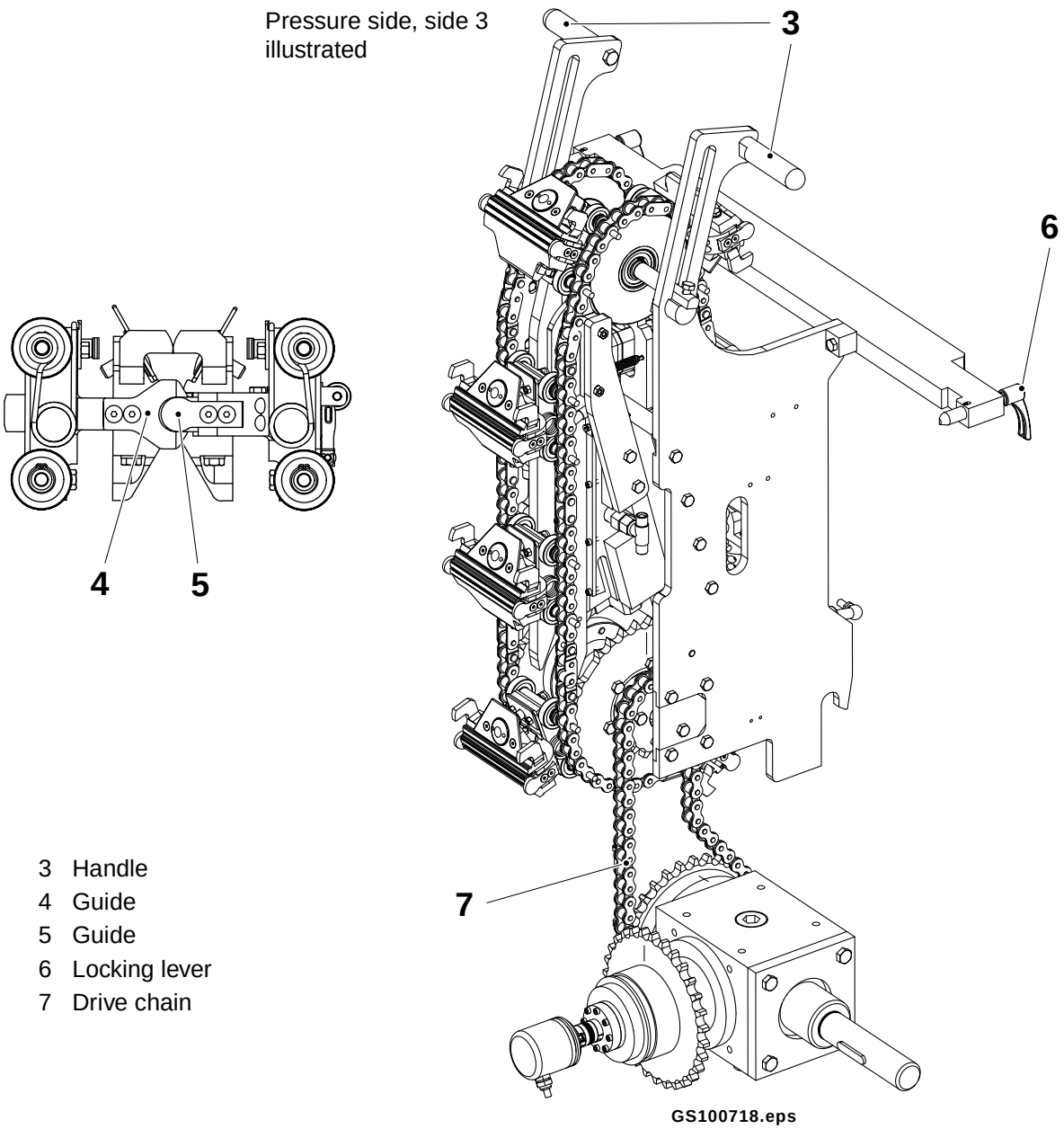

3 Handle
4 Guide
5 Guide
6 Locking lever
7 Drive chain

MM2.21TS100444en.fm

5.3.5 Design correction

5.3.5-1 Design correction - description

Machine Status	
SPC reference	2542897-0100

The ruler (5) in the pressure jaw follows the rail (4). The cylinders (1), (2) and (3) are controlled from the PLC with input from the bar code reader at the upper forming ring.

Depending on which cylinders are activated, the ruler (5) will protrude from the jaw in a range from 0 to 3,5 mm, distance A. The longer out the ruler is, the more it will pull down the packaging material tube.

The cylinders have different stroke length due to different length of the pistons (6), (7) and (8).

See the table below for distance A.

Cylinder	**Stroke**	**X = Activated**							
Cylinder (1)	0.5 mm	-	X	-	X	-	X	-	X
Cylinder (2)	1.0 mm	-	-	X	X	-	-	X	X
Cylinder (3)	2.0 mm	-	-	-	-	X	X	X	X
	A (mm)	0	0.5	1.0	1.5	2.0	2.5	3.0	3.5

MM2.21TS100444en.fm

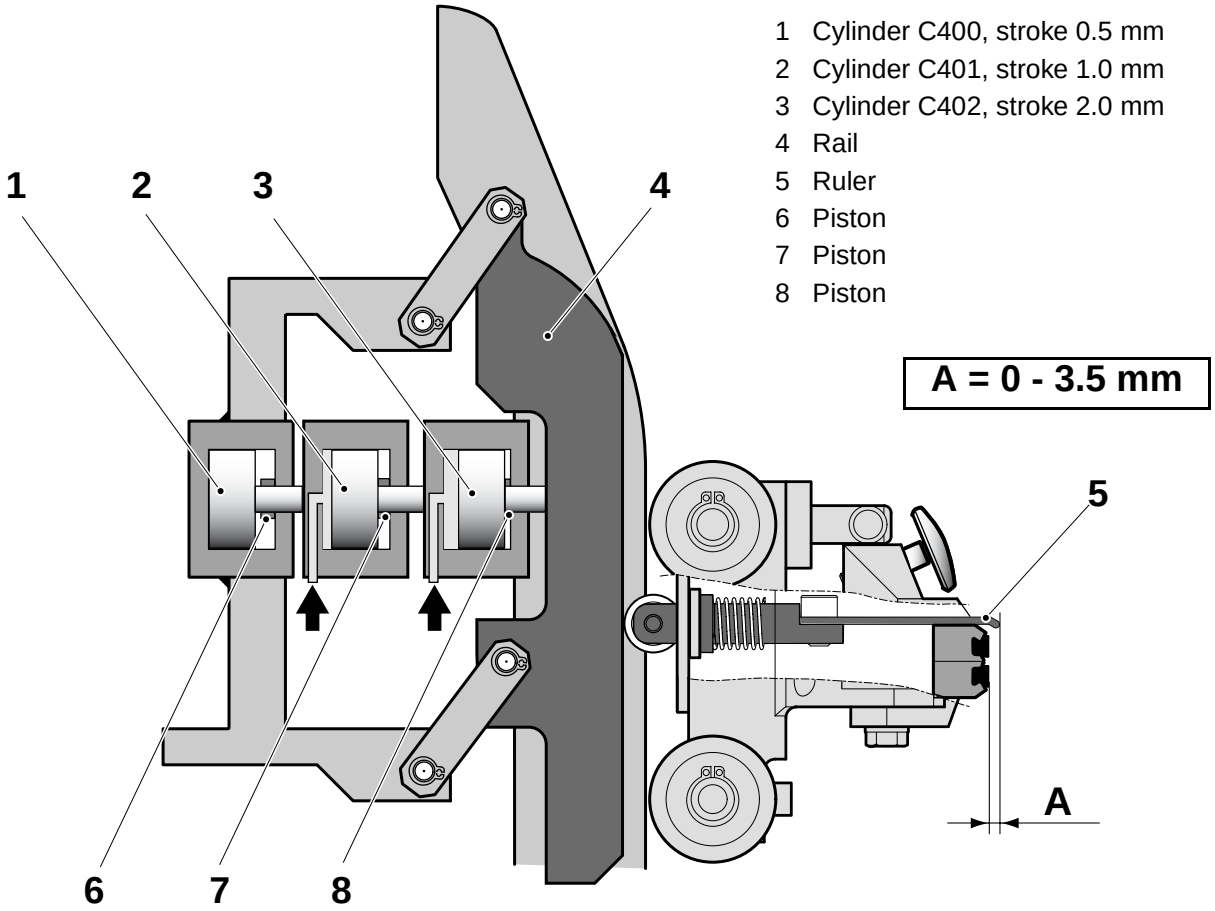

1 Cylinder C400, stroke 0.5 mm
2 Cylinder C401, stroke 1.0 mm
3 Cylinder C402, stroke 2.0 mm
4 Rail
5 Ruler
6 Piston
7 Piston
8 Piston

MM2.21TS100444en.fm

5.3.5-2 Design correction - check

Machine Status	
SPC reference	2542897-0100

Check for play at the links (4), (5) and (6).

Check that the surface of the curve (7) is undamaged (at arrow).

Check that the two springs (8) are safely attached and undamaged.

With air on the machine, activate the three cylinders one at the time, and check that the curve moves.

Note! If all cylinders are operating and the design correction is not enough, check the jaw chain length. See 5.3.2-1 Sprocket - check chain length and 5.4.1-1 Sprocket - check chain length.

MM2.21TS100444en.fm

Manual override at arrows

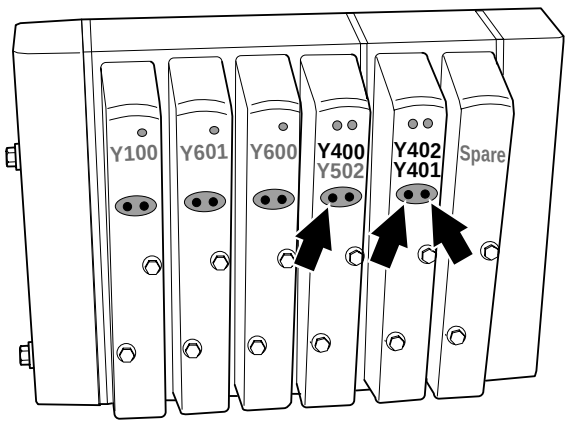

Cylinder	Stroke length	Valve
1 - C400	0.5 mm	Y400
2 - C401	1.0 mm	Y401
3 - C402	2.0 mm	Y402

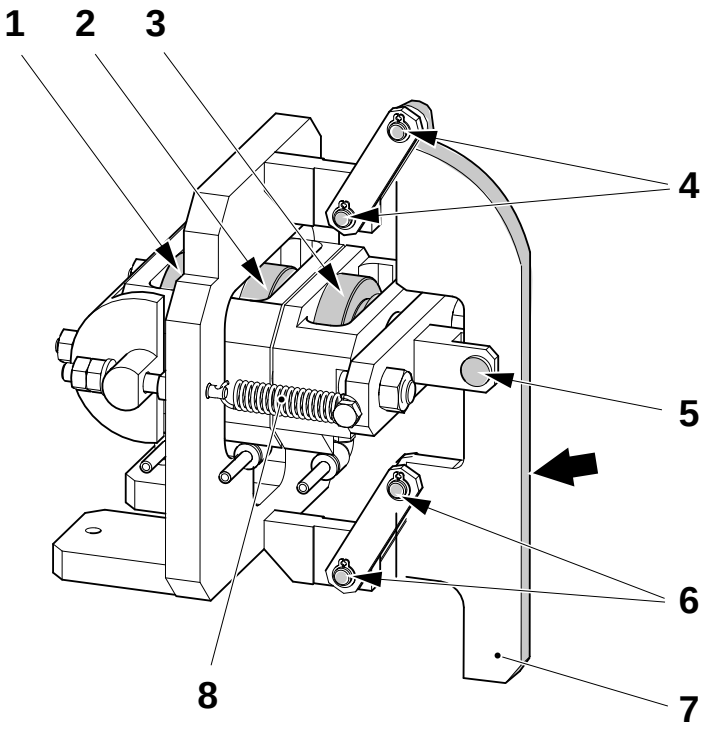

1 Cylinder 1 - C400, stroke 0.5 mm
2 Cylinder 2 - C401, stroke 1.0 mm
3 Cylinder 3 - C402, stroke 2.0 mm
4 Link
5 Link
6 Link
7 Curve
8 Spring

5.3.5-3 Design correction - change cylinders

Machine Status	
SPC reference	2542897-0100

Disassembly

a) Remove the nuts (1) and springs (2).

b) Remove the nuts (3).

c) Remove the cylinder back piece (4).

d) Remove the three cylinder housings (5), (6) and (7).

e) Remove the springs (8), they shall be replaced with new.

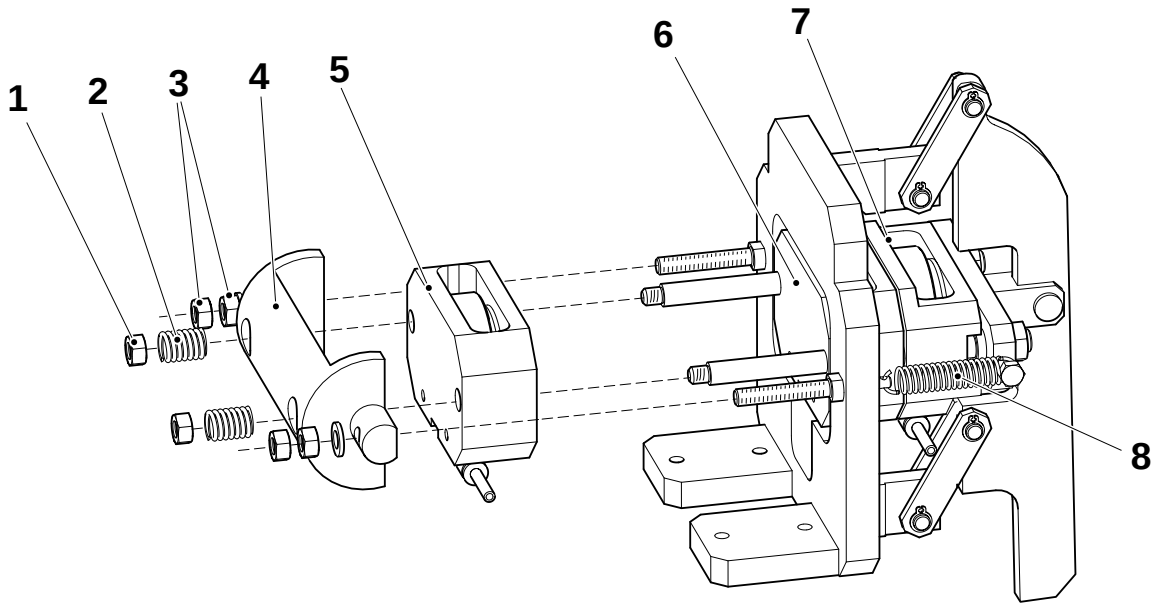

MM2.21TS100444en.fm

1 Nut
2 Spring
3 Nut
4 Cylinder back piece
5 Cylinder housing, Cylinder1 - C400
6 Cylinder housing, Cylinder 2 - C401
7 Cylinder housing, Cylinder 3 - C402
8 Spring

(Cont'd)

(Cont'd)

f) Remove the two screws (10) and pull out the cylinder (9) and the piston (11) from the cylinder housing (5).

Note! Do not mix the pistons, their length (A) is different for all three cylinders.

g) Repeat disassembly for cylinder housings (6) and (7).

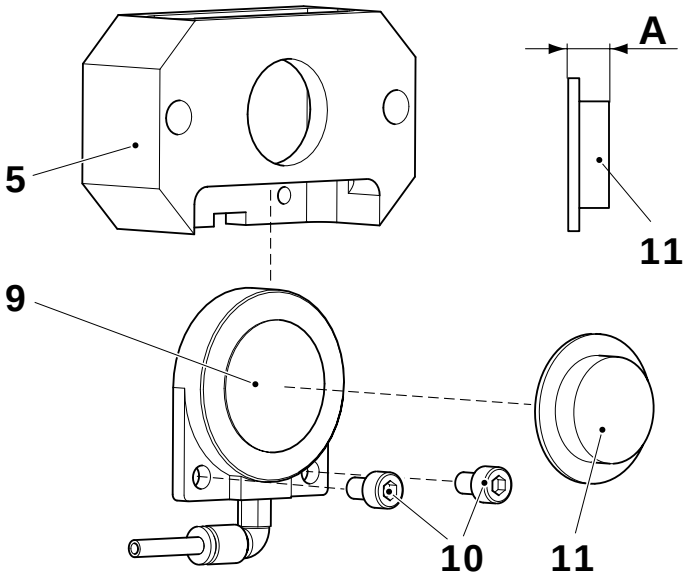

Cylinder	A Piston length
1	8.0 mm
2	8.5 mm
3	9.5 mm

9 Cylinder
10 Screw
11 Piston

MM2.21TS100444en.fm

Assembly

Fit the new cylinders (9) and assemble in the reverse order.

Note! Make sure to fit the right piston (11) to respectively cylinder, see table above.

Fit new springs (2) and (8).

Set according to 5.3.5-4 Design correction - set.

5.3.5-4 Design correction - set

Machine Status	
SPC reference	2542897-0100
Template	2569629-1,2,3

a) To get access for the setting, fold down the heating side that **not** faces the pressure side to adjust. See 5.4.2-1 Frame section - fold down to service position**.**

b) Dis-connect the hydraulic hose, connect a hand pump and pressurize the plunge with 10 bar.

WARNING! **Risk of serious personal injury!**
Keep hands away when setting pressure at the plunger!

c) Make sure the air pressure for the design correction cylinders is off.

d) Place the template (1) on top of the pressure rulers (3) as illustrated. Note that the pressure rulers are wider higher up!

e) Loosen the nuts (4) at both sides, and adjust the curve (2) until it just touches the template (1). Adjust the nuts (4) equal for both sides of the cylinder.

f) Tighten the nuts (4).

g) Re-connect the hydraulic hose.

h) Raise the heating side, see 5.4.2-2 Frame section - raise to production position.

i) Bleed the hydraulic system.

Template 2569629	A (mm)	Variant
-1	9.2	200B
-2	9.5	150S
-3	8.3	65

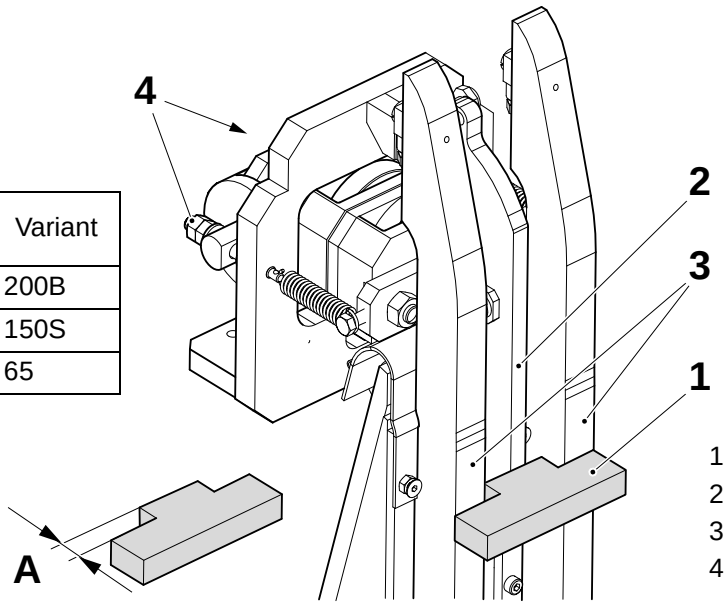

1 Template
2 Curve
3 Pressure ruler
4 Nut

MM2.21TS100444en.fm

5.3.6 Pressure jaw

5.3.6-1 Pressure jaw - check

Machine Status	
SPC reference	2524103-0100

Check:

- that the bearing rollers (1) rotate freely and for wear (diameter minimum 34.85 mm).
- the dollys (2) for damages
- that the knife (3) is sharp and undamaged
- the guides (4) for damage

Push at the roller bearing (5) and check that the ruler (6) moves smoothly out and in.

Push at the fork (7) and check that the knife (8) moves smoothly out and in.

Replace parts according to 5.3.6-3 Pressure jaw - disassemble.

MM2.21TS100444en.fm

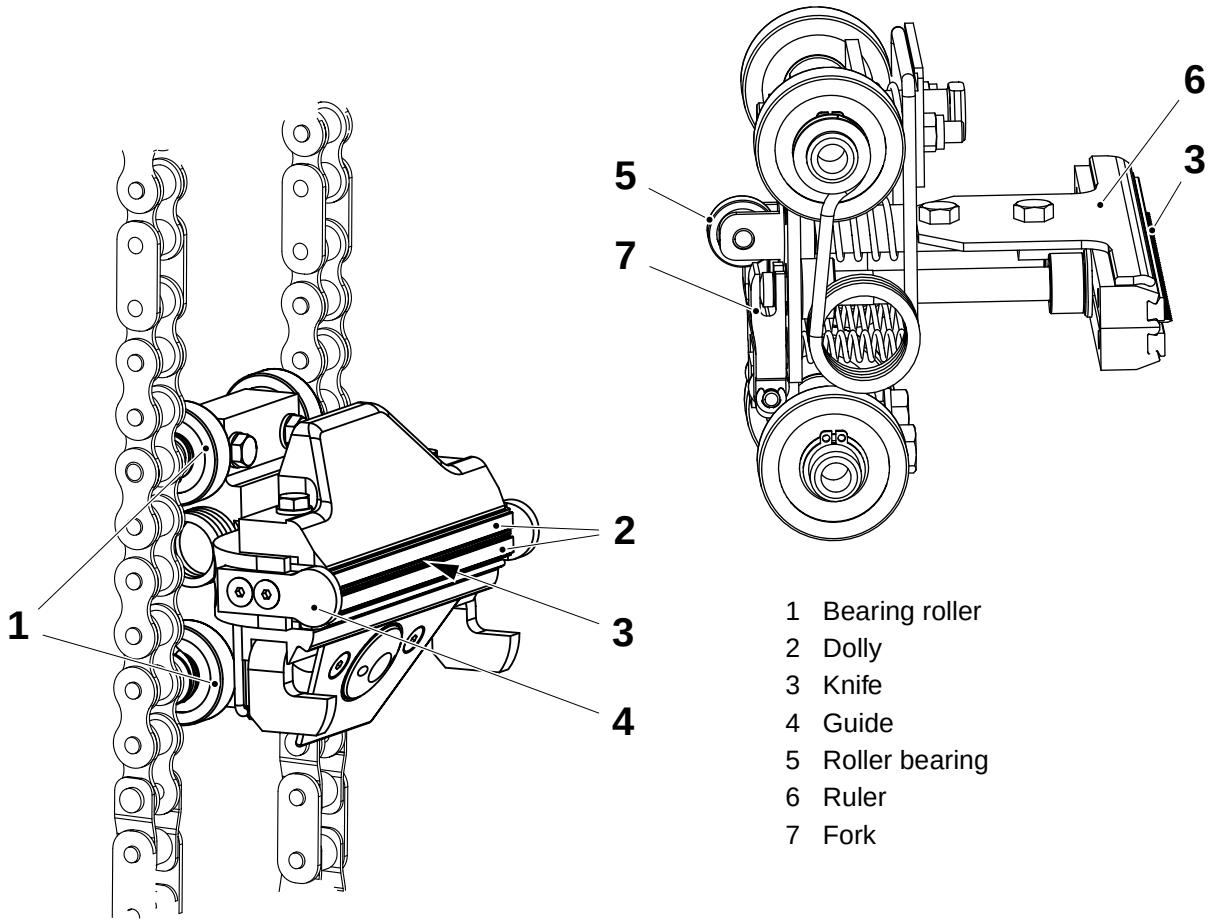

1 Bearing roller
2 Dolly
3 Knife
4 Guide
5 Roller bearing
6 Ruler
7 Fork

5.3.6-2 Pressure jaw - remove

Machine Status	
SPC reference	2524103-0100

Follow items a) - c) in 5.3.2-2 Sprocket - remove chains.

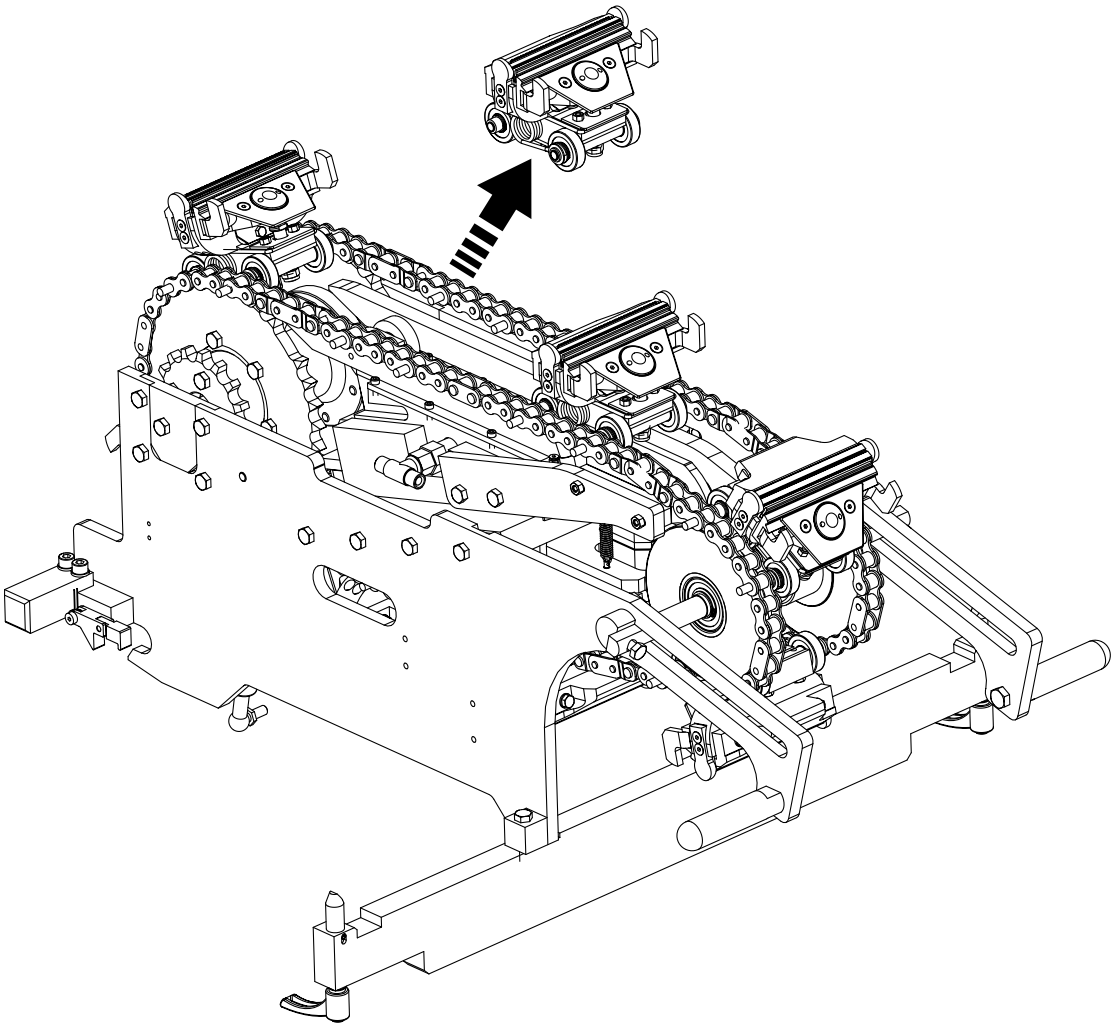

MM2.21TS100444en.fm

5.3.6-3 Pressure jaw - disassemble

Machine Status	
SPC reference	2524103-0100

- To change the bearing rollers (1) remove the chains according to items a) - c) in 5.3.2-2 Sprocket - remove chains.

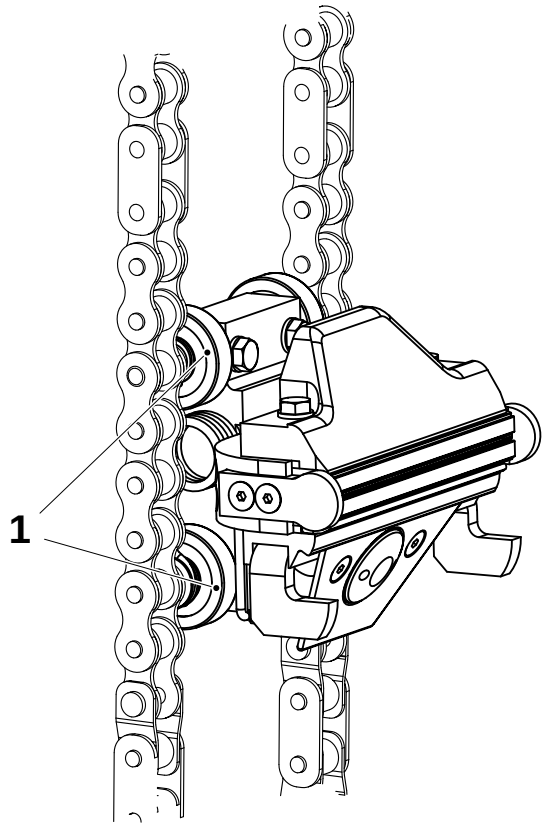

1 Ball bearing

(Cont'd)

MM2.21TS100444en.fm

(Cont'd)

Disassembly

If the jaw is not removed:

a) Remove the nut (2), take care of the spring (3) and the spring (4).

b) Fold down the pressure jaw.

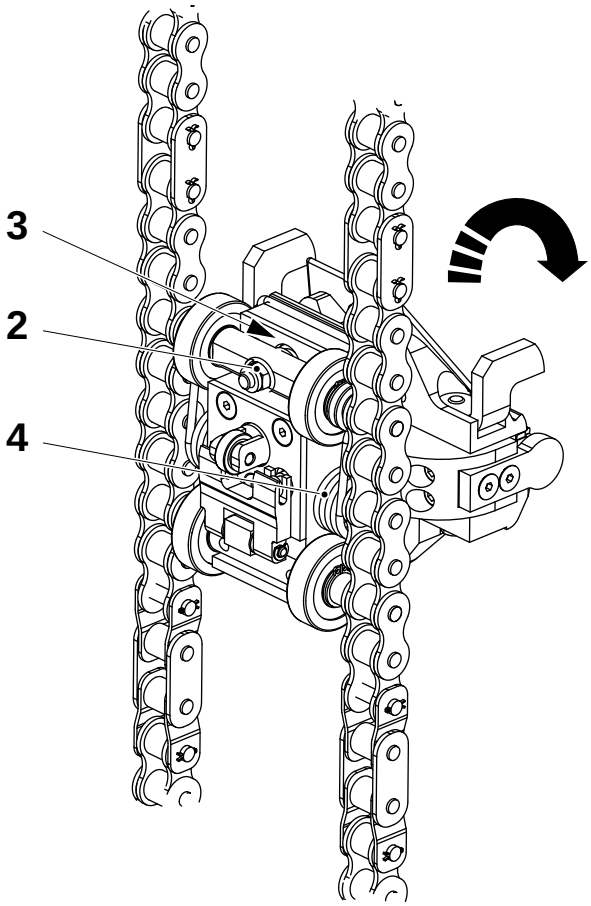

2 Nut
3 Spring
4 Spring

MM2.21TS100444en.fm

(Cont'd)

(Cont'd)

Note! Do not mix parts with parts from other jaws.

c) Unscrew the screws (5) to remove the volume flaps (6) and (7) and the stop arms (8).

d) Unscrew the screws (9) and remove the guides (10).

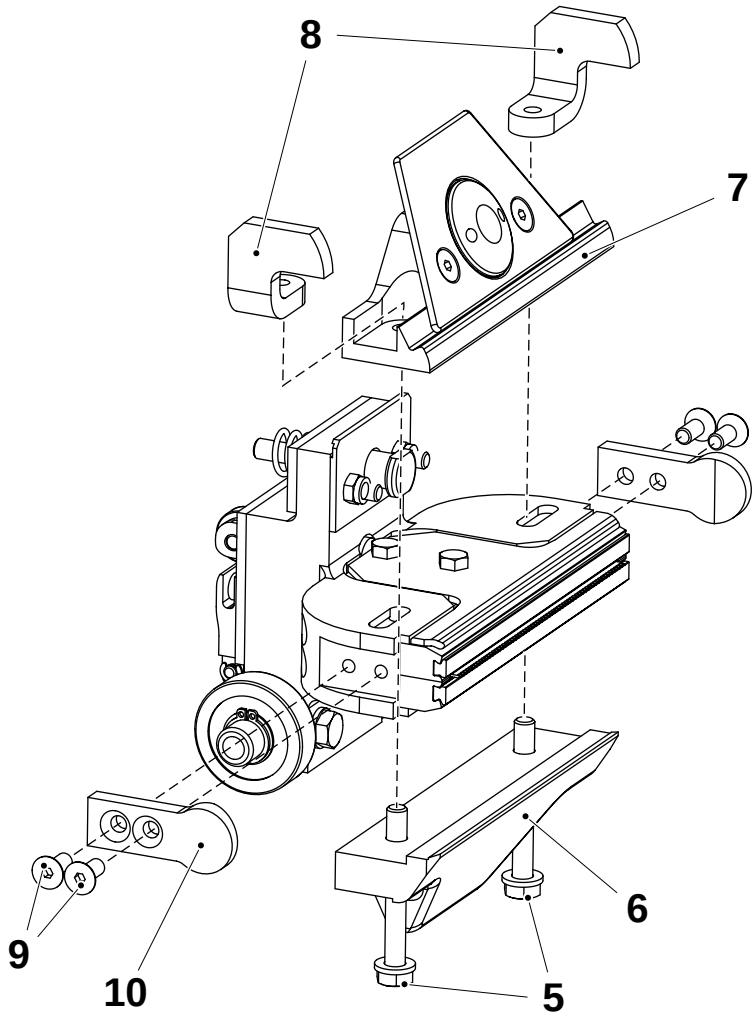

5 Screw
6 Volume flap
7 Volume flap
8 Stop arm
9 Screw
10 Guide

(Cont'd)

MM2.21TS100444en.fm

(Cont'd)

e) Unscrew the screws (11) and remove the cutting rails (12). Use a screwdriver to remove the dollies (13). Do not use any tools when fitting the new dollies.

f) Unscrew the grub screws (14) and remove the knife (15).

Note! Fit new grub screws when assembling.

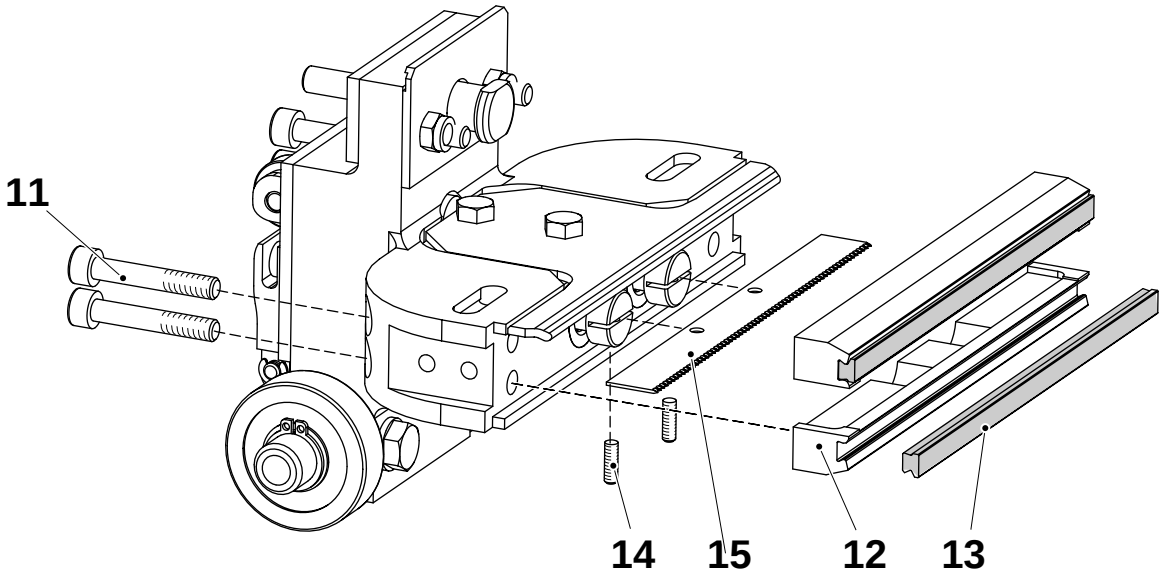

11 Screw (4 pcs)
12 Cutting rail
13 Dolly
14 Grub screw (2 pcs)
15 Knife

MM2.21TS100444en.fm

(Cont'd)

(Cont'd)

g) Remove the circlip (16), pull out the pin (17) and remove the fork (18). Pull out the springs (19).

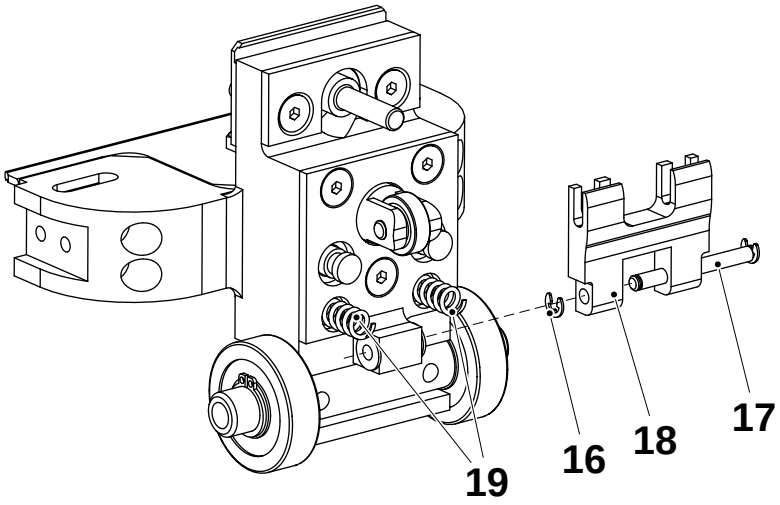

16 Circlip
17 Pin
18 Fork
19 Spring

MM2.21TS100444en.fm

h) Unscrew the screws (20). Remove the plate (21) and the remove the bushings (22).

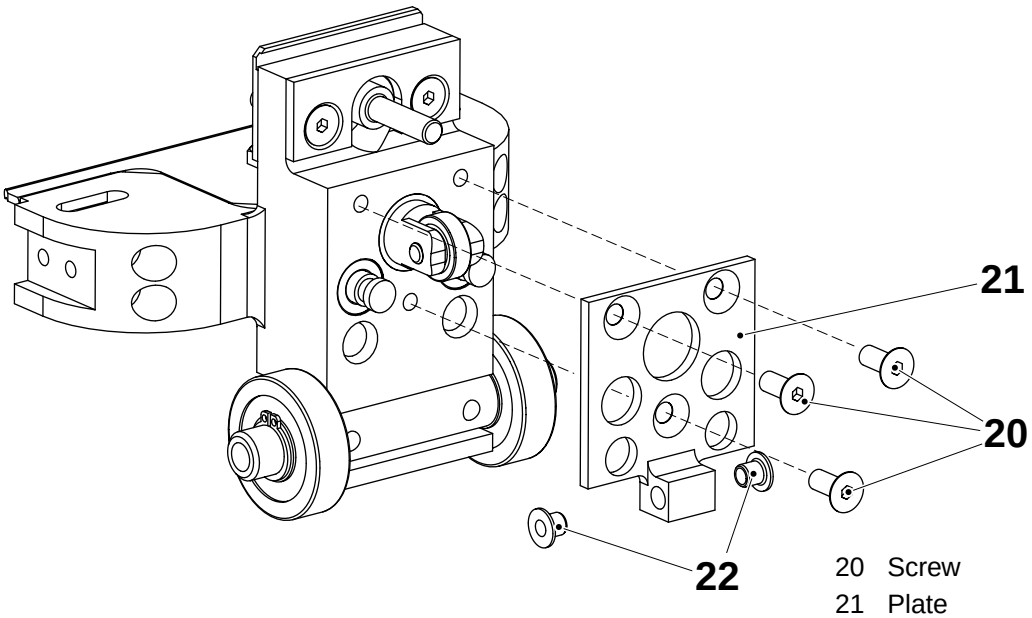

20 Screw
21 Plate
22 Bushing

(Cont'd)

(Cont'd)

i) Pull out the rods (23) and push out the bushings (24) nad (25).

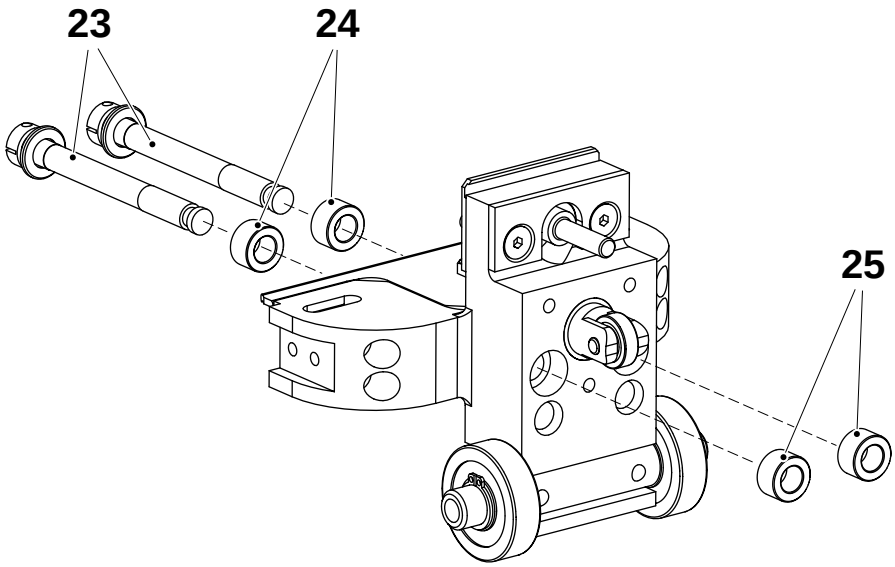

23 Rod
24 Bushing
25 Bushing

MM2.21TS100444en.fm

j) Unscrew the screws (26) and remove the ruler (27) and the bushing (29).

k) Pull out the rod (29), the spring (30) and the bushing (31). Remove the ball bearing (32) from the rod.

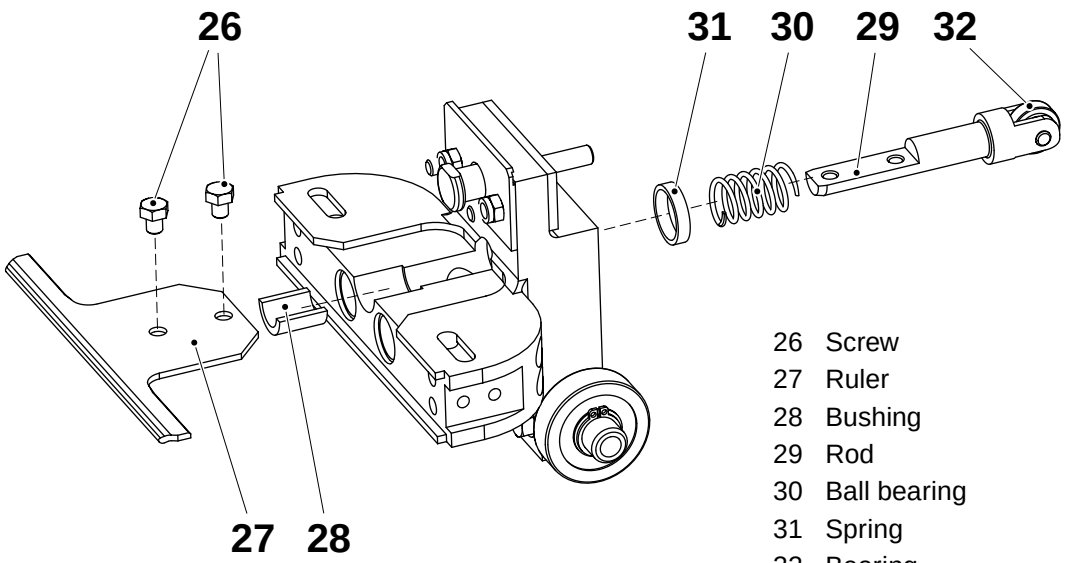

26 Screw
27 Ruler
28 Bushing
29 Rod
30 Ball bearing
31 Spring
32 Bearing

5.3.6-3 Pressure jaw - set volume adjuster

Machine Status	
SPC reference	2524103-0100

As a basic setting, set the volume adjuster (1) to protrude x mm from the plate (2).

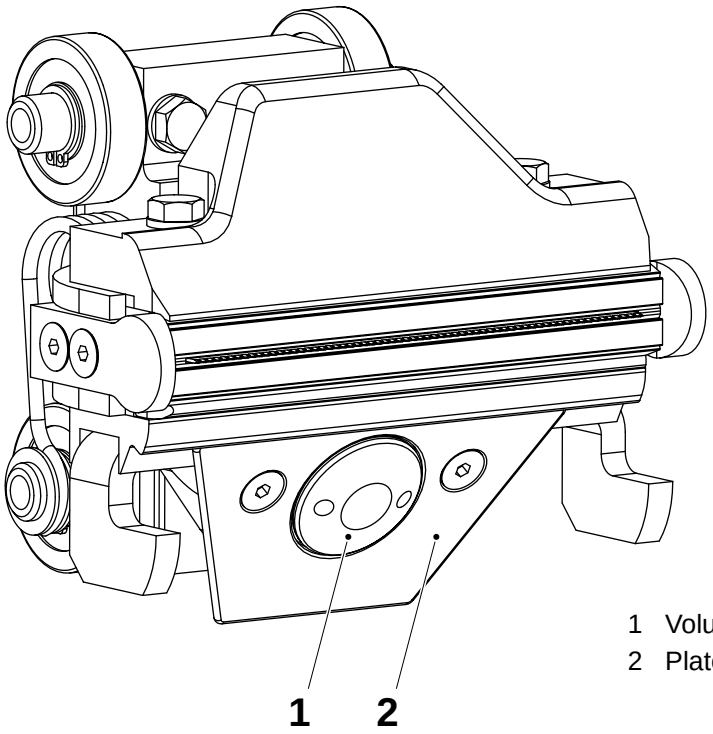

1 Volume adjuster
2 Plate

MM2.21TS100444en.fm

5.3.7 Guide sprocket

5.3.7-1 Guide sprocket - check

Machine Status	
SPC reference	2542895-0100

Check the guide sprockets (1) for wear and damages. The guide sprocket diameter shall be minimum 137 mm.

Replace as required, see 5.3.7-2 Guide sprocket - change bearings on page 289.

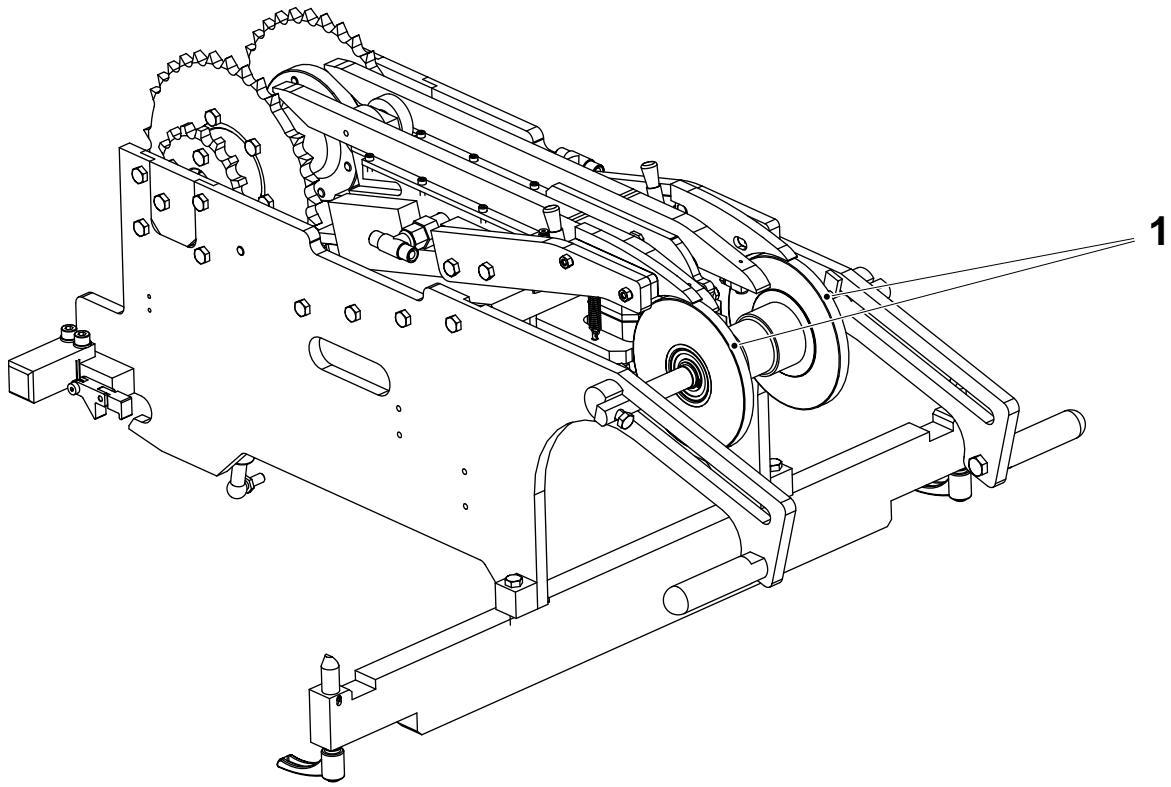

1 Guide sprocket

MM2.21TS100444en.fm

5.3.7-2 Guide sprocket - change bearings

Machine Status	
SPC reference	2542895-0100

a) Fold down the pressure side, see 5.3.4-1 Frame section - fold down to service position on page 269.

b) Remove the pressure jaws and chains, see 5.3.2-2 Sprocket - remove chains on page 257.

c) Loosen the screws (1) and lift out the guide sprocket unit (2).

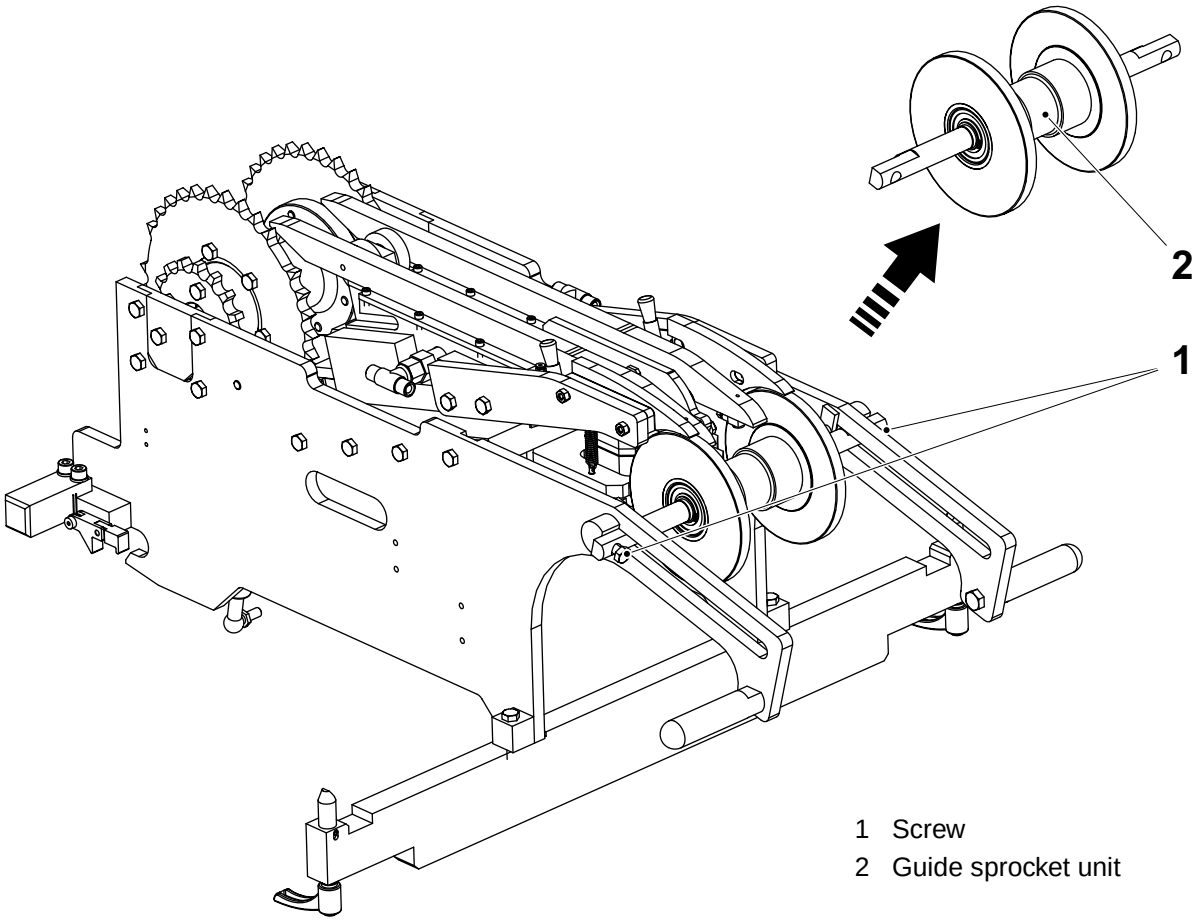

1 Screw
2 Guide sprocket unit

MM2.21TS100444en.fm

(Cont'd)

(Cont'd)

d) Remove the retaining ring (3) and push out the shaft (6) from the hub (5).

e) Remove the bearings (4).

f) Replace bearings and retaining rings.

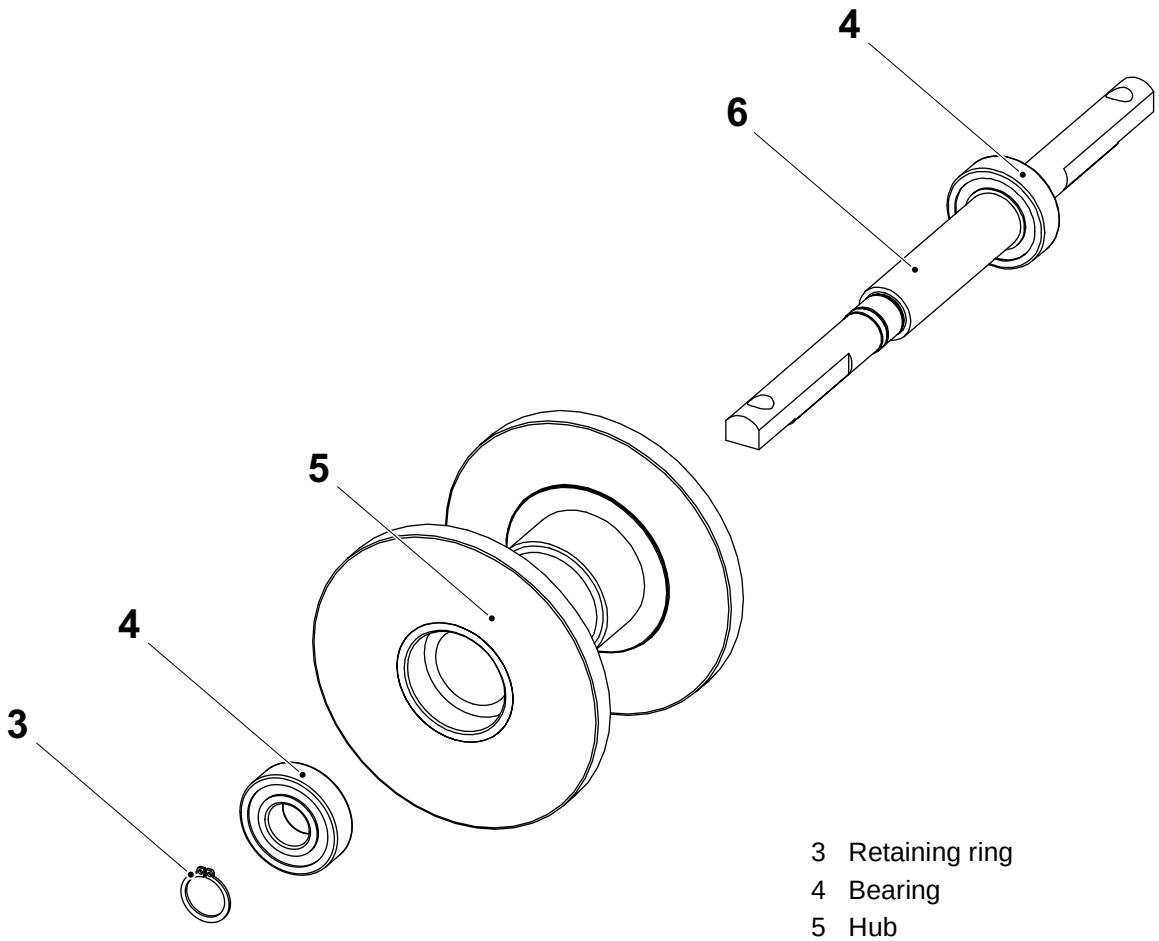

3 Retaining ring
4 Bearing
5 Hub
6 Shaft

MM2.21TS100444en.fm

(Cont'd)

(Cont'd)

Check with a steel ruler (8) that the sprocket (7) and the guide sprocket (9) are aligned before tightening the screws (10).

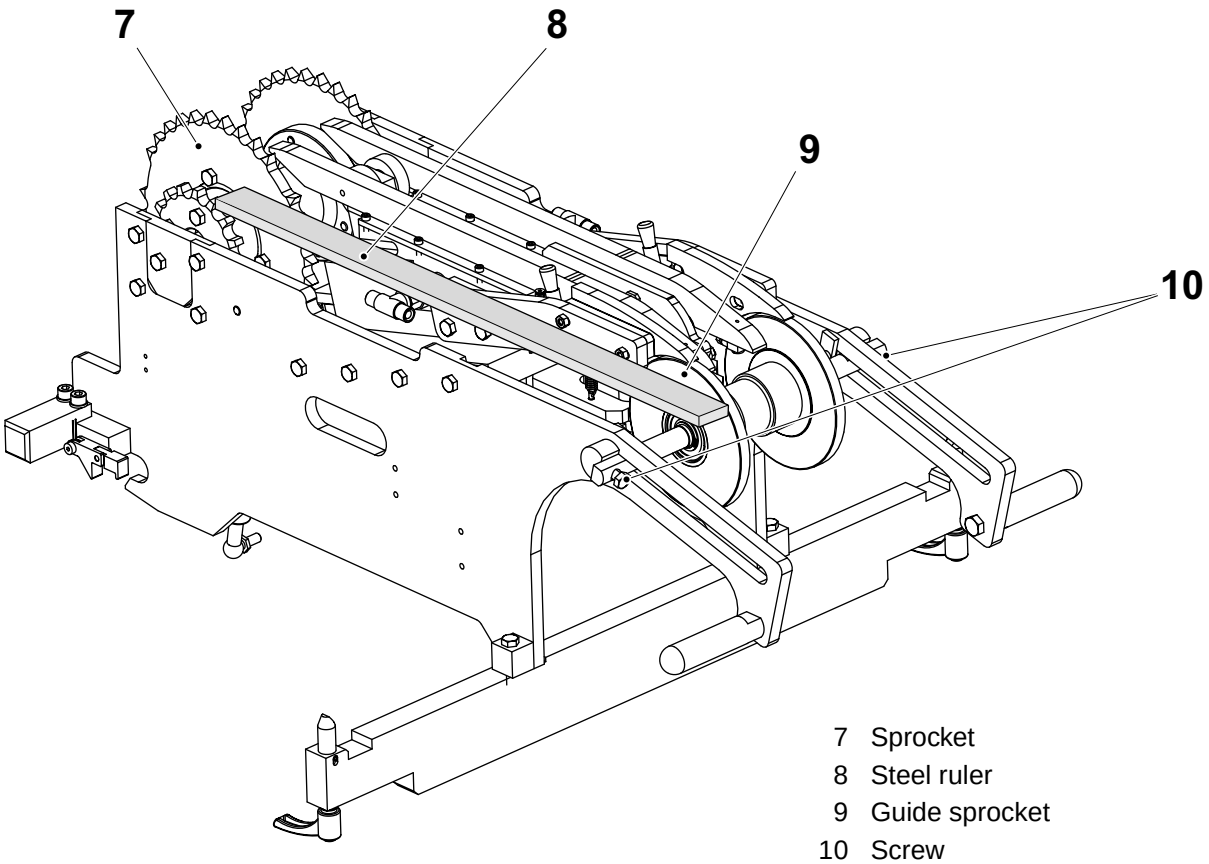

7 Sprocket
8 Steel ruler
9 Guide sprocket
10 Screw

MM2.21TS100444en.fm

5.4 Heating side

5.4-1 Heating side - description

Machine Status	
SPC reference	2524102-0100 (Side 1) 2524105-0100 (Side 2)

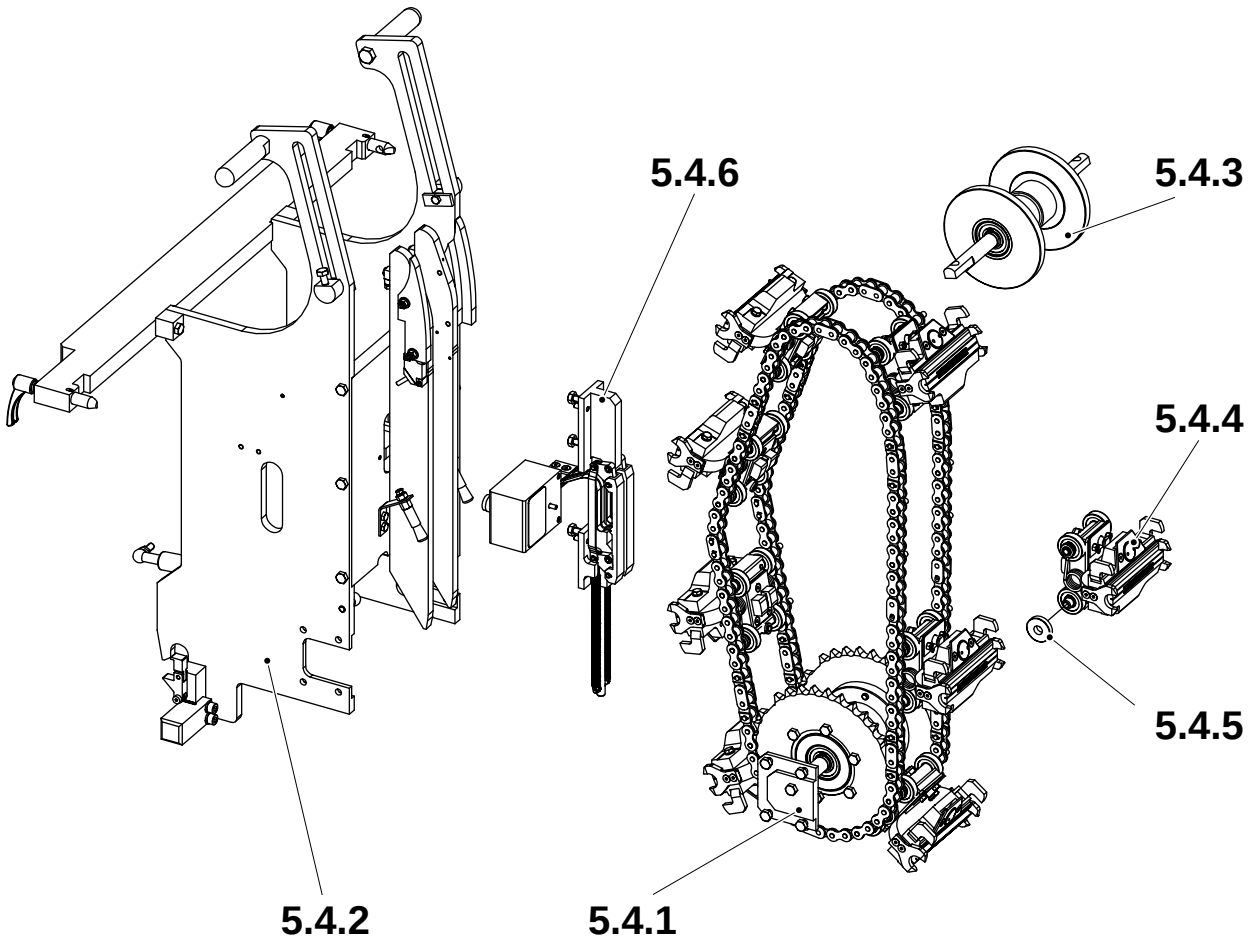

MM2.21TS100444en.fm

5.4.1 Sprocket
5.4.2 Frame section
5.4.3 Guide sprocket
5.4.4 Heating jaw
5.4.5 Synchronizer (side 1)
5.4.6 Contact rail

5.4.1 Sprocket

5.4.1-1 Sprocket - check chain length

Machine Status	
SPC reference	2523911-0100

Remove the chains, see 5.4.1-2 Sprocket - remove chains.

With the chain hanging vertically, measure the total length **A**.

Change the chain if out of tolerances. See table below.

When the chains are to long due to wear, the design correction can not compensate enough to keep the packages within the design.

Note! Always change all four chains for the pressure side and the corresponding heating side at the same time.

Volume (ml)	Max. chain length (mm)
65	1669.2
150S	1758.2
200B	1705.2
200S	

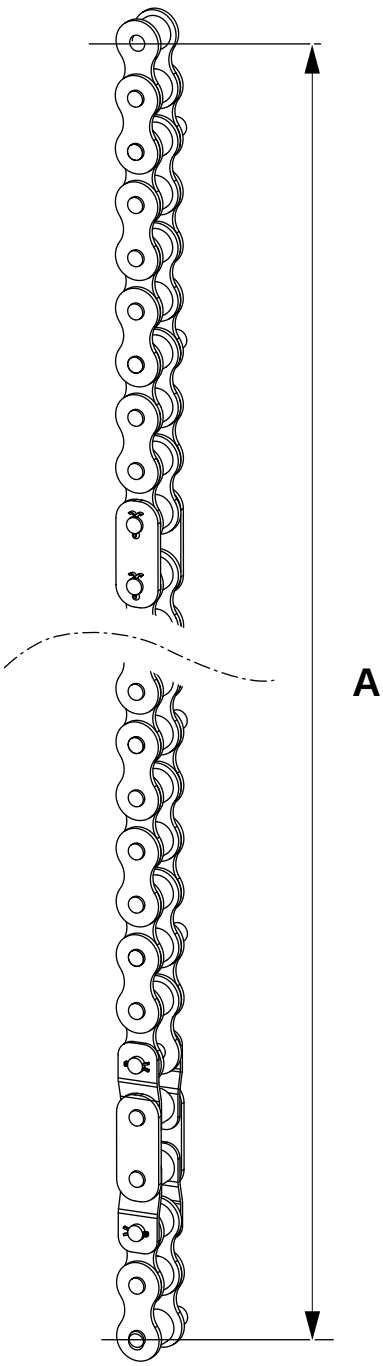

MM2.21TS100444en.fm

5.4.1-2 Sprocket - remove chains

Machine Status	
SPC reference	2523911-0100

a) Fold down the side, see 5.4.2-1 Frame section - fold down to service position on page 300.

b) Fit the tool (1) to the chains (2) as illustrated.

c) Tighten the wingnuts (3) to release the tension for the chain locks (4).

d) Remove the chain locks and lift out the chains (2) with the jaws (5).

Note! Take care not to drop the jaws.
The jaws are numbered, and if removed, they must be fitted to the chain at the same position. Make a note of which link one jaw is fitted to before removing the jaws.

e) If needed, remove the jaws.

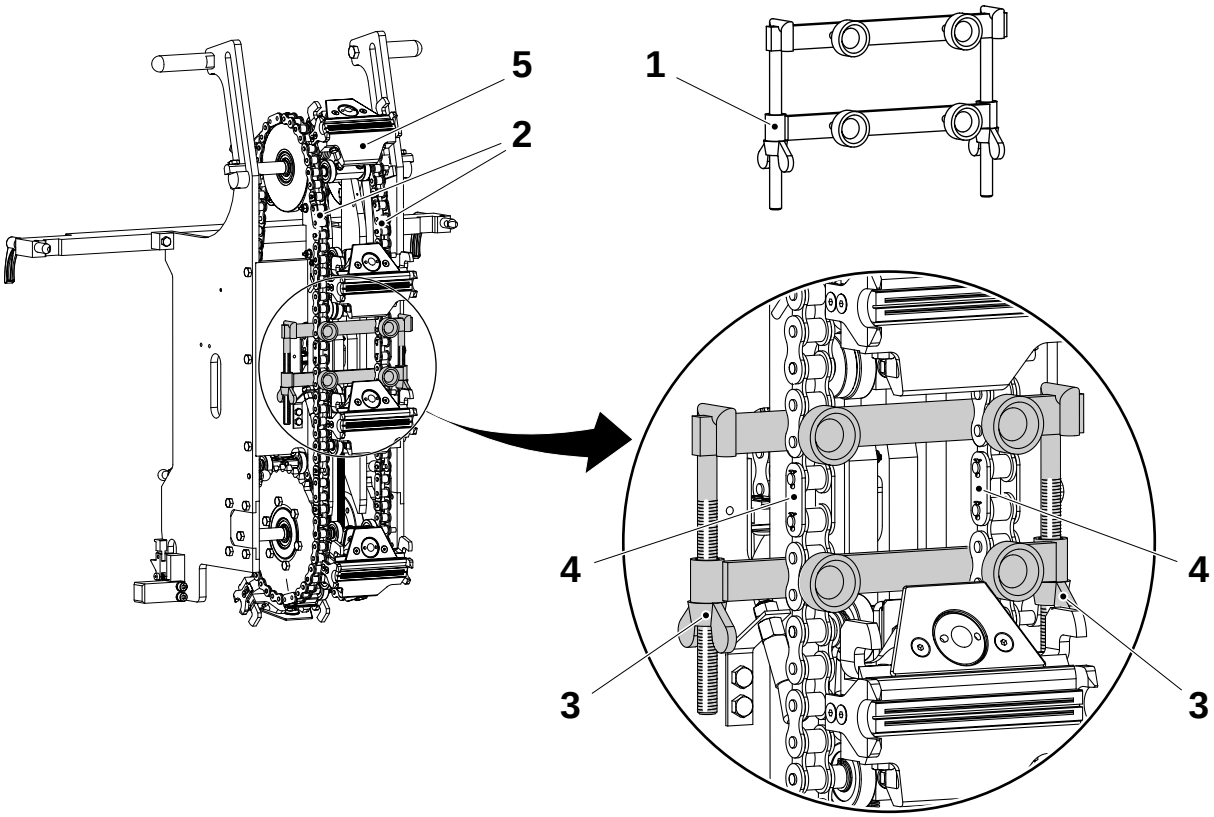

MM2.21TS100444en.fm

1 Tool
2 Chain
3 Wingnut
4 Chain lock
5 Jaw

5.4.1-3 Sprocket - install chains

Machine Status	
SPC reference	2523911-0100

a) If removed, fit all the jaws (1) to the chains.

Note! The jaws are numbered, and they must be fitted to the chain at the same position as they had before removing.

b) Fit the tool (2) to the chain ends.

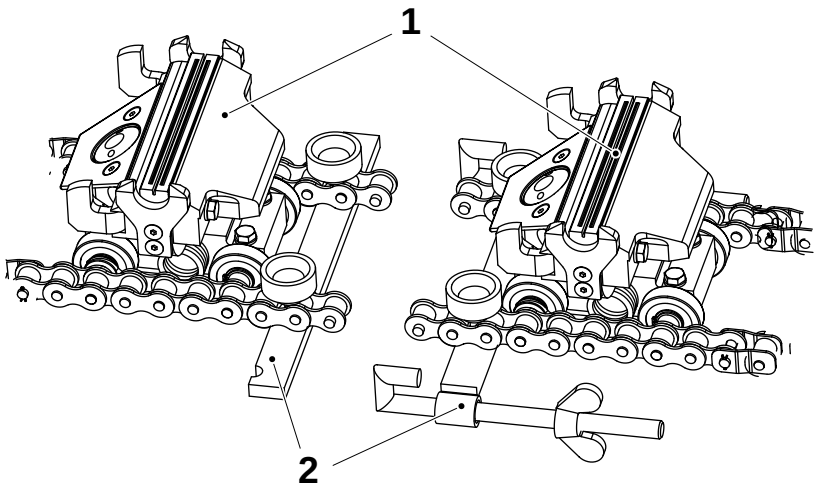

1 Jaw
2 Tool

Note! Make sure to fit the prolonged links facing the prolonged sprockets.

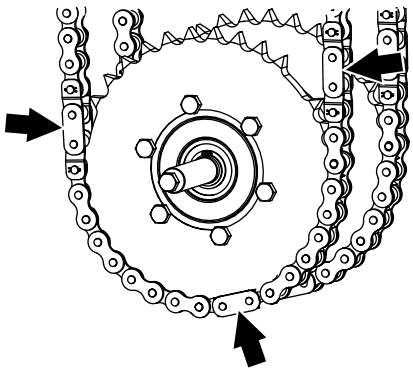

200B

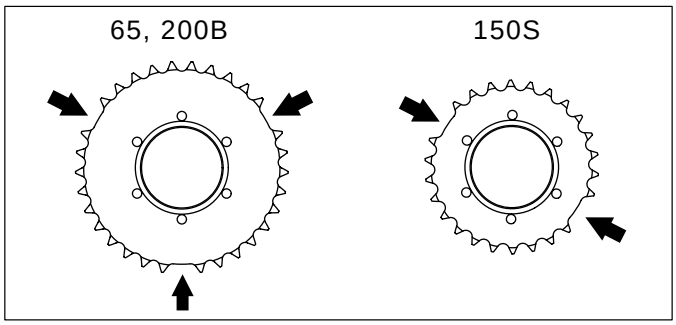

(Cont'd)

(Cont'd)

c) Connect the tool (2) and tighten the wingnuts (3) until the chain locks (4) can be fitted.

d) Fit the chain locks with new split pins (5) and remove the tool.

e) Raise the side according to 5.3.4-2 Frame section - raise to production position on page 271.

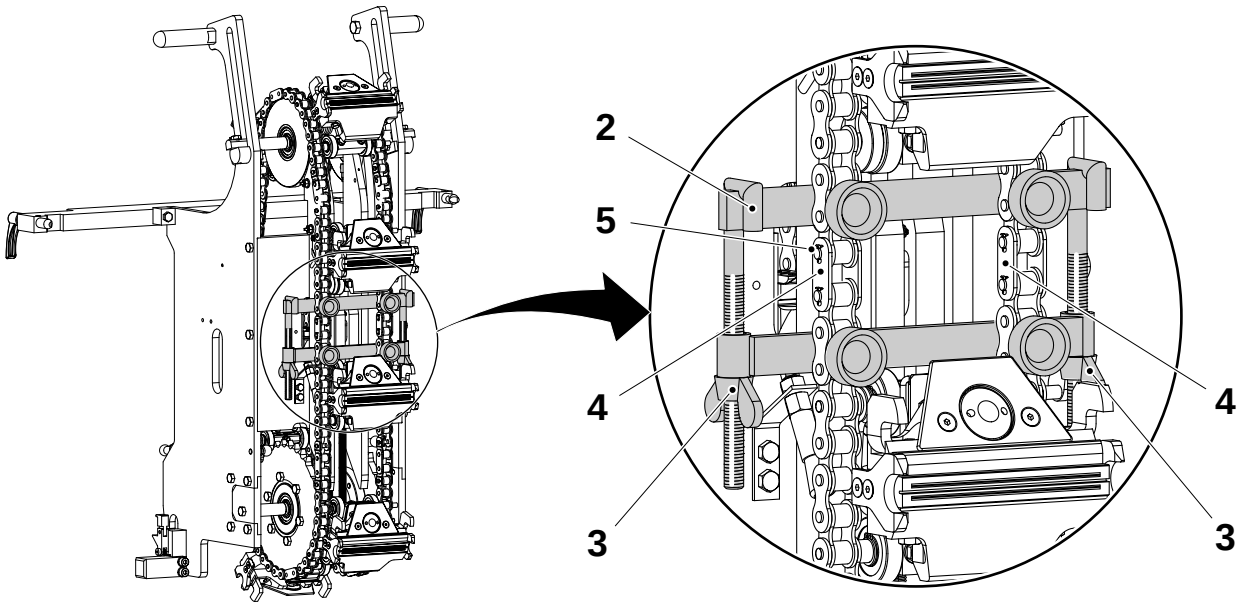

2 Tool
3 Wingnut
4 Chain lock
5 Split pin

MM2.21TS100444en.fm

5.4.1-4 Sprocket - change sprockets and bearings

Machine Status	
SPC reference	2523911-0100

a) Fold down the heating side, see 5.4.2-1 Frame section - fold down to service position.

b) Remove the heating jaws and chains, see 5.4.1-2 Sprocket - remove chains**s**

c) Remove the screws (1) and lift out the sprocket unit (2).

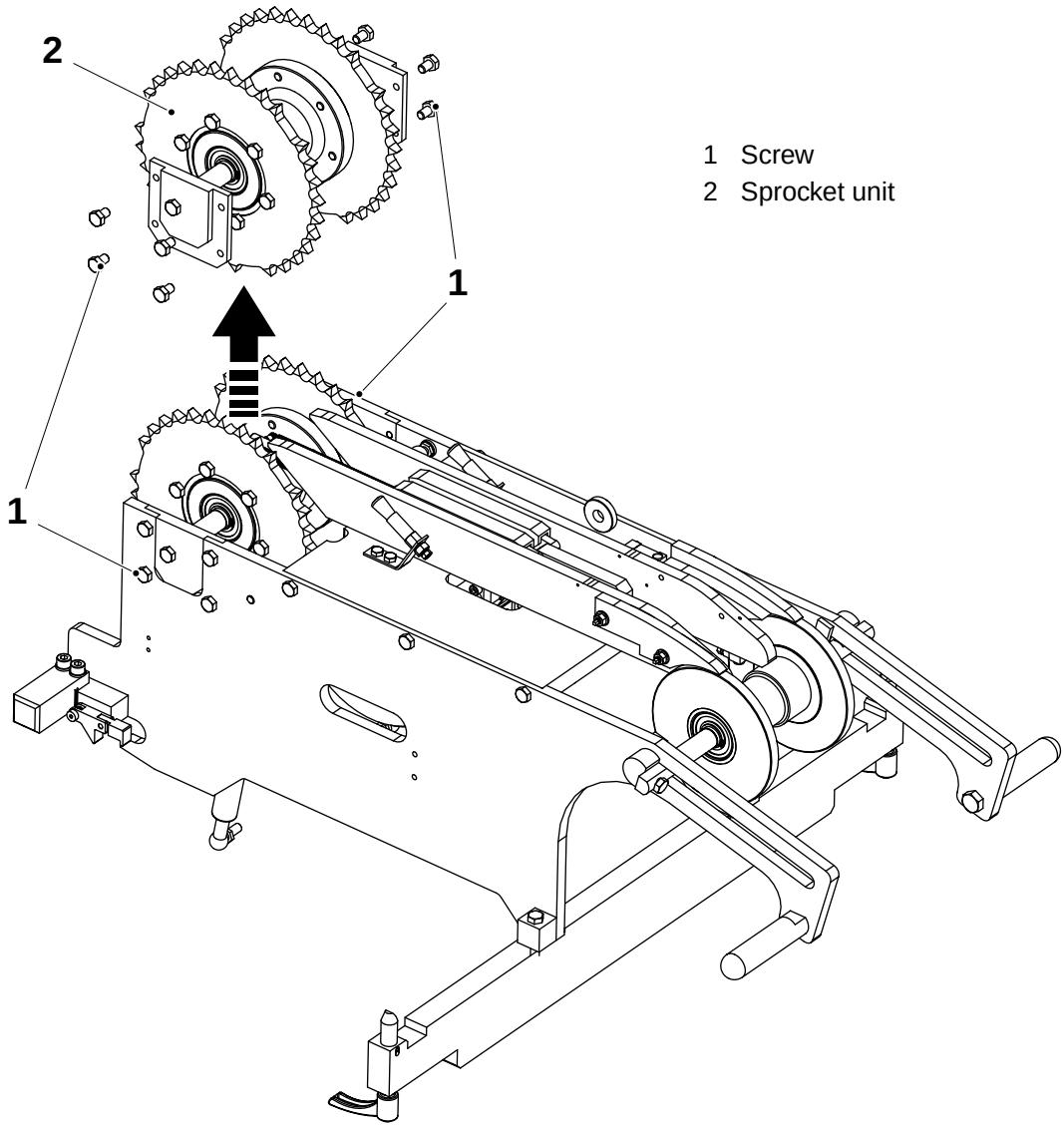

MM2.21TS100444en.fm

(Cont'd)

(Cont'd)

d) Remove the screws (3) and the support plates (4) for both sides.

Note! Mark one screw hole for one of the sprockets (6) and the corresponding threaded hole for the hub. If re-assembled at other angle, loss of jaw synchronisation will follow.

e) Remove the screws (5) for both sprockets (6).

f) Remove the retaining rings (7) for both sides and push out the shaft (9).

g) Remove the bearings (8).

h) Replace the sprockets, retaining rings and bearings.

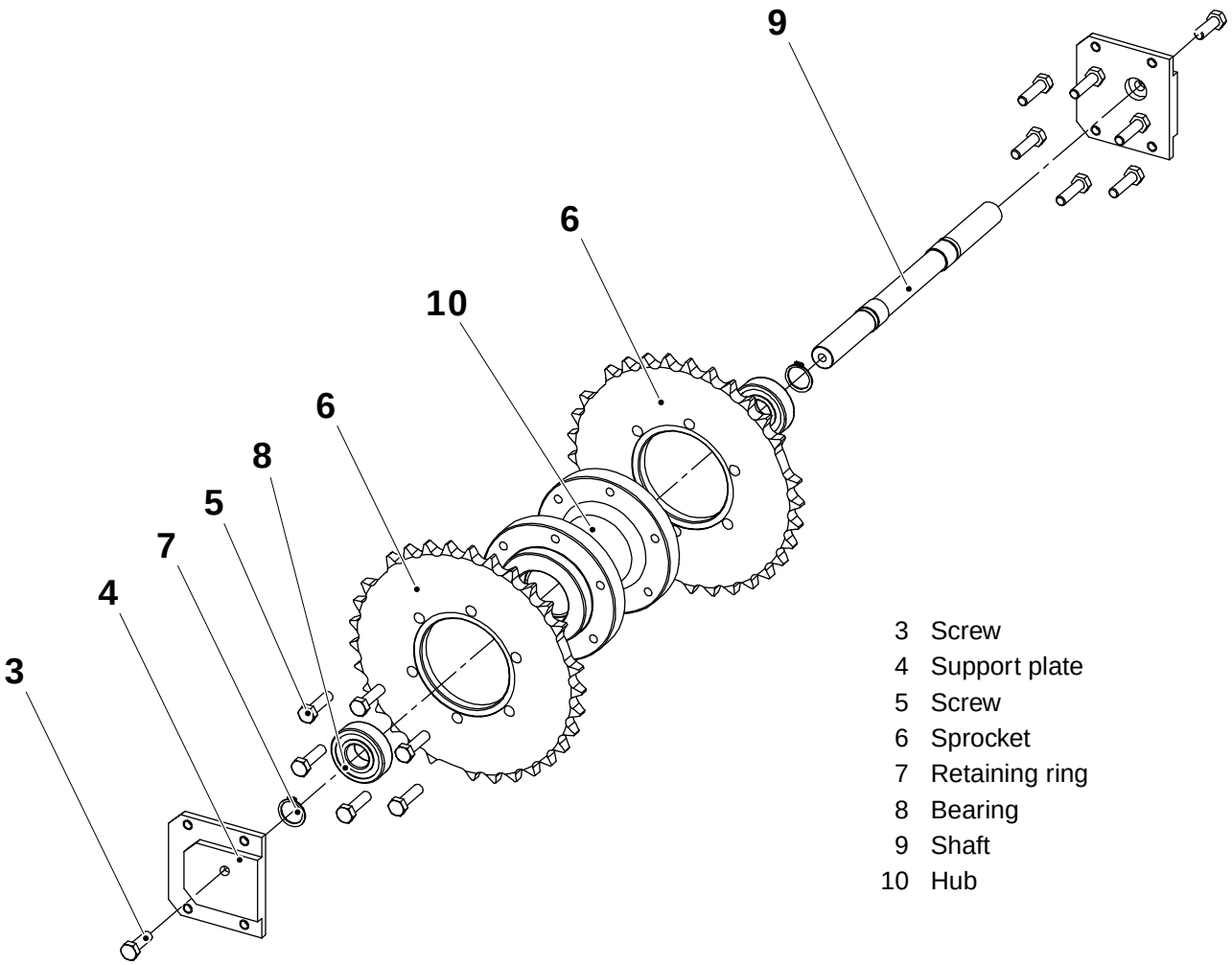

3 Screw
4 Support plate
5 Screw
6 Sprocket
7 Retaining ring
8 Bearing
9 Shaft
10 Hub

MM2.21TS100444en.fm

(Cont'd)

(Cont'd)

Assemble

Note! When assembling the sprockets (6) to the hub, observe that the area where the distance between the sprockets are longer (indicated with arrows), are at the same position for both sprockets. Make also sure to assemble the sprockets at the hub at the same angle, see the note on previous page.

Use the tool (11) and a composing stick (12) when aligning the sprockets (6).

(The drive sprocket teeth is symmetric with the four fastening holes. No need to keep track of its angle when assembling).

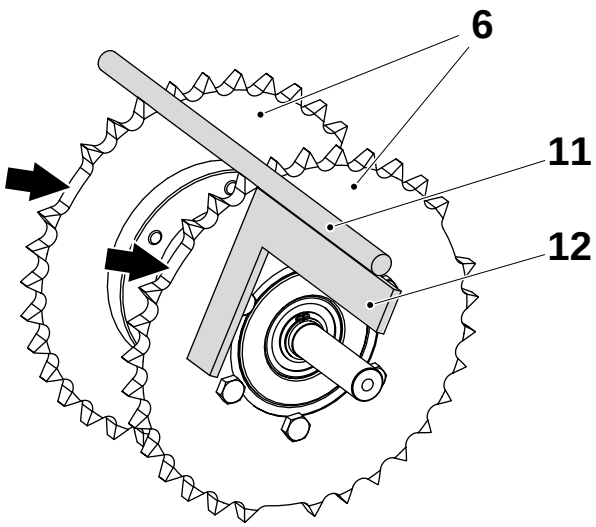

6 Sprocket
11 Tool
12 Composing stick

MM2.21TS100444en.fm

5.4.2 Frame section

5.4.2-1 Frame section - fold down to service position

Machine Status	
SPC reference	2523910-0100

DANGER! **Immediate danger to life!**
Risk of blocking the evacuation way in case of an emergency.
Never fold down the frame section for pressure side 4 or heating side 1 if the door to the electrical cabinet is open.

WARNING! **Risk of crushing!**
Always remove the gas dampers before lifting out the side frames.

If the side is to be lifted out, remove the gas dampers **before** folding down the side. Disconnecting the gas dampers with the side folded down may cause both personal injuries and damage to the dampers.

If the fastening for the side is loosened with the gas dampers connected, the side will jump out of its brackets due to the force of the gas dampers.

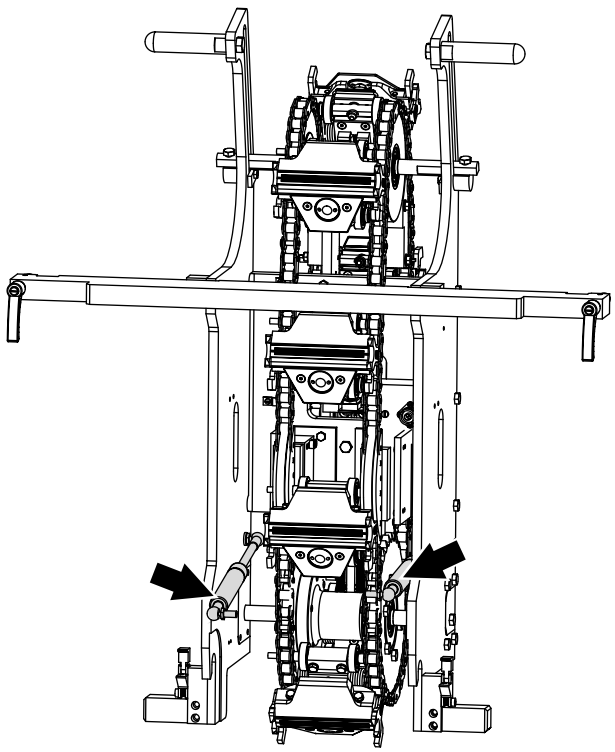

(Cont'd)

MM2.21TS100444en.fm

(Cont'd)

a) For one heating jaw (1), make a note of which pressure jaw it faces.

b) Unscrew the two locking levers (2), grip both handles (3) and lower the side.

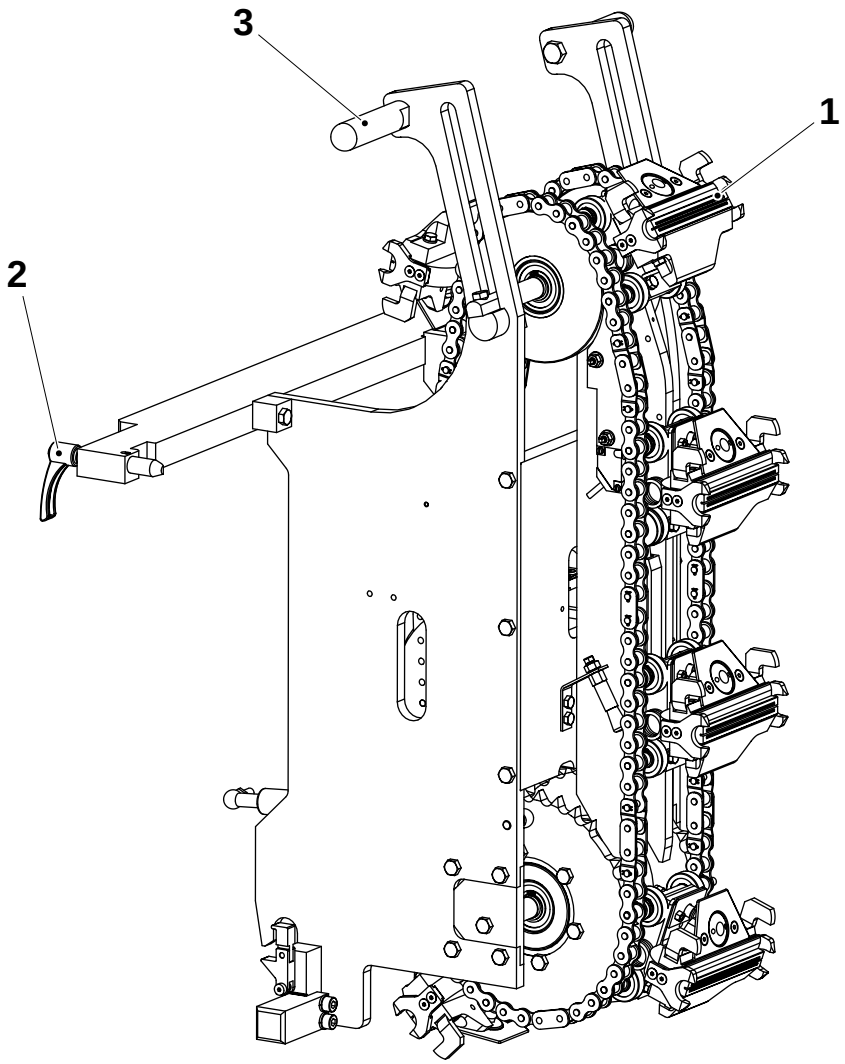

1 Pressure jaw
2 Locking lever
3 Handle

MM2.21TS100444en.fm

5.4.2-2 Frame section - raise to production position

Machine Status	
SPC reference	2523910-0100

a) Grip both handles (1) and raise the side.

b) Make sure that the heating jaw meets its corresponding pressure jaw. Make sure that the guides (2) get in contact with the guides (3) without force, turn the sides slightly when connecting.

c) Tighten the locking levers (4).

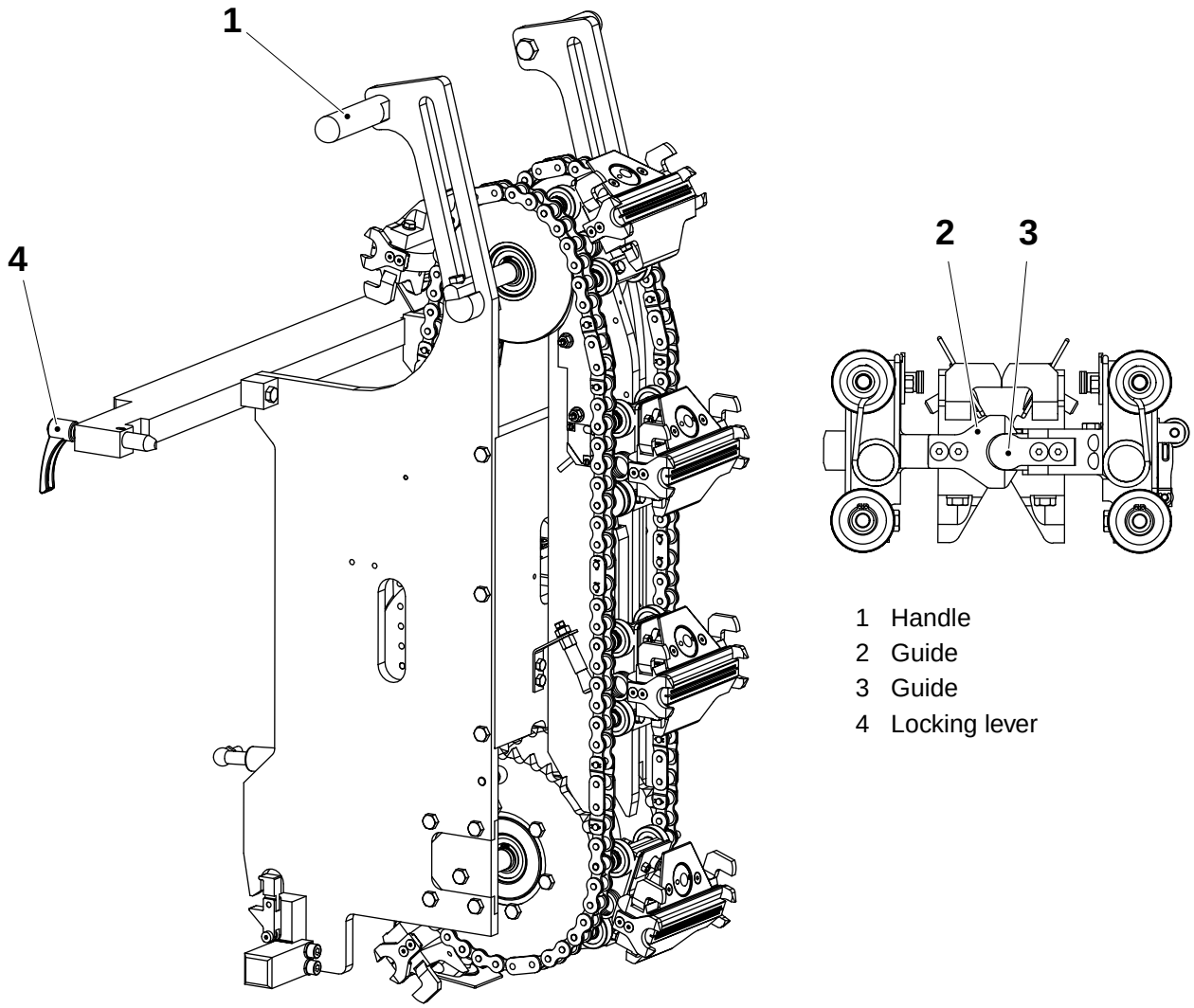

1 Handle
2 Guide
3 Guide
4 Locking lever

MM2.21TS100444en.fm

5.4.2-3 Frame section - check oil brushes

Machine Status	
SPC reference	2523910-0100

Check:

- the oil brushes (1) for wear and damages
- that the oil brushes (1) bear correctly against the chains
- that oil is delivered.

Adjust the position for the oil brushes if needed and replace if worn.

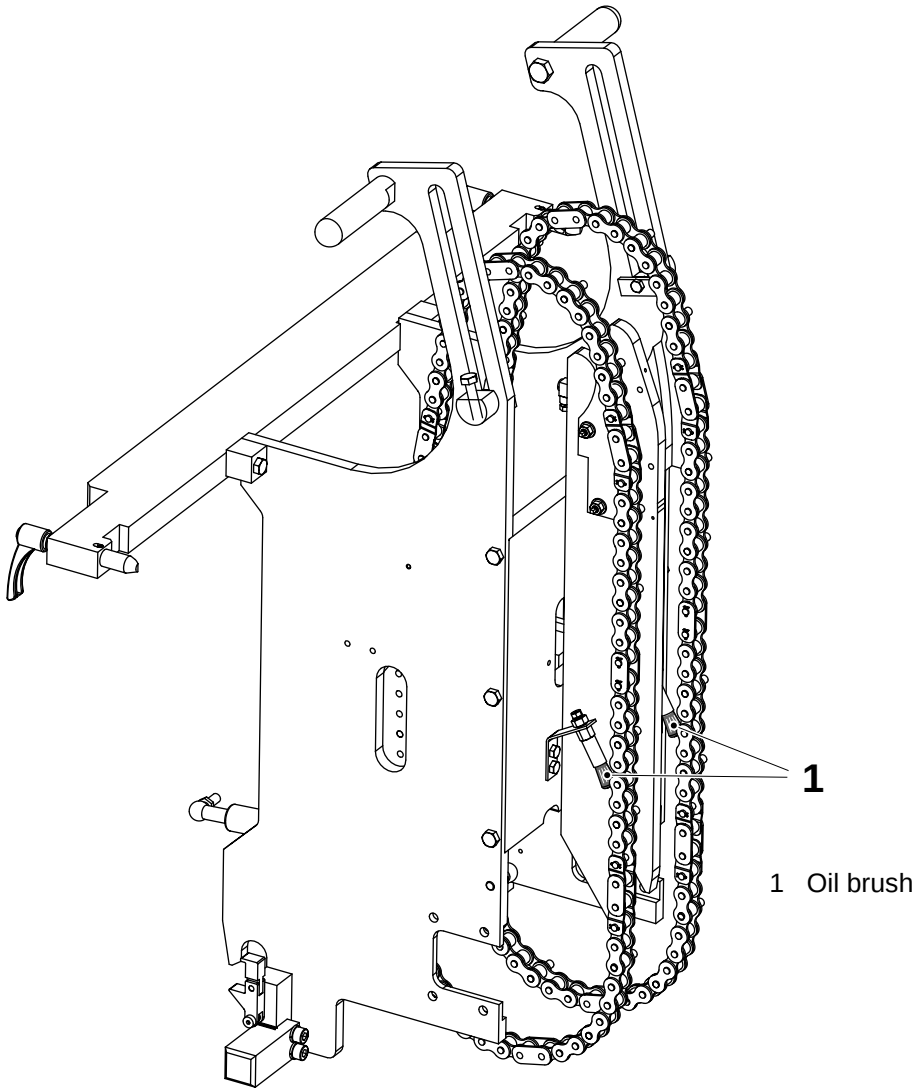

1 Oil brush

MM2.21TS100444en.fm

5.4.2-4 Frame section - check roller bar

Machine Status	
SPC reference	2523910-0100

Check the roller bars (1) for wear and damages.

Replace as required, see 5.4.2-5 Frame section - remove roller bar.

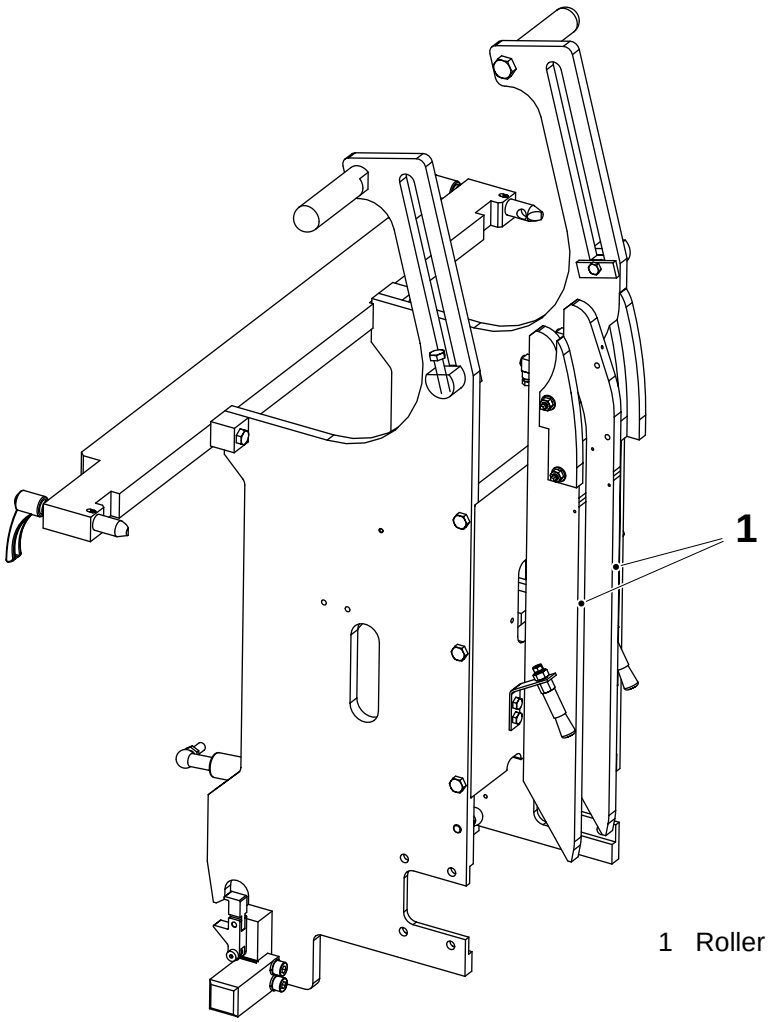

1 Roller bar

MM2.21TS100444en.fm

5.4.2-5 Frame section - remove roller bar

Machine Status	
SPC reference	2523910-0100

a) Remove the chains according to 5.4.1-2 Sprocket - remove chains on page 294.

b) Rmove the oil hose ftrom the connection (1).

c) Remove the screws (2) holding the chain tensioner (3).

d) Remove the screws (4) and lift out the roller bar (5).

e) Repeat for the other roller bar.

f) Install in the inverse order.

g) Install the chains, see 5.4.1-3 Sprocket - install chains on page 295.

h) Bleed the lubrication system and make sure oil is distributed after connecting the oil hoses.

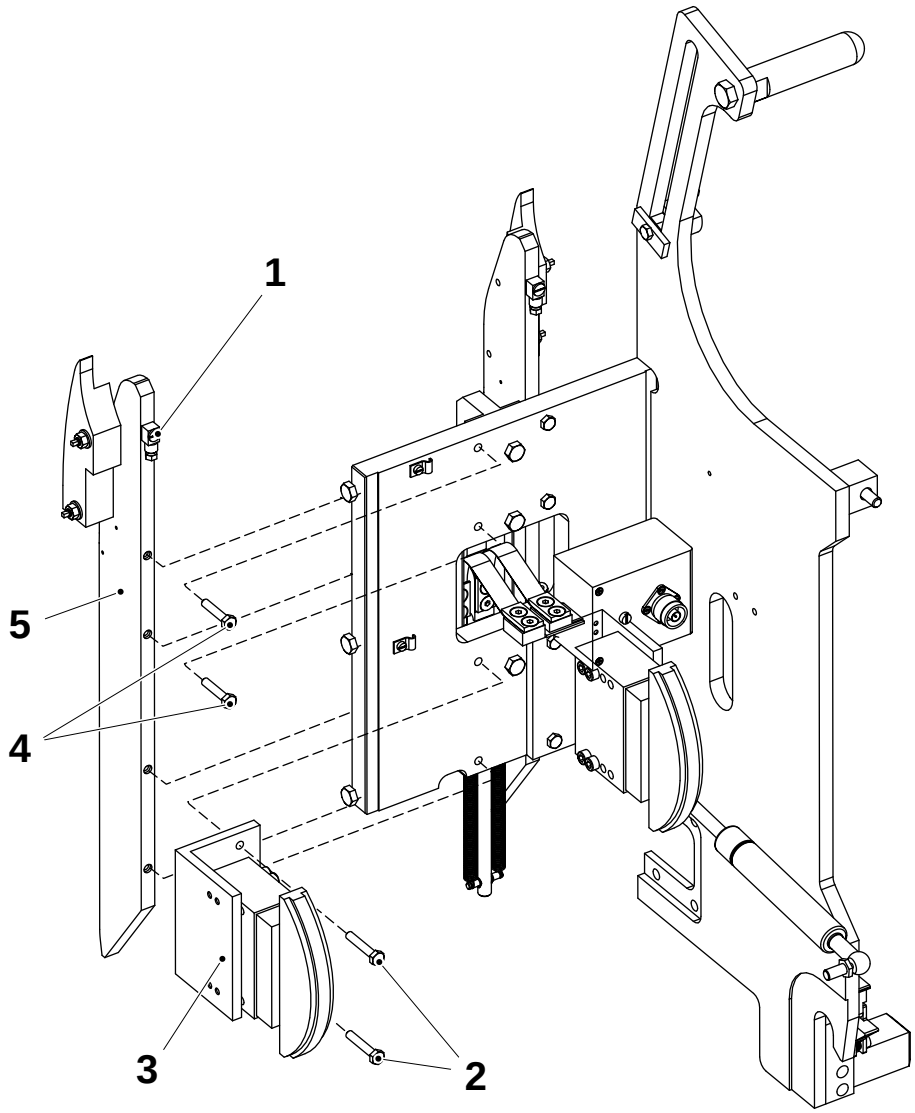

1 Connection
2 Screw
3 Chain tensioner
4 Screw
5 Roller bar

MM2.21TS100444en.fm

5.4.2-6 Frame section - check chain guide

Machine Status	
SPC reference	2523910-0100

Check: the chain guides(1) for wear and damages.

Replace as required.

Adjust the vertical position, see 5.4.2-6 Frame section - set chain guide.

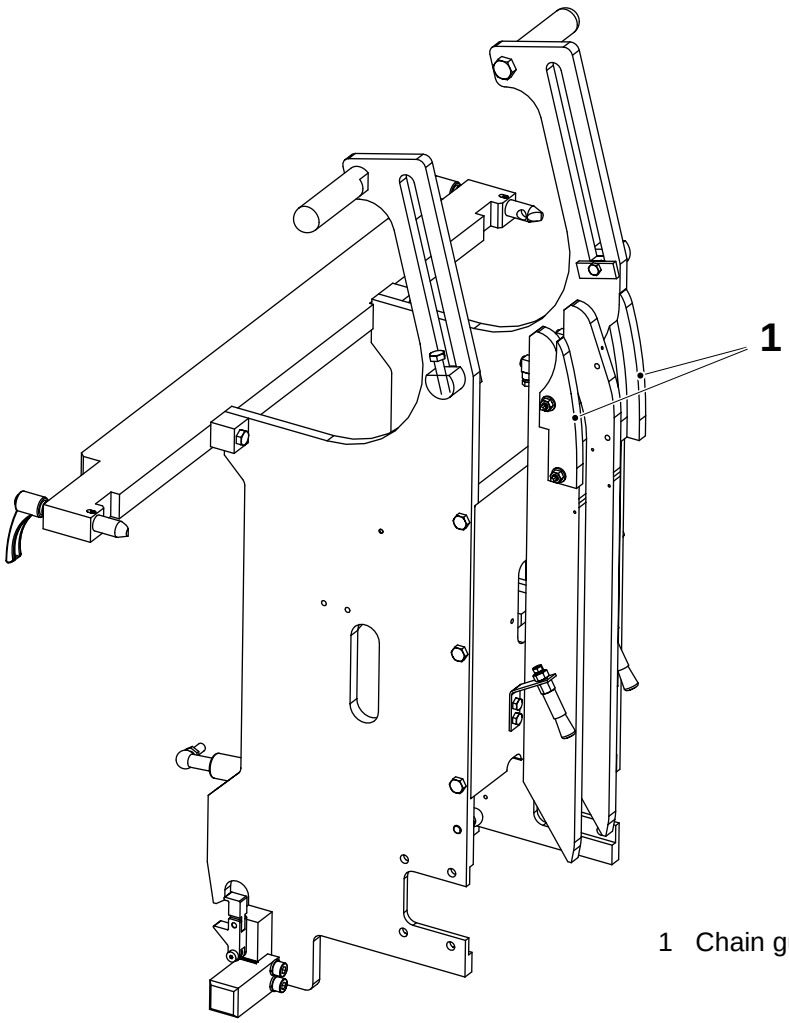

1 Chain guide

MM2.21TS100444en.fm

5.4.2-6 Frame section - set chain guide

Machine Status	
SPC reference	2523910-0100
Template	2569731-0100

Fit the template (1) as illustrated, loosen the nuts (2) andjust the vertically position for the chain guides (3).

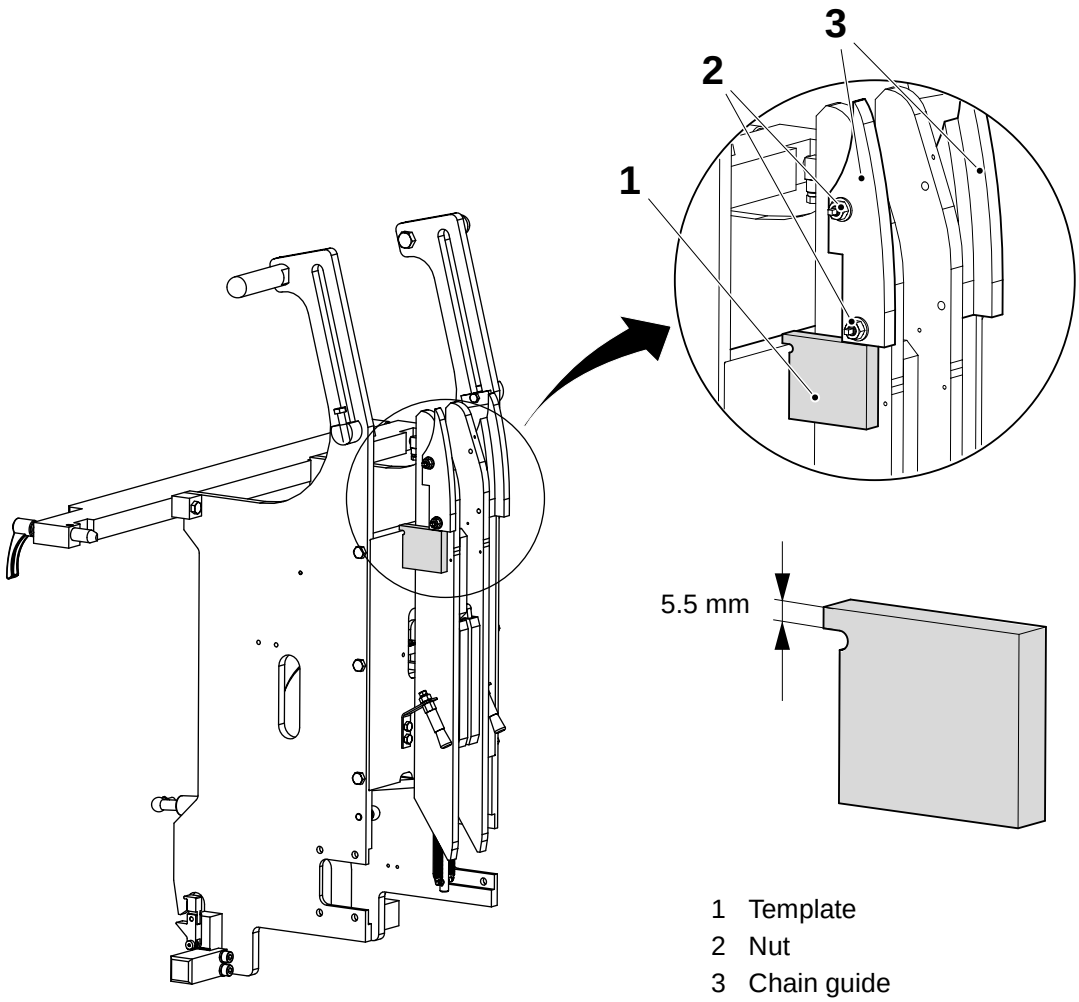

1 Template
2 Nut
3 Chain guide

MM2.21TS100444en.fm

5.4.3 Guide sprocket

5.3.7-1 Guide sprocket - check

Machine Status	
SPC reference	2523911-0100

Check the guide sprockets (1) for wear and damages. The guide sprocket diameter shall be minimum 137 mm.

Replace as required, see 5.4.3-1 Guide sprocket - change bearings on page 309.

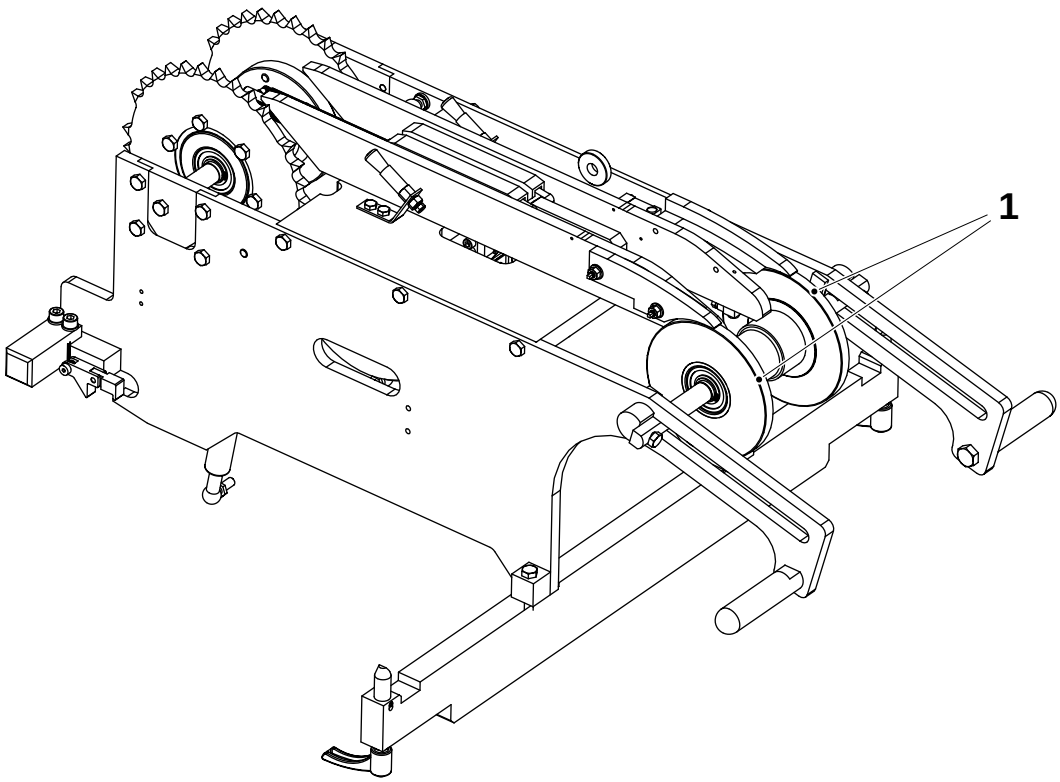

1 Guide sprocket

MM2.21TS100444en.fm

5.4.3-1 Guide sprocket - change bearings

Machine Status	
SPC reference	2523911-0100

a) Fold down the side, see 5.4.2-1 Frame section - fold down to service position on page 300.

b) Remove the chains, see 5.4.1-2 Sprocket - remove chains on page 294.

c) Remove the roller bars, see 5.4.2-5 Frame section - remove roller bar on page 305

d) Remove the contact rail, see 5.4.6-2 Contact rail - remove on page 321

e) Loosen the grub screws in the distance sleeve (1) for one side and lift out the guide sprocket unit (2).

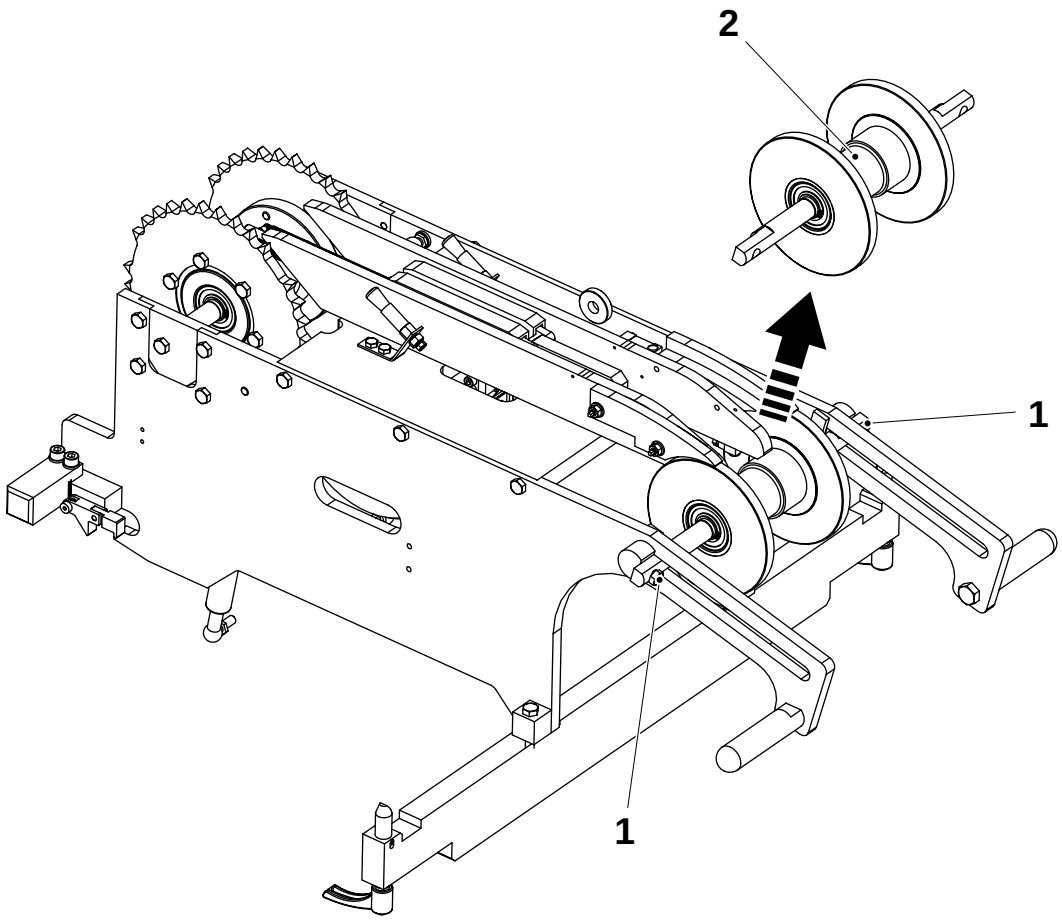

1 Screw
2 Guide sprocket unit

(Cont'd)

MM2.21TS100444en.fm

(Cont'd)

f) Remove the retaining ring (3) and push out the shaft (6) from the hub (5).

g) Remove the bearings (4).

h) Replace bearings and retaining rings.

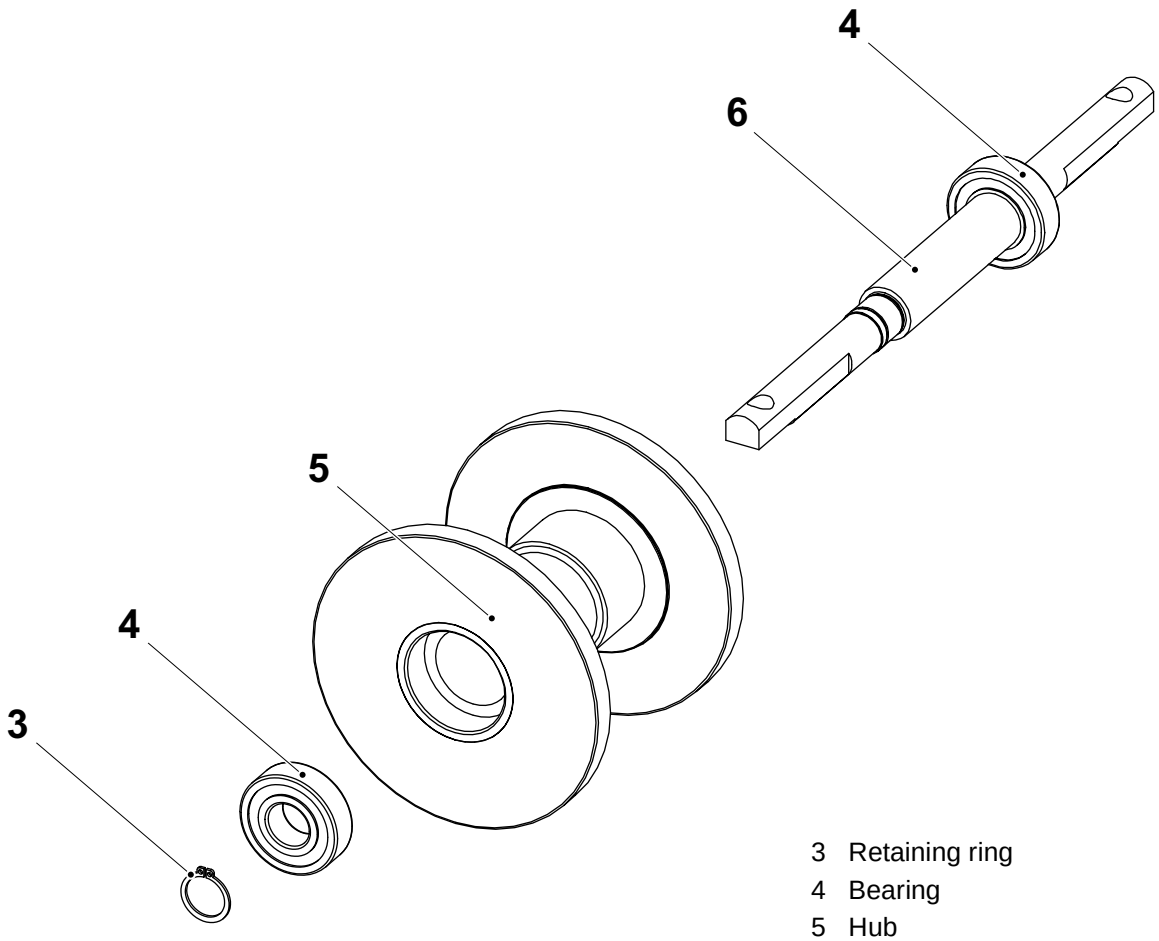

3 Retaining ring
4 Bearing
5 Hub
6 Shaft

MM2.21TS100444en.fm

(Cont'd)

(Cont'd)

Check with a steel ruler (8) that the sprocket (7) and the guide sprocket (9) are aligned before tightening the screws (10).

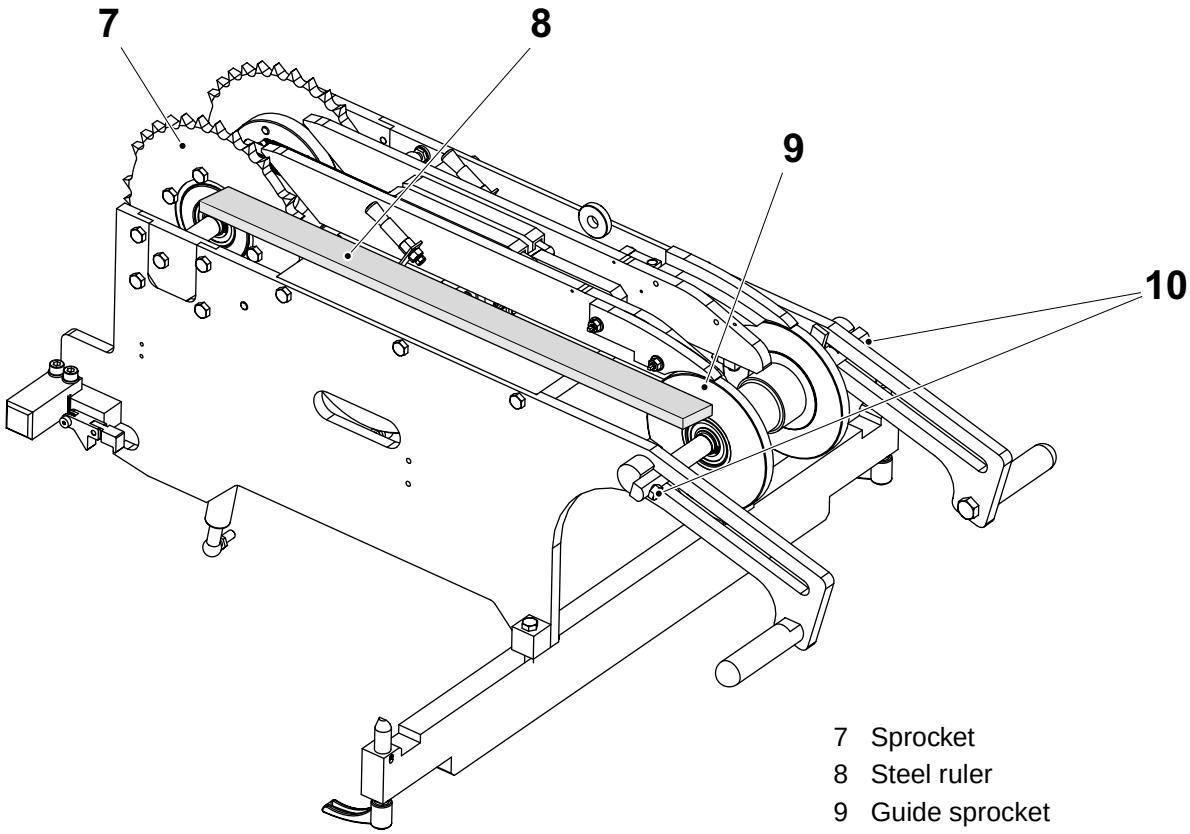

7 Sprocket
8 Steel ruler
9 Guide sprocket
10 Screw

MM2.21TS100444en.fm

5.4.4 Heating jaw

5.4.4-1 Heating jaw - check

Machine Status	
SPC reference	2524100-0100

Check:

- the bearing rollers (1) for wear and damages and that they rotate freely
- the guides (2) for damages

Clean the inductor (3) and check:

- the inductor (1) for damage
- that the surface of the inductor is flat within B = 0,4 mm.

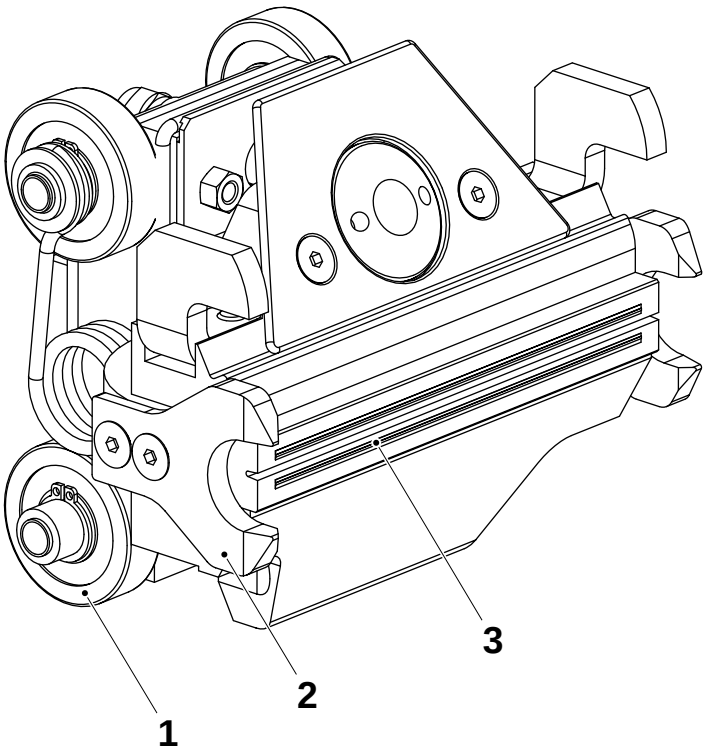

1 Bearing roller
2 Guide
3 Inductor

MM2.21TS100444en.fm

(Cont'd)

(Cont'd)

Check the wear of the carbon brushes (4); that **A** is minimum 10 mm. (Distance **A** for a new carbon brush is 12 mm).

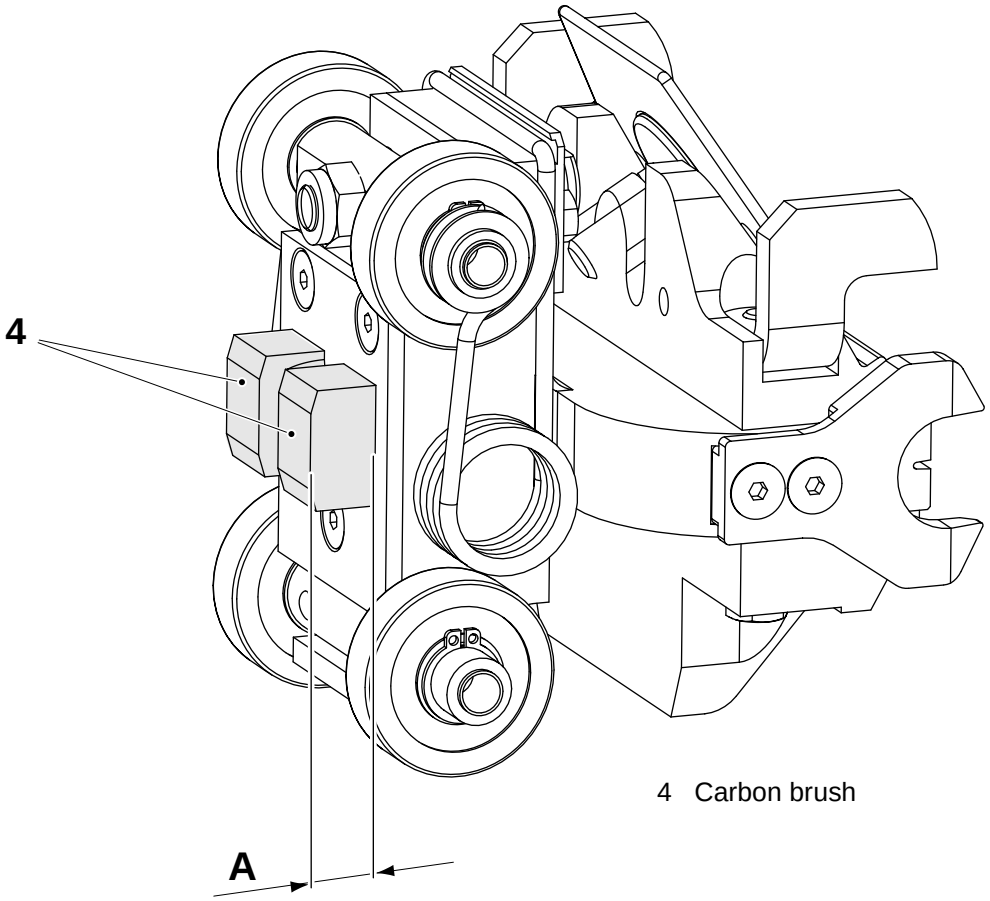

4 Carbon brush

A = min. 10 mm

MM2.21TS100444en.fm

5.4.4-2 Heating jaw - remove

Machine Status	
SPC reference	2524100-0100

Follow items a) - e) in 5.4.1-2 Sprocket - remove chains.

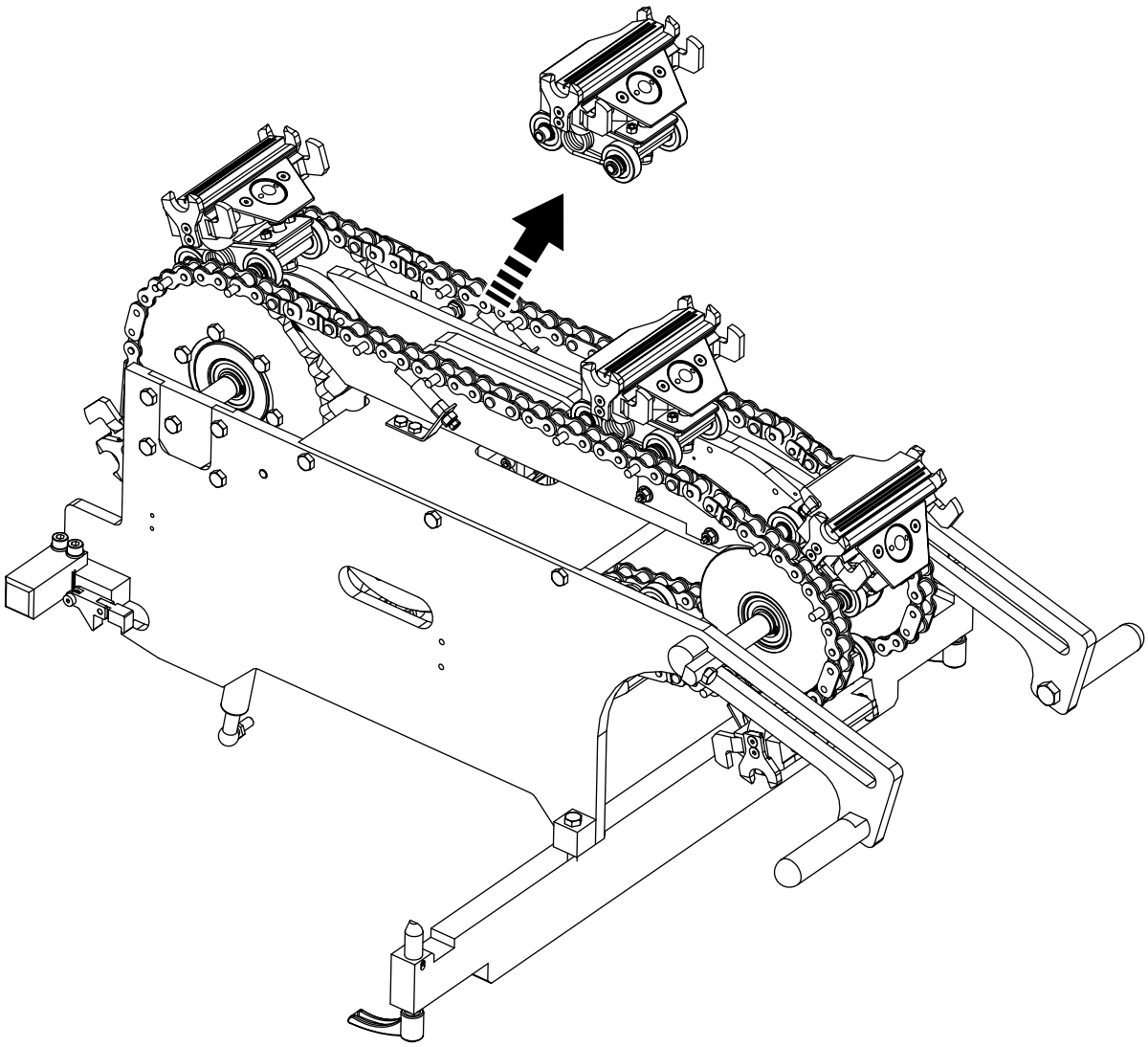

MM2.21TS100444en.fm

5.4.4-3 Heating jaw - change bearing rollers

Machine Status	
SPC reference	2524100-0100

a) To change the bearing rollers (1) remove the chains according to items a) - c) in 5.4.1-2 Sprocket - remove chains.

b) Remove the retaining spring (1), the sleeve (2) for the spring and the retaining ring (3).

c) Pull out the roller bearing and fit the new.

d) Assemble in the reverse order.

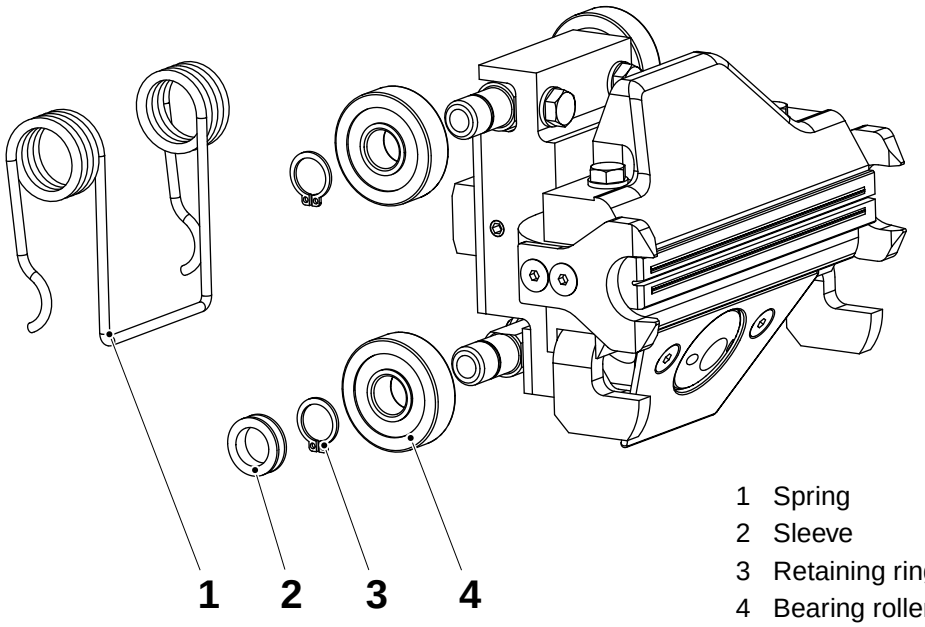

1 Spring
2 Sleeve
3 Retaining ring
4 Bearing roller

MM2.21TS100444en.fm

5.4.4-4 Heating jaw - change carbon brushes and inductor

Machine Status	
SPC reference	2524100-0100

Remove

Note! Do not mix parts with parts from other jaws.

a) Remove the screws (1) and remove the guides (2).

b) Remove the screws (3) and remove:
   – the upper and lower volume flaps (4) and (5)
   – the two stop arms (6).

c) Remove the spring (7).

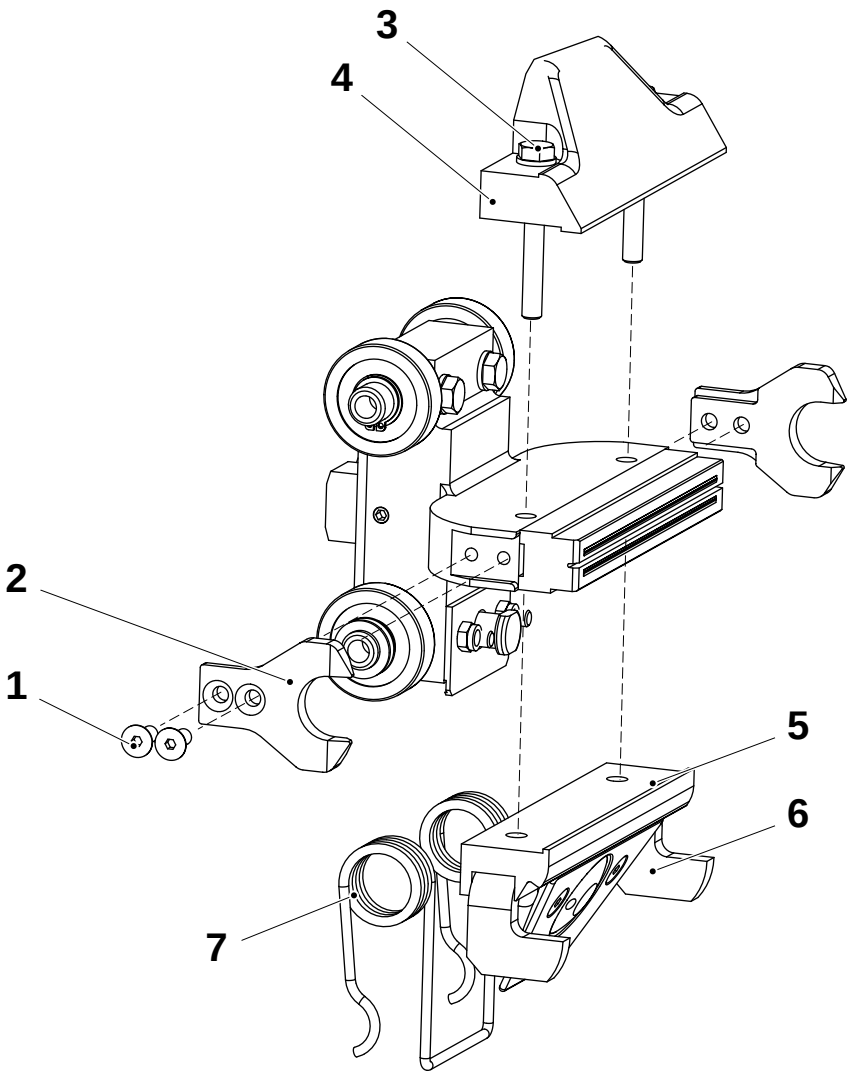

1 Screw
2 Guide
3 Screw
4 Volume flap
5 Volume flap
6 Stop arm
7 Spring

MM2.21TS100444en.fm

(Cont'd)

(Cont'd)

d) Loosen the grub screw (8) and pull out the carbon brushes (9) and the inductor (10).

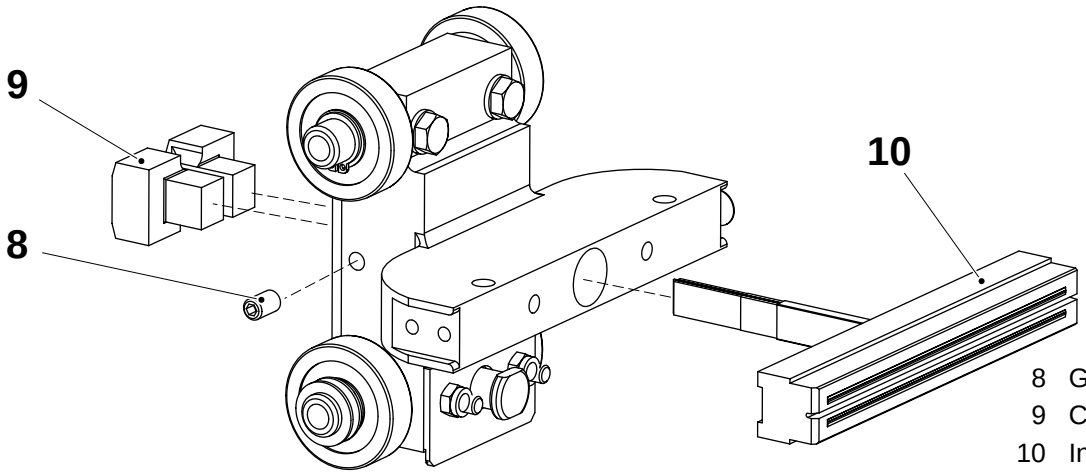

8 Grub screw
9 Carbon brush
10 Inductor

Install

Note! The inductor (10) must be turned the correct way. The direction for heating side 1 & 2 are different. For both sides, install the inductor in the direction where the phase (11) is closest to the infeed unit.

Make sure that:

- the clamp block of metal (12) is placed behind the grub screw (8)
- the carbon brushes (9) and the inductor (10) are seated correctly against the jaw before tightening the grub screw (8)

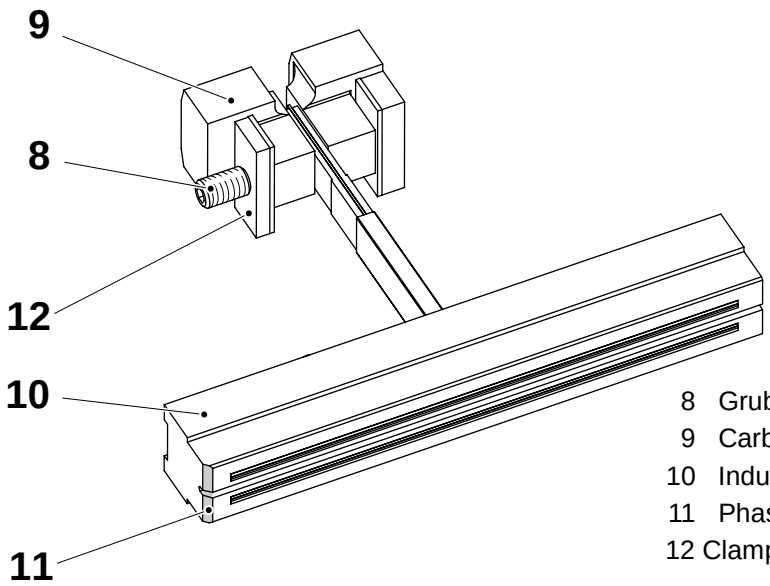

8 Grub screw
9 Carbon brush
10 Inductor
11 Phase
12 Clamp block (metallic)

MM2.21TS100444en.fm

5.4.4-5 Heating jaw - set volume adjuster

Machine Status	
SPC reference	2524100-0100

As a basic setting, align the back of the volume adjuster (1) with the:

- plate (2) for 65 200B and 200S
- volume flap (3) for 150S

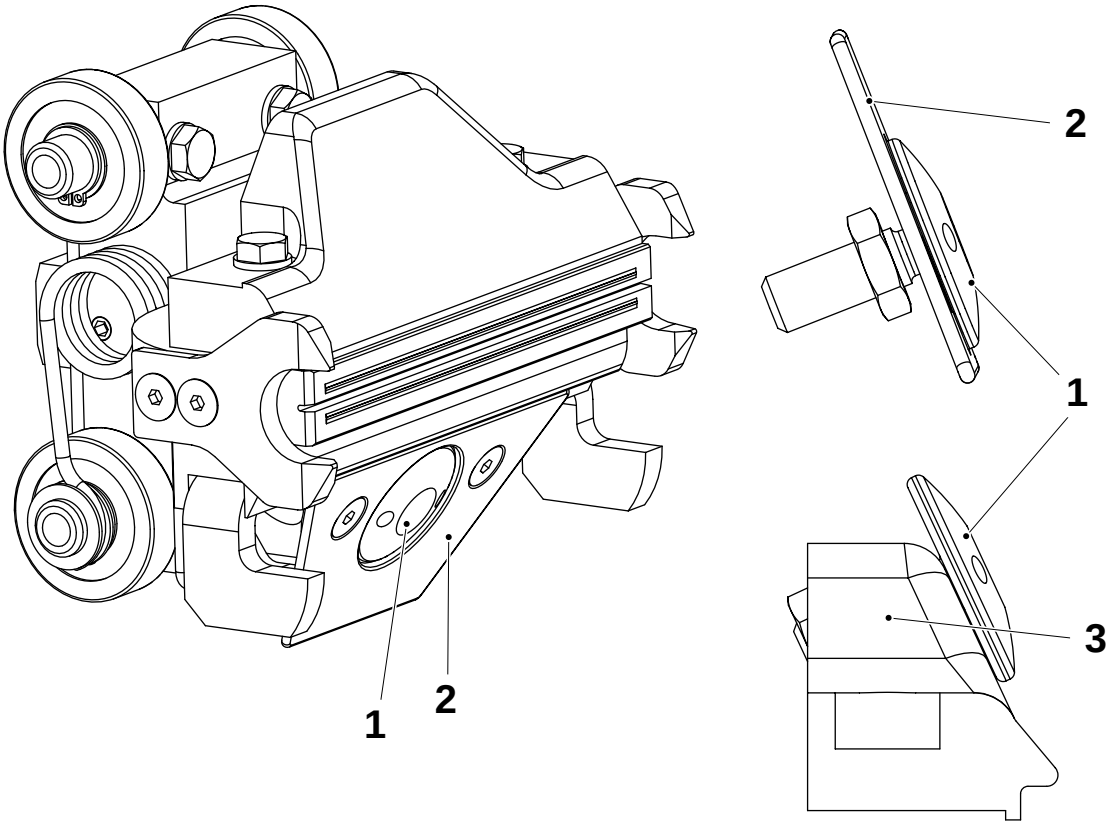

1 Volume adjsuter
2 Plate
3 Volume flap

MM2.21TS100444en.fm

5.4.5 Synchronizer

5.4.5-1 Synchronizer - check

Machine Status	
SPC reference	2543110-0100 (Heating side 1)

Locate the reference heating jaw with the roller (1). Turn the chain until the sleeve is opposit the proximity switch (2) and check that the proximity switch is activated.

If not, adjust the distance **A** by loosening the screws (3).

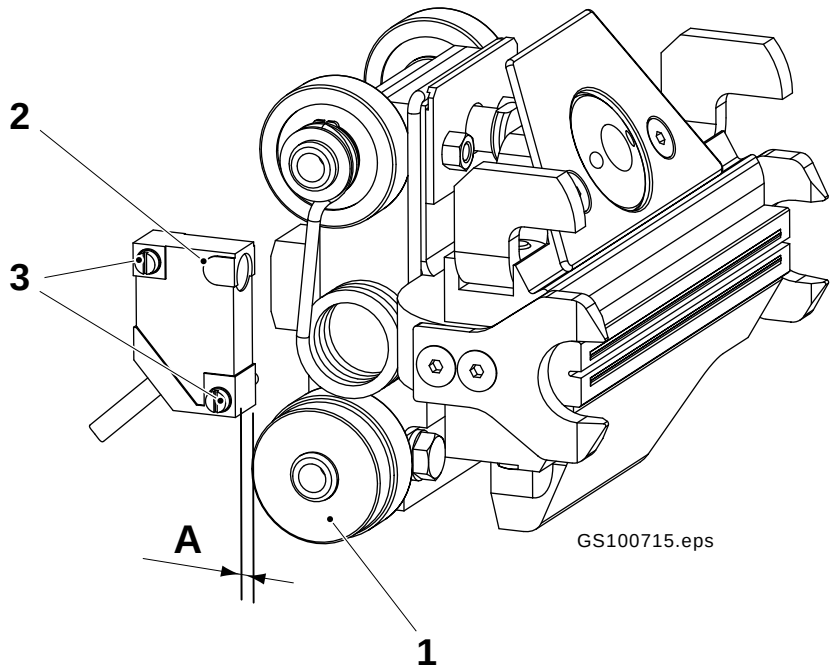

1 Sleeve
2 Proximity switch MB404
3 Screw

A = 0.3-0.8 mm

MM2.21TS100444en.fm

5.4.6 Contact rail

5.4.6-1 Contact rail - check

Machine Status	
SPC reference	1533096-0100

Check for wear and damages:

- the contact rail (1)
- the axle pins (2)
- the contact links (3)

Change as required.

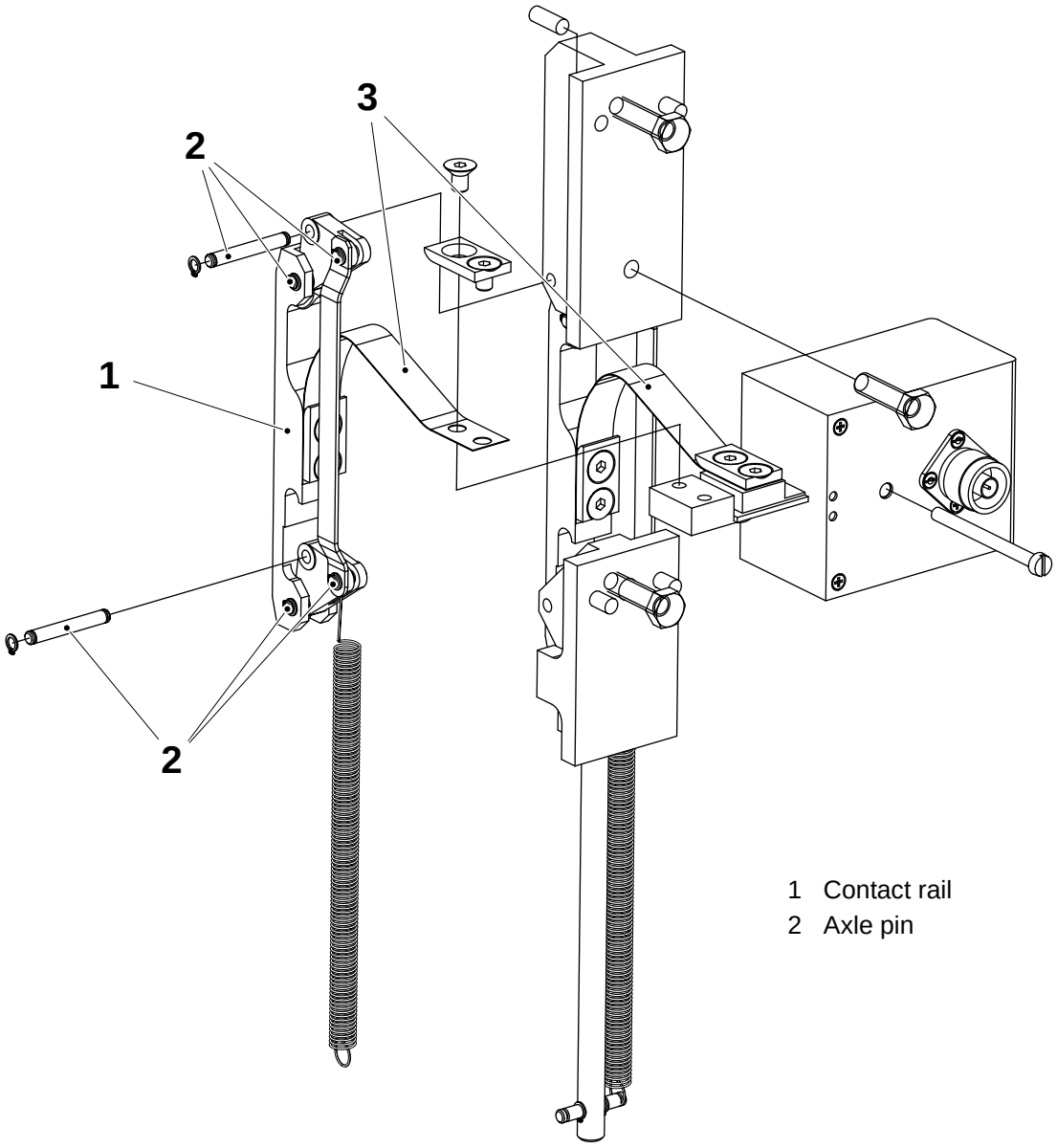

1 Contact rail
2 Axle pin

MM2.21TS100444en.fm

5.4.6-2 Contact rail - remove

Machine Status	
SPC reference	1533096-0100

a) Remove the screws (1) for the contact links (2).

b) Remove the screws (3) and lift out the contact rail (4).

c) Install in the reverse order.

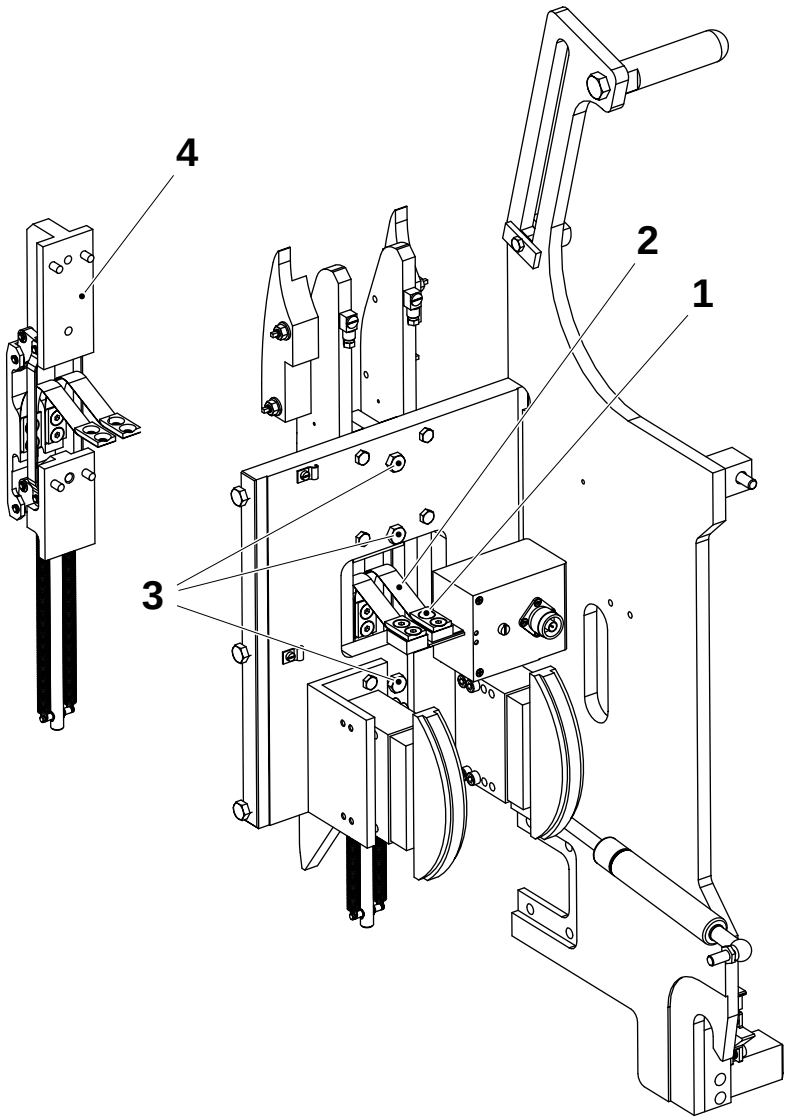

1 Screw (4 pcs)
2 Contact link (2pcs)
3 Screw
4 Contact rail

MM2.21TS100444en.fm

5.4.6-3 Contact rail - change transformer

Machine Status	
SPC reference	1533096-0100

See 8.2.2-3 TPIH cables - change impedance transformer

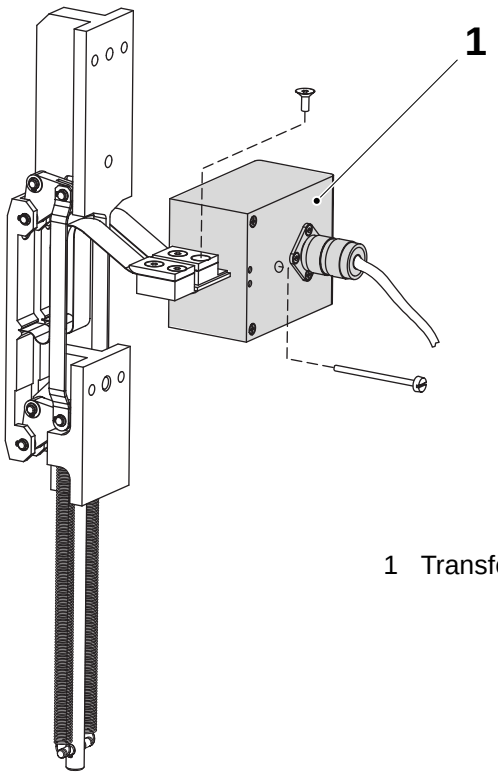

1 Transformer

MM2.21TS100444en.fm

5.5 Valve ramp

SPC reference	1515570

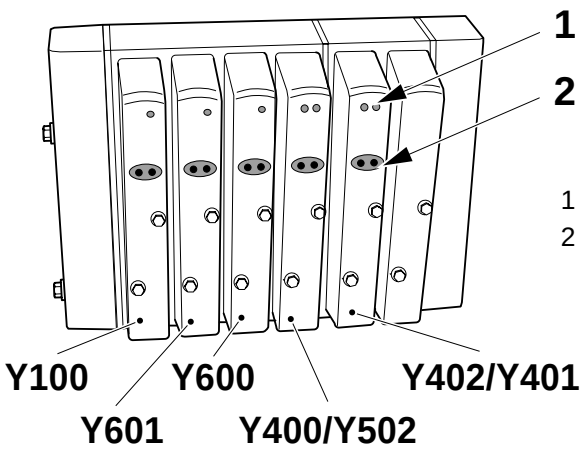

1 LED indication, valve status
2 Manual override

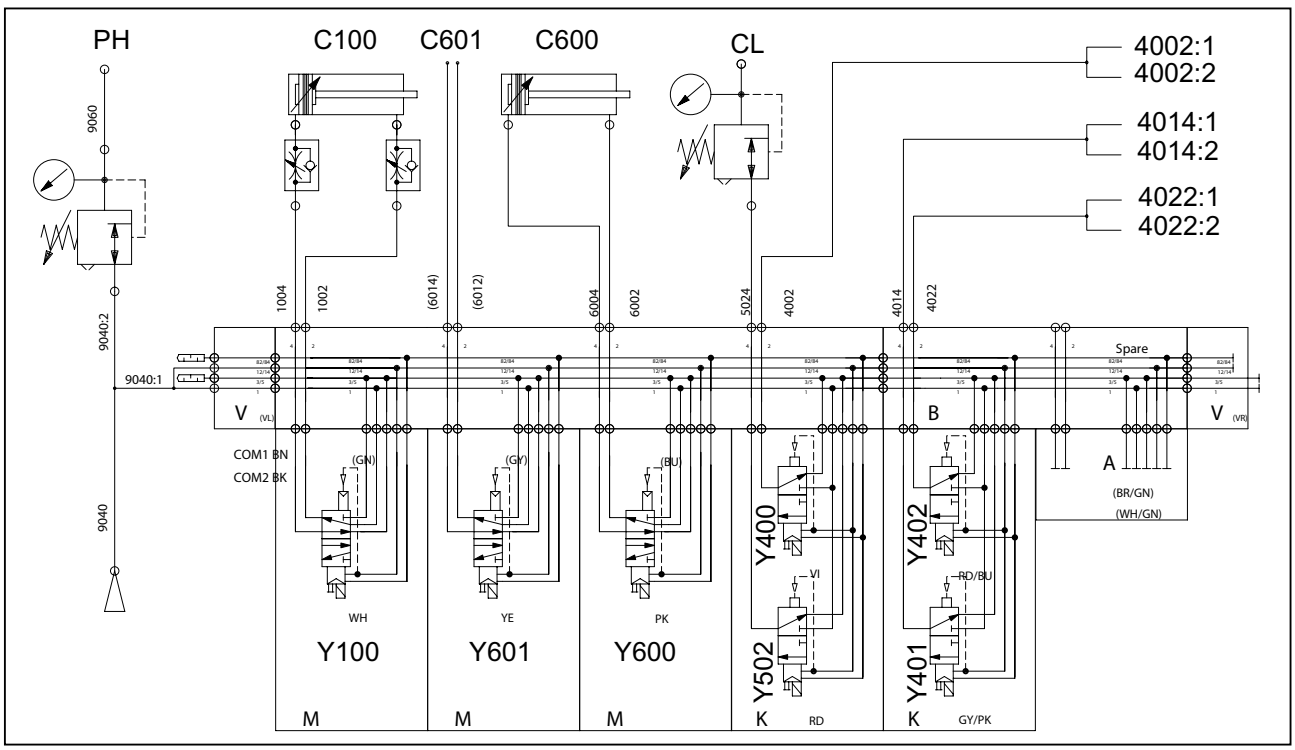

PH Pressure header
CL Central lubrication

Valve	Cylinder	Function
Y100	C100	Strip element (Used with manual infeed)
Y601	C601	External package counter (Option)
Y600	C600	Package waste
Y502		Central lubrication
Y400	C400:1 C400:2	Design correction 1, Machine side 3 Design correction 1, Machine side 4
Y401	C401:1 C401:2	Design correction 2, Machine side 3 Design correction 2, Machine side 4
Y402	C402:1 C402:2	Design correction 3, Machine side 3 Design correction 3, Machine side 4

MM2.21TS100444en.fm

This page intentionally left blank

MM2.21TS100444en.fm

7 Package outfeed

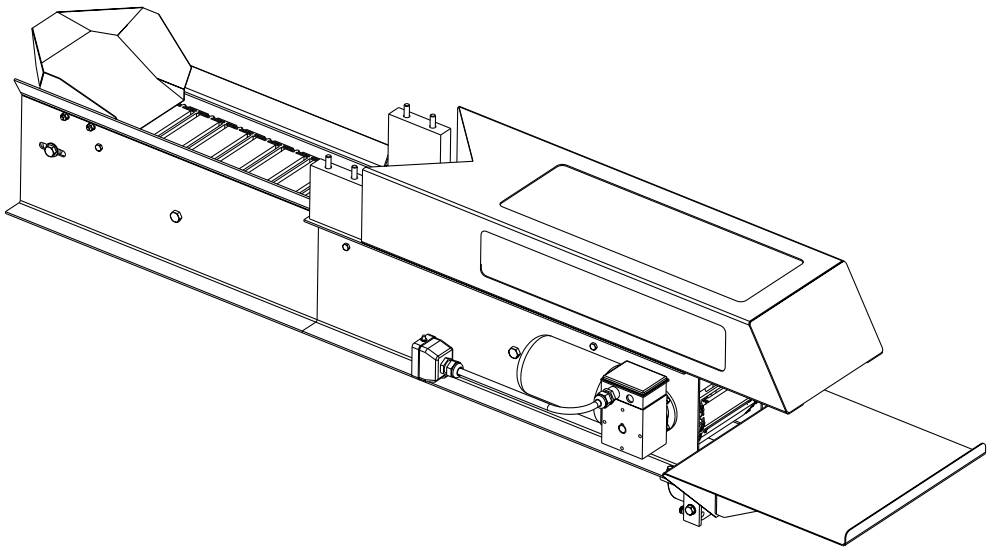

MM2.21TS100445en.fm

7-1 Package outfeed - description

SPC reference	630407-0100

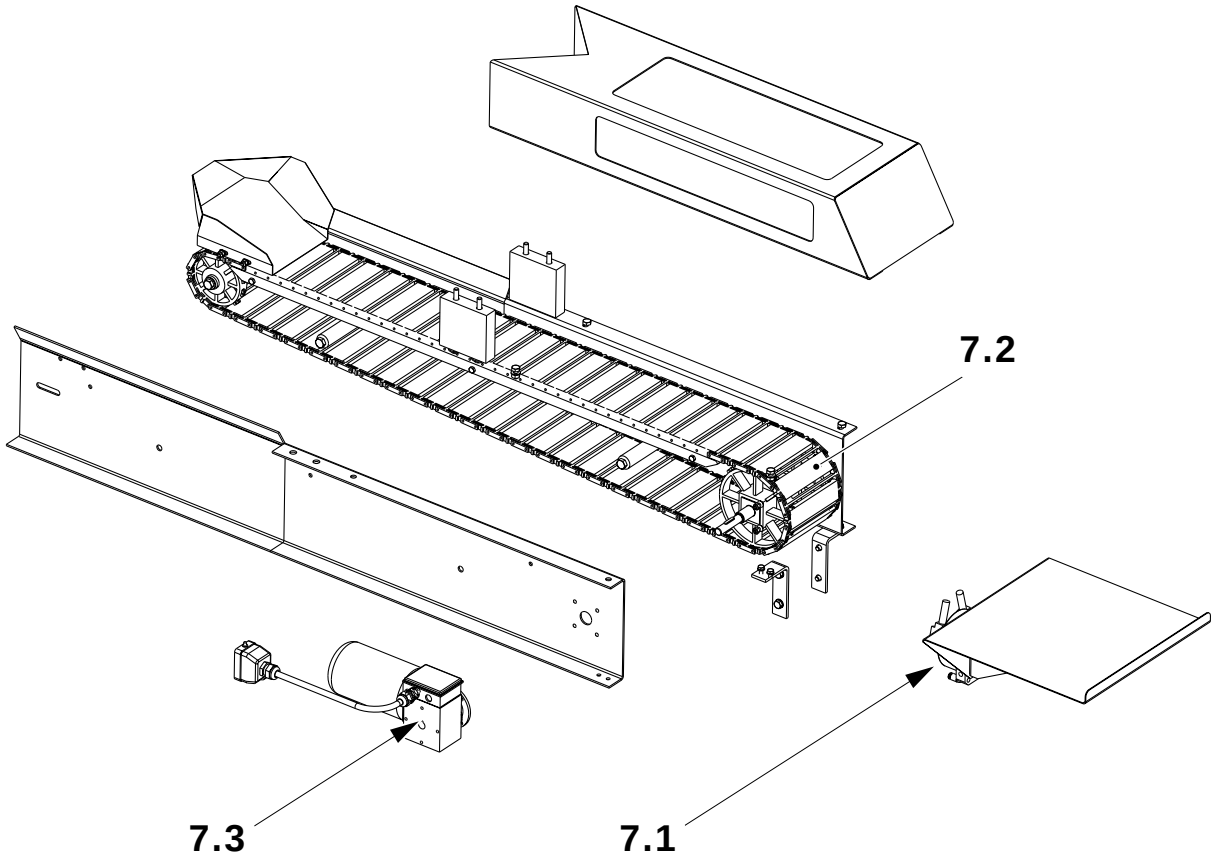

7.1 Torque cylinder
7.2 Conveyor belt
7.3 Motor and bearing

MM2.21TS100445en.fm

7-2 Package outfeed - check

Machine Status	
SPC reference	630407

a) Check the screws and the compressed air connection on the Torque cylinder (1).

b) Check that the plate (2) change position when the waste button (3) is depressed, and that seven packages are wasted. If required change the torque cylinder (1). See 7.1-1 Torque cylinder - change.

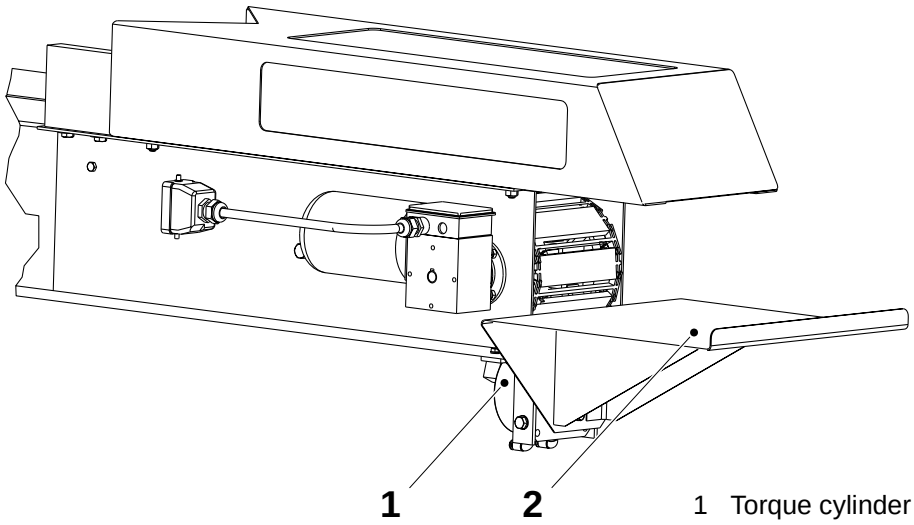

1 Torque cylinder
2 Plate
3 Waste button

c) Check that the sprockets (1) and the conveyer belt (2) are undamaged, and that the conveyor belt (2) is tensed, if required change.
see 7.2-1 Conveyor belt - change

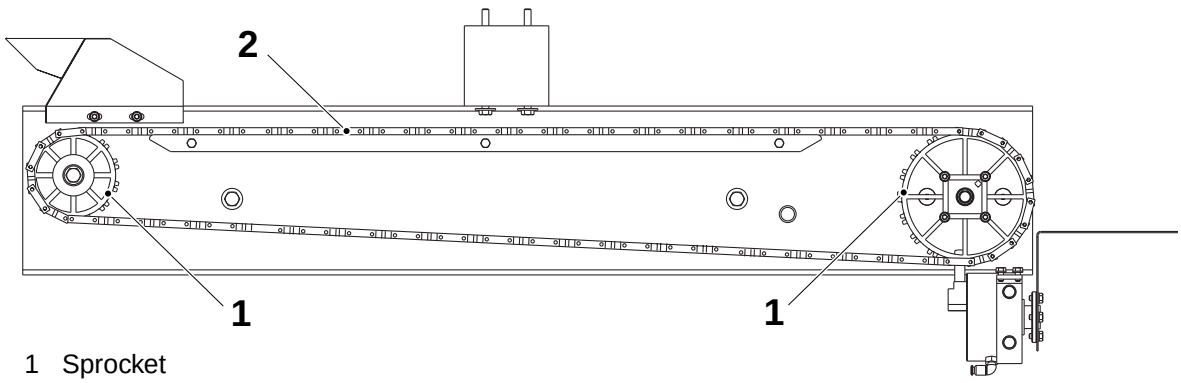

1 Sprocket
2 Conveyor belt

MM2.21TS100445en.fm

7.1 Torque cylinder

7.1-1 Torque cylinder - change

Machine Status	
SPC reference	630407

Remove and replace the torque cylinder (3).

a) Loosen the four screws (5) and remove the plate (4).

b) Remove the torque cylinder by loosening the screws (1), unscrew the air connections (3).

c) Change the torque cylinder. Assemble in the reverse order.

d) Set the torque cylinder, see 7.1-2 Torque cylinder - set.

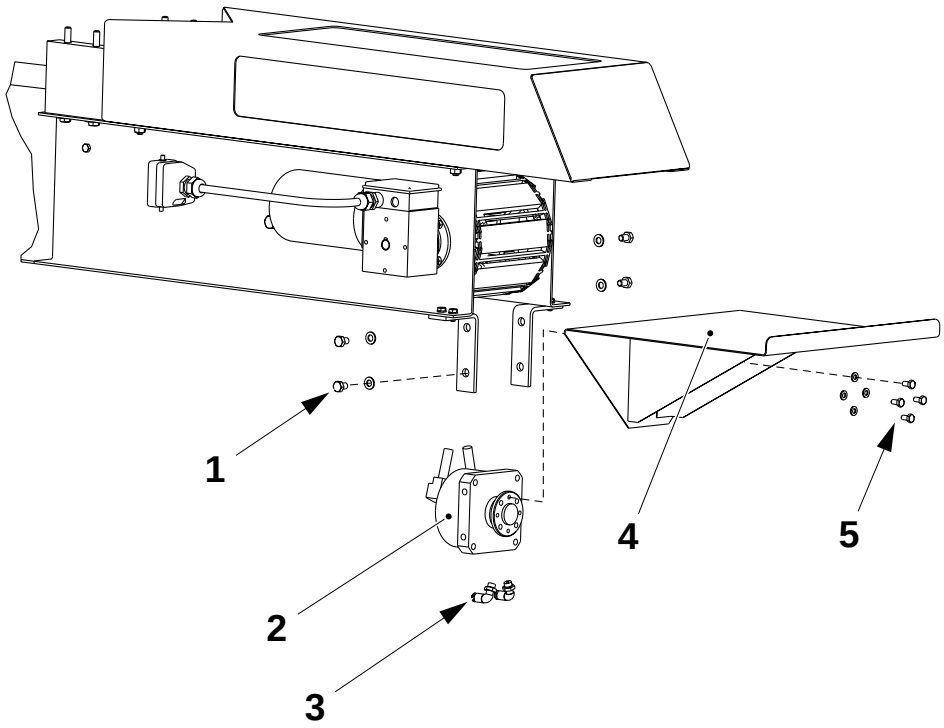

1 Screws
2 Torque cylinder
3 Air connection
4 Plate
5 Screws

MM2.21TS100445en.fm

7.1-2 Torque cylinder - set

Machine Status	
SPC reference	630407

Adjust the angle for the checker plate (1) at production- and at package waste position. Loosen the screws for the stop lugs in the torque cylinder (2) to set the end positions.

Check at production:

- for safe and smooth package transfer to the conveyor belt
- that the seven packages are ejected when the package waste button is pushed
- at splice of strip and packaging material web, that the spice is among the seven ejected packages.

If needed, re-adjust the end stop position(s).

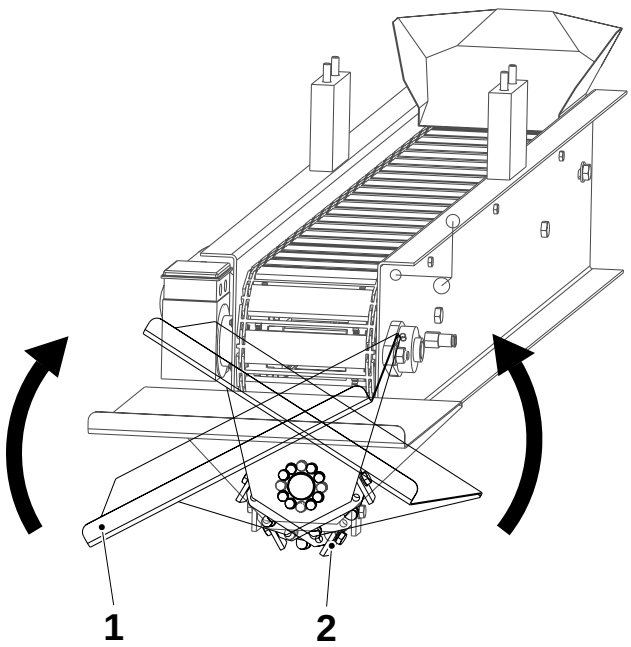

1 Checker plate
2 Torque cylinder

MM2.21TS100445en.fm

7.2 Conveyor belt

7.2-1 Conveyor belt - change

Machine Status	
SPC reference	630407

Remove and replace the conveyer belt (2) and sprockets (1) and (3).

a) Disconnect the cable connection (3) from the motor (4) and the air hoses (7) on the torque cylinder (6).

b) Loosen the screws (5) and lift out the package outfeed.

c) Remove the cover (1) by unscrewing the screws (2).

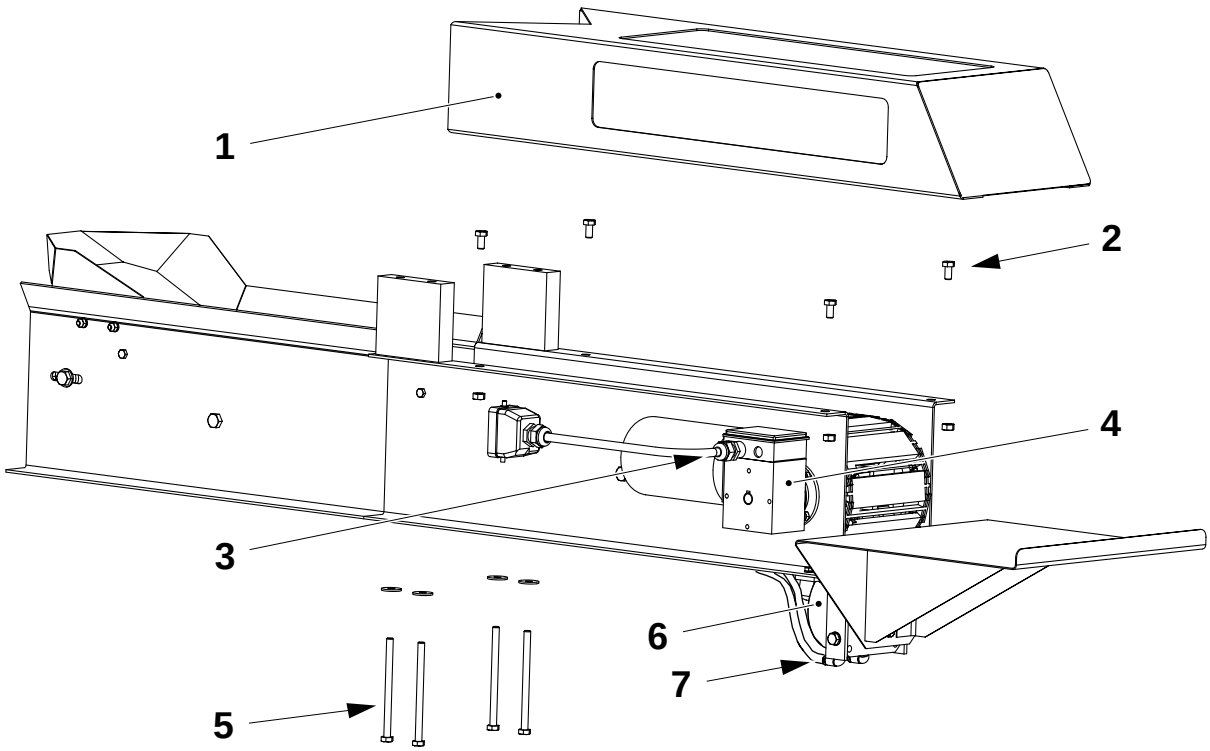

MM2.21TS100445en.fm

1 Cover
2 Screw
3 Cable connection
4 Motor
5 Screws
6 Torque cylinder
7 Air hoses

(Cont'd)

(Cont'd)

d) Release the conveyor belt tension by loosening the screws (6).

e) Loosen following screws and nuts (5), (6), (7), (8) and (9).

f) Remove the gable plate (4).

g) Pull out the conveyor belt (2) together with the sprockets (1) and (3).

h) Replace the conveyer belt (2) and sprockets (1) and (3).

i) Assemble in the reverse order

j) Check that the sprockets (1) and (3) are fitted in the conveyer belt (2) outer link row.

k) Tension the conveyer belt (2), See 7.2-2 Conveyor belt - set

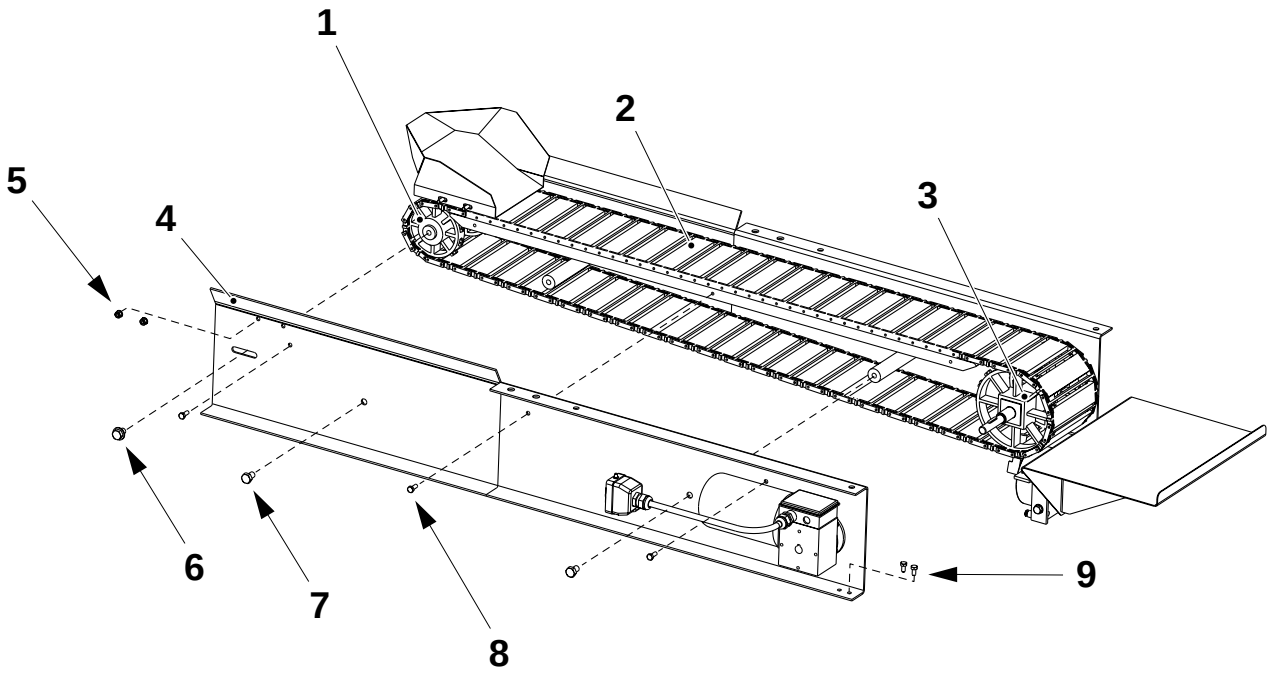

1 Sprocket
2 Conveyer belt
3 Sprocket
4 Gable plate
5 Nuts
6 Screws
7 Screws
8 Screw
9 Screws

MM2.21TS100445en.fm

7.2-2 Conveyor belt - set

Machine Status	
SPC reference	630407

Tension the conveyer belt (2) until the belt is stretched but not tight, adjust by loosening the screws (1).

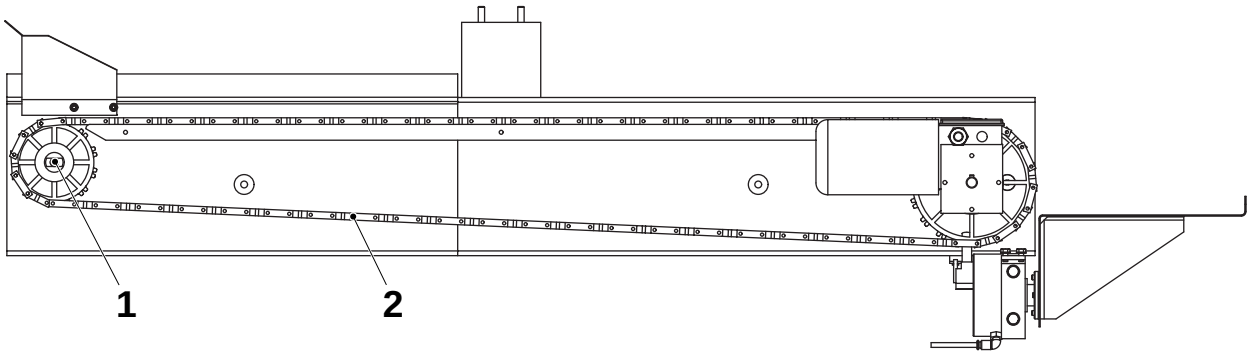

1 Tension screw
2 Conveyer belt

MM2.21TS100445en.fm

7.3 Motor and flange bearing

7.3-1 Motor and flange bearing - change

Machine Status	
SPC reference	630407

Remove and replace the motor (2) and flange bearing (4).

a) Disconnect the cable (1) from the motor (2).
b) Loosen the three nuts (3) and remove the motor (2).
c) Replace the motor (2) and connect the cable connection (1).
d) Loosen the nuts (5) and remove the flange bearing (4)
e) Replace the flange bearing (4).
f) Check that the package outfeed works smothly when starting up.

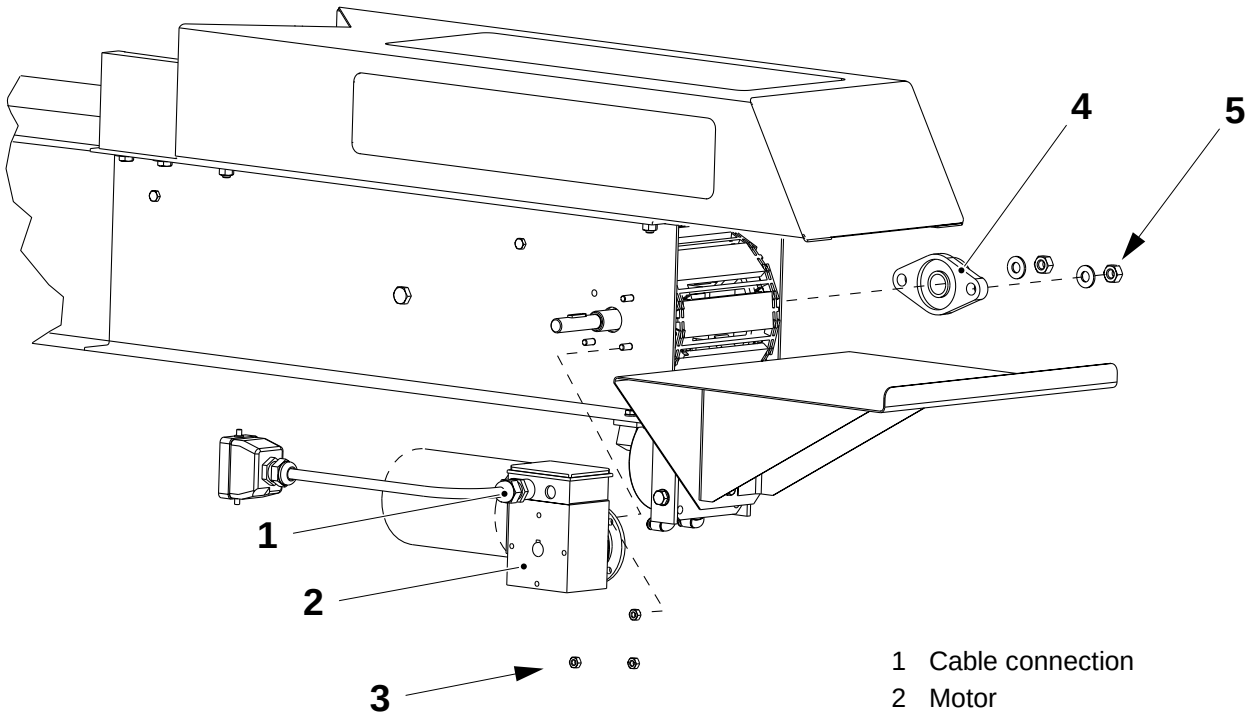

1 Cable connection
2 Motor
3 Nuts
4 Flange bearing
5 Nuts

MM2.21TS100445en.fm

This page intentionally left blank

MM2.21TS100445en.fm

8 Electrical equipment

MM2.21TS100446en.fm

This page intentionally left blank

MM2.21TS100446en.fm

8.1 Electrical components

8.1.1 Temperature regulators

8.1.1-1 Temperature regulators - set

Machine Status	
SPC reference	

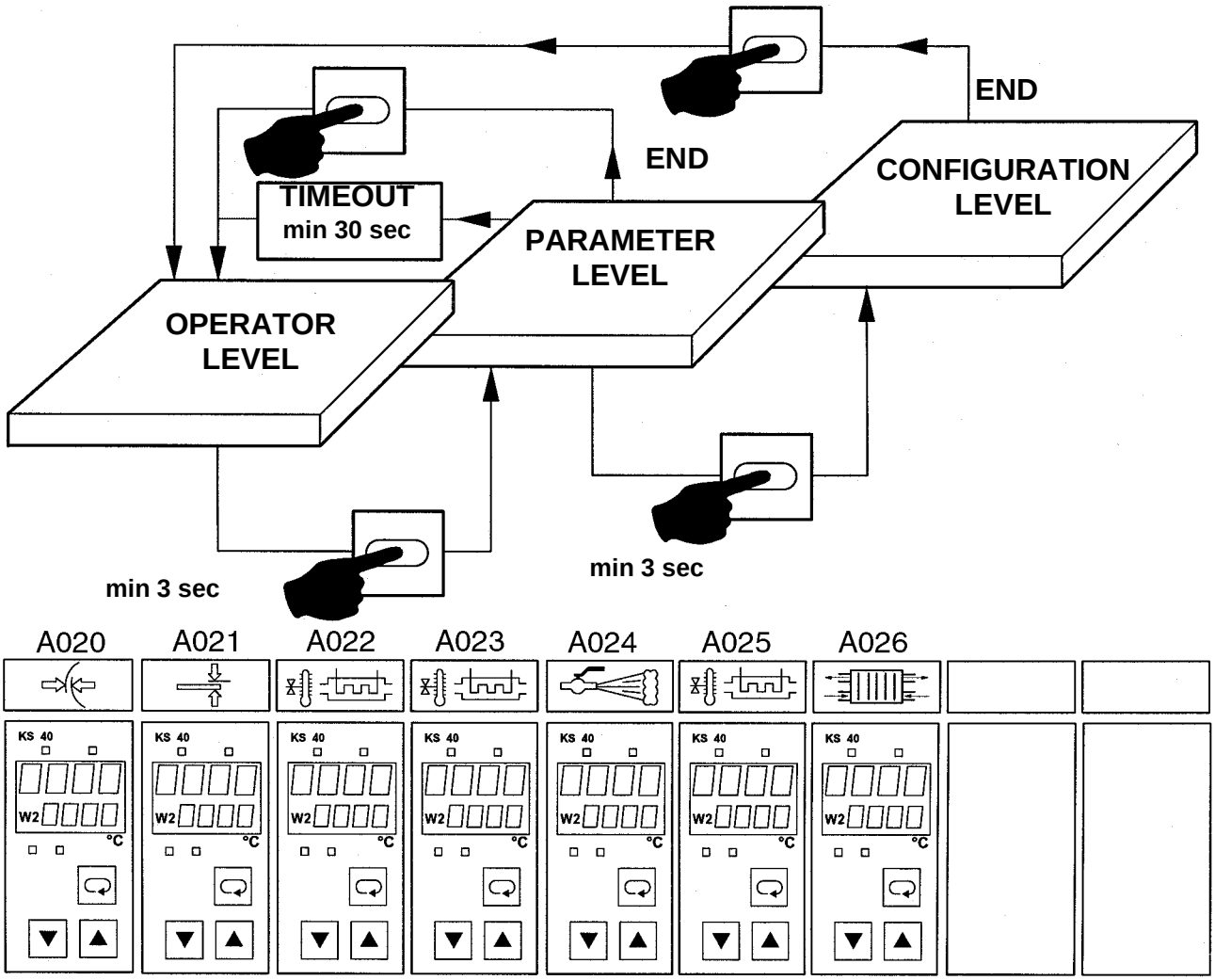

MM2.21TS100446en.fm

A020	Temperature control-LS element	A024	Temperature monitor-steam
A021	Temperature control-LS strip element	A025	Temperature monitor-Sterilization house
A022	Temperature control-air heater	A026	Temperature monitor-heat exchanger
A023	Temperature control-air preheater		

(Cont'd)

(Cont'd)

Setting

The temperature is set on the operator level. The temperature for the moment is shown on the display “Process value” (3). Set the temperature (according to the table on page 340) by pushing “Increase value” (6) or “Decrease value” (7).

Step up to the parameter level by pushing the selector key (5) in three seconds. Step to the variable LOC by pushing the selector key repeatedly. Set LOC to the value “0” by pushing “Decrease value” (7).

Step up to the configuration level by pushing the selector key (5) in five seconds. After entering the configuration level, the text “Con 1” is shown on the display “Set point” (4) and a configuration code is shown on the display “Process value” (3). (The correct configuration code is shown in the table on page 340.)

After checking and adjusting the configuration code, push the selector key (5) once more. The text “Con 2” is shown on the display “Set point” (4) and a new configuration code is shown on the display “Process value” (3). Check and adjust, by means of pushing “Increase value” (6) or “Decrease value” (7), until the right configuration code is shown on the display. (The correct configuration code is shown in the table on page 340.)

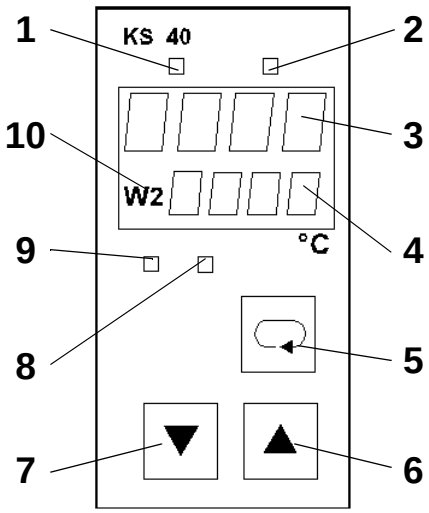

1 Heating (yellow LED)
2 Without function
3 Process value
4 Set point (W)
5 Selector key
6 Increase value
7 Decrease value
8 Heating alarm (red LED)
9 Temperature within limits (green LED)
10 W2 value (high temperature, set point 2)

(Cont'd)

MM2.21TS100446en.fm

(Cont'd)

Change to the operator level by pushing the selector key (5). Step up to the parameter level and set the value (according to the table on page 340).

Set all the parameters according to the instruction above, except the parameter “LOC”.

When all the settings are correct, return to the operator level by waiting for 30 seconds. Set the low temperature (according to the table on page 340).

After this, step up to the parameter level by pushing the selector key (5) in three seconds. Step to the parameter “LOC” and set the value to “1”, by pushing “Increase value” (6) (according to the table on page 340). Return to the operator level by waiting for 30 seconds.

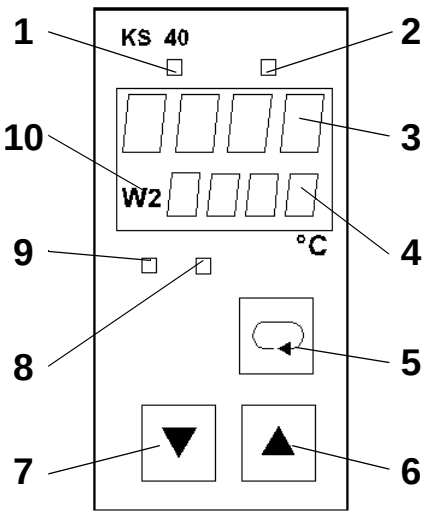

1 Heating (yellow LED)
2 Without function
3 Process value
4 Set point (W)
5 Selector key
6 Increase value
7 Decrease value
8 Heating alarm (red LED)
9 Temperature within limits (green LED)
10 W2 value (high temperature, set point 2)

(Cont'd)

MM2.21TS100446en.fm

(Cont'd)

Settings temperature controller

	A020 LS element	A021 LS strip element	A022 Air heater	A023 Air preheater	A024 Steam	A025 Sterilization house	A026 Heat exchanger (monitoring)
SP1	0275	0240	0360	0137	0127	- - -	0140
SP2	0340	0000	0000	0000	0000	0100	0000
PT2	0000	0000	0000	0000	0000	0010	0000
SP3	0330	- - -	- - -	- - -	- - -	- - -	- - -
PT3	0001	- - -	- - -	- - -	- - -	- - -	- - -
SP4	0270	- - -	- - -	- - -	- - -	- - -	- - -
PT4	0010	- - -	- - -	- - -	- - -	- - -	- - -
LCL1	0020	0020	0010	0010	0010	0020	0010
LCH1	0020	0020	0010	0010	0100	0025	0015
LCL2	0020	0010	0010	0010	0010	0010	0001
LCH2	0020	0010	0010	0010	0010	0010	0140
HCA	- - -	- - -	- - -	- - -	- - -	- - -	- - -
Loc	0000	0000	0000	0000	0000	0000	0000
SPL	0000	0000	0000	0000	0000	0000	0000
SPH	0390	0700	0400	0264	0200	0250	0250
Pb1	004,1	003,8	001,2	000,5	002,5	002,5	002,5
ti	0001	0003	0012	0009	0001	0001	0001
td	0001	0003	0012	0009	0001	0001	0001
t1	000,4	000,4	000,4	001,8	000,4	000,4	000,4
con1	0238	0230	0230	0230	0230	0230	0230
con2	0108	0000	0000	0000	0000	0000	0005

MM2.21TS100446en.fm

8.1.1-2 Temperature regulator - error signal

Machine Status	
SPC reference	

In case of an error, an error code is displayed on the display (3). The error code is displayed until the error is acknowledged, or until its cause has been eliminated.

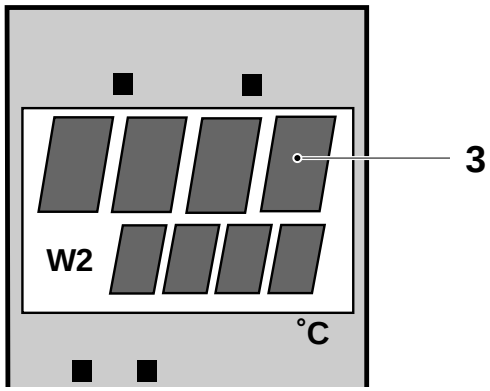

3 Display

The following error signals can be displayed:

Code	Cause
FbF	Sensor break
POL	Wrong sensor polarity
AdF	Selftuning error

In case of problems with a temperature regulator, check all connections. Change temperature regulator as required, refer to *8.1.1-3 Temperature regulators - change*.

MM2.21TS100446en.fm

8.1.1-3 Temperature regulators - change

Machine Status	
EM reference	67035-100V

Grip the front panel (1) and pull the regulator out from its case (2).

Change the regulator and calibrate it; see *8.1.1-4 Temperature regulators - calibrate*.

Set the temperature regulator; see *8.1.1-1 Temperature regulators - set*.

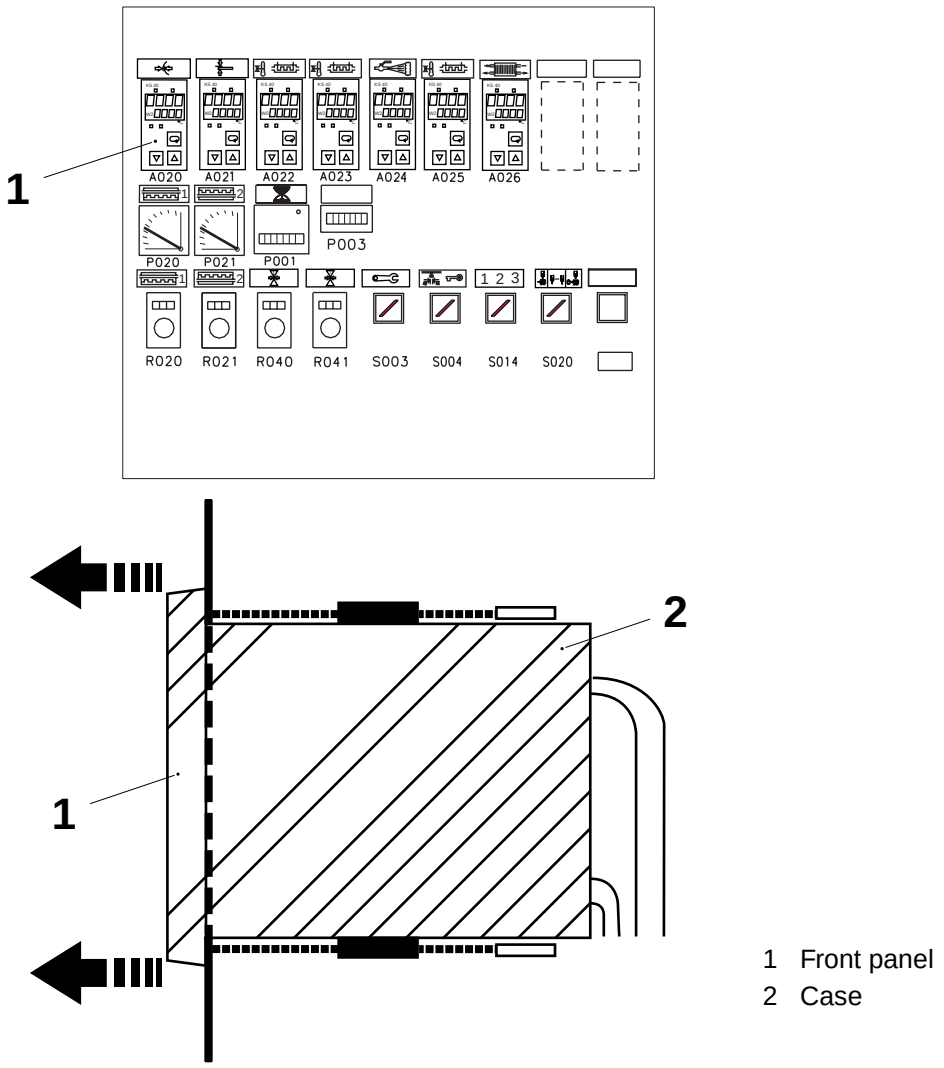

1 Front panel
2 Case

MM2.21TS100446en.fm

8.1.1-4 Temperature regulators - calibrate

Machine Status	
Tool - Calibrator - Extension cable - Adhesive label	 TP No. 90410-338 TP No. 90410-308 TP No. 90194-131
SPC reference	90410-51

Note! Before calibration, be sure that the calibrator has already been set (according to the Pentronic calibration certificate); see instructions here below. Calibration must be performed when a temperature regulator is changed, or at least once a year.

Set calibrator-Micromite II

Thermocouple type and measuring unit

a) Turn **On** mains power (at least 15 minutes before setting).

b) Connect the type K thermocouple to the + input (1) (yellow lead) and the - input (2) (red lead).

c) Push the **On/Off** key (6) to switch on the instrument.

Caution! Switch off the instrument before removing the batteries or switching off the AC-adapter. Failure to do so will result in the loss of all instrument set-up information.

d) Push the **F/C** key (4) to select “centigrade”.

e) Push the **Select** key (5) and the **Sensor** key (3).

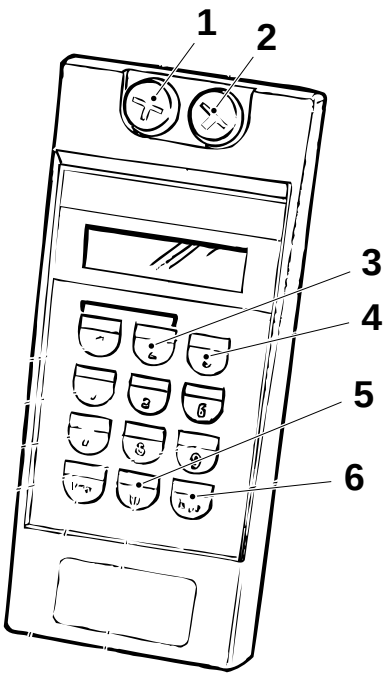

1 Input (+)
2 Input (-)
3 Sensor key
4 F/C key
5 Select key
6 On/Off key

(Cont'd)

MM2.21TS100446en.fm

(Cont'd)

f) Select the thermocouple type. Move the flashing cursor to the right or to the left by pushing the **Up** (9) or **Down** (7) keys.

g) Push the **Enter** key (7) when the cursor is indicating **type K**.

Temperature output value

Push the **Select** key (5) and the **Output 1** key (10) to set the output temperature. Use the numeric keys to type in the temperature value and push the **Enter** key.
To clear an output value, simultaneously push the **Input** key (11) and the **Sensor** key (3).

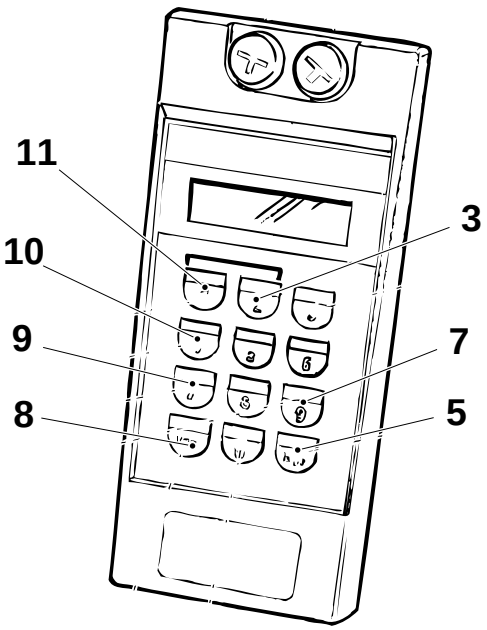

3 Sensor key
5 Select key
7 Down key
8 Enter key
9 Up key
10 Output 1 key
11 Input key

MM2.21TS100446en.fm

(Cont'd)

(Cont'd)

Calibrate Temperature Regulator

a) Grip the front panel of the temperature regulator and pull it out from the case; see *8.1.1-3 Temperature regulators - change*.

b) Close the calibration bridge **A** (arrow) and open the **lock** bridge.

c) Fit back the temperature regulator.

d) Connect the Micromite instrument instead of the temperature sensor by means of the extension cable.

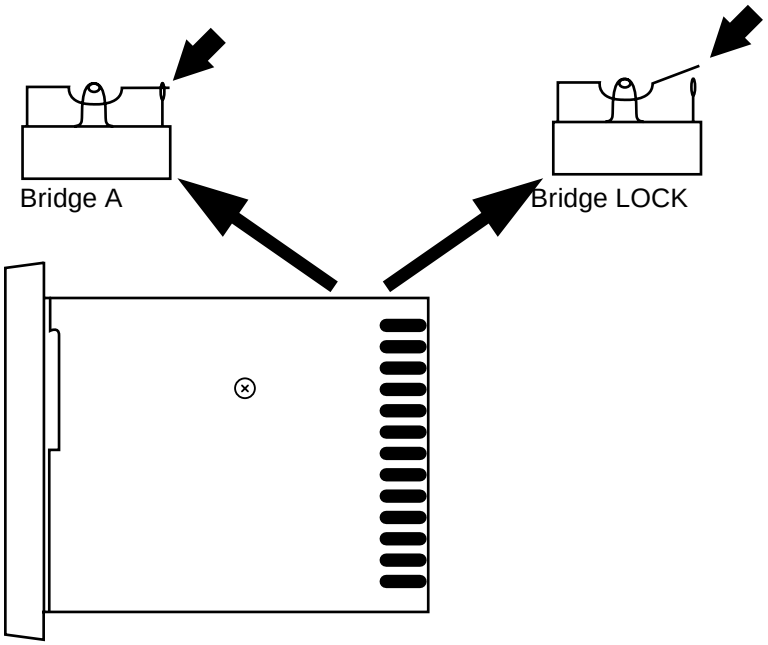

(Cont'd)

MM2.21TS100446en.fm

(Cont'd)

e) The display (1) shows **CAL**.

f) Let the temperature stabilise. Select **Output 1** and set the value for **SP1**.

g) Find the deviation value for the Micromite instrument corresponding to **Output 1** on the Calibration certificate.

h) Check that the difference between the displayed value and the Calibration certificate deviation value from is within ± 1.4° C. If it is not, correct by means of the buttons (3) and (4). Press key **Menu** key (2) to store.

i) Remove the regulator from its case.

j) Open the calibration bridge **A**.

k) Fit back the regulator.

l) Check all setting values according to the table; see 8.1.1-1 Temperature regulators - set.

m) For **90410-51**, step to parameter **Loc** and set the value to **4**.

n) Pull out the regulator, set the **Lock** bridge in **closed** position, and fit back the regulator.

o) Remove the complete regulator from the panel by removing the screws on the top and the bottom of the regulator.

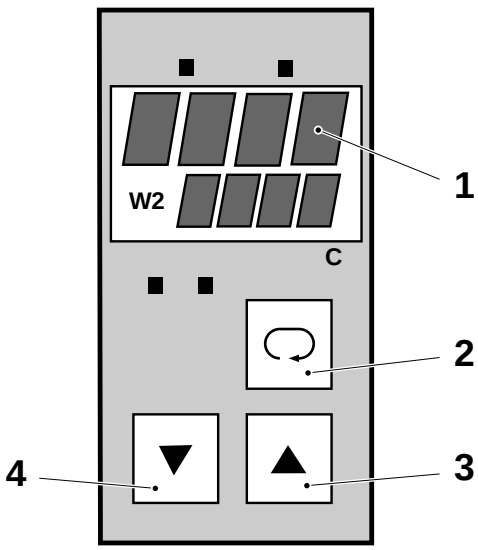

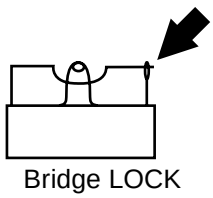

1 Display
2 Menu key
3 Increase value
4 Decrease value

MM2.21TS100446en.fm

(Cont'd)

(Cont'd)

p) Put the adhesive label (6) over the edge of the regulator and its case (5).

q) Fit back the complete regulator.

Note! To cancel the calibration, repeat items from *a)* to *e)*.
Press the **Menu** key (2) and the **Increase value** key (3) simultaneously to set the correction value to **0**. Continue with steps from *f)* to *h)*.

r) Repeat on the other temperature regulators.

s) Check the thermocouples; see *8.1.2-1 Thermocouple - check*.

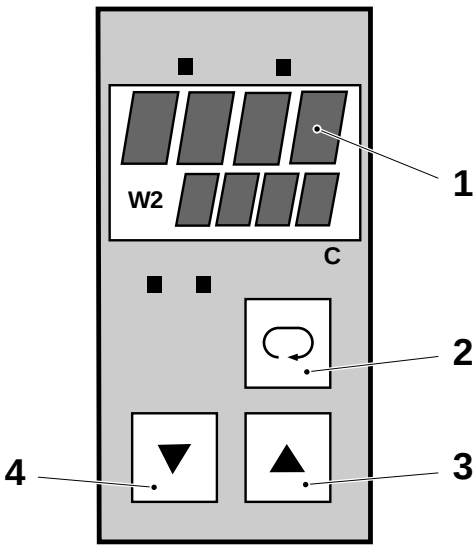

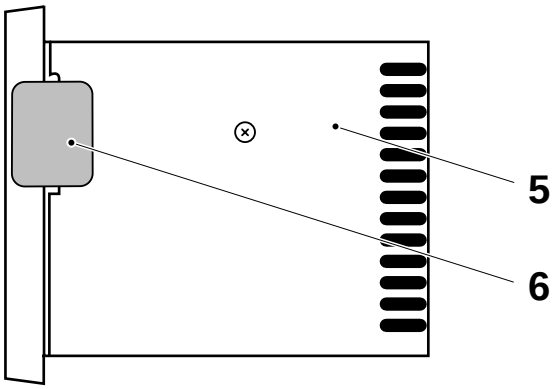

1 Display
2 Menu key
3 Increase value
4 Decrease value
5 Case
6 Adhesive label

MM2.21TS100446en.fm

8.1.2 Thermocouple

8.1.2-1 Thermocouple - check

Machine Status	
Tool - calibration oven - extension wire	 TP No. 90410-337 TP No. 90410-309
SPC reference	*90410-51*

Note! This check must be performed whenever a temperature regulator is changed or at least once a year.

a) Turn on the calibration oven by connecting the mains plug.

b) Push the **Func** key (2) to select Set-up mode (indicated by a flashing “SP” on the calibrator display (1)).

c) Use the **Up** (3) or **Down** (4) key s to set the temperature value to **100**°C.

Note! Push the key once to change the value by 0.1°C.
Push the key for at least two seconds to make the temperature value change more quickly.

d) Push the **Func** key again to select **Run mode**.
The calibration oven is now ready for measuring operations.

1 Display
2 Func key
3 Up key
4 Down key

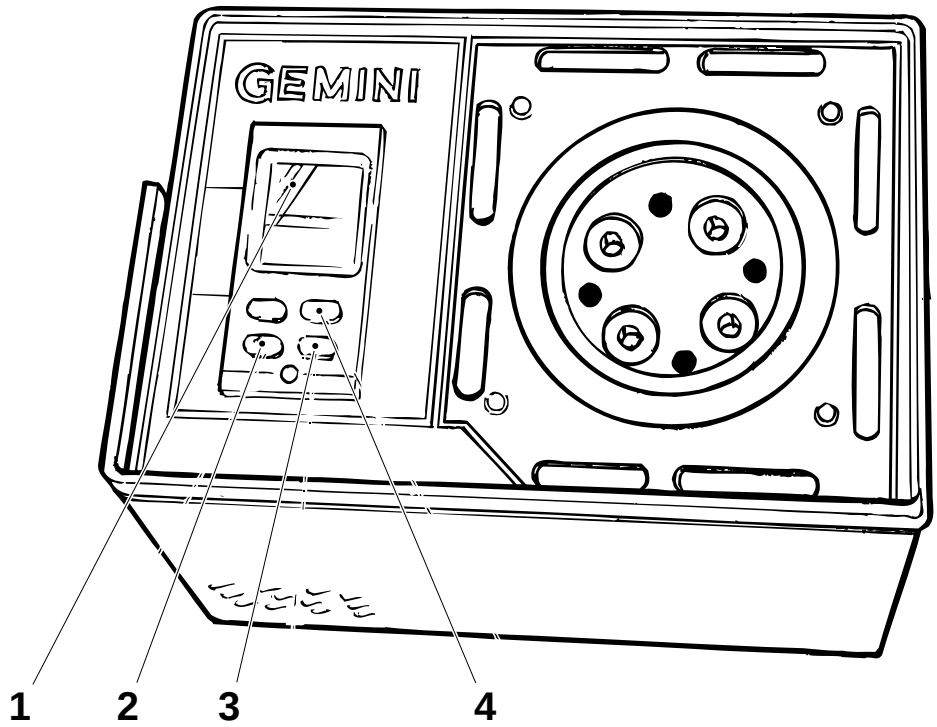

MM2.21TS100446en.fm

(Cont'd)

(Cont'd)

e) Detach the thermocouple from the machine and place it in one of the cavities (5) in the oven.

f) Place the calibrated thermocouple (to be found in the calibration kit) in an adjacent cavity of the oven.

Note! Make sure that the two thermocouples are inserted equally deeply.

g) Use the extension cable to connect the calibrator to the thermocouple form the machine. Note the temperature reading on the display.

h) Connect the calibrator to the calibrated thermocouple. Note the temperature reading.

i) If the value of the thermocouple from the machines deviates by more than ± 1.1°C from the value of the calibrated thermocouple, change the thermocouple from the machine.

j) When measuring has been completed, let the oven stay switched on and cool it by setting the temperature value to 0.
This cools down the oven more quickly.

MM2.21TS100446en.fm

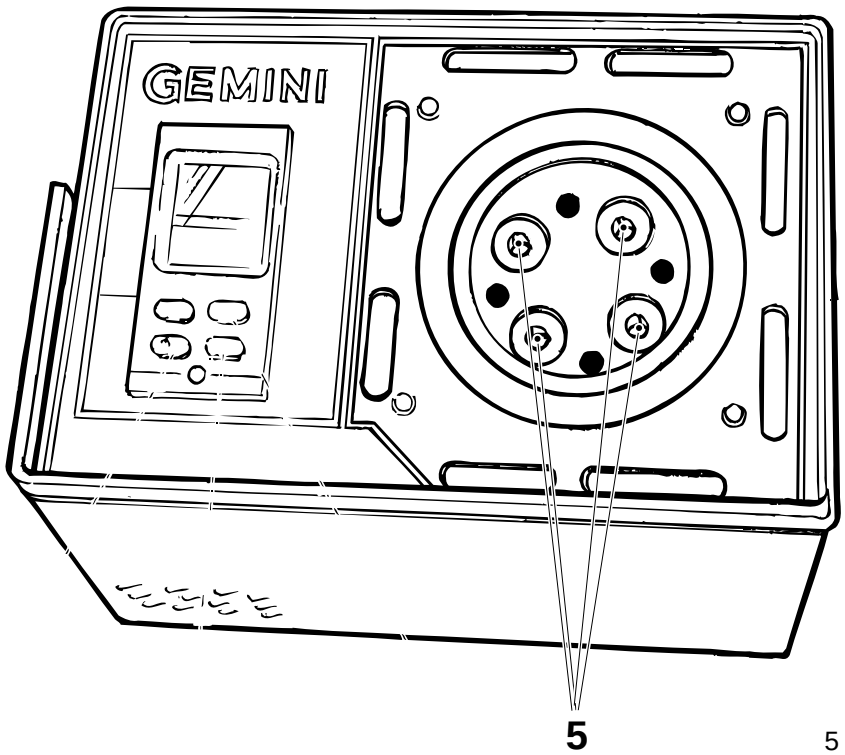

5 Cavity

8.1.3 Frequency converter

8.1.3-1 Frequency converter - description

SPC reference	1368572

Controls

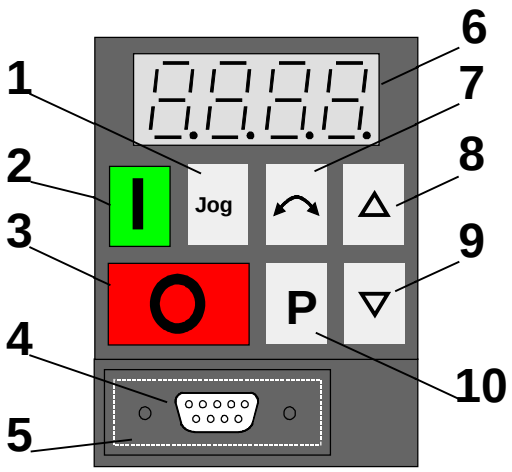

1 Jog Button
2 Run Button
3 Stop Button
4 RS 485 Interface
5 Removable Cover strip
6 Led Display
7 Forward / Reverse Button
8 Up / Increase Frequency
9 Down / Decrease Frequency
10 Parametrization Button

MM2.21TS100446en.fm

(Cont'd)

(Cont'd)

Step Guide

Step / action	Button	Display
1. Apply mains power to the converter. The display will alternate between the actual frequency (0,0 Hz) and the requested set point 5,0.		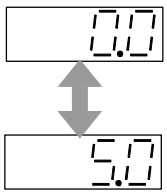
2. Press the parametrization button.	P	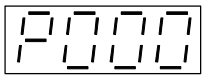
3. Press the button until the parameter P005 is displayed.	△	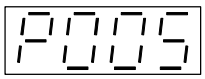
4. Press P to display the present frequency setpoint (5,0 Hz is the factory default setting).	P	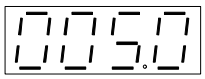
5. Press the button to set desired frequency setpoint (e.g 35 Hz)	△	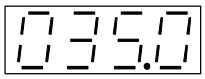
6. Press P to lock the setting into memory.	P	
7. Press the button to return to P000.	▽	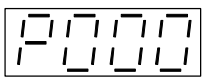
8. Press P to exit the parametrization procedure. The display will alternate between the present output frequency and the frequency setpoint.	P	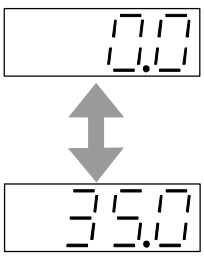

MM2.21TS100446en.fm

8.1.3-2 Frequency inverter - set

Parameter

Note! Parameter P009* work as a safety level, you have to add value 3 to be able to continue with further settings. Change parameter P009 to value 0 (zero), after you are finish with all settings.

Settings 65 ml

	Default	Main motor G002	Infeed G003	Web tension G004
P001	0			
P002	10	2	1	0
P003	10	1	1	0
P004	0			
P005	5			
P006	0	2	2	1
P007	1	0	0	0
P009	0	3	3	3
P010	1			
P011	0			
P012	0			
P013	50	70	60	60
P014	0			
P015	0			
P016	0			
P017	1			
P018	0			
P019	2			
P021	0			
P022	50		70	60
P023	0			1
P024	0			
P025	0			
P027	0			
P028	0			
P029	0			
P031	5			
P032	5			
P033	10			
P034	11	10	10	10
P040	0			
P041	5			
P042	10		50	30,9

MM2.21TS100446en.fm

	Default	Main motor G002	Infeed G003	Web tension G004
P043	15	4	5	20,6
P044	20			
P045	0		7	
P046	25	30.8		
P047	30	20		
P048	35			
P049	40			
P050	0			
P051	1	6		
P052	2	6		6
P053	6			
P054	6	1		
P055	6			
P056	0			
P057	1			
P061	6			
P062	8			
P063	1			
P064	1			
P065	1			
P066	0			
P069	1			0
P070	0			
P071	0			
P072	250			
P073	0			
P074	1			
P075	0			
P076	0 el. 4	4	0	0
P077	1			
P078	50	100	100	100
P079	0			
P080		0,73	0,7	0,8
P081	50			
P082		1690	1500	1400
P083		2,2	0,9	3,4
P084		400	230	230
P085		0,75	0,18	0,75
P086	150			
P087	0			
P088	0			
P089	***	20.30	38.00	7.00

MM2.21TS100446en.fm

	Default	Main motor G002	Infeed G003	Web tension G004
P091	0			
P092	6			
P093	0			
P094	50			
P095	0			
P099	0			
P101	0			
P111	***	1.50	0.75	0.75
P112	***	6	6	6
P113	***	24	14	14
P121	1			
P122	1			
P123	1			
P124	1			
P125	1			
P128	120			
P131	***			
P132	***			
P133	***			
P134	***			
P135	***			
P136	***			
P137	***			
P138	***			
P140	***			
P141	***			
P142	***			
P143	***			
P186	200			
P201	0			
P202	1			
P203	0			
P204	0			
P205	1			
P206	0			
P207	100			
P208	0			
P210	***			
P211	0			
P212	100			
P220	0			
P321	0			

MM2.21TS100446en.fm

	Default	Main motor G002	Infeed G003	Web tension G004
P322	50			
P323	0			
P356	6			
P386	1			
P387	1			
P700	***			
P701	***			
P702	***			
P720	0			
P721	***			
P722	0			
P723	***			
P724	0			
P725	***			
P726	0			
P880	***			
P910	0			
P918	***			
P922	***	2.06	2.04	2.04
P923	0			
P927	***			
P928	***			
P930	***			
P931	***			
P944	0			
P947	***			
P958	***			
P963	***			
P967	***			
P968	***			
P970	***			
P971	1			

(Cont'd)

MM2.21TS100446en.fm

(Cont'd)

Setting 150 S

	Default	Main motor G002	Infeed G003	Web tension G004
P001	0			
P002	10	2	1	0
P003	10	1	1	0
P004	0			
P005	5			
P006	0	2	2	1
P007	1	0	0	0
P009	0		3	3
P010	1			
P011	0			
P012	0			
P013	50	70		
P014	0			
P015	0			
P016	0			
P017	1			
P018	0			
P019	2			
P021	0			
P022	50		70	
P023	0		1	1
P024	0			
P025	0			
P027	0			
P028	0			
P029	0			
P031	5			
P032	5			
P033	10			
P034	11	10	10	10
P040	0			
P041	5			
P042	10		47,6	30,9
P043	15	4	46,0	20,6
P044	20			
P045	0		7	
P046	25	36.1		
P047	30			

MM2.21TS100446en.fm

	Default	Main motor G002	Infeed G003	Web tension G004
P048	35			
P049	40			
P050	0			
P051	1	6		
P052	2	6		6
P053	6			
P054	6	1		
P055	6			
P056	0			
P057	1			
P061	6			
P062	8			
P063	1			
P064	1			
P065	1			
P066	0			
P069	1			0
P070	0			
P071	0			
P072	250			
P073	0			
P074	1			
P075	0			
P076	0 el. 4	4	0	0
P077	1			
P078	50	100	100	100
P079	0			
P080		0,73	0,7	0,8
P081	50			
P082		1690	1500	1400
P083		2,2	0,9	3,4
P084		400	230	230
P085		0,75	0,18	0,75
P086	150			
P087	0			
P088	0			
P089	***	20.30	38.00	7.00
P091	0			
P092	6			
P093	0			
P094	50			
P095	0			

MM2.21TS100446en.fm

	Default	Main motor G002	Infeed G003	Web tension G004
P099	0			
P101	0			
P111	***			
P112	***			
P113	***			
P121	1			
P122	1			
P123	1			
P124	1			
P125	1			
P128	120			
P131	***			
P132	***			
P133	***			
P134	***			
P135	***			
P136	***			
P137	***			
P138	***			
P140	***			
P141	***			
P142	***			
P143	***			
P186	200			
P201	0			
P202	1			
P203	0			
P204	0			
P205	1			
P206	0			
P207	100			
P208	0			
P210	***			
P211	0			
P212	100			
P220	0			
P321	0			
P322	50			
P323	0			
P356	6			
P386	1			
P387	1			

MM2.21TS100446en.fm

	Default	Main motor G002	Infeed G003	Web tension G004
P700	***			
P701	***			
P702	***			
P720	0			
P721	***			
P722	0			
P723	***			
P724	0			
P725	***			
P726	0			
P880	***			
P910	0			
P918	***			
P922	***			
P923	0			
P927	***			
P928	***			
P930	***			
P931	***			
P944	0			
P947	***			
P958	***			
P963	***			
P967	***			
P968	***			
P970	***			
P971	1			

(Cont'd)

MM2.21TS100446en.fm

(Cont'd)

Setting 200 B

	Default	Main motor G002	Infeed G003	Web tension G004
P001	0			
P002	10	2	1	0
P003	10	1	1	0
P004	0			
P005	5			
P006	0	2	2	1
P007	1	0	0	0
P009	0	9	3	3
P010	1			
P011	0			
P012	0			
P013	50	70	60	
P014	0			
P015	0			
P016	0			
P017	1			
P018	0			
P019	2			
P021	0			
P022	50		70	
P023	0			1
P024	0			
P025	0			
P027	0			
P028	0			
P029	0			
P031	5			
P032	5			
P033	10			
P034	11	10	10	10
P040	0			
P041	5			
P042	10		52	30,9
P043	15	4	5	20,6
P044	20			
P045	0	7	7	
P046	25	28.7		
P047	30			

MM2.21TS100446en.fm

	Default	Main motor G002	Infeed G003	Web tension G004
P048	35			
P049	40			
P050	0	7	7	
P051	1	6		
P052	2	6		6
P053	6			
P054	6	1		
P055	6			
P056	0			
P057	1			
P061	6			
P062	8			
P063	1			
P064	1			
P065	1			
P066	0			
P069	1			0
P070	0			
P071	0			
P072	250			
P073	0			
P074	1			
P075	0			
P076	0 el. 4	4	0	0
P077	1			
P078	50	100	100	100
P079	0			
P080		0,73	0,7	0,8
P081	50			
P082		1690	1500	1400
P083		2,2	0,9	3,4
P084		400	230	230
P085		0,75	0,18	0,75
P086	150			
P087	0			
P088	0			
P089	***	24	38.00	7.00
P091	0			
P092	6			
P093	0			
P094	50			
P095	0			

MM2.21TS100446en.fm

	Default	Main motor G002	Infeed G003	Web tension G004
P099	0			
P101	0			
P111	***			
P112	***			
P113	***			
P121	1	0		
P122	1			
P123	1			
P124	1			
P125	1			
P128	120			
P131	***			
P132	***			
P133	***			
P134	***			
P135	***			
P136	***			
P137	***			
P138	***			
P140	***			
P141	***			
P142	***			
P143	***			
P186	200			
P201	0			
P202	1			
P203	0			
P204	0			
P205	1			
P206	0			
P207	100			
P208	0			
P210	***			
P211	0			
P212	100			
P220	0			
P321	0			
P322	50			
P323	0			
P356	6			
P386	1			
P387	1			

MM2.21TS100446en.fm

	Default	Main motor G002	Infeed G003	Web tension G004
P700	***			
P701	***			
P702	***			
P720	0			
P721	***			
P722	0			
P723	***			
P724	0			
P725	***			
P726	0			
P880	***			
P910	0			
P918	***			
P922	***			
P923	0			
P927	***			
P928	***			
P930	***			
P931	***			
P944	0			
P947	***			
P958	***			
P963	***			
P967	***			
P968	***			
P970	***			
P971	1			

(Cont'd)

MM2.21TS100446en.fm

(Cont'd)

Setting 200 S

	Default	Main motor G002	Infeed G003	Web tension G004
P001	0			
P002	10	2	1	0
P003	10	1	1	0
P004	0			
P005	5			
P006	0	2	2	1
P007	1	0	0	0
P009	0	3	3	3
P010	1			
P011	0			
P012	0			
P013	50	70	60	
P014	0			
P015	0			
P016	0			
P017	1			
P018	0			
P019	2			
P021	0			
P022	50		70	
P023	0			1
P024	0			
P025	0			
P027	0			
P028	0			
P029	0			
P031	5			
P032	5			
P033	10			
P034	11	10	10	10
P040	0			
P041	5			
P042	10		52	30,9
P043	15	4	5	20,6
P044	20			
P045	0		7	
P046	25	35		
P047	30	20		

MM2.21TS100446en.fm

	Default	Main motor G002	Infeed G003	Web tension G004
P048	35			
P049	40			
P050	0		7	
P051	1	6		
P052	2	6	2	6
P053	6			
P054	6	1		
P055	6			
P056	0			
P057	1			
P061	6			
P062	8			
P063	1			
P064	1			
P065	1			
P066	0			
P069	1			0
P070	0			
P071	0			
P072	250			
P073	0			
P074	1			
P075	0			
P076	0 el. 4	4	0	0
P077	1			
P078	50	100	100	100
P079	0			
P080		0,73	0,7	0,8
P081	50			
P082		1690	1500	1400
P083		2,2	0,9	3,4
P084		400	230	230
P085		0,75	0,18	0,75
P086	150			
P087	0			
P088	0			
P089	***	20.30	38.00	7.00
P091	0			
P092	6			
P093	0			
P094	50			
P095	0			

MM2.21TS100446en.fm

	Default	Main motor G002	Infeed G003	Web tension G004
P099	0			
P101	0			
P111	***	1.50	0.75	0.75
P112	***	6	6	6
P113	***	24	14	14
P121	1	0		
P122	1			
P123	1			
P124	1			
P125	1			
P128	120			
P131	***			
P132	***			
P133	***			
P134	***			
P135	***			
P136	***			
P137	***			
P138	***			
P140	***			
P141	***			
P142	***			
P143	***			
P186	200			
P201	0			
P202	1			
P203	0			
P204	0			
P205	1			
P206	0			
P207	100			
P208	0			
P210	***			
P211	0			
P212	100			
P220	0			
P321	0			
P322	50			
P323	0			
P356	6			
P386	1			
P387	1			

MM2.21TS100446en.fm

	Default	Main motor G002	Infeed G003	Web tension G004
P700	***			
P701	***			
P702	***			
P720	0			
P721	***			
P722	0			
P723	***			
P724	0			
P725	***			
P726	0			
P880	***			
P910	0			
P918	***			
P922	***	2.08	2.08	2.08
P923	0			
P927	***			
P928	***			
P930	***			
P931	***			
P944	0			
P947	***			
P958	***			
P963	***			
P967	***			
P968	***			
P970	***			
P971	1			

(Cont'd)

MM2.21TS100446en.fm

(Cont'd)

Switches

Set DIP - switch according to the picture below.

Setting G002.

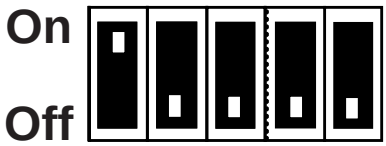

Setting G003.

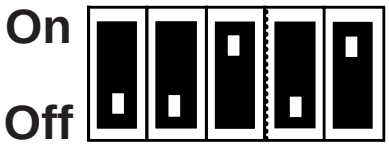

Setting G004.

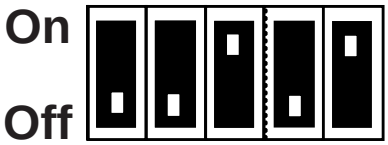

MM2.21TS100446en.fm

8.1.3-3 Frequency inverter - fault codes

Machine Status	
SPC reference	1368572

In the event of a fault, the converter switches off and a fault code appears on the display. The last fault that occurred is stored in parameter P930, e.g. '0004' indicates that the last fault was F004

Fault codes	Cause	Action
F001	Over voltage	Check whether supply voltage is within the limits indicated on the rating plate. Increase the Ramp-down time (P003) or apply braking resistor (option). Check whether the required braking power is within the specified limits.
F002	Over current	Check whether the motor power corresponds to the inverter power. Check that the cable length limits have not been exceeded. Check motor cable and motor for short-circuits and earth faults. Check whether the motor parameters (P080 - P085) correspond with the motor being used. Check the stator resistance (P089). Increase the ramp-up time (P002). Reduce the boost set in P078 and P079. Check whether the motor is obstructed or overloaded.
F003	Overload	Check whether the motor is overloaded. Increase the maximum motor frequency if a motor with high slip is used.
F004	Overheating of motor (monitoring with PTC)	Check if motor is overloaded. Check the connections to the PTC. Check that P087 has not been set to 1 without a PTC being connected.
F005	Inverter over temperature (internal heatsink sensor)	Check that the ambient temperature is not too high. Check that the air inlet and outlet are not obstructed. Check that the inverter's integral fan is working.
F006	Supply phase missing (only three-phase units)	Check the power connections and adjust if necessary.
F008	USS protocol time-out	Check the serial interface. Check the settings of the bus master and P091 - P093. Check whether the time-out interval is too short (P093).
F009	Under voltage	Check whether the supply voltage is within the limits indicated on the rating plate. Check the supply is not subject to temporary failures or voltage reductions.
F010	Initialisation fault	Check the entire parameter set. Set P009 to `0000' before power down.
F011	Internal interface fault [1]	Switch off power and switch on again.
F012	External trip	Source of trip is digital input (configured as an external trip input) going low - check the external source.
F013	Programme fault [1]	Switch off power and switch on again.

MM2.21TS100446en.fm

Fault codes	Cause	Action
F016	Sensorless vector control unstable	Try calibrating the stator resistance (set P088 to 1 and RUN). Alternatively try re-adjusting the sensorless vector control loop gain (see P386).
F030	PROFIBUS link failure	Check the integrity of the link.
F031	PROFIBUS to inverter link failure	Check the integrity of the link.
F033	PROFIBUS configuration error	Check the PROFIBUS configuration.
F036	PROFIBUS module watchdog trip	Replace PROFIBUS module.
F057	Delayed Trip *(See P057)*	P051 to P055 or P356 = 20 and trip input has remained low for longer than the time set in P057.
F074	Motor over temperature by I^2t calculation	Trip occurs only if P074 = 4, 5, 6 or 7. Check that the motor current does not exceed the value set in P083 and P086.
F106	Parameter fault P006	Parameterise fixed frequency(ies) on the digital inputs.
F112	Parameter fault P012/P013	Set parameter P012 < P013.
F151-F156	Digital input parameter fault	Change the settings of digital inputs P051 to P055 and P356.
F188	Automatic calibration failure	Motor not connected to inverter - connect motor. If the fault persists, set P088 = 0 and then enter the measured stator resistance of the motor into P089 manually.
F212	Parameter fault P211/P212	Set parameter P211 < P212.
F231	Output current measurement imbalance	Check motor cable and motor for short-circuits and earth faults.

1) Ensure that the wiring guidelines described in section 9.3 have been complied with.

When the fault has been corrected the inverter can be reset. To do this press button P twice (once to display P000 and the second time to reset the fault), or clear the fault via a binary input (see parameters P051 - P055 and P356 in section 6).

MM2.21TS100446en.fm

8.1.3-4 Frequency inverter - warning codes

Machine Status	
SPC reference	1368572

In the event of a warning, the inverter display will flash. The last warning to occur is stored in parameter P931.

Warning code	Cause	Action
002	Current limit active	Check whether the motor power corresponds to the inverter power. Check that the cable length limits have not been exceeded. Check motor cable and motor for short-circuits and earth faults. Check whether the motor parameters (P080 - P085) correspond with the motor being used. Check the stator resistance (P089). Increase the ramp-up time (P002). Reduce the boost set in P078 and P079. Check whether the motor is obstructed or overloaded.
003	Voltage limit active	Increase ramp time or fit breaking resistor
004	Slip limit exceeded	Check that motor is not overloaded, check motor parameters
005	Inverter over temperature (heatsink)	Check that the ambient temperature is not too high. Check that the air inlet and outlet are not obstructed. Check that the inverter's integral fan is working
006	Motor over-temperature	Check if motor is overloaded. Check that P087 has not been set to 1 without a PTC being connected.
010	Power supply - current limit	
018	Auto re-start after fault (P018) is pending	WARNING: The inverter may start at any time.
075	Braking resistor - hot	

MM2.21TS100446en.fm

8.1.4 Level meter card

8.1.4-1 Level meter card - configuration

Machine Status	
SPC reference	

The level meter is connected to two coil elements. The coil elements are mounted on the filling machine together with an appropriate float and mounting material.

When the float moves up and down, it changes the balance in the inductive bridge formed by the coil elements. The level meter will detect and indicate the position of the float.

On the front panel of the level meter there is a yellow LED bar (1), indicating the position of the float as a percentage of the meter range. The meter range is 0–150 mm. This corresponds to 0–100% on the level meter indicator and 0–20 mA on the level meter outputs. The zero point and span of the meter are calibrated with the Span (2), Comp (3) and Zero (4) trim potentiometers, available on the front panel.

One high and one low alarm are indicated with the two red LED:s on the front panel. The alarm levels are set with trim potentiometers available on the front panel.

Note! The alarm high / low function on the level meter card is not used, the alarm is set by the PLC program.

MM2.21TS100446en.fm

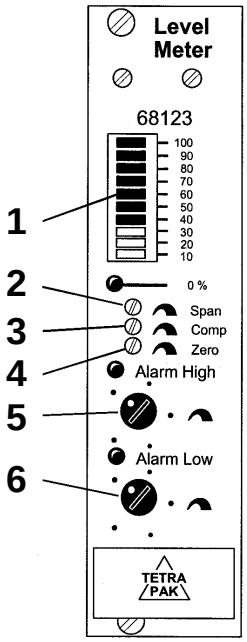

1 LED bar
2 Span trim potentiometer
3 Comp trim potentiometer
4 Zero trim potentiometer
5 Alarm high trim potentiometer
6 Alarm low trim potentiometer

8.1.4-2 Level meter card - set

Machine Status	
SPC reference	

For setting of the potentiometers use a isolated screwdriver with a blade width of 3 mm.

Initial setting of the potentiometers

a) Set the “Span” trim potentiometer (2) to its clockwise end position.

b) Set the “Comp” trim potentiometer (3) to its counter-clockwise end position.

c) Set the “Zero” trim potentiometer (4) to its counter-clockwise end position.

d) Set the “Alarm high” trim potentiometer (5) to its clockwise end position.

e) Set the “Alarm low” trim potentiometer (6) to its counter-clockwise end position.

Note! The alarms are not used, keep the trim potentiometers as set above.

In order to acclimatize the electronic components the supply voltage shall be switched on at least 10 minutes before calibration of the level meter.

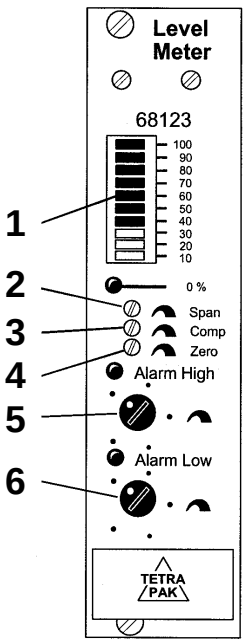

1 LED bar
2 Span trim potentiometer
3 Comp trim potentiometer
4 Zero trim potentiometer
5 Alarm high trim potentiometer.
6 Alarm low trim potentiometer.

MM2.21TS100446en.fm

Calibration of the Level Meter

With the float in its lowest position, the LED bar (1) should indicate 100%.

a) Turn the “Span” trim potentiometer (2) counter-clockwise until the LED bar shows 90%.

b) Turn the “Comp” trim potentiometer (3) clockwise as long as the LED bar reading decreases. Then turn the potentiometer slowly counter-clockwise, just until the LED bar reading starts to increase.

c) Turn the “Zero” trim potentiometer (4) clockwise until the LED bar reach it’s minimum.

d) Turn the “Span” trim potentiometer (2) to its maximum clockwise position or until the LED bar indicates 90%.

e) Turn the “Comp” trim potentiometer (3) clockwise as long as the LED bar reading decreases. **Do not turn any further!** If it´s not possible to read an accurate minimum on the LED bar, adjust the “Zero” trim potentiometer (4) slightly counter-clockwise and repeat (e).

f) Turn the “Zero” trim potentiometer (4) clockwise until LED 0% lights up. **Do not turn any further!**

g) Put the float in its highest position and keep it there. The LED bar on the level meter should now indicate 100%.

h) Turn the “Span” trim potentiometer (2) counter-clockwise until the LED bar reading starts to decrease. Then turn the potentiometer clockwise until the LED bar shows 100%. **Do not turn any further!**

i) Check the meter response by slowly moving the float up and down. Correct the setting with the “Span” (2) and the “Zero” (4) trim potentiometers if necessary.

MM2.21TS100446en.fm

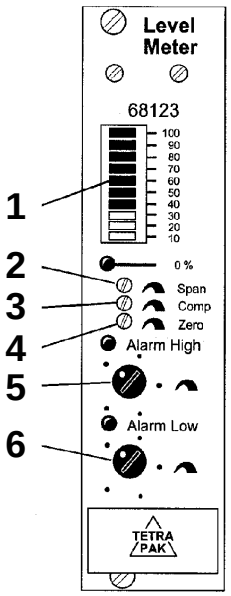

1 LED bar
2 Span trim potentiometer
3 Comp trim potentiometer
4 Zero trim potentiometer
5 Alarm high trim potentiometer
6 Alarm low trim potentiometer

8.1.5 Level regulator relay

8.1.5-1 Level regulator relay - description

Machine Status	
SPC reference	90458-2580

The level regulator relay (RM4-LA) monitors the product level by measuring the change in resistance of immersed and non immersed electrodes. The relay sensitivity must be set according to the conductivity of the product.

The level regulator parameters are set using the potentiometer and selectors shown in the illustration below:

a) The selector (1) sets the filling/empty functionality.

b) The potentiometer (2) fine adjusts the sensitivity as % of the sensitivity range (3).

c) The potentiometer (4) sets the delay.

d) The selector (3) sets the **On** the level status of the relay and the sensitivity range.

e) The yellow LED (5) lights up when the relay is **closed**.

f) The green LED (6) lights up when the power is **On**.

MM2.21TS100446en.fm

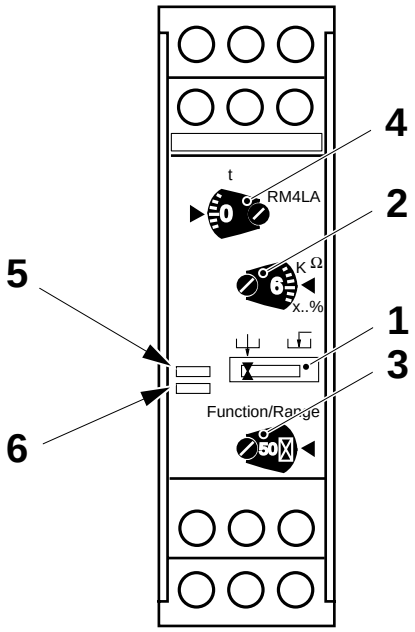

1 Function selector
2 R-value
3 Function / range
4 Time value t
5 Yellow LED
6 Green LED

8.1.5-2 Level regulator relay - set

Machine Status	Main Power ON
SPC reference	

Set the display functions using a screwdriver, refer to the table below:

Description		**Function/Range** (3)	**Time value** (4)	**R-value** (2)	**Function-sector** (1)
Hydrogen peroxide bath high level	A030	500 ⊠	0	0	⊔
Hydrogen peroxide production level	A031	500 ⊠	0	0	⊔
Membrane leakage	A032	500 ⊠	0	0	⊔
Spray container	A033	50 ⊠	0	0	⊔

If necessary, make fine adjustments using the potentiometer (2).

Make sure that the yellow LED lights up when the correct level is obtained.

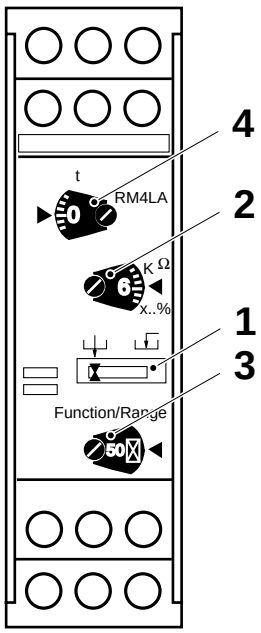

1 Function selector
2 R-value
3 Function / range
4 Time value t

MM2.21TS100446en.fm

8.1.6 Fuse board

8.1.6-1 Fuse board - description

SPC reference	1095777-0300

Q001	Q006	F001	F002	F003	F007	F008	F010	F011	F012	F013	F014	F015
6.3 A	0.63 A	10 A	10 A	10 A	10 A	10 A	10 A	10 A	10 A	16 A	16 A	10 A

F016	F017	F018	F019	F020	F021	F023	F024	F025	F026	F027	F029	F030
10 A	10 A	10 A	10 A	16 A	20 A	10 A	10 A	2 A	25 A	10 A	10 A	10 A

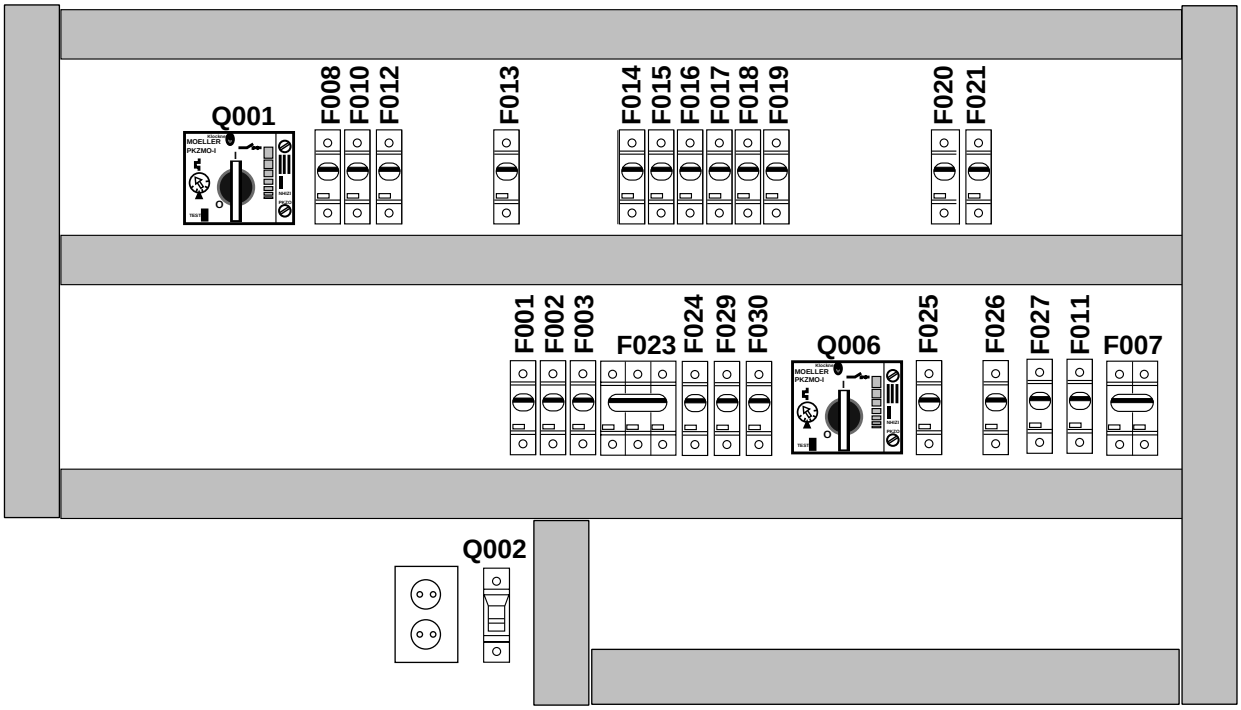

MM2.21TS100446en.fm

Q001: Overload protection (signal voltage)
Q002: Residual current device
Q006: Conveyor motor
F001: TS- sealing
F002: TS- sealing
F003: TS- sealing
F007: Control voltage
F008: Light in cabinet. Wall sockets
F010: Light in machine body and infeed
F011: Web guiding
F012: Element pack mat, splicing
F013: LS-element
F014: LS strip element splicing
F015: Air heater element
F016: Air heater element
F017: Air heater element
F018: Control voltage
F019: Power supply PLC system
F020: Air preheating element
F021: Paper web element
F023: Main motor
F024: Spare
F025: Sealing block LS-strip
F026: Pack mat, element splicing
F027: Preheating sterilization house
F029: Motor free loop infeed
F030: Motor web tension

(Cont'd)

(Cont'd)

Q004: Residual current device

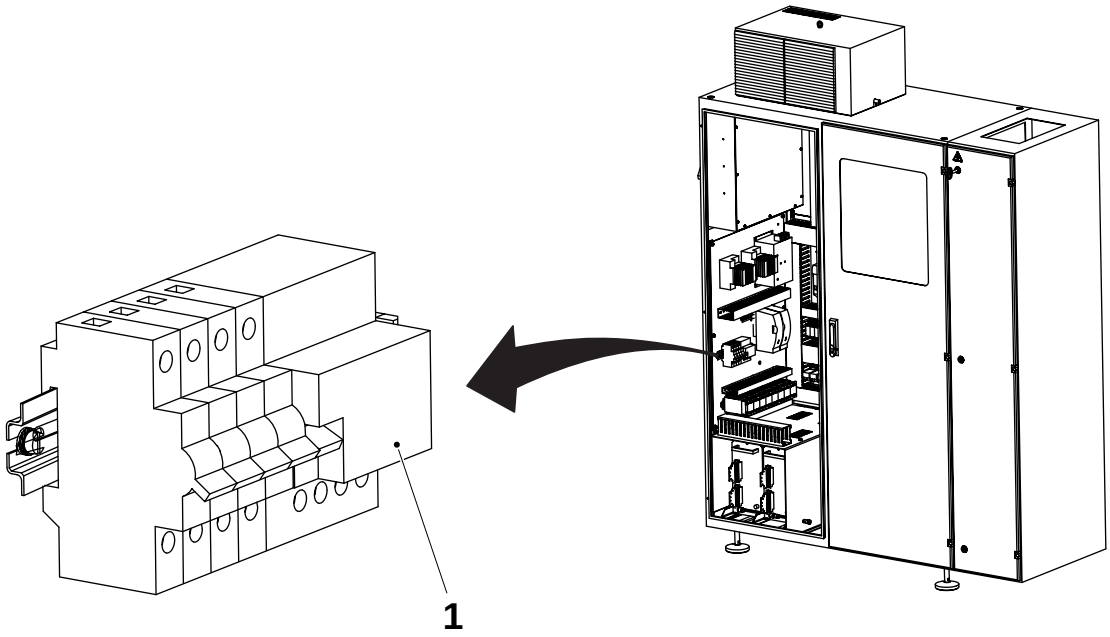

1 Q004

MM2.21TS100446en.fm

(Cont'd)

(Cont'd)

Set the overload protections following the table below:

Q021	F100
25 A	100 A

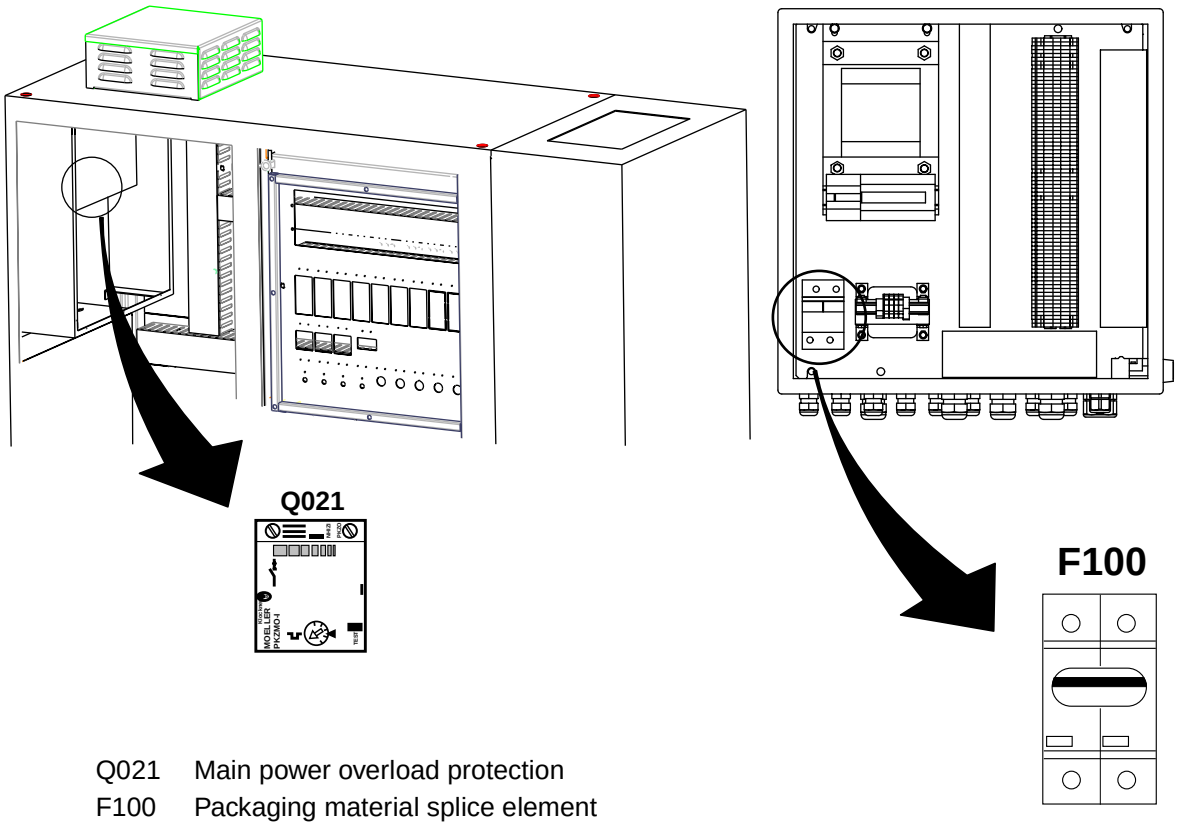

Q021 Main power overload protection
F100 Packaging material splice element

8.1.7 Over voltage protector

8.1.7-1 Over voltage protector - check/change

Machine Status	
SPC reference	

When one or more of the phases are subject to an over voltage, the over voltage protector will break the power supply. This is indicated by the Surge voltage alarm on the operation panel.

When one or more of the fuses are tripped, the colour in the indication window (1) will also change from green to red.

Change all tripped fuses.

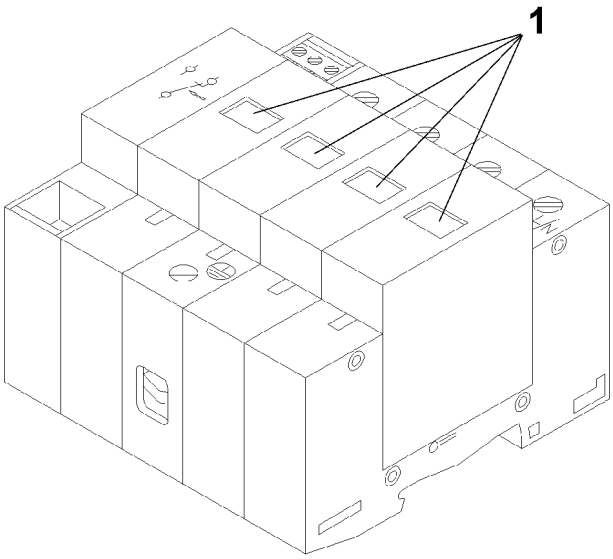

1 Indication window

MM2.21TS100446en.fm

8.1.8 Residual current device

8.1.8-1 Residual current device - check

Machine Status	Main Power ON
SPC reference	1368572

The residual current device (2) must always be tested before using the socket outlet (1).

Q002

a) Make sure that the switch is **ON**, position (3).

b) Press the test button (4).

c) The residual current device (2) must trip immediately: The switch jumps to **OFF**, position (5).

WARNING! **Hazardous voltage.**
Electric shock will cause death or serious injury.
Change the **residual current device** (2) if it does not trip immediately.

d) Put back the switch to position (3).

MM2.21TS100446en.fm

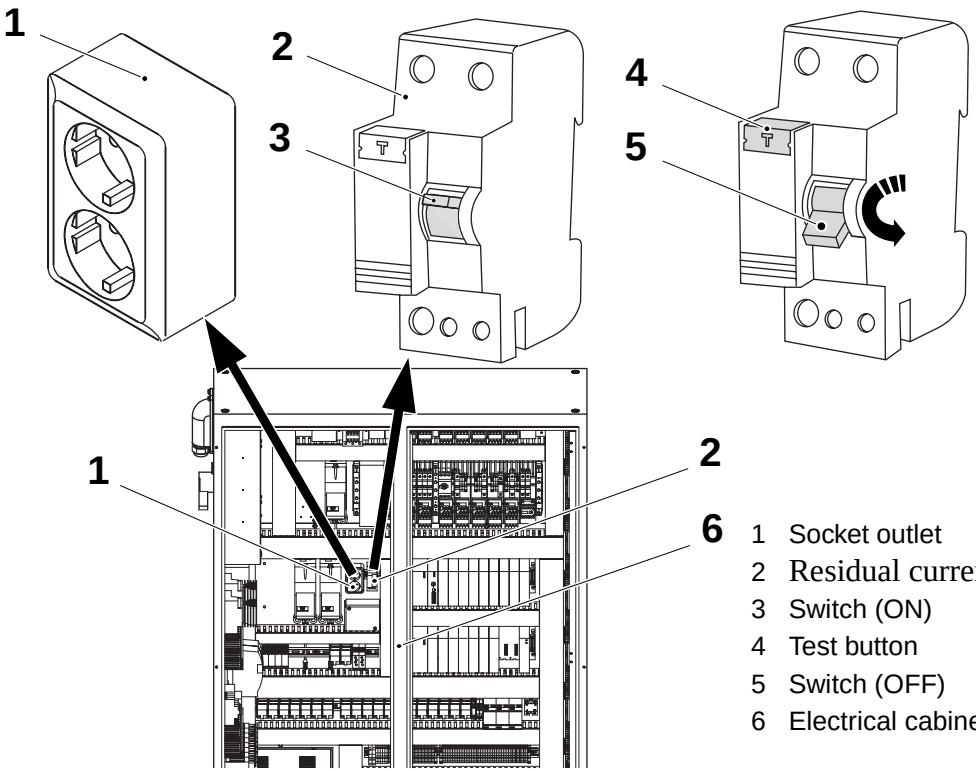

1 Socket outlet
2 Residual current device
3 Switch (ON)
4 Test button
5 Switch (OFF)
6 Electrical cabinet

Q004

The residual current device Q004 protects the elements (1) in the heating chamber.

a) Make sure that the switch is **ON**, position (3).

b) Press the test button (4).

c) The residual current device (2) must trip immediately: The switch jumps to **OFF**, position (5).

WARNING! **Hazardous voltage.**
Electric shock will cause death or serious injury.
Change the **residual current device** (2) if it does not trip immediately.

a) Put back the switch to position (3).

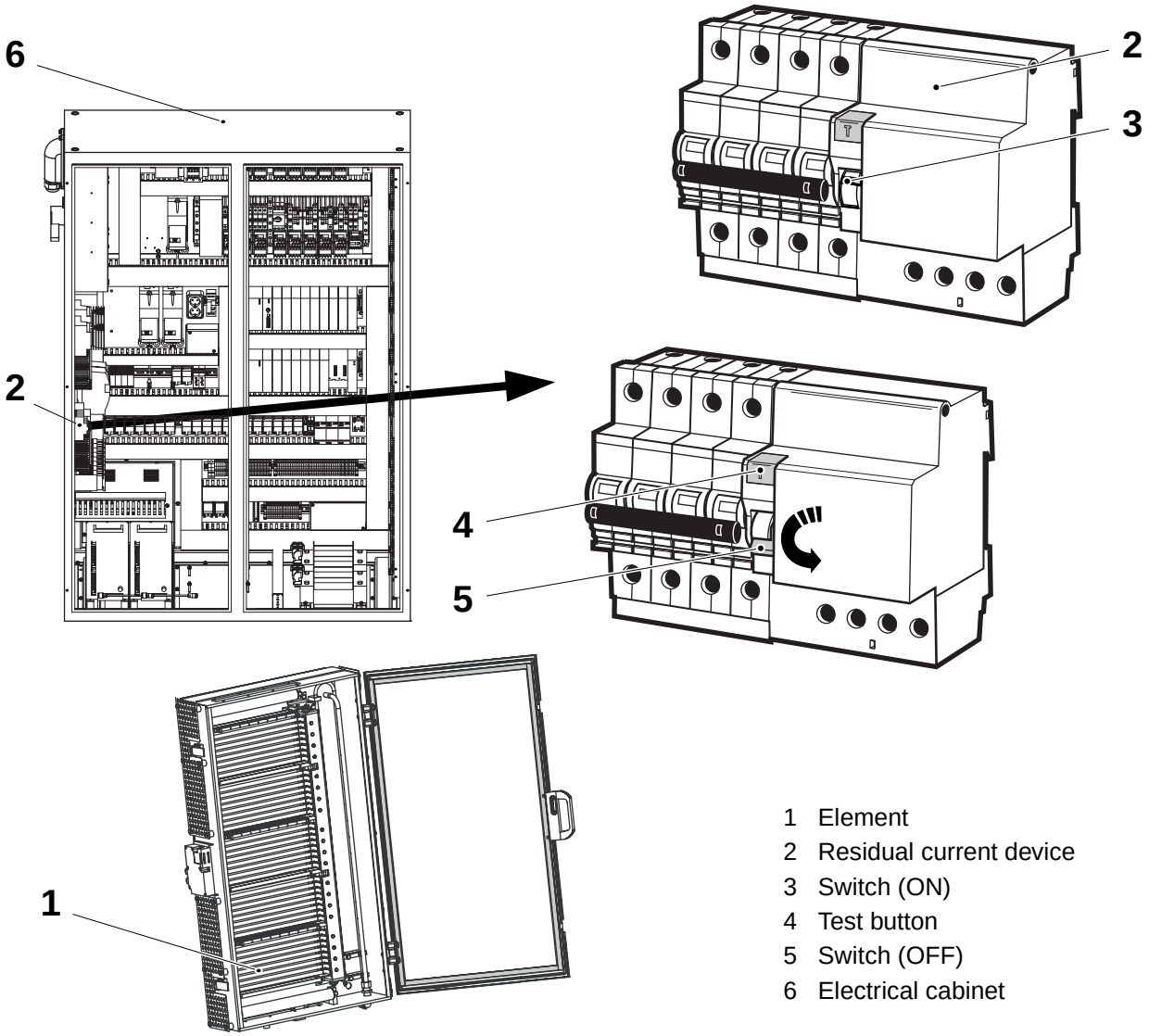

1 Element
2 Residual current device
3 Switch (ON)
4 Test button
5 Switch (OFF)
6 Electrical cabinet

MM2.21TS100446en.fm

8.1.9 Web tension drives

8.1.9-1 Web tension drives - check

Machine Status	
SPC reference	1512305-0100 1512306-0100 90458-0746

a) Swing out the Drive (1) by loosening the screw (2).

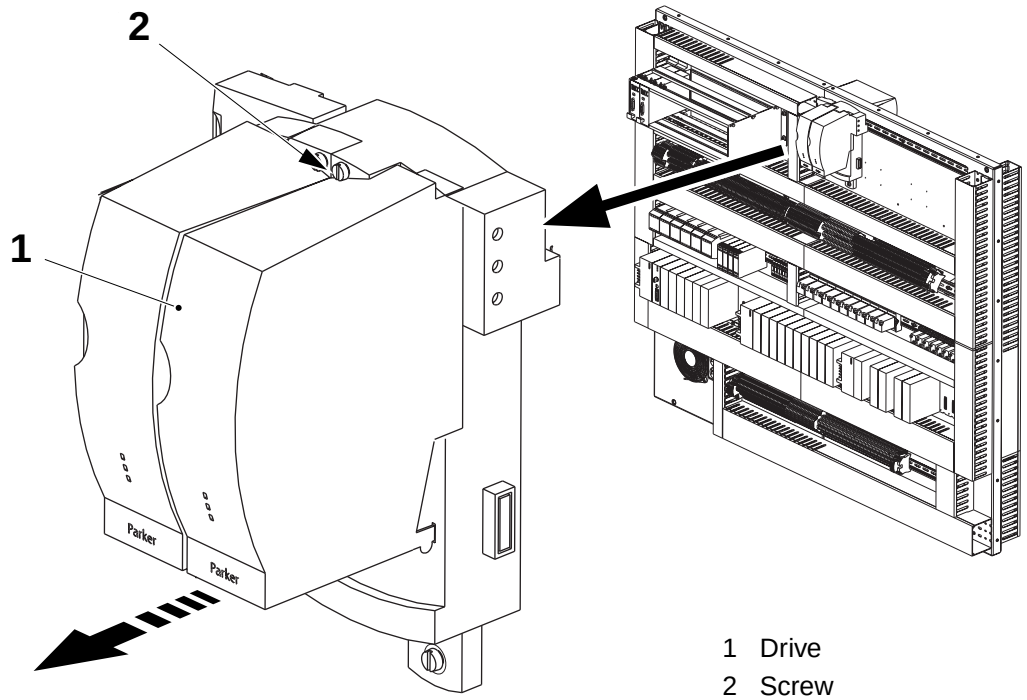

1 Drive
2 Screw

(Cont'd)

MM2.21TS100446en.fm

(Cont'd)

b) Make sure that the switches from 1 to 8 on the switch panel (3) in the drives (1) are set in the correct position according to the following table.

c) Fit back the drive (1).

Switch number	Function	Description	Switch position
1	Boost enable (ON) Boost disable (OFF)	Activates timed boost	ON
2	Step/dir. (OFF) Step+/Step- (ON)	Allow conventional or two step line control	OFF
3	Standby 50% (OFF) 70% (ON)	Standby select	OFF
4	Resolution bit 1	Set motor resolution	ON
5	Resolution bit 2	Set motor resolution	ON
6	Current select bit 1	Set motor current	ON
7	Current select bit 2	Set motor current	OFF
8	Current select bit 3	Set motor current	ON

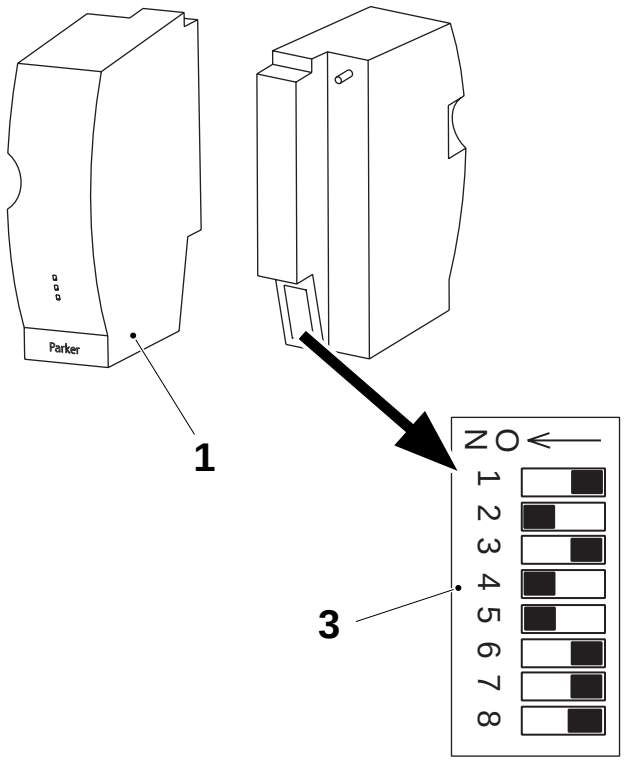

1 Drive
3 Switch panel

(Cont'd)

MM2.21TS100446en.fm

(Cont'd)

Troubleshooting

The LEDs in the front of the drivers (1) have the following meanings:

LED (4)

- Orange: hardware OK & Zero Phase
- Green: Power ON

LED (5)

- Red: Drive Fault. Check the following items.
  - Check power supply voltage
  - The drive may not be fully inserted into the docking station. Check that the wiring is not preventing the drive from being fully home.
  - There is a short circuit across two of the motor connections or between one of the motor connections and ground. Disconnect power, remove the drive from the docking station and check the motor connections with a meter. This condition may also rise if a very low inductance motor is used; the preferred range is from 0.8 mH to 10 mH.
  - The drive has shut down due to excess of temperature; check that the refrigerator in the electrical cabinet is working. Allow the drive to cool down and check again. If the motor has ample torque for the application, try to move the cylinder by hand.
- Green: Drive ready/energized

LED (6): Not used.

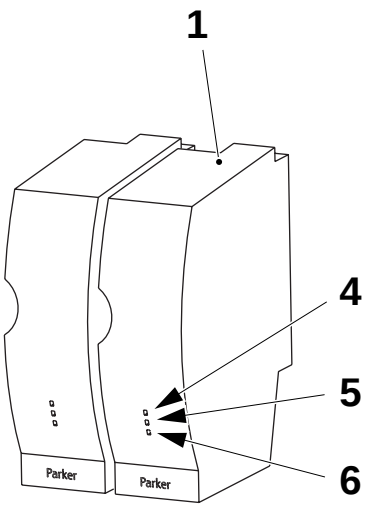

1 Drive
4 LED
5 LED
6 LED

(Cont'd)

MM2.21TS100446en.fm

(Cont'd)

Troubleshooting

The LEDs in the front of the power supply module (7) have the following meanings:

DANGER!

Risk of electrocution!

The supply unit **must not** be opened. Risk of shock, burns or even death. In case of accident, call immediately for medical assistance.

Position	Colour	Function
8	Green	AC present
	Orange	AC present, HV output disabled by overload or over temperature
	No colour	AC input not present or internal mains fuse blown. Check AC supply.

9	Not used	

10	Green	24V supplied by P25L
	Orange	24V supplied by external supply
	Red	24V disabled by over current fault
	No colour	No 24V present

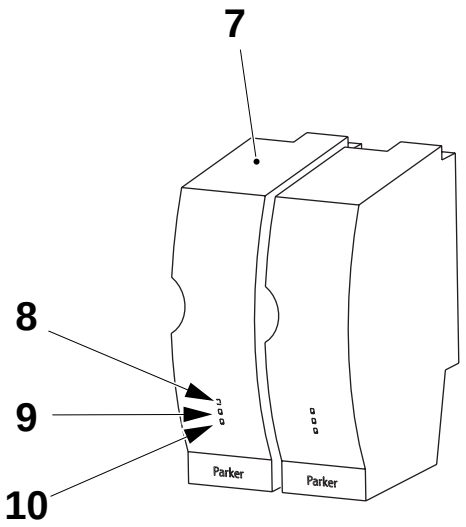

7 Supply module
8 LED
9 LED
10 LED

MM2.21TS100446en.fm

8.1.10 Paper web element supervision

8.1.10-1 Paper web element supervision - set

Machine Status	
SPC reference	90459-0690

a) Use a screwdriver to set as follows:

b) Switch “I value” (1) to **10**.

c) Switch “Hysterisis” (2) to **0** (fully anti clockwise).

d) Potentiometers T1 (3) to **0** (fully anti clockwise).

e) Potentiometers T2 (4) to **0** (fully anti clockwise).

Note! The LED R (5) switches **off** if a malfunction occurs during production.

f) Set the selectors (6) on the bottom of the element as shown below.

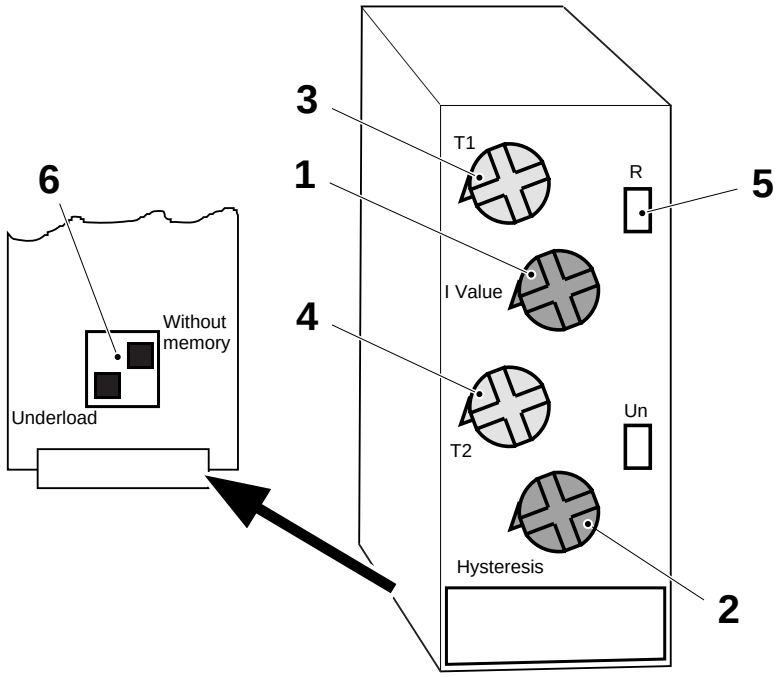

1 Switch “I Value”
2 Switch “Hysterisis”
3 Potentiometer T1
4 Potentiometer T2
5 LED R
6 Selector

MM2.21TS100446en.fm

8.2 TPIH

8.2-1 TPIH - description

EM reference	

Each TPIH-2000 system contains:

- potentiometer (1)
- TPIH generator (2)
- inductor (3)
- Carbon brush (4)
- busbar (5)
- impedance transformer (6)
- coaxial cable (7)

The pulse duration is controlled by the PLC program.

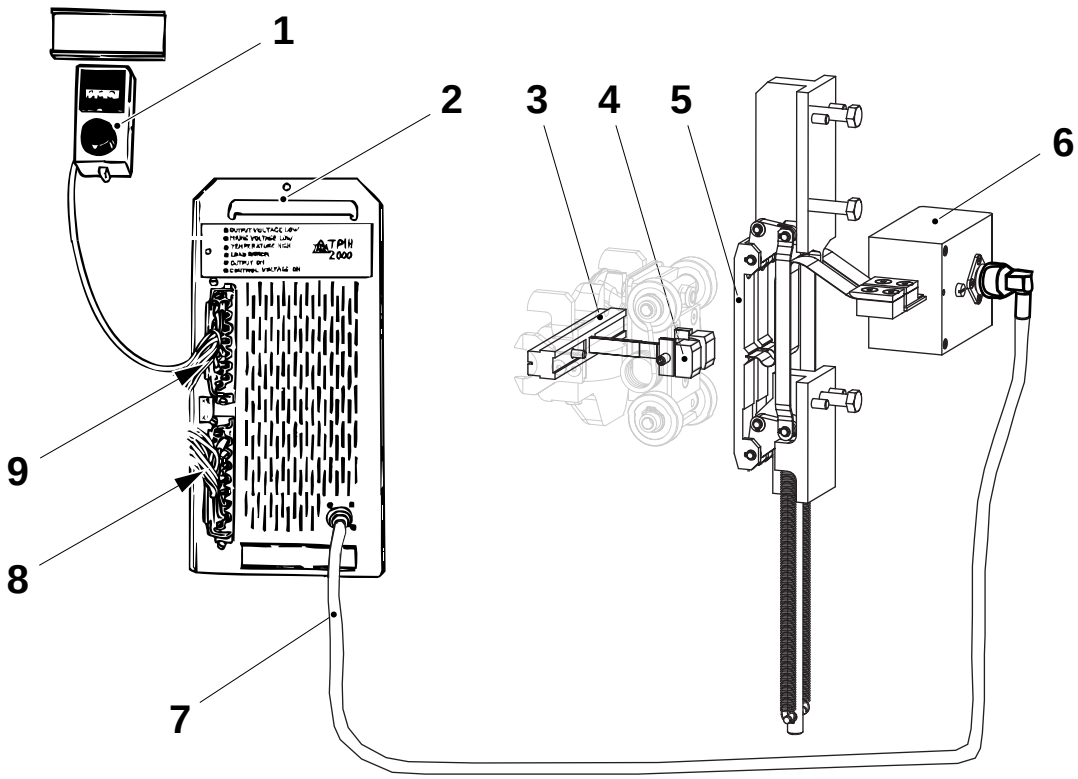

MM2.21TS100446en.fm

1 Potentiometer
2 TPIH generator
3 Inductor
4 Carbon brush
5 Busbar
6 Impedance transformer
7 Coaxial cable
8 400/230 volt connector
9 Signal connector

8.2.1 TPIH generator

8.2.1-1 TPIH generator - alarm description

Machine Status	Production
Tools - test instrument	TP No. 68462
EM reference	

Output voltage low

If this is the only LED (1) that has lit up:

- the generator is faulty and must be replaced, or
- the +10V DC to the potentiometer is missing, or
- the potentiometer setting is below the minimum value of 350, or
- the potentiometer is broken (the output voltage from the potentiometer does not follow the movement of the potentiometer slider)

Mains voltage low

If the LED (2) has lit up, at least one of the three phases is below 85% of nominal value and, as a consequence, the generator is not able to deliver the proper output power.

Check the mains supply voltage.

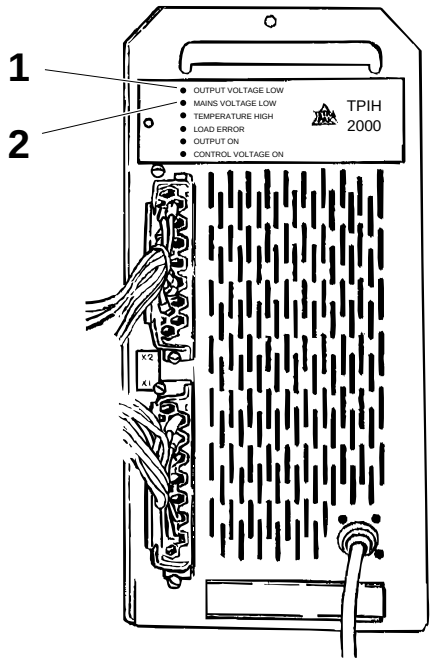

1 Output voltage low LED
2 Mains voltage low LED

(Cont'd)

MM2.21TS100446en.fm

(Cont'd)

Temperature high

If the LED (3) has lit up, the temperature of the TPIH generator is too high. Possible causes could be:

- the cooling fan inside the generator is not working
- the ambient temperature is above 50°C

Change the generator if the fan does not operate; see 8.2.1-3 TPIH generator - change.

Load error

If the LED (4) has lit up, the generator is unable to transmit a pulse due to faulty load caused by:

- short circuit in coaxial cable, busbar, inductor or impedance transformer
- open circuit in coaxial cable, busbar, inductor or impedance transformer
- insufficient pressure between pressure jaw and cutting jaw
- wrong type of impedance transformer installed
- wrong type of inductor installed

The origin of the load error may be located with the aid of test instrument (5).

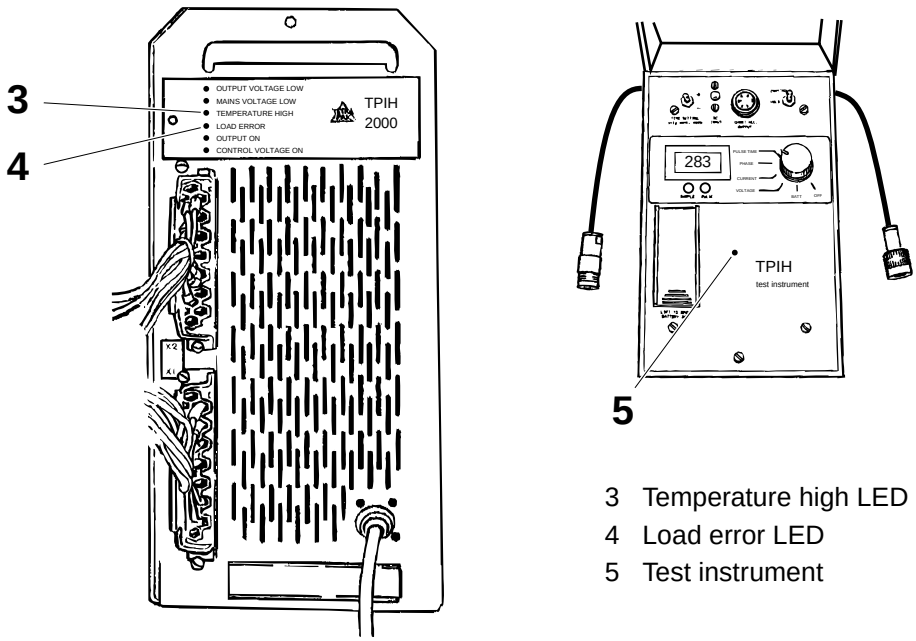

3 Temperature high LED
4 Load error LED
5 Test instrument

MM2.21TS100446en.fm

8.2.1-2 TPIH generator - fault finding

Machine status	Production
Tools - test instrument	TP No. 68462
EM reference	

Proceed as follows:

a) Perform a **Normal Stop**.

b) Disconnect the coaxial cable (1) from the mal function generator and connect the test instrument between the cable and the connector (2) of the generator.

c) Step up to **Production**.

d) Measure the values for voltage, current, phase angle, and pulse time and compare with the values in the table below. The left generator works in pair with side 1 and the right generator works in pair with side 2.

Step down to Normal Stop and restore the coaxial cable (1).

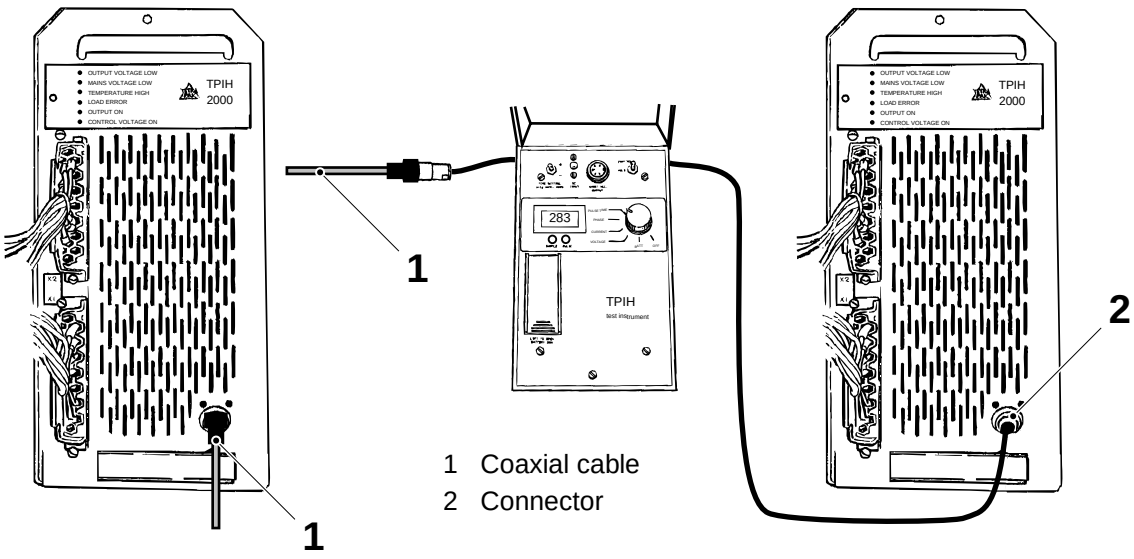

1 Coaxial cable
2 Connector

(Cont'd)

MM2.21TS100446en.fm

(Cont'd)

Load examples	Phase angle	Voltage/Current
Optimal load	0°	50 Ω
Normal load	±15°	40 - 65 Ω
Short circuit in coaxial cable, contacts or primary of the IH transformer	pos (3)	1 - 10 Ω (1)
Open circuit in coaxial cable, contacts or primary of the IH transformer	neg (3)	200 - 2000 Ω (2)
Short circuit in inductor, busbar or secondary of the IH transformer	pos	10 - 20 Ω
Open circuit in inductor, busbar or secondary of the IH transformer	neg	2 - 5 Ω
No packaging material on the inductor	neg	5 - 15 Ω

Note! 1) Greater value = greater distance between problem and instrument.

2) Smaller value = shorter distance between problem and instrument.

3) Greater phase difference = greater distance between problem and instrument.

Output on

When the LED (3) lights up, a pulse is transmitted from the generator into a proper load. The entire generator system is operating.

Control voltage on

When the LED (4) lights up, 230V is connected to the generator.

Note! This does not check the three phase 400/230V to the power supply.

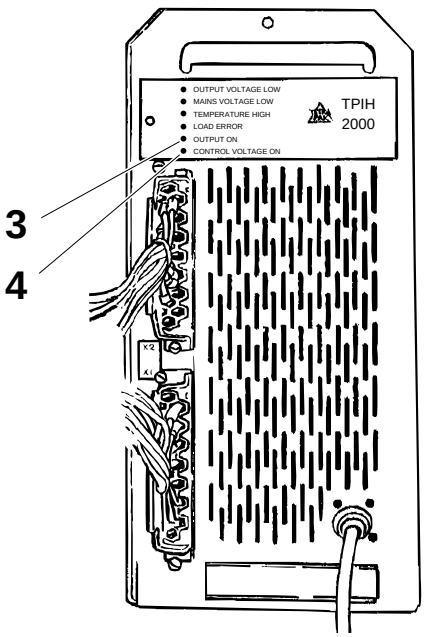

3 Output on
4 Control voltage on

MM2.21TS100446en.fm

8.2.1-3 TPIH generator - change

Machine Status	
EM reference	

DANGER!

Risk of electrocution!
The TPIH generator **must not** be opened. Risk of shock, burns or even death. In case of accident, call immediately for medical assistance.

a) Make sure that the main power switch is **Off** and that it has been padlocked.

b) Remove the connectors X1 (1) and X2 (2).

c) Remove the coaxial connector (3).

d) Unscrew the screw (4) and pull out the generator.

e) Change the generator and assemble in the reverse order.

Send the generator to the nearest Tetra Pak service station for service.

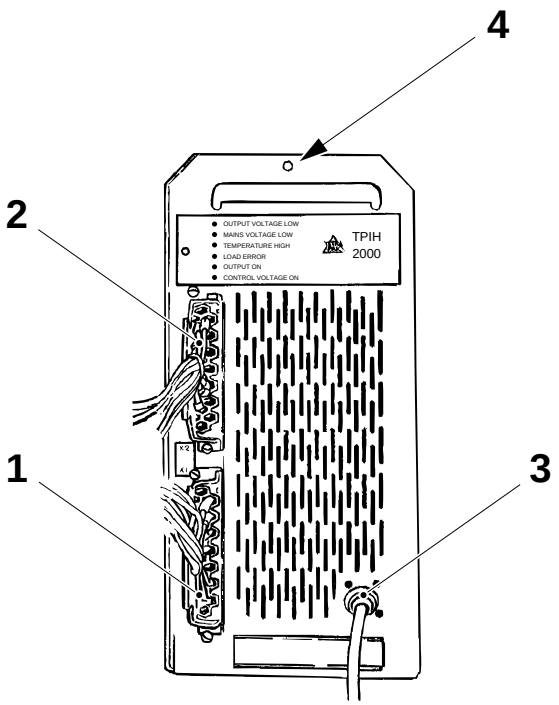

1 Connector X1
2 Connector X2
3 Coaxial connector
4 Screw

MM2.21TS100446en.fm

8.2.2 TPIH cables

8.2.2-1 TPIH cables - check condition

Machine Status	
EM reference	

Check the following details for wear and/or damage:

- the coaxial connectors (1); make sure that there is no moisture between the male connector and the female connector
- the rubber gasket (2) in the male connectors; make sure that it seals properly (it should not be possible to turn the male connector easily)
- the coaxial cables (3); make sure that the cables are flexible and that there are no cracks where they bend

Clean or change as required.

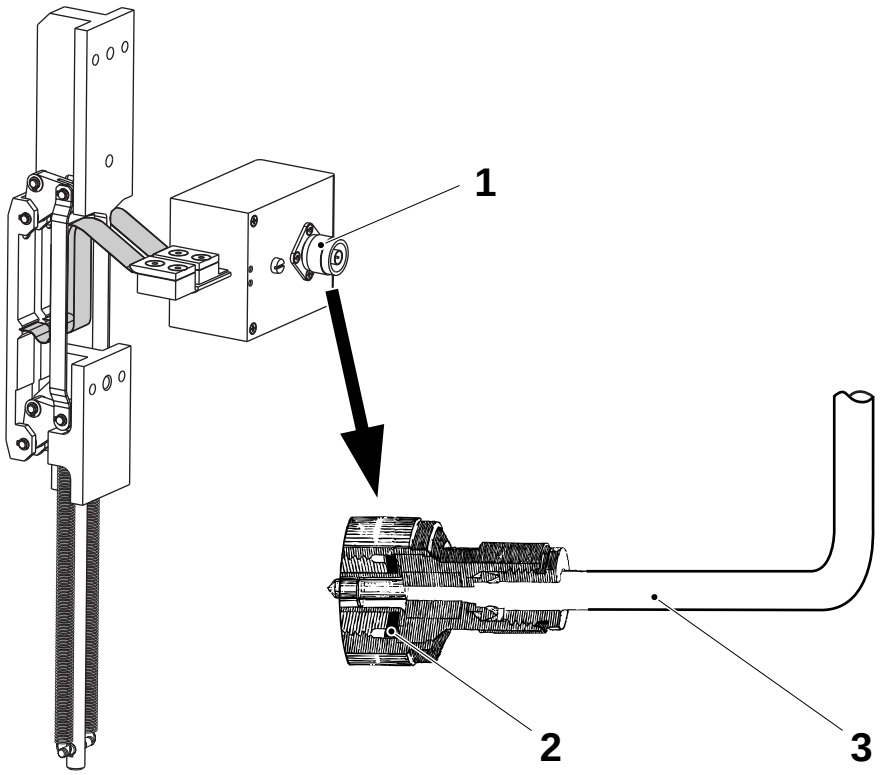

1 Coaxial connector
2 Rubber gasket
3 Coaxial cable

MM2.21TS100446en.fm

8.2.2-2 Litz cables - check

Machine Status	
EM reference	

Check that the connection points between the busbar (1) and the litz cable (2), and between the impedance transformer (3) and the litz cables (2) are undamaged, if required change.

See chapter 5 for change of the busbar.

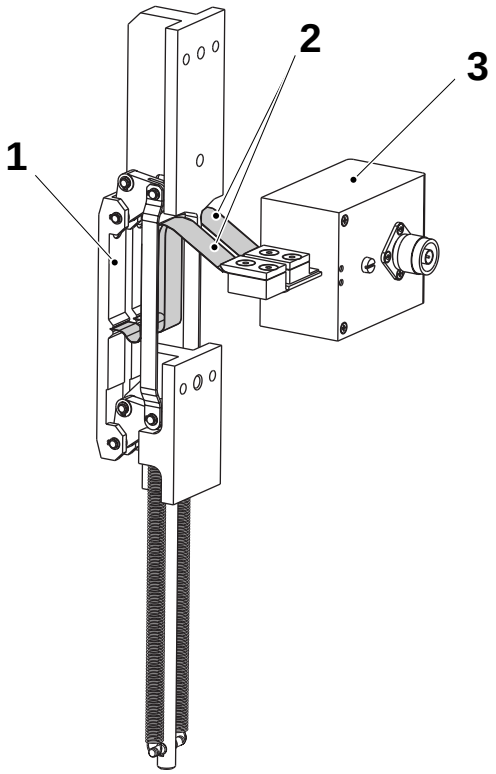

1 Busbar
2 Litz cable
3 Impedance transformer

MM2.21TS100446en.fm

8.2.2-3 TPIH cables - change impedance transformer

Machine Status	
EM reference	

Remove the coaxial cable (4). Disconnect the litz cable (1) by loosening the screws (2). Loosen the screw (5) and remove the impedance transformer (3).

Assemble in the reverse order.

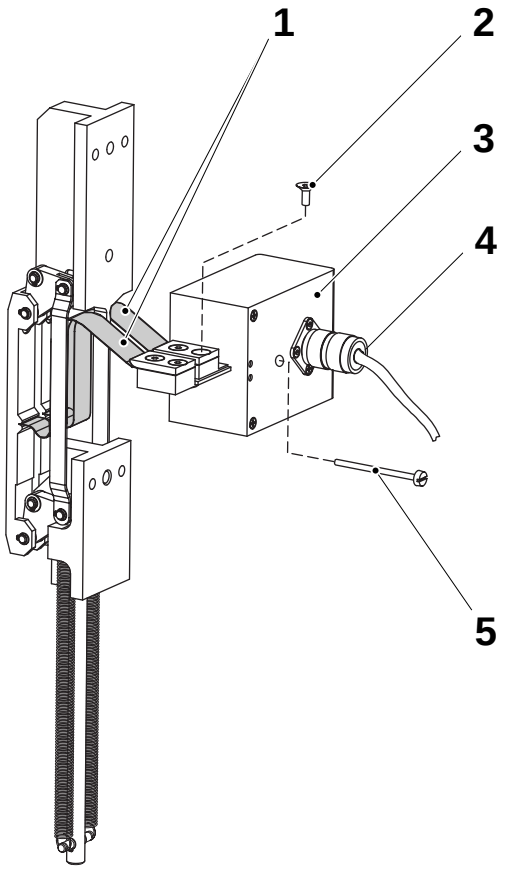

1 Litz cable
2 Screw
3 Impedance transformer
4 Coaxial cable
5 Screw

MM2.21TS100446en.fm

8.2.4 TPIH TS power

8.2.4-1 TPIH TS power - set

Machine Status	
EM reference	

Basic setting

Set the power value for side 1 and side 2 TS with the potentiometers (1) and (2) according to the table.

Potentiometer (1) regulates side 1 and potentiometer (2) side 2.

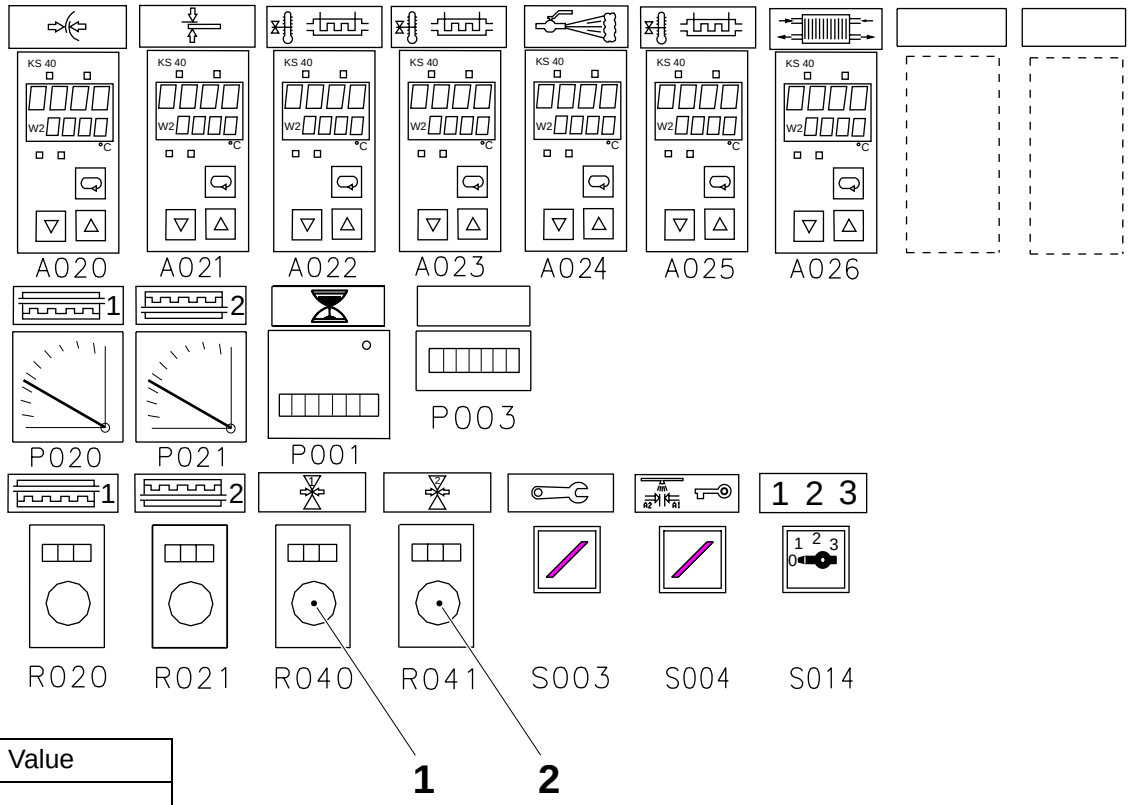

Package	Value
65	
150S	760
200B	790

1 Potentiometer, side 1 TS power
2 Potentiometer, side 2 TS power

Final setting

In **Production**, evaluate the TS sealing; see *OM*, Package checks.
If required, fine set the potentiometers.

MM2.21TS100446en.fm

8.2.5 TPIH test instrument

EM reference	

8.2.5-1 TPIH test instrument - description

Machine Status	
Tools - test instrument	TP No. 68462
EM reference	

The TPIH test instrument is used to check the available output power from the TPIH generator as well as the condition of the coaxial cable, the impedance transformer, the busbar and the inductor.

Connect it in series with the coaxial cable from the generator.

The test instrument can be used for direct measurement of the following parameters:

- HF voltage
- HF current
- phase shift voltage/current
- pulse duration

The results of these measurements can be used to calculate the available HF power.

One 9V battery is used for the instrument and an automatic power-off function minimises battery consumption.

A test output permits connection of a printer, such as a Brush recorder. Print-out of the HF voltage, HF current and the phase shift as a function of time are possible.

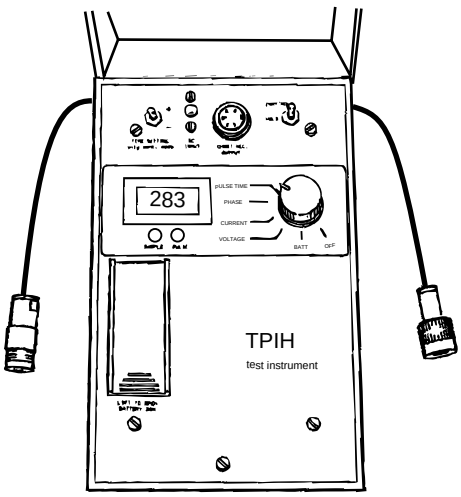

MM2.21TS100446en.fm

8.3 PLC

8.3-1 PLC - change battery

Machine Status	Main Power ON
Consumables - battery	TP No.90031-301
Tools - needle nose pliers	
SPC reference	

Alternative with one cable connector

Note! For alternative with two cable connectors (1), see the *Alternative with two cable connectors* section.

When the battery signal lamp (2) lights up, the battery (3) must be changed.

a) Remove the battery cover (4).

Note! The battery replacement must be completed within 20 minutes or else the RAM memory might be erased.

b) Remove the battery (3) from the mounting clips (5).

c) Firmly attach the clips to the new battery.

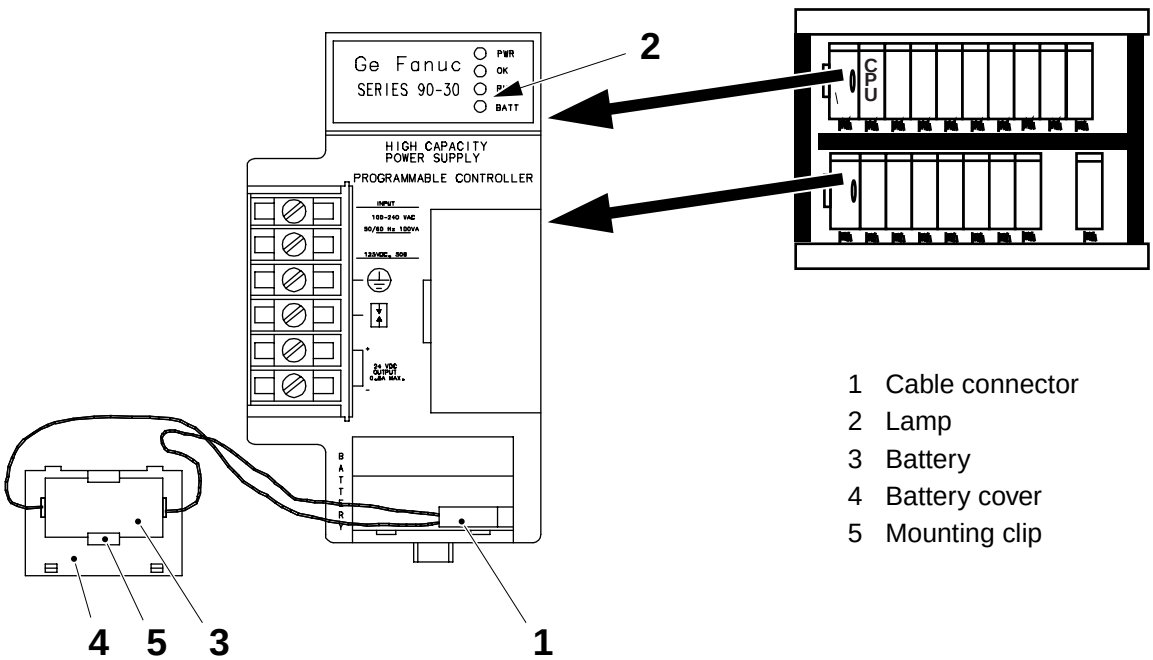

1 Cable connector
2 Lamp
3 Battery
4 Battery cover
5 Mounting clip

(Cont'd)

MM2.21TS100446en.fm

(Cont'd)

Caution! **Handle the old battery in a safe way!**
The battery contains harmful substances and must not be thrown away in nature. Hand it in to the nearest recycle centre. Do not burn lithium batteries. Do not try to recharge lithium batteries.

d) Disconnect the cable connector (1) of the old battery and discard the battery.

e) Carefully insert the cable connector (1) of the new battery (3) into the contact (6) with the aid of needle nose pliers.

f) Fit the battery cover (4).

g) Repeat items from *a)* to *e)* for the other power supply units (7).

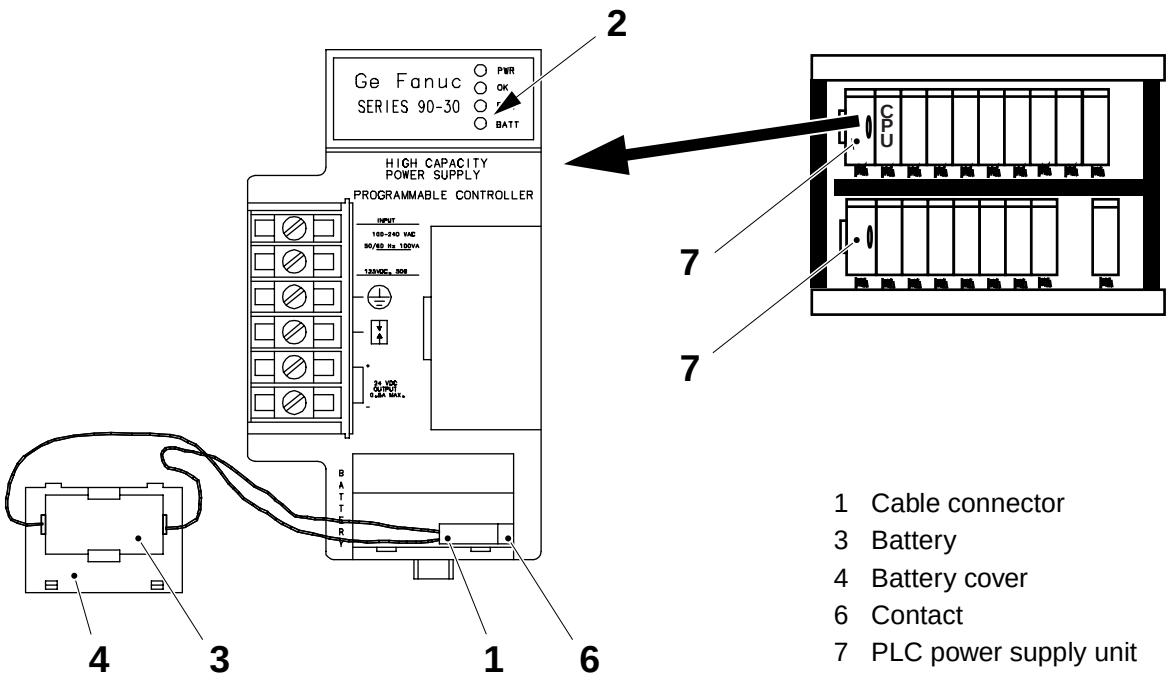

1 Cable connector
3 Battery
4 Battery cover
6 Contact
7 PLC power supply unit

MM2.21TS100446en.fm

(Cont'd)

(Cont'd)

Alternative with two cable connectors

Note! For alternative with one cable connector (1), see the *Alternative with one cable connector* section.

When the battery signal lamp (2) lights up, the battery (3) must be changed.

a) Remove the battery cover (4).

b) **First** fit the cable of the new battery on the unused cable connector (1) with the aid of needle nose pliers.

Caution! **Handle the old battery in a safe way!**
The battery contains harmful substances and must not be thrown away in nature. Hand it in to the nearest recycle centre. Do not burn lithium batteries. Do not try to recharge lithium batteries.

c) **Secondly** remove the old battery cable and remove the battery from its mounting clip (5). Discard the old battery.

d) Firmly insert the new battery into the mounting clip.

e) Fit the battery cover.

f) Repeat items from *a)* to *e)* for the other PLC power supply units (6).

MM2.21TS100446en.fm

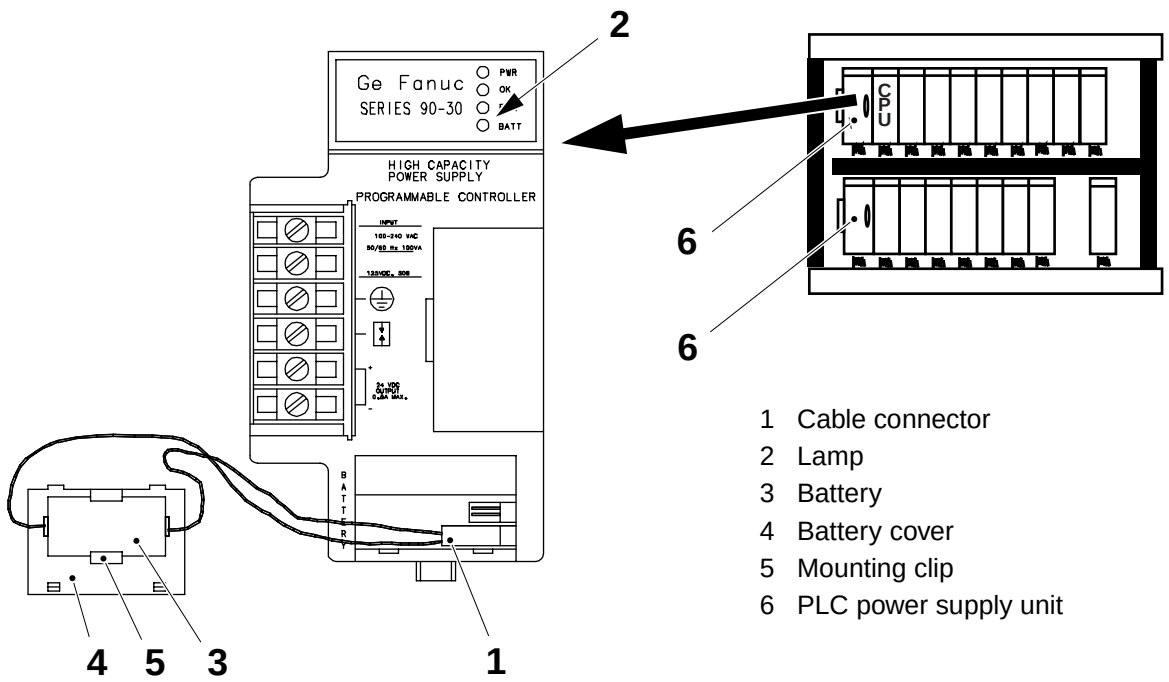

1 Cable connector
2 Lamp
3 Battery
4 Battery cover
5 Mounting clip
6 PLC power supply unit

8.3-2 PLC - change module

Machine Status	
SPC reference	

To change the I/O (Input/Output) modules or the CPU module (Central Processing Unit), do the following:

If I/O module: Remove the terminal (4) according to procedure 8.3-3 PLC - change terminal on page 403.
Follow the items *a)* - *h)* below.

If CPU module: Follow the instructions below.

a) Grip the upper section of the module (6) firmly.

b) Push the catch (7) on the underside of the module upwards, and tilt the module outwards.

c) Let go off the catch.

d) Pull the entire module upwards so that the hook is disengaged from the groove (2) in the base plate (1).

e) Replace the module with a new one.

f) Hold the new module with the hooks (3) facing away from you.

g) Place the module in front of the contact concerned and tilt it upwards so that the upper hook (3) at the back of the module engages the groove in the base plate (1).

h) Press the module (6) down, until the catch (7) engages the base plate (1).

On the **I/O module**: Fit the terminal (4) back again. See procedure 8.3-3 PLC - change terminal.

MM2.21TS100446en.fm

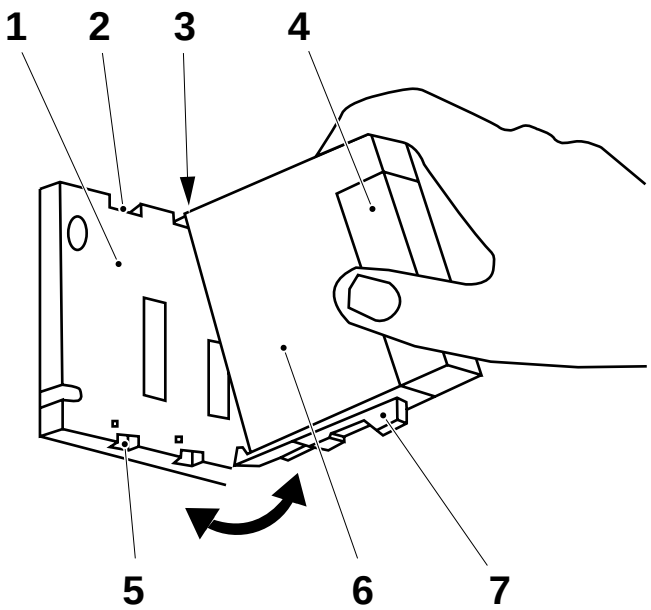

1 Base plate
2 Upper groove in base plate
3 Upper hook at the back of the module
4 Terminal (only I/O module)
5 Lower groove
6 Module
7 Catch

8.3-3 PLC - change terminal

Machine Status	

a) Switch OFF mains power.

b) Open the terminal (3) hatch.

c) Push the catch (2) upwards.

d) The entire terminal block now tilts outwards a little.

e) Grasp the handle (4) and pull it towards you until the terminal contacts have been disengaged from the module.

f) The catch has now been released and the entire terminal can be removed.

g) Change the terminal.

h) Hold the new terminal with the hatch towards you and the hook (5) on the back of the terminal away from you.

i) Place the terminal in front of the module concerned and tilt it so that the hook engages the groove in the module.

j) Press the terminal against the module until the catch locks into the terminal.

MM2.21TS100446en.fm

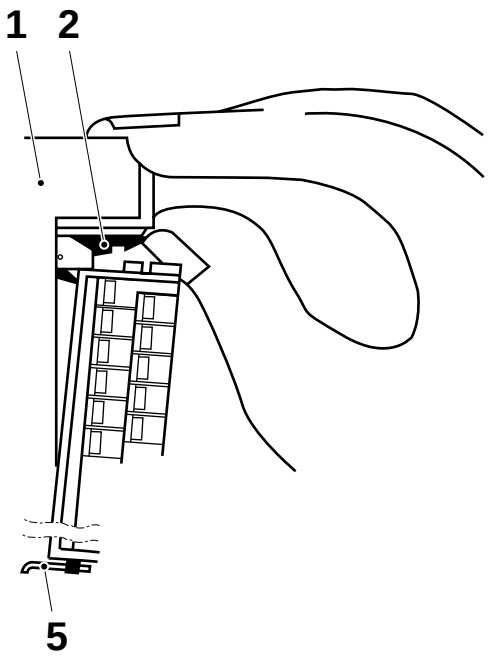

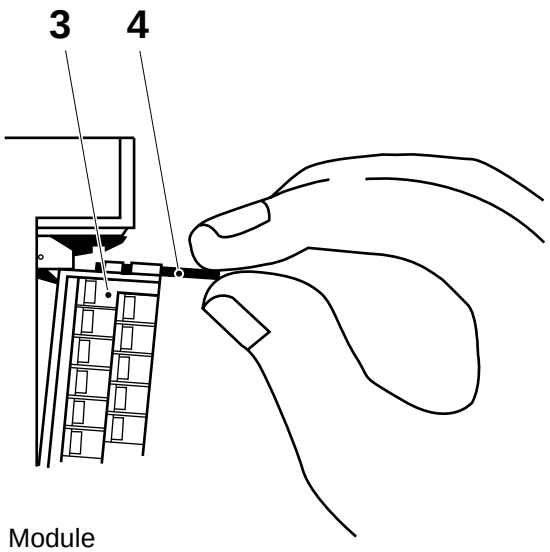

1 Module
2 Catch
3 Terminal
4 Handle
5 Hook

8.3-4 PLC - load program

Machine status	Main power **On**
Tools - communication cable - AT compatible PC with diskette station	RS 232 C
SPC reference	1350699-0200

Note! This instruction describes one way to load the PLC program from a diskette.

a) Remove the label and insert the memory protection key on the CPU. Turn the key in position **OFF no-protect**.

b) Connect the communication cable between the PC and the PLC.

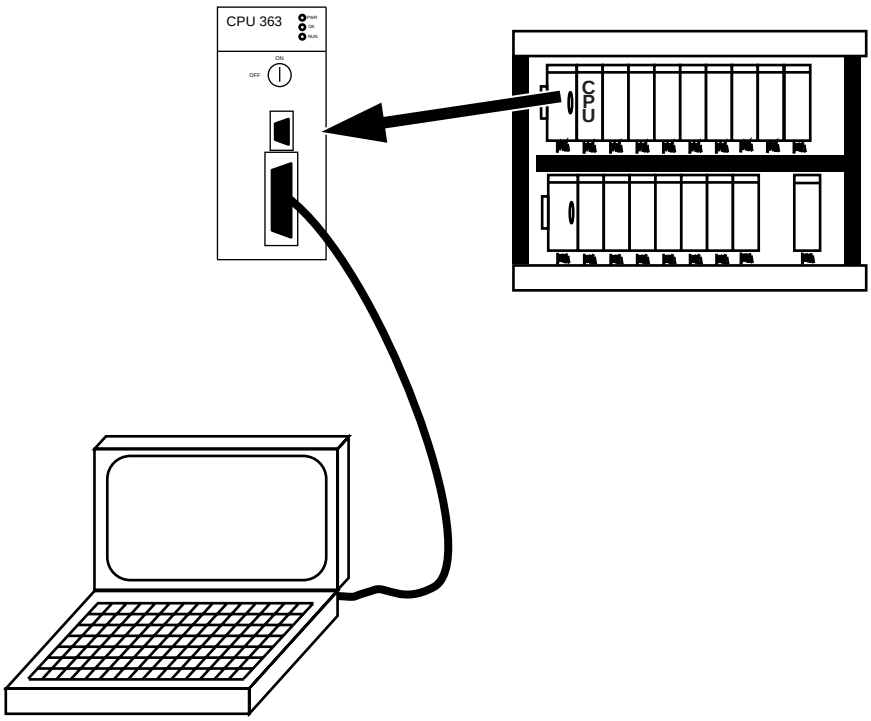

c) Start **LM90** to enter the GE Fanuc PLC (Logicmaster 90).

d) Insert the program diskette in drive **A**.

e) From the **Main menu**, press **F1... Logicmaster 90 Programmer Package**.

f) The **SELECT OR CREATE A PROGRAM FOLDER** menu will be displayed.

g) Type **A:** and press <**ENTER**>.

(Cont'd)

MM2.21TS100446en.fm

(Cont'd)

h) With the **Arrow** keys, select the program to be loaded (1) into the PLC (YYY is an example).

i) Press **<ENTER>**.

Note! If a program has been installed previously, the program name will appear in the **PLC program name** field (3).

j) Type **N** to answer “Folder found: back up its contents? (Y/N)”.

k) The **SERIES 90-30/90-20 PROGRAMMING SOFTWARE** menu will now be displayed.

l) Press **F9**... **Utility: Load/Store/etc**.

m) The **PROGRAM UTILITY FUNCTIONS** menu is displayed.

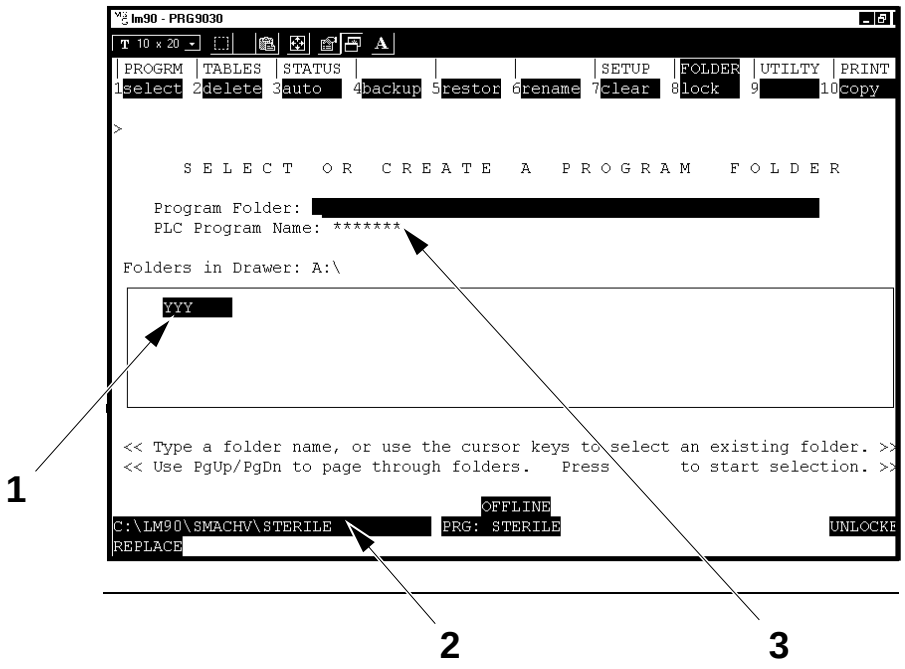

1 Program to be loaded (example)
2 Currently selected program folder (example)
3 PLC Program selected

(Cont'd)

MM2.21TS100446en.fm

(Cont'd)

n) Check that the status line (LM communication) shows **ONLINE** (8). If not, press **Alt + M** until the status line shows **ONLINE**.

o) Check that the status line (PLC status) shows **STOP** (7). If not, press **Alt + R** until the status line shows **STOP**.

p) Check that the status line shows **LOGIC NOT EQ** (9).

Note! If the status line shows **LOGIC EQUAL**, there is no need to load the program.

q) Press **F2... Store from Programmer to PLC**.

r) Select Y/N for the information to be stored (normal case).

- Program logic (4), Y.
- Configuration (5), Y.
- Reference tables (6), N.
- Press **<ENTER>** to store.

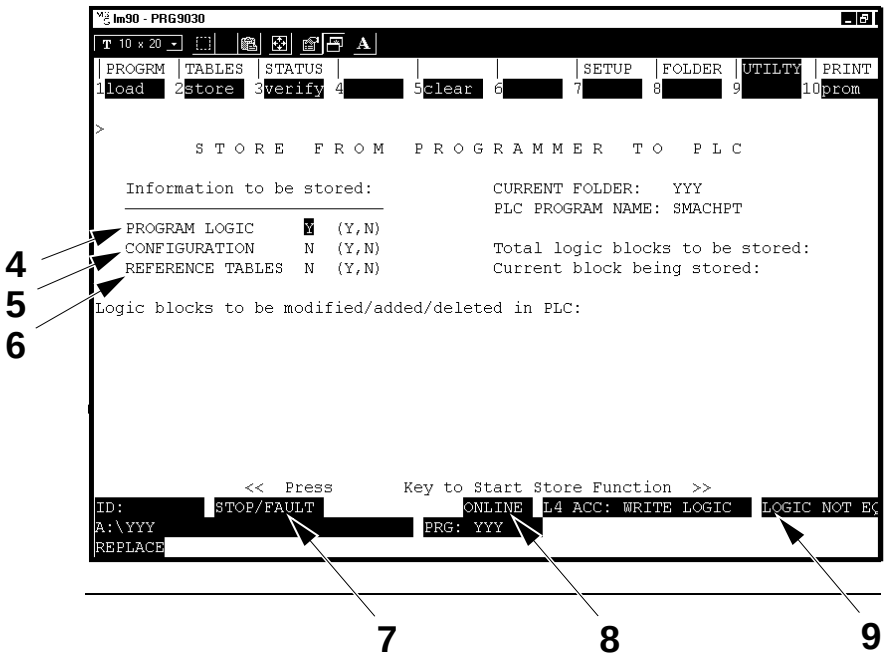

4 Program logic
5 Configuration
6 Reference tables
7 CPU status (STOP)
8 Connection mode status (ONLINE)
9 Program logic status (LOGIC NOT)

(Cont'd)

MM2.21TS100446en.fm

(Cont'd)

s) Type **Y** to answer “Program name in PLC does not match program name in folder; continue? (Y/N)”.

t) Type **Y** to answer “Selected items will be over-written; continue store in PLC? (Y/N)”. (Any other key will be taken as N).

u) When **Store complete** is displayed, the status line (9) should state **LOGIC EQUAL**.

v) Press **Alt + R** until the status line shows **RUN** (7).

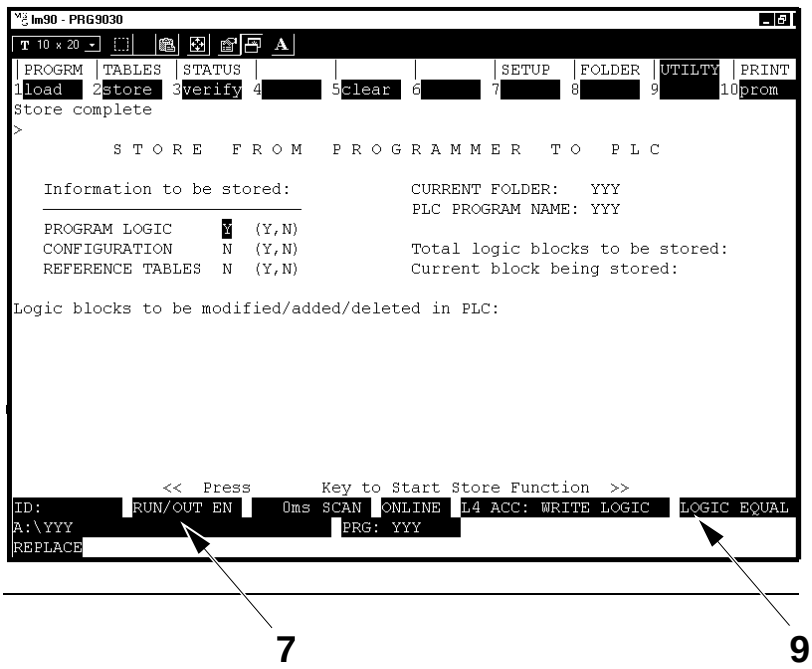

7 CPU status (RUN)
9 Program logic status (LOGIC EQ)

w) Press **<ESC>** and type **Y** to answer “Exit Logicmaster 90 Programmer Package? (Y/N)”.

x) The program load is ready.

y) Remove the memory protection key from the CPU and place a new label.

MM2.21TS100446en.fm

8.3-5 PLC - print program

Machine Status	Main Power ON
SPC reference	1350699-0200

The following setup will give a printout in portrait and compressed text. Be very careful when typing in the leading and trailing statements. It is very important to use upper and lower case correct.

The setting is valid for HP Laser Jet III but it might work on other printers, if not see your printer manual for the right printer codes.

a) Press **F1** for the Programming Package.

b) Press **F10** for the Print Functions.

c) Press **F1** for Setup Printer Parameters.

d) Select the parameters as follows.

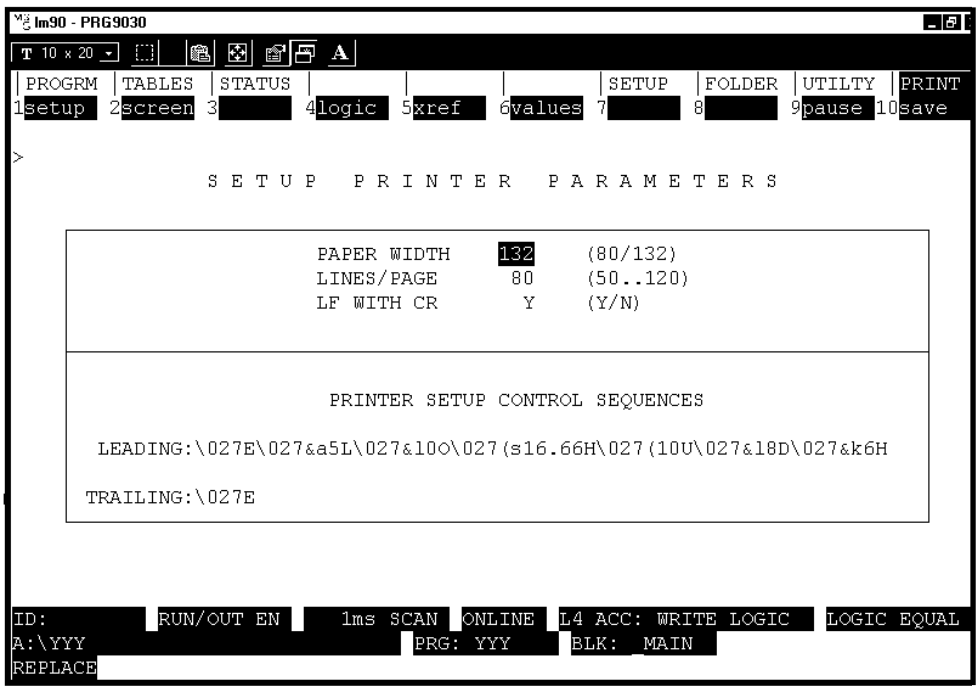

MM2.21TS100446en.fm

Description of printer codes	
\027E	Reset printer
\027&a5L	Left margin, # of columns (5)
\027&I5C	Vertical Motion Index, # of 1/48 Inch increments (5)
\027(10U	Primary Symbol Set, (PC-8)
\027(s20H	Primary Pitch, # of Characters / Inch (20)
\027(s4102T	Typelace Family, Letter Gothic

(Cont'd)

(Cont'd)

e) Press **<ESC>** button to come back to LH90 main menu.

f) Press **F4** for Print Program Logic.

g) Select the options as follows.

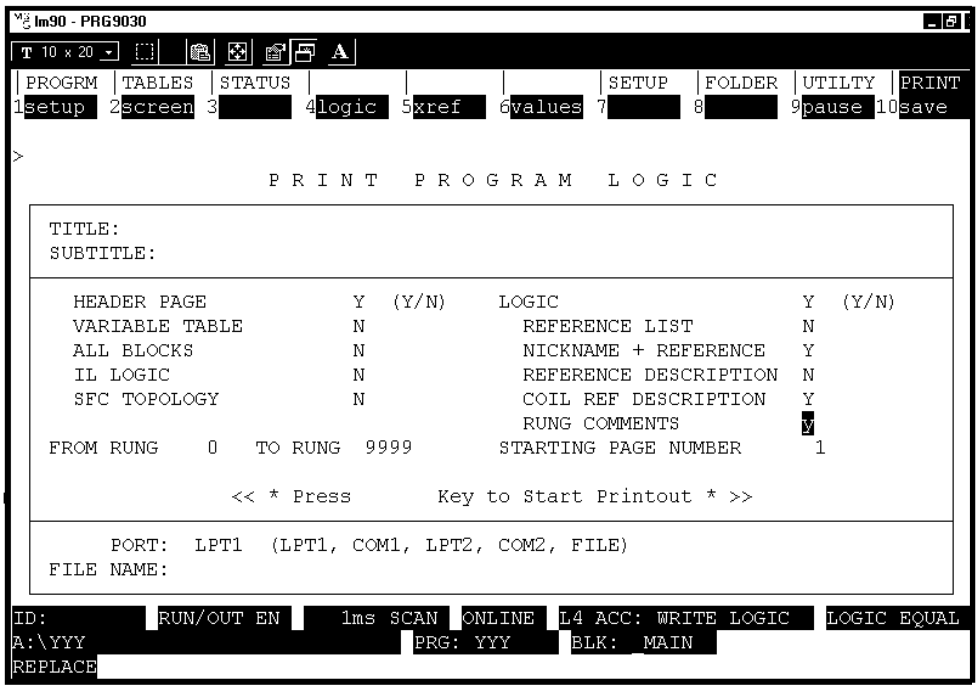

h) Press **<ENTER>** to start print out.

MM2.21TS100446en.fm

8.4 PLMS

8.4-1 PLMS - function description

Machine Status	
SPC reference	

PLMS (Packaging Line Monitoring System) is a system for collecting data from filling machines and production lines.

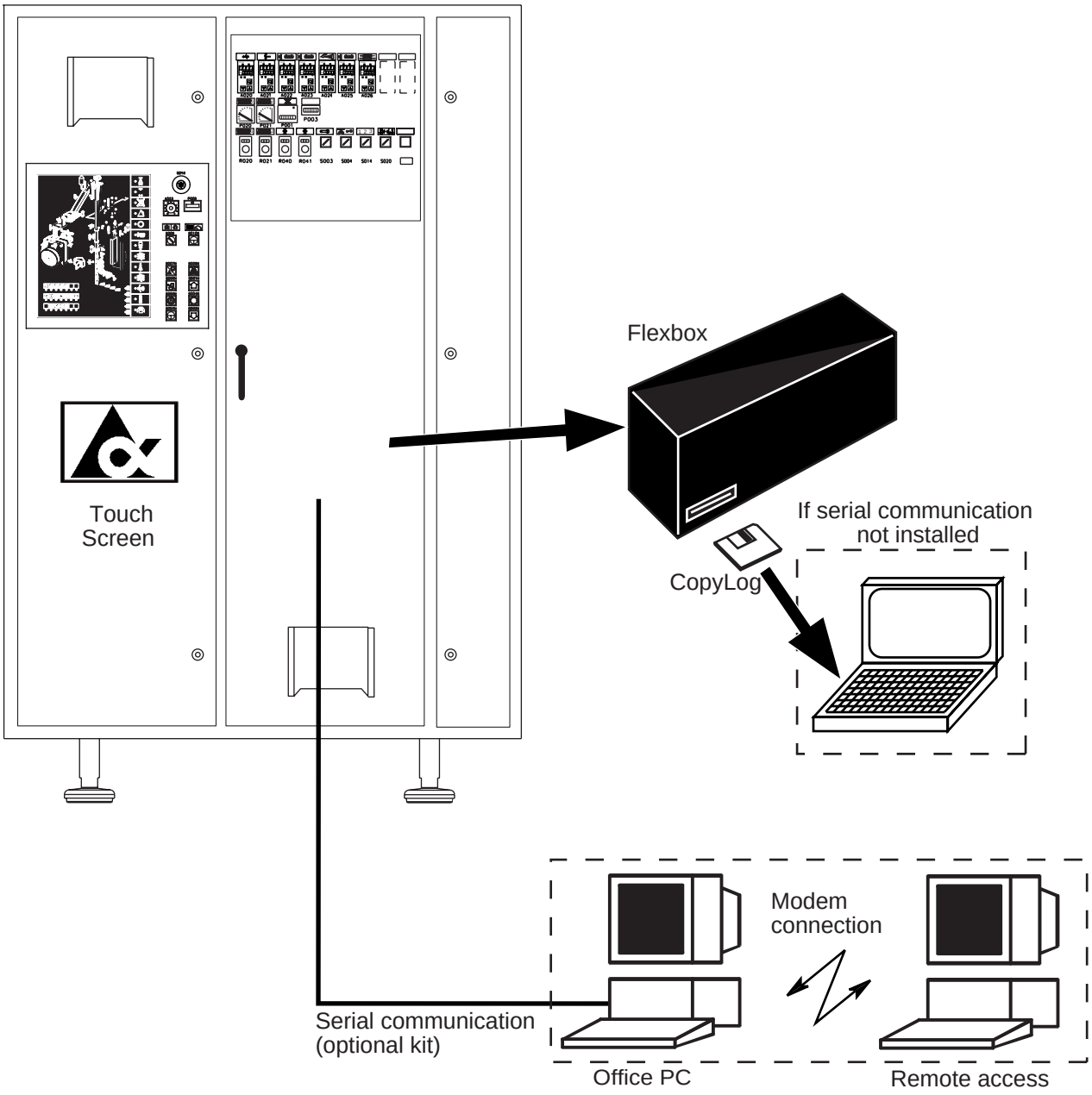

MM2.21TS100446en.fm

8.4-2 PLMS - copy data

Machine Status	
SPC reference	

To analyze data collected by the system, the data must first be copied to a PC. There are two possible methods:

- direct communication between the filling machine and a PC using the Serial Communication kit (if installed). See the *PLMS Send and Receive User Manual* for the copying procedures.
- manually copying the data by using a floppy disk.

This section **only** describes how to manually copy the data.

The copied data can be analyzed on a PC utilizing the PLMS Off-Line Analysis program. For more information, see *PLMS Off-Line Analysis User Manual*.

It is possible to copy data for different purposes:

- data files in DBF format. Collected events to be analyzed with the PLMS Off-Line Analysis program or any program with the possibility to read database files in DB4 format.
- data files in BIN format. Collected events to be analyzed with the PLMS Off-Line Analysis program.
- PLMS Config files with the configuration of the filling machine for all available languages.

(Cont'd)

MM2.21TS100446en.fm

(Cont'd)

Copy DBF files

Open the lower right electrical cabinet door and insert a 1.44 Mb formatted floppy disk in the floppy disk drive.

Note! Ensure the disk is empty and not write protected.

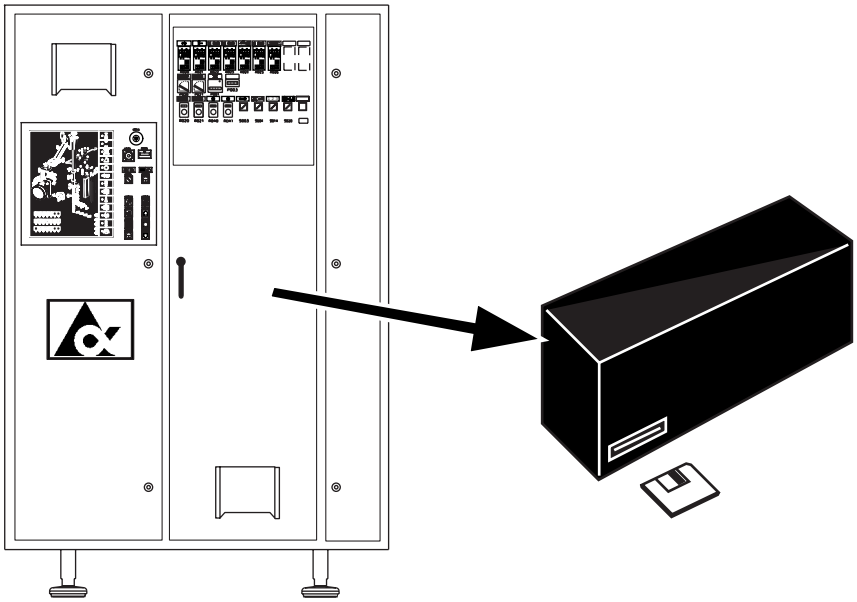

a) Touch the **Collect system** button (1).

b) Touch the **Copy log** button (2).

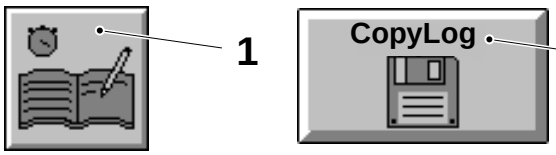

1 Collect system button
2 Copy log button

(Cont'd)

MM2.21TS100446en.fm

(Cont'd)

Note! **Copylog starting date** (3) is set by default to the last downloading date. **Copylog ending date** (4) is set by default to the date of yesterday.

c) Touch the **OK** button (5) to download the following files:

- evntcode.dbf
- plmsdata.dbf
- TCA/P1.p00 - PLMS config in English
- (TCA/P1.p** - PLMS config file of the selected language, if different than English).

Note! Do **not** press the **Lamp test** button on the control panel during operation, if flashing!



Note! The starting date is automatically updated after the data log is copied.

MM2.21TS100446en.fm

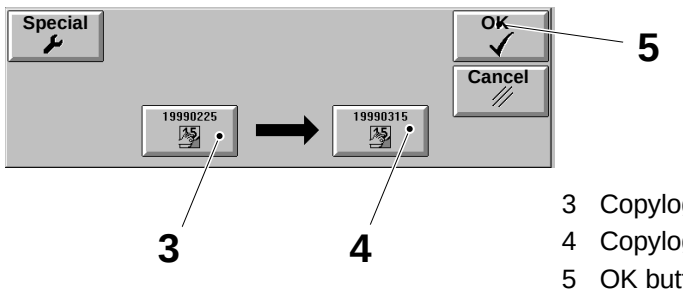

3 Copylog starting date button
4 Copylog ending date button
5 OK button

Changing the Copylog start/end date

To download the data files from a different period of time, follow the instructions below.

a) Touch the **Special** button (6).

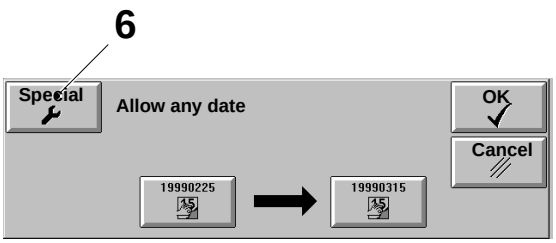

6 Special button

(Cont'd)

(Cont'd)

b) Touch the **Copylog starting date** button (3).

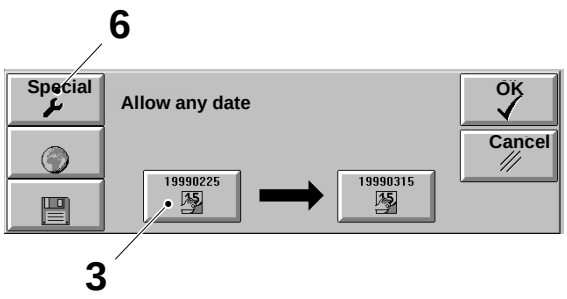

3 Copylog starting date button
6 Special button

c) Enter the starting date with the **Arrow** buttons.

d) Touch the **OK** button (5).

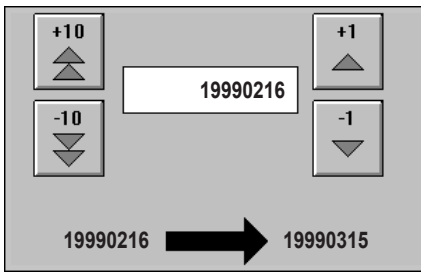

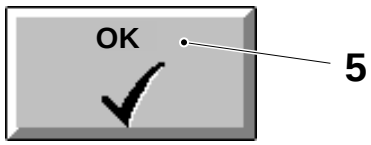

5 OK button

e) Touch the **Copylog ending date** button (4).

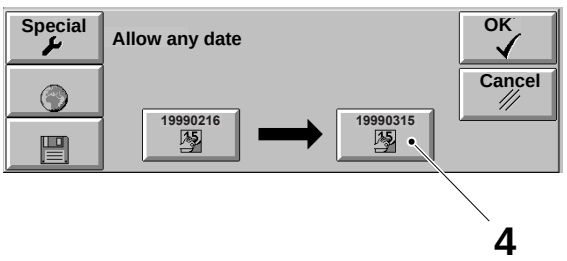

4 Copylog ending date button

f) Choose the correct ending date with the **Arrow** buttons.

g) Touch the **OK** button (5).

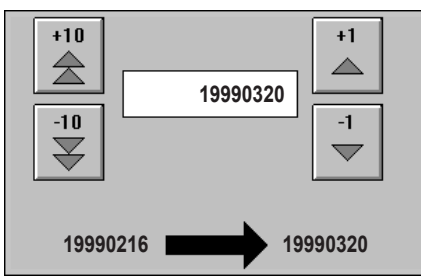

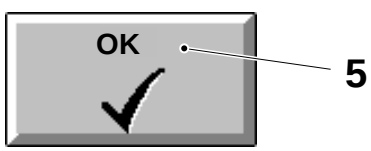

5 OK button

(Cont'd)

MM2.21TS100446en.fm

(Cont'd)

h) Touch the **OK** button (5) to start copying

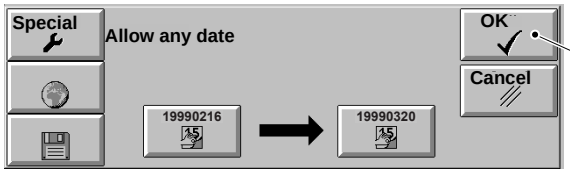

5 OK button

Note! Do **not** press the **Lamp test** button on the control panel during operation, if flashing!



The following icons will be displayed on the screen. Perform a suitable action

Icon	Meaning	Action
	The flashing arrow indicates that the copying procedure is in progress.	**Wait**
	Successful copy procedure	Touch the **Close** button (8) and remove the floppy disk
	Failed copy procedure Check that the floppy disk is: -inside the floppy disk drive -correctly formatted -not write protected -not full.	Touch the **Close** button (8) and repeat the procedure
	Failed copy procedure Check that not too many days are selected (too many days could cause a data overflow on the floppy disk)	Touch the Close button (8) and repeat the procedure with fewer days as a period of time

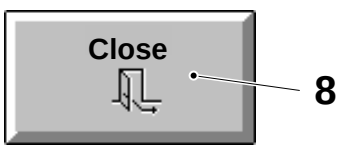

8 Close button

(Cont'd)

MM2.21TS100446en.fm

(Cont'd)

Copy BIN files

a) Touch the **Special** button (1).

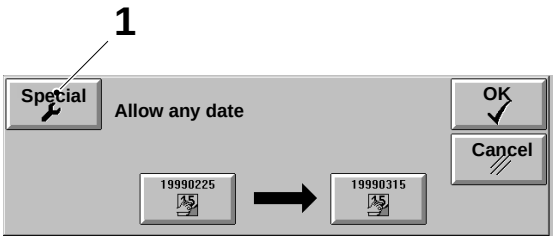

1 Special button

Note! The **Copylog starting date** button (3) is set by default to the last downloading date.
The **Copylog ending date** button (4) is set by default to the date of yesterday.

b) Touch the **Bin files** button (9) to start downloading the following files:

- TCA/P1.p00. PLMS config in English.
- (TCA/P1.p** for config file on the selected language, if different than English)
- the files *.bin for the selected period of time.

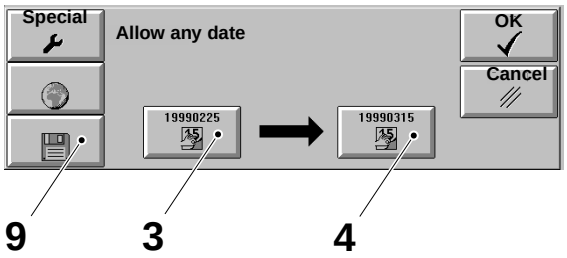

3 Copylog starting date button
4 Copylog ending date button
9 Bin files button

Note! Do **not** press the **Lamp test** button on the control panel during operation, if flashing!



Note! The starting date is automatically updated every time the data log is copied.

(Cont'd)

MM2.21TS100446en.fm

(Cont'd)

The following icons will be displayed on the screen. Perform a suitable action

Icon	Meaning	Action
	The flashing arrow indicates that the copying procedure is in progress.	**Wait**
	Successful copy procedure	Touch the **Close** button (8) and remove the floppy disk
	Failed copy procedure Check that the floppy disk is: -inside the floppy disk drive -correctly formatted -not write protected -not full.	Touch the **Close** button (8) and repeat the procedure
	Failed copy procedure Check that not too many days are selected (too many days could cause a data overflow on the floppy disk)	Touch the Close button (8) and repeat the procedure with fewer days as a period of time

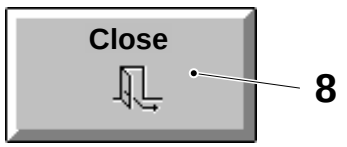

8 Close button

Copy PLMS Config files

a) Touch the **Special** button (1).

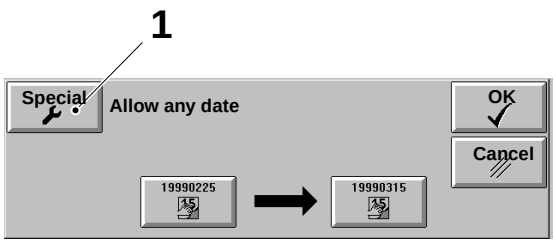

1 Special button

(Cont'd)

MM2.21TS100446en.fm

(Cont'd)

b) Touch the **World** button (10) to start copying all the PLMS config files TCA/P1.p** for all available languages.

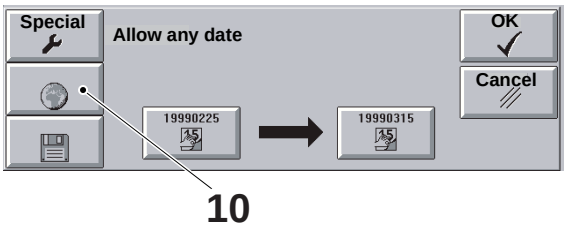

10 World button

The following icons will be displayed on the screen. Perform a suitable action

Icon	Meaning	Action
	The flashing arrow indicates that the copying procedure is in progress.	**Wait**
	Successful copy procedure	Touch the **Close** button (8) and remove the floppy disk
	Failed copy procedure Check that the floppy disk is: -inside the floppy disk drive -correctly formatted -not write protected -not full.	Touch the **Close** button (8) and repeat the procedure

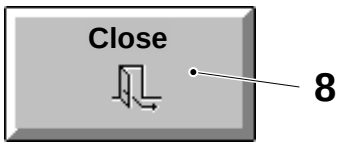

8 Close button

MM2.21TS100446en.fm

9 Supply system

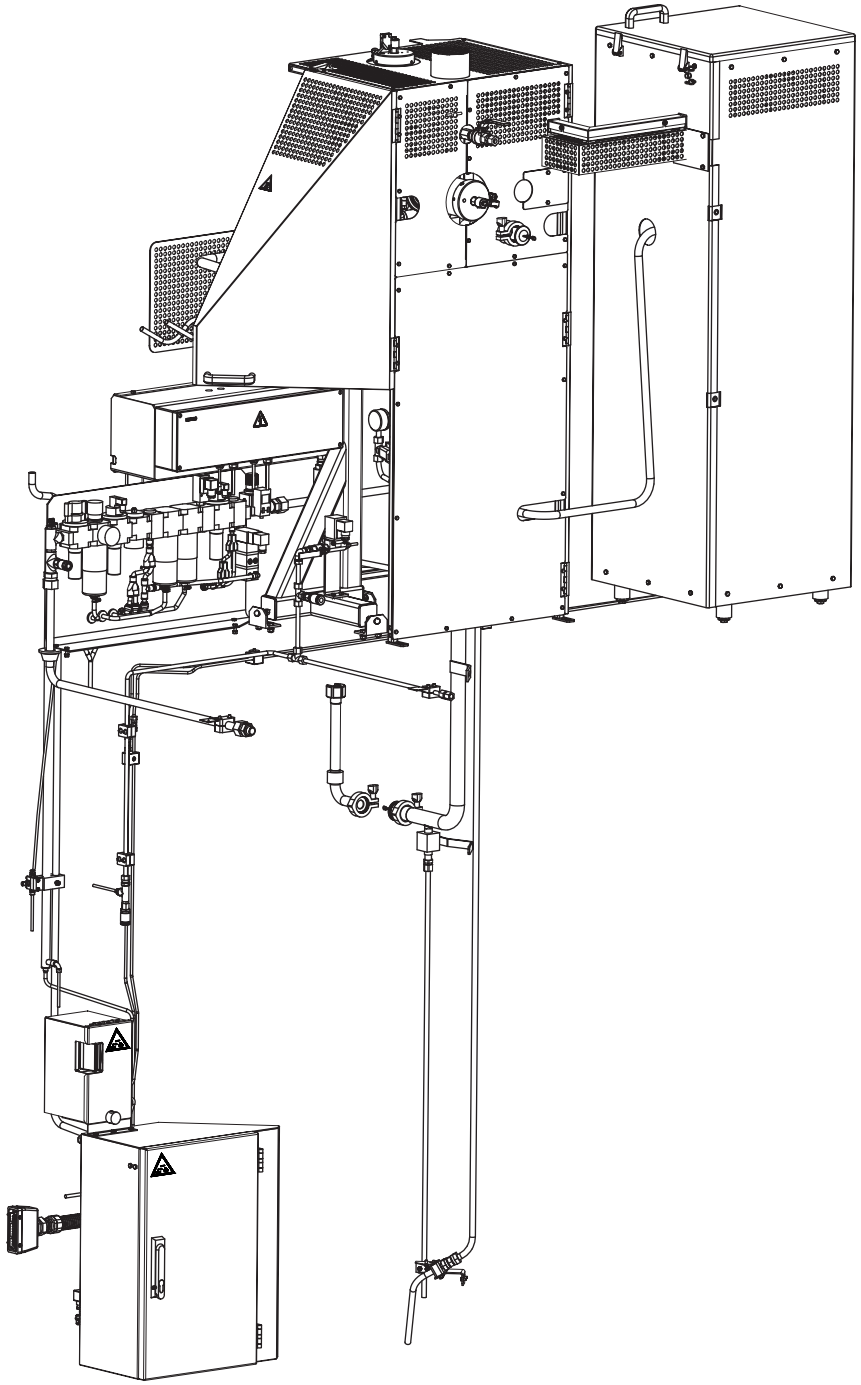

MM2.21TS100447en.fm

9-1 Supply system - description

SPC reference	630409-0200

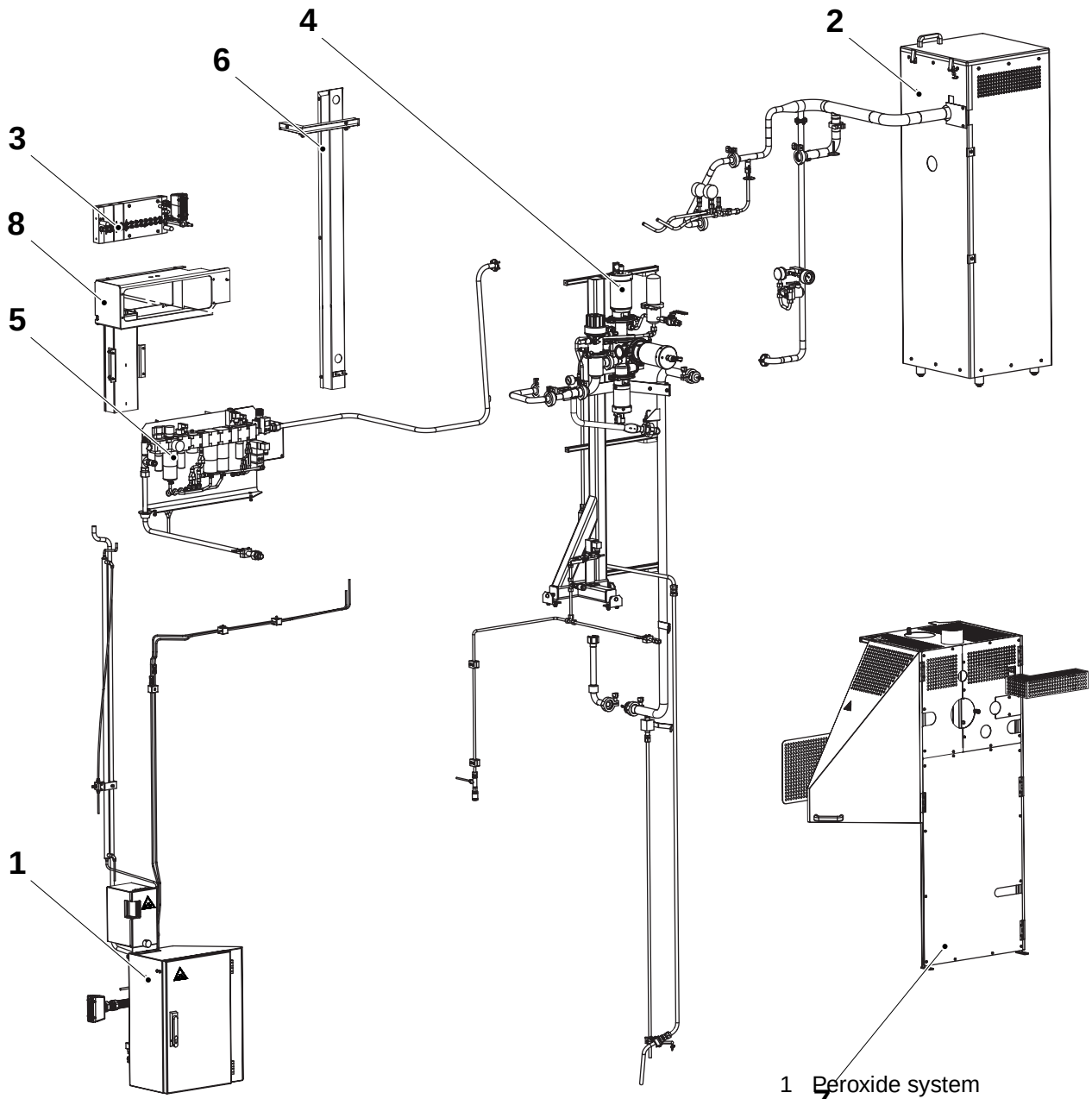

1 Peroxide system
2 Sterile air system
3 Valve ramp
4 Filling unit
5 Air unit
6 Cable trays supply sys.
7 Cover
8 Connection box

MM2.21TS100447en.fm

9.1 Peroxide system

SPC reference	2542850

9.1.1 Pump unit

SPC reference	2542930

9.1.1-1 Pump unit - check

Machine Status	
SPC reference	

WARNING! **Risk of corrosion.**
Hydrogen peroxide. Follow the *Safety Precautions*.

Check the hoses (1) and (2) for:

- condition
- leakage

Change the hoses if required.

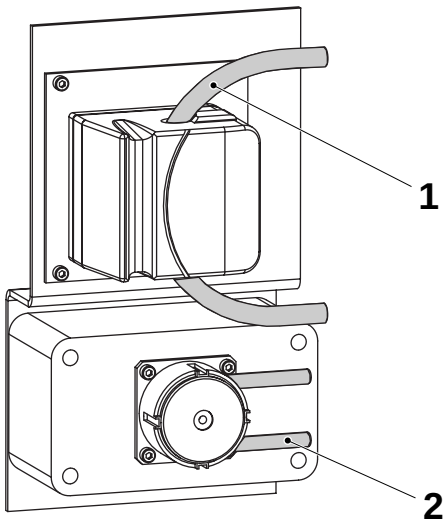

1 Peroxide bath hose
2 Peroxide spray pump hose

MM2.21TS100447en.fm

9.1.1-2 Peroxide unit - change hoses

Machine Status	
SPC reference	2542930

WARNING! **Risk of corrosion.**
Hydrogen peroxide. Follow the *Safety Precautions*.

Peroxide bath pump:

- Open the door (3) for the peroxide pumps. Fold out the handle (7) remove the hose clips (2) replace the hose (1).
- Check that no folds appear when fitting the new hose

Spray pump:

- Open the door (3) for the peroxide pumps. Remove the screws (6) and the hose clips (4). Replace the peristalic pump (5).

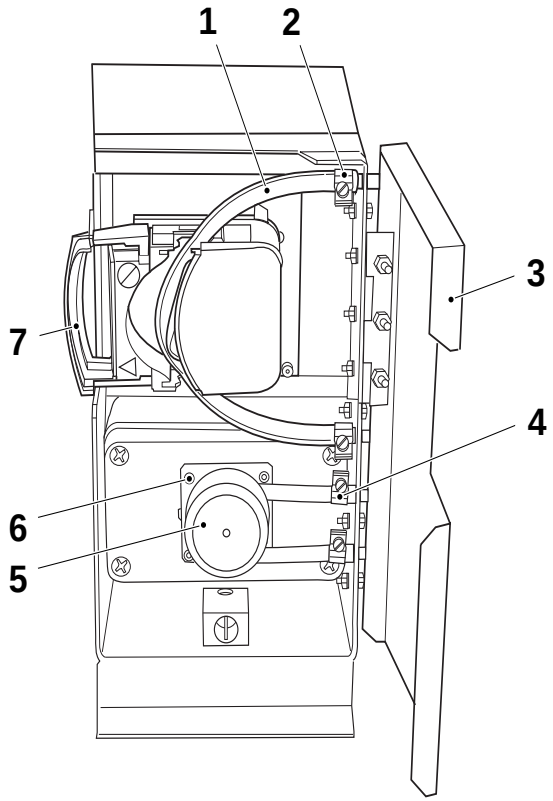

1 Hose
2 Hose clip
3 Door
4 Hose clip
5 peristalic pump
6 Screw
7 Handle

MM2.21TS100447en.fm

9.1.2 Peroxide system

SPC reference	2543045

9.1.2-1 Peroxide system - check

Machine Status	
SPC reference	

WARNING! **Risk of corrosion and intoxication.**
Hydrogen peroxide. Follow the *Safety Precautions*.

Check the hoses (1) and (2) for:

- condition
- leakage

Change the hoses if required.

Check the bottles (3) and (4) for:

- condition
- leakage
- Safety sign

Change the bottles and safety sign if required

MM2.21TS100447en.fm

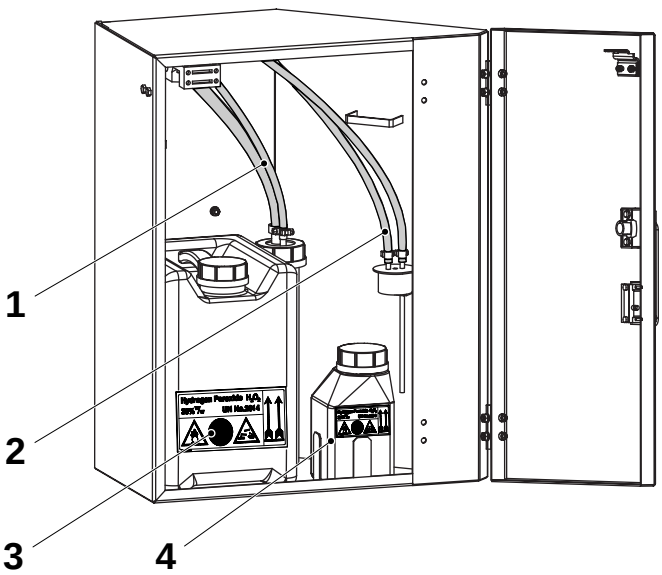

1 Peroxide bath hose
2 Peroxide spray pump hose
3 Peroxide bath bottle
4 Peroxide spray bottle
5 Safety sign

9.1.2-2 Peroxide system - set cooling water

Machine Status	
SPC reference	2543045

WARNING! **Risk of corrosion and intoxication.**
Hydrogen peroxide. Follow the *Safety Precautions*.

Adjust the cooling water on the regulating valve.

See technical data in OM, peroxide cooling water.

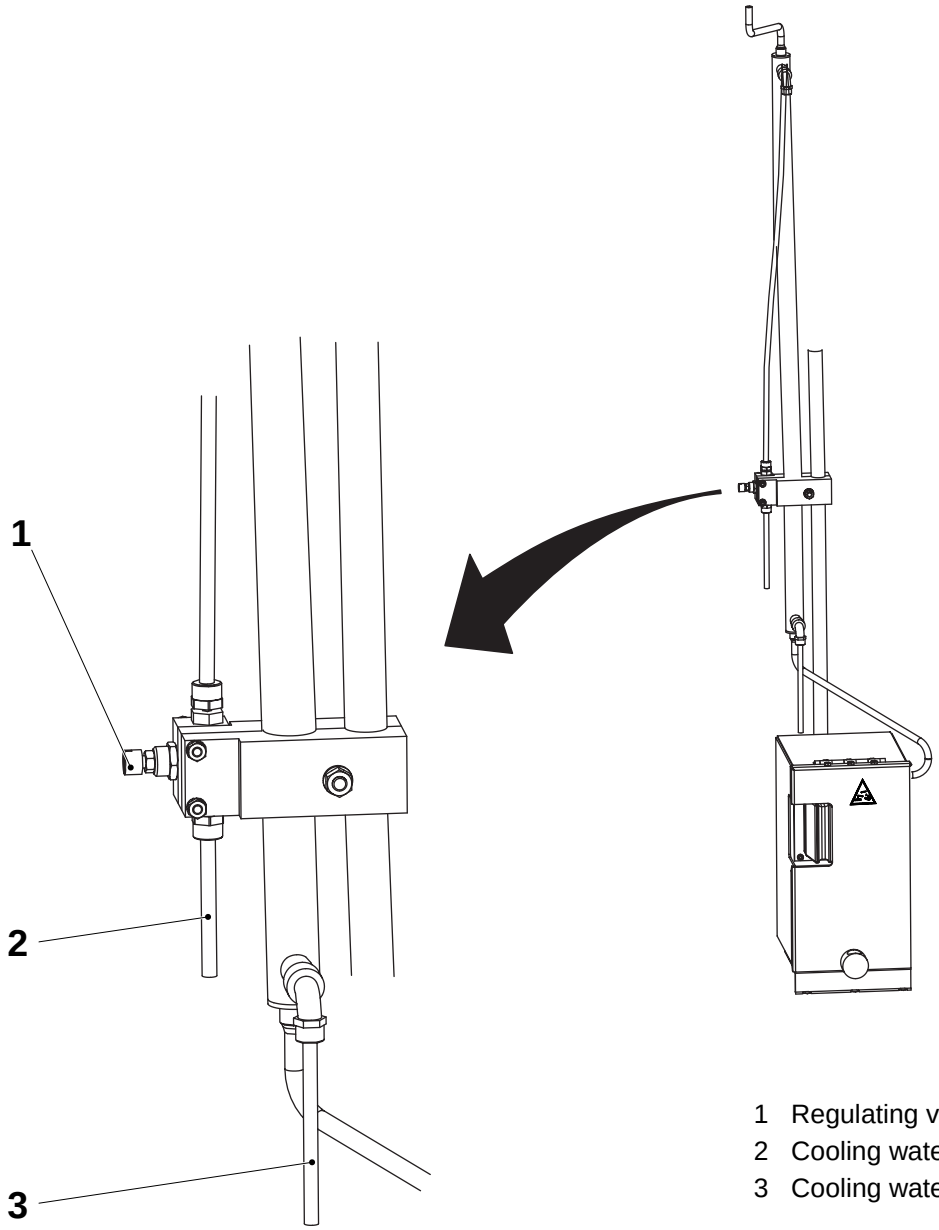

1 Regulating valve
2 Cooling water inlet
3 Cooling water outlet

MM2.21TS100447en.fm

9.2 Sterile air system

SPC reference	2542860

9.2-1 Sterile air system - check

Machine Status	
SPC reference	

WARNING! **Risk of corrosion.**
Hydrogen peroxide. Follow the *Safety Precautions*.

WARNING! **Risk of personal injury!**
Make sure that the machine is **not** pressurized and that the system has cooled down before loosening any connection.

Check for leakage at all connections.

Replace gaskets if required.

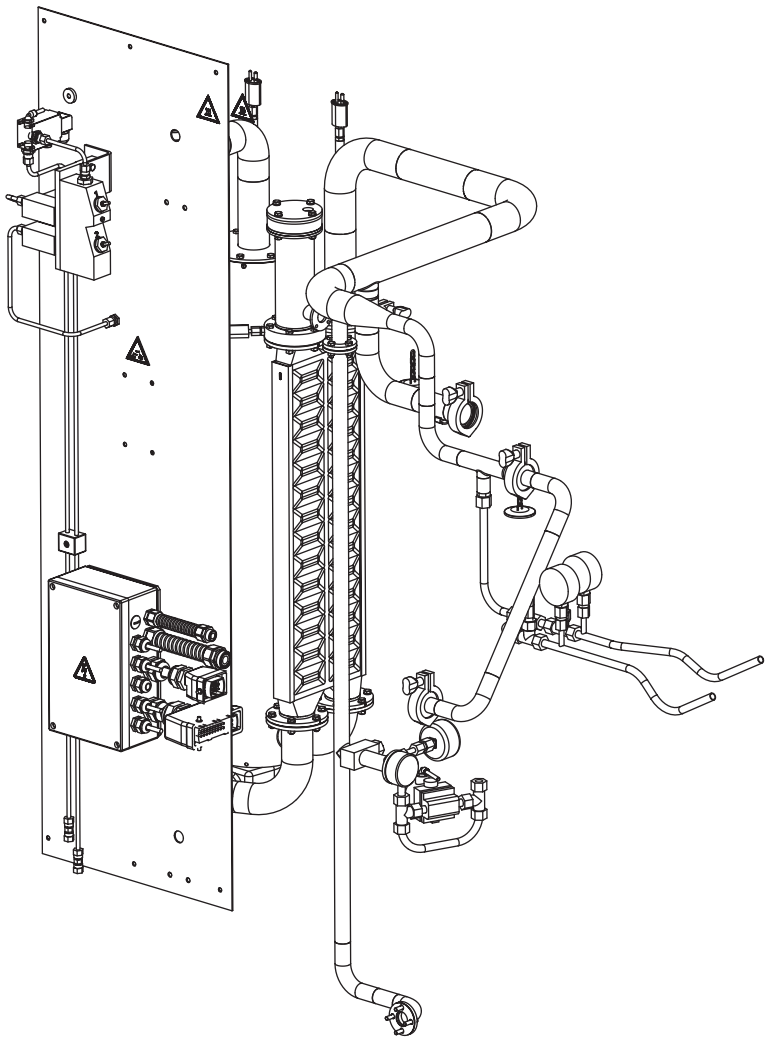

MM2.21TS100447en.fm

9.2-2 Sterile air system - check pressure

Machine Status	
SPC reference	2542860
Pressure gauge	0 -1 bar

Risk of corrosion.

WARNING! Hydrogen peroxide. Follow the *Safety Precautions*.

Risk of personal injury!

WARNING! Make sure that the machine is **not** pressurized and that the system has cooled down before loosening any connection.

Remove the thermocouple (1) and add a pressure gauge.

Check that the pressure is 0.2 bar when B-valve is closed.

Check that the pressure is 0.10 bar when B-valve is open.

If the pressure is out of value, check for leaked or damages on equipment.

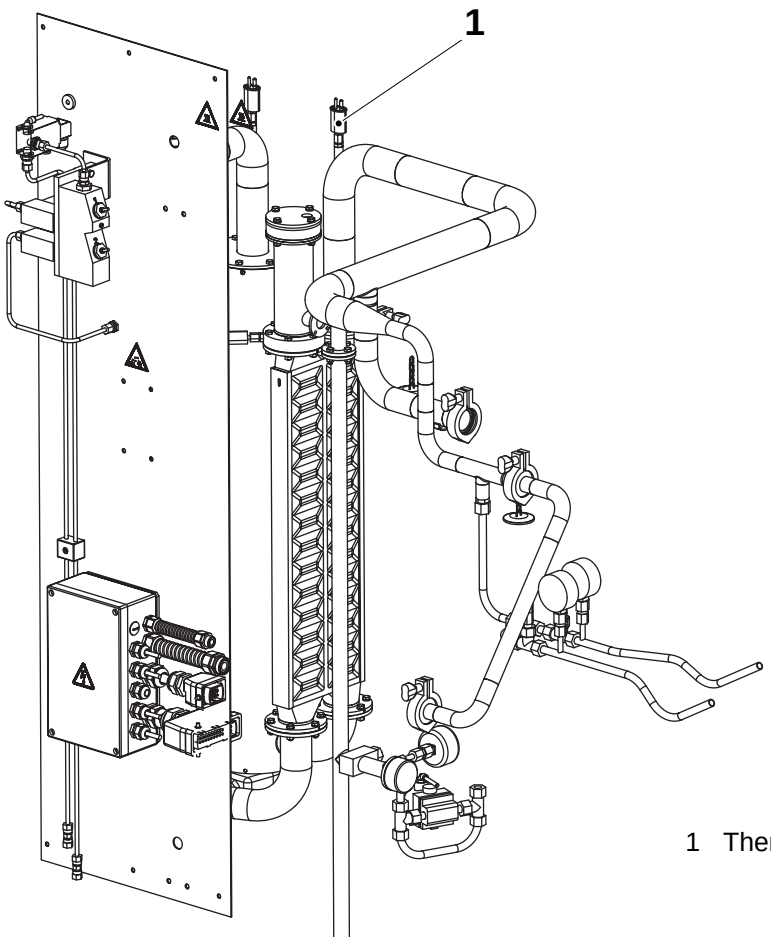

1 Thermocouple

MM2.21TS100447en.fm

9.2-3 Spray system - check filter

Machine Status	
SPC reference	2556785
Consumable	see list below

WARNING!

Risk of corrosion.
Hydrogen peroxide. Follow the *Safety Precautions*.

WARNING!

Risk of personal injury!
Make sure that the machine is **not** pressurized and that the system has cooled down before loosening any connection.

WARNING!

Chemical products!
Acids. Follow the *Safety precautions*.

Remove the couple (1) and remove the pipe (2). Unscrew the filter (3). Clean the filter (3). Change the O-ring (4) if required.

Delime the filter with one of the four acids solutions listed below. All solutions must have a temperature of 50°- 60°C during deliming.

Caution! Do **not** use hydrochloric acid (HCl).

- acetic acid (CH_3COOH), 20%
- nitric acid (HNO_3), 5-10%
- citric acid ($C_6H_8O_7$), 20%
- phosphoric acid (H_3PO_4), 5-10%

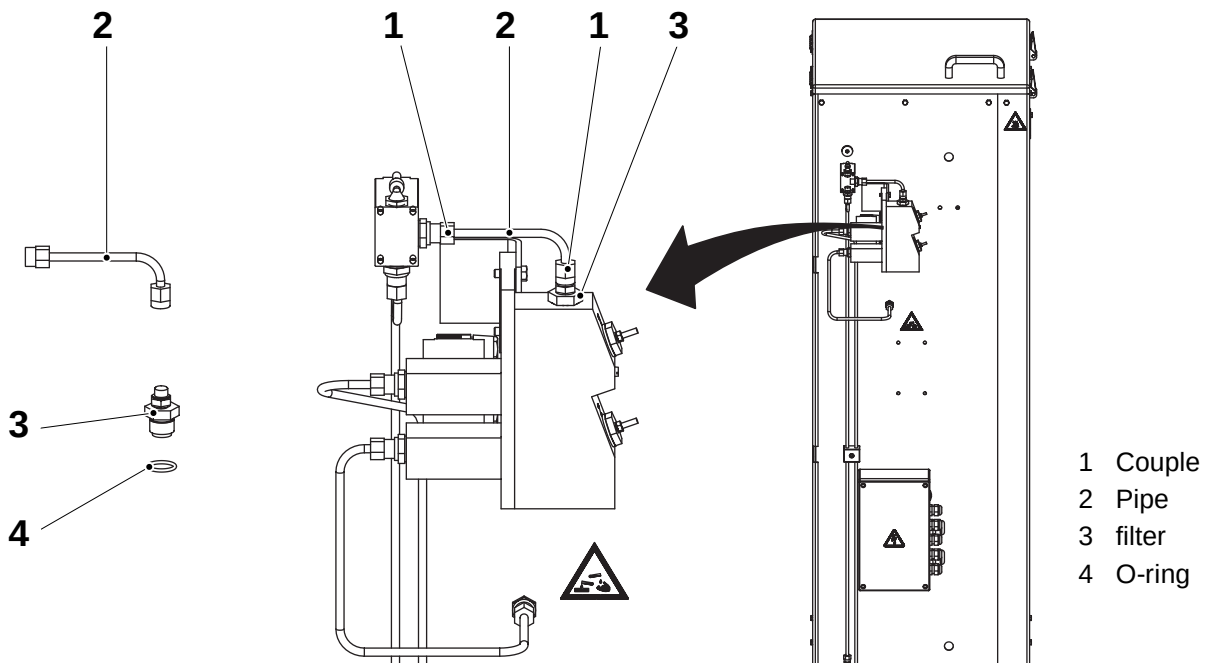

1 Couple
2 Pipe
3 filter
4 O-ring

MM2.21TS100447en.fm

9.2-4 Nozzle - clean

Machine Status	
SPC reference	1514650
Consumable	see list below

WARNING!

Risk of corrosion.
Hydrogen peroxide. Follow the *Safety Precautions*.

WARNING!

Risk of personal injury!
Make sure that the machine is **not** pressurized and that the system has cooled down before loosening any connection.

WARNING!

Chemical products!
Acids. Follow the *Safety precautions*.

Remove the couple (1) and bend the tube (2) to the side. Unscrew the nozzle (3). Clean the nozzle (3). Change the O-ring (4) if required.

Delime the nozzle with one of the four acids solutions listed below. All solutions must have a temperature of 50°- 60°C during deliming.

Caution! Do **not** use hydrochloric acid (HCl).

- acetic acid (CH_3COOH), 20%
- nitric acid (HNO_3), 5-10%
- citric acid ($C_6H_8O_7$), 20%
- phosphoric acid (H_3PO_4), 5-10%

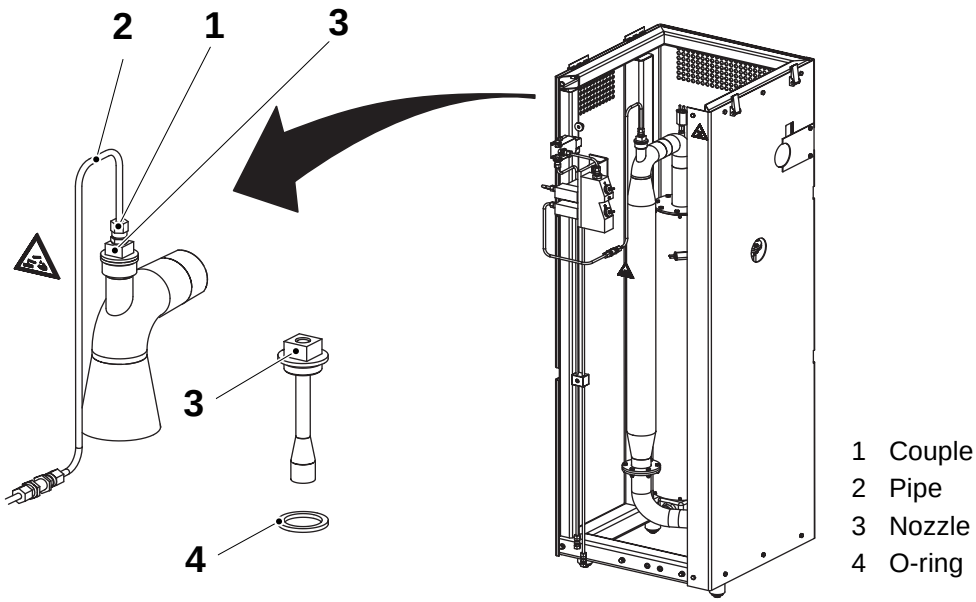

1 Couple
2 Pipe
3 Nozzle
4 O-ring

MM2.21TS100447en.fm

9.2-5 LS pressure - set

Machine Status	
SPC reference	2543000

WARNING! **Risk of personal injury!**
Hot surfaces. Wear protective gloves.

Loosen the nut (1), set the pressure by turning the set screw (2). Check value on the pressure gauge (3). Tighten the nut.

See Technical data In OM, LS pressure.

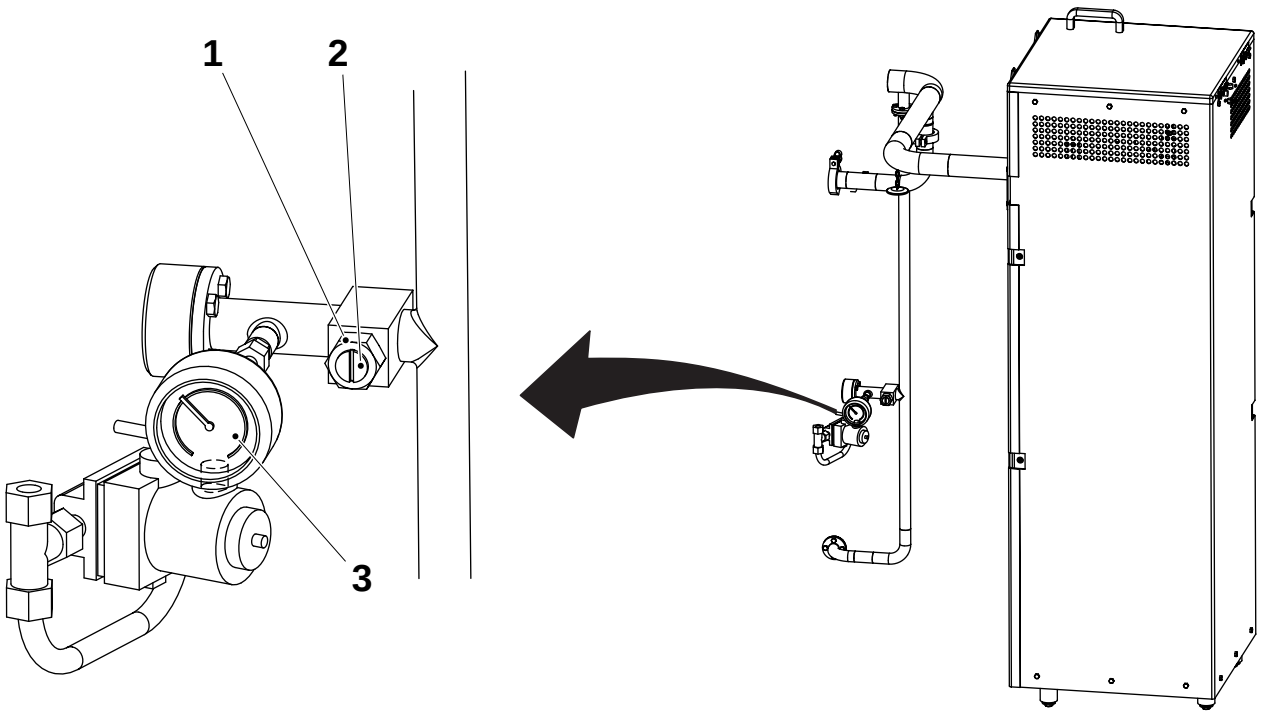

1 Nut
2 Set screw
3 Pressure gauge

MM2.21TS100447en.fm

9.2.2 Heat exchanger

SPC reference	1515150

9.2.2.1 Heat exchanger - check tightness

Machine Status	
SPC reference	

WARNING!

Risk of corrosion and intoxication.
Hydrogen peroxide. Follow the *Safety Precautions*.

WARNING!

Risk of personal injury!
Make sure that the machine is **not** pressurized and that the system has cooled down before loosening any connection.

Remove the screws at the top- and bottom flanges and lift out the heat exchanger.

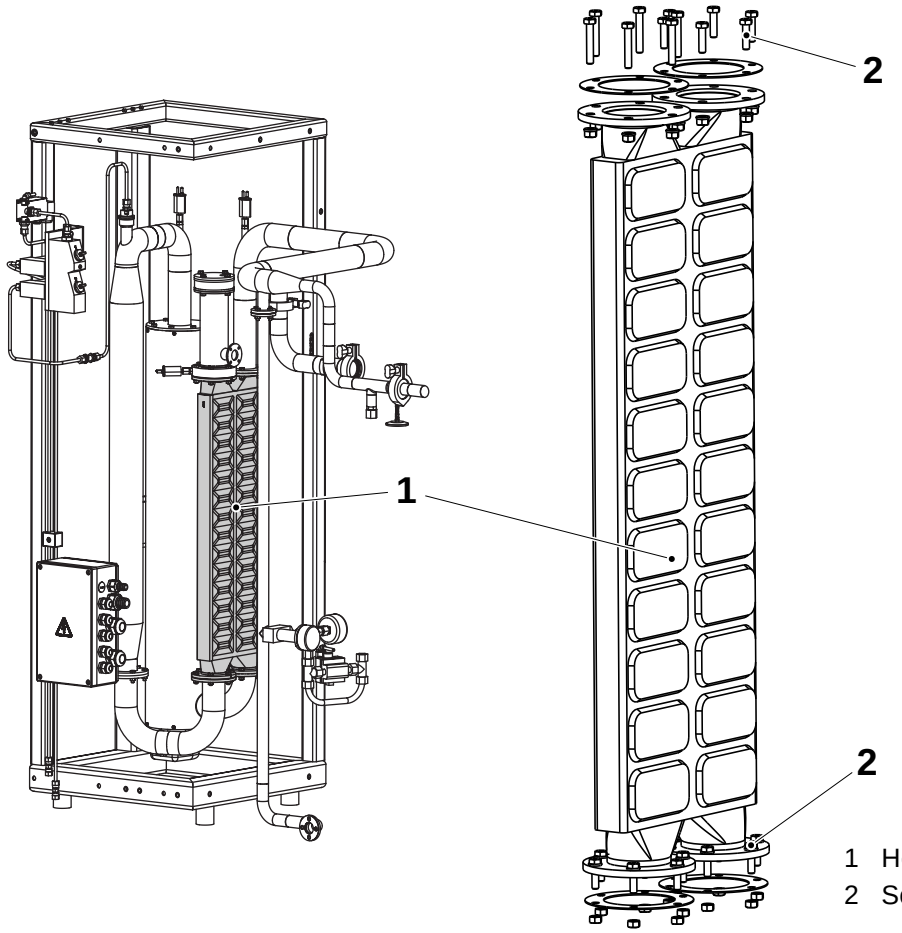

1 Heat exchanger
2 Screw

MM2.21TS100447en.fm

(Cont'd)

(Cont'd)

WARNING! **Risk of personal injury!**
Pressurized vessel, wear eye protection!

Tools	
- flange	TP No. 979952
- flange	TP No. 979951
- hydrostatic test equipment	TP No. 565536

Check the tightness as follows:

a) Plug one of the connections (3) using a blanking flange TP No. 979952.

b) Connect the hydrostatic test equipment with flange TP No. 979951, to the connection (2), positioned **diagonally** to the plugged connection (3).

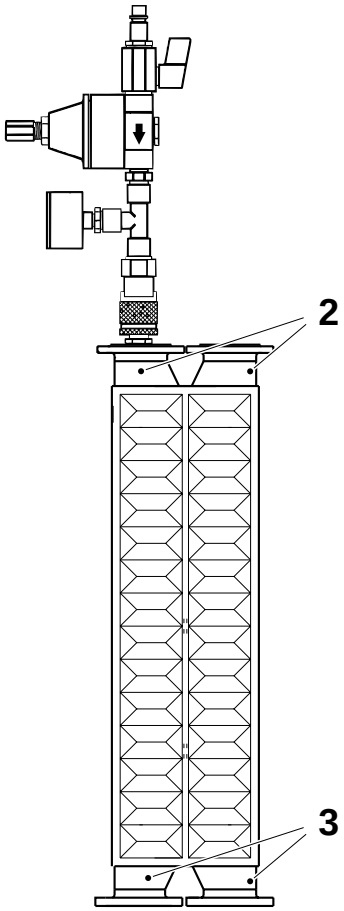

1 Screw
2 Connection
3 Plugged connection

(Cont'd)

MM2.21TS100447en.fm

(Cont'd)

Note! Make sure that the equipment is connected in the correct direction - the flow must run **from** the valve (5) **towards** the pressure gauge (8) **(see arrow)**.

Caution! Before turning on compressed air, turn the adjustment screw (7) **counter-clockwise** until the spring load is released, and **close** the valve (5).

c) Connect compressed air to the connection (4).

d) Submerge the whole heat exchanger in water. Make sure **not** to drench the pressure controller (6). Let all air bubbles disappear.

e) Open the valve (5). Adjust the pressure to **50 kPa (0.5 bar)**, indicated on the pressure gauge (8), using the adjustment screw (7). Air bubbles will immediately show any leakages in the heat exchanger.

f) Repeat the procedure with the other side.

g) If leakage is suspected, change the heat exchanger.

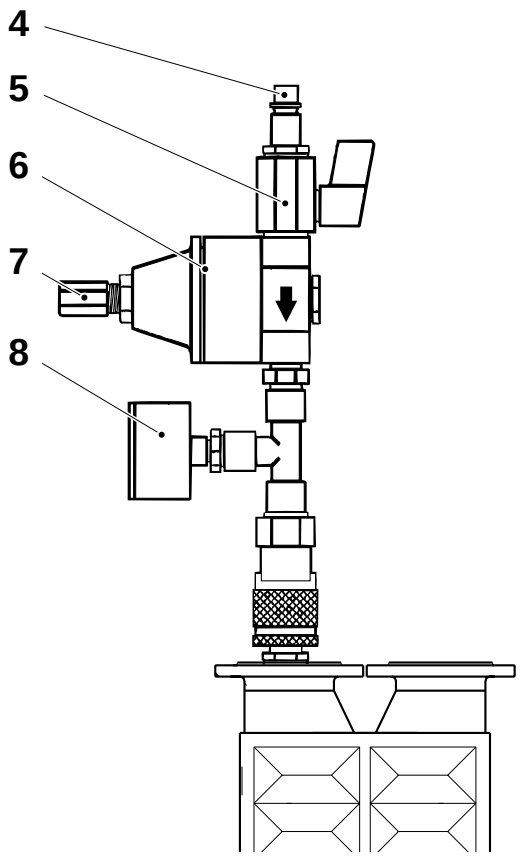

4 Compressed air connection
5 Valve
6 Pressure controller
7 Adjustment screw
8 Pressure gauge

(Cont'd)

MM2.21TS100447en.fm

(Cont'd)

Change the joint gaskets.

Fit the heat exchanger on the machine with the flange marked **number 4** positioned as illustrated.

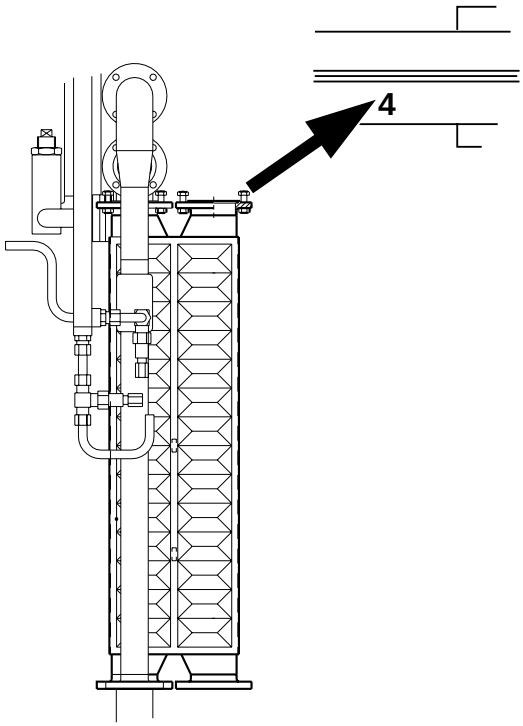

MM2.21TS100447en.fm

9.2.2-2 Heat exchanger - clean

Machine Status	
SPC reference	2556690
Consumable	see list below

WARNING! **Risk of corrosion and intoxication.**
Hydrogen peroxide. Follow the *Safety Precautions*.

WARNING! **Chemical products!**
Acids. Follow the *Safety precautions*.

See 9.2.2.1 Heat exchanger - check tightness for dismantling procedure.

The heat exchanger could be delimed with one of the four acids solutions listed below. All solutions must have a temperature of 50°- 60°C during deliming.

Caution! Do **not** use hydrochloric acid (HCl).

- acetic acid (CH_3COOH), 20%
- nitric acid (HNO_3), 5-10%
- citric acid ($C_6H_8O_7$), 20%
- phosphoric acid (H_3PO_4), 5-10%

MM2.21TS100447en.fm

9.3 Air processing unit

SPC reference	2556690

9.3-1 Air processing unit - description

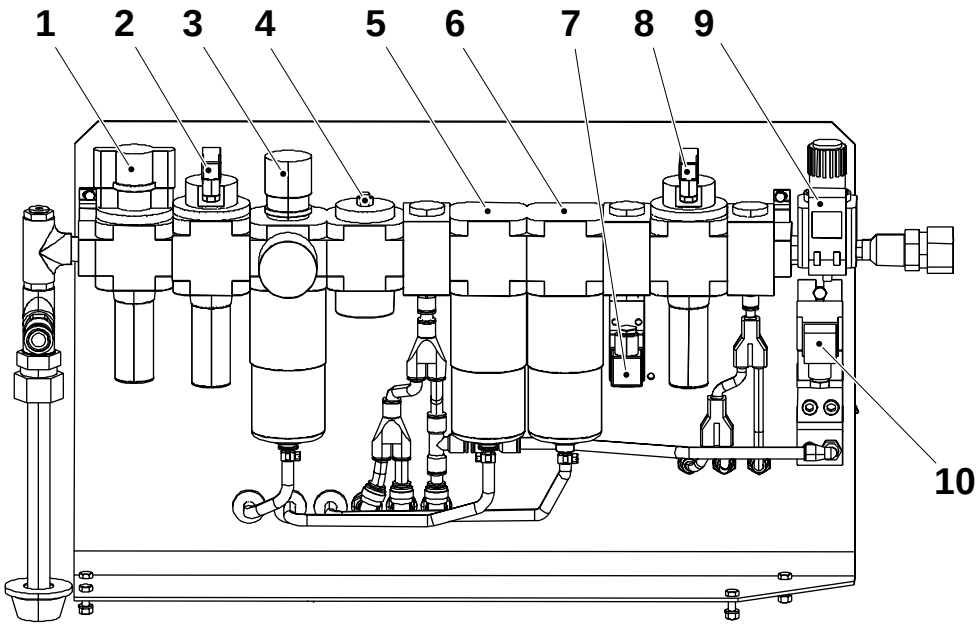

1 Main air ON/OFF
2 Main air valve
3 Filter regulator
4 Soft start valve
5 Filter
6 Filter
7 Main air pressure guard
8 Sterile air valve
9 Sterile air pressure gauge/guard
10 IP- Transducer

MM2.21TS100447en.fm

9.3-2 Air processing unit - set main air pressure guard

Machine Status	
SPC reference	2556690
Machine status	Power ON

Valve panel air supply pressure switch

- Remove the protective housing (1) and the connector (4).
- Turn the adjusting screw (3) to it´s end position towards (-) to get minimum difference between on and off.
- Turn the adjusting screw (2) some revolutions counter clockwise (towards “-”)
- Adjust the main air supply to 350 kPa (3,5 bar).
  Turn the adjusting screw (2) clockwise (towards “+”) until the circuit opens between pin 1 and pin 3.
- Increase the pressure and check that the switch closes before the pressure reach 450 (4,5 bar).
- Check repeatedly that the pressure switch opens at 350 kPa (3,5 bar) and closes at 450 kPa (4,5 bar).
- Refit the protective housing (1) and the connector (4).

MM2.21TS100447en.fm

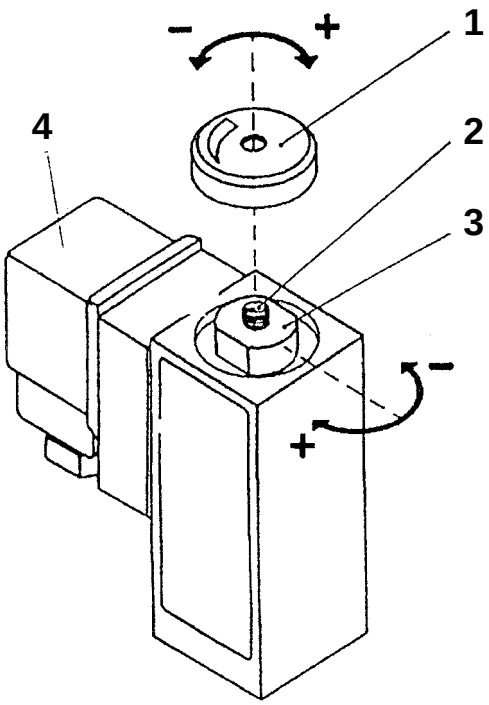

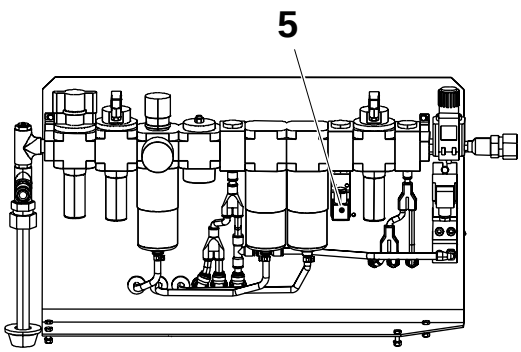

1 Protective housing
2 Screw
3 Screw
4 Connector
5 Main air pressure guard

9.3-3 Air processing unit - set sterile air pressure guard

Machine Status	
SPC reference	2556690
Machine status	Power ON

a) Check that there is electricity connected to the Pressure switch (2) and that there is pressure in the system.
The display shows that “Out A” is active and that the sterile air pressure is 280 kPa (0,28 Bar).

Note! Use the step up and step down buttons for manoeuvring.

b) Press button “Edit” (4) choose Out A. Press “Edit” again and choose high when it steps up.

c) Press “Edit” again and SP (Set Point) starts to flash, choose 0,30 Bar which is the lowest possible level to choose.

d) Press “Edit” again and HY (hysteres) starts to flash choose 0,00 with assistance of the arrows.

e) Press “Edit” again and NO/NC starts to flash. Choose NO.

f) Press “Edit” again to resume production mode.

g) Turn the regulator (1) until 0,37 Bar is displayed.

MM2.21TS100447en.fm

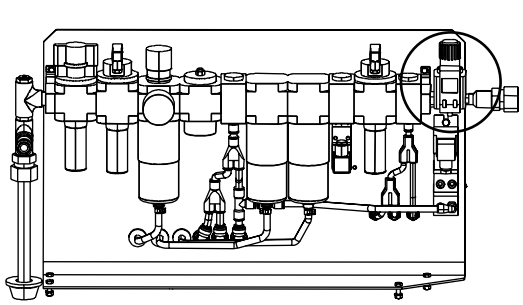

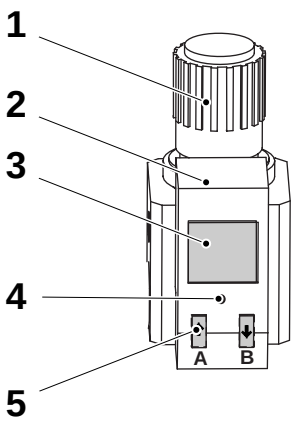

1 Regulator
2 Pressure switch
3 Display
4 Edit
5 Manoeuvring button

9.3-4 IP-transducer - set

Machine Status	
SPC reference	2556690
Tool	Manometer 0 -1 bar
Power	ON

a) Connect a manometer to the regulating valve air connection.

b) Step up machine to **Preheating.**

c) Set the pressure for the Regulating valve to 0,1 bar by means of the ZERO trim potentiometer screw.

d) Step up machine to **Preheating of filling system**.

e) Set the pressure for the Regulating valve to 2 bar by means of the SPAN trim potentiometer screw.

f) Step up machine to **Preparation for cleaning**.

g) Set the pressure for the Regulating valve to 4,5 bar by means of the SPAN trim potentiometer screw.

h) Check that the pressure to the regulating valve is 4,5 bar.

i) Step down to **Zero**.

j) Disconnect manometer and connections. Connect the incoming air hose.

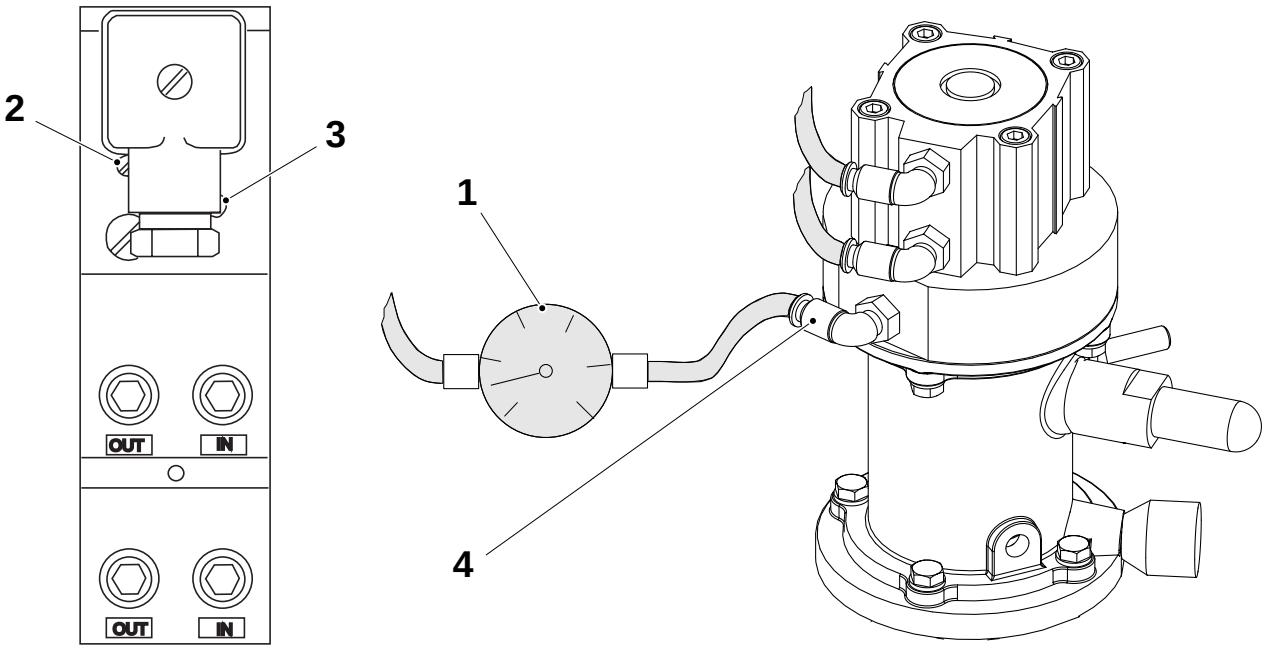

1 Manometer
2 Zero
3 Span
4 Incoming air

MM2.21TS100447en.fm

9.3-5 Air filter-change

Machine Status	
SPC reference	2523865

Loosen the drain hoses marked with arrows.
Unscrew the filters (1), (2) and (3).

Filter (1) could be cleaned. Filter (2) and (3) should be changed.

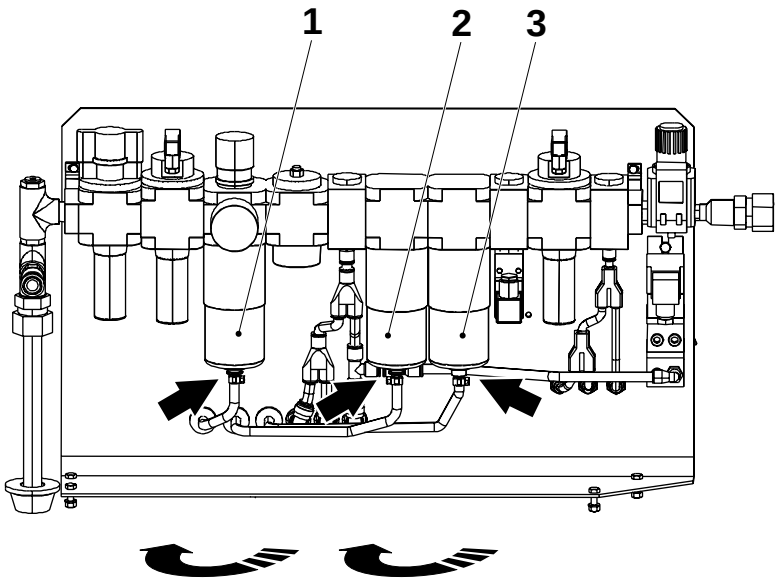

1 Filter regulator valve filter
2 Filter (1 micron)
3 Filter (0.01 micron)

MM2.21TS100447en.fm

9.3-6 Filter regulator-set

Machine Status	
SPC reference	2523865

Adjust the pressure by turning the knob (see arrow).

See Technical data In OM, air pressure regulating valve.

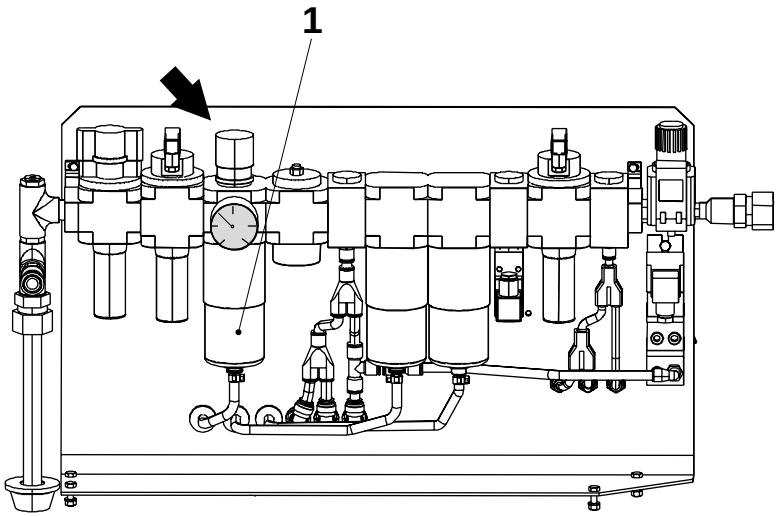

1 Filter regulator

MM2.21TS100447en.fm

9.3-7 Soft start valve -set

Machine Status	
SPC reference	2523865-0100

Loosen the nut (2) turn the screw (3) fully down.

Turn the screw (3) counter clockwise five revolutions.

Tighten the nut (2).

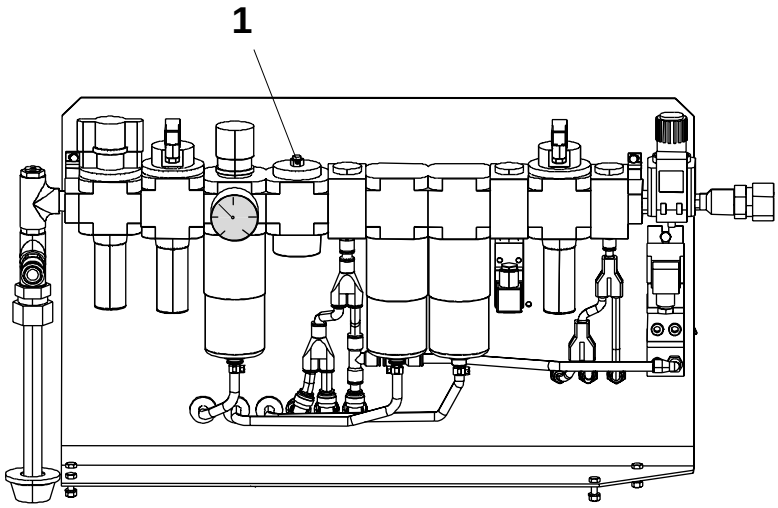

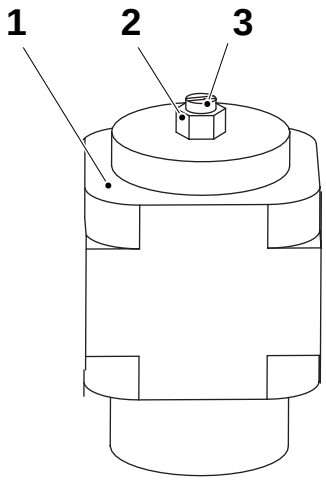

1 Soft start valve
2 Nut
3 Screw

MM2.21TS100447en.fm

9.3-8 Pneumatic chart

SPC reference	2556840

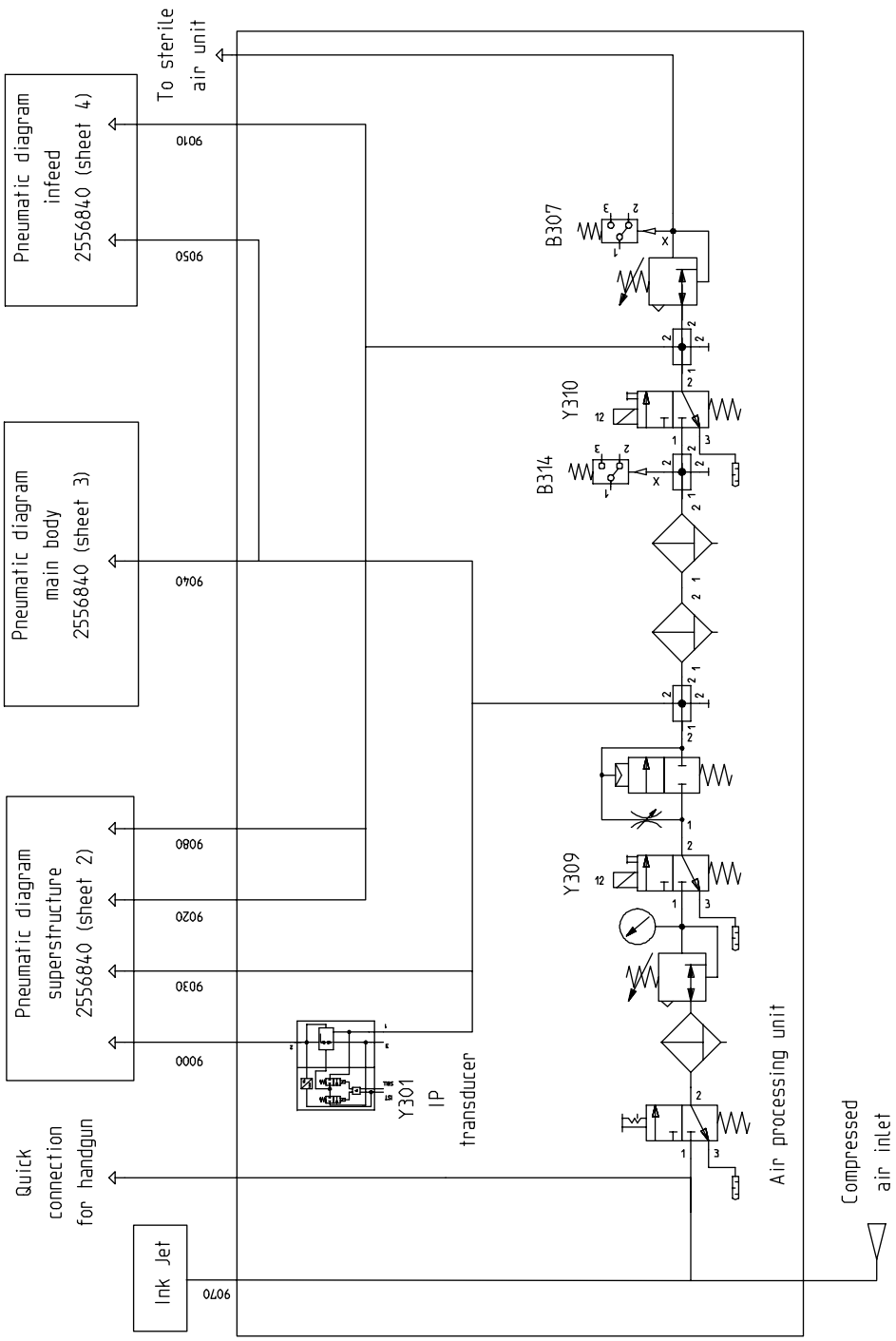

MM2.21TS100447en.fm

Component	Denomination	Component	Denomination	Component	Denomination
B 307	Sterile air prssure gauge/guard	Y 301	IP transducer	Y 310	Sterile air valve
B 314	Main air pressure guard	Y 309	Main air valve		

(Cont'd)

(Cont'd)

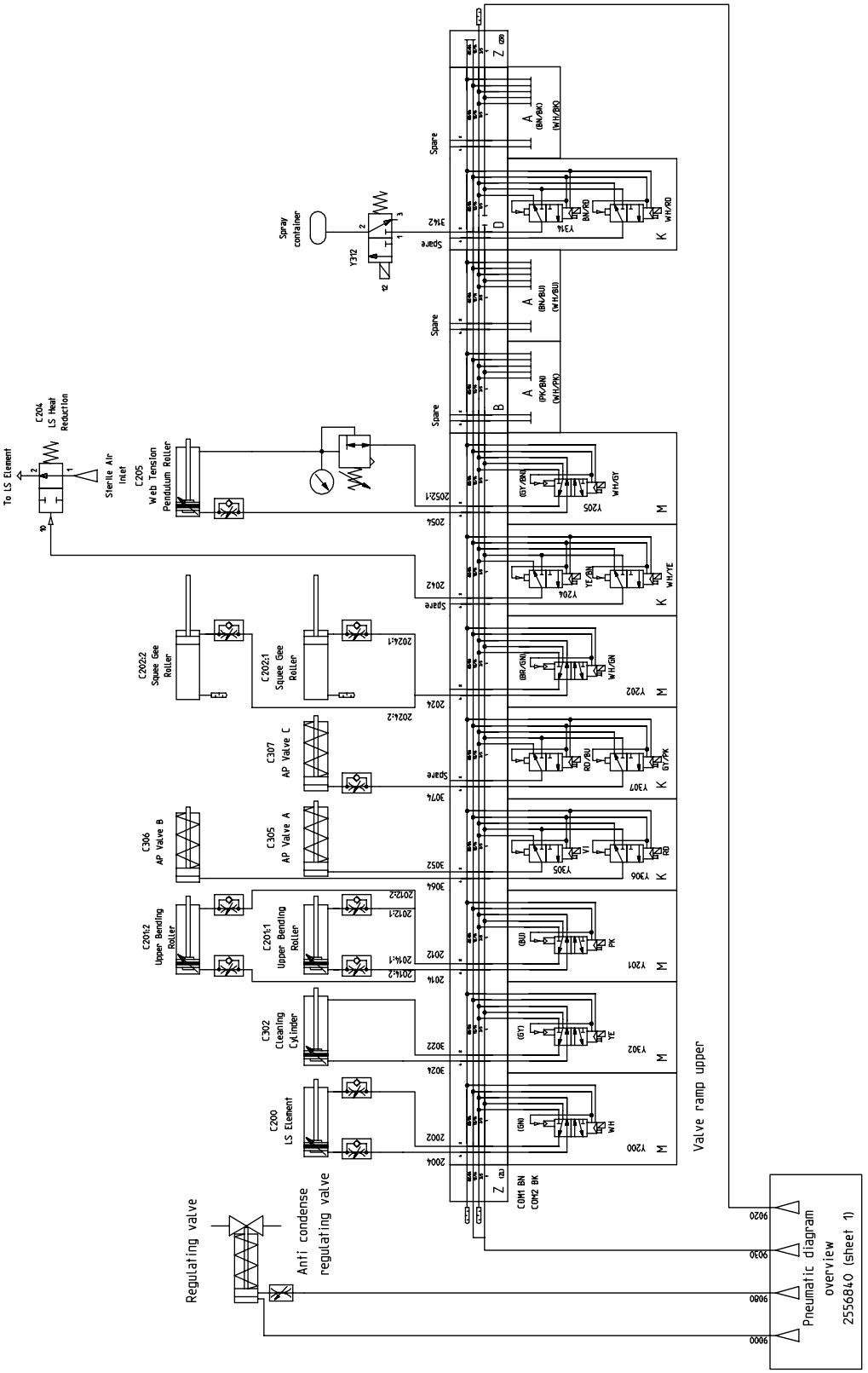

(Cont'd)

MM2.21TS100447en.fm

(Cont'd)

Component	Denomination
C 200	LS element
C 201:1	Upper bending roller
C 201:2	Upper bending roller
C 202:1	Squee gee roller
C 202:2	Squee gee roller
C 204	LS heat reduction
C 205	Web tension pendulium roller
C 302	Cleaning cylinder
C 305	AP A valve
C 306	AP B valve
C 307	AP A valve

MM2.21TS100447en.fm

9.4 Filling unit

9.4-1 Filling unit - function description

Machine Status	
SPC reference	2542990-0100

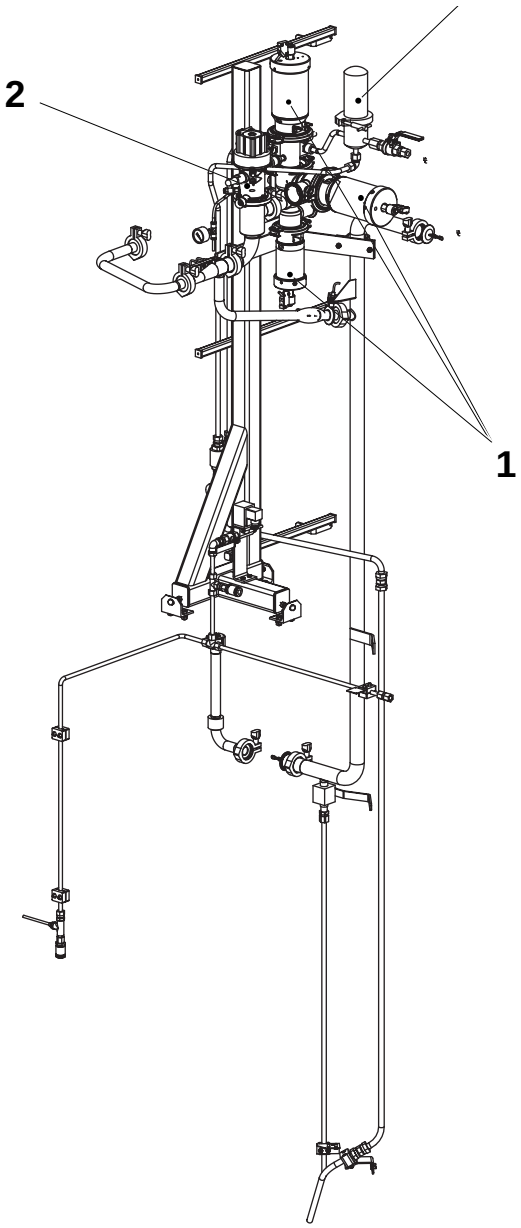

1 AP- Valve
2 Regulating valve
3 Steam system

(Cont'd)

MM2.21TS100447en.fm

(Cont'd)

Working Principle

The design of the regulating valve (a constant flow valve) ensures that the product pressure and the product flow from the valve is kept constant (for a specific product).

Inside the packaging material tube there is a float that registers the product level. The position of the float is detected by the level coils, that gives a corresponding signal to the level meter card.

On the Level meter card, the LEDs (10 - 100) display the height of the float. Depending on the incoming level signal and the setting of the card, it will send an electrical signal to the PLC.

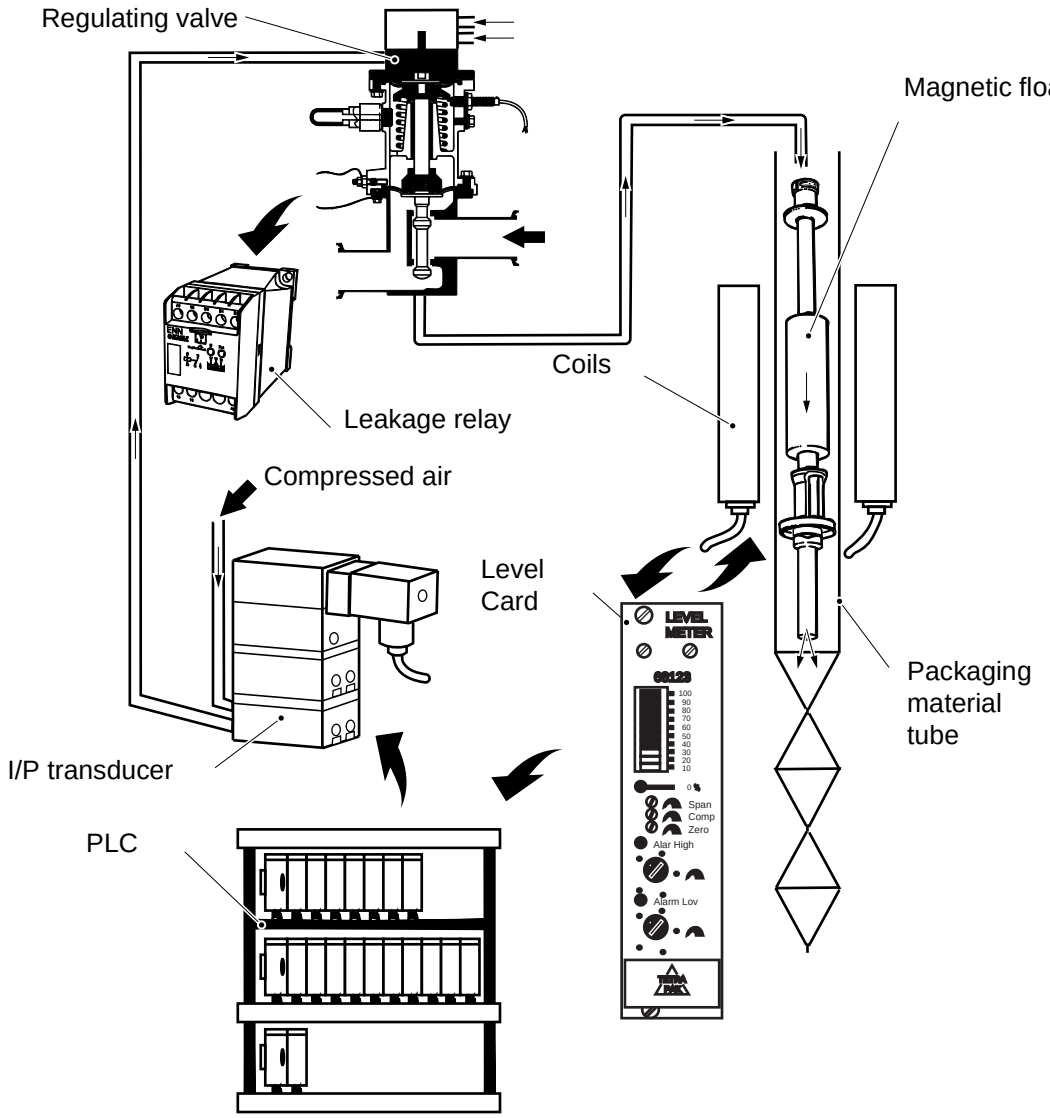

MM2.21TS100447en.fm

(Cont'd)

(Cont'd)

Process-specific parameters are sent from the PLC to the I/P transducer. The I/P transducer gives an air pressure corresponding to the received signal in order to open the regulating valve in order to control the flow.

Some process parameters will be different depending of product and environments.

Leakage Detector

A leakage detector detects faults in the membranes of the regulating valve. The membranes are made of two different layers. The first layer is in contact with the product, the second is conductive.

If the first layer breaks, the leakage detector is activated. The alarm signal will hereby occur **before** a leakage occurs. Immediately change membranes in the regulating valve, see 9.4.2-3 Regulating valve - overhaul.

MM2.21TS100447en.fm

9.4-2 Filling system - set proximity sensor

Machine Status	
SPC reference	2542990-0100

Set distance **A** as follow:

- Loosen the screw (2), adjust the proximity switch (1) until **A** is reached between the Proximity switch and the activator (3).
- Tighten the screw (2).

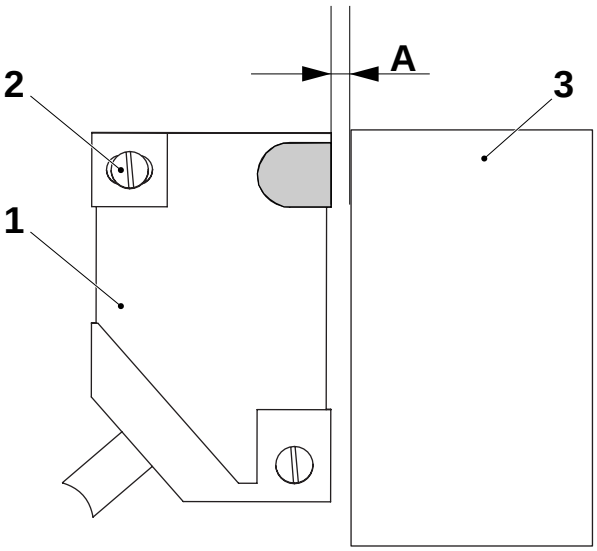

A = 1 ±0.5 mm

1 Proximity switch
2 Screw
3 Activator

Set distance **B** as follow:

- Loosen the nuts (6), adjust the proximity switch (4) until **B** is reached between the Proximity switch and the activator (5).
- Tighten the nuts (6).

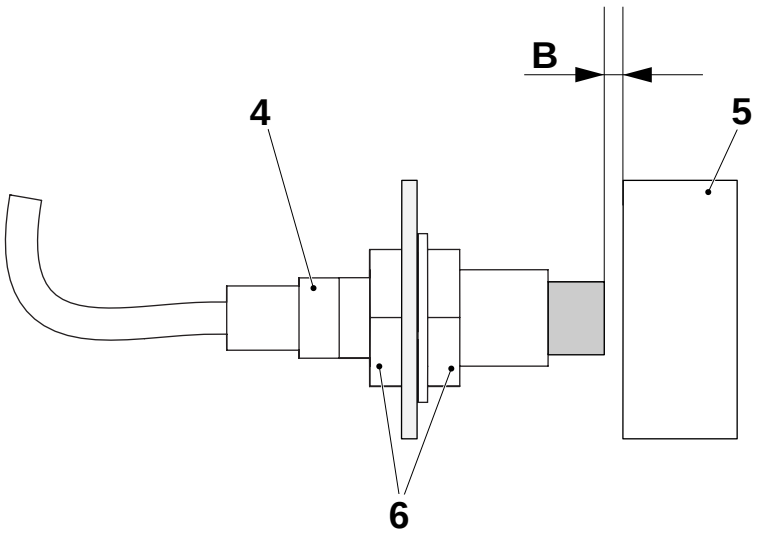

B = 4 ±1 mm

4 Proximity switch
5 Activator
6 Nut

MM2.21TS100447en.fm

9.4.1 Filling unit

SPC reference	2542990-0100

9.4.1-1 AP-valve - remove

Machine Status	
Tools - tool	 TP No. 449969-101
SPC reference	576434-0100

WARNING!

Risk of personal injury!
Make sure that the steam and compressed air have been turned off. Make sure that there is **no product, steam or cleaning liquid** in the line. In case of accident, call immediately for medical attention.

a) Remove the air connections (1) from the cylinders.

b) Remove the proximity switches (2).

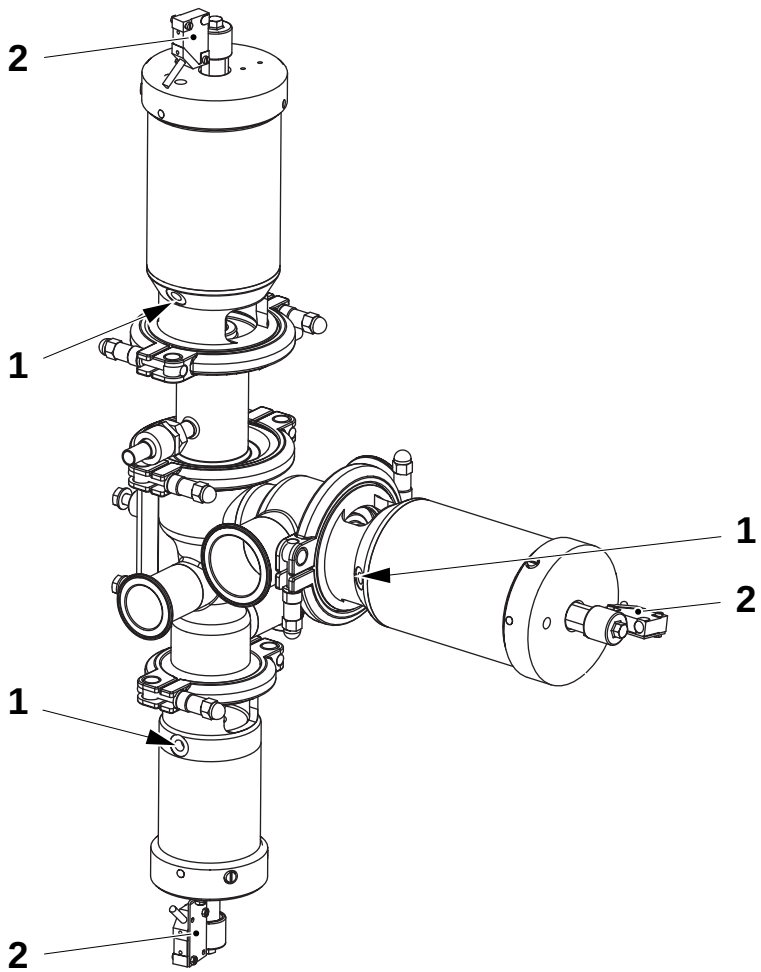

1 Air connection
2 Proximity switch

(Cont'd)

MM2.21TS100447en.fm

(Cont'd)

c) Remove the sleeve (5).

d) Compress the cylinder spring by approximately 5 coils using the tool (4) TP No. 449969-101.

e) Remove the clamp ring (3) and the cylinder.

f) Check the gasket (6); change as required.

g) Repeat steps *c)* to *e)* for the B-cylinder and C- cylinder.

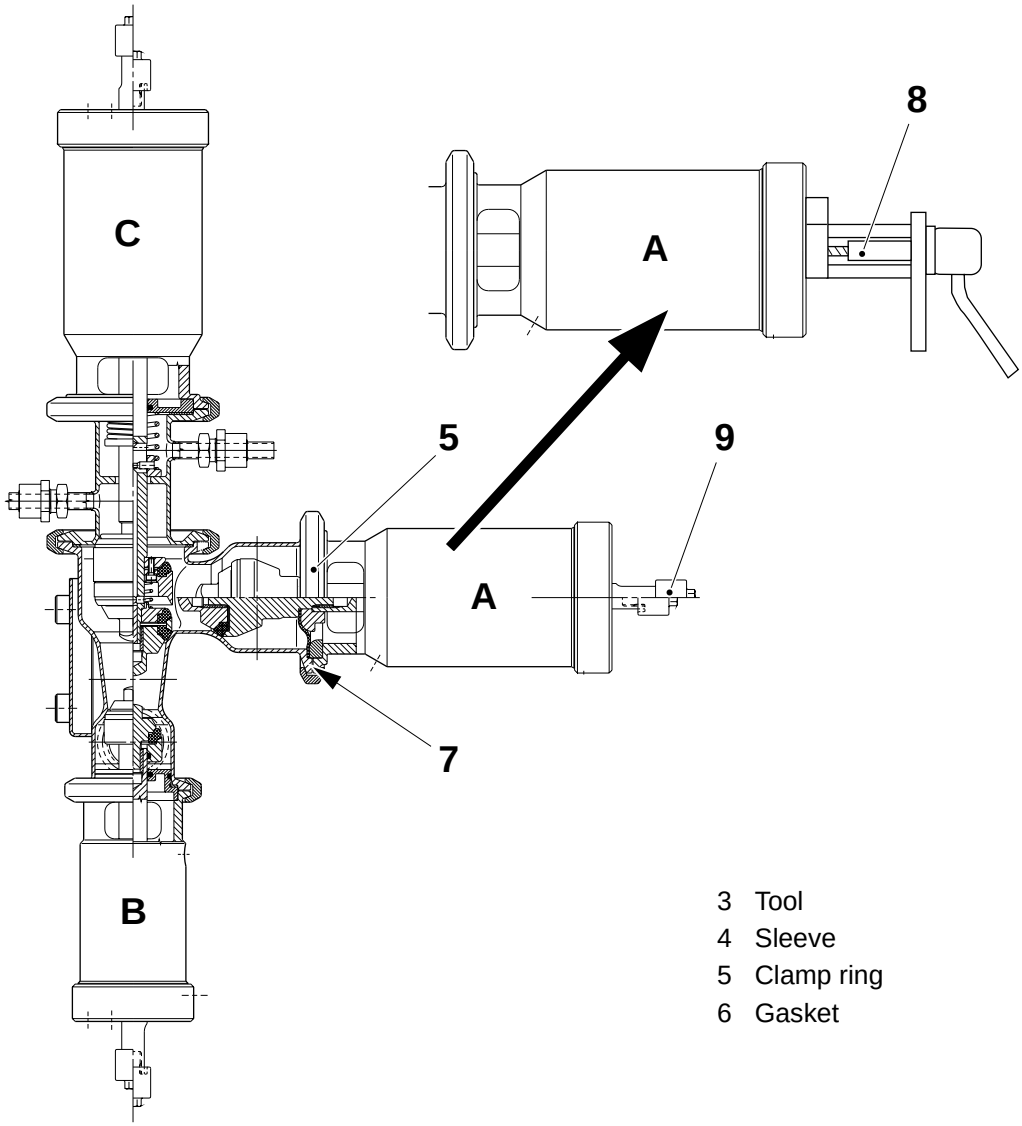

3 Tool
4 Sleeve
5 Clamp ring
6 Gasket

MM2.21TS100447en.fm

9.4.1-2 AP valve - change seals and diaphragm

Machine Status	
Tools - torque wrench	 min 55 Nm
SPC reference	576434-0100

A-cylinder (product)

a) Remove the cylinder, refer to 1.2.1-1 AP valve - remove cylinders.

b) Fully release the tool.

c) Remove the valve cone (1) and change the seal ring (2).

d) Remove the seal ring holder (3), the diaphragm (4), the ring (5) and the washer (6).

e) Check the diaphragm (4), change as required.

f) Fit the ring (5) and the washer (6) in the cylinder housing with the grooves facing upwards.

g) Fit the new diaphragm (4).

WARNING!

Risk of serious production fault!
Make sure to install the diaphragm (4) with the bulge pointing away from the valve body.

h) Assemble the seal ring holder (3), the seal ring (2) and the valve cone (1) in the reverse order.

Note! Tighten the valve cone (5) with a torque wrench set to **50 Nm**.

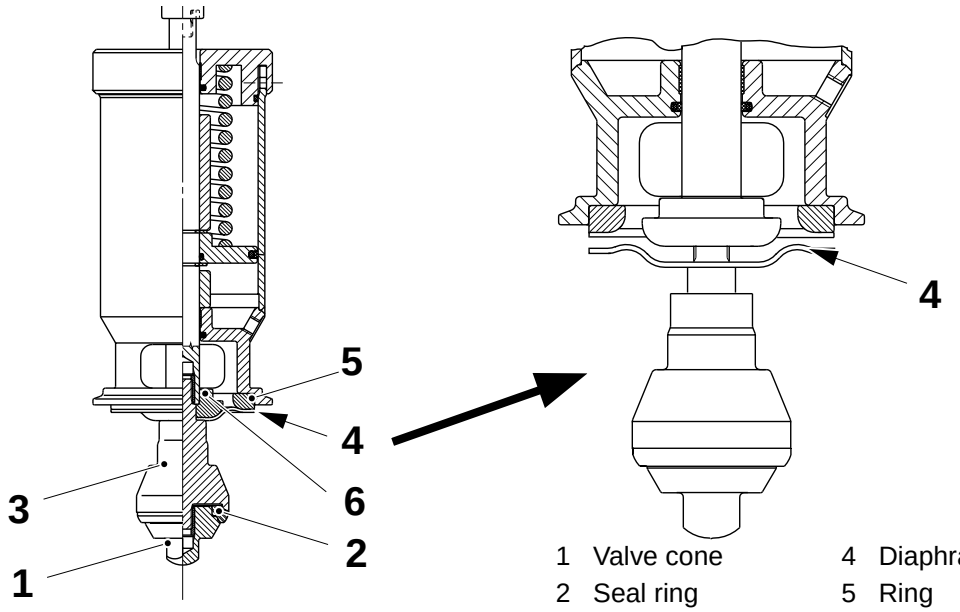

1 Valve cone
2 Seal ring
3 Ring holder
4 Diaphragm
5 Ring
6 Washer

(Cont'd)

MM2.21TS100447en.fm

(Cont'd)

C-cylinder (steam)

a) Remove the cylinder, refer to 1.2.1-1 AP valve - remove cylinders.

b) Remove the valve cone (1) and the ring (2).

c) Check the seal rings (3). Change as required.

d) Loosen the screws (4) and remove the holder (5).

e) Check the seal ring (6). Change as required.

f) Reassemble in the reverse order.

Note! Tighten the valve cone (1) with a torque wrench set to **50 Nm**.

For setting see, 9.4.1-4 C-cylinder- set movement

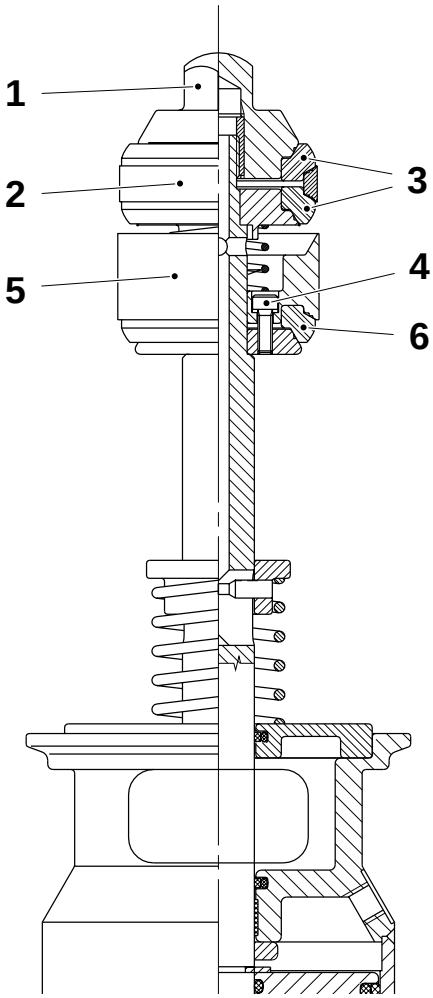

1 Valve cone
2 Seal ring
3 Seal ring
4 Screw
5 Holder
6 Seal ring

(Cont'd)

MM2.21TS100447en.fm

(Cont'd)

B-cylinder (sterile air)

a) Remove the sterile air valves, refer to 1.2.1-1 AP valve - remove cylinders.

b) Fully release the tool.

c) Change the O-ring (1).

d) Remove the valve cone (2) and change the seal ring (3).

e) Remove the washer (4) and change the O-ring (5).

f) Reassemble in the reverse order.

Note! Tighten the valve cone (2) with a torque wrench set to **50 ±2 Nm**.

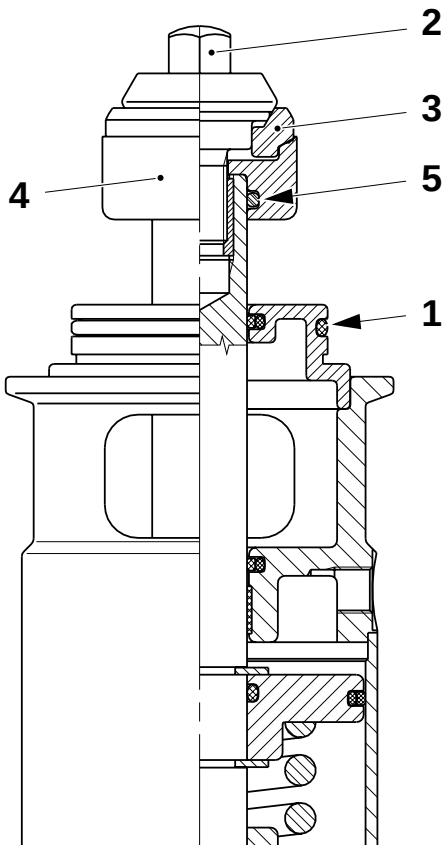

1 O-ring
2 Valve cone
3 Seal ring
4 Washer
5 O-ring

MM2.21TS100447en.fm

9.4.1-3 AP valve - change A- and B-cylinder seals

Machine Status	
Tools - tool	TP No. 449969-101
Consumable - silicon grease	code L
SPC reference	5764360 576438

WARNING! **Risk of personal injury!**
Make sure that the steam and the compressed air have been turned off. Make sure that there is **no product, steam or cleaning liquid** in the line. In case of accident, call for medical attention immediately.

A-cylinder (product)

a) Remove the product valve, refer to 1.2.1-1 AP valve - remove cylinders.
b) Remove the lock screws (2).
c) Loosen the tool and remove the end section (1).
d) Check the seal rings (3), (4) and the O-ring (5). Change as required.

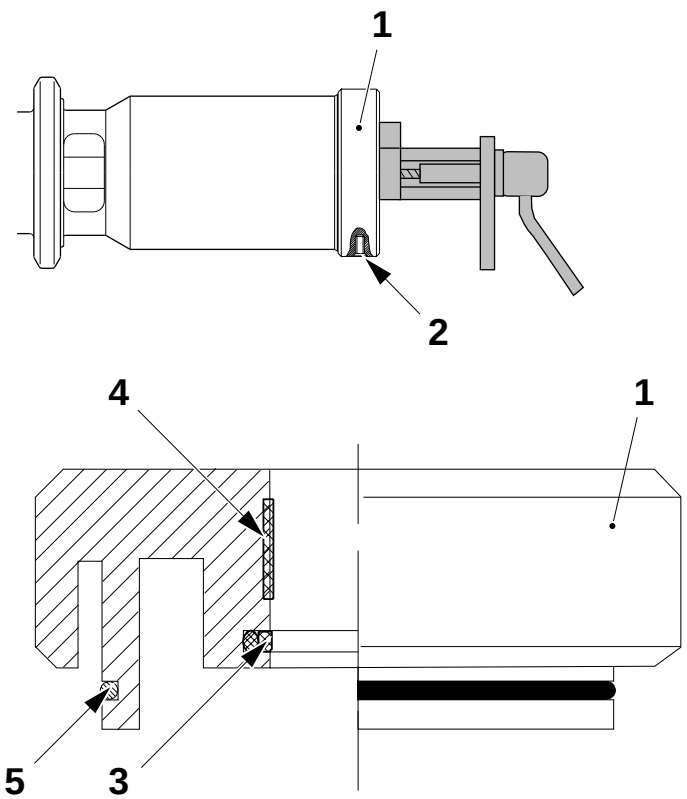

1 End section
2 Lock screw
3 Seal ring
4 Seal ring
5 O-ring

MM2.21TS100447en.fm

(Cont'd)

(Cont'd)

e) Remove the rod (6) with the spring (7) and the piston (8).

f) Remove the circlip (9) and disassemble the piston (8) from the rod (6).

g) Check the O-rings (10) and the seal rings (11). Change as required.

h) Lubricate the piston rod with grease code L.

i) Assemble in the reverse order.

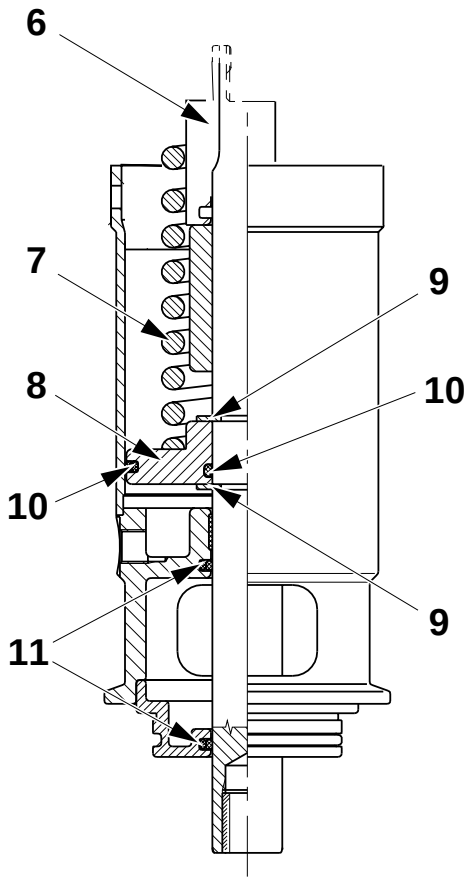

6 Rod
7 Spring
8 Piston
9 Circlip
10 O-ring
11 Seal ring

(Cont'd)

MM2.21TS100447en.fm

(Cont'd)

B-cylinder

a) Remove the cylinder, refer to 1.2.1-1 AP valve - remove cylinders.

b) Remove the screws (2).

c) Loosen the tool and remove the end section (1).

d) Check the seal rings (3) and (5) and the O-ring (4). Change as required.

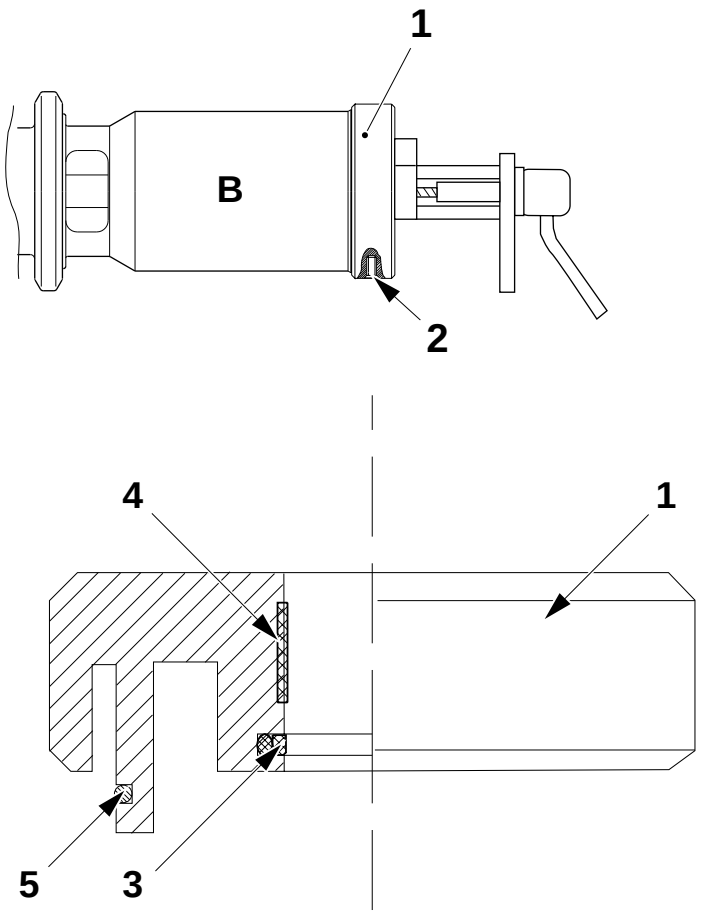

1 End section
2 lock screw
3 Seal ring
4 O-ring
5 Seal ring

MM2.21TS100447en.fm

(Cont'd)

(Cont'd)

e) Remove the rod (6) with the spring (7) and the piston (8).

f) Remove the circlip (9) and disassemble the piston (8) from the rod (6).

g) Check the O-rings (10) and the seal rings (11). Change as required.

h) Lubricate the piston rod with grease code L.

i) Assemble in the reverse order.

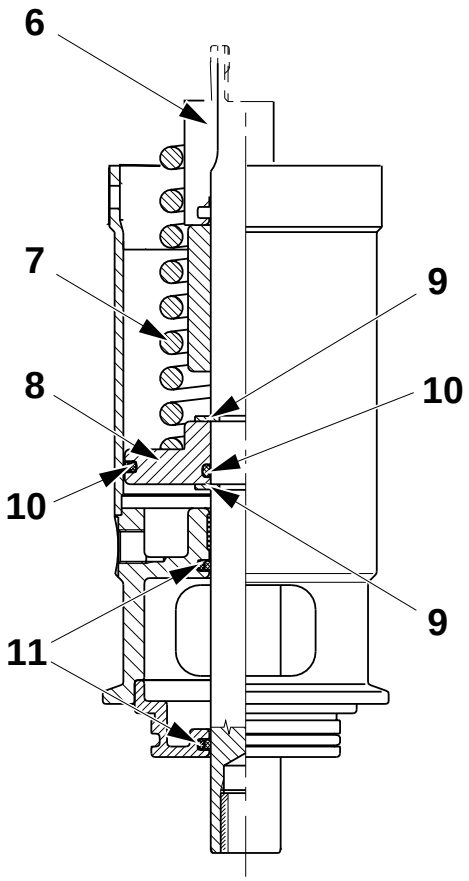

6 Rod
7 Spring
8 Piston
9 Circlip
10 O-ring
11 Seal rings

MM2.21TS100447en.fm

9.4.1-4 AP valve - change C-cylinder seals

Machine Status	
Tools - tool	TP No. 449969-101
Consumable - silicone grease	code L
SPC reference	576437

a) Remove the change-over valve, refer to 1.2.1-1 AP valve - remove cylinders.

b) Remove the screws (2).

c) Loosen the tool and remove the end section (1).

d) Check the seal rings (3) and (5) and the O-ring (4). Change as required.

e) Remove the cylindrical pin (7), the washer (6) and the spring (8).

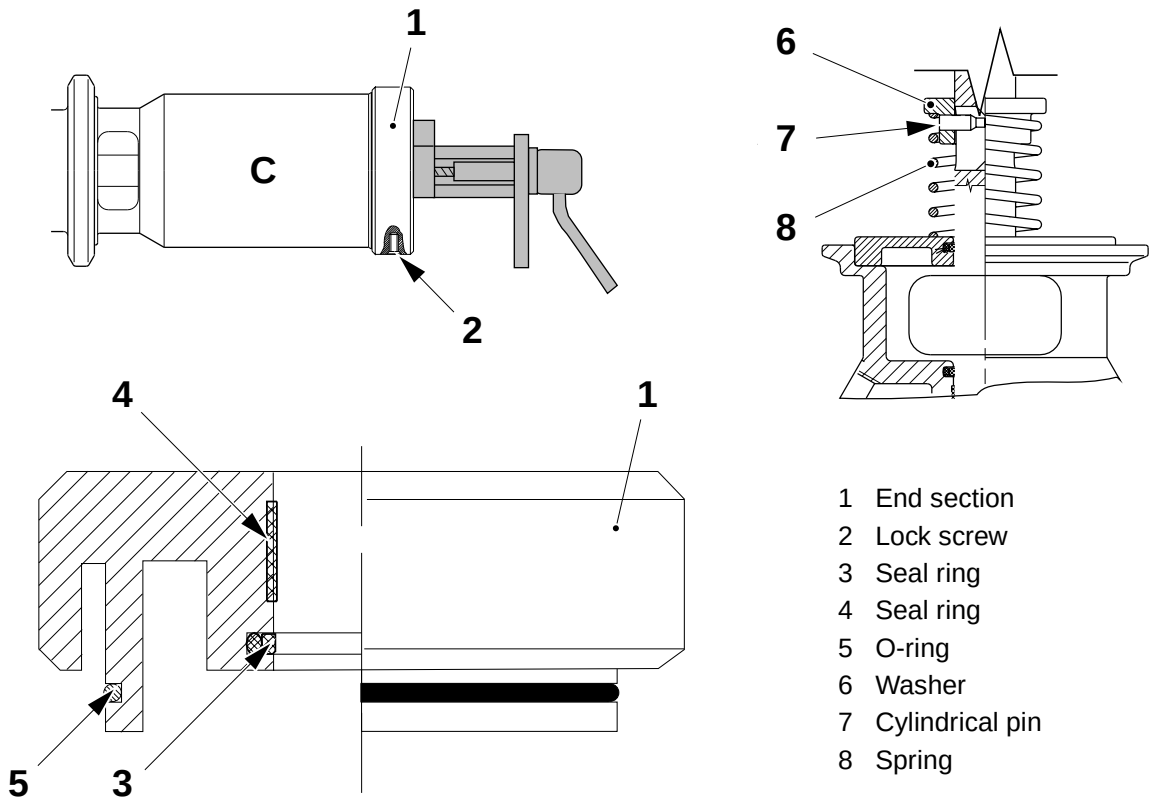

1 End section
2 Lock screw
3 Seal ring
4 Seal ring
5 O-ring
6 Washer
7 Cylindrical pin
8 Spring

MM2.21TS100447en.fm

(Cont'd)

(Cont'd)

f) Remove the rod (9) with the spring (10) and the piston (11).

g) Remove the circlips (12) and remove the piston (11) from the rod (9).

h) Check the O-ring (13) and the seal rings (14). Change as required.

i) Lubricate the piston rod with grease code L.

j) Assemble in the reverse order.

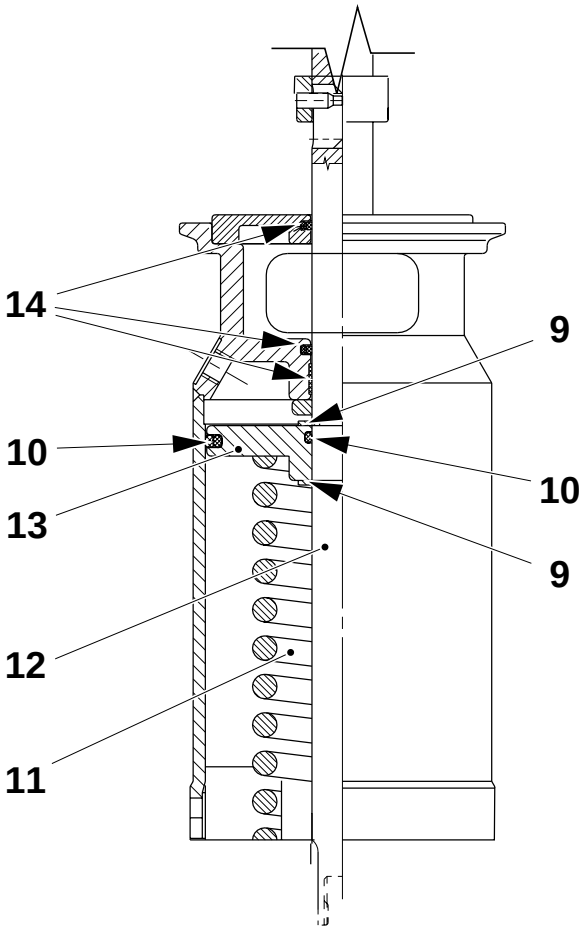

9 Rod
10 Spring
11 Piston
12 Circlip
13 O-ring
14 Seal ring

MM2.21TS100447en.fm

9.4.1-4 C-cylinder- set movement

Machine Status	
SPC reference	576437-0100

a) Set the closing time to 7 sec on the C-cylinder (1) by adjusting on the set screw (2).

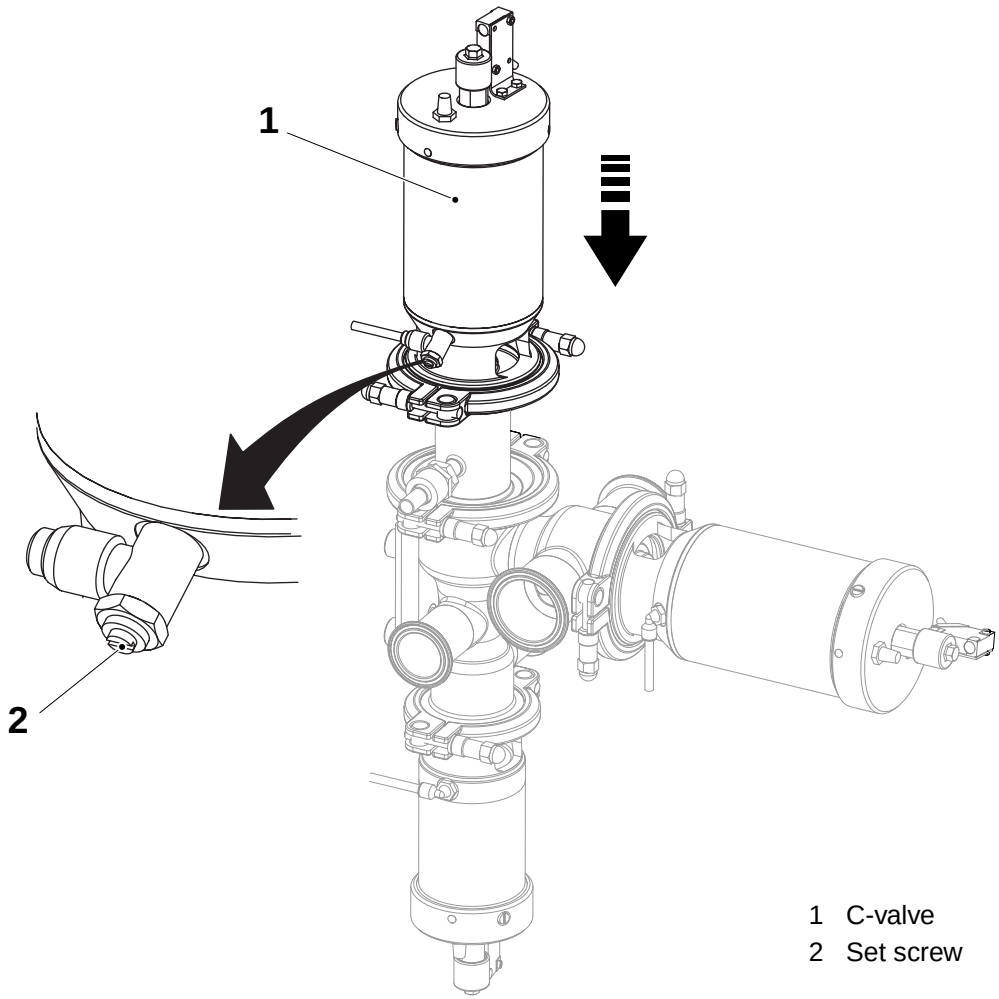

1 C-valve
2 Set screw

MM2.21TS100447en.fm

9.4.2 Regulating valve

Machine Status	
SPC reference	2542995-0100

9.4.2-1 Regulating valve - description

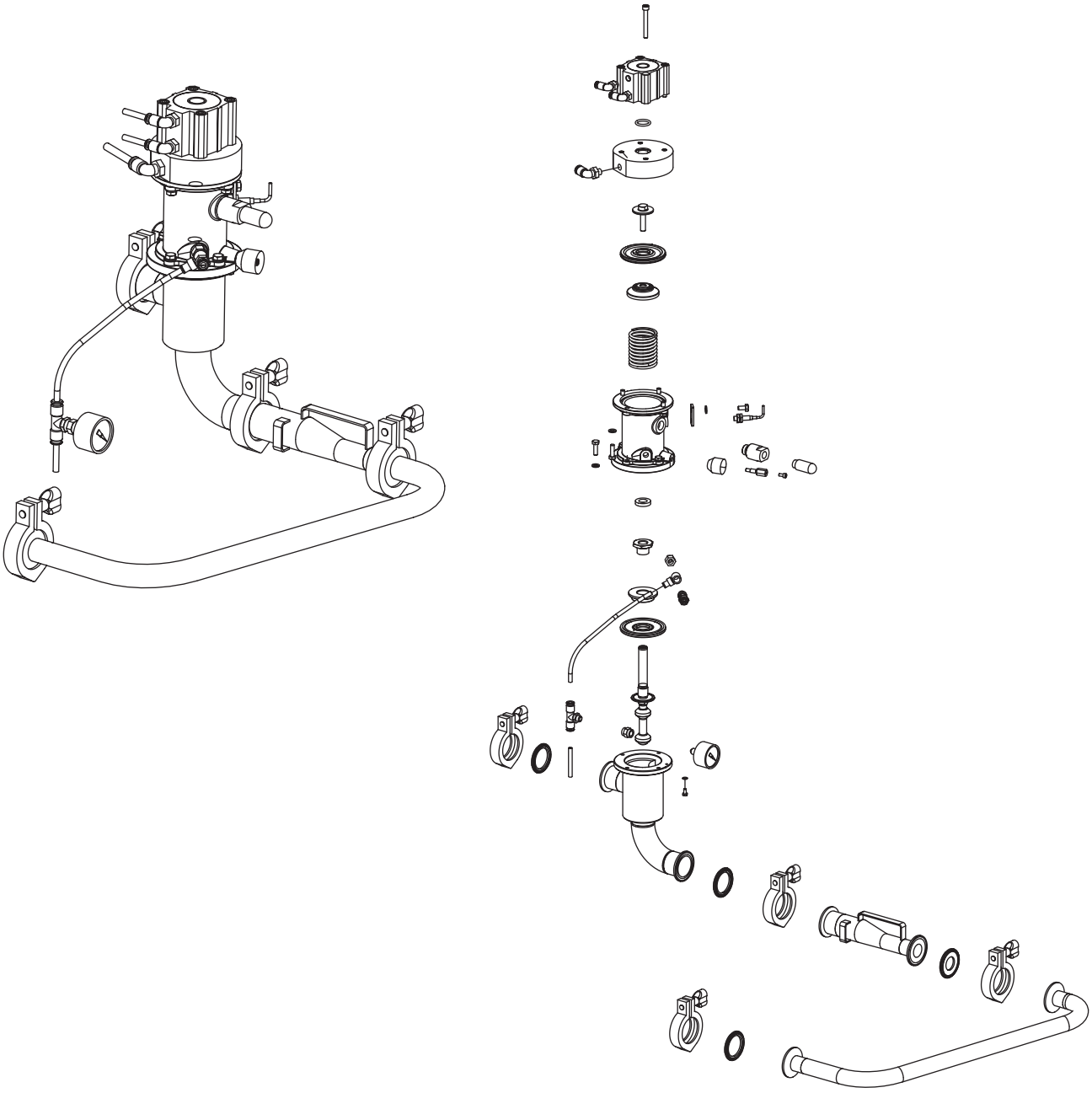

MM2.21TS100447en.fm

9.4.2-3 Regulating valve - overhaul

Machine Status	
SPC reference	2542995-0100

a) Remove the air hoses (1) and hose (2). Note their positions.

b) Remove the proximity switch (3).

c) Disconnect the sensor (4).

d) Disconnect the air dryer valve (5).

e) Remove the valve support (6) from the regulator body (7).

f) Remove the cover (8) from the valve support.

g) Remove the silencer (9) from the valve support.

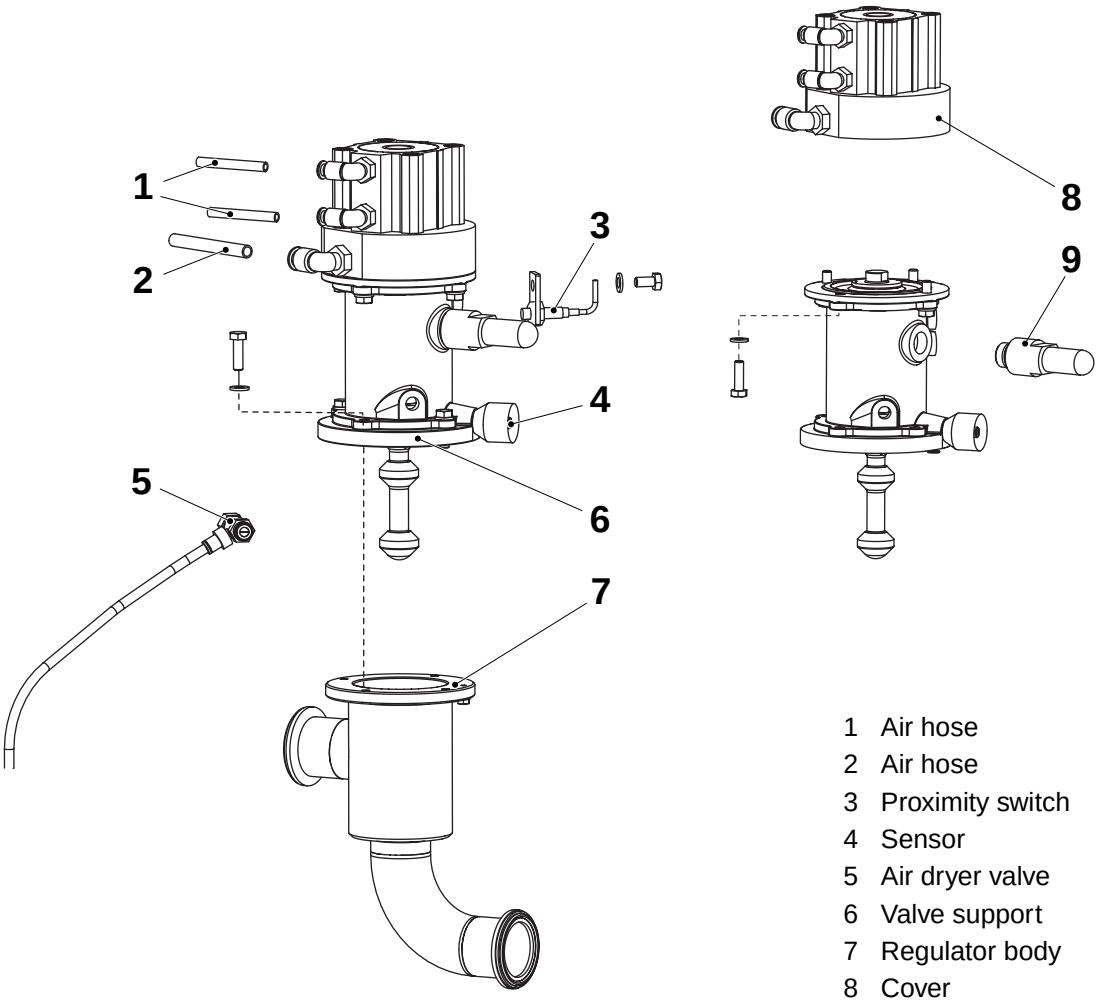

MM2.21TS100447en.fm

1 Air hose
2 Air hose
3 Proximity switch
4 Sensor
5 Air dryer valve
6 Valve support
7 Regulator body
8 Cover
9 Silencer

(Cont'd)

(Cont'd)

h) Remove the screw (10) from the shutter (11).

i) Remove the diaphragm (12), the spacer (13), and the compression spring (14).

j) Separate the shutter by removing the shock absorber (15), unscrew the ferrule (16), and remove the spacer (17) and the diaphragm (18).

k) Replace the two diaphragms (12) and (18). Inspect the other parts, replace as required.

l) Assemble the parts in the reversed order.

m) Check that the shutter moves smoothly.

Note! The diaphragm must be fitted with the product side (20) facing the regulator body (6).

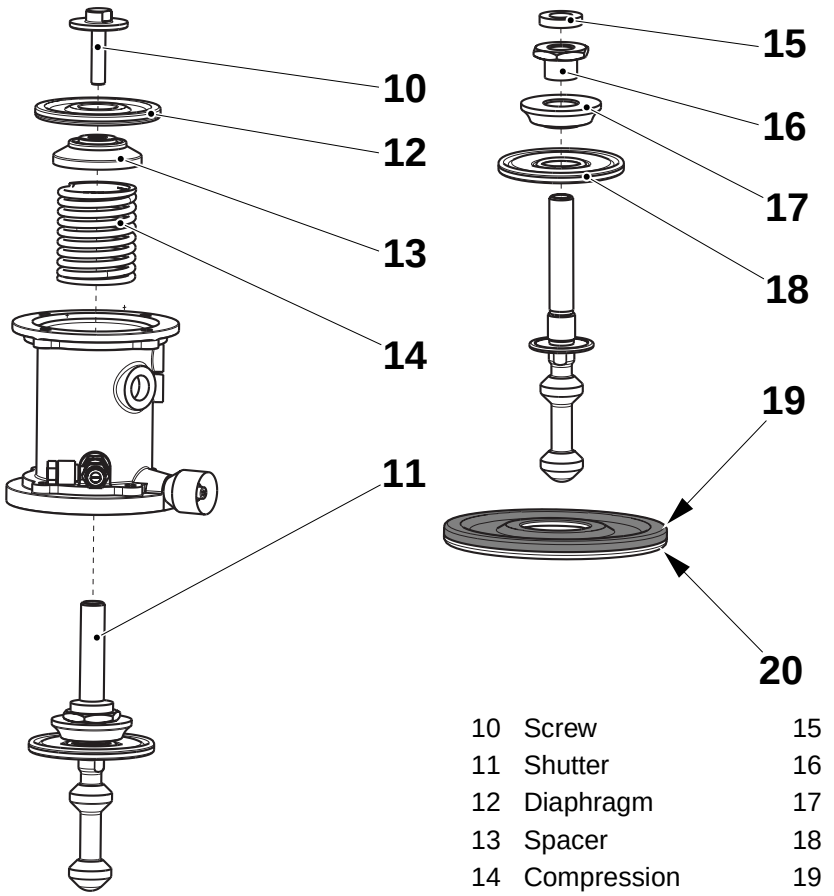

10	Screw	15	Shock absorber
11	Shutter	16	Ferrule
12	Diaphragm	17	Spacer
13	Spacer	18	Diaphragm
14	Compression spring	19	Back side
		20	Product side

(Cont'd)

MM2.21TS100447en.fm

(Cont'd)

Close the air dryer valve (5), open the valve approximate one revolution.

Set the air drying flow until a small airflow pass the silencer (9).

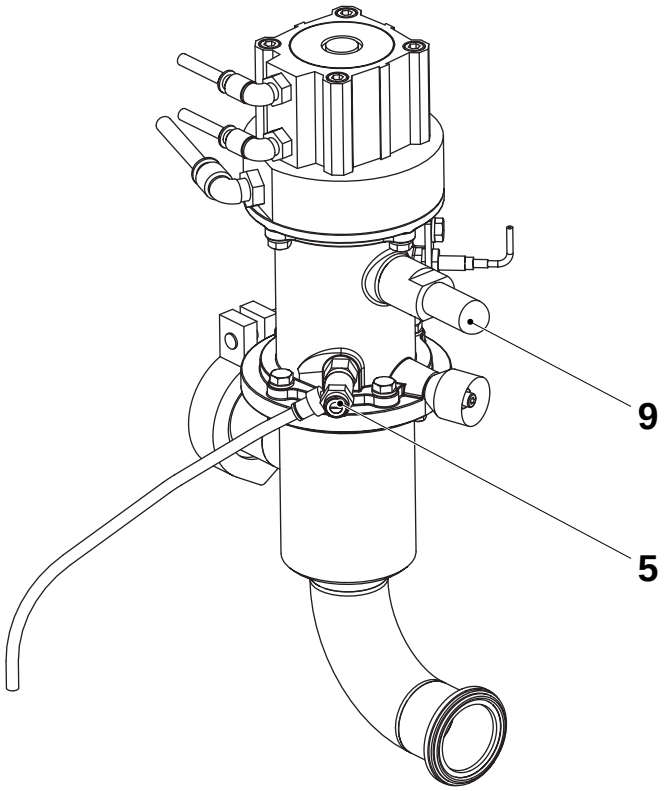

5 Air dryer valve
9 Silencer

MM2.21TS100447en.fm

9.4.2-2 Regulating valve - set proximity switch

Machine Status	
SPC reference	2542995-0100

a) Remove the inductive switch assembly from the flow regulator with screw (1).

b) Set distance **A** between the plate and the inductive switch (3) end.

c) Put back the inductive switch assembly.

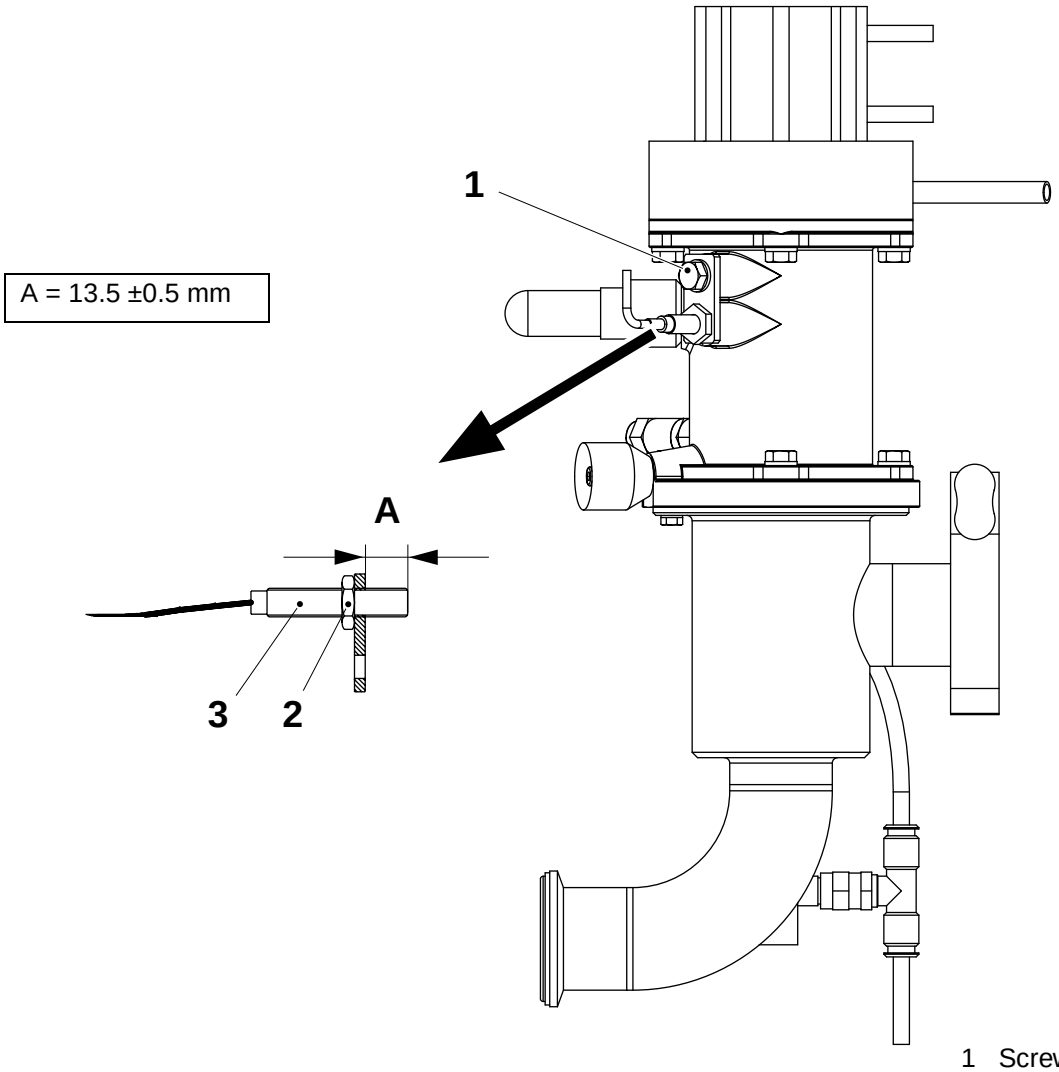

1 Screw
2 Nut
3 Proximity switch

MM2.21TS100447en.fm

9.4.4 Steam unit

SPC reference	2556700-0100

9.4.4-1 Steam unit - check filter

Machine Status	
SPC reference	2556700-0100

WARNING! **Risk of personal injury!**
Make sure that the steam and the compressed air have been turned off. Make sure that there is **no product, steam or cleaning liquid** in the line. In case of accident call for medical attention.

WARNING! **Risk of personal injury**!
The steam system and adjacent components may be hot.
If required wear heat-resistant protective gloves.

Close the steam valve and check that the steam valve locking is in right position before starting any work!

a) Close the steam valve (5) make sure that the steam valve locking (6) is in right position.

b) Loosen the clamp ring (3) and remove the protective cover (1). Clean the inside of the cover as required.

c) Check the O-ring (4) and change it as required.

d) Remove and, if required, clean the filter cartridge (2) by following the procedure described in *9.4.4-3 Steam unit- clean filter*.

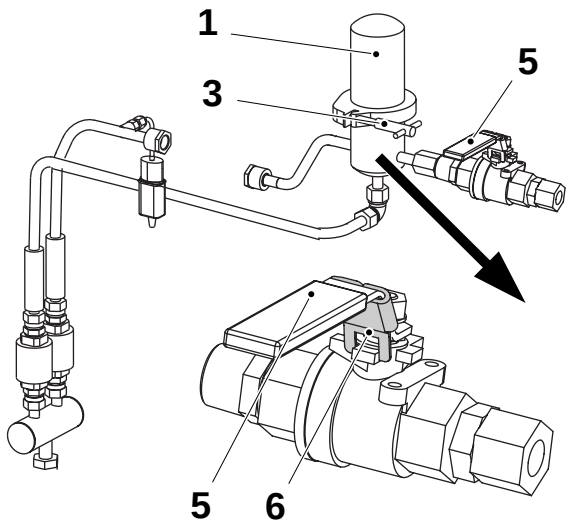

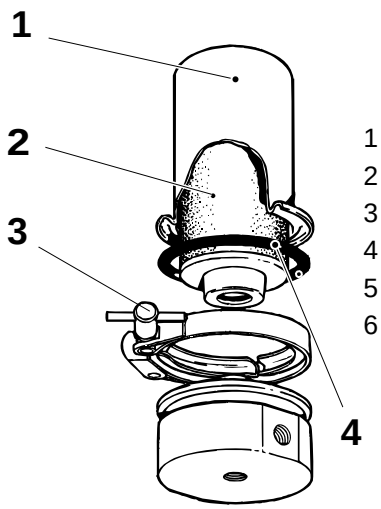

1 Protective cover
2 Steam filter
3 Clamp ring
4 O-ring
5 Steam valve
6 Steam valve locking

MM2.21TS100447en.fm

9.4.4-2 Steam unit - clean steam trap

Machine Status	
SPC reference	2556700

WARNING! **Risk of personal injury!**
Make sure that the steam and the compressed air have been turned off. Make sure that there is **no product, steam or cleaning liquid** in the line. In case of accident call for medical attention.

WARNING! **Risk of personal injury**!
The steam system and adjacent components may be hot.
If required wear heat-resistant protective gloves.

Close the steam valve and check that the steam valve locking is in right position before starting any work!

a) Close the steam valve (1) make sure that the steam valve locking (2) is in right position

b) Remove the steam traps (3) from the line.

c) Unscrew the cap (4).

d) Remove the spacer (5), the spring (6) and the strainer (7). Clean the parts as required.

e) Assemble in the reverse order.

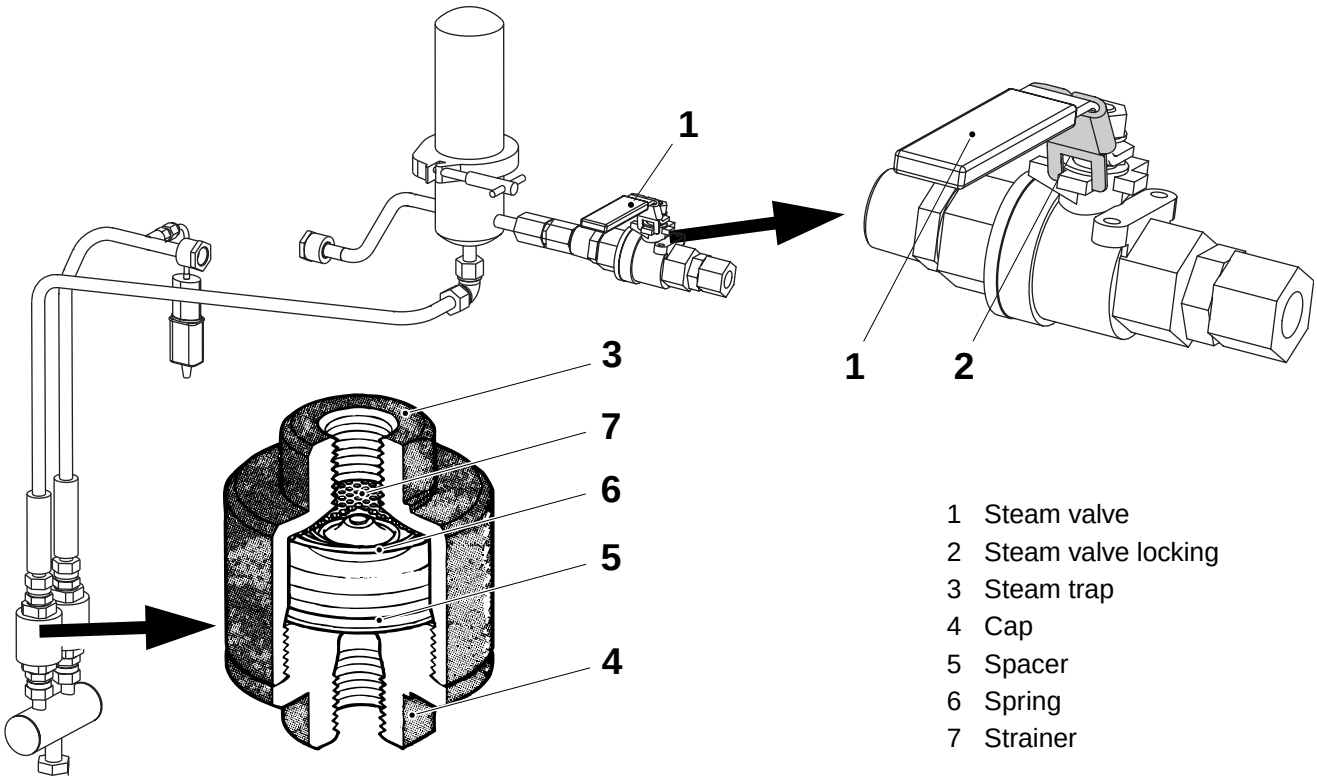

1 Steam valve
2 Steam valve locking
3 Steam trap
4 Cap
5 Spacer
6 Spring
7 Strainer

MM2.21TS100447en.fm

9.4.4-3 Steam unit- clean filter

Machine Status	
Tools - tank - filter - coalecher element - thermometer - pressure gauge	 50 litres Pall Profile 10µm Pall SU range
Consumables - nitric acid	 14 - 15% (w/w)
SPC reference	2556700

WARNING! **Risk of personal injury!**
Make sure that the steam and the compressed air have been turned off. Make sure that there is **no product, steam or cleaning liquid** in the line. In case of accident call for medical attention.

Close the steam valve and check that the steam valve locking is in right position before starting any work!

Close the steam valve (1) make sure that the steam valve locking (2) is in right position

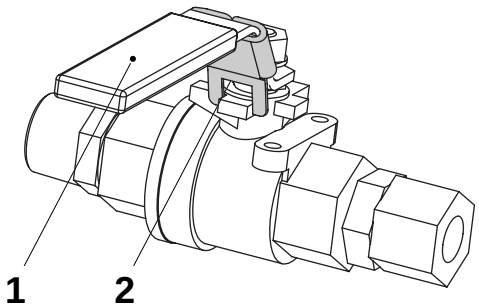

1 Steam valve
2 Steam valve locking

Remove the O-ring (arrow) from the filter cartridge.

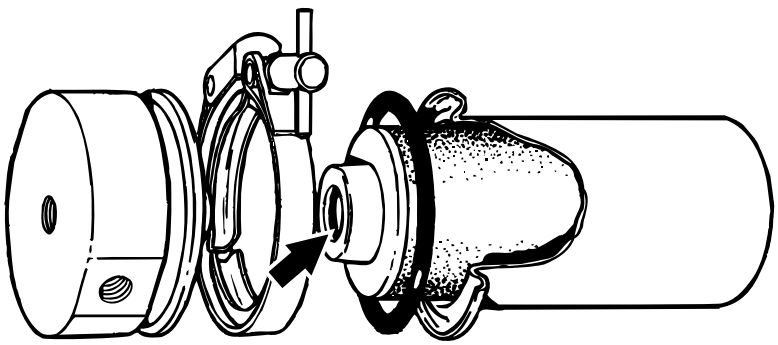

(Cont'd)

MM2.21TS100447en.fm

(Cont'd)

General information

To obtain optimum performance of the filter cartridge:

- clean the filter cartridge thoroughly (or return to Pall for cleaning and testing) before reusing
- label and store used cartridges **after** removing the O-ring.

Water used during cleaning should be distilled **and** filtered.

For rinsing, use a 50 litre tank, designed to avoid “dead spaces”. Incoming water (renewal rate 5 l/min.) must be filtered with Pall Profile 10µm.

The contents of the tank should be agitated by means of compressed air, filtered through a Coalecher element from the Pall SU range.

Caution! If the cartridge is highly contaminated or if the recommended cleaning procedure cannot be executed correctly, contact **Pall Scientific & Laboratory Services** for advice.

MM2.21TS100447en.fm

(Cont'd)

(Cont'd)

Cleaning with nitric acid

WARNING!

Risk of personal injury!
Nitric Acid. Follow the *Safety precautions*.
The cleaning procedure must not contravene with any legal or local safety regulations.

a) Immerse the filter cartridge **in 14 - 15%** (w/w) nitric acid at **60 - 70°C** for 10 - 20 minutes.

b) Rinse the cartridge in water for **at least** 10 minutes.

c) Empty the tank and refill with water. The **pH level** of the tank contents should now be **6 - 8**.

d) Rinse the cartridge again for at least two hours, or until the pH level of the tank contents is the same as that of the incoming water.

e) Flush the cartridge in the reverse direction with water.
If the water emerging from the cartridge is discoloured or contains visible contaminants, repeat the first two steps in the cleaning procedure.

(Cont'd)

MM2.21TS100447en.fm

(Cont'd)

Reverse bubble point testing

Note! Perform these steps **immediately** after the cleaning procedure.

a) Thoroughly soak the filter cartridge in water.

b) Plug one end of the cartridge and connect the other end to a compressed air line. The pressure should be in the range of **0 - 13 KPa**.

c) Submerge the filter cartridge in water. The filter should be kept approximately **125 mm** below the surface.

d) Gradually increase the air pressure while rotating the cartridge slowly, until air bubbles can be seen emerging from it. Record the air pressure at this point.

e) Carefully inspect the filter cartridge to ensure that the air bubbles emerge at a similar rate from the entire cartridge. If not, contact **Pall Scientific & Laboratory Services** for advice.

f) Lower the pressure to half the recorded pressure. If air bubbles emerge from an isolated area of the cartridge at this pressure, contact **Pall Scientific & Laboratory Services** for advice.

Drying procedure

Dry the filter at **105 - 120°C** for **1 - 2 hours**.

After drying, visually check the filter cartridge for damage and/or corrosion. Change the cartridge as required.

Before fitting the filter cartridge, fit a new O-ring.

MM2.21TS100447en.fm

9.4.4-3 Steam unit - change filter insert

Machine Status	
SPC reference	2556700-0100

WARNING! **Risk of personal injury!**
Make sure that the steam and the compressed air have been turned off. Make sure that there is **no product, steam or cleaning liquid** in the line. In case of accident call immediately for medical attention.

Close the system inlet valve. Slowly open the vent and drain the valve to release the pressure.

WARNING! **Risk of personal injury!**
Hot surfaces. Wear protective gloves.

Close the steam valve and check that the steam valve locking is in right position before starting any work!

a) Close the steam valve (1) make sure that the steam valve locking (2) is in right position

b) After few minutes remove the T-nut (3) and the protective cover (4). Clean the inside of the cover.

c) Check the O-ring (6); change as required.

d) Change the filter cartridge (5), and assemble in the reverse order.

Note! Do not overtighten the T-nut, finger tight only.

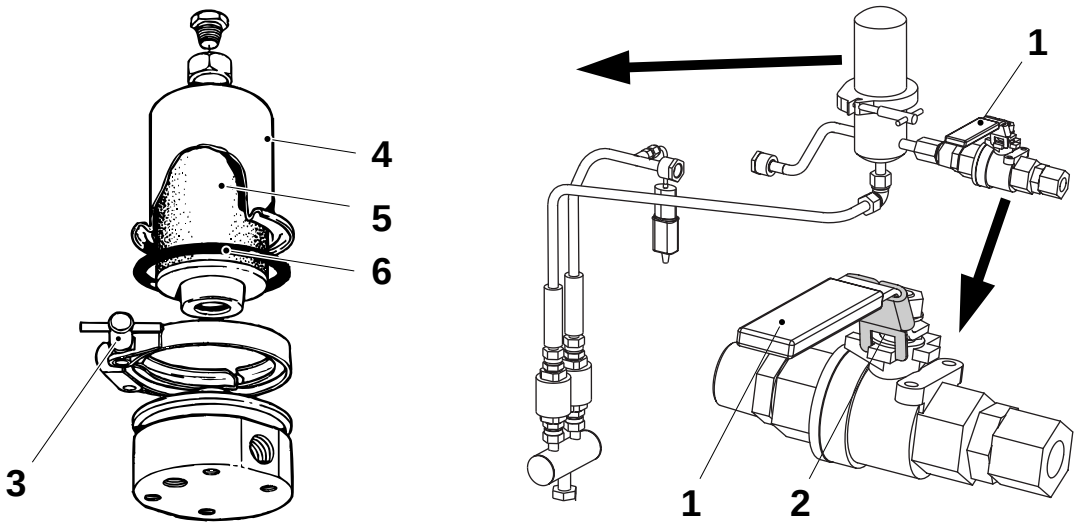

1 Steam valve
2 Steam valve locking
3 T-nut
4 Protective cover
5 Filter cartridge
6 O-ring

MM2.21TS100447en.fm

9.5-1 Air unit

9.5.1-1 No procedures described

Machine Status	
SPC reference	

MM2.21TS100447en.fm

9.6-1 Cable Trays Supply System

9.6.1-1 No procedures described

Machine Status	
SPC reference	

MM2.21TS100447en.fm

9.7-1 Cover

9.7.1-1 No procedures described

Machine Status	
SPC reference	

MM2.21TS100447en.fm

9.8-1 Connection Box

9.8.1-1 No procedures described

Machine Status	
SPC reference	

MM2.21TS100447en.fm

10 Reel trolley

MM2.21TS100448en.fm

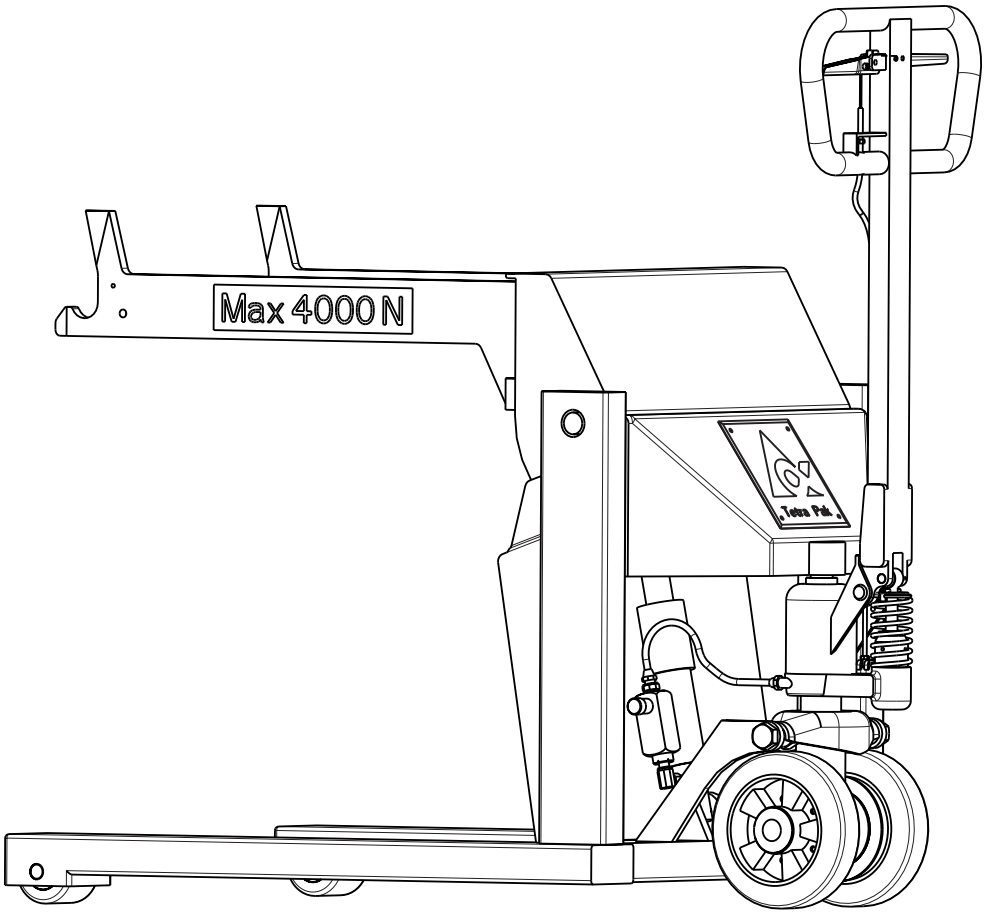

10-1 Reel trolley - check

Machine Status	
SPC reference	1538186-0100

a) Press the brake handle (1) and check the brake releases. If not, see *10-8 Reel trolley - set brake*.

b) Check that all connections are free from oil. Clean if necessary.

c) Pump up the arms to their highest position and check that the cylinder piston (3) is dry. Clean if necessary.

d) Put a packaging material reel in the trolley and pump up the arms until the reel lifts from the floor. Wait for 10 minutes. Make sure the reel does not sink. Sinking can be caused by a broken pump cylinder (2). Change if necessary, see *10-2 Reel trolley - change pump cylinder*.

e) Pump up the arms again until the reel lifts from the floor and then let it down. If the arms sink very quickly, set the regulating valve (4), see *10-3 Reel trolley - set regulating valve*.

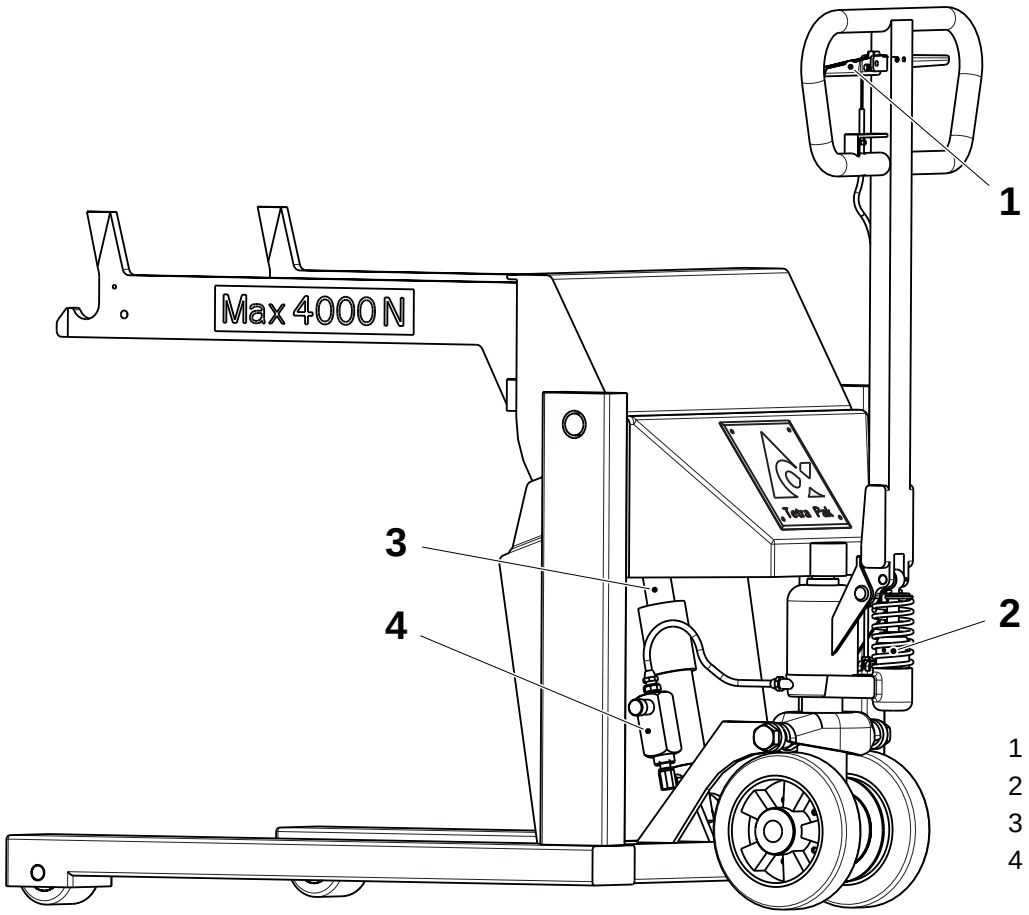

1 Handle
2 Pump cylinder
3 Cylinder piston
4 Regulating valve

MM2.21TS100448en.fm

10-2 Reel trolley - change pump cylinder

Machine Status	
Consumables - lubricant	code C
SPC reference	1538186-0100

Handle

a) Release the tie rod (1) from the valve arm (2).

b) Remove the screw (3) from the axle pin (4).

c) Turn the axle pin (4) clockwise a little and pull out the tie rod (1).

d) Pull out the axle pin (4) and remove the handle (5).

Pump cylinder

a) Remove the split pin (6), the washer (7) and the spring (8).

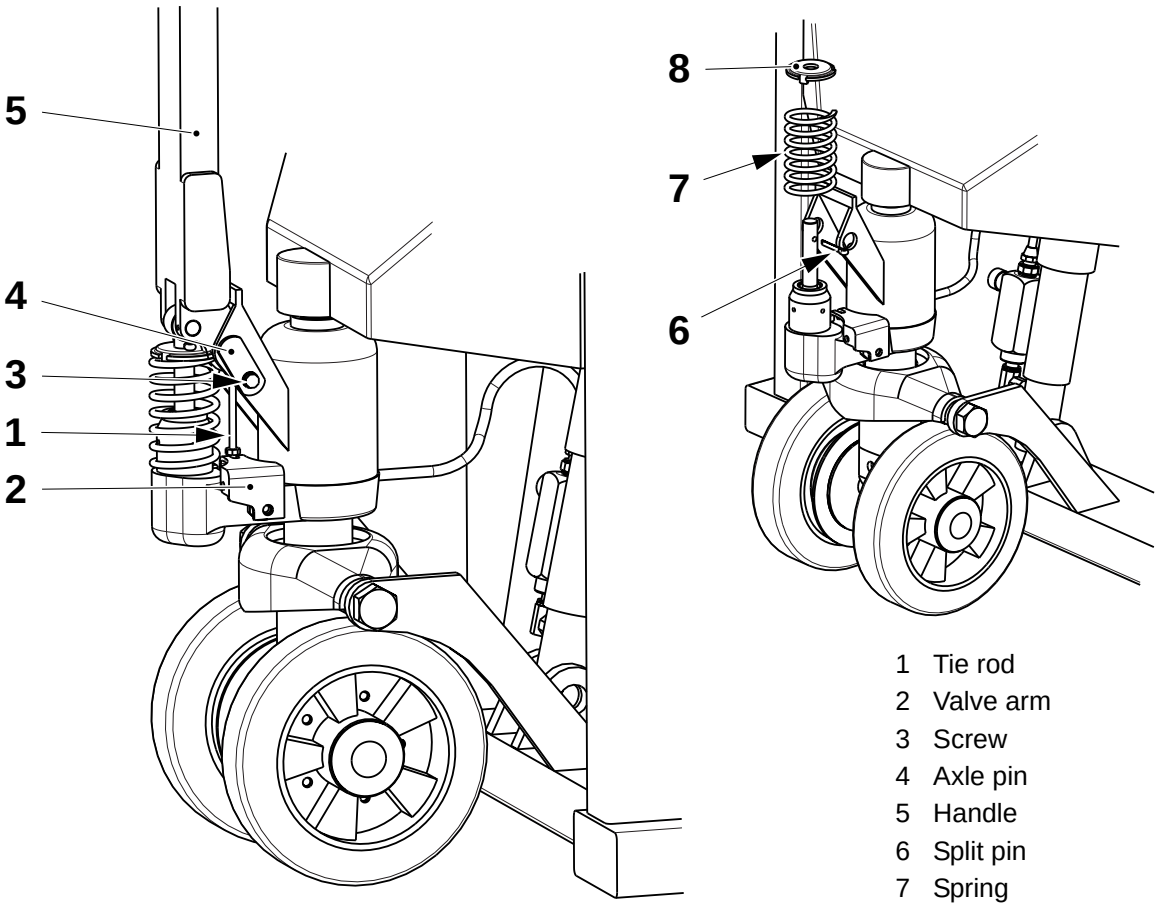

1 Tie rod
2 Valve arm
3 Screw
4 Axle pin
5 Handle
6 Split pin
7 Spring
8 Washer

(Cont'd)

MM2.21TS100448en.fm

(Cont'd)

b) Unscrew the cylinder (9).

c) Remove and change the O-ring (10).

d) Pull the axle (11) in the direction indicated by the arrow in the illustration.

e) Remove the oil seal (12), retaining ring (13), spacer (14) and the seal (15).

f) Change the oil seal (12) and the seal (15).

g) Assemble in the reverse order. Put the arms in lowered position. If necessary, remove the plug (16) and fill with oil, code C, see *Lubricants*.

h) Fill until oil starts to flow out of the plug hole.

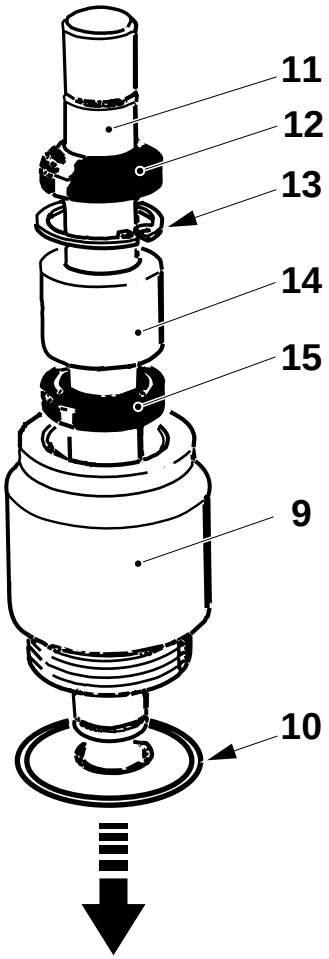

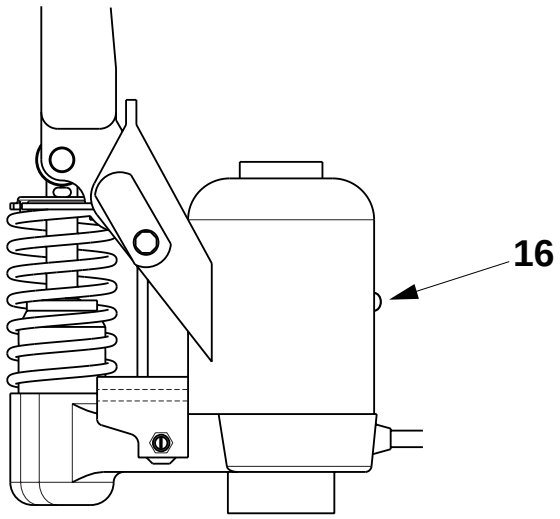

MM2.21TS100448en.fm

9 Cylinder
10 O-ring
11 Axle
12 Oil seal
13 Retaining ring
14 Spacer
15 Seal
16 Plug

10-3 Reel trolley - set regulating valve

Machine Status	
SPC reference	1538186-0100

Using the handle (1), pump up the arms (2) to their highest position.

Press in the handle (3) to lower the arms. Set the knob (4) so the arms reach the lowest position in **8 - 9 seconds**.

If it is not possible to set the correct value, change the sink valve, see *10-4 Reel trolley - change sink valve*.

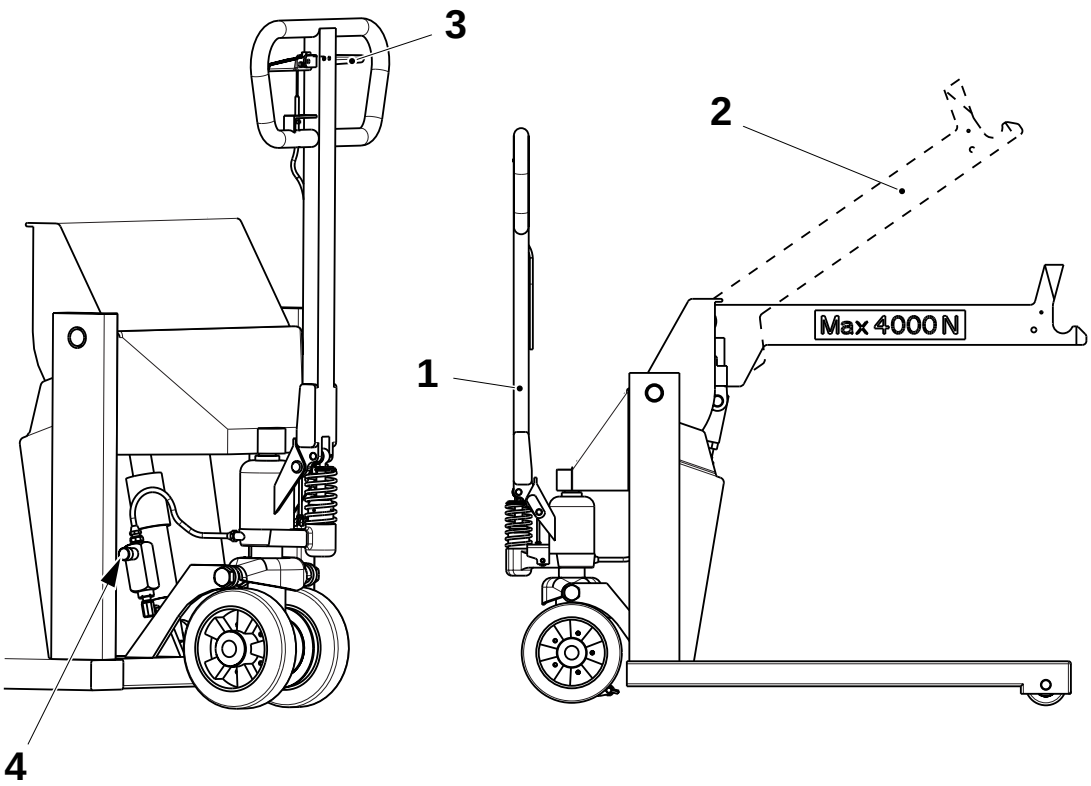

1 Handle
2 Arms
3 Handle (sink)
4 Knob

MM2.21TS100448en.fm

10-4 Reel trolley - change sink valve

Machine Status	
Consumables - lubricant	code C
SPC reference	1538186-0100

a) Release the tie rod (1) and drive out the spring pin (2).

b) Remove the valve arm (3).

c) Unscrew and remove the sink valve (4).

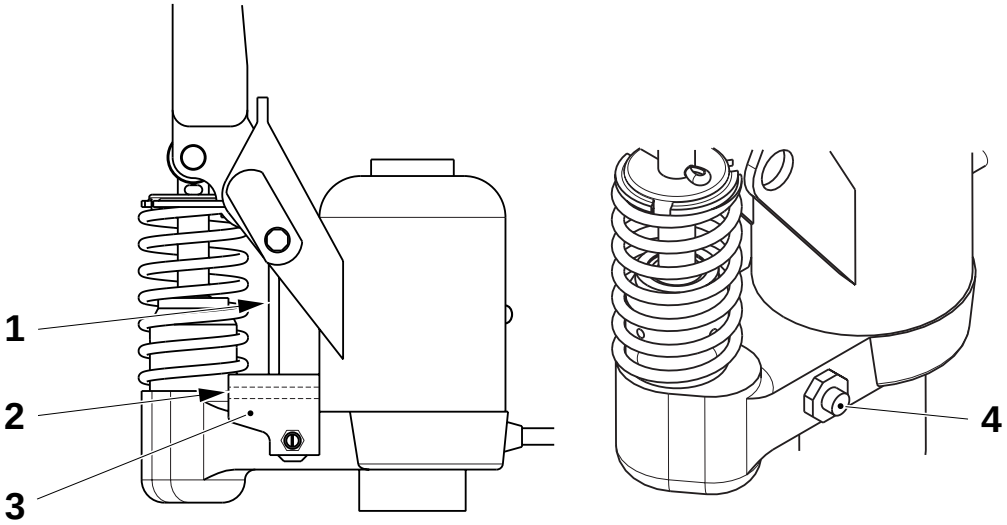

1 Tie rod
2 Spring pin
3 Valve arm
4 Sink valve

MM2.21TS100448en.fm

d) Remove and change the O-rings (5), copper washer (6) and teflon washer (7).

e) Assemble in the reverse order.

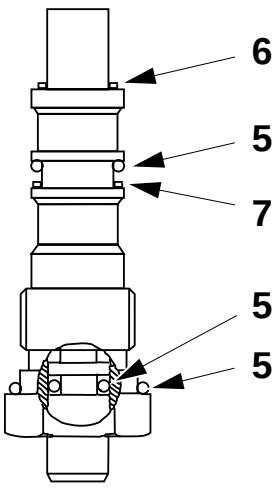

5 O-ring
6 Copper washer
7 Teflon washer

(Cont'd)

(Cont'd)

f) Pump up the arms to their highest position.

g) Loosen the lock nut (8).

h) Unscrew the setting screw (9).

i) Press in the handle (sink) and, at the same time, turn the screw (9) to point where the lifting arms start to sink.

j) Without moving the screw (9), tighten the lock nut (8).

k) Put the arms in their lowest position.

l) If necessary, remove the plug (10) and fill up with oil, code C, see *Lubricants*. Fill up until oil starts to flow out of the plug hole.

m) Set the sink time, see *10-3 Reel trolley - set regulating valve*.

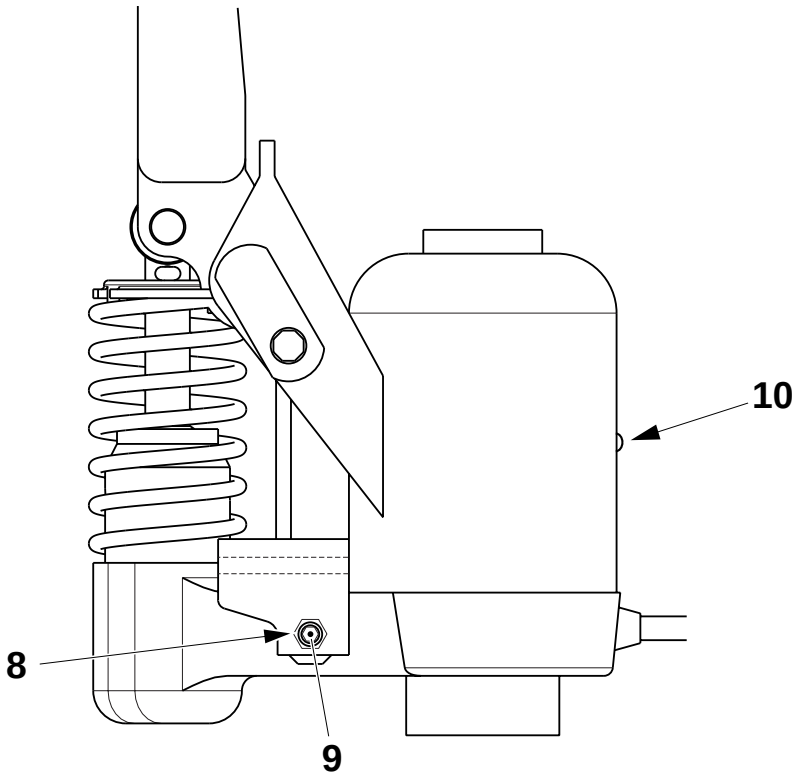

8 Lock nut
9 Setting screw
10 Plug

MM2.21TS100448en.fm

10-5 Reel trolley - overhaul lifting cylinder

Machine Status	
Consumables - lubricant	code C
SPC reference	1538186-0100

a) Undo the oil connection (1).

b) Drive in the spring pins (2) until they stop.

c) Drive out the axles (3).

d) Pull out the cylinder piston (4).

e) Change the seal (5).

f) Remove the retaining ring (6) and the spacer (7).

g) Change the seal (8).

h) Assemble in the reverse order and fill up through the plug (9) with oil, code C, see *Lubricants*.

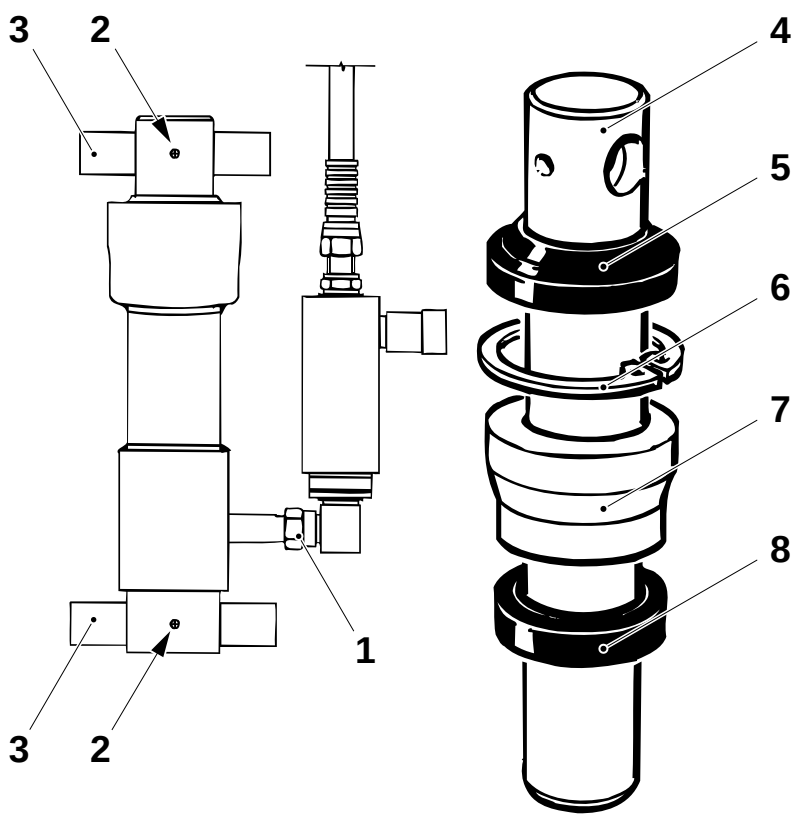

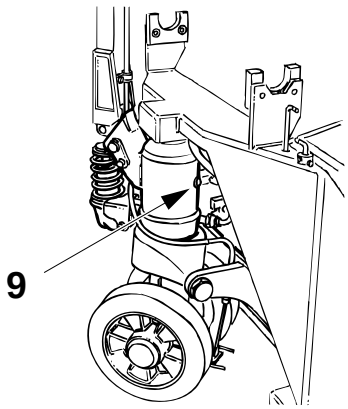

1 Oil connection
2 Spring pin
3 Axle
4 Cylinder piston
5 Seal
6 Retaining ring
7 Spacer
8 Seal
9 Oil plug

MM2.21TS100448en.fm

10-6 Reel trolley - remove fork wheel

Machine Status	
SPC reference	1538186-0100

a) Put the trolley on its side.

b) Drive the pins (1) out of the axle (2) and pull out the axle.

c) Remove the wheel (3) and the sleeves (4).

d) Assemble in the reverse order.

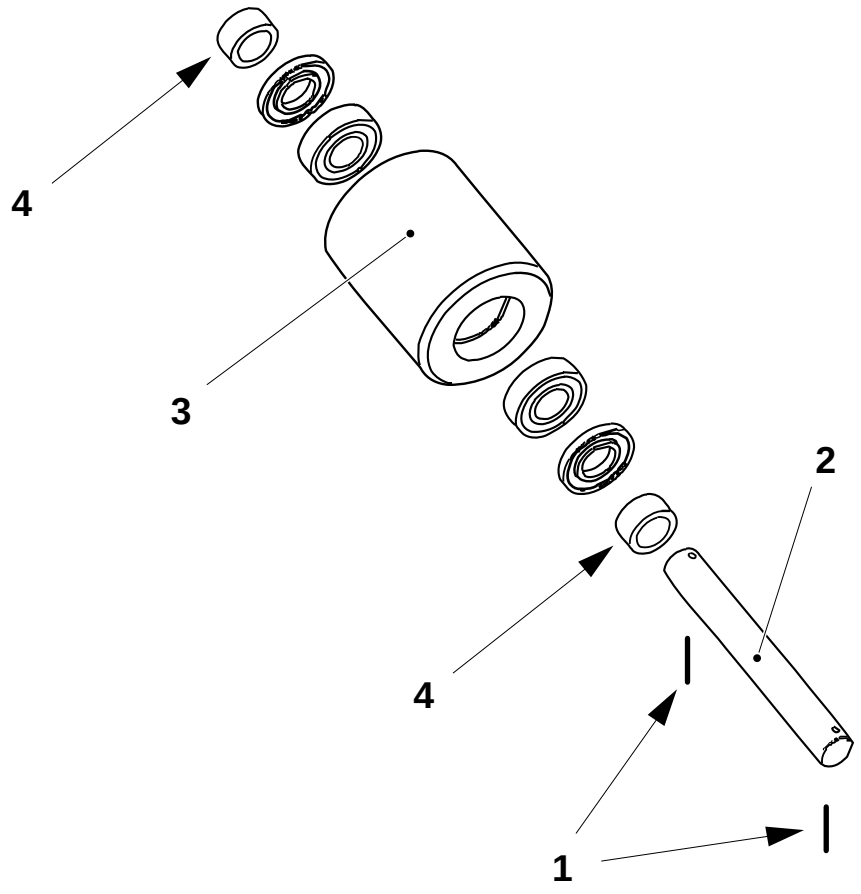

1 Pin
2 Axle
3 Wheel
4 Sleeve

MM2.21TS100448en.fm

10-7 Reel trolley - remove guide wheel

Machine Status	
SPC reference	1538186-0100

a) Put the trolley on its side.

b) Remove the plastic plug (1), retaining ring (2) and wheel (3).

c) Release the torsion spring (4).

d) Remove the cover (5).

e) Remove the springs (6) holding the two break linings (7) together.

f) Assemble in the reverse order.

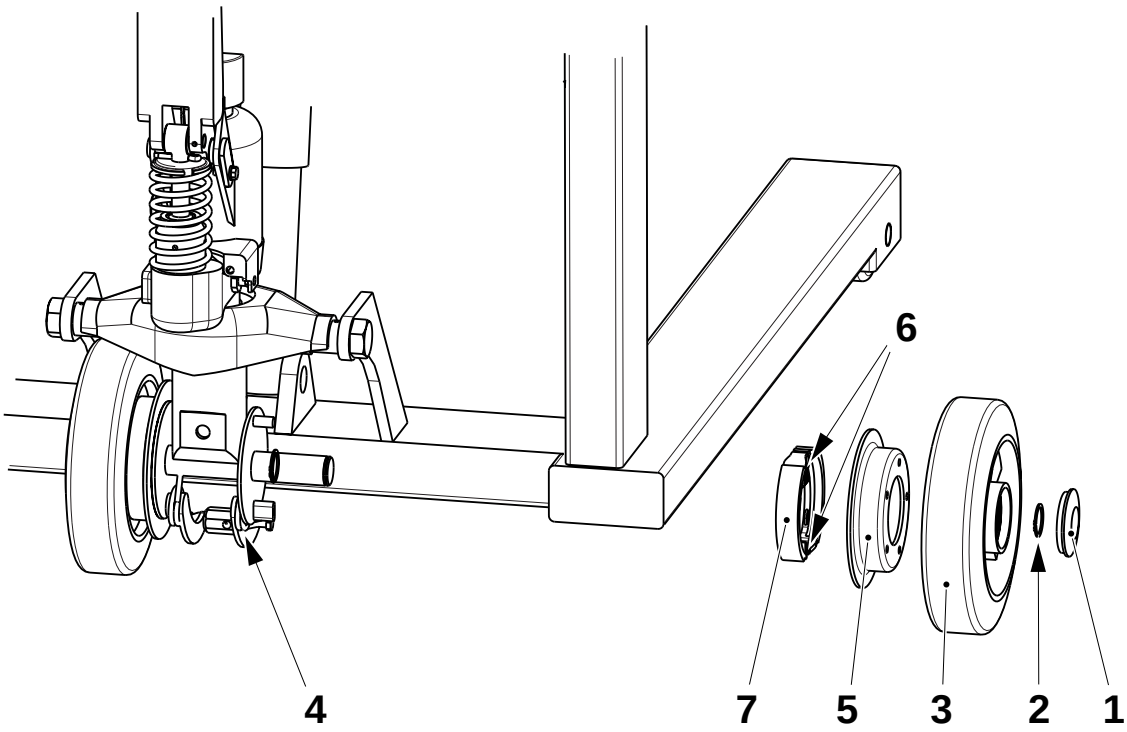

MM2.21TS100448en.fm

1 Plastic plug
2 Retaining ring
3 Wheel
4 Torsion spring
5 Cover
6 Spring
7 Brake lining

10-8 Reel trolley - set brake

Machine Status	
SPC reference	1538186-0100

Press in the brake handle to distance **A**.

Adjust the nuts (1) and (2) until the brake releases.

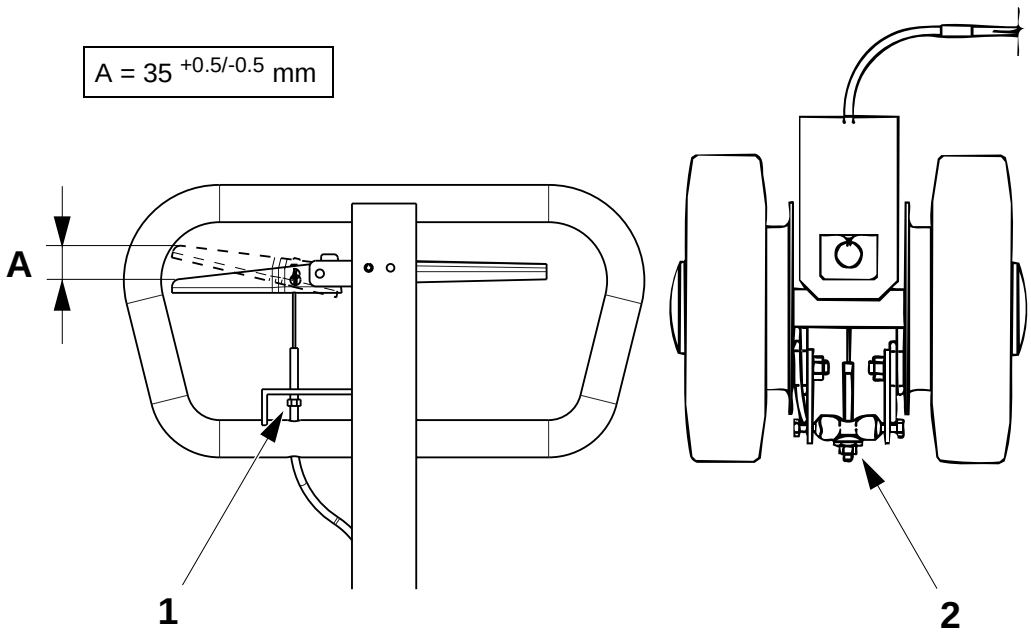

1 Nut
2 Nut

MM2.21TS100448en.fm

This page intentionally left blank

MM2.21TS100448en.fm

11 General

MM2.21TS100449en.fm

11.1 Consumables

11.1-1 Lubricants

WARNING! **Risk of personal injury!**
Certain lubricants can cause injury if they come into contact with the eyes, skin, mucous membranes, or clothing. Always follow the manufacturer's instructions for handling chemical products.

The table below lists only a selection of lubricants with their respective designations.

Lubricant specifications may be ordered from:
Tetra Pak Global Technical Support AB, Ruben Rausings gata, SE-221 86 LUND, Sweden.

Lubricant Code	Part No. (used when ordering from Tetra Pak)	Example	
		Supplier	Product Designation (2002-10)
A Motor oil	90 296-28	BP Esso Statoil Mobil Shell Caltex/Texaco Optimol	Vanellus FE 10W-30 Essolube XD-3 10W-30 PowerWay D2 10W-30 Delvac 1400 Super 10W-30 Myrina TX 10W-30 Ursa LA 10W-30 Non Plus Ultra 10W-40
B High-pressure oil	90 296-73 90 296-78	BP Esso Statoil Mobil Shell Caltex/Texaco Imperial Kluber Optimol	Energol GR-XP 220 Spartan EP 220 LoadWay EP 220 Mobilgear 630 Omala oil 220 Meropa Lubricant 220 Tribol ET 280-220 Lamora 220 Optigear 5150 VG 220
	90 296-72 For use in production plant with start temperature below 5° C.	BP Esso Statoil Mobil Shell Caltex/Texaco Imperial Kluber Optimol	Energol GR-XP 150 Spartan EP 150 LoadWay EP 150 Mobilgear 629 Omala oil 150 Meropa Lubricant 150 Tribol ET 280-150 Lamora 150 Optigear 5120 VG 150

MM2.21TS100449en.fm

Lubricant Code	Part No. (used when ordering from Tetra Pak)	Example	
		Supplier	Product Designation (2002-10)
C Hydraulic oil	90 296-53	BP Esso Statoil Mobil Shell	Bartran HV 32 Univis N 32 HydraWay HV 32 DTE Oil 13 Tellus Oil T 32
D Mist lubrication oil	90 296-80	BP Esso Statoil Mobil Shell Caltex/Texaco	Autran GM-MP ATF Dextron TransWay DX II ATF 220 ATF Dextron II Texamatic fluid (DEXTRON II)
E Compounded cylinder oil	90 296-77 90 296-2	BP Esso Statoil Mobil Shell Caltex/Texaco	Energol AC-C460 Cylesso TK 460 CylWay FZ 460 600W Super Cylinder Oil Valvata Oil J460 Vanguard Cylinder Oil
F Lithium grease, EP type	90 296-68	BP Esso Statoil Mobil Shell Kluber Optimol	Energrease LS EP 2 Esso MP Grease/Beacon EP 2 UniWay EP 2 N Mobillux EP 2 Grease 1344 LiEP 2 Centoplex 2 EP Longtime PD 2

MM2.21TS100449en.fm

Lubricant Code	Part No. (used when ordering from Tetra Pak)	Example	
		Supplier	Product Designation (2002-10)
H High-pressure oil	90 296-75 90 296-76	BP Esso Statoil Mobil Shell Caltex/Texaco Imperial Kluber Optimol	Energol GR-XP 320 Spartan EP 320 LoadWay EP 320 Mobilgear 632 Omala oil 320 Meropa Lubricant 320 Tribol ET 280-320 Lamora 320 Optigear 5180 VG 320
	90 296-73 90 296-78 For use in production plant with start temperature below 5° C.	BP Esso Statoil Mobil Shell Caltex/Texaco Imperial Kluber Optimol	Energol GR-XP 220 Spartan EP 220 LoadWay EP 220 Mobilgear 630 Omala oil 220 Meropa Lubricant 220 Tribol ET 280-220 Lamora 220 Optigear 5150 VG 220
K Circulation oil	90 296-15	BP Esso Statoil Mobil Shell Caltex/Texaco Imperial Kluber	Energol CS 100 Turbesso 100 TurbWay 100 DTE Oil Heavy Tellu Oil 100 Regal Oil R & O 100 Tribol 775 Crucolan 100
L Silicon grease	90 296-9	Dow Kluber	Dow Corning 7 Compound Unisilikon L 250L
M Lithium grease, EP type	90 296-70	BP Esso Statoil Mobil Kluber Optimol	Energrease LS EP 1 Beacon EP 1 UniWay EP 1 Mobillux EP 1 Centoplex 1 EP Longtime PD 1
N PTFE grease	90 296-91	Sikema	Fluolub 210
O Lithium complex grease	90 296-61	BP Esso Statoil Imperial	Energrease LS 3 Unirex N3 UniWay HT-63 Molub-Alloy ET 860-220

MM2.21TS100449en.fm

Lubricant Code	Part No. (used when ordering from Tetra Pak)	Example	
		Supplier	Product Designation (2002-10)
P Synthetic compressor oil	90 296-54	BP Esso Statoil Mobil Shell Caltex/Texaco	Energol RC-R68 Compressor Oil 68 CompWay 68 Rarus 427 Corena Oil H68 Compressor Oil VDL 68
Q Low friction assembly paste	90 296-12	Dow Kluber	Molykote G-N Plus Unimoly Plus
R Synthetic grease	90 459-246	Kluber	Klubersynth UH1 14-1600
S Synthetic hydrocarbon grease	90 296-10	Mecman Mobil	435-1 Mobilgrease 28
T Synthetic lubricating grease	90 459-0340	Shell	Cassida HDS2
U Hydraulic fluid	90 459-1310	Shell	Cassida Fluid HF32
V	90296-0104	Molykote	Molykote Foodslip EP Gear Oil 220
X	90296-0105	Klüber Lubrication	Klüberoil 4 UH1-220

MM2.21TS100449en.fm

11.1-2 Cleaning and Disinfecting Agents

WARNING! **Risk of explosion!**
Do **not** use alcohol based compounds (such as disinfectant code G and cleaning agent code J) when cleaning or disinfecting parts that can come into contact with hydrogen peroxide.

CAUTION! **Risk of hydrogen peroxide decomposition!**
Do **not** use chlorine or iodine based cleaning agents or disinfectants when cleaning or disinfecting parts that can come into contact with hydrogen peroxide.

Comparable qualities from other suppliers may be selected in compliance with the technical requirements listed in the table.

All cleaning agents/disinfectants must comply with local legal requirements.

The supplier recommendations for concentration and temperature should be followed.
When dosing the products automatically, their concentrations should be checked.

Hard water >5° dH.

Cleaning/ Disinfection	Code (0101)		Example			
			Type of Product	Pure Chemicals	Formulated Products	
					Henkel	Diversey-Lever
CIP	**A**		Alkali	NaOH 1.5%	P3-mip RC P3-mip CIP	Diverflow VC13 (Soft water) Diverflow VC7 (Hard water)
	B	**1**	Acid	HNO_3 1%	-	Diverflow VA5
		2	Acid	H_3PO_4 1%	P3-horolith CIP P3-horolith USP	Diverflow VA3
		3	Acid	HNO_3+H_3PO_4	P3-horolith FL P3-horolith V	Diverflow VA4
External cleaning	**C**	**1**	Alkali foam	-	P3-topax 12	Diverclean VF9
		2	Acid foam	-	P3-topax 56	Diverclean VF12
		3	Disinfection foam	-	P3-topax 99	Divoscan VT1
		4	Alkali solution	-	P3-mip FPC	Diverclean VK12

(Cont'd)

MM2.21TS100449en.fm

(Cont'd)

Cleaning/ Disinfection	Code (0101)		Example			
			Type of Product	Pure Chemicals	Formulated Products	
					Henkel	Diversey-Lever
Manual cleaning, wiping	**D**		Alkali solution/ foam	-	P3-mip FPC P3-topax 12	Diverclean VK12
	E		Acid solution/ foam	-	P3-topax 56 P3-topax 58	Diverflow VA5 Diverflow VA3
Manual disinfection, immersion	**F**	**1**	Disinfection foam	-	P3-topax 99	Divosan VS1
		2	Disinfection solution	-	P3-steril BG	Divosan VT1
Manual disinfection	**G**	**1**	Alcohol solution	Isopropanol 70%	-	Divosan VT10
		2	Alcohol solution	Ethanol 70%	P3-alkodes	-
Hand disinfection	**H**		-	-	P3-manodes	Leverline Med H5
Manual cleaning	**J**		Alcohol solution	Isopropanol/ Ethanol 95%	-	-
Deliming	**K**		Citric acid solution	-	-	

MM2.21TS100449en.fm

This page intentionally left blank

MM2.21TS100449en.fm

12 Checklist overview

MM2.21TS100450en.fm

12.1 Checklist overview - description

This section of the MM, **is intended for customers who do NOT use the Tetra Pak Maintenance System (TPMS).** The checklist overview contains all the check points for a specified machine type or equipment which are needed in order to keep the equipment in good condition. The following items can be found in the checklist:

- **Document Reference**– shows where you can find more information about the check point.
- **Section/Description** – name of unit and type of activity. For further information, see MM code.
- **Interval** – how often the check item should be performed in production hours.

Note! The checklist overview in this manual **may differ from the TPMS checklists** delivered by your local service station, due to the fact that TPMS checklists are continuously updated and adapted to local demands.

12.2 TPMS - description

The maintenance system used for equipment from Tetra Pak is called the **Tetra Pak Maintenance System (TPMS)**. If you are using TPMS, the checklists will be delivered directly from your local Tetra Pak service station.

The TPMS checklists are designed to match and keep pace with the ongoing development of new and existing equipment from Tetra Pak, and to meet the demands set by our customers for even higher efficiency and better economy.

Some of the advantages of TPMS are:

- TPMS maintains complete production lines.
- TPMS reduces down-time to a minimum each time maintenance is carried out.
- Updates of the maintenance schedule based on experience gained, improvements, modifications and specific customer requirements are issued.
- Recommendations regarding spare parts, rotation units, tools and templates, etc. are included.

The service life of each item in the equipment is predicted and all items are checked before they affect the efficiency of the equipment. This leads to different maintenance intervals for each item and the check list is unique for each maintenance occasion.

The results of the maintenance are sent back to the Tetra Pak service station. Statistics are evaluated regularly, giving a continuously updated maintenance system.

If you require further information regarding TPMS, please do not hesitate to contact your local Tetra Pak office

MM2.21TS100450en.fm

12.3 Checklist overview

Document Reference	Section/Description	Activity	Interval (h)
00	**Pre-Maintenance Checks**		
OM	Run machine check function. If machine does not function correctly, inform supervisor before continuing.	Check	1000
	Go through the lists carried out by the customer since the last service, discuss with customer technician	Check	1000
01	**Infeed**		
MM 1.2.1-1	Strip magazine; Hub	Check	2000
MM 1.2.1-2	Strip magazine; Hub; Bearings	Change	8000
MM 1.2.3-1	Strip magazine; Cutting table	Check	1000
MM 1.2.4-1	Mounting sheet; Rollers	Check	1000
MM 1.2.4-2	Mounting sheet; Rollers	Change	5000
MM 1.2.5-1	Magazine; Rollers	Check	1000
MM 1.2.5-2	Magazine; Rollers	Change	5000
MM 1.2.7.-1	Bobbin Brake	Check	1000
MM 1.2.7-2	Bobbin Brake - Belt	Change	3000
MM 1.2.7-3	Bobbin Brake - Rollers	Change	5000
MM 1.3.1-1	Strip applicator; Strip guide; Roller	Change	3000
MM 1.3.1-2	Strip applicator; Strip guide; Roller	Change	6000
MM 1.3.3-1	Strip applicator; Drive roller	Check	2000
MM 1.3.3-2	Strip applicator; Drive roller-Flange bushing	Change	6000
MM 1.3.4-1	Strip applicator; Pressure roller	Check	500
MM 1.3.6-1	Strip applicator; Rollers	Check	2000
MM 1.3.7-1	Strip applicator; Rollers	Check	2000
MM 1.3.9-1	Strip applicator; Rollers	Check	2000
MM 1.3.6-2	Strip applicator; Rollers-Flange bushing	Change	6000
MM 1.3.7-2	Strip applicator; Rollers-Flange bushing	Change	6000
MM 1.3.9-2	Strip applicator; Rollers-Flange bushing	Change	6000
MM 1.3.11-1	Strip applicator; Pressure roller	Check	1000
MM 1.3.11-2	Strip applicator; Pressure roller-Flange bushing	Change	6000
MM 1.3.12-1	Strip applicator; Splicing detector-Flange bushing	Change	3000
MM 1.4-1	Strip applicator; Paper magazine	Check	2000
MM 1.5-1	Frame; Bearing block	Change	6000
MM 1.5.1-1	Bending roller	Check	2000
MM 1.5.1-2	Bending roller; Flange bushings	Change	6000
MM 1.7.1-1	Splicing device; Pressure jaw	Check	2000
MM 1.7.1-2	Splicing device; Pressure jaw-Cylinder	Change	12000
MM 1.7.1-3	Splicing device; Pressure jaw-Rubber strip	Change	2000
MM 1.7.1.1-1	Splicing device; Paper guide-Cylinder	Check	2000
MM 1.7.1.1-2	Splicing device; Paper guide-Cylinder	Change	12000
MM 1.7.2-1	Splicing device; Splicing table-Teflon tape	Check	1000
MM 1.7.2-2	Splicing device; Splicing table-Teflon tape	Change	3000

MM2.21TS100450en.fm

Document Reference	Section/Description	Activity	Interval (h)
MM 1.7.2-3	Splicing device; Splicing table	Check	2000
MM 1.7.2-4	Splicing device; Splicing table-Cylinder	Overhaul	12000
02	**Sterile Unit**		
MM 2.2.1-1	Element Group; Element	Check	1000
MM 2.2.1-1	Element Group; Element	Change	3000
MM 2.2.2-1	Hatch; Rubber strip	Check	1000
MM 2.2.2-1	Hatch; Rubber strip	Change	5000
MM 2.2.3-1	Box	Check	1000
MM	Box; Shaft	Check	5000
MM 2.2.3-2	Box; Bushing	Change	3000
MM 2.2.4-1	Connecting pipe	Clean	1000
MM 2.2.5-1	Box; Air knife	Check	1000
MM 2.3-2	Sterilization Bath; Bending roller	Check	1000
MM 2.3-3	Sterilization Bath; Roller-Bearings	Change	2000
MM 2.3-3	Sterilization Bath; Bending roller-Bearings	Change	10000
MM 2.3-5	Squee-gee roller-Rubber hose	Change	500
MM 2.3-6	Squee-gee roller; Ball bearing	Change	1000
MM 2.3.6-1	Sterilization Bath; Level Sensor	Check	1000
MM 2.3.6-2	Sterilization Bath; - Seal	Change	5000
MM 2.3.7-1	Lid; Rubber strip	Check	1000
MM 2.3.7-1	Lid; Rubber strip	Change	5000
03	**Tube Forming unit**		
MM 3.1-1	Web guide	Check	1000
MM 3.1-2	Web guide; Bearings	Change	5000
MM 3.2-1	Pendulum roller	Check	1000
MM 3.2-2	Pendulum roller; Bearings	Change	5000
MM	Pendulum roller; Seal	Change	10000
MM 3.2-3	Pendulum roller; Cylinder	Change	8000
MM 3.4.-1	Drive unit	Check	1000
MM 3.4-2	Drive unit	Overhaul	10000
MM	Aseptic chamber; Rubber gasket	Change	5000
MM 3.7.1-1	Lower forming ring	Check	500
MM 3.7.1-2	Lower forming ring;Flange bearing	Change	3000
MM 3.7.3-1	Longitudinal element	Check	1000
MM 3.7.3-2	Longitudinal element; Rollers	Change	2000
MM 3.7.3-3	Longitudinal element	Overhaul	6000
MM	Longitudinal element	Change	12000
MM 3.7.5-1	Cantilever; Seal ring	Change	2000
MM 3.7.6-1	Upper forming ring	Check	500
MM 3.7.6-2	Upper forming ring; Flange bearing	Change	3000
MM 3.8-1	Edge roller	Check	1000
MM 3.8-2	Edge roller; Flange bearing	Change	3000

MM2.21TS100450en.fm

Document Reference	Section/Description	Activity	Interval (h)
MM 3.8-3	Edge roller; Roller	Change	4000
04	**Main Body**		
MM	Drive unit; Chain tension	Check	500
MM	Drive unit; Chain andSprocket	Change	4000
MM	Drive unit; Safety clutch	Check	1000
MM	Drive unit; Oil brushes	Check	1000
MM	Heating Side	Check	500
MM	Sprocket	Check	1000
MM	Sprocket	Change	3000
MM	Sprocket; Ball bearing	Check	3000
MM	Sprocket; Ball bearing	Change	6000
MM	Frame section; Chain guide	Check	1000
MM	Frame section; Chain tensioner	Check	2000
MM	Guide sprocket	Check	3000
MM	Guide sprocket	Change	6000
MM	Heating jaw	Check	500
MM	Heating jaw; Rollers	Change	1000
MM	Heating jaw; Rollers	Change	1000
MM	Heating jaw; Carbon brush	Change	1000
MM	Heating jaw; Guide	Check	2000
MM	Heating jaw; Shafts	Check	3000
MM	Heating jaw; Clamp block	Change	4000
MM	Heating jaw; Spring	Change	5000
MM	Heating jaw; Spring	Change	5000
MM	Contact Rail	Check	3000
MM	Pressure Side	Check	500
MM	Spacer piece: Chain guide	Check	1000
MM	Spacer piece: Roller	Check	1000
MM	Sprocket; Sprocket	Check	1000
MM	Sprocket; Sprocket	Check	2000
MM	Sprocket; Chain	Check	1000
MM	Sprocket; Ball bearing	Check	3000
MM	Plunger; Roller Bar	Check	5000
MM	Plunger; X-Seal	Change	4000
MM	Design correction; Curve	Check	2000
MM	Design correction; Pressure plate	Check	5000
MM	Pressure jaw	Check	500
MM	Pressure jaw; Bearing roller	Change	1000
MM	Pressure jaw; Bearing roller	Change	1000
MM	Pressure jaw	Check	2000
MM	Pressure jaw; Knife	Change	2000
MM	Pressure jaw; Knife	Change	2000

MM2.21TS100450en.fm

12 Checklist overview

Document Reference	Section/Description	Activity	Interval (h)
MM	Pressure jaw; Ruler	Check	5000
MM	Pressure jaw; Spring	Change	5000
MM	Pressure jaw; Spring	Change	5000
MM	Guide sprocket	Check	3000
05	**PackageOutfeed**		
MM 7.1-1	Cylinder	Change	10000
MM 7-2	Outfeed	Check	2000
MM 7.2-1	Outfeed; Conveyor belt, Sprockets	Change	10000
MM 7.3-1	Flange bearing Unit	Change	10000
06	**Supply systems**		
MM 9.2-3	Spray system; Filter	Check	1000
MM 9.1.1-1	Pump Unit; Hose	Check	500
MM 9.4.2-3	Regulating valve	Overhaul	500
MM 9.4.1-1 MM 9.4.1-2 MM 9.4.1-3 MM 9.4.1-4	AP valve; A-cylinder, B-Cylinder and C-Cylinder-Seals / Diaphragms	Change	2000
MM 9.2.2-1	Heat exchanger	Check	5000
MM 9.4.4-3	Steam system; Filter insert	Change	3000
MM 9.4.4-2	Steam system; Steam Traps	Clean	1000
MM 9.3-2	Air unit-Filter	Change	1000
07	**Electrical cabinet**		
MM 8.1.8-1	Residual current device - Function	Check	500
09	**Domino Ink jet unit**		
Domino	Filters	Change	2000
Domino	Filter	Check	8000
95	**After-Maintenance Checks**		
	Door guards and emergency stops. Check that all switches and emergency stops are intact and operates correctly.	Check	1000
	Run machine - Check function.	Check	1000
	Package check - Check package according to recommendation in Operation Manual.	Check	1000
OM	Packaging material Splicing device - Make a splice and check function of unit and quality of unit.-Function	Check	1000
OM	Strip Splicing device - Make a splice and check function of unit and quality of unit.-Function	Check	1000

MM2.21TS100450en.fm

Tetra Pak

EM binder labels. 40 mm Full width *Note! This page is generated **automatically** using the **variable definitions** made in the **front page** file!!*

Tetra Pak A1
630451-0200

Issue 2003-03-01 Doc No. MM-85599-0102

Tetra Pak A1
630451-0200

Issue 2003-03-01 Doc No. MM-85599-0102

Tetra Pak A1
630451-0200

Issue 2003-03-01 Doc No. MM-85599-0102

Tetra Pak A1
630451-0200

Issue 2003-03-01 Doc No. MM-85599-0102

Tetra Pak A1
630451-0200

Issue 2003-03-01 Doc No. MM-85599-0102

Tetra Pak A1
630451-0200

Issue 2003-03-01 Doc No. MM-85599-0102

Tetra Pak A1
630451-0200

Issue 2003-03-01 Doc No. MM-85599-0102

Tetra Pak A1
630451-0200

Issue 2003-03-01 Doc No. MM-85599-0102

Tetra Pak A1
630451-0200

Issue 2003-03-01 Doc No. MM-85599-0102

Tetra Pak A1
630451-0200

Issue 2003-03-01 Doc No. MM-85599-0102

Tetra Pak A1
630451-0200

Issue 2003-03-01 Doc No. MM-85599-0102

Tetra Pak A1
630451-0200

Issue 2003-03-01 Doc No. MM-85599-0102

EM binder labels. 30mm Halfwidth *Note! This page is generated **automatically**. using the **variable definitions** made in the **front page** file!!*

Tetra Pak A1
630451-0200
Issue 2003-03-01 Doc No. MM-85599-0102

Tetra Pak A1
630451-0200
Issue 2003-03-01 Doc No. MM-85599-0102

Tetra Pak A1
630451-0200
Issue 2003-03-01 Doc No. MM-85599-0102

Tetra Pak A1
630451-0200
Issue 2003-03-01 Doc No. MM-85599-0102

Tetra Pak A1
630451-0200
Issue 2003-03-01 Doc No. MM-85599-0102

Tetra Pak A1
630451-0200
Issue 2003-03-01 Doc No. MM-85599-0102

Tetra Pak A1
630451-0200
Issue 2003-03-01 Doc No. MM-85599-0102

Tetra Pak A1
630451-0200
Issue 2003-03-01 Doc No. MM-85599-0102

Tetra Pak A1
630451-0200
Issue 2003-03-01 Doc No. MM-85599-0102

Tetra Pak A1
630451-0200
Issue 2003-03-01 Doc No. MM-85599-0102

Tetra Pak A1
630451-0200
Issue 2003-03-01 Doc No. MM-85599-0102

Tetra Pak A1
630451-0200
Issue 2003-03-01 Doc No. MM-85599-0102

Tetra Pak A1
630451-0200
Issue 2003-03-01 Doc No. MM-85599-0102

Tetra Pak A1
630451-0200
Issue 2003-03-01 Doc No. MM-85599-0102

Tetra Pak A1
630451-0200
Issue 2003-03-01 Doc No. MM-85599-0102

Tetra Pak A1
630451-0200
Issue 2003-03-01 Doc No. MM-85599-0102