OM
Operation Manual

Tetra Pak A1

630451-0200

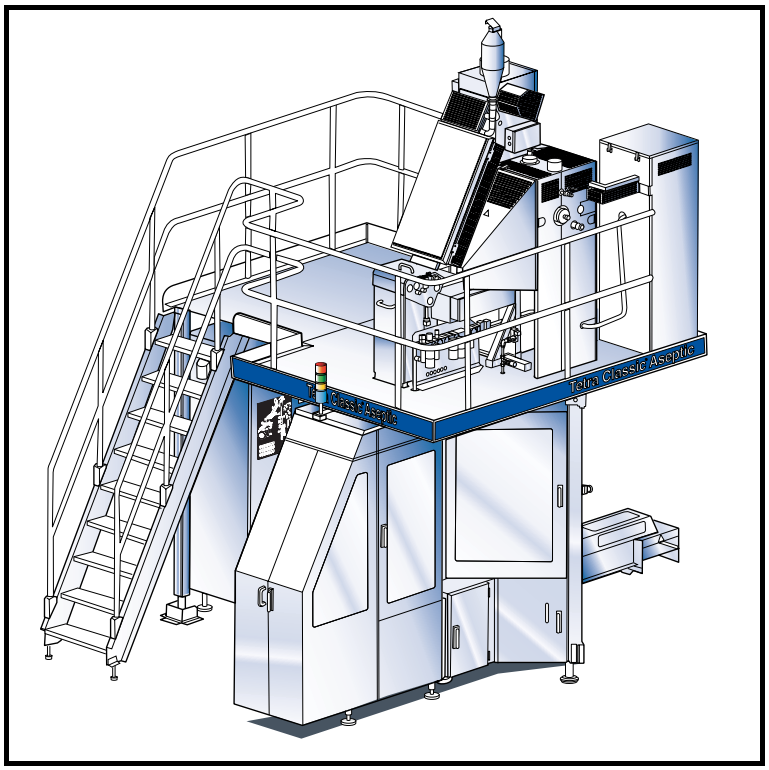

OM2.21856000102.fro.fm

Tetra Pak

Doc No. OM-85600-0102

This document is valid for:

Series No/ Machine No Sign.

OM

Tetra Pak A1
630451-0200

Equipment included:

2592400-0100

OM2.21856000102.fro.fm

Doc No. OM-85600-0102

Issue 2003-03-01

Tetra Pak

Tetra Pak Carton Ambient AB

Table of contents

Introduction 1

Document Information 1
Machine Introduction 3
Identification 4
Orientation 5
Hygiene 6
Abbreviations Used in this Manual 7

Safety Precautions 9

Read the Safety Precautions 9
Hazard information 10
Requirements on personnel 11
Safety signs 14
Safety Devices 17
Personal Protection 22
Hazardous Materials 23
Supply Systems 30

General description. 37

Abbreviations 37
Packaging material and strip 38
Right hand 40
Left hand 41
Electrical Cabinet 42
Ladder symbols 44
Alarm symbols 46
Control panel buttons/function 48
Push buttons/function. 50
Controllers 51
Temperature regulator 52
Packaging terms. 53
Packaging material web 56
Numbering of jaws and packages 57

2.2856000102TOC.fm

Alarms/Troubleshooting 59
Warning lamp and alarms 59
Alarm handling 59
Monitor panel 60

Preparations after daily care 77

Preparations after weekly care 89
Threading of packaging material web 95
Threading of strip 102

Start 109

Production check 113

Package checks 117
Numbering of jaws and packages 118
Longitude sealing (LS) 124
Transversal sealing (TS) 125
To be checked extra carefully. 125

Strip splice preparation 129

Stop 131
Emergency stop 131
Short stop 132
Normal stop 134
Production finished 135

Daily Care 137

Weekly Care 157

PLMS Display 183
Description 183
Navigation 184
System setting 187
Production shift setting 189
Alarm system 191

2.2856000102TOC.fm

Collect system 193
Manoeuvre system 210
Customize system 212

Packaging material splice 215

Threading of packaging material web 215
Factory splice 218

Peroxide handling 219

Concentration check 219
Hydrogen peroxide concentration (by weight) 221
Adding wetting agent 222
Filling peroxide bottle 224
Filling spray can 225
Peroxide disposal 226
Recommended hydrogen peroxide 227

Technical Data 229

Setting Values 229
Disinfectants and Cleaning Agents 231
Lubricants 233

2.2856000102TOC.fm

This page intentionally left blank

2.2856000102TOC.fm

Introduction

This section contains basic information about this manual and related Tetra Pak equipment..

DANGER!

Immediate danger to life!
To ensure maximum safety, always read the Safety Precautions before operating or servicing the machine or equipment.

Document Information

Tetra Pak recommends that the delivered information is studied carefully, and above all, ensure its availability to those who will be operating the machine or equipment.

It is important to keep the manual for the life of the machine or equipment and pass the manual on to any subsequent holder or user.

Tetra Pak will not be held responsible for any damage to the machine or equipment caused by not following the instructions given in this manual.

OM2.21TS100700en.fm

Delivered Documentation

The documents delivered with this machine or equipment include:

- Electrical Manual (EM)
  The purpose of this manual is to provide the service technicians and electricians with information required for service and maintenance
- Installation Manual (IM)
  The purpose of this manual is to provide installation personnel with the information required for installation
- Maintenance Manual (MM)
  The purpose of this manual is to provide the service technicians with information required for maintenance and service
- Operation Manual (OM)
  The purpose of this manual is to provide the operator with information on how to handle and operate the machine or equipment before, during, and after production
- Spare Parts Catalogue (SPC)
  The purpose of this manual is to provide necessary information for ordering spare parts from Tetra Pak

OM2.21TS100700en.fm

Typographical Conventions

Buttons, TPOP screens, and program steps are printed in CAPITAL LETTERS.

References are underlined.

Machine Introduction

Intended Use of the Machine or Equipment

The intended use of this Tetra Pak machine is to pack liquid food products.

All other use is prohibited! Tetra Pak will not be held responsible for injury or damage if the machine or equipment is used for any other purpose.

Manufacturer

This Tetra Pak machine or equipment has been manufactured by:

Tetra Pak Carton Ambient AB
Ruben Rausings gata
SE-221 86 LUND
Sweden

Service

If problems are encountered when operating this machine or equipment, contact the nearest Tetra Pak service station or market company.

Contact the liaison responsible with other inquiries, comments or suggestions for improvement regarding the machine or equipment and its documentation.

Copyright © 2003
Tetra Pak Carton Ambient AB

All rights reserved. No parts of this document may be reproduced or copied in any form or by any means without written permission from Tetra Pak Carton Ambient AB.

OM2.21TS100700en.fm

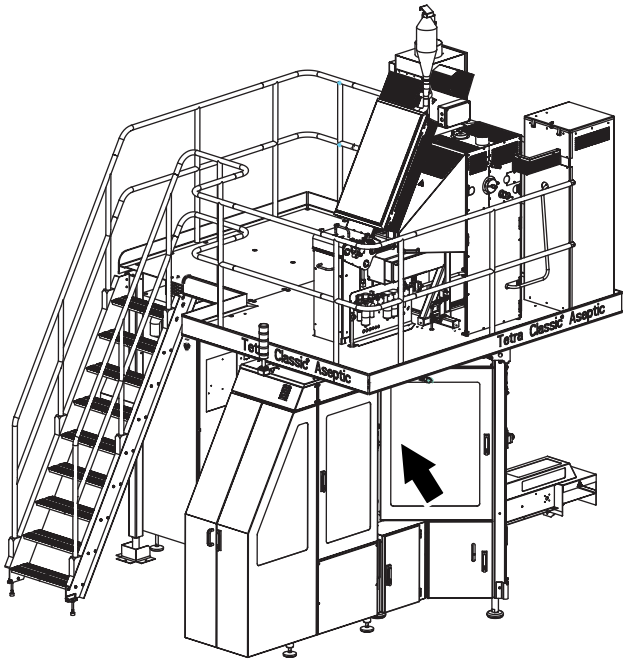

Identification

CE Classification

This equipment complies with the basic health and safety regulations of the European Economic Area (EEA).

Machine Plate

The illustration shows an example of the machine plate and its location on the machine or equipment. The machine plate carries data needed when contacting Tetra Pak concerning this specific machine or equipment.

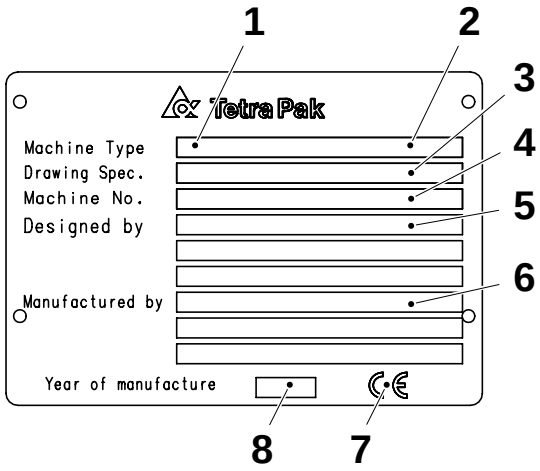

1 Machine type
2 Volume
3 Drawing specifications
4 Machine serial number
5 Designed by
6 Manufacturer
7 CE mark
8 Year of manufacture

OM2.21TS100700en.fm

Orientation

The illustration shows the orientation of the machine or equipment. This directional information will be used throughout this manual.

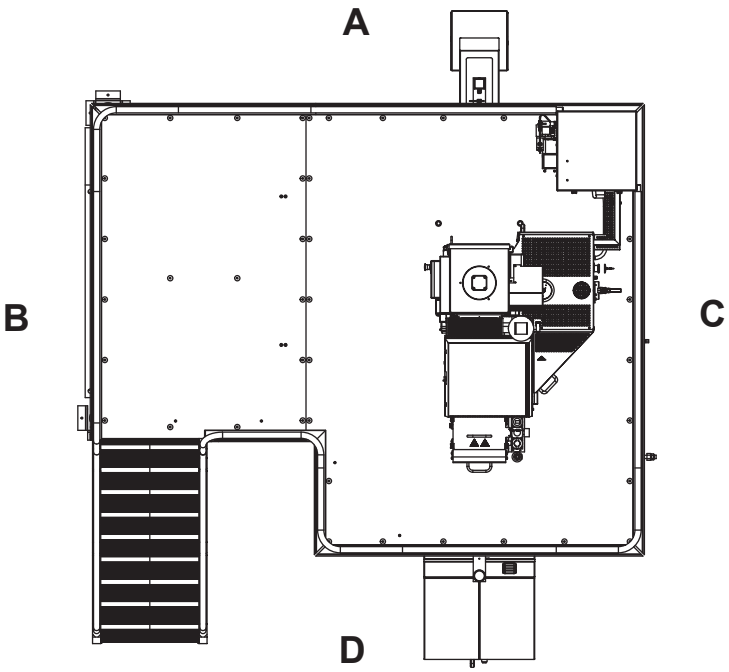

A Front
B Right Hand side
C Left Hand side
D Back

OM2.21TS100700en.fm

Hygiene

To avoid microbiological pollution of the packaging material:

- always keep the doors in the filling room (area) closed and never open any windows when the equipment is in production to prevent contamination via air streams
- never clean the floors or the equipment in the filling room (area) when the equipment is in production
- compressed air used for cleaning purposes is to be used only for cleaning filters and should only be used outside of the filling room (area) or in the final folder compartment of the filling machine
- prepare the splicing of the packaging material as late as possible
- disinfect hands before touching the packaging material, the strip(s), or any other equipment part that may come into contact with the product.Use disinfectant (code H).
- keep hands and gloves clean
- always wear some type of hair protection (cap or hairnet) and clean clothes (preferably white)
- do not wear a watch, ring, necklace, earrings or any other visible jewelry
- clean the platforms, the ladder and the area around the equipment when the equipment is not in production

OM2.21TS100700en.fm

Abbreviations Used in this Manual

Abbreviation	Meaning	Translation
approx.	approximately	
CIP	Cleaning In Place	
EM	Electrical Manual	
IM	Installation Manual	
LED	Light Emitting Diode	
LH	Left Hand	
LS	Longitudinal Seal(ing)	
min	Minimum	
max	Maximum	
MM	Maintenance Manual	
OE	Optional Equipment	
OM	Operation Manual	
p/h	packages per hour	
PLC	Programmable Logic Controller	
PLMS	Packaging Line Monitoring System	
RH	Right Hand	
RK	Rebuilding Kit	
SA	Strip Applicator	
SPC	Spare Parts Catalogue	
TP	Tetra Pak	
TPMS	Tetra Pak Maintenance System	
TS	Transversal Seal(ing)	

OM2.21TS100700en.fm

This page intentionally left blank

OM2.21TS100700en.fm

Safety Precautions

Read the Safety Precautions

All persons operating, servicing, adjusting or otherwise working with or near this machine must carefully read and follow all safety instructions in this manual and warning signs on the machine itself. Failure to do so could result in death, serious injury and / or damage to machine.

In case of accident, always call for medical attention immediately.

OM2.21TS100701en.fm

Hazard information



This is the “safety alert” symbol. Obey all safety messages that follow this symbol to avoid death or injury.

The following safety alert symbols and signal words are used in this manual and on the machine itself to inform about hazards:

 **DANGER!**
indicates an imminently hazardous situation which, if not avoided, **will** result in **death or serious injury**.

 **WARNING!**
indicates a potentially hazardous situation which, if not avoided, **could** result in **death or serious injury**.

CAUTION!
indicates a potentially hazardous situation which, if not avoided, **may** result in **minor or moderate injury**. It may also be used to alert against unsafe practices.

IMPORTANT!
indicates a potentially hazardous situation which, if not avoided, **may** result in **property damage**.

Note!
Is used to emphasize important information.
A **Note** is not to be regarded as hazard information.

OM2.21TS100701en.fm

Requirements on personnel

DANGER!

Failure to obey the Safety Precautions will put your life in danger.
All personnel must regard all electrical equipment as live.

The work is to be carried out in such a way that there is no risk of injury to personnel.

General

During maintenance or service work, the service technician and the electrician are responsible not only for the machine, but for the safety of the personnel in the vicinity of the machine as well!

It is also the responsibility of the service technician and the electrician to ensure that the machine safety devices are fully operational before he/she finishes the maintenance or service work.

(Cont'd)

OM2.21TS100701en.fm

(Cont'd)

Service technician

Only trained or instructed service technicians are allowed to work on the machine.

Service technicians may be:

- technicians employed by **Tetra Pak**

  Tetra Pak technicians are Tetra Pak employees who have completed training courses at the Tetra Pak Technical Training Centres or have equivalent knowledge.
- technicians employed by the **customer**

  Technicians employed by the customer must have the following skills:
  - capable of reading (English or native) technical information
  - able to understand technical drawings
  - basic knowledge of mechanics and electronics
  - basic knowledge of mathematics
  - capable of handling (special) tools

OM2.21TS100701en.fm

(Cont'd)

(Cont'd)

Electrician

Electricians should:

- be certified according to local regulations
- have experience of similar types of installations
- have proven skills in reading and working from drawings and cable lists
- have knowledge of local safety regulations for power and automation

Work with the electrical equipment in the machine must be performed by **skilled persons only**.

According to EN 60204-1:1997 clause 3.52 a skilled person is:

– *a person with relevant education and experience to enable him or her to perceive risks and to avoid hazards which electricity can create.*

Machine operator

Only trained or instructed persons are allowed to operate the machine.

The machine operator is an individual that has enough training and/or knowledge to run the equipment in the correct way.

OM2.21TS100701en.fm

Safety signs

WARNING!
Hazards without safety signs drastically increase the risk of death or serious injury.
Replace all missing or damaged safety signs immediately.

The table below contains all safety signs that are located on this machine.

The position numbers (Pos) within the table refer to the positions in the illustration in the Location of Safety Signs on page 16.

Pos	ISO signs	Pos	ISO signs
	 **Mandatory action.** Wear eye protection.	020/ 030	 **Dangerous Chemicals.** Wear protective equipment.
	 **Mandatory action.** Hearing protection recommended.	070/ 080	 **Harmful vapour.**

(Cont'd)

OM2.21TS100701en.fm

(Cont'd)

Pos	ISO signs	Pos	ISO signs
	 **Hazardous voltage.** Read Maintenance Manual BEFORE using this socket outlet. Failure to follow maintenance instruction could result in death or serious injury.	**090**	 **Hazardous voltage.** Will cause death or serious injury. Disconnect power before servicing. Lockout machine.
010/ 050/ 060	 **Hot surface.** Do not touch. Allow to cool before servicing.	**040**	 **Moving part can crush and cut.** Do not operate with guard removed. Follow lockout procedure before servicing.
100	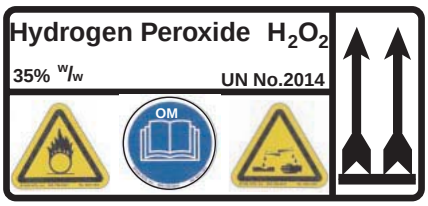 **Hydrogen peroxide.** Corrosive chemical. Can cause serious injury in both liquid and gas form. Hydrogen peroxide may cause irritation or damage if contact with skin, mucous membranes, eyes, or clothes. Wear personal protective.	**110**	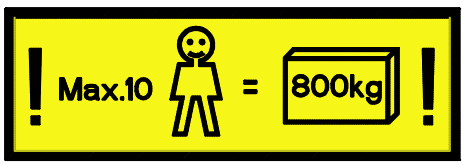 **Max load sign** No more than 10 persons or 800 kg load may be present on the platform at the same time.

Location of Safety Signs

Note!
Always ensure that all safety signs on the machine are undamaged and in it's correct position, after installation and maintenance.

The illustration below indicates where the safety signs are located on the machine. The position numbers refer to the table in Safety signs on page 14.

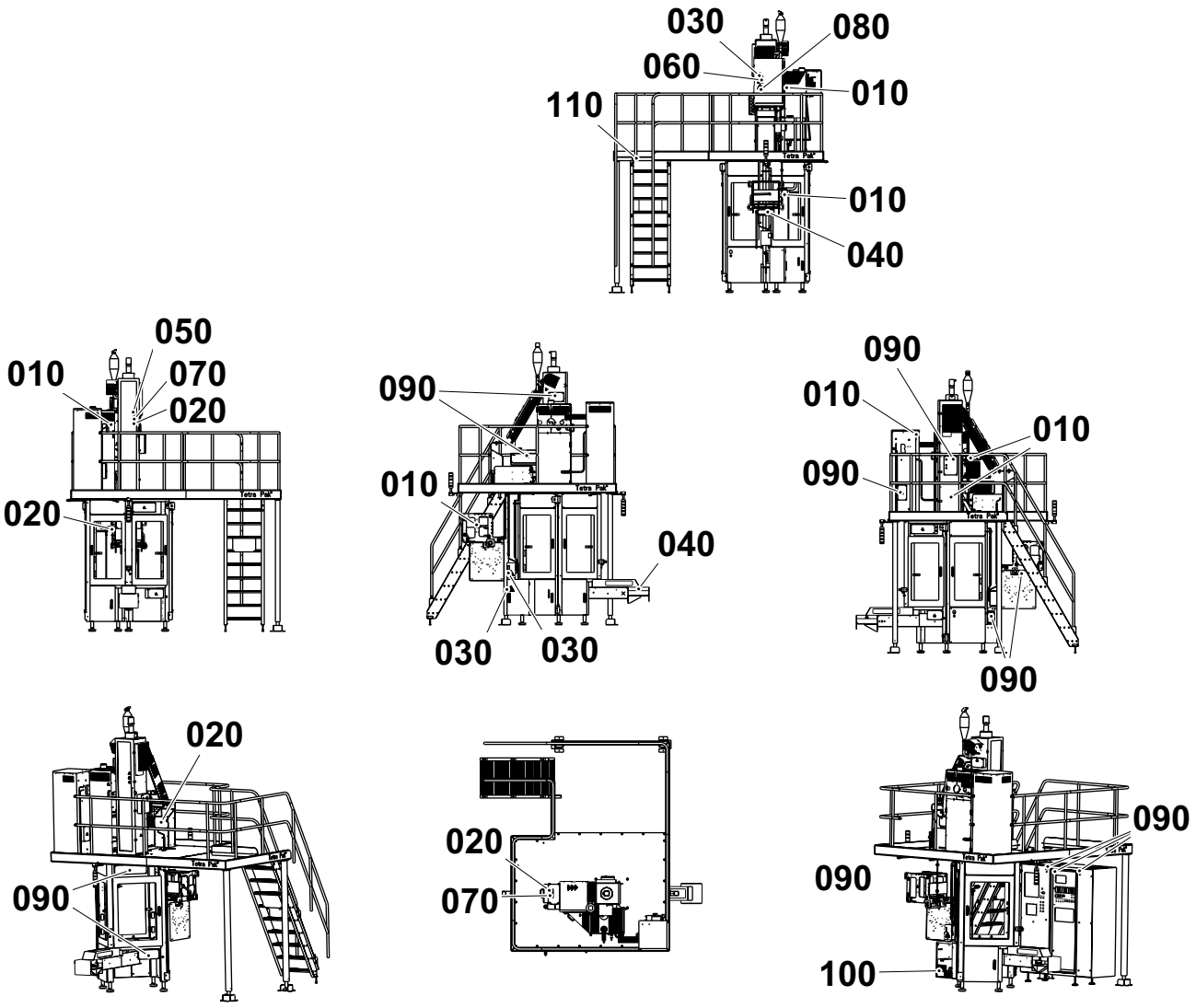

OM2.21TS100701en.fm

Safety Devices

DANGER!

Unshielded hazards.
Never inch or run the machine if any component of the safety system is inoperative.

All inoperative components of the safety system must be changed immediately.

Activating a safety device, such as an EMERGENCY STOP or opening an interlocked safe guard, does not switch off the power supply to the machine.

Emergency Stop

CAUTION!
The perioxide bath is not automatically emptied if an EMERGENCY STOP is pushed. This has to be done manually.

Learn the positions of the EMERGENCY STOP devices in order to stop the machine immediately in case of an emergency situation.

To stop production the normal way, see the Stop section in this Operation Manual (OM) on page 131.

(Cont'd)

(Cont'd)

Emergency Stop Push Buttons

Push one of the EMERGENCY STOP push buttons to stop the machine immediately.

Empty the peroxide bath, see Manual emptying of peroxide bath on page 29.

The illustrations below show an emergency stop push button and the arrows indicate the locations on the machine.

Location of Emergency Stop Push Buttons

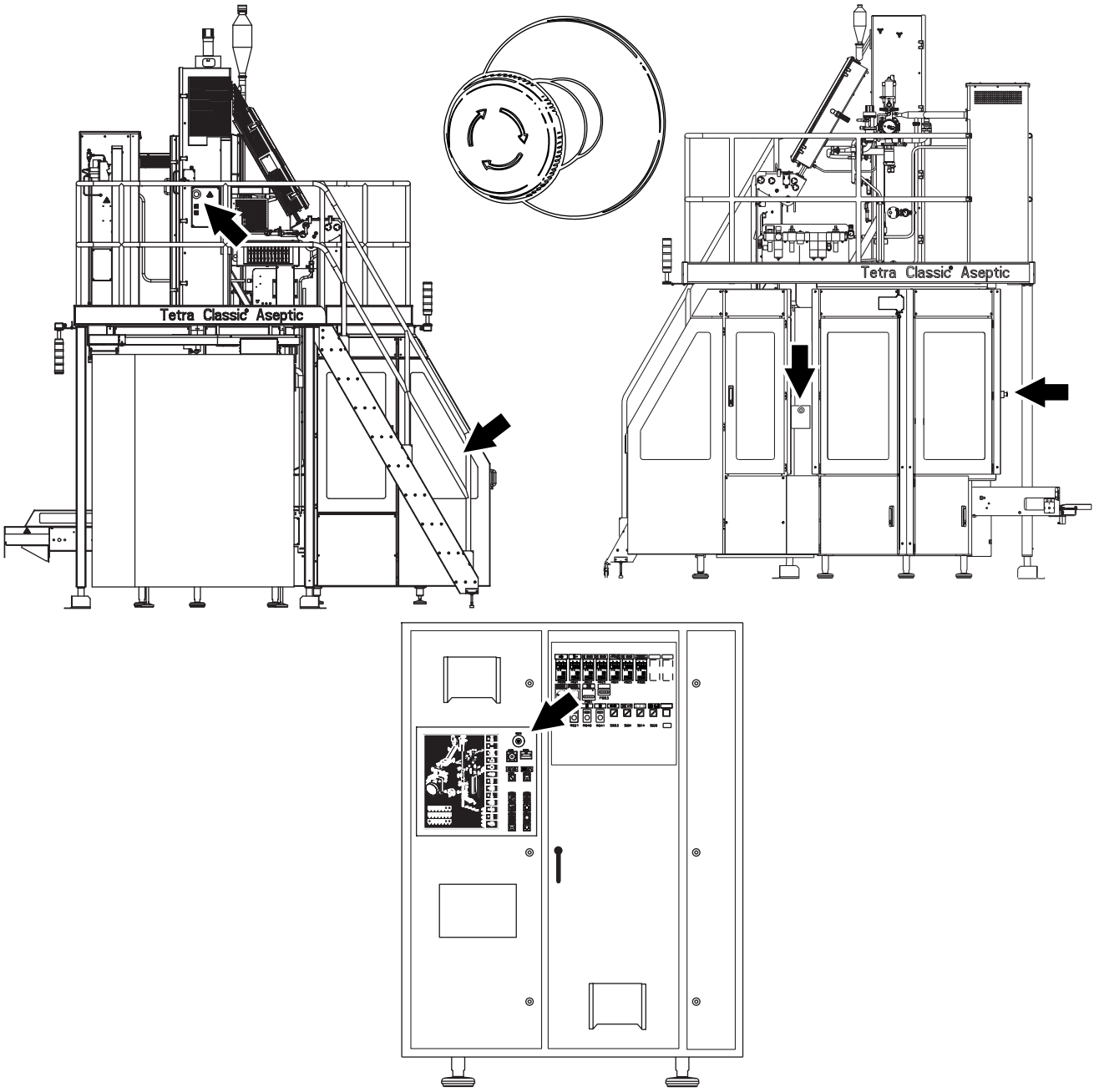

OM2.21TS100701en.fm

(Cont'd)

(Cont'd)

Emergency Stop Wires

Pull one of the EMERGENCY STOP wires to stop the machine immediately.

Empty the peroxide bath, see Manual emptying of peroxide bath on page 29.

The illustrations below show an emergency stop wire and the arrows indicate the locations on the machine.

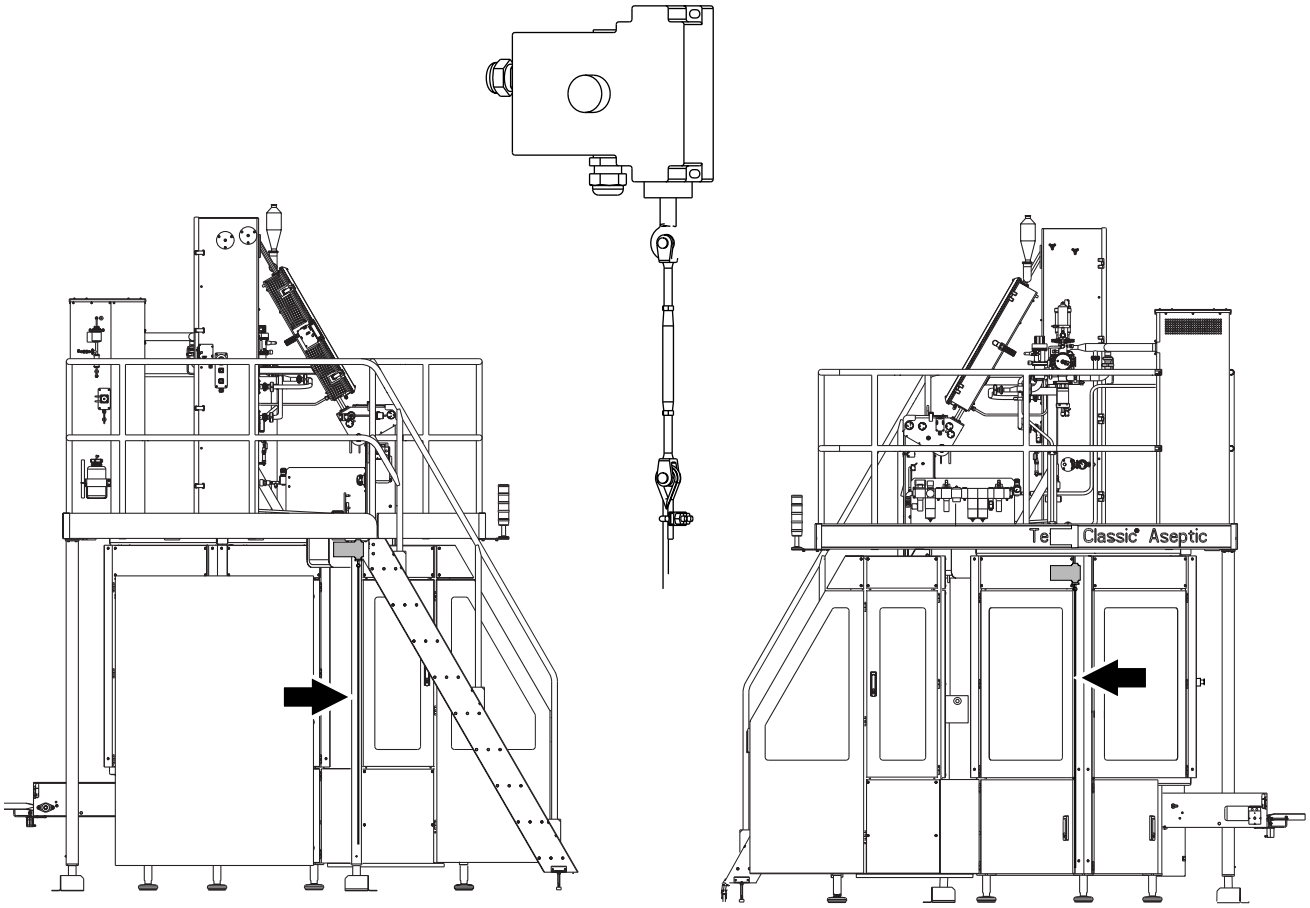

Location of Emergency Stop Wires

OM2.21TS100701en.fm

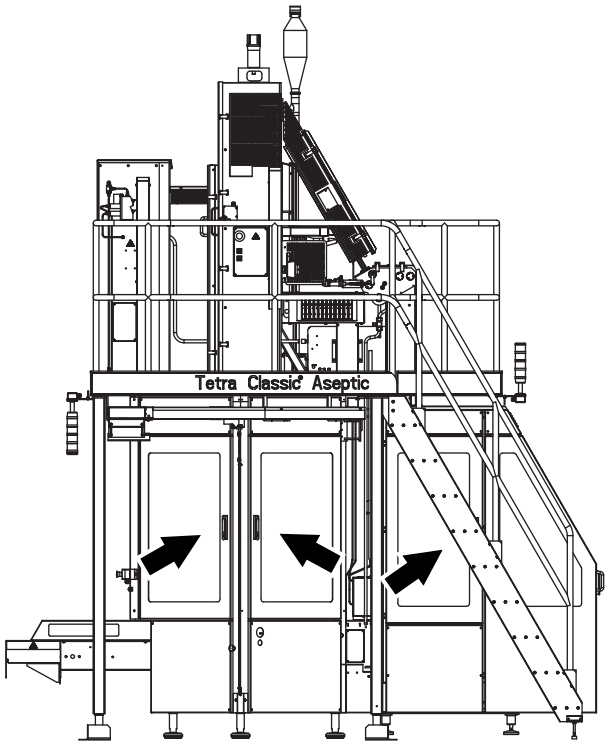

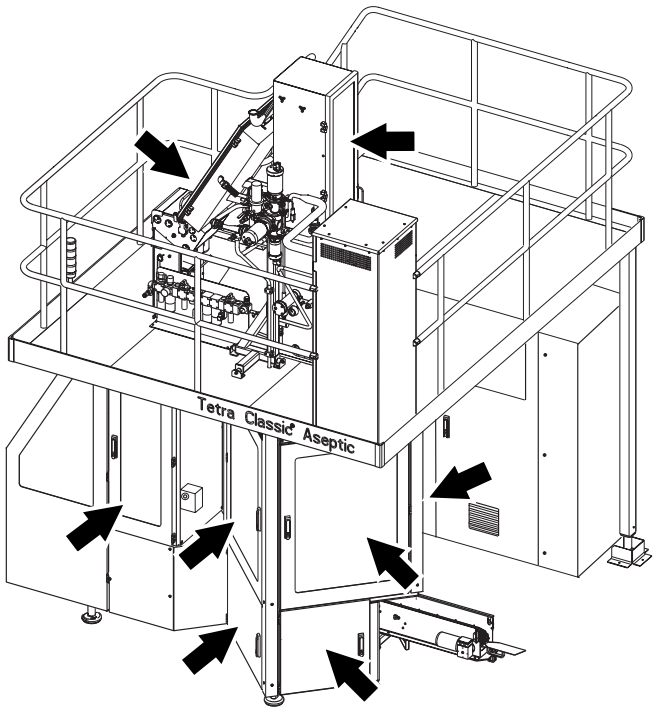

Safeguards

DANGER!

Moving machinery.
Never defeat safety switches.

All movable guards, such as doors and covers, leading to hazardous areas are fitted with interlocking devices, usually electric safety switches. These devices are part of the safety system of the machine, and must never be defeated, bypassed or otherwise made inoperative

Safeguarded components may be thermally hot after operation.

After installation and maintenance, check that all safeguards are fitted and in correct operation before the machine is inched or run.

CAUTION!
Machine damage.
Never stop the machine by opening a movable guard, except in case of emergency.

The illustrations show all movable guards; locations indicated by arrows.

OM2.21TS100701en.fm

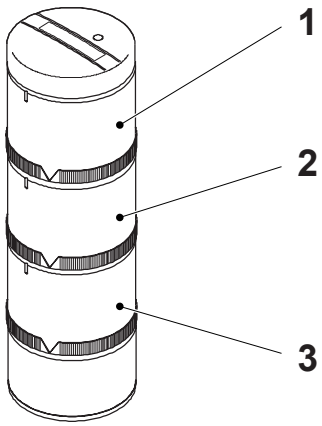

1 Red light
2 Yellow light
3 Blue light

Warning Lamp

The machine is fitted with a column of one or several warning lamps.

The red light flashes when a **hazardous condition** has occurred, such as an emergency stop having been activated.

The yellow light flashes when an condition has occurred which requires action by the operator, such as a door or cover having been opened.

The blue light flashes when operator action is required, such as refilling a magazine.

For a complete list of alarms, see the Alarms/Troubleshooting section in this Operation Manual (OM) on page 59.

The light stops flashing and remain lit when the ALARM RESET button is pressed. After the fault is corrected or the operator takes the appropriate action, the warning light goes off

Horn Alarm

The horn alarm produces a **sonic warning signal** every time the main motor is about to start.

The warning signal sounds for approximately 3 seconds prior to motor ignition and is intended to alert personnel that **the machine is about to start**.

OM2.21TS100701en.fm

Personal Protection

Note!
Information about personal protection regarding chemical products can be found in the section describing each specific chemical.

Hearing Protection

CAUTION!
Hazardous noise level.
Risk of impaired hearing.
Hearing protection is recommended.

Jewellery

WARNING!
Risk of entanglement.
No personal jewellery such as rings, watches, bracelets or necklaces may be worn when performing work on or near the machine.

OM2.21TS100701en.fm

Hazardous Materials

Hydrogen Peroxide (H2O2)

WARNING!
Corrosive chemical.
Always wear personal protective equipment.

In both liquid and gas form, hydrogen peroxide may cause irritation or damage if in contact with skin, mucous membranes, eyes, or clothes. In case of accident call for medical attention immediately.

Liquid hydrogen peroxide in concentrations lower than 1% is normally considered harmless to humans.

Consult the instructions on the label of the tank or container.

OM2.21TS100701en.fm

Handling

DANGER!
Explosion.
Do NOT pour surplus hydrogen peroxide back into the original container.

If contaminated hydrogen peroxide is poured back in the original container with fresh peroxide, or if hydrogen peroxide is allowed to decompose, there is a risk of explosion. Avoid contamination of hydrogen peroxide. It may react with or **form explosive products** with many organic substances such as acetone, cellulose, and ethanol.

(Cont'd)

(Cont'd)

CAUTION!
Rapid decomposition.
Ensure that equipment used for handling and diluting hydrogen peroxide is clean before coming in contact with hydrogen peroxide and neutralized with water after.

Pumps or other **equipment** used for hydrogen peroxide **must be** used **for this purpose only** and must be manufactured from appropriate materials such as stainless steel 316 L, glass, polyethylene, or teflon.

If hydrogen peroxide is spilled, dilute it with large amounts of water and flush it into a drain.

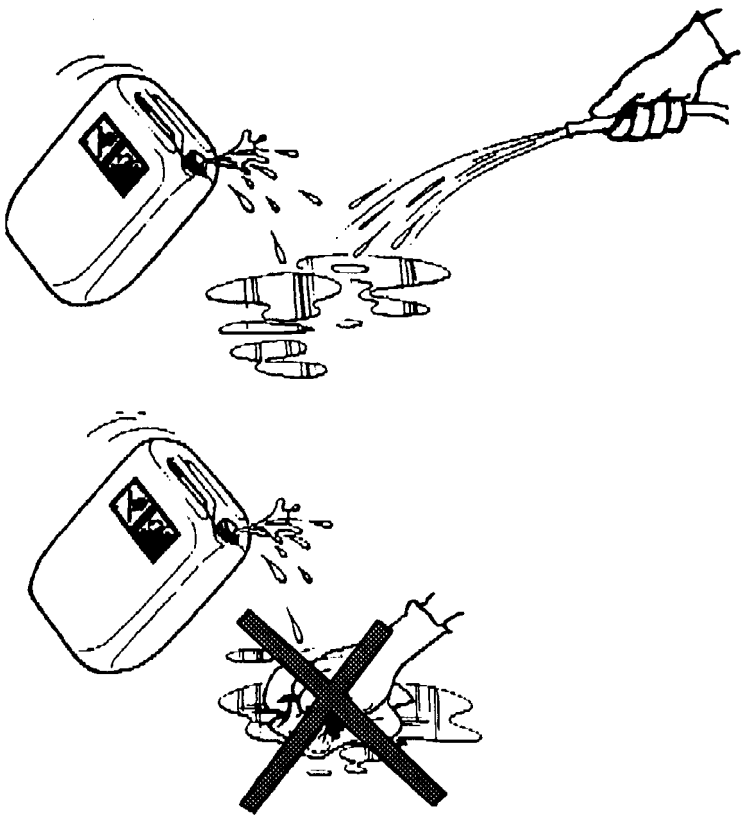

OM2.21TS100701en.fm

WARNING!
Self-ignition.
Never wipe with combustible materials, such as rags or paper, as these may self-ignite. In case of fire, cool by using a hose and spray with large quantities of water.

Disposal

The hydrogen peroxide should be sent for destruction. Some countries allow it to be diluted with water to a concentration below 1% and poured into the drain.

(Cont'd)

(Cont'd)

Storage

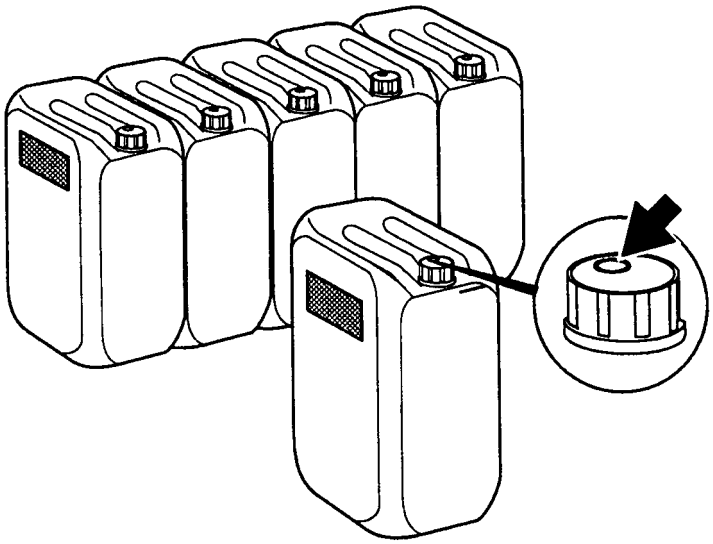

WARNING!
Emission of oxygen supports fire.
In case of fire, cool the peroxide containers by spraying with large quantities of water.

The commercial food grade hydrogen peroxide has been stabilized, but it may decompose into oxygen and water if it is exposed to heat or contaminated by contact with incompatible materials. The decomposition of hydrogen peroxide increases drastically with temperature.

Make sure that the room or area used for storage is:

- cool, clean, and well ventilated
- shielded from direct sunlight
- kept free from combustible materials.

Note!
Hydrogen peroxide **must** only be stored in the **original container** as delivered by the supplier. Keep the container upright and closed with its **proper ventilation cap**, that allows oxygen to escape. If not, there may be an explosion if decomposition of the peroxide occurs violently. Always make sure that the container is properly closed.

(Cont'd)

OM2.21TS100701en.fm

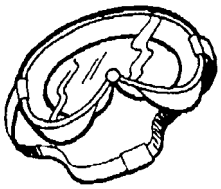

1

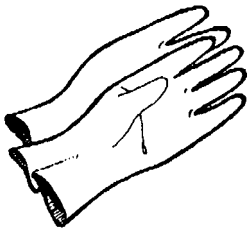

2

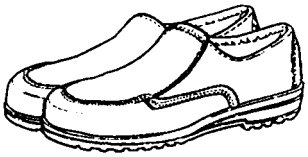

3

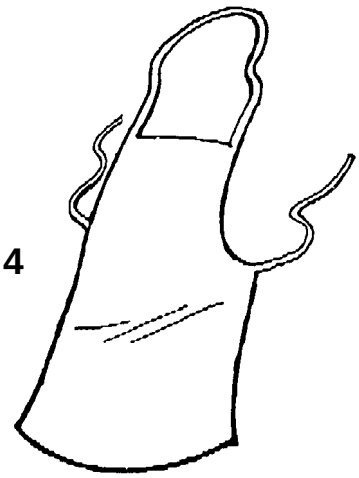

4

(Cont'd)

Personal Protective Equipment

Whenever there is a risk of contact with hydrogen peroxide, wear:

- safety goggles (1)
- protective gloves (2) of neoprene
- shoes (3) made of PVC or PE plastic, or rubber
- apron (4).

Always make sure that:

- the showers (5) work
- an eyewash device, movable (6) or wall-mounted (7) is available at or near each machine site
- there are additional washing facilities.

OM2.21TS100701en.fm

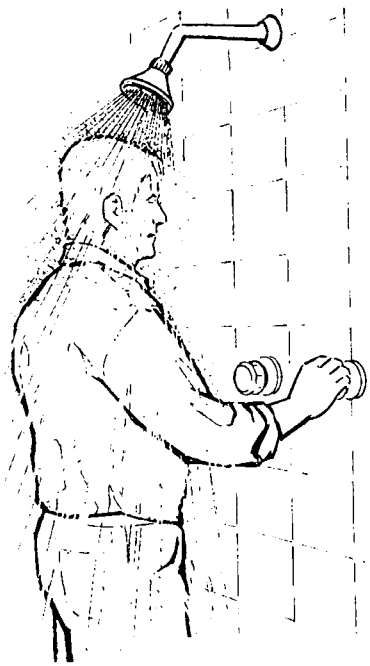

5



6

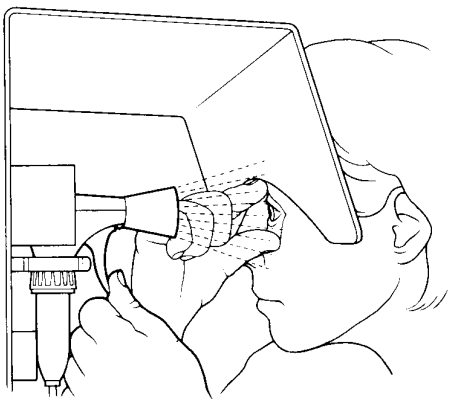

7

1 Safety goggles (TP No 90303-11)
2 Protective gloves (TP No.90303-12)
3 Shoes
4 Apron (TP No. 90303-13)
5 Shower
6 Eyewash device (TP No. 90303-6)
7 Eyewash device

(Cont'd)

(Cont'd)

Emergency Procedures

In case of an accident involving hydrogen peroxide, it is very important to rinse the affected area as soon as possible with as much water as possible.

If hydrogen peroxide is swallowed:

- drink large amounts of lukewarm water (in order to dilute the peroxide)
- call for medical attention immediately.

If splashes or vapour from hydrogen peroxide come in contact with the eyes:

- wash the eyes thoroughly with lukewarm water for 15 minutes (keep eyelids wide apart)
- call for medical attention immediately.

(Cont'd)



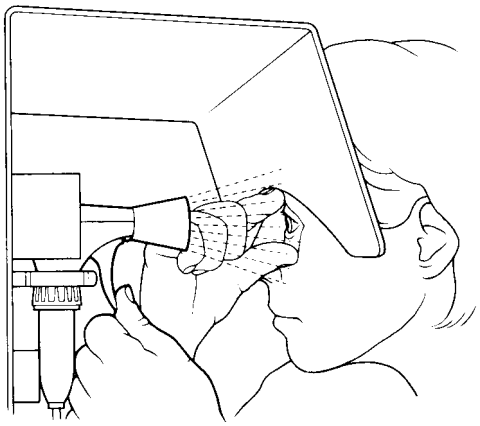

OM2.21TS100701en.fm

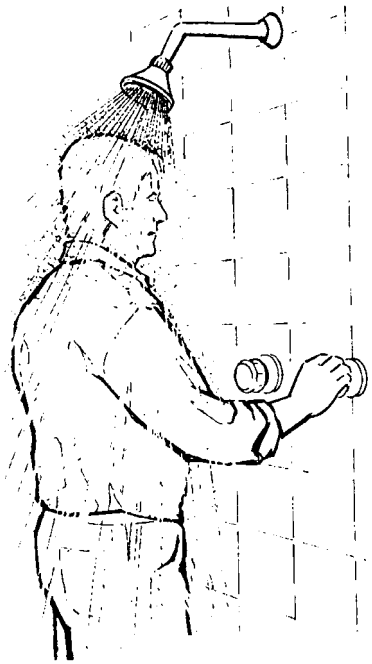

(Cont'd)

If hydrogen peroxide comes into contact with skin or clothes:

- rinse immediately with plenty of water
- if skin burns appear call for medical attention immediately
- thoroughly wash the clothes before wearing them again.

If irritation or pain is experienced due to having **inhaled** hydrogen peroxide vapour:

- leave the affected area and get some fresh air
- if the symptoms get worse, call for medical attention.

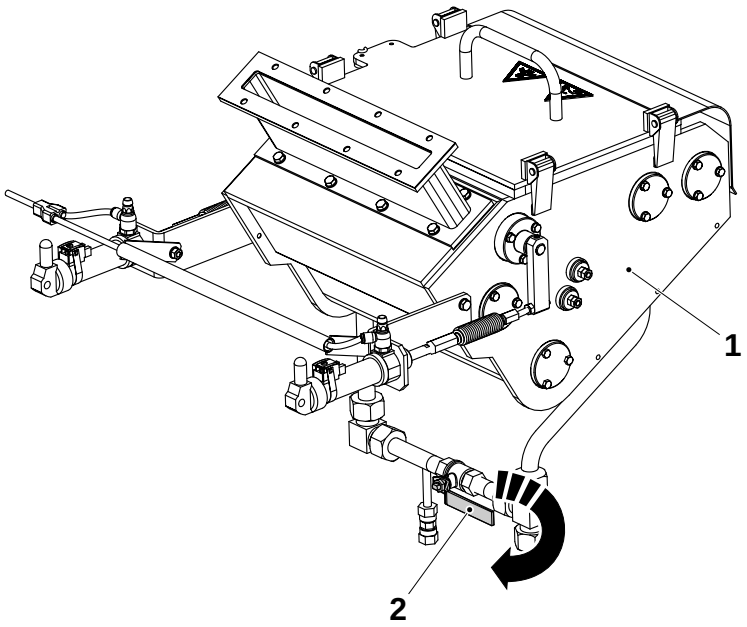

Manual emptying of peroxide bath

If the machine has been stopped by the emergency stop system, or by main power failure, the peroxide bath has to be emptied manually.

WARNING!
Make sure to be familiar with the information regarding Hydrogen Peroxide (H2O2) before emptying the peroxide bath.

a) Empty the peroxide bath (1) by opening the drainage valve (2).

b) Make sure that the peroxide bath is empty before closing the drainage valve.

1 Peroxide bath
2 Drainage valve

OM2.21TS100701en.fm

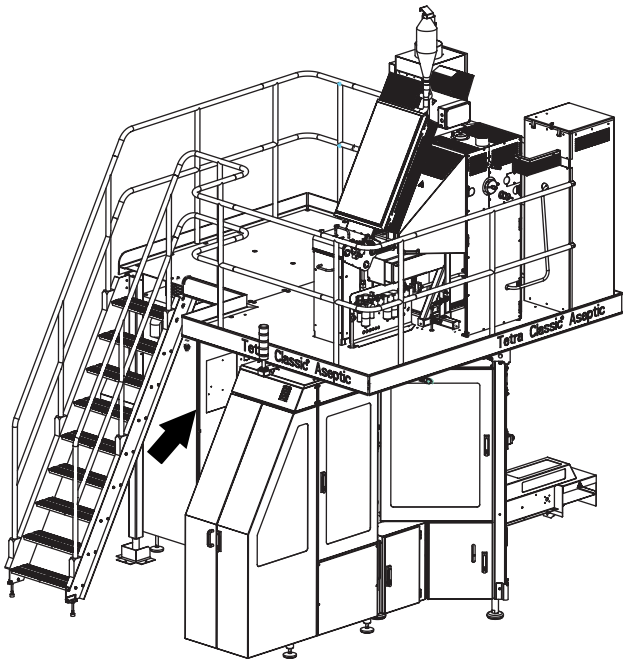

Supply Systems

Electrical Cabinet

DANGER!

Hazardous voltage.
Electric shock will cause death or serious injury.
The **Power Supply Disconnecting Device** must be turned **OFF** and secured with a lock, before any service is carried out inside the electrical cabinet.

Note!
The key to the lock must be removed by the service technician or the electrician, and retained in his/her possession until all work is completed.

Make sure that the electrical cabinet doors are locked after performing any kind of work in the electrical cabinet.

The illustration shows the electrical cabinet; location indicated by arrow.

(Cont'd)

OM2.21TS100701en.fm

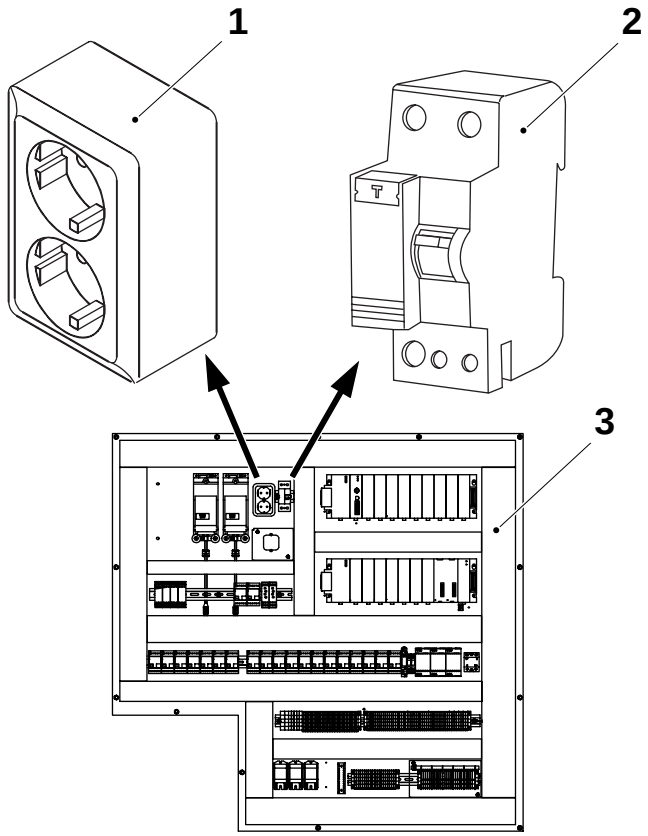

Socket Outlet

WARNING!
Hazardous voltage.
Read Maintenance Manual BEFORE using this socket outlet.

Failure to follow maintenance instruction could result in death or serious injury.

The illustrations below shows the socket outlet (1) and residual current device (2), and their locations in the electrical cabinet (3).

1 Socket outlet
2 Residual current device
3 Electrical cabinet

OM2.21TS100701en.fm

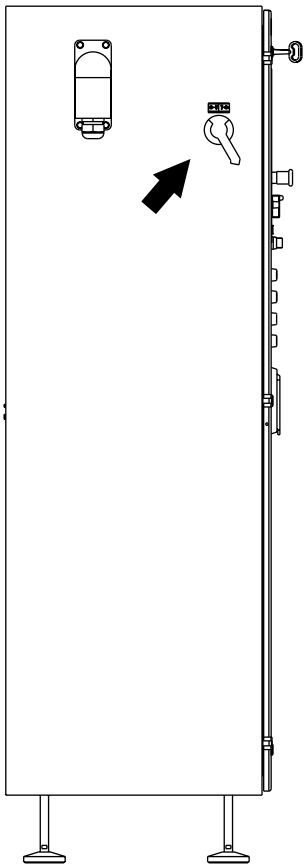

Power Supply

DANGER!

Hazardous voltage and moving machinery.
The **Power Supply Disconnecting Device** must be turned **OFF** and secured with a lock, before any service is carried out.

Note!
The key to the lock must be removed by the service technician or the electrician, and retained in his/her possession until all work is completed.

Certain maintenance procedures require supply systems to be turned on. These exceptions are clearly stated in the maintenance manual.

The illustration shows the power supply disconnecting device and the arrow indicates the location on the machine.

OM2.21TS100701en.fm

Air Supply

WARNING!

Compressed air and moving machinery.
The **Main Air Valve** must be turned **OFF** and secured with a lock, before any service is carried out.

Note!
The key to the lock must be removed by the service technician and retained in his/her possession until all work is completed.

Certain maintenance procedures require supply systems to be turned on. These exceptions are clearly stated in the maintenance manual.

The illustrations shows the main air valve (1), the lock (2), and the arrow indicates the location on the machine.

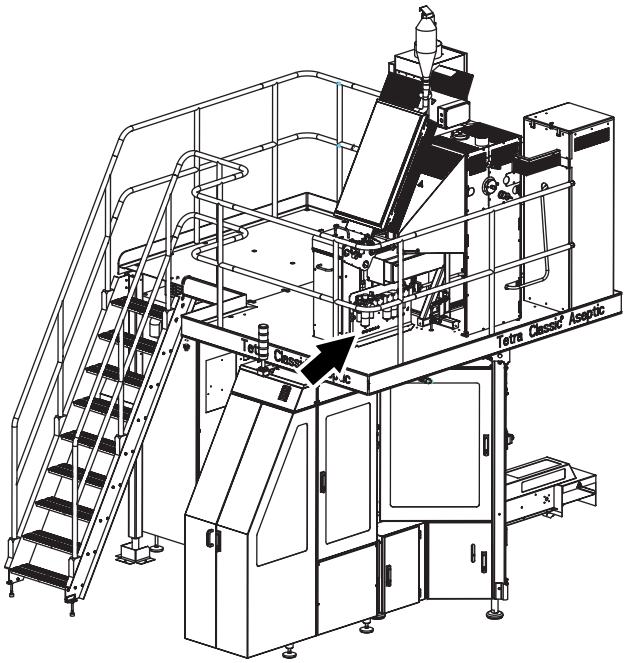

Location of Main Air Valve

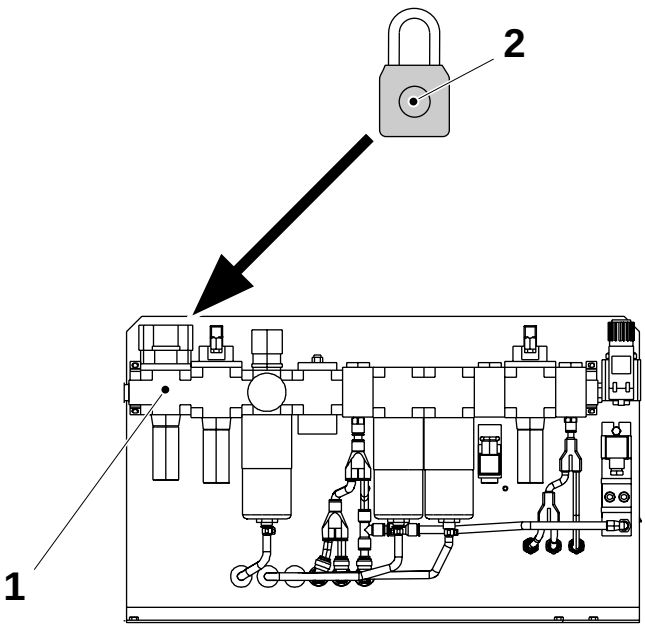

1 Main Air Valve
2 Padlock

OM2.21TS100701en.fm

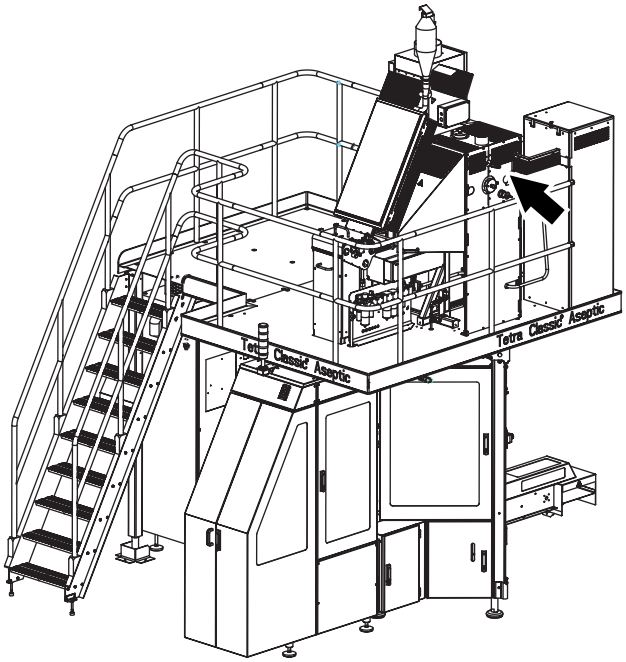

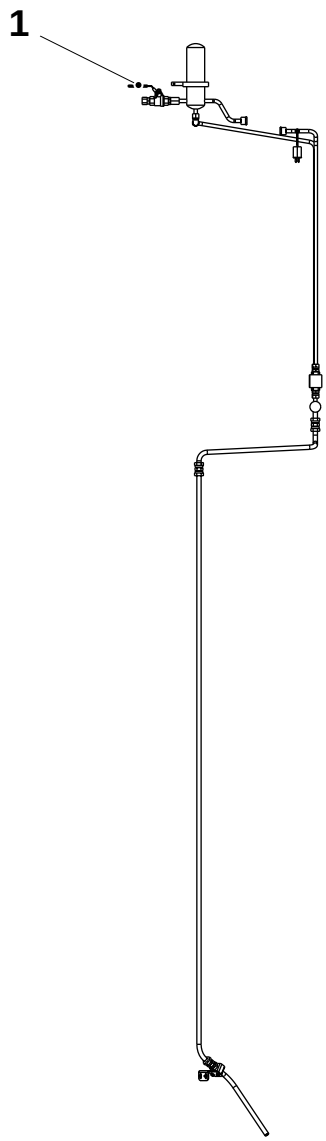

Steam Supply

WARNING!

Hot steam may cause severe burns.
The **Supply Valve** must be turned **OFF**, the equipment depressurized, and vent all steam safely, before any service is carried out.

Pressurized steam can be discharged unexpectedly. Pipes and components can be extremely hot.

Certain maintenance procedures require supply systems to be turned on. These exceptions are clearly stated in the maintenance manual.

The illustration shows the steam supply valve (1) and the location on the machine.

1 Steam Supply Valve

OM2.21TS100701en.fm

Water Supply

WARNING!
Water under pressure.
The **Water Supply Valves** must be turned **OFF**, before any service is carried out.

Certain maintenance procedures require supply systems to be turned on. These exceptions are clearly stated in the maintenance manual.

The illustration below shows the water supply valves (1) and the location on the machine.

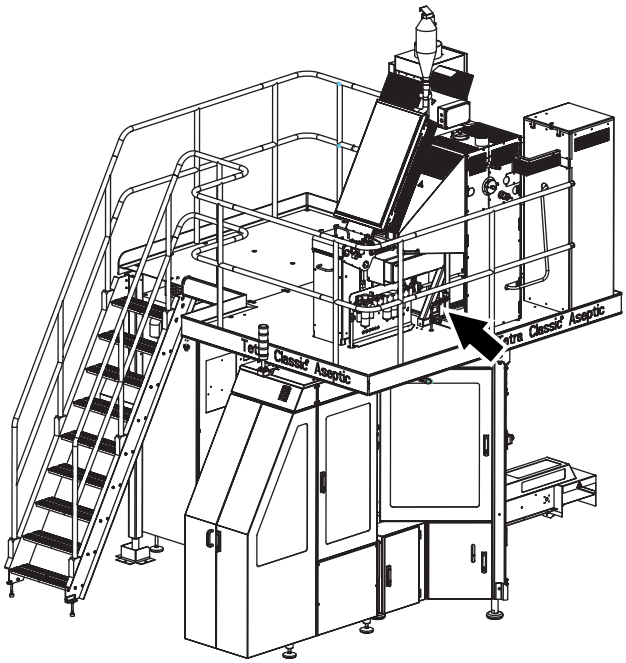

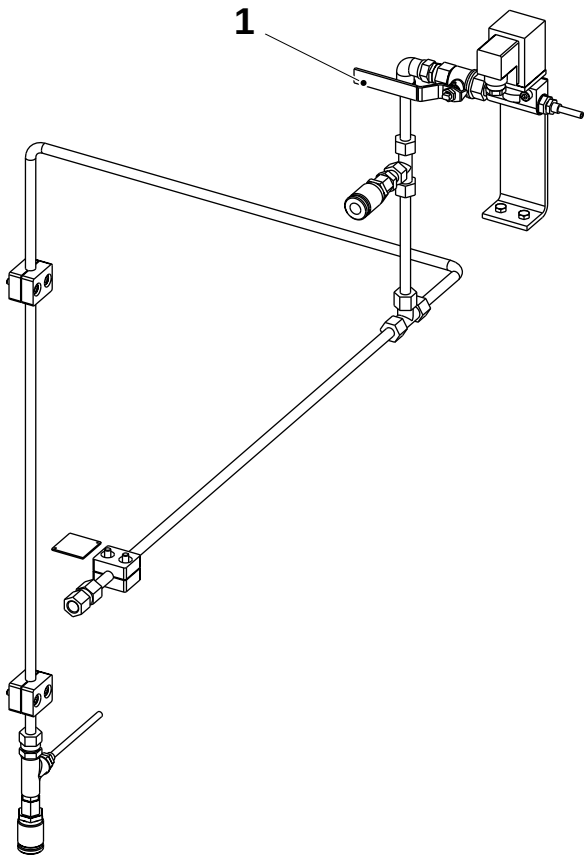

1 Water Supply Valve

OM2.21TS100701en.fm

This page intentionally left blank

OM2.21TS100701en.fm

General description

This section describes the main parts of the machine and the terminology.

CAUTION!

To ensure maximum safety, always read this section and the safety precautions carefully before doing any work on the equipment or making any adjustments.

Abbreviations

Abbreviation	Meaning	Translation
CIP	Cleaning In Place	
IH	Induction heating	
MM	Maintenance Manual	
LS	Longitudinal Sealing	
PLMS	Packaging Line Monitoring System	
SA	Strip Applicator	
SS	Short Stop	
TPIH	Tetra Pak Induction Heating	
TS	Transversal sealing	

OM2.21TS100702en.fm

Packaging material and strip

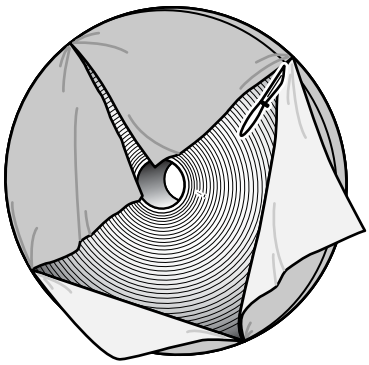

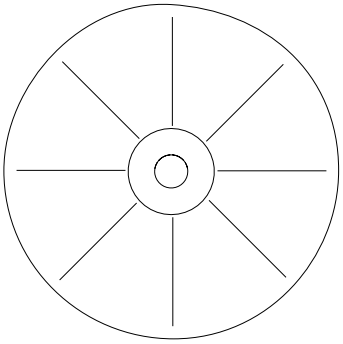

Introduction

To ensure that the properties of the material is not changed it is vital to follow the storage and handling recommendation of packaging material and additional material.

Delivery

The packaging material will be delivered in “small” or “jumbo” reels on one way pallets. Normally the packaging material reel is wrapped in protective shrink film. The individually wrapped reels are stacked on pallets. A hood of shrink film or a strech film is protecting the reel stack on a pallet against moisture and dirt. In this way the reels are also secured to the pallet. With customer agreements the reels can be delivered without the protective films.

Pallets can be stacked on top of each other, up to three pallets height. A protection sheet must be used between the pallets. Be careful when lifting the pallets and reels. Do not scratch the other reels.

The additional material is delivered in boxes.

OM2.21TS100702en.fm

Storage of material

Recommendations:

- Use the material on a first in - first out basis.
- The storage premises must be kept clean.
- The material must be stored completely separate from other goods, such as milk powder, essences, animal food, chemicals, detergents, etc. There is a great risk that the packaging material is absorbing vapours which could result in taste problems.
- Store the material on pallets only! The space to nearest wall should be kept at minimum 100 mm.
- The material must not be exposed to direct moisture, such as condensation dripping from pipe etc., neither exposed in direct sunlight.
- If the material is stored longer than recommended, see specification, reliable production check should be initiated.
- Partly used material shall be relabeled with its identification label and wrapped with protection film. the reels shall be stored in accordance with this recommendation

Storage conditions

Packaging material

Temperature: Storage temperature between 0ºC and +40ºC.
Humidity: Relative humidity (RH) of between 30% and 70%.

Additional material

LS-strips, IS-strips,

Temperature: Storage temperature between 0º C and +40ºC.
Humidity: Relative humidity (RH) of between 30% and 70%.

Storage time

Storage time limit which guarantees the function of the material is specified for each material and additional material types. The storage time is counted from the manufacturing date of the material up until the time when it will be applied in the filling machine.

Storage conditions in prior to packing

The material must be allowed to reach the same temperature prevailing in the packaging premises. If the packaging material is protected with protective plastic film, this should be kept on until the reel will be used.

Handling of packaging material

Use a special lifting truck to handle the reels.

OM2.21TS100702en.fm

Right hand

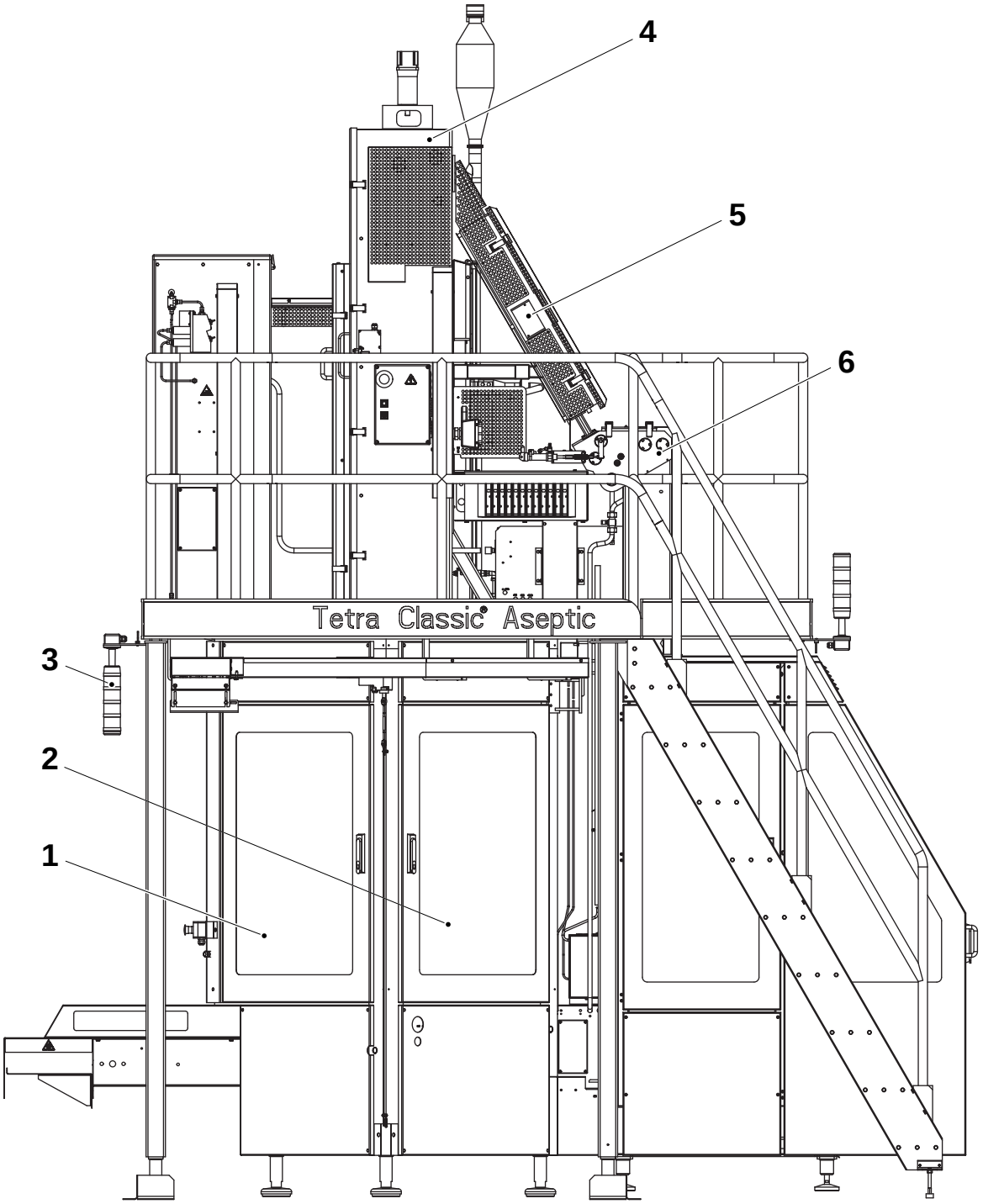

OM2.21TS100702en.fm

1 Side frame 1
2 Side frame 4
3 Warning beacon
4 Tube forming module
5 Heating chamber
6 Peroxide bath

Left hand

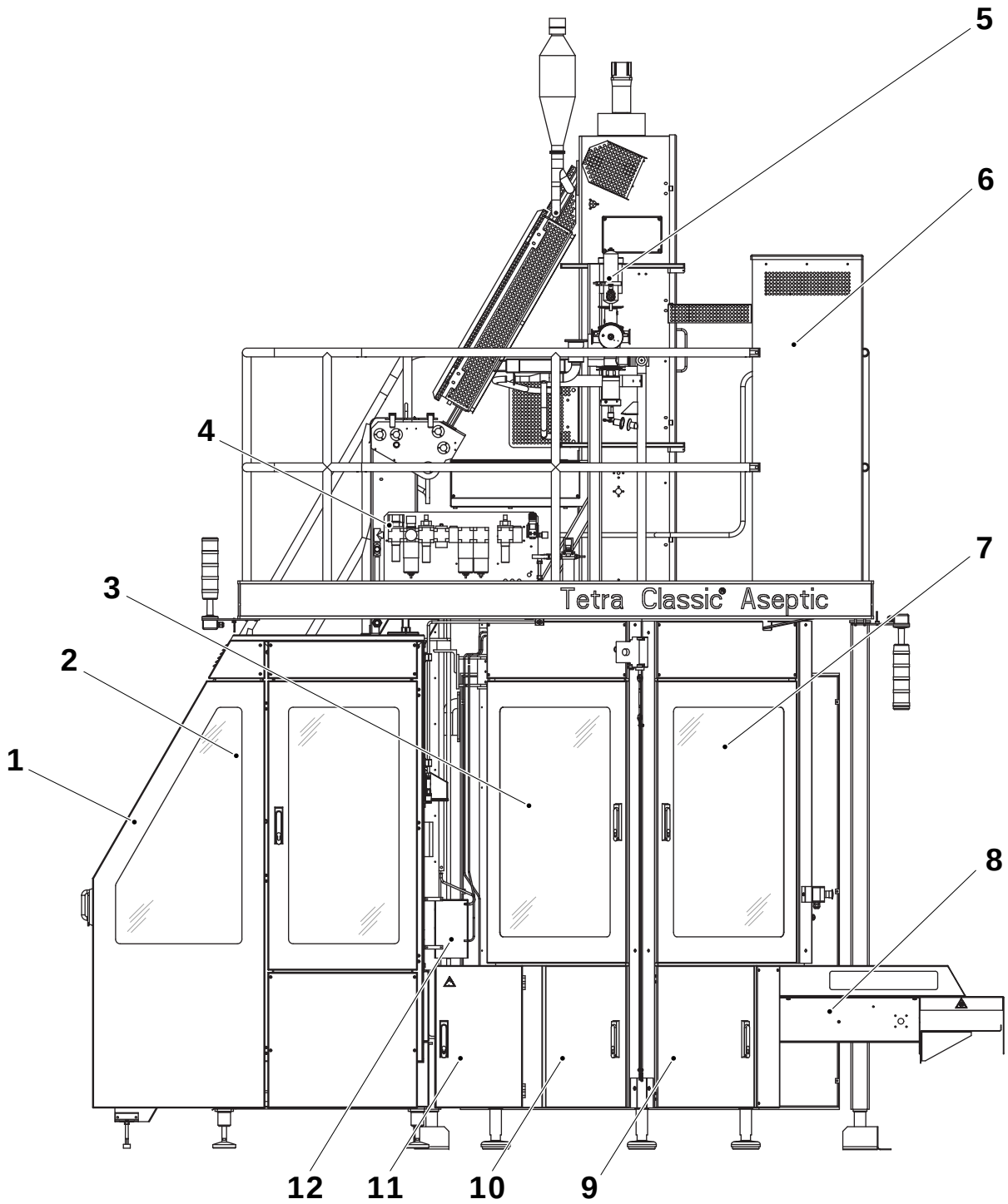

OM2.21TS100702en.fm

1 Infeed
2 Strip applicator
3 Side frame 3
4 Air processing unit
5 Filling system
6 Sterile unit
7 Side frame 2
8 Out feed
9 Pressure header
10 Lubrication pump
11 Peroxide cabinet
12 Peroxide pump cabinet

Electrical Cabinet

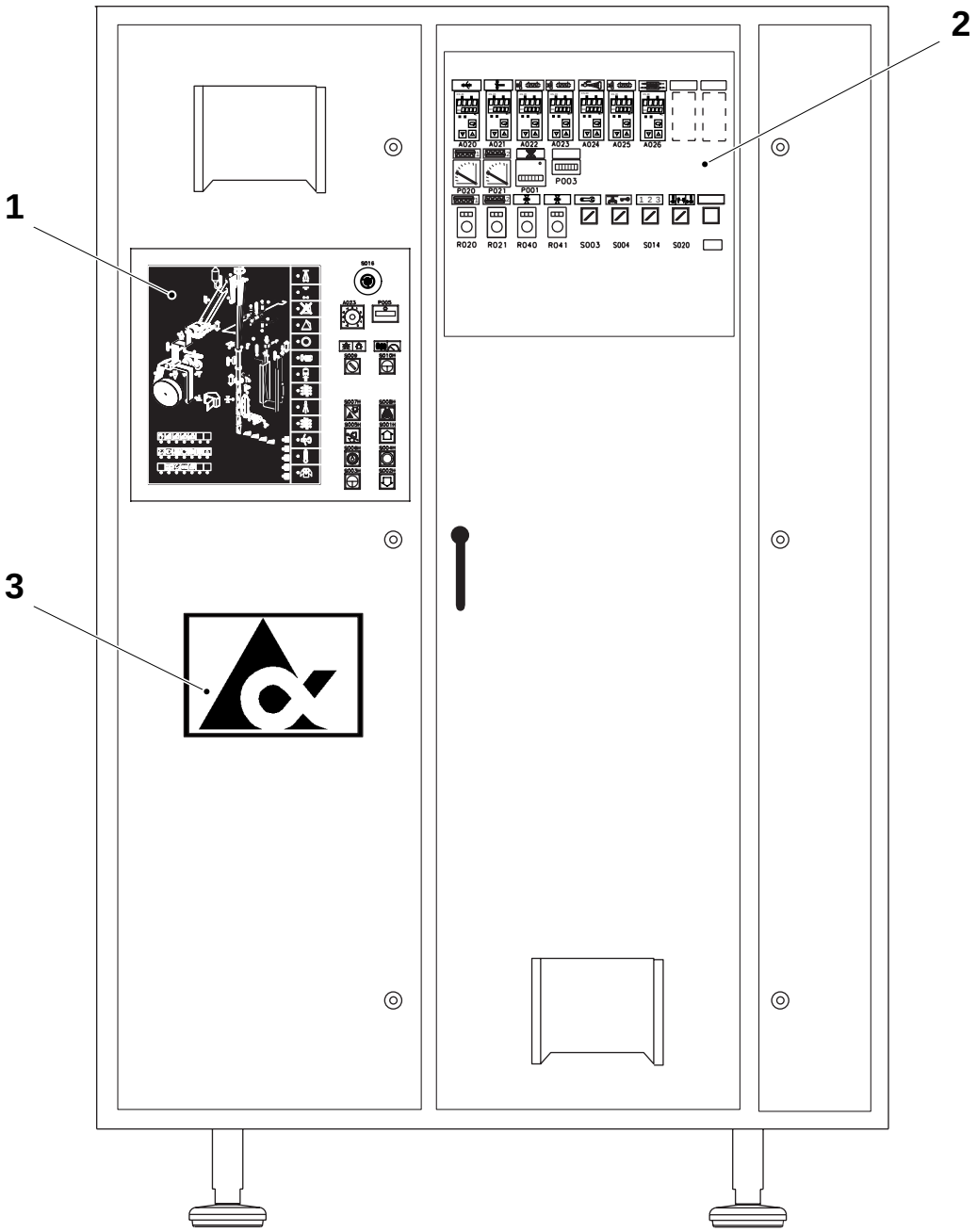

1 Control panel
2 Controllers
3 PLMS mimic panel

OM2.21TS100702en.fm

This page intentionally left blank

OM2.21TS100702en.fm

Ladder symbols

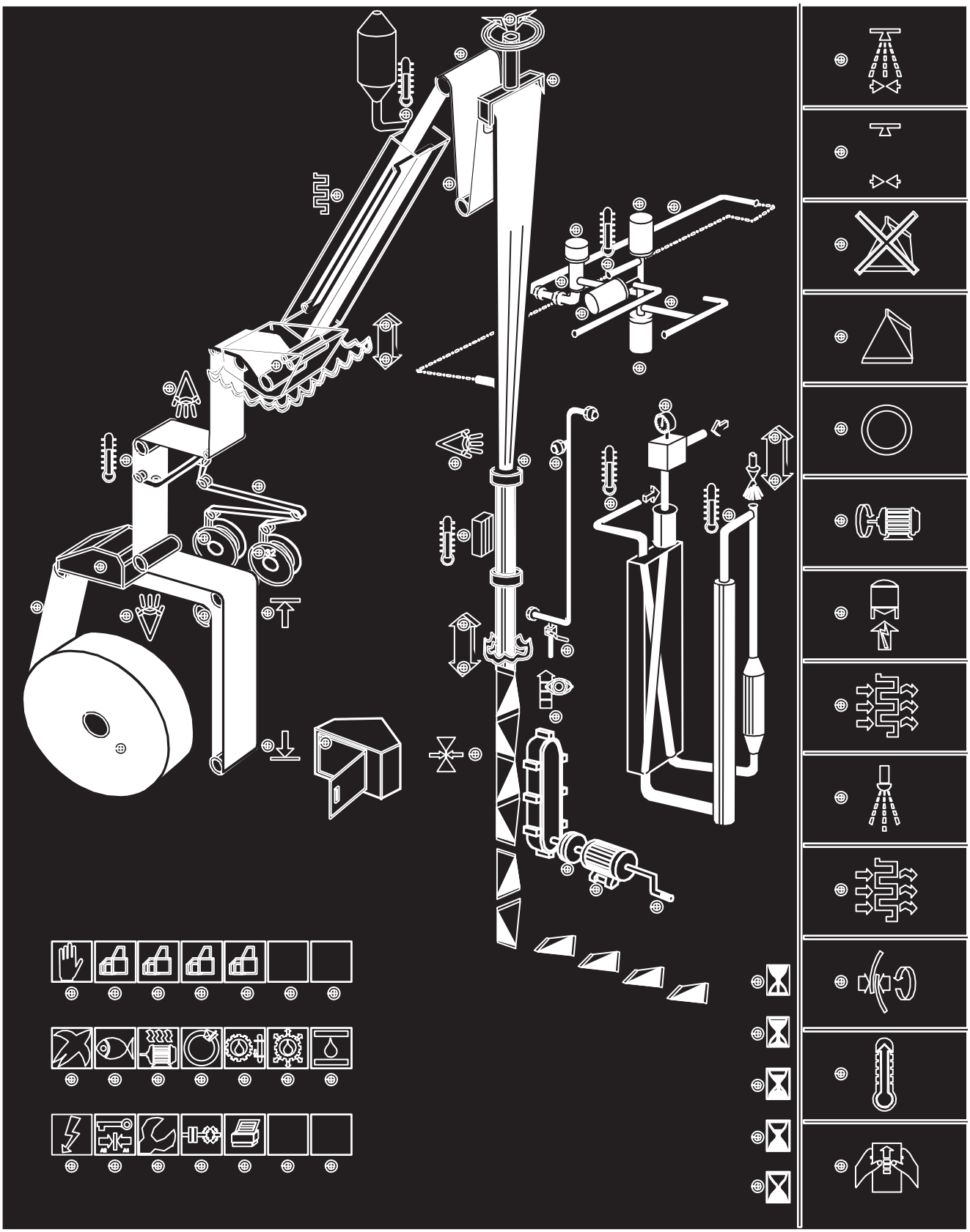

OM2.21TS100702en.fm

Ladder symbols

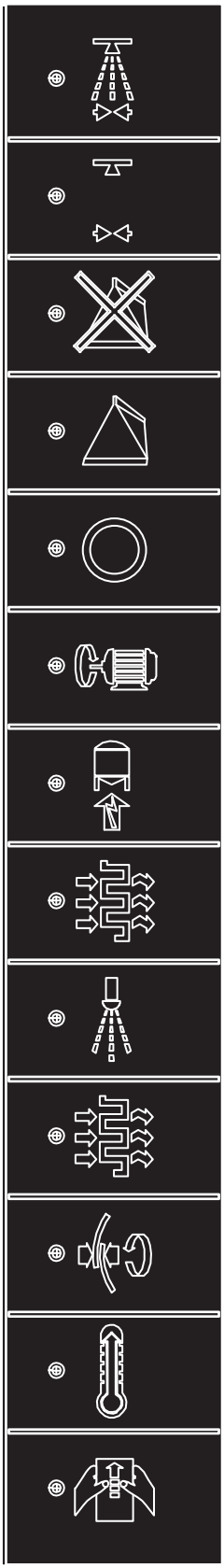

Cleaning

Preparation for cleaning

Production finished

Production

Short stop

Drive motor on

Signal to/from sterilizer

Drying

Spraying

Preheating of filling system

Tube sealing

Preheating

Preparation

OM2.21TS100702en.fm

Alarm symbols

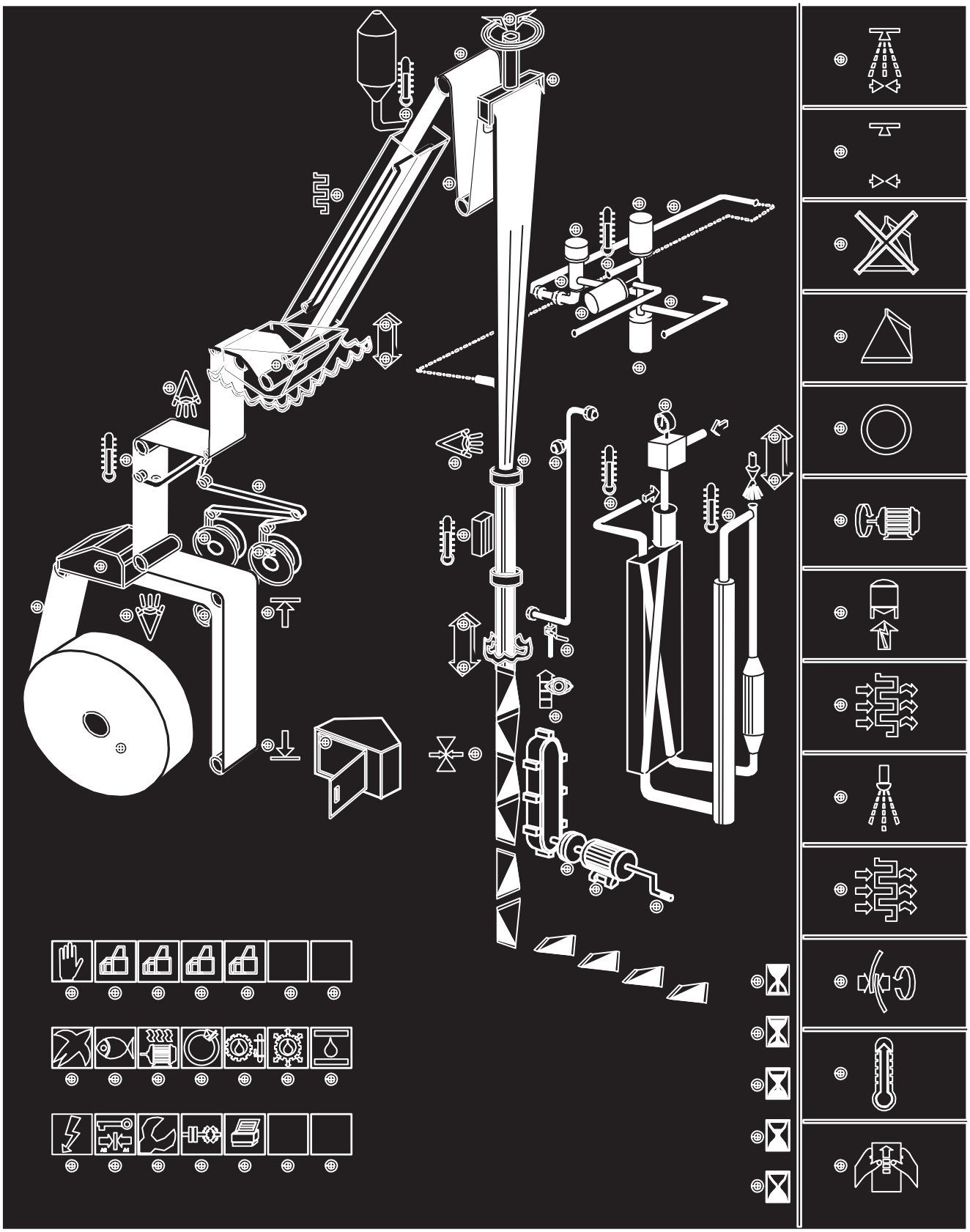

OM2.21TS100702en.fm

Alarm symbols

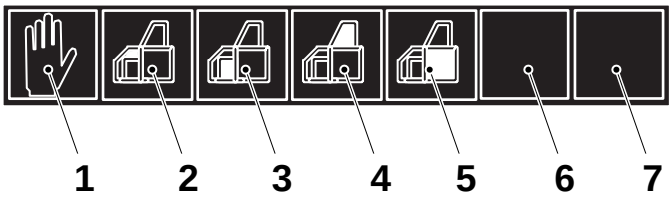

1 Emergency stops activated
2 Safety monitors activated, Infeed
3 Safety monitors activated, Infeed loop
4 Safety monitors activated, Sterile unit
5 Safety monitors activated, Main body
6 Spare
7 Spare

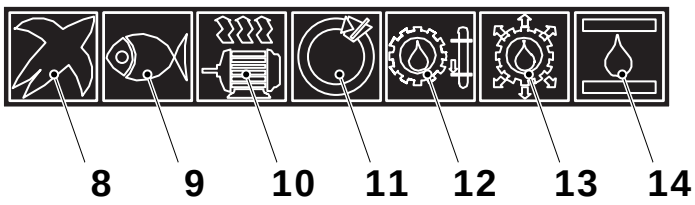

8 Main air pressure
9 Water, low pressure (not used)
10 Overload
11 Index sensor misread
12 Central lubrication, low level time out
13 Central lubrication, pressure
14 Hydraulic switch

OM2.21TS100702en.fm

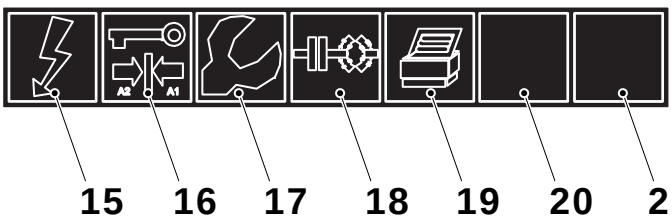

15 Surge voltage protection
16 Final cleaning
17 Service switch ON
18 PLC fault
19 Ink jet fault
20 Spare
21 Spare

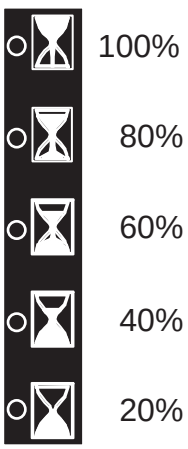

Remaining time of machine events.
Each lamp indicates 20% of remaining time.

Control panel buttons/function

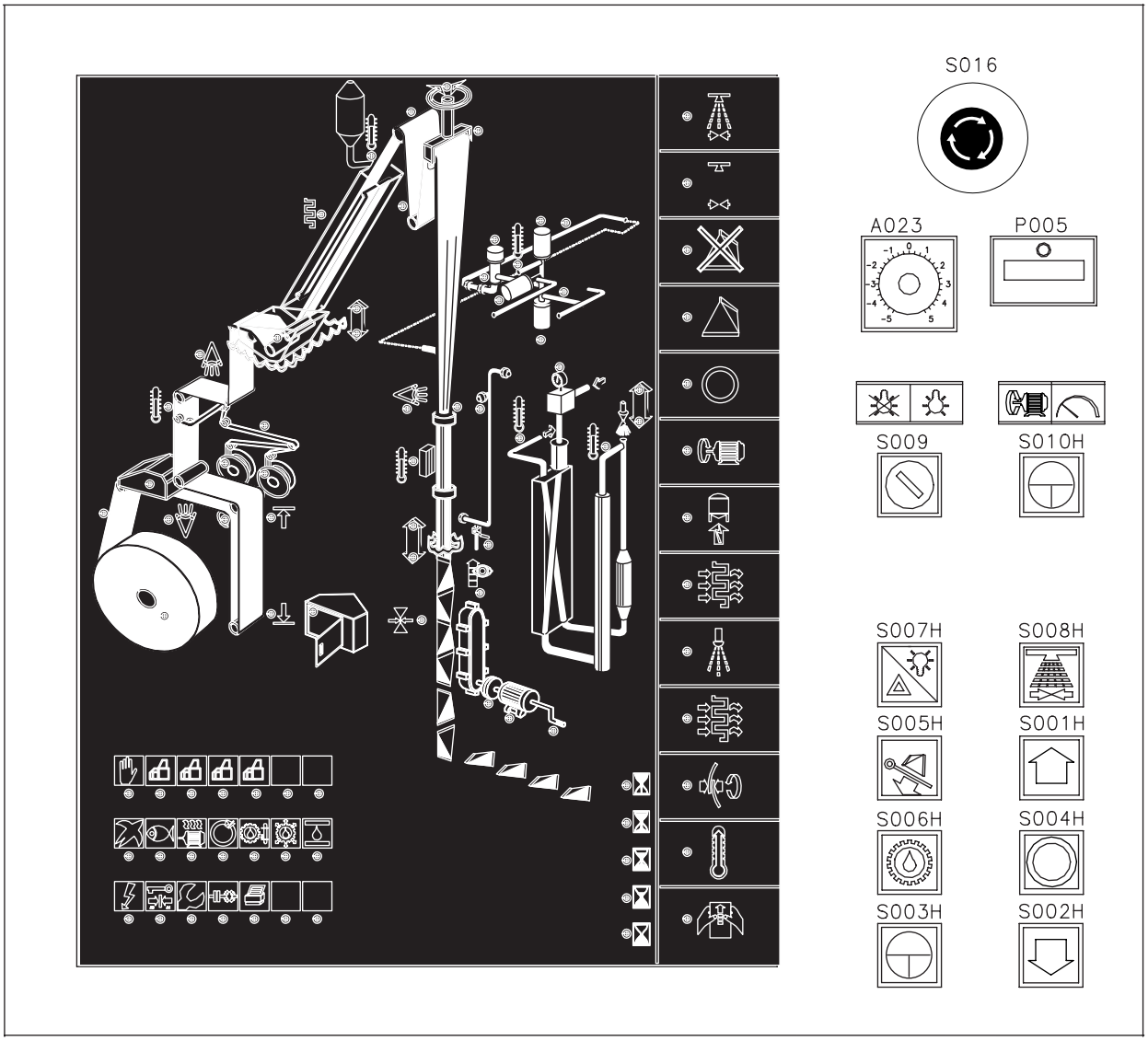

OM2.21TS100702en.fm

Control panel buttons/function

Control panel button	Function	Control panel button	Function
S001H 	Step up.	S008H 	Cleaning.
S002H 	Step down.	S009 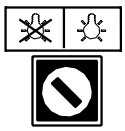	Machine light On / Off.
S003H 	Inching.	S010M 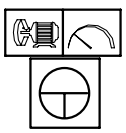	Slow inching If the power has been turned off, the button will show flashing light when the program step **PREPERATION** is reached. To continue, press the **SLOW INCHING** button until the drive motor starts.
S004H 	Short stop.	A023 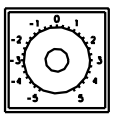	Design correction.
S005H 	Package disposal Less than 0.6 sec, 2 packages More than 0.6 sec, 14-16 packages.	P005 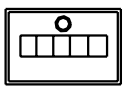	Package counter.
S006H 	Manual lubrication.	S016 	Emergency stop.
S007H 	Alarm reset / Lamp test.		

OM2.21TS100702en.fm

Push buttons/function

Push buttons located on the Infeed unit

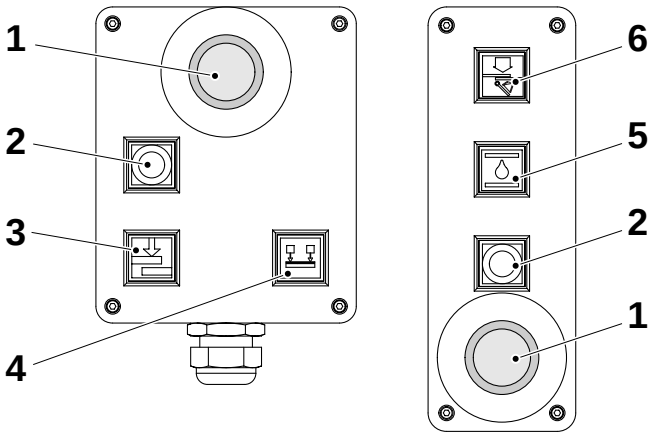

Push buttons located on the Tube forming module

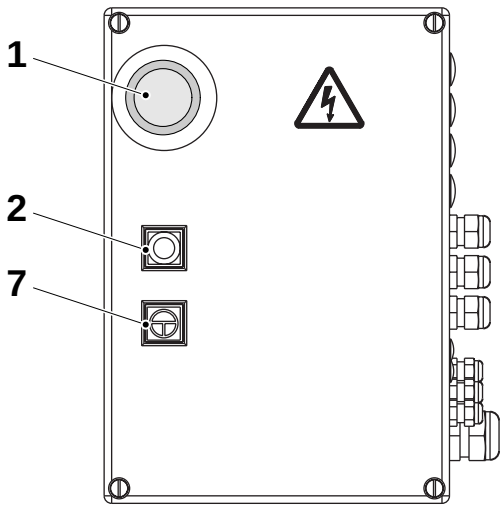

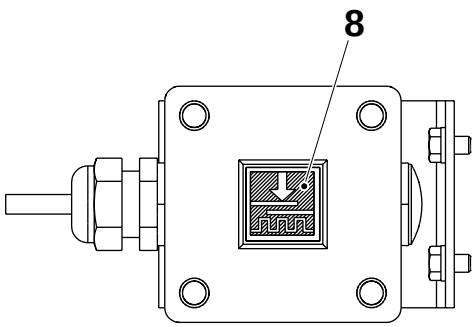

1 Emergency stop
2 Short stop
3 Packaging material splice
4 Packaging material holder
5 Bleeding of hydraulic system (In program step **PREHEATING**)
6 Package waste
7 Inch
8 Strip splice prepared

OM2.21TS100702en.fm

Controllers

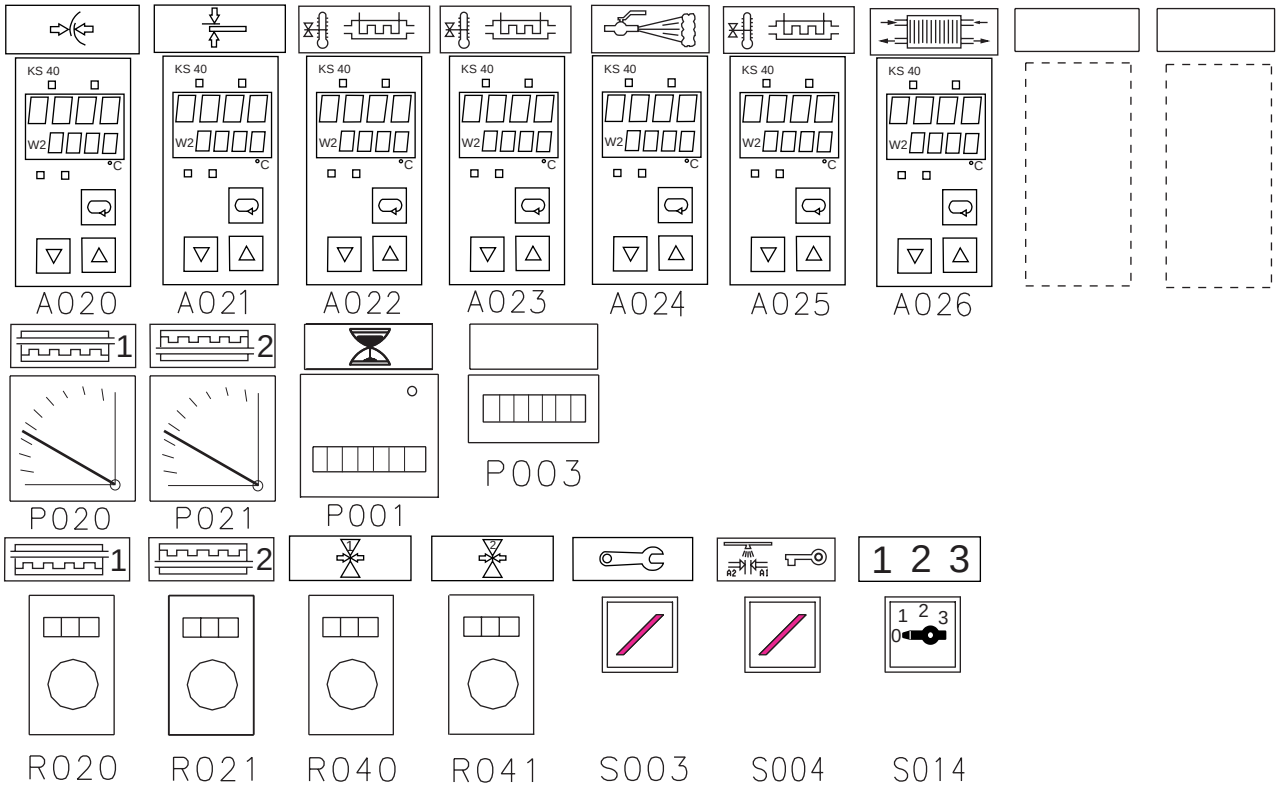

OM2.21TS100702en.fm

A020	Temperature control - LS element
A021	Temperature control - SA element
A022	Temperature control - air super heater
A023	Temperature control - air preheater
A024	Temperature monitor - steam
A025	Temperature monitor - heating chamber
A026	Temperature monitor - heat exchanger
P020	Ampere meter - heating chamber element side 1
P021	Ampere meter - heating chamber element side 2
P001	Hour meter
P003	Package counter
R020	Potentiometer - heating chamber element side 1
R021	Potentiometer - heating chamber element side 2
R040	Potentiometer - TS side 1
R041	Potentiometer - TS side 2
S003	Service switch
S004	Key switch - Final cleaning
S014	Package discharge

Temperature regulator

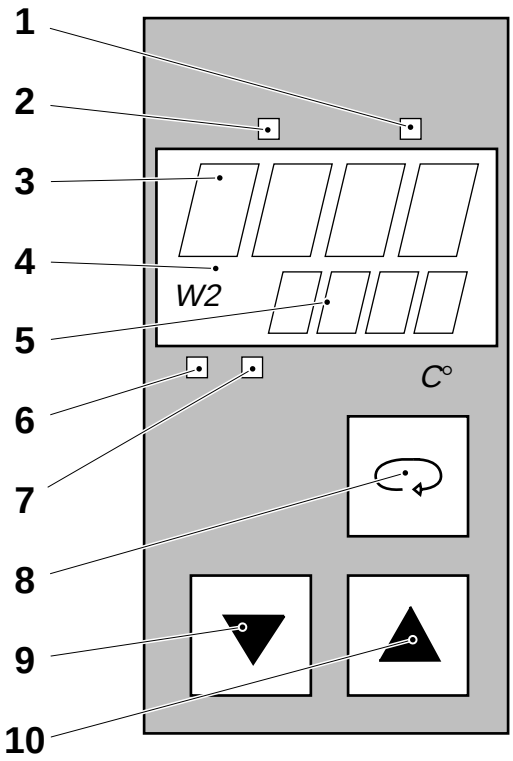

1 Not used
2 Heating (yellow LED)
3 Display, actual value
4 Set point indicator (SP)
5 Display, set value (SP1/SP2)
6 Actual value within alarm levels
7 Not used
8 Menu button
9 Decrease value button
10 Increase value button

OM2.21TS100702en.fm

Note!
Two different set points (SP1 and SP2) can be used.

Temperature LS and LS strip splice (SP1)

The set point indicator W2 (4) is off.

Set the required temperature by means of the increase/decrease value buttons (9) and (10).

Read the set value on the display (5).

Temperature LS tube sealing (SP2)

The set point indicator W2 (4) is on.

Press the menu button (8) until SP2 is shown on the display (3) (approx. 5 sec.).

Set the required temperature by means of the increase/decrease value buttons (9) and (10).

Packaging terms

General description

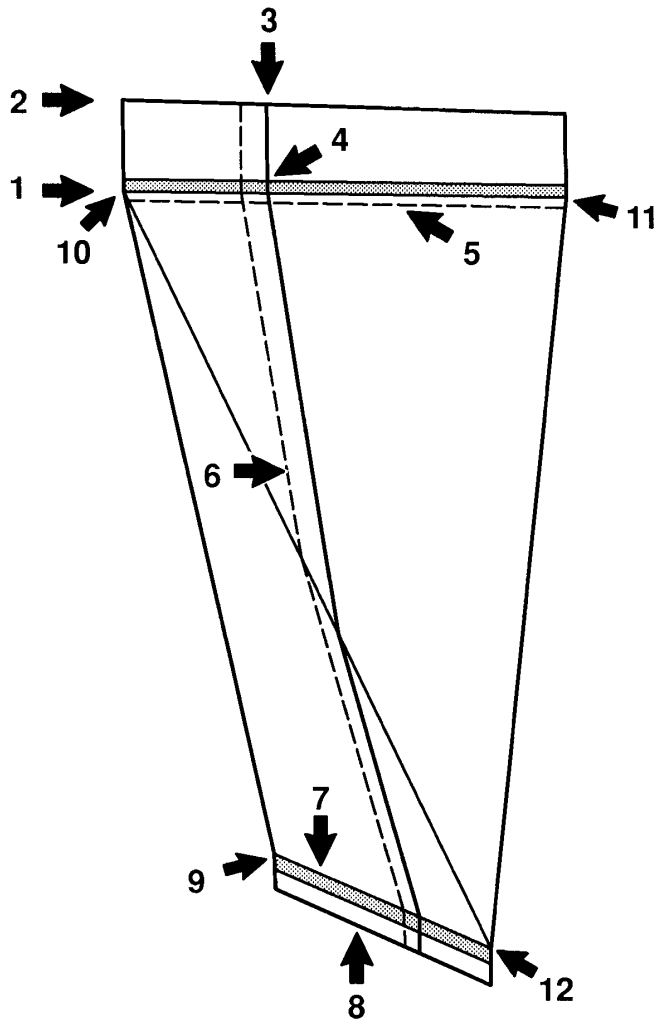

1 Inner corner
2 Outer corner
3 Outer cross
4 Inner cross
5 Perforation
6 Longitudinal seal (LS)
7 Inner transversal seal (inner TS)
8 Outer transversal seal (outer TS)
9 Lower front corner
10 Upper rear corner
11 Upper front corner
12 Lower rear corner

OM2.21TS100702en.fm

Package definitions

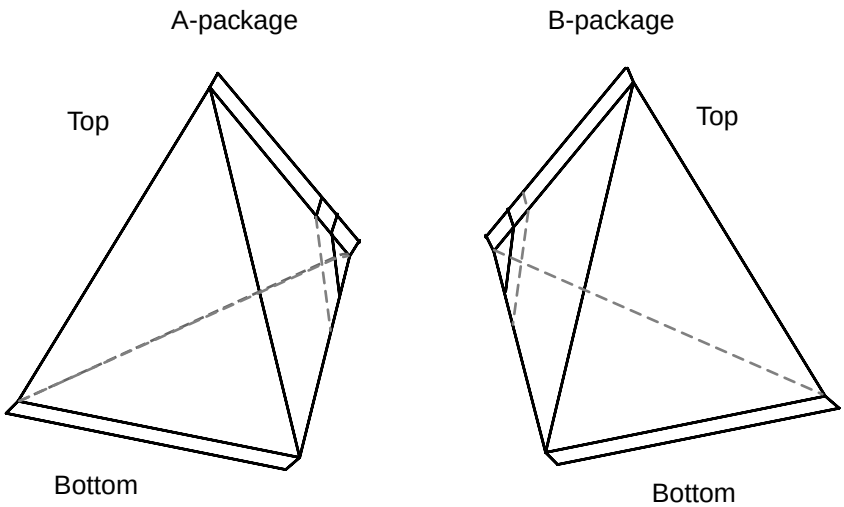

Package panels

Panel No.	A-package	B-package
1	Front panel	Front panel
2	Left panel	Right panel
3	Rear panel	Rear panel
4	Right panel	Left panel

TCA65

A-package

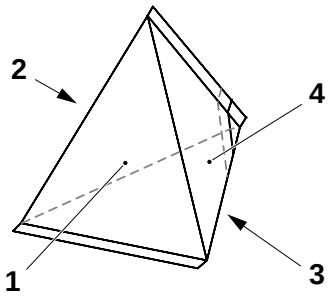

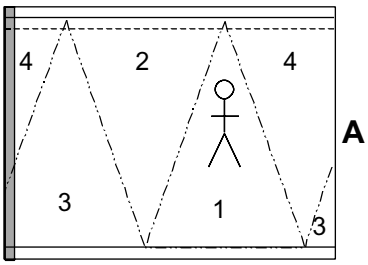

B-package

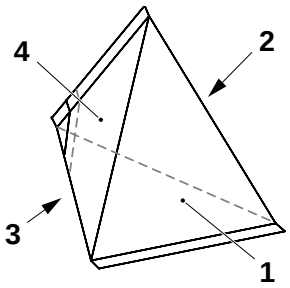

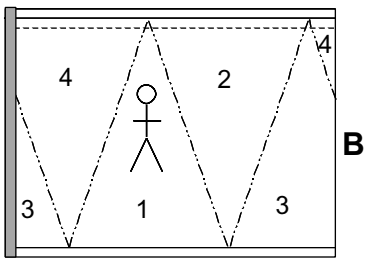

TCA150S & TCA200B

A-package

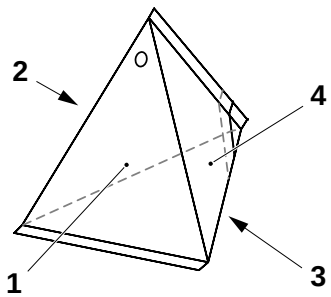

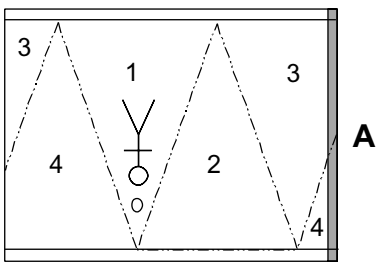

B-package

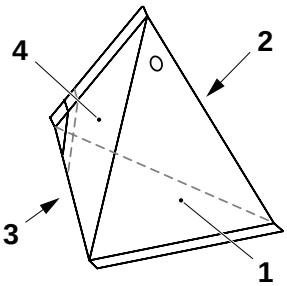

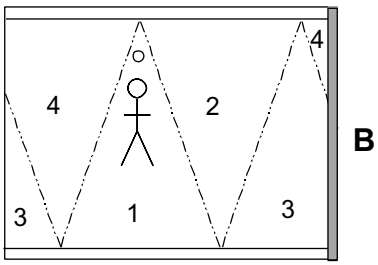

OM2.21TS100702en.fm

Fin corner denomination

123 where

- 1 = **A** or **B** package
- 2 = **T**op or **B**ottom
- 3 = **F**ront, **R**ear, **R**ight or **L**eft

*Example: ATR = **A** pack, **T**op, **R**ear fin corner*

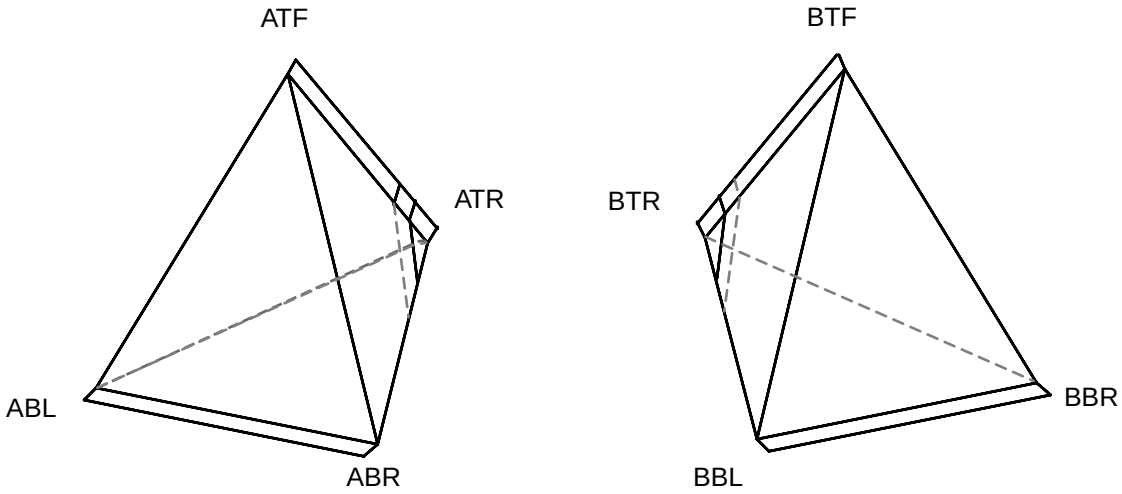

OM2.21TS100702en.fm

Packaging material web

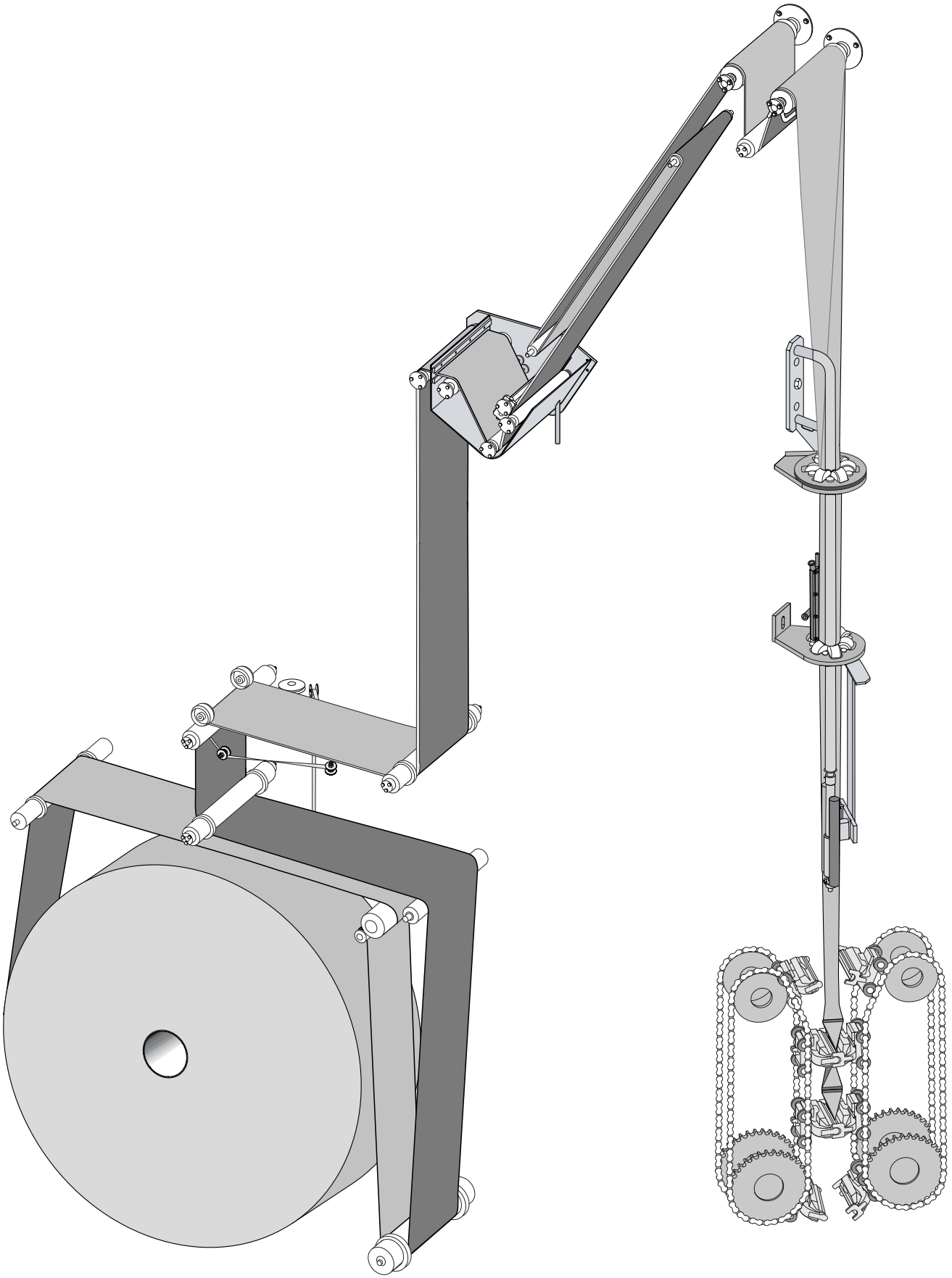

OM2.21TS100702en.fm

Numbering of jaws and packages

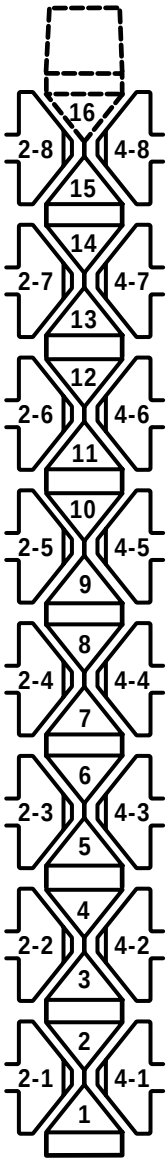

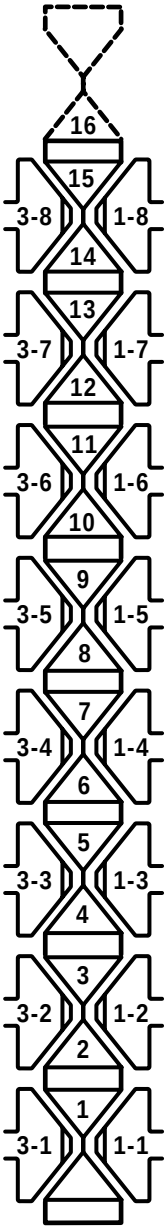

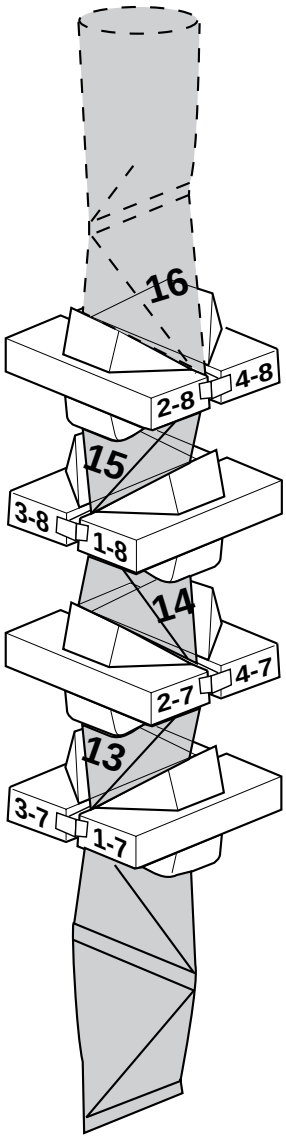

Volume (ml)	Side 2	Side 4	Side 3	Side 1
	Heating jaws	Pressure jaws	Pressure jaws	Heating jaws
65 / 200	2-1 to 2-8	4-1 to 4-8	3-1 to 3-8	1-1 to 1-8
150	2-1 to 2-7	4-1 to 4-7	3-1 to 3-7	1-1 to 1-7

The illustration shows the 65 / 200 ml volumes

OM2.21TS100702en.fm

This page intentionally left blank

OM2.21TS100702en.fm

Alarms/Troubleshooting

This section describes the different alarms that may occur.

2.2TS100703en.fm

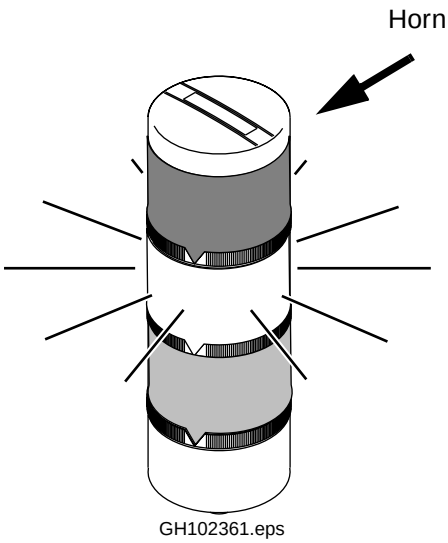

Flashing light

Warning lamp and alarms

When one of the three colours of the warning lamp flashes, an alarm has been triggered.

- **Red** colour flashing, the machine is emergency stopped.
- **Yellow** colour flashing, indicates an abnormal status such as low oil pressure.
- **Blue** colour flashing, indicates an alarm that requires some action from the operator, such as loading a new packaging material reel.

Alarm handling

a) Note which alarm is flashing.

b) Press **Alarm reset** to acknowledge the alarm. The indication changes to fix light.
Alarms triggered as a result of the first alarm will now be indicated as fix light.

c) Take appropriate actions. See the following pages.
The indication goes out when the cause is taken care of.

d) Repeat item b) - c) until the monitor is empty of alarms.



Note!
In order to high light the alarm causing the fault, the alarms that follow from this will not be shown until the first alarm is taken care of.

Monitor panel

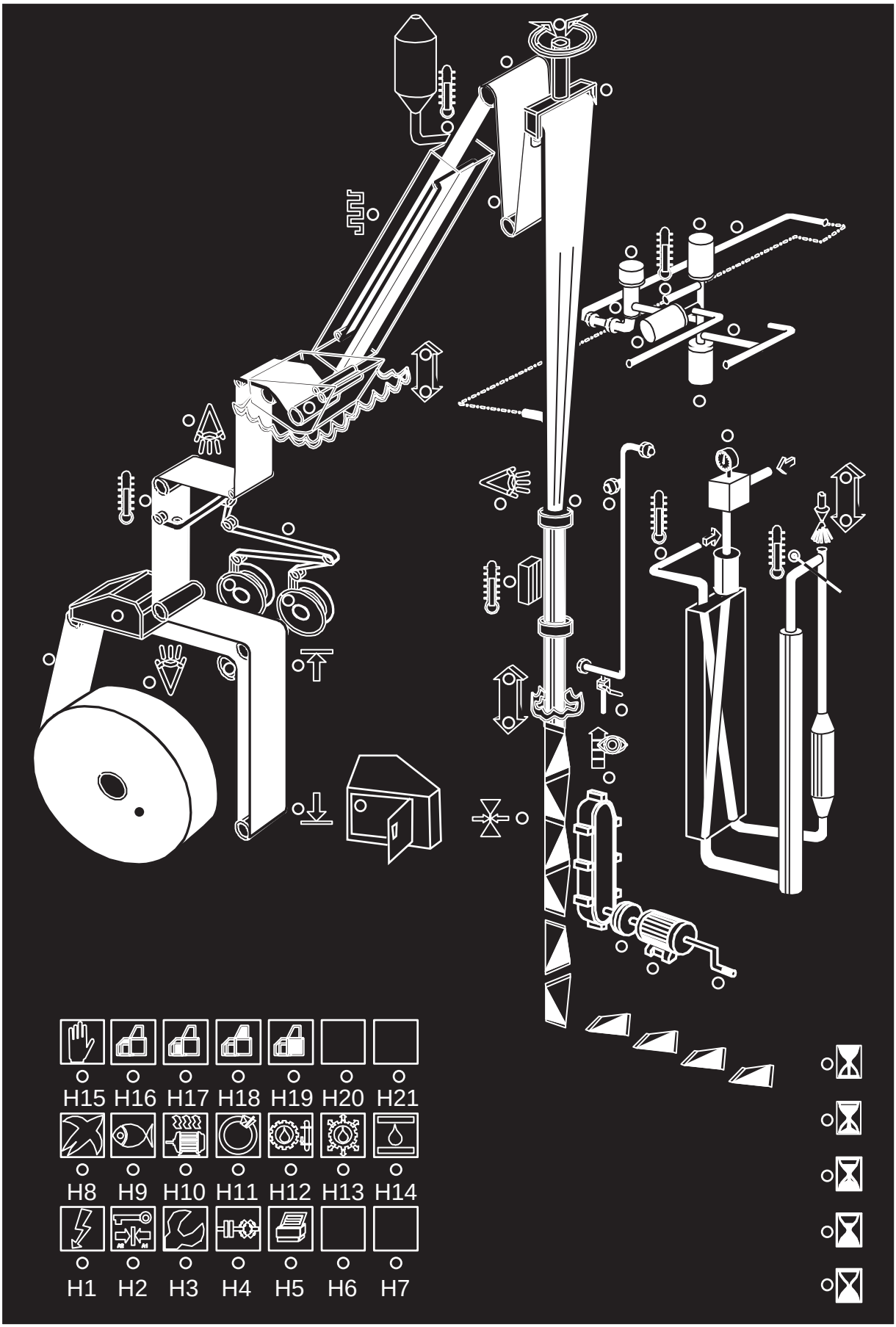

2.2TS100703en.fm

Continued

Pos	Alarm	Cause	Machine action	Instruction to operator
H1	Surge volt protection.	Over voltage.	Indication only	Call technician
H2	Final cleaning.	Cleaning key in final cleaning position.	Machine is in final cleaning mode. Otherwise intermediate cleaning.	
H3	Service switch on.	Service key in service position.	Service mode. Indication only.	
H4	PLC fault.	Forced signal/ Low battery/ PLMS	Indication only. Indication only. Blue alarm.	Call technician.
H5	Inkjet fault	Inkjet printer failure.	Inkjet unit shows red alarm. The machine steps down to **SHORT STOP.** Yellow alarm.	Call technician.
H6	Not used			
H7	Not used			
H8	Main air pressure.	Main air pressure low.	The machine steps down to step **ZERO**. Yellow alarm.	Call technician.
H9	Not used			
H10	Overload.	Overload protection outfeed motor activated.	Not possible to reach **READY FOR PRODUCTION**. In **PRODUCTION** the machine steps down to **SHORT STOP**. Yellow alarm.	Call technician.
H11	Synchronisation sensor misread.	Index sensor misread.	During **SYNCHRONISATION**, the machine steps down to step **ZERO**. Yellow alarm.	Check sensor. Call technician.

2.2TS100703en.fm

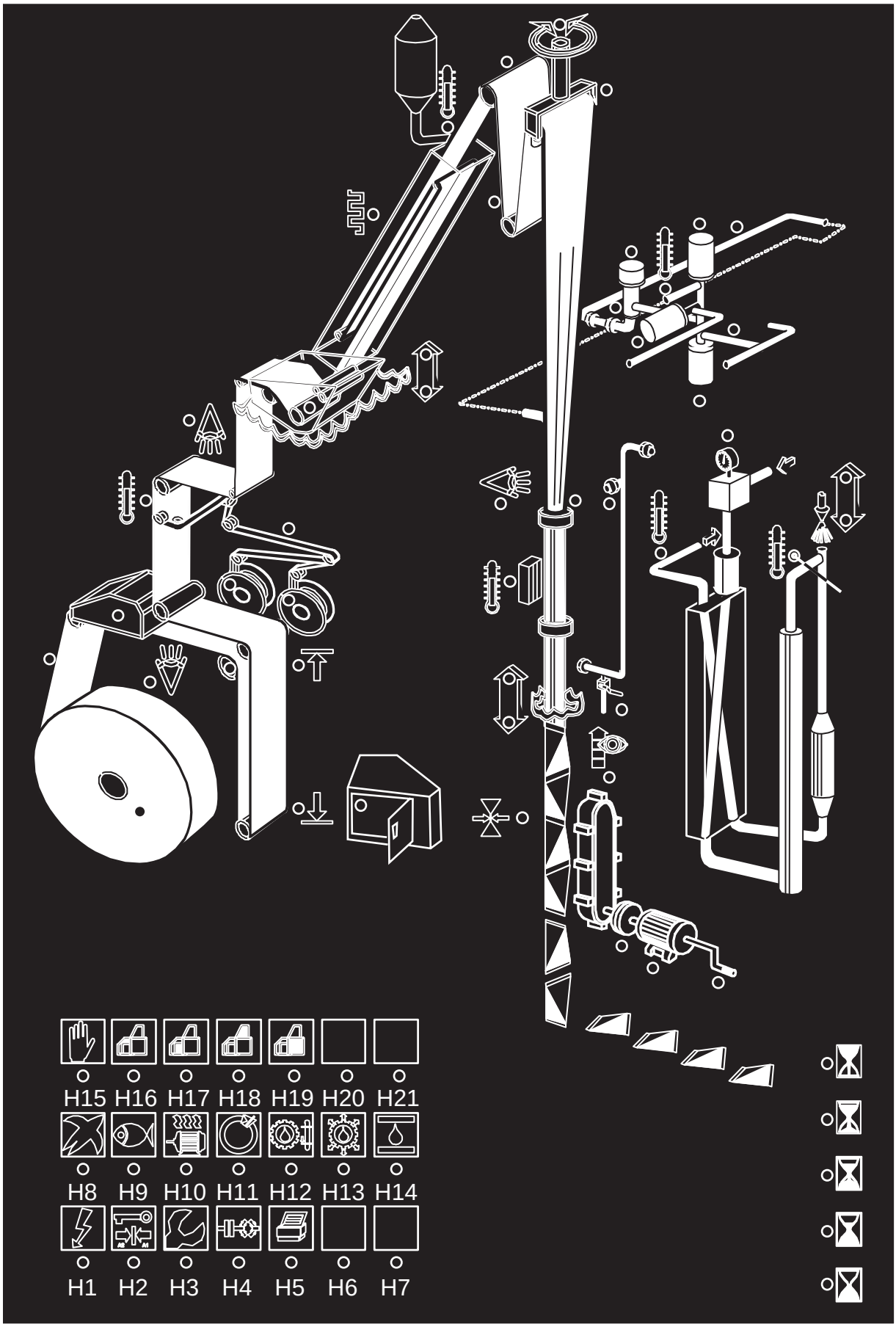

2.2TS100703en.fm

Continued

Pos	Alarm	Cause	Machine action	Instruction to operator
H12	Central lubrication, low level	Low oil level.	In **CLEANING** the machine steps down to **PREPARATION FOR CLEANING**. In other steps blue alarm.	Top up with oil
H13	Central lubrication, pressure	Low lubrication pressure	In **PREHEATING** the machine steps down to **STEP ZERO**. Yellow alarm. In **CLEANING** the machine steps down to **PREPARATION FOR CLEANING**. Yellow alarm. In other steps blue alarm.	Call technician.
H14	Hydraulic bleeding	Bleeding of hydraulic system ongoing.	Indication only	
H15	Emergency stop activated	Emergency stop activated.	The machine stops immediately and steps down to step **ZERO**. Red alarm.	See section Stop
H16	Door guard infeed activated.	Web splice cover or strip magazine door open.	Web and strip splice not possible. Indication only.	Close cover/door
H17	Not used			
H18	Door guards, heating chamber/ tube forming module activated	Heating chamber/tube forming module door open	From **SPRAYING** to **PRODUCTION FINISHED,** the machine stops immediately and steps down to step **ZERO.** Otherwise the machine stops followed by yellow alarm.	Close door
H19	Door guards, main body, web magazine and crank guard.	Main body/web magazine door open or crank handle inserted	The machine stops immediately. Yellow alarm.	Close door/remove crank handle
H20	Not used.			
H21	Not used.			

2.2TS100703en.fm

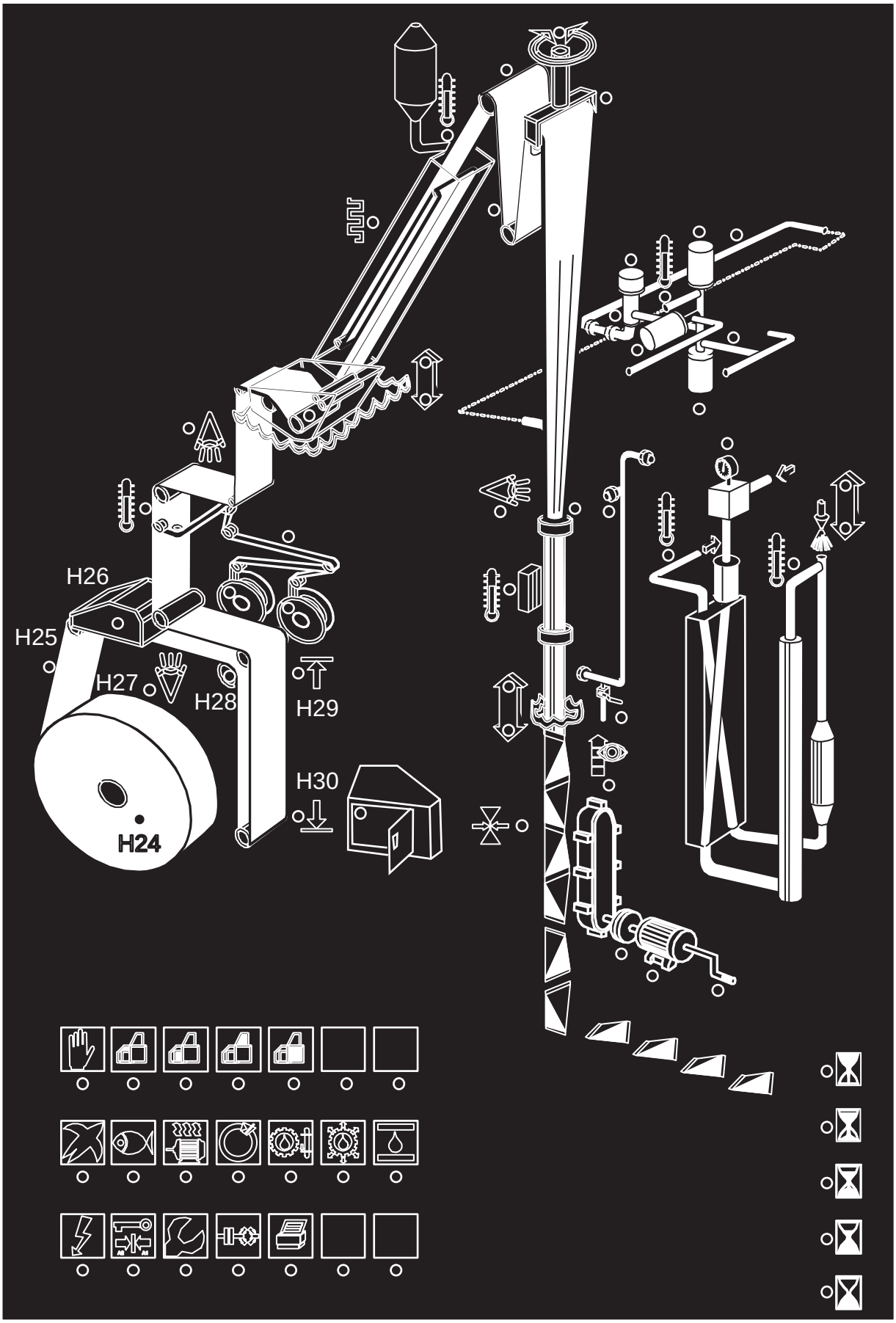

2.2TS100703en.fm

Continued

Pos	Alarm	Cause	Machine action	Instruction to operator
H24	Packaging material supply	Low level packaging material reel	Blue alarm. After approx. 3 minutes the machine steps down to **SHORT STOP** followed by yellow alarm.	Prepare to splice the packaging material acc to Packaging material splice.
H25	Packaging material, web broken	Packaging material web broken.	In **TUBE SEALING** the machine steps down to **PREHEATING.** Yellow alarm. In **DRIVE MOTOR ON** and in **PRODUCTION** the machine steps down to **SIGNAL TO/ FROM STERILIZER**. Yellow alarm.	Perform Daily Care
H26	Web guide splice.	Splice table in wrong position.	Blue alarm. (Splice not possible)	Call technician.
H27	Web splice design sensor, misreading.	Packaging material web splice sensor error.	Blue alarm. During splice sequence, the machine steps down to **SHORT STOP** followed by yellow alarm.	If the packaging material is correct positioned at the sensor, call a technician.
H28	Infeed free loop motor fault	Infeed free loop motor error	In **TUBE SEALING** the machine steps down to **PREHEATING.** Blue alarm. In **PRODUCTION**, the machine steps down to **SHORT STOP**. Blue alarm.	Call technician
H29	Infeed free loop high position	Free loop position error	In **TUBE SEALING** the machine steps down to **PREHEATING.** Yellow alarm. In **DRIVE MOTOR ON** and in **PRODUCTION** the machine steps down to **SIGNAL TO/ FROM STERILIZER**. Yellow alarm.	Call technician
H30	Not used			

2.2TS100703en.fm

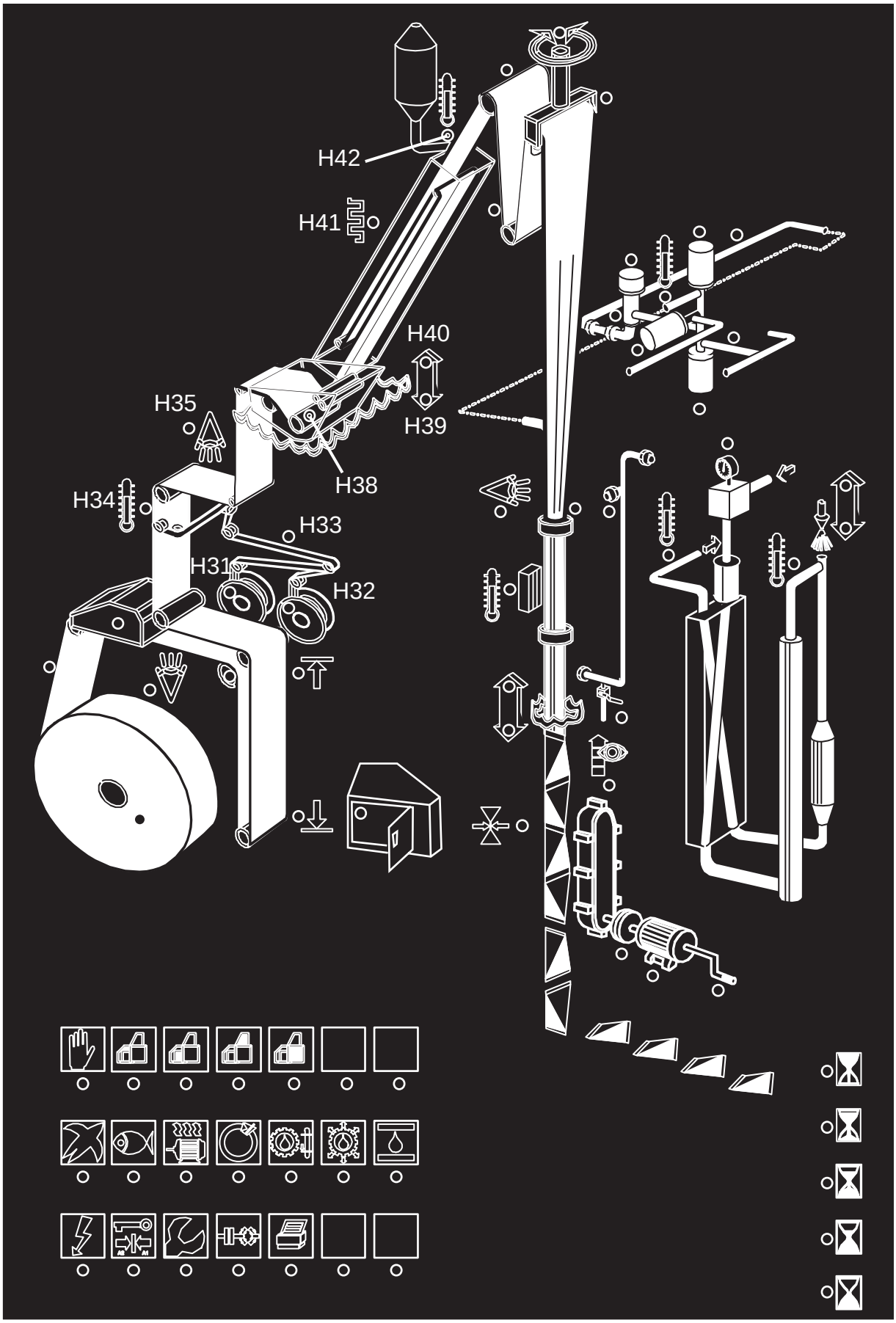

2.2TS100703en.fm

Continued

Pos	Alarm	Cause	Machine action	Instruction to operator
H31	LS strip reel 2 empty	LS strip supply reel 2 is empty.	Blue alarm.	Prepare for strip splice, acc to Strip splice preparation.
H32	LS strip reel 1 empty	LS strip supply reel 1 is empty.	Blue alarm.	Prepare for strip splice, acc to Strip splice preparation.
H33	LS strip broken	LS strip broken.	In **TUBE SEALING** the machine steps down to **PREHEATING**. Yellow alarm. In **PRODUCTION**, the machine steps down to **SIGNAL TO/ FROM STERILIZER**. Yellow alarm.	Thread the strip acc to Threading of strip
H34	SA element low temperature	SA element temperature is to low.	The machine steps down to step **ZERO**. Yellow alarm.	Call technician.
H35	Not used			
H38	Squee-gee rollers	Squee-gee rollers in wrong position.	In **PRODUCTION**, the machine steps down to **SHORT STOP**. Yellow alarm.	Call technician.
H39	Peroxide bath, low level	Low level	In **DRIVE MOTOR ON**, the machine steps down to **SIGNAL TO/FROM STERILIZER**. In **PRODUCTION** the machine steps down to **SHORT STOP**. In other steps yellow alarm.	Check if the level in the peroxide container is low, top up if required. See Peroxide handling on page 219. Call technician if correct level and remaining alarm.
H40	Peroxide bath, high level	Overfilling of peroxide bath	In **DRIVE MOTOR ON**, the machine steps down to **SIGNAL TO/FROM STERILIZER**. In **PRODUCTION** the machine steps down to **SHORT STOP.** Yellow alarm.	Call technician.
H41	Heating chamber, low power	Current interrupt	In **PRODUCTION**, the machine steps down to step **ZERO**. Yellow alarm.	Call technician.
H42	Heating chamber, low temperature	Low temperature	Not possible to step up to **PRODUCTION.** Yellow alarm.	Call technician.

2.2TS100703en.fm

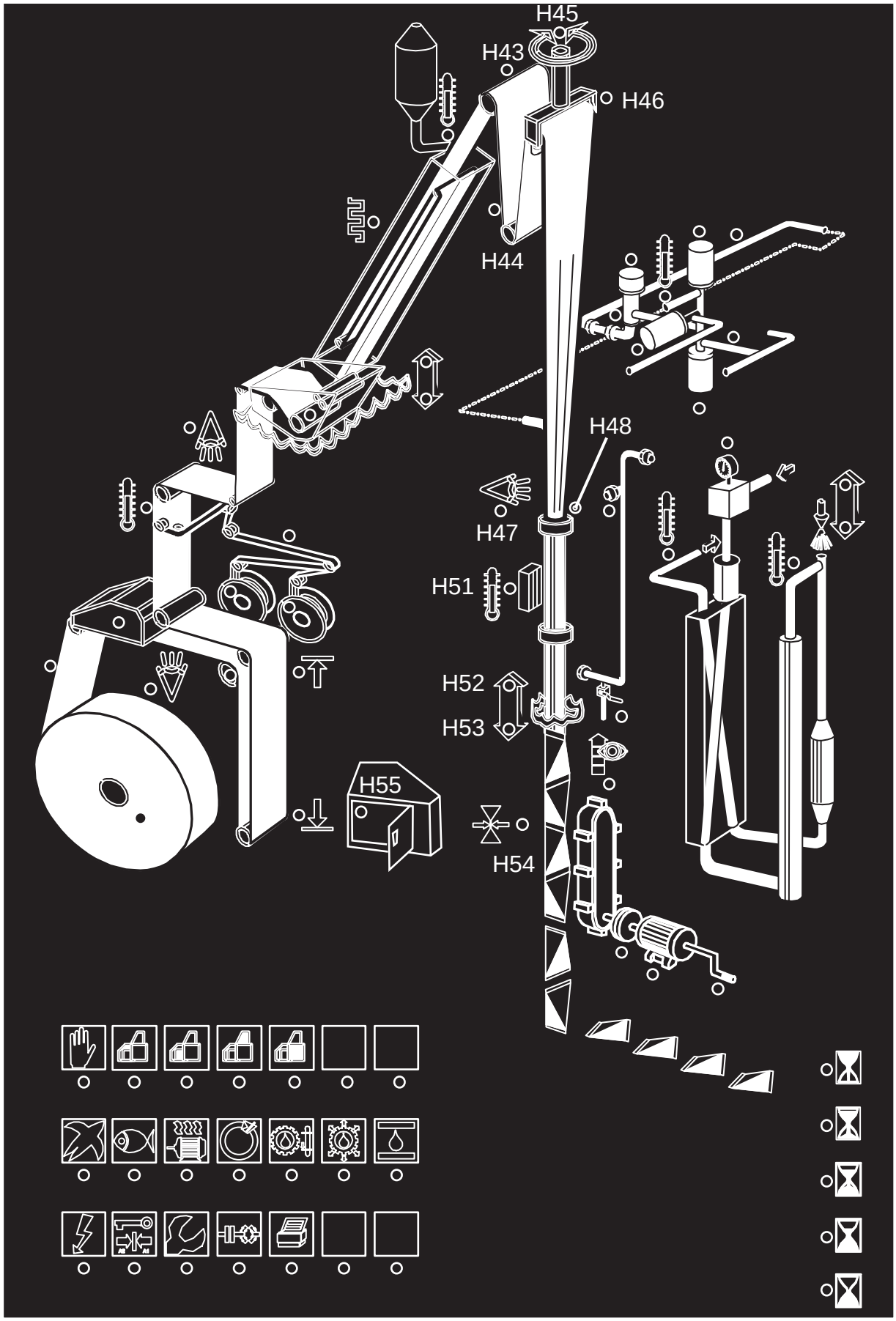

2.2TS100703en.fm

Continued

Pos	Alarm	Cause	Machine action	Instruction to operator
H43	Web tension motor fault	Web tension motor problem	In **DRIVE MOTOR ON** and **PRODUCTION** the machine steps down to **SIGNAL TO / FROM STERILIZER.** Yellow alarm.	Call technician
H44	Not used			
H45	Not used			
H46	Upper bending roller	Wrong position	The machine steps down from **SPRAYING** and **DRYING** to **TUBE SEALING.** Yellow alarm.	Call technician.
H47	Design sensor misread	Sensor has not changed status for 4 seconds	In **DRIVE MOTOR ON** and **PRODUCTION** the machine steps down to **SIGNAL TO / FROM STERILIZER**. Yellow alarm.	Call technician.
H48	Not used			
H51	LS element, low temperature	Temperature too low	In **PRODUCTION** the machine steps down to **SHORT STOP. Y**ellow alarm**.** In other steps blue alarm.	Call technician.
H52	Product level high/Cleaning pipe wrong position	Product level too high or cleaning pipe in wrong position	In **PRODUCTION** the machine steps down to **SHORT STOP**. In **CLEANING** the machine steps down to **PREPARATION FOR CLEANING**. **Y**ellow alarm**.**	Call technician.
H53	Product level low	Product level too low	In **PRODUCTION** blue alarm. If more than 20 seconds the machine steps down to **SHORT STOP** followed by yellow alarm.	Call technician.
H54	Fault in IH units transversal sealing.	Three TS faults for the same jaw or six TS faults during one revolution.	In **PRODUCTION** the machine steps down to **SHORT STOP**. In **TUBE SEALING** the machine steps down to **PREHEATING**. **Y**ellow alarm**.**	Call technician.
H55	Door monitor peroxide zone	Peroxide cabinet door open	The peroxide pump stops. **Y**ellow alarm**.**	Close the door

2.2TS100703en.fm

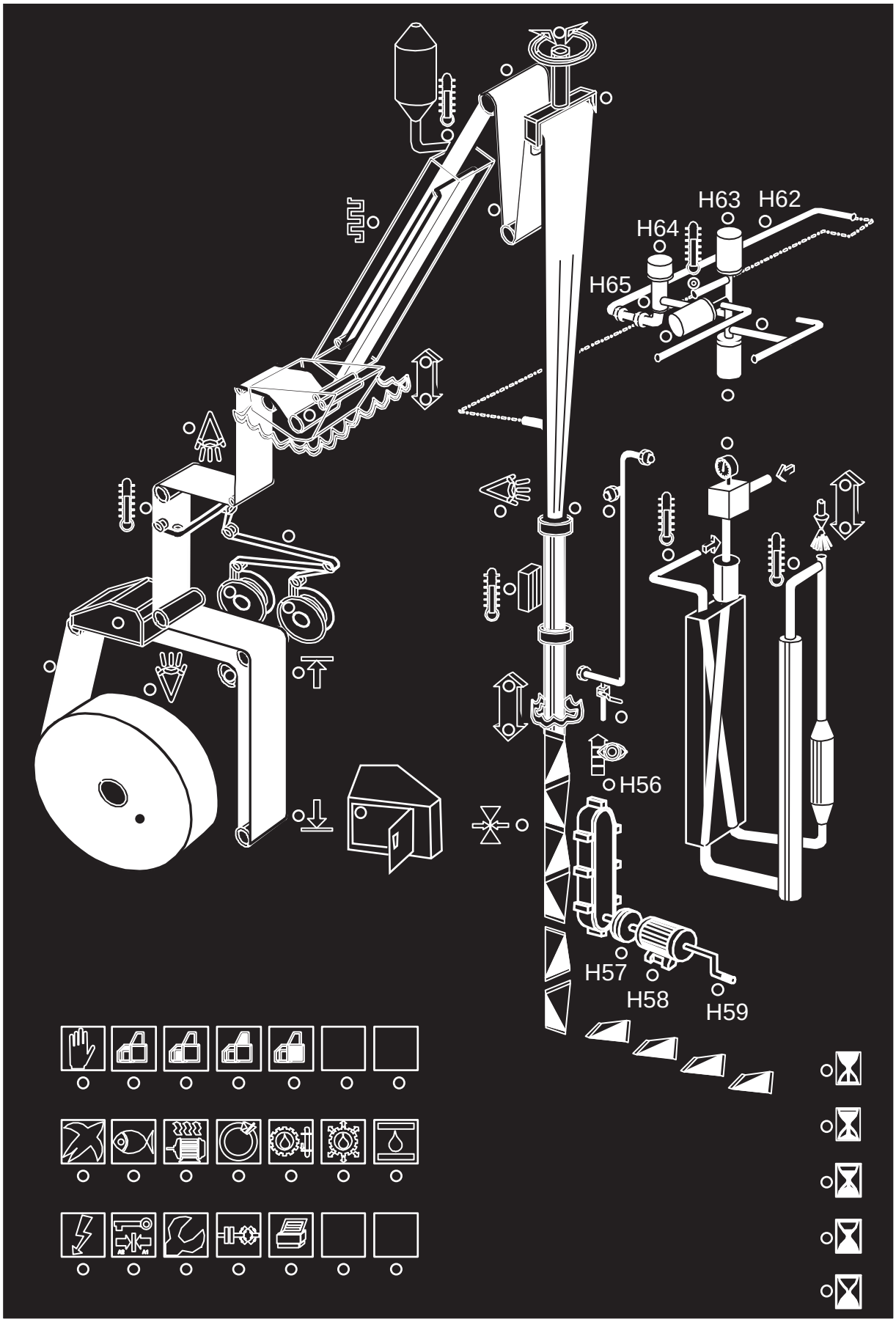

2.2TS100703en.fm

Continued

Pos	Alarm	Cause	Machine action	Instruction to operator
H56	Design wrong position.	Out of design	In **DRIVE MOTOR ON** and **PRODUCTION** the machine steps down to **SIGNAL TO / FROM STERILIZER**. Yellow alarm.	Call technician
H57	Jaw overload protection.	Safety clutch released	In **DRIVE MOTOR ON** and **PRODUCTION** the machine steps down to **SIGNAL TO / FROM STERILIZER**. Yellow alarm.	Call technician
H58	Main motor fault.	Main motor problem	In **TUBE SEALING** the machine steps down to **PREHEATING** In **DRIVE MOTOR ON** and **PRODUCTION** the machine steps down to **SIGNAL TO / FROM STERILIZER.**. Yellow alarm.	Call technician
H59	Not used			
H62	Product or cleaning pipe wrong position.	Production or cleaning pipe not in position.	Not possible to step up to **PRODUCTION** or **CLEANING** Yellow alarm.	Connect pipe correctly
H63	C-valve wrong position.	C-valve position error	The machine steps down to step **ZERO.** In **FINAL CLEANING** the machine steps down to **PREPARATION FOR CLEANING.** Yellow alarm.	Call technician
H64	Regulating valve wrong position.	Regulating valve in wrong position	In **PREHEATING OF FILLING SYSTEM**, **SPRAYING, DRYING** and **CLEANING** the machine steps down to step **ZERO.** Yellow alarm.	Call technician
H65	Regulating valve membrane broken	Membrane in regulating valve broken.	The machine steps down to step **ZERO**. Yellow alarm.	Call technician.

2.2TS100703en.fm

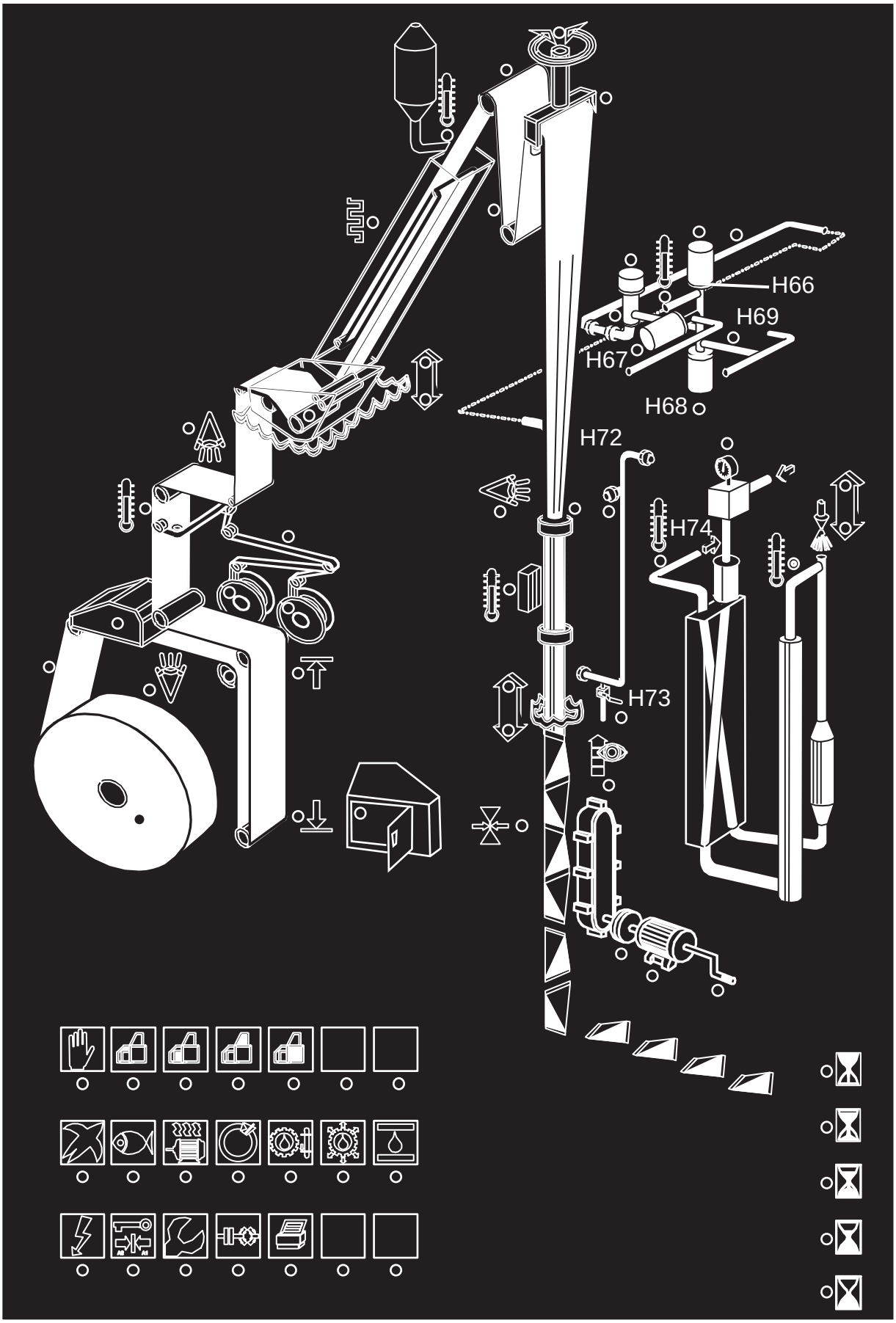

2.2TS100703en.fm

Continued

Pos	Alarm	Cause	Machine action	Instruction to operator
H66	Steam low temperature	Steam temperature too low.	The machine steps down to step **ZERO**. Yellow alarm.	Call technician.
H67	A-valve wrong position	A-valve in wrong of position.	In **PRODUCTION** the machine steps down to **SIGNAL TO / FROM STERILIZER**. Yellow alarm. From step **PREHEATING** to **DRYING**, the machine steps down to step **ZERO**. Yellow alarm.	Call technician.
H68	B-valve wrong position	B-valve in wrong position.	In **PREHEATING OF FILLING SYSTEM, SPRAYING** and **DRYING**, the machine steps down to **TUBE SEALING.** Yellow alarm. **IN CLEANING** the machine steps down to **PREPARATION FOR CLEANING**. Yellow alarm. For other steps the machine steps down to step **ZERO**. Yellow alarm.	Call technician.
H69	Air or cleaning pipe wrong position	Air pipe / Cleaning pipe not in position.	Not possible to step up the machine. Yellow alarm.	Connect pipe correctly
H72	Cleaning pipe or plug, wrong position	Cleaning pipe / plug not in position.	In **CLEANING** the machine steps to **PREPARATION FOR CLEANING**. Yellow alarm.	Connect pipe/plug correctly
H73	Draining valve position wrong	Draining valve in wrong position.	In **CLEANING** the machine steps to **PREPARATION FOR CLEANING**. Yellow alarm. In other steps blue alarm.	Put draining valve in correct position.
H74	Not used			

2.2TS100703en.fm

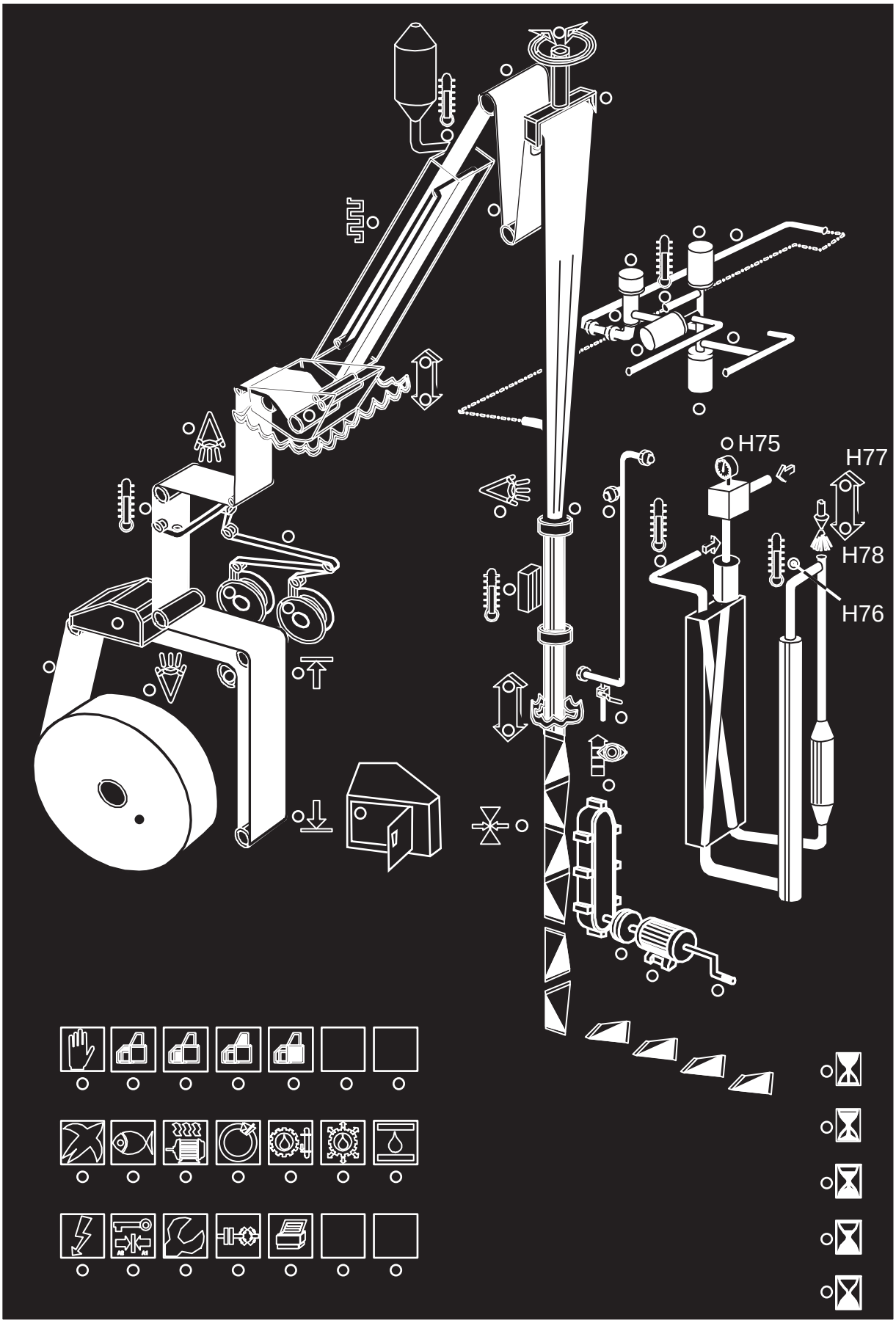

2.2TS100703en.fm

Continued

Pos	Alarm	Cause	Machine action	Instruction to operator
H75	Sterile air low pressure	Sterile air pressure too low.	The machine steps down to step **ZERO**. Yellow alarm. In other steps blue alarm.	Call technician.
H76	Air super heater low temperature	Temperature too low.	In **PRODUCTION** the machine steps down to step **ZERO**. Yellow alarm. In other steps blue alarm.	Call technician.
H77	Spray container High level	Wrong level in spray container.	The machine steps down to **TUBE SEALING.** Yellow alarm.	Call technician.
H78	Spray container, Low level	Wrong level in spray container.	The machine steps down to **PREHEATING OF FILLING SYSTEM**. Yellow alarm.	Call technician.

2.2TS100703en.fm

This page intentionally left blank

2.2TS100703en.fm

Preparations after daily care

This section describes how to:

- **install the filling pipe and product pipes**
- **thread the packaging material through the machine**

after Daily care has been performed.

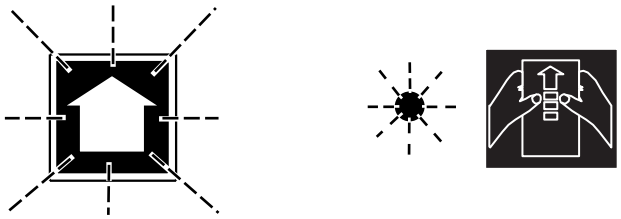

1

Main power switch is **ON**.

– The **STEP UP BUTTON** flashes
– The **PREPARATION** symbol flashes
– Alarm indication for cleaning pipes

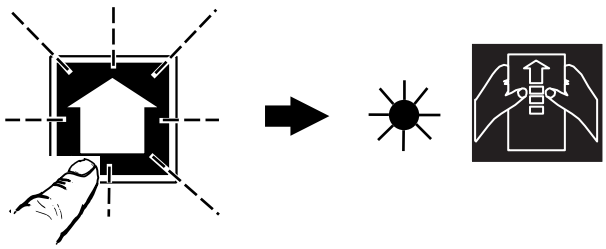

2

Press the **STEP UP BUTTON.**

– The **PREPARATION SYMBOL** gets a fixed light.

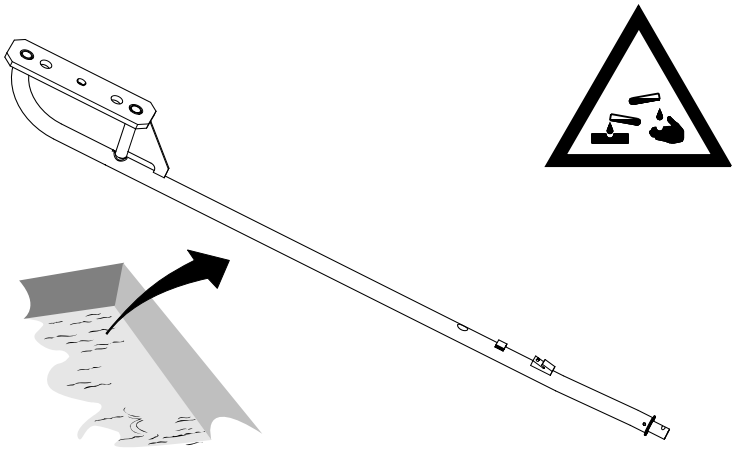

3a

WARNING!

Read the section Hydrogen Peroxide (H2O2) in Safety precautions!

Pick up the upper filling pipe from the container with sterilisation liquid. Rinse it with drinking water.

OM2.21TS100704en.fm

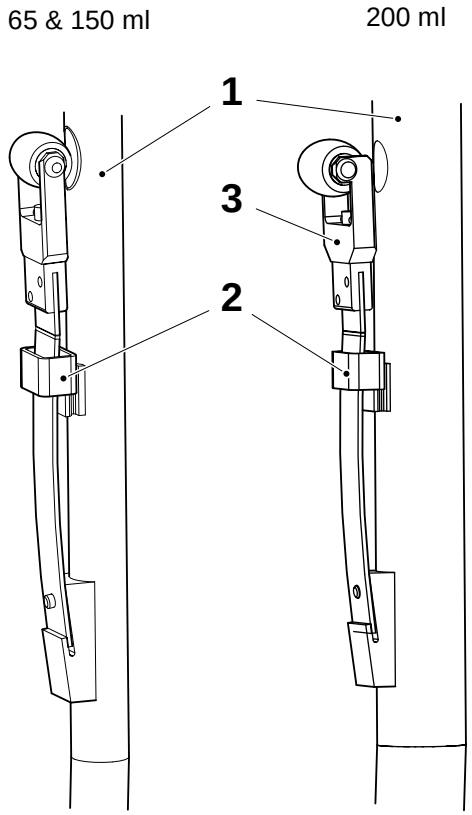

3b

Fit the pressure roller assembly at the upper filling pipe (1) and lock with the hatch (2) as illustrated.

Note!
The fork (3) for the 200 ml is not symmetric, make sure to turn it the correct way as illustrated.

1 Upper filling pipe
2 Hatch
3 Fork (200 ml)

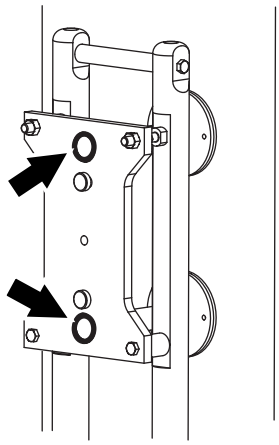

3c

Make sure that the gaskets are intact and correctly seated.

Wipe clean the area for the filling pipe with de-ionized water.

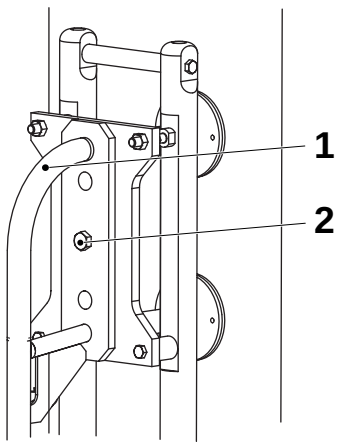

3d

Gently position the upper filling pipe (1).

Install and tighten the screw (2).

1 Upper filling pipe
2 Screw

OM2.21TS100704en.fm

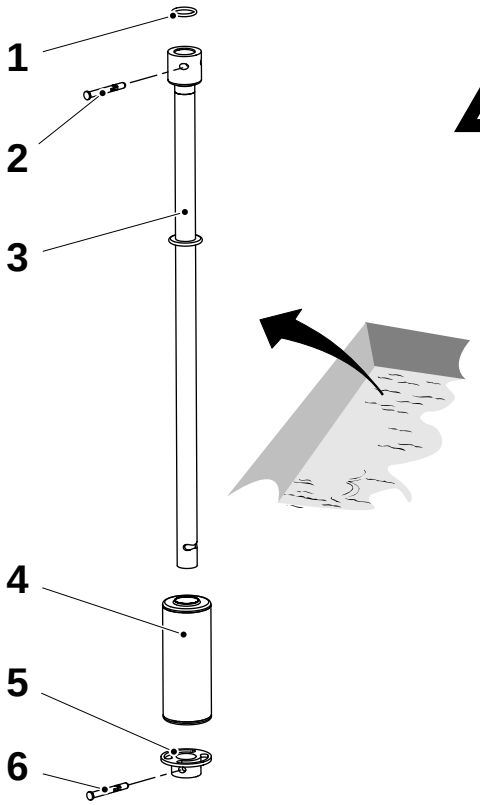



4a

WARNING!

Read the section Hydrogen Peroxide (H2O2) in Safety precautions!

Pick up the parts for the lower filling pipe (3) from the container with sterilisation liquid. Rinse with drinking water.

Note!
Shake the float (4) when it is picked up from the container in order to make sure that there is no leakage (any liquid penetrated into the float).

Fit the O-ring (1), the float (4) and the locking cup (5). Secure with the locking pin (6).

Note!
Make sure that the locking pin (6) is secured properly; change if necessary.

1 O-ring
2 Pin
3 Lower filling pipe
4 Float
5 Locking cup
6 Pin

OM2.21TS100704en.fm

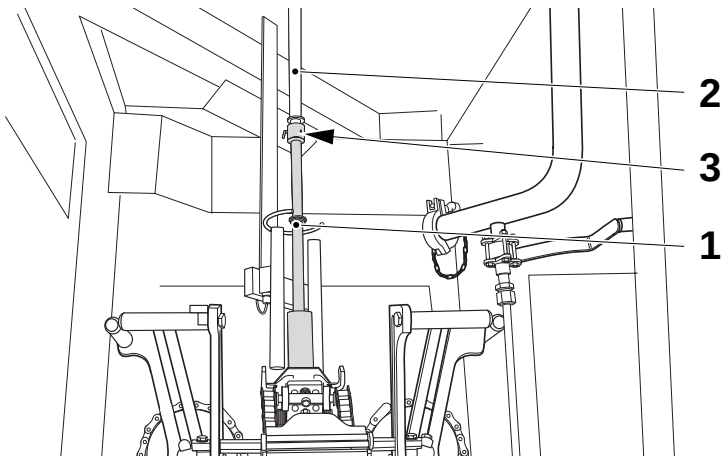

4b

Assemble the lower filling pipe (1) at the upper filling pipe (2).

Note!
Make sure that the pin (3) is secured properly; change if necessary.

1 Lower filling pipe
2 Upper filling pipe
3 Pin

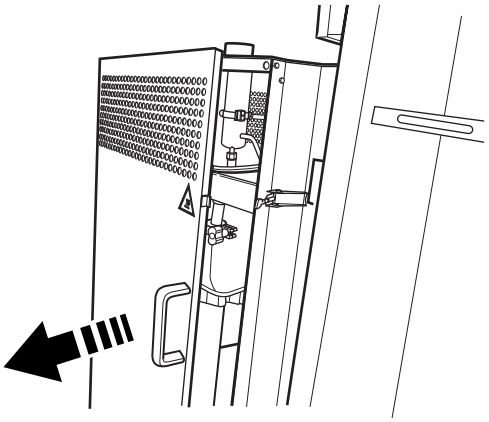

5a

Open the door for the incoming cleaning pipe connection.

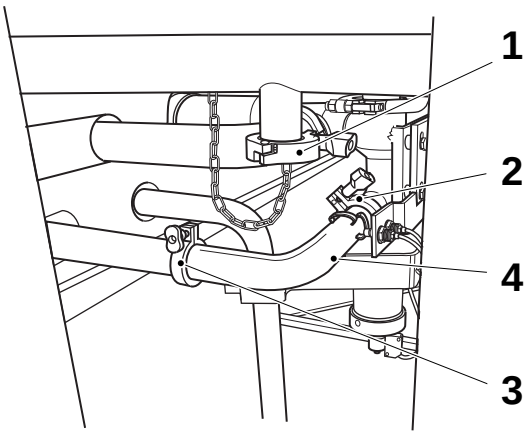

5b

a) Remove the clamp (1) and remove the lid. Take care of the gasket

b) Remove the clamps (2) and (3) and remove the pipe (4) carefully by lifting it straight out.

Note!
Twisting the pipe will damage the seals and make it impossible for the machine to reach sterility.

1 Clamp
2 Clamp
3 Clamp
4 Pipe

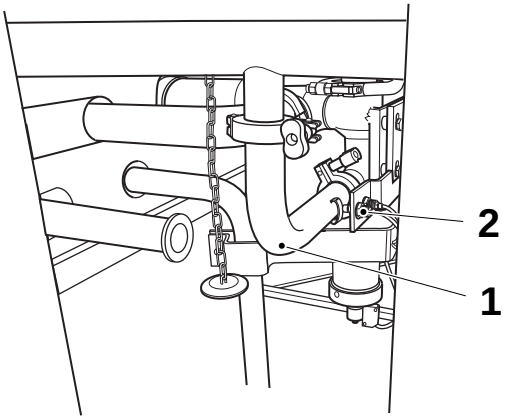

5c

Connect the pipe (1) as illustrated.

Note!
Make sure that the switch (2) is activated.

1 Pipe
2 Switch

OM2.21TS100704en.fm

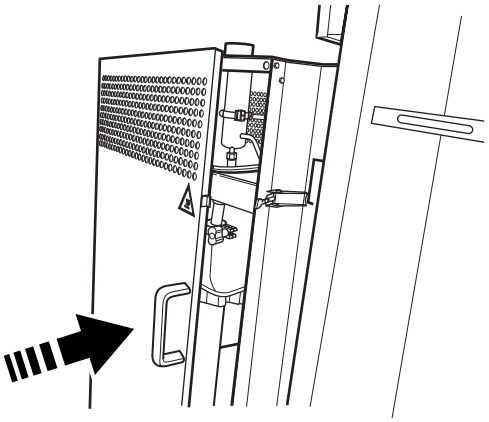

5d

Close the door for the incoming cleaning pipe connection.

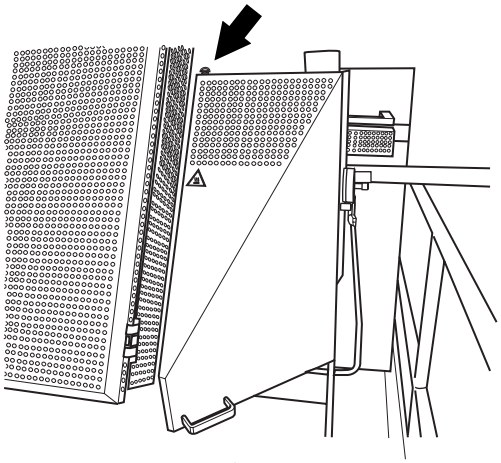

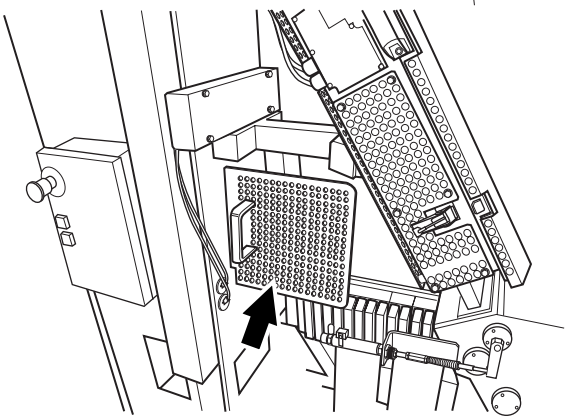

6a

To get access to the pipes:

- Loosen the hatch (at arrow) and open the cover.
- Lift up and remove the cover.

OM2.21TS100704en.fm

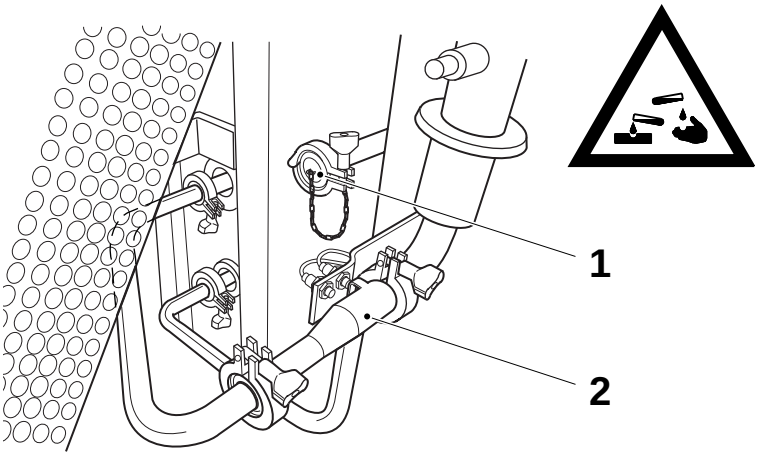

6b

WARNING!

Read the section Hydrogen Peroxide (H2O2) in Safety precautions!

Remove the lid (1).

Remove the pipe (2) and place it in disinfectants, code **F**. See section Disinfectants and Cleaning Agents.

1 Lid
2 Pipe

OM2.21TS100704en.fm

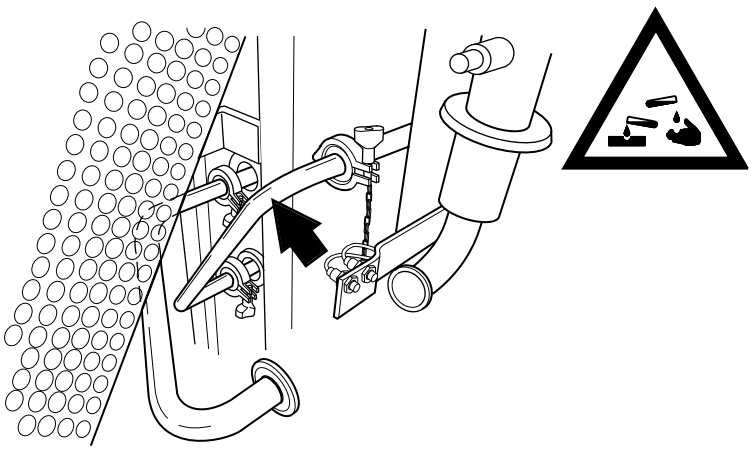

6c

WARNING!

Read the section Hydrogen Peroxide (H2O2) in Safety precautions!

Pick up the pipe from the container with sterilisation liquid. Rinse it with drinking water. Check for both ends, that the seats are carefully cleaned.

Clean two gaskets with cleaning compound code **D** and fit them to the pipe. See section Disinfectants and Cleaning Agents.

Fit the pipe.

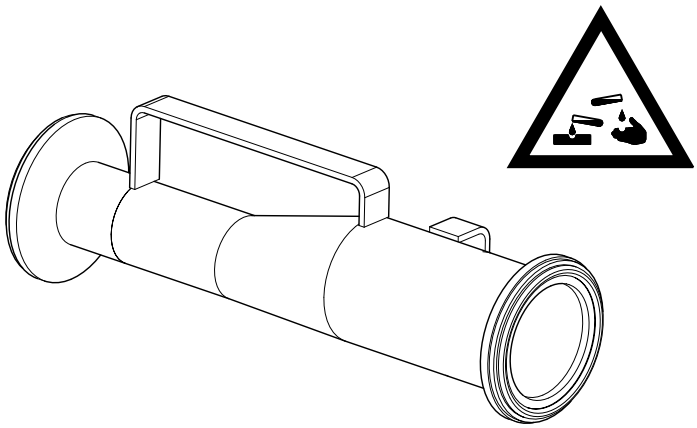

6d

WARNING!

Read the section Hydrogen Peroxide (H2O2) in Safety precautions!

Pick up the pipe from the container with sterilisation liquid. Rinse it with drinking water. Check that the seats are carefully cleaned.

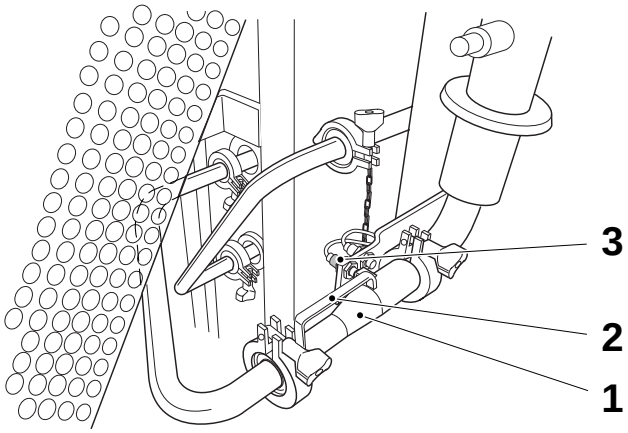

6e

Install the pipe (1) with its handle (2) upwards.

Note!
Make sure that the switch (3) is activated when the nuts are tightened.

1 Pipe
2 Handle
3 Switch

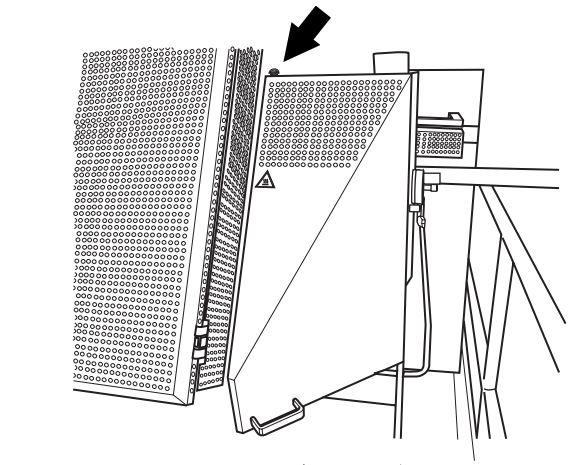

6f

Close the cover and lock the hatch (at arrow).

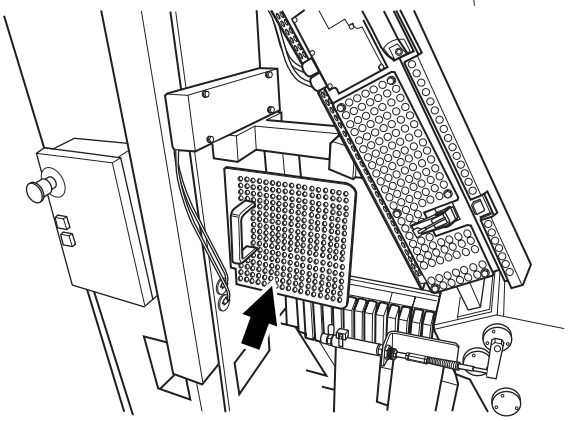

Install the cover.

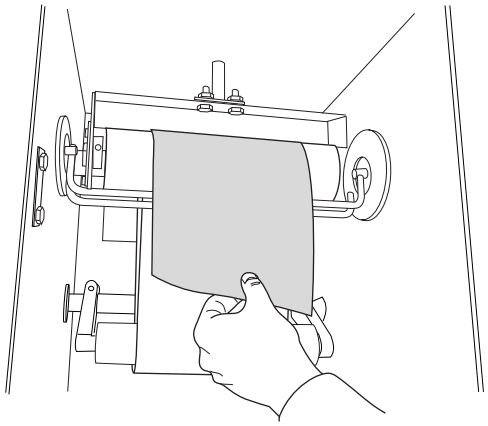

7a

Pull down the packaging material web to the upper forming ring.

Note!
In the infeed unit, feed forward enough packaging material to reach down into the jaw system.

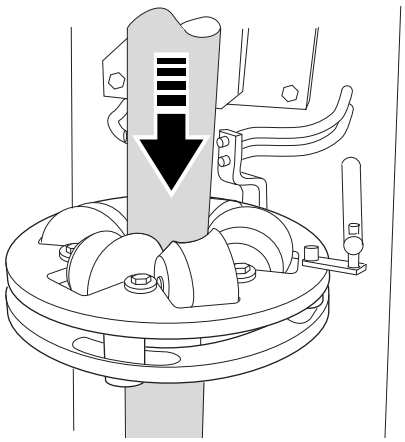

7b

Form the material tube through the upper forming ring.

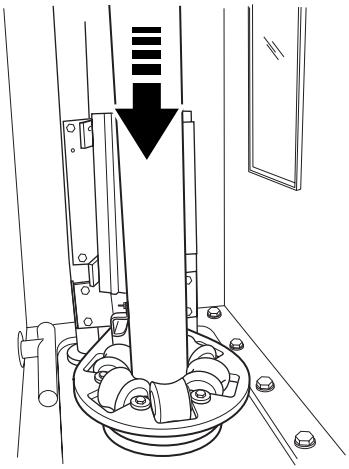

7c

Thread the packaging material through the lower forming ring.

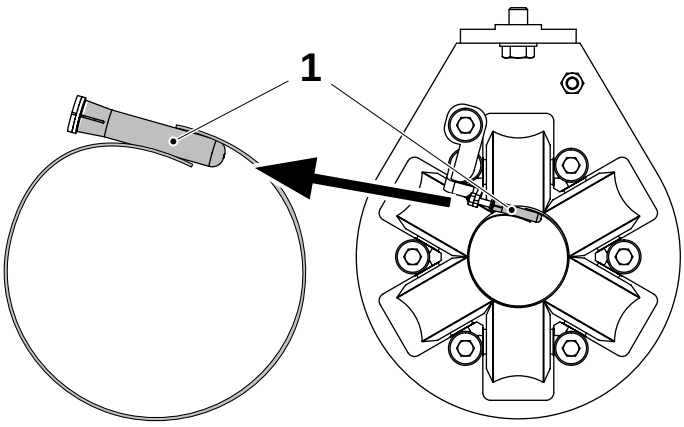

Check that the roller (1) in the lower forming ring is between the tube edges as illustrated.

1 Roller

OM2.21TS100704en.fm

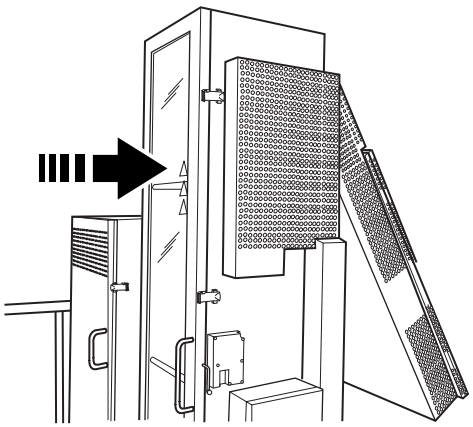

8

Close the door to the tube forming module.

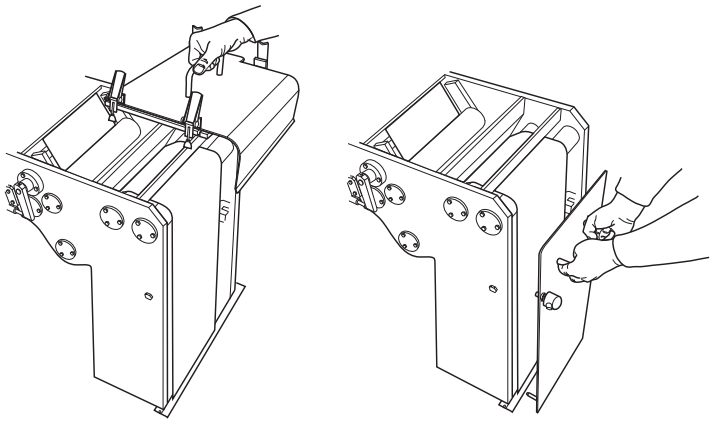

9

Fit the covers for the sterile bath.

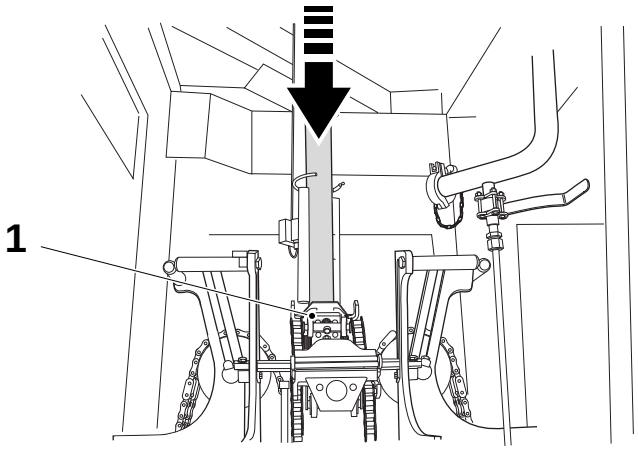

10

Pull down the packaging material long enough to make sure that the side jaws will grip the material.

Close the main body doors.

1 Jaws

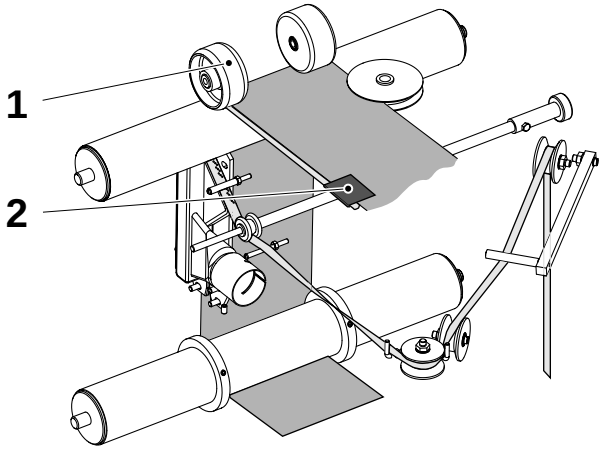

11

Open the strip applicator door and pull the strip through the strip applicator as illustrated.

Pull the strip beneath the pressure roller (1) and fix the strip with a piece of adhesive tape (2).

Lower the pressure roller.

1 Pressure roller
2 Adhesive tape

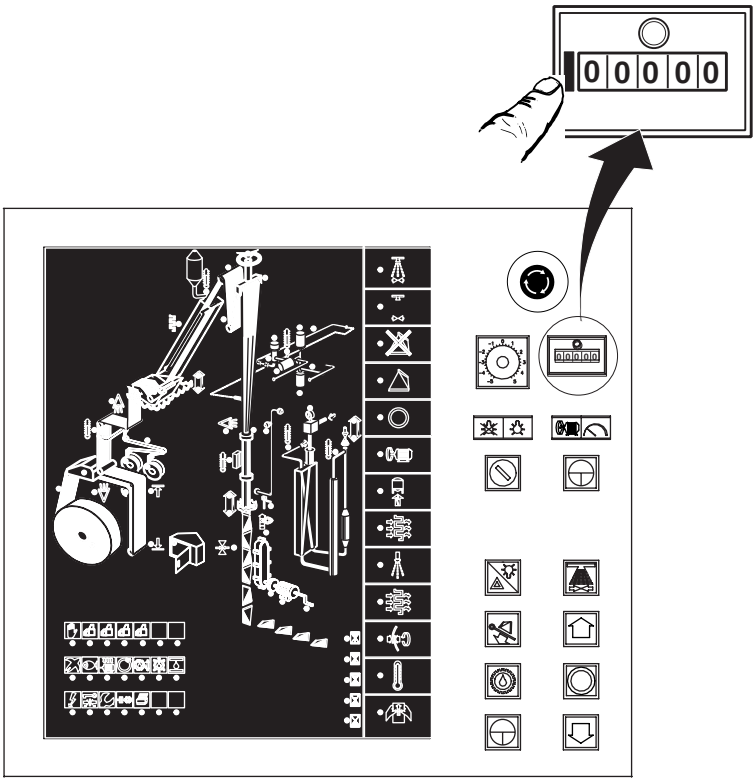

12

Reset the package counter.

OM2.21TS100704en.fm

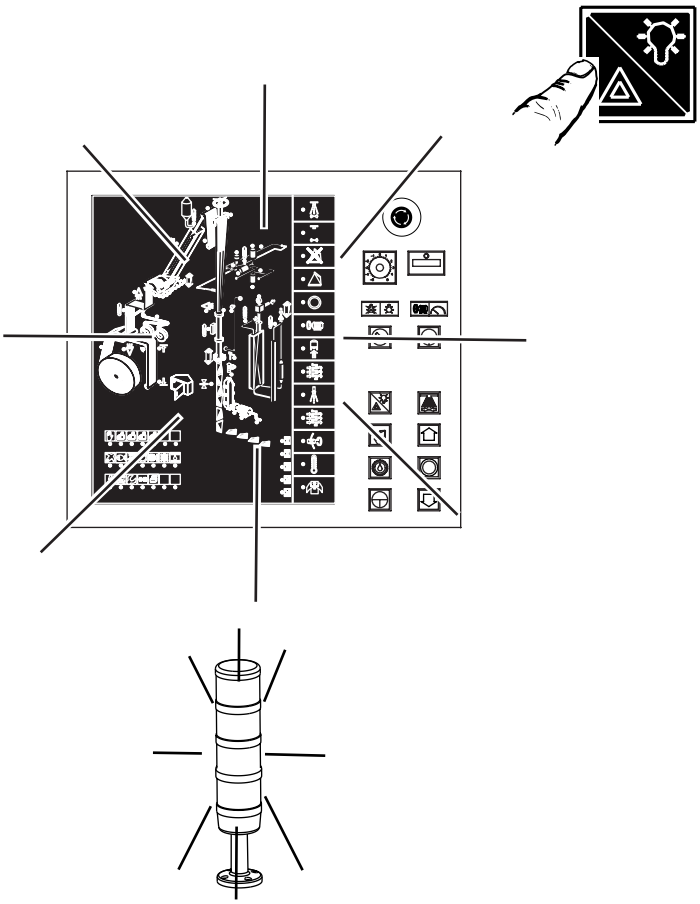

13

Press **LAMP TEST** and keep it depressed for a few seconds.

Check that the following lamps/LED:s light up:

- Warning beacon (2 pcs.)
- LED:s in the monitor panel
- Push buttons

Check that no larm is indicated. If so, eliminate the cause and press the **ALARM RESET** button.

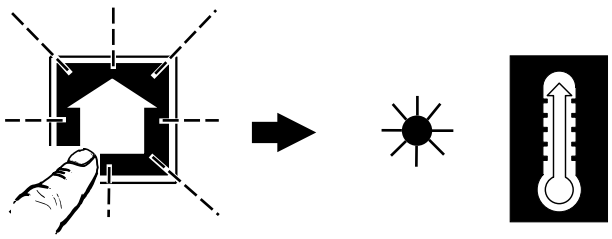

14

Press the **STEP UP** button to start **PREHEATING**.

– The **PREHEATING** symbol gets a fixed light.

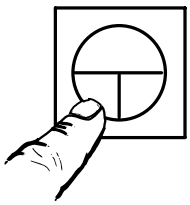

15

Press the **INCH** button and keep it depressed until some packages has been produced.

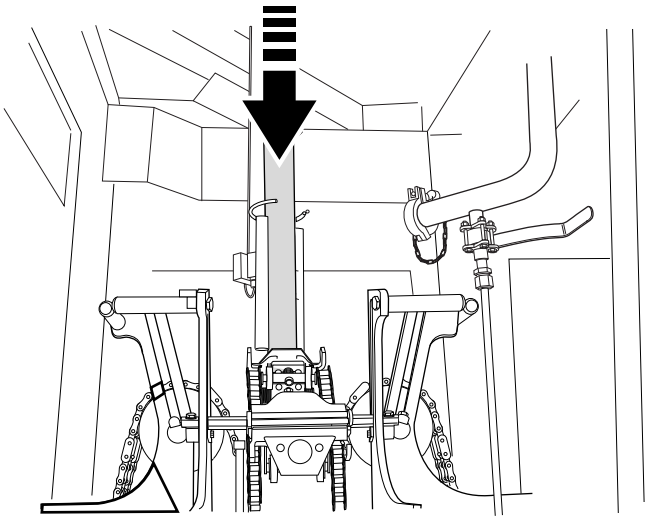

OM2.21TS100704en.fm

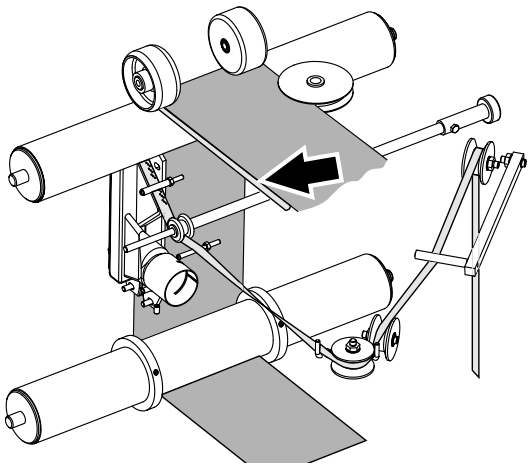

16

Check that the strip is safely attached to the packaging material.

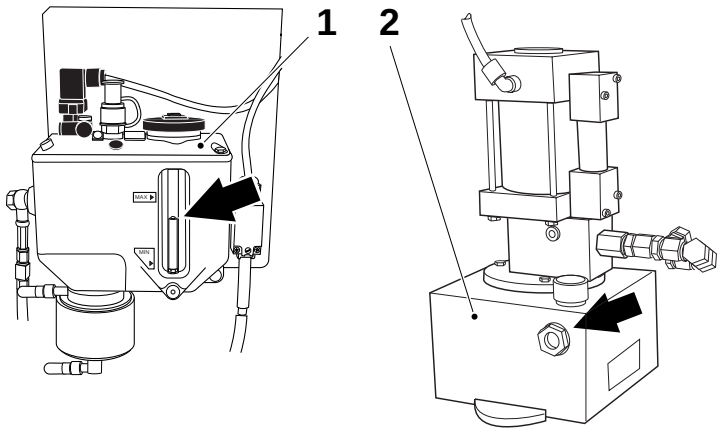

17a

During **PREHEATING:**

Check the oil level, and if required top up:

- Lubrication unit (1)
  Oil type: V or X
- Pressure header (2)
  Oil type: C

Oil types according section Lubricants on page 233.



17b

WARNING!

Read the section Hydrogen Peroxide (H2O2) in Safety precautions!

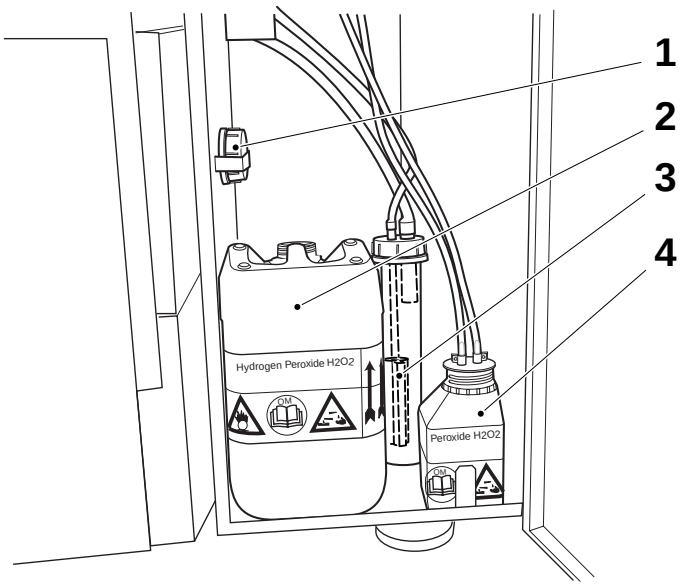

Note!
Never re-use the peroxide.

Fill up:

- the peroxide bottle (2), volume 10 litres
  - make a note of the weight of the filled can for consumption check.
- the spray can (4), volume 0,5 litre

See Peroxide handling regarding:

- Concentration check, page 219
- Hydrogen peroxide concentration (by weight), page 221
- Filling peroxide bottle, page 224
- Filling spray can, page 226
- Recommended hydrogen peroxide, page 228
- Peroxide disposal, page 227

1 Ventilated cap
2 Peroxide bottle
3 Peroxide filter
4 Spray can

OM2.21TS100704en.fm

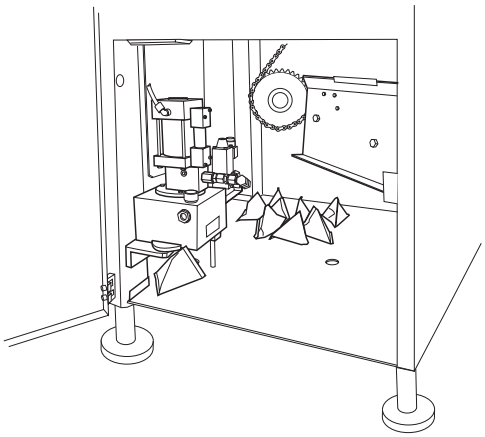

17c

Remove the empty packages from the main body.

Close the door and reset the alarm.

18

Continue according section Start on page 109

OM2.21TS100704en.fm

This page intentionally left blank

OM2.21TS100704en.fm

Preparations after weekly care

This section describes how to:

- **install the filling pipe and product pipes**
- **thread the packaging material through the machine**

after Weekly care has been performed.

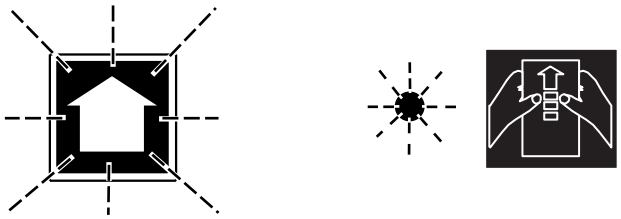

1

Main power switch is **ON**.

– The **STEP UP BUTTON** flashes
– The **PREPARATION** symbol flashes
– Alarm indication for cleaning pipes

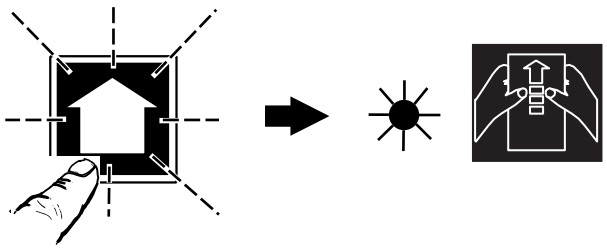

2

Press the **STEP UP BUTTON.**

– The **PREPARATION SYMBOL** gets a fixed light.

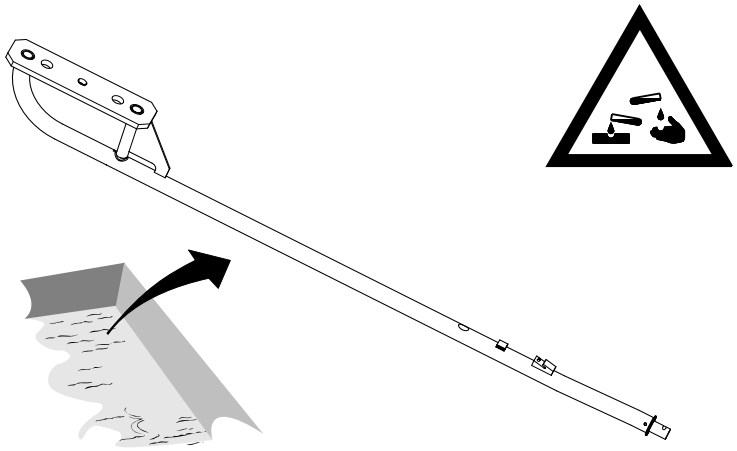

3a

WARNING!

Read the section Hydrogen Peroxide (H2O2) in Safety precautions!

Pick up the upper filling pipe from the container with sterilisation liquid. Rinse it with drinking water.

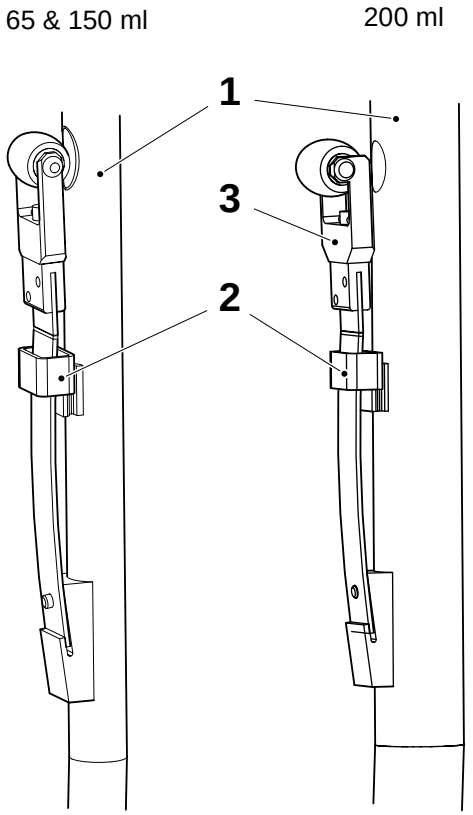

3b

Fit the pressure roller assembly at the upper filling pipe (1) and lock with the hatch (2) as illustrated.

Note!
The fork (3) for the 200 ml is not symmetric, make sure to turn it the correct way as illustrated.

1 Upper filling pipe
2 Hatch
3 Fork

OM2.21TS100705en.fm

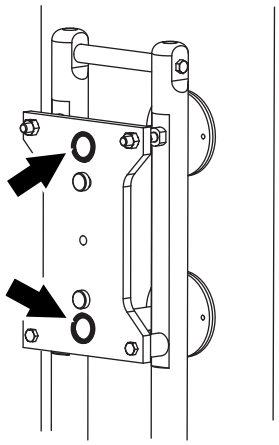

3c

Make sure that the gaskets are intact and correctly seated.

Wipe clean the area for the filling pipe with de-ionized water.

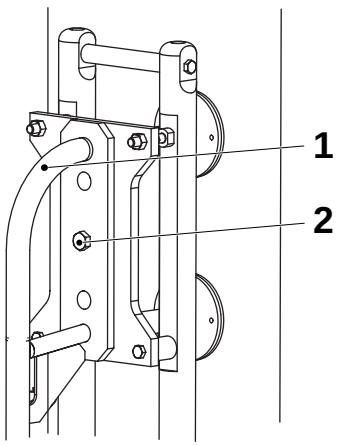

3d

Gently position the upper filling pipe (1).

Install and tighten the screw (2).

1 Upper filling pipe
2 Screw

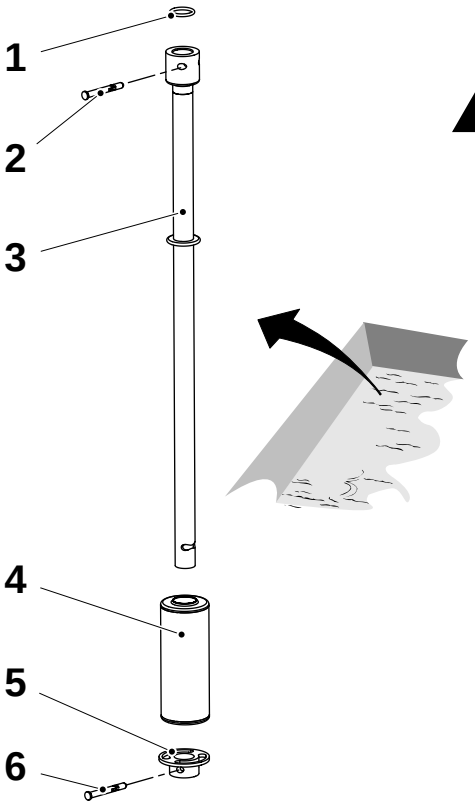



4a

WARNING!

Read the section Hydrogen Peroxide (H2O2) in Safety precautions!

Pick up the parts for the lower filling pipe (3) from the container with sterilisation liquid. Rinse with drinking water.

Note!
Shake the float (4) when it is picked up from the container in order to make sure that there is no leakage (any liquid penetrated into the float).

Fit the O-ring (1), the float (4) and the locking cup (5). Secure with the locking pin (6).

Note!
Make sure that the locking pin (6) is secured properly; change if necessary.

1 O-ring
2 Pin
3 Lower filling pipe
4 Float
5 Locking cup
6 Pin

OM2.21TS100705en.fm

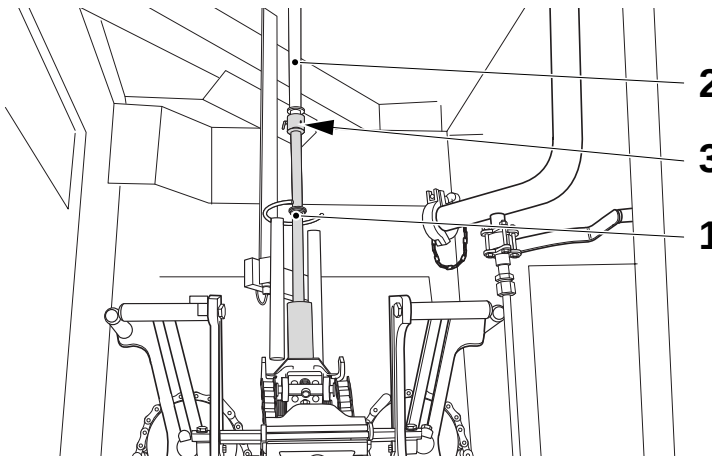

4b

Assemble the lower filling pipe (1) at the upper filling pipe (2).

Note!
Make sure that the pin (3) is secured properly; change if necessary.

1 Lower filling pipe
2 Upper filling pipe
3 Pin

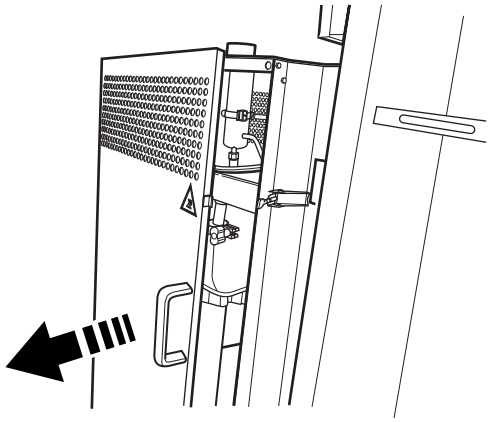

5a

Open the door for the incoming cleaning pipe connection.

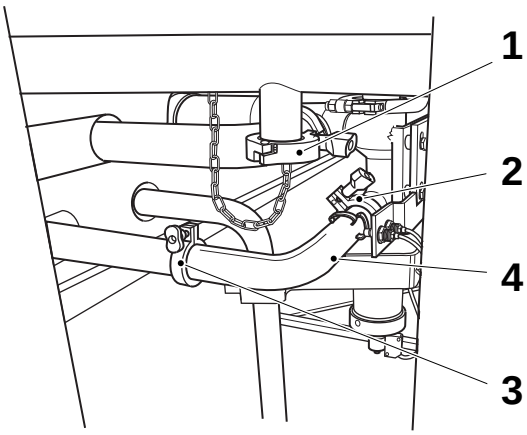

5b

a) Remove the clamp (1) and remove the lid. Take care of the gasket

b) Remove the clamps (2) and (3) and remove the pipe (4) carefully by lifting it straight out.

Note!
Twisting the pipe will damage the seals and make it impossible for the machine to reach sterility.

1 Clamp
2 Clamp
3 Clamp
4 Pipe

OM2.21TS100705en.fm

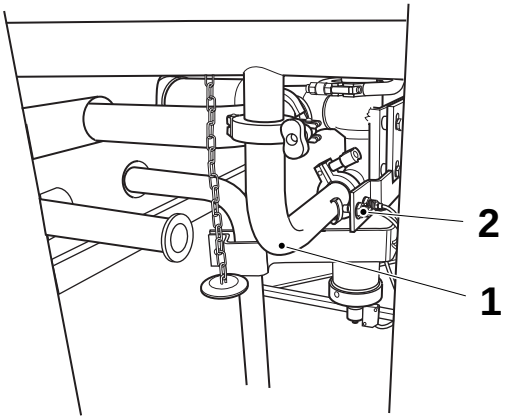

5c

Connect the pipe (1) as illustrated.

Note!
Make sure that the switch (2) is activated.

1 Pipe
2 Switch

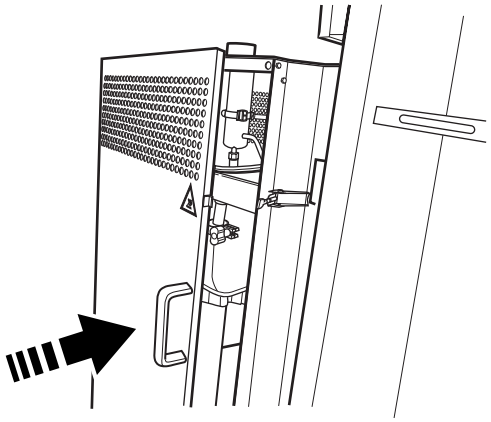

5d

Close the door for the incoming cleaning pipe connection.

OM2.21TS100705en.fm

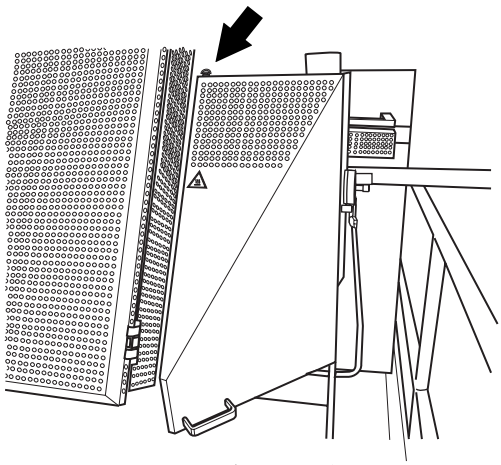

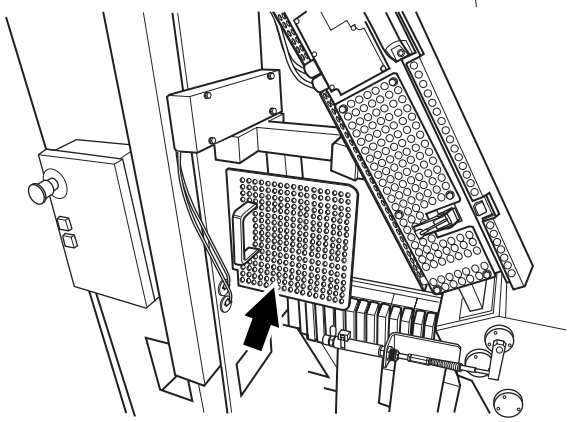

6a

To get access to the pipes:

- Loosen the hatch (at arrow) and open the cover.
- Lift up and remove the cover.

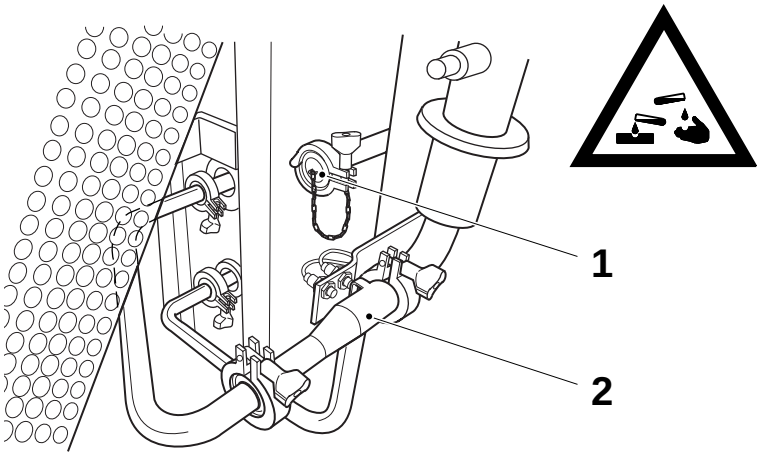

6b

WARNING!

Read the section Hydrogen Peroxide (H2O2) in Safety precautions!

Remove the lid (1).

Remove the pipe (2) and place it in disinfectants, code **F**. See section Disinfectants and Cleaning Agents.

1 Lid
2 Pipe

OM2.21TS100705en.fm

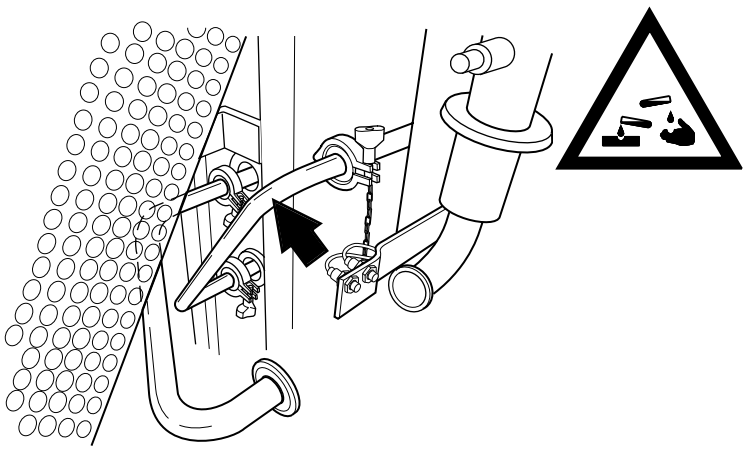

6c

WARNING!

Read the section Hydrogen Peroxide (H2O2) in Safety precautions!

Pick up the pipe from the container with sterilisation liquid. Rinse it with drinking water. Check for both ends, that the seats are carefully cleaned.

Clean two gaskets with cleaning compound code **D** and fit them to the pipe. See section Disinfectants and Cleaning Agents.

Fit the pipe.

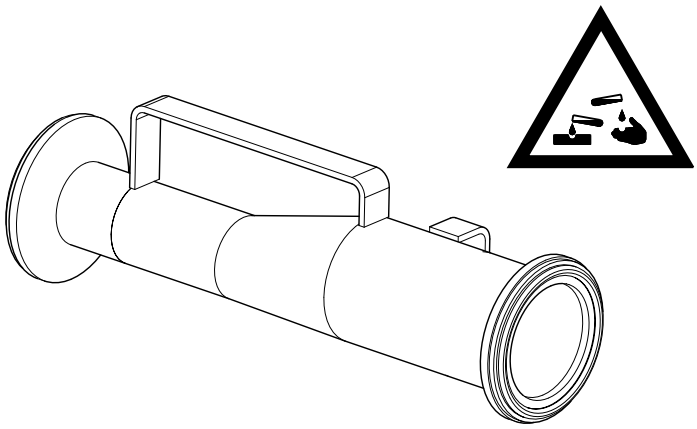

6d

WARNING!

Read the section Hydrogen Peroxide (H2O2) in Safety precautions!

Pick up the pipe from the container with sterilisation liquid. Rinse it with drinking water. Check that the seats are carefully cleaned.

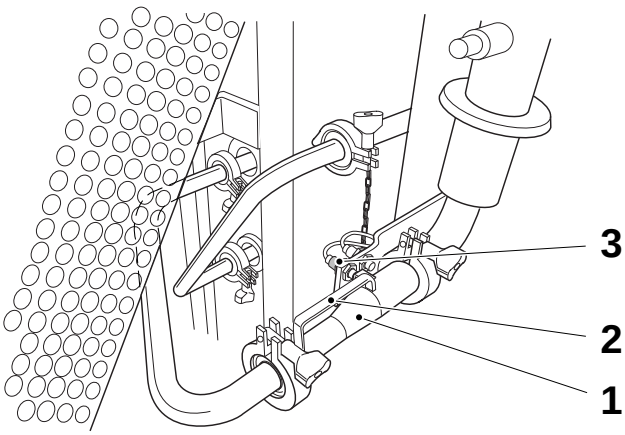

6e

Install the pipe (1) with its handle (2) upwards.

Note!
Make sure that the switch (3) is activated when the nuts are tightened.

1 Pipe
2 Handle
3 Switch

OM2.21TS100705en.fm

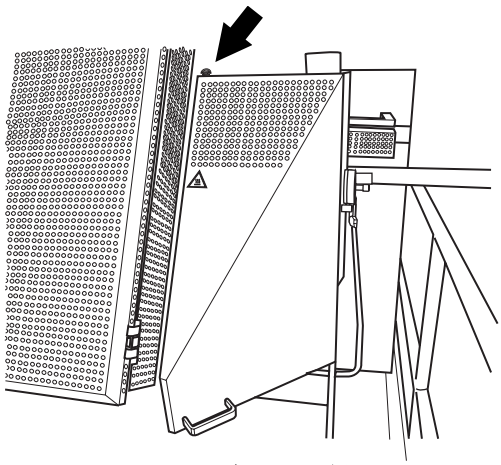

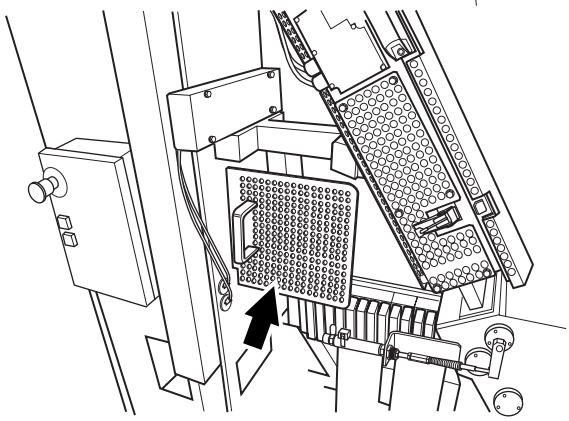

6f

Close the cover and lock the hatch (at arrow).

Install the cover.

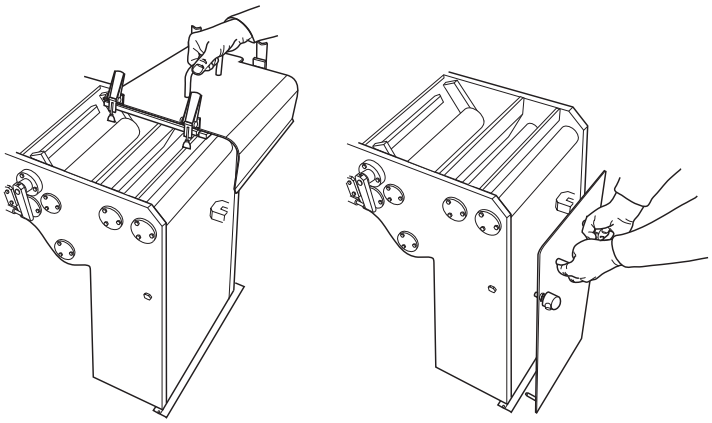

7

Remove the covers from the sterile bath in order to prepare for the web threading.

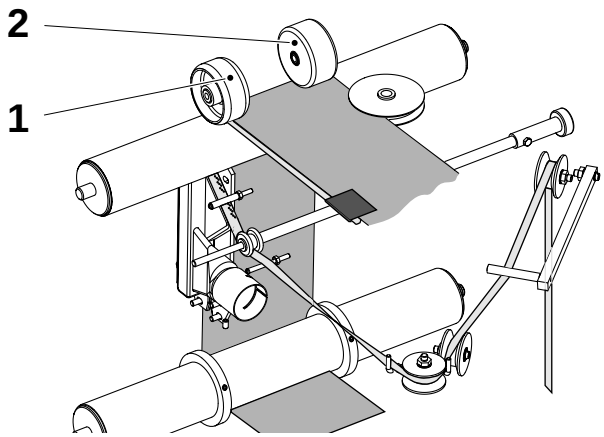

8

Lift the pressure roller (1) and the splice detector roller (2).

Note!
Make sure that the latches are holding the rollers in their open position.

1 Pressure roller
2 Splice detector roller

IMG_0729b.jpg

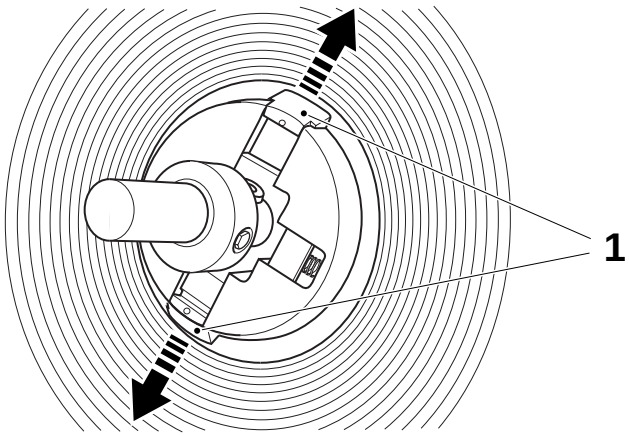

Threading of packaging material web

9

Prepare a reel of packaging material, and fit the bobbin holder.

Make sure that the hatches (1) in the bobbin holder are released and lock the reel.

1 Hatch

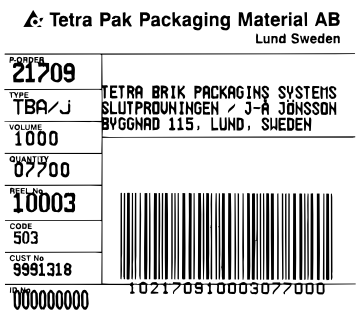

Note!
Remove and keep the P-order tag.

OM2.21TS100705en.fm

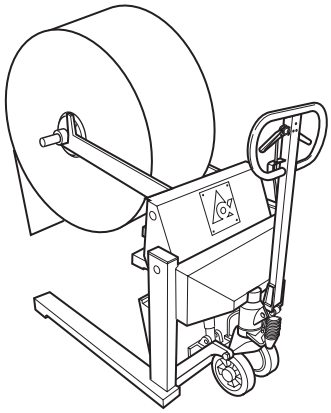

10

Fit the reel in the trolley, making sure the bobbin holder is correctly seated in the trolley arms.

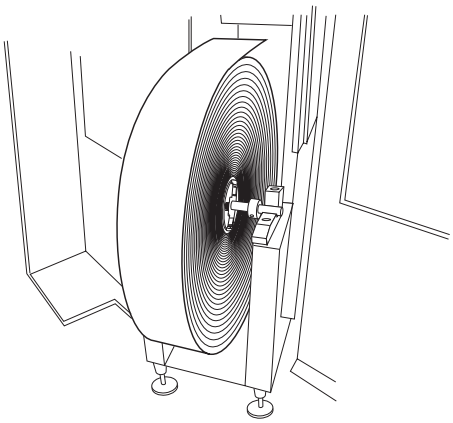

11

Open the rear doors to the infeed unit and install the packaging material reel.

Make sure that the bobin holder is correctly seated in its holders.

OM2.21TS100705en.fm

Overview of packaging material web through the infeed unit

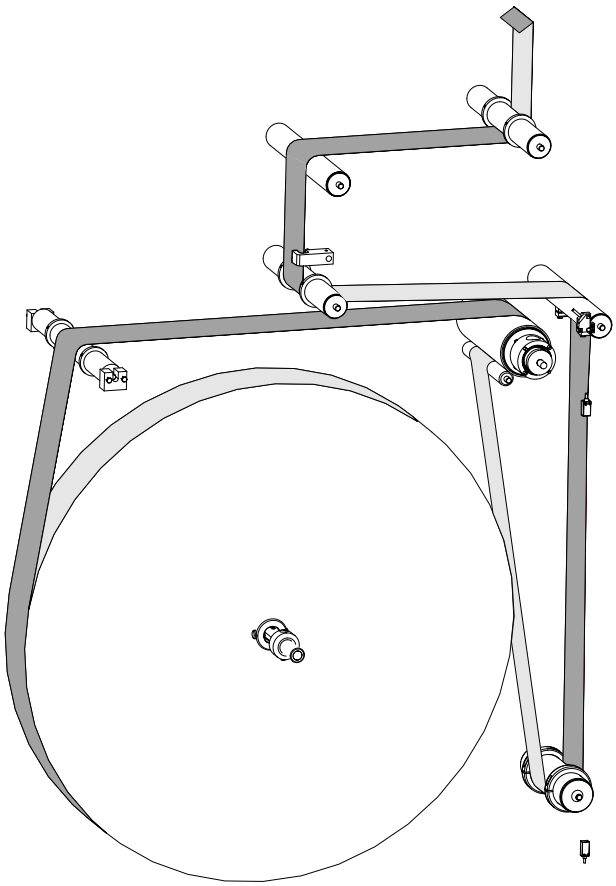

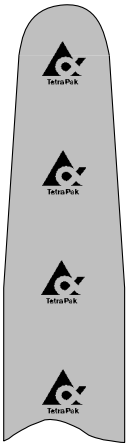

12

Cut the end of the packaging material end according to the illustration in order to simplify threading.

OM2.21TS100705en.fm

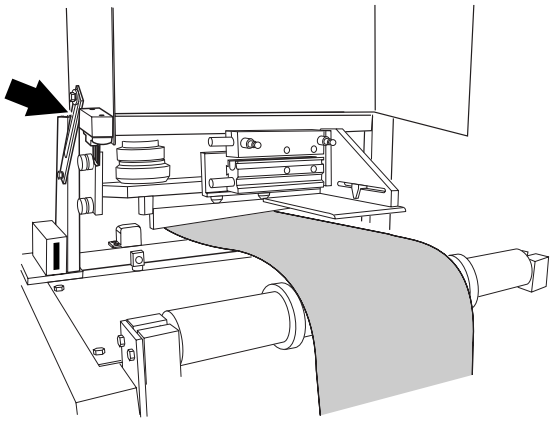

13

WARNING!

Risk of crushing!

Make sure that the hatch (at arrow) safely holds the cover in open position.

Open the cover for the splicing device.

Thread the packaging material web through the splicing device.

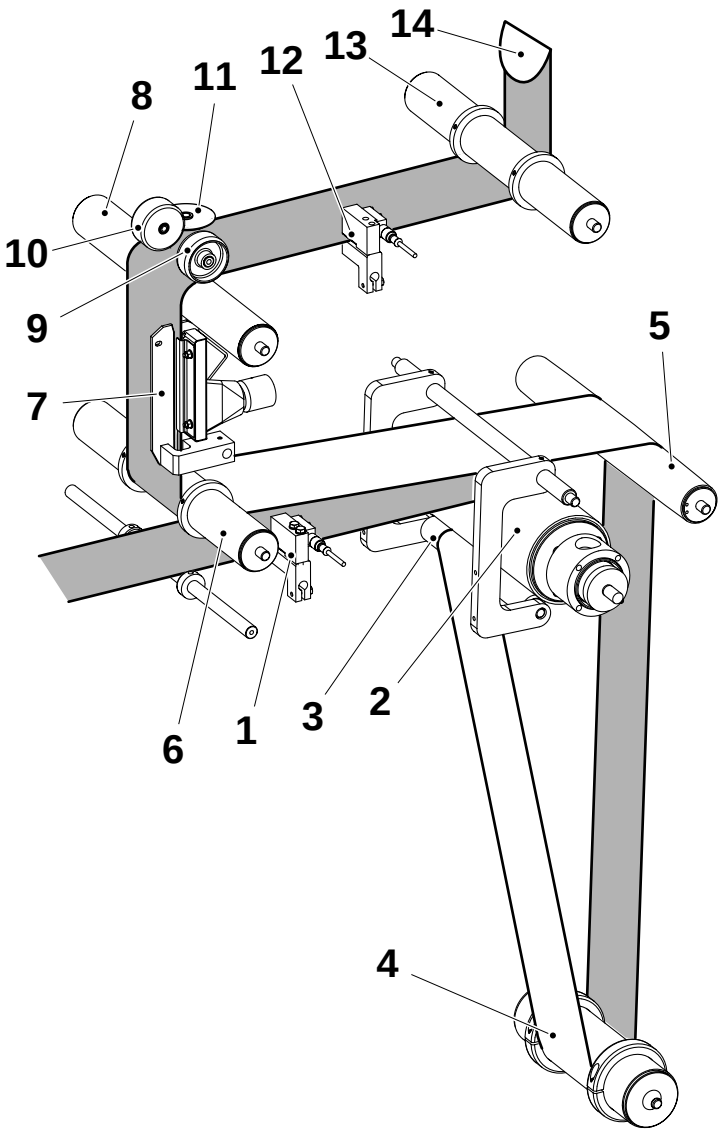

14

Open the side door for the infeed unit and thread the packaging material:

a) through the photocell holder (1)

b) around the driven bending roller (2)

c) around the counter roller (3)

d) around the magazine roller (4)

e) around the bending roller (5)

f) around the bending roller (6) and through the guides (7)

g) around the bending roller (8) and under the pressure roller (9) and the splice detector roller (10)

h) Make sure that the strip guide roller (11) rests against the paper edge.

i) through the photocell holder (12) and around the bending roller (13)

j) Bend the web end (14) as illustrated.

1 Photocell holder
2 Driven bending roller
3 Counter roller
4 Magazine roller
5 Bending roller
6 Bending roller
7 Guide
8 Bending roller
9 Pressure roller
10 Splice detector roller
11 Strip guide roller
12 Photocell holder
13 Bending roller
14 Web end

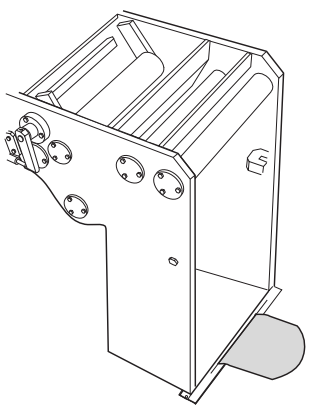

15

Push the packaging material up through the vertical material protection and hook the paper end at the platform edge.

OM2.21TS100705en.fm

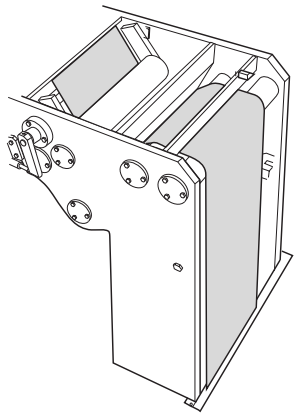



16

WARNING!

Wear protective gloves!

Continoue to thread into the sterile bath, above the two bending rollers and up between the squee-gee rollers.

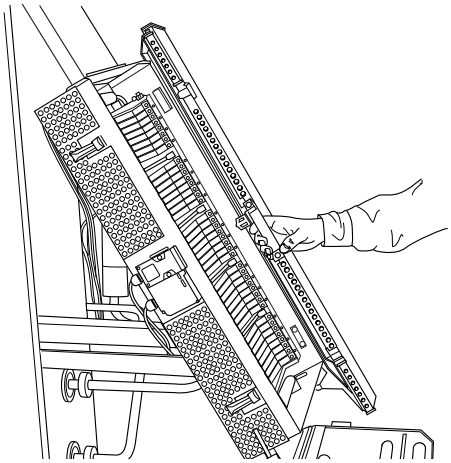

17

Open the door for the heating chamber.

Open also both layers of elements.

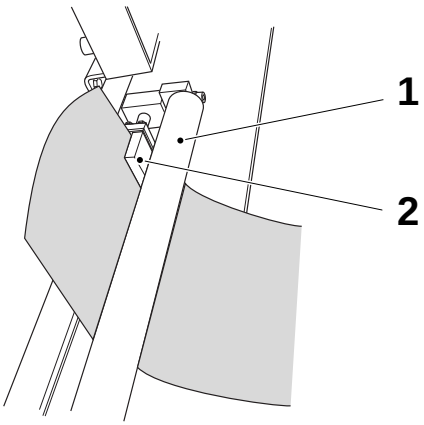

18

Thread below the bending roller (1) and through the slot in the air knife (2).

1 Bending roller
2 Air knife

OM2.21TS100705en.fm

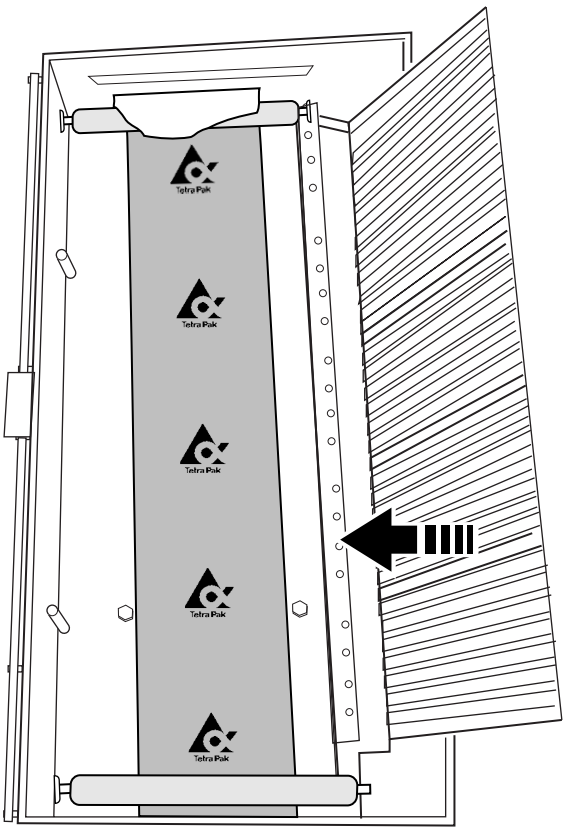

19

Thread around the upper bending roller and put down the lower layer of elements.

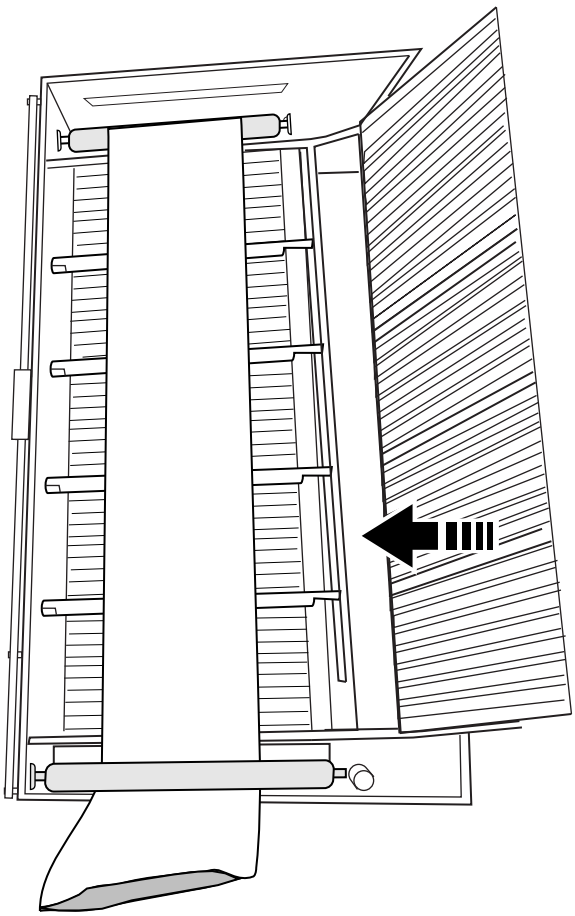

20

Thread around the lower bending roller and put down the layer of elements.

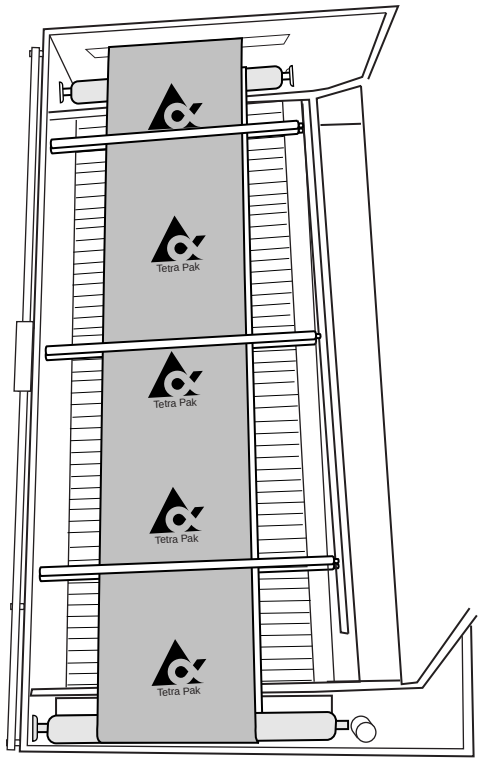

21

Thread between the twin rods.

Push the packaging material up through the inlet into the tube forming module.

OM2.21TS100705en.fm

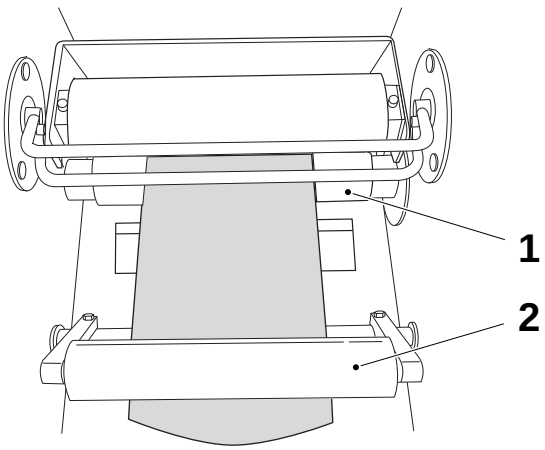

22

Thread around the driven bending roller (1) and down around the lower bending roller (2).

1 Driven bending roller
2 Bending roller

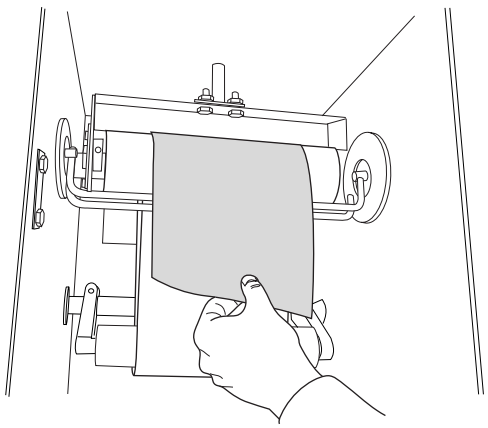

23

Thread around the upper bending roller and pull down the packaging material web to the upper forming ring.

Note!
In the infeed unit, feed forward enough packaging material to reach down into the jaw system.

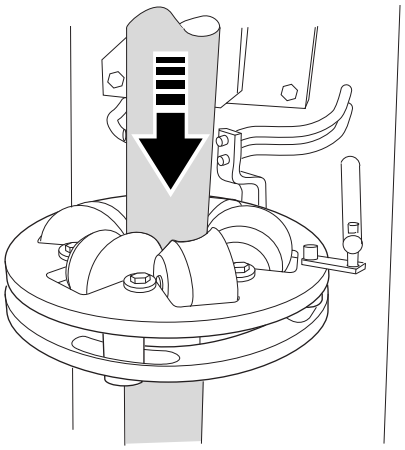

24a

Form the material tube through the upper forming ring.

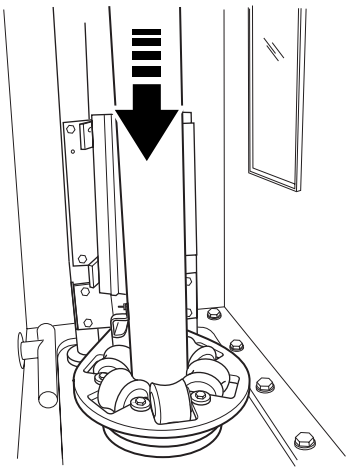

24b

Thread the packaging material through the lower forming ring.

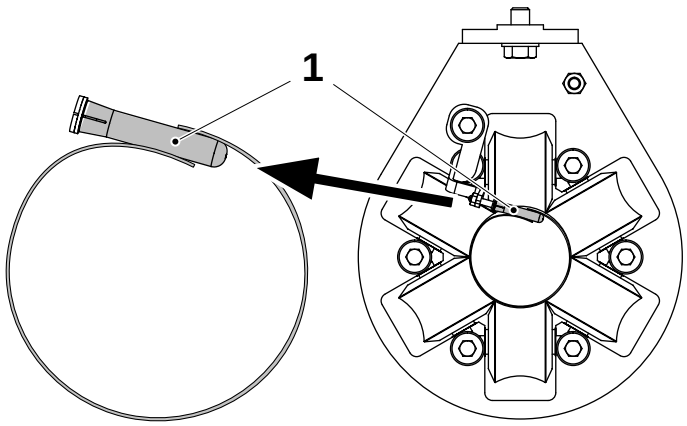

Check that the roller (1) in the lower forming ring is between the tube edges as illustrated.

1 Roller

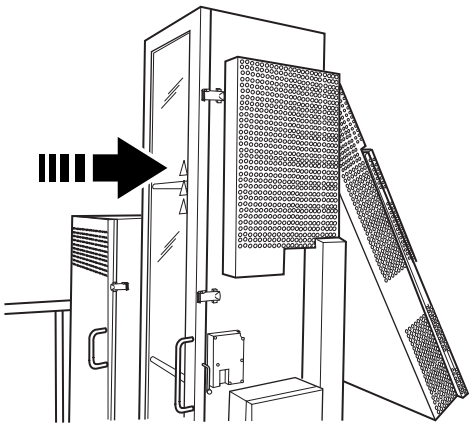

25

Close the door to the tube forming module.

OM2.21TS100705en.fm

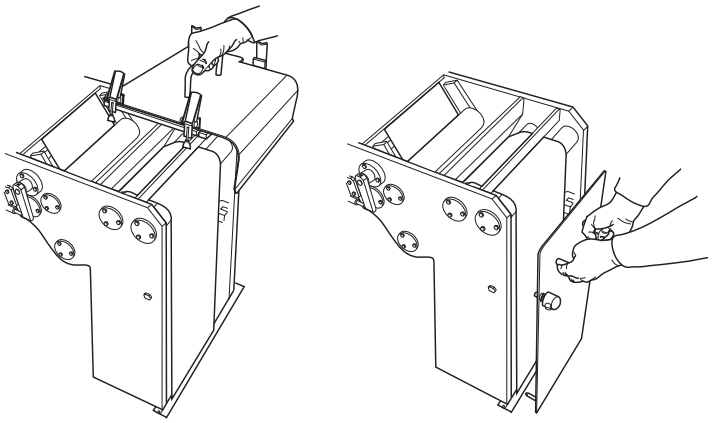

26

Fit the covers for the sterile bath.

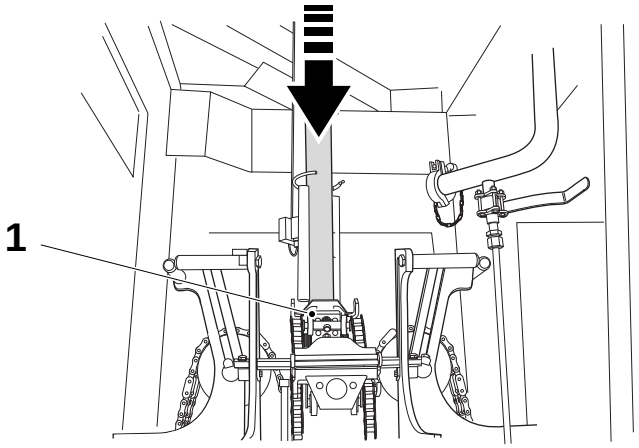

27

Pull down the packaging material long enough to make sure that the side jaws will grip the material.

Close the main body doors.

1 Jaws

OM2.21TS100705en.fm

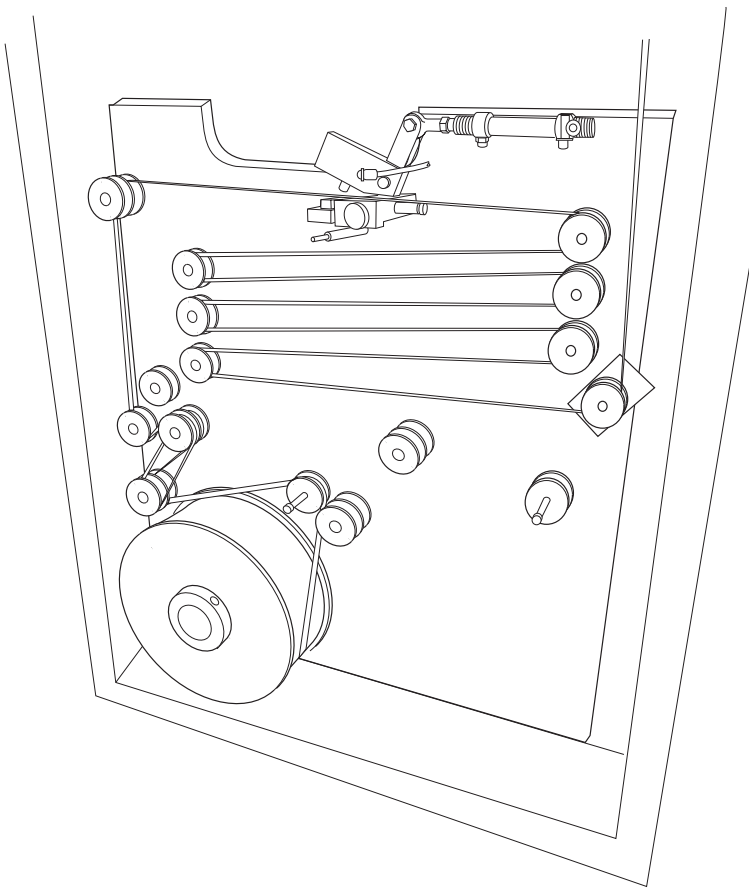

Threading of strip 28a

Open the strip magazine door.

Pull the strip for production as illustrated.

Remove the slack of the strip by turning the strip reel backwards.

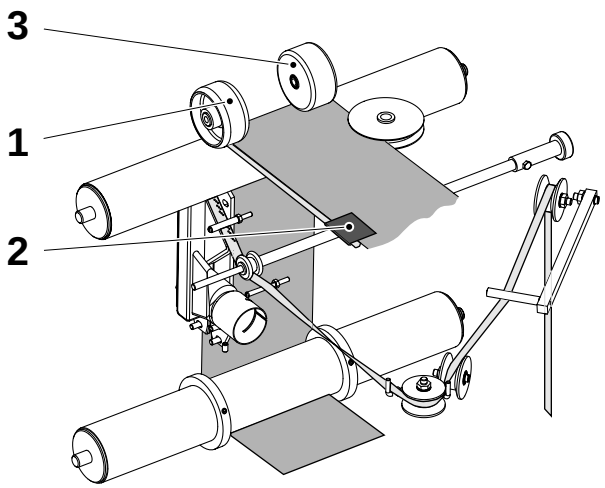

28b

Open the strip applicator door and pull the strip through the strip applicator as illustrated.

Pull the strip beneath the pressure roller (1) and fix the strip with a piece of adhesive tape (2).

Lower the pressure roller (1) and the splice detector roller (3).

Hold the rollers while releasing, so that they do not slam into the bending roller causing damage to either the bending roller or the pressure/splice detector rollers.

1 Pressure roller
2 Adhesive tape
3 Splice detector roller

OM2.21TS100705en.fm

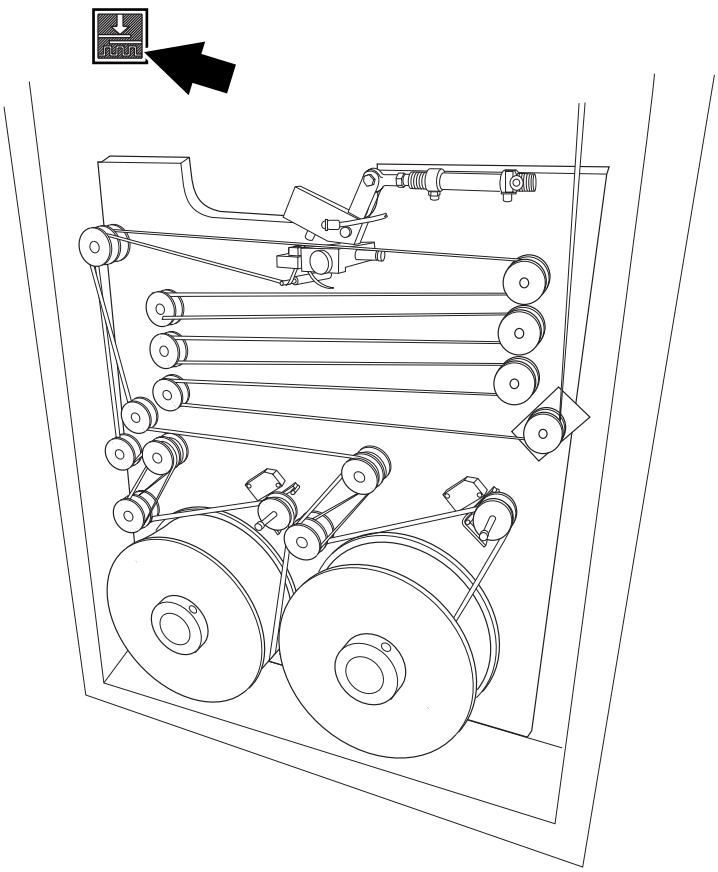

28c

Prepare the other strip reel for splice, see section Strip splice preparation on page 129.

Press the button above the strip magazine (at arrow in the illustration).

The machine is now prepared for automatic strip splice.

Close the magazine door and reset the alarm.

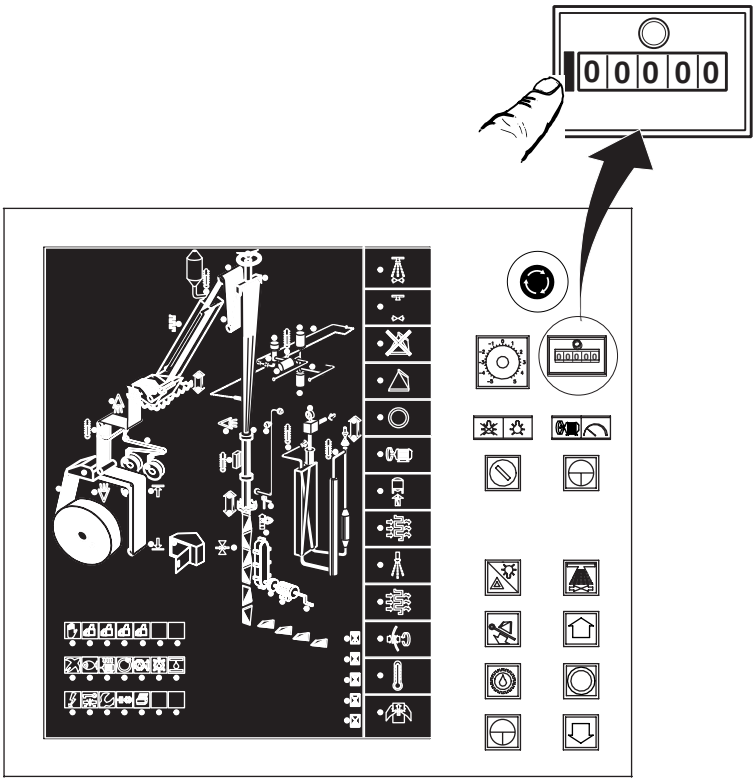

29

Reset the package counter.

OM2.21TS100705en.fm

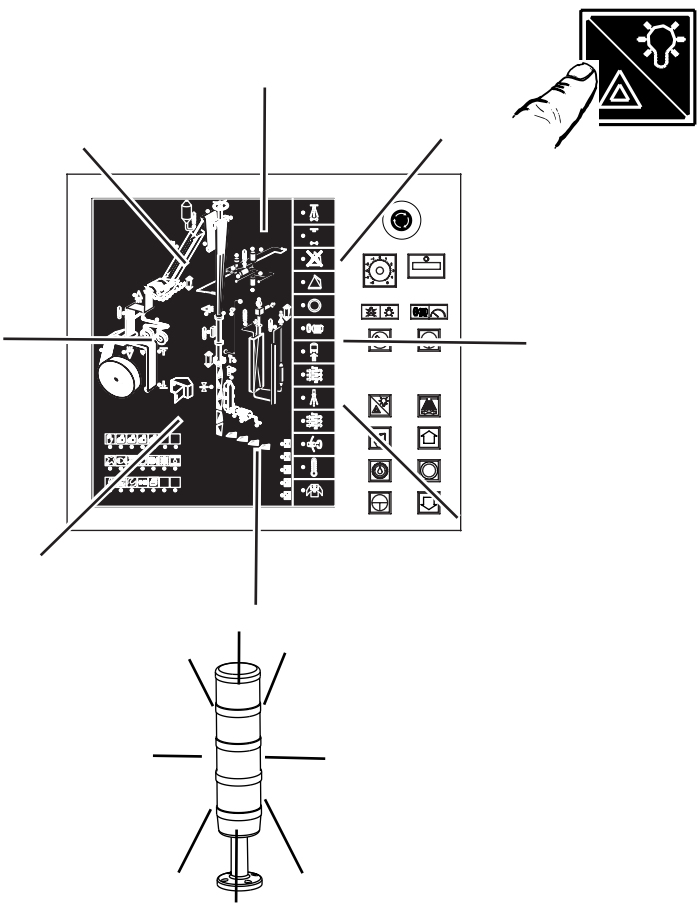

30

Press **LAMP TEST** and keep it depressed for a few seconds.

Check that the following lamps/LED:s light up:

- Warning beacon (2 pcs.)
- LED:s in the monitor panel
- Push buttons

Check that no larm is indicated. If so, eliminate the cause and press the **ALARM RESET** button.

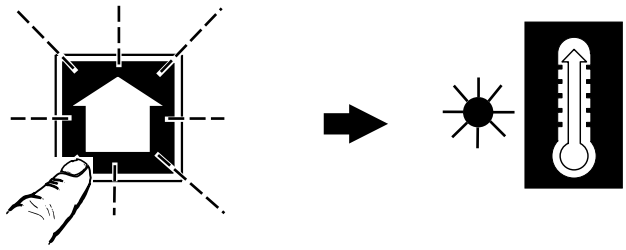

31

Press the **STEP UP** button to start **PREHEATING**.

The **PREHEATING** symbol gets a fixed light.

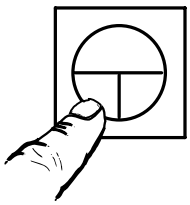

32

Press the **INCH** button and keep it depressed until some packages has been produced.

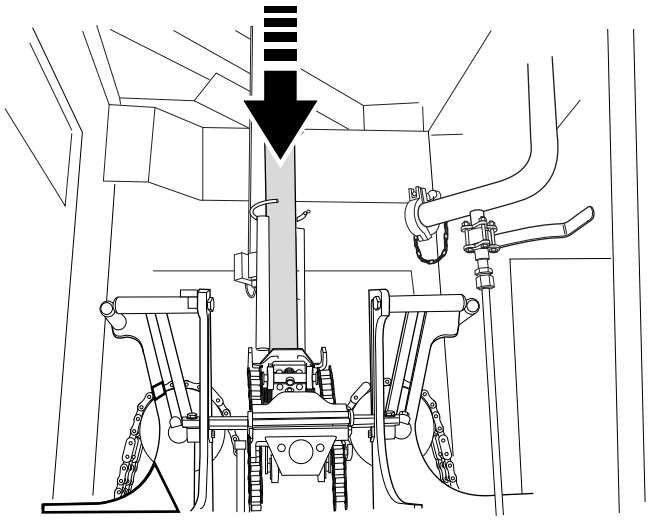

OM2.21TS100705en.fm

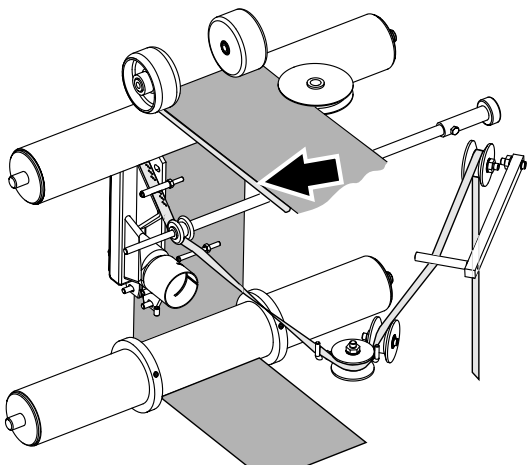

33

Check that the strip is safely attached to the packaging material.

Check that both the pressure roller and the splice detector roller are lowered.

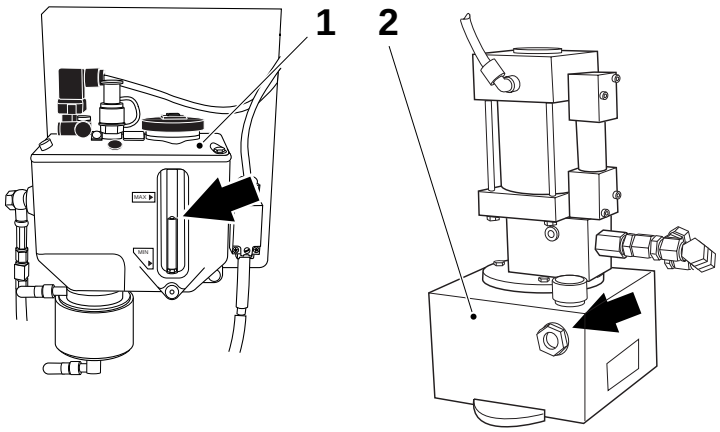

34a

During **PREHEATING:**

Check the oil level, and if required top up:

- Lubrication unit (1)
  Oil type: V or X
- Pressure header (2)
  Oil type: C

Oil types according section Lubricants on page 233.



34b

WARNING!

Read the section Hydrogen Peroxide (H2O2) in Safety precautions!

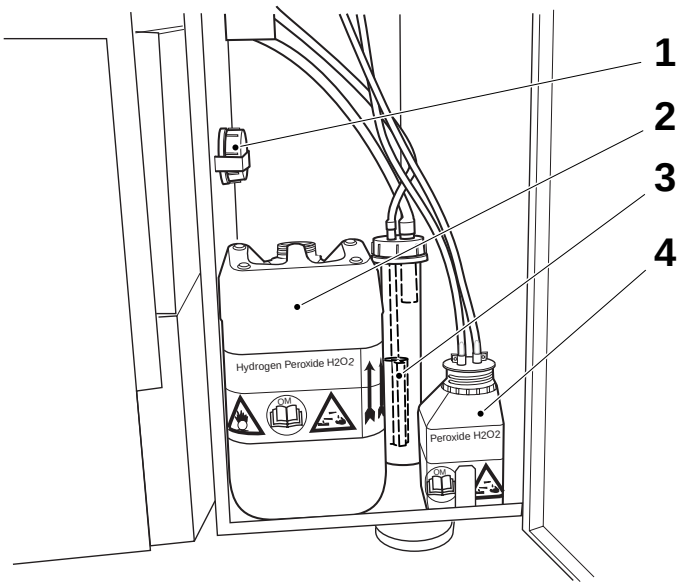

Note!
Never re-use the peroxide.

Fill up:

- the peroxide bottle (2), volume 10 litres
  - make a note of the weight of the filled can for consumption check.
- the spray can (4), volume 0,5 litre

See Peroxide handling regarding:

- Concentration check, page 219
- Hydrogen peroxide concentration (by weight), page 221
- Filling peroxide bottle, page 224
- Filling spray can, page 225
- Recommended hydrogen peroxide, page 227
- Peroxide disposal, page 226

1 Ventilated cap
2 Peroxide bottle
3 Peroxide filter
4 Spray can

OM2.21TS100705en.fm

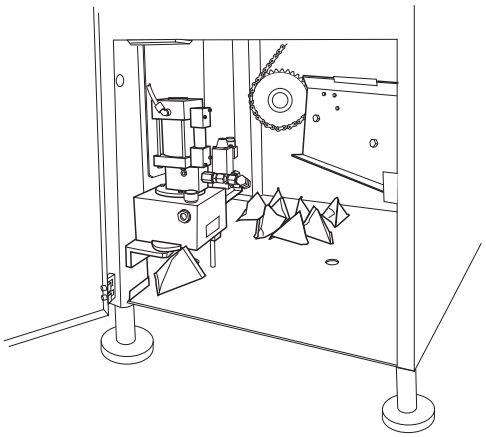

34c

Remove the empty packages from the main body.

Close the door and reset the alarm.

35

Continue according to Start on page 109.

OM2.21TS100705en.fm

This page intentionally left blank

OM2.21TS100705en.fm

Start

Start conditions:

The machine has been stepped to PREHEATING according to section Preparations after daily care or section Preparations after weekly care.

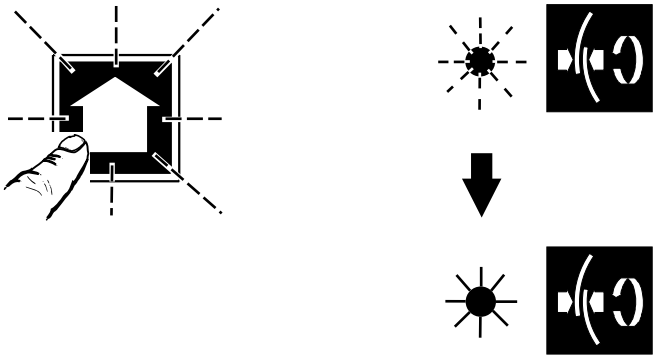

1

When **PREHEATING** is ready, the **TUBE SEALING** symbol and the **STEP UP** button flash.

To make a tight tube, press and keep the **STEP UP** button depressed until the drive motor starts. The siren sounds until the drive motor starts.

The **TUBE SEALING** symbol shows a fixed light.

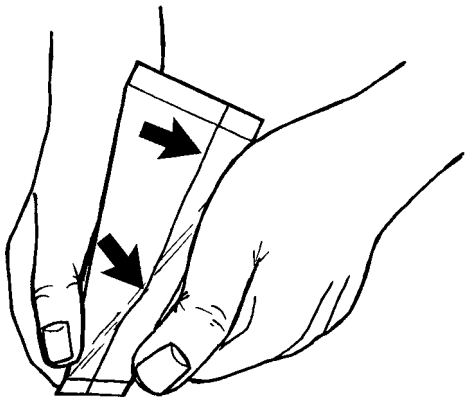

2a

Check after the sealing sequence that the LS seal is acceptable.

See chapter Package checks, section LS check.

If the longitudinal seal is OK, proceed with item 3a.

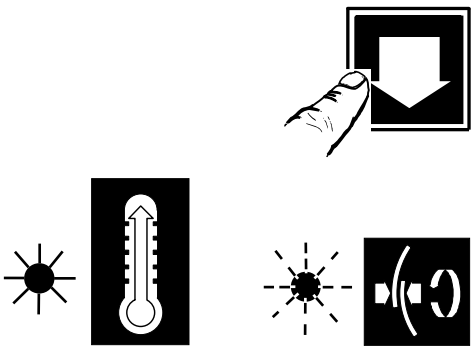

2b

If the longitudinal seal is not OK, press the **STEP DOWN** button.

The **PREHEATING** symbol shows a fixed light and the **TUBE SEALING** symbol starts flashing.

Make sure that the LS temperature is correct, and that the pressure roller is intact and correctly fitted.

Repeat the sequence from item 1.

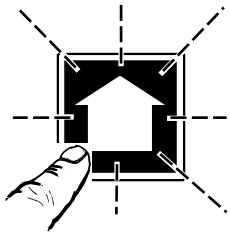

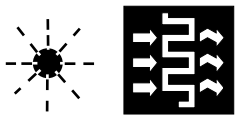

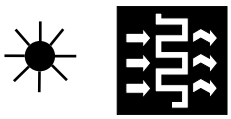

3a

The **STEP UP** button flashes.

Press the **STEP UP** button to start **PREHEATING OF FILLING SYSTEM**.

The **PREHEATING OF FILLING SYSTEM** symbol shows a fixed light light in 15 minutes.

– The machine will automatically step through items 3b - 3d.

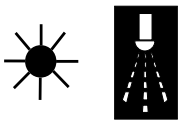

3b

During the **SPRAYING** sequence the symbol shows a fixed light.

– Sequence time 5 minutes.

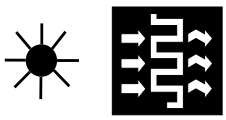

3c

During the **DRYING** sequence the symbol shows a fixed light.

– Sequence time 25 minutes.

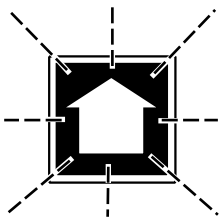



3d

When **DRYING** is ready, the **SIGNAL TO/FROM STERILIZER** symbol and the **STEP UP** button start flashing.

OM2.21TS100706en.fm

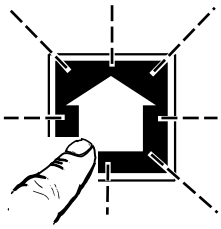

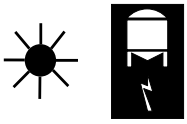

4a

Press the **STEP UP** button.

The **SIGNAL TO/FROM STERILIZER** symbol shows a fixed.

– The machine is now ready for production and is waiting for a response signal from the sterilizer.

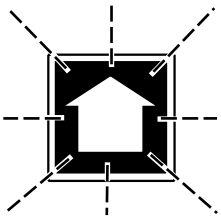

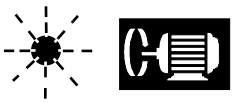

4b

When the machine gets the response signal from the sterilizer, the **DRIVE MOTOR ON** symbol and the **STEP UP** button start flashing.

OM2.21TS100706en.fm

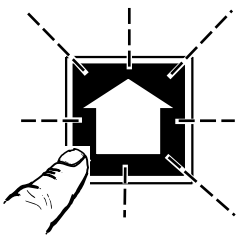

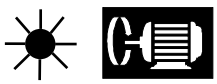

5a

Press the **STEP UP** button and keep it depressed until the drive motor starts.

– The siren sounds until the drive motor starts.

DRIVE MOTOR ON shows a fixed light.

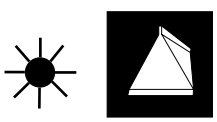

5b

When the tube design is in correct position, the machine steps further to **PRODUCTION**.

PRODUCTION shows a fixed light.

6

Check packages according to Package checks on page 117

OM2.21TS100706en.fm

Production check

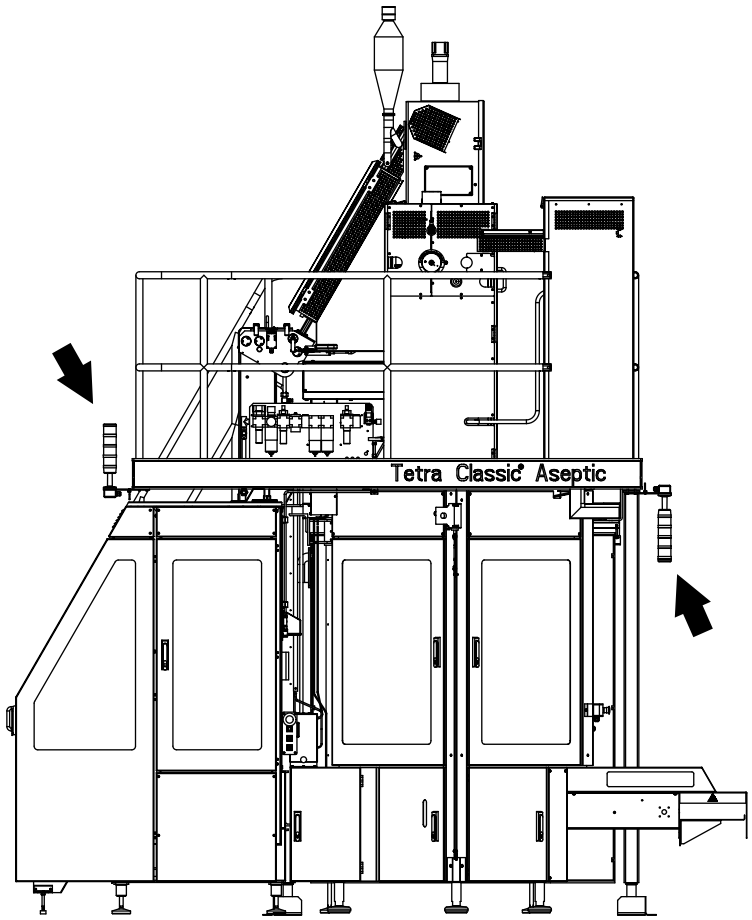

OM2.21TS100707en.fm

1

During production, stay close to the machine.

If the warning beacons start to flash, check on the control panel where the fault is located.

Acknowledge the alarm and eliminate the fault.

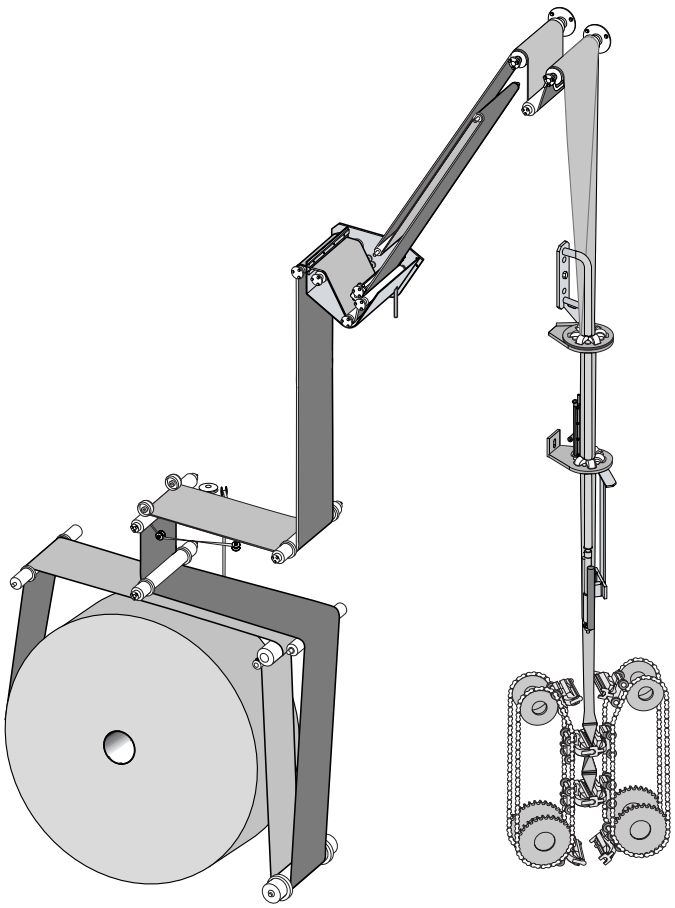

2

Always keep an eye on the passage of the material web through the machine.

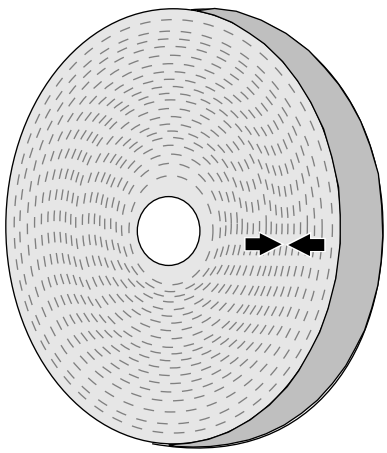

3

When the packaging material has been spliced from the factory, the splice has been marked with arrows on the material web reel. Packages with such splices will be automatically discharged. See Packaging material splice on page 215

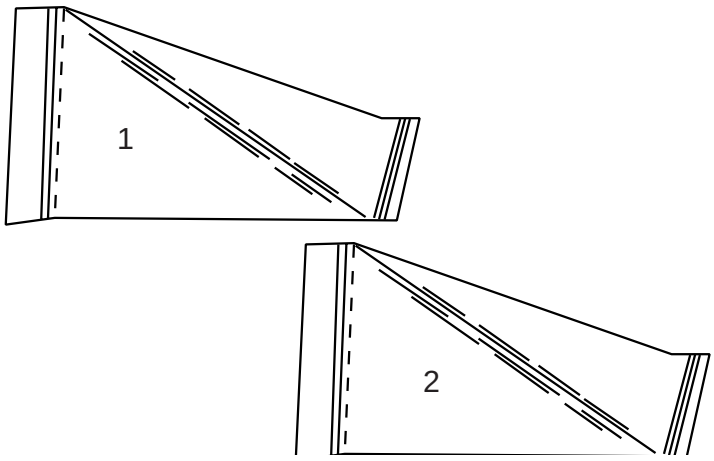

4

After splice:

Remove two consecutive (next to each other) packages.

Number the packages in the order they come out of the machine.

Check the packages according to Package checks on page 117.

OM2.21TS100707en.fm

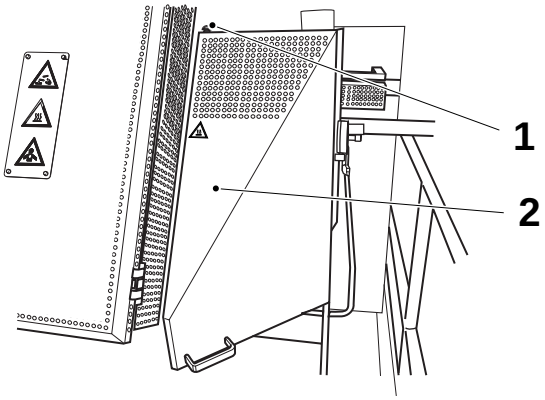



5a

WARNING!
Risk of burns!
Do not touch anything beyond the cover.

Open the hatch (1) and open the cover (2).

1 Hatch
2 Cover

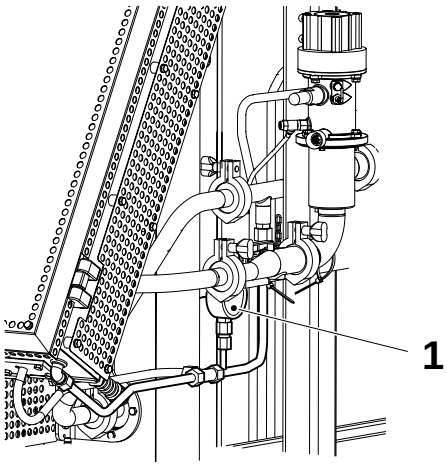



5b

WARNING!
Risk of burns!
Do not touch anything beyond the cover.

Check that the pressure gauge (1) shows 0.12 bar.

If not, call a technician.

Close the cover.

1 Pressure gauge

OM2.21TS100707en.fm

This page intentionally left blank

OM2.21TS100707en.fm

Package checks

This chapter describes the different kinds of package checks to do from START to PRODUCTION FINISHED.

The table below shows which check to do for each event and the number of packages to check.

Checking intervals

		Start	General checks every 20 minutes	LS strip splice	Packaging material splice	At production finished
Non destructive checks	1 Shape and design					
	2 Tube twist					
	3 Design position					
	4 Overlap					
	5 Weight	 1……14/16				
Destructive checks	5 Surfaces					
	LS-strip position					
	LS					
	TS					 1……14/16

2.2TS100708en.fm

Numbering of jaws and packages

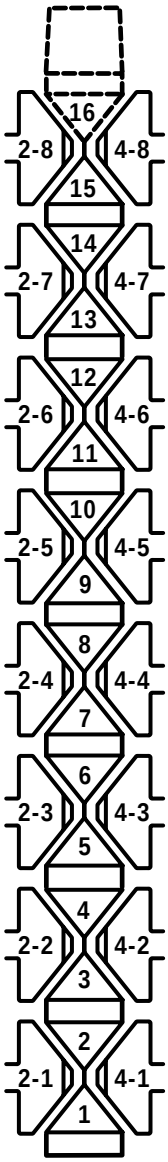

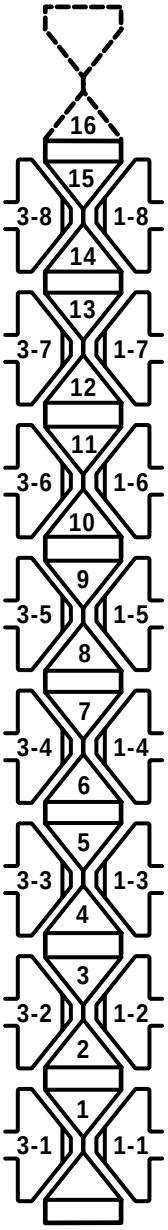

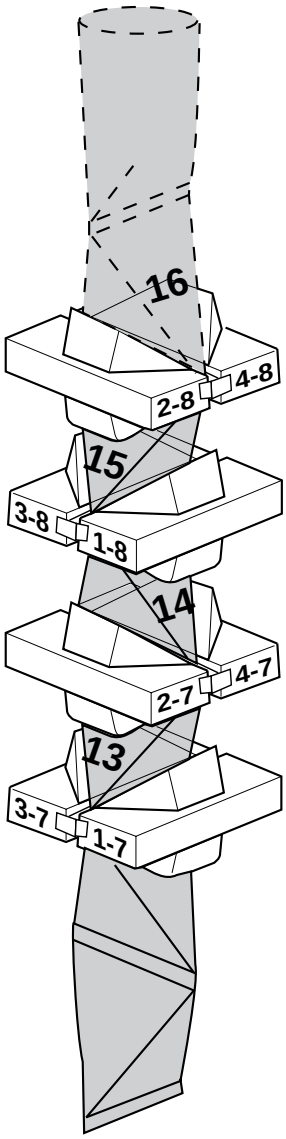

2.2TS100708en.fm

Volume (ml)	Side 2	Side 4	Side 3	Side 1
	Heating jaws	Pressure jaws	Pressure jaws	Heating jaws
65 / 200	2-1 to 2-8	4-1 to 4-8	3-1 to 3-8	1-1 to 1-8
150	2-1 to 2-7	4-1 to 4-7	3-1 to 3-7	1-1 to 1-7

The illustration shows the 65 / 200 ml volumes

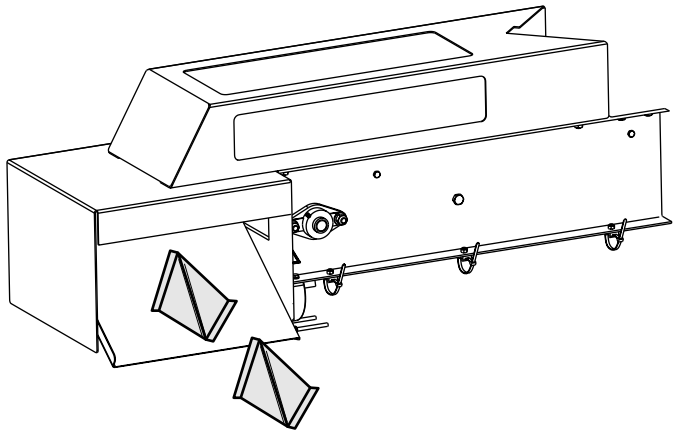

Every 20 minutes during production and after splicing, pick 2 packages in a row.

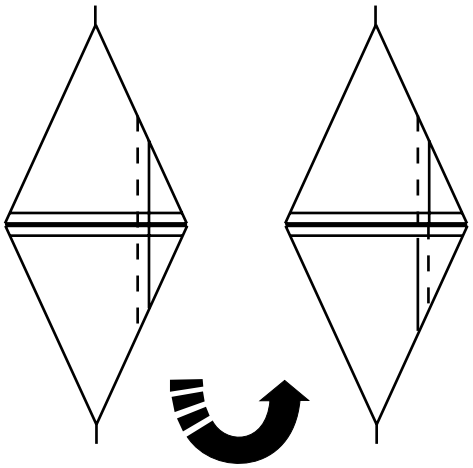

1a

Tube twist

a) Align LS.

b) Turn one package, align LS

2.2TS100708en.fm

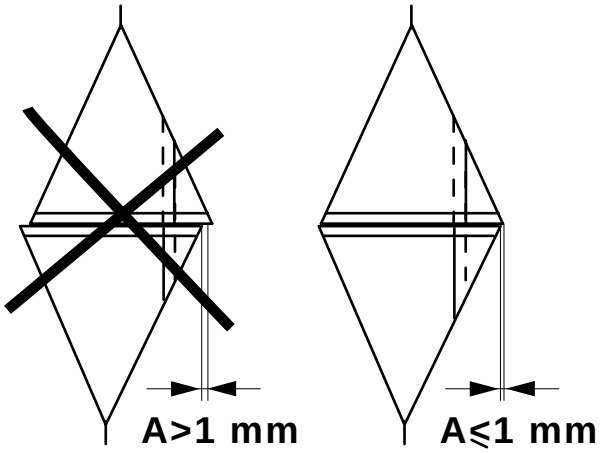

1b

Check A:

- Acceptable if **A** ≤ 1 mm
- **NOT** acceptable if **A** > 1 mm

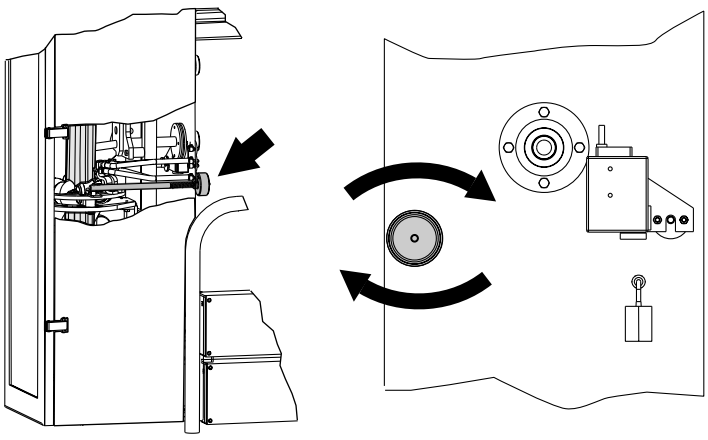

1c

If tube twist is out of **A,** adjust the upper forming ring.

If **A** can not be adjusted to an acceptable value, call technician.

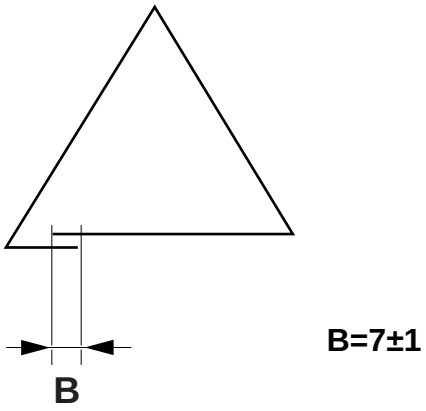

2

LS Overlap

Check the width of the LS overlap distance **B**.

If out of **B** call technician.

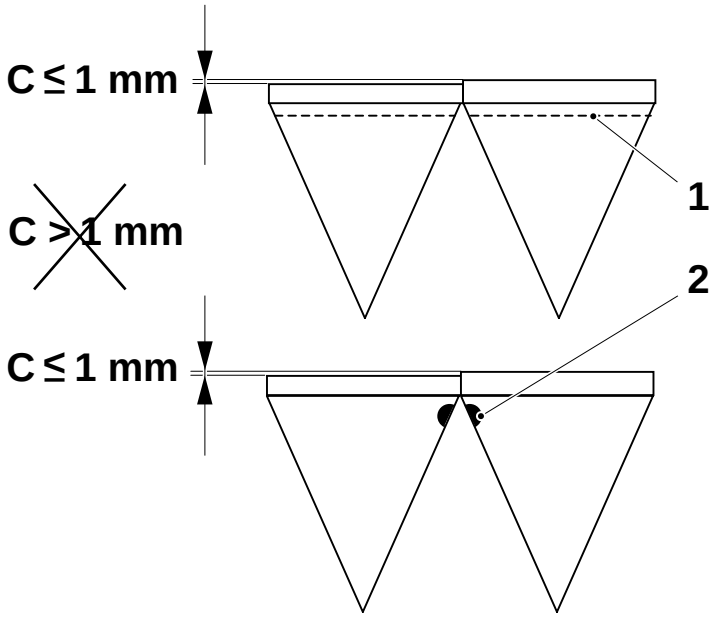

3

Design position

Align opening
(perforation, straw hole e.t.c.)

Check **C**, difference in distance between the fins:

- Acceptable if **C** ≤ 1 mm
- **NOT** acceptable if **C** > 1 mm
  - Call technician

1 Perforation
2 Straw hole

2.2TS100708en.fm

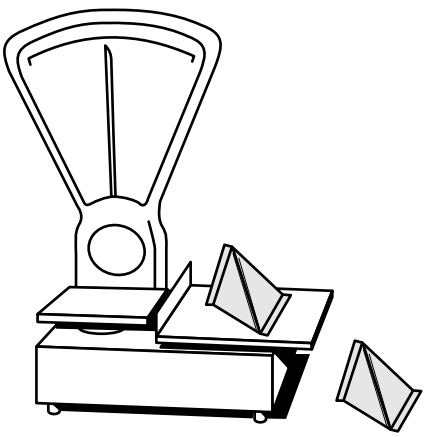

4

Weight

Weigh the packages and record their weight deviation.

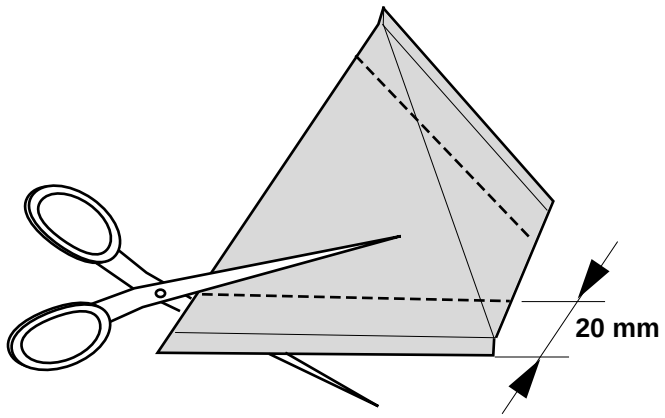

5

Cut off the TS approximately 20 mm wide.

Save the TS until item 9.

2.2TS100708en.fm

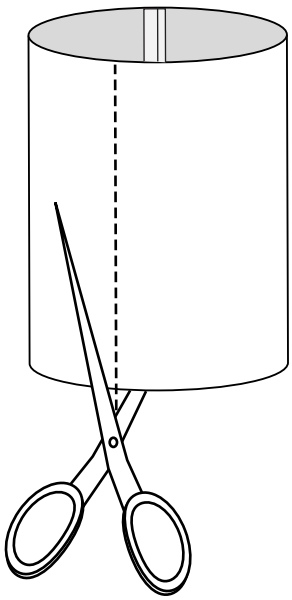

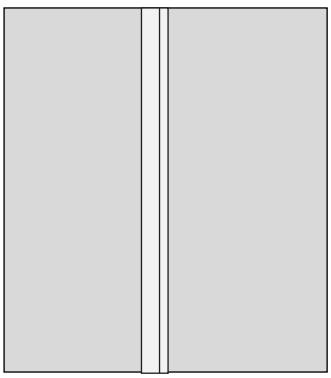

6

Surfaces

Cut the packages open as illustrated.

Rinse and dry the package.

Check the outside and inside surfaces of the packages for scratches or other possible defects.

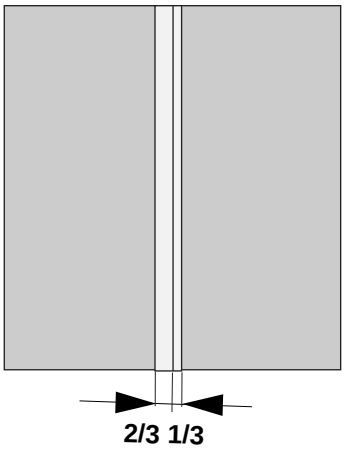

7

LS Strip Position

Check that the LS strip is correctly positioned.

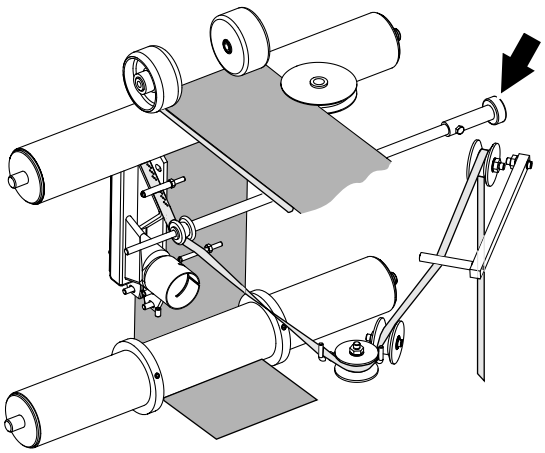

Adjust the position of the strip by turning the adjustment knob.

2.2TS100708en.fm

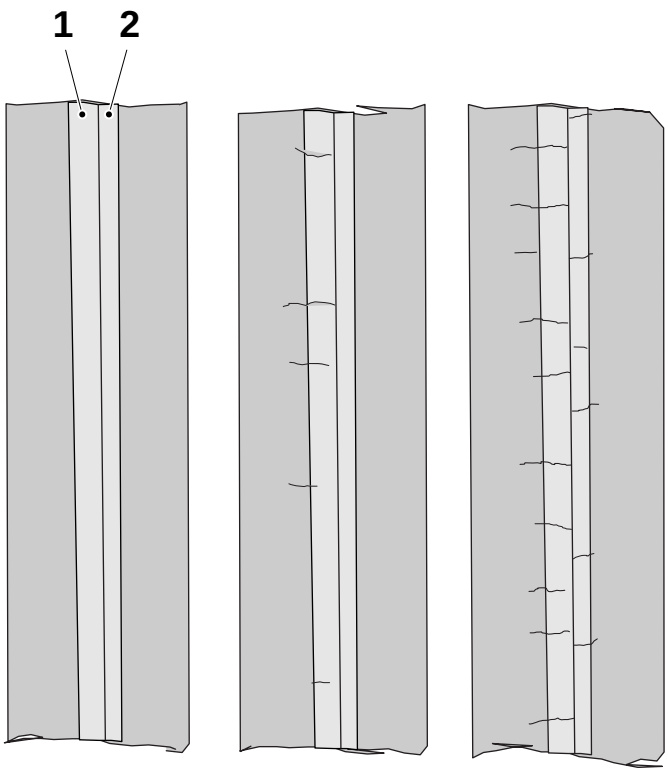

fig.1 fig.2 fig.3

8a

Example of seals.

Fig.1
This seal is Ok.

Fig.2
This seal is acceptable.

Fig.3
Decrease the LS and SA sealing temperature in steps of 5°C

1 SA side
2 LS side

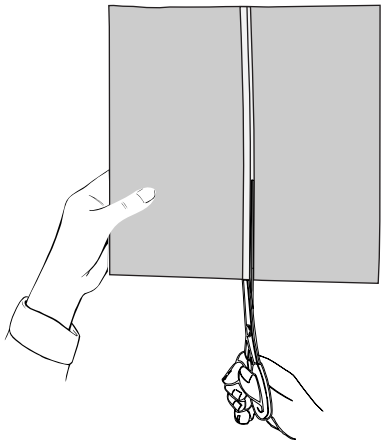

8b

Check LS/SA

Cut along the inner edge of the packaging material

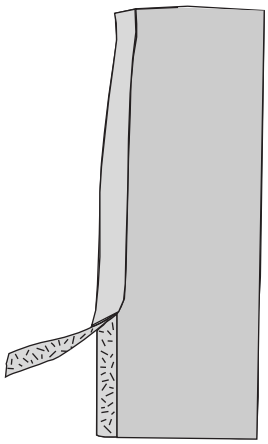

8c

Pull off the overlapping packaging material on the outside of the package.

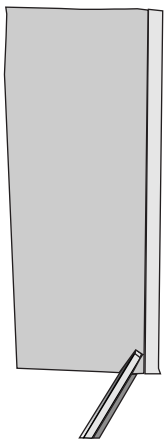

8d

Cut a notch as in picture.

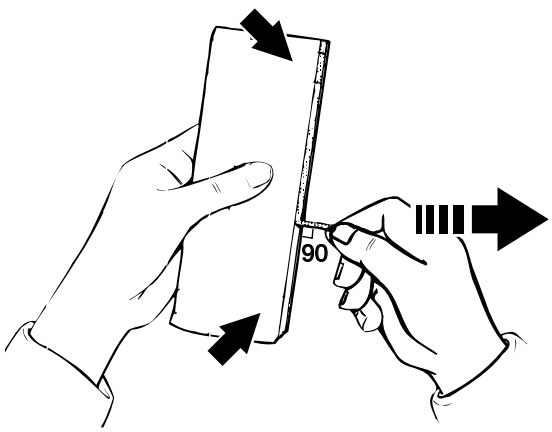

8e

Pull 20 mm of the strip outwards at an angle of 90 degrees.

Take hold again and pull another 20 mm. Continue along the whole edge.

2.2TS100708en.fm

Longitude sealing (LS) 8f

The sealing quality depends on heat, pressure, and cooling.

1 PE layer 1
2 PE layer 2
3 AL-foil
4 Board
5 Strip

The weakest point of the joint must not be the sealing.

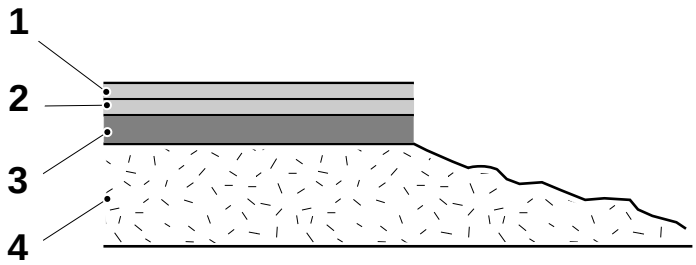

Split in board. OK

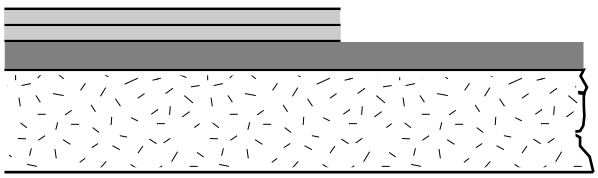

Split between AL-foil and PE layer 2. OK

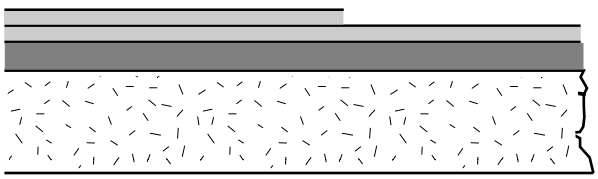

Split between PE layer 1 and PE layer 2. OK.

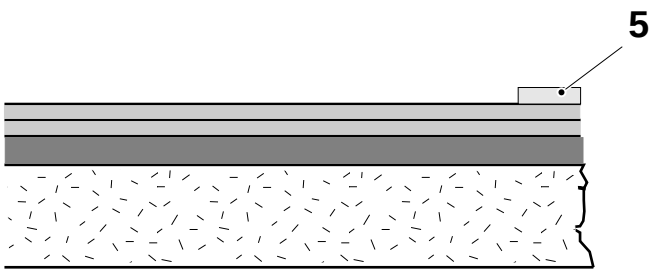

Split within LS strip. OK

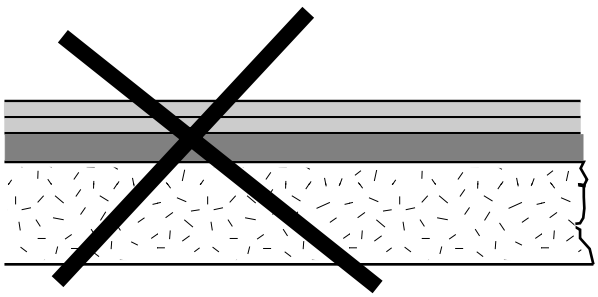

Split between packaging material and LS strip. This is **NOT** acceptable.

Increase temperature by steps of 5 °C and go back to 8a.

2.2TS100708en.fm

Transversal sealing (TS)

9a

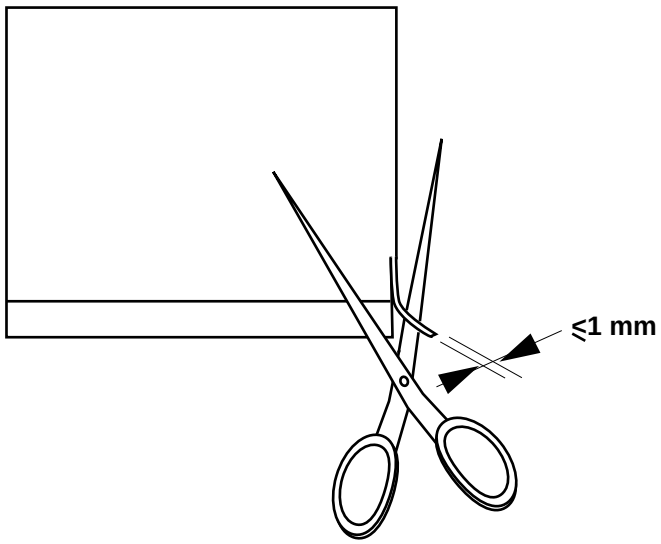

Cut off max. 1 mm of the fin.

2.2TS100708en.fm

9b

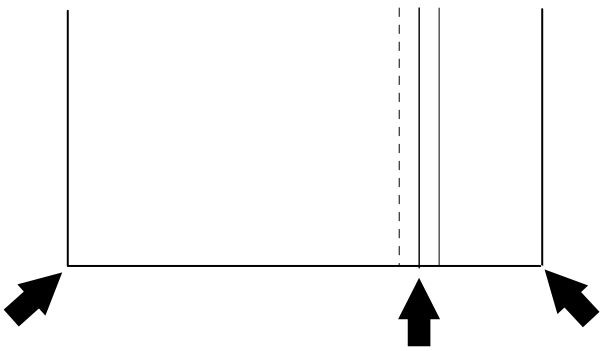

Critical points, see arrows.

To be checked extra carefully.

9c

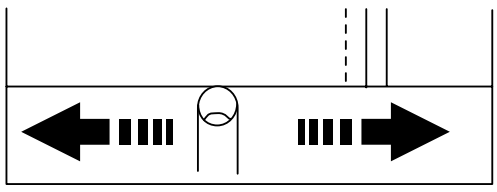

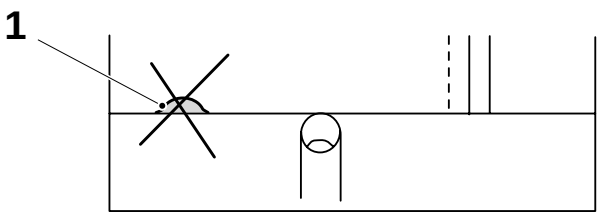

Unfold and view inside of package, feel the seal with your finger nail.

Reduce the TPIH power by 10 scale units and check again according to 9a.

Plastics lumps/ridges are **NOT** acceptable.

1 Plastic lump

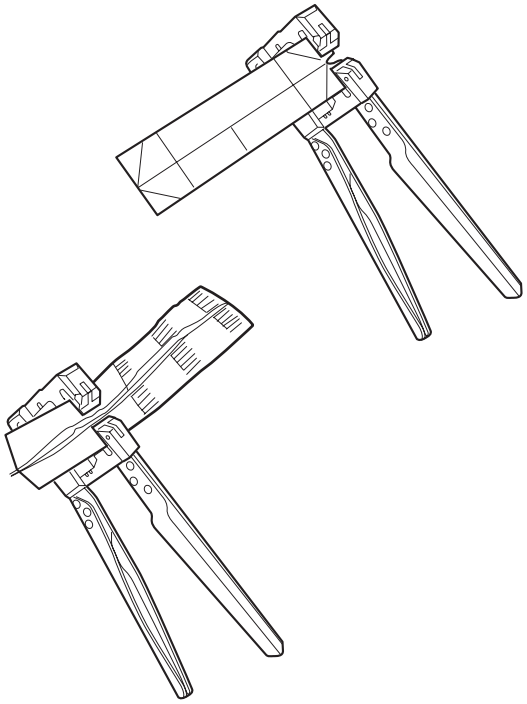

9d

Insert the sample into the stretch pliers and gently squeeze the handles to stretch the seal.

Pull approximately 1/3 of the seal length from corners to cross (where LS meets TS)

Pull the cross, make sure to pull perpendicular to the TS.

Observe how the seal stretches and breaks.

Continue stretching until the sample has opened completely.

2.2TS100708en.fm

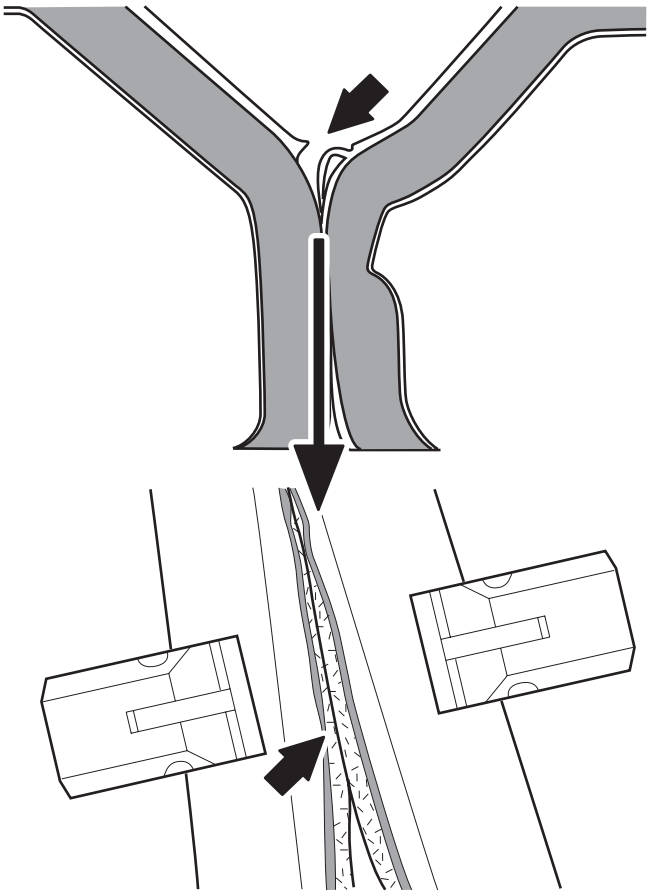

9e

The seal is:

- acceptable if the seal remains intact but rupture takes place in any layer.
  - board
  - alfoil
  - PE - layer 1 and 2
  - LS - strip
- **NOT** acceptable if the packaging material opens without rupturing the seal.

(Same principal as for LS at item 8f)

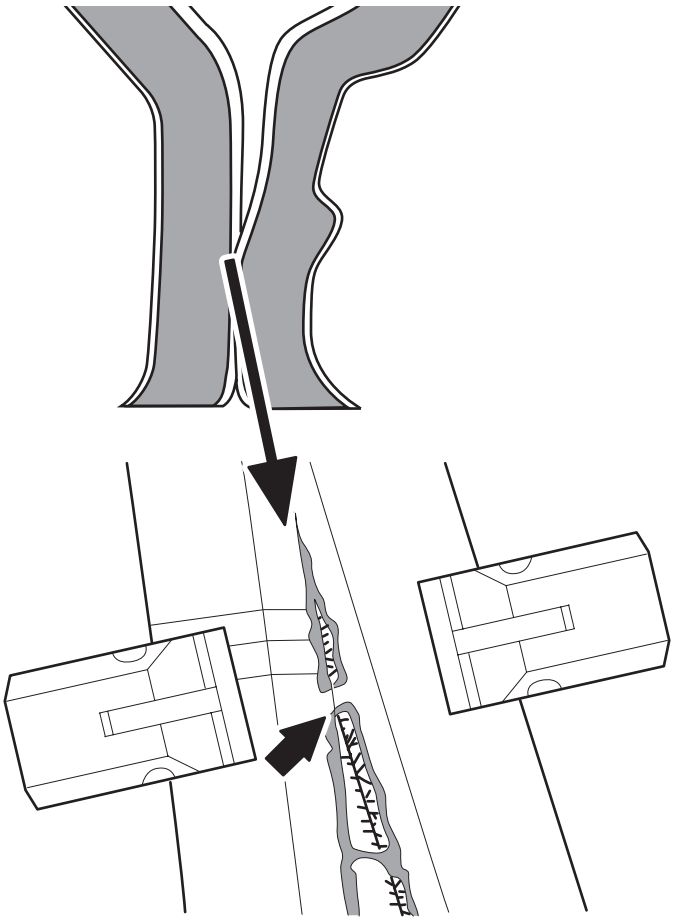

9f

The seal is defective if the seal is so weak that the two inner plastic layer separate without rupturing.

Increase the TPIH power in steps of 10 scale divisions per time. Repeat the check of the TS again from item 9a.

If no acceptable seal can be obtained, call a technician.

2.2TS100708en.fm

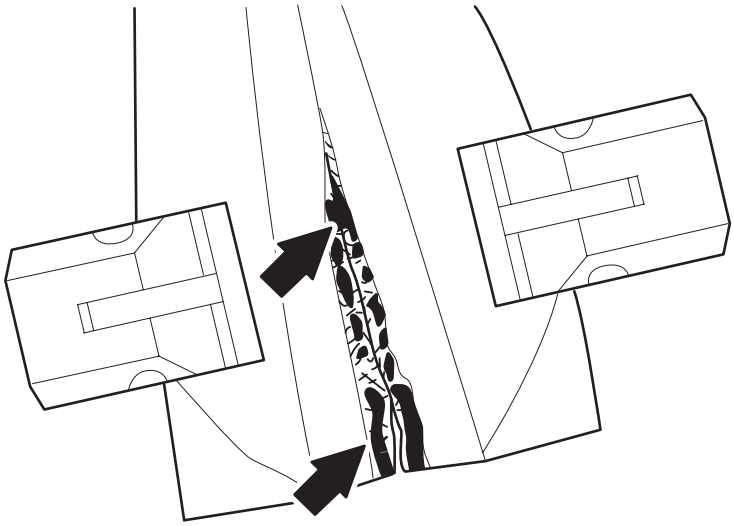

9g

The seal is **NOT** acceptable if there are burn marks in the seal.

Reduce the TPIH power by 10 scale units and check again from item 9a. Repeat until there are no burn marks in the seal.

This page intentionally left blank

2.2TS100708en.fm

Packaging material splice

This section describes how to prepare a new packaging material reel for splice.

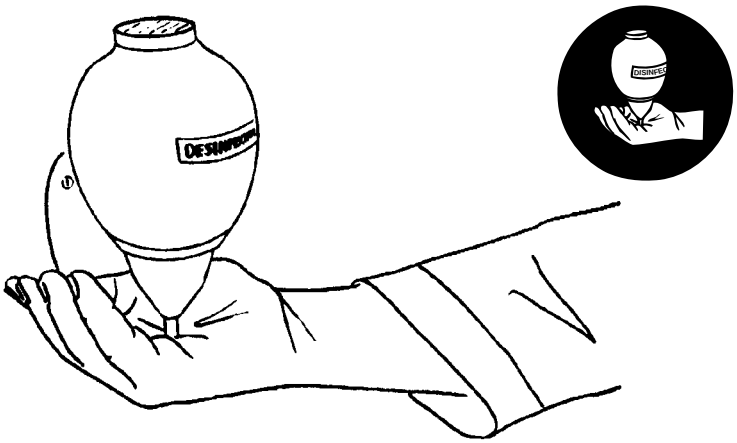

IMG_0729b.jpg

1

To avoid infection of the product, disinfect your hands/gloves before touching packaging material, strips, and machine parts that get in contact with product.

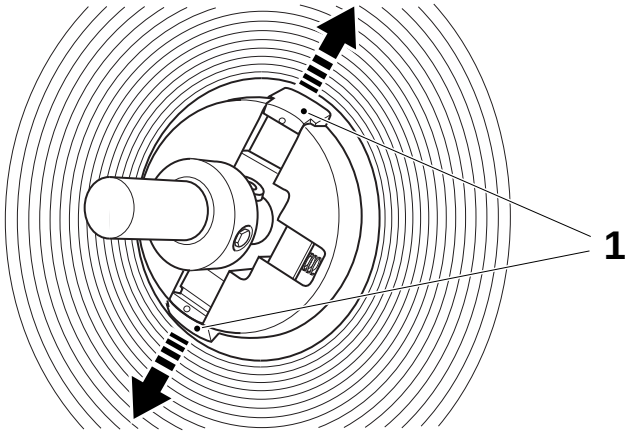

Threading of packaging material web

2

Prepare a reel of packaging material, and fit the bobbin holder.

Make sure that the hatches (1) in the bobbin holder are released and lock the reel.

Remove the plastic wrapping and the outer layers of packaging material.

1 Hatch

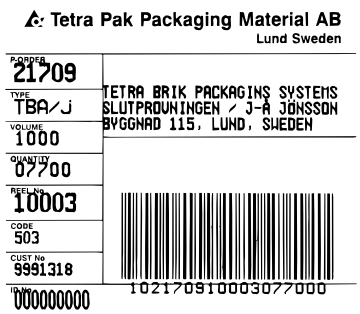

Note!
Remove and keep the P-order tag.

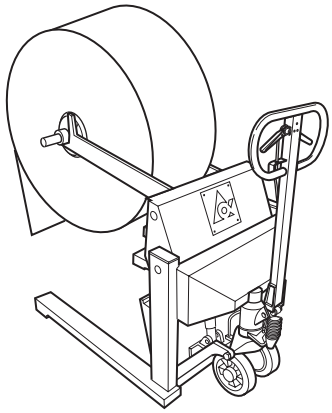

3

Fit the reel in the trolley, making sure the bobbin holder is correctly seated in the trolley arms.

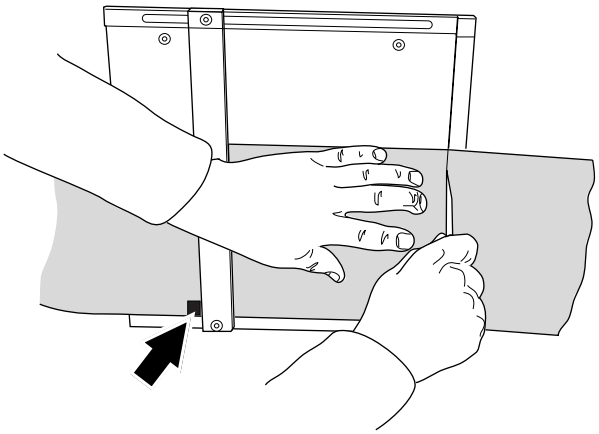

4

Hold the packaging material against the lower guide of the cutting table, and the register mark position at the arrow according to the illustration.

Cut the packaging material with a sharp knife at the slot in the cutting table.

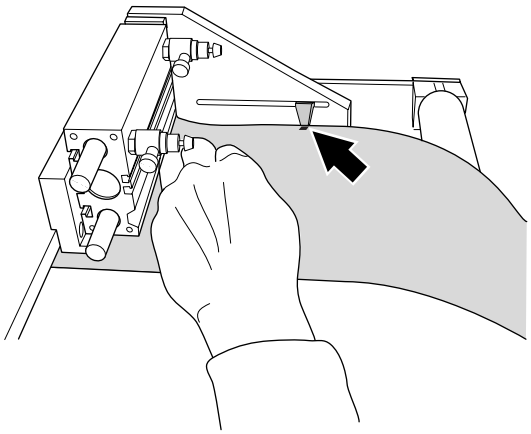

5

WARNING!
Risk of crushing!
Make sure the cover is safely held in its upper position by the locking hatch.

Open the cover for the splicing device and position the register mark at the arrow according to the illustration.

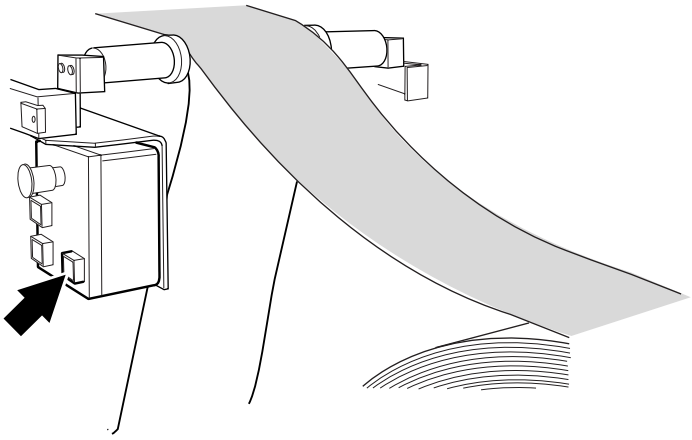

6

Press the **MATERIAL HOLDER** button to lock the packaging material.

Close the cover.

OM2.21TS100709en.fm

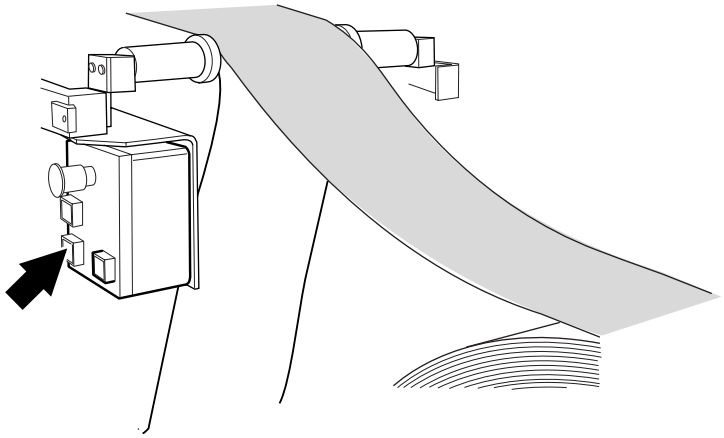

7

Feed out by hand approx. 1 meter of packaging material from the reel.

Press the **SPLICING** button to start the splice sequence.

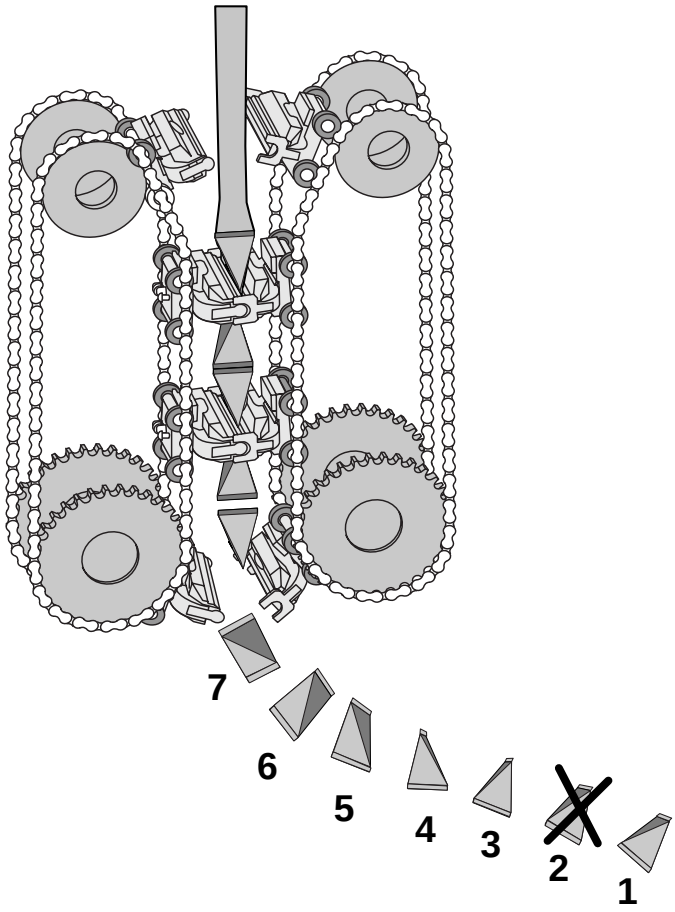

8

Seven packages will automatically be ejected after the splice is performed.

Remove the package carrying the splice (2) and the packages (1) and (3), before and after the splice.

Check the packages (4-7) after the splice. Do not mix the packages.

See Package checks on page 117

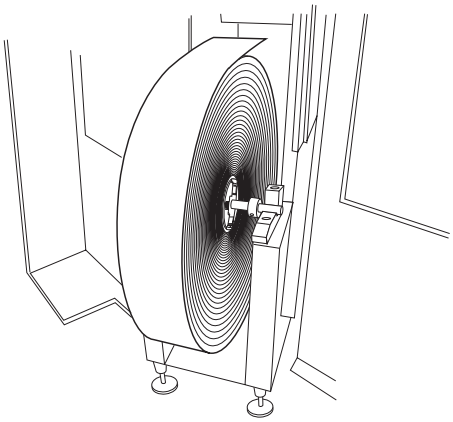

9

Remove the bobbin for the used up packaging material and gently insert the new packaging material reel.

Note!
Make sure that the bobin holder is correctly seated in its holders.

Close the doors.

OM2.21TS100709en.fm

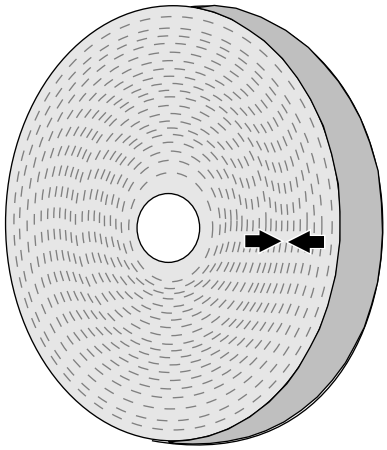

Factory splice

1

When the packaging material reel contains a factory splice, the splice will be automatically ejected.

The splice is marked with two arrows as illustrated.

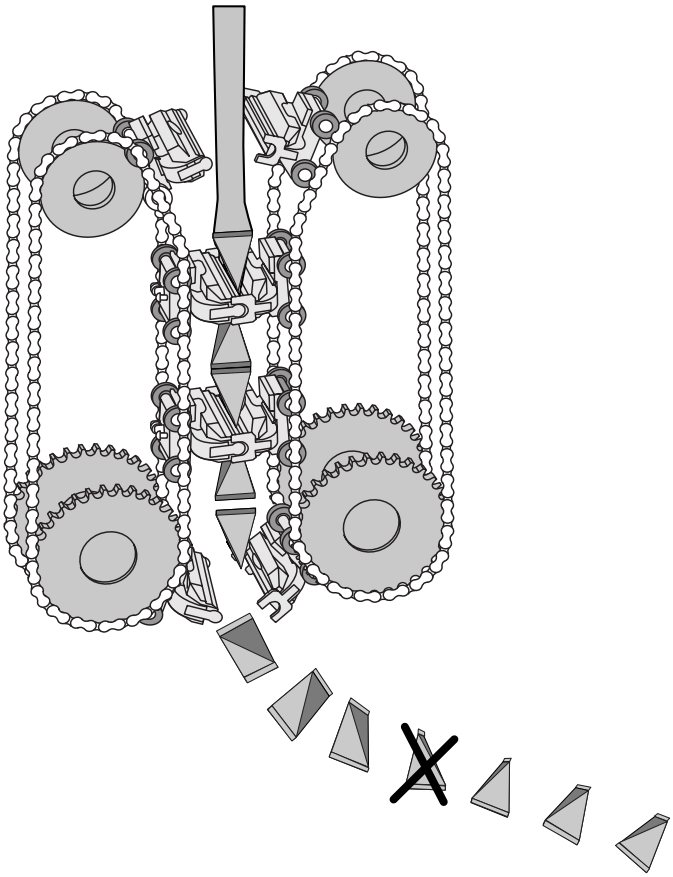

2

Seven packages will automatically be ejected.

Remove the package carrying the splice and the packages before and after the splice.

Check the packages (4-7) after the splice. Do not mix the packages.

See Package checks on page 117

OM2.21TS100709en.fm

Strip splice preparation

This section describes how to prepare a new strip reel for automatic splice.

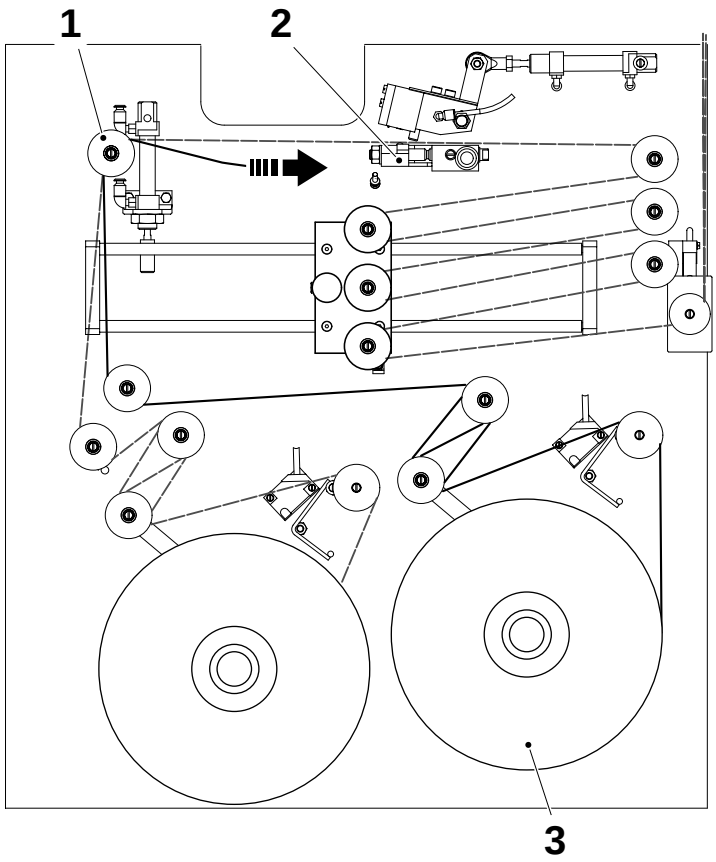

1a

After the splice:

a) Open the strip magazine door.

b) Move the strip to the inner of the twin rollers (1)

c) Fit the new strip reel (1) at the empty side (right side illustrated) and thread the strip towards the cutting table (2) according to the illustration.

1 Twin rollers
2 Strip reel
3 Cutting table

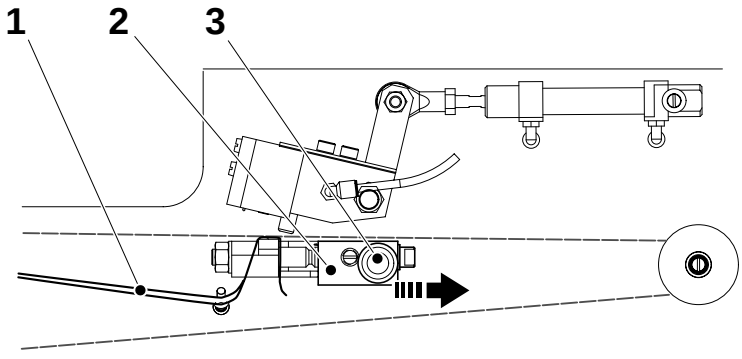

1b

Use the knob (3) to pull out the knife holder (2).

Pull the strip (1) as illustrated.

1 Strip
2 Knife holder
3 Knob

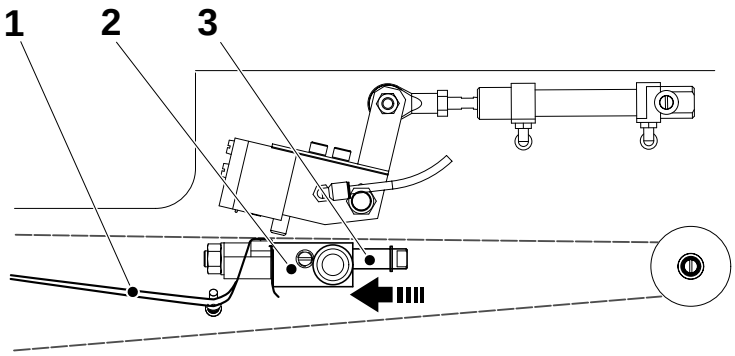

1c

Pull back the knife holder (2).

1 Strip
2 Knife holder
3 Knob

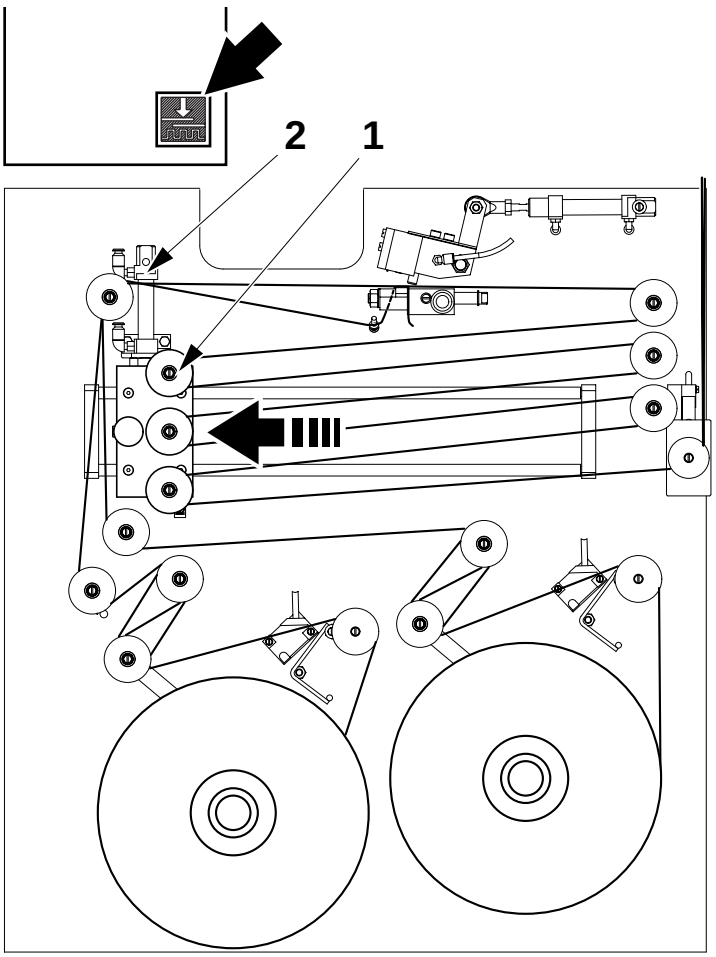

1d

a) Gently push back the guide (1) to its left end position.

b) Press the button (at arrow) and the cylinder (2) will lock the guide (1).

c) Remove the slack of the strip by turning the strip reel backwards.

d) Close the magazine door and reset the alarm.

The machine is now prepared for automatic strip splice.

1 Guide
2 Cylinder

OM2.21TS100710en.fm

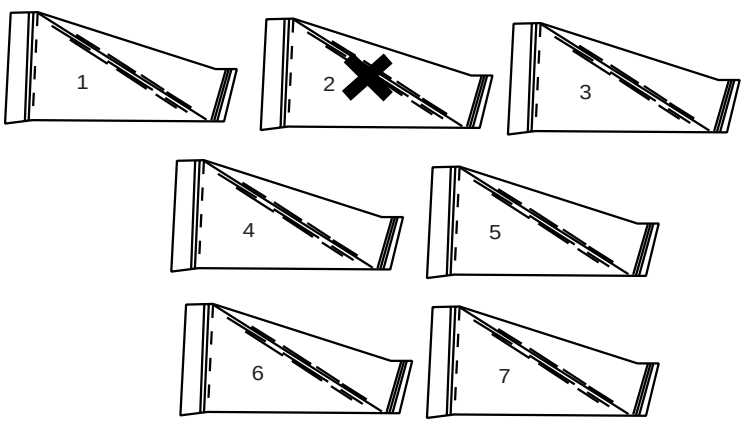

2

The package carrying the splice (2) and the packages (1) and (3), before and after the splice will be discharged automatically.

Check the packages (4-7) after the splice. Do not mix the packages.

See Package checks on page 117

Stop

This section describes how to stop the machine in:

- **Emergency stop**
- **Short stop**
- **Normal stop**

Location of emergency stop buttons/cords

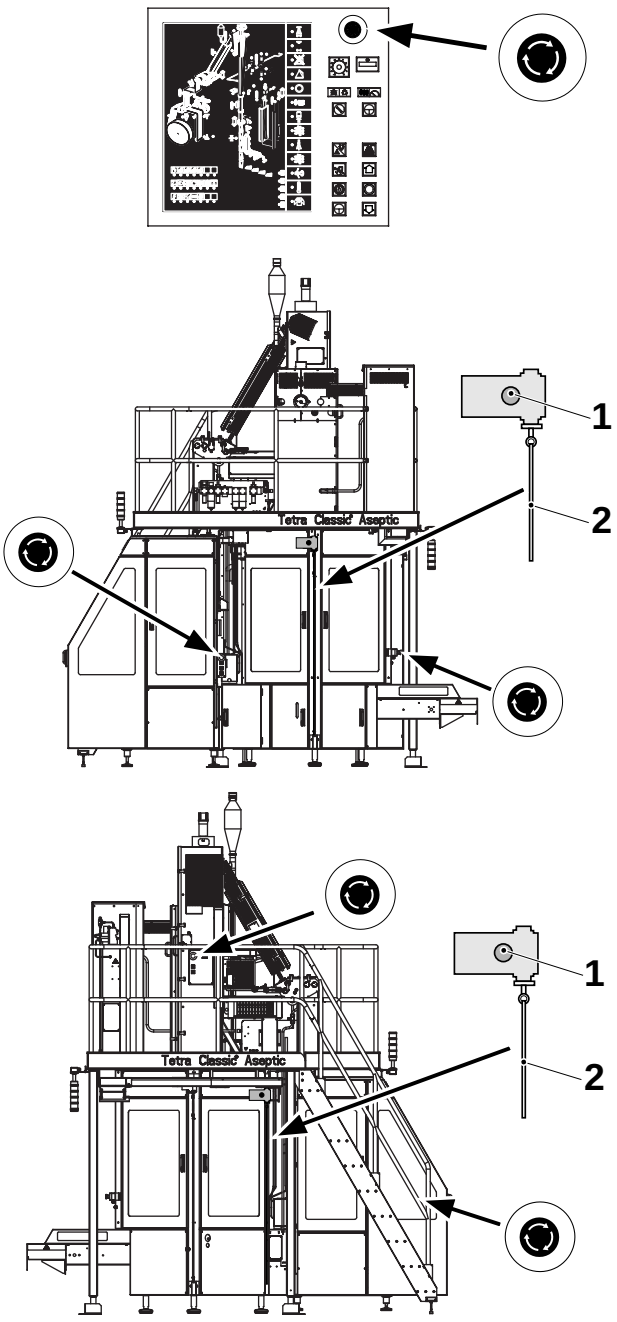

OM2.21TS100711en.fm

Emergency stop

When there is a risk of **serious danger to people or machine**, push any of the emergency stop buttons or pull one of the emergency stop wires (2) immediately.

a) All machine movements and functions stop instantly.

b) The pneumatic system depressurizes.

c) The machine steps down to programme step **ZERO.**

Take the following actions:

WARNING!
Risk of corrision and intoxination. Hydrogen peroxide. Follow the safety Precautions

Empty the peroxide bath manually.

See section Manual emptying of peroxide bath on page 29.

a) Eliminate the cause of the stop.

b) Reset the **EMERGENCY STOP** button/wire.

- Push button, twist to release
- Wire, push the release button (1)

c) Empty the tube from any remaining product by cutting it open, see section Daily Care.

d) Clean the machine according to section Daily Care.

e) Restart according to section Preparations after daily care.

1 Release button
2 Emergency stop wire

Short stop

1

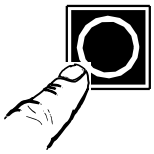

(Maximum fifteen minutes).

Push the **SHORT STOP** button.

a) The product supply stops.

b) The TS switches off.

c) The drive motor stops.

d) The sealing pressure switches off.

Note!
The siren sounds after 14 minutes, and after fifteen minutes, if no action is taken, the machine steps down to program step **ZERO POSITION.**.

OM2.21TS100711en.fm

2

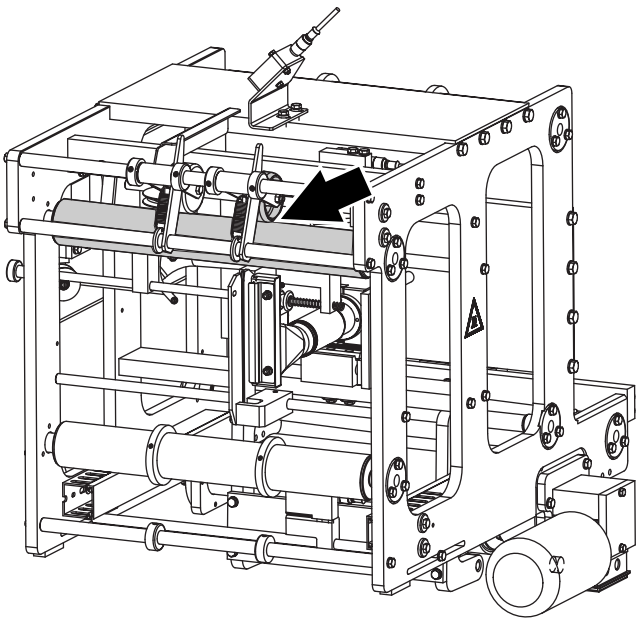

WARNING!
Risk of burns!
The heating element is hot.

If necessary, wear heat-resistant protective gloves.

Check that the material web is not stuck between the pressure and counter rollers in the strip applicator.

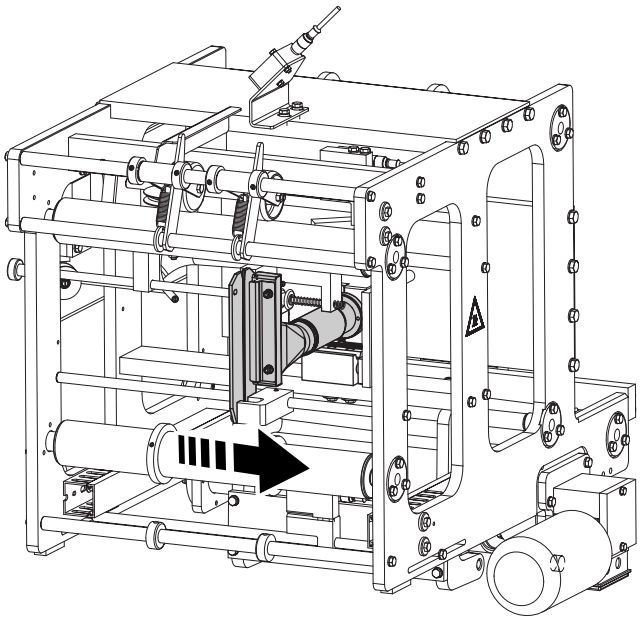

3

WARNING!
Risk of burns and/or pinching!

When the machine steps into **SHORT STOP** mode, the strip applicator element will move to the side. The strip applicator element will retain its high temperature.

When the **STEP UP** button is pushed to resume production, the strip applicator element rapidly returns to its previous position.

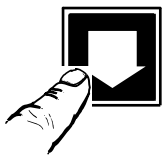

Normal stop

Press the **STEP DOWN** button**.**

a) The product valve (A) closes.

b) The steam valve (C) closes.

c) The drive motor stops after approx. 10 seconds.

d) The filling machine steps down to **SIGNAL TO / FROM STERILIZER**.

Note!
If the stop exceeds fourty minutes, the machine will step down to **STEP ZERO**.

OM2.21TS100711en.fm

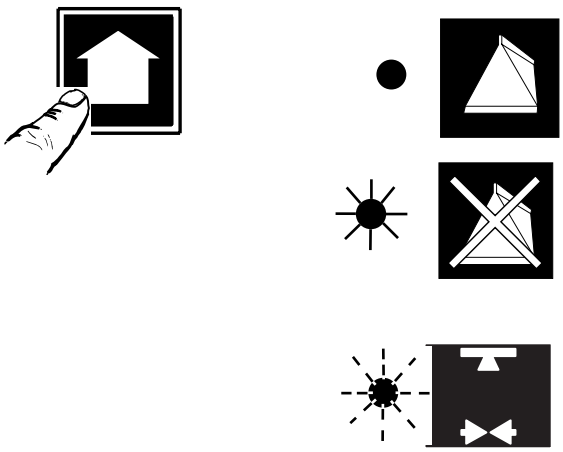

Production finished
1a

Press the **STEP UP** button to stop the production**.**

- The **PRODUCTION** symbol goes out.
- The **PRODUCTION FINISHED** symbol gets a fixed light.

When the tube is empty of product, the machine stops.

If no further action is taken during the following 60 seconds (regret time), the machine steps to **PREPARATION FOR CLEANING**.

The **PREPARATION FOR CLEANING** symbol flashes during this time.

OM2.21TS100711en.fm

1b

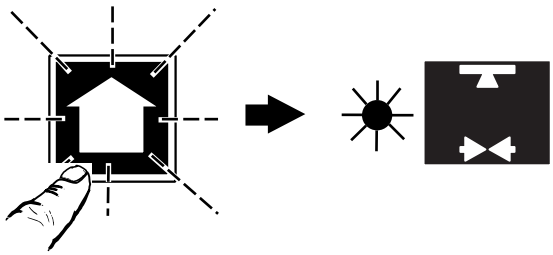

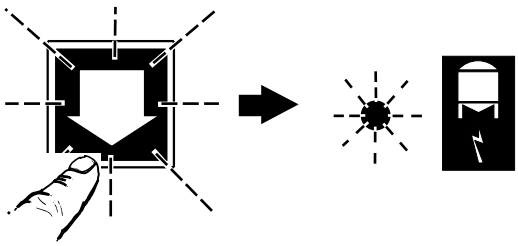

During regret time = 60 seconds

The following choices can be made:

Continue to PREPARATION FOR CLEANING

- Press the **STEP UP** button.
  - The **PREPARATION FOR CLEANING** symbol gets a fixed light.

Return to PRODUCTION

- Press the **STEP DOWN** button.
  - The **SIGNAL TO/FROM STERILIZER** symbol gets a fixed light. Continue according to Start item 4a.

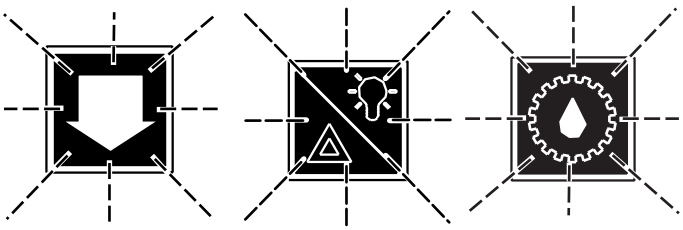

1c

The alarm panel indicates missing cleaning pipes.

The **STEP DOWN** button flashes.

The **ALARM RESET** button flashes.

The **LUBRICATION** button flashes.

Continue according to:

- Daily Care on page 137 or
- Weekly Care on page 157.

OM2.21TS100711en.fm

Daily Care

CAUTION!
Do not use alcohol-, chlorine-, or iodine-based cleaning compounds when cleaning parts which may come into contact with hydrogen peroxide.

This section describes what to do after each production run or at least every 24 operating hours.

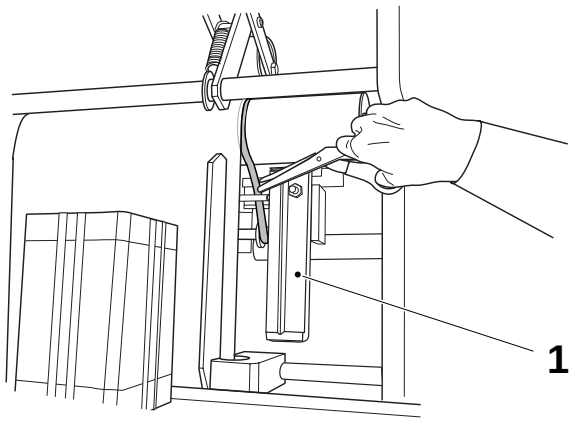

1

WARNING!
Risk of burns!
The heating element (1) is hot.

Cut the strip close to the packaging material web. Pull the strip back a little bit and away from the heating element.

1 Heating element

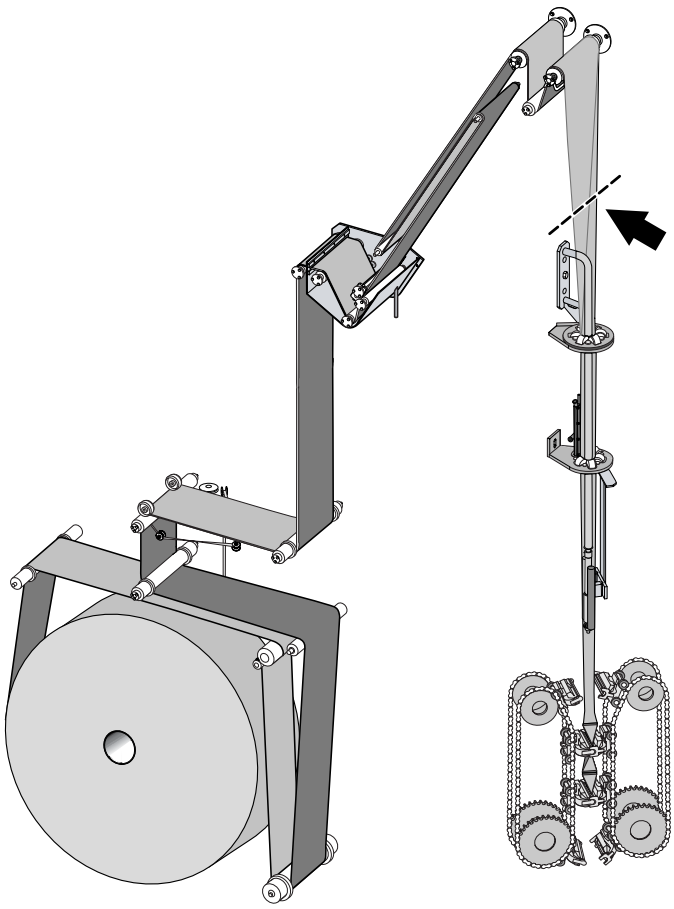

2

Cut the packaging material web above the filling pipe.

OM2.21TS100712en.fm

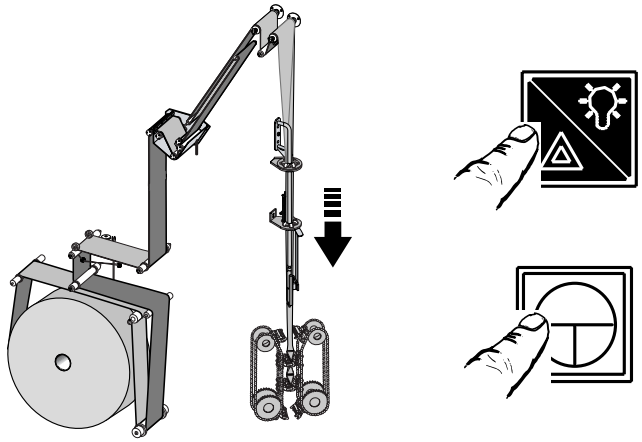

3

Inch out the packaging material in the following way:

a) Close the doors.

b) Press the **ALARM RESET** button.

c) Press and hold down the **INCH** button until the remaining packaging material has left the jaw system.

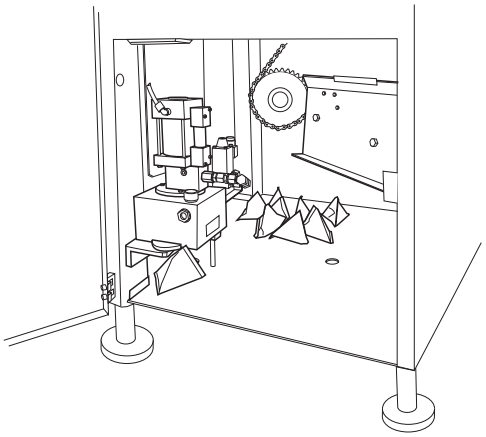

4

Remove the empty packages from the main body.

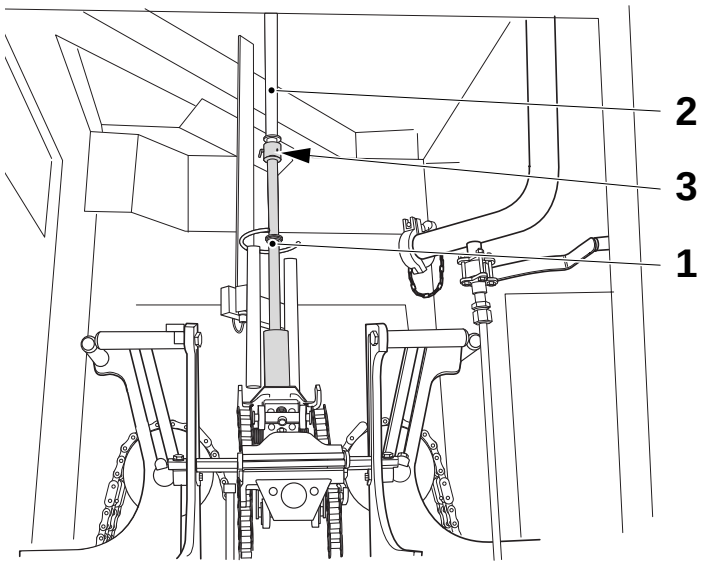

5

Open the door to the jaw system, pull out the pin (3) and gently pull down the lower filling pipe (1) from the upper filling pipe (2).

1 Lower filling pipe
2 Upper filling pipe
3 Pin

OM2.21TS100712en.fm

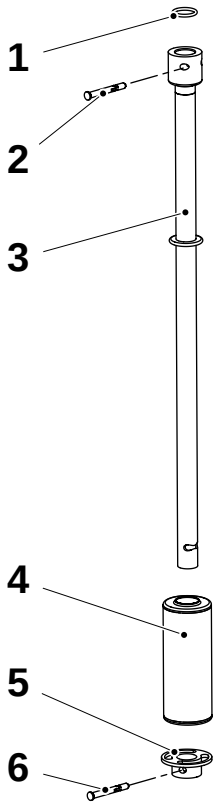



6

Chemical products!

WARNING!

Sterilisation/cleaning compound. Follow section Safety Precautions.

Disassemble the lower filling pipe and clean the parts in cleaning compound code **D**. See section Disinfectants and Cleaning Agents.

Place the parts in a container filled with disinfectants code **F** until the next production run. See section Disinfectants and Cleaning Agents.

1 O-ring
2 Pin
3 Lower filling pipe
4 Float
5 Locking cup
6 Pin

OM2.21TS100712en.fm



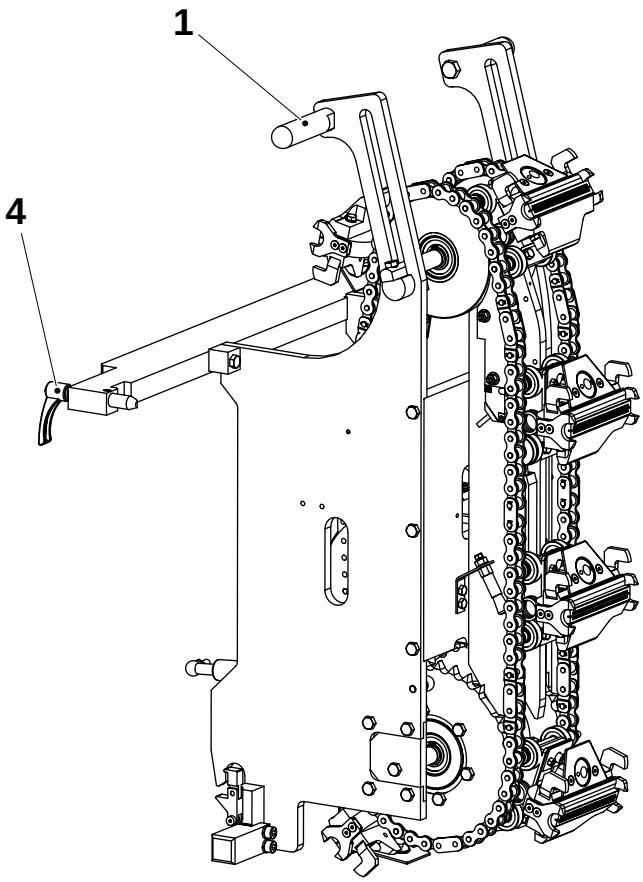

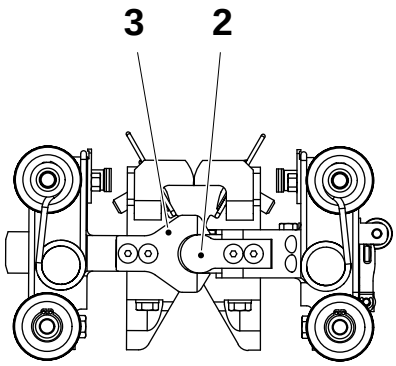

7
Heating Sides - Fold down/Raise

DANGER!

Risk of blocking the evacuation area!
Never fold down the sides closest to the electrical cabinet if a cabinet door is open.

To get access to the inside of the sides, lower the two heating sides observing the following:

WARNING!

Risk of crushing!
Always hold both hands on the handles!

a) Unscrew the two locking levers (4).

b) Grip both handles (1) and lower the side

When raising the sides to production position:

a) Grip both handles and raise the side.

b) Rotate the chain, make sure that the heating jaw meets its corresponding pressure jaw. Make sure that the guides (2) get in contact with the guides (5) without force, turn the sides slightly when connecting.

c) Lock both locking levers (1).

1 Handle
2 Guide
3 Guide
4 Locking lever

OM2.21TS100712en.fm

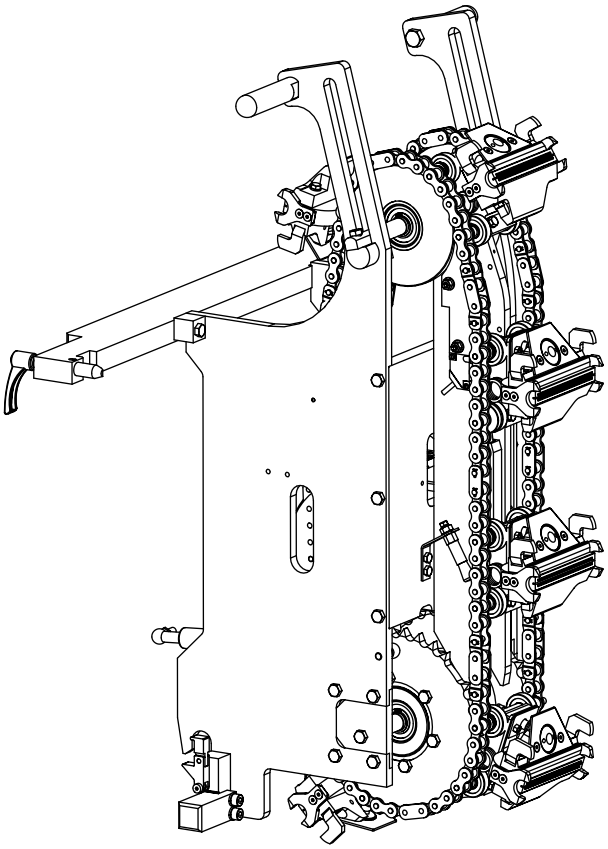

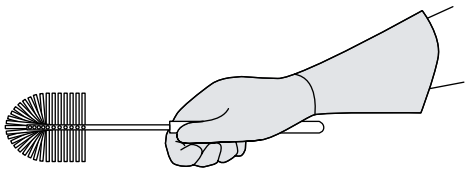

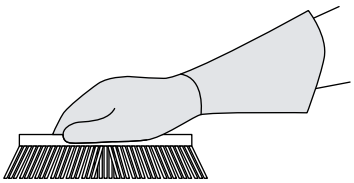

8

Use warm water and brushes when cleaning the sides.

OM2.21TS100712en.fm

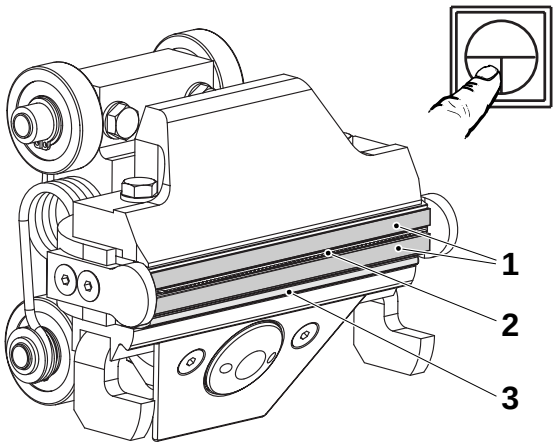

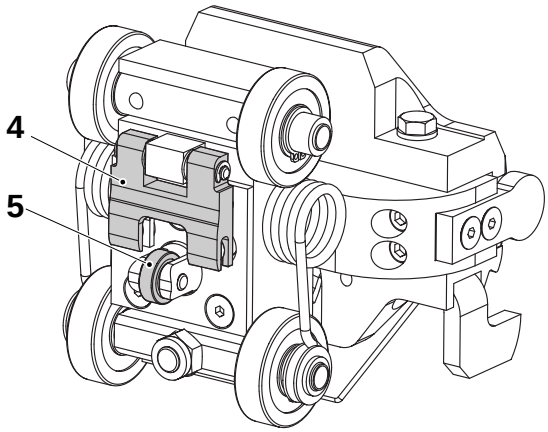

9a

Pressure jaws

Wipe clean and check for all pressure jaws:

- that the pressure rubbers (1) are intact
- that the knife (2) is intact Watch your fingers, **the knife is sharp!**
- that the ruler (3) is intact
- that the knife and the ruler move out/ in freely
  - push at the fork (4) to check the knife
  - push at the roller (5) to check the ruler

To get access to all jaws; use the **INCH** button in program step **PREPARATION FOR CLEANING**. (Doors closed and alarm reset).

If faults, call a technician.

1 Pressure rubber
2 Knife
3 Ruler
4 Fork
5 Roller

OM2.21TS100712en.fm



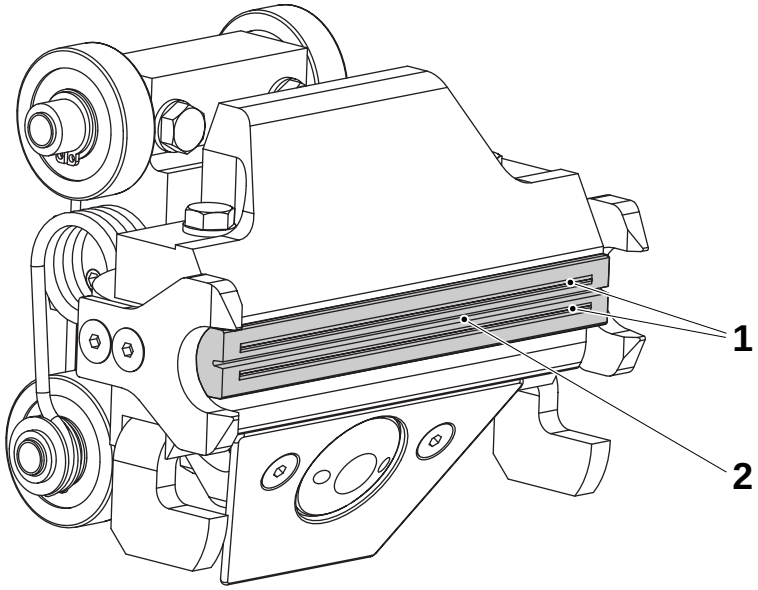

9b

Heating jaws

Wipe clean and check for all heating jaws:

- that the inductor (1) is intact
- that the cutting groove (2) is free from packaging material residue. Do not use any sharp tool of steel that could damage the inductor!

To get access to all jaws; use the **INCH** button in program step **PREPERATION FOR CLEANING**. (Doors closed and alarm reset).

If faults, call a technician.

1 Inductor
2 Cutting groove

OM2.21TS100712en.fm



10a

WARNING!
Hydrogen peroxide!
Follow the *Safety Precautions*.

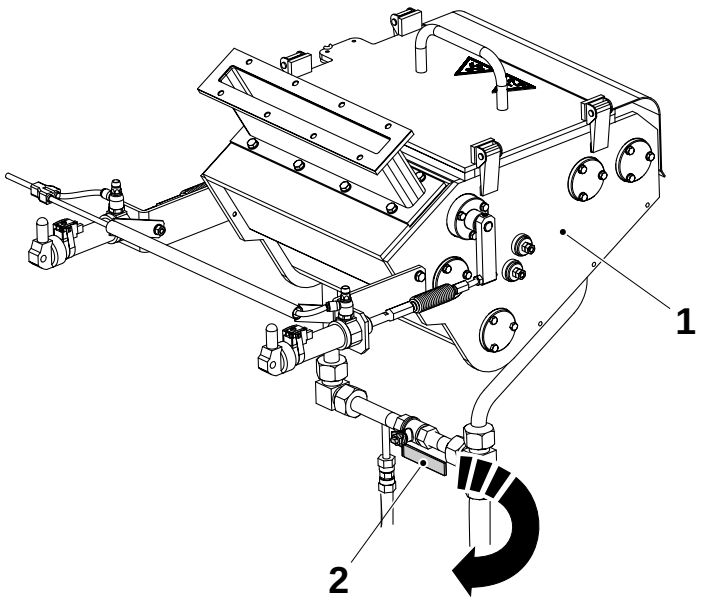

Empty the peroxide bath (1) by opening the drainage valve (2).

Rinse the peroxide bath container with deionized water.

Make sure that the peroxide bath is empty before closing the drainage valve.

1 Peroxide bath
2 Drainage valve

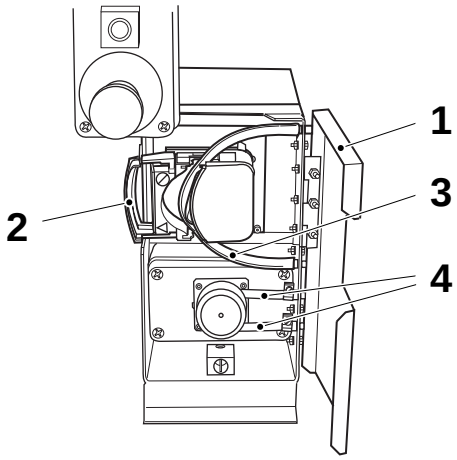

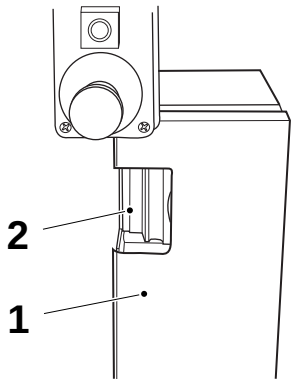

10b

WARNING!
Hydrogen peroxide!
Follow the *Safety Precautions*.

a) Open the door (1) for the peroxide pumps.
b) Fold out the handle (2) to drain the peroxide in the hose (3).
c) Check condition of the hoses (3) and (4).
   – If fault, call a technician.
d) Close the handle (2) and the door (1).

1 Door
2 Handle
3 Hose
4 Hose

OM2.21TS100712en.fm

10c

WARNING!
Hydrogen peroxide!
Read the section Hydrogen Peroxide (H2O2) in Safety precautions!

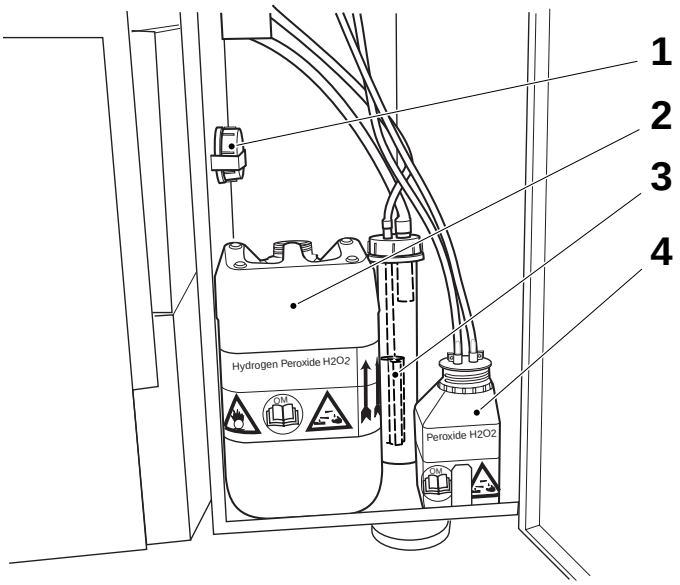

Weigh the peroxide bottle and check the consumption since last time it was filled up.

Empty the peroxide bottle (2).

Place the peroxide suction pipe (3) in its holder and fit the ventilated cap at the peroxide bottle (2) when transporting the bottle.

1 Ventilated cap
2 Peroxide bottle
3 Peroxide suction pipe
4 Spray can

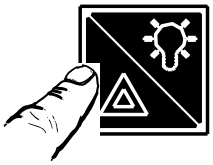

11

Close all doors and acknowledge the alarms.

Push the **LUBRICATION** button for 5 seconds to start the **LUBRICATION** sequence.

The machine starts and will run during the whole lubricating sequence.

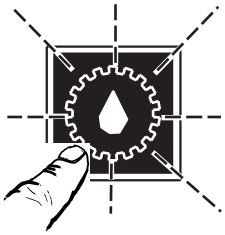

The **LUBRICATION** symbol shows a fixed light corresponding to the lubrication pulses during the **LUBRICATION** sequence.

OM2.21TS100712en.fm

Cleaning Pipes

12a

General regarding gaskets:

- Check condition and install new if needed.
- Make sure the gaskets are seated correctly before tightening nuts and clamps.

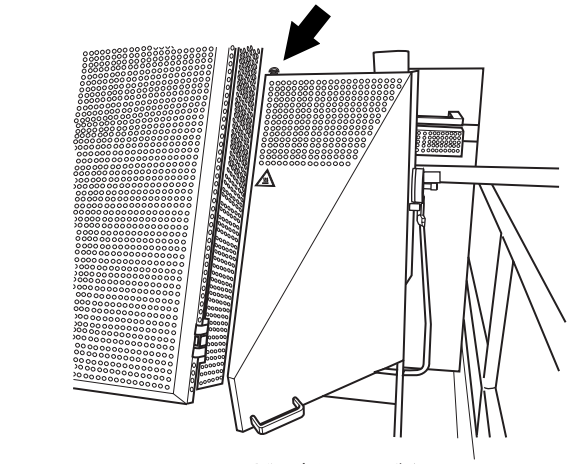

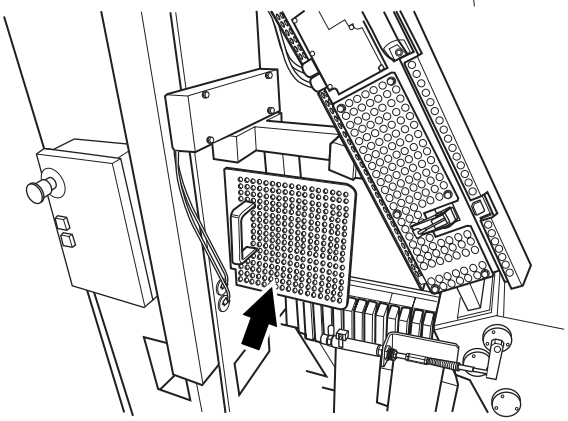

12b

WARNING!
After production the pipes behind the covers are hot.

To get access to the pipes:

- Loosen the hatch (at arrow) and open the cover.

- Lift up and remove the cover.

OM2.21TS100712en.fm

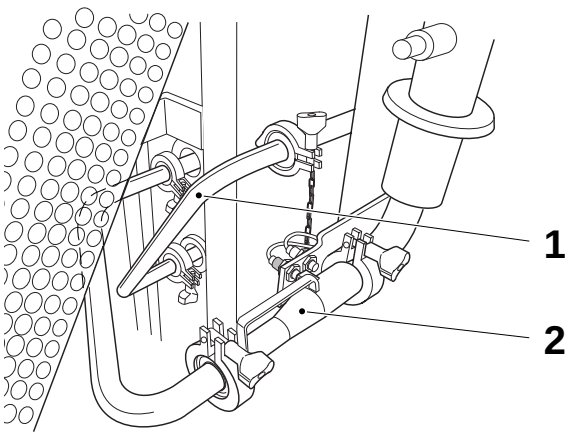



12c

WARNING!
Disinfectant!
Follow the *Safety Precautions*.

Remove the pipes (1) and (2).

Place the pipe (1) in a container filled with disinfectants code **F** until the next production run.

See section Disinfectants and Cleaning Agents.

1 Pipe
2 Pipe

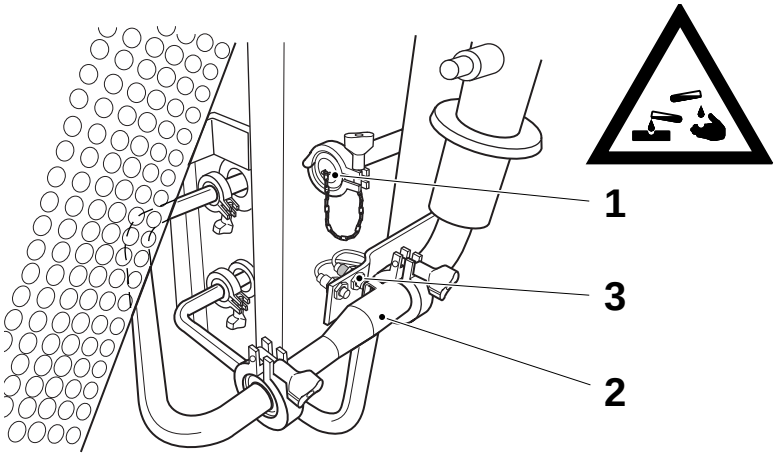

12d

WARNING!
Disinfectant!
Follow the *Safety Precautions*.

a) Install the lid (1).

b) Pick up the cleaning pipe (2) from the container filled with disinfectants, rinse it with drinking water and install it.

Make sure that the switch (2) is activated.

1 Lid
2 Cleaning pipe
3 Switch

OM2.21TS100712en.fm

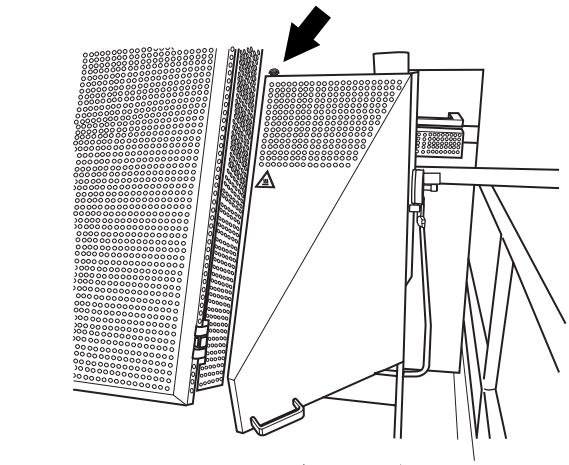

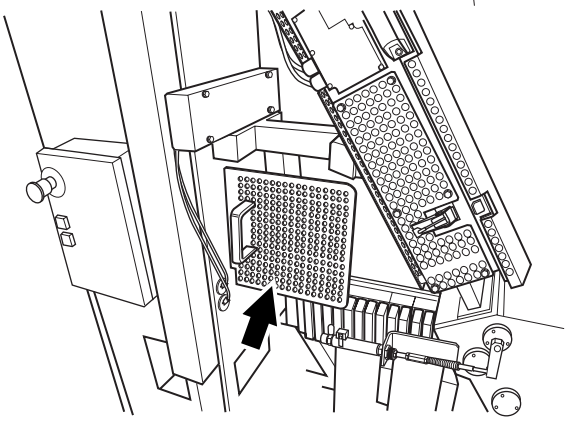

12e

WARNING!
After production the pipes behind the covers are hot.

Close the cover and lock the hatch (at arrow).

Install the cover.

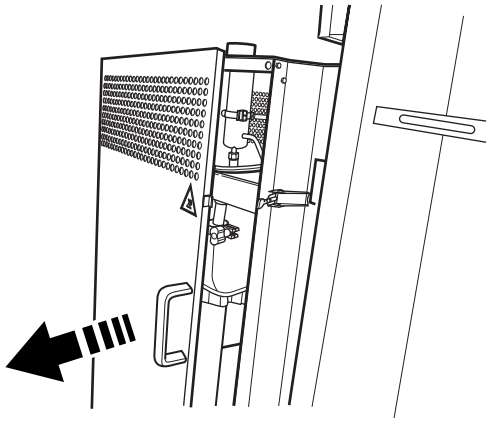

13a

Open the door for the incoming cleaning pipe connection.

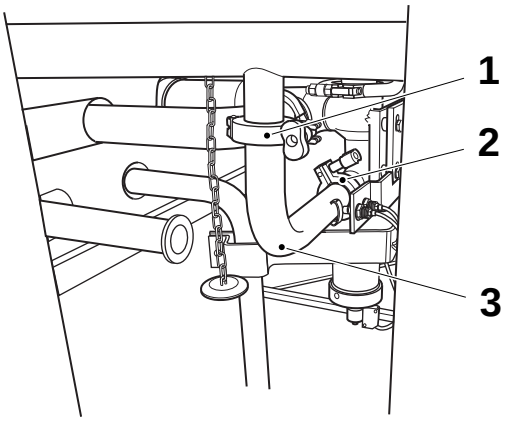

13b

WARNING!
After production the pipes are hot.

Remove the clamps (1) and (2) and remove the pipe (3).

1 Clamp
2 Clamp
3 Pipe

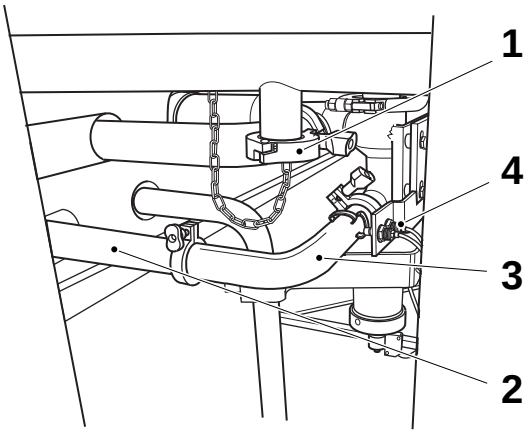

13c

a) Fit the lid (1).

b) Connect the pipe (3) to the cleaning pipe (2).

Note!
Make sure that the switch (4) is activated.

1 Lid
2 Cleaning pipe
3 Pipe
4 Switch

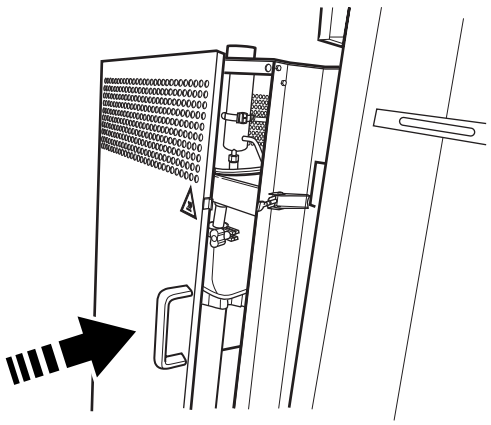

13d

Close the door for the incoming cleaning pipe connection.

OM2.21TS100712en.fm

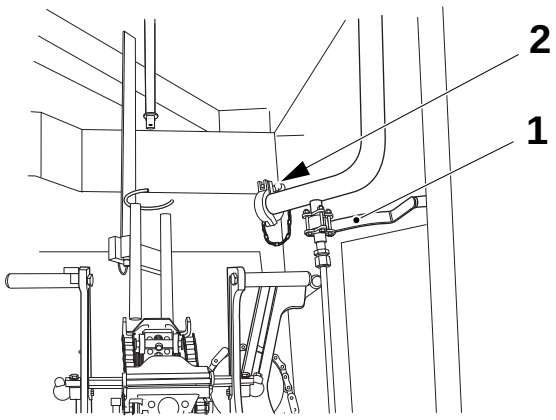

14

Check that the drainage valve (1) is closed.

Remove the lid (2).

1 Drainage valve
2 Lid

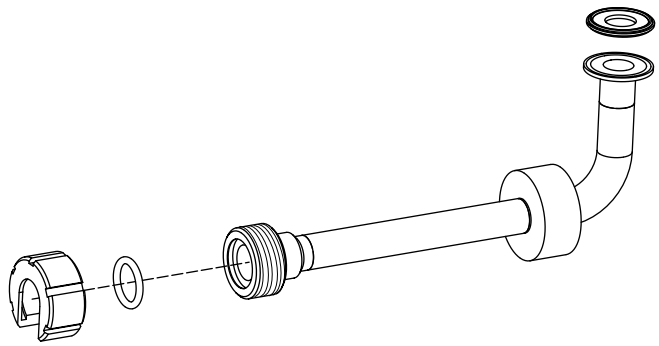

15a

Pick up the pipe parts from the container filled with disinfectants and rinse with drinking water.

Check the gaskets and replace if needed.

OM2.21TS100712en.fm

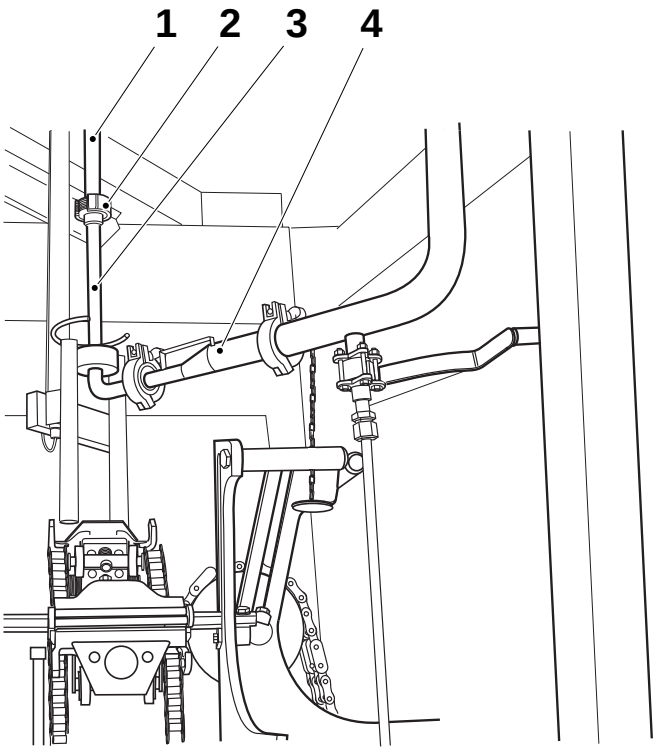

15b

Fit the pipe (3) to the upper filling pipe (1), do not tigten the nut (2).

Fit the pipe (4) with its handle upwards. Do not tighten the clamps

Center the pipe (3) to the upper filling pipe (2), make sure it is seated correctly, and tighten the nut (2) for metallic contact.

Tighten the clamps for the pipe (4).

1 Upper filling pipe
2 Nut
3 Pipe
4 Pipe

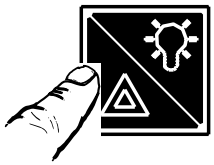

16

Close all doors and reset the alarm.

17a

CAUTION!

Read the text regarding the cleaning phases before selcting type of cleaning.

Cleaning type selection

- Intermediate cleaning
- Final cleaning

OM2.21TS100712en.fm

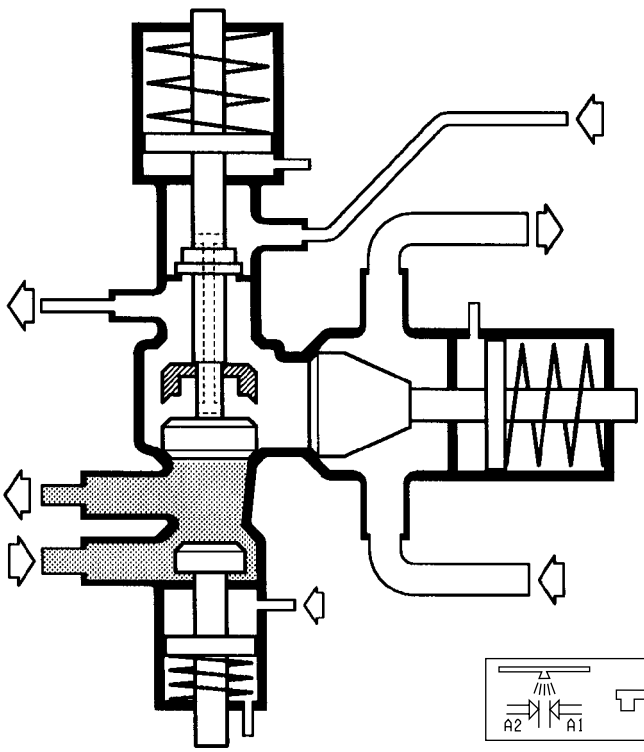

17b

Intermediate cleaning

Intermediate cleaning must be carried out whenever sterile product remains in the product line. There is a steam barrier between the cleaning solution and the product.

The valve is positioned as illustrated, when the programme is in the **CLEANING IN PLACE (CIP)** step.

Intermediate cleaning is to be carried out immediately after stop, except when final cleaning acc to item 17c, can be performed within one hour.

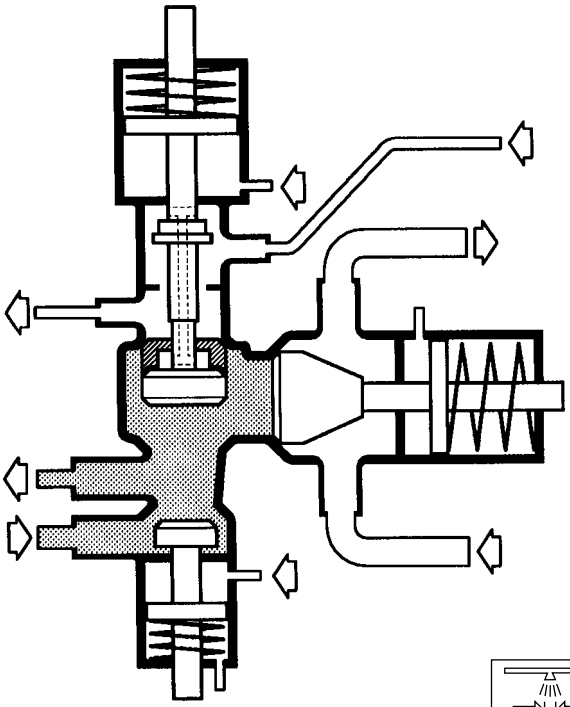

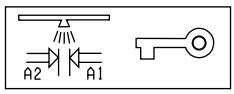

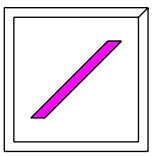

17c

CAUTION!
Final cleaning must be performed by skilled or instructed persons only.

Final cleaning

In order to clean all parts in contact with product in the valve, cleaning must be carried out with the **key switch** in the position for cleaning the steam barrier space.

The valve is positioned as illustrated when the programme is in the **CLEANING IN PLACE (CIP)** step and the **key switch** is activated.
Cleaning in this position must be performed at least every day and/or as soon as production is finished.

Remember never to clean with the **key switch** in the position for cleaning the steam barrier space, when product still remains in the product valve.

OM2.21TS100712en.fm

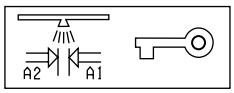

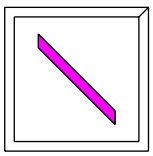

17d

CAUTION!
Final cleaning must be performed by skilled or instructed persons only.

Choose type of cleaning, Intermediate or Final.
(Intermediate position illustrated).



18

Press the **ALARM RESET** button.

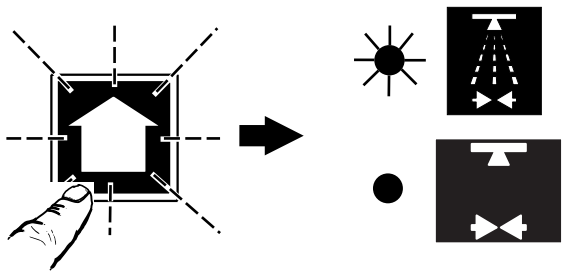

19

Press the **STEP UP** button to start the **CLEANING** sequence.

- The **CLEANING** symbol gets a fixed light.
- the **PREPARATION FOR CLEANING** symbol goes out.

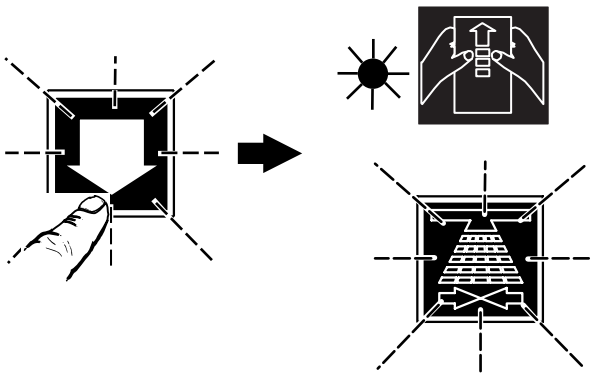

Note!
To return to **PREPARATION**, press the **STEP DOWN** button.

To get back up to **PREPARATION FOR CLEANING**, press the **CLEANING** button.

OM2.21TS100712en.fm

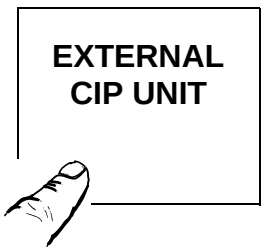

20

Start the external cleaning unit.

DURING CLEANING

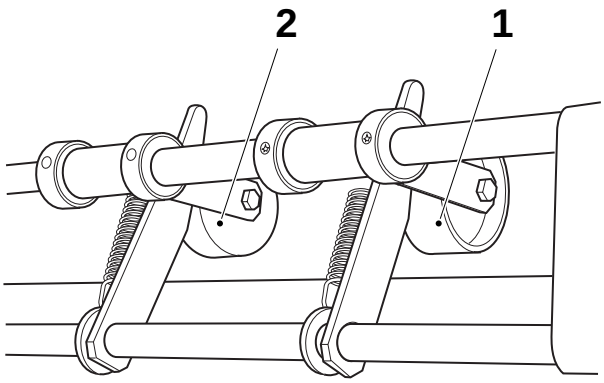

21a

Open the doors to the infeed unit.

Raise the pressure roller (1), check its condition. If damaged, call a technician.

Wipe clean the pressure roller (1) and the splice detector roller (2).

1 Pressure roller
2 Splice detector roller

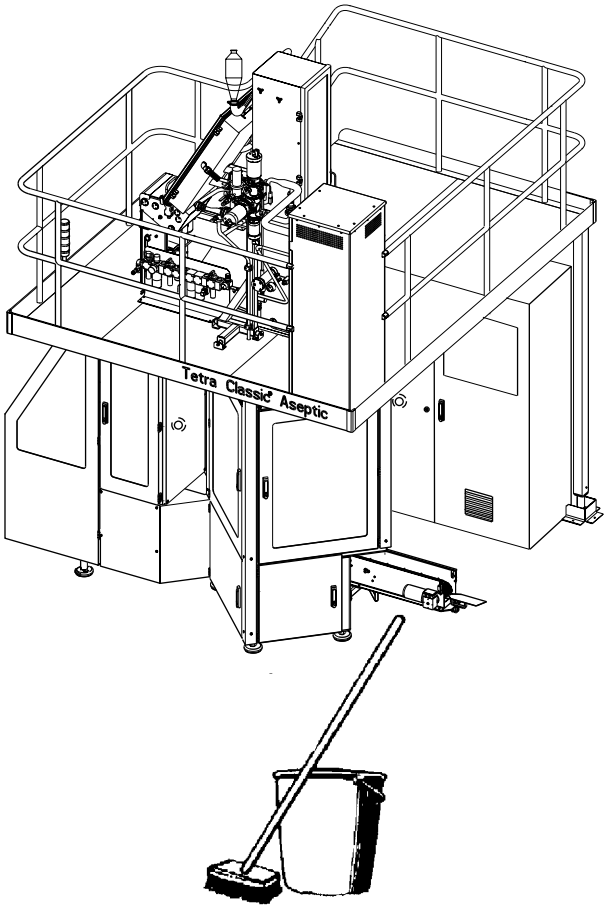

21b

Clean the area around the machine.

OM2.21TS100712en.fm

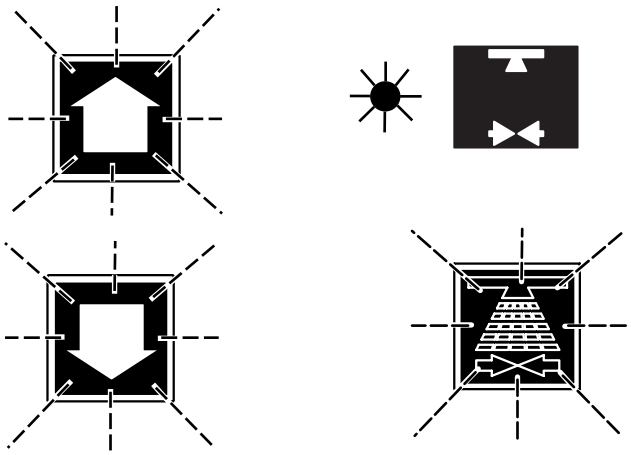

CLEANING SEQUENCE FINISHED

22

When the **CLEANING** sequence is finished:

- The **STEP UP/STEP DOWN** butons flash
- The **PREPARATION FOR CLEANING** symbol shows a fixed light
- The **CLEANING** button flashes

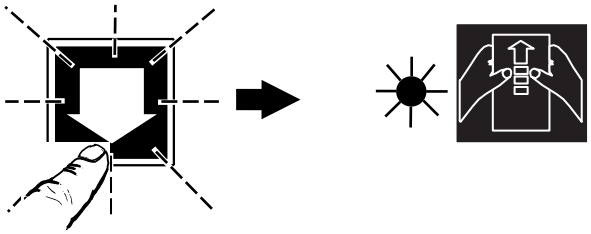

23

Press the **STEP DOWN** button to confirm end of **CLEANING**.

– The **PREPARATION** symbol gets a fixed light

(If another **CLEANING** sequence is required, press **STEP UP**).



24

Press the **ALARM RESET** button.

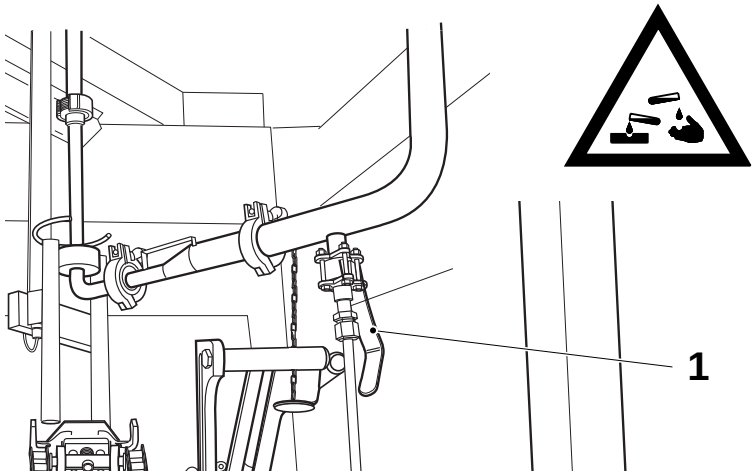

25a

WARNING!
Make sure that the **CLEANING** sequence is finished before continuing with this and the following items!

Open the doors to the jaw system.

Open the drainage valve (1).
(Illustrated as open).

1 Drainage valve

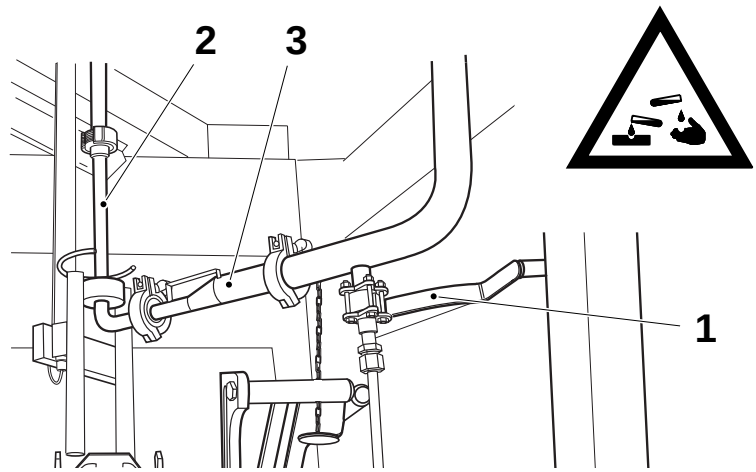

25b

WARNING!
Disinfectant!
Follow the *Safety Precautions*.

When all liquid has been drained:

a) Close the drainage valve (1).

b) Remove the pipes (2) and (3).

c) Place the part in disinfectants, code **F**. See section Disinfectants and Cleaning Agents.

1 Drainage valve
2 Pipe
3 Pipe

OM2.21TS100712en.fm

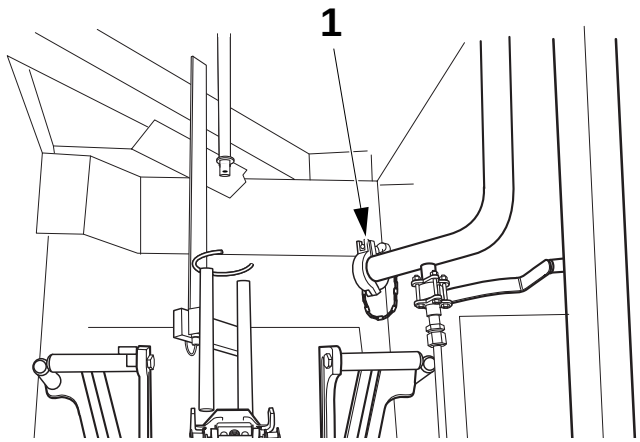

25c

Fit the lid (1).

1 Lid

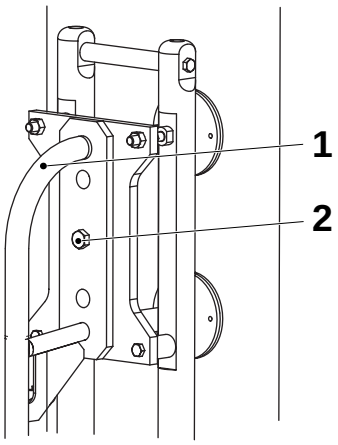

26a

Remove the screw (2) and gently lift out the upper filling pipe (1).

Refit the screw.

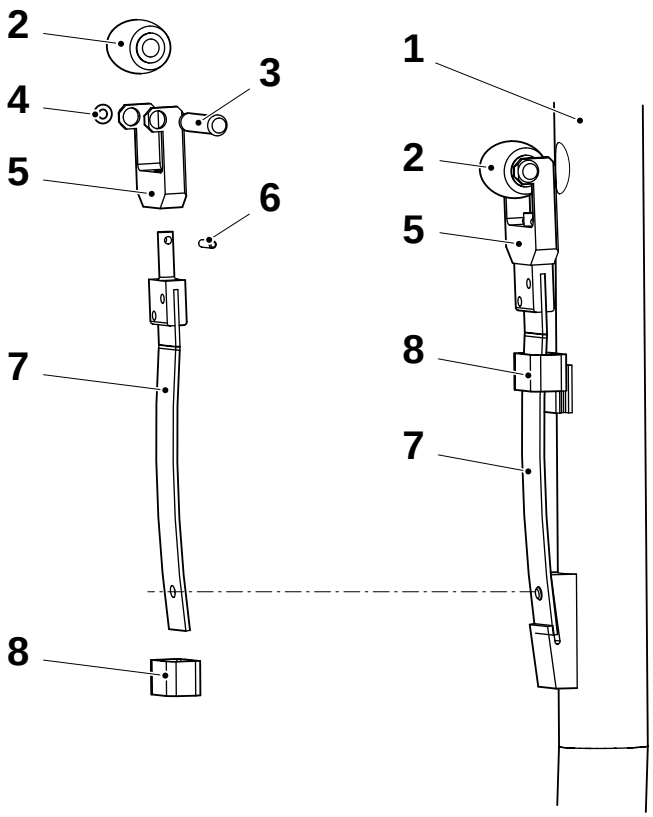

26b

Push the roller (2) against the filling pipe (1) and check the condition of the spring (7).

Lift up the hatch (8) to remove the pressure roller assembly.

Clean the parts and replace any defective.

1 Filling pipe
2 Roller
3 Pin
4 O-ring
5 Fork
6 Pin
7 Spring
8 Hatch

OM2.21TS100712en.fm

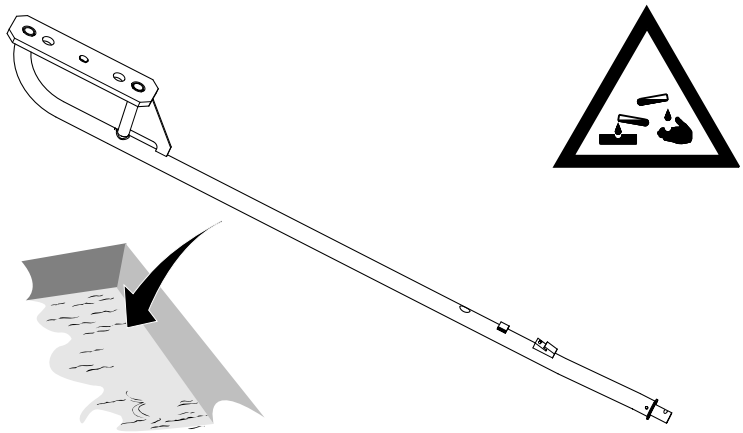

26c

WARNING!
Disinfectant!
Follow the *Safety Precautions*.

Clean the outside of the filling pipe and place it in a container filled with disinfectants code **F** until the next production run.

See section Disinfectants and Cleaning Agents.

OM2.21TS100712en.fm

Weekly Care

CAUTION!
Do not use alcohol-, chlorine-, or iodine-based cleaning compounds when cleaning parts which may come into contact with hydrogen peroxide.

This section describes what to do once a week or at least every 120 operating hours.

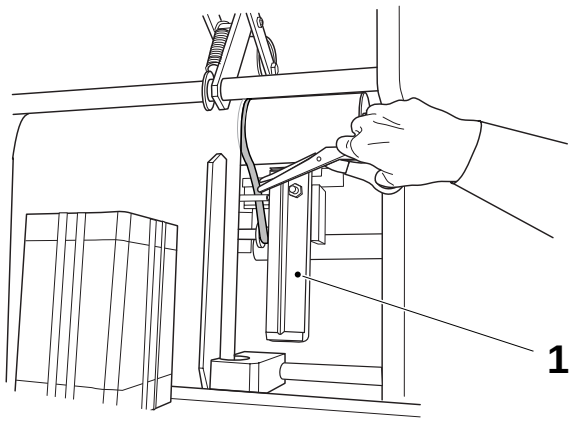

1

WARNING!
Risk of burns!
The heating element (1) is hot.

Cut the strip close to the packaging material web. Pull the strip back a little bit and away from the heating element.

1 Heating element

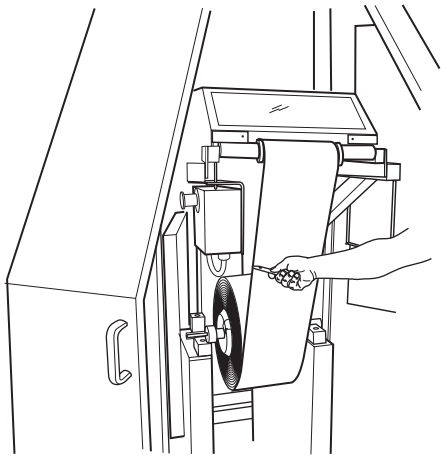

2

Cut the packaging material web close to the packaging material reel.

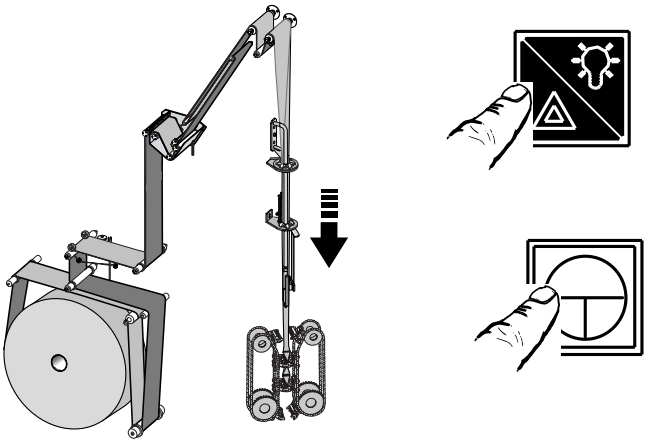

3

Inch out the packaging material in the following way:

a) Close the doors.

b) Press the **ALARM RESET** button.

c) Press and hold down the **INCH** button until the remaining packaging material has left the jaw system.

OM2.21TS100713en.fm

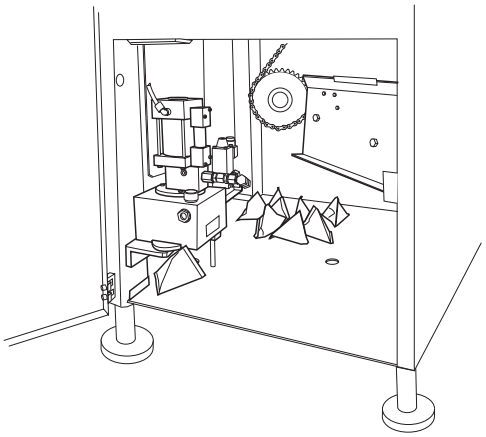

4

Remove the empty packages from the main body.

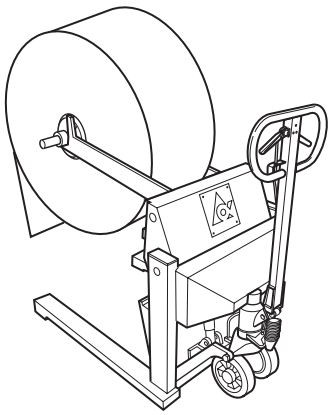

5

Remove the packaging material reel.

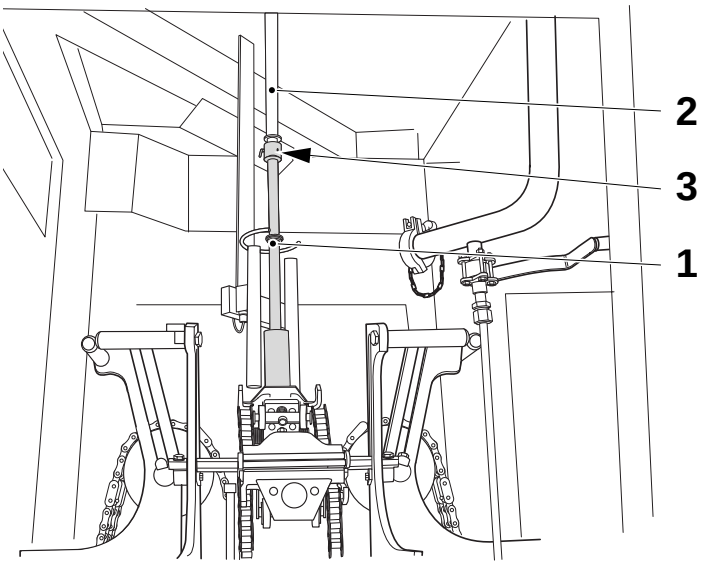

6

Open the door to the jaw system, pull out the pin (3) and gently pull down the lower filling pipe (1) from the upper filling pipe (2).

1 Lower filling pipe
2 Upper filling pipe
3 Pin

OM2.21TS100713en.fm

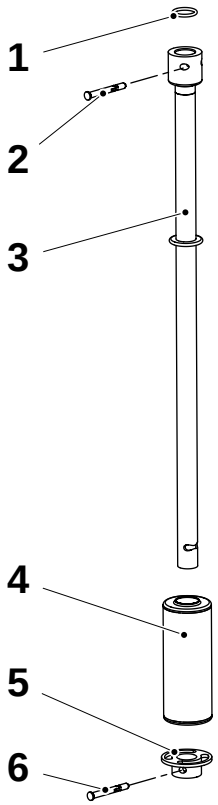



7

Chemical products!

WARNING!

Sterilisation/cleaning compound. Follow section Safety Precautions.

Disassemble the lower filling pipe and clean the parts in cleaning compound code **D**. See section Disinfectants and Cleaning Agents.

Place the parts in a container filled with disinfectants code **F** until the next production run. See section Disinfectants and Cleaning Agents.

1 O-ring
2 Pin
3 Lower filling pipe
4 Float
5 Locking cup
6 Pin

OM2.21TS100713en.fm



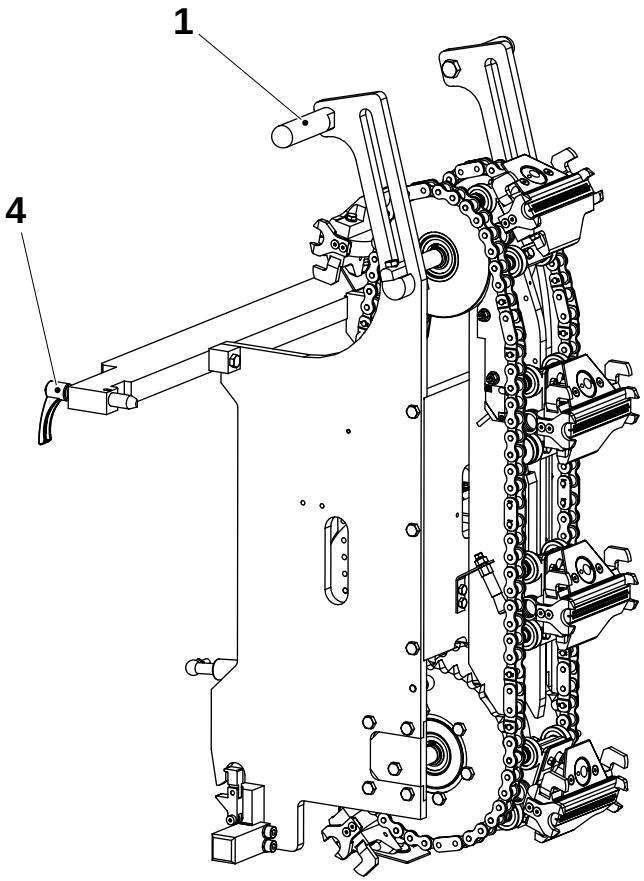

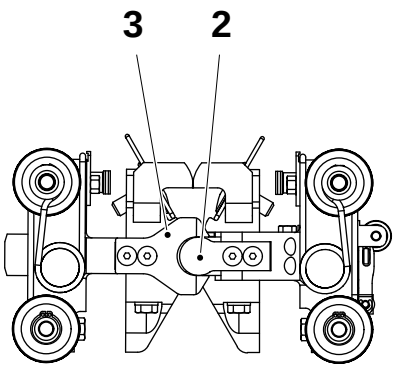

8

Heating Sides - Fold down/Raise

DANGER!

Risk of blocking the evacuation area!
Never fold down the sides closest to the electrical cabinet if a cabinet door is open.

To get access to the inside of the sides, lower the two heating sides observing the following:

WARNING!

Risk of crushing!
Always hold both hands on the handles!

a) Unscrew the two locking levers (4).

b) Grip both handles (1) and lower the side

When raising the sides to production position:

a) Grip both handles and raise the side.

b) Rotate the chain, make sure that the heating jaw meets its corresponding pressure jaw. Make sure that the guides (2) get in contact with the guides (5) without force, turn the sides slightly when connecting.

c) Lock both locking levers (1).

1 Handle
2 Guide
3 Guide
4 Locking lever

OM2.21TS100713en.fm

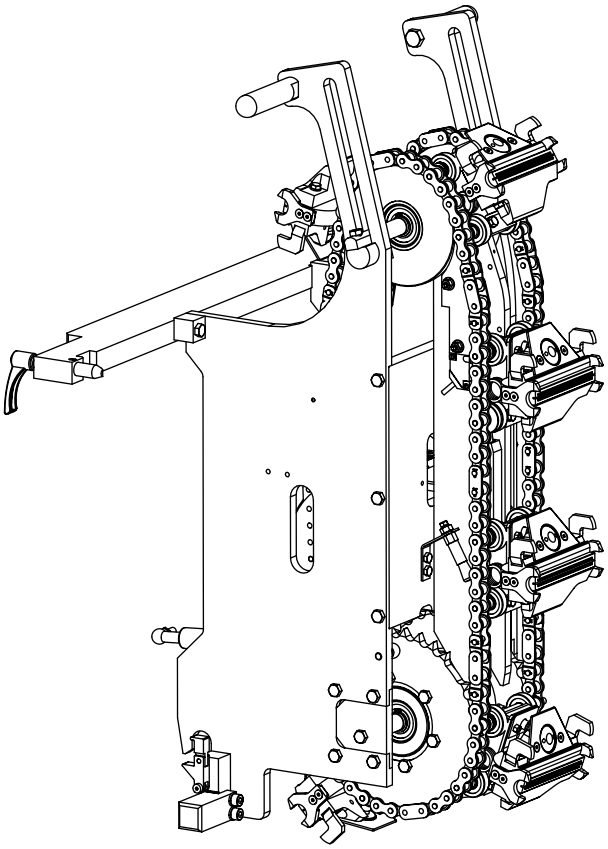

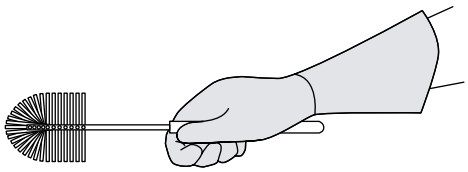

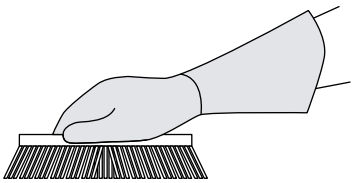

9

Use warm water and brushes when cleaning the sides.

OM2.21TS100713en.fm

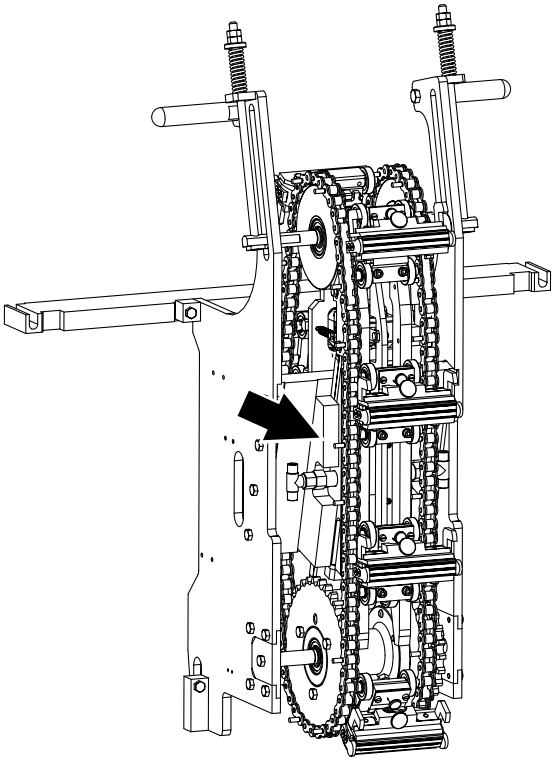

10

The slide bearings for the plunges in the pressure sides must be manually greased.

IMPORTANT!
The plunges must be pressurized while greasing, otherwise the slide bearings will pop out of position!

a) Dis/connect the hydraulic hose for the pressure side to grease.

b) Connect the manual hydraulic pump and pump up the pressure.

c) Locate the four grease nipples on the pressure side and use a grease gun to press grease into the slide bearing cages.

d) Dis-connect the pump and re-connect the hydraulic hose.

OM2.21TS100713en.fm

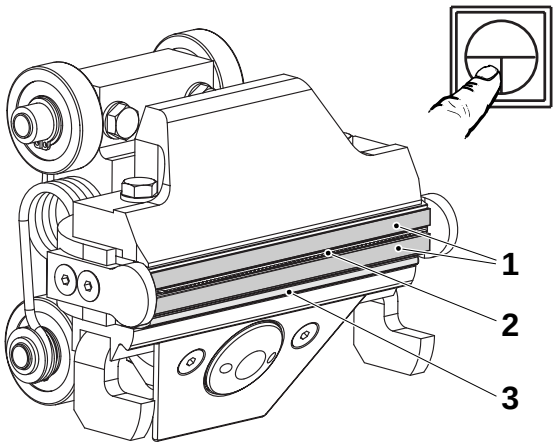

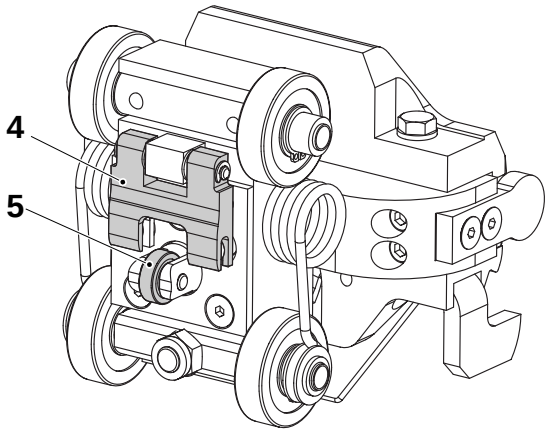

11a
Pressure jaws

Wipe clean and check for all pressure jaws:

- that the pressure rubbers (1) are intact
- that the knife (2) is intact Watch your fingers, **the knife is sharp!**
- that the ruler (3) is intact
- that the knife and the ruler move out/ in freely
  - push at the fork (4) to check the knife
  - push at the roller (5) to check the ruler

To get access to all jaws; use the **INCH** button in program step **PREPARATION FOR CLEANING**. (Doors closed and alarm reset).

If faults, call a technician.

1 Pressure rubber
2 Knife
3 Ruler
4 Fork
5 Roller

OM2.21TS100713en.fm



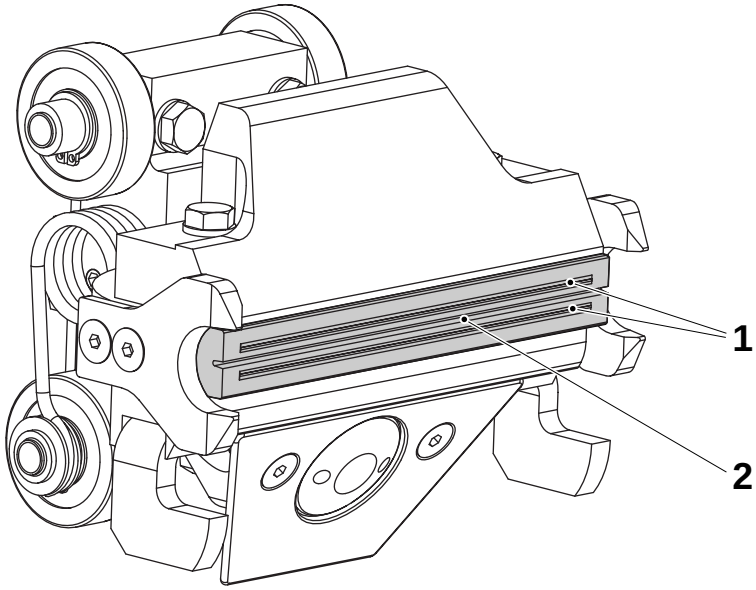

11b

Heating jaws

Wipe clean and check for all heating jaws:

- that the inductor (1) is intact
- that the cutting groove (2) is free from packaging material residue. Do not use any sharp tool of steel that could damage the inductor!

To get access to all jaws; use the **INCH** button in program step **PREPERATION FOR CLEANING**. (Doors closed and alarm reset).

If faults, call a technician.

1 Inductor
2 Cutting groove

OM2.21TS100713en.fm



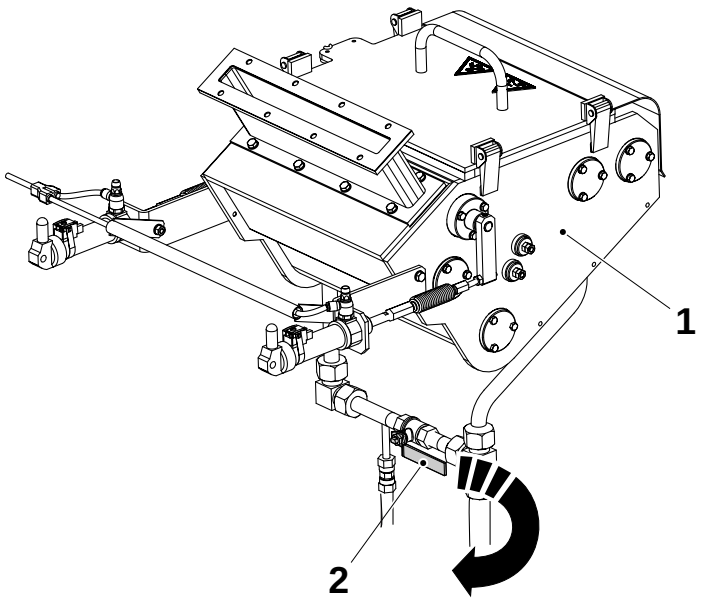

12a

WARNING!
Hydrogen peroxide!
Follow the *Safety Precautions*.

Empty the peroxide bath (1) by opening the drainage valve (2).

Clean the inside of the peroxide with de-ionized wtaer.

Make sure that the peroxide bath is empty before closing the drainage valve.

1 Peroxide bath
2 Drainage valve

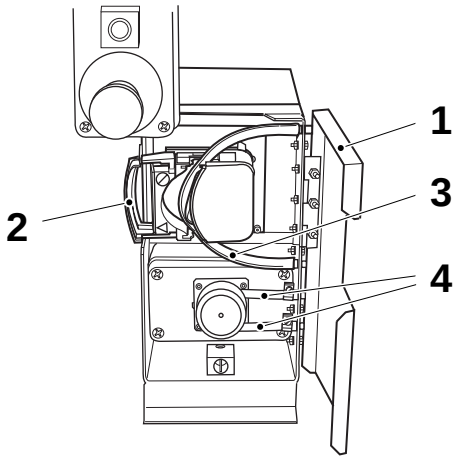

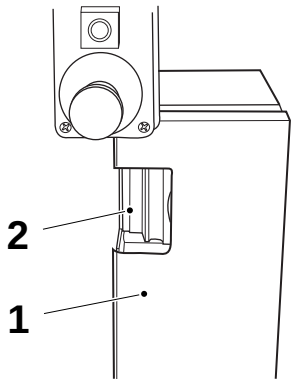



12b

WARNING!
Hydrogen peroxide!
Follow the *Safety Precautions*.

a) Open the door (1) for the peroxide pumps.
b) Fold out the handle (2) to drain the peroxide in the hose (3).
c) Check condition of the hoses (3) and (4).
   – If fault, call a technician.
d) Close the handle (2) and the door (1).

1 Door
2 Handle
3 Hose
4 Hose

OM2.21TS100713en.fm



12c

WARNING!
Hydrogen peroxide!
Read the section Hydrogen Peroxide (H2O2) in Safety precautions!

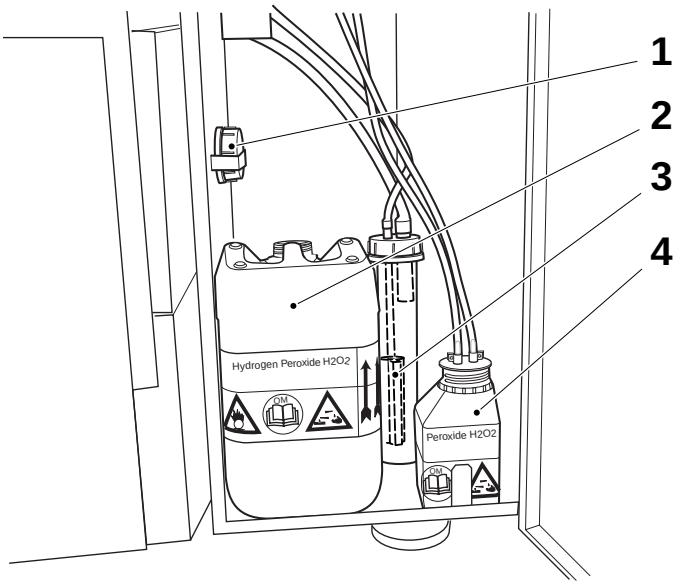

Weigh the peroxide bottle (2) and check the consumption since last time it was filled up.

Empty the:

- peroxide bottle (2)
- the spray can (4)

Place the peroxide suction pipe (3) in its holder and fit the ventilated cap at the peroxide bottle (2) when transporting the bottle.

1 Ventilated cap
2 Peroxide bottle
3 Peroxide suction pipe
4 Spray can



12 d

WARNING!
Hydrogen peroxide!
Follow the *Safety Precautions*.

Clean the peroxide filter (3) and the peroxide bottle (2) with **deionized** water.

Dry the bottle by shaking it and fit the peroxide filter to the bottle.

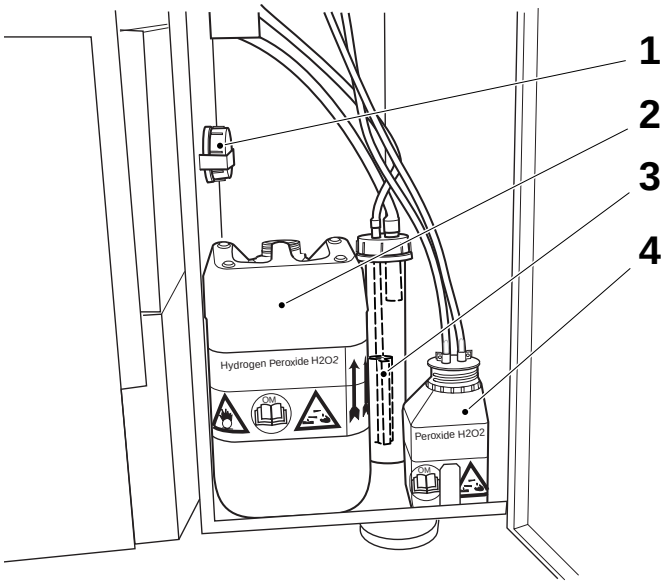

1 Ventilated cap
2 Peroxide bottle
3 Peroxide filter
4 Spray can

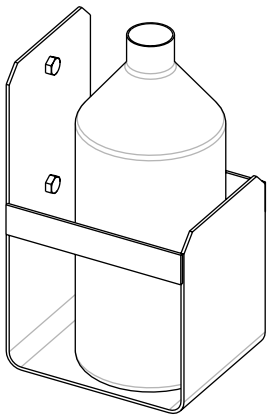

13

Empty the bottle with spillage from the air filter.

OM2.21TS100713en.fm

14



WARNING!
Hydrogen peroxide!
Follow the *Safety Precautions*.



WARNING!
Risk of personal injury!
Make sure that the machine is **not** pressurized and that the system has cooled down before loosening any connection.

Remove the couple (1) and bend the tube (2) to the side. Unscrew the nozzle (3). Clean the nozzle (3). Change the O-ring (4) if required.

Install in the reverse order.

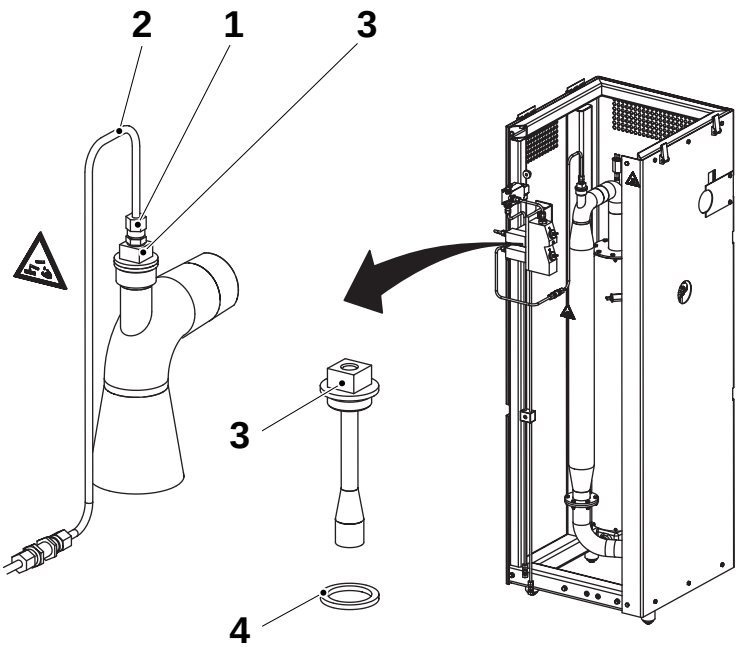

1 Couple
2 Pipe
3 Nozzle
4 O-ring

OM2.21TS100713en.fm

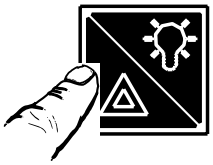

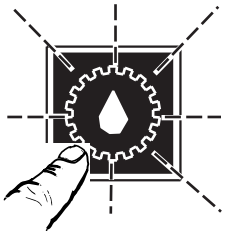

15

Close all doors and acknowledge the alarms.

Push the **LUBRICATION** button for 5 seconds to start the **LUBRICATION** sequence.

The machine starts and will run during the whole lubricating sequence.

The **LUBRICATION** symbol shows a fixed light corresponding to the lubrication pulses during the **LUBRICATION** sequence.

OM2.21TS100713en.fm

Cleaning Pipes

16a

General regarding gaskets:

- Check condition and install new if needed.
- Make sure the gaskets are seated correctly before tightening nuts and clamps.

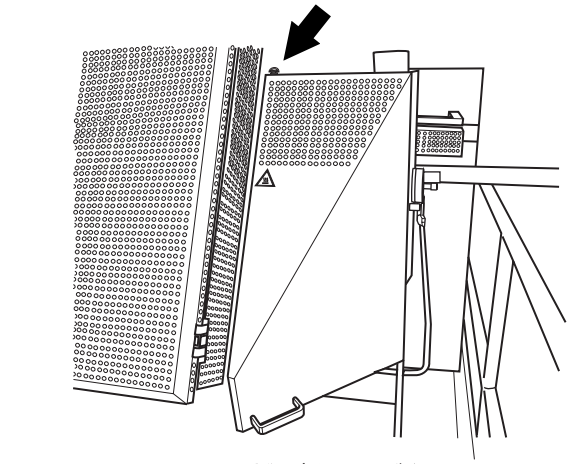

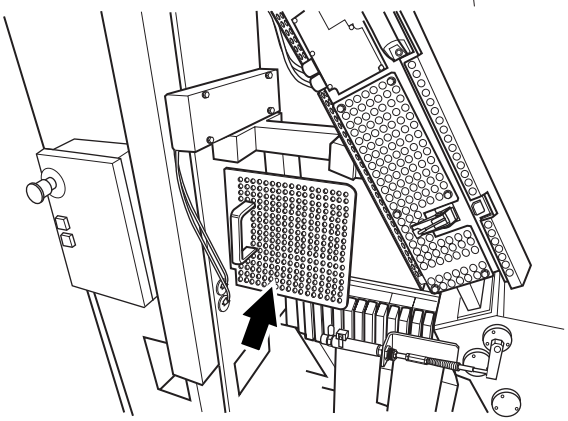

16b

WARNING!
After production the pipes behind the covers are hot.

To get access to the pipes:

- Loosen the hatch (at arrow) and open the cover.

- Lift up and remove the cover.

OM2.21TS100713en.fm

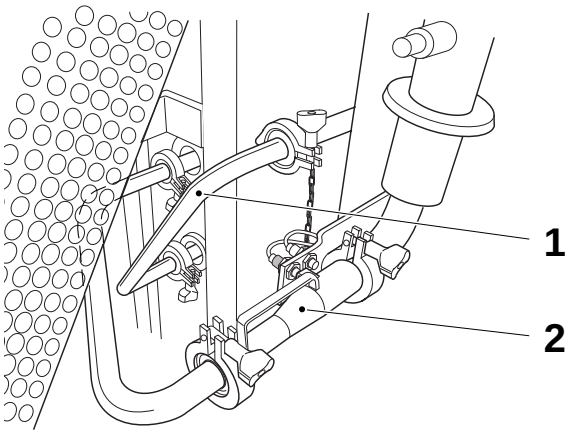



16c

WARNING!
Disinfectant!
Follow the *Safety Precautions*.

Remove the pipes (1) and (2).

Place the pipe (1) in a container filled with disinfectants code **F** until the next production run.

See section Disinfectants and Cleaning Agents.

1 Pipe
2 Pipe

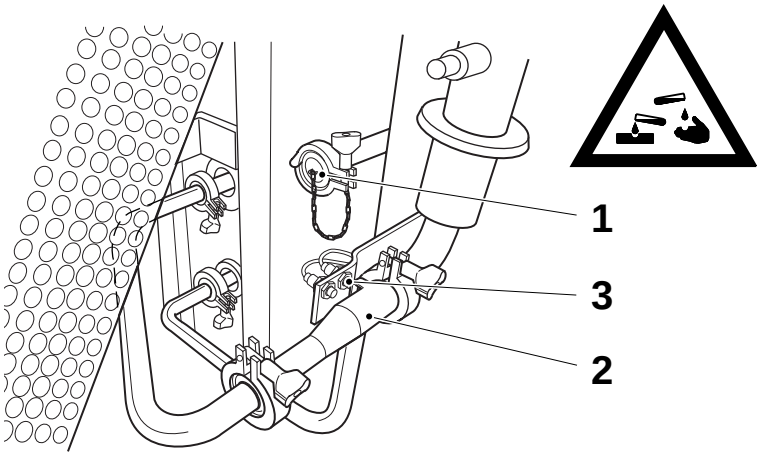

16d

WARNING!
Disinfectant!
Follow the *Safety Precautions*.

a) Install the lid (1).

b) Pick up the cleaning pipe (2) from the container filled with disinfectants, rinse it with drinking water and install it.

Note!
Make sure that the switch (3) is activated.

1 Lid
2 Cleaning pipe
3 Switch

OM2.21TS100713en.fm

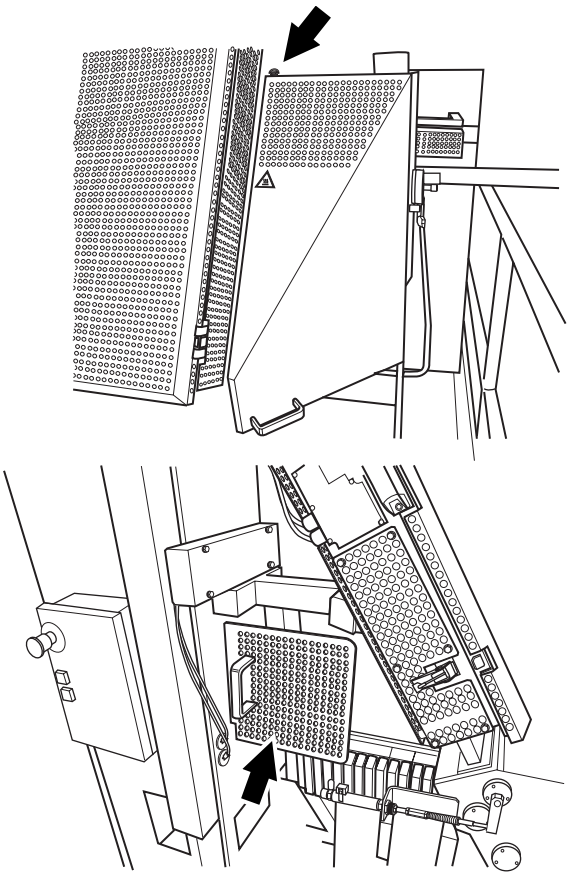

16e

WARNING!
After production the pipes behind the covers are hot.

Close the cover and lock the hatch (at arrow).

Install the cover.

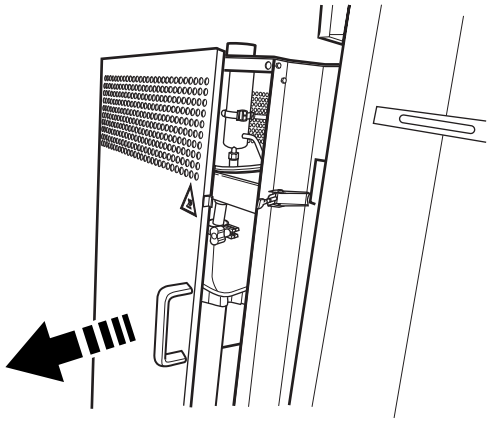

17a

WARNING!
After production the pipes behind the covers are hot.

Open the door for the incoming cleaning pipe connection.

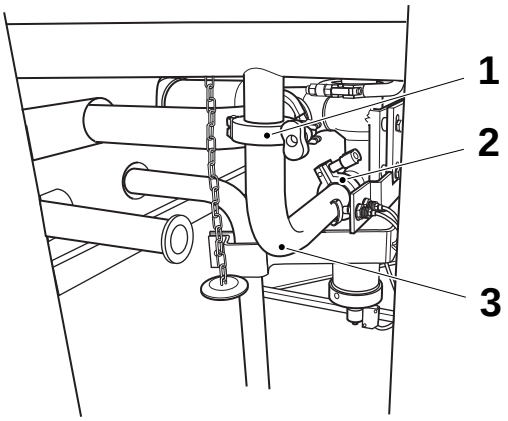

17b

WARNING!
After production the pipes are hot.

Remove the clamps (1) and (2) and remove the pipe (3).

1 Clamp
2 Clamp
3 Pipe

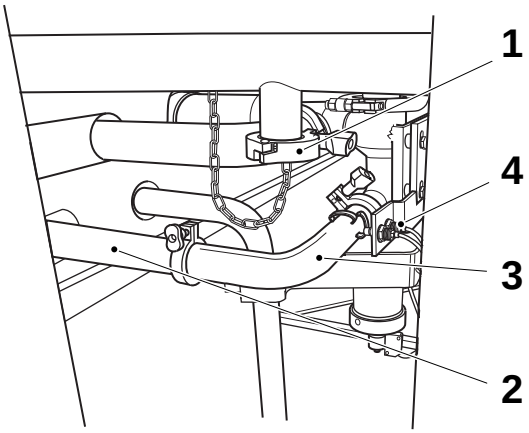

17c

a) Fit the lid (1).

b) Connect the pipe (3) to the cleaning pipe (2).

Note!
Make sure that the switch (4) is activated.

1 Lid
2 Cleaning pipe
3 Pipe
4 Switch

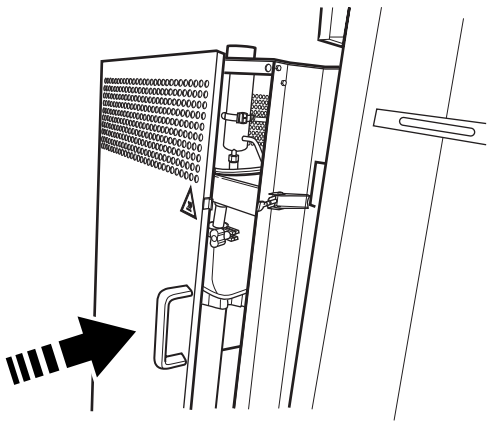

17d

Close the door for the incoming cleaning pipe connection.

OM2.21TS100713en.fm

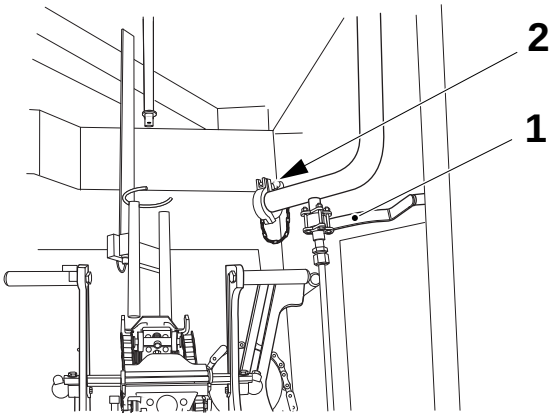

18

Check that the drainage valve (1) is closed.

Remove the lid (2).

1 Drainage valve
2 Lid

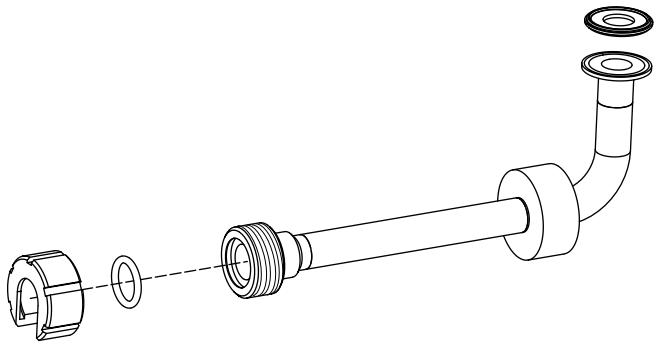

19a

Pick up the pipe parts from the container filled with disinfectants and rinse with drinking water.

Check the gaskets and replace if needed.

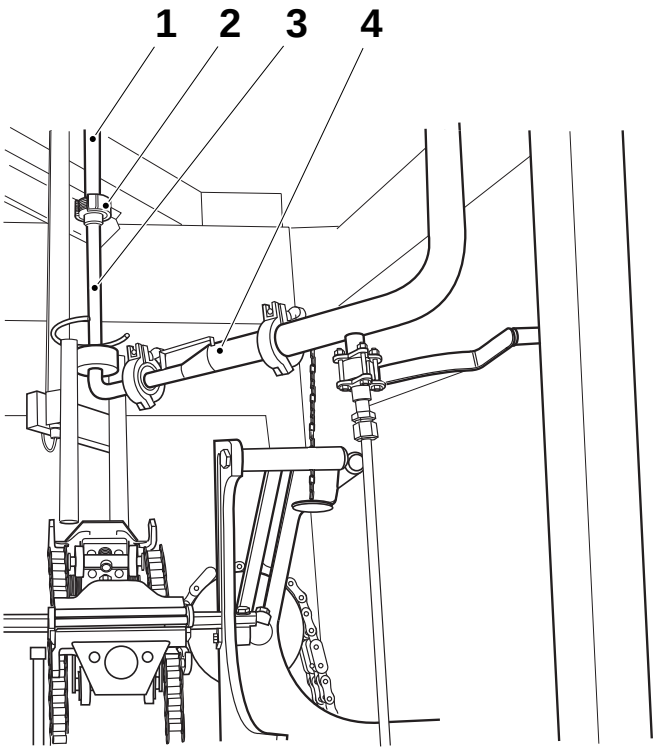

19b

Fit the pipe (3) to the upper filling pipe (1), do not tigten the nut (2).

Fit the pipe (4) with its handle upwards. Do not tighten the clamps

Center the pipe (3) to the upper filling pipe (2), make sure it is seated correctly, and tighten the nut (2) for metallic contact.

Tighten the clamps for the pipe (4).

1 Upper filling pipe
2 Nut
3 Pipe
4 Pipe

OM2.21TS100713en.fm

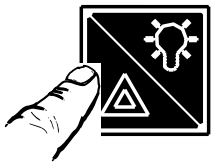

20

Close all doors and reset the alarm.

21a

Cleaning type selection

- Intermediate cleaning
- Final cleaning

CAUTION!
Read the text regarding the cleaning phases before selcting type of cleaning.

OM2.21TS100713en.fm

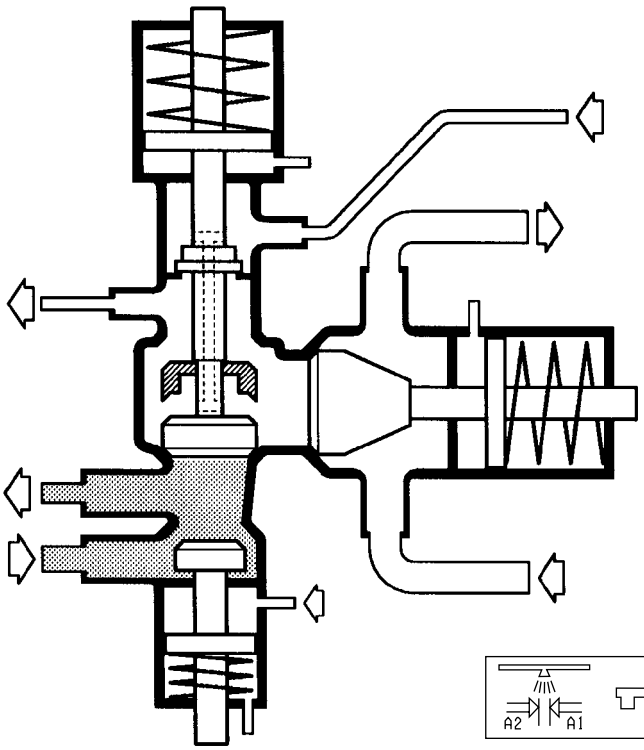

21b

Intermediate cleaning

Intermediate cleaning must be carried out whenever sterile product remains in the product line. There is a steam barrier between the cleaning solution and the product.

The valve is positioned as illustrated, when the programme is in the **CLEANING IN PLACE (CIP)** step.

Intermediate cleaning is to be carried out immediately after stop, except when final cleaning acc to item 21c, can be performed within one hour.

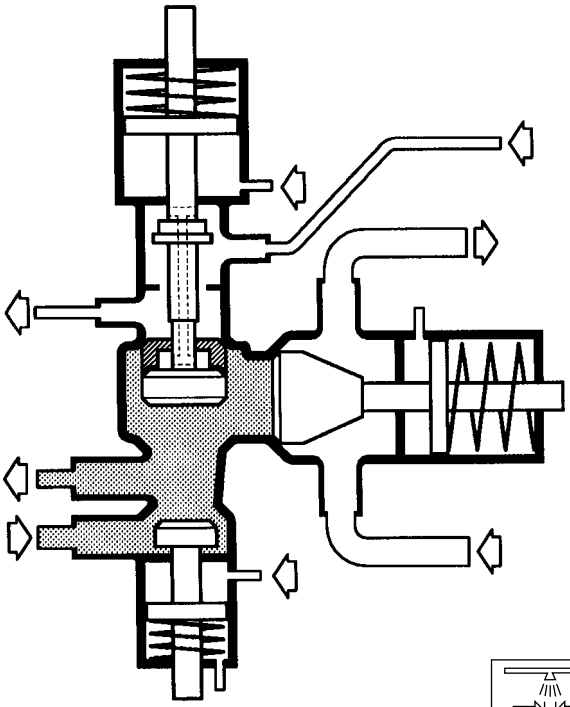

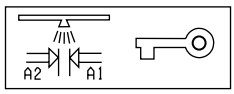

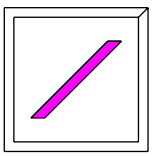

21c

Final cleaning

In order to clean all parts in contact with product in the valve, cleaning must be carried out with the **key switch** in the position for cleaning the steam barrier space.

The valve is positioned as illustrated when the programme is in the **CLEANING IN PLACE (CIP)** step and the **key switch** is activated.
Cleaning in this position must be performed at least every day and/or as soon as production is finished.

Remember never to clean with the **key switch** in the position for cleaning the steam barrier space, when product still remains in the product valve.

CAUTION!
Final cleaning must be performed by skilled or instructed persons only.

OM2.21TS100713en.fm

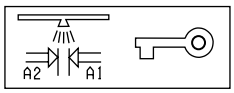

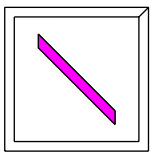

21d

Choose type of cleaning, Intermediate or Final.
(Intermediate position illustrated).

CAUTION!
Final cleaning must be performed by skilled or instructed persons only.



22

Press the **ALARM RESET** button.

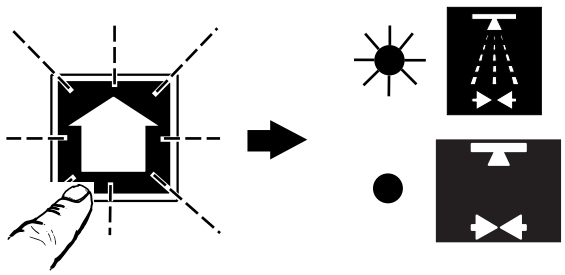

23

Press the **STEP UP** button to start the **CLEANING** sequence.

- The **CLEANING** symbol gets a fixed light.
- the **PREPARATION FOR CLEANING** symbol goes out.

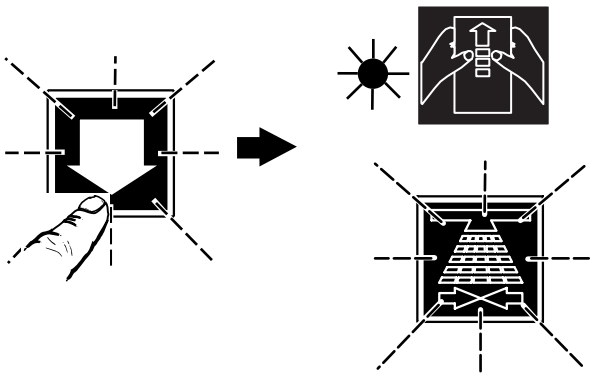

Note!
To return to **PREPARATION**, push the **STEP DOWN** button.

To get back up to **PREPARATION FOR CLEANING**, press the **CLEANING** button.

OM2.21TS100713en.fm

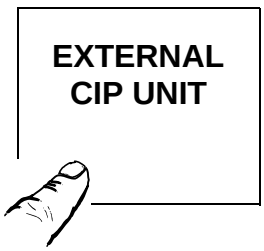

24

Start the external cleaning unit.

DURING CLEANING

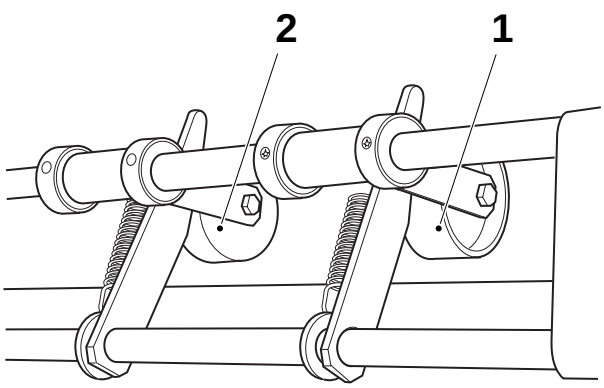

25a

Open the doors to the infeed unit.

Raise the pressure roller (1), check its condition. If damaged, call a technician.

Wipe clean the pressure roller (1) and the splice detector roller (2).

1 Pressure roller
2 Splice detector roller

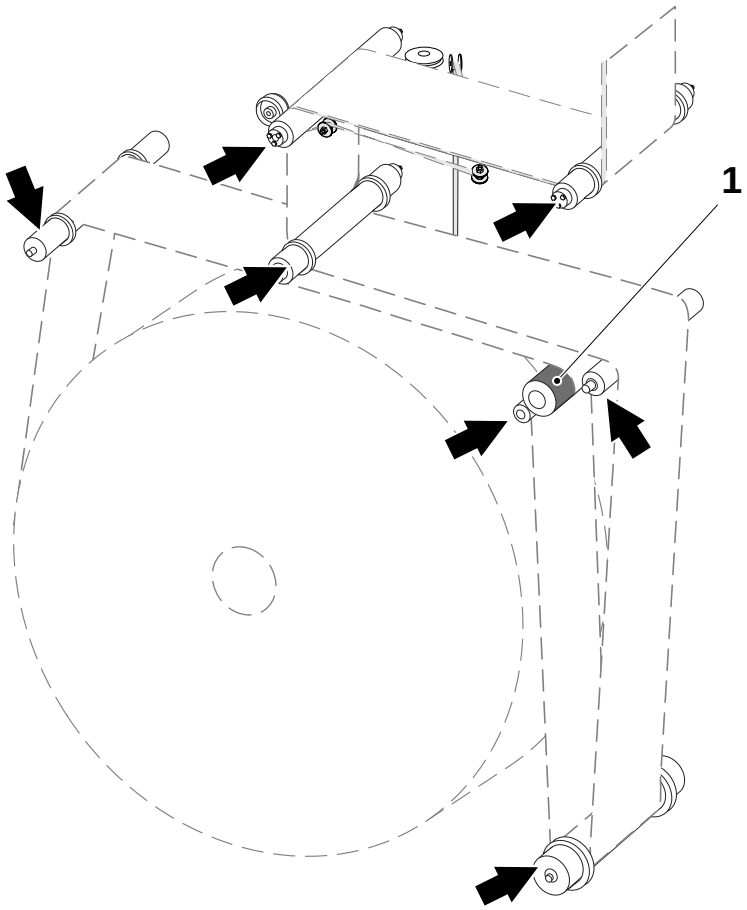

25b

Clean all bending rollers of steel with cleaning compound code **G**.
See section Disinfectants and Cleaning Agents.

Check that the rollers rotate smoothly.

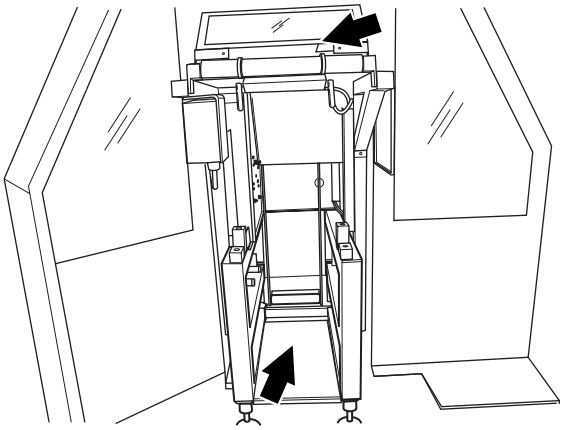

25c

Clean the packaging material reel magazine and the splicing device.

Use disinfectants code **G**, see section Disinfectants and Cleaning Agents.

OM2.21TS100713en.fm

25 d

Vacuum clean the platform.

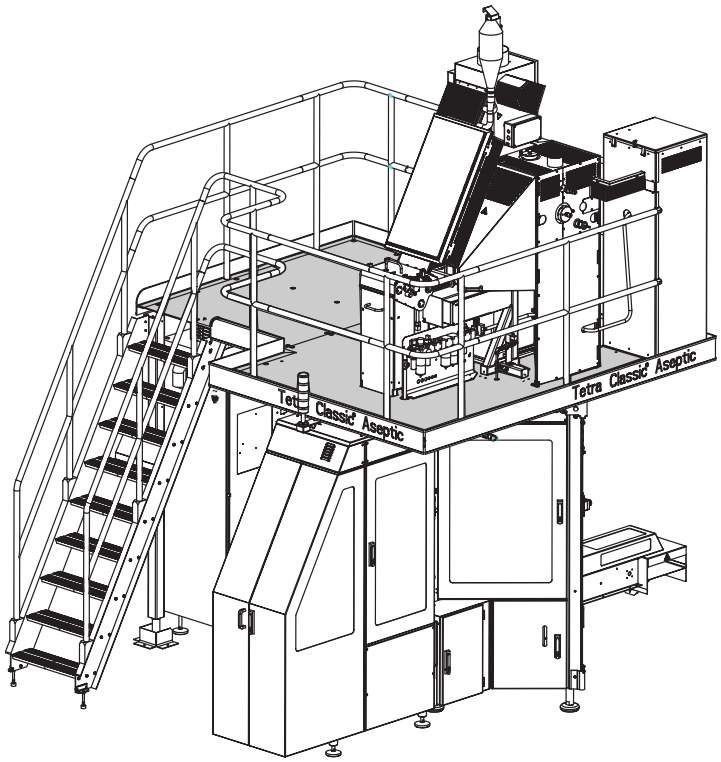

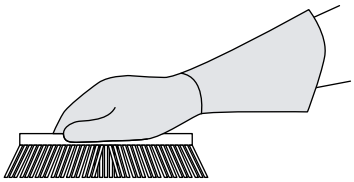

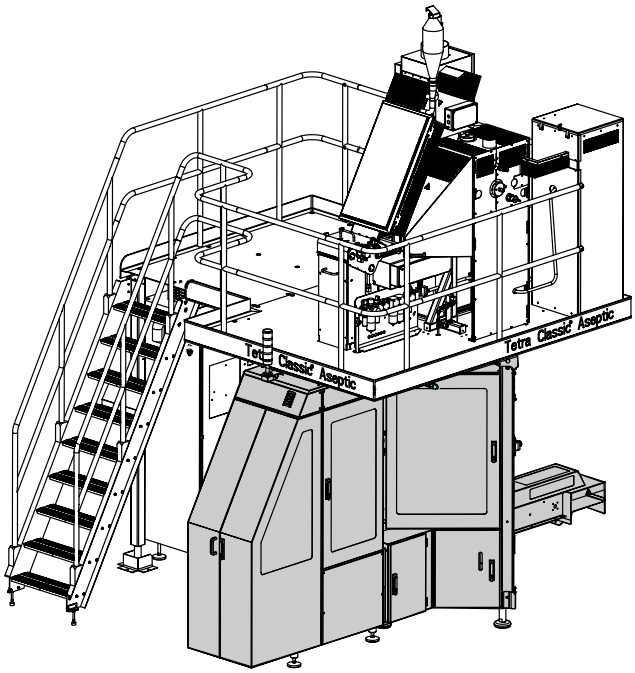

25e

Chemical products!

WARNING!
Disinfectant/cleaning compound. Follow the Safety Precautions.

Caution!

CAUTION!
Do not clean the TPOP.

Clean the exterior (the gray shaded area) of the machine with a hygienic brush and cleaning compound (code E). See the Technical Data chapter.

When finished, clean the hygienic brush with cleaning compound (code E). See the Technical Data chapter.

Put the brush in a container with disinfectant (code F2). See the Technical Data chapter.

OM2.21TS100713en.fm

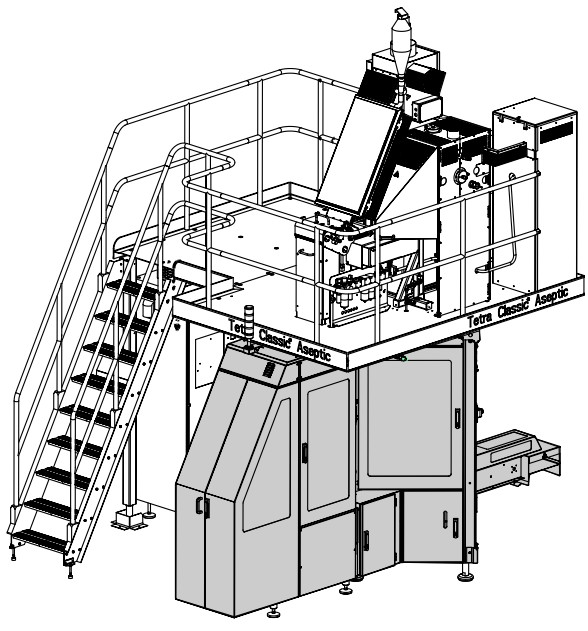

25f

Chemical products!

WARNING!
Disinfectant/cleaning compound. Follow the Safety Precautions.

CAUTION!
Use a low pressure water nozzle with a wide dispersion.

Rinse the exterior (the gray shaded area) of the machine with drinking water, see the Technical Data chapter, and dry off with a cloth.



25g

Chemical products!

WARNING!
Disinfectant/cleaning compound. Follow the Safety Precautions.

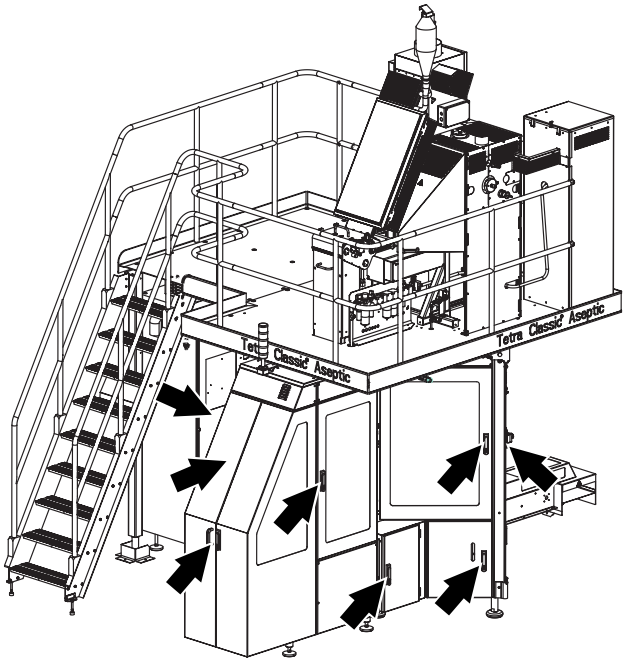

Disinfect door handles (see arrows) with a cloth and cleaning compound (code G). See the Technical Data chapter.

Disinfect the buttons of the TPOP (see arrow) with a cloth and cleaning compound (code G). See the Technical Data chapter.

OM2.21TS100713en.fm

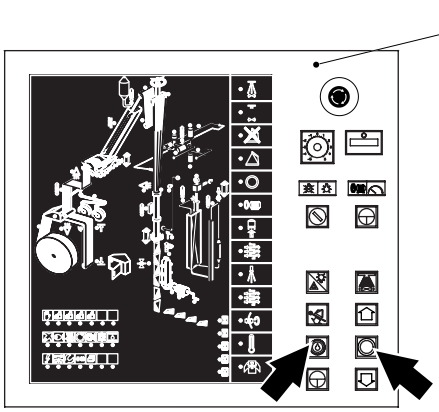

25h

Chemical products!

WARNING!
Disinfectant/cleaning compound. Follow the Safety Precautions.

Disinfect the buttons of the Control Panel (1) (see arrow) and the PLMS touch screen (2) with a cloth and cleaning compound (code G). See the Technical Data chapter.

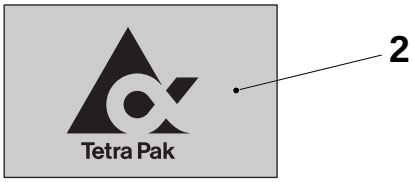

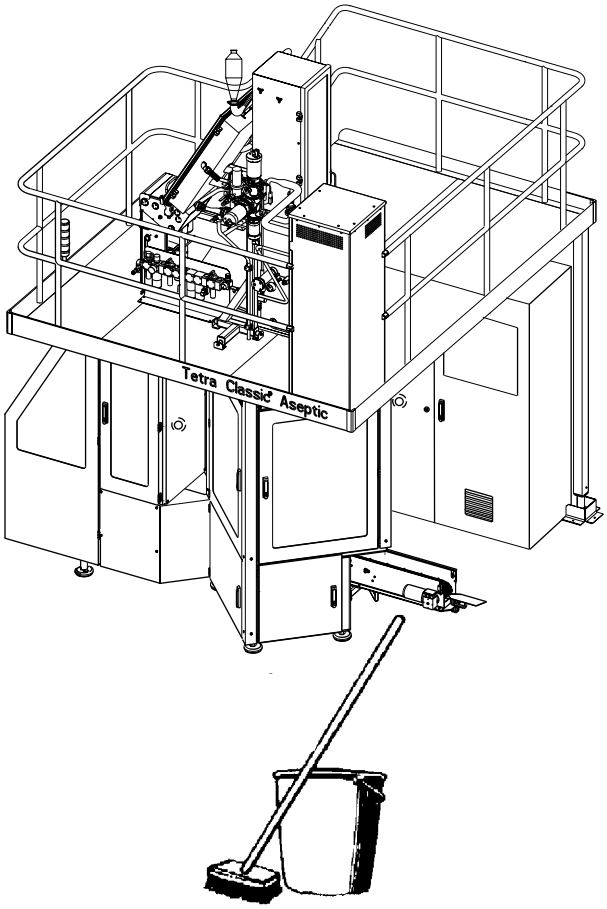

25i

Clean the area around the machine.

OM2.21TS100713en.fm

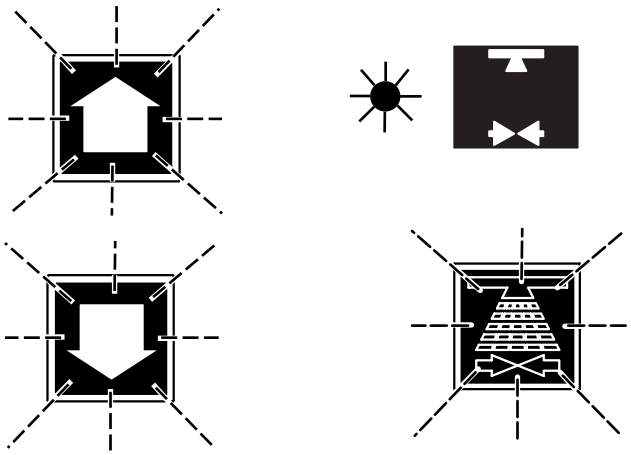

CLEANING SEQUENCE FINISHED

26

When the **CLEANING** sequence is finished:

- The **STEP UP/STEP DOWN** buttons flash
- The **PREPARATION FOR CLEANING** symbol shows a fixed light
- The **CLEANING** button flashes

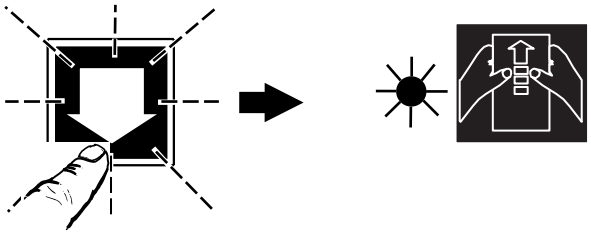

27

Press the **STEP DOWN** button to confirm end of **CLEANING**.

– The **PREPARATION** symbol gets a fixed light

(If another **CLEANING** sequence is required, press **STEP UP**).



28

Press the **ALARM RESET** button.

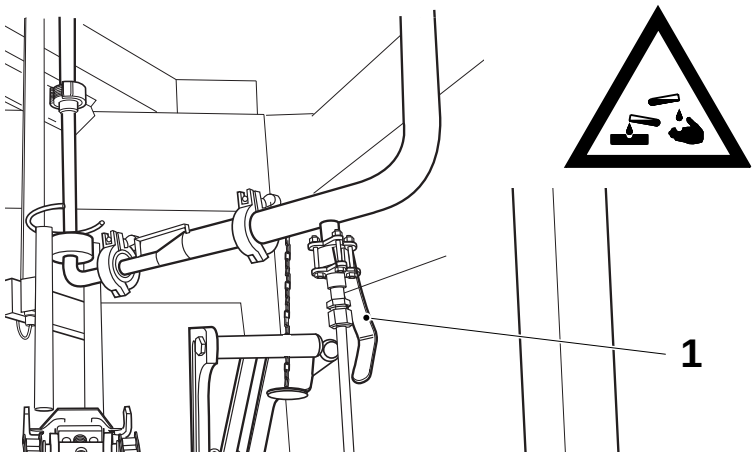

29a

WARNING!
Make sure that the **CLEANING** sequence is finished before continuing with this and the following items!

Open the doors to the jaw system.

Open the drainage valve (1).
(Illustrated as open).

1 Drainage valve

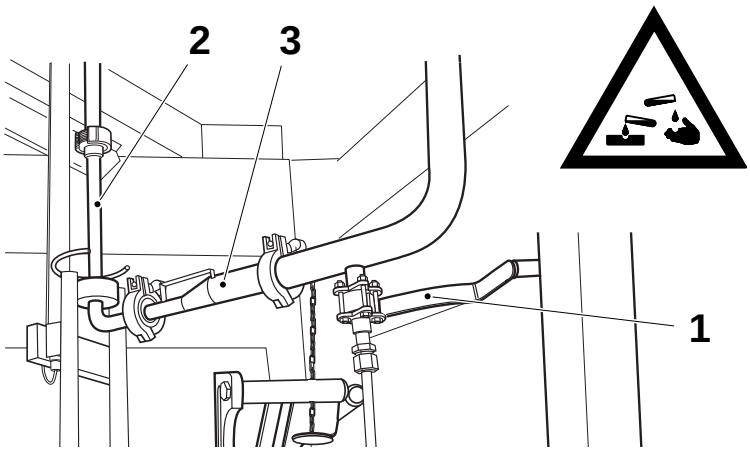

29b

WARNING!
Disinfectant!
Follow the *Safety Precautions*.

When all liquid has been drained:

a) Close the drainage valve (1).

b) Remove the pipes (2) and (3).

c) Place the part in disinfectants, code **F**. See section Disinfectants and Cleaning Agents.

1 Drainage valve
2 Pipe
3 Pipe

OM2.21TS100713en.fm

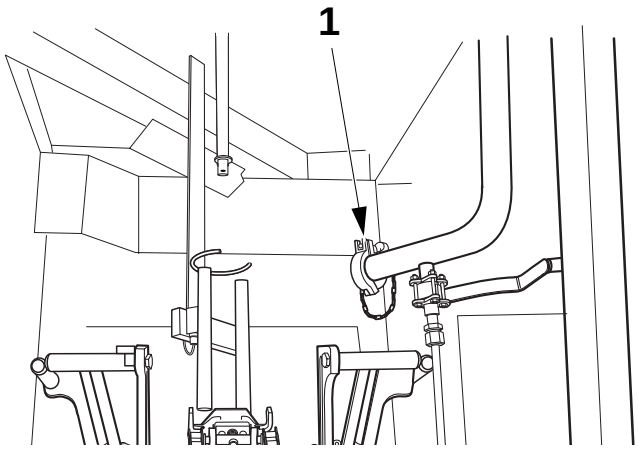

29c

Fit the lid (1).

1 Lid

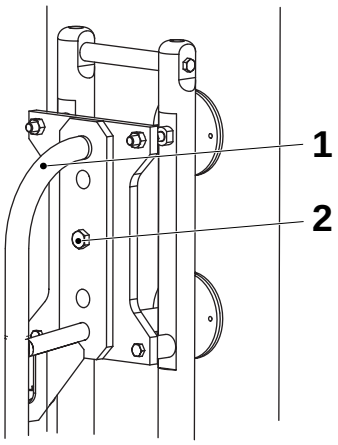

30a

Remove the screw (2) and gently lift out the upper filling pipe (1).

Refit the screw.

1 Filling pipe, upper
2 Screw

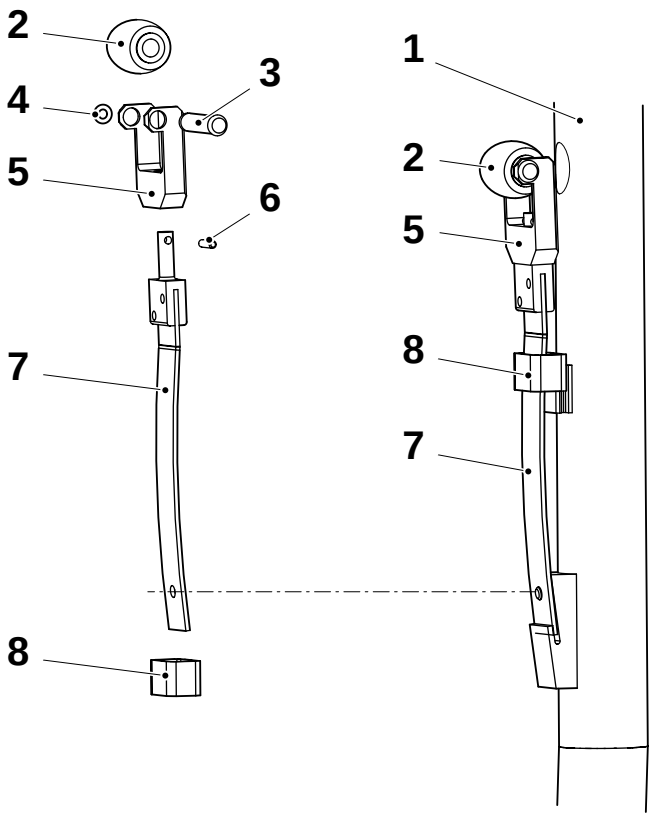

30b

Push the roller (2) against the filling pipe (1) and check the condition of the spring (7).

Lift up the hatch (8) to remove the pressure roller assembly.

Clean the parts and replace any defective.

1 Filling pipe
2 Roller
3 Pin
4 O-ring
5 Fork
6 Pin
7 Spring
8 Hatch

OM2.21TS100713en.fm

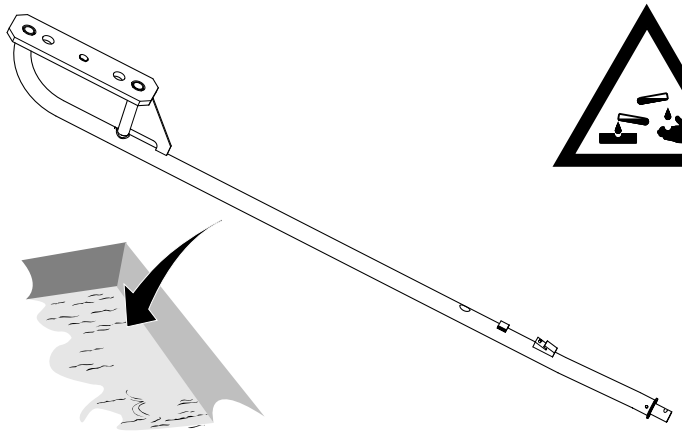

30c

WARNING!
Disinfectant!
Follow the *Safety Precautions*.

Clean the outside of the filling pipe and place it in a container filled with disinfectants code **F** until the next production run.

See section Disinfectants and Cleaning Agents.

OM2.21TS100713en.fm

This page intentionally left blank

OM2.21TS100713en.fm

PLMS Display

This section describes:

- **Description**
- **Navigation**
- **System setting**
- **Production shift setting**
- **Alarm system**
- **Collect system**
- **Manoeuvre system**
- **Customize system**

Caution!

This chapter contains instructions for the setting and handling of the PLMS. These settings must be performed by an Operator trained on PLMS or by a Service technician.

Description

The PLMS display is touch-sensitive. The buttons allow the operator to communicate with the system.

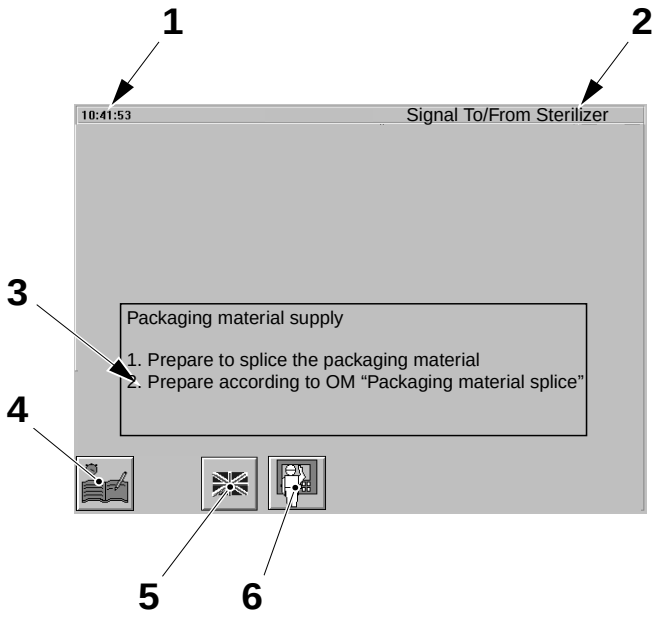

2.2TS100714en.fm

1 Current time
2 Program step name
3 Alarm dialog window
4 **Collect system** button
5 **System setting** button
6 **Manoeuvre system** button

Navigation

This section describes how to navigate into the PLMS windows.

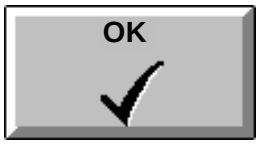

Touch the **OK** button to record the data entry and close the active window.

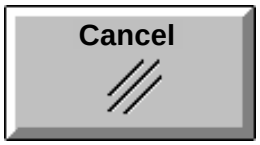

Touch the **Cancel** button to close the active window without recording any data.

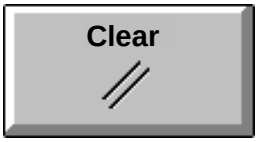

If the number entered is incorrect, touch the **Clear** button and enter the correct number.

2.2TS100714en.fm

Touch the **Exit** button to close the active window.



Selection of an event cause

When the system asks to select a specific cause for an event, it is possible to select the cause with different levels of detail.

The first window gives the list of the generic causes.

To find a specific item, use the **Arrow** button to select a main group, and then touch the **Detail** button. Repeat the procedure until the specific cause is found.

To move back one level, touch the **General** button.

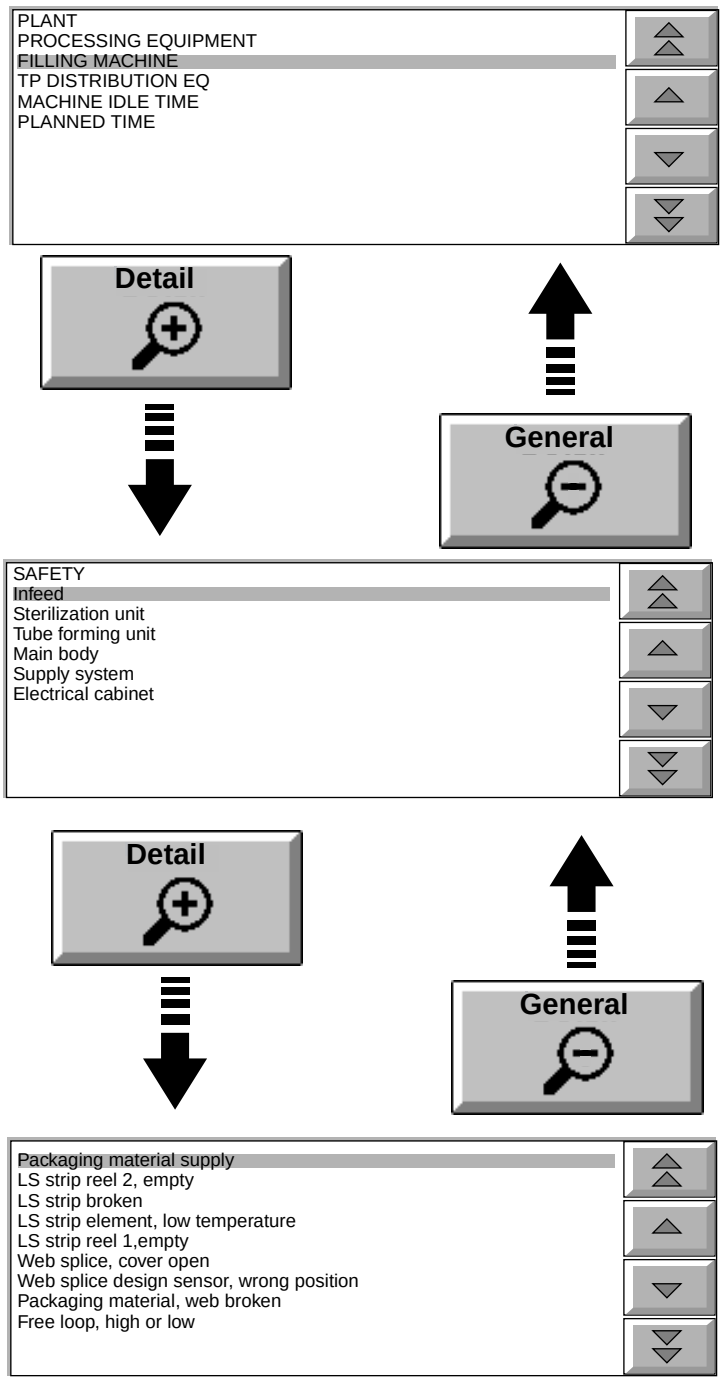

2.2TS100714en.fm

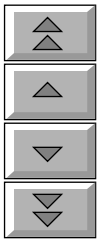

Changing values

The **Arrow** buttons allow values to be changed in increments of 10 (double-arrow buttons) or in increments of 1 (single-arrow buttons).

Note!
After touching a single-arrow button continuously for 10 increments of 1, it changes to increments of 10. After touching a double-arrow button continuously for 10 increments of 10, it changes to increments of 100.

2.2TS100714en.fm

System setting

This function allows the operator to change the language used by the PLMS software and to set the current time.



Language setting

1

Touch the **System setting** button.

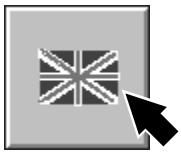

2.2TS100714en.fm

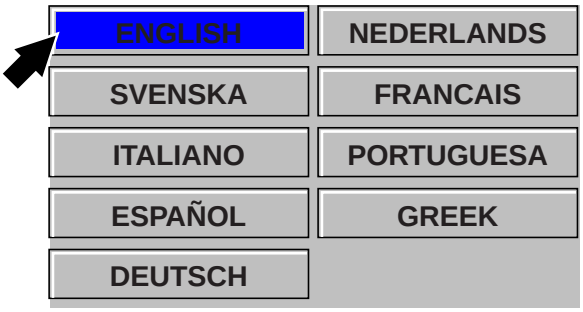

2

Touch the required language button.

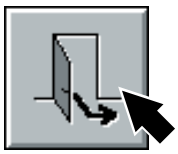

3

Touch the **Exit** button.

Time setting



1

Note!
Setting the time can only be done in **Step Zero** and with **Preparation Phase** and **Production Phase** closed.

Touch the **System setting** button.

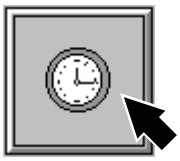

2

Touch the **Clock** button.

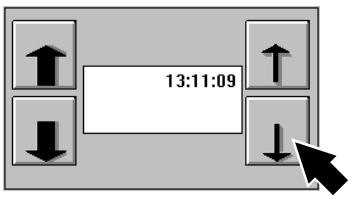

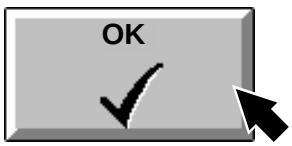

3

Touch the thick arrows to set the hours and the thin arrow to set the minutes.

Touch the **OK** button.



4

Touch the **Exit** button.

2.2TS100714en.fm

Production shift setting

Setting the production shifts can only be done in **Step Zero** and with **Preparation Phase** and **Production Phases** closed.

Note!
If the filling machine is not in **Step Zero**, the **Shift** button is displayed as an icon.



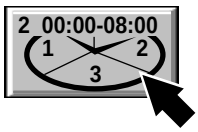

1

Touch the **Collect system** button.

Touch the **Shift** button.

2.2TS100714en.fm

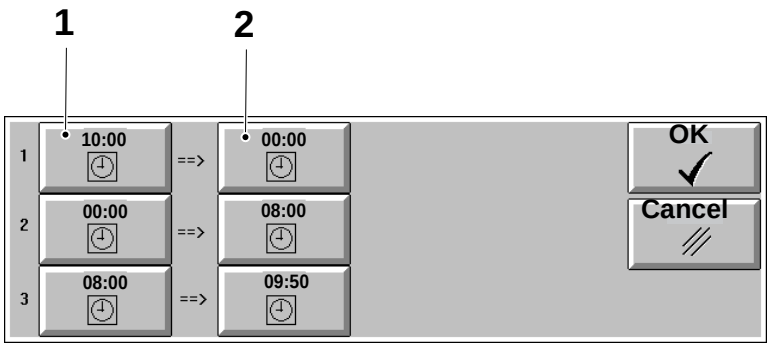

2

Touch the required **Shift** button.

Input a start time (1) and an end time (2) for each shift.

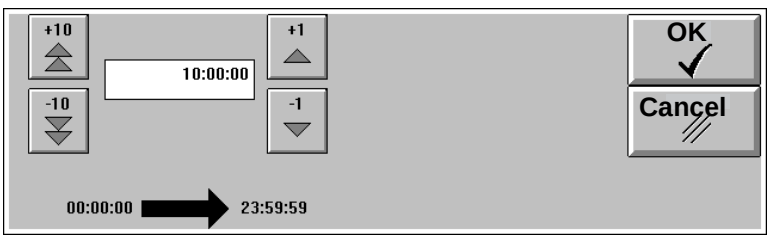



3

Set the time as required and touch the **OK** button.

Repeat for the other shifts.

Note!
Do not overlap the time otherwise an error will be displayed.

Alarm system

Alarms show where there is a problem in the machine and how to solve it.

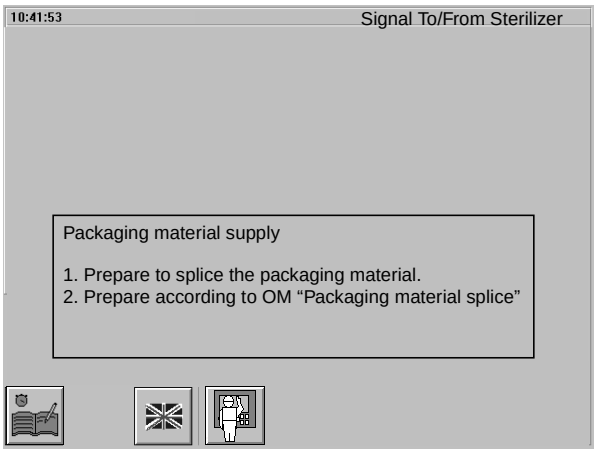

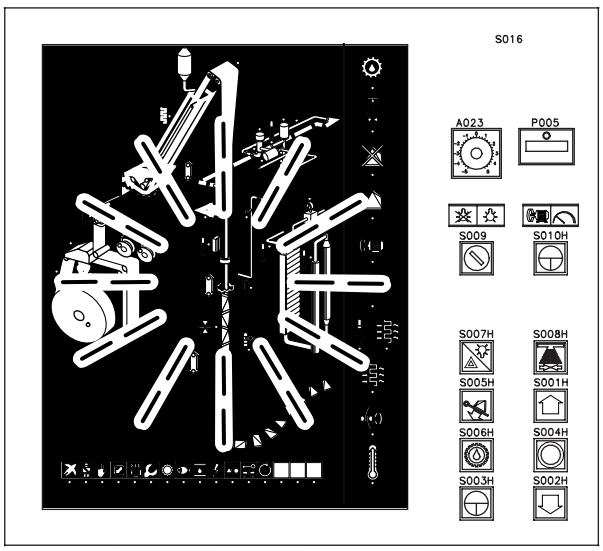



Alarm handling

When a machine fault occurs, the corresponding LED on the control panel lights up and a dialog window appears on the display.

Read the dialog window and follow the displayed instructions.

Press **Alarm reset**.

The PLMS display returns to the main window and the LED on the control panel goes out.

Note!
Whenever a fault recurs or remains, call a technician.

2.2TS100714en.fm

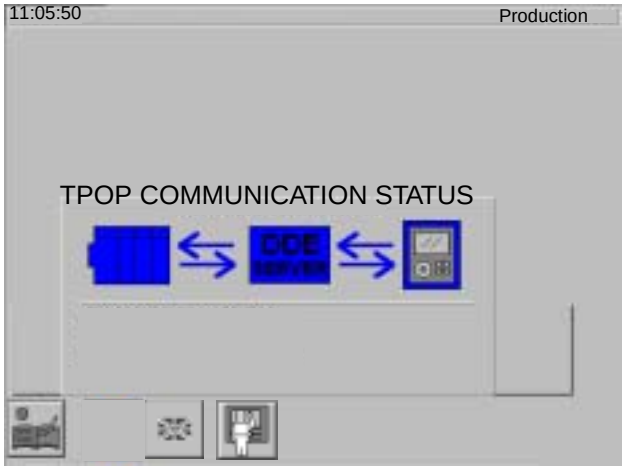



System communication fault reset

If a communication fault occurs, a dialogue box appears on the PLMS display.

Note!
By touching one of the three alarm items on the touch screen, a help text will appear.

The **Lamp test** button, on the control panel, also flashes to show that an error has occurred.

Press the **Lamp test** button to reset the PLMS.

Note!
If the communication fault remains, call a technician to check the communication cable between the PLC and the flexbox.



Collect system

The PLMS Collect system automatically records all the events which take place during the machine functioning.

The operator is asked to interact with the PLMS Collect System in the following cases:

Preparation Phase:

- *Delay in Preparation Phase*
- *Jump to Step Zero during Preparation phase*

Production Phase:

- *Manual recording of Production stop causes*
- *Check or change Production stop causes*
- *Jump to Step Zero during Production Phase*
- *Step to Step Production Finish during Production Phase*

Generic tasks:

- *Record package waste for quality checks*
- *Record maintenance time*
- *Recorded data copying*

2.2TS100714en.fm

Phases

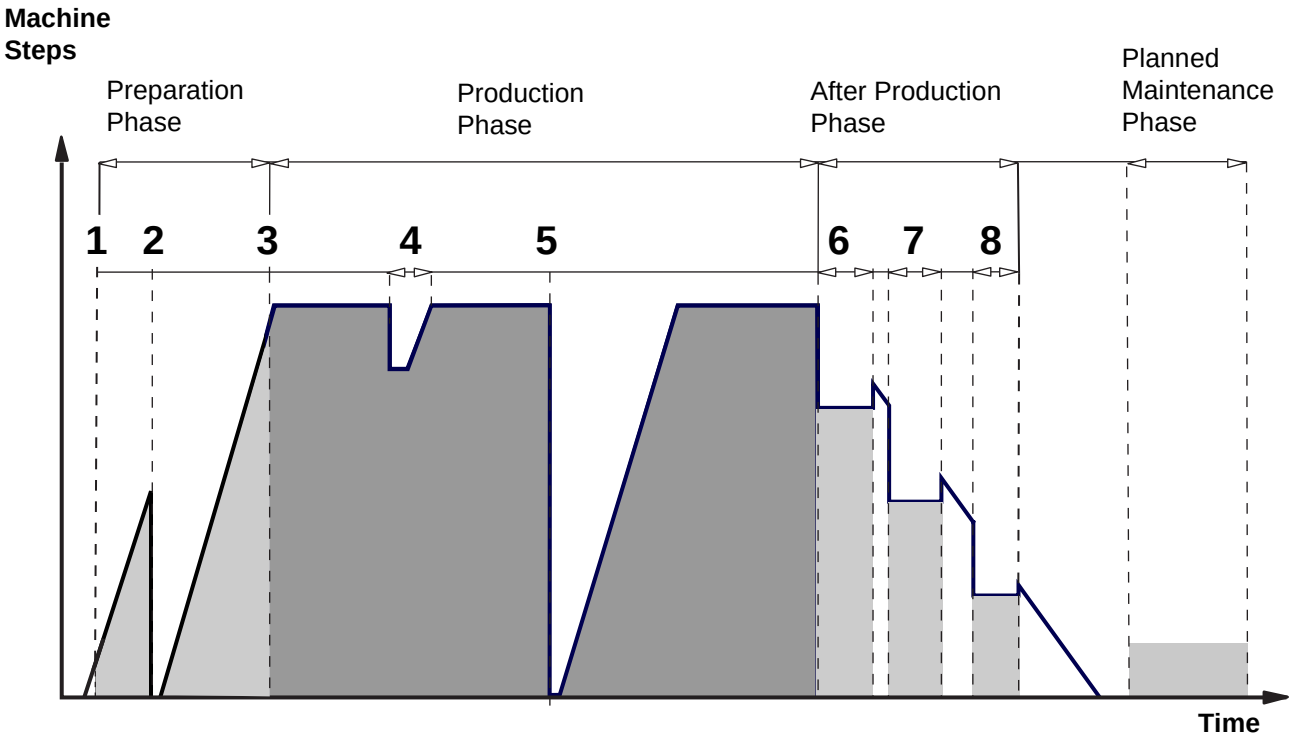

2.2TS100714en.fm

1 Tight Tube
2 Jump to Step Zero during Preparation (only if occurs)
3 Motor Start
4 Short Stop (Only if occurs)
5 Jump to Step Zero during Production (only if occurs, Cleaning and Preparation follow)
6 Venting
7 Cleaning - CIP
8 External Cleaning

Preparation Phase
This phase starts with the first attempt to prepare the equipment for planned production and ends when **Production Phase** starts.

Production Phase
This phase starts with the first attempt to produce packages and ends when the planned production is completed or when production is interrupted.

After Production Phase
This phase starts with the first attempt to run the after production program and ends when intended tasks in **After Production Phase** have been completed.

Planned Maintenance Phase
This phase starts at the beginning of the first preventive action and ends when the planned maintenance has been carried out.

Delay in Preparation Phase



1

If the **Preparation Phase** is too long (more than 70 minutes), the **Collect system** button starts to flash.

Touch the **Collect system** button to enter the system.

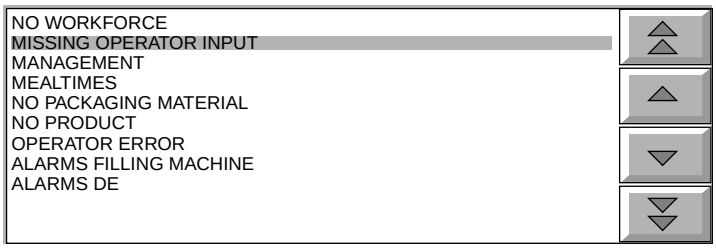

2

The PLMS prompts the following question:

Why so much pre-production delay?

Answer by selecting the correct cause for the event, see *Selection of an event cause* on page *185* for details.

If no answer is given within 10 minutes, a **missing operator input** will be assigned automatically as a stop reason.

2.2TS100714en.fm



3

The **Clock** button shows the exceeding **Preparation** time. The system allows you to split up the exceeding Preparation time and attribute it to different causes.

Touch the **Clock** button.

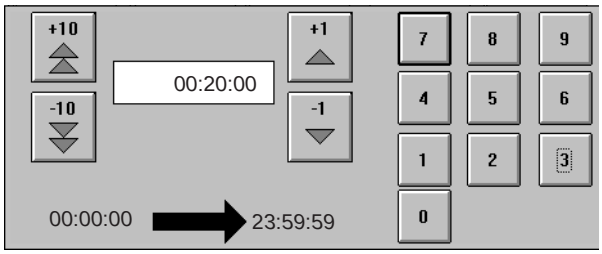

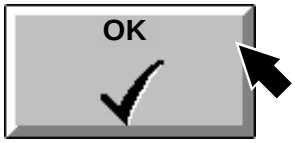

4

Enter the time to be attributed to the selected cause.

Touch the **OK** button to accept the entry and return to the previous window.



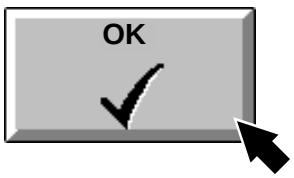

5

The **Clock** button shows the remaining stop time which has not been allocated.

Touch the **OK** button to record the cause and return to the main window.

2.2TS100714en.fm



6

If the stop time has not been fully allocated, the **Collect system** button keeps flashing.

Touch the **Collect system** button and repeat the whole procedure to fully allocate the remaining stop time.

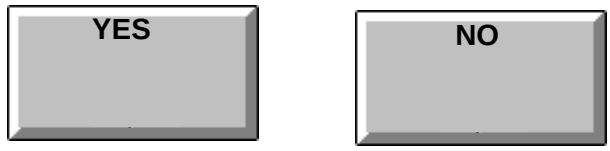

Jump to Step Zero during Preparation phase

When the machine steps to **Step Zero**, during **Preparation Phase**, the PLMS prompts the following question:

Do you want to continue the Preparation Phase?

- If the answer is **YES** the PLMS keeps the **Preparation Phase** open. If the machine keeps staying in **Step Zero**, the question appears again 10 minutes after the first reply. If the answer is **YES** again, the system allows 10 additional minutes in **Step Zero**, then close the **Preparation Phase** automatically.
- If the answer is **NO** the PLMS closes the **Preparation Phase**.
- If no answer is given within 20 minutes the **Preparation Phase** closes automatically.

2.2TS100714en.fm

Manual recording of Production stop causes



1

When, during **Production Phase**, the machine stops due to:

- Manual **Motor start** interruption
- Manual **Short Stop**
- Manual **Emergency Stop**
- Step out from **Production** (Step up or Step down)
- Opening of a door

the **Collect system** button starts to flash.

Touch the **Collect system** button to enter the system.

2.2TS100714en.fm

2

The PLMS prompts one of the following questions:

- Why did you interrupt Motor Start?
- Why did you press Short Stop?
- Why did you press Emergency Stop?
- Why did you Step out from Production?
- Why did you open the door?

Note!
The PLMS prompts the question: “Why did you interrupt Motor Start” only at the first manual **Motor Start** interruption after the **Preparation Phase**.

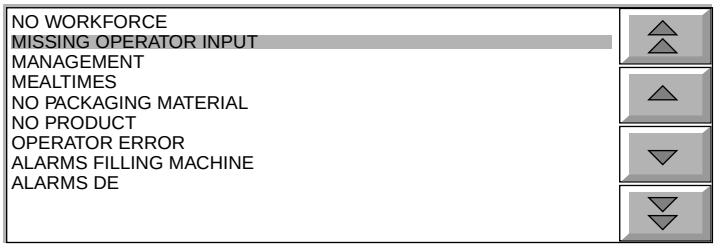

3

Answer by selecting the correct cause for the event, see *Selection of an event cause* on page *185* for details.

If no cause is manually selected within 10 minutes, a **missing operator input** will be assigned automatically as a stop reason.

2.2TS100714en.fm



4

The **Clock** symbol displays the total time taken for the stop.



5

When there is a manual waste, touch the **Waste number** button.

Note!
Manual waste means packages removed by the operator.

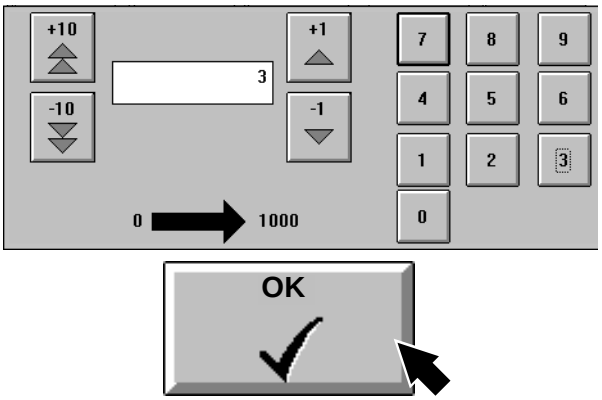

6

Use the **Arrow** buttons or the numeric keypad to enter the number of packages taken.

Touch the **OK** button to accept the entry and return to the previous window.

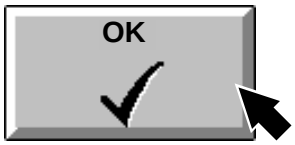

7

Touch the **OK** button to record the stop cause and the waste and return to the main window.

2.2TS100714en.fm

Check or change Production stop causes



1

During a Production stop, it is possible to check or change Production stop causes which have been automatically assigned by the system.

Touch the **Collect system** button.

Note!
This button is only available during the stop and during the first 10 minutes after the restart.

2.2TS100714en.fm



2

Touch the **SeeStop** button to check if the recorded stop cause is correct.

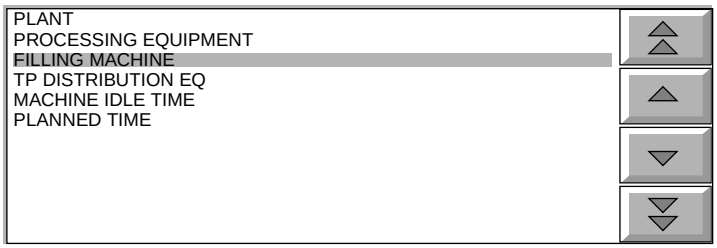

3

If the cause is not correct, select the correct cause in the scroll lists, see *Selection of an event cause* on page *185* for details.



4

When there is manual waste, touch the **Waste number** button.

Note!
Manual waste means packages removed by the operators.

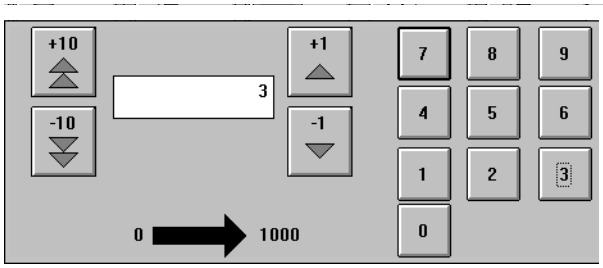

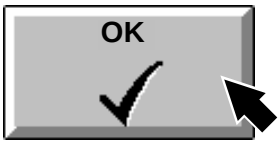

5

Use the **Arrow** buttons or the numeric keypad to enter the number of packages taken.

Touch the **OK** button to accept the entry for packages number and return to the previous window.



6

Touch the **OK** button to record the entered data and return to the main window.

2.2TS100714en.fm

Is this the end of Production?
YES = End of production
NO = Machine failure-Prepare for a new production

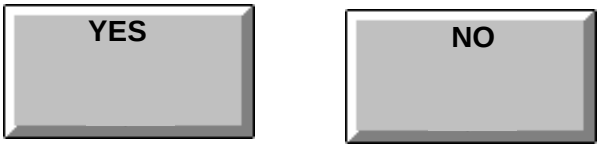

Jump to Step Zero during Production Phase

When the machine steps to **Step Zero** during **Production Phase** the PLMS prompts the following question:

Is this the end of Production?

- If the answer is **YES** the PLMS closes the **Production Phase**.
- If the answer is **NO** the PLMS keeps the **Production Phase** open and the period of time until the next **Production** is recorded as a **Production** stop.
  If the machine keeps staying in **Step Zero**, the question appears again 10 minutes after the first reply. If the answer is **NO** again, the system allows 10 additional minutes in **Step Zero**, then closes the **Production Phase** automatically.
- If no answer is given within 20 minutes, the **Production Phase** closes automatically.

2.2TS100714en.fm

Is this the end of Production?
YES = End of production
NO = Machine failure-Prepare for a new production

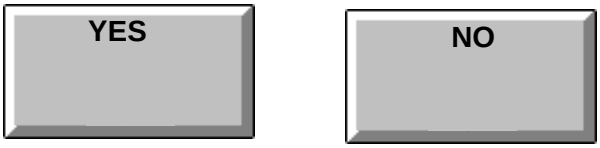

Step to Step Production Finish during Production Phase

When the machine steps to **Venting** during **Production Phase** the PLMS prompts the following question:

Is this end of Production?

- If the answer is **YES** the PLMS closes the **Production Phase**.
- If the answer is **NO** the PLMS keeps the **Production Phase** open and the period of time until the next **Production** is recorded as a **Production** stop.
- If no answer is given within 4 minutes, the **Production Phase** closes automatically.

Record package waste for quality checks



1

Remember to record the number of packages taken whenever packages are collected for quality checks.

Touch the **Collect system** button.



2

Touch the **Waste** button.

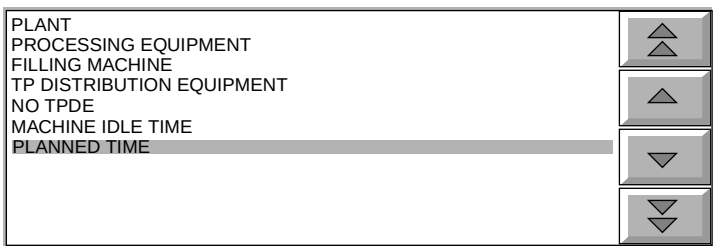

3

Use the **Arrow** buttons to select **Planned time**.

Touch the **Detail** button.

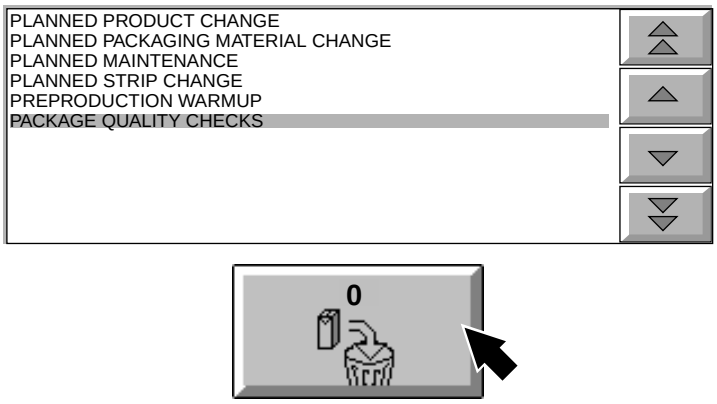

4

Use the **Arrow** buttons to select **Package quality checks**.

Touch the **Waste number** button.

2.2TS100714en.fm

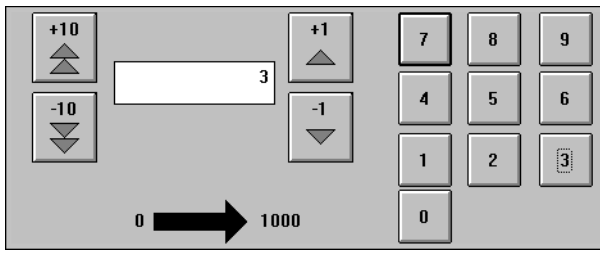



5

Use the **Arrow** buttons or the numeric keypad to enter the number of packages taken.

Touch the **OK** button to accept the entry and return to the previous window.

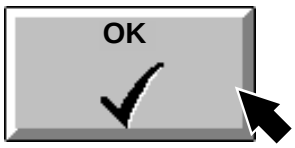

6

Touch the **OK** button to record the entered data and return to the main window.

2.2TS100714en.fm

Record maintenance time



1

Remember to record the time taken for Planned Maintenance, Preparation after daily care and Preparation after weekly care.

Touch the **Collect system** button.

2.2TS100714en.fm



2

Note!
The **Planned Maintenance** button is only available in **Step Zero**, with **Preparation Phase** and **Production Phase** closed.

Touch the **Planned maintenance** button.

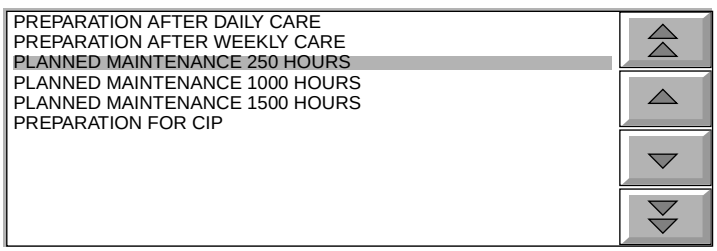

3

Select the correct item in the scroll list by means of the **Arrow** buttons.

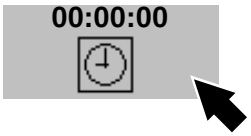

4

Touch the **Clock** button.

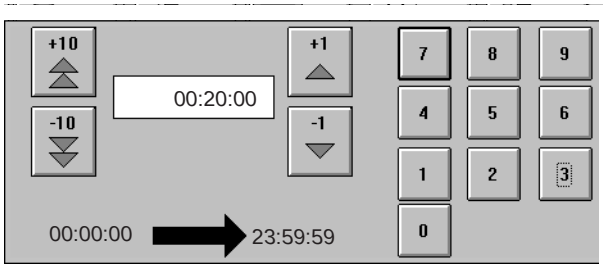

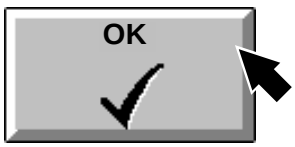

5

Use the **Arrow** buttons or the numeric keypad to enter the time taken for maintenance.

Touch the **OK** button to accept the entry and return to the previous window.



6

Touch the **OK** button to record the entered data and return to the main window.

2.2TS100714en.fm



Recorded data copying

The **CopyLog** button is used to copy the data from the PLMS flexbox to a floppy disk. See the *MM* for the filling machine for details.

Note!
To analyse the data collected by the system, the data must be copied in an office PC equipped with the PLMS Off-Line Analysis program.

2.2TS100714en.fm



Manoeuvre system

This function allows the operator to:

- check the number of packages wasted and reset it if required;
- check the status of the package counters and reset them if required;
- set the number of packages per tray/unit.

2.2TS100714en.fm

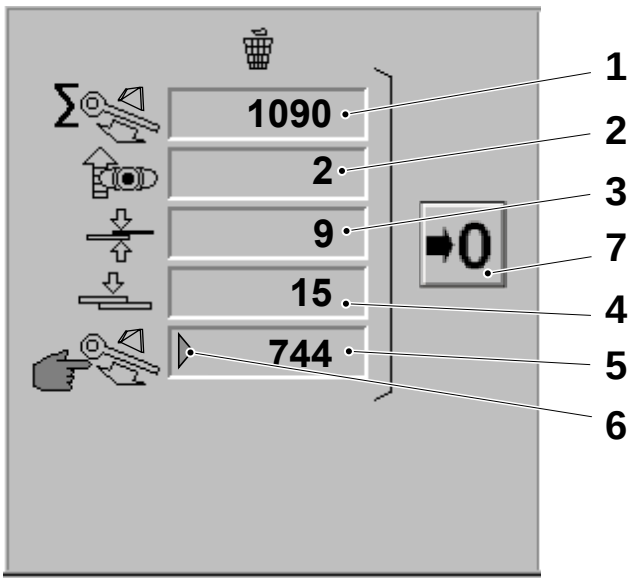

1 Total waste
2 Waste design correction system
3 Waste SA splice
4 Waste LS splice
5 Manual waste
6 Indicator most recent waste
7 Reset button

Waste counters

The counter (1) displays the total number of packages discharged in the drop chute since the last counter reset.

The counters (2 to 5) display the number of packages wasted during one or more **Production Phases** since the last counter reset.

The Reset button (7) allows all of the counter to be reset simultaneously.

Note!
The reset can be done only when the main motor is not running.

The green arrow (6) points at the latest waste.

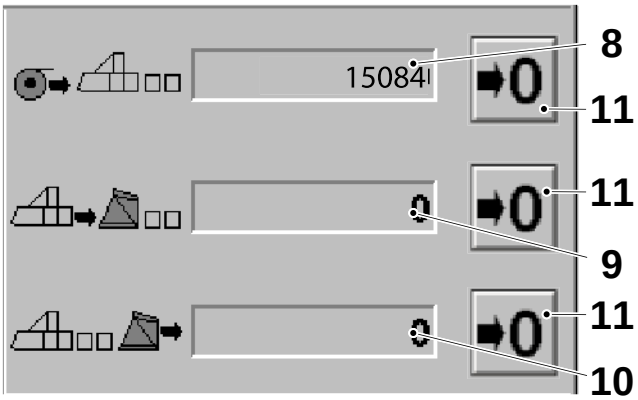

8 Packages into the filling machine
9 Packages out from the filling machine
10 Option
11 Reset button

Package counters

The counter (8) displays the incoming unformed packages entering the filling machine.

The counter (9) displays the packages coming out from the final folder.

The counter (10) displays the packages passing the last counting photocell on the packaging line.

Each counter can be reset with the **Reset** buttons (11).

Note!
The reset can be done only when the main motor is not running.

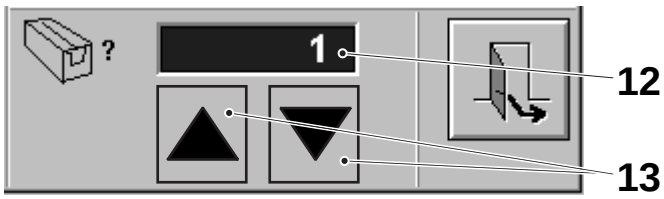

12 Packages per tray/unit in the last point distribution machine
13 Increase/decrease button

Packages per tray setting

The box (12) allows the setting of the number of packages per tray/unit passing the last counting photocell in the packaging line.

Touch the **Arrow** buttons (13) to change the value.

Note!
The system refers to this value to calculate the total number of packages displayed by counter (10) in the picture above. If no DE equipment is present and loose packages pass the last counting photocell, the value to enter is 1.

2.2TS100714en.fm

Customize system

This function allows the operator to:

- add text information by hand.





1

Touch the **Collect system** button.

Touch the **Customize** button.

2.2TS100714en.fm

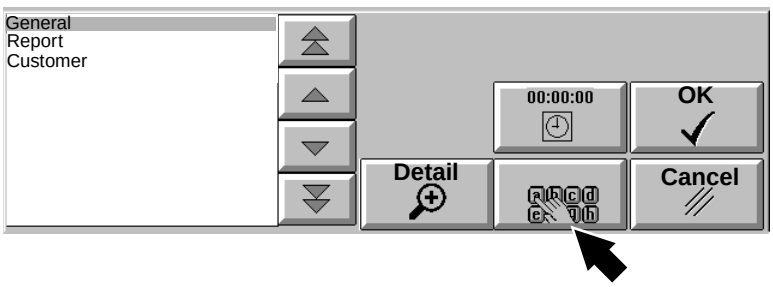

2

Mark one item and touch the **Key Board** button for adding text on this level.

Note!
For sub levels. Mark one item and continue with item 4.

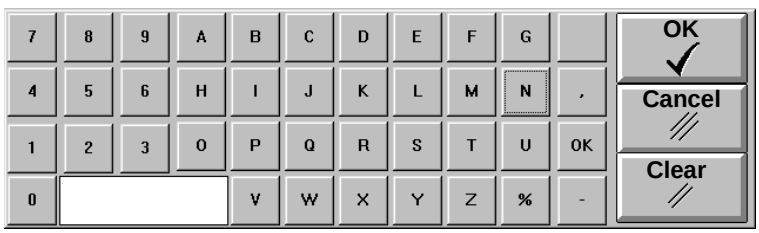

3

The text will be displayed in the text window.

Touch the **Ok** button.

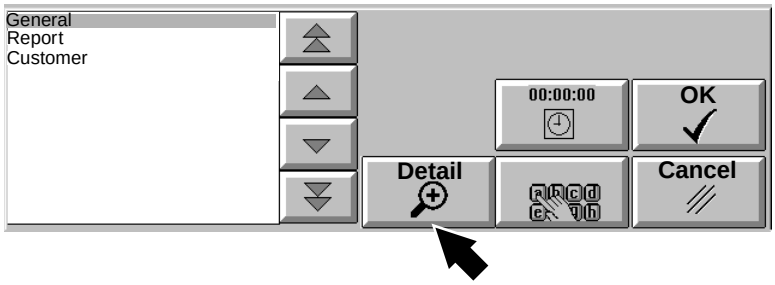

4

Touch the **Detail** button.

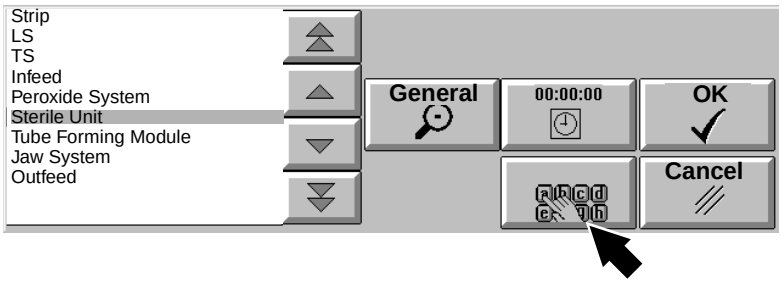

5

Mark one item and touch the **Key Board** button for adding text on this sub level.

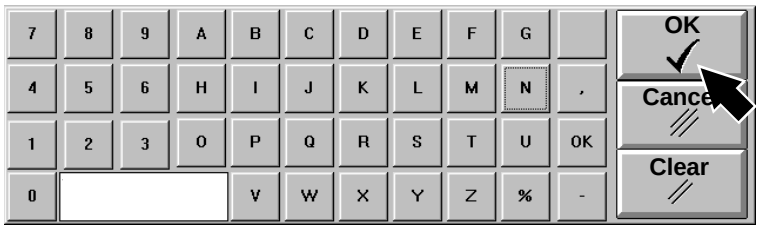

6

The text will be displayed in the text window.

Touch the **OK** button.

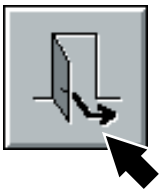

7

Touch the **Exit** button.

2.2TS100714en.fm



8

Touch the **Collect system** button.



9

Touch the **Report** button.

The added text is accumulated here.

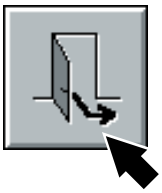

10

Touch the **Exit** button.

2.2TS100714en.fm

This page intentionally left blank

2.2TS100714en.fm

Peroxide handling



Hydrogen peroxide!
Follow the *Safety precautions.*

This section contains information on how to handle hydrogen peroxide:

- **Concentration check**
- **Adding wetting agent**
- **Filling peroxide container**
- **Filling spray can**
- **Recommended peroxide grades**

OM2.21TS100715en.fm

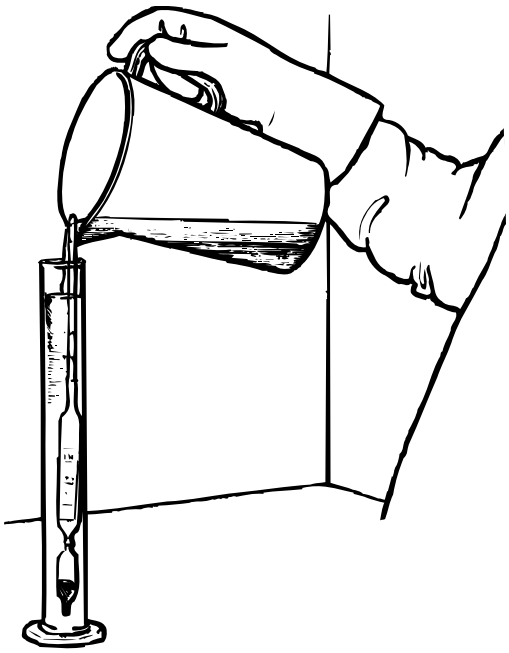

Concentration check 1

WARNING!

Read the section Hydrogen Peroxide (H2O2) in Safety precautions!

The following equipment is required:

- aerometer with thermometer
- a clean plastic cylinder

Caution!
The equipment must be thoroughly cleaned.
Fill up with hydrogen peroxide from the peroxide bottle, by using a pelerin ball.

Discard this sample, then take a second sample.

Pour a small amount of hydrogen peroxide into the graduated cylinder.

Lower the aerometer into the cylinder making sure that it contains enough liquid to float the aerometer.

If there are air bubbles on the aerometer, stir gently until the bubbles disappear.

Read the density at the liquid level on the aerometer and **at the same time** read the temperature.

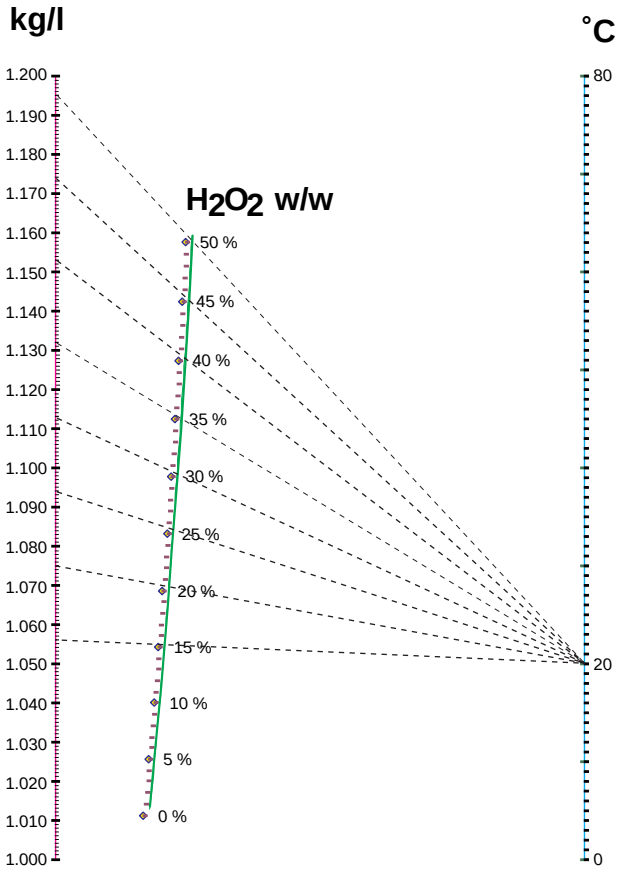

Sample nomogram

2

From the nomogram, evaluate the hydrogen peroxide concentration in percent by weight.

With a ruler, join the density value of the sample with the temperature value to determine the hydrogen peroxide concentration.

Note!

Note!
Photocopying or resizing the nomogram may distort its accuracy. This could lead to incorrect evaluation of the hydrogen peroxide concentration.

Note!
To check the accuracy of the nomogram, refer to the following table which lists the concentration and density values calculated at 20 °C:

°C	kg/l	% w/w
20	1.056	15
20	1.075	20
20	1.094	25
20	1.113	30
20	1.132	35
20	1.153	40
20	1.174	45
20	1.195	50

If the concentration is **below 30% or above 50%**, change the hydrogen peroxide.

OM2.21TS100715en.fm

Hydrogen peroxide concentration (by weight)

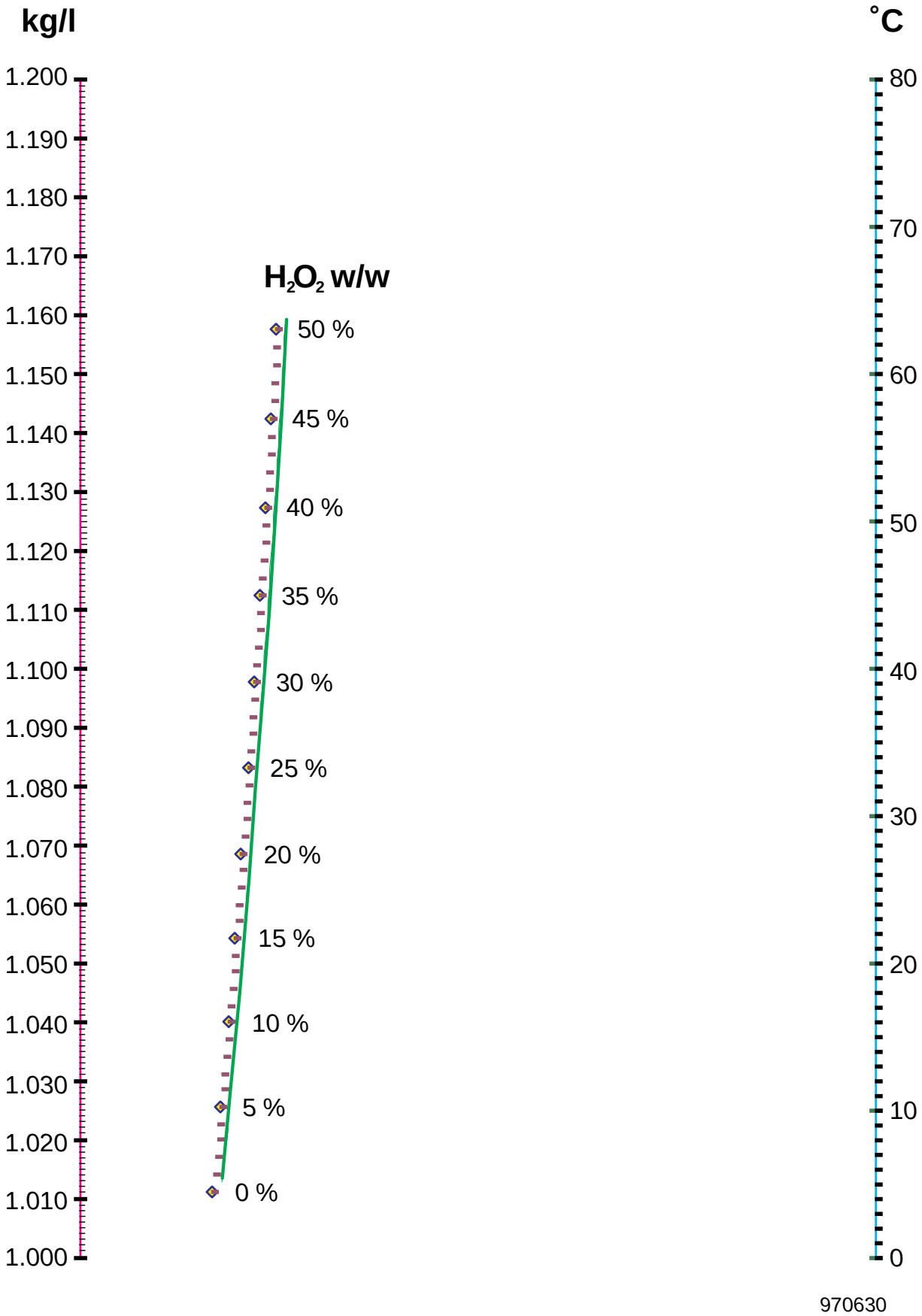

OM2.21TS100715en.fm

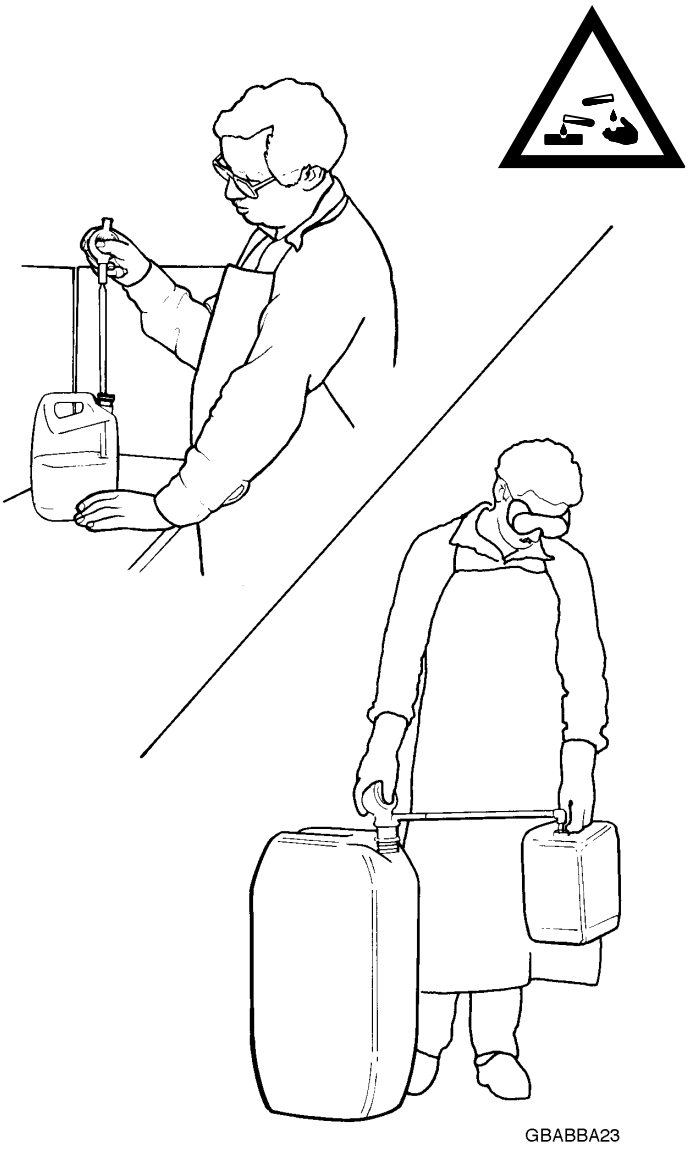

Adding wetting agent 1

WARNING!

Read the section Hydrogen Peroxide (H2O2) in Safety precautions!

Note!
Store the wetting agent and the hydrogen peroxide at the same temperature. Otherwise they will not blend properly.

Carefully follow the directives in section Safety precautions. Make sure that the peroxide concentration is 35%.

All tools and other objects that will get in contact with the peroxide must be thoroughly cleaned.

Mix a quantity of sterilization liquid that exceeds the estimated consumption during one days production by 5 l.

Example:
Add 30 ml of wetting agent to 10 l of peroxide (3 ml per litre peroxide).

First pour the wetting agent into the container to be connected to the machine and then fill it with peroxide with the aid of a pump.

OM2.21TS100715en.fm





2

WARNING!

Read the section Hydrogen Peroxide (H2O2) in Safety precautions!

Mix the contents thoroughly by shaking the container.

Note!

Note!

Unless the wetting agent is uniformly dispersed in the peroxide, some of the packages may turn out unsterile.

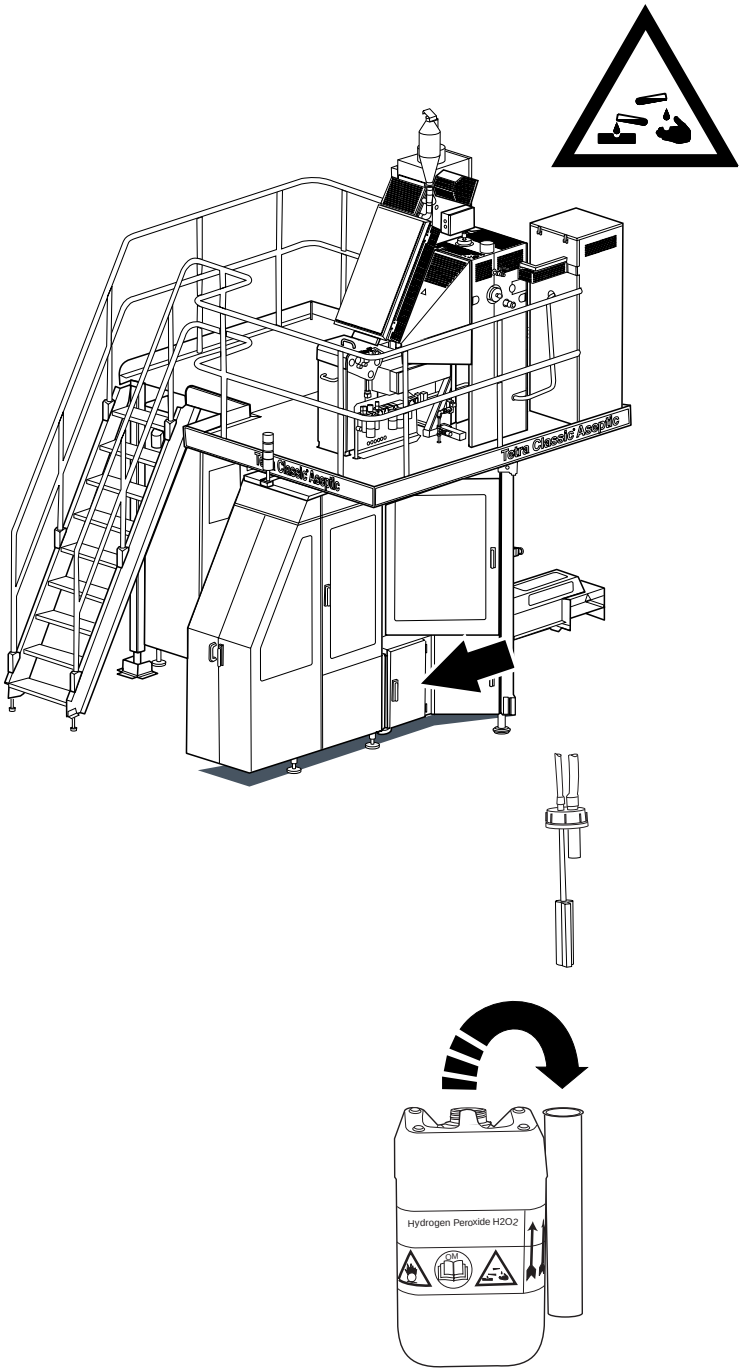

Filling peroxide bottle 1

WARNING!

Read the section Hydrogen Peroxide (H2O2) in Safety precautions!

Remove the pipe coupling and place it in it's holder.
Fit the ventilated cap.

OM2.21TS100715en.fm

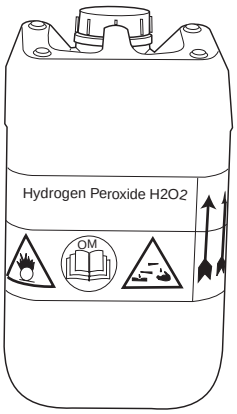



2

WARNING!

Read the section Hydrogen Peroxide (H2O2) in Safety precautions!

Fill the peroxide bottle with correct type of peroxide, and mix it with wetting agent, see section Adding wetting agent.

Fit the ventilated cap.

Put the bottle back into the machine and fit the pipe couple.



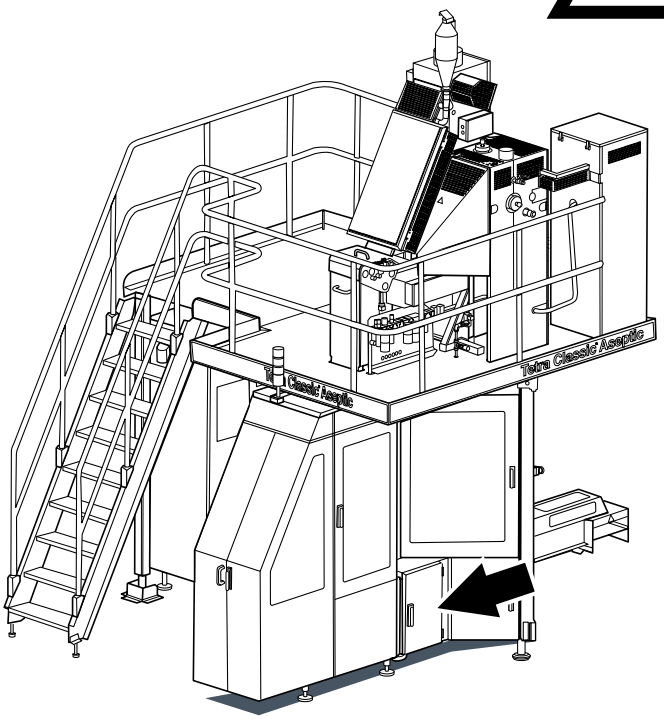

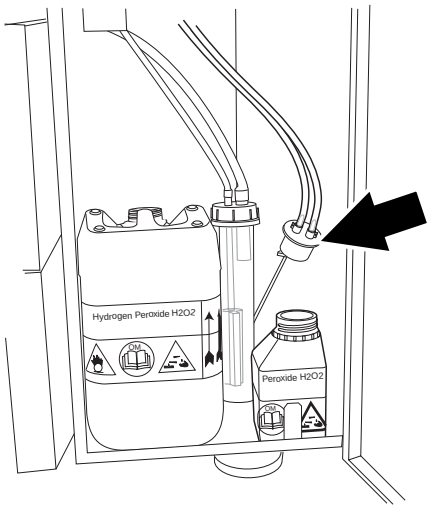

Filling spray can 1

WARNING!

Read the section Hydrogen Peroxide (H2O2) in Safety precautions!

Open the door of the hydrogen peroxide spray can compartment.

Remove the suction line from the spray can and place it in it's holder, fit the ventilated cap.

OM2.21TS100715en.fm

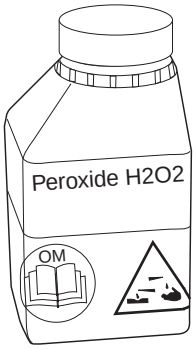



2

WARNING!

Read the section Hydrogen Peroxide (H2O2) in Safety precautions!

Fill the spray can with 35 % hydrogen peroxide by means of a pump.

Fit the ventilated cap.

Put the can back into the machine, and connect the suction line.

Close the door to the compartment.

Note!

Note!
No wetting agent in the spray can.

OM2.21TS100715en.fm

Peroxide disposal



WARNING!

Read the section Hydrogen Peroxide (H2O2) in Safety precautions!

Make sure to fulfil the local environment regulations.

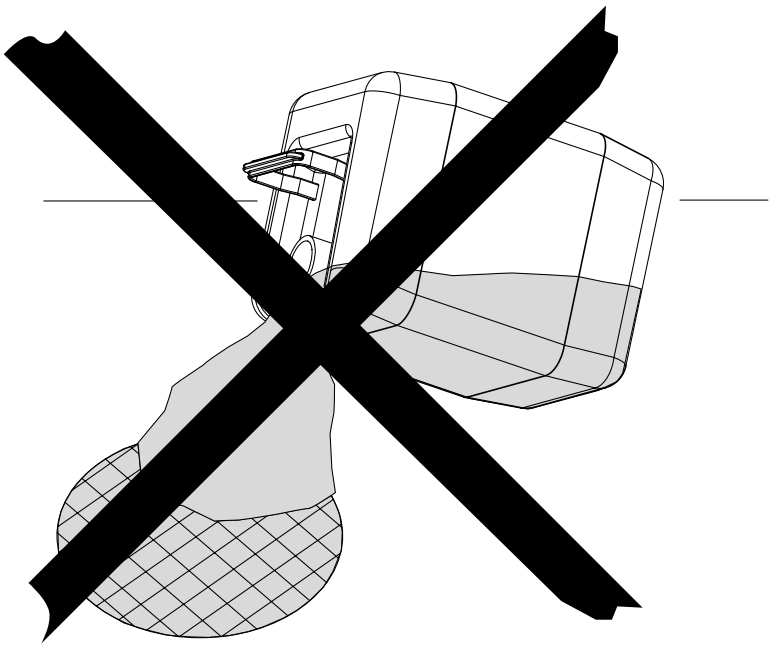

Recommended hydrogen peroxide

Selection of grades tested by Tetra Pak

The table below lists a selection of hydrogen peroxide grades tested by Tetra Pak. Hydrogen peroxide grades of comparable quality from other suppliers may be selected in compliance with the Hydrogen Peroxide Quality Specification or local legal requirements.

Hydrogen Peroxide Quality Specification (document No in table) may be ordered from Technical Standardization, Tetra Pak AB, Ruben Rausings gata, S-221 86 Lund, Sweden.

Sterilization in	Document No.	Material No. (internal TP designation for material type)	Part No. (used when ordering from Tetra Pak)	Example	
				Supplier	Grade
Hydrogen peroxide 35 % w/w	M1282.805	82805-10	90298-24	INTEROX (UK)	Aseptic packaging grade (APG 50)
				INTEROX (ITALY)	Aseptic grade
				INTEROX (NETHERLANDS)	Standard grade
				EKA (SWEDEN)	Aseptic grade (A35)

OM2.21TS100715en.fm

Setting Values

Pressures	Unit	Value
Air pressure regulating valve	bar	6.0
Sterile air	bar	0.37
Blow pipe, (B-valve closed) no setting	bar	0.1-0.15
Air knife, (B-valve closed) no setting	bar	0.1-0.15
Air to web tension	bar	2
Cooling water supply	kPa (bar)	300-600 (3-6)
LS	bar	0.10
SA	bar	0.35
Product pressure (depending on product and local conditions)	kPa (bar)	50 - 350 (0.5 - 3.5)
Product pressure (permitted variation during PRODUCTION)	kPa (bar)	±50 (0.5)
Pressure header (TS hydraulic pressure)	bar	12

Temperature controllers	Unit	Value (basic setting)
LS (A020)	°C	275
SA (A021)	°C	240
Air superheater (A022)	°C	360
Sterile air (A023)	°C	137
Steam (A024)	°C	127
Heating chamber (A025)	°C	100

(Cont´d)

OM2.21TS100716en.fm

(Cont´d)

Ampere meters	Unit / Specification	Value
Ampere meter (P020). Heating chamber element side 1, upper. (Set by R020)	Ampere	65 ml. 3.9 150 S. 4.6 200 B. 4.6
Ampere meter (P021). Heating chamber element side 2, lower. (Set by R021)	Ampere	65 ml. 3.9 150 S. 4.6 200 B. 4.6
Potentiometer		
Potentiometer (R020) heating chamber element side 1, upper.		Adjust for 5 Amp
Potentiometer (R021) heating chamber element side 2, lower.		Adjust for 4.75 Amp
Potentiometer (R040) - TS side 1	Scale	Ca 760-790
Potentiometer (R041) - TS side 2	Scale	Ca 760-790
Miscellaneous		
Wetting agent	ml/liter	3
Hydrogen peroxide	% w/w	35
Peroxide cooling water	l/min	0.7
Cooling water supply	°C	10-20
Web spraying	l/min	0.3
Vacuum cleaner	Food industry vacuum cleaner (with HEPA filter)	—
Cloth	Lint-free disposable cloth	—
Tape	Non-transparent tape with good adhesive properties	—
Wire brush	Wire brush with brass bristles	—
Hygienic brush	Hygienic brush that can be sterilised	—
Drinking water	According to Counsil Directive 98/83 EC	—
Noise declaration	See the Installation Manual	

OM2.21TS100716en.fm

Disinfectants and Cleaning Agents

WARNING!
Risk of explosion!
Do **not** use alcohol based agents (such as disinfectant code G and cleaning agent code J) when cleaning or disinfecting parts that can come into contact with hydrogen peroxide.

Caution!
Do **not** use chlorine based or iodine based cleaning agents/disinfectants when cleaning/disinfection parts which will come into contact with hydrogen peroxide.

Comparable qualities from other suppliers may be selected in compliance with the technical requirements listed in the table.

All cleaning agents/disinfectants must comply with local legal requirements.

The supplier recommendations for concentration and temperature should be followed.
When dosing the products automatically, their concentrations should be checked.

Hard water >5° dH.

Cleaning/ Disinfection	Code (0101)		Example			
			Type of product	Pure Chemicals	Formulated products	
					Henkel	Diversey-Lever
CIP	A		Alkali	NaOH 1.5%	P3-mip RC P3-mip CIP	Diverflow VC13 (Soft water) Diverflow VC7 (Hard water)
	B	1	Acid	HNO_3 1%	-	Diverflow VA5
		2	Acid	H_3PO_4 1%	P3-horolith CIP P3-horolith USP	Diverflow VA3
		3	Acid	HNO_3+H_3PO_4	P3-horolith FL P3-horolith V	Diverflow VA4
External cleaning	C	1	Alkali foam	-	P3-topax 12	Diverclean VF9
		2	Acid foam	-	P3-topax 56	Diverclean VF12
		3	Disinfection foam	-	P3-topax 99	Divoscan VT1
		4	Alkali solution	-	P3-mip FPC	Diverclean VK12
Manual cleaning, wiping	D		Alkali solution/ foam	-	P3-mip FPC P3-topax 12	Diverclean VK12
	E		Acid solution/ foam	-	P3-topax 56 P3-topax 58	Diverflow VA5 Diverflow VA3

(Cont´d)

OM2.21TS100716en.fm

(Cont´d)

Cleaning/ Disinfection	Code (0101)		Example			
			Type of product	Pure Chemicals	Formulated products	
					Henkel	Diversey-Lever
Manual disinfection, immersion	F	1	Disinfection foam	-	P3-topax 99	Divosan VS1
		2	Disinfection solution	-	P3-steril BG	Divosan VT1
Manual disinfection	G	1	Alcohol solution	Isopropanol 70%	-	Divosan VT10
		2	Alcohol solution	Ethanol 70%	P3-alkodes	-
Hand disinfection	H		-	-	P3-manodes	Leverline Med H5
Manual cleaning	J		Alcohol solution	Isopropanol/ Ethanol 95%	-	-
Deliming	K		With citric acid base	-	-	

OM2.21TS100716en.fm

Lubricants

WARNING!

Risk of personal injury!

Certain lubricants can cause injury if they come into contact with the eyes, skin, mucous membranes, or clothing. Always follow the manufacturer's instructions for handling chemical products.

The table below lists only a selection of lubricants with their respective designations.

Lubricant specifications may be ordered from:
Tetra Pak Global Technical Support AB
Ruben Rausings gata
SE-221 86 LUND
Sweden..

Lubricant Code	Part No. (used when ordering from Tetra Pak)	Example	
		Supplier	Product Designation (2002-10)
A Motor oil	90 296-28	BP Esso Statoil Mobil Shell Caltex/Texaco Optimol	Vanellus FE 10W-30 Essolube XD-3 10W-30 PowerWay D2 10W-30 Delvac 1400 Super 10W-30 Myrina TX 10W-30 Ursa LA 10W-30 Non Plus Ultra 10W-40
B High-pressure oil	90 296-73 90 296-78	BP Esso Statoil Mobil Shell Caltex/Texaco Imperial Kluber Optimol	Energol GR-XP 220 Spartan EP 220 LoadWay EP 220 Mobilgear 630 Omala oil 220 Meropa Lubricant 220 Tribol ET 280-220 Lamora 220 Optigear 5150 VG 220
	90 296-72 For use in production plant with start temperature below 5°C.	BP Esso Statoil Mobil Shell Caltex/Texaco Imperial Kluber Optimol	Energol GR-XP 150 Spartan EP 150 LoadWay EP 150 Mobilgear 629 Omala oil 150 Meropa Lubricant 150 Tribol ET 280-150 Lamora 150 Optigear 5120 VG 150

(*Cont´d*)

OM2.21TS100716en.fm

(*Cont´d*)

Lubricant Code	Part No. (used when ordering from Tetra Pak)	Example	
		Supplier	Product Designation (2002-10)
C Hydraulic oil	90 296-53	BP Esso Statoil Mobil Shell	Bartran HV 32 Univis N 32 HydraWay HV 32 DTE Oil 13 Tellus Oil T 32
D Mist lubrication oil	90 296-80	BP Esso Statoil Mobil Shell Caltex/Texaco	Autran GM-MP ATF Dextron TransWay DX II ATF 220 ATF Dextron II Texamatic fluid (DEXTRON II)
E Compounded cylinder oil	90 296-77 90 296-2	BP Esso Statoil Mobil Shell Caltex/Texaco	Energol AC-C460 Cylesso TK 460 CylWay FZ 460 600W Super Cylinder Oil Valvata Oil J460 Vanguard Cylinder Oil
F Lithium grease, EP type	90 296-68	BP Esso Statoil Mobil Shell Kluber Optimol	Energrease LS EP 2 Esso MP Grease/Beacon EP 2 UniWay EP 2 N Mobillux EP 2 Grease 1344 LiEP 2 Centoplex 2 EP Longtime PD 2

(*Cont´d*)

OM2.21TS100716en.fm

(*Cont´d*)

Lubricant Code	Part No. (used when ordering from Tetra Pak)	Example	
		Supplier	Product Designation (2002-10)
H High-pressure oil	90 296-75 90 296-76	BP Esso Statoil Mobil Shell Caltex/Texaco Imperial Kluber Optimol	Energol GR-XP 320 Spartan EP 320 LoadWay EP 320 Mobilgear 632 Omala oil 320 Meropa Lubricant 320 Tribol ET 280-320 Lamora 320 Optigear 5180 VG 320
	90 296-73 90 296-78 For use in production plant with start temperature below 5°C.	BP Esso Statoil Mobil Shell Caltex/Texaco Imperial Kluber Optimol	Energol GR-XP 220 Spartan EP 220 LoadWay EP 220 Mobilgear 630 Omala oil 220 Meropa Lubricant 220 Tribol ET 280-220 Lamora 220 Optigear 5150 VG 220
K Circulation oil	90 296-15	BP Esso Statoil Mobil Shell Caltex/Texaco Imperial Kluber	Energol CS 100 Turbesso 100 TurbWay 100 DTE Oil Heavy Tellu Oil 100 Regal Oil R & O 100 Tribol 775 Crucolan 100
L Silicon grease	90 296-9	Dow Kluber	Dow Corning 7 Compound Unisilikon L 250L
M Lithium grease, EP type	90 296-70	BP Esso Statoil Mobil Kluber Optimol	Energrease LS EP 1 Beacon EP 1 UniWay EP 1 Mobillux EP 1 Centoplex 1 EP Longtime PD 1

(*Cont´d*)

OM2.21TS100716en.fm

(*Cont´d*)

Lubricant Code	Part No. (used when ordering from Tetra Pak)	Example	
		Supplier	Product Designation (2002-10)
N PTFE grease	90 296-91	Sikema	Fluolub 210
O Lithium complex grease	90 296-61	BP Esso Statoil Imperial	Energrease LS 3 Unirex N3 UniWay HT-63 Molub-Alloy ET 860-220
P Synthetic compressor oil	90 296-54	BP Esso Statoil Mobil Shell Caltex/Texaco	Energol RC-R68 Compressor Oil 68 CompWay 68 Rarus 427 Corena Oil H68 Compressor Oil VDL 68
Q Low friction assembly paste	90 296-12	Dow Kluber	Molykote G-N Plus Unimoly Plus
R Synthetic grease	90 459-246	Kluber	Klubersynth UH1 14-1600
S Synthetic hydrocarbon grease	90 296-10	Mecman Mobil	435-1 Mobilgrease 28
T Synthetic lubricating grease	90 459-0340	Shell	Cassida HDS2
U Hydraulic fluid	90 459-1310	Shell	Cassida Fluid HF32
V	90296-0104	Molykote	Molykote Foodslip EP Gear Oil 220
X	90296-0105	Klüber Lubrication	Klüberoil 4 UH1-220

OM2.21TS100716en.fm

Tetra Pak