SPC
Spare Parts Catalogue

Tetra Pak A1

630451-0200

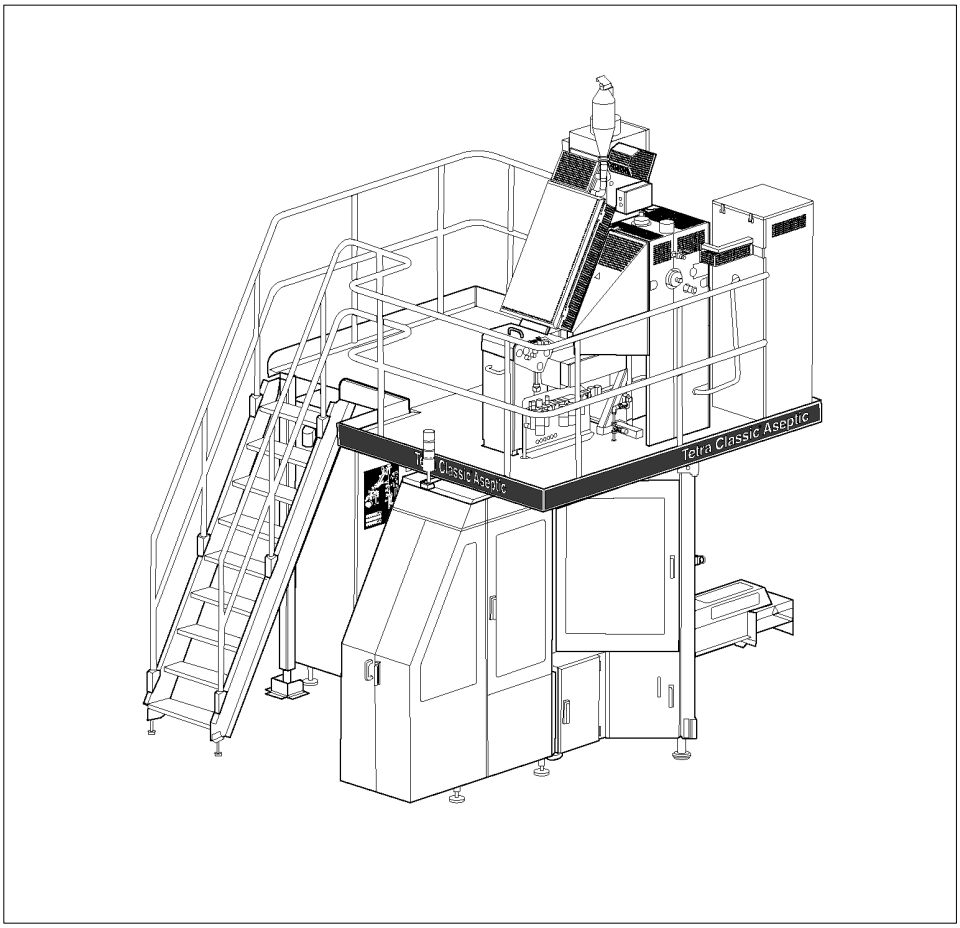

Tetra Pak

Doc. No: SPC-2608179-0101

Main Groups of the Machine

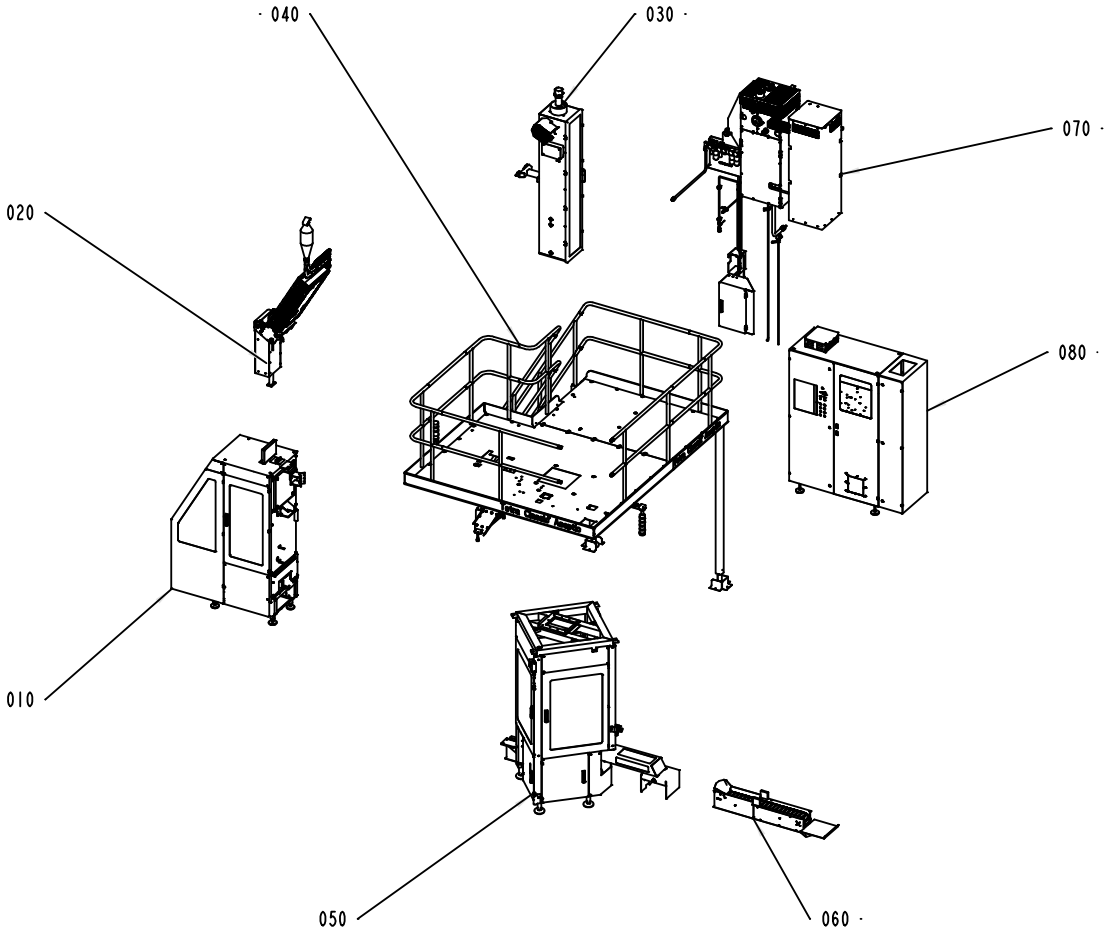

010 - Infeed
020 - Sterile Unit
030 - Tube Forming Module
040 - Platform
050 - Main Body
060 - Package Outfeed
070 - Supply System
080 - Electric Equipment

For the correct machine data, check your machine specification, supplied with the machine!

This document is valid for:

Series No/Machine No Sign.

SPC
Spare Parts Catalogue

Tetra Pak A1
630451-0200

This document is valid for:
Series No:15021

Machine No:1296/1297/1299/1300/1301

Table of Content:

Introduction ..... , **5**

Infeed
B- 630401-0200 ..... , **9**

Sterile Unit
B- 630402-0200 ..... , **111**

Tube Forming Module
B- 630403-0200 ..... , **157**

Platform
B- 630404-0200 ..... , **203**

Main Body
B- 630405-0200 ..... , **221**

Package Outfeed
B- 630407-0100 ..... , **327**

Supply System
B- 630409-0200 ..... , **331**

Regular Accessories
B- 630410-0200 ..... , **411**

Optional Kit
B- 2592400-0100 ..... , **435**

Electric Equipment
B- 639338-0100 ..... , **443**

Part Number Index ..... , **493**

Electrical Parts Index ..... , **523**

SP Code Parts Index ..... , **533**

Doc. No: SPC-2608179-0101

Issue 2003-03

Tetra Pak

Tetra Pak Carton Ambient AB

General information

Manufacturer

This machine is produced by:
Tetra Pak Carton Ambient AB
Ruben Rausings gata
SE-221 86 Lund/Sweden

Document producer

This document has been produced by:
Tetra Pak Carton Ambient AB
Ruben Rausisings gata
SE-221 86 Lund /Sweden

Number of pages

This document contains totally **540 pages,** including the first **8** introduction pages.

Copyright © 2003 Tetra Pak Carton Ambient AB

All rights reserved. No parts of this document may be reproduced or copied in any forms or by any means, without written permission from Tetra Pak Carton Ambient AB

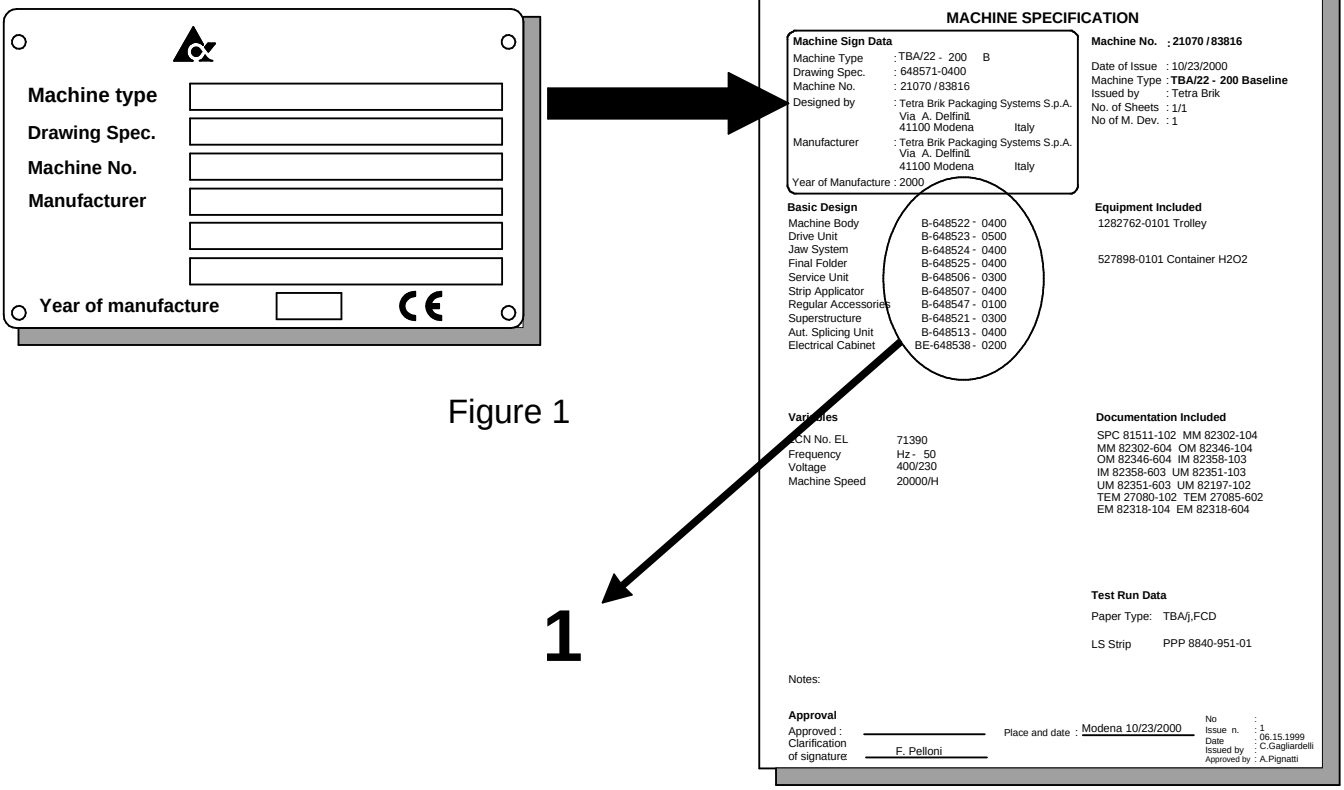

Figure 1

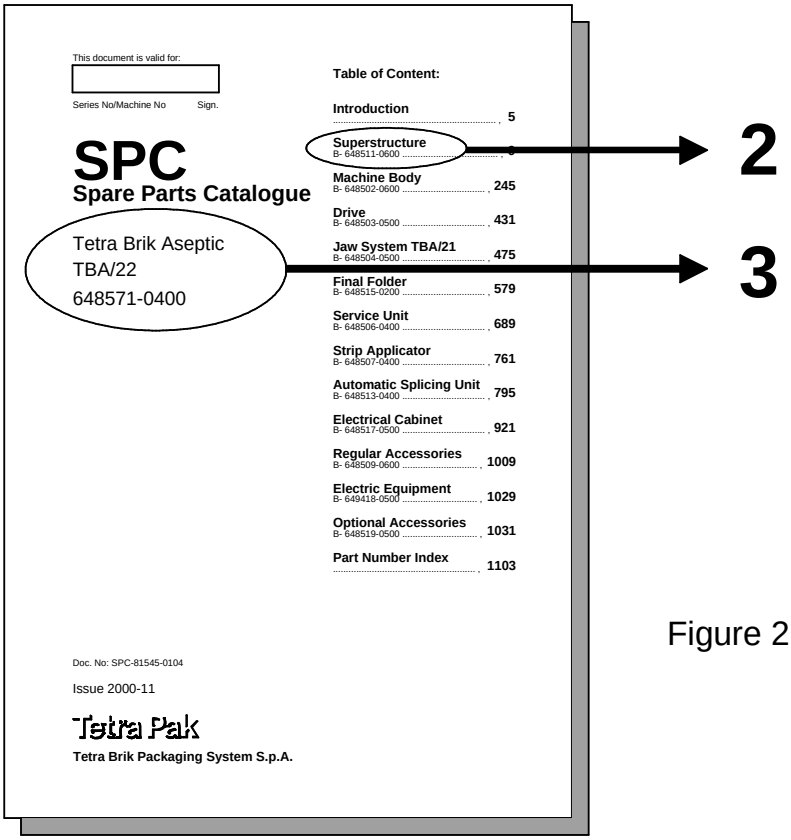

Figure 2

Figure 3 A-648571-0400

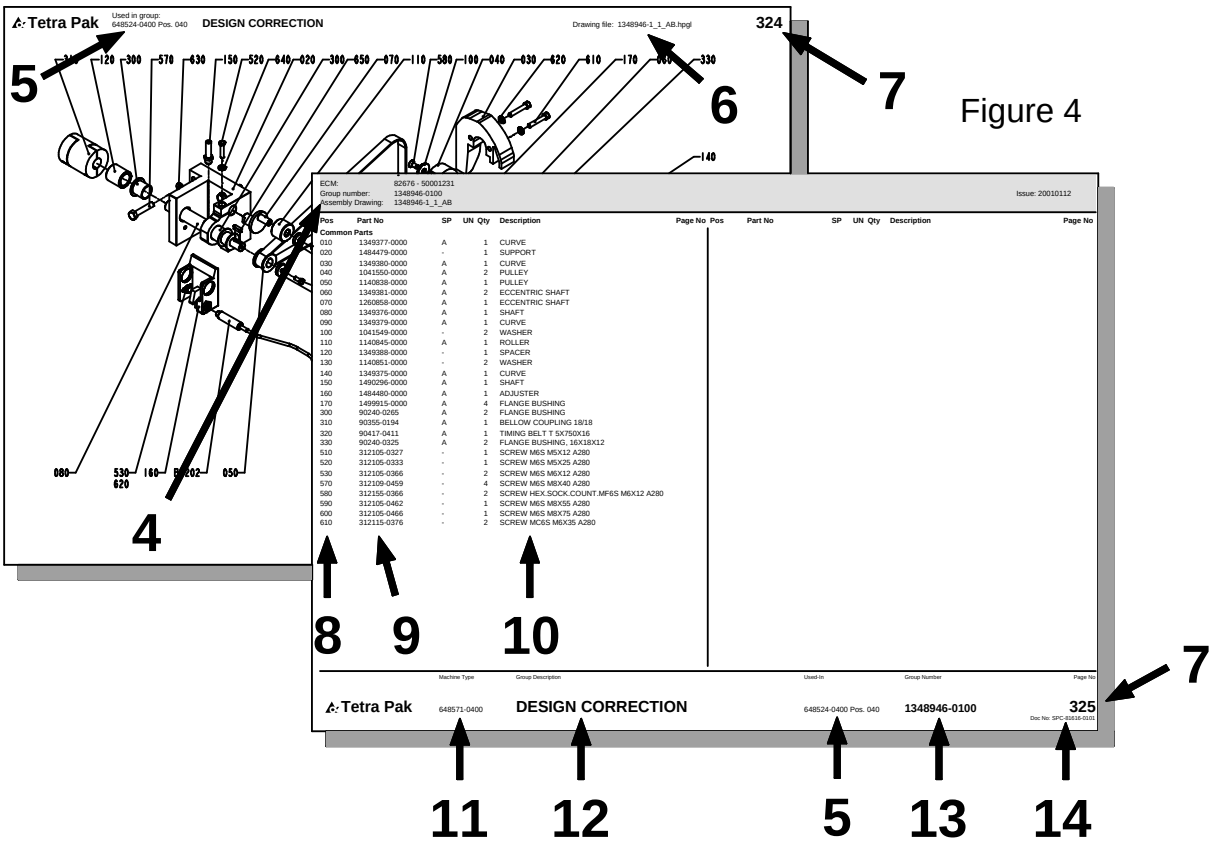

Figure 4

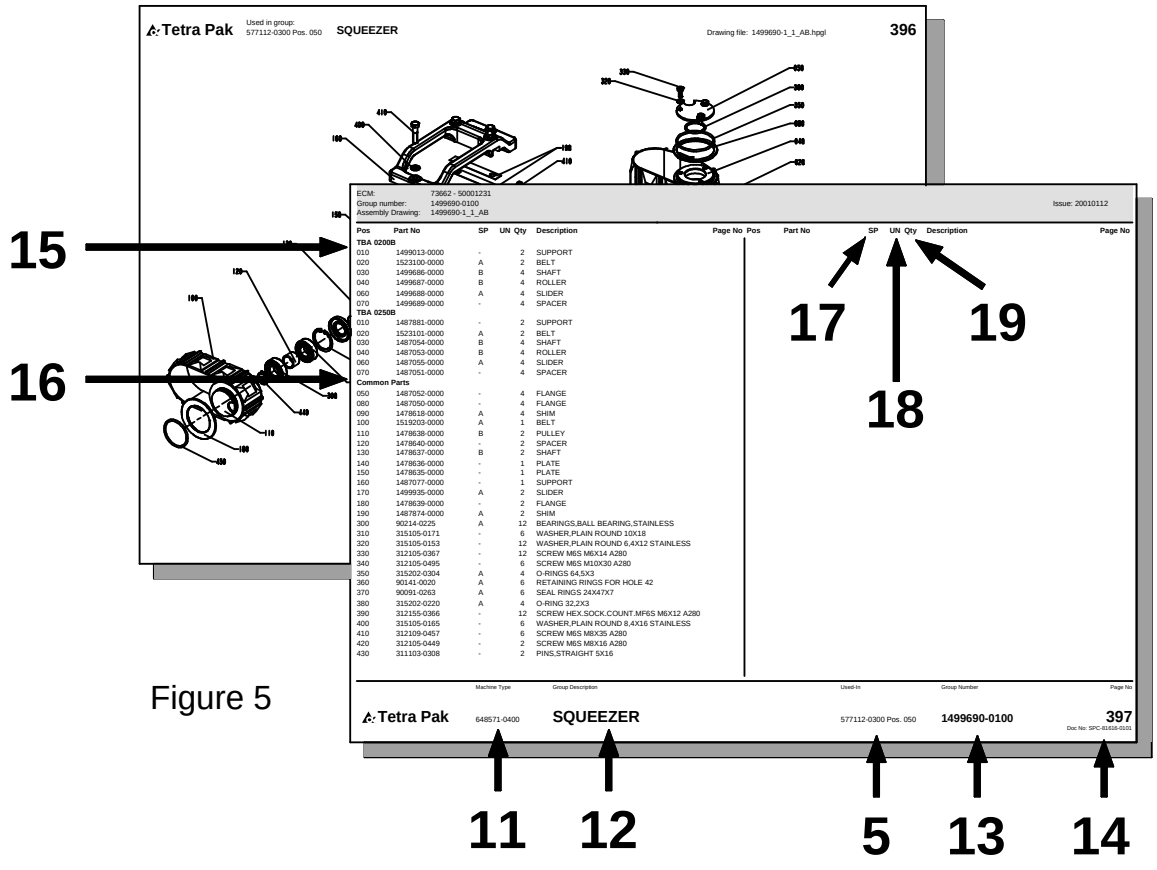

Figure 5

General information

Service

When ordering spare parts for your machine, contact the nearest Tetra Pak service station.

Machine identification

This machine plate is an example of the type of machine plate, attached to the machine frame. The plate carries data needed when contacting Tetra Pak concerning this particular machine **(see Figure 1).**

Purpose of the Spare Parts Catalogue

The purpose of the Spare Parts Catalogue (SPC) is to provide the technicians and contact personnel with information on how to find and order spare parts for maintenance and service of the machine.
For instructions of how to replace parts and adjust machine setup, see the Maintenance Manual (MM).

Delivered documentation

The technical documentation delivered with this machine is started in the Machine Specification.
Note! If any of these documents is missing, it must be reported in the document **Start Up Machine Quality Report**. For more information, see chapter 8 Preparation for Commissioning in the Installation Manual.
It is important that you keep these documents for the life of the equipment, and pass the documents on to any subsequent holder or user of the equipment.

Design modification

The content of this document is in accordance with the design and construction of the machine at the time it was delivered from the Tetra Pak machine production facility.

Further copies

Additional copies can be ordered from the nearst Tetra Pak service station. When ordering technical publications, always quote the document number printed on the front cover of the document concerned.

Tetra Pak Part numbering system

The third and forth digits in the sub-number, specify one unique group which can be ordered. If the forth digit is replaced by a "0", the number combination only points to a bill-of-material document.
The first and second digits in the sub-number, specify the development step (model) of the machine or group. **(see fig. 3)**
Main number of machine /group /article, depending on level.
Prefix, giving information about level, eg.
A = Machine
B = Main section (*)
C = Groups and subgroups
*) Customized distribution machines are registered as B-level as well.

How to find the correct Spare Part Number

A. Check that the data on your machine sign, and/or machine specification, corresponds with the catalogue. **(see fig.1)**

1) Main groups of the machine

B. The second catalogue sheet contains a table of content for the main groups, included in the catalogue. The information regarding machine and main group page status MUST correspond with your machine specification.
Locate and choose the main groups page number (1), in which you want to search for spare parts. **(see fig.2)**

2) Main group
3) Machine type

C. Search in the main group illustration, the item number, which may hold your wanted spare part. Go to the text page below and find the page number for the actual group. **(see fig. 4)**

4) Internal information, such as latest Engineering Change, Bill-of-Material included in the catalogue page and the Assembly Drawing required
5) Used-In reference to next higher level in the machine structure
6) Assembly drawing number including the archive file extension
7) Continuous page numbering through the document
8) Pos number corresponding to illustration
9) Group or article number
10) Group or article description. The letter "B" in front of some article numbers indicates that this article contains other parts, directly listed below the B-article. Letter "A" indicates a subgroup number with an own page directly after the actual page
11) Machine type including development status
12) Group description
13) Group number (bill-of-material) including development status
14) Document number

D. Continue to the found page number, and search in the illustration for your spare part. Go to the text row for the found item number, and read the part number. Take eventual variant headings in consideration; if you are unsure, read your machine specification. **(see fig. 5)**

15) Variant heading, eg volume, left/right etc.
16) Heading for common parts
17) SP = Code for articles, which are included into various spare part kits.
    A = Critical Spare Part
    B = Non Critical Spares Part
    C = Don't stop function, can bypassed
    D = Seldom break, long time production
18) UN = Short code for measure units, eg mm, kg etc.
19) Qty = Number of items needed in the complete assembly.

SPC
Spare Parts Catalogue

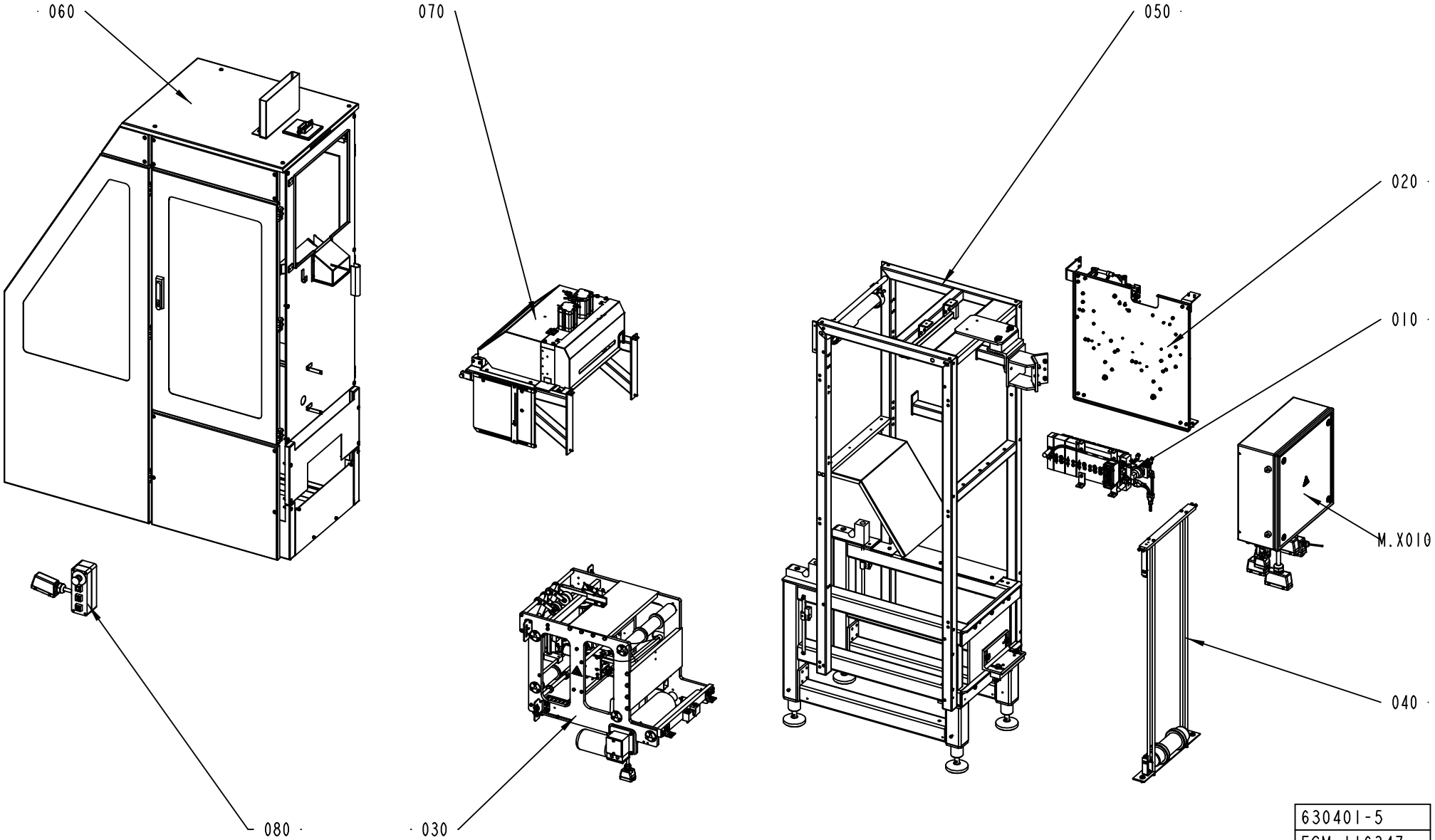
060
070
050
020
010
M.X010
040
080
030
630401-5
ECM 116347

Pos	Part No	SP	UN	Qty	Description	Page No
Common Parts						
010	A1515495-0100	-		1	VALVE RAMP INFEED	**13**
020	A2524000-0100	-		1	STRIP MAGAZINE	**15**
030	A2524060-0100	-		1	STRIP APPLICATOR	**31**
040	A2524070-0100	-		1	PAPER MAGAZINE	**57**
050	A2524280-0100	-		1	CASSETTE	**59**
060	A2524286-0100	-		1	DOORS AND COVERS	**67**
070	A2542700-0100	-		1	SPLICING DEVICE	**93**
080	A2543100-0100	-		1	PUSH BUTTON BOX	**105**
M.X010	A2555136-0100	-		1	ELECTRICAL CABINET	**107, 109**

Pos	Part No	SP	UN	Qty	Description	Page No

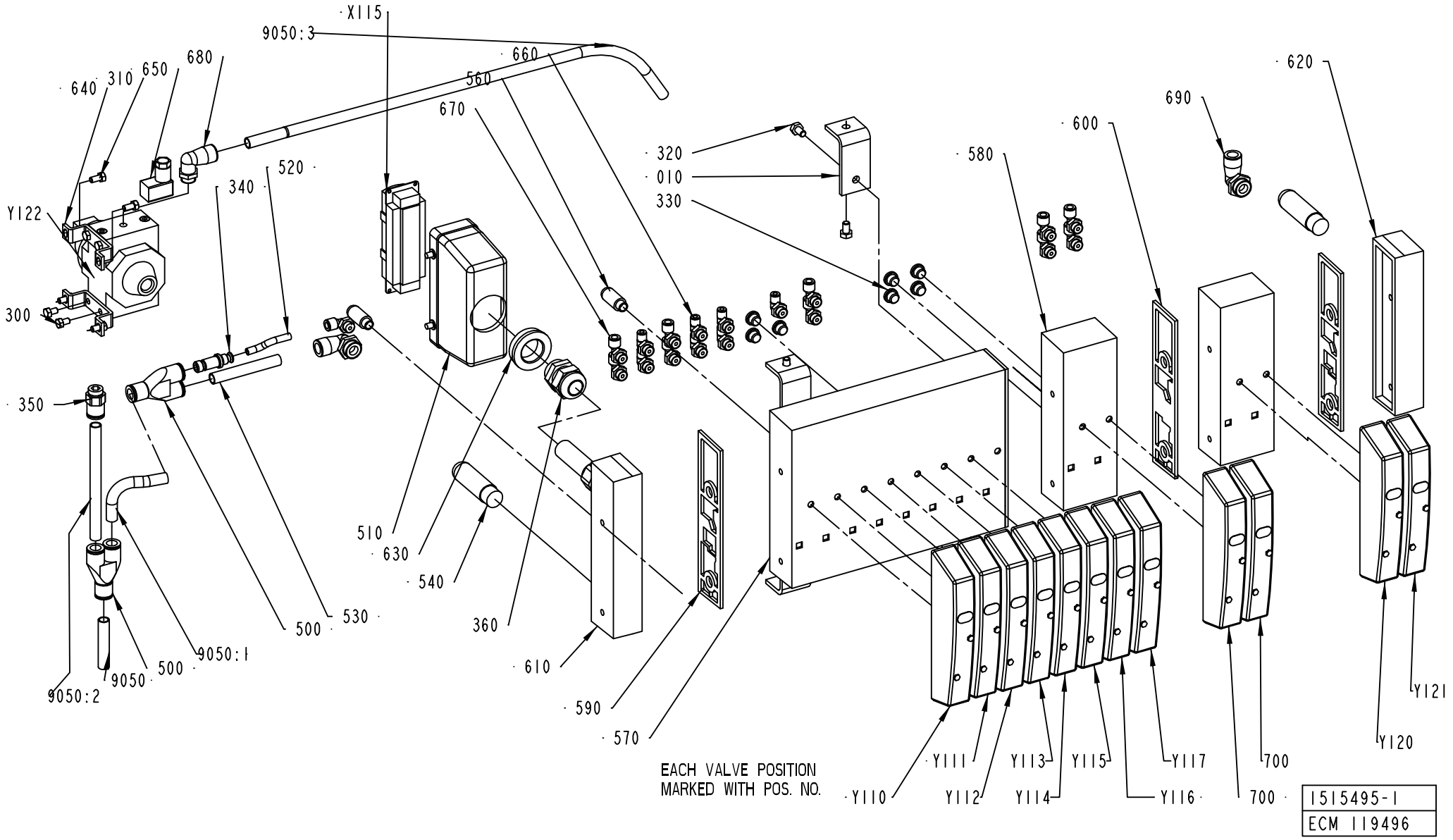
X115
9050:3
660
560
670
680
650
310
640
620
690
600
580
320
010
330
520
340
Y122
300
350
510
630
540
360
610
590
570
500
530
9050:1
9050
500
9050:2
EACH VALVE POSITION
MARKED WITH POS. NO.
Y110
Y111
Y112
Y113
Y114
Y115
Y116
Y117
700
700
Y120
Y121
1515495-1
ECM 119496

ECM: 120673 - 20021203
Group number: 1515495-0100
Assembly Drawing: 1515495-1_1_AB

Issue: 20030310

Pos	Part No	SP	UN	Qty	Description	Page No
Common Parts						
010	1515496-0000	-		4	BRACKET	
300	312105-0323	-		4	SKRUV M6S ISO 4017 M5X8 A480	
310	312105-0325	-		4	SCREW M6S ISO 4017 M5X10 A480	
320	312105-0364	-		8	SCREW M6S ISO 4017 M6X10 A480	
330	342713-0209	-		7	PLUG, EXT THREAD HEX SOCKET 8638-00-180	
340	342716-0207	-		1	REDUCER 6-10	
350	342722-0211	-		1	STRAIGHT COUPLING D=10-G1/4"	
360	352103-0111	-		1	CABLE GLAND, ST 16, PR22,5/PG16	
500	90055-0216	-		2	Y-CONNECTION, 10-10	
510	90110-0152	-		1	CABLE HOOD 24-POL 70.352.2428.1	
520	90166-0081	-	MM	50	TUBE 6 MM PA BLUE	
530	90166-0160	-	MM	70	TUBE 10 MM PA BLUE	
540	90328-0024	-		2	SILENCER G3/8	
560	90328-0047	-		2	SILENCER G1/8	
570	90458-1205	-		1	BASIC SUB-BASE FOR 8 VALVES	
580	90458-1206	-		2	EXPANSION SUB-BASE FOR 2 VALVES	
590	90458-1207	A		3	SEALING, STANDARD	
600	90458-1208	A		1	SEALING, CHANNEL 1 BLOCKED	
610	90458-1212	-		1	LEFT ENDPLATE INCL. 10M CABLE	
620	90458-1214	-		1	RIGHT ENDPLATE EXTERNAL PILOT AIR	
630	90458-2587	-		1	REDUCER, SKINDICHT-MR 29/16	
640	90458-2836	-		2	MOUNTING BRACKET, HFOE-D-MIDI/MAXI	
650	90458-2837	-		1	PLUG SOCKET, KMEB-1-24-5-LED	
660	90458-2955	-		7	ELBOW PIPE JOINT, EXT.THREAD, D=4MM-G1/8	
670	90458-2956	-		11	ELBOW PIPE JOINT, EXT.THREAD, D=6MM-G1/8	
680	90458-2961	-		1	ELBOW PIPE JOINT, EXT.THREAD,D=10MM-G1/4	
690	90458-2962	-		2	ELBOW PIPE JOINT, EXT.THREAD,D=10MM-G3/8	
700	90458-1215	-		2	COVER PLATE FOR EMPTY VALVE POSITION	
9050	90166-0160	-	MM	5000	TUBE 10 MM PA BLUE	
9050:1	90166-0160	-	MM	70	TUBE 10 MM PA BLUE	
9050:2	90166-0160	-	MM	60	TUBE 10 MM PA BLUE	
9050:3	90166-0160	-	MM	800	TUBE 10 MM PA BLUE	
X115	90110-0150	-		1	MALE INSERT 121110 0000	
Y110	90458-1194	A		7	MONOSTABLE VALVE 5/2	
Y111	90458-1197	A		2	BISTABLE VALVE 5/2	
Y112	90458-1194	A		1	MONOSTABLE VALVE 5/2	
Y113	90458-1194	A		1	MONOSTABLE VALVE 5/2	
Y114	90458-1194	A		1	MONOSTABLE VALVE 5/2	
Y115	90458-1194	A		1	MONOSTABLE VALVE 5/2	
Y116	90458-1202	-		1	VALVES 2X3/2, CLOSED	
Y117	90458-1194	A		1	MONOSTABLE VALVE 5/2	
Y120	90458-1194	A		1	MONOSTABLE VALVE 5/2	
Y121	90458-1194	A		1	MONOSTABLE VALVE 5/2	
Y122	90459-0109	A		1	SHUT-OFF VALVE G1/4	

Machine Type | Group Description | Used-In | Group Number | Page No

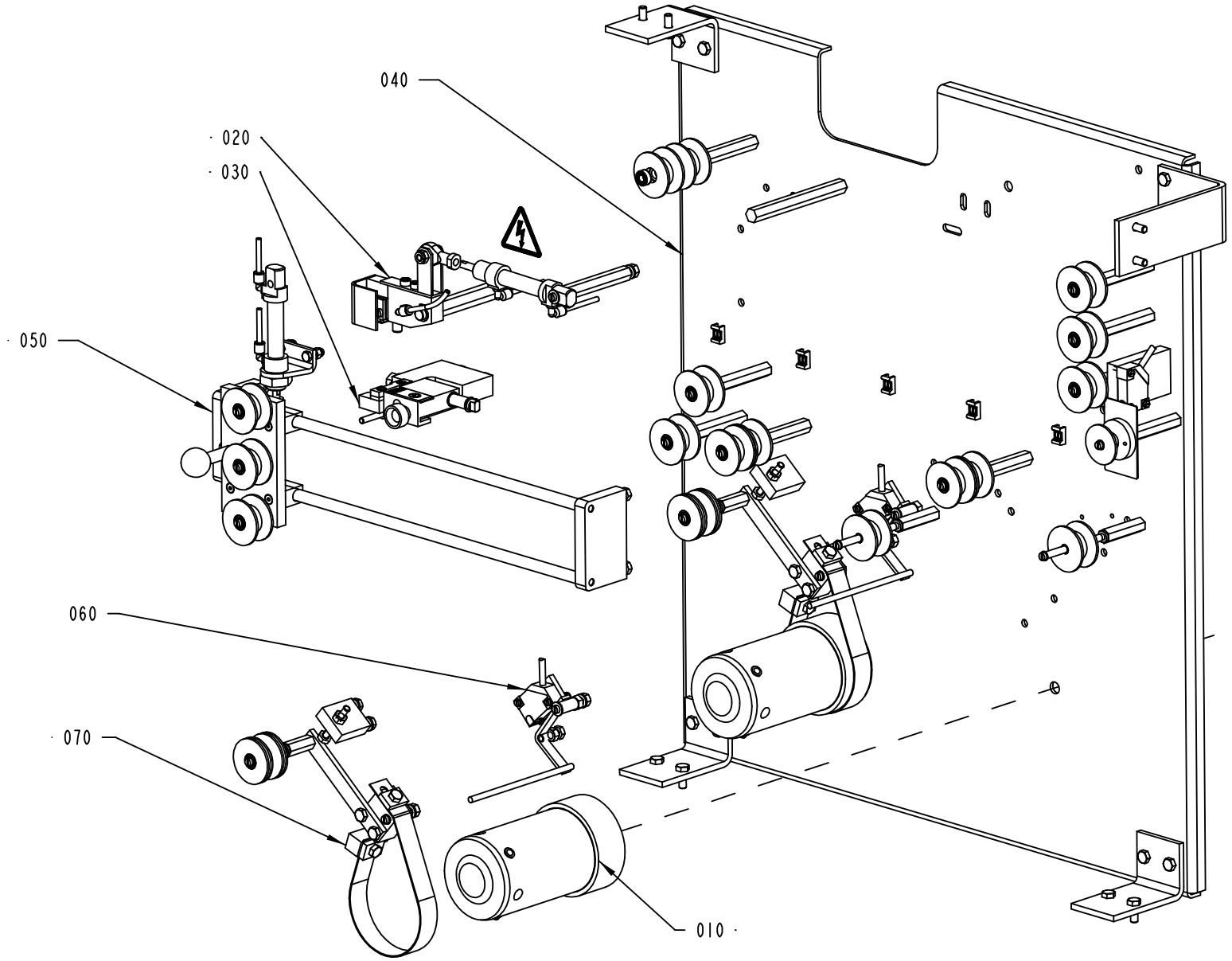

2524000-1
ECM 104004

ECM: 110567 - 20021113
Group number: 2524000-0100
Assembly Drawing: 2524000-1_1_AA

Issue: 20030310

Pos	Part No	SP	UN	Qty	Description	Page No
Common Parts						
010	A1095815-0100	-		2	HUB	**17**
020	A1515305-0100	-		1	HEATING DEVICE	**19**
030	A1515320-0100	-		1	CUTTING TABLE	**21**
040	A2523982-0100	-		1	MOUNTING PLATE	**23**
050	A2523990-0100	-		1	MAGAZINE	**25**
060	A2523991-0100	-		2	PROXIMITY SWITCH	**27**
070	A2542630-0100	-		2	BOBBIN BRAKE	**29**

Pos	Part No	SP	UN	Qty	Description	Page No

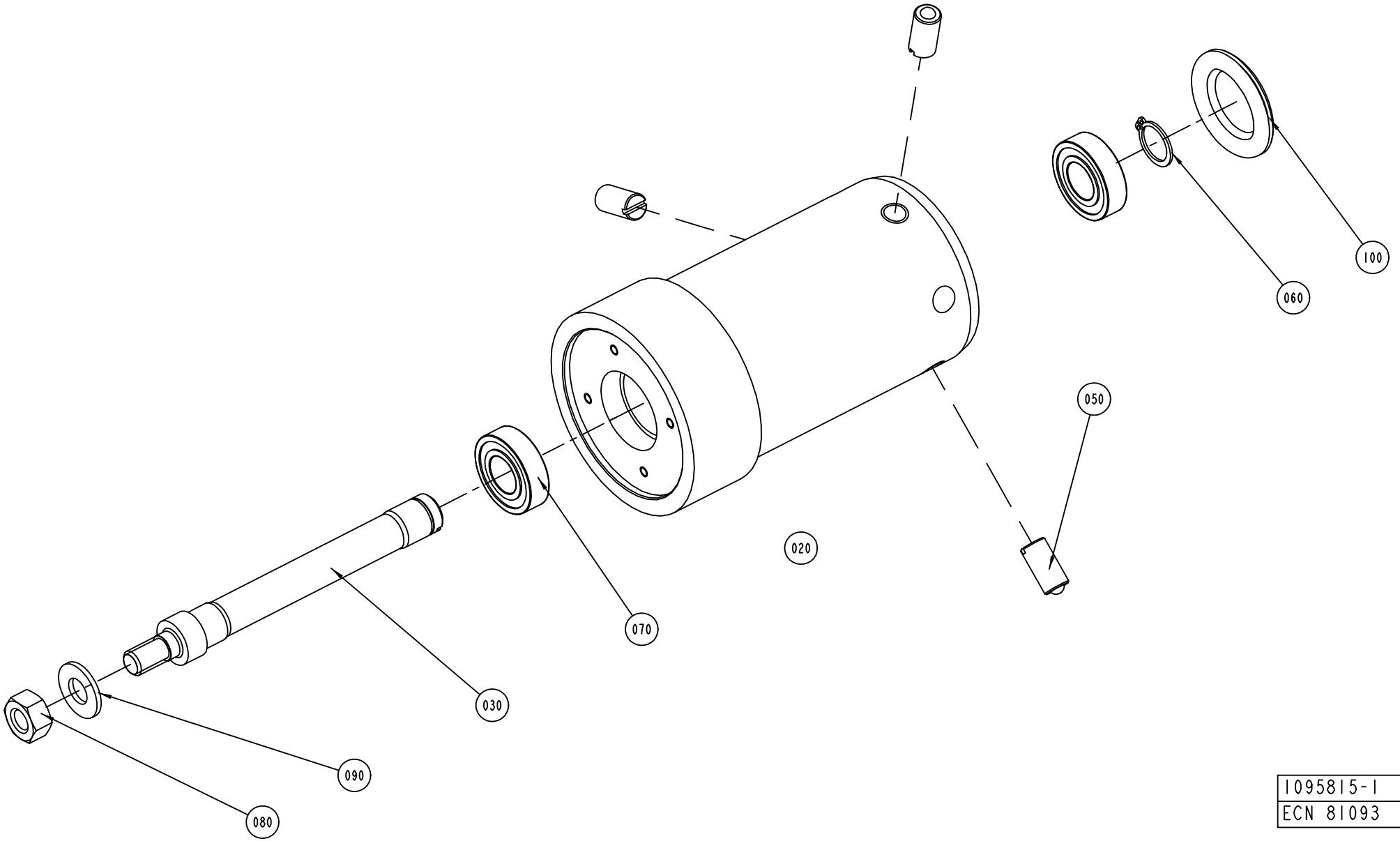

1095815-1
ECN 81093

ECM: 89464 - 20010201
Group number: 1095815-0100
Assembly Drawing: 1095815-1_1_AD

Issue: 20030310

Pos	Part No	SP	UN	Qty	Description	Page No
Common Parts						
010	541751-0000	-		1	CONICAL BOBBIN	
020	1484724-0000	A		1	HUB	
030	537327-0000	A		1	SHAFT	
040	90157-0016	-		1	LOCKING FLUID	
050	90287-0106	B		3	SCREW SPRINGLOAD. SLOTTED HEAD M10X21	
060	315751-0112	-		1	RETAIN. RING, 15	
070	90214-0207	A		2	BALL BEARING, 15X32X9 MM	
080	312605-0320	-		1	HEXAGON NUT, M6M M10 A280	
090	315105-0173	-		1	WASHER ISO 7089-10-200 HV-A4	
100	90261-0049	-		1	PLUG, BLIND, PLASTIC, NO. SR1750	

Pos	Part No	SP	UN	Qty	Description	Page No

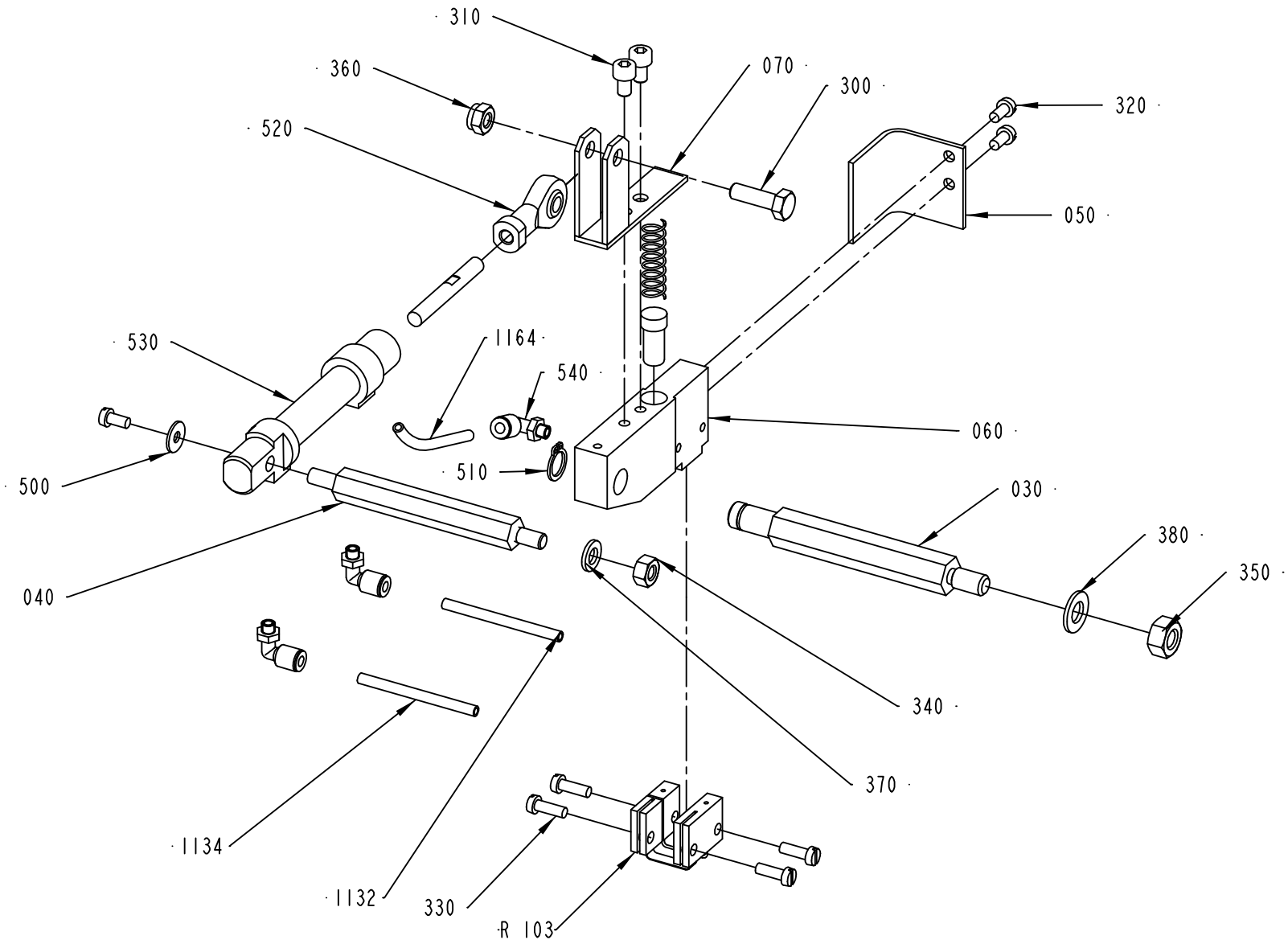

1515305-1
ECM 119496

ECM: 120624 - 20021203
Group number: 1515305-0100
Assembly Drawing: 1515305-1_1_AB

Issue: 20030310

Pos	Part No	SP	UN	Qty	Description	Page No
Common Parts						
010	400828-0000	A		1	SPRING	
020	400833-0000	A		1	PLUNGER	
030	1037120-0000	-		1	SHAFT	
040	1037121-0000	-		1	SHAFT	
050	1349181-0000	-		1	TOUCH GUARD	
060	1490804-0000	-		1	HOLDER	
070	1515302-0000	-		1	HOLDER	
1132	90166-0095	-	MM	1600	TUBE 4 MM PA BLUE	
1134	90166-0095	-	MM	1600	TUBE 4 MM PA BLUE	
1164	90166-0095	-	MM	1600	TUBE 4 MM PA BLUE	
300	312105-0370	-		1	SCREW M6S ISO 4017 M6X20 A480	
310	312115-0323	-		2	SCREW ISO4762 M5X8 A4	
320	312125-0287	-		3	SCREW PAN HEAD MCS M4X8 SS	
330	312125-0291	-		4	SCREW PAN HEAD MCS M4X12 SS	
340	312605-0316	-		1	HEXAGON NUT, M6M M6 A280	
350	312605-0318	-		1	HEXAGON NUT, M6M M8 A280	
360	312812-0316	-		1	HEXAGON NUT, NY-LOCK M6 A480	
370	315105-0153	-		1	WASHER ISO 7089-6-200 HV-A4	
380	315105-0165	-		1	WASHER ISO 7089-8-200 HV-A4	
500	90005-0082	-		1	WASHER PLAIN ROUND 4,3(M4)/12,H=1	
510	90141-0016	-		1	RETAIN. RING, 10	
520	90239-0491	-		1	ROD END,BALL JOINT EYE,MINI-ISO M6	
530	90450-0306	A		1	DOUBLE ACTING, MINI-ISO, CYL. 12-25	
540	90458-2954	-		3	ELBOW PIPE JOINT, EXT.THREAD, D=4MM M5	
R103	1498047-0000	A		1	SEALING BLOCK	

Pos	Part No	SP	UN	Qty	Description	Page No

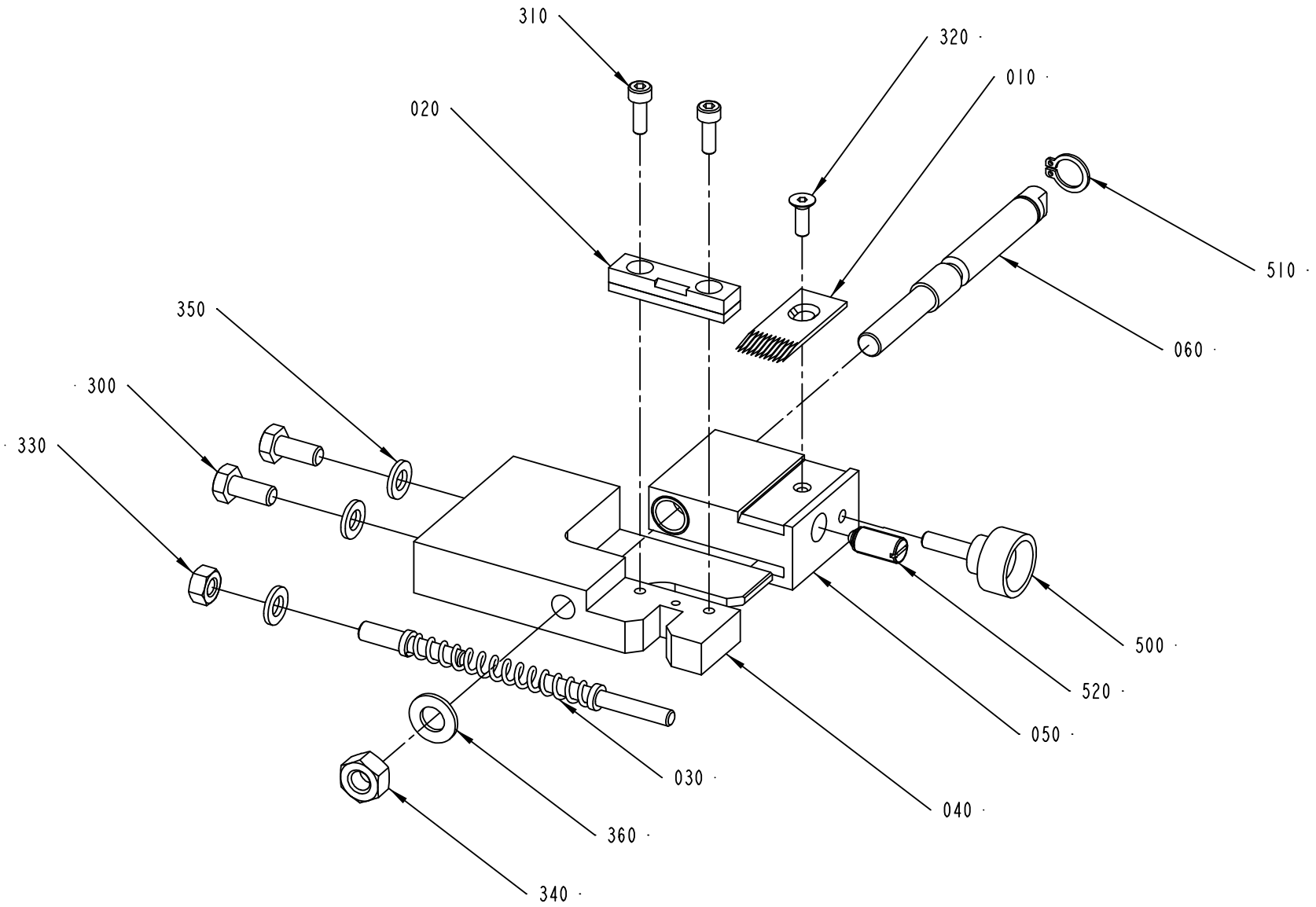

1515320-1
ECM 73234

Pos	Part No	SP	UN	Qty	Description	Page No
Common Parts						
010	1347258-0000	A		1	KNIFE	
020	1349014-0000	A		1	PAD	
030	1349179-0000	B		1	FINGER	
040	1349926-0000	-		1	SPLICING TABLE	
050	B1349927-0000	-		1	SLIDE	
010	*321120-0104*	*C*		*2*	*BEARBUSHING W/O FL,ANGE 10/12X10*	
060	1349928-0000	-		1	SHAFT	
300	312105-0367	-		2	SCREW M6S M6X14 A280	
310	312115-0291	-		2	SCREW ISO4762 M4X12 A4	
320	312155-0291	-		1	SCREW EN 10642 MF6S M4X12 A480	
330	312605-0316	-		1	HEXAGON NUT, M6M M6 A280	
340	312605-0318	-		1	HEXAGON NUT, M6M M8 A280	
350	315105-0153	-		3	WASHER ISO 7089-6-200 HV-A4	
360	315105-0165	-		1	WASHER ISO 7089-8-200 HV-A4	
500	90051-0035	-		1	KNOB, EXTERNAL THREAD. NO. 8308-1135	
510	90141-0016	-		1	RETAIN. RING, 10	
520	90287-0112	-		1	SCREW SPRINGLOAD. SLOTTED HEAD M8X16	

Pos	Part No	SP	UN	Qty	Description	Page No

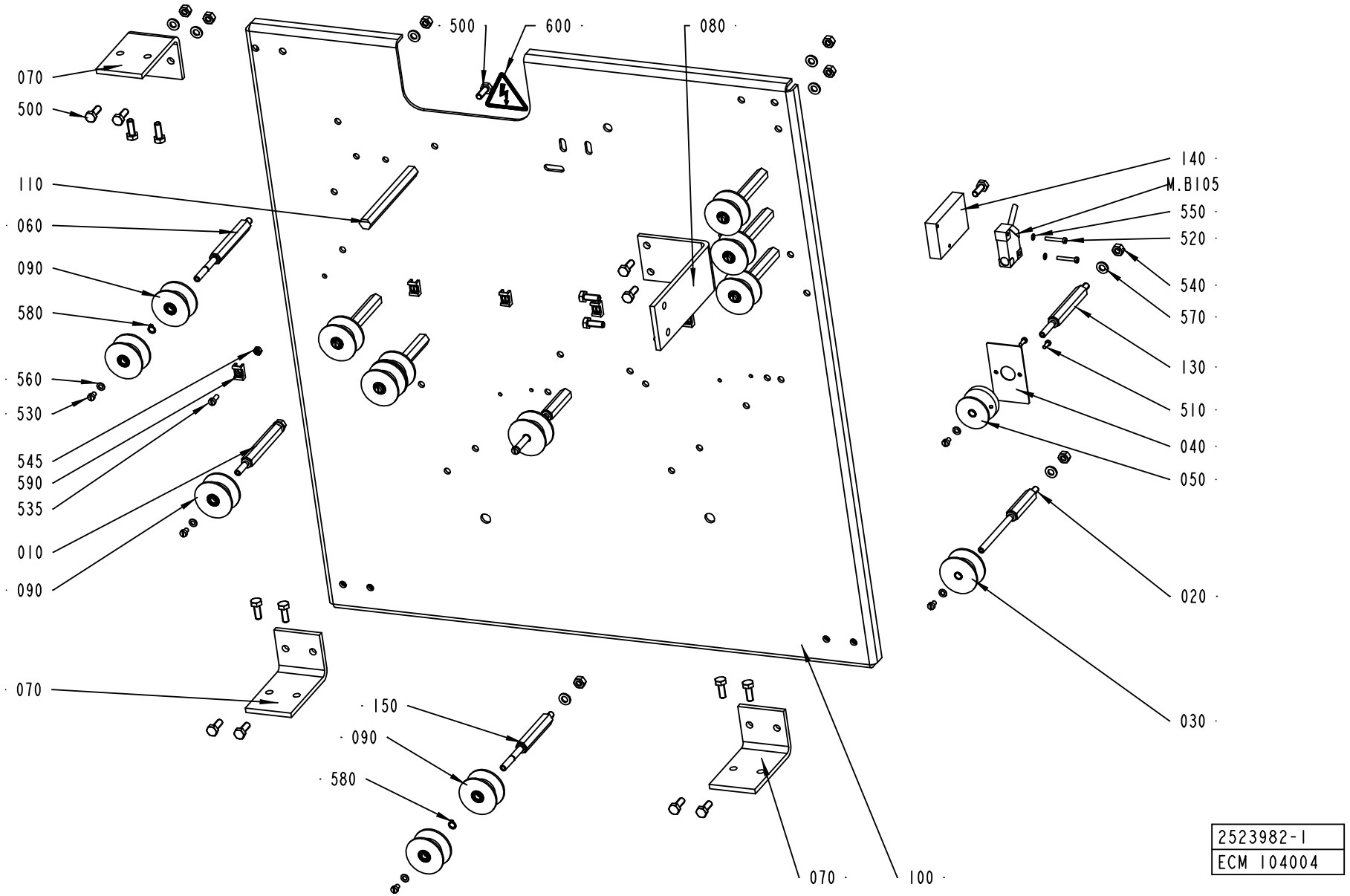
070
500
110
060
090
580
560
530
545
590
535
010
090
070
500
600
080
140
M.B105
550
520
540
570
130
510
040
050
020
030
150
090
580
070
100
2523982-1
ECM 104004

Pos	Part No	SP	UN	Qty	Description	Page No
Common Parts						
010	536916-0000	-		5	AXLE PIN	
020	544725-0000	-		2	AXLE PIN	
030	583986-0000	A		2	ROLL	
040	1349581-0000	-		1	FLAG	
050	B1349986-0000	A		1	ROLLER	
010	*321120-0101*	*C*		*2*	*BEARING BUSHING W/O FLANGE,6/8X6*	
060	2542682-0000	-		1	SHAFT	
070	1515322-0000	-		3	BRACKET	
080	1515323-0000	-		1	BRACKET	
090	1548195-0000	A		11	ROLL	
100	2523981-0000	-		1	MOUNTING PLATE	
110	2542817-0000	-		1	PIN	
130	2523985-0000	-		1	AXLE PIN	
140	2523986-0000	-		1	BRACKET	
150	2542956-0000	-		2	SHAFT	
500	312105-0368	-		18	SCREW M6S M6X16 A280	
510	312125-0222	-		2	SPåRSKRUV MCS M3X8 SS	
520	312125-0230	-		2	SPåRSKRUV MCS M3X20 SS	
530	312125-0285	-		11	SCREW SLOT.PAN HD. MCS 4X6 A480	
535	312125-0289	-		5	SPåRSKRUV MCS 4X10 A480	
540	312605-0316	-		19	HEXAGON NUT, M6M M6 A280	
545	312605-0312	-		5	HEXAGON NUT, M6M M4 A280	
550	315105-0124	-		4	WASHER ISO 7089-3-200 HV-A4	
560	315105-0136	-		11	WASHER ISO 7089-4-200 HV-A4	
570	315105-0153	-		19	WASHER ISO 7089-6-200 HV-A4	
580	315751-0103	-		3	RETAIN. RING, 6	
590	352113-0205	-		5	ANCHOR PLATES FOR STRIPS, TYPE TM2S8-C10	
600	359705-0015	A		1	WARNING SIGN ISO, RISK OF ELECTRIC SHOCK	
M.B105	90044-0194	A		1	PROX.SW. IN5329/IN3002-BPKG	

Pos	Part No	SP	UN	Qty	Description	Page No

Machine Type | Group Description | Used-In | Group Number | Page No

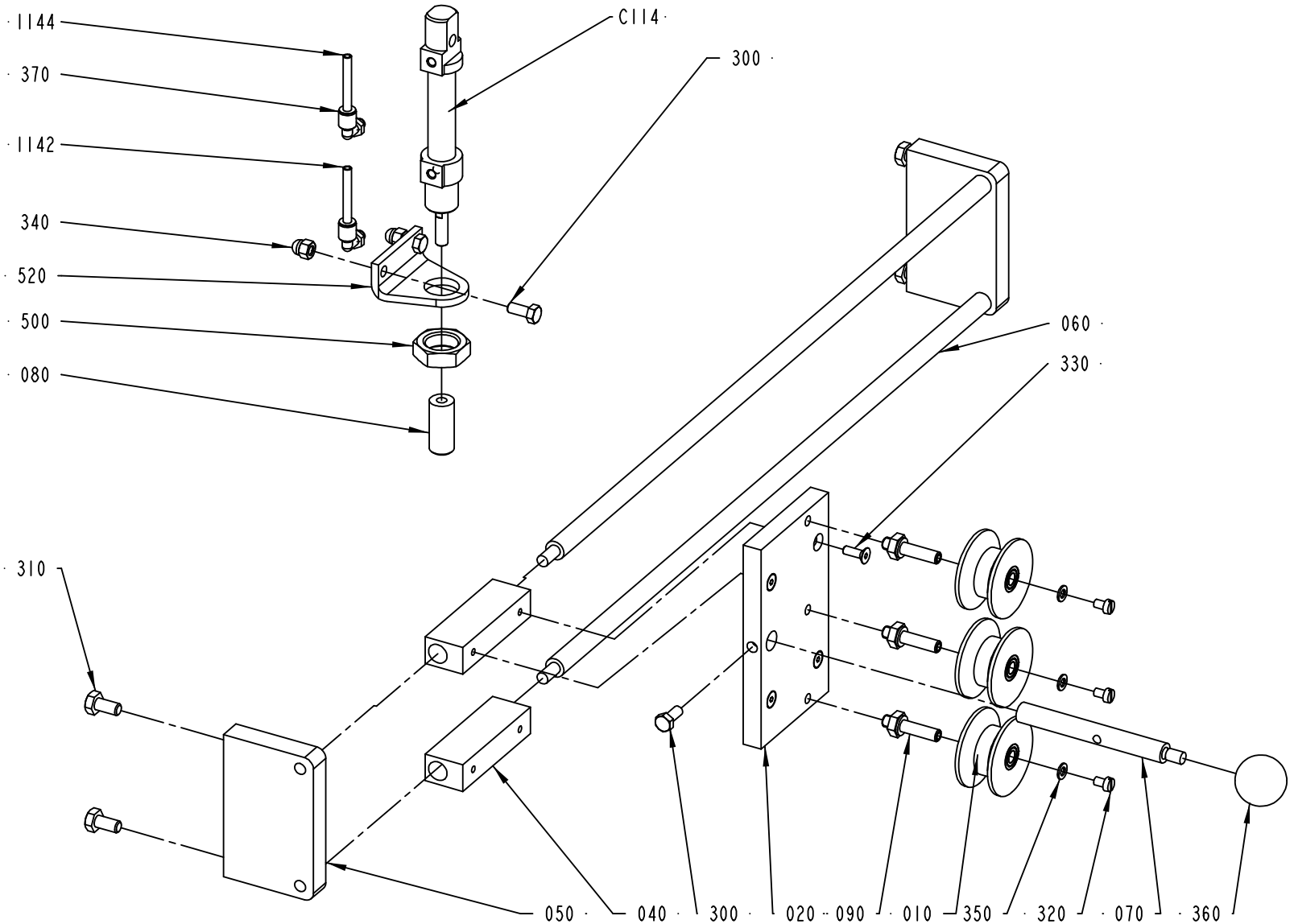

2523990-1
ECM 104004

ECM: 120627 - 20021203
Group number: 2523990-0100
Assembly Drawing: 2523990-1_1_AA

Issue: 20030310

Pos	Part No	SP	UN	Qty	Description	Page No
Common Parts						
010	1548195-0000	A		3	ROLL	
020	1515317-0000	-		1	BRACKET	
040	2523988-0000	-		2	GUIDE	
050	1515483-0000	-		2	BRACKET	
060	1515484-0000	-		2	SLIDE RAIL	
070	2523989-0000	-		1	PIN	
080	1515548-0000	-		1	STOP	
090	2523987-0000	-		3	SHAFT	
1142	315400-0016	-	MM	2000	TUBE PUN-H-4X0,75-BL	
1144	315400-0016	-	MM	2000	TUBE PUN-H-4X0,75-BL	
300	312105-0327	-		3	SCREW M6S ISO 4017 M5X12 A480	
310	312105-0366	-		4	SCREW M6S M6X12 A280	
320	312125-0285	-		3	SCREW SLOT.PAN HD. MCS 4X6 A480	
330	312155-0291	-		4	SCREW EN 10642 MF6S M4X12 A480	
340	312705-0314	-		2	NUT HEX. DOMED CAP MHM-6 M5 A280	
350	315105-0136	-		3	WASHER ISO 7089-4-200 HV-A4	
360	318800-0103	-		1	HANDLES,SPHERICAL KNOB,INT.THRE.,D.25-M6	
370	90458-2954	-		2	ELBOW PIPE JOINT, EXT.THREAD, D=4MM M5	
500	90099-0048	-		1	ROD END,NUT M16X1,5	
520	90458-2972	-		1	FOOT CRHBN-12/16X1	
C114	90450-0306	A		1	DOUBLE ACTING, MINI-ISO, CYL. 12-25	

Pos	Part No	SP	UN	Qty	Description	Page No

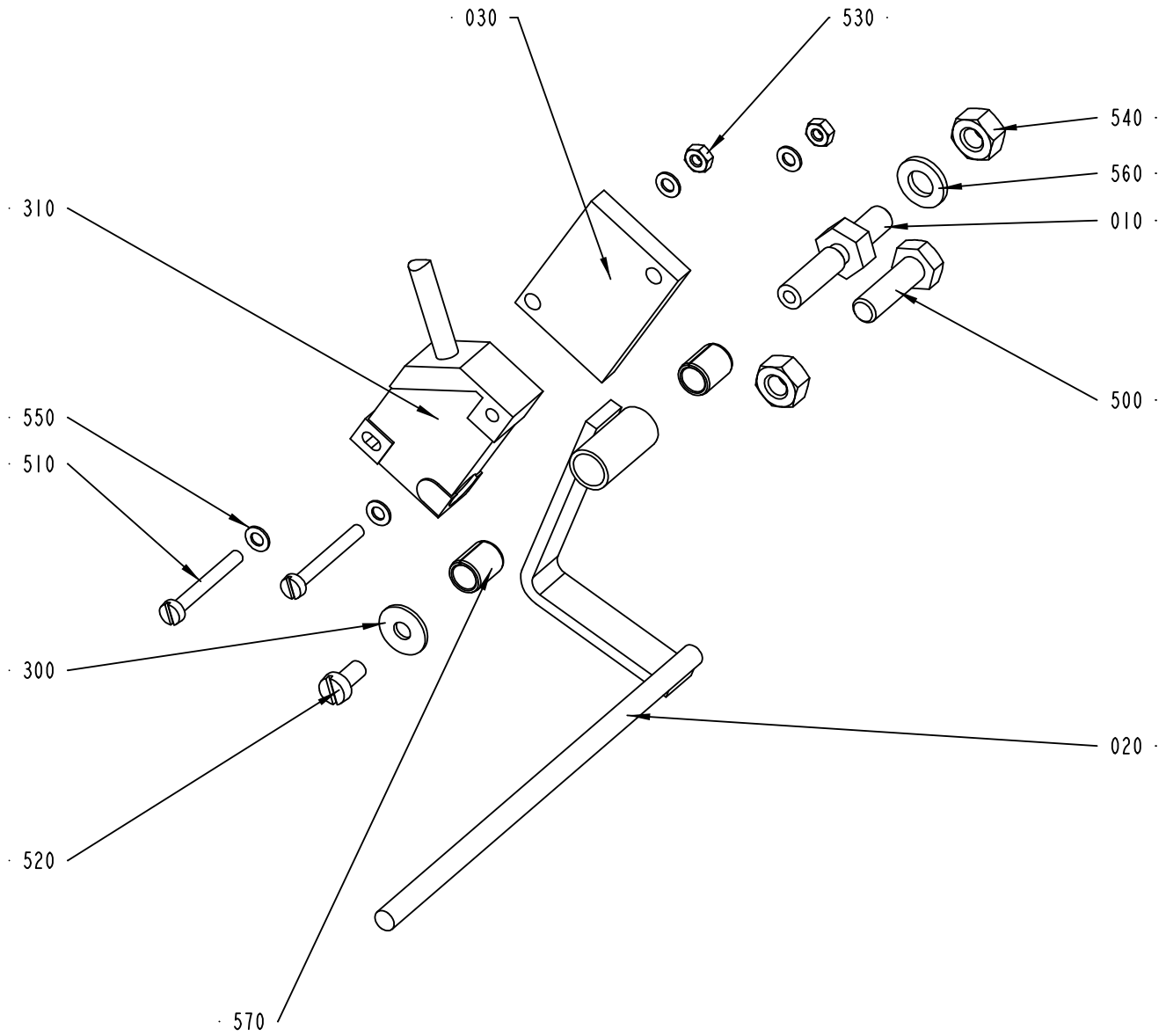

2523991-1
ECM 104004

ECM: 120628 - 20021203
Group number: 2523991-0100
Assembly Drawing: 2523991-1_1_AA

Issue: 20030310

Pos	Part No	SP	UN	Qty	Description	Page No
Common Parts						
010	1105643-0000	-		1	AXLE PIN	
020	1490818-0000	-		1	ARM	
030	2523992-0000	-		1	SPACER	
300	90005-0082	-		1	WASHER PLAIN ROUND 4,3(M4)/12,H=1	
310	90044-0194	A		1	PROX.SW. IN5329/IN3002-BPKG	
500	312105-0370	-		1	SCREW M6S ISO 4017 M6X20 A480	
510	312125-0232	-		2	SCREW PAN HEAD MCS M3X25 SS	
520	312125-0287	-		1	SCREW PAN HEAD MCS M4X8 SS	
530	312605-0310	-		2	HEXAGON NUT, M6M M3 A280	
540	312605-0316	-		2	HEXAGON NUT, M6M M6 A280	
550	315105-0124	-		4	WASHER ISO 7089-3-200 HV-A4	
560	315105-0153	-		1	WASHER ISO 7089-6-200 HV-A4	
570	321141-0064	-		2	BEARING BUSHING W/O FL, 6X8X10 MM	

Pos	Part No	SP	UN	Qty	Description	Page No

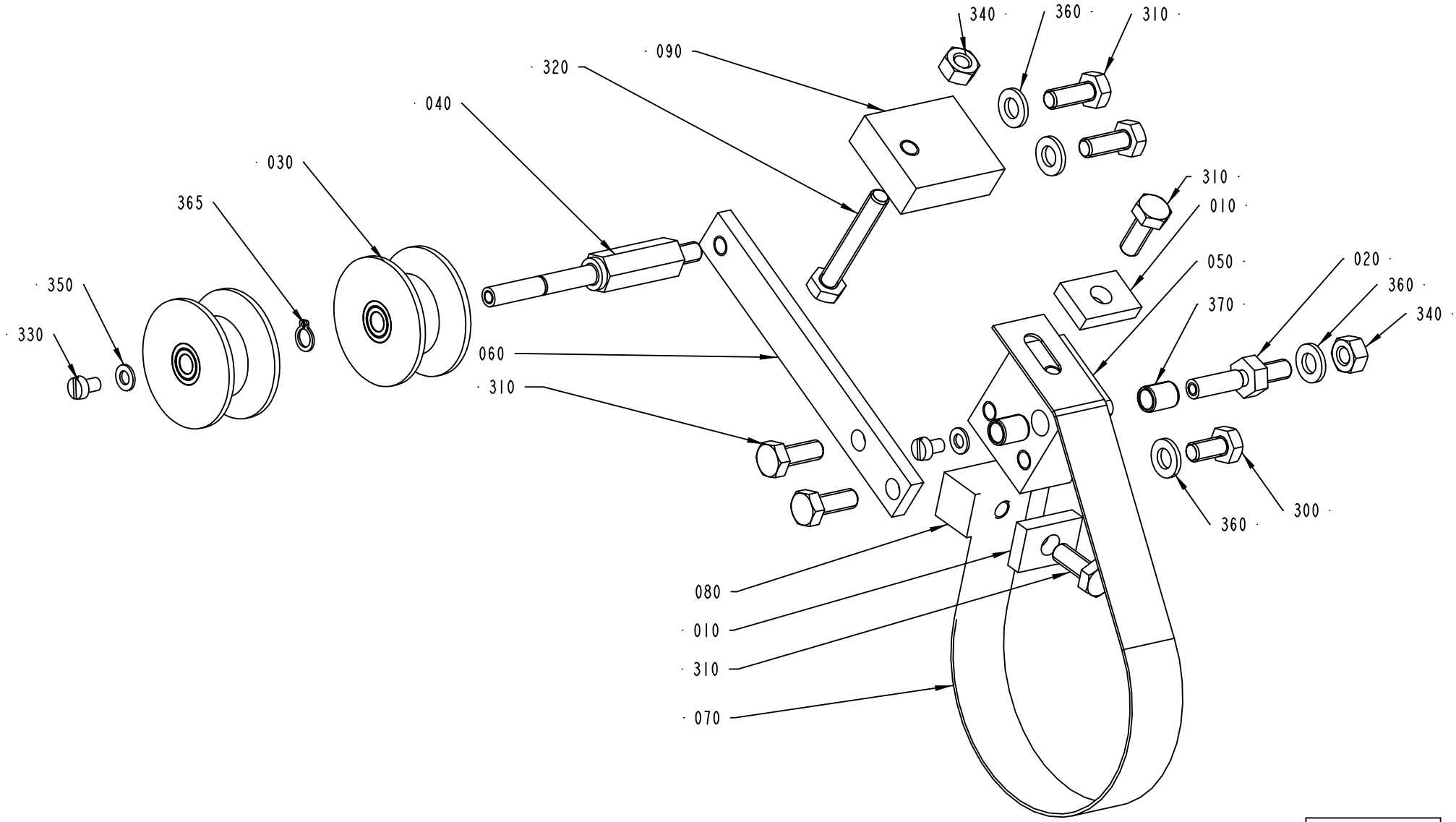
340
360
310
090
320
040
030
365
350
330
060
310
310
010
050
020
360
370
340
360
300
080
010
310
070
2542630-1
ECM 104004

ECM: 120629 - 20021203
Group number: 2542630-0100
Assembly Drawing: 2542630-1_1_AA

Issue: 20030310

Pos	Part No	SP	UN	Qty	Description	Page No
Common Parts						
010	592263-0000	-		2	LUG	
020	1105643-0000	-		1	AXLE PIN	
030	1548195-0000	A		2	ROLL	
040	2542957-0000	-		1	SHAFT	
050	2524066-0000	-		1	ARM	
060	2524067-0000	-		1	ARM	
070	2524068-0000	A		1	BELT	
080	2524069-0000	-		1	BRACKET	
090	2542622-0000	-		1	BRACKET	
300	312105-0366	-		1	SCREW M6S M6X12 A280	
310	312105-0368	-		6	SCREW M6S M6X16 A280	
320	312109-0378	-		1	SCREW M6S ISO4017 M6X40 A480	
330	312125-0285	-		2	SCREW SLOT.PAN HD. MCS 4X6 A480	
340	312605-0316	-		2	HEXAGON NUT, M6M M6 A280	
350	315105-0136	-		2	WASHER ISO 7089-4-200 HV-A4	
360	315105-0153	-		4	WASHER ISO 7089-6-200 HV-A4	
365	315751-0103	-		1	RETAIN. RING, 6	
370	321141-0064	-		2	BEARING BUSHING W/O FL, 6X8X10 MM	

Pos	Part No	SP	UN	Qty	Description	Page No

Machine Type | Group Description | Used-In | Group Number | Page No

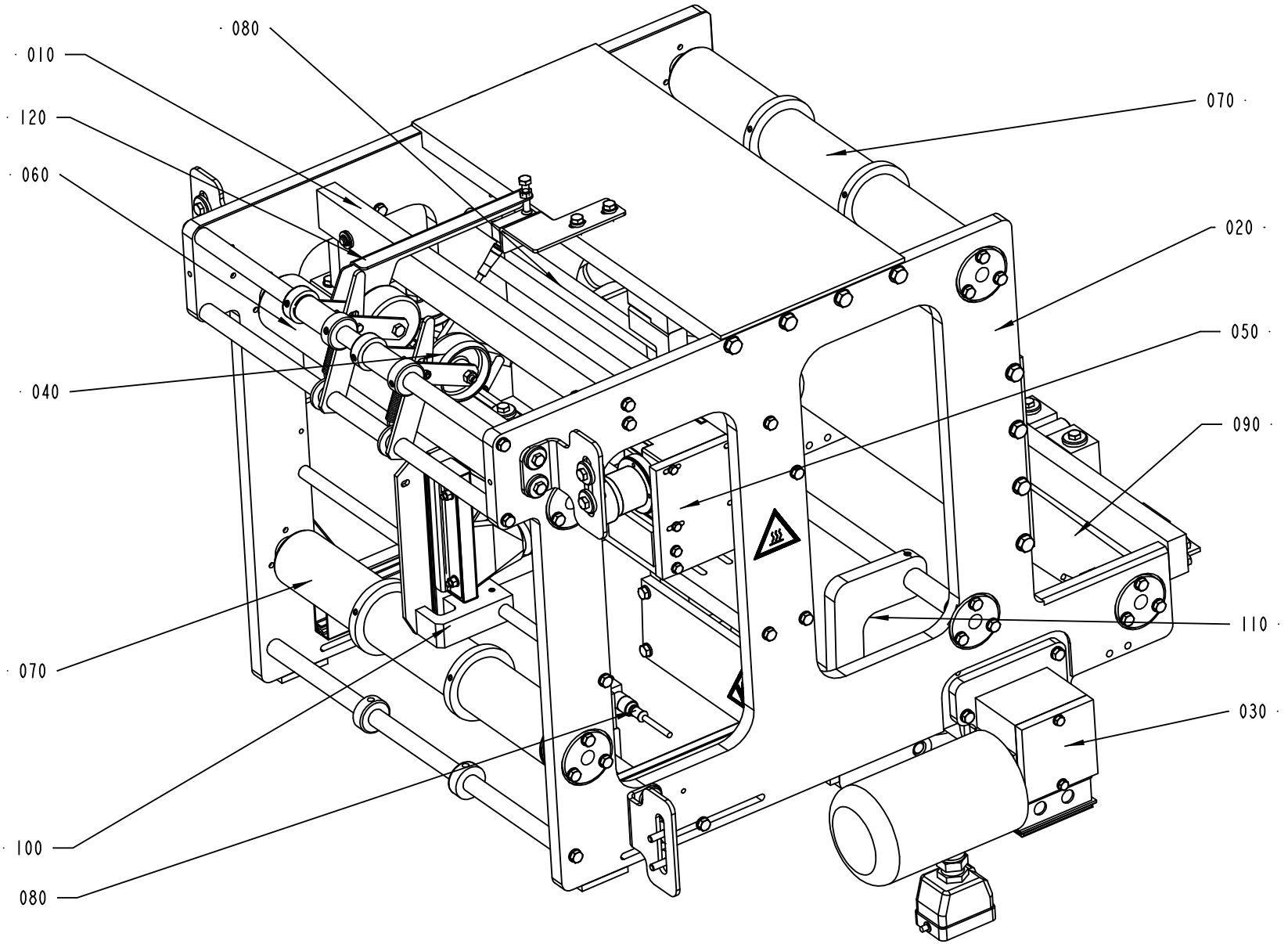

2524060-1
ECM 119827

ECM: 121245 - 20021203
Group number: 2524060-0100
Assembly Drawing: 2524060-1_1_AB

Issue: 20030310

Pos	Part No	SP	UN	Qty	Description	Page No
Common Parts						
010	A2523885-0100	-		1	STRIP GUIDE	**33**
020	A2523890-0100	-		1	FRAME	**35**
030	A2523900-0100	-		1	DRIVE ROLLER	**37**
040	A2524015-0100	-		1	PRESSURE ROLLER	**39**
050	A2524020-0100	-		1	HEATING DEVICE	**41**
060	A2524035-0100	-		1	BENDING ROLLER	**43**
070	A2524040-0100	-		2	BENDING ROLLER	**45**
080	A2524045-0100	-		2	INDICATOR	**47**
090	A2524065-0100	-		1	BENDING ROLLER	**49**
100	A2524125-0100	-		1	PAPER GUIDE	**51**
110	A2542627-0100	-		1	PRESSURE ROLLER	**53**
120	A2556810-0100	-		1	SPLICE DETECTOR	**55**

Pos	Part No	SP	UN	Qty	Description	Page No

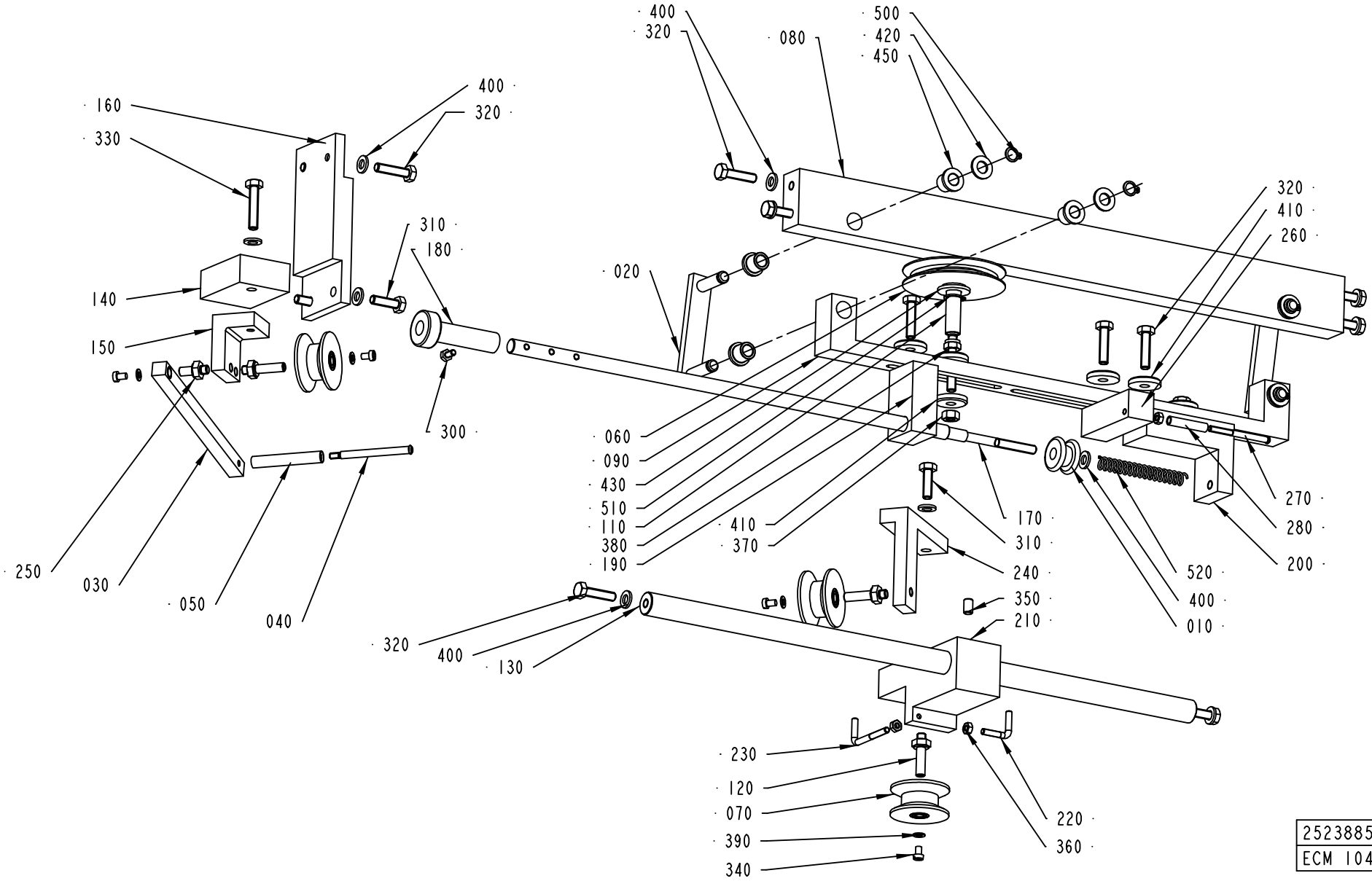
400
320
080
500
420
450
160
330
400
320
310
180
020
320
410
260
140
150
300
060
090
430
510
110
380
190
410
370
170
310
240
350
210
270
280
200
520
400
010
250
030
050
040
320
400
130
230
120
070
390
340
220
360
2523885-1
ECM 104022

ECM: 120177 - 20021203
Group number: 2523885-0100
Assembly Drawing: 2523885-1_1_AA

Issue: 20030310

Pos	Part No	SP	UN	Qty	Description	Page No
Common Parts						
010	257923-0000	A		1	GUIDE WHEEL	
020	1346746-0000	-		2	LEVER	
030	1347737-0000	-		1	ARM	
040	1347882-0000	-		1	SHAFT	
050	1347883-0000	B		1	ROLLER	
060	1514892-0000	A		1	WHEEL	
070	1548195-0000	A		3	ROLL	
080	2523881-0000	-		1	BAR	
090	2523882-0000	-		1	CRADLE	
110	2523884-0000	-		1	AXLE PIN	
120	2523987-0000	-		3	SHAFT	
130	2524037-0000	-		1	SHAFT	
140	2524009-0000	-		1	BRACKET	
150	2524011-0000	-		1	BRACKET	
160	2542914-0000	-		1	BRACKET	
170	2542945-0000	-		1	ADJUSTING SCREW	
180	2542946-0000	-		1	KNOB	
190	2542947-0000	-		1	BRACKET	
200	2542948-0000	-		1	BRACKET	
210	2543011-0000	-		1	BRACKET	
220	2543012-0000	-		1	HOOK	
230	2543013-0000	-		1	HOOK	
240	2543015-0000	-		1	BRACKET	
250	2543016-0000	-		1	SHAFT	
260	2556836-0000	-		1	BRACKET	
270	469463-0000	-		2	SHAFT	
280	469464-0000	A		2	ROLL	
300	312105-0287	-		1	SCREW M6S ISO4017 M4X8 A480	
310	312105-0370	-		3	SCREW M6S ISO 4017 M6X20 A480	
320	312105-0372	-		12	SCREW M6S ISO 4017 M6X25 A480	
330	312109-0374	-		1	SCREW M6S ISO 4017 M6X30 A480	
340	312125-0285	-		4	SCREW SLOT.PAN HD. MCS 4X6 A480	
350	312318-0364	-		1	SCREW ISO4029 M6X10 A4	
360	312605-0312	-		4	HEXAGON NUT, M6M M4 A280	
370	312605-0316	-		1	HEXAGON NUT, M6M M6 A280	
380	312812-0316	-		1	HEXAGON NUT, NY-LOCK M6 A480	
390	315105-0136	-		4	WASHER ISO 7089-4-200 HV-A4	
400	315105-0153	-		13	WASHER ISO 7089-6-200 HV-A4	
410	315125-0153	-		6	WASHER TBRSB 6,4X22X4 A4	
420	315105-0165	-		4	WASHER ISO 7089-8-200 HV-A4	
430	315105-0173	-		1	WASHER ISO 7089-10-200 HV-A4	
450	321111-0097	B		8	FLANGE BUSHING, 8X12X12 MM	
500	90141-0015	A		4	RETAIN. RING, 8	
510	90141-0016	A		1	RETAIN. RING, 10	
520	90458-2967	-		1	COMP. SPRING 6040	

Machine Type	Group Description	Used-In	Group Number	Page No

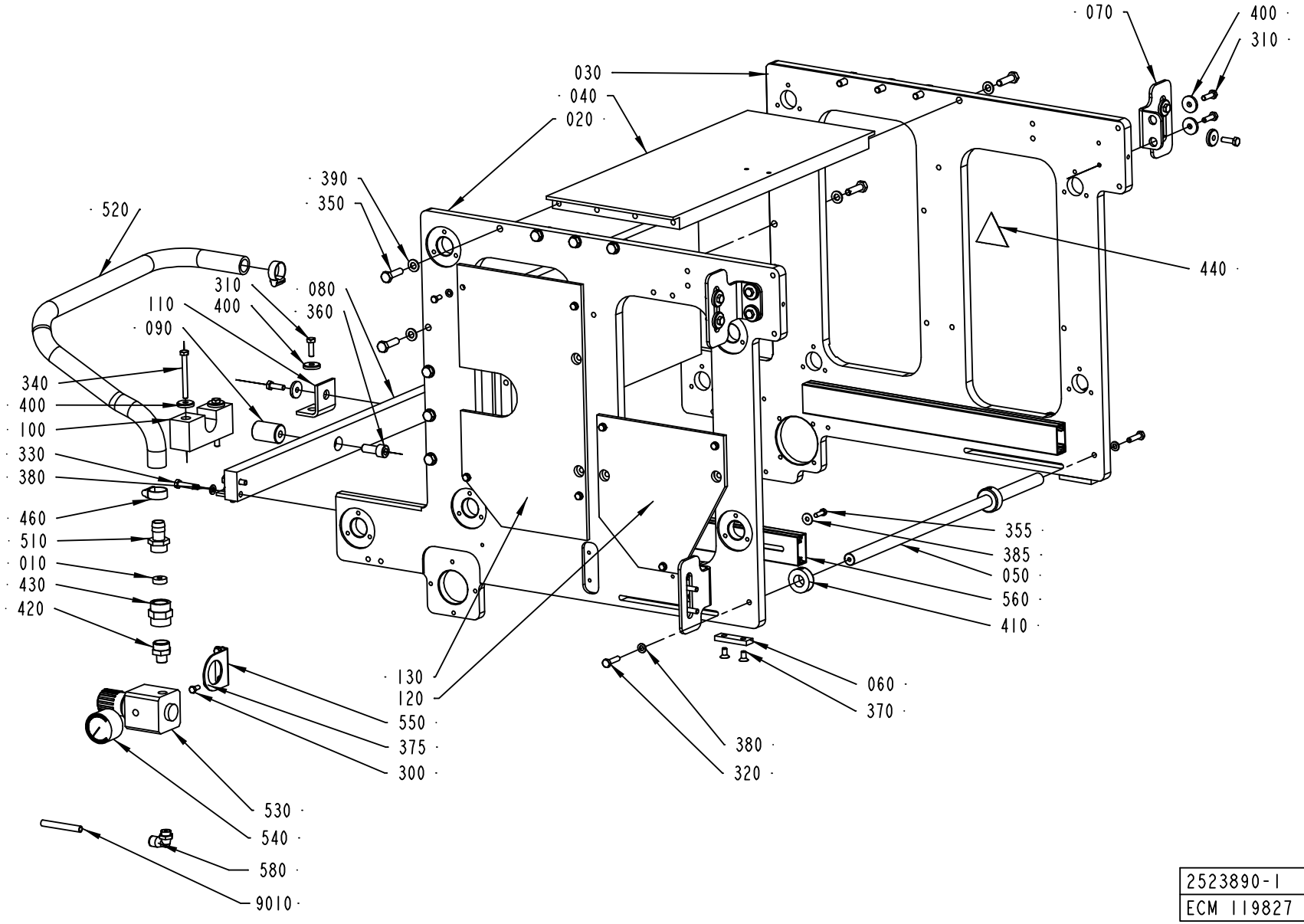

2523890-1
ECM 119827

Pos	Part No	SP	UN	Qty	Description	Page No
Common Parts						
010	1515463-0000	-		1	THROTTLE WASHER	
020	2524016-0000	-		1	PLATE	
030	2524017-0000	-		1	PLATE	
040	2524033-0000	-		2	PLATE	
050	2524037-0000	-		1	SHAFT	
060	2524057-0000	-		2	PLATE	
070	2524058-0000	-		4	BRACKET	
080	2524059-0000	-		1	BAR	
090	2524061-0000	-		1	AXLE PIN	
100	2524062-0000	-		1	BLOCK	
110	2524063-0000	-		2	BRACKET	
120	2543018-0000	-		1	COVER	
130	2543019-0000	-		1	COVER	
300	312105-0327	-		9	SCREW M6S ISO 4017 M5X12 A480	
310	312105-0370	-		20	SCREW M6S ISO 4017 M6X20 A480	
320	312105-0372	-		2	SCREW M6S ISO 4017 M6X25 A480	
330	312105-0374	-		4	SCREW M6S ISO 4014 M6X30 A480	
340	312105-0382	-		2	SCREW M6S ISO 4014 M6X60 A480	
350	312105-0455	-		16	SCREW M6S ISO 4017 M8X30 A480	
355	312125-0329	-		4	SCREW PAN HEAD MCS M5X16 SS	
360	312115-0493	-		1	SCREW ISO4762 M10X25 A4	
370	312155-0366	-		4	SCREW EN 10642 MF6S M6X12 A480	
375	315105-0146	-		9	WASHER ISO 7089-5-200 HV-A4	
380	315105-0153	-		4	WASHER ISO 7089-6-200 HV-A4	
385	315125-0146	-		4	WASHER TBRSB 5.3X15X1 A4	
390	315105-0165	-		16	WASHER ISO 7089-8-200 HV-A4	
400	315125-0153	-		22	WASHER TBRSB 6,4X22X4 A4	
410	315742-0112	-		2	COLLAR, 16/32, H=12	
420	342700-0205	-		1	NIPPLES,HEXAGON,EXT.G-THREAD G1/2"-G1/4"	
430	342707-0113	-		1	SLEEVE, INT. THREAD, NO. 2543-1/2	
440	359710-0001	A		1	WARNING SIGN ISO, HOT SURFACE	
460	342991-0103	-		2	HOSE CLIP,WORM DRIVE TYPE (19)-23	
510	90163-0039	-		1	HOSE NIPPLE EXT.THR. R1/2 2601-17 MM	
520	90166-0060	-	MM	1000	HOSE 19/26-27 REINF.PVC	
530	90458-0254	A		1	PRECISION PRESSURE REGULATOR,LRP-1/4-0,7	
540	90458-2969	B		1	PRESSURE GAUGE, MAP-40-1-1/8-EN	
550	90458-2971	-		1	BRACKET, HR-1/4-P FOR LRP-1/4-0,7	
560	2576318-0000	-		2	CABLE DUCT	
580	90458-2958	-		1	ELBOW PIPE JOINT, EXT.THREAD, D=8MM-G1/4	
9010	90166-0013	-	MM	6000	TUBE 8 MM PA BLUE	

Pos	Part No	SP	UN	Qty	Description	Page No

Machine Type | Group Description | Used-In | Group Number | Page No

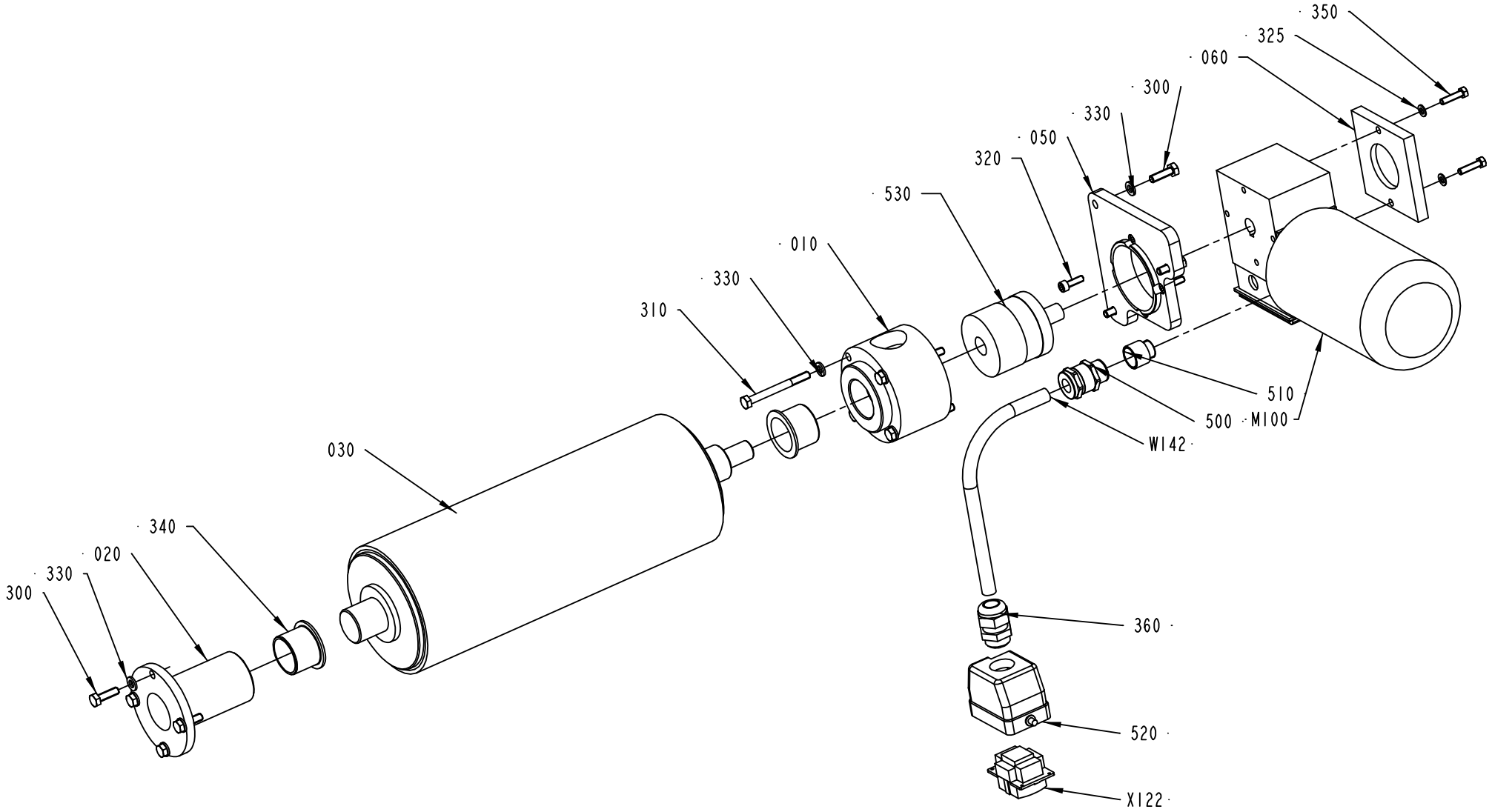

2523900-1
ECM 104022

ECM: 120583 - 20021203
Group number: 2523900-0100
Assembly Drawing: 2523900-1_1_AA

Issue: 20030310

Pos	Part No	SP	UN	Qty	Description	Page No
Common Parts						
010	2523892-0000	-		1	HOUSING	
020	2523893-0000	-		1	HOUSING	
030	2523894-0000	A		1	BENDING ROLLER	
050	2523896-0000	-		1	SPACER	
060	2542677-0000	-		1	LID	
300	312105-0370	-		7	SCREW M6S ISO 4017 M6X20 A480	
310	312105-0382	-		4	SCREW M6S ISO 4014 M6X60 A480	
320	312115-0329	-		4	SCREW ISO4762 M5X16 A4	
325	315105-0146	-		2	WASHER ISO 7089-5-200 HV-A4	
330	315105-0153	-		11	WASHER ISO 7089-6-200 HV-A4	
340	321153-0337	A		2	FLANGE BUSHING, 30X34X26 MM	
350	312105-0331	-		2	SCREW M6S ISO 4017 M5X20 A480	
360	352103-0108	-		1	CABLE GLAND, ST 13,5 , PR20,4/PG13,5	
500	90012-0137	-		1	GLAND, EXTENDED WITH INSERT, PG11	
510	90089-0009	-		1	REDUCING SLEEVE, PR15,2/PR18,6	
520	90110-0157	-		1	CABLE HOOD 6-POL 70.352.0628.1	
530	90459-0388	A		1	BELLOW COUPLING, 14X16 MM	
M100	90457-0959	A		1	WORM GEAR MOTOR PC 440M3T	
W142	90220-0104	-	MM	9000	SCR. CABLE 4X1,5MM2	
X122	90110-0159	-		1	MALE INSERT 70.310.0640.0	

Pos	Part No	SP	UN	Qty	Description	Page No

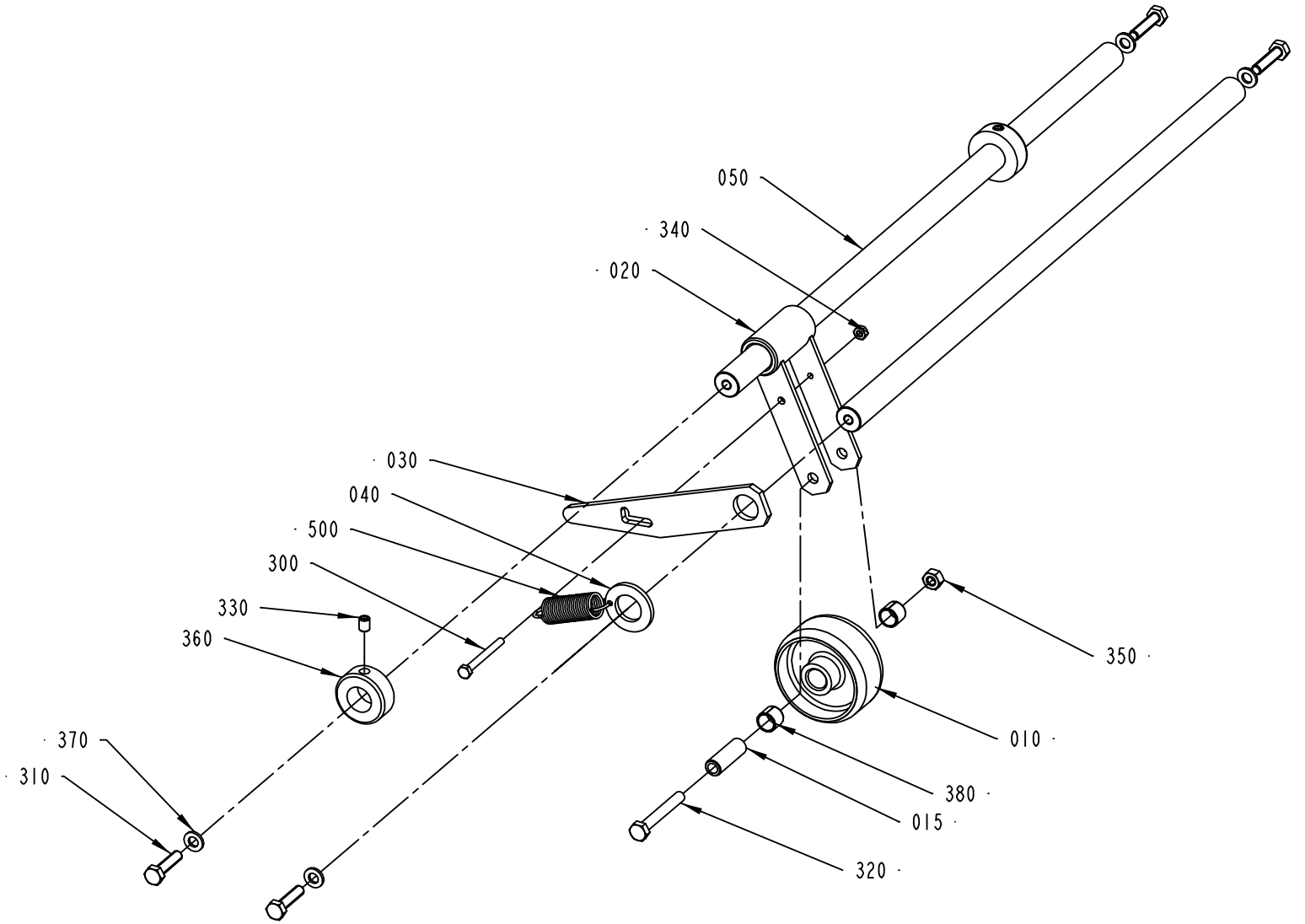

2524015-1
ECM 119827

Pos	Part No	SP	UN	Qty	Description	Page No
Common Parts						
010	21903-0000	A		1	ROLL	
015	21904-0000	-		1	SHAFT	
020	1514278-0000	-		1	FORK	
030	1514467-0000	-		1	CATCH	
040	1514469-0000	-		1	WASHER	
050	2524037-0000	-		1	SHAFT	
300	312105-0303	-		1	SCREW M6S ISO 4017 M4X40 A480	
310	312105-0372	-		4	SCREW M6S ISO 4017 M6X25 A480	
320	312105-0379	-		1	SCREW M6S ISO 4014 M6X45 A480	
330	312318-0362	-		2	SCREW ISO4029 M6X8 A4	
340	312605-0312	-		1	HEXAGON NUT, M6M M4 A280	
350	312605-0316	-		1	HEXAGON NUT, M6M M6 A280	
360	315742-0112	-		2	COLLAR, 16/32, H=12	
370	315105-0153	-		4	WASHER ISO 7089-6-200 HV-A4	
380	321141-0140	B		2	BEARING BUSHING W/O FL, 10X12X10 MM	
500	90458-2968	A		1	TENSION SPRING 3823	

Pos	Part No	SP	UN	Qty	Description	Page No

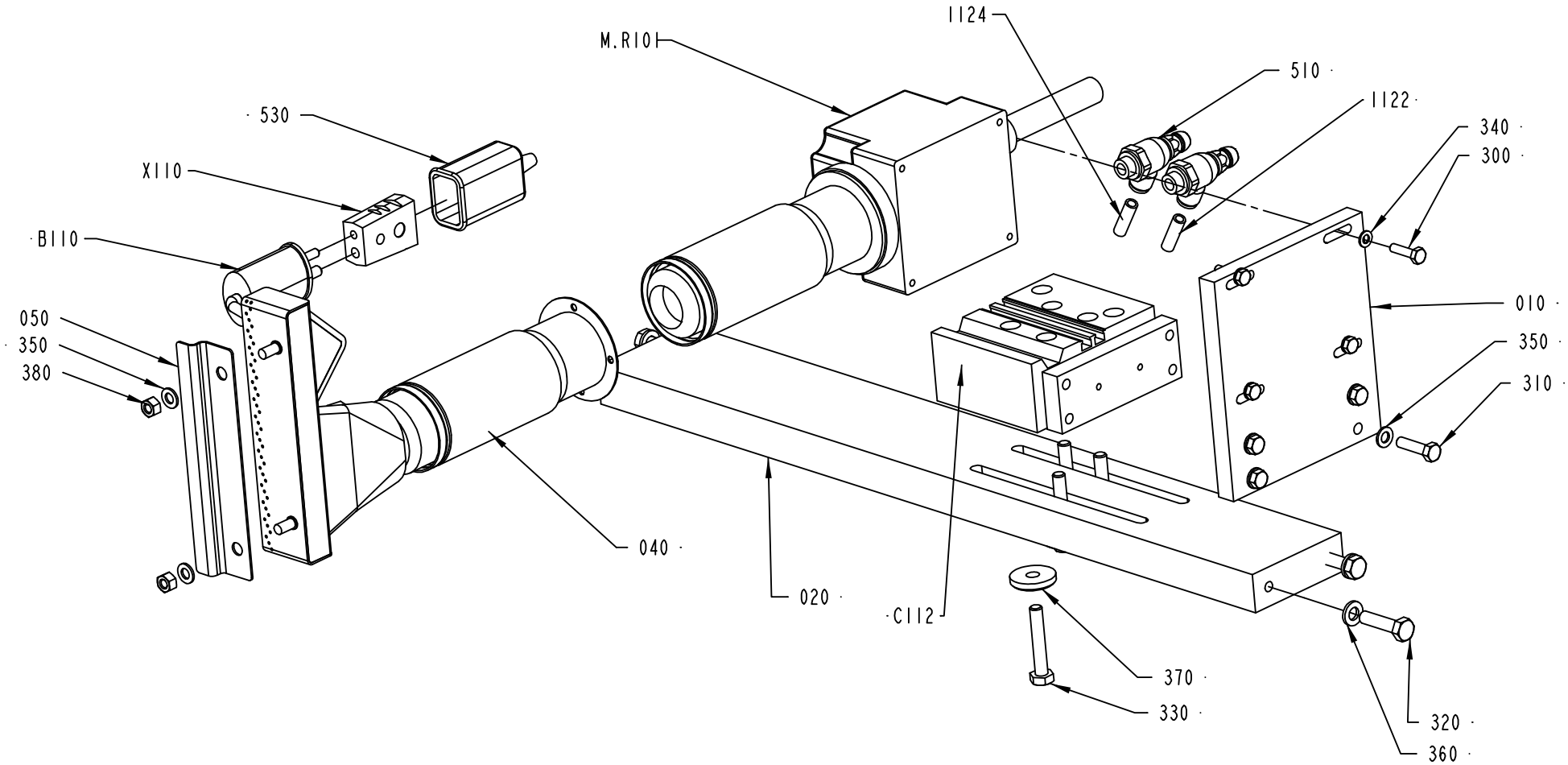

2524020-1
ECM 104022

Pos	Part No	SP	UN	Qty	Description	Page No
Common Parts						
010	2524014-0000	-		1	PLATE	
020	2524051-0000	-		1	BEAM	
040	2542871-0000	-		1	NOZZLE	
050	2543009-0000	-		1	PLATE	
1122	315400-0001	-	MM	4000	TUBE PUN-H-6X1-BL	
1124	315400-0001	-	MM	4000	TUBE PUN-H-6X1-BL	
300	312105-0293	-		4	SCREW M6S ISO 4017 M4X16 A480	
310	312105-0331	-		4	SCREW M6S ISO 4017 M5X20 A480	
320	312105-0372	-		4	SCREW M6S ISO 4017 M6X25 A480	
330	312109-0376	-		4	SCREW M6S ISO 4017 M6X35 A480	
340	315105-0136	-		4	WASHER ISO 7089-4-200 HV-A4	
350	315105-0146	-		6	WASHER ISO 7089-5-200 HV-A4	
360	315105-0153	-		4	WASHER ISO 7089-6-200 HV-A4	
370	315125-0153	-		4	WASHER TBRSB 6,4X22X4 A4	
380	312605-0314	-		2	HEXAGON NUT, M6M M5 A280	
510	90235-0846	A		2	THROTTLE CHECK VALVE G1/8", MANUAL, 6	
530	90326-0012	-		1	PROTECTIVE COVER, T31A4618	
B110	90326-0043	A		1	THERMOCOUPLE, CR-ALPREM.G	
C112	90459-0390	A		1	CYLINDER WITH INT. GUIDING BORE 20	
M.R101	B90206-0094	A		1	HOT AIR GUN, 220V 3000W 13,7A	
	90206-0332	*C*		*1*	*HEATING ELEMENT 220V 3000W 13,7A*	
X110	90326-0020	-		1	PLUG, FEMALE YELLOW CR-AL	

Pos	Part No	SP	UN	Qty	Description	Page No

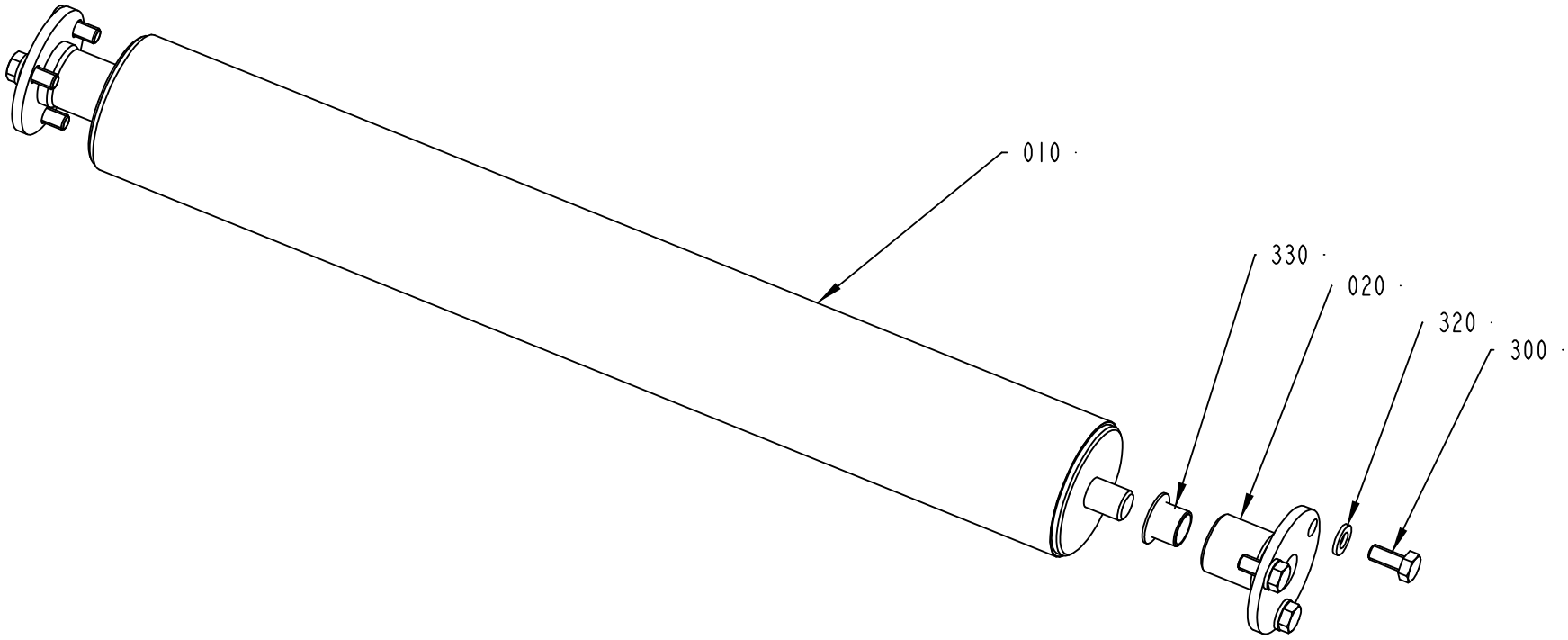

2524035-1
ECM 104022

ECM: 120548 - 20021203
Group number: 2524035-0100
Assembly Drawing: 2524035-1_1_AA

Issue: 20030310

Pos	Part No	SP	UN	Qty	Description	Page No
Common Parts						
010	2524053-0000	-		1	BENDING ROLLER	
020	2524013-0000	-		2	HOUSING	
300	312105-0367	-		6	SCREW M6S M6X14 A280	
320	315105-0153	-		6	WASHER ISO 7089-6-200 HV-A4	
330	321158-0180	B		2	FLANGE BUSHING, 12X14X12 MM	

Pos	Part No	SP	UN	Qty	Description	Page No

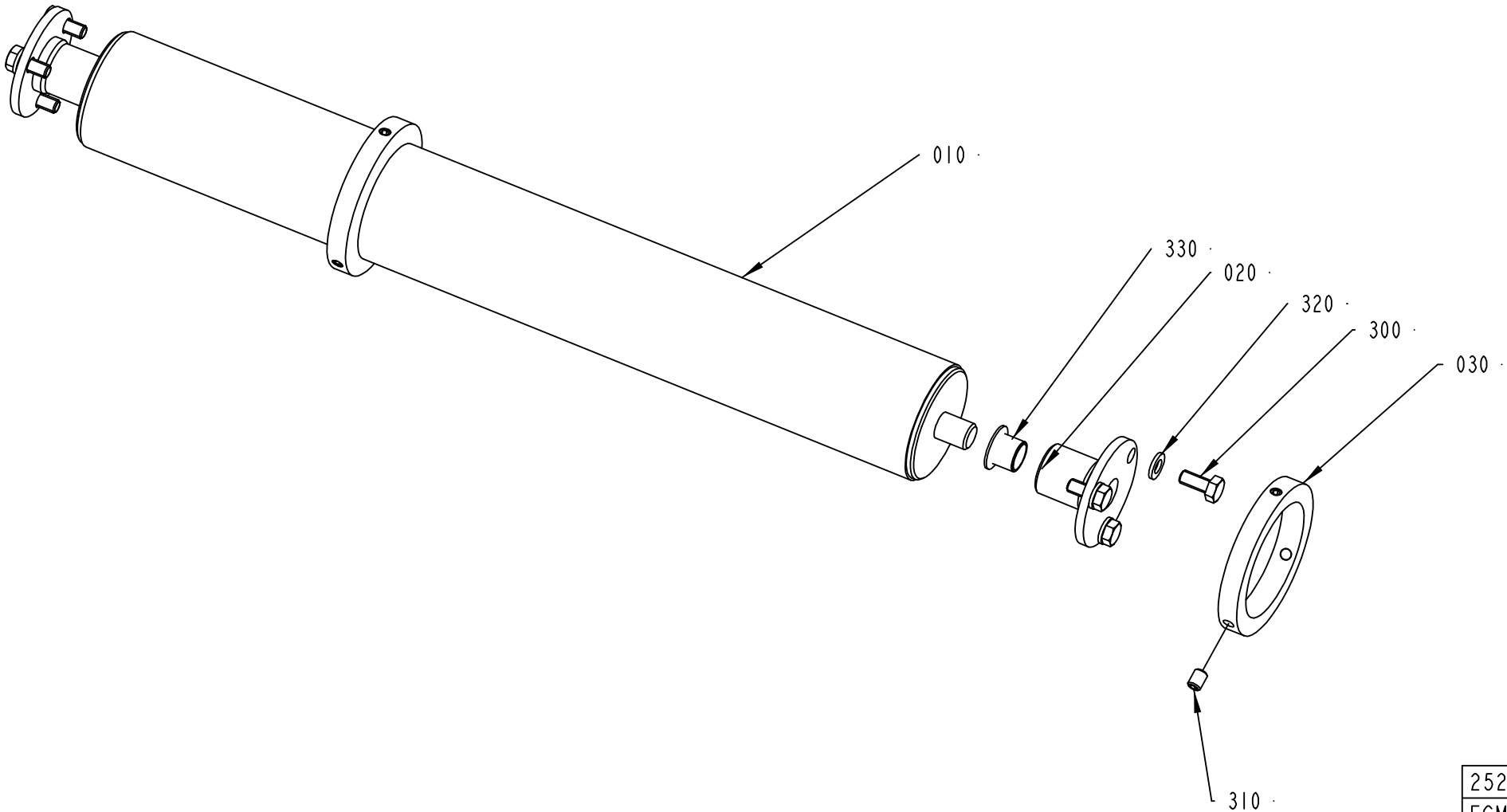
010
330
020
320
300
030
310
2524040-1
ECM 104022

ECM: 120591 - 20021203
Group number: 2524040-0100
Assembly Drawing: 2524040-1_1_AA

Issue: 20030310

Pos	Part No	SP	UN	Qty	Description	Page No
Common Parts						
010	1514276-0000	-		1	BENDING ROLLER	
020	2524013-0000	-		2	HOUSING	
030	1514487-0000	-		2	FLANGE	
300	312105-0367	-		6	SCREW M6S M6X14 A280	
310	312318-0362	-		6	SCREW ISO4029 M6X8 A4	
320	315105-0153	-		6	WASHER ISO 7089-6-200 HV-A4	
330	321158-0180	B		2	FLANGE BUSHING, 12X14X12 MM	

Pos	Part No	SP	UN	Qty	Description	Page No

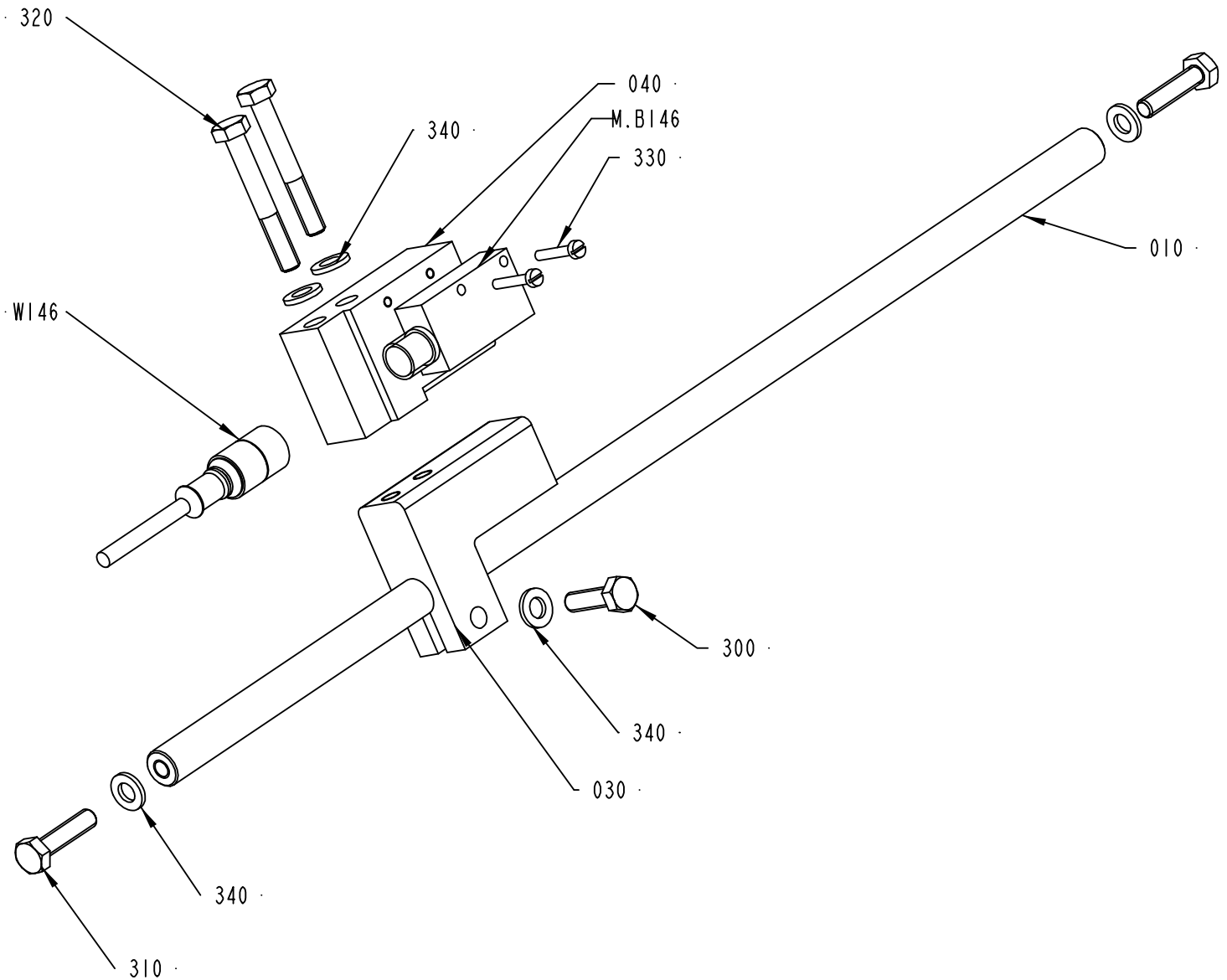

2524045-1
ECM 104022

ECM: 120594 - 20021203
Group number: 2524045-0100
Assembly Drawing: 2524045-1_1_AA

Issue: 20030310

Pos	Part No	SP	UN	Qty	Description	Page No
Common Parts						
010	2524038-0000	-		1	SHAFT	
030	2542623-0000	-		1	BRACKET	
040	2542621-0000	-		1	BRACKET	
300	312105-0370	-		1	SCREW M6S ISO 4017 M6X20 A480	
310	312105-0372	-		2	SCREW M6S ISO 4017 M6X25 A480	
320	312105-0379	-		2	SCREW M6S ISO 4014 M6X45 A480	
330	312125-0228	-		2	SCREW PAN HEAD MCS M3X16 A480	
340	315105-0153	-		5	WASHER ISO 7089-6-200 HV-A4	
M.B146	90459-0391	A		1	CONTRAST SCANNER KT3W-P1116	
W146	90458-2454	-		1	CABLE, SICK DOL 1204-G05M	

Pos	Part No	SP	UN	Qty	Description	Page No

Machine Type | Group Description | Used-In | Group Number | Page No

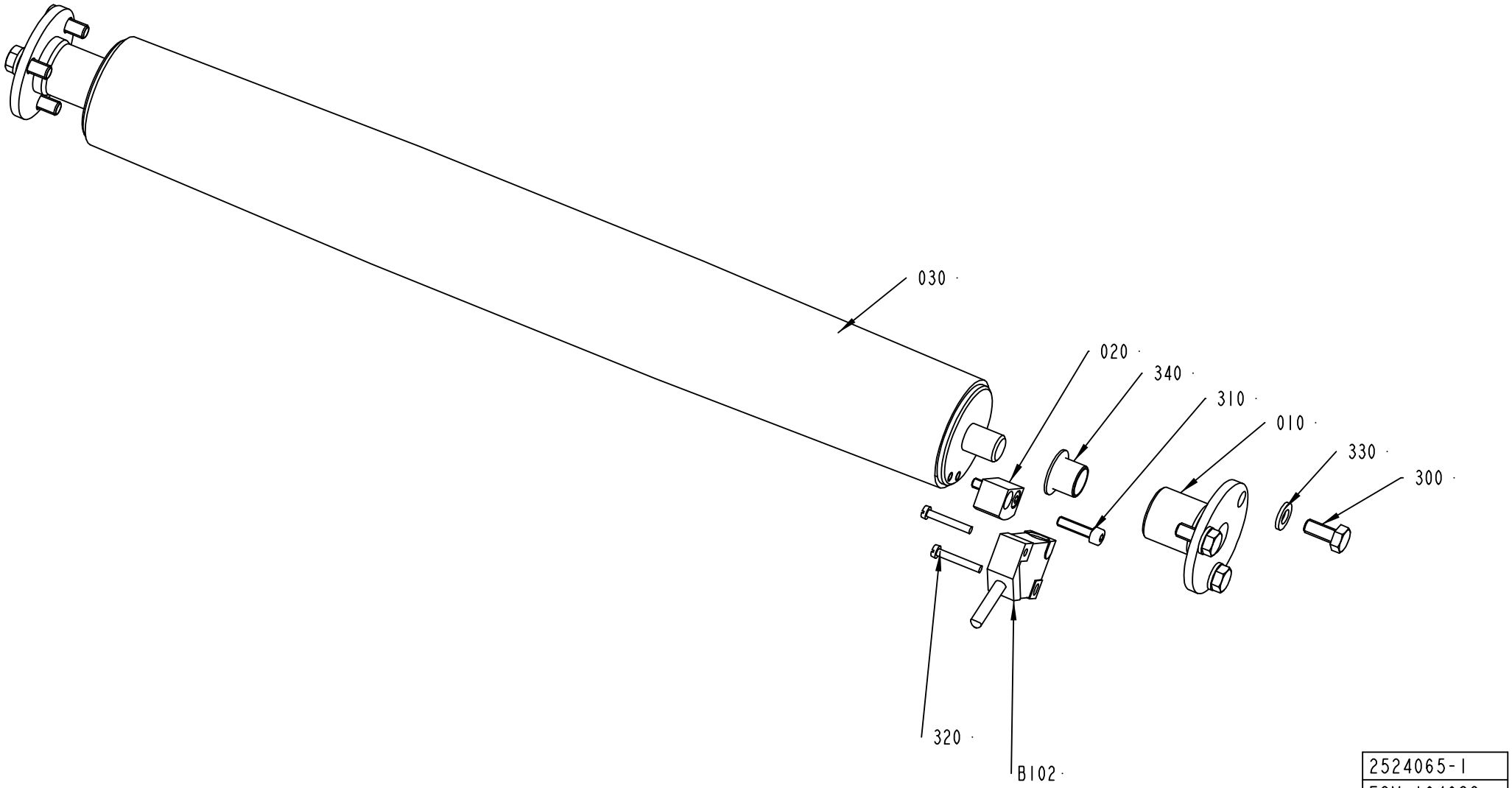
030
020
340
310
010
330
300
320
B102
2524065-1
ECM 104022

ECM: 120595 - 20021203
Group number: 2524065-0100
Assembly Drawing: 2524065-1_1_AA

Issue: 20030310

Pos	Part No	SP	UN	Qty	Description	Page No
Common Parts						
010	2524013-0000	-		2	HOUSING	
020	2524032-0000	-		1	INDICATOR	
030	2543014-0000	-		1	BENDING ROLLER	
300	312105-0367	-		6	SCREW M6S M6X14 A280	
310	312115-0293	-		2	SCREW ISO4762 M4X16 A4	
320	312125-0230	-		2	SPåRSKRUV MCS M3X20 SS	
330	315105-0153	-		6	WASHER ISO 7089-6-200 HV-A4	
340	321158-0180	B		2	FLANGE BUSHING, 12X14X12 MM	
B102	90044-0194	A		1	PROX.SW. IN5329/IN3002-BPKG	

Pos	Part No	SP	UN	Qty	Description	Page No

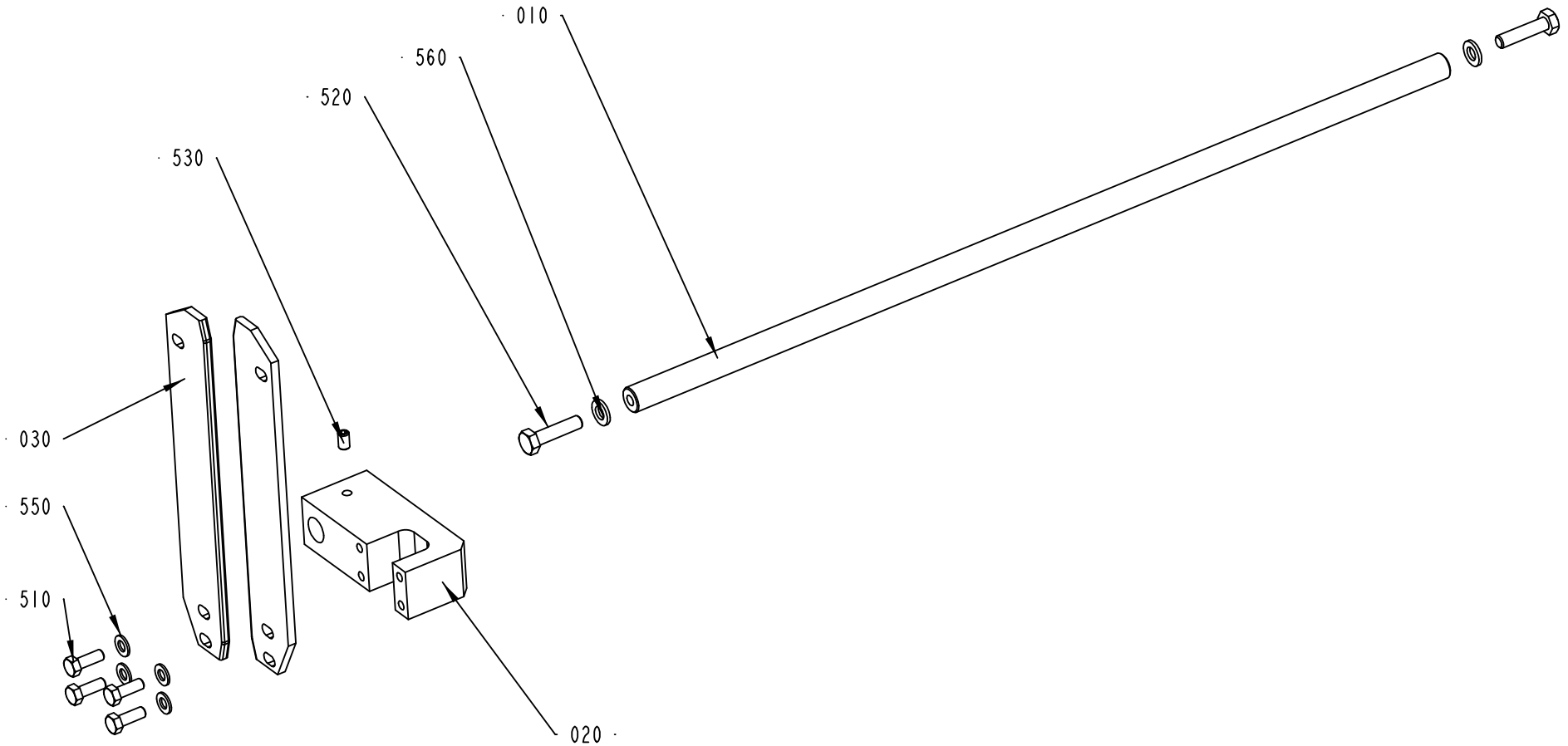

2524125-1
ECM 104022

ECM: 120597 - 20021203
Group number: 2524125-0100
Assembly Drawing: 2524125-1_1_AA

Issue: 20030310

Pos	Part No	SP	UN	Qty	Description	Page No
Common Parts						
010	2524038-0000	-		2	SHAFT	
020	2524119-0000	-		1	BRACKET	
030	2524122-0000	A		2	PAPER GUIDE	
510	312105-0328	-		4	SCREW M6S ISO 4017 M5X14 A480	
520	312105-0372	-		2	SCREW M6S ISO 4017 M6X25 A480	
530	312318-0323	-		1	SCREW ISO4029 M5X8 A4	
550	315105-0146	-		4	WASHER ISO 7089-5-200 HV-A4	
560	315105-0153	-		2	WASHER ISO 7089-6-200 HV-A4	

Pos	Part No	SP	UN	Qty	Description	Page No

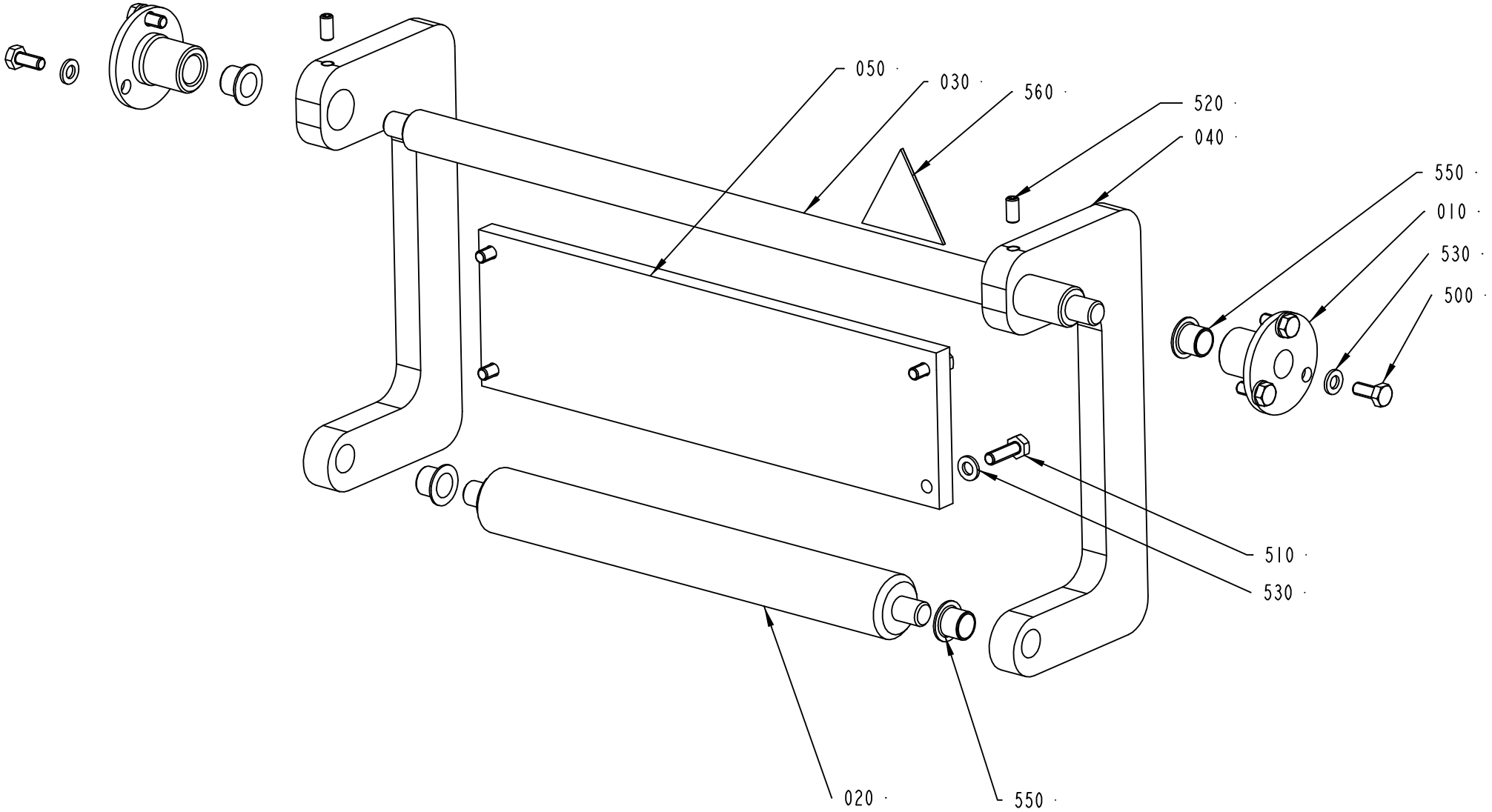

2542627-1
ECM 119827

ECM: 120365 - 20021203
Group number: 2542627-0100
Assembly Drawing: 2542627-1_1_AB

Issue: 20030310

Pos	Part No	SP	UN	Qty	Description	Page No
Common Parts						
010	2524013-0000	-		2	HOUSING	
020	2542628-0000	-		1	BENDING ROLLER	
030	2542629-0000	-		1	AXLE	
040	2542631-0000	-		2	ARM	
050	2542683-0000	-		1	BRACKET	
500	312105-0367	-		6	SCREW M6S M6X14 A280	
510	312105-0370	-		4	SCREW M6S ISO 4017 M6X20 A480	
520	312318-0366	-		2	SCREW ISO4029 M6X12 A4	
530	315105-0153	-		10	WASHER ISO 7089-6-200 HV-A4	
550	321158-0180	B		4	FLANGE BUSHING, 12X14X12 MM	
560	359705-0005	A		1	WARNING SIGN ISO, MOVING PART	

Pos	Part No	SP	UN	Qty	Description	Page No

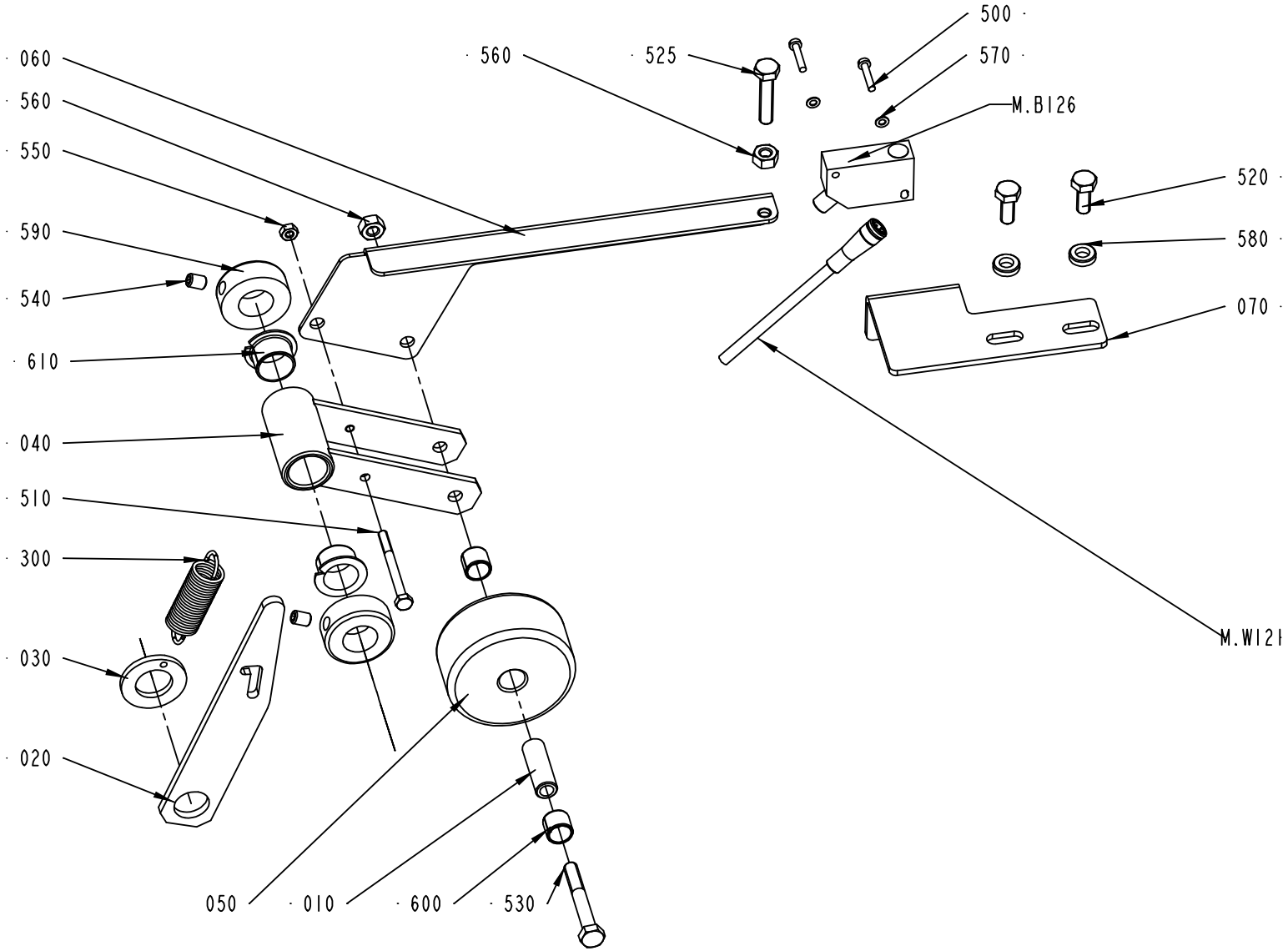

2556810-1
ECM 119827

Pos	Part No	SP	UN	Qty	Description	Page No
Common Parts						
010	21904-0000	-		1	SHAFT	
020	1514467-0000	-		1	CATCH	
030	1514469-0000	-		1	WASHER	
040	2556801-0000	-		1	FORK	
050	2556802-0000	-		1	ROLLER	
060	2556803-0000	-		1	FLAG	
070	2556805-0000	-		1	BRACKET	
300	90458-2968	A		1	TENSION SPRING 3823	
500	312125-0228	-		2	SCREW PAN HEAD MCS M3X16 A480	
510	312115-0305	-		1	SCREW ISO4762 M4X50 A4	
520	312105-0368	-		2	SCREW M6S M6X16 A280	
525	312109-0374	-		1	SCREW M6S ISO 4017 M6X30 A480	
530	312105-0379	-		1	SCREW M6S ISO 4014 M6X45 A480	
540	312318-0362	-		2	SCREW ISO4029 M6X8 A4	
550	312605-0312	-		3	HEXAGON NUT, M6M M4 A280	
560	312605-0316	-		2	HEXAGON NUT, M6M M6 A280	
570	315105-0124	-		4	WASHER ISO 7089-3-200 HV-A4	
580	315115-0153	-		2	WASHER PLAIN, TBRB 6,4/12 H=3	
590	315742-0112	-		2	COLLAR, 16/32, H=12	
600	321141-0140	A		2	BEARING BUSHING W/O FL, 10X12X10 MM	
610	321161-0216	-		2	FLANGE BUSHING, 16X18X12 MM	
M.B126	90044-0155	A		1	PROX.SW. IN5297/IN-3002-BPKG/AS-610-TPS	
M.W121	90458-2455	-		1	CABLE, SICK DOL 0803-G10M	
W121	90458-2454	-		1	CABLE, SICK DOL 1204-G05M	

Pos	Part No	SP	UN	Qty	Description	Page No

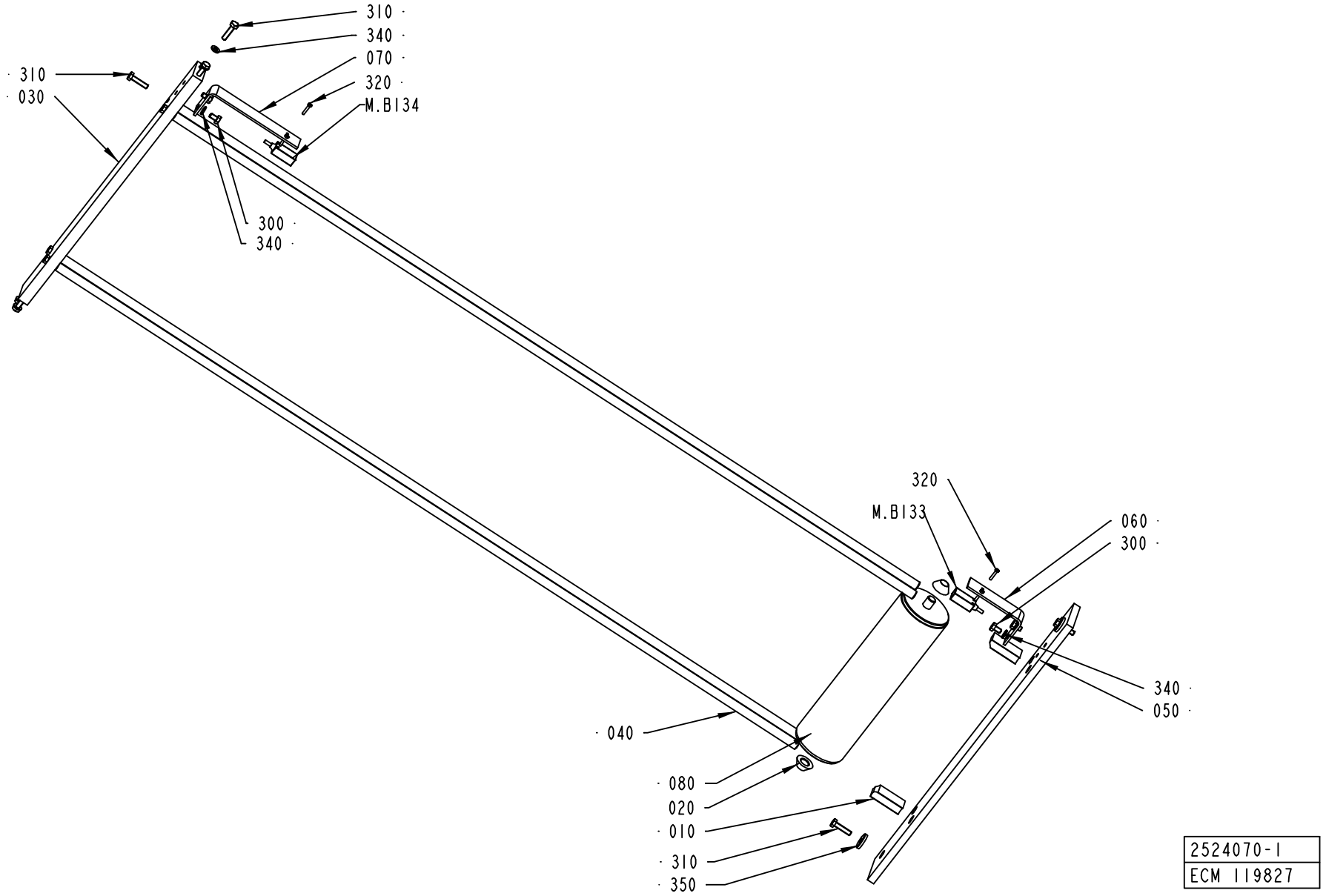
310
340
070
320
M.B134
310
030
300
340
320
M.B133
060
300
340
050
040
080
020
010
310
350
2524070-1
ECM 119827

Pos	Part No	SP	UN	Qty	Description	Page No
Common Parts						
010	1515366-0000	B		2	STOP BLOCK	
020	1515392-0000	B		2	SPACER	
030	2524018-0000	-		1	BAR	
040	2524019-0000	-		4	BAR	
050	2524031-0000	-		1	BAR	
060	2524034-0000	-		1	BRACKET	
070	2524036-0000	-		1	BRACKET	
080	2524054-0000	-		1	DANCER ROLLER	
300	312105-0364	-		4	SCREW M6S ISO 4017 M6X10 A480	
310	312105-0372	-		10	SCREW M6S ISO 4017 M6X25 A480	
320	312125-0228	-		4	SCREW PAN HEAD MCS M3X16 A480	
340	315105-0153	-		8	WASHER ISO 7089-6-200 HV-A4	
350	315125-0153	-		2	WASHER TBRSB 6,4X22X4 A4	
M.B133	90232-0117	A		1	PH.CELL WT4-2P135S10	
M.B134	90232-0117	A		1	PH.CELL WT4-2P135S10	

Pos	Part No	SP	UN	Qty	Description	Page No

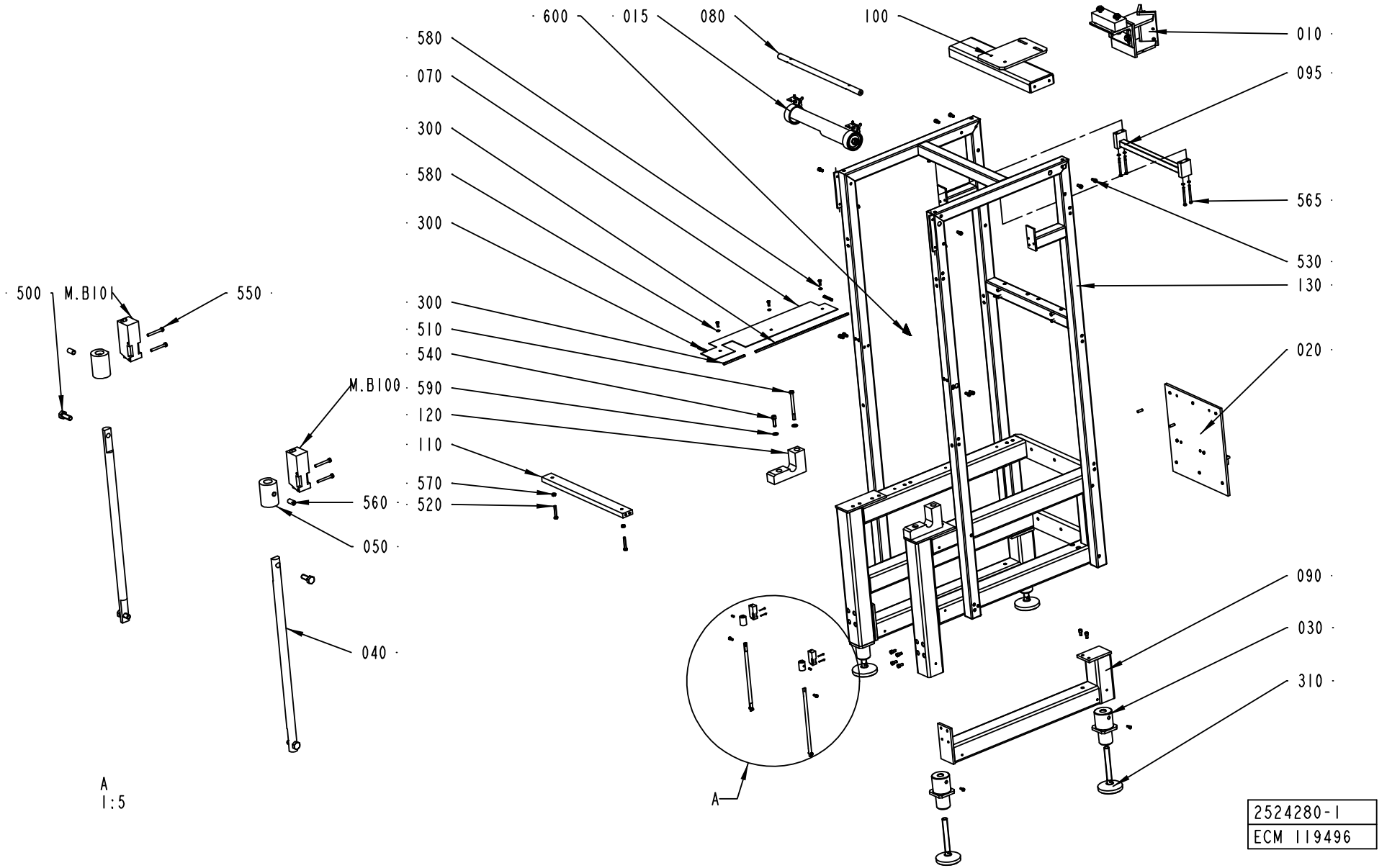
600
015
080
100
010
580
070
095
300
580
565
300
530
130
500
M.B101
550
300
510
540
020
M.B100
590
120
110
570
560
520
050
090
040
030
310
A
1:5
A
2524280-1
ECM 119496

ECM: 119926 - 20021203
Group number: 2524280-0100
Assembly Drawing: 2524280-1_1_AB

Issue: 20030310

Pos	Part No	SP	UN	Qty	Description	Page No
Common Parts						
010	A2524005-0100	-		1	FASTENING BRACKET	**61**
015	A2564230-0100	-		1	LIGHT FIXTURE	**63**
020	A2524010-0100	-		1	FASTENING BRACKET	**65**
030	1514875-0000	-		4	SLEEVE	
040	1515329-0000	-		2	BAR	
050	1515384-0000	-		2	LOCK SLEEVE	
070	1515673-0000	-		1	PROTECTION PLATE	
080	2523998-0000	-		1	ROD	
090	2523999-0000	-		2	LEG	
095	1515834-0000	-		1	MOUNTING BAR	
100	2524023-0000	-		1	BEAM	
110	2524116-0000	-		1	ROD	
120	2524117-0000	A		2	BEARING BRACKET	
130	2524279-0000	-		1	FRAME	
300	90143-0060	-	MM	700	EDGE STRIP 9,5X6,3MM BLACK PVC	
310	90347-0142	-		4	FOOT	
500	312105-0368	-		11	SCREW M6S M6X16 A280	
510	312105-0515	-		2	SCREW M6S ISO 4014 M10X120 A480	
520	312109-0461	-		2	SCREW M6S ISO 4017 M8X50 A480	
530	312115-0449	-		22	SCREW ISO4762 M8X16 A4	
540	312115-0497	-		2	SCREW ISO4762 M10X35 A4	
550	312125-0232	-		4	SCREW PAN HEAD MCS M3X25 SS	
560	312318-0366	-		2	SCREW ISO4029 M6X12 A4	
565	90287-0312	-		4	SCREW M6S ISO 4014 M6X75 A480	
570	312605-0318	-		2	HEXAGON NUT, M6M M8 A280	
580	315105-0153	-		8	WASHER ISO 7089-6-200 HV-A4	
590	315105-0173	-		1	WASHER ISO 7089-10-200 HV-A4	
600	359710-0001	A		1	WARNING SIGN ISO, HOT SURFACE	
M.B100	90232-0103	A		1	PH.CELL E3S-CT61-L-5M	
M.B101	90232-0104	A		1	PH.CELL E3S-CT61-D-5M	

Pos	Part No	SP	UN	Qty	Description	Page No

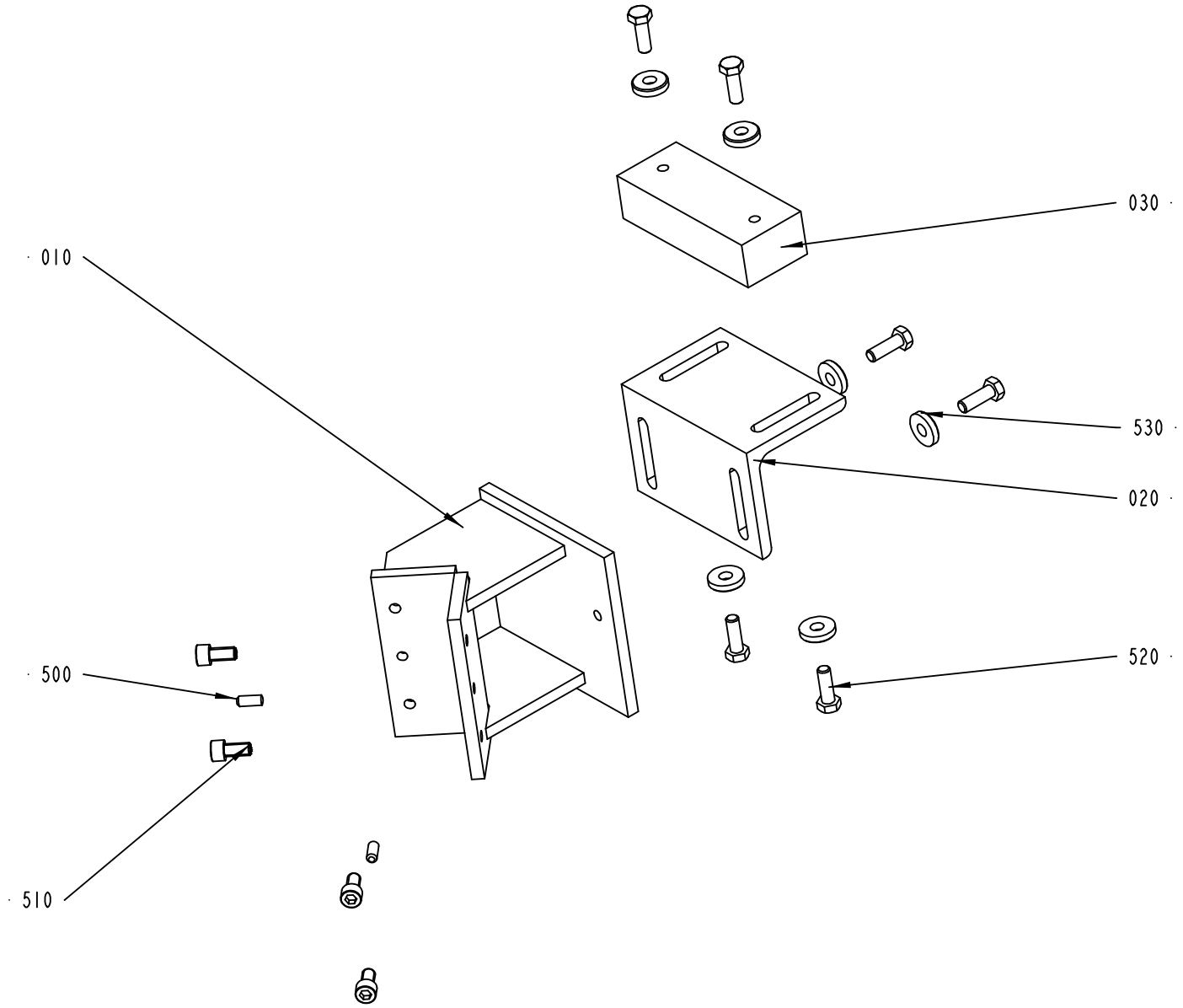

2524005-1
ECM 114581

ECM: 107115 - 20021113
Group number: 2524005-0100
Assembly Drawing: 2524005-1_1_AA

Issue: 20030310

Pos	Part No	SP	UN	Qty	Description	Page No
Common Parts						
010	2523886-0000	-		1	BRACKET	
020	2523887-0000	-		1	BRACKET	
030	2524012-0000	-		1	SPACER	
500	311103-0401	-		2	PARALLELL PIN, M6, 8X20 MM	
510	312115-0491	-		4	SCREW ISO4762 M10X20 A4	
520	312105-0495	-		6	SCREW M6S ISO 4017 M10X30 A480	
530	315125-0173	-		6	WASHER TBRSB 10,5X28X6 A4	

Pos	Part No	SP	UN	Qty	Description	Page No

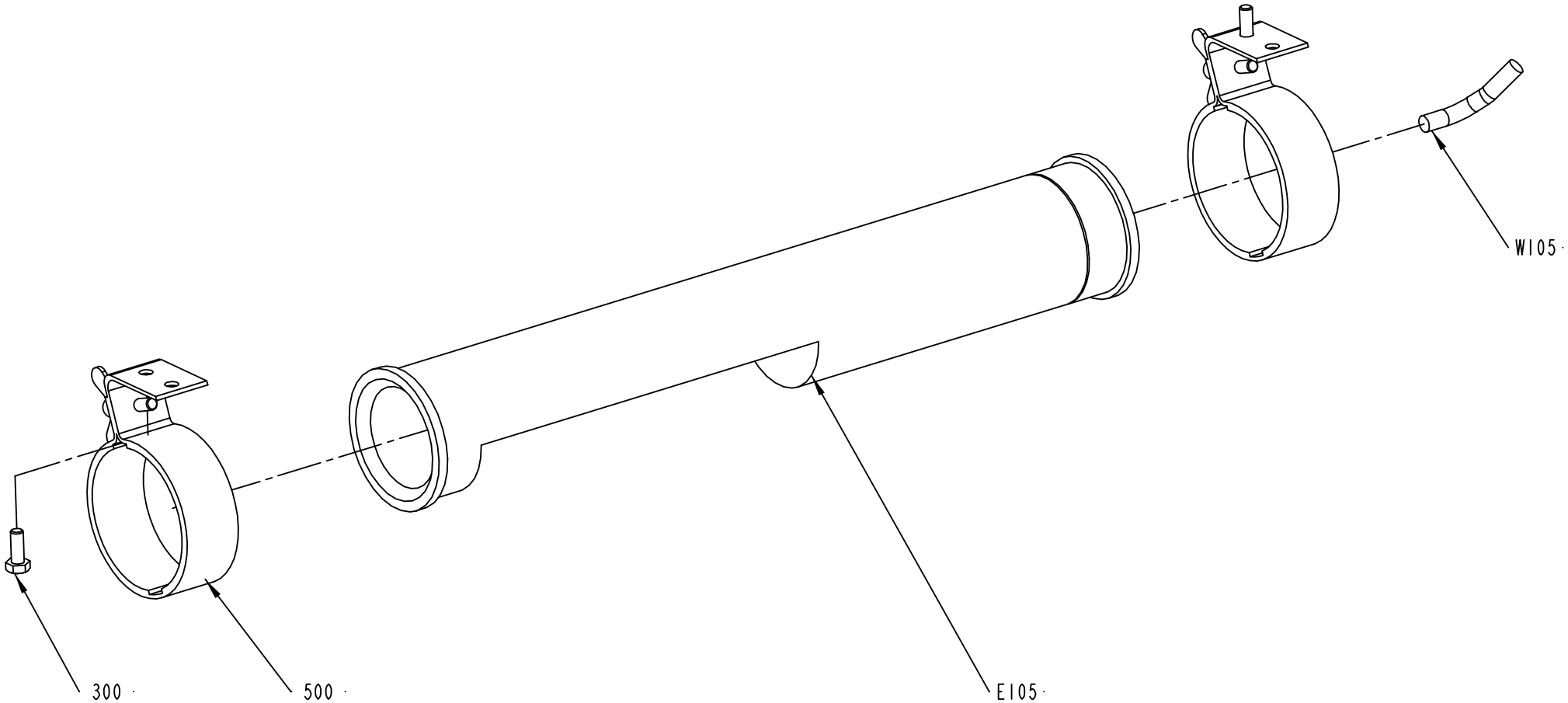

2564230-1
ECM 114581

ECM: 115088 - 20021113
Group number: 2564230-0100
Assembly Drawing: 2564230-1_1_AA

Issue: 20030310

Pos	Part No	SP	UN	Qty	Description	Page No
Common Parts						
300	312105-0368	-		2	SCREW M6S M6X16 A280	
500	90164-0303	-		2	BRACKET SK2202 WALDMANN	
E105	B90164-0015	-		1	LIGHT FIXTURE, DWDCV111B/230V 50HZ	
	90297-0007	*B*		*1*	*FLUORESCENT TUBE, PL11*	
W105	351150-0412	-	MM	2500	CABLE OLFLEX 3X1,5 MM2 LIGHT/GREY	

Pos	Part No	SP	UN	Qty	Description	Page No

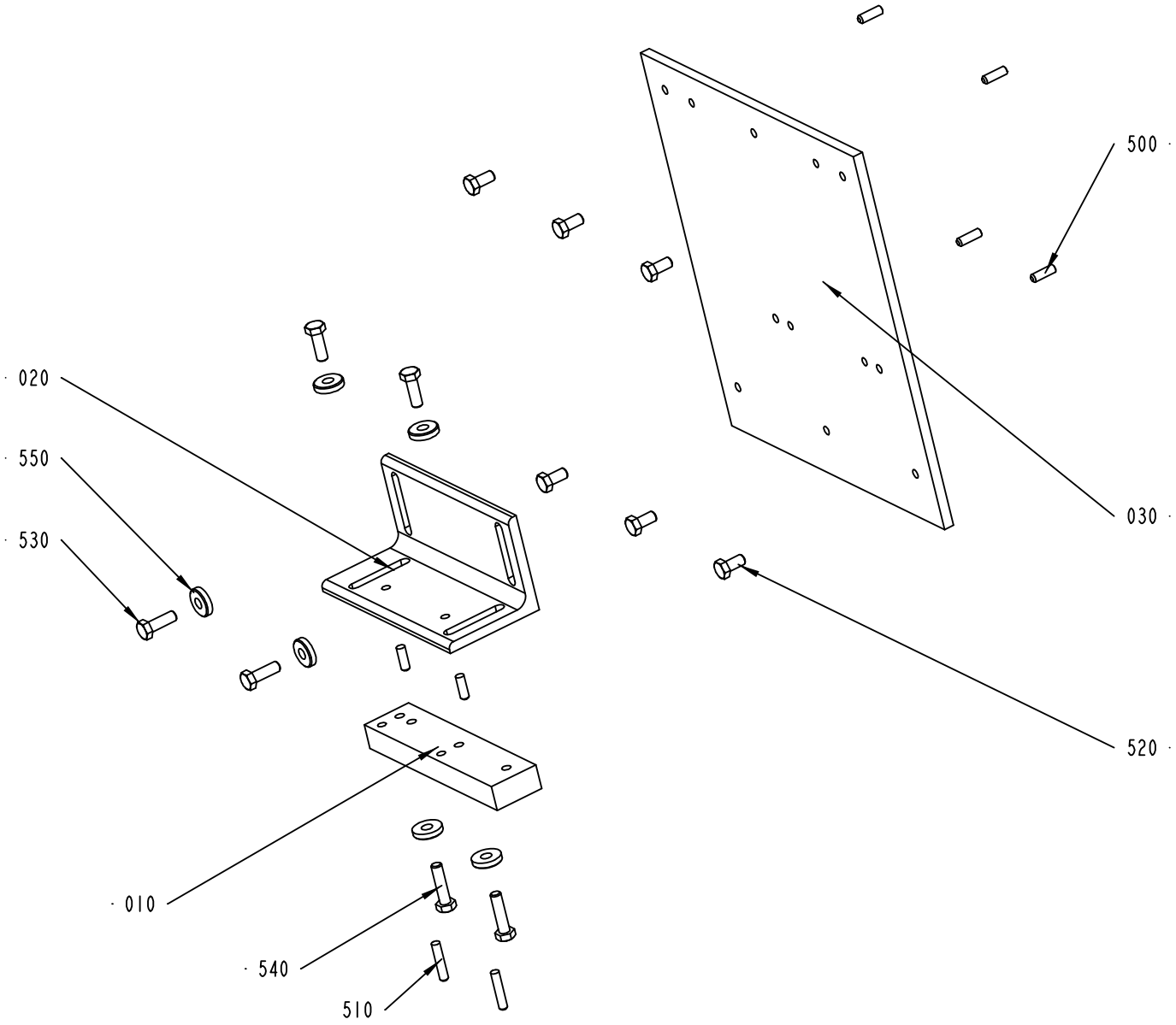

2524010-1
ECM 114581

ECM: 107116 - 20021113
Group number: 2524010-0100
Assembly Drawing: 2524010-1_1_AA

Issue: 20030310

Pos	Part No	SP	UN	Qty	Description	Page No
Common Parts						
010	2524001-0000	-		1	PLATE	
020	2524002-0000	-		1	BRACKET	
030	2524004-0000	-		1	PLATE	
500	311103-0403	-		6	PARALLELL PIN, M6, 8X25 MM	
510	311103-0409	-		2	PARALLELL PIN, M6, 8X40 MM	
520	312105-0491	-		6	SCREW M6S ISO 4017 M10X20 A480	
530	312105-0495	-		4	SCREW M6S ISO 4017 M10X30 A480	
540	312105-0499	-		2	SCREW M6S ISO 4014 M10X40 A480	
550	315125-0173	-		6	WASHER TBRSB 10,5X28X6 A4	

Pos	Part No	SP	UN	Qty	Description	Page No

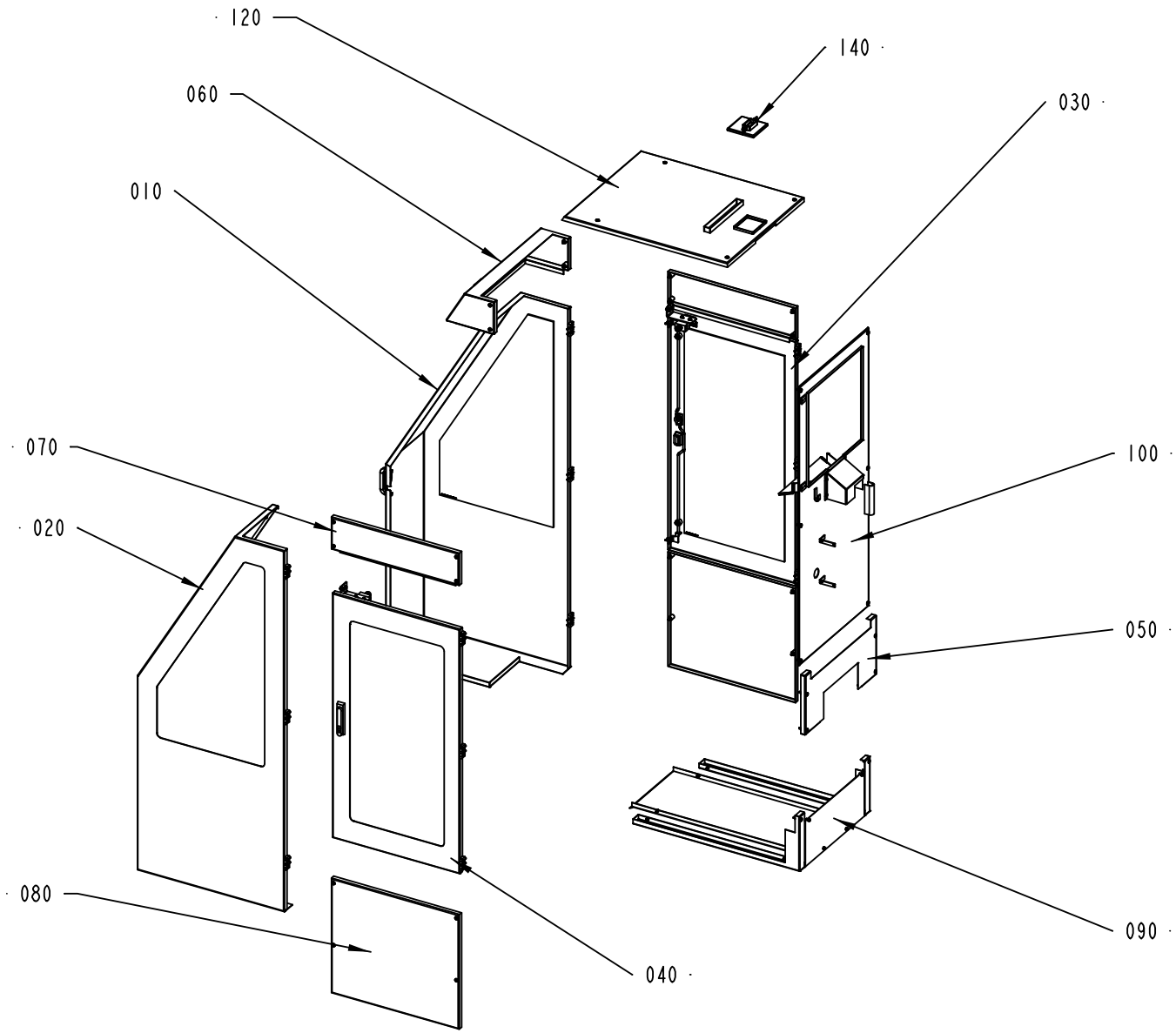

2524286-1
ECM 119584

ECM: 120240 - 20021203
Group number: 2524286-0100
Assembly Drawing: 2524286-1_1_AB

Issue: 20030310

Pos	Part No	SP	UN	Qty	Description	Page No
Common Parts						
010	A2524150-0100	-		1	DOOR	**69**
020	A2524155-0100	-		1	DOOR	**71**
030	A1514985-0100	-		1	DOOR	**73**
040	A2542950-0100	-		1	DOOR	**75**
050	A2524064-0100	-		1	COVER PLATE	**77**
060	A2542655-0100	-		1	COVER	**79**
070	A1515360-0100	-		2	COVER	**81**
080	A1515370-0100	-		2	COVER	**83**
090	A2524056-0100	-		1	BOTTOM COVERS	**85**
100	A2524287-0100	-		1	COVER	**87**
120	A2524160-0100	-		1	COVER	**89**
140	A2542635-0100	-		1	COVER	**91**

Pos	Part No	SP	UN	Qty	Description	Page No

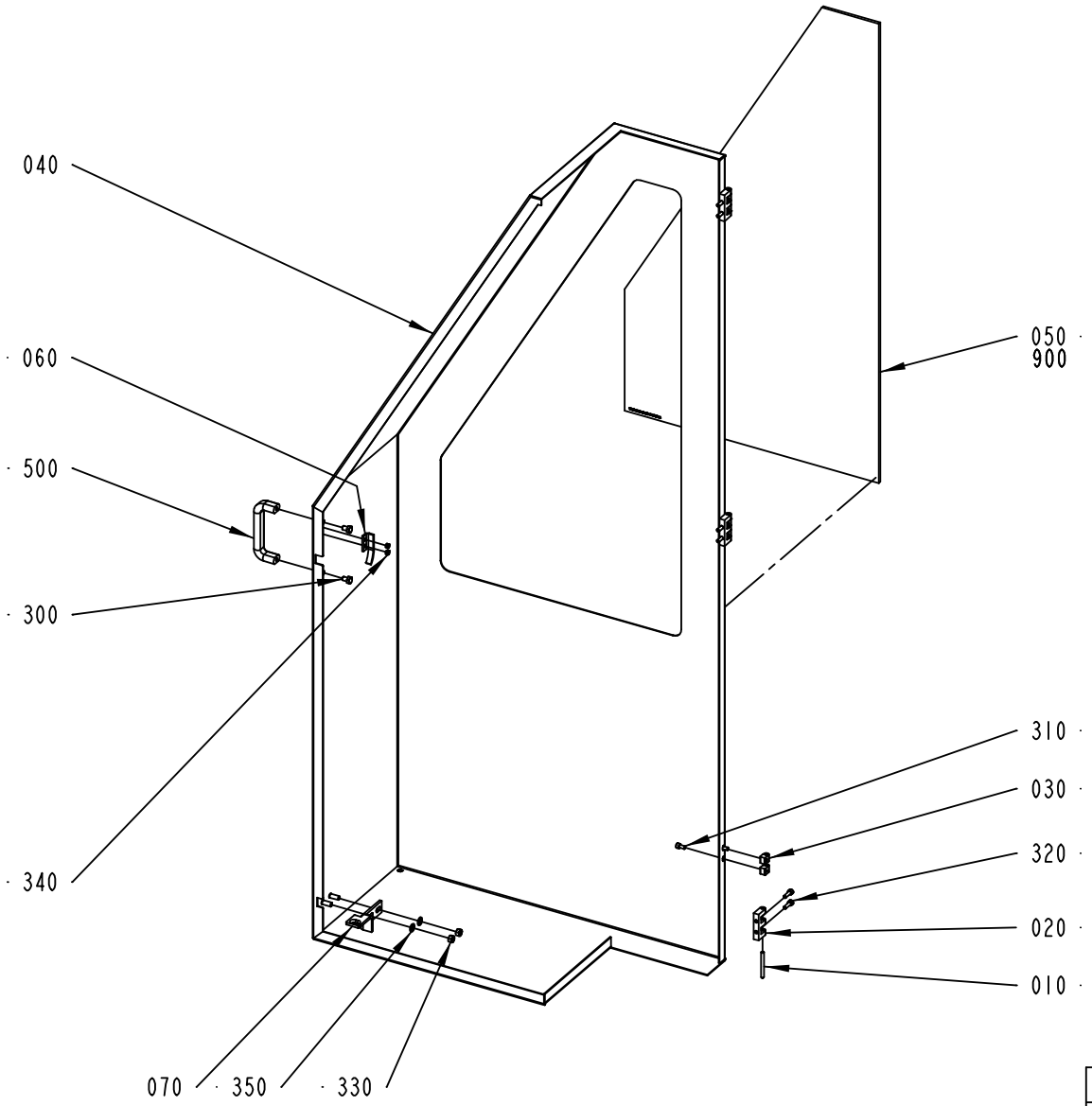

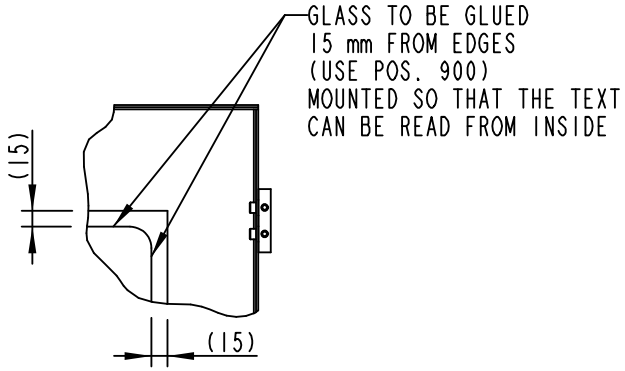

2524150-1
ECM 104198

Pos	Part No	SP	UN	Qty	Description	Page No
Common Parts						
010	988685-0000	-		3	PIN	
020	1035792-0000	-		3	E-HINGE	
030	1129770-0000	-		6	BLOCKING PIECE	
040	2524151-0000	-		1	DOOR	
050	1514982-0000	-		1	GLASS PANE	
060	1514983-0000	-		1	STOPPER	
070	1515455-0000	-		1	BRACKET	
300	312105-0447	-		2	SCREW M6S ISO 4017 M8X12 A480	
310	312115-0366	-		6	SCREW ISO4762 M6X12 A4	
320	312115-0370	-		6	SCREW ISO4762 M6X20 A4	
330	312605-0318	-		2	HEXAGON NUT, M6M M8 A280	
340	312812-0314	-		2	HEXAGON NUT, NY-LOCK M5 A480	
350	315105-0165	-		2	WASHER ISO 7089-8-200 HV-A4	
500	90017-0022	-		1	HANDLE, NO. EL-037311	
900	90157-0041	-		1	SEALING COMPOUND	

Pos	Part No	SP	UN	Qty	Description	Page No

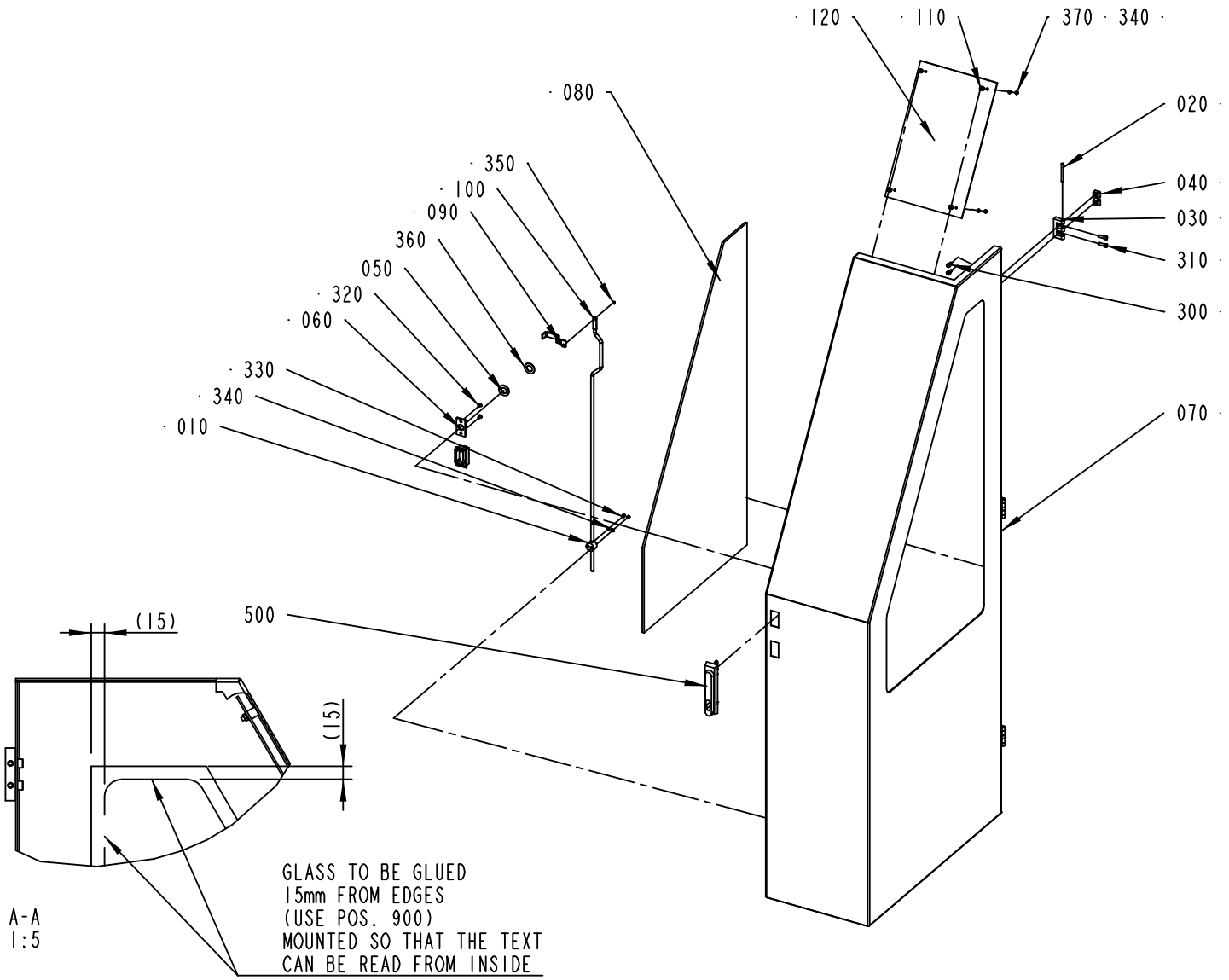

2524155-1
ECM 104198

ECM: 105081 - 20021113
Group number: 2524155-0100
Assembly Drawing: 2524155-1_1_AA

Issue: 20030310

Pos	Part No	SP	UN	Qty	Description	Page No
Common Parts						
010	1129274-0000	-		1	GUIDE LUG	
020	988685-0000	-		3	PIN	
030	1035792-0000	-		3	E-HINGE	
040	1129770-0000	-		6	BLOCKING PIECE	
050	1338524-0000	-		1	WASHER	
060	1363878-0000	-		1	PLATE	
070	2524156-0000	-		1	DOOR	
080	1514977-0000	-		1	GLASS PANE	
090	1515451-0000	-		1	LATCH	
100	1515454-0000	-		1	LOCKING ARM	
110	1515808-0000	-		4	SPACER	
120	1515809-0000	-		1	SHIELD PLATE	
300	312115-0366	-		6	SCREW ISO4762 M6X12 A4	
310	312115-0370	-		6	SCREW ISO4762 M6X20 A4	
320	312155-0323	-		2	SCREW EN 10642 MF6S M5X8 A480	
330	312705-0312	-		2	NUT HEX. DOMED CAP MHM-6 M4 A280	
340	315105-0136	-		6	WASHER ISO 7089-4-200 HV-A4	
350	315755-0106	-		1	LOCKING WASHER 4	
360	321130-0240	-		1	THRUST WASHER, 18X32X1,5 MM	
370	312605-0312	-		4	HEXAGON NUT, M6M M4 A280	
500	90237-0176	-		1	TURNING HANDLE	
900	90157-0041	-		1	SEALING COMPOUND	

Pos	Part No	SP	UN	Qty	Description	Page No

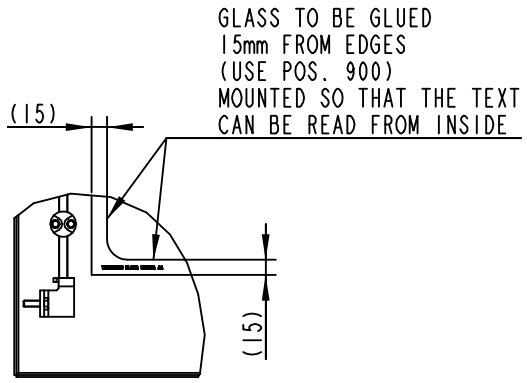

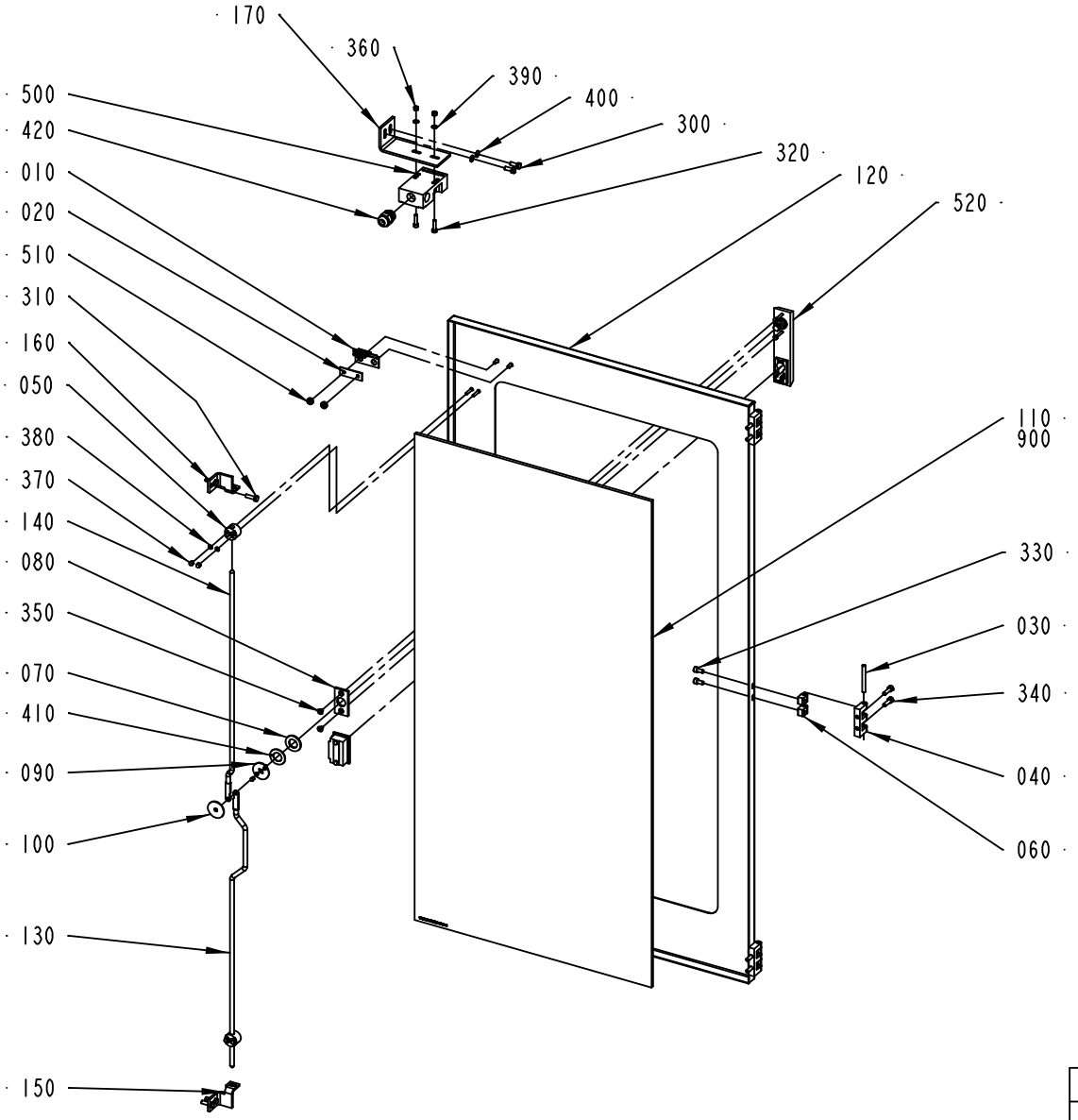

1514985-1
ECM 83969

Pos	Part No	SP	UN	Qty	Description	Page No
Common Parts						
010	975917-0000	-		1	KEY FOR SAFETY SWITCH 90044-103	
020	975924-0000	-		1	WASHER	
030	988685-0000	-		3	PIN	
040	1035792-0000	-		3	E-HINGE	
050	1129274-0000	-		2	GUIDE LUG	
060	1129770-0000	-		6	BLOCKING PIECE	
070	1338524-0000	-		1	WASHER	
080	1363878-0000	-		1	PLATE	
090	1514923-0000	-		1	HOLDER	
100	1514924-0000	-		1	PLATE	
110	1514979-0000	-		1	GLASS PANE	
120	1514984-0000	-		1	DOOR	
130	1515452-0000	-		1	LOCKING ARM	
140	1515453-0000	-		1	LOCKING ARM	
150	1515493-0000	-		1	BRACKET	
160	1515494-0000	-		1	BRACKET	
170	1515986-0000	-		1	BRACKET	
300	312105-0368	-		2	SCREW M6S M6X16 A280	
310	312105-0370	-		4	SCREW M6S ISO 4017 M6X20 A480	
320	312115-0331	-		2	SCREW ISO4762 M5X20 A4	
330	312115-0366	-		6	SCREW ISO4762 M6X12 A4	
340	312115-0370	-		6	SCREW ISO4762 M6X20 A4	
350	312155-0323	-		2	SCREW EN 10642 MF6S M5X8 A480	
360	312605-0314	-		2	HEXAGON NUT, M6M M5 A280	
370	312705-0312	-		4	NUT HEX. DOMED CAP MHM-6 M4 A280	
380	315105-0136	-		4	WASHER ISO 7089-4-200 HV-A4	
390	315105-0146	-		2	WASHER ISO 7089-5-200 HV-A4	
400	315105-0153	-		2	WASHER ISO 7089-6-200 HV-A4	
410	321130-0240	-		1	THRUST WASHER, 18X32X1,5 MM	
420	352103-0106	-		1	CABLE GLAND, ST 11, PR18,6/PG11	
500	90044-0139	A		1	KEY SAF.SW. AZ16-02 ZVR K-2254	
510	90099-0150	-		2	NUT ROUND, M5	
520	90237-0176	-		1	TURNING HANDLE	
900	90157-0041	-	L	1	SEALING COMPOUND	

Pos	Part No	SP	UN	Qty	Description	Page No

Machine Type	Group Description	Used-In	Group Number	Page No

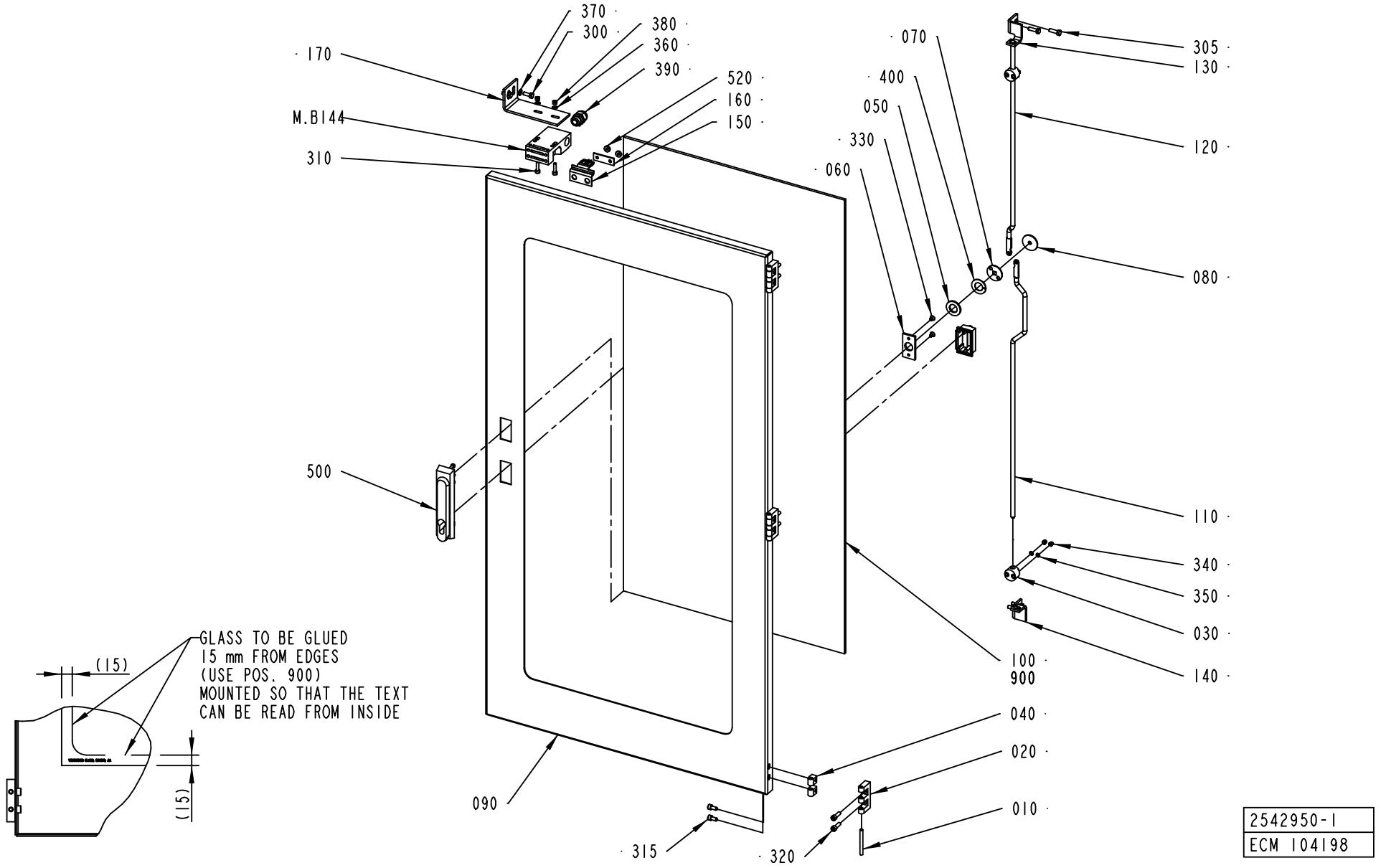

2542950-1
ECM 104198

Pos	Part No	SP	UN	Qty	Description	Page No
Common Parts						
010	988685-0000	-		3	PIN	
020	1035792-0000	-		3	E-HINGE	
030	1129274-0000	-		2	GUIDE LUG	
040	1129770-0000	-		6	BLOCKING PIECE	
050	1338524-0000	-		1	WASHER	
060	1363878-0000	-		1	PLATE	
070	1514923-0000	-		1	HOLDER	
080	1514924-0000	-		1	PLATE	
090	2542949-0000	-		1	DOOR	
100	1514979-0000	-		1	GLASS PANE	
110	1515452-0000	-		1	LOCKING ARM	
120	1515453-0000	-		1	LOCKING ARM	
130	1515493-0000	-		1	BRACKET	
140	1515494-0000	-		1	BRACKET	
150	975917-0000	-		1	KEY FOR SAFETY SWITCH 90044-103	
160	975924-0000	-		1	WASHER	
170	1515986-0000	-		1	BRACKET	
300	312105-0368	-		2	SCREW M6S M6X16 A280	
305	312105-0370	-		4	SCREW M6S ISO 4017 M6X20 A480	
310	312115-0331	-		2	SCREW ISO4762 M5X20 A4	
315	312115-0366	-		6	SCREW ISO4762 M6X12 A4	
320	312115-0370	-		6	SCREW ISO4762 M6X20 A4	
330	312155-0323	-		2	SCREW EN 10642 MF6S M5X8 A480	
340	312705-0312	-		4	NUT HEX. DOMED CAP MHM-6 M4 A280	
350	315105-0136	-		4	WASHER ISO 7089-4-200 HV-A4	
360	315105-0146	-		2	WASHER ISO 7089-5-200 HV-A4	
370	315105-0153	-		2	WASHER ISO 7089-6-200 HV-A4	
380	312605-0314	-		2	HEXAGON NUT, M6M M5 A280	
390	352103-0106	-		1	CABLE GLAND, ST 11, PR18,6/PG11	
400	321130-0240	-		1	THRUST WASHER, 18X32X1,5 MM	
500	90237-0176	-		1	TURNING HANDLE	
520	90099-0150	-		2	NUT ROUND, M5	
900	90157-0041	-	ML	50	SEALING COMPOUND	
M.B144	90044-0139	A		1	KEY SAF.SW. AZ16-02 ZVR K-2254	

Pos	Part No	SP	UN	Qty	Description	Page No

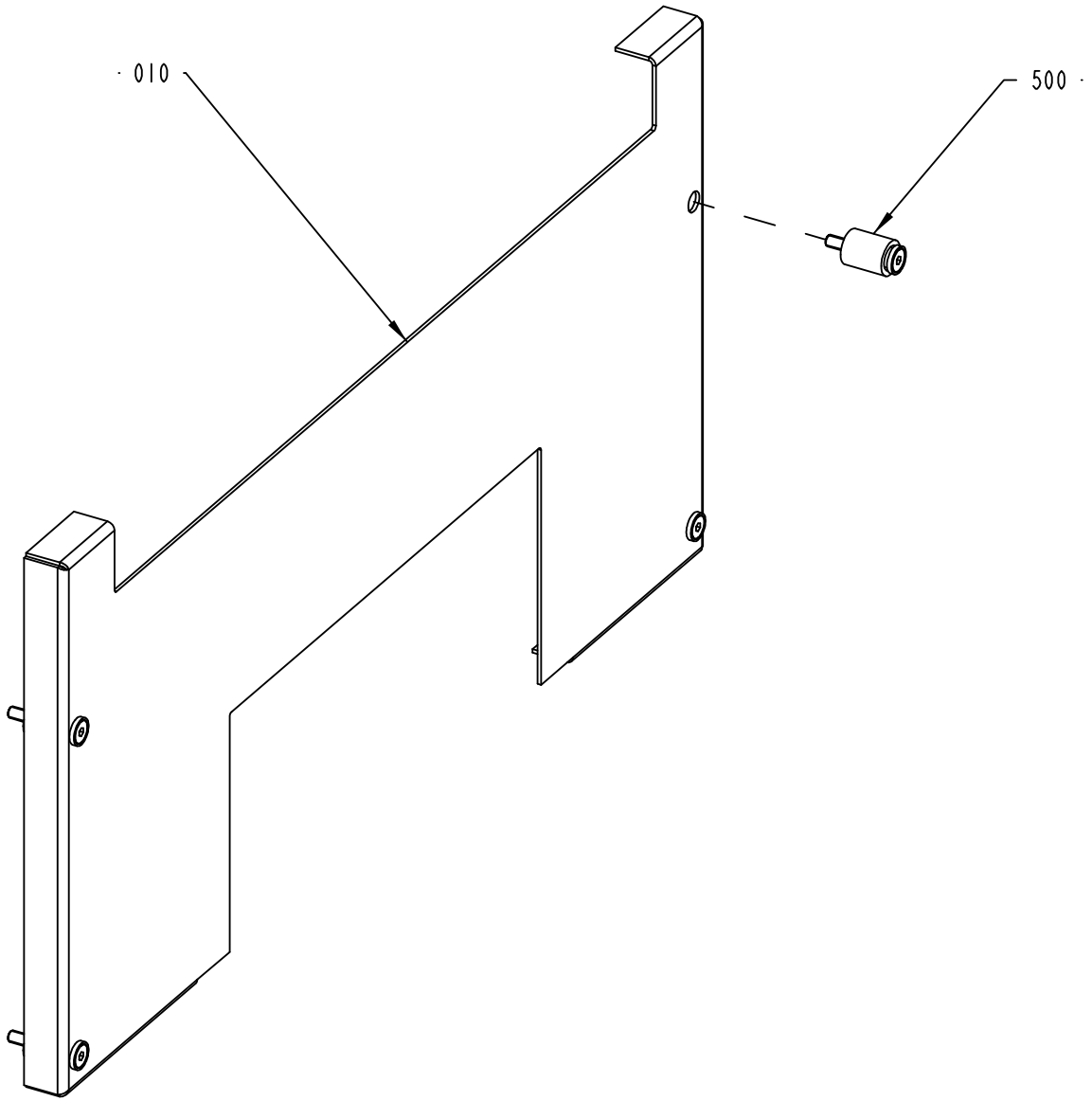

2524064-1
ECM 104198

Pos	Part No	SP	UN	Qty	Description	Page No
Common Parts						
010	2524158-0000	-		1	COVER PLATE	
500	90226-0458	-		4	MOUNTING SCREW	

Pos	Part No	SP	UN	Qty	Description	Page No

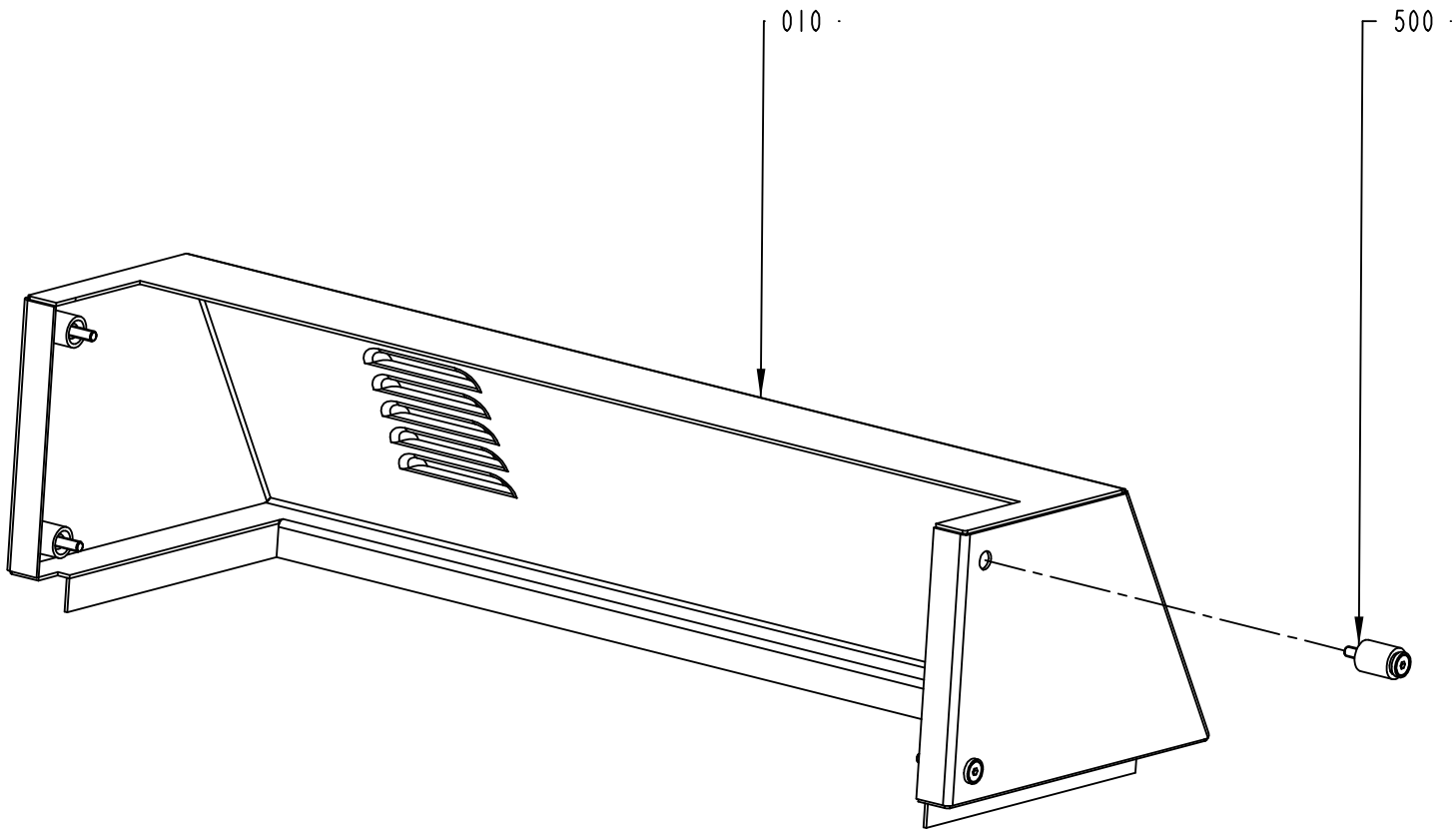

2542655-1
ECM 104198

ECM: 112500 - 20021113
Group number: 2542655-0100
Assembly Drawing: 2542655-1_1_AA

Issue: 20030310

Pos	Part No	SP	UN	Qty	Description	Page No
Common Parts						
010	2542654-0000	-		1	COVER	
500	90226-0458	-		4	MOUNTING SCREW	

Pos	Part No	SP	UN	Qty	Description	Page No

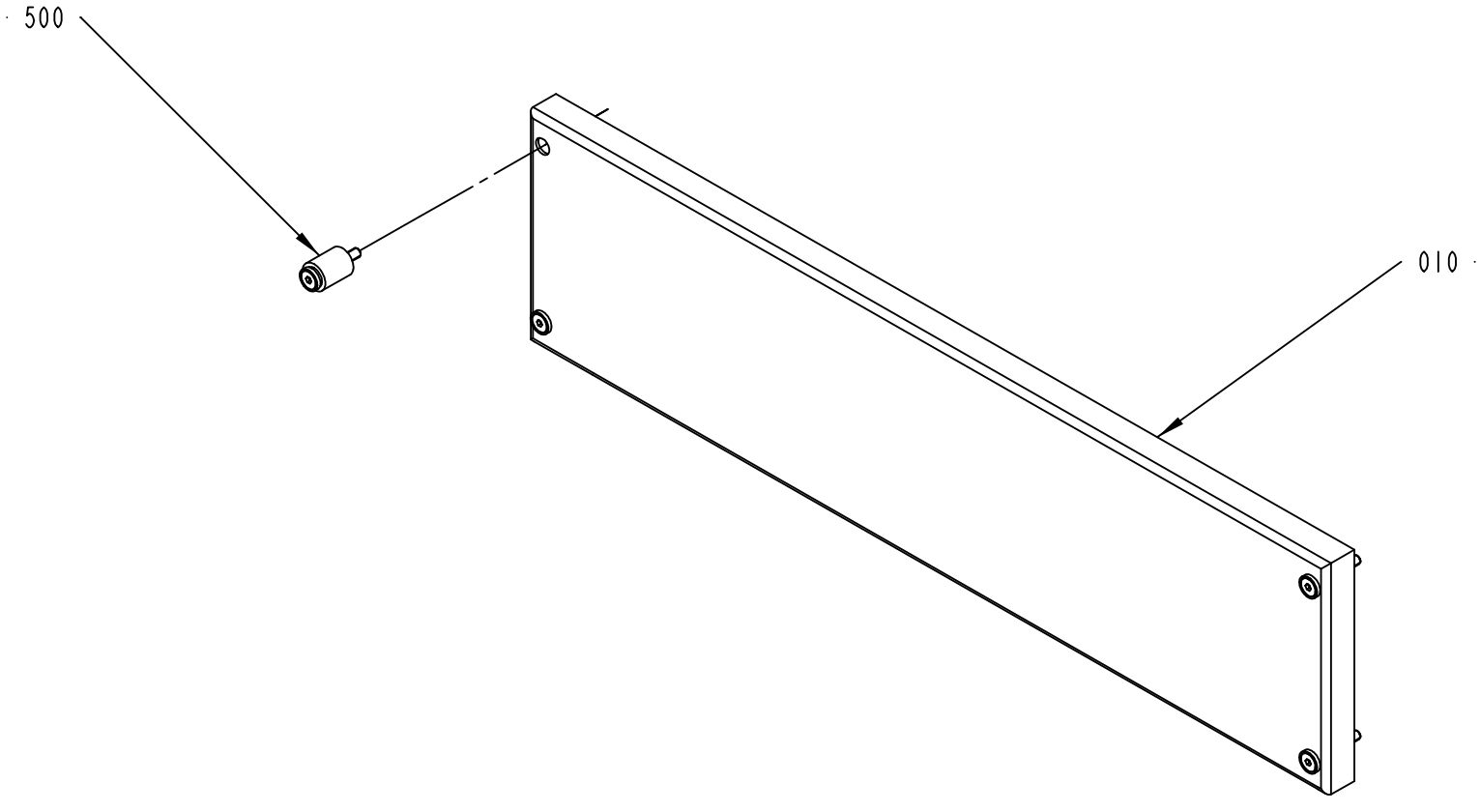

1515360-1
ECM 83969

ECM: 92756 - 20020313
Group number: 1515360-0100
Assembly Drawing: 1515360-1_1_AA

Issue: 20030310

Pos	Part No	SP	UN	Qty	Description	Page No
Common Parts						
010	1514971-0000	-		1	COVER	
500	90226-0458	-		4	MOUNTING SCREW	

Pos	Part No	SP	UN	Qty	Description	Page No

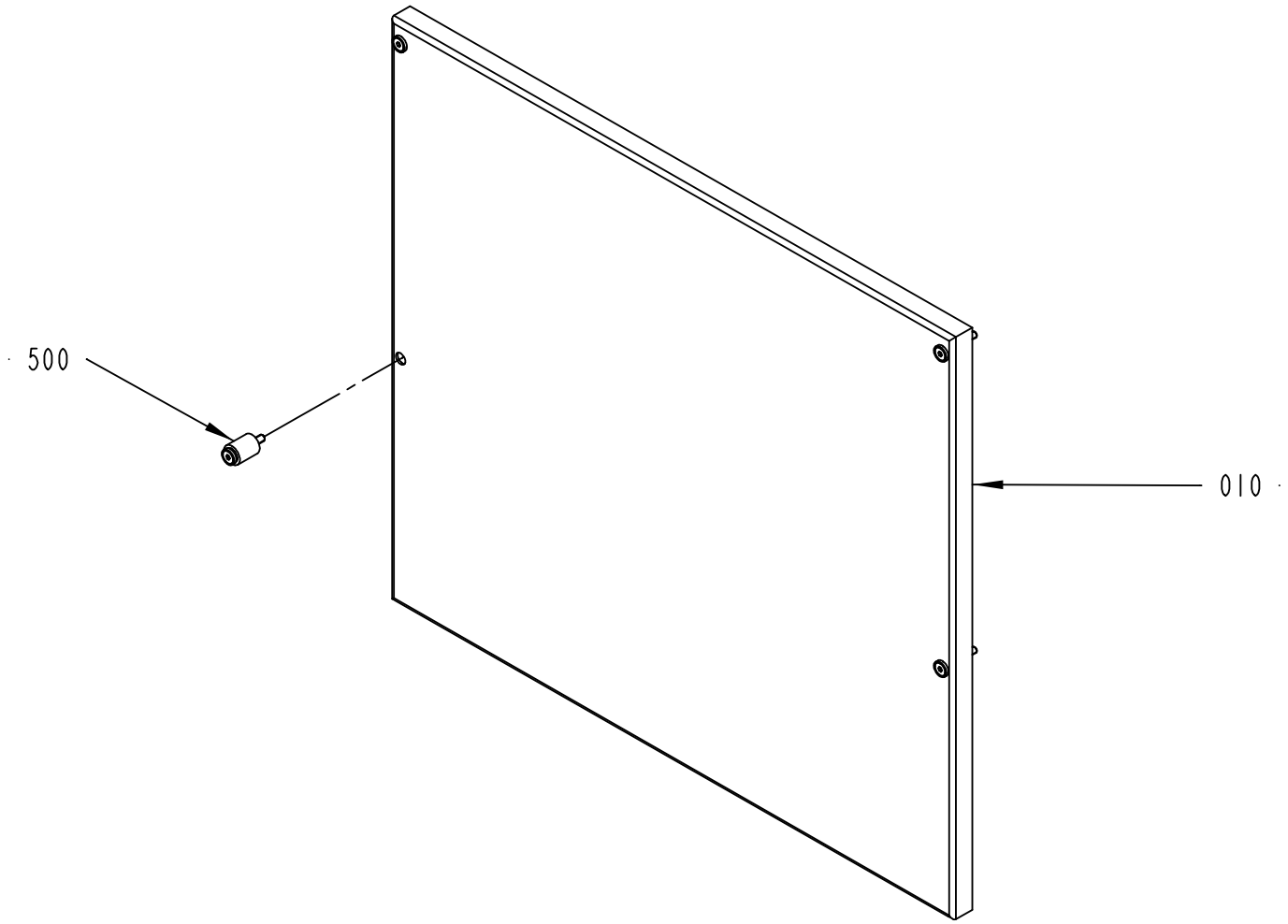

1515370-1
ECM 83969

ECM: 92757 - 20020313
Group number: 1515370-0100
Assembly Drawing: 1515370-1_1_AA

Issue: 20030310

Pos	Part No	SP	UN	Qty	Description	Page No
Common Parts						
010	1515398-0000	-		1	COVER	
500	90226-0458	-		4	MOUNTING SCREW	

Pos	Part No	SP	UN	Qty	Description	Page No

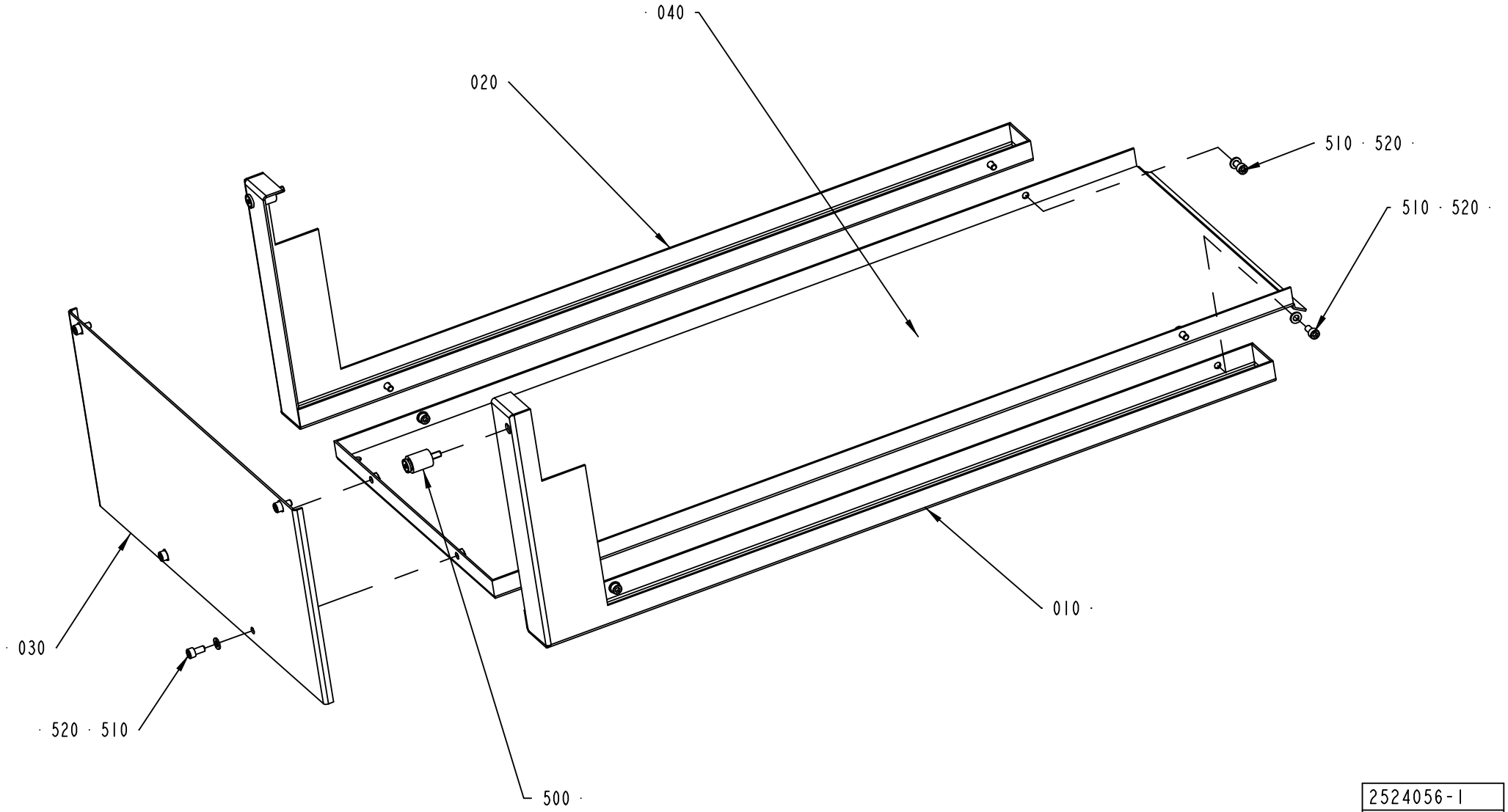

2524056-1
ECM 104198

ECM: 105078 - 20021113
Group number: 2524056-0100
Assembly Drawing: 2524056-1_1_AA

Issue: 20030310

Pos	Part No	SP	UN	Qty	Description	Page No
Common Parts						
010	2524152-0000	-		1	SHIELD	
020	2524157-0000	-		1	SHIELD	
030	2524153-0000	-		1	FRONT COVER	
040	2524154-0000	-		1	SHIELD	
500	90226-0458	-		2	MOUNTING SCREW	
510	312115-0366	-		12	SCREW ISO4762 M6X12 A4	
520	315105-0153	-		12	WASHER ISO 7089-6-200 HV-A4	

Pos	Part No	SP	UN	Qty	Description	Page No

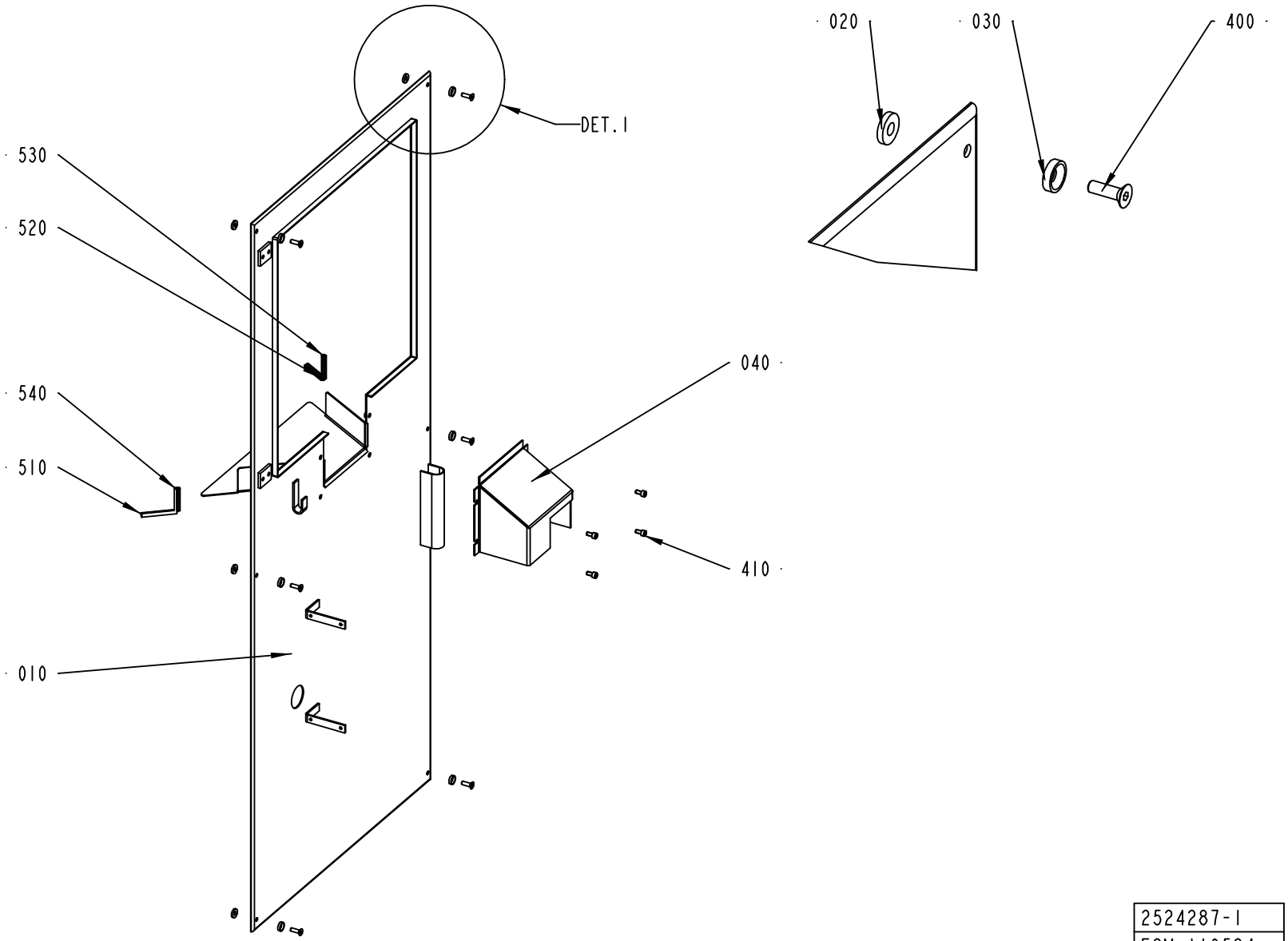

2524287-1
ECM 119584

ECM: 119822 - 20021203
Group number: 2524287-0100
Assembly Drawing: 2524287-1_1_AB

Issue: 20030310

Pos	Part No	SP	UN	Qty	Description	Page No
Common Parts						
010	2556807-0000	-		1	COVER	
020	1515182-0000	-		6	SPACER	
030	1515774-0000	-		6	WASHER	
040	2542636-0000	-		1	COVER	
400	312155-0370	-		6	SCREW EN 10642 MF6S M6X20 A480	
410	312115-0366	-		4	SCREW ISO4762 M6X12 A4	
510	90143-0060	-	MM	60	EDGE STRIP 9,5X6,3MM BLACK PVC	
520	90143-0060	-	MM	55	EDGE STRIP 9,5X6,3MM BLACK PVC	
530	90143-0060	-	MM	45	EDGE STRIP 9,5X6,3MM BLACK PVC	
540	90143-0060	-	MM	45	EDGE STRIP 9,5X6,3MM BLACK PVC	

Pos	Part No	SP	UN	Qty	Description	Page No

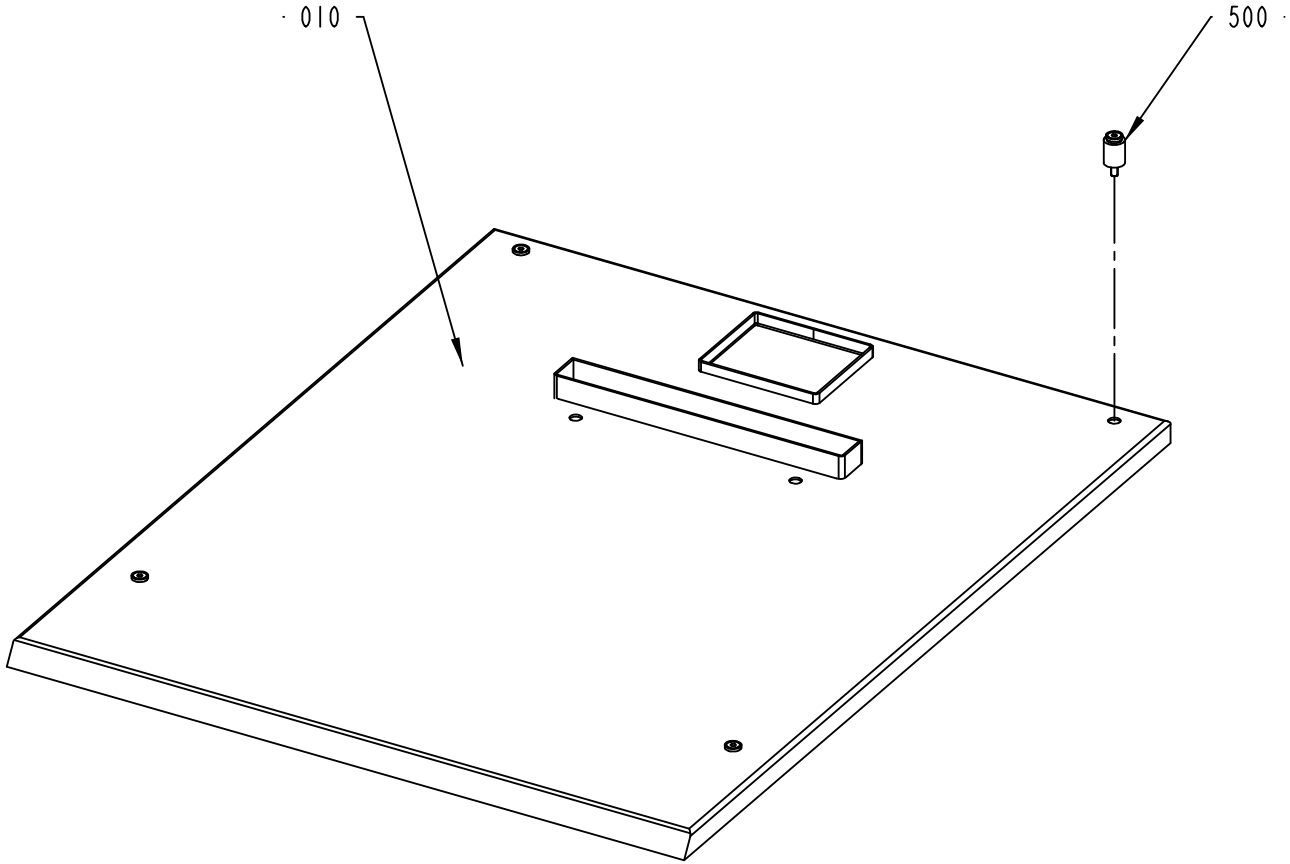

2524160-1
ECM 104198

Pos	Part No	SP	UN	Qty	Description	Page No
Common Parts						
010	2524052-0000	-		1	COVER PLATE	
500	90226-0458	-		4	MOUNTING SCREW	

Pos	Part No	SP	UN	Qty	Description	Page No

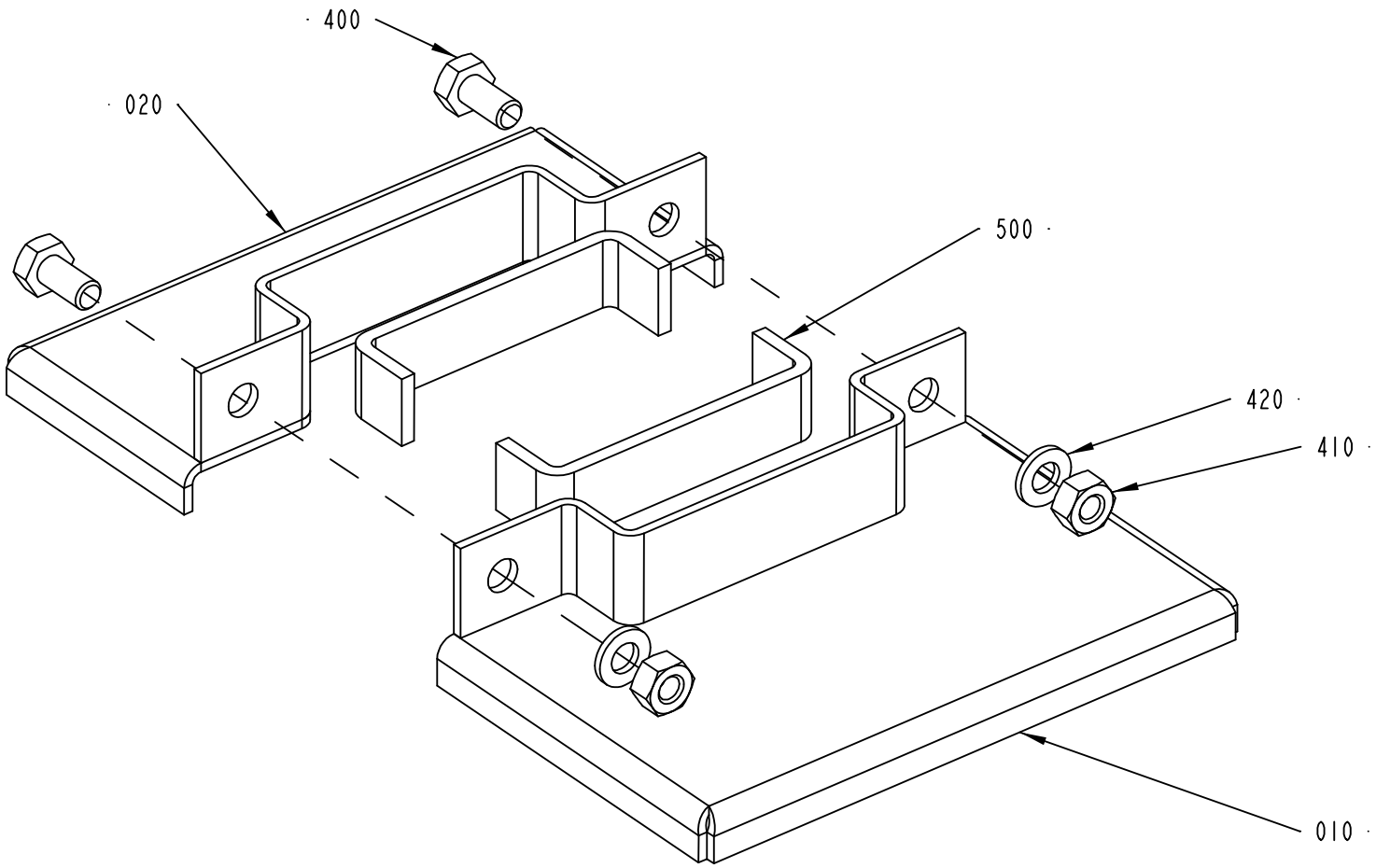

2542635-1
ECM 104198

ECM: 106884 - 20021113
Group number: 2542635-0100
Assembly Drawing: 2542635-1_1_AA

Issue: 20030310

Pos	Part No	SP	UN	Qty	Description	Page No
Common Parts						
010	2542634-0000	-		1	COVER PLATE	
020	2542637-0000	-		1	COVER PLATE	
400	312105-0366	-		2	SCREW M6S M6X12 A280	
410	312605-0316	-		2	HEXAGON NUT, M6M M6 A280	
420	315105-0153	-		2	WASHER ISO 7089-6-200 HV-A4	
500	90143-0073	-	MM	180	RUBBER STRIP	

Pos	Part No	SP	UN	Qty	Description	Page No

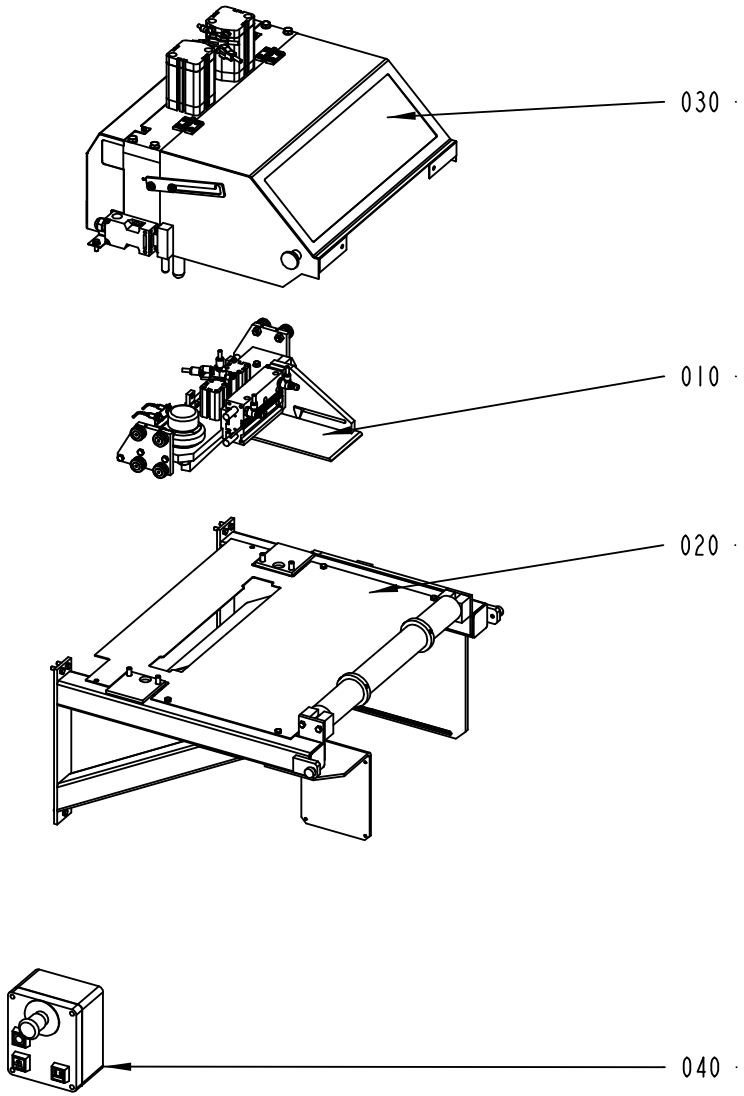

2542700-1
ECM 103913

Pos	Part No	SP	UN	Qty	Description	Page No
Common Parts						
010	A2523971-0100	-		1	PRESSURE JAW	**95**
020	A2542685-0100	-		1	CANTILEVER	**99**
030	A2542690-0100	-		1	SPLICING TABLE	**101**
040	A1515480-0100	-		1	PUSH BUTTON BOX	**103**

Pos	Part No	SP	UN	Qty	Description	Page No

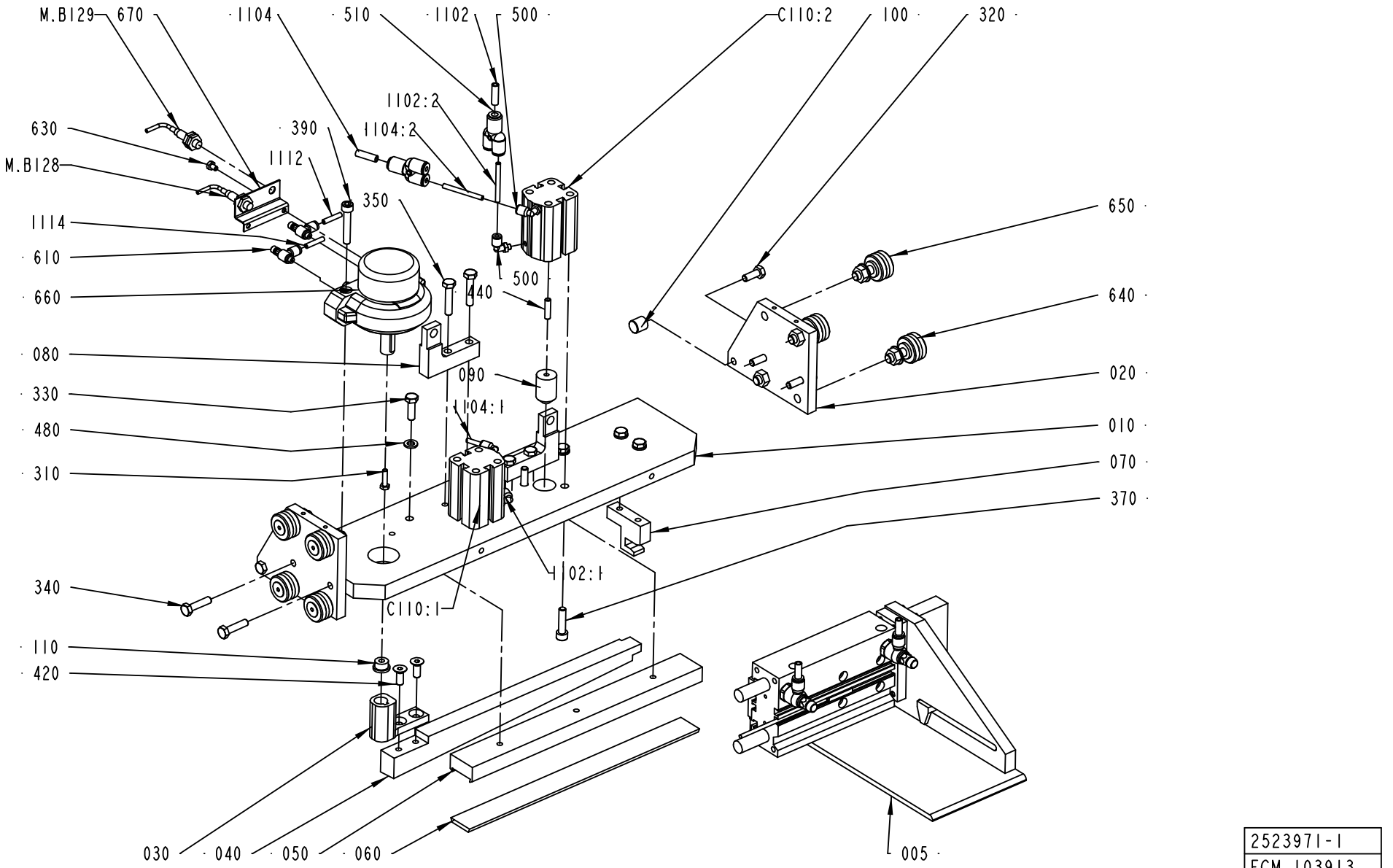

2523971-1
ECM 103913

Pos	Part No	SP	UN	Qty	Description	Page No
Common Parts						
005	A2523973-0100	-		1	PAPER GUIDE	**97**
010	2523972-0000	-		1	BRACKET	
020	1515334-0000	-		2	CARRIAGE	
030	1515336-0000	-		1	KNIFE HOLDER	
040	1515337-0000	A		1	KNIFE	
050	1515342-0000	-		1	HOLDER	
060	1515343-0000	A		1	RUBBER STRIP	
070	1515347-0000	-		1	FORK	
080	1515348-0000	-		2	BRACKET	
090	1515349-0000	-		2	PIECE	
100	1515359-0000	-		2	PIN	
110	1515396-0000	-		1	WASHER	
1102	315400-0001	-	MM	2500	TUBE PUN-H-6X1-BL	
1102:1	315400-0016	-	MM	150	TUBE PUN-H-4X0,75-BL	
1102:2	315400-0016	-	MM	150	TUBE PUN-H-4X0,75-BL	
1104	315400-0001	-	MM	2500	TUBE PUN-H-6X1-BL	
1104:1	315400-0016	-	MM	150	TUBE PUN-H-4X0,75-BL	
1104:2	315400-0016	-	MM	150	TUBE PUN-H-4X0,75-BL	
1112	315400-0016	-	MM	2500	TUBE PUN-H-4X0,75-BL	
1114	315400-0016	-	MM	2500	TUBE PUN-H-4X0,75-BL	
310	312105-0293	-		1	SCREW M6S ISO 4017 M4X16 A480	
320	312105-0368	-		2	SCREW M6S M6X16 A280	
330	312105-0370	-		3	SCREW M6S ISO 4017 M6X20 A480	
340	312105-0372	-		6	SCREW M6S ISO 4017 M6X25 A480	
350	312105-0374	-		4	SCREW M6S ISO 4014 M6X30 A480	
370	312115-0372	-		4	SCREW ISO4762 M6X25 A4	
390	312115-0376	-		2	SCREW ISO4762 M6X35 A4	
420	312155-0368	-		2	SCREW EN 10642 MF6S M6X16 A480	
440	312318-0331	-		2	SCREW ISO4029 M5X20 A4	
480	315105-0153	-		5	WASHER ISO 7089-6-200 HV-A4	
500	90458-2954	-		4	ELBOW PIPE JOINT, EXT.THREAD, D=4MM M5	
510	90055-0154	-		2	HOSE COUPLING	
610	90235-0845	-		2	THROTTLE CHECK VALVE, M5, MANUAL, 4MM	
630	90287-0290	-		2	SCREW M6S M4X6 A270	
640	90363-0023	A		4	IDLER ROLLER ECCENTRIC, 25 TYPE LJ	
650	90363-0024	A		4	IDLER ROLLER, 25 TYPE LJ	
660	90450-0110	A		1	ROTARY ACTUATOR DSR-25-180-P	
670	90450-0701	-		1	SENSOR BRACKET WSR-25-J FOR CYL 25	
C110:1	90457-0005	A		1	SINGLE ACTING, SHORT STROKE, CYL 20-15	
C110:2	90457-0005	A		1	SINGLE ACTING, SHORT STROKE, CYL 20-15	
M.B128	90458-0138	A		1	PROX.SW. E2EG-X1R5B1-5M	
M.B129	90458-0138	A		1	PROX.SW. E2EG-X1R5B1-5M	

Machine Type | Group Description | Used-In | Group Number | Page No

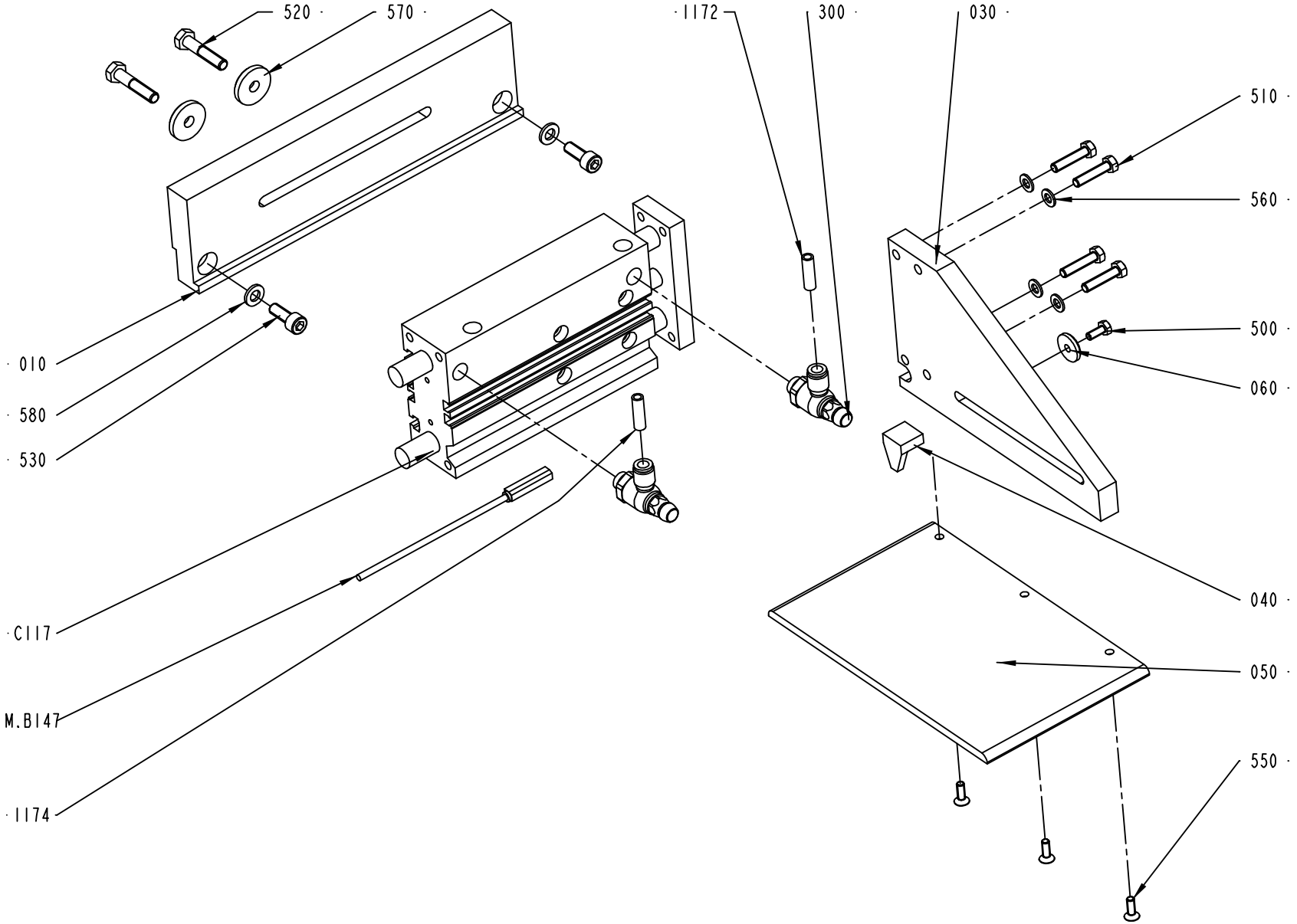

2523973-1
ECM 103913

ECM: 120674 - 20021203
Group number: 2523973-0100
Assembly Drawing: 2523973-1_1_AA

Issue: 20030310

Pos	Part No	SP	UN	Qty	Description	Page No
Common Parts						
010	2523974-0000	-		1	BRACKET	
030	2523976-0000	-		1	PLATE	
040	2523977-0000	-		1	SCALE	
050	2523978-0000	-		1	PAPER GUIDE	
060	2523979-0000	-		1	WASHER	
1172	315400-0001	-	MM	2500	TUBE PUN-H-6X1-BL	
1174	315400-0001	-	MM	2500	TUBE PUN-H-6X1-BL	
300	90235-0846	-		2	THROTTLE CHECK VALVE G1/8", MANUAL, 6	
500	312105-0289	-		1	SCREW M6S ISO 4017 M4X10 A480	
510	312105-0332	-		4	SCREW M6S ISO 4017 M5X22 A480	
520	312105-0374	-		2	SCREW M6S ISO 4014 M6X30 A480	
530	312115-0368	-		2	SCREW ISO4762 M6X16 A4	
550	312155-0291	-		3	SCREW EN 10642 MF6S M4X12 A480	
560	315105-0146	-		4	WASHER ISO 7089-5-200 HV-A4	
570	315125-0153	-		2	WASHER TBRSB 6,4X22X4 A4	
580	315105-0153	-		2	WASHER ISO 7089-6-200 HV-A4	
C117	90459-0392	A		1	CYLINDER WITH INT. GUIDING BORE 20	
M.B147	983386-0000	A		1	PROXIMITY SWITCH	

Pos	Part No	SP	UN	Qty	Description	Page No

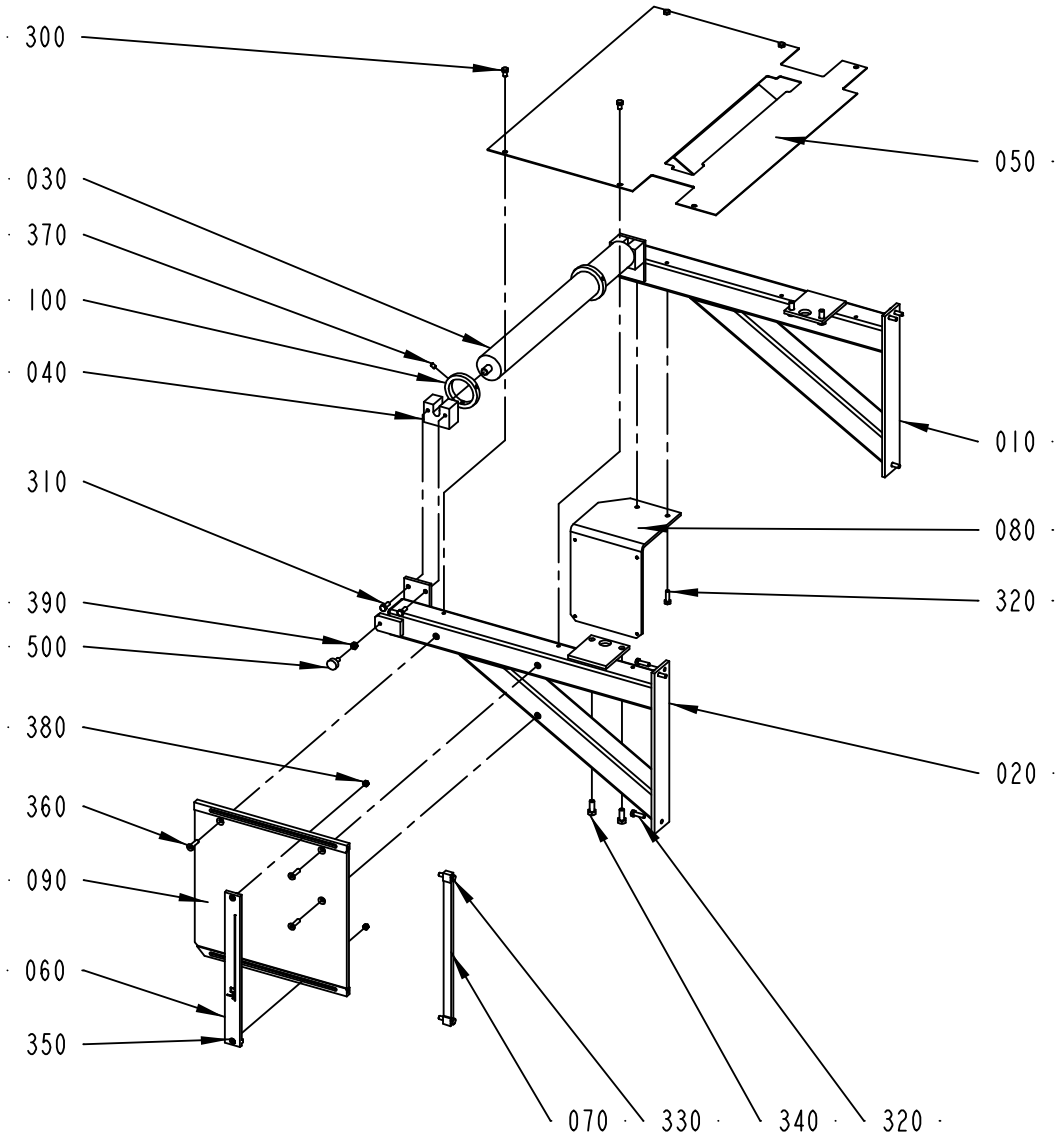

2542685-1
ECM 103913

ECM: 120631 - 20021203
Group number: 2542685-0100
Assembly Drawing: 2542685-1_1_AA

Issue: 20030310

Pos	Part No	SP	UN	Qty	Description	Page No
Common Parts						
010	1515369-0000	-		1	BRACKET	
020	1515371-0000	-		1	BRACKET	
030	1515372-0000	A		1	BENDING ROLLER	
040	1515373-0000	B		2	BEARING	
050	2542686-0000	-		1	PLATE	
060	1515375-0000	-		1	RULER	
070	1515376-0000	-		1	CUTTING TABLE	
080	2542688-0000	-		1	ANGLE BRACKET	
090	2542692-0000	-		1	CUTTING TABLE	
100	1515469-0000	-		2	FLANGE	
300	312105-0364	-		4	SCREW M6S ISO 4017 M6X10 A480	
310	312105-0368	-		4	SCREW M6S M6X16 A280	
320	312105-0370	-		8	SCREW M6S ISO 4017 M6X20 A480	
330	312105-0372	-		2	SCREW M6S ISO 4017 M6X25 A480	
340	312105-0451	-		4	SCREW M6S ISO 4017 M8X20 A480	
350	312155-0329	-		2	SCREW EN 10642 MF6S M5X16 A480	
360	312155-0372	-		3	SCREW EN 10642 MF6S M6X25 A480	
370	312318-0362	-		6	SCREW ISO4029 M6X8 A4	
380	312605-0314	-		2	HEXAGON NUT, M6M M5 A280	
390	312605-0316	-		2	HEXAGON NUT, M6M M6 A280	
500	90347-0007	-		2	VIBRATION DAMPER	

Pos	Part No	SP	UN	Qty	Description	Page No

Machine Type	Group Description	Used-In	Group Number	Page No

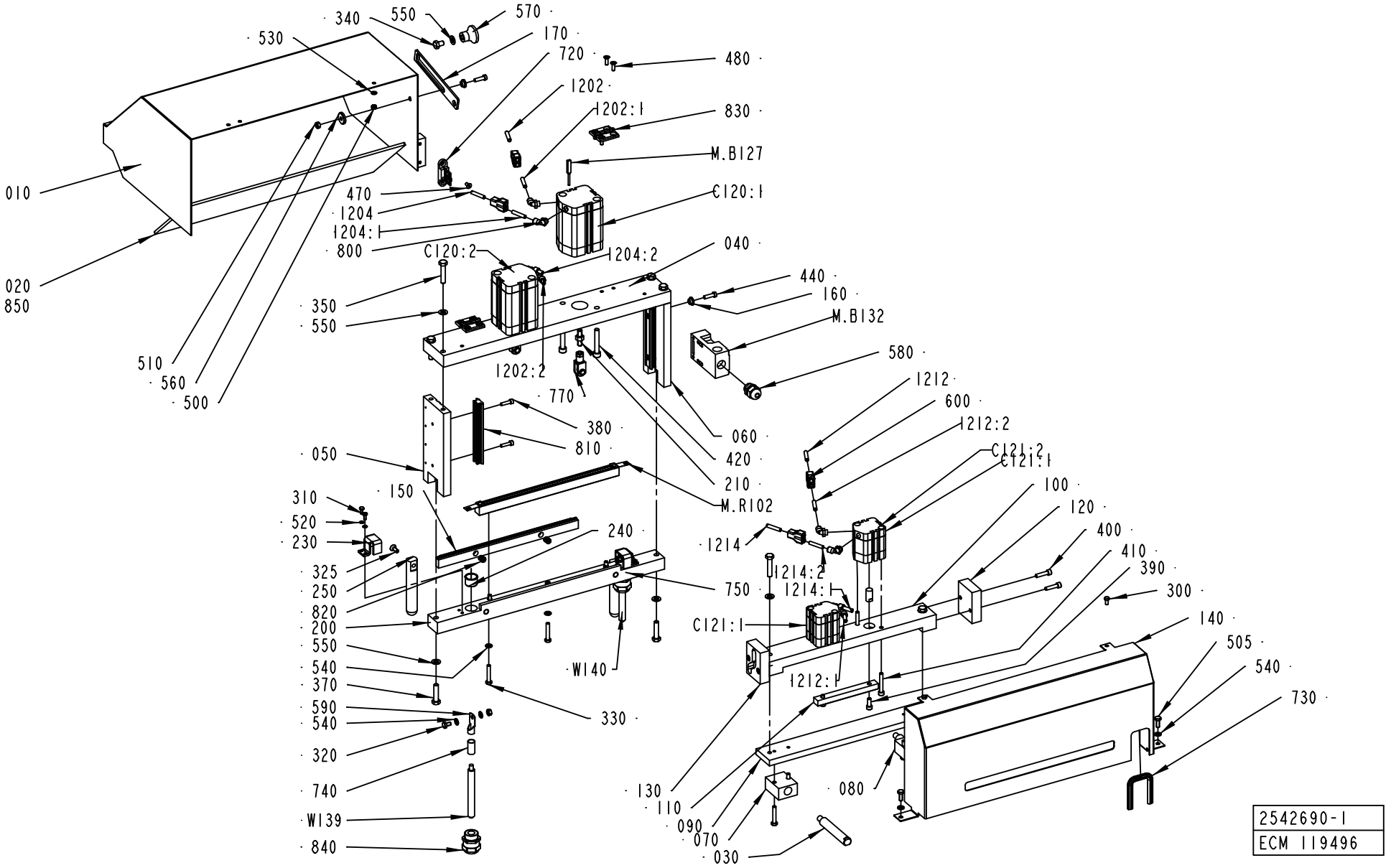
010
020
850
510
560
500
530
340
550
570
170
720
480
1202
1202:1
830
M.B127
C120:1
470
1204
1204:1
800
C120:2
1204:2
040
440
160
M.B132
580
350
550
1202:2
770
380
810
060
420
210
M.R102
1212
600
1212:2
C121:2
C121:1
100
120
400
410
390
300
140
505
540
730
050
150
310
520
230
325
250
820
200
550
540
370
590
540
320
740
W139
840
240
750
W140
330
1214
1214:2
1214:1
C121:1
1212:1
130
110
090
070
030
080
2542690-1
ECM 119496

ECM: 119956 - 20021203
Group number: 2542690-0100
Assembly Drawing: 2542690-1_1_AB

Issue: 20030310

Pos	Part No	SP	UN	Qty	Description	Page No
Common Parts						
010	2542687-0000	-		1	COVER	
020	2542689-0000	-		1	GLASS	
030	1515338-0000	-		2	GUIDE	
040	2556806-0000	-		1	BRACKET	
050	1515341-0000	-		1	END SECTION	
060	1515344-0000	-		1	END SECTION	
070	1515351-0000	A		1	BEARING	
080	1515352-0000	A		1	BEARING	
090	1515353-0000	-		1	BAR	
100	1515354-0000	-		1	BRACKET	
110	1515356-0000	-		1	BRAKE BLOCK	
120	1515357-0000	A		1	CURVE	
1202	315400-0001	-	MM	2500	TUBE PUN-H-6X1-BL	
1202:1	315400-0001	-	MM	160	TUBE PUN-H-6X1-BL	
1202:2	315400-0001	-	MM	160	TUBE PUN-H-6X1-BL	
1204	315400-0001	-	MM	2500	TUBE PUN-H-6X1-BL	
1204:1	315400-0001	-	MM	160	TUBE PUN-H-6X1-BL	
1204:2	315400-0001	-	MM	160	TUBE PUN-H-6X1-BL	
1212	315400-0001	-	MM	2500	TUBE PUN-H-6X1-BL	
1212:1	315400-0001	-	MM	160	TUBE PUN-H-6X1-BL	
1212:2	315400-0001	-	MM	160	TUBE PUN-H-6X1-BL	
1214	315400-0001	-	MM	2500	TUBE PUN-H-6X1-BL	
1214:1	315400-0001	-	MM	160	TUBE PUN-H-6X1-BL	
1214:2	315400-0001	-	MM	160	TUBE PUN-H-6X1-BL	
130	1515358-0000	A		1	CURVE	
140	1515379-0000	-		1	COVER	
150	2542691-0000	A		1	KNIFE	
160	1515386-0000	-		2	STEERING	
170	1515387-0000	-		1	LOCKING ARM	
200	2542697-0000	-		1	BEAM	
210	2556808-0000	B		1	SPACER	
230	2542958-0000	B		2	COVER	
240	2542963-0000	-		2	COVER	
250	2542964-0000	-		2	BAR	
300	312105-0325	-		2	SCREW M6S ISO 4017 M5X10 A480	
310	312105-0289	-		4	SCREW M6S ISO 4017 M4X10 A480	
320	312105-0364	-		2	SCREW M6S ISO 4017 M6X10 A480	
325	312155-0368	-		2	SCREW EN 10642 MF6S M6X16 A480	
330	312105-0376	-		10	SCREW M6S ISO 4014 M6X35 A480	
340	312105-0447	-		1	SCREW M6S ISO 4017 M8X12 A480	
350	312105-0459	-		6	SCREW M6S ISO 4014 M8X40 A480	
370	312109-0457	-		2	SCREW M6S ISO 4017 M8X35 A480	
380	312115-0331	-		4	SCREW ISO4762 M5X20 A4	
390	312115-0368	-		2	SCREW ISO4762 M6X16 A4	
400	312115-0372	-		4	SCREW ISO4762 M6X25 A4	
410	312115-0378	-		4	SCREW ISO4762 M6X40 A4	
420	312115-0461	-		4	SCREW ISO4762 M8X50 A4	
440	312125-0370	-		2	SCREW PAN HEAD MCS M6X20 SS	
470	312155-0325	-		2	SCREW EN 10642 MF6S M5X10 A480	
480	312155-0329	-		8	SCREW EN 10642 MF6S M5X16 A480	
500	312605-0314	-		4	HEXAGON NUT, M6M M5 A280	
505	312105-0368	-		2	SCREW M6S M6X16 A280	
510	312605-0316	-		3	HEXAGON NUT, M6M M6 A280	
520	315105-0136	-		5	WASHER ISO 7089-4-200 HV-A4	
530	315105-0146	-		4	WASHER ISO 7089-5-200 HV-A4	
540	315105-0153	-		12	WASHER ISO 7089-6-200 HV-A4	
550	315105-0165	-		9	WASHER ISO 7089-8-200 HV-A4	
560	315125-0153	-		1	WASHER TBRSB 6,4X22X4 A4	
570	318873-0107	-		1	KNOB, CIRCUL, THREADED BUSH, M8 33X29 MM	
580	352103-0105	-		1	CABLE GLAND, STR 11, PR 18,6/PG11	
590	353104-0182	-		2	CABLE SHOE YAV 35 M6*	
600	90055-0100	-		4	Y-CONNECTION, 6-6	
720	90044-0311	-		1	KEY FOR SAFETY SWITCH, AZ15/16 B2	
730	90143-0060	-	MM	140	EDGE STRIP 9,5X6,3MM BLACK PVC	
740	90166-0094	-	MM	25	SHRINKABLE HOSE 19 MM	
750	90166-0094	-	MM	25	SHRINKABLE HOSE 19 MM	
770	90239-0532	B		2	ROD END, CLEVIS WITH AXLE M8X1,25	
800	90458-2956	-		8	ELBOW PIPE JOINT, EXT.THREAD, D=6MM-G1/8	
810	90458-2973	B		2	GUIDE BAR, 25X12,25X150 MM	
820	90459-0074	B		2	COMP. SPRING 2367	
830	90459-0075	B		2	HINGE, 1056-U30	
840	90458-0308	-		2	CABLE GLAND, M25X1,5, NO.5311 1030	
850	90153-0023	-		1	ADHESIVE, SILICON 251470 TUB 90CC	
C120:1	90459-1417	A		1	DOUBLE ACTING, COMPACT, CYL 50-50	
C120:2	90459-1417	A		1	DOUBLE ACTING, COMPACT, CYL 50-50	
C121:1	90450-0478	A		1	DOUBLE ACTING, COMPACT, CYL 32-15	
C121:2	90450-0478	A		1	DOUBLE ACTING, COMPACT, CYL 32-15	
M.B127	90044-0165	A		1	SENSOR, SME-8-K5-LED-24	
M.B132	90044-0139	A		1	KEY SAF.SW. AZ16-02 ZVR K-2254	
M.R102	1520983-0000	A		1	TPC-BAR	
W139	351164-0111	-	MM	5000	CABLE AWM 1X35 MM2 BLACK	
W140	351164-0111	-	MM	5000	CABLE AWM 1X35 MM2 BLACK	

Machine Type | Group Description | Used-In | Group Number | Page No

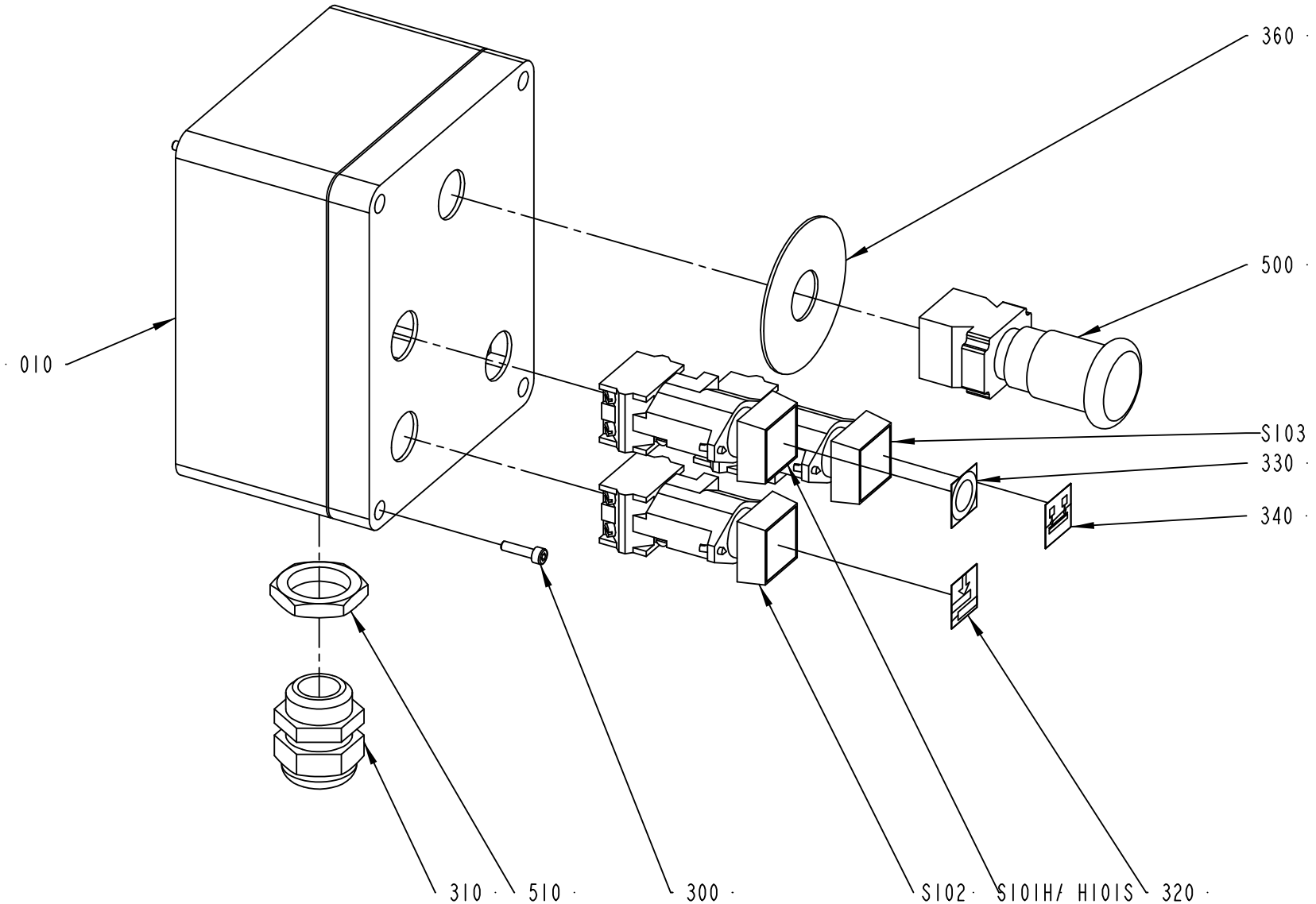

1515480-1
ECM 73237

ECM: 120632 - 20021203
Group number: 1515480-0100
Assembly Drawing: 1515480-1_1_AA

Issue: 20030310

Pos	Part No	SP	UN	Qty	Description	Page No
Common Parts						
010	1515466-0000	-		1	BOX	
300	312115-0293	-		4	SCREW ISO4762 M4X16 A4	
310	352103-0116	-		1	KABELFöRSKR. ST 21, PR28,3/PG21	
320	359301-0100	-		1	SIGN "SPLICING"	
330	359301-0110	-		1	SIGN "SHORT STOP"	
340	359301-0488	-		1	BUTTON SIGN, MATERIAL LOCKING	
360	486826-0001	-		1	SIGN "EMERGENCY STOP"	
500	90064-0124	A		1	SWITCH, EM. STOP, ZB2-BS844+ZB2-BZ1045	
510	90099-0119	-		1	NUT, PR 28,3 (PG21)	
S101H	90064-0084	A		1	PUSH BUTTON, YELLOW	
S102	B90064-0082	A		2	PUSH BUTTON, WHITE	
	90036-0057	*B*		*1*	*LIGHT BULB, BA9S 28V*	
S103	B90064-0082	A		1	PUSH BUTTON, WHITE	
	90036-0057	*B*		*1*	*LIGHT BULB, BA9S 28V*	

Pos	Part No	SP	UN	Qty	Description	Page No

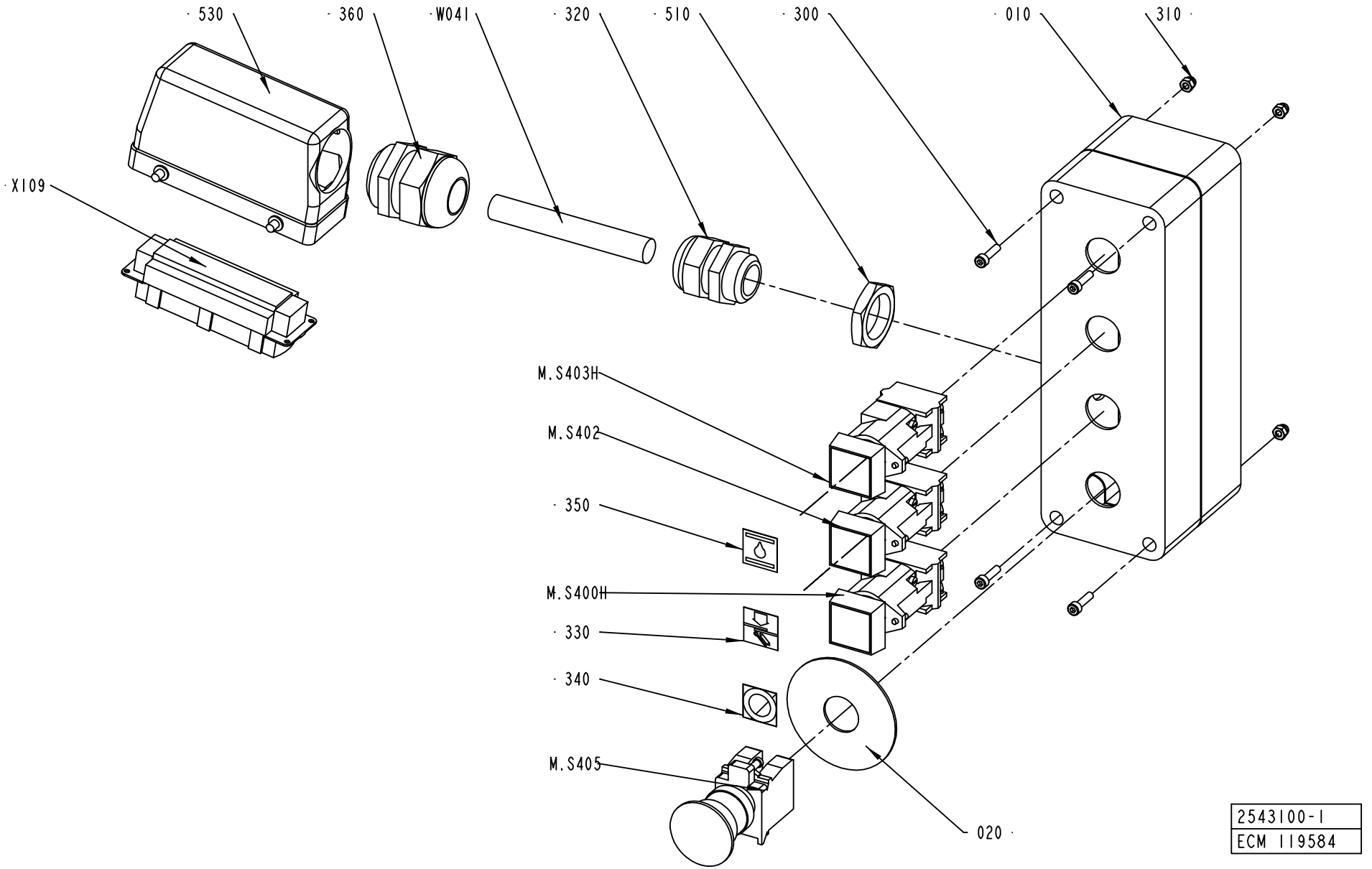
· 530
· 360
·W041
· 320
· 510
· 300
· 010
310 ·
·X109
M.S403H
M.S402
· 350
M.S400H
· 330
· 340
M.S405
020 ·
2543100-1
ECM 119584

ECM: 119864 - 20021203
Group number: 2543100-0100
Assembly Drawing: 2543100-1_1_AB

Issue: 20030310

Pos	Part No	SP	UN	Qty	Description	Page No
Common Parts						
010	1515833-0000	-		1	BOX	
020	486826-0001	-		1	SIGN "EMERGENCY STOP"	
300	312115-0293	-		4	SCREW ISO4762 M4X16 A4	
310	312705-0312	-		4	NUT HEX. DOMED CAP MHM-6 M4 A280	
320	352103-0116	-		1	KABELFöRSKR. ST 21, PR28,3/PG21	
330	359301-0051	-		1	SIGN"STRIP SPLICE"	
340	359301-0110	-		1	SIGN "SHORT STOP"	
350	359301-0265	-		1	SIGN "HYDRAULIC"	
360	352103-0120	-		1	CABLE GLAND, STR 29, PR37,0/PG29	
510	90099-0119	-		1	NUT, PR 28,3 (PG21)	
530	90110-0346	-		1	CABLE HOOD 1211220 00 00	
M.S400H	B90064-0082	A		1	PUSH BUTTON, WHITE	
	90036-0057	*B*		*1*	*LIGHT BULB, BA9S 28V*	
M.S402	90064-0084	A		1	PUSH BUTTON, YELLOW	
M.S403H	B90064-0082	A		1	PUSH BUTTON, WHITE	
	90036-0057	*B*		*1*	*LIGHT BULB, BA9S 28V*	
M.S405	90458-1651	A		1	EMERGENCY STOP, ZB4-BS-844 ZB4-BZ-104	
M.W041	351150-0425	-	M	10	CABLE OLFLEX 25X0,75 MM2 LIGHT/GREY	
X109	90110-0150	-		1	MALE INSERT 121110 0000	

Pos	Part No	SP	UN	Qty	Description	Page No

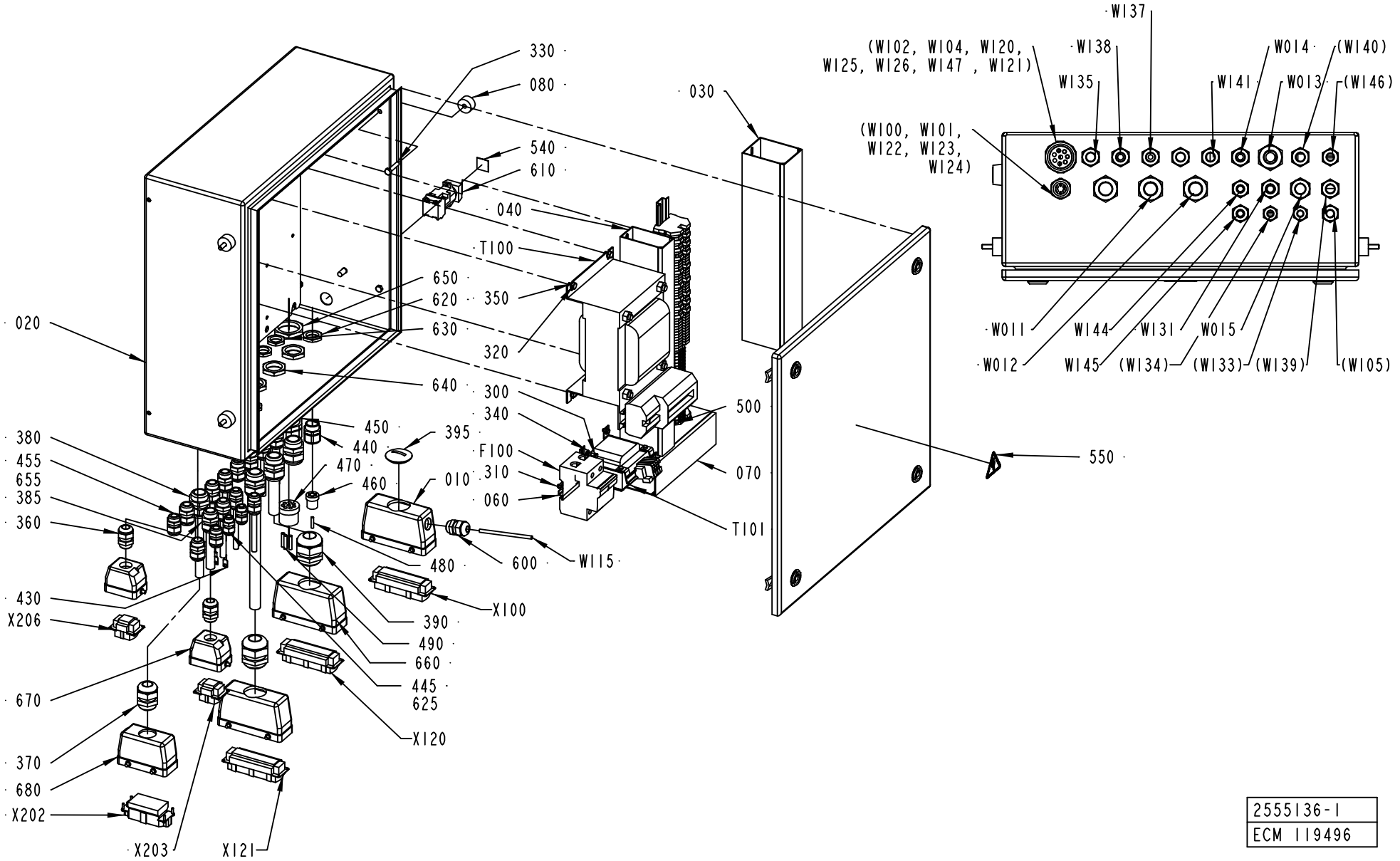

2555136-1
ECM 119496

ECM: 119812 - 20021203
Group number: 2555136-0100
Assembly Drawing: 2555136-1_1_AB

Issue: 20030310

Pos	Part No	SP	UN	Qty	Description	Page No
Common Parts						
010	1515026-0000	-		1	CABLE HOOD 24-POL	
020	2557505-0000	-		1	ELECTRICAL CABINET	
030	1515473-0000	-		1	CABLE DUCT	
040	1515474-0000	-		1	CABLE DUCT	
050	1515481-0000	-		1	ASSEMBLY RAIL	
060	1515546-0000	-		1	RAIL	
070	1515822-0000	-		1	CABLE DUCT	
080	1515824-0000	-		4	SPACER	
300	312101-0287	-		4	SCREW M6S M4X8 FZB	
310	312105-0323	-		4	SKRUV M6S ISO 4017 M5X8 A480	
320	312105-0362	-		4	SCREW M6S ISO 4017 M6X8 A480	
330	312109-0374	-		4	SCREW M6S ISO 4017 M6X30 A480	
340	315105-0146	-		4	WASHER ISO 7089-5-200 HV-A4	
350	315105-0153	-		4	WASHER ISO 7089-6-200 HV-A4	
360	352103-0108	-		11	CABLE GLAND, ST 13,5 , PR20,4/PG13,5	
370	352103-0115	-		1	CABLE GLAND, STR 21, PR28,3/PG21	
380	352103-0116	-		4	KABELFöRSKR. ST 21, PR28,3/PG21	
385	352103-0111	-		1	CABLE GLAND, ST 16, PR22,5/PG16	
390	352103-0120	-		2	CABLE GLAND, STR 29, PR37,0/PG29	
395	90002-0010	-		1	BLANK-OFF PLUG, PR 37 SKINDICHT-BLK29	
400	353021-0212	-		34	FEED THROUGH TERMINAL, 10200.0	
410	353024-0205	-		10	EARTH TERMINAL, 1010.1	
420	353021-0302	-		22	TERMINALS,TRIPLE-LEVEL, DLD 2,5/35 PA	
425	353032-0302	-		1	END PLATE WAP	
430	353104-0140	-		2	CABLE SHOEYAV 06 M 4*	
440	353240-0004	-		1	NORMAL WITHOUT INSERT, PG 16	
445	352103-0101	-		2	KABELFöRSKR. ST 9, PR15,2/PG9	
450	353240-0006	-		1	FöRSKRUVNING, PG 29	
455	352103-0106	-		4	CABLE GLAND, ST 11, PR18,6/PG11	
470	353249-0079	-		1	INSERT, MULTI HOLE, E155M8X5,5	
480	353249-0301	-		1	SEALING PIN, 4X20	
490	353249-0303	-		3	SEALING PIN, 5,3X25	
500	359011-0807	-		2	MARKING PLATES 5-FW 1-50	
520	359011-0809	-		2	MARKING PLATES 5-FW 101-150	
530	359011-0834	-		1	SET OF SIGNS 6-GW(EARTH)	
540	359301-0101	-		1	SIGN	
550	359705-0015	A		1	WARNING SIGN ISO, RISK OF ELECTRIC SHOCK	
600	90012-0049	-		1	CABLE GLAND, STR13,5, PR20,4/PG13,5	
610	90064-0084	A		1	PUSH BUTTON, YELLOW	
620	90099-0110	-		2	NUT, PR 22,5 (PG16)	
625	90099-0104	-		2	NUT, PR 15,2 (PG9)	
630	90099-0118	-		9	NUT, PR 20,4 (PG13,5)	
640	90099-0119	-		4	NUT, PR 28,3 (PG21)	
650	90099-0120	-		1	MUTTER PR 37 (PG29)	
655	90099-0117	-		4	NUT, PR 18,6 (PG11)	
660	90110-0152	-		2	CABLE HOOD 24-POL 70.352.2428.1	
670	90110-0157	-		2	CABLE HOOD 6-POL 70.352.0628.1	
680	90110-0160	-		1	CABLE HOOD 6-16-POL 70.352.1628.1	
F100	90458-1448	A		1	MAGNETIC FUSE, S292 C100	
T100	1364474-0000	A		1	TRANSFORMER	
T101	563461-0000	A		1	TRANSFORMER	
W011	351150-0425	-	MM	6500	CABLE OLFLEX 25X0,75 MM2 LIGHT/GREY	
W012	351150-0425	-	MM	6500	CABLE OLFLEX 25X0,75 MM2 LIGHT/GREY	
W013	351150-0147	-	MM	6500	CABLE OLFLEX 3X6 MM2 LIGHT/GREY	
W014	351150-0412	-	MM	7500	CABLE OLFLEX 3X1,5 MM2 LIGHT/GREY	
W015	351150-0420	-	MM	6500	CABLE OLFLEX 7X2,5 MM2 LIGHT/GREY	
W115	90220-0059	-	MM	6500	THERMOCOUPLE CABLE K/ 2X0,81MM2	
W131	351150-0417	-	MM	1600	CABLE OLFLEX 3X2,5 MM2 LIGHT/GREY	
W135	351150-0407	-	MM	2000	CABLE OLFLEX 12X0,75 MM2 LIGHT/GREY	
W137	351150-0403	-	MM	1700	CABLE OLFLEX 3X0,75 MM2 LIGHT/GREY	
W138	351150-0405	-	MM	2000	CABLE OLFLEX 5X0,75 MM2 LIGHT/GREY	
W141	351150-0412	-	MM	1700	CABLE OLFLEX 3X1,5 MM2 LIGHT/GREY	
W144	351150-0405	-	MM	2000	CABLE OLFLEX 5X0,75 MM2 LIGHT/GREY	
W145	351150-0405	-	MM	2000	CABLE OLFLEX 5X0,75 MM2 LIGHT/GREY	
X100	90110-0150	-		1	MALE INSERT 121110 0000	
X120	90110-0150	-		1	MALE INSERT 121110 0000	
X121	90110-0150	-		1	MALE INSERT 121110 0000	
X202	90110-0156	-		1	MALE INSERT 70.210.0653.0	
X203	90110-0159	-		1	MALE INSERT 70.310.0640.0	
X206	90110-0159	-		1	MALE INSERT 70.310.0640.0	

Machine Type | Group Description | Used-In | Group Number | Page No

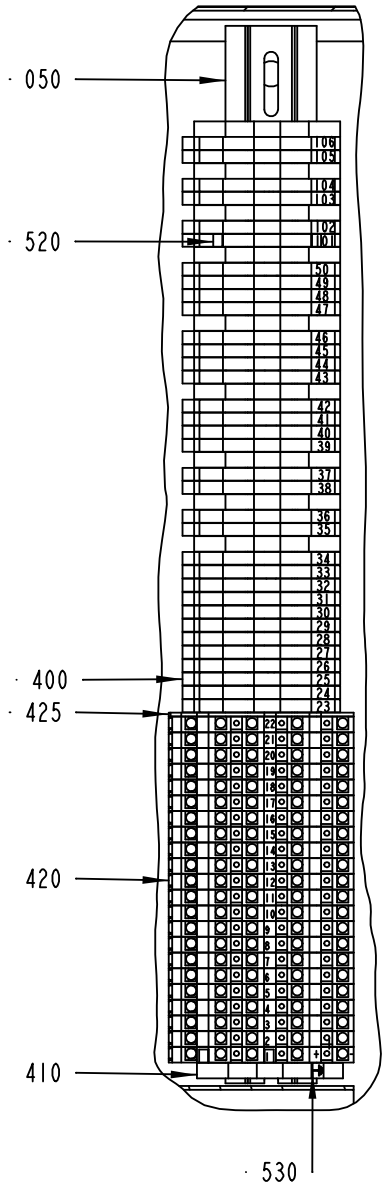

2555136-1
ECM 119496

ECM: 119812 - 20021203
Group number: 2555136-0100
Assembly Drawing: 2555136-1_2_AB

Issue: 20030310

Pos	Part No	SP	UN	Qty	Description	Page No
Common Parts						
010	1515026-0000	-		1	CABLE HOOD 24-POL	
020	2557505-0000	-		1	ELECTRICAL CABINET	
030	1515473-0000	-		1	CABLE DUCT	
040	1515474-0000	-		1	CABLE DUCT	
050	1515481-0000	-		1	ASSEMBLY RAIL	
060	1515546-0000	-		1	RAIL	
070	1515822-0000	-		1	CABLE DUCT	
080	1515824-0000	-		4	SPACER	
300	312101-0287	-		4	SCREW M6S M4X8 FZB	
310	312105-0323	-		4	SKRUV M6S ISO 4017 M5X8 A480	
320	312105-0362	-		4	SCREW M6S ISO 4017 M6X8 A480	
330	312109-0374	-		4	SCREW M6S ISO 4017 M6X30 A480	
340	315105-0146	-		4	WASHER ISO 7089-5-200 HV-A4	
350	315105-0153	-		4	WASHER ISO 7089-6-200 HV-A4	
360	352103-0108	-		11	CABLE GLAND, ST 13,5 , PR20,4/PG13,5	
370	352103-0115	-		1	CABLE GLAND, STR 21, PR28,3/PG21	
380	352103-0116	-		4	KABELFöRSKR. ST 21, PR28,3/PG21	
385	352103-0111	-		1	CABLE GLAND, ST 16, PR22,5/PG16	
390	352103-0120	-		2	CABLE GLAND, STR 29, PR37,0/PG29	
395	90002-0010	-		1	BLANK-OFF PLUG, PR 37 SKINDICHT-BLK29	
400	353021-0212	-		34	FEED THROUGH TERMINAL, 10200.0	
410	353024-0205	-		10	EARTH TERMINAL, 1010.1	
420	353021-0302	-		22	TERMINALS,TRIPLE-LEVEL, DLD 2,5/35 PA	
425	353032-0302	-		1	END PLATE WAP	
430	353104-0140	-		2	CABLE SHOEYAV 06 M 4*	
440	353240-0004	-		1	NORMAL WITHOUT INSERT, PG 16	
445	352103-0101	-		2	KABELFöRSKR. ST 9, PR15,2/PG9	
450	353240-0006	-		1	FöRSKRUVNING, PG 29	
455	352103-0106	-		4	CABLE GLAND, ST 11, PR18,6/PG11	
470	353249-0079	-		1	INSERT, MULTI HOLE, E155M8X5,5	
480	353249-0301	-		1	SEALING PIN, 4X20	
490	353249-0303	-		3	SEALING PIN, 5,3X25	
500	359011-0807	-		2	MARKING PLATES 5-FW 1-50	
520	359011-0809	-		2	MARKING PLATES 5-FW 101-150	
530	359011-0834	-		1	SET OF SIGNS 6-GW(EARTH)	
540	359301-0101	-		1	SIGN	
550	359705-0015	A		1	WARNING SIGN ISO, RISK OF ELECTRIC SHOCK	
600	90012-0049	-		1	CABLE GLAND, STR13,5, PR20,4/PG13,5	
610	90064-0084	A		1	PUSH BUTTON, YELLOW	
620	90099-0110	-		2	NUT, PR 22,5 (PG16)	
625	90099-0104	-		2	NUT, PR 15,2 (PG9)	
630	90099-0118	-		9	NUT, PR 20,4 (PG13,5)	
640	90099-0119	-		4	NUT, PR 28,3 (PG21)	
650	90099-0120	-		1	MUTTER PR 37 (PG29)	
655	90099-0117	-		4	NUT, PR 18,6 (PG11)	
660	90110-0152	-		2	CABLE HOOD 24-POL 70.352.2428.1	
670	90110-0157	-		2	CABLE HOOD 6-POL 70.352.0628.1	
680	90110-0160	-		1	CABLE HOOD 6-16-POL 70.352.1628.1	
F100	90458-1448	A		1	MAGNETIC FUSE, S292 C100	
T100	1364474-0000	A		1	TRANSFORMER	
T101	563461-0000	A		1	TRANSFORMER	
W011	351150-0425	-	MM	6500	CABLE OLFLEX 25X0,75 MM2 LIGHT/GREY	
W012	351150-0425	-	MM	6500	CABLE OLFLEX 25X0,75 MM2 LIGHT/GREY	
W013	351150-0147	-	MM	6500	CABLE OLFLEX 3X6 MM2 LIGHT/GREY	
W014	351150-0412	-	MM	7500	CABLE OLFLEX 3X1,5 MM2 LIGHT/GREY	
W015	351150-0420	-	MM	6500	CABLE OLFLEX 7X2,5 MM2 LIGHT/GREY	
W115	90220-0059	-	MM	6500	THERMOCOUPLE CABLE K/ 2X0,81MM2	
W131	351150-0417	-	MM	1600	CABLE OLFLEX 3X2,5 MM2 LIGHT/GREY	
W135	351150-0407	-	MM	2000	CABLE OLFLEX 12X0,75 MM2 LIGHT/GREY	
W137	351150-0403	-	MM	1700	CABLE OLFLEX 3X0,75 MM2 LIGHT/GREY	
W138	351150-0405	-	MM	2000	CABLE OLFLEX 5X0,75 MM2 LIGHT/GREY	
W141	351150-0412	-	MM	1700	CABLE OLFLEX 3X1,5 MM2 LIGHT/GREY	
W144	351150-0405	-	MM	2000	CABLE OLFLEX 5X0,75 MM2 LIGHT/GREY	
W145	351150-0405	-	MM	2000	CABLE OLFLEX 5X0,75 MM2 LIGHT/GREY	
X100	90110-0150	-		1	MALE INSERT 121110 0000	
X120	90110-0150	-		1	MALE INSERT 121110 0000	
X121	90110-0150	-		1	MALE INSERT 121110 0000	
X202	90110-0156	-		1	MALE INSERT 70.210.0653.0	
X203	90110-0159	-		1	MALE INSERT 70.310.0640.0	
X206	90110-0159	-		1	MALE INSERT 70.310.0640.0	

Machine Type | Group Description | Used-In | Group Number | Page No

Tetra Pak

SPC
Spare Parts Catalogue

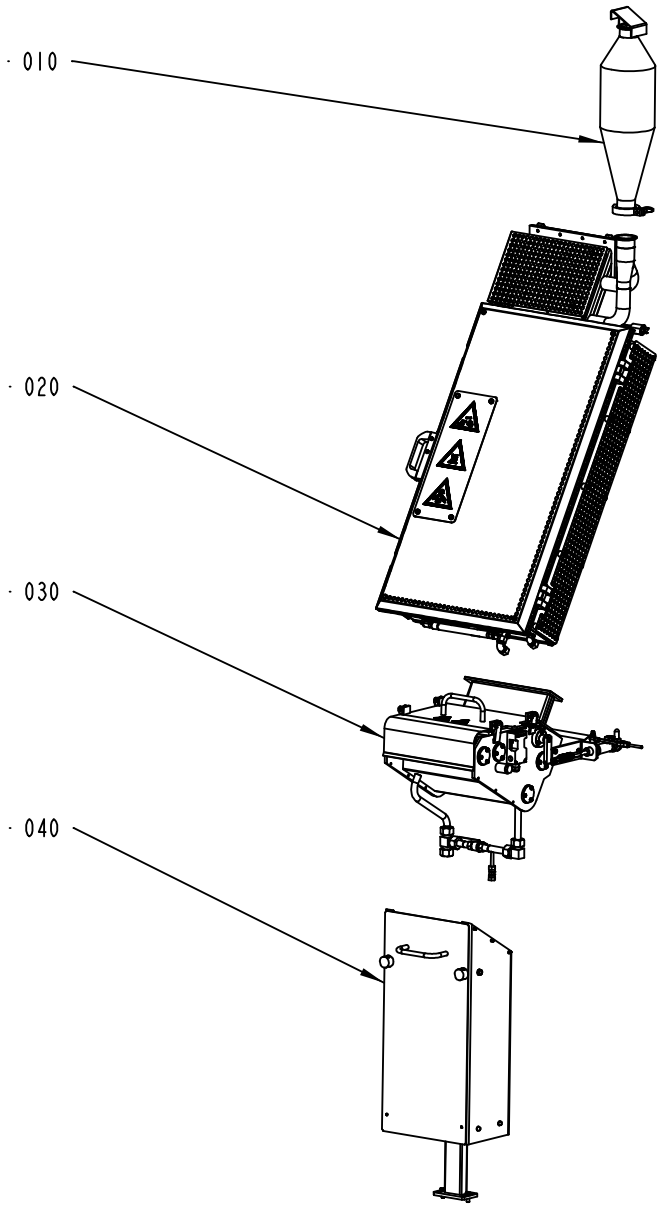

630402-5
ECM 104326

Pos	Part No	SP	UN	Qty	Description	Page No
Common Parts						
010	A1515220-0100	-		1	CATALYZER	**115**
020	A2542770-0100	-		1	HEATING CHAMBER	**117**
030	A2542840-0100	-		1	STERILIZATION BATH	**139**
040	A2542925-0100	-		1	PAPER FEED	**155**

Pos	Part No	SP	UN	Qty	Description	Page No

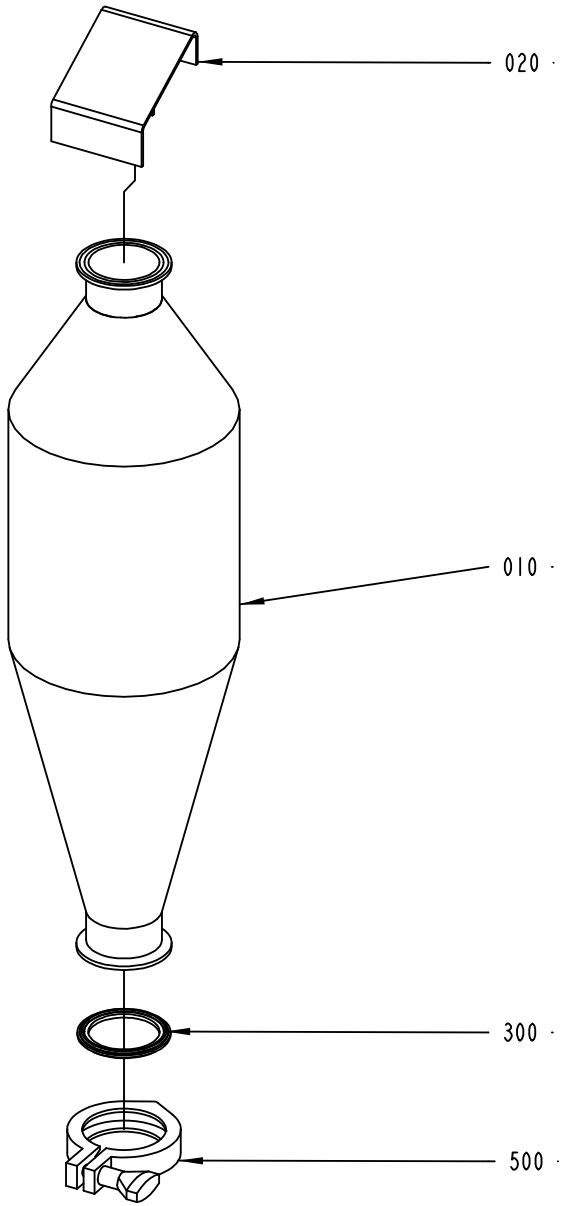

1515220-1
ECM 73245

ECM: 91154 - 20020313
Group number: 1515220-0100
Assembly Drawing: 1515220-1_1_AA

Issue: 20030314

Pos	Part No	SP	UN	Qty	Description	Page No
Common Parts						
010	566128-0000	-		1	CATALYZER	
020	1515234-0000	-		1	HOOD	
300	342850-0305	A		1	GASKET 47,8X62,6X5,2 MM 2" FDA	
500	90217-0304	-		1	CLAMP, ISO2852 FOR PIPE 50,8 MM	

Pos	Part No	SP	UN	Qty	Description	Page No

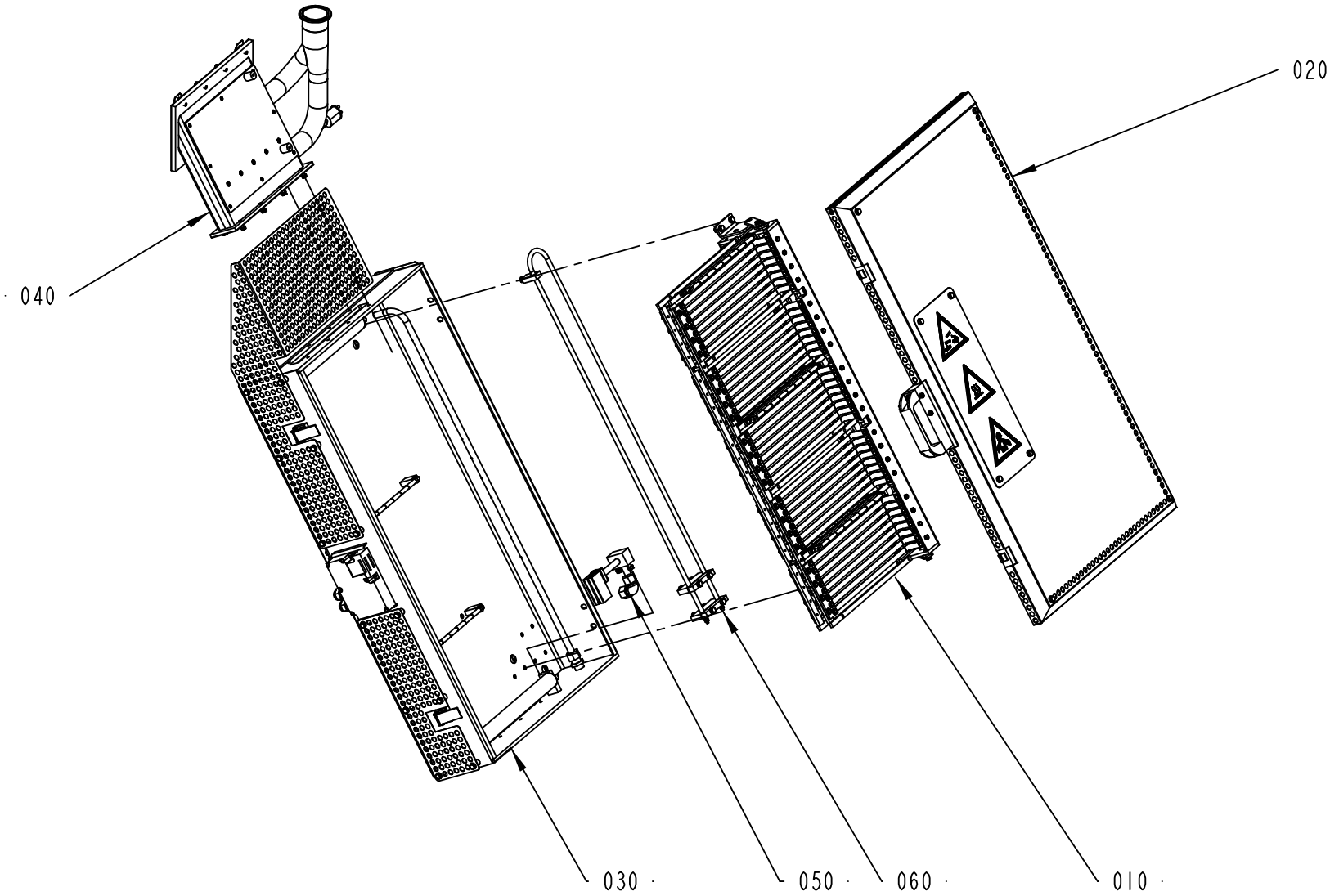

2542770-1
ECM 114878

ECM: 115898 - 20021113
Group number: 2542770-0100
Assembly Drawing: 2542770-1_1_AA

Issue: 20030314

Pos	Part No	SP	UN	Qty	Description	Page No
Common Parts						
010	A2523845-0100	-		1	ELEMENT GROUP	**119**
020	A2523870-0100	-		1	HATCH	**129**
030	A2542765-0100	-		1	BOX	**131**
040	A2542790-0100	-		1	CONNECTION PIPE	**133**
050	A2543050-0100	-		1	AIR KNIFE	**135**
060	A2556820-0100	-		1	PRE-HEATING ELEMENT	**137**

Pos	Part No	SP	UN	Qty	Description	Page No

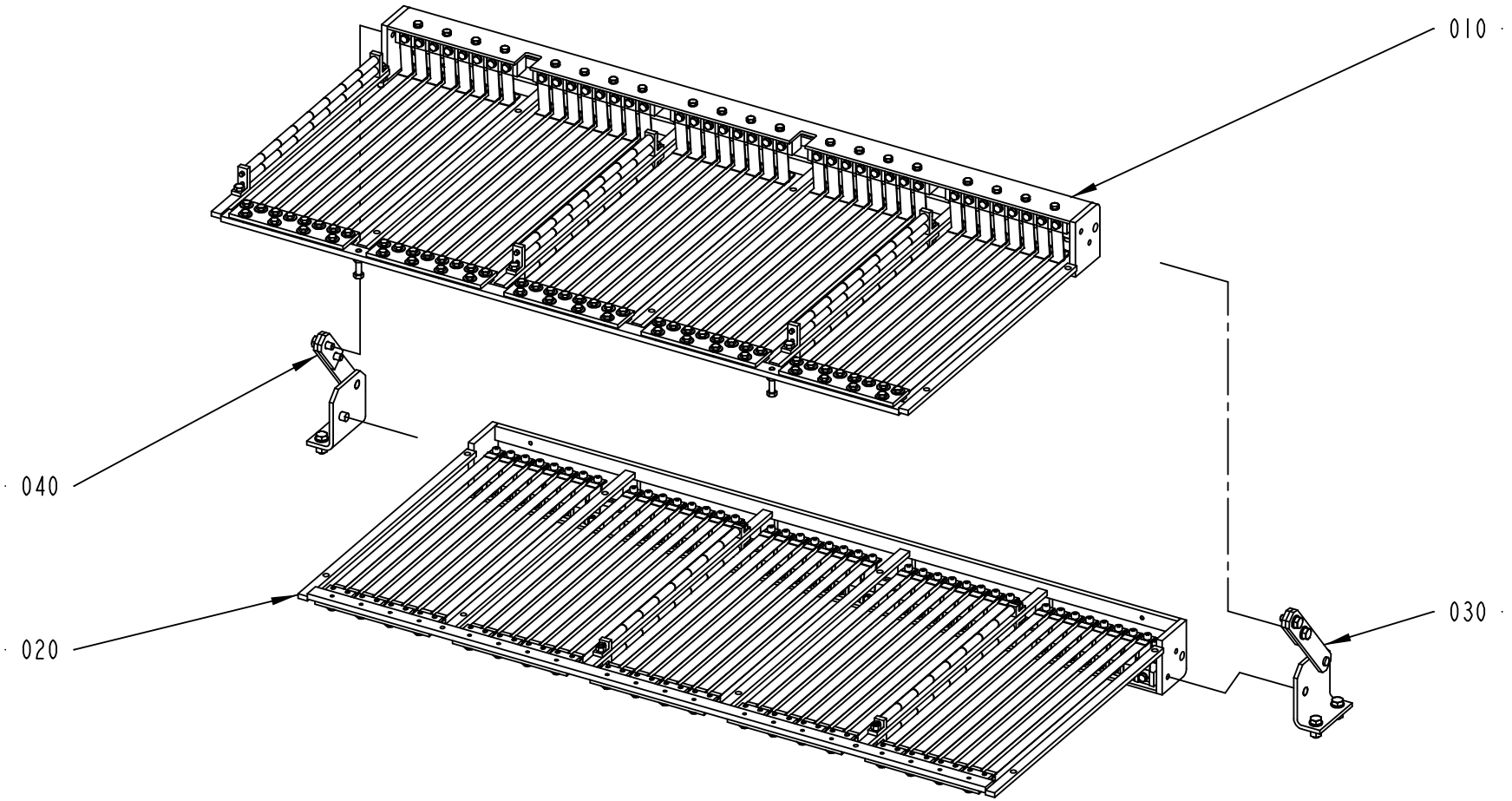

2523845-1
ECM 108086

ECM: 115805 - 20021113
Group number: 2523845-0100
Assembly Drawing: 2523845-1_1_AA

Issue: 20030314

Pos	Part No	SP	UN	Qty	Description	Page No
Common Parts						
010	A2523945-0100	-		1	ELEMENT	**121**
020	A2524025-0100	-		1	ELEMENT	**123**
030	A2524030-0100	-		1	BRACKET	**125**
040	A2524295-0100	-		1	BRACKET	**127**

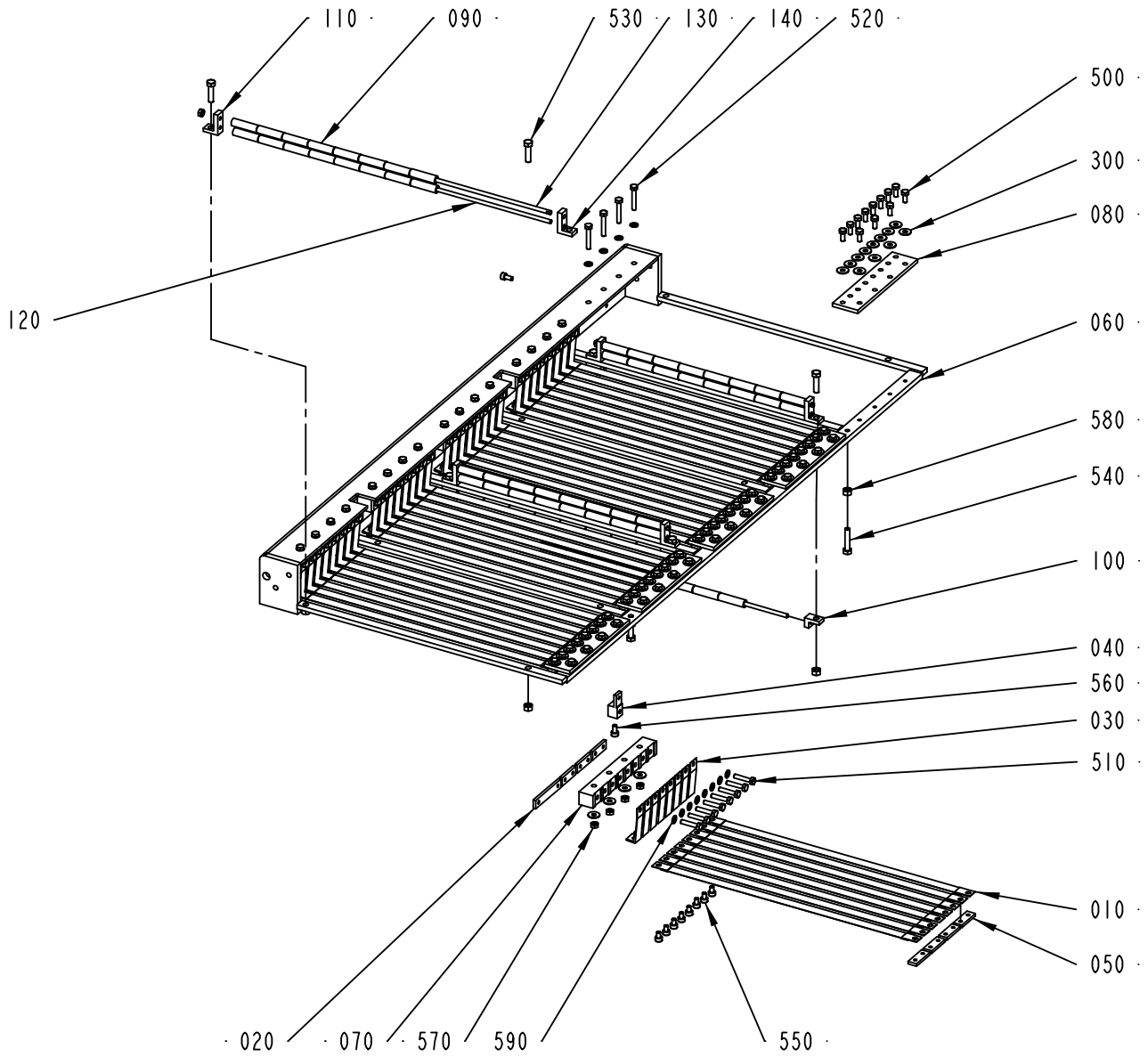

2523945-1
ECM 108086

ECM: 115807 - 20021113
Group number: 2523945-0100
Assembly Drawing: 2523945-1_1_AA

Issue: 20030314

Pos	Part No	SP	UN	Qty	Description	Page No
Common Parts						
010	1514095-0000	-		40	HEATING ELEMENT	
020	1514096-0000	-		4	CONNECTION	
030	1514097-0000	-		40	SPRING BRACKET	
040	1514098-0000	-		2	CONNECTION	
050	1514099-0000	-		35	CONNECTION	
060	2524026-0000	-		1	HOLDER	
070	2542761-0000	-		5	INSULATING RAIL	
080	2542762-0000	-		5	INSULATING PLATE	
090	2542836-0000	-		64	ROLLER	
100	2542837-0000	-		4	BRACKET	
110	2542838-0000	-		3	BRACKET	
120	2542839-0000	-		5	SHAFT	
130	2543053-0000	-		3	SHAFT	
140	2543054-0000	-		3	BRACKET	
300	90005-0082	-		80	WASHER PLAIN ROUND 4,3(M4)/12,H=1	
500	312105-0289	-		60	SCREW M6S ISO 4017 M4X10 A480	
510	312105-0295	-		40	SCREW M6S ISO4017 M4X20 A480	
520	312105-0297	-		20	SCREW M6S ISO 4017 M4X25 A480	
530	312105-0331	-		6	SCREW M6S ISO 4017 M5X20 A480	
540	312105-0333	-		2	SCREW M6S ISO 4017 M5X25 A480	
550	312115-0285	-		40	SCREW ISO4762 M4X6 A4	
560	312115-0287	-		4	SCREW ISO4762 M4X8 A4	
570	312605-0312	-		23	HEXAGON NUT, M6M M4 A280	
580	312605-0314	-		8	HEXAGON NUT, M6M M5 A280	
590	315105-0136	-		60	WASHER ISO 7089-4-200 HV-A4	

Pos	Part No	SP	UN	Qty	Description	Page No

Machine Type | Group Description | Used-In | Group Number | Page No

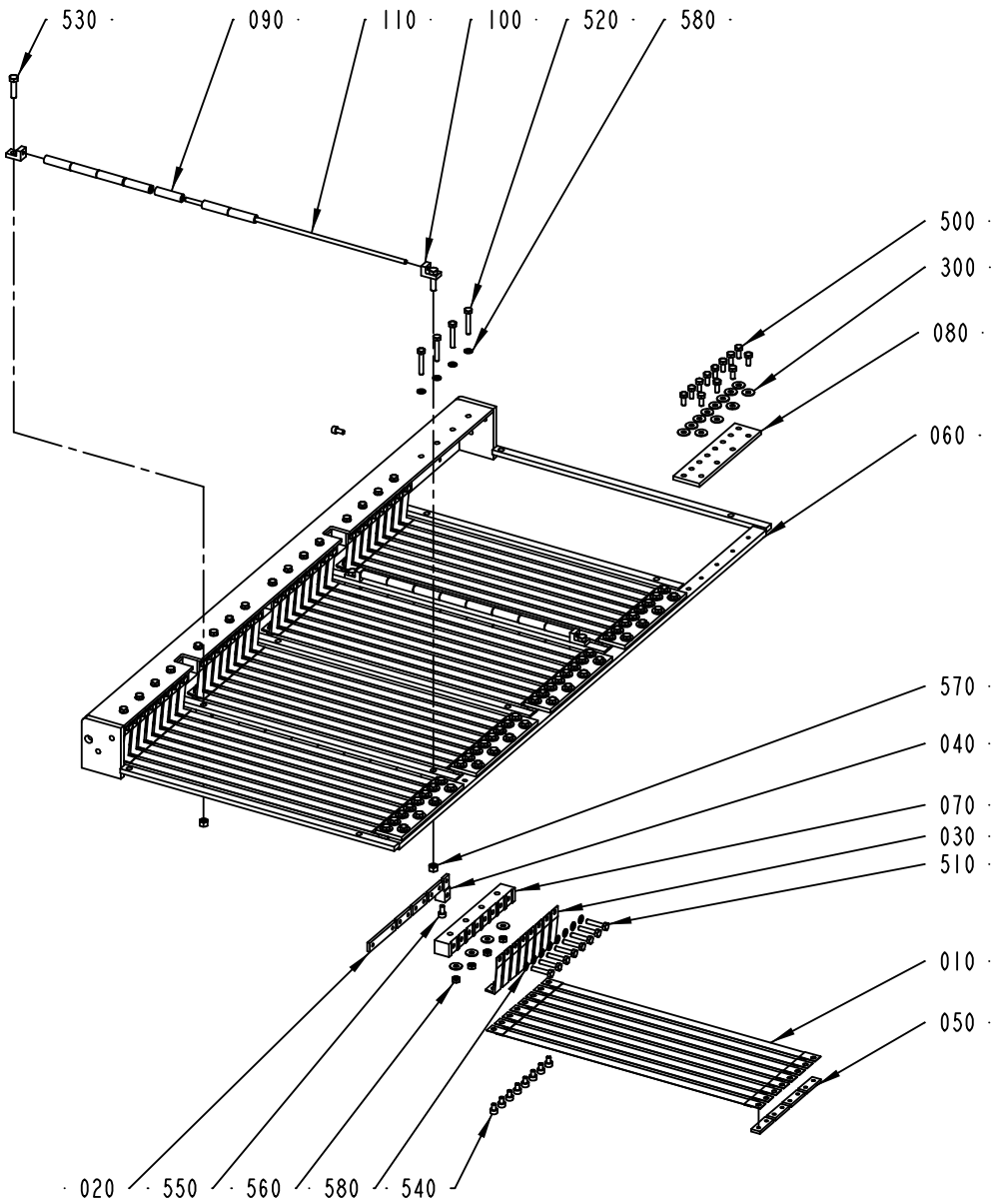

2524025-1
ECM 108086

ECM: 115806 - 20021113
Group number: 2524025-0100
Assembly Drawing: 2524025-1_1_AA

Issue: 20030314

Pos	Part No	SP	UN	Qty	Description	Page No
Common Parts						
010	1514095-0000	-		40	HEATING ELEMENT	
020	1514096-0000	-		4	CONNECTION	
030	1514097-0000	-		40	SPRING BRACKET	
040	1514098-0000	-		2	CONNECTION	
050	1514099-0000	-		35	CONNECTION	
060	2524026-0000	-		1	HOLDER	
070	2542761-0000	-		5	INSULATING RAIL	
080	2542762-0000	-		5	INSULATING PLATE	
090	2542836-0000	-		32	ROLLER	
100	2542837-0000	-		8	BRACKET	
110	2542839-0000	-		4	SHAFT	
300	90005-0082	-		80	WASHER PLAIN ROUND 4,3(M4)/12,H=1	
500	312105-0289	-		60	SCREW M6S ISO 4017 M4X10 A480	
510	312105-0295	-		40	SCREW M6S ISO4017 M4X20 A480	
520	312105-0297	-		20	SCREW M6S ISO 4017 M4X25 A480	
530	312105-0331	-		4	SCREW M6S ISO 4017 M5X20 A480	
540	312115-0285	-		40	SCREW ISO4762 M4X6 A4	
550	312115-0287	-		4	SCREW ISO4762 M4X8 A4	
560	312605-0312	-		20	HEXAGON NUT, M6M M4 A280	
570	312605-0314	-		4	HEXAGON NUT, M6M M5 A280	
580	315105-0136	-		60	WASHER ISO 7089-4-200 HV-A4	

Pos	Part No	SP	UN	Qty	Description	Page No

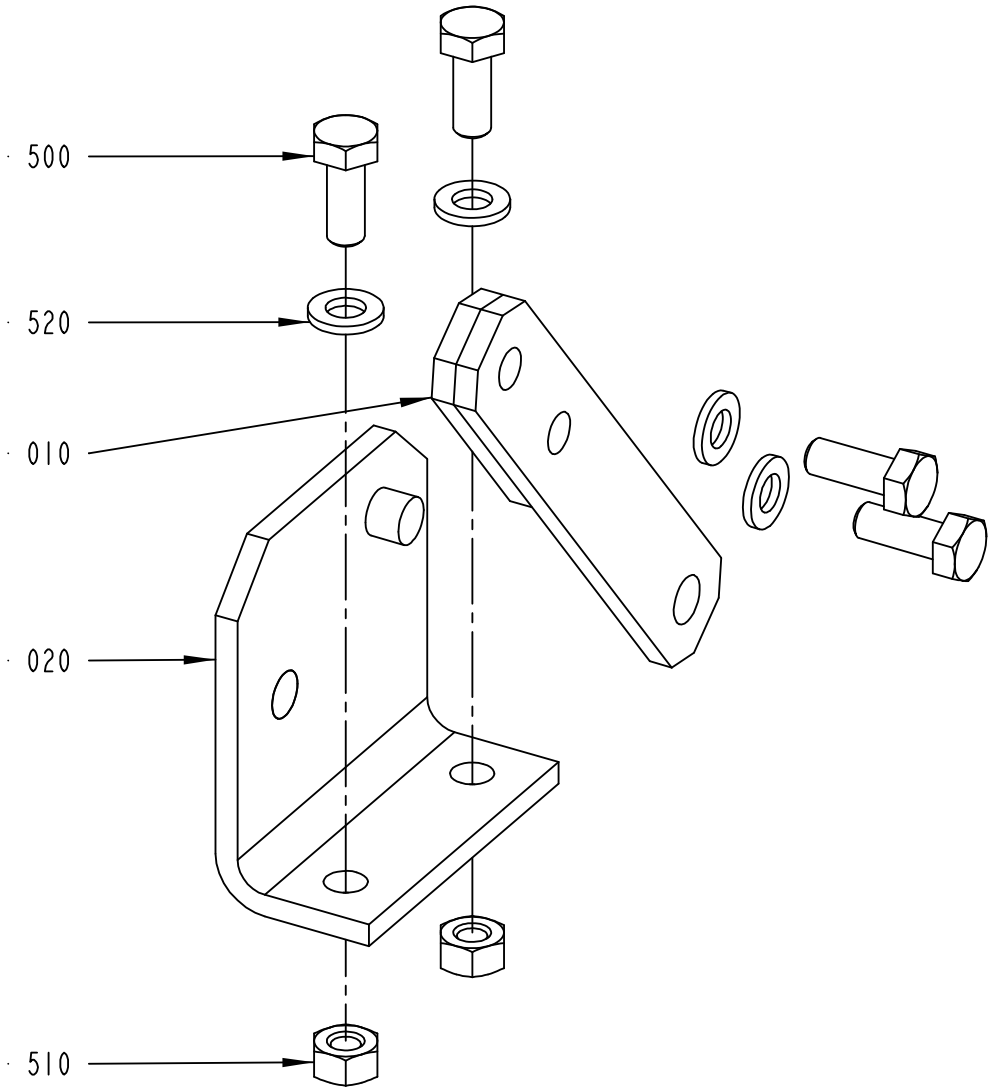

2524030-1
ECM 108086

ECM: 115803 - 20021113
Group number: 2524030-0100
Assembly Drawing: 2524030-1_1_AA

Issue: 20030314

Pos	Part No	SP	UN	Qty	Description	Page No
Common Parts						
010	1514103-0000	-		1	JOINTED ARM	
020	2524294-0000	-		1	BRACKET	
500	312105-0368	-		4	SCREW M6S M6X16 A280	
510	312605-0316	-		2	HEXAGON NUT, M6M M6 A280	
520	315105-0153	-		4	WASHER ISO 7089-6-200 HV-A4	

Pos	Part No	SP	UN	Qty	Description	Page No

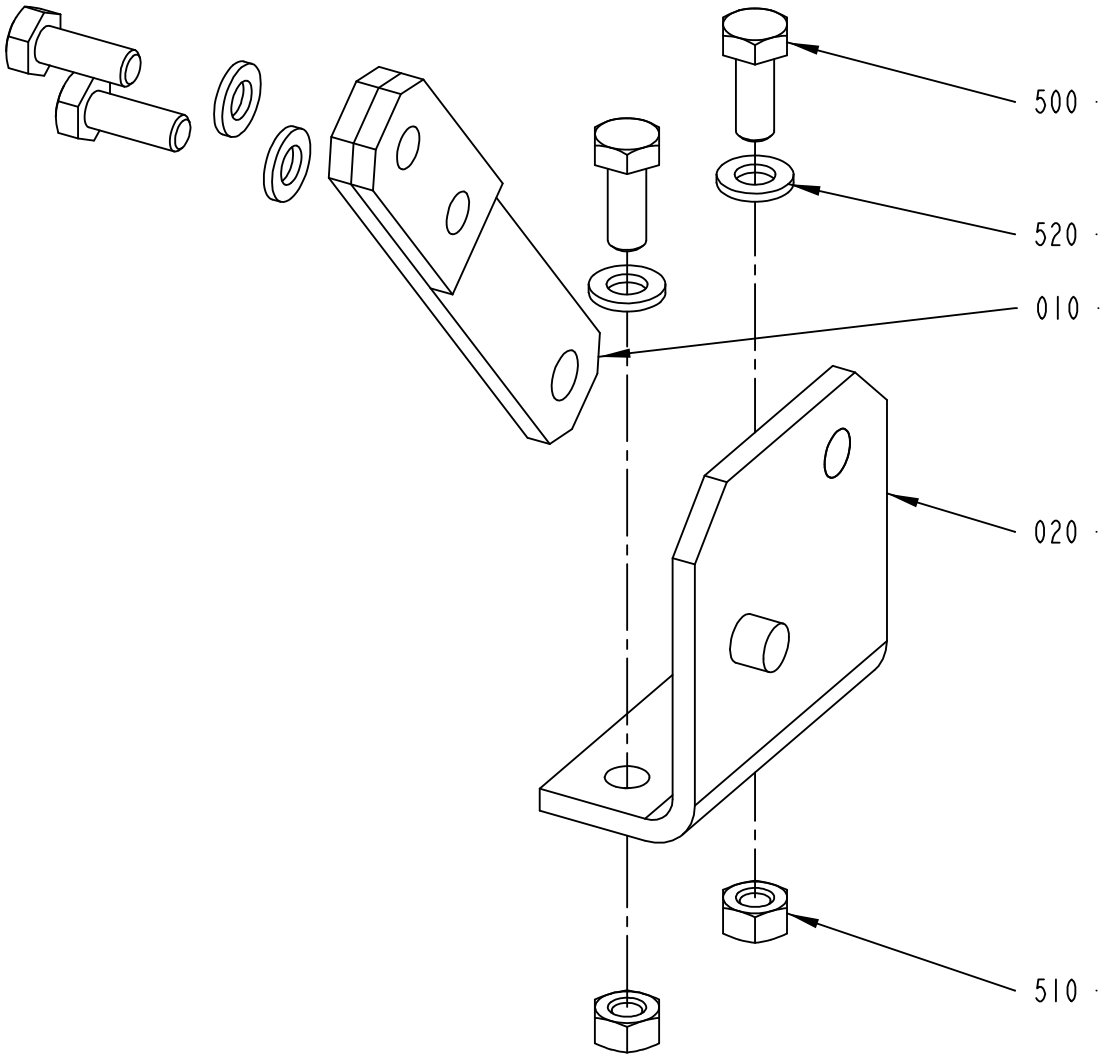

2524295-1
ECM 108086

ECM: 115804 - 20021113
Group number: 2524295-0100
Assembly Drawing: 2524295-1_1_AA

Issue: 20030314

Pos	Part No	SP	UN	Qty	Description	Page No
Common Parts						
010	1514103-0000	-		1	JOINTED ARM	
020	2524296-0000	-		1	BRACKET	
500	312105-0368	-		4	SCREW M6S M6X16 A280	
510	312605-0316	-		2	HEXAGON NUT, M6M M6 A280	
520	315105-0153	-		4	WASHER ISO 7089-6-200 HV-A4	

Pos	Part No	SP	UN	Qty	Description	Page No

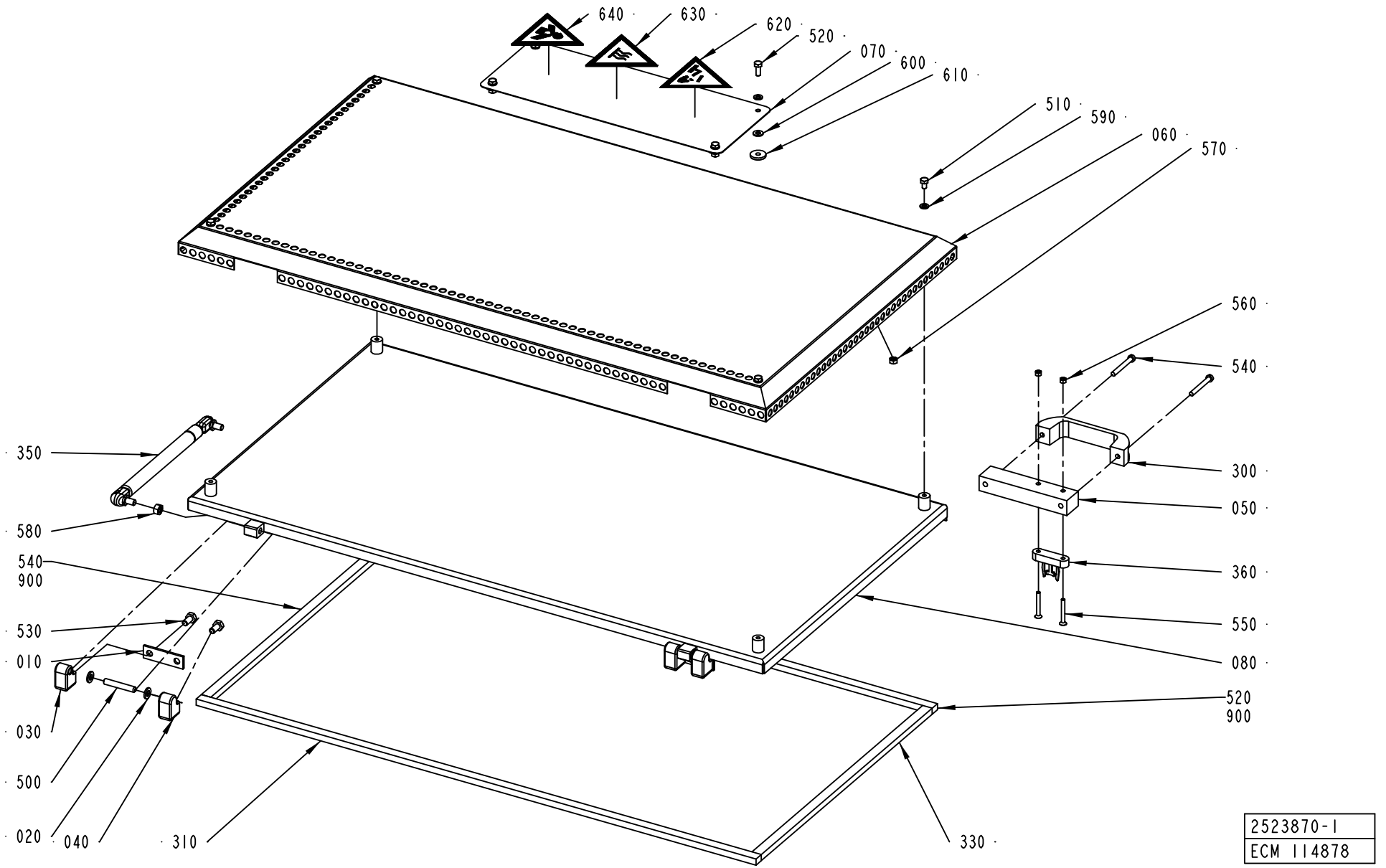
640
630
620
520
070
600
610
510
590
060
570
560
540
300
050
360
550
080
520
900
350
580
540
900
530
010
030
500
020
040
310
330
2523870-1
ECM 114878

ECM: 115899 - 20021113
Group number: 2523870-0100
Assembly Drawing: 2523870-1_1_AA

Issue: 20030314

Pos	Part No	SP	UN	Qty	Description	Page No
Common Parts						
010	441737-0000	-		2	WASHER	
020	441739-0000	-		4	WASHER	
030	441740-0000	-		2	HINGE FLANGE	
040	441741-0000	-		2	HINGE FLANGE	
050	1514087-0000	-		1	SPACER	
060	1514126-0000	-		1	HEAT GUARD	
070	1515989-0000	-		1	COVER PLATE	
080	2523866-0000	-		1	LID	
300	90017-0035	-		1	HANDLE, NO. 1095-05	
310	90143-0088	-	MM	905	RUBBER STRIP	
320	90143-0088	-	MM	905	RUBBER STRIP	
330	90143-0088	-	MM	478	RUBBER STRIP	
340	90143-0088	-	MM	478	RUBBER STRIP	
350	90347-0143	-		1	GAS SPRING	
360	90458-0372	-		1	KEY FOR SAFETY SWITCH, AZM-161-B6	
500	311103-0413	-		2	PARALLELL PIN, M6, 8X50 MM	
510	312105-0364	-		4	SCREW M6S ISO 4017 M6X10 A480	
520	312105-0368	-		4	SCREW M6S M6X16 A280	
530	312105-0449	-		4	SCREW M6S ISO 4017 M8X16 A480	
540	312125-0380	-		2	SCREW PAN HEAD MCS M6X50 SS	
550	312155-0339	-		2	SCREW EN 10642 MF6S M5X40 A480	
560	312605-0314	-		2	HEXAGON NUT, M6M M5 A280	
570	312605-0316	-		4	HEXAGON NUT, M6M M6 A280	
580	312605-0318	-		1	HEXAGON NUT, M6M M8 A280	
590	315105-0153	-		8	WASHER ISO 7089-6-200 HV-A4	
600	315105-0156	-		4	WASHER PLAIN, BRB, 6,7/14,H=1,5	
610	315125-0153	-		4	WASHER TBRSB 6,4X22X4 A4	
620	359705-0004	-		1	WARNING SIGN ISO, DANGEROUS CHEMICALS	
630	359705-0008	-		1	WARNING SIGN ISO, HOT SURFACE	
640	359705-0014	-		1	WARNING SIGN ISO, HARMFUL VAPOUR	
900	90153-0016	-	L	1	ADHESIVE,TUBE 100G RHODORSIL CAF 3	

Pos	Part No	SP	UN	Qty	Description	Page No

Machine Type | Group Description | Used-In | Group Number | Page No

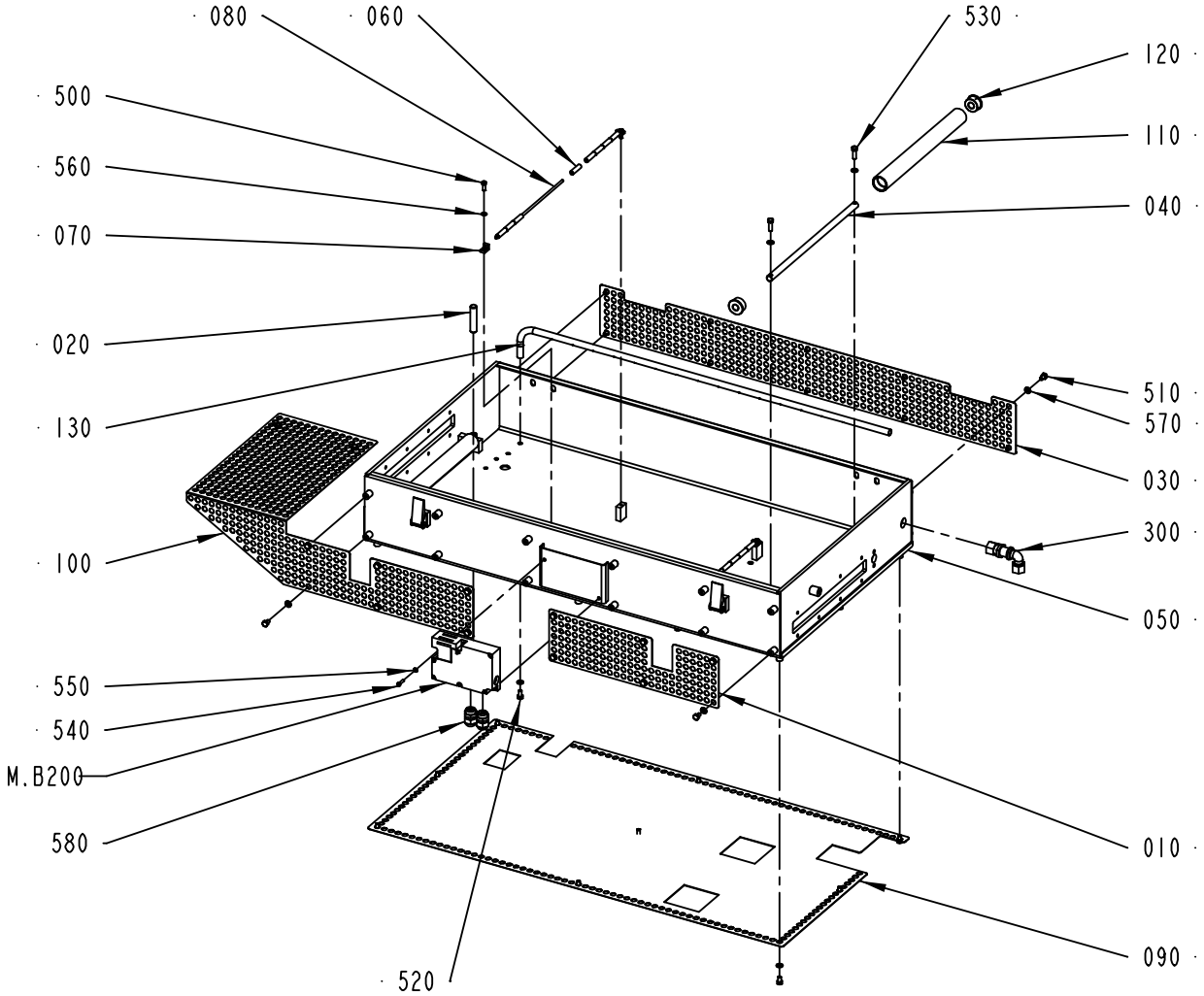

2542765-1
ECM 114878

Pos	Part No	SP	UN	Qty	Description	Page No
Common Parts						
010	1514089-0000	-		1	HEAT GUARD	
020	1514104-0000	-		2	BAR	
030	1515622-0000	-		1	HEAT GUARD	
040	1515838-0000	-		2	SHAFT	
050	2524029-0000	-		1	BOX	
060	2542836-0000	-		16	ROLLER	
070	2542837-0000	-		4	BRACKET	
080	2542839-0000	-		2	SHAFT	
090	2542862-0000	-		1	HEAT GUARD	
100	2556816-0000	-		1	HEAT GUARD	
110	2556823-0000	-		2	BENDING ROLLER	
120	2556824-0000	-		4	BUSHING	
130	2556825-0000	-		1	AIR NOZZLE	
300	90030-0221	-		1	CONN. ELBOW BULKHEAD WSV 12	
500	312105-0328	-		4	SCREW M6S ISO 4017 M5X14 A480	
510	312105-0364	-		35	SCREW M6S ISO 4017 M6X10 A480	
520	312105-0366	-		1	SCREW M6S M6X12 A280	
530	312105-0370	-		4	SCREW M6S ISO 4017 M6X20 A480	
540	312125-0293	-		2	SCREW PAN HEAD MCS M4X16 SS	
550	315105-0136	-		2	WASHER ISO 7089-4-200 HV-A4	
560	315105-0146	-		4	WASHER ISO 7089-5-200 HV-A4	
570	315105-0153	-		40	WASHER ISO 7089-6-200 HV-A4	
580	352103-0105	-		2	CABLE GLAND, STR 11, PR 18,6/PG11	
M.B200	90458-0370	-		1	KEY SAF.SW. AZM161SK-24RKA-024	

Pos	Part No	SP	UN	Qty	Description	Page No

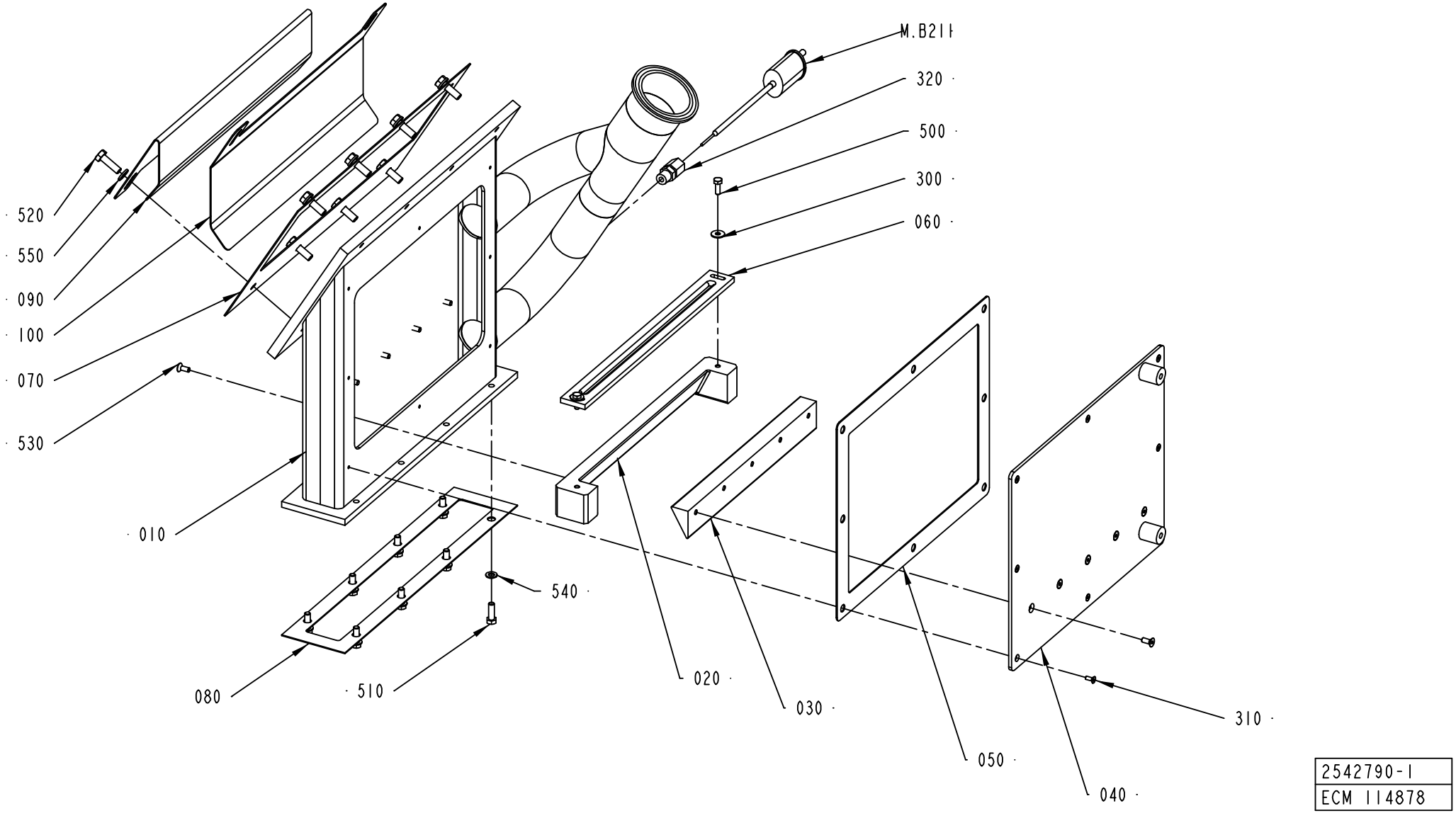
M.B21
320
500
300
060
520
550
090
100
070
530
010
540
080
510
020
030
050
040
310
2542790-1
ECM 114878

Pos	Part No	SP	UN	Qty	Description	Page No
Common Parts						
010	2542784-0000	-		1	CONNECTION PIPE	
020	2542785-0000	-		1	GUIDE RAIL	
030	2542786-0000	-		1	GUIDE RAIL	
040	2542787-0000	-		1	LID	
050	2542788-0000	-		1	GASKET	
060	2542789-0000	-		1	GUIDE	
070	2542811-0000	-		1	GASKET	
080	2542812-0000	-		1	GASKET	
090	2542814-0000	-		1	PLATE	
100	2542816-0000	-		1	PLATE	
300	90005-0082	-		2	WASHER PLAIN ROUND 4,3(M4)/12,H=1	
310	90287-0295	-		8	SCREW HEX.SOCK.COUNT.MF6S M3X8 A280	
320	90326-0306	-		1	GLAND FITTING 9041-45-KS-KR.1/8" D=4,5MM	
500	312105-0291	-		2	SCREW M6S ISO 4017 M4X12 A480	
510	312105-0329	-		8	SCREW M6S ISO 4017 M5X16 A480	
520	312105-0370	-		8	SCREW M6S ISO 4017 M6X20 A480	
530	312155-0289	-		10	SCREW EN 10642 MF6S M4X10 A480	
540	315105-0146	-		8	WASHER ISO 7089-5-200 HV-A4	
550	315105-0153	-		8	WASHER ISO 7089-6-200 HV-A4	
M.B211	90326-0037	-		1	THERMOCOUPLE, CR-AL PREM.G	

Pos	Part No	SP	UN	Qty	Description	Page No

Machine Type | Group Description | Used-In | Group Number | Page No

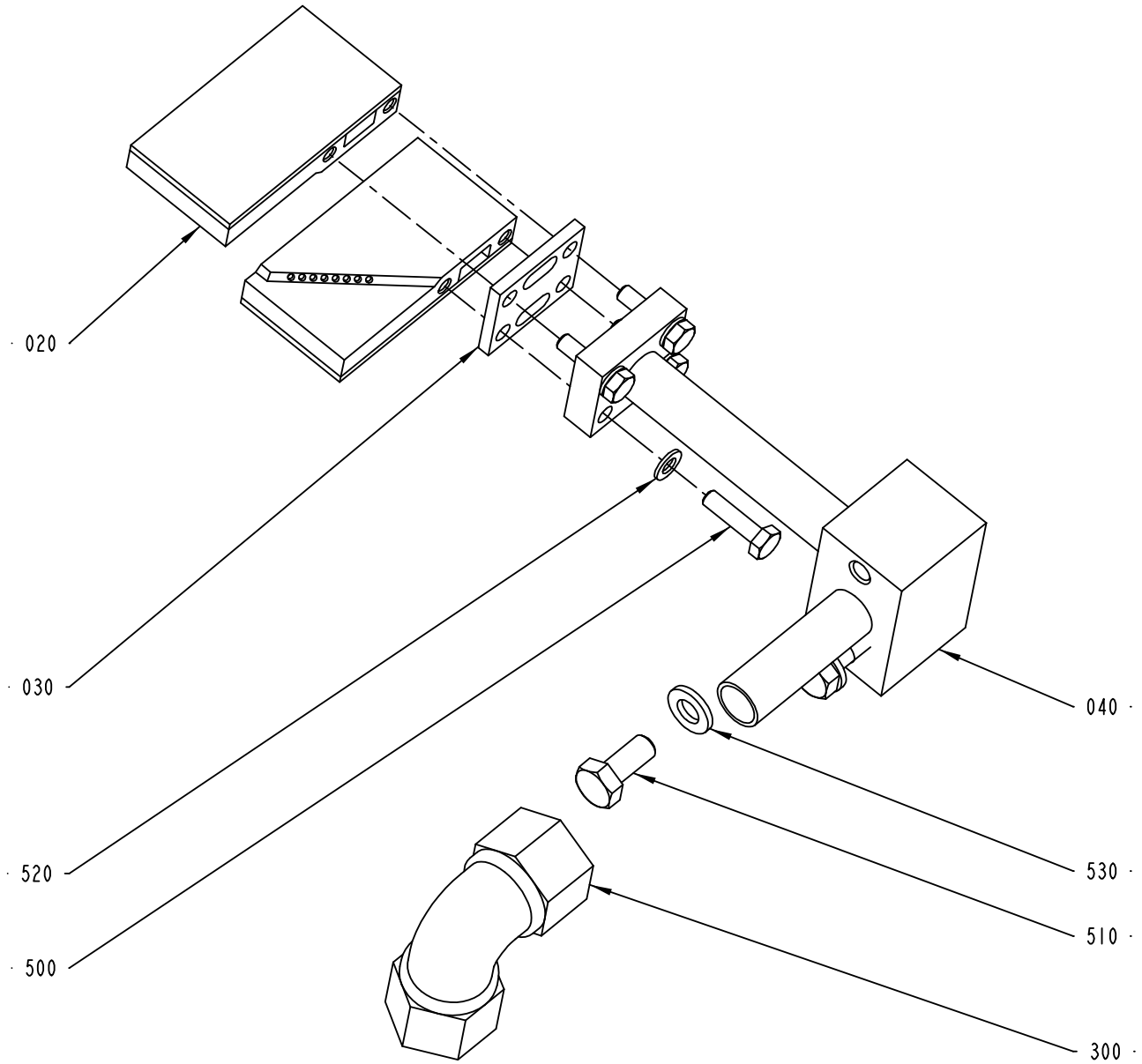

2543050-1
ECM 114878

ECM: 115902 - 20021113
Group number: 2543050-0100
Assembly Drawing: 2543050-1_1_AA

Issue: 20030314

Pos	Part No	SP	UN	Qty	Description	Page No
0150S						
040	2556818-0000	-		1	HOLDER	
0200B						
040	2543069-0000	-		1	HOLDER	
V065						
040	2556817-0000	-		1	HOLDER	
Common Parts						
010	2556829-0000	-		1	NOZZLE	
020	2543067-0000	-		1	NOZZLE	
030	2543068-0000	-		1	SPACER	
300	90030-0096	-		1	CONN. ELBOW W-12	
500	312105-0293	-		4	SCREW M6S ISO 4017 M4X16 A480	
510	312105-0367	-		2	SCREW M6S M6X14 A280	
520	315105-0136	-		4	WASHER ISO 7089-4-200 HV-A4	
530	315105-0153	-		2	WASHER ISO 7089-6-200 HV-A4	

Pos	Part No	SP	UN	Qty	Description	Page No

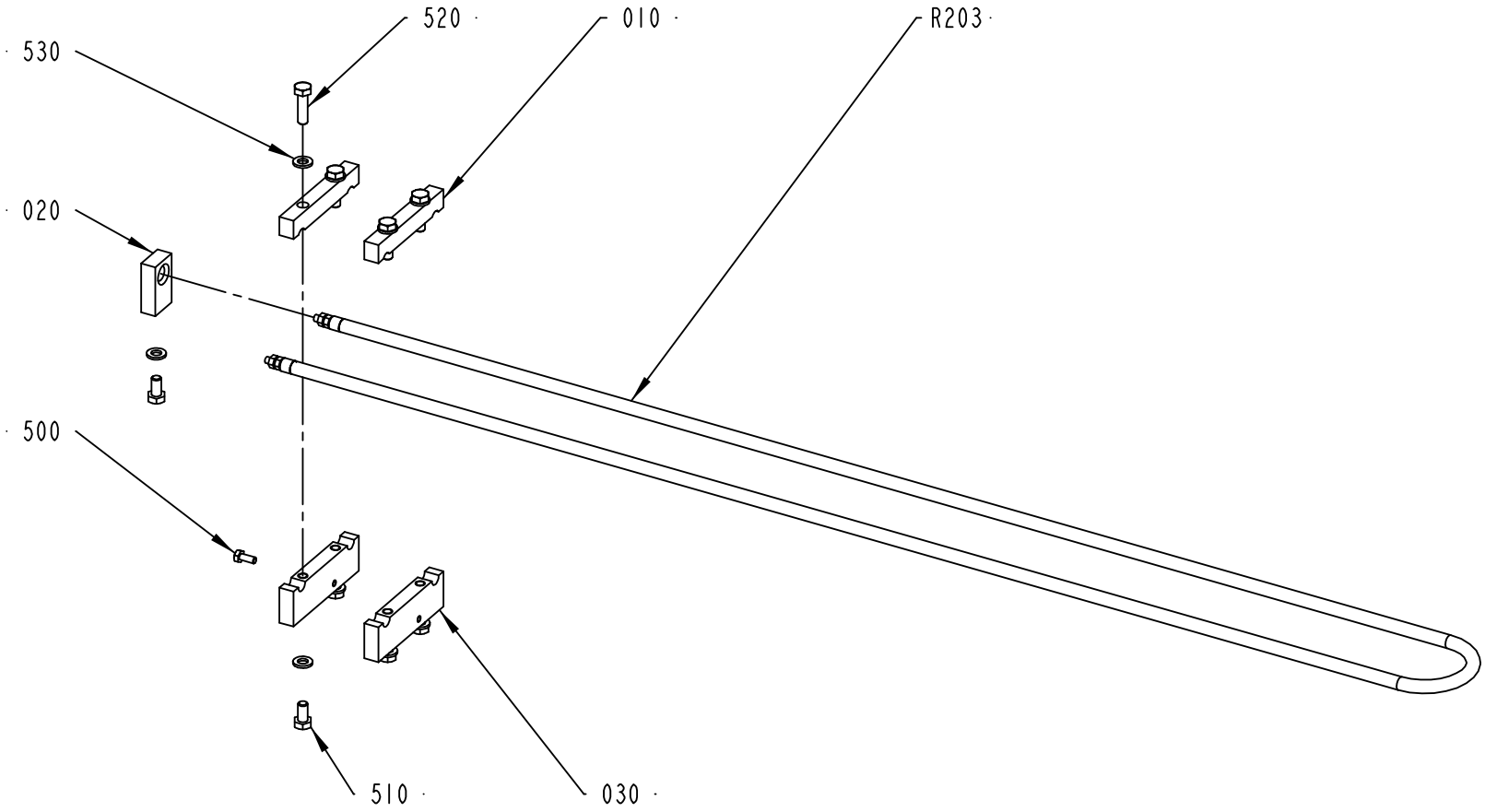

2556820-1
ECM 108086

ECM: 115897 - 20021113
Group number: 2556820-0100
Assembly Drawing: 2556820-1_1_AA

Issue: 20030314

Pos	Part No	SP	UN	Qty	Description	Page No
Common Parts						
010	1515919-0000	-		2	BRACKET	
020	2556826-0000	-		1	BRACKET	
030	2556827-0000	-		2	BRACKET	
500	312105-0289	-		1	SCREW M6S ISO 4017 M4X10 A480	
510	312105-0366	-		5	SCREW M6S M6X12 A280	
520	312105-0371	-		4	SCREW M6S ISO 4017 M6X22 A480	
530	315105-0153	-		9	WASHER ISO 7089-6-200 HV-A4	
R203	90458-2728	-		1	HEATING ELMENT, 230V/1500W/ø8.5	

Pos	Part No	SP	UN	Qty	Description	Page No

Machine Type | Group Description | Used-In | Group Number | Page No

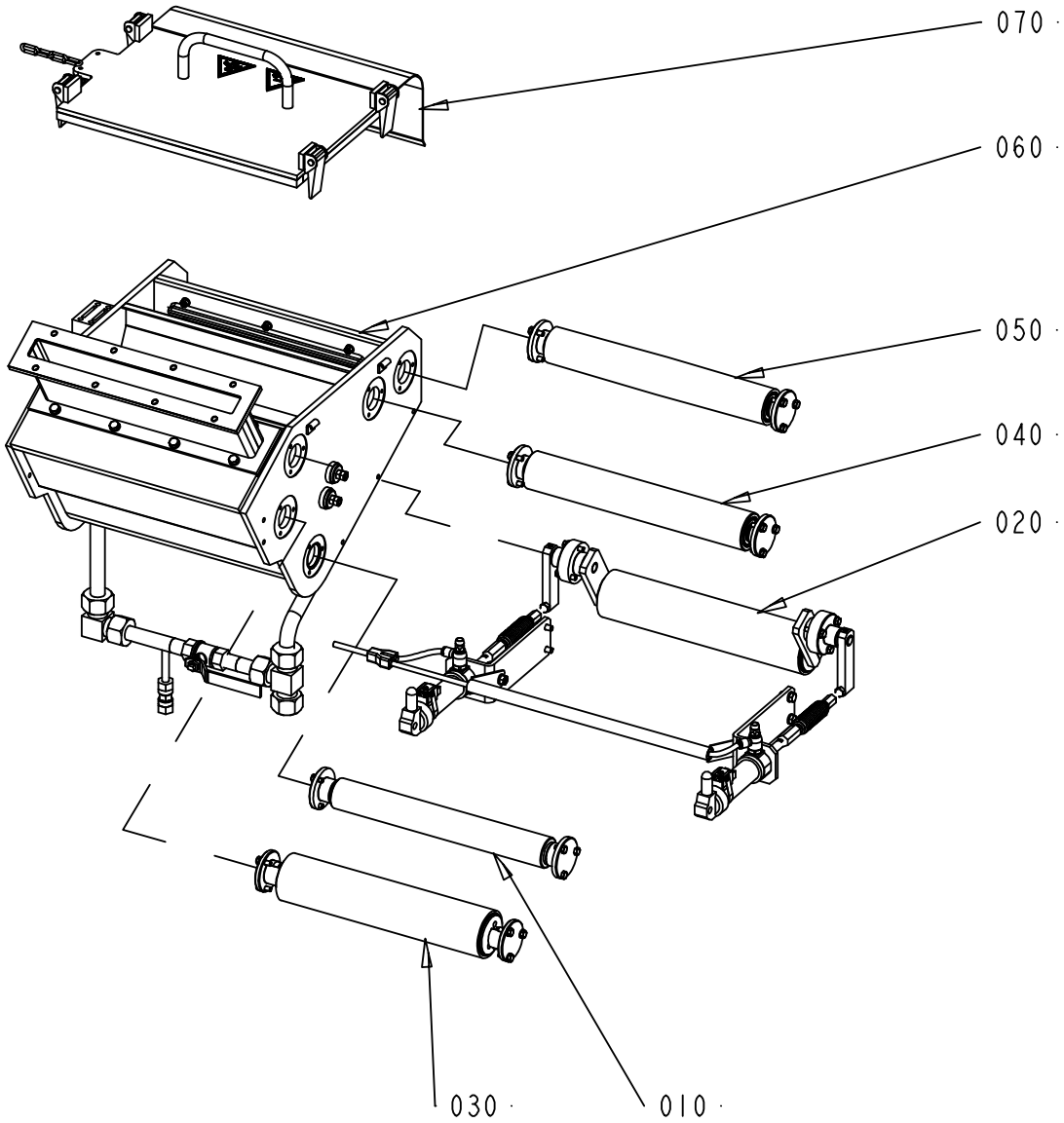

2542840-1
ECM 108089

ECM: 115904 - 20021113
Group number: 2542840-0100
Assembly Drawing: 2542840-1_1_AA

Issue: 20030314

Pos	Part No	SP	UN	Qty	Description	Page No
Common Parts						
010	A2523875-0100	-		1	ROLLER	**141**
020	A2524300-0100	-		1	PRESSURE ROLLER	**143**
030	A2542640-0100	-		1	ROLLER	**145**
040	A2542645-0100	-		1	ROLLER	**147**
050	A2542760-0100	-		1	BENDING ROLLER	**149**
060	A2542835-0100	-		1	STERILIZATION BATH	**151**
070	A2542845-0100	-		1	LID	**153**

Pos	Part No	SP	UN	Qty	Description	Page No

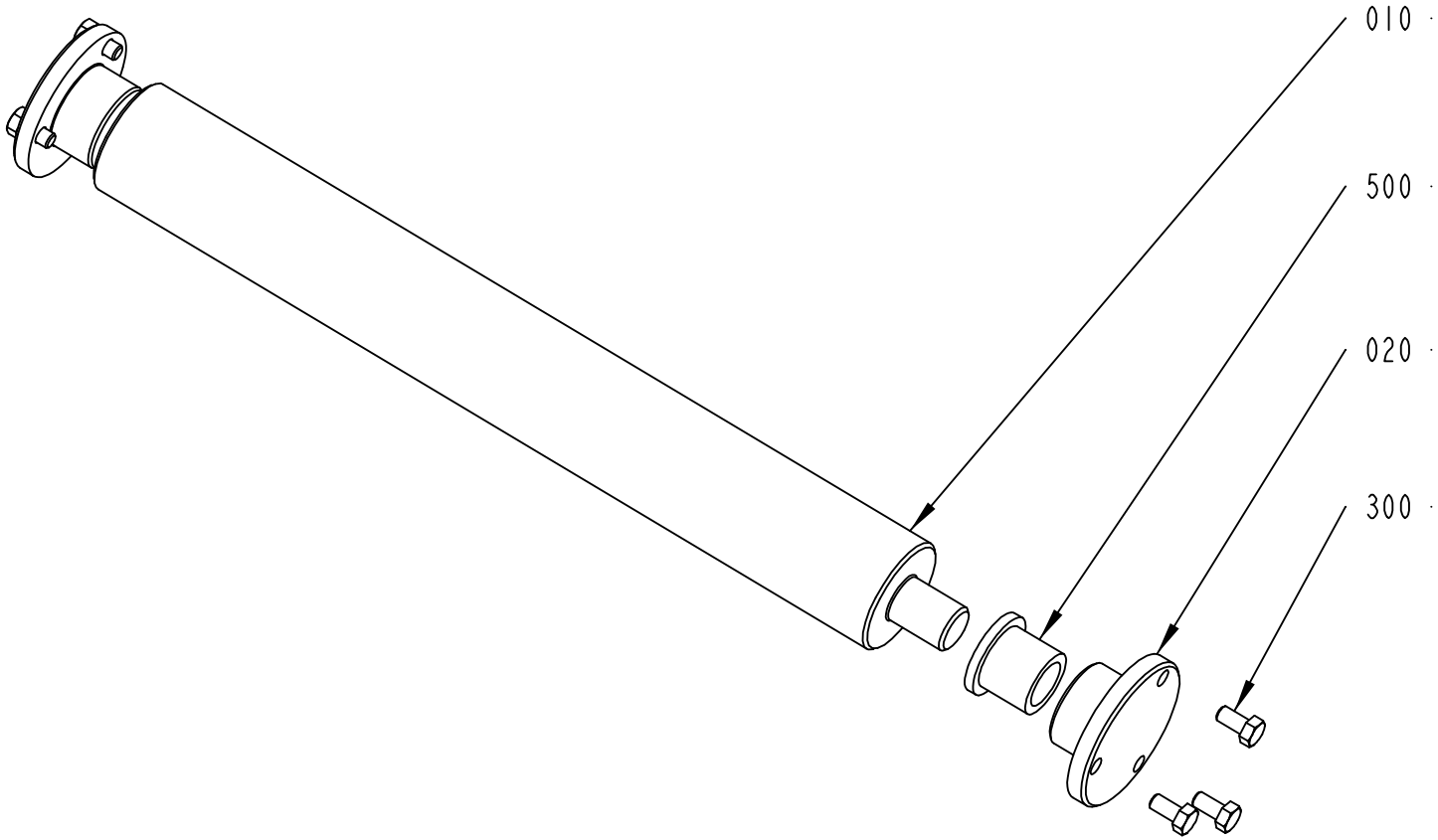

2523875-1
ECM 108089

ECM: 115905 - 20021113
Group number: 2523875-0100
Assembly Drawing: 2523875-1_1_AA

Issue: 20030314

Pos	Part No	SP	UN	Qty	Description	Page No
Common Parts						
010	2523868-0000	-		1	BENDING ROLLER	
020	2523869-0000	-		2	BEARING HOUSING	
300	312105-0325	-		6	SCREW M6S ISO 4017 M5X10 A480	
500	90240-0146	-		2	FLANGE BUSHING,15X21X20 MM	

Pos	Part No	SP	UN	Qty	Description	Page No

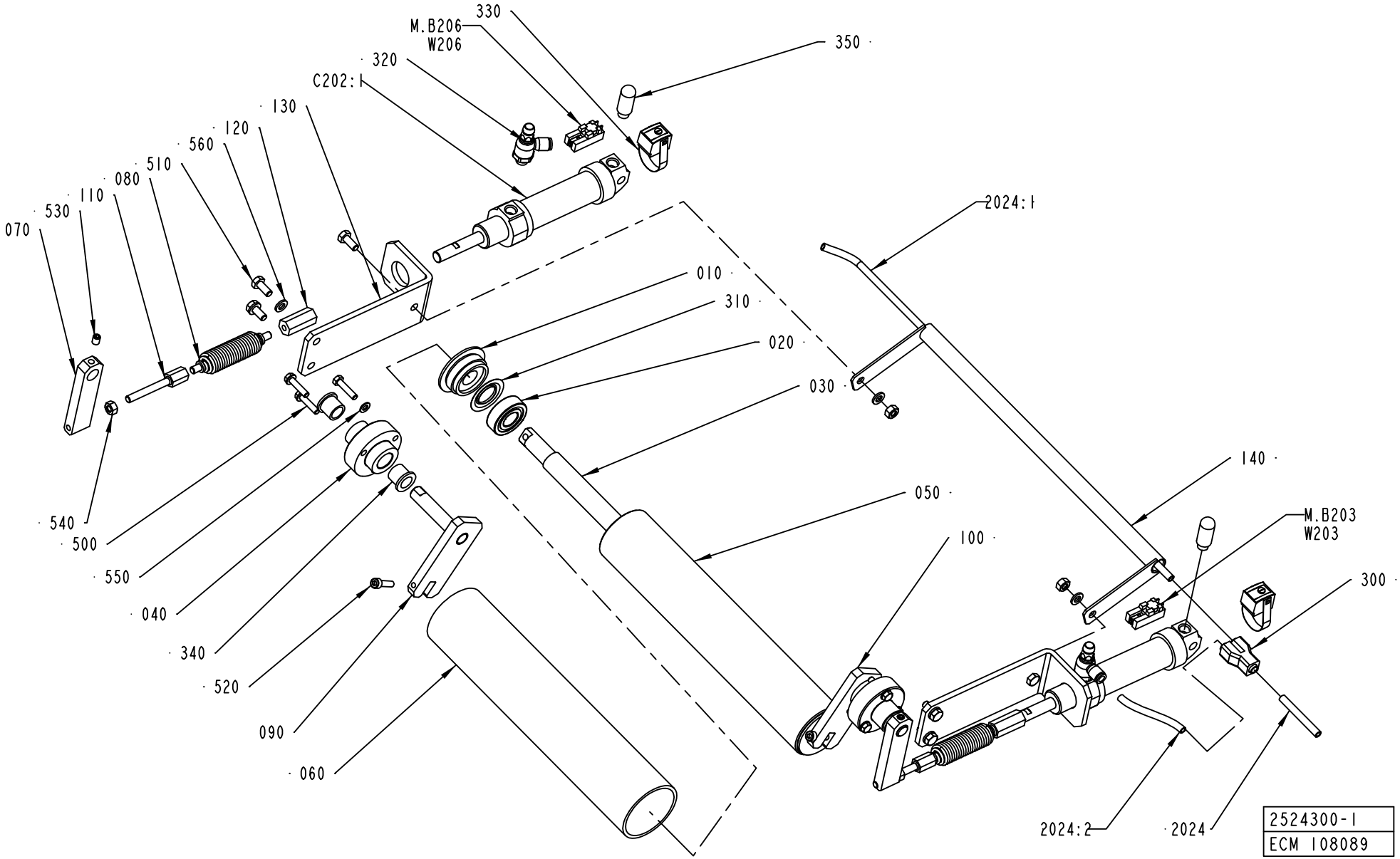
330
M.B206
W206
350
320
C202:1
130
120
560
510
080
110
530
070
2024:1
010
310
020
030
140
050
100
M.B203
W203
300
540
500
550
040
340
520
090
060
2024:2
2024
2524300-1
ECM 108089

ECM: 115906 - 20021113
Group number: 2524300-0100
Assembly Drawing: 2524300-1_1_AA

Issue: 20030314

Pos	Part No	SP	UN	Qty	Description	Page No
Common Parts						
010	247170-0000	-		2	BEARING COVER	
020	1523209-0000	-		2	BALL BEARING	
030	2542766-0000	-		1	SHAFT	
040	2542767-0000	-		2	BEARING HOUSING	
050	2542768-0000	-		1	ROLLER	
060	2542769-0000	-		1	HOSE	
070	2542776-0000	-		2	ARM	
080	2542777-0000	-		2	SPRING	
090	2542778-0000	-		1	ARM	
100	2542779-0000	-		1	ARM	
110	2542832-0000	-		2	SCREW	
120	2542833-0000	-		2	NUT	
130	2542834-0000	-		2	BRACKET	
140	2556828-0000	-		1	CABLE DUCT	
2024	90166-0081	-	MM	2000	TUBE 6 MM PA BLUE	
2024:1	90166-0081	-	MM	500	TUBE 6 MM PA BLUE	
2024:2	90166-0081	-	MM	100	TUBE 6 MM PA BLUE	
300	90055-0100	-		1	Y-CONNECTION, 6-6	
310	90214-0303	-		2	SEALING RING, 18,6X35X2 MM	
320	90235-0846	-		2	THROTTLE CHECK VALVE G1/8", MANUAL, 6	
330	90239-0581	-		2	SENSOR,BRACKET,FOR CYL 25	
340	90240-0184	-		4	FLANGE BUSHING,12X16X15 MM	
350	90328-0047	-		2	SILENCER G1/8	
360	90457-0047	-		2	SENSOR 2750-1-5111-1 W.ADAPTER PNP	
500	312105-0332	-		6	SCREW M6S ISO 4017 M5X22 A480	
510	312105-0367	-		6	SCREW M6S M6X14 A280	
520	312115-0331	-		2	SCREW ISO4762 M5X20 A4	
530	312318-0362	-		2	SCREW ISO4029 M6X8 A4	
540	312605-0316	-		4	HEXAGON NUT, M6M M6 A280	
550	315105-0146	-		6	WASHER ISO 7089-5-200 HV-A4	
560	315105-0153	-		6	WASHER ISO 7089-6-200 HV-A4	
C202:1	90239-0829	-		1	DOUBLE ACTING, MINI-ISO, CYL.25-50	
C202:2	90239-0829	-		1	DOUBLE ACTING, MINI-ISO, CYL.25-50	

Pos	Part No	SP	UN	Qty	Description	Page No

Machine Type | Group Description | Used-In | Group Number | Page No

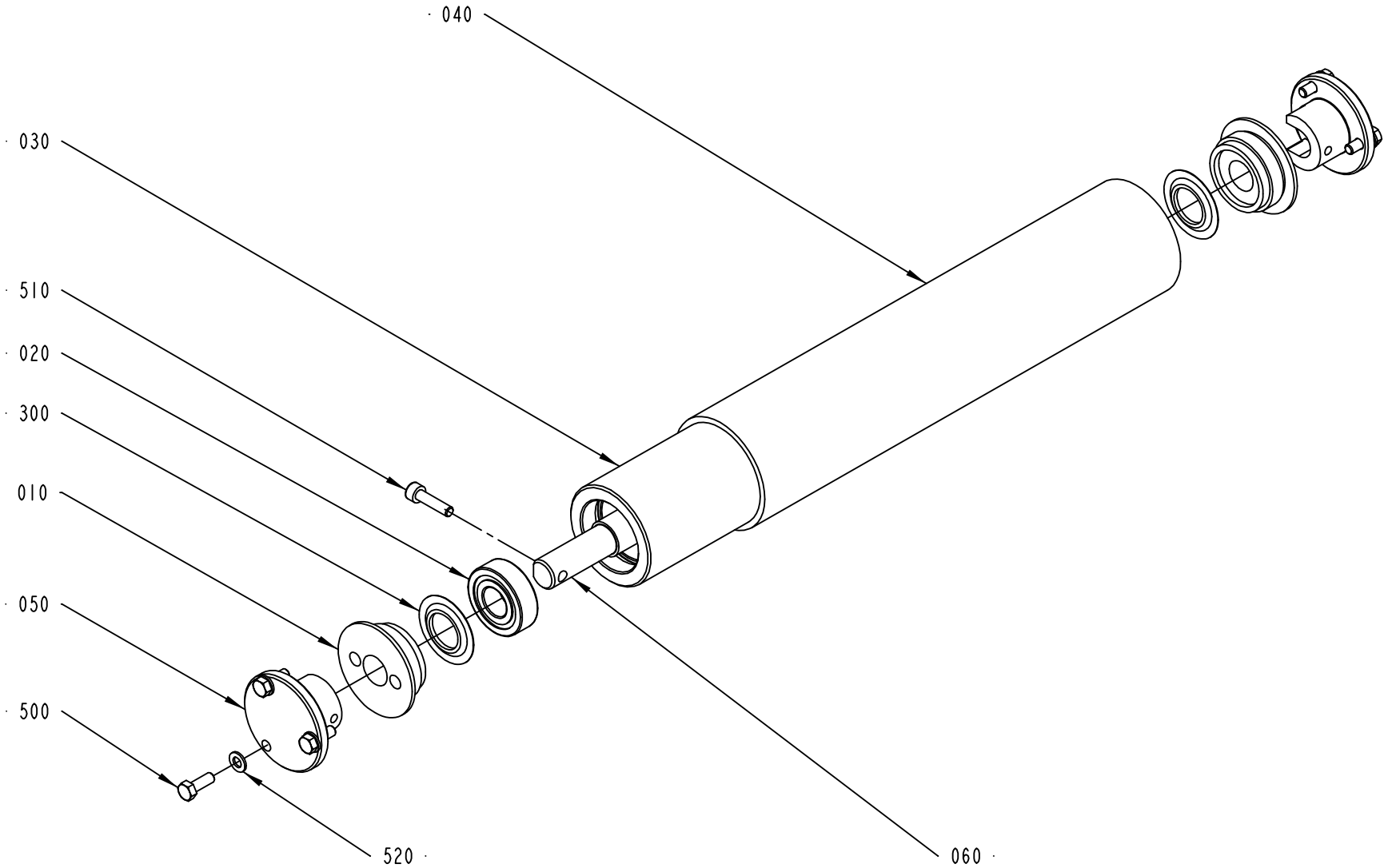

2542640-1
ECM 108089

Pos	Part No	SP	UN	Qty	Description	Page No
Common Parts						
010	247170-0000	-		2	BEARING COVER	
020	1523209-0000	-		2	BALL BEARING	
030	2542768-0000	-		1	ROLLER	
040	2542769-0000	-		1	HOSE	
050	2542771-0000	-		2	AXLE SUPPORT	
060	2542843-0000	-		1	SHAFT	
300	90214-0303	-		2	SEALING RING, 18,6X35X2 MM	
500	312105-0328	-		6	SCREW M6S ISO 4017 M5X14 A480	
510	312115-0331	-		2	SCREW ISO4762 M5X20 A4	
520	315105-0146	-		6	WASHER ISO 7089-5-200 HV-A4	

Pos	Part No	SP	UN	Qty	Description	Page No

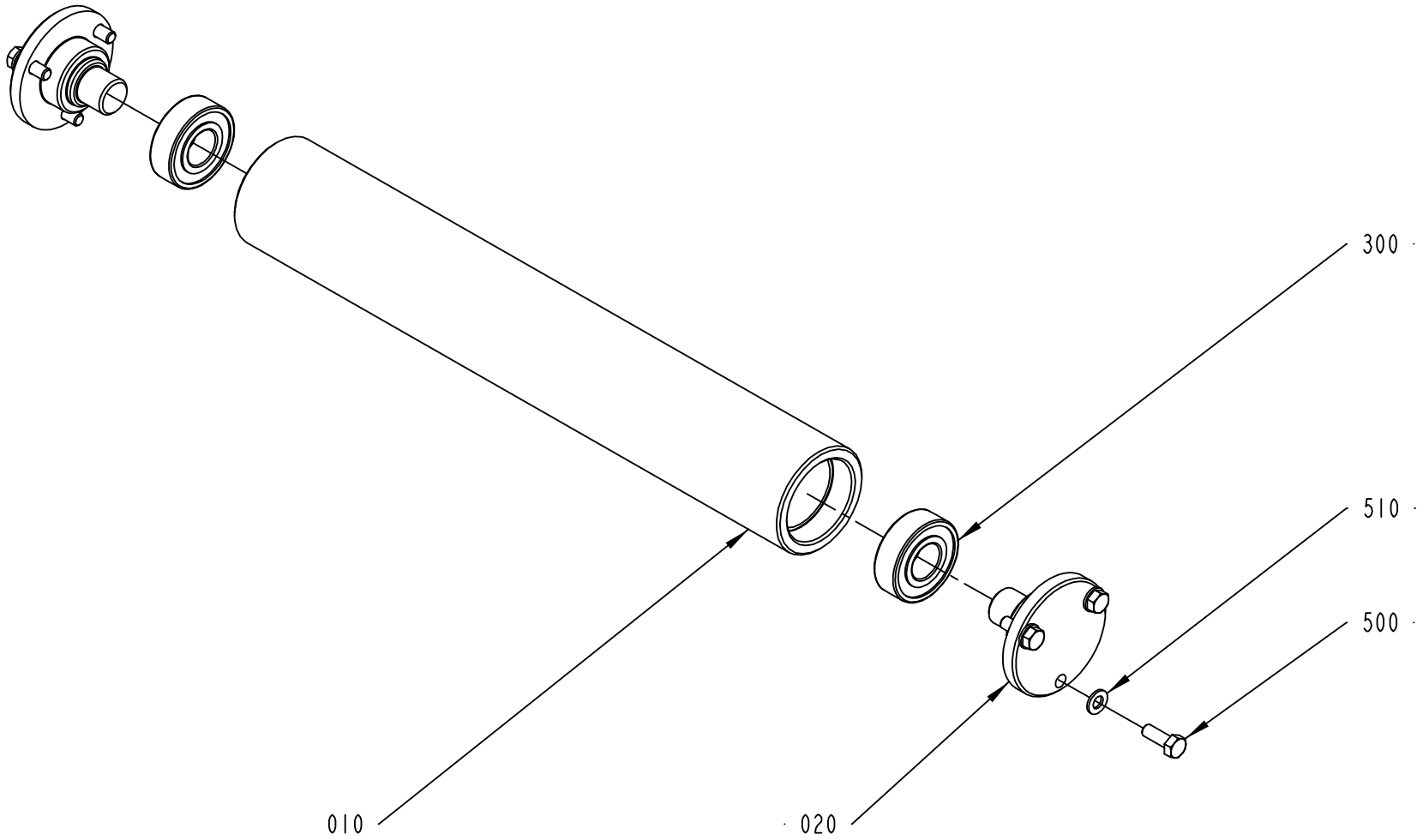

2542645-1
ECM 108089

ECM: 115908 - 20021113
Group number: 2542645-0100
Assembly Drawing: 2542645-1_1_AA

Issue: 20030314

Pos	Part No	SP	UN	Qty	Description	Page No
Common Parts						
010	2542772-0000	-		1	ROLLER	
020	2542773-0000	-		2	SHAFT	
300	90458-1704	-		2	BALL BEARING, 15X35X11 MM	
500	312105-0328	-		6	SCREW M6S ISO 4017 M5X14 A480	
510	315105-0146	-		6	WASHER ISO 7089-5-200 HV-A4	

Pos	Part No	SP	UN	Qty	Description	Page No

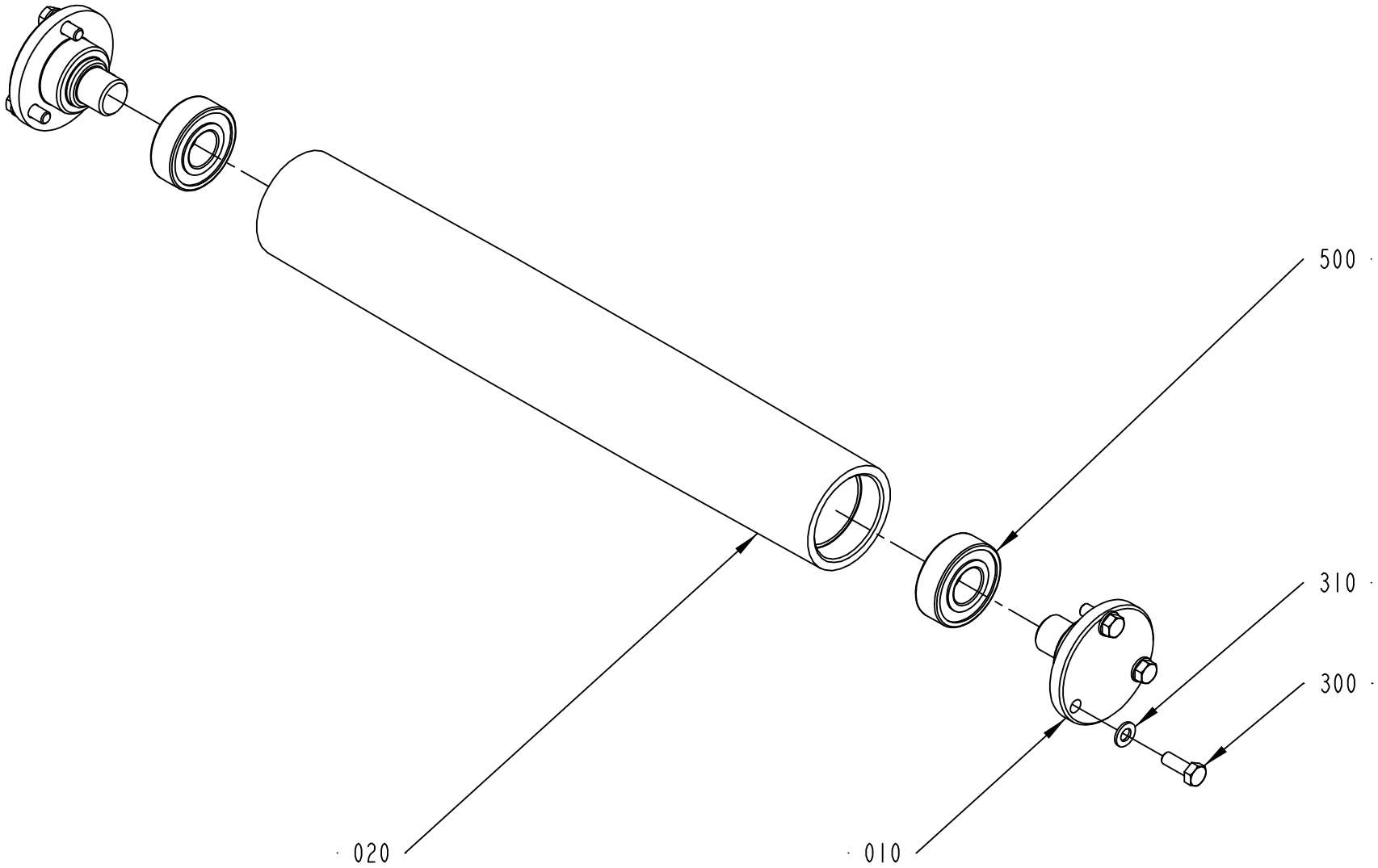

2542760-1
ECM 108089

ECM: 115909 - 20021113
Group number: 2542760-0100
Assembly Drawing: 2542760-1_1_AA

Issue: 20030314

Pos	Part No	SP	UN	Qty	Description	Page No
Common Parts						
010	2542773-0000	-		2	SHAFT	
020	2542774-0000	-		1	BENDING ROLLER	
300	312105-0328	-		6	SCREW M6S ISO 4017 M5X14 A480	
310	315105-0146	-		6	WASHER ISO 7089-5-200 HV-A4	
500	90458-1704	-		2	BALL BEARING, 15X35X11 MM	

Pos	Part No	SP	UN	Qty	Description	Page No

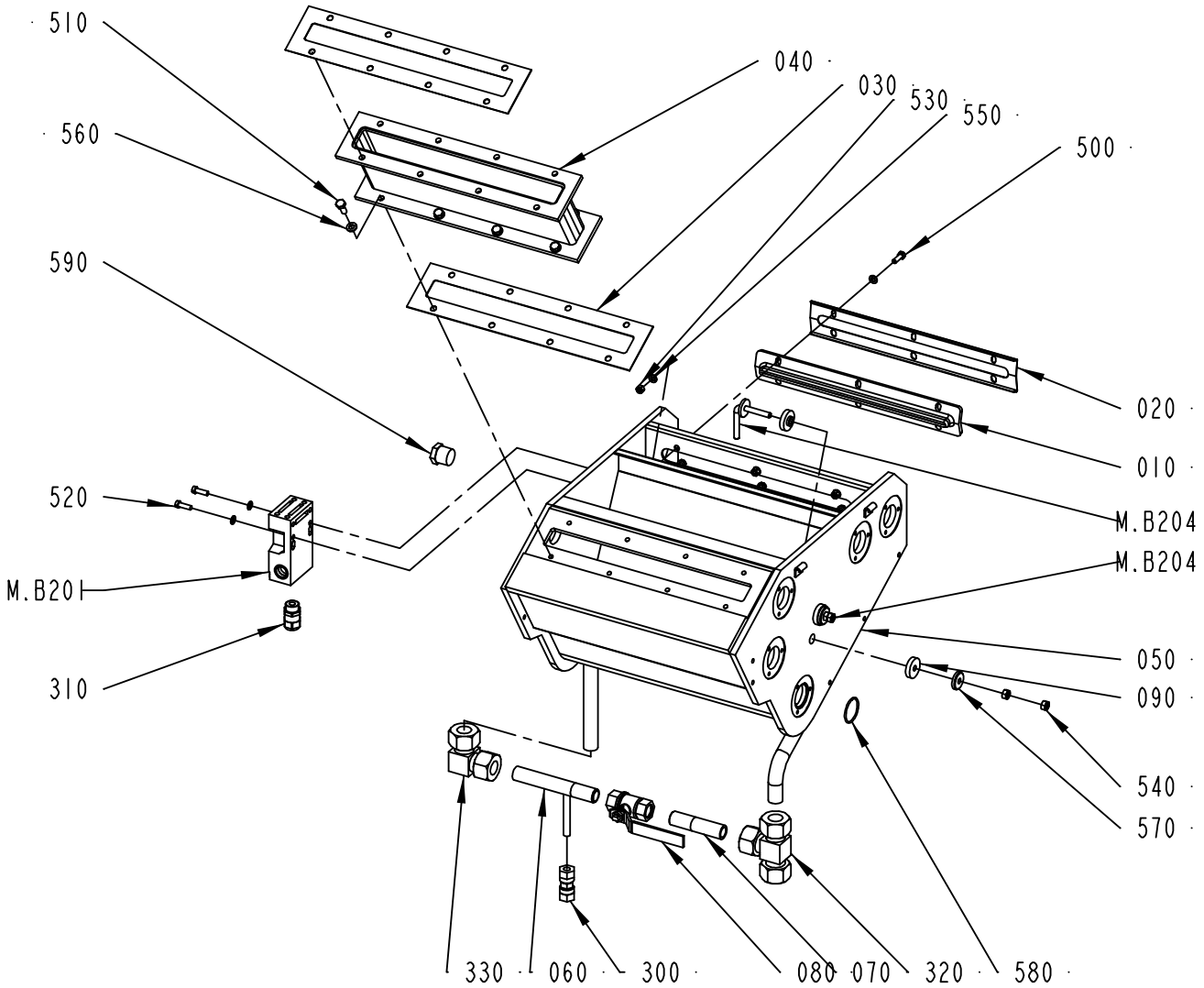

2542835-1
ECM 108089

Pos	Part No	SP	UN	Qty	Description	Page No
Common Parts						
010	273954-0000	-		1	SEAL	
020	456784-0000	-		1	LID	
030	1514086-0000	-		2	GASKET	
040	1515872-0000	-		1	CONNECTION PIPE	
050	2542644-0000	-		1	STERILIZATION BATH	
060	2542844-0000	-		1	PIPE	
070	2542846-0000	-		1	PIPE	
080	2542849-0000	-		1	BALL VALVE	
090	2542926-0000	-		4	SEALING WASHER	
300	90030-0091	-		1	CONN. PIPE G-8	
310	90458-0314	-		1	CABLE GLAND, M16X1,5, NO.5311 1110	
320	90459-1403	-		1	CONN. T-PIPE T-17	
330	90459-1404	-		1	CONN. ELBOW, 17	
500	312105-0329	-		6	SCREW M6S ISO 4017 M5X16 A480	
510	312105-0368	-		8	SCREW M6S M6X16 A280	
520	312125-0329	-		2	SCREW PAN HEAD MCS M5X16 SS	
530	312605-0314	-		6	HEXAGON NUT, M6M M5 A280	
540	312605-0316	-		4	HEXAGON NUT, M6M M6 A280	
550	315105-0146	-		14	WASHER ISO 7089-5-200 HV-A4	
560	315105-0153	-		8	WASHER ISO 7089-6-200 HV-A4	
570	315125-0153	-		2	WASHER TBRSB 6,4X22X4 A4	
580	315202-0712	-		2	O-RING 28,30X1,78 MM	
590	342219-0204	-		1	SHUTTER	
M.B201	90459-1194	-		1	KEY SAF.SW. AZ16-03 ZVRK-M16	
M.B204	2542927-0000	-		2	ELECTRODE	

Pos	Part No	SP	UN	Qty	Description	Page No

Machine Type | Group Description | Used-In | Group Number | Page No

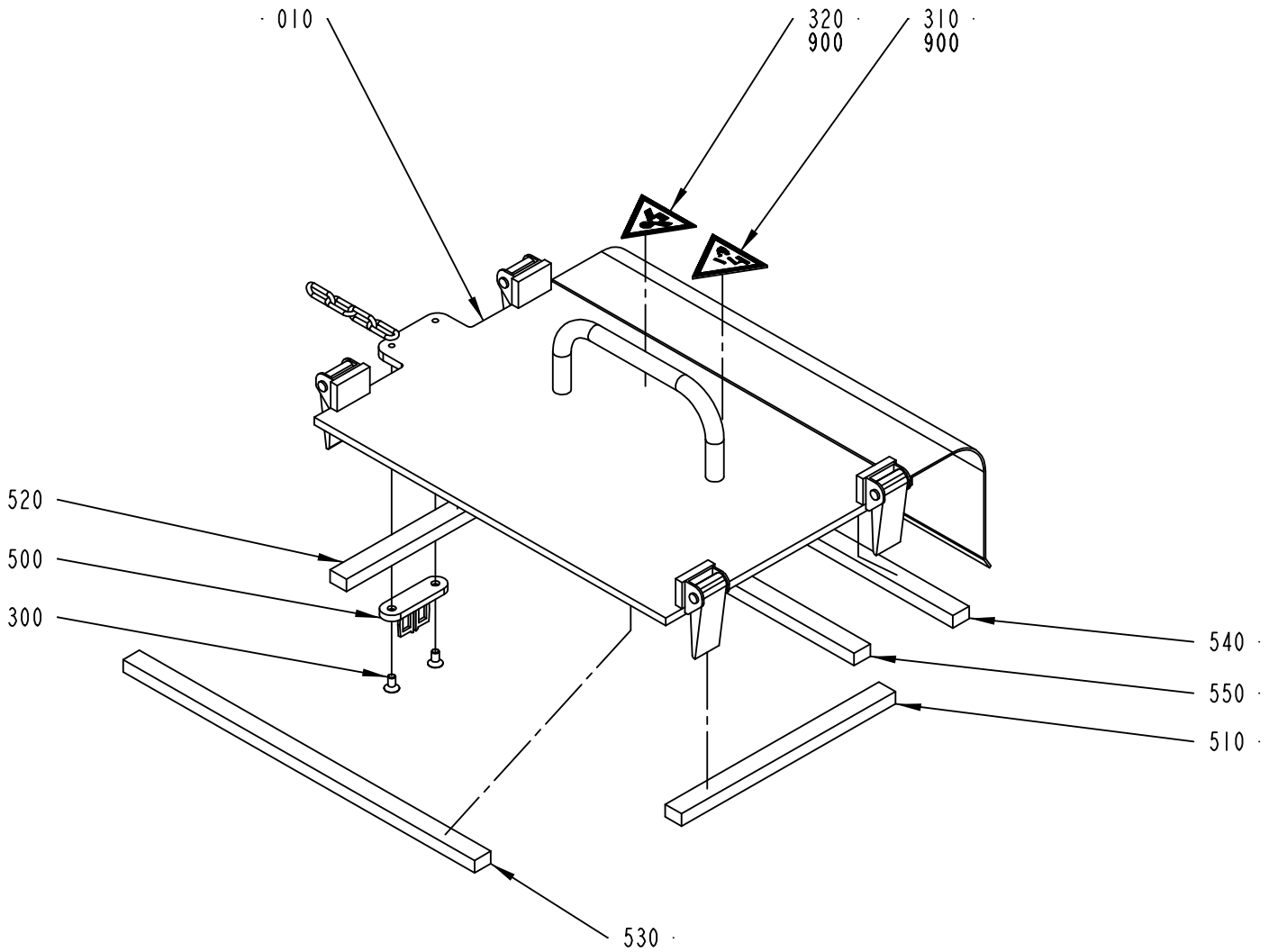

2542845-1
ECM 108089

ECM: 115911 - 20021113
Group number: 2542845-0100
Assembly Drawing: 2542845-1_1_AA

Issue: 20030314

Pos	Part No	SP	UN	Qty	Description	Page No
Common Parts						
010	2542841-0000	-		1	LID	
300	312155-0325	-		2	SCREW EN 10642 MF6S M5X10 A480	
310	359705-0003	-		1	WARNING SIGN ISO, DANGEROUS CHEMICALS	
320	359705-0013	-		1	WARNING SIGN ISO, HARMFUL VAPOUR	
500	90044-0310	-		1	KEY FOR SAFETY SWITCH, AZ 15/16 B1	
510	90143-0088	-	MM	190	RUBBER STRIP	
520	90143-0088	-	MM	190	RUBBER STRIP	
530	90143-0088	-	MM	322	RUBBER STRIP	
540	90143-0088	-	MM	322	RUBBER STRIP	
550	90143-0088	-	MM	292	RUBBER STRIP	
900	90153-0016	-	ML	50	ADHESIVE,TUBE 100G RHODORSIL CAF 3	

Pos	Part No	SP	UN	Qty	Description	Page No

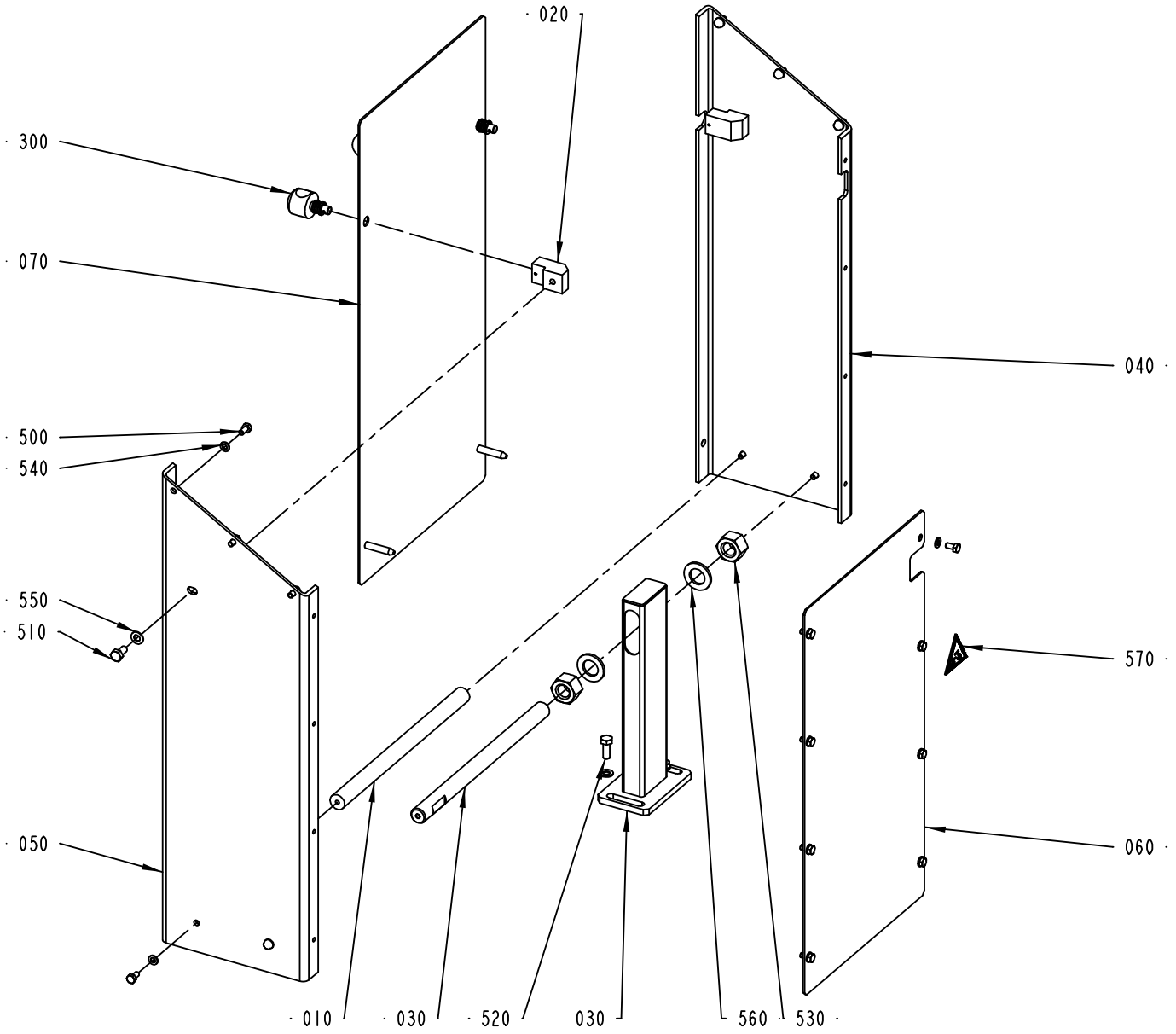

2542925-1
ECM 104261

ECM: 104262 - 20021113
Group number: 2542925-0100
Assembly Drawing: 2542925-1_1_AA

Issue: 20030314

Pos	Part No	SP	UN	Qty	Description	Page No
Common Parts						
010	1514843-0000	-		1	SHAFT	
020	2523944-0000	-		2	SNAP-IN LOCK	
030	2524021-0000	-		1	SHAFT	
040	2524022-0000	-		1	SUPPORT	
050	2543044-0000	-		1	SIDE FRAME	
060	2543046-0000	-		1	SIDE FRAME	
070	2543047-0000	-		1	COVER PLATE	
080	2543048-0000	-		1	COVER PLATE	
300	90458-1324	-		2	ELLIPSE LOCK, FSQ-M8 4-28900-03-SS	
500	312105-0366	-		18	SCREW M6S M6X12 A280	
510	312105-0449	-		2	SCREW M6S ISO 4017 M8X16 A480	
520	312105-0452	-		2	SCREW M6S ISO 4017 M8X22 A480	
530	312605-0326	-		2	HEXAGON NUT, M6M M20 A280	
540	315105-0153	-		18	WASHER ISO 7089-6-200 HV-A4	
550	315105-0165	-		4	WASHER ISO 7089-8-200 HV-A4	
560	315105-0192	-		2	WASHER ISO 7089-20-200 HV-A4	
570	359705-0003	-		1	WARNING SIGN ISO, DANGEROUS CHEMICALS	

Pos	Part No	SP	UN	Qty	Description	Page No

Machine Type | Group Description | Used-In | Group Number | Page No

Tetra Pak

SPC
Spare Parts Catalogue

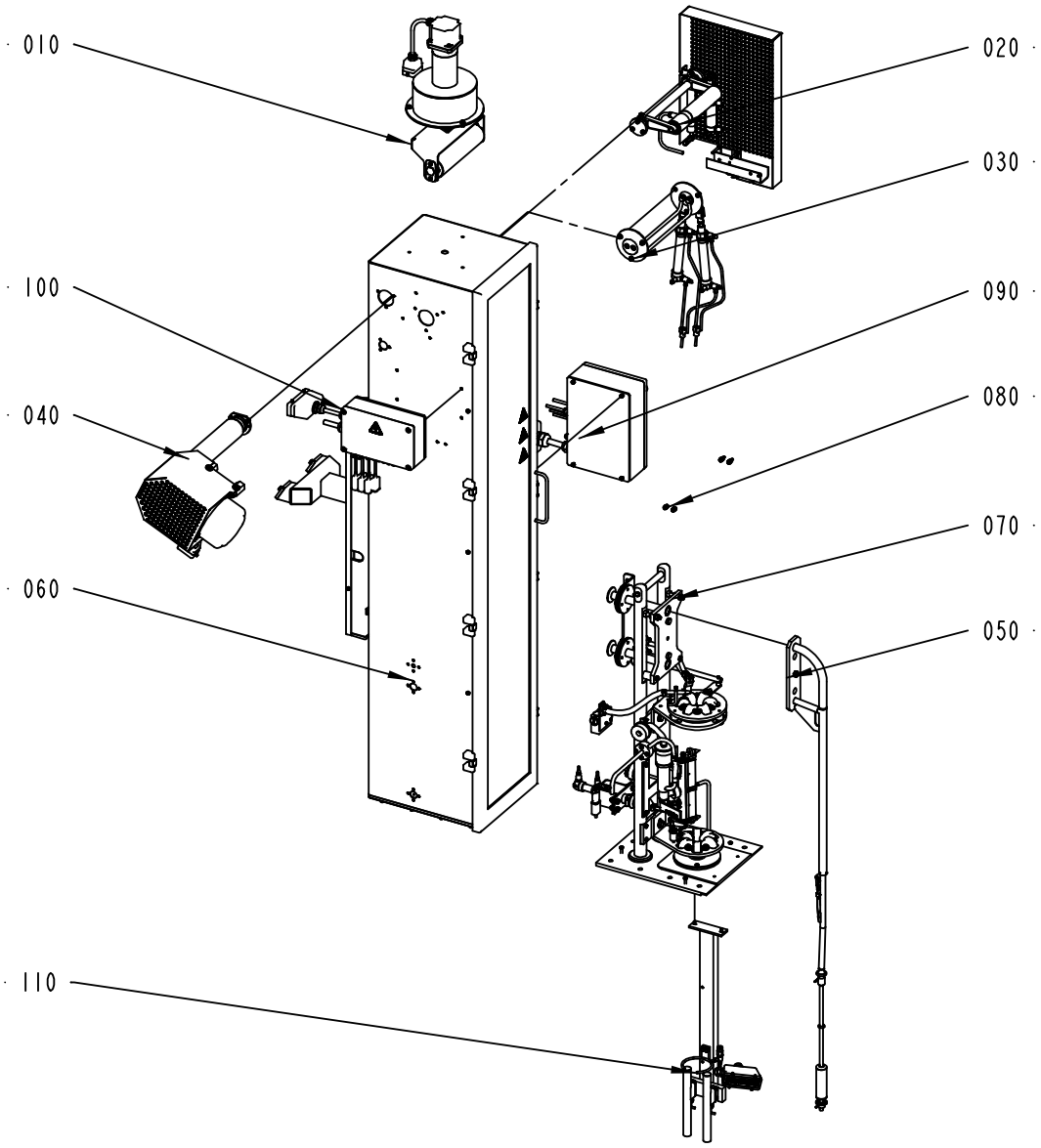

630403-5
ECM 116221

Pos	Part No	SP	UN	Qty	Description	Page No
Common Parts						
010	A2523920-0100	-		1	WEB GUIDE	**161**
020	A2523930-0100	-		1	PENDULUM ROLLER	**163**
030	A2523935-0100	-		1	CLAMP	**165**
040	A2523965-0100	-		1	DRIVE UNIT	**167**
050	A2524289-0100	-		1	FILLING PIPE	**169**
060	A2542665-0100	-		1	ASEPTIC CHAMBER	**171**
070	A2542725-0100	-		1	FORMING MANDREL BRACKET	**173**
080	A2542730-0100	-		1	EDGE ROLLER	**191**
090	A2542745-0100	-		1	PUSH BUTTON BOX	**193**
100	A2542855-0100	-		1	CONNECTION BOX	**195, 197**
110	A2543075-0100	-		1	COIL	**199**

Pos	Part No	SP	UN	Qty	Description	Page No

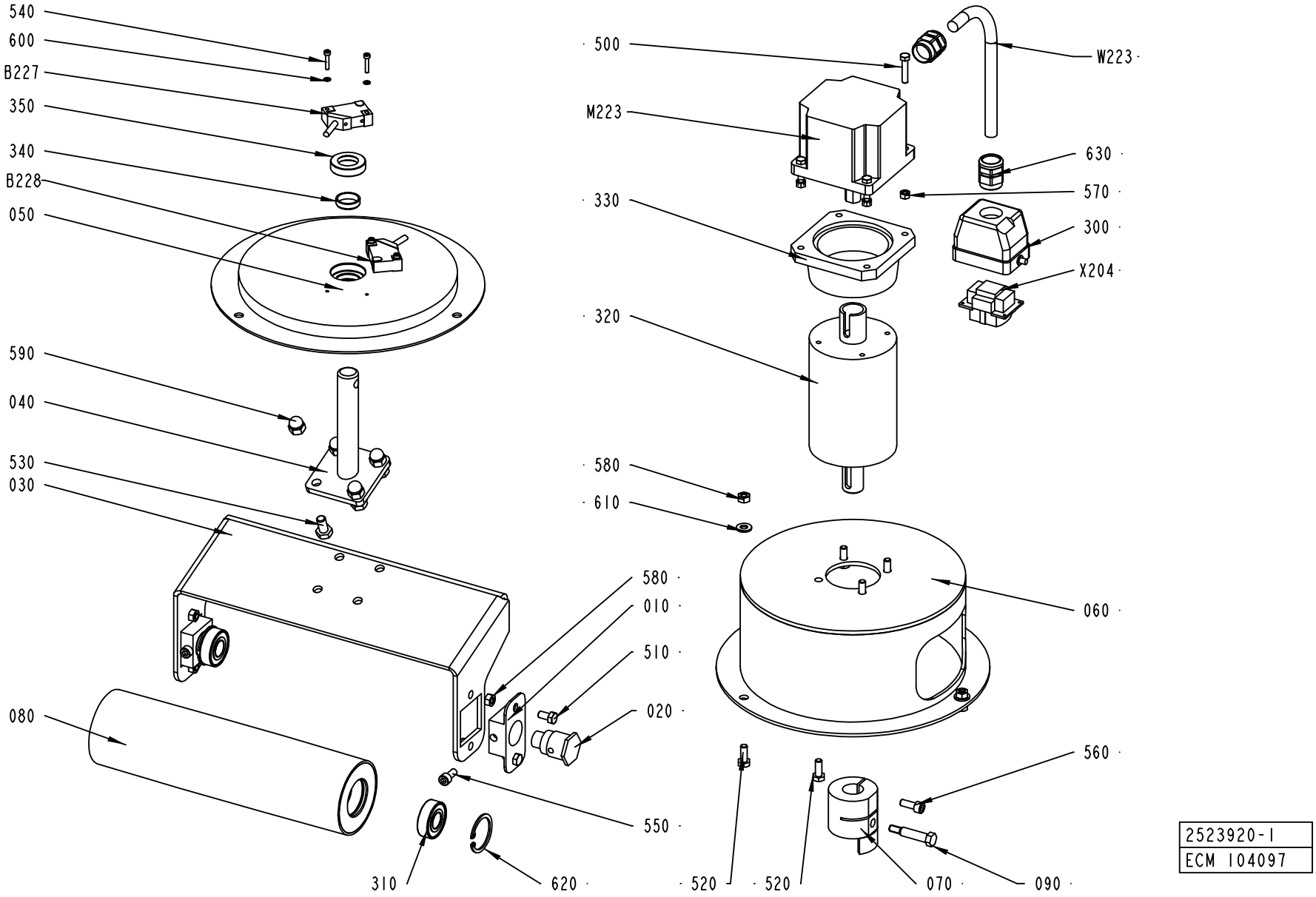

2523920-1
ECM 104097

ECM: 114293 - 20021113
Group number: 2523920-0100
Assembly Drawing: 2523920-1_1_AA

Issue: 20030314

Pos	Part No	SP	UN	Qty	Description	Page No
Common Parts						
010	2523919-0000	-		2	FLANGE	
020	2523921-0000	-		2	SHAFT	
030	2523922-0000	-		1	BRACKET	
040	2523923-0000	-		1	SHAFT	
050	2523924-0000	-		1	GUIDING PLATE	
060	2523925-0000	-		1	FLANGE	
070	2523926-0000	-		1	CLAMPING RING	
080	2523927-0000	-		1	ROLLER	
090	2542736-0000	-		1	FITTING BOLT	
300	90110-0157	-		1	CABLE HOOD 6-POL 70.352.0628.1	
310	90458-0182	-		2	BALL BEARING, 15X35X11 MM	
320	90458-2935	-		1	GEARS, PLANETARY BGT 800	
330	90458-2936	-		1	MOTOR BRACKET , NEMA 34 FOR BGT-800	
340	90459-0057	-		1	BUSHING , 19X22X6 MM	
350	90459-0058	-		1	RADIAL SEAL 19X32X8 MM DUST LIP	
500	312105-0333	-		4	SCREW M6S ISO 4017 M5X25 A480	
510	312105-0366	-		4	SCREW M6S M6X12 A280	
520	312105-0368	-		7	SCREW M6S M6X16 A280	
530	312105-0449	-		4	SCREW M6S ISO 4017 M8X16 A480	
540	312115-0228	-		4	SCREW ISO4762 M3X16 A4	
550	312115-0367	-		2	SCREW ISO4762 M6X14 A4	
560	312115-0368	-		2	SCREW ISO4762 M6X16 A4	
570	312605-0314	-		4	HEXAGON NUT, M6M M5 A280	
580	312605-0316	-		7	HEXAGON NUT, M6M M6 A280	
590	312705-0318	-		4	NUT HEX. DOMED CAP MHM-6 M8 A280	
600	315105-0124	-		4	WASHER ISO 7089-3-200 HV-A4	
610	315105-0156	-		3	WASHER PLAIN, BRB, 6,7/14,H=1,5	
620	315753-0124	-		2	RETAIN. RING, 35	
630	353245-0010	-		2	GLAND, EXTENDED WITH INSERT, PG13,5	
B227	90044-0194	-		1	PROX.SW. IN5329/IN3002-BPKG	
B228	90044-0194	-		1	PROX.SW. IN5329/IN3002-BPKG	
M223	90458-2937	-		1	STEPPER MOTOR, PK296-E4.5T	
W223	90220-0107	-	MM	13000	SCR. CABLE 5X0,75MM2	
X204	90110-0159	-		1	MALE INSERT 70.310.0640.0	

Pos	Part No	SP	UN	Qty	Description	Page No

Machine Type | Group Description | Used-In | Group Number | Page No

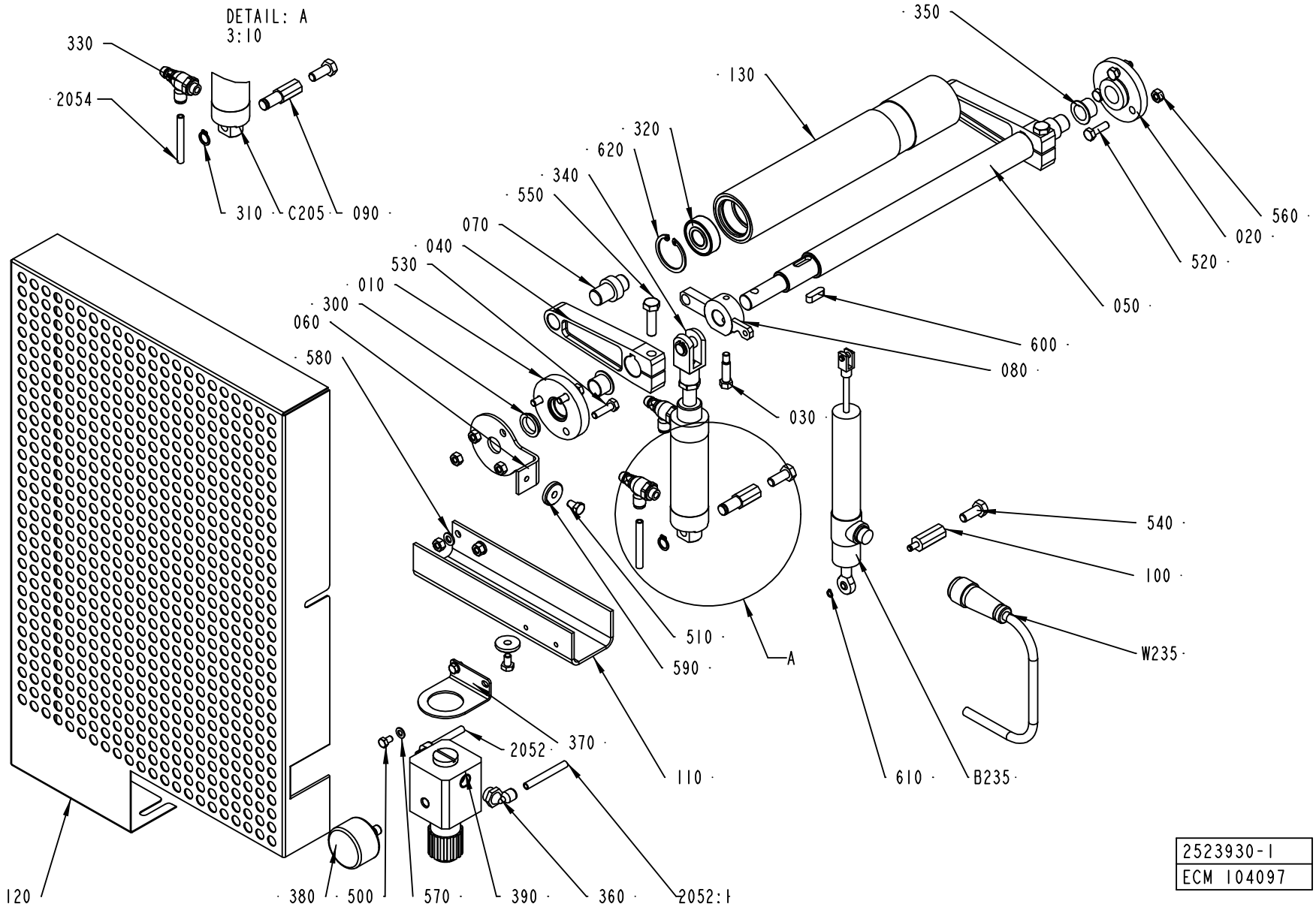
DETAIL: A
3:10
330
2054
310
C205
090
350
130
320
620
340
550
070
040
530
010
300
060
580
560
020
520
050
600
080
030
540
100
W235
510
590
A
370
2052
110
610
B235
120
380
500
570
390
360
2052:1
2523930-1
ECM 104097

ECM: 113558 - 20021113
Group number: 2523930-0100
Assembly Drawing: 2523930-1_1_AA

Issue: 20030314

Pos	Part No	SP	UN	Qty	Description	Page No
0150S						
130	2523928-0000	-		1	ROLLER	
0200B						
130	2543074-0000	-		1	ROLLER	
V065						
130	2543085-0000	-		1	ROLLER	
Common Parts						
010	1036174-0000	-		1	BEARING COVER	
020	1036328-0000	-		1	LID	
030	1041688-0000	-		1	FITTING BOLT	
040	1347938-0000	-		2	PENDULUM ARM	
050	2523929-0000	-		1	SHAFT	
060	2523931-0000	-		1	LID	
070	2542661-0000	-		2	SHAFT	
080	2542732-0000	-		1	LEVER	
090	2542733-0000	-		1	SHAFT	
100	2542734-0000	-		1	SHAFT	
110	2542981-0000	-		1	BRACKET	
120	2542984-0000	-		1	COVER	
2052	90166-0081	-	MM	1700	TUBE 6 MM PA BLUE	
2052:1	90166-0081	-	MM	500	TUBE 6 MM PA BLUE	
2054	90166-0081	-	MM	1700	TUBE 6 MM PA BLUE	
300	90091-0357	-		1	VARISEAL ROTO 15X23X4 MM	
310	90141-0016	-		1	RETAIN. RING, 10	
320	90458-0182	-		2	BALL BEARING, 15X35X11 MM	
330	90235-0846	-		2	THROTTLE CHECK VALVE G1/8", MANUAL, 6	
340	90239-0516	-		1	ROD END, CLEVIS WITH AXLE M10X1,25	
350	90240-0263	-		2	FLANGE BUSHING, 15X17X12 MM	
360	90458-2957	-		2	ELBOW PIPE JOINT, EXT.THREAD, D=6MM-G1/4	
370	90458-2971	-		1	BRACKET, HR-1/4-P FOR LRP-1/4-0,7	
380	90459-0671	-		1	PRESSURE GAUGE, MAP-40-4-1/8-EN	
390	90459-0672	-		1	PRECISION PRESSURE REGULATOR,LRP-1/4-4	
500	312105-0323	-		2	SKRUV M6S ISO 4017 M5X8 A480	
510	312105-0364	-		3	SCREW M6S ISO 4017 M6X10 A480	
520	312105-0370	-		3	SCREW M6S ISO 4017 M6X20 A480	
530	312105-0371	-		3	SCREW M6S ISO 4017 M6X22 A480	
540	312105-0451	-		2	SCREW M6S ISO 4017 M8X20 A480	
550	312105-0455	-		2	SCREW M6S ISO 4017 M8X30 A480	
560	312605-0316	-		8	HEXAGON NUT, M6M M6 A280	
570	315105-0146	-		2	WASHER ISO 7089-5-200 HV-A4	
580	315105-0153	-		2	WASHER ISO 7089-6-200 HV-A4	
590	315125-0153	-		3	WASHER TBRSB 6,4X22X4 A4	
600	315705-0232	-		2	PARALLEL KEY W. ROUND ENDS 6X6X20 MM	
610	315750-0102	-		1	RETAIN. RING, 5	
620	315753-0124	-		2	RETAIN. RING, 35	
B235	90459-1367	-		1	INDUC. TRANSD. IW 25A / 40-0.5-KHN-A79	
C205	90459-1507	-		1	DOUBLE ACTING, MINI-ISO, CYL. 32-50	
W235	90459-1368	-		1	CABLE, TWK BI 723 M 3 PS-GG5	

Machine Type | Group Description | Used-In | Group Number | Page No

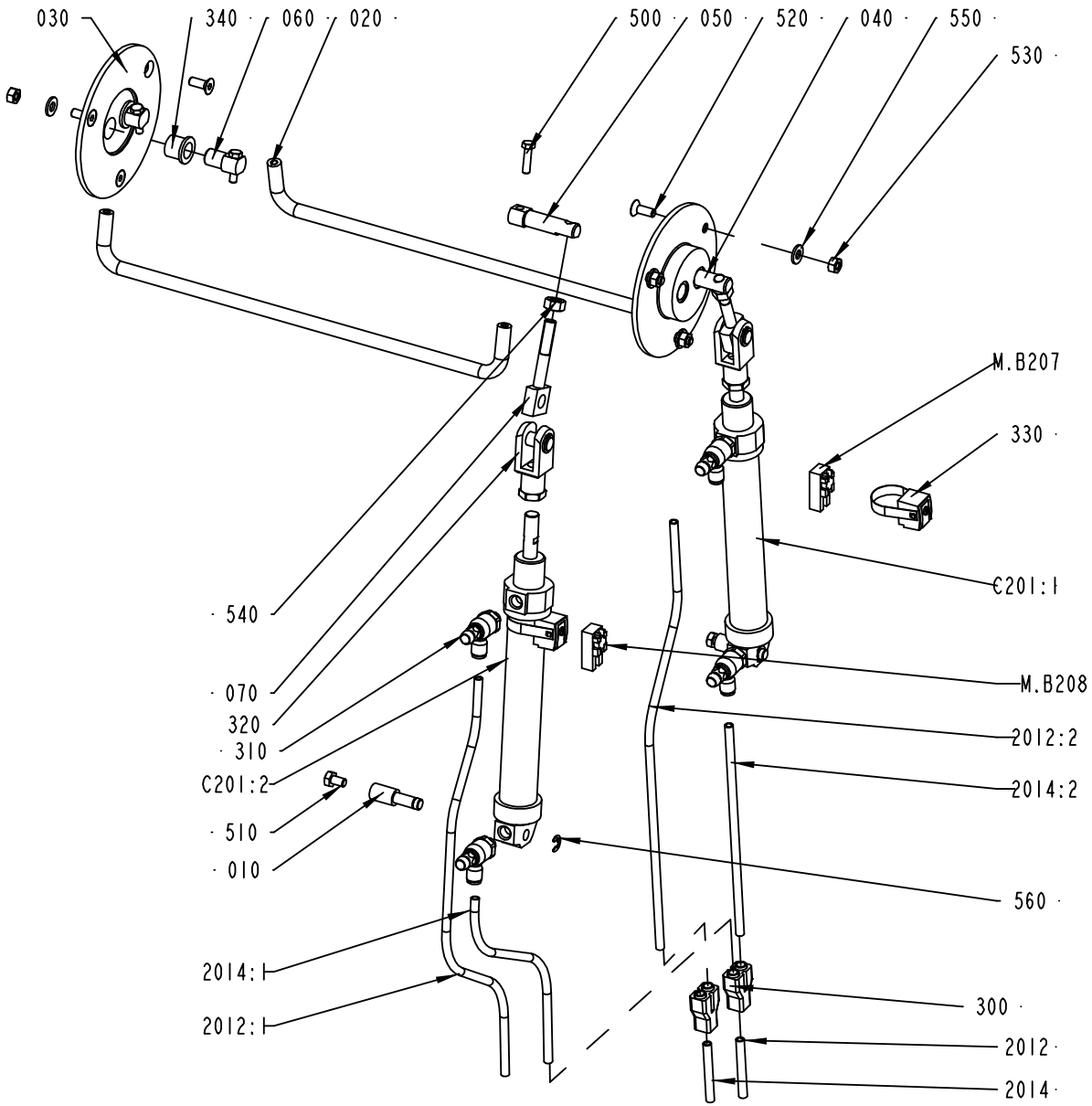

2523935-1
ECM 104097

Pos	Part No	SP	UN	Qty	Description	Page No
Common Parts						
010	1515044-0000	-		2	PIN	
020	2523933-0000	-		2	BOW CLAMP	
030	2523934-0000	-		2	FLANGE	
040	2523936-0000	-		1	SHAFT	
050	2523937-0000	-		1	SHAFT	
060	2523938-0000	-		2	SHAFT	
070	2543073-0000	-		2	BRACKET	
2012	90166-0081	-	MM	1700	TUBE 6 MM PA BLUE	
2012:1	90166-0081	-	MM	500	TUBE 6 MM PA BLUE	
2012:2	90166-0081	-	MM	500	TUBE 6 MM PA BLUE	
2014	90166-0081	-	MM	1700	TUBE 6 MM PA BLUE	
2014:1	90166-0081	-	MM	500	TUBE 6 MM PA BLUE	
2014:2	90166-0081	-	MM	500	TUBE 6 MM PA BLUE	
300	90055-0100	-		2	Y-CONNECTION, 6-6	
310	90235-0846	-		4	THROTTLE CHECK VALVE G1/8", MANUAL, 6	
320	90239-0516	-		2	ROD END, CLEVIS WITH AXLE M10X1,25	
330	90239-0581	-		2	SENSOR,BRACKET,FOR CYL 25	
340	90240-0184	-		4	FLANGE BUSHING,12X16X15 MM	
500	312105-0331	-		4	SCREW M6S ISO 4017 M5X20 A480	
510	312105-0364	-		2	SCREW M6S ISO 4017 M6X10 A480	
520	312155-0368	-		6	SCREW EN 10642 MF6S M6X16 A480	
530	312605-0316	-		6	HEXAGON NUT, M6M M6 A280	
540	312605-0318	-		2	HEXAGON NUT, M6M M8 A280	
550	315105-0156	-		6	WASHER PLAIN, BRB, 6,7/14,H=1,5	
560	315755-0108	-		2	LOCKING WASHER 6	
C201:1	90239-0832	-		1	DOUBLE ACTING, MINI-ISO, CYL. 25-125	
C201:2	90239-0832	-		1	DOUBLE ACTING, MINI-ISO, CYL. 25-125	
M.B207	90457-0047	-		1	SENSOR 2750-1-5111-1 W.ADAPTER PNP	
M.B208	90457-0047	-		1	SENSOR 2750-1-5111-1 W.ADAPTER PNP	

Pos	Part No	SP	UN	Qty	Description	Page No

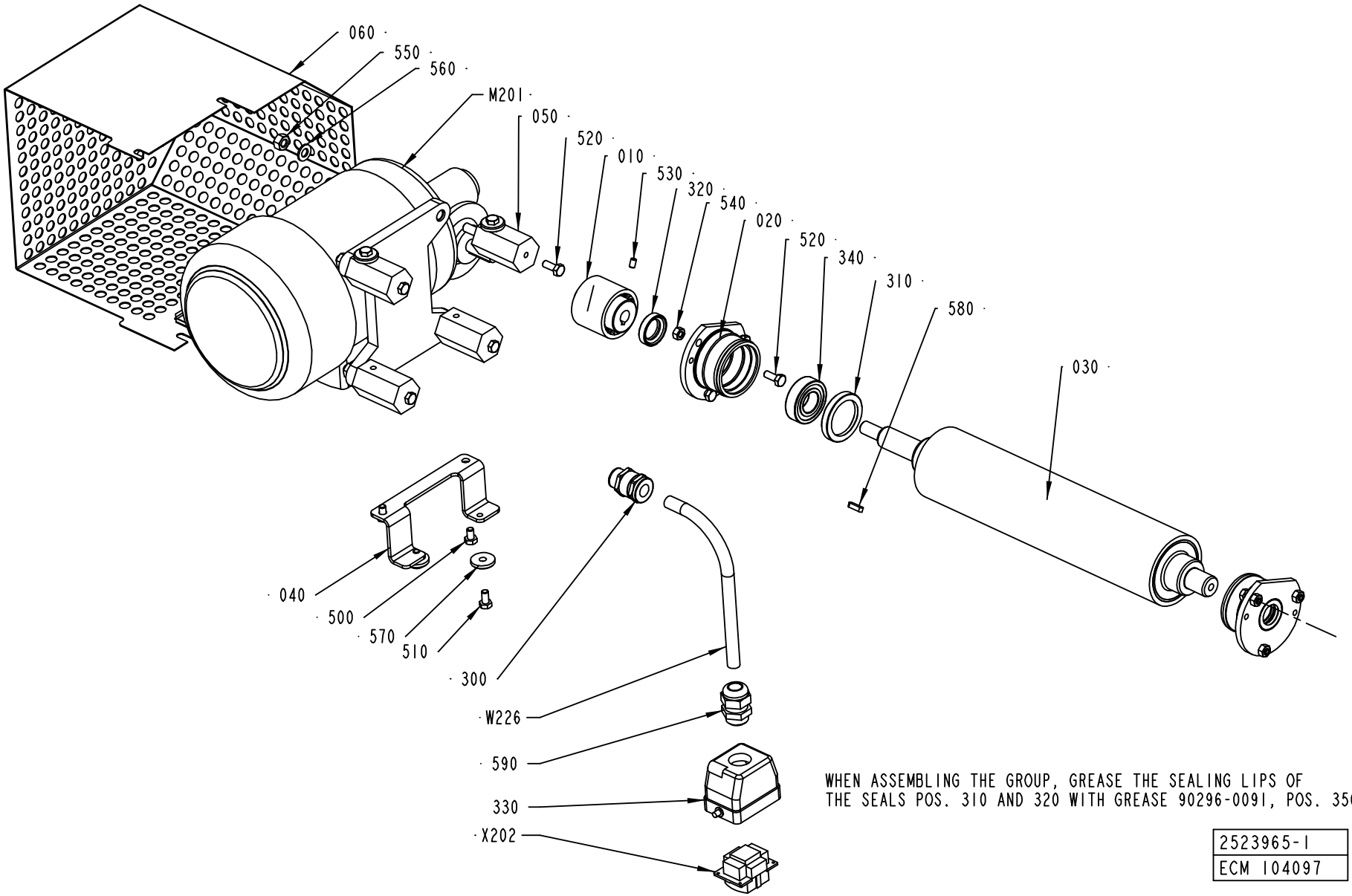

WHEN ASSEMBLING THE GROUP, GREASE THE SEALING LIPS OF THE SEALS POS. 310 AND 320 WITH GREASE 90296-0091, POS. 350

2523965-1
ECM 104097

ECM: 104096 - 20021113
Group number: 2523965-0100
Assembly Drawing: 2523965-1_1_AA

Issue: 20030314

Pos	Part No	SP	UN	Qty	Description	Page No
Common Parts						
010	1129298-0000	-		1	SHAFT COUPLING	
020	1484514-0000	-		2	HOUSING	
030	2523958-0000	-		1	ROLLER	
040	2542979-0000	-		1	BRACKET	
050	2542982-0000	-		4	SPACER	
060	2542983-0000	-		1	COVER	
300	90012-0137	-		1	GLAND, EXTENDED WITH INSERT, PG11	
310	90091-0297	-		2	RADIAL SEAL 35X47X7 MM DUST LIP	
320	90091-0320	-		2	RADIAL SEAL 20X30X7 MM DUST LIP	
330	90110-0157	-		1	CABLE HOOD 6-POL 70.352.0628.1	
340	90214-0225	-		2	BALL BEARING SOLID OIL 20X42X12 MM	
350	90296-0091	-		1	LUBRICATION GREASE	
500	312105-0364	-		2	SCREW M6S ISO 4017 M6X10 A480	
510	312105-0366	-		4	SCREW M6S M6X12 A280	
520	312105-0368	-		10	SCREW M6S M6X16 A280	
530	312318-0323	-		2	SCREW ISO4029 M5X8 A4	
540	312605-0316	-		6	HEXAGON NUT, M6M M6 A280	
550	312605-0318	-		4	HEXAGON NUT, M6M M8 A280	
560	315105-0165	-		4	WASHER ISO 7089-8-200 HV-A4	
570	315125-0153	-		4	WASHER TBRSB 6,4X22X4 A4	
580	315701-0168	-		1	PARALLEL KEY W. ROUND ENDS 4X4X16 MM	
590	352103-0108	-		1	CABLE GLAND, ST 13,5 , PR20,4/PG13,5	
M201	90069-0613	-		1	GEARS, WORM MOTOR ODM120-80BE3	
W226	90220-0104	-	MM	12000	SCR. CABLE 4X1,5MM2	
X202	90110-0159	-		1	MALE INSERT 70.310.0640.0	

Pos	Part No	SP	UN	Qty	Description	Page No

Machine Type | Group Description | Used-In | Group Number | Page No

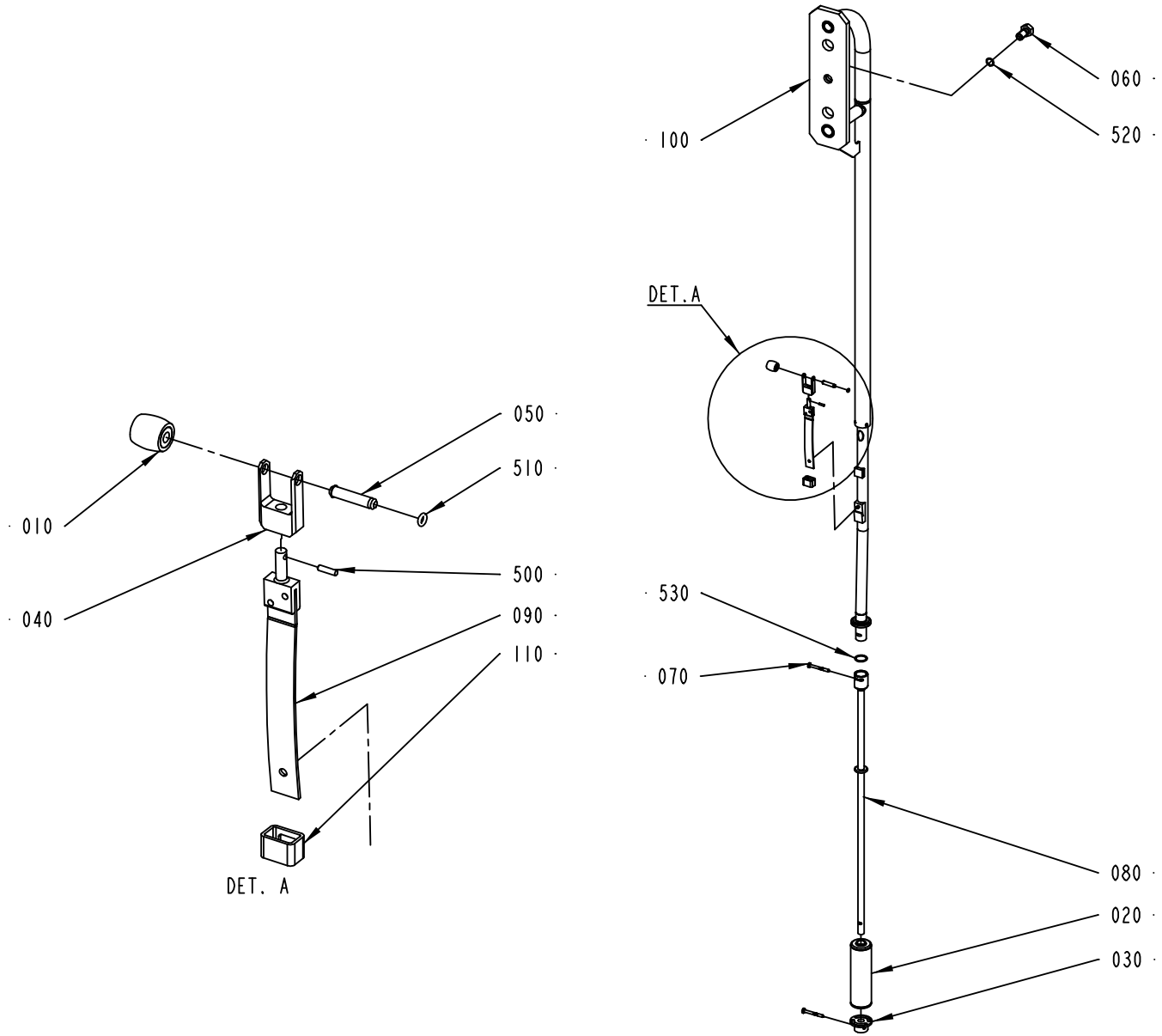

2524289-1
ECM 105179

ECM: 115011 - 20021113
Group number: 2524289-0100
Assembly Drawing: 2524289-1_1_AA

Issue: 20030314

Pos	Part No	SP	UN	Qty	Description	Page No
0150S						
010	1515232-0000	-		1	PRESSURE ROLLER	
020	1514693-0000	-		1	FLOAT	
030	1515171-0000	-		1	GUIDE	
040	1514198-0000	-		1	FORK	
050	1514202-0000	-		1	SHAFT	
070	1515172-0000	-		2	SHEAR PIN	
080	2524292-0000	-		1	TUBE	
100	2542953-0000	-		1	UPPER FILLING TUBE	
530	315205-0514	-		1	O-RING 18,72X2,62 MM	
0200B						
010	263062-0000	-		1	PRESSURE ROLLER	
020	1514693-0000	-		1	FLOAT	
030	1515171-0000	-		1	GUIDE	
040	2542955-0000	-		1	FORK	
050	1515821-0000	-		1	SHAFT	
070	1515172-0000	-		2	SHEAR PIN	
080	2524292-0000	-		1	TUBE	
100	2542953-0000	-		1	UPPER FILLING TUBE	
530	315205-0514	-		1	O-RING 18,72X2,62 MM	
V065						
010	32197-0000	-		1	PRESSURE ROLLER	
020	594704-0000	-		1	FLOAT	
030	1514162-0000	-		1	GUIDE	
040	1514198-0000	-		1	FORK	
050	1514202-0000	-		1	SHAFT	
070	1515601-0000	-		2	SHEAR PIN	
080	2524288-0000	-		1	TUBE	
100	2542951-0000	-		1	UPPER FILLING TUBE	
530	315205-0705	-		1	O-RING 17,17X1,78 MM	
Common Parts						
060	1515561-0000	-		1	SCREW	
090	2542915-0000	-		1	LEAF SPRING	
110	2542954-0000	-		1	HOOD	
500	311103-0207	-		1	PARALLELL PIN, CP, M6, 2,5X10 MM	
510	315202-0101	-		1	O-RING 3,1X1,6 MM	
520	315202-0109	-		1	O-RING 11,1X1,6 MM	

Pos	Part No	SP	UN	Qty	Description	Page No

Machine Type | Group Description | Used-In | Group Number | Page No

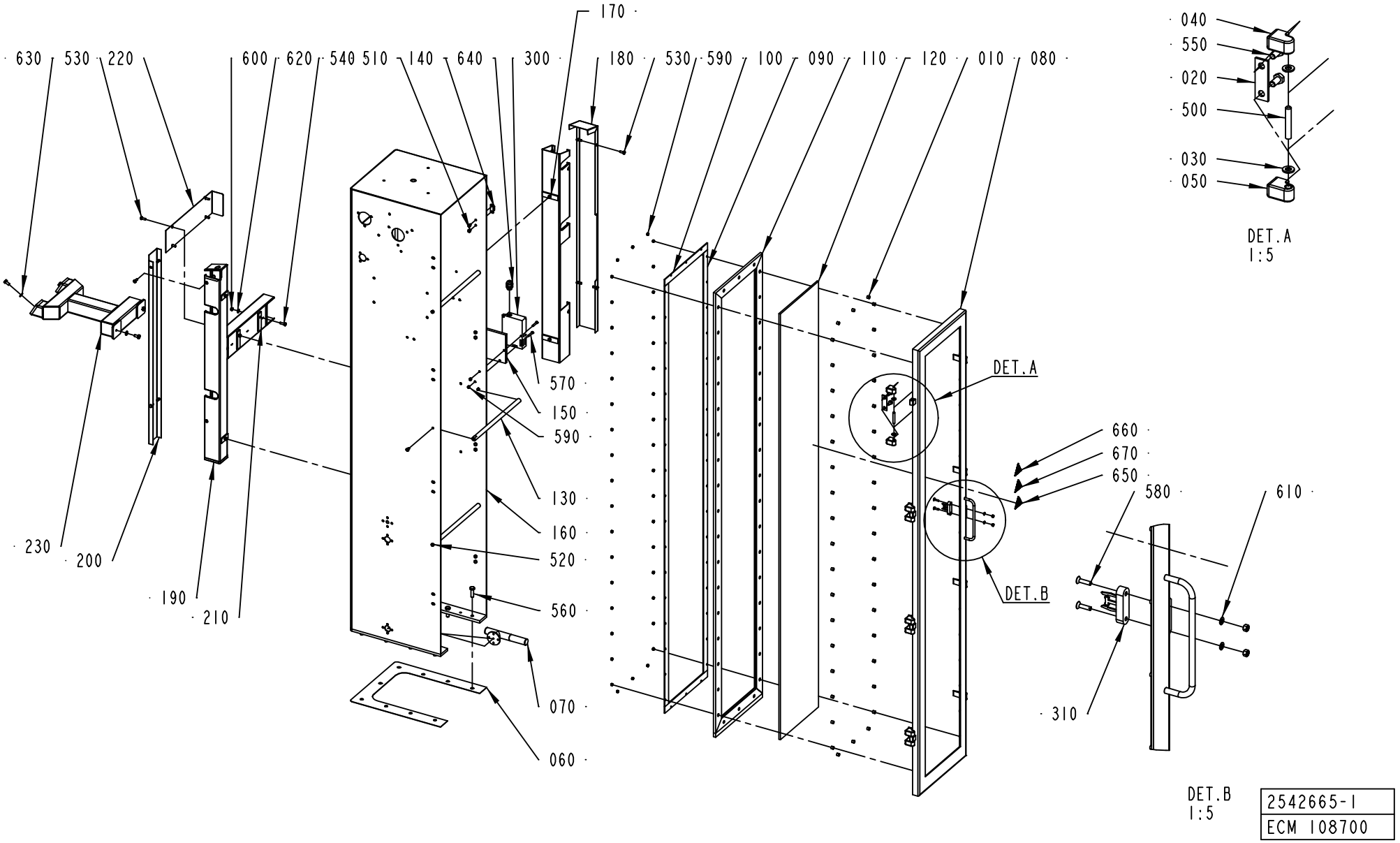

2542665-1
ECM 108700

ECM: 111769 - 20021113
Group number: 2542665-0100
Assembly Drawing: 2542665-1_1_AA

Issue: 20030314

Pos	Part No	SP	UN	Qty	Description	Page No
Common Parts						
010	441718-0000	-		40	SPACER	
020	441737-0000	-		4	WASHER	
030	441739-0000	-		8	WASHER	
040	441740-0000	-		4	HINGE FLANGE	
050	441741-0000	-		4	HINGE FLANGE	
060	1514169-0000	-		1	GASKET	
070	1514173-0000	-		1	SPREADER	
080	1514182-0000	-		1	FRAME	
090	1514193-0000	-		2	COVER STRIP	
100	1514194-0000	-		2	COVER STRIP	
110	1514195-0000	-		1	RUBBER GASKET	
120	1514196-0000	-		1	GLASS PANE	
130	1514218-0000	-		3	STRUT	
140	1514219-0000	-		4	CLAMP LUG	
150	1514943-0000	-		1	DISTANCE PLATE	
160	2542721-0000	-		1	ASEPTIC CHAMBER	
170	2542755-0000	-		1	CABLE DUCT	
180	2542756-0000	-		1	LID	
190	2542809-0000	-		1	CABLE DUCT	
200	2542810-0000	-		1	LID	
210	2542883-0000	-		1	CABLE DUCT	
220	2542884-0000	-		1	LID	
230	2556683-0000	-		1	SUPPORT	
300	90458-0370	-		1	KEY SAF.SW. AZM161SK-24RKA-024	
310	90458-0372	-		1	KEY FOR SAFETY SWITCH, AZM-161-B6	
500	311103-0413	-		4	PARALLELL PIN, M6, 8X50 MM	
510	312105-0362	-		8	SCREW M6S ISO 4017 M6X8 A480	
520	312105-0366	-		6	SCREW M6S M6X12 A280	
530	312105-0368	-		12	SCREW M6S M6X16 A280	
540	312105-0370	-		6	SCREW M6S ISO 4017 M6X20 A480	
550	312105-0449	-		12	SCREW M6S ISO 4017 M8X16 A480	
560	312105-0497	-		9	SCREW M6S ISO 4017 M10X35 A480	
570	312125-0335	-		2	SCREW PAN HEAD MCS M5X30 SS	
580	312155-0331	-		2	SCREW EN 10642 MF6S M5X20 A480	
590	312605-0314	-		44	HEXAGON NUT, M6M M5 A280	
600	312605-0316	-		6	HEXAGON NUT, M6M M6 A280	
610	315105-0146	-		2	WASHER ISO 7089-5-200 HV-A4	
620	315105-0156	-		6	WASHER PLAIN, BRB, 6,7/14,H=1,5	
630	315105-0165	-		4	WASHER ISO 7089-8-200 HV-A4	
640	352103-0106	-		1	CABLE GLAND, ST 11, PR18,6/PG11	
650	359705-0003	-		1	WARNING SIGN ISO, DANGEROUS CHEMICALS	
660	359705-0007	-		1	WARNING SIGN ISO, HOT SURFACE	
670	359705-0013	-		1	WARNING SIGN ISO, HARMFUL VAPOUR	

Machine Type | Group Description | Used-In | Group Number | Page No

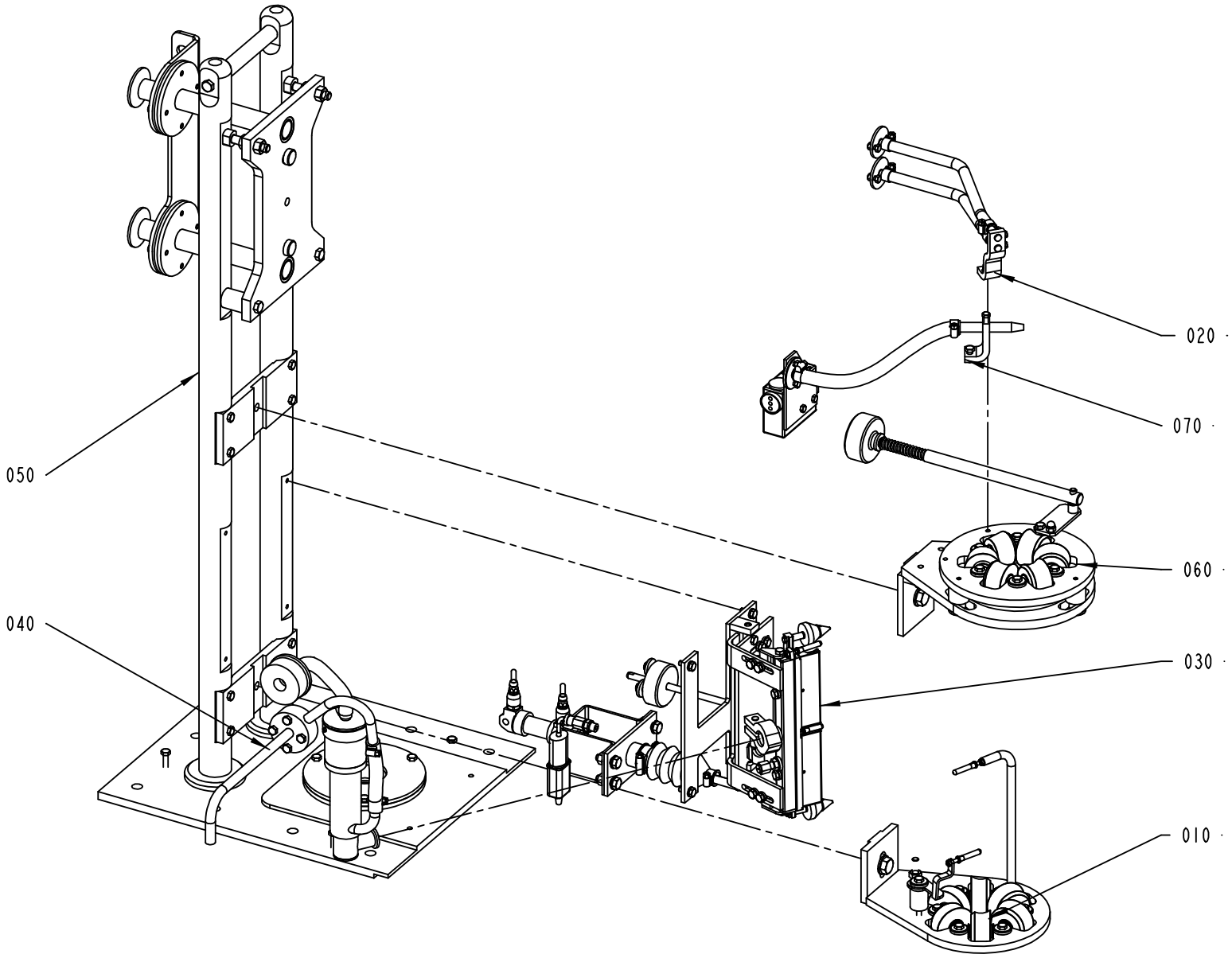

2542725-1
ECM 104727

ECM: 105025 - 20021113
Group number: 2542725-0100
Assembly Drawing: 2542725-1_1_AA

Issue: 20030314

Pos	Part No	SP	UN	Qty	Description	Page No
Common Parts						
010	A2523960-0100	-		1	LOWER FORMING RING	**175**
020	A2523970-0100	-		1	PHOTOCELLS	**177**
030	A2524080-0100	-		1	LONGITUDINAL ELEMENT	**179, 181**
040	A2524140-0100	-		1	HEATING ELEMENT	**183**
050	A2524185-0100	-		1	CANTILEVER	**185**
060	A2524195-0100	-		1	UPPER FORMING RING	**187**
070	A2543080-0100	-		1	PHOTOCELL UNIT	**189**

Pos	Part No	SP	UN	Qty	Description	Page No

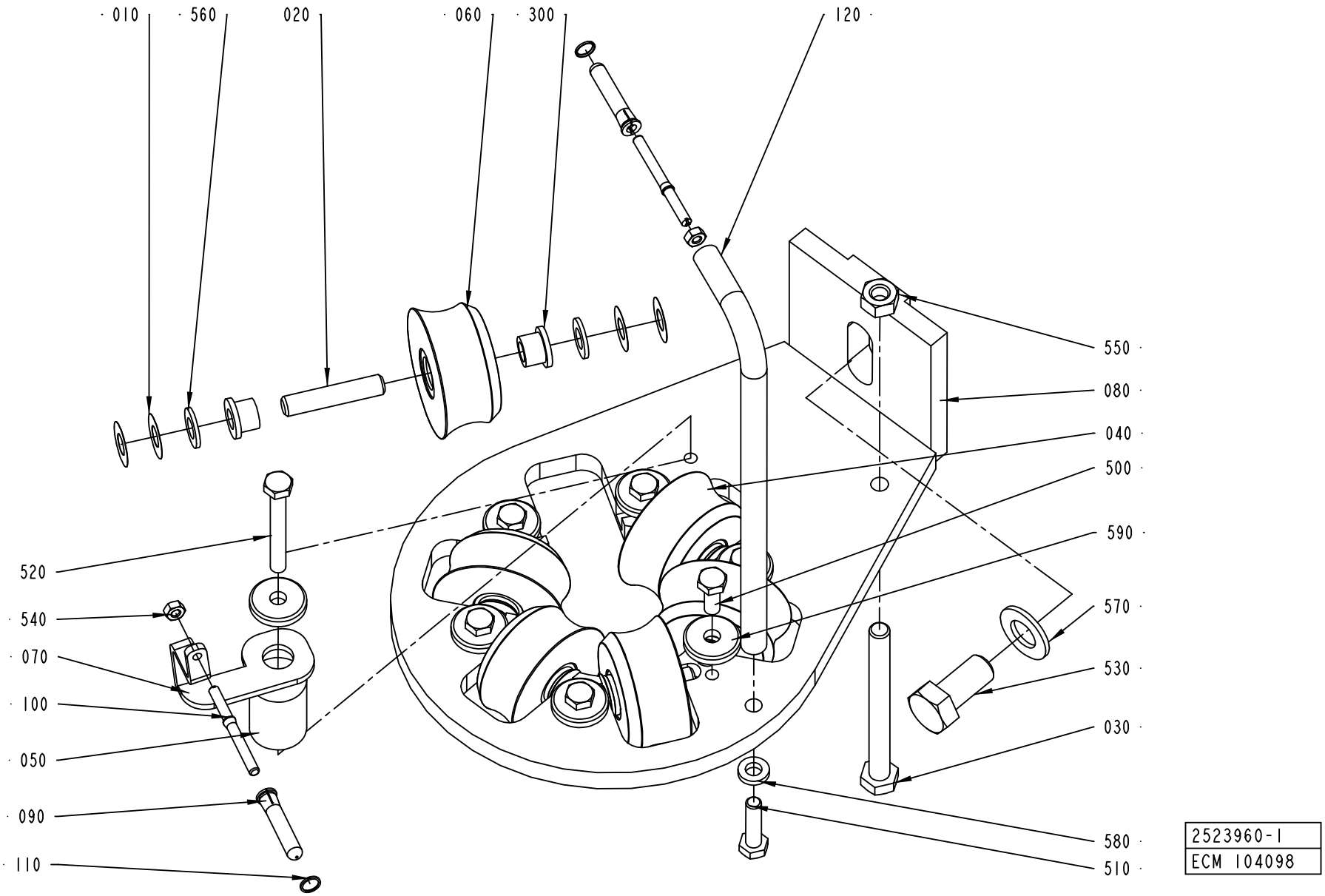
010
560
020
060
300
120
550
080
040
500
590
570
530
030
580
510
520
540
070
100
050
090
110
2523960-1
ECM 104098

ECM: 104099 - 20021113
Group number: 2523960-0100
Assembly Drawing: 2523960-1_1_AA

Issue: 20030314

Pos	Part No	SP	UN	Qty	Description	Page No
0150S						
020	1514127-0000	-		6	SHAFT	
040	2523959-0000	-		1	ROLLER	
060	2523939-0000	-		5	ROLLER	
070	2542802-0000	-		1	BRACKET	
080	2542806-0000	-		1	HOLDER	
090	2542856-0000	-		1	ROLL	
100	2542857-0000	-		1	SHAFT	
110	2542863-0000	-		1	LOCKING RING	
540	312605-0312	-		1	HEXAGON NUT, M6M M4 A280	
0200B						
020	1514127-0000	-		6	SHAFT	
040	2523962-0000	-		1	ROLLER	
060	2542783-0000	-		5	ROLLER	
070	2542803-0000	-		1	BRACKET	
080	2542806-0000	-		1	HOLDER	
090	2542856-0000	-		1	ROLL	
100	2542857-0000	-		1	SHAFT	
110	2542863-0000	-		1	LOCKING RING	
540	312605-0312	-		1	HEXAGON NUT, M6M M4 A280	
V065						
020	1514125-0000	-		6	SHAFT	
040	2523961-0000	-		1	ROLLER	
060	2542782-0000	-		5	ROLLER	
070	2542801-0000	-		1	BRACKET	
080	2542805-0000	-		1	HOLDER	
090	2542856-0000	-		2	ROLL	
100	2542857-0000	-		2	SHAFT	
110	2542863-0000	-		2	LOCKING RING	
540	312605-0312	-		2	HEXAGON NUT, M6M M4 A280	
Common Parts						
010	2033-0011	-		24	WASHER	
030	1514228-0000	-		1	SCREW	
050	2542676-0000	-		1	SPACER	
120	2542880-0000	-		1	HOLDER	
300	90240-0172	-		12	FLANGE BUSHING, 8X12X10 MM	
500	312105-0368	-		6	SCREW M6S M6X16 A280	
510	312105-0372	-		1	SCREW M6S ISO 4017 M6X25 A480	
520	312105-0380	-		1	SCREW M6S ISO 4014 M6X50 A480	
530	312105-0534	-		1	SCREW M6S ISO 4017 M12X25 A480	
550	312605-0318	-		1	HEXAGON NUT, M6M M8 A280	
560	315105-0165	-		12	WASHER ISO 7089-8-200 HV-A4	
570	315105-0178	-		1	WASHER ISO 7089-12-200 HV-A4	
580	315115-0153	-		1	WASHER PLAIN, TBRB 6,4/12 H=3	
590	315125-0153	-		7	WASHER TBRSB 6,4X22X4 A4	

Machine Type | Group Description | Used-In | Group Number | Page No

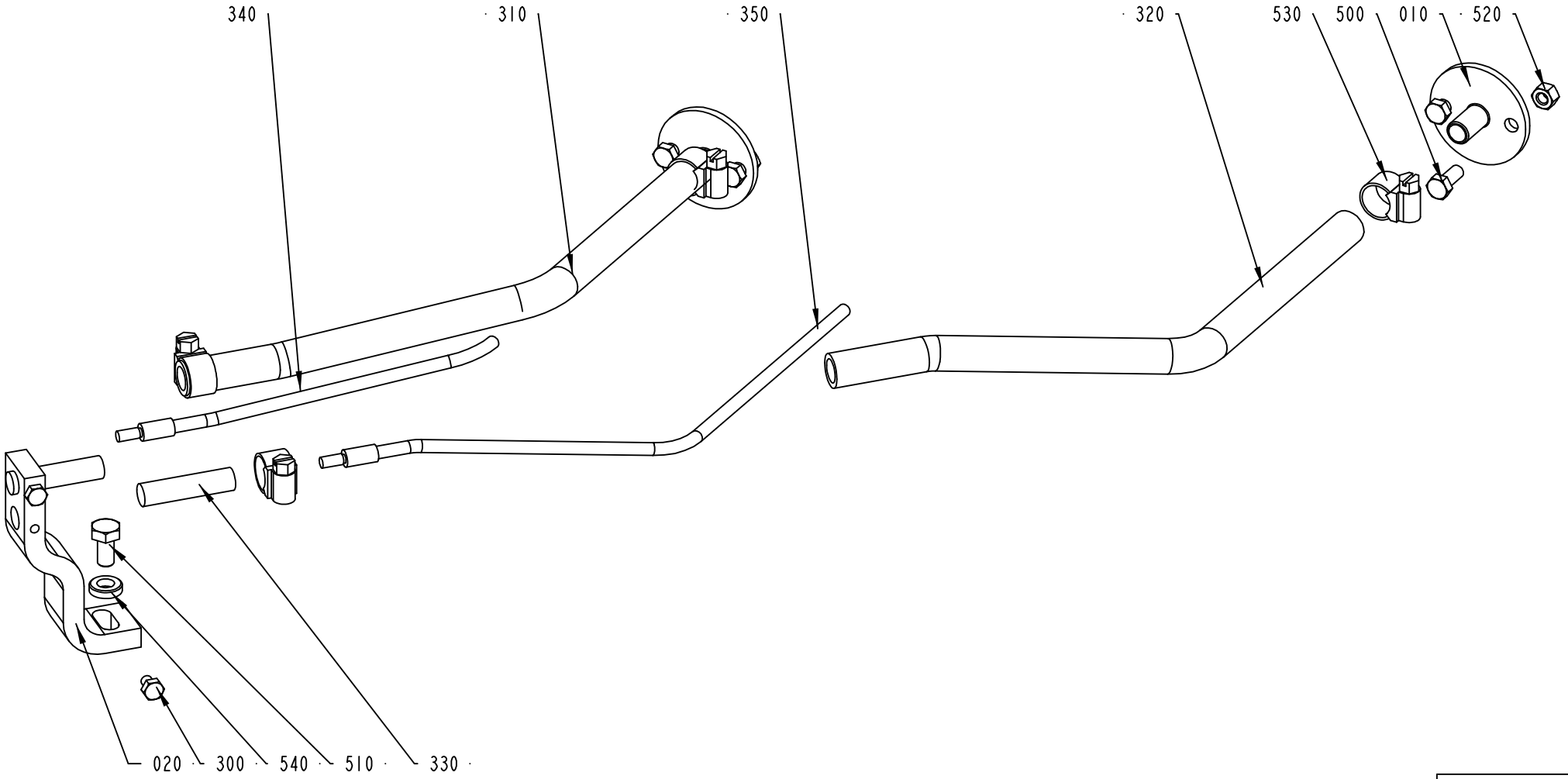

2523970-1
ECM 104100

Pos	Part No	SP	UN	Qty	Description	Page No
0200B OR 0150S						
020	2523963-0000	-		1	BRACKET	
V065						
020	2523969-0000	-		1	BRACKET	
Common Parts						
010	2523967-0000	-		2	BRACKET	
300	90287-0290	-		2	SCREW M6S M4X6 A270	
310	90458-2329	-	MM	300	HOSE, SILICONE, 50 SHORE, 9/13 MM	
320	90458-2329	-	MM	300	HOSE, SILICONE, 50 SHORE, 9/13 MM	
330	90459-1418	-		2	FOCUSING DEVICE AF/FC2	
340	90459-1419	-		1	FIBRE CV/CB1-2	
350	90459-1419	-		1	FIBRE CV/CB1-2	
500	312105-0327	-		4	SCREW M6S ISO 4017 M5X12 A480	
510	312105-0366	-		1	SCREW M6S M6X12 A280	
520	312605-0314	-		4	HEXAGON NUT, M6M M5 A280	
530	315115-0153	-		1	WASHER PLAIN, TBRB 6,4/12 H=3	
540	342991-0100	-		4	HOSE CLIP,WORM DRIVE TYPE 10-13	

Pos	Part No	SP	UN	Qty	Description	Page No

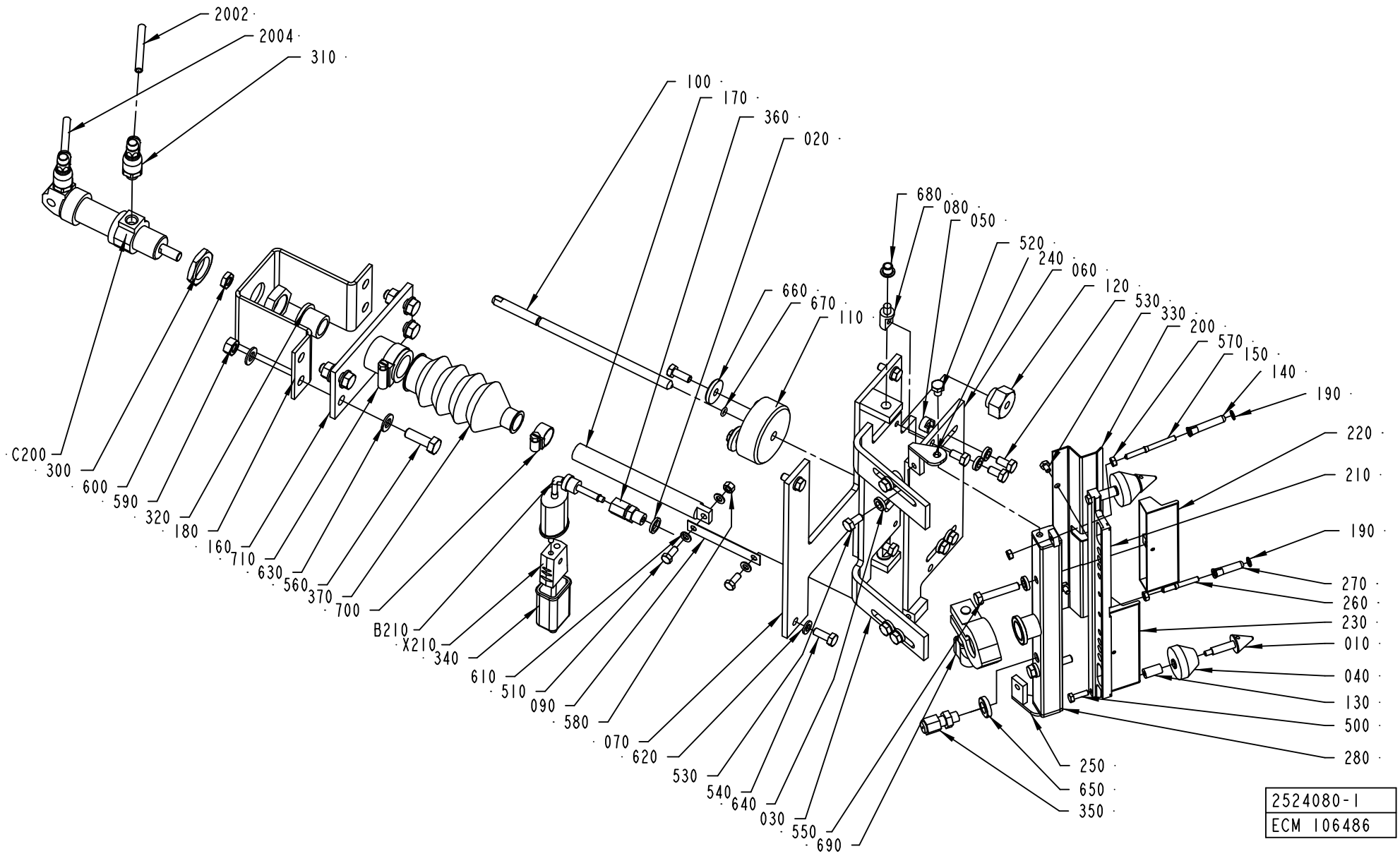
2002
2004
310
100
170
360
020
680
080
050
520
240
060
120
530
330
200
570
150
140
190
220
210
190
270
260
230
010
040
130
500
280
660
670
110
C200
300
600
590
320
180
160
710
630
560
370
700
B210
X210
340
610
510
090
580
070
620
530
540
640
030
550
690
250
650
350
2524080-1
ECM 106486

ECM: 106483 - 20021113
Group number: 2524080-0100
Assembly Drawing: 2524080-1_1_AA

Issue: 20030314

Pos	Part No	SP	UN	Qty	Description	Page No
0150S						
190	2542863-0000	-		1	LOCKING RING	
200	2524077-0000	-		1	PLATE	
210	2524074-0000	-		1	DISTRIBUTOR	
220	2524073-0000	-		1	NOZZLE	
570	312605-0312	-		2	HEXAGON NUT, M6M M4 A280	
0200B						
190	2542863-0000	-		1	LOCKING RING	
200	2524077-0000	-		1	PLATE	
210	2524074-0000	-		1	DISTRIBUTOR	
220	2524073-0000	-		1	NOZZLE	
570	312605-0312	-		2	HEXAGON NUT, M6M M4 A280	
V065						
190	2542863-0000	-		2	LOCKING RING	
200	2542876-0000	-		1	PLATE	
210	2542877-0000	-		1	DISTRIBUTOR	
220	2542878-0000	-		1	NOZZLE	
230	2542879-0000	-		1	NOZZLE	
260	2542912-0000	-		1	SHAFT	
270	2542913-0000	-		1	ROLL	
570	312605-0312	-		3	HEXAGON NUT, M6M M4 A280	
Common Parts						
010	272095-0000	-		2	SHAFT	
020	273429-0000	-		1	WASHER	
030	2524075-0000	-		1	NOZZLE BRACKET	
040	2524076-0000	-		2	ROLL	
050	2524078-0000	-		4	BLOCK	
060	2524079-0000	-		1	PLATE	
070	2524137-0000	-		1	BASE PLATE	
080	2524138-0000	-		2	SHAFT	
090	2524139-0000	-		1	SPRING	
100	2524148-0000	-		1	SCREW	
110	2524149-0000	-		1	FLANGE	
120	2542652-0000	-		1	NUT	
130	2542653-0000	-		2	SPACER	
140	2542856-0000	-		1	ROLL	
150	2542857-0000	-		1	SHAFT	
160	2542858-0000	-		1	BRACKET	
170	2542859-0000	-		1	SHAFT	
180	2542861-0000	-		1	BRACKET	
2002	90166-0081	-	MM	2000	TUBE 6 MM PA BLUE	
2004	90166-0081	-	MM	2000	TUBE 6 MM PA BLUE	
240	2542910-0000	-		1	BRACKET	
250	2542911-0000	-		1	BRACKET	
280	2542968-0000	-		1	HEATING CHAMBER	
300	90099-0110	-		1	NUT, PR 22,5 (PG16)	
310	90235-0846	-		2	THROTTLE CHECK VALVE G1/8", MANUAL, 6	
320	90240-0146	-		1	FLANGE BUSHING,15X21X20 MM	
330	90287-0290	-		2	SCREW M6S M4X6 A270	
340	90326-0012	-		1	PROTECTIVE COVER, T31A4618	
350	90326-0304	-		1	LEAD IN, 9041-15-KS-UB60	
360	90326-0306	-		1	GLAND FITTING 9041-45-KS-KR.1/8" D=4,5MM	
370	90342-0021	-		1	RUBBER BELLOWS, 15, 5X30 MM	
500	312105-0292	-		2	SCREW M6S ISO 4017 M4X14 A480	
510	312105-0327	-		2	SCREW M6S ISO 4017 M5X12 A480	
520	312105-0362	-		2	SCREW M6S ISO 4017 M6X8 A480	
530	312105-0366	-		10	SCREW M6S M6X12 A280	
540	312105-0368	-		8	SCREW M6S M6X16 A280	
550	312105-0376	-		2	SCREW M6S ISO 4014 M6X35 A480	
560	312105-0453	-		4	SCREW M6S ISO 4017 M8X25 A480	
580	312605-0314	-		1	HEXAGON NUT, M6M M5 A280	
590	312605-0318	-		4	HEXAGON NUT, M6M M8 A280	
600	312625-0318	-		1	HEXAGON THIN NUT, EN 24035 ML6M M8 A4	
610	315105-0146	-		3	WASHER ISO 7089-5-200 HV-A4	
620	315105-0153	-		4	WASHER ISO 7089-6-200 HV-A4	
630	315105-0165	-		8	WASHER ISO 7089-8-200 HV-A4	
640	315115-0153	-		10	WASHER PLAIN, TBRB 6,4/12 H=3	
650	315115-0171	-		1	WASHER PLAIN, TBRB 10/18 H=4	
660	315125-0153	-		4	WASHER TBRSB 6,4X22X4 A4	
670	315205-0503	-		1	O-RING 4,47X1,78 MM	
680	321155-0062	-		2	FLANGE BUSHING, 6X8X6 MM	
690	342840-0101	-		1	CLAMP, 12,7 AND 19,1 MM 3-A PCS+PMCS	
700	342991-0101	-		1	HOSE CLIP,WORM DRIVE TYPE (13)-16	
710	342991-0105	-		1	HOSE CLIP,WORM DRIVE TYPE (27)-30	
B210	B90326-0048	-		1	THERMOCOUPLE, 12826-31	
	90326-0304	-		*1*	*LEAD IN, 9041-15-KS-UB60*	
C200	90239-0944	-		1	DOUBLE ACTING, MINI-ISO, CYL. 20-35"	
X210	90326-0020	-		1	PLUG, FEMALE YELLOW CR-AL	

Machine Type | Group Description | Used-In | Group Number | Page No

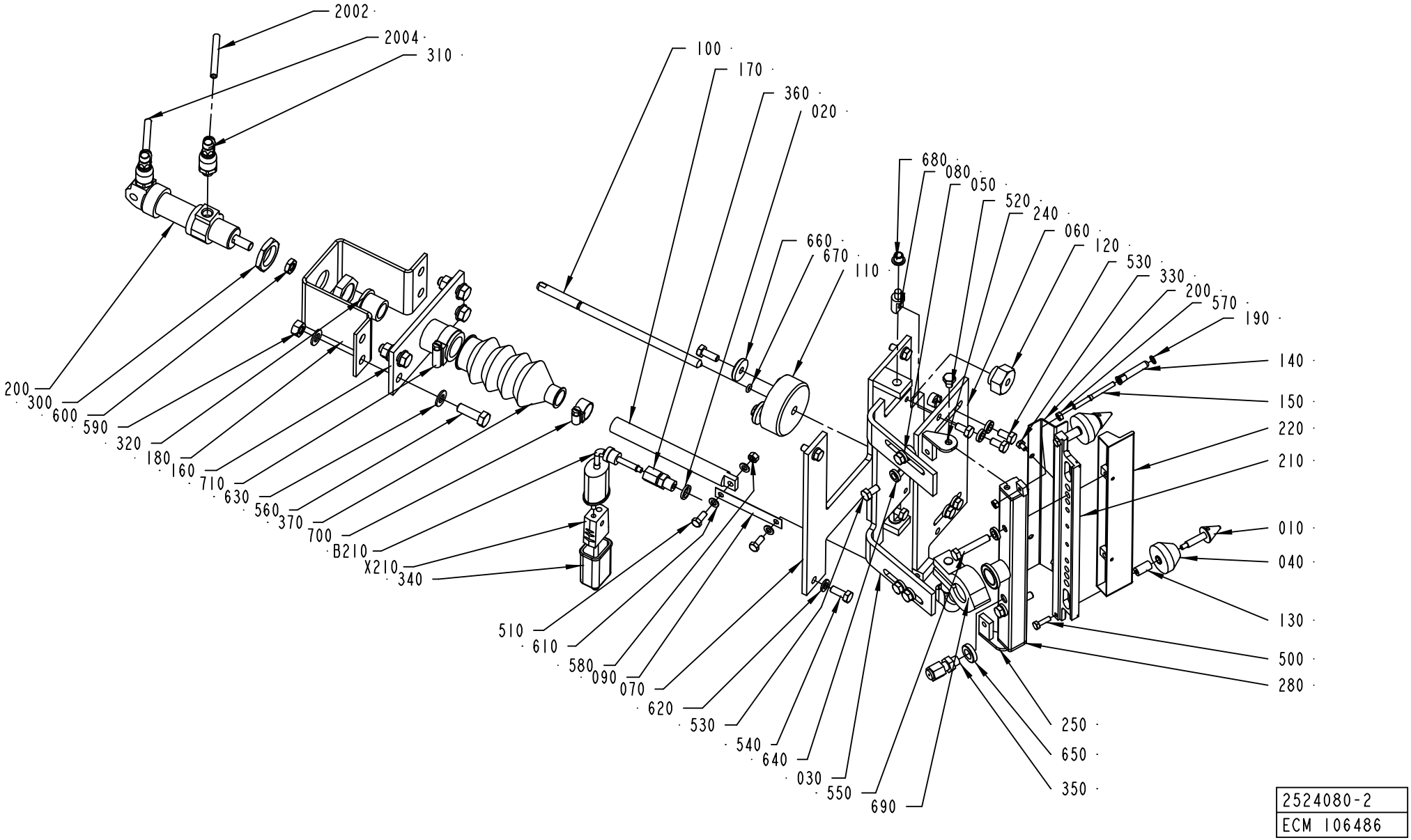
2002
2004
310
100
170
360
020
680
080
050
520
240
060
120
530
330
200
570
190
140
150
220
210
010
040
130
500
280
250
650
350
660
670
110
200
300
600
590
320
180
160
710
630
560
370
700
B210
X210
340
510
610
580
090
070
620
530
540
640
030
550
690
2524080-2
ECM 106486

ECM: 106483 - 20021113
Group number: 2524080-0100
Assembly Drawing: 2524080-2_1_AA

Issue: 20030314

Pos	Part No	SP	UN	Qty	Description	Page No
0150S						
190	2542863-0000	-		1	LOCKING RING	
200	2524077-0000	-		1	PLATE	
210	2524074-0000	-		1	DISTRIBUTOR	
220	2524073-0000	-		1	NOZZLE	
570	312605-0312	-		2	HEXAGON NUT, M6M M4 A280	
0200B						
190	2542863-0000	-		1	LOCKING RING	
200	2524077-0000	-		1	PLATE	
210	2524074-0000	-		1	DISTRIBUTOR	
220	2524073-0000	-		1	NOZZLE	
570	312605-0312	-		2	HEXAGON NUT, M6M M4 A280	
V065						
190	2542863-0000	-		2	LOCKING RING	
200	2542876-0000	-		1	PLATE	
210	2542877-0000	-		1	DISTRIBUTOR	
220	2542878-0000	-		1	NOZZLE	
230	2542879-0000	-		1	NOZZLE	
260	2542912-0000	-		1	SHAFT	
270	2542913-0000	-		1	ROLL	
570	312605-0312	-		3	HEXAGON NUT, M6M M4 A280	
Common Parts						
010	272095-0000	-		2	SHAFT	
020	273429-0000	-		1	WASHER	
030	2524075-0000	-		1	NOZZLE BRACKET	
040	2524076-0000	-		2	ROLL	
050	2524078-0000	-		4	BLOCK	
060	2524079-0000	-		1	PLATE	
070	2524137-0000	-		1	BASE PLATE	
080	2524138-0000	-		2	SHAFT	
090	2524139-0000	-		1	SPRING	
100	2524148-0000	-		1	SCREW	
110	2524149-0000	-		1	FLANGE	
120	2542652-0000	-		1	NUT	
130	2542653-0000	-		2	SPACER	
140	2542856-0000	-		1	ROLL	
150	2542857-0000	-		1	SHAFT	
160	2542858-0000	-		1	BRACKET	
170	2542859-0000	-		1	SHAFT	
180	2542861-0000	-		1	BRACKET	
2002	90166-0081	-	MM	2000	TUBE 6 MM PA BLUE	
2004	90166-0081	-	MM	2000	TUBE 6 MM PA BLUE	
240	2542910-0000	-		1	BRACKET	
250	2542911-0000	-		1	BRACKET	
280	2542968-0000	-		1	HEATING CHAMBER	
300	90099-0110	-		1	NUT, PR 22,5 (PG16)	
310	90235-0846	-		2	THROTTLE CHECK VALVE G1/8", MANUAL, 6	
320	90240-0146	-		1	FLANGE BUSHING,15X21X20 MM	
330	90287-0290	-		2	SCREW M6S M4X6 A270	
340	90326-0012	-		1	PROTECTIVE COVER, T31A4618	
350	90326-0304	-		1	LEAD IN, 9041-15-KS-UB60	
360	90326-0306	-		1	GLAND FITTING 9041-45-KS-KR.1/8" D=4,5MM	
370	90342-0021	-		1	RUBBER BELLOWS, 15, 5X30 MM	
500	312105-0292	-		2	SCREW M6S ISO 4017 M4X14 A480	
510	312105-0327	-		2	SCREW M6S ISO 4017 M5X12 A480	
520	312105-0362	-		2	SCREW M6S ISO 4017 M6X8 A480	
530	312105-0366	-		10	SCREW M6S M6X12 A280	
540	312105-0368	-		8	SCREW M6S M6X16 A280	
550	312105-0376	-		2	SCREW M6S ISO 4014 M6X35 A480	
560	312105-0453	-		4	SCREW M6S ISO 4017 M8X25 A480	
580	312605-0314	-		1	HEXAGON NUT, M6M M5 A280	
590	312605-0318	-		4	HEXAGON NUT, M6M M8 A280	
600	312625-0318	-		1	HEXAGON THIN NUT, EN 24035 ML6M M8 A4	
610	315105-0146	-		3	WASHER ISO 7089-5-200 HV-A4	
620	315105-0153	-		4	WASHER ISO 7089-6-200 HV-A4	
630	315105-0165	-		8	WASHER ISO 7089-8-200 HV-A4	
640	315115-0153	-		10	WASHER PLAIN, TBRB 6,4/12 H=3	
650	315115-0171	-		1	WASHER PLAIN, TBRB 10/18 H=4	
660	315125-0153	-		4	WASHER TBRSB 6,4X22X4 A4	
670	315205-0503	-		1	O-RING 4,47X1,78 MM	
680	321155-0062	-		2	FLANGE BUSHING, 6X8X6 MM	
690	342840-0101	-		1	CLAMP, 12,7 AND 19,1 MM 3-A PCS+PMCS	
700	342991-0101	-		1	HOSE CLIP,WORM DRIVE TYPE (13)-16	
710	342991-0105	-		1	HOSE CLIP,WORM DRIVE TYPE (27)-30	
B210	B90326-0048	-		1	THERMOCOUPLE, 12826-31	
	90326-0304	-		*1*	*LEAD IN, 9041-15-KS-UB60*	
C200	90239-0944	-		1	DOUBLE ACTING, MINI-ISO, CYL. 20-35"	
X210	90326-0020	-		1	PLUG, FEMALE YELLOW CR-AL	

Machine Type | Group Description | Used-In | Group Number | Page No

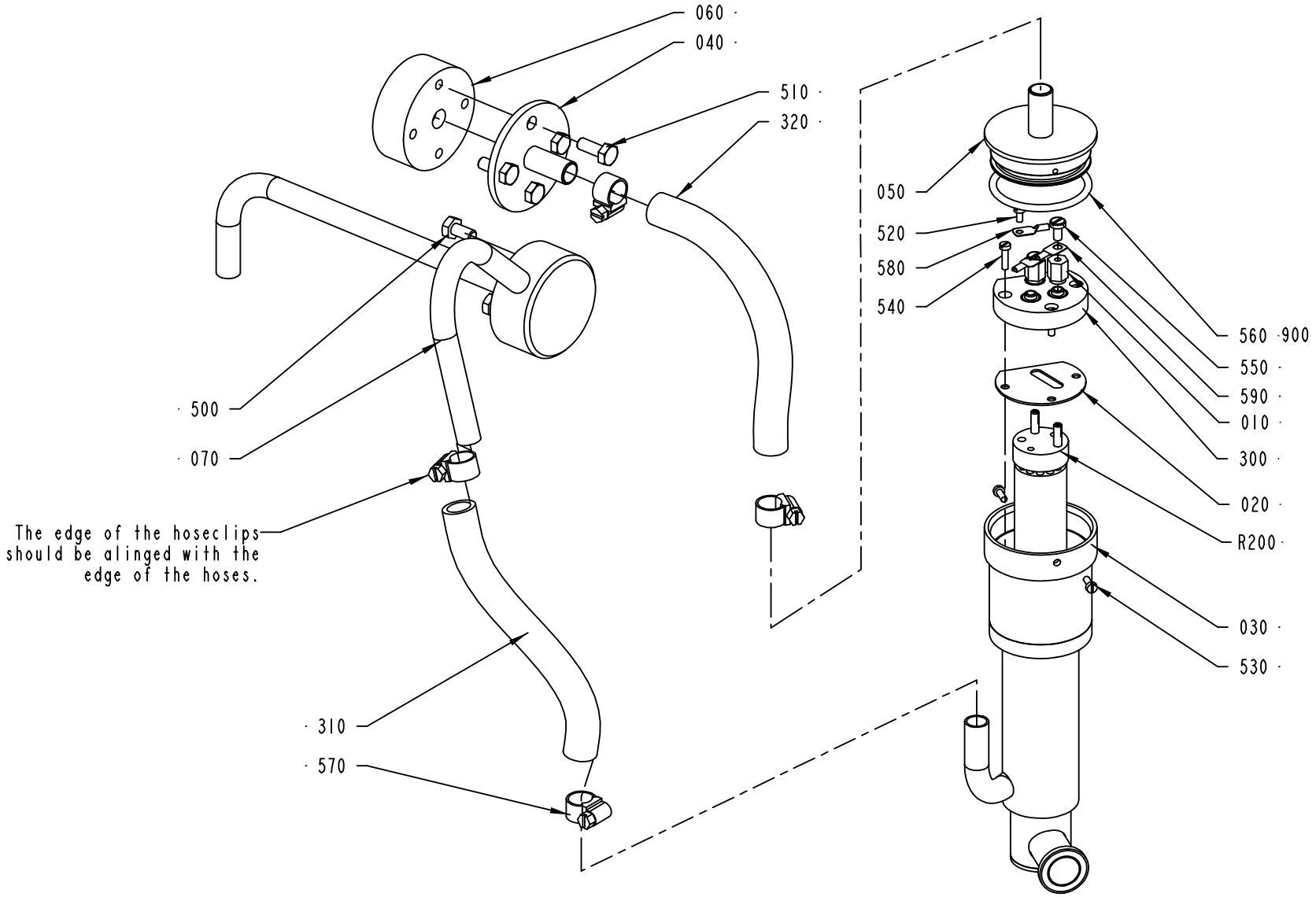

2524140-1
ECM 112341

ECM: 106484 - 20021113
Group number: 2524140-0100
Assembly Drawing: 2524140-1_1_AA

Issue: 20030314

Pos	Part No	SP	UN	Qty	Description	Page No
Common Parts						
010	207639-0000	-		2	SPACER	
020	2524136-0000	-		1	GASKET	
030	2524141-0000	-		1	(TUBULAR)JACKET	
040	2524142-0000	-		1	CONNECTION PIPE	
050	2524143-0000	-		1	LID	
060	2524144-0000	-		1	CONNECTION PIPE	
070	2542657-0000	-		1	CONNECTION PIPE	
300	B90125-0020	-		1	PLATE	
	294464-0000	*A*		*1*	*BASE PLATE*	
	270927-0000	*A*		*3*	*SCREW*	
	270926-0000	*A*		*6*	*NUT*	
	294464-0000	*A*		*1*	*BASE PLATE*	
	270927-0000	*A*		*3*	*SCREW*	
	270926-0000	*A*		*6*	*NUT*	
310	90166-0161	-	MM	250	HOSE	
320	90166-0161	-	MM	250	HOSE	
500	312105-0366	-		4	SCREW M6S M6X12 A280	
510	312105-0368	-		4	SCREW M6S M6X16 A280	
520	312125-0220	-		1	SKRUV SLOT.PAN HD. MCS 3X6 A480	
530	312125-0222	-		2	SPåRSKRUV MCS M3X8 SS	
540	312125-0226	-		3	SCREW PAN HEAD MCS M3X12 SS	
550	312132-0287	-		2	SCREW SLOT. PAN HEAD MSCS M4X8	
560	315205-0602	-		1	O-RING 44,04X3,53 MM	
570	342991-0100	-		4	HOSE CLIP,WORM DRIVE TYPE 10-13	
580	353104-0128	-		1	CABLE SHOE	
590	353104-0130	-		2	CABLE SHOEYAV 025 M 4*	
900	90296-0091	-		1	LUBRICATION GREASE	
R200	90459-0707	-		1	HEATING ELEMENT, 1500W/220V	

Pos	Part No	SP	UN	Qty	Description	Page No

Machine Type | Group Description | Used-In | Group Number | Page No

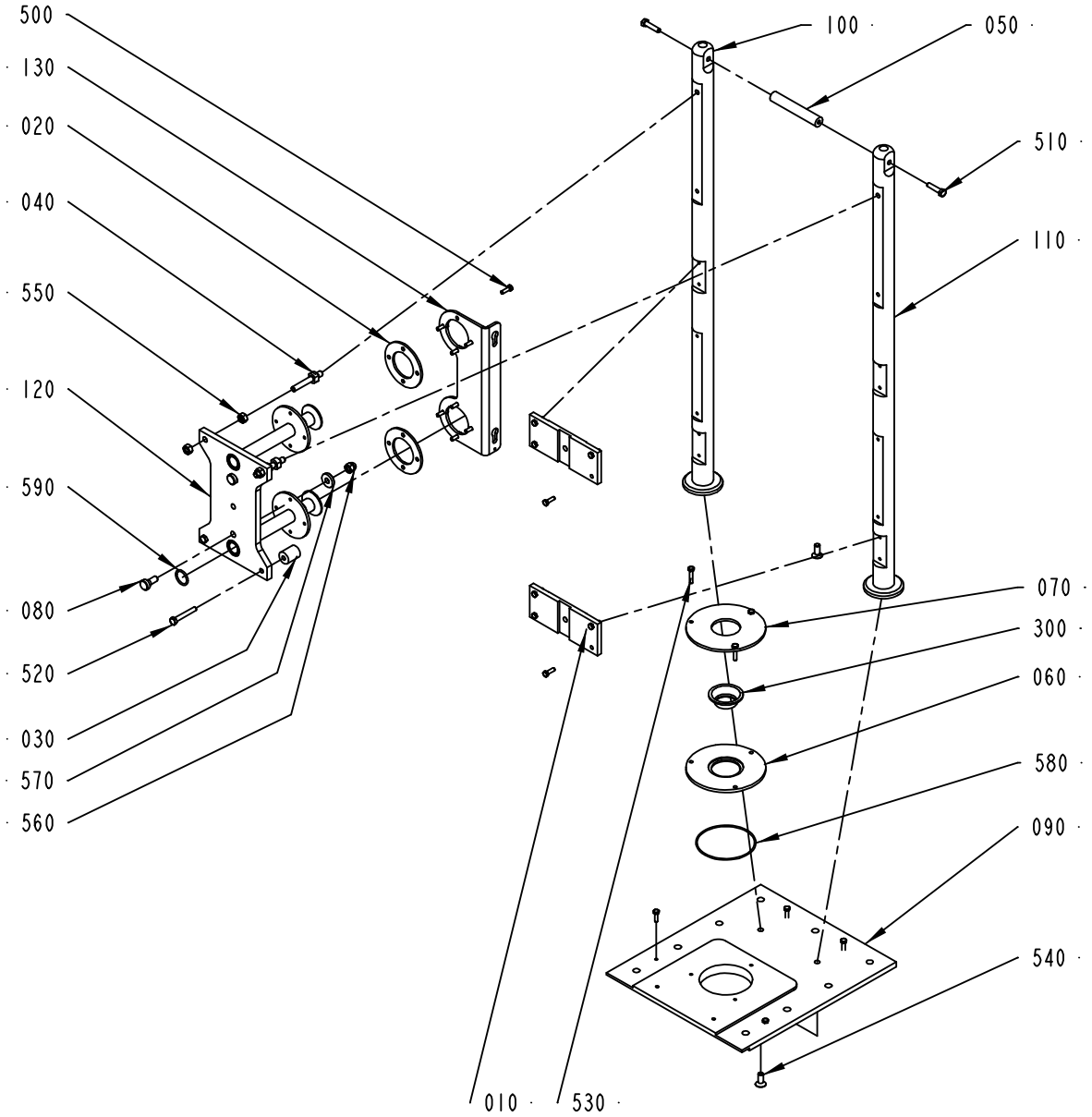

2524185-1
ECM 104727

Pos	Part No	SP	UN	Qty	Description	Page No
0150S						
060	1515759-0000	-		1	CLAMP RING	
070	1515763-0000	-		1	CLAMP RING	
300	1515768-0000	-		1	SEAL RING	
0200B						
060	1515758-0000	-		1	CLAMP RING	
070	1515762-0000	-		1	CLAMP RING	
300	273953-0000	-		1	SEAL	
V065						
060	1515761-0000	-		1	CLAMP RING	
070	1515764-0000	-		1	CLAMP RING	
300	90458-1848	-		1	SEAL RING, VITON 37,5X65X20MM	
Common Parts						
010	1514155-0000	-		2	BRACKET	
020	1514213-0000	-		2	GASKET	
030	1514216-0000	-		2	SPACER	
040	1514217-0000	-		2	THREADED BUSHING	
050	1514948-0000	-		1	BAR	
080	2524186-0000	-		2	GUIDE STUD	
090	2524187-0000	-		1	ASSEMBLY PLATE	
100	2524312-0000	-		1	CANTILEVER	
110	2542722-0000	-		1	CANTILEVER	
120	2543083-0000	-		1	FASTENING PLATE	
130	2556777-0000	-		1	BRACKET	
500	312105-0370	-		20	SCREW M6S ISO 4017 M6X20 A480	
510	312105-0457	-		2	SCREW M6S ISO 4014 M8X35 A480	
520	312105-0462	-		2	SCREW M6S ISO 4014 M8X55 A480	
530	312109-0374	-		3	SCREW M6S ISO 4017 M6X30 A480	
540	312155-0493	-		3	SCREW EN 10642 MF6S M10X25 A480	
550	312605-0320	-		4	HEXAGON NUT, M6M M10 A280	
560	312705-0320	-		2	NUT HEX. DOMED CAP MHM-6 M10 A280	
570	315125-0173	-		2	WASHER TBRSB 10,5X28X6 A4	
580	315202-0756	-		1	O-RING 107,62X2,62 MM	
590	315204-0218	-		2	O-RING 26,2X3 MM	

Pos	Part No	SP	UN	Qty	Description	Page No

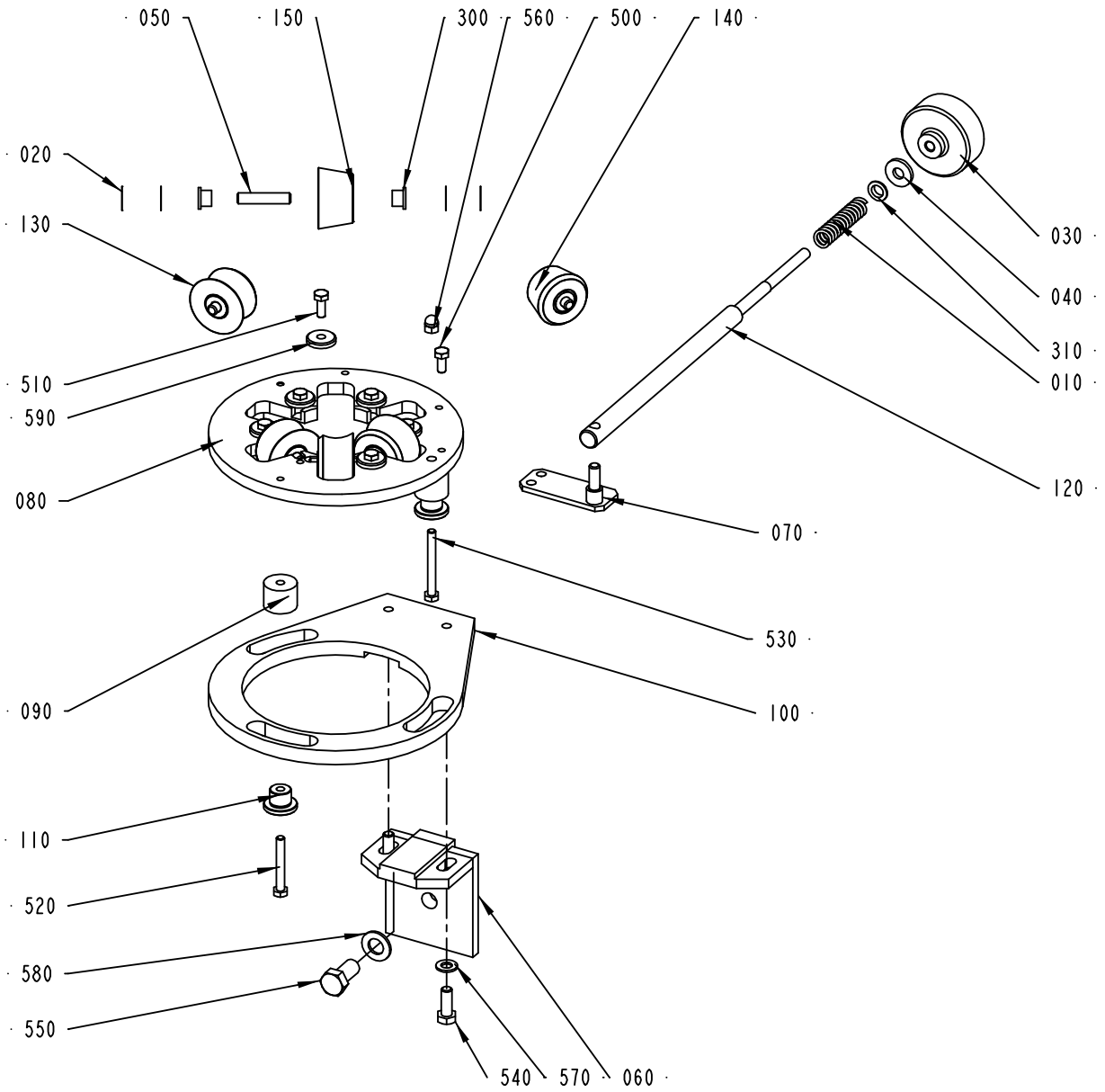

2524195-1
ECM 105024

ECM: 104101 - 20021113
Group number: 2524195-0100
Assembly Drawing: 2524195-1_1_AA

Issue: 20030314

Pos	Part No	SP	UN	Qty	Description	Page No
0150S						
050	1514142-0000	-		6	SHAFT	
070	2542663-0000	-		1	BRACKET	
080	2524196-0000	-		1	HOLDER	
100	2524190-0000	-		1	BRACKET	
130	2542664-0000	-		4	ROLLER	
140	2542739-0000	-		1	ROLLER	
150	2542740-0000	-		1	ROLLER	
0200B						
050	1514142-0000	-		6	SHAFT	
070	2542663-0000	-		1	BRACKET	
080	2524196-0000	-		1	HOLDER	
100	2524190-0000	-		1	BRACKET	
130	2542717-0000	-		4	ROLLER	
140	2542744-0000	-		1	ROLLER	
150	2542743-0000	-		1	ROLLER	
V065						
050	1514125-0000	-		6	SHAFT	
070	2524188-0000	-		1	BRACKET	
080	2524189-0000	-		1	HOLDER	
100	2524192-0000	-		1	BRACKET	
130	2542668-0000	-		4	ROLLER	
140	2542741-0000	-		1	ROLLER	
150	2542742-0000	-		1	ROLLER	
Common Parts						
010	1881-0001	-		1	COMPRESSION SPRING	
020	2033-0011	-		24	WASHER	
030	257090-0000	-		1	SHIFTER HANDLE	
040	436403-0000	-		1	WASHER	
060	1514149-0000	-		1	ANGLE BRACKET	
090	2524191-0000	-		3	SPACER	
110	2524193-0000	-		3	SPACER	
120	2524194-0000	-		1	SHAFT	
300	90240-0172	-		12	FLANGE BUSHING, 8X12X10 MM	
310	90459-0491	-		1	FLANGE BUSHING, 10X12X4 MM	
500	312105-0367	-		1	SCREW M6S M6X14 A280	
510	312105-0368	-		6	SCREW M6S M6X16 A280	
520	312105-0379	-		2	SCREW M6S ISO 4014 M6X45 A480	
530	312105-0381	-		1	SCREW M6S ISO 4014 M6X55 A480	
540	312105-0452	-		2	SCREW M6S ISO 4017 M8X22 A480	
550	312105-0534	-		1	SCREW M6S ISO 4017 M12X25 A480	
560	312705-0316	-		1	NUT HEX. DOMED CAP MHM-6 M6 A280	
570	315105-0165	-		2	WASHER ISO 7089-8-200 HV-A4	
580	315105-0178	-		1	WASHER ISO 7089-12-200 HV-A4	
590	315125-0153	-		6	WASHER TBRSB 6,4X22X4 A4	

Machine Type | Group Description | Used-In | Group Number | Page No

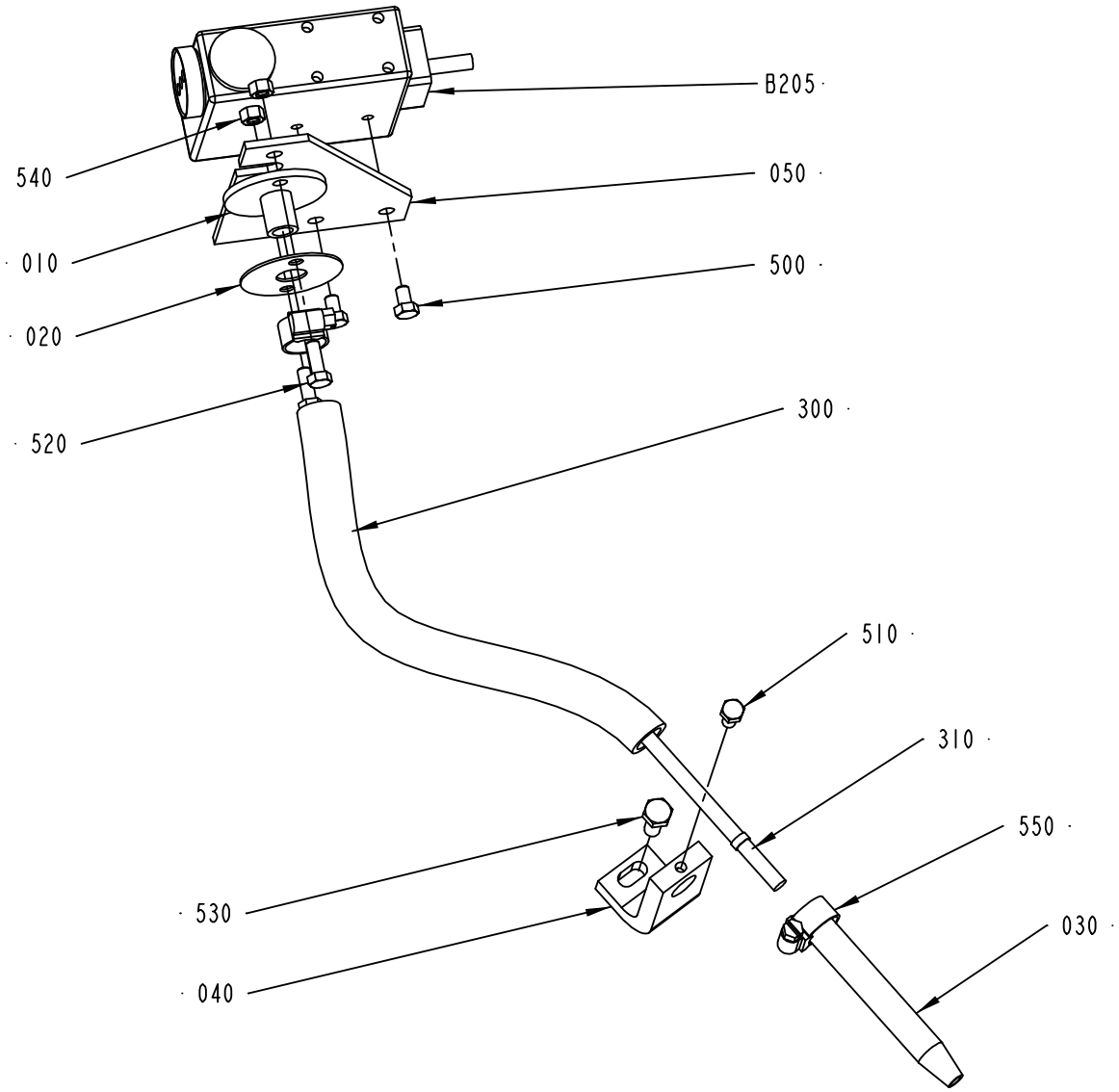

2543080-1
ECM 105024

Pos	Part No	SP	UN	Qty	Description	Page No
Common Parts						
010	1514391-0000	-		1	BRACKET	
020	1514393-0000	-		1	GASKET	
030	1514401-0000	-		1	TUBE	
040	1514431-0000	-		1	BRACKET	
050	1514932-0000	-		1	BRACKET	
300	90166-0161	-	MM	300	HOSE	
310	90232-0332	-		1	FIBRE LM 21-500	
500	312105-0323	-		2	SKRUV M6S ISO 4017 M5X8 A480	
510	312105-0325	-		1	SCREW M6S ISO 4017 M5X10 A480	
520	312105-0328	-		2	SCREW M6S ISO 4017 M5X14 A480	
530	312105-0368	-		1	SCREW M6S M6X16 A280	
540	312605-0314	-		2	HEXAGON NUT, M6M M5 A280	
550	342991-0101	-		2	HOSE CLIP,WORM DRIVE TYPE (13)-16	
B205	B90232-0089	-		1	PH.CELL NTL6-P12-1011520	
	90232-0327	*-*		*1*	*CAPSULE 2-006-513*	

Pos	Part No	SP	UN	Qty	Description	Page No

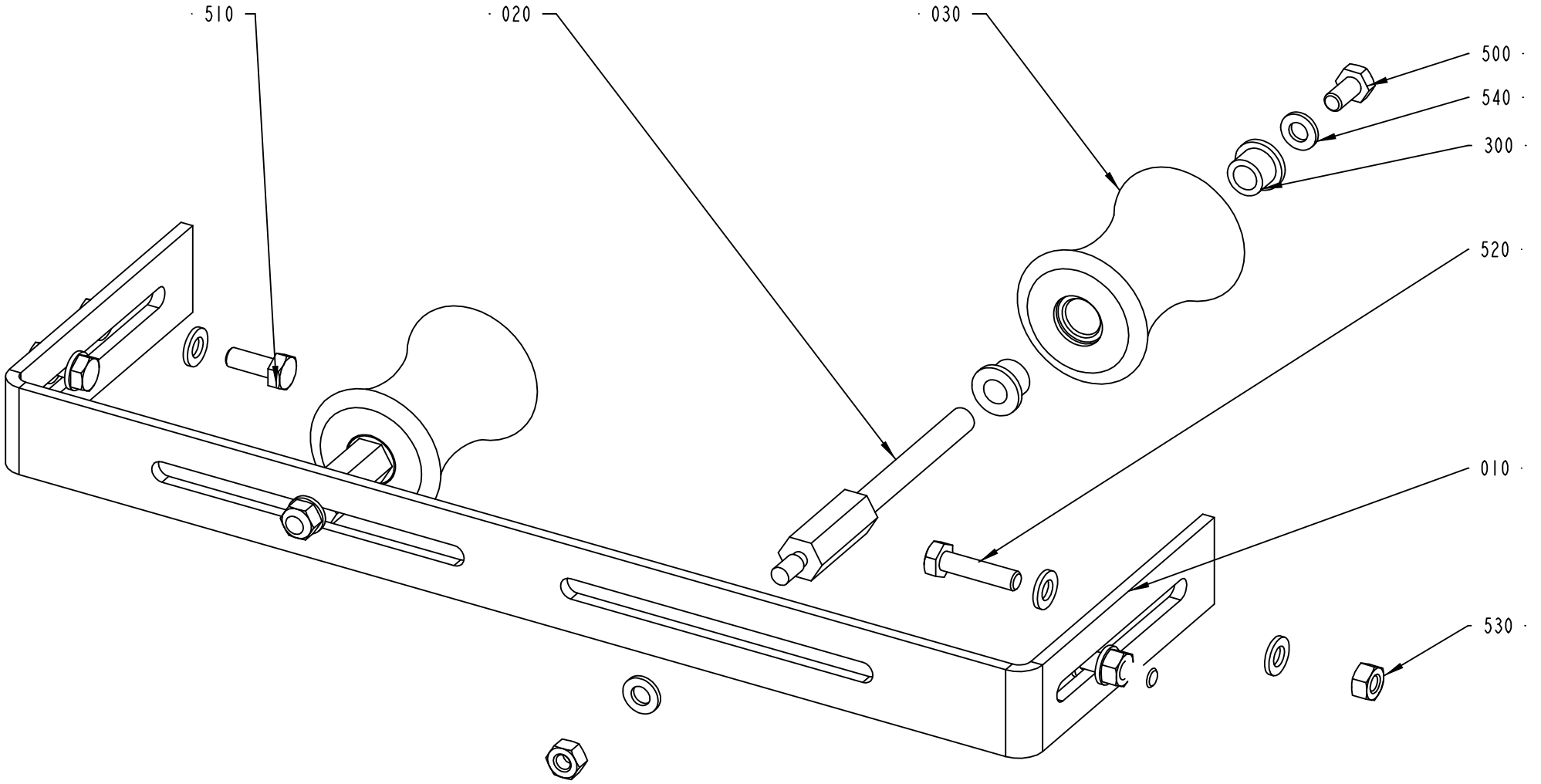

2542730-3
ECM 109147

Pos	Part No	SP	UN	Qty	Description	Page No
0200B						
010	2542723-0000	-		1	HOLDER	
020	2542724-0000	-		2	SHAFT	
030	2542726-0000	-		2	ROLLER	
300	90240-0172	-		4	FLANGE BUSHING, 8X12X10 MM	
500	312105-0366	-		2	SCREW M6S M6X12 A280	
510	312105-0368	-		2	SCREW M6S M6X16 A280	
520	312105-0372	-		2	SCREW M6S ISO 4017 M6X25 A480	
530	312605-0316	-		6	HEXAGON NUT, M6M M6 A280	
540	315105-0153	-		12	WASHER ISO 7089-6-200 HV-A4	
0200S OR V065 OR 0150S						
510	312105-0366	-		2	SCREW M6S M6X12 A280	
520	312105-0371	-		2	SCREW M6S ISO 4017 M6X22 A480	
530	312605-0316	-		4	HEXAGON NUT, M6M M6 A280	
540	315105-0153	-		8	WASHER ISO 7089-6-200 HV-A4	

Pos	Part No	SP	UN	Qty	Description	Page No

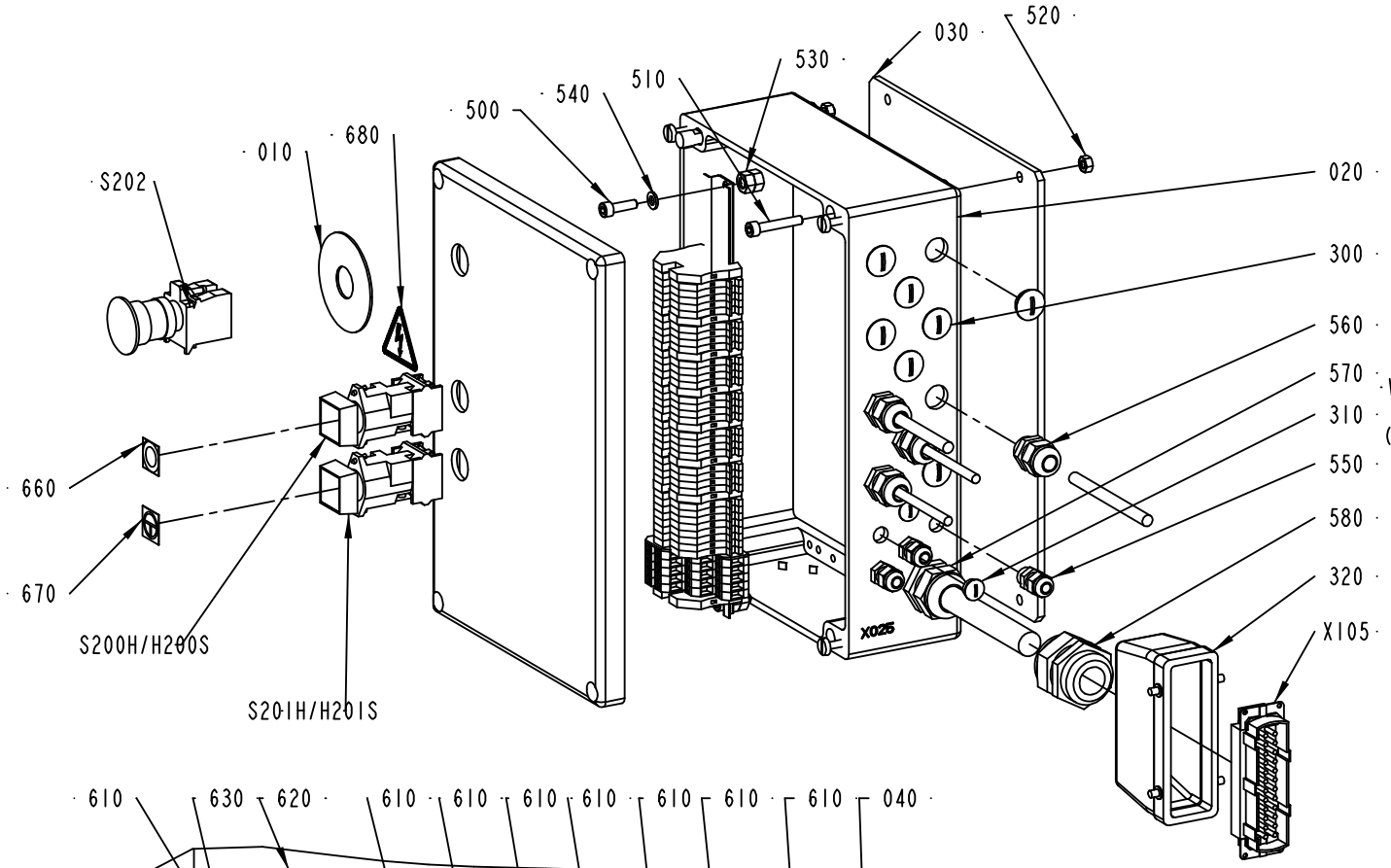

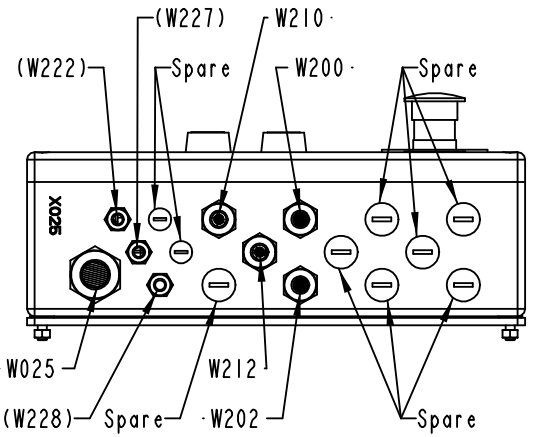

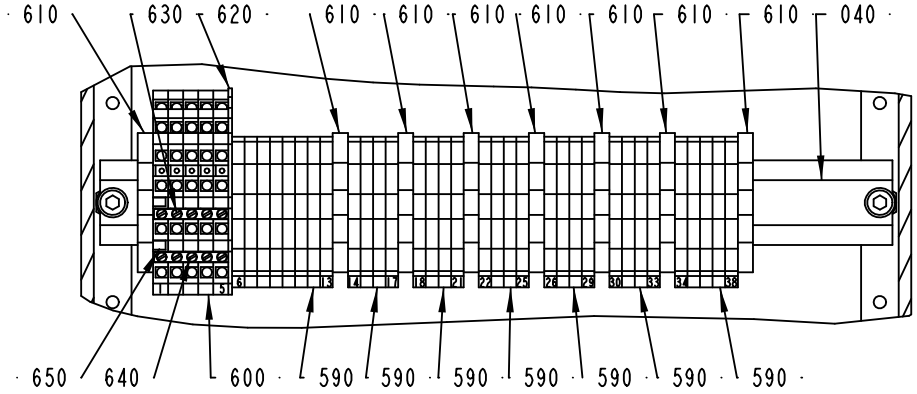

2542745-1
ECM 112326

ECM: 114399 - 20021113
Group number: 2542745-0100
Assembly Drawing: 2542745-1_1_AA

Issue: 20030314

Pos	Part No	SP	UN	Qty	Description	Page No
Common Parts						
010	486826-0001	-		1	SIGN "EMERGENCY STOP"	
020	2543115-0000	-		1	PUSH BUTTON BOX	
030	2556811-0000	-		1	SPACER	
040	2556814-0000	-		1	RAIL	
300	90002-0009	-		7	BLANK-OFF PLUG, PR 18.6 SKINDICHT-BLK11	
310	90002-0018	-		2	BLANK-OFF PLUG, PR 12,5 SKINDICHT-BLK7	
320	90110-0152	-		1	CABLE HOOD 24-POL 70.352.2428.1	
500	312115-0370	-		2	SCREW ISO4762 M6X20 A4	
510	312115-0376	-		4	SCREW ISO4762 M6X35 A4	
520	312605-0316	-		4	HEXAGON NUT, M6M M6 A280	
530	312605-0318	-		4	HEXAGON NUT, M6M M8 A280	
540	315105-0153	-		2	WASHER ISO 7089-6-200 HV-A4	
550	352103-0096	-		3	CABLE GLAND, ST 7, PR 12,5/PG7	
560	352103-0106	-		4	CABLE GLAND, ST 11, PR18,6/PG11	
570	352103-0116	-		1	KABELFöRSKR. ST 21, PR28,3/PG21	
580	352103-0120	-		1	CABLE GLAND, STR 29, PR37,0/PG29	
590	353021-0212	-		33	FEED THROUGH TERMINAL, 10200.0	
600	353021-0302	-		5	TERMINALS,TRIPLE-LEVEL, DLD 2,5/35 PA	
610	353024-0205	-		8	EARTH TERMINAL, 1010.1	
620	353032-0302	-		1	END PLATE WAP	
630	353034-0404	-		1	BRIDGE CONNECTOR Q10, 13131.0	
640	353034-0404	-		1	BRIDGE CONNECTOR Q10, 13131.0	
650	359011-0807	-		2	MARKING PLATES 5-FW 1-50	
660	359301-0110	-		1	SIGN "SHORT STOP"	
670	359301-0506	-		1	BUTTON SIGN, INCHING	
680	359705-0015	-		1	WARNING SIGN ISO, RISK OF ELECTRIC SHOCK	
S200H	90064-0084	-		1	PUSH BUTTON, YELLOW	
S201H	B90064-0093	-		1	PUSH BUTTON, GREEN	
	90036-0057	*C*		*1*	*LIGHT BULB, BA9S 28V*	
S202	90458-1651	-		1	EMERGENCY STOP, ZB4-BS-844 ZB4-BZ-104	
W025	351150-0425	-	MM	7000	CABLE OLFLEX 25X0,75 MM2 LIGHT/GREY	
W200	351150-0405	-	MM	1400	CABLE OLFLEX 5X0,75 MM2 LIGHT/GREY	
W202	351150-0405	-	MM	1000	CABLE OLFLEX 5X0,75 MM2 LIGHT/GREY	
W210	351150-0431	-	MM	1400	CABLE OLFLEX 2X0,75 MM2 LIGHT/GREY	
W212	351150-0431	-	MM	1000	CABLE OLFLEX 2X0,75 MM2 LIGHT/GREY	
X105	90110-0150	-		1	MALE INSERT 121110 0000	

Pos	Part No	SP	UN	Qty	Description	Page No

Machine Type | Group Description | Used-In | Group Number | Page No

CONNECTION BOX

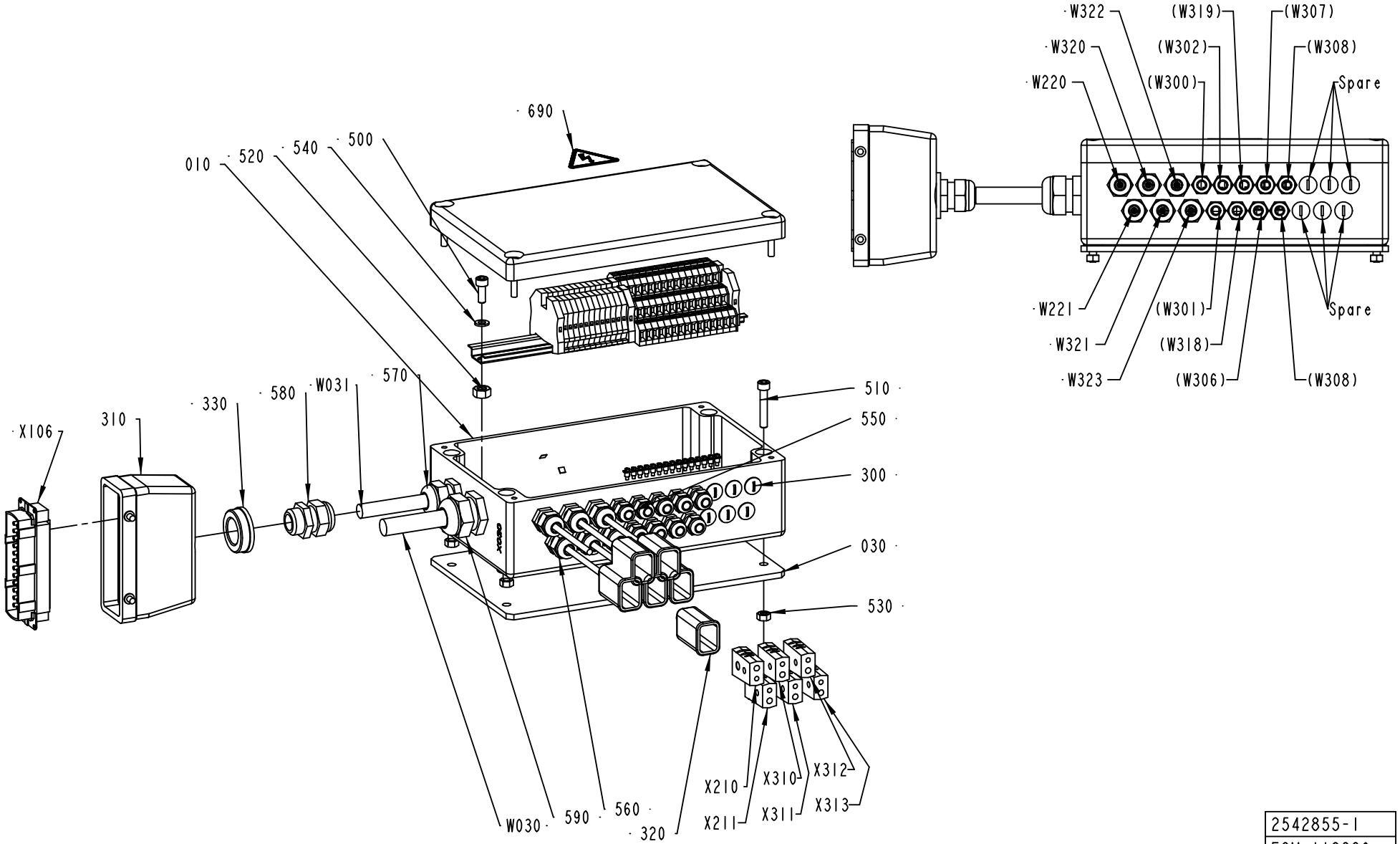

2542855-1
ECM 112326

ECM: 114398 - 20021113
Group number: 2542855-0100
Assembly Drawing: 2542855-1_1_AA

Issue: 20030314

Pos	Part No	SP	UN	Qty	Description	Page No
Common Parts						
010	2543113-0000	-		1	CONNECTION BOX	
020	2543114-0000	-		1	RAIL	
030	2556812-0000	-		1	SPACER	
300	90002-0018	-		6	BLANK-OFF PLUG, PR 12,5 SKINDICHT-BLK7	
310	90110-0152	-		1	CABLE HOOD 24-POL 70.352.2428.1	
320	90326-0012	-		6	PROTECTIVE COVER, T31A4618	
330	90458-2587	-		1	REDUCER, SKINDICHT-MR 29/16	
500	312115-0368	-		2	SCREW ISO4762 M6X16 A4	
510	312115-0376	-		4	SCREW ISO4762 M6X35 A4	
520	312601-0318	-		2	NUT M6M8FZB	
530	312605-0316	-		4	HEXAGON NUT, M6M M6 A280	
540	315105-0153	-		2	WASHER ISO 7089-6-200 HV-A4	
550	352103-0096	-		15	CABLE GLAND, ST 7, PR 12,5/PG7	
560	352103-0101	-		6	KABELFöRSKR. ST 9, PR15,2/PG9	
570	352103-0110	-		1	CABLE GLAND, STR 16, PR22,5/PG16	
580	352103-0111	-		1	CABLE GLAND, ST 16, PR22,5/PG16	
590	352103-0115	-		1	CABLE GLAND, STR 21, PR28,3/PG21	
600	353021-0212	-		12	FEED THROUGH TERMINAL, 10200.0	
610	353021-0302	-		15	TERMINALS,TRIPLE-LEVEL, DLD 2,5/35 PA	
620	353024-0205	-		3	EARTH TERMINAL, 1010.1	
630	353032-0302	-		1	END PLATE WAP	
640	353034-0404	-		1	BRIDGE CONNECTOR Q10, 13131.0	
650	353034-0404	-		1	BRIDGE CONNECTOR Q10, 13131.0	
660	353034-0404	-		1	BRIDGE CONNECTOR Q10, 13131.0	
670	353034-0404	-		1	BRIDGE CONNECTOR Q10, 13131.0	
680	359011-0807	-		2	MARKING PLATES 5-FW 1-50	
690	359705-0015	-		1	WARNING SIGN ISO, RISK OF ELECTRIC SHOCK	
W030	351150-0424	-	MM	6300	CABLE OLFLEX 18X0,75 MM2 LIGHT/GREY	
W031	90220-0117	-	MM	7000	SCR. CABLE 0,41 MM2	
W220	90220-0059	-	MM	3000	THERMOCOUPLE CABLE K/ 2X0,81MM2	
W221	90220-0059	-	MM	3000	THERMOCOUPLE CABLE K/ 2X0,81MM2	
W320	90220-0059	-	MM	7500	THERMOCOUPLE CABLE K/ 2X0,81MM2	
W321	90220-0059	-	MM	7500	THERMOCOUPLE CABLE K/ 2X0,81MM2	
W322	90220-0059	-	MM	3000	THERMOCOUPLE CABLE K/ 2X0,81MM2	
W323	90220-0059	-	MM	7500	THERMOCOUPLE CABLE K/ 2X0,81MM2	
X106	90110-0150	-		1	MALE INSERT 121110 0000	
X210	90326-0020	-		1	PLUG, FEMALE YELLOW CR-AL	
X211	90326-0020	-		1	PLUG, FEMALE YELLOW CR-AL	
X310	90326-0020	-		1	PLUG, FEMALE YELLOW CR-AL	
X311	90326-0020	-		1	PLUG, FEMALE YELLOW CR-AL	
X312	90326-0020	-		1	PLUG, FEMALE YELLOW CR-AL	
X313	90326-0020	-		1	PLUG, FEMALE YELLOW CR-AL	

Machine Type | Group Description | Used-In | Group Number | Page No

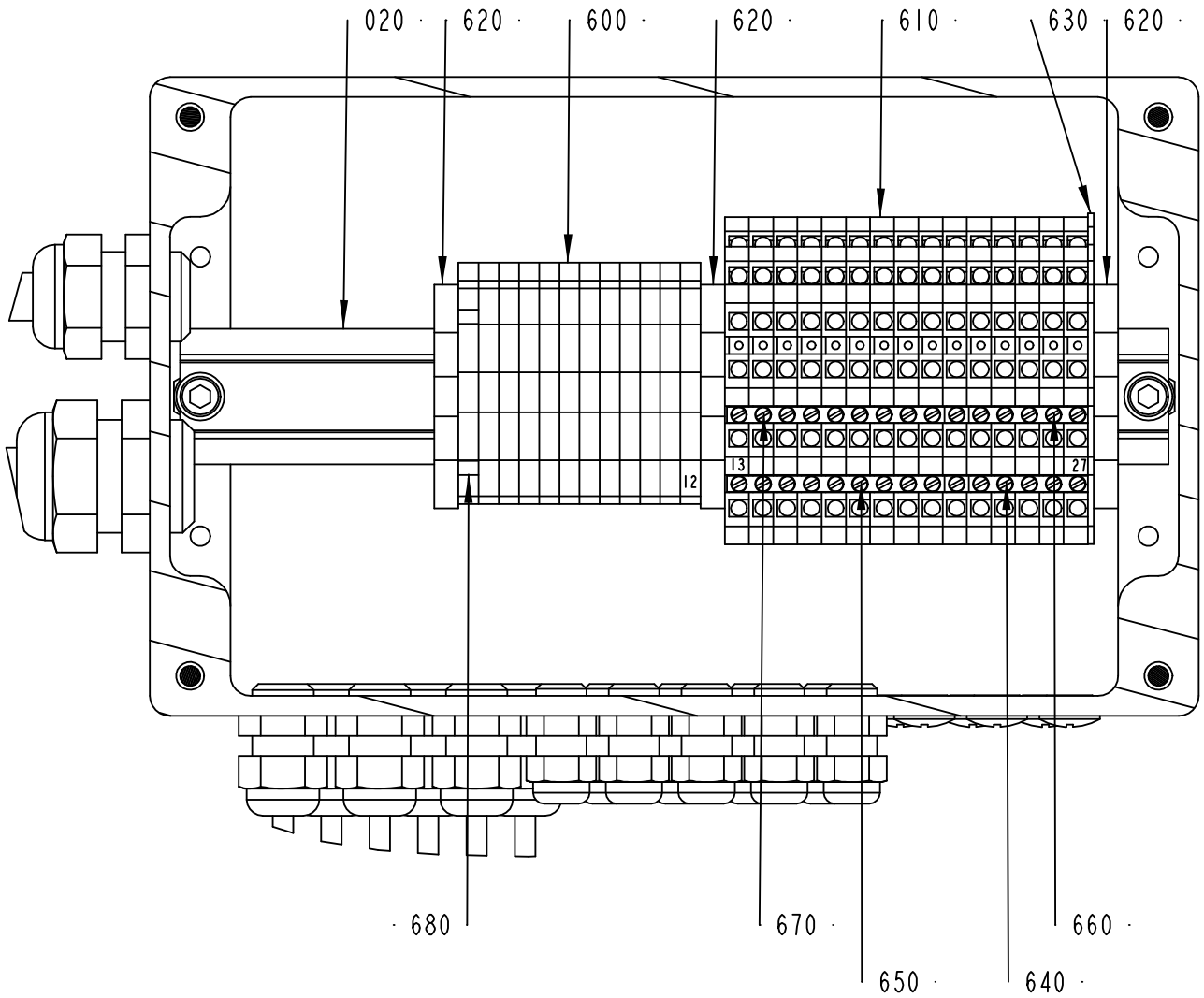

2542855-1
ECM 112326

ECM: 114398 - 20021113
Group number: 2542855-0100
Assembly Drawing: 2542855-1_2_AA

Issue: 20030314

Pos	Part No	SP	UN	Qty	Description	Page No
Common Parts						
010	2543113-0000	-		1	CONNECTION BOX	
020	2543114-0000	-		1	RAIL	
030	2556812-0000	-		1	SPACER	
300	90002-0018	-		6	BLANK-OFF PLUG, PR 12,5 SKINDICHT-BLK7	
310	90110-0152	-		1	CABLE HOOD 24-POL 70.352.2428.1	
320	90326-0012	-		6	PROTECTIVE COVER, T31A4618	
330	90458-2587	-		1	REDUCER, SKINDICHT-MR 29/16	
500	312115-0368	-		2	SCREW ISO4762 M6X16 A4	
510	312115-0376	-		4	SCREW ISO4762 M6X35 A4	
520	312601-0318	-		2	NUT M6M8FZB	
530	312605-0316	-		4	HEXAGON NUT, M6M M6 A280	
540	315105-0153	-		2	WASHER ISO 7089-6-200 HV-A4	
550	352103-0096	-		15	CABLE GLAND, ST 7, PR 12,5/PG7	
560	352103-0101	-		6	KABELFöRSKR. ST 9, PR15,2/PG9	
570	352103-0110	-		1	CABLE GLAND, STR 16, PR22,5/PG16	
580	352103-0111	-		1	CABLE GLAND, ST 16, PR22,5/PG16	
590	352103-0115	-		1	CABLE GLAND, STR 21, PR28,3/PG21	
600	353021-0212	-		12	FEED THROUGH TERMINAL, 10200.0	
610	353021-0302	-		15	TERMINALS,TRIPLE-LEVEL, DLD 2,5/35 PA	
620	353024-0205	-		3	EARTH TERMINAL, 1010.1	
630	353032-0302	-		1	END PLATE WAP	
640	353034-0404	-		1	BRIDGE CONNECTOR Q10, 13131.0	
650	353034-0404	-		1	BRIDGE CONNECTOR Q10, 13131.0	
660	353034-0404	-		1	BRIDGE CONNECTOR Q10, 13131.0	
670	353034-0404	-		1	BRIDGE CONNECTOR Q10, 13131.0	
680	359011-0807	-		2	MARKING PLATES 5-FW 1-50	
690	359705-0015	-		1	WARNING SIGN ISO, RISK OF ELECTRIC SHOCK	
W030	351150-0424	-	MM	6300	CABLE OLFLEX 18X0,75 MM2 LIGHT/GREY	
W031	90220-0117	-	MM	7000	SCR. CABLE 0,41 MM2	
W220	90220-0059	-	MM	3000	THERMOCOUPLE CABLE K/ 2X0,81MM2	
W221	90220-0059	-	MM	3000	THERMOCOUPLE CABLE K/ 2X0,81MM2	
W320	90220-0059	-	MM	7500	THERMOCOUPLE CABLE K/ 2X0,81MM2	
W321	90220-0059	-	MM	7500	THERMOCOUPLE CABLE K/ 2X0,81MM2	
W322	90220-0059	-	MM	3000	THERMOCOUPLE CABLE K/ 2X0,81MM2	
W323	90220-0059	-	MM	7500	THERMOCOUPLE CABLE K/ 2X0,81MM2	
X106	90110-0150	-		1	MALE INSERT 121110 0000	
X210	90326-0020	-		1	PLUG, FEMALE YELLOW CR-AL	
X211	90326-0020	-		1	PLUG, FEMALE YELLOW CR-AL	
X310	90326-0020	-		1	PLUG, FEMALE YELLOW CR-AL	
X311	90326-0020	-		1	PLUG, FEMALE YELLOW CR-AL	
X312	90326-0020	-		1	PLUG, FEMALE YELLOW CR-AL	
X313	90326-0020	-		1	PLUG, FEMALE YELLOW CR-AL	

Machine Type | Group Description | Used-In | Group Number | Page No

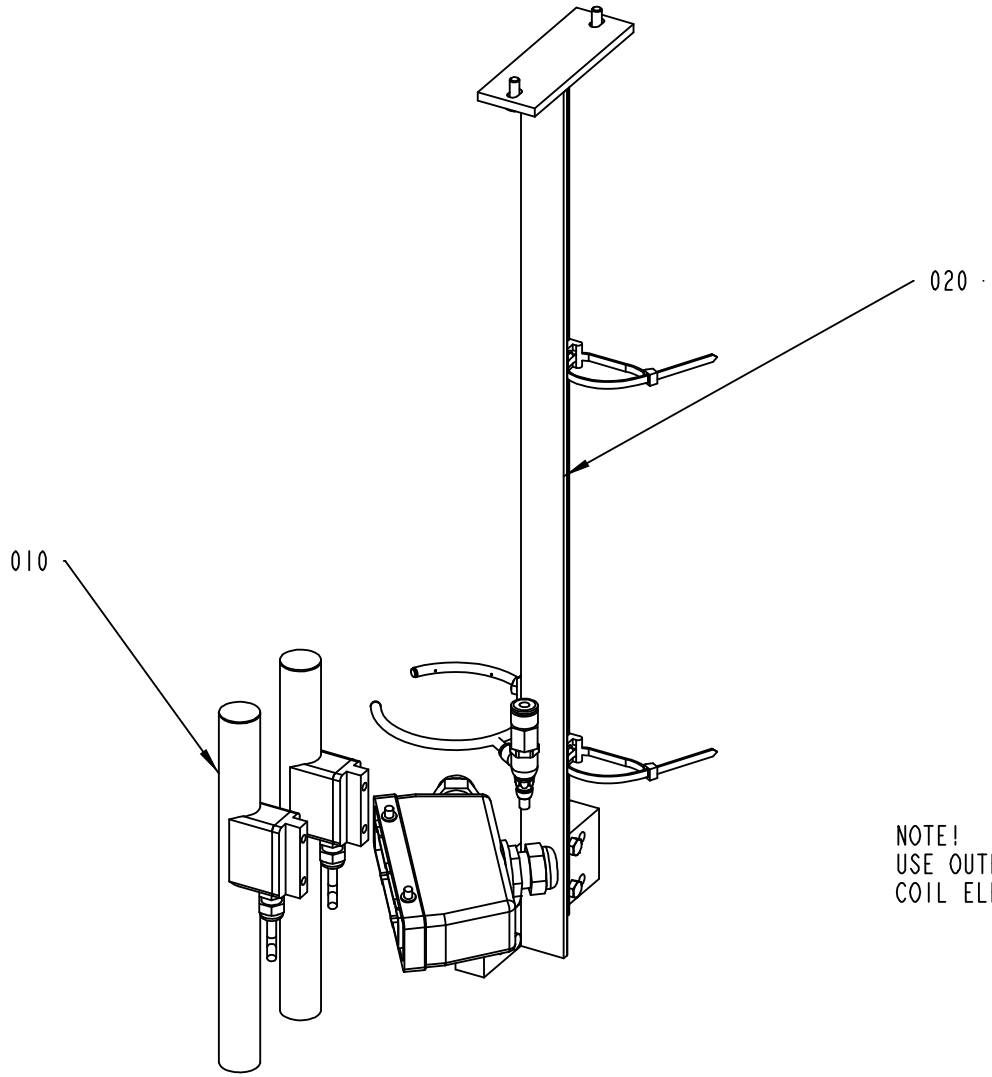

NOTE!
USE OUTER HOLES FOR MOUNTING
COIL ELEMENTS IN 150 AND 200 ML.

2543075-1
ECM 105179

Pos	Part No	SP	UN	Qty	Description	Page No
Common Parts						
010	B68161-0102	-		2	COIL ELEMENT	
010	*542039-0000*	-		*1*	*COIL FORMER: CYLINDER*	
020	*542031-0000*	-		*1*	*COIL FORMER: SECTION*	
030	*542040-0000*	-		*1*	*CONNECTION CABLE*	
040	*542041-0000*	-		*1*	*INSIDE CONNECTION CABLE*	
050	*541666-0000*	-		*1*	*CASING*	
060	*542029-0000*	-		*1*	*COIL CORE SHEET*	
070	*542028-0000*	-		*1*	*AIR GAP DISTANCE*	
080	*352103-0096*	-		*1*	*CABLE GLAND, ST 7, PR 12,5/PG7*	
090	*551930-0000*	-		*1*	*FLOAT*	
020	A2524290-0100	-		1	COIL HOLDER	**201**

Pos	Part No	SP	UN	Qty	Description	Page No

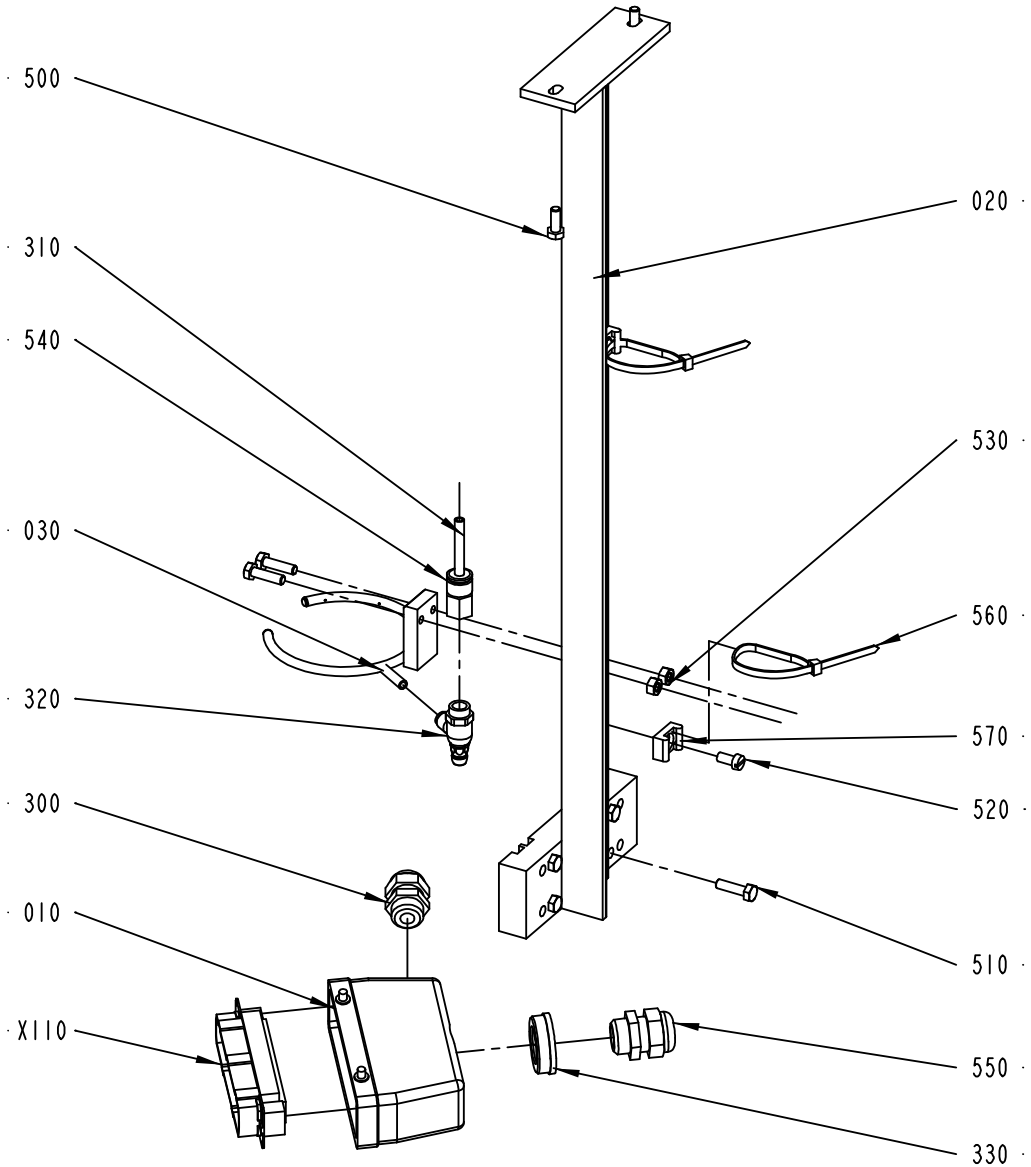

2524290-1
ECM 105179

ECM: 115024 - 20021113
Group number: 2524290-0100
Assembly Drawing: 2524290-1_1_AA

Issue: 20030314

Pos	Part No	SP	UN	Qty	Description	Page No
Common Parts						
010	1515026-0000	-		1	CABLE HOOD 24-POL	
020	2524291-0000	-		1	BRACKET	
030	2543077-0000	-		1	TUBE FLUSHING DEVICE	
300	90012-0049	-		1	CABLE GLAND, STR13,5, PR20,4/PG13,5	
310	90166-0119	-	MM	2000	HOSE PUR 4/6 BLACK	
320	90235-0847	-		1	THROTTLE CHECK VALVE, G1/4", MANUAL,6	
330	90458-2587	-		1	REDUCER, SKINDICHT-MR 29/16	
500	312105-0368	-		2	SCREW M6S M6X16 A280	
510	312105-0371	-		6	SCREW M6S ISO 4017 M6X22 A480	
520	312125-0366	-		2	SCREW PAN HEAD MCS M6X12 SS	
530	312605-0316	-		2	HEXAGON NUT, M6M M6 A280	
540	342770-0106	-		1	STRAIGHT COUPLING INT, D=6 MM - G1/4	
550	352103-0111	-		1	CABLE GLAND, ST 16, PR22,5/PG16	
560	352113-0102	-		2	CLIP-STRIP, BLACK 188X4,8 MM	
570	352113-0204	-		2	ANCHOR PLATES FOR STRIPS, TYPE TM3S25-M	
X110	90110-0150	-		1	MALE INSERT 121110 0000	

Pos	Part No	SP	UN	Qty	Description	Page No

Tetra Pak

SPC
Spare Parts Catalogue

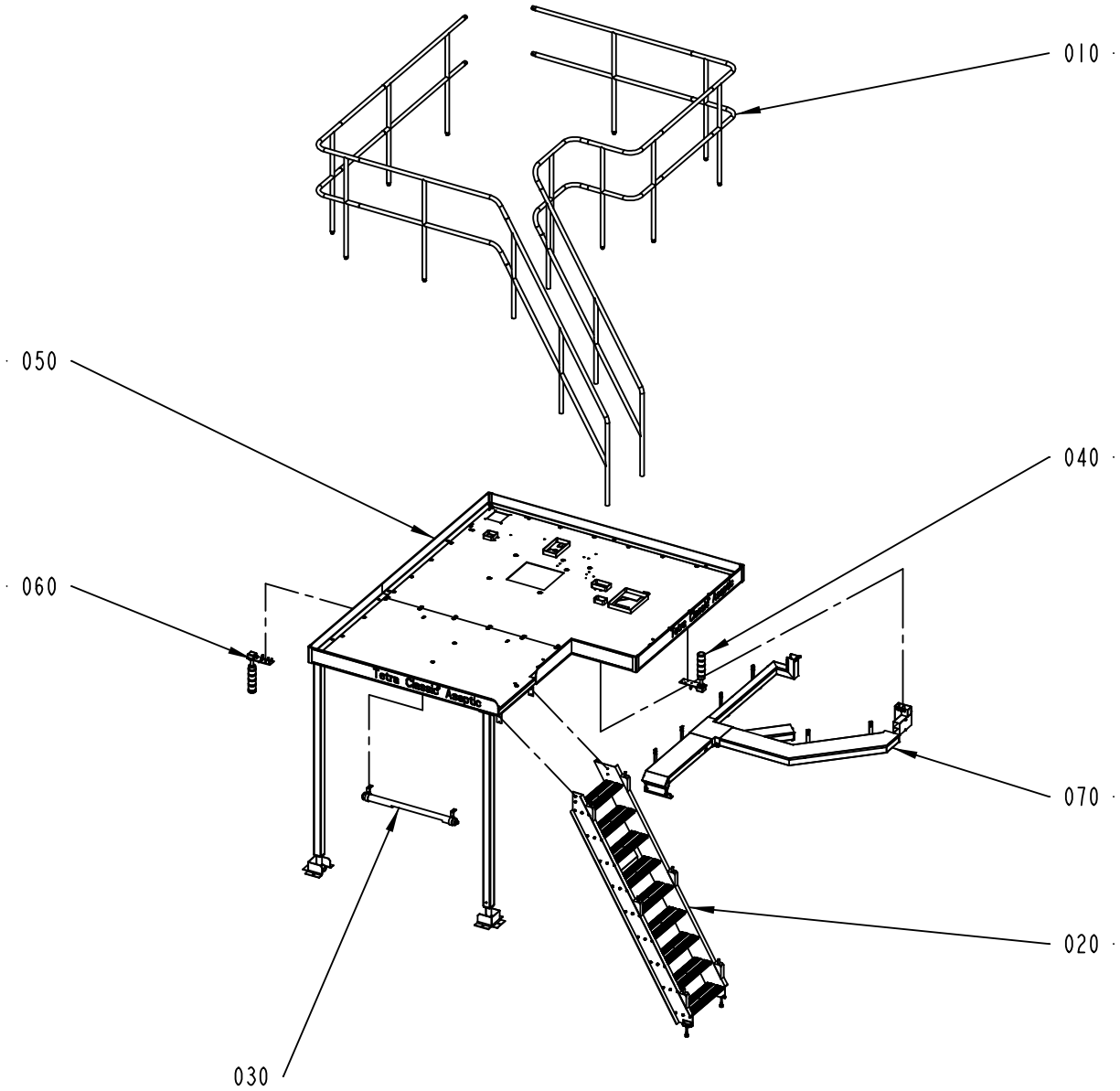

630404-5
ECM 104483

ECM: 115932 - 20021113
Group number: 630404-0200
Assembly Drawing: 630404-5_1_AA

Issue: 20030310

Pos	Part No	SP	UN	Qty	Description	Page No
Common Parts						
010	A1514420-0100	-		1	RAILING	**207**
020	A2524170-0100	-		1	LADDER	**209**
030	A1514745-0100	-		1	LIGHT FIXTURE	**211**
040	A2542870-0100	-		1	WARNING BEACON	**213**
050	A2524165-0100	-		1	PLATFORM	**215**
060	A2542875-0100	-		1	WARNING BEACON	**217**
070	A2542852-0100	-		1	CABLE TRAYS PLATFORM	**219**

Pos	Part No	SP	UN	Qty	Description	Page No

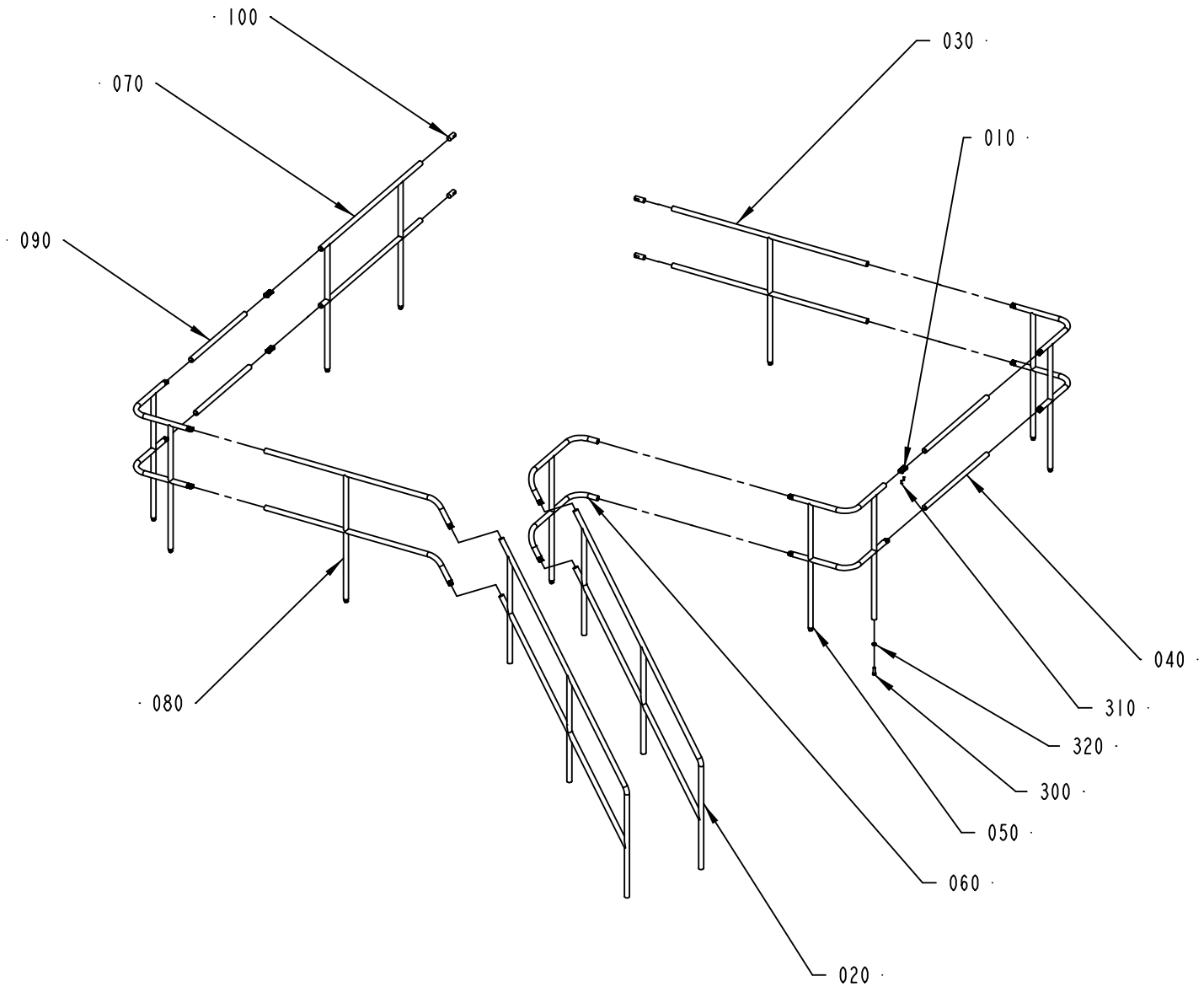

1514420-1
ECN 73202

ECM: 80961 - 20020313
Group number: 1514420-0100
Assembly Drawing: 1514420-1_1_AA

Issue: 20030310

Pos	Part No	SP	UN	Qty	Description	Page No
Common Parts						
010	1514621-0000	-		2	RAILING	
040	1514624-0000	-		1	RAILING	
070	1514627-0000	-		2	RAILING	
080	1514628-0000	-		3	RAILING	
090	1514865-0000	-		1	RAILING	
100	1514869-0000	-		1	RAILING	
110	1514871-0000	-		1	RAILING	
120	1514872-0000	-		2	RAILING	
300	312318-0453	-		36	SCREW ISO4029 M8X25 A4	
310	312101-0630	-		11	SCREW M6S M16X50 FZB	
320	315111-0186	-		11	WASHER PLAIN, TBRB 17/30 H=6	
500	B985328-0000	-		18	CONNECTION	
	985327-0000	*-*		*1*	*PROFILE*	

Pos	Part No	SP	UN	Qty	Description	Page No

Machine Type | Group Description | Used-In | Group Number | Page No

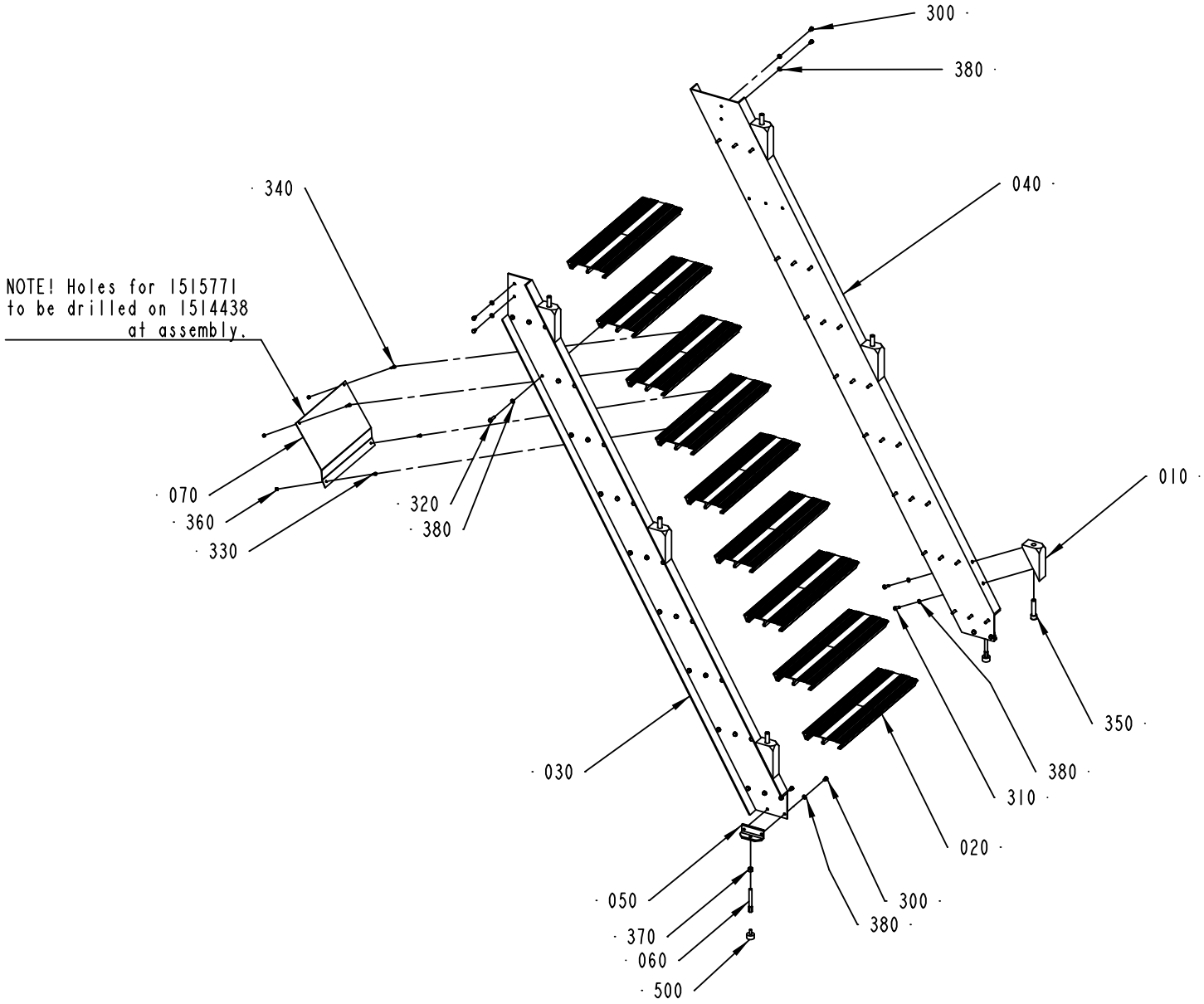

2524170-1
ECM 104483

Pos	Part No	SP	UN	Qty	Description	Page No
Common Parts						
010	1514227-0000	-		6	BRACKET	
020	1514438-0000	-		9	STEP	
030	1514439-0000	-		1	SIDE PIECE	
040	1514441-0000	-		1	SIDE PIECE	
050	1514458-0000	-		2	BRACKET	
060	1514459-0000	-		2	SETTING SCREW	
070	1515771-0000	-		1	COVER PLATE	
300	312105-0447	-		8	SCREW M6S ISO 4017 M8X12 A480	
310	312105-0451	-		12	SCREW M6S ISO 4017 M8X20 A480	
320	312105-0455	-		54	SCREW M6S ISO 4017 M8X30 A480	
330	312115-0364	-		2	SCREW ISO4762 M6X10 A4	
340	312115-0368	-		2	SCREW ISO4762 M6X16 A4	
350	312115-0634	-		6	SCREW ISO4762 M16X70 A4	
360	312605-0316	-		4	HEXAGON NUT, M6M M6 A280	
370	312605-0322	-		2	HEXAGON NUT, M6M M12 A280	
380	315105-0165	-		74	WASHER ISO 7089-8-200 HV-A4	
500	90347-0004	-		2	VIBRATION DAMPER D=30 TH=M8 H=17 H2=21MM	

Pos	Part No	SP	UN	Qty	Description	Page No

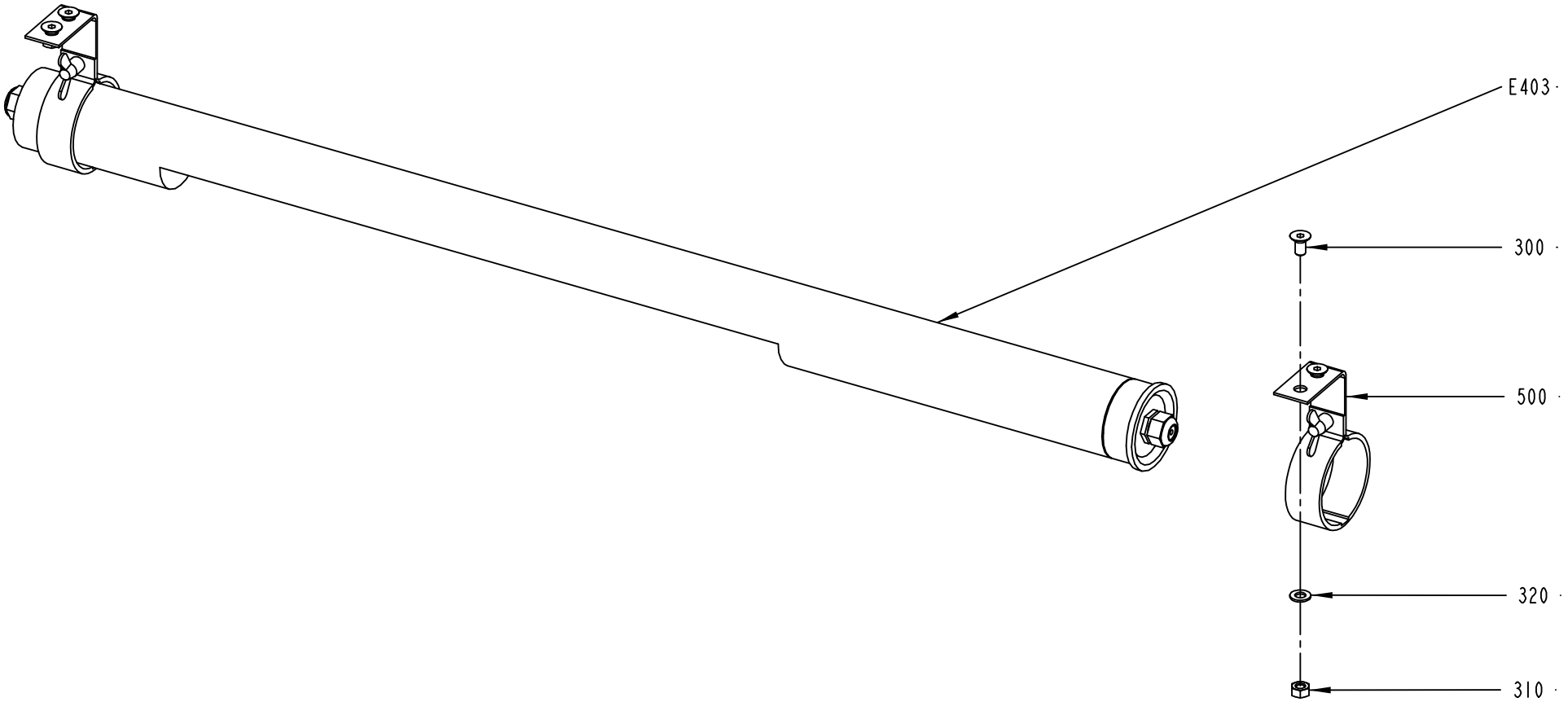

Pos E403 includes
Fluorecent Tube 90297-0002 and
Holder 90164-0303

1514745-1
ECN 73202

ECM: 92402 - 20020313
Group number: 1514745-0100
Assembly Drawing: 1514745-1_1_AA

Issue: 20030310

Pos	Part No	SP	UN	Qty	Description	Page No
Common Parts						
300	312155-0449	-		4	SCREW EN 10642 MF6S M8X16 A480	
310	312605-0318	-		4	HEXAGON NUT, M6M M8 A280	
320	315105-0165	-		4	WASHER ISO 7089-8-200 HV-A4	
500	90164-0302	-		2	BRACKET	
E403	B90457-0149	-		1	LIGHT FIXTURE, DWDV 118D/230V 50 HZ	
	90164-0302	-		*1*	*BRACKET*	
	90164-0303	-		*1*	*BRACKET SK2202 WALDMANN*	
	90297-0002	-		*1*	*FLUORESCENT TUBE, TLD 18/33*	

Pos	Part No	SP	UN	Qty	Description	Page No

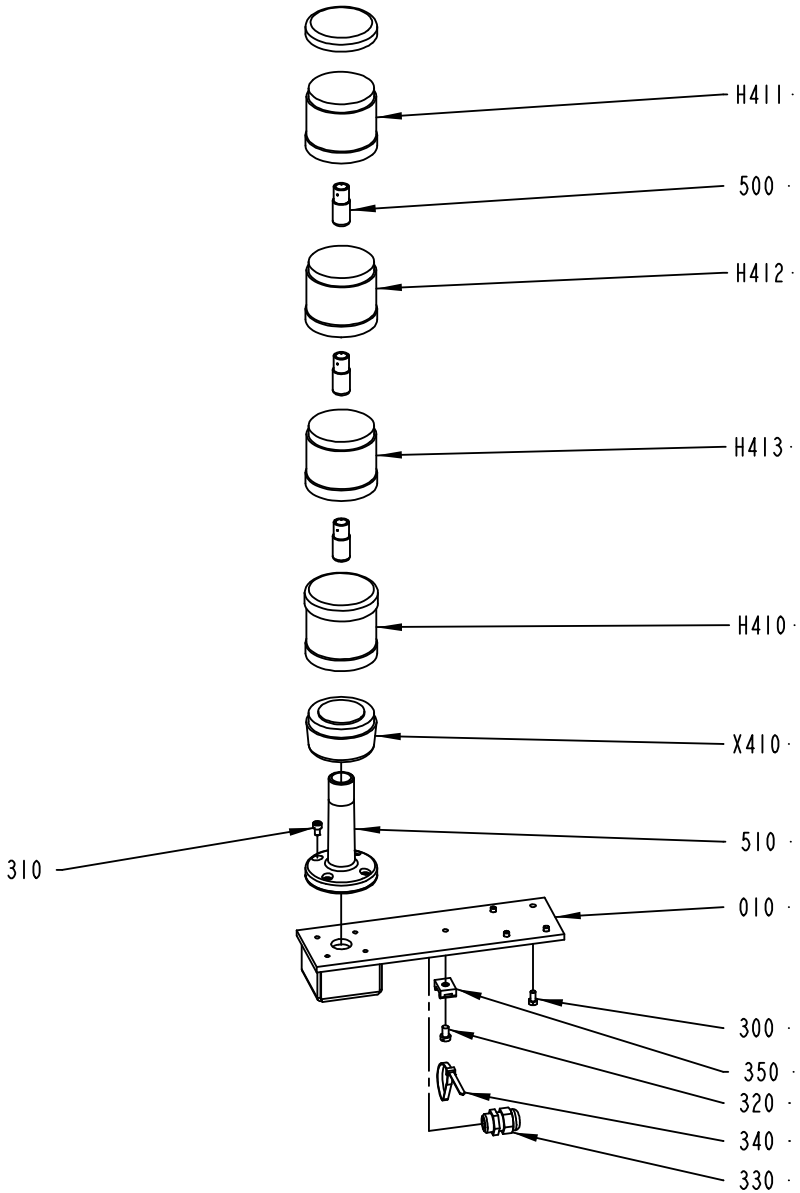

2542870-1
ECM 108570

Pos	Part No	SP	UN	Qty	Description	Page No
Common Parts						
010	2542869-0000	-		1	BRACKET	
300	312105-0325	-		4	SCREW M6S ISO 4017 M5X10 A480	
310	312115-0323	-		4	SCREW ISO4762 M5X8 A4	
320	312125-0364	-		1	SCREW SLOT.PAN HD. MCS 6X10 A480	
330	352103-0106	-		1	CABLE GLAND, ST 11, PR18,6/PG11	
340	352113-0102	-		1	CLIP-STRIP, BLACK 188X4,8 MM	
350	352113-0204	-		1	ANCHOR PLATES FOR STRIPS, TYPE TM3S25-M	
500	90036-0068	B		3	BULB 6.5W 24V	
510	90458-0297	-		1	BASE WITH TUBE 110 MM KA70-1011	
H410	90458-0302	B		1	SIREN WITH ADJUSTABLE VOLUME KS 70-3004	
H411	90458-0293	B		1	LIGHT ELEMENT, RED, KL70-401R	
H412	90458-0294	B		1	LIGHT ELEMENT, YELLOW, KL70-401Y	
H413	90458-0295	B		1	LIGHT ELEMENT, BLUE, KL70-401L	
X410	90458-0292	B		1	BASE, KT70-1001	

Pos	Part No	SP	UN	Qty	Description	Page No

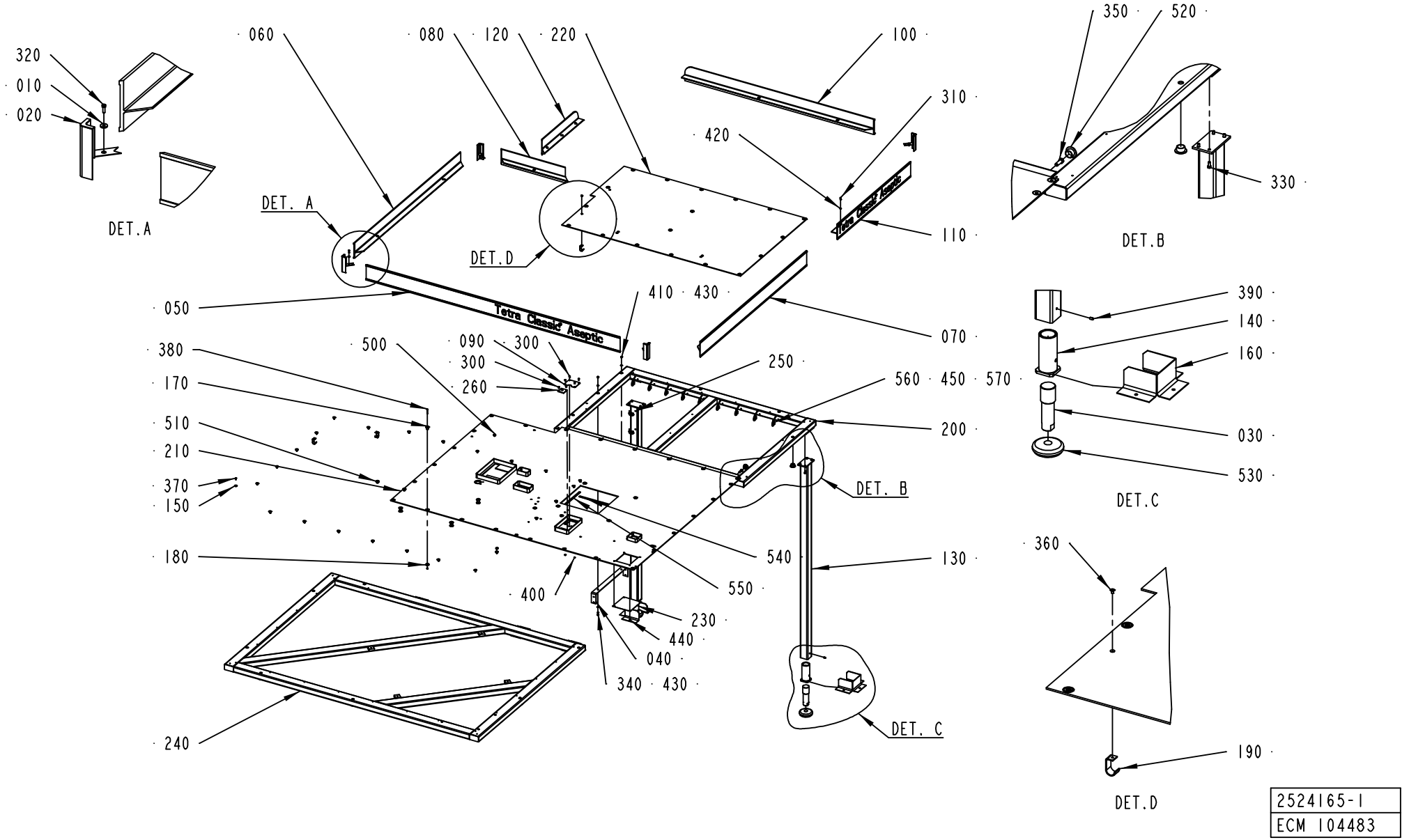

2524165-1
ECM 104483

ECM: 104512 - 20021113
Group number: 2524165-0100
Assembly Drawing: 2524165-1_1_AA

Issue: 20030310

Pos	Part No	SP	UN	Qty	Description	Page No
Common Parts						
010	38087-0000	-		4	WASHER	
020	1254027-0000	-		4	CORNER STRIP	
030	1514432-0000	-		2	LEG	
040	1514446-0000	-		1	BRACKET	
050	1514632-0000	-		1	FOOT PLATE	
060	1514633-0000	-		1	FOOT PLATE	
070	1514634-0000	-		1	FOOT PLATE	
080	1514636-0000	-		1	FOOT PLATE	
090	1514638-0000	-		1	CHECKER PLATE	
100	1514866-0000	-		1	FOOT PLATE	
110	1514867-0000	-		1	FOOT PLATE	
120	1514868-0000	-		1	FOOT PLATE	
130	1514883-0000	-		1	SUPPORT LEG	
140	1514885-0000	-		2	SLEEVE	
150	1514889-0000	-		43	WASHER	
160	1514891-0000	-		2	PROTECTION	
170	1515618-0000	-		4	SPACER SLEEVE	
180	1515619-0000	-		4	SPACER SLEEVE	
190	1515828-0000	-		4	BRACKET	
200	2524161-0000	-		1	FRAME	
210	2524162-0000	-		1	CHECKER PLATE	
220	2524176-0000	-		1	CHECKER PLATE	
230	2542864-0000	-		1	PLATE	
240	2542986-0000	-		1	FRAME	
250	2556861-0000	-		1	SUPPORT LEG	
260	2556787-0000	-		1	LID	
300	312105-0364	-		6	SCREW M6S ISO 4017 M6X10 A480	
310	312105-0367	-		3	SCREW M6S M6X14 A280	
320	312105-0370	-		4	SCREW M6S ISO 4017 M6X20 A480	
330	312105-0451	-		8	SCREW M6S ISO 4017 M8X20 A480	
340	312105-0453	-		2	SCREW M6S ISO 4017 M8X25 A480	
350	312105-0538	-		4	SCREW M6S ISO 4017 M12X35 A480	
360	312155-0364	-		4	SCREW EN 10642 MF6S M6X10 A480	
370	312155-0368	-		43	SCREW EN 10642 MF6S M6X16 A480	
380	312155-0379	-		4	SCREW MF6S EN 10642 M6X45 A480	
390	312318-0447	-		2	SCREW ISO4029 M8X12 A4	
400	312605-0316	-		8	HEXAGON NUT, M6M M6 A280	
410	312812-0318	-		2	HEXAGON NUT, NY-LOCK M8 A480	
420	315105-0153	-		3	WASHER ISO 7089-6-200 HV-A4	
430	315105-0165	-		4	WASHER ISO 7089-8-200 HV-A4	
440	312105-0362	-		4	SCREW M6S ISO 4017 M6X8 A480	
450	312125-0364	-		15	SCREW SLOT.PAN HD. MCS 6X10 A480	
500	90015-0020	-		2	LEAD-IN, TET5-7, E-1458016	
510	90015-0021	-		2	LEAD-IN, TET10-14, E-1458023	
520	90261-0067	-		18	PLUG, BLIND, PLASTIC, NO. 55-10365	
530	90347-0175	-		2	MACHINE SHOE BRIK T 125	
540	90458-0145	-		2	SEALING, 3X15 MM CLOSED CELL SPONGE	
550	90458-0145	-		2	SEALING, 3X15 MM CLOSED CELL SPONGE	
560	352113-0204	-		15	ANCHOR PLATES FOR STRIPS, TYPE TM3S25-M	
570	352113-0102	-		15	CLIP-STRIP, BLACK 188X4,8 MM	

Machine Type | Group Description | Used-In | Group Number | Page No

WARNING BEACON

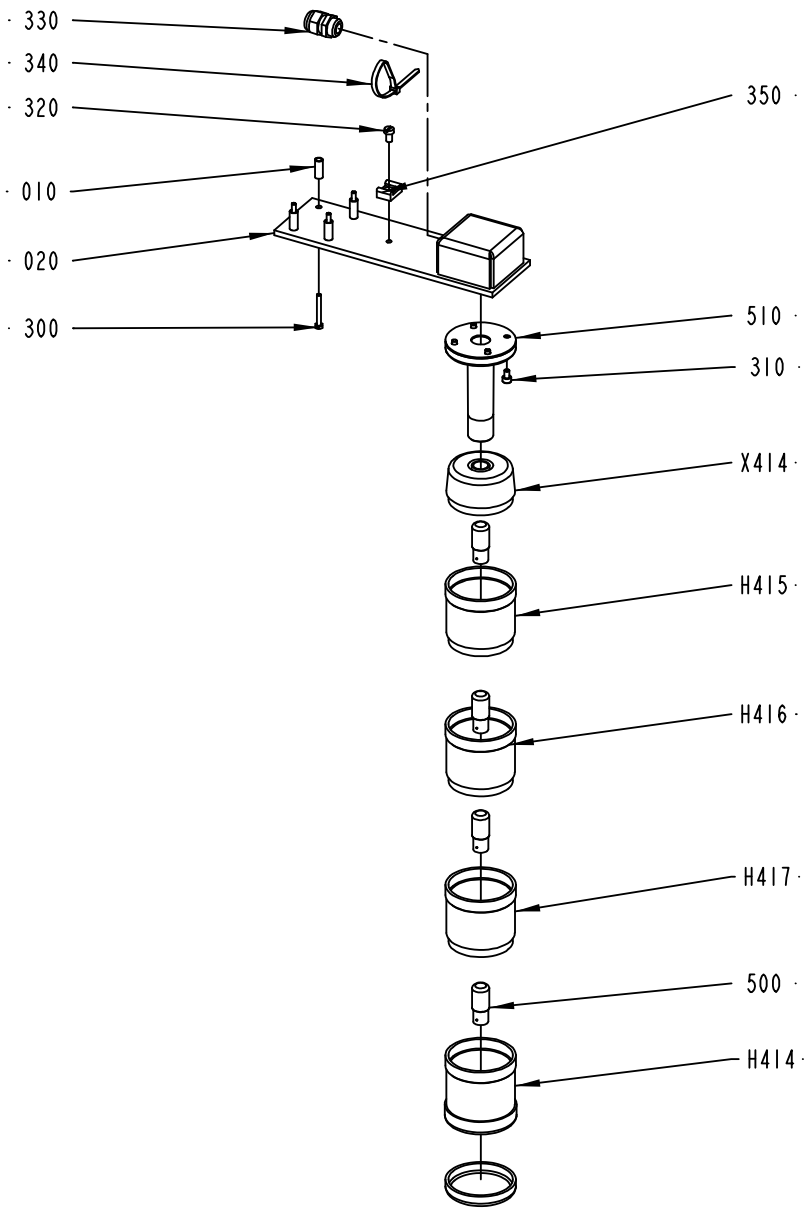

2542875-1
ECM 108570

ECM: 108583 - 20021113
Group number: 2542875-0100
Assembly Drawing: 2542875-1_1_AA

Issue: 20030310

Pos	Part No	SP	UN	Qty	Description	Page No
Common Parts						
010	1515649-0000	-		4	SLEEVE	
020	2542869-0000	-		1	BRACKET	
300	312105-0301	-		4	SCREW M6S ISO 4017 M4X35 A480	
310	312115-0323	-		4	SCREW ISO4762 M5X8 A4	
320	312125-0364	-		1	SCREW SLOT.PAN HD. MCS 6X10 A480	
330	352103-0106	-		1	CABLE GLAND, ST 11, PR18,6/PG11	
340	352113-0102	-		1	CLIP-STRIP, BLACK 188X4,8 MM	
350	352113-0204	-		1	ANCHOR PLATES FOR STRIPS, TYPE TM3S25-M	
500	90036-0068	B		4	BULB 6.5W 24V	
510	90458-0297	-		1	BASE WITH TUBE 110 MM KA70-1011	
H414	90458-0302	B		1	SIREN WITH ADJUSTABLE VOLUME KS 70-3004	
H415	90458-0293	B		1	LIGHT ELEMENT, RED, KL70-401R	
H416	90458-0294	B		1	LIGHT ELEMENT, YELLOW, KL70-401Y	
H417	90458-0295	B		1	LIGHT ELEMENT, BLUE, KL70-401L	
X414	90458-0292	B		1	BASE, KT70-1001	

Pos	Part No	SP	UN	Qty	Description	Page No

Machine Type | Group Description | Used-In | Group Number | Page No

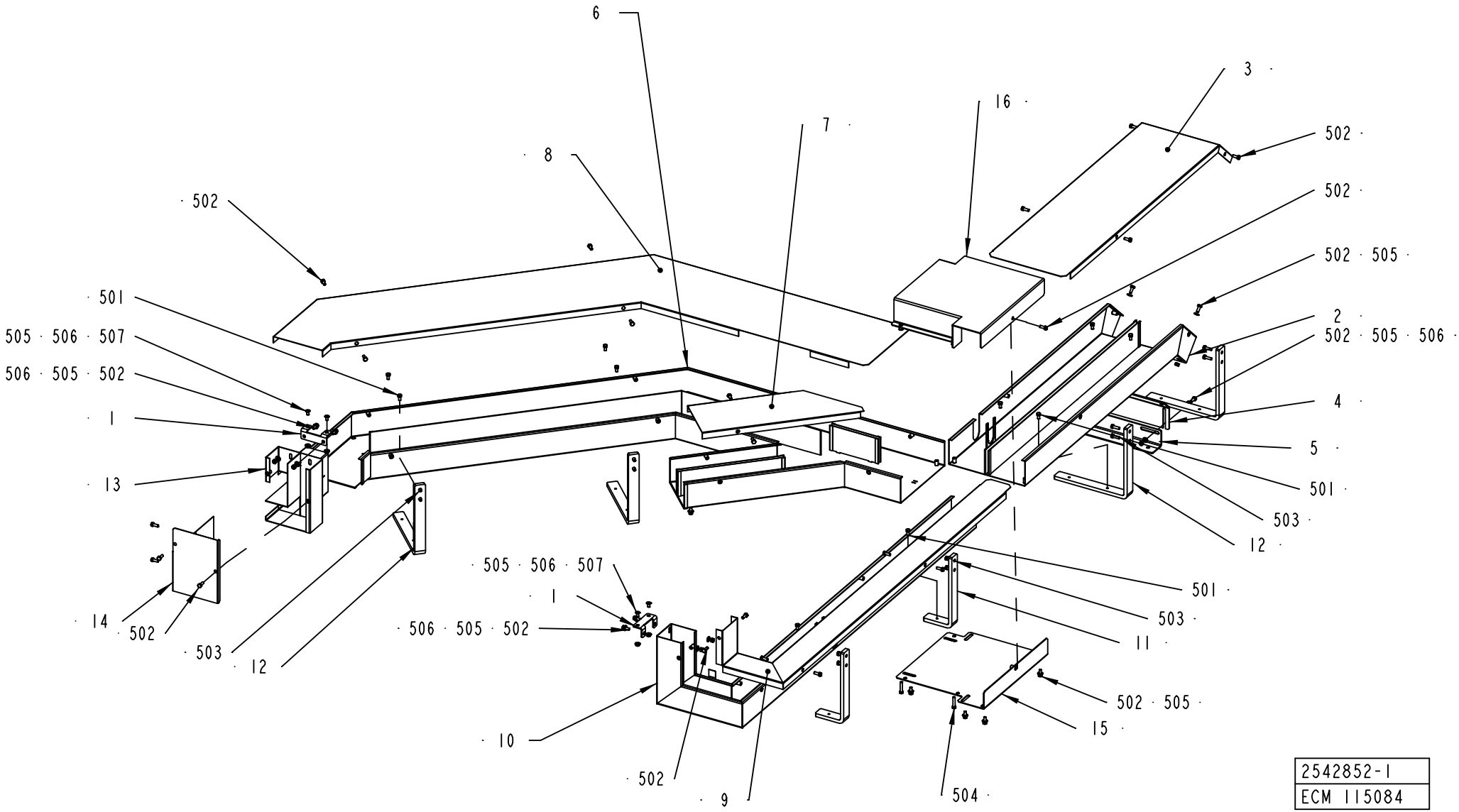
6
3
16
7
8
502
502
502
502 505
2
502 505 506
4
5
501
503
12
501
503
11
502 505
15
504
501
505 506 507
1
506 505 502
503
12
14
502
505 506 507
1
506 505 502
10
502
9
2542852-1
ECM 115084

Pos	Part No	SP	UN	Qty	Description	Page No
Common Parts						
010	2542713-0000	-		2	BRACKET FOR CABLE TRAY	
020	2542747-0000	-		1	CABLE TRAY	
030	2542748-0000	-		1	CABLE TRAY LID	
040	2542881-0000	-		1	BRACKET FOR CABLE TRAY	
050	2542985-0000	-		1	BRACKET FOR CABLE TRAY	
060	2542751-0000	-		1	CABLE TRAY	
070	2542750-0000	-		1	CABLE TRAY LID	
080	2542752-0000	-		1	CABLE TRAY LID	
090	2542759-0000	-		1	CABLE TRAY LID	
100	2542749-0000	-		1	CABLE TRAY	
110	2556705-0000	-		2	BRACKET FOR CABLE TRAY	
120	2542882-0000	-		4	BRACKET FOR CABLE TRAY	
130	2542918-0000	-		1	CABLE TRAY	
140	2542919-0000	-		1	CABLE TRAY LID	
150	2542807-0000	-		1	JUNCTION	
160	2542808-0000	-		1	JUNCTION LID	
501	312105-0366	-		10	SCREW M6S M6X12 A280	
502	312105-0368	-		37	SCREW M6S M6X16 A280	
503	312105-0370	-		12	SCREW M6S ISO 4017 M6X20 A480	
504	312109-0374	-		3	SCREW M6S ISO 4017 M6X30 A480	
505	315105-0156	-		26	WASHER PLAIN, BRB, 6,7/14,H=1,5	
506	312605-0316	-		12	HEXAGON NUT, M6M M6 A280	
507	312155-0366	-		4	SCREW EN 10642 MF6S M6X12 A480	

Pos	Part No	SP	UN	Qty	Description	Page No

Machine Type | Group Description | Used-In | Group Number | Page No

Tetra Pak

SPC
Spare Parts Catalogue

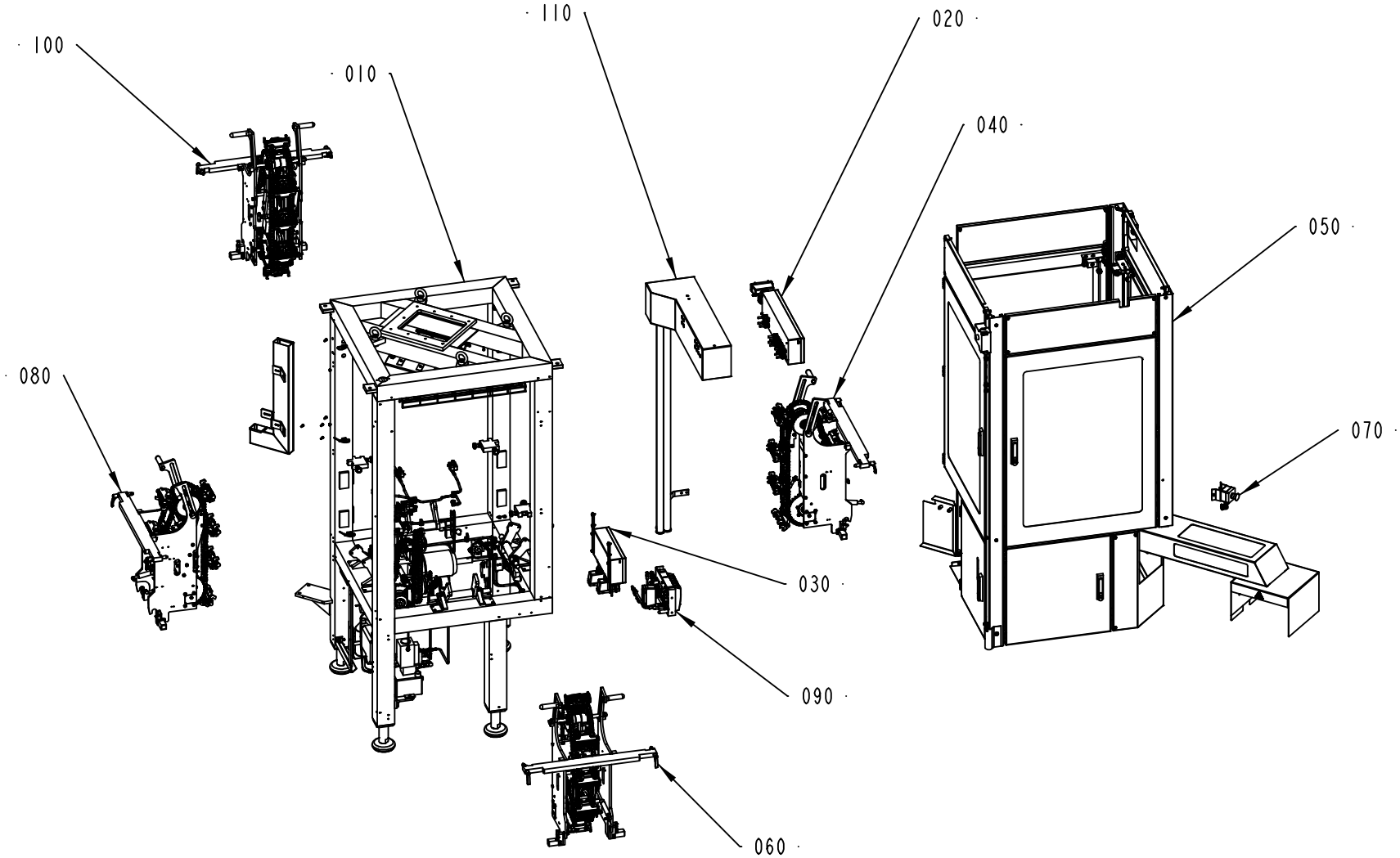

630405-5
ECM 115564

Pos	Part No	SP	UN	Qty	Description	Page No
Common Parts						
010	A2524101-0100	-		1	FRAME	**225**
040	A2524102-0100	-		1	HEATING SIDE 1	**243**
050	A2524104-0100	-		1	DOORS AND COVERS	**259**
060	A2524105-0100	-		1	HEATING SIDE 2	**277**
070	A2556854-0100	-		1	EMERGENCY STOP	**279**
080	A2524107-0100	-		1	PRESSURE SIDE 3	**281**
090	A1515570-0100	-		1	VALVE RAMP	**307**
100	A2524108-0100	-		1	PRESSURE SIDE 4	**309**
110	A2543071-0100	-		1	CABLE TRAYS MAIN BODY	**317**
M.X040	A2556852-0100	-		1	CONNECTION BOX	**319, 321**
M.X050	A2556794-0100	-		1	CONNECTION BOX	**323, 325**

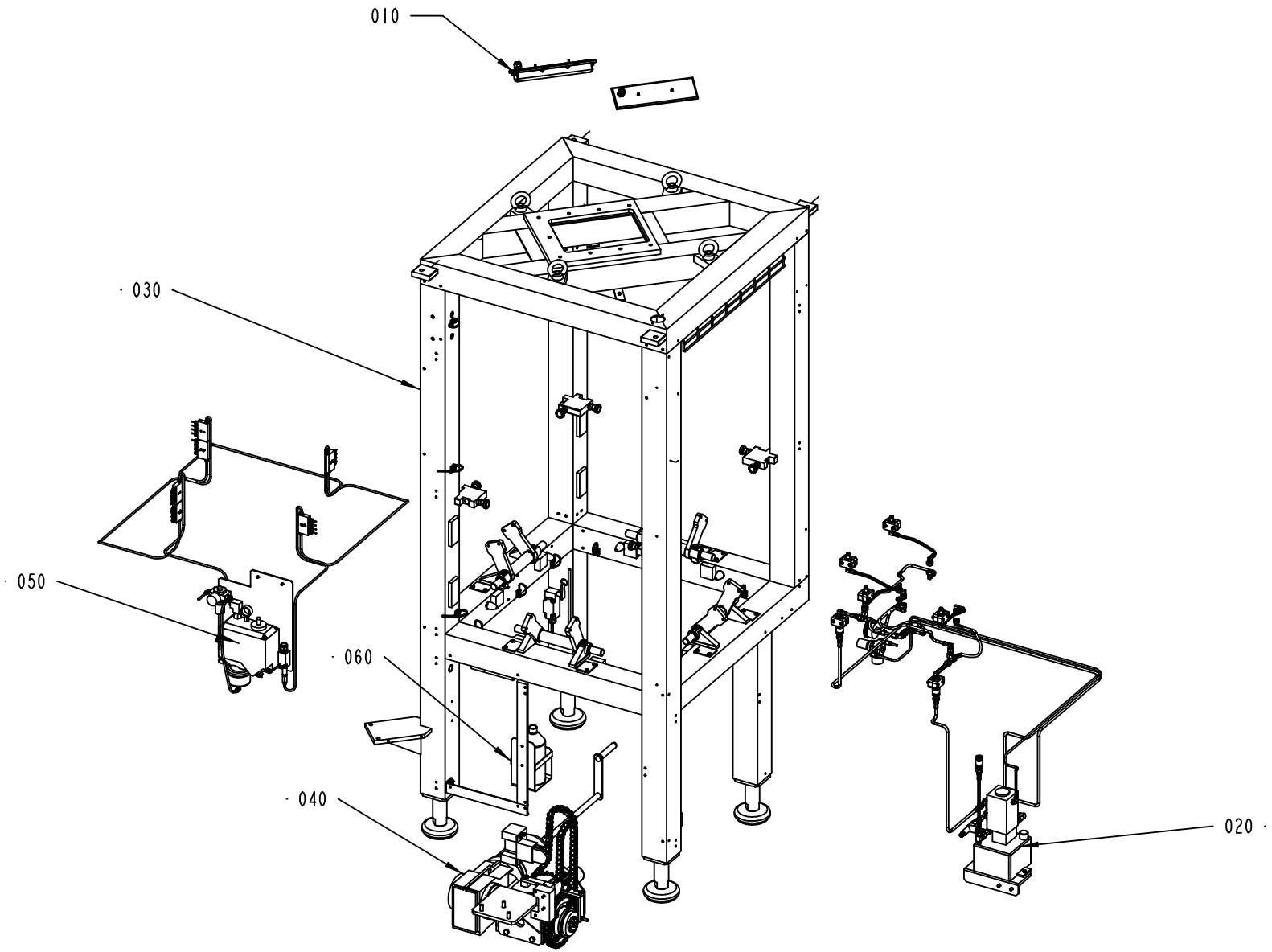

2524101-1
ECM 104392

ECM: 104391 - 20021113
Group number: 2524101-0100
Assembly Drawing: 2524101-1_1_AA

Issue: 20030314

Pos	Part No	SP	UN	Qty	Description	Page No
Common Parts						
010	A1350005-0100	-		2	LIGHT FIXTURE	**227**
020	A1514505-0100	-		1	HYDRAULIC SYSTEM	**229**
030	A2523914-0100	-		1	FRAME	**231**
040	A2523913-0100	-		1	DRIVE UNIT	**233**
050	A2556718-0100	-		1	CENTRAL LUBRICATION	**235**
060	A1515450-0100	-		1	FILTER DRAIN	**241**

Pos	Part No	SP	UN	Qty	Description	Page No

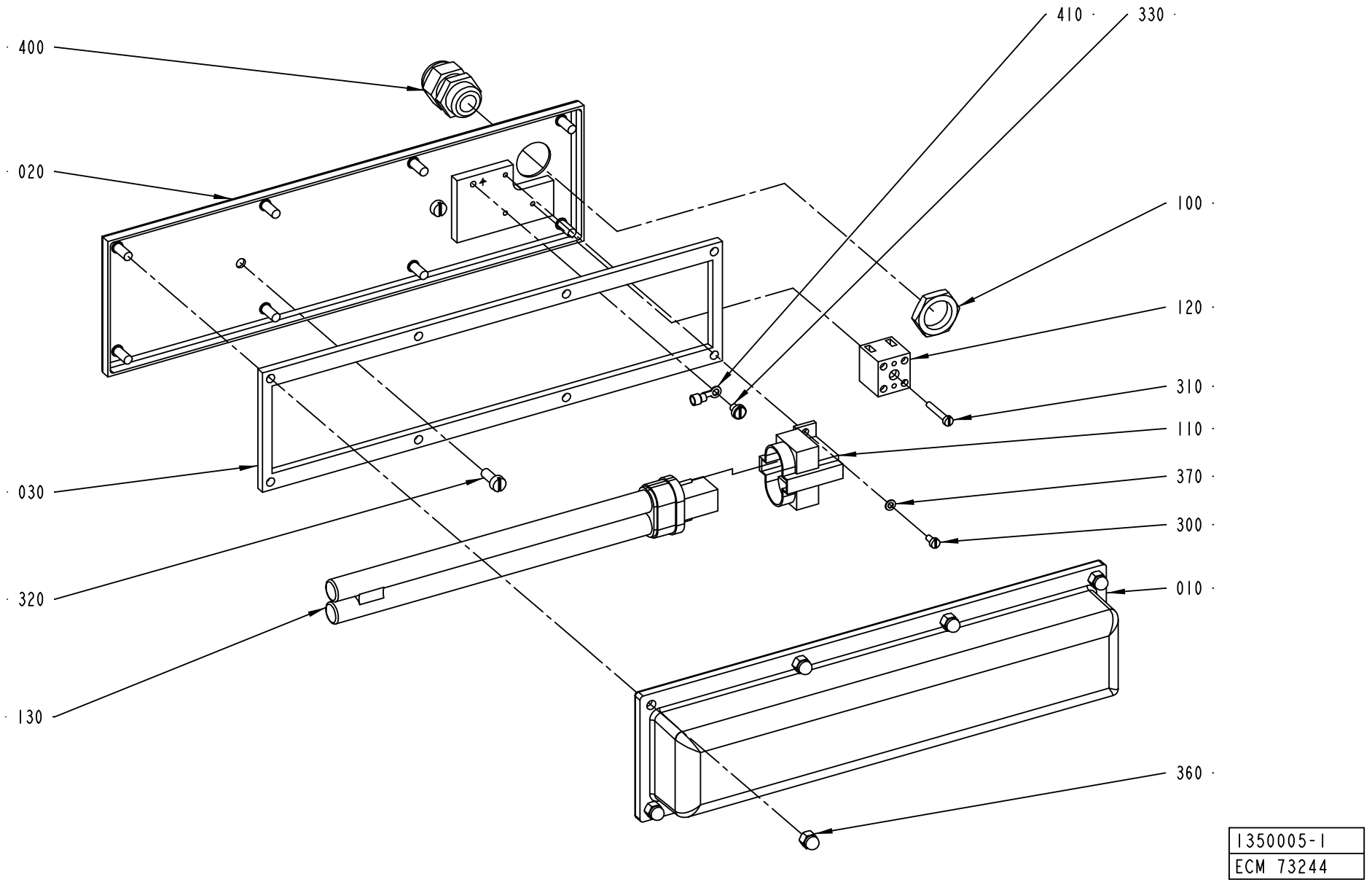
400
020
030
320
130
410
330
100
120
310
110
370
300
010
360
1350005-1
ECM 73244

ECM: 102234 - 20020313
Group number: 1350005-0100
Assembly Drawing: 1350005-1_1_AB

Issue: 20030314

Pos	Part No	SP	UN	Qty	Description	Page No
Common Parts						
010	456260-0000	A		1	COVER	
020	456262-0000	A		1	SHEET	
030	441536-0000	A		1	GASKET	
100	90099-0087	-		1	NUT PR=20,4	
110	90164-0301	A		1	HOLDING FIXTURE	
120	90195-0020	-		1	TERMINAL BLOCK, 1977.2	
130	90297-0007	B		1	FLUORESCENT TUBE, PL11	
300	312125-0220	-		2	SKRUV SLOT.PAN HD. MCS 3X6 A480	
310	312125-0230	-		1	SPåRSKRUV MCS M3X20 SS	
320	312125-0327	-		2	SCREW PAN HEAD MCS M5X12 SS	
330	312132-0284	-		1	SCREW SLOT. PAN HEAD MSCS M4X5	
360	312705-0314	-		8	NUT HEX. DOMED CAP MHM-6 M5 A280	
370	315105-0124	-		2	WASHER ISO 7089-3-200 HV-A4	
400	352103-0106	-		1	CABLE GLAND, ST 11, PR18,6/PG11	
410	353101-0129	-		1	CABLE SHOE	

Pos	Part No	SP	UN	Qty	Description	Page No

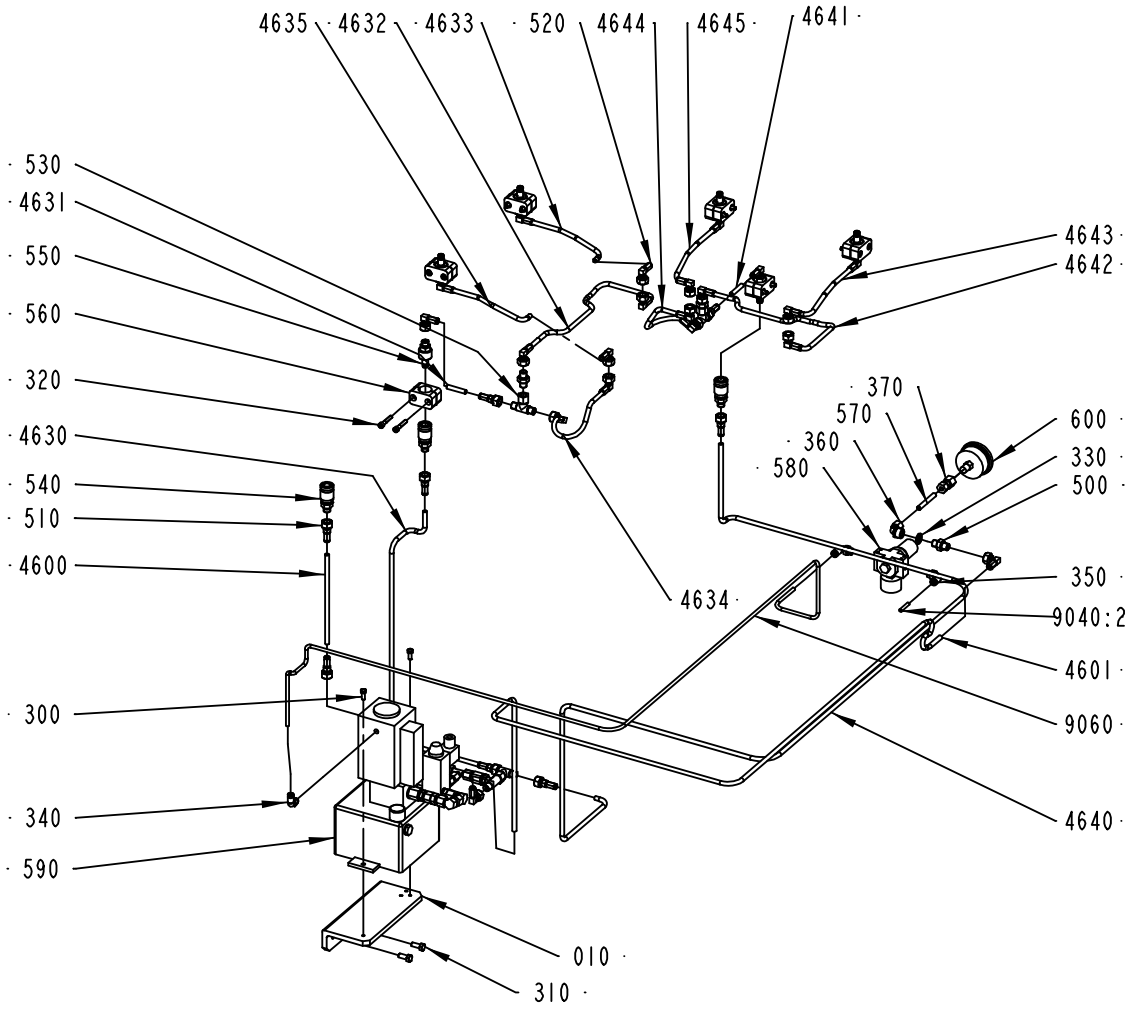

1514505-1
ECM 73204

Pos	Part No	SP	UN	Qty	Description	Page No
Common Parts						
010	1514493-0000	-		1	BRACKET	
300	312105-0368	-		2	SCREW M6S M6X16 A280	
310	312105-0451	-		2	SCREW M6S ISO 4017 M8X20 A480	
320	312115-0376	-		12	SCREW ISO4762 M6X35 A4	
330	315211-0108	-		1	GASKET BOLT HEAD 13,74X20,57X2 MM G1/4	
340	342732-0102	-		1	ELBOW PIPE JOINT, EXT.THREAD, D=6MM-G1/8	
350	342732-0103	-		2	ELBOW PIPE JOINT, EXT.THREAD, D=6MM-G1/4	
360	342733-0104	-		1	CONN. ELBOW WI-8-G1/4	
370	342790-0103	-		1	CONN. PRESS. GAUGE MAV8-LRFZB	
4600	90148-0010	-	MM	2000	HOSE	
4601	90148-0010	-	MM	1800	HOSE	
4630	90148-0010	-	MM	800	HOSE	
4631	90148-0010	-	MM	50	HOSE	
4632	90148-0010	-	MM	450	HOSE	
4633	90148-0010	-	MM	200	HOSE	
4634	90148-0010	-	MM	200	HOSE	
4635	90148-0010	-	MM	200	HOSE	
4640	90148-0010	-	MM	2600	HOSE	
4641	90148-0010	-	MM	50	HOSE	
4642	90148-0010	-	MM	450	HOSE	
4643	90148-0010	-	MM	200	HOSE	
4644	90148-0010	-	MM	200	HOSE	
4645	90148-0010	-	MM	200	HOSE	
500	90055-0042	-		3	NIPPLES, EXT. THREAD, HEXAGON, NO. 6835-	
510	90055-0056	-		8	HOSE COUPLING	
520	90055-0057	-		20	HOSE COUPLING	
530	90055-0058	-		3	HOSE COUPLING	
540	90163-0043	-		3	QUICK COUPLING, (F) MD-006-0-WR013	
550	90163-0044	-		6	QUICK COUPLING, (M) MD-006-2-WRD13	
560	90165-0048	-		6	CLIP	
570	90266-0167	-	MM	60	PIPE	
580	B90458-2741	A		1	PRESSURE REGULATOR, LR-1/8-D-MINI	
	90458-2742	*B*		*1*	*BRACKET HR-D-MIN, FOR LR-1/8-D-MINI*	
590	90458-2746	A		1	PRESSURE HEADER, P801-5	
600	90458-2747	A		1	PRESSURE GAUGE, 2758 D=63 MM	
9040:2	90166-0081	-	MM	500	TUBE 6 MM PA BLUE	
9060	90166-0081	-	MM	2000	TUBE 6 MM PA BLUE	

Pos	Part No	SP	UN	Qty	Description	Page No

Machine Type | Group Description | Used-In | Group Number | Page No

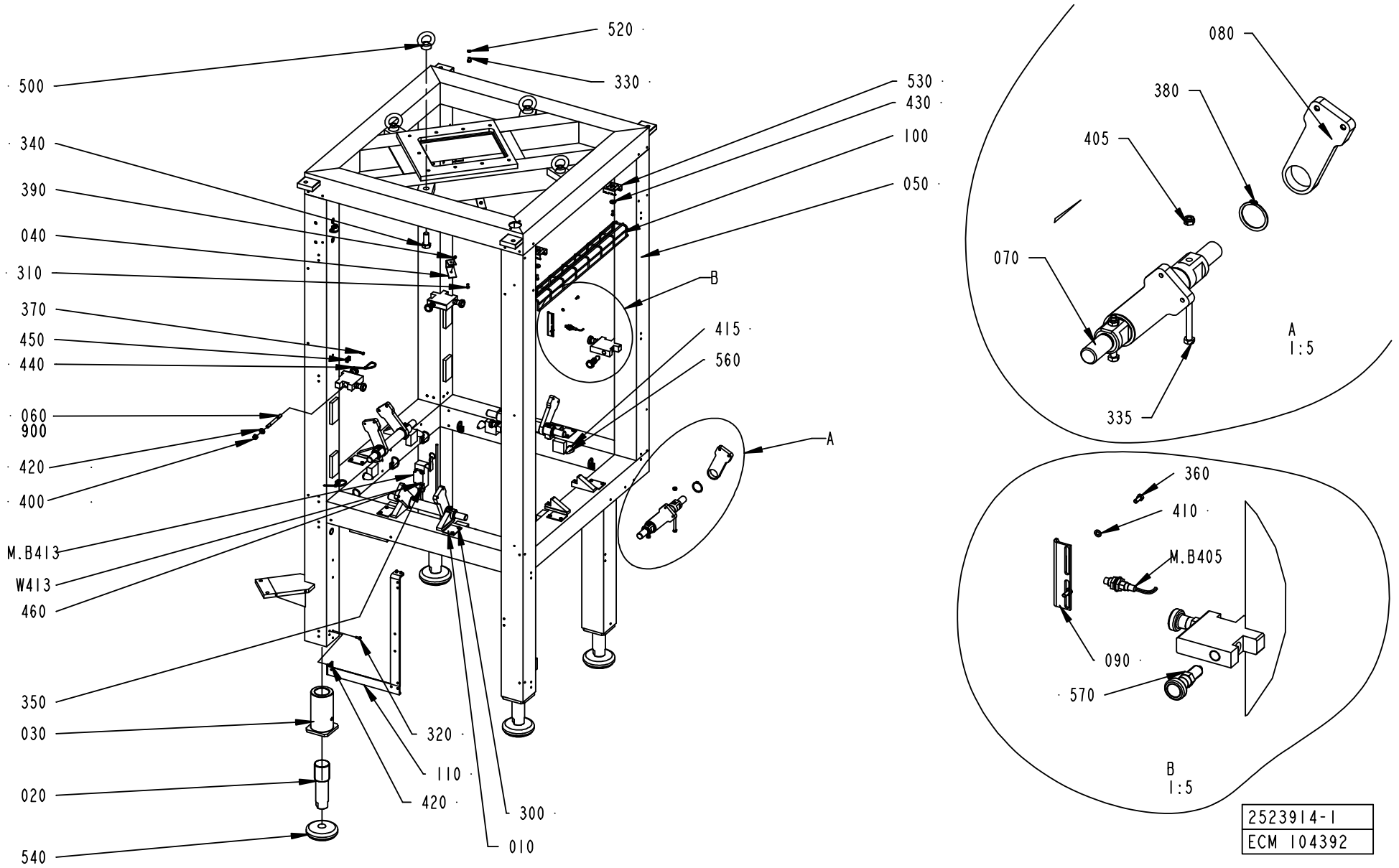
520
500
330
530
430
340
100
390
050
040
310
B
370
415
450
560
440
060
900
A
420
400
M.B413
W413
460
350
030
320
110
020
420
300
540
010
080
380
405
070
335
A
1:5
360
410
M.B405
090
570
B
1:5
2523914-1
ECM 104392

ECM: 122364 - 20021212
Group number: 2523914-0100
Assembly Drawing: 2523914-1_1_AA

Issue: 20030314

Pos	Part No	SP	UN	Qty	Description	Page No
Common Parts						
010	1514399-0000	-		8	GUARD PLATE	
020	1514432-0000	-		4	LEG	
030	1514523-0000	-		4	SLEEVE	
040	1514614-0000	-		4	BRACKET	
050	2524097-0000	-		1	FRAME	
060	1515028-0000	-		8	STUD BOLT	
070	2542902-0000	-		4	SHAFT	
080	2542901-0000	-		8	LINK ARM	
090	2502748-0000	-		1	HOLDER	
100	1515591-0000	-		1	CABLE DUCT	
110	2543058-0000	-		1	BRACKET	
300	312105-0364	-		16	SCREW M6S ISO 4017 M6X10 A480	
310	312105-0366	-		4	SCREW M6S M6X12 A280	
320	312105-0368	-		12	SCREW M6S M6X16 A280	
330	312105-0447	-		1	SCREW M6S ISO 4017 M8X12 A480	
335	312105-0464	-		8	SCREW M6S ISO 4014 M8X65 A480	
340	312105-0674	-		4	SCREW M6S ISO 4017 M20X50 A480	
350	312115-0339	-		4	SCREW ISO4762 M5X40 A4	
360	312125-0327	-		2	SCREW PAN HEAD MCS M5X12 SS	
370	312125-0366	-		14	SCREW PAN HEAD MCS M6X12 SS	
380	315751-0127	-		8	RETAIN. RING, 40	
390	312605-0314	-		4	HEXAGON NUT, M6M M5 A280	
400	312605-0320	-		8	HEXAGON NUT, M6M M10 A280	
405	312812-0318	-		8	HEXAGON NUT, NY-LOCK M8 A480	
410	315105-0146	-		2	WASHER ISO 7089-5-200 HV-A4	
415	315125-0153	-		8	WASHER TBRSB 6,4X22X4 A4	
420	315105-0156	-		4	WASHER PLAIN, BRB, 6,7/14,H=1,5	
425	315105-0173	-		8	WASHER PLAIN, BRB, 10,5/22,H=2	
430	315121-0153	-		4	WASHER PLAIN, TBRSB 6,4/22 H=4	
440	352113-0102	-		14	CLIP-STRIP, BLACK 188X4,8 MM	
450	352113-0204	-		14	ANCHOR PLATES FOR STRIPS, TYPE TM3S25-M	
460	352103-0108	-		1	CABLE GLAND, ST 13,5 , PR20,4/PG13,5	
500	90040-0006	-		4	EYE BOLT NUT, TYPE, LH, M10	
520	90062-0016	-		1	LOCK WASHER SERRAT.EXT.GEAR,8,4/15 H=0,8	
530	90181-0190	-		4	CABLE DUCT, WALL BRACKET, B4 MINI	
540	90347-0175	-		4	MACHINE SHOE BRIK T 125	
560	90459-1342	-		8	RUBBER BUFFER, 10-00340-01	
570	90459-1385	A		8	LOCK KNOB, GN617 NI 8	
900	90157-0021	-	KG	1	LOCKING FLUID	
M.B405	90458-0675	A		1	PROXIMITY SENSOR, E2EG-X5MB1-5M	
M.B413	90459-0925	A		1	LIMIT SW. GSAB 20 A1B	
W413	351150-0405	-	MM	500	CABLE OLFLEX 5X0,75 MM2 LIGHT/GREY	

Machine Type | Group Description | Used-In | Group Number | Page No

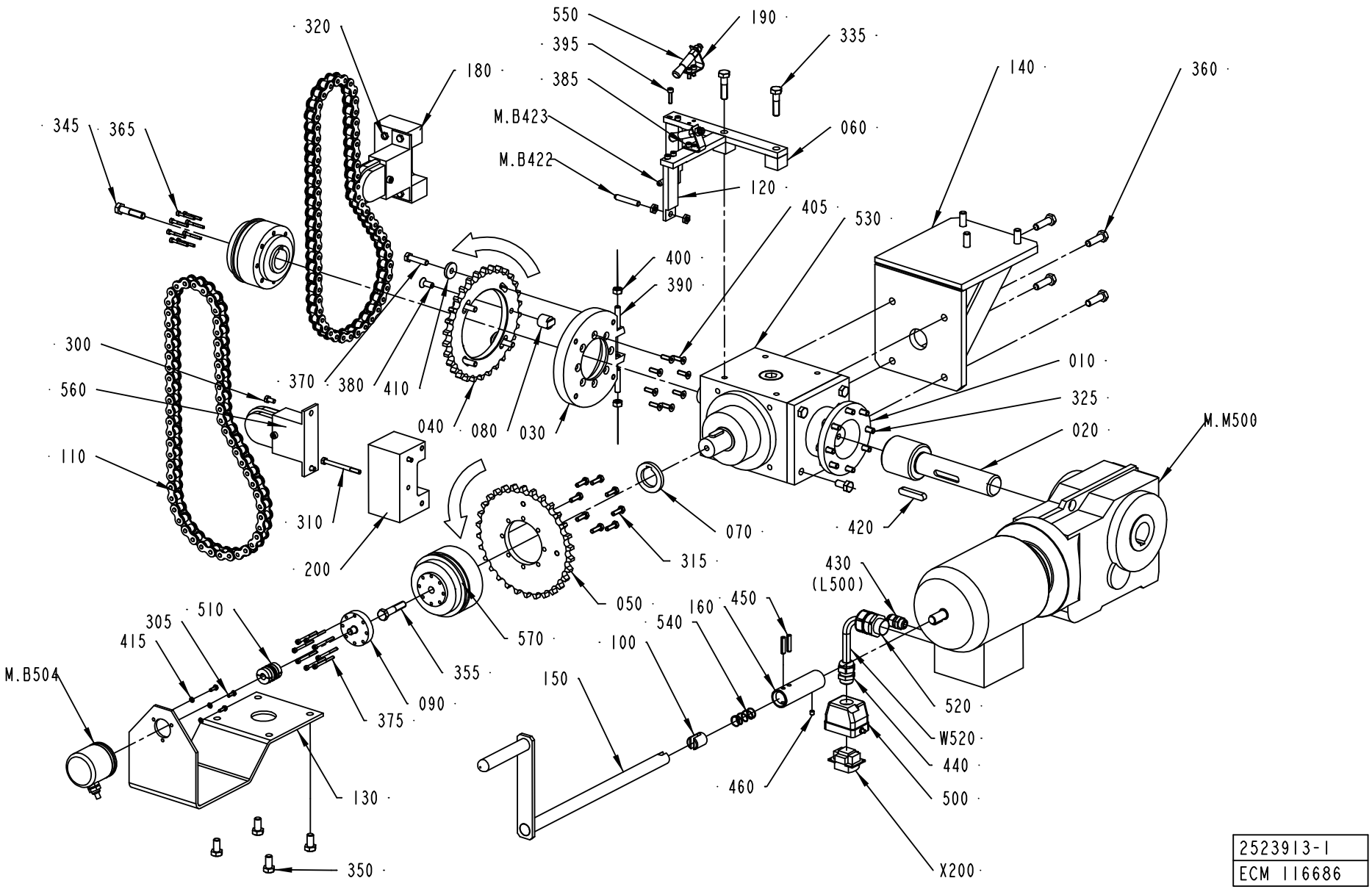
320
180
550
190
335
395
385
M.B423
M.B422
060
120
140
360
345
365
405
530
400
390
300
560
370
380
410
040
080
030
010
325
020
M.M500
110
310
200
070
420
315
050
430
(L500)
160
450
540
100
150
460
510
305
415
570
355
090
375
M.B504
130
350
520
W520
440
500
X200
2523913-1
ECM 116686

ECM: 122366 - 20021212
Group number: 2523913-0100
Assembly Drawing: 2523913-1_1_AB

Issue: 20030314

Pos	Part No	SP	UN	Qty	Description	Page No
0150S						
110	2556853-0000	A		2	CHAIN	
180	2556856-0000	-		1	SPACER BLOCK	
200	2556857-0000	-		2	SPACER BLOCK	
310	312105-0388	-		2	SCREW M6S ISO 4014 M6X90 A480	
320	312105-0384	-		2	SCREW M6S ISO 4014 M6X70 A480	
0200B						
110	2556855-0000	A		2	CHAIN	
180	2556857-0000	-		1	SPACER BLOCK	
200	2556856-0000	-		1	SPACER BLOCK	
310	312105-0384	-		4	SCREW M6S ISO 4014 M6X70 A480	
320	312105-0380	-		4	SCREW M6S ISO 4014 M6X50 A480	
V065						
110	2556855-0000	A		2	CHAIN	
180	2556857-0000	-		1	SPACER BLOCK	
200	2556856-0000	-		1	SPACER BLOCK	
310	312105-0384	-		4	SCREW M6S ISO 4014 M6X70 A480	
320	312105-0380	-		4	SCREW M6S ISO 4014 M6X50 A480	
Common Parts						
010	2556792-0000	-		1	FLANGE	
020	2556793-0000	A		1	DRIVE SHAFT	
030	2556797-0000	A		1	FLANGE	
040	2556798-0000	A		1	SPROCKET	
050	2556799-0000	A		1	SPROCKET	
060	2569716-0000	-		1	HOLDER	
070	2556841-0000	-		1	SPACER	
080	1515221-0000	A		1	CARRIER PIN	
090	2556842-0000	A		1	ADAPTER	
100	2524264-0000	-		2	WASHER	
120	2569717-0000	-		1	HOLDER	
130	2556845-0000	-		1	BRACKET	
140	1515753-0000	-		1	BRACKET	
150	2523863-0000	A		1	CRANK	
160	2523864-0000	-		1	ADAPTER	
190	2556843-0000	-		2	BRACKET	
300	312105-0366	-		7	SCREW M6S M6X12 A280	
305	312105-0291	B		3	SCREW M6S ISO 4017 M4X12 A480	
315	312105-0370	-		8	SCREW M6S ISO 4017 M6X20 A480	
325	312105-0453	-		8	SCREW M6S ISO 4017 M8X25 A480	
335	312105-0499	-		2	SCREW M6S ISO 4014 M10X40 A480	
345	312105-0500	-		1	SCREW M6S ISO 4014 M10X45 A480	
350	312105-0491	-		8	SCREW M6S ISO 4017 M10X20 A480	
355	312105-0501	-		1	SCREW M6S ISO 4014 M10X50 A480	
360	312105-0497	-		7	SCREW M6S ISO 4017 M10X35 A480	
365	312115-0299	-		8	SCREW ISO4762 M4X30 A4	
370	312109-0457	-		4	SCREW M6S ISO 4017 M8X35 A480	
375	312115-0304	-		8	SCREW ISO4762 M4X45 A4	
380	312155-0451	-		1	SCREW EN 10642 MF6S M8X20 A480	
385	312115-0327	-		4	SCREW ISO4762 M5X12 A4	
390	312318-0459	A		2	SCREW ISO4029 M8X40 A4	
395	312115-0331	-		4	SCREW ISO4762 M5X20 A4	
400	312605-0318	A		2	HEXAGON NUT, M6M M8 A280	
405	312155-0370	-		8	SCREW EN 10642 MF6S M6X20 A480	
410	315125-0165	-		4	WASHER TBRSB 8,4X26X5 A4	
415	315105-0136	-		3	WASHER ISO 7089-4-200 HV-A4	
420	315705-0303	-		1	PARALLEL KEY W. ROUND ENDS 10X8X50 MM	
430	352103-0101	-		1	KABELFöRSKR. ST 9, PR15,2/PG9	
440	352103-0108	-		1	CABLE GLAND, ST 13,5 , PR20,4/PG13,5	
450	311112-0343	-		2	SPRING PIN, ISO 8752 6X28-C	
460	312318-0360	-		1	SCREW ISO4029 M6X6 A4	
500	90110-0157	-		1	CABLE HOOD 6-POL 70.352.0628.1	
510	90355-0031	A		1	TORQUE RIGID COUPLING, 10X10 MM	
520	90458-0442	-		1	GLAND, EXTENDED WITH INSERT, M25X1,5	
530	90458-2749	A		1	GEARS, BEVEL A1	
540	90335-0152	-		1	COMP. SPRING 22300, 1,25X17,25X40,5	
550	90092-0082	A		2	OIL BRUSH D=2,5MM TUBE D=10	
560	90459-1277	A		2	CHAIN TENSIONER, 5131HPNF	
570	90459-1449	A		2	SAFETY CLUTCH, 1/490.725.C DIA. 32	
M.B422	90044-0117	A		1	PROX.SW. IX 0208	
M.B423	90044-0117	A		1	PROX.SW. IX 0208	
M.B504	90458-1552	A		1	ANGLE ENCODER, 670900130	
M.M500	90459-0248	A		1	GEARS, BEVEL MOTOR KA47DT80N4-2WE	
W520	90220-0104	-	MM	7000	SCR. CABLE 4X1,5MM2	
X200	90110-0159	-		1	MALE INSERT 70.310.0640.0	

Machine Type | Group Description | Used-In | Group Number | Page No

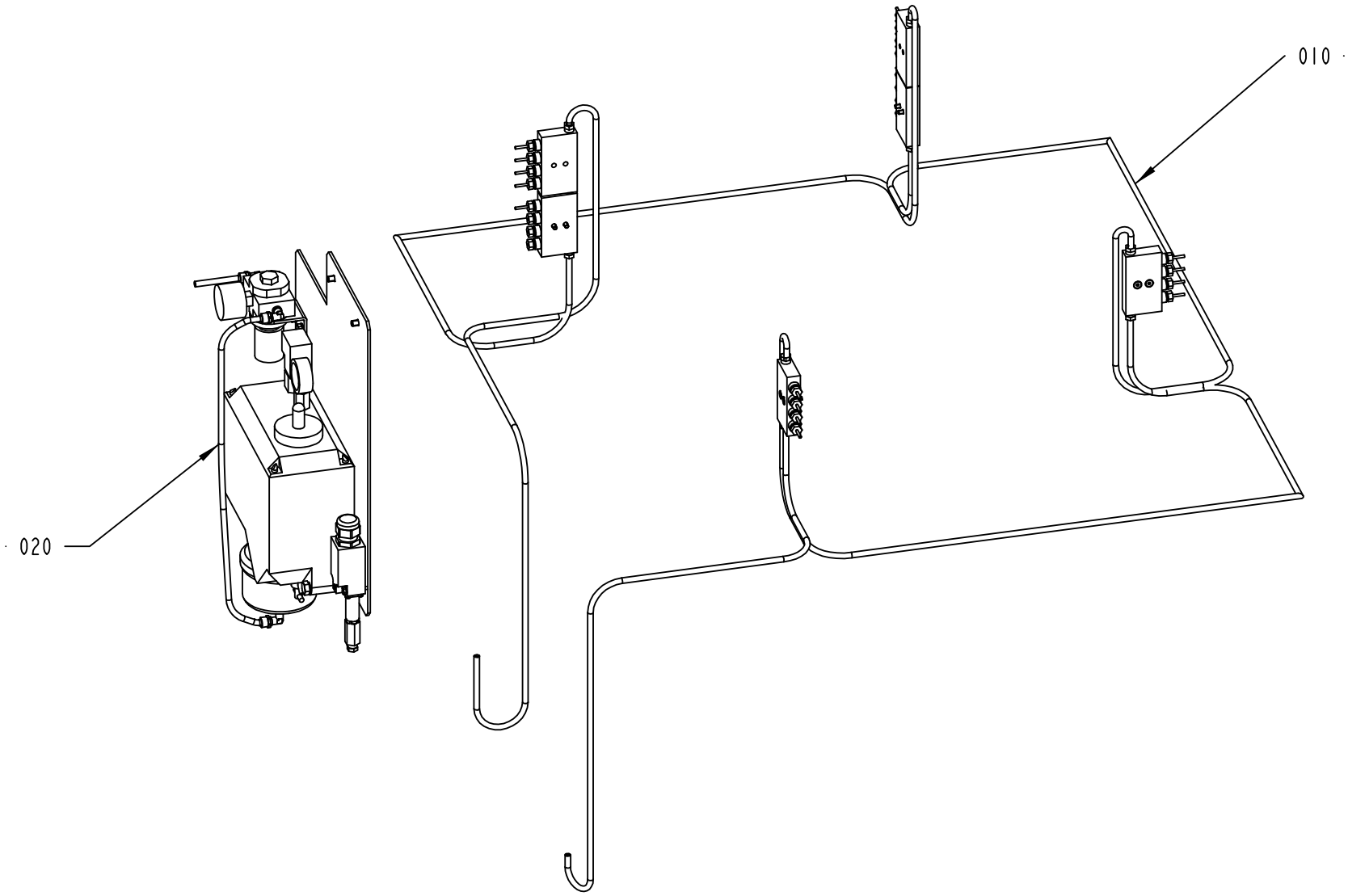

2556718-1
ECM 104392

Pos	Part No	SP	UN	Qty	Description	Page No
Common Parts						
010	A2556717-0100	-		1	LUBRICANT DISTRIBUTOR	**237**
020	A1514495-0100	-		1	CENTRAL LUBRICATION	**239**

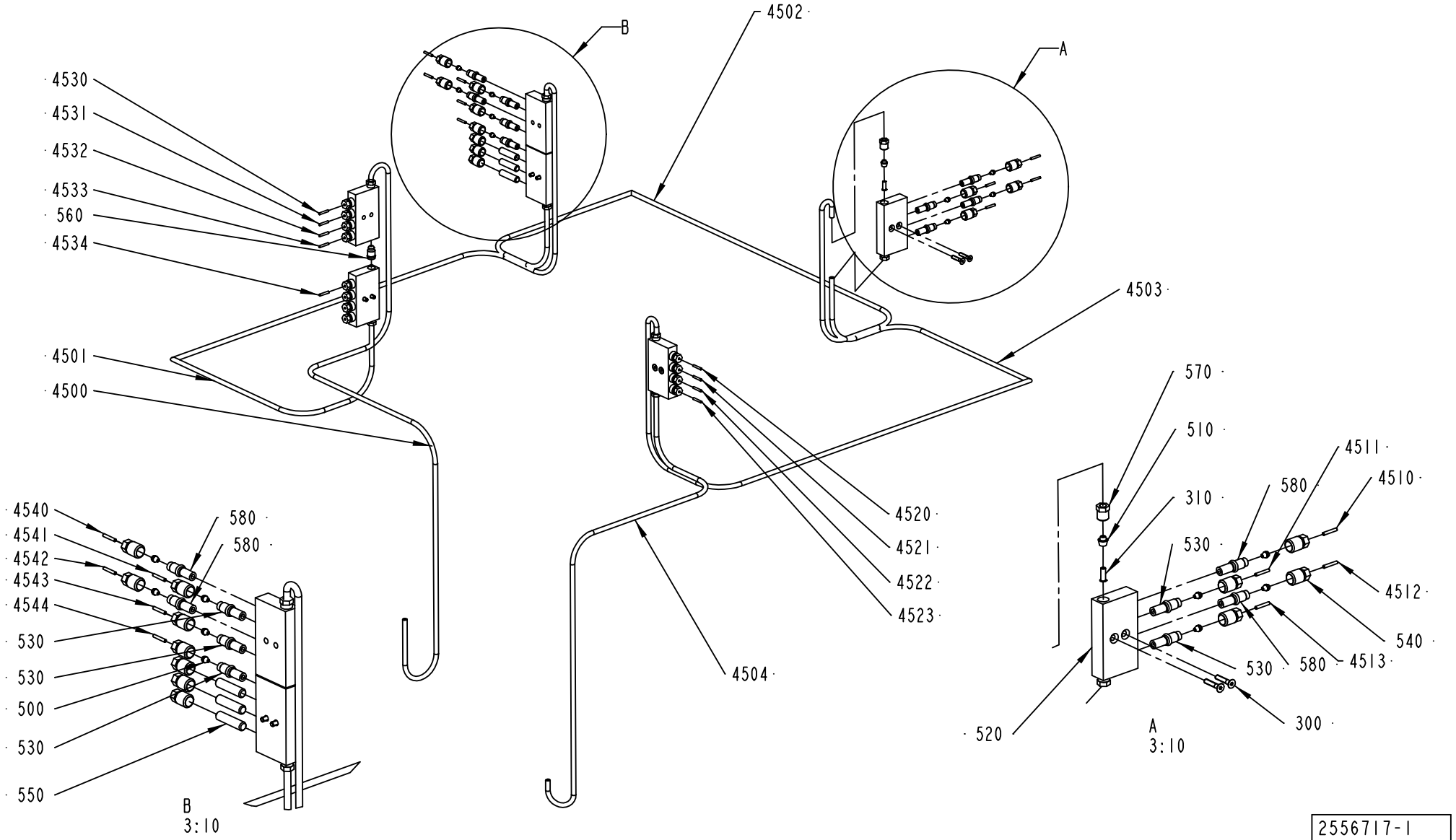

2556717-1
ECM 104392

Pos	Part No	SP	UN	Qty	Description	Page No
Common Parts						
300	312155-0295	B		8	SCREW EN 10642 MF6S M4X20 A480	
310	342706-0130	A		8	ACCESSORIES, INSERT SLEEVE 6 MM	
4500	90166-0108	A	MM	1500	TUBE 6 MM PA,TRANSP.	
4501	90166-0108	A	MM	1500	TUBE 6 MM PA,TRANSP.	
4502	90166-0108	A	MM	1500	TUBE 6 MM PA,TRANSP.	
4503	90166-0108	A	MM	1500	TUBE 6 MM PA,TRANSP.	
4504	90166-0108	A	MM	1500	TUBE 6 MM PA,TRANSP.	
4510	90166-0143	A	MM	1000	TUBE 2,5 MM PA,TRANSP.	
4511	90166-0143	A	MM	1000	TUBE 2,5 MM PA,TRANSP.	
4512	90166-0143	A	MM	1000	TUBE 2,5 MM PA,TRANSP.	
4513	90166-0143	A	MM	1000	TUBE 2,5 MM PA,TRANSP.	
4520	90166-0143	A	MM	1000	TUBE 2,5 MM PA,TRANSP.	
4521	90166-0143	A	MM	1000	TUBE 2,5 MM PA,TRANSP.	
4522	90166-0143	A	MM	1000	TUBE 2,5 MM PA,TRANSP.	
4523	90166-0143	A	MM	1000	TUBE 2,5 MM PA,TRANSP.	
4530	90166-0143	A	MM	1000	TUBE 2,5 MM PA,TRANSP.	
4531	90166-0143	A	MM	1000	TUBE 2,5 MM PA,TRANSP.	
4532	90166-0143	A	MM	1000	TUBE 2,5 MM PA,TRANSP.	
4533	90166-0143	A	MM	1000	TUBE 2,5 MM PA,TRANSP.	
4534	90166-0143	A	MM	1000	TUBE 2,5 MM PA,TRANSP.	
4540	90166-0143	A	MM	1000	TUBE 2,5 MM PA,TRANSP.	
4541	90166-0143	A	MM	1000	TUBE 2,5 MM PA,TRANSP.	
4542	90166-0143	A	MM	1000	TUBE 2,5 MM PA,TRANSP.	
4543	90166-0143	A	MM	1000	TUBE 2,5 MM PA,TRANSP.	
4544	90166-0143	A	MM	1000	TUBE 2,5 MM PA,TRANSP.	
500	90028-0020	A		18	CONE TUBE 2,5MM	
510	90028-0025	A		8	CONE TUBE 6 MM	
520	90032-0039	A		6	BLOCK 4 WAYS	
530	90092-0054	A		10	METERING VALVE 50 MM3	
540	90134-0039	-		24	BUSHING VALVE CONNECTION 2,5 MM	
550	90134-0052	-		6	PLUG DOSING BLOCK	
560	90134-0054	-		2	BLOCK CONNECTION M10X1	
570	90134-0055	-		8	BUSHING/NUT INLET/OUTLET 6 MM	
580	90092-0052	A		8	METERING VALVE 10 MM3	

Pos	Part No	SP	UN	Qty	Description	Page No

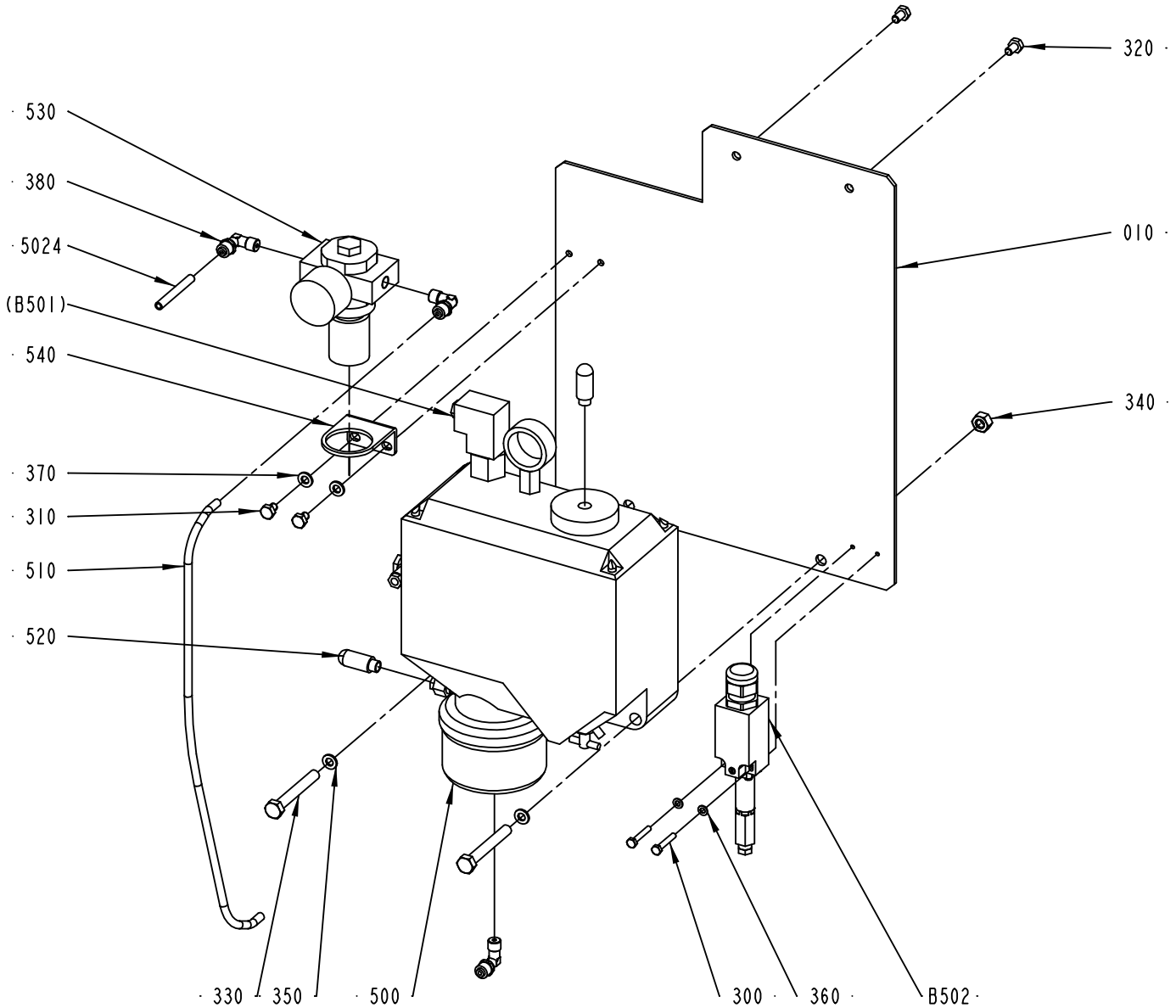

1514495-1
ECM 73201

Pos	Part No	SP	UN	Qty	Description	Page No
Common Parts						
010	1514436-0000	-		1	MOUNTING PLATE	
300	312105-0297	-		2	SCREW M6S ISO 4017 M4X25 A480	
310	312105-0362	-		2	SCREW M6S ISO 4017 M6X8 A480	
320	312105-0364	-		2	SCREW M6S ISO 4017 M6X10 A480	
330	312105-0463	-		2	SCREW M6S ISO 4014 M8X60 A480	
340	312605-0318	-		2	HEXAGON NUT, M6M M8 A280	
350	315103-0153	-		2	BRICKA, BRB, 6,4/12,H=1,5 NIPL BR	
360	315105-0136	-		2	WASHER ISO 7089-4-200 HV-A4	
370	315105-0153	-		2	WASHER ISO 7089-6-200 HV-A4	
380	342930-0113	-		3	ELBOW 90 COUPL.,EXT.THREAD 6/4-R1/8"	
500	B90048-0032	A		1	OIL PUMP INCL. CONTAINER 1,5 L	
	90048-0452	*B*		*1*	*SEALING KIT*	
5024	90166-0081	-	MM	2000	TUBE 6 MM PA BLUE	
510	90166-0081	-	MM	600	TUBE 6 MM PA BLUE	
520	90328-0047	A		2	SILENCER G1/8	
530	B90458-2741	A		1	PRESSURE REGULATOR, LR-1/8-D-MINI	
	90458-2742	*B*		*1*	*BRACKET HR-D-MIN, FOR LR-1/8-D-MINI*	
540	90458-2742	-		1	BRACKET HR-D-MIN, FOR LR-1/8-D-MINI	
B502	90274-0084	A		1	PRESSURE GUARD, 1800 KPA	

Pos	Part No	SP	UN	Qty	Description	Page No

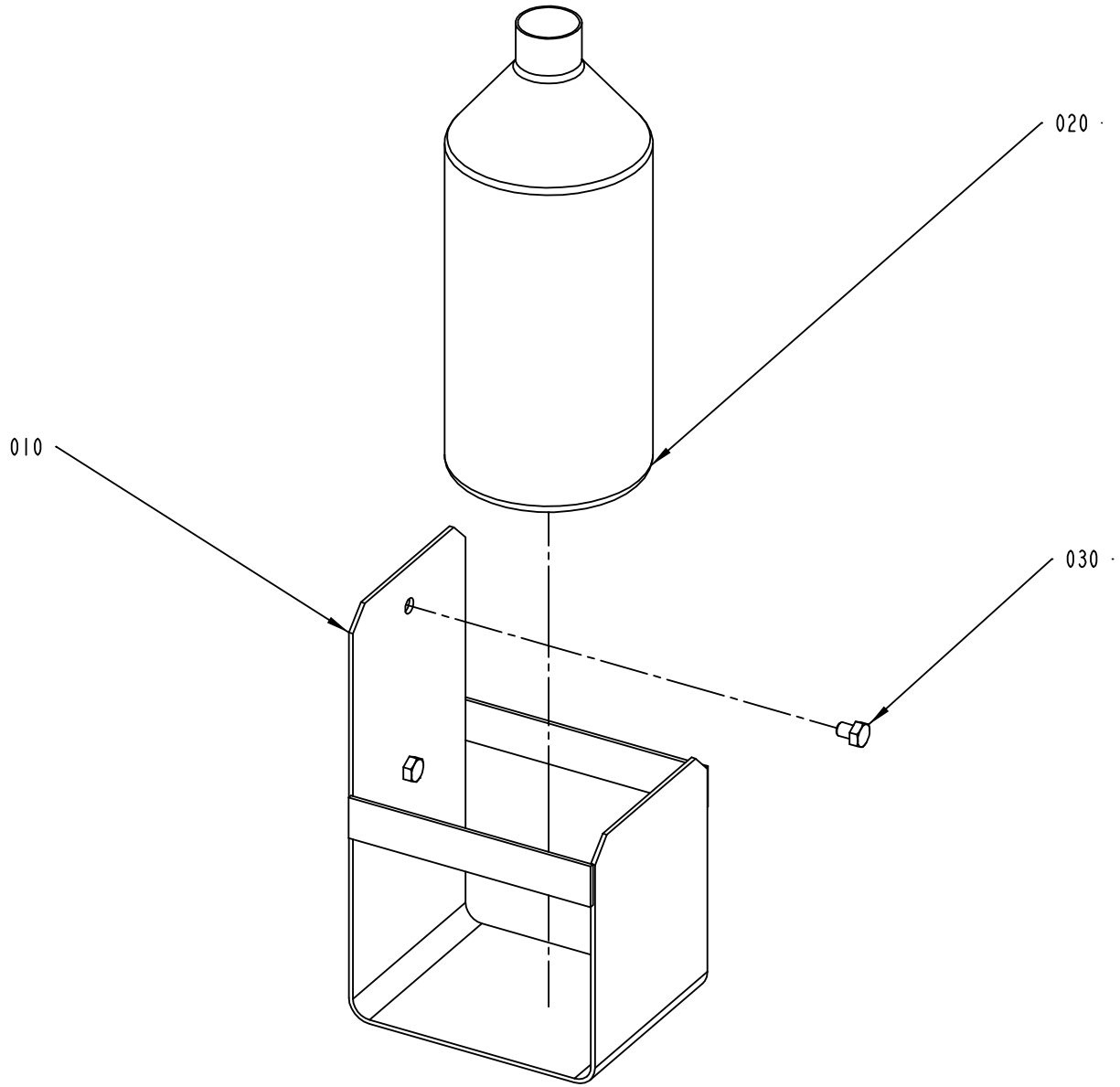

1515450-1
ECM 73201

ECM: 122354 - 20021212
Group number: 1515450-0100
Assembly Drawing: 1515450-1_1_AA

Issue: 20030314

Pos	Part No	SP	UN	Qty	Description	Page No
Common Parts						
010	1514433-0000	-		1	BRACKET	
020	90458-2884	B		1	BOTTLE, 1000ML PLASTIC BROWN INCL LID	
030	312105-0362	-		2	SCREW M6S ISO 4017 M6X8 A480	

Pos	Part No	SP	UN	Qty	Description	Page No

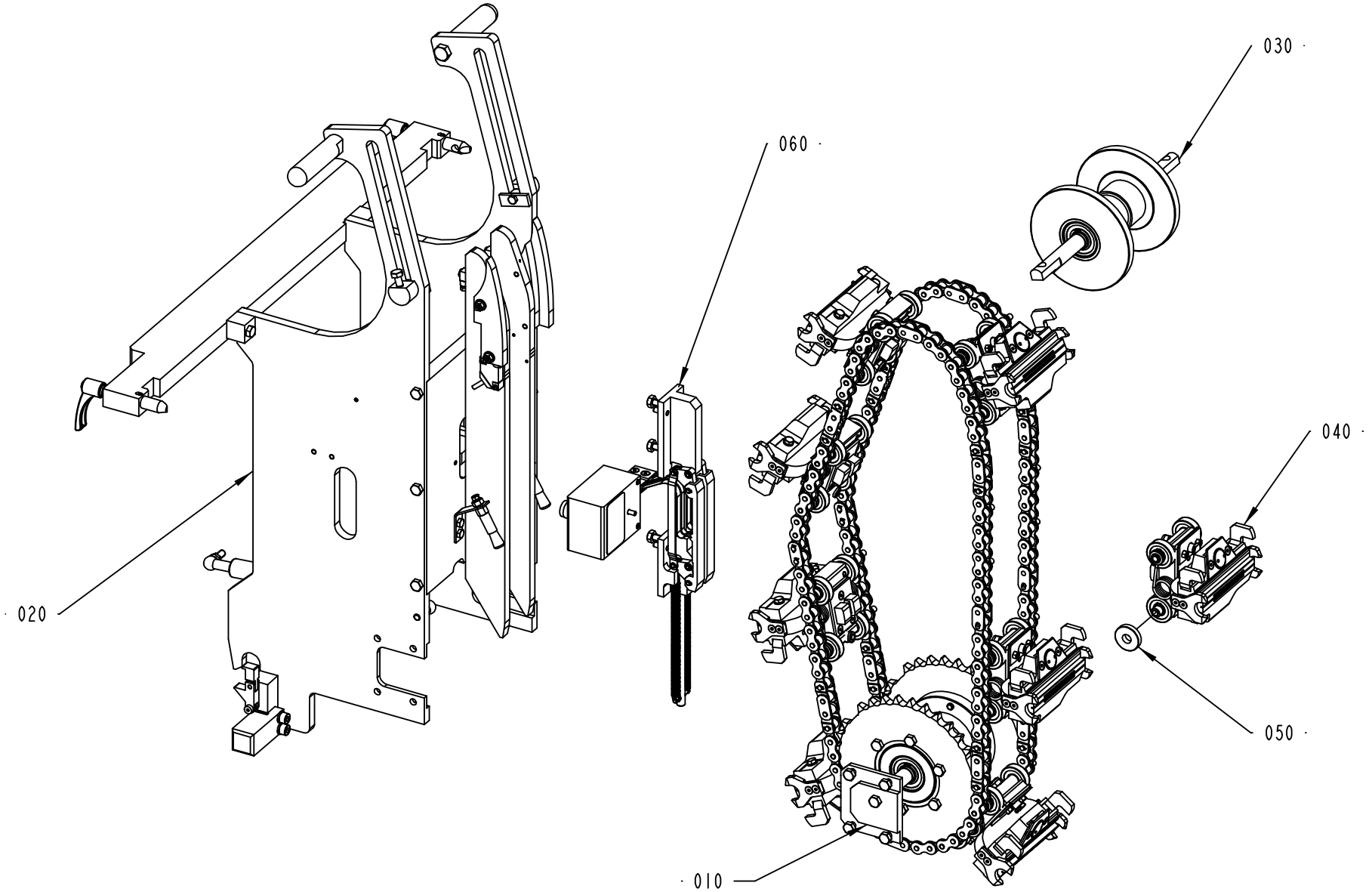
030
060
040
020
050
010
2524102-1
ECM 104382

Pos	Part No	SP	UN	Qty	Description	Page No
0150S						
040	A2524100-0100	-		7	HEATING JAW	**245**
0200B						
040	A2524100-0100	-		8	HEATING JAW	**245**
V065						
040	A2524100-0100	-		8	HEATING JAW	**245**
Common Parts						
010	A2523911-0100	-		1	SPROCKET	**247, 249, 251**
020	A2523910-0100	-		1	FRAME SECTION	**253**
030	A2542895-0100	-		1	GUIDE SPROCKET	**255**
050	A2543110-0100	-		1	SYNCHRONIZER	**257**
060	B1533096-0100	-		1	CONTACT RAIL	
010	*A1533090-0100*	*-*		*1*	*CONTACT RAIL*	
020	*A1533091-0100*	*-*		*1*	*CONTACT RAIL*	
040	*1533076-0000*	*A*		*2*	*AXLE PIN*	
050	*1533077-0000*	*-*		*1*	*SHAFT*	
060	*1533095-0000*	*A*		*1*	*BRACKET*	
070	*1533097-0000*	*A*		*1*	*BRACKET*	
090	*1533509-0000*	*A*		*2*	*WASHER*	
100	*1533512-0000*	*-*		*1*	*ATTACHMENT*	
105	*311103-0352*	*-*		*4*	*PIN,STRIGHT M6 6X18 RFR*	
110	*315750-0102*	*A*		*6*	*RETAIN. RING, 5*	
120	*312155-0364*	*A*		*4*	*SCREW EN 10642 MF6S M6X10 A480*	
140	*312105-0455*	*-*		*3*	*SCREW M6S ISO 4017 M8X30 A480*	
150	*312121-0343*	*A*		*1*	*SCREW SLOT.PAN HD. MCS 5X60 FZB*	
160	*1533505-0000*	*A*		*1*	*TRANSFORMER*	

Pos	Part No	SP	UN	Qty	Description	Page No

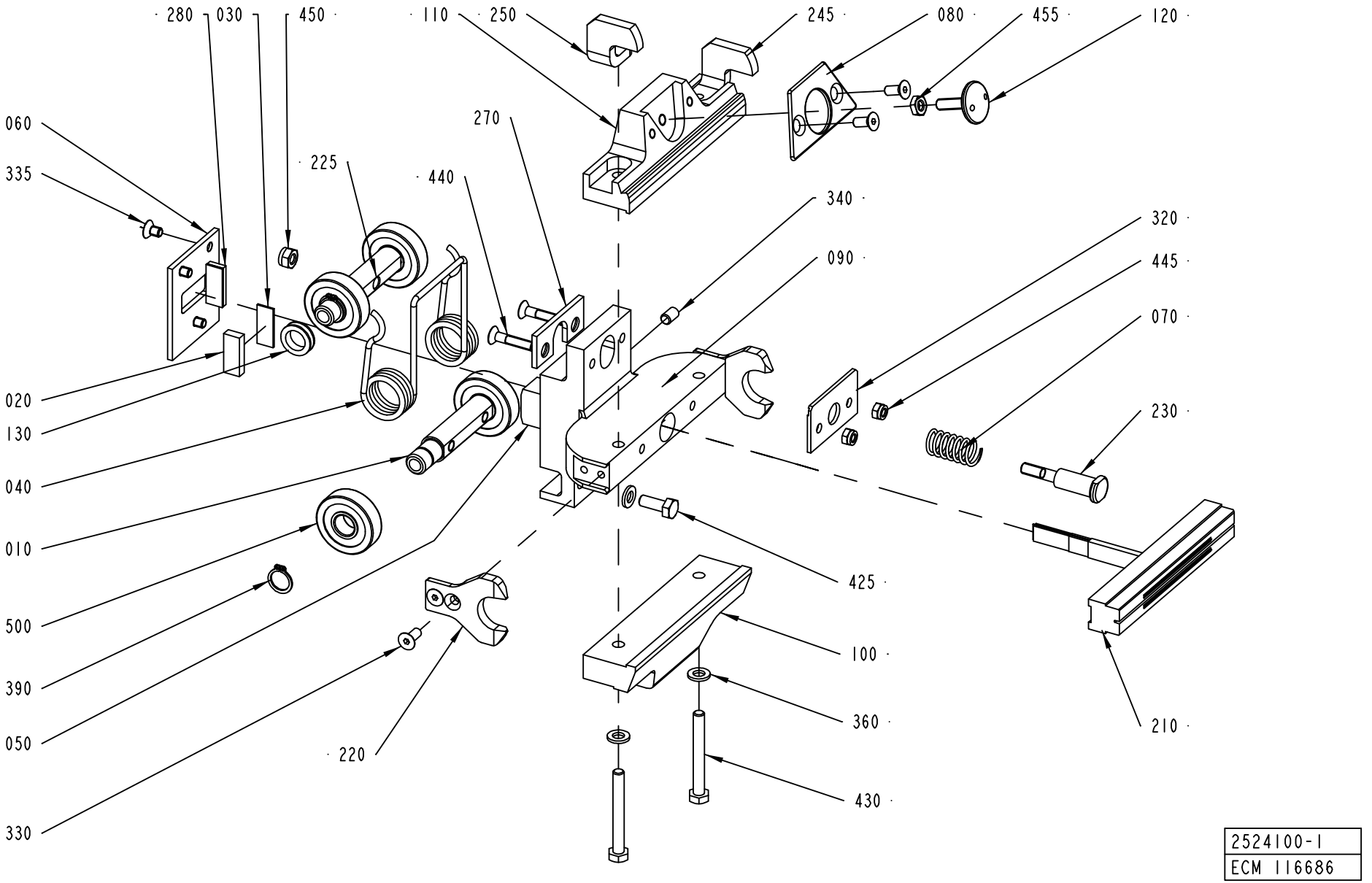
280
030
450
110
250
245
080
455
120
060
335
270
225
440
340
320
445
090
070
230
020
130
040
010
500
390
050
330
220
425
100
360
430
210
2524100-1
ECM 116686

ECM: 122350 - 20021212
Group number: 2524100-0100
Assembly Drawing: 2524100-1_1_AB

Issue: 20030314

Pos	Part No	SP	UN	Qty	Description	Page No
0150S						
100	2524237-0000	A		1	VOLUME FLAP	
110	2524238-0000	A		1	VOLUME FLAP	
120	2524204-0000	A		1	VOLUME ADJUSTER	
210	1520176-0000	A		1	INDUCTOR	
330	312155-0327	A		4	SCREW EN 10642 MF6S M5X12 A480	
455	312625-0318	-		1	HEXAGON THIN NUT, EN 24035 ML6M M8 A4	
0200B						
080	2543101-0000	-		1	PLATE	
100	2569684-0000	A		1	VOLUME FLAP	
110	2524215-0000	A		1	VOLUME FLAP	
120	2524204-0000	A		1	VOLUME ADJUSTER	
210	1520175-0000	A		1	INDUCTOR	
330	312155-0327	A		6	SCREW EN 10642 MF6S M5X12 A480	
455	312625-0318	-		1	HEXAGON THIN NUT, EN 24035 ML6M M8 A4	
V065						
080	2543107-0000	-		1	PLATE	
100	2543104-0000	A		1	VOLUME FLAP	
110	2543105-0000	A		1	VOLUME FLAP	
120	2543108-0000	A		1	VOLUME ADJUSTER	
210	1520174-0000	A		1	INDUCTOR	
330	312155-0327	A		6	SCREW EN 10642 MF6S M5X12 A480	
455	312625-0316	-		1	HEXAGON THIN NUT, EN 24035 ML6M M6 A4	
Common Parts						
010	2569625-0000	A		1	SHAFT	
020	2524224-0000	A		1	CLAMP BLOCK	
030	1514312-0000	A		2	CLAMP BLOCK	
040	2542892-0000	A		1	SPRING	
050	1533562-0000	A		2	CARBON BRUSH	
060	2524210-0000	A		1	CARBON BRUSH HOLDER	
070	2556791-0000	A		1	TENSION SPRING	
090	2524209-0000	A		1	HEATING JAW	
130	2556678-0000	B		2	SLEEVE	
220	2524081-0000	A		2	GUIDE	
225	2569624-0000	A		1	SHAFT	
230	2569623-0000	A		1	STOP SCREW	
245	2524207-0000	A		1	STOP ARM	
250	2524208-0000	A		1	STOP ARM	
270	2524220-0000	-		1	SUPPORTING SHEET	
280	2524243-0000	A		1	CLAMP BLOCK	
320	2542894-0000	-		1	STOP PLATE	
335	312155-0323	-		3	SCREW EN 10642 MF6S M5X8 A480	
340	312318-0364	A		1	SCREW ISO4029 M6X10 A4	
360	315105-0153	-		4	WASHER ISO 7089-6-200 HV-A4	
390	315751-0109	-		4	RETAIN. RING, 12	
425	312105-0368	-		2	SCREW M6S M6X16 A280	
430	312109-0380	A		2	SCREW M6S ISO 4017 M6X50 A480	
440	312155-0333	-		2	SCREW EN 10642 MF6S M5X25 A480	
445	312812-0314	A		2	HEXAGON NUT, NY-LOCK M5 A480	
450	312812-0316	A		1	HEXAGON NUT, NY-LOCK M6 A480	
500	90459-1532	A		4	BEARING ROLLER, 12X35X10 MM	

Machine Type | Group Description | Used-In | Group Number | Page No

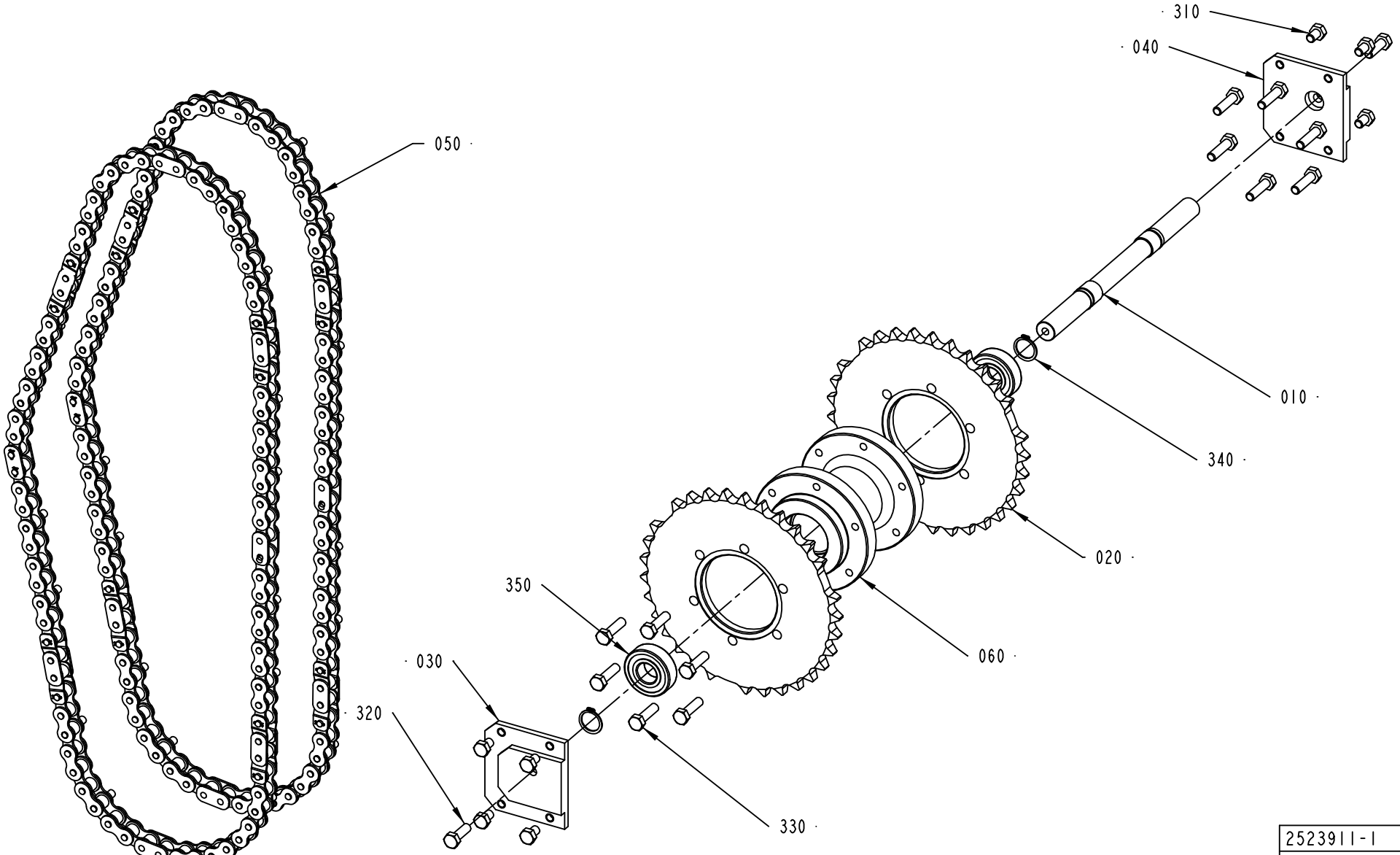

2523911-1
ECM 104382

ECM: 122361 - 20021212
Group number: 2523911-0100
Assembly Drawing: 2523911-1_1_AA

Issue: 20030314

Pos	Part No	SP	UN	Qty	Description	Page No
0150S						
020	2524261-0000	A		2	SPROCKET	
030	2524262-0000	-		2	SUPPORT PLATE	
050	2524247-0000	A		2	CHAIN	
0200B						
020	2523839-0000	A		2	SPROCKET	
030	2523856-0000	-		1	SUPPORT PLATE	
040	2523857-0000	-		1	SUPPORT PLATE	
050	2524128-0000	A		2	CHAIN	
V065						
020	2542888-0000	A		2	SPROCKET	
030	2542890-0000	-		1	SUPPORT PLATE	
040	2542891-0000	-		1	SUPPORT PLATE	
050	2542889-0000	A		2	CHAIN	
Common Parts						
010	1515013-0000	A		1	SHAFT	
060	2524251-0000	A		1	HUB	
310	312105-0447	-		8	SCREW M6S ISO 4017 M8X12 A480	
320	312105-0453	-		2	SCREW M6S ISO 4017 M8X25 A480	
330	312105-0455	-		12	SCREW M6S ISO 4017 M8X30 A480	
340	315751-0116	-		2	RETAIN. RING, 20	
350	321313-0104	A		2	BALL BEARING, 20X47X14 MM	

Pos	Part No	SP	UN	Qty	Description	Page No

Machine Type | Group Description | Used-In | Group Number | Page No

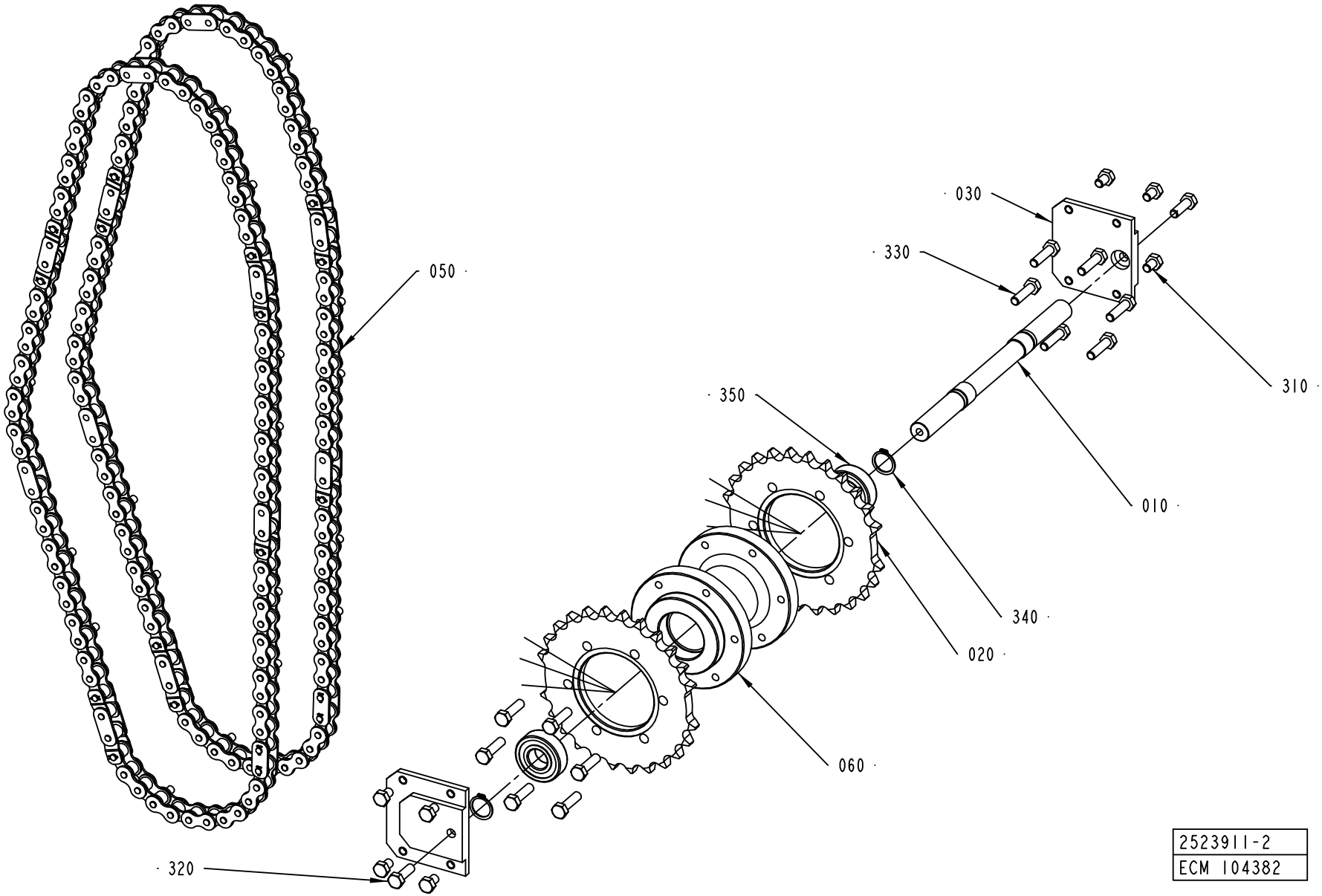
030
330
310
050
350
010
340
020
060
320
2523911-2
ECM 104382

Pos	Part No	SP	UN	Qty	Description	Page No
0150S						
020	2524261-0000	A		2	SPROCKET	
030	2524262-0000	-		2	SUPPORT PLATE	
050	2524247-0000	A		2	CHAIN	
0200B						
020	2523839-0000	A		2	SPROCKET	
030	2523856-0000	-		1	SUPPORT PLATE	
040	2523857-0000	-		1	SUPPORT PLATE	
050	2524128-0000	A		2	CHAIN	
V065						
020	2542888-0000	A		2	SPROCKET	
030	2542890-0000	-		1	SUPPORT PLATE	
040	2542891-0000	-		1	SUPPORT PLATE	
050	2542889-0000	A		2	CHAIN	
Common Parts						
010	1515013-0000	A		1	SHAFT	
060	2524251-0000	A		1	HUB	
310	312105-0447	-		8	SCREW M6S ISO 4017 M8X12 A480	
320	312105-0453	-		2	SCREW M6S ISO 4017 M8X25 A480	
330	312105-0455	-		12	SCREW M6S ISO 4017 M8X30 A480	
340	315751-0116	-		2	RETAIN. RING, 20	
350	321313-0104	A		2	BALL BEARING, 20X47X14 MM	

Pos	Part No	SP	UN	Qty	Description	Page No

Machine Type | Group Description | Used-In | Group Number | Page No

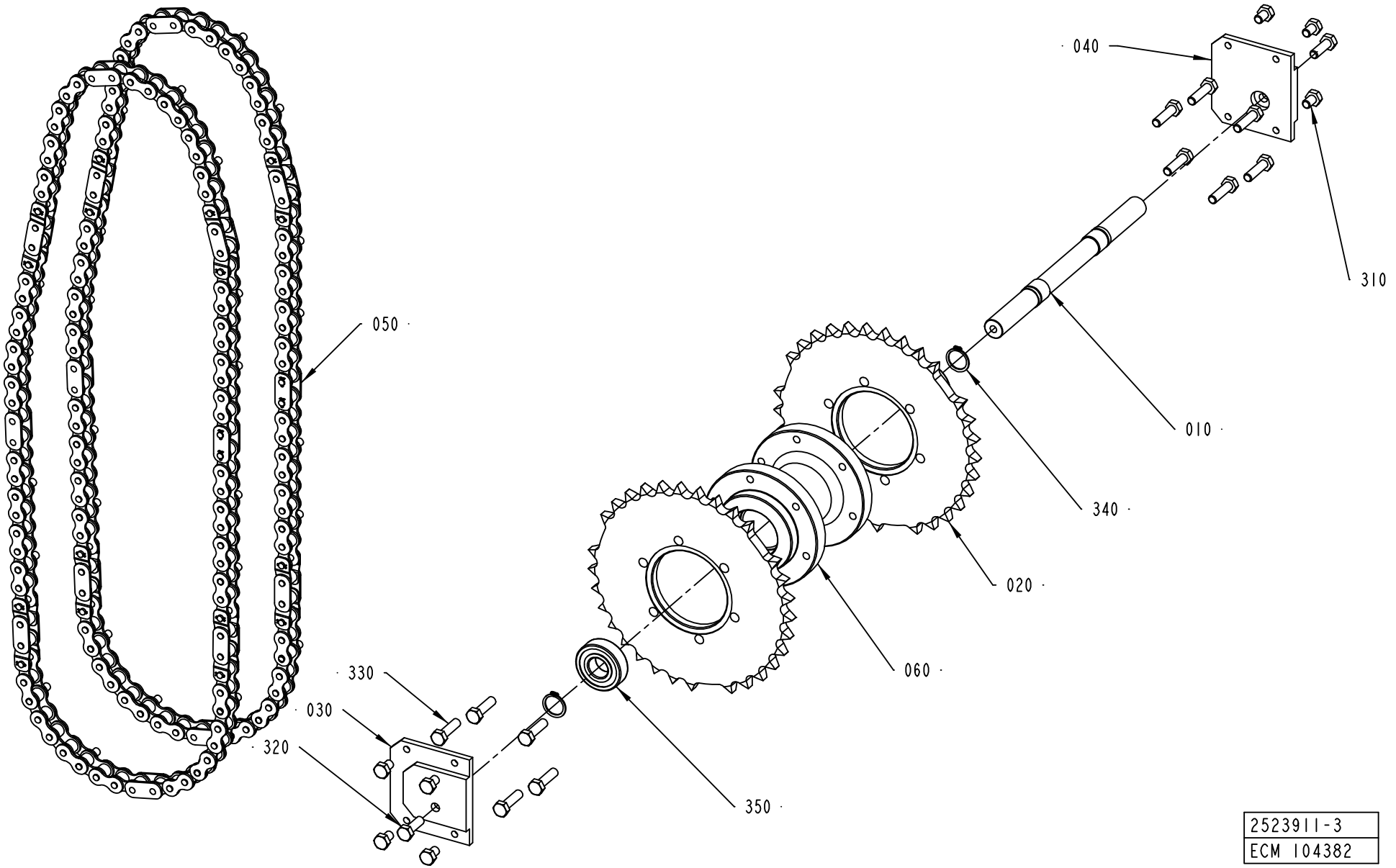
040
310
050
010
340
020
060
330
030
320
350
2523911-3
ECM 104382

ECM: 122361 - 20021212
Group number: 2523911-0100
Assembly Drawing: 2523911-3_1_AA

Issue: 20030314

Pos	Part No	SP	UN	Qty	Description	Page No
0150S						
020	2524261-0000	A		2	SPROCKET	
030	2524262-0000	-		2	SUPPORT PLATE	
050	2524247-0000	A		2	CHAIN	
0200B						
020	2523839-0000	A		2	SPROCKET	
030	2523856-0000	-		1	SUPPORT PLATE	
040	2523857-0000	-		1	SUPPORT PLATE	
050	2524128-0000	A		2	CHAIN	
V065						
020	2542888-0000	A		2	SPROCKET	
030	2542890-0000	-		1	SUPPORT PLATE	
040	2542891-0000	-		1	SUPPORT PLATE	
050	2542889-0000	A		2	CHAIN	
Common Parts						
010	1515013-0000	A		1	SHAFT	
060	2524251-0000	A		1	HUB	
310	312105-0447	-		8	SCREW M6S ISO 4017 M8X12 A480	
320	312105-0453	-		2	SCREW M6S ISO 4017 M8X25 A480	
330	312105-0455	-		12	SCREW M6S ISO 4017 M8X30 A480	
340	315751-0116	-		2	RETAIN. RING, 20	
350	321313-0104	A		2	BALL BEARING, 20X47X14 MM	

Pos	Part No	SP	UN	Qty	Description	Page No

Machine Type | Group Description | Used-In | Group Number | Page No

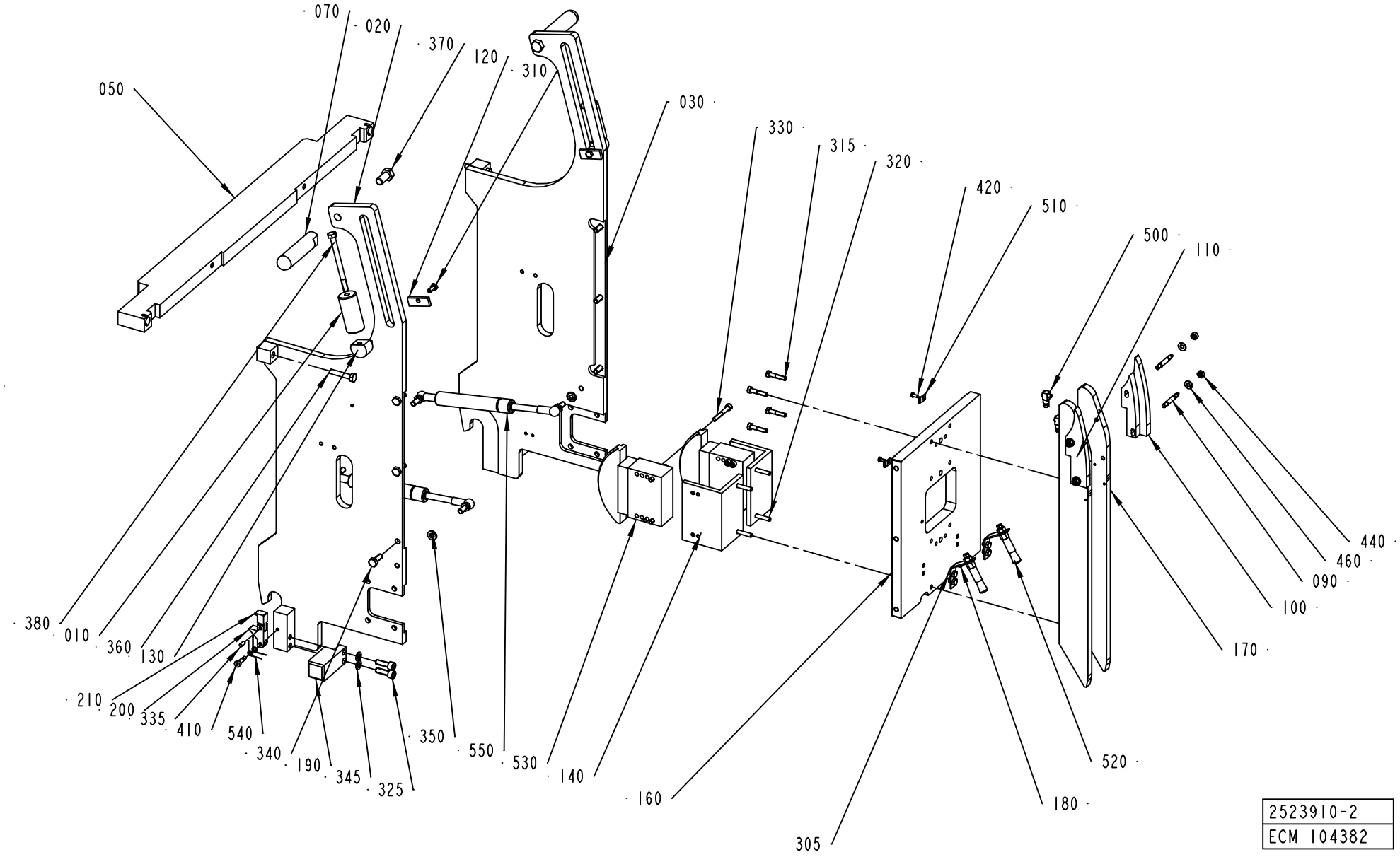
070
020
370
120
310
050
030
330
315
320
420
510
500
110
440
460
090
100
170
380
010
360
130
210
200
335
410
540
340
190
345
325
350
550
530
140
160
305
180
520
2523910-2
ECM 104382

ECM: 122340 - 20021212
Group number: 2523910-0100
Assembly Drawing: 2523910-2_1_AA

Issue: 20030314

Pos	Part No	SP	UN	Qty	Description	Page No
0150S						
010	2542896-0000	-		2	SPACER	
380	312105-0471	-		2	SCREW M6S ISO 4014 M8X100 A480	
0200B OR V065						
380	312105-0457	-		2	SCREW M6S ISO 4014 M8X35 A480	
Common Parts						
020	2556712-0000	-		1	SIDE PLATE	
030	2556713-0000	-		1	SIDE PLATE	
050	1515021-0000	-		1	BEAM	
070	2556682-0000	-		2	HANDLE	
090	2523832-0000	A		4	FASTENER	
100	2523833-0000	A		1	CHAIN GUIDE	
110	2523834-0000	A		1	CHAIN GUIDE	
120	2523854-0000	-		2	BRACKET	
130	2523855-0000	-		2	BRACKET	
140	2523906-0000	-		2	BRACKET	
160	2524082-0000	-		1	PLATE	
170	2524083-0000	A		2	ROLLER BAR	
180	2524250-0000	-		2	BRACKET	
190	2542903-0000	-		2	DOLLY	
200	2542904-0000	-		2	FLAP	
210	2542905-0000	-		2	FLAP	
305	312105-0362	-		4	SCREW M6S ISO 4017 M6X8 A480	
310	312105-0367	-		2	SCREW M6S M6X14 A280	
315	312105-0374	-		4	SCREW M6S ISO 4014 M6X30 A480	
320	312105-0376	-		4	SCREW M6S ISO 4014 M6X35 A480	
325	312115-0453	-		4	SCREW ISO4762 M8X25 A4	
330	312115-0379	-		8	SCREW ISO4762 M6X45 A4	
335	311103-0306	-		2	PARALLELL PIN, M6, 5X12 MM	
340	312105-0452	-		6	SCREW M6S ISO 4017 M8X22 A480	
345	315402-0165	-		4	LOCK WASHER FBB 8,2	
360	312105-0459	-		2	SCREW M6S ISO 4014 M8X40 A480	
370	312105-0534	-		2	SCREW M6S ISO 4017 M12X25 A480	
410	312180-0366	-		2	SCREW ISO7379 H6X12	
420	312125-0287	-		2	SCREW PAN HEAD MCS M4X8 SS	
440	312605-0316	-		4	HEXAGON NUT, M6M M6 A280	
460	315105-0156	-		4	WASHER PLAIN, BRB, 6,7/14,H=1,5	
500	90134-0058	-		2	CONNECTION	
510	90165-0003	-		2	PIPE CLIP FOR TUBE D=4 MM	
520	90092-0082	A		2	OIL BRUSH D=2,5MM TUBE D=10	
530	90459-1149	A		2	CHAIN TENSIONER, 51330BPNF	
540	90459-1345	-		4	TORSION SPRING 8359	
550	90459-1343	B		2	GAS SPRING NO. G23-100-800N-01	

Machine Type Group Description Used-In Group Number Page No

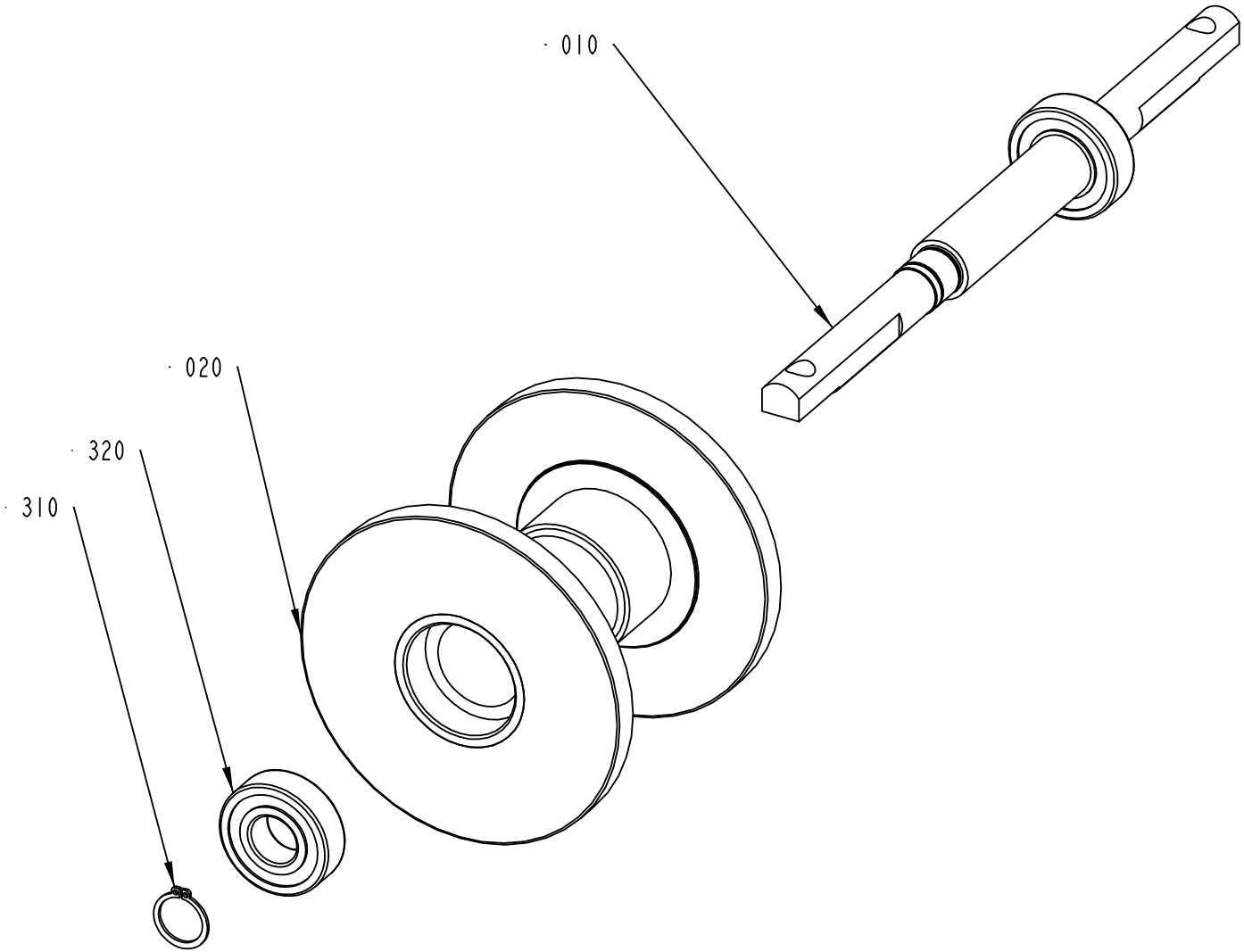

2542895-1
ECM 104382

ECM: 122341 - 20021212
Group number: 2542895-0100
Assembly Drawing: 2542895-1_1_AA

Issue: 20030314

Pos	Part No	SP	UN	Qty	Description	Page No
Common Parts						
010	1515017-0000	A		1	SHAFT	
020	1515018-0000	A		1	GUIDE SPROCKET	
310	315751-0116	-		2	RETAIN. RING, 20	
320	321313-0104	A		2	BALL BEARING, 20X47X14 MM	

Pos	Part No	SP	UN	Qty	Description	Page No

Assemble pos 010 on the back shaft
on one of the jaws on Heatingsidel

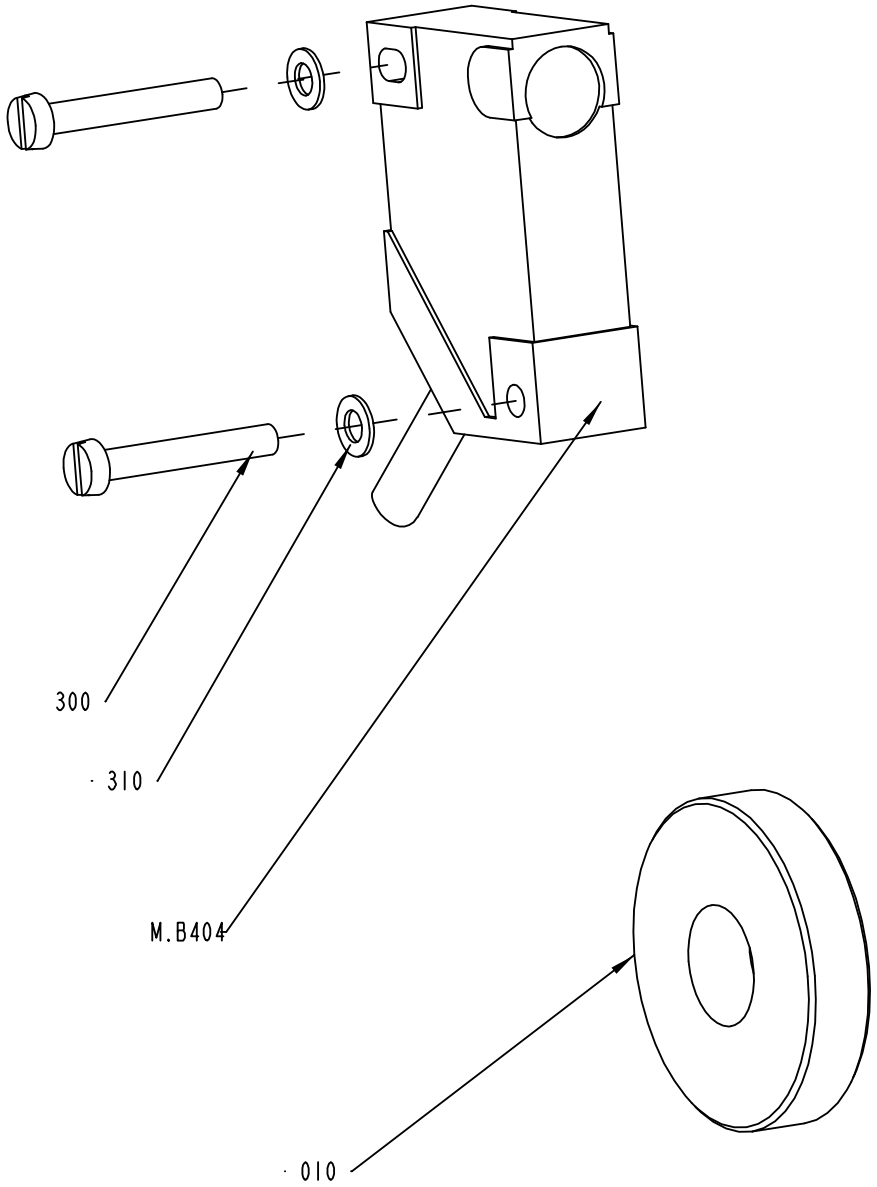

2543110-1
ECM 104382

ECM: 122349 - 20021212
Group number: 2543110-0100
Assembly Drawing: 2543110-1_1_AA

Issue: 20030314

Pos	Part No	SP	UN	Qty	Description	Page No
Common Parts						
010	2543109-0000	-		1	SLEEVE	
300	312125-0230	-		2	SPåRSKRUV MCS M3X20 SS	
310	315105-0124	-		2	WASHER ISO 7089-3-200 HV-A4	
M.B404	90044-0194	A		1	PROX.SW. IN5329/IN3002-BPKG	

Pos	Part No	SP	UN	Qty	Description	Page No

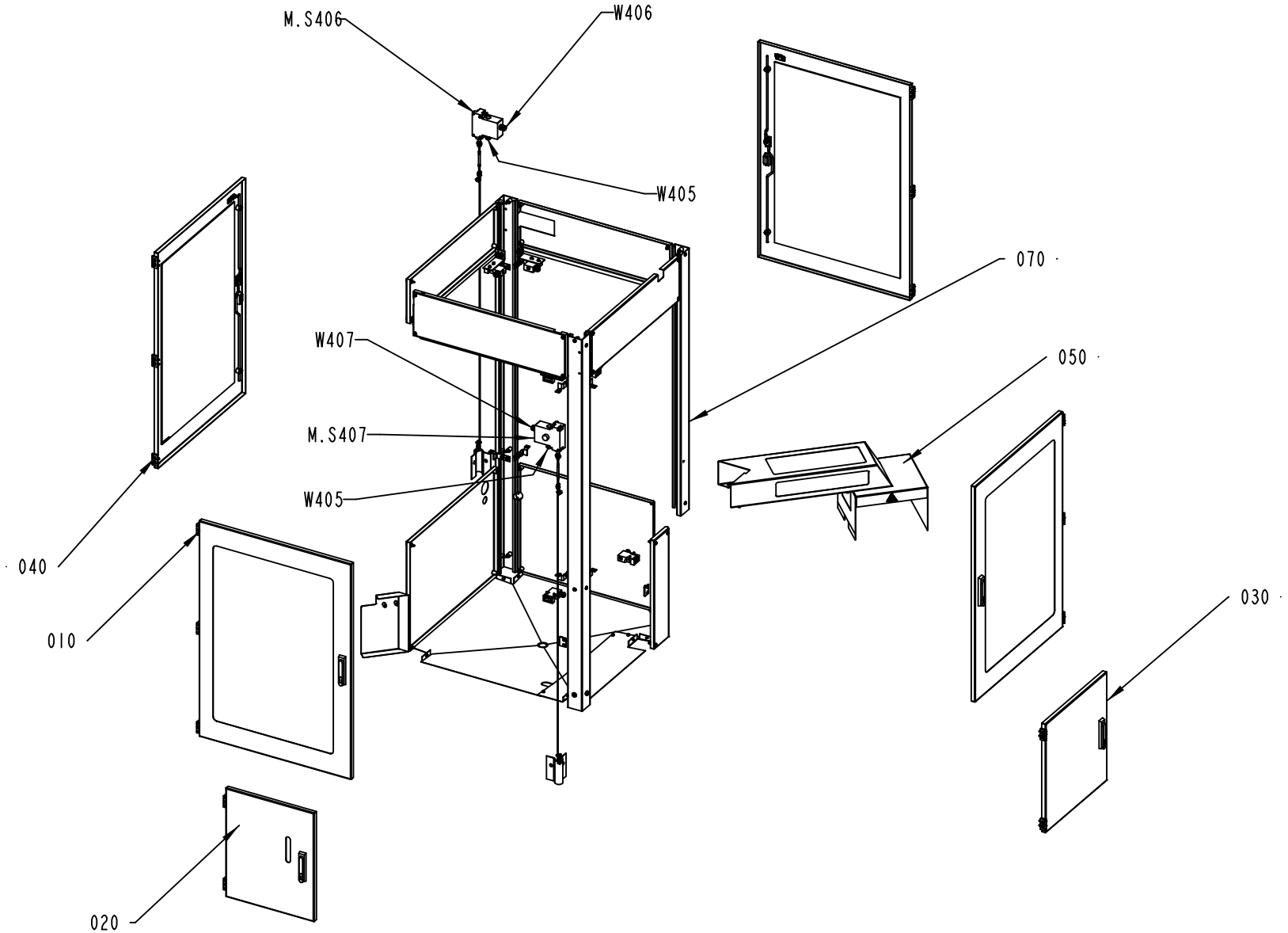

2524104-1
ECM 104434

Pos	Part No	SP	UN	Qty	Description	Page No
Common Parts						
010	A1514903-0100	-		2	DOOR	**261**
020	A2542935-0100	-		1	DOOR	**263**
030	A1514913-0100	-		1	DOOR	**265**
040	A1514915-0100	-		2	DOOR	**267**
050	A2542715-0100	-		1	COVER	**269**
070	A2524111-0100	-		1	COVER	**271**
M.S406	A2523950-0100	-		1	EMERGENCY STOP	**275**
M.S407	A2523950-0100	-		1	EMERGENCY STOP	**275**
W405	351150-0403	-	MM	2500	CABLE OLFLEX 3X0,75 MM2 LIGHT/GREY	
W406	351150-0403	-	MM	2000	CABLE OLFLEX 3X0,75 MM2 LIGHT/GREY	
W407	351150-0403	-	MM	1000	CABLE OLFLEX 3X0,75 MM2 LIGHT/GREY	

Pos	Part No	SP	UN	Qty	Description	Page No

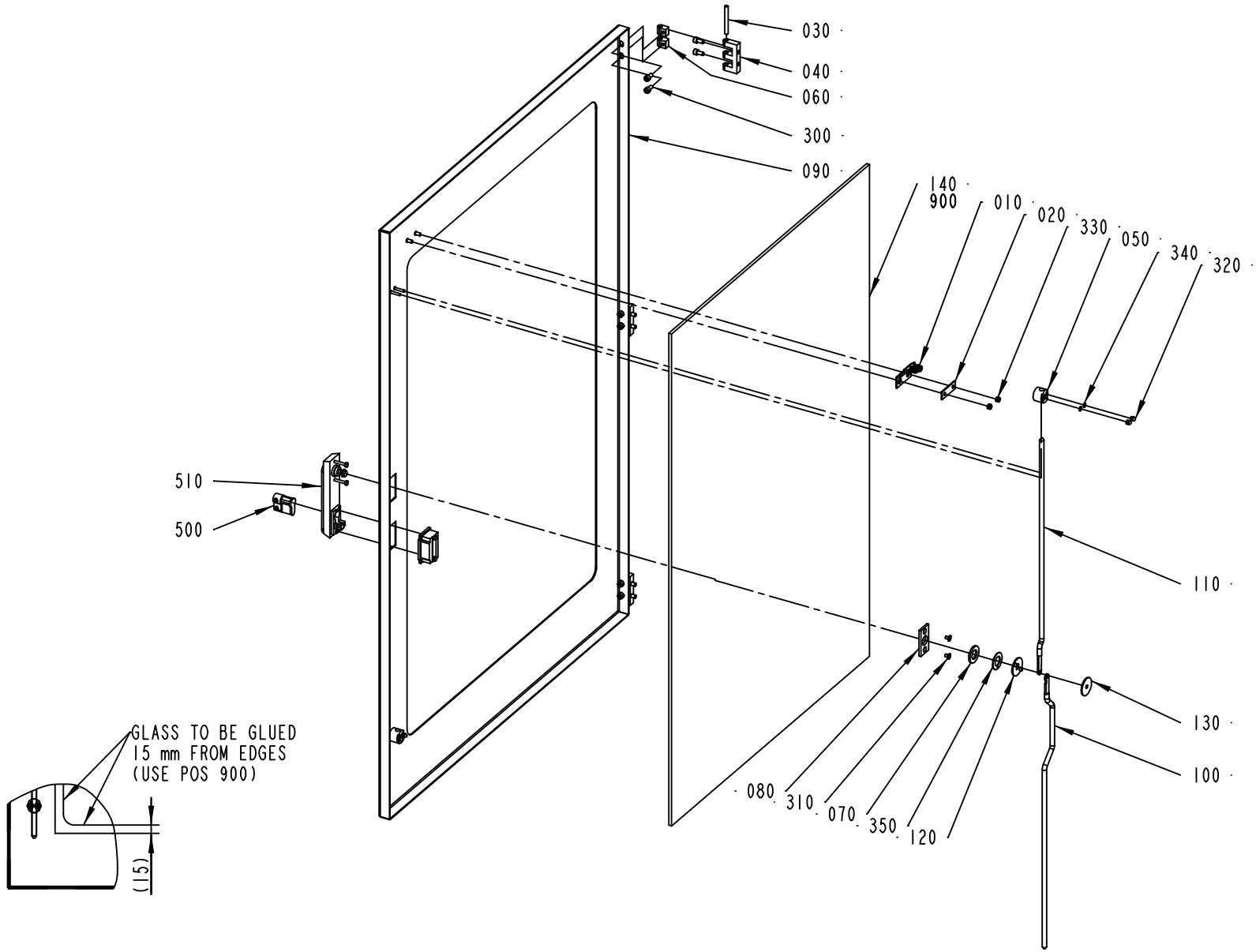

1514903-1
ECM 73247

Pos	Part No	SP	UN	Qty	Description	Page No
Common Parts						
010	975917-0000	-		1	KEY FOR SAFETY SWITCH 90044-103	
020	975924-0000	-		1	WASHER	
030	988685-0000	-		3	PIN	
040	1035792-0000	-		3	E-HINGE	
050	1129274-0000	-		2	GUIDE LUG	
060	1129770-0000	-		6	BLOCKING PIECE	
070	1338524-0000	-		1	WASHER	
080	1363878-0000	-		1	PLATE	
090	1514904-0000	-		1	DOOR	
100	1514905-0000	-		1	LOCKING ARM	
110	1514906-0000	-		1	LOCKING ARM	
120	1514923-0000	-		1	HOLDER	
130	1514924-0000	-		1	PLATE	
140	1514927-0000	-		1	GLASS PANE	
300	312115-0366	-		12	SCREW ISO4762 M6X12 A4	
310	312155-0323	-		2	SCREW EN 10642 MF6S M5X8 A480	
320	312705-0312	-		4	NUT HEX. DOMED CAP MHM-6 M4 A280	
330	312812-0314	-		2	HEXAGON NUT, NY-LOCK M5 A480	
340	315105-0136	-		4	WASHER ISO 7089-4-200 HV-A4	
350	321130-0240	-		1	THRUST WASHER, 18X32X1,5 MM	
500	90237-0128	-		1	LOCK CYLINDER, 1109-U3	
510	90237-0176	-		1	TURNING HANDLE	
900	90157-0041	-	L	1	SEALING COMPOUND	

Pos	Part No	SP	UN	Qty	Description	Page No

Machine Type | Group Description | Used-In | Group Number | Page No

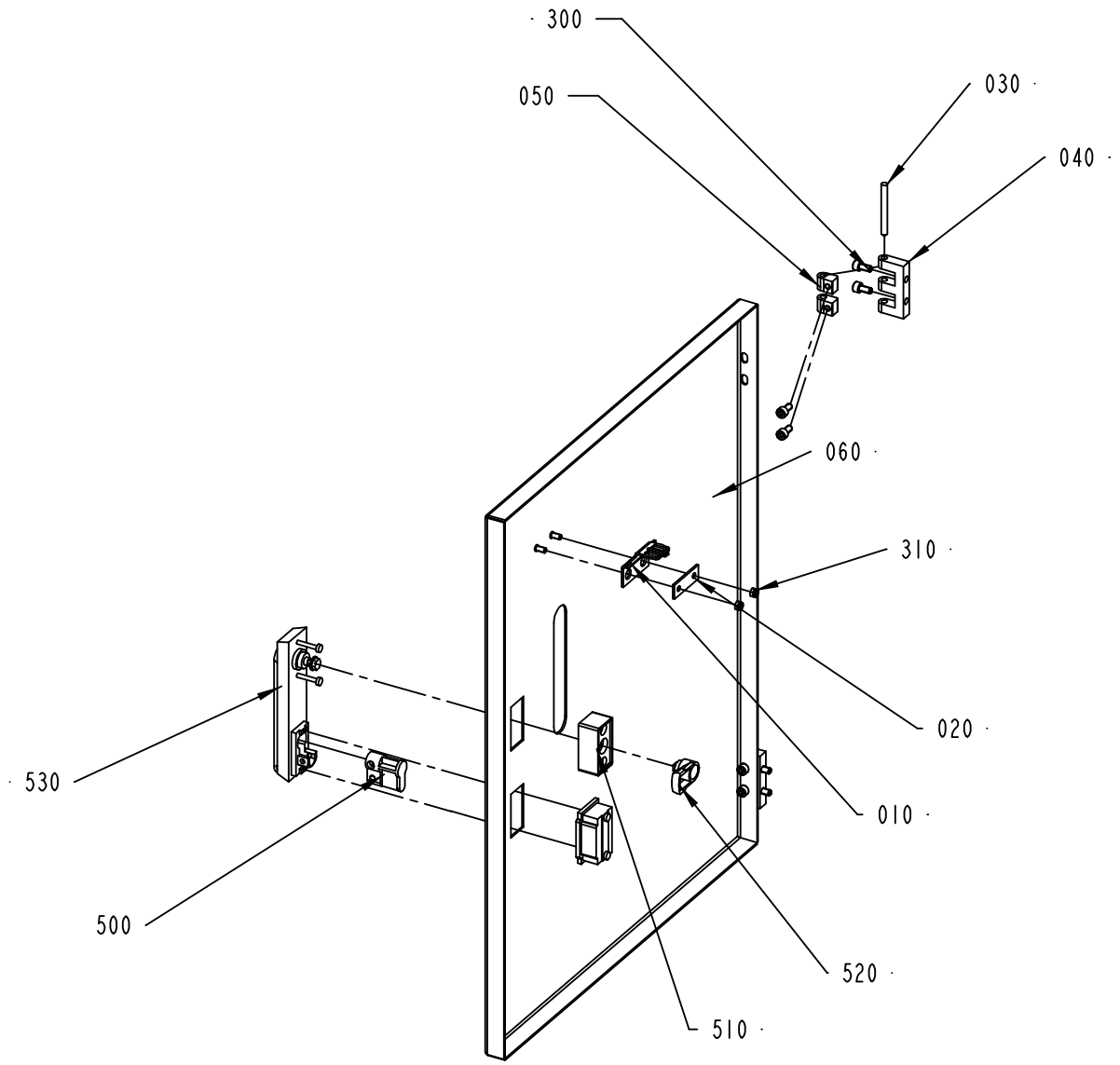

2542935-1
ECM 104434

Pos	Part No	SP	UN	Qty	Description	Page No
Common Parts						
010	975917-0000	-		1	KEY FOR SAFETY SWITCH 90044-103	
020	975924-0000	-		1	WASHER	
030	988685-0000	-		2	PIN	
040	1035792-0000	-		2	E-HINGE	
050	1129770-0000	-		4	BLOCKING PIECE	
060	2543057-0000	-		1	DOOR	
300	312115-0366	-		8	SCREW ISO4762 M6X12 A4	
310	312812-0314	-		2	HEXAGON NUT, NY-LOCK M5 A480	
500	90237-0128	-		1	LOCK CYLINDER, 1109-U3	
510	90237-0154	-		1	LOCK HOUSING, 1121-U60-0C	
520	90237-0165	-		1	LATCH	
530	90237-0176	-		1	TURNING HANDLE	

Pos	Part No	SP	UN	Qty	Description	Page No

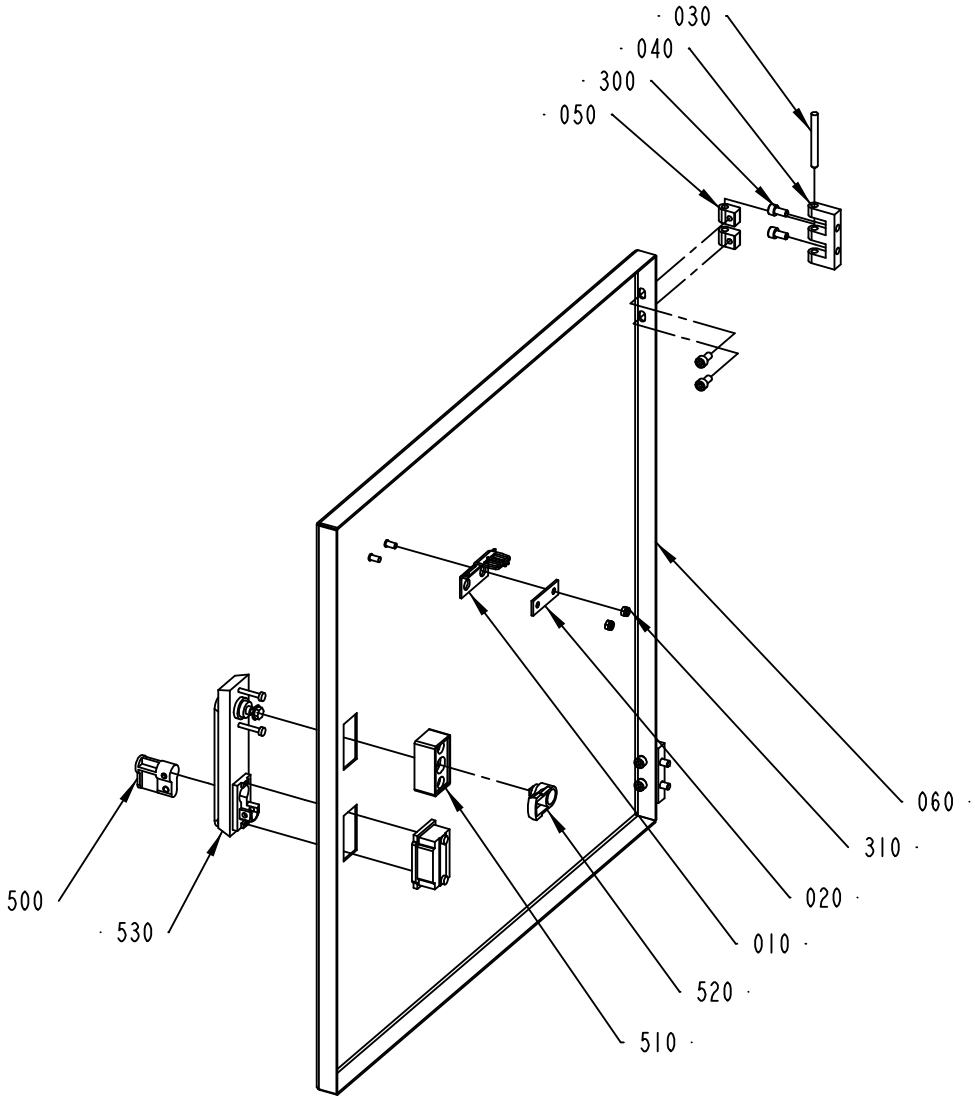

1514913-1
ECM 73247

Pos	Part No	SP	UN	Qty	Description	Page No
Common Parts						
010	975917-0000	-		1	KEY FOR SAFETY SWITCH 90044-103	
020	975924-0000	-		1	WASHER	
030	988685-0000	-		2	PIN	
040	1035792-0000	-		2	E-HINGE	
050	1129770-0000	-		4	BLOCKING PIECE	
060	1514914-0000	-		1	DOOR	
300	312115-0366	-		8	SCREW ISO4762 M6X12 A4	
310	312812-0314	-		2	HEXAGON NUT, NY-LOCK M5 A480	
500	90237-0128	-		1	LOCK CYLINDER, 1109-U3	
510	90237-0154	-		1	LOCK HOUSING, 1121-U60-0C	
520	90237-0165	-		1	LATCH	
530	90237-0176	-		1	TURNING HANDLE	

Pos	Part No	SP	UN	Qty	Description	Page No

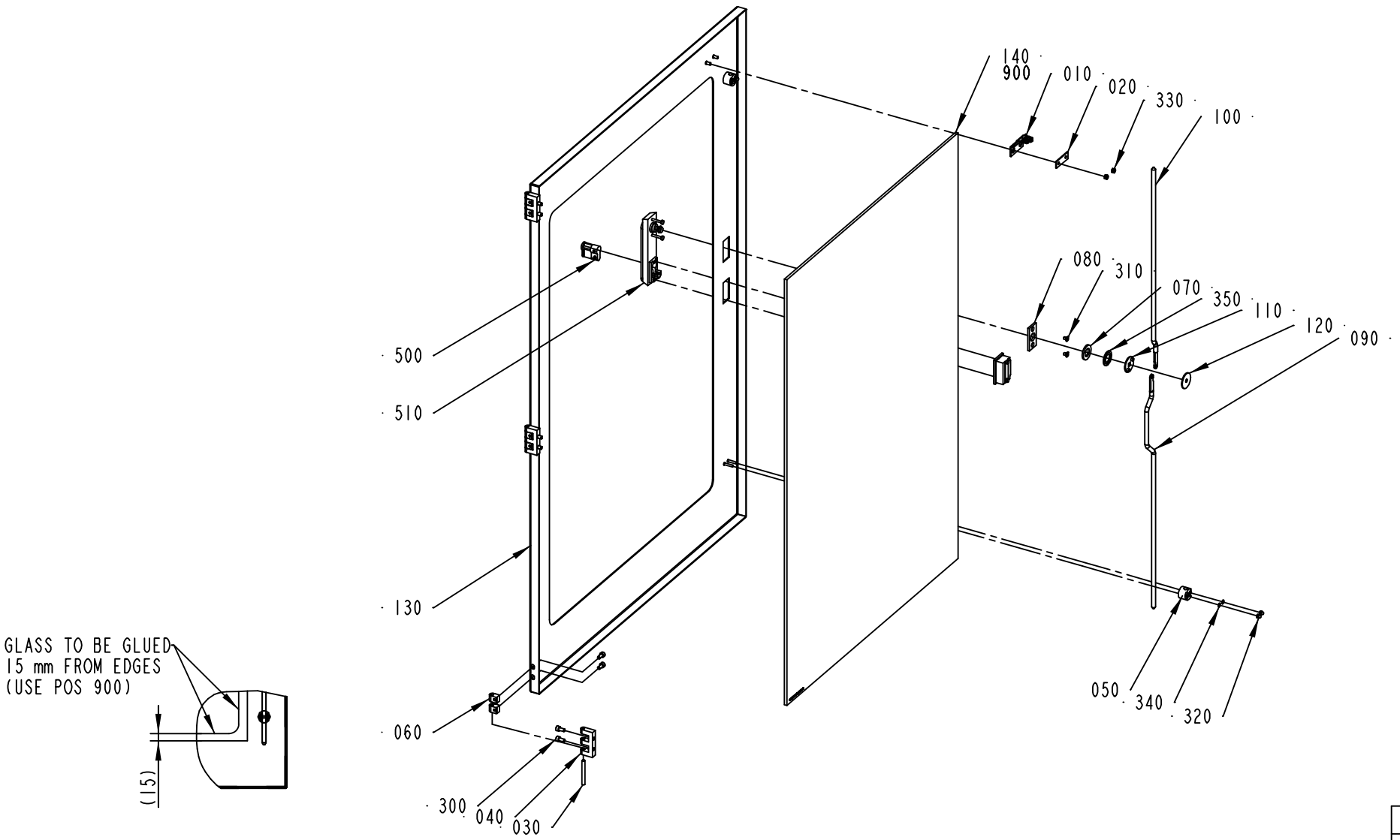

1514915-1
ECM 73247

Pos	Part No	SP	UN	Qty	Description	Page No
Common Parts						
010	975917-0000	-		1	KEY FOR SAFETY SWITCH 90044-103	
020	975924-0000	-		1	WASHER	
030	988685-0000	-		3	PIN	
040	1035792-0000	-		3	E-HINGE	
050	1129274-0000	-		2	GUIDE LUG	
060	1129770-0000	-		6	BLOCKING PIECE	
070	1338524-0000	-		1	WASHER	
080	1363878-0000	-		1	PLATE	
090	1514905-0000	-		1	LOCKING ARM	
100	1514906-0000	-		1	LOCKING ARM	
110	1514923-0000	-		1	HOLDER	
120	1514924-0000	-		1	PLATE	
130	1514925-0000	-		1	DOOR	
140	1514927-0000	-		1	GLASS PANE	
300	312115-0366	-		12	SCREW ISO4762 M6X12 A4	
310	312155-0323	-		2	SCREW EN 10642 MF6S M5X8 A480	
320	312705-0312	-		4	NUT HEX. DOMED CAP MHM-6 M4 A280	
330	312812-0314	-		2	HEXAGON NUT, NY-LOCK M5 A480	
340	315105-0136	-		4	WASHER ISO 7089-4-200 HV-A4	
350	321130-0240	-		1	THRUST WASHER, 18X32X1,5 MM	
500	90237-0128	-		1	LOCK CYLINDER, 1109-U3	
510	90237-0176	-		1	TURNING HANDLE	
900	90157-0041	-	L	1	SEALING COMPOUND	

Pos	Part No	SP	UN	Qty	Description	Page No

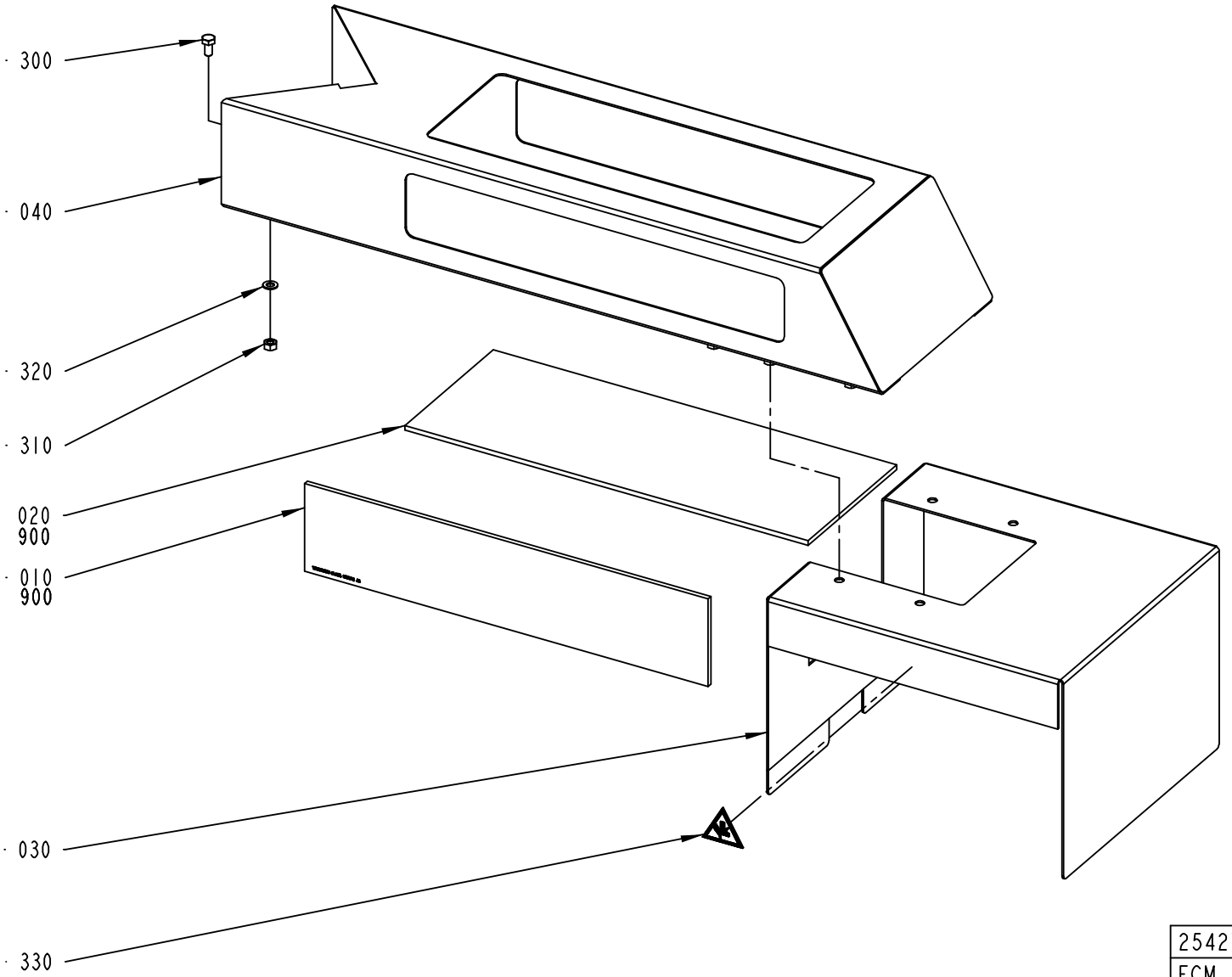

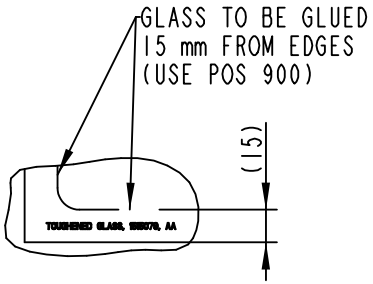

2542715-1
ECM 104434

ECM: 109320 - 20021212
Group number: 2542715-0100
Assembly Drawing: 2542715-1_1_AA

Issue: 20030314

Pos	Part No	SP	UN	Qty	Description	Page No
Common Parts						
010	1515078-0000	-		2	GLASS PANE	
020	1515079-0000	-		1	GLASS PANE	
030	2542711-0000	-		1	COVER	
040	2542712-0000	-		1	COVER	
300	312105-0449	-		8	SCREW M6S ISO 4017 M8X16 A480	
310	312605-0318	-		8	HEXAGON NUT, M6M M8 A280	
320	315105-0165	-		8	WASHER ISO 7089-8-200 HV-A4	
330	359705-0005	A		2	WARNING SIGN ISO, MOVING PART	
900	90157-0041	-	L	1	SEALING COMPOUND	

Pos	Part No	SP	UN	Qty	Description	Page No

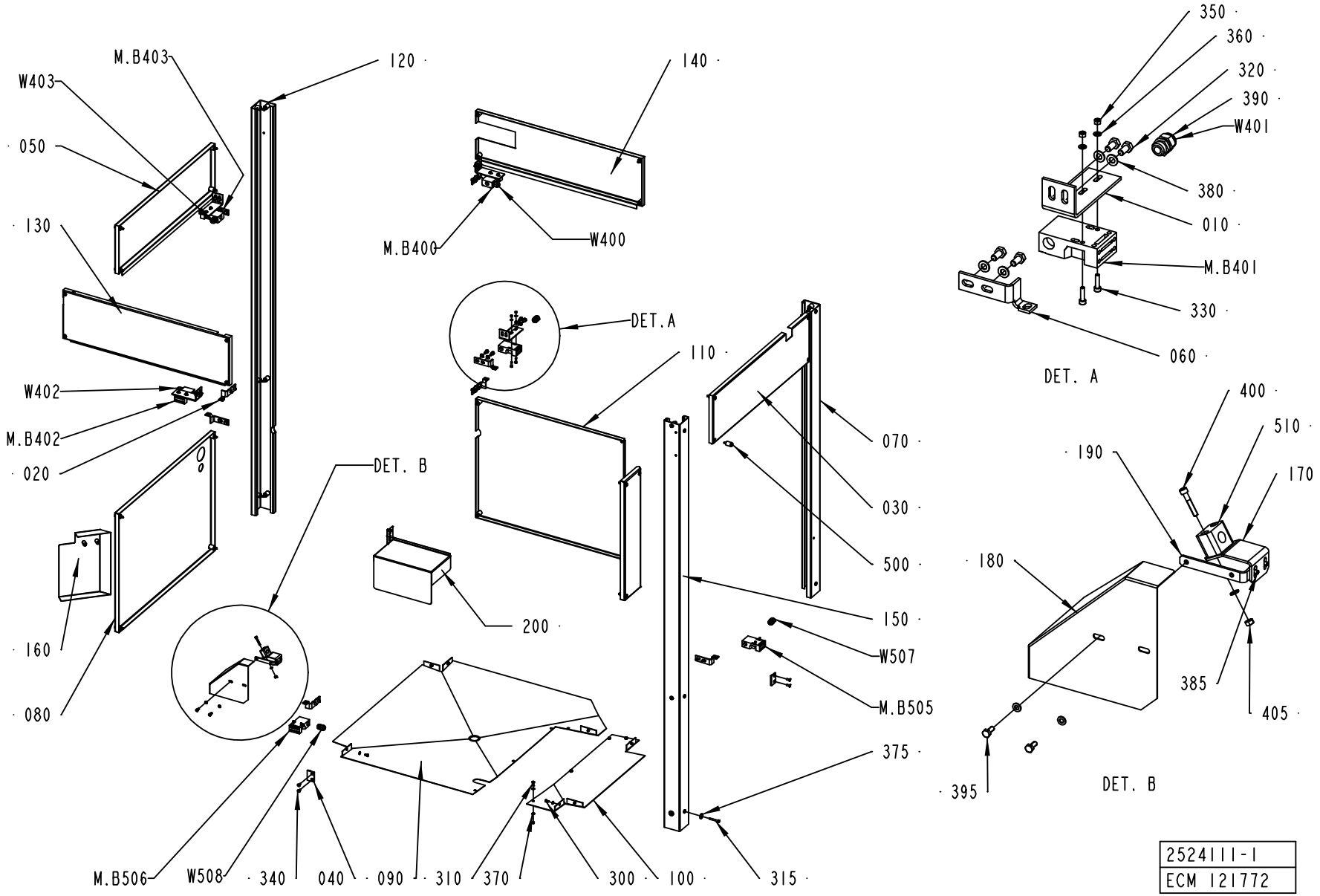
M.B403
W403
050
130
W402
M.B402
020
160
080
120
140
M.B400
W400
DET.A
110
DET. B
200
070
030
500
150
W507
M.B505
375
315
M.B506
W508
340
040
090
310
370
300
100
350
360
320
390
W401
380
010
M.B401
330
060
DET. A
400
510
190
170
180
385
405
395
DET. B
2524111-1
ECM 121772

Pos	Part No	SP	UN	Qty	Description	Page No
Common Parts						
010	1514907-0000	-		1	BRACKET	
020	1514909-0000	-		4	BRACKET	
030	2556679-0000	-		1	COVER	
040	1514919-0000	-		2	PLATE	
050	1514922-0000	-		1	COVER	
060	1514928-0000	-		4	BRACKET	
070	1515296-0000	-		1	COVER	
080	1515574-0000	-		1	COVER	
090	2556795-0000	-		1	DRAIN PLATE	
100	1515632-0000	-		1	DRAIN PLATE	
110	2523861-0000	-		1	COVER	
120	2523862-0000	-		1	COVER	
130	2524244-0000	-		1	COVER	
140	2524245-0000	-		1	COVER	
150	2524246-0000	-		1	COVER	
160	A2556784-0100	-		1	COVER	**273**
170	2556696-0000	-		1	ANGLE BRACKET	
180	2569632-0000	-		1	COVER	
190	2569633-0000	-		1	BRACKET	
200	2569727-0000	-		1	COVER	
300	312105-0364	-		7	SCREW M6S ISO 4017 M6X10 A480	
310	312105-0368	-		4	SCREW M6S M6X16 A280	
315	312105-0379	-		4	SCREW M6S ISO 4014 M6X45 A480	
320	312105-0449	-		24	SCREW M6S ISO 4017 M8X16 A480	
330	312115-0331	-		12	SCREW ISO4762 M5X20 A4	
340	312155-0368	-		4	SCREW EN 10642 MF6S M6X16 A480	
350	312605-0314	-		12	HEXAGON NUT, M6M M5 A280	
360	315105-0146	-		8	WASHER ISO 7089-5-200 HV-A4	
370	315105-0153	-		19	WASHER ISO 7089-6-200 HV-A4	
375	315105-0165	-		24	WASHER ISO 7089-8-200 HV-A4	
380	315125-0153	-		4	WASHER TBRSB 6,4X22X4 A4	
385	312105-0325	-		2	SCREW M6S ISO 4017 M5X10 A480	
390	352103-0106	-		6	CABLE GLAND, ST 11, PR18,6/PG11	
395	312105-0367	-		4	SCREW M6S M6X14 A280	
400	312115-0376	-		2	SCREW ISO4762 M6X35 A4	
405	312605-0316	-		2	HEXAGON NUT, M6M M6 A280	
500	90226-0458	-		46	MOUNTING SCREW	
510	90165-0047	-		1	CLIP	
M.B400	90044-0139	A		1	KEY SAF.SW. AZ16-02 ZVR K-2254	
M.B401	90044-0139	A		1	KEY SAF.SW. AZ16-02 ZVR K-2254	
M.B402	90044-0139	A		1	KEY SAF.SW. AZ16-02 ZVR K-2254	
M.B403	90044-0139	A		1	KEY SAF.SW. AZ16-02 ZVR K-2254	
M.B505	90044-0139	A		1	KEY SAF.SW. AZ16-02 ZVR K-2254	
M.B506	90044-0139	A		1	KEY SAF.SW. AZ16-02 ZVR K-2254	
W400	351150-0405	-	MM	3000	CABLE OLFLEX 5X0,75 MM2 LIGHT/GREY	
W401	351150-0405	-	MM	3000	CABLE OLFLEX 5X0,75 MM2 LIGHT/GREY	
W402	351150-0405	-	MM	3000	CABLE OLFLEX 5X0,75 MM2 LIGHT/GREY	
W403	351150-0405	-	MM	3000	CABLE OLFLEX 5X0,75 MM2 LIGHT/GREY	
W507	351150-0405	-	MM	3000	CABLE OLFLEX 5X0,75 MM2 LIGHT/GREY	
W508	351150-0405	-	MM	3000	CABLE OLFLEX 5X0,75 MM2 LIGHT/GREY	

Machine Type | Group Description | Used-In | Group Number | Page No

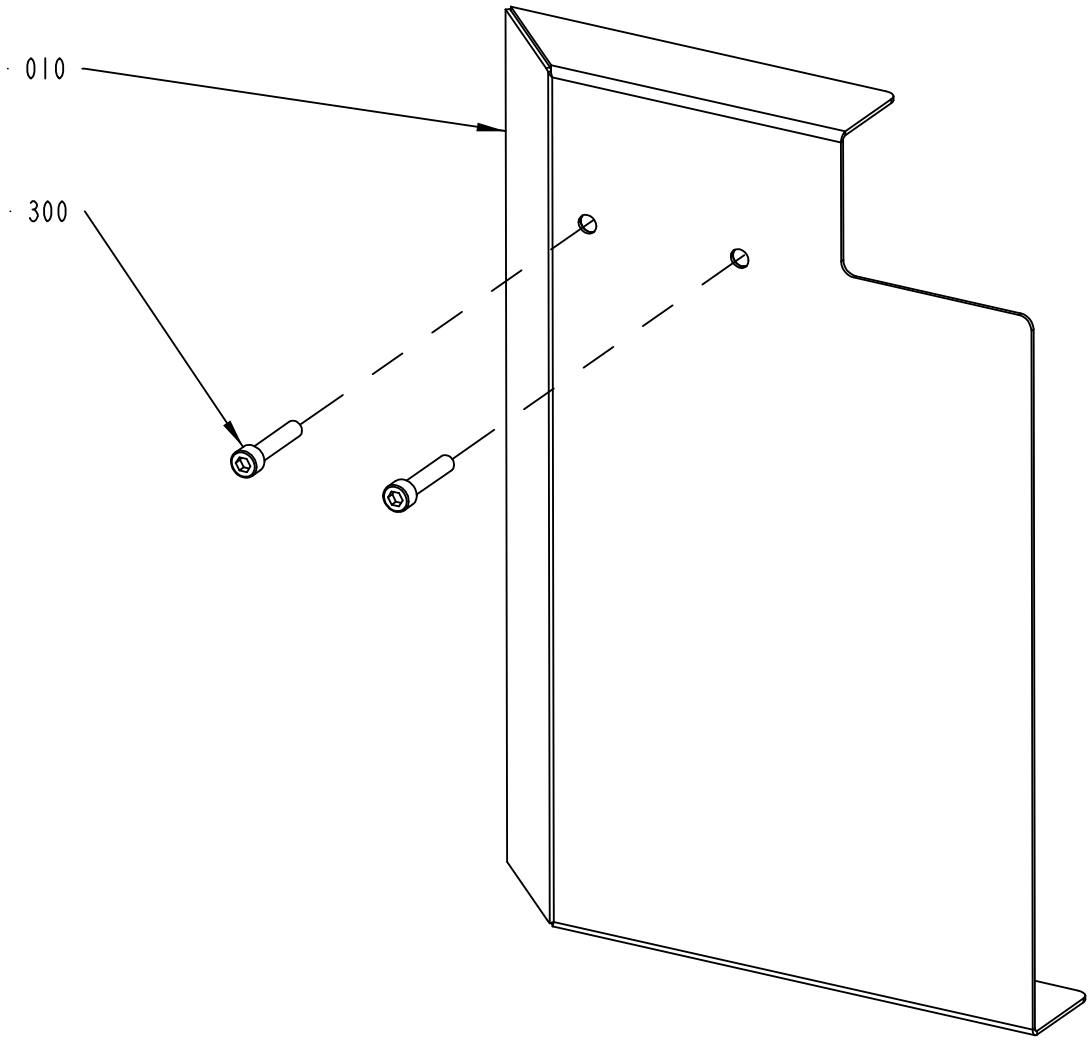

2556784-1
ECM 104434

ECM: 115520 - 20021113
Group number: 2556784-0100
Assembly Drawing: 2556784-1_1_AA

Issue: 20030314

Pos	Part No	SP	UN	Qty	Description	Page No
Common Parts						
010	2556783-0000	-		1	COVER	
300	312115-0374	-		2	SCREW ISO4762 M6X30 A4	

Pos	Part No	SP	UN	Qty	Description	Page No

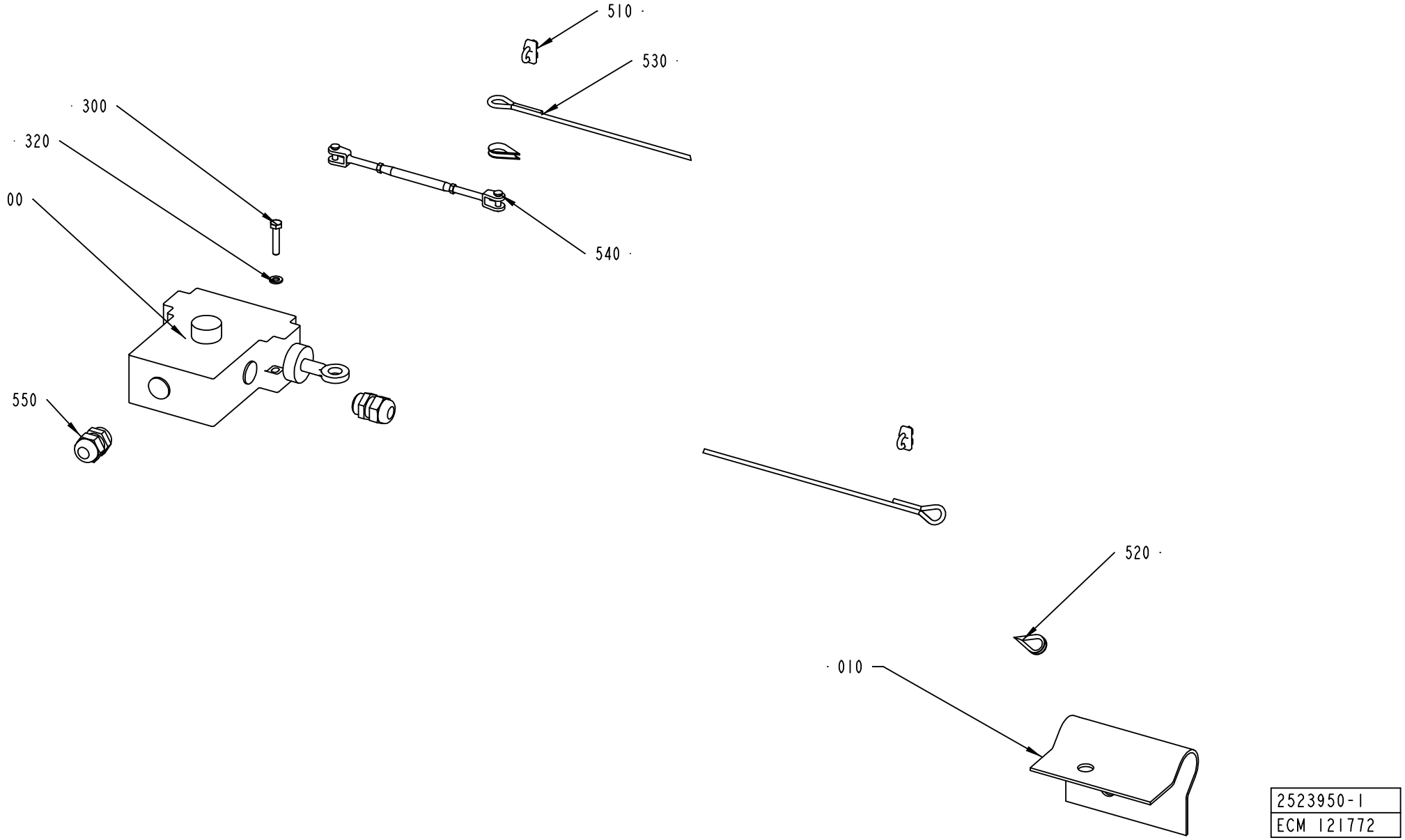
510
530
300
320
00
540
550
520
010
2523950-1
ECM 121772

ECM: 122367 - 20021212
Group number: 2523950-0100
Assembly Drawing: 2523950-1_1_AB

Issue: 20030314

Pos	Part No	SP	UN	Qty	Description	Page No
Common Parts						
010	2524260-0000	-		1	BRACKET	
300	312105-0374	-		2	SCREW M6S ISO 4014 M6X30 A480	
320	315105-0153	-		2	WASHER ISO 7089-6-200 HV-A4	
500	90044-0167	A		1	EM. STOP XY2-CE 5A 270	
510	90211-0001	-		2	WIRE LOCK, 5 MM	
520	90211-0011	-		2	EYELET,WIRE ROPE	
530	90145-0008	-	MM	1800	WIRE	
540	90243-0421	-		1	TURNBUCKLE, 5 MM, 197 - 132 MM, 11100255	
550	352103-0108	-		2	CABLE GLAND, ST 13,5 , PR20,4/PG13,5	

Pos	Part No	SP	UN	Qty	Description	Page No

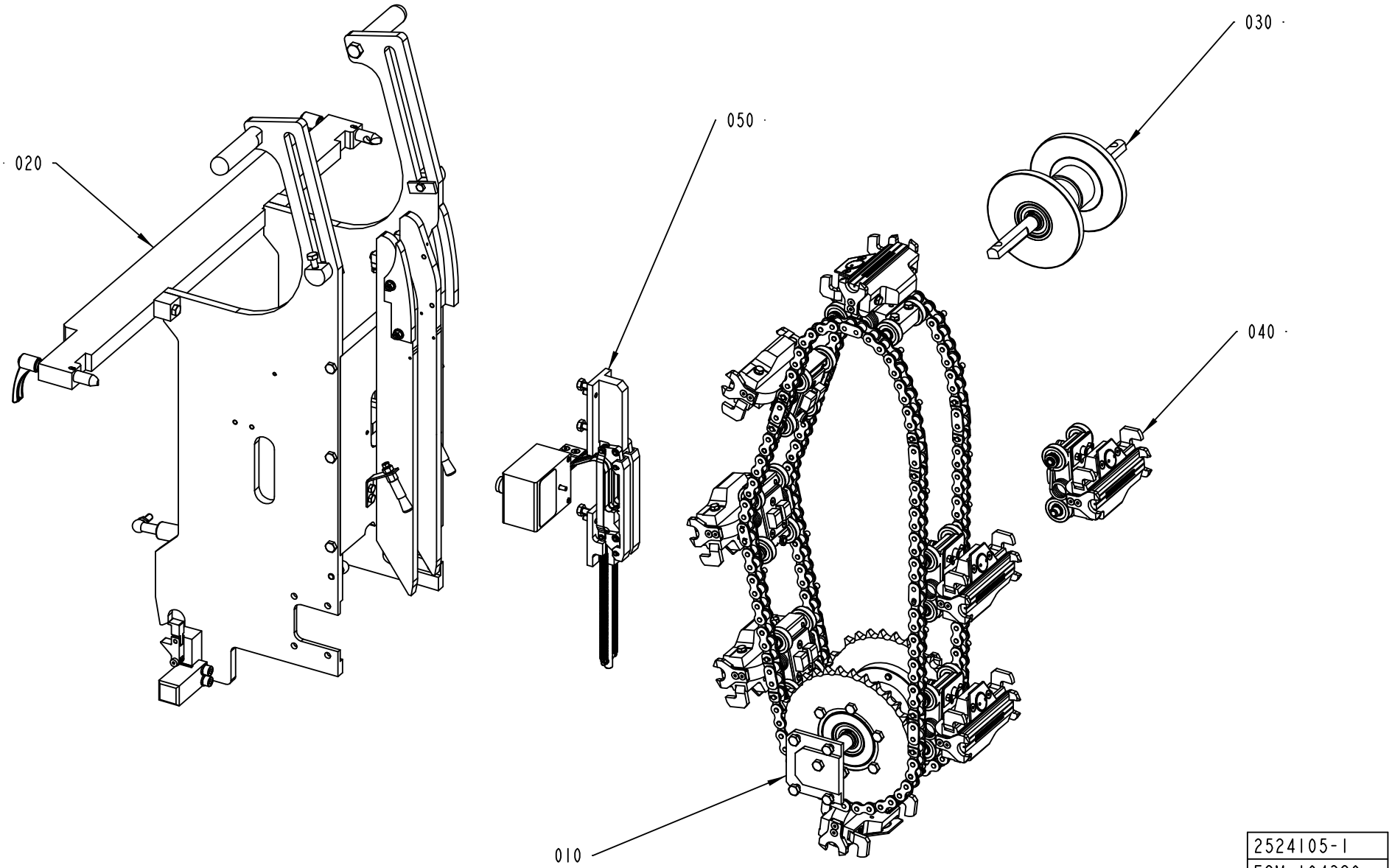
020
050
030
040
010
2524105-1
ECM 104389

Pos	Part No	SP	UN	Qty	Description	Page No
0150S						
040	A2524100-0100	-		7	HEATING JAW	**245**
0200B						
040	A2524100-0100	-		8	HEATING JAW	**245**
V065						
040	A2524100-0100	-		8	HEATING JAW	**245**
Common Parts						
010	A2523911-0100	-		1	SPROCKET	**247, 249, 251**
020	A2523910-0100	-		1	FRAME SECTION	**253**
030	A2542895-0100	-		1	GUIDE SPROCKET	**255**
050	B1533096-0100	-		1	CONTACT RAIL	
010	*A1533090-0100*	*-*		*1*	*CONTACT RAIL*	
020	*A1533091-0100*	*-*		*1*	*CONTACT RAIL*	
040	*1533076-0000*	*A*		*2*	*AXLE PIN*	
050	*1533077-0000*	*-*		*1*	*SHAFT*	
060	*1533095-0000*	*A*		*1*	*BRACKET*	
070	*1533097-0000*	*A*		*1*	*BRACKET*	
090	*1533509-0000*	*A*		*2*	*WASHER*	
100	*1533512-0000*	*-*		*1*	*ATTACHMENT*	
105	*311103-0352*	*-*		*4*	*PIN,STRIGHT M6 6X18 RFR*	
110	*315750-0102*	*A*		*6*	*RETAIN. RING, 5*	
120	*312155-0364*	*A*		*4*	*SCREW EN 10642 MF6S M6X10 A480*	
140	*312105-0455*	*-*		*3*	*SCREW M6S ISO 4017 M8X30 A480*	
150	*312121-0343*	*A*		*1*	*SCREW SLOT.PAN HD. MCS 5X60 FZB*	
160	*1533505-0000*	*A*		*1*	*TRANSFORMER*	

Pos	Part No	SP	UN	Qty	Description	Page No

Machine Type | Group Description | Used-In | Group Number | Page No

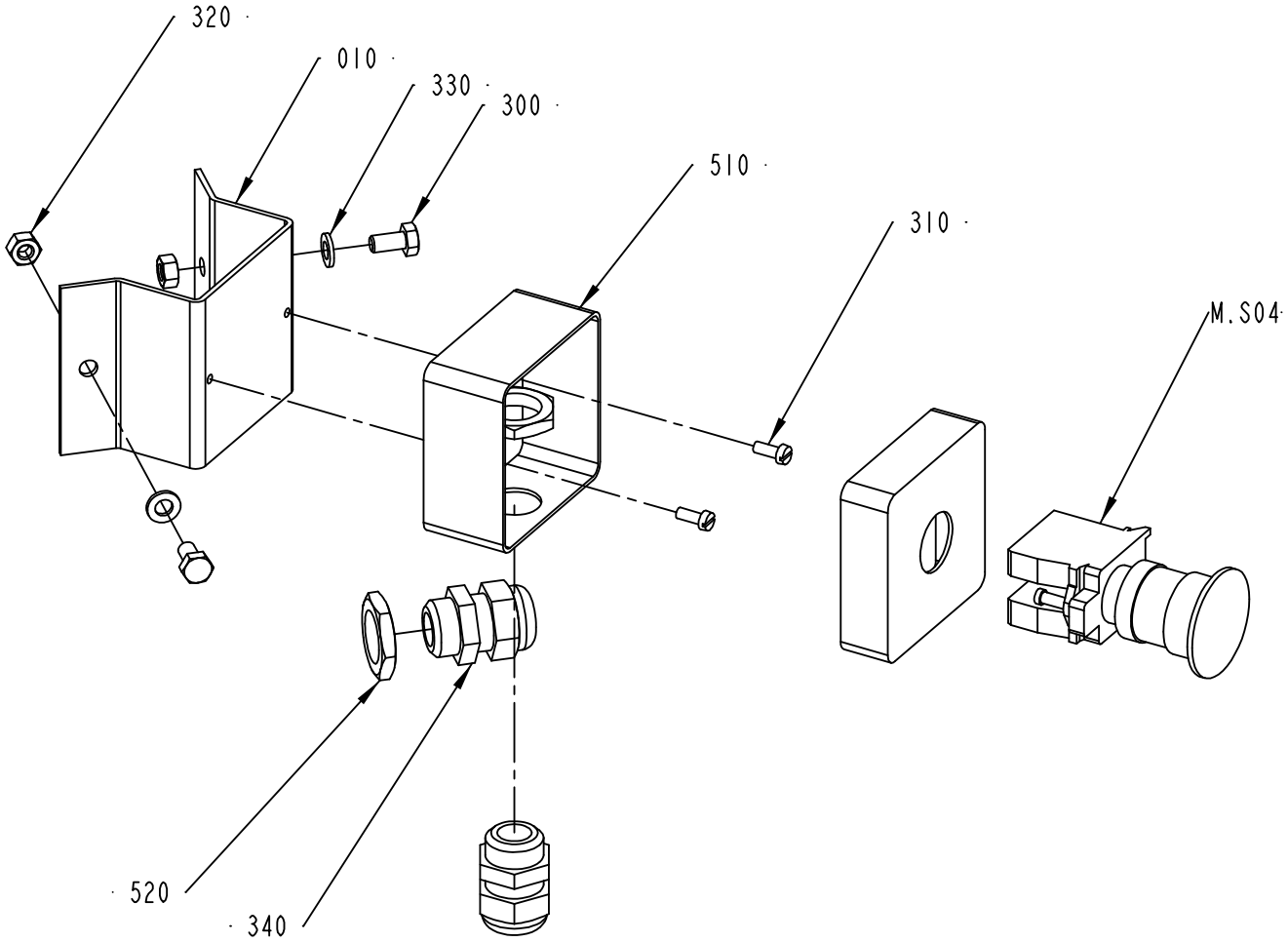

2556854-1
ECM 104392

ECM: 122353 - 20021212
Group number: 2556854-0100
Assembly Drawing: 2556854-1_1_AA

Issue: 20030314

Pos	Part No	SP	UN	Qty	Description	Page No
Common Parts						
010	1515408-0000	-		1	MOUNTING BRACKET	
300	312105-0366	-		2	SCREW M6S M6X12 A280	
310	312125-0289	-		2	SPåRSKRUV MCS 4X10 A480	
320	312605-0316	-		2	HEXAGON NUT, M6M M6 A280	
330	315105-0153	-		2	WASHER ISO 7089-6-200 HV-A4	
340	352103-0108	-		2	CABLE GLAND, ST 13,5 , PR20,4/PG13,5	
500	90066-0030	-		1	PUSH BUTTON BOX XAL J01	
510	90099-0118	-		2	NUT, PR 20,4 (PG13,5)	
M.S404	90458-1651	A		1	EMERGENCY STOP, ZB4-BS-844 ZB4-BZ-104	

Pos	Part No	SP	UN	Qty	Description	Page No

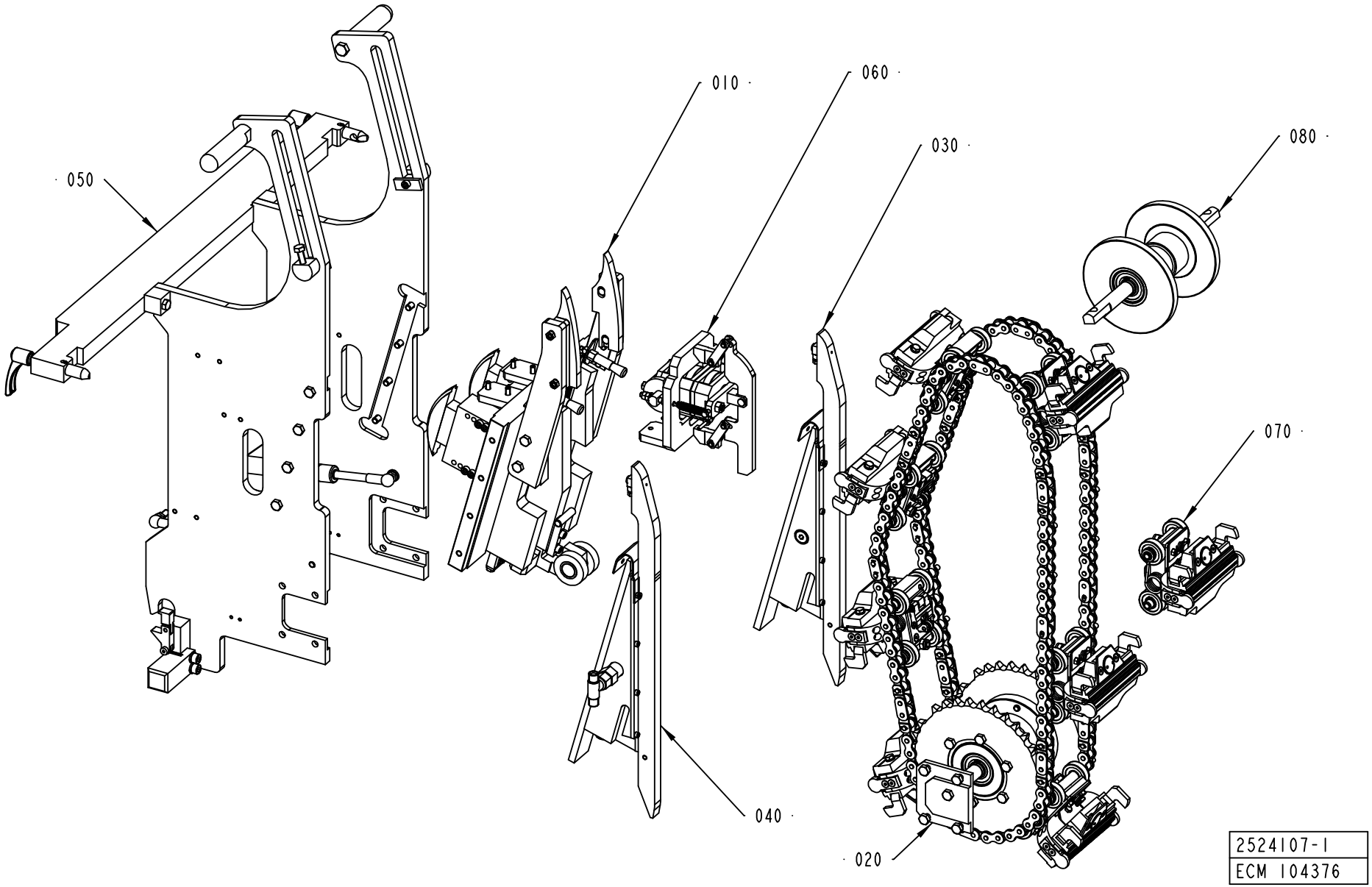
050
010
060
030
080
070
040
020
2524107-1
ECM 104376

Pos	Part No	SP	UN	Qty	Description	Page No
0150S						
070	A2524103-0100	-		7	PRESSURE JAW	**283, 285**
0200B						
070	A2524103-0100	-		8	PRESSURE JAW	**283, 285**
V065						
070	A2524103-0100	-		8	PRESSURE JAW	**283, 285**
Common Parts						
010	A2523915-0100	-		1	SPACER PIECE	**287**
020	A2523912-0100	-		1	SPROCKET	**289, 291, 293**
030	A2524109-0100	-		1	PLUNGER	**295**
040	A2524110-0100	-		1	PLUNGER	**297**
050	A2524112-0100	-		1	FRAME SECTION	**299**
060	A2524135-0100	-		1	DESIGN CORRECTION	**301**
080	A2542895-0100	-		1	GUIDE SPROCKET	**255**

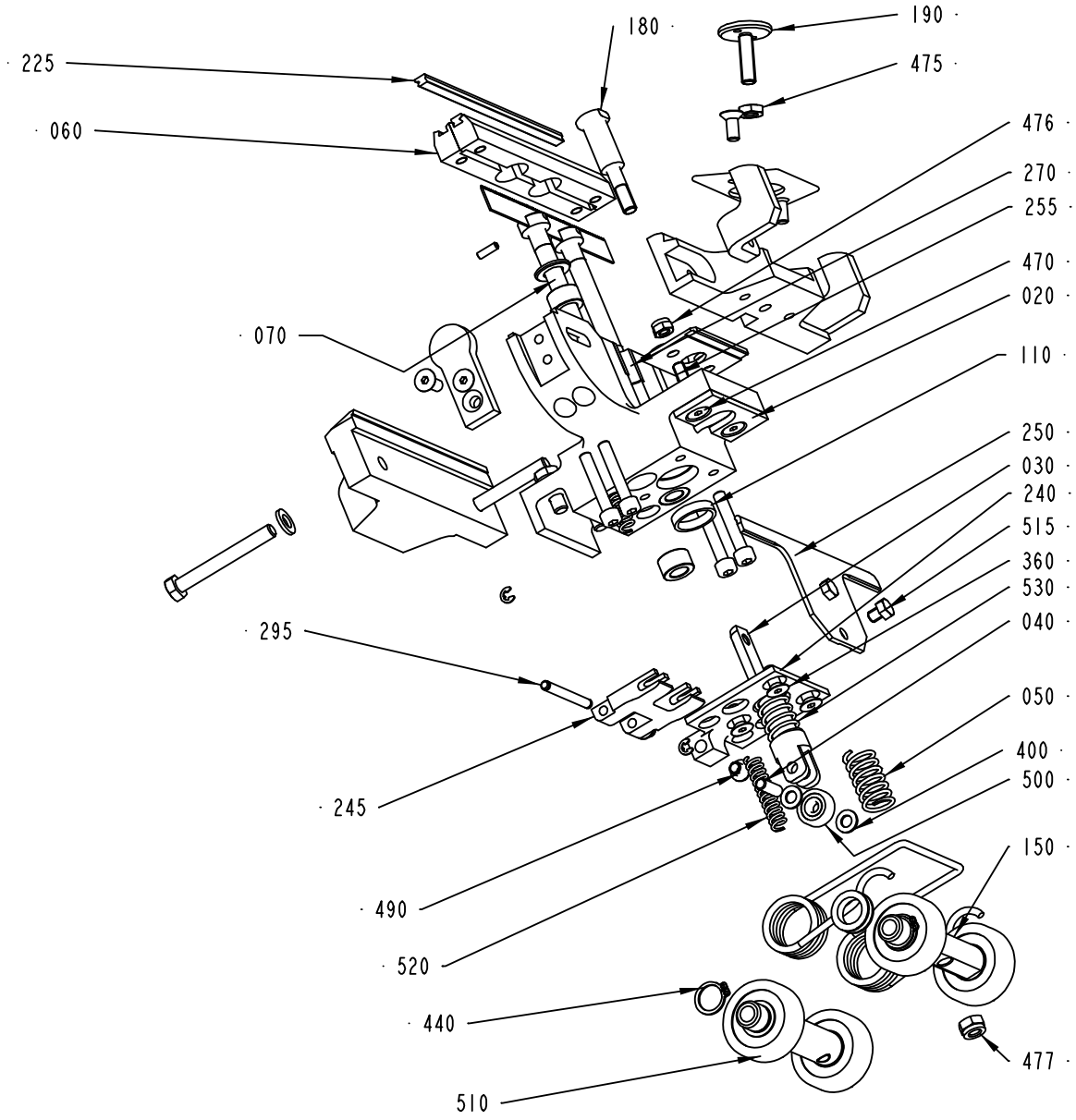

2524103-1
ECM 116686

ECM: 122336 - 20021212
Group number: 2524103-0100
Assembly Drawing: 2524103-1_1_AB

Issue: 20030314

Pos	Part No	SP	UN	Qty	Description	Page No
0150S						
190	2524204-0000	A		1	VOLUME ADJUSTER	
260	2524235-0000	-		1	VOLUME FLAP	
265	2524236-0000	-		1	VOLUME FLAP	
360	312155-0327	A		7	SCREW EN 10642 MF6S M5X12 A480	
475	312625-0318	-		1	HEXAGON THIN NUT, EN 24035 ML6M M8 A4	
0200B						
185	2543101-0000	A		1	PLATE	
190	2524204-0000	A		1	VOLUME ADJUSTER	
260	2569683-0000	-		1	VOLUME FLAP	
265	2524203-0000	-		1	VOLUME FLAP	
360	312155-0327	A		9	SCREW EN 10642 MF6S M5X12 A480	
475	312625-0318	-		1	HEXAGON THIN NUT, EN 24035 ML6M M8 A4	
V065						
185	2543107-0000	A		1	PLATE	
190	2543108-0000	A		1	VOLUME ADJUSTER	
260	2543102-0000	-		1	VOLUME FLAP	
265	2543103-0000	-		1	VOLUME FLAP	
360	312155-0327	A		9	SCREW EN 10642 MF6S M5X12 A480	
475	312625-0316	-		1	HEXAGON THIN NUT, EN 24035 ML6M M6 A4	
Common Parts						
010	2569625-0000	A		1	SHAFT	
020	2524220-0000	-		1	SUPPORTING SHEET	
030	2524198-0000	A		1	ROD	
040	1514362-0000	A		1	PIN	
050	2556791-0000	A		1	TENSION SPRING	
060	1533906-0000	A		2	CUTTING RAIL	
070	2556710-0000	A		2	PUSH ROD	
080	2542892-0000	A		1	SPRING	
110	1514782-0000	A		1	BEARING	
120	2524218-0000	A		1	PRESSURE JAW	
150	2569624-0000	A		1	SHAFT	
180	2569623-0000	A		1	STOP SCREW	
195	2556678-0000	B		2	SLEEVE	
200	2556709-0000	B		2	WASHER	
210	1515568-0000	A		1	KNIFE	
220	2556796-0000	A		2	GUIDE	
225	1110083-0007	A		2	DOLLY	
240	2523948-0000	A		1	BRACKET	
245	2523951-0000	A		1	ARM	
250	2524199-0000	A		1	RULER	
255	2542894-0000	-		1	STOP PLATE	
270	2524205-0000	A		1	BUSHING	
280	2524207-0000	A		1	STOP ARM	
285	2524208-0000	A		1	STOP ARM	
295	2524242-0000	A		1	SHAFT	
310	312115-0335	-		4	SCREW ISO4762 M5X30 A4	
320	311103-0233	A		2	PARALLELL PIN, M6, 3X10 MM	
330	315755-0105	A		2	LOCKING WASHER 3,2	
400	315105-0146	-		2	WASHER ISO 7089-5-200 HV-A4	
410	315105-0153	-		4	WASHER ISO 7089-6-200 HV-A4	
420	321105-0143	-		4	BEAR. BUSH. WITHOUT FL, 8X14X8 MM	
440	315751-0109	-		4	RETAIN. RING, 12	
450	312105-0368	-		2	SCREW M6S M6X16 A280	
460	312109-0380	-		2	SCREW M6S ISO 4017 M6X50 A480	
470	312155-0333	A		2	SCREW EN 10642 MF6S M5X25 A480	
476	312812-0314	A		2	HEXAGON NUT, NY-LOCK M5 A480	
477	312812-0316	-		1	HEXAGON NUT, NY-LOCK M6 A480	
490	321158-0022	-		2	FLANGE BUSHING, 4X5,5X6 MM	
500	90459-0758	A		1	BALL BEARING, 5X16X5 MM	
510	90459-1532	A		4	BEARING ROLLER, 12X35X10 MM	
515	90287-0199	-		2	SCREW M6S ISO 4017 M5X6 A480	
520	90459-1340	A		2	COMP. SPRING 6034	
530	90459-1341	A		1	COMP. SPRING 2547	

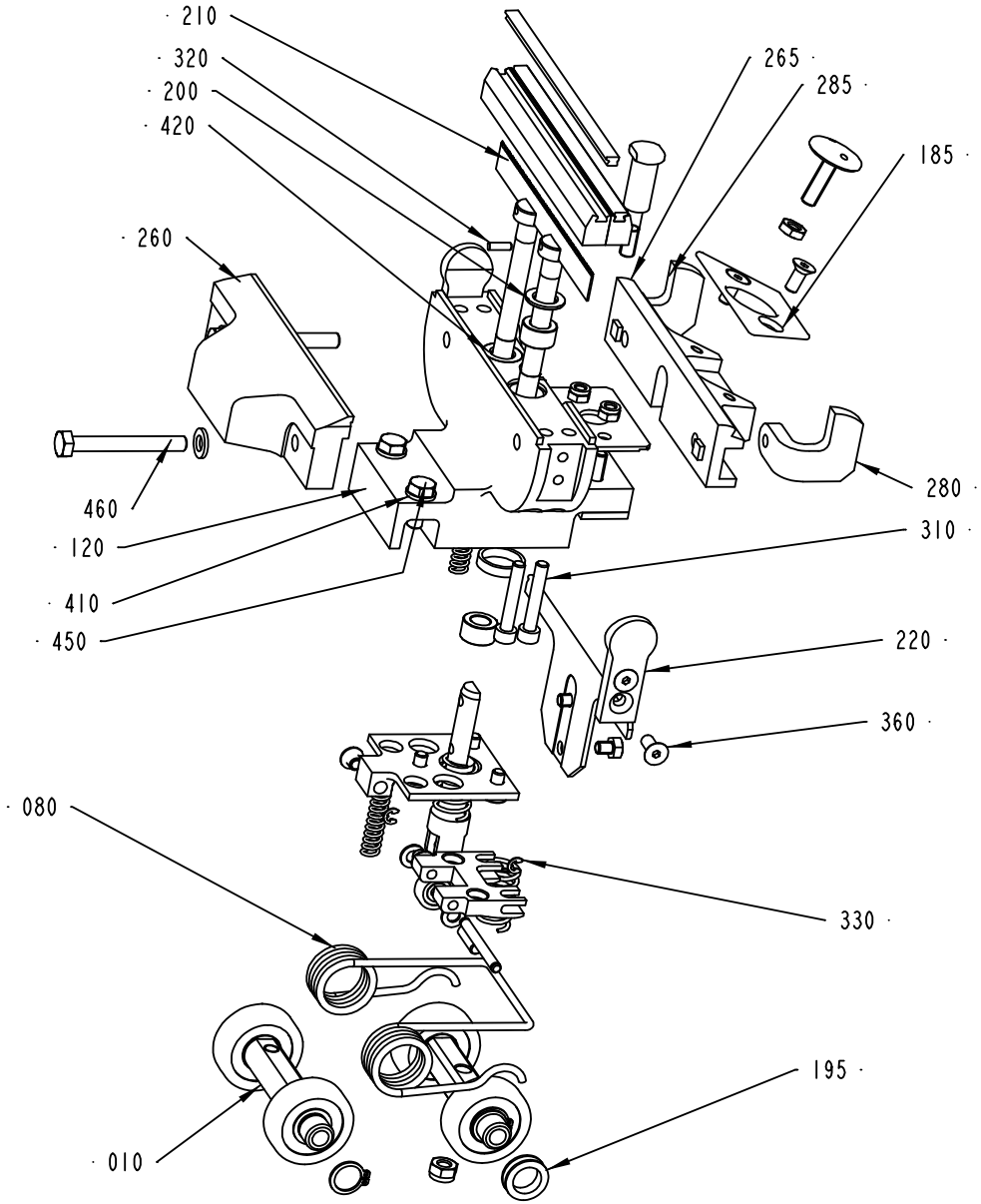

2524103-1
ECM 116686

ECM: 122336 - 20021212
Group number: 2524103-0100
Assembly Drawing: 2524103-1_2_AB

Issue: 20030314

Pos	Part No	SP	UN	Qty	Description	Page No
0150S						
190	2524204-0000	A		1	VOLUME ADJUSTER	
260	2524235-0000	-		1	VOLUME FLAP	
265	2524236-0000	-		1	VOLUME FLAP	
360	312155-0327	A		7	SCREW EN 10642 MF6S M5X12 A480	
475	312625-0318	-		1	HEXAGON THIN NUT, EN 24035 ML6M M8 A4	
0200B						
185	2543101-0000	A		1	PLATE	
190	2524204-0000	A		1	VOLUME ADJUSTER	
260	2569683-0000	-		1	VOLUME FLAP	
265	2524203-0000	-		1	VOLUME FLAP	
360	312155-0327	A		9	SCREW EN 10642 MF6S M5X12 A480	
475	312625-0318	-		1	HEXAGON THIN NUT, EN 24035 ML6M M8 A4	
V065						
185	2543107-0000	A		1	PLATE	
190	2543108-0000	A		1	VOLUME ADJUSTER	
260	2543102-0000	-		1	VOLUME FLAP	
265	2543103-0000	-		1	VOLUME FLAP	
360	312155-0327	A		9	SCREW EN 10642 MF6S M5X12 A480	
475	312625-0316	-		1	HEXAGON THIN NUT, EN 24035 ML6M M6 A4	
Common Parts						
010	2569625-0000	A		1	SHAFT	
020	2524220-0000	-		1	SUPPORTING SHEET	
030	2524198-0000	A		1	ROD	
040	1514362-0000	A		1	PIN	
050	2556791-0000	A		1	TENSION SPRING	
060	1533906-0000	A		2	CUTTING RAIL	
070	2556710-0000	A		2	PUSH ROD	
080	2542892-0000	A		1	SPRING	
110	1514782-0000	A		1	BEARING	
120	2524218-0000	A		1	PRESSURE JAW	
150	2569624-0000	A		1	SHAFT	
180	2569623-0000	A		1	STOP SCREW	
195	2556678-0000	B		2	SLEEVE	
200	2556709-0000	B		2	WASHER	
210	1515568-0000	A		1	KNIFE	
220	2556796-0000	A		2	GUIDE	
225	1110083-0007	A		2	DOLLY	
240	2523948-0000	A		1	BRACKET	
245	2523951-0000	A		1	ARM	
250	2524199-0000	A		1	RULER	
255	2542894-0000	-		1	STOP PLATE	
270	2524205-0000	A		1	BUSHING	
280	2524207-0000	A		1	STOP ARM	
285	2524208-0000	A		1	STOP ARM	
295	2524242-0000	A		1	SHAFT	
310	312115-0335	-		4	SCREW ISO4762 M5X30 A4	
320	311103-0233	A		2	PARALLELL PIN, M6, 3X10 MM	
330	315755-0105	A		2	LOCKING WASHER 3,2	
400	315105-0146	-		2	WASHER ISO 7089-5-200 HV-A4	
410	315105-0153	-		4	WASHER ISO 7089-6-200 HV-A4	
420	321105-0143	-		4	BEAR. BUSH. WITHOUT FL, 8X14X8 MM	
440	315751-0109	-		4	RETAIN. RING, 12	
450	312105-0368	-		2	SCREW M6S M6X16 A280	
460	312109-0380	-		2	SCREW M6S ISO 4017 M6X50 A480	
470	312155-0333	A		2	SCREW EN 10642 MF6S M5X25 A480	
476	312812-0314	A		2	HEXAGON NUT, NY-LOCK M5 A480	
477	312812-0316	-		1	HEXAGON NUT, NY-LOCK M6 A480	
490	321158-0022	-		2	FLANGE BUSHING, 4X5,5X6 MM	
500	90459-0758	A		1	BALL BEARING, 5X16X5 MM	
510	90459-1532	A		4	BEARING ROLLER, 12X35X10 MM	
515	90287-0199	-		2	SCREW M6S ISO 4017 M5X6 A480	
520	90459-1340	A		2	COMP. SPRING 6034	
530	90459-1341	A		1	COMP. SPRING 2547	

ASSEMBLY INSTRUCTIONS
POS 320: M8x35 (6 PIECES) DRAWN TO 35 Nm

BEFORE LUBRICATION OF PLUNGER THROUGH NIPPLES (POS 460) FILL ENTIRE LUBRICATION SYSTEM WITH GREASE, INCLUDING LINEAR BEARING, BEFORE ASSEMBLING PLUNGER.
WHEN USING NIPPLES MAKE SURE THAT PLUNGER IS LOCATED IN WORKING POSITION

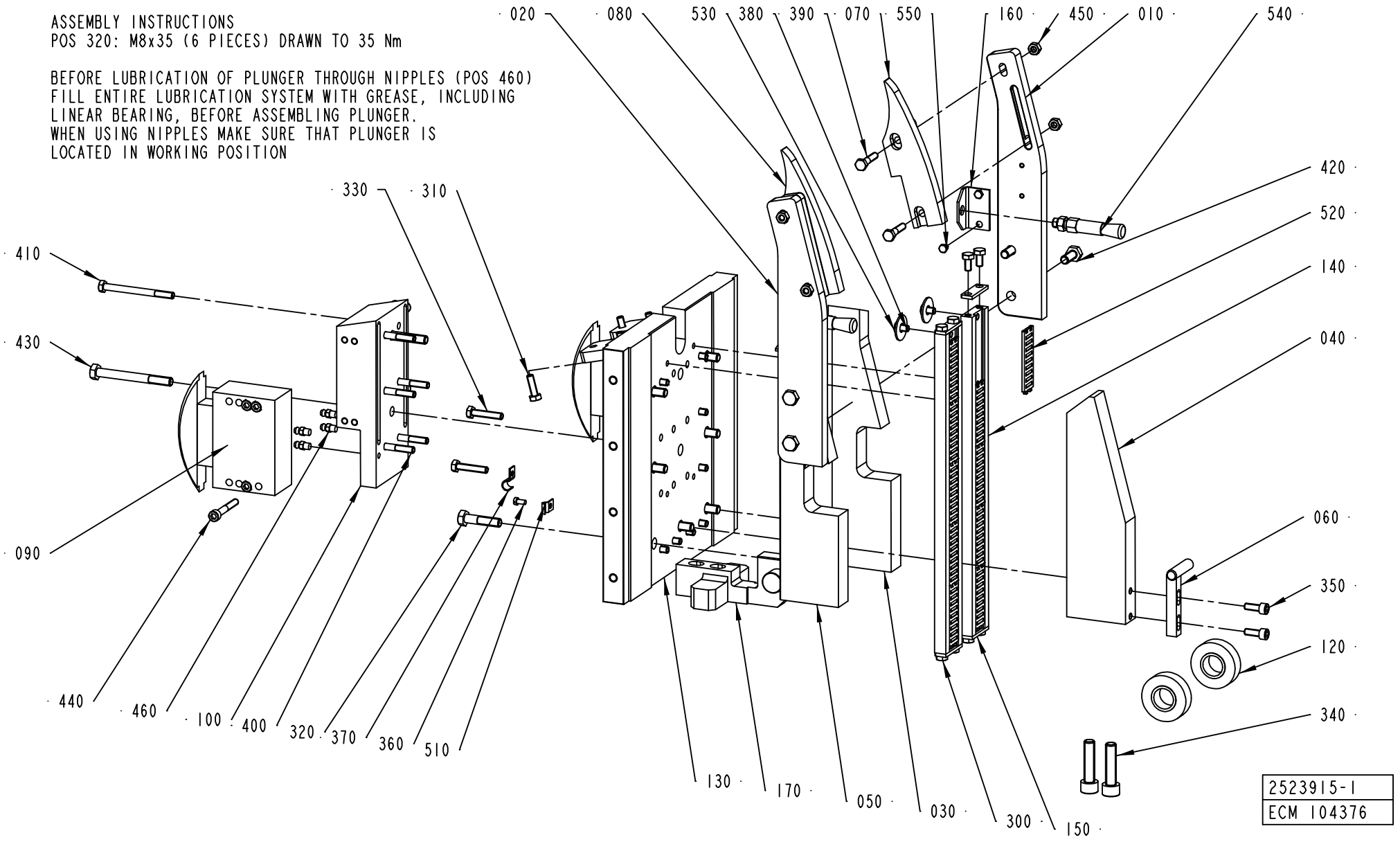

2523915-1
ECM 104376

ECM: 122339 - 20021212
Group number: 2523915-0100
Assembly Drawing: 2523915-1_1_AA

Issue: 20030314

Pos	Part No	SP	UN	Qty	Description	Page No
0150S						
090	90459-1149	A		2	CHAIN TENSIONER, 51330BPNF	
0200B OR V065						
090	2523908-0000	A		2	CHAIN TENSIONER	
Common Parts						
010	2523835-0000	-		1	VERTICAL HOLDER	
020	2523836-0000	-		1	VERTICAL HOLDER	
030	2523837-0000	-		1	GUIDE	
040	1515031-0000	-		1	GUIDE	
050	2523838-0000	-		1	GUIDE	
060	1515036-0000	-		1	STOP ARM	
070	2523851-0000	A		1	CHAIN GUIDE	
080	2523852-0000	A		1	CHAIN GUIDE	
100	2523909-0000	-		1	BRACKET	
120	2523954-0000	A		2	ROLLER	
130	2524126-0000	-		1	SPACER PIECE	
140	2524127-0000	-		2	ROLLER PLATE	
150	2524252-0000	-		4	PLATE	
160	2524253-0000	-		2	BRACKET	
170	2523953-0000	-		1	HOLDER	
300	312105-0366	-		8	SCREW M6S M6X12 A280	
310	312105-0370	-		4	SCREW M6S ISO 4017 M6X20 A480	
320	312105-0457	-		7	SCREW M6S ISO 4014 M8X35 A480	
330	312105-0374	-		4	SCREW M6S ISO 4014 M6X30 A480	
330	312109-0374	-		10	SCREW M6S ISO 4017 M6X30 A480	
340	312115-0499	-		2	SCREW ISO4762 M10X40 A4	
350	312115-0368	-		2	SCREW ISO4762 M6X16 A4	
360	312125-0287	-		1	SCREW PAN HEAD MCS M4X8 SS	
370	316810-0106	-		2	PIPE CLIP FOR TUBE D=8 MM	
380	312105-0362	-		2	SCREW M6S ISO 4017 M6X8 A480	
400	312105-0379	-		2	SCREW M6S ISO 4014 M6X45 A480	
410	312105-0384	-		4	SCREW M6S ISO 4014 M6X70 A480	
420	312105-0451	-		4	SCREW M6S ISO 4017 M8X20 A480	
430	312105-0466	-		2	SCREW M6S ISO 4014 M8X75 A480	
440	312115-0379	-		8	SCREW ISO4762 M6X45 A4	
450	312605-0316	-		4	HEXAGON NUT, M6M M6 A280	
460	344502-0021	-		4	GREASE NIPPLE STRAIGHT M6	
510	90165-0003	-		3	PIPE CLIP FOR TUBE D=4 MM	
520	90458-2760	A		10	NEEDLE ROLLER FLAT CAGE, FF 3020	
530	90005-0105	-		2	WASHER PLAIN ROUND 8,4(M8)/24, H=1,5	
540	90092-0082	A		2	OIL BRUSH D=2,5MM TUBE D=10	
550	90287-0290	-		4	SCREW M6S M4X6 A270	

Machine Type Group Description Used-In Group Number Page No

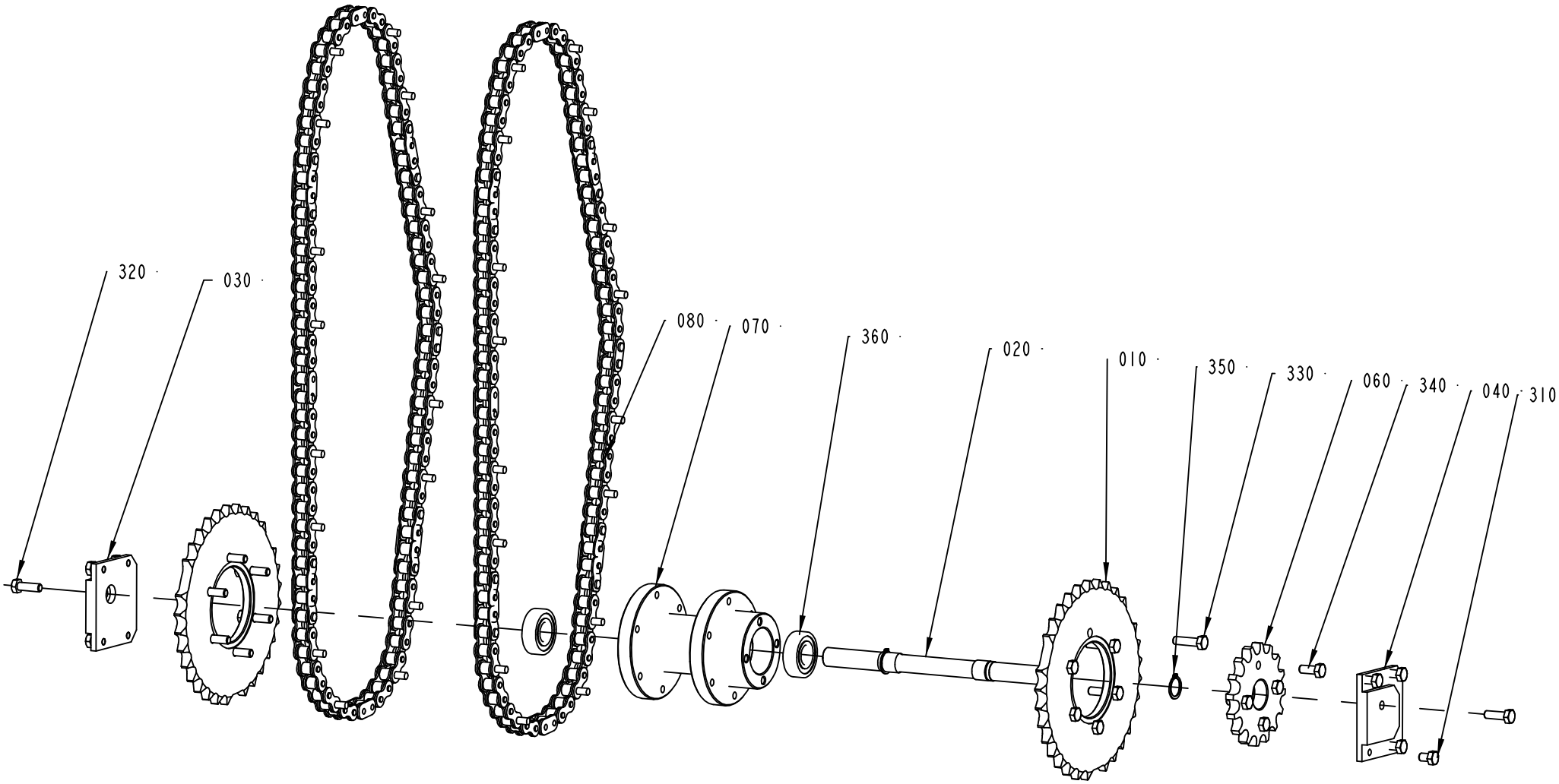

2523912-1
ECM 104376

Pos	Part No	SP	UN	Qty	Description	Page No
0150S						
010	2524261-0000	A		2	SPROCKET	
030	2524262-0000	-		2	SUPPORT PLATE	
080	2524247-0000	A		2	CHAIN	
0200B						
010	2523839-0000	A		2	SPROCKET	
030	2523856-0000	-		1	SUPPORT PLATE	
040	2523857-0000	-		1	SUPPORT PLATE	
080	2524128-0000	A		2	CHAIN	
V065						
010	2542888-0000	A		2	SPROCKET	
030	2542890-0000	-		1	SUPPORT PLATE	
040	2542891-0000	-		1	SUPPORT PLATE	
080	2542889-0000	A		2	CHAIN	
Common Parts						
020	1515013-0000	A		1	SHAFT	
060	2524263-0000	A		1	SPROCKET	
070	2542642-0000	A		1	HUB	
310	312105-0447	-		8	SCREW M6S ISO 4017 M8X12 A480	
320	312105-0453	-		2	SCREW M6S ISO 4017 M8X25 A480	
330	312105-0455	-		12	SCREW M6S ISO 4017 M8X30 A480	
340	312105-0451	-		4	SCREW M6S ISO 4017 M8X20 A480	
350	315751-0116	-		2	RETAIN. RING, 20	
360	321313-0104	A		2	BALL BEARING, 20X47X14 MM	

Pos	Part No	SP	UN	Qty	Description	Page No

Machine Type | Group Description | Used-In | Group Number | Page No

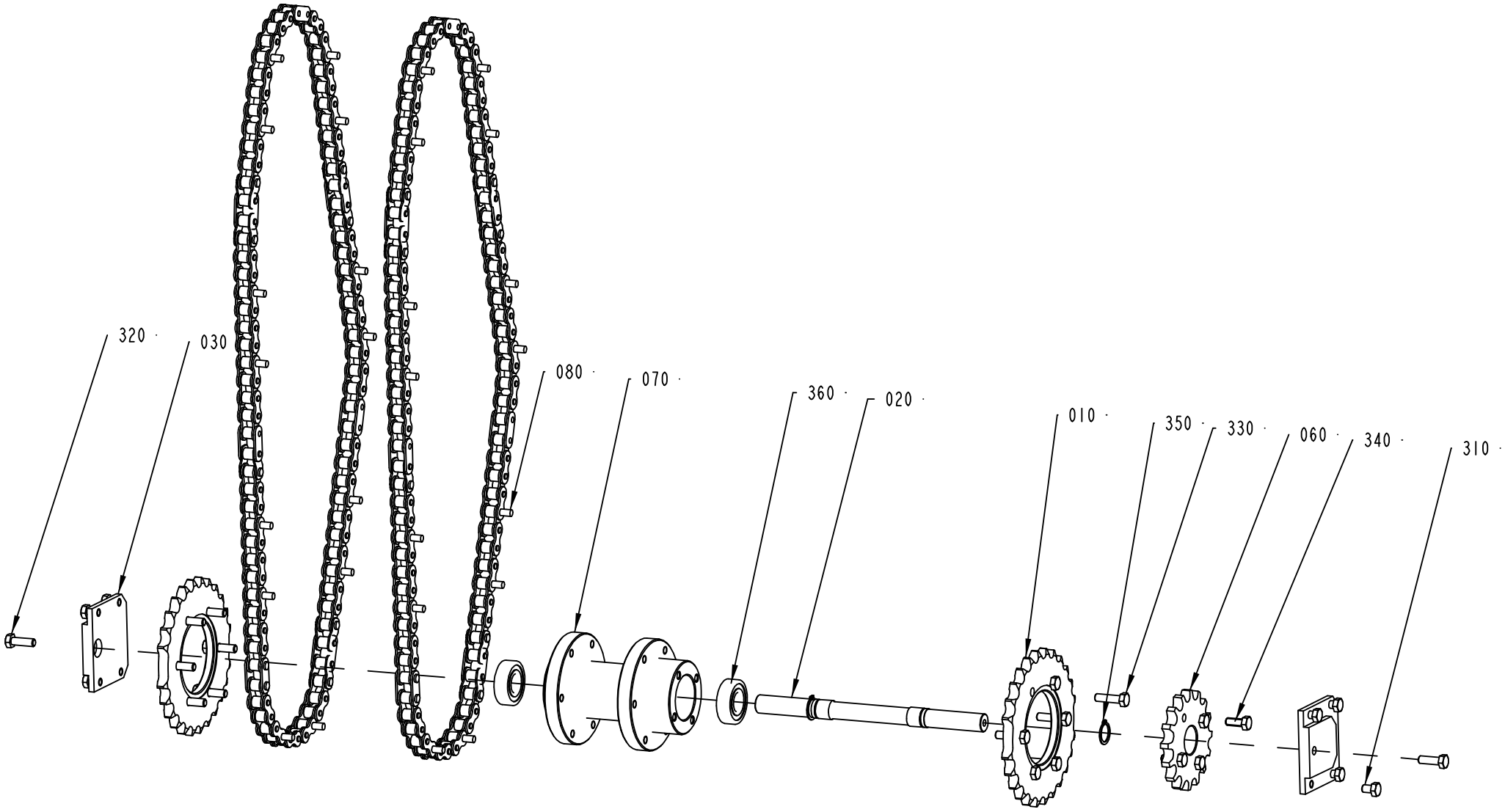
320
030
080
070
360
020
010
350
330
060
340
310
2523912-2
ECM 104376

ECM: 122359 - 20021212
Group number: 2523912-0100
Assembly Drawing: 2523912-2_1_AA

Issue: 20030314

Pos	Part No	SP	UN	Qty	Description	Page No
0150S						
010	2524261-0000	A		2	SPROCKET	
030	2524262-0000	-		2	SUPPORT PLATE	
080	2524247-0000	A		2	CHAIN	
0200B						
010	2523839-0000	A		2	SPROCKET	
030	2523856-0000	-		1	SUPPORT PLATE	
040	2523857-0000	-		1	SUPPORT PLATE	
080	2524128-0000	A		2	CHAIN	
V065						
010	2542888-0000	A		2	SPROCKET	
030	2542890-0000	-		1	SUPPORT PLATE	
040	2542891-0000	-		1	SUPPORT PLATE	
080	2542889-0000	A		2	CHAIN	
Common Parts						
020	1515013-0000	A		1	SHAFT	
060	2524263-0000	A		1	SPROCKET	
070	2542642-0000	A		1	HUB	
310	312105-0447	-		8	SCREW M6S ISO 4017 M8X12 A480	
320	312105-0453	-		2	SCREW M6S ISO 4017 M8X25 A480	
330	312105-0455	-		12	SCREW M6S ISO 4017 M8X30 A480	
340	312105-0451	-		4	SCREW M6S ISO 4017 M8X20 A480	
350	315751-0116	-		2	RETAIN. RING, 20	
360	321313-0104	A		2	BALL BEARING, 20X47X14 MM	

Pos	Part No	SP	UN	Qty	Description	Page No

Machine Type | Group Description | Used-In | Group Number | Page No

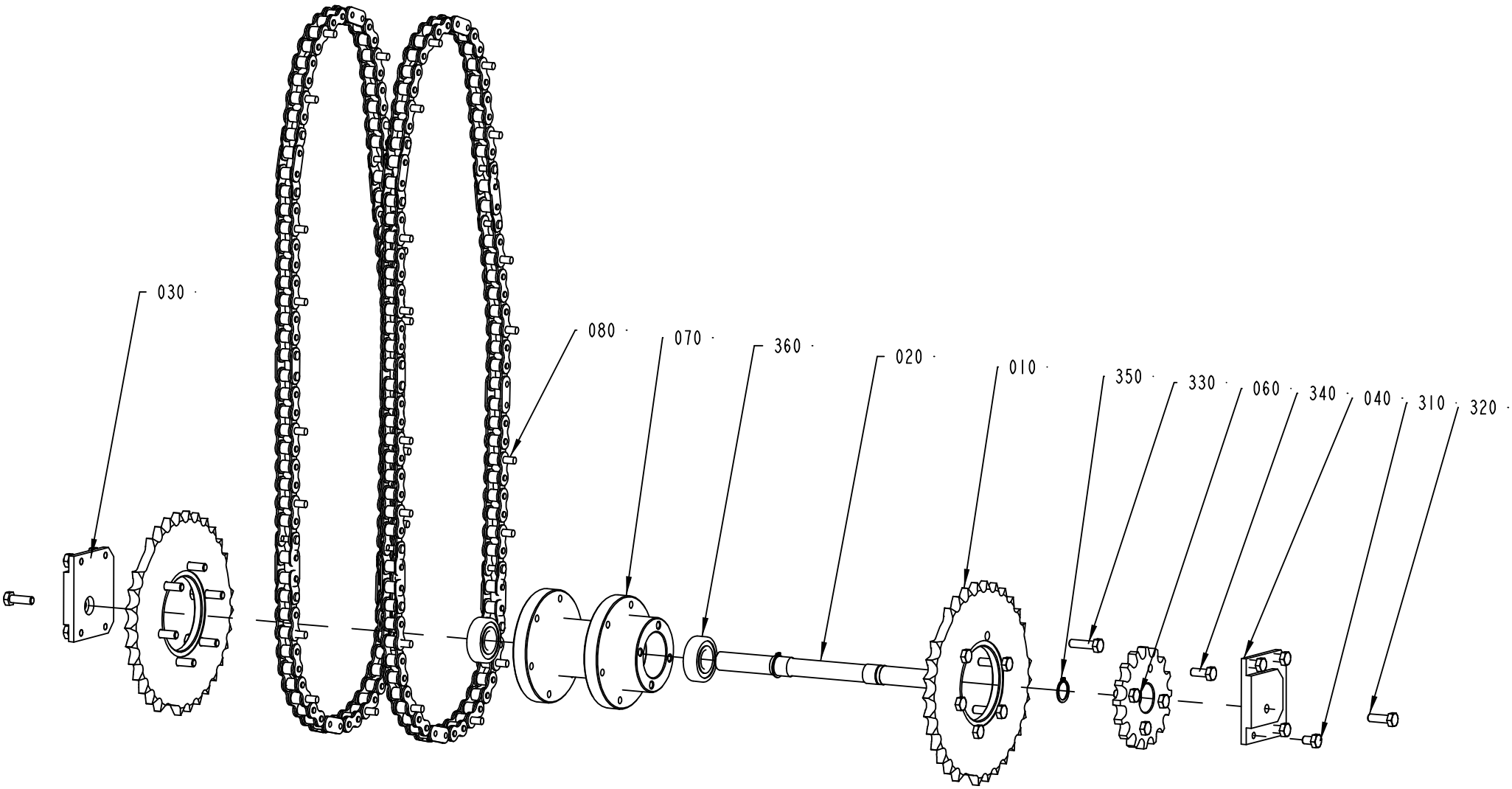

2523912-3
ECM 104376

Pos	Part No	SP	UN	Qty	Description	Page No
0150S						
010	2524261-0000	A		2	SPROCKET	
030	2524262-0000	-		2	SUPPORT PLATE	
080	2524247-0000	A		2	CHAIN	
0200B						
010	2523839-0000	A		2	SPROCKET	
030	2523856-0000	-		1	SUPPORT PLATE	
040	2523857-0000	-		1	SUPPORT PLATE	
080	2524128-0000	A		2	CHAIN	
V065						
010	2542888-0000	A		2	SPROCKET	
030	2542890-0000	-		1	SUPPORT PLATE	
040	2542891-0000	-		1	SUPPORT PLATE	
080	2542889-0000	A		2	CHAIN	
Common Parts						
020	1515013-0000	A		1	SHAFT	
060	2524263-0000	A		1	SPROCKET	
070	2542642-0000	A		1	HUB	
310	312105-0447	-		8	SCREW M6S ISO 4017 M8X12 A480	
320	312105-0453	-		2	SCREW M6S ISO 4017 M8X25 A480	
330	312105-0455	-		12	SCREW M6S ISO 4017 M8X30 A480	
340	312105-0451	-		4	SCREW M6S ISO 4017 M8X20 A480	
350	315751-0116	-		2	RETAIN. RING, 20	
360	321313-0104	A		2	BALL BEARING, 20X47X14 MM	

Pos	Part No	SP	UN	Qty	Description	Page No

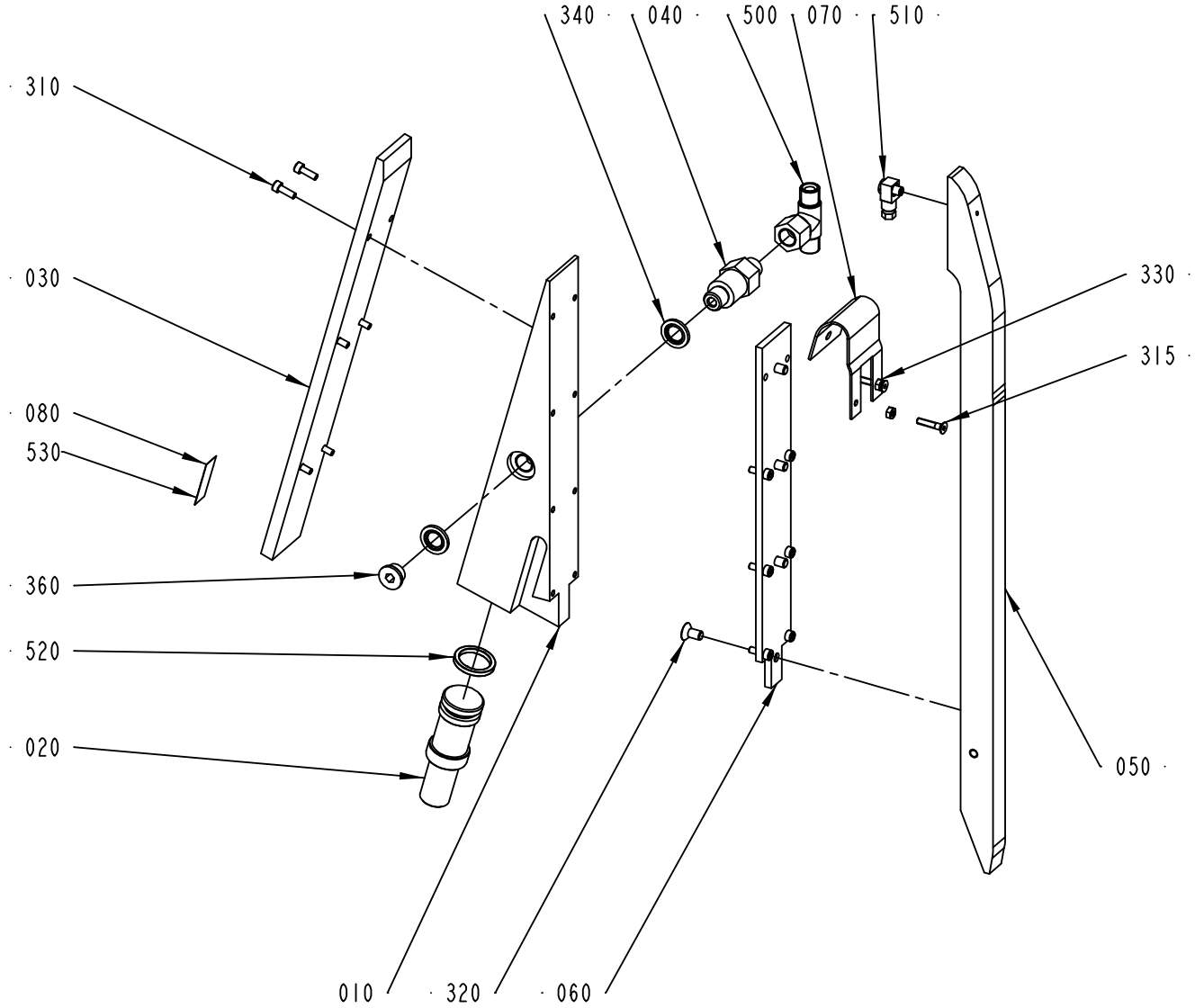

2524109-1
ECM 116686

ECM: 122335 - 20021212
Group number: 2524109-0100
Assembly Drawing: 2524109-1_1_AB

Issue: 20030314

Pos	Part No	SP	UN	Qty	Description	Page No
Common Parts						
010	2523955-0000	A		1	PLUNGER	
020	1514284-0000	A		1	PISTON	
030	2556681-0000	-		1	ROLLER PLATE	
040	1514289-0000	-		1	CONNECTION	
050	2523956-0000	A		1	ROLLER BAR	
060	2523957-0000	-		1	PLATE	
070	2524256-0000	B		1	COVER	
080	599361-0000	-		1	DIAL	
310	312115-0291	-		12	SCREW ISO4762 M4X12 A4	
315	312155-0295	-		2	SCREW EN 10642 MF6S M4X20 A480	
320	312155-0366	-		4	SCREW EN 10642 MF6S M6X12 A480	
330	312605-0312	-		2	HEXAGON NUT, M6M M4 A280	
340	315211-0108	-		2	GASKET BOLT HEAD 13,74X20,57X2 MM G1/4	
360	342713-0210	-		1	PLUG, EXT THREAD HEX SOCKET 8638-00-140	
500	90055-0058	-		1	HOSE COUPLING	
510	90134-0058	-		1	CONNECTION	
520	90458-2796	A		1	X-SEAL 21,82X3,53 MM	
530	90153-0015	-	G	1	ADHESIVE,LOCTITE IS 496/CYANOLOT 303	

Pos	Part No	SP	UN	Qty	Description	Page No

Machine Type	Group Description	Used-In	Group Number	Page No

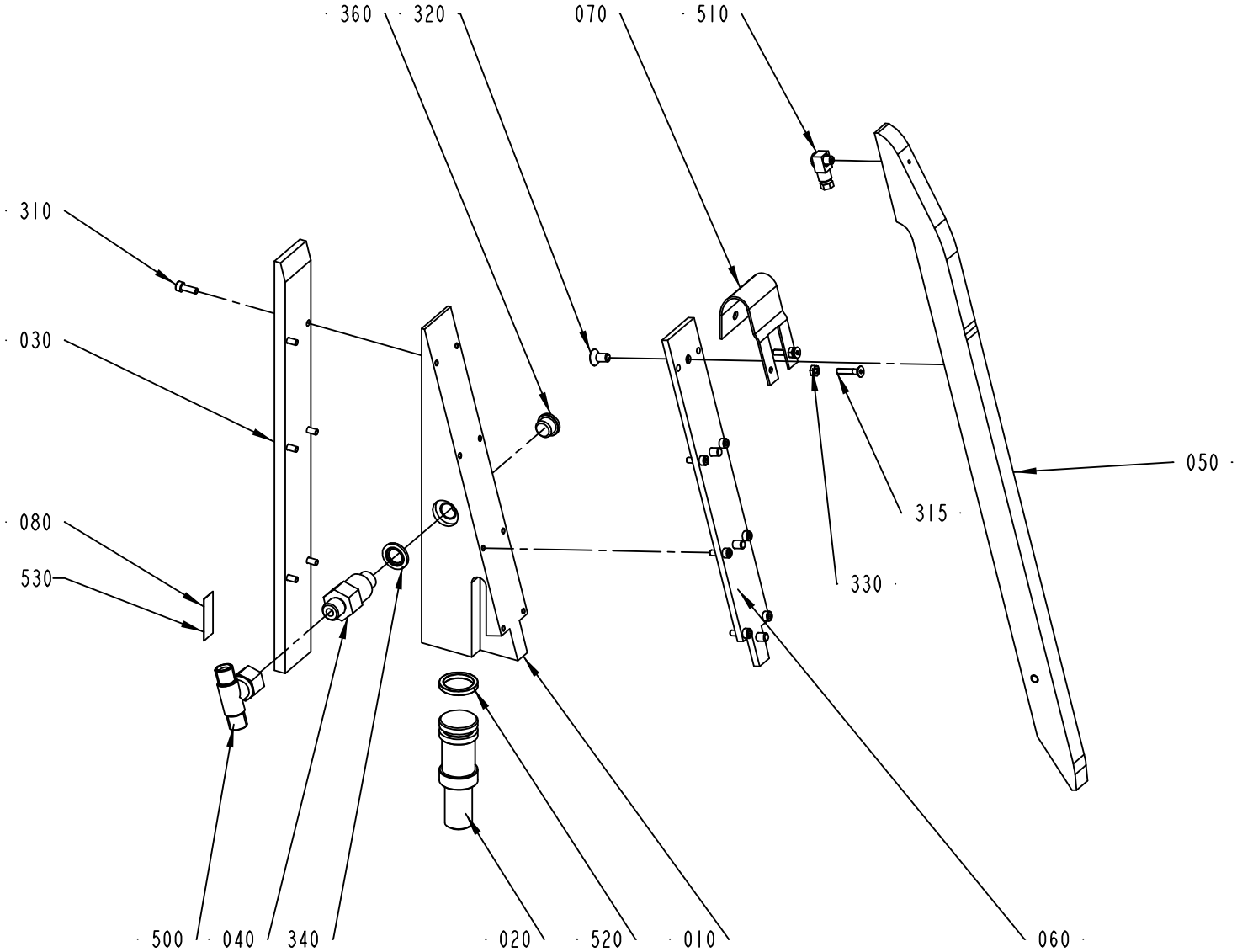

2524110-1
ECM 116686

ECM: 122334 - 20021212
Group number: 2524110-0100
Assembly Drawing: 2524110-1_1_AB

Issue: 20030314

Pos	Part No	SP	UN	Qty	Description	Page No
Common Parts						
010	2523955-0000	A		1	PLUNGER	
020	1514284-0000	A		1	PISTON	
030	2556681-0000	-		1	ROLLER PLATE	
040	1514289-0000	-		1	CONNECTION	
050	2523956-0000	A		1	ROLLER BAR	
060	2523957-0000	-		1	PLATE	
070	2524256-0000	B		1	COVER	
080	599361-0000	-		1	DIAL	
310	312115-0291	-		12	SCREW ISO4762 M4X12 A4	
315	312155-0295	-		2	SCREW EN 10642 MF6S M4X20 A480	
320	312155-0366	-		4	SCREW EN 10642 MF6S M6X12 A480	
330	312605-0312	-		2	HEXAGON NUT, M6M M4 A280	
340	315211-0108	-		2	GASKET BOLT HEAD 13,74X20,57X2 MM G1/4	
360	342713-0210	-		1	PLUG, EXT THREAD HEX SOCKET 8638-00-140	
500	90055-0058	-		1	HOSE COUPLING	
510	90134-0058	-		1	CONNECTION	
520	90458-2796	A		1	X-SEAL 21,82X3,53 MM	
530	90153-0015	-	G	1	ADHESIVE,LOCTITE IS 496/CYANOLOT 303	

Pos	Part No	SP	UN	Qty	Description	Page No

Machine Type	Group Description	Used-In	Group Number	Page No

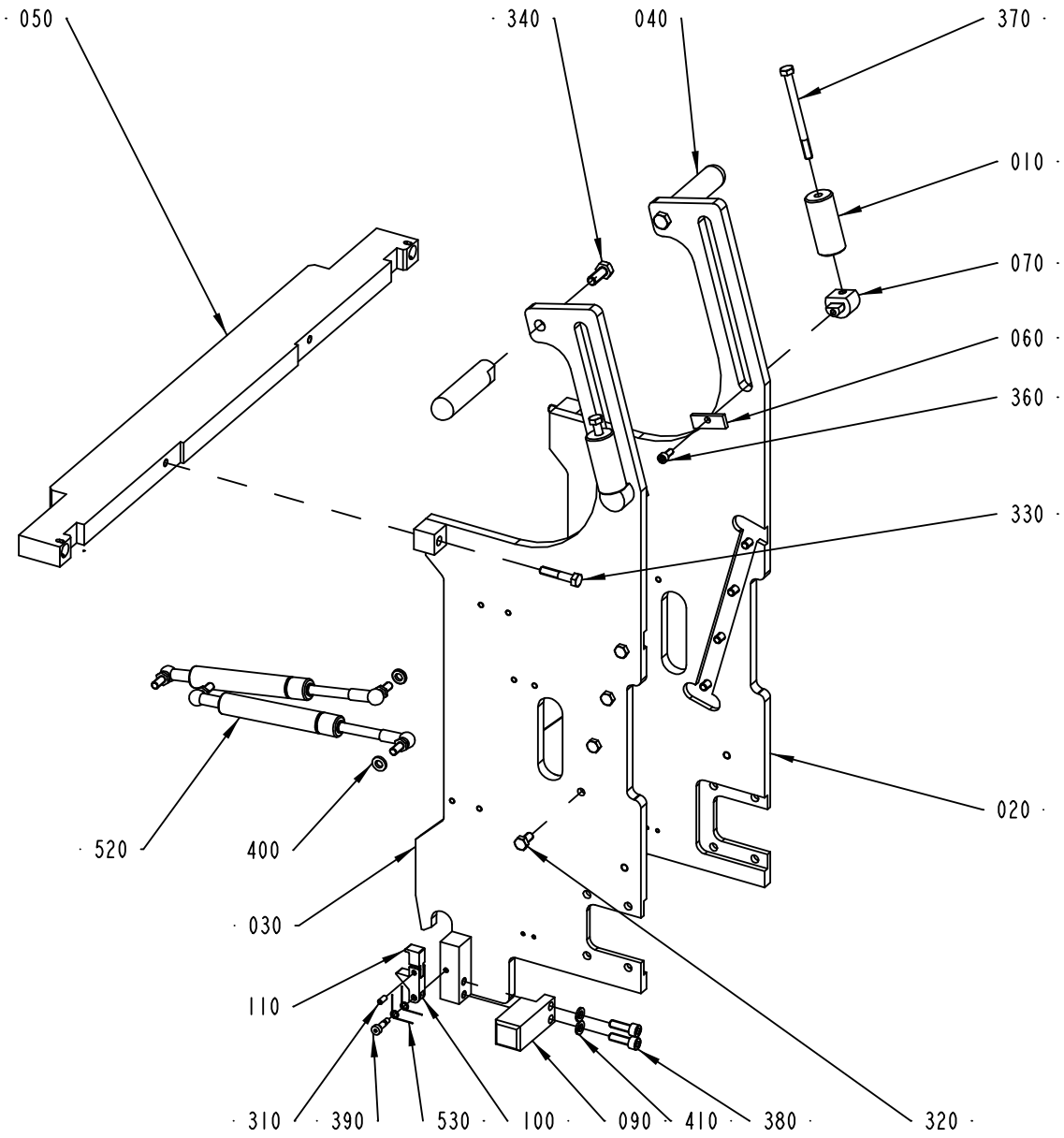

2524112-2
ECM 104376

Pos	Part No	SP	UN	Qty	Description	Page No
0150S						
010	2542896-0000	-		2	SPACER	
370	312105-0471	-		2	SCREW M6S ISO 4014 M8X100 A480	
0200B OR V065						
370	312109-0457	-		2	SCREW M6S ISO 4017 M8X35 A480	
Common Parts						
020	2556714-0000	-		1	SIDE PLATE	
030	2556715-0000	-		1	SIDE PLATE	
040	2556682-0000	-		2	HANDLE	
050	1515021-0000	-		1	BEAM	
060	2523854-0000	-		2	BRACKET	
070	2523855-0000	-		2	BRACKET	
090	2542903-0000	-		2	DOLLY	
100	2542904-0000	-		2	FLAP	
110	2542905-0000	-		2	FLAP	
310	311103-0306	-		2	PARALLELL PIN, M6, 5X12 MM	
320	312105-0449	-		8	SCREW M6S ISO 4017 M8X16 A480	
330	312105-0459	-		2	SCREW M6S ISO 4014 M8X40 A480	
340	312105-0493	-		2	SCREW M6S ISO 4017 M10X25 A480	
360	312115-0367	-		2	SCREW ISO4762 M6X14 A4	
380	312115-0453	-		4	SCREW ISO4762 M8X25 A4	
390	312180-0366	-		2	SCREW ISO7379 H6X12	
410	315402-0165	-		4	LOCK WASHER FBB 8,2	
520	90459-1343	B		2	GAS SPRING NO. G23-100-800N-01	
530	90459-1345	-		4	TORSION SPRING 8359	

Pos	Part No	SP	UN	Qty	Description	Page No

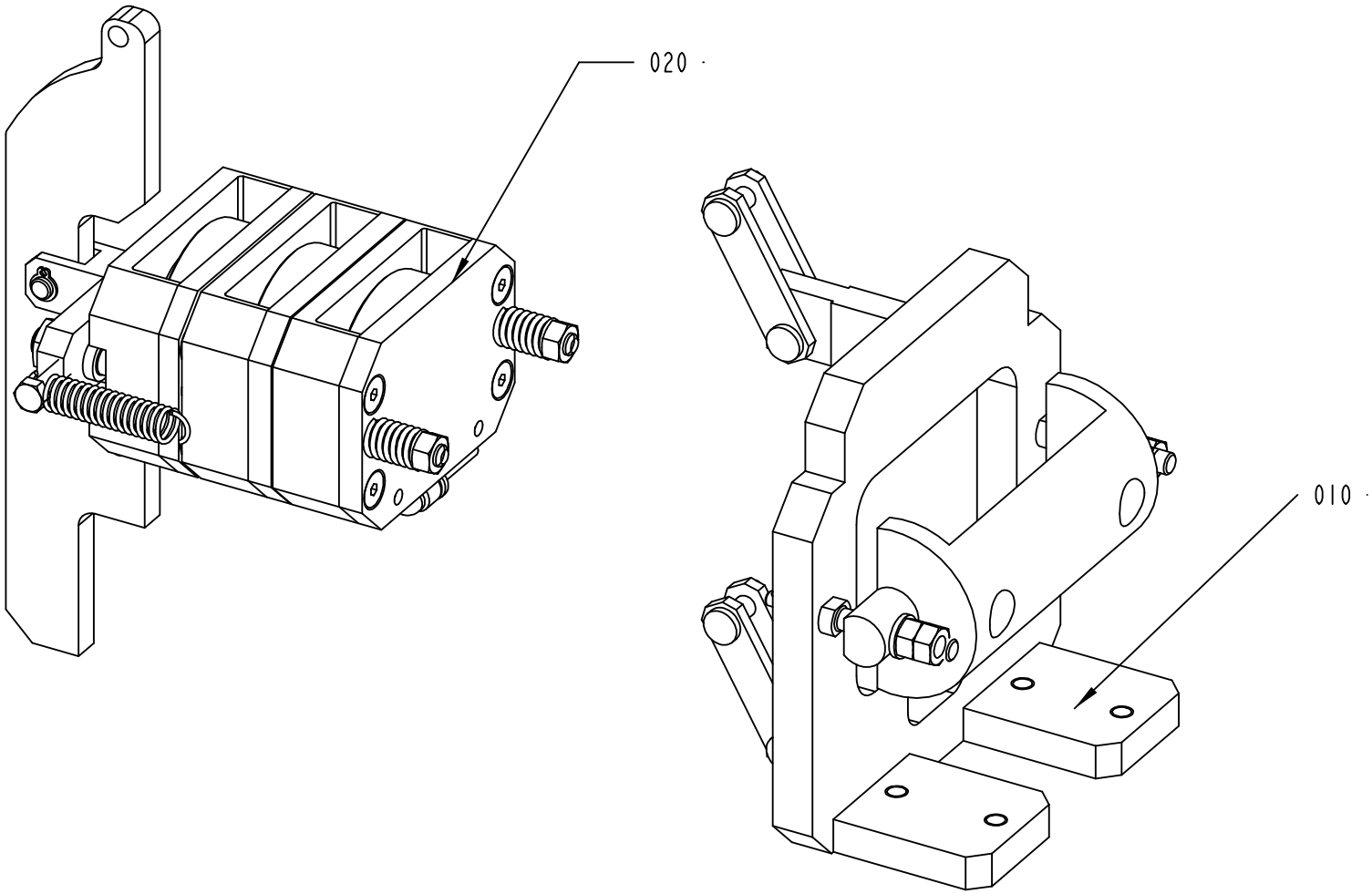

2524135-1
ECM 104376

Pos	Part No	SP	UN	Qty	Description	Page No
Common Parts						
010	A2556680-0100	-		1	CYLINDER BRACKET	**303**
020	A2542897-0100	-		1	DESIGN CORRECTION DEVICE	**305**

Pos	Part No	SP	UN	Qty	Description	Page No

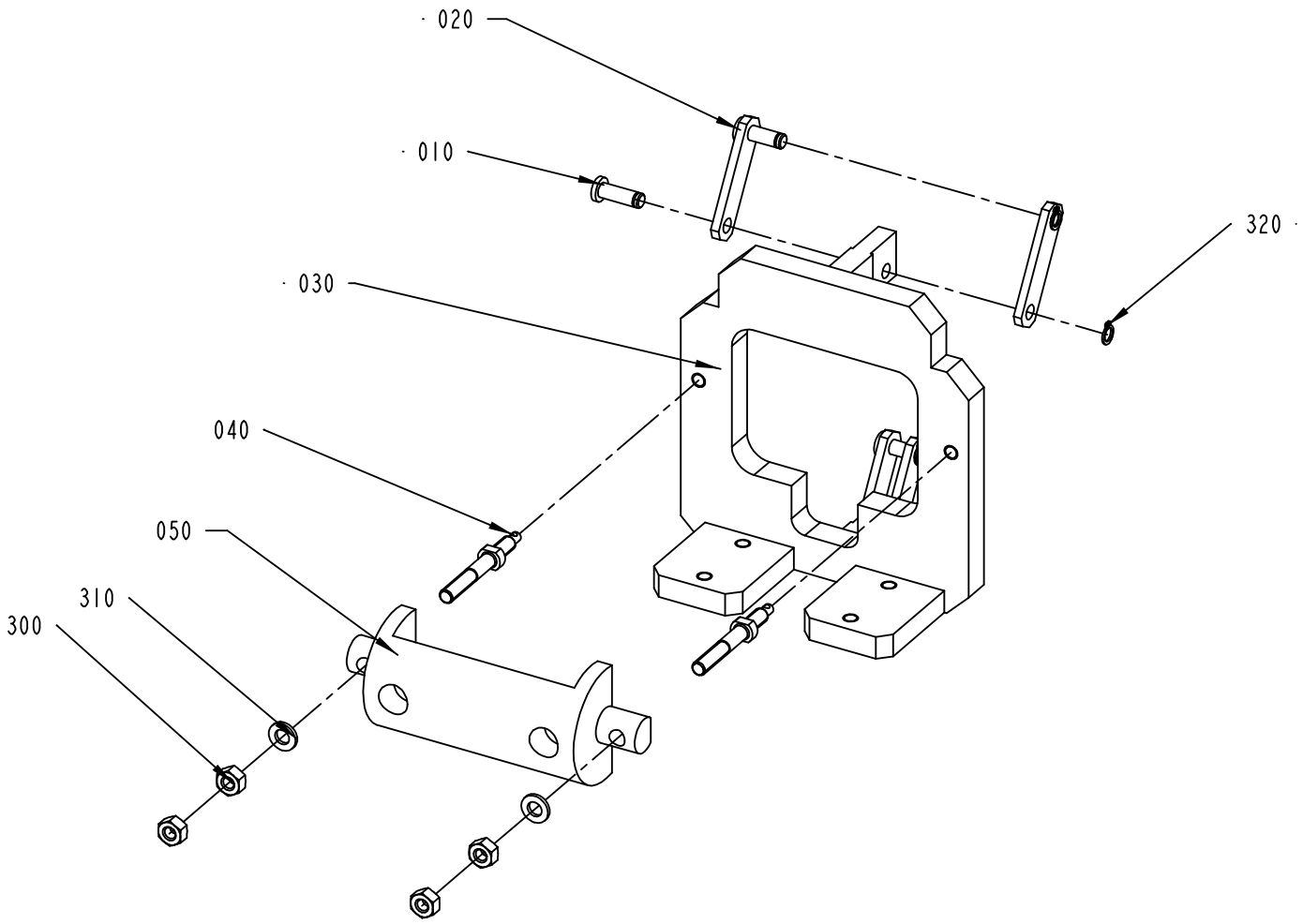

2556680-1
ECM 104376

ECM: 122333 - 20021212
Group number: 2556680-0100
Assembly Drawing: 2556680-1_1_AA

Issue: 20030314

Pos	Part No	SP	UN	Qty	Description	Page No
Common Parts						
010	1514455-0000	A		4	PIN	
020	1515006-0000	A		4	LINK ARM	
030	2556677-0000	-		1	BRACKET	
040	1515082-0000	A		2	STUD BOLT	
050	1515083-0000	-		1	YOKE	
300	312605-0316	A		4	HEXAGON NUT, M6M M6 A280	
310	315105-0153	-		2	WASHER ISO 7089-6-200 HV-A4	
320	315751-0103	-		4	RETAIN. RING, 6	

Pos	Part No	SP	UN	Qty	Description	Page No

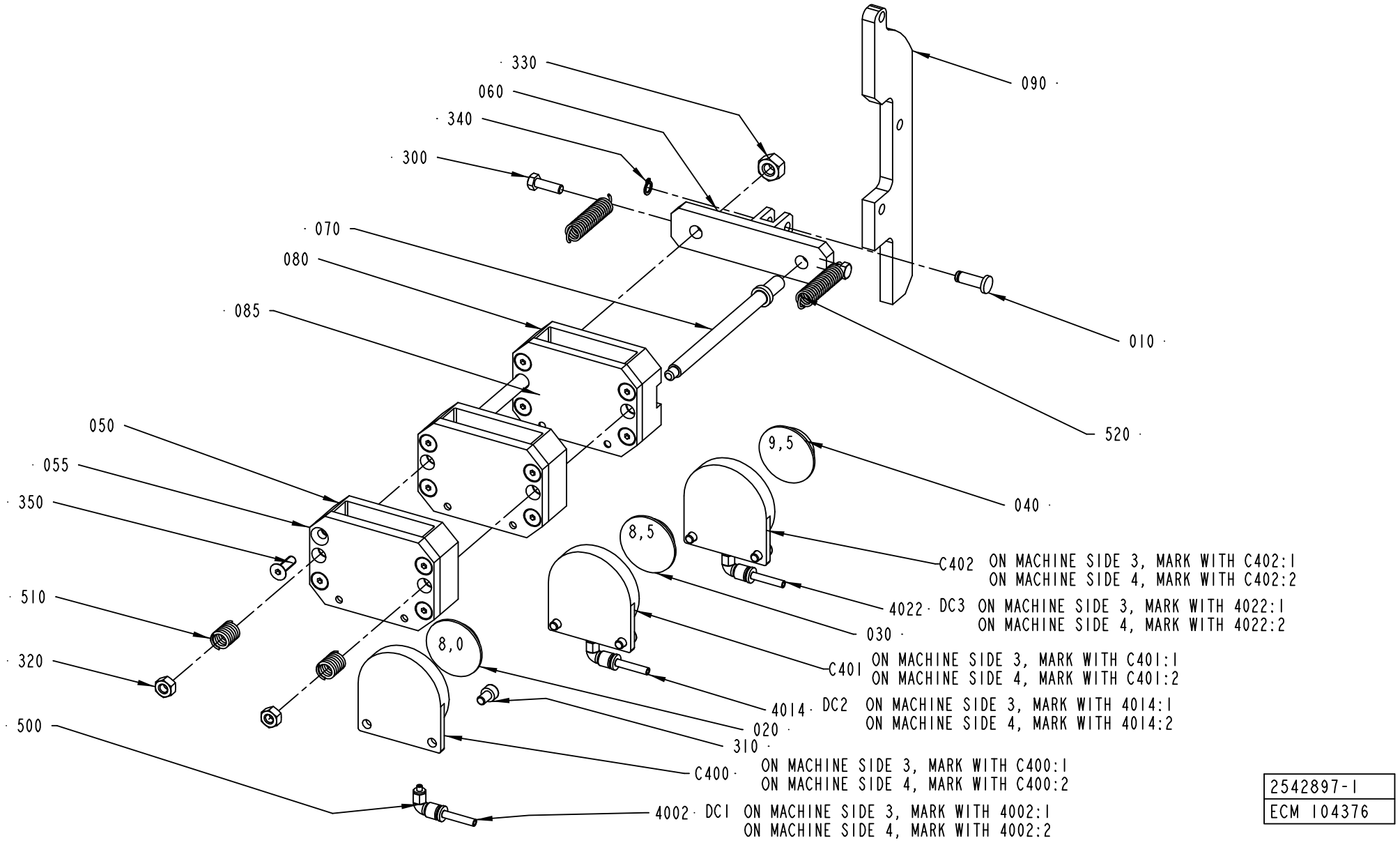

2542897-1
ECM 104376

ECM: 122330 - 20021212
Group number: 2542897-0100
Assembly Drawing: 2542897-1_1_AA

Issue: 20030314

Pos	Part No	SP	UN	Qty	Description	Page No
Common Parts						
010	1514455-0000	A		1	PIN	
020	1515054-0000	-		1	SPACER	
030	1515064-0000	-		1	SPACER	
040	1515066-0000	-		1	SPACER	
050	2556674-0000	-		2	CYLINDER BRACKET	
055	2556673-0000	-		2	PLATE	
060	1515068-0000	A		1	PRESSURE PLATE	
070	1515069-0000	-		2	TIE ROD	
080	2556675-0000	-		1	CYLINDER BRACKET	
085	2556676-0000	-		1	PLATE	
090	2524248-0000	A		1	CURVE	
300	312105-0329	-		2	SCREW M6S ISO 4017 M5X16 A480	
310	312115-0325	-		6	SCREW ISO4762 M5X10 A4	
320	312605-0316	-		2	HEXAGON NUT, M6M M6 A280	
330	312605-0318	-		2	HEXAGON NUT, M6M M8 A280	
340	315751-0103	-		1	RETAIN. RING, 6	
350	312155-0329	-		12	SCREW EN 10642 MF6S M5X16 A480	
4002	90166-0254	-	MM	1000	TUBE 4 MM PUR BLUE	
4014	90166-0254	-	MM	1000	TUBE 4 MM PUR BLUE	
4022	90166-0254	-	MM	1000	TUBE 4 MM PUR BLUE	
500	90458-2766	-		3	ELBOW PIPE JOINT, EXT.THREAD,D=4 MM M3	
510	90458-2768	A		2	COMP. SPRING 2531	
520	90458-2769	A		2	TENSION SPRING 3800	
C400	90459-1153	A		1	CYLINDER, CLAMPING MODULE EV-40-5	
C401	90459-1153	A		1	CYLINDER, CLAMPING MODULE EV-40-5	
C402	90459-1153	A		1	CYLINDER, CLAMPING MODULE EV-40-5	

Pos	Part No	SP	UN	Qty	Description	Page No

Machine Type | Group Description | Used-In | Group Number | Page No

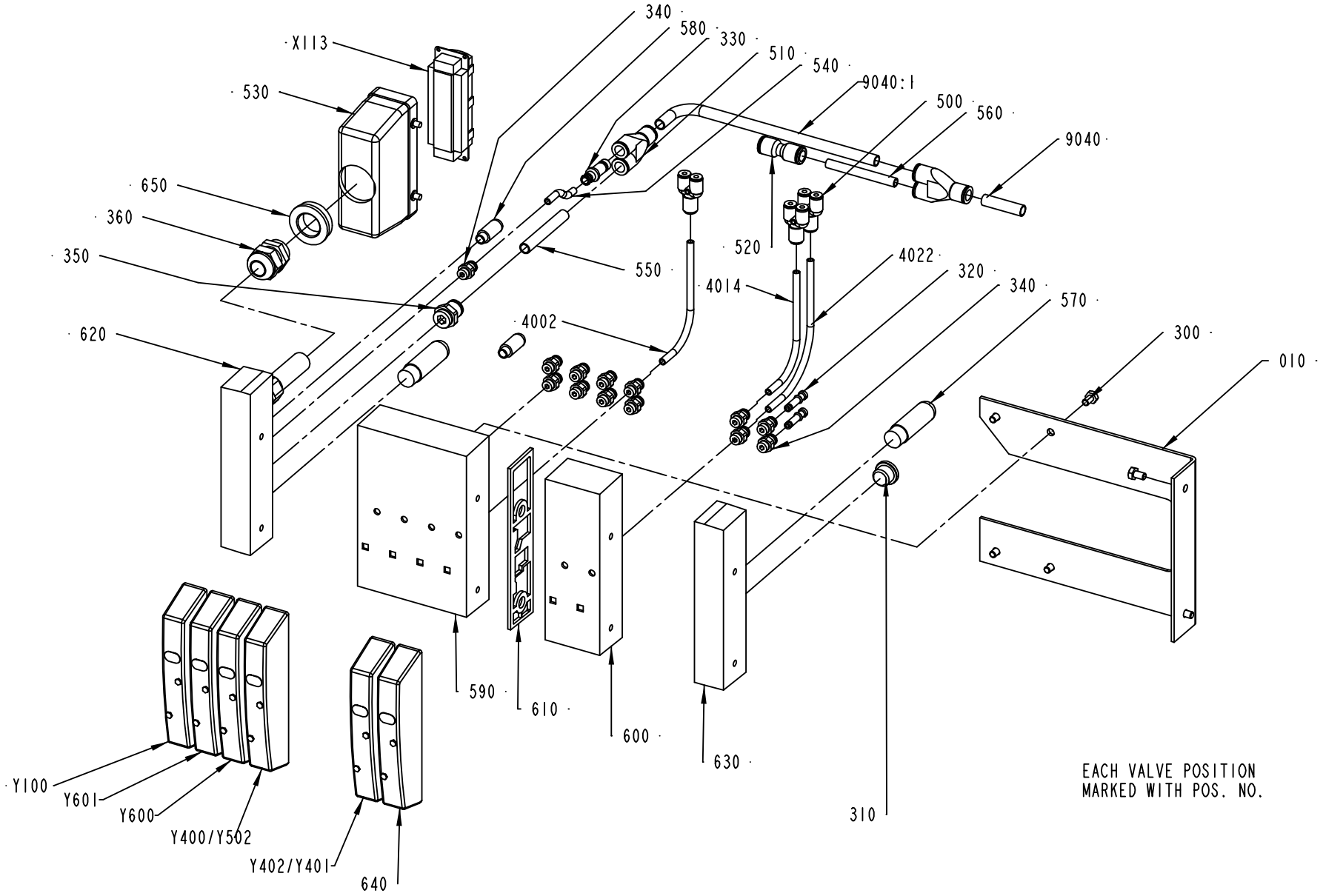

1515570-1
ECN 91351

ECM: 122362 - 20021212
Group number: 1515570-0100
Assembly Drawing: 1515570-1_1_AA

Issue: 20030314

Pos	Part No	SP	UN	Qty	Description	Page No
Common Parts						
010	1515744-0000	-		1	BRACKET	
300	312105-0364	-		6	SCREW M6S ISO 4017 M6X10 A480	
310	342713-0211	-		1	PLUG, EXT THREAD HEX SOCKET 8638-00-380	
320	342715-0102	-		2	BLIND PLUG 6 MM	
330	342716-0207	-		1	REDUCER 6-10	
340	342722-0202	-		13	PIPE COUPLING 1/8" D=6MM	
350	342722-0212	-		1	STRAIGHT COUPLING D=10-G3/8"	
360	352103-0111	-		1	CABLE GLAND, ST 16, PR22,5/PG16	
4002	90166-0081	-	MM	2000	TUBE 6 MM PA BLUE	
4014	90166-0081	-	MM	2000	TUBE 6 MM PA BLUE	
4022	90166-0081	-	MM	2000	TUBE 6 MM PA BLUE	
500	90055-0154	-		3	HOSE COUPLING	
510	90055-0216	-		2	Y-CONNECTION, 10-10	
520	90055-0240	-		1	HOSE,NIPPLE,REDUCER,TUBE, 8/10MM	
530	90110-0152	-		1	CABLE HOOD 24-POL 70.352.2428.1	
540	90166-0081	-	MM	50	TUBE 6 MM PA BLUE	
550	90166-0160	-	MM	70	TUBE 10 MM PA BLUE	
560	90166-0160	-	MM	70	TUBE 10 MM PA BLUE	
570	90328-0024	A		2	SILENCER G3/8	
580	90328-0047	-		2	SILENCER G1/8	
590	90458-1204	-		1	BASIC SUB-BASE FOR 4 VALVES	
600	90458-1206	-		1	EXPANSION SUB-BASE FOR 2 VALVES	
610	90458-1207	-		1	SEALING, STANDARD	
620	90458-1212	-		1	LEFT ENDPLATE INCL. 10M CABLE	
630	90458-1214	-		1	RIGHT ENDPLATE EXTERNAL PILOT AIR	
640	90458-1215	-		1	COVER PLATE FOR EMPTY VALVE POSITION	
650	90458-2587	-		1	REDUCER, SKINDICHT-MR 29/16	
9040	90166-0160	-	MM	6000	TUBE 10 MM PA BLUE	
9040:1	90166-0160	-	MM	500	TUBE 10 MM PA BLUE	
X113	90110-0150	-		1	MALE INSERT 121110 0000	
Y100	90458-1194	A		1	MONOSTABLE VALVE 5/2	
Y400/Y502	90458-1202	A		1	VALVES 2X3/2, CLOSED	
Y402/Y401	90458-1202	A		1	VALVES 2X3/2, CLOSED	
Y600	90458-1194	A		1	MONOSTABLE VALVE 5/2	
Y601	90458-1194	A		1	MONOSTABLE VALVE 5/2	

Pos	Part No	SP	UN	Qty	Description	Page No

Machine Type | Group Description | Used-In | Group Number | Page No

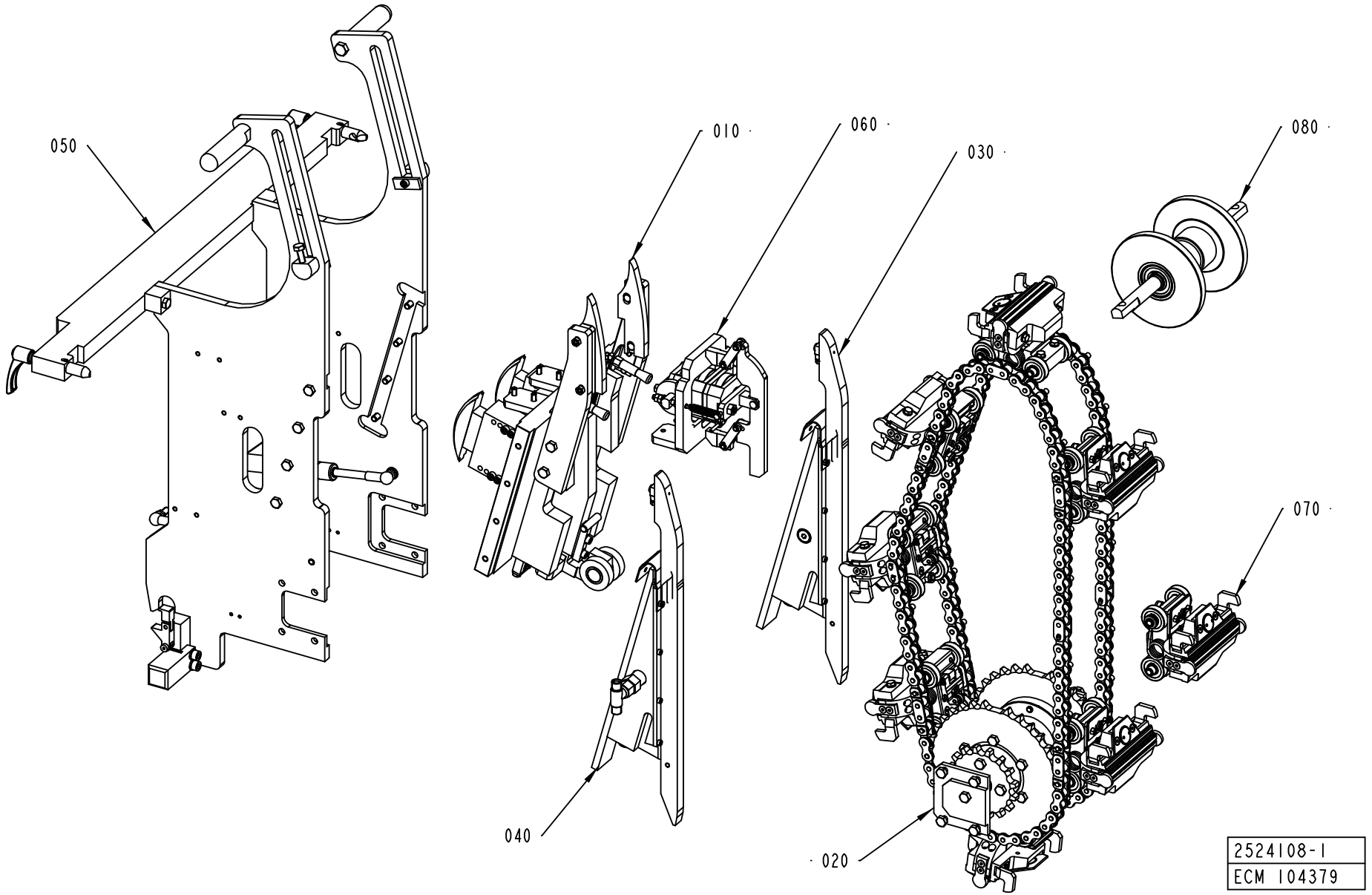
050
010
060
030
080
070
040
020
2524108-1
ECM 104379

Pos	Part No	SP	UN	Qty	Description	Page No
0150S						
070	A2524103-0100	-		7	PRESSURE JAW	**283, 285**
0200B						
070	A2524103-0100	-		8	PRESSURE JAW	**283, 285**
V065						
070	A2524103-0100	-		8	PRESSURE JAW	**283, 285**
Common Parts						
010	A2523915-0100	-		1	SPACER PIECE	**287**
020	A2524257-0100	-		1	SPROCKET	**311, 313, 315**
030	A2524109-0100	-		1	PLUNGER	**295**
040	A2524110-0100	-		1	PLUNGER	**297**
050	A2524112-0100	-		1	FRAME SECTION	**299**
060	A2524135-0100	-		1	DESIGN CORRECTION	**301**
080	A2542895-0100	-		1	GUIDE SPROCKET	**255**

Pos	Part No	SP	UN	Qty	Description	Page No

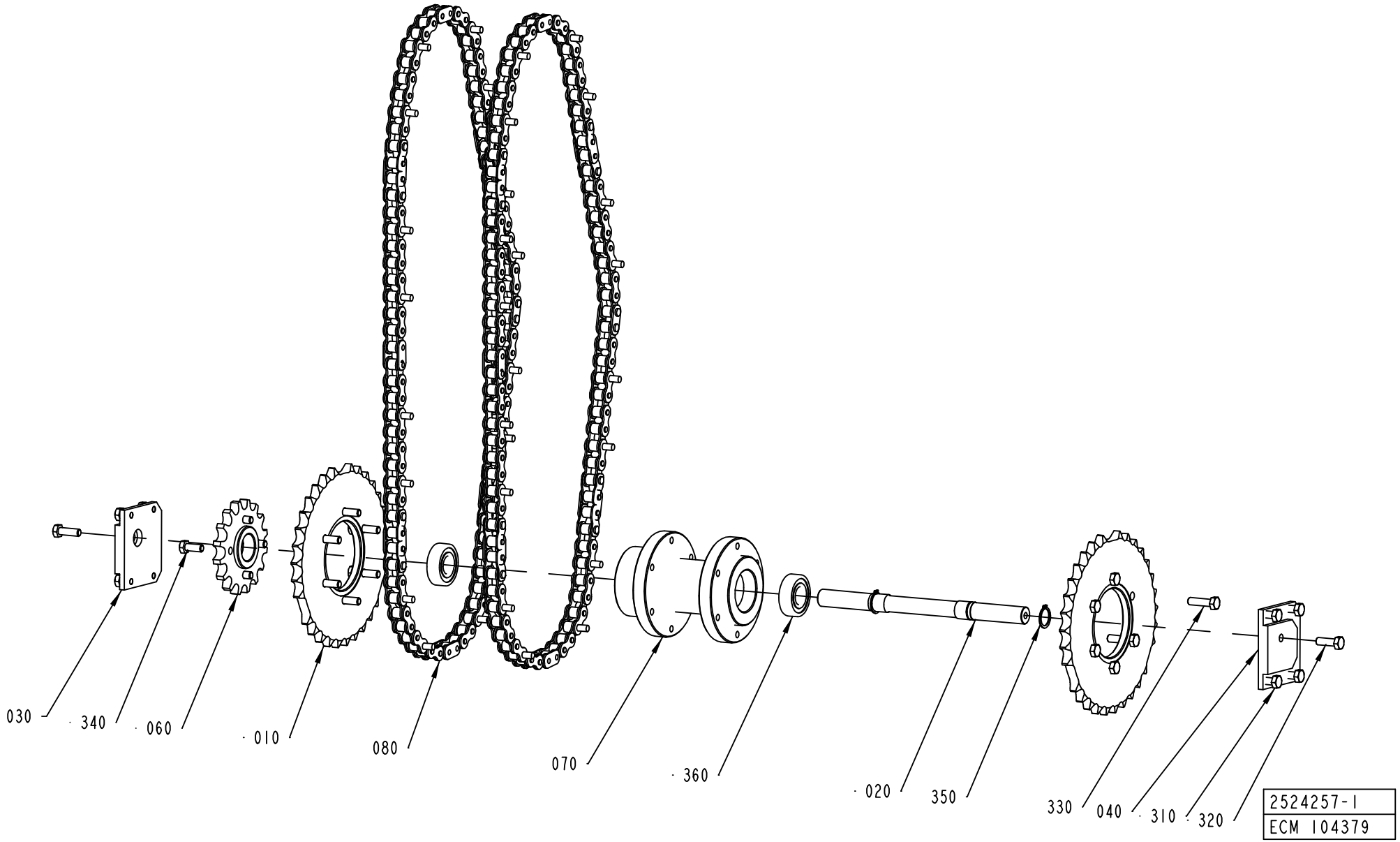
030
340
060
010
080
070
360
020
350
330
040
310
320
2524257-1
ECM 104379

ECM: 122360 - 20021212
Group number: 2524257-0100
Assembly Drawing: 2524257-1_1_AA

Issue: 20030314

Pos	Part No	SP	UN	Qty	Description	Page No
0150S						
010	2524261-0000	A		2	SPROCKET	
030	2524262-0000	-		2	SUPPORT PLATE	
080	2524247-0000	A		2	CHAIN	
0200B						
010	2523839-0000	A		2	SPROCKET	
030	2523856-0000	-		1	SUPPORT PLATE	
040	2523857-0000	-		1	SUPPORT PLATE	
080	2524128-0000	A		2	CHAIN	
V065						
010	2542888-0000	A		2	SPROCKET	
030	2542890-0000	-		1	SUPPORT PLATE	
040	2542891-0000	-		1	SUPPORT PLATE	
080	2542889-0000	A		2	CHAIN	
Common Parts						
020	1515013-0000	A		1	SHAFT	
060	2524263-0000	A		1	SPROCKET	
070	2542642-0000	A		1	HUB	
310	312105-0447	-		8	SCREW M6S ISO 4017 M8X12 A480	
320	312105-0453	-		2	SCREW M6S ISO 4017 M8X25 A480	
330	312105-0455	-		12	SCREW M6S ISO 4017 M8X30 A480	
340	312105-0451	-		4	SCREW M6S ISO 4017 M8X20 A480	
350	315751-0116	-		2	RETAIN. RING, 20	
360	321313-0104	A		2	BALL BEARING, 20X47X14 MM	

Pos	Part No	SP	UN	Qty	Description	Page No

Machine Type | Group Description | Used-In | Group Number | Page No

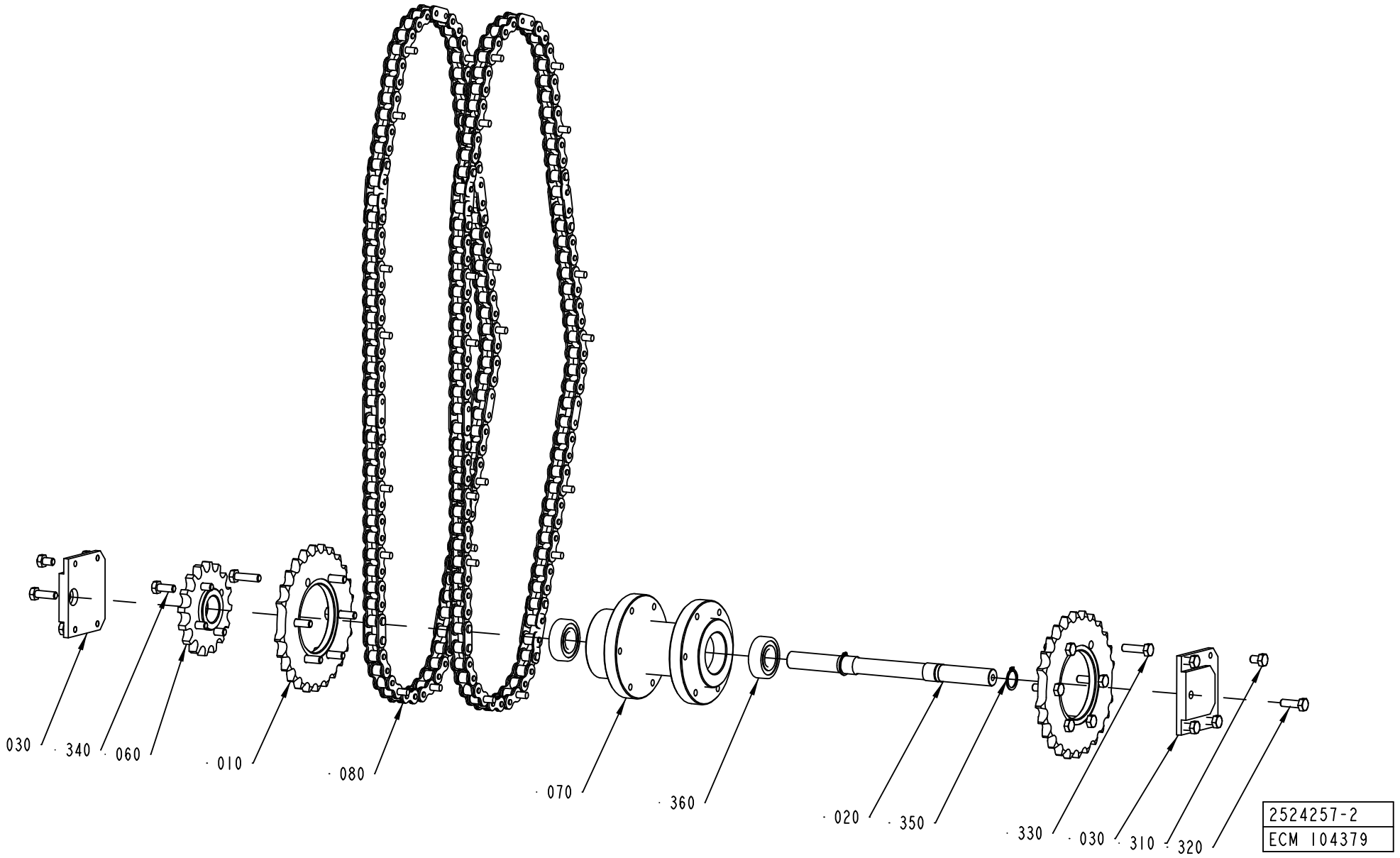
030
340
060
010
080
070
360
020
350
330
030
310
320
2524257-2
ECM 104379

ECM: 122360 - 20021212
Group number: 2524257-0100
Assembly Drawing: 2524257-2_1_AA

Issue: 20030314

Pos	Part No	SP	UN	Qty	Description	Page No
0150S						
010	2524261-0000	A		2	SPROCKET	
030	2524262-0000	-		2	SUPPORT PLATE	
080	2524247-0000	A		2	CHAIN	
0200B						
010	2523839-0000	A		2	SPROCKET	
030	2523856-0000	-		1	SUPPORT PLATE	
040	2523857-0000	-		1	SUPPORT PLATE	
080	2524128-0000	A		2	CHAIN	
V065						
010	2542888-0000	A		2	SPROCKET	
030	2542890-0000	-		1	SUPPORT PLATE	
040	2542891-0000	-		1	SUPPORT PLATE	
080	2542889-0000	A		2	CHAIN	
Common Parts						
020	1515013-0000	A		1	SHAFT	
060	2524263-0000	A		1	SPROCKET	
070	2542642-0000	A		1	HUB	
310	312105-0447	-		8	SCREW M6S ISO 4017 M8X12 A480	
320	312105-0453	-		2	SCREW M6S ISO 4017 M8X25 A480	
330	312105-0455	-		12	SCREW M6S ISO 4017 M8X30 A480	
340	312105-0451	-		4	SCREW M6S ISO 4017 M8X20 A480	
350	315751-0116	-		2	RETAIN. RING, 20	
360	321313-0104	A		2	BALL BEARING, 20X47X14 MM	

Pos	Part No	SP	UN	Qty	Description	Page No

Machine Type | Group Description | Used-In | Group Number | Page No

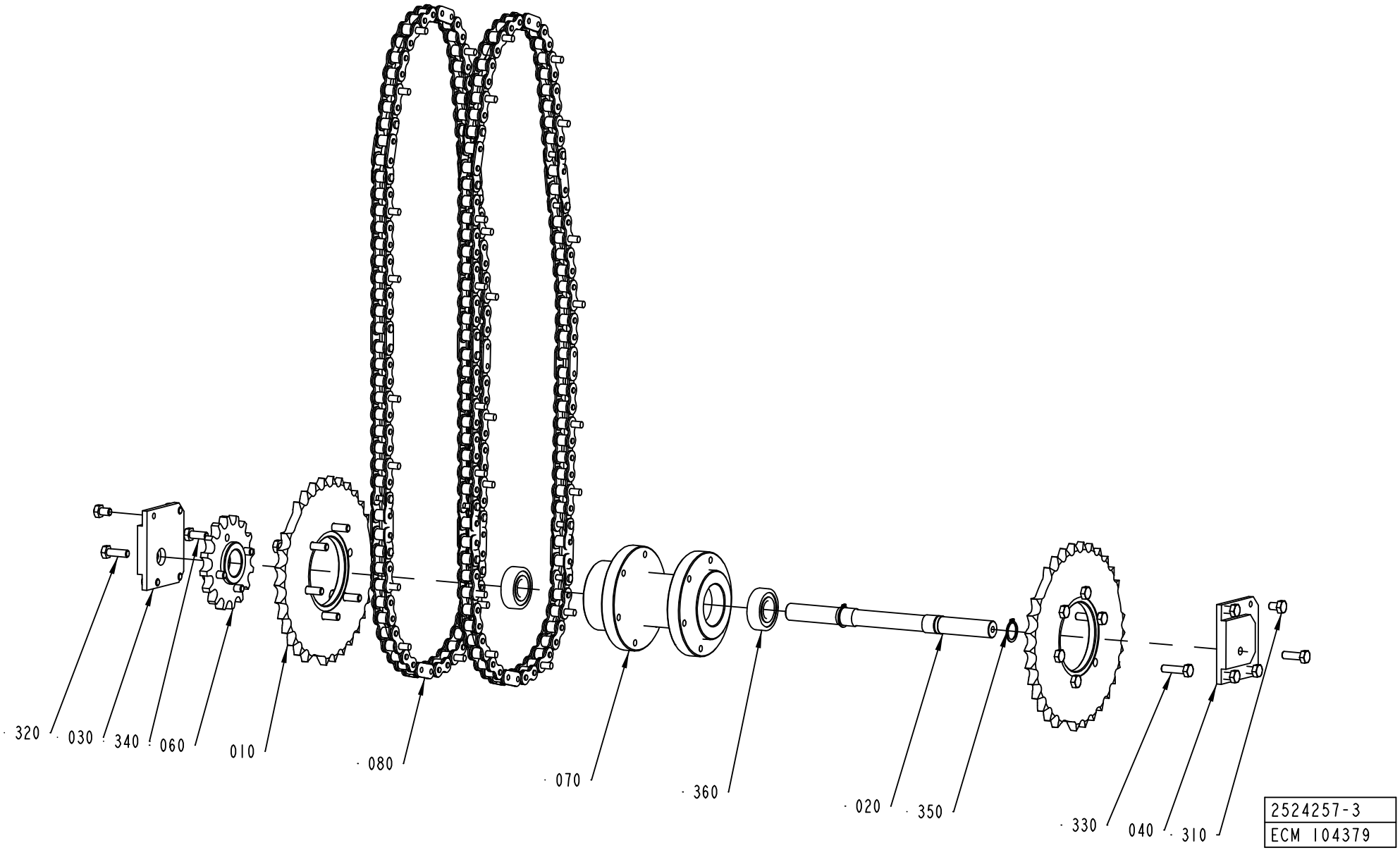
320
030
340
060
010
080
070
360
020
350
330
040
310
2524257-3
ECM 104379

ECM: 122360 - 20021212
Group number: 2524257-0100
Assembly Drawing: 2524257-3_1_AA

Issue: 20030314

Pos	Part No	SP	UN	Qty	Description	Page No
0150S						
010	2524261-0000	A		2	SPROCKET	
030	2524262-0000	-		2	SUPPORT PLATE	
080	2524247-0000	A		2	CHAIN	
0200B						
010	2523839-0000	A		2	SPROCKET	
030	2523856-0000	-		1	SUPPORT PLATE	
040	2523857-0000	-		1	SUPPORT PLATE	
080	2524128-0000	A		2	CHAIN	
V065						
010	2542888-0000	A		2	SPROCKET	
030	2542890-0000	-		1	SUPPORT PLATE	
040	2542891-0000	-		1	SUPPORT PLATE	
080	2542889-0000	A		2	CHAIN	
Common Parts						
020	1515013-0000	A		1	SHAFT	
060	2524263-0000	A		1	SPROCKET	
070	2542642-0000	A		1	HUB	
310	312105-0447	-		8	SCREW M6S ISO 4017 M8X12 A480	
320	312105-0453	-		2	SCREW M6S ISO 4017 M8X25 A480	
330	312105-0455	-		12	SCREW M6S ISO 4017 M8X30 A480	
340	312105-0451	-		4	SCREW M6S ISO 4017 M8X20 A480	
350	315751-0116	-		2	RETAIN. RING, 20	
360	321313-0104	A		2	BALL BEARING, 20X47X14 MM	

Pos	Part No	SP	UN	Qty	Description	Page No

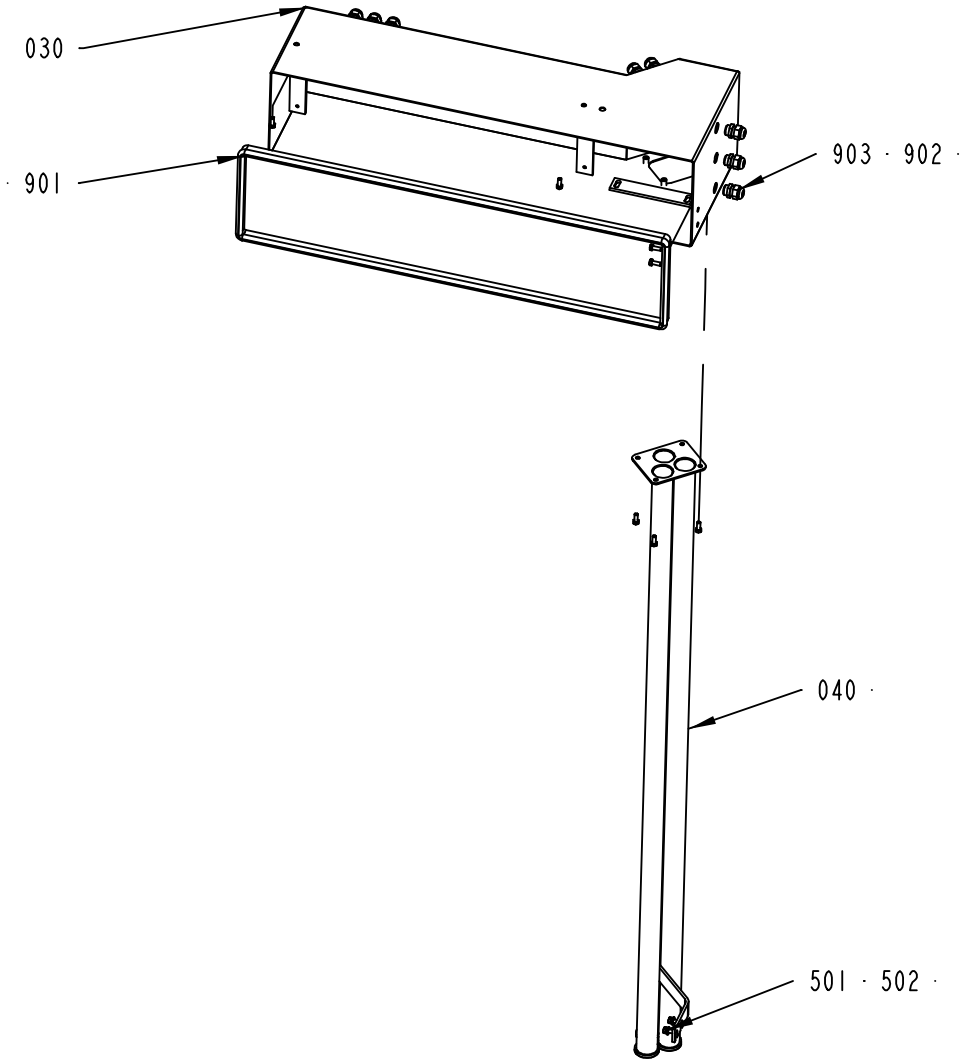

2543071-1
ECM 116686

ECM: 120323 - 20021212
Group number: 2543071-0100
Assembly Drawing: 2543071-1_1_AB

Issue: 20030314

Pos	Part No	SP	UN	Qty	Description	Page No
Common Parts						
030	2542714-0000	-		1	CABLE COVER	
040	2556707-0000	-		1	CABLE DUCT	
501	312105-0368	-		10	SCREW M6S M6X16 A280	
502	315105-0156	-		2	WASHER PLAIN, BRB, 6,7/14,H=1,5	
504	315105-0165	-		4	WASHER ISO 7089-8-200 HV-A4	
901	90143-0057	-	MM	2000	STRIP EMKA 1011-05 21X11MM	
902	90099-0117	-		14	NUT, PR 18,6 (PG11)	
903	352103-0106	-		14	CABLE GLAND, ST 11, PR18,6/PG11	

Pos	Part No	SP	UN	Qty	Description	Page No

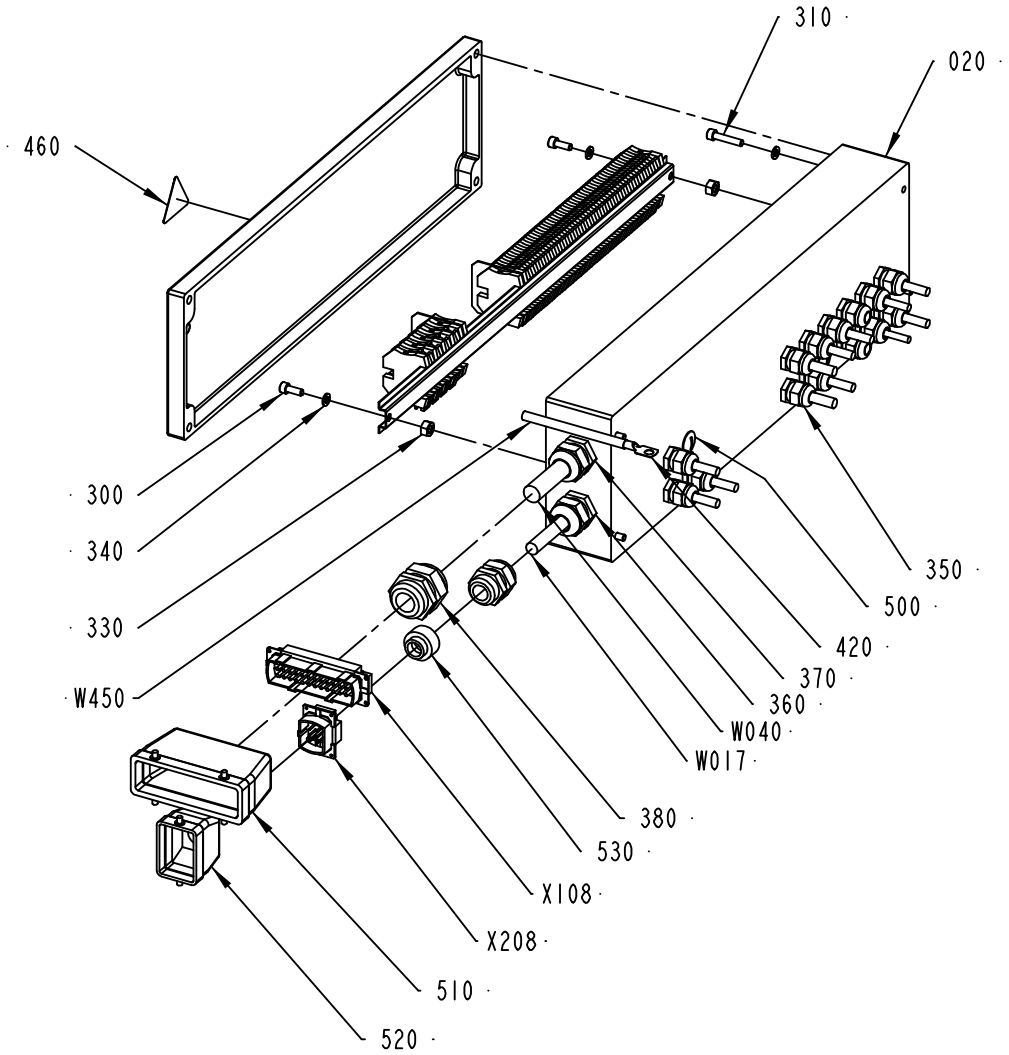

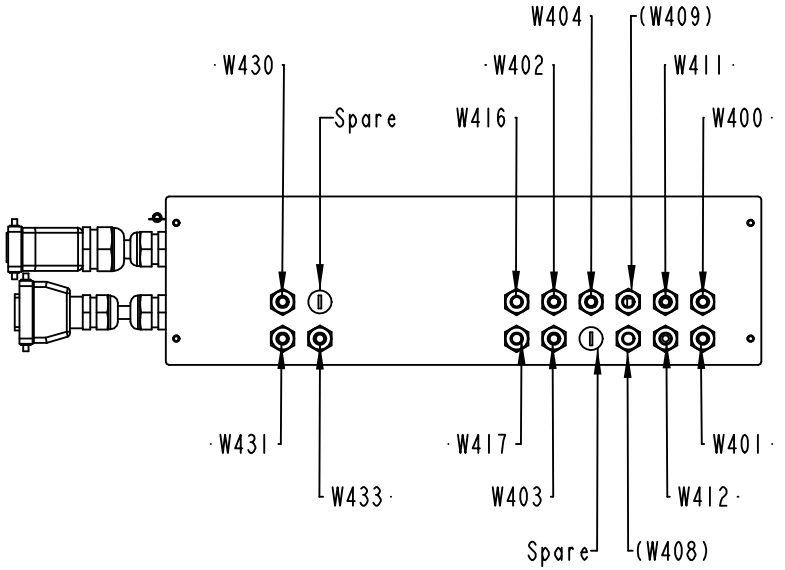

2556852-1
ECM 104392

ECM: 122351 - 20021212
Group number: 2556852-0100
Assembly Drawing: 2556852-1_1_AA

Issue: 20030314

Pos	Part No	SP	UN	Qty	Description	Page No
Common Parts						
010	1514683-0000	-		1	RAIL	
020	2556851-0000	-		1	CONNECTION BOX	
030	1514889-0000	-		2	WASHER	
040	1515166-0000	-		2	BRACKET	
300	312115-0368	-		2	SCREW ISO4762 M6X16 A4	
310	312115-0374	-		4	SCREW ISO4762 M6X30 A4	
320	312155-0366	-		2	SCREW EN 10642 MF6S M6X12 A480	
330	312605-0318	-		2	HEXAGON NUT, M6M M8 A280	
340	315105-0153	-		6	WASHER ISO 7089-6-200 HV-A4	
350	352103-0106	-		14	CABLE GLAND, ST 11, PR18,6/PG11	
360	352103-0115	-		2	CABLE GLAND, STR 21, PR28,3/PG21	
370	352103-0116	-		1	KABELFöRSKR. ST 21, PR28,3/PG21	
380	352103-0120	-		1	CABLE GLAND, STR 29, PR37,0/PG29	
390	353021-0212	-		58	FEED THROUGH TERMINAL, 10200.0	
400	353024-0205	-		9	EARTH TERMINAL, 1010.1	
410	353033-0105	-		2	PARTITITION, 10501.0	
420	353104-0169	-		1	CABLE SHOEYAV 16 M8*	
430	359011-0807	-		2	MARKING PLATES 5-FW 1-50	
440	359011-0809	-		1	MARKING PLATES 5-FW 101-150	
450	359011-0834	-		1	SET OF SIGNS 6-GW(EARTH)	
460	359705-0015	A		1	WARNING SIGN ISO, RISK OF ELECTRIC SHOCK	
500	90002-0009	-		2	BLANK-OFF PLUG, PR 18.6 SKINDICHT-BLK11	
510	90110-0152	-		1	CABLE HOOD 24-POL 70.352.2428.1	
520	90110-0157	-		1	CABLE HOOD 6-POL 70.352.0628.1	
530	90458-2607	-		1	REDUCER, SKINDICHT-ME 13.5/21	
W017	351150-0415	-	MM	4000	CABLE OLFLEX 7X1,5 MM2 LIGHT/GREY	
W040	351150-0425	-	MM	4000	CABLE OLFLEX 25X0,75 MM2 LIGHT/GREY	
W400	351150-0405	-	MM	1300	CABLE OLFLEX 5X0,75 MM2 LIGHT/GREY	
W401	351150-0405	-	MM	1800	CABLE OLFLEX 5X0,75 MM2 LIGHT/GREY	
W402	351150-0405	-	MM	1800	CABLE OLFLEX 5X0,75 MM2 LIGHT/GREY	
W403	351150-0405	-	MM	1300	CABLE OLFLEX 5X0,75 MM2 LIGHT/GREY	
W404	351150-0405	-	MM	4000	CABLE OLFLEX 5X0,75 MM2 LIGHT/GREY	
W411	351150-0404	-	MM	7500	CABLE OLFLEX 4X0,75 MM2 LIGHT/GREY	
W412	351150-0431	-	MM	7500	CABLE OLFLEX 2X0,75 MM2 LIGHT/GREY	
W416	351150-0406	-	MM	4000	CABLE OLFLEX 7X0,75 MM2 LIGHT/GREY	
W417	351150-0406	-	MM	4000	CABLE OLFLEX 7X0,75 MM2 LIGHT/GREY	
W430	351150-0412	-	MM	900	CABLE OLFLEX 3X1,5 MM2 LIGHT/GREY	
W431	351150-0412	-	MM	1700	CABLE OLFLEX 3X1,5 MM2 LIGHT/GREY	
W433	351150-0412	-	MM	1500	CABLE OLFLEX 3X1,5 MM2 LIGHT/GREY	
W450	351162-0109	-	MM	6500	CABLE AWM 1X16 MM2 YELLOW-GREEN	
X108	90110-0150	-		1	MALE INSERT 121110 0000	
X208	90110-0159	-		1	MALE INSERT 70.310.0640.0	

Machine Type | Group Description | Used-In | Group Number | Page No

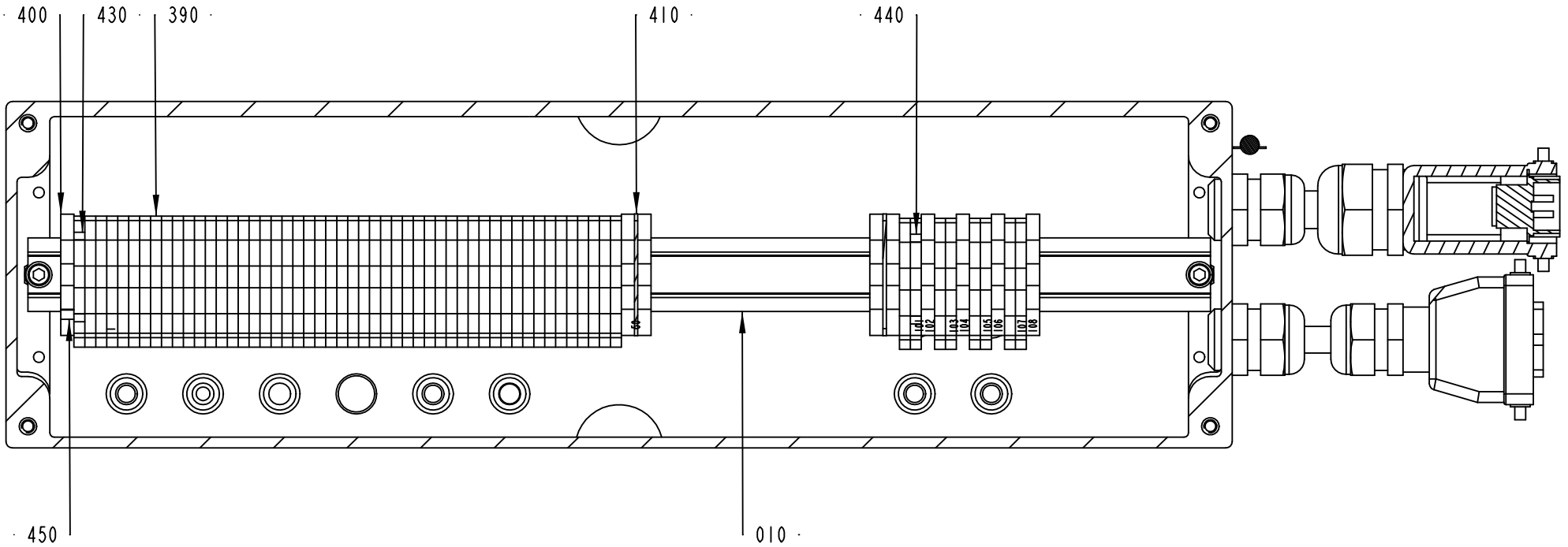

2556852-1
ECM 104392

ECM: 122351 - 20021212
Group number: 2556852-0100
Assembly Drawing: 2556852-1_2_AA

Issue: 20030314

Pos	Part No	SP	UN	Qty	Description	Page No
Common Parts						
010	1514683-0000	-		1	RAIL	
020	2556851-0000	-		1	CONNECTION BOX	
030	1514889-0000	-		2	WASHER	
040	1515166-0000	-		2	BRACKET	
300	312115-0368	-		2	SCREW ISO4762 M6X16 A4	
310	312115-0374	-		4	SCREW ISO4762 M6X30 A4	
320	312155-0366	-		2	SCREW EN 10642 MF6S M6X12 A480	
330	312605-0318	-		2	HEXAGON NUT, M6M M8 A280	
340	315105-0153	-		6	WASHER ISO 7089-6-200 HV-A4	
350	352103-0106	-		14	CABLE GLAND, ST 11, PR18,6/PG11	
360	352103-0115	-		2	CABLE GLAND, STR 21, PR28,3/PG21	
370	352103-0116	-		1	KABELFöRSKR. ST 21, PR28,3/PG21	
380	352103-0120	-		1	CABLE GLAND, STR 29, PR37,0/PG29	
390	353021-0212	-		58	FEED THROUGH TERMINAL, 10200.0	
400	353024-0205	-		9	EARTH TERMINAL, 1010.1	
410	353033-0105	-		2	PARTITITION, 10501.0	
420	353104-0169	-		1	CABLE SHOEYAV 16 M8*	
430	359011-0807	-		2	MARKING PLATES 5-FW 1-50	
440	359011-0809	-		1	MARKING PLATES 5-FW 101-150	
450	359011-0834	-		1	SET OF SIGNS 6-GW(EARTH)	
460	359705-0015	A		1	WARNING SIGN ISO, RISK OF ELECTRIC SHOCK	
500	90002-0009	-		2	BLANK-OFF PLUG, PR 18.6 SKINDICHT-BLK11	
510	90110-0152	-		1	CABLE HOOD 24-POL 70.352.2428.1	
520	90110-0157	-		1	CABLE HOOD 6-POL 70.352.0628.1	
530	90458-2607	-		1	REDUCER, SKINDICHT-ME 13.5/21	
W017	351150-0415	-	MM	4000	CABLE OLFLEX 7X1,5 MM2 LIGHT/GREY	
W040	351150-0425	-	MM	4000	CABLE OLFLEX 25X0,75 MM2 LIGHT/GREY	
W400	351150-0405	-	MM	1300	CABLE OLFLEX 5X0,75 MM2 LIGHT/GREY	
W401	351150-0405	-	MM	1800	CABLE OLFLEX 5X0,75 MM2 LIGHT/GREY	
W402	351150-0405	-	MM	1800	CABLE OLFLEX 5X0,75 MM2 LIGHT/GREY	
W403	351150-0405	-	MM	1300	CABLE OLFLEX 5X0,75 MM2 LIGHT/GREY	
W404	351150-0405	-	MM	4000	CABLE OLFLEX 5X0,75 MM2 LIGHT/GREY	
W411	351150-0404	-	MM	7500	CABLE OLFLEX 4X0,75 MM2 LIGHT/GREY	
W412	351150-0431	-	MM	7500	CABLE OLFLEX 2X0,75 MM2 LIGHT/GREY	
W416	351150-0406	-	MM	4000	CABLE OLFLEX 7X0,75 MM2 LIGHT/GREY	
W417	351150-0406	-	MM	4000	CABLE OLFLEX 7X0,75 MM2 LIGHT/GREY	
W430	351150-0412	-	MM	900	CABLE OLFLEX 3X1,5 MM2 LIGHT/GREY	
W431	351150-0412	-	MM	1700	CABLE OLFLEX 3X1,5 MM2 LIGHT/GREY	
W433	351150-0412	-	MM	1500	CABLE OLFLEX 3X1,5 MM2 LIGHT/GREY	
W450	351162-0109	-	MM	6500	CABLE AWM 1X16 MM2 YELLOW-GREEN	
X108	90110-0150	-		1	MALE INSERT 121110 0000	
X208	90110-0159	-		1	MALE INSERT 70.310.0640.0	

Machine Type | Group Description | Used-In | Group Number | Page No

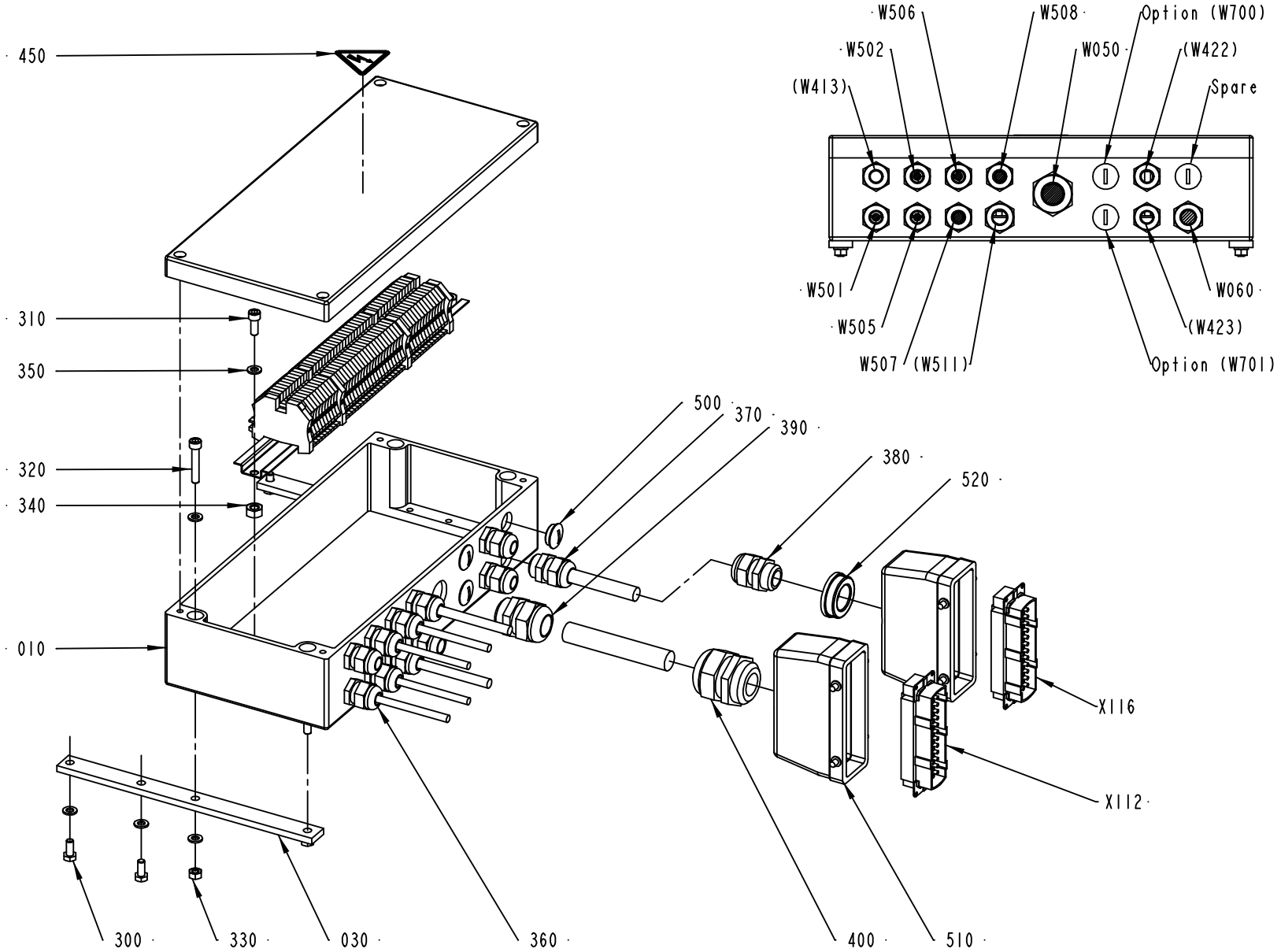

2556794-1
ECM 104392

Pos	Part No	SP	UN	Qty	Description	Page No
Common Parts						
010	1514689-0000	-		1	BOX	
020	1515027-0000	-		1	RAIL	
030	1515167-0000	-		2	BRACKET	
300	312105-0367	-		4	SCREW M6S M6X14 A280	
310	312115-0368	-		2	SCREW ISO4762 M6X16 A4	
320	312115-0376	-		4	SCREW ISO4762 M6X35 A4	
330	312605-0316	-		4	HEXAGON NUT, M6M M6 A280	
340	312605-0318	-		2	HEXAGON NUT, M6M M8 A280	
350	315105-0153	-		14	WASHER ISO 7089-6-200 HV-A4	
360	352103-0106	-		9	CABLE GLAND, ST 11, PR18,6/PG11	
370	352103-0108	-		2	CABLE GLAND, ST 13,5 , PR20,4/PG13,5	
380	352103-0111	-		1	CABLE GLAND, ST 16, PR22,5/PG16	
390	352103-0116	-		1	KABELFöRSKR. ST 21, PR28,3/PG21	
400	352103-0120	-		1	CABLE GLAND, STR 29, PR37,0/PG29	
410	353021-0212	-		44	FEED THROUGH TERMINAL, 10200.0	
420	353024-0205	-		4	EARTH TERMINAL, 1010.1	
430	359011-0807	-		2	MARKING PLATES 5-FW 1-50	
440	359011-0834	-		1	SET OF SIGNS 6-GW(EARTH)	
450	359705-0015	A		1	WARNING SIGN ISO, RISK OF ELECTRIC SHOCK	
500	90002-0009	-		3	BLANK-OFF PLUG, PR 18.6 SKINDICHT-BLK11	
510	90110-0152	-		2	CABLE HOOD 24-POL 70.352.2428.1	
520	90458-2587	-		1	REDUCER, SKINDICHT-MR 29/16	
W050	351150-0425	-	MM	7000	CABLE OLFLEX 25X0,75 MM2 LIGHT/GREY	
W060	351150-0407	-	MM	8000	CABLE OLFLEX 12X0,75 MM2 LIGHT/GREY	
W501	351150-0431	-	MM	2500	CABLE OLFLEX 2X0,75 MM2 LIGHT/GREY	
W502	351150-0431	-	MM	2500	CABLE OLFLEX 2X0,75 MM2 LIGHT/GREY	
W505	351150-0431	-	MM	1300	CABLE OLFLEX 2X0,75 MM2 LIGHT/GREY	
W506	351150-0403	-	MM	2500	CABLE OLFLEX 3X0,75 MM2 LIGHT/GREY	
W507	351150-0405	-	MM	1500	CABLE OLFLEX 5X0,75 MM2 LIGHT/GREY	
W508	351150-0405	-	MM	2500	CABLE OLFLEX 5X0,75 MM2 LIGHT/GREY	
X112	90110-0150	-		1	MALE INSERT 121110 0000	
X116	90110-0150	-		1	MALE INSERT 121110 0000	

Pos	Part No	SP	UN	Qty	Description	Page No

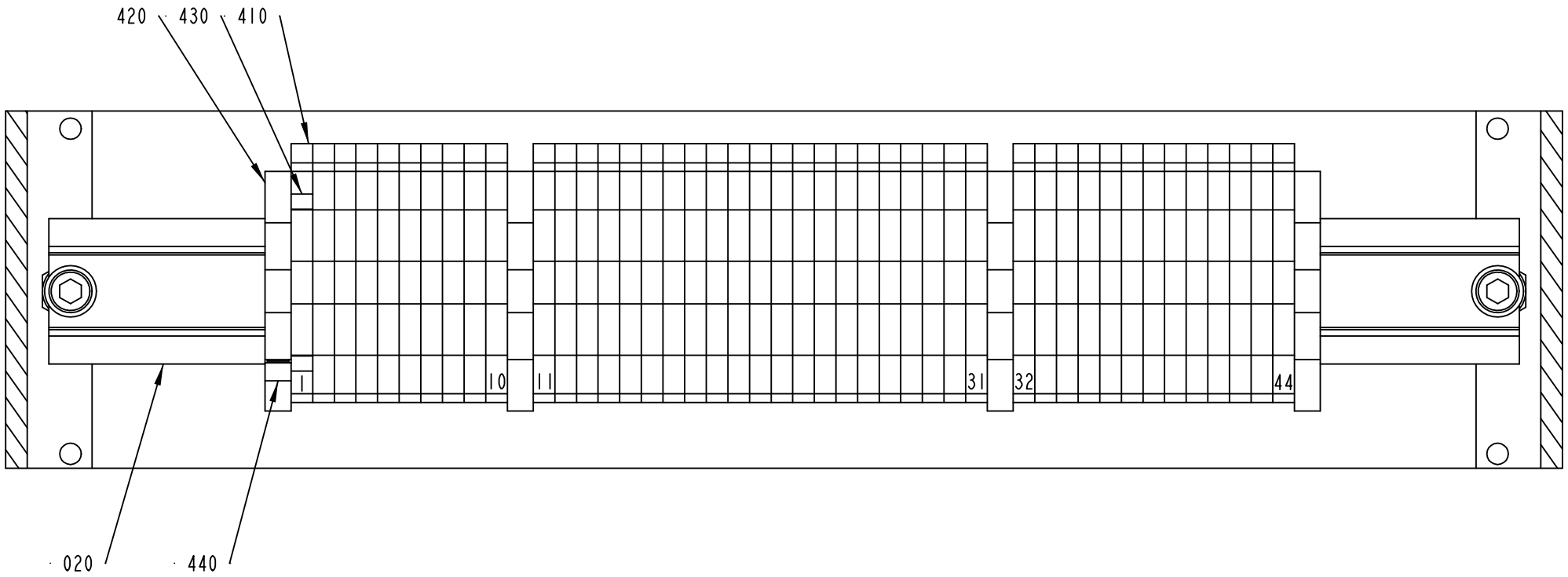

2556794-1
ECM 104392

ECM: 122352 - 20021212
Group number: 2556794-0100
Assembly Drawing: 2556794-1_2_AA

Issue: 20030314

Pos	Part No	SP	UN	Qty	Description	Page No
Common Parts						
010	1514689-0000	-		1	BOX	
020	1515027-0000	-		1	RAIL	
030	1515167-0000	-		2	BRACKET	
300	312105-0367	-		4	SCREW M6S M6X14 A280	
310	312115-0368	-		2	SCREW ISO4762 M6X16 A4	
320	312115-0376	-		4	SCREW ISO4762 M6X35 A4	
330	312605-0316	-		4	HEXAGON NUT, M6M M6 A280	
340	312605-0318	-		2	HEXAGON NUT, M6M M8 A280	
350	315105-0153	-		14	WASHER ISO 7089-6-200 HV-A4	
360	352103-0106	-		9	CABLE GLAND, ST 11, PR18,6/PG11	
370	352103-0108	-		2	CABLE GLAND, ST 13,5 , PR20,4/PG13,5	
380	352103-0111	-		1	CABLE GLAND, ST 16, PR22,5/PG16	
390	352103-0116	-		1	KABELFöRSKR. ST 21, PR28,3/PG21	
400	352103-0120	-		1	CABLE GLAND, STR 29, PR37,0/PG29	
410	353021-0212	-		44	FEED THROUGH TERMINAL, 10200.0	
420	353024-0205	-		4	EARTH TERMINAL, 1010.1	
430	359011-0807	-		2	MARKING PLATES 5-FW 1-50	
440	359011-0834	-		1	SET OF SIGNS 6-GW(EARTH)	
450	359705-0015	A		1	WARNING SIGN ISO, RISK OF ELECTRIC SHOCK	
500	90002-0009	-		3	BLANK-OFF PLUG, PR 18.6 SKINDICHT-BLK11	
510	90110-0152	-		2	CABLE HOOD 24-POL 70.352.2428.1	
520	90458-2587	-		1	REDUCER, SKINDICHT-MR 29/16	
W050	351150-0425	-	MM	7000	CABLE OLFLEX 25X0,75 MM2 LIGHT/GREY	
W060	351150-0407	-	MM	8000	CABLE OLFLEX 12X0,75 MM2 LIGHT/GREY	
W501	351150-0431	-	MM	2500	CABLE OLFLEX 2X0,75 MM2 LIGHT/GREY	
W502	351150-0431	-	MM	2500	CABLE OLFLEX 2X0,75 MM2 LIGHT/GREY	
W505	351150-0431	-	MM	1300	CABLE OLFLEX 2X0,75 MM2 LIGHT/GREY	
W506	351150-0403	-	MM	2500	CABLE OLFLEX 3X0,75 MM2 LIGHT/GREY	
W507	351150-0405	-	MM	1500	CABLE OLFLEX 5X0,75 MM2 LIGHT/GREY	
W508	351150-0405	-	MM	2500	CABLE OLFLEX 5X0,75 MM2 LIGHT/GREY	
X112	90110-0150	-		1	MALE INSERT 121110 0000	
X116	90110-0150	-		1	MALE INSERT 121110 0000	

Pos	Part No	SP	UN	Qty	Description	Page No

Tetra Pak

SPC
Spare Parts Catalogue

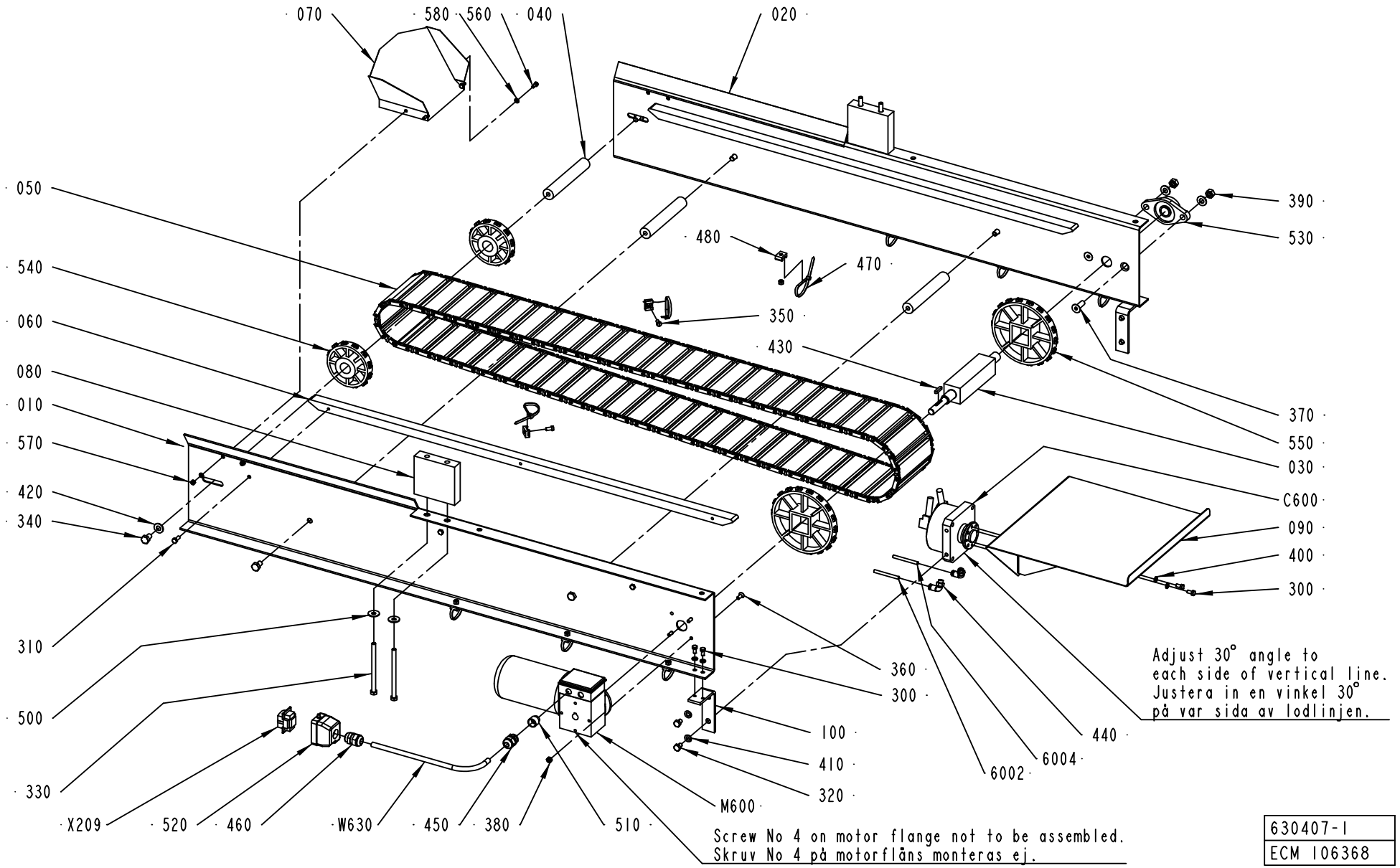
070
580
560
040
020
050
540
060
080
010
570
420
340
310
500
330
X209
520
460
W630
450
380
510
M600
320
410
100
360
300
440
6004
6002
480
470
350
430
390
530
370
550
030
C600
090
400
300
Adjust 30° angle to each side of vertical line.
Justera in en vinkel 30° på var sida av lodlinjen.
Screw No 4 on motor flange not to be assembled.
Skruv No 4 på motorfläns monteras ej.
630407-1
ECM 106368

ECM: 108913 - 20021113
Group number: 630407-0100
Assembly Drawing: 630407-1_1_AB

Issue: 20030310

Pos	Part No	SP	UN	Qty	Description	Page No
Common Parts						
010	1514788-0000	-		1	GABLE PLATE	
020	1514789-0000	-		1	GABLE PLATE	
030	1514791-0000	B		1	SHAFT	
040	1514792-0000	-		3	SHAFT	
050	1514795-0000	B		1	CONVEYOR BELT	
060	1514797-0000	-		2	SLIDE RAIL	
070	2542633-0000	-		1	SLIDE SHEET	
080	1515617-0000	-		2	BRACKET	
090	1515643-0000	-		1	CHECKER PLATE	
100	1515644-0000	-		2	BRACKET	
300	312105-0366	-		8	SCREW M6S M6X12 A280	
310	312105-0368	-		6	SCREW M6S M6X16 A280	
320	312105-0447	-		4	SCREW M6S ISO 4017 M8X12 A480	
330	312105-0475	-		4	SCREW M6S ISO 4014 M8X120 A480	
340	312105-0489	-		6	SCREW M6S ISO 4017 M10X16 A480	
350	312125-0366	-		9	SCREW PAN HEAD MCS M6X12 SS	
360	312155-0368	-		3	SCREW EN 10642 MF6S M6X16 A480	
370	312155-0495	-		2	SCREW EN 10642 MF6S M10X30 A480	
380	312605-0316	-		10	HEXAGON NUT, M6M M6 A280	
390	312605-0320	-		2	HEXAGON NUT, M6M M10 A280	
400	315105-0153	-		8	WASHER ISO 7089-6-200 HV-A4	
410	315105-0165	-		4	WASHER ISO 7089-8-200 HV-A4	
420	315105-0173	-		4	WASHER ISO 7089-10-200 HV-A4	
430	315705-0202	-		1	PARALLEL KEY W ROUND ENDS 5X5X25MM	
440	342732-0102	-		2	ELBOW PIPE JOINT, EXT.THREAD, D=6MM-G1/8	
450	352103-0106	-		1	CABLE GLAND, ST 11, PR18,6/PG11	
460	352103-0108	-		1	CABLE GLAND, ST 13,5 , PR20,4/PG13,5	
470	352113-0102	-		9	CLIP-STRIP, BLACK 188X4,8 MM	
480	352113-0204	-		9	ANCHOR PLATES FOR STRIPS, TYPE TM3S25-M	
500	90005-0116	-		4	WASHER PLAIN ROUND 8,4(M8)/24, H=2	
510	90089-0009	-		1	REDUCING SLEEVE, PR15,2/PR18,6	
520	90110-0157	-		1	CABLE HOOD 6-POL 70.352.0628.1	
530	90345-0072	A		1	FLANGE BEARING, 20X113X33,3 MM	
540	90458-2539	B		2	SPROCKET, S900-12T-104/Ø25-AC	
550	90458-2542	B		2	SPROCKET, S900-18T-115/40-AC	
560	312105-0327	-		4	SCREW M6S ISO 4017 M5X12 A480	
570	312605-0314	-		4	HEXAGON NUT, M6M M5 A280	
580	315105-0146	-		4	WASHER ISO 7089-5-200 HV-A4	
6002	90166-0081	-	M	2	TUBE 6 MM PA BLUE	
6004	90166-0081	-	M	2	TUBE 6 MM PA BLUE	
C600	90458-2543	A		1	ROTARY ACTUATOR DSM32-270-P-FW-CC	
M600	90458-0275	A		1	WORM GEAR MOTOR,PC440M3TB5-93	
W630	351150-0413	-	M	10	CABLE OLFLEX 4X1,5 MM2 LIGHT/GREY	
X209	90110-0159	-		1	MALE INSERT 70.310.0640.0	

Machine Type | Group Description | Used-In | Group Number | Page No

Tetra Pak

SPC
Spare Parts Catalogue

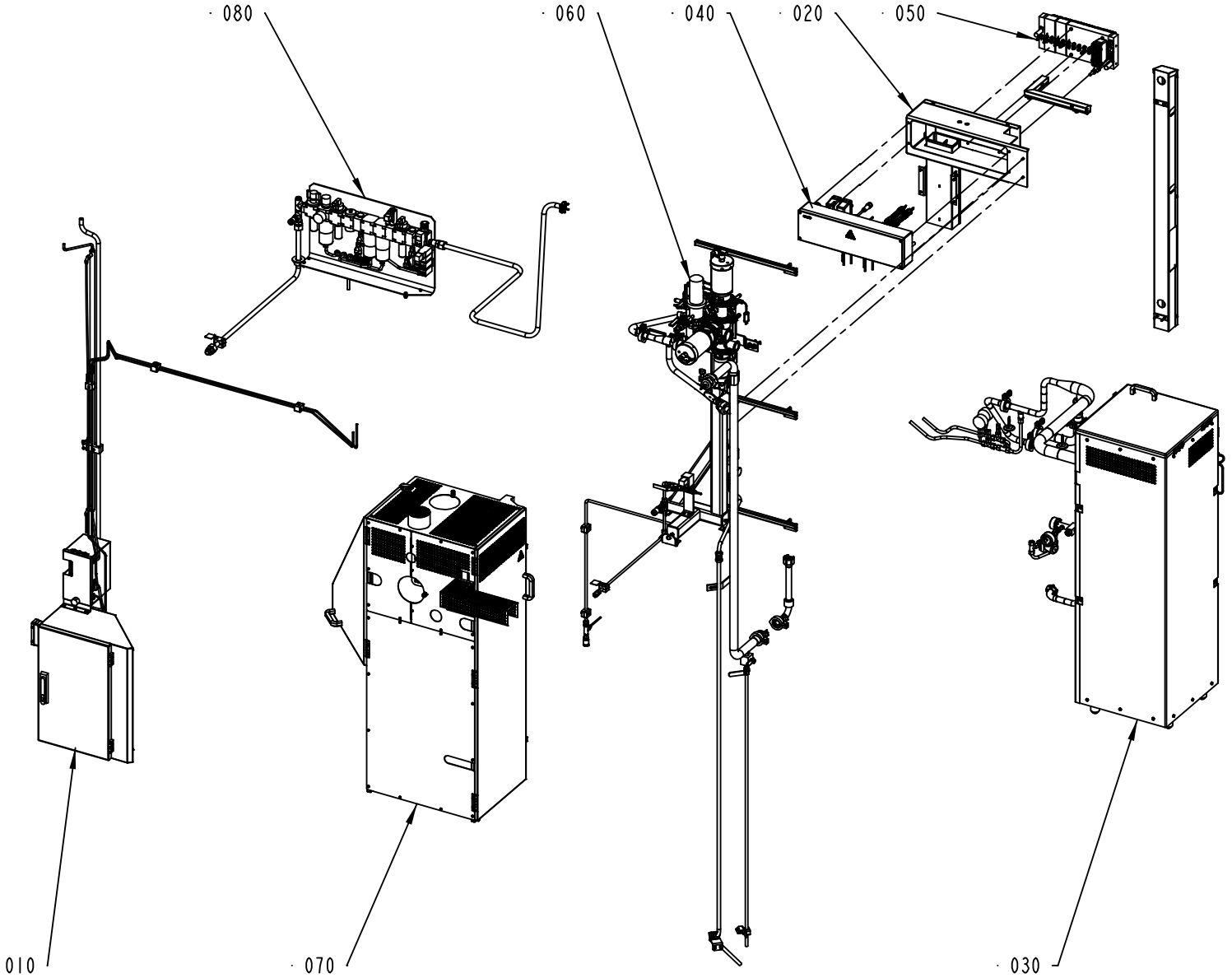

630409-5
ECM 114990

ECM: 116181 - 20021113
Group number: 630409-0200
Assembly Drawing: 630409-5_1_AA

Issue: 20030313

Pos	Part No	SP	UN	Qty	Description	Page No
Common Parts						
010	A2542850-0100	-		1	PEROXIDE SYSTEM	**335**
020	A2542851-0100	-		1	CABLE TRAYS SUPPLY SYS.	**347**
030	A2542860-0100	-		1	STERILE AIR SYSTEM	**349**
040	A2542865-0100	-		1	CONNECTION BOX	**375, 377**
050	A2542980-0100	-		1	VALVE RAMP UPPER	**379**
060	A2542990-0100	-		1	FILLING UNIT	**381**
070	A2543040-0100	-		1	COVER	**395**
080	A2556690-0100	-		1	AIR UNIT	**405**

Pos	Part No	SP	UN	Qty	Description	Page No

Machine Type | Group Description | Used-In | Group Number | Page No

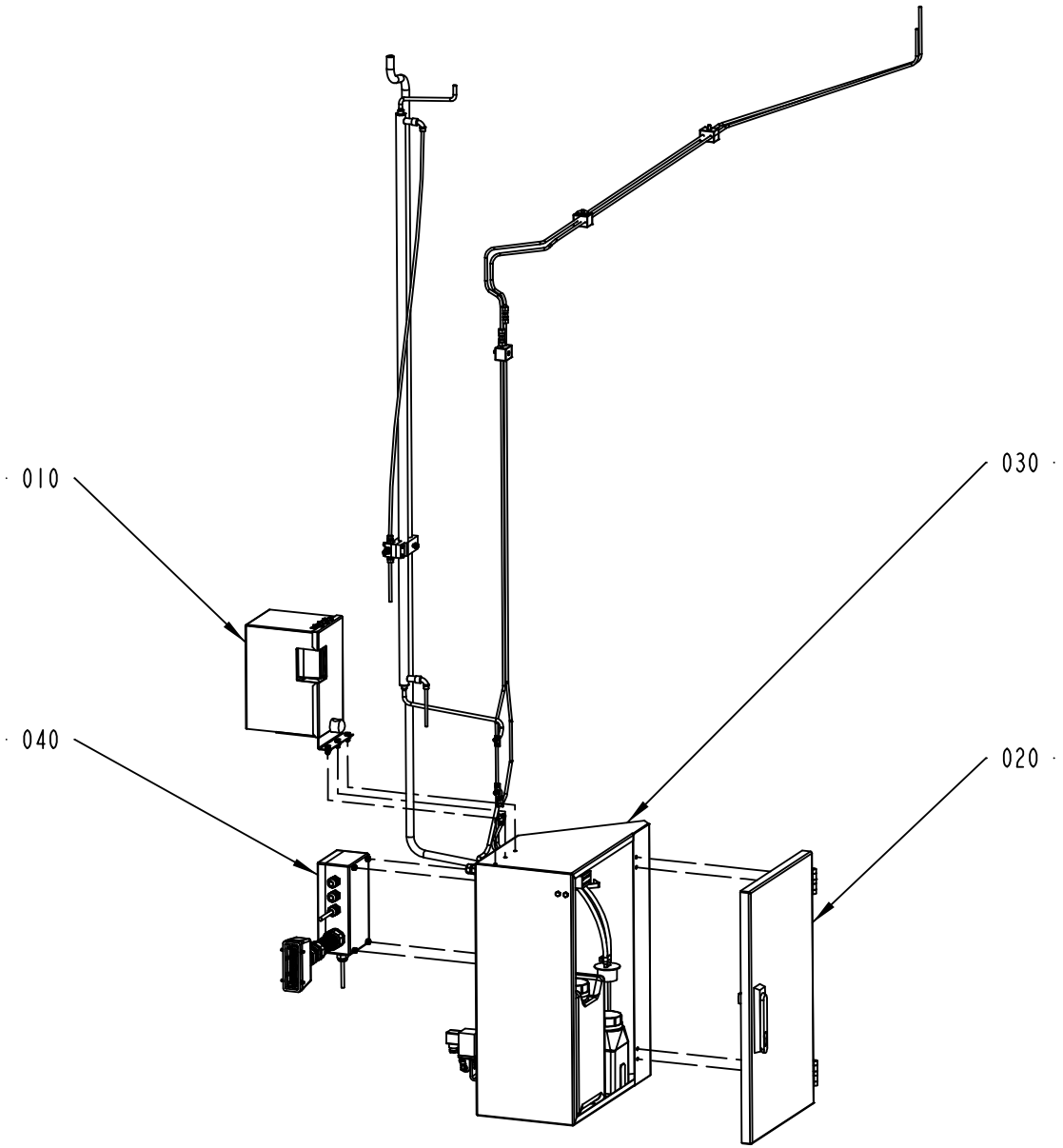

2542850-1
ECM 115571

ECM: 115808 - 20021113
Group number: 2542850-0100
Assembly Drawing: 2542850-1_1_AA

Issue: 20030313

Pos	Part No	SP	UN	Qty	Description	Page No
Common Parts						
010	A2542930-0100	-		1	PUMP UNIT	**337**
020	A2542940-0100	-		1	DOOR	**339**
030	A2543045-0100	-		1	PEROXID SYSTEM	**341**
040	A2556860-0100	-		1	CONNECTION BOX	**343, 345**

Pos	Part No	SP	UN	Qty	Description	Page No

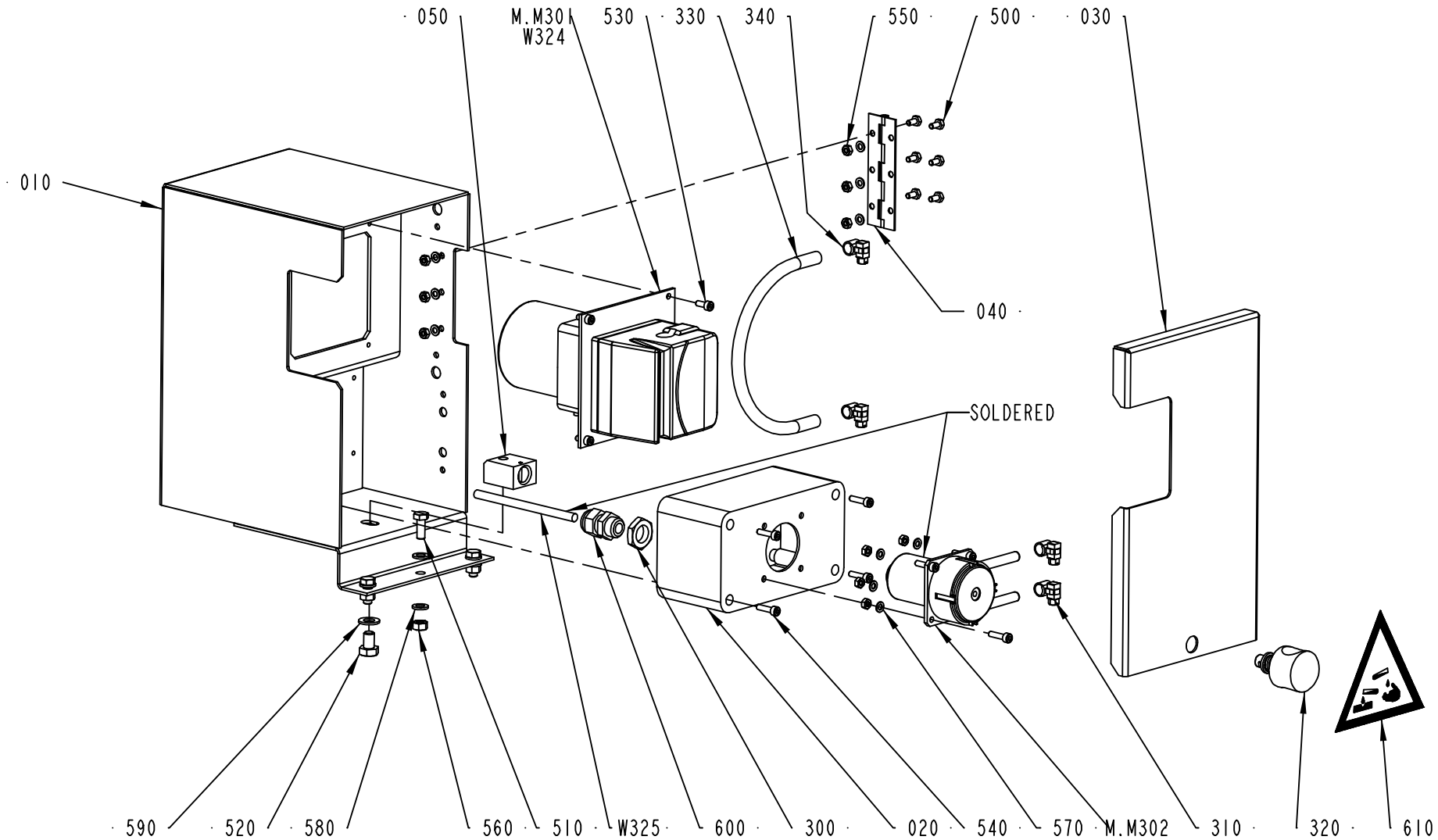

2542930-1
ECM 117569

ECM: 120799 - 20021212
Group number: 2542930-0100
Assembly Drawing: 2542930-1_1_AB

Issue: 20030313

Pos	Part No	SP	UN	Qty	Description	Page No
Common Parts						
010	2542932-0000	-		1	BOX	
020	2542936-0000	-		1	PUMP HOUSING	
030	2543059-0000	-		1	DOOR	
040	2543061-0000	-		1	HINGE	
050	2543062-0000	-		1	SNAP-IN LOCK	
300	90099-0104	-		1	NUT, PR 15,2 (PG9)	
310	90132-0021	A		2	HOSE CLIP 6-10MM	
320	90458-1324	-		1	ELLIPSE LOCK, FSQ-M8 4-28900-03-SS	
330	90459-1423	A	MM	260	PUMP HOSE, MARPRENE 6.4X1,6	
340	90132-0023	A		2	HOSE CLIP S 15/9	
500	312105-0287	-		6	SCREW M6S ISO4017 M4X8 A480	
510	312105-0368	-		3	SCREW M6S M6X16 A280	
520	312105-0447	-		1	SCREW M6S ISO 4017 M8X12 A480	
530	312115-0289	-		4	SCREW ISO4762 M4X10 A4	
540	312115-0293	-		8	SCREW ISO4762 M4X16 A4	
550	312605-0312	-		10	HEXAGON NUT, M6M M4 A280	
560	312605-0316	-		3	HEXAGON NUT, M6M M6 A280	
570	315105-0136	-		10	WASHER ISO 7089-4-200 HV-A4	
580	315105-0153	-		6	WASHER ISO 7089-6-200 HV-A4	
590	315105-0165	-		1	WASHER ISO 7089-8-200 HV-A4	
600	352103-0101	-		1	KABELFöRSKR. ST 9, PR15,2/PG9	
610	359705-0004	-		1	WARNING SIGN ISO, DANGEROUS CHEMICALS	
M.M301	90459-1473	A		1	PEROXIDE PUMP, 313VDL/D 140.NS13.A37	
M.M302	90458-2609	A		1	PERISTALTIC PUMP, SR10/50 20500507	
W325	351150-0431	-	MM	500	CABLE OLFLEX 2X0,75 MM2 LIGHT/GREY	

Pos	Part No	SP	UN	Qty	Description	Page No

Machine Type | Group Description | Used-In | Group Number | Page No

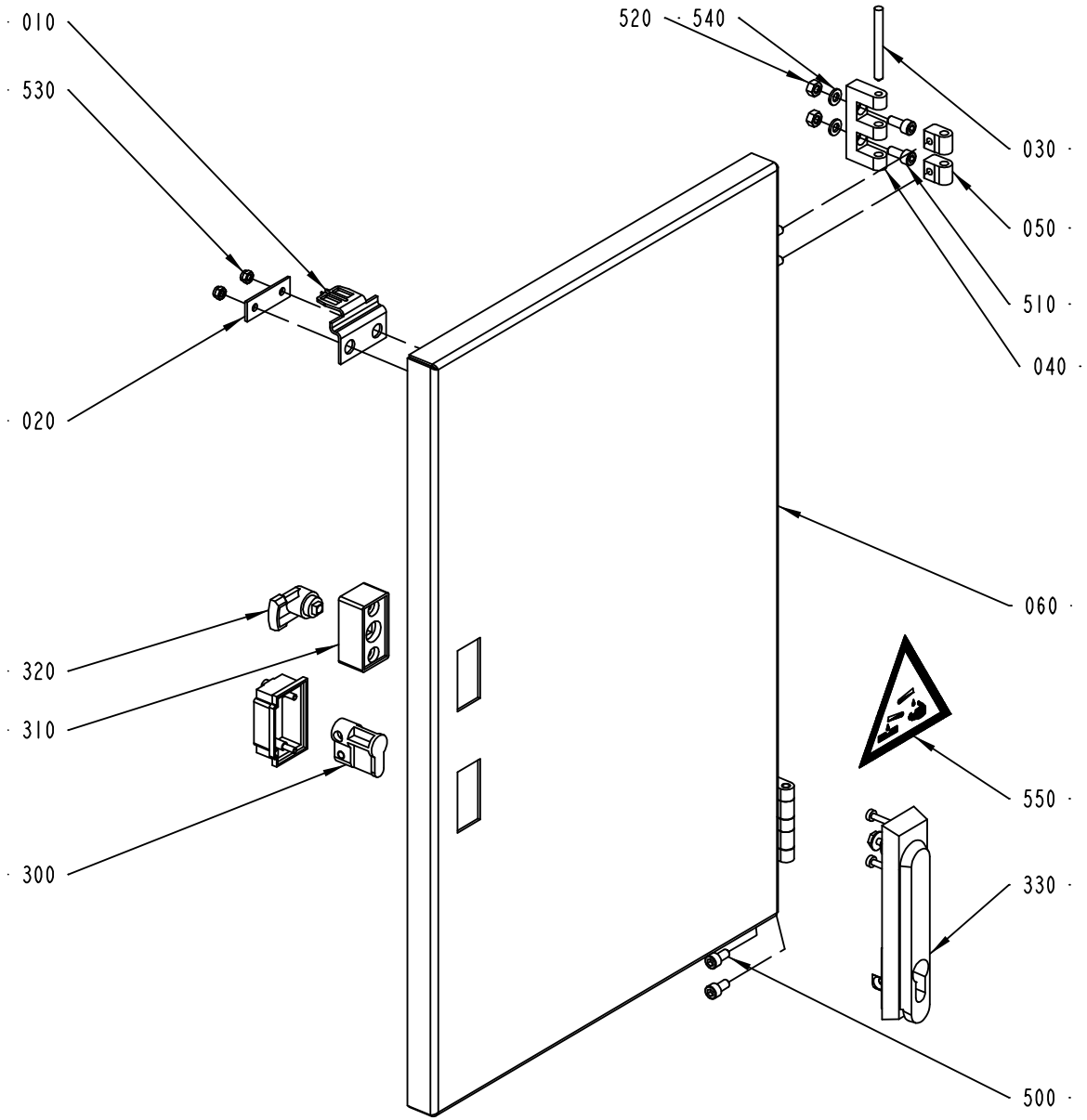

2542940-1
ECM 117569

Pos	Part No	SP	UN	Qty	Description	Page No
Common Parts						
010	975917-0000	A		1	KEY FOR SAFETY SWITCH 90044-103	
020	975924-0000	-		1	WASHER	
030	988685-0000	-		2	PIN	
040	1035792-0000	-		2	E-HINGE	
050	1129770-0000	-		4	BLOCKING PIECE	
060	2543056-0000	-		1	DOOR	
300	90237-0128	-		1	LOCK CYLINDER, 1109-U3	
310	90237-0154	-		1	LOCK HOUSING, 1121-U60-0C	
320	90237-0165	-		1	LATCH	
330	90237-0176	-		1	TURNING HANDLE	
500	312115-0366	-		4	SCREW ISO4762 M6X12 A4	
510	312115-0367	-		4	SCREW ISO4762 M6X14 A4	
520	312605-0316	-		4	HEXAGON NUT, M6M M6 A280	
530	312812-0314	-		2	HEXAGON NUT, NY-LOCK M5 A480	
540	315105-0153	-		4	WASHER ISO 7089-6-200 HV-A4	
550	359705-0004	A		1	WARNING SIGN ISO, DANGEROUS CHEMICALS	

Pos	Part No	SP	UN	Qty	Description	Page No

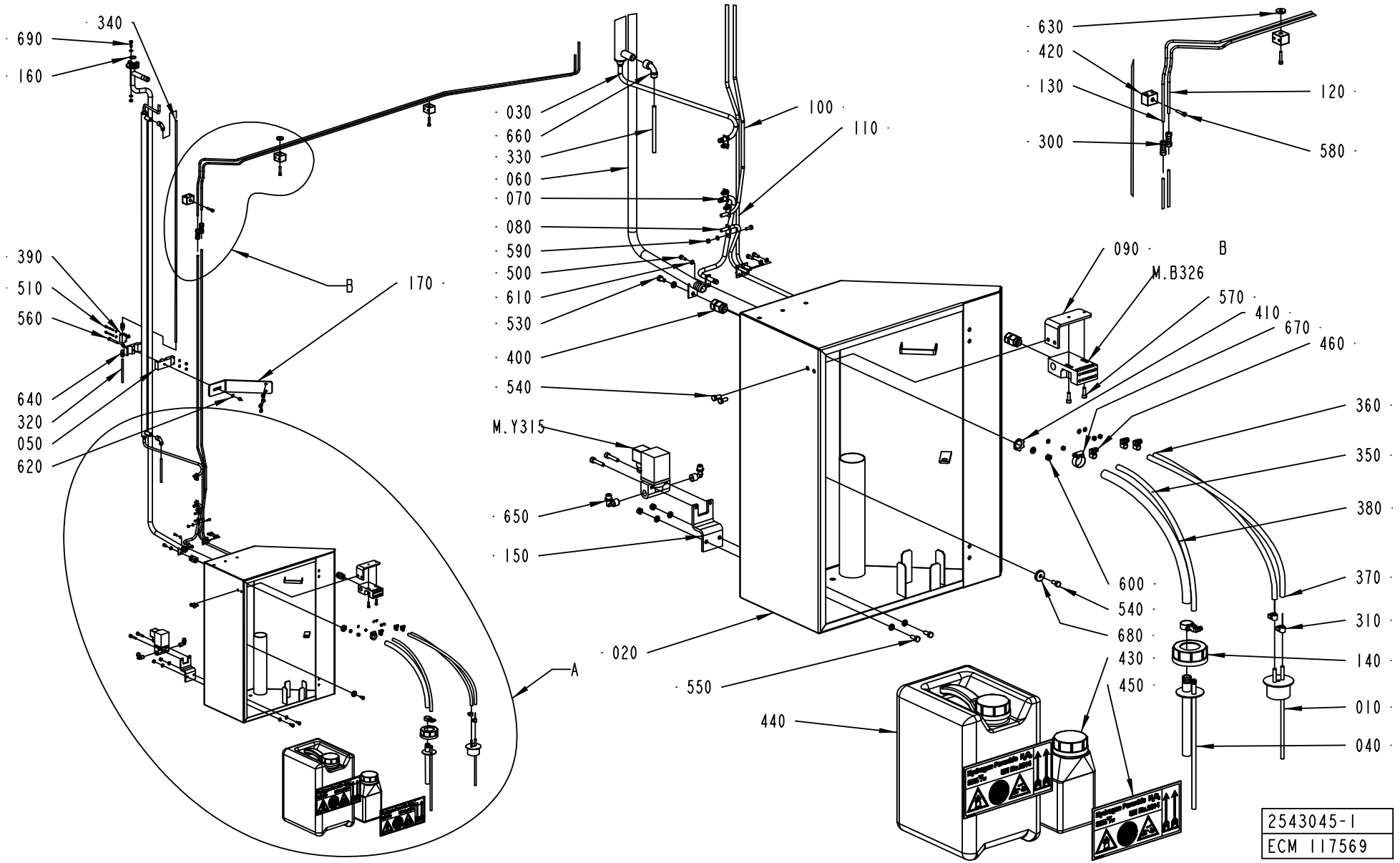
340
690
160
390
510
560
640
320
050
620
B
170
A
030
660
330
060
070
080
590
500
610
530
400
540
M.Y315
650
150
020
550
100
110
630
420
130
300
120
580
090
B
M.B326
570
410
670
460
360
350
380
370
310
140
010
040
600
540
680
430
450
440
2543045-1
ECM 117569

ECM: 121121 - 20021212
Group number: 2543045-0100
Assembly Drawing: 2543045-1_1_AB

Issue: 20030313

Pos	Part No	SP	UN	Qty	Description	Page No
Common Parts						
010	1514550-0000	A		1	LID	
020	2542928-0000	-		1	BOX	
030	2542929-0000	-		1	COOLER	
040	2542931-0000	A		1	SUCTION PIPE	
050	2542933-0000	-		2	HOLDER	
060	2569707-0000	-		1	PIPE	
070	2543063-0000	-		1	PIPE	
080	2543064-0000	-		1	PIPE	
090	2543066-0000	-		1	BRACKET	
100	2556699-0000	-		1	PIPE	
110	2556701-0000	-		1	PIPE	
120	2556702-0000	-		1	PIPE	
130	2556703-0000	-		1	PIPE	
140	2556821-0000	B		1	LID	
150	2556822-0000	-		1	BRACKET	
160	927422-0001	A		1	O-RING 19.2X3 SILICON	
170	2569708-0000	-		1	BRACKET	
300	90030-0075	-		2	PIPE CONNECTION G-6	
310	90132-0021	-		4	HOSE CLIP 6-10MM	
320	90459-0221	-	MM	2000	TUBE, 6 MM PE BLACK	
330	90459-0221	-	MM	1200	TUBE, 6 MM PE BLACK	
340	90459-0221	-	MM	1200	TUBE, 6 MM PE BLACK	
350	90166-0101	A	MM	500	HOSE, SILICONE, 60 SHORE, 6/10 MM	
360	90166-0101	A	MM	550	HOSE, SILICONE, 60 SHORE, 6/10 MM	
370	90166-0101	A	MM	550	HOSE, SILICONE, 60 SHORE, 6/10 MM	
380	90166-0161	-	MM	500	HOSE	
390	90235-0028	A		1	VALVE	
400	90458-0436	-		2	GLAND, EXTENDED WITH INSERT, M16X1,5	
410	90458-0460	-		1	GLAND, LOCKNUT, M16X1,5	
420	90458-2618	-		3	PIPE CLAMP, D=10 MM, 106/06-PP	
430	90458-2727	A		1	BOTTLE, 1L-RE-SP-212707-95-61-WHITE	
440	90458-2765	A		1	BOTTLE, 10L-F-SP-212708-500-61-N W. LID	
450	90458-0668	-		2	WARNING SIGN ISO, HYDROGEN PEROXIDE	
460	90132-0023	-		2	HOSE CLIP S 15/9	
500	312105-0291	-		7	SCREW M6S ISO 4017 M4X12 A480	
510	312115-0304	-		2	SCREW ISO4762 M4X45 A4	
530	312105-0366	-		1	SCREW M6S M6X12 A280	
540	312105-0367	-		8	SCREW M6S M6X14 A280	
550	312105-0368	-		4	SCREW M6S M6X16 A280	
560	312105-0380	-		1	SCREW M6S ISO 4014 M6X50 A480	
570	312115-0329	-		2	SCREW ISO4762 M5X16 A4	
580	312115-0374	-		5	SCREW ISO4762 M6X30 A4	
590	312605-0312	-		9	HEXAGON NUT, M6M M4 A280	
600	312605-0316	-		7	HEXAGON NUT, M6M M6 A280	
610	315105-0136	-		18	WASHER ISO 7089-4-200 HV-A4	
620	315105-0153	-		16	WASHER ISO 7089-6-200 HV-A4	
630	315125-0165	-		1	WASHER TBRSB 8,4X26X5 A4	
640	342920-0113	-		2	STRAIGHT COUPLING,EXT.THREADED 6/4-R1/8"	
650	342930-0114	-		2	ELBOW 90 COUPL.,EXT.THREAD 6/4-R1/4"	
660	342933-0114	-		2	ELBOW 90 COUPL.,INT.THREAD 6/4-G1/4"	
670	342991-0103	-		2	HOSE CLIP,WORM DRIVE TYPE (19)-23	
680	315125-0153	-		6	WASHER TBRSB 6,4X22X4 A4	
690	312105-0370	-		3	SCREW M6S ISO 4017 M6X20 A480	
M.B326	90459-1194	A		1	KEY SAF.SW. AZ16-03 ZVRK-M16	
M.Y315	90042-0107	A		1	SOL.VALVE BURKERT 24VDC	

Machine Type | Group Description | Used-In | Group Number | Page No

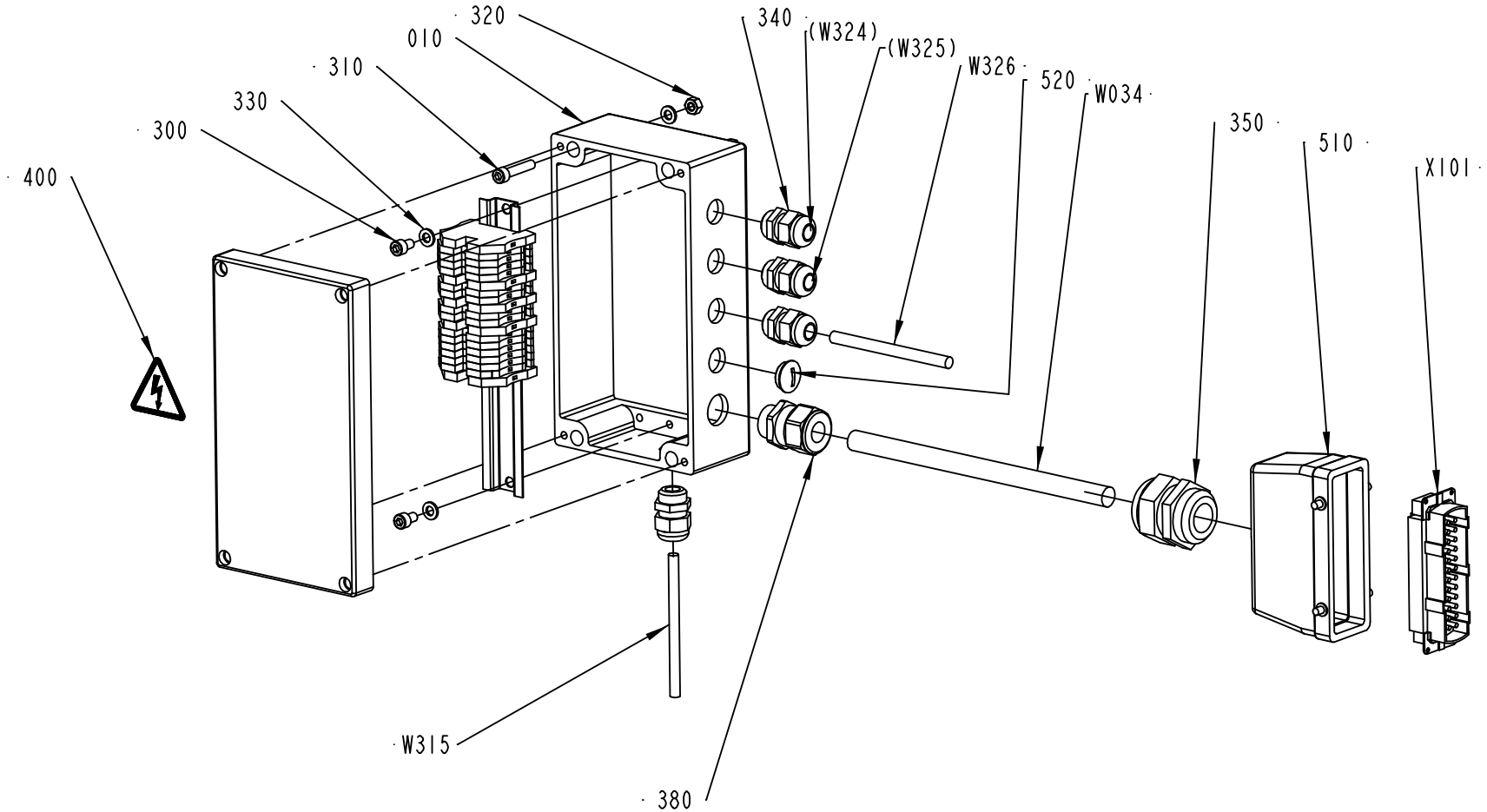

2556860-1
ECM 117569

ECM: 122034 - 20021212
Group number: 2556860-0100
Assembly Drawing: 2556860-1_1_AB

Issue: 20030313

Pos	Part No	SP	UN	Qty	Description	Page No
Common Parts						
010	2556779-0000	-		1	BOX	
020	2556782-0000	-		1	RAIL	
300	312115-0364	-		2	SCREW ISO4762 M6X10 A4	
310	312115-0374	-		4	SCREW ISO4762 M6X30 A4	
320	312605-0316	-		4	HEXAGON NUT, M6M M6 A280	
330	315105-0153	-		6	WASHER ISO 7089-6-200 HV-A4	
340	352103-0106	-		4	CABLE GLAND, ST 11, PR18,6/PG11	
350	352103-0120	-		1	CABLE GLAND, STR 29, PR37,0/PG29	
360	353021-0212	-		14	FEED THROUGH TERMINAL, 10200.0	
370	353024-0205	-		5	EARTH TERMINAL, 1010.1	
380	353245-0004	-		1	GLAND, EXTENDED WITH INSERT, PG16/PR 22,	
400	359705-0015	A		1	WARNING SIGN ISO, RISK OF ELECTRIC SHOCK	
410	359011-0807	-		2	MARKING PLATES 5-FW 1-50	
510	90110-0152	-		1	CABLE HOOD 24-POL 70.352.2428.1	
520	90002-0009	-		1	BLANK-OFF PLUG, PR 18.6 SKINDICHT-BLK11	
W034	351150-0424	-	MM	6000	CABLE OLFLEX 18X0,75 MM2 LIGHT/GREY	
W315	351150-0403	-	MM	600	CABLE OLFLEX 3X0,75 MM2 LIGHT/GREY	
W326	351150-0406	-	MM	500	CABLE OLFLEX 7X0,75 MM2 LIGHT/GREY	
X101	90110-0150	-		1	MALE INSERT 121110 0000	

Pos	Part No	SP	UN	Qty	Description	Page No

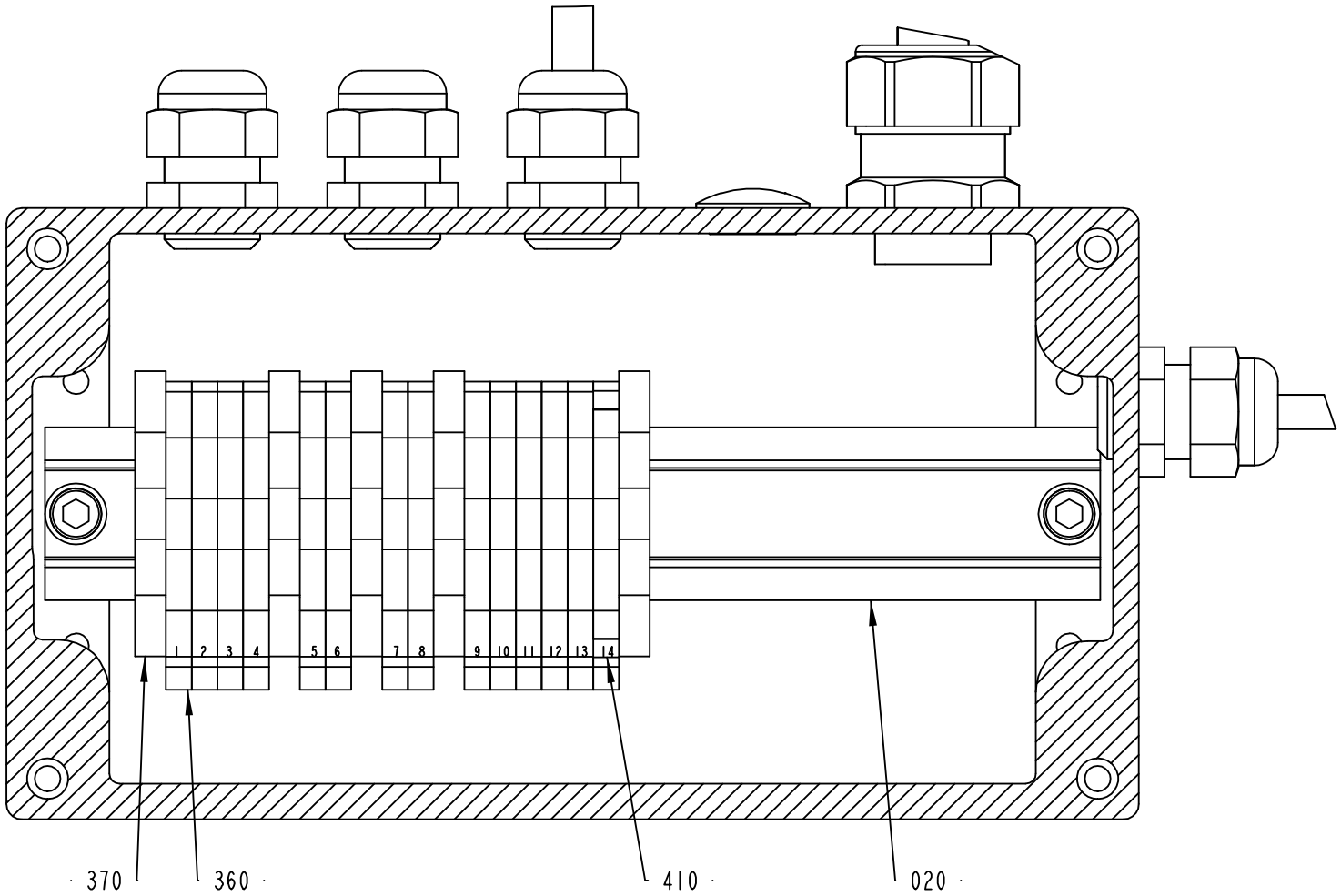

2556860-1
ECM 117569

ECM: 122034 - 20021212
Group number: 2556860-0100
Assembly Drawing: 2556860-1_2_AB

Issue: 20030313

Pos	Part No	SP	UN	Qty	Description	Page No
Common Parts						
010	2556779-0000	-		1	BOX	
020	2556782-0000	-		1	RAIL	
300	312115-0364	-		2	SCREW ISO4762 M6X10 A4	
310	312115-0374	-		4	SCREW ISO4762 M6X30 A4	
320	312605-0316	-		4	HEXAGON NUT, M6M M6 A280	
330	315105-0153	-		6	WASHER ISO 7089-6-200 HV-A4	
340	352103-0106	-		4	CABLE GLAND, ST 11, PR18,6/PG11	
350	352103-0120	-		1	CABLE GLAND, STR 29, PR37,0/PG29	
360	353021-0212	-		14	FEED THROUGH TERMINAL, 10200.0	
370	353024-0205	-		5	EARTH TERMINAL, 1010.1	
380	353245-0004	-		1	GLAND, EXTENDED WITH INSERT, PG16/PR 22,	
400	359705-0015	A		1	WARNING SIGN ISO, RISK OF ELECTRIC SHOCK	
410	359011-0807	-		2	MARKING PLATES 5-FW 1-50	
510	90110-0152	-		1	CABLE HOOD 24-POL 70.352.2428.1	
520	90002-0009	-		1	BLANK-OFF PLUG, PR 18.6 SKINDICHT-BLK11	
W034	351150-0424	-	MM	6000	CABLE OLFLEX 18X0,75 MM2 LIGHT/GREY	
W315	351150-0403	-	MM	600	CABLE OLFLEX 3X0,75 MM2 LIGHT/GREY	
W326	351150-0406	-	MM	500	CABLE OLFLEX 7X0,75 MM2 LIGHT/GREY	
X101	90110-0150	-		1	MALE INSERT 121110 0000	

Pos	Part No	SP	UN	Qty	Description	Page No

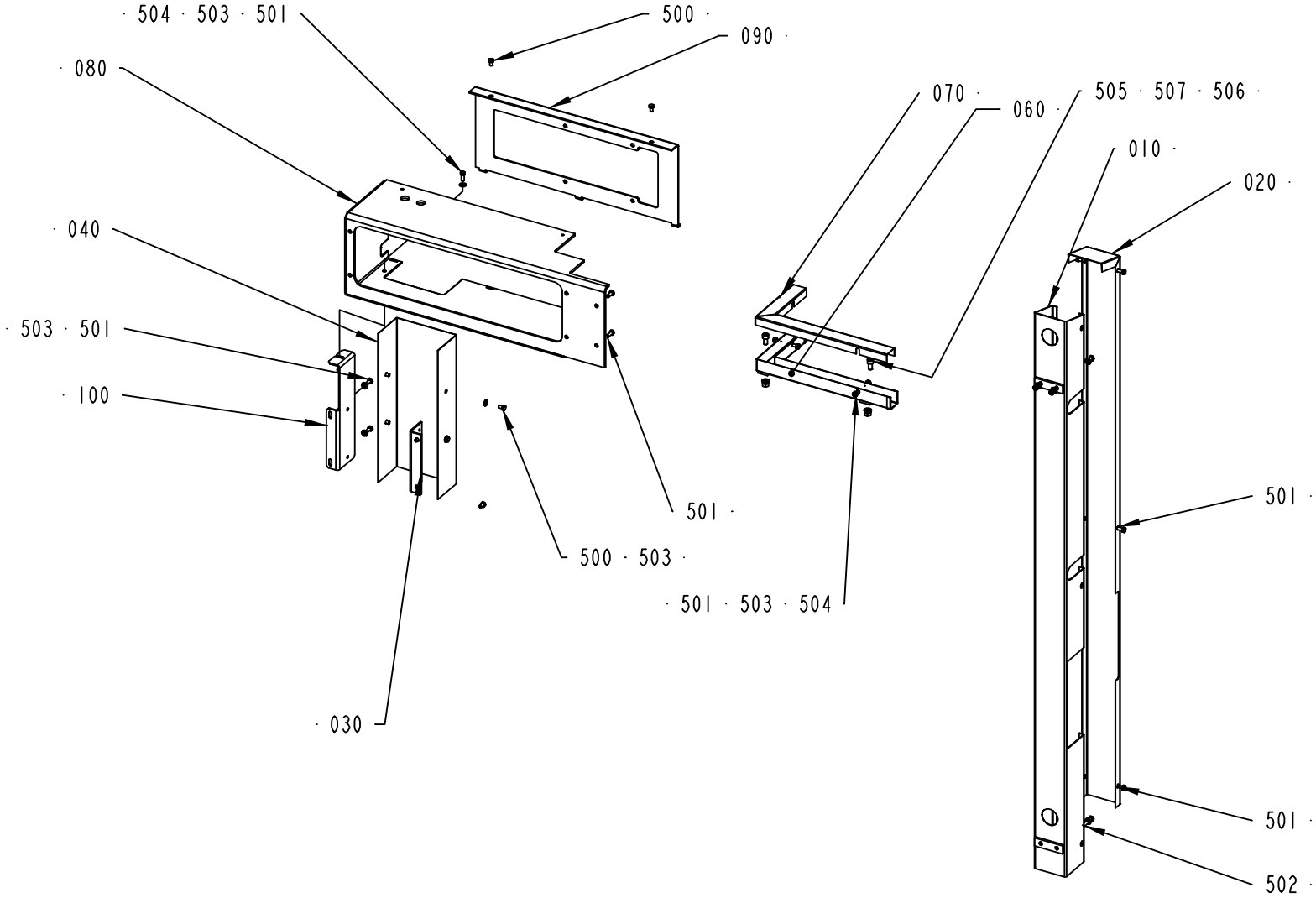

2542851-1
ECM 123016

Pos	Part No	SP	UN	Qty	Description	Page No
Common Parts						
010	2542757-0000	-		1	CABLE TRAY	
020	2542758-0000	-		1	CABLE TRAY LID	
030	2542887-0000	-		1	BRACKET FOR CABLE TRAY	
040	2569713-0000	-		1	CABLE DUCT	
060	2543096-0000	-		1	CABLE TRAY	
070	2543097-0000	-		1	CABLE TRAY LID	
080	2542885-0000	-		1	BRACKET FOR CONNECTION BOX	
090	2542886-0000	-		1	BRACKET FOR VALVE PANEL	
100	2569687-0000	-		1	BRACKET	
500	312105-0364	-		8	SCREW M6S ISO 4017 M6X10 A480	
501	312105-0368	-		13	SCREW M6S M6X16 A280	
502	312105-0376	-		2	SCREW M6S ISO 4014 M6X35 A480	
503	315105-0156	-		14	WASHER PLAIN, BRB, 6,7/14,H=1,5	
504	312605-0316	-		7	HEXAGON NUT, M6M M6 A280	
505	312115-0449	-		2	SCREW ISO4762 M8X16 A4	
506	315105-0165	-		2	WASHER ISO 7089-8-200 HV-A4	
507	312605-0318	-		2	HEXAGON NUT, M6M M8 A280	

Pos	Part No	SP	UN	Qty	Description	Page No

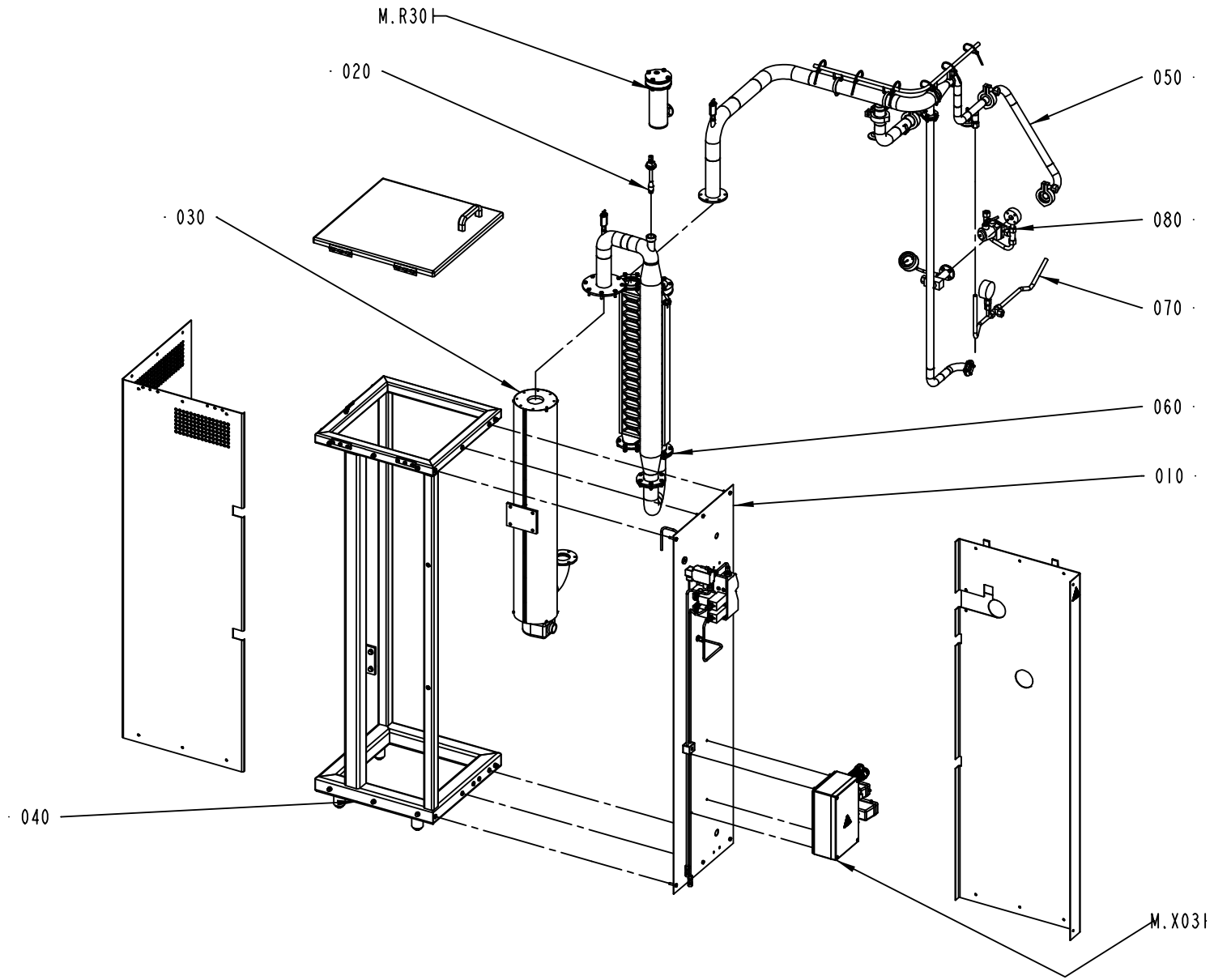

2542860-1
ECM 117569

Pos	Part No	SP	UN	Qty	Description	Page No
Common Parts						
010	A2556785-0100	-		1	SPRAY SYSTEM	**351**
020	A1514650-0100	-		1	SPRAY NOZZLE	**353**
030	A1514715-0100	-		1	AIR SUPER-HEATER	**355**
040	A2556780-0100	-		1	COVER	**357**
050	A2543000-0100	-		1	PIPE CONNECTION	**359**
060	A1515150-0100	-		1	HEAT EXCHANGER	**361**
070	A2542815-0100	-		1	PIPE	**363**
080	A2524145-0100	-		1	VALVE CONNECTION	**365**
M.R301	A207637-0400	-		1	ELEMENT	**367**
M.X031	A2556850-0100	-		1	CONNECTION BOX	**371, 373**

Pos	Part No	SP	UN	Qty	Description	Page No

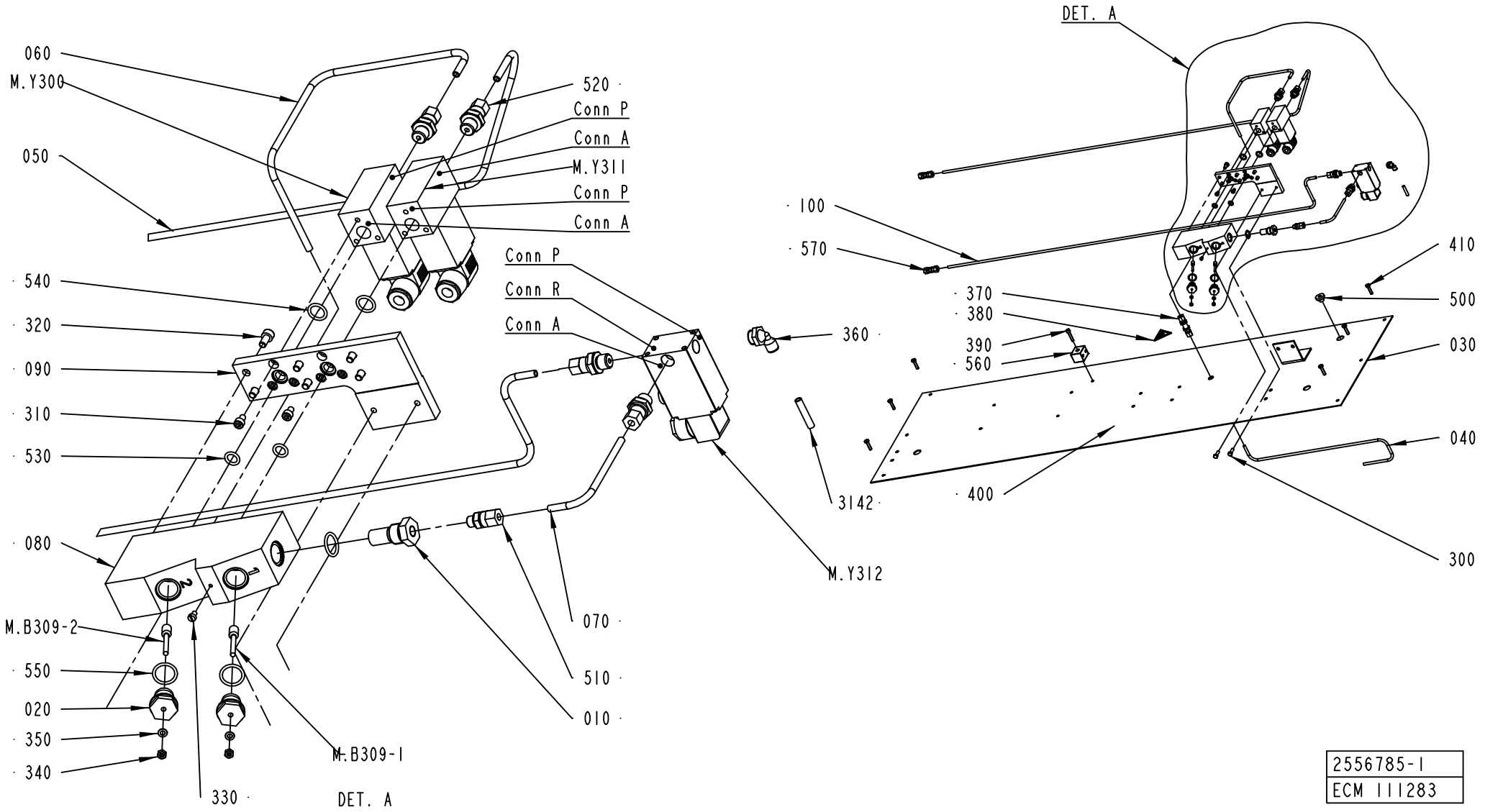

2556785-1
ECM 111283

Pos	Part No	SP	UN	Qty	Description	Page No
Common Parts						
010	450833-0000	A		1	FILTER	
020	560931-0000	A		2	BRACKET	
030	2556704-0000	-		1	COVER	
040	1514747-0000	-		1	PIPE	
050	2556698-0000	-		1	PIPE	
060	1515423-0000	-		1	PIPE	
070	1515424-0000	-		1	PIPE	
080	1515656-0000	-		1	SPRAYBLOCK	
090	1515657-0000	-		1	CONNECTION PLATE	
100	2556697-0000	-		1	PIPE	
300	312105-0370	-		2	SCREW M6S ISO 4017 M6X20 A480	
310	312115-0323	-		6	SCREW ISO4762 M5X8 A4	
3142	90166-0081	-	MM	6500	TUBE 6 MM PA BLUE	
320	312115-0366	-		6	SCREW ISO4762 M6X12 A4	
330	312125-0285	-		1	SCREW SLOT.PAN HD. MCS 4X6 A480	
340	312605-0312	-		2	HEXAGON NUT, M6M M4 A280	
350	315105-0136	-		2	WASHER ISO 7089-4-200 HV-A4	
360	90458-2957	-		1	ELBOW PIPE JOINT, EXT.THREAD, D=6MM-G1/4	
370	90030-0066	-		1	CONN. BULKHEAD SV 6-L/SY	
390	312115-0374	-		1	SCREW ISO4762 M6X30 A4	
400	312605-0316	-		1	HEXAGON NUT, M6M M6 A280	
410	312105-0372	-		6	SCREW M6S ISO 4017 M6X25 A480	
500	90015-0023	-		1	LEAD-IN, TET7-10, E-1458019	
510	90030-0184	-		1	CONN. STR. GA-6-G1/8	
520	90030-0232	-		4	CONN. PIPE SS-6MO-1-4RP	
530	927421-0001	A		2	O-RING 9.3X2.4 SILICON	
540	927421-0003	A		2	O-RING 13.3X2.4 SILICON	
550	927421-0006	A		3	O-RING 17.3X2.4 SILICON	
560	90458-2618	-		1	PIPE CLAMP, D=10 MM, 106/06-PP	
570	90030-0075	-		2	PIPE CONNECTION G-6	
M.B309-1	567070-0013	A		1	ELECTRODE	
M.B309-2	567070-0013	A		1	ELECTRODE	
M.Y300	B544906-0000	A		1	SOLENOID VALVE	
	90042-0464	*-*		*1*	*DIAPHRAGM VITON 1211321*	
	90042-0465	*-*		*1*	*O-RING VITON 17,17X1,78*	
M.Y311	B544906-0000	A		1	SOLENOID VALVE	
	90042-0464	*-*		*1*	*DIAPHRAGM VITON 1211321*	
	90042-0465	*-*		*1*	*O-RING VITON 17,17X1,78*	
M.Y312	B90042-0171	A		1	SOLENOID VALVE BUERKERT	
	90042-0466	*C*		*1*	*DIAPHRAGM 330.95.2 VITON*	

Machine Type	Group Description	Used-In	Group Number	Page No

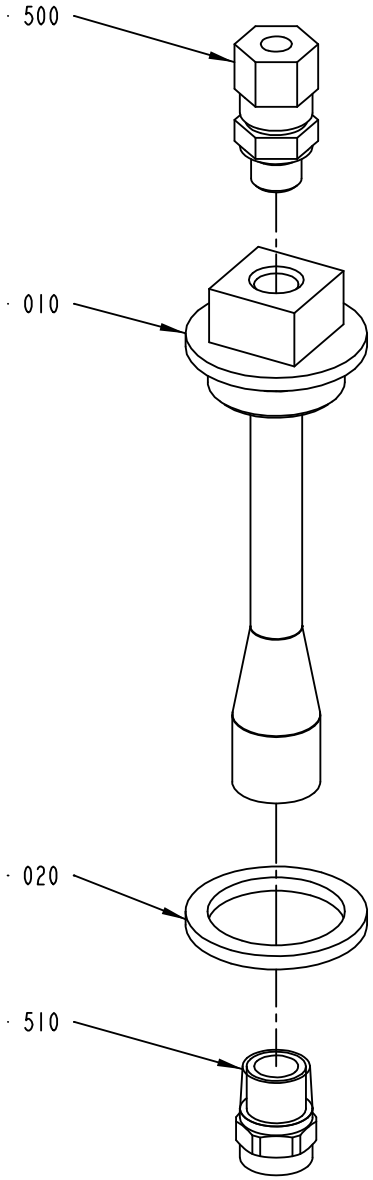

1514650-1
ECM 73239

ECM: 122038 - 20021212
Group number: 1514650-0100
Assembly Drawing: 1514650-1_1_AA

Issue: 20030313

Pos	Part No	SP	UN	Qty	Description	Page No
Common Parts						
010	1514653-0000	A		1	BRACKET	
020	1514654-0000	A		1	WASHER	
500	90030-0051	-		1	CONN. STR., 6-R1/8, EXT. THREAD	
510	90458-2574	A		1	SPRAY NOZZLE B 1/4 M - SS 1.5	

Pos	Part No	SP	UN	Qty	Description	Page No

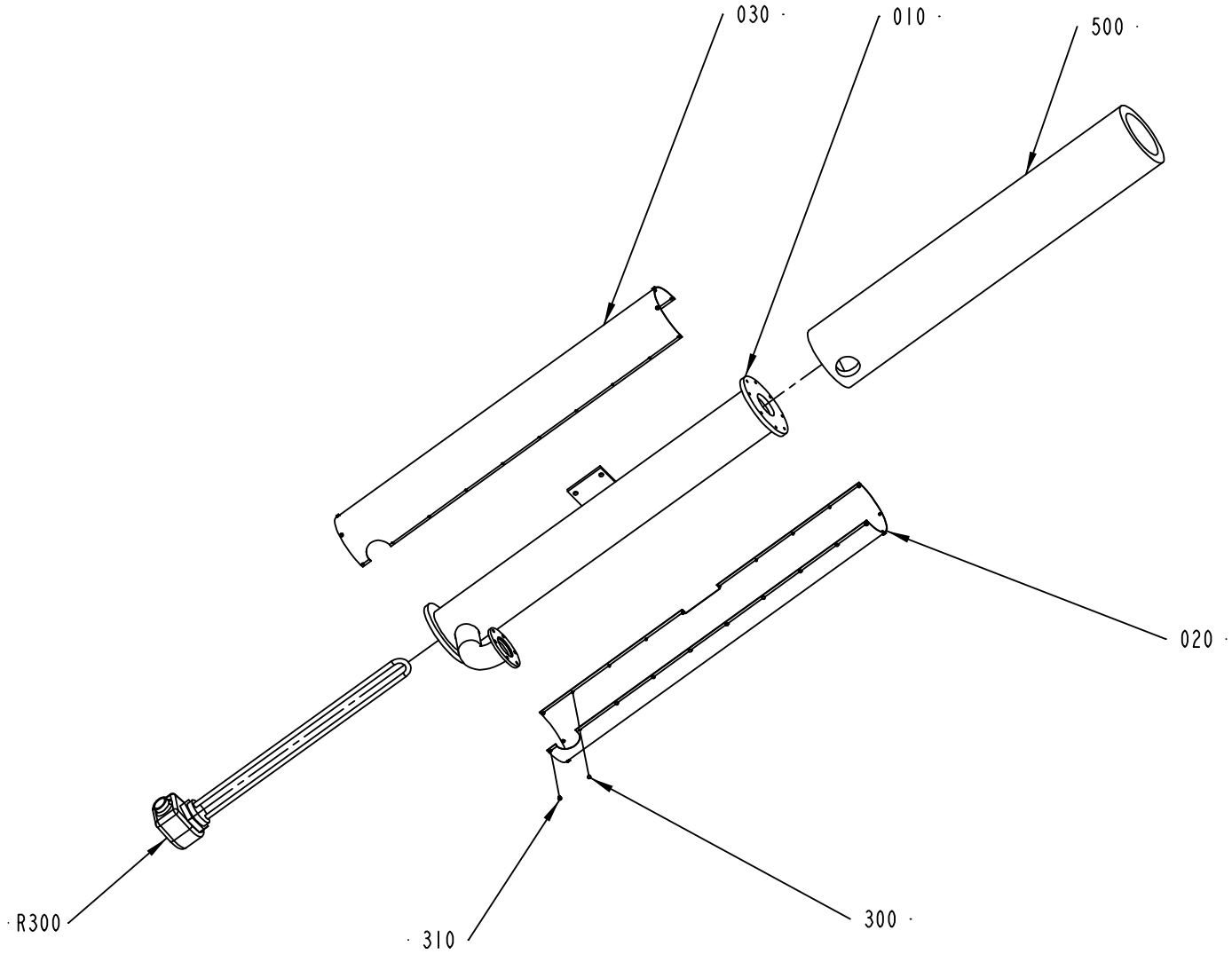

1514715-1
ECM 73239

ECM: 81028 - 20020313
Group number: 1514715-0100
Assembly Drawing: 1514715-1_1_AA

Issue: 20030313

Pos	Part No	SP	UN	Qty	Description	Page No
Common Parts						
010	1514652-0000	-		1	TUBE	
020	1514688-0000	-		1	COVER PLATE	
030	1514692-0000	-		1	COVER PLATE	
300	311521-0142	-		16	BLANK RIVET 3,2X6	
310	312125-0285	-		12	SCREW SLOT.PAN HD. MCS 4X6 A480	
500	90411-0001	-		1	INSULATING MAT	
R300	19269-0002	A		1	ELEMENT	

Pos	Part No	SP	UN	Qty	Description	Page No

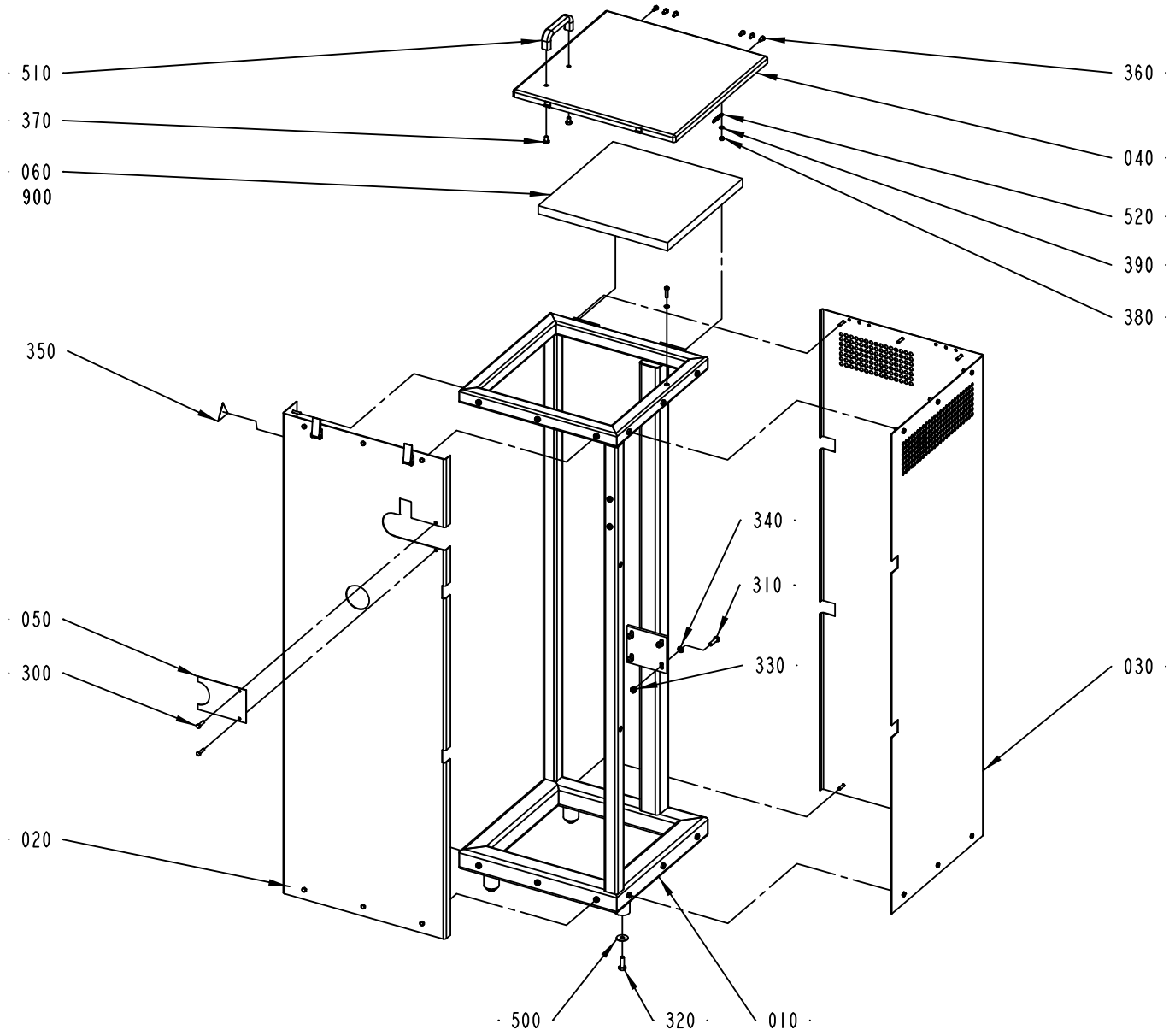

2556780-1
ECM 117569

ECM: 121184 - 20021212
Group number: 2556780-0100
Assembly Drawing: 2556780-1_1_AB

Issue: 20030313

Pos	Part No	SP	UN	Qty	Description	Page No
Common Parts						
010	2556771-0000	-		1	FRAME	
020	2556772-0000	-		1	COVER	
030	2556773-0000	-		1	COVER	
040	2556774-0000	-		1	DOOR	
050	1514834-0000	-		1	COVER	
060	1515586-0000	-		1	HEAT INSULATION	
300	312105-0372	-		23	SCREW M6S ISO 4017 M6X25 A480	
310	312105-0455	-		4	SCREW M6S ISO 4017 M8X30 A480	
320	312105-0495	-		4	SCREW M6S ISO 4017 M10X30 A480	
330	312605-0318	-		4	HEXAGON NUT, M6M M8 A280	
340	315105-0165	-		4	WASHER ISO 7089-8-200 HV-A4	
350	359710-0001	A		1	WARNING SIGN ISO, HOT SURFACE	
360	312105-0366	-		6	SCREW M6S M6X12 A280	
370	312105-0447	-		2	SCREW M6S ISO 4017 M8X12 A480	
380	312605-0316	-		1	HEXAGON NUT, M6M M6 A280	
390	315105-0153	-		2	WASHER ISO 7089-6-200 HV-A4	
500	90005-0140	-		4	WASHER PLAIN ROUND 10,5(M10)/30, H=2	
510	90017-0022	-		1	HANDLE, NO. EL-037311	
520	90155-0008	-	MM	200	HANGER CHAIN, 18	
900	90153-0016	-		1	ADHESIVE,TUBE 100G RHODORSIL CAF 3	

Pos	Part No	SP	UN	Qty	Description	Page No

Machine Type | Group Description | Used-In | Group Number | Page No

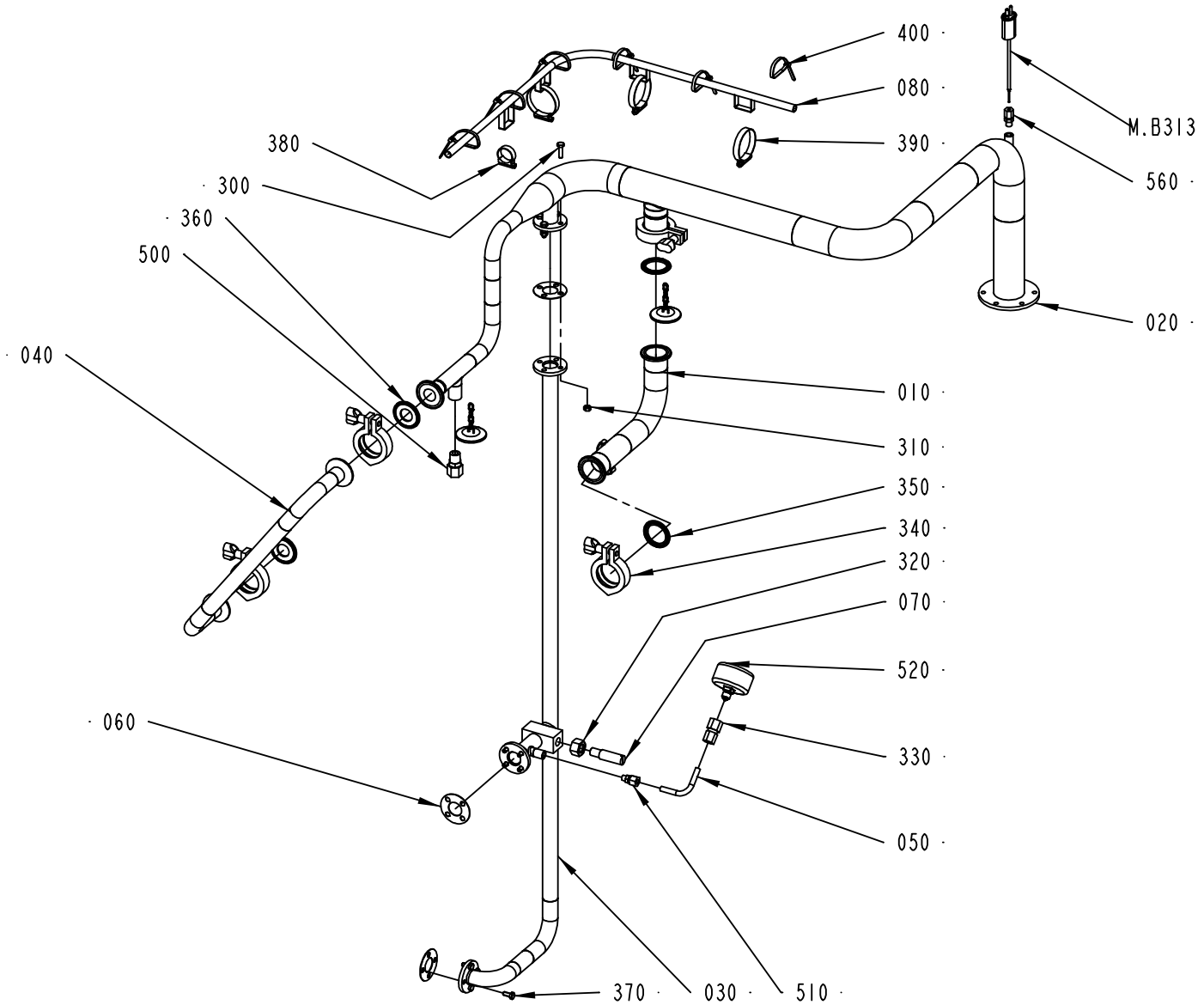

2543000-1
ECM 117569

Pos	Part No	SP	UN	Qty	Description	Page No
Common Parts						
010	2542992-0000	-		1	PIPE CONNECTION	
020	2542989-0000	-		1	PIPE CONNECTION	
030	1514676-0000	-		1	PIPE CONNECTION	
040	2542993-0000	-		1	PIPE CONNECTION	
050	2569711-0000	-		1	PIPE	
060	1514698-0000	A		3	GASKET	
070	1514703-0000	A		1	SCREW	
080	2569630-0000	-		1	GUIDE	
300	312105-0371	-		4	SCREW M6S ISO 4017 M6X22 A480	
310	312605-0316	-		4	HEXAGON NUT, M6M M6 A280	
320	312605-0324	-		1	HEXAGON NUT, M6M M16 A280	
330	342725-0103	-		1	CONN. STR. PIPE GI-8-G1/4	
340	342840-0103	-		4	CLAMPING PIECE	
350	342850-0304	A		2	GASKET 35,4X49,1X5,2 1"1/2 FDA	
360	342850-0303	A		2	GASKET 22,7X49,1X5,2 MM 1" FDA	
370	312105-0367	-		8	SCREW M6S M6X14 A280	
380	342991-0104	-		1	HOSE CLIP,WORM DRIVE TYPE (23)-27	
390	342991-0109	-		3	HOSE CLIP,WORM DRIVE TYPE (48)-50	
400	352113-0102	-		6	CLIP-STRIP, BLACK 188X4,8 MM	
500	90030-0181	-		1	CONN. STR. GE 12-3/8-18 NPTF	
510	90030-0290	-		1	CONN. STR., 8-R1/8, EXT. THREAD	
520	90043-0061	B		1	PRESSURE GAUGE, 2061 D=63 MM, THROTTLED	
560	90326-0306	A		1	GLAND FITTING 9041-45-KS-KR.1/8" D=4,5MM	
M.B313	90326-0037	A		1	THERMOCOUPLE, CR-AL PREM.G	

Pos	Part No	SP	UN	Qty	Description	Page No

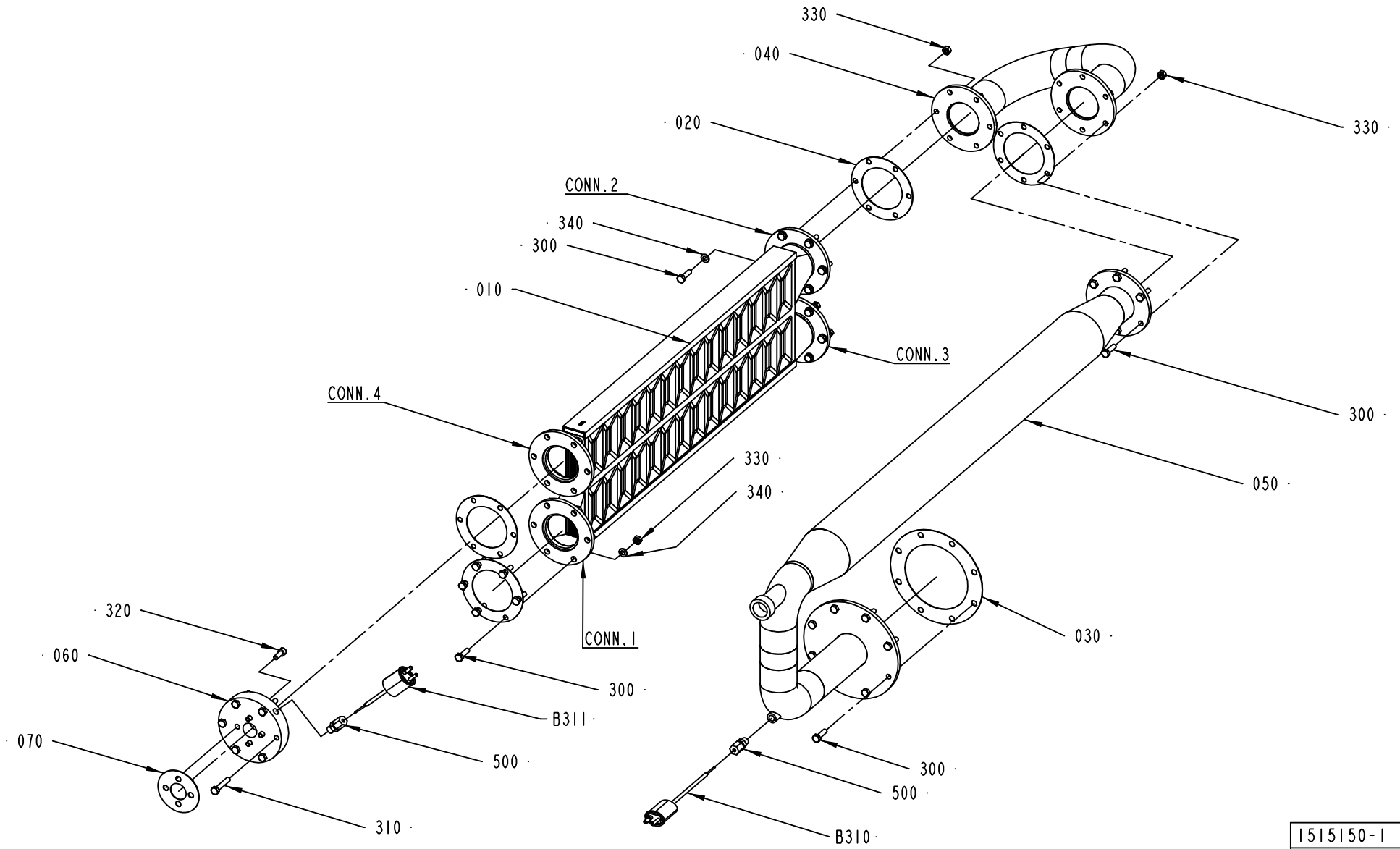

1515150-1
ECM 73239

ECM: 122039 - 20021212
Group number: 1515150-0100
Assembly Drawing: 1515150-1_1_AA

Issue: 20030313

Pos	Part No	SP	UN	Qty	Description	Page No
Common Parts						
010	522090-0000	A		1	HEAT EXCHANGER	
020	531737-0000	A		5	GASKET	
030	535698-0000	A		1	GASKET	
040	1514668-0000	-		1	PIPE BEND	
050	1514669-0000	-		1	SPRAY PIPE	
060	1514672-0000	-		1	CONNECTION	
070	1514697-0000	A		1	GASKET	
300	312105-0371	-		32	SCREW M6S ISO 4017 M6X22 A480	
310	312105-0376	-		6	SCREW M6S ISO 4014 M6X35 A480	
320	312115-0368	-		4	SCREW ISO4762 M6X16 A4	
330	312605-0316	-		30	HEXAGON NUT, M6M M6 A280	
340	315105-0153	-		24	WASHER ISO 7089-6-200 HV-A4	
500	90326-0306	A		2	GLAND FITTING 9041-45-KS-KR.1/8" D=4,5MM	
B310	90326-0037	A		1	THERMOCOUPLE, CR-AL PREM.G	
B311	90326-0038	A		1	THERMOCOUPLE, CR-AL	

Pos	Part No	SP	UN	Qty	Description	Page No

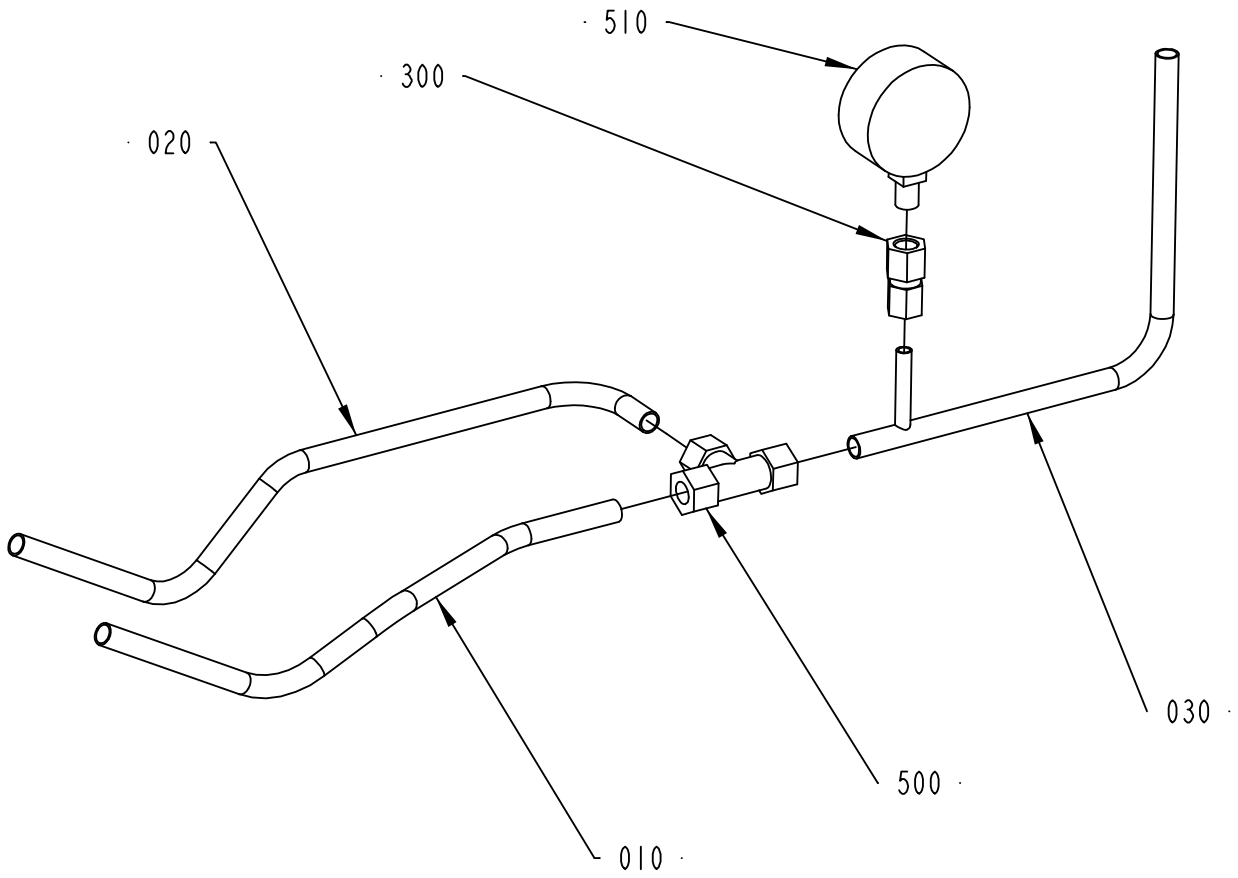

2542815-1
ECM 117569

Pos	Part No	SP	UN	Qty	Description	Page No
Common Parts						
010	2542917-0000	-		1	PIPE	
020	2556789-0000	-		1	PIPE	
030	2569631-0000	-		1	PIPE	
300	342725-0103	-		1	CONN. STR. PIPE GI-8-G1/4	
500	90030-0058	-		1	CONN. T-PIPE T-12	
510	90043-0004	B		1	PRESSURE GAUGE, 2040 D=63 MM	

Pos	Part No	SP	UN	Qty	Description	Page No

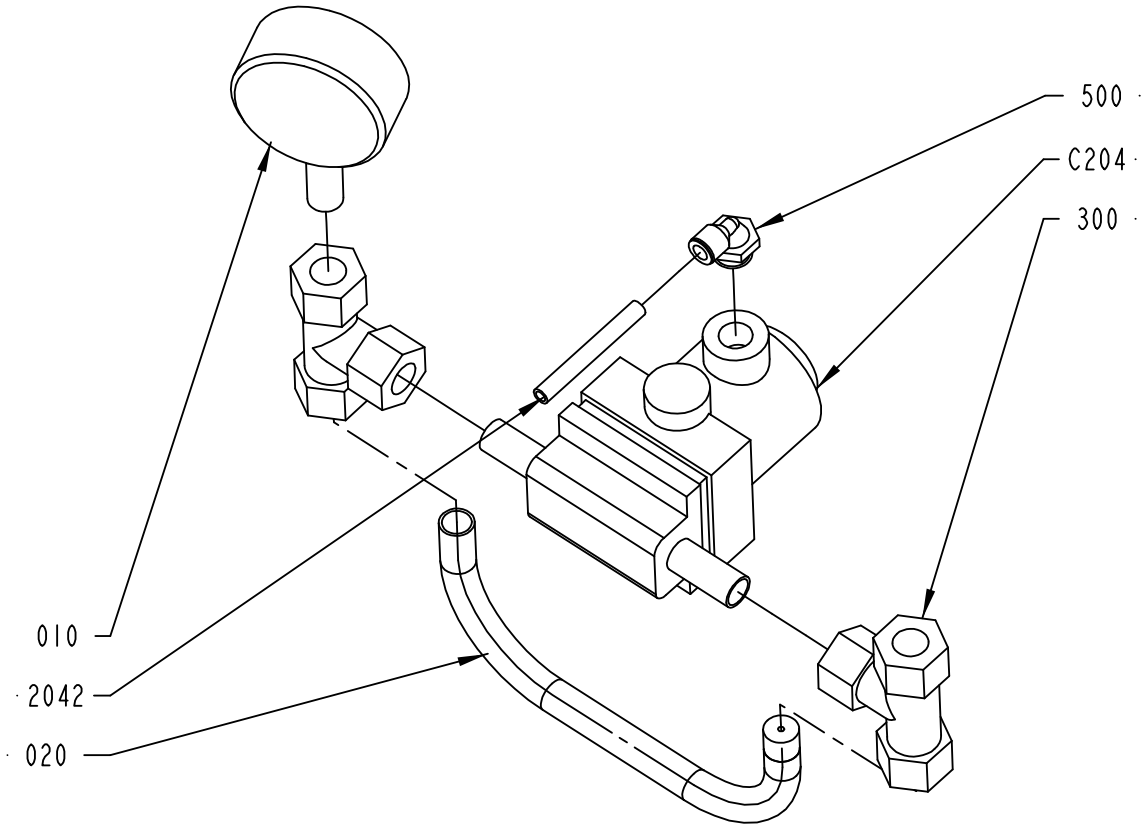

2524145-1
ECM 111283

ECM: 122041 - 20021212
Group number: 2524145-0100
Assembly Drawing: 2524145-1_1_AA

Issue: 20030313

Pos	Part No	SP	UN	Qty	Description	Page No
Common Parts						
010	2524146-0000	-		1	CONNECTION PIPE	
020	2524147-0000	-		1	THROTTLING	
2042	90166-0081	-	MM	2000	TUBE 6 MM PA BLUE	
300	90030-0058	-		2	CONN. T-PIPE T-12	
500	90458-2957	-		1	ELBOW PIPE JOINT, EXT.THREAD, D=6MM-G1/4	
C204	B90458-2434	A		1	DIAPHRAGM VALVE 12MM, N.O. WELD CONN.	
	90458-0205	*A*		*1*	*DIAPHRAGM, 600 10 M13 88037819*	
	90458-2436	*A*		*1*	*ACTUATOR 615, 9615000Z 2*	

Pos	Part No	SP	UN	Qty	Description	Page No

Machine Type | Group Description | Used-In | Group Number | Page No

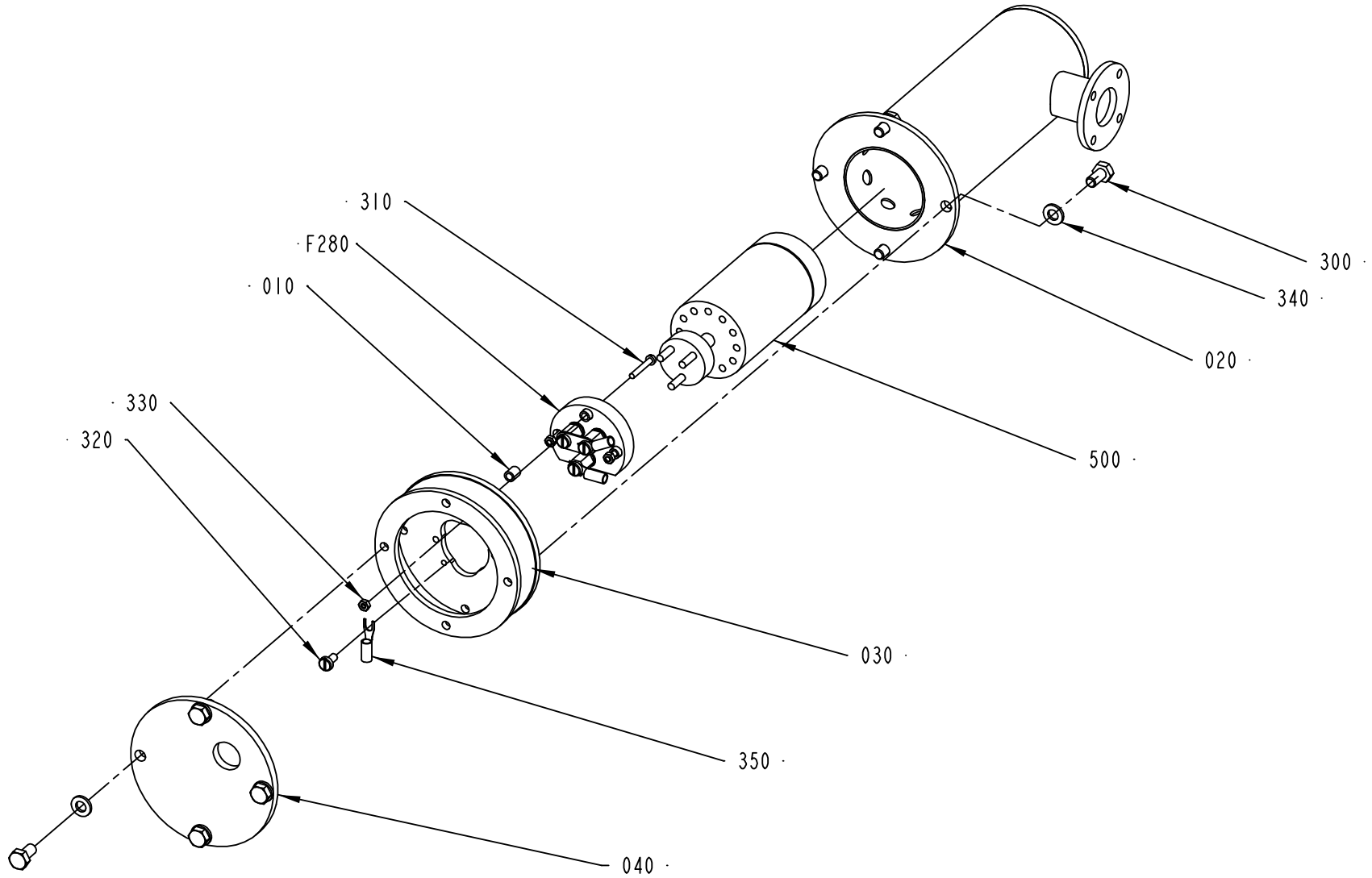

207637-3
ECM 98669

Pos	Part No	SP	UN	Qty	Description	Page No
Common Parts						
010	19797-0000	A		3	BUSHING	
020	38960-0000	A		1	COIL HEATER	
030	38962-0000	A		1	CLUTCH PIECE	
040	38963-0000	A		1	LID	
300	312105-0366	-		8	SCREW M6S M6X12 A280	
310	312121-0230	-		3	SCREW SLOT.PAN HD. MCS 3X20 FZB	
320	312132-0284	-		1	SCREW SLOT. PAN HEAD MSCS M4X5	
330	312601-0310	-		3	NUT M6M3FZB	
340	315105-0153	-		8	WASHER ISO 7089-6-200 HV-A4	
350	353103-0130	-		1	CABLE SHOE	
500	90206-0014	A		1	HEATING ELEMENT 2X1250W,220V	
F280	A207638-0300	-		1	SLEEVE CONTACT	**369**

Pos	Part No	SP	UN	Qty	Description	Page No

SLEEVE CONTACT

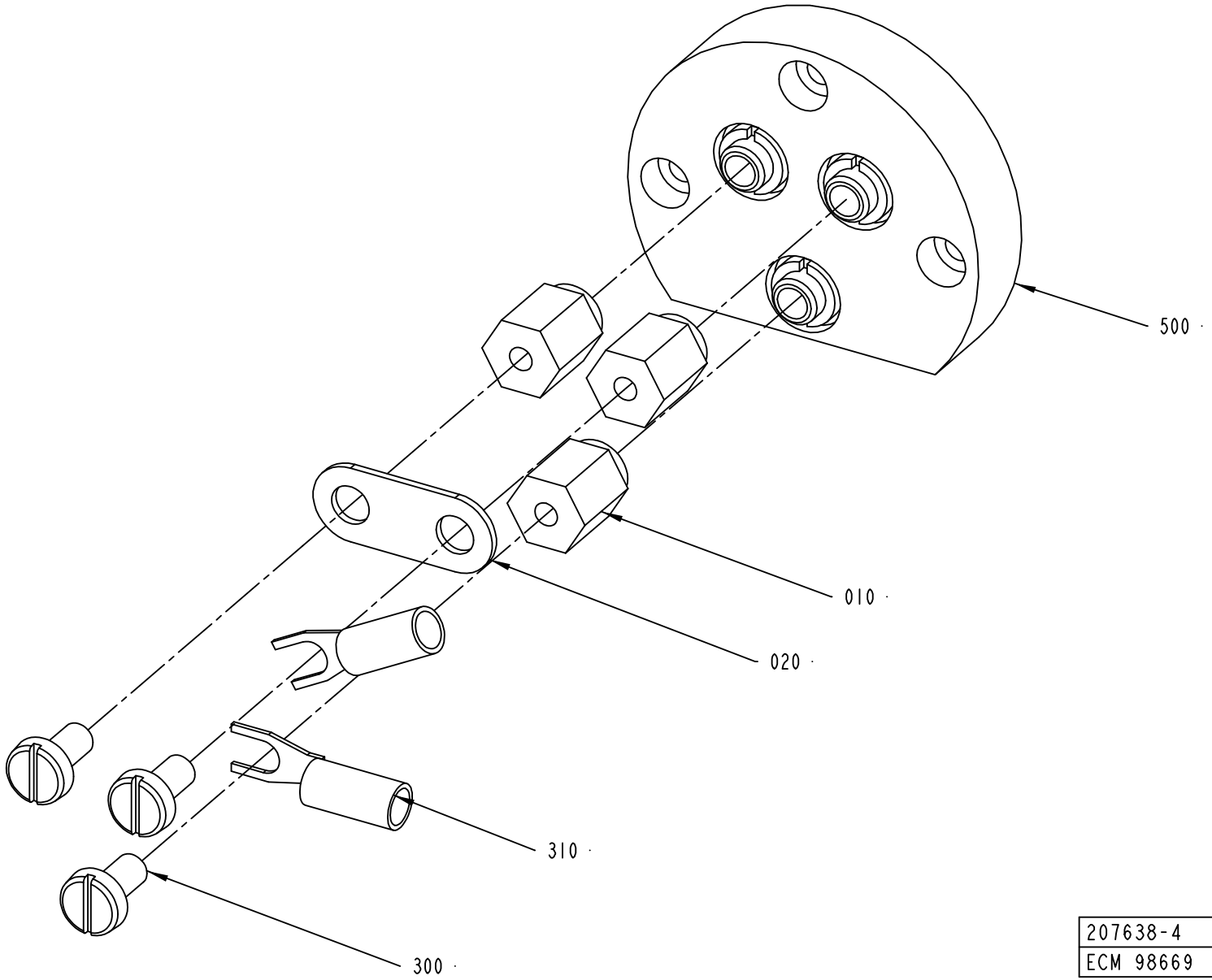

207638-4
ECM 98669

ECM: 98902 - 20020313
Group number: 207638-0300
Assembly Drawing: 207638-4_1_AA

Issue: 20030313

Pos	Part No	SP	UN	Qty	Description	Page No
Common Parts						
010	207639-0000	A		3	SPACER	
020	209283-0000	-		1	BRIDGE CONNECTOR	
300	312132-0287	-		3	SCREW SLOT. PAN HEAD MSCS M4X8	
310	353103-0130	-		2	CABLE SHOE	
500	B90125-0020	-		1	PLATE	
	294464-0000	*A*		*1*	*BASE PLATE*	
	270927-0000	*A*		*3*	*SCREW*	
	270926-0000	*A*		*6*	*NUT*	
	294464-0000	*A*		*1*	*BASE PLATE*	
	270927-0000	*A*		*3*	*SCREW*	
	270926-0000	*A*		*6*	*NUT*	

Pos	Part No	SP	UN	Qty	Description	Page No

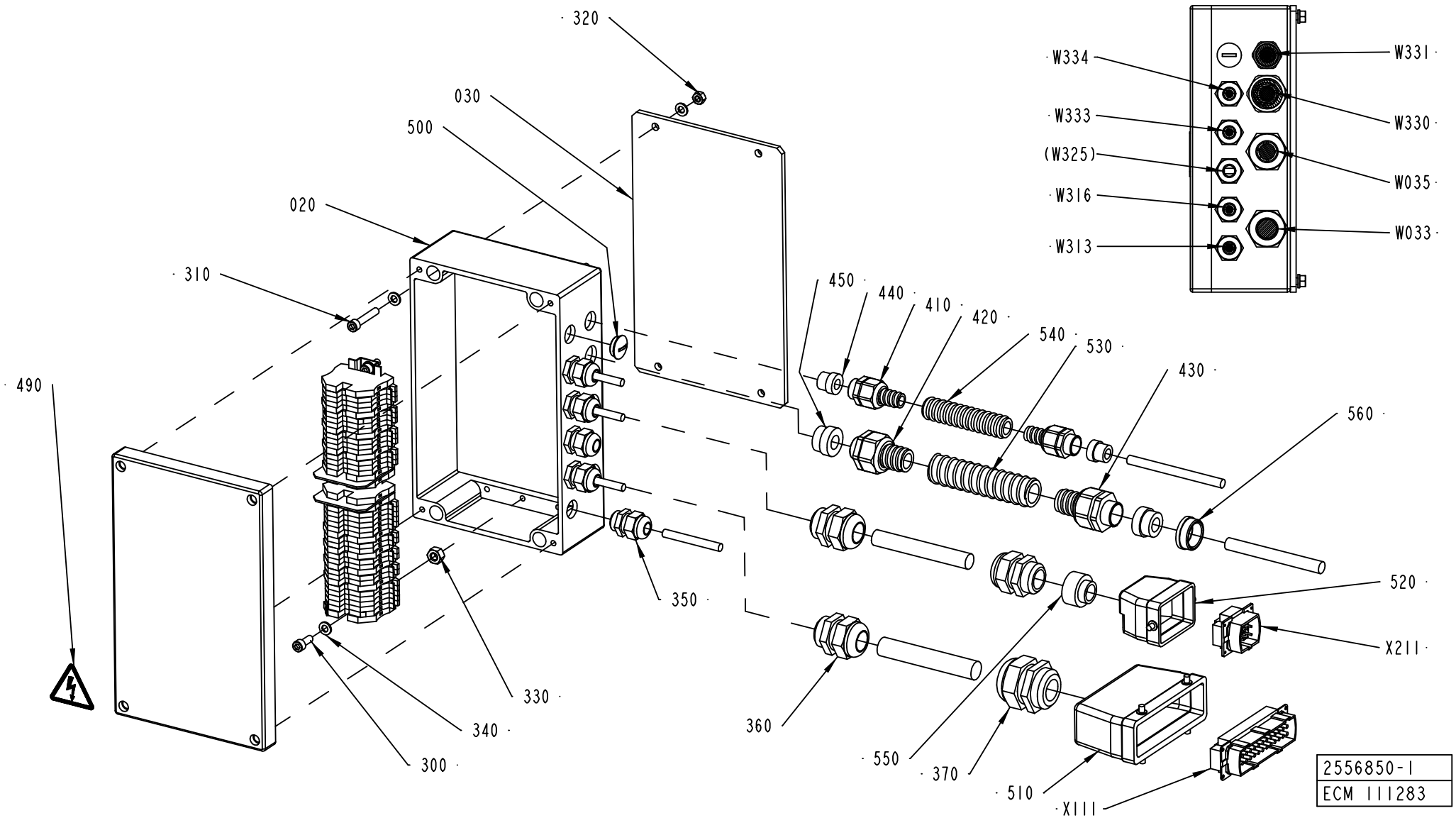
320
030
500
020
310
490
450
440
410
420
540
530
430
560
520
X211
350
330
340
300
360
550
370
510
X111
W334
W331
W333
W330
(W325)
W035
W316
W033
W313
2556850-1
ECM 111283

ECM: 122073 - 20021212
Group number: 2556850-0100
Assembly Drawing: 2556850-1_1_AA

Issue: 20030313

Pos	Part No	SP	UN	Qty	Description	Page No
Common Parts						
010	1514691-0000	-		1	RAIL	
020	2556778-0000	-		1	BOX	
030	2556813-0000	-		1	SPACER	
300	312115-0368	-		2	SCREW ISO4762 M6X16 A4	
310	312115-0376	-		4	SCREW ISO4762 M6X35 A4	
320	312605-0316	-		4	HEXAGON NUT, M6M M6 A280	
330	312605-0318	-		2	HEXAGON NUT, M6M M8 A280	
340	315105-0153	-		10	WASHER ISO 7089-6-200 HV-A4	
350	352103-0106	-		5	CABLE GLAND, ST 11, PR18,6/PG11	
360	352103-0116	-		3	KABELFöRSKR. ST 21, PR28,3/PG21	
370	352103-0120	-		1	CABLE GLAND, STR 29, PR37,0/PG29	
380	353021-0212	-		28	FEED THROUGH TERMINAL, 10200.0	
390	353024-0205	-		13	EARTH TERMINAL, 1010.1	
400	353033-0105	-		2	PARTITITION, 10501.0	
410	353243-0002	-		2	EXTENDED WITHOUT INSERT, PG11	
420	353243-0004	-		1	EXTENDED WITHOUT INSERT, PG13,5	
430	353243-0005	-		1	EXTENDED WITHOUT INSERT, PG16	
440	353249-0018	-		2	INSERT, SINGEL HOLE, HI.TEMP, EK152I9	
450	353249-0021	-		2	INSERT, SINGEL HOLE, HI.TEMP, EK154I13	
460	359011-0807	-		2	MARKING PLATES 5-FW 1-50	
470	359011-0809	-		2	MARKING PLATES 5-FW 101-150	
480	359011-0834	-		1	SET OF SIGNS 6-GW(EARTH)	
490	359705-0015	A		1	WARNING SIGN ISO, RISK OF ELECTRIC SHOCK	
500	90002-0009	-		1	BLANK-OFF PLUG, PR 18.6 SKINDICHT-BLK11	
510	90110-0152	-		1	CABLE HOOD 24-POL 70.352.2428.1	
520	90110-0157	-		1	CABLE HOOD 6-POL 70.352.0628.1	
530	90152-0051	-	MM	1300	SPIRAL CONDUIT, 25X18, UL 1816	
540	90152-0059	-	MM	2000	SPIRAL CONDUIT, 18X12, UL 1211	
550	90458-2607	-		1	REDUCER, SKINDICHT-ME 13.5/21	
560	90458-2608	-		1	REDUCER, SKINDICHT-MR 21/16	
W033	351150-0425	-	MM	7200	CABLE OLFLEX 25X0,75 MM2 LIGHT/GREY	
W035	351150-0420	-	MM	7000	CABLE OLFLEX 7X2,5 MM2 LIGHT/GREY	
W313	351150-0404	-	MM	3000	CABLE OLFLEX 4X0,75 MM2 LIGHT/GREY	
W316	351150-0403	-	MM	3000	CABLE OLFLEX 3X0,75 MM2 LIGHT/GREY	
W330	351120-0165	-	MM	2000	CABLE SIHF 4X2,5MM2 GREEN/YELLOW	
W331	351120-0144	-	MM	2300	CABLE SIHF 3X1,5MM2 GREEN/YELLOW	
W333	351150-0403	-	MM	3000	CABLE OLFLEX 3X0,75 MM2 LIGHT/GREY	
W334	351150-0403	-	MM	3000	CABLE OLFLEX 3X0,75 MM2 LIGHT/GREY	
X111	90110-0150	-		1	MALE INSERT 121110 0000	
X211	90110-0159	-		1	MALE INSERT 70.310.0640.0	

Machine Type	Group Description	Used-In	Group Number	Page No

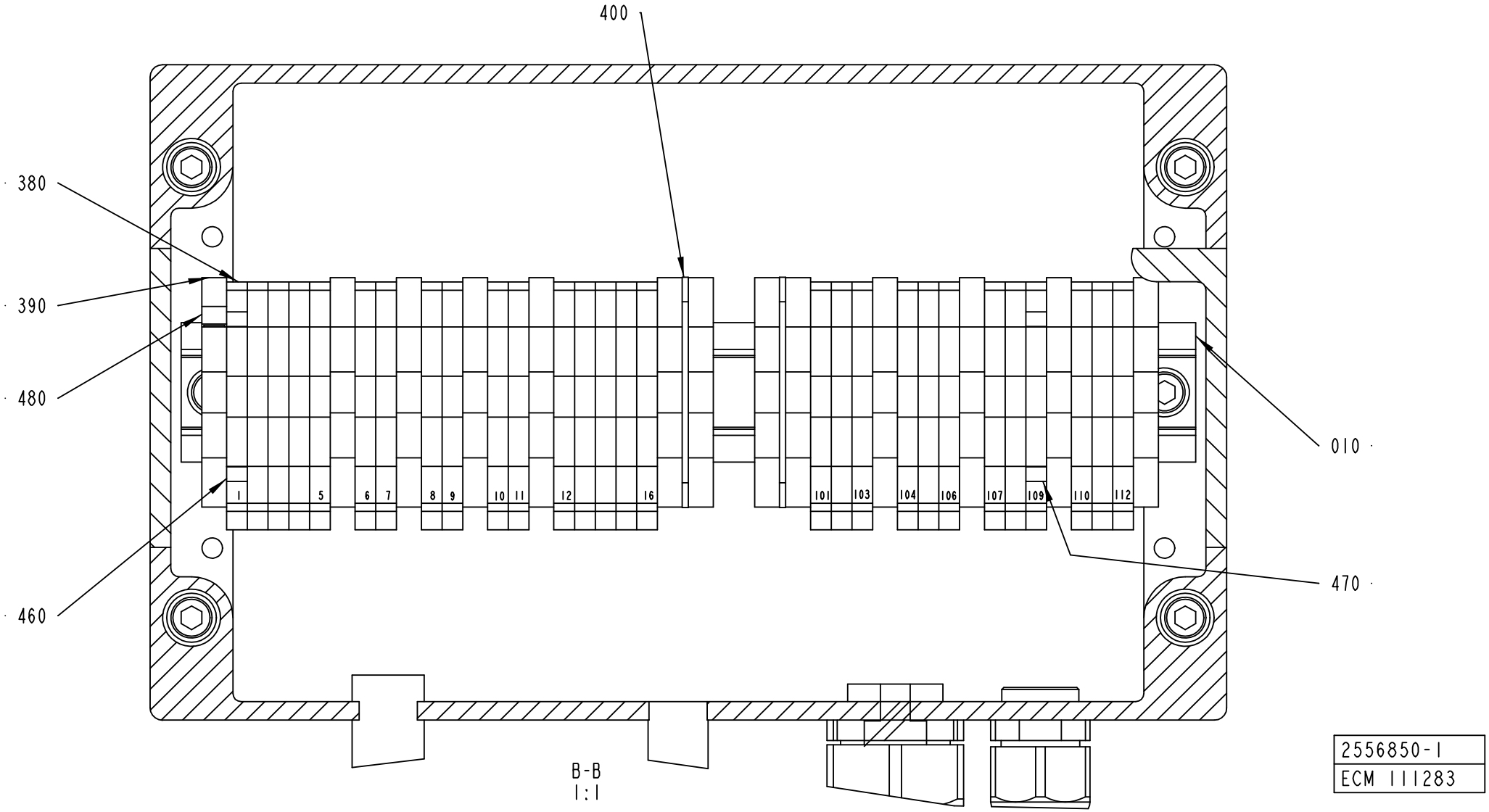
400
380
390
480
460
010
470
1
5
6
7
8
9
10
11
12
16
101
103
104
106
107
109
110
112
B-B
1:1
2556850-1
ECM 111283

ECM: 122073 - 20021212
Group number: 2556850-0100
Assembly Drawing: 2556850-1_2_AA

Issue: 20030313

Pos	Part No	SP	UN	Qty	Description	Page No
Common Parts						
010	1514691-0000	-		1	RAIL	
020	2556778-0000	-		1	BOX	
030	2556813-0000	-		1	SPACER	
300	312115-0368	-		2	SCREW ISO4762 M6X16 A4	
310	312115-0376	-		4	SCREW ISO4762 M6X35 A4	
320	312605-0316	-		4	HEXAGON NUT, M6M M6 A280	
330	312605-0318	-		2	HEXAGON NUT, M6M M8 A280	
340	315105-0153	-		10	WASHER ISO 7089-6-200 HV-A4	
350	352103-0106	-		5	CABLE GLAND, ST 11, PR18,6/PG11	
360	352103-0116	-		3	KABELFöRSKR. ST 21, PR28,3/PG21	
370	352103-0120	-		1	CABLE GLAND, STR 29, PR37,0/PG29	
380	353021-0212	-		28	FEED THROUGH TERMINAL, 10200.0	
390	353024-0205	-		13	EARTH TERMINAL, 1010.1	
400	353033-0105	-		2	PARTITITION, 10501.0	
410	353243-0002	-		2	EXTENDED WITHOUT INSERT, PG11	
420	353243-0004	-		1	EXTENDED WITHOUT INSERT, PG13,5	
430	353243-0005	-		1	EXTENDED WITHOUT INSERT, PG16	
440	353249-0018	-		2	INSERT, SINGEL HOLE, HI.TEMP, EK152I9	
450	353249-0021	-		2	INSERT, SINGEL HOLE, HI.TEMP, EK154I13	
460	359011-0807	-		2	MARKING PLATES 5-FW 1-50	
470	359011-0809	-		2	MARKING PLATES 5-FW 101-150	
480	359011-0834	-		1	SET OF SIGNS 6-GW(EARTH)	
490	359705-0015	A		1	WARNING SIGN ISO, RISK OF ELECTRIC SHOCK	
500	90002-0009	-		1	BLANK-OFF PLUG, PR 18.6 SKINDICHT-BLK11	
510	90110-0152	-		1	CABLE HOOD 24-POL 70.352.2428.1	
520	90110-0157	-		1	CABLE HOOD 6-POL 70.352.0628.1	
530	90152-0051	-	MM	1300	SPIRAL CONDUIT, 25X18, UL 1816	
540	90152-0059	-	MM	2000	SPIRAL CONDUIT, 18X12, UL 1211	
550	90458-2607	-		1	REDUCER, SKINDICHT-ME 13.5/21	
560	90458-2608	-		1	REDUCER, SKINDICHT-MR 21/16	
W033	351150-0425	-	MM	7200	CABLE OLFLEX 25X0,75 MM2 LIGHT/GREY	
W035	351150-0420	-	MM	7000	CABLE OLFLEX 7X2,5 MM2 LIGHT/GREY	
W313	351150-0404	-	MM	3000	CABLE OLFLEX 4X0,75 MM2 LIGHT/GREY	
W316	351150-0403	-	MM	3000	CABLE OLFLEX 3X0,75 MM2 LIGHT/GREY	
W330	351120-0165	-	MM	2000	CABLE SIHF 4X2,5MM2 GREEN/YELLOW	
W331	351120-0144	-	MM	2300	CABLE SIHF 3X1,5MM2 GREEN/YELLOW	
W333	351150-0403	-	MM	3000	CABLE OLFLEX 3X0,75 MM2 LIGHT/GREY	
W334	351150-0403	-	MM	3000	CABLE OLFLEX 3X0,75 MM2 LIGHT/GREY	
X111	90110-0150	-		1	MALE INSERT 121110 0000	
X211	90110-0159	-		1	MALE INSERT 70.310.0640.0	

Machine Type	Group Description	Used-In	Group Number	Page No

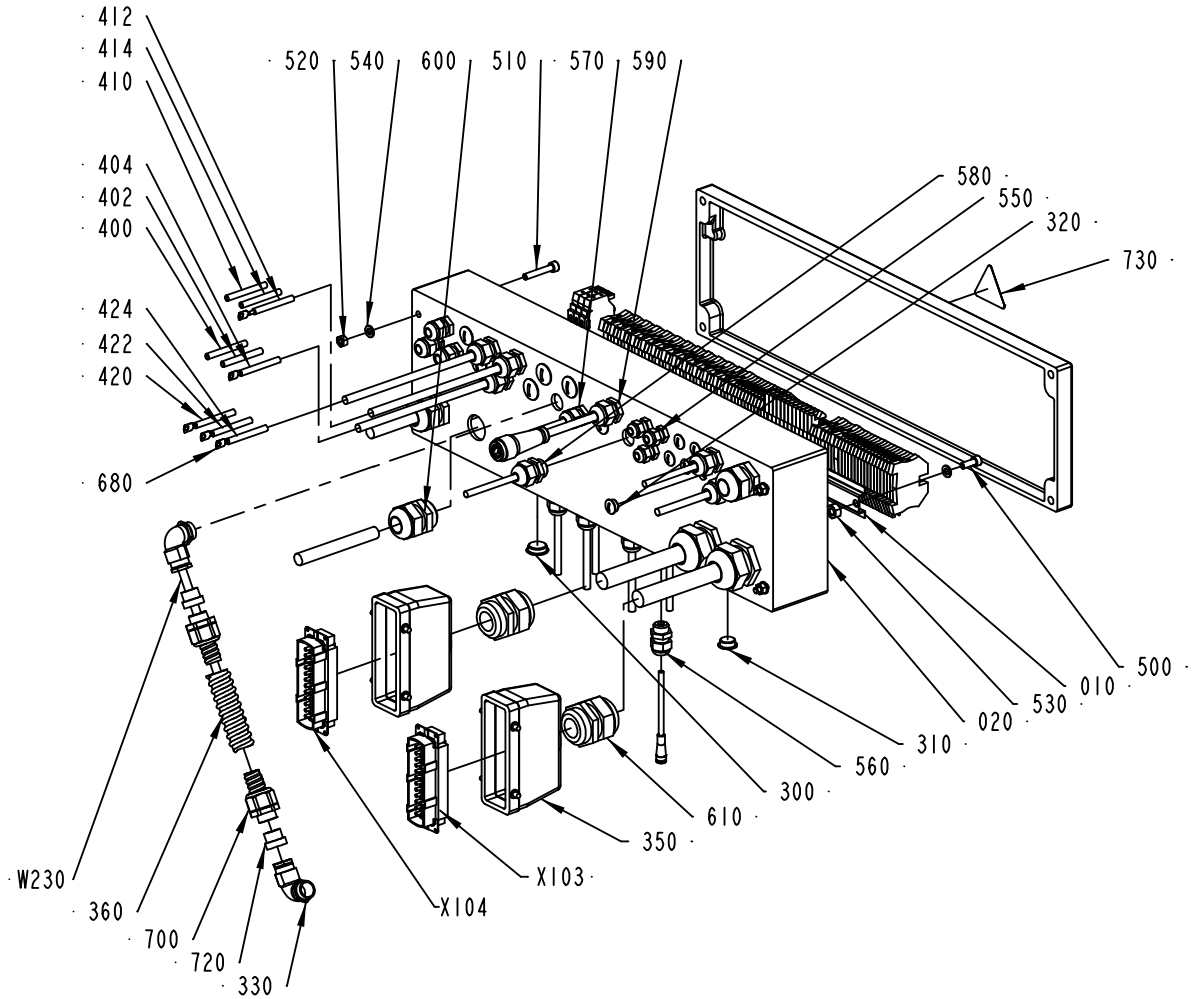

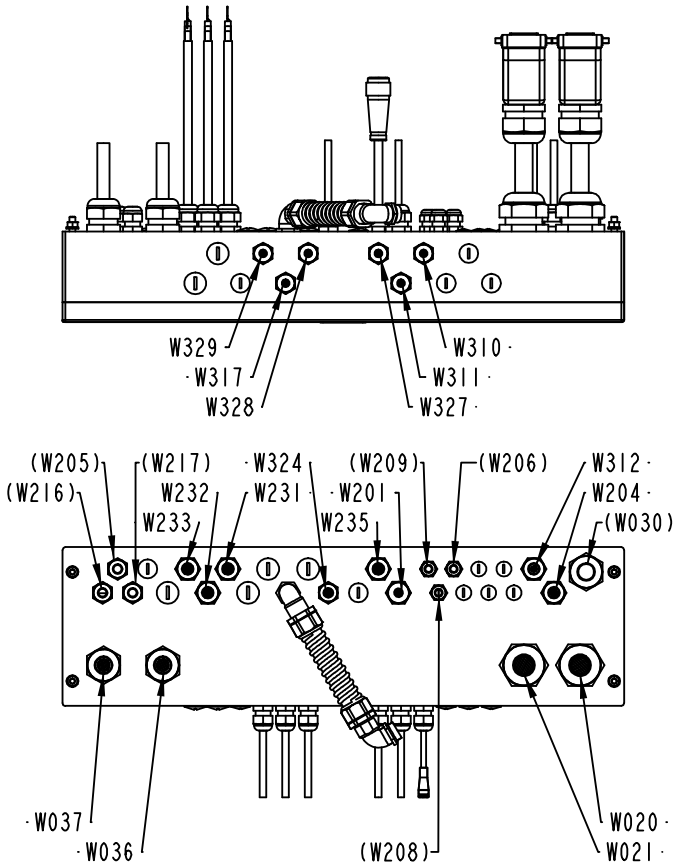

2542865-1
ECM 117569

Pos	Part No	SP	UN	Qty	Description	Page No
Common Parts						
010	1514683-0000	-		1	RAIL	
020	2542867-0000	-		1	CONNECTION BOX	
300	90002-0009	-		6	BLANK-OFF PLUG, PR 18.6 SKINDICHT-BLK11	
310	90002-0013	-		6	BLANK-OFF PLUG, PR 15,2 SKINDICHT-BLK9	
320	90002-0018	-		5	BLANK-OFF PLUG, PR 12,5 SKINDICHT-BLK7	
330	90012-0114	-		2	CABLE GLAND, PR18,6/PG11, ELBOW, 120377	
350	90110-0152	-		2	CABLE HOOD 24-POL 70.352.2428.1	
360	90152-0050	-	MM	1600	SPIRAL CONDUIT, 20X13, UL 1313	
400	90458-2906	-	MM	50	HOSE, SILICONE, 60 SHORE, 4/6 MM	
402	90458-2906	-	MM	100	HOSE, SILICONE, 60 SHORE, 4/6 MM	
404	90458-2906	-	MM	800	HOSE, SILICONE, 60 SHORE, 4/6 MM	
410	90458-2906	-	MM	60	HOSE, SILICONE, 60 SHORE, 4/6 MM	
412	90458-2906	-	MM	100	HOSE, SILICONE, 60 SHORE, 4/6 MM	
414	90458-2906	-	MM	800	HOSE, SILICONE, 60 SHORE, 4/6 MM	
420	90458-2906	-	MM	50	HOSE, SILICONE, 60 SHORE, 4/6 MM	
422	90458-2906	-	MM	40	HOSE, SILICONE, 60 SHORE, 4/6 MM	
424	90458-2906	-	MM	40	HOSE, SILICONE, 60 SHORE, 4/6 MM	
500	312115-0368	-		2	SCREW ISO4762 M6X16 A4	
510	312115-0376	-		4	SCREW ISO4762 M6X35 A4	
520	312605-0316	-		4	HEXAGON NUT, M6M M6 A280	
530	312605-0318	-		2	HEXAGON NUT, M6M M8 A280	
540	315105-0153	-		6	WASHER ISO 7089-6-200 HV-A4	
550	352103-0096	-		3	CABLE GLAND, ST 7, PR 12,5/PG7	
560	352103-0100	-		6	CABLE GLAND, STR 9, PR15,2/PG9	
570	352103-0101	-		4	KABELFöRSKR. ST 9, PR15,2/PG9	
580	352103-0105	-		1	CABLE GLAND, STR 11, PR 18,6/PG11	
590	352103-0106	-		6	CABLE GLAND, ST 11, PR18,6/PG11	
600	352103-0115	-		3	CABLE GLAND, STR 21, PR28,3/PG21	
610	352103-0120	-		4	CABLE GLAND, STR 29, PR37,0/PG29	
620	353021-0212	-		57	FEED THROUGH TERMINAL, 10200.0	
630	353021-0302	-		12	TERMINALS,TRIPLE-LEVEL, DLD 2,5/35 PA	
640	353024-0205	-		16	EARTH TERMINAL, 1010.1	
650	353032-0302	-		1	END PLATE WAP	
660	353034-0404	-		1	BRIDGE CONNECTOR Q10, 13131.0	
665	353034-0404	-		1	BRIDGE CONNECTOR Q10, 13131.0	
670	353034-0404	-		1	BRIDGE CONNECTOR Q10, 13131.0	
675	353034-0404	-		1	BRIDGE CONNECTOR Q10, 13131.0	
680	353104-0130	-		5	CABLE SHOEYAV 025 M 4*	
700	353243-0003	-		2	EXTENDED WITHOUT INSERT, PG11	
720	353249-0019	-		2	INSERT, SINGEL HOLE, HI.TEMP, EK153I9	
730	359705-0015	A		1	WARNING SIGN ISO, RISK OF ELECTRIC SHOCK	
740	359011-0807	-		2	MARKING PLATES 5-FW 1-50	
750	359011-0808	-		2	MARKING PLATES 5-FW 51-100	
760	359011-0809	-		2	MARKING PLATES 5-FW 101-150	
M.B205	90232-0123	A		1	PH.CELL WLL170-P135-6011723	
M.B216	90232-0123	A		1	PH.CELL WLL170-P135-6011723	
M.B217	90232-0123	A		1	PH.CELL WLL170-P135-6011723	
W020	351150-0425	-	MM	6500	CABLE OLFLEX 25X0,75 MM2 LIGHT/GREY	
W021	351150-0425	-	MM	6500	CABLE OLFLEX 25X0,75 MM2 LIGHT/GREY	
W036	351150-0415	-	MM	7000	CABLE OLFLEX 7X1,5 MM2 LIGHT/GREY	
W037	351150-0415	-	MM	7000	CABLE OLFLEX 7X1,5 MM2 LIGHT/GREY	
W201	351150-0431	-	MM	1100	CABLE OLFLEX 2X0,75 MM2 LIGHT/GREY	
W204	351150-0404	-	MM	1700	CABLE OLFLEX 4X0,75 MM2 LIGHT/GREY	
W230	351120-0144	-	MM	2000	CABLE SIHF 3X1,5MM2 GREEN/YELLOW	
W231	351120-0144	-	MM	2000	CABLE SIHF 3X1,5MM2 GREEN/YELLOW	
W232	351120-0144	-	MM	2000	CABLE SIHF 3X1,5MM2 GREEN/YELLOW	
W233	351120-0144	-	MM	2000	CABLE SIHF 3X1,5MM2 GREEN/YELLOW	
W235	90459-1368	-		2500	CABLE, TWK BI 723 M 3 PS-GG5	
W310	90458-0165	-		1000	CABLE	
W311	351150-0431	-	MM	1100	CABLE OLFLEX 2X0,75 MM2 LIGHT/GREY	
W312	351150-0431	-	MM	1100	CABLE OLFLEX 2X0,75 MM2 LIGHT/GREY	
W317	351150-0431	-	MM	500	CABLE OLFLEX 2X0,75 MM2 LIGHT/GREY	
W324	351150-0431	-	MM	3000	CABLE OLFLEX 2X0,75 MM2 LIGHT/GREY	
W327	351150-0431	-	MM	500	CABLE OLFLEX 2X0,75 MM2 LIGHT/GREY	
W328	351150-0431	-	MM	500	CABLE OLFLEX 2X0,75 MM2 LIGHT/GREY	
W329	351150-0431	-	MM	1000	CABLE OLFLEX 2X0,75 MM2 LIGHT/GREY	
X103	90110-0150	-		1	MALE INSERT 121110 0000	
X104	90110-0150	-		1	MALE INSERT 121110 0000	

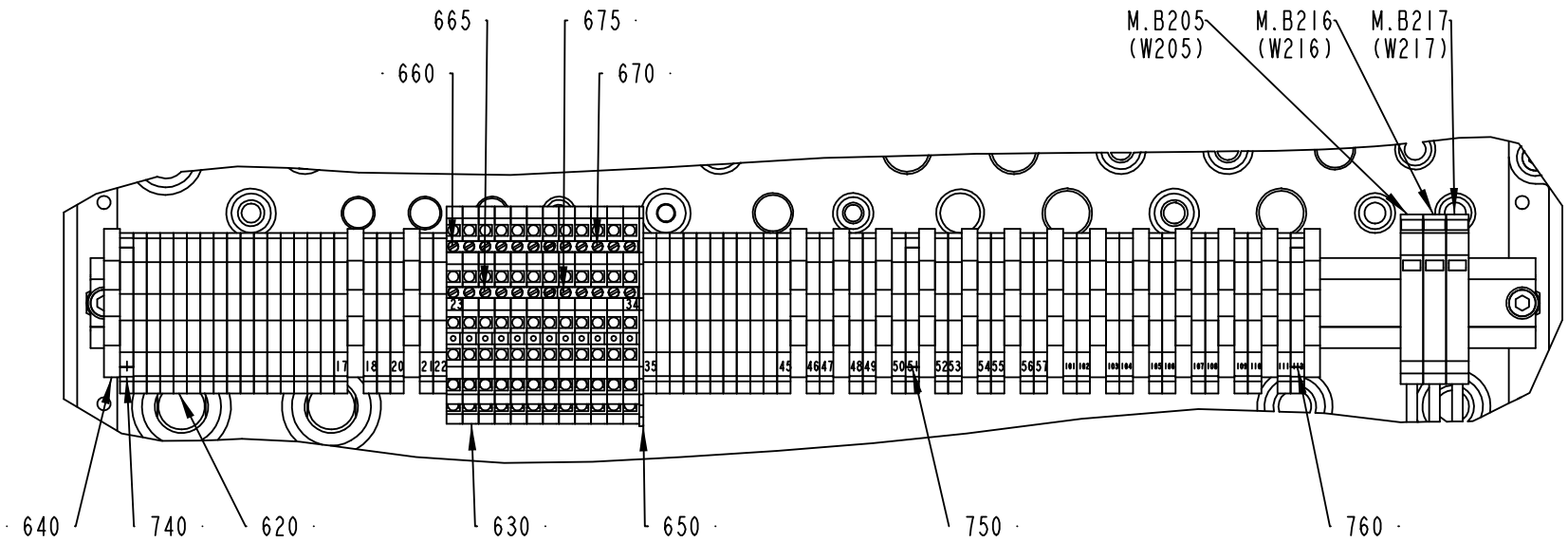

2542865-1
ECM 117569

Pos	Part No	SP	UN	Qty	Description	Page No
Common Parts						
010	1514683-0000	-		1	RAIL	
020	2542867-0000	-		1	CONNECTION BOX	
300	90002-0009	-		6	BLANK-OFF PLUG, PR 18.6 SKINDICHT-BLK11	
310	90002-0013	-		6	BLANK-OFF PLUG, PR 15,2 SKINDICHT-BLK9	
320	90002-0018	-		5	BLANK-OFF PLUG, PR 12,5 SKINDICHT-BLK7	
330	90012-0114	-		2	CABLE GLAND, PR18,6/PG11, ELBOW, 120377	
350	90110-0152	-		2	CABLE HOOD 24-POL 70.352.2428.1	
360	90152-0050	-	MM	1600	SPIRAL CONDUIT, 20X13, UL 1313	
400	90458-2906	-	MM	50	HOSE, SILICONE, 60 SHORE, 4/6 MM	
402	90458-2906	-	MM	100	HOSE, SILICONE, 60 SHORE, 4/6 MM	
404	90458-2906	-	MM	800	HOSE, SILICONE, 60 SHORE, 4/6 MM	
410	90458-2906	-	MM	60	HOSE, SILICONE, 60 SHORE, 4/6 MM	
412	90458-2906	-	MM	100	HOSE, SILICONE, 60 SHORE, 4/6 MM	
414	90458-2906	-	MM	800	HOSE, SILICONE, 60 SHORE, 4/6 MM	
420	90458-2906	-	MM	50	HOSE, SILICONE, 60 SHORE, 4/6 MM	
422	90458-2906	-	MM	40	HOSE, SILICONE, 60 SHORE, 4/6 MM	
424	90458-2906	-	MM	40	HOSE, SILICONE, 60 SHORE, 4/6 MM	
500	312115-0368	-		2	SCREW ISO4762 M6X16 A4	
510	312115-0376	-		4	SCREW ISO4762 M6X35 A4	
520	312605-0316	-		4	HEXAGON NUT, M6M M6 A280	
530	312605-0318	-		2	HEXAGON NUT, M6M M8 A280	
540	315105-0153	-		6	WASHER ISO 7089-6-200 HV-A4	
550	352103-0096	-		3	CABLE GLAND, ST 7, PR 12,5/PG7	
560	352103-0100	-		6	CABLE GLAND, STR 9, PR15,2/PG9	
570	352103-0101	-		4	KABELFöRSKR. ST 9, PR15,2/PG9	
580	352103-0105	-		1	CABLE GLAND, STR 11, PR 18,6/PG11	
590	352103-0106	-		6	CABLE GLAND, ST 11, PR18,6/PG11	
600	352103-0115	-		3	CABLE GLAND, STR 21, PR28,3/PG21	
610	352103-0120	-		4	CABLE GLAND, STR 29, PR37,0/PG29	
620	353021-0212	-		57	FEED THROUGH TERMINAL, 10200.0	
630	353021-0302	-		12	TERMINALS,TRIPLE-LEVEL, DLD 2,5/35 PA	
640	353024-0205	-		16	EARTH TERMINAL, 1010.1	
650	353032-0302	-		1	END PLATE WAP	
660	353034-0404	-		1	BRIDGE CONNECTOR Q10, 13131.0	
665	353034-0404	-		1	BRIDGE CONNECTOR Q10, 13131.0	
670	353034-0404	-		1	BRIDGE CONNECTOR Q10, 13131.0	
675	353034-0404	-		1	BRIDGE CONNECTOR Q10, 13131.0	
680	353104-0130	-		5	CABLE SHOEYAV 025 M 4*	
700	353243-0003	-		2	EXTENDED WITHOUT INSERT, PG11	
720	353249-0019	-		2	INSERT, SINGEL HOLE, HI.TEMP, EK153I9	
730	359705-0015	A		1	WARNING SIGN ISO, RISK OF ELECTRIC SHOCK	
740	359011-0807	-		2	MARKING PLATES 5-FW 1-50	
750	359011-0808	-		2	MARKING PLATES 5-FW 51-100	
760	359011-0809	-		2	MARKING PLATES 5-FW 101-150	
M.B205	90232-0123	A		1	PH.CELL WLL170-P135-6011723	
M.B216	90232-0123	A		1	PH.CELL WLL170-P135-6011723	
M.B217	90232-0123	A		1	PH.CELL WLL170-P135-6011723	
W020	351150-0425	-	MM	6500	CABLE OLFLEX 25X0,75 MM2 LIGHT/GREY	
W021	351150-0425	-	MM	6500	CABLE OLFLEX 25X0,75 MM2 LIGHT/GREY	
W036	351150-0415	-	MM	7000	CABLE OLFLEX 7X1,5 MM2 LIGHT/GREY	
W037	351150-0415	-	MM	7000	CABLE OLFLEX 7X1,5 MM2 LIGHT/GREY	
W201	351150-0431	-	MM	1100	CABLE OLFLEX 2X0,75 MM2 LIGHT/GREY	
W204	351150-0404	-	MM	1700	CABLE OLFLEX 4X0,75 MM2 LIGHT/GREY	
W230	351120-0144	-	MM	2000	CABLE SIHF 3X1,5MM2 GREEN/YELLOW	
W231	351120-0144	-	MM	2000	CABLE SIHF 3X1,5MM2 GREEN/YELLOW	
W232	351120-0144	-	MM	2000	CABLE SIHF 3X1,5MM2 GREEN/YELLOW	
W233	351120-0144	-	MM	2000	CABLE SIHF 3X1,5MM2 GREEN/YELLOW	
W235	90459-1368	-		2500	CABLE, TWK BI 723 M 3 PS-GG5	
W310	90458-0165	-		1000	CABLE	
W311	351150-0431	-	MM	1100	CABLE OLFLEX 2X0,75 MM2 LIGHT/GREY	
W312	351150-0431	-	MM	1100	CABLE OLFLEX 2X0,75 MM2 LIGHT/GREY	
W317	351150-0431	-	MM	500	CABLE OLFLEX 2X0,75 MM2 LIGHT/GREY	
W324	351150-0431	-	MM	3000	CABLE OLFLEX 2X0,75 MM2 LIGHT/GREY	
W327	351150-0431	-	MM	500	CABLE OLFLEX 2X0,75 MM2 LIGHT/GREY	
W328	351150-0431	-	MM	500	CABLE OLFLEX 2X0,75 MM2 LIGHT/GREY	
W329	351150-0431	-	MM	1000	CABLE OLFLEX 2X0,75 MM2 LIGHT/GREY	
X103	90110-0150	-		1	MALE INSERT 121110 0000	
X104	90110-0150	-		1	MALE INSERT 121110 0000	

Machine Type | Group Description | Used-In | Group Number | Page No

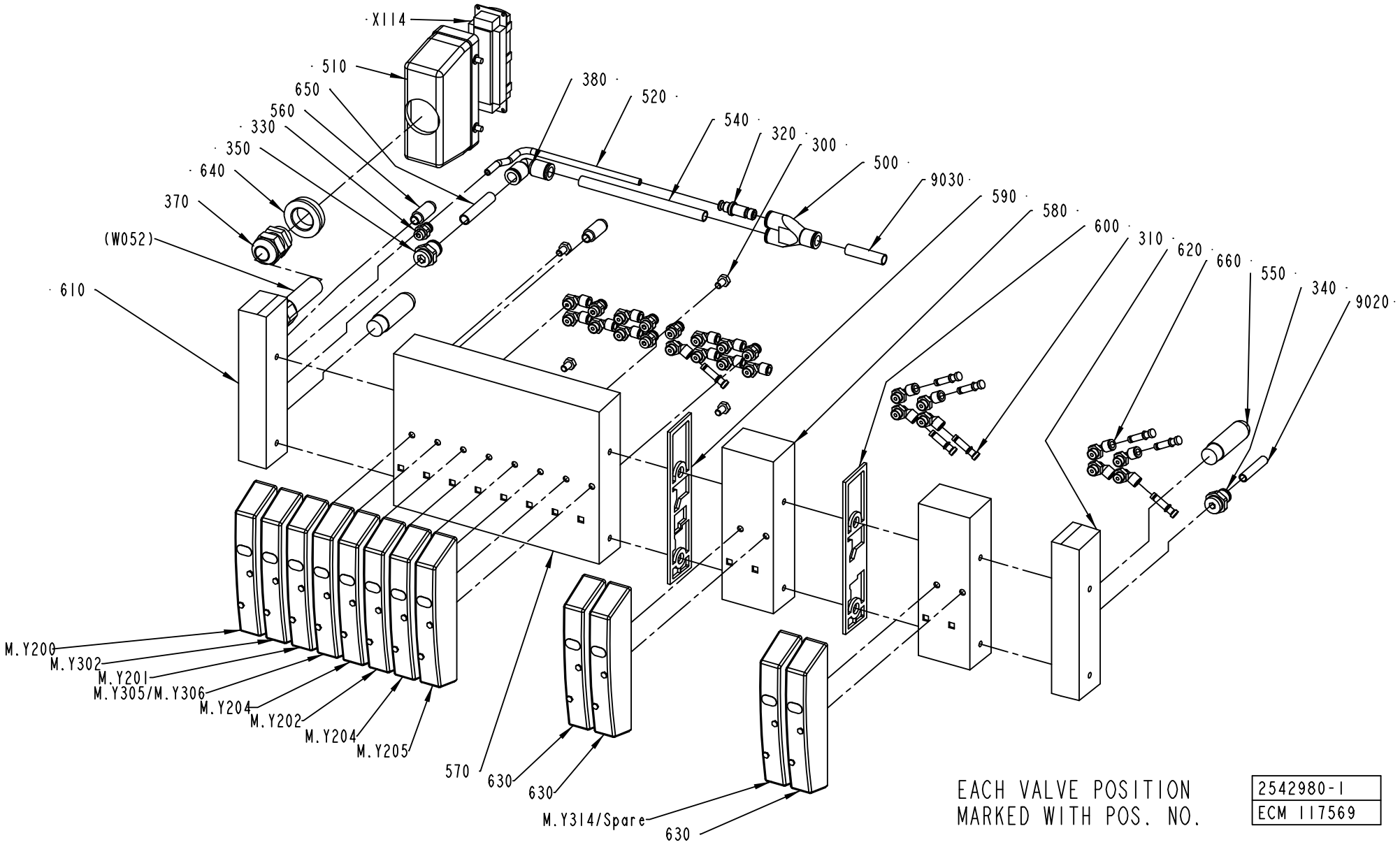
X114
510
650
560
330
350
640
370
(W052)
610
380
520
540
320
300
500
9030
590
580
600
310
620
660
550
340
9020
M.Y200
M.Y302
M.Y201
M.Y305/M.Y306
M.Y204
M.Y202
M.Y204
M.Y205
570
630
630
M.Y314/Spare
630
EACH VALVE POSITION
MARKED WITH POS. NO.
2542980-1
ECM 117569

ECM: 121580 - 20021212
Group number: 2542980-0100
Assembly Drawing: 2542980-1_1_AB

Issue: 20030313

Pos	Part No	SP	UN	Qty	Description	Page No
Common Parts						
300	312105-0364	-		4	SCREW M6S ISO 4017 M6X10 A480	
310	342715-0102	-		8	BLIND PLUG 6 MM	
320	342716-0207	-		1	REDUCER 6-10	
330	342722-0202	-		6	PIPE COUPLING 1/8" D=6MM	
340	342722-0206	-		1	STRAIGHT COUPLING D=8-G3/8"	
350	342722-0212	-		1	STRAIGHT COUPLING D=10-G3/8"	
370	352103-0111	-		1	CABLE GLAND, ST 16, PR22,5/PG16	
380	342735-0104	-		1	ELBOW PIPE JOINT	
500	90055-0216	-		1	Y-CONNECTION, 10-10	
510	90110-0152	-		1	CABLE HOOD 24-POL 70.352.2428.1	
520	90166-0081	-	MM	200	TUBE 6 MM PA BLUE	
540	90166-0160	-	MM	135	TUBE 10 MM PA BLUE	
550	90328-0024	B		2	SILENCER G3/8	
560	90328-0047	B		2	SILENCER G1/8	
570	90458-1205	-		1	BASIC SUB-BASE FOR 8 VALVES	
580	90458-1206	-		2	EXPANSION SUB-BASE FOR 2 VALVES	
590	90458-1207	B		1	SEALING, STANDARD	
600	90458-1208	B		1	SEALING, CHANNEL 1 BLOCKED	
610	90458-1212	-		1	LEFT ENDPLATE INCL. 10M CABLE	
620	90458-1214	-		1	RIGHT ENDPLATE EXTERNAL PILOT AIR	
630	90458-1215	B		3	COVER PLATE FOR EMPTY VALVE POSITION	
640	90458-2587	-		1	REDUCER, SKINDICHT-MR 29/16	
650	90166-0160	-	MM	50	TUBE 10 MM PA BLUE	
660	90458-2956	-		19	ELBOW PIPE JOINT, EXT.THREAD, D=6MM-G1/8	
9020	90166-0013	-	MM	600	TUBE 8 MM PA BLUE	
9030	90166-0160	-	MM	750	TUBE 10 MM PA BLUE	
SPARE/Y307	90458-1202	A		1	VALVES 2X3/2, CLOSED	
X114	90110-0150	-		1	MALE INSERT 121110 0000	
Y200	90458-1194	A		1	MONOSTABLE VALVE 5/2	
Y201	90458-1194	A		1	MONOSTABLE VALVE 5/2	
Y202	90458-1194	A		1	MONOSTABLE VALVE 5/2	
Y204	90458-1202	A		1	VALVES 2X3/2, CLOSED	
Y205	90458-1194	A		1	MONOSTABLE VALVE 5/2	
Y302	90458-1194	A		1	MONOSTABLE VALVE 5/2	
Y305/Y306	90458-1202	A		1	VALVES 2X3/2, CLOSED	
Y314/SPARE	90458-1202	A		1	VALVES 2X3/2, CLOSED	

Pos	Part No	SP	UN	Qty	Description	Page No

Machine Type	Group Description	Used-In	Group Number	Page No

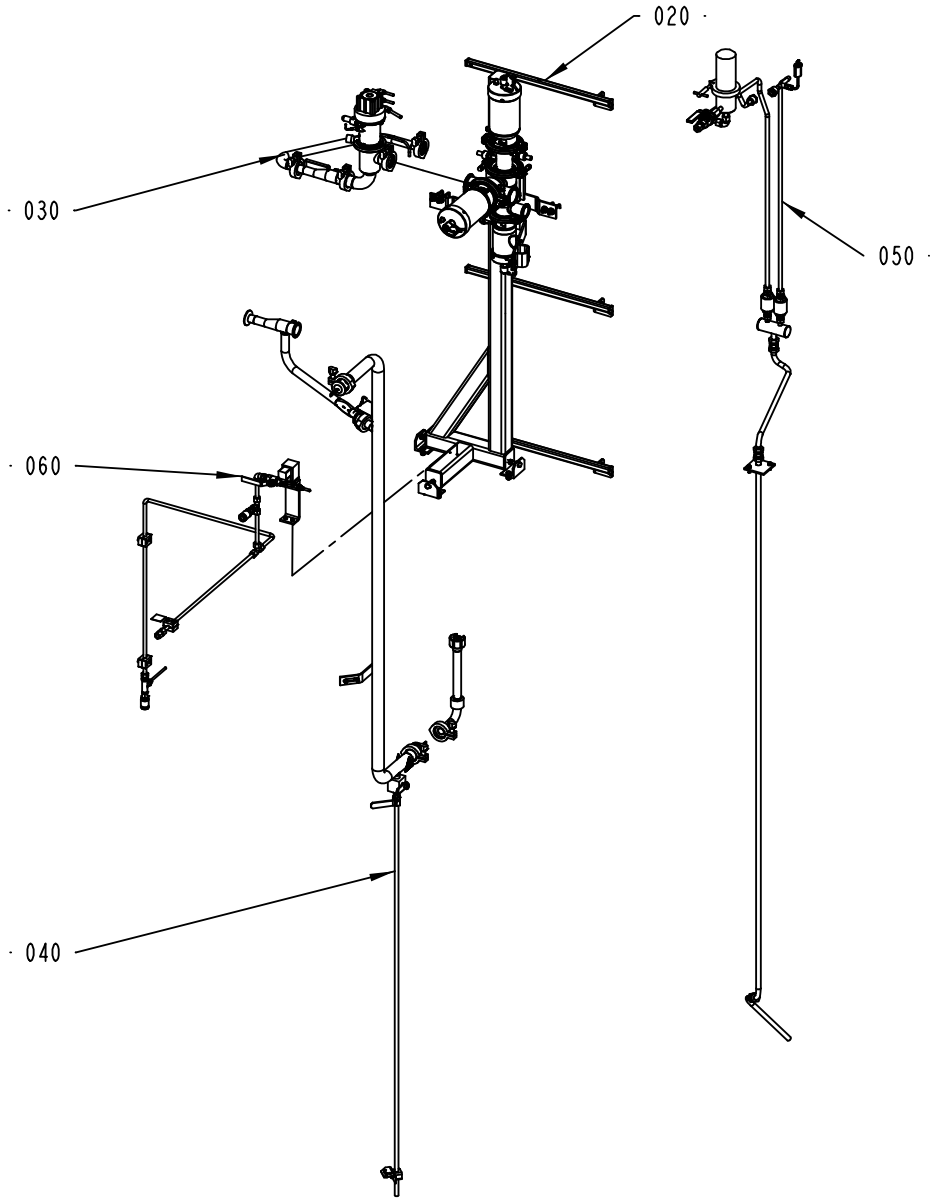

2542990-1
ECM 117569

ECM: 120773 - 20021212
Group number: 2542990-0100
Assembly Drawing: 2542990-1_1_AB

Issue: 20030313

Pos	Part No	SP	UN	Qty	Description	Page No
Common Parts						
020	A2543025-0100	-		1	PRODUCT VALVE	**383**
030	A2542995-0100	-		1	REGULATING VALVE	**385**
040	A2543005-0100	-		1	CLEANING SYSTEM	**387, 389**
050	A2556700-0100	-		1	STEAM UNIT	**391**
060	A2556786-0100	-		1	WATER VALVE UNIT	**393**

Pos	Part No	SP	UN	Qty	Description	Page No

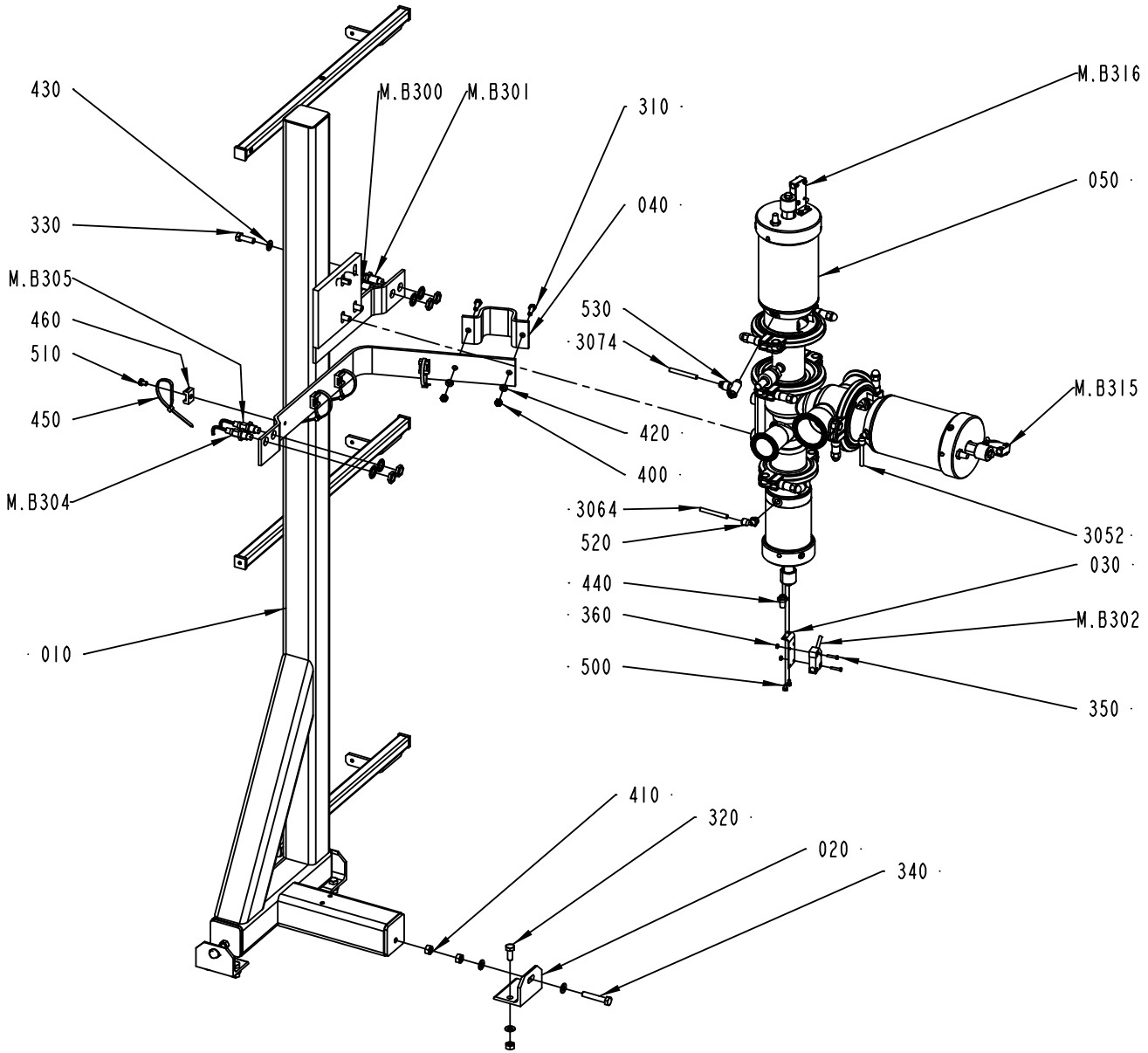

2543025-1
ECM 117569

ECM: 120675 - 20021212
Group number: 2543025-0100
Assembly Drawing: 2543025-1_1_AB

Issue: 20030313

Pos	Part No	SP	UN	Qty	Description	Page No
Common Parts						
010	2543026-0000	-		1	FRAME	
020	1514524-0000	-		3	BRACKET	
030	1515001-0000	-		3	BRACKET	
040	1515208-0000	-		1	CLAMP	
050	576434-0101	-		1	AP-VALVE 51-38	
3052	90166-0081	-	MM	1600	TUBE 6 MM PA BLUE	
3064	90166-0081	-	MM	1600	TUBE 6 MM PA BLUE	
3074	90166-0081	-	MM	1600	TUBE 6 MM PA BLUE	
310	312105-0370	-		2	SCREW M6S ISO 4017 M6X20 A480	
320	312105-0451	-		6	SCREW M6S ISO 4017 M8X20 A480	
330	312105-0453	-		4	SCREW M6S ISO 4017 M8X25 A480	
340	312109-0460	-		3	SCREW M6S ISO 4017 M8X45 A480	
350	312125-0228	-		6	SCREW PAN HEAD MCS M3X16 A480	
360	312605-0310	-		6	HEXAGON NUT, M6M M3 A280	
400	312605-0316	-		2	HEXAGON NUT, M6M M6 A280	
410	312605-0318	-		12	HEXAGON NUT, M6M M8 A280	
420	315105-0153	-		2	WASHER ISO 7089-6-200 HV-A4	
430	315105-0165	-		16	WASHER ISO 7089-8-200 HV-A4	
440	346800-0109	-		3	SILENCER FILTER R1/8"	
450	352113-0102	-		4	CLIP-STRIP, BLACK 188X4,8 MM	
460	352113-0204	-		4	ANCHOR PLATES FOR STRIPS, TYPE TM3S25-M	
500	90287-0290	-		6	SCREW M6S M4X6 A270	
510	90287-0149	-		4	SCREW MC6S M6X8 109	
520	90458-2956	-		2	ELBOW PIPE JOINT, EXT.THREAD, D=6MM-G1/8	
530	90235-0288	-		1	THROTTLE CHECK VALVE	
M.B300	90458-0675	A		1	PROXIMITY SENSOR, E2EG-X5MB1-5M	
M.B301	90458-0675	A		1	PROXIMITY SENSOR, E2EG-X5MB1-5M	
M.B302	90044-0194	A		1	PROX.SW. IN5329/IN3002-BPKG	
M.B304	90458-0675	A		1	PROXIMITY SENSOR, E2EG-X5MB1-5M	
M.B305	90458-0675	A		1	PROXIMITY SENSOR, E2EG-X5MB1-5M	
M.B315	90044-0194	A		1	PROX.SW. IN5329/IN3002-BPKG	
M.B316	90044-0194	A		1	PROX.SW. IN5329/IN3002-BPKG	

Pos	Part No	SP	UN	Qty	Description	Page No

Machine Type | Group Description | Used-In | Group Number | Page No

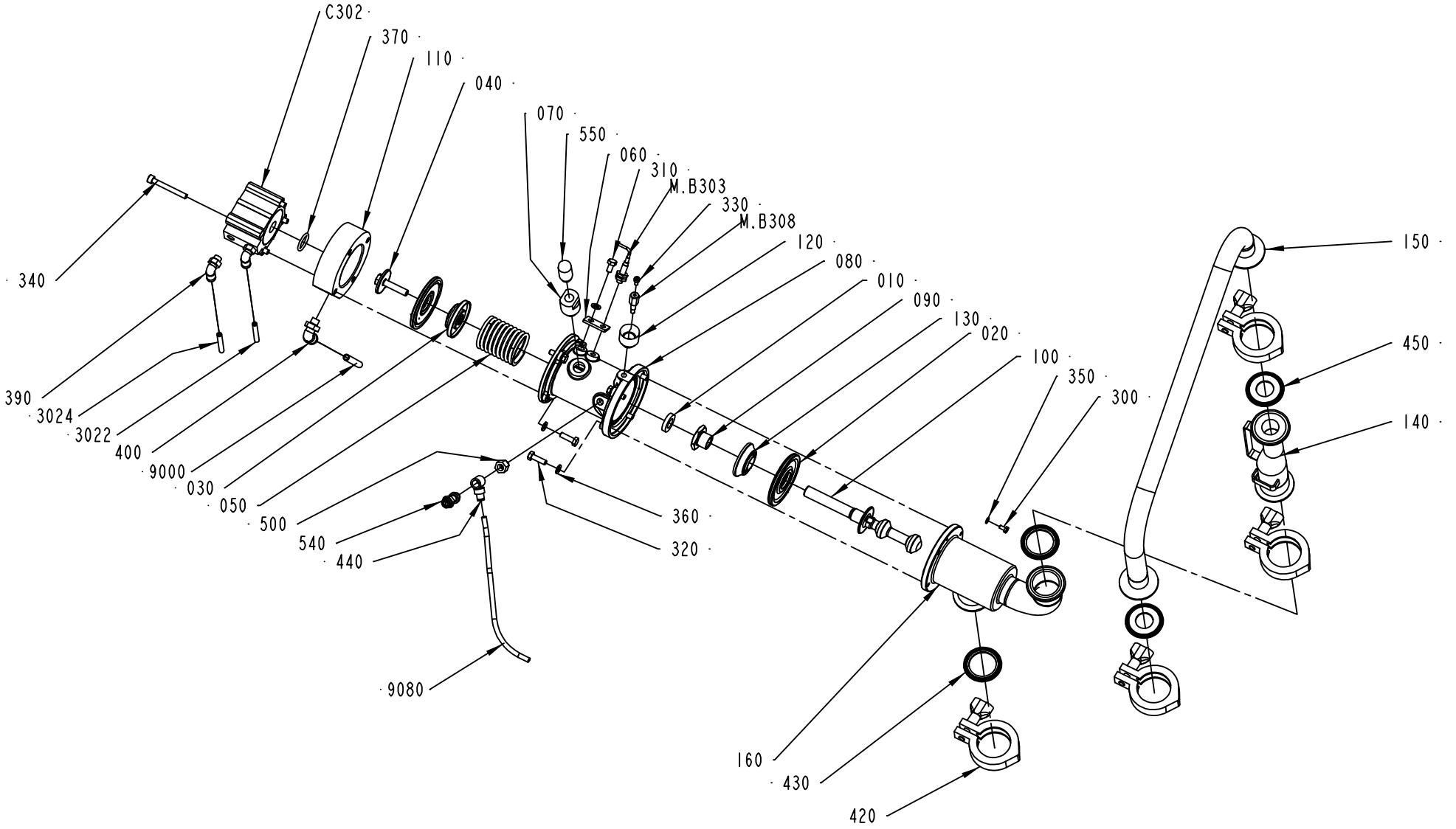

2542995-1
ECM 117569

ECM: 120930 - 20021212
Group number: 2542995-0100
Assembly Drawing: 2542995-1_1_AB

Issue: 20030313

Pos	Part No	SP	UN	Qty	Description	Page No
Common Parts						
010	736514-0000	A		1	SHOCK ABSORBER	
020	925998-0000	A		2	DIAPHRAGM	
030	926906-0000	A		1	SPACER	
040	926907-0000	A		1	SCREW	
050	926909-0000	A		1	COMPRESSION SPRING	
060	926934-0000	-		1	SUPPORT	
070	927044-0000	A		1	SPACER	
080	927194-0000	-		1	BODY	
090	979434-0000	A		1	FERRULE	
100	1129321-0000	A		1	SHUTTER	
110	1363370-0000	-		1	COVER	
120	1478813-0000	B		1	SPACER	
130	1511600-0000	A		1	SPACER	
140	2542987-0000	-		1	PIPE CONNECTION	
150	2542988-0000	-		1	PIPE	
160	2542991-0000	-		1	BODY	
300	312105-0287	A		1	SCREW M6S ISO4017 M4X8 A480	
3022	90166-0081	-	MM	1600	TUBE 6 MM PA BLUE	
3024	90166-0081	-	MM	1600	TUBE 6 MM PA BLUE	
310	312105-0366	-		1	SCREW M6S M6X12 A280	
320	312105-0370	-		8	SCREW M6S ISO 4017 M6X20 A480	
330	312115-0287	A		1	SCREW ISO4762 M4X8 A4	
340	312115-0380	-		4	SCREW ISO4762 M6X50 A4	
350	315105-0136	-		1	WASHER ISO 7089-4-200 HV-A4	
360	315105-0153	-		9	WASHER ISO 7089-6-200 HV-A4	
370	315202-0215	A		1	O-RING 19,2X3 MM	
390	90458-2956	-		2	ELBOW PIPE JOINT, EXT.THREAD, D=6MM-G1/8	
400	90458-2964	-		1	ELBOW PIPE JOINT, EXT.THREAD, D=8MM-G1/8	
420	342840-0103	-		4	CLAMPING PIECE	
430	342850-0304	A		2	GASKET 35,4X49,1X5,2 1"1/2 FDA	
440	342981-0113	-		1	BANJO CONNEC,RING,FOR PLAST.TUBE 6-G1/8"	
450	342850-0303	A		2	GASKET 22,7X49,1X5,2 MM 1" FDA	
500	90030-0212	-		1	NIPPLES, REDUSING, INT. THR. NO. 2521	
540	90235-0282	B		1	THROTTLE CHECK VALVES,G1/8	
550	90328-0026	B		1	SILENCER G1/4	
9000	90166-0013	-	MM	2000	TUBE 8 MM PA BLUE	
9080	90166-0081	-	MM	2250	TUBE 6 MM PA BLUE	
C302	90450-0230	A		1	DOUBLE ACTING, COMPACT, CYL 50-20	
M.B303	90458-0138	A		1	PROX.SW. E2EG-X1R5B1-5M	
M.B308	1478814-0000	A		1	SENSOR	

Pos	Part No	SP	UN	Qty	Description	Page No

Machine Type | Group Description | Used-In | Group Number | Page No

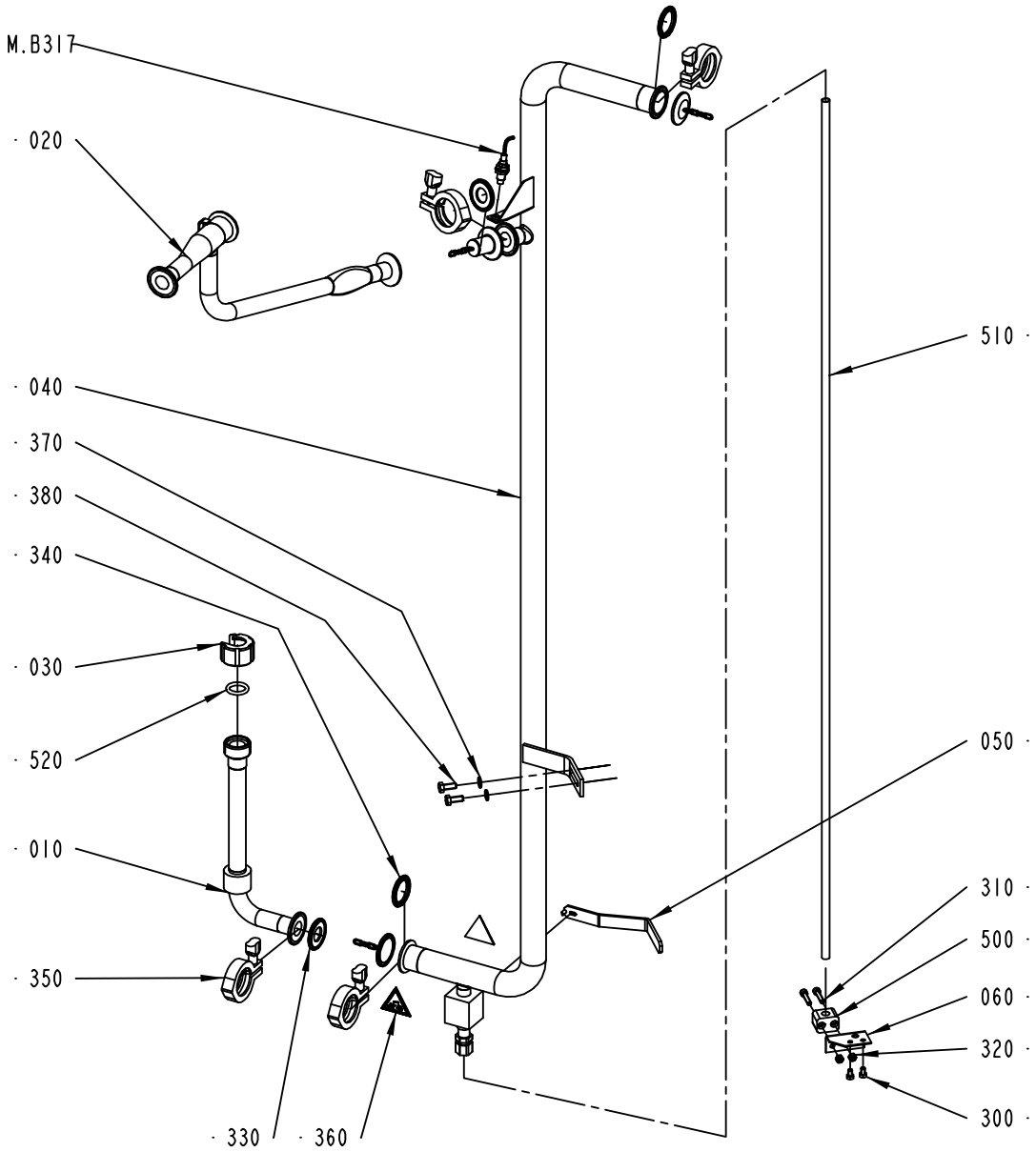

2543005-1
ECM 117569

Pos	Part No	SP	UN	Qty	Description	Page No
0200B OR 0150S						
010	2543001-0000	-		1	PIPE CONNECTION	
020	2542997-0000	-		1	PIPE CONNECTION	
030	1514696-0000	-		1	NUT	
520	90458-2616	A		1	O-RING 28X 5MM	
V065						
010	2542999-0000	-		1	PIPE CONNECTION	
020	2542996-0000	-		1	PIPE CONNECTION	
030	1514704-0000	-		1	NUT	
520	90458-2612	A		1	O-RING 24X5 MM	
Common Parts						
040	2542998-0000	-		1	PIPE	
050	2542994-0000	-		1	HANDLE	
060	1515598-0000	-		1	BRACKET	
300	312105-0364	-		2	SCREW M6S ISO 4017 M6X10 A480	
310	312115-0374	-		2	SCREW ISO4762 M6X30 A4	
320	312605-0316	-		2	HEXAGON NUT, M6M M6 A280	
330	342850-0303	A		2	GASKET 22,7X49,1X5,2 MM 1" FDA	
340	342850-0304	A		2	GASKET 35,4X49,1X5,2 1"1/2 FDA	
350	342840-0103	-		4	CLAMPING PIECE	
360	359705-0003	A		2	WARNING SIGN ISO, DANGEROUS CHEMICALS	
370	315105-0165	-		2	WASHER ISO 7089-8-200 HV-A4	
380	312105-0451	-		2	SCREW M6S ISO 4017 M8X20 A480	
500	90165-0051	-		1	CLIP	
510	90266-0174	-	MM	1500	TUBE 12X1 SS 2333-22	
M.B317	90458-0675	A		1	PROXIMITY SENSOR, E2EG-X5MB1-5M	

Pos	Part No	SP	UN	Qty	Description	Page No

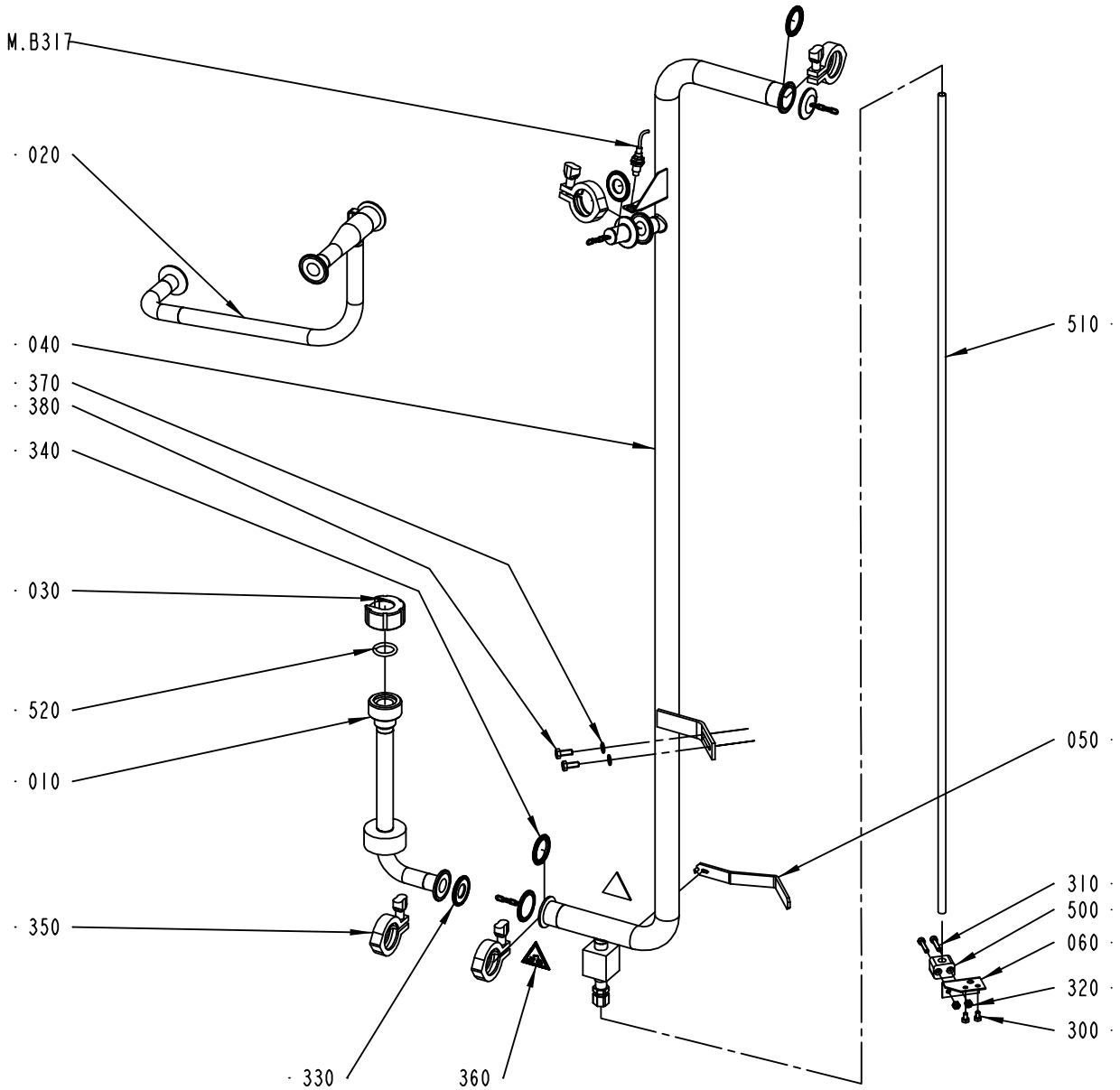

2543005-2
ECM 117569

Pos	Part No	SP	UN	Qty	Description	Page No
0200B OR 0150S						
010	2543001-0000	-		1	PIPE CONNECTION	
020	2542997-0000	-		1	PIPE CONNECTION	
030	1514696-0000	-		1	NUT	
520	90458-2616	A		1	O-RING 28X 5MM	
V065						
010	2542999-0000	-		1	PIPE CONNECTION	
020	2542996-0000	-		1	PIPE CONNECTION	
030	1514704-0000	-		1	NUT	
520	90458-2612	A		1	O-RING 24X5 MM	
Common Parts						
040	2542998-0000	-		1	PIPE	
050	2542994-0000	-		1	HANDLE	
060	1515598-0000	-		1	BRACKET	
300	312105-0364	-		2	SCREW M6S ISO 4017 M6X10 A480	
310	312115-0374	-		2	SCREW ISO4762 M6X30 A4	
320	312605-0316	-		2	HEXAGON NUT, M6M M6 A280	
330	342850-0303	A		2	GASKET 22,7X49,1X5,2 MM 1" FDA	
340	342850-0304	A		2	GASKET 35,4X49,1X5,2 1"1/2 FDA	
350	342840-0103	-		4	CLAMPING PIECE	
360	359705-0003	A		2	WARNING SIGN ISO, DANGEROUS CHEMICALS	
370	315105-0165	-		2	WASHER ISO 7089-8-200 HV-A4	
380	312105-0451	-		2	SCREW M6S ISO 4017 M8X20 A480	
500	90165-0051	-		1	CLIP	
510	90266-0174	-	MM	1500	TUBE 12X1 SS 2333-22	
M.B317	90458-0675	A		1	PROXIMITY SENSOR, E2EG-X5MB1-5M	

Pos	Part No	SP	UN	Qty	Description	Page No

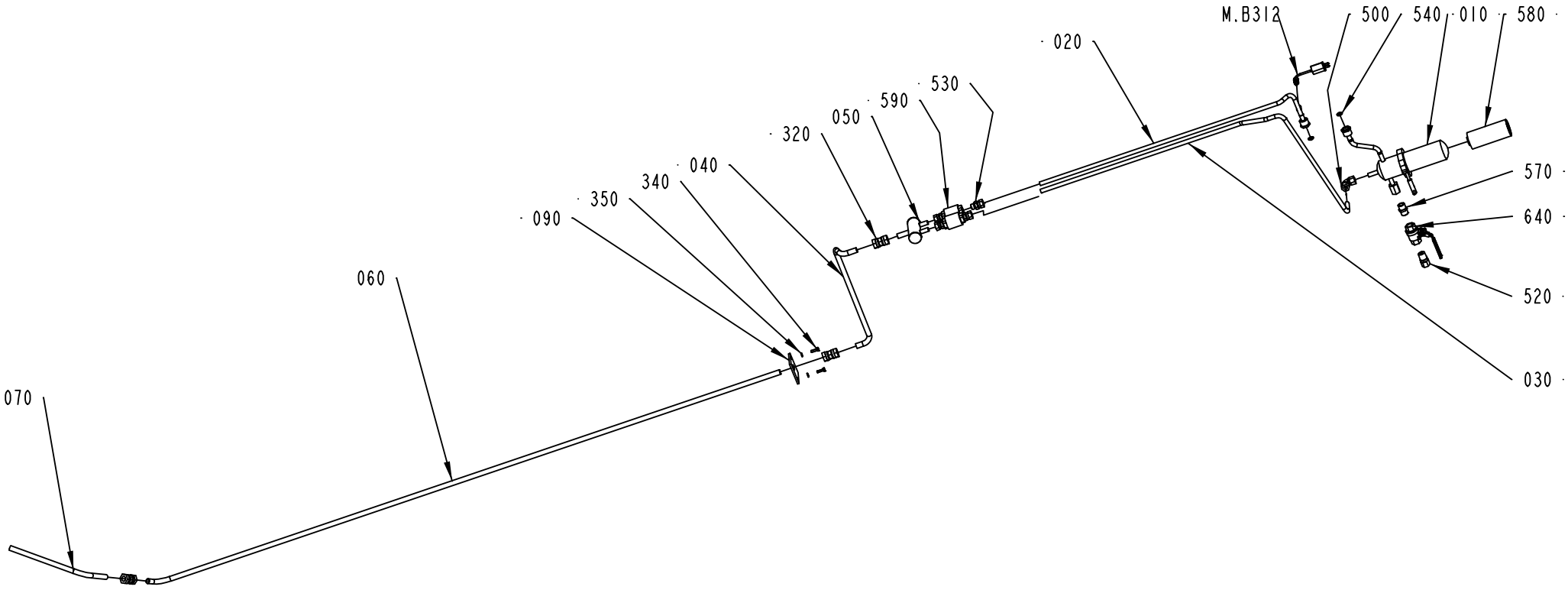

GENERAL THREAD SEALANT 90157-0034
TO BE USED WITH ACTIVATOR 90458-2606

2556700-1
ECM 117569

Pos	Part No	SP	UN	Qty	Description	Page No
Common Parts						
010	1514722-0000	-		1	FILTER	
020	2556687-0000	-		1	STEAM PIPE	
030	2556686-0000	-		1	STEAM PIPE	
040	2556684-0000	-		1	STEAM PIPE	
050	1514941-0000	-		1	ATTACHMENT PIPE	
060	2556693-0000	-		1	PIPE	
070	2556694-0000	-		1	PIPE	
090	2556787-0000	-		1	LID	
320	342727-0214	-		3	CONN. PIPE G-15-L/SY	
340	312105-0370	-		2	SCREW M6S ISO 4017 M6X20 A480	
350	315105-0153	-		2	WASHER ISO 7089-6-200 HV-A4	
500	90030-0096	-		1	CONN. ELBOW W-12	
510	90030-0159	-		1	CONN. BULKHEAD SV 15-L/SY	
520	90030-0180	-		1	CONN. STR. GE 12-1/2-14 NPTF	
530	90030-0187	-		4	CONN. STR. GA-12-G3/8	
540	90091-0266	-		2	SEAL RING 10,4X16,3X2,5 MM	
570	90330-0021	-		1	NIPPLES, EXT. THREAD. R-207R1/2	
580	90337-0315	A		1	FILTERINSERT / MCS 4463	
590	B90360-0020	A		2	STEAM TRAP / MK36/51 3/8"	
	90360-0310	-		*1*	*CAPSULE, FOR STEAM TRAP 90360-20*	
	90360-0309	-		*1*	*STRAINER, FOR STEAM TRAP 90360-20*	
640	90458-2648	A		1	BALL VALVE G1/2", LOCKABLE	
900	90157-0034	-	L	1	SEALING COMPOUND LOCTITE 572 50 ML	
910	90458-2606	-		1	ACTIVATOR, 7649 AEROSOL 0178276A	
M.B312	90326-0089	A		1	THERMOCOUPLE, 5110-089-000	

Pos	Part No	SP	UN	Qty	Description	Page No

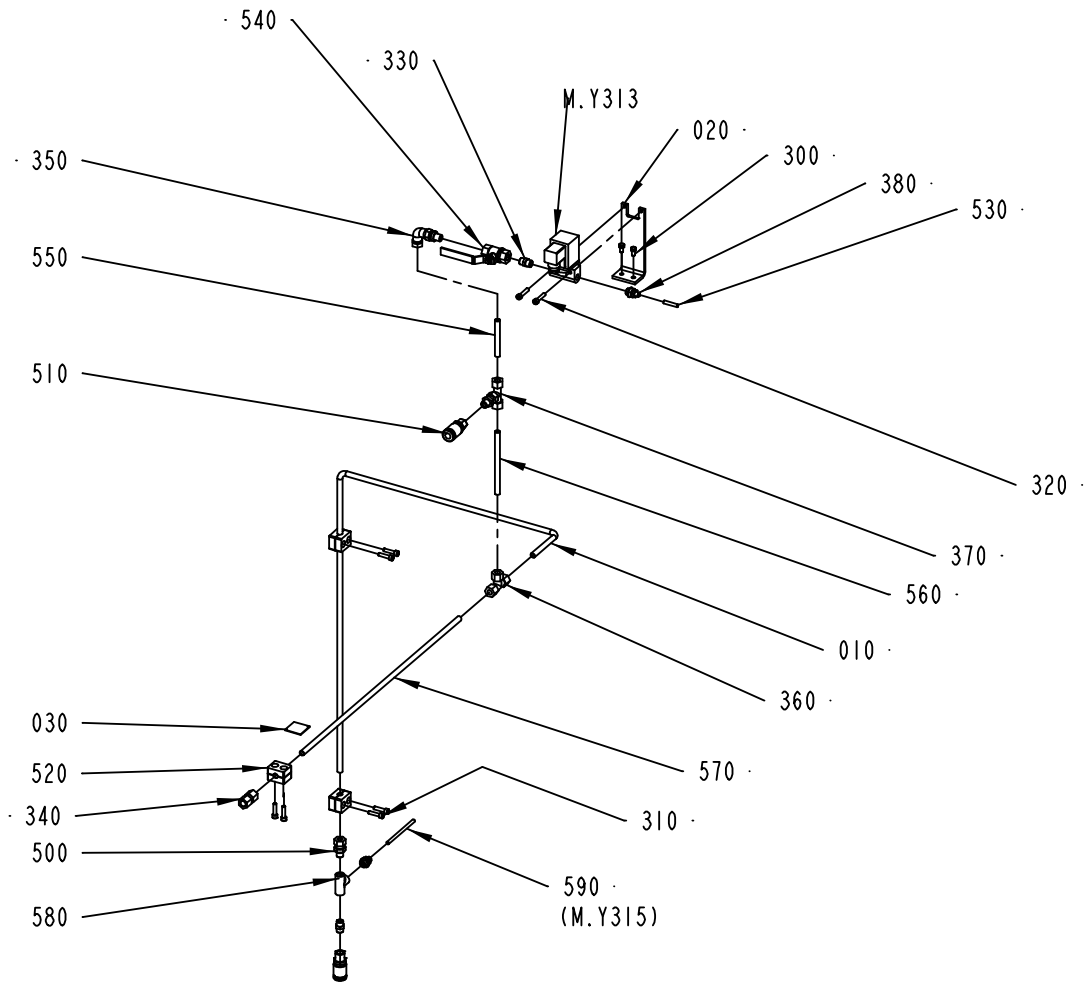

2556786-1
ECM 110383

ECM: 121210 - 20021212
Group number: 2556786-0100
Assembly Drawing: 2556786-1_1_AA

Issue: 20030313

Pos	Part No	SP	UN	Qty	Description	Page No
Common Parts						
010	1515654-0000	-		1	WATER PIPE	
020	1515721-0000	-		1	BRACKET	
030	273455-0000	A		1	LABEL (COLD WATER)	
300	312105-0366	-		2	SCREW M6S M6X12 A280	
310	312115-0372	-		6	SCREW ISO4762 M6X25 A4	
320	312115-0374	-		2	SCREW ISO4762 M6X30 A4	
330	342700-0110	-		2	NIPPLES,HEXAGON,EXT.G-THREAD G1/4"-G1/4"	
340	342725-0108	-		1	CONN. STR. PIPE GI-10-G1/4	
350	342738-0212	-		1	ADJUSTABLE ELBOW CONNECTION,EXT 10-G1/4	
360	342747-0208	-		1	CONN. T-PIPE T-10	
370	342755-0108	-		1	CONN. T-PIPE ADJ. ,EVT,EXT.T-10-G1/4	
380	342921-0114	-		2	STRAIGHT COUPLING,EXT.THREADED 6/4-G1/4"	
500	90030-0186	-		2	CONN. STR. GA-10-G1/4	
510	90163-0028	-		2	QUICK COUPLING, LP 006-0-WR513	
520	90165-0113	-		3	PIPE CLAMP	
530	90459-0221	-	MM	1000	TUBE, 6 MM PE BLACK	
540	90187-0093	-		1	BALL VALVE G1/4	
550	90266-0168	-	MM	80	TUBE 10X1 SS 2333-22	
560	90266-0168	-	MM	139	TUBE 10X1 SS 2333-22	
570	90266-0168	-	MM	605	TUBE 10X1 SS 2333-22	
580	90330-0024	-		1	T-PIPE, INT. THREAD, RP1/4	
590	90459-0221	-	MM	1000	TUBE, 6 MM PE BLACK	
M.Y313	90042-0107	A		1	SOL.VALVE BURKERT 24VDC	

Pos	Part No	SP	UN	Qty	Description	Page No

Machine Type | Group Description | Used-In | Group Number | Page No

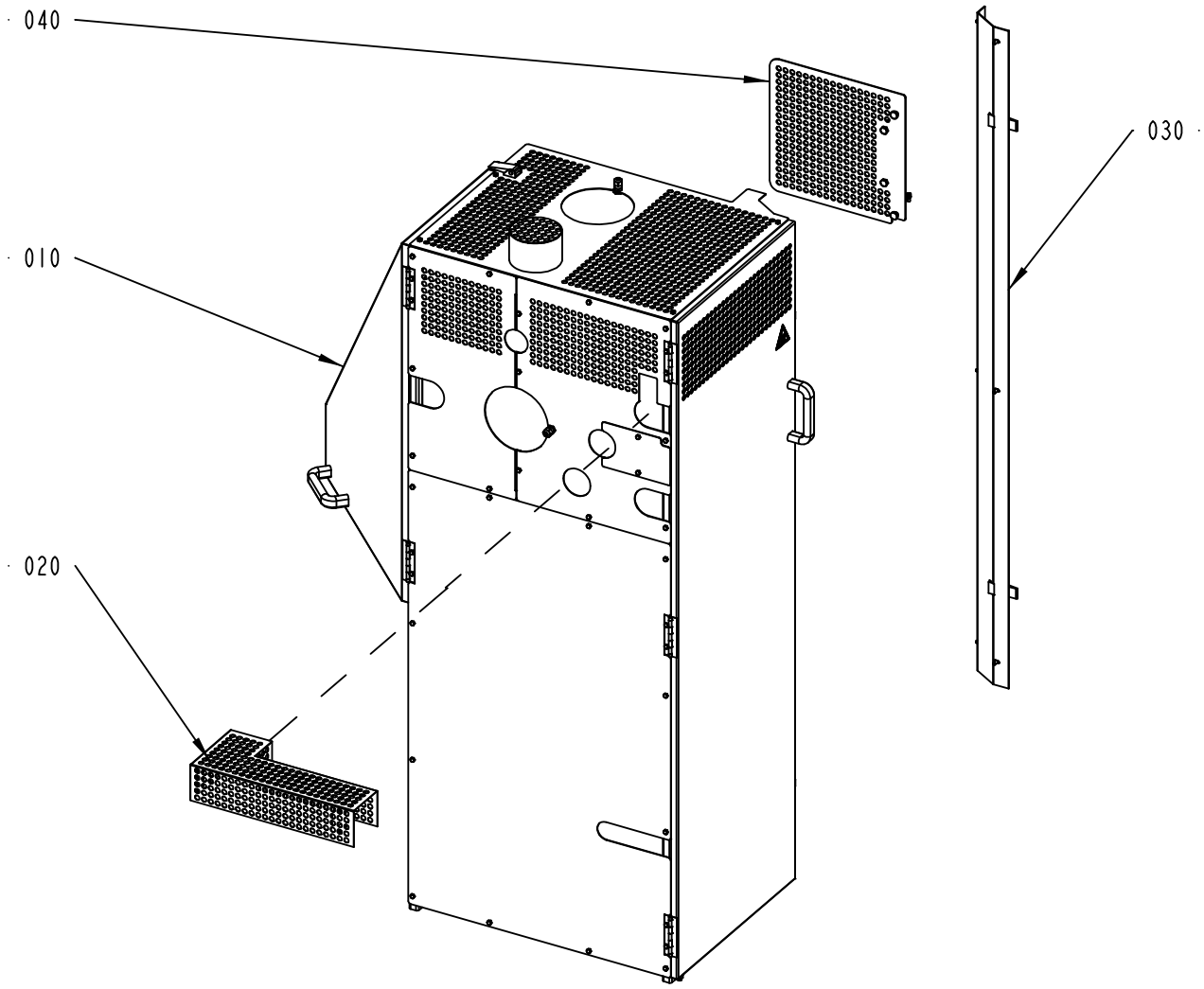

2543040-1
ECM 112547

ECM: 112804 - 20021113
Group number: 2543040-0100
Assembly Drawing: 2543040-1_1_AA

Issue: 20030313

Pos	Part No	SP	UN	Qty	Description	Page No
Common Parts						
010	A2543030-0100	-		1	COVER	**397**
020	A2543035-0100	-		1	TOUCH GUARD	**399**
030	A2556685-0100	-		1	COVER	**401**
040	A2556790-0100	-		1	COVER	**403**

Pos	Part No	SP	UN	Qty	Description	Page No

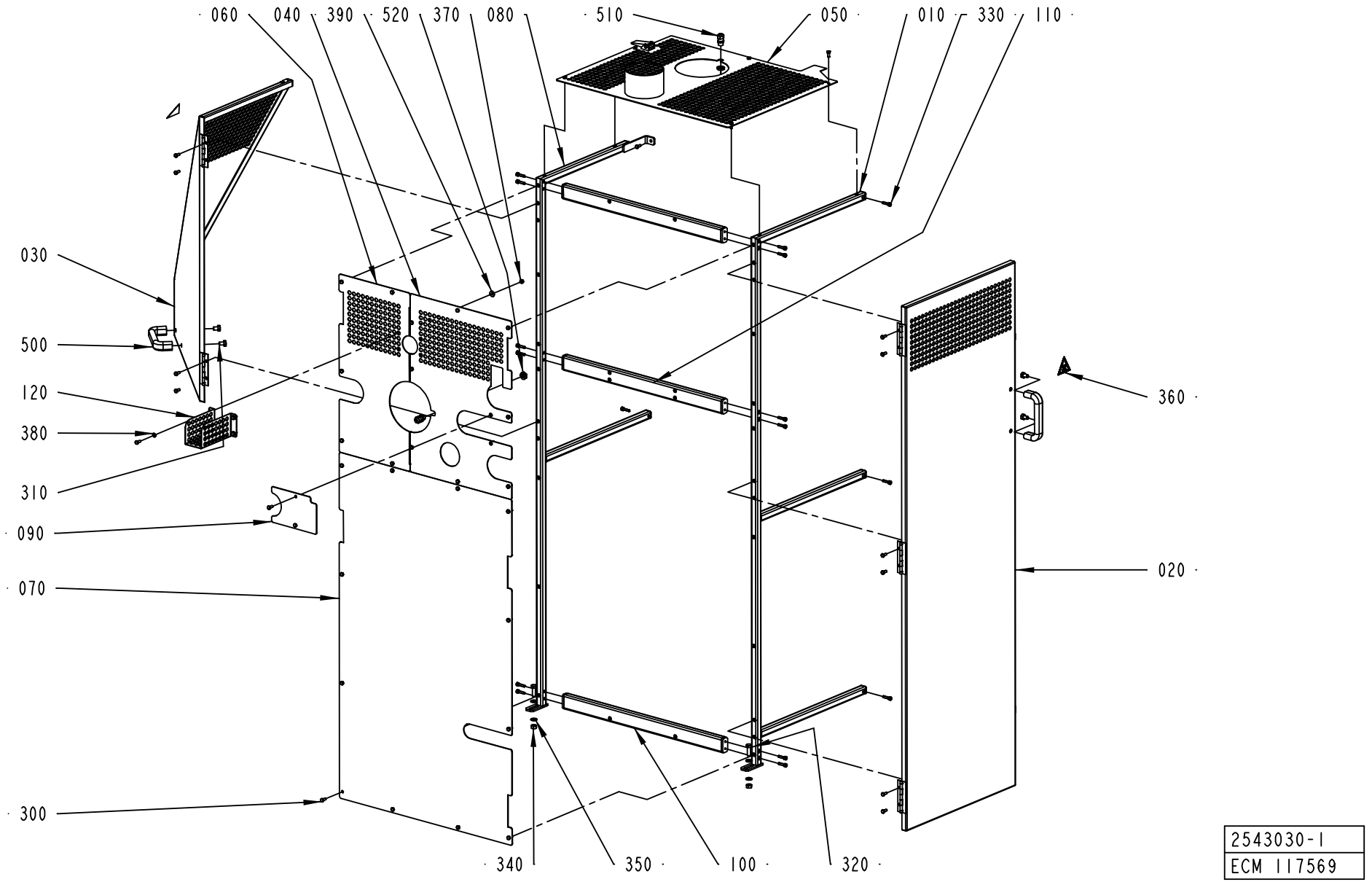
060
040
390
520
370
080
510
050
010
330
110
030
500
120
380
310
090
070
300
340
350
100
320
360
020
2543030-1
ECM 117569

Pos	Part No	SP	UN	Qty	Description	Page No
Common Parts						
010	2543003-0000	-		1	FRAME	
020	2543022-0000	-		1	DOOR	
030	2543023-0000	-		1	DOOR	
040	2543024-0000	-		1	PLATE	
050	2543028-0000	-		1	PLATE	
060	2543029-0000	-		1	PLATE	
070	2543031-0000	-		1	PLATE	
080	2543033-0000	-		1	FRAME	
090	2543034-0000	-		1	COVER PLATE	
100	2543036-0000	-		2	FRAME	
110	2543037-0000	-		1	FRAME	
120	2569634-0000	-		1	COVER	
300	312105-0327	-		47	SCREW M6S ISO 4017 M5X12 A480	
310	312105-0447	-		4	SCREW M6S ISO 4017 M8X12 A480	
320	312105-0453	-		2	SCREW M6S ISO 4017 M8X25 A480	
330	312115-0331	-		16	SCREW ISO4762 M5X20 A4	
340	312605-0318	-		2	HEXAGON NUT, M6M M8 A280	
350	315105-0165	-		4	WASHER ISO 7089-8-200 HV-A4	
360	359710-0001	A		2	WARNING SIGN ISO, HOT SURFACE	
370	312605-0314	-		4	HEXAGON NUT, M6M M5 A280	
380	315105-0146	-		4	WASHER ISO 7089-5-200 HV-A4	
390	315125-0146	-		4	WASHER TBRSB 5.3X15X1 A4	
500	90017-0022	-		2	HANDLE, NO. EL-037311	
510	90458-0305	-		2	CABLE GLAND, M12X1,5, NO.5311 1000	
520	90458-0321	-		2	NUT, M12X1,5	

Pos	Part No	SP	UN	Qty	Description	Page No

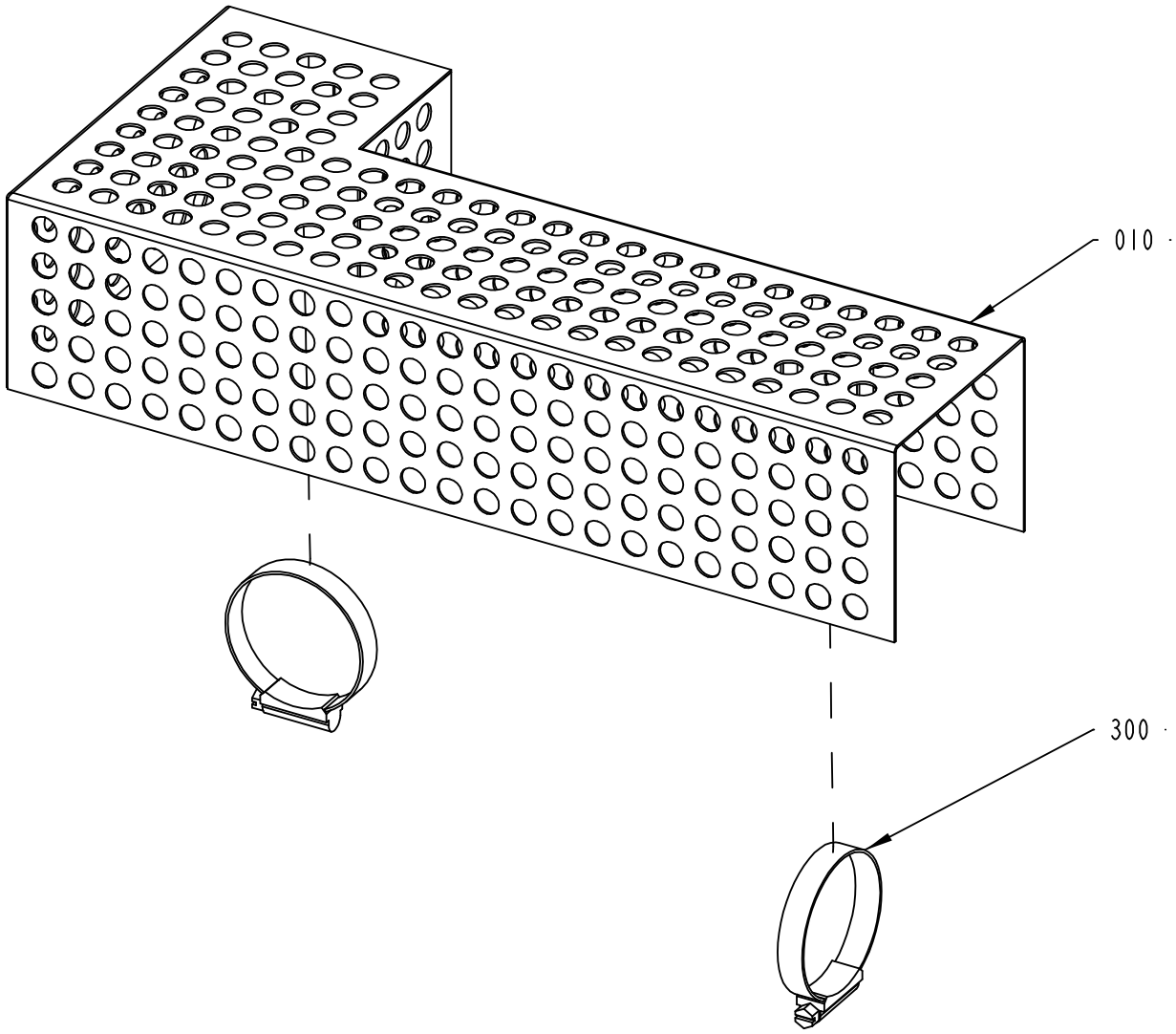

2543035-1
ECM 112547

Pos	Part No	SP	UN	Qty	Description	Page No
Common Parts						
010	2543038-0000	-		1	TOUCH GUARD	
300	342991-0109	-		2	HOSE CLIP,WORM DRIVE TYPE (48)-50	

Pos	Part No	SP	UN	Qty	Description	Page No

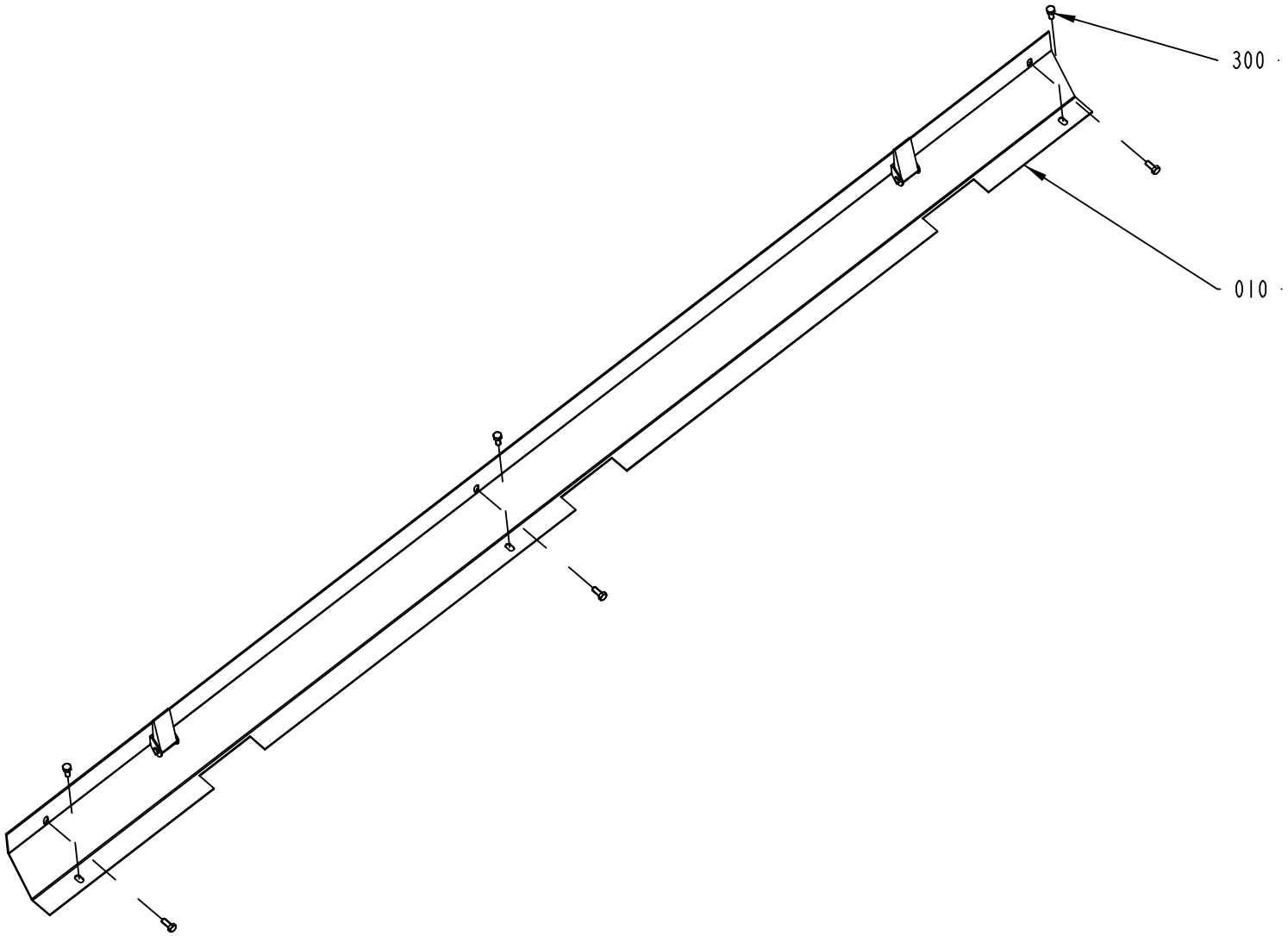

2556685-1
ECM 112547

ECM: 112805 - 20021113
Group number: 2556685-0100
Assembly Drawing: 2556685-1_1_AA

Issue: 20030313

Pos	Part No	SP	UN	Qty	Description	Page No
Common Parts						
010	2543032-0000	-		1	PLATE	
300	312105-0327	-		6	SCREW M6S ISO 4017 M5X12 A480	

Pos	Part No	SP	UN	Qty	Description	Page No

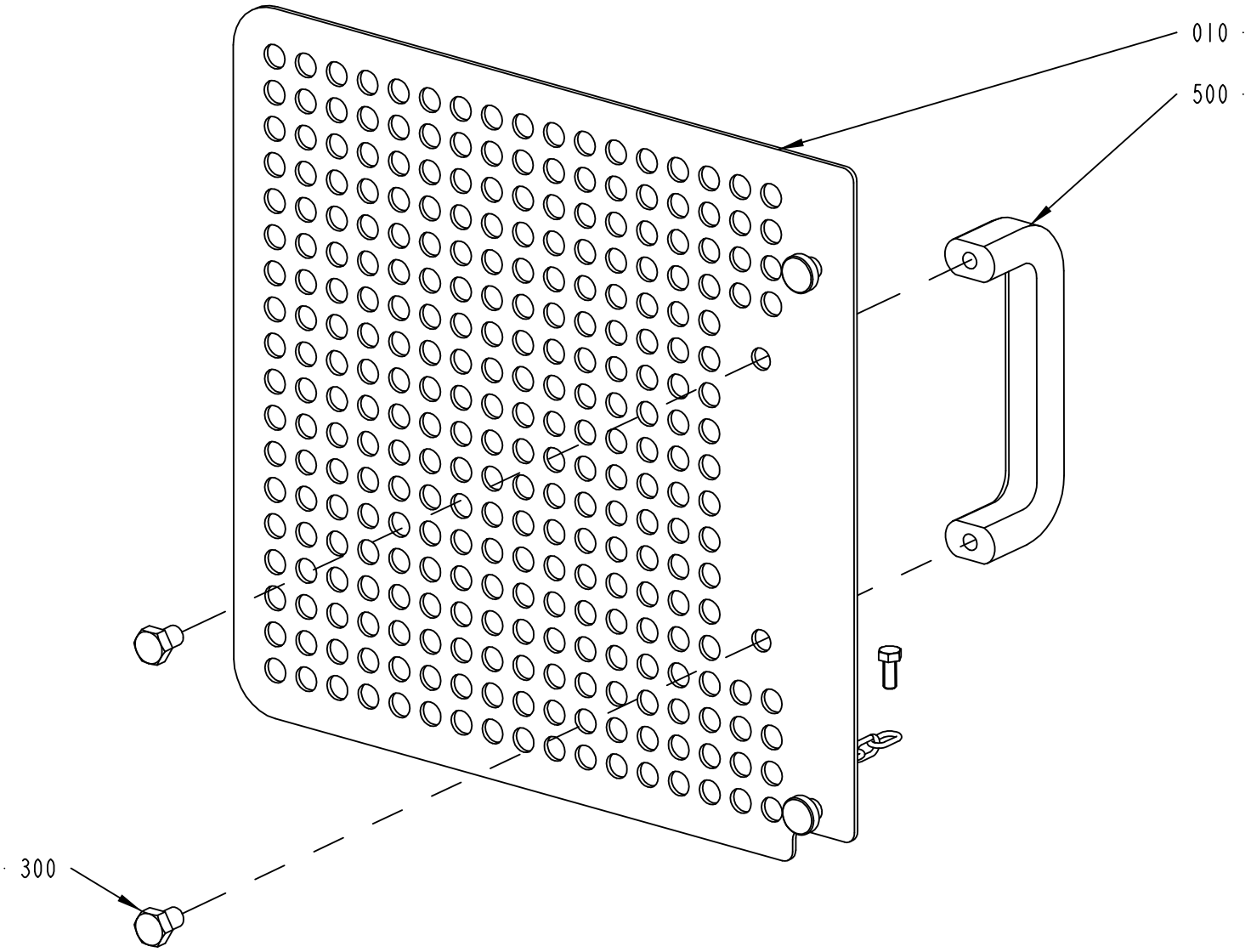

2556790-1
ECM 112547

ECM: 114697 - 20021113
Group number: 2556790-0100
Assembly Drawing: 2556790-1_1_AA

Issue: 20030313

Pos	Part No	SP	UN	Qty	Description	Page No
Common Parts						
010	2556776-0000	-		1	COVER	
300	312105-0447	-		2	SCREW M6S ISO 4017 M8X12 A480	
310	312105-0327	-		1	SCREW M6S ISO 4017 M5X12 A480	
500	90017-0022	-		1	HANDLE, NO. EL-037311	

Pos	Part No	SP	UN	Qty	Description	Page No

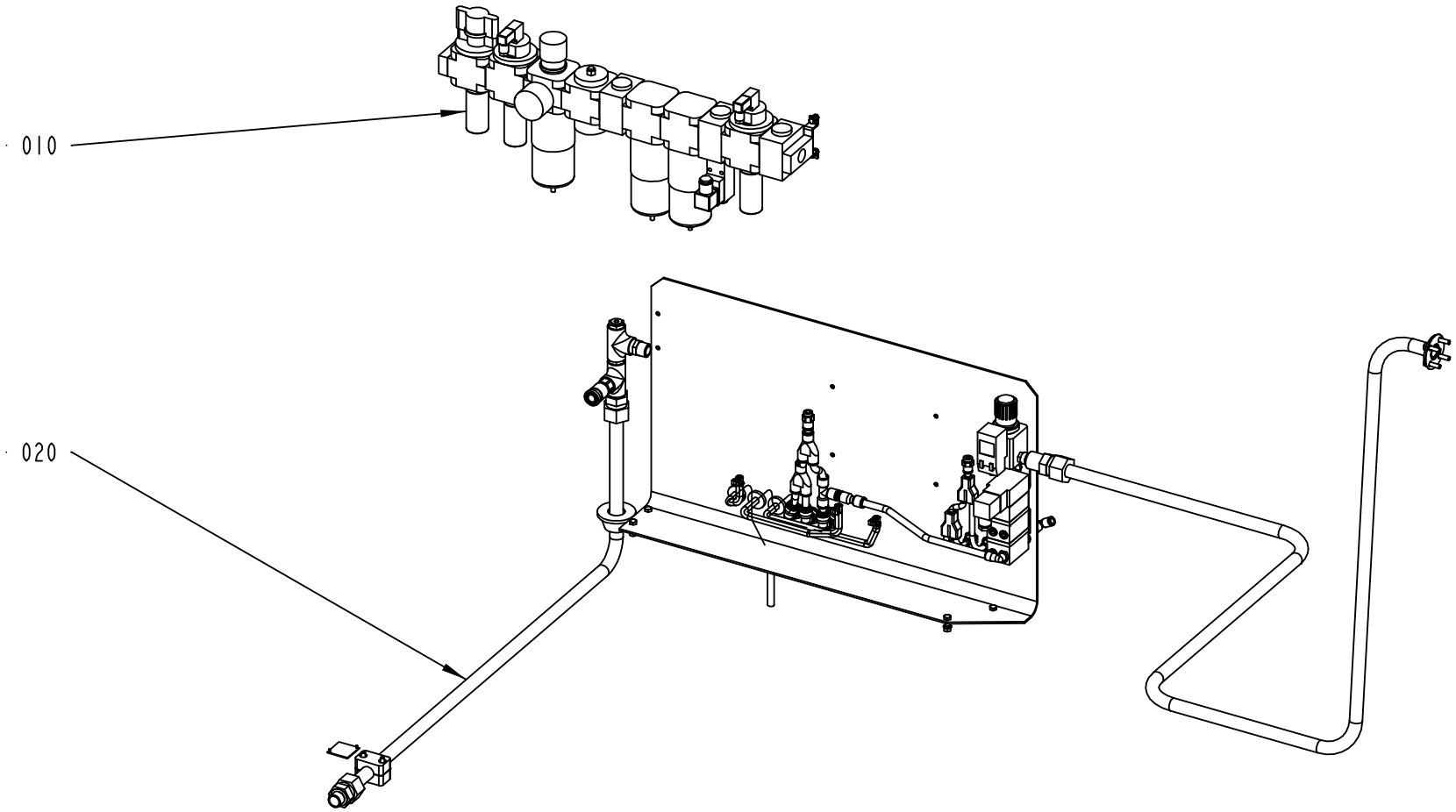

2556690-1
ECM 117569

Pos	Part No	SP	UN	Qty	Description	Page No
Common Parts						
010	A2523865-0100	-		1	FILTER RAMP	**407**
020	A2556695-0100	-		1	AIR PANEL	**409**

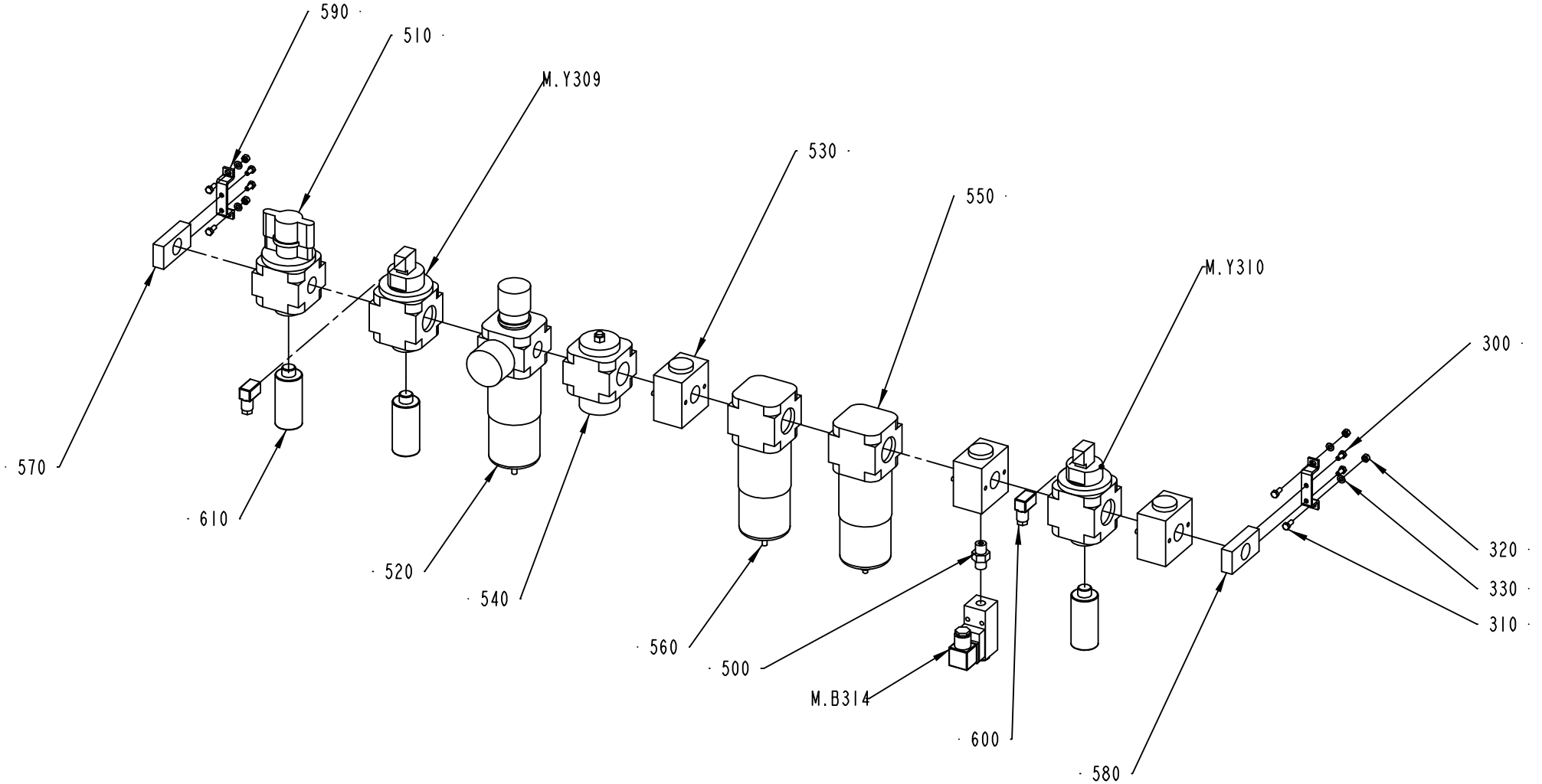

2523865-1
ECM 117569

ECM: 121589 - 20021212
Group number: 2523865-0100
Assembly Drawing: 2523865-1_1_AA

Issue: 20030313

Pos	Part No	SP	UN	Qty	Description	Page No
Common Parts						
300	312105-0325	-		4	SCREW M6S ISO 4017 M5X10 A480	
310	312105-0327	-		4	SCREW M6S ISO 4017 M5X12 A480	
320	312605-0314	-		4	HEXAGON NUT, M6M M5 A280	
330	315105-0146	-		4	WASHER ISO 7089-5-200 HV-A4	
500	90224-0372	-		1	CONN. STRAIGHT ESK-1/4-1/4 151521	
510	90458-2826	A		1	SHUT OFF VALVE 3/2, HE-D MAXI	
520	90458-2828	A		1	FILTER REG 0,5-12 BAR 40 µ, D-MAXI-A	
530	90458-2829	-		3	DISTRIBUTOR, FRZ-D-MAXI	
540	90458-2831	A		1	START UP VALVE 2/2, HEL-D-MAXI	
550	90458-2832	A		1	FILTER 0,01 MICRON G1/2", LFMA-D-MAXI	
560	90458-2833	A		1	FILTER 1 MICRON G1/2", LFMB-D-MAXI	
570	90458-2834	-		1	END PLATE LEFT, PBL-1/2-D-MAXI-L	
580	90458-2835	-		1	END PLATE RIGHT, PBL-1/2-D-MAXI-R	
590	90458-2836	-		2	MOUNTING BRACKET, HFOE-D-MIDI/MAXI	
600	90458-2837	A		2	PLUG SOCKET, KMEB-1-24-5-LED	
610	90458-2838	B		3	SILENCER U-3/8	
M.B314	90274-0103	A		1	PRESSURE GUARD PEV-1/4-B (10773	
M.Y309	90458-2830	A		1	START UP VALVE 3/2, HEE-D-MAXI-24DC	
M.Y310	90458-2830	A		1	START UP VALVE 3/2, HEE-D-MAXI-24DC	

Pos	Part No	SP	UN	Qty	Description	Page No

Machine Type | Group Description | Used-In | Group Number | Page No

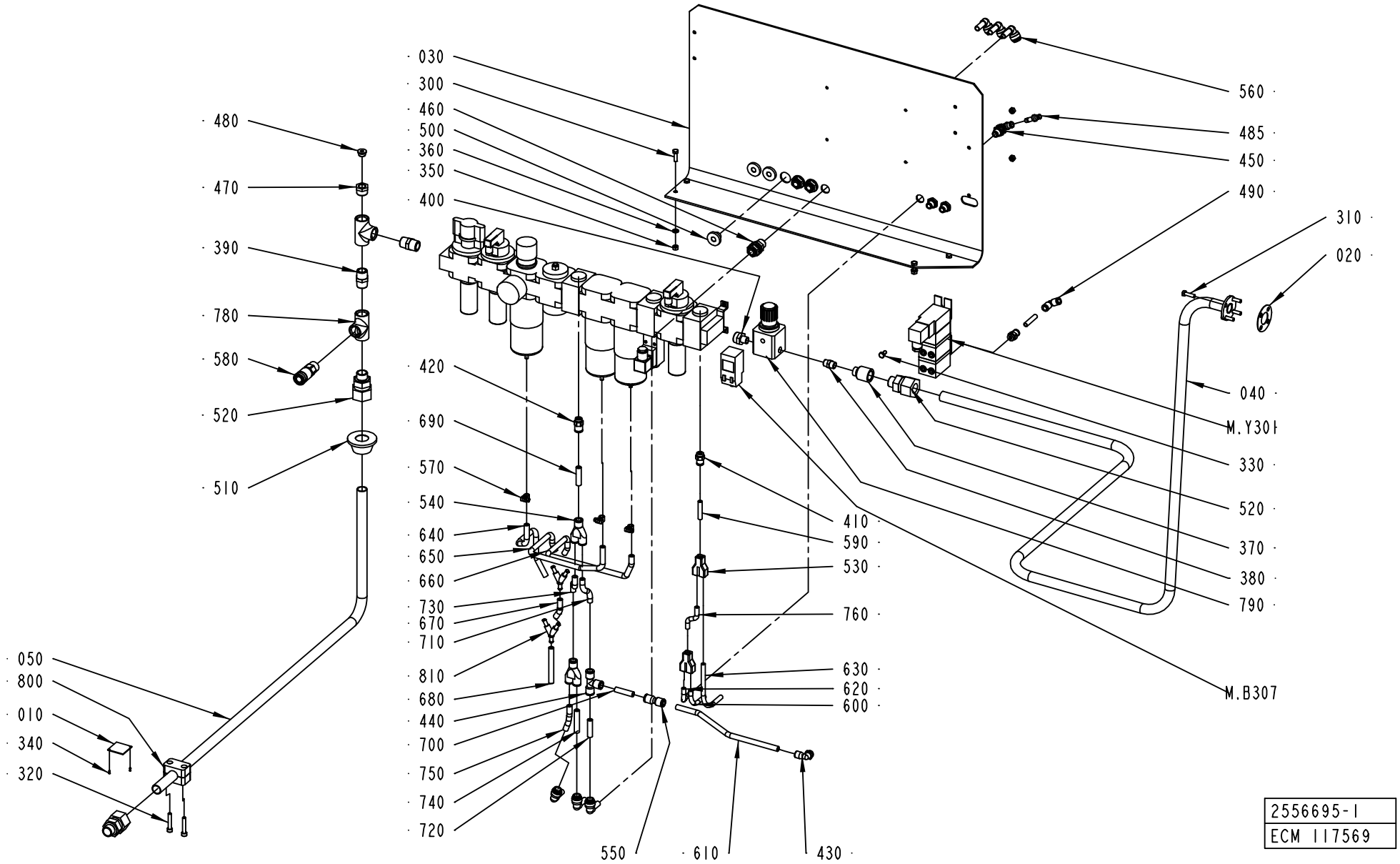
030
300
460
500
360
350
400
480
470
390
780
580
520
510
050
800
010
340
320
420
690
570
540
640
650
660
730
670
710
810
680
440
700
750
740
720
550
610
430
560
485
450
490
310
020
040
M.Y301
330
520
370
380
790
410
590
530
760
630
620
600
M.B307
2556695-1
ECM 117569

ECM: 121997 - 20021212
Group number: 2556695-0100
Assembly Drawing: 2556695-1_1_AB

Issue: 20030313

Pos	Part No	SP	UN	Qty	Description	Page No
Common Parts						
010	273458-0000	A		1	LABEL (AIR)	
020	1514698-0000	A		1	GASKET	
030	2556781-0000	-		1	BRACKET	
040	2543039-0000	-		1	AIR PIPE	
050	1515577-0000	-		1	PIPE	
300	312105-0370	-		4	SCREW M6S ISO 4017 M6X20 A480	
310	312105-0371	-		4	SCREW M6S ISO 4017 M6X22 A480	
320	312115-0376	-		2	SCREW ISO4762 M6X35 A4	
330	312105-0366	-		2	SCREW M6S M6X12 A280	
340	312502-0122	-		2	DRIVE SCREW ROUND HEAD KDS 0X6	
350	312605-0316	-		6	HEXAGON NUT, M6M M6 A280	
360	315105-0153	-		4	WASHER ISO 7089-6-200 HV-A4	
370	342217-0103	-		1	SLEEVE, REDUCTION, INT, R-2021/2X1/4	
380	342700-0110	-		1	NIPPLES,HEXAGON,EXT.G-THREAD G1/4"-G1/4"	
390	90330-0021	-		2	NIPPLES, EXT. THREAD. R-207R1/2	
400	342700-0205	-		1	NIPPLES,HEXAGON,EXT.G-THREAD G1/2"-G1/4"	
410	342722-0205	-		2	STRAIGHT COUPLING D=8-G1/4"	
420	342722-0211	-		1	STRAIGHT COUPLING D=10-G1/4"	
430	90458-2958	-		1	ELBOW PIPE JOINT, EXT.THREAD, D=8MM-G1/4	
440	342748-0104	-		1	T-CONNECTION 10MM	
450	90457-0178	-		3	EQUAL BULKHEAD ELBOW CONNECTOR 36390800	
460	342768-0104	-		3	BULKHEAD CONNECTOR, 10 MM	
470	342701-0205	-		1	BUSHING,INT./EXT.G-THREAD G1/2"-G1/4"	
480	342713-0210	-		1	PLUG, EXT THREAD HEX SOCKET 8638-00-140	
485	342716-0203	-		1	REDUCER 6-8	
490	342735-0103	-		1	ELBOW PIPE JOINT	
500	90015-0021	-		3	LEAD-IN, TET10-14, E-1458023	
510	90015-0025	-		1	LEAD-IN, TET26-35, E-1458041	
520	90030-0586	-		3	CONN. STR., 20-G1/2, EXT. THREAD	
530	90055-0101	-		2	Y-CONNECTION, 8-8	
540	90055-0216	-		2	Y-CONNECTION, 10-10	
550	90055-0240	-		1	HOSE,NIPPLE,REDUCER,TUBE, 8/10MM	
560	90055-0248	-		6	ELBOW WITH TAILPIECE 10/10 MM	
570	90132-0021	-		3	HOSE CLIP 6-10MM	
580	90163-0076	-		1	QUICK COUPLING, (F) LP-006-0-WR021	
590	90166-0013	-	MM	40	TUBE 8 MM PA BLUE	
600	90166-0013	-	MM	120	TUBE 8 MM PA BLUE	
610	90166-0013	-	MM	400	TUBE 8 MM PA BLUE	
620	90166-0013	-	MM	120	TUBE 8 MM PA BLUE	
630	90166-0013	-	MM	180	TUBE 8 MM PA BLUE	
640	90166-0101	-	MM	300	HOSE, SILICONE, 60 SHORE, 6/10 MM	
650	90166-0101	-	MM	400	HOSE, SILICONE, 60 SHORE, 6/10 MM	
660	90166-0101	-	MM	400	HOSE, SILICONE, 60 SHORE, 6/10 MM	
670	90166-0101	-	MM	80	HOSE, SILICONE, 60 SHORE, 6/10 MM	
680	90166-0101	-	MM	3500	HOSE, SILICONE, 60 SHORE, 6/10 MM	
690	90166-0160	-	MM	40	TUBE 10 MM PA BLUE	
700	90166-0160	-	MM	40	TUBE 10 MM PA BLUE	
710	90166-0160	-	MM	90	TUBE 10 MM PA BLUE	
720	90166-0160	-	MM	50	TUBE 10 MM PA BLUE	
730	90166-0160	-	MM	90	TUBE 10 MM PA BLUE	
740	90166-0160	-	MM	80	TUBE 10 MM PA BLUE	
750	90166-0160	-	MM	80	TUBE 10 MM PA BLUE	
760	90166-0160	-	MM	80	TUBE 10 MM PA BLUE	
780	90330-0049	-		2	T-PIPE, INT. THREAD, R-221R1/2	
790	90458-0254	A		1	PRECISION PRESSURE REGULATOR,LRP-1/4-0,7	
800	90458-2729	-		1	CLAMP 20MM, SLK 320-P	
810	90458-2846	-		2	CONNECTION Y, FOR HOSES DI 6MM	
M.B307	90458-2730	A		1	PRESSURE SENS. SDE-1-D10-G2--R18-C-P1-M8	
M.Y301	90042-0234	A		1	SOLENOID VALVE FAIRCHILD TD6000-45	

Machine Type | Group Description | Used-In | Group Number | Page No

Tetra Pak

SPC
Spare Parts Catalogue

This page is intentionally left blank.

ECM: 121213 - 20021212
Group number: 630410-0200
Assembly Drawing:

Issue: 20030310

Pos	Part No	SP	UN	Qty	Description	Page No
Common Parts						
010	1515917-0000	-		1	HYDRAULIC DIAGRAM	
020	2556716-0000	-		1	CENTRAL LUBRIC. DIAGRAM	
030	2556840-0000	-		1	PNEUMATIC DIAGRAM	
040	2569714-0000	-		1	WATER DIAGRAM	
050	A2592385-0100	-		1	SET OF SIGNS	**415**
060	A2592389-0100	-		1	TOOL KIT	**417**
070	A2592391-0100	-		1	START-UP KIT	**427**
080	598878-0000	-		1	MACHINE SIGN 2 ADR. EEA	
300	90003-0422	-		1	CORRUGATED CARDBOARD BOX	
310	90182-0008	-		100	CLIP STRIP, 376X7,6 MM	
320	90459-0281	-		4	LIFTING STRAP, 3000KG L=2M	
330	90459-0282	-		4	LIFTING STRAP, 3000KG L=4M	
500	311521-0142	-		4	BLANK RIVET 3,2X6	
510	352113-0102	-		200	CLIP-STRIP, BLACK 188X4,8 MM	

Pos	Part No	SP	UN	Qty	Description	Page No

Machine Type | Group Description | Used-In | Group Number | Page No

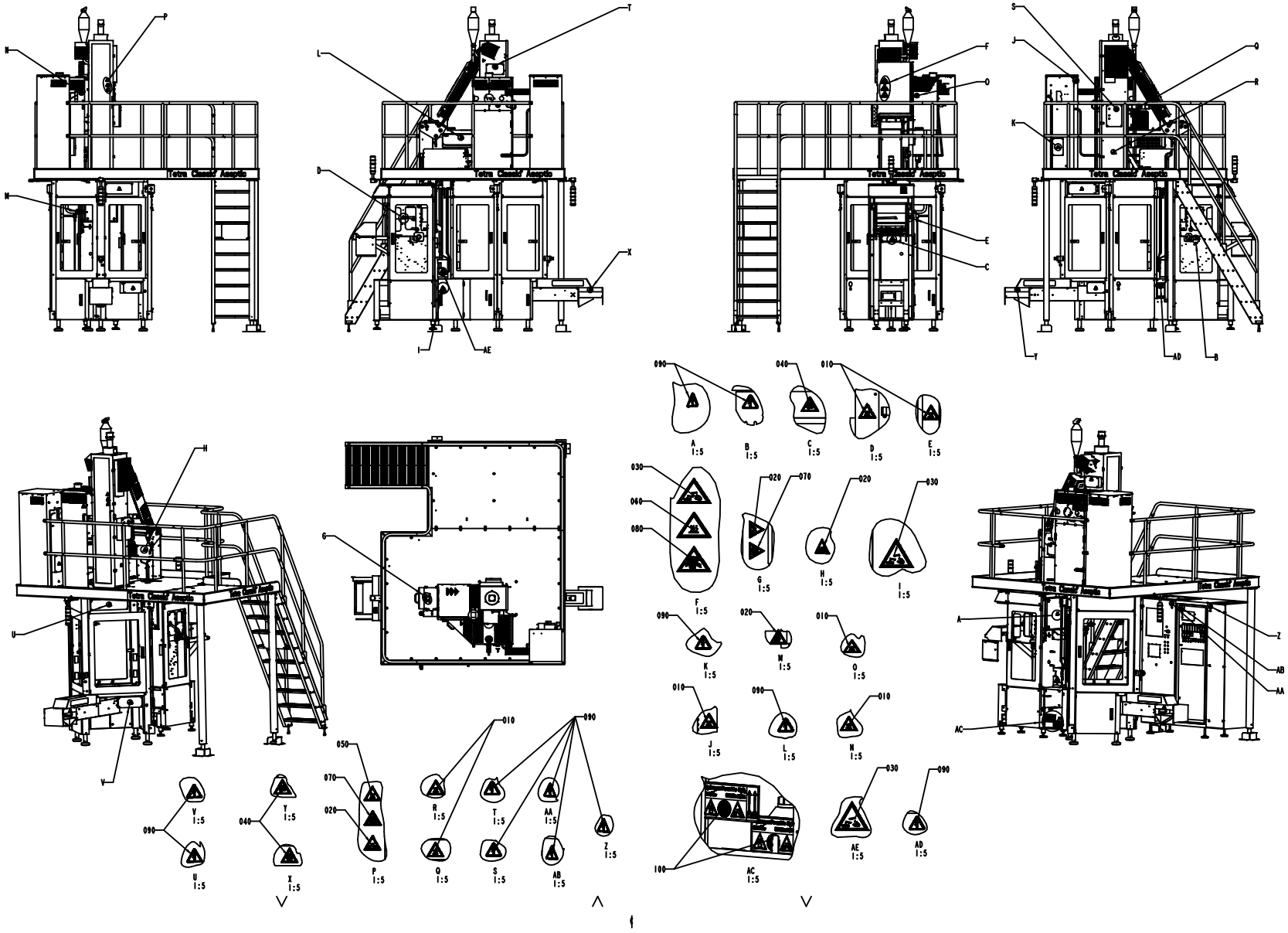
A 1:5
B 1:5
C 1:5
D 1:5
E 1:5
F 1:5
G 1:5
H 1:5
I 1:5
J 1:5
K 1:5
L 1:5
M 1:5
N 1:5
O 1:5
P 1:5
Q 1:5
R 1:5
S 1:5
T 1:5
U 1:5
V 1:5
X 1:5
Y 1:5
Z 1:5
AA 1:5
AB 1:5
AC 1:5
AD 1:5
AE 1:5

ECM: 122722 - 20021212
Group number: 2592385-0100
Assembly Drawing: 2592385-1_1_AA

Issue: 20030310

Pos	Part No	SP	UN	Qty	Description	Page No
Common Parts						
010	359710-0001	-		7	WARNING SIGN ISO, HOT SURFACE	
020	359705-0003	-		5	WARNING SIGN ISO, DANGEROUS CHEMICALS	
030	359705-0004	-		3	WARNING SIGN ISO, DANGEROUS CHEMICALS	
040	359705-0005	-		3	WARNING SIGN ISO, MOVING PART	
050	359705-0007	-		1	WARNING SIGN ISO, HOT SURFACE	
060	359705-0008	-		1	WARNING SIGN ISO, HOT SURFACE	
070	359705-0013	-		2	WARNING SIGN ISO, HARMFUL VAPOUR	
080	359705-0014	-		1	WARNING SIGN ISO, HARMFUL VAPOUR	
090	359705-0015	-		12	WARNING SIGN ISO, RISK OF ELECTRIC SHOCK	
100	90458-0668	-		2	WARNING SIGN ISO, HYDROGEN PEROXIDE	

Pos	Part No	SP	UN	Qty	Description	Page No

This page is intentionally left blank.

ECM: 122873 - 20021212
Group number: 2592389-0100
Assembly Drawing:

Issue: 20030310

Pos	Part No	SP	UN	Qty	Description	Page No
Common Parts						
	90459-2214	-		1	MEASURING CYLINDER, 50ML 648-04	
	90459-2208	-		1	HOOK SPANNER ADJUSTABLE, DIAM. 6 MM	
010	A1515670-0100	-		1	TOOL	**419**
020	A230922-0100	-		1	AIR JET GUN	**421**
030	A2524259-0100	-		1	LIFTING DEVICE	**423**
040	A2527237-0100	-		1	SPRAY GUN	**425**
050	36430-0000	-		1	BRUSH	
060	6-4918 2311 01	-		1	WRENCH 17/19	
070	6-69696 00	-		1	HOOK SPANNER	
080	B74767-0102	-		1	DYNAMOMETER	
090	*74912-0000*	-		*1*	*DOWEL*	
100	*74768-0000*	-		*1*	*SLEEVE*	
110	*74769-0000*	-		*1*	*SLEEVE*	
120	*74770-0000*	-		*1*	*ROD*	
130	*74771-0000*	-		*1*	*STEERING*	
140	*74772-0000*	-		*1*	*DIAL*	
170	*107000-0000*	-		*1*	*SPRING*	
200	*312125-0285*	-		*2*	*SCREW SLOT.PAN HD. MCS 4X6 A480*	
090	777510-0101	-		1	SCISSORS	
100	779905-0101	-		1	INSPECTION LAMP	
300	90229-0010	-		1	LADDER	
310	90243-0203	-		1	MEASURING INSTRUMENT	
320	90303-0011	-		1	PROTECTIVE GOGGLES	
330	90303-0012	-		1	PROTECTIVE GLOVES	
340	90303-0013	-		1	APRON	
350	90337-0007	-		1	AEROMETER	
360	90337-0009	-		1	MEASURING CYLINDER	

Pos	Part No	SP	UN	Qty	Description	Page No

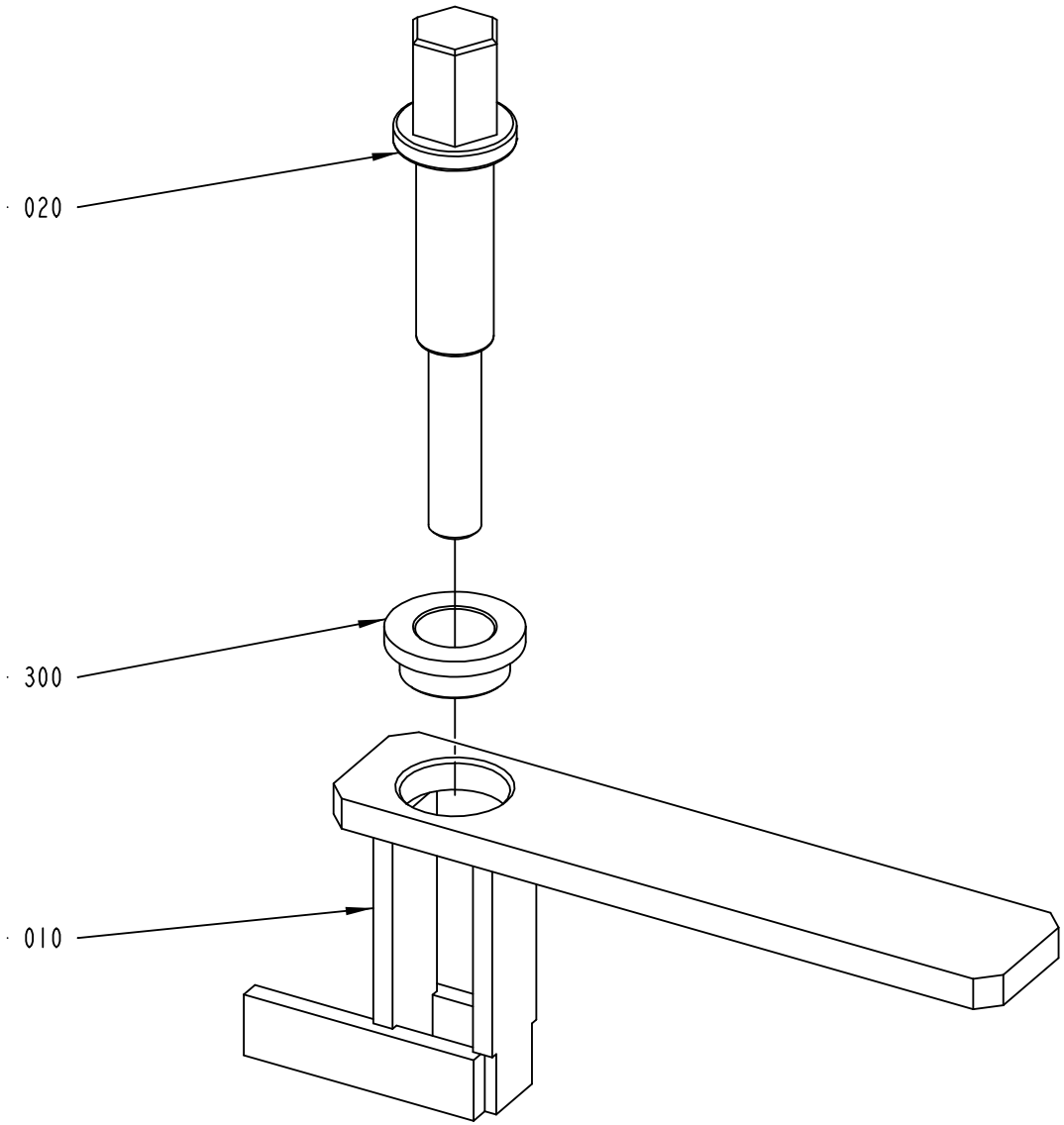

1515670-1
ECN 99040

ECM: 99042 - 20011005
Group number: 1515670-0100
Assembly Drawing: 1515670-1_1_AA

Issue: 20030310

Pos	Part No	SP	UN	Qty	Description	Page No
Common Parts						
010	449970-0000	-		1	HOLDER	
020	1515964-0000	-		1	SPINDLE	
300	321101-0222	-		1	FLANGE BUSHING, 18X25X12	

Pos	Part No	SP	UN	Qty	Description	Page No

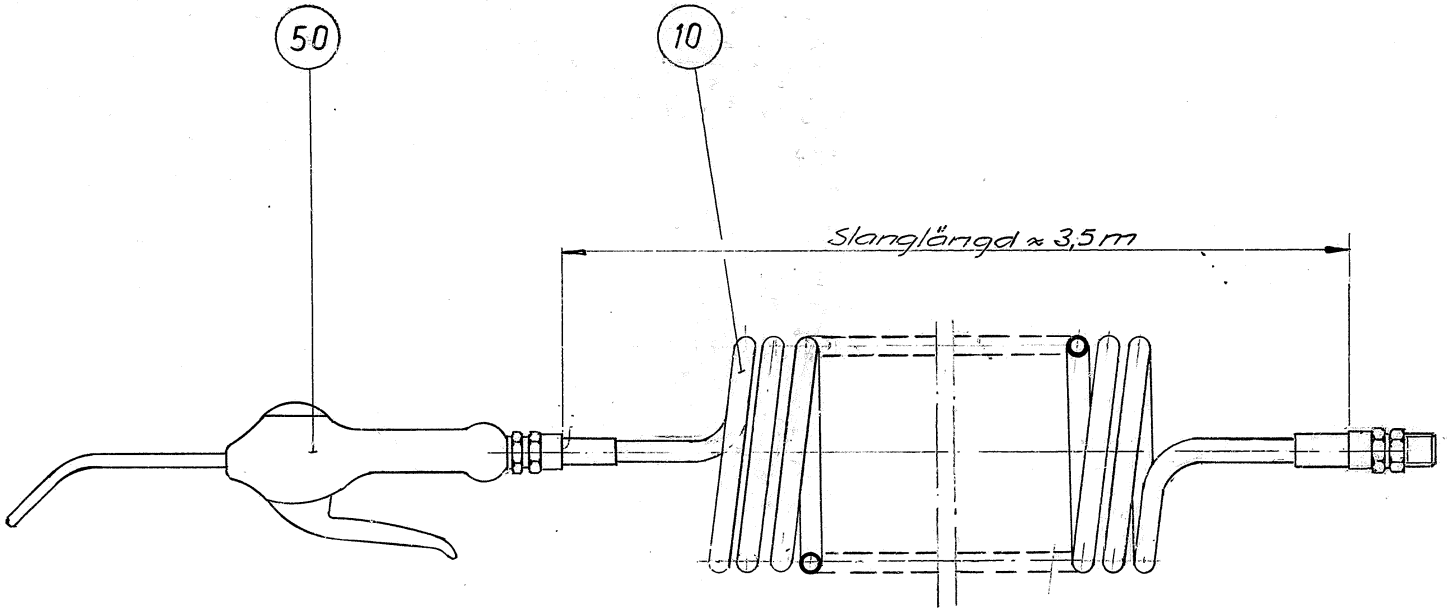

S3-230922-1

ECM: 72091 - 19981216
Group number: 230922-0100
Assembly Drawing: 230922-1_1_AA

Issue: 20030310

Pos	Part No	SP	UN	Qty	Description	Page No
Common Parts						
010	90152-0016	C		1	HOSE (SPIRAL)	
050	90243-0061	C		1	AIR GUN, CEJN SERIE 204 ED: 90459-0173	

Pos	Part No	SP	UN	Qty	Description	Page No

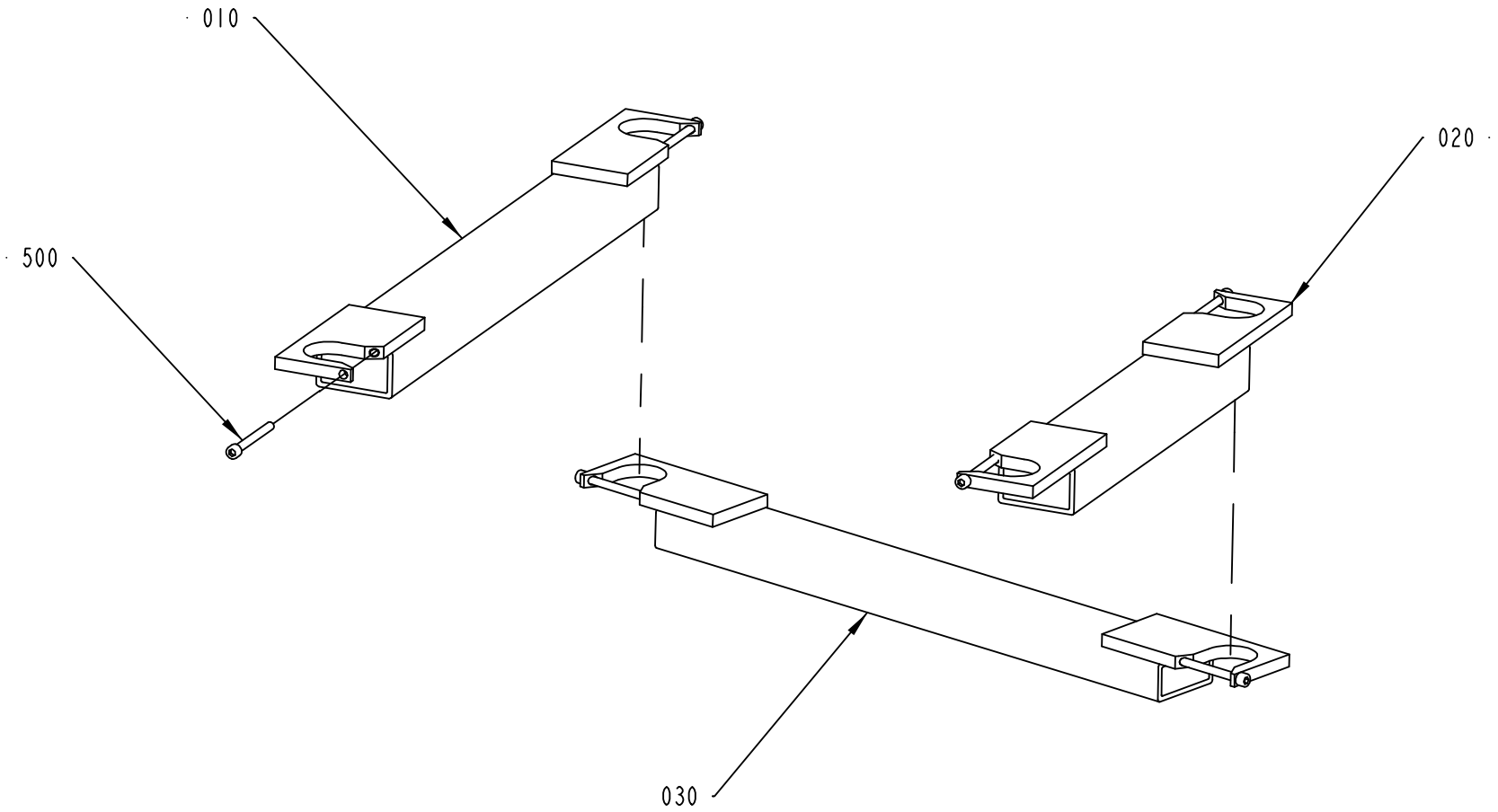

2524259-1
ECM 119959

ECM: 122874 - 20021212
Group number: 2524259-0100
Assembly Drawing: 2524259-1_1_AA

Issue: 20030310

Pos	Part No	SP	UN	Qty	Description	Page No
Common Parts						
010	2524098-0000	-		1	BEAM	
020	2524099-0000	-		1	BEAM	
030	2524266-0000	-		1	BEAM	
500	312111-0511	-		6	SCREW HEX.SOCK.HD.MC6S-TT 10X100 88 F	

Pos	Part No	SP	UN	Qty	Description	Page No

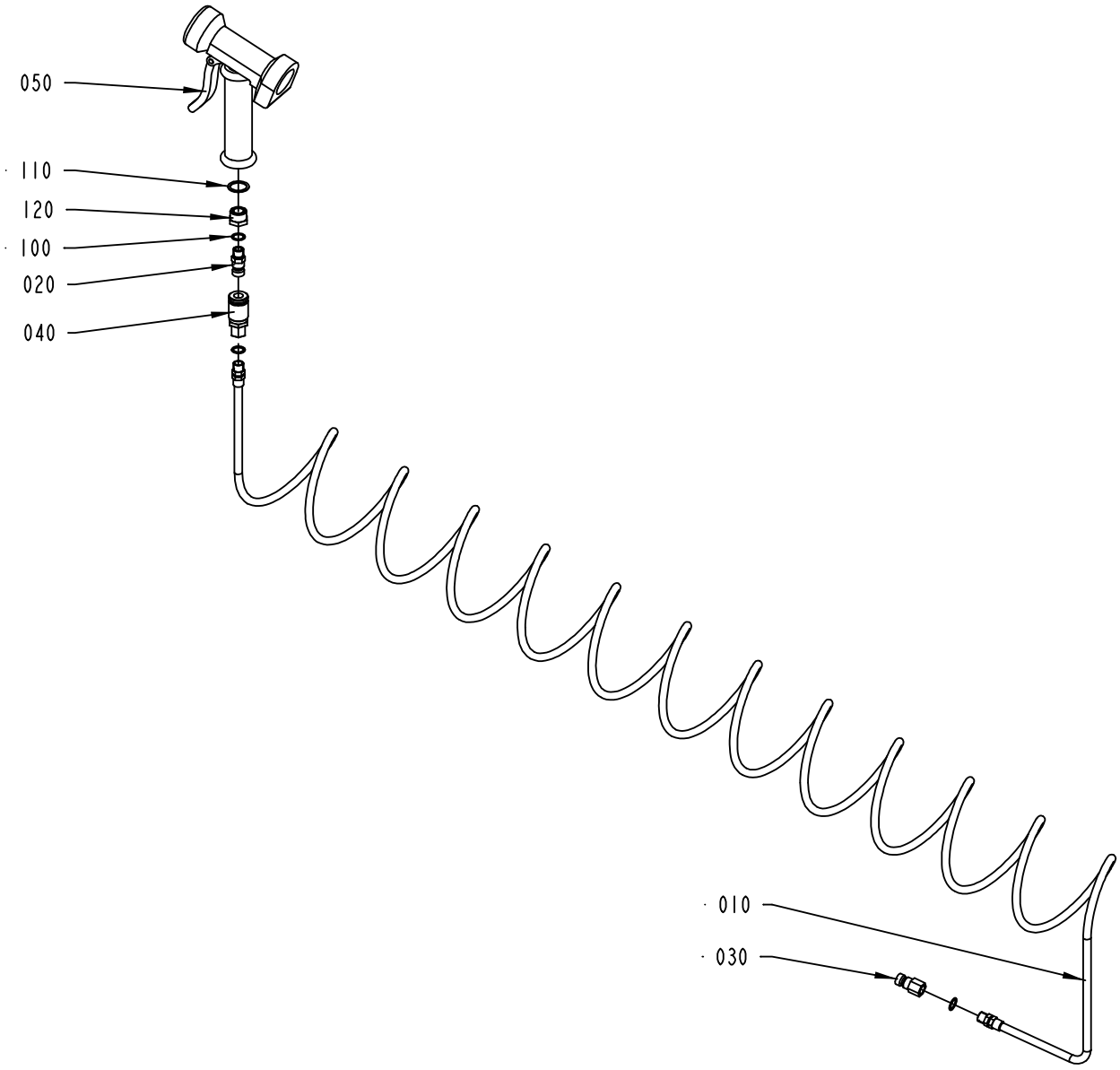

2527237-1
ECM 119959

ECM: 122048 - 20021212
Group number: 2527237-0100
Assembly Drawing: 2527237-1_1_AA

Issue: 20030310

Pos	Part No	SP	UN	Qty	Description	Page No
Common Parts						
010	90152-0017	-		1	HOSE (SPIRAL)	
020	90163-0014	-		1	QUICK COUPLING, (M) LP-006-1-WR013	
030	90163-0015	-		1	QUICK COUPLING, (M) LP-006-1-WR513	
040	90163-0028	-		1	QUICK COUPLING, LP 006-0-WR513	
050	90426-0003	-		1	HAND SHOWER	
100	315233-0110	-		3	WASHER CAPTIVE SEALING G1/4	
110	315233-0113	-		1	WASHER CAPTIVE SEALING G1/2	
120	342701-0205	-		1	BUSHING,INT./EXT.G-THREAD G1/2"-G1/4"	

Pos	Part No	SP	UN	Qty	Description	Page No

This page is intentionally left blank.

ECM: 122876 - 20021212
Group number: 2592391-0100
Assembly Drawing:

Issue: 20030310

Pos	Part No	SP	UN	Qty	Description	Page No
0150S						
040	1515232-0000	-		5	PRESSURE ROLLER	
060	1520176-0000	-		2	INDUCTOR	
0200B						
040	263062-0000	-		5	PRESSURE ROLLER	
060	1520175-0000	-		2	INDUCTOR	
V065						
040	32197-0000	-		5	PRESSURE ROLLER	
060	1520174-0000	-		2	INDUCTOR	
160	2542669-0000	-		1	ROLLER	
170	2542670-0000	-		1	ROLLER	
Common Parts						
010	1110083-0007	-		32	DOLLY	
020	A1296877-0100	-		1	SEAL KIT	**429**
030	1514095-0000	-		5	HEATING ELEMENT	
050	1515568-0000	-		2	KNIFE	
070	1533562-0000	-		8	CARBON BRUSH	
080	2524081-0000	-		4	GUIDE	
090	A2524120-0100	-		2	BOBBIN	**431, 433**
100	2524207-0000	-		4	STOP ARM	
110	2524208-0000	-		4	STOP ARM	
120	2523951-0000	-		2	ARM	
130	2556710-0000	-		4	PUSH ROD	
140	2556791-0000	-		2	TENSION SPRING	
150	2556796-0000	-		4	GUIDE	
300	311411-0138	-		16	SPLIT PIN SP1,6X12RFR	
310	315202-0101	-		5	O-RING 3,1X1,6 MM	
320	315202-0218	-		4	O-RING 26,2X3 MM	
330	321158-0022	-		4	FLANGE BUSHING, 4X5,5X6 MM	
340	342725-0108	-		1	CONN. STR. PIPE GI-10-G1/4	
350	342840-0105	-		2	CLAMPING PIECE	
360	342841-0104	-		2	FERRULE, 3-A, GC-CLAMP 38,1 MM (1 1/2")	
370	342841-0105	-		2	FERRULE, 3-A, GC-CLAMP 50,8 MM (2")	
380	342850-0303	-		6	GASKET 22,7X49,1X5,2 MM 1" FDA	
390	342850-0304	-		6	GASKET 35,4X49,1X5,2 1"1/2 FDA	
400	342850-0305	-		2	GASKET 47,8X62,6X5,2 MM 2" FDA	
500	90030-0180	-		1	CONN. STR. GE 12-1/2-14 NPTF	
510	90030-0419	-		1	CONN. STR., 20-R1/2, INT. THREAD	
520	90036-0057	-		5	LIGHT BULB, BA9S 28V	
530	90036-0068	-		2	BULB 6.5W 24V	
540	90064-0315	-		1	LAMP REMOVER, NO:700	
550	90082-0301	-		3	OVERVOLTOLTAGE PROTECTOR	
560	90119-0067	-		1	SOLID-STATE RELAY, H12WD4850	
570	90206-0014	-		1	HEATING ELEMENT 2X1250W,220V	
580	90206-0332	-		1	HEATING ELEMENT 220V 3000W 13,7A	
590	B90233-0027	-		3	TUBE FUSE, 16A	
	90233-0305	*C*		*1*	*INDICATOR*	
600	90233-0028	-		3	TUBE FUSE, 10A	
610	90233-0031	-		3	TUBE FUSE, 20A	
620	90240-0172	-		12	FLANGE BUSHING, 8X12X10 MM	
630	90296-0104	-	L	1	OIL	
640	90326-0037	-		1	THERMOCOUPLE, CR-AL PREM.G	
650	90326-0038	-		1	THERMOCOUPLE, CR-AL	
660	90326-0043	-		1	THERMOCOUPLE, CR-ALPREM.G	
670	B90326-0048	-		1	THERMOCOUPLE, 12826-31	
	90326-0304	-		*1*	*LEAD IN, 9041-15-KS-UB60*	
680	90349-0003	-		1	WETTING AGENT	
690	90458-2765	-		1	BOTTLE, 10L-F-SP-212708-500-61-N W. LID	
700	90459-0707	-		1	HEATING ELEMENT, 1500W/220V	
710	90459-1340	-		4	COMP. SPRING 6034	
720	90459-1532	-		4	BEARING ROLLER, 12X35X10 MM	
730	925998-0000	-		4	DIAPHRAGM	

Machine Type | Group Description | Used-In | Group Number | Page No

This page is intentionally left blank.

ECM: 70850 - 19970729
Group number: 1296877-0100
Assembly Drawing:

Issue: 20030310

Pos	Part No	SP	UN	Qty	Description	Page No
Common Parts						
010	530589-0000	-		4	SEAL RING	
020	530588-0000	-		1	SEAL RING	
030	533169-0000	-		1	DIAPHRAGM	
040	539212-0000	-		1	GASKET	
050	90091-0266	-		2	SEAL RING 10,4X16,3X2,5 MM	
060	90207-0363	-		1	GASKET	
070	90207-0365	-		1	GASKET	
100	315204-0215	-		1	O-RING 19,2X3 MM	
110	315204-0301	-		1	O-RING 49,5X3 MM	

Pos	Part No	SP	UN	Qty	Description	Page No

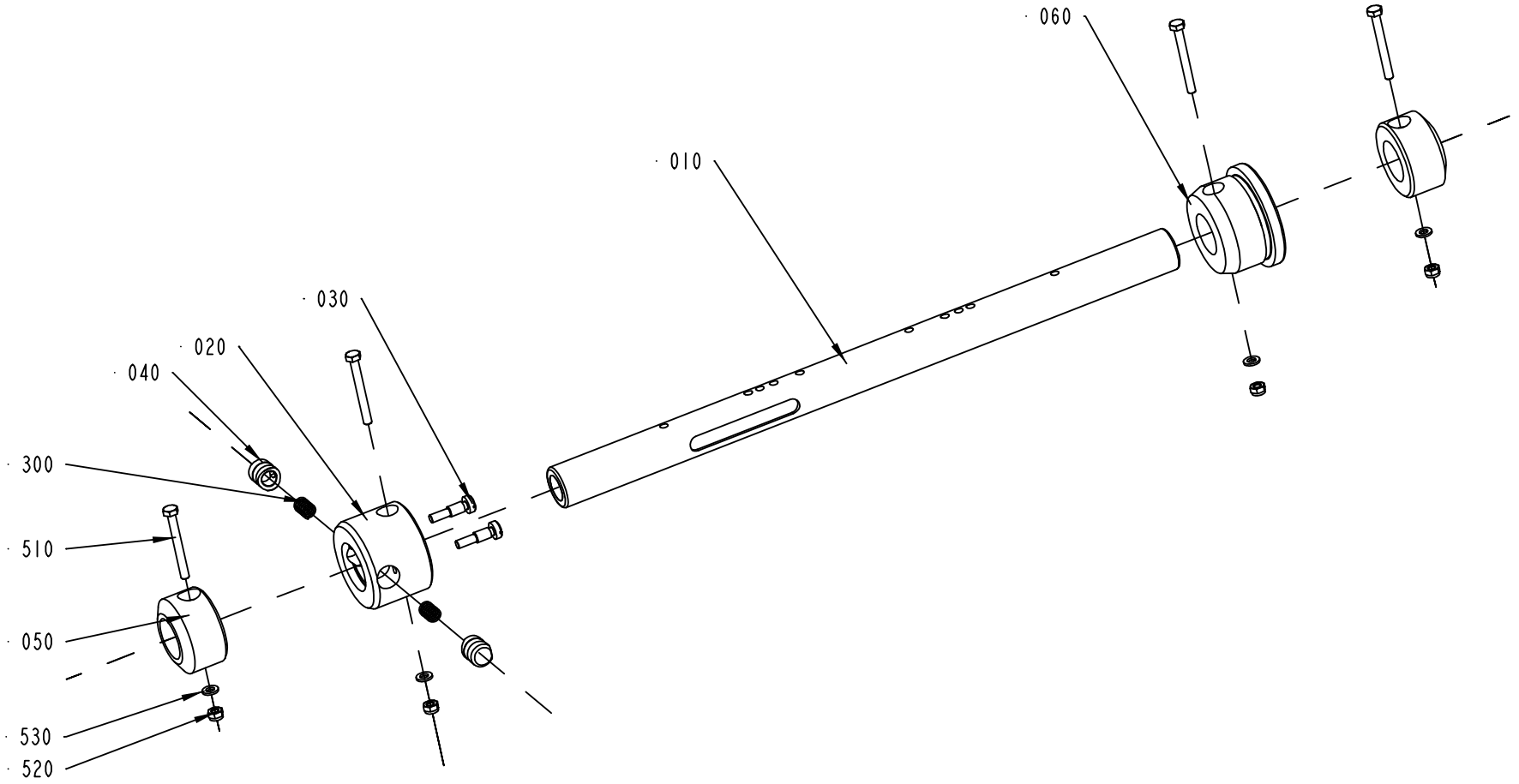

2524120-1
ECM 104287

ECM: 106818 - 20021113
Group number: 2524120-0100
Assembly Drawing: 2524120-1_1_AA

Issue: 20030310

Pos	Part No	SP	UN	Qty	Description	Page No
0150S						
020	272814-0000	-		1	SLEEVE	
040	575002-0000	-		2	PLUNGER	
060	272815-0001	-		1	SLEEVE	
070	272728-0000	-		1	BARRIER	
300	90335-0025	-		3	COMP. SPRING 22010, 1X11X26	
0200B						
020	272814-0000	-		1	SLEEVE	
040	575002-0000	-		2	PLUNGER	
060	272815-0001	-		1	SLEEVE	
070	272728-0000	-		1	BARRIER	
300	90335-0025	-		3	COMP. SPRING 22010, 1X11X26	
0200S						
020	272814-0000	-		1	SLEEVE	
040	575002-0000	-		2	PLUNGER	
060	272815-0001	-		1	SLEEVE	
070	272728-0000	-		1	BARRIER	
300	90335-0025	-		3	COMP. SPRING 22010, 1X11X26	
V065						
020	271239-0000	-		1	SLEEVE	
030	271241-0000	-		2	SCREW	
040	272813-0000	-		2	PLUNGER	
060	593562-0000	-		1	SLEEVE	
300	90335-0025	-		2	COMP. SPRING 22010, 1X11X26	
Common Parts						
010	2524118-0000	-		1	SHAFT	
050	440259-0000	-		2	RETAINING RING	
500	312105-0381	-		4	SCREW M6S ISO 4014 M6X55 A480	
510	312812-0316	-		4	HEXAGON NUT, NY-LOCK M6 A480	
520	315105-0153	-		4	WASHER ISO 7089-6-200 HV-A4	

Pos	Part No	SP	UN	Qty	Description	Page No

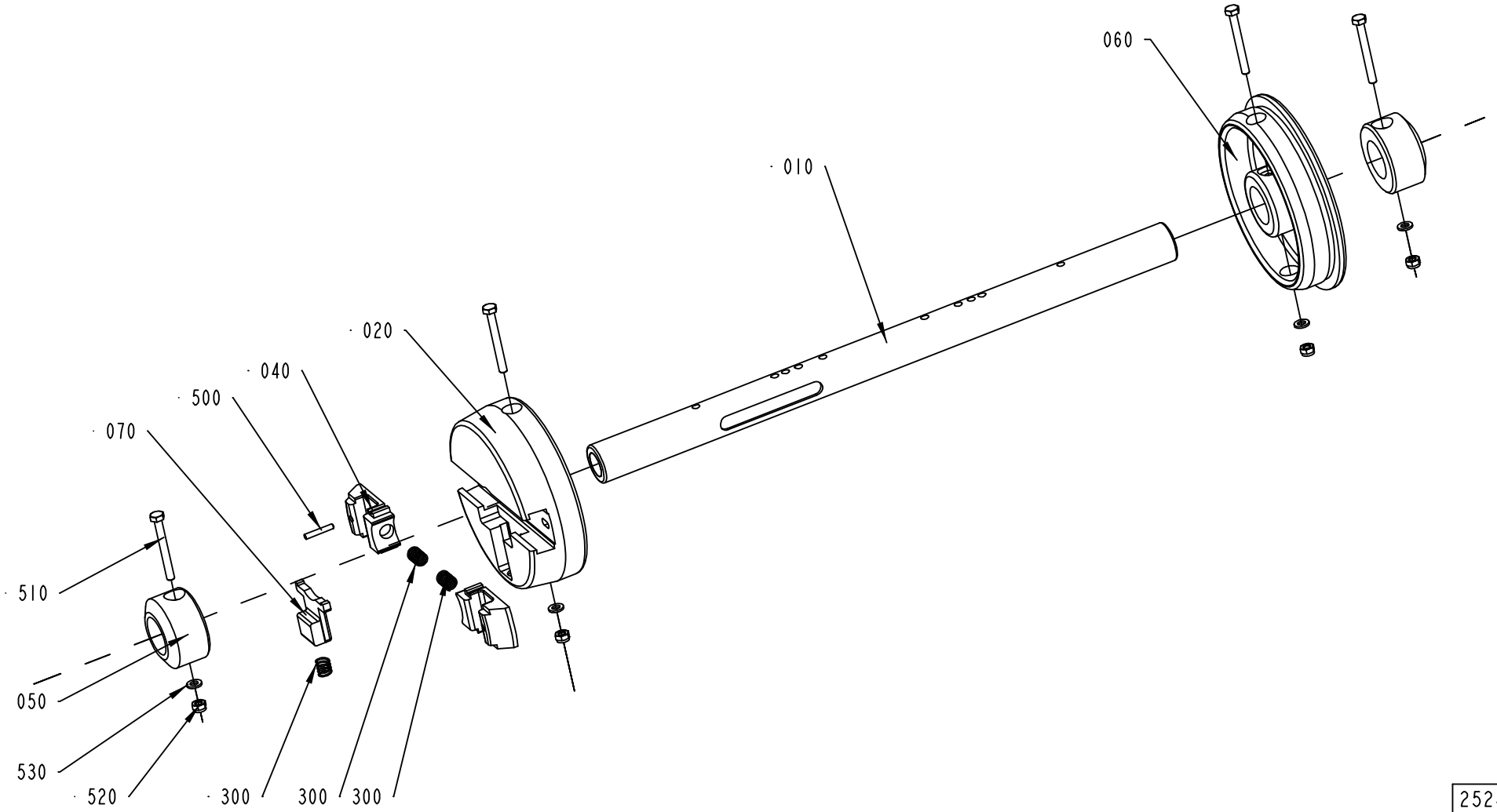

2524120-3
ECM 104287

ECM: 106818 - 20021113
Group number: 2524120-0100
Assembly Drawing: 2524120-3_1_AA

Issue: 20030310

Pos	Part No	SP	UN	Qty	Description	Page No
0150S						
020	272814-0000	-		1	SLEEVE	
040	575002-0000	-		2	PLUNGER	
060	272815-0001	-		1	SLEEVE	
070	272728-0000	-		1	BARRIER	
300	90335-0025	-		3	COMP. SPRING 22010, 1X11X26	
0200B						
020	272814-0000	-		1	SLEEVE	
040	575002-0000	-		2	PLUNGER	
060	272815-0001	-		1	SLEEVE	
070	272728-0000	-		1	BARRIER	
300	90335-0025	-		3	COMP. SPRING 22010, 1X11X26	
0200S						
020	272814-0000	-		1	SLEEVE	
040	575002-0000	-		2	PLUNGER	
060	272815-0001	-		1	SLEEVE	
070	272728-0000	-		1	BARRIER	
300	90335-0025	-		3	COMP. SPRING 22010, 1X11X26	
V065						
020	271239-0000	-		1	SLEEVE	
030	271241-0000	-		2	SCREW	
040	272813-0000	-		2	PLUNGER	
060	593562-0000	-		1	SLEEVE	
300	90335-0025	-		2	COMP. SPRING 22010, 1X11X26	
Common Parts						
010	2524118-0000	-		1	SHAFT	
050	440259-0000	-		2	RETAINING RING	
500	312105-0381	-		4	SCREW M6S ISO 4014 M6X55 A480	
510	312812-0316	-		4	HEXAGON NUT, NY-LOCK M6 A480	
520	315105-0153	-		4	WASHER ISO 7089-6-200 HV-A4	

Pos	Part No	SP	UN	Qty	Description	Page No

Machine Type | Group Description | Used-In | Group Number | Page No

Tetra Pak

SPC
Spare Parts Catalogue

This page is intentionally left blank.

Pos	Part No	SP	UN	Qty	Description	Page No
Dateunit DOMINO						
	A2579770-0100	-		1	GUIDE RAIL	**439**
	90458-2573	-		1	INK JET PRINTER A300 STD 6M CONDUIT	
Extra transformer						
	90245-0022	-		1	MATCHING TRANSF. 18 KVA	
With Launchkit						
	A2592387-0100	-		1	LAUNCH KIT	
PAPRTROLLEY						
	A1538186-0100	-		1	PAPER TROLLEY	**441**

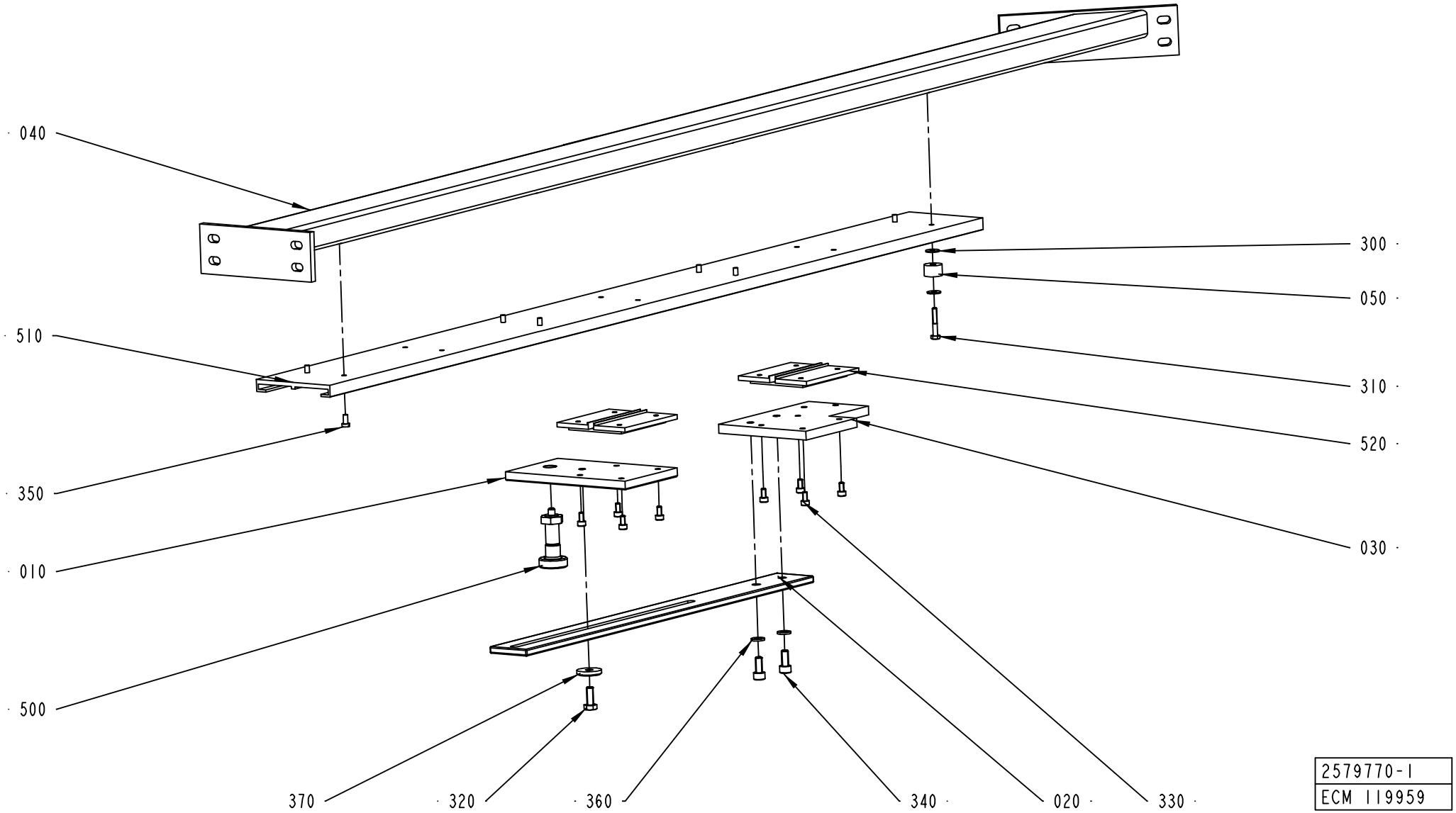
040
510
350
010
500
370
320
360
340
020
330
030
520
310
050
300
2579770-1
ECM 119959

ECM: 119964 - 20021212
Group number: 2579770-0100
Assembly Drawing: 2579770-1_1_AA

Issue: 20030310

Pos	Part No	SP	UN	Qty	Description	Page No
Common Parts						
010	2579715-0000	-		1	ADJUSTING PLATE	
020	2579714-0000	-		1	ADJUSTING RAIL	
030	2579713-0000	-		1	ATTACHMENT PLATE	
040	2579712-0000	-		1	CANTILEVER	
050	2579716-0000	-		1	STOP	
300	90005-0082	-		2	WASHER PLAIN ROUND 4,3(M4)/12,H=1	
310	312105-0297	-		1	SCREW M6S ISO 4017 M4X25 A480	
320	312105-0368	-		1	SCREW M6S M6X16 A280	
330	312115-0287	-		8	SCREW ISO4762 M4X8 A4	
340	312115-0367	-		2	SCREW ISO4762 M6X14 A4	
350	312125-0287	-		7	SCREW PAN HEAD MCS M4X8 SS	
360	315105-0153	-		2	WASHER ISO 7089-6-200 HV-A4	
370	315125-0153	-		1	WASHER TBRSB 6,4X22X4 A4	
500	90459-1940	-		1	LOCK KNOB, GN613 NIK 6	
510	90459-1944	-	MM	1000	GUIDE BAR, 80X12X3960	
520	90458-1955	-		2	CARRIAGE, NW 02 80	

Pos	Part No	SP	UN	Qty	Description	Page No

Machine Type | Group Description | Used-In | Group Number | Page No

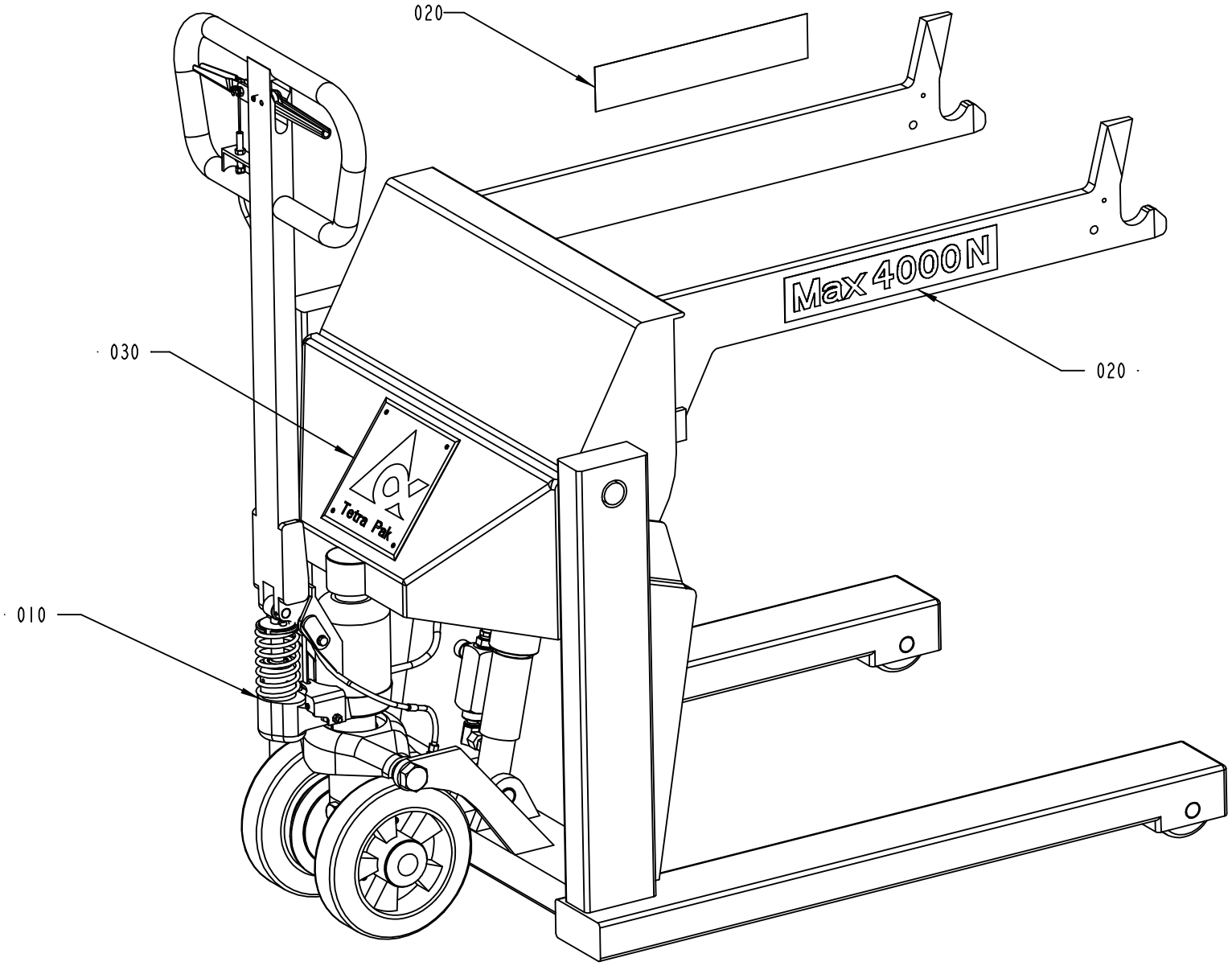

1538186-1
ECN 91803

ECM: 91829 - 20010504
Group number: 1538186-0100
Assembly Drawing: 1538186-1_1_AA

Issue: 20030310

Pos	Part No	SP	UN	Qty	Description	Page No
Common Parts						
010	B90458-1474	-		1	PAPER TROLLEY, 32 04 192 3	
	A1558477-0100	*-*		*1*	*WHEEL*	
	A1558479-0100	*-*		*1*	*HANDLE*	
	A1558480-0100	*-*		*1*	*LIFTING CYLINDER*	
	312812-0324	*-*		*1*	*HEXAGON NUT, NY-LOCK M16 A480*	
	312105-0634	*-*		*1*	*SCREW M6S ISO 4014 M16X70 A480*	
	312101-0678	*-*		*2*	*SCREW M6S M20X70 FZB*	
	90067-0365	*A*		*1*	*HYDRAULIC HOSE*	
	90067-0368	*A*		*1*	*YOKE*	
	90067-0370	*A*		*2*	*WHEEL*	
	90067-0371	*A*		*4*	*WASHER PLAIN, BRB, 21/29 H=2,5*	
	90067-0372	*A*		*2*	*SHAFT*	
	B90458-1473	*-*		*1*	*PUMP, 34 73 521 7*	
	90067-0369	*A*		*1*	*VALVE ARM*	
	90458-1393	*A*		*1*	*PUMP CYLINDER, 34 73 522 5*	
	90458-1468	*A*		*1*	*SPLIT PIN, 43 71 234 8*	
	90458-1469	*A*		*1*	*PUMP HOUSING, 34 73 517 5*	
	90458-1470	*A*		*1*	*SINK VALVE COMPL, 34 73 094 5*	
	90067-0351	*A*		*1*	*SEAL KIT*	
	90067-0354	*A*		*1*	*PUMP PISTON*	
	90067-0355	*A*		*1*	*COMPRESSION SPRING*	
	90067-0356	*A*		*1*	*TOP WASHER*	
	90067-0357	*-*		*1*	*REPAIR KIT*	
020	522308-0000	-		2	SIGN	
030	574658-0000	-		1	LOGOTYPE TP	

Pos	Part No	SP	UN	Qty	Description	Page No

Tetra Pak

SPC
Spare Parts Catalogue

This page is intentionally left blank.

ECM: 83156 - 20021218
Group number: 639338-0100
Assembly Drawing:

Issue: 20030310

Pos	Part No	SP	UN	Qty	Description	Page No
Common Parts						
0010	A1368571-0100	-		1	ELECTRIC EQUIPMENT	**447**
0040	A45157-0100	-		1	STANDARD EQUIPMENT	
0060	A45159-0100	-		1	ELECTRICAL DOCUMENT	

Pos	Part No	SP	UN	Qty	Description	Page No

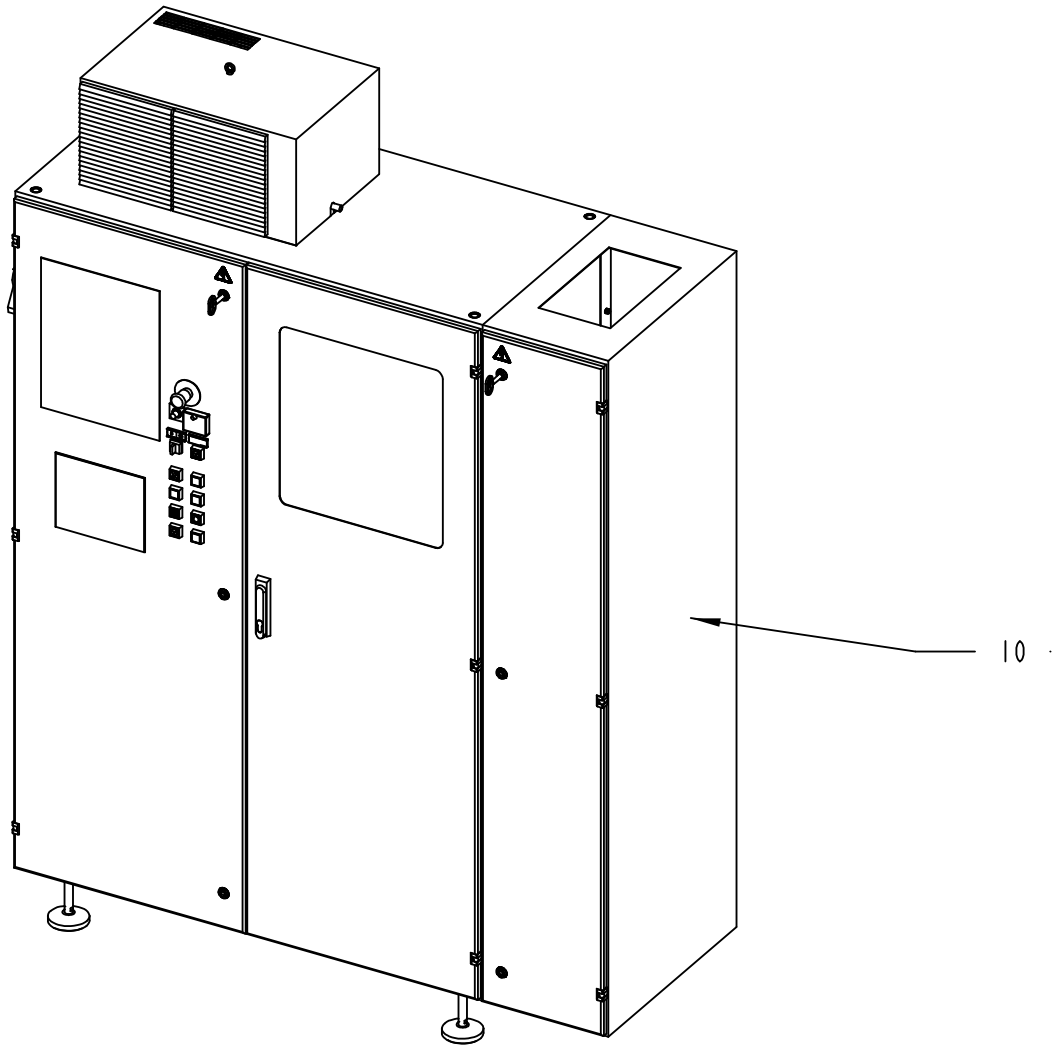

1368571-1
ECM 119179

ECM: 119936 - 20021218
Group number: 1368571-0100
Assembly Drawing: 1368571-1_1_AB

Issue: 20030310

Pos	Part No	SP	UN	Qty	Description	Page No
Common Parts						
010	A1368572-0100	-		1	ELECTRICAL CABINET	**449**

Pos	Part No	SP	UN	Qty	Description	Page No

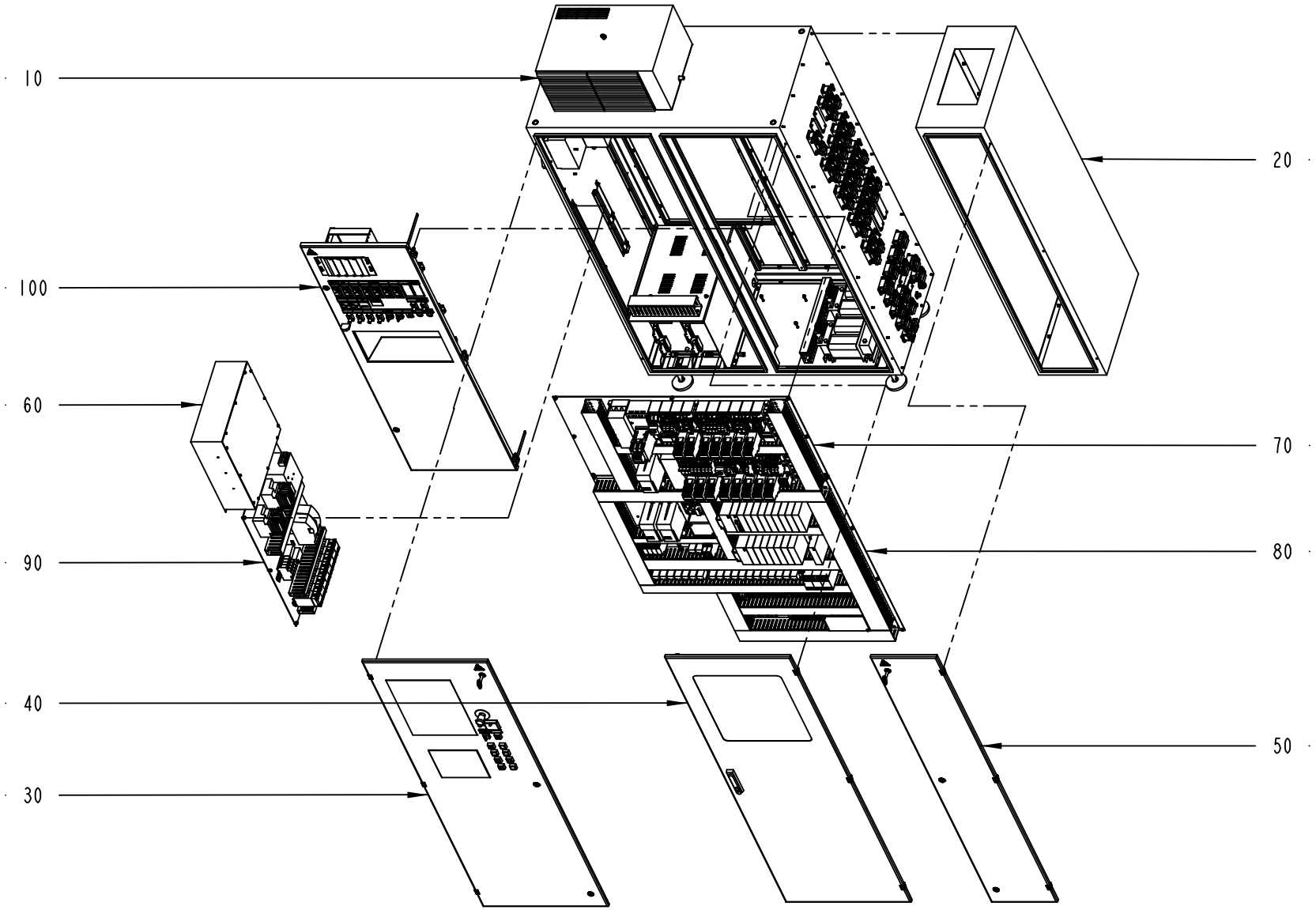

1368572-1
ECM 119179

ECM: 119182 - 20021218
Group number: 1368572-0100
Assembly Drawing: 1368572-1_1_AB

Issue: 20030310

Pos	Part No	SP	UN	Qty	Description	Page No
Common Parts						
010	A1368573-0100	-		1	ELECTRICAL CABINET	**451, 453, 455, 457**
020	A1368574-0100	-		1	CABINET SIDE	**461**
030	A2548710-0100	-		1	DOOR	**463, 465**
040	A1368577-0100	-		1	DOOR	**469**
050	A1368578-0100	-		1	DOOR	**471**
060	A1368579-0100	-		1	COVER	**473**
070	A1368580-0100	-		1	MOUNTING PLATE	**475, 477**
080	A1368581-0100	-		1	MOUNTING PLATE	**479, 481**
090	A1368582-0100	-		1	MOUNTING PLATE	**487**
100	A1368575-0100	-		1	SWING FRAME	**489, 491**

Pos	Part No	SP	UN	Qty	Description	Page No

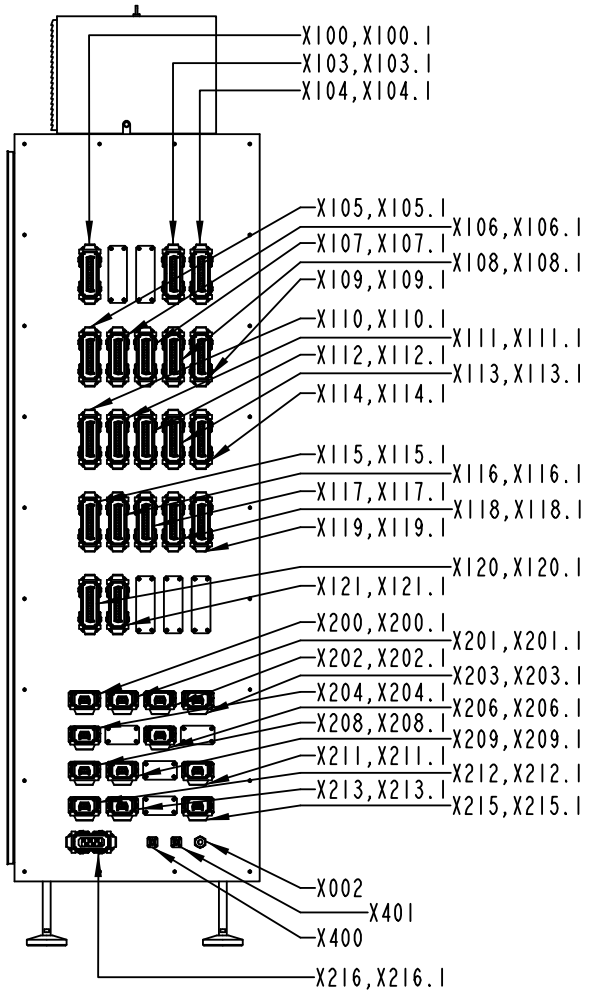
X100,X100.1
X103,X103.1
X104,X104.1
X105,X105.1
X106,X106.1
X107,X107.1
X108,X108.1
X109,X109.1
X110,X110.1
X111,X111.1
X112,X112.1
X113,X113.1
X114,X114.1
X115,X115.1
X116,X116.1
X117,X117.1
X118,X118.1
X119,X119.1
X120,X120.1
X121,X121.1
X200,X200.1
X201,X201.1
X202,X202.1
X203,X203.1
X204,X204.1
X206,X206.1
X208,X208.1
X209,X209.1
X211,X211.1
X212,X212.1
X213,X213.1
X215,X215.1
X002
X401
X400
X216,X216.1

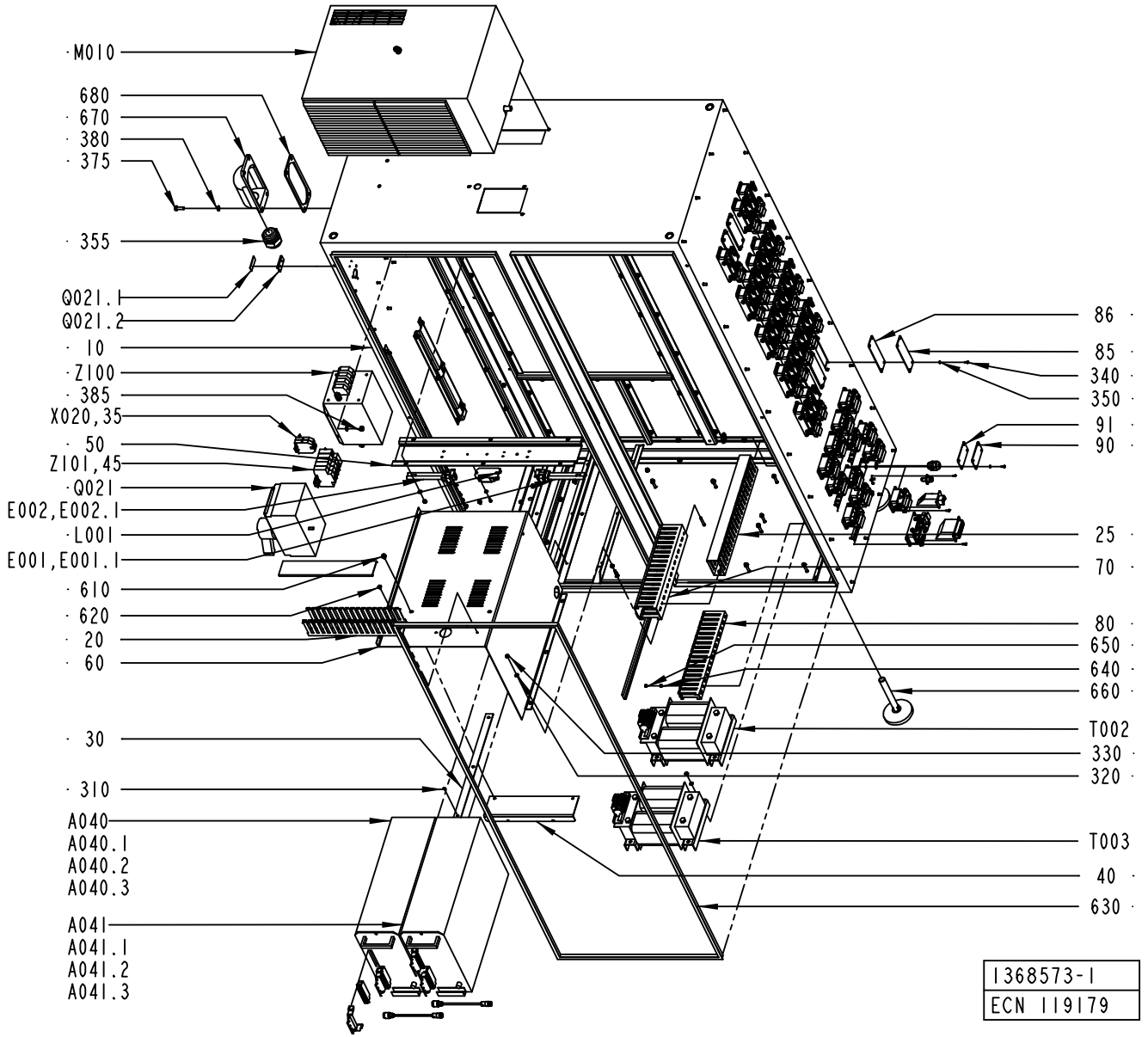
M010
680
670
380
375
355
Q021.1
Q021.2
10
Z100
385
X020,35
50
Z101,45
Q021
E002,E002.1
L001
E001,E001.1
610
620
20
60
30
310
A040
A040.1
A040.2
A040.3
A041
A041.1
A041.2
A041.3
86
85
340
350
91
90
25
70
80
650
640
660
T002
330
320
T003
40
630
1368573-1
ECN 119179

ECM: 119183 - 20021218
Group number: 1368573-0100
Assembly Drawing: 1368573-1_1_AB

Issue: 20030310

Pos	Part No	SP	UN	Qty	Description	Page No
Common Parts						
010	1368595-0000	-		1	CABINET	
020	1368619-0000	-		1	CABLE DUCT	
025	1367323-0000	-		1	CABLE DUCT	
030	731049-0000	-		4	SLIDING STRIP TPIH	
035	1367314-0000	-		1	RAIL	
040	1361009-0000	-		1	BRACKET	
045	1368668-0000	-		1	RAIL	
050	1368669-0000	-		1	BRACKET	
055	A1368594-0100	-		1	TERMINAL	**459**
060	1368608-0000	-		1	COVER PLATE	
070	1368637-0000	-		6	CABLE DUCT	
080	1368638-0000	-		4	CABLE DUCT	
085	1361415-0000	-		5	COVERPLATE	
086	1361422-0000	-		5	GASKET	
090	1361416-0000	-		4	COVERPLATE	
091	1361423-0000	-		4	GASKET	
310	312145-0285	-		12	SCREW COUNTERS.SLOT.HD. MFS 4X6 SS	
320	315105-0153	-		169	WASHER ISO 7089-6-200 HV-A4	
330	312812-0316	-		167	HEXAGON NUT, NY-LOCK M6 A480	
340	312125-0289	-		168	SPåRSKRUV MCS 4X10 A480	
350	315105-0136	-		36	WASHER ISO 7089-4-200 HV-A4	
355	352103-0122	-		1	CABLE GLAND, ST 36, PR47,0/PG36	
360	312125-0222	-		8	SPåRSKRUV MCS M3X8 SS	
365	312125-0291	-		6	SCREW PAN HEAD MCS M4X12 SS	
375	312105-0453	-		4	SCREW M6S ISO 4017 M8X25 A480	
380	315105-0165	-		8	WASHER ISO 7089-8-200 HV-A4	
385	312812-0318	-		4	HEXAGON NUT, NY-LOCK M8 A480	
610	90287-0157	-		4	SCREW M6SF FLAT HEAD M6X10 88	
620	90287-0337	-		3	SCREW RECESSED HEAD M4X10 WH. NYLON	
630	90143-0057	-	MM	4282	STRIP EMKA 1011-05 21X11MM	
631	90143-0057	-	MM	4282	STRIP EMKA 1011-05 21X11MM	
640	90005-0158	-		33	SPACER 4,3/8, H=5	
645	90062-0059	-		6	LOCK WASHER SERRAT.EXT.GEAR,4,3/8 H=0,5	
650	90261-0079	-		33	PLUG, BLIND, PLASTIC, NO. 1955	
660	90347-0142	-		4	FOOT	
670	90010-0028	-		1	ANGLE FLANGE, SINGLE E-2633839	
680	90010-0029	-		1	FLANGE PACKING, FL 21	
690	90099-0110	-		1	NUT, PR 22,5 (PG16)	
A040	B67600-0501	-		1	TPIH GENERATOR	
10	*542036-0000*	-			*ETIKETT "PART NO" 84X140MM*	
500	*565140-0001*	-			*COMPONENTS WITHOUT TP-NO*	
510	*565144-0000*	-			*LABEL LED*	
520	*565145-0000*	-			*LABEL X1/X2*	
530	*565146-0000*	-			*INSULATION SPACER*	
540	*565147-0000*	-			*GUIDE RAIL LEFT*	
550	*565148-0000*	-			*GUIDE RAIL RIGHT*	
560	*565149-0000*	-			*GUIDE RAIL BACK*	
570	*565150-0000*	-			*FRONT HANDLE*	
580	*565151-0000*	-			*BOX BOTTOM*	
590	*565152-0000*	-			*FRAME*	
600	*565153-0000*	-			*COMPLETE BOX*	
610	*565154-0000*	-			*BOX UPPER PART*	
F100	*B67577-0501*	-			*POWER CARD*	
130	*573137-0001*	-			*COMPONENTS WITHOUT TP-NO*	
140	*565299-0000*	-			*SORTING INSTRUCTION*	
150	*543112-0000*	-			*MODIFYING EUROPECONNECTOR*	
160	*573138-0000*	-		*3*	*HEAT SINK L*	
180	*565301-0000*	-			*CAPACITOR CABLE RED*	
190	*565300-0000*	-			*CAPACITOR CABLE BLACK*	
200	*575980-0000*	-			*CIRCUIT DIAGRAM*	
F101	*B67564-0101*	-			*THIH TOROID COIL 1*	
100	*564253-0001*	-			*COMPONENTS WITHOUT TP-NO*	
110	*532687-0000*	-			*TOROID COIL 1*	
F102	*B67565-0101*	-			*TPIH TOROID COIL 2*	
100	*564254-0001*	-			*COMPONENTS WITHOUT TP-NO*	
110	*532688-0000*	-			*TOROID COIL 2*	
F103	*B67566-0101*	-			*TPIH TOROID COIL 3*	
100	*564255-0001*	-			*COMPONENTS WITHOUT TP-NO*	
110	*532689-0000*	-			*TOROID COIL 3*	
F104	*B67567-0101*	-			*TPIH THERMOSTAT CABLE*	
100	*564256-0001*	-			*COMPONENTS WITHOUT TP-NO*	
110	*532690-0000*	-			*THERMOSTAT CABLE*	
F105	*B67568-0101*	-			*TPIH COIL SINGLE LAYER*	
100	*564257-0001*	-			*COMPONENTS WITHOUT TP-NO*	
110	*532692-0000*	-			*COIL SINGLE LAYER*	
120	*532691-0000*	-			*COIL FORMER*	
F106	*B67569-0101*	-			*TPIH TANK COIL*	
100	*564260-0001*	-			*COMPONENTS WITHOUT TP-NO*	
110	*532693-0000*	-			*BOTTOM GABLE*	
120	*532695-0000*	-			*GABLE*	
130	*532696-0000*	-			*RING SPRING*	
140	*532697-0000*	-			*WINDING HOLDER*	
150	*565286-0000*	-			*WINDING HOLDER*	

Machine Type | Group Description | Used-In | Group Number | Page No

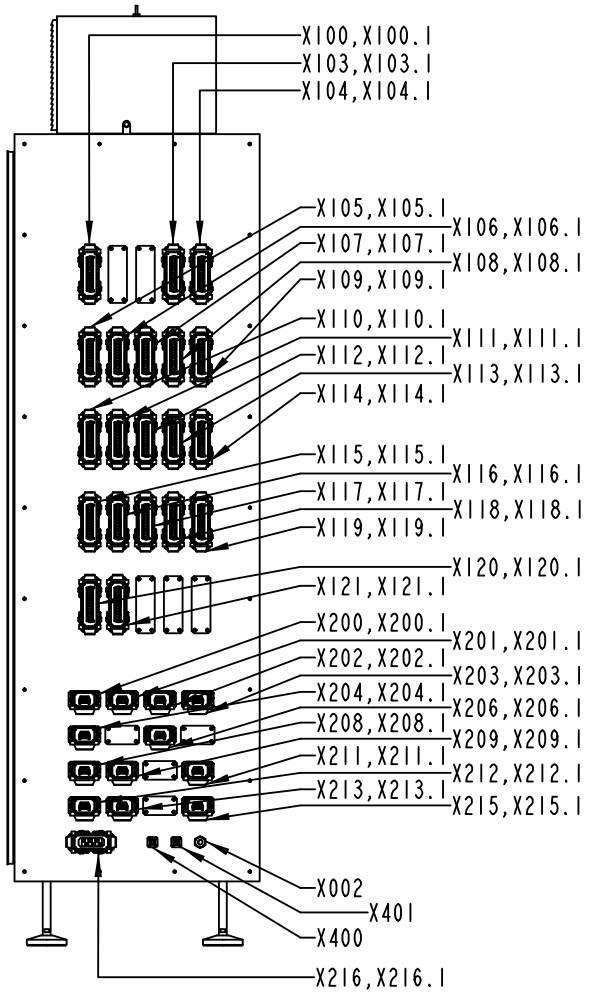
X100,X100.1
X103,X103.1
X104,X104.1
X105,X105.1
X106,X106.1
X107,X107.1
X108,X108.1
X109,X109.1
X110,X110.1
X111,X111.1
X112,X112.1
X113,X113.1
X114,X114.1
X115,X115.1
X116,X116.1
X117,X117.1
X118,X118.1
X119,X119.1
X120,X120.1
X121,X121.1
X200,X200.1
X201,X201.1
X202,X202.1
X203,X203.1
X204,X204.1
X206,X206.1
X208,X208.1
X209,X209.1
X211,X211.1
X212,X212.1
X213,X213.1
X215,X215.1
X002
X401
X400
X216,X216.1

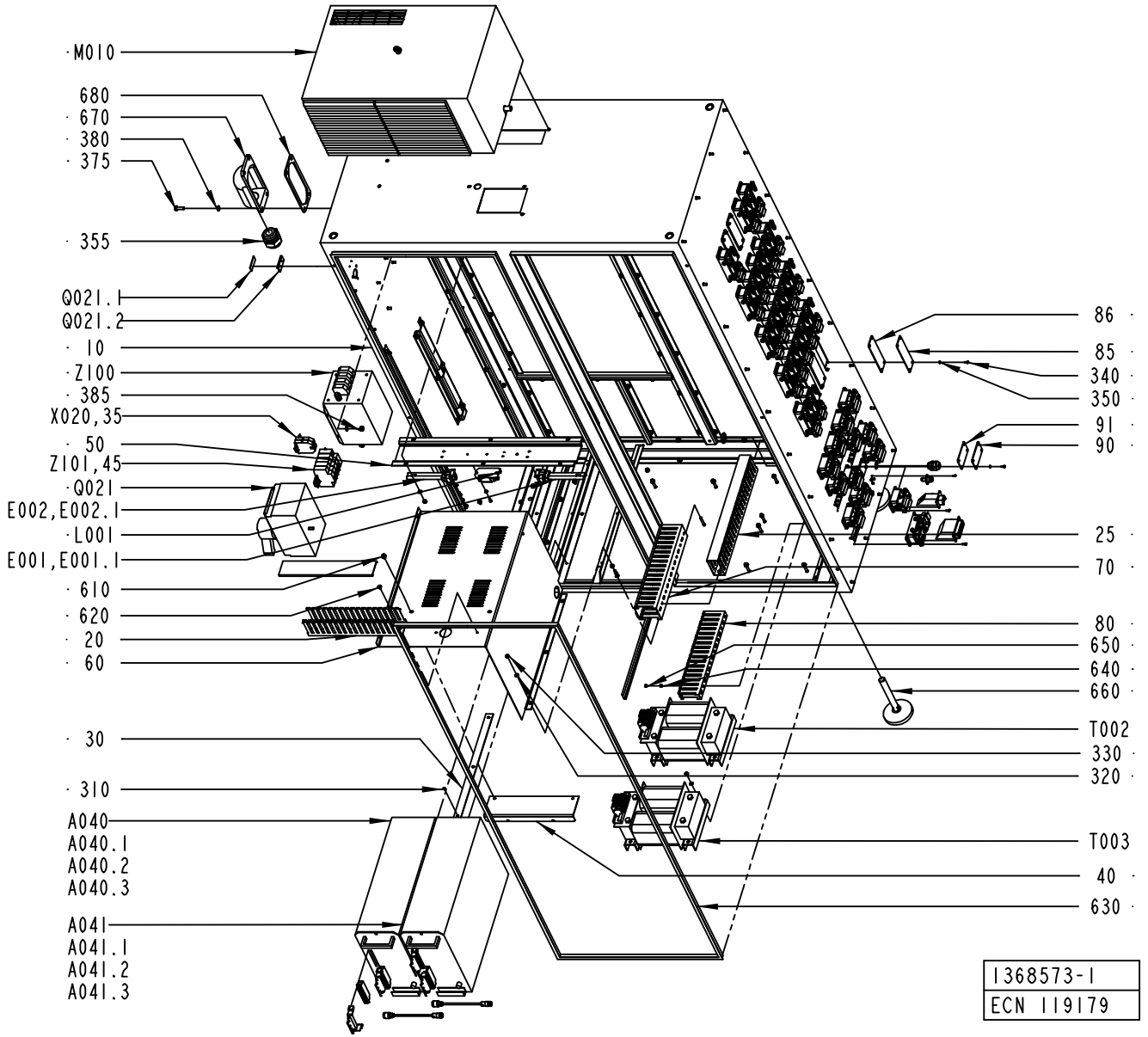
M010
680
670
380
375
355
Q021.1
Q021.2
10
Z100
385
X020,35
50
Z101,45
Q021
E002,E002.1
L001
E001,E001.1
610
620
20
60
30
310
A040
A040.1
A040.2
A040.3
A041
A041.1
A041.2
A041.3
86
85
340
350
91
90
25
70
80
650
640
660
T002
330
320
T003
40
630
1368573-1
ECN 119179

Pos	Part No	SP	UN	Qty	Description	Page No
Common Parts (Cont'd)						
A040.1	90110-0121	-		1	FEMALE INSERT GDS A-H 09 06 215 2811	
A040.2	90110-0122	-		1	COVER, 09 06 000 9957	
A040.3	548770-0007	-		1	COAXIAL CABLE L=3000 MM	
A041	B67600-0501	-		1	TPIH GENERATOR	
10	*542036-0000*	-			*ETIKETT "PART NO" 84X140MM*	
500	*565140-0001*	-			*COMPONENTS WITHOUT TP-NO*	
510	*565144-0000*	-			*LABEL LED*	
520	*565145-0000*	-			*LABEL X1/X2*	
530	*565146-0000*	-			*INSULATION SPACER*	
540	*565147-0000*	-			*GUIDE RAIL LEFT*	
550	*565148-0000*	-			*GUIDE RAIL RIGHT*	
560	*565149-0000*	-			*GUIDE RAIL BACK*	
570	*565150-0000*	-			*FRONT HANDLE*	
580	*565151-0000*	-			*BOX BOTTOM*	
590	*565152-0000*	-			*FRAME*	
600	*565153-0000*	-			*COMPLETE BOX*	
610	*565154-0000*	-			*BOX UPPER PART*	
F100	*B67577-0501*	-			*POWER CARD*	
130	*573137-0001*	-			*COMPONENTS WITHOUT TP-NO*	
140	*565299-0000*	-			*SORTING INSTRUCTION*	
150	*543112-0000*	-			*MODIFYING EUROPECONNECTOR*	
160	*573138-0000*	-		*3*	*HEAT SINK L*	
180	*565301-0000*	-			*CAPACITOR CABLE RED*	
190	*565300-0000*	-			*CAPACITOR CABLE BLACK*	
200	*575980-0000*	-			*CIRCUIT DIAGRAM*	
F101	*B67564-0101*	-			*THIH TOROID COIL 1*	
100	*564253-0001*	-			*COMPONENTS WITHOUT TP-NO*	
110	*532687-0000*	-			*TOROID COIL 1*	
F102	*B67565-0101*	-			*TPIH TOROID COIL 2*	
100	*564254-0001*	-			*COMPONENTS WITHOUT TP-NO*	
110	*532688-0000*	-			*TOROID COIL 2*	
F103	*B67566-0101*	-			*TPIH TOROID COIL 3*	
100	*564255-0001*	-			*COMPONENTS WITHOUT TP-NO*	
110	*532689-0000*	-			*TOROID COIL 3*	
F104	*B67567-0101*	-			*TPIH THERMOSTAT CABLE*	
100	*564256-0001*	-			*COMPONENTS WITHOUT TP-NO*	
110	*532690-0000*	-			*THERMOSTAT CABLE*	
F105	*B67568-0101*	-			*TPIH COIL SINGLE LAYER*	
100	*564257-0001*	-			*COMPONENTS WITHOUT TP-NO*	
110	*532692-0000*	-			*COIL SINGLE LAYER*	
120	*532691-0000*	-			*COIL FORMER*	
F106	*B67569-0101*	-			*TPIH TANK COIL*	
100	*564260-0001*	-			*COMPONENTS WITHOUT TP-NO*	
110	*532693-0000*	-			*BOTTOM GABLE*	
120	*532695-0000*	-			*GABLE*	
130	*532696-0000*	-			*RING SPRING*	
140	*532697-0000*	-			*WINDING HOLDER*	
150	*565286-0000*	-			*WINDING HOLDER*	
160	*565287-0000*	-			*SPACER*	
170	*532694-0000*	-			*TANK COIL*	
F107	*B67570-0101*	-			*TPIH CAPACITOR CARD*	
100	*564261-0001*	-			*COMPONENTS WITHOUT TP-NO*	
120	*484995-0000*	-			*PRINTED CIRCUIT BOARD*	
130	*565289-0000*	-			*COMPONENT REFERENCE*	
F108	*B67582-0101*	-			*TPIH HEATSINK PREREGULATO*	
100	*573134-0001*	-			*COMPONENTS WITHOUT TP-NO*	
110	*565290-0000*	-			*HEAT SINK V1*	
120	*532703-0000*	-			*HEAT SINK V2*	
130	*565291-0000*	-			*HEAT SINK V3*	
140	*573135-0000*	-			*HEAT SINK PREREGULATOR*	
F110	*B67573-0101*	-			*TPIH TRANSISTOR PACKAGE R*	
100	*564264-0001*	-			*COMPONENTS WITHOUT TP-NO*	
110	*565295-0000*	-			*GABLE LEFT*	
120	*532709-0000*	-			*GABLE RIGHT*	
130	*532710-0000*	-			*STUDSCREW*	
140	*532711-0000*	-			*HEAT SINK PLATE PLANE*	
150	*532712-0000*	-			*DISTANCE PLATE*	
160	*565296-0000*	-			*WASHER*	
170	*565297-0000*	-			*TRANSISTOR PACKAGE R*	
F111	*B67581-0101*	-			*TPIH TRANSISTOR PACKAGE L*	
100	*565312-0001*	-			*COMPONENTS WITHOUT TP-NO*	
110	*565295-0000*	-			*GABLE LEFT*	
120	*532709-0000*	-			*GABLE RIGHT*	
130	*532710-0000*	-			*STUDSCREW*	
140	*532711-0000*	-			*HEAT SINK PLATE PLANE*	
150	*532712-0000*	-			*DISTANCE PLATE*	
160	*565296-0000*	-			*WASHER*	
180	*565298-0000*	-			*TRANSISTOR PACKAGE L*	
F112	*B67574-0401*	-			*OUTPUT TRANSFORMER*	
100	*565134-0001*	-			*COMPONENTS WITHOUT TP-NO*	
110	*532716-0000*	-			*OUTPUT TRANSFORMER*	
F200	*B67578-0101*	-			*TPIH FAN HOLDER*	
202	*565136-0001*	-			*COMPONENTS WITHOUT TP-NO*	

Machine Type | Group Description | Used-In | Group Number | Page No

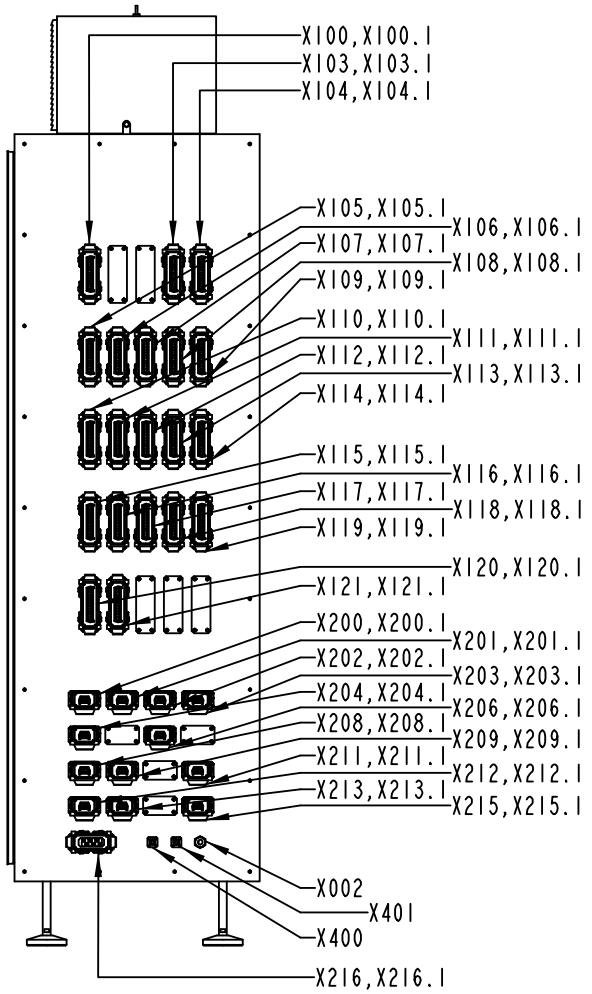
X100,X100.1
X103,X103.1
X104,X104.1
X105,X105.1
X106,X106.1
X107,X107.1
X108,X108.1
X109,X109.1
X110,X110.1
X111,X111.1
X112,X112.1
X113,X113.1
X114,X114.1
X115,X115.1
X116,X116.1
X117,X117.1
X118,X118.1
X119,X119.1
X120,X120.1
X121,X121.1
X200,X200.1
X201,X201.1
X202,X202.1
X203,X203.1
X204,X204.1
X206,X206.1
X208,X208.1
X209,X209.1
X211,X211.1
X212,X212.1
X213,X213.1
X215,X215.1
X002
X401
X400
X216,X216.1

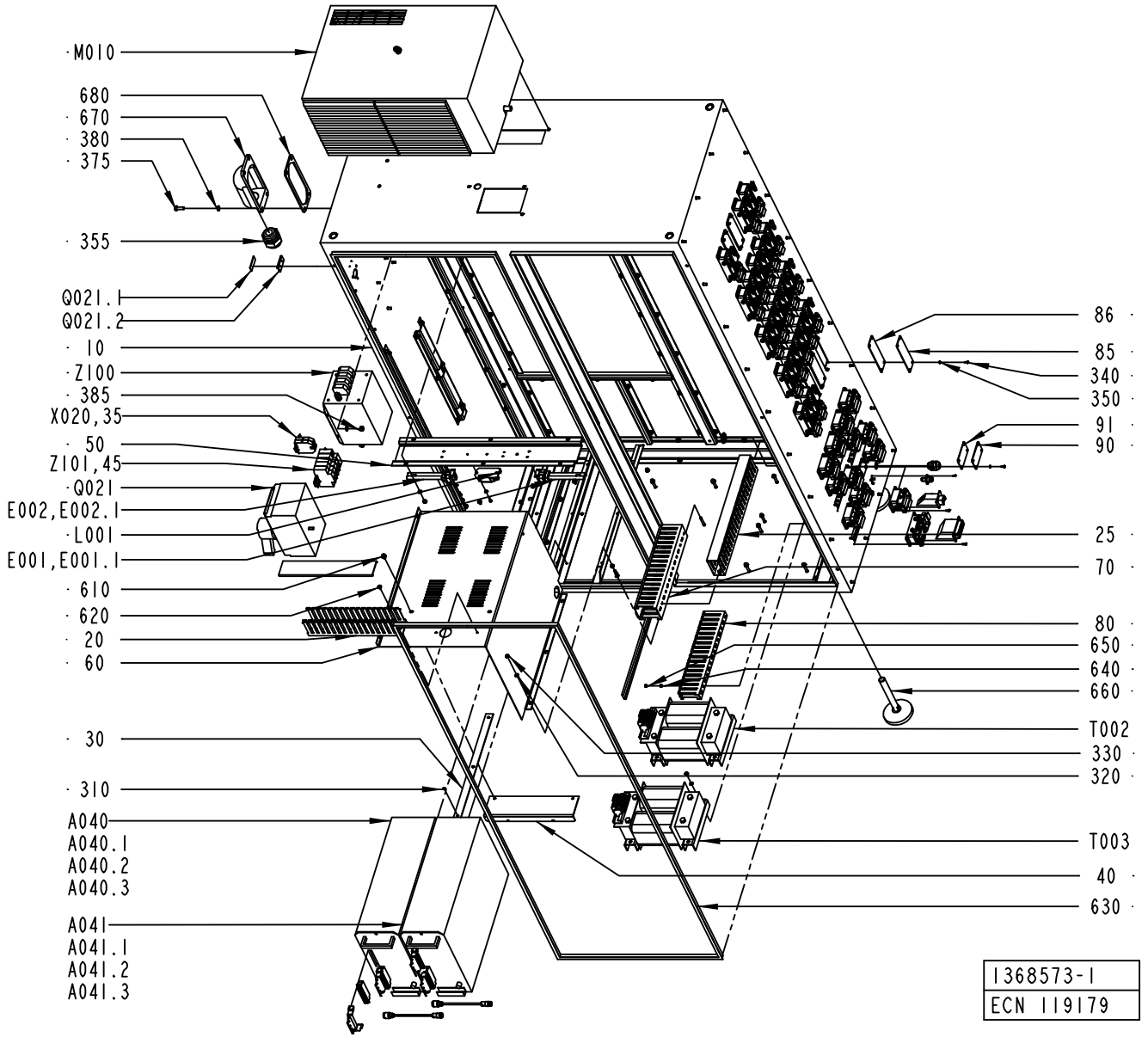
M010
680
670
380
375
355
Q021.1
Q021.2
10
Z100
385
X020,35
50
Z101,45
Q021
E002,E002.1
L001
E001,E001.1
610
620
20
60
30
310
A040
A040.1
A040.2
A040.3
A041
A041.1
A041.2
A041.3
86
85
340
350
91
90
25
70
80
650
640
660
T002
330
320
T003
40
630
1368573-1
ECN 119179

Pos	Part No	SP	UN	Qty	Description	Page No
Common Parts (Cont'd)						
A041	B67600-0501	-		1	TPIH GENERATOR	
10	*542036-0000*	-			*ETIKETT "PART NO" 84X140MM*	
500	*565140-0001*	-			*COMPONENTS WITHOUT TP-NO*	
510	*565144-0000*	-			*LABEL LED*	
520	*565145-0000*	-			*LABEL X1/X2*	
530	*565146-0000*	-			*INSULATION SPACER*	
540	*565147-0000*	-			*GUIDE RAIL LEFT*	
550	*565148-0000*	-			*GUIDE RAIL RIGHT*	
560	*565149-0000*	-			*GUIDE RAIL BACK*	
570	*565150-0000*	-			*FRONT HANDLE*	
580	*565151-0000*	-			*BOX BOTTOM*	
590	*565152-0000*	-			*FRAME*	
600	*565153-0000*	-			*COMPLETE BOX*	
610	*565154-0000*	-			*BOX UPPER PART*	
F100	*B67577-0501*	-			*POWER CARD*	
130	*573137-0001*	-			*COMPONENTS WITHOUT TP-NO*	
140	*565299-0000*	-			*SORTING INSTRUCTION*	
150	*543112-0000*	-			*MODIFYING EUROPECONNECTOR*	
160	*573138-0000*	-		*3*	*HEAT SINK L*	
180	*565301-0000*	-			*CAPACITOR CABLE RED*	
190	*565300-0000*	-			*CAPACITOR CABLE BLACK*	
200	*575980-0000*	-			*CIRCUIT DIAGRAM*	
F101	*B67564-0101*	-			*THIH TOROID COIL 1*	
100	*564253-0001*	-			*COMPONENTS WITHOUT TP-NO*	
110	*532687-0000*	-			*TOROID COIL 1*	
F102	*B67565-0101*	-			*TPIH TOROID COIL 2*	
100	*564254-0001*	-			*COMPONENTS WITHOUT TP-NO*	
110	*532688-0000*	-			*TOROID COIL 2*	
F103	*B67566-0101*	-			*TPIH TOROID COIL 3*	
100	*564255-0001*	-			*COMPONENTS WITHOUT TP-NO*	
110	*532689-0000*	-			*TOROID COIL 3*	
F104	*B67567-0101*	-			*TPIH THERMOSTAT CABLE*	
100	*564256-0001*	-			*COMPONENTS WITHOUT TP-NO*	
110	*532690-0000*	-			*THERMOSTAT CABLE*	
F105	*B67568-0101*	-			*TPIH COIL SINGLE LAYER*	
100	*564257-0001*	-			*COMPONENTS WITHOUT TP-NO*	
110	*532692-0000*	-			*COIL SINGLE LAYER*	
120	*532691-0000*	-			*COIL FORMER*	
F106	*B67569-0101*	-			*TPIH TANK COIL*	
100	*564260-0001*	-			*COMPONENTS WITHOUT TP-NO*	
110	*532693-0000*	-			*BOTTOM GABLE*	
120	*532695-0000*	-			*GABLE*	
130	*532696-0000*	-			*RING SPRING*	
140	*532697-0000*	-			*WINDING HOLDER*	
150	*565286-0000*	-			*WINDING HOLDER*	
160	*565287-0000*	-			*SPACER*	
170	*532694-0000*	-			*TANK COIL*	
F107	*B67570-0101*	-			*TPIH CAPACITOR CARD*	
100	*564261-0001*	-			*COMPONENTS WITHOUT TP-NO*	
120	*484995-0000*	-			*PRINTED CIRCUIT BOARD*	
130	*565289-0000*	-			*COMPONENT REFERENCE*	
F108	*B67582-0101*	-			*TPIH HEATSINK PREREGULATO*	
100	*573134-0001*	-			*COMPONENTS WITHOUT TP-NO*	
110	*565290-0000*	-			*HEAT SINK V1*	
120	*532703-0000*	-			*HEAT SINK V2*	
130	*565291-0000*	-			*HEAT SINK V3*	
140	*573135-0000*	-			*HEAT SINK PREREGULATOR*	
F110	*B67573-0101*	-			*TPIH TRANSISTOR PACKAGE R*	
100	*564264-0001*	-			*COMPONENTS WITHOUT TP-NO*	
110	*565295-0000*	-			*GABLE LEFT*	
120	*532709-0000*	-			*GABLE RIGHT*	
130	*532710-0000*	-			*STUDSCREW*	
140	*532711-0000*	-			*HEAT SINK PLATE PLANE*	
150	*532712-0000*	-			*DISTANCE PLATE*	
160	*565296-0000*	-			*WASHER*	
170	*565297-0000*	-			*TRANSISTOR PACKAGE R*	
F111	*B67581-0101*	-			*TPIH TRANSISTOR PACKAGE L*	
100	*565312-0001*	-			*COMPONENTS WITHOUT TP-NO*	
110	*565295-0000*	-			*GABLE LEFT*	
120	*532709-0000*	-			*GABLE RIGHT*	
130	*532710-0000*	-			*STUDSCREW*	
140	*532711-0000*	-			*HEAT SINK PLATE PLANE*	
150	*532712-0000*	-			*DISTANCE PLATE*	
160	*565296-0000*	-			*WASHER*	
180	*565298-0000*	-			*TRANSISTOR PACKAGE L*	
F112	*B67574-0401*	-			*OUTPUT TRANSFORMER*	
100	*565134-0001*	-			*COMPONENTS WITHOUT TP-NO*	
110	*532716-0000*	-			*OUTPUT TRANSFORMER*	
F200	*B67578-0101*	-			*TPIH FAN HOLDER*	
202	*565136-0001*	-			*COMPONENTS WITHOUT TP-NO*	
203	*543120-0000*	-			*PARTITION WALL*	
204	*533839-0000*	-			*FILTER*	
205	*533840-0000*	-			*GASKET*	

Machine Type | Group Description | Used-In | Group Number | Page No

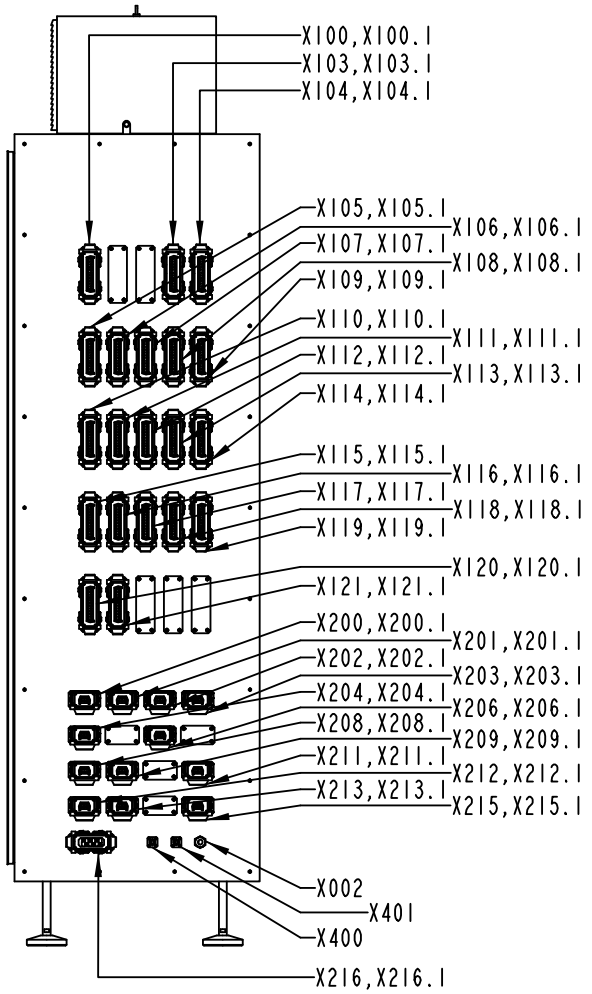
X100,X100.1
X103,X103.1
X104,X104.1
X105,X105.1
X106,X106.1
X107,X107.1
X108,X108.1
X109,X109.1
X110,X110.1
X111,X111.1
X112,X112.1
X113,X113.1
X114,X114.1
X115,X115.1
X116,X116.1
X117,X117.1
X118,X118.1
X119,X119.1
X120,X120.1
X121,X121.1
X200,X200.1
X201,X201.1
X202,X202.1
X203,X203.1
X204,X204.1
X206,X206.1
X208,X208.1
X209,X209.1
X211,X211.1
X212,X212.1
X213,X213.1
X215,X215.1
X002
X401
X400
X216,X216.1

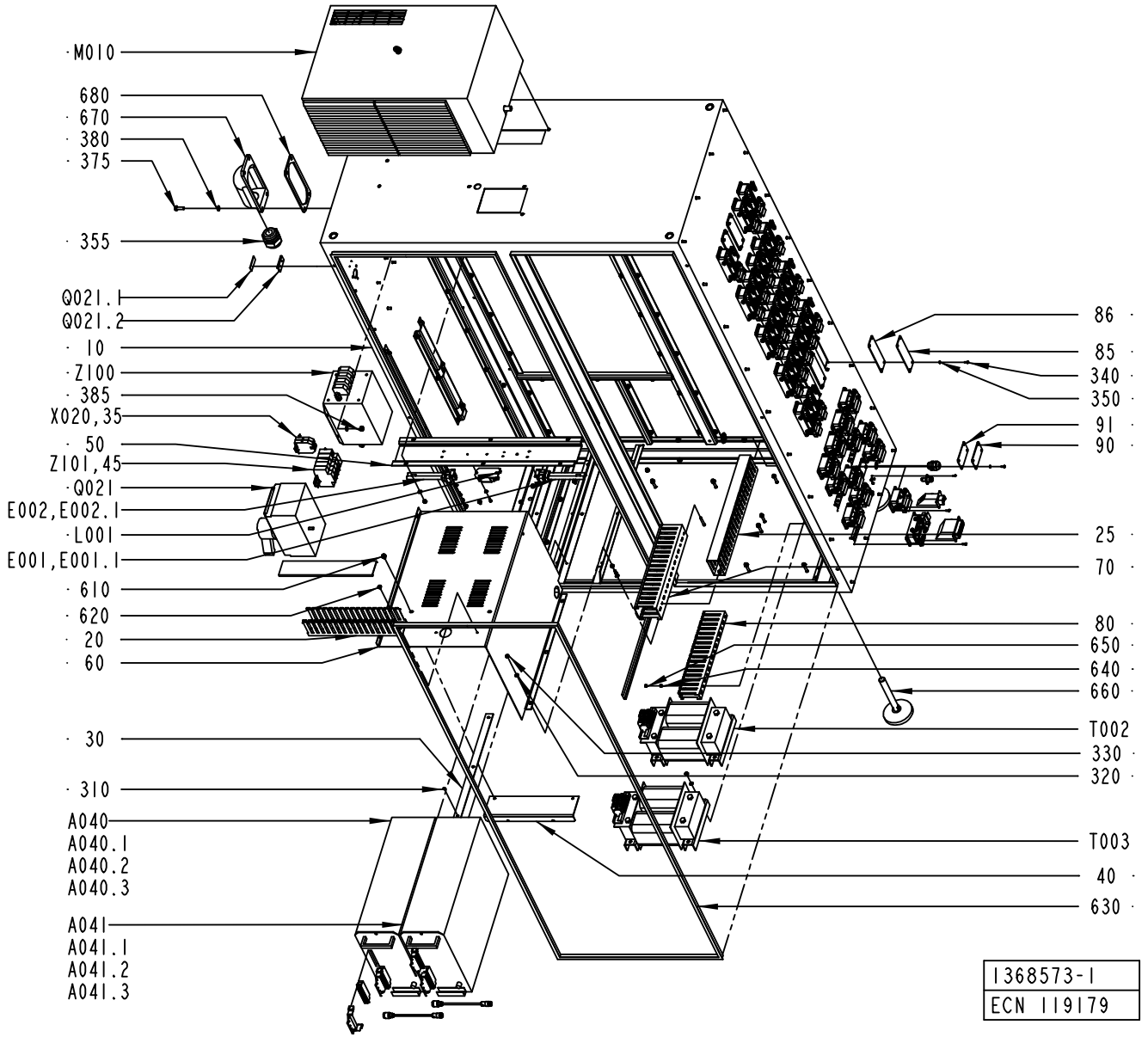
M010
680
670
380
375
355
Q021.1
Q021.2
10
Z100
385
X020,35
50
Z101,45
Q021
E002,E002.1
L001
E001,E001.1
610
620
20
60
30
310
A040
A040.1
A040.2
A040.3
A041
A041.1
A041.2
A041.3
86
85
340
350
91
90
25
70
80
650
640
660
T002
330
320
T003
40
630
1368573-1
ECN 119179

Pos	Part No	SP	UN	Qty	Description	Page No
Common Parts (Cont'd)						
X216	90110-0165	-		1	FEMALE INSERT 70.005.0653.0	
X216.1	90110-0167	-		1	CHASSIS HOUSING 310133-33	
X400	90110-0127	-		1	COAXIAL CONNECTOR, GE 15057C10HBN	
X401	90110-0127	-		1	COAXIAL CONNECTOR, GE 15057C10HBN	
Z100	90024-0060	-		1	POWER LINE FILTER, 80 A 250/440 VAC	
Z101	B90082-0013	-		1	OVERVOLTAGE PROTECTOR	
	90082-0301	*A*		*3*	*OVERVOLTOLTAGE PROTECTOR*	

Pos	Part No	SP	UN	Qty	Description	Page No

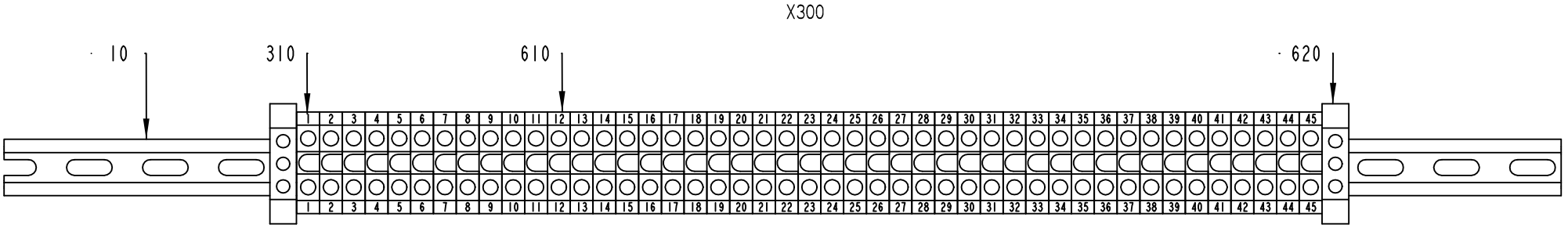

1368594-1
ECM 119179

ECM: 119196 - 20021218
Group number: 1368594-0100
Assembly Drawing: 1368594-1_1_AA

Issue: 20030310

Pos	Part No	SP	UN	Qty	Description	Page No
Common Parts						
010	1368662-0000	-		1	RAIL	
310	359011-0807	-		2	MARKING PLATES 5-FW 1-50	
610	90077-0079	-		45	FEED THROUGH TERMINAL, 02943.6	
620	90135-0026	-		2	EARTH TERMINAL, 3802.6	

Pos	Part No	SP	UN	Qty	Description	Page No

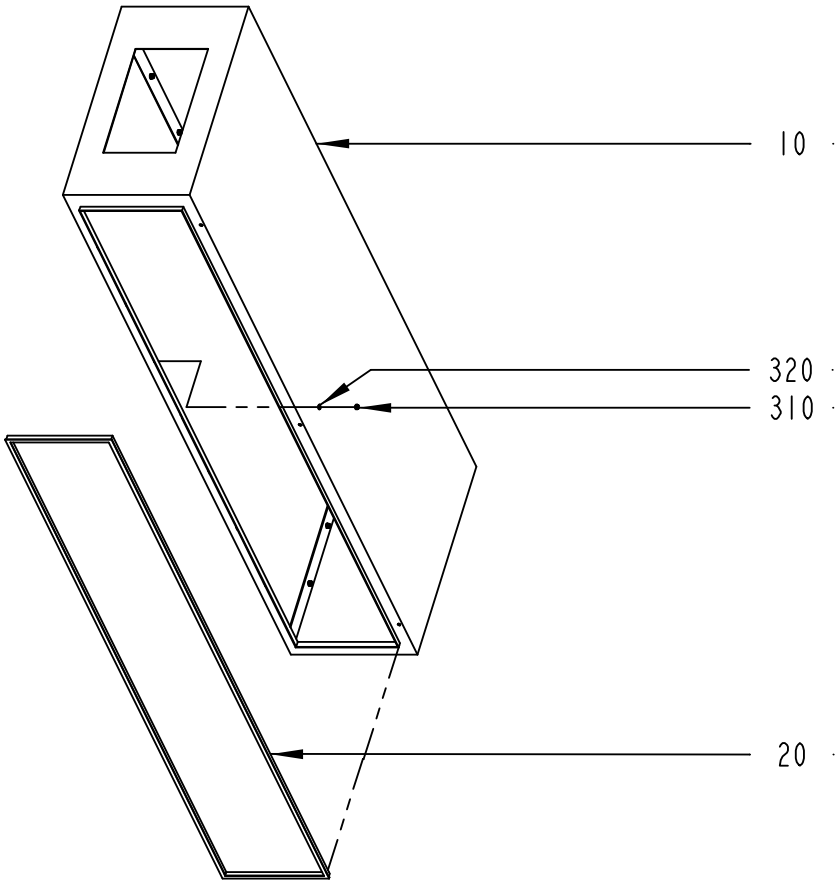

1368574-1
ECN 89318

ECM: 89327 - 20020222
Group number: 1368574-0100
Assembly Drawing: 1368574-1_1_AA

Issue: 20030310

Pos	Part No	SP	UN	Qty	Description	Page No
Common Parts						
010	1368596-0000	-		1	CABINET SIDE	
020	90143-0057	-	MM	4183	STRIP EMKA 1011-05 21X11MM	
310	312812-0316	-		22	HEXAGON NUT, NY-LOCK M6 A480	
320	315105-0153	-		22	WASHER ISO 7089-6-200 HV-A4	

Pos	Part No	SP	UN	Qty	Description	Page No

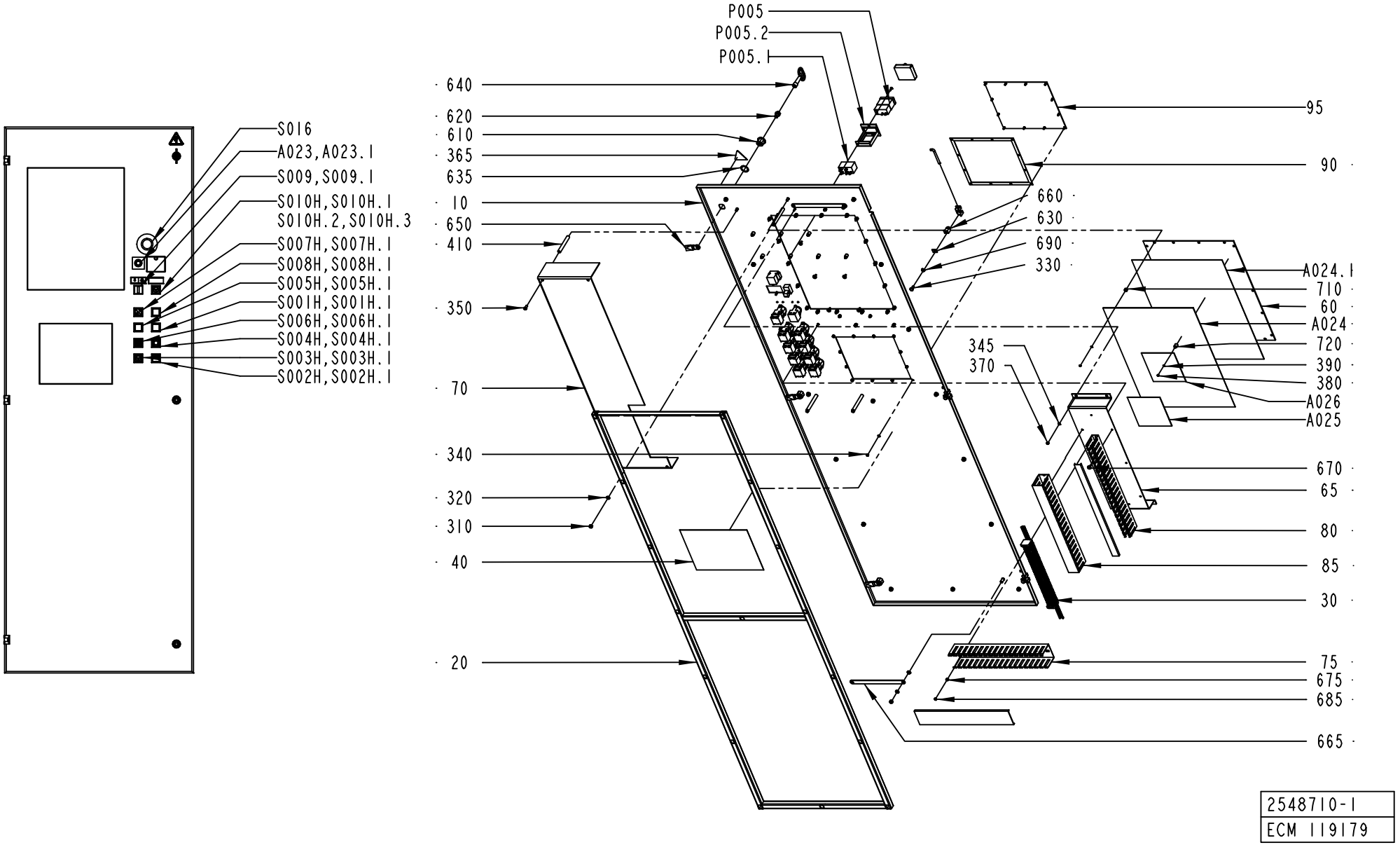
S016
A023,A023.1
S009,S009.1
S010H,S010H.1
S010H.2,S010H.3
S007H,S007H.1
S008H,S008H.1
S005H,S005H.1
S001H,S001H.1
S006H,S006H.1
S004H,S004H.1
S003H,S003H.1
S002H,S002H.1
P005
P005.2
P005.1
640
620
610
365
635
10
650
410
350
70
340
320
310
40
20
95
90
660
630
690
330
A024.1
710
60
A024
720
390
380
A026
A025
345
370
670
65
80
85
30
75
675
685
665
2548710-1
ECM 119179

ECM: 119192 - 20021218
Group number: 2548710-0100
Assembly Drawing: 2548710-1_1_AA

Issue: 20030310

Pos	Part No	SP	UN	Qty	Description	Page No
NOPLMS						
090	1347796-0000	-		1	SEAL	
095	1478507-0000	-		1	COVER	
PLMS						
A051	B1349775-0101	-		1	DISPLAY UNIT 8,4"	
010	*B1369440-0100*	*B*		*1*	*BEZEL ASSEMBLY 8,4"*	
0010	*1349770-0000*	*-*		*1*	*FOIL*	
0020	*1348178-0000*	*-*		*1*	*FRONT PLATE*	
0030	*B90041-0096*	*-*		*1*	*FRAME, BEZEL, 8,4" , E274HL-585*	
	90153-0060	*-*		*1*	*ADHESIVE, 3M DP-190 B/A*	
0050	*1348175-0000*	*-*		*1*	*GASKET*	
0060	*598116-0000*	*-*		*1*	*SPACER*	
045	*1367630-0000*	*-*		*1*	*GASKET*	
060	*90041-0094*	*B*		*1*	*DISPLAY, SHARP 8,4"*	
070	*90041-0081*	*B*		*1*	*DISPLAY ADAPTER FOR LVDS, 1930-2200-010*	
080	*1348179-0000*	*-*		*1*	*MOUNTING PLATE*	
090	*90041-0080*	*B*		*1*	*CABLE, CPU-LVDSCARD+DISPLAY-LVDSCARD*	
100	*495765-0000*	*-*		*4*	*WASHER*	
110	*495722-0000*	*-*		*4*	*SCREW BUSHING*	
120	*90041-0098*	*B*		*1*	*ADAPTER BACKLIGHT, CXA-0214*	
130	*90041-0097*	*B*		*1*	*CONTROLLER, E271-2210*	
140	*90041-0078*	*B*		*1*	*REMOTE COMMUNIKATION LINK BOARD,E000014B*	
150	*B1129570-0000*	*B*		*1*	*LDS, LVDS TERMINAL 1*	
	90194-0154	*-*		*1*	*TERM. MARKING LABEL KIT, BLA-BSTB, 1-24*	
	90110-0282	*-*		*1*	*PLINTH, BLA18, 128336*	
160	*1348705-0000*	*-*		*1*	*COVER*	
170	*90220-0302*	*-*		*1*	*CLAMP FOR SCR.CABLE, 16MM, 55-016-89*	
180	*90220-0304*	*-*		*5*	*CLAMP FOR SCR.CABLE, 24MM,*	
190	*1362133-0000*	*-*		*1*	*PROTECTION PLATE*	
210	*312605-0310*	*-*		*20*	*HEXAGON NUT, M6M M3 A280*	
220	*312605-0312*	*-*		*14*	*HEXAGON NUT, M6M M4 A280*	
225	*312812-0312*	*-*		*8*	*HEXAGON NUT, NY-LOCK M4 A480*	
230	*312125-0299*	*-*		*4*	*SCREW PAN HEAD MCS M4X30 SS*	
235	*90457-0949*	*-*		*4*	*SPACER NUT M4/20 NI PL*	
240	*312125-0220*	*-*		*20*	*SKRUV SLOT.PAN HD. MCS 3X6 A480*	
245	*312132-0284*	*-*		*4*	*SCREW SLOT. PAN HEAD MSCS M4X5*	
250	*90316-0019*	*-*		*2*	*SPACER SCREW DSM M3/5 NI PL*	
260	*90316-0023*	*-*		*8*	*SPACER NUT DSM M3055X8*	
270	*90316-0022*	*-*		*2*	*SPACER NUT DSNF M3060X20*	
280	*90005-0127*	*-*		*22*	*WASHER PL.RND.NYL.3,2/7 H=0,5*	
290	*315105-0136*	*-*		*28*	*WASHER ISO 7089-4-200 HV-A4*	
300	*90316-0016*	*-*		*4*	*SPACER NUT DSM M3/20 NI PL*	
310	*90041-0324*	*-*		*4*	*SPACER NUT, DSM M3050 X 40*	
320	*90041-0327*	*B*		*1*	*BACKLIGHT INVERTER CABLE, E400000A*	
330	*90041-0100*	*B*		*1*	*RESITIVE TOUCH CABLE, E400001A*	
340	*359705-0015*	*-*		*1*	*WARNING SIGN ISO, RISK OF ELECTRIC SHOCK*	
Common Parts						
010	2548714-0000	-		1	DOOR	
020	2548715-0000	-		1	FRAME	
030	A1368593-0100	-		1	TERMINAL	**467**
040	1367324-0000	-		1	FUSE PANEL LABEL	
060	1368615-0000	-		1	WINDOW	
065	1368628-0000	-		1	BRACKET	
070	2548722-0000	-		1	COVER	
075	2548723-0000	-		1	CABLE DUCT	
080	1368660-0000	-		1	CABLE DUCT	
085	1368661-0000	-		1	CABLE DUCT	
310	312812-0316	-		19	HEXAGON NUT, NY-LOCK M6 A480	
320	315105-0153	-		19	WASHER ISO 7089-6-200 HV-A4	
330	312105-0366	-		3	SCREW M6S M6X12 A280	
340	312605-0312	-		12	HEXAGON NUT, M6M M4 A280	
345	315105-0136	-		16	WASHER ISO 7089-4-200 HV-A4	
350	312125-0366	-		4	SCREW PAN HEAD MCS M6X12 SS	
365	359705-0015	-		1	WARNING SIGN ISO, RISK OF ELECTRIC SHOCK	
370	312812-0312	-		4	HEXAGON NUT, NY-LOCK M4 A480	
375	359240-0100	-		2	SIGN HOLDER FOR 359240-0001	
380	312605-0310	-		26	HEXAGON NUT, M6M M3 A280	
385	312145-0291	-		2	SCREW COUNT.SLOT.HD. 4X12 A4	
390	315105-0124	-		26	WASHER ISO 7089-3-200 HV-A4	
395	311521-0142	-		4	BLANK RIVET 3,2X6	
410	495130-0080	-		4	SPACER SLEEVE	
610	90237-0142	-		3	LOCK HOUSING, 1000-U45	
620	90237-0202	-		3	LOCK, INSERT SQUARE,1000-U2 8 MM	
630	1361036-0000	-		3	GASKET	
635	90237-0322	-		3	LOCK GASKET, 1000-U137	
640	90237-0324	-		1	KEY, 1104-02 FOR SQUARE 8 MM	
650	90237-0368	-		3	LOCK CAM, 1000-15	
660	90248-0032	-		3	HINGE, 1110-U2	
665	90135-0043	-		2	EARTH WIRE L=200 MM 16 MM2	
670	90287-0337	-		6	SCREW RECESSED HEAD M4X10 WH. NYLON	
675	90005-0158	-		3	SPACER 4,3/8, H=5	
685	90261-0079	-		3	PLUG, BLIND, PLASTIC, NO. 1955	

Machine Type | Group Description | Used-In | Group Number | Page No

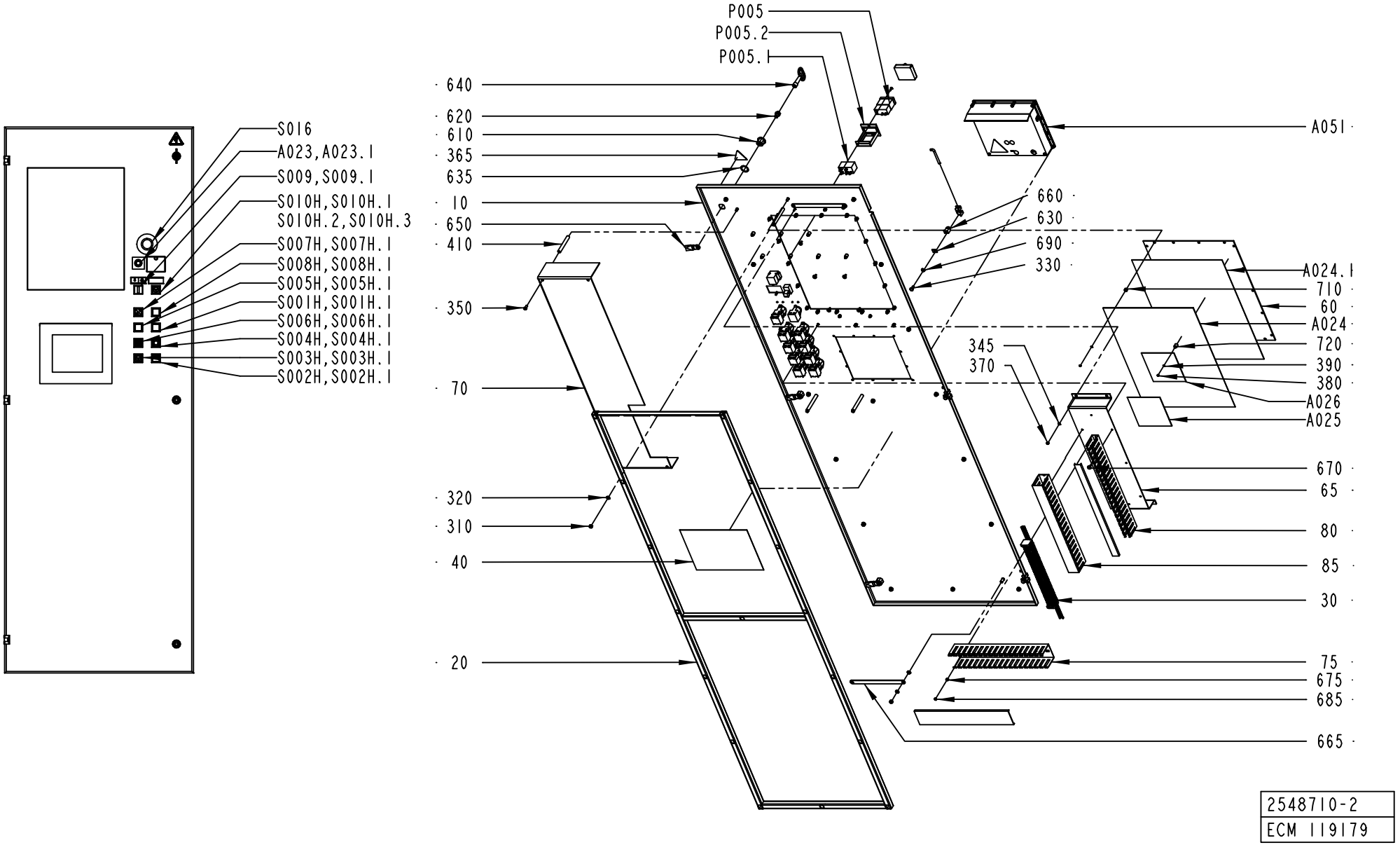
S016
A023,A023.1
S009,S009.1
S010H,S010H.1
S010H.2,S010H.3
S007H,S007H.1
S008H,S008H.1
S005H,S005H.1
S001H,S001H.1
S006H,S006H.1
S004H,S004H.1
S003H,S003H.1
S002H,S002H.1
P005
P005.2
P005.1
640
620
610
365
635
10
650
410
350
70
320
310
40
20
A051
660
630
690
330
A024.1
710
60
A024
720
390
380
A026
A025
345
370
670
65
80
85
30
75
675
685
665
2548710-2
ECM 119179

Pos	Part No	SP	UN	Qty	Description	Page No
Common Parts (Cont'd)						
690	90062-0015	-		5	LOCK WASHER SERRAT.EXT.GEAR,6,4/11 H=0,7	
710	971286-0000	-		18	SPACER H=6MM	
720	975849-0000	-		8	SPACER	
A023	B558389-0101	-		1	MULTI PURPOSE POTENTIOM.	
100	*578265-0000*	*-*		*1*	*COMPONENTS WITHOUT TP-NO*	
110	*578266-0000*	*-*		*1*	*CIRCUIT BOARD*	
120	*578267-0000*	*-*		*1*	*CASING*	
A023.1	551922-0000	-		1	LABEL,POTENTIOMETER DESIGN CORR.	
A024	1369441-0000	-		1	CIRCUIT BOARD	
A024.1	2518143-0000	-		1	DISPLAY	
A025	B68699-0101	-		1	MULTIPLEXER CARD 56LED	
010	*578860-0000*	*-*		*1*	*CIRCUIT BOARD*	
020	*578861-0001*	*-*			*COMPONENTS WITHOUT TP-NO*	
A026	B68699-0101	-		1	MULTIPLEXER CARD 56LED	
010	*578860-0000*	*-*		*1*	*CIRCUIT BOARD*	
020	*578861-0001*	*-*			*COMPONENTS WITHOUT TP-NO*	
P005	90053-0024	-		1	COUNTER 24VDC 6 DIGITS	
P005.1	90053-0311	-		1	BASE 916	
P005.2	90053-0305	-		1	FRAME F 1 DV	
S001H	90064-0098	-		1	PUSH BUTTON, CLEAR	
S001H.1	359301-0001	-		1	SIGN "UP"	
S002H	B90064-0082	-		1	PUSH BUTTON, WHITE	
	90036-0057	*B*		*1*	*LIGHT BULB, BA9S 28V*	
S002H.1	359301-0005	-		1	SIGN "DOWN"	
S003H	90064-0098	-		1	PUSH BUTTON, CLEAR	
S003H.1	359301-0506	-		1	BUTTON SIGN, INCHING	
S004H	90064-0084	-		1	PUSH BUTTON, YELLOW	
S004H.1	359301-0110	-		1	SIGN "SHORT STOP"	
S005H	B90064-0082	-		1	PUSH BUTTON, WHITE	
	90036-0057	*B*		*1*	*LIGHT BULB, BA9S 28V*	
S005H.1	359301-0456	-		1	BUTTON SIGN, PACKAGE DISPOSAL	
S006H	B90064-0082	-		1	PUSH BUTTON, WHITE	
	90036-0057	*B*		*1*	*LIGHT BULB, BA9S 28V*	
S006H.1	359301-0125	-		1	SIGN "LUBRICATION"	
S007H	B90064-0082	-		1	PUSH BUTTON, WHITE	
	90036-0057	*B*		*1*	*LIGHT BULB, BA9S 28V*	
S007H.1	359301-0131	-		1	BUTTON SIGN, LAMP TEST / ALARM RES.	
S008H	B90064-0082	-		1	PUSH BUTTON, WHITE	
	90036-0057	*B*		*1*	*LIGHT BULB, BA9S 28V*	
S008H.1	359301-0215	-		1	SIGN "WASH PRODUCT VALVE"	
S009	90111-0120	-		1	SWITCH, 2 POS.704.510 .0A+704.901.5/A	
S009.1	359241-0140	-		1	SIGN "LIGHTING MACHINE"	
S010H	90064-0098	-		1	PUSH BUTTON, CLEAR	
S010H.1	359301-0506	-		1	BUTTON SIGN, INCHING	
S010H.2	359241-0311	-		1	SIGN, LOW SPEED	
S016	90458-1651	-		1	EMERGENCY STOP, ZB4-BS-844 ZB4-BZ-104	
S016.1	486826-0001	-		1	SIGN "EMERGENCY STOP"	

Machine Type | Group Description | Used-In | Group Number | Page No

PX001

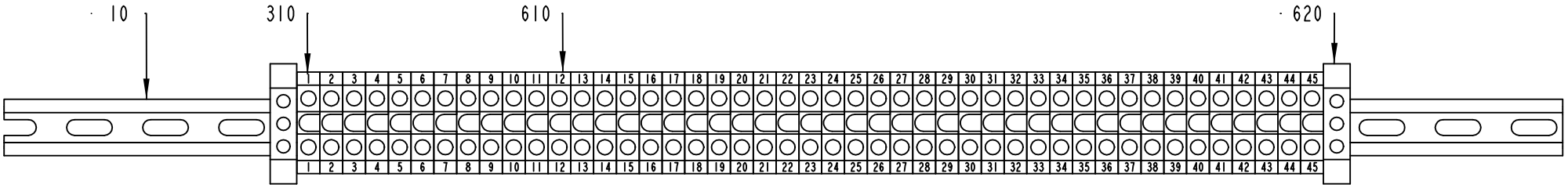

1368593-1
ECM 119179

Pos	Part No	SP	UN	Qty	Description	Page No
Common Parts						
010	1368662-0000	-		1	RAIL	
310	359011-0807	-		2	MARKING PLATES 5-FW 1-50	
610	90077-0079	-		45	FEED THROUGH TERMINAL, 02943.6	
620	90135-0026	-		2	EARTH TERMINAL, 3802.6	

Pos	Part No	SP	UN	Qty	Description	Page No

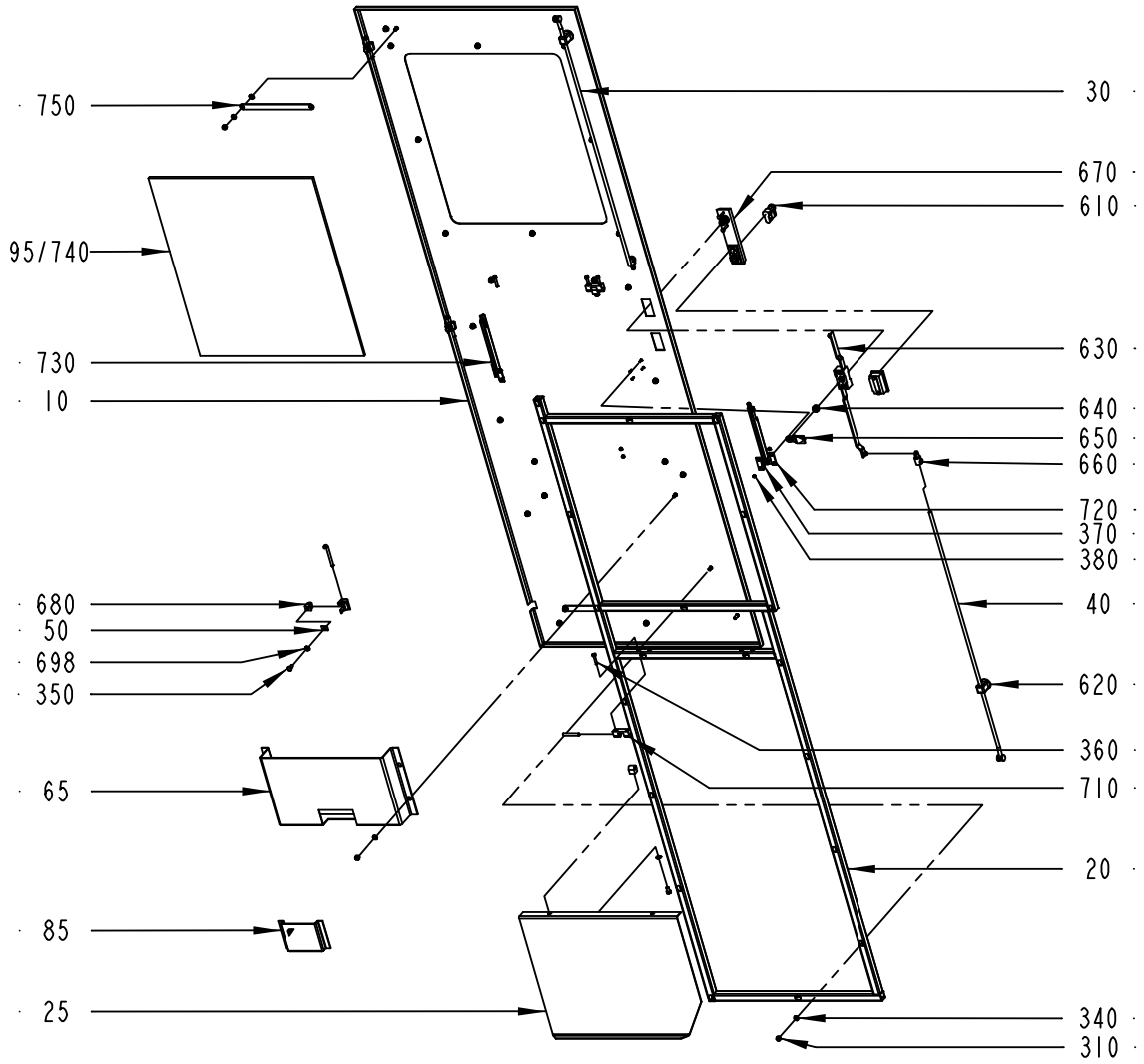

1368577-1
ECN 119179

ECM: 119185 - 20021218
Group number: 1368577-0100
Assembly Drawing: 1368577-1_1_AB

Issue: 20030310

Pos	Part No	SP	UN	Qty	Description	Page No
Common Parts						
010	1368602-0000	-		1	DOOR	
020	1368605-0000	-		1	FRAME	
025	1368606-0000	-		1	TABLE	
030	1368665-0000	-		1	ROD	
040	1368666-0000	-		1	ROD	
050	1361036-0000	-		3	GASKET	
065	2562365-0000	-		1	HOLDER	
085	970802-0000	-		1	DISCETTE BOX 3,5"	
095	1368607-0000	-		1	GLASS PANE	
310	312812-0316	-		26	HEXAGON NUT, NY-LOCK M6 A480	
340	315105-0153	-		26	WASHER ISO 7089-6-200 HV-A4	
350	312105-0366	-		5	SCREW M6S M6X12 A280	
360	312105-0333	-		4	SCREW M6S ISO 4017 M5X25 A480	
370	315105-0124	-		8	WASHER ISO 7089-3-200 HV-A4	
380	312810-0310	-		8	HEXAGON NUT, NY-LOCK M3 FZB	
610	90237-0128	-		1	LOCK CYLINDER, 1109-U3	
620	90237-0151	-		2	GUIDE, 1001-U11	
630	90237-0153	-		1	LOCK HOUSING, 1121-U26-0B	
640	90237-0155	-		1	LOCK ADAPTER, 1121-U40	
650	90237-0156	-		1	LOCK BOLT, 1000-16	
660	90237-0158	-		2	ROUND BAR, NO. 1049-U18-L839.5	
670	90237-0176	-		1	TURNING HANDLE	
680	90248-0032	-		3	HINGE, 1110-U2	
698	90062-0015	-		7	LOCK WASHER SERRAT.EXT.GEAR,6,4/11 H=0,7	
710	90248-0019	-		2	HINGE 1054-U1	
720	90457-1055	-		1	HINGE, COVER STAY, RIGHT, NO. 1050-U1	
730	90457-1056	-		1	HINGE, COVER STAY, LEFT, NO. 1050-U2	
740	90157-0041	-	L	1	SEALING COMPOUND	
750	90135-0043	-		1	EARTH WIRE L=200 MM 16 MM2	

Pos	Part No	SP	UN	Qty	Description	Page No

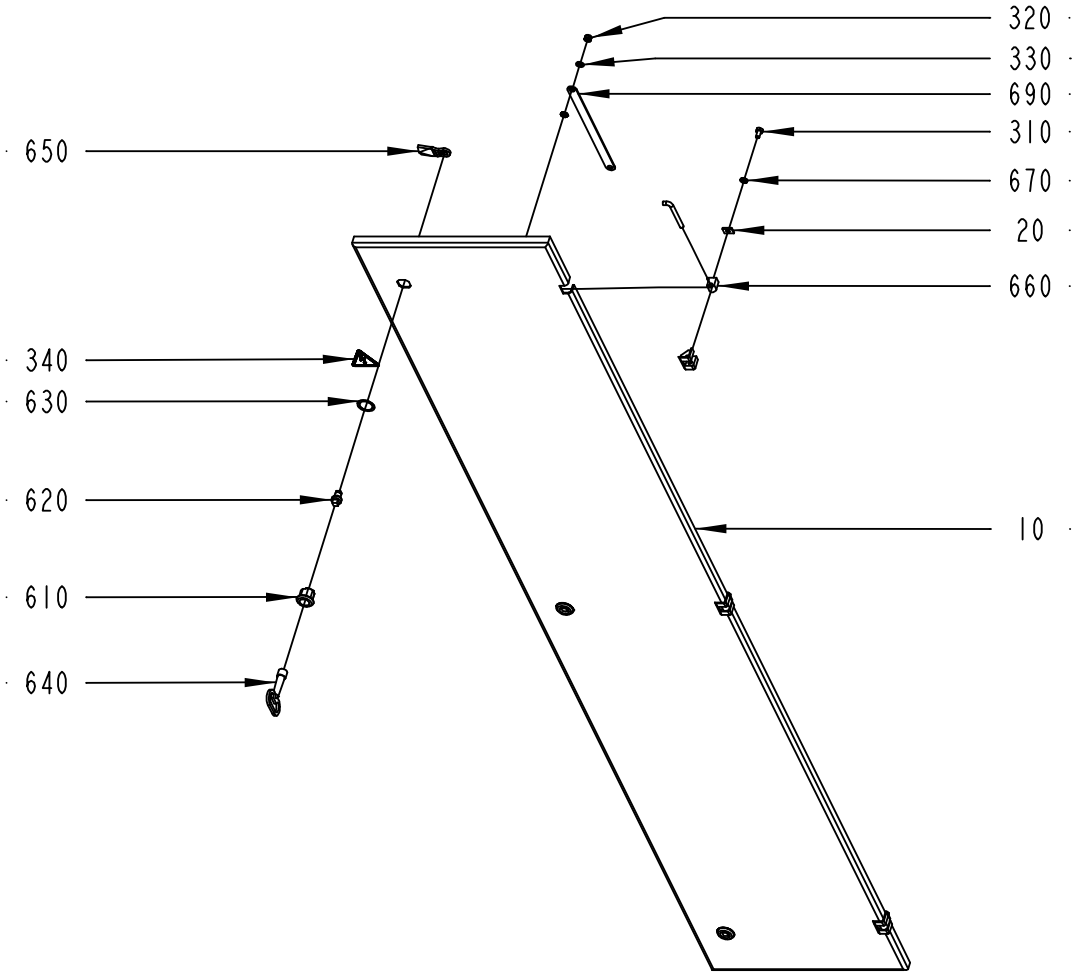

1368578-1
ECN 119179

ECM: 119186 - 20021218
Group number: 1368578-0100
Assembly Drawing: 1368578-1_1_AB

Issue: 20030310

Pos	Part No	SP	UN	Qty	Description	Page No
Common Parts						
010	1368603-0000	-		1	DOOR	
020	1361036-0000	-		3	GASKET	
310	312105-0366	-		3	SCREW M6S M6X12 A280	
320	312812-0316	-		2	HEXAGON NUT, NY-LOCK M6 A480	
330	315105-0153	-		2	WASHER ISO 7089-6-200 HV-A4	
340	359705-0015	-		1	WARNING SIGN ISO, RISK OF ELECTRIC SHOCK	
610	90237-0142	-		3	LOCK HOUSING, 1000-U45	
620	90237-0202	-		3	LOCK, INSERT SQUARE,1000-U2 8 MM	
630	90237-0322	-		3	LOCK GASKET, 1000-U137	
640	90237-0324	-		1	KEY, 1104-02 FOR SQUARE 8 MM	
650	90237-0368	-		3	LOCK CAM, 1000-15	
660	90248-0032	-		3	HINGE, 1110-U2	
670	90062-0015	-		5	LOCK WASHER SERRAT.EXT.GEAR,6,4/11 H=0,7	
690	90135-0043	-		2	EARTH WIRE L=200 MM 16 MM2	

Pos	Part No	SP	UN	Qty	Description	Page No

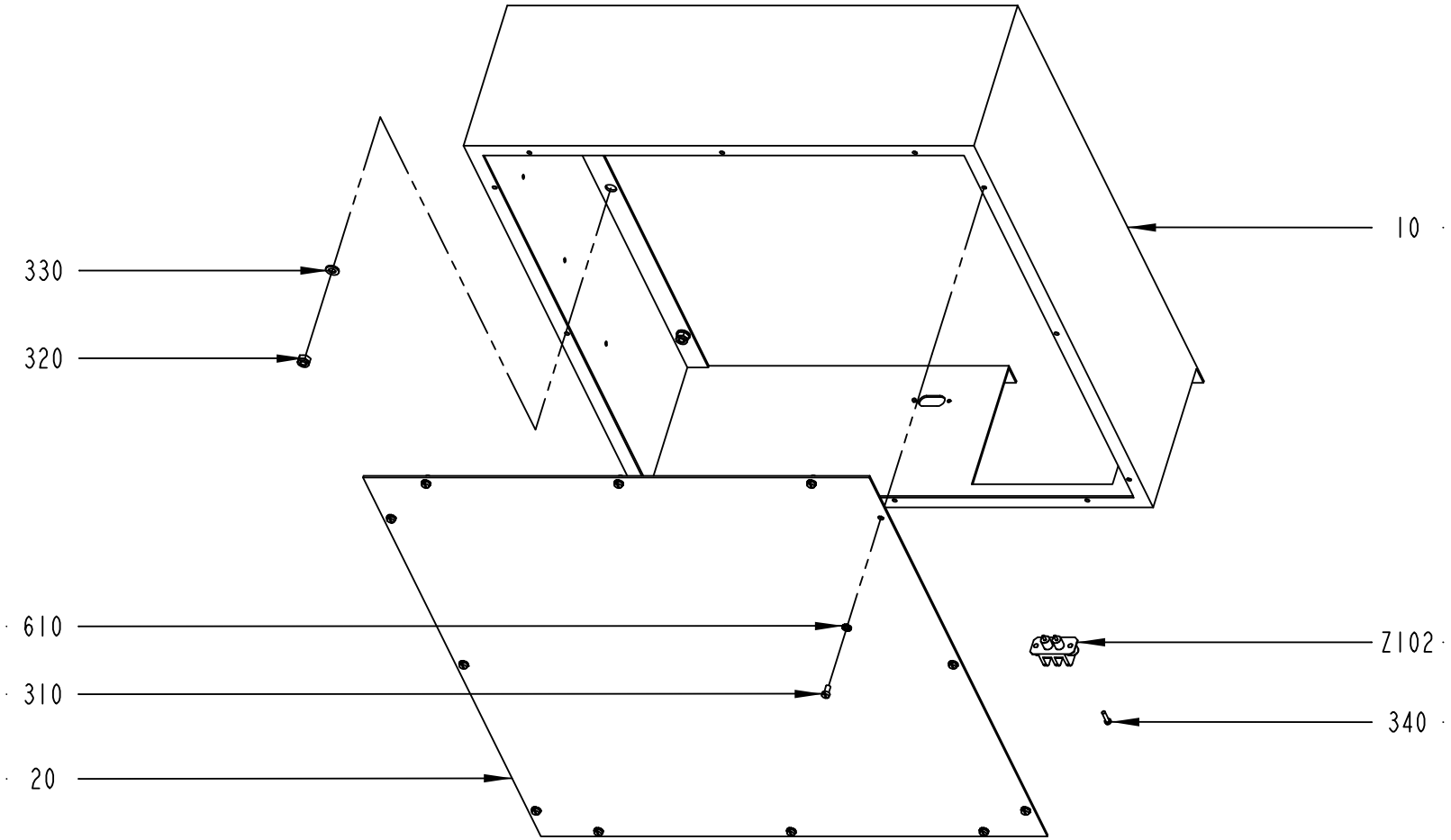

1368579-1
ECN 119179

ECM: 119187 - 20021218
Group number: 1368579-0100
Assembly Drawing: 1368579-1_1_AB

Issue: 20030310

Pos	Part No	SP	UN	Qty	Description	Page No
Common Parts						
010	1368613-0000	-		1	COVER	
020	1368614-0000	-		1	COVER PLATE	
310	312125-0287	-		12	SCREW PAN HEAD MCS M4X8 SS	
320	312812-0316	-		9	HEXAGON NUT, NY-LOCK M6 A480	
330	315105-0153	-		9	WASHER ISO 7089-6-200 HV-A4	
340	312125-0226	-		2	SCREW PAN HEAD MCS M3X12 SS	
610	90062-0059	-		12	LOCK WASHER SERRAT.EXT.GEAR,4,3/8 H=0,5	
Z102	90024-0036	-		1	FILTERED TERMINAL BLOCK	

Pos	Part No	SP	UN	Qty	Description	Page No

	Q001	SPARE F008 F010	F012 SPARE SPARE	SPARE F013 SPARE	SPARE SPARE F014	F015 F016 F017	F018 F019 SPARE	SPARE SPARE F020	F021 SPARE SPARE	SPARE SPARE SPARE
K300			K020	K021	K022	K023	K024	K025	K026	

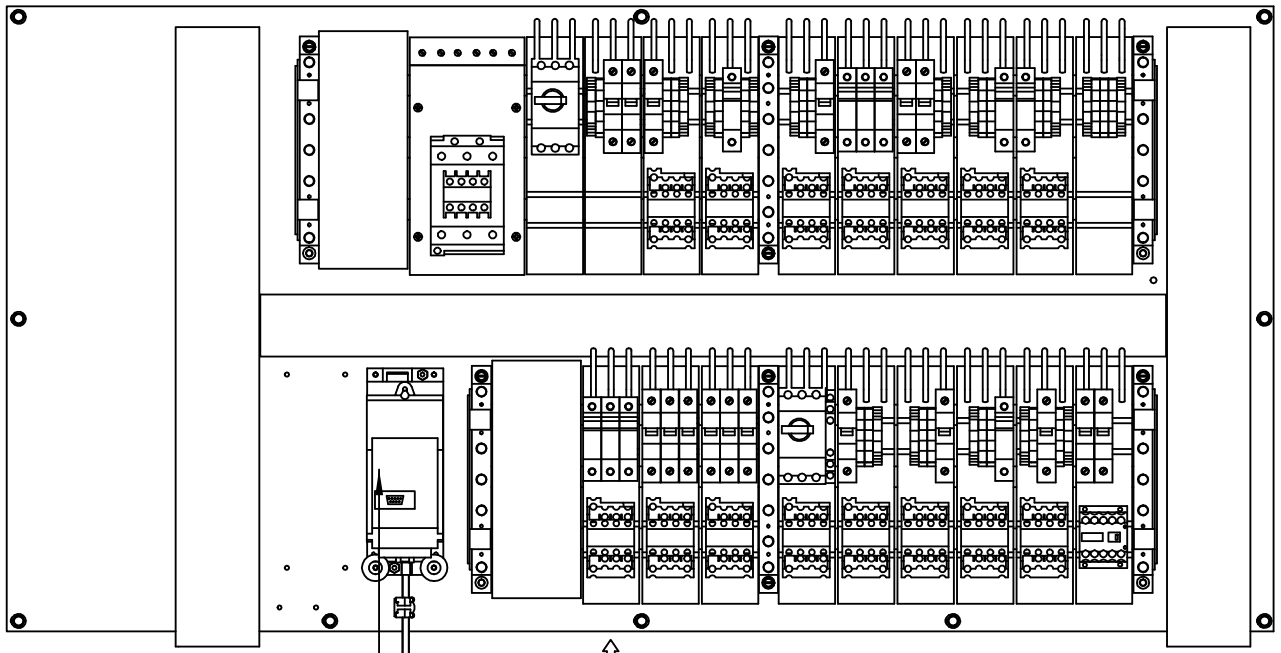

G002, G002.1, Z107, Z108, Z109

F001 F002 F003	F023	F024 F029 F030	Q006 Q006.1	F025 SPARE SPARE	SPARE SPARE F026	SPARE SPARE F027	SPARE F011 SPARE	F007 SPARE
K004	K001	K009	K006	K028	K029	K027	K011	K045

1368580-1
ECM 119179

ECM: 119188 - 20021218
Group number: 1368580-0100
Assembly Drawing: 1368580-1_1_AB

Issue: 20030310

Pos	Part No	SP	UN	Qty	Description	Page No
Common Parts						
010	1368620-0000	-		1	MOUNTING PLATE	
020	1368631-0000	-		2	CABLE DUCT	
040	1368632-0000	-		1	CABLE DUCT	
050	1368663-0000	-		3	BUSBAR	
060	1368664-0000	-		3	BUSBAR	
310	312125-0329	-		8	SCREW PAN HEAD MCS M5X16 SS	
320	353042-0010	-		6	BUSBAR HÅLLARE	
330	353042-0012	-		18	ADJUSTMENTPLATTA	
340	353042-0014	-		19	BUSBAR ADA ADAPTER	
350	353042-0016	-		2	CONNECTIONSADAPTER	
360	353042-0019	-		4	SIDE GUARD	
370	353021-0214	-		23	FEED THROUGH TERMINAL, 10202.0	
380	353031-0203	-		15	END SUPPORT, WEW 35/2	
610	90062-0060	-		8	LOCK WASHER SERRAT.EXT.GEAR,5,3/10 H=0,6	
620	90287-0157	-		10	SCREW M6SF FLAT HEAD M6X10 88	
630	90287-0337	-		15	SCREW RECESSED HEAD M4X10 WH. NYLON	
640	90458-0569	-		1	CONNECTION ADAPTER FOR BUS BAR	
F001	90233-0028	-		1	TUBE FUSE, 10A	
F001.1	90233-0303	-		1	FUSE HOLDER, ST10	
F002	90233-0028	-		1	TUBE FUSE, 10A	
F002.1	90233-0303	-		1	FUSE HOLDER, ST10	
F003	90233-0028	-		1	TUBE FUSE, 10A	
F003.1	90233-0303	-		1	FUSE HOLDER, ST10	
F007	90007-0138	-		1	CIRCUIT BREAKER, 2P 10 A K	
F008	90007-0129	-		1	CIRCUIT BREAKER, 1P 10 A K	
F010	90007-0129	-		1	CIRCUIT BREAKER, 1P 10 A K	
F011	90007-0129	-		1	CIRCUIT BREAKER, 1P 10 A K	
F012	90007-0129	-		1	CIRCUIT BREAKER, 1P 10 A K	
F013	B90233-0027	-		1	TUBE FUSE, 16A	
	90233-0305	*C*		*1*	*INDICATOR*	
F013.1	90233-0303	-		1	FUSE HOLDER, ST10	
F014	90007-0131	-		1	CIRCUIT BREAKER, 1P 16 A K	
F015	90233-0028	-		1	TUBE FUSE, 10A	
F015.1	90233-0303	-		1	FUSE HOLDER, ST10	
F016	90233-0028	-		1	TUBE FUSE, 10A	
F016.1	90233-0303	-		1	FUSE HOLDER, ST10	
F017	90233-0028	-		1	TUBE FUSE, 10A	
F017.1	90233-0303	-		1	FUSE HOLDER, ST10	
F018	90007-0129	-		1	CIRCUIT BREAKER, 1P 10 A K	
F019	90007-0129	-		1	CIRCUIT BREAKER, 1P 10 A K	
F020	B90233-0027	-		1	TUBE FUSE, 16A	
	90233-0305	*C*		*1*	*INDICATOR*	
F020.1	90233-0303	-		1	FUSE HOLDER, ST10	
F021	90233-0031	-		1	TUBE FUSE, 20A	
F021.1	90233-0303	-		1	FUSE HOLDER, ST10	
F023	90007-0147	-		1	CIRCUIT BREAKER, 3P 10 A K	
F024	90007-0129	-		1	CIRCUIT BREAKER, 1P 10 A K	
F025	90007-0127	-		1	CIRCUIT BREAKER, 1P 2 A K	
F026	90007-0133	-		1	CIRCUIT BREAKER, 1P 25 A K	
F027	90233-0028	-		1	TUBE FUSE, 10A	
F027.1	90233-0303	-		1	FUSE HOLDER, ST10	
F029	90007-0129	-		1	CIRCUIT BREAKER, 1P 10 A K	
F030	90007-0129	-		1	CIRCUIT BREAKER, 1P 10 A K	
G002	90430-0072	-		1	FREQ.CONV. 6SE3214-0DA40	
G002.1	90135-0039	-		1	SHIELD CLIP KLBU 4-13.5	
K001	B90075-0124	-		1	CONTACTOR, 4KW 24VDC	
	90075-0313	*A*		*1*	*AUXILIARY CONTACT K&M 22 DILM.2NO;2NC*	
K004	B90075-0124	-		1	CONTACTOR, 4KW 24VDC	
	90075-0313	*A*		*1*	*AUXILIARY CONTACT K&M 22 DILM.2NO;2NC*	
K006	B90075-0124	-		1	CONTACTOR, 4KW 24VDC	
	90075-0313	*A*		*1*	*AUXILIARY CONTACT K&M 22 DILM.2NO;2NC*	
K009	B90075-0124	-		1	CONTACTOR, 4KW 24VDC	
	90075-0313	*A*		*1*	*AUXILIARY CONTACT K&M 22 DILM.2NO;2NC*	
K011	B90075-0124	-		1	CONTACTOR, 4KW 24VDC	
	90075-0313	*A*		*1*	*AUXILIARY CONTACT K&M 22 DILM.2NO;2NC*	
K020	B90075-0124	-		1	CONTACTOR, 4KW 24VDC	
	90075-0313	*A*		*1*	*AUXILIARY CONTACT K&M 22 DILM.2NO;2NC*	
K021	B90075-0124	-		1	CONTACTOR, 4KW 24VDC	
	90075-0313	*A*		*1*	*AUXILIARY CONTACT K&M 22 DILM.2NO;2NC*	
K022	B90075-0124	-		1	CONTACTOR, 4KW 24VDC	
	90075-0313	*A*		*1*	*AUXILIARY CONTACT K&M 22 DILM.2NO;2NC*	
K023	B90075-0124	-		1	CONTACTOR, 4KW 24VDC	
	90075-0313	*A*		*1*	*AUXILIARY CONTACT K&M 22 DILM.2NO;2NC*	
K024	B90075-0124	-		1	CONTACTOR, 4KW 24VDC	
	90075-0313	*A*		*1*	*AUXILIARY CONTACT K&M 22 DILM.2NO;2NC*	
K025	B90075-0124	-		1	CONTACTOR, 4KW 24VDC	
	90075-0313	*A*		*1*	*AUXILIARY CONTACT K&M 22 DILM.2NO;2NC*	
K026	B90075-0124	-		1	CONTACTOR, 4KW 24VDC	
	90075-0313	*A*		*1*	*AUXILIARY CONTACT K&M 22 DILM.2NO;2NC*	
K027	B90075-0124	-		1	CONTACTOR, 4KW 24VDC	
	90075-0313	*A*		*1*	*AUXILIARY CONTACT K&M 22 DILM.2NO;2NC*	
K028	B90075-0124	-		1	CONTACTOR, 4KW 24VDC	
	90075-0313	*A*		*1*	*AUXILIARY CONTACT K&M 22 DILM.2NO;2NC*	

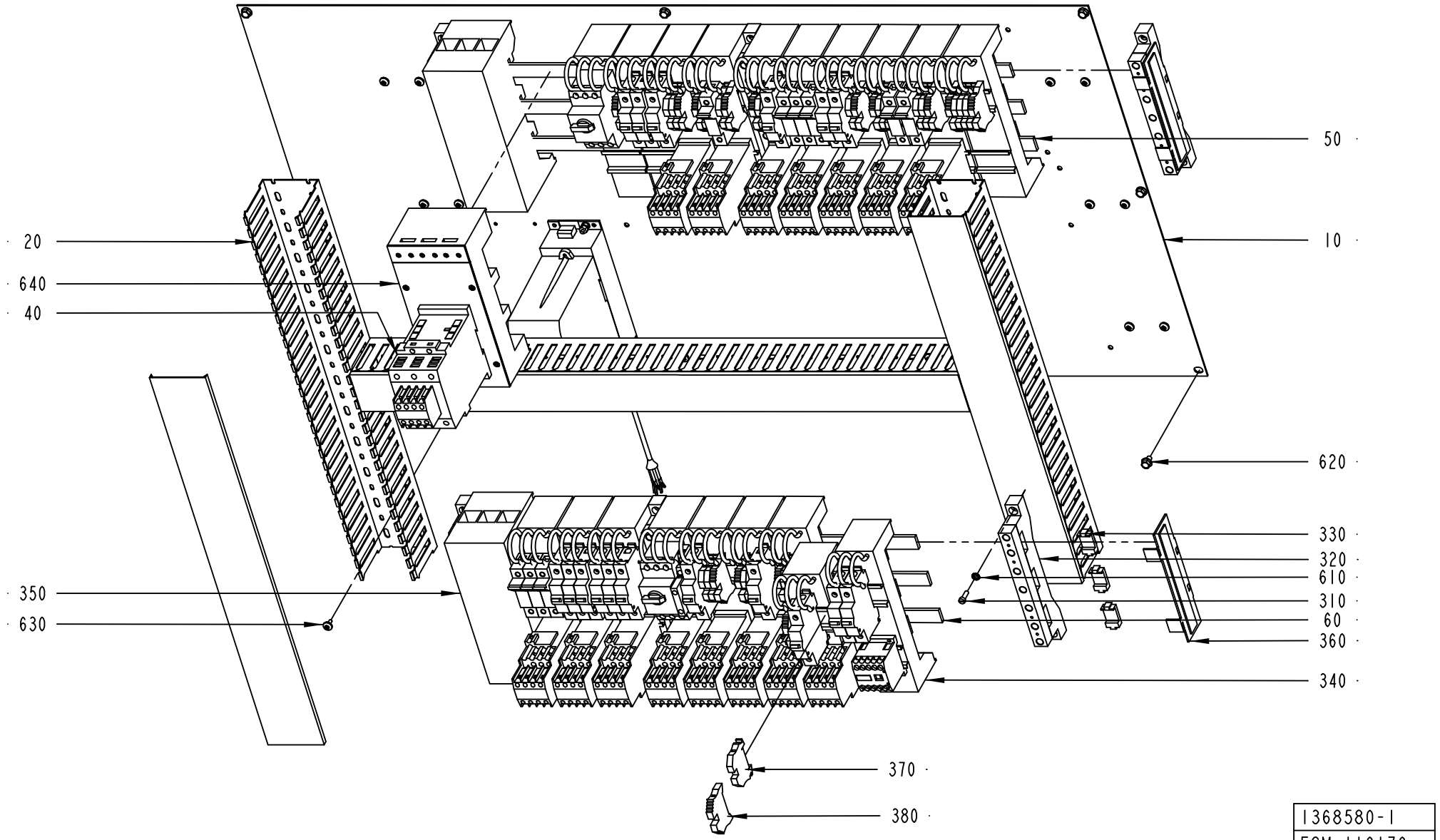

1368580-1
ECM 119179

Pos	Part No	SP	UN	Qty	Description	Page No
Common Parts (Cont'd)						
K029	B90075-0124	-		1	CONTACTOR, 4KW 24VDC	
	90075-0313	*A*		*1*	*AUXILIARY CONTACT K&M 22 DILM.2NO;2NC*	
K045	90075-0141	-		1	CONTACTOR, 4KW 24VDC	
K300	B90075-0126	-		1	CONTACTOR, 22KW 24VDC	
	90075-0313	*A*		*1*	*AUXILIARY CONTACT K&M 22 DILM.2NO;2NC*	
Q001	90095-0077	-		1	OVERLOAD PROTECTION, PKZM 6-10 A	
Q006	90095-0072	-		1	OVERLOAD PROTECTION, PKZM 1,0 A	
Q006.1	90259-0313	-		1	AUX. CONTACT K&M NHI21-PKZM0	
Z107	90430-0328	-		1	FILTER 6SE3290-0DA87-0FB1	
Z108	90024-0047	-		1	EMI SUPPRESSION FERRITE	
Z109	90024-0047	-		1	EMI SUPPRESSION FERRITE	

Pos	Part No	SP	UN	Qty	Description	Page No

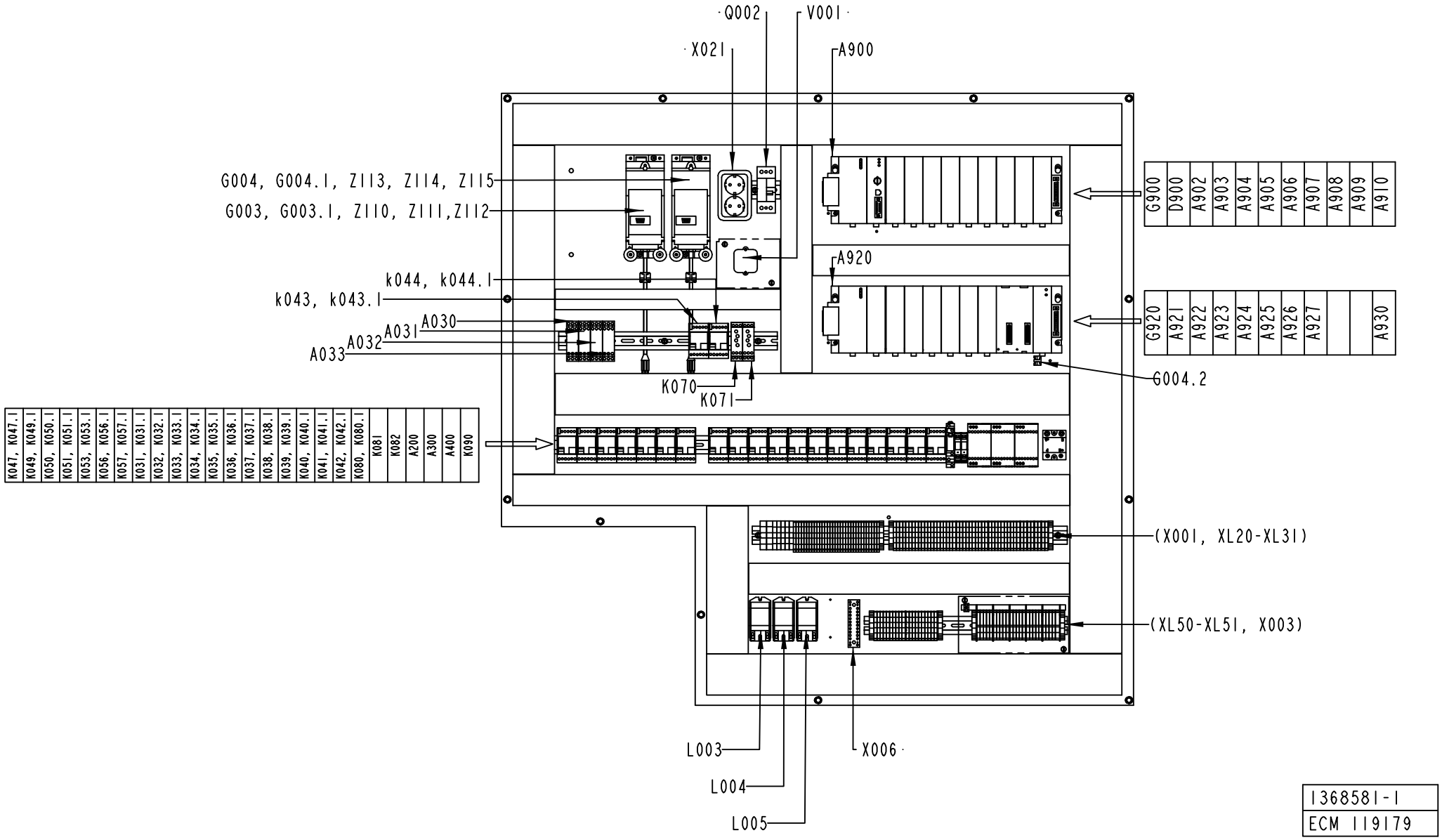
Q002
V001
X021
A900
G004, G004.1, Z113, Z114, Z115
G003, G003.1, Z110, Z111,Z112
G900 D900 A902 A903 A904 A905 A906 A907 A908 A909 A910
A920
k044, k044.1
k043, k043.1
A030
A031
A032
A033
G920 A921 A922 A923 A924 A925 A926 A927 A930
K070
K071
G004.2
K047.1 K049.1 K050.1 K051.1 K053.1 K056.1 K057.1 K031.1 K032.1 K033.1 K034.1 K035.1 K036.1 K037.1 K038.1 K039.1 K040.1 K041.1 K042.1 K080.1 K081 K082 A200 A300 A400 K090
(X001, XL20-XL31)
(XL50-XL51, X003)
L003
L004
L005
X006
1368581-1
ECM 119179

ECM: 119190 - 20021218
Group number: 1368581-0100
Assembly Drawing: 1368581-1_1_AB

Issue: 20030310

Pos	Part No	SP	UN	Qty	Description	Page No
Common Parts						
010	1368621-0000	-		1	MOUNTING PLATE	
015	1368624-0000	-		1	COVER PLATE	
020	1368625-0000	-		1	COVER PLATE	
025	1368639-0000	-		1	CABLE DUCT	
030	1368640-0000	-		1	CABLE DUCT	
035	1368641-0000	-		1	CABLE DUCT	
040	1368642-0000	-		1	CABLE DUCT	
045	1368643-0000	-		1	CABLE DUCT	
050	1368644-0000	-		1	CABLE DUCT	
055	1368645-0000	-		1	CABLE DUCT	
060	1368646-0000	-		1	CABLE DUCT	
065	1368647-0000	-		1	CABLE DUCT	
070	1368648-0000	-		1	CABLE DUCT	
075	1368649-0000	-		1	CABLE DUCT	
085	1368652-0000	-		1	RAIL	
090	1368653-0000	-		1	RAIL	
100	1368655-0000	-		1	RAIL	
105	1368670-0000	-		2	COVER	
110	A1368591-0100	-		1	TERMINAL	**483**
120	A1368592-0100	-		1	TERMINAL	**485**
310	312125-0327	-		15	SCREW PAN HEAD MCS M5X12 SS	
320	312125-0366	-		4	SCREW PAN HEAD MCS M6X12 SS	
330	315101-0146	-		15	WASHER PLAIN, BRB, 5,3/10 H=1	
340	359705-0015	-		2	WARNING SIGN ISO, RISK OF ELECTRIC SHOCK	
410	495130-0060	-		2	SPACER SLEEVE	
420	495130-0080	-		2	SPACER SLEEVE	
610	90062-0060	-		15	LOCK WASHER SERRAT.EXT.GEAR,5,3/10 H=0,6	
620	90287-0157	-		13	SCREW M6SF FLAT HEAD M6X10 88	
630	90287-0336	-		4	SCREW HEX. SOCK. SET, M6X20 PLASTIC	
640	90287-0337	-		66	SCREW RECESSED HEAD M4X10 WH. NYLON	
A030	90458-2580	-		1	LEVEL CONTROL RELAY RM4-LA32M	
A031	90458-2580	-		1	LEVEL CONTROL RELAY RM4-LA32M	
A032	90458-2580	-		1	LEVEL CONTROL RELAY RM4-LA32M	
A033	90458-2580	-		1	LEVEL CONTROL RELAY RM4-LA32M	
A200	90119-0106	-		1	SAFETY RELAY JOKAB RT 6	
A300	90119-0106	-		1	SAFETY RELAY JOKAB RT 6	
A400	90119-0106	-		1	SAFETY RELAY JOKAB RT 6	
A900	90031-0051	-		1	BASEPLATE, 10-SLOT	
A902	90031-0058	-		1	PLC, DIGITAL INPUT MODULE	
A903	90031-0059	-		1	PLC, DIGITAL OUTPUT MODULE	
A904	90031-0057	-		1	PLC, DIGITAL INPUT MODULE	
A905	90031-0057	-		1	PLC, DIGITAL INPUT MODULE	
A906	90031-0057	-		1	PLC, DIGITAL INPUT MODULE	
A907	90031-0057	-		1	PLC, DIGITAL INPUT MODULE	
A908	90031-0057	-		1	PLC, DIGITAL INPUT MODULE	
A909	90031-0057	-		1	PLC, DIGITAL INPUT MODULE	
A910	90031-0057	-		1	PLC, DIGITAL INPUT MODULE	
A920	B90031-0053	-		1	BASEPLATE,10-SLOT	
	90031-0302	-		*1*	*I/O BUS TERMINATION PLUG*	
A921	90031-0059	-		1	PLC, DIGITAL OUTPUT MODULE	
A922	90031-0059	-		1	PLC, DIGITAL OUTPUT MODULE	
A923	90031-0059	-		1	PLC, DIGITAL OUTPUT MODULE	
A924	90031-0059	-		1	PLC, DIGITAL OUTPUT MODULE	
A925	90031-0059	-		1	PLC, DIGITAL OUTPUT MODULE	
A926	90031-0059	-		1	PLC, DIGITAL OUTPUT MODULE	
A927	90031-0059	-		1	PLC, DIGITAL OUTPUT MODULE	
A930	90031-0063	-		1	PLC,ANALOG COMBO MODULE,IN-4PT/OUT-2PT	
D900	90031-0075	-		1	CPU363, SERIAL COMMUNICATION	
G003	90430-0070	-		1	FREQ.CONV. 6SE3213-6CA40	
G003.1	90135-0039	-		1	SHIELD CLIP KLBU 4-13.5	
G004	90430-0070	-		1	FREQ.CONV. 6SE3213-6CA40	
G004.1	90135-0039	-		1	SHIELD CLIP KLBU 4-13.5	
G004.2	90135-0034	-		1	SHIELD CLAMP KLBU 3-8	
G900	B90031-0068	-		1	PLC, POWER SUPPLY	
	352551-0134	*A*		*1*	*FINE-WIRE FUSE 2 A SLOW;5X20MM*	
	90031-0301	*A*		*1*	*SPARE BATTERY CPU,PCM,2PCS*	
G920	B90031-0068	-		1	PLC, POWER SUPPLY	
	352551-0134	*A*		*1*	*FINE-WIRE FUSE 2 A SLOW;5X20MM*	
	90031-0301	*A*		*1*	*SPARE BATTERY CPU,PCM,2PCS*	
K031	90119-0056	-		1	RELAY, AUXILIARY MK3P5-S 24VDC	
K031.1	90129-0006	-		1	BASE, S3-B	
K032	90119-0056	-		1	RELAY, AUXILIARY MK3P5-S 24VDC	
K032.1	90129-0006	-		1	BASE, S3-B	
K033	90119-0056	-		1	RELAY, AUXILIARY MK3P5-S 24VDC	
K033.1	90129-0006	-		1	BASE, S3-B	
K034	90119-0056	-		1	RELAY, AUXILIARY MK3P5-S 24VDC	
K034.1	90129-0006	-		1	BASE, S3-B	
K035	90119-0056	-		1	RELAY, AUXILIARY MK3P5-S 24VDC	
K035.1	90129-0006	-		1	BASE, S3-B	
K036	90119-0056	-		1	RELAY, AUXILIARY MK3P5-S 24VDC	
K036.1	90129-0006	-		1	BASE, S3-B	
K037	90119-0056	-		1	RELAY, AUXILIARY MK3P5-S 24VDC	
K037.1	90129-0006	-		1	BASE, S3-B	

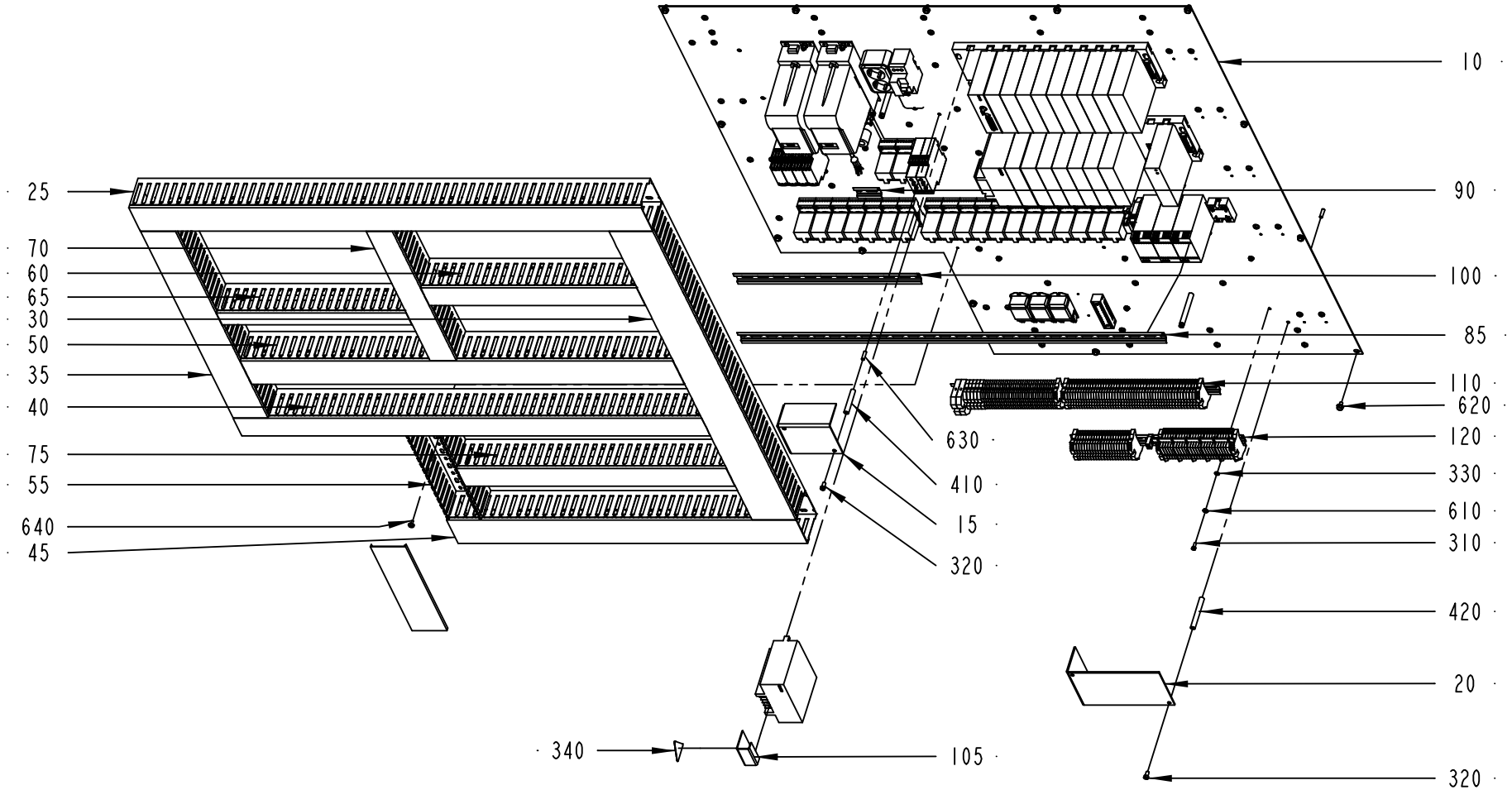

1368581-1
ECM 119179

Pos	Part No	SP	UN	Qty	Description	Page No
Common Parts (Cont'd)						
K038	90119-0056	-		1	RELAY, AUXILIARY MK3P5-S 24VDC	
K038.1	90129-0006	-		1	BASE, S3-B	
K039	90119-0056	-		1	RELAY, AUXILIARY MK3P5-S 24VDC	
K039.1	90129-0006	-		1	BASE, S3-B	
K040	90119-0056	-		1	RELAY, AUXILIARY MK3P5-S 24VDC	
K040.1	90129-0006	-		1	BASE, S3-B	
K041	90119-0056	-		1	RELAY, AUXILIARY MK3P5-S 24VDC	
K041.1	90129-0006	-		1	BASE, S3-B	
K042	90119-0056	-		1	RELAY, AUXILIARY MK3P5-S 24VDC	
K042.1	90129-0006	-		1	BASE, S3-B	
K043	90119-0056	-		1	RELAY, AUXILIARY MK3P5-S 24VDC	
K043.1	90129-0006	-		1	BASE, S3-B	
K044	90119-0056	-		1	RELAY, AUXILIARY MK3P5-S 24VDC	
K044.1	90129-0006	-		1	BASE, S3-B	
K047	90119-0056	-		1	RELAY, AUXILIARY MK3P5-S 24VDC	
K047.1	90129-0006	-		1	BASE, S3-B	
K049	90119-0056	-		1	RELAY, AUXILIARY MK3P5-S 24VDC	
K049.1	90129-0006	-		1	BASE, S3-B	
K050	90119-0056	-		1	RELAY, AUXILIARY MK3P5-S 24VDC	
K050.1	90129-0006	-		1	BASE, S3-B	
K051	90119-0056	-		1	RELAY, AUXILIARY MK3P5-S 24VDC	
K051.1	90129-0006	-		1	BASE, S3-B	
K053	90119-0056	-		1	RELAY, AUXILIARY MK3P5-S 24VDC	
K053.1	90129-0006	-		1	BASE, S3-B	
K056	90119-0056	-		1	RELAY, AUXILIARY MK3P5-S 24VDC	
K056.1	90129-0006	-		1	BASE, S3-B	
K057	90119-0056	-		1	RELAY, AUXILIARY MK3P5-S 24VDC	
K057.1	90129-0006	-		1	BASE, S3-B	
K070	90459-0690	-		1	CURRENT CONTROL RELAY, 84 871 034	
K071	90459-0690	-		1	CURRENT CONTROL RELAY, 84 871 034	
K080	90458-0961	-		1	SOLID-STATE RELAY G3R-ODX02SN	
K080.1	90458-0963	-		1	SOCKET, TS35 OMRON P2RF-05-E	
K081	90119-0063	-		1	OPTO-RELAY, DC/DC AMMS-10-1/30VDC	
K082	90119-0063	-		1	OPTO-RELAY, DC/DC AMMS-10-1/30VDC	
K090	90119-0043	-		1	OPTO-RELAY, 22DC 60S-3/32VDC	
L003	90297-0306	-		1	BALLAST COIL 50/60 HZ	
L004	90297-0306	-		1	BALLAST COIL 50/60 HZ	
L005	90297-0306	-		1	BALLAST COIL 50/60 HZ	
Q002	90111-0172	-		1	EARTH FAULT BREAKER, F 362-25/0.03	
V001	90038-0025	-		1	RECTIFIER, 6,5/15A SKD 30/04A1	
X006	90195-0010	-		1	TERMINAL BLOCK, 1989.2	
X021	90001-0033	-		1	WALL SOCKET OUTLET	
Z110	90430-0326	-		1	FILTER 6SE3290-0BA87-0FB2	
Z111	90024-0047	-		1	EMI SUPPRESSION FERRITE	
Z112	90024-0047	-		1	EMI SUPPRESSION FERRITE	
Z113	90430-0326	-		1	FILTER 6SE3290-0BA87-0FB2	
Z114	90024-0047	-		1	EMI SUPPRESSION FERRITE	
Z115	90024-0047	-		1	EMI SUPPRESSION FERRITE	

Machine Type | Group Description | Used-In | Group Number | Page No

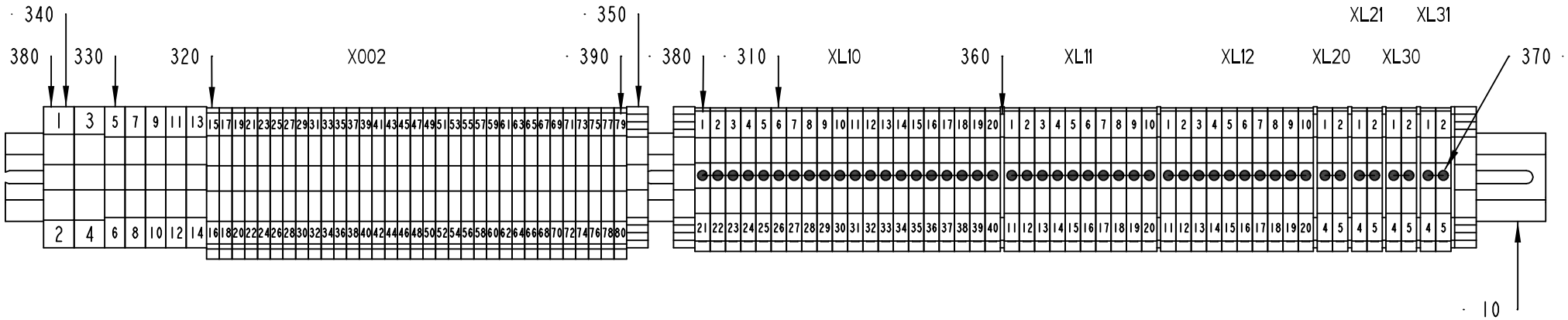

1368591-1
ECM 119179

Pos	Part No	SP	UN	Qty	Description	Page No
Common Parts						
010	1368651-0000	-		1	RAIL	
310	353021-0217	-		48	FEED THROUGH TERMINAL, 10201.8	
320	353024-0204	-		33	EARTH TERMINAL WPE 2,5	
330	353024-0206	-		5	EARTH TERMINAL, 1010.2	
340	353024-0208	-		2	EARTH TERMINAL, 1010.4	
350	353031-0203	-		3	END SUPPORT, WEW 35/2	
360	353032-0005	-		7	END PLATE WAP 2,5-10 BLUE	
370	353034-0031	-		6	BRIDGE CONNECTOR, WQV 4/10, 10520.6	
380	359011-0807	-		8	MARKING PLATES 5-FW 1-50	
390	359011-0808	-		1	MARKING PLATES 5-FW 51-100	

Pos	Part No	SP	UN	Qty	Description	Page No

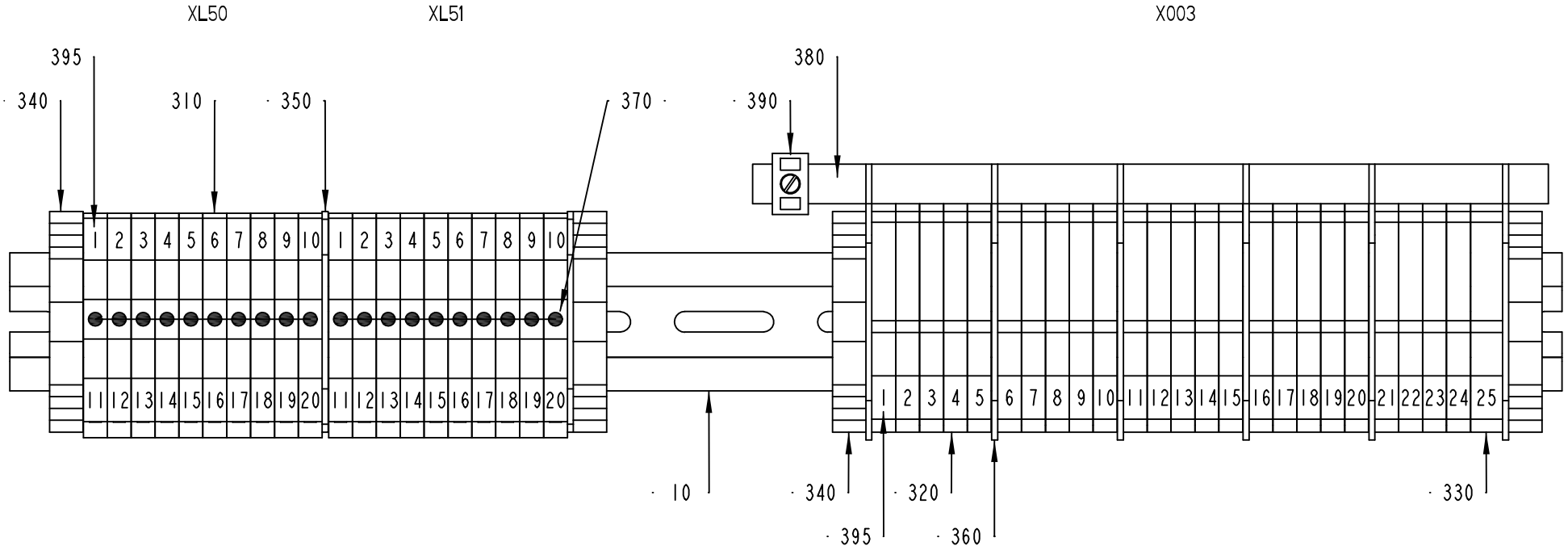

1368592-1
ECM 119179

ECM: 119194 - 20021218
Group number: 1368592-0100
Assembly Drawing: 1368592-1_1_AA

Issue: 20030310

Pos	Part No	SP	UN	Qty	Description	Page No
Common Parts						
010	1368654-0000	-		1	RAIL	
310	353021-0213	-		20	FEED THROUGH TERMINAL, 10201.0	
320	353022-0002	-		24	NEUTRAL TERMINAL, 10107.8	
330	353022-0003	-		1	NEUTRAL TERMINAL, 10108.8	
340	353031-0203	-		4	END SUPPORT, WEW 35/2	
350	353032-0004	-		2	END PLATE WAP 2,5-10 BEIGE	
360	353033-0104	-		6	END PLATE, 10502.8	
370	353034-0031	-		2	BRIDGE CONNECTOR, WQV 4/10, 10520.6	
380	353041-0001	-	MM	200	RAIL 10X3MM SSCH	
390	353041-0105	-		1	HOLDER ZB16 WEIDMULLER 5028.8	
395	359011-0807	-		3	MARKING PLATES 5-FW 1-50	

Pos	Part No	SP	UN	Qty	Description	Page No

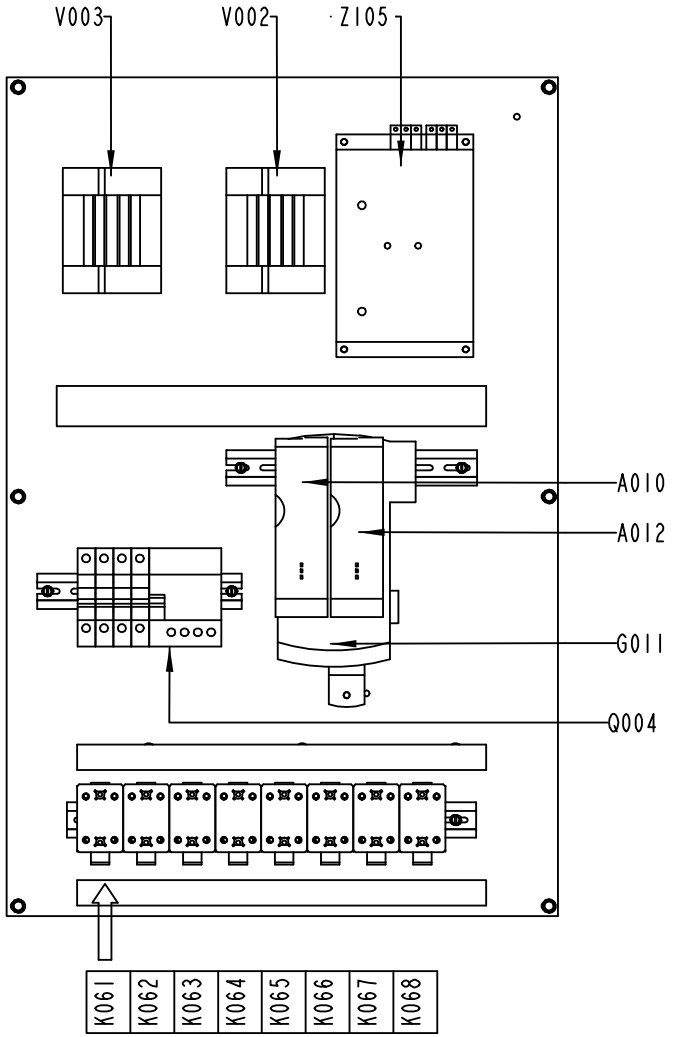

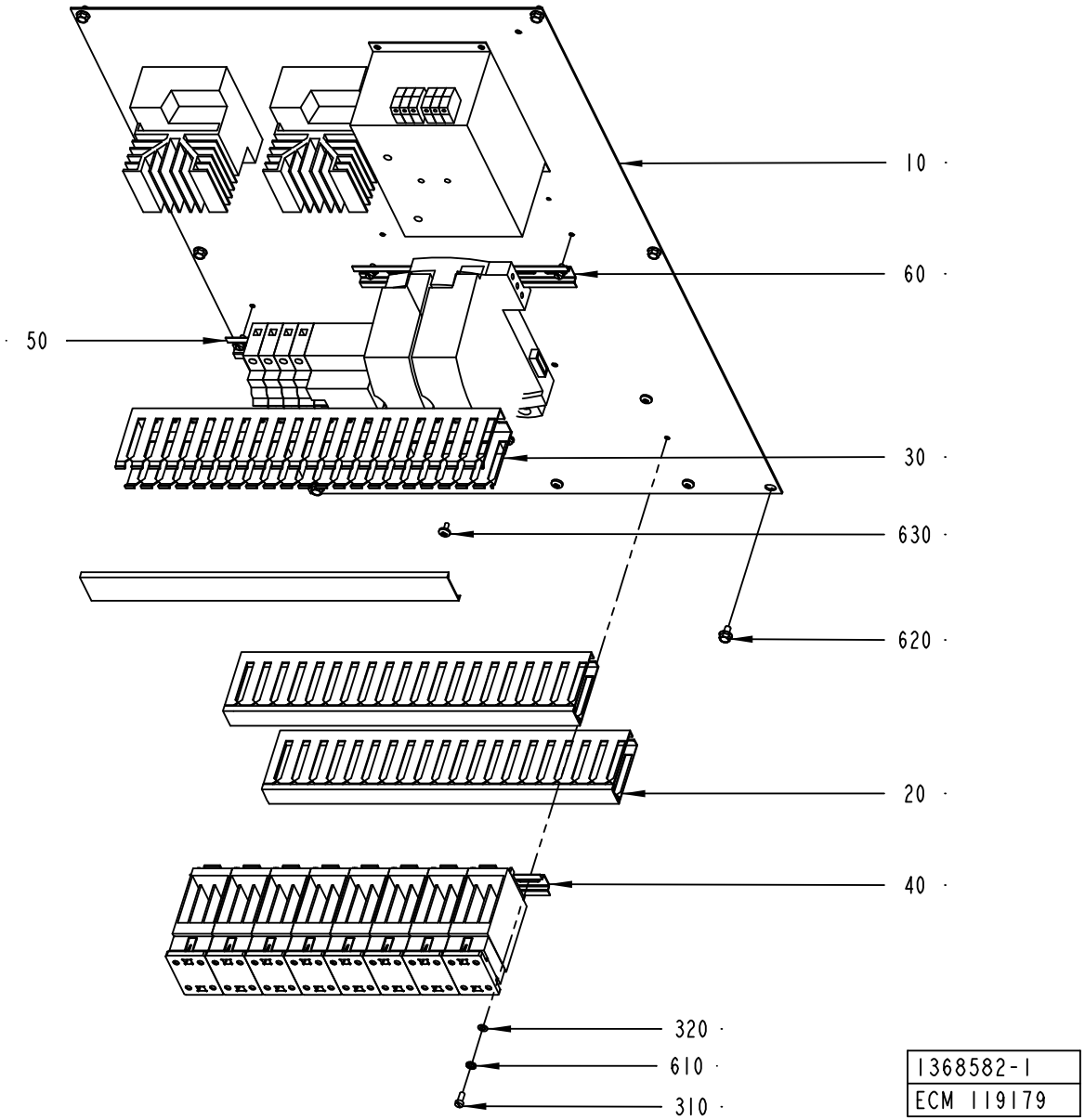

1368582-1
ECM 119179

ECM: 119191 - 20021218
Group number: 1368582-0100
Assembly Drawing: 1368582-1_1_AB

Issue: 20030310

Pos	Part No	SP	UN	Qty	Description	Page No
Common Parts						
010	1368622-0000	-		1	MOUNTING PLATE	
020	1368634-0000	-		2	CABLE DUCT	
030	1368635-0000	-		1	CABLE DUCT	
040	1368636-0000	-		1	RAIL	
050	1368656-0000	-		1	RAIL	
060	1368657-0000	-		1	RAIL	
310	312125-0327	-		7	SCREW PAN HEAD MCS M5X12 SS	
320	315105-0146	-		7	WASHER ISO 7089-5-200 HV-A4	
610	90062-0060	-		7	LOCK WASHER SERRAT.EXT.GEAR,5,3/10 H=0,6	
620	90287-0157	-		6	SCREW M6SF FLAT HEAD M6X10 88	
630	90287-0337	-		9	SCREW RECESSED HEAD M4X10 WH. NYLON	
A010	90459-1577	-		1	1 AXIS DOCKING STATION D2/PLC/DOL	
A012	90458-0746	-		1	STEP MOTOR DRIVE L50	
G011	90459-1580	-		1	POWER SUPPLY DEVICE P25L	
K061	90119-0082	-		1	SSR 90119-67 + HEAT SINK	
K062	90119-0082	-		1	SSR 90119-67 + HEAT SINK	
K063	90119-0082	-		1	SSR 90119-67 + HEAT SINK	
K064	90119-0082	-		1	SSR 90119-67 + HEAT SINK	
K065	90119-0082	-		1	SSR 90119-67 + HEAT SINK	
K066	90119-0082	-		1	SSR 90119-67 + HEAT SINK	
K067	90119-0082	-		1	SSR 90119-67 + HEAT SINK	
K068	90119-0082	-		1	SSR 90119-67 + HEAT SINK	
Q004	90459-2071	-		1	EARTH CIRCUIT BREAKER, 4P 16A/30 MA IP20	
V002	90430-0032	-		1	THYRISTOR UNIT, 425A/25A	
V003	90430-0032	-		1	THYRISTOR UNIT, 425A/25A	
Z105	90430-0335	-		1	FILTER LA174936U025	

Pos	Part No	SP	UN	Qty	Description	Page No

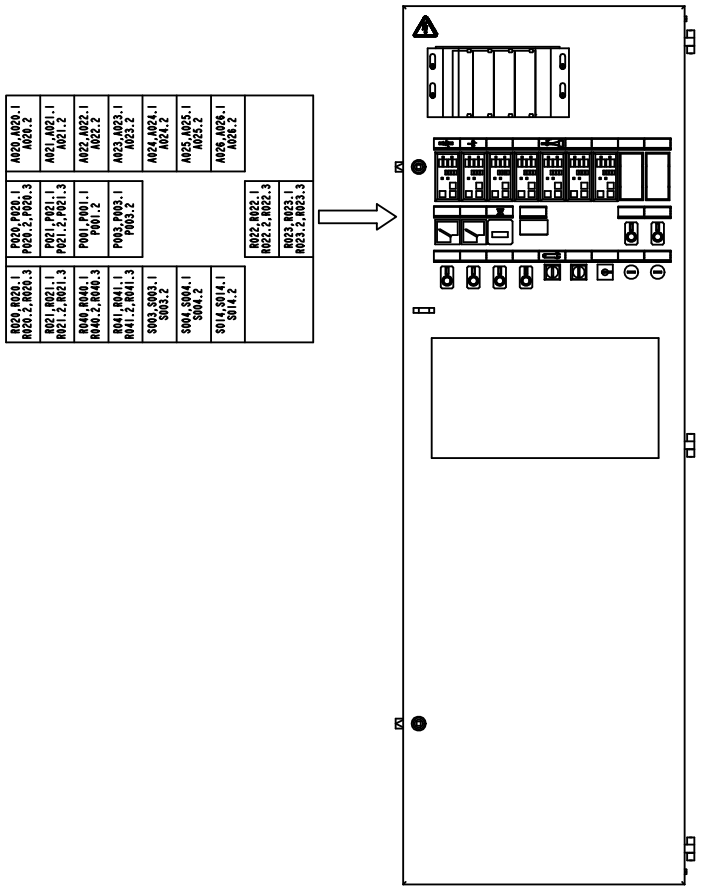
A020,A020.1
A020.2
A021,A021.1
A021.2
A022,A022.1
A022.2
A023,A023.1
A023.2
A024,A024.1
A024.2
A025,A025.1
A025.2
A026,A026.1
A026.2
P020,P020.1
P020.2,P020.3
P021,P021.1
P021.2,P021.3
P001,P001.1
P001.2
P003,P003.1
P003.2
A022.1
A022.2,A022.3
A023.1
A023.2,A023.3
R020,R020.1
R020.2,R020.3
R021,R021.1
R021.2,R021.3
R040,R040.1
R040.2,R040.3
R041,R041.1
R041.2,R041.3
S003,S003.1
S003.2
S004,S004.1
S004.2
S014,S014.1
S014.2

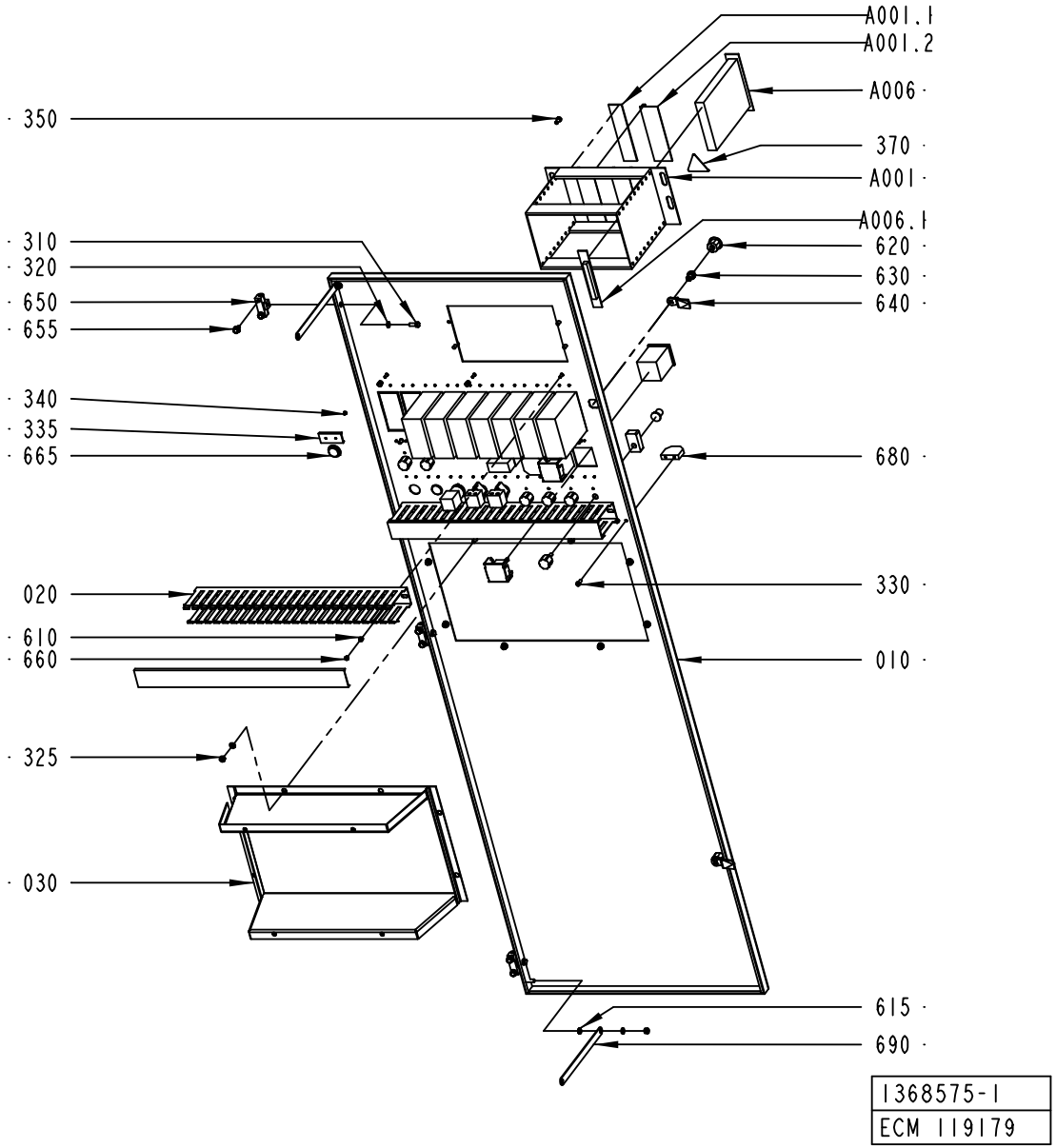
A001.1
A001.2
A006
350
370
A001
A006.1
310
620
320
630
650
640
655
340
335
680
665
330
020
610
660
010
325
030
615
690
1368575-1
ECM 119179

ECM: 119184 - 20021218
Group number: 1368575-0100
Assembly Drawing: 1368575-1_1_AB

Issue: 20030310

Pos	Part No	SP	UN	Qty	Description	Page No
PLMS						
A050	B1363288-0301	-		1	FLEXBOX TETRA BRIK	
100	*B90041-0092*	*A*		*1*	*FLEX BOX INNOSCAN E100006A*	
	90458-0266	*A*		*1*	*POWER SUPPLY UNIT, U036407A*	
	90264-0064	*A*		*1*	*FAN / FL 12G308*	
	90041-0091	*A*		*1*	*PC 2,5" HD BAY, 3016-0028-013*	
	90041-0029	*A*		*1*	*FLOPPY DISC UNIT FD-235HF 1,4MB*	
	90041-0027	*A*		*1*	*BACK PLANE CARD 7-SLOT, 2120-0037-015*	
110	*90041-0083*	*A*		*1*	*HOST COMM. LINK BOARD LVDS, E000013A-02*	
120	*90458-0259*	*A*		*1*	*PROCESSOR BOARD PMMX E000032B*	
130	*90041-0087*	*A*		*1*	*SERIAL CARD 2 CHANNEL RS486/422 BOARD*	
140	*90041-0090*	*A*		*1*	*HARD DISC 2,5" , U036403A*	
150	*90041-0080*	*A*		*1*	*CABLE, CPU-LVDSCARD+DISPLAY-LVDSCARD*	
160	*90041-0086*	*A*		*1*	*CABLE, COM 2, 2223-0012-015*	
A050.1	90456-0003	-		1	INTOUCH OEM 256 V.5.6B/6.0B HW KEY	
A050.2	90110-0028	-		1	CONTACT UNIT 4-POLE	
A050.3	B1363292-0501	-		1	PLMS COMMON SOFTWARE	
0010	*B47932-0601*	*-*		*1*	*PLMS BASIC PROGRAM*	
0020	*58283-0000*	*-*		*1*	*DOCUMENTATION DISKETT*	
0030	*1363455-0000*	*-*		*1*	*LABELS DISKETT*	
0040	*1363456-0000*	*-*		*1*	*LABELS FLEXBOX*	
0050	*58282-0000*	*-*		*1*	*SHORT FORM INSTRUCTION*	
0060	*58280-0000*	*-*		*1*	*MASTER DISKETT*	
0020	*B48621-0501*	*-*		*1*	*PLMS DDE*	
0020	*2536014-0000*	*-*		*1*	*DOCUMENTATION DISKETTE*	
0030	*2536015-0000*	*-*		*1*	*LABEL DISKETTE*	
0040	*2536016-0000*	*-*		*1*	*LABEL FLEXBOX*	
0050	*2536013-0000*	*-*		*1*	*SHORT FORM INSTRUCTION*	
0060	*2536011-0000*	*-*		*1*	*MASTER DISKETTE*	
0030	*B47962-0401*	*-*		*1*	*PLMS DOS WINDOWS*	
0020	*58291-0000*	*-*		*1*	*DOCUMENTATION DISKETT*	
0030	*1363460-0000*	*-*		*1*	*LABELS FLEXBOX*	
0040	*58290-0000*	*-*		*1*	*SHORT FORM INSTRUCTION*	
0040	*B47936-0201*	*-*		*1*	*PLMS INTOUCH RUNTIME PROGRAM*	
0020	*57587-0000*	*-*		*1*	*DOCUMENTATION DISKETT*	
0030	*597779-0000*	*-*		*1*	*LABELS FLEXBOX*	
0040	*57588-0000*	*-*		*1*	*SHORT FORM INSTRUCTION*	
W008	1317252-0000	-		1	CABLE SERIAL	
W009	1366189-0000	-		1	CABLE LVDS 6M	
Common Parts						
010	1368598-0000	-		1	SWING FRAME	
020	1368630-0000	-		2	CABLE DUCT	
030	1347145-0000	-		1	FRAME	
310	312105-0368	-		3	SCREW M6S M6X16 A280	
320	315105-0153	-		13	WASHER ISO 7089-6-200 HV-A4	
325	312812-0316	-		10	HEXAGON NUT, NY-LOCK M6 A480	
330	312125-0327	-		2	SCREW PAN HEAD MCS M5X12 SS	
335	359240-0100	-		24	SIGN HOLDER FOR 359240-0001	
340	311521-0142	-		48	BLANK RIVET 3,2X6	
345	359240-0001	-		4	SIGN, NOT ENGRAVED	
350	312125-0366	-		4	SCREW PAN HEAD MCS M6X12 SS	
360	312125-0370	-		2	SCREW PAN HEAD MCS M6X20 SS	
370	359705-0015	-		1	WARNING SIGN ISO, RISK OF ELECTRIC SHOCK	
610	90005-0158	-		6	SPACER 4,3/8, H=5	
615	90062-0015	-		2	LOCK WASHER SERRAT.EXT.GEAR,6,4/11 H=0,7	
620	90237-0142	-		2	LOCK HOUSING, 1000-U45	
630	90237-0202	-		2	LOCK, INSERT SQUARE,1000-U2 8 MM	
640	90237-0335	-		2	LOCKING CATCH	
650	90248-0019	-		3	HINGE 1054-U1	
655	90287-0157	-		2	SCREW M6SF FLAT HEAD M6X10 88	
660	90261-0079	-		6	PLUG, BLIND, PLASTIC, NO. 1955	
665	90002-0004	-		2	BLANK-OFF PLUG, PR 22,5 SKINDICHT-BLK16	
670	90287-0157	-		4	SCREW M6SF FLAT HEAD M6X10 88	
680	970215-0000	-		1	STOP BLOCK	
690	90135-0043	-		2	EARTH WIRE L=200 MM 16 MM2	
A001	B67388-0101	-		1	FRONT MOUNTED RACK 42TE	
020 1	*542038-0001*	*-*		*1*	*COMPONENTS WITHOUT TP-NO*	
A001.1	B68445-0103	-		1	FRONT PLATE 6TE	
010 3	*543921-0003*	*-*		*1*	*COMPONENTS WITHOUT TP-NO*	
A001.2	B68445-0104	-		1	FRONT PLATE 8 TE	
010 4	*543921-0004*	*-*		*1*	*COMPONENTS WITHOUT TP-NO*	
A006	B68123-0301	-		1	LEVEL METERIND.2 COILS	
200	*540294-0000*	*-*			*COVER PLATE HANDLE 6TE*	
210	*564237-0001*	*-*			*COMPONENTS WITHOUT TP-NO*	
220	*564238-0000*	*-*			*DISCETTE FOR LAYOUTS*	
230	*564239-0000*	*-*			*FRONT PLATE 6TE*	
240	*564240-0000*	*-*			*COVER PLATE CIRCUIT CARD*	
F010	*A68256-0100*	*-*		*1*	*CIRCUIT BOARD*	
A006.1	B68263-0101	-		1	BACKPLANE FRONT RACK 6TE	
100	*543372-0000*	*-*		*1*	*CIRCUIT BOARD 6TE*	
110	*551925-0001*	*-*		*1*	*COMPONENTS WITHOUT TP-NO*	
120	*551926-0000*	*-*		*1*	*TERMINAL LABELS 6TE*	
A020	90410-0051	-		1	TEMPERATURE CONTROLLER, KS 40	

Machine Type | Group Description | Used-In | Group Number | Page No

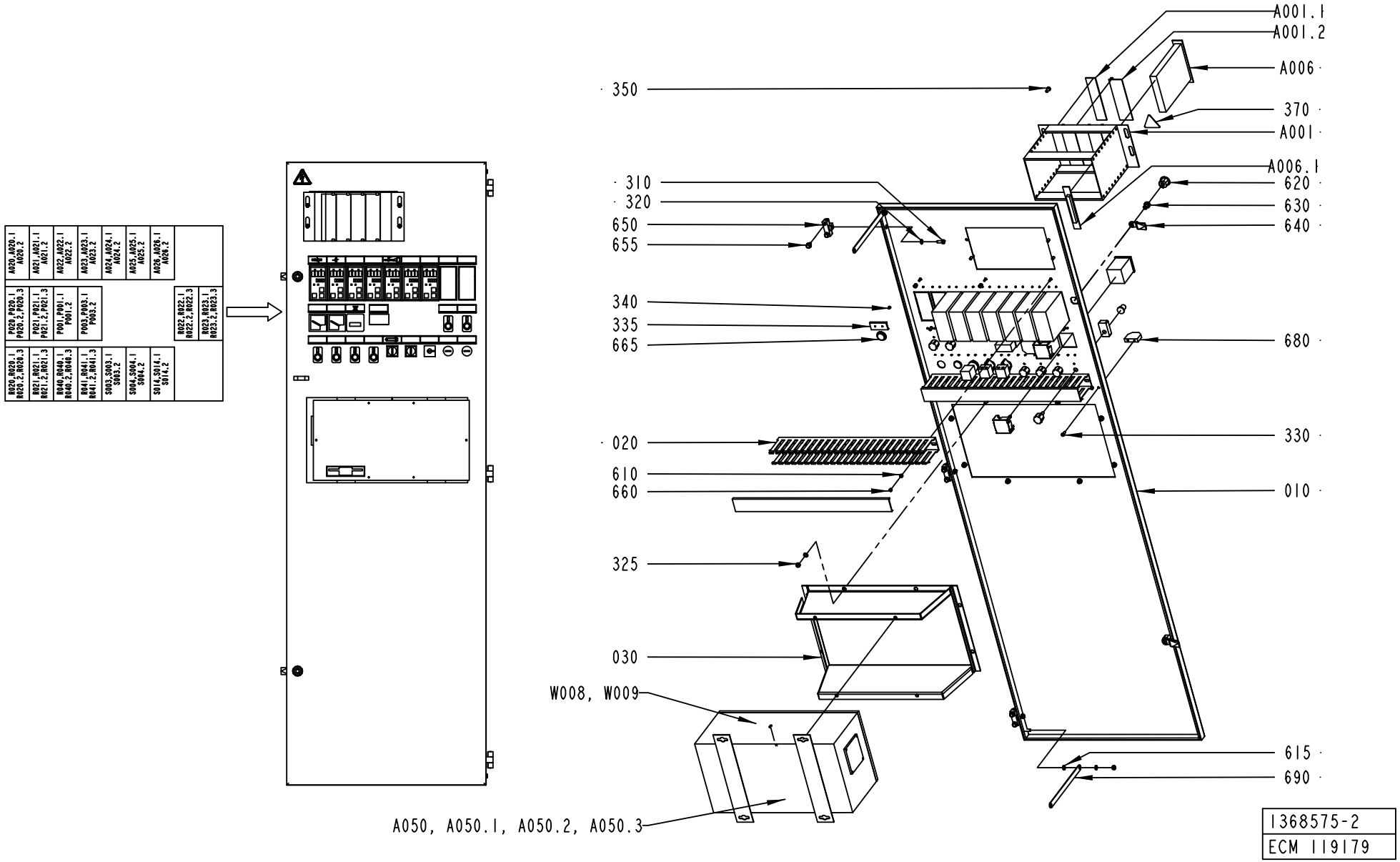
A001.1
A001.2
A006
370
A001
A006.1
620
630
640
680
330
010
615
690
350
310
320
650
655
340
335
665
020
610
660
325
030
W008, W009
A050, A050.1, A050.2, A050.3
1368575-2
ECM 119179

Pos	Part No	SP	UN	Qty	Description	Page No
Common Parts (Cont'd)						
A020.1	359241-0131	-		1	SIGN, TEMP. LS HEATER	
A021	90410-0051	-		1	TEMPERATURE CONTROLLER, KS 40	
A021.1	359241-0132	-		1	SIGN, TEMP. STRIP APPLICATOR	
A022	90410-0051	-		1	TEMPERATURE CONTROLLER, KS 40	
A022.1	359241-0228	-		1	SIGN KYLT	
A023	90410-0051	-		1	TEMPERATURE CONTROLLER, KS 40	
A023.1	359241-0228	-		1	SIGN KYLT	
A024	90410-0051	-		1	TEMPERATURE CONTROLLER, KS 40	
A024.1	359241-0121	-		1	SIGN "STEAM"	
A025	90410-0051	-		1	TEMPERATURE CONTROLLER, KS 40	
A025.1	359241-0228	-		1	SIGN KYLT	
A026	90410-0051	-		1	TEMPERATURE CONTROLLER, KS 40	
A026.1	359241-0486	-		1	HEAT EXCHANGER	
P001	90178-0007	-		1	HOUR COUNTER, BG 40,17-1 12-48VDC	
P001.2	359241-0201	-		1	SIGN "HOUR GLASS"	
P003	90053-0029	-		1	COUNTER, F524.800FA3C 24VDC	
P003.2	359240-0001	-		1	SIGN, NOT ENGRAVED	
P020	90000-0024	-		1	AMMETER, IQ48 15-100HZ	
P020.1	359241-0294	-		1	SIGN	
P020.3	90458-0629	-		1	PROTECTIVE COVER 48.	
P021	90000-0024	-		1	AMMETER, IQ48 15-100HZ	
P021.1	359241-0295	-		1	SIGN	
P021.3	90458-0629	-		1	PROTECTIVE COVER 48.	
R020	90130-0301	-		1	ADJUSTING KNOB WITH DIAL	
R020.1	359241-0294	-		1	SIGN	
R021	90130-0301	-		1	ADJUSTING KNOB WITH DIAL	
R021.1	359241-0295	-		1	SIGN	
R022	90130-0301	-		1	ADJUSTING KNOB WITH DIAL	
R022.1	359241-0294	-		1	SIGN	
R023	90130-0301	-		1	ADJUSTING KNOB WITH DIAL	
R023.1	359241-0295	-		1	SIGN	
R040	90130-0301	-		1	ADJUSTING KNOB WITH DIAL	
R040.2	359241-0193	-		1	SIGN"TRANSSKARVSFÖRSEG.S1	
R041	90130-0301	-		1	ADJUSTING KNOB WITH DIAL	
R041.2	359241-0194	-		1	SIGN"TRANSSKARVSÖRSEGL.S2	
S003	90111-0122	-		1	KEY SWITCH, 2 NO CONTACTS	
S003.1	359241-0133	-		1	SIGN, SERVICE SWITCH	
S004	90111-0122	-		1	KEY SWITCH, 2 NO CONTACTS	
S004.1	359241-0250	-		1	SIGN "CLEANING OF STEAM BARRIER"	
S004.2	359240-0001	-		1	SIGN, NOT ENGRAVED	

Machine Type	Group Description	Used-In	Group Number	Page No

Tetra Pak

SPC
Spare Parts Catalogue

Part No	Description	Page No
6-4918 2311 01	WRENCH 17/19	417
6-69696 00	HOOK SPANNER	417
1881-0001	COMPRESSION SPRING	187
2033-0011	WASHER	175, 187
19269-0002	ELEMENT	355
19797-0000	BUSHING	367
21903-0000	ROLL	39
21904-0000	SHAFT	39, 55
32197-0000	PRESSURE ROLLER	169, 427
36430-0000	BRUSH	417
38087-0000	WASHER	215
38960-0000	COIL HEATER	367
38962-0000	CLUTCH PIECE	367
38963-0000	LID	367
45157-0100	STANDARD EQUIPMENT	445
45159-0100	ELECTRICAL DOCUMENT	445
67388-0101	FRONT MOUNTED RACK 42TE	489, 491
67600-0501	TPIH GENERATOR	451, 453, 455, 457
68123-0301	LEVEL METERIND.2 COILS	489, 491
68161-0102	COIL ELEMENT	199
68263-0101	BACKPLANE FRONT RACK 6TE	489, 491
68445-0103	FRONT PLATE 6TE	489, 491
68445-0104	FRONT PLATE 8 TE	489, 491
68699-0101	MULTIPLEXER CARD 56LED	463, 465
74767-0102	DYNAMOMETER	417
90000-0024	AMMETER, IQ48 15-100HZ	489, 491
90001-0033	WALL SOCKET OUTLET	479, 481
90002-0004	BLANK-OFF PLUG, PR 22,5 SKINDICHT-BLK16	489, 491
90002-0009	BLANK-OFF PLUG, PR 18.6 SKINDICHT-BLK11	193, 319, 321, 323, 325, 343, 345, 371, 373, 375, 377
90002-0010	BLANK-OFF PLUG, PR 37 SKINDICHT-BLK29	107, 109
90002-0013	BLANK-OFF PLUG, PR 15,2 SKINDICHT-BLK9	375, 377
90002-0018	BLANK-OFF PLUG, PR 12,5 SKINDICHT-BLK7	193, 195, 197, 375, 377
90003-0422	CORRUGATED CARDBOARD BOX	413
90005-0082	WASHER PLAIN ROUND 4,3(M4)/12,H=1	19, 27, 121, 123, 133, 439
90005-0105	WASHER PLAIN ROUND 8,4(M8)/24, H=1,5	287
90005-0116	WASHER PLAIN ROUND 8,4(M8)/24, H=2	329
90005-0140	WASHER PLAIN ROUND 10,5(M10)/30, H=2	357
90005-0158	SPACER 4,3/8, H=5	451, 453, 455, 457, 463, 465, 489, 491
90007-0127	CIRCUIT BREAKER, 1P 2 A K	475, 477
90007-0129	CIRCUIT BREAKER, 1P 10 A K	475, 477
90007-0131	CIRCUIT BREAKER, 1P 16 A K	475, 477
90007-0133	CIRCUIT BREAKER, 1P 25 A K	475, 477
90007-0138	CIRCUIT BREAKER, 2P 10 A K	475, 477
90007-0147	CIRCUIT BREAKER, 3P 10 A K	475, 477
90010-0028	ANGLE FLANGE, SINGLE E-2633839	451, 453, 455, 457
90010-0029	FLANGE PACKING, FL 21	451, 453, 455, 457
90012-0049	CABLE GLAND, STR13,5, PR20,4/PG13,5	107, 109, 201
90012-0114	CABLE GLAND, PR18,6/PG11, ELBOW, 120377	375, 377
90012-0137	GLAND, EXTENDED WITH INSERT, PG11	37, 167
90015-0020	LEAD-IN, TET5-7, E-1458016	215
90015-0021	LEAD-IN, TET10-14, E-1458023	215, 409
90015-0023	LEAD-IN, TET7-10, E-1458019	351
90015-0025	LEAD-IN, TET26-35, E-1458041	409
90017-0022	HANDLE, NO. EL-037311	69, 357, 397, 403
90017-0035	HANDLE, NO. 1095-05	129
90024-0036	FILTERED TERMINAL BLOCK	473
90024-0047	EMI SUPPRESSION FERRITE	475, 477, 479, 481
90024-0060	POWER LINE FILTER, 80 A 250/440 VAC	451, 453, 455, 457
90028-0020	CONE TUBE 2,5MM	237
90028-0025	CONE TUBE 6 MM	237
90030-0051	CONN. STR., 6-R1/8, EXT. THREAD	353
90030-0058	CONN. T-PIPE T-12	363, 365
90030-0066	CONN. BULKHEAD SV 6-L/SY	351
90030-0075	PIPE CONNECTION G-6	341, 351
90030-0091	CONN. PIPE G-8	151
90030-0096	CONN. ELBOW W-12	135, 391
90030-0159	CONN. BULKHEAD SV 15-L/SY	391
90030-0180	CONN. STR. GE 12-1/2-14 NPTF	391, 427
90030-0181	CONN. STR. GE 12-3/8-18 NPTF	359
90030-0184	CONN. STR. GA-6-G1/8	351
90030-0186	CONN. STR. GA-10-G1/4	393
90030-0187	CONN. STR. GA-12-G3/8	391
90030-0212	NIPPLES, REDUSING, INT. THR. NO. 2521	385
90030-0221	CONN. ELBOW BULKHEAD WSV 12	131
90030-0232	CONN. PIPE SS-6MO-1-4RP	351
90030-0290	CONN. STR., 8-R1/8, EXT. THREAD	359
90030-0419	CONN. STR., 20-R1/2, INT. THREAD	427
90030-0586	CONN. STR., 20-G1/2, EXT. THREAD	409
90031-0051	BASEPLATE, 10-SLOT	479, 481
90031-0053	BASEPLATE,10-SLOT	479, 481
90031-0057	PLC, DIGITAL INPUT MODULE	479, 481
90031-0058	PLC, DIGITAL INPUT MODULE	479, 481
90031-0059	PLC, DIGITAL OUTPUT MODULE	479, 481

Part No	Description	Page No
90031-0063	PLC,ANALOG COMBO MODULE,IN-4PT/OUT-2PT	479, 481
90031-0068	PLC, POWER SUPPLY	479, 481
90031-0075	CPU363, SERIAL COMMUNICATION	479, 481
90032-0039	BLOCK 4 WAYS	237
90036-0057	LIGHT BULB, BA9S 28V	427
90036-0068	BULB 6.5W 24V	213, 217, 427
90038-0025	RECTIFIER, 6,5/15A SKD 30/04A1	479, 481
90040-0006	EYE BOLT NUT, TYPE, LH, M10	231
90042-0107	SOL.VALVE BURKERT 24VDC	341, 393
90042-0171	SOLENOID VALVE BUERKERT	351
90042-0234	SOLENOID VALVE FAIRCHILD TD6000-45	409
90043-0004	PRESSURE GAUGE, 2040 D=63 MM	363
90043-0061	PRESSURE GAUGE, 2061 D=63 MM, THROTTLED	359
90044-0117	PROX.SW. IX 0208	233
90044-0139	KEY SAF.SW. AZ16-02 ZVR K-2254	73, 75, 101, 271
90044-0155	PROX.SW. IN5297/IN-3002-BPKG/AS-610-TPS	55
90044-0165	SENSOR, SME-8-K5-LED-24	101
90044-0167	EM. STOP XY2-CE 5A 270	275
90044-0194	PROX.SW. IN5329/IN3002-BPKG	23, 27, 49, 161, 257, 383
90044-0310	KEY FOR SAFETY SWITCH, AZ 15/16 B1	153
90044-0311	KEY FOR SAFETY SWITCH, AZ15/16 B2	101
90048-0032	OIL PUMP INCL. CONTAINER 1,5 L	239
90051-0035	KNOB, EXTERNAL THREAD. NO. 8308-1135	21
90053-0024	COUNTER 24VDC 6 DIGITS	463, 465
90053-0029	COUNTER, F524.800FA3C 24VDC	489, 491
90053-0305	FRAME F 1 DV	463, 465
90053-0311	BASE 916	463, 465
90055-0042	NIPPLES, EXT. THREAD, HEXAGON, NO. 6835-	229
90055-0056	HOSE COUPLING	229
90055-0057	HOSE COUPLING	229
90055-0058	HOSE COUPLING	229, 295, 297
90055-0100	Y-CONNECTION, 6-6	101, 143, 165
90055-0101	Y-CONNECTION, 8-8	409
90055-0154	HOSE COUPLING	95, 307
90055-0216	Y-CONNECTION, 10-10	13, 307, 379, 409
90055-0240	HOSE,NIPPLE,REDUCER,TUBE, 8/10MM	307, 409
90055-0248	ELBOW WITH TAILPIECE 10/10 MM	409
90062-0015	LOCK WASHER SERRAT.EXT.GEAR,6,4/11 H=0,7	463, 465, 469, 471, 489, 491
90062-0016	LOCK WASHER SERRAT.EXT.GEAR,8,4/15 H=0,8	231
90062-0059	LOCK WASHER SERRAT.EXT.GEAR,4,3/8 H=0,5	451, 453, 455, 457, 473
90062-0060	LOCK WASHER SERRAT.EXT.GEAR,5,3/10 H=0,6	475, 477, 479, 481, 487
90064-0082	PUSH BUTTON, WHITE	103, 105, 463, 465
90064-0084	PUSH BUTTON, YELLOW	103, 105, 107, 109, 193, 463, 465
90064-0093	PUSH BUTTON, GREEN	193
90064-0098	PUSH BUTTON, CLEAR	463, 465
90064-0124	SWITCH, EM. STOP, ZB2-BS844+ZB2-BZ1045	103
90064-0315	LAMP REMOVER, NO:700	427
90066-0030	PUSH BUTTON BOX XAL J01	279
90069-0613	GEARS, WORM MOTOR ODM120-80BE3	167
90075-0124	CONTACTOR, 4KW 24VDC	475, 477
90075-0126	CONTACTOR, 22KW 24VDC	475, 477
90075-0141	CONTACTOR, 4KW 24VDC	475, 477
90077-0079	FEED THROUGH TERMINAL, 02943.6	459, 467
90082-0013	OVERVOLTAGE PROTECTOR	451, 453, 455, 457
90082-0301	OVERVOLTOLTAGE PROTECTOR	427
90089-0009	REDUCING SLEEVE, PR15,2/PR18,6	37, 329
90091-0266	SEAL RING 10,4X16,3X2,5 MM	391, 429
90091-0297	RADIAL SEAL 35X47X7 MM DUST LIP	167
90091-0320	RADIAL SEAL 20X30X7 MM DUST LIP	167
90091-0357	VARISEAL ROTO 15X23X4 MM	163
90092-0052	METERING VALVE 10 MM3	237
90092-0054	METERING VALVE 50 MM3	237
90092-0082	OIL BRUSH D=2,5MM TUBE D=10	233, 253, 287
90095-0072	OVERLOAD PROTECTION, PKZM 1,0 A	475, 477
90095-0077	OVERLOAD PROTECTION, PKZM 6-10 A	475, 477
90099-0048	ROD END,NUT M16X1,5	25
90099-0087	NUT PR=20,4	227
90099-0104	NUT, PR 15,2 (PG9)	107, 109, 337
90099-0110	NUT, PR 22,5 (PG16)	107, 109, 179, 181, 451, 453, 455, 457
90099-0117	NUT, PR 18,6 (PG11)	107, 109, 317
90099-0118	NUT, PR 20,4 (PG13,5)	107, 109, 279
90099-0119	NUT, PR 28,3 (PG21)	103, 105, 107, 109
90099-0120	MUTTER PR 37 (PG29)	107, 109
90099-0150	NUT ROUND, M5	73, 75
90110-0028	CONTACT UNIT 4-POLE	489, 491
90110-0121	FEMALE INSERT GDS A-H 09 06 215 2811	451, 453, 455, 457
90110-0122	COVER, 09 06 000 9957	451, 453, 455, 457
90110-0127	COAXIAL CONNECTOR, GE 15057C10HBN	451, 453, 455, 457
90110-0150	MALE INSERT 121110 0000	13, 105, 107, 109, 193, 195, 197, 201, 307, 319, 321, 323, 325, 343, 345, 371, 373, 375, 377, 379
90110-0152	CABLE HOOD 24-POL 70.352.2428.1	13, 107, 109, 193, 195, 197, 307, 319, 321, 323, 325, 343, 345, 371, 373, 375, 377, 379
90110-0153	CHASSIS HOUSING 24-P CHI 24, 121240 0000	451, 453, 455, 457
90110-0156	MALE INSERT 70.210.0653.0	107, 109

Part No	Description	Page No
90110-0157	CABLE HOOD 6-POL 70.352.0628.1	37, 107, 109, 161, 167, 233, 319, 321, 329, 371, 373
90110-0159	MALE INSERT 70.310.0640.0	37, 107, 109, 161, 167, 233, 319, 321, 329, 371, 373
90110-0160	CABLE HOOD 6-16-POL 70.352.1628.1	107, 109
90110-0161	FEMALE INSERT 70 105 0653 0	451, 453, 455, 457
90110-0164	FEMALE INSERT 70 105 2453 3	451, 453, 455, 457
90110-0165	FEMALE INSERT 70.005.0653.0	451, 453, 455, 457
90110-0166	CHASSIS HOUSING 310144-33	451, 453, 455, 457
90110-0167	CHASSIS HOUSING 310133-33	451, 453, 455, 457
90110-0346	CABLE HOOD 1211220 00 00	105
90111-0120	SWITCH, 2 POS.704.510 .0A+704.901.5/A	463, 465
90111-0122	KEY SWITCH, 2 NO CONTACTS	489, 491
90111-0172	EARTH FAULT BREAKER, F 362-25/0.03	479, 481
90119-0043	OPTO-RELAY, 22DC 60S-3/32VDC	479, 481
90119-0056	RELAY, AUXILIARY MK3P5-S 24VDC	479, 481
90119-0063	OPTO-RELAY, DC/DC AMMS-10-1/30VDC	479, 481
90119-0067	SOLID-STATE RELAY, H12WD4850	427
90119-0082	SSR 90119-67 + HEAT SINK	487
90119-0106	SAFETY RELAY JOKAB RT 6	479, 481
90125-0020	PLATE	183, 369
90129-0006	BASE, S3-B	479, 481
90130-0301	ADJUSTING KNOB WITH DIAL	489, 491
90132-0021	HOSE CLIP 6-10MM	337, 341, 409
90132-0023	HOSE CLIP S 15/9	337, 341
90134-0039	BUSHING VALVE CONNECTION 2,5 MM	237
90134-0052	PLUG DOSING BLOCK	237
90134-0054	BLOCK CONNECTION M10X1	237
90134-0055	BUSHING/NUT INLET/OUTLET 6 MM	237
90134-0058	CONNECTION	253, 295, 297
90135-0026	EARTH TERMINAL, 3802.6	459, 467
90135-0034	SHIELD CLAMP KLBU 3-8	479, 481
90135-0039	SHIELD CLIP KLBU 4-13.5	475, 477, 479, 481
90135-0043	EARTH WIRE L=200 MM 16 MM2	463, 465, 469, 471, 489, 491
90141-0015	RETAIN. RING, 8	33
90141-0016	RETAIN. RING, 10	19, 21, 33, 163
90143-0057	STRIP EMKA 1011-05 21X11MM	317, 451, 453, 455, 457, 461
90143-0060	EDGE STRIP 9,5X6,3MM BLACK PVC	59, 87, 101
90143-0073	RUBBER STRIP	91
90143-0088	RUBBER STRIP	129, 153
90145-0008	WIRE	275
90148-0010	HOSE	229
90152-0016	HOSE (SPIRAL)	421
90152-0017	HOSE (SPIRAL)	425
90152-0050	SPIRAL CONDUIT, 20X13, UL 1313	375, 377
90152-0051	SPIRAL CONDUIT, 25X18, UL 1816	371, 373
90152-0059	SPIRAL CONDUIT, 18X12, UL 1211	371, 373
90153-0015	ADHESIVE,LOCTITE IS 496/CYANOLOT 303	295, 297
90153-0016	ADHESIVE,TUBE 100G RHODORSIL CAF 3	129, 153, 357
90153-0023	ADHESIVE, SILICON 251470 TUB 90CC	101
90155-0008	HANGER CHAIN, 18	357
90157-0016	LOCKING FLUID	17
90157-0021	LOCKING FLUID	231
90157-0034	SEALING COMPOUND LOCTITE 572 50 ML	391
90157-0041	SEALING COMPOUND	69, 71, 73, 75, 261, 267, 269, 469
90163-0014	QUICK COUPLING, (M) LP-006-1-WR013	425
90163-0015	QUICK COUPLING, (M) LP-006-1-WR513	425
90163-0028	QUICK COUPLING, LP 006-0-WR513	393, 425
90163-0039	HOSE NIPPLE EXT.THR. R1/2 2601-17 MM	35
90163-0043	QUICK COUPLING, (F) MD-006-0-WR013	229
90163-0044	QUICK COUPLING, (M) MD-006-2-WRD13	229
90163-0076	QUICK COUPLING, (F) LP-006-0-WR021	409
90164-0015	LIGHT FIXTURE, DWDCV111B/230V 50HZ	63
90164-0301	HOLDING FIXTURE	227, 451, 453, 455, 457
90164-0302	BRACKET	211
90164-0303	BRACKET SK2202 WALDMANN	63
90165-0003	PIPE CLIP FOR TUBE D=4 MM	253, 287
90165-0047	CLIP	271
90165-0048	CLIP	229
90165-0051	CLIP	387, 389
90165-0113	PIPE CLAMP	393
90166-0013	TUBE 8 MM PA BLUE	35, 379, 385, 409
90166-0060	HOSE 19/26-27 REINF.PVC	35
90166-0081	TUBE 6 MM PA BLUE	13, 143, 163, 165, 179, 181, 229, 239, 307, 329, 351, 365, 379, 383, 385
90166-0094	SHRINKABLE HOSE 19 MM	101
90166-0095	TUBE 4 MM PA BLUE	19
90166-0101	HOSE, SILICONE, 60 SHORE, 6/10 MM	341, 409
90166-0108	TUBE 6 MM PA,TRANSP.	237
90166-0119	HOSE PUR 4/6 BLACK	201
90166-0143	TUBE 2,5 MM PA,TRANSP.	237
90166-0160	TUBE 10 MM PA BLUE	13, 307, 379, 409
90166-0161	HOSE	183, 189, 341
90166-0254	TUBE 4 MM PUR BLUE	305
90178-0007	HOUR COUNTER, BG 40,17-1 12-48VDC	489, 491
90181-0190	CABLE DUCT, WALL BRACKET, B4 MINI	231
90182-0008	CLIP STRIP, 376X7,6 MM	413

Part No	Description	Page No
90187-0093	BALL VALVE G1/4	393
90195-0010	TERMINAL BLOCK, 1989.2	479, 481
90195-0020	TERMINAL BLOCK, 1977.2	227
90206-0014	HEATING ELEMENT 2X1250W,220V	367, 427
90206-0094	HOT AIR GUN, 220V 3000W 13,7A	41
90206-0332	HEATING ELEMENT 220V 3000W 13,7A	427
90207-0363	GASKET	429
90207-0365	GASKET	429
90211-0001	WIRE LOCK, 5 MM	275
90211-0011	EYELET,WIRE ROPE	275
90214-0207	BALL BEARING, 15X32X9 MM	17
90214-0225	BALL BEARING SOLID OIL 20X42X12 MM	167
90214-0303	SEALING RING, 18,6X35X2 MM	143, 145
90217-0304	CLAMP, ISO2852 FOR PIPE 50,8 MM	115
90220-0059	THERMOCOUPLE CABLE K/ 2X0,81MM2	107, 109, 195, 197
90220-0104	SCR. CABLE 4X1,5MM2	37, 167, 233
90220-0107	SCR. CABLE 5X0,75MM2	161
90220-0117	SCR. CABLE 0,41 MM2	195, 197
90224-0372	CONN. STRAIGHT ESK-1/4-1/4 151521	407
90226-0458	MOUNTING SCREW	77, 79, 81, 83, 85, 89, 271
90229-0010	LADDER	417
90232-0089	PH.CELL NTL6-P12-1011520	189
90232-0103	PH.CELL E3S-CT61-L-5M	59
90232-0104	PH.CELL E3S-CT61-D-5M	59
90232-0117	PH.CELL WT4-2P135S10	57
90232-0123	PH.CELL WLL170-P135-6011723	375, 377
90232-0332	FIBRE LM 21-500	189
90233-0027	TUBE FUSE, 16A	427, 475, 477
90233-0028	TUBE FUSE, 10A	427, 475, 477
90233-0031	TUBE FUSE, 20A	427, 475, 477
90233-0303	FUSE HOLDER, ST10	475, 477
90235-0028	VALVE	341
90235-0282	THROTTLE CHECK VALVES,G1/8	385
90235-0288	THROTTLE CHECK VALVE	383
90235-0845	THROTTLE CHECK VALVE, M5, MANUAL, 4MM	95
90235-0846	THROTTLE CHECK VALVE G1/8", MANUAL, 6	41, 97, 143, 163, 165, 179, 181
90235-0847	THROTTLE CHECK VALVE, G1/4", MANUAL,6	201
90237-0128	LOCK CYLINDER, 1109-U3	261, 263, 265, 267, 339, 469
90237-0142	LOCK HOUSING, 1000-U45	463, 465, 471, 489, 491
90237-0151	GUIDE, 1001-U11	469
90237-0153	LOCK HOUSING, 1121-U26-0B	469
90237-0154	LOCK HOUSING, 1121-U60-0C	263, 265, 339
90237-0155	LOCK ADAPTER, 1121-U40	469
90237-0156	LOCK BOLT, 1000-16	469
90237-0158	ROUND BAR, NO. 1049-U18-L839.5	469
90237-0165	LATCH	263, 265, 339
90237-0176	TURNING HANDLE	71, 73, 75, 261, 263, 265, 267, 339, 469
90237-0202	LOCK, INSERT SQUARE,1000-U2 8 MM	463, 465, 471, 489, 491
90237-0322	LOCK GASKET, 1000-U137	463, 465, 471
90237-0324	KEY, 1104-02 FOR SQUARE 8 MM	463, 465, 471
90237-0335	LOCKING CATCH	489, 491
90237-0368	LOCK CAM, 1000-15	463, 465, 471
90239-0491	ROD END,BALL JOINT EYE,MINI-ISO M6	19
90239-0516	ROD END, CLEVIS WITH AXLE M10X1,25	163, 165
90239-0532	ROD END, CLEVIS WITH AXLE M8X1,25	101
90239-0581	SENSOR,BRACKET,FOR CYL 25	143, 165
90239-0829	DOUBLE ACTING, MINI-ISO, CYL.25-50	143
90239-0832	DOUBLE ACTING, MINI-ISO, CYL. 25-125	165
90239-0944	DOUBLE ACTING, MINI-ISO, CYL. 20-35"	179, 181
90240-0146	FLANGE BUSHING,15X21X20 MM	141, 179, 181
90240-0172	FLANGE BUSHING, 8X12X10 MM	175, 187, 191, 427
90240-0184	FLANGE BUSHING,12X16X15 MM	143, 165
90240-0263	FLANGE BUSHING, 15X17X12 MM	163
90243-0061	AIR GUN, CEJN SERIE 204 ED: 90459-0173	421
90243-0203	MEASURING INSTRUMENT	417
90243-0421	TURNBUCKLE, 5 MM, 197 - 132 MM, 11100255	275
90245-0022	MATCHING TRANSF. 18 KVA	437
90248-0019	HINGE 1054-U1	469, 489, 491
90248-0032	HINGE, 1110-U2	463, 465, 469, 471
90259-0039	OVERLOAD RELAY 25-40A	451, 453, 455, 457
90259-0313	AUX. CONTACT K&M NHI21-PKZM0	475, 477
90261-0049	PLUG, BLIND, PLASTIC, NO. SR1750	17
90261-0067	PLUG, BLIND, PLASTIC, NO. 55-10365	215
90261-0079	PLUG, BLIND, PLASTIC, NO. 1955	451, 453, 455, 457, 463, 465, 489, 491
90266-0167	PIPE	229
90266-0168	TUBE 10X1 SS 2333-22	393
90266-0174	TUBE 12X1 SS 2333-22	387, 389
90274-0084	PRESSURE GUARD, 1800 KPA	239
90274-0103	PRESSURE GUARD PEV-1/4-B (10773	407
90287-0106	SCREW SPRINGLOAD. SLOTTED HEAD M10X21	17
90287-0112	SCREW SPRINGLOAD. SLOTTED HEAD M8X16	21
90287-0149	SCREW MC6S M6X8 109	383
90287-0157	SCREW M6SF FLAT HEAD M6X10 88	451, 453, 455, 457, 475, 477, 479, 481, 487, 489, 491
90287-0199	SCREW M6S ISO 4017 M5X6 A480	283, 285

Part No	Description	Page No
90287-0290	SCREW M6S M4X6 A270	95, 177, 179, 181, 287, 383
90287-0295	SCREW HEX.SOCK.COUNT.MF6S M3X8 A280	133
90287-0312	SCREW M6S ISO 4014 M6X75 A480	59
90287-0336	SCREW HEX. SOCK. SET, M6X20 PLASTIC	479, 481
90287-0337	SCREW RECESSED HEAD M4X10 WH. NYLON	451, 453, 455, 457, 463, 465, 475, 477, 479, 481, 487
90296-0091	LUBRICATION GREASE	167, 183
90296-0104	OIL	427
90297-0006	FLUORESCENT TUBE, PL9	451, 453, 455, 457
90297-0007	FLUORESCENT TUBE, PL11	227
90297-0306	BALLAST COIL 50/60 HZ	451, 453, 455, 457, 479, 481
90303-0011	PROTECTIVE GOGGLES	417
90303-0012	PROTECTIVE GLOVES	417
90303-0013	APRON	417
90326-0012	PROTECTIVE COVER, T31A4618	41, 179, 181, 195, 197
90326-0020	PLUG, FEMALE YELLOW CR-AL	41, 179, 181, 195, 197
90326-0037	THERMOCOUPLE, CR-AL PREM.G	133, 359, 361, 427
90326-0038	THERMOCOUPLE, CR-AL	361, 427
90326-0043	THERMOCOUPLE, CR-ALPREM.G	41, 427
90326-0048	THERMOCOUPLE, 12826-31	179, 181, 427
90326-0089	THERMOCOUPLE, 5110-089-000	391
90326-0304	LEAD IN, 9041-15-KS-UB60	179, 181
90326-0306	GLAND FITTING 9041-45-KS-KR.1/8" D=4,5MM	133, 179, 181, 359, 361
90328-0024	SILENCER G3/8	13, 307, 379
90328-0026	SILENCER G1/4	385
90328-0047	SILENCER G1/8	13, 143, 239, 307, 379
90330-0021	NIPPLES, EXT. THREAD. R-207R1/2	391, 409
90330-0024	T-PIPE, INT. THREAD, RP1/4	393
90330-0049	T-PIPE, INT. THREAD, R-221R1/2	409
90335-0025	COMP. SPRING 22010, 1X11X26	431, 433
90335-0152	COMP. SPRING 22300, 1,25X17,25X40,5	233
90337-0007	AEROMETER	417
90337-0009	MEASURING CYLINDER	417
90337-0315	FILTERINSERT / MCS 4463	391
90342-0021	RUBBER BELLOWS, 15, 5X30 MM	179, 181
90345-0072	FLANGE BEARING, 20X113X33,3 MM	329
90347-0004	VIBRATION DAMPER D=30 TH=M8 H=17 H2=21MM	209
90347-0007	VIBRATION DAMPER	99
90347-0142	FOOT	59, 451, 453, 455, 457
90347-0143	GAS SPRING	129
90347-0175	MACHINE SHOE BRIK T 125	215, 231
90349-0003	WETTING AGENT	427
90355-0031	TORQUE RIGID COUPLING, 10X10 MM	233
90360-0020	STEAM TRAP / MK36/51 3/8"	391
90363-0023	IDLER ROLLER ECCENTRIC, 25 TYPE LJ	95
90363-0024	IDLER ROLLER, 25 TYPE LJ	95
90410-0051	TEMPERATURE CONTROLLER, KS 40	489, 491
90411-0001	INSULATING MAT	355
90426-0003	HAND SHOWER	425
90430-0032	THYRISTOR UNIT, 425A/25A	487
90430-0070	FREQ.CONV. 6SE3213-6CA40	479, 481
90430-0072	FREQ.CONV. 6SE3214-0DA40	475, 477
90430-0326	FILTER 6SE3290-0BA87-0FB2	479, 481
90430-0328	FILTER 6SE3290-0DA87-0FB1	475, 477
90430-0335	FILTER LA174936U025	487
90450-0110	ROTARY ACTUATOR DSR-25-180-P	95
90450-0230	DOUBLE ACTING, COMPACT, CYL 50-20	385
90450-0306	DOUBLE ACTING, MINI-ISO, CYL. 12-25	19, 25
90450-0478	DOUBLE ACTING, COMPACT, CYL 32-15	101
90450-0701	SENSOR BRACKET WSR-25-J FOR CYL 25	95
90456-0003	INTOUCH OEM 256 V.5.6B/6.0B HW KEY	489, 491
90457-0005	SINGLE ACTING, SHORT STROKE, CYL 20-15	95
90457-0047	SENSOR 2750-1-5111-1 W.ADAPTER PNP	143, 165
90457-0149	LIGHT FIXTURE, DWDV 118D/230V 50 HZ	211
90457-0178	EQUAL BULKHEAD ELBOW CONNECTOR 36390800	409
90457-0959	WORM GEAR MOTOR PC 440M3T	37
90457-1055	HINGE, COVER STAY, RIGHT, NO. 1050-U1	469
90457-1056	HINGE, COVER STAY, LEFT, NO. 1050-U2	469
90458-0138	PROX.SW. E2EG-X1R5B1-5M	95, 385
90458-0145	SEALING, 3X15 MM CLOSED CELL SPONGE	215
90458-0165	CABLE	375, 377
90458-0182	BALL BEARING, 15X35X11 MM	161, 163
90458-0254	PRECISION PRESSURE REGULATOR,LRP-1/4-0,7	35, 409
90458-0275	WORM GEAR MOTOR,PC440M3TB5-93	329
90458-0292	BASE, KT70-1001	213, 217
90458-0293	LIGHT ELEMENT, RED, KL70-401R	213, 217
90458-0294	LIGHT ELEMENT, YELLOW, KL70-401Y	213, 217
90458-0295	LIGHT ELEMENT, BLUE, KL70-401L	213, 217
90458-0297	BASE WITH TUBE 110 MM KA70-1011	213, 217
90458-0302	SIREN WITH ADJUSTABLE VOLUME KS 70-3004	213, 217
90458-0305	CABLE GLAND, M12X1,5, NO.5311 1000	397
90458-0308	CABLE GLAND, M25X1,5, NO.5311 1030	101
90458-0314	CABLE GLAND, M16X1,5, NO.5311 1110	151
90458-0321	NUT, M12X1,5	397

Part No	Description	Page No
90458-0370	KEY SAF.SW. AZM161SK-24RKA-024	131, 171
90458-0372	KEY FOR SAFETY SWITCH, AZM-161-B6	129, 171
90458-0436	GLAND, EXTENDED WITH INSERT, M16X1,5	341
90458-0442	GLAND, EXTENDED WITH INSERT, M25X1,5	233
90458-0460	GLAND, LOCKNUT, M16X1,5	341
90458-0569	CONNECTION ADAPTER FOR BUS BAR	475, 477
90458-0629	PROTECTIVE COVER 48.	489, 491
90458-0632	TRANSFORMER, 1 PHASE 2,5 KVA	451, 453, 455, 457
90458-0668	WARNING SIGN ISO, HYDROGEN PEROXIDE	341, 415
90458-0675	PROXIMITY SENSOR, E2EG-X5MB1-5M	231, 383, 387, 389
90458-0746	STEP MOTOR DRIVE L50	487
90458-0961	SOLID-STATE RELAY G3R-ODX02SN	479, 481
90458-0963	SOCKET, TS35 OMRON P2RF-05-E	479, 481
90458-1194	MONOSTABLE VALVE 5/2	13, 307, 379
90458-1197	BISTABLE VALVE 5/2	13
90458-1202	VALVES 2X3/2, CLOSED	13, 307, 379
90458-1204	BASIC SUB-BASE FOR 4 VALVES	307
90458-1205	BASIC SUB-BASE FOR 8 VALVES	13, 379
90458-1206	EXPANSION SUB-BASE FOR 2 VALVES	13, 307, 379
90458-1207	SEALING, STANDARD	13, 307, 379
90458-1208	SEALING, CHANNEL 1 BLOCKED	13, 379
90458-1212	LEFT ENDPLATE INCL. 10M CABLE	13, 307, 379
90458-1214	RIGHT ENDPLATE EXTERNAL PILOT AIR	13, 307, 379
90458-1215	COVER PLATE FOR EMPTY VALVE POSITION	13, 307, 379
90458-1324	ELLIPSE LOCK, FSQ-M8 4-28900-03-SS	155, 337
90458-1448	MAGNETIC FUSE, S292 C100	107, 109
90458-1474	PAPER TROLLEY, 32 04 192 3	441
90458-1552	ANGLE ENCODER, 670900130	233
90458-1651	EMERGENCY STOP, ZB4-BS-844 ZB4-BZ-104	105, 193, 279, 463, 465
90458-1704	BALL BEARING, 15X35X11 MM	147, 149
90458-1848	SEAL RING, VITON 37,5X65X20MM	185
90458-1955	CARRIAGE, NW 02 80	439
90458-2329	HOSE, SILICONE, 50 SHORE, 9/13 MM	177
90458-2434	DIAPHRAGM VALVE 12MM, N.O. WELD CONN.	365
90458-2454	CABLE, SICK DOL 1204-G05M	47, 55
90458-2455	CABLE, SICK DOL 0803-G10M	55
90458-2539	SPROCKET, S900-12T-104/Ø25-AC	329
90458-2542	SPROCKET, S900-18T-115/40-AC	329
90458-2543	ROTARY ACTUATOR DSM32-270-P-FW-CC	329
90458-2573	INK JET PRINTER A300 STD 6M CONDUIT	437
90458-2574	SPRAY NOZZLE B 1/4 M - SS 1.5	353
90458-2580	LEVEL CONTROL RELAY RM4-LA32M	479, 481
90458-2587	REDUCER, SKINDICHT-MR 29/16	13, 195, 197, 201, 307, 323, 325, 379
90458-2606	ACTIVATOR, 7649 AEROSOL 0178276A	391
90458-2607	REDUCER, SKINDICHT-ME 13.5/21	319, 321, 371, 373
90458-2608	REDUCER, SKINDICHT-MR 21/16	371, 373
90458-2609	PERISTALTIC PUMP, SR10/50 20500507	337
90458-2612	O-RING 24X5 MM	387, 389
90458-2616	O-RING 28X 5MM	387, 389
90458-2618	PIPE CLAMP, D=10 MM, 106/06-PP	341, 351
90458-2648	BALL VALVE G1/2", LOCKABLE	391
90458-2727	BOTTLE, 1L-RE-SP-212707-95-61-WHITE	341
90458-2728	HEATING ELMENT, 230V/1500W/ø8.5	137
90458-2729	CLAMP 20MM, SLK 320-P	409
90458-2730	PRESSURE SENS. SDE-1-D10-G2--R18-C-P1-M8	409
90458-2741	PRESSURE REGULATOR, LR-1/8-D-MINI	229, 239
90458-2742	BRACKET HR-D-MIN, FOR LR-1/8-D-MINI	239
90458-2746	PRESSURE HEADER, P801-5	229
90458-2747	PRESSURE GAUGE, 2758 D=63 MM	229
90458-2749	GEARS, BEVEL A1	233
90458-2760	NEEDLE ROLLER FLAT CAGE, FF 3020	287
90458-2765	BOTTLE, 10L-F-SP-212708-500-61-N W. LID	341, 427
90458-2766	ELBOW PIPE JOINT, EXT.THREAD,D=4 MM M3	305
90458-2768	COMP. SPRING 2531	305
90458-2769	TENSION SPRING 3800	305
90458-2796	X-SEAL 21,82X3,53 MM	295, 297
90458-2826	SHUT OFF VALVE 3/2, HE-D MAXI	407
90458-2828	FILTER REG 0,5-12 BAR 40 µ, D-MAXI-A	407
90458-2829	DISTRIBUTOR, FRZ-D-MAXI	407
90458-2830	START UP VALVE 3/2, HEE-D-MAXI-24DC	407
90458-2831	START UP VALVE 2/2, HEL-D-MAXI	407
90458-2832	FILTER 0,01 MICRON G1/2", LFMA-D-MAXI	407
90458-2833	FILTER 1 MICRON G1/2", LFMB-D-MAXI	407
90458-2834	END PLATE LEFT, PBL-1/2-D-MAXI-L	407
90458-2835	END PLATE RIGHT, PBL-1/2-D-MAXI-R	407
90458-2836	MOUNTING BRACKET, HFOE-D-MIDI/MAXI	13, 407
90458-2837	PLUG SOCKET, KMEB-1-24-5-LED	13, 407
90458-2838	SILENCER U-3/8	407
90458-2846	CONNECTION Y, FOR HOSES DI 6MM	409
90458-2884	BOTTLE, 1000ML PLASTIC BROWN INCL LID	241
90458-2906	HOSE, SILICONE, 60 SHORE, 4/6 MM	375, 377
90458-2935	GEARS, PLANETARY BGT 800	161
90458-2936	MOTOR BRACKET , NEMA 34 FOR BGT-800	161
90458-2937	STEPPER MOTOR, PK296-E4.5T	161

Part No	Description	Page No
90458-2954	ELBOW PIPE JOINT, EXT.THREAD, D=4MM M5	19, 25, 95
90458-2955	ELBOW PIPE JOINT, EXT.THREAD, D=4MM-G1/8	13
90458-2956	ELBOW PIPE JOINT, EXT.THREAD, D=6MM-G1/8	13, 101, 379, 383, 385
90458-2957	ELBOW PIPE JOINT, EXT.THREAD, D=6MM-G1/4	163, 351, 365
90458-2958	ELBOW PIPE JOINT, EXT.THREAD, D=8MM-G1/4	35, 409
90458-2961	ELBOW PIPE JOINT, EXT.THREAD,D=10MM-G1/4	13
90458-2962	ELBOW PIPE JOINT, EXT.THREAD,D=10MM-G3/8	13
90458-2964	ELBOW PIPE JOINT, EXT.THREAD, D=8MM-G1/8	385
90458-2967	COMP. SPRING 6040	33
90458-2968	TENSION SPRING 3823	39, 55
90458-2969	PRESSURE GAUGE, MAP-40-1-1/8-EN	35
90458-2971	BRACKET, HR-1/4-P FOR LRP-1/4-0,7	35, 163
90458-2972	FOOT CRHBN-12/16X1	25
90458-2973	GUIDE BAR, 25X12,25X150 MM	101
90459-0057	BUSHING , 19X22X6 MM	161
90459-0058	RADIAL SEAL 19X32X8 MM DUST LIP	161
90459-0074	COMP. SPRING 2367	101
90459-0075	HINGE, 1056-U30	101
90459-0109	SHUT-OFF VALVE G1/4	13
90459-0221	TUBE, 6 MM PE BLACK	341, 393
90459-0248	GEARS, BEVEL MOTOR KA47DT80N4-2WE	233
90459-0281	LIFTING STRAP, 3000KG L=2M	413
90459-0282	LIFTING STRAP, 3000KG L=4M	413
90459-0388	BELLOW COUPLING, 14X16 MM	37
90459-0390	CYLINDER WITH INT. GUIDING BORE 20	41
90459-0391	CONTRAST SCANNER KT3W-P1116	47
90459-0392	CYLINDER WITH INT. GUIDING BORE 20	97
90459-0491	FLANGE BUSHING, 10X12X4 MM	187
90459-0671	PRESSURE GAUGE, MAP-40-4-1/8-EN	163
90459-0672	PRECISION PRESSURE REGULATOR,LRP-1/4-4	163
90459-0690	CURRENT CONTROL RELAY, 84 871 034	479, 481
90459-0707	HEATING ELEMENT, 1500W/220V	183, 427
90459-0758	BALL BEARING, 5X16X5 MM	283, 285
90459-0925	LIMIT SW. GSAB 20 A1B	231
90459-1149	CHAIN TENSIONER, 51330BPNF	253, 287
90459-1153	CYLINDER, CLAMPING MODULE EV-40-5	305
90459-1194	KEY SAF.SW. AZ16-03 ZVRK-M16	151, 341
90459-1277	CHAIN TENSIONER, 5131HPNF	233
90459-1340	COMP. SPRING 6034	283, 285, 427
90459-1341	COMP. SPRING 2547	283, 285
90459-1342	RUBBER BUFFER, 10-00340-01	231
90459-1343	GAS SPRING NO. G23-100-800N-01	253, 299
90459-1345	TORSION SPRING 8359	253, 299
90459-1367	INDUC. TRANSD. IW 25A / 40-0.5-KHN-A79	163
90459-1368	CABLE, TWK BI 723 M 3 PS-GG5	163, 375, 377
90459-1385	LOCK KNOB, GN617 NI 8	231
90459-1403	CONN. T-PIPE T-17	151
90459-1404	CONN. ELBOW, 17	151
90459-1417	DOUBLE ACTING, COMPACT, CYL 50-50	101
90459-1418	FOCUSING DEVICE AF/FC2	177
90459-1419	FIBRE CV/CB1-2	177
90459-1423	PUMP HOSE, MARPRENE 6.4X1,6	337
90459-1449	SAFETY CLUTCH, 1/490.725.C DIA. 32	233
90459-1473	PEROXIDE PUMP, 313VDL/D 140.NS13.A37	337
90459-1507	DOUBLE ACTING, MINI-ISO, CYL. 32-50	163
90459-1532	BEARING ROLLER, 12X35X10 MM	245, 283, 285, 427
90459-1577	1 AXIS DOCKING STATION D2/PLC/DOL	487
90459-1580	POWER SUPPLY DEVICE P25L	487
90459-1940	LOCK KNOB, GN613 NIK 6	439
90459-1944	GUIDE BAR, 80X12X3960	439
90459-2070	COOLING UNIT, 3372.209 RF	451, 453, 455, 457
90459-2071	EARTH CIRCUIT BREAKER, 4P 16A/30 MA IP20	487
90459-2208	HOOK SPANNER ADJUSTABLE, DIAM. 6 MM	417
90459-2214	MEASURING CYLINDER, 50ML 648-04	417
207637-0400	ELEMENT	349
207638-0300	SLEEVE CONTACT	367
207639-0000	SPACER	183, 369
209283-0000	BRIDGE CONNECTOR	369
230922-0100	AIR JET GUN	417
247170-0000	BEARING COVER	143, 145
257090-0000	SHIFTER HANDLE	187
257923-0000	GUIDE WHEEL	33
263062-0000	PRESSURE ROLLER	169, 427
271239-0000	SLEEVE	431, 433
271241-0000	SCREW	431, 433
272095-0000	SHAFT	179, 181
272728-0000	BARRIER	431, 433
272813-0000	PLUNGER	431, 433
272814-0000	SLEEVE	431, 433
272815-0001	SLEEVE	431, 433
273429-0000	WASHER	179, 181
273455-0000	LABEL (COLD WATER)	393
273458-0000	LABEL (AIR)	409
273953-0000	SEAL	185

Part No	Description	Page No
273954-0000 ..	SEAL	151
311103-0207 ..	PARALLELL PIN, CP, M6, 2,5X10 MM	169
311103-0233 ..	PARALLELL PIN, M6, 3X10 MM	283, 285
311103-0306 ..	PARALLELL PIN, M6, 5X12 MM	253, 299
311103-0401 ..	PARALLELL PIN, M6, 8X20 MM	61
311103-0403 ..	PARALLELL PIN, M6, 8X25 MM	65
311103-0409 ..	PARALLELL PIN, M6, 8X40 MM	65
311103-0413 ..	PARALLELL PIN, M6, 8X50 MM	129, 171
311112-0343 ..	SPRING PIN, ISO 8752 6X28-C	233
311411-0138 ..	SPLIT PIN SP1,6X12RFR	427
311521-0142 ..	BLANK RIVET 3,2X6	355, 413, 463, 465, 489, 491
312101-0287 ..	SCREW M6S M4X8 FZB	107, 109
312101-0630 ..	SCREW M6S M16X50 FZB	207
312105-0287 ..	SCREW M6S ISO4017 M4X8 A480	33, 337, 385
312105-0289 ..	SCREW M6S ISO 4017 M4X10 A480	97, 101, 121, 123, 137
312105-0291 ..	SCREW M6S ISO 4017 M4X12 A480	133, 233, 341
312105-0292 ..	SCREW M6S ISO 4017 M4X14 A480	179, 181
312105-0293 ..	SCREW M6S ISO 4017 M4X16 A480	41, 95, 135
312105-0295 ..	SCREW M6S ISO4017 M4X20 A480	121, 123
312105-0297 ..	SCREW M6S ISO 4017 M4X25 A480	121, 123, 239, 439
312105-0301 ..	SCREW M6S ISO 4017 M4X35 A480	217
312105-0303 ..	SCREW M6S ISO 4017 M4X40 A480	39
312105-0323 ..	SKRUV M6S ISO 4017 M5X8 A480	13, 107, 109, 163, 189
312105-0325 ..	SCREW M6S ISO 4017 M5X10 A480	13, 101, 141, 189, 213, 271, 407
312105-0327 ..	SCREW M6S ISO 4017 M5X12 A480	25, 35, 177, 179, 181, 329, 397, 401, 403, 407
312105-0328 ..	SCREW M6S ISO 4017 M5X14 A480	51, 131, 145, 147, 149, 189
312105-0329 ..	SCREW M6S ISO 4017 M5X16 A480	133, 151, 305
312105-0331 ..	SCREW M6S ISO 4017 M5X20 A480	37, 41, 121, 123, 165
312105-0332 ..	SCREW M6S ISO 4017 M5X22 A480	97, 143
312105-0333 ..	SCREW M6S ISO 4017 M5X25 A480	121, 161, 469
312105-0362 ..	SCREW M6S ISO 4017 M6X8 A480	107, 109, 171, 179, 181, 215, 239, 241, 253, 287
312105-0364 ..	SCREW M6S ISO 4017 M6X10 A480	13, 57, 99, 101, 129, 131, 163, 165, 167, 215, 231, 239, 271, 307, 347, 379, 387, 389
312105-0366 ..	SCREW M6S M6X12 A280	25, 29, 91, 131, 137, 155, 161, 167, 171, 177, 179, 181, 183, 191, 219, 231, 233, 279, 287, 329, 341, 357, 367, 385, 393, 409, 463, 465, 469, 471
312105-0367 ..	SCREW M6S M6X14 A280	21, 43, 45, 49, 53, 135, 143, 187, 215, 253, 271, 323, 325, 341, 359
312105-0368 ..	SCREW M6S M6X16 A280	23, 29, 55, 59, 63, 73, 75, 95, 99, 101, 125, 127, 129, 151, 161, 167, 171, 175, 179, 181, 183, 187, 189, 191, 201, 219, 229, 231, 245, 271, 283, 285, 317, 329, 337, 341, 347, 439, 489, 491
312105-0370 ..	SCREW M6S ISO 4017 M6X20 A480	19, 27, 33, 35, 37, 47, 53, 73, 75, 95, 99, 131, 133, 163, 171, 185, 215, 219, 233, 287, 341, 351, 383, 385, 391, 409
312105-0371 ..	SCREW M6S ISO 4017 M6X22 A480	137, 163, 191, 201, 359, 361, 409
312105-0372 ..	SCREW M6S ISO 4017 M6X25 A480	33, 35, 39, 41, 47, 51, 57, 95, 99, 175, 191, 351, 357
312105-0374 ..	SCREW M6S ISO 4014 M6X30 A480	35, 95, 97, 253, 275, 287
312105-0376 ..	SCREW M6S ISO 4014 M6X35 A480	101, 179, 181, 253, 347, 361
312105-0379 ..	SCREW M6S ISO 4014 M6X45 A480	39, 47, 55, 187, 271, 287
312105-0380 ..	SCREW M6S ISO 4014 M6X50 A480	175, 233, 341
312105-0381 ..	SCREW M6S ISO 4014 M6X55 A480	187, 431, 433
312105-0382 ..	SCREW M6S ISO 4014 M6X60 A480	35, 37
312105-0384 ..	SCREW M6S ISO 4014 M6X70 A480	233, 287
312105-0388 ..	SCREW M6S ISO 4014 M6X90 A480	233
312105-0447 ..	SCREW M6S ISO 4017 M8X12 A480	69, 101, 209, 231, 247, 249, 251, 289, 291, 293, 311, 313, 315, 329, 337, 357, 397, 403
312105-0449 ..	SCREW M6S ISO 4017 M8X16 A480	129, 155, 161, 171, 269, 271, 299
312105-0451 ..	SCREW M6S ISO 4017 M8X20 A480	99, 163, 209, 215, 229, 287, 289, 291, 293, 311, 313, 315, 383, 387, 389
312105-0452 ..	SCREW M6S ISO 4017 M8X22 A480	155, 187, 253
312105-0453 ..	SCREW M6S ISO 4017 M8X25 A480	179, 181, 215, 233, 247, 249, 251, 289, 291, 293, 311, 313, 315, 383, 397, 451, 453, 455, 457
312105-0455 ..	SCREW M6S ISO 4017 M8X30 A480	35, 163, 209, 247, 249, 251, 289, 291, 293, 311, 313, 315, 357
312105-0457 ..	SCREW M6S ISO 4014 M8X35 A480	185, 253, 287
312105-0459 ..	SCREW M6S ISO 4014 M8X40 A480	101, 253, 299
312105-0462 ..	SCREW M6S ISO 4014 M8X55 A480	185
312105-0463 ..	SCREW M6S ISO 4014 M8X60 A480	239
312105-0464 ..	SCREW M6S ISO 4014 M8X65 A480	231
312105-0466 ..	SCREW M6S ISO 4014 M8X75 A480	287
312105-0471 ..	SCREW M6S ISO 4014 M8X100 A480	253, 299
312105-0475 ..	SCREW M6S ISO 4014 M8X120 A480	329
312105-0489 ..	SCREW M6S ISO 4017 M10X16 A480	329
312105-0491 ..	SCREW M6S ISO 4017 M10X20 A480	65, 233
312105-0493 ..	SCREW M6S ISO 4017 M10X25 A480	299
312105-0495 ..	SCREW M6S ISO 4017 M10X30 A480	61, 65, 357
312105-0497 ..	SCREW M6S ISO 4017 M10X35 A480	171, 233
312105-0499 ..	SCREW M6S ISO 4014 M10X40 A480	65, 233
312105-0500 ..	SCREW M6S ISO 4014 M10X45 A480	233
312105-0501 ..	SCREW M6S ISO 4014 M10X50 A480	233
312105-0515 ..	SCREW M6S ISO 4014 M10X120 A480	59
312105-0534 ..	SCREW M6S ISO 4017 M12X25 A480	175, 187, 253
312105-0538 ..	SCREW M6S ISO 4017 M12X35 A480	215
312105-0674 ..	SCREW M6S ISO 4017 M20X50 A480	231
312109-0374 ..	SCREW M6S ISO 4017 M6X30 A480	33, 55, 107, 109, 185, 219, 287
312109-0376 ..	SCREW M6S ISO 4017 M6X35 A480	41
312109-0378 ..	SCREW M6S ISO4017 M6X40 A480	29
312109-0380 ..	SCREW M6S ISO 4017 M6X50 A480	245, 283, 285

Part No	Description	Page No
312109-0457 ..	SCREW M6S ISO 4017 M8X35 A480	101, 233, 299
312109-0460 ..	SCREW M6S ISO 4017 M8X45 A480	383
312109-0461 ..	SCREW M6S ISO 4017 M8X50 A480	59
312111-0511 ..	SCREW HEX.SOCK.HD.MC6S-TT 10X100 88 F	423
312115-0228 ..	SCREW ISO4762 M3X16 A4	161
312115-0285 ..	SCREW ISO4762 M4X6 A4	121, 123
312115-0287 ..	SCREW ISO4762 M4X8 A4	121, 123, 385, 439
312115-0289 ..	SCREW ISO4762 M4X10 A4	337
312115-0291 ..	SCREW ISO4762 M4X12 A4	21, 295, 297
312115-0293 ..	SCREW ISO4762 M4X16 A4	49, 103, 105, 337
312115-0299 ..	SCREW ISO4762 M4X30 A4	233
312115-0304 ..	SCREW ISO4762 M4X45 A4	233, 341
312115-0305 ..	SCREW ISO4762 M4X50 A4	55
312115-0323 ..	SCREW ISO4762 M5X8 A4	19, 213, 217, 351
312115-0325 ..	SCREW ISO4762 M5X10 A4	305
312115-0327 ..	SCREW ISO4762 M5X12 A4	233
312115-0329 ..	SCREW ISO4762 M5X16 A4	37, 341
312115-0331 ..	SCREW ISO4762 M5X20 A4	73, 75, 101, 143, 145, 233, 271, 397
312115-0335 ..	SCREW ISO4762 M5X30 A4	283, 285
312115-0339 ..	SCREW ISO4762 M5X40 A4	231
312115-0364 ..	SCREW ISO4762 M6X10 A4	209, 343, 345
312115-0366 ..	SCREW ISO4762 M6X12 A4	69, 71, 73, 75, 85, 87, 261, 263, 265, 267, 339, 351
312115-0367 ..	SCREW ISO4762 M6X14 A4	161, 299, 339, 439
312115-0368 ..	SCREW ISO4762 M6X16 A4	97, 101, 161, 195, 197, 209, 287, 319, 321, 323, 325, 361, 371, 373, 375, 377
312115-0370 ..	SCREW ISO4762 M6X20 A4	69, 71, 73, 75, 193
312115-0372 ..	SCREW ISO4762 M6X25 A4	95, 101, 393
312115-0374 ..	SCREW ISO4762 M6X30 A4	273, 319, 321, 341, 343, 345, 351, 387, 389, 393
312115-0376 ..	SCREW ISO4762 M6X35 A4	95, 193, 195, 197, 229, 271, 323, 325, 371, 373, 375, 377, 409
312115-0378 ..	SCREW ISO4762 M6X40 A4	101
312115-0379 ..	SCREW ISO4762 M6X45 A4	253, 287
312115-0380 ..	SCREW ISO4762 M6X50 A4	385
312115-0449 ..	SCREW ISO4762 M8X16 A4	59, 347
312115-0453 ..	SCREW ISO4762 M8X25 A4	253, 299
312115-0461 ..	SCREW ISO4762 M8X50 A4	101
312115-0491 ..	SCREW ISO4762 M10X20 A4	61
312115-0493 ..	SCREW ISO4762 M10X25 A4	35
312115-0497 ..	SCREW ISO4762 M10X35 A4	59
312115-0499 ..	SCREW ISO4762 M10X40 A4	287
312115-0634 ..	SCREW ISO4762 M16X70 A4	209
312121-0230 ..	SCREW SLOT.PAN HD. MCS 3X20 FZB	367
312125-0220 ..	SKRUV SLOT.PAN HD. MCS 3X6 A480	183, 227
312125-0222 ..	SPåRSKRUV MCS M3X8 SS	23, 183, 451, 453, 455, 457
312125-0226 ..	SCREW PAN HEAD MCS M3X12 SS	183, 473
312125-0228 ..	SCREW PAN HEAD MCS M3X16 A480	47, 55, 57, 383
312125-0230 ..	SPåRSKRUV MCS M3X20 SS	23, 49, 227, 257
312125-0232 ..	SCREW PAN HEAD MCS M3X25 SS	27, 59
312125-0285 ..	SCREW SLOT.PAN HD. MCS 4X6 A480	23, 25, 29, 33, 351, 355
312125-0287 ..	SCREW PAN HEAD MCS M4X8 SS	19, 27, 253, 287, 439, 473
312125-0289 ..	SPåRSKRUV MCS 4X10 A480	23, 279, 451, 453, 455, 457
312125-0291 ..	SCREW PAN HEAD MCS M4X12 SS	19, 451, 453, 455, 457
312125-0293 ..	SCREW PAN HEAD MCS M4X16 SS	131
312125-0327 ..	SCREW PAN HEAD MCS M5X12 SS	227, 231, 479, 481, 487, 489, 491
312125-0329 ..	SCREW PAN HEAD MCS M5X16 SS	35, 151, 475, 477
312125-0335 ..	SCREW PAN HEAD MCS M5X30 SS	171
312125-0364 ..	SCREW SLOT.PAN HD. MCS 6X10 A480	213, 215, 217
312125-0366 ..	SCREW PAN HEAD MCS M6X12 SS	201, 231, 329, 463, 465, 479, 481, 489, 491
312125-0370 ..	SCREW PAN HEAD MCS M6X20 SS	101, 489, 491
312125-0380 ..	SCREW PAN HEAD MCS M6X50 SS	129
312132-0284 ..	SCREW SLOT. PAN HEAD MSCS M4X5	227, 367
312132-0287 ..	SCREW SLOT. PAN HEAD MSCS M4X8	183, 369
312145-0285 ..	SCREW COUNTERS.SLOT.HD. MFS 4X6 SS	451, 453, 455, 457
312145-0291 ..	SCREW COUNT.SLOT.HD. 4X12 A4	463, 465
312155-0289 ..	SCREW EN 10642 MF6S M4X10 A480	133
312155-0291 ..	SCREW EN 10642 MF6S M4X12 A480	21, 25, 97
312155-0295 ..	SCREW EN 10642 MF6S M4X20 A480	237, 295, 297
312155-0323 ..	SCREW EN 10642 MF6S M5X8 A480	71, 73, 75, 245, 261, 267
312155-0325 ..	SCREW EN 10642 MF6S M5X10 A480	101, 153
312155-0327 ..	SCREW EN 10642 MF6S M5X12 A480	245, 283, 285
312155-0329 ..	SCREW EN 10642 MF6S M5X16 A480	99, 101, 305
312155-0331 ..	SCREW EN 10642 MF6S M5X20 A480	171
312155-0333 ..	SCREW EN 10642 MF6S M5X25 A480	245, 283, 285
312155-0339 ..	SCREW EN 10642 MF6S M5X40 A480	129
312155-0364 ..	SCREW EN 10642 MF6S M6X10 A480	215
312155-0366 ..	SCREW EN 10642 MF6S M6X12 A480	35, 219, 295, 297, 319, 321
312155-0368 ..	SCREW EN 10642 MF6S M6X16 A480	95, 101, 165, 215, 271, 329
312155-0370 ..	SCREW EN 10642 MF6S M6X20 A480	87, 233
312155-0372 ..	SCREW EN 10642 MF6S M6X25 A480	99
312155-0379 ..	SCREW MF6S EN 10642 M6X45 A480	215
312155-0449 ..	SCREW EN 10642 MF6S M8X16 A480	211
312155-0451 ..	SCREW EN 10642 MF6S M8X20 A480	233
312155-0493 ..	SCREW EN 10642 MF6S M10X25 A480	185
312155-0495 ..	SCREW EN 10642 MF6S M10X30 A480	329
312180-0366 ..	SCREW ISO7379 H6X12	253, 299

Part No	Description	Page No
312318-0323 ..	SCREW ISO4029 M5X8 A4	51, 167
312318-0331 ..	SCREW ISO4029 M5X20 A4	95
312318-0360 ..	SCREW ISO4029 M6X6 A4	233
312318-0362 ..	SCREW ISO4029 M6X8 A4	39, 45, 55, 99, 143
312318-0364 ..	SCREW ISO4029 M6X10 A4	33, 245
312318-0366 ..	SCREW ISO4029 M6X12 A4	53, 59
312318-0447 ..	SCREW ISO4029 M8X12 A4	215
312318-0453 ..	SCREW ISO4029 M8X25 A4	207
312318-0459 ..	SCREW ISO4029 M8X40 A4	233
312502-0122 ..	DRIVE SCREW ROUND HEAD KDS 0X6	409
312601-0310 ..	NUT M6M3FZB	367
312601-0318 ..	NUT M6M8FZB	195, 197
312605-0310 ..	HEXAGON NUT, M6M M3 A280	27, 383, 463, 465
312605-0312 ..	HEXAGON NUT, M6M M4 A280	23, 33, 39, 55, 71, 121, 123, 175, 179, 181, 295, 297, 337, 341, 351, 463, 465
312605-0314 ..	HEXAGON NUT, M6M M5 A280	41, 73, 75, 99, 101, 121, 123, 129, 151, 161, 171, 177, 179, 181, 189, 231, 271, 329, 397, 407
312605-0316 ..	HEXAGON NUT, M6M M6 A280	19, 21, 23, 27, 29, 33, 39, 55, 91, 99, 101, 125, 127, 129, 143, 151, 161, 163, 165, 167, 171, 191, 193, 195, 197, 201, 209, 215, 219, 253, 271, 279, 287, 303, 305, 323, 325, 329, 337, 339, 341, 343, 345, 347, 351, 357, 359, 361, 371, 373, 375, 377, 383, 387, 389, 409
312605-0318 ..	HEXAGON NUT, M6M M8 A280	19, 21, 59, 69, 129, 165, 167, 175, 179, 181, 193, 211, 233, 239, 269, 305, 319, 321, 323, 325, 347, 357, 371, 373, 375, 377, 383, 397
312605-0320 ..	HEXAGON NUT, M6M M10 A280	17, 185, 231, 329
312605-0322 ..	HEXAGON NUT, M6M M12 A280	209
312605-0324 ..	HEXAGON NUT, M6M M16 A280	359
312605-0326 ..	HEXAGON NUT, M6M M20 A280	155
312625-0316 ..	HEXAGON THIN NUT, EN 24035 ML6M M6 A4	245, 283, 285
312625-0318 ..	HEXAGON THIN NUT, EN 24035 ML6M M8 A4	179, 181, 245, 283, 285
312705-0312 ..	NUT HEX. DOMED CAP MHM-6 M4 A280	71, 73, 75, 105, 261, 267
312705-0314 ..	NUT HEX. DOMED CAP MHM-6 M5 A280	25, 227
312705-0316 ..	NUT HEX. DOMED CAP MHM-6 M6 A280	187
312705-0318 ..	NUT HEX. DOMED CAP MHM-6 M8 A280	161
312705-0320 ..	NUT HEX. DOMED CAP MHM-6 M10 A280	185
312810-0310 ..	HEXAGON NUT, NY-LOCK M3 FZB	469
312812-0312 ..	HEXAGON NUT, NY-LOCK M4 A480	463, 465
312812-0314 ..	HEXAGON NUT, NY-LOCK M5 A480	69, 245, 261, 263, 265, 267, 283, 285, 339
312812-0316 ..	HEXAGON NUT, NY-LOCK M6 A480	19, 33, 245, 283, 285, 431, 433, 451, 453, 455, 457, 461, 463, 465, 469, 471, 473, 489, 491
312812-0318 ..	HEXAGON NUT, NY-LOCK M8 A480	215, 231, 451, 453, 455, 457
315101-0146 ..	WASHER PLAIN, BRB, 5,3/10 H=1	479, 481
315103-0153 ..	BRICKA, BRB, 6,4/12,H=1,5 NIPL BR	239
315105-0124 ..	WASHER ISO 7089-3-200 HV-A4	23, 27, 55, 161, 227, 257, 463, 465, 469
315105-0136 ..	WASHER ISO 7089-4-200 HV-A4	23, 25, 29, 33, 41, 71, 73, 75, 101, 121, 123, 131, 135, 233, 239, 261, 267, 337, 341, 351, 385, 451, 453, 455, 457, 463, 465
315105-0146 ..	WASHER ISO 7089-5-200 HV-A4	35, 37, 41, 51, 73, 75, 97, 101, 107, 109, 131, 133, 143, 145, 147, 149, 151, 163, 171, 179, 181, 231, 271, 283, 285, 329, 397, 407, 487
315105-0153 ..	WASHER ISO 7089-6-200 HV-A4	19, 21, 23, 27, 29, 33, 35, 37, 39, 41, 43, 45, 47, 49, 51, 53, 57, 59, 73, 75, 85, 91, 95, 97, 101, 107, 109, 125, 127, 129, 131, 133, 135, 137, 143, 151, 155, 163, 179, 181, 191, 193, 195, 197, 215, 239, 245, 271, 275, 279, 283, 285, 303, 319, 321, 323, 325, 329, 337, 339, 341, 343, 345, 357, 361, 367, 371, 373, 375, 377, 383, 385, 391, 409, 431, 433, 439, 451, 453, 455, 457, 461, 463, 465, 469, 471, 473, 489, 491
315105-0156 ..	WASHER PLAIN, BRB, 6,7/14,H=1,5	129, 161, 165, 171, 219, 231, 253, 317, 347
315105-0165 ..	WASHER ISO 7089-8-200 HV-A4	19, 21, 33, 35, 69, 101, 155, 167, 171, 175, 179, 181, 187, 209, 211, 215, 269, 271, 317, 329, 337, 347, 357, 383, 387, 389, 397, 451, 453, 455, 457
315105-0173 ..	WASHER ISO 7089-10-200 HV-A4	17, 33, 59, 231, 329
315105-0178 ..	WASHER ISO 7089-12-200 HV-A4	175, 187
315105-0192 ..	WASHER ISO 7089-20-200 HV-A4	155
315111-0186 ..	WASHER PLAIN, TBRB 17/30 H=6	207
315115-0153 ..	WASHER PLAIN, TBRB 6,4/12 H=3	55, 175, 177, 179, 181
315115-0171 ..	WASHER PLAIN, TBRB 10/18 H=4	179, 181
315121-0153 ..	WASHER PLAIN, TBRSB 6,4/22 H=4	231
315125-0146 ..	WASHER TBRSB 5.3X15X1 A4	35, 397
315125-0153 ..	WASHER TBRSB 6,4X22X4 A4	33, 35, 41, 57, 97, 101, 129, 151, 163, 167, 175, 179, 181, 187, 231, 271, 341, 439
315125-0165 ..	WASHER TBRSB 8,4X26X5 A4	233, 341
315125-0173 ..	WASHER TBRSB 10,5X28X6 A4	61, 65, 185
315202-0101 ..	O-RING 3,1X1,6 MM	169, 427
315202-0109 ..	O-RING 11,1X1,6 MM	169
315202-0215 ..	O-RING 19,2X3 MM	385
315202-0218 ..	O-RING 26,2X3 MM	427
315202-0712 ..	O-RING 28,30X1,78 MM	151
315202-0756 ..	O-RING 107,62X2,62 MM	185
315204-0215 ..	O-RING 19,2X3 MM	429
315204-0218 ..	O-RING 26,2X3 MM	185
315204-0301 ..	O-RING 49,5X3 MM	429
315205-0503 ..	O-RING 4,47X1,78 MM	179, 181
315205-0514 ..	O-RING 18,72X2,62 MM	169
315205-0602 ..	O-RING 44,04X3,53 MM	183
315205-0705 ..	O-RING 17,17X1,78 MM	169
315211-0108 ..	GASKET BOLT HEAD 13,74X20,57X2 MM G1/4	229, 295, 297
315233-0110 ..	WASHER CAPTIVE SEALING G1/4	425
315233-0113 ..	WASHER CAPTIVE SEALING G1/2	425
315400-0001 ..	TUBE PUN-H-6X1-BL	41, 95, 97, 101
315400-0016 ..	TUBE PUN-H-4X0,75-BL	25, 95

Part No	Description	Page No
315402-0165 ..	LOCK WASHER FBB 8,2	253, 299
315701-0168 ..	PARALLEL KEY W. ROUND ENDS 4X4X16 MM	167
315705-0202 ..	PARALLEL KEY W ROUND ENDS 5X5X25MM	329
315705-0232 ..	PARALLEL KEY W. ROUND ENDS 6X6X20 MM	163
315705-0303 ..	PARALLEL KEY W. ROUND ENDS 10X8X50 MM	233
315742-0112 ..	COLLAR, 16/32, H=12	35, 39, 55
315750-0102 ..	RETAIN. RING, 5	163
315751-0103 ..	RETAIN. RING, 6	23, 29, 303, 305
315751-0109 ..	RETAIN. RING, 12	245, 283, 285
315751-0112 ..	RETAIN. RING, 15	17
315751-0116 ..	RETAIN. RING, 20	247, 249, 251, 255, 289, 291, 293, 311, 313, 315
315751-0127 ..	RETAIN. RING, 40	231
315753-0124 ..	RETAIN. RING, 35	161, 163
315755-0105 ..	LOCKING WASHER 3,2	283, 285
315755-0106 ..	LOCKING WASHER 4	71
315755-0108 ..	LOCKING WASHER 6	165
316810-0106 ..	PIPE CLIP FOR TUBE D=8 MM	287
318800-0103 ..	HANDLES,SPHERICAL KNOB,INT.THRE.,D.25-M6	25
318873-0107 ..	KNOB, CIRCUL, THREADED BUSH, M8 33X29 MM	101
321101-0222 ..	FLANGE BUSHING, 18X25X12	419
321105-0143 ..	BEAR. BUSH. WITHOUT FL, 8X14X8 MM	283, 285
321111-0097 ..	FLANGE BUSHING, 8X12X12 MM	33
321130-0240 ..	THRUST WASHER, 18X32X1,5 MM	71, 73, 75, 261, 267
321141-0064 ..	BEARING BUSHING W/O FL, 6X8X10 MM	27, 29
321141-0140 ..	BEARING BUSHING W/O FL, 10X12X10 MM	39, 55
321153-0337 ..	FLANGE BUSHING, 30X34X26 MM	37
321155-0062 ..	FLANGE BUSHING, 6X8X6 MM	179, 181
321158-0022 ..	FLANGE BUSHING, 4X5,5X6 MM	283, 285, 427
321158-0180 ..	FLANGE BUSHING, 12X14X12 MM	43, 45, 49, 53
321161-0216 ..	FLANGE BUSHING, 16X18X12 MM	55
321313-0104 ..	BALL BEARING, 20X47X14 MM	247, 249, 251, 255, 289, 291, 293, 311, 313, 315
342217-0103 ..	SLEEVE, REDUCTION, INT, R-2021/2X1/4	409
342219-0204 ..	SHUTTER	151
342700-0110 ..	NIPPLES,HEXAGON,EXT.G-THREAD G1/4"-G1/4"	393, 409
342700-0205 ..	NIPPLES,HEXAGON,EXT.G-THREAD G1/2"-G1/4"	35, 409
342701-0205 ..	BUSHING,INT./EXT.G-THREAD G1/2"-G1/4"	409, 425
342706-0130 ..	ACCESSORIES, INSERT SLEEVE 6 MM	237
342707-0113 ..	SLEEVE, INT. THREAD, NO. 2543-1/2	35
342713-0209 ..	PLUG, EXT THREAD HEX SOCKET 8638-00-180	13
342713-0210 ..	PLUG, EXT THREAD HEX SOCKET 8638-00-140	295, 297, 409
342713-0211 ..	PLUG, EXT THREAD HEX SOCKET 8638-00-380	307
342715-0102 ..	BLIND PLUG 6 MM	307, 379
342716-0203 ..	REDUCER 6-8	409
342716-0207 ..	REDUCER 6-10	13, 307, 379
342722-0202 ..	PIPE COUPLING 1/8" D=6MM	307, 379
342722-0205 ..	STRAIGHT COUPLING D=8-G1/4"	409
342722-0206 ..	STRAIGHT COUPLING D=8-G3/8"	379
342722-0211 ..	STRAIGHT COUPLING D=10-G1/4"	13, 409
342722-0212 ..	STRAIGHT COUPLING D=10-G3/8"	307, 379
342725-0103 ..	CONN. STR. PIPE GI-8-G1/4	359, 363
342725-0108 ..	CONN. STR. PIPE GI-10-G1/4	393, 427
342727-0214 ..	CONN. PIPE G-15-L/SY	391
342732-0102 ..	ELBOW PIPE JOINT, EXT.THREAD, D=6MM-G1/8	229, 329
342732-0103 ..	ELBOW PIPE JOINT, EXT.THREAD, D=6MM-G1/4	229
342733-0104 ..	CONN. ELBOW WI-8-G1/4	229
342735-0103 ..	ELBOW PIPE JOINT	409
342735-0104 ..	ELBOW PIPE JOINT	379
342738-0212 ..	ADJUSTABLE ELBOW CONNECTION,EXT 10-G1/4	393
342747-0208 ..	CONN. T-PIPE T-10	393
342748-0104 ..	T-CONNECTION 10MM	409
342755-0108 ..	CONN. T-PIPE ADJ. ,EVT,EXT.T-10-G1/4	393
342768-0104 ..	BULKHEAD CONNECTOR, 10 MM	409
342770-0106 ..	STRAIGHT COUPLING INT, D=6 MM - G1/4	201
342790-0103 ..	CONN. PRESS. GAUGE MAV8-LRFZB	229
342840-0101 ..	CLAMP, 12,7 AND 19,1 MM 3-A PCS+PMCS	179, 181
342840-0103 ..	CLAMPING PIECE	359, 385, 387, 389
342840-0105 ..	CLAMPING PIECE	427
342841-0104 ..	FERRULE, 3-A, GC-CLAMP 38,1 MM (1 1/2")	427
342841-0105 ..	FERRULE, 3-A, GC-CLAMP 50,8 MM (2")	427
342850-0303 ..	GASKET 22,7X49,1X5,2 MM 1" FDA	359, 385, 387, 389, 427
342850-0304 ..	GASKET 35,4X49,1X5,2 1"1/2 FDA	359, 385, 387, 389, 427
342850-0305 ..	GASKET 47,8X62,6X5,2 MM 2" FDA	115, 427
342920-0113 ..	STRAIGHT COUPLING,EXT.THREADED 6/4-R1/8"	341
342921-0114 ..	STRAIGHT COUPLING,EXT.THREADED 6/4-G1/4"	393
342930-0113 ..	ELBOW 90 COUPL.,EXT.THREAD 6/4-R1/8"	239
342930-0114 ..	ELBOW 90 COUPL.,EXT.THREAD 6/4-R1/4"	341
342933-0114 ..	ELBOW 90 COUPL.,INT.THREAD 6/4-G1/4"	341
342981-0113 ..	BANJO CONNEC,RING,FOR PLAST.TUBE 6-G1/8"	385
342991-0100 ..	HOSE CLIP,WORM DRIVE TYPE 10-13	177, 183
342991-0101 ..	HOSE CLIP,WORM DRIVE TYPE (13)-16	179, 181, 189
342991-0103 ..	HOSE CLIP,WORM DRIVE TYPE (19)-23	35, 341
342991-0104 ..	HOSE CLIP,WORM DRIVE TYPE (23)-27	359
342991-0105 ..	HOSE CLIP,WORM DRIVE TYPE (27)-30	179, 181
342991-0109 ..	HOSE CLIP,WORM DRIVE TYPE (48)-50	359, 399

Part No	Description	Page No
344502-0021 ..	GREASE NIPPLE STRAIGHT M6	287
346800-0109 ..	SILENCER FILTER R1/8"	383
351120-0144 ..	CABLE SIHF 3X1,5MM2 GREEN/YELLOW	371, 373, 375, 377
351120-0165 ..	CABLE SIHF 4X2,5MM2 GREEN/YELLOW	371, 373
351150-0147 ..	CABLE OLFLEX 3X6 MM2 LIGHT/GREY	107, 109
351150-0403 ..	CABLE OLFLEX 3X0,75 MM2 LIGHT/GREY	107, 109, 259, 323, 325, 343, 345, 371, 373
351150-0404 ..	CABLE OLFLEX 4X0,75 MM2 LIGHT/GREY	319, 321, 371, 373, 375, 377
351150-0405 ..	CABLE OLFLEX 5X0,75 MM2 LIGHT/GREY	107, 109, 193, 231, 271, 319, 321, 323, 325
351150-0406 ..	CABLE OLFLEX 7X0,75 MM2 LIGHT/GREY	319, 321, 343, 345
351150-0407 ..	CABLE OLFLEX 12X0,75 MM2 LIGHT/GREY	107, 109, 323, 325
351150-0412 ..	CABLE OLFLEX 3X1,5 MM2 LIGHT/GREY	63, 107, 109, 319, 321
351150-0413 ..	CABLE OLFLEX 4X1,5 MM2 LIGHT/GREY	329
351150-0415 ..	CABLE OLFLEX 7X1,5 MM2 LIGHT/GREY	319, 321, 375, 377
351150-0417 ..	CABLE OLFLEX 3X2,5 MM2 LIGHT/GREY	107, 109
351150-0420 ..	CABLE OLFLEX 7X2,5 MM2 LIGHT/GREY	107, 109, 371, 373
351150-0424 ..	CABLE OLFLEX 18X0,75 MM2 LIGHT/GREY	195, 197, 343, 345
351150-0425 ..	CABLE OLFLEX 25X0,75 MM2 LIGHT/GREY	105, 107, 109, 193, 319, 321, 323, 325, 371, 373, 375, 377
351150-0431 ..	CABLE OLFLEX 2X0,75 MM2 LIGHT/GREY	193, 319, 321, 323, 325, 337, 375, 377
351162-0109 ..	CABLE AWM 1X16 MM2 YELLOW-GREEN	319, 321
351164-0111 ..	CABLE AWM 1X35 MM2 BLACK	101
352103-0096 ..	CABLE GLAND, ST 7, PR 12,5/PG7	193, 195, 197, 375, 377
352103-0100 ..	CABLE GLAND, STR 9, PR15,2/PG9	375, 377
352103-0101 ..	KABELFöRSKR. ST 9, PR15,2/PG9	107, 109, 195, 197, 233, 337, 375, 377
352103-0105 ..	CABLE GLAND, STR 11, PR 18,6/PG11	101, 131, 375, 377
352103-0106 ..	CABLE GLAND, ST 11, PR18,6/PG11	73, 75, 107, 109, 171, 193, 213, 217, 227, 271, 317, 319, 321, 323, 325, 329, 343, 345, 371, 373, 375, 377
352103-0108 ..	CABLE GLAND, ST 13,5 , PR20,4/PG13,5	37, 107, 109, 167, 231, 233, 275, 279, 323, 325, 329
352103-0110 ..	CABLE GLAND, STR 16, PR22,5/PG16	195, 197, 451, 453, 455, 457
352103-0111 ..	CABLE GLAND, ST 16, PR22,5/PG16	13, 107, 109, 195, 197, 201, 307, 323, 325, 379
352103-0115 ..	CABLE GLAND, STR 21, PR28,3/PG21	107, 109, 195, 197, 319, 321, 375, 377
352103-0116 ..	KABELFöRSKR. ST 21, PR28,3/PG21	103, 105, 107, 109, 193, 319, 321, 323, 325, 371, 373
352103-0120 ..	CABLE GLAND, STR 29, PR37,0/PG29	105, 107, 109, 193, 319, 321, 323, 325, 343, 345, 371, 373, 375, 377
352103-0122 ..	CABLE GLAND, ST 36, PR47,0/PG36	451, 453, 455, 457
352113-0102 ..	CLIP-STRIP, BLACK 188X4,8 MM	201, 213, 215, 217, 231, 329, 359, 383, 413
352113-0204 ..	ANCHOR PLATES FOR STRIPS, TYPE TM3S25-M	201, 213, 215, 217, 231, 329, 383
352113-0205 ..	ANCHOR PLATES FOR STRIPS, TYPE TM2S8-C10	23
353021-0212 ..	FEED THROUGH TERMINAL, 10200.0	107, 109, 193, 195, 197, 319, 321, 323, 325, 343, 345, 371, 373, 375, 377
353021-0213 ..	FEED THROUGH TERMINAL, 10201.0	485
353021-0214 ..	FEED THROUGH TERMINAL, 10202.0	475, 477
353021-0217 ..	FEED THROUGH TERMINAL, 10201.8	483
353021-0302 ..	TERMINALS,TRIPLE-LEVEL, DLD 2,5/35 PA	107, 109, 193, 195, 197, 375, 377
353022-0002 ..	NEUTRAL TERMINAL, 10107.8	485
353022-0003 ..	NEUTRAL TERMINAL, 10108.8	485
353024-0204 ..	EARTH TERMINAL WPE 2,5	483
353024-0205 ..	EARTH TERMINAL, 1010.1	107, 109, 193, 195, 197, 319, 321, 323, 325, 343, 345, 371, 373, 375, 377
353024-0206 ..	EARTH TERMINAL, 1010.2	483
353024-0208 ..	EARTH TERMINAL, 1010.4	451, 453, 455, 457, 483
353031-0203 ..	END SUPPORT, WEW 35/2	475, 477, 483, 485
353032-0004 ..	END PLATE WAP 2,5-10 BEIGE	485
353032-0005 ..	END PLATE WAP 2,5-10 BLUE	483
353032-0302 ..	END PLATE WAP	107, 109, 193, 195, 197, 375, 377
353033-0104 ..	END PLATE, 10502.8	485
353033-0105 ..	PARTITITION, 10501.0	319, 321, 371, 373
353034-0031 ..	BRIDGE CONNECTOR, WQV 4/10, 10520.6	483, 485
353034-0404 ..	BRIDGE CONNECTOR Q10, 13131.0	193, 195, 197, 375, 377
353041-0001 ..	RAIL 10X3MM SSCH	485
353041-0105 ..	HOLDER ZB16 WEIDMULLER 5028.8	485
353042-0010 ..	BUSBAR HÅLLARE	475, 477
353042-0012 ..	ADJUSTMENTPLATTA	475, 477
353042-0014 ..	BUSBAR ADA ADAPTER	475, 477
353042-0016 ..	CONNECTIONSADAPTER	475, 477
353042-0019 ..	SIDE GUARD	475, 477
353101-0129 ..	CABLE SHOE	227
353103-0130 ..	CABLE SHOE	367, 369
353104-0128 ..	CABLE SHOE	183
353104-0130 ..	CABLE SHOEYAV 025 M 4*	183, 375, 377
353104-0140 ..	CABLE SHOEYAV 06 M 4*	107, 109
353104-0169 ..	CABLE SHOEYAV 16 M8*	319, 321
353104-0182 ..	CABLE SHOE YAV 35 M6*	101
353240-0004 ..	NORMAL WITHOUT INSERT, PG 16	107, 109
353240-0006 ..	FöRSKRUVNING, PG 29	107, 109
353243-0002 ..	EXTENDED WITHOUT INSERT, PG11	371, 373
353243-0003 ..	EXTENDED WITHOUT INSERT, PG11	375, 377
353243-0004 ..	EXTENDED WITHOUT INSERT, PG13,5	371, 373
353243-0005 ..	EXTENDED WITHOUT INSERT, PG16	371, 373
353245-0004 ..	GLAND, EXTENDED WITH INSERT, PG16/PR 22,	343, 345
353245-0010 ..	GLAND, EXTENDED WITH INSERT, PG13,5	161
353249-0018 ..	INSERT, SINGEL HOLE, HI.TEMP, EK152I9	371, 373
353249-0019 ..	INSERT, SINGEL HOLE, HI.TEMP, EK153I9	375, 377
353249-0021 ..	INSERT, SINGEL HOLE, HI.TEMP, EK154I13	371, 373

Part No	Description	Page No
353249-0079 ..	INSERT, MULTI HOLE, E155M8X5,5	107, 109
353249-0301 ..	SEALING PIN, 4X20	107, 109
353249-0303 ..	SEALING PIN, 5,3X25	107, 109
359011-0807 ..	MARKING PLATES 5-FW 1-50	107, 109, 193, 195, 197, 319, 321, 323, 325, 343, 345, 371, 373, 375, 377, 459, 467, 483, 485
359011-0808 ..	MARKING PLATES 5-FW 51-100	375, 377, 483
359011-0809 ..	MARKING PLATES 5-FW 101-150	107, 109, 319, 321, 371, 373, 375, 377
359011-0834 ..	SET OF SIGNS 6-GW(EARTH)	107, 109, 319, 321, 323, 325, 371, 373, 451, 453, 455, 457
359240-0001 ..	SIGN, NOT ENGRAVED	489, 491
359240-0100 ..	SIGN HOLDER FOR 359240-0001	451, 453, 455, 457, 463, 465, 489, 491
359241-0121 ..	SIGN "STEAM"	489, 491
359241-0124 ..	SIGN, MAIN SWITCH	451, 453, 455, 457
359241-0131 ..	SIGN, TEMP. LS HEATER	489, 491
359241-0132 ..	SIGN, TEMP. STRIP APPLICATOR	489, 491
359241-0133 ..	SIGN, SERVICE SWITCH	489, 491
359241-0140 ..	SIGN "LIGHTING MACHINE"	463, 465
359241-0193 ..	SIGN"TRANSSKARVSFÖRSEG.S1	489, 491
359241-0194 ..	SIGN"TRANSSKARVSÖRSEGL.S2	489, 491
359241-0201 ..	SIGN "HOUR GLASS"	489, 491
359241-0228 ..	SIGN KYLT	489, 491
359241-0250 ..	SIGN "CLEANING OF STEAM BARRIER"	489, 491
359241-0294 ..	SIGN	489, 491
359241-0295 ..	SIGN	489, 491
359241-0311 ..	SIGN, LOW SPEED	463, 465
359241-0486 ..	HEAT EXCHANGER	489, 491
359301-0001 ..	SIGN "UP"	463, 465
359301-0005 ..	SIGN "DOWN"	463, 465
359301-0051 ..	SIGN"STRIP SPLICE"	105
359301-0100 ..	SIGN "SPLICING"	103
359301-0101 ..	SIGN	107, 109
359301-0110 ..	SIGN "SHORT STOP"	103, 105, 193, 463, 465
359301-0125 ..	SIGN "LUBRICATION"	463, 465
359301-0131 ..	BUTTON SIGN, LAMP TEST / ALARM RES.	463, 465
359301-0215 ..	SIGN "WASH PRODUCT VALVE"	463, 465
359301-0265 ..	SIGN "HYDRAULIC"	105
359301-0456 ..	BUTTON SIGN, PACKAGE DISPOSAL	463, 465
359301-0488 ..	BUTTON SIGN, MATERIAL LOCKING	103
359301-0506 ..	BUTTON SIGN, INCHING	193, 463, 465
359705-0003 ..	WARNING SIGN ISO, DANGEROUS CHEMICALS	153, 155, 171, 387, 389, 415
359705-0004 ..	WARNING SIGN ISO, DANGEROUS CHEMICALS	129, 337, 339, 415
359705-0005 ..	WARNING SIGN ISO, MOVING PART	53, 269, 415
359705-0007 ..	WARNING SIGN ISO, HOT SURFACE	171, 415
359705-0008 ..	WARNING SIGN ISO, HOT SURFACE	129, 415
359705-0013 ..	WARNING SIGN ISO, HARMFUL VAPOUR	153, 171, 415
359705-0014 ..	WARNING SIGN ISO, HARMFUL VAPOUR	129, 415
359705-0015 ..	WARNING SIGN ISO, RISK OF ELECTRIC SHOCK	23, 107, 109, 193, 195, 197, 319, 321, 323, 325, 343, 345, 371, 373, 375, 377, 415, 463, 465, 471, 479, 481, 489, 491
359710-0001 ..	WARNING SIGN ISO, HOT SURFACE	35, 59, 357, 397, 415
400828-0000 ..	SPRING	19
400833-0000 ..	PLUNGER	19
436403-0000 ..	WASHER	187
440259-0000 ..	RETAINING RING	431, 433
441536-0000 ..	GASKET	227
441718-0000 ..	SPACER	171
441737-0000 ..	WASHER	129, 171
441739-0000 ..	WASHER	129, 171
441740-0000 ..	HINGE FLANGE	129, 171
441741-0000 ..	HINGE FLANGE	129, 171
449970-0000 ..	HOLDER	419
450833-0000 ..	FILTER	351
456260-0000 ..	COVER	227
456262-0000 ..	SHEET	227
456784-0000 ..	LID	151
469463-0000 ..	SHAFT	33
469464-0000 ..	ROLL	33
486826-0001 ..	SIGN "EMERGENCY STOP"	103, 105, 193, 463, 465
495130-0060 ..	SPACER SLEEVE	479, 481
495130-0080 ..	SPACER SLEEVE	463, 465, 479, 481
522090-0000 ..	HEAT EXCHANGER	361
522308-0000 ..	SIGN	441
529259-0000 ..	TRANSFORMER	451, 453, 455, 457
530588-0000 ..	SEAL RING	429
530589-0000 ..	SEAL RING	429
531737-0000 ..	GASKET	361
533169-0000 ..	DIAPHRAGM	429
535698-0000 ..	GASKET	361
536916-0000 ..	AXLE PIN	23
537327-0000 ..	SHAFT	17
539212-0000 ..	GASKET	429
541751-0000 ..	CONICAL BOBBIN	17
544725-0000 ..	AXLE PIN	23
544906-0000 ..	SOLENOID VALVE	351
548770-0007 ..	COAXIAL CABLE L=3000 MM	451, 453, 455, 457
551922-0000 ..	LABEL,POTENTIOMETER DESIGN CORR.	463, 465

Part No	Description	Page No
558389-0101 ..	MULTI PURPOSE POTENTIOM.	463, 465
560931-0000 ..	BRACKET	351
563461-0000 ..	TRANSFORMER	107, 109
566128-0000 ..	CATALYZER	115
567070-0013 ..	ELECTRODE	351
574658-0000 ..	LOGOTYPE TP	441
575002-0000 ..	PLUNGER	431, 433
576434-0101 ..	AP-VALVE 51-38	383
583986-0000 ..	ROLL	23
592263-0000 ..	LUG	29
593562-0000 ..	SLEEVE	431, 433
594704-0000 ..	FLOAT	169
598878-0000 ..	MACHINE SIGN 2 ADR. EEA	413
599361-0000 ..	DIAL	295, 297
731049-0000 ..	SLIDING STRIP TPIH	451, 453, 455, 457
736514-0000 ..	SHOCK ABSORBER	385
777510-0101 ..	SCISSORS	417
779905-0101 ..	INSPECTION LAMP	417
925998-0000 ..	DIAPHRAGM	385, 427
926906-0000 ..	SPACER	385
926907-0000 ..	SCREW	385
926909-0000 ..	COMPRESSION SPRING	385
926934-0000 ..	SUPPORT	385
927044-0000 ..	SPACER	385
927194-0000 ..	BODY	385
927421-0001 ..	O-RING 9.3X2.4 SILICON	351
927421-0003 ..	O-RING 13.3X2.4 SILICON	351
927421-0006 ..	O-RING 17.3X2.4 SILICON	351
927422-0001 ..	O-RING 19.2X3 SILICON	341
970215-0000 ..	STOP BLOCK	489, 491
970802-0000 ..	DISCETTE BOX 3,5"	469
971286-0000 ..	SPACER H=6MM	463, 465
975849-0000 ..	SPACER	463, 465
975917-0000 ..	KEY FOR SAFETY SWITCH 90044-103	73, 75, 261, 263, 265, 267, 339
975924-0000 ..	WASHER	73, 75, 261, 263, 265, 267, 339
979434-0000 ..	FERRULE	385
983386-0000 ..	PROXIMITY SWITCH	97
985328-0000 ..	CONNECTION	207
988685-0000 ..	PIN	69, 71, 73, 75, 261, 263, 265, 267, 339
1035792-0000 .	E-HINGE	69, 71, 73, 75, 261, 263, 265, 267, 339
1036174-0000 .	BEARING COVER	163
1036328-0000 .	LID	163
1037120-0000 .	SHAFT	19
1037121-0000 .	SHAFT	19
1041688-0000 .	FITTING BOLT	163
1095815-0100 .	HUB	15
1105643-0000 .	AXLE PIN	27, 29
1110083-0007 .	DOLLY	283, 285, 427
1129274-0000 .	GUIDE LUG	71, 73, 75, 261, 267
1129298-0000 .	SHAFT COUPLING	167
1129321-0000 .	SHUTTER	385
1129770-0000 .	BLOCKING PIECE	69, 71, 73, 75, 261, 263, 265, 267, 339
1254027-0000 .	CORNER STRIP	215
1296877-0100 .	SEAL KIT	427
1317252-0000 .	CABLE SERIAL	489, 491
1338524-0000 .	WASHER	71, 73, 75, 261, 267
1346746-0000 .	LEVER	33
1347145-0000 .	FRAME	489, 491
1347258-0000 .	KNIFE	21
1347737-0000 .	ARM	33
1347796-0000 .	SEAL	463, 465
1347882-0000 .	SHAFT	33
1347883-0000 .	ROLLER	33
1347938-0000 .	PENDULUM ARM	163
1349014-0000 .	PAD	21
1349179-0000 .	FINGER	21
1349181-0000 .	TOUCH GUARD	19
1349581-0000 .	FLAG	23
1349775-0101 .	DISPLAY UNIT 8,4"	463, 465
1349926-0000 .	SPLICING TABLE	21
1349927-0000 .	SLIDE	21
1349928-0000 .	SHAFT	21
1349986-0000 .	ROLLER	23
1350005-0100 .	LIGHT FIXTURE	225
1361009-0000 .	BRACKET	451, 453, 455, 457
1361036-0000 .	GASKET	463, 465, 469, 471
1361415-0000 .	COVERPLATE	451, 453, 455, 457
1361416-0000 .	COVERPLATE	451, 453, 455, 457
1361422-0000 .	GASKET	451, 453, 455, 457
1361423-0000 .	GASKET	451, 453, 455, 457
1363288-0301 .	FLEXBOX TETRA BRIK	489, 491
1363292-0501 .	PLMS COMMON SOFTWARE	489, 491
1363370-0000 .	COVER	385
1363878-0000 .	PLATE	71, 73, 75, 261, 267

Part No	Description	Page No
1364474-0000	.TRANSFORMER	107, 109
1366189-0000	.CABLE LVDS 6M	489, 491
1367314-0000	.RAIL	451, 453, 455, 457
1367323-0000	.CABLE DUCT	451, 453, 455, 457
1367324-0000	.FUSE PANEL LABEL	463, 465
1368571-0100	.ELECTRIC EQUIPMENT	445
1368572-0100	.ELECTRICAL CABINET	447
1368573-0100	.ELECTRICAL CABINET	449
1368574-0100	.CABINET SIDE	449
1368575-0100	.SWING FRAME	449
1368577-0100	.DOOR	449
1368578-0100	.DOOR	449
1368579-0100	.COVER	449
1368580-0100	.MOUNTING PLATE	449
1368581-0100	.MOUNTING PLATE	449
1368582-0100	.MOUNTING PLATE	449
1368591-0100	.TERMINAL	479, 481
1368592-0100	.TERMINAL	479, 481
1368593-0100	.TERMINAL	463, 465
1368594-0100	.TERMINAL	451, 453, 455, 457
1368595-0000	.CABINET	451, 453, 455, 457
1368596-0000	.CABINET SIDE	461
1368598-0000	.SWING FRAME	489, 491
1368602-0000	.DOOR	469
1368603-0000	.DOOR	471
1368605-0000	.FRAME	469
1368606-0000	.TABLE	469
1368607-0000	.GLASS PANE	469
1368608-0000	.COVER PLATE	451, 453, 455, 457
1368613-0000	.COVER	473
1368614-0000	.COVER PLATE	473
1368615-0000	.WINDOW	463, 465
1368619-0000	.CABLE DUCT	451, 453, 455, 457
1368620-0000	.MOUNTING PLATE	475, 477
1368621-0000	.MOUNTING PLATE	479, 481
1368622-0000	.MOUNTING PLATE	487
1368624-0000	.COVER PLATE	479, 481
1368625-0000	.COVER PLATE	479, 481
1368628-0000	.BRACKET	463, 465
1368630-0000	.CABLE DUCT	489, 491
1368631-0000	.CABLE DUCT	475, 477
1368632-0000	.CABLE DUCT	475, 477
1368634-0000	.CABLE DUCT	487
1368635-0000	.CABLE DUCT	487
1368636-0000	.RAIL	487
1368637-0000	.CABLE DUCT	451, 453, 455, 457
1368638-0000	.CABLE DUCT	451, 453, 455, 457
1368639-0000	.CABLE DUCT	479, 481
1368640-0000	.CABLE DUCT	479, 481
1368641-0000	.CABLE DUCT	479, 481
1368642-0000	.CABLE DUCT	479, 481
1368643-0000	.CABLE DUCT	479, 481
1368644-0000	.CABLE DUCT	479, 481
1368645-0000	.CABLE DUCT	479, 481
1368646-0000	.CABLE DUCT	479, 481
1368647-0000	.CABLE DUCT	479, 481
1368648-0000	.CABLE DUCT	479, 481
1368649-0000	.CABLE DUCT	479, 481
1368651-0000	.RAIL	483
1368652-0000	.RAIL	479, 481
1368653-0000	.RAIL	479, 481
1368654-0000	.RAIL	485
1368655-0000	.RAIL	479, 481
1368656-0000	.RAIL	487
1368657-0000	.RAIL	487
1368660-0000	.CABLE DUCT	463, 465
1368661-0000	.CABLE DUCT	463, 465
1368662-0000	.RAIL	459, 467
1368663-0000	.BUSBAR	475, 477
1368664-0000	.BUSBAR	475, 477
1368665-0000	.ROD	469
1368666-0000	.ROD	469
1368668-0000	.RAIL	451, 453, 455, 457
1368669-0000	.BRACKET	451, 453, 455, 457
1368670-0000	.COVER	479, 481
1369441-0000	.CIRCUIT BOARD	463, 465
1478507-0000	.COVER	463, 465
1478813-0000	.SPACER	385
1478814-0000	.SENSOR	385
1484514-0000	.HOUSING	167
1484724-0000	.HUB	17
1490804-0000	.HOLDER	19
1490818-0000	.ARM	27
1498047-0000	.SEALING BLOCK	19

Part No	Description	Page No
1511600-0000	.SPACER	385
1514086-0000	.GASKET	151
1514087-0000	.SPACER	129
1514089-0000	.HEAT GUARD	131
1514095-0000	.HEATING ELEMENT	121, 123, 427
1514096-0000	.CONNECTION	121, 123
1514097-0000	.SPRING BRACKET	121, 123
1514098-0000	.CONNECTION	121, 123
1514099-0000	.CONNECTION	121, 123
1514103-0000	.JOINTED ARM	125, 127
1514104-0000	.BAR	131
1514125-0000	.SHAFT	175, 187
1514126-0000	.HEAT GUARD	129
1514127-0000	.SHAFT	175
1514142-0000	.SHAFT	187
1514149-0000	.ANGLE BRACKET	187
1514155-0000	.BRACKET	185
1514162-0000	.GUIDE	169
1514169-0000	.GASKET	171
1514173-0000	.SPREADER	171
1514182-0000	.FRAME	171
1514193-0000	.COVER STRIP	171
1514194-0000	.COVER STRIP	171
1514195-0000	.RUBBER GASKET	171
1514196-0000	.GLASS PANE	171
1514198-0000	.FORK	169
1514202-0000	.SHAFT	169
1514213-0000	.GASKET	185
1514216-0000	.SPACER	185
1514217-0000	.THREADED BUSHING	185
1514218-0000	.STRUT	171
1514219-0000	.CLAMP LUG	171
1514227-0000	.BRACKET	209
1514228-0000	.SCREW	175
1514276-0000	.BENDING ROLLER	45
1514278-0000	.FORK	39
1514284-0000	.PISTON	295, 297
1514289-0000	.CONNECTION	295, 297
1514312-0000	.CLAMP BLOCK	245
1514362-0000	.PIN	283, 285
1514391-0000	.BRACKET	189
1514393-0000	.GASKET	189
1514399-0000	.GUARD PLATE	231
1514401-0000	.TUBE	189
1514420-0100	.RAILING	205
1514431-0000	.BRACKET	189
1514432-0000	.LEG	215, 231
1514433-0000	.BRACKET	241
1514436-0000	.MOUNTING PLATE	239
1514438-0000	.STEP	209
1514439-0000	.SIDE PIECE	209
1514441-0000	.SIDE PIECE	209
1514446-0000	.BRACKET	215
1514455-0000	.PIN	303, 305
1514458-0000	.BRACKET	209
1514459-0000	.SETTING SCREW	209
1514467-0000	.CATCH	39, 55
1514469-0000	.WASHER	39, 55
1514487-0000	.FLANGE	45
1514493-0000	.BRACKET	229
1514495-0100	.CENTRAL LUBRICATION	235
1514505-0100	.HYDRAULIC SYSTEM	225
1514523-0000	.SLEEVE	231
1514524-0000	.BRACKET	383
1514550-0000	.LID	341
1514614-0000	.BRACKET	231
1514621-0000	.RAILING	207
1514624-0000	.RAILING	207
1514627-0000	.RAILING	207
1514628-0000	.RAILING	207
1514632-0000	.FOOT PLATE	215
1514633-0000	.FOOT PLATE	215
1514634-0000	.FOOT PLATE	215
1514636-0000	.FOOT PLATE	215
1514638-0000	.CHECKER PLATE	215
1514650-0100	.SPRAY NOZZLE	349
1514652-0000	.TUBE	355
1514653-0000	.BRACKET	353
1514654-0000	.WASHER	353
1514668-0000	.PIPE BEND	361
1514669-0000	.SPRAY PIPE	361
1514672-0000	.CONNECTION	361
1514676-0000	.PIPE CONNECTION	359
1514683-0000	.RAIL	319, 321, 375, 377

Part No	Description	Page No
1514688-0000	.COVER PLATE	355
1514689-0000	.BOX	323, 325
1514691-0000	.RAIL	371, 373
1514692-0000	.COVER PLATE	355
1514693-0000	.FLOAT	169
1514696-0000	.NUT	387, 389
1514697-0000	.GASKET	361
1514698-0000	.GASKET	359, 409
1514703-0000	.SCREW	359
1514704-0000	.NUT	387, 389
1514715-0100	.AIR SUPER-HEATER	349
1514722-0000	.FILTER	391
1514745-0100	.LIGHT FIXTURE	205
1514747-0000	.PIPE	351
1514782-0000	.BEARING	283, 285
1514788-0000	.GABLE PLATE	329
1514789-0000	.GABLE PLATE	329
1514791-0000	.SHAFT	329
1514792-0000	.SHAFT	329
1514795-0000	.CONVEYOR BELT	329
1514797-0000	.SLIDE RAIL	329
1514834-0000	.COVER	357
1514843-0000	.SHAFT	155
1514865-0000	.RAILING	207
1514866-0000	.FOOT PLATE	215
1514867-0000	.FOOT PLATE	215
1514868-0000	.FOOT PLATE	215
1514869-0000	.RAILING	207
1514871-0000	.RAILING	207
1514872-0000	.RAILING	207
1514875-0000	.SLEEVE	59
1514883-0000	.SUPPORT LEG	215
1514885-0000	.SLEEVE	215
1514889-0000	.WASHER	215, 319, 321
1514891-0000	.PROTECTION	215
1514892-0000	.WHEEL	33
1514903-0100	.DOOR	259
1514904-0000	.DOOR	261
1514905-0000	.LOCKING ARM	261, 267
1514906-0000	.LOCKING ARM	261, 267
1514907-0000	.BRACKET	271
1514909-0000	.BRACKET	271
1514913-0100	.DOOR	259
1514914-0000	.DOOR	265
1514915-0100	.DOOR	259
1514919-0000	.PLATE	271
1514922-0000	.COVER	271
1514923-0000	.HOLDER	73, 75, 261, 267
1514924-0000	.PLATE	73, 75, 261, 267
1514925-0000	.DOOR	267
1514927-0000	.GLASS PANE	261, 267
1514928-0000	.BRACKET	271
1514932-0000	.BRACKET	189
1514941-0000	.ATTACHMENT PIPE	391
1514943-0000	.DISTANCE PLATE	171
1514948-0000	.BAR	185
1514971-0000	.COVER	81
1514977-0000	.GLASS PANE	71
1514979-0000	.GLASS PANE	73, 75
1514982-0000	.GLASS PANE	69
1514983-0000	.STOPPER	69
1514984-0000	.DOOR	73
1514985-0100	.DOOR	67
1515001-0000	.BRACKET	383
1515006-0000	.LINK ARM	303
1515013-0000	.SHAFT	247, 249, 251, 289, 291, 293, 311, 313, 315
1515017-0000	.SHAFT	255
1515018-0000	.GUIDE SPROCKET	255
1515021-0000	.BEAM	253, 299
1515026-0000	.CABLE HOOD 24-POL	107, 109, 201
1515027-0000	.RAIL	323, 325
1515028-0000	.STUD BOLT	231
1515031-0000	.GUIDE	287
1515036-0000	.STOP ARM	287
1515044-0000	.PIN	165
1515054-0000	.SPACER	305
1515064-0000	.SPACER	305
1515066-0000	.SPACER	305
1515068-0000	.PRESSURE PLATE	305
1515069-0000	.TIE ROD	305
1515078-0000	.GLASS PANE	269
1515079-0000	.GLASS PANE	269
1515082-0000	.STUD BOLT	303
1515083-0000	.YOKE	303

Part No	Description	Page No
1515150-0100	.HEAT EXCHANGER	349
1515166-0000	.BRACKET	319, 321
1515167-0000	.BRACKET	323, 325
1515171-0000	.GUIDE	169
1515172-0000	.SHEAR PIN	169
1515182-0000	.SPACER	87
1515208-0000	.CLAMP	383
1515220-0100	.CATALYZER	113
1515221-0000	.CARRIER PIN	233
1515232-0000	.PRESSURE ROLLER	169, 427
1515234-0000	.HOOD	115
1515296-0000	.COVER	271
1515302-0000	.HOLDER	19
1515305-0100	.HEATING DEVICE	15
1515317-0000	.BRACKET	25
1515320-0100	.CUTTING TABLE	15
1515322-0000	.BRACKET	23
1515323-0000	.BRACKET	23
1515329-0000	.BAR	59
1515334-0000	.CARRIAGE	95
1515336-0000	.KNIFE HOLDER	95
1515337-0000	.KNIFE	95
1515338-0000	.GUIDE	101
1515341-0000	.END SECTION	101
1515342-0000	.HOLDER	95
1515343-0000	.RUBBER STRIP	95
1515344-0000	.END SECTION	101
1515347-0000	.FORK	95
1515348-0000	.BRACKET	95
1515349-0000	.PIECE	95
1515351-0000	.BEARING	101
1515352-0000	.BEARING	101
1515353-0000	.BAR	101
1515354-0000	.BRACKET	101
1515356-0000	.BRAKE BLOCK	101
1515357-0000	.CURVE	101
1515358-0000	.CURVE	101
1515359-0000	.PIN	95
1515360-0100	.COVER	67
1515366-0000	.STOP BLOCK	57
1515369-0000	.BRACKET	99
1515370-0100	.COVER	67
1515371-0000	.BRACKET	99
1515372-0000	.BENDING ROLLER	99
1515373-0000	.BEARING	99
1515375-0000	.RULER	99
1515376-0000	.CUTTING TABLE	99
1515379-0000	.COVER	101
1515384-0000	.LOCK SLEEVE	59
1515386-0000	.STEERING	101
1515387-0000	.LOCKING ARM	101
1515392-0000	.SPACER	57
1515396-0000	.WASHER	95
1515398-0000	.COVER	83
1515408-0000	.MOUNTING BRACKET	279
1515423-0000	.PIPE	351
1515424-0000	.PIPE	351
1515450-0100	.FILTER DRAIN	225
1515451-0000	.LATCH	71
1515452-0000	.LOCKING ARM	73, 75
1515453-0000	.LOCKING ARM	73, 75
1515454-0000	.LOCKING ARM	71
1515455-0000	.BRACKET	69
1515463-0000	.THROTTLE WASHER	35
1515466-0000	.BOX	103
1515469-0000	.FLANGE	99
1515473-0000	.CABLE DUCT	107, 109
1515474-0000	.CABLE DUCT	107, 109
1515480-0100	.PUSH BUTTON BOX	93
1515481-0000	.ASSEMBLY RAIL	107, 109
1515483-0000	.BRACKET	25
1515484-0000	.SLIDE RAIL	25
1515493-0000	.BRACKET	73, 75
1515494-0000	.BRACKET	73, 75
1515495-0100	.VALVE RAMP INFEED	11
1515496-0000	.BRACKET	13
1515546-0000	.RAIL	107, 109
1515548-0000	.STOP	25
1515561-0000	.SCREW	169
1515568-0000	.KNIFE	283, 285, 427
1515570-0100	.VALVE RAMP	223
1515574-0000	.COVER	271
1515577-0000	.PIPE	409
1515586-0000	.HEAT INSULATION	357

Part No	Description	Page No
1515591-0000	.CABLE DUCT	231
1515598-0000	.BRACKET	387, 389
1515601-0000	.SHEAR PIN	169
1515617-0000	.BRACKET	329
1515618-0000	.SPACER SLEEVE	215
1515619-0000	.SPACER SLEEVE	215
1515622-0000	.HEAT GUARD	131
1515632-0000	.DRAIN PLATE	271
1515643-0000	.CHECKER PLATE	329
1515644-0000	.BRACKET	329
1515649-0000	.SLEEVE	217
1515654-0000	.WATER PIPE	393
1515656-0000	.SPRAYBLOCK	351
1515657-0000	.CONNECTION PLATE	351
1515670-0100	.TOOL	417
1515673-0000	.PROTECTION PLATE	59
1515721-0000	.BRACKET	393
1515744-0000	.BRACKET	307
1515753-0000	.BRACKET	233
1515758-0000	.CLAMP RING	185
1515759-0000	.CLAMP RING	185
1515761-0000	.CLAMP RING	185
1515762-0000	.CLAMP RING	185
1515763-0000	.CLAMP RING	185
1515764-0000	.CLAMP RING	185
1515768-0000	.SEAL RING	185
1515771-0000	.COVER PLATE	209
1515774-0000	.WASHER	87
1515808-0000	.SPACER	71
1515809-0000	.SHIELD PLATE	71
1515821-0000	.SHAFT	169
1515822-0000	.CABLE DUCT	107, 109
1515824-0000	.SPACER	107, 109
1515828-0000	.BRACKET	215
1515833-0000	.BOX	105
1515834-0000	.MOUNTING BAR	59
1515838-0000	.SHAFT	131
1515872-0000	.CONNECTION PIPE	151
1515917-0000	.HYDRAULIC DIAGRAM	413
1515919-0000	.BRACKET	137
1515964-0000	.SPINDLE	419
1515986-0000	.BRACKET	73, 75
1515989-0000	.COVER PLATE	129
1520174-0000	.INDUCTOR	245, 427
1520175-0000	.INDUCTOR	245, 427
1520176-0000	.INDUCTOR	245, 427
1520983-0000	.TPC-BAR	101
1523209-0000	.BALL BEARING	143, 145
1533096-0100	.CONTACT RAIL	243, 277
1533562-0000	.CARBON BRUSH	245, 427
1533906-0000	.CUTTING RAIL	283, 285
1538186-0100	.PAPER TROLLEY	437
1548195-0000	.ROLL	23, 25, 29, 33
2502748-0000	.HOLDER	231
2518143-0000	.DISPLAY	463, 465
2523832-0000	.FASTENER	253
2523833-0000	.CHAIN GUIDE	253
2523834-0000	.CHAIN GUIDE	253
2523835-0000	.VERTICAL HOLDER	287
2523836-0000	.VERTICAL HOLDER	287
2523837-0000	.GUIDE	287
2523838-0000	.GUIDE	287
2523839-0000	.SPROCKET	247, 249, 251, 289, 291, 293, 311, 313, 315
2523845-0100	.ELEMENT GROUP	117
2523851-0000	.CHAIN GUIDE	287
2523852-0000	.CHAIN GUIDE	287
2523854-0000	.BRACKET	253, 299
2523855-0000	.BRACKET	253, 299
2523856-0000	.SUPPORT PLATE	247, 249, 251, 289, 291, 293, 311, 313, 315
2523857-0000	.SUPPORT PLATE	247, 249, 251, 289, 291, 293, 311, 313, 315
2523861-0000	.COVER	271
2523862-0000	.COVER	271
2523863-0000	.CRANK	233
2523864-0000	.ADAPTER	233
2523865-0100	.FILTER RAMP	405
2523866-0000	.LID	129
2523868-0000	.BENDING ROLLER	141
2523869-0000	.BEARING HOUSING	141
2523870-0100	.HATCH	117
2523875-0100	.ROLLER	139
2523881-0000	.BAR	33
2523882-0000	.CRADLE	33
2523884-0000	.AXLE PIN	33
2523885-0100	.STRIP GUIDE	31

Part No	Description	Page No
2523886-0000	.BRACKET	61
2523887-0000	.BRACKET	61
2523890-0100	.FRAME	31
2523892-0000	.HOUSING	37
2523893-0000	.HOUSING	37
2523894-0000	.BENDING ROLLER	37
2523896-0000	.SPACER	37
2523900-0100	.DRIVE ROLLER	31
2523906-0000	.BRACKET	253
2523908-0000	.CHAIN TENSIONER	287
2523909-0000	.BRACKET	287
2523910-0100	.FRAME SECTION	243, 277
2523911-0100	.SPROCKET	243, 277
2523912-0100	.SPROCKET	281
2523913-0100	.DRIVE UNIT	225
2523914-0100	.FRAME	225
2523915-0100	.SPACER PIECE	281, 309
2523919-0000	.FLANGE	161
2523920-0100	.WEB GUIDE	159
2523921-0000	.SHAFT	161
2523922-0000	.BRACKET	161
2523923-0000	.SHAFT	161
2523924-0000	.GUIDING PLATE	161
2523925-0000	.FLANGE	161
2523926-0000	.CLAMPING RING	161
2523927-0000	.ROLLER	161
2523928-0000	.ROLLER	163
2523929-0000	.SHAFT	163
2523930-0100	.PENDULUM ROLLER	159
2523931-0000	.LID	163
2523933-0000	.BOW CLAMP	165
2523934-0000	.FLANGE	165
2523935-0100	.CLAMP	159
2523936-0000	.SHAFT	165
2523937-0000	.SHAFT	165
2523938-0000	.SHAFT	165
2523939-0000	.ROLLER	175
2523944-0000	.SNAP-IN LOCK	155
2523945-0100	.ELEMENT	119
2523948-0000	.BRACKET	283, 285
2523950-0100	.EMERGENCY STOP	259
2523951-0000	.ARM	283, 285, 427
2523953-0000	.HOLDER	287
2523954-0000	.ROLLER	287
2523955-0000	.PLUNGER	295, 297
2523956-0000	.ROLLER BAR	295, 297
2523957-0000	.PLATE	295, 297
2523958-0000	.ROLLER	167
2523959-0000	.ROLLER	175
2523960-0100	.LOWER FORMING RING	173
2523961-0000	.ROLLER	175
2523962-0000	.ROLLER	175
2523963-0000	.BRACKET	177
2523965-0100	.DRIVE UNIT	159
2523967-0000	.BRACKET	177
2523969-0000	.BRACKET	177
2523970-0100	.PHOTOCELLS	173
2523971-0100	.PRESSURE JAW	93
2523972-0000	.BRACKET	95
2523973-0100	.PAPER GUIDE	95
2523974-0000	.BRACKET	97
2523976-0000	.PLATE	97
2523977-0000	.SCALE	97
2523978-0000	.PAPER GUIDE	97
2523979-0000	.WASHER	97
2523981-0000	.MOUNTING PLATE	23
2523982-0100	.MOUNTING PLATE	15
2523985-0000	.AXLE PIN	23
2523986-0000	.BRACKET	23
2523987-0000	.SHAFT	25, 33
2523988-0000	.GUIDE	25
2523989-0000	.PIN	25
2523990-0100	.MAGAZINE	15
2523991-0100	.PROXIMITY SWITCH	15
2523992-0000	.SPACER	27
2523998-0000	.ROD	59
2523999-0000	.LEG	59
2524000-0100	.STRIP MAGAZINE	11
2524001-0000	.PLATE	65
2524002-0000	.BRACKET	65
2524004-0000	.PLATE	65
2524005-0100	.FASTENING BRACKET	59
2524009-0000	.BRACKET	33
2524010-0100	.FASTENING BRACKET	59

Part No	Description	Page No
2524011-0000	.BRACKET	33
2524012-0000	.SPACER	61
2524013-0000	.HOUSING	43, 45, 49, 53
2524014-0000	.PLATE	41
2524015-0100	.PRESSURE ROLLER	31
2524016-0000	.PLATE	35
2524017-0000	.PLATE	35
2524018-0000	.BAR	57
2524019-0000	.BAR	57
2524020-0100	.HEATING DEVICE	31
2524021-0000	.SHAFT	155
2524022-0000	.SUPPORT	155
2524023-0000	.BEAM	59
2524025-0100	.ELEMENT	119
2524026-0000	.HOLDER	121, 123
2524029-0000	.BOX	131
2524030-0100	.BRACKET	119
2524031-0000	.BAR	57
2524032-0000	.INDICATOR	49
2524033-0000	.PLATE	35
2524034-0000	.BRACKET	57
2524035-0100	.BENDING ROLLER	31
2524036-0000	.BRACKET	57
2524037-0000	.SHAFT	33, 35, 39
2524038-0000	.SHAFT	47, 51
2524040-0100	.BENDING ROLLER	31
2524045-0100	.INDICATOR	31
2524051-0000	.BEAM	41
2524052-0000	.COVER PLATE	89
2524053-0000	.BENDING ROLLER	43
2524054-0000	.DANCER ROLLER	57
2524056-0100	.BOTTOM COVERS	67
2524057-0000	.PLATE	35
2524058-0000	.BRACKET	35
2524059-0000	.BAR	35
2524060-0100	.STRIP APPLICATOR	11
2524061-0000	.AXLE PIN	35
2524062-0000	.BLOCK	35
2524063-0000	.BRACKET	35
2524064-0100	.COVER PLATE	67
2524065-0100	.BENDING ROLLER	31
2524066-0000	.ARM	29
2524067-0000	.ARM	29
2524068-0000	.BELT	29
2524069-0000	.BRACKET	29
2524070-0100	.PAPER MAGAZINE	11
2524073-0000	.NOZZLE	179, 181
2524074-0000	.DISTRIBUTOR	179, 181
2524075-0000	.NOZZLE BRACKET	179, 181
2524076-0000	.ROLL	179, 181
2524077-0000	.PLATE	179, 181
2524078-0000	.BLOCK	179, 181
2524079-0000	.PLATE	179, 181
2524080-0100	.LONGITUDINAL ELEMENT	173
2524081-0000	.GUIDE	245, 427
2524082-0000	.PLATE	253
2524083-0000	.ROLLER BAR	253
2524097-0000	.FRAME	231
2524098-0000	.BEAM	423
2524099-0000	.BEAM	423
2524100-0100	.HEATING JAW	243, 277
2524101-0100	.FRAME	223
2524102-0100	.HEATING SIDE 1	223
2524103-0100	.PRESSURE JAW	281, 309
2524104-0100	.DOORS AND COVERS	223
2524105-0100	.HEATING SIDE 2	223
2524107-0100	.PRESSURE SIDE 3	223
2524108-0100	.PRESSURE SIDE 4	223
2524109-0100	.PLUNGER	281, 309
2524110-0100	.PLUNGER	281, 309
2524111-0100	.COVER	259
2524112-0100	.FRAME SECTION	281, 309
2524116-0000	.ROD	59
2524117-0000	.BEARING BRACKET	59
2524118-0000	.SHAFT	431, 433
2524119-0000	.BRACKET	51
2524120-0100	.BOBBIN	427
2524122-0000	.PAPER GUIDE	51
2524125-0100	.PAPER GUIDE	31
2524126-0000	.SPACER PIECE	287
2524127-0000	.ROLLER PLATE	287
2524128-0000	.CHAIN	247, 249, 251, 289, 291, 293, 311, 313, 315
2524135-0100	.DESIGN CORRECTION	281, 309
2524136-0000	.GASKET	183

Part No	Description	Page No
2524137-0000	.BASE PLATE	179, 181
2524138-0000	.SHAFT	179, 181
2524139-0000	.SPRING	179, 181
2524140-0100	.HEATING ELEMENT	173
2524141-0000	.(TUBULAR)JACKET	183
2524142-0000	.CONNECTION PIPE	183
2524143-0000	.LID	183
2524144-0000	.CONNECTION PIPE	183
2524145-0100	.VALVE CONNECTION	349
2524146-0000	.CONNECTION PIPE	365
2524147-0000	.THROTTLING	365
2524148-0000	.SCREW	179, 181
2524149-0000	.FLANGE	179, 181
2524150-0100	.DOOR	67
2524151-0000	.DOOR	69
2524152-0000	.SHIELD	85
2524153-0000	.FRONT COVER	85
2524154-0000	.SHIELD	85
2524155-0100	.DOOR	67
2524156-0000	.DOOR	71
2524157-0000	.SHIELD	85
2524158-0000	.COVER PLATE	77
2524160-0100	.COVER	67
2524161-0000	.FRAME	215
2524162-0000	.CHECKER PLATE	215
2524165-0100	.PLATFORM	205
2524170-0100	.LADDER	205
2524176-0000	.CHECKER PLATE	215
2524185-0100	.CANTILEVER	173
2524186-0000	.GUIDE STUD	185
2524187-0000	.ASSEMBLY PLATE	185
2524188-0000	.BRACKET	187
2524189-0000	.HOLDER	187
2524190-0000	.BRACKET	187
2524191-0000	.SPACER	187
2524192-0000	.BRACKET	187
2524193-0000	.SPACER	187
2524194-0000	.SHAFT	187
2524195-0100	.UPPER FORMING RING	173
2524196-0000	.HOLDER	187
2524198-0000	.ROD	283, 285
2524199-0000	.RULER	283, 285
2524203-0000	.VOLUME FLAP	283, 285
2524204-0000	.VOLUME ADJUSTER	245, 283, 285
2524205-0000	.BUSHING	283, 285
2524207-0000	.STOP ARM	245, 283, 285, 427
2524208-0000	.STOP ARM	245, 283, 285, 427
2524209-0000	.HEATING JAW	245
2524210-0000	.CARBON BRUSH HOLDER	245
2524215-0000	.VOLUME FLAP	245
2524218-0000	.PRESSURE JAW	283, 285
2524220-0000	.SUPPORTING SHEET	245, 283, 285
2524224-0000	.CLAMP BLOCK	245
2524235-0000	.VOLUME FLAP	283, 285
2524236-0000	.VOLUME FLAP	283, 285
2524237-0000	.VOLUME FLAP	245
2524238-0000	.VOLUME FLAP	245
2524242-0000	.SHAFT	283, 285
2524243-0000	.CLAMP BLOCK	245
2524244-0000	.COVER	271
2524245-0000	.COVER	271
2524246-0000	.COVER	271
2524247-0000	.CHAIN	247, 249, 251, 289, 291, 293, 311, 313, 315
2524248-0000	.CURVE	305
2524250-0000	.BRACKET	253
2524251-0000	.HUB	247, 249, 251
2524252-0000	.PLATE	287
2524253-0000	.BRACKET	287
2524256-0000	.COVER	295, 297
2524257-0100	.SPROCKET	309
2524259-0100	.LIFTING DEVICE	417
2524260-0000	.BRACKET	275
2524261-0000	.SPROCKET	247, 249, 251, 289, 291, 293, 311, 313, 315
2524262-0000	.SUPPORT PLATE	247, 249, 251, 289, 291, 293, 311, 313, 315
2524263-0000	.SPROCKET	289, 291, 293, 311, 313, 315
2524264-0000	.WASHER	233
2524266-0000	.BEAM	423
2524279-0000	.FRAME	59
2524280-0100	.CASSETTE	11
2524286-0100	.DOORS AND COVERS	11
2524287-0100	.COVER	67
2524288-0000	.TUBE	169
2524289-0100	.FILLING PIPE	159
2524290-0100	.COIL HOLDER	199

Part No	Description	Page No
2524291-0000	.BRACKET	201
2524292-0000	.TUBE	169
2524294-0000	.BRACKET	125
2524295-0100	.BRACKET	119
2524296-0000	.BRACKET	127
2524300-0100	.PRESSURE ROLLER	139
2524312-0000	.CANTILEVER	185
2527237-0100	.SPRAY GUN	417
2542621-0000	.BRACKET	47
2542622-0000	.BRACKET	29
2542623-0000	.BRACKET	47
2542627-0100	.PRESSURE ROLLER	31
2542628-0000	.BENDING ROLLER	53
2542629-0000	.AXLE	53
2542630-0100	.BOBBIN BRAKE	15
2542631-0000	.ARM	53
2542633-0000	.SLIDE SHEET	329
2542634-0000	.COVER PLATE	91
2542635-0100	.COVER	67
2542636-0000	.COVER	87
2542637-0000	.COVER PLATE	91
2542640-0100	.ROLLER	139
2542642-0000	.HUB	289, 291, 293, 311, 313, 315
2542644-0000	.STERILIZATION BATH	151
2542645-0100	.ROLLER	139
2542652-0000	.NUT	179, 181
2542653-0000	.SPACER	179, 181
2542654-0000	.COVER	79
2542655-0100	.COVER	67
2542657-0000	.CONNECTION PIPE	183
2542661-0000	.SHAFT	163
2542663-0000	.BRACKET	187
2542664-0000	.ROLLER	187
2542665-0100	.ASEPTIC CHAMBER	159
2542668-0000	.ROLLER	187
2542669-0000	.ROLLER	427
2542670-0000	.ROLLER	427
2542676-0000	.SPACER	175
2542677-0000	.LID	37
2542682-0000	.SHAFT	23
2542683-0000	.BRACKET	53
2542685-0100	.CANTILEVER	93
2542686-0000	.PLATE	99
2542687-0000	.COVER	101
2542688-0000	.ANGLE BRACKET	99
2542689-0000	.GLASS	101
2542690-0100	.SPLICING TABLE	93
2542691-0000	.KNIFE	101
2542692-0000	.CUTTING TABLE	99
2542697-0000	.BEAM	101
2542700-0100	.SPLICING DEVICE	11
2542711-0000	.COVER	269
2542712-0000	.COVER	269
2542713-0000	.BRACKET FOR CABLE TRAY	219
2542714-0000	.CABLE COVER	317
2542715-0100	.COVER	259
2542717-0000	.ROLLER	187
2542721-0000	.ASEPTIC CHAMBER	171
2542722-0000	.CANTILEVER	185
2542723-0000	.HOLDER	191
2542724-0000	.SHAFT	191
2542725-0100	.FORMING MANDREL BRACKET	159
2542726-0000	.ROLLER	191
2542730-0100	.EDGE ROLLER	159
2542732-0000	.LEVER	163
2542733-0000	.SHAFT	163
2542734-0000	.SHAFT	163
2542736-0000	.FITTING BOLT	161
2542739-0000	.ROLLER	187
2542740-0000	.ROLLER	187
2542741-0000	.ROLLER	187
2542742-0000	.ROLLER	187
2542743-0000	.ROLLER	187
2542744-0000	.ROLLER	187
2542745-0100	.PUSH BUTTON BOX	159
2542747-0000	.CABLE TRAY	219
2542748-0000	.CABLE TRAY LID	219
2542749-0000	.CABLE TRAY	219
2542750-0000	.CABLE TRAY LID	219
2542751-0000	.CABLE TRAY	219
2542752-0000	.CABLE TRAY LID	219
2542755-0000	.CABLE DUCT	171
2542756-0000	.LID	171
2542757-0000	.CABLE TRAY	347

Part No	Description	Page No
2542758-0000	.CABLE TRAY LID	347
2542759-0000	.CABLE TRAY LID	219
2542760-0100	.BENDING ROLLER	139
2542761-0000	.INSULATING RAIL	121, 123
2542762-0000	.INSULATING PLATE	121, 123
2542765-0100	.BOX	117
2542766-0000	.SHAFT	143
2542767-0000	.BEARING HOUSING	143
2542768-0000	.ROLLER	143, 145
2542769-0000	.HOSE	143, 145
2542770-0100	.HEATING CHAMBER	113
2542771-0000	.AXLE SUPPORT	145
2542772-0000	.ROLLER	147
2542773-0000	.SHAFT	147, 149
2542774-0000	.BENDING ROLLER	149
2542776-0000	.ARM	143
2542777-0000	.SPRING	143
2542778-0000	.ARM	143
2542779-0000	.ARM	143
2542782-0000	.ROLLER	175
2542783-0000	.ROLLER	175
2542784-0000	.CONNECTION PIPE	133
2542785-0000	.GUIDE RAIL	133
2542786-0000	.GUIDE RAIL	133
2542787-0000	.LID	133
2542788-0000	.GASKET	133
2542789-0000	.GUIDE	133
2542790-0100	.CONNECTION PIPE	117
2542801-0000	.BRACKET	175
2542802-0000	.BRACKET	175
2542803-0000	.BRACKET	175
2542805-0000	.HOLDER	175
2542806-0000	.HOLDER	175
2542807-0000	.JUNCTION	219
2542808-0000	.JUNCTION LID	219
2542809-0000	.CABLE DUCT	171
2542810-0000	.LID	171
2542811-0000	.GASKET	133
2542812-0000	.GASKET	133
2542814-0000	.PLATE	133
2542815-0100	.PIPE	349
2542816-0000	.PLATE	133
2542817-0000	.PIN	23
2542832-0000	.SCREW	143
2542833-0000	.NUT	143
2542834-0000	.BRACKET	143
2542835-0100	.STERILIZATION BATH	139
2542836-0000	.ROLLER	121, 123, 131
2542837-0000	.BRACKET	121, 123, 131
2542838-0000	.BRACKET	121
2542839-0000	.SHAFT	121, 123, 131
2542840-0100	.STERILIZATION BATH	113
2542841-0000	.LID	153
2542843-0000	.SHAFT	145
2542844-0000	.PIPE	151
2542845-0100	.LID	139
2542846-0000	.PIPE	151
2542849-0000	.BALL VALVE	151
2542850-0100	.PEROXIDE SYSTEM	333
2542851-0100	.CABLE TRAYS SUPPLY SYS.	333
2542852-0100	.CABLE TRAYS PLATFORM	205
2542855-0100	.CONNECTION BOX	159
2542856-0000	.ROLL	175, 179, 181
2542857-0000	.SHAFT	175, 179, 181
2542858-0000	.BRACKET	179, 181
2542859-0000	.SHAFT	179, 181
2542860-0100	.STERILE AIR SYSTEM	333
2542861-0000	.BRACKET	179, 181
2542862-0000	.HEAT GUARD	131
2542863-0000	.LOCKING RING	175, 179, 181
2542864-0000	.PLATE	215
2542865-0100	.CONNECTION BOX	333
2542867-0000	.CONNECTION BOX	375, 377
2542869-0000	.BRACKET	213, 217
2542870-0100	.WARNING BEACON	205
2542871-0000	.NOZZLE	41
2542875-0100	.WARNING BEACON	205
2542876-0000	.PLATE	179, 181
2542877-0000	.DISTRIBUTOR	179, 181
2542878-0000	.NOZZLE	179, 181
2542879-0000	.NOZZLE	179, 181
2542880-0000	.HOLDER	175
2542881-0000	.BRACKET FOR CABLE TRAY	219
2542882-0000	.BRACKET FOR CABLE TRAY	219

Part No	Description	Page No
2542883-0000	.CABLE DUCT	171
2542884-0000	.LID	171
2542885-0000	.BRACKET FOR CONNECTION BOX	347
2542886-0000	.BRACKET FOR VALVE PANEL	347
2542887-0000	.BRACKET FOR CABLE TRAY	347
2542888-0000	.SPROCKET	247, 249, 251, 289, 291, 293, 311, 313, 315
2542889-0000	.CHAIN	247, 249, 251, 289, 291, 293, 311, 313, 315
2542890-0000	.SUPPORT PLATE	247, 249, 251, 289, 291, 293, 311, 313, 315
2542891-0000	.SUPPORT PLATE	247, 249, 251, 289, 291, 293, 311, 313, 315
2542892-0000	.SPRING	245, 283, 285
2542894-0000	.STOP PLATE	245, 283, 285
2542895-0100	.GUIDE SPROCKET	243, 277, 281, 309
2542896-0000	.SPACER	253, 299
2542897-0100	.DESIGN CORRECTION DEVICE	301
2542901-0000	.LINK ARM	231
2542902-0000	.SHAFT	231
2542903-0000	.DOLLY	253, 299
2542904-0000	.FLAP	253, 299
2542905-0000	.FLAP	253, 299
2542910-0000	.BRACKET	179, 181
2542911-0000	.BRACKET	179, 181
2542912-0000	.SHAFT	179, 181
2542913-0000	.ROLL	179, 181
2542914-0000	.BRACKET	33
2542915-0000	.LEAF SPRING	169
2542917-0000	.PIPE	363
2542918-0000	.CABLE TRAY	219
2542919-0000	.CABLE TRAY LID	219
2542925-0100	.PAPER FEED	113
2542926-0000	.SEALING WASHER	151
2542927-0000	.ELECTRODE	151
2542928-0000	.BOX	341
2542929-0000	.COOLER	341
2542930-0100	.PUMP UNIT	335
2542931-0000	.SUCTION PIPE	341
2542932-0000	.BOX	337
2542933-0000	.HOLDER	341
2542935-0100	.DOOR	259
2542936-0000	.PUMP HOUSING	337
2542940-0100	.DOOR	335
2542945-0000	.ADJUSTING SCREW	33
2542946-0000	.KNOB	33
2542947-0000	.BRACKET	33
2542948-0000	.BRACKET	33
2542949-0000	.DOOR	75
2542950-0100	.DOOR	67
2542951-0000	.UPPER FILLING TUBE	169
2542953-0000	.UPPER FILLING TUBE	169
2542954-0000	.HOOD	169
2542955-0000	.FORK	169
2542956-0000	.SHAFT	23
2542957-0000	.SHAFT	29
2542958-0000	.COVER	101
2542963-0000	.COVER	101
2542964-0000	.BAR	101
2542968-0000	.HEATING CHAMBER	179, 181
2542979-0000	.BRACKET	167
2542980-0100	.VALVE RAMP UPPER	333
2542981-0000	.BRACKET	163
2542982-0000	.SPACER	167
2542983-0000	.COVER	167
2542984-0000	.COVER	163
2542985-0000	.BRACKET FOR CABLE TRAY	219
2542986-0000	.FRAME	215
2542987-0000	.PIPE CONNECTION	385
2542988-0000	.PIPE	385
2542989-0000	.PIPE CONNECTION	359
2542990-0100	.FILLING UNIT	333
2542991-0000	.BODY	385
2542992-0000	.PIPE CONNECTION	359
2542993-0000	.PIPE CONNECTION	359
2542994-0000	.HANDLE	387, 389
2542995-0100	.REGULATING VALVE	381
2542996-0000	.PIPE CONNECTION	387, 389
2542997-0000	.PIPE CONNECTION	387, 389
2542998-0000	.PIPE	387, 389
2542999-0000	.PIPE CONNECTION	387, 389
2543000-0100	.PIPE CONNECTION	349
2543001-0000	.PIPE CONNECTION	387, 389
2543003-0000	.FRAME	397
2543005-0100	.CLEANING SYSTEM	381
2543009-0000	.PLATE	41
2543011-0000	.BRACKET	33
2543012-0000	.HOOK	33

Part No	Description	Page No
2543013-0000	.HOOK	33
2543014-0000	.BENDING ROLLER	49
2543015-0000	.BRACKET	33
2543016-0000	.SHAFT	33
2543018-0000	.COVER	35
2543019-0000	.COVER	35
2543022-0000	.DOOR	397
2543023-0000	.DOOR	397
2543024-0000	.PLATE	397
2543025-0100	.PRODUCT VALVE	381
2543026-0000	.FRAME	383
2543028-0000	.PLATE	397
2543029-0000	.PLATE	397
2543030-0100	.COVER	395
2543031-0000	.PLATE	397
2543032-0000	.PLATE	401
2543033-0000	.FRAME	397
2543034-0000	.COVER PLATE	397
2543035-0100	.TOUCH GUARD	395
2543036-0000	.FRAME	397
2543037-0000	.FRAME	397
2543038-0000	.TOUCH GUARD	399
2543039-0000	.AIR PIPE	409
2543040-0100	.COVER	333
2543044-0000	.SIDE FRAME	155
2543045-0100	.PEROXID SYSTEM	335
2543046-0000	.SIDE FRAME	155
2543047-0000	.COVER PLATE	155
2543048-0000	.COVER PLATE	155
2543050-0100	.AIR KNIFE	117
2543053-0000	.SHAFT	121
2543054-0000	.BRACKET	121
2543056-0000	.DOOR	339
2543057-0000	.DOOR	263
2543058-0000	.BRACKET	231
2543059-0000	.DOOR	337
2543061-0000	.HINGE	337
2543062-0000	.SNAP-IN LOCK	337
2543063-0000	.PIPE	341
2543064-0000	.PIPE	341
2543066-0000	.BRACKET	341
2543067-0000	.NOZZLE	135
2543068-0000	.SPACER	135
2543069-0000	.HOLDER	135
2543071-0100	.CABLE TRAYS MAIN BODY	223
2543073-0000	.BRACKET	165
2543074-0000	.ROLLER	163
2543075-0100	.COIL	159
2543077-0000	.TUBE FLUSHING DEVICE	201
2543080-0100	.PHOTOCELL UNIT	173
2543083-0000	.FASTENING PLATE	185
2543085-0000	.ROLLER	163
2543096-0000	.CABLE TRAY	347
2543097-0000	.CABLE TRAY LID	347
2543100-0100	.PUSH BUTTON BOX	11
2543101-0000	.PLATE	245, 283, 285
2543102-0000	.VOLUME FLAP	283, 285
2543103-0000	.VOLUME FLAP	283, 285
2543104-0000	.VOLUME FLAP	245
2543105-0000	.VOLUME FLAP	245
2543107-0000	.PLATE	245, 283, 285
2543108-0000	.VOLUME ADJUSTER	245, 283, 285
2543109-0000	.SLEEVE	257
2543110-0100	.SYNCHRONIZER	243
2543113-0000	.CONNECTION BOX	195, 197
2543114-0000	.RAIL	195, 197
2543115-0000	.PUSH BUTTON BOX	193
2548710-0100	.DOOR	449
2548714-0000	.DOOR	463, 465
2548715-0000	.FRAME	463, 465
2548722-0000	.COVER	463, 465
2548723-0000	.CABLE DUCT	463, 465
2555136-0100	.ELECTRICAL CABINET	11
2556673-0000	.PLATE	305
2556674-0000	.CYLINDER BRACKET	305
2556675-0000	.CYLINDER BRACKET	305
2556676-0000	.PLATE	305
2556677-0000	.BRACKET	303
2556678-0000	.SLEEVE	245, 283, 285
2556679-0000	.COVER	271
2556680-0100	.CYLINDER BRACKET	301
2556681-0000	.ROLLER PLATE	295, 297
2556682-0000	.HANDLE	253, 299
2556683-0000	.SUPPORT	171

Part No	Description	Page No
2556684-0000	.STEAM PIPE	391
2556685-0100	.COVER	395
2556686-0000	.STEAM PIPE	391
2556687-0000	.STEAM PIPE	391
2556690-0100	.AIR UNIT	333
2556693-0000	.PIPE	391
2556694-0000	.PIPE	391
2556695-0100	.AIR PANEL	405
2556696-0000	.ANGLE BRACKET	271
2556697-0000	.PIPE	351
2556698-0000	.PIPE	351
2556699-0000	.PIPE	341
2556700-0100	.STEAM UNIT	381
2556701-0000	.PIPE	341
2556702-0000	.PIPE	341
2556703-0000	.PIPE	341
2556704-0000	.COVER	351
2556705-0000	.BRACKET FOR CABLE TRAY	219
2556707-0000	.CABLE DUCT	317
2556709-0000	.WASHER	283, 285
2556710-0000	.PUSH ROD	283, 285, 427
2556712-0000	.SIDE PLATE	253
2556713-0000	.SIDE PLATE	253
2556714-0000	.SIDE PLATE	299
2556715-0000	.SIDE PLATE	299
2556716-0000	.CENTRAL LUBRIC. DIAGRAM	413
2556717-0100	.LUBRICANT DISTRIBUTOR	235
2556718-0100	.CENTRAL LUBRICATION	225
2556771-0000	.FRAME	357
2556772-0000	.COVER	357
2556773-0000	.COVER	357
2556774-0000	.DOOR	357
2556776-0000	.COVER	403
2556777-0000	.BRACKET	185
2556778-0000	.BOX	371, 373
2556779-0000	.BOX	343, 345
2556780-0100	.COVER	349
2556781-0000	.BRACKET	409
2556782-0000	.RAIL	343, 345
2556783-0000	.COVER	273
2556784-0100	.COVER	271
2556785-0100	.SPRAY SYSTEM	349
2556786-0100	.WATER VALVE UNIT	381
2556787-0000	.LID	215, 391
2556789-0000	.PIPE	363
2556790-0100	.COVER	395
2556791-0000	.TENSION SPRING	245, 283, 285, 427
2556792-0000	.FLANGE	233
2556793-0000	.DRIVE SHAFT	233
2556794-0100	.CONNECTION BOX	223
2556795-0000	.DRAIN PLATE	271
2556796-0000	.GUIDE	283, 285, 427
2556797-0000	.FLANGE	233
2556798-0000	.SPROCKET	233
2556799-0000	.SPROCKET	233
2556801-0000	.FORK	55
2556802-0000	.ROLLER	55
2556803-0000	.FLAG	55
2556805-0000	.BRACKET	55
2556806-0000	.BRACKET	101
2556807-0000	.COVER	87
2556808-0000	.SPACER	101
2556810-0100	.SPLICE DETECTOR	31
2556811-0000	.SPACER	193
2556812-0000	.SPACER	195, 197
2556813-0000	.SPACER	371, 373
2556814-0000	.RAIL	193
2556816-0000	.HEAT GUARD	131
2556817-0000	.HOLDER	135
2556818-0000	.HOLDER	135
2556820-0100	.PRE-HEATING ELEMENT	117
2556821-0000	.LID	341
2556822-0000	.BRACKET	341
2556823-0000	.BENDING ROLLER	131
2556824-0000	.BUSHING	131
2556825-0000	.AIR NOZZLE	131
2556826-0000	.BRACKET	137
2556827-0000	.BRACKET	137
2556828-0000	.CABLE DUCT	143
2556829-0000	.NOZZLE	135
2556836-0000	.BRACKET	33
2556840-0000	.PNEUMATIC DIAGRAM	413
2556841-0000	.SPACER	233
2556842-0000	.ADAPTER	233

Part No	Description	Page No
2556843-0000	.BRACKET	233
2556845-0000	.BRACKET	233
2556850-0100	.CONNECTION BOX	349
2556851-0000	.CONNECTION BOX	319, 321
2556852-0100	.CONNECTION BOX	223
2556853-0000	.CHAIN	233
2556854-0100	.EMERGENCY STOP	223
2556855-0000	.CHAIN	233
2556856-0000	.SPACER BLOCK	233
2556857-0000	.SPACER BLOCK	233
2556860-0100	.CONNECTION BOX	335
2556861-0000	.SUPPORT LEG	215
2557505-0000	.ELECTRICAL CABINET	107, 109
2562365-0000	.HOLDER	469
2564230-0100	.LIGHT FIXTURE	59
2569623-0000	.STOP SCREW	245, 283, 285
2569624-0000	.SHAFT	245, 283, 285
2569625-0000	.SHAFT	245, 283, 285
2569630-0000	.GUIDE	359
2569631-0000	.PIPE	363
2569632-0000	.COVER	271
2569633-0000	.BRACKET	271
2569634-0000	.COVER	397
2569683-0000	.VOLUME FLAP	283, 285
2569684-0000	.VOLUME FLAP	245
2569687-0000	.BRACKET	347
2569707-0000	.PIPE	341
2569708-0000	.BRACKET	341
2569711-0000	.PIPE	359
2569713-0000	.CABLE DUCT	347
2569714-0000	.WATER DIAGRAM	413
2569716-0000	.HOLDER	233
2569717-0000	.HOLDER	233
2569727-0000	.COVER	271
2576318-0000	.CABLE DUCT	35
2579712-0000	.CANTILEVER	439
2579713-0000	.ATTACHMENT PLATE	439
2579714-0000	.ADJUSTING RAIL	439
2579715-0000	.ADJUSTING PLATE	439
2579716-0000	.STOP	439
2579770-0100	.GUIDE RAIL	437
2592385-0100	.SET OF SIGNS	413
2592387-0100	.LAUNCH KIT	437
2592389-0100	.TOOL KIT	413
2592391-0100	.START-UP KIT	413

Tetra Pak

SPC
Spare Parts Catalogue

Pos	Part No	Description	Page No
A			
A001	67388-0101	FRONT MOUNTED RACK 42TE	489, 491
A001.1	68445-0103	FRONT PLATE 6TE	489, 491
A001.2	68445-0104	FRONT PLATE 8 TE	489, 491
A006	68123-0301	LEVEL METERIND.2 COILS	489, 491
A006.1	68263-0101	BACKPLANE FRONT RACK 6TE	489, 491
A010	90459-1577	1 AXIS DOCKING STATION D2/PLC/DOL	487
A012	90458-0746	STEP MOTOR DRIVE L50	487
A020	90410-0051	TEMPERATURE CONTROLLER, KS 40	489, 491
A020.1	359241-0131	SIGN, TEMP. LS HEATER	489, 491
A021	90410-0051	TEMPERATURE CONTROLLER, KS 40	489, 491
A021.1	359241-0132	SIGN, TEMP. STRIP APPLICATOR	489, 491
A022	90410-0051	TEMPERATURE CONTROLLER, KS 40	489, 491
A022.1	359241-0228	SIGN KYLT	489, 491
A023	90410-0051	TEMPERATURE CONTROLLER, KS 40	489, 491
A023.1	359241-0228	SIGN KYLT	489, 491
A023.1	551922-0000	LABEL,POTENTIOMETER DESIGN CORR.	463, 465
A023	558389-0101	MULTI PURPOSE POTENTIOM.	463, 465
A024	90410-0051	TEMPERATURE CONTROLLER, KS 40	489, 491
A024.1	359241-0121	SIGN "STEAM"	489, 491
A024	1369441-0000	CIRCUIT BOARD	463, 465
A024.1	2518143-0000	DISPLAY	463, 465
A025	68699-0101	MULTIPLEXER CARD 56LED	463, 465
A025	90410-0051	TEMPERATURE CONTROLLER, KS 40	489, 491
A025.1	359241-0228	SIGN KYLT	489, 491
A026	68699-0101	MULTIPLEXER CARD 56LED	463, 465
A026	90410-0051	TEMPERATURE CONTROLLER, KS 40	489, 491
A026.1	359241-0486	HEAT EXCHANGER	489, 491
A030	90458-2580	LEVEL CONTROL RELAY RM4-LA32M	479, 481
A031	90458-2580	LEVEL CONTROL RELAY RM4-LA32M	479, 481
A032	90458-2580	LEVEL CONTROL RELAY RM4-LA32M	479, 481
A033	90458-2580	LEVEL CONTROL RELAY RM4-LA32M	479, 481
A040	67600-0501	TPIH GENERATOR	451, 453, 455, 457
A040.1	90110-0121	FEMALE INSERT GDS A-H 09 06 215 2811	451, 453, 455, 457
A040.2	90110-0122	COVER, 09 06 000 9957	451, 453, 455, 457
A040.3	548770-0007	COAXIAL CABLE L=3000 MM	451, 453, 455, 457
A041	67600-0501	TPIH GENERATOR	451, 453, 455, 457
A041.1	90110-0121	FEMALE INSERT GDS A-H 09 06 215 2811	451, 453, 455, 457
A041.2	90110-0122	COVER, 09 06 000 9957	451, 453, 455, 457
A041.3	548770-0007	COAXIAL CABLE L=3000 MM	451, 453, 455, 457
A050.2	90110-0028	CONTACT UNIT 4-POLE	489, 491
A050.1	90456-0003	INTOUCH OEM 256 V.5.6B/6.0B HW KEY	489, 491
A050	1363288-0301	FLEXBOX TETRA BRIK	489, 491
A050.3	1363292-0501	PLMS COMMON SOFTWARE	489, 491
A051	1349775-0101	DISPLAY UNIT 8,4"	463, 465
A200	90119-0106	SAFETY RELAY JOKAB RT 6	479, 481
A300	90119-0106	SAFETY RELAY JOKAB RT 6	479, 481
A400	90119-0106	SAFETY RELAY JOKAB RT 6	479, 481
A900	90031-0051	BASEPLATE, 10-SLOT	479, 481
A902	90031-0058	PLC, DIGITAL INPUT MODULE	479, 481
A903	90031-0059	PLC, DIGITAL OUTPUT MODULE	479, 481
A904	90031-0057	PLC, DIGITAL INPUT MODULE	479, 481
A905	90031-0057	PLC, DIGITAL INPUT MODULE	479, 481
A906	90031-0057	PLC, DIGITAL INPUT MODULE	479, 481
A907	90031-0057	PLC, DIGITAL INPUT MODULE	479, 481
A908	90031-0057	PLC, DIGITAL INPUT MODULE	479, 481
A909	90031-0057	PLC, DIGITAL INPUT MODULE	479, 481
A910	90031-0057	PLC, DIGITAL INPUT MODULE	479, 481
A920	90031-0053	BASEPLATE,10-SLOT	479, 481
A921	90031-0059	PLC, DIGITAL OUTPUT MODULE	479, 481
A922	90031-0059	PLC, DIGITAL OUTPUT MODULE	479, 481
A923	90031-0059	PLC, DIGITAL OUTPUT MODULE	479, 481
A924	90031-0059	PLC, DIGITAL OUTPUT MODULE	479, 481
A925	90031-0059	PLC, DIGITAL OUTPUT MODULE	479, 481
A926	90031-0059	PLC, DIGITAL OUTPUT MODULE	479, 481
A927	90031-0059	PLC, DIGITAL OUTPUT MODULE	479, 481
A930	90031-0063	PLC,ANALOG COMBO MODULE,IN-4PT/OUT-2PT	479, 481
B			
B102	90044-0194	PROX.SW. IN5329/IN3002-BPKG	49
B110	90326-0043	THERMOCOUPLE, CR-ALPREM.G	41
B205	90232-0089	PH.CELL NTL6-P12-1011520	189
B210	90326-0048	THERMOCOUPLE, 12826-31	179, 181
B227	90044-0194	PROX.SW. IN5329/IN3002-BPKG	161
B228	90044-0194	PROX.SW. IN5329/IN3002-BPKG	161
B235	90459-1367	INDUC. TRANSD. IW 25A / 40-0.5-KHN-A79	163
B310	90326-0037	THERMOCOUPLE, CR-AL PREM.G	361
B311	90326-0038	THERMOCOUPLE, CR-AL	361
B502	90274-0084	PRESSURE GUARD, 1800 KPA	239
C			
C110:1	90457-0005	SINGLE ACTING, SHORT STROKE, CYL 20-15	95
C110:2	90457-0005	SINGLE ACTING, SHORT STROKE, CYL 20-15	95
C112	90459-0390	CYLINDER WITH INT. GUIDING BORE 20	41
C114	90450-0306	DOUBLE ACTING, MINI-ISO, CYL. 12-25	25

Pos	Part No	Description	Page No
C			
C117	90459-0392	CYLINDER WITH INT. GUIDING BORE 20	97
C120:1	90459-1417	DOUBLE ACTING, COMPACT, CYL 50-50	101
C120:2	90459-1417	DOUBLE ACTING, COMPACT, CYL 50-50	101
C121:1	90450-0478	DOUBLE ACTING, COMPACT, CYL 32-15	101
C121:2	90450-0478	DOUBLE ACTING, COMPACT, CYL 32-15	101
C200	90239-0944	DOUBLE ACTING, MINI-ISO, CYL. 20-35"	179, 181
C201:1	90239-0832	DOUBLE ACTING, MINI-ISO, CYL. 25-125	165
C201:2	90239-0832	DOUBLE ACTING, MINI-ISO, CYL. 25-125	165
C202:1	90239-0829	DOUBLE ACTING, MINI-ISO, CYL.25-50	143
C202:2	90239-0829	DOUBLE ACTING, MINI-ISO, CYL.25-50	143
C204	90458-2434	DIAPHRAGM VALVE 12MM, N.O. WELD CONN.	365
C205	90459-1507	DOUBLE ACTING, MINI-ISO, CYL. 32-50	163
C302	90450-0230	DOUBLE ACTING, COMPACT, CYL 50-20	385
C400	90459-1153	CYLINDER, CLAMPING MODULE EV-40-5	305
C401	90459-1153	CYLINDER, CLAMPING MODULE EV-40-5	305
C402	90459-1153	CYLINDER, CLAMPING MODULE EV-40-5	305
C600	90458-2543	ROTARY ACTUATOR DSM32-270-P-FW-CC	329
D			
D900	90031-0075	CPU363, SERIAL COMMUNICATION	479, 481
E			
E001	90164-0301	HOLDING FIXTURE	451, 453, 455, 457
E001.1	90297-0006	FLUORESCENT TUBE, PL9	451, 453, 455, 457
E002	90164-0301	HOLDING FIXTURE	451, 453, 455, 457
E002.1	90297-0006	FLUORESCENT TUBE, PL9	451, 453, 455, 457
E105	90164-0015	LIGHT FIXTURE, DWDCV111B/230V 50HZ	63
E403	90457-0149	LIGHT FIXTURE, DWDV 118D/230V 50 HZ	211
F			
F001	90233-0028	TUBE FUSE, 10A	475, 477
F001.1	90233-0303	FUSE HOLDER, ST10	475, 477
F002	90233-0028	TUBE FUSE, 10A	475, 477
F002.1	90233-0303	FUSE HOLDER, ST10	475, 477
F003	90233-0028	TUBE FUSE, 10A	475, 477
F003.1	90233-0303	FUSE HOLDER, ST10	475, 477
F007	90007-0138	CIRCUIT BREAKER, 2P 10 A K	475, 477
F008	90007-0129	CIRCUIT BREAKER, 1P 10 A K	475, 477
F010	90007-0129	CIRCUIT BREAKER, 1P 10 A K	475, 477
F011	90007-0129	CIRCUIT BREAKER, 1P 10 A K	475, 477
F012	90007-0129	CIRCUIT BREAKER, 1P 10 A K	475, 477
F013	90233-0027	TUBE FUSE, 16A	475, 477
F013.1	90233-0303	FUSE HOLDER, ST10	475, 477
F014	90007-0131	CIRCUIT BREAKER, 1P 16 A K	475, 477
F015	90233-0028	TUBE FUSE, 10A	475, 477
F015.1	90233-0303	FUSE HOLDER, ST10	475, 477
F016	90233-0028	TUBE FUSE, 10A	475, 477
F016.1	90233-0303	FUSE HOLDER, ST10	475, 477
F017	90233-0028	TUBE FUSE, 10A	475, 477
F017.1	90233-0303	FUSE HOLDER, ST10	475, 477
F018	90007-0129	CIRCUIT BREAKER, 1P 10 A K	475, 477
F019	90007-0129	CIRCUIT BREAKER, 1P 10 A K	475, 477
F020	90233-0027	TUBE FUSE, 16A	475, 477
F020.1	90233-0303	FUSE HOLDER, ST10	475, 477
F021	90233-0031	TUBE FUSE, 20A	475, 477
F021.1	90233-0303	FUSE HOLDER, ST10	475, 477
F023	90007-0147	CIRCUIT BREAKER, 3P 10 A K	475, 477
F024	90007-0129	CIRCUIT BREAKER, 1P 10 A K	475, 477
F025	90007-0127	CIRCUIT BREAKER, 1P 2 A K	475, 477
F026	90007-0133	CIRCUIT BREAKER, 1P 25 A K	475, 477
F027	90233-0028	TUBE FUSE, 10A	475, 477
F027.1	90233-0303	FUSE HOLDER, ST10	475, 477
F029	90007-0129	CIRCUIT BREAKER, 1P 10 A K	475, 477
F030	90007-0129	CIRCUIT BREAKER, 1P 10 A K	475, 477
F100	90458-1448	MAGNETIC FUSE, S292 C100	107, 109
F280	207638-0300	SLEEVE CONTACT	367
G			
G002.1	90135-0039	SHIELD CLIP KLBU 4-13.5	475, 477
G002	90430-0072	FREQ.CONV. 6SE3214-0DA40	475, 477
G003.1	90135-0039	SHIELD CLIP KLBU 4-13.5	479, 481
G003	90430-0070	FREQ.CONV. 6SE3213-6CA40	479, 481
G004.2	90135-0034	SHIELD CLAMP KLBU 3-8	479, 481
G004.1	90135-0039	SHIELD CLIP KLBU 4-13.5	479, 481
G004	90430-0070	FREQ.CONV. 6SE3213-6CA40	479, 481
G011	90459-1580	POWER SUPPLY DEVICE P25L	487
G900	90031-0068	PLC, POWER SUPPLY	479, 481
G920	90031-0068	PLC, POWER SUPPLY	479, 481
H			
H410	90458-0302	SIREN WITH ADJUSTABLE VOLUME KS 70-3004	213
H411	90458-0293	LIGHT ELEMENT, RED, KL70-401R	213
H412	90458-0294	LIGHT ELEMENT, YELLOW, KL70-401Y	213
H413	90458-0295	LIGHT ELEMENT, BLUE, KL70-401L	213
H414	90458-0302	SIREN WITH ADJUSTABLE VOLUME KS 70-3004	217
H415	90458-0293	LIGHT ELEMENT, RED, KL70-401R	217
H416	90458-0294	LIGHT ELEMENT, YELLOW, KL70-401Y	217

Pos	Part No	Description	Page No
H			
H417	90458-0295	LIGHT ELEMENT, BLUE, KL70-401L	217
K			
K001	90075-0124	CONTACTOR, 4KW 24VDC	475, 477
K004	90075-0124	CONTACTOR, 4KW 24VDC	475, 477
K006	90075-0124	CONTACTOR, 4KW 24VDC	475, 477
K009	90075-0124	CONTACTOR, 4KW 24VDC	475, 477
K011	90075-0124	CONTACTOR, 4KW 24VDC	475, 477
K020	90075-0124	CONTACTOR, 4KW 24VDC	475, 477
K021	90075-0124	CONTACTOR, 4KW 24VDC	475, 477
K022	90075-0124	CONTACTOR, 4KW 24VDC	475, 477
K023	90075-0124	CONTACTOR, 4KW 24VDC	475, 477
K024	90075-0124	CONTACTOR, 4KW 24VDC	475, 477
K025	90075-0124	CONTACTOR, 4KW 24VDC	475, 477
K026	90075-0124	CONTACTOR, 4KW 24VDC	475, 477
K027	90075-0124	CONTACTOR, 4KW 24VDC	475, 477
K028	90075-0124	CONTACTOR, 4KW 24VDC	475, 477
K029	90075-0124	CONTACTOR, 4KW 24VDC	475, 477
K031	90119-0056	RELAY, AUXILIARY MK3P5-S 24VDC	479, 481
K031.1	90129-0006	BASE, S3-B	479, 481
K032	90119-0056	RELAY, AUXILIARY MK3P5-S 24VDC	479, 481
K032.1	90129-0006	BASE, S3-B	479, 481
K033	90119-0056	RELAY, AUXILIARY MK3P5-S 24VDC	479, 481
K033.1	90129-0006	BASE, S3-B	479, 481
K034	90119-0056	RELAY, AUXILIARY MK3P5-S 24VDC	479, 481
K034.1	90129-0006	BASE, S3-B	479, 481
K035	90119-0056	RELAY, AUXILIARY MK3P5-S 24VDC	479, 481
K035.1	90129-0006	BASE, S3-B	479, 481
K036	90119-0056	RELAY, AUXILIARY MK3P5-S 24VDC	479, 481
K036.1	90129-0006	BASE, S3-B	479, 481
K037	90119-0056	RELAY, AUXILIARY MK3P5-S 24VDC	479, 481
K037.1	90129-0006	BASE, S3-B	479, 481
K038	90119-0056	RELAY, AUXILIARY MK3P5-S 24VDC	479, 481
K038.1	90129-0006	BASE, S3-B	479, 481
K039	90119-0056	RELAY, AUXILIARY MK3P5-S 24VDC	479, 481
K039.1	90129-0006	BASE, S3-B	479, 481
K040	90119-0056	RELAY, AUXILIARY MK3P5-S 24VDC	479, 481
K040.1	90129-0006	BASE, S3-B	479, 481
K041	90119-0056	RELAY, AUXILIARY MK3P5-S 24VDC	479, 481
K041.1	90129-0006	BASE, S3-B	479, 481
K042	90119-0056	RELAY, AUXILIARY MK3P5-S 24VDC	479, 481
K042.1	90129-0006	BASE, S3-B	479, 481
K043	90119-0056	RELAY, AUXILIARY MK3P5-S 24VDC	479, 481
K043.1	90129-0006	BASE, S3-B	479, 481
K044	90119-0056	RELAY, AUXILIARY MK3P5-S 24VDC	479, 481
K044.1	90129-0006	BASE, S3-B	479, 481
K045	90075-0141	CONTACTOR, 4KW 24VDC	475, 477
K047	90119-0056	RELAY, AUXILIARY MK3P5-S 24VDC	479, 481
K047.1	90129-0006	BASE, S3-B	479, 481
K049	90119-0056	RELAY, AUXILIARY MK3P5-S 24VDC	479, 481
K049.1	90129-0006	BASE, S3-B	479, 481
K050	90119-0056	RELAY, AUXILIARY MK3P5-S 24VDC	479, 481
K050.1	90129-0006	BASE, S3-B	479, 481
K051	90119-0056	RELAY, AUXILIARY MK3P5-S 24VDC	479, 481
K051.1	90129-0006	BASE, S3-B	479, 481
K053	90119-0056	RELAY, AUXILIARY MK3P5-S 24VDC	479, 481
K053.1	90129-0006	BASE, S3-B	479, 481
K056	90119-0056	RELAY, AUXILIARY MK3P5-S 24VDC	479, 481
K056.1	90129-0006	BASE, S3-B	479, 481
K057	90119-0056	RELAY, AUXILIARY MK3P5-S 24VDC	479, 481
K057.1	90129-0006	BASE, S3-B	479, 481
K061	90119-0082	SSR 90119-67 + HEAT SINK	487
K062	90119-0082	SSR 90119-67 + HEAT SINK	487
K063	90119-0082	SSR 90119-67 + HEAT SINK	487
K064	90119-0082	SSR 90119-67 + HEAT SINK	487
K065	90119-0082	SSR 90119-67 + HEAT SINK	487
K066	90119-0082	SSR 90119-67 + HEAT SINK	487
K067	90119-0082	SSR 90119-67 + HEAT SINK	487
K068	90119-0082	SSR 90119-67 + HEAT SINK	487
K070	90459-0690	CURRENT CONTROL RELAY, 84 871 034	479, 481
K071	90459-0690	CURRENT CONTROL RELAY, 84 871 034	479, 481
K080	90458-0961	SOLID-STATE RELAY G3R-ODX02SN	479, 481
K080.1	90458-0963	SOCKET, TS35 OMRON P2RF-05-E	479, 481
K081	90119-0063	OPTO-RELAY, DC/DC AMMS-10-1/30VDC	479, 481
K082	90119-0063	OPTO-RELAY, DC/DC AMMS-10-1/30VDC	479, 481
K090	90119-0043	OPTO-RELAY, 22DC 60S-3/32VDC	479, 481
K300	90075-0126	CONTACTOR, 22KW 24VDC	475, 477
L			
L001	90297-0306	BALLAST COIL 50/60 HZ	451, 453, 455, 457
L003	90297-0306	BALLAST COIL 50/60 HZ	479, 481
L004	90297-0306	BALLAST COIL 50/60 HZ	479, 481
L005	90297-0306	BALLAST COIL 50/60 HZ	479, 481

Pos	Part No	Description	Page No
M			
M010	90459-2070	COOLING UNIT, 3372.209 RF	451, 453, 455, 457
M100	90457-0959	WORM GEAR MOTOR PC 440M3T	37
M201	90069-0613	GEARS, WORM MOTOR ODM120-80BE3	167
M223	90458-2937	STEPPER MOTOR, PK296-E4.5T	161
M600	90458-0275	WORM GEAR MOTOR,PC440M3TB5-93	329
P			
P001	90178-0007	HOUR COUNTER, BG 40,17-1 12-48VDC	489, 491
P001.2	359241-0201	SIGN "HOUR GLASS"	489, 491
P003	90053-0029	COUNTER, F524.800FA3C 24VDC	489, 491
P003.2	359240-0001	SIGN, NOT ENGRAVED	489, 491
P005	90053-0024	COUNTER 24VDC 6 DIGITS	463, 465
P005.2	90053-0305	FRAME F 1 DV	463, 465
P005.1	90053-0311	BASE 916	463, 465
P020	90000-0024	AMMETER, IQ48 15-100HZ	489, 491
P020.3	90458-0629	PROTECTIVE COVER 48.	489, 491
P020.1	359241-0294	SIGN	489, 491
P021	90000-0024	AMMETER, IQ48 15-100HZ	489, 491
P021.3	90458-0629	PROTECTIVE COVER 48.	489, 491
P021.1	359241-0295	SIGN	489, 491
Q			
Q001	90095-0077	OVERLOAD PROTECTION, PKZM 6-10 A	475, 477
Q002	90111-0172	EARTH FAULT BREAKER, F 362-25/0.03	479, 481
Q004	90459-2071	EARTH CIRCUIT BREAKER, 4P 16A/30 MA IP20	487
Q006	90095-0072	OVERLOAD PROTECTION, PKZM 1,0 A	475, 477
Q006.1	90259-0313	AUX. CONTACT K&M NHI21-PKZM0	475, 477
Q021	90259-0039	OVERLOAD RELAY 25-40A	451, 453, 455, 457
Q021.2	359240-0100	SIGN HOLDER FOR 359240-0001	451, 453, 455, 457
Q021.1	359241-0124	SIGN, MAIN SWITCH	451, 453, 455, 457
R			
R020	90130-0301	ADJUSTING KNOB WITH DIAL	489, 491
R020.1	359241-0294	SIGN	489, 491
R021	90130-0301	ADJUSTING KNOB WITH DIAL	489, 491
R021.1	359241-0295	SIGN	489, 491
R022	90130-0301	ADJUSTING KNOB WITH DIAL	489, 491
R022.1	359241-0294	SIGN	489, 491
R023	90130-0301	ADJUSTING KNOB WITH DIAL	489, 491
R023.1	359241-0295	SIGN	489, 491
R040	90130-0301	ADJUSTING KNOB WITH DIAL	489, 491
R040.2	359241-0193	SIGN"TRANSSKARVSFÖRSEG.S1	489, 491
R041	90130-0301	ADJUSTING KNOB WITH DIAL	489, 491
R041.2	359241-0194	SIGN"TRANSSKARVSÖRSEGL.S2	489, 491
R103	1498047-0000	SEALING BLOCK	19
R200	90459-0707	HEATING ELEMENT, 1500W/220V	183
R203	90458-2728	HEATING ELMENT, 230V/1500W/ø8.5	137
R300	19269-0002	ELEMENT	355
S			
S003	90111-0122	KEY SWITCH, 2 NO CONTACTS	489, 491
S003.1	359241-0133	SIGN, SERVICE SWITCH	489, 491
S004	90111-0122	KEY SWITCH, 2 NO CONTACTS	489, 491
S004.2	359240-0001	SIGN, NOT ENGRAVED	489, 491
S004.1	359241-0250	SIGN "CLEANING OF STEAM BARRIER"	489, 491
S009	90111-0120	SWITCH, 2 POS.704.510 .0A+704.901.5/A	463, 465
S009.1	359241-0140	SIGN "LIGHTING MACHINE"	463, 465
S016	90458-1651	EMERGENCY STOP, ZB4-BS-844 ZB4-BZ-104	463, 465
S016.1	486826-0001	SIGN "EMERGENCY STOP"	463, 465
S102	90064-0082	PUSH BUTTON, WHITE	103
S103	90064-0082	PUSH BUTTON, WHITE	103
S202	90458-1651	EMERGENCY STOP, ZB4-BS-844 ZB4-BZ-104	193
T			
T001	529259-0000	TRANSFORMER	451, 453, 455, 457
T002	90458-0632	TRANSFORMER, 1 PHASE 2,5 KVA	451, 453, 455, 457
T003	90458-0632	TRANSFORMER, 1 PHASE 2,5 KVA	451, 453, 455, 457
T100	1364474-0000	TRANSFORMER	107, 109
T101	563461-0000	TRANSFORMER	107, 109
V			
V001	90038-0025	RECTIFIER, 6,5/15A SKD 30/04A1	479, 481
V002	90430-0032	THYRISTOR UNIT, 425A/25A	487
V003	90430-0032	THYRISTOR UNIT, 425A/25A	487
W			
W008	1317252-0000	CABLE SERIAL	489, 491
W009	1366189-0000	CABLE LVDS 6M	489, 491
W011	351150-0425	CABLE OLFLEX 25X0,75 MM2 LIGHT/GREY	107, 109
W012	351150-0425	CABLE OLFLEX 25X0,75 MM2 LIGHT/GREY	107, 109
W013	351150-0147	CABLE OLFLEX 3X6 MM2 LIGHT/GREY	107, 109
W014	351150-0412	CABLE OLFLEX 3X1,5 MM2 LIGHT/GREY	107, 109
W015	351150-0420	CABLE OLFLEX 7X2,5 MM2 LIGHT/GREY	107, 109
W017	351150-0415	CABLE OLFLEX 7X1,5 MM2 LIGHT/GREY	319, 321
W020	351150-0425	CABLE OLFLEX 25X0,75 MM2 LIGHT/GREY	375, 377
W021	351150-0425	CABLE OLFLEX 25X0,75 MM2 LIGHT/GREY	375, 377
W025	351150-0425	CABLE OLFLEX 25X0,75 MM2 LIGHT/GREY	193
W030	351150-0424	CABLE OLFLEX 18X0,75 MM2 LIGHT/GREY	195, 197
W031	90220-0117	SCR. CABLE 0,41 MM2	195, 197

W

Pos	Part No	Description	Page No
W033	351150-0425	CABLE OLFLEX 25X0,75 MM2 LIGHT/GREY	371, 373
W034	351150-0424	CABLE OLFLEX 18X0,75 MM2 LIGHT/GREY	343, 345
W035	351150-0420	CABLE OLFLEX 7X2,5 MM2 LIGHT/GREY	371, 373
W036	351150-0415	CABLE OLFLEX 7X1,5 MM2 LIGHT/GREY	375, 377
W037	351150-0415	CABLE OLFLEX 7X1,5 MM2 LIGHT/GREY	375, 377
W040	351150-0425	CABLE OLFLEX 25X0,75 MM2 LIGHT/GREY	319, 321
W050	351150-0425	CABLE OLFLEX 25X0,75 MM2 LIGHT/GREY	323, 325
W060	351150-0407	CABLE OLFLEX 12X0,75 MM2 LIGHT/GREY	323, 325
W105	351150-0412	CABLE OLFLEX 3X1,5 MM2 LIGHT/GREY	63
W115	90220-0059	THERMOCOUPLE CABLE K/ 2X0,81MM2	107, 109
W121	90458-2454	CABLE, SICK DOL 1204-G05M	55
W131	351150-0417	CABLE OLFLEX 3X2,5 MM2 LIGHT/GREY	107, 109
W135	351150-0407	CABLE OLFLEX 12X0,75 MM2 LIGHT/GREY	107, 109
W137	351150-0403	CABLE OLFLEX 3X0,75 MM2 LIGHT/GREY	107, 109
W138	351150-0405	CABLE OLFLEX 5X0,75 MM2 LIGHT/GREY	107, 109
W139	351164-0111	CABLE AWM 1X35 MM2 BLACK	101
W140	351164-0111	CABLE AWM 1X35 MM2 BLACK	101
W141	351150-0412	CABLE OLFLEX 3X1,5 MM2 LIGHT/GREY	107, 109
W142	90220-0104	SCR. CABLE 4X1,5MM2	37
W144	351150-0405	CABLE OLFLEX 5X0,75 MM2 LIGHT/GREY	107, 109
W145	351150-0405	CABLE OLFLEX 5X0,75 MM2 LIGHT/GREY	107, 109
W146	90458-2454	CABLE, SICK DOL 1204-G05M	47
W200	351150-0405	CABLE OLFLEX 5X0,75 MM2 LIGHT/GREY	193
W201	351150-0431	CABLE OLFLEX 2X0,75 MM2 LIGHT/GREY	375, 377
W202	351150-0405	CABLE OLFLEX 5X0,75 MM2 LIGHT/GREY	193
W204	351150-0404	CABLE OLFLEX 4X0,75 MM2 LIGHT/GREY	375, 377
W210	351150-0431	CABLE OLFLEX 2X0,75 MM2 LIGHT/GREY	193
W212	351150-0431	CABLE OLFLEX 2X0,75 MM2 LIGHT/GREY	193
W220	90220-0059	THERMOCOUPLE CABLE K/ 2X0,81MM2	195, 197
W221	90220-0059	THERMOCOUPLE CABLE K/ 2X0,81MM2	195, 197
W223	90220-0107	SCR. CABLE 5X0,75MM2	161
W226	90220-0104	SCR. CABLE 4X1,5MM2	167
W230	351120-0144	CABLE SIHF 3X1,5MM2 GREEN/YELLOW	375, 377
W231	351120-0144	CABLE SIHF 3X1,5MM2 GREEN/YELLOW	375, 377
W232	351120-0144	CABLE SIHF 3X1,5MM2 GREEN/YELLOW	375, 377
W233	351120-0144	CABLE SIHF 3X1,5MM2 GREEN/YELLOW	375, 377
W235	90459-1368	CABLE, TWK BI 723 M 3 PS-GG5	163, 375, 377
W310	90458-0165	CABLE	375, 377
W311	351150-0431	CABLE OLFLEX 2X0,75 MM2 LIGHT/GREY	375, 377
W312	351150-0431	CABLE OLFLEX 2X0,75 MM2 LIGHT/GREY	375, 377
W313	351150-0404	CABLE OLFLEX 4X0,75 MM2 LIGHT/GREY	371, 373
W315	351150-0403	CABLE OLFLEX 3X0,75 MM2 LIGHT/GREY	343, 345
W316	351150-0403	CABLE OLFLEX 3X0,75 MM2 LIGHT/GREY	371, 373
W317	351150-0431	CABLE OLFLEX 2X0,75 MM2 LIGHT/GREY	375, 377
W320	90220-0059	THERMOCOUPLE CABLE K/ 2X0,81MM2	195, 197
W321	90220-0059	THERMOCOUPLE CABLE K/ 2X0,81MM2	195, 197
W322	90220-0059	THERMOCOUPLE CABLE K/ 2X0,81MM2	195, 197
W323	90220-0059	THERMOCOUPLE CABLE K/ 2X0,81MM2	195, 197
W324	351150-0431	CABLE OLFLEX 2X0,75 MM2 LIGHT/GREY	375, 377
W325	351150-0431	CABLE OLFLEX 2X0,75 MM2 LIGHT/GREY	337
W326	351150-0406	CABLE OLFLEX 7X0,75 MM2 LIGHT/GREY	343, 345
W327	351150-0431	CABLE OLFLEX 2X0,75 MM2 LIGHT/GREY	375, 377
W328	351150-0431	CABLE OLFLEX 2X0,75 MM2 LIGHT/GREY	375, 377
W329	351150-0431	CABLE OLFLEX 2X0,75 MM2 LIGHT/GREY	375, 377
W330	351120-0165	CABLE SIHF 4X2,5MM2 GREEN/YELLOW	371, 373
W331	351120-0144	CABLE SIHF 3X1,5MM2 GREEN/YELLOW	371, 373
W333	351150-0403	CABLE OLFLEX 3X0,75 MM2 LIGHT/GREY	371, 373
W334	351150-0403	CABLE OLFLEX 3X0,75 MM2 LIGHT/GREY	371, 373
W400	351150-0405	CABLE OLFLEX 5X0,75 MM2 LIGHT/GREY	271, 319, 321
W401	351150-0405	CABLE OLFLEX 5X0,75 MM2 LIGHT/GREY	271, 319, 321
W402	351150-0405	CABLE OLFLEX 5X0,75 MM2 LIGHT/GREY	271, 319, 321
W403	351150-0405	CABLE OLFLEX 5X0,75 MM2 LIGHT/GREY	271, 319, 321
W404	351150-0405	CABLE OLFLEX 5X0,75 MM2 LIGHT/GREY	319, 321
W405	351150-0403	CABLE OLFLEX 3X0,75 MM2 LIGHT/GREY	259
W406	351150-0403	CABLE OLFLEX 3X0,75 MM2 LIGHT/GREY	259
W407	351150-0403	CABLE OLFLEX 3X0,75 MM2 LIGHT/GREY	259
W411	351150-0404	CABLE OLFLEX 4X0,75 MM2 LIGHT/GREY	319, 321
W412	351150-0431	CABLE OLFLEX 2X0,75 MM2 LIGHT/GREY	319, 321
W413	351150-0405	CABLE OLFLEX 5X0,75 MM2 LIGHT/GREY	231
W416	351150-0406	CABLE OLFLEX 7X0,75 MM2 LIGHT/GREY	319, 321
W417	351150-0406	CABLE OLFLEX 7X0,75 MM2 LIGHT/GREY	319, 321
W430	351150-0412	CABLE OLFLEX 3X1,5 MM2 LIGHT/GREY	319, 321
W431	351150-0412	CABLE OLFLEX 3X1,5 MM2 LIGHT/GREY	319, 321
W433	351150-0412	CABLE OLFLEX 3X1,5 MM2 LIGHT/GREY	319, 321
W450	351162-0109	CABLE AWM 1X16 MM2 YELLOW-GREEN	319, 321
W501	351150-0431	CABLE OLFLEX 2X0,75 MM2 LIGHT/GREY	323, 325
W502	351150-0431	CABLE OLFLEX 2X0,75 MM2 LIGHT/GREY	323, 325
W505	351150-0431	CABLE OLFLEX 2X0,75 MM2 LIGHT/GREY	323, 325
W506	351150-0403	CABLE OLFLEX 3X0,75 MM2 LIGHT/GREY	323, 325
W507	351150-0405	CABLE OLFLEX 5X0,75 MM2 LIGHT/GREY	271, 323, 325
W508	351150-0405	CABLE OLFLEX 5X0,75 MM2 LIGHT/GREY	271, 323, 325
W520	90220-0104	SCR. CABLE 4X1,5MM2	233

Pos	Part No	Description	Page No
W			
W630	351150-0413	CABLE OLFLEX 4X1,5 MM2 LIGHT/GREY	329
X			
X002	352103-0110	CABLE GLAND, STR 16, PR22,5/PG16	451, 453, 455, 457
X006	90195-0010	TERMINAL BLOCK, 1989.2	479, 481
X020	353024-0208	EARTH TERMINAL, 1010.4	451, 453, 455, 457
X020.1	359011-0834	SET OF SIGNS 6-GW(EARTH)	451, 453, 455, 457
X021	90001-0033	WALL SOCKET OUTLET	479, 481
X100	90110-0150	MALE INSERT 121110 0000	107, 109
X100.1	90110-0153	CHASSIS HOUSING 24-P CHI 24, 121240 0000	451, 453, 455, 457
X100	90110-0164	FEMALE INSERT 70 105 2453 3	451, 453, 455, 457
X101	90110-0150	MALE INSERT 121110 0000	343, 345
X103	90110-0150	MALE INSERT 121110 0000	375, 377
X103.1	90110-0153	CHASSIS HOUSING 24-P CHI 24, 121240 0000	451, 453, 455, 457
X103	90110-0164	FEMALE INSERT 70 105 2453 3	451, 453, 455, 457
X104	90110-0150	MALE INSERT 121110 0000	375, 377
X104.1	90110-0153	CHASSIS HOUSING 24-P CHI 24, 121240 0000	451, 453, 455, 457
X104	90110-0164	FEMALE INSERT 70 105 2453 3	451, 453, 455, 457
X105	90110-0150	MALE INSERT 121110 0000	193
X105.1	90110-0153	CHASSIS HOUSING 24-P CHI 24, 121240 0000	451, 453, 455, 457
X105	90110-0164	FEMALE INSERT 70 105 2453 3	451, 453, 455, 457
X106	90110-0150	MALE INSERT 121110 0000	195, 197
X106.1	90110-0153	CHASSIS HOUSING 24-P CHI 24, 121240 0000	451, 453, 455, 457
X106	90110-0164	FEMALE INSERT 70 105 2453 3	451, 453, 455, 457
X107.1	90110-0153	CHASSIS HOUSING 24-P CHI 24, 121240 0000	451, 453, 455, 457
X107	90110-0164	FEMALE INSERT 70 105 2453 3	451, 453, 455, 457
X108	90110-0150	MALE INSERT 121110 0000	319, 321
X108.1	90110-0153	CHASSIS HOUSING 24-P CHI 24, 121240 0000	451, 453, 455, 457
X108	90110-0164	FEMALE INSERT 70 105 2453 3	451, 453, 455, 457
X109	90110-0150	MALE INSERT 121110 0000	105
X109.1	90110-0153	CHASSIS HOUSING 24-P CHI 24, 121240 0000	451, 453, 455, 457
X109	90110-0164	FEMALE INSERT 70 105 2453 3	451, 453, 455, 457
X110	90110-0150	MALE INSERT 121110 0000	201
X110.1	90110-0153	CHASSIS HOUSING 24-P CHI 24, 121240 0000	451, 453, 455, 457
X110	90110-0164	FEMALE INSERT 70 105 2453 3	451, 453, 455, 457
X110	90326-0020	PLUG, FEMALE YELLOW CR-AL	41
X111	90110-0150	MALE INSERT 121110 0000	371, 373
X111.1	90110-0153	CHASSIS HOUSING 24-P CHI 24, 121240 0000	451, 453, 455, 457
X111	90110-0164	FEMALE INSERT 70 105 2453 3	451, 453, 455, 457
X112	90110-0150	MALE INSERT 121110 0000	323, 325
X112.1	90110-0153	CHASSIS HOUSING 24-P CHI 24, 121240 0000	451, 453, 455, 457
X112	90110-0164	FEMALE INSERT 70 105 2453 3	451, 453, 455, 457
X113	90110-0150	MALE INSERT 121110 0000	307
X113.1	90110-0153	CHASSIS HOUSING 24-P CHI 24, 121240 0000	451, 453, 455, 457
X113	90110-0164	FEMALE INSERT 70 105 2453 3	451, 453, 455, 457
X114	90110-0150	MALE INSERT 121110 0000	379
X114.1	90110-0153	CHASSIS HOUSING 24-P CHI 24, 121240 0000	451, 453, 455, 457
X114	90110-0164	FEMALE INSERT 70 105 2453 3	451, 453, 455, 457
X115	90110-0150	MALE INSERT 121110 0000	13
X115.1	90110-0153	CHASSIS HOUSING 24-P CHI 24, 121240 0000	451, 453, 455, 457
X115	90110-0164	FEMALE INSERT 70 105 2453 3	451, 453, 455, 457
X116	90110-0150	MALE INSERT 121110 0000	323, 325
X116.1	90110-0153	CHASSIS HOUSING 24-P CHI 24, 121240 0000	451, 453, 455, 457
X116	90110-0164	FEMALE INSERT 70 105 2453 3	451, 453, 455, 457
X117.1	90110-0153	CHASSIS HOUSING 24-P CHI 24, 121240 0000	451, 453, 455, 457
X117	90110-0164	FEMALE INSERT 70 105 2453 3	451, 453, 455, 457
X118.1	90110-0153	CHASSIS HOUSING 24-P CHI 24, 121240 0000	451, 453, 455, 457
X118	90110-0164	FEMALE INSERT 70 105 2453 3	451, 453, 455, 457
X119.1	90110-0153	CHASSIS HOUSING 24-P CHI 24, 121240 0000	451, 453, 455, 457
X119	90110-0164	FEMALE INSERT 70 105 2453 3	451, 453, 455, 457
X120	90110-0150	MALE INSERT 121110 0000	107, 109
X120.1	90110-0153	CHASSIS HOUSING 24-P CHI 24, 121240 0000	451, 453, 455, 457
X120	90110-0164	FEMALE INSERT 70 105 2453 3	451, 453, 455, 457
X121	90110-0150	MALE INSERT 121110 0000	107, 109
X121.1	90110-0153	CHASSIS HOUSING 24-P CHI 24, 121240 0000	451, 453, 455, 457
X121	90110-0164	FEMALE INSERT 70 105 2453 3	451, 453, 455, 457
X122	90110-0159	MALE INSERT 70.310.0640.0	37
X200	90110-0159	MALE INSERT 70.310.0640.0	233
X200	90110-0161	FEMALE INSERT 70 105 0653 0	451, 453, 455, 457
X200.1	90110-0166	CHASSIS HOUSING 310144-33	451, 453, 455, 457
X201	90110-0161	FEMALE INSERT 70 105 0653 0	451, 453, 455, 457
X201.1	90110-0166	CHASSIS HOUSING 310144-33	451, 453, 455, 457
X202	90110-0156	MALE INSERT 70.210.0653.0	107, 109
X202	90110-0159	MALE INSERT 70.310.0640.0	167
X202	90110-0161	FEMALE INSERT 70 105 0653 0	451, 453, 455, 457
X202.1	90110-0166	CHASSIS HOUSING 310144-33	451, 453, 455, 457
X203	90110-0159	MALE INSERT 70.310.0640.0	107, 109
X203	90110-0161	FEMALE INSERT 70 105 0653 0	451, 453, 455, 457
X203.1	90110-0166	CHASSIS HOUSING 310144-33	451, 453, 455, 457
X204	90110-0159	MALE INSERT 70.310.0640.0	161
X204	90110-0161	FEMALE INSERT 70 105 0653 0	451, 453, 455, 457
X204.1	90110-0166	CHASSIS HOUSING 310144-33	451, 453, 455, 457
X206	90110-0159	MALE INSERT 70.310.0640.0	107, 109

Pos	Part No	Description	Page No
X			
X206	90110-0161	FEMALE INSERT 70 105 0653 0	451, 453, 455, 457
X206.1	90110-0166	CHASSIS HOUSING 310144-33	451, 453, 455, 457
X208	90110-0159	MALE INSERT 70.310.0640.0	319, 321
X208	90110-0161	FEMALE INSERT 70 105 0653 0	451, 453, 455, 457
X208.1	90110-0166	CHASSIS HOUSING 310144-33	451, 453, 455, 457
X209	90110-0159	MALE INSERT 70.310.0640.0	329
X209	90110-0161	FEMALE INSERT 70 105 0653 0	451, 453, 455, 457
X209.1	90110-0166	CHASSIS HOUSING 310144-33	451, 453, 455, 457
X210	90326-0020	PLUG, FEMALE YELLOW CR-AL	179, 181, 195, 197
X211	90110-0159	MALE INSERT 70.310.0640.0	371, 373
X211	90110-0161	FEMALE INSERT 70 105 0653 0	451, 453, 455, 457
X211.1	90110-0166	CHASSIS HOUSING 310144-33	451, 453, 455, 457
X211	90326-0020	PLUG, FEMALE YELLOW CR-AL	195, 197
X212	90110-0161	FEMALE INSERT 70 105 0653 0	451, 453, 455, 457
X212.1	90110-0166	CHASSIS HOUSING 310144-33	451, 453, 455, 457
X213	90110-0161	FEMALE INSERT 70 105 0653 0	451, 453, 455, 457
X213.1	90110-0166	CHASSIS HOUSING 310144-33	451, 453, 455, 457
X215	90110-0161	FEMALE INSERT 70 105 0653 0	451, 453, 455, 457
X215.1	90110-0166	CHASSIS HOUSING 310144-33	451, 453, 455, 457
X216	90110-0165	FEMALE INSERT 70.005.0653.0	451, 453, 455, 457
X216.1	90110-0167	CHASSIS HOUSING 310133-33	451, 453, 455, 457
X310	90326-0020	PLUG, FEMALE YELLOW CR-AL	195, 197
X311	90326-0020	PLUG, FEMALE YELLOW CR-AL	195, 197
X312	90326-0020	PLUG, FEMALE YELLOW CR-AL	195, 197
X313	90326-0020	PLUG, FEMALE YELLOW CR-AL	195, 197
X400	90110-0127	COAXIAL CONNECTOR, GE 15057C10HBN	451, 453, 455, 457
X401	90110-0127	COAXIAL CONNECTOR, GE 15057C10HBN	451, 453, 455, 457
X410	90458-0292	BASE, KT70-1001	213
X414	90458-0292	BASE, KT70-1001	217
Y			
Y100	90458-1194	MONOSTABLE VALVE 5/2	307
Y110	90458-1194	MONOSTABLE VALVE 5/2	13
Y111	90458-1197	BISTABLE VALVE 5/2	13
Y112	90458-1194	MONOSTABLE VALVE 5/2	13
Y116	90458-1202	VALVES 2X3/2, CLOSED	13
Y117	90458-1194	MONOSTABLE VALVE 5/2	13
Y122	90459-0109	SHUT-OFF VALVE G1/4	13
Y200	90458-1194	MONOSTABLE VALVE 5/2	379
Y201	90458-1194	MONOSTABLE VALVE 5/2	379
Y202	90458-1194	MONOSTABLE VALVE 5/2	379
Y204	90458-1202	VALVES 2X3/2, CLOSED	379
Y205	90458-1194	MONOSTABLE VALVE 5/2	379
Y302	90458-1194	MONOSTABLE VALVE 5/2	379
Y600	90458-1194	MONOSTABLE VALVE 5/2	307
Z			
Z100	90024-0060	POWER LINE FILTER, 80 A 250/440 VAC	451, 453, 455, 457
Z101	90082-0013	OVERVOLTAGE PROTECTOR	451, 453, 455, 457
Z102	90024-0036	FILTERED TERMINAL BLOCK	473
Z105	90430-0335	FILTER LA174936U025	487
Z107	90430-0328	FILTER 6SE3290-0DA87-0FB1	475, 477
Z108	90024-0047	EMI SUPPRESSION FERRITE	475, 477
Z110	90430-0326	FILTER 6SE3290-0BA87-0FB2	479, 481
Z111	90024-0047	EMI SUPPRESSION FERRITE	479, 481
Z112	90024-0047	EMI SUPPRESSION FERRITE	481
Z113	90430-0326	FILTER 6SE3290-0BA87-0FB2	479, 481
Z114	90024-0047	EMI SUPPRESSION FERRITE	479, 481

Pos	Part No	Description	Page No	Pos	Part No	Description	Page No

Machine Type	Group Description	Page No

Tetra Pak

SPC
Spare Parts Catalogue

A- Critical Spare Part

Pos	Part No	Description	Page No
R300	19269-0002	ELEMENT	355
010	19797-0000	BUSHING	367
010	21903-0000	ROLL	39
020	38960-0000	COIL HEATER	367
030	38962-0000	CLUTCH PIECE	367
040	38963-0000	LID	367
500	90028-0020	CONE TUBE 2,5MM	237
510	90028-0025	CONE TUBE 6 MM	237
520	90032-0039	BLOCK 4 WAYS	237
M.Y315	90042-0107	SOL.VALVE BURKERT 24VDC	341, 393
M.Y312	90042-0171	SOLENOID VALVE BUERKERT	351
M.Y301	90042-0234	SOLENOID VALVE FAIRCHILD TD6000-45	409
M.B422	90044-0117	PROX.SW. IX 0208	233
500	90044-0139	KEY SAF.SW. AZ16-02 ZVR K-2254	73, 75, 101, 271
M.B126	90044-0155	PROX.SW. IN5297/IN-3002-BPKG/AS-610-TPS	55
M.B127	90044-0165	SENSOR, SME-8-K5-LED-24	101
500	90044-0167	EM. STOP XY2-CE 5A 270	275
M.B105	90044-0194	PROX.SW. IN5329/IN3002-BPKG	23, 27, 49, 257, 383
500	90048-0032	OIL PUMP INCL. CONTAINER 1,5 L	239
S102	90064-0082	PUSH BUTTON, WHITE	103, 105
S101H	90064-0084	PUSH BUTTON, YELLOW	103, 105, 107, 109
500	90064-0124	SWITCH, EM. STOP, ZB2-BS844+ZB2-BZ1045	103
580	90092-0052	METERING VALVE 10 MM3	237
530	90092-0054	METERING VALVE 50 MM3	237
550	90092-0082	OIL BRUSH D=2,5MM TUBE D=10	233, 253, 287
310	90132-0021	HOSE CLIP 6-10MM	337
340	90132-0023	HOSE CLIP S 15/9	337
500	90141-0015	RETAIN. RING, 8	33
510	90141-0016	RETAIN. RING, 10	33
110	90164-0301	HOLDING FIXTURE	227
350	90166-0101	HOSE, SILICONE, 60 SHORE, 6/10 MM	341
4500	90166-0108	TUBE 6 MM PA,TRANSP.	237
4510	90166-0143	TUBE 2,5 MM PA,TRANSP.	237
500	90206-0014	HEATING ELEMENT 2X1250W,220V	367
M.R101	90206-0094	HOT AIR GUN, 220V 3000W 13,7A	41
070	90214-0207	BALL BEARING, 15X32X9 MM	17
M.B100	90232-0103	PH.CELL E3S-CT61-L-5M	59
M.B101	90232-0104	PH.CELL E3S-CT61-D-5M	59
M.B133	90232-0117	PH.CELL WT4-2P135S10	57
M.B205	90232-0123	PH.CELL WLL170-P135-6011723	375, 377
390	90235-0028	VALVE	341
510	90235-0846	THROTTLE CHECK VALVE G1/8", MANUAL, 6	41
B502	90274-0084	PRESSURE GUARD, 1800 KPA	239
M.B314	90274-0103	PRESSURE GUARD PEV-1/4-B (10773	407
M.B313	90326-0037	THERMOCOUPLE, CR-AL PREM.G	359, 361
B311	90326-0038	THERMOCOUPLE, CR-AL	361
B110	90326-0043	THERMOCOUPLE, CR-ALPREM.G	41
M.B312	90326-0089	THERMOCOUPLE, 5110-089-000	391
560	90326-0306	GLAND FITTING 9041-45-KS-KR.1/8" D=4,5MM	359, 361
570	90328-0024	SILENCER G3/8	307
520	90328-0047	SILENCER G1/8	239
580	90337-0315	FILTERINSERT / MCS 4463	391
530	90345-0072	FLANGE BEARING, 20X113X33,3 MM	329
510	90355-0031	TORQUE RIGID COUPLING, 10X10 MM	233
590	90360-0020	STEAM TRAP / MK36/51 3/8"	391
640	90363-0023	IDLER ROLLER ECCENTRIC, 25 TYPE LJ	95
650	90363-0024	IDLER ROLLER, 25 TYPE LJ	95
660	90450-0110	ROTARY ACTUATOR DSR-25-180-P	95
C302	90450-0230	DOUBLE ACTING, COMPACT, CYL 50-20	385
530	90450-0306	DOUBLE ACTING, MINI-ISO, CYL. 12-25	19, 25
C121:1	90450-0478	DOUBLE ACTING, COMPACT, CYL 32-15	101
C110:1	90457-0005	SINGLE ACTING, SHORT STROKE, CYL 20-15	95
M100	90457-0959	WORM GEAR MOTOR PC 440M3T	37
M.B128	90458-0138	PROX.SW. E2EG-X1R5B1-5M	95, 385
530	90458-0254	PRECISION PRESSURE REGULATOR,LRP-1/4-0,7	35, 409
M600	90458-0275	WORM GEAR MOTOR,PC440M3TB5-93	329
M.B405	90458-0675	PROXIMITY SENSOR, E2EG-X5MB1-5M	231, 383, 387, 389
Y110	90458-1194	MONOSTABLE VALVE 5/2	13, 307, 379
Y111	90458-1197	BISTABLE VALVE 5/2	13
Y400/Y502	90458-1202	VALVES 2X3/2, CLOSED	307, 379
590	90458-1207	SEALING, STANDARD	13
600	90458-1208	SEALING, CHANNEL 1 BLOCKED	13
F100	90458-1448	MAGNETIC FUSE, S292 C100	107, 109
M.B504	90458-1552	ANGLE ENCODER, 670900130	233
M.S405	90458-1651	EMERGENCY STOP, ZB4-BS-844 ZB4-BZ-104	105, 279
C204	90458-2434	DIAPHRAGM VALVE 12MM, N.O. WELD CONN.	365
C600	90458-2543	ROTARY ACTUATOR DSM32-270-P-FW-CC	329
510	90458-2574	SPRAY NOZZLE B 1/4 M - SS 1.5	353
M.M302	90458-2609	PERISTALTIC PUMP, SR10/50 20500507	337
520	90458-2612	O-RING 24X5 MM	387, 389
520	90458-2616	O-RING 28X 5MM	387, 389
640	90458-2648	BALL VALVE G1/2", LOCKABLE	391

Pos	Part No	Description	Page No
A- Critical Spare Part			
430	90458-2727	BOTTLE, 1L-RE-SP-212707-95-61-WHITE	341
M.B307	90458-2730	PRESSURE SENS. SDE-1-D10-G2--R18-C-P1-M8	409
580	90458-2741	PRESSURE REGULATOR, LR-1/8-D-MINI	229, 239
590	90458-2746	PRESSURE HEADER, P801-5	229
600	90458-2747	PRESSURE GAUGE, 2758 D=63 MM	229
530	90458-2749	GEARS, BEVEL A1	233
520	90458-2760	NEEDLE ROLLER FLAT CAGE, FF 3020	287
440	90458-2765	BOTTLE, 10L-F-SP-212708-500-61-N W. LID	341
510	90458-2768	COMP. SPRING 2531	305
520	90458-2769	TENSION SPRING 3800	305
520	90458-2796	X-SEAL 21,82X3,53 MM	295, 297
510	90458-2826	SHUT OFF VALVE 3/2, HE-D MAXI	407
520	90458-2828	FILTER REG 0,5-12 BAR 40 µ, D-MAXI-A	407
M.Y309	90458-2830	START UP VALVE 3/2, HEE-D-MAXI-24DC	407
540	90458-2831	START UP VALVE 2/2, HEL-D-MAXI	407
550	90458-2832	FILTER 0,01 MICRON G1/2", LFMA-D-MAXI	407
560	90458-2833	FILTER 1 MICRON G1/2", LFMB-D-MAXI	407
600	90458-2837	PLUG SOCKET, KMEB-1-24-5-LED	407
500	90458-2968	TENSION SPRING 3823	39, 55
Y122	90459-0109	SHUT-OFF VALVE G1/4	13
M.M500	90459-0248	GEARS, BEVEL MOTOR KA47DT80N4-2WE	233
530	90459-0388	BELLOW COUPLING, 14X16 MM	37
C112	90459-0390	CYLINDER WITH INT. GUIDING BORE 20	41
M.B146	90459-0391	CONTRAST SCANNER KT3W-P1116	47
C117	90459-0392	CYLINDER WITH INT. GUIDING BORE 20	97
500	90459-0758	BALL BEARING, 5X16X5 MM	283, 285
M.B413	90459-0925	LIMIT SW. GSAB 20 A1B	231
530	90459-1149	CHAIN TENSIONER, 51330BPNF	253, 287
C400	90459-1153	CYLINDER, CLAMPING MODULE EV-40-5	305
M.B326	90459-1194	KEY SAF.SW. AZ16-03 ZVRK-M16	341
560	90459-1277	CHAIN TENSIONER, 5131HPNF	233
520	90459-1340	COMP. SPRING 6034	283, 285
530	90459-1341	COMP. SPRING 2547	283, 285
570	90459-1385	LOCK KNOB, GN617 NI 8	231
C120:1	90459-1417	DOUBLE ACTING, COMPACT, CYL 50-50	101
330	90459-1423	PUMP HOSE, MARPRENE 6.4X1,6	337
570	90459-1449	SAFETY CLUTCH, 1/490.725.C DIA. 32	233
M.M301	90459-1473	PEROXIDE PUMP, 313VDL/D 140.NS13.A37	337
500	90459-1532	BEARING ROLLER, 12X35X10 MM	245, 283, 285
010	207639-0000	SPACER	369
010	257923-0000	GUIDE WHEEL	33
030	273455-0000	LABEL (COLD WATER)	393
010	273458-0000	LABEL (AIR)	409
320	311103-0233	PARALLELL PIN, M6, 3X10 MM	283, 285
300	312105-0287	SCREW M6S ISO4017 M4X8 A480	385
430	312109-0380	SCREW M6S ISO 4017 M6X50 A480	245
330	312115-0287	SCREW ISO4762 M4X8 A4	385
330	312155-0327	SCREW EN 10642 MF6S M5X12 A480	245, 283, 285
470	312155-0333	SCREW EN 10642 MF6S M5X25 A480	283, 285
340	312318-0364	SCREW ISO4029 M6X10 A4	245
390	312318-0459	SCREW ISO4029 M8X40 A4	233
300	312605-0316	HEXAGON NUT, M6M M6 A280	303
400	312605-0318	HEXAGON NUT, M6M M8 A280	233
445	312812-0314	HEXAGON NUT, NY-LOCK M5 A480	245, 283, 285
450	312812-0316	HEXAGON NUT, NY-LOCK M6 A480	245
370	315202-0215	O-RING 19,2X3 MM	385
330	315755-0105	LOCKING WASHER 3,2	283, 285
600	321141-0140	BEARING BUSHING W/O FL, 10X12X10 MM	55
340	321153-0337	FLANGE BUSHING, 30X34X26 MM	37
350	321313-0104	BALL BEARING, 20X47X14 MM	247, 249, 251, 255, 289, 291, 293, 311, 313, 315
310	342706-0130	ACCESSORIES, INSERT SLEEVE 6 MM	237
360	342850-0303	GASKET 22,7X49,1X5,2 MM 1" FDA	359, 385, 387, 389
350	342850-0304	GASKET 35,4X49,1X5,2 1"1/2 FDA	359, 385, 387, 389
300	342850-0305	GASKET 47,8X62,6X5,2 MM 2" FDA	115
360	359705-0003	WARNING SIGN ISO, DANGEROUS CHEMICALS	387, 389
550	359705-0004	WARNING SIGN ISO, DANGEROUS CHEMICALS	339
560	359705-0005	WARNING SIGN ISO, MOVING PART	53, 269
600	359705-0015	WARNING SIGN ISO, RISK OF ELECTRIC SHOCK	23, 107, 109, 319, 321, 323, 325, 343, 345, 371, 373, 375, 377
440	359710-0001	WARNING SIGN ISO, HOT SURFACE	35, 59, 357, 397
010	400828-0000	SPRING	19
020	400833-0000	PLUNGER	19
030	441536-0000	GASKET	227
010	450833-0000	FILTER	351
010	456260-0000	COVER	227
020	456262-0000	SHEET	227
280	469464-0000	ROLL	33
010	522090-0000	HEAT EXCHANGER	361
020	531737-0000	GASKET	361
030	535698-0000	GASKET	361
030	537327-0000	SHAFT	17
M.Y300	544906-0000	SOLENOID VALVE	351

A- Critical Spare Part

Pos	Part No	Description	Page No
020	560931-0000	BRACKET	351
T101	563461-0000	TRANSFORMER	107, 109
M.B309-1	567070-0013	ELECTRODE	351
030	583986-0000	ROLL	23
010	736514-0000	SHOCK ABSORBER	385
020	925998-0000	DIAPHRAGM	385
030	926906-0000	SPACER	385
040	926907-0000	SCREW	385
050	926909-0000	COMPRESSION SPRING	385
070	927044-0000	SPACER	385
530	927421-0001	O-RING 9.3X2.4 SILICON	351
540	927421-0003	O-RING 13.3X2.4 SILICON	351
550	927421-0006	O-RING 17.3X2.4 SILICON	351
160	927422-0001	O-RING 19.2X3 SILICON	341
010	975917-0000	KEY FOR SAFETY SWITCH 90044-103	339
090	979434-0000	FERRULE	385
M.B147	983386-0000	PROXIMITY SWITCH	97
225	1110083-0007	DOLLY	283, 285
100	1129321-0000	SHUTTER	385
010	1347258-0000	KNIFE	21
020	1349014-0000	PAD	21
050	1349986-0000	ROLLER	23
T100	1364474-0000	TRANSFORMER	107, 109
M.B308	1478814-0000	SENSOR	385
020	1484724-0000	HUB	17
R103	1498047-0000	SEALING BLOCK	19
130	1511600-0000	SPACER	385
020	1514284-0000	PISTON	295, 297
030	1514312-0000	CLAMP BLOCK	245
040	1514362-0000	PIN	283, 285
010	1514455-0000	PIN	303, 305
010	1514550-0000	LID	341
010	1514653-0000	BRACKET	353
020	1514654-0000	WASHER	353
070	1514697-0000	GASKET	361
060	1514698-0000	GASKET	359, 409
070	1514703-0000	SCREW	359
110	1514782-0000	BEARING	283, 285
060	1514892-0000	WHEEL	33
020	1515006-0000	LINK ARM	303
010	1515013-0000	SHAFT	247, 249, 251, 289, 291, 293, 311, 313, 315
010	1515017-0000	SHAFT	255
020	1515018-0000	GUIDE SPROCKET	255
060	1515068-0000	PRESSURE PLATE	305
040	1515082-0000	STUD BOLT	303
080	1515221-0000	CARRIER PIN	233
040	1515337-0000	KNIFE	95
060	1515343-0000	RUBBER STRIP	95
070	1515351-0000	BEARING	101
080	1515352-0000	BEARING	101
120	1515357-0000	CURVE	101
130	1515358-0000	CURVE	101
030	1515372-0000	BENDING ROLLER	99
210	1515568-0000	KNIFE	283, 285
210	1520174-0000	INDUCTOR	245
210	1520175-0000	INDUCTOR	245
210	1520176-0000	INDUCTOR	245
M.R102	1520983-0000	TPC-BAR	101
050	1533562-0000	CARBON BRUSH	245
060	1533906-0000	CUTTING RAIL	283, 285
090	1548195-0000	ROLL	23, 25, 29, 33
090	2523832-0000	FASTENER	253
100	2523833-0000	CHAIN GUIDE	253
110	2523834-0000	CHAIN GUIDE	253
020	2523839-0000	SPROCKET	247, 249, 251, 289, 291, 293, 311, 313, 315
070	2523851-0000	CHAIN GUIDE	287
080	2523852-0000	CHAIN GUIDE	287
150	2523863-0000	CRANK	233
030	2523894-0000	BENDING ROLLER	37
090	2523908-0000	CHAIN TENSIONER	287
240	2523948-0000	BRACKET	283, 285
245	2523951-0000	ARM	283, 285
120	2523954-0000	ROLLER	287
010	2523955-0000	PLUNGER	295, 297
050	2523956-0000	ROLLER BAR	295, 297
070	2524068-0000	BELT	29
220	2524081-0000	GUIDE	245
170	2524083-0000	ROLLER BAR	253
120	2524117-0000	BEARING BRACKET	59
030	2524122-0000	PAPER GUIDE	51
050	2524128-0000	CHAIN	247, 249, 251, 289, 291, 293, 311, 313, 315
030	2524198-0000	ROD	283, 285

Pos	Part No	Description	Page No
A- Critical Spare Part			
250	2524199-0000	RULER	283, 285
120	2524204-0000	VOLUME ADJUSTER	245, 283, 285
270	2524205-0000	BUSHING	283, 285
245	2524207-0000	STOP ARM	245, 283, 285
250	2524208-0000	STOP ARM	245, 283, 285
090	2524209-0000	HEATING JAW	245
060	2524210-0000	CARBON BRUSH HOLDER	245
110	2524215-0000	VOLUME FLAP	245
120	2524218-0000	PRESSURE JAW	283, 285
020	2524224-0000	CLAMP BLOCK	245
100	2524237-0000	VOLUME FLAP	245
110	2524238-0000	VOLUME FLAP	245
295	2524242-0000	SHAFT	283, 285
280	2524243-0000	CLAMP BLOCK	245
050	2524247-0000	CHAIN	247, 249, 251, 289, 291, 293, 311, 313, 315
090	2524248-0000	CURVE	305
060	2524251-0000	HUB	247, 249, 251
020	2524261-0000	SPROCKET	247, 249, 251, 289, 291, 293, 311, 313, 315
060	2524263-0000	SPROCKET	289, 291, 293, 311, 313, 315
070	2542642-0000	HUB	289, 291, 293, 311, 313, 315
150	2542691-0000	KNIFE	101
020	2542888-0000	SPROCKET	247, 249, 251, 289, 291, 293, 311, 313, 315
050	2542889-0000	CHAIN	247, 249, 251, 289, 291, 293, 311, 313, 315
040	2542892-0000	SPRING	245, 283, 285
040	2542931-0000	SUCTION PIPE	341
185	2543101-0000	PLATE	283, 285
100	2543104-0000	VOLUME FLAP	245
110	2543105-0000	VOLUME FLAP	245
185	2543107-0000	PLATE	283, 285
120	2543108-0000	VOLUME ADJUSTER	245, 283, 285
070	2556710-0000	PUSH ROD	283, 285
070	2556791-0000	TENSION SPRING	245, 283, 285
020	2556793-0000	DRIVE SHAFT	233
220	2556796-0000	GUIDE	283, 285
030	2556797-0000	FLANGE	233
040	2556798-0000	SPROCKET	233
050	2556799-0000	SPROCKET	233
090	2556842-0000	ADAPTER	233
110	2556853-0000	CHAIN	233
110	2556855-0000	CHAIN	233
230	2569623-0000	STOP SCREW	245, 283, 285
225	2569624-0000	SHAFT	245, 283, 285
010	2569625-0000	SHAFT	245, 283, 285
100	2569684-0000	VOLUME FLAP	245
B- Non - Critical Spares Part			
500	90036-0068	BULB 6.5W 24V	213, 217
510	90043-0004	PRESSURE GAUGE, 2040 D=63 MM	363
520	90043-0061	PRESSURE GAUGE, 2061 D=63 MM, THROTTLED	359
540	90235-0282	THROTTLE CHECK VALVES,G1/8	385
770	90239-0532	ROD END, CLEVIS WITH AXLE M8X1,25	101
050	90287-0106	SCREW SPRINGLOAD. SLOTTED HEAD M10X21	17
130	90297-0007	FLUORESCENT TUBE, PL11	227
550	90328-0024	SILENCER G3/8	379
550	90328-0026	SILENCER G1/4	385
560	90328-0047	SILENCER G1/8	379
X410	90458-0292	BASE, KT70-1001	213, 217
H411	90458-0293	LIGHT ELEMENT, RED, KL70-401R	213, 217
H412	90458-0294	LIGHT ELEMENT, YELLOW, KL70-401Y	213, 217
H413	90458-0295	LIGHT ELEMENT, BLUE, KL70-401L	213, 217
H410	90458-0302	SIREN WITH ADJUSTABLE VOLUME KS 70-3004	213, 217
590	90458-1207	SEALING, STANDARD	379
600	90458-1208	SEALING, CHANNEL 1 BLOCKED	379
630	90458-1215	COVER PLATE FOR EMPTY VALVE POSITION	379
540	90458-2539	SPROCKET, S900-12T-104/Ø25-AC	329
550	90458-2542	SPROCKET, S900-18T-115/40-AC	329
610	90458-2838	SILENCER U-3/8	407
020	90458-2884	BOTTLE, 1000ML PLASTIC BROWN INCL LID	241
540	90458-2969	PRESSURE GAUGE, MAP-40-1-1/8-EN	35
810	90458-2973	GUIDE BAR, 25X12,25X150 MM	101
820	90459-0074	COMP. SPRING 2367	101
830	90459-0075	HINGE, 1056-U30	101
550	90459-1343	GAS SPRING NO. G23-100-800N-01	253, 299
305	312105-0291	SCREW M6S ISO 4017 M4X12 A480	233
300	312155-0295	SCREW EN 10642 MF6S M4X20 A480	237
450	321111-0097	FLANGE BUSHING, 8X12X12 MM	33
380	321141-0140	BEARING BUSHING W/O FL, 10X12X10 MM	39
330	321158-0180	FLANGE BUSHING, 12X14X12 MM	43, 45, 49, 53
050	1347883-0000	ROLLER	33
030	1349179-0000	FINGER	21
120	1478813-0000	SPACER	385
030	1514791-0000	SHAFT	329
050	1514795-0000	CONVEYOR BELT	329

Pos	Part No	Description	Page No
B- Non - Critical Spares Part			
010	1515366-0000	STOP BLOCK	57
040	1515373-0000	BEARING	99
020	1515392-0000	SPACER	57
070	2524256-0000	COVER	295, 297
230	2542958-0000	COVER	101
130	2556678-0000	SLEEVE	245, 283, 285
200	2556709-0000	WASHER	283, 285
210	2556808-0000	SPACER	101
140	2556821-0000	LID	341
C- Don't stop function, can bypassed			
010	90152-0016	HOSE (SPIRAL)	421
050	90243-0061	AIR GUN, CEJN SERIE 204 ED: 90459-0173	421

Pos	Part No	Description	Page No

Pos	Part No	Description	Page No	Pos	Part No	Description	Page No

Tetra Pak

SPC binder labels. 40 mm Full width *Note! This page is generated* **automatically.**
using the **variable definitions** *made in the* **front page** *file!!*

Tetra Pak A1
630451-0200
Issue: 2003-03 Doc No: SPC-2608179-0101

Tetra Pak A1
630451-0200
Issue: 2003-03 Doc No: SPC-2608179-0101

Tetra Pak A1
630451-0200
Issue: 2003-03 Doc No: SPC-2608179-0101

Tetra Pak A1
630451-0200
Issue: 2003-03 Doc No: SPC-2608179-0101

Tetra Pak A1
630451-0200
Issue: 2003-03 Doc No: SPC-2608179-0101

Tetra Pak A1
630451-0200
Issue: 2003-03 Doc No: SPC-2608179-0101

Tetra Pak A1
630451-0200
Issue: 2003-03 Doc No: SPC-2608179-0101

Tetra Pak A1
630451-0200
Issue: 2003-03 Doc No: SPC-2608179-0101

Tetra Pak A1
630451-0200
Issue: 2003-03 Doc No: SPC-2608179-0101

Tetra Pak A1
630451-0200
Issue: 2003-03 Doc No: SPC-2608179-0101

Tetra Pak A1
630451-0200
Issue: 2003-03 Doc No: SPC-2608179-0101