SPC TCA/150 valid for machine 13083/10970 633218	SPC TCA/150 valid for machine 13083/10970 633218	SPC TCA/150 valid for machine 13083/10970 633218	SPC TCA/150 valid for machine 13083/10970 633218
SPC TCA/150 valid for machine 13083/10970 633218	SPC TCA/150 valid for machine 13083/10970 633218	SPC TCA/150 valid for machine 13083/10970 633218	SPC TCA/150 valid for machine 13083/10970 633218
SPC TCA/150 valid for machine 13083/10970 633218	SPC TCA/150 valid for machine 13083/10970 633218	SPC TCA/150 valid for machine 13083/10970 633218	SPC TCA/150 valid for machine 13083/10970 633218

SPC

Spare Parts Catalogue

TCA/150 010V

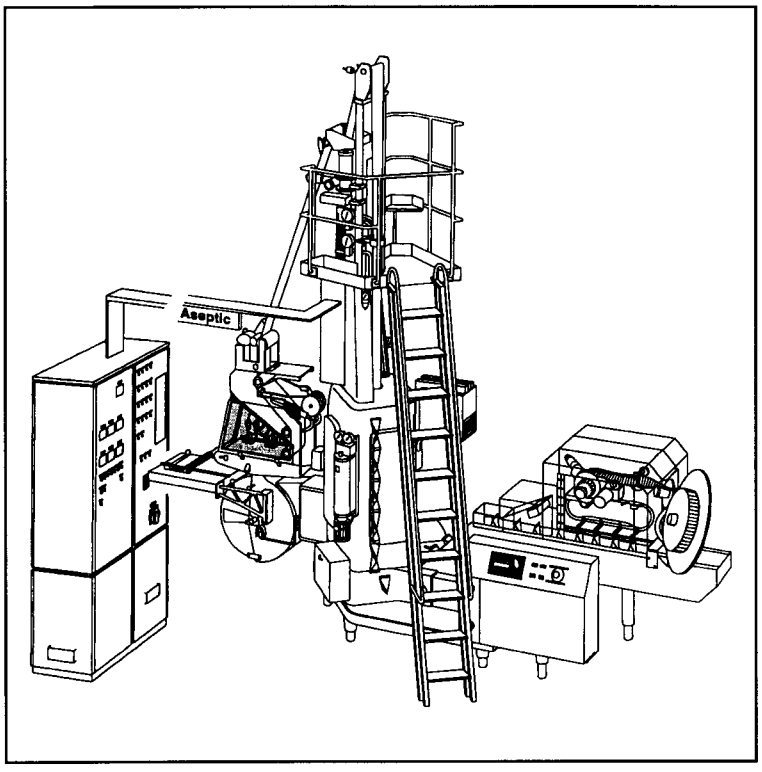

Tetra Pak

Doc No SPC-85500-1

This document is valid for:

633218-13083/10970

Series No/Machine No Sign.

SPC

Spare Parts Catalogue

Tetra Classic Aseptic TCA/150 633218-010V

Contents **Page No**

Introduction I-4

Magazine
633201-110V 3

Superstructure
633202-120V 15

Frame Sides
633203-110V 87/109

Machine Body
633204-080V 133

Cutting Device
633205-050V 155

Elevator E
630225-010V 203

Hole Punch Device
610308-150V 217

Accessories
633209-090V 283

Installed Extra Equipments
To check your actual machine data and eventual installed extra equipments, check the machine specification, supplied on machine delivery!

Order/add necessary documents.

Issue 9305

Tetra Pak

Tetra Classic Packaging Systems AB

Service

When ordering spare parts for your machine, contact the nearest Tetra Pak service station. You will find a list of all service stations at the end of this publication.

Manufacturer

This machine is produced by:

Tetra Classic Packaging Systems AB
Ruben Rausings gata
S-221 86 LUND
Sweden

Machine Identification

The machine plate on the right is an example of the type of machine plate attached to the machine frame. The plate carries data needed when contacting Tetra Pak concerning this particular machine.

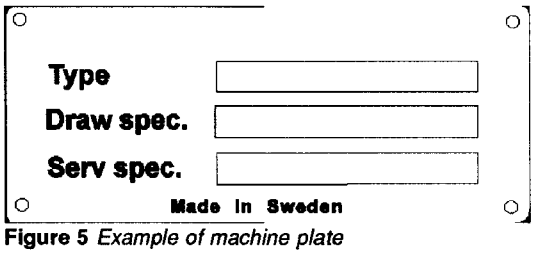

Figure 5 *Example of machine plate*

The location of the different machine plates is shown on the page "Location of machine number plates", page I-7.

Document Information

Purpose of the Spare Parts Catalogue

The purpose of the Spare Parts Catalogue (SPC) is to provide the service technicians and contact personnel with information on how to find and order spare parts for repairing and servicing the machine.

For instructions on how to replace parts and adjust machine setup, see the Maintenance manual.

Design Modifications
The content of this document is in accordance with the design and construction of the machine at the time it was delivered from the Tetra Pak machine production facility.

Document producer
This document has been produced by:

Tetra Classic Packaging Systems AB
Teknisk Documentation
Ruben Rausings gata
S-221 86 LUND
Sweden

Further copies
Additional copies can be ordered from nearest Tetra Pak service station. You will find a list of all the service stations at the end of this publication. Copies are also available directly from:

Tetra Laval Marketing Services AB
Central Technical Publications
Ruben Rausings gata
S-221 86 LUND
Sweden

When ordering technical publications, always quote the **document No** printed on the front cover of the document concerned.

Number of pages
This document contains a total number of ***20 introduction and 299 catalogue pages.***

Copyright
This document is protected under the Copyright Act and **must not be copied** without the express permission by Tetra Pak.

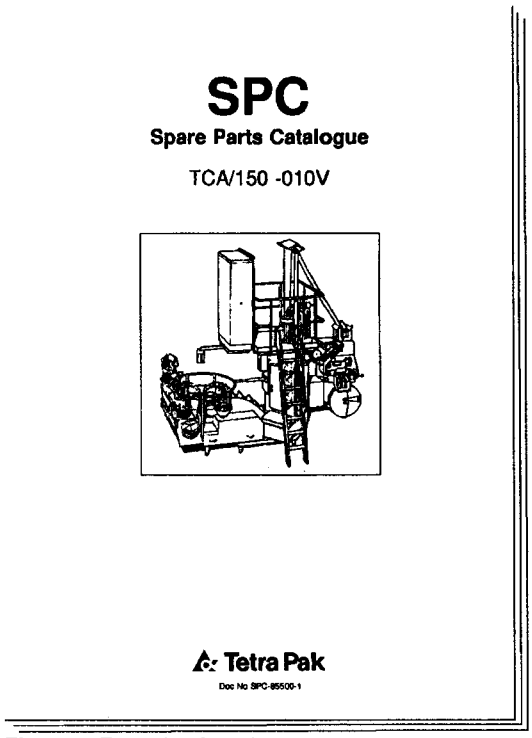

Figure 7 *Example of catalogue*

Tetra Pak Part Numbering System

Example of part/group number

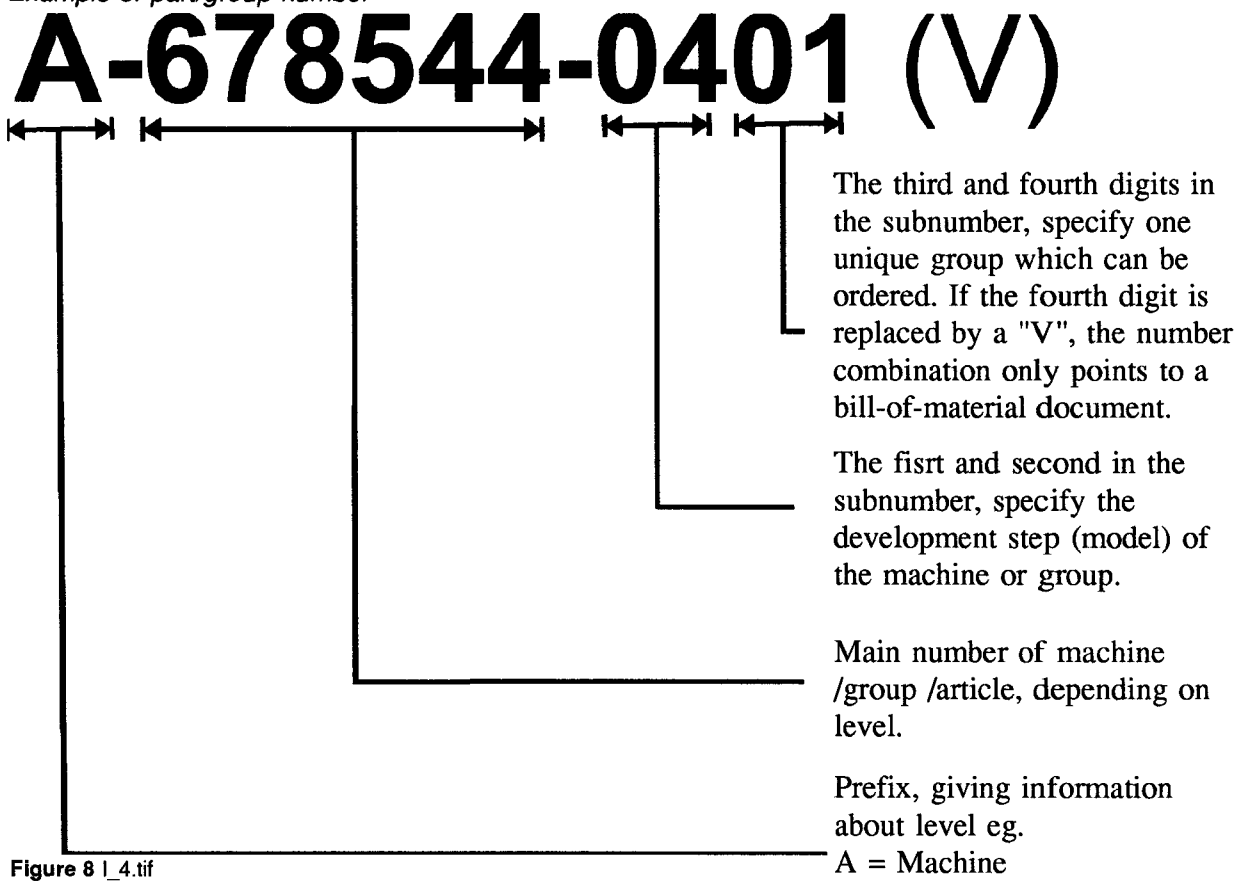

Figure 8 I_4.tif

Location of Machine Number Plates

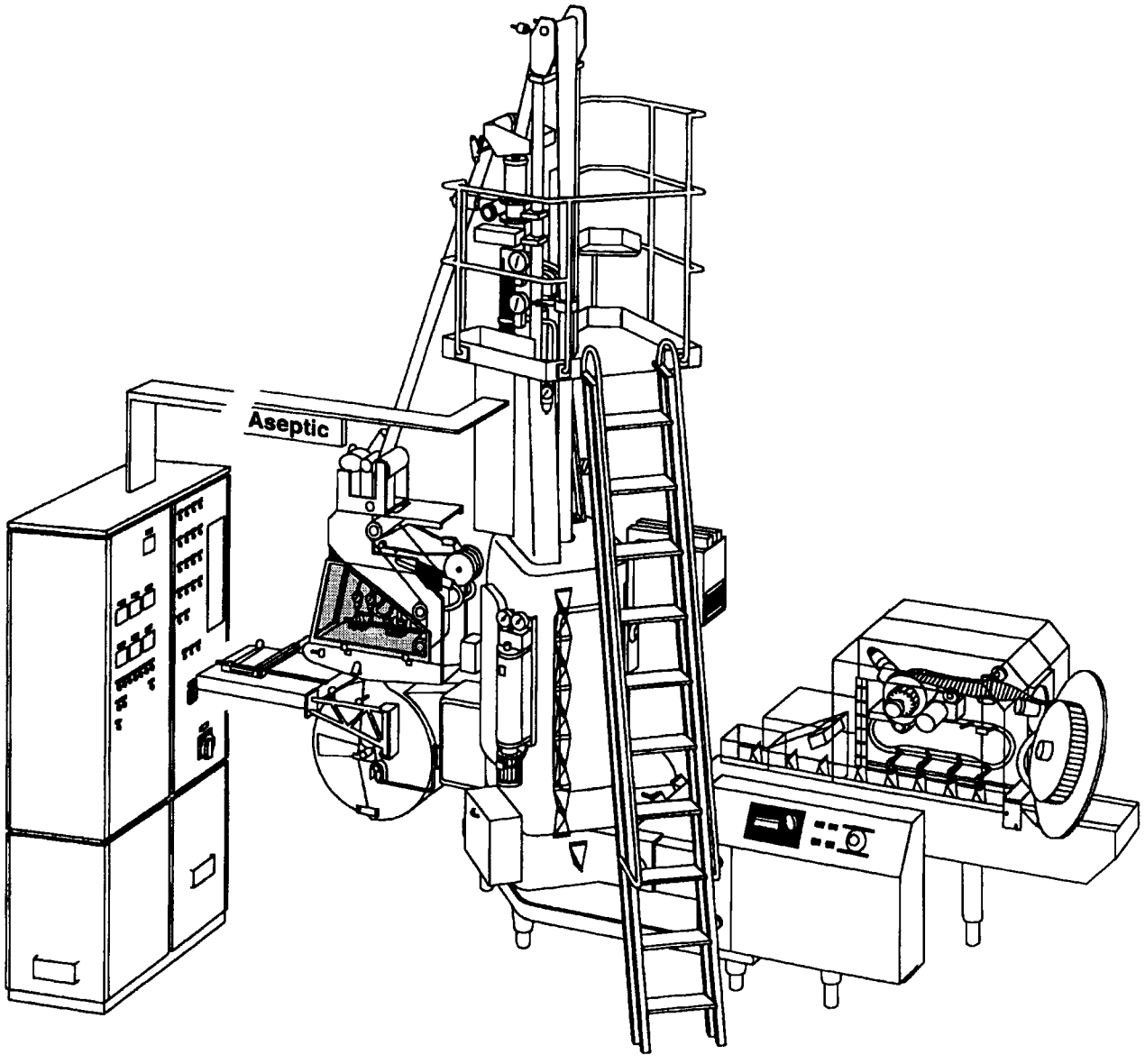

Machine Sign

Type	
Draw spec.	
Serv spec.	

Made in Sweden

Group Number Plate

TETRA PAK

Nº

For the correct machine data, check your machine specification, supplied on machine delivery!

How to find the correct Spare Part Number

A. Check that the data on your machine type sign, and/or machine specification corresponds with the catalogue, in which you are looking at right now. If not change/order an actual catalogue.

1. Main groups of the machine

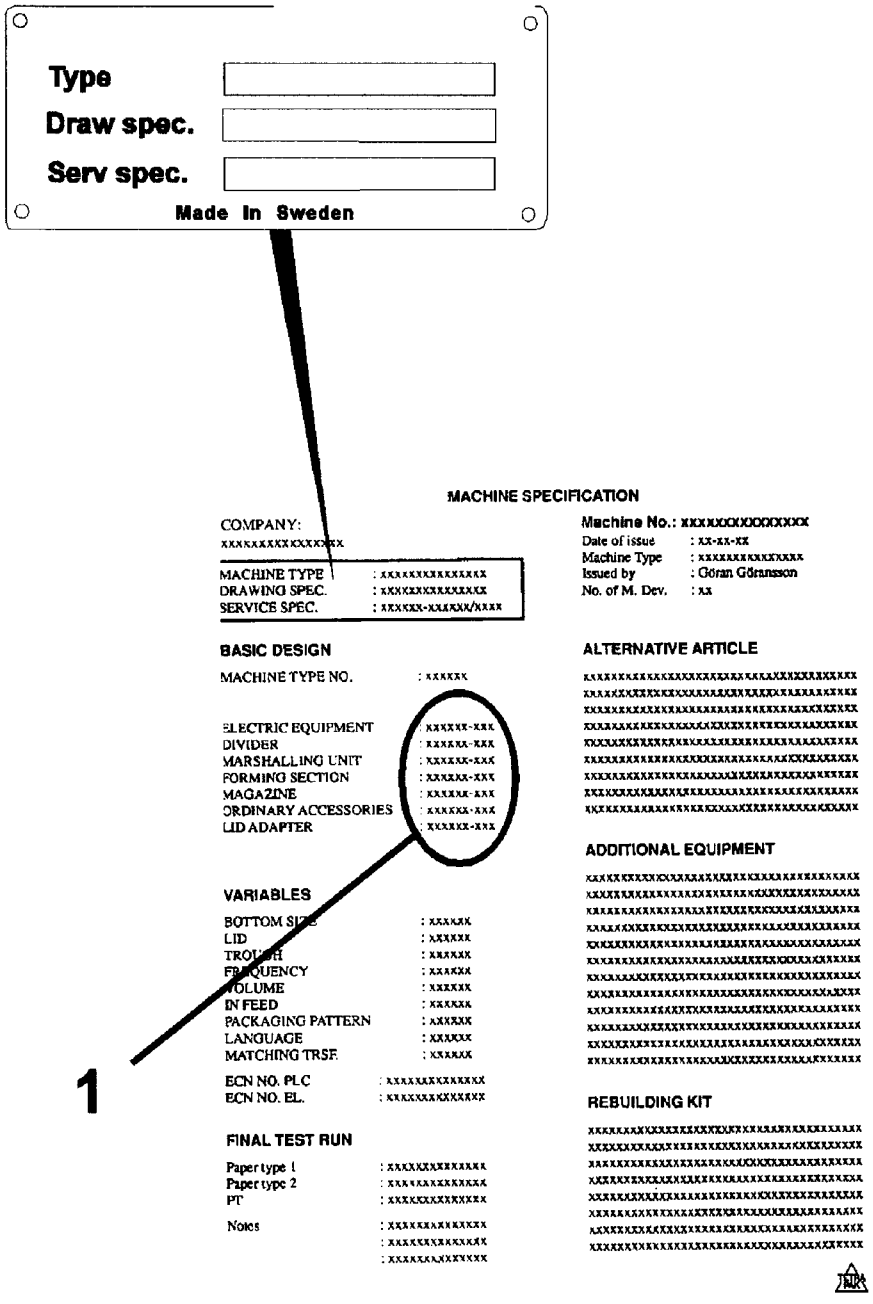

Figure 12 *Example of machine specification*

How to find the correct Spare Part Number

B. The second catalogue sheet contains a table of content for the main groups, included in the catalogue.
The information regarding machine and main group status MUST correspond with your machine specification.
Locate and choose the main groups page number, in which you want to search for spare parts.

1. Main group of the machine
2. Machine Type

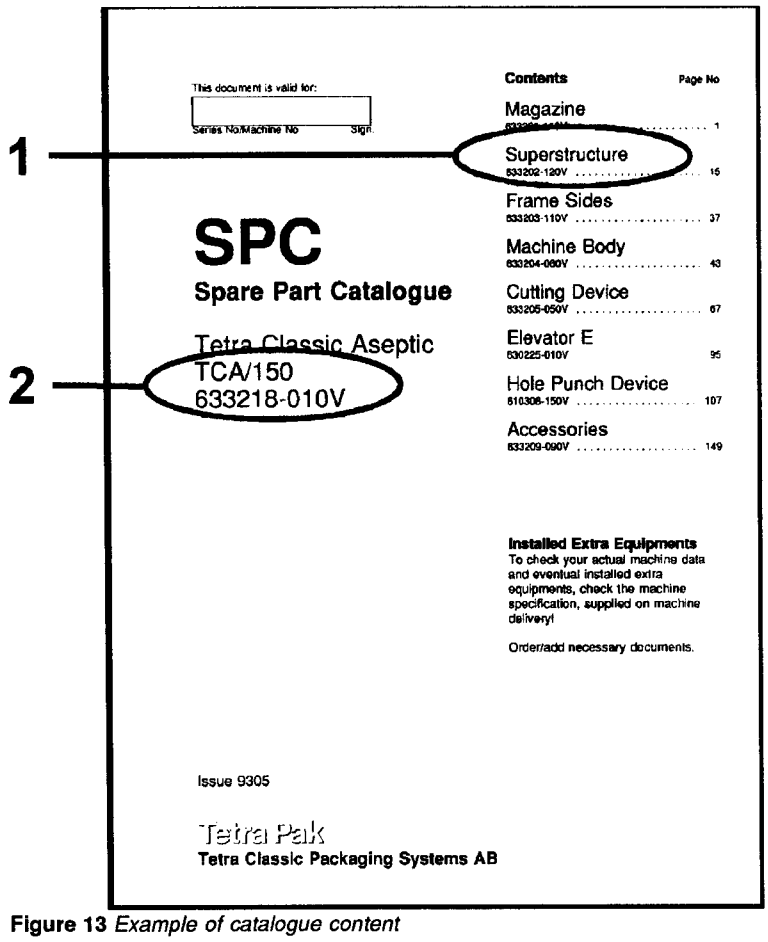

Figure 13 *Example of catalogue content*

Continued overleaf

How to find the correct Spare Part Number

C. Search in the main group illustration, the item number, which may hold your wanted spare part. Go to the text page below and read page number for the actual group.

4. Internal information, such as latest Alteration Message, bill-of-materials included in catalogue page.
5. Pos number on main group illustration
6. Pos numbering on illustration.
7. Illustration number in the SPC database.
8. Continuous page numbering through the document.
9. Pos number corresponding to illustration.
10. Group or article number, to spare parts store.
11. Group or article description.
12. Machine type including development status.
13. Group description.
14. Group number (bill-of-material) including development status.
15. Document number.

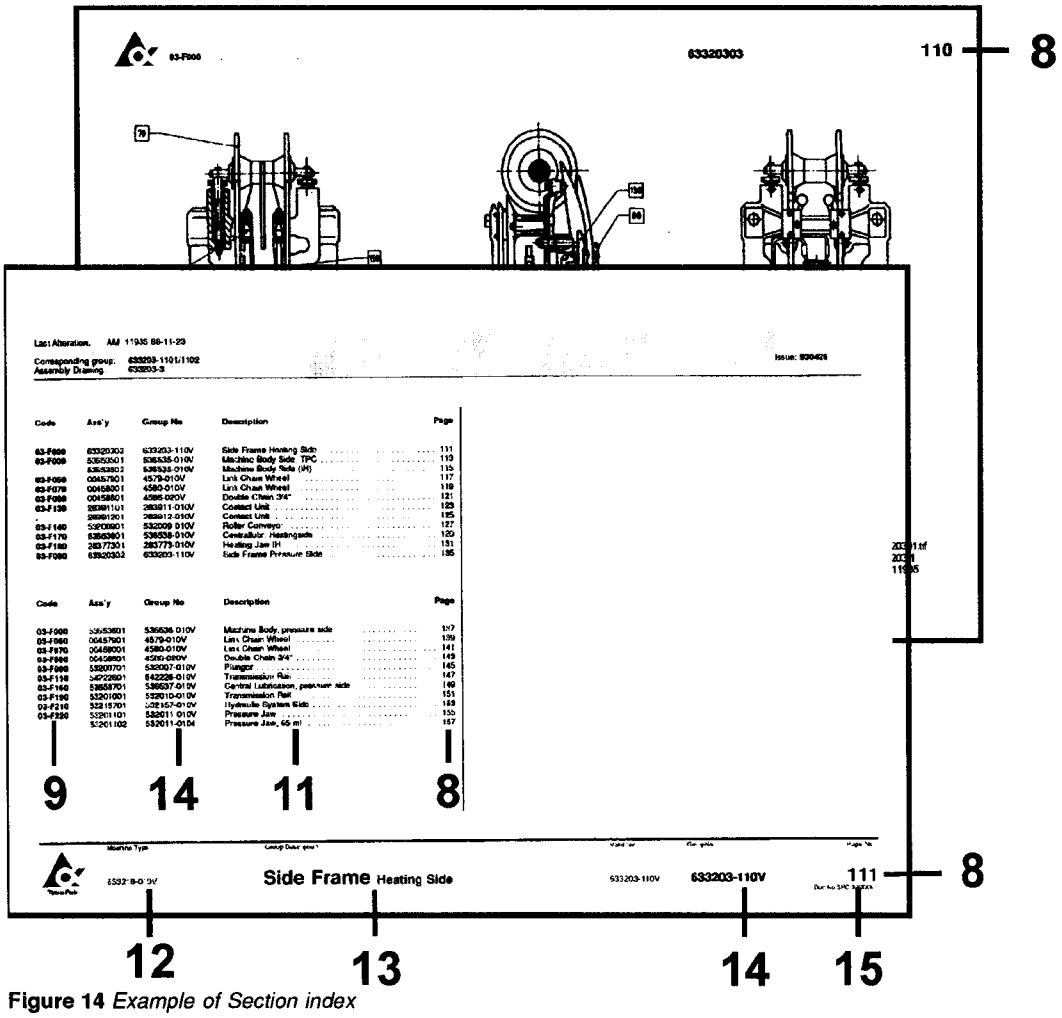

Figure 14 *Example of Section index*

D. Continue to the found page number, and search in the illustration, for your spare part.

Go to the text row for the found item number, and read the part number. Take eventual variant headings in consideration; if you are unsure, read your machine specification.

16. Variant heading, eg volume, left/right etc.
17. Heading for common parts.
18. SP = Code for articles, which are included into various spare part kits.
    - U = Kit 101, start up parts supplied on machine delivery.
    - P = Kit 102, production parts to be held at production site workshop.
    - S = Kit 103, overhaul parts to be held at service stations store.
    - C = Kit 104, security parts to be avaiable at the central store.
19. UN = Short code for measure units eg mm, kg etc.
20. Qty = Number of item needed in the complete assembly.

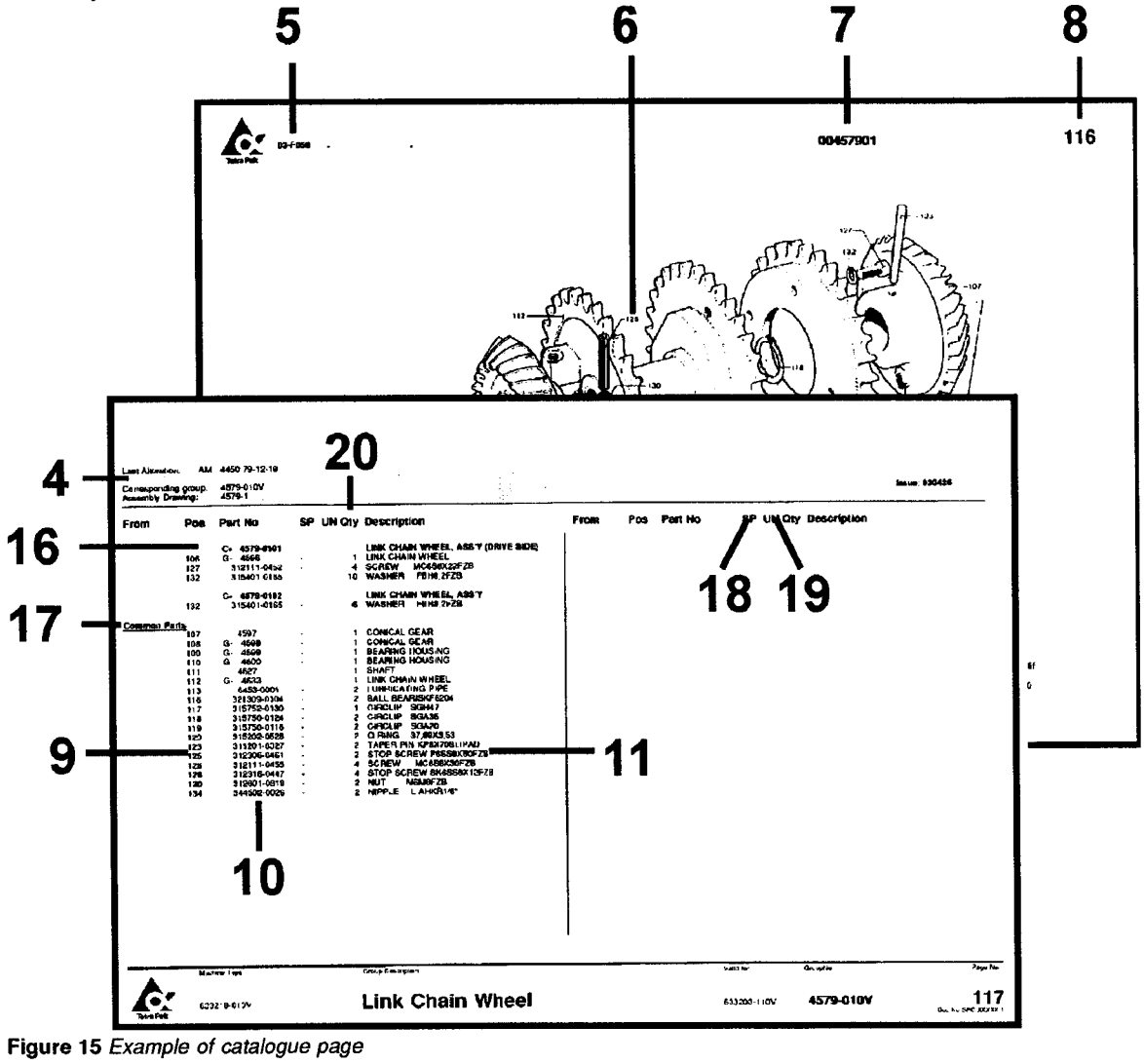

Figure 15 *Example of catalogue page*

On the page overleaf you will find a complete page number index, for the catalogue, sorted in both alfabetical and numerical group number order. A similar index will be found at the beginning of each main section, containing the sections pages in geographical structure/page number order.

Alfabetical group number index

Pos	Group No	Description	Page
02-F090	552869-010V	(Tubular)Jacket	29
04-F090	449972-010V	Air pipe-line	139
.	30119-040V	Air Heater	47
*.	247207-010V	Air Valve	49
.	537570-010V	Air distribution unit	245
***09-**	567111-010V	Air Jet Gun	299
04-F150	294214-0101	Appliance box	147
.8-F350	239793-010V	Bending Roller	239
.	20387-010V	Bobbin	267
.	20387-010V	Bobbin	273
04-F170	499860-010V	Bracket IH	151
.8-F200	20036-010V	Brake	249
.	20389-010V	Brake	275
.	20389-010V	Brake	269
09-F030	532265-010V	Cable Duct	287
.	33216-010V	Cantilever	11
.	19521-020V	Carriage	225
01-F010	11040-040V	Cassette	5
01-F010	633201-080V	Cassette	3
05-F220	230177-030V	Central lubrication	193
05-F230	263843-020V	Central Lubrication	195
03-F160	536537-010V	Central Lubrication, pressure side	123
04-F130	263812-010V	Central Lubrication	145
03-F170	536538-010V	Centrallubr. Heatingside	103
25-F010	33738-010V	Chain Feed Conveyor	211
05-F200	33946-010V	Chain Tensioner	199
05-F090	4869-010V	Chain Tensioner	175
05-F110	4871-010V	Chain Tensioner	177
.	19573-020V	Connection box	223
.	236638-0201	Connection Box	187
.	283912-010V	Contact Unit	99
03-F130	283911-010V	Contact Unit	97
.	19522-010V	Counter roller	227
.	4865-030V	Counter Wheel	163
05-F070	4867-010V	Cover	171
05-F000	257840-0304	Cutting Device	157
05-F000	633205-130V	Cutting Device	155
.	529316-010V	Cutting Wheel	161
.	37460-010V	Dating unit	255
***04-F010**	548468-010V	Door	137
02-F020	11126-010V	Door	19
03-F080	4586-020V	Double Chain 3/4"	95
03-F080	4586-020V	Double Chain 3/4"	117
***05-F210**	539935-010V	Drive Shaft	191
*.	29098-010V	Edge Drier	83
***02-F260**	236892-030V	Element Group	63
.	294112-020V	Element group	277
*.	207637-020V	Element	67
*.	232955-020V	Element	65
25-F100	630225-010V	Elevator	203
25-F040	535881-010V	Elevator	213
02-F370	538979-010V	Fan Assembly	81
.	293483-010V	Fastening plate	265
.	293484-010V	Fastening plate	271
.	486705-010V	Feeder	235
02-F150	38699-010V	Float Assembly	39
25-F030	535876-0101	Frame Section	207
.	19526-030V	Frame	237
	535876-0102	Frame Section	209
.	19523-010V	Free-wheel coupling	229
.	38094-010V	Gauge Group	45
03-F180	283773-010V	Heating Jaw IH	105
.	37459-010V	Holder	253
.	37485-010V	Holder	261

Alfabetical group number index

Pos	Group No	Description	Page
	265768-030V	Hole Punch, relay machines	243
.8-F020	610308-150V	Hole punch	217
.8-F000	265768-030V	Hole Punch, relay machines	241
*.	537961-010V	Hydraulic system	143
03-F210	532157-010V	Hydraulic System Side	127
*04-F110	532160-020V	Hydraulic system	141
05-F240	440325-010V	Impulse Transmitter	197
05-F170	236641-030V	Impulse Transmitter	185
05-F080	4868-010V	Intermediary Shaft	173
02-F360	263881-010V	Ladder	79
.	32744-020V	Level Guard	55
03-F050	4579-010V	Link Chain Wheel	91
03-F060	4579-010V	Link Chain Wheel	113
03-F070	4580-010V	Link Chain Wheel	93
03-F070	4580-010V	Link Chain Wheel	115
02-F080	33038-020V	Lower Forming Ring	27
03-F000	536535-010V	Machine Body Side	89
04-F000	449404-020V	Machine Body	135
04-F000	633204-190V	Machine Body AT150	133
03-F000	536536-010V	Machine Body, pressure side	111
.8-F010	13852-020V	Magazine	247
05-F120	4872-050V	Motor	179
.8-F020	19519-030V	Opening arrangement	219
02-F030	209969-010V	Operation Device	21
25-F020	236727-010V	Package Guide	205
.	268188-010V	Paper guide	59
.	450343-010V	Paper guide	263
01-F020	7105-010V	Paper Reel Holder	7
.	497924-010V	Peroxide Cooler	61
02-F340	449123-030V	Pipe	77
02-F330	247420-010V	Platform	75
03-F090	532007-010V	Plunger	119
.	36351-010V	Pressure Roller	37
03-F220	532011-010V	Pressure Jaw	129
.	37461-010V	Printing wheel	257
.	38715-010V	Pump	183
05-F140	247367-010V	Pump	181
.	19525-070V	Punch unit	233
09-F000	633209-070V	Regular Accessories	283
09-F010	499134-010V	Roller Stand	285
03-F140	532009-010V	Roller Conveyor	101
.	33608-010V	Screw	259
.	263886-030V	Sealing Device	221
09-F060	544536-010V	Set of Signs	297
05-F010	434042-020V	Shearing Device	159
03-F000	633203-110V	Side Frame Heating Side	87
03-F000	633203-110V	Side Frame Pressure Side	109
.	4438-030V	Slip Disc	169
01-F030	33163-010V	Splicing Apparatus	9
09-F050	451434-020V	Start-Up Kit	293
	451434-020V	Start-Up Kit	295
.8-F370	267052-030V	Start-up Kit	279
.	20991-010V	Steering	231
.	6880-010V	Steering	165
.	12270-040V	Sterile Filter	43
02-F170	247181-060V	Sterile Air Unit	41
.	247368-030V	Sterilization Bath	57
02-F230	37496-040V	Sterilizer	53
.8-F210	251344-020V	Strip Applicator	251
02-F000	633202-160V	Superstructure	15
*02-F000	247463-030V	Superstructure	17
02-F100	552873-010V	Teflon Hose	31
02-F050	445679-020V	Terminal Plinth	23
.	450114-010V	Terminal plinth	149

Alfabetical group number index

Pos	Group No	Description	Page
.	236637-010V	Terminal plinth	189
.	449969-010V	Tool	291
09.F040	451432-010V	Tools AT-Machines	289
03-F110	542226-010V	Transmission Rail	121
03-F190	532010-010V	Transmission Rail	125
***02-F130**	449122-010V	Tube Heater	35
02-F070	13247-010V	Upper Forming Ring	25
.	440630-010V	Valve	71
***02-F120**	450044-010V	Valve Group Water	33
***02-F300**	246893-040V	Valve	69
02-F320	247382-040V	Valve Group	73
.	497371-010V	Vent. Pipe Air Valve	51
05-F050	4866-030V	Worm Gear	167

Tetra Pak

Numerical group number index

Pos	Group No	Description	Page
01-F010	11040-040V	Cassette	5
02-F020	11126-010V	Door	19
.	12270-040V	Sterile Filter	43
02-F070	13247-010V	Upper Forming Ring	25
.8-F010	13852-020V	Magazine	247
.8-F020	19519-030V	Opening arrangement	219
.	19521-020V	Carriage	225
.	19522-010V	Counter roller	227
.	19523-010V	Free-wheel coupling	229
.	19525-070V	Punch unit	233
.	19526-030V	Frame	237
.	19573-020V	Connection box	223
.8-F200	20036-010V	Brake	249
.	20387-010V	Bobbin	267
.	20387-010V	Bobbin	273
.	20389-010V	Brake	269
.	20389-010V	Brake	275
*.	207637-020V	Element	67
.	20991-010V	Steering	231
02-F030	209969-010V	Operation Device	21
05-F220	230177-030V	Central lubrication	193
*.	232955-020V	Element	65
.	236637-010V	Terminal plinth	189
.	236638-0201	Connection Box	187
05-F170	236641-030V	Impulse Transmitter	185
25-F020	236727-010V	Package Guide	205
*02-F260	236892-030V	Element Group	63
.8-F350	239793-010V	Bending Roller	239
*02-F300	246893-040V	Valve	69
02-F170	247181-060V	Sterile Air Unit	41
*.	247207-010V	Air Valve	49
05-F140	247367-010V	Pump	181
.	247368-030V	Sterilization Bath	57
02-F320	247382-040V	Valve Group	73
02-F330	247420-010V	Platform	75
*02-F000	247463-030V	Superstructure	17
.8-F210	251344-020V	Strip Applicator	251
05-F000	257840-0304	Cutting Device	157
04-F130	263812-010V	Central Lubrication	145
05-F230	263843-020V	Central Lubrication	195
02-F360	263881-010V	Ladder	79
.	263886-030V	Sealing Device	221
.8-F000	265768-030V	Hole Punch, relay machines	241
	265768-030V	Hole Punch, relay machines	243
.8-F370	267052-030V	Start-up Kit	279
.	268188-010V	Paper guide	59
03-F180	283773-010V	Heating Jaw IH	105
03-F130	283911-010V	Contact Unit	97
.	283912-010V	Contact Unit	99
*.	29098-010V	Edge Drier	83
.	293483-010V	Fastening plate	265
.	293484-010V	Fastening plate	271
.	294112-020V	Element group	277
04-F150	294214-0101	Appliance box	147
.	30119-040V	Air Heater	47
.	32744-020V	Level Guard	55
02-F080	33038-020V	Lower Forming Ring	27
01-F030	33163-010V	Splicing Apparatus	9
.	33216-010V	Cantilever	11
.	33608-010V	Screw	259
25-F010	33738-010V	Chain Feed Conveyor	211
05-F200	33946-010V	Chain Tensioner	199
.	36351-010V	Pressure Roller	37
.	37459-010V	Holder	253

Numerical group number index

Pos	Group No	Description	Page
.	37460-010V	Dating unit	255
.	37461-010V	Printing wheel	257
.	37485-010V	Holder	261
02-F230	37496-040V	Sterilizer	53
.	38094-010V	Gauge Group	45
02-F150	38699-010V	Float Assembly	39
.	38715-010V	Pump	183
05-F010	434042-020V	Shearing Device	159
05-F240	440325-010V	Impulse Transmitter	197
.	440630-010V	Valve	71
.	4438-030V	Slip Disc	169
02-F050	445679-020V	Terminal Plinth	23
*02-F130	449122-010V	Tube Heater	35
02-F340	449123-030V	Pipe	77
04-F000	449404-020V	Machine Body	135
.	449969-010V	Tool	291
04-F090	449972-010V	Air pipe-line	139
*02-F120	450044-010V	Valve Group Water	33
.	450114-010V	Terminal plinth	149
.	450343-010V	Paper guide	263
09.F040	451432-010V	Tools AT-Machines	289
09-F050	451434-020V	Start-Up Kit	293
	451434-020V	Start-Up Kit	295
03-F060	4579-010V	Link Chain Wheel	113
03-F050	4579-010V	Link Chain Wheel	91
03-F070	4580-010V	Link Chain Wheel	93
03-F070	4580-010V	Link Chain Wheel	115
03-F080	4586-020V	Double Chain 3/4"	95
03-F080	4586-020V	Double Chain 3/4"	117
.	4865-030V	Counter Wheel	163
05-F050	4866-030V	Worm Gear	167
05-F070	4867-010V	Cover	171
.	486705-010V	Feeder	235
05-F080	4868-010V	Intermediary Shaft	173
05-F090	4869-010V	Chain Tensioner	175
05-F110	4871-010V	Chain Tensioner	177
05-F120	4872-050V	Motor	179
.	497371-010V	Vent. Pipe Air Valve	51
.	497924-010V	Peroxide Cooler	61
09-F010	499134-010V	Roller Stand	285
04-F170	499860-010V	Bracket IH	151
.	529316-010V	Cutting Wheel	161
03-F090	532007-010V	Plunger	119
03-F140	532009-010V	Roller Conveyor	101
03-F190	532010-010V	Transmission Rail	125
03-F220	532011-010V	Pressure Jaw	129
03-F210	532157-010V	Hydraulic System Side	127
*04-F110	532160-020V	Hydraulic system	141
09-F030	532265-010V	Cable Duct	287
	535876-0102	Frame Section	209
25-F030	535876-0101	Frame Section	207
25-F040	535881-010V	Elevator	213
03-F000	536535-010V	Machine Body Side	89
03-F000	536536-010V	Machine Body, pressure side	111
03-F160	536537-010V	Central Lubrication, pressure side	123
03-F170	536538-010V	Centrallubr. Heatingside	103
.	537570-010V	Air distribution unit	245
*.	537961-010V	Hydraulic system	143
02-F370	538979-010V	Fan Assembly	81
*05-F210	539935-010V	Drive Shaft	191
03-F110	542226-010V	Transmission Rail	121
09-F060	544536-010V	Set of Signs	297
*04-F010	548468-010V	Door	137
02-F090	552869-010V	(Tubular)Jacket	29

Tetra Pak

Numerical group number index

Pos	Group No	Description	Page
02-F100	552873-010V	Teflon Hose	31
***09-**	567111-010V	Air Jet Gun	299
.8-F020	610308-150V	Hole punch	217
25-F100	630225-010V	Elevator	203
01-F010	633201-080V	Cassette	3
02-F000	633202-160V	Superstructure	15
03-F000	633203-110V	Side Frame Pressure Side	109
03-F000	633203-110V	Side Frame Heating Side	87
04-F000	633204-190V	Machine Body AT150	133
05-F000	633205-130V	Cutting Device	155
09-F000	633209-070V	Regular Accessories	283
.	6880-010V	Steering	165
01-F020	7105-010V	Paper Reel Holder	7

This page is intentionally left blank

Special terminology and shortenings

This page is currently empty, but when as soon as some shortenings, new machine terms etc. occur they will be explained here.

It can also be used as your personal notepad for found hints.

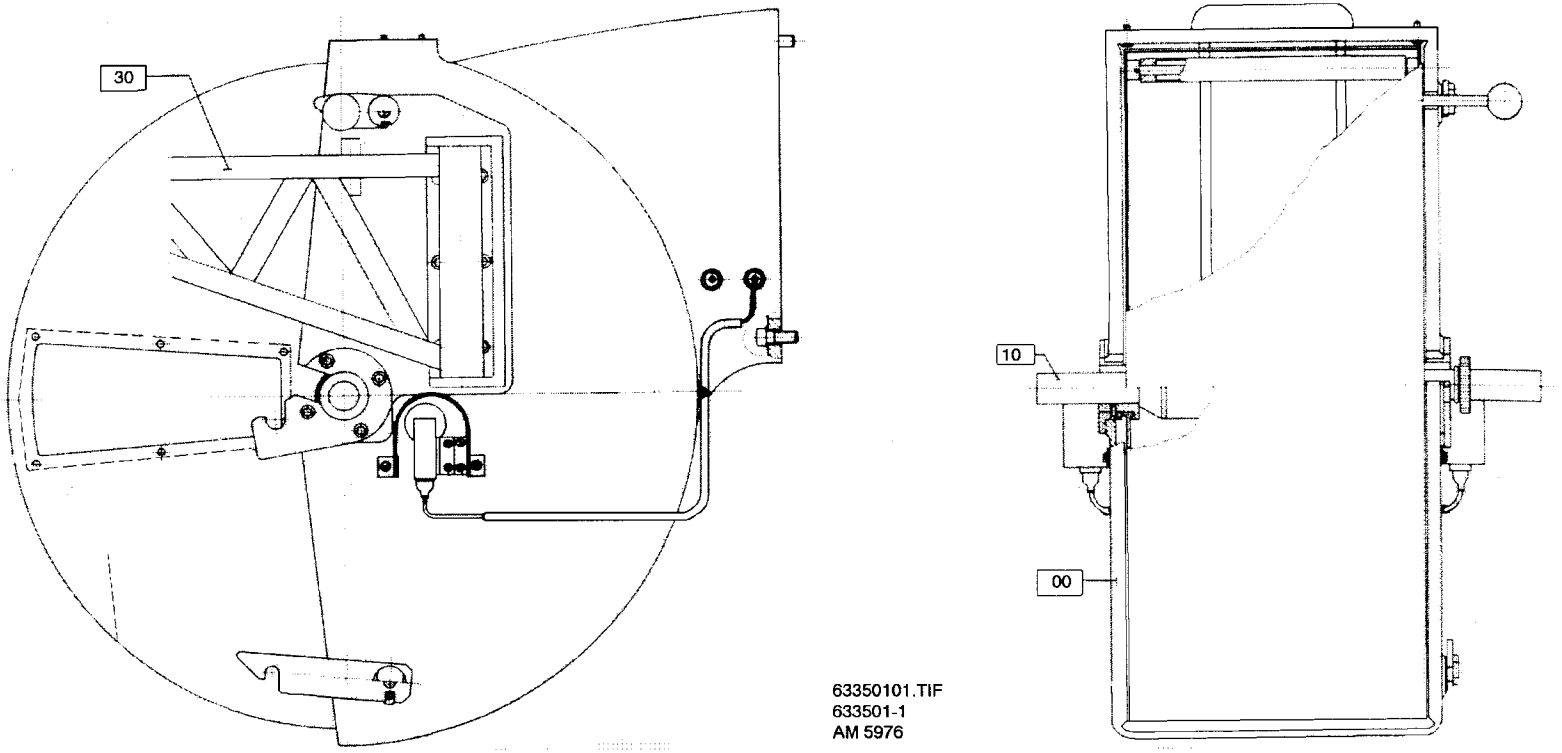

63350101.TIF
633501-1
AM 5976

From	Pos	Part No	SP	UN	Qty	Description

From	Pos	Part No	SP	UN	Qty	Description

Pos	Group No	Description	Page
01-F010	633201-080V	Cassette	3
01-F010	11040-040V	Cassette	5
01-F020	7105-010V	Paper Reel Holder	7
01-F030	33163-010V	Splicing Apparatus	9
.	33216-010V	Cantilever	11

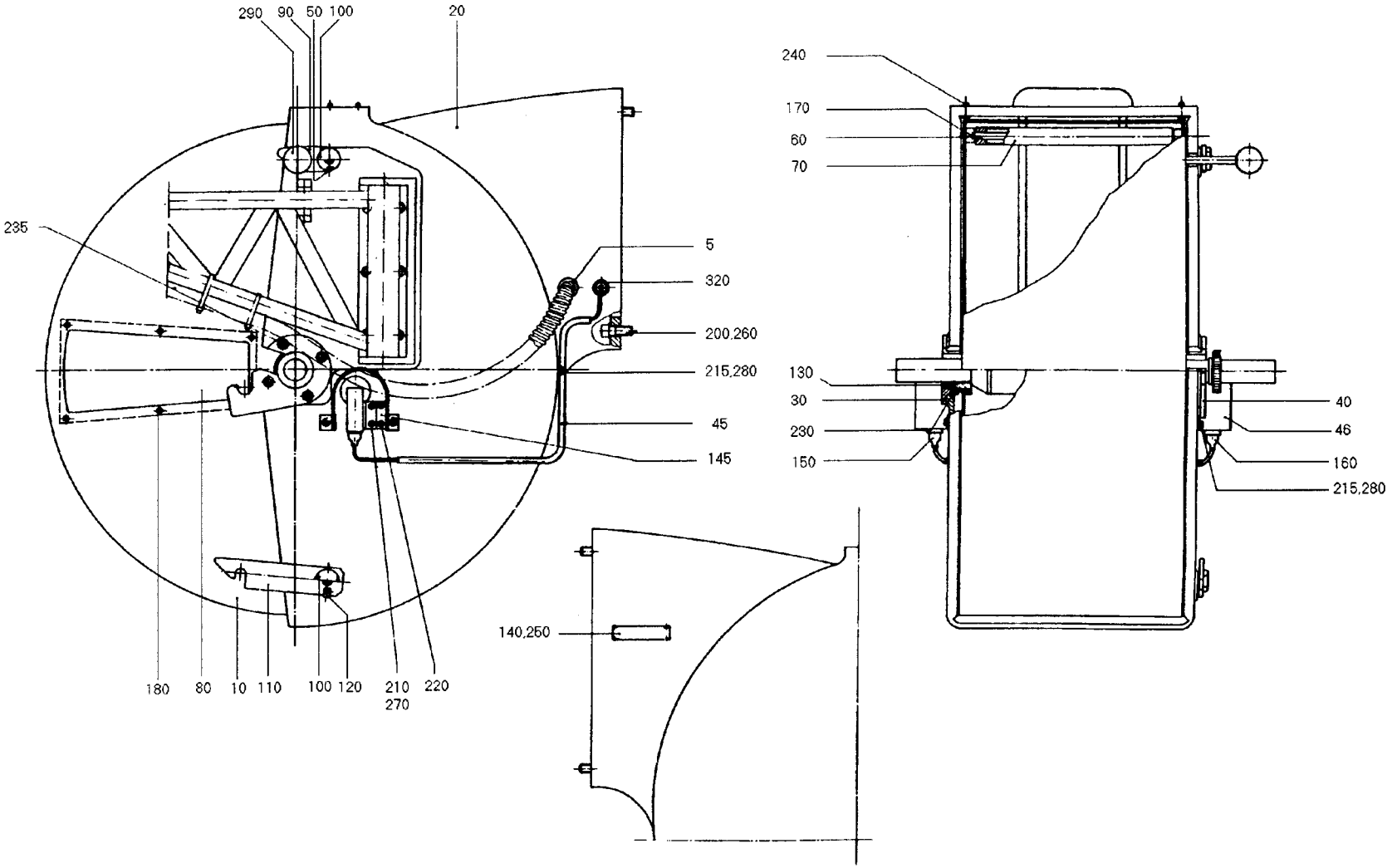

1104003.tif
11040-3
AM 10075

From	Pos	Part No	SP	UN	Qty	Description
		C- 11040-0401				**CASSETTE, ASS'Y (RELAY MACHINES)**
		C- 11040-0402				**CASSETTE, ASS'Y (TPMC MACHINES)**
	005	352103-0106	-		1	CABLE GLANR.ST 11 (RELAY MACHINES)
	005	352136-0127	-		1	GLAND FITT (TPMC MACHINES)
	010	445953-0002	-		1	HOOD
	020	19477	-		1	CASSETTE
	030	13890-0001	-		1	HOLDER
	040	13890-0002	-		1	HOLDER
	045	294261	-		2	PIPE
	046	294262	-		2	COVER
	050	1013	-		1	SHAFT
	060	4287-0004	-		1	SHAFT
	070	4288-0007	-		1	BENDING ROLLER
	080	4948	-		2	WINDOW
	090	G- 4961	-		1	CATCH
	100	4962	-		2	SCREW
	110	10325	-		1	CATCH
	120	10363	-		1	PEG
	130	13888	-		2	BEARING
	140	20497	-		1	GROUP NUMBER PLATE
	145	294263	-		2	LUG
	150	90232-0034	-		1	PHOTOCELL
	160	90232-0035	-		1	PHOTOCELL
	170	311305-0238	-		1	SLOTTED PIRPC3X20FZB
	180	311508-0416	-		12	RIVET KN4X10ALUM.
	200	312111-0536	-		4	SCREW MC6S12X30FZB
	210	312125-0289	-		4	SLOTTED HEMCS4X10RFR
	215	312125-0327	-		6	SLOTTED HEMCS5X12RFR
	220	312145-0331	-		4	SLOTTED HEMFS5X20RFR
	230	312145-0366	-		6	SLOTTED HEMFS6X12RFR
	235	312165-0368	-		8	SLOTTED HEMKFS6X16RFR
	240	312306-0371	-		4	STOP SCREW P6SS6X22FZB
	250	312502-0221	-		4	DRIVE SCREKDS4X6FNB
	260	315101-0178	-		4	WASHER BRB13X24FZB
	270	315105-0136	-		4	WASHER BRB4,3X8RFR
	280	315105-0146	-		6	WASHER BRB5,3X10RFR
	290	318800-0106	-		1	HANDLE BALLA D.40-M10
	320	352101-0103	-		2	LEAD-IN G 18,6

From	Pos	Part No	SP	UN	Qty	Description

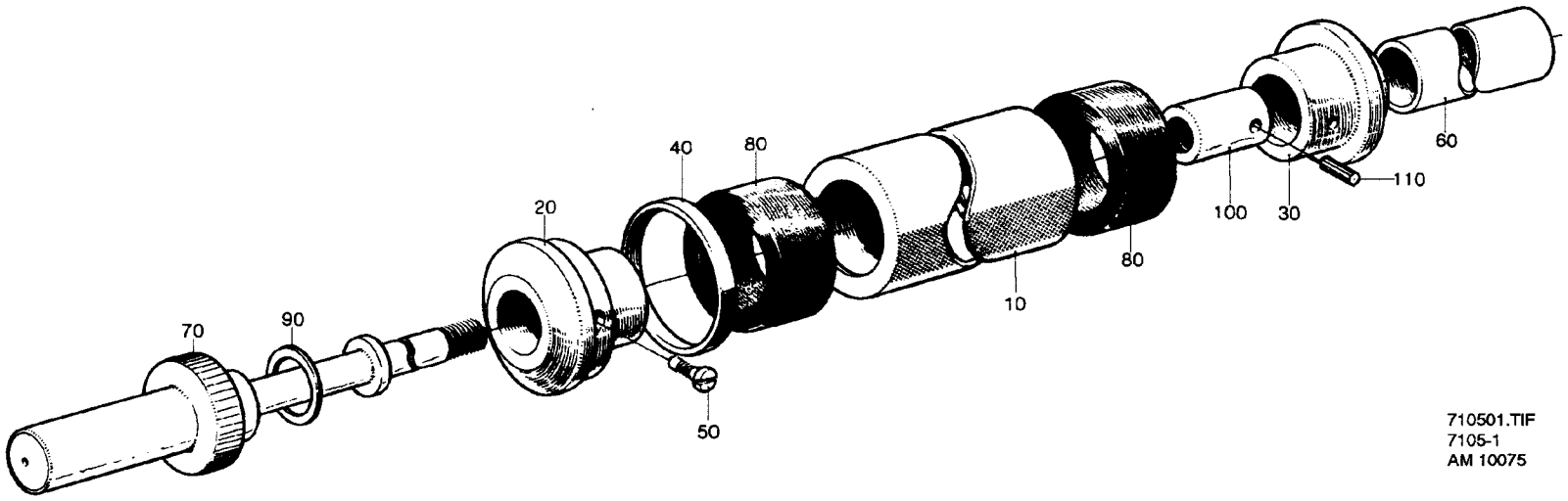

710501.TIF
7105-1
AM 10075

From	Pos	Part No	SP	UN	Qty	Description
Paper width 180 - 254 mm						
		C- 7105-0101				**PAPER REEL HOLDER,** (PW 180 mm)
		C- 7105-0102				**PAPER REEL HOLDER,** (PW 193,197 MM)
		C- 7105-0103				**PAPER REEL HOLDER,** (PW 206 MM)
		C- 7105-0104				**PAPER REEL HOLDER,** (211, 214 MM)
		C- 7105-0105				**PAPER REEL HOLDER,** (PW 220 MM)
		C- 7105-0106				**PAPER REEL HOLDER,** (PW 226-229 MM)
		C- 7105-0107				**PAPER REEL HOLDER,** (PW 248 MM)
		C- 7105-0108				**PAPER REEL HOLDER,** (254 MM)
	010	4071-0004	-		1	SPACER SLEEVE
	020	7108	-		1	STOP SLEEVE
	030	7109	-		1	PUSH SLEEVE
	040	4075-0010	-		1	SPACER RING (PW 180 MM)
	040	4075-0009	-		1	SPACER RING (PW 193,197 MM)
	040	4075-0005	-		1	SPACER RING (PW 206 MM)
	040	4075-0008	-		1	SPACER RING (PW 211,214 MM)
	040	4075-0007	-		1	SPACER RING (PW 220 MM)
	040	4075-0004	-		1	SPACER RING (PW 226,227,229 MM)
	040	4075-0003	-		1	SPACER RING (PW 248 MM)
	040	4075-0001	-		1	SPACER RING (PW 254 MM)
	050	4410-0001	-		2	SCREW
	060	4974-0003	-		1	SHAFT
Paper width 126, 131 mm						
		C- 7105-0109				**PAPER REEL HOLDER, ASS'Y**
	010	4071-0008	-		1	SPACER SLEEVE
	020	111374	-		1	STOP SLEEVE
	030	111375	-		1	PUSH SLEEVE
	040	4075-0017	-		1	SPACER RING
	050	4410-0002	-		2	SCREW
	060	4974-0003	-		1	SHAFT
Paper width 160 mm						
		C- 7105-0110				**PAPER REEL HOLDER, ASS'Y**
	010	4071-0008	-		1	SPACER SLEEVE
	020	111374	-		1	STOP SLEEVE
	030	111375	-		1	PUSH SLEEVE
	040	4075-0017	-		1	SPACER RING
	050	4410-0002	-		2	SCREW
	060	4974-0006	-		1	SHAFT

From	Pos	Part No	SP	UN	Qty	Description
Common Parts						
	070	4977-0003	-		1	SPINDLE
	080	4072	-		2	RUBBER RING
	090	4975	-		1	WASHER
	100	4976	-		1	NUT
	110	311102-0369	-		1	CYLINDRICACP M6 6X60

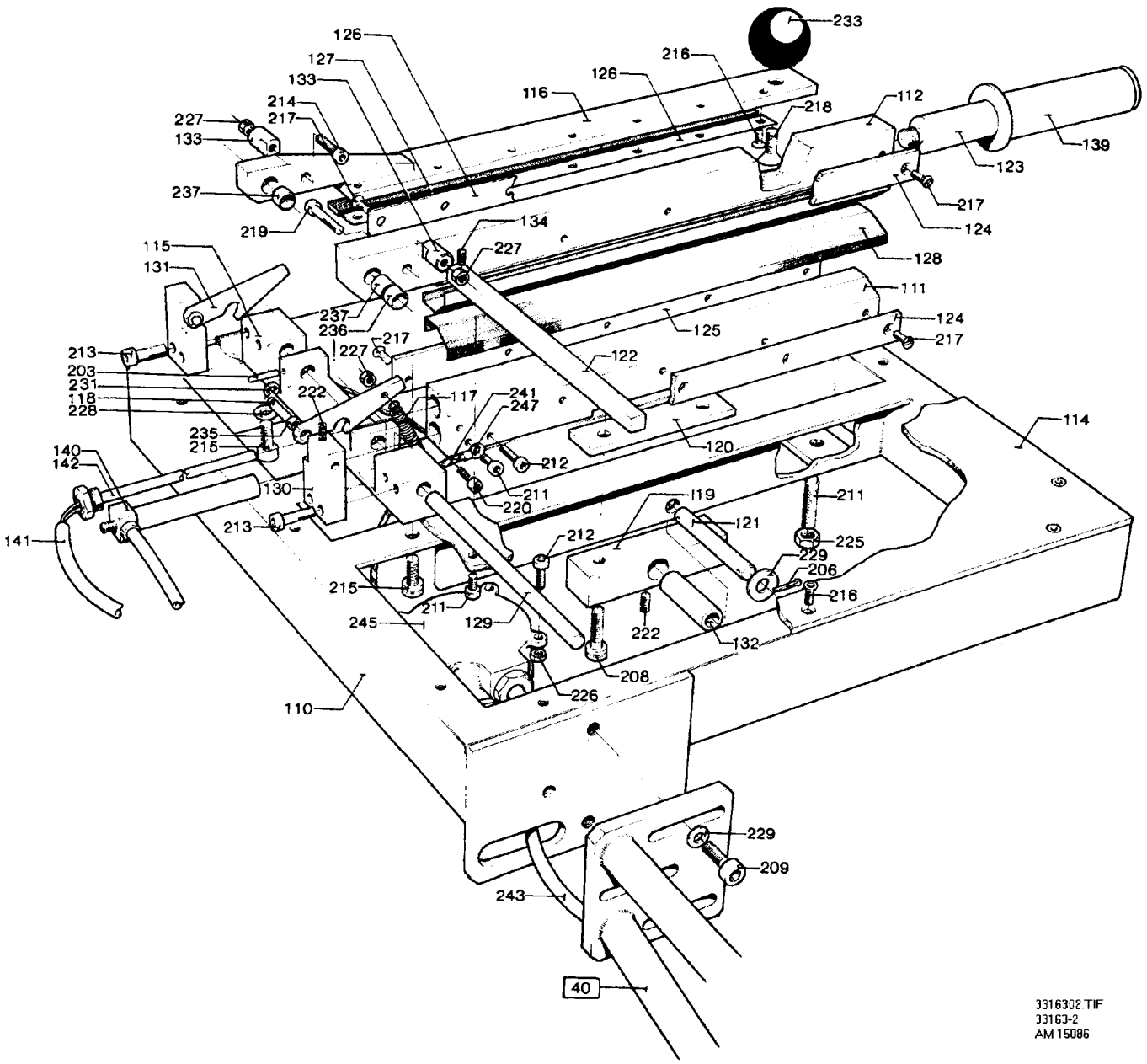

3316302.TIF
33163-2
AM 15086

From	Pos	Part No	SP	UN	Qty	Description
	F040	**C- 33216-0101**	**-**		**1**	**CANTILEVER**
TC, TCA/150/300/500						
		C- 33163-0101				**SPLICING APPARATUS, ASS'Y**
	216	312145-0285	-		21	SLOTTED HEMFS4X6RFR
TC/155						
		C- 33163-0102				**SPLICING APPARATUS, ASS'Y**
	010	534747	-		1	COVERING PLATE
	020	352135-0106	-	M	2	HOSE .016
	030	352136-0127	-		1	GLAND FITT
	216	312145-0285	-		25	SLOTTED HEMFS4X6RFR
TCA/500 -150 ml SLIM						
		C- 33163-0103				**SPLICING APPARATUS, ASS'Y**
	015	537943	-		1	ADAPTER
	040	312151-0495	-		3	SCREW MF6S10X30FZB
	216	312145-0285	-		21	SLOTTED HEMFS4X6RFR
Unknown variant						
		C- 33163-0104				**SPLICING APPARATUS, ASS'Y**
	010	534747	-		1	COVERING PLATE
	015	537943	-		1	ADAPTER
	020	352135-0106	-	M	2	HOSE .016
	030	352136-0127	-		1	GLAND FITT
	040	312151-0495	-		3	SCREW MF6S10X30FZB
	216	312145-0285	-		25	SLOTTED HEMFS4X6RFR
Common Parts						
	110	33164	-		1	APPLIANCE FRAME
	111	33165	-		1	HEATING BLOCK
	112	33167	-		1	PRESSURE ARM
	114	33166	-		1	SHEET (METAL)
	115	33168	-		1	BRACKET
	116	33169	-		1	TEARING BAR
	117	30702	-		2	TENSION SPRING
	118	33044	-		2	SHAFT
	119	33170	-		1	BRACKET
	120	33171	-		1	INSULATING PLATE
	121	33172	-		1	SHAFT
	122	33173	-		2	HEAD RAIL
	123	33174	-		1	SHAFT
	124	33175	-		2	SIDE PLATE
	125	33176	-		1	SIDE PLATE
	126	33177	-		2	ABRASION SAW BLADE
	127	33178	-		1	RUBBER SHIM
	128	33179	R		2	TEFLON CLOTH
	129	33180	-		1	SHAFT
	130	33470	-		2	BEARING
	131	33471	-		2	CATCH
	132	33472	-		1	BUSHING
	133	33473	-		2	SHAFT
	134	37648	-		2	SCREW
	139	90017-0004	-		1	HANDLE
	140	90059-0001	-		1	THERMOSTAT
	141	90142-0005	-	MM	500	HOSE
	142	90206-0009	-		1	HEATING ELEMENT
	203	311305-0238	-		1	SLOTTED PIRPC3X20FZB
	206	311411-0165	-		2	SPLIT PIN SP2,5X16RFR
	208	312111-0378	-		2	SCREW MC6S6X40FZB
	209	312111-0495	-		3	SCREW MC6S10X30FZB
	211	312115-0287	-		5	SCREW 4X8 A4 80
	212	312115-0291	-		3	SCREW MC6S4X12 A4 80
	213	312115-0371	-		4	SCREW 6X22 A4 80
	214	312115-0378	-		1	SCREW 6X40 A4 80
	215	312115-0447	-		3	SCREW 8X12 A4 80
	217	312145-0287	-		22	SLOTTED HEMFS4X8RFR
	218	312155-0491	-		1	SCREW MF6S10X20RFR
	219	312115-0380	-		1	SCREW 6X50 A4 80
	220	312115-0368	-		2	SCREW 6X16 A4 80
	221	312311-0459	-		2	STOP SCREW T6SS8X40FZB
	222	312318-0360	-		3	STOP SCREW SK6SS6X6RFR
	225	312601-0318	-		2	NUT M6M8FZB
	226	312605-0312	-		2	NUT M6M4RFR
	227	312605-0316	-		4	NUT M6M6RFR
	228	315105-0165	-		1	WASHER BRB8,4X16RFR
	229	315105-0173	-		5	WASHER BRB10,5X22RFR
	231	315754-0106	-		2	LOCKING WAE 4
	233	318800-0106	-		1	HANDLE BALLA D.40-M10
	235	321120-0101	-		2	BUSHING 6/8X6
	236	321120-0104	-		1	BUSHING 10/12X10
	237	90240-0028	-		2	PLAIN BEARING
	241	351175-0104	-	MM	300	CABLE AWM YELL/GREEN 1,5
	243	351127-0144	-	MM	1500	CABLE
	245	352020-0105	-		1	CONNECTIONOSA UE5
	247	353101-0130	-		1	CABLE SHOE
	260	90153-0017	-	G	150	ADHESIVE

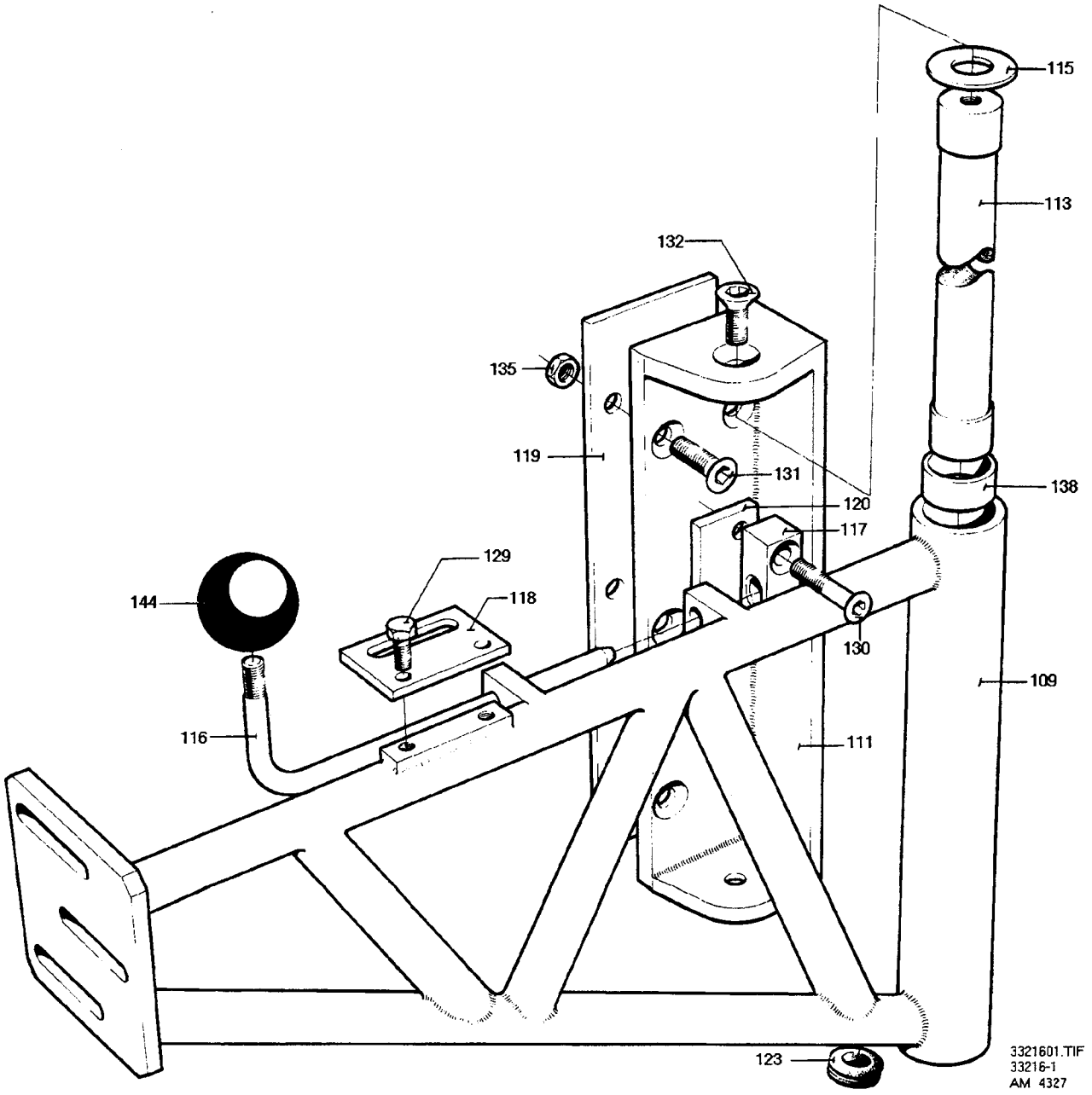
115
113
132
135
119
131
138
120
117
129
144
118
130
109
116
111
123
3321601.TIF
33216-1
AM 4327

From	Pos	Part No	SP	UN	Qty	Description
		C- 33216-0101				**CANTILEVER, ASS'Y**
Rebuilding Version						
		C- 33216-0102				**CANTILEVER, ASS'Y**
	119	33474	-		1	LACE
	120	33478	-		1	LACE
Common Parts						
	109	33217	-		1	SUPPORTING ARM
	111	33218	-		1	SUPPORTING ARM HOLDER
	113	27115	-		1	SHAFT
	115	27118	-		2	THRUST WASHER
	116	27729	-		1	LATCH
	117	27730	-		1	LOCKING COMPOUND
	118	27731	-		1	SHEET (METAL)
	123	90015-0016	-		1	BUSHING
	129	312105-0362	-		2	SCREW M6S6X8RFR
	130	312151-0459	-		2	SCREW MF6S8X40FZB
	131	312151-0495	-		6	SCREW MF6S10X30FZB
	132	312151-0536	-		2	SCREW MF6S12X30FZB
	135	312621-0320	-		6	NUT ML6M10FZB
	138	321120-0171	-		2	BUSHING 30/34X30
	144	318800-0106	-		1	HANDLE BALLA D.40-M10

From	Pos	Part No	SP	UN	Qty	Description

Tetra Pak

Pos No on indexpage

Illustration ID

Page No

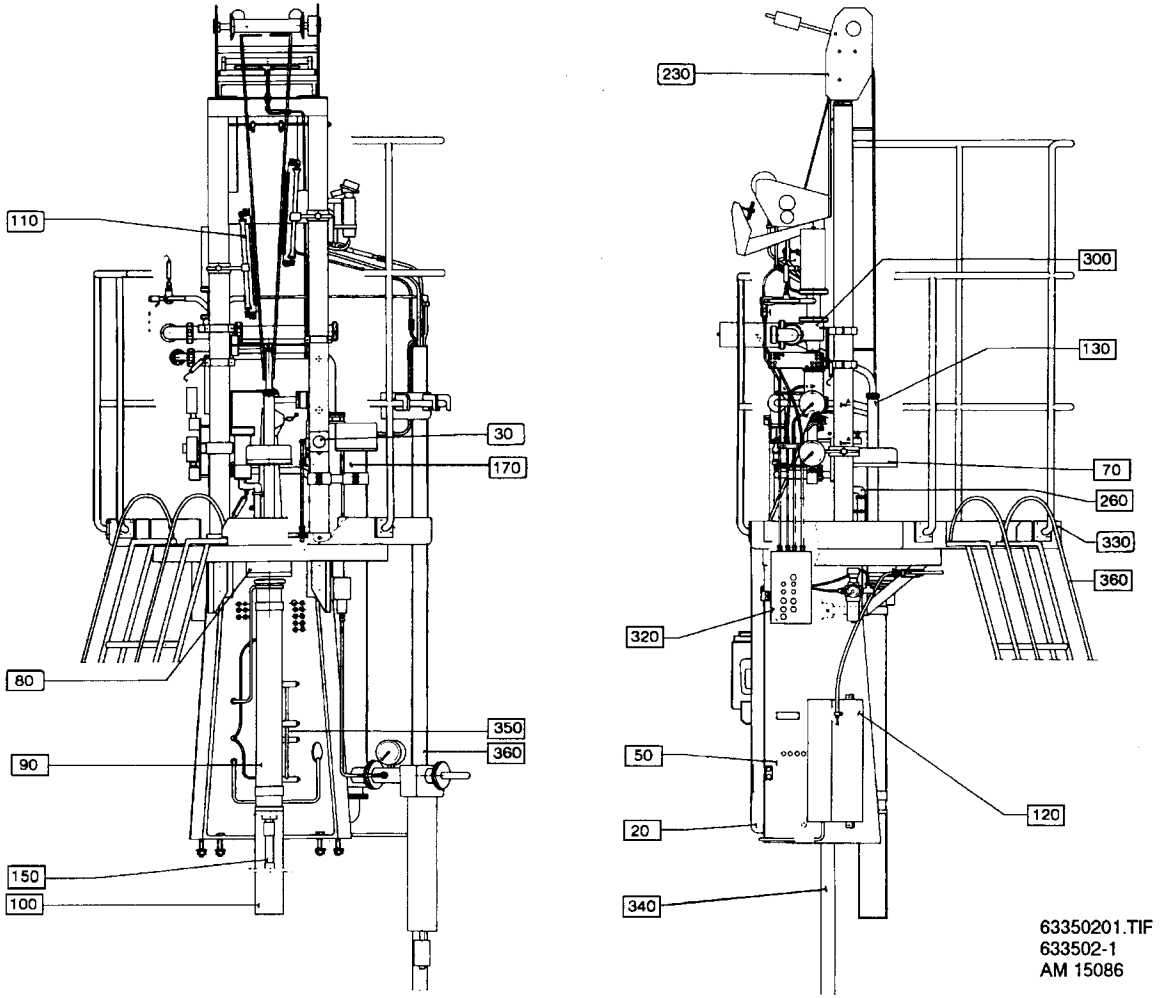
110
30
170
80
350
360
90
150
100
230
300
130
70
260
330
360
320
50
120
20
340
63350201.TIF
633502-1
AM 15086

Pos	Group No	Description	Page
02-F000	633202-160V	Superstructure	15
***02-F000**	247463-030V	Superstructure	17
02-F020	11126-010V	Door	19
02-F030	209969-010V	Operation Device	21
02-F050	445679-020V	Terminal Plinth	23
02-F070	13247-010V	Upper Forming Ring	25
02-F080	33038-020V	Lower Forming Ring	27
02-F090	552869-010V	(Tubular)Jacket	29
02-F100	552873-010V	Teflon Hose	31
***02-F120**	450044-010V	Valve Group Water	33
***02-F130**	449122-010V	Tube Heater	35
.	36351-010V	Pressure Roller	37
02-F150	38699-010V	Float Assembly	39
02-F170	247181-060V	Sterile Air Unit	41
.	12270-040V	Sterile Filter	43
.	38094-010V	Gauge Group	45
.	30119-040V	Air Heater	47
*.	247207-010V	Air Valve	49
.	497371-010V	Vent. Pipe Air Valve	51
02-F230	37496-040V	Sterilizer	53
.	32744-020V	Level Guard	55
.	247368-030V	Sterilization Bath	57
.	268188-010V	Paper guide	59
.	497924-010V	Peroxide Cooler	61
***02-F260**	236892-030V	Element Group	63
*.	232955-020V	Element	65
*.	207637-020V	Element	67
***02-F300**	246893-040V	Valve	69
.	440630-010V	Valve	71
02-F320	247382-040V	Valve Group	73
02-F330	247420-010V	Platform	75
02-F340	449123-030V	Pipe	77
02-F360	263881-010V	Ladder	79
02-F370	538979-010V	Fan Assembly	81
*.	29098-010V	Edge Drier	83
02-F320	24738202	247382-040V	Valve Group	97
02-F330	24742001	247420-010V	Platform	99
02-F340	44912302	449123-030V	Pipe	101
02-F360	26388101	263881-010V	Ladder	103
	26388102	263881-010V	Ladder	105
02-F370	53897901	538979-010V	Fan Assembly	107

***) Deviates from the B-group development step**

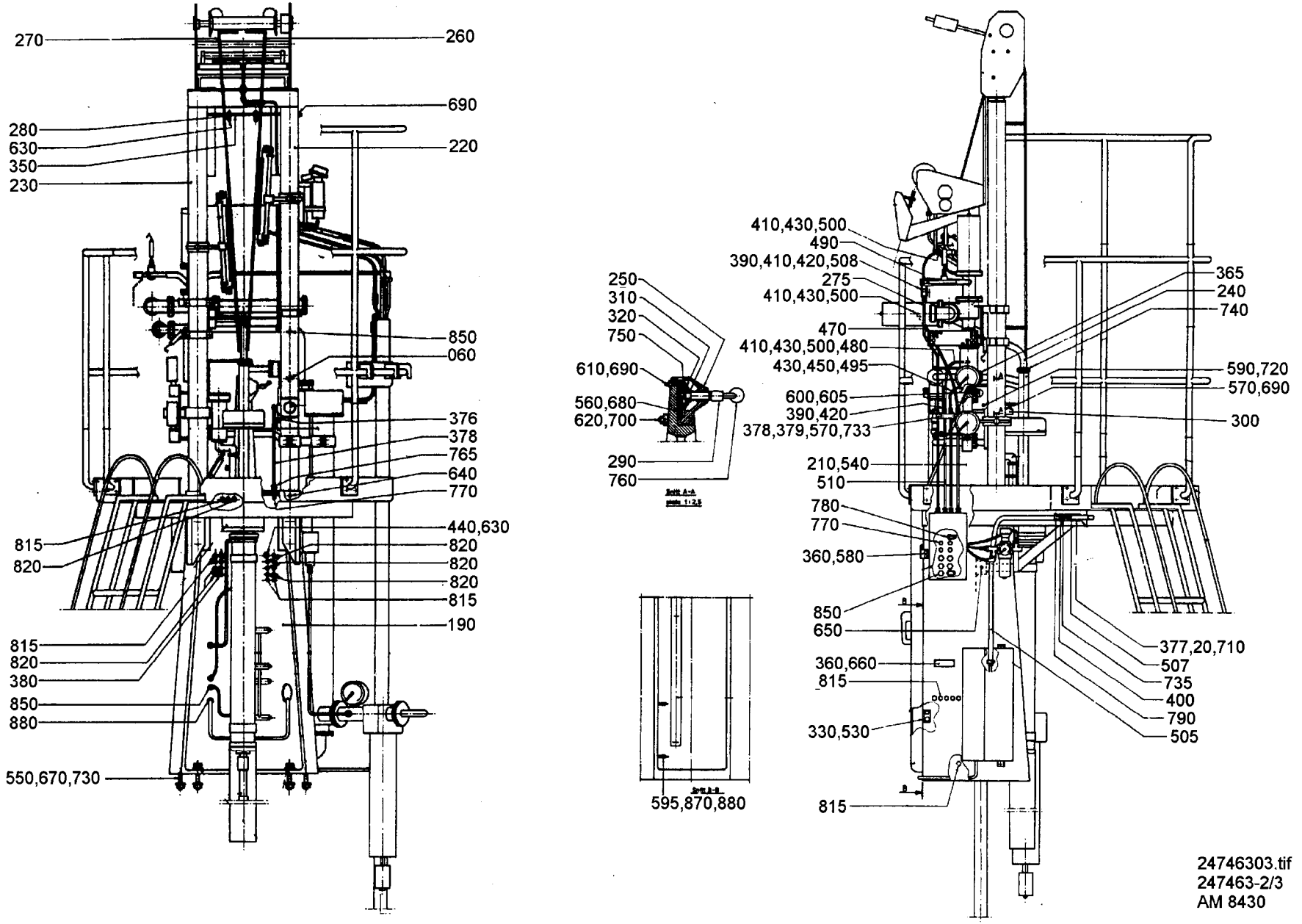
270
260
690
280
630
350
230
220
850
060
376
378
765
640
770
440,630
815
820
820
820
820
815
190
815
820
380
850
880
550,670,730
250
310
320
750
610,690
560,680
620,700
290
760
595,870,880
410,430,500
490
390,410,420,508
275
410,430,500
470
410,430,500,480
430,450,495
600,605
390,420
378,379,570,733
210,540
510
780
770
360,580
850
650
360,660
815
330,530
815
365
240
740
590,720
570,690
300
377,20,710
507
735
400
790
505
24746303.tif
247463-2/3
AM 8430

From	Pos	Part No	SP	UN	Qty	Description
TCA/500						
		C- 247463-0301				**SUPERSTRUCTURE, ASS'Y**
	240	466157	-		1	PIPE BEND
	260	10380	-		1	ROD RIGHT
	270	10381	-		1	ROD LEFT
TCA/150 ,300						
		C- 247463-0302				**SUPERSTRUCTURE, ASS'Y**
	240	466158	-		1	PIPE BEND
	260	497926	-		1	ROD RIGHT
	270	497927	-		1	ROD LEFT
Common Parts						
	190	G- 247471	-		1	MACHINE BODY LOWER
	210	G- 11184	-		1	MACHINE BODY UPPER
	220	12353	-		1	COLUMN RIGHT
	230	12354	-		1	COLUMN LEFT
	250	G- 2404	-		1	CAP
	275	466105	-		1	PIPE
	280	1756	-		4	ROD SUPPORT
	290	2410	-		1	HANDLE CRANK
	300	6462	-		1	SUPPORT
	310	10385	-		1	WASHER
	320	10386	-		1	LOCKING FINGER
	330	11154	-		2	ANGLE
	340	11155	-		2	HINGE
	350	11165-0001	-		2	STRUT
	360	20497	-		1	GROUP NUMBER PLATE
	365	90091-0180	-		1	GASKET
	375	282747	-		1	PIPE
	376	282748	-		1	PIPE
	377	90239-0514	-		2	BRACKET
	378	466106	-		1	CRAMP
	379	466107	-		1	LID
	380	90002-0003	-		4	BLANK-OFF PLUG
	390	90030-0052	-		4	PIPE CONNECTION
	400	90163-0052	-		2	NIPPLE
	410	90055-0042	-		4	NIPPLE
	420	90055-0056	-		4	HOSE COUPLING
	430	90055-0057	-		4	HOSE COUPLING
	440	90110-0024	-		1	PLUG
	460	90131-0002	-		1	HOSE COUPLING
	470	90148-0010	-	MM	X	HOSE
	480	90148-0010	-	MM	X	HOSE
	490	90148-0010	-	MM	X	HOSE
	495	90148-0010	-	MM	X	HOSE
	500	90163-0001	-		3	CONNECTION
		90163-0300	R		0	* GASKET
	505	90162-0027	-	M	1	HOSE
	507	90187-0074	-		1	BALL VALVE
	508	90235-0180	-		1	VALVE
	510	476817	-		3	PIPE
	520	312121-0291	-		4	SLOTTED HEMCS4X12FZB
	530	312101-0366	-		6	SCREW M6S6X12FZB
	540	312101-0455	-		4	SCREW M6S8X30FZB
	550	312101-0636	-		4	SCREW M6S16X80FZB
	560	312105-0333	-		1	SCREW M6S5X25 A2 80
	570	312105-0372	-		3	SCREW M6S6X25RFR
	580	312111-0370	-		4	SCREW MC6S6X20FZB
	590	312111-0459	-		4	SCREW MC6S8X40FZB
	595	312122-0289	-		2	SLOTTED HEMCS4X10MSGFN
	600	312306-0360	-		1	STOP SCREW P6SS6X6FZB
	605	312311-0372	-		1	STOP SCREW T6SS6X25FZB
	610	312311-0374	-		3	STOP SCREW T6SS6X30FZB
	620	312311-0457	-		2	STOP SCREW T6SS8X35FZB
	630	312316-0443	-		8	STOP SCREW SK6SS8X8FZB
	640	312316-0447	-		8	STOP SCREW SK6SS8X12FZB
	650	312316-0487	-		4	STOP SCREW SK6SS10X12FZB
	660	312502-0221	-		4	DRIVE SCREKDS4X6FNB
	670	312601-0324	-		4	NUT M6M16FZB
	680	312605-0314	-		1	NUT M6M5RFR
	690	312605-0316	-		6	NUT M6M6RFR
	700	312605-0318	-		2	NUT M6M8RFR
	710	315101-0136	-		4	WASHER BRB4,3X8FZB
	720	315101-0165	-		3	WASHER BRB8,4X16FZB
	730	315101-0186	-		8	WASHER BRB17X30FZB
	733	315105-0153	-		2	WASHER BRB6,4X12RFR
	735	315233-0110	-		4	SEAL RING R1/4"
	740	315250-0101	R		1	GASKET 32/25
	750	315750-0109	-		1	CIRCLIP SGA12
	760	318800-0104	-		1	HANDLE BALLA D.30-M8
	765	342752-0102	-		2	STRAIGHT C
	770	342722-0202	-		10	PIPE COUPLD=6-R1/8"
	780	342732-0104	-		4	ELBOW PIPE D8-R1/4"
	790	342991-0102	-		2	HOSE CLIP 13-20MMRFR
	815	352103-0105	-		13	CABLE GLANR.STR 11
	820	352103-0106	-		12	CABLE GLANR.ST 11
	830	352103-0110	-		1	CABLE GLAND STR 16
	850	352101-0103	-		22	LEAD-IN G 18,6
	860	352101-0105	-		3	LEAD-IN G 22,5
	870	352113-0102	-		4	RIBBON CLA
	880	352113-0202	-		2	ARMATURE -TM2-S8

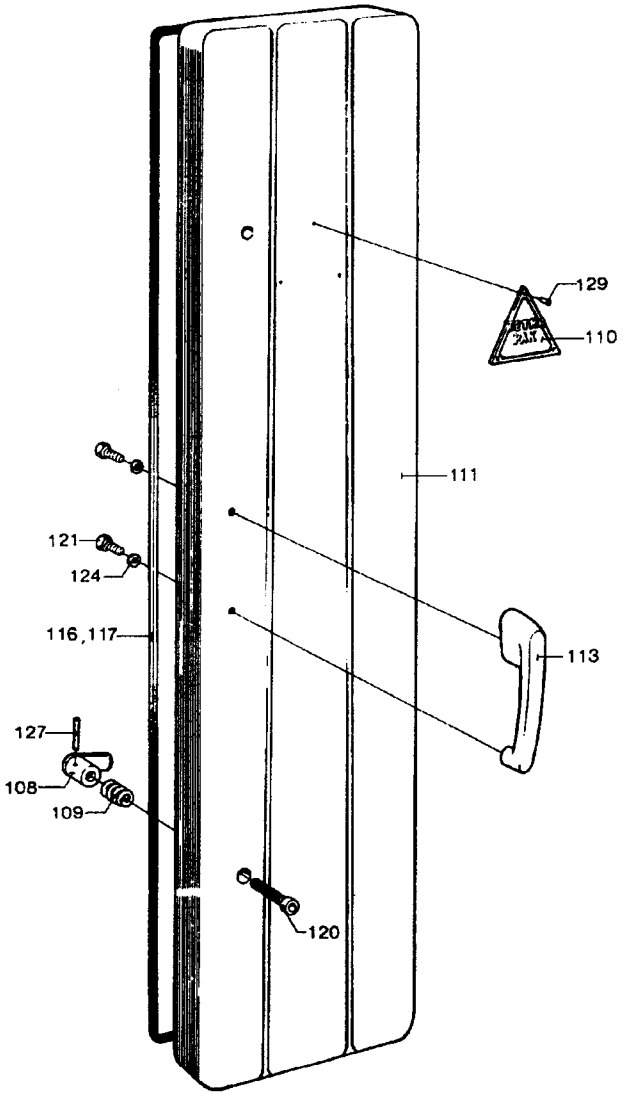

1112601.TIF
11126-1
AM 3981

From	Pos	Part No	SP	UN Qty	Description
		C- 11126-0101			**DOOR, ASS'Y**
	108	2702	-	2	LATCH
	109	2703	-	2	COMPRESSION SPRING
	110	3675	-	1	TETRA PAK NAME PLATE
	111	11077	-	1	DOOR
	112	G- 11158	-	1	HANDLE
	116	90143-0028	-	MM 2810	STRIP
	117	90153-0002	-	X	ADHESIVE
	120	312115-0459	-	2	SCREW 8X40 A4 80
	121	312105-0327	-	2	SCREW M6S5X12 A4 80
	124	315101-0146	-	2	WASHER BRB5,3X10FZB
	127	311307-0240	-	2	SLOTTED PIRPD3X24FZB
	129	311508-0199	-	3	RIVET KN2X6ALUM.

From	Pos	Part No	SP	UN Qty	Description

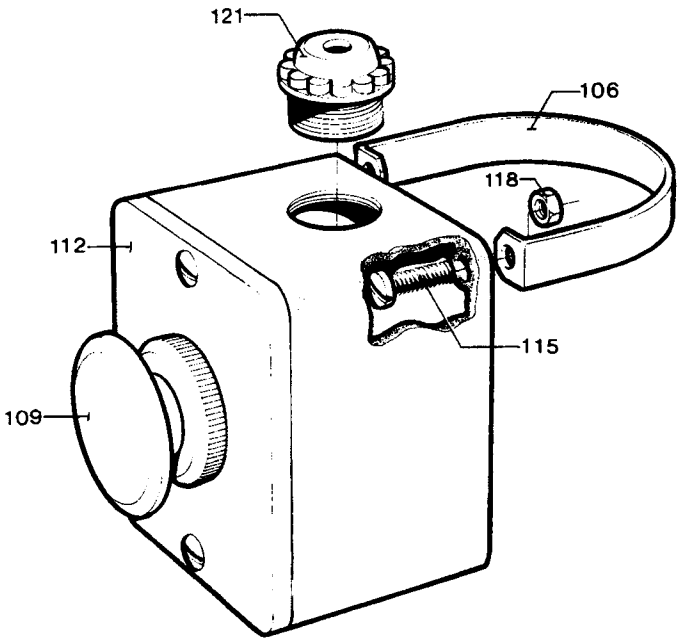
121
106
118
112
115
109

Last Alteration: AM

Corresponding group: 209969-010V
Assembly Drawing: 209969-1

Issue: **930702**

From	Pos	Part No	SP	UN	Qty	Description
		C- 209969-0101				**OPERATION DEVICE, ASS'Y**
	106	10782	-		2	CLAMP STRIP
	109	90064-0052	-		1	PUSH BUTTON
	112	90066-0013	-		1	PUSH BUTTON BOX
	115	312125-0329	-		4	SLOTTED HEMCS5X16RFR
	118	312605-0314	-		4	NUT M6M5RFR
	121	352101-0105	-		1	LEAD-IN G 22,5

From	Pos	Part No	SP	UN	Qty	Description

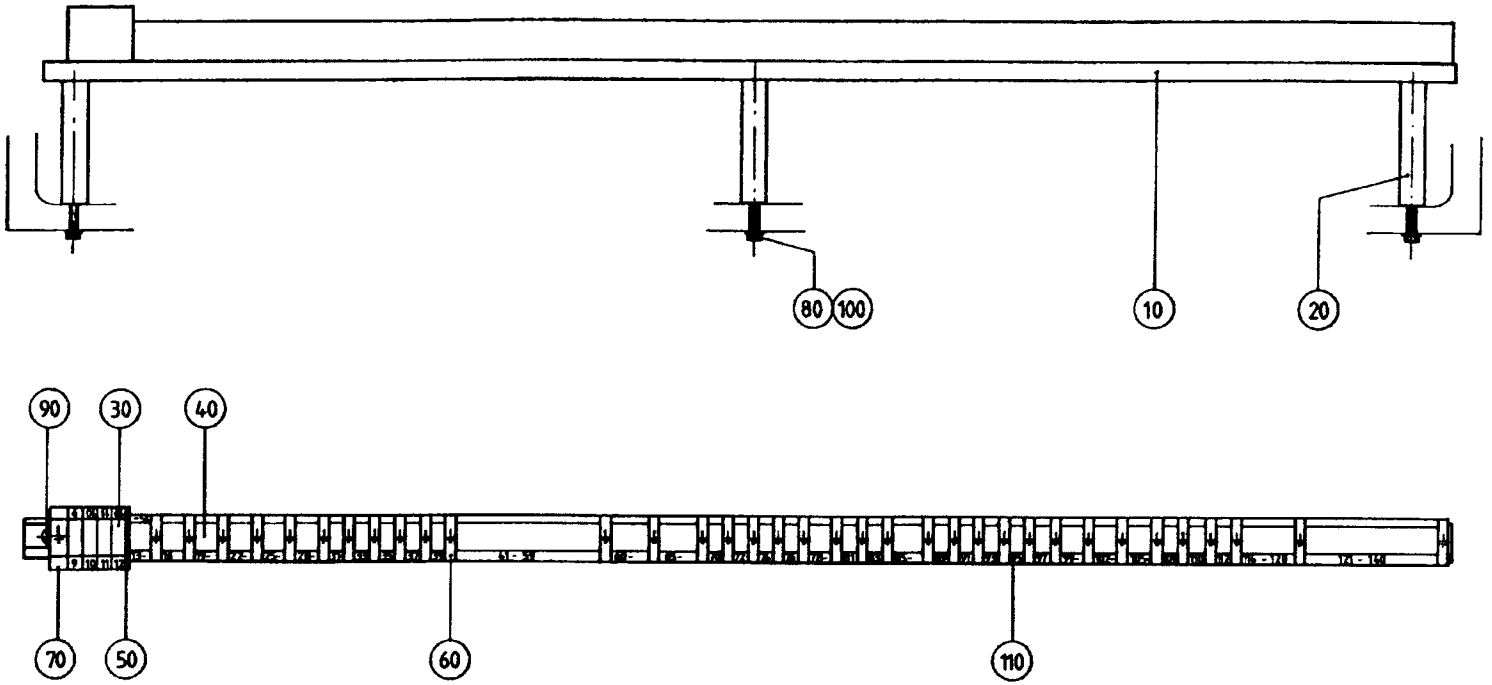

44567902.TIF
445679-2
AM 8784

From	Pos	Part No	SP	UN Qty	Description
		C- 445679-0201			**TERMINAL PLINTH, ASS'Y**
	010	445677	-	1	MOUNTING RAIL
	020	445678	-	3	SPACER
	030	90077-0041	-	4	TERMINAL BLOCK
	040	90077-0064	-	136	TERMINAL BLOCK
	050	90093-0008	-	1	END PLATE
	060	90135-0022	-	35	EARTHING CLAMP
	070	90135-0024	-	1	EARTHING CLAMP
	080	312101-0376	-	3	SCREW M6S6X35FZB
	090	312141-0368	-	3	SLOTTED HEMFS6X16FZB
	100	315101-0153	-	3	WASHER BRB6,4X12FZB
	110	359011-0804	-	2	SIGN BOARDATS 1-150

From	Pos	Part No	SP	UN Qty	Description

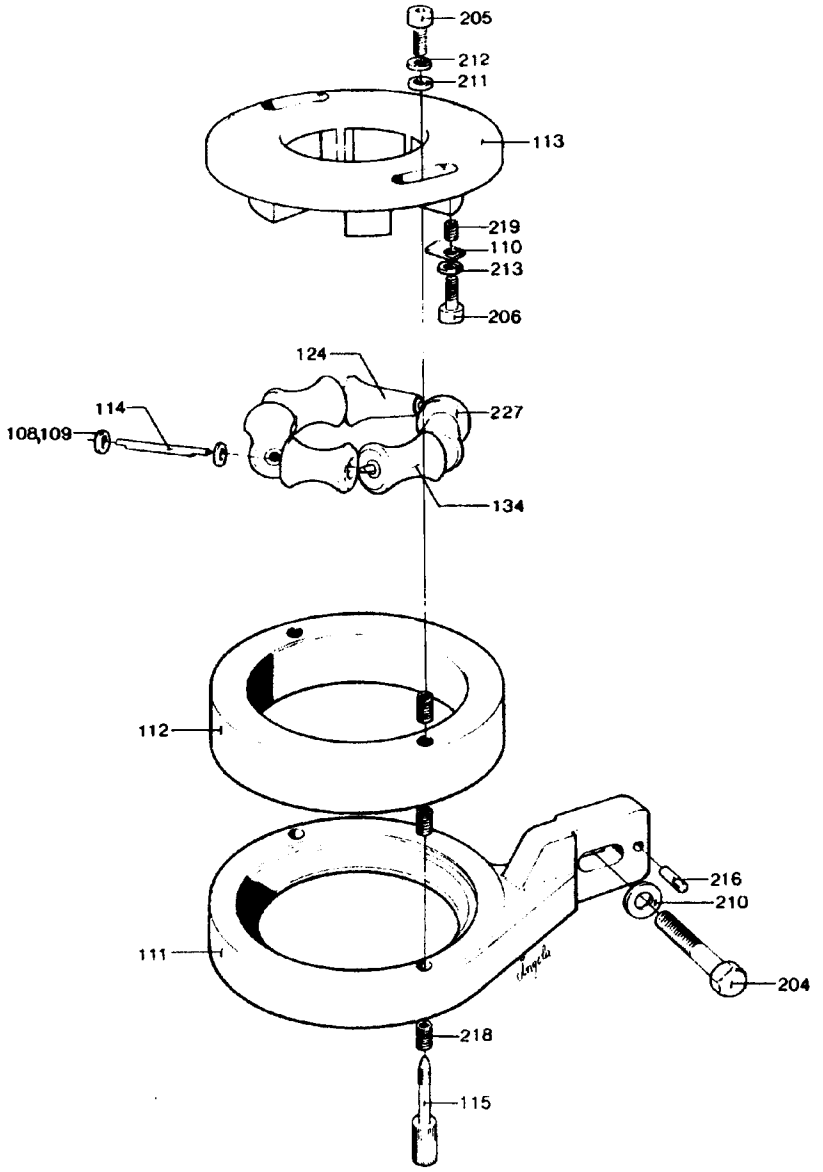

1324701.tif
13247-1
AM 10854

From	Pos	Part No	SP	UN	Qty	Description
TCA-machines						
	000	**C- 13247-0101**				**UPPER FORMING RING, ASS'Y (180,178 ML)**
	116	13242	-		1	SPACER LUG
	124	13244	-		1	ROLL
	134	13245	-		4	ROLL
	204	312105-0501	-		1	SCREW M6S10X50RFR
	227	13474	-		1	ROLL
	000	**C- 13247-0102**				**UPPER FORMING RING, ASS'Y (189 ML)**
	116	13242	-		1	SPACER LUG
	124	13243	-		1	ROLL
	134	13246	-		4	ROLL
	204	312105-0501	-		1	SCREW M6S10X50RFR
	227	13475	-		1	ROLL
	000	**C- 13247-0103**				**UPPER FORMING RING, ASS'Y (200 ML)**
	116	13242	-		1	SPACER LUG
	124	13126	-		1	ROLL
	134	13127	-		4	ROLL
	204	312105-0501	-		1	SCREW M6S10X50RFR
	227	13128	-		1	ROLL
	000	**C- 13247-0104**				**UPPER FORMING RING, ASS'Y (124 ML)**
	116	13242	-		1	SPACER LUG
	124	36383	-		1	ROLL
	134	36386	-		4	ROLL
	204	312105-0501	-		1	SCREW M6S10X50RFR
	227	36387	-		1	ROLL
	000	**C- 13247-0105**				**UPPER FORMING RING, ASS'Y (150 ML)**
	116	13242	-		1	SPACER LUG
	124	36384	-		1	ROLL
	134	36385	-		4	ROLL
	204	312105-0501	-		1	SCREW M6S10X50RFR
	227	36388	-		1	ROLL
TC-machines						
	000	**C- 13247-0111**				**UPPER FORMING RING, ASS'Y (180,178 ML)**
	124	13244	-		1	ROLL
	134	13245	-		4	ROLL
	204	312105-0499	-		1	SCREW M6S10X40RFR
	227	13474	-		1	ROLL
	000	**C- 13247-0112**				**UPPER FORMING RING, ASS'Y (189 ML)**
	124	13243	-		1	ROLL
	134	13246	-		4	ROLL
	204	312105-0499	-		1	SCREW M6S10X40RFR
	227	13475	-		1	ROLL
	000	**C- 13247-0113**				**UPPER FORMING RING, ASS'Y (200 ML)**
	124	13126	-		1	ROLL
	134	13127	-		4	ROLL
	204	312105-0499	-		1	SCREW M6S10X40RFR
	227	13128	-		1	ROLL
	000	**C- 13247-0114**				**UPPER FORMING RING, ASS'Y (125,118 ML)**
	124	36383	-		1	ROLL
	134	36386	-		4	ROLL
	204	312105-0499	-		1	SCREW M6S10X40RFR
	227	36387	-		1	ROLL
	000	**C- 13247-0115**				**UPPER FORMING RING, ASS'Y (150 ML)**
	124	36384	-		1	ROLL
	134	36385	-		4	ROLL
	204	312105-0499	-		1	SCREW M6S10X40RFR
	227	36388	-		1	ROLL
Common Parts						
	110	4999	-		6	WASHER
	113	5006	-		1	LID, UPPER FORMING RING
	114	5007	-		6	SHAFT
	206	312115-0291	-		6	SCREW MC6S4X12 A4 80
	211	315105-0153	-		2	WASHER BRB6,4X12RFR
	213	315402-0136	-		6	WASHER FBB4,1RFR
	219	90026-0002	-		6	THREADED BUSH
	108	2033-0002	-		12	WASHER
	109	2033-0003	-		12	WASHER
	111	5004	-		1	UPPER FORMING RING
	112	5005	-		1	SPACING WASHER
	115	5008	-		2	KNURLED SCREW
	205	312115-0368	-		2	SCREW 6X16 A4 80
	210	315105-0173	-		1	WASHER BRB10,5X22RFR
	212	315402-0156	-		2	WASHER FBB6,5RFR
	216	311303-0310	-		1	SLOTTED PIRPB5X20FZB
	218	90026-0004	-		6	THREADED BUSH

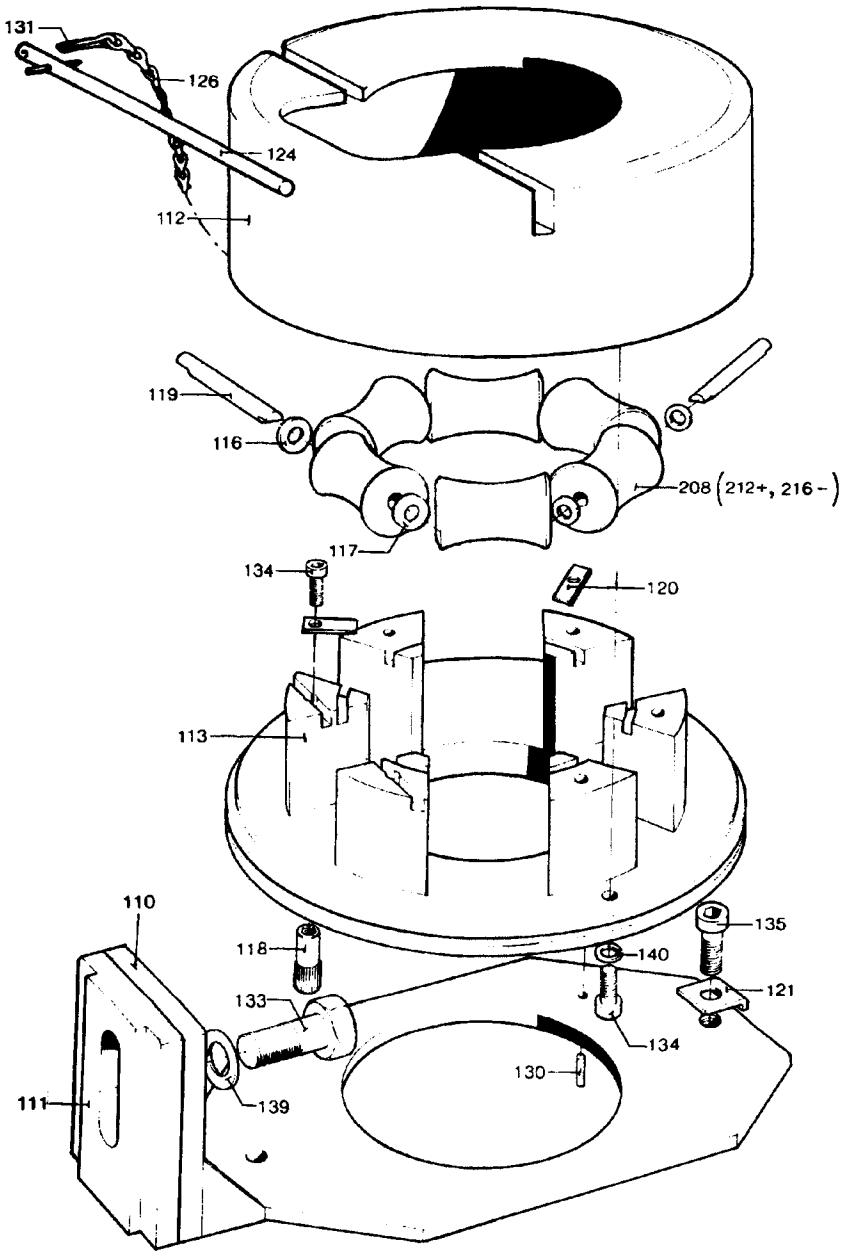

3303803.TIF
33038-3
AM 12583

From	Pos	Part No	SP	UN	Qty	Description
Volume 200 - 118, 150 ml SLIM						
		C- 33038-0201				**LOWER FORMING RING, ASS'Y** (125,118 ML)
		C- 33038-0202				**LOWER FORMING RING, ASS'Y** (150 ML)
		C- 33038-0203				**LOWER FORMING RING, ASS'Y** (180 ML)
		C- 33038-0204				**LOWER FORMING RING, ASS'Y** (189 ML)
		C- 33038-0205				**LOWER FORMING RING, ASS'Y** (200 ML)
		C- 33038-0208				**LOWER FORMING RING, ASS'Y** (150 ML SLIM)
	110	19162	-		1	HOLDER
	111	13242	-		1	SPACER LUG (150 ml SLIM)
	112	13284	-		1	LID
	113	19160	-		1	RING
	118	2795	-		6	NUT
	119	4998	-		6	SHAFT
	120	4999	-		6	WASHER
	121	19150	-		2	THRUST WASHER
	124	12155	-		1	STOP PIN
	126	90155-0001	-	MM	500	CHAIN
	130	311305-0233	-		1	SLOTTED PIRPC3X10FZB
	131	311411-0179	-		2	SPLIT PIN SP3,2X16RFR
	133	312105-0495	-		1	SCREW M6S10X30RFR
	134	312115-0293	-		8	SCREW 4 X 16 A4 80
	135	312115-0366	-		2	SCREW 6X12 A4 80
	140	315401-0136	-		2	WASHER FBH 4,1 FZB
	208	5211-0001	-		6	ROLLER TO LOWER RING (125,118 ML)
	208	5210-0001	-		6	ROLLER TO LOWER RING (150 ML)
	208	6443-0001	-		6	ROLLER TO LOWER RING (180 ML)
	208	5206-0001	-		6	ROLLER TO LOWER RING (189 ML)
	208	5205-0001	-		6	ROLLER TO LOWER RING (200 ML)
	208	535098	-		6	ROLLER, (STD.SIZE) (150 ML SLIM)
	212	5211-0002	-		6	ROLLER TO LOWER RING (125,118 ML)
	212	5210-0002	-		6	ROLLER TO LOWER RING (150 ML)
	212	13248-0001	-		6	TRIMMING ROLLER PLUS (180 ML)
	212	13249-0001	-		6	TRIMMING ROLLER PLUS (189 ML)
	212	13129-0001	-		6	TRIMMING ROLLER PLUS (200 ML)
	212	537033	-		6	TRIMMING ROLLER PLUS (150 ML SLIM)
	216	5211-0003	-		6	ROLLER TO LOWER RING (125,118 ML)
	216	5210-0003	-		6	ROLLER TO LOWER RING (150 ML)
	216	13248-0002	-		6	TRIMMING ROLLER MINUS (180 ML)
	216	13249-0002	-		6	TRIMMING ROLLER MINUS (189 ML)
	216	13129-0002	-		6	TRIMMING ROLLER MINUS (200 ML)
	216	537032	-		6	TRIMMING ROLLER MINUS (150 ML SLIM)

From	Pos	Part No	SP	UN	Qty	Description	
Common Parts							
	116	2033-0002	-		12	WASHER	
	117	2033-0003	-		12	WASHER	
	139	315105-0173	-		1	WASHER	BRB10,5X22RFR

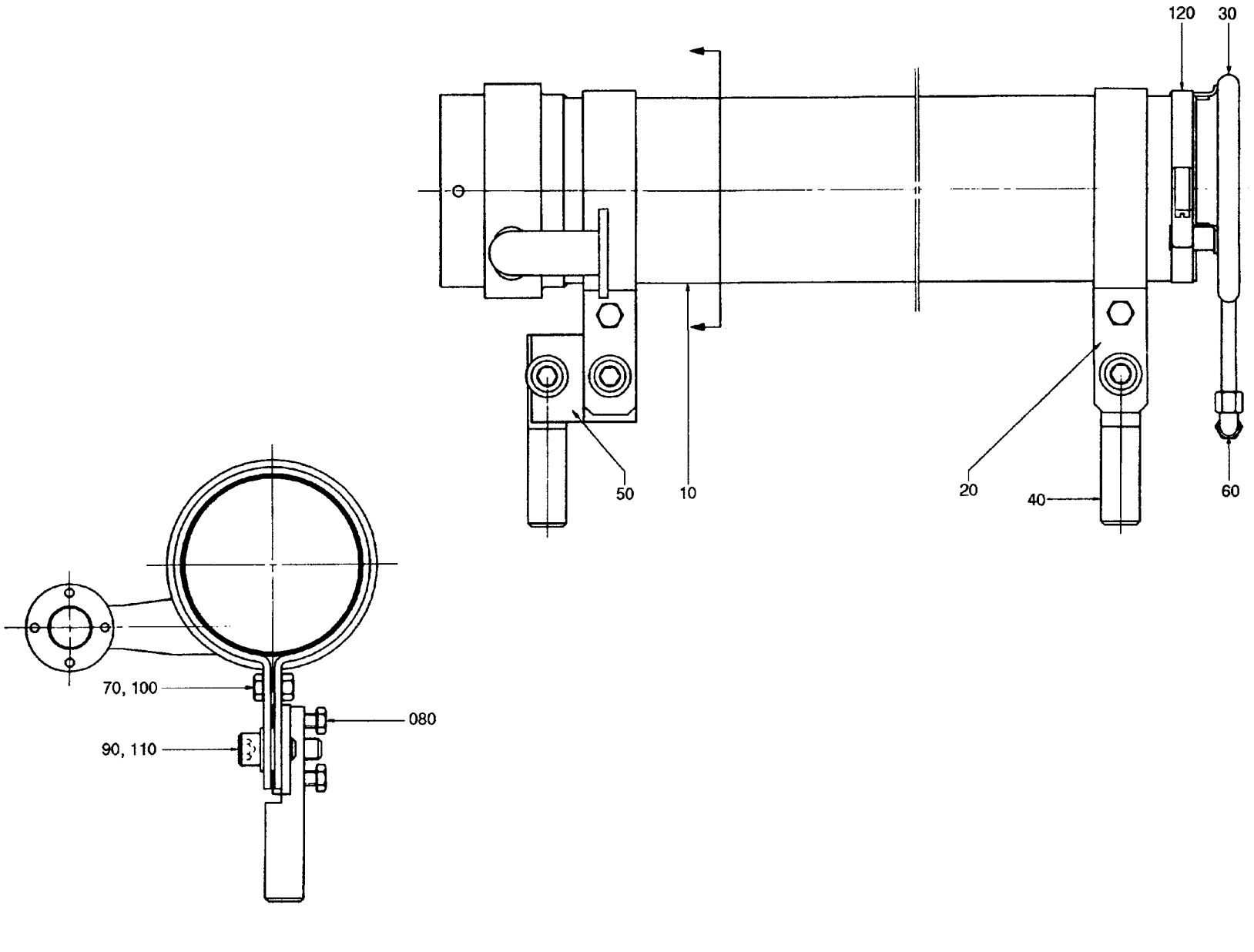

55286901.TIF
552869-1
AM 9791

From	Pos	Part No	SP	UN	Qty	Description
		C- 552869-0101				**(TUBULAR)JACKET, ASS'Y**
	010	552868	-		1	(TUBULAR)JACKET
	020	12167	-		2	CLAMP RING
	030	32724-0002	-		2	COOLING PIPE
	040	12168	-		2	HOLDER
	050	552870	-		1	LACE
	060	90030-0077	-		1	PIPE CONNECTION
	070	312105-0451	-		2	SCREW M6S8X20RFR
	080	312105-0455	-		4	SCREW M6S8X30RFR
	090	312115-0538	-		3	SCREW 12X35 A4 80
	100	312605-0318	-		2	NUT M6M8RFR
	110	315115-0178	-		5	WASHER TBRB13X24RFR
	120	342991-0115	-		1	HOSE CLIP 104-138MMRFR

From	Pos	Part No	SP	UN	Qty	Description

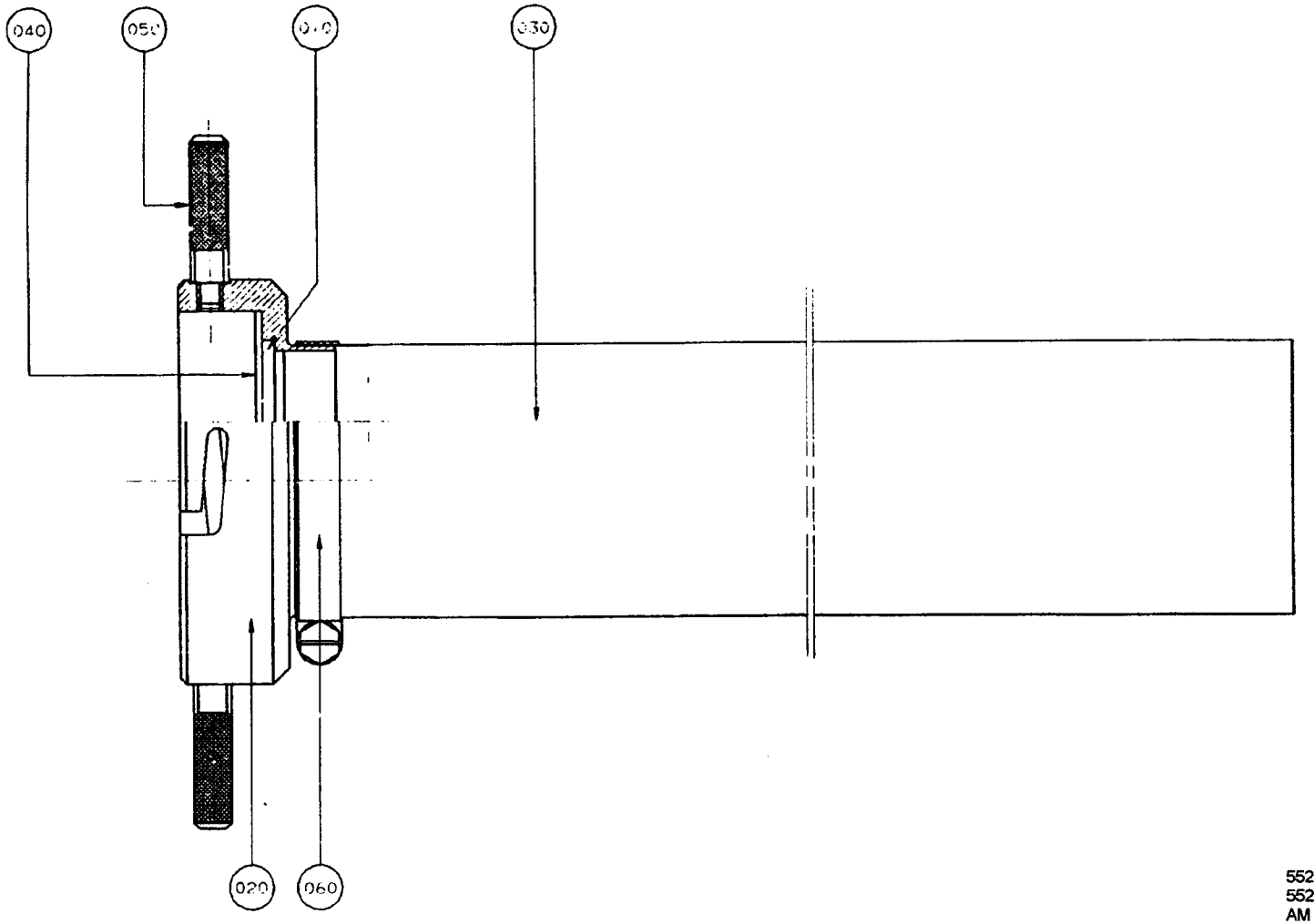

55287301.tif
552873-1
AM 9791

From	Pos	Part No	SP	UN	Qty	Description
Volume 200, 250 ml						
		C- 552873-0101				**TEFLON HOSE, ASS'Y**
	010	11081-0002	-		1	GUIDE RING
Volume 284, 300 ml						
		C- 552873-0101				**TEFLON HOSE, ASS'Y**
	010	11081-0001	-		1	GUIDE RING
Volume 180, 189 ml						
		C- 552873-0101				**TEFLON HOSE, ASS'Y**
	010	11081-0004	-		1	GUIDE RING
Common Parts						
	020	552871	-		1	HOSE ATTACHMENT
	030	11084	-		1	TEFLON HOSE
	040	552872	-		1	WASHER
	050	12195	-		1	HANDLE
	060	342991-0113	-		1	HOSE CLIP 77-95MMRFR

From	Pos	Part No	SP	UN	Qty	Description

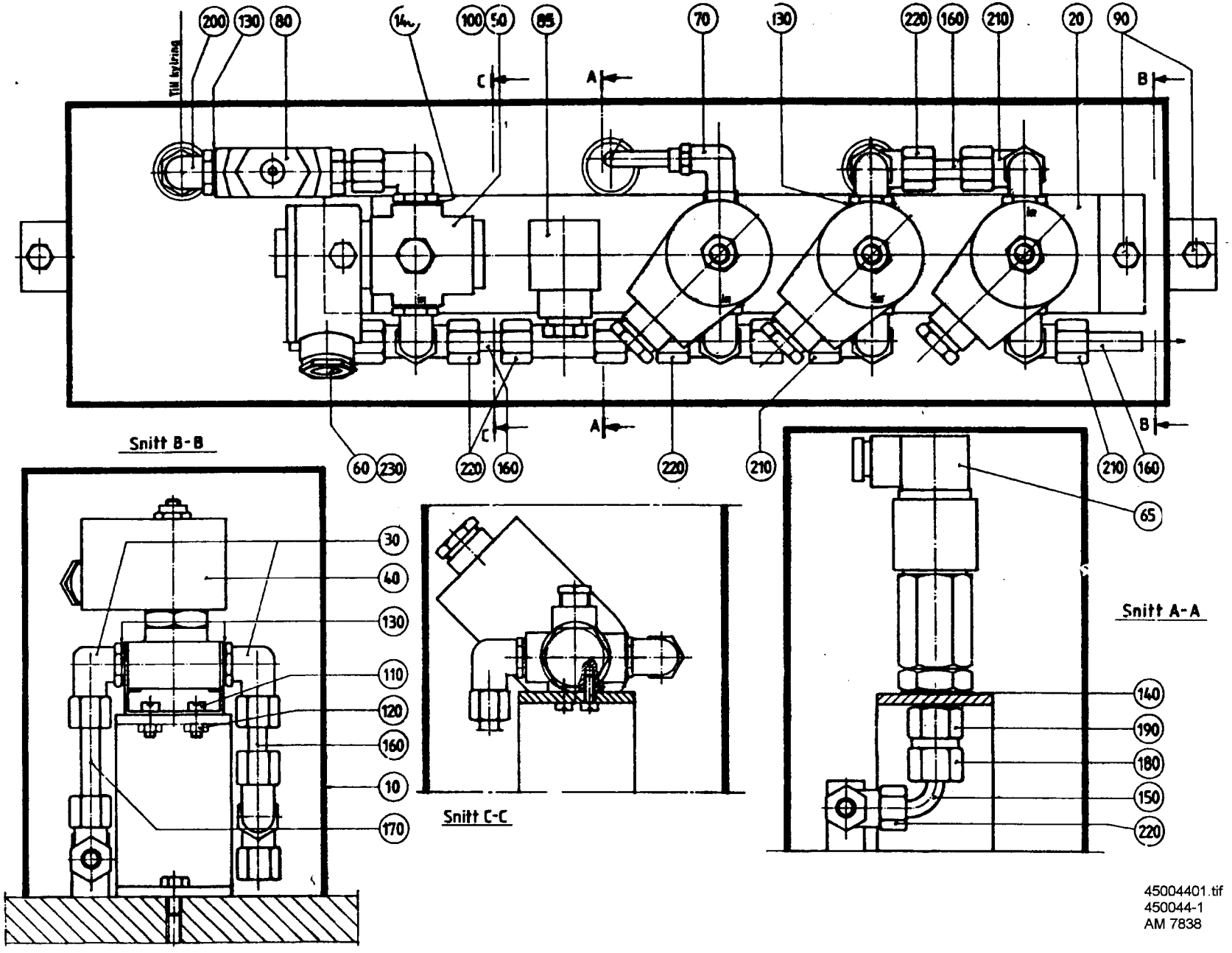

45004401.tif
450044-1
AM 7838

From	Pos	Part No	SP	UN	Qty	Description
		C- 450044-0101				**VALVE GROUP WATER, ASS'Y**
	010	476473	-		1	PROTECTIVE CASING
	020	449881	-		1	BRACKET
	030	90030-0056	-		7	PIPE CONNECTION
	040	90042-0098	-		3	SOLENOID VALVE
	050	90042-0023	-		1	SOLENOID VALVE
	060	90099-0001	-		4	NUT
	065	90110-0095	-		1	CONTAKT
	070	90224-0101	-		1	CONNECTION
	080	90235-0020	-		1	VALVE
	085	90274-0042	-		1	GUARD
	090	312101-0366	-		4	SCREW M6S6X12FZB
	100	312121-0291	-		2	SLOTTED HEMCS4X12FZB
	110	312121-0327	-		6	SLOTTED HEMCS5X12FZB
	120	312601-0314	-		6	NUT M6M5FZB
	130	315233-0110	-		1	SEAL RING R1/4"
	140	315233-0111	-		8	SEAL RING R3/8"
	150	341001-0148	-	MM	50	COPPER TUB
	160	341001-0148	-	MM	45	COPPER TUB
	170	341001-0148	-	MM	60	COPPER TUB
	180	342710-0203	-		1	REDUCER RBM12/8
	190	342723-0109	-		1	PIPE COUPLGI-12-3/8"
	200	342730-0104	-		1	ELBOW PIPE WA-8-1/4"
	210	342736-0103	-		3	ELBOW PIPE W-8
	220	342746-0103	-		4	T-CONNECTI T-8
	230	352103-0101	-		4	CABLE GLAND ST 9

From	Pos	Part No	SP	UN	Qty	Description

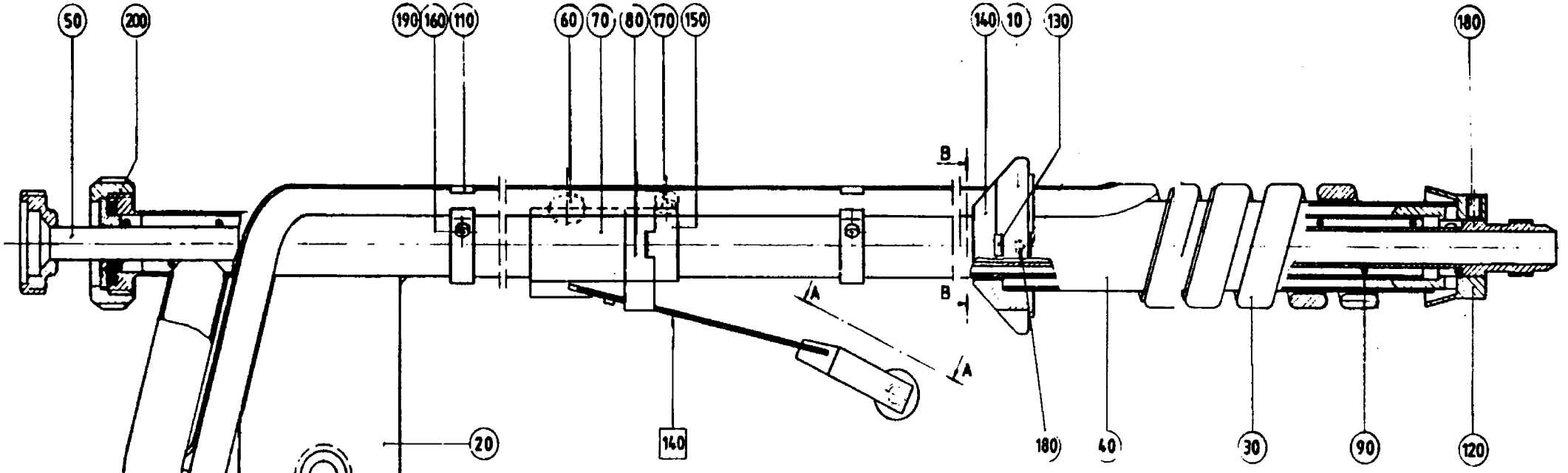

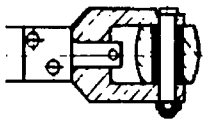

VY A-A

SNITT B-B

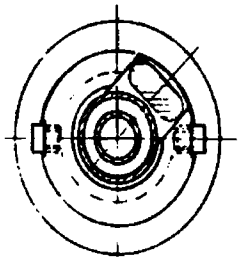

44912201.tif
449122-1
AM 6084

From	Pos	Part No	SP	UN	Qty	Description
Volume 180, 189 ml						
		C- 449122-0101				**TUBE HEATER, ASS'Y**
	010	33021-0001	-		1	RING
Volume 200 ml						
		C- 449122-0102				**TUBE HEATER, ASS'Y**
	010	33021-0002	-		1	RING
Volume 250 ml						
		C- 449122-0103				**TUBE HEATER, ASS'Y**
	010	33021-0003	-		1	RING
Volume 284, 300 ml						
		C- 449122-0104				**TUBE HEATER, ASS'Y**
	010	33021-0004	-		1	RING
Common Parts						
	F140	C- 36351-0102	-		1	PRESSURE ROLLER
	020	269398	-		1	PROTECTION PIPE
	030	278513	-		1	ELEMENT
	040	33023	-		1	REFLECTOR TUBE
	050	269399	-		1	FILLER TUBE
	060	11052	-		1	SCREW
	070	11053	-		1	SPRING HOLDER
	080	11054	-		1	GUIDE RING
	090	11146	-		1	GUIDE SPRING
	100	12265	-		1	BUSHING
	110	20914	-		2	HOLDER
	120	33019	-		1	SLEEVE
	130	33498	-		2	LOCK SHEET
	140	209170	-		1	HOLDER
	150	209173	-		1	SETTING RING
	152	90326-0012	-		1	PROTECTIVE COVER
	155	90326-0020	-		1	SOCKET
	160	312115-0297	-		2	SCREW 4X25 A4 80
	170	312115-0366	-		1	SCREW 6X12 A4 80
	180	312318-0360	-		4	STOP SCREW SK6SS6X6RFR
	190	312605-0312	-		2	NUT M6M4RFR
	200	315250-0101	-		1	GASKET 32/25

From	Pos	Part No	SP	UN	Qty	Description

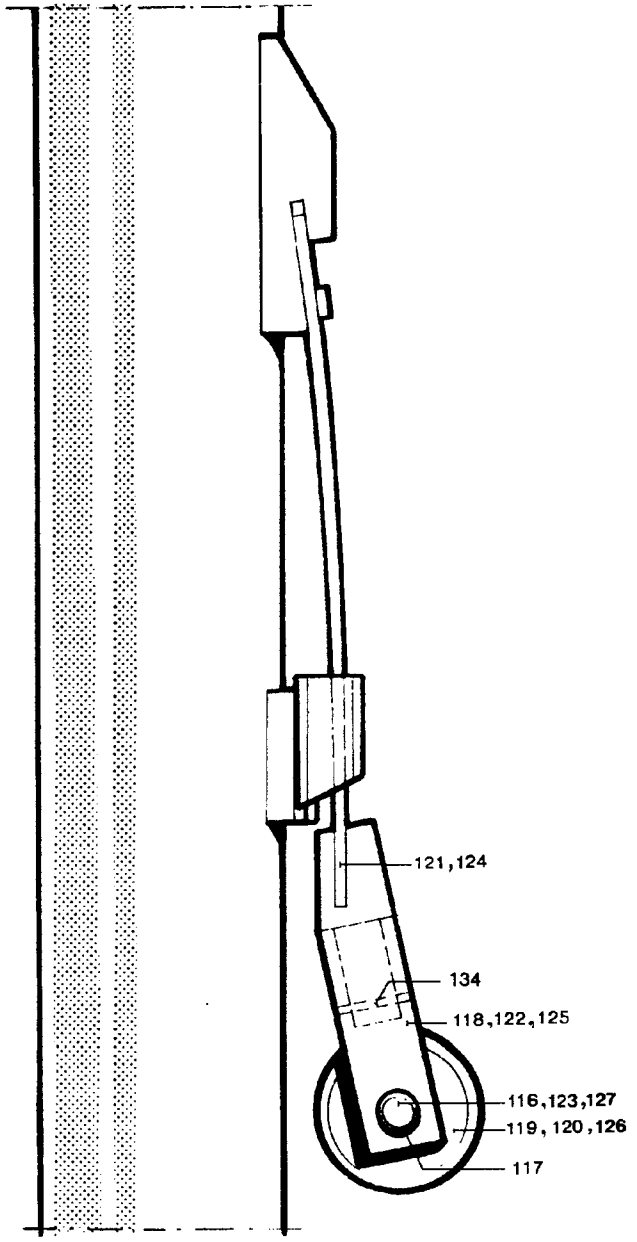

3635101.TIF
36351-1
AM 3621

From	Pos	Part No	SP	UN	Qty	Description
		C- 36351-0101				**PRESSURE ROLLER, ASS'Y**
Volume 62.5, 118, 125, 150, 150 mlSLIM						
	124	37586	-		1	SPRING
	125	37190	-		1	FORK
	126	32197	PU		1	PRESSURE ROLLER
	127	37191	-		1	SHAFT
		C- 36351-0102				**PRESSURE ROLLER, ASS'Y**
Volume 180, 189, 199, 200, 227 ml						
	120	**263062*	PU		1	PRESS.ROLLER LONG.ELEMENT
	121	32733	-		1	SPRING
	122	**259881*	-		1	FORK
	123	**259899*	-		1	SHAFT
		C- 36351-0103				**PRESSURE ROLLER, ASS'Y**
Volume 473, 500, 568 ml						
	116	6692	-		1	SHAFT
	118	10808	-		1	FORK
	119	26619	PU		1	PRESSURE ROLLER
	121	32733	-		1	SPRING
		C- 36351-0104				**PRESSURE ROLLER, ASS'Y**
Volume 65 ml and without LS-strip						
	124	37586	-		1	SPRING
	125	37190	-		1	FORK
	126	536545	PU		1	PRESSURE ROLLER
	127	37191	-		1	SHAFT
Common Parts						
	117	10593	PU		1	LOCKING RUBBER
	134	311307-0207	-		1	SLOTTED PIRPD2,5X10FZB

From	Pos	Part No	SP	UN	Qty	Description

***) Deviates from the C-group's development step**

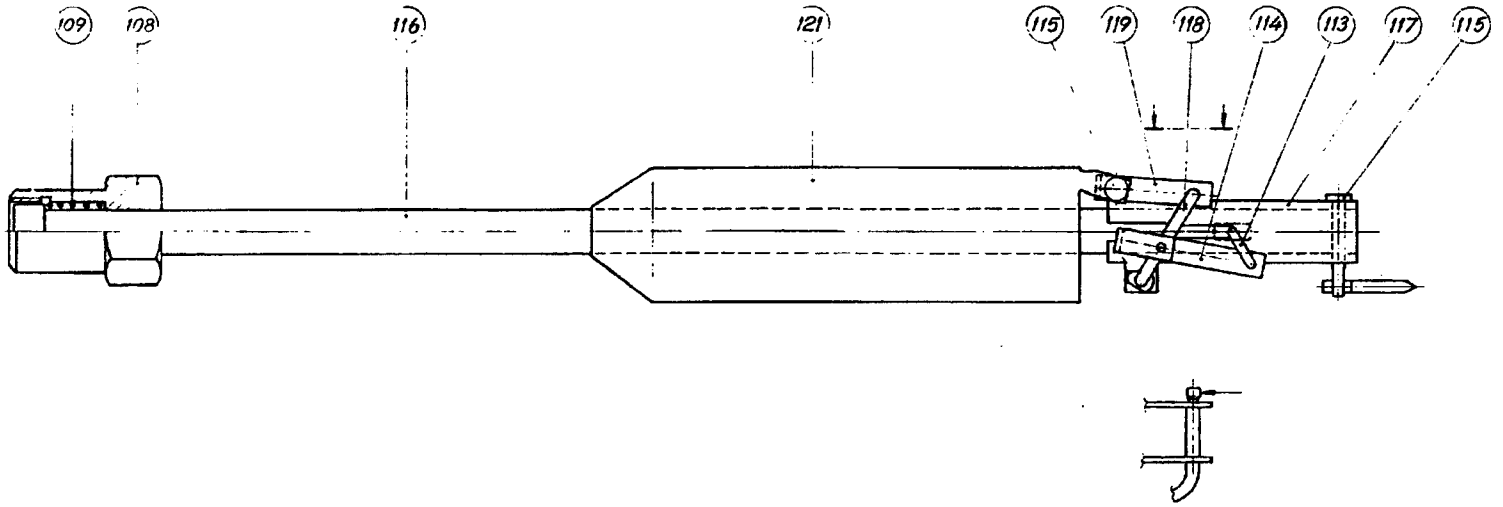

3869901.tif
38699-1
AM 6084

From	Pos	Part No	SP	UN Qty	Description
		C- 38699-010V			**FLOAT ASS'Y**
	108	11065	-	1	NUT
	109	11071	-	1	SPRING
	113	36815	-	1	THROTTLE
	114	36816	-	1	LINK
	115	36821-0002	-	2	SHEAR PIN
	116	38227	-	1	FILLER TUBE
	117	38228	-	1	SLEEVE
	118	38229	-	1	ARM
	119	38230	-	1	CLAMPING ELEMENT
	121	38700	-	1	FLOAT

From	Pos	Part No	SP	UN Qty	Description

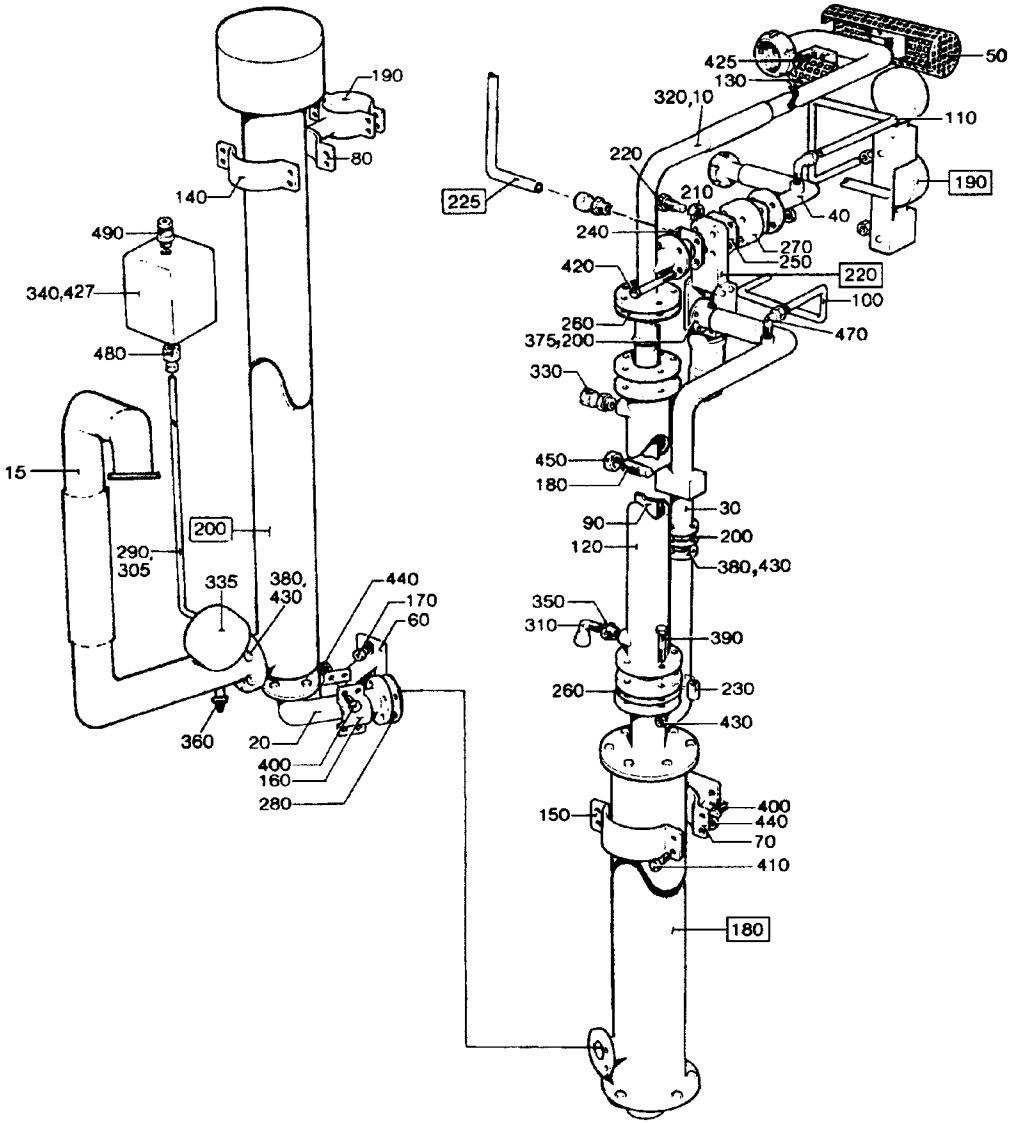

24718104.TIF
247181-4
AM 12583

From	Pos	Part No	SP	UN	Qty	Description
		C- 247181-0401				**STERILE AIR UNIT, ASS'Y**
		C- 247181-0402				**STERILE AIR UNIT, ASS'Y** (TCA/500 -150
mlSLIM)						
	F180	**C- 012270-0401**	**-**		**1**	**STERILE FILTER**
	F190	**C- 038094-0101**	**-**		**1**	**GAUGE GROUP**
	F200	**C- 030119-0401**	**-**		**1**	**AIR SUPER-HEATER**
	F220	**C- 247207-030V**	**-**		**1**	**AIR VALVE**
	F225	**C- 497371-0101**	**-**		**1**	**VENT. PIPE AIR VALVE**
	040	247224	-		1	ATTACHMENT PIPE
	040	537170	-		1	ATTACHMENT PIPE (TCA/500 -150 mlSLIM)
	010	247223	-		1	PIPE
	015	531898	-		1	PIPE
	020	247126	-		1	PIPE BEND
	030	247184	-		1	ATTACHMENT PIPE
	050	531376	-		1	TOUCH GUARD
	060	11087	-		1	HOLDER
	070	11090	-		1	HOLDER
	080	35972	-		1	HOLDER
	090	37973	-		1	INSERT
	100	247492	-		1	PIPE
	110	247493	-		1	PIPE
	120	252982	-		1	HEAT EXCHANGER
	130	531375	-		1	TOUCH GUARD
	140	11089	-		1	CAP
	150	12300	-		1	CAP
	160	12301	-		1	CAP
	170	12308	-		2	SCREW
	180	32712	-		1	SCREW
	190	33268	-		1	CAP
	200	33730-0001	R		2	GASKET
	210	35810-0002	-		1	NUT
	220	35812	-		1	SCREW
	230	36861	-		12	SPACER SLEEVE
	240	531987	R		2	GASKET
	250	535699	-		1	GASKET
	260	531737	R		5	GASKET
	270	247225	-		1	VALVE HOUSING
	280	535700	R		1	GASKET
	290	247494	-		1	PIPE
	305	90030-0052	-		1	PIPE CONNECTION
	310	90030-0071	-		1	PIPE CONNECTION
	320	90330-0029	-		1	PLUG
	330	90030-0115	-		1	PIPE CONNECTION
	335	90043-0009	-		1	PRESSURE GAUGE
	340	90274-0032	-		1	GUARD
	350	90330-0042	-		1	BUSHING
	360	90163-0067	-		1	HOSE NIPPLE
	375	312105-0366	-		4	SCREW M6S6X12RFR
	380	312105-0370	-		26	SCREW M6S6X20RFR
	390	312105-0380	-		12	SCREW M6S6X50RFR
	400	312105-0451	-		8	SCREW M6S8X20RFR
	410	312105-0455	-		12	SCREW M6S8X30RFR
	420	312105-0469	-		4	SCREW M6S8X90RFR
	425	312115-0329	-		4	SCREW 5X16 A4 80
	427	312121-0293	-		2	SLOTTED HEMCS4X16FZB
	430	312605-0316	-		38	NUT M6M6RFR
	440	312605-0318	-		20	NUT M6M8RFR
	450	312605-0324	-		1	NUT M6M16RFR
	460	315105-0153	-		6	WASHER BRB6,4X12RFR
	470	342731-0102	-		2	ELBOW PIPE WE6-LRFZB
	480	342790-0103	-		1	GAUGE CONN MAV8-LRFZB
	490	352103-0106	-		1	CABLE GLANR.ST 11

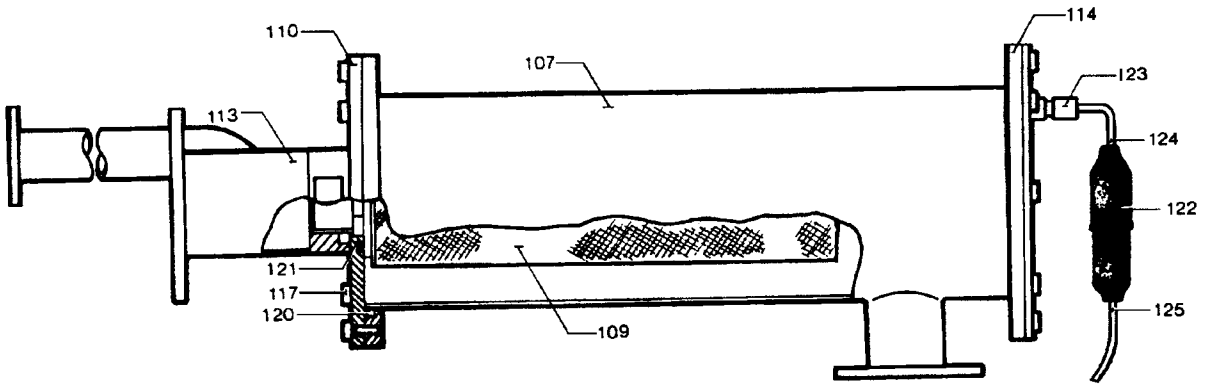

1227004.TIF
12270-4
AM 12583

From	Pos	Part No	SP	UN Qty	Description
		C- 12270-0401			**STERILE FILTER, ASS'Y**
	107	247127	-	1	CONTAINER
	109	555053	-	1	FLANGE
	110	12274	-	1	LID
	113	247183	-	1	BASE
	114	247472	-	1	BOTTOM
	117	312105-0366	-	16	SCREW M6S6X12RFR
	120	315204-0313	-	2	O-RING 109,5X3VITON
	121	315204-0225	-	1	O-RING 44,2X3VITON
	122	90326-0012	-	1	PROTECTIVE COVER
	123	90326-0017	-	1	GLAND
	124	90326-0019	-	1	THERMOELEMENT
	125	90326-0020	-	1	SOCKET

From	Pos	Part No	SP	UN Qty	Description

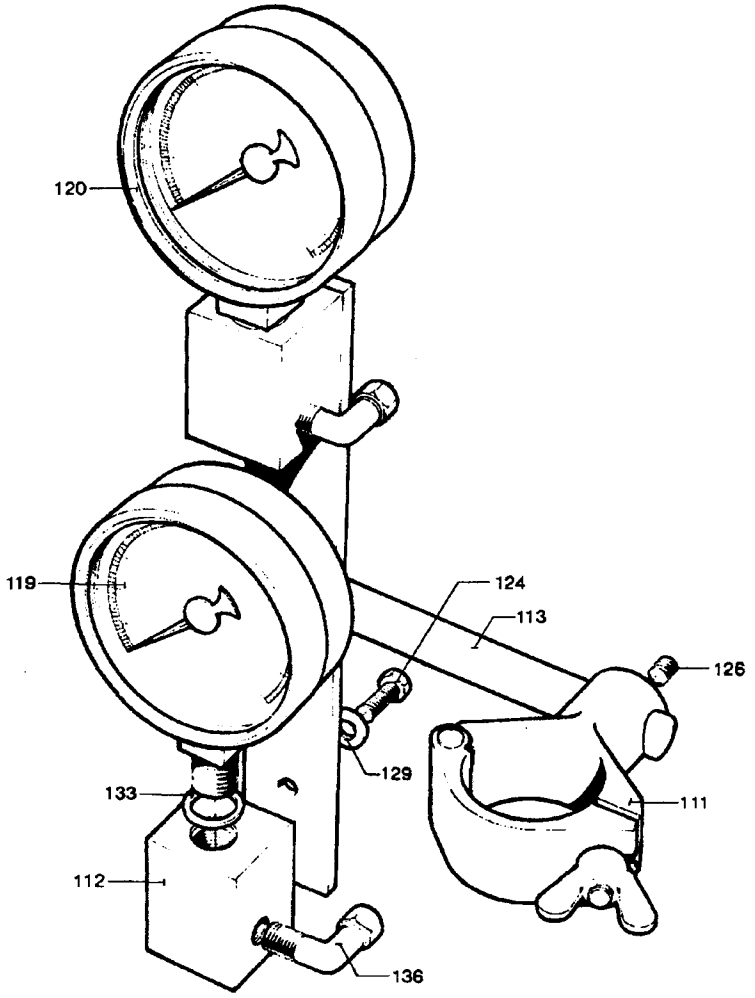

3809401.TIF
38094-1
AM 4289

From	Pos	Part No	SP	UN	Qty	Description
		C- 38094-0101				**GAUGE GROUP, ASS'Y**
	111	10789	-		1	PIPE CLAMP
	112	36986	-		2	GAUGE BRACKET
	113	36987	-		1	HOLDER
	119	90043-0028	-		1	PRESSURE GAUGE
	120	90043-0047	-		1	PRESSURE GAUGE
	124	312105-0366	-		4	SCREW M6S6X12RFR
	126	312115-0447	-		1	SCREW 8X12 A4 80
	129	315105-0153	-		4	WASHER BRB6,4X12RFR
	133	315233-0111	-		2	SEAL RING R3/8"
	136	342731-0102	-		2	ELBOW PIPE WE6-LRFZB

From	Pos	Part No	SP	UN	Qty	Description

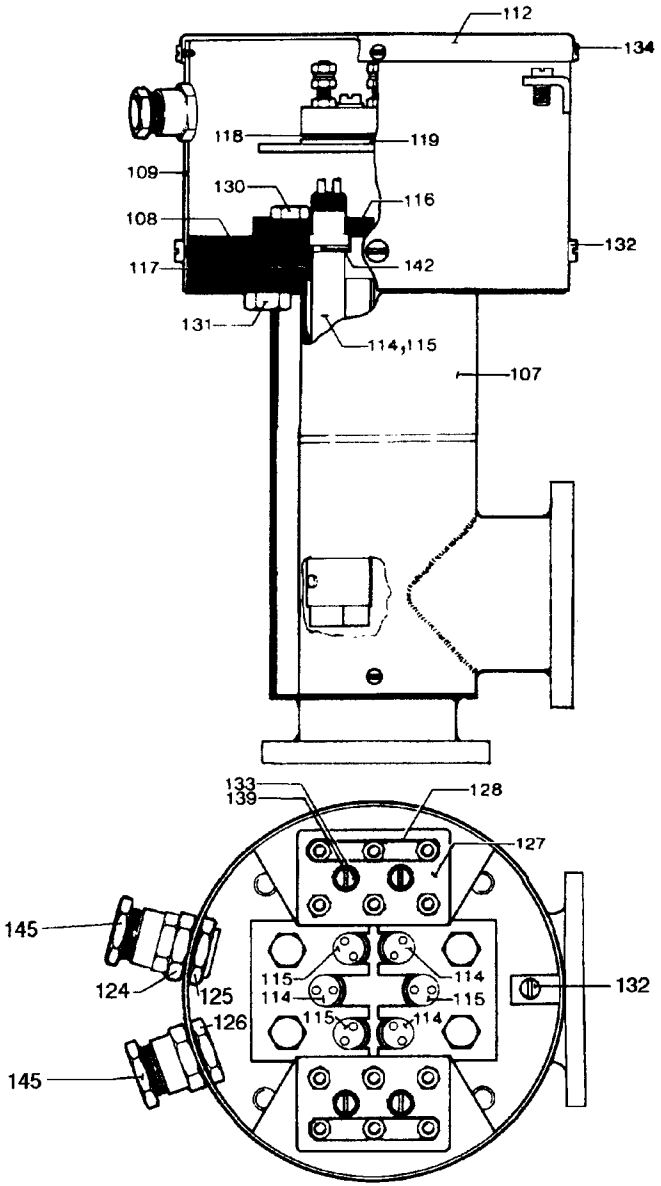

3011903.TIF
30119-3
AM 7838

From	Pos	Part No	SP	UN	Qty	Description
		C- 30119-0401				**AIR HEATER, ASS'Y**
	107	247125	-		1	HEATING PIPE
	108	29861	-		1	BRACKET
	109	29874	-		1	CONNECTION HOUS.(MINOR)
	112	29876	-		1	LID
	114	29877-0001	-		3	ROD ELEMENT
	115	29877-0002	R		3	ROD ELEMENT
	116	29897	-		2	HOLDER
	117	531731	R		1	GASKET
	118	751009	-		2	INSULATION
	119	30298	-		2	INSULATION
	120	484838	-		1	WIRING DIAGRAM
	124	90089-0004	-		1	SLEEVE
	125	90099-0004	-		1	NUT
	126	90099-0003	-		1	NUT
	127	90195-0028	-		2	TERMINAL BLOCK
	128	90195-0029	-		4	COUPLING STRIP
	130	312105-0449	-		4	SCREW M6S8X16RFR
	131	312105-0491	-		4	SCREW M6S10X20RFR
	132	312125-0323	-		5	SLOTTED HEMCS5X8RFR
	133	312125-0331	-		4	SLOTTED HEMCS5X20RFR
	134	312503-0279	-		12	DRIVE SCRERXKB6X9,5FZB
	139	315105-0146	-		4	WASHER BRB5,3X10RFR
	142	315204-0211	R		6	O-RING 13,3X2,4VITON
	145	352100-0111	-		2	CABLE GLANR.22,5-13,5

From	Pos	Part No	SP	UN	Qty	Description

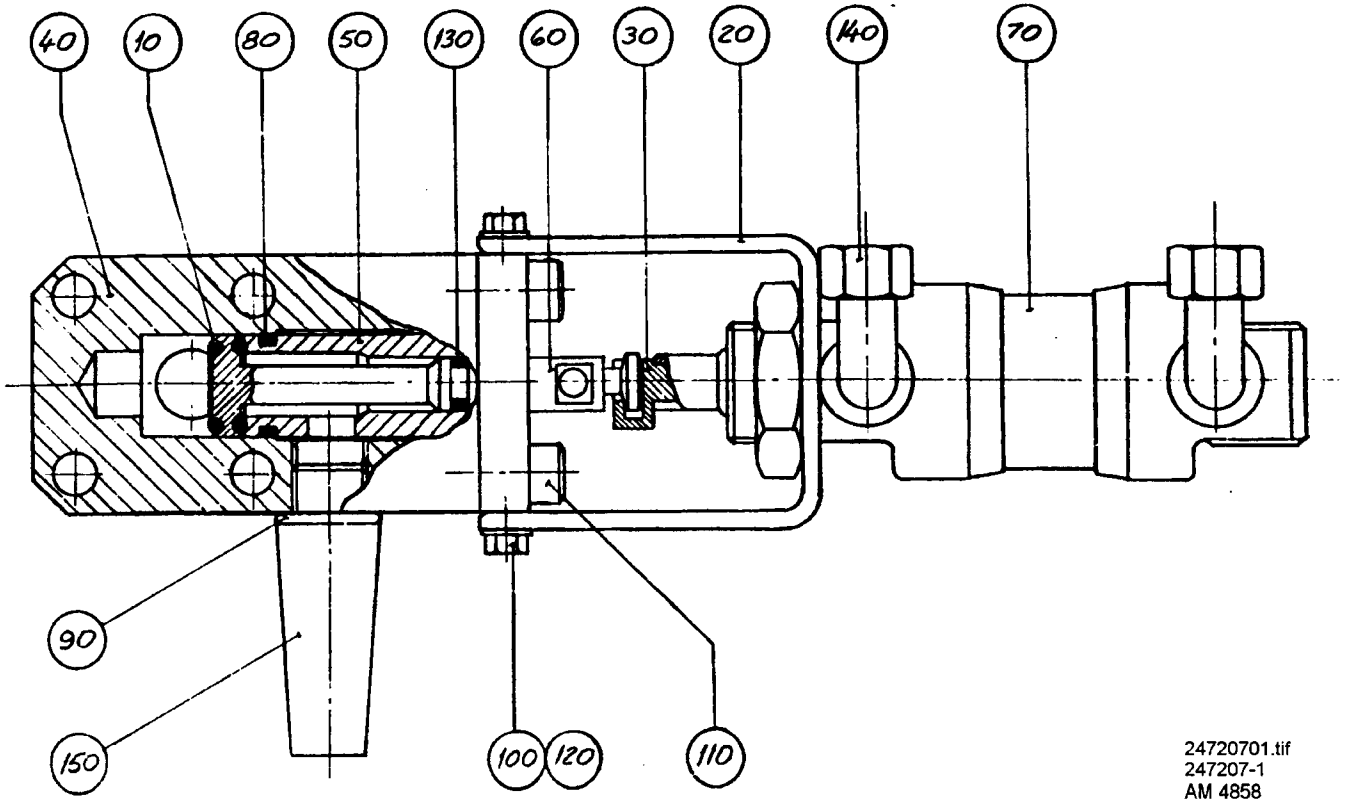

24720701.tif
247207-1
AM 4858

From	Pos	Part No	SP	UN	Qty	Description
		C- 247207-0101				**AIR VALVE, ASS'Y**
	010	37369	R		2	GASKET
	020	37637	-		1	CYLINDER BRACKET
	030	37638	-		1	PENDULUM SUSPENSION
	040	**532029*	-		1	VALVE HOUSING
	050	38832	-		1	SPINDLE GUIDE
	060	38833	-		1	VALVE SPINDLE
	070	90239-0189	-		1	CYLINDER
		90285-0094	S		0	* SEAL
	080	90242-0064	R		1	O-RING
	090	90242-0065	R		1	O-RING
	100	312105-0327	-		4	SCREW M6S5X12 A2 80
	110	312115-0449	-		2	SCREW 8X16 A4 80
	120	315105-0146	-		4	WASHER BRB5,3X10RFR
	130	315204-0206	R		1	O-RING 7,3X2,4VITON
	140	90030-0004	-		2	CONNECTION
	150	346800-0115	-		1	SILENCER FILTER R3/4"

From	Pos	Part No	SP	UN	Qty	Description

***) Modified according to RK-532194-010V**

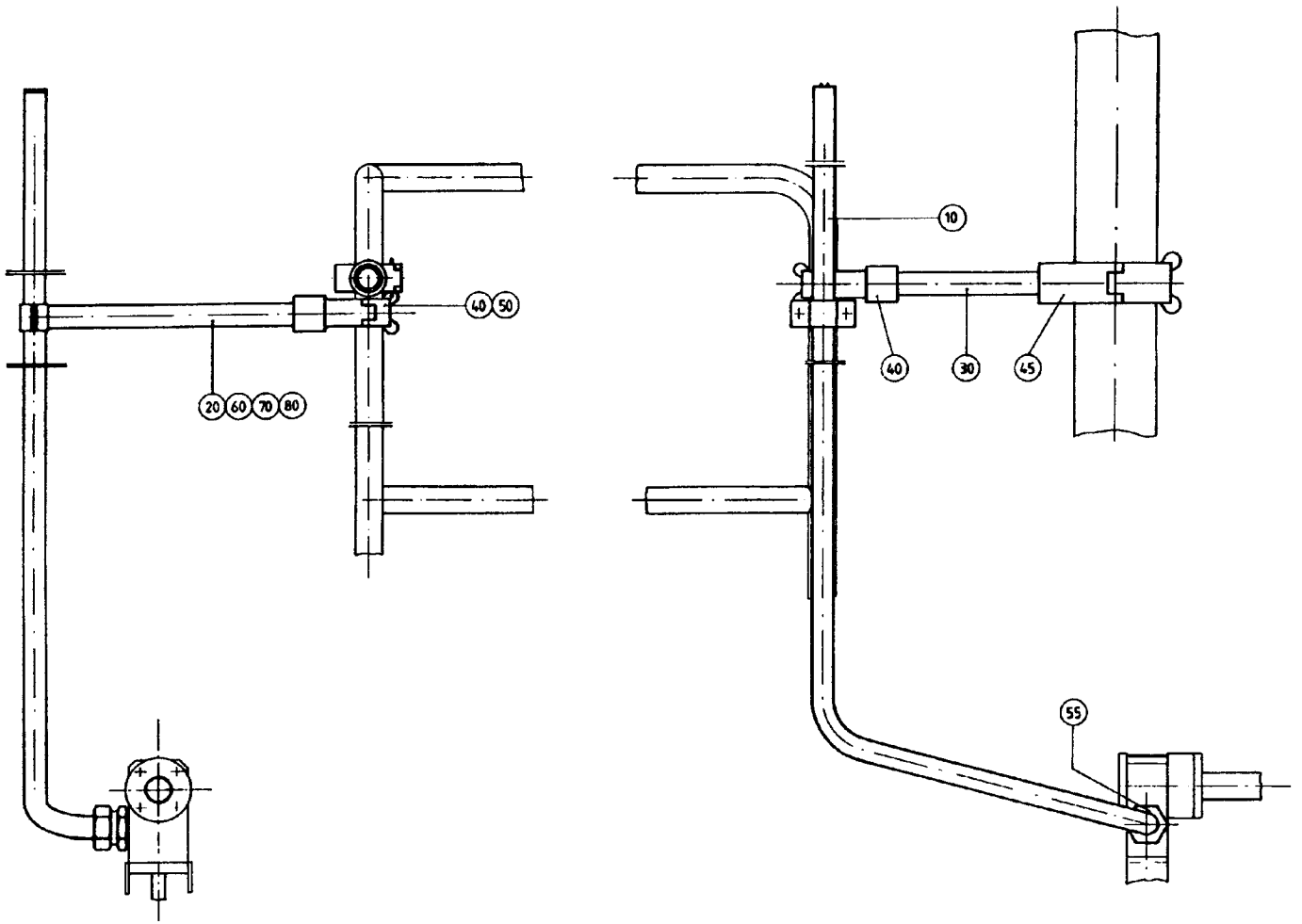

49737101. TIF
497371-1
AM 8784

From	Pos	Part No	SP	UN	Qty	Description
		C- 497371-0101				**VENT PIPE AIR VALVE, ASS'Y**
	010	497372	-		1	VENTILATING PIPE
	020	497373	-		1	STRUT
	030	493659	-		1	STRUT
	040	90101-0001	-		2	HOLDER
	045	90101-0005	-		1	HOLDER
	050	90165-0302	-		1	DECREASING SLEEVE
	055	90330-0018	-		1	CONNECTION
	060	312105-0370	-		2	SCREW M6S6X20RFR
	070	312605-0316	-		2	NUT M6M6RFR
	080	315105-0153	-		2	WASHER BRB6,4X12RFR

From	Pos	Part No	SP	UN	Qty	Description

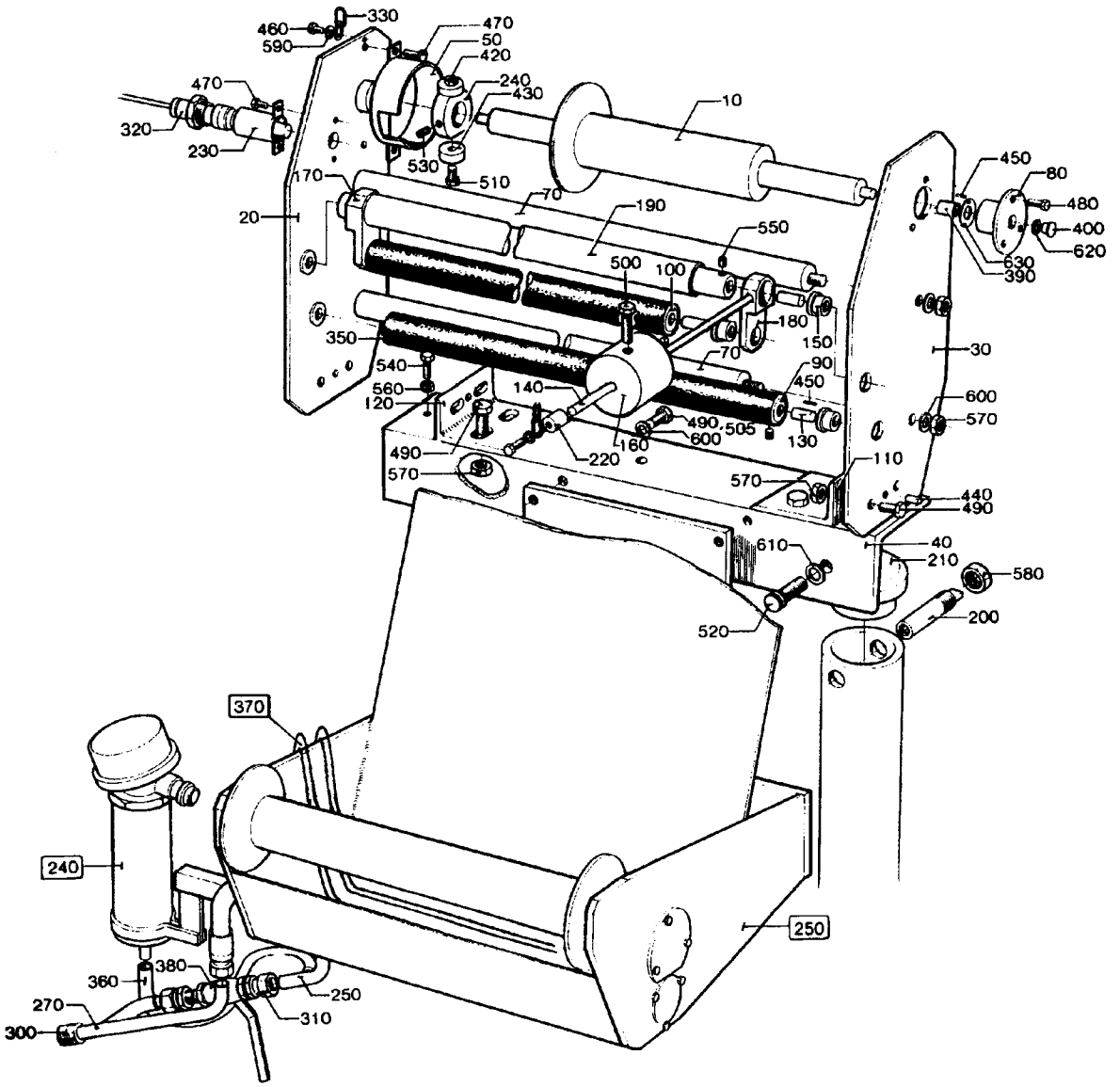

3749603.TIF
37496-3
AM 9791

From	Pos	Part No	SP	UN	Qty	Description
		C- 37496-0401				**STERILIZER, ASS'Y** (150 ml SLIM)
		C- 37496-0402				**STERILIZER, ASS'Y** (500 ml)
		C- 37496-0403				**STERILIZER, ASS'Y** (300 ml)
		C- 37496-0404				**STERILIZER, ASS'Y** (250 ml)
		C- 37496-0405				**STERILIZER, ASS'Y** (200 ml)
		C- 37496-0406				**STERILIZER, ASS'Y** (189 ml)
		C- 37496-0407				**STERILIZER, ASS'Y** (180 ml)
	F240	**C- 032744-0201**	-		1	**LEVEL GUARD**
	F250	**C- 247368-030V**	-		1	**STERILIZATION BATH**
	F253	**C- 268188-0101**	-		1	**PAPER GUIDE**
		C- 268554-0101				**. PAPER GUIDE**
	F370	**C- 497924-0101**	-		1	**PEROXIDE COOLER**
	010	37498-0010	-		1	BENDING ROLLER (150 ml SLIM)
	010	37498-0002	-		1	BENDING ROLLER (500 ml)
	010	37498-0003	-		1	BENDING ROLLER (300 ml)
	010	37498-0004	-		1	BENDING ROLLER (250 ml)
	010	37498-0005	-		1	BENDING ROLLER (200 ml)
	010	37498-0006	-		1	BENDING ROLLER (189 ml)
	010	37498-0007	-		1	BENDING ROLLER (180 ml)
	020	37353	-		1	END SECTION
	030	37354	-		1	END SECTION
	040	12176	-		1	CANTILEVER
	050	37356	-		1	PROTECTION
	070	10418	-		2	SPACER ROD
	080	10434	-		2	BEARING HOUSING
	090	10683-0001	-		1	SQUEE-GEE ROLLER
	100	10683-0002	-		1	SQUEE-GEE ROLLER
	110	12180-0001	-		1	BRACKET
	120	12180-0002	-		1	BRACKET
	130	12181	-		6	AXLE PIN
	140	12183	-		2	LEVER
	150	12184	-		6	BUSHING
	160	497166	-		2	COUNTER WEIGHT
	170	12548-0001	-		1	LUG
	180	12548-0002	-		1	LUG
	190	12549-0001	-		1	SHAFT
	200	12686	-		2	SPINDLE
	210	12687	-		2	LACE
	220	36533	-		1	SLEEVE
	230	37152	-		1	HOLDER
	240	37153	-		1	RING
	250	252677	-		1	PIPE
	270	279778	-		1	PIPE
	300	90030-0106	-		1	PIPE CONNECTION
	310	90030-0109	-		2	PIPE CONNECTION
	320	90044-0037	-		1	MAGNETIC SWITCH
	330	90155-0008	-	MM	300	CHAIN
	340	90155-0008	-	MM	800	CHAIN
	350	90162-0013	-	MM	600	HOSE
	360	90166-0005	-	MM	300	HOSE
	380	90187-0059	-		1	VALVE
	390	90240-0028	-		2	PLAIN BEARING
	400	90261-0001	-		2	PIPE PLUG
	420	90339-0006	-		1	MAGNET
	430	90339-0007	-		1	MAGNET
	440	311103-0350	-		2	CYLINDRICACP M6 6X14 RFR
	450	311305-0185	-		6	SLOTTED PIRPC2X6FZB
	460	312101-0325	-		6	SCREW M6S5X10FZB
	470	312101-0364	-		4	SCREW M6S6X10FZB
	480	312101-0366	-		6	SCREW M6S6X12FZB
	490	312101-0495	-		10	SCREW M6S10X30FZB
	500	312109-0335	-		2	SCREW M6S5X30HRFR
	505	312109-0374	-		2	SCREW M6S6X30HRFR
	510	312115-0293	-		2	SCREW 4 X 16 A4 80
	520	312115-0536	-		2	SCREW 12X30 A4 80
	530	312311-0366	-		1	STOP SCREW T6SS6X12FZB
	540	312311-0374	-		4	STOP SCREW T6SS6X30FZB
	550	312318-0362	-		6	STOP SCREW SK6SS6X8RFR
	560	312601-0316	-		2	NUT M6M6FZB
	570	312601-0320	-		12	NUT M6M10FZB
	580	312601-0326	-		2	NUT M6M20FZB
	590	315105-0146	-		6	WASHER BRB5,3X10RFR
	600	315105-0173	-		22	WASHER BRB10,5X22RFR
	610	315105-0178	-		2	WASHER BRB13X24RFR
	620	315752-0109	-		2	CIRCLIP SGH12
	630	321129-0104	-		2	THRUST WAS12/24X1,5

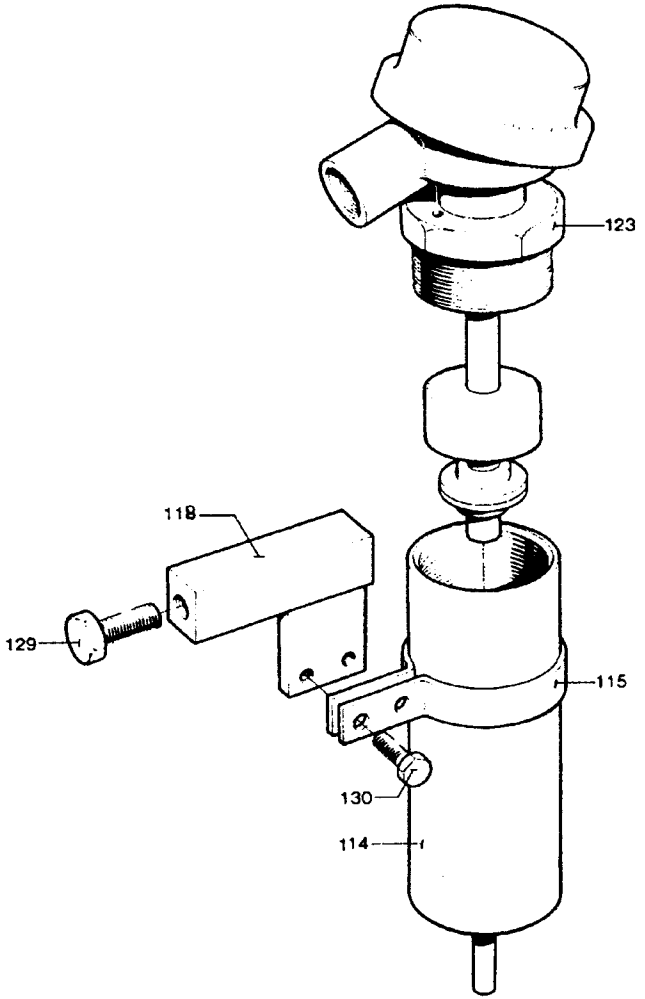

3274401.TIF
32744-1
AM 3406

From	Pos	Part No	SP	UN	Qty	Description
		C- 32744-0201				**LEVEL GUARD, ASS'Y**
	114	35921	-		1	VESSEL
	115	32746	-		1	CLAMP RING
	118	36008	-		1	BRACKET
	123	90274-0020	-		1	LEVEL PROBE
		90274-0309	R		0	. FLOAT
	129	312105-0491	-		1	SCREW M6S10X20RFR
	130	312105-0368	-		2	SCREW M6S6X16RFR

From	Pos	Part No	SP	UN	Qty	Description

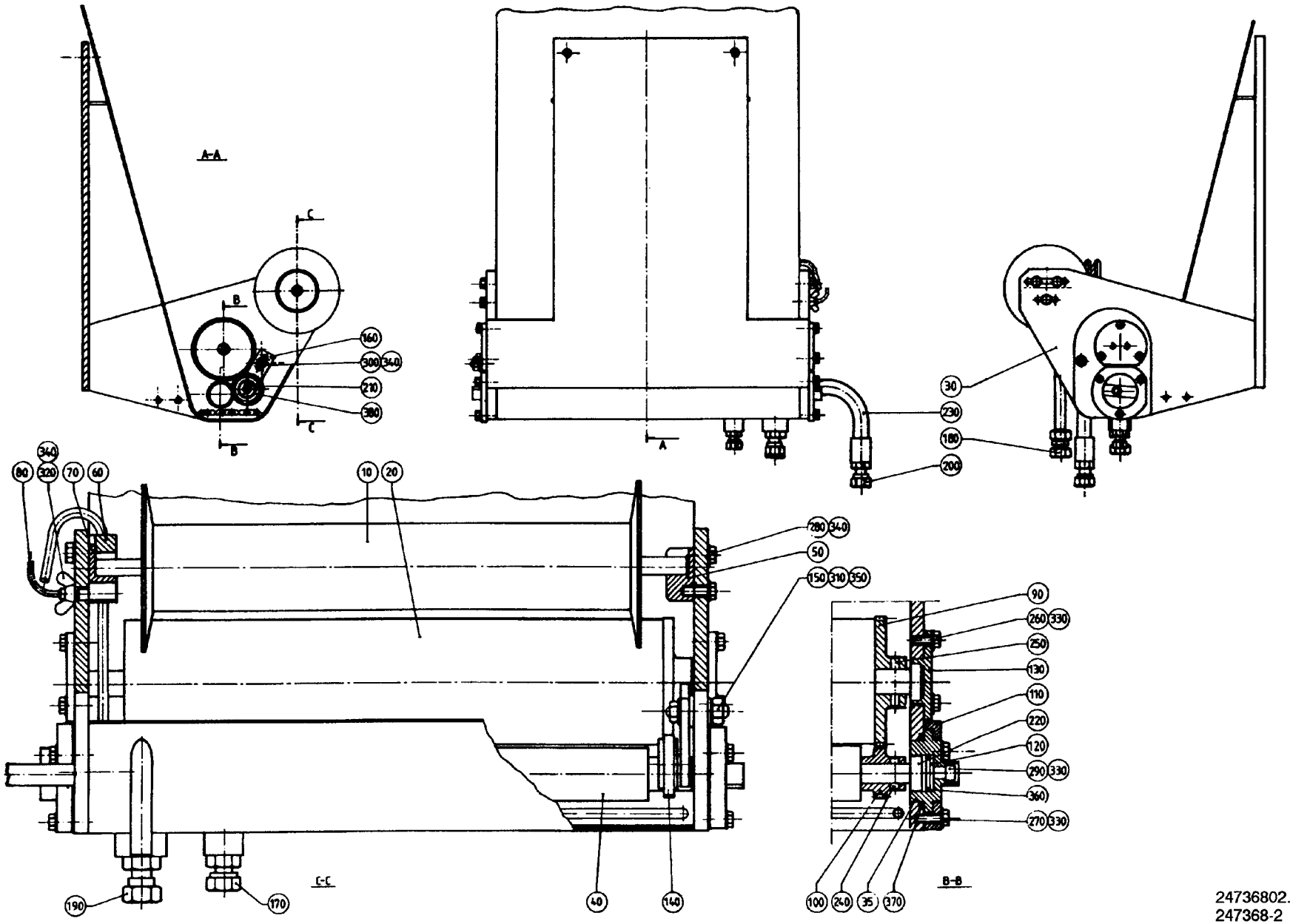

24736802.TIF
247368-2

From	Pos	Part No	SP	UN	Qty	Description
Volume 568 ml						
		C- 247368-0301				**STERILIZATION BATH, ASS'Y**
	010	37345-0001	-		1	BENDING ROLLER
	020	37499-0001	-		1	BENDING ROLLER
Volume 500 ml						
		C- 247368-0302				**STERILIZATION BATH, ASS'Y**
	010	37345-0002	-		1	BENDING ROLLER
	020	37499-0002	-		1	BENDING ROLLER
Volume 300 ml						
		C- 247368-0303				**STERILIZATION BATH, ASS'Y**
	010	37345-0003	-		1	BENDING ROLLER
	020	37499-0003	-		1	BENDING ROLLER
Volume 250 ml						
		C- 247368-0304				**STERILIZATION BATH, ASS'Y**
	010	37345-0004	-		1	BENDING ROLLER
	020	37499-0004	-		1	BENDING ROLLER
Volume 200 ml						
		C- 247368-0305				**STERILIZATION BATH, ASS'Y**
	010	37345-0005	-		1	BENDING ROLLER
	020	37499-0005	-		1	BENDING ROLLER
Volume 189 ml						
		C- 247368-0306				**STERILIZATION BATH, ASS'Y**
	010	37345-0006	-		1	BENDING ROLLER
	020	37499-0006	-		1	BENDING ROLLER
Volume 180 ml						
		C- 247368-0307				**STERILIZATION BATH, ASS'Y**
	010	37345-0007	-		1	BENDING ROLLER
	020	37499-0007	-		1	BENDING ROLLER
Volume 150 ml						
		C- 247368-0308				**STERILIZATION BATH, ASS'Y**
	010	37345-0008	-		1	BENDING ROLLER
	020	37499-0008	-		1	BENDING ROLLER
Volume 125 ml						
		C- 247368-0309				**STERILIZATION BATH, ASS'Y**
	010	37345-0009	-		1	BENDING ROLLER
	020	37499-0009	-		1	BENDING ROLLER

From	Pos	Part No	SP	UN	Qty	Description
Volume 150 ml SLIM						
		C- 247368-0310				**STERILIZATION BATH, ASS'Y**
	010	37345-0010	-		1	BENDING ROLLER
	020	37499-0010	-		1	BENDING ROLLER
Common Parts						
	030	37340	-		1	STERILIZATION BATH
	035	534167	-		2	BEARING HOUSING
	040	535567	-		1	WETTING ROLLER
	050	10349	-		1	BEARING
	060	10561	-		1	BEARING BRACKET
	070	10562	-		1	BEARING BOX
	080	10563	-		1	ECCENTRIC
	090	27726	-		1	GEAR WHEEL
	100	27727	-		1	GEAR WHEEL
	110	534168	-		2	CLAMPING RING
	120	534169	-		2	BEARING BRACING
	130	534175	-		2	BEARING COVER
	140	535568	-		1	GEAR WHEEL
	150	535569	-		1	DOWEL
	160	535570	-		1	LEVER
	170	90030-0052	-		1	PIPE CONNECTION
	180	90030-0106	-		1	PIPE CONNECTION
	190	90030-0109	-		1	PIPE CONNECTION
	200	90030-0187	-		1	PIPE CONNECTION
	210	90141-0015	-		1	LOCK RING
	220	90214-0040	R		5	BALL BEARING
	230	90330-0050	-		1	ELBOW PIPE
	240	311103-0310	-		2	CYLINDRICACP M6 5X20 RFR
	250	311103-0314	-		1	CYLINDRICACP M6 5X30 RFR
	260	312105-0325	-		6	SCREW M6S5X10 A4 80
	270	312105-0328	-		6	SCREW M6S5X14 A4 80
	280	312105-0368	-		5	SCREW M6S6X16RFR
	290	312115-0325	-		2	SCREW 5X10 A4 80
	300	312605-0316	-		1	NUT M6M6RFR
	310	312605-0318	-		1	NUT M6M8RFR
	320	312711-0116	-		1	WING NUT VM6FZB
	330	315105-0146	-		15	WASHER BRB5,3X10RFR
	340	315105-0153	-		7	WASHER BRB6,4X12RFR
	350	315105-0165	-		1	WASHER BRB8,4X16RFR
	360	315202-0116	-		2	O-RING 18,1X1,6
	370	315202-0223	R		2	O-RING 39,2X3

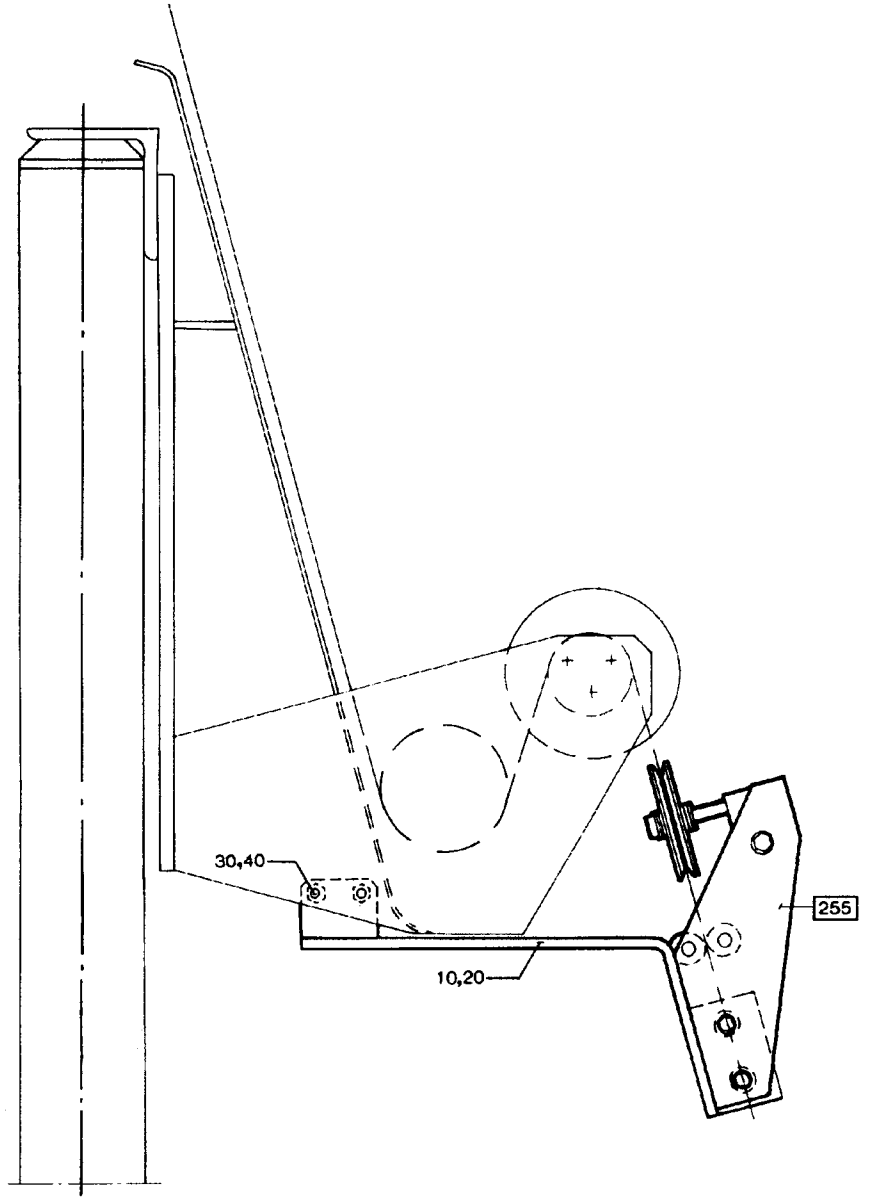

26818801.TIF
268188-1
AM 5367

From	Pos	Part No	SP	UN Qty	Description
	F000	**C- 268188-0101**			**Paper Guide, Assy'**
	F255	**C- 268554-0101**	**-**	**1**	**PAPER GUIDE**
	010	292365	-	1	CANTILEVER
	020	292366	-	1	CANTILEVER
	030	312105-0370	-	4	SCREW M6S6X20RFR
	040	315105-0153	-	4	WASHER BRB6,4X12RFR

From	Pos	Part No	SP	UN Qty	Description

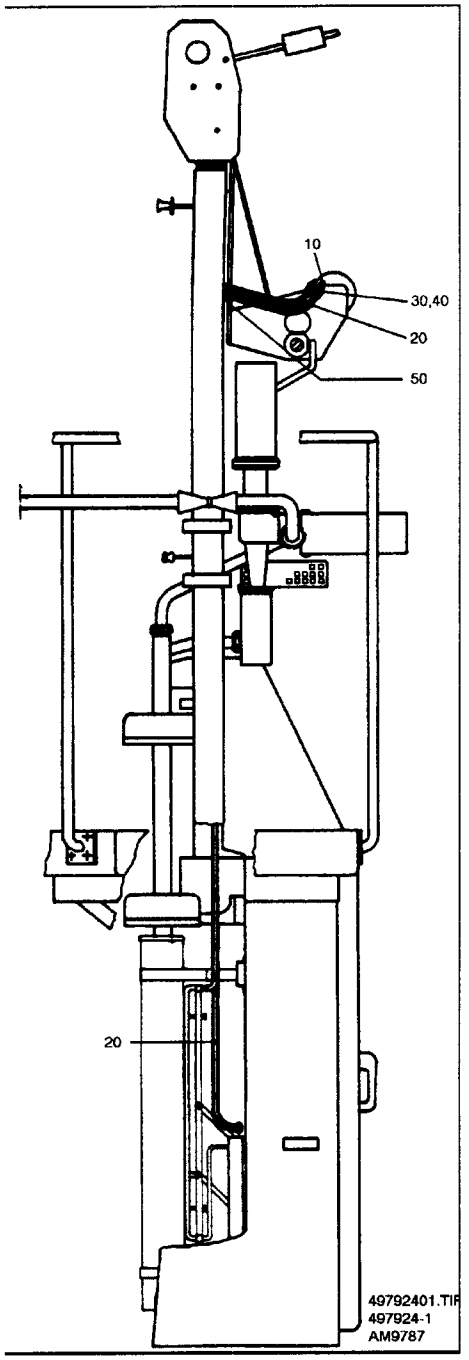
10
30,40
20
50
20
49792401.TIF
497924-1
AM9787

Last Alteration: AM 9787 87-06-09

Corresponding group: 497924-010V
Assembly Drawing: 497924-1

Issue: **930702**

From	Pos	Part No	SP	UN Qty	Description
		C- 497924-0101			**PEROXIDE COOLER, ASS'Y**
	010	537034	-	1	COOLING PIPE COIL
	020	90166-0089	-	MM 5500	HOSE
	030	342725-0102	-	2	STRAIGHT PGI 6 LR/RO RFR
	040	342921-0113	-	2	PIPE COUPL6/4-1/8"
	050	352101-0103	-	2	LEAD-IN G 18,6

From	Pos	Part No	SP	UN Qty	Description

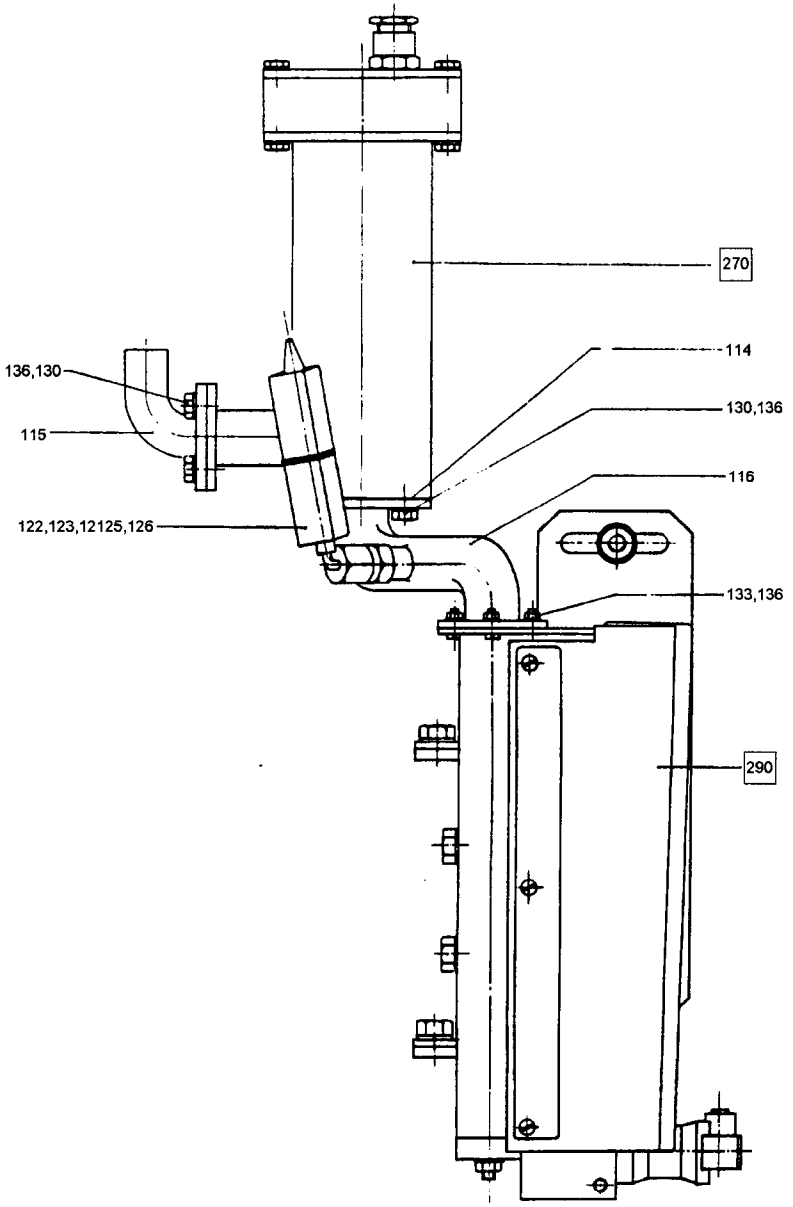
270
114
136,130
130,136
115
116
122,123,12125,126
133,136
290

From	Pos	Part No	SP	UN	Qty	Description
TC-machines						
		C- 236892-0301				**ELEMENT GROUP, ASS'Y, TC/500**
		C- 236892-0302				**ELEMENT GROUP, ASS'Y, TC/300**
		C- 236892-0303				**ELEMENT GROUP, ASS'Y, TC/150**
	F290	C- 232955-020V	-		1	ELEMENT
	114	33730-0001	-		2	GASKET
	115	208853	-		1	CONTACT FLANGE
	130	312105-0366	-		8	SCREW M6S6X12RFR
	136	315105-0153	-		8	WASHER BRB6,4X12RFR
TC/155 -65 ml						
		C- 236892-0307				**ELEMENT GROUP, ASS'Y, TC/155**
	F290	C- 536952-010V	-		1	LS-ELEMENT
	114	33730-0001	-		2	GASKET
	115	208853	-		1	CONTACT FLANGE
	130	312105-0366	-		8	SCREW M6S6X12RFR
	136	315105-0153	-		8	WASHER BRB6,4X12RFR
TCA-machines						
		C- 236892-0304				**ELEMENT GROUP, ASS'Y, TC/150, 300**
		C- 236892-0305				**ELEMENT GROUP, ASS'Y, TC/500**
	F290	C- 232955-020V	-		1	ELEMENT
	114	33730-0001	-		1	GASKET
	130	312105-0366	-		4	SCREW M6S6X12RFR
	136	315105-0153	-		4	WASHER BRB6,4X12RFR
	114	33730-0001	-		1	GASKET
	130	312105-0366	-		4	SCREW M6S6X12RFR
	136	315105-0153	-		4	WASHER BRB6,4X12RFR
TCA/500 -150 ml SLIM						
		C- 236892-0306				**ELEMENT GROUP, ASS'Y, TC/500 -150 ml**
	F290	C- 536952-010V	-		1	LS-ELEMENT
	114	33730-0001	-		1	GASKET
	130	312105-0366	-		4	SCREW M6S6X12RFR
	136	315105-0153	-		4	WASHER BRB6,4X12RFR

From	Pos	Part No	SP	UN	Qty	Description
Common Parts						
	F270	C- 207637-020V	-		1	ELEMENT
		C- 207638-0201				. SLEEVE CONTACT
		C- 207638-0202				. SLEEVE CONTACT
	116	232991	-		1	ATTACHMENT PIPE
	122	90326-0012	-		1	PROTECTIVE COVER
	123	90326-0017	-		1	GLAND
	125	90326-0020	-		1	SOCKET
	126	90326-0043	-		1	THERMOELEMENT
	133	312605-0312	-		3	NUT M6M4RFR
	135	315105-0136	-		3	WASHER BRB4,3X8RFR

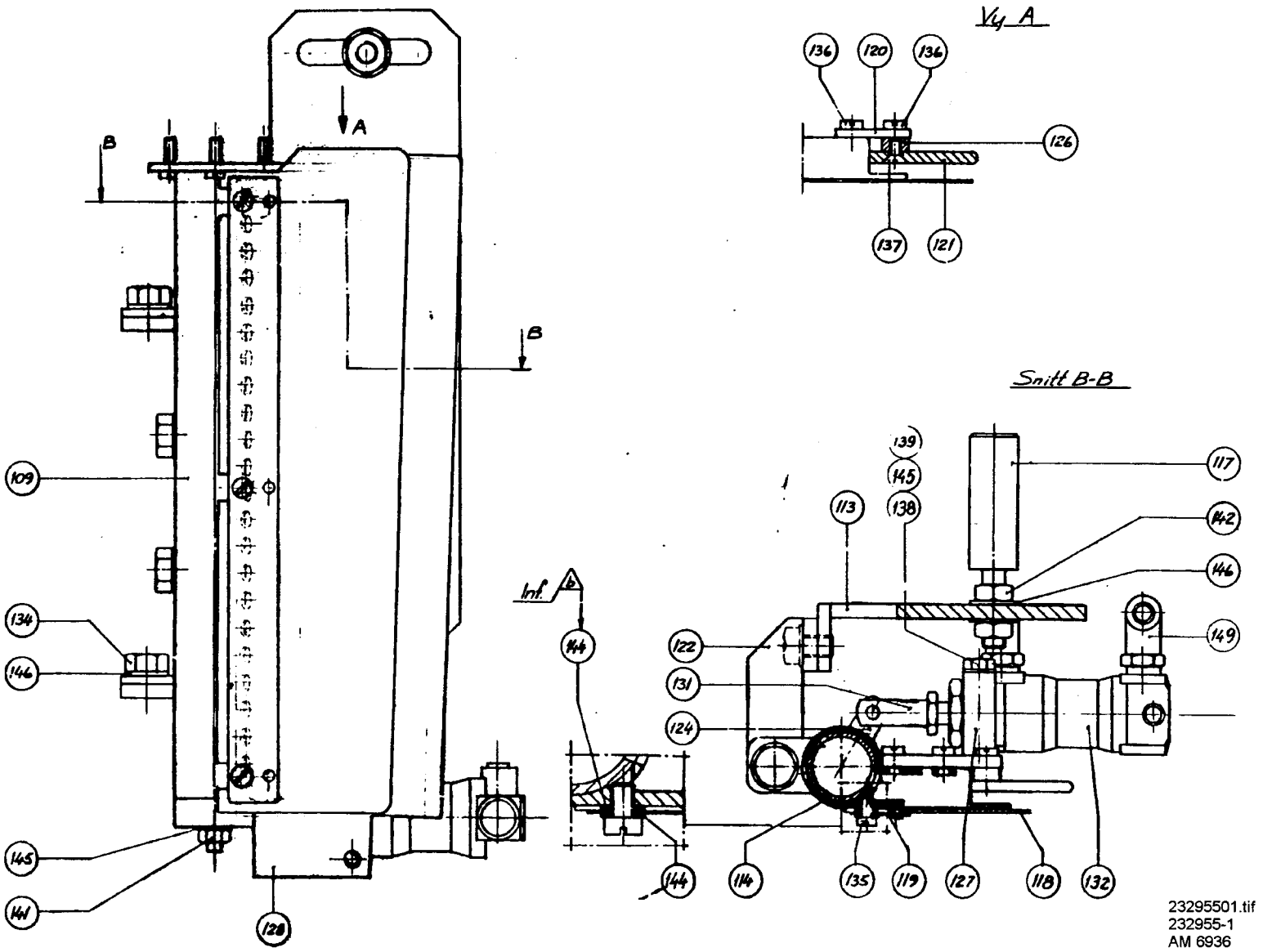

23295501.tif
232955-1
AM 6936

From	Pos	Part No	SP	UN	Qty	Description
TC-machines						
		C- 232955-201				**ELEMENT, ASS'Y**
	113	32288-0003	-		1	HOLDER, LS ELEMENT
TCA-machines						
		C- 232955-202				**ELEMENT, ASS'Y**
	113	32288-0004	-		1	HOLDER, LS ELEMENT
Common Parts						
	109	230494	-		1	CASING
	114	230518	-		1	CYLINDER
	117	32289	-		2	DOWEL
	118	255336	R		1	SLIDE RAIL
	119	255341	-		1	RIM
	120	230499	-		1	BRACKET
	121	230500	R		1	SLIDE RAIL
	122	232946	-		1	HOLDER
	124	232948	-		1	ARM
	126	232950	-		2	WASHER
	127	283147	-		1	BRACKET
	128	283209	-		1	BRACKET
	131	90239-0088	-		1	BRACKET
	132	90239-0821	-		1	CYLINDER
	134	312105-0447	-		4	SCREW M6S8X12RFR
	135	312125-0285	-		3	SLOTTED HEMCS4X6RFR
	136	312125-0323	-		8	SLOTTED HEMCS5X8RFR
	137	312145-0287	-		4	SLOTTED HEMFS4X8RFR
	138	312105-0376	-		2	SCREW M6S6X35RFR
	139	312318-0360	-		1	STOP SCREW SK6SS6X6RFR
	141	312605-0316	-		1	NUT M6M6RFR
	142	312605-0318	-		4	NUT M6M8RFR
	144	315105-0136	-		6	WASHER BRB4,3X8RFR
	145	315105-0153	-		3	WASHER BRB6,4X12RFR
	146	315105-0165	-		8	WASHER BRB8,4X16RFR
	149	342792-0102	-		2	BANJO CONN

From	Pos	Part No	SP	UN	Qty	Description

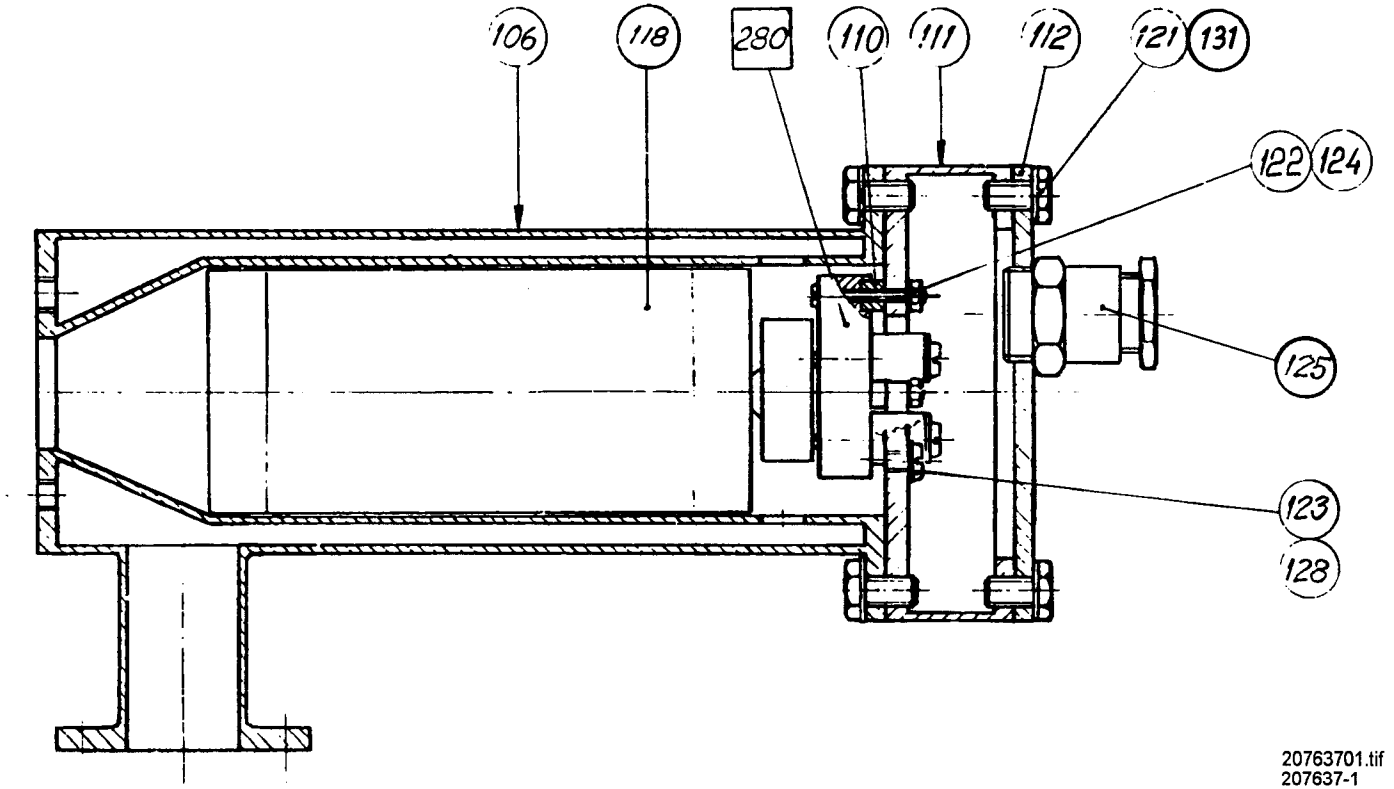

20763701.tif
207637-1
AM 10076

From	Pos	Part No	SP	UN	Qty	Description
TC/150, 300, 500						
		C- 207637-0201				**ELEMENT, ASS'Y**
	F280	C- 207638-0201	-		1	SLEEVE CONTACT
	125	352103-0106	-		1	CABLE GLANR.ST 11
TCA/150, 300, 500						
		C- 207637-0202				**ELEMENT, ASS'Y**
	F280	C- 207638-0202	-		1	SLEEVE CONTACT
	125	352103-0106	-		1	CABLE GLANR.ST 11
TC/155						
		C- 207637-0203				**ELEMENT, ASS'Y**
	F280	C- 207638-0201	-		1	SLEEVE CONTACT
	125	352136-0127	-		1	GLAND FITT
	140	352135-0106	-	M	2	HOSE .016
Common Parts						
	106	38960	-		1	COIL HEATER
	110	19797	-		3	BUSHING
	111	38962	-		1	CLUTCH PIECE
	112	38963	-		1	LID
	118	90206-0014	R		1	HEATING ELEMENT
	121	312105-0366	-		8	SCREW M6S6X12RFR
	122	312121-0230	-		3	SLOTTED HEMCS3X20FZB
	123	312132-0287	-		1	SLOTTED HEMSCS4X8MSGFN
	124	312601-0310	-		3	NUT M6M3FZB
	128	353103-0130	-		1	CABLE SHOE
	131	315105-0153	-		8	WASHER BRB6,4X12RFR

From	Pos	Part No	SP	UN	Qty	Description

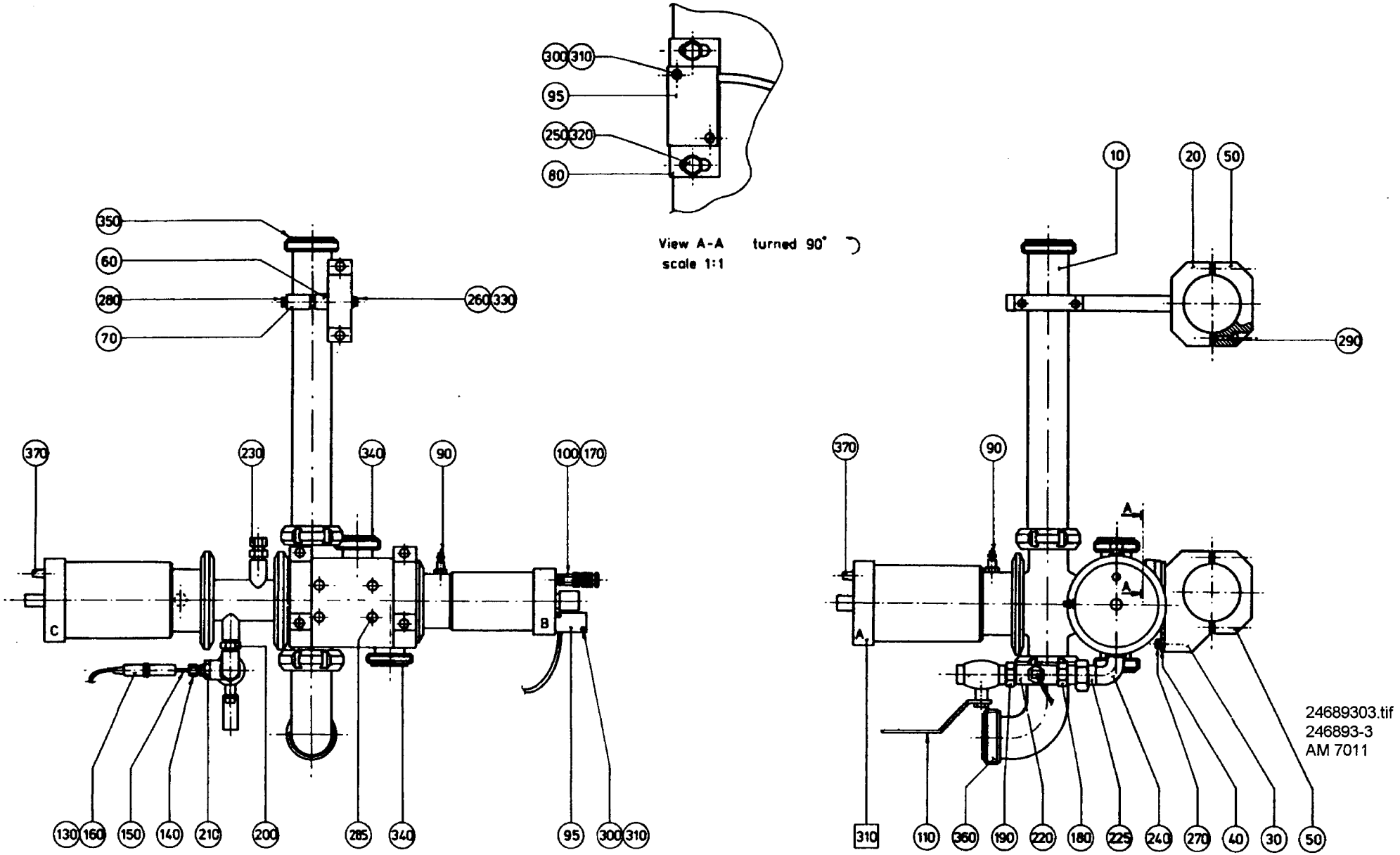
300 310
95
250 320
80
View A-A turned 90°
scale 1:1
350
60
280
70
260 330
370
230
340
90
100 170
C
B
130 160
150
140
210
200
285
340
95
300 310
10
20
50
290
370
90
A
A
A
310
110
360
190
220
180
225
240
270
40
30
50
24689303.tif
246893-3
AM 7011

From	Pos	Part No	SP	UN	Qty	Description
		C- 246893-0401				**VALVE, ASS'Y**
	F310	C- 440630-0101	-		1	VALVE
	010	38518	-		1	PIPE
	020	255199	-		1	HOLDER
	030	246812	-		2	HOLDER
	040	466159	-		1	BRACKET
	050	37853	-		3	CAP
	060	252703	-		1	HOLDER
	070	252704	-		1	CAP
	080	297195	-		1	SPACER
	090	466627	-		3	NIPPLE
	095	90044-0062	-		2	PROXIMITY SWITCH
	100	90163-0001	-		1	CONNECTION
		90163-0300	R		0	* GASKET
	110	90187-0059	-		1	VALVE
	130	90326-0012	-		1	PROTECTIVE COVER
	140	90326-0017	-		1	GLAND
	150	90326-0019	-		1	THERMOELEMENT
	160	90326-0020	-		1	SOCKET
	170	90330-0013	-		1	REDUCTION NIPPLE
	180	90330-0019	-		1	REDUCTION NIPPLE
	190	90330-0021	-		1	NIPPLE
	200	90330-0028	-		1	NIPPLE
	210	90330-0036	-		1	BUSHING
	220	90330-0049	-		1	T-PIECE
	225	90330-0062	-		1	COUPLING
	230	90330-0064	-		1	CONNECTION
	240	90330-0065	-		1	ELBOW PIPE
	250	312105-0329	-		2	SCREW M6S5X16 A2 80
	260	312105-0451	-		2	SCREW M6S8X20RFR
	270	312105-0453	-		4	SCREW M6S8X25RFR
	280	312105-0459	-		2	SCREW M6S8X40RFR
	285	312115-0451	-		4	SCREW 8X20 A4 80
	290	312115-0459	-		6	SCREW 8X40 A4 80
	300	312125-0228	-		4	SLOTTED HEMCS3X16RFR
	310	315105-0124	-		4	WASHER BRB3,2X6RFR
	320	315105-0146	-		2	WASHER BRB5,3X10RFR
	330	315105-0165	-		2	WASHER BRB8,4X16RFR
	340	315250-0103	R		2	GASKET 48/38
	350	315250-0104	R		4	GASKET 61/51
	360	342807-0104	-		1	ELBOW PIPE51
	370	346800-0109	-		2	SILENCER FILTER R1/8"

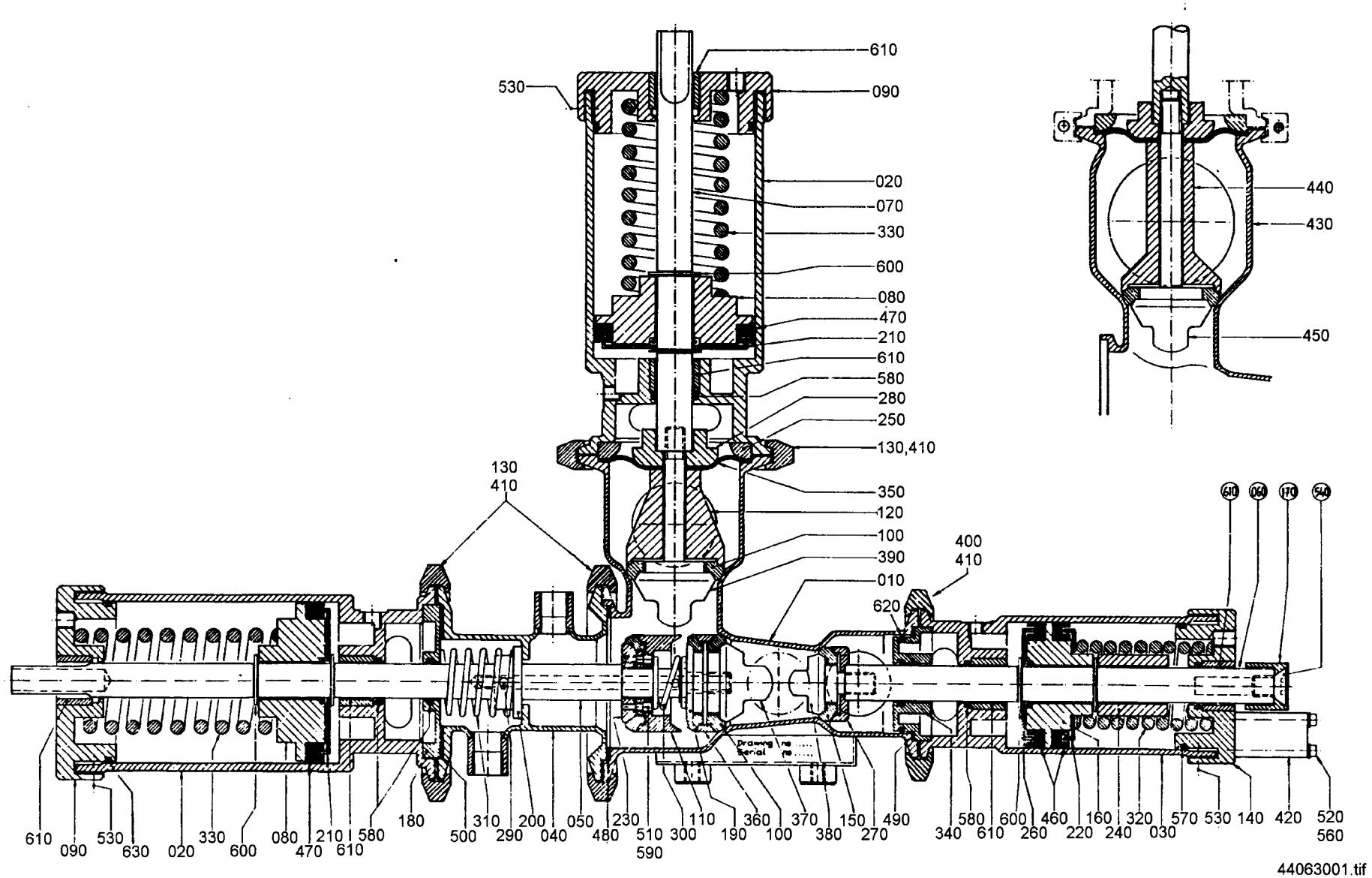

44063001.tif
440630-1
AM 6395

From	Pos	Part No	SP	UN	Qty	Description
2" Valve TBA/8, TBA/9						
		C- 440630-0101				**VALVE, ASS'Y**
	010	440631	-		1	VALVE BODY 51
	090	440639	-		2	END SECTION
	120	440642	-		1	HOLDER
	390	440669	-		1	VALVE CONE
3" Valve TBA/8						
		C- 440630-0102				**VALVE, ASS'Y**
	090	440639	-		2	END SECTION
	430	449678	-		1	VALVE BODY 76
	440	449679	-		1	HOLDER
	450	449680	-		1	VALVE CONE
2" Valve TBA/3, TBA/3R						
		C- 440630-0103				**VALVE, ASS'Y**
	010	484997	-		1	VALVE BODY 51
	090	440639	-		1	END SECTION
	095	484998	-		1	END SECTION
	120	440642	-		1	HOLDER
	390	440669	-		1	VALVE CONE
2" Valve TCA/150, 300 500						
		C- 440630-0104				**VALVE, ASS'Y**
	010	484997	-		1	VALVE BODY 51
	090	440639	-		2	END SECTION
	120	440642	-		1	HOLDER
	170	440647	-		1	SLEEVE
	390	440669	-		1	VALVE CONE
	420	440731	-		1	PLATE
	520	312115-0304	-		2	SCREW 4X45 A4 80
	540	312155-0532	-		1	SCREW MF6S12X20RFR
	560	315105-0136	-		2	WASHER BRB4,3X8RFR
Common Parts						
	020	440632	-		2	CYLINDER HOUSING
	030	440633	-		1	CYLINDER HOUSING
	040	440634	-		1	HOUSE
	050	440635	-		1	PISTON ROD
	060	440636	-		1	PISTON ROD
	070	440637	-		1	PISTON ROD
	080	440638	-		2	PISTON
	100	530589	-		4	SEAL RING
	110	440641	-		1	HOLDER
	130	440694	-		3	CLAMP RING
	140	440695	-		1	END SECTION
	150	530588	-		1	SEAL RING
	160	440646	-		1	PISTON
	180	440648	-		1	SEALING WASHER
	190	440649	-		1	SEALING WASHER
	200	440650	-		1	WASHER
	210	440651	-		2	WASHER
	220	440652	-		2	WASHER
	230	440653	-		1	WASHER
	240	440654	-		1	SPACER SLEEVE
	250	440655	-		1	RING
	260	440656	-		2	WASHER
	270	440657	-		1	WASHER
	280	440658	-		1	WASHER
	290	440659	-		1	CYLINDRICAL PIN
	300	440660	-		1	COMPRESSION SPRING
	310	440661	-		1	COMPRESSION SPRING
	320	440662	-		1	COMPRESSION SPRING
	330	440663	-		2	COMPRESSION SPRING
	340	440664	-		1	SEALING WASHER
	350	554096	-		1	DIAPHRAGM
	360	440666	-		1	RING
	370	440667	-		1	VALVE CONE
	380	440668	-		1	VALVE CONE
	400	440729	-		1	CLAMP RING
	410	440730	-		8	BOLT
	460	90020-0027	-		2	SLEEVE
	470	90020-0028	-		2	SLEEVE
	480	90207-0363	-		1	GASKET
	490	90207-0365	-		1	GASKET
	500	90207-0367	-		1	GASKET
	510	312115-0291	-		4	SCREW MC6S4X12 A4 80
	530	312155-0323	-		3	SCREW MF6S5X8RFR
	570	315202-0304	-		1	O-RING 64,5X3
	580	315204-0215	-		9	O-RING 19,2X3VITON
	590	315402-0136	-		4	WASHER FBB4,1RFR
	600	315754-0113	-		6	LOCKING WAE 15
	610	497933	-		6	BUSHING
	620	315202-0301	-		1	O-RING 49,5X3
	630	315202-0308	-		2	O-RING 84,5X3

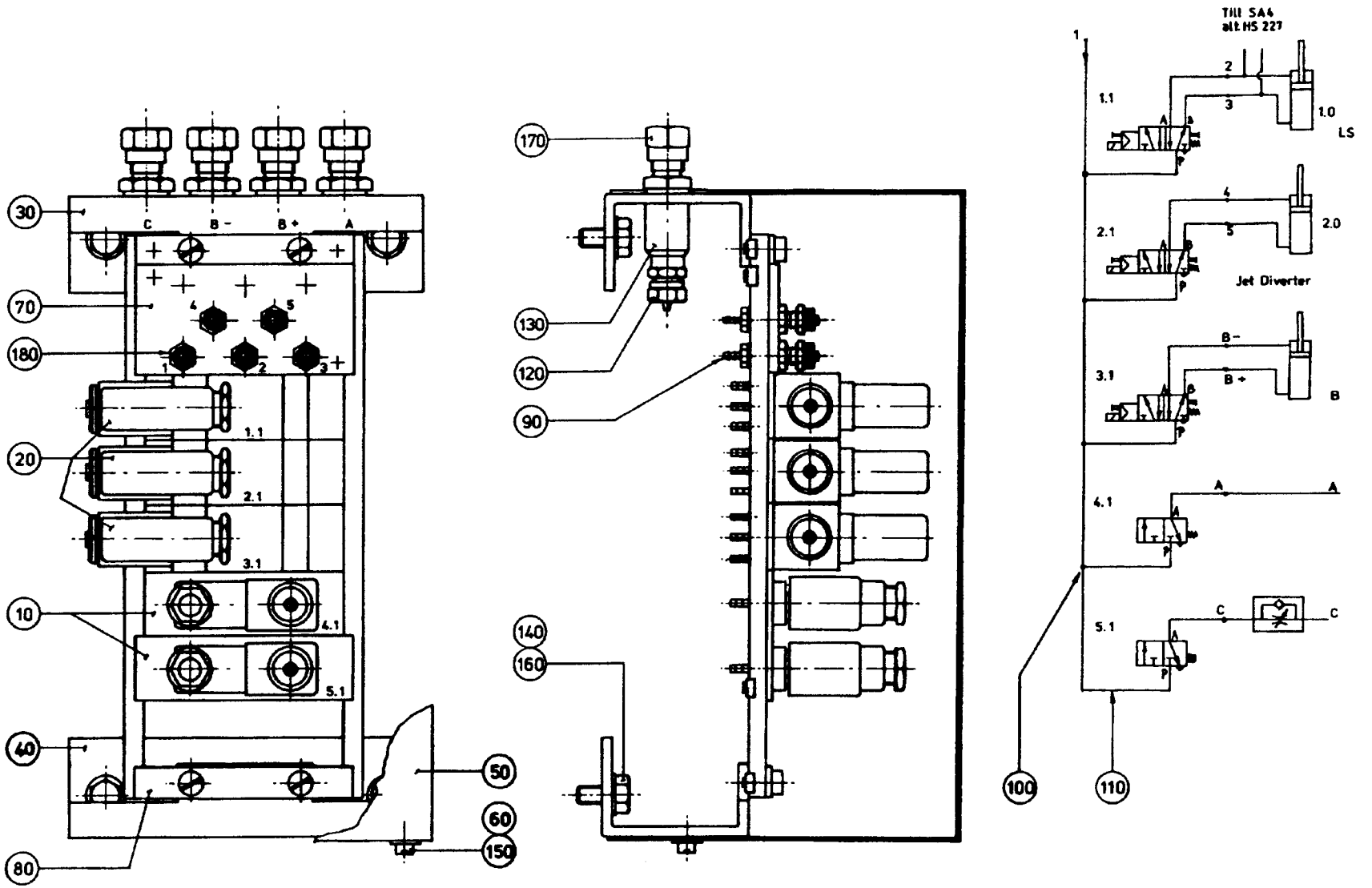

24738202.TIF
247382-2
AM 13231

From	Pos	Part No	SP	UN	Qty	Description
50 Hz						
		C- 247382-0401				**VALVE GROUP, ASS'Y**
	010	90042-0045	-		2	SOLENOID VALVE
		90042-0346	S		1	. COIL
	020	90042-0047	-		3	SOLENOID VALVE
		90042-0346	S		1	. COIL
60 Hz						
		C- 247382-0401				**VALVE GROUP, ASS'Y**
	010	90042-0046	-		2	SOLENOID VALVE
		90042-0379	S		1	. COIL
	020	90042-0048	-		3	SOLENOID VALVE
		90042-0379	S		1	. COIL
Common Parts						
	030	466104	-		1	BRACKET
	040	436721	-		1	BRACKET
	050	247435	-		1	PROTECTIVE CASING
	060	2033-0012	-		4	WASHER
	070	237499	-		1	PLATE
	080	90042-0328	-		1	RAMP
	090	90055-0044	-		5	HOSE NIPPLE
	100	90055-0045	-		4	HOSE NIPPLE
	110	90166-0099	-	M	2	HOSE
	120	90224-0230	-		4	GLAND FITTING
	130	90330-0012	-		4	REDUCTION SLEEVE
	140	312105-0449	-		4	SCREW M6S8X16RFR
	150	312125-0287	-		4	SLOTTED HEMCS4X8RFR
	160	315105-0165	-		4	WASHER BRB8,4X16RFR
	170	342752-0103	-		4	STRAIGHT C
	180	342921-0111	-		5	PIPE COUPL6/4-5M

From	Pos	Part No	SP	UN	Qty	Description

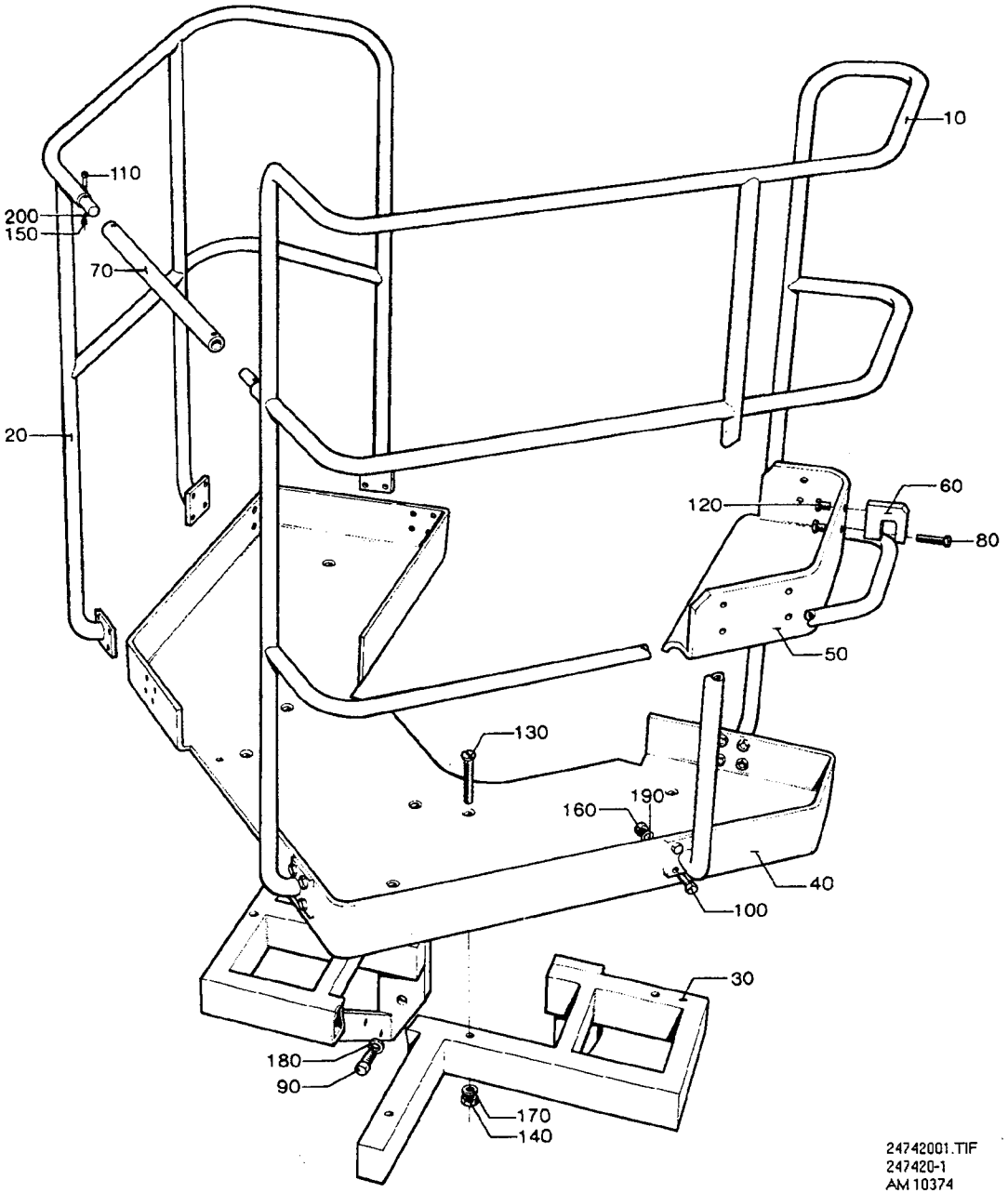

24742001.TIF
247420-1
AM 10374

From	Pos	Part No	SP	UN	Qty	Description
		C- 247420-0101				**PLATFORM, ASS'Y**
	010	246997	-		1	RAILING
	020	246998	-		1	RAILING
	030	247000	-		1	FRAME
	040	247001	-		1	PLATFORM
	050	247417	-		1	STAIR
	060	229112	-		4	CATCH
	070	246999	-		1	RAILING
	080	312101-0380	-		4	SCREW M6S6X50FZB
	090	312101-0630	-		4	SCREW M6S16X50FZB
	100	312105-0493	-		24	SCREW M6S10X25RFR
	110	312115-0453	-		2	SCREW 8X25 A4 80
	120	312151-0370	-		8	SCREW MF6S6X20FZB
	130	312141-0467	-		8	SCREW MFS8X80FZB
	140	312601-0318	-		8	NUT M6M8FZB
	150	312605-0318	-		2	NUT M6M8RFR
	160	312605-0320	-		24	NUT M6M10RFR
	170	315101-0165	-		8	WASHER BRB8,4X16FZB
	180	315101-0186	-		4	WASHER BRB17X30FZB
	190	315111-0173	-		24	WASHER TBRB10,5X22FZB
	200	315115-0165	-		2	WASHER TBRB8,4X16RFR

From	Pos	Part No	SP	UN	Qty	Description

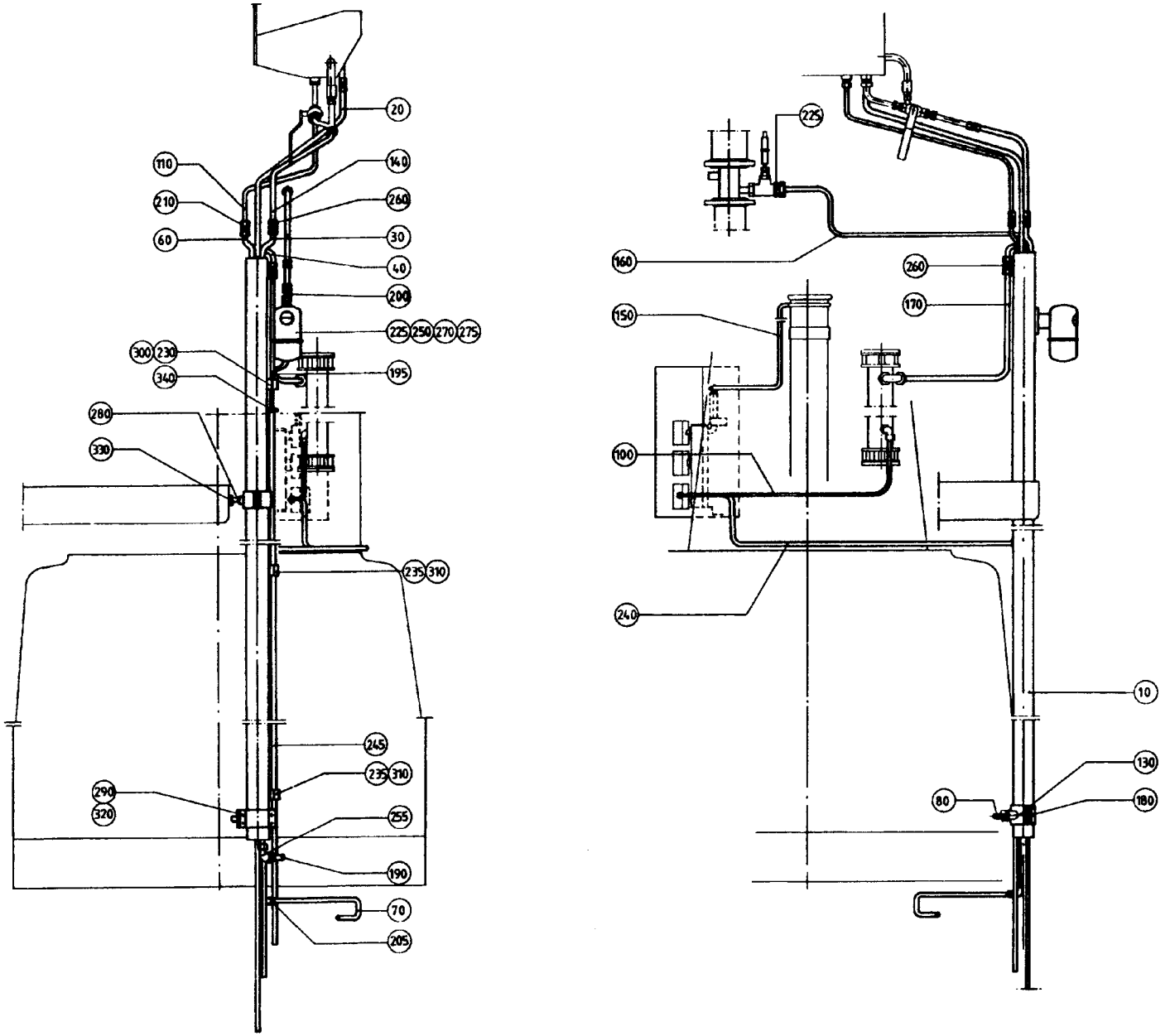

44912302.TIF
449123-2
AM 8784

From	Pos	Part No	SP	UN Qty	Description
TCA/500					
		C- 449123-0301			**PIPE, ASS'Y**
	010	449736-0001	-	1	PROTECTION PIPE
	020	449737-0001	-	1	PIPE
	030	449774-0001	-	1	PIPE
	040	449775-0001	-	1	PIPE
	060	449777-0001	-	1	PIPE
	070	252682	-	1	PIPE
	080	497512-0001	-	1	STRUT
TCA/300					
		C- 449123-0302			**PIPE, ASS'Y**
	010	449736-0002	-	1	PROTECTION PIPE
	020	449737-0002	-	1	PIPE
	030	449774-0002	-	1	PIPE
	040	449775-0002	-	1	PIPE
	060	449777-0002	-	1	PIPE
	070	449778	-	1	PIPE
	080	497512-0002	-	1	STRUT
TCA/150					
		C- 449123-0303			**PIPE, ASS'Y**
	010	449736-0002	-	1	PROTECTION PIPE
	020	449737-0002	-	1	PIPE
	030	449774-0002	-	1	PIPE
	040	449775-0002	-	1	PIPE
	060	449777-0002	-	1	PIPE
	070	449778	-	1	PIPE
	080	497512-0003	-	1	STRUT
Common Parts					
	100	493964	-	1	PIPE
	110	449735	-	1	PIPE
	130	255066	-	2	HOLDER
	140	279626	-	1	PIPE
	150	292317	-	1	PIPE
	160	484940	-	1	PIPE STEAM AP-VALVE
	170	484980	-	1	PIPE COOL-WATER
	180	252676	-	2	CAP
	190	279781-0002	-	1	PIPE
	195	497126	-	1	PIPE
	200	522170	-	1	PIPE
	205	90030-0077	-	1	PIPE CONNECTION
	210	90030-0091	-	1	PIPE CONNECTION

From	Pos	Part No	SP	UN Qty	Description
	225	90030-0213	-	3	PIPE COUPLING
	230	90165-0051	-	1	CLIP
	235	90165-0062	-	2	CLIP
	240	90166-0045	-	MM1200	HOSE
	245	90166-0121	-	MM2400	HOSE
	250	90230-0025	-	1	NON-RETURN VALVE
	255	90330-0023	-	2	PIPE JOINT
	260	90330-0063	-	2	CONNECTION
	270	90360-0005	-	1	STEAM TRAP
	275	90360-0006	-	1	ATTACHMENT
	280	312104-0501	-	1	SCREW M6S10X50H8.8FZB
	290	312105-0451	-	8	SCREW M6S8X20RFR
	300	312115-0372	-	2	SCREW MC6S6X25 A4 80
	310	312115-0376	-	4	SCREW 6X35 A4 80
	320	312605-0318	-	8	NUT M6M8RFR
	330	312605-0320	-	1	NUT M6M10RFR
	340	342991-0102	-	1	HOSE CLIP 13-20MMRFR

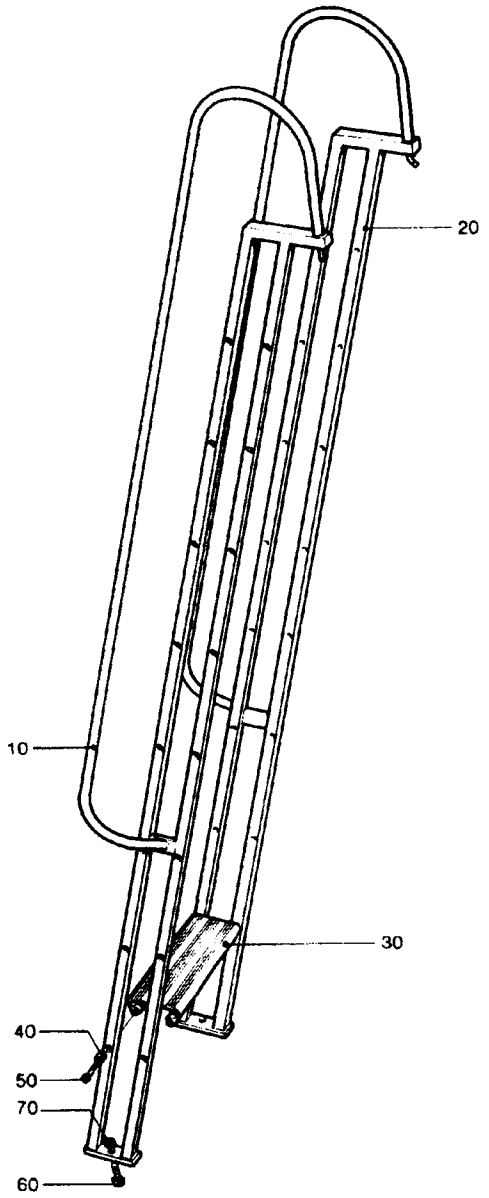

26388101.TIF
263881-1
AM 5976

From	Pos	Part No	SP	UN	Qty	Description
TC/150 TC/300						
	F00	**C- 263881-0101**				**Ladder, Ass'y**
	010	263879-0001	-		1	SIDE PIECE
	020	263879-0002	-		1	SIDE PIECE
	030	208361-0001	-		7	STAIR
	040	208658-0001	-		28	SPACER
	050	90287-0056	-		28	SCREW
	060	312104-0501	-		2	SCREW M6S10X50H8.8FZB
	070	312601-0320	-		2	NUT M6M10FZB
TC/500						
	F00	**C- 263881-0102**				**Ladder, Ass'y**
	010	263879-0003	-		1	SIDE PIECE
	020	263879-0004	-		1	SIDE PIECE
	030	208361-0001	-		7	STAIR
	040	208658-0001	-		28	SPACER
	050	90287-0056	-		28	SCREW
	060	312104-0501	-		2	SCREW M6S10X50H8.8FZB
	070	312601-0320	-		2	NUT M6M10FZB
TC/500						
	F00	**C- 263881-0103**				**Ladder, Ass'y**
	010	263879-0005	-		1	SIDE PIECE
	020	263879-0006	-		1	SIDE PIECE
	030	208361-0001	-		8	STAIR
	040	208658-0001	-		32	SPACER
	050	90287-0056	-		32	SCREW
	060	312104-0501	-		2	SCREW M6S10X50H8.8FZB
	070	312601-0320	-		2	NUT M6M10FZB
TCA/150 TCA/300						
	F00	**C- 263881-0104**				**Ladder, Ass'y**
	010	263879-0007	-		1	SIDE PIECE
	020	263879-0008	-		1	SIDE PIECE
	030	208361-0001	-		10	STAIR
	040	208658-0001	-		40	SPACER
	050	90287-0056	-		40	SCREW
	060	312104-0501	-		2	SCREW M6S10X50H8.8FZB
	070	312601-0320	-		2	NUT M6M10FZB
TCA/500						
	F00	**C- 263881-0105**				**Ladder, Ass'y**
	010	263879-0009	-		1	SIDE PIECE
	020	263879-0010	-		1	SIDE PIECE
	030	208361-0001	-		12	STAIR
	040	208658-0001	-		48	SPACER
	050	90287-0056	-		48	SCREW
	060	312104-0501	-		2	SCREW M6S10X50H8.8FZB
	070	312601-0320	-		2	NUT M6M10FZB

From	Pos	Part No	SP	UN	Qty	Description

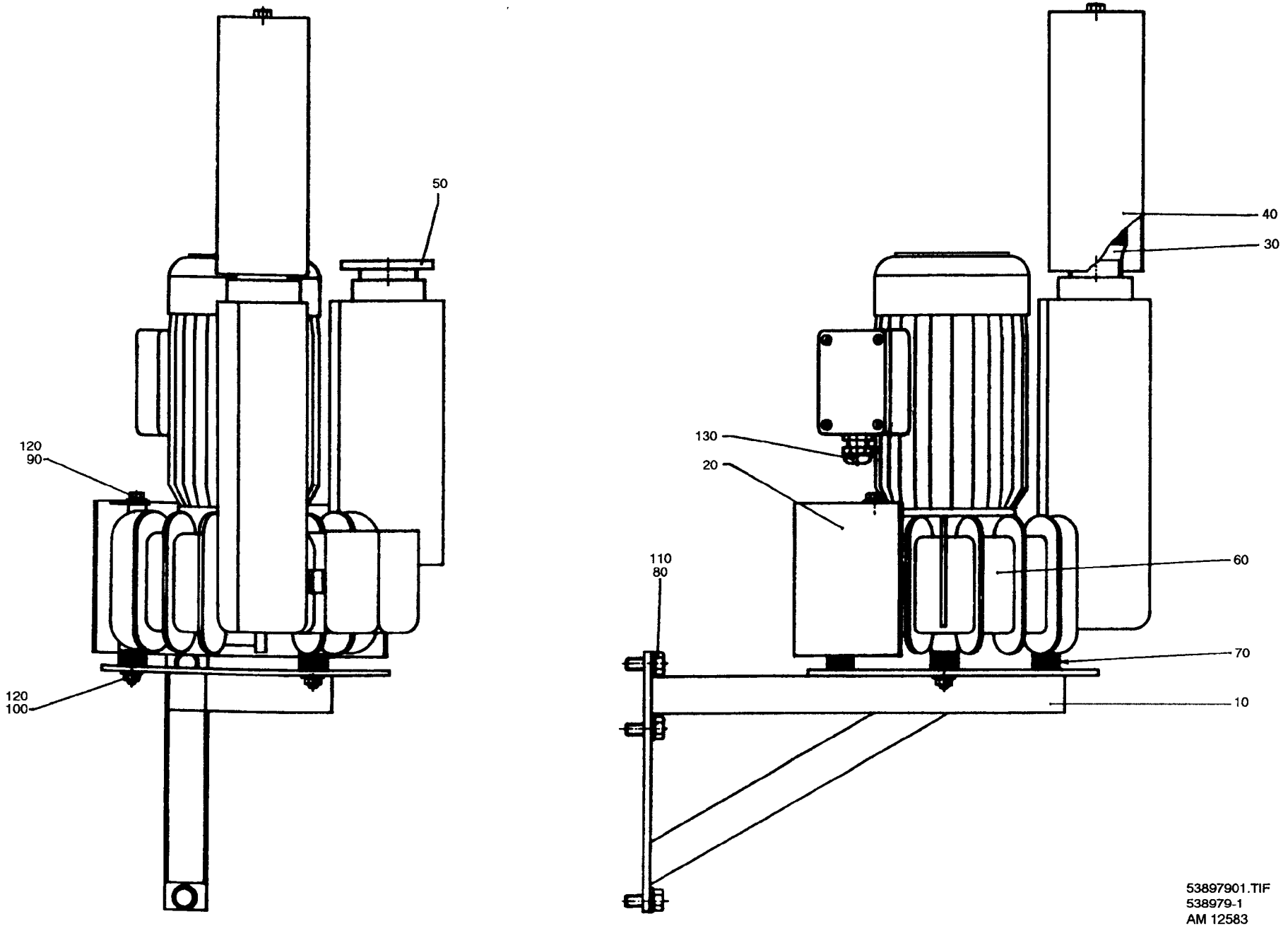

53897901.TIF
538979-1
AM 12583

From	Pos	Part No	SP	UN	Qty	Description
		C- 538979-0101				**FAN ASSEMBLY**
	010	531899	-		1	CANTILEVER
	020	533480	-		1	HEAT GUARD
	030	533965	-		1	AIR FILTER
	040	533981	-		1	FILTER HOUSING
	050	538980	-		1	FLANGE COUPLING
	060	90264-0041	-		1	AIR COMPR.FAN
	070	90347-0064	-		3	DAMPER
	080	312101-0493	-		3	SCREW M6S10X25FZB
	090	312105-0370	-		3	SCREW M6S6X20RFR
	100	312605-0316	-		3	NUT M6M6RFR
	110	315101-0173	-		3	WASHER BRB10,5X22FZB
	120	315105-0153	-		6	WASHER BRB6,4X12RFR
	130	352103-0111	-		1	CABLE GLANR.ST 16

From	Pos	Part No	SP	UN	Qty	Description

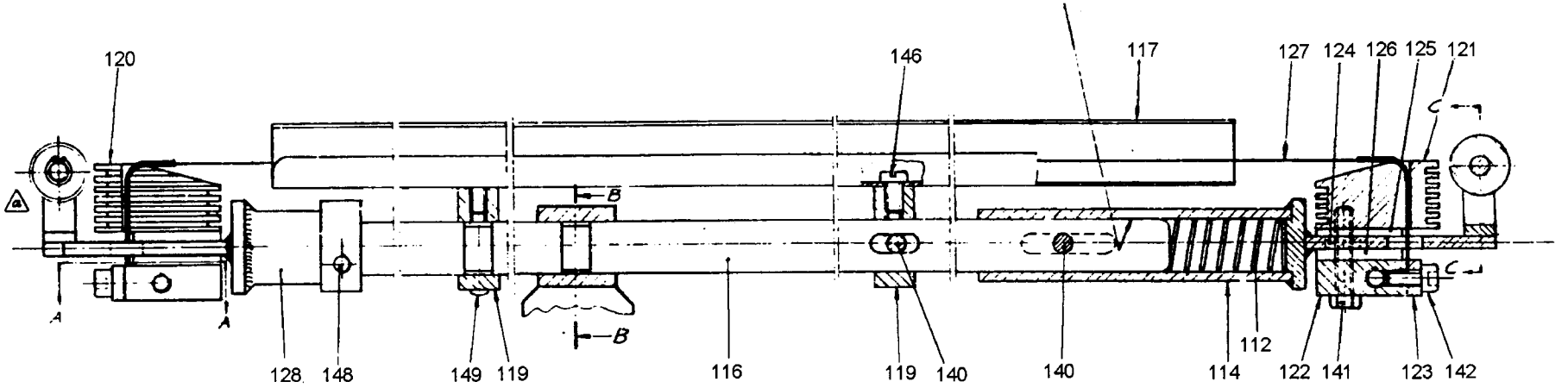

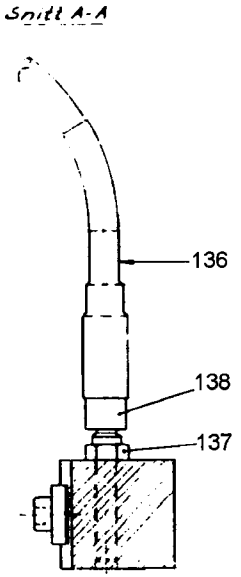

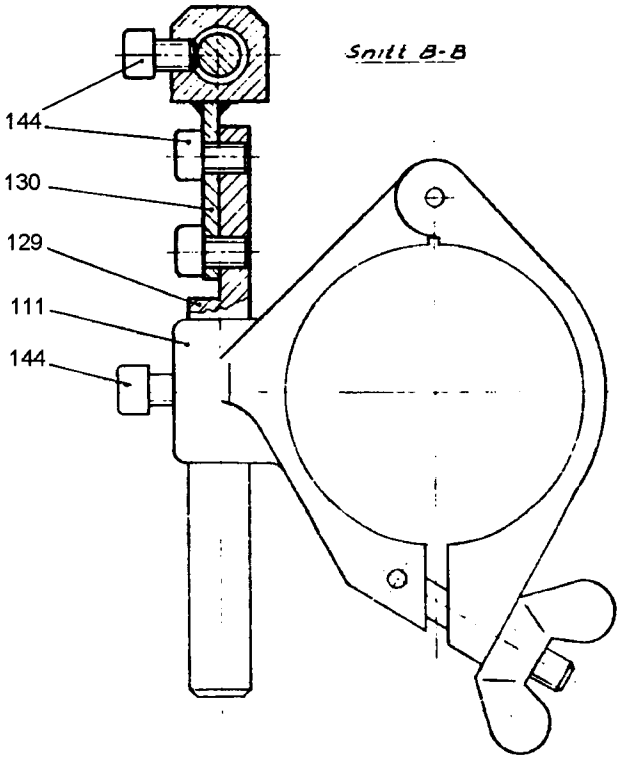

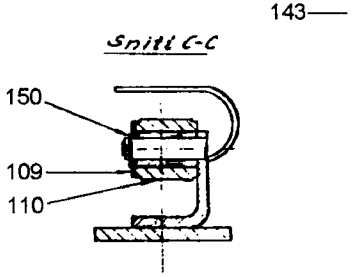

2909801.tif
29098-1
AM 5976

From	Pos	Part No	SP	UN	Qty	Description
		C- 29098-0101				**EDGE DRIER, ASS'Y**
	109	2033-0013	-		2	WASHER
	110	8405	-		2	PRESSURE ROLLER
	111	10789	-		1	PIPE CLAMP
	112	14189	-		1	COMPRESSION SPRING
	114	29102	-		1	BRACKET
	116	29104	-		1	SUPPORT ROD
	117	29106	-		1	REFLECTOR
	118	29108	-		1	BRACKET
	119	29109	-		1	BRACKET
	120	29110	-		1	COOLING BODY
	121	29111	-		1	COOLING BODY
	122	29112	-		2	ATTACHMENT
	123	29113	-		2	WASHER
	124	29114	-		4	INSULATED BUSHING
	125	29115	-		2	INSULATING PLATE
	126	29116	-		2	INSULATING PLATE
	127	29120-0002	R		1	HEATING RIBBON
	128	32475	-		1	BRACKET
	129	37518	-		1	LINK
	130	37519	-		1	BRACKET
	136	90166-0018	-	MM	160	SHRINKABLE HOSE
	137	90110-0019	-		2	PLUG
	138	90125-0015	-		2	CONTACT
	140	311103-0361	-		2	CYLINDRICACP M6 6X40 RFR
	141	312105-0333	-		4	SCREW M6S5X25 A2 80
	142	312115-0325	-		2	SCREW 5X10 A4 80
	144	312115-0447	-		4	SCREW 8X12 A4 80
	146	312125-0323	-		2	SLOTTED HEMCS5X8RFR
	148	312306-0360	-		4	STOP SCREW P6SS6X6FZB
	150	315750-0103	-		2	CIRCLIP SGA6

From	Pos	Part No	SP	UN	Qty	Description

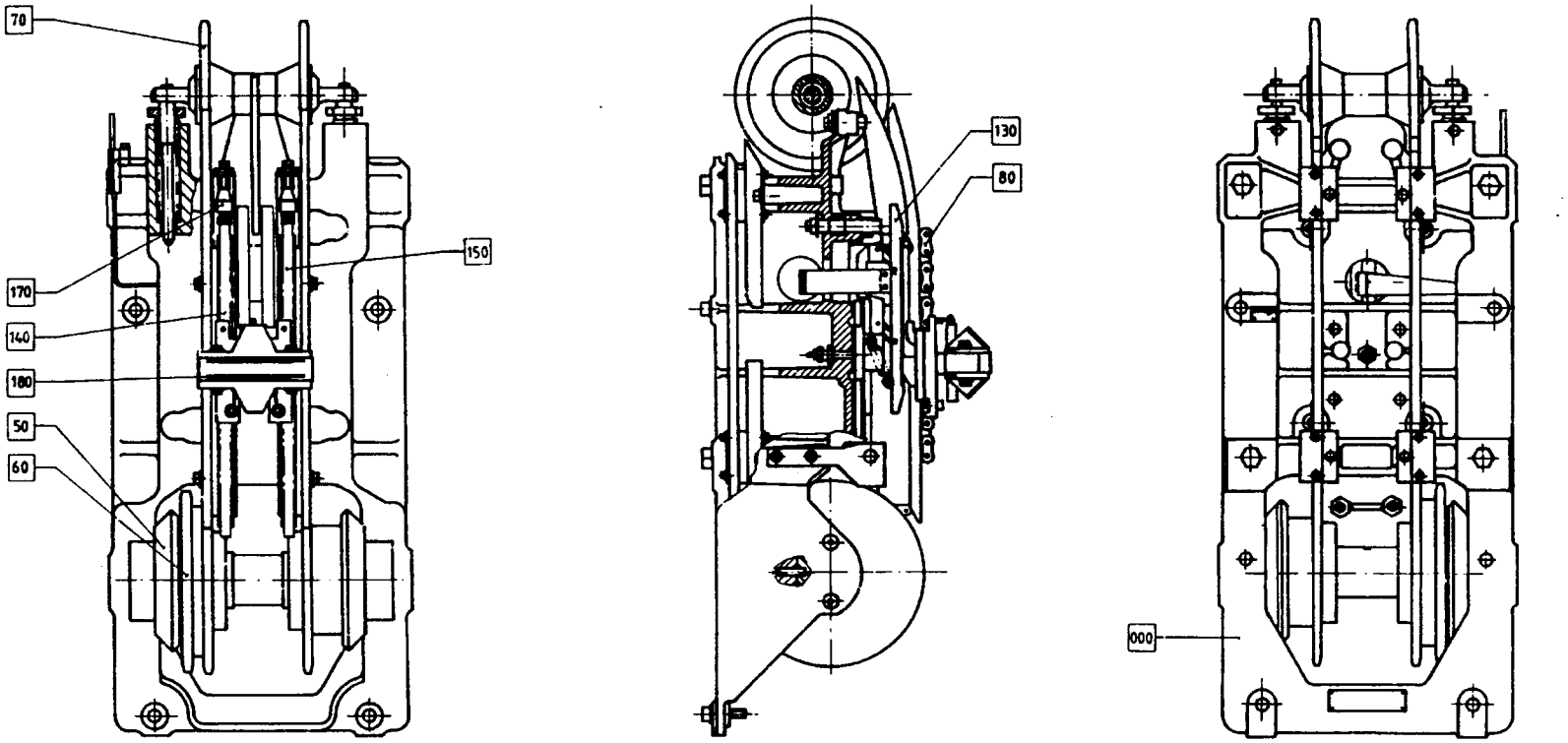

63320303.tif
633203-3
AM 11935

Pos	Group No	Description	Page
03-F000	633203-110V	Side Frame Heating Side	87
03-F000	536535-010V	Machine Body Side	89
03-F050	4579-010V	Link Chain Wheel	91
03-F070	4580-010V	Link Chain Wheel	93
03-F080	4586-020V	Double Chain 3/4"	95
03-F130	283911-010V	Contact Unit	97
.	283912-010V	Contact Unit	99
03-F140	532009-010V	Roller Conveyor	101
03-F170	536538-010V	Centrallubr. Heatingside	103
03-F180	283773-010V	Heating Jaw IH	105

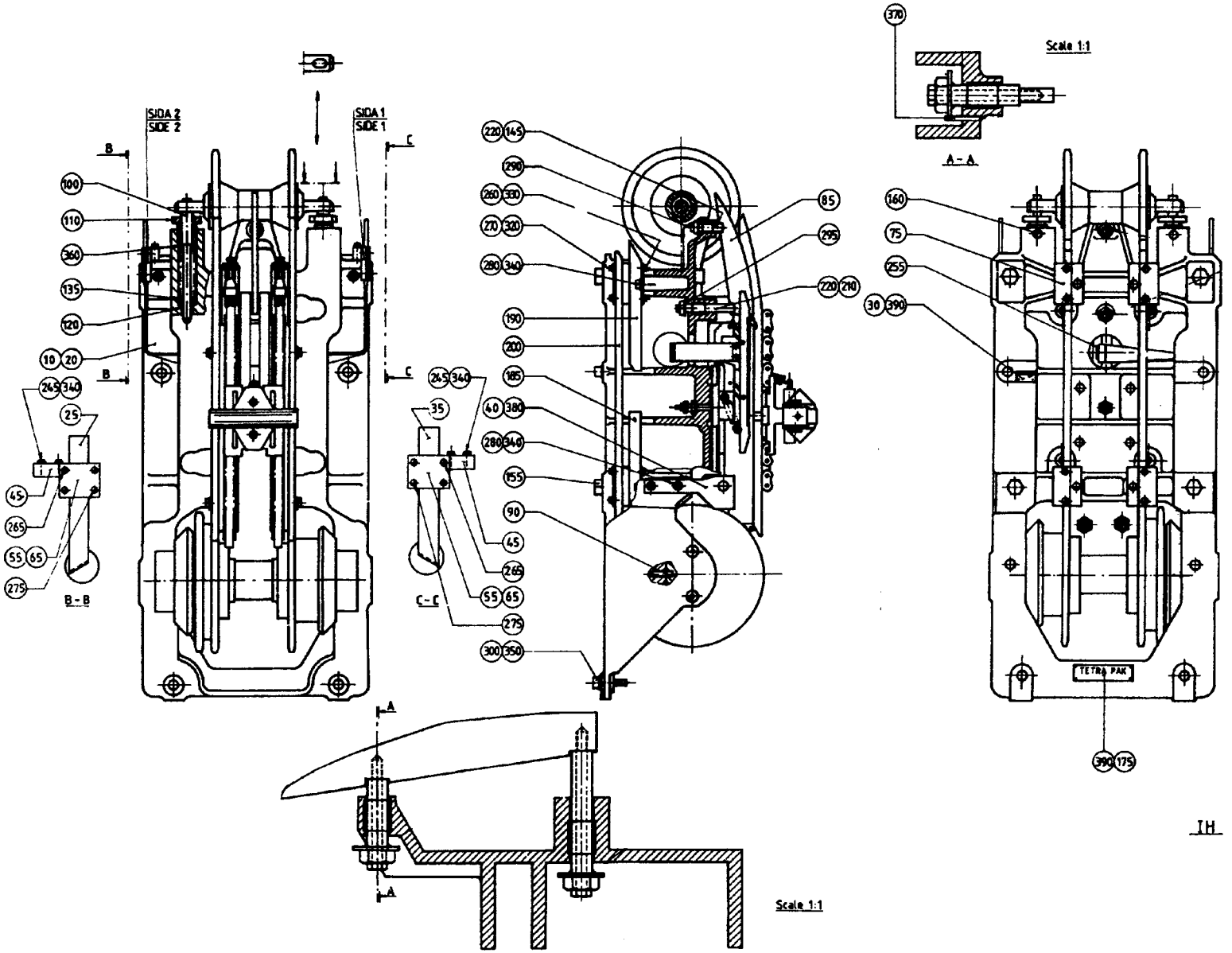

53653502.tif
536535-2
AM 14805

From	Pos	Part No	SP	UN Qty	Description
		C- 536535-0103			**MACHINE BODY SIDE 1, ASS'Y (IH)**
	020	G- 37824-0002	-	1	SIDE FRAME RIGHT
	030	10816	-	1	MARKING PLATE
	035	293459	-	1	CABLE
	045	294102	-	1	HOLDER
	055	294250	-	1	LUG
	065	294251	-	1	CAP
	245	312101-0374	-	2	SCREW M6S6X30FZB
	255	312132-0289	-	4	SLOTTED HEMSCS4X10MSGFN
	265	312141-0366	-	2	SLOTTED HEMFS6X12FZB
	275	312141-0372	-	2	SLOTTED HEMFS6X25FZB
	340	315101-0153	-	14	WASHER BRB6,4X12FZB
	380	13389-0002	-	1	SHEET (METAL)
	390	312502-0221	-	6	DRIVE SCREKDS4X6FNB
		C- 536535-0104			**MACHINE BODY SIDE 2, ASS'Y (IH)**
	010	G- 37824-0001	-	1	SIDE FRAME LEFT
	025	293458	-	1	CABLE
	040	13389-0001	-	1	SHEET (METAL)
	045	294102	-	1	HOLDER
	055	294250	-	1	LUG
	065	294251	-	1	CAP
	245	312101-0374	-	2	SCREW M6S6X30FZB
	255	312132-0289	-	4	SLOTTED HEMSCS4X10MSGFN
	265	312141-0366	-	2	SLOTTED HEMFS6X12FZB
	275	312141-0372	-	2	SLOTTED HEMFS6X25FZB
	340	315101-0153	-	14	WASHER BRB6,4X12FZB
	390	312502-0221	-	4	DRIVE SCREKDS4X6FNB
Common Parts					
	075	263217	-	4	BOW CLAMP
	085	542230	-	1	CURVE
	090	2481	-	2	TACK
	100	4636	-	2	PLUNGER
	110	4637	-	2	ADJUSTING NUT
	120	4638	-	2	BUSHING
	135	4639	-	2	COMPRESSION SPRING
	145	543511	-	1	ADJUSTMENT SLEEVE
	155	4660	-	4	STRUT
	160	7502	-	2	STOP SCREW
	175	20497	-	1	GROUP NUMBER PLATE
	185	263096	-	2	TRANSMISSION RAIL
	190	263097	-	2	TRANSMISSION RAIL
	200	263218	-	2	RAIL
	210	543512	-	1	ADJUSTMENT SLEEVE
	220	543513	-	2	WASHER
	260	312101-0327	-	8	SCREW M6S5X12FZB
	270	312111-0287	-	8	SCREW MC6S4X8FZB
	280	312111-0368	-	6	SCREW MC6S6X16FZB
	290	312105-0381	-	1	SCREW M6S6X55RFR
	295	312105-0388	-	1	SCREW 6X90 RFR
	300	312111-0540	-	4	SCREW MC6S12X40FZB
	320	315101-0136	-	8	WASHER BRB4,3X8FZB
	330	315101-0146	-	8	WASHER BRB5,3X10FZB
	350	315101-0178	-	4	WASHER BRB13X24FZB
	360	315111-0178	-	2	WASHER TBRB13X24FZB
	370	311303-0238	-	2	SLOTTED PIRPB3X20FZB

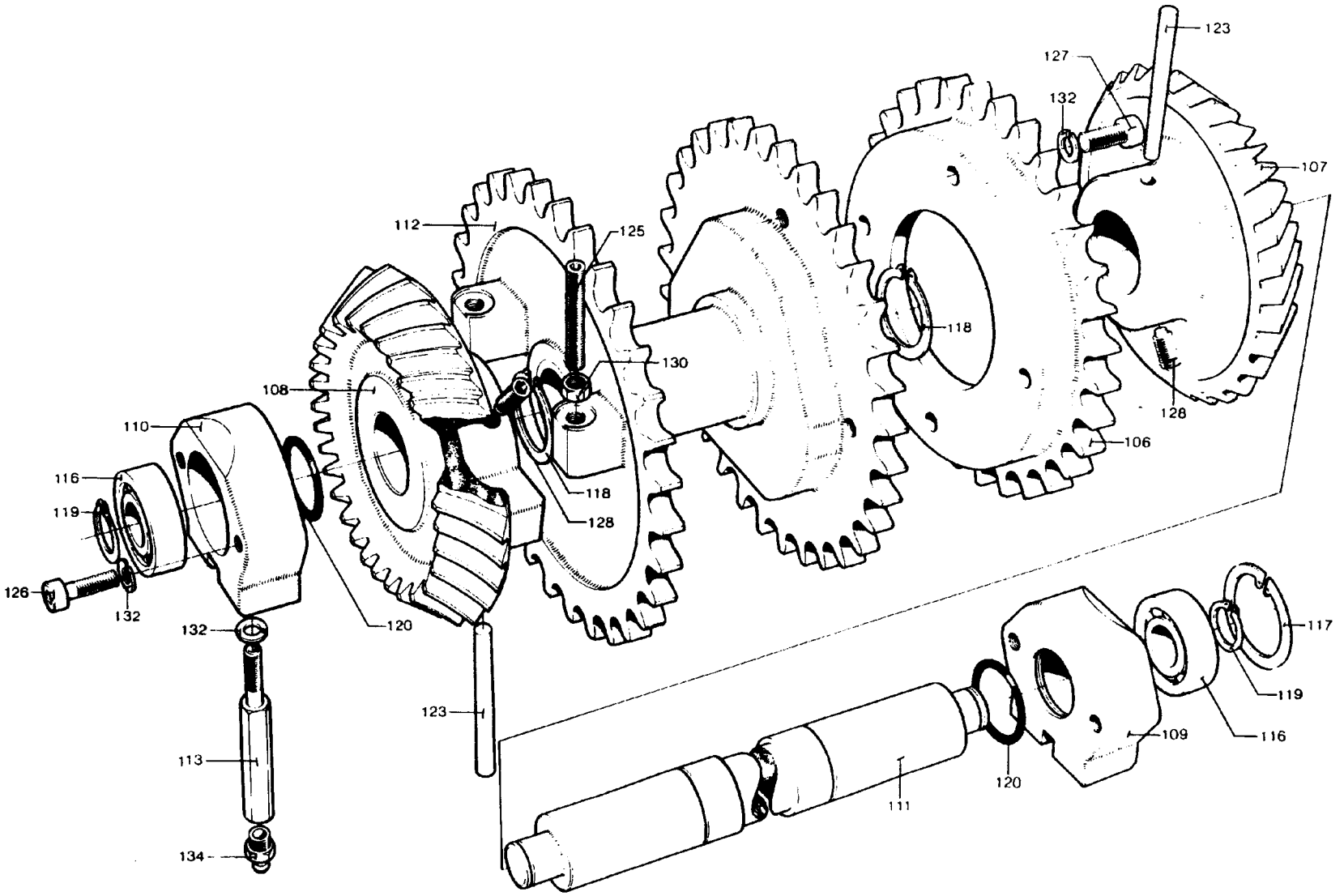

457901.tif
4579-1
AM 4450

From	Pos	Part No	SP	UN Qty	Description
		C- 4579-0101			**LINK CHAIN WHEEL, ASS'Y (DRIVE SIDE)**
	106	G- 4596	-	1	LINK CHAIN WHEEL
	127	312111-0452	-	4	SCREW MC6S8X22FZB
	132	315401-0165	-	10	WASHER FBH8,2FZB
		C- 4579-0102			**LINK CHAIN WHEEL, ASS'Y**
	132	315401-0165	-	6	WASHER FBH8,2FZB
Common Parts					
	107	4597	-	1	CONICAL GEAR
	108	G- 4598	-	1	CONICAL GEAR
	109	G- 4599	-	1	BEARING HOUSING
	110	G- 4600	-	1	BEARING HOUSING
	111	4627	-	1	SHAFT
	112	G- 4633	-	1	LINK CHAIN WHEEL
	113	6453-0001	-	2	LUBRICATING PIPE
	116	321309-0104	-	2	BALL BEARISKF6204
	117	315752-0130	-	1	CIRCLIP SGH47
	118	315750-0124	-	2	CIRCLIP SGA35
	119	315750-0116	-	2	CIRCLIP SGA20
	120	315202-0528	-	2	O-RING 37,69X3,53
	123	311201-0327	-	2	TAPER PIN KP8X70SLIPAD
	125	312306-0461	-	2	STOP SCREW P6SS8X50FZB
	126	312111-0455	-	4	SCREW MC6S8X30FZB
	128	312316-0447	-	4	STOP SCREW SK6SS8X12FZB
	130	312601-0318	-	2	NUT M6M8FZB
	134	344502-0026	-	2	NIPPLE L AHKR1/8"

From	Pos	Part No	SP	UN Qty	Description

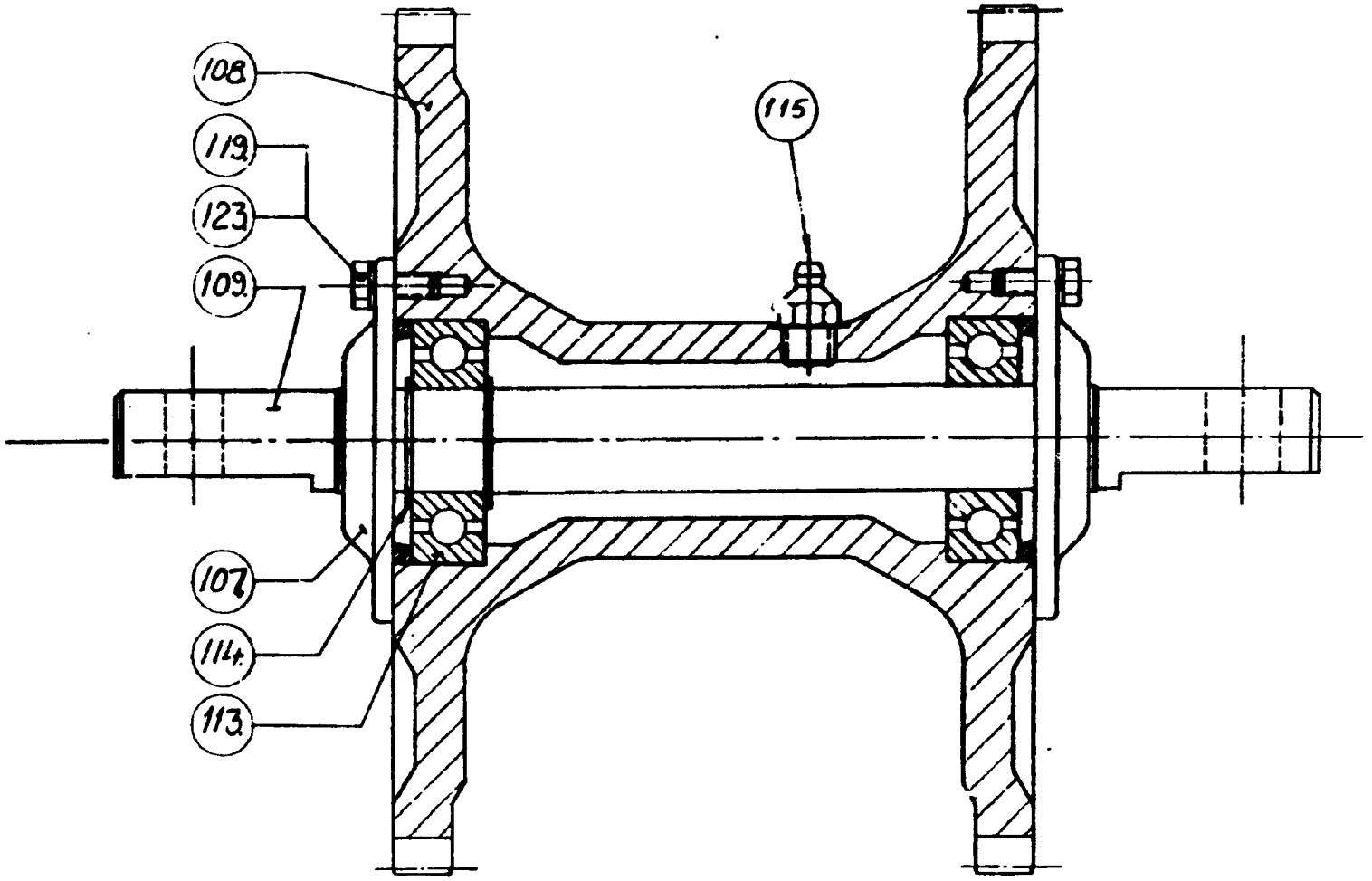

458001.tif
4580-1
AM 1592

From	Pos	Part No	SP	UN	Qty	Description
		C- 4580-0101				**LINK CHAIN WHEEL, ASS'Y**
	107	3749	-		2	OIL SEAL (L@VALOCK)
	108	G- 4595	-		1	LINK CHAIN WHEEL
	109	4628	-		1	SHAFT
	113	321309-0104	-		2	BALL BEARISKF6204
	114	315750-0116	-		2	CIRCLIP SGA20
	115	344502-0026	-		1	NIPPLE L AHKR1/8"
	119	312101-0327	-		6	SCREW M6S5X12FZB
	123	315401-0146	-		6	WASHER FBH 5,1 FZB

From	Pos	Part No	SP	UN	Qty	Description

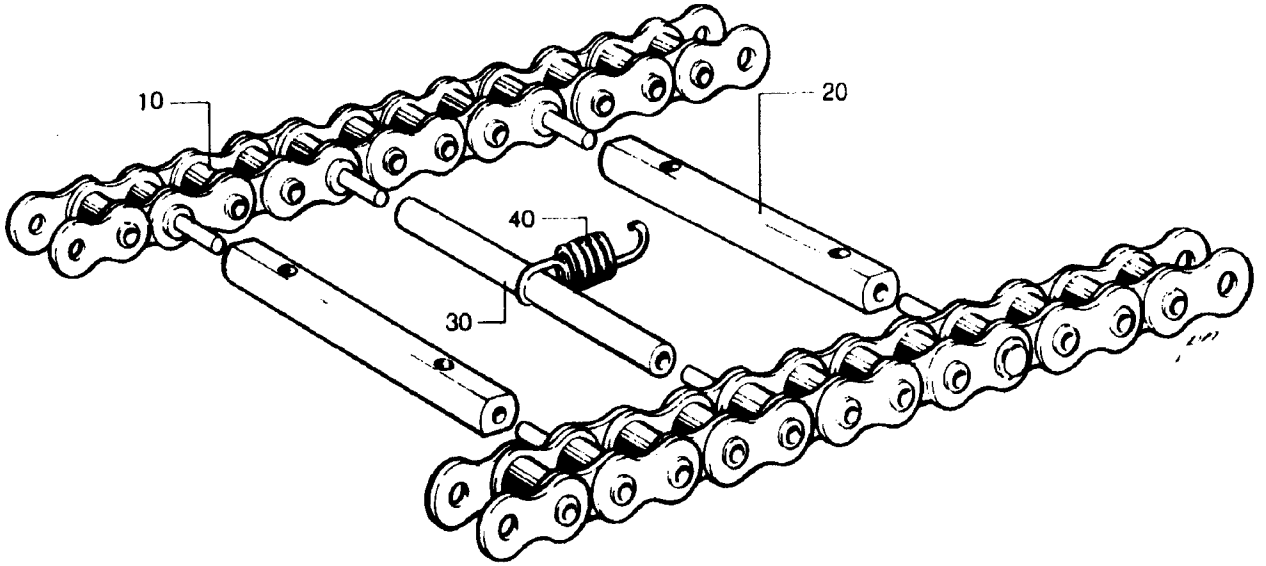

458601.tif
4586-1
AM 8332

From	Pos	Part No	SP	UN	Qty	Description
		C- 4586-0201				**DOUBLE CHAIN 3/4", ASS'Y**
	010	4624	-		2	ROLLER PLATE
	020	484567	-		8	SHAFT
	030	4626	-		8	SHAFT
	040	266495	-		8	TENSION SPRING

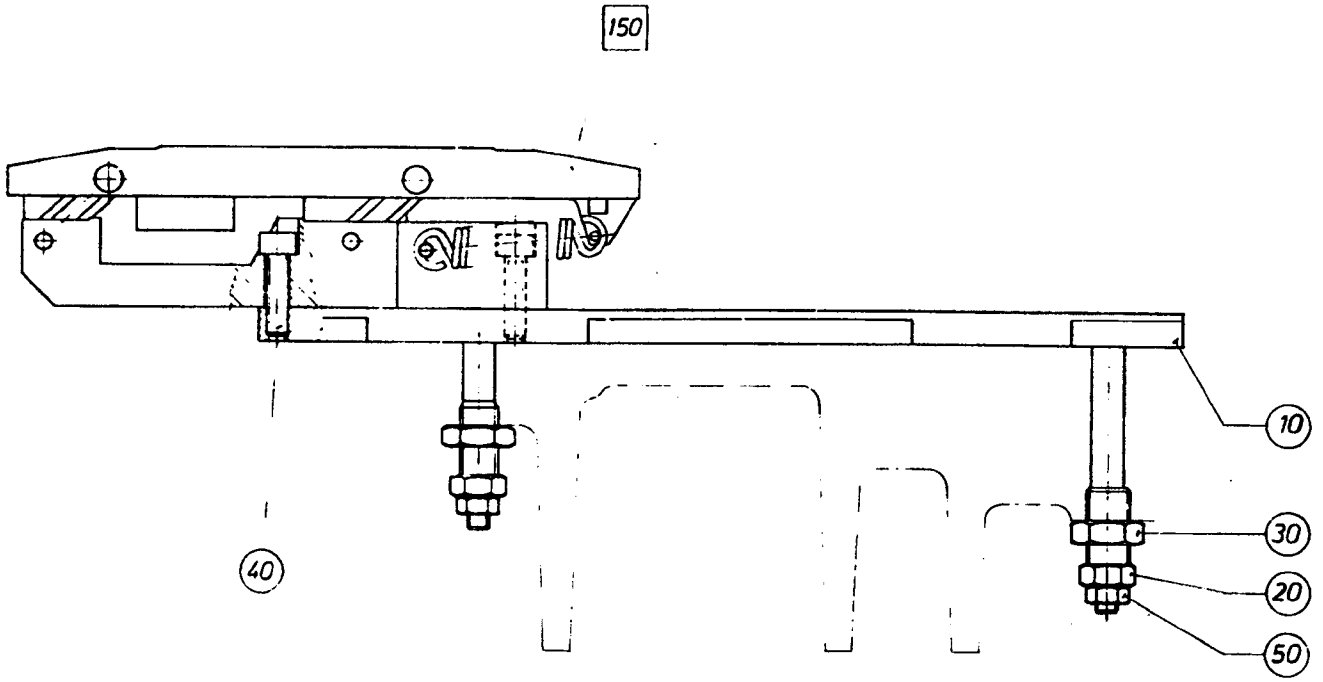

28391101.tif
283911-1
AM 5719

From	Pos	Part No	SP	UN	Qty	Description
		C- 283911-0101				**CONTACT UNIT, ASS'Y**
	F010	C- 283912-0101	-		X	CONTACT UNIT
	F150	C- 283912-0101	-		1	CONTACT UNIT
	010	259503	-		1	MOUNTING BAR
	020	13172	-		3	ADJUSTING SCREW
	030	13254	-		3	NUT
	040	312111-0372	-		2	SCREW MC6S6X25FZB
	050	312605-0316	-		3	NUT M6M6RFR

From	Pos	Part No	SP	UN	Qty	Description

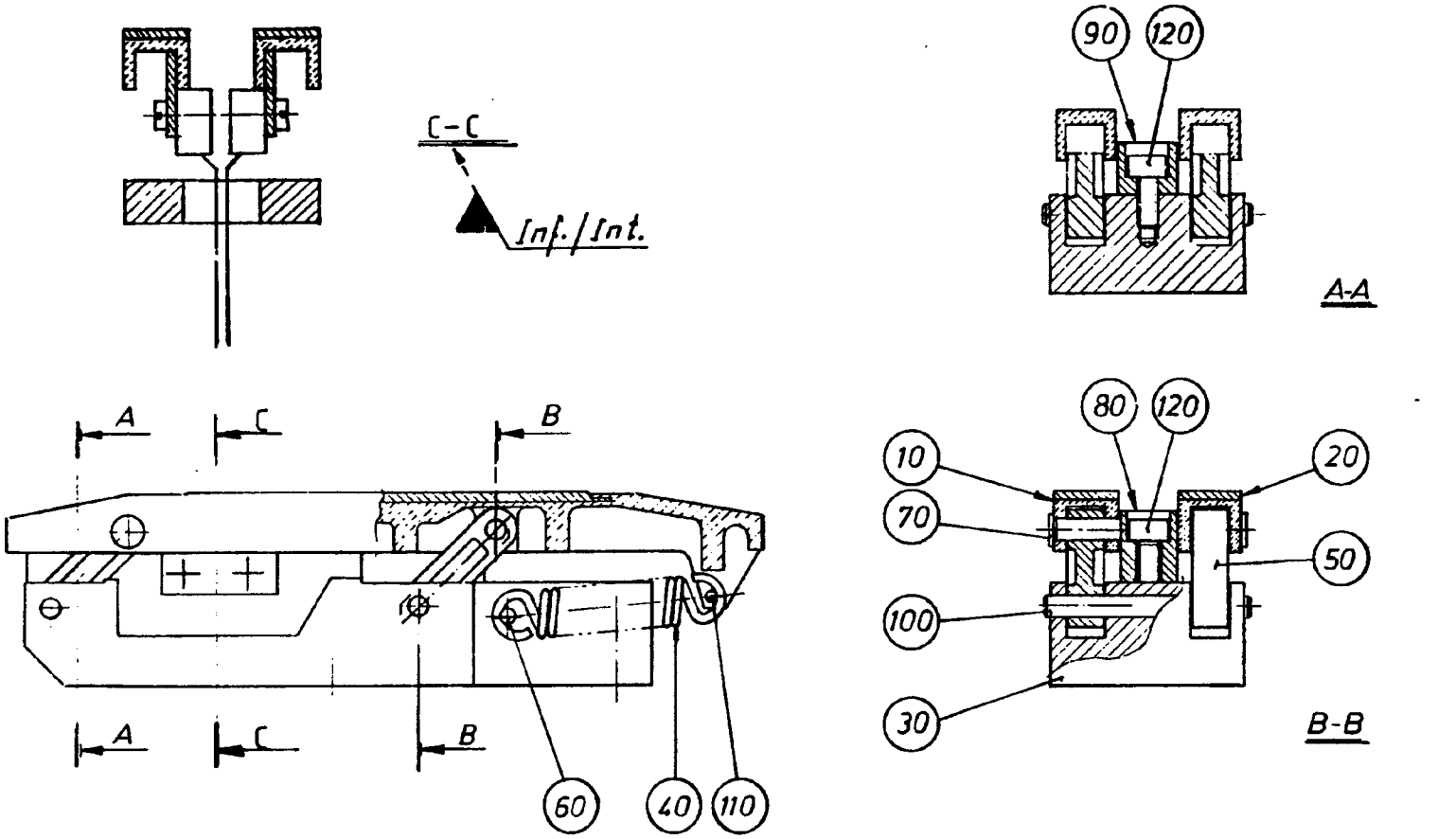

28391201.tif
283912-1
AM 10164

From	Pos	Part No	SP	UN Qty	Description
		C- 283912-0101			**CONTACT UNIT, ASS'Y**
	010	279578	-	1	CONTACT RAIL LEFT
	020	279579	-	1	CONTACT RAIL RIGHT
	030	279664	-	1	BRACKET
	040	243989	-	2	TENSION SPRING
	050	243990	-	4	LINK ARM
	060	244588	-	1	SHAFT
	070	246520	-	4	SHAFT
	080	246523	-	1	STOP LUG
	090	284047	-	1	GUIDE LUG
	100	255256	-	2	SHAFT
	110	311103-0235	-	2	CYLINDRICACP M6 3X14 RFR
	120	312115-0329	-	3	SCREW 5X16 A4 80

From	Pos	Part No	SP	UN Qty	Description

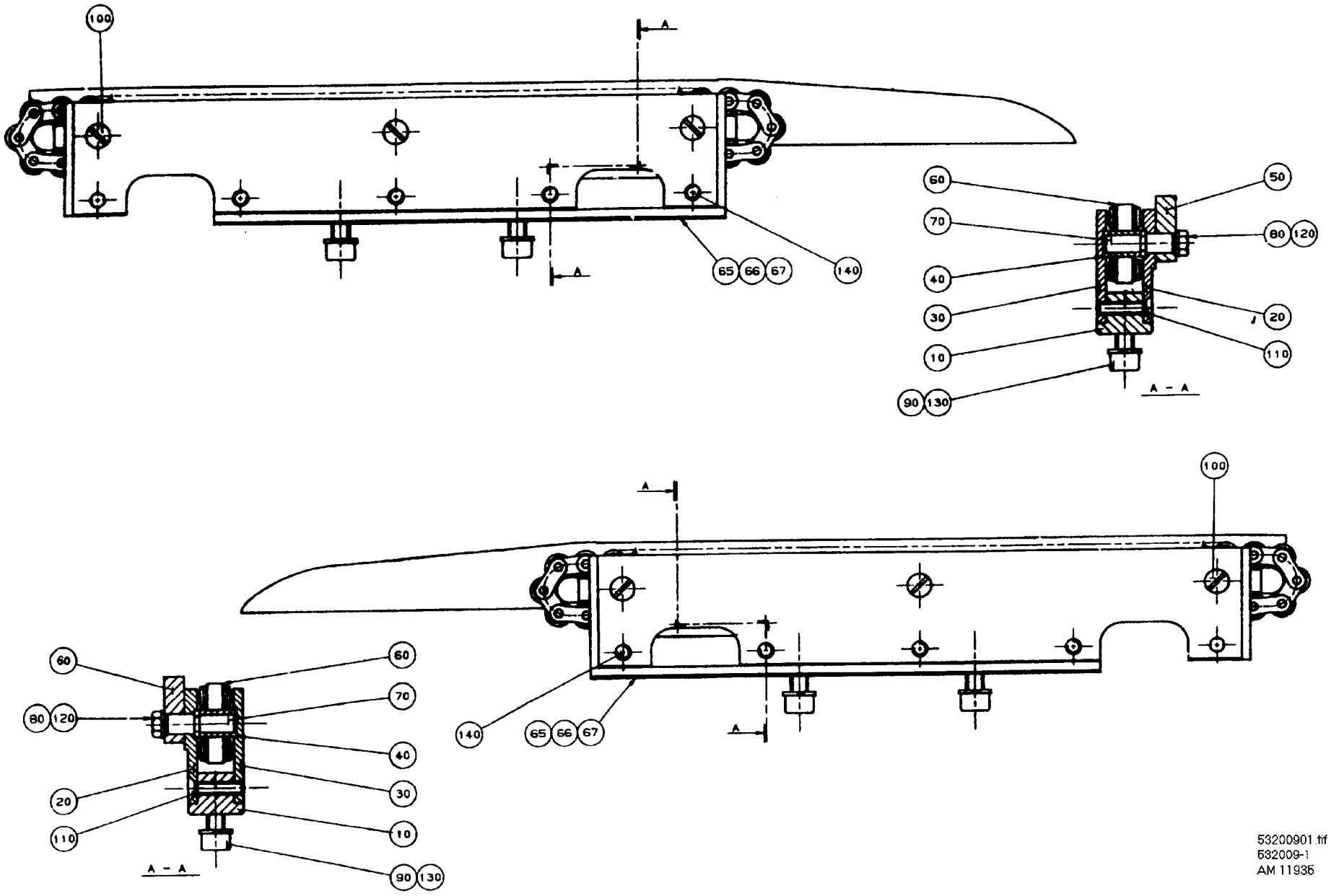

53200901.tif
532009-1
AM 11935

From	Pos	Part No	SP	UN	Qty	Description
		C- 532009-0101				**ROLLER CONVEYOR, ASS'Y (LEFT SIDE)**
		C- 532009-0102				**ROLLER CONVEYOR, ASS'Y (RIGHT SIDE)**
	010	531991	-		1	BRACKET
	020	543519	C		1	END SECTION
	030	531993	C		1	END SECTION
	040	531994	S		1	ROLLER CONVEYOR
	050	543517	S		1	TRANSMISSION RAIL
	060	531996	S		1	PRESSURE CHAIN
	065	273725-0001	S		5	LACE
	066	273725-0002	S		5	LACE
	067	273725-0003	S		5	LACE
	070	543508	C		2	BUSHING
	080	312101-0366	S		2	SCREW M6S6X12FZB
	090	312111-0451	S		2	SCREW MC6S8X20FZB
	100	312145-0364	S		6	SLOTTED HEMFS6X10RFR
	110	312145-0372	S		3	SLOTTED HEMFS6X25RFR
	120	315101-0153	S		3	WASHER BRB6,4X12FZB
	130	315401-0165	S		2	WASHER FBH8,2FZB
	140	312101-0372	S		1	SCREW M6S6X25FZB
EARING HOUSING						
	110	G- 4600	-		1	BEARING HOUSING
	111	4627	-		1	SHAFT
	112	G- 4633	-		1	LINK CHAIN WHEEL
	113	6453-0001	-		2	LUBRICATING PIPE
	116	321309-0104	-		2	BALL BEARISKF6204
	117	315752-0130	-		1	CIRCLIP SGH47
	118	315750-0124	-		2	CIRCLIP SGA35
	119	315750-0116	-		2	CIRCLIP SGA20
	120	315202-0528	-		2	O-RING 37,69X3,53
	123	311201-0327	-		2	TAPER PIN KP8X70SLIPAD
	125	312306-0461	-		2	STOP SCREW P6SS8X50FZB
	126	312111-0455	-		4	SCREW MC6S8X30FZB
	128	312316-0447	-		4	STOP SCREW SK6SS8X12FZB
	130	312601-0318	-		2	NUT M6M8FZB
	134	344502-0026	-		2	NIPPLE L AHKR1/8"

From	Pos	Part No	SP	UN	Qty	Description

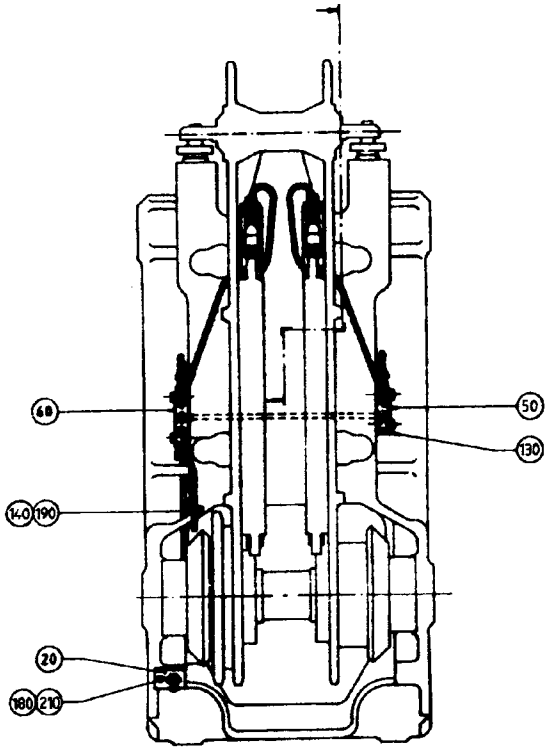

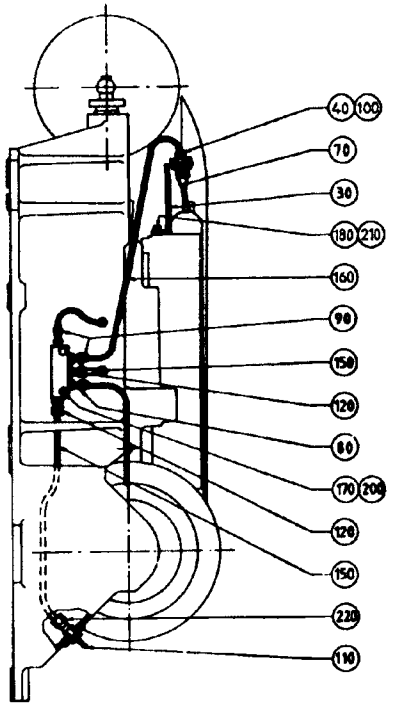

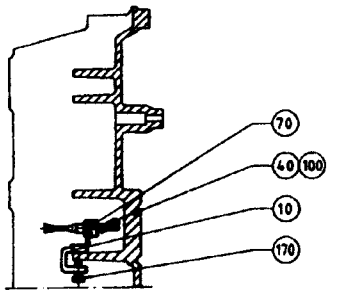

53653801.tif
536538-1
AM 10077

From	Pos	Part No	SP	UN	Qty	Description
		C- 536538-0101				**CENTRALLUBR. HEATINGSIDE, ASS'Y**
	010	263106	-		1	HOLDER
	020	259962-0002	-		1	PLATE
	030	493726	-		2	HOLDER
	040	90028-0001	S		4	CONE
	050	90032-0012	-		1	JUNCTION BLOCK
	060	90032-0013	-		1	JUNCTION BLOCK
	070	90092-0048	S		4	OIL BRUSH
	080	90092-0064	S		1	METERING VALVE
	090	90092-0065	S		4	METERING VALVE
	100	90134-0003	S		4	BUSHING
	110	90134-0033	-		1	NIPPLE
	120	90134-0034	-		3	NIPPLE
	130	90136-0002	-		1	PLUG
	140	90165-0003	-		1	CLIP
	150	90166-0011	S	MM	700	HOSE
	160	90166-0103	S	M	2	HOSE
	170	312101-0372	-		6	SCREW M6S6X25FZB
	180	312115-0327	-		3	SCREW MC6S5X12 A4 80
	190	312121-0285	-		1	SLOTTED HEMCS4X6FZB
	200	315101-0153	-		4	WASHER BRB6,4X12FZB
	210	315105-0146	-		3	WASHER BRB5,3X10RFR
	220	342724-0102	-		1	PIPE COUPLGI6-LRFZB

From	Pos	Part No	SP	UN	Qty	Description

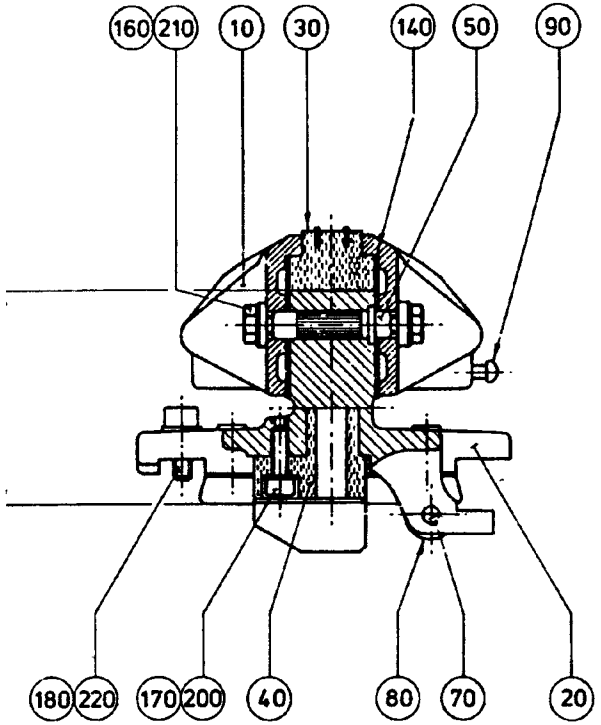

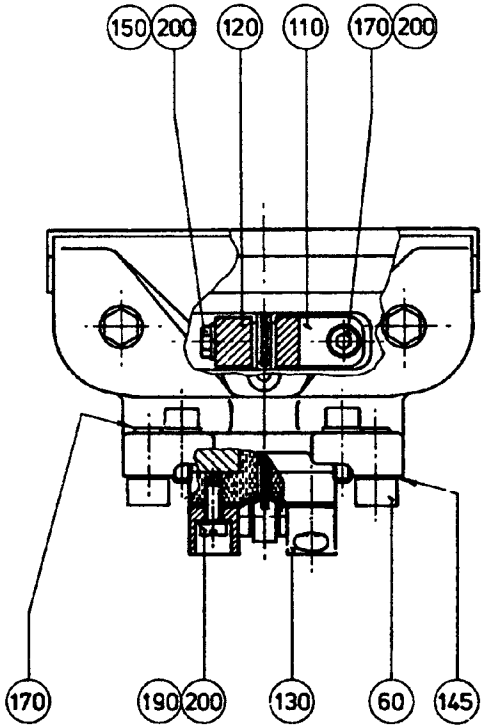

28377301.tif
283773-1
AM 10374

From	Pos	Part No	SP	UN	Qty	Description
Volume 62,5 ml						
		C- 283773-0101				**HEATING JAW, IH, ASS'Y**
	010	112971-0002	-		2	FLAP
	030	536380	UP		1	INDUCTOR 150IH
Volume 125 ml						
		C- 283773-0102				**HEATING JAW, IH, ASS'Y**
	010	4608	-		2	FLAP
	030	536381	UP		1	INDUCTOR 150IH
Volume 150 ml						
		C- 283773-0103				**HEATING JAW, IH, ASS'Y**
	010	4609	-		2	FLAP
	030	536382	UP		1	INDUCTOR 150IH
Volume 180, 189 200 ml						
		C- 283773-0104				**HEATING JAW, IH, ASS'Y**
	010	4609	-		2	FLAP
	030	530647	UP		1	INDUCTOR 150IH
Common Parts						
	020	278985	C		1	HEATING JAW
	040	279233	S		1	CARBON BRUSH HOLDER
	050	4613	C		2	BUSHING
	060	4615	S		2	ROLLER BAR
	070	533998	S		1	PEG
	080	4617	S		1	ROLL
	090	5809	-		1	TACK
	110	535500	S		1	BRACKET
	120	440419	S		1	BRACKET
	130	279668	S		2	CARBON BRUSH COMPLETE
	140	284046	-		2	GASKET
	145	493071	-		X	LACE
	150	90287-0171	S		2	SCREW
	160	312105-0366	-		4	SCREW M6S6X12RFR
	170	312115-0329	-		6	SCREW 5X16 A4 80
	180	312115-0368	-		2	SCREW 6X16 A4 80
	190	312122-0327	S		2	SLOTTED HEMCS5X12MSGFN
	200	315103-0146	S		6	WASHER BRB5,3X10MSGFN
	210	315115-0153	-		4	WASHER TBRB6,4X12RFR
	220	315402-0156	-		2	WASHER FBB6,5RFR

From	Pos	Part No	SP	UN	Qty	Description

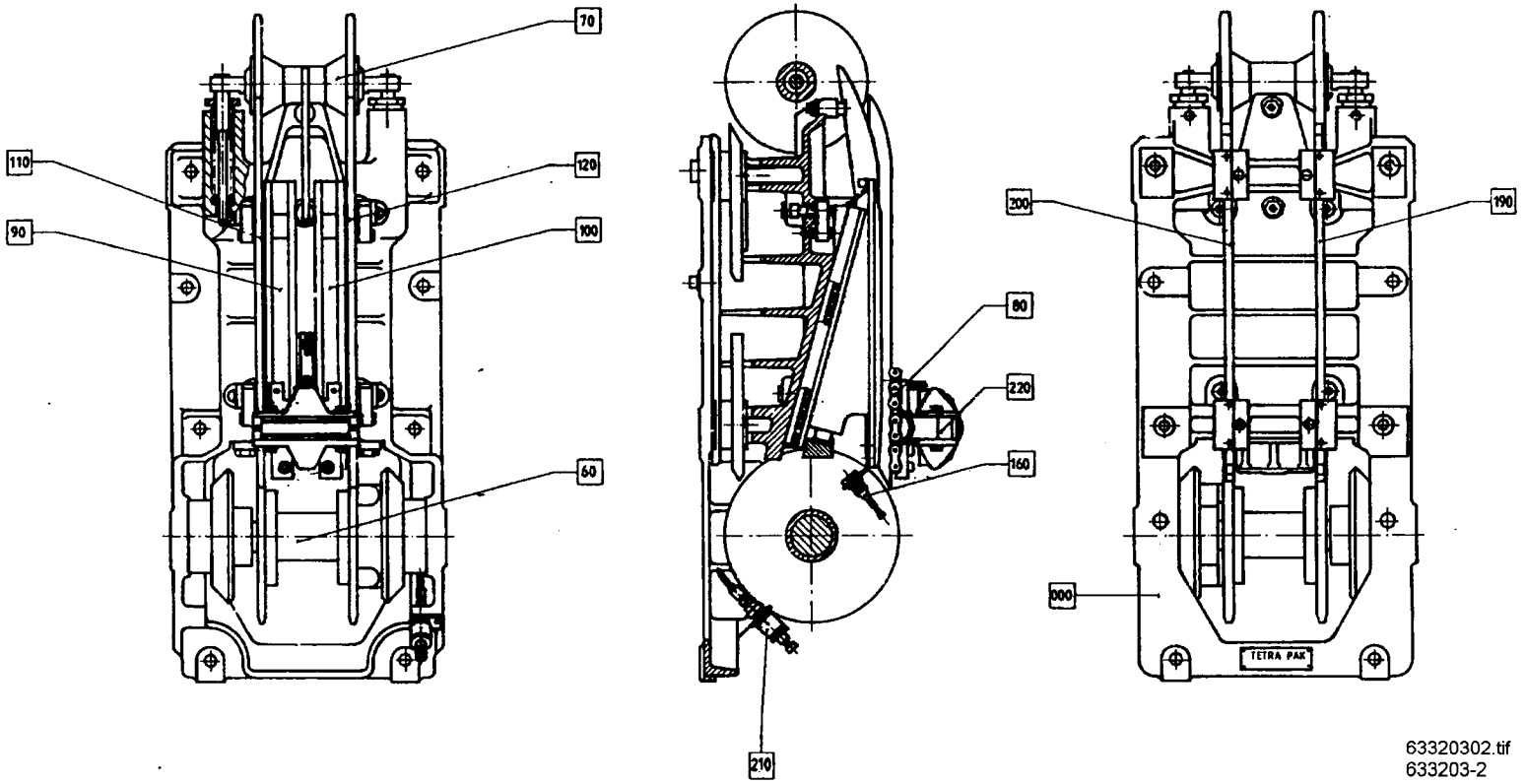

63320302.tif
633203-2
AM 11935

Pos	Group No	Description	Page
03-F000	633203-110V	Side Frame Pressure Side	109
03-F000	536536-010V	Machine Body, pressure side	111
03-F060	4579-010V	Link Chain Wheel	113
03-F070	4580-010V	Link Chain Wheel	115
03-F080	4586-020V	Double Chain 3/4"	117
03-F090	532007-010V	Plunger	119
03-F110	542226-010V	Transmission Rail	121
03-F160	536537-010V	Central Lubrication, pressure side	123
03-F190	532010-010V	Transmission Rail	125
03-F210	532157-010V	Hydraulic System Side	127
03-F220	532011-010V	Pressure Jaw	129

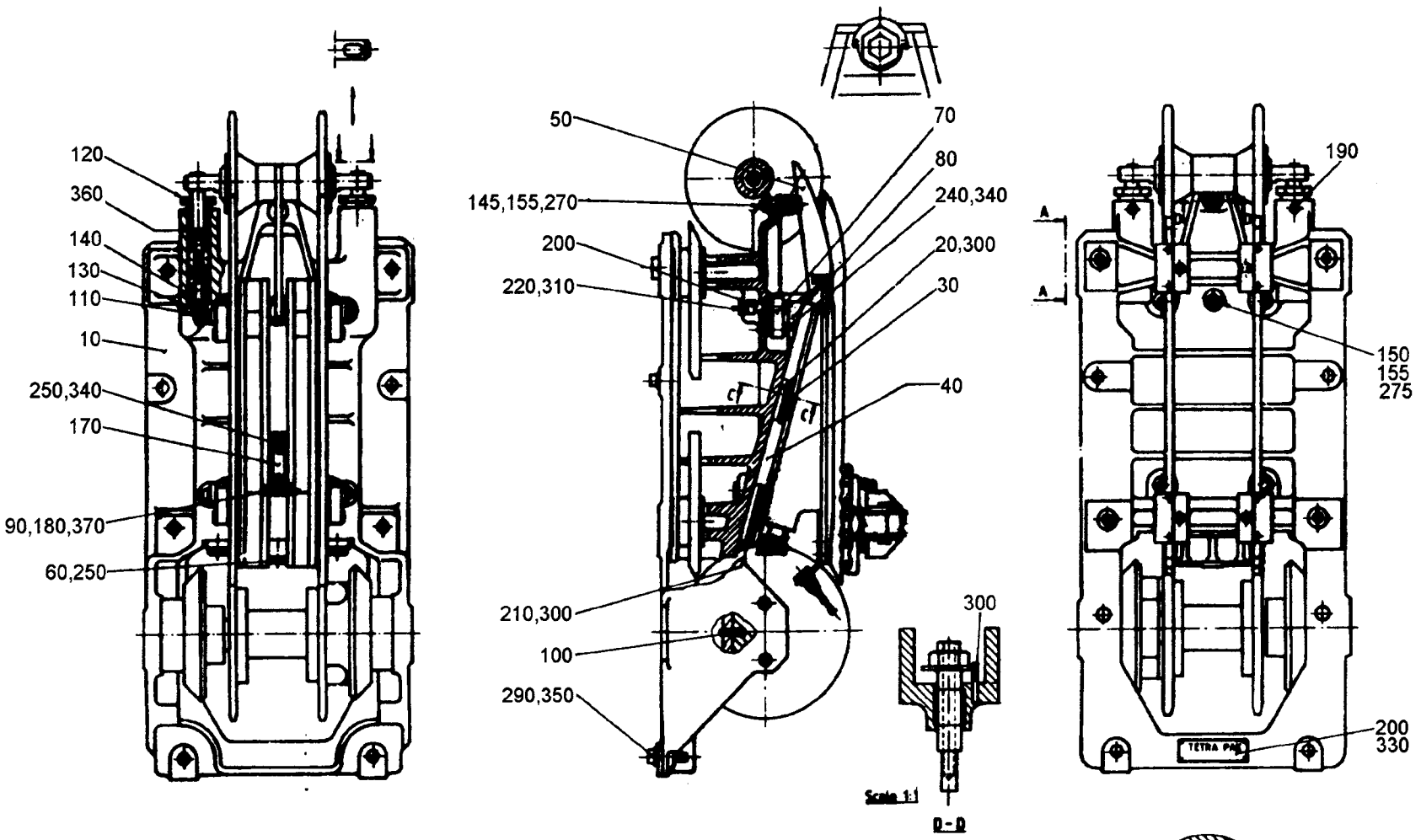

53653601.tif
536536-1
AM12594

From	Pos	Part No	SP	UN	Qty	Description
		C- 536536-0101				**MACH.BODY, PRESS SIDE, ASS'Y (SIDE 3)**
		C- 536536-0102				**MACH.BODY, PRESS SIDE, ASS'Y (SIDE 4)**
	010	G- 37806-0001	-		1	SIDE FRAME (SIDE 4)
	010	G- 37806-0002	-		1	SIDE FRAME (SIDE 3)
	020	543501	S		2	ROLLER PLATE
	030	484671	S		2	ROLLER BEARING
	040	499490	S		2	PROTECTION
	050	542229	-		1	CURVE
	060	484672	-		1	YOKE
	070	484675	-		1	NUT
	080	484676	-		1	LUG
	090	2189	S		2	SLEEVE
	100	2481	-		2	TACK
	110	4636	-		2	PLUNGER
	120	4637	-		2	ADJUSTING NUT
	130	4638	-		2	BUSHING
	140	4639	-		2	COMPRESSION SPRING
	145	543511	-		1	ADJUSTMENT SLEEVE
	150	543512	-		1	ADJUSTMENT SLEEVE
	155	543513	-		2	WASHER
	160	4666	-		4	NUT
	170	4677	-		1	BRACKET
	180	4678	-		1	ECCENTRIC SHAFT
	190	7502	-		2	STOP SCREW
	200	20497	-		1	GROUP NUMBER PLATE
	210	484680	-		2	STOP LUG
	220	493718	-		4	WASHER
	230	311305-0274	-		4	SLOTTED PIRPC4X25FZB
	235	311305-0356	-		4	SLOTTED PIRPC6X28FZB
	240	312101-0374	-		2	SCREW M6S6X30FZB
	250	312101-0540	-		3	SCREW M6S12X40FZB
	260	312111-0374	-		2	SCREW MC6S6X30FZB
	270	312105-0381	-		1	SCREW M6S6X55RFR
	275	312105-0388	-		1	SCREW 6X90 RFR
	280	312111-0499	-		2	SCREW MC6S10X40FZB
	290	312111-0540	-		4	SCREW MC6S12X40FZB
	300	312115-0287	S		20	SCREW 4X8 A4 80
	310	312151-0457	-		4	SCREW MF6S8X35FZB
	320	312311-0532	-		4	STOP SCREW T6SS12X20FZB
	330	312502-0221	-		4	DRIVE SCREKDS4X6FNB
	340	315101-0153	-		20	WASHER BRB6,4X12FZB
	350	315101-0178	-		4	WASHER BRB13X24FZB
	360	315111-0178	-		2	WASHER TBRB13X24FZB
	370	315750-0105	-		2	CIRCLIP SGA8
	380	311303-0238	-		2	SLOTTED PIRPB3X20FZB

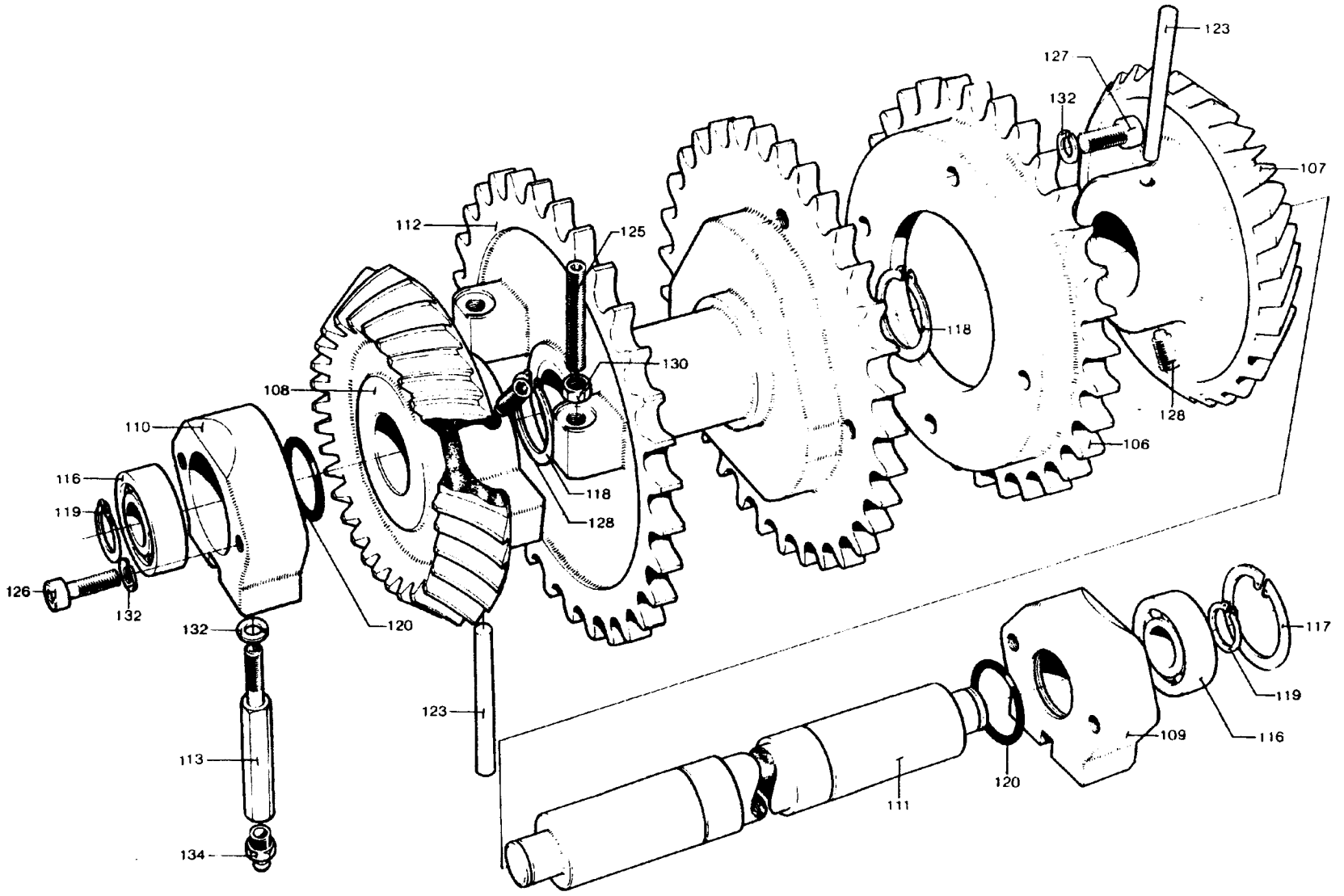

457901.tif
4579-1
AM 4450

From	Pos	Part No	SP	UN	Qty	Description
		C- 4579-0101				**LINK CHAIN WHEEL, ASS'Y (DRIVE SIDE)**
	106	G- 4596	-		1	LINK CHAIN WHEEL
	127	312111-0452	-		4	SCREW MC6S8X22FZB
	132	315401-0165	-		10	WASHER FBH8,2FZB
		C- 4579-0102				**LINK CHAIN WHEEL, ASS'Y**
	132	315401-0165	-		6	WASHER FBH8,2FZB
Common Parts						
	107	4597	-		1	CONICAL GEAR
	108	G- 4598	-		1	CONICAL GEAR
	109	G- 4599	-		1	BEARING HOUSING
	110	G- 4600	-		1	BEARING HOUSING
	111	4627	-		1	SHAFT
	112	G- 4633	-		1	LINK CHAIN WHEEL
	113	6453-0001	-		2	LUBRICATING PIPE
	116	321309-0104	-		2	BALL BEARISKF6204
	117	315752-0130	-		1	CIRCLIP SGH47
	118	315750-0124	-		2	CIRCLIP SGA35
	119	315750-0116	-		2	CIRCLIP SGA20
	120	315202-0528	-		2	O-RING 37,69X3,53
	123	311201-0327	-		2	TAPER PIN KP8X70SLIPAD
	125	312306-0461	-		2	STOP SCREW P6SS8X50FZB
	126	312111-0455	-		4	SCREW MC6S8X30FZB
	128	312316-0447	-		4	STOP SCREW SK6SS8X12FZB
	130	312601-0318	-		2	NUT M6M8FZB
	134	344502-0026	-		2	NIPPLE L AHKR1/8"

From	Pos	Part No	SP	UN	Qty	Description

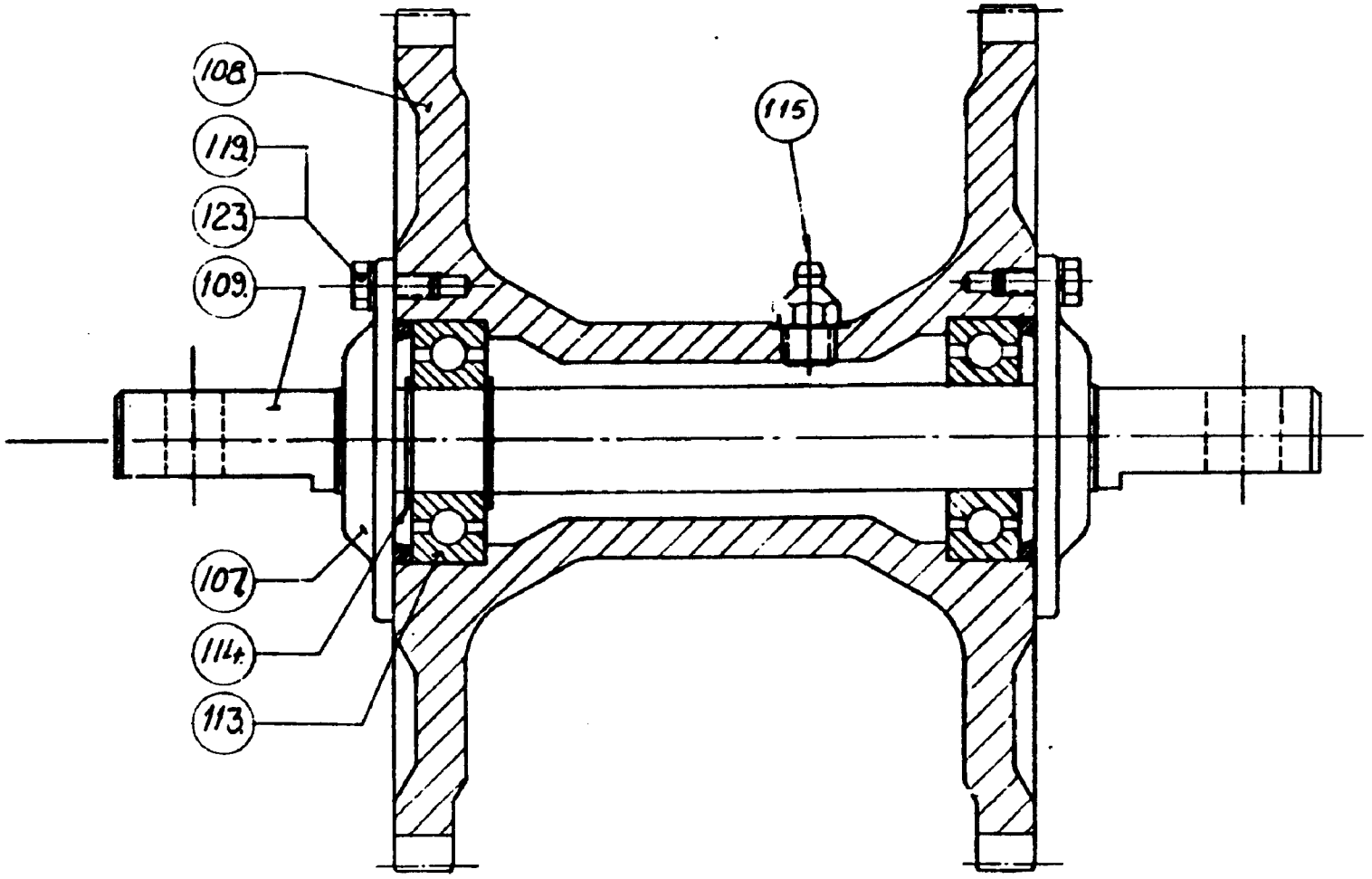

458001.tif
4580-1
AM 1592

From	Pos	Part No	SP	UN Qty	Description
		C- 4580-0101			**LINK CHAIN WHEEL, ASS'Y**
	107	3749	-	2	OIL SEAL (L@VALOCK)
	108	G- 4595	-	1	LINK CHAIN WHEEL
	109	4628	-	1	SHAFT
	113	321309-0104	-	2	BALL BEARISKF6204
	114	315750-0116	-	2	CIRCLIP SGA20
	115	344502-0026	-	1	NIPPLE L AHKR1/8"
	119	312101-0327	-	6	SCREW M6S5X12FZB
	123	315401-0146	-	6	WASHER FBH 5,1 FZB

From	Pos	Part No	SP	UN Qty	Description

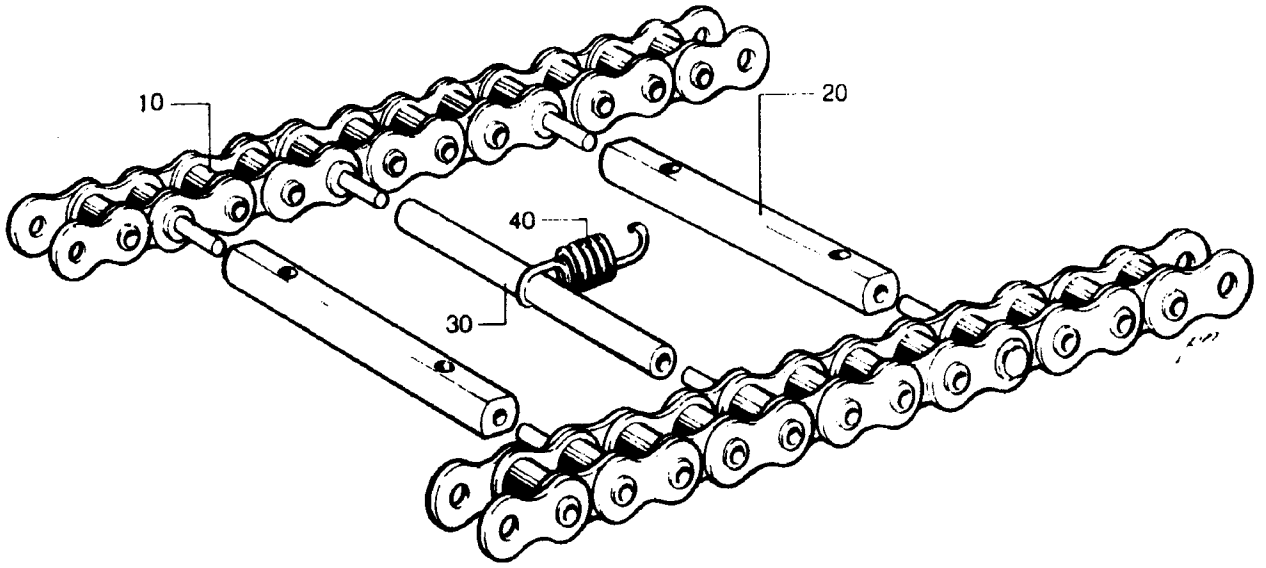

458601.tif
4586-1
AM 8332

From	Pos	Part No	SP	UN	Qty	Description
		C- 4586-0201				**DOUBLE CHAIN 3/4", ASS'Y**
	010	4624	-		2	ROLLER PLATE
	020	484567	-		8	SHAFT
	030	4626	-		8	SHAFT
	040	266495	-		8	TENSION SPRING

From	Pos	Part No	SP	UN	Qty	Description

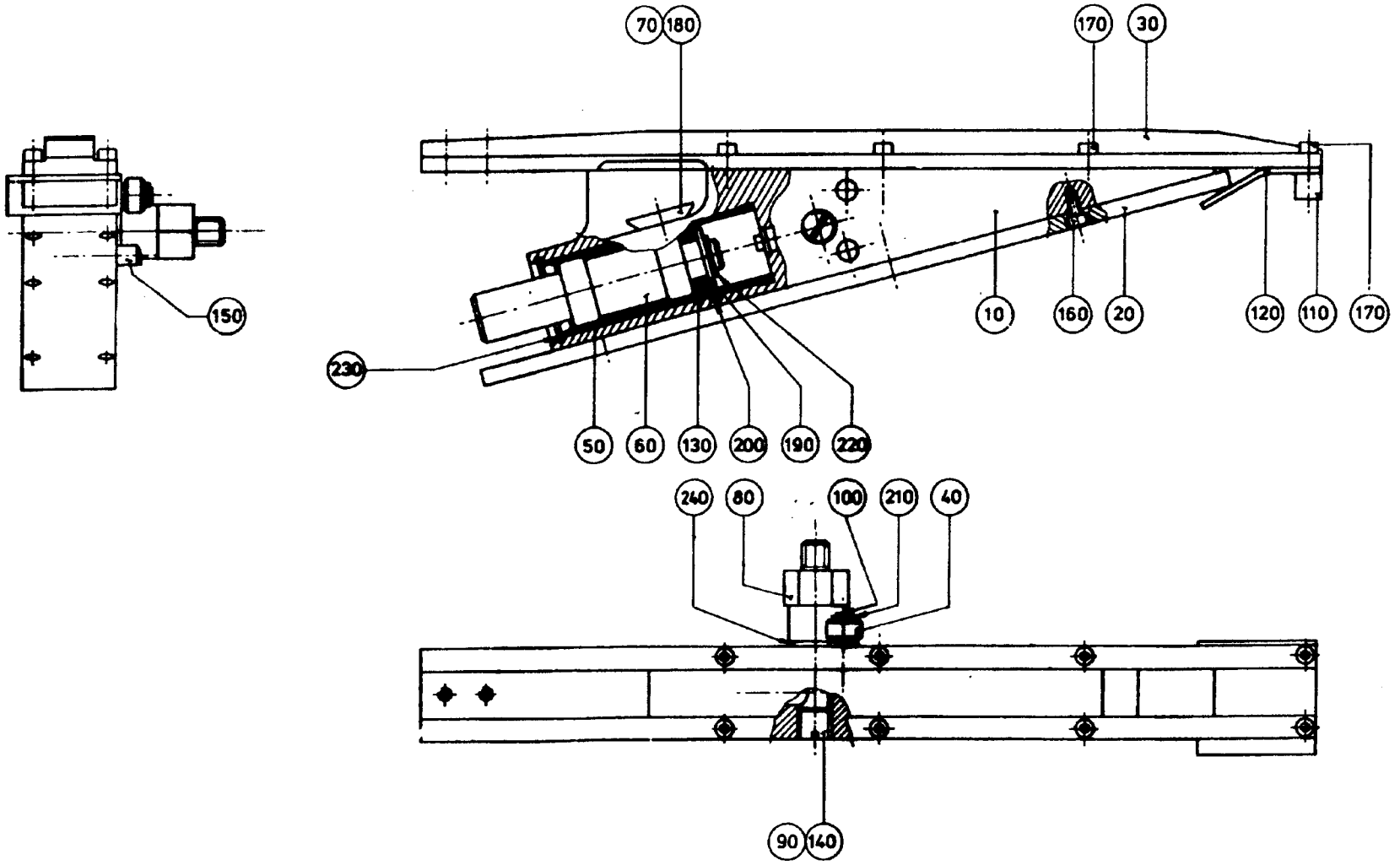

53200701.tif
532007-1/2
AM 11935

From	Pos	Part No	SP	UN	Qty	Description
		C- 532007-0101				**PLUNGER, ASS'Y (RIGHT SIDE)**
		C- 532007-0102				**PLUNGER, ASS'Y (LEFT SIDE)**
	010	G- 484668	C		1	PLUNGER
	020	543501	S		1	ROLLER PLATE
	030	541032	S		1	ROLLER CONVEYOR
	040	2189	S		1	SLEEVE
	050	37807	S		1	LINING
	060	37808	S		1	PISTON
	080	543502	C		1	CONNECTION
	100	493719	C		1	SHAFT
	110	529297	C		1	WASHER
	120	529298	S		1	RUBBER CLOTH
	130	90020-0020	S		1	SLEEVE
	140	342713-0210	-		1	BLIND PLUG
	150	312115-0368	-		1	SCREW 6X16 A4 80
	160	312115-0287	S		6	SCREW 4X8 A4 80
	170	312115-0293	S		8	SCREW 4 X 16 A4 80
	180	315233-0110	-		1	SEAL RING R1/4"
	190	315101-0178	-		1	WASHER BRB13X24FZB
	200	315202-0219	S		1	O-RING 29,2X3
	210	315750-0103	S		1	CIRCLIP SGA6
	220	315750-0109	S		1	CIRCLIP SGA12
	230	315752-0123	S		1	CIRCLIP SGH32

From	Pos	Part No	SP	UN	Qty	Description

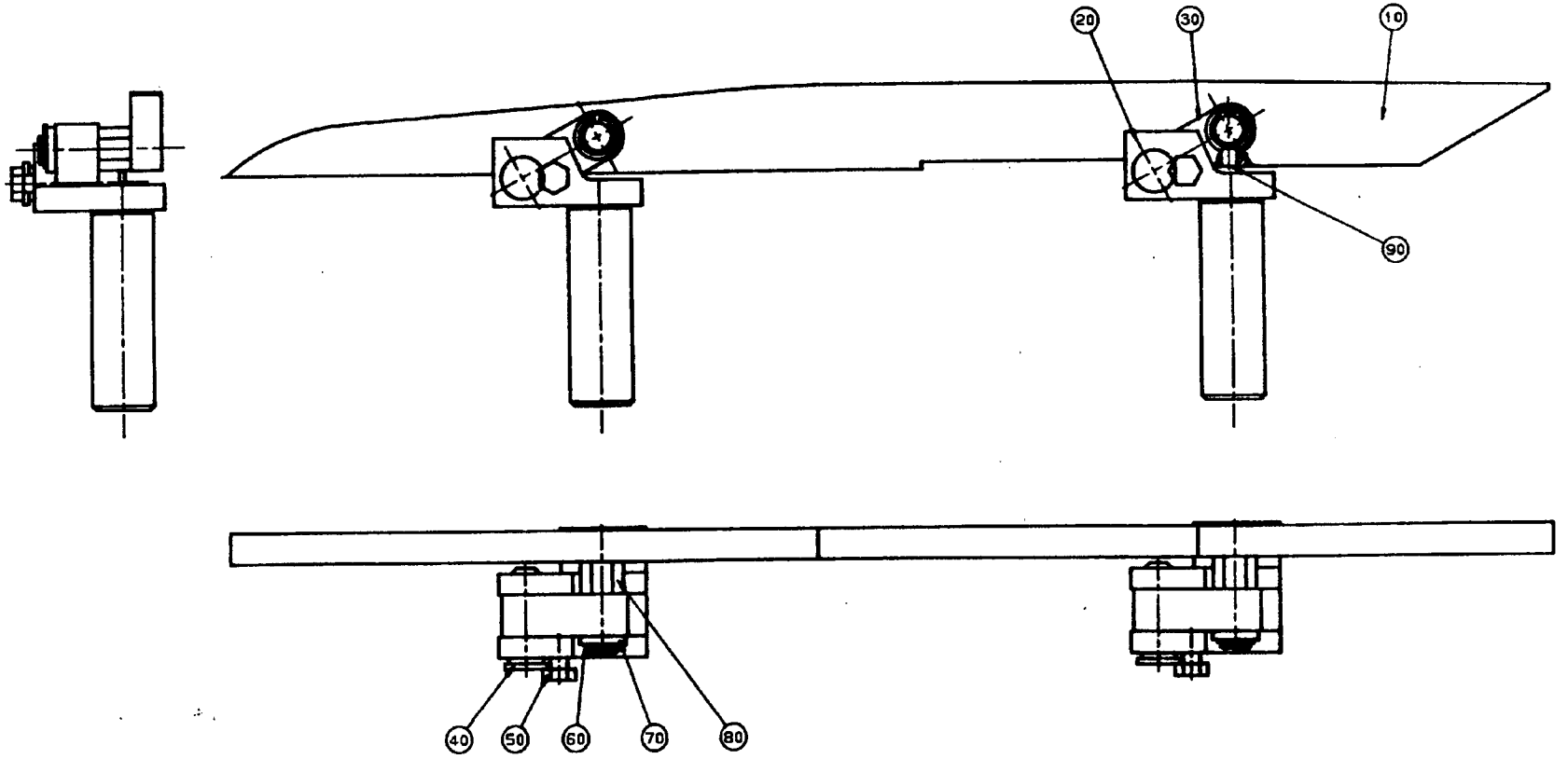

54222601.TIF
542226-1
AM 11936

From	Pos	Part No	SP	UN	Qty	Description
		C- 542226-0101				**TRANSMISSION RAIL, ASS'Y (RIGHT)**
		C- 542226-0102				**TRANSMISSION RAIL, ASS'Y (LEFT)**
	020	542223	C		2	BRACKET RIGHT
	020	542224	C		2	BRACKET LEFT
	010	543518	S		1	TRANSMISSION RAIL
	030	541036	C		2	LINK
	040	542225	S		2	SHAFT
	050	312105-0364	-		2	SCREW M6S6X10RFR
	060	315750-0107	SU		2	CIRCLIP SGA10
	070	128593	S		2	WASHER
	080	543507	S		2	SHAFT
	090	312318-0362	S		2	STOP SCREW SK6SS6X8RFR

From	Pos	Part No	SP	UN	Qty	Description

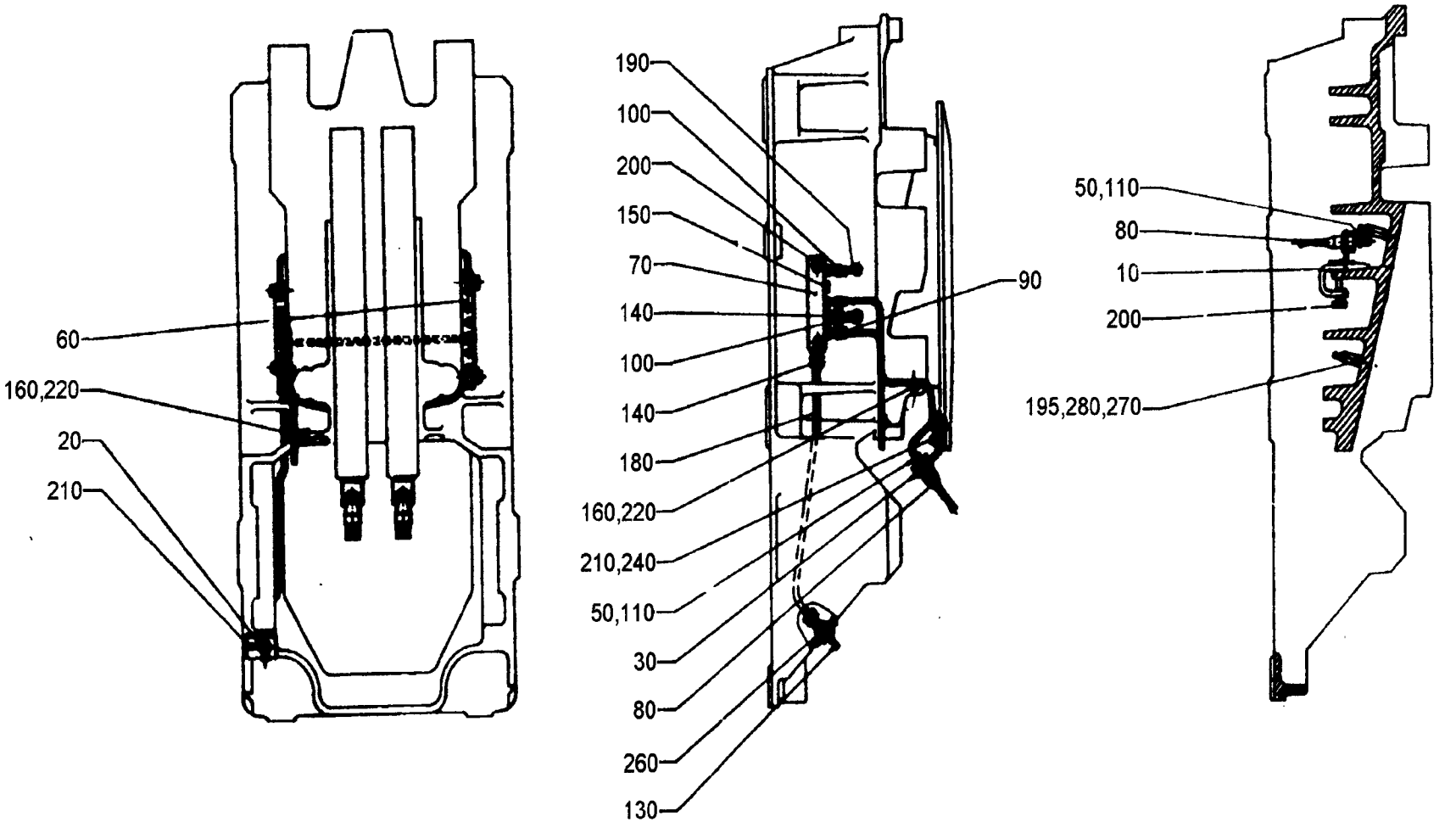

53653701.tif
536537-1
AM 11935

From	Pos	Part No	SP	UN	Qty	Description
		C- 536537-0101				**CENTR.LUBRICATION, PRESS SIDE, ASS'Y**
	010	263106	-		1	HOLDER
	020	259962-0002	-		1	PLATE
	030	484681	-		2	HOLDER
	050	90028-0001	S		4	CONE
	060	90032-0035	-		1	JUNCTION BLOCK
	070	90032-0036	-		1	JUNCTION BLOCK
	080	90092-0048	S		4	OIL BRUSH
	090	90092-0064	S		1	METERING VALVE
	100	90092-0065	S		4	METERING VALVE
	110	90134-0003	S		4	BUSHING
	130	90134-0033	-		1	NIPPLE
	140	90134-0034	-		3	NIPPLE
	150	90136-0002	-		7	PLUG
	160	90165-0003	-		5	CLIP
	180	90166-0011	S	MM	700	HOSE
	190	90166-0103	S	M	3	HOSE
	195	90330-0032	-		4	NIPPLE
	200	312101-0372	-		6	SCREW M6S6X25FZB
	210	312115-0327	-		5	SCREW MC6S5X12 A4 80
	220	312121-0285	-		5	SLOTTED HEMCS4X6FZB
	240	315105-0146	-		4	WASHER BRB5,3X10RFR
	260	342724-0102	-		1	PIPE COUPLGI6-LRFZB
	270	344502-0026	S		4	NIPPLE L AHKR1/8"
	280	342707-0109	-		4	MUFF

From	Pos	Part No	SP	UN	Qty	Description

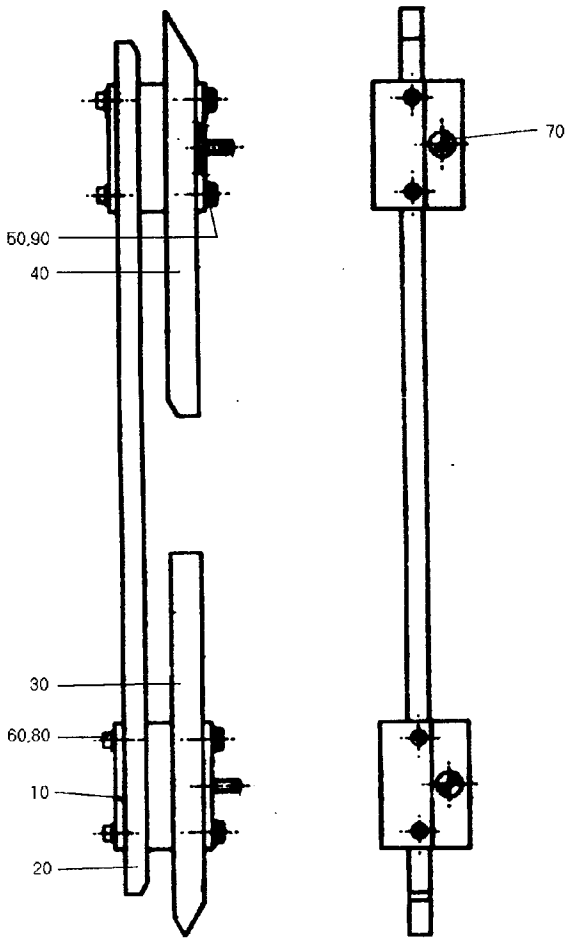

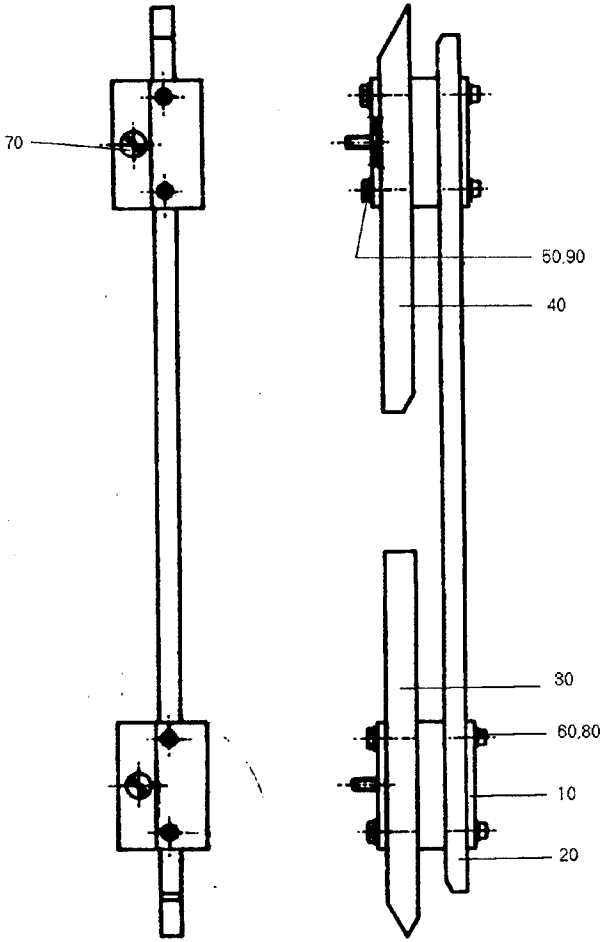

53201001.TIF
532010-1
AM 11975

From	Pos	Part No	SP	UN	Qty	Description
		C- 532010-0101				**TRANSMISSION RAIL, ASS'Y (RIGHT SIDE)**
		C- 532010-0102				**TRANSMISSION RAIL, ASS'Y (LEFT SIDE)**
	010	484677	-		2	BOW CLAMP
	020	263218	-		1	RAIL
	030	484678	-		1	TRANSMISSION RAIL
	040	484679	-		1	TRANSMISSION RAIL
	050	312101-0327	-		4	SCREW M6S5X12FZB
	060	312111-0291	-		4	SCREW MC6S4X12FZB
	070	312141-0368	-		2	SLOTTED HEMFS6X16FZB
	080	315101-0136	-		4	WASHER BRB4,3X8FZB
	090	315101-0146	-		4	WASHER BRB5,3X10FZB

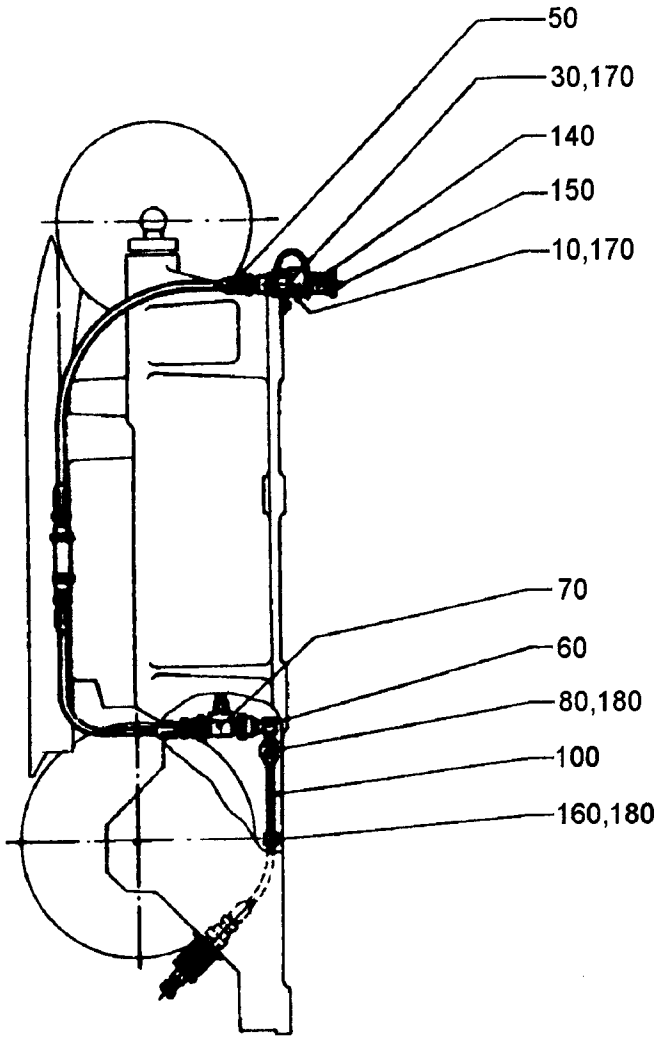

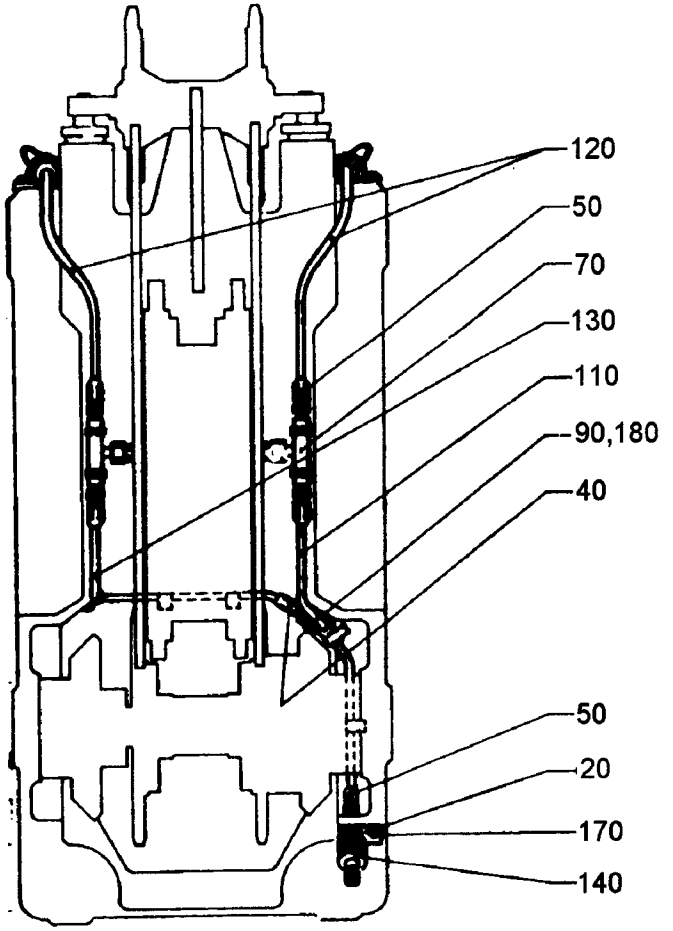

53215701.tif
532157-1
AM 10077

From	Pos	Part No	SP	UN	Qty	Description
		C- 532157-0101				**HYDRAULIC SYSTEM SIDE, ASS'Y**
	010	259961	-		2	HOLDER
	020	259962-0001	-		1	PLATE
	030	284116	-		2	CAP
	040	90055-0055	-		1	HOSE COUPLING
	050	90055-0056	-		8	HOSE COUPLING
	060	90055-0057	-		1	HOSE COUPLING
	070	90055-0058	-		3	HOSE COUPLING
	080	90074-0003	-		1	CLIP
	090	90074-0015	-		1	CLIP
	100	90148-0010	-	MM	160	HOSE
	110	90148-0010	-	MM	190	HOSE
	120	90148-0010	-	MM	350	HOSE
	130	90148-0010	-	MM	420	HOSE
	140	90163-0044	S		3	CONNECTION
	150	90163-0306	S		2	DUST COVER
	160	90165-0007	-		4	CLIP
	170	312111-0327	-		9	SCREW MC6S5X12FZB
	180	312121-0323	-		7	SLOTTED HEMCS5X8FZB

From	Pos	Part No	SP	UN	Qty	Description

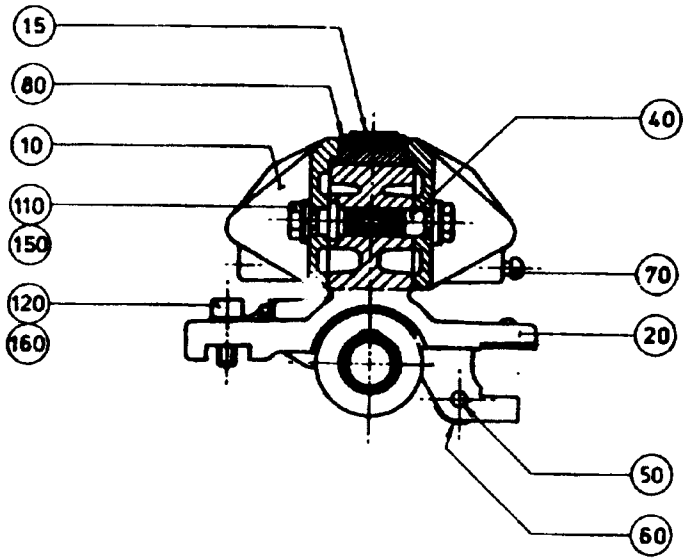

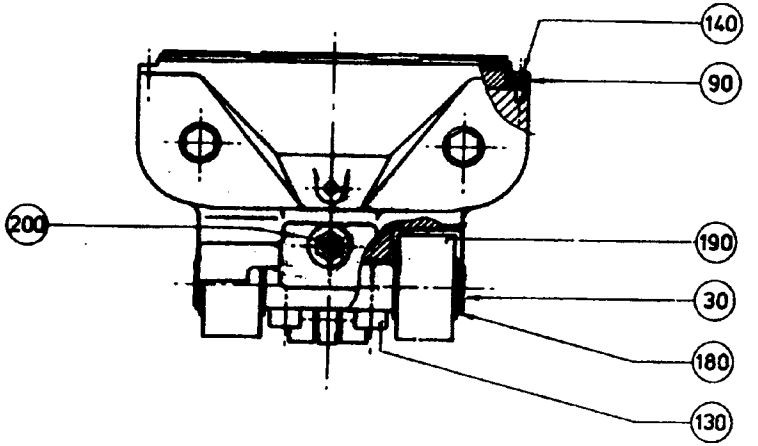

53201101.tif
532011-1
AM14237

From	Pos	Part No	SP	UN	Qty	Description
TPC-machine, Volume 200, 189, 180 ml						
		C- 532011-0101				**PRESSURE JAW, ASS'Y**
	010	G- 30820	C		2	FLAP
	015	263964	PU		1	RUBBER RAIL
	080	263963	C		1	RUBBER HOLDER
	090	531998	SU		2	SUPPORT
	110	312105-0367	S		4	SCREW M6S6X14RFR
	140	312145-0224	S		4	SLOTTED HEMFS3X10RFR
TPC-machine, Volume 150, 125 ml						
		C- 532011-0102				**PRESSURE JAW, ASS'Y**
	010	G- 4609	C		2	FLAP
	015	263964	PU		1	RUBBER RAIL
	080	263963	C		1	RUBBER HOLDER
	090	531998	SU		2	SUPPORT
	110	312105-0367	S		4	SCREW M6S6X14RFR
	140	312145-0224	S		4	SLOTTED HEMFS3X10RFR
IH-machine, Volume 200, 189, 180 ml						
		C- 532011-0105				**PRESSURE JAW, ASS'Y**
	010	G- 30820	C		2	FLAP
	015	294327	PU		1	RUBBER RAIL
	080	263963	C		1	RUBBER HOLDER
	090	531998	SU		2	SUPPORT
	110	312105-0367	S		4	SCREW M6S6X14RFR
	140	312145-0224	S		4	SLOTTED HEMFS3X10RFR
IH-machine, Volume 150, 125 ml						
		C- 532011-0106				**PRESSURE JAW, ASS'Y**
	010	G- 4609	C		2	FLAP
	015	294327	PU		1	RUBBER RAIL
	080	263963	C		1	RUBBER HOLDER
	090	531998	SU		2	SUPPORT
	110	312105-0367	S		4	SCREW M6S6X14RFR
	140	312145-0224	S		4	SLOTTED HEMFS3X10RFR

From	Pos	Part No	SP	UN	Qty	Description
Common Parts						
	020	G- 484673	C		1	PRESSURE JAW
	030	484674	S		1	SHAFT
	040	4613	C		2	BUSHING
	050	533998	S		1	PEG
	060	543509	PU		1	ROLL
	070	5809	C		1	TACK
	120	312115-0368	S		2	SCREW 6X16 A4 80
	130	312115-0372	S		2	SCREW MC6S6X25 A4 80
	150	315115-0153	S		4	WASHER TBRB6,4X12RFR
	160	315401-0153	S		2	WASHER FBH6,1FZB
	180	315750-0112	SU		2	CIRCLIP SGA15
	190	321576-0197	SU		2	SUPPORT RONUTR15
	200	344502-0021	S		1	NIPPLE L AHM6

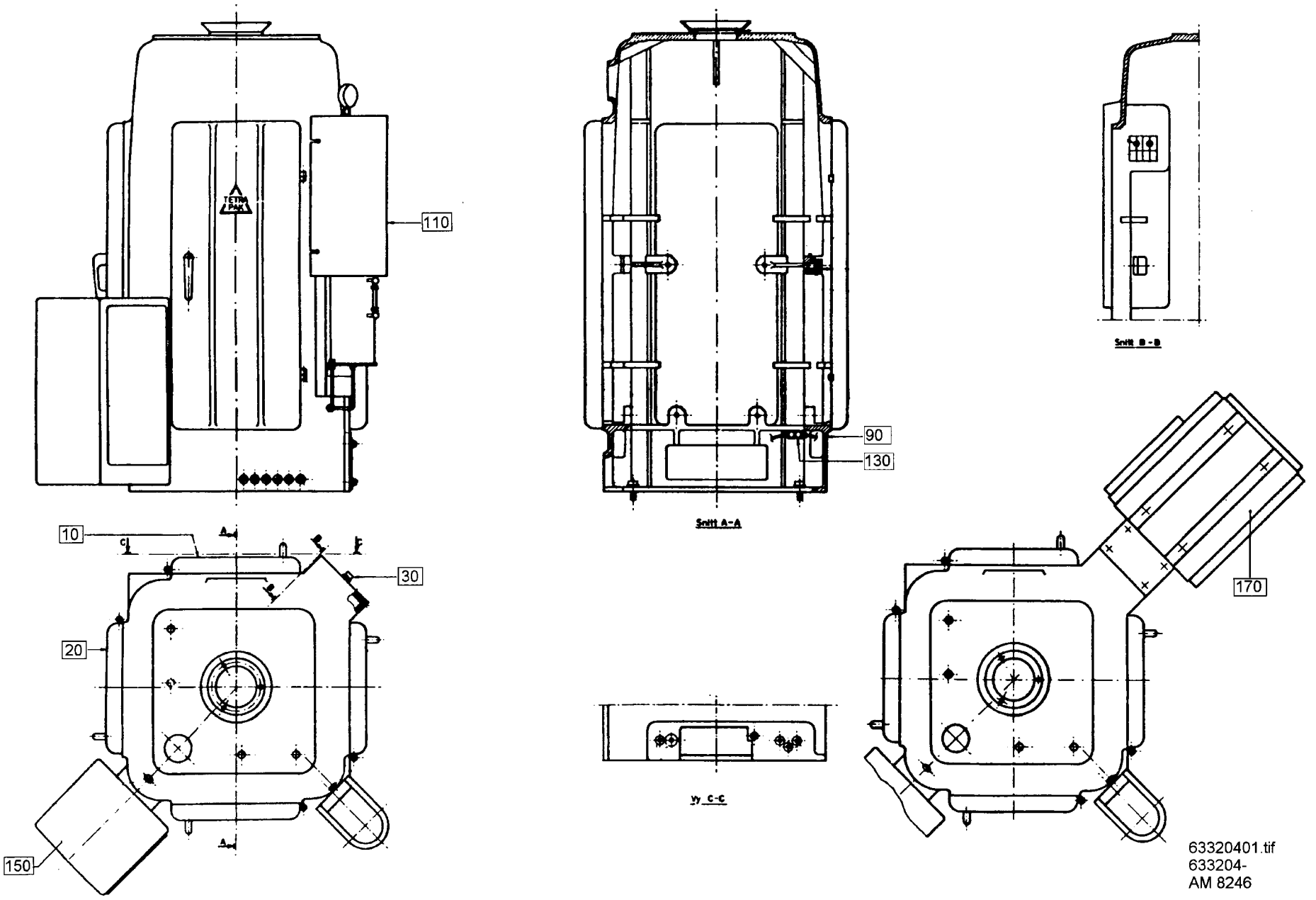

63320401.tif
633204-
AM 8246

Pos	Group No	Description	Page
04-F000	633204-190V	Machine Body AT150	133
04-F000	449404-020V	Machine Body	135
***04-F010**	548468-010V	Door	137
04-F090	449972-010V	Air pipe-line	139
***04-F110**	532160-020V	Hydraulic system	141
*.	537961-010V	Hydraulic system	143
04-F130	263812-010V	Central Lubrication	145
04-F150	294214-0101	Appliance box	147
.	450114-010V	Terminal plinth	149
04-F170	499860-010V	Bracket IH	151

Deviates from the B-group development step

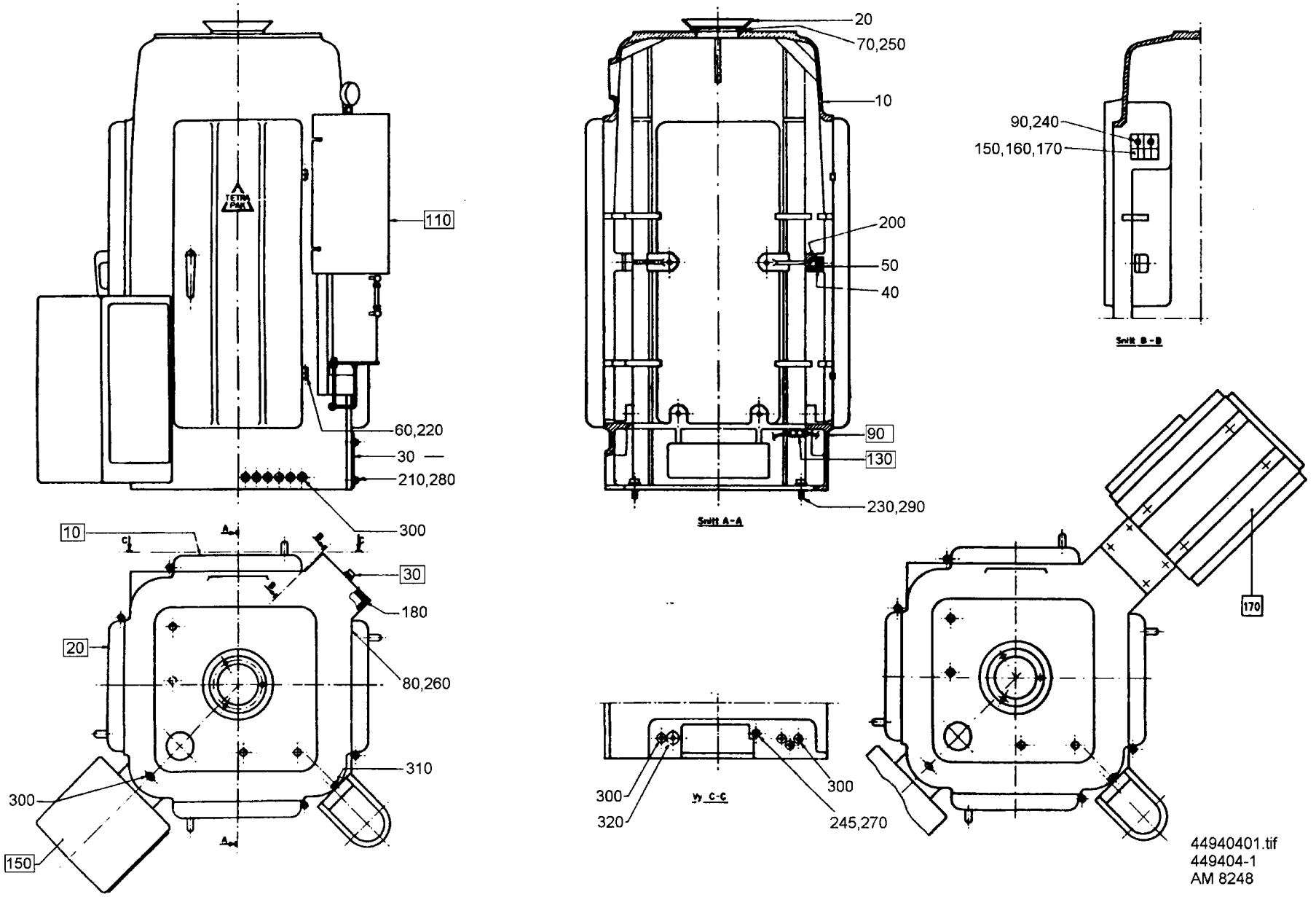

44940401.tif
449404-1
AM 8248

From	Pos	Part No	SP	UN Qty	Description
		C- 449404-0201			**MACHINE BODY, ASS'Y**
	010	G- 526614	-	1	MACHINE BODY
	020	33267	-	1	BOWL
	030	236651	-	1	SHEET
	040	2612-0001	-	20	WASHER
	040	2612-0002	-	20	WASHER
	040	2612-0003	-	12	WASHER
	040	2612-0004	-	12	WASHER
	050	2613	-	8	SCREW
	060	2965	-	8	HINGE
	070	2975	-	1	RING
	080	20497	-	1	GROUP NUMBER PLATE
	200	311305-0310	-	8	SLOTTED PIRPC5X20FZB
	210	312101-0449	-	4	SCREW M6S8X16FZB
	220	312101-0366	-	8	SCREW M6S6X12FZB
	230	312111-0628	-	4	SCREW MC6S16X40FZB
	245	312311-0548	-	1	STOP SCREW T6SS12X80FZB
	250	312165-0329	-	3	SLOTTED HEMKFS5X16RFR
	260	312502-0221	-	4	DRIVE SCREKDS4X6FNB
	270	312601-0322	-	1	NUT M6M12FZB
	280	315101-0165	-	4	WASHER BRB8,4X16FZB
	290	315101-0186	-	4	WASHER BRB17X30FZB
	300	352101-0103	-	10	LEAD-IN G 18,6
	310	352101-0105	-	1	LEAD-IN G 22,5

From	Pos	Part No	SP	UN Qty	Description

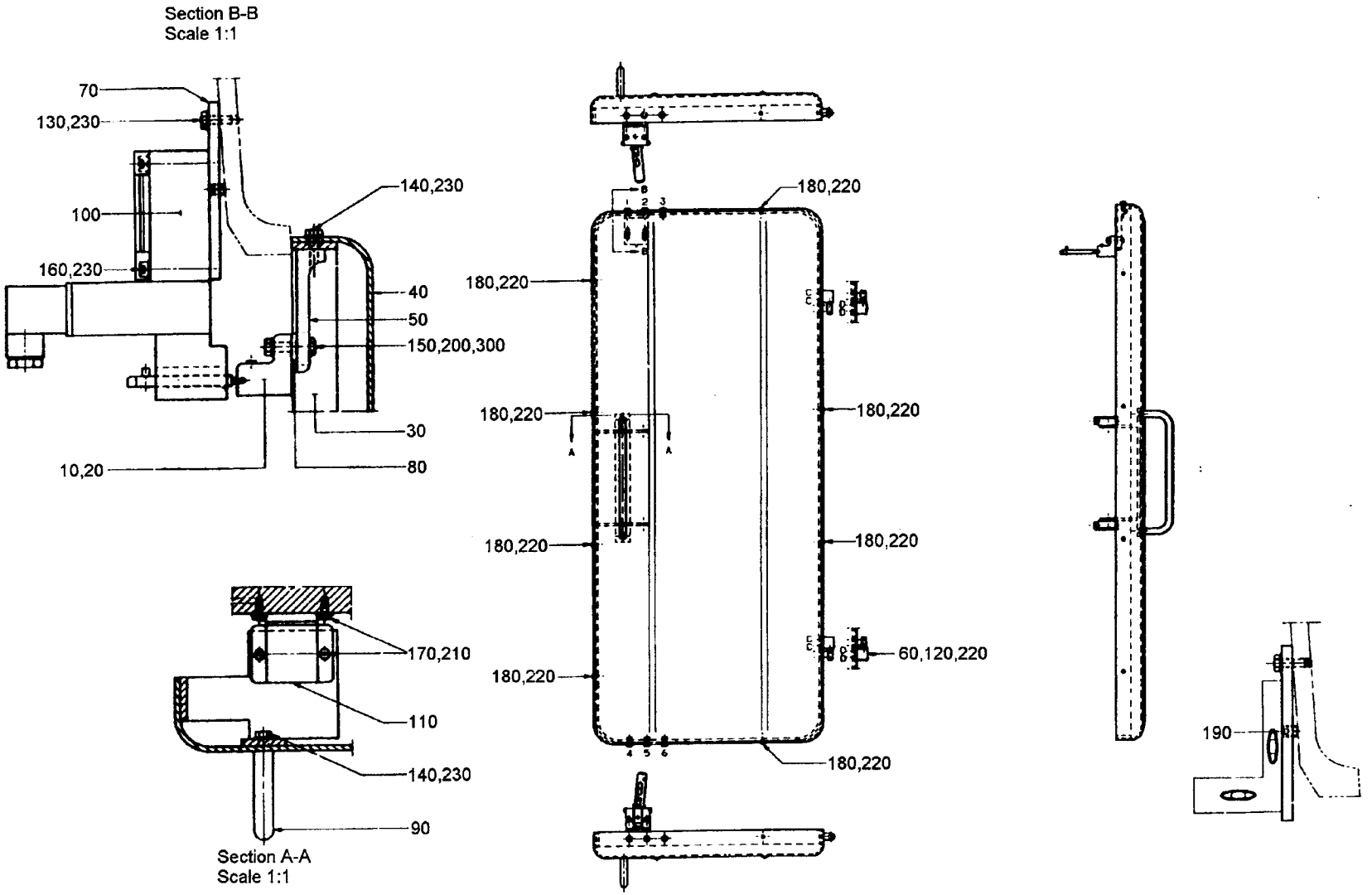

54846801.tif
548468-1
AM 12589

From	Pos	Part No	SP	UN Qty	Description
		C- 548468-0101			**DOOR, ASS'Y (SIDE 1 AND 3)**
		C- 548468-0102			**DOOR, ASS'Y (SIDE 2 AND 4)**
	010	90111-0333	-	1	ANGELED OPERATING DEV (SIDE 2 AND 4)
	020	90111-0334	-	1	ANGELED OPERATING DEV (SIDE 1 AND 3)
	030	547509	-	1	FRAME
	040	547510	-	1	DOOR
	050	550302	-	1	HOLDER
	060	547508	-	2	HINGE
	070	547655	-	1	PLATE
	080	550313	-	1	SPACER
	090	90017-0012	-	1	HANDLE
	100	90111-0151	-	1	SECURITY BREAKER
	110	90237-0046	-	2	LOCK PART
	120	312105-0291	-	4	SCREW M6S4X12RFR
	130	312105-0328	-	2	SCREW M6S5X14 A4 80
	140	312105-0329	-	8	SCREW M6S5X16 A4 80
	150	312105-0333	-	2	SCREW M6S5X25 A4 80
	160	312115-0339	-	2	SCREW 5X40 A4 80
	170	312125-0222	-	8	SLOTTED HEMCS3X8RFR
	180	312125-0287	-	8	SLOTTED HEMCS4X8RFR
	190	312318-0323	-	1	STOP SCREW SK6SS5X8RFR
	200	312605-0314	-	8	NUT M6M5RFR
	210	315105-0124	-	8	WASHER BRB3,2X6RFR
	220	315105-0136	-	12	WASHER BRB4,3X8RFR
	230	315105-0146	-	14	WASHER BRB5,3X10RFR

From	Pos	Part No	SP	UN Qty	Description

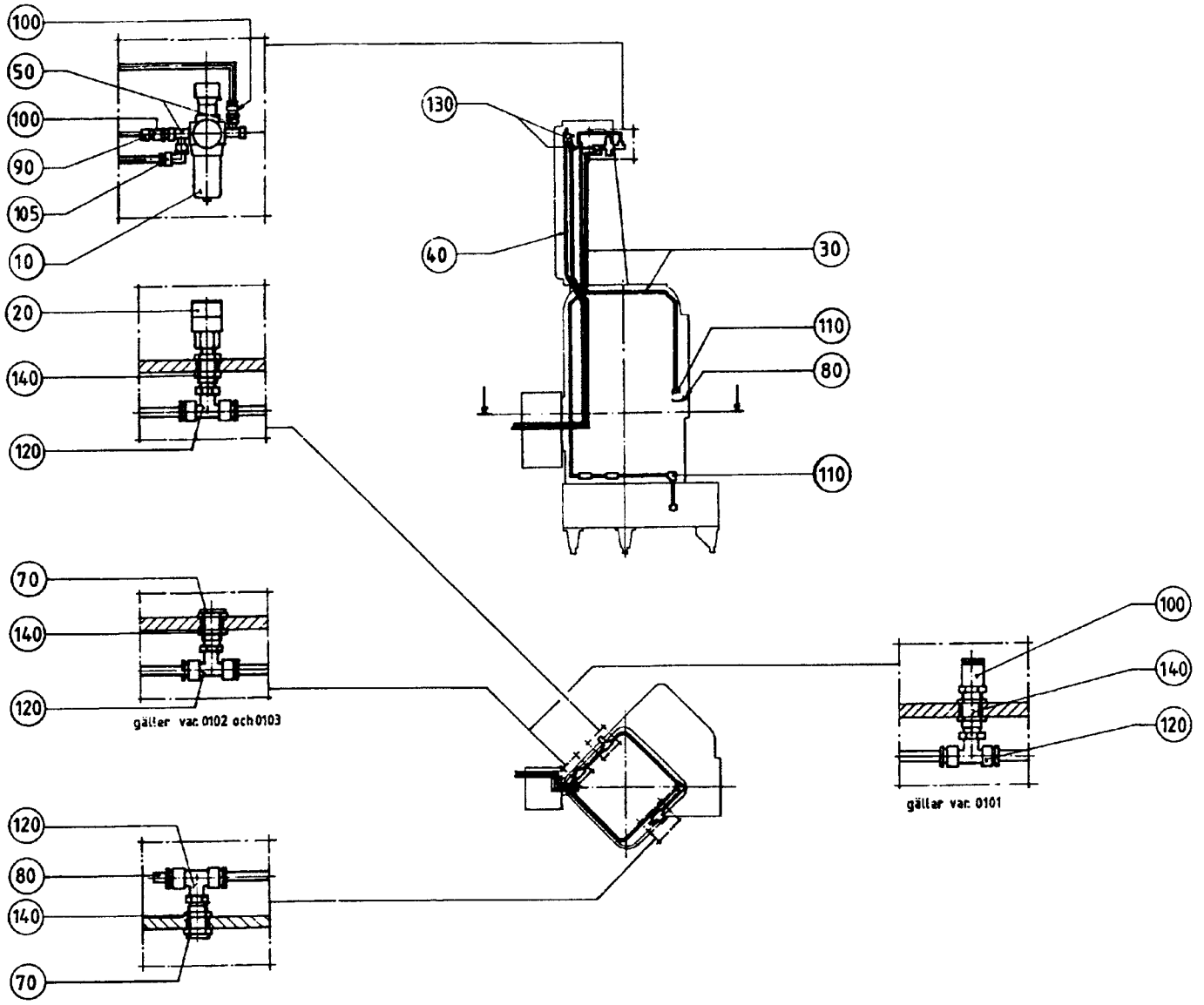

44997201.TIF
449972-1
AM 7752

From	Pos	Part No	SP	UN	Qty	Description
TCA/150 TCA/300 with Hole Punch						
	F000	**C- 449972-0101**				**Air Pipe-line, Ass'y**
	070	342713-0210	-		1	BLIND PLUG
	080	342715-0103	-		2	PLUG D=8
	100	342722-0205	-		3	PIPE COUPLD=8-R1/4"
	105	342732-0104	-		1	ELBOW PIPE D8-R1/4"
	110	342735-0103	-		2	ELBOW PIPE D=8
	120	342742-0104	-		3	T-CONNECTI D8-R1/4"
	140	342767-0104	-		3	BULKHEAD LR1/4
TCA/150 TCA/300 without Hole Punch						
	F000	**C- 449972-0102**				**Air Pipe-line, Ass'y**
	070	342713-0210	-		2	BLIND PLUG
	080	342715-0103	-		2	PLUG D=8
	100	342722-0205	-		2	PIPE COUPLD=8-R1/4"
	105	342732-0104	-		1	ELBOW PIPE D8-R1/4"
	110	342735-0103	-		2	ELBOW PIPE D=8
	120	342742-0104	-		3	T-CONNECTI D8-R1/4"
	140	342767-0104	-		3	BULKHEAD LR1/4
Common Parts						
	010	90113-0013	-		1	REGULATOR
		90113-0359	S		0	# FILTER CARTRIDGE
		90234-0328	S		1	# COVER
	020	90163-0008	-		1	CONNECTION
	030	90166-0013	-	M	7	HOSE
	040	90166-0105	-	M	6	HOSE
	050	342245-0102	-		2	T-PIPE
	090	342716-0203	-		1	REDUCER 6-8
	130	342748-0102	-		2	T-CONNECTI D=6

From	Pos	Part No	SP	UN	Qty	Description

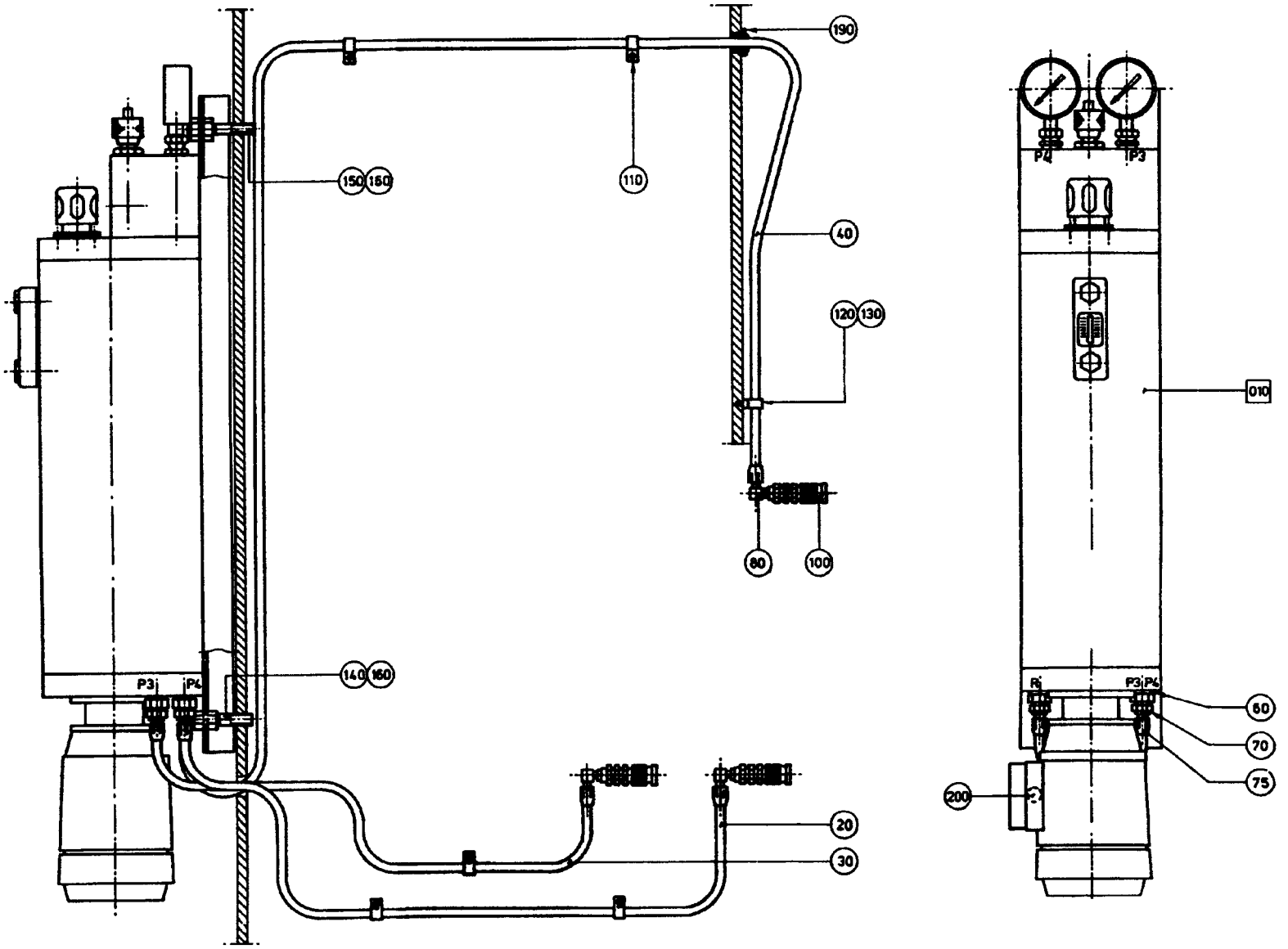

53216002.TIF
532160-2
AM 10078

From	Pos	Part No	SP	UN Qty	Description
TC/150/155, TCA/150					
	F000	**C- 532160-0201**			**Hydraulic System, Ass'y**
	020	90148-0010	-	MM 450	HOSE
	030	90148-0010	-	MM 1100	HOSE
	040	90148-0010	-	MM 2800	HOSE
TC/300, TCA/300					
	F000	**C- 532160-0202**			**Hydraulic System, Ass'y**
	020	90148-0010	-	MM 870	HOSE
	030	90148-0010	-	MM 1460	HOSE
	040	90148-0010	-	MM 2900	HOSE
TC/500, TCA/500					
	F000	**C- 532160-0203**			**Hydraulic System, Ass'y**
	020	90148-0010	-	MM 500	HOSE
	030	90148-0010	-	MM 1100	HOSE
	040	90148-0010	-	MM 3000	HOSE
Common Parts					
	F010	**C- 537961-0101**	**-**	**1**	**HYDRAULIC SYSTEM**
	060	90005-0005	-	3	WASHER
	070	90055-0042	-	3	NIPPLE
	075	90055-0056	-	3	HOSE COUPLING
	080	90055-0057	-	3	HOSE COUPLING
	100	90163-0043	-	3	CONNECTION
	110	90165-0007	-	5	CLIP
	120	90165-0013	-	1	CLIP
	130	312121-0220	-	1	SLOTTED HEMCS3X6FZB
	140	312303-0541	-	1	STUD SCREWMPS 12X30 RFR
	150	312303-0543	-	1	STUD SCREWMPS 12X40 RFR
	160	312601-0322	-	4	NUT M6M12FZB
	190	352101-0103	-	1	LEAD-IN G 18,6
	200	352136-0127	-	1	GLAND FITT

From	Pos	Part No	SP	UN Qty	Description

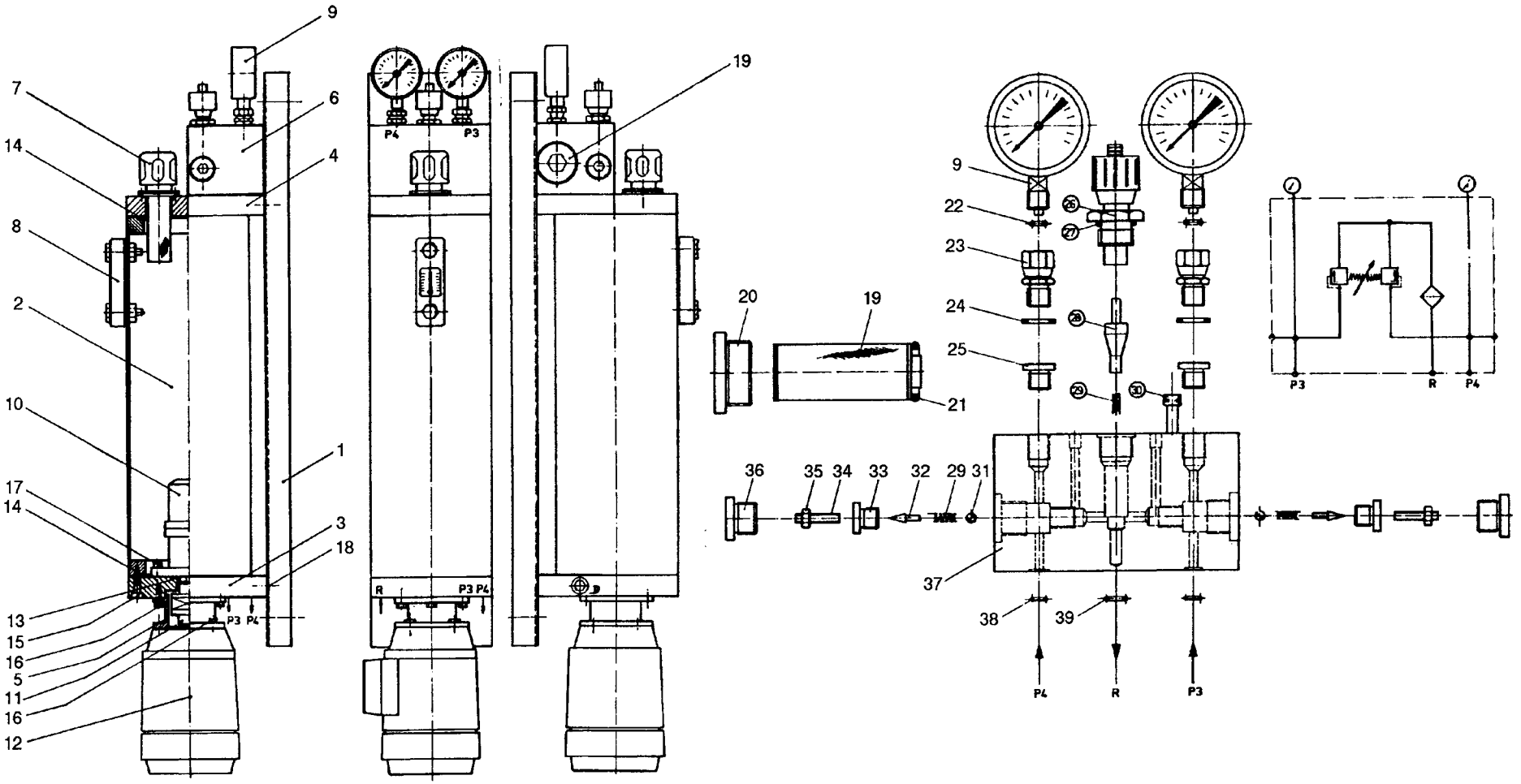

53796101.TIF
537961-1, 2
AM 10078

From	Pos	Part No	SP	UN	Qty	Description
	F000	**C- 537961-0101**				**Hydraulic System, Ass'y**
	007	90415-0333	C		1	FILLER CAP
	008	90199-0020	C		1	LEVEL GLASS
	009	90043-0081	C		2	PRESSURE GAUGE
	010	90321-0053	C		1	PUMP
	011	90321-0468	C		1	SHAFT COUPLING
	012	90045-0115	C		1	MOTOR
	019	90415-0334	S		1	FILTER
	021	90242-0144	S		1	O-RING
	026	90201-0027	C		1	SHUT-OFF VALVE
	100	90321-0469	S		1	O-RING SET

From	Pos	Part No	SP	UN	Qty	Description

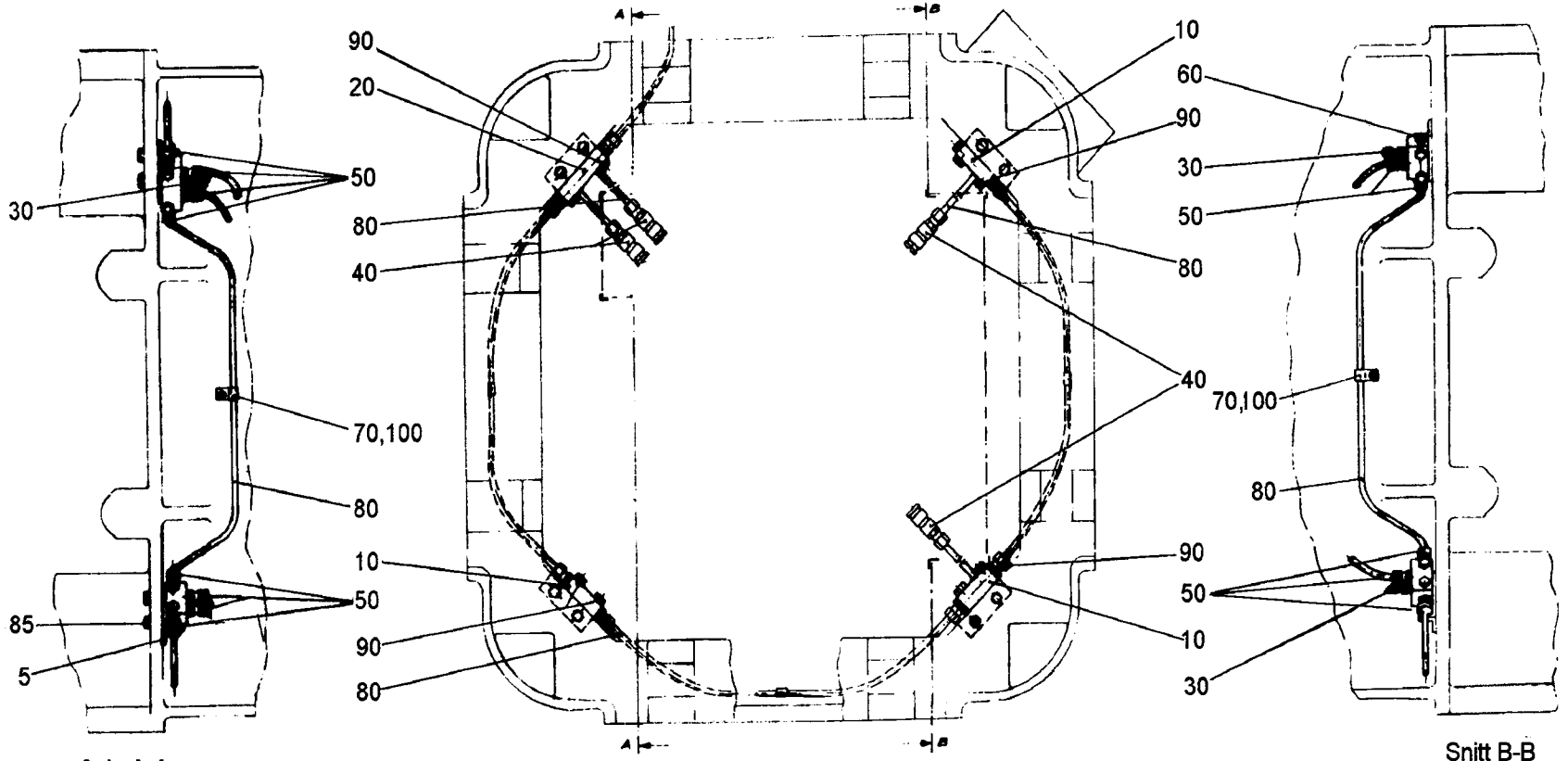

Snitt A-A

Snitt B-B

26381201.tif
263812-1
AM 4817

From	Pos	Part No	SP	UN Qty	Description
		C- 263812-0101			**CENTRAL LUBRICATION, ASS'Y**
	005	268022	-	4	FASTENING BRACKET
	010	90032-0012	-	3	JUNCTION BLOCK
	020	90032-0013	-	1	JUNCTION BLOCK
	030	90092-0064	R	3	METERING VALVE
	040	90134-0032	-	4	CONNECTION
	050	90134-0034	-	13	NIPPLE
	060	90136-0002	-	1	PLUG
	070	90165-0005	-	3	CLIP
	080	90166-0011	-	MM 3500	HOSE
	085	312101-0368	-	8	SCREW M6S6X16FZB
	090	312101-0372	-	8	SCREW M6S6X25FZB
	100	312121-0285	-	3	SLOTTED HEMCS4X6FZB

From	Pos	Part No	SP	UN Qty	Description

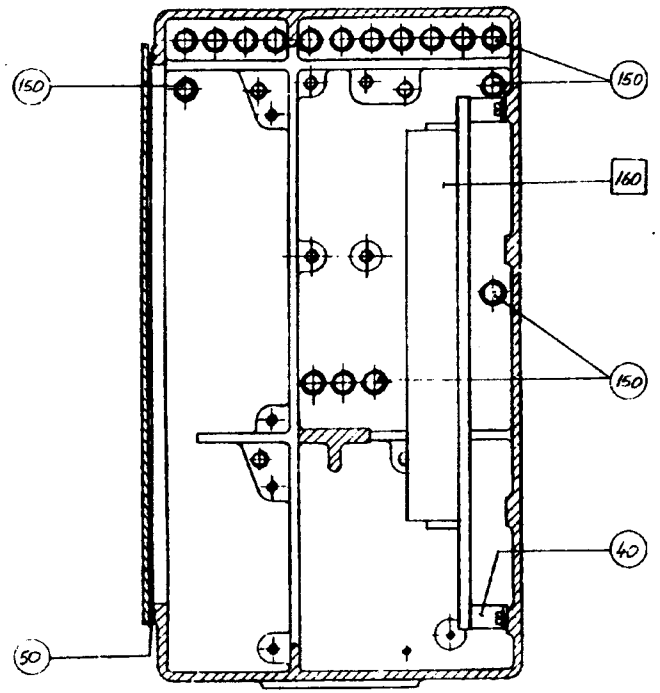

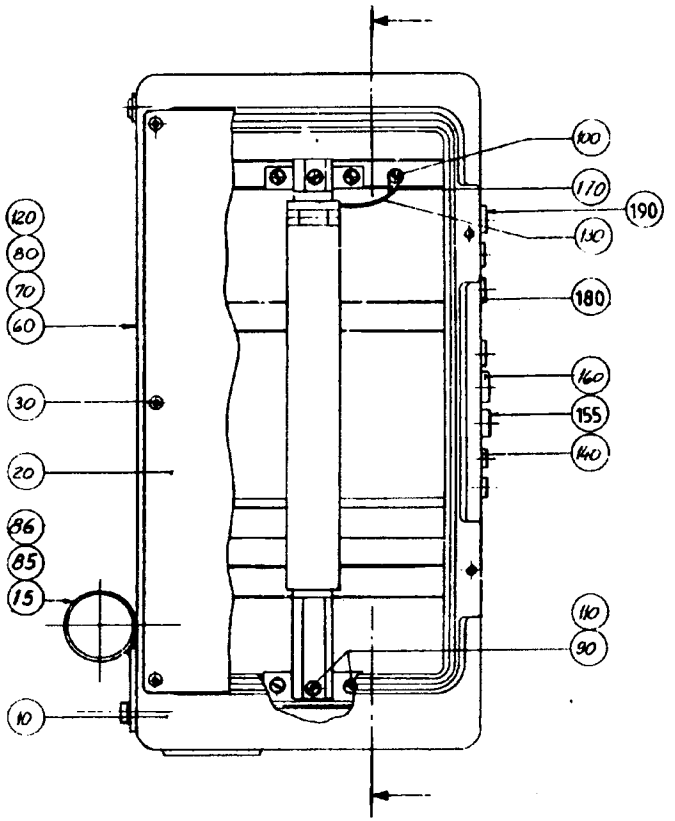

29421401.tif
294214-1
AM 13620

From	Pos	Part No	SP	UN	Qty	Description
TC/150, TCA/150						
	F000	**C- 294214-0101**				**Appliance Box, Ass'y**
	010	G- 436613	-		1	BOX
	080	312101-0540	-		4	SCREW M6S12X40FZB
	120	315101-0178	-		4	WASHER BRB13X24FZB
	160	352103-0110	-		6	CABLE GLANR.STR 16
TC/150,155,300 TCA/150,300,500						
	F000	**C- 294214-0103**				**Appliance Box, Ass'y**
	010	G- 436613	-		1	BOX
	015	544750	-		1	HOLDER
	080	312101-0540	-		4	SCREW M6S12X40FZB
	085	312105-0451	-		2	SCREW M6S8X20RFR
	086	315105-0165	-		2	WASHER BRB8,4X16RFR
	120	315101-0178	-		4	WASHER BRB13X24FZB
	160	352136-0129	-		4	GLAND FITT
Common Parts						
	F160	**C- 450114-0101**	**-**		**1**	**TERMINAL PLINTH**
	020	436614	-		1	OPENING
	030	21613	-		5	SCREW
	035	90002-0004	-		3	PLUG
	036	90002-0009	-		15	BLANK-OFF PLUG
	037	90002-0013	-		4	BLANK-OFF PLUG
	040	90077-0310	-		2	BRACKET
	050	90143-0012	-	MM	1400	STRIP
	090	312121-0366	-		6	SLOTTED HEMCS6X12FZB
	100	312122-0364	-		1	SLOTTED HEMCS6X10MSGFN
	110	315101-0153	-		6	WASHER BRB6,4X12FZB
	130	351175-0106	-	MM	80	CABLE AWM YELL/GREEN 4,0
	140	352103-0100	-		4	CABLE GLANR.STR 9
	150	352103-0106	-		26	CABLE GLANR.ST 11
	170	353101-0153	-		1	CABLE SHOE

From	Pos	Part No	SP	UN	Qty	Description

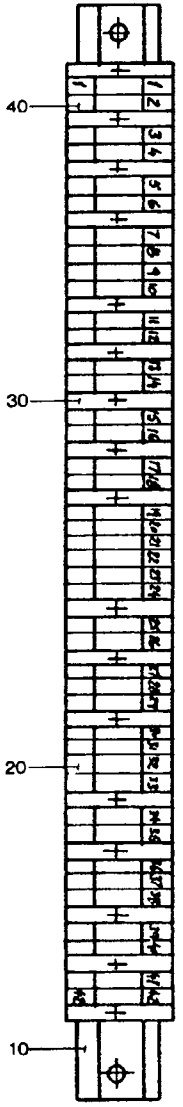

45011401.TIF
450114-1
AM 5976

From	Pos	Part No	SP	UN Qty	Description
	F000	**C- 450114-0101**			**Terminal Plinth, Ass'y**
	010	10793-0030	-	1	MOUNTING RAIL
	020	90077-0065	-	42	TERMINAL BLOCK
	030	90135-0021	-	17	EARTHING CLAMP
	040	359011-0801	-	2	SIGN BOARDBSFW 0-49

From	Pos	Part No	SP	UN Qty	Description

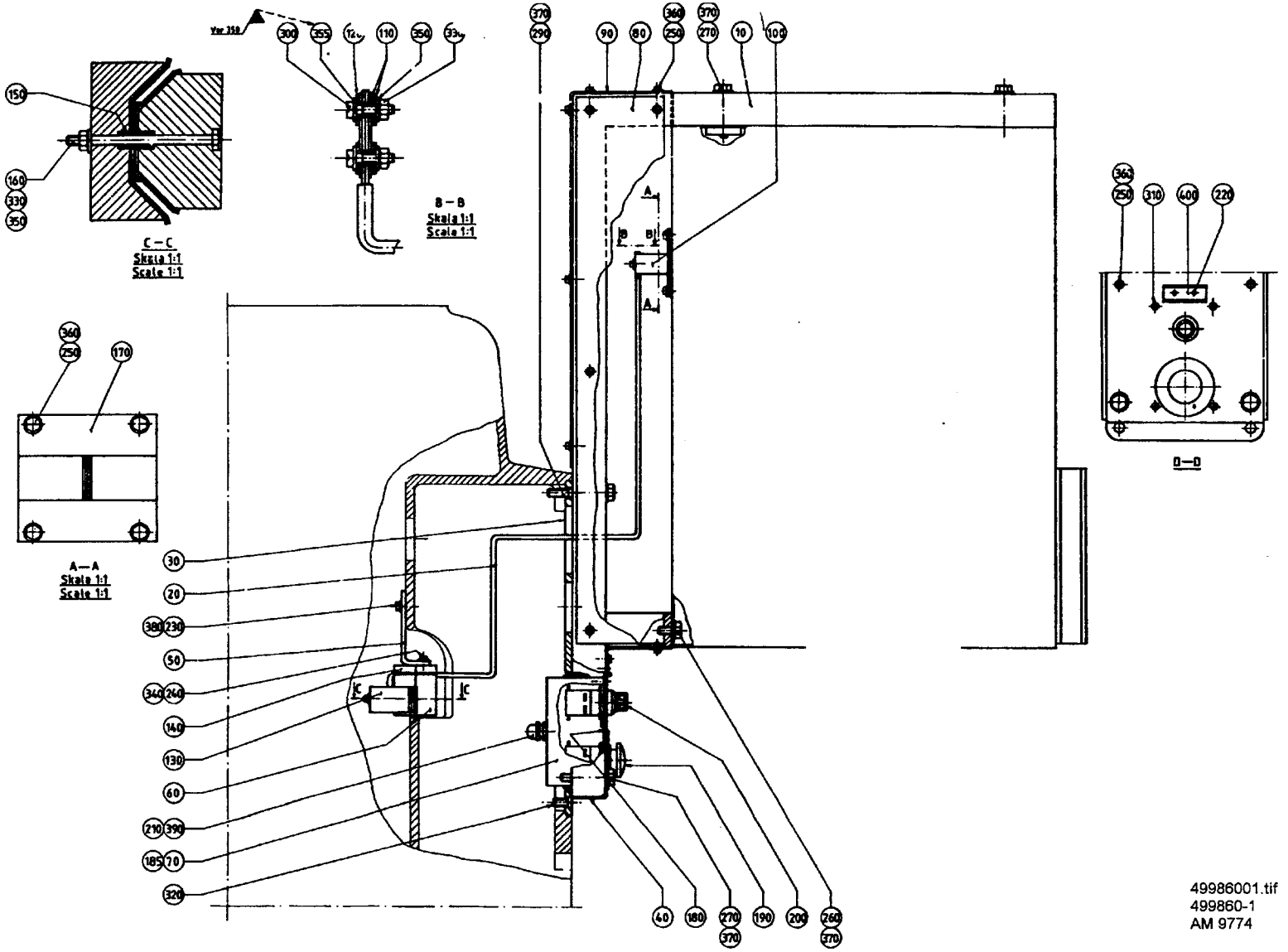

49986001.tif
499860-1
AM 9774

From	Pos	Part No	SP	UN Qty	Description
		C- 499860-0101			**BRACKET IH, ASS'Y**
	010	499377	-	2	CANTILEVER
	020	499378	C	1	CONTACT RAIL
	030	499379	-	1	PLATE
	040	499380	-	1	CONTROL PANEL
	050	294244	-	1	HOLDER
	060	294245	C	1	BRACKET
	070	499381	-	1	PUSH BUTTON BOX
	080	499382	-	2	SHEET
	090	499383	-	1	SHEET
	100	499384	C	1	BUSBAR
	110	32545	C	4	INSULATION WASHER
	120	32546-0001	C	2	INSULATION NUT
	130	294246	C	1	CAP
	140	294247	C	1	LID
	150	294248	C	1	PIPE
	160	294249	C	1	SCREW
	170	440528	C	2	CLAMPING PLATE
	180	499385	C	1	GASKET
	185	90002-0004	-	1	BLANK-OFF PLUG 22,5
	190	90064-0052	C	1	PUSH BUTTON
	200	90064-0054	C	1	PUSH BUTTON
		90064-0306	S	0	* GUARD
		90064-0309	S	0	* GASKET
	210	90099-0002	-	1	NUT
	220	311520-0429	C	2	BLANK RIVE3,2X8
	230	312101-0370	-	2	SCREW M6S6X20FZB
	240	312101-0372	-	2	SCREW M6S6X25FZB
	250	312105-0325	-	28	SCREW M6S5X10 A2 80
	260	312105-0491	-	2	SCREW M6S10X20RFR
	270	312105-0502	-	6	SCREW M6S10X55RFR
	290	312105-0505	-	2	SCREW M6S10X70RFR
	300	312122-0372	S	2	SLOTTED HEMCS6X25MSGFN
	310	312145-0299	-	4	SLOTTED HEMFS4X30RFR
	320	312155-0491	-	2	SCREW MF6S10X20RFR
	330	312602-0316	S	3	NUT M6M6MSGFN
	340	315101-0153	-	2	WASHER BRB6,4X12FZB
	350	315103-0153	S	3	WASHER BRB6,4X12MSGFN
	355	315103-0165	-	2	WASHER BRB8,4X16MSGFN
	360	315105-0146	-	28	WASHER BRB5,3X10RFR
	370	315105-0173	-	10	WASHER BRB10,5X22RFR
	380	315121-0153	-	2	WASHER TBRSB6,4X22FZB
	390	352103-0106	-	1	CABLE GLANR.ST 11
	400	359240-0100	C	1	SIGN HOLDER

From	Pos	Part No	SP	UN Qty	Description

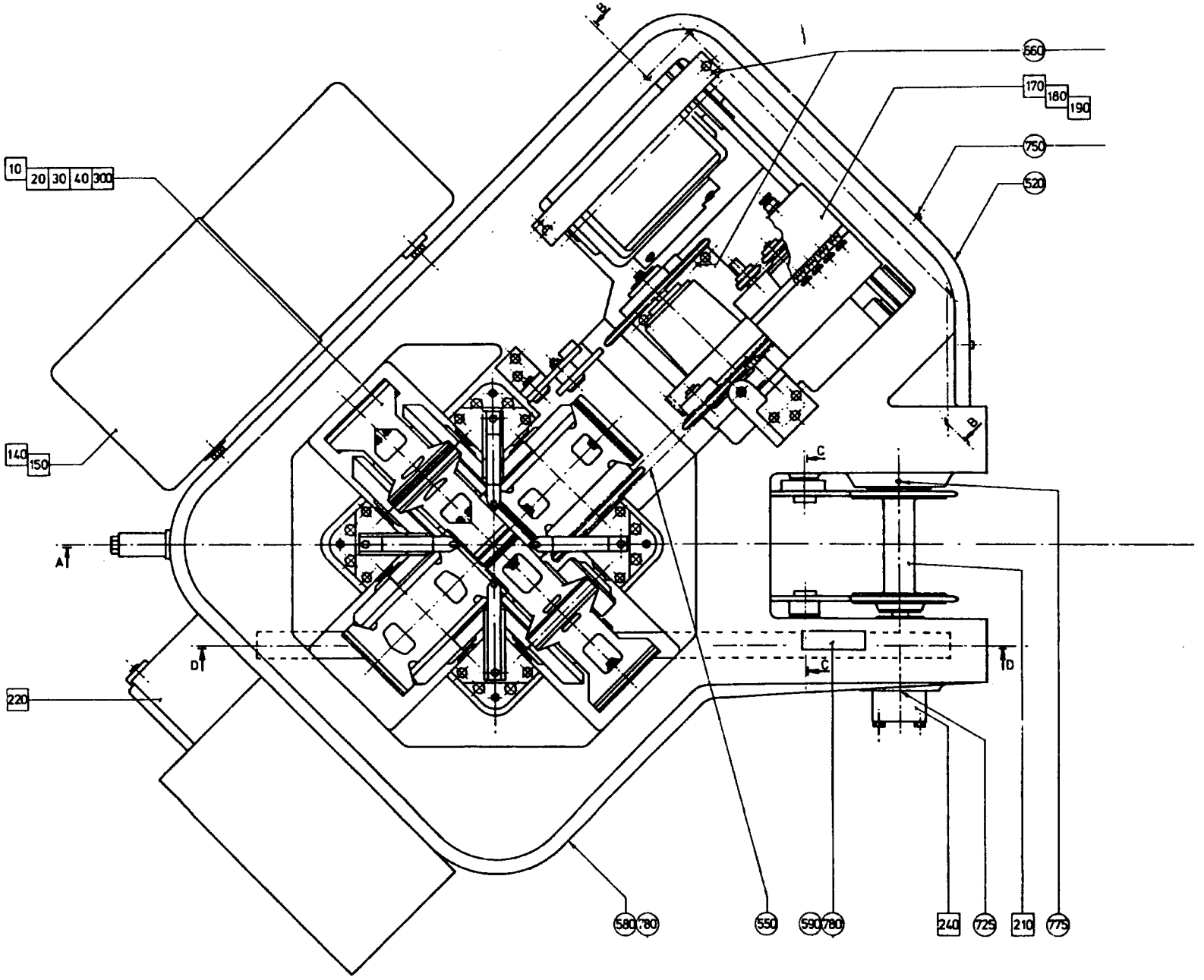
660
170
180
190
750
520
10
20
30
40
300
140
150
220
580
780
550
590
780
240
725
210
775
A
B
C
D

Pos	Group No	Description	Page
05-F000	633205-130V	Cutting Device	155
05-F000	257840-0304	Cutting Device	157
05-F010	434042-020V	Shearing Device	159
.	529316-010V	Cutting Wheel	161
.	4865-030V	Counter Wheel	163
.	6880-010V	Steering	165
05-F050	4866-030V	Worm Gear	167
.	4438-030V	Slip Disc	169
05-F070	4867-010V	Cover	171
05-F080	4868-010V	Intermediary Shaft	173
05-F090	4869-010V	Chain Tensioner	175
05-F110	4871-010V	Chain Tensioner	177
05-F120	4872-050V	Motor	179
05-F140	247367-010V	Pump	181
.	38715-010V	Pump	183
05-F170	236641-030V	Impulse Transmitter	185
.	236638-0201	Connection Box	187
.	236637-010V	Terminal plinth	189
***05-F210**	539935-010V	Drive Shaft	191
05-F220	230177-030V	Central lubrication	193
05-F230	263843-020V	Central Lubrication	195
05-F240	440325-010V	Impulse Transmitter	197
05-F200	33946-010V	Chain Tensioner	199

Deviates from the B-group development step

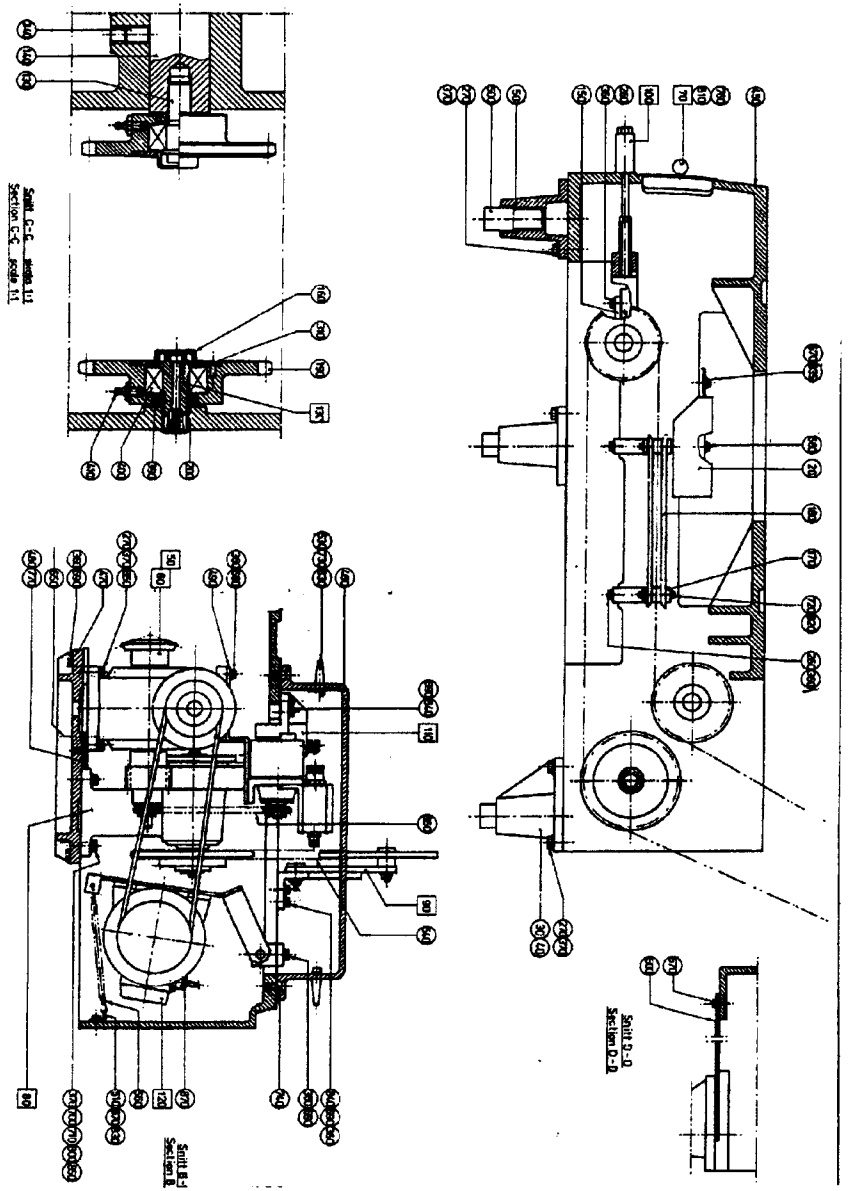

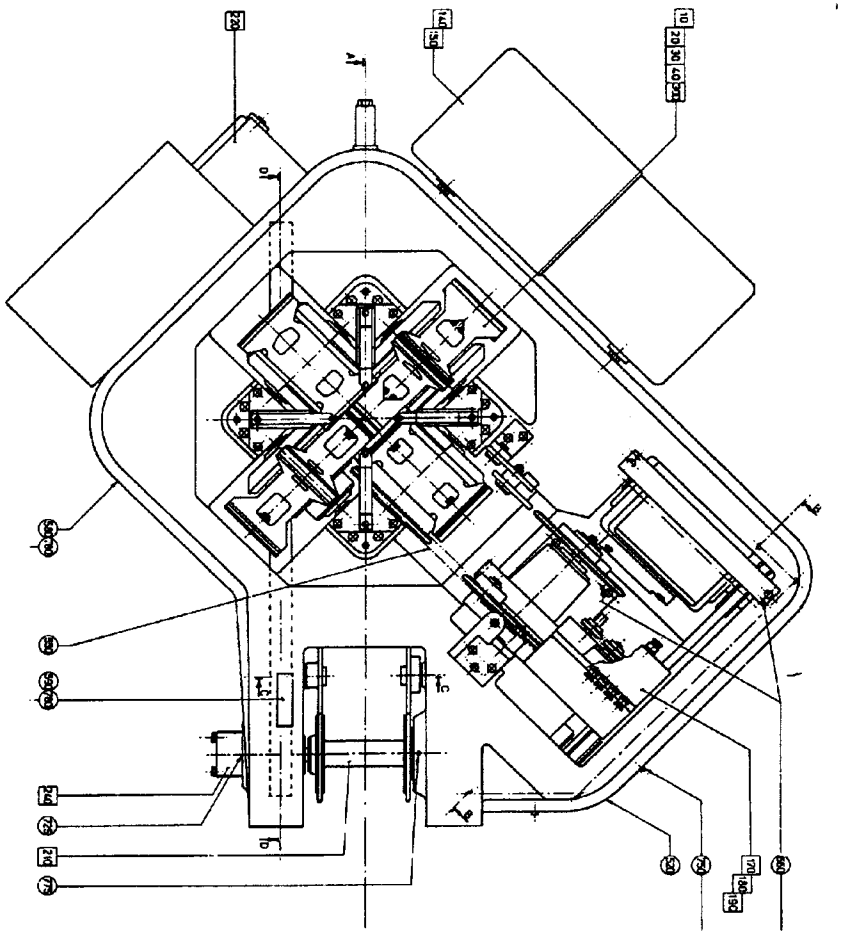

25784008.tif
257840-7/8
AM 9049

From	Pos	Part No	SP	UN Qty	Description
		C- 257840-0304			**CUTTING DEVICE, ASS'Y**
	020	36291-0001	-	1	LEAD PLATE
	030	3269	-	1	BRACKET
	040	3270	-	1	BRACKET
	050	3271	-	3	BRACKET
	060	33932	-	1	FASTENING PLATE
	070	33933	-	1	PLATE, RIGHT
	080	33934	-	1	PROTECTION PLATE
	170	G- 33937	-	4	BRACKET
	180	33938	-	4	SUPPORT BAR
	210	33936	-	2	STEER PLATE
	220	33935	-	2	BRACKET
	250	312101-0327	-	2	SCREW M6S5X12FZB
	260	312101-0453	-	4	SCREW M6S8X25FZB
	270	312101-0495	-	20	SCREW M6S10X30FZB
	290	312111-0459	-	6	SCREW MC6S8X40FZB
	300	312111-0461	-	2	SCREW MC6S8X50FZB
	320	312151-0624	-	4	SCREW MF6S16X30FZB
	350	315101-0146	-	2	WASHER BRB5,3X10FZB
	360	315101-0165	-	24	WASHER BRB8,4X16FZB
	370	315101-0173	-	24	WASHER BRB10,5X22FZB
	450	G- 4907	-	1	CUTTING MECHANISM BODY
	460	G- 4909	-	1	MOTOR COVER
	470	G- 4905	-	1	GEARBOX SHELF
	480	284541	-	2	CUSHION
	490	440059	-	1	CANTILEVER
	500	3318	-	5	LEG
	510	4488	-	1	ANGLE
	520	7018	-	1	COVERING PLATE
	530	7309	-	2	HANDLE
	540	7470-0006	-	1	CHAIN
	550	7470-0007	-	1	CHAIN
	560	10920	-	1	TENSION SPRING
	580	27402	-	1	MACHINE PLATE
	590	20497	-	1	GROUP NUMBER PLATE
	600	440467	-	1	CABLE HOLDER
	650	311211-0294	-	2	TAPER PIN GKP6X6X35
	660	311305-0312	-	4	SLOTTED PIRPC5X25FZB
	670	312101-0366	-	3	SCREW M6S6X12FZB
	680	312101-0451	-	6	SCREW M6S8X20FZB
	690	312101-0455	-	13	SCREW M6S8X30FZB
	700	312101-0499	-	3	SCREW M6S10X40FZB
	710	312101-0501	-	1	SCREW M6S10X50FZB
	720	312111-0293	-	8	SCREW MC6S4X16FZB
	725	312111-0368	-	2	SCREW MC6S6X16FZB
	730	312111-0371	-	4	SCREW MC6S6X22FZB
	740	312111-0447	-	2	SCREW MC6S8X12FZB
	750	312121-0323	-	2	SLOTTED HEMCS5X8FZB
	760	312125-0333	-	2	SLOTTED HEMCS5X25RFR
	770	312151-0493	-	4	SCREW MF6S10X25FZB
	775	312311-0370	-	2	STOP SCREW T6SS6X20FZB
	780	312502-0221	-	8	DRIVE SCREKDS4X6FNB
	790	312601-0316	-	7	NUT M6M6FZB
	800	312601-0320	-	1	NUT M6M10FZB
	810	312605-0314	-	2	NUT M6M5RFR
	820	315101-0136	-	16	WASHER BRB4,3X8FZB
	830	315101-0153	-	9	WASHER BRB6,4X12FZB
	835	315121-0153	-	1	WASHER TBRSB6,4X22FZB
	840	315401-0165	-	7	WASHER FBH8,2FZB
	850	315401-0173	-	8	WASHER FBH10,2FZB
	860	318201-0060	-	1	ROLLER CHA3/8"
	870	352100-0111	-	1	CABLE GLANR.22,5-13,5

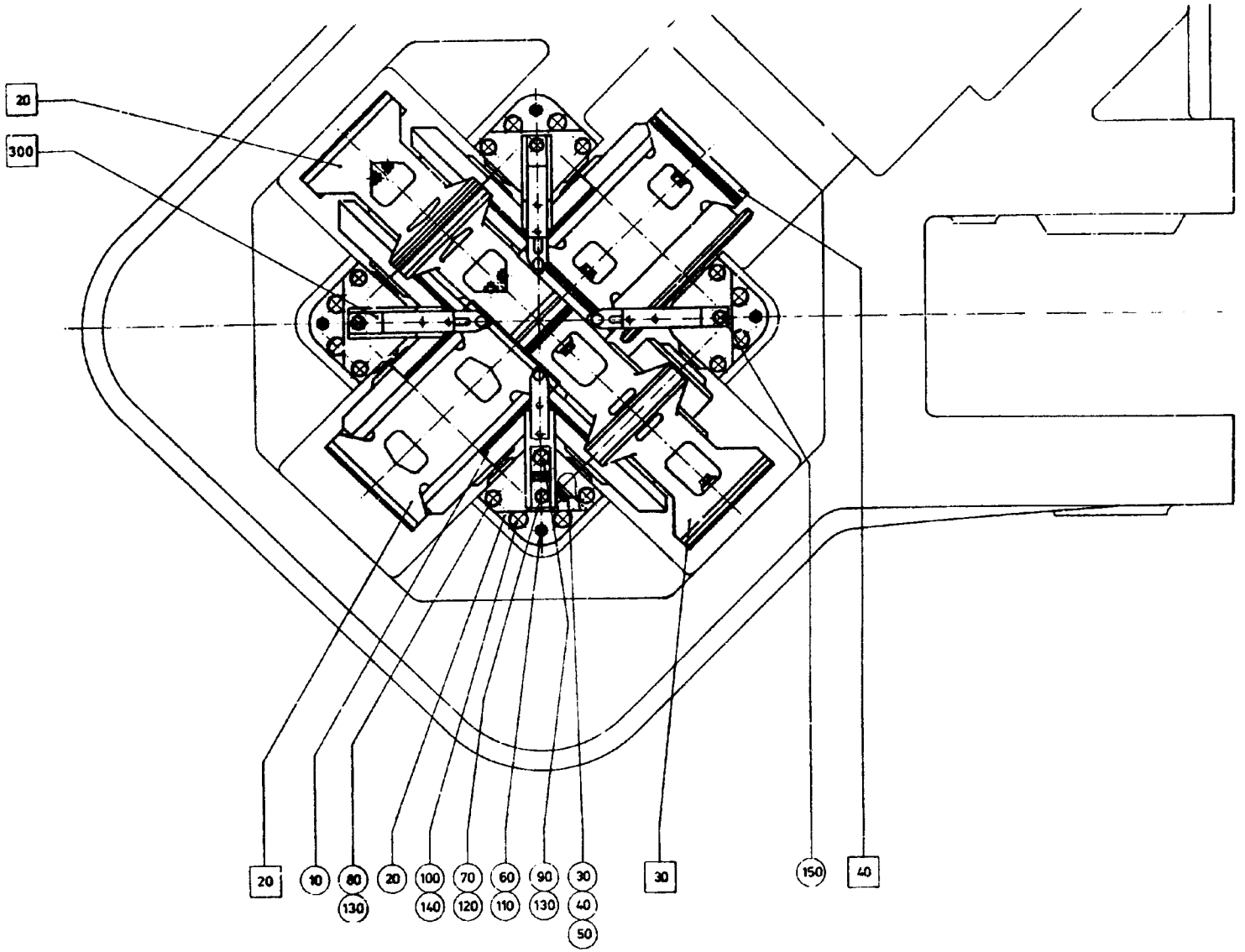

43404201.tif
434042-1
AM 8810

From	Pos	Part No	SP	UN Qty	Description
		C- 434042-0201			**SHEARING DEVICE, ASS'Y**
	F020	C- 529316-0101	-	2	CUTTING WHEEL
	F030	C- 004865-0301	-	1	COUNTER WHEEL
	F040	C- 004865-0302	-	1	COUNTER WHEEL
	F300	C- 006880-0102	-	4	STEERING
	010	4910	-	3	PROTECTION
	020	G- 4895	-	4	BEARING BRACKET
	030	1755-0005	-	16	WASHER
	040	1755-0006	-	32	WASHER
	050	1755-0007	-	16	WASHER
	060	311211-0299	-	4	TAPER PIN GKP6X6X55
	070	312101-0366	-	4	SCREW M6S6X12FZB
	080	312101-0461	-	8	SCREW M6S8X50FZB
	090	312101-0463	-	4	SCREW M6S8X60FZB
	100	312101-0499	-	8	SCREW M6S10X40FZB
	110	312601-0316	-	4	NUT M6M6FZB
	120	315101-0153	-	4	WASHER BRB6,4X12FZB
	130	315101-0165	-	12	WASHER BRB8,4X16FZB
	140	315101-0173	-	8	WASHER BRB10,5X22FZB
	150	315111-0173	-	2	WASHER TBRB10,5X22FZB

From	Pos	Part No	SP	UN Qty	Description

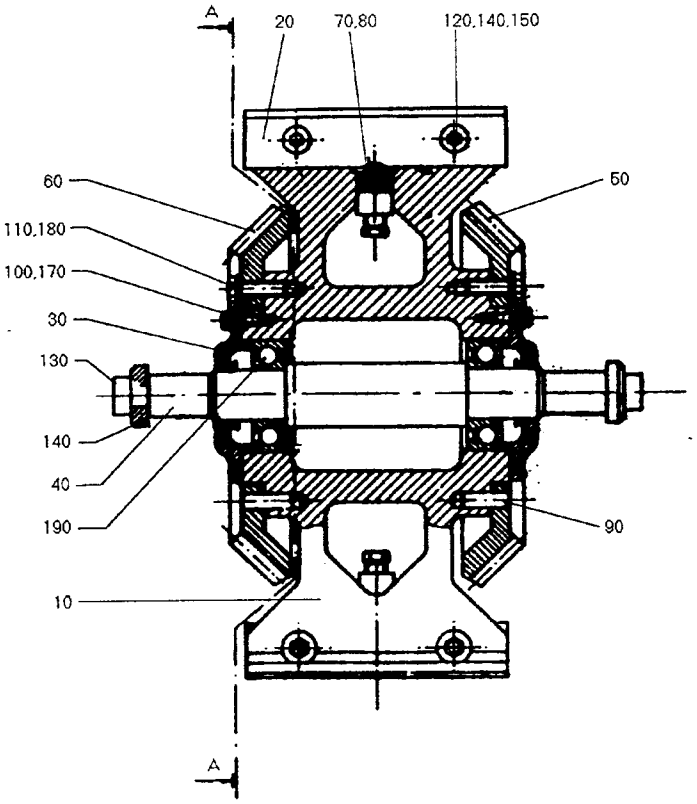

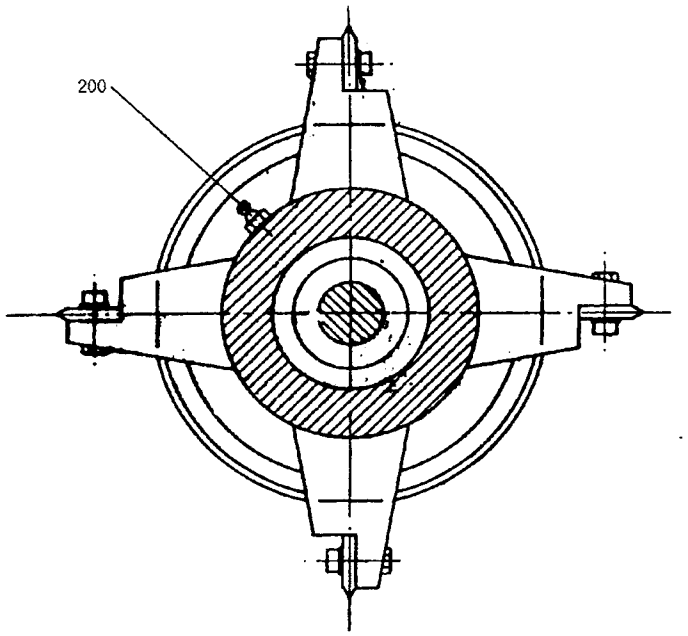

Section A - A

52931601.tif
529316-1
AM 8810

From	Pos	Part No	SP	UN	Qty	Description
		C- 529316-0101				**CUTTING WHEEL, ASS'Y**
	010	G- 529317	-		1	KNIFE WHEEL
	020	484815	-		4	KNIFE
	030	2467	-		2	OIL SEAL (L@VALOCK)
	040	4884	-		1	SHAFT
	050	4886-0001	-		1	GEAR WHEEL
	060	4886-0002	-		1	GEAR WHEEL
	070	529293	-		4	SCREW
	080	529294	-		4	NUT
	090	311101-0406	-		2	CYLINDRICACP8H6X32
	100	312101-0368	-		6	SCREW M6S6X16FZB
	110	312101-0453	-		8	SCREW M6S8X25FZB
	120	312111-0371	-		8	SCREW MC6S6X22FZB
	130	312111-0492	-		2	SCREW MC6S10X22FZB
	140	312601-0316	-		8	NUT M6M6FZB
	150	315111-0153	-		8	WASHER TBRB6,4X12FZB
	160	315121-0173	-		2	WASHER BRSB10,5X28FZB
	170	315401-0153	-		6	WASHER FBH6,1FZB
	180	315401-0165	-		8	WASHER FBH8,2FZB
	190	321312-0105	-		2	BALL BEARISKF6205RS
	200	344502-0026	-		2	NIPPLE L AHKR1/8"

From	Pos	Part No	SP	UN	Qty	Description

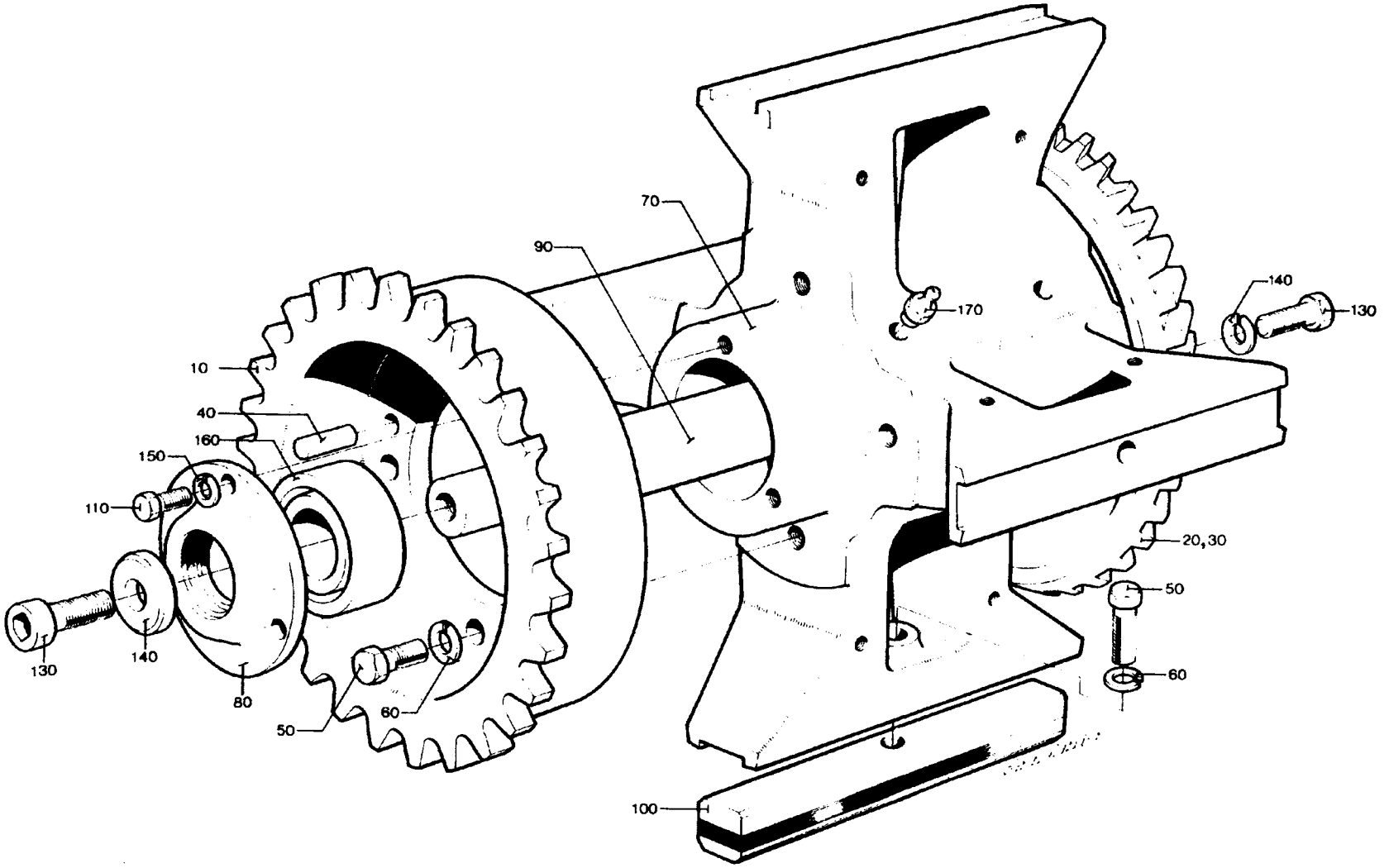

486502.tif
4865-2
AM 6801

From	Pos	Part No	SP	UN	Qty	Description
		C- 4865-0301				**COUNTER WHEEL, ASS'Y**
	030	4886-0002	-		1	GEAR WHEEL
	040	311101-0406	-		1	CYLINDRICACP8H6X32
	050	312101-0455	-		4	SCREW M6S8X30FZB
	060	315401-0165	-		8	WASHER FBH8,2FZB
with Drive Sprocket						
		C- 4865-0302				**COUNTER WHEEL, ASS'Y**
	010	4888	-		1	SPROCKET
	020	4886-0001	-		1	GEAR WHEEL
	040	311101-0406	-		2	CYLINDRICACP8H6X32
	050	312101-0455	-		8	SCREW M6S8X30FZB
	060	315401-0165	-		12	WASHER FBH8,2FZB
Common Parts						
	070	4887	-		1	COUNTER WHEEL
	080	2467	-		2	OIL SEAL (L@VALOCK)
	090	4884	-		1	SHAFT
	100	209972	-		4	RAIL
	110	312101-0368	-		6	SCREW M6S6X16FZB
	120	312101-0453	-		4	SCREW M6S8X25FZB
	130	312111-0492	-		2	SCREW MC6S10X22FZB
	140	315121-0173	-		2	WASHER BRSB10,5X28FZB
	150	315401-0153	-		6	WASHER FBH6,1FZB
	160	321312-0105	-		2	BALL BEARISKF6205RS
	170	344502-0026	-		2	NIPPLE L AHKR1/8"

From	Pos	Part No	SP	UN	Qty	Description



688001.tif
6880-1
AM 8410

From	Pos	Part No	SP	UN	Qty	Description
		C- 6880-0101				**STEERING, ASS'Y**
	010	6881	-		1	CANTILEVER
	020	6882	-		1	LEAD ARM
	030	312101-0368	-		2	SCREW M6S6X16FZB
	040	315101-0153	-		2	WASHER BRB6,4X12FZB
	050	315401-0153	-		2	WASHER FBH6,1FZB

From	Pos	Part No	SP	UN	Qty	Description

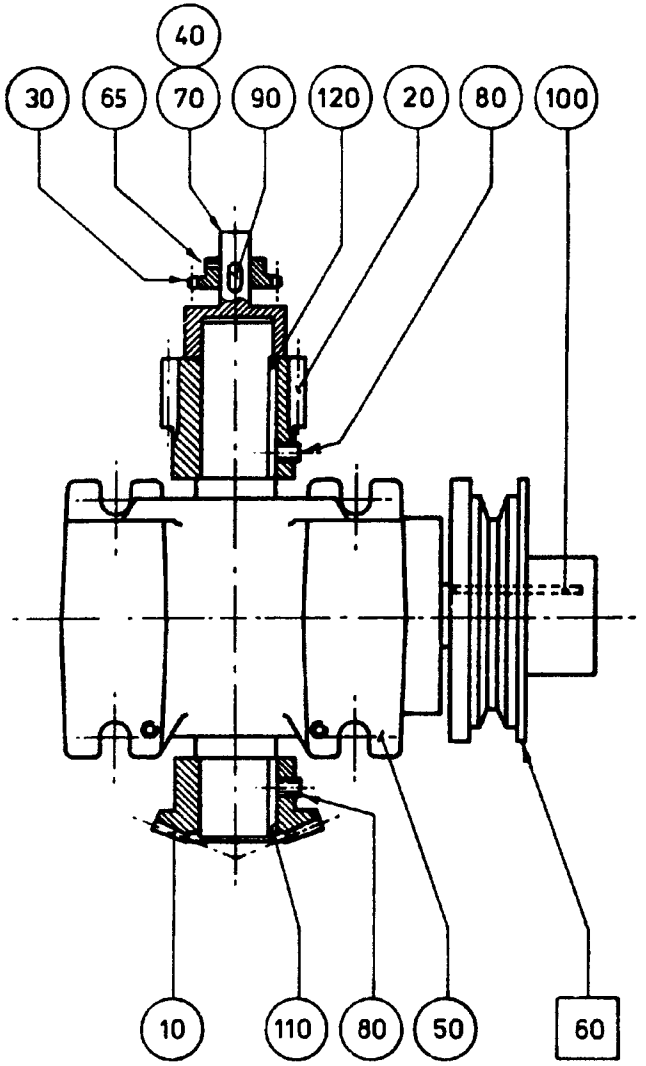

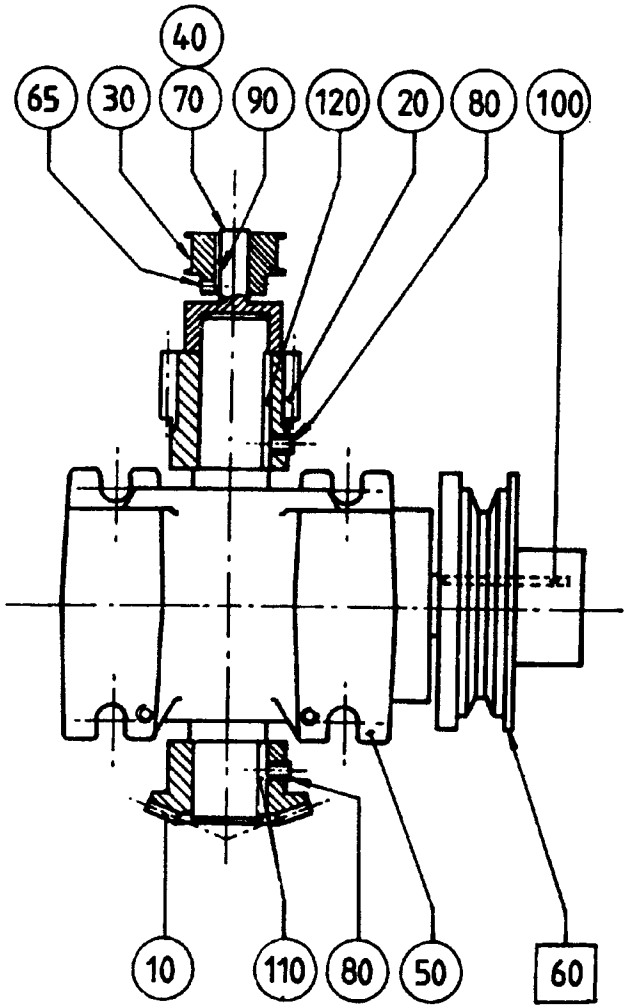

486602.tif
4866-2
AM 10079

From	Pos	Part No	SP	UN	Qty	Description
Rely Machines						
		C- 4866-0301				**WORM GEAR, ASS'Y**
	030	6216	-		1	SPROCKET
	065	312306-0287	-		1	STOP SCREW P6SS4X8FZB
TPMC Machines						
		C- 4866-0302				**WORM GEAR, ASS'Y**
	030	534728	-		1	TOOTHED PULLY
	065	312316-0321	-		1	STOP SCREW SK6SS5X6FZB
Common Parts						
	F060	C- 004438-030V	-		1	SLIP DISC
	010	4881	-		1	GEAR WHEEL
	020	4882	-		1	GEAR WHEEL
	040	6849	-		1	AXLE PIN
	050	90056-0075	-		1	WORM GEAR
		90056-0514	S		1	* WORM WHEEL
		90056-0515	S		1	* WORM SHAFT
		90091-0262	S		1	* SEAL RING
		315202-0316	S		1	* O-RING 124,5X3
		315221-0185	S		2	* SEAL RINCB40X62X7
		321309-0108	S		2	* BALL BEASKF6208
		321314-0103	S		1	* BALL BEASKF6303
		321314-0106	S		1	* BALL BEASKF6306
	070	312316-0323	-		4	STOP SCREW SK6SS5X8FZB
	080	312316-0447	-		4	STOP SCREW SK6SS8X12FZB
	090	315701-0198	-		1	FLAT WEDGE5X5X14
	100	315701-0276	-		1	FLAT WEDGE8X7X70
	110	315701-0300	-		1	FLAT WEDGE10X8X35
	120	315701-0305	-		1	FLAT WEDGE10X8X60

From	Pos	Part No	SP	UN	Qty	Description

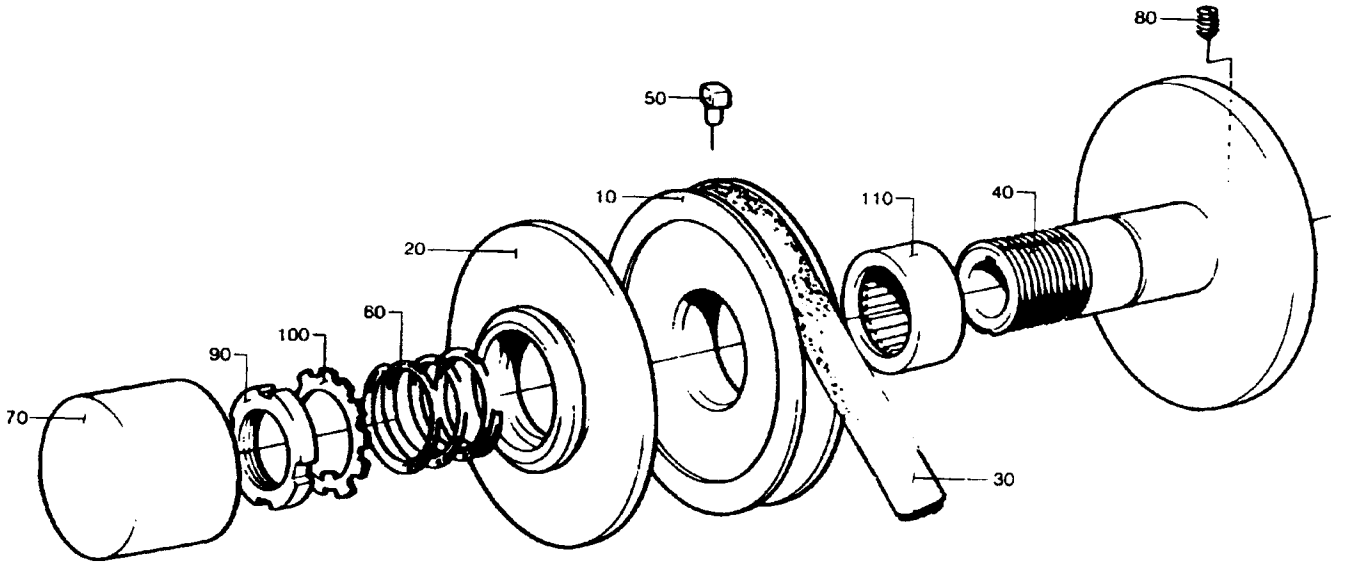

443802.tif
4438-2
AM 6702

From	Pos	Part No	SP	UN	Qty	Description
TC, TCA/300 -75/m- 50Hz						
		C- 4438-0301				**SLIP DISC, ASS'Y**
	010	4465-0001	-		1	PULLEY
	020	4466-0001	-		1	FLANGE
	030	318101-0030	-		1	V-BELT B30
TC, TCA/150 -75/m- 50Hz						
		C- 4438-0302				**SLIP DISC, ASS'Y**
	010	4465-0002	-		1	PULLEY
	020	4466-0002	-		1	FLANGE
	030	318101-0039	-		1	V-BELT B39
TC, TCA/300 -75/m- 60Hz						
		C- 4438-0303				**SLIP DISC, ASS'Y**
	010	4465-0003	-		1	PULLEY
	020	4466-0001	-		1	FLANGE
	030	318101-0031	-		1	V-BELT B31
TC, TCA/150 -75/m- 60Hz						
		C- 4438-0304				**SLIP DISC, ASS'Y**
	010	4465-0004	-		1	PULLEY
	020	4466-0002	-		1	FLANGE
	030	318101-0040	-		1	V-BELT B40
TC/300 -150/m- 50Hz						
		C- 4438-0305				**SLIP DISC, ASS'Y**
	010	4465-0001	-		1	PULLEY
	020	4466-0001	-		1	FLANGE
	030	318101-0033	-		1	V-BELT B33
TC/150 -150/m- 50Hz						
		C- 4438-0306				**SLIP DISC, ASS'Y**
	010	4465-0002	-		1	PULLEY
	020	4466-0002	-		1	FLANGE
	030	318101-0043	-		1	V-BELT B43

From	Pos	Part No	SP	UN	Qty	Description
TC/300 -150/m- 60Hz						
		C- 4438-0307				**SLIP DISC, ASS'Y**
	010	4465-0003	-		1	PULLEY
	020	4466-0001	-		1	FLANGE
	030	318101-0035	-		1	V-BELT B35
TC/150 -150/m- 60Hz						
		C- 4438-0308				**SLIP DISC, ASS'Y**
	010	4465-0004	-		1	PULLEY
	020	4466-0002	-		1	FLANGE
	030	318101-0044	-		1	V-BELT B44
TC/300 -100/m- 50Hz						
		C- 4438-0309				**SLIP DISC, ASS'Y**
	010	4465-0001	-		1	PULLEY
	020	4466-0001	-		1	FLANGE
	030	318101-0033	-		1	V-BELT B33
TC/300 -100/m- 60Hz						
		C- 4438-0310				**SLIP DISC, ASS'Y**
	010	4465-0003	-		1	PULLEY
	020	4466-0001	-		1	FLANGE
	030	318101-0035	-		1	V-BELT B35
Common Parts						
	040	G- 4467	-		1	HUB
	050	4468	-		1	DOWEL
	060	4469	-		1	SPRING
	070	5450-0001	-		1	CARTON
	080	312316-0362	-		2	STOP SCREW SK6SS6X8FZB
	090	312805-0108	-		1	ROUND NUT KM8
	100	315410-0108	-		1	LOCK WASHESKFMB8
	110	321511-0422	-		1	NEEDLE BEANK40/20

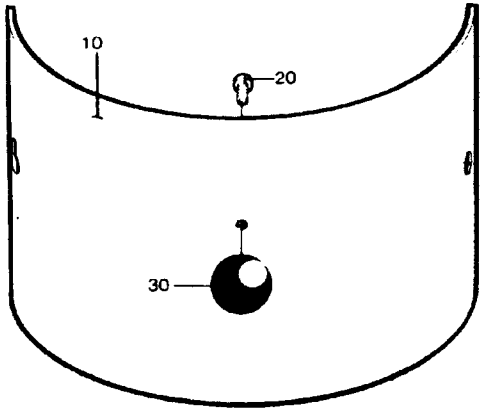

486701.tif
4867-1
AM 6801

From	Pos	Part No	SP	UN	Qty	Description
		C- 4867-0101				**OPENING. ASS'Y**
	010	4912	-		1	OPENING
	020	312125-0366	-		1	SLOTTED HEMCS6X12RFR
	030	318800-0103	-		1	HANDLE BALLA D.25-M6

From	Pos	Part No	SP	UN	Qty	Description

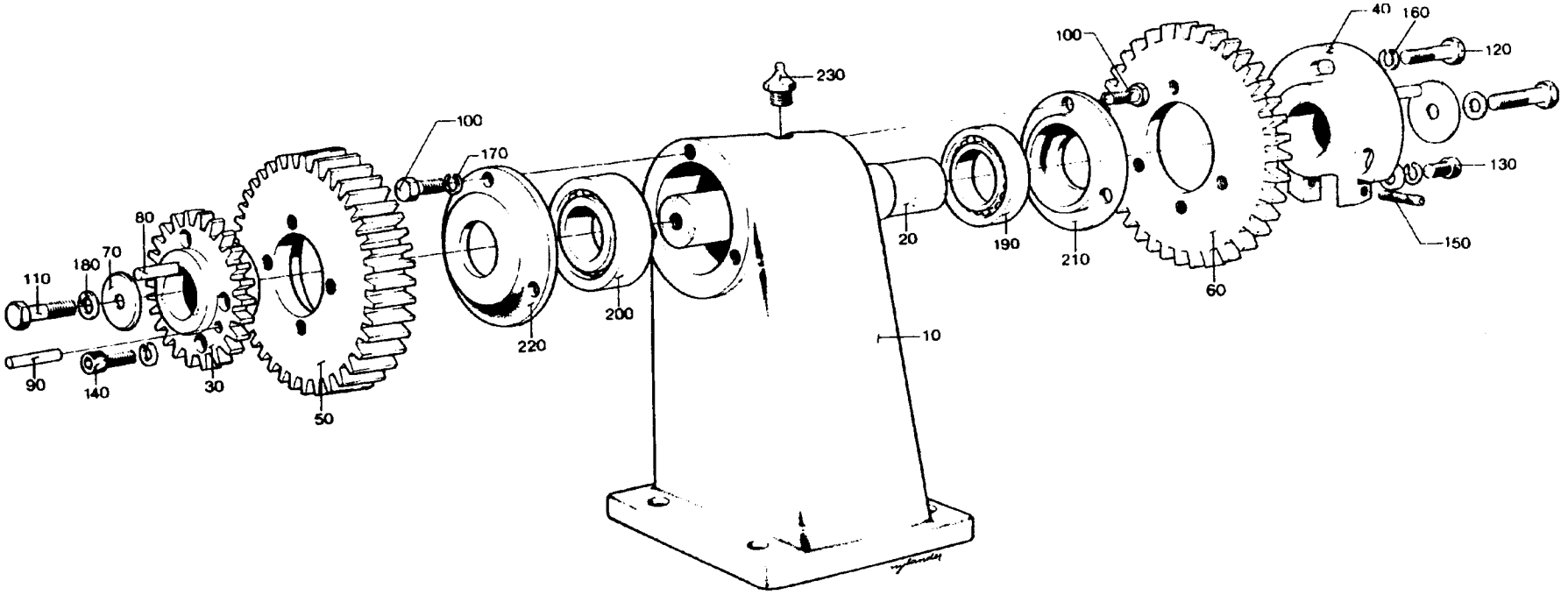

486801.tif
4868-1
AM 6801

From	Pos	Part No	SP	UN Qty	Description
		C- 4868-0101			**INTERMEDIARY SHAFT, ASS'Y**
	010	G- 4874	-	1	CANTILEVER
	020	4875	-	1	SHAFT
	030	4876	-	1	SPROCKET
	040	4878	-	1	CARRIER FLANGE
	050	4877	-	1	GEAR WHEEL
	060	4879	-	1	SPROCKET
	070	4880	-	2	WASHER
	080	311102-0404	-	6	CYLINDRICACP M6 8X28
	090	311102-0406	-	1	CYLINDRICACP M6 8X32
	100	312101-0368	-	6	SCREW M6S6X16FZB
	110	312101-0453	-	2	SCREW M6S8X25FZB
	120	312101-0455	-	4	SCREW M6S8X30FZB
	130	312111-0447	-	1	SCREW MC6S8X12FZB
	140	312111-0452	-	4	SCREW MC6S8X22FZB
	150	312306-0455	-	2	STOP SCREW P6SS8X30FZB
	160	315101-0165	-	4	WASHER BRB8,4X16FZB
	170	315401-0153	-	6	WASHER FBH6,1FZB
	180	315401-0165	-	11	WASHER FBH8,2FZB
	190	321306-0107	-	1	BALL BEARISKF6007
	200	321309-0107	-	1	BALL BEARISKF6207
	210	321600-0120	-	1	OIL SEAL (LL3562
	220	321600-0124	-	1	OIL SEAL (LL3572
	230	344502-0026	-	1	NIPPLE L AHKR1/8"

From	Pos	Part No	SP	UN Qty	Description

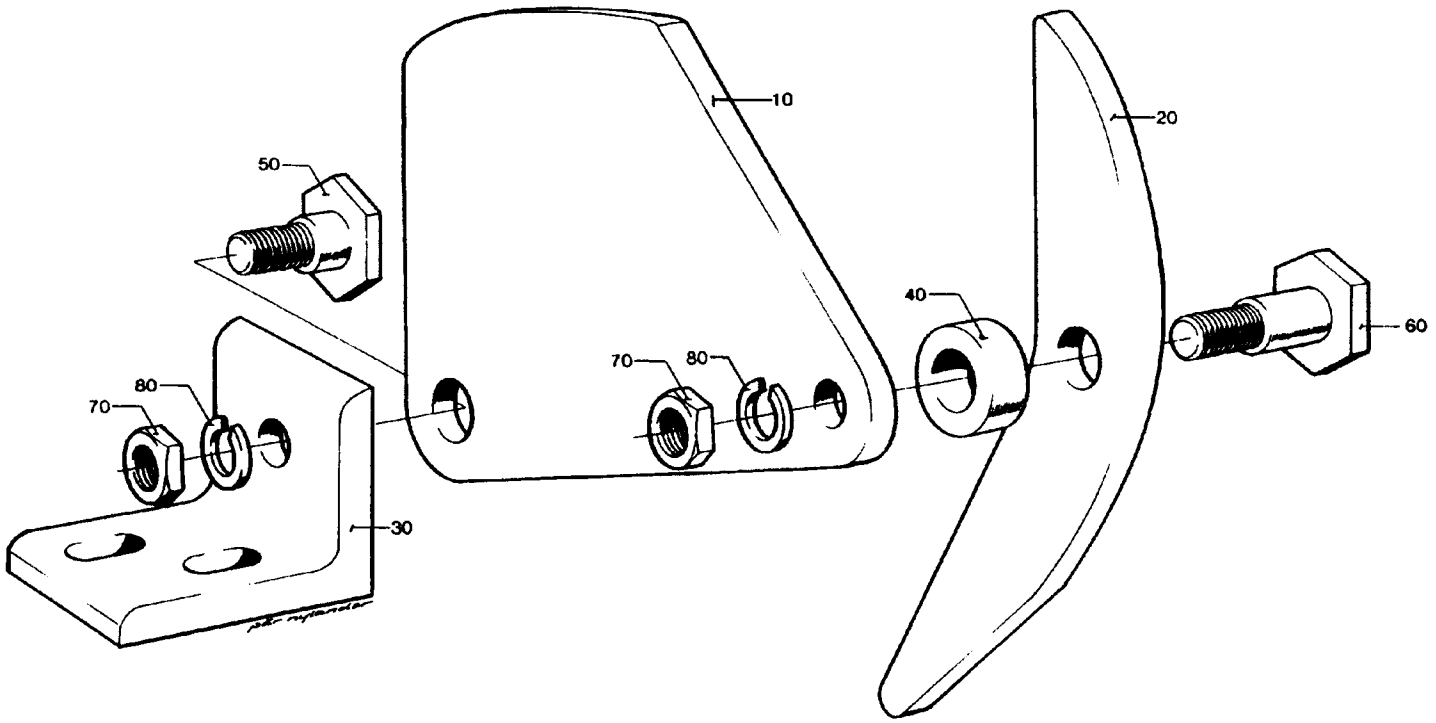

486901.tif
4869-1
AM 6801

From	Pos	Part No	SP	UN	Qty	Description
		C- 4869-0101				**CHAIN TENSIONER, ASS'Y**
	010	4891	-		1	TENSION ARM
	020	4892	-		1	CURVE
	030	4890	-		1	ANGLE
	040	4893	-		1	SPACER SLEEVE
	050	4894-0001	-		1	BOLT
	060	4894-0002	-		1	BOLT
	070	312601-0320	-		2	NUT M6M10FZB
	080	315401-0173	-		2	WASHER FBH10,2FZB

From	Pos	Part No	SP	UN	Qty	Description

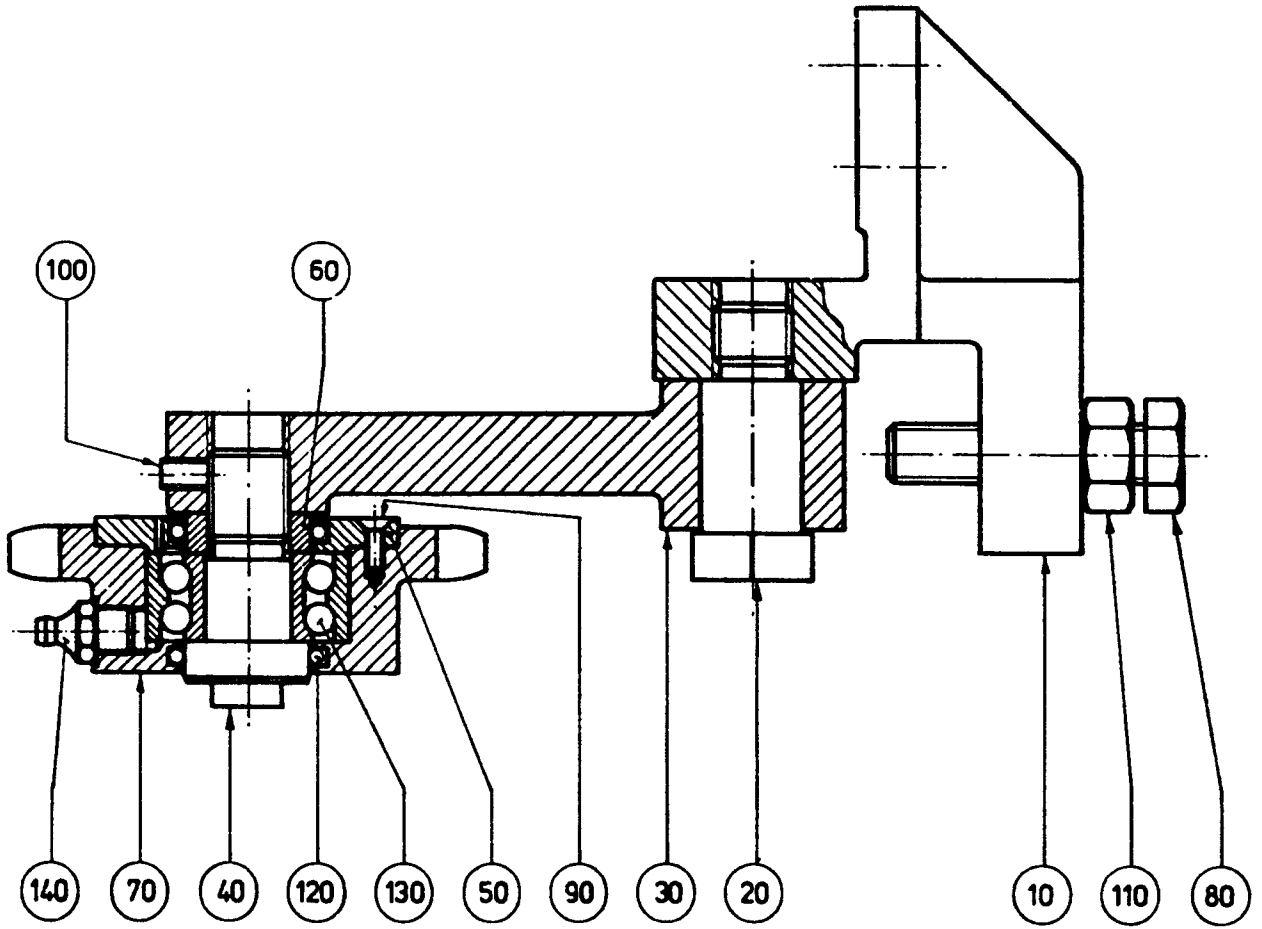

487101.tif
4871-1
AM 6801

From	Pos	Part No	SP	UN	Qty	Description
		C- 4871-0101				**CHAIN TENSIONER, ASS'Y**
	010	G- 4476	-		1	CANTILEVER
	020	2141	-		1	BOLT
	030	4474-0001	-		1	TENSION ARM
	040	4831-0001	-		1	BOLT
	050	4903	-		1	SEAL COVER
	060	4904	-		1	SPACER RING
	070	4906	-		1	SPROCKET
	080	312104-0546	-		1	SCREW M6S12X70H8.8FZB
	090	312151-0291	-		3	SCREW MF6S4X12FZB
	100	312316-0362	-		1	STOP SCREW SK6SS6X8FZB
	110	312601-0322	-		1	NUT M6M12FZB
	120	315202-0520	-		2	O-RING 26,58X3,53
	130	321330-0103	-		1	BALL BEARISKF3203
	140	344502-0026	-		1	NIPPLE L AHKR1/8"

From	Pos	Part No	SP	UN	Qty	Description

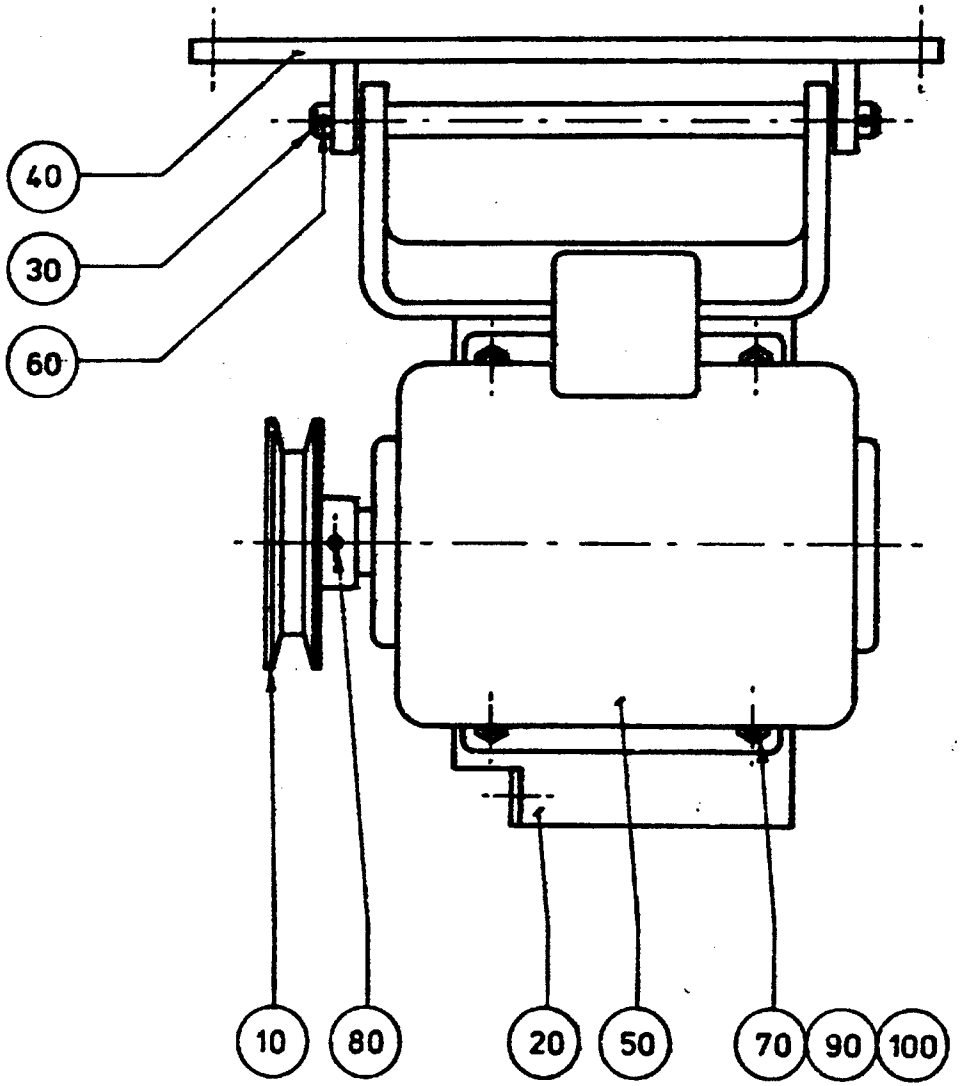

487201.tif
4872-1
AM 6801

From	Pos	Part No	SP	UN	Qty	Description
		C- 4872-0501				**MOTOR, ASS'Y 75/M**
		C- 4872-0502				**MOTOR, ASS'Y 120/M**
	010	284893	-		1	PULLEY 75/M
	010	284894	-		1	PULLEY 120/M
Common Parts						
	020	4896	-		1	MOTOR SHELF
	030	4897	-		1	SHAFT
	040	4898	-		1	FASTENING IRON
	050	90045-0049	-		1	MOTOR
	060	311401-0199	-		2	SPLIT PIN SP4X32FZB
	070	312101-0455	-		4	SCREW M6S8X30FZB
	080	312316-0323	-		2	STOP SCREW SK6SS5X8FZB
	090	312601-0318	-		4	NUT M6M8FZB
	100	315401-0165	-		4	WASHER FBH8,2FZB

From	Pos	Part No	SP	UN	Qty	Description

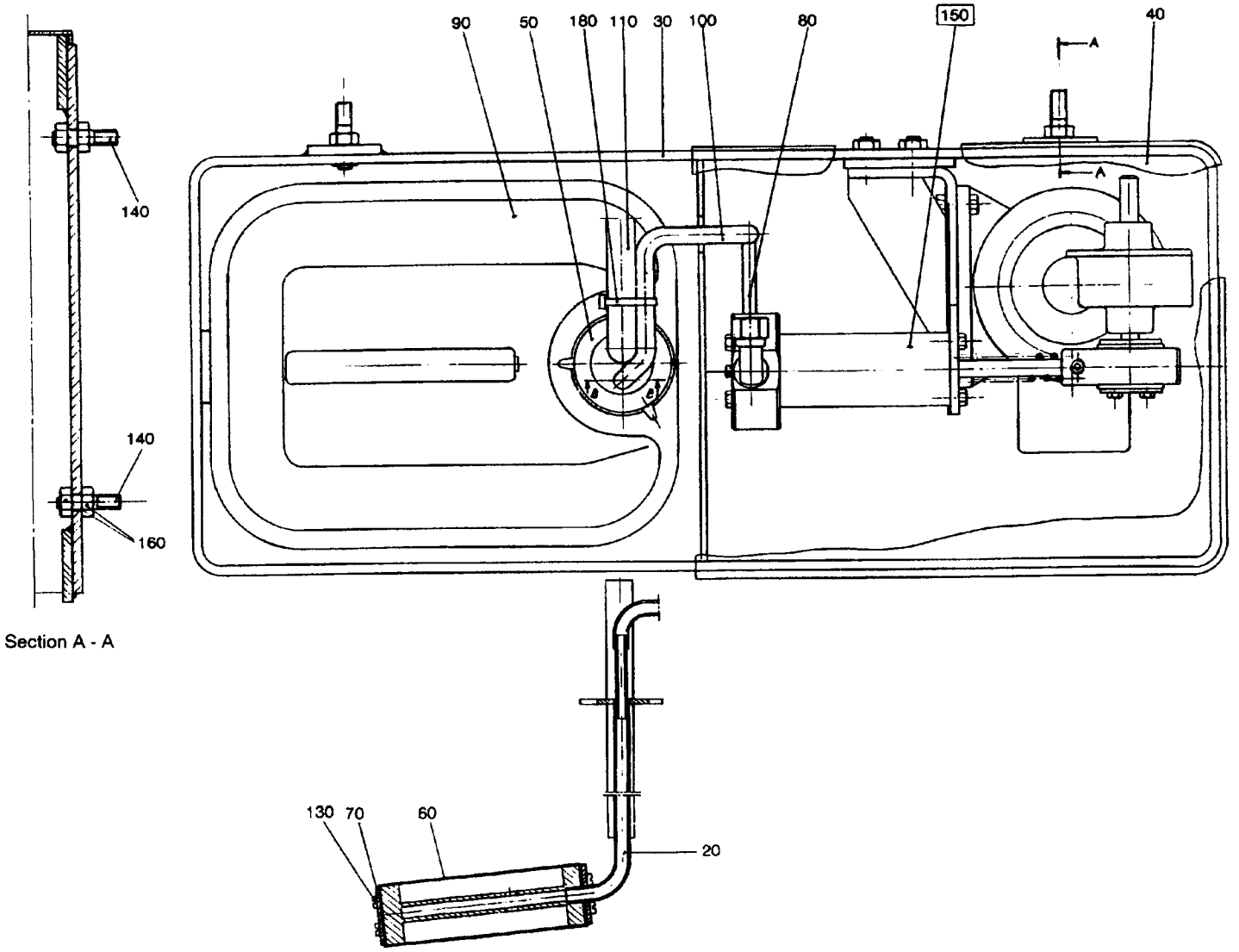

24736701.TIF
247367-1
AM 9786

From	Pos	Part No	SP	UN	Qty	Description
	F000	**C- 247367-0101**				**Pump**
	F150	**C- 038715-0101**	**-**		**1**	**PUMP**
	020	36189	-		1	IMMERSION PIPE
	030	38439	-		1	HOLDER
	040	38440	-		1	COVER
	050	35962	-		1	LID
	060	36200	R		1	FILTER MESH
	070	36201	-		1	WASHER
	080	38848	-		1	PIPE
	090	90050-0010	-		1	BOTTLE
	100	90166-0005	-	MM	500	HOSE
	110	90166-0059	-	MM	500	HOSE
	130	312125-0285	-		8	SLOTTED HEMCS4X6RFR
	140	312303-0457	-		4	STUD SCREWMPS 8X25 RFR
	160	312605-0318	-		8	NUT M6M8RFR
	180	352113-0101	-		3	RIBBON CLA

From	Pos	Part No	SP	UN	Qty	Description

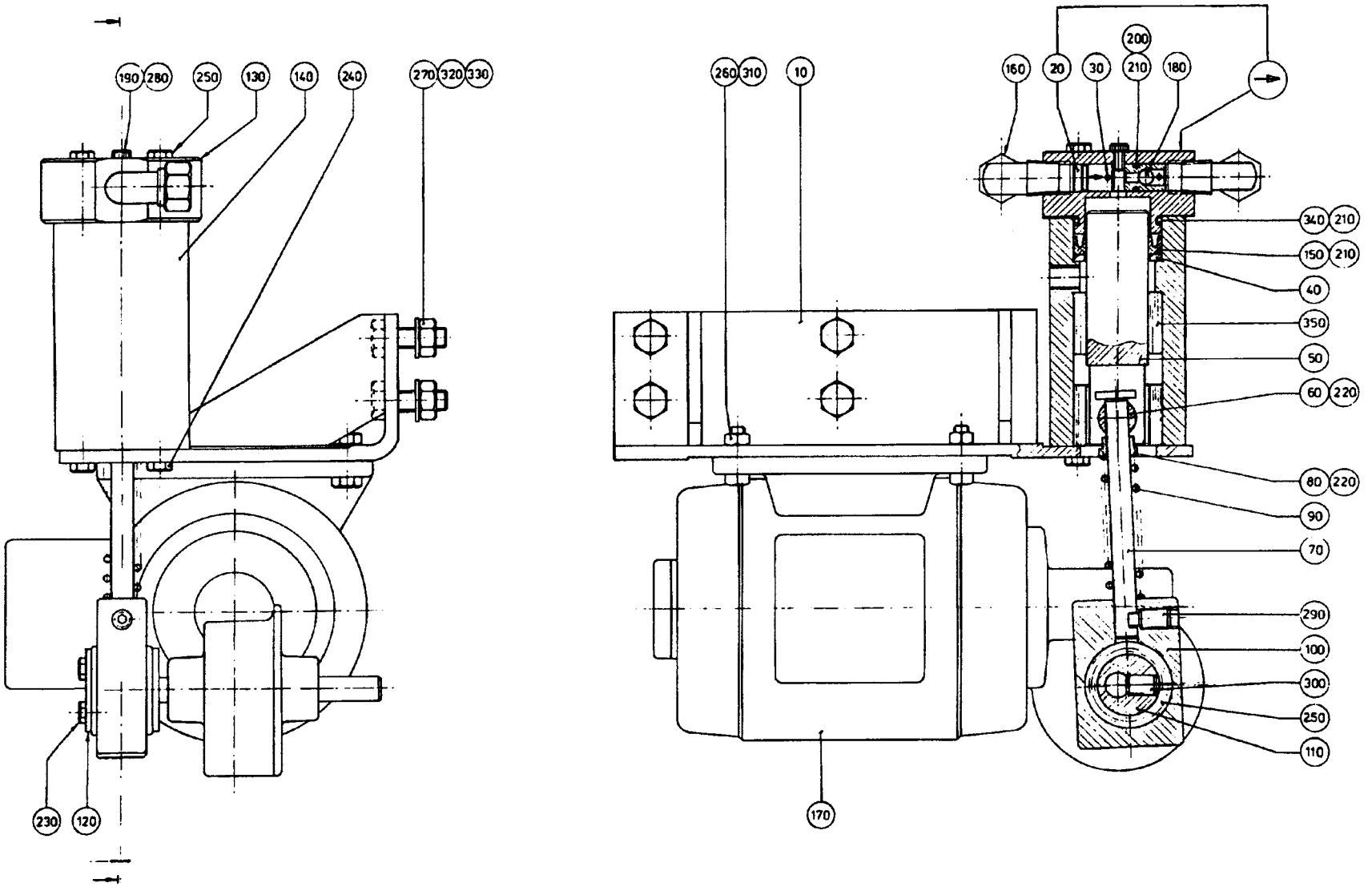

3871501.TIF
38715-1
AM 5976

From	Pos	Part No	SP	UN	Qty	Description
	F000	**C- 38715-0101**				**Pump, Ass'y**
	010	38351	-		1	CANTILEVER
	020	38354	-		2	VALVE HOUSING
	030	38355	-		2	TACK
	040	38357	-		1	SUPPORT RING
	050	38359	-		1	PISTON
	060	38360-0001	-		1	PISTON PIN
	070	38361	-		1	CONNECTING ROD
	080	38362	-		1	SLEEVE
	090	38364	-		1	COMPRESSION SPRING
	100	38365	-		1	CRANK BRACKET
	110	38366	-		1	ECCENTRIC
	120	38367	-		1	LOCK WASHER
	130	38666	-		1	PUMP HOUSING
	140	38667	-		1	BEARING HOUSING
	150	90020-0021	-		1	SLEEVE
	160	90030-0071	-		2	PIPE CONNECTION
	170	90069-0007	-		1	WORM GEAR MOTOR
	180	90090-0010	-		2	STEEL BALL
	190	90144-0004	-	MM	100	TAPE
	200	90242-0036	R		2	O-RING
	210	90296-0009	-	G	X	GREASE
	220	90296-0068	-	G	X	GREASE
	230	312101-0287	-		2	SCREW M6S4X8FZB
	240	312105-0327	-		2	SCREW M6S5X12 A4 80
	250	312105-0337	-		2	SCREW M6S5X35RFR
	260	312105-0370	-		4	SCREW M6S6X20RFR
	270	312105-0453	-		4	SCREW M6S8X25RFR
	280	312115-0287	-		1	SCREW 4X8 A4 80
	290	312311-0449	-		1	STOP SCREW T6SS8X16FZB
	300	312316-0447	-		1	STOP SCREW SK6SS8X12FZB
	310	312605-0316	-		4	NUT M6M6RFR
	320	312605-0318	-		4	NUT M6M8RFR
	330	315105-0165	-		4	WASHER BRB8,4X16RFR
	340	315204-0219	R		1	O-RING 29,2X3VITON
	350	321115-0253	-		3	BUSHING 25E7/35X25

From	Pos	Part No	SP	UN	Qty	Description

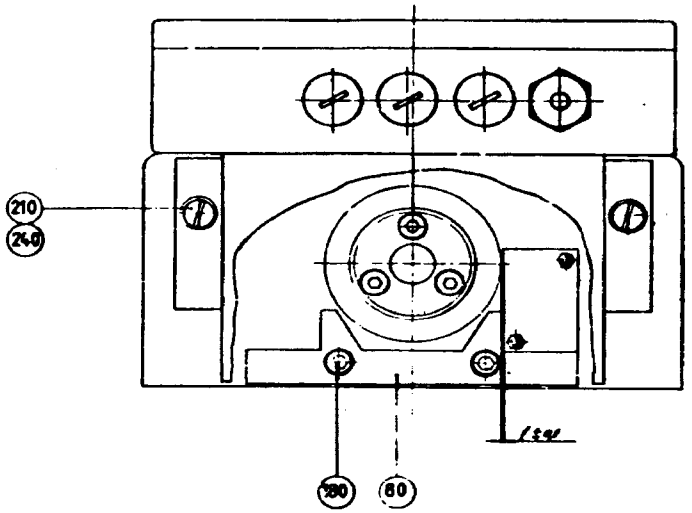

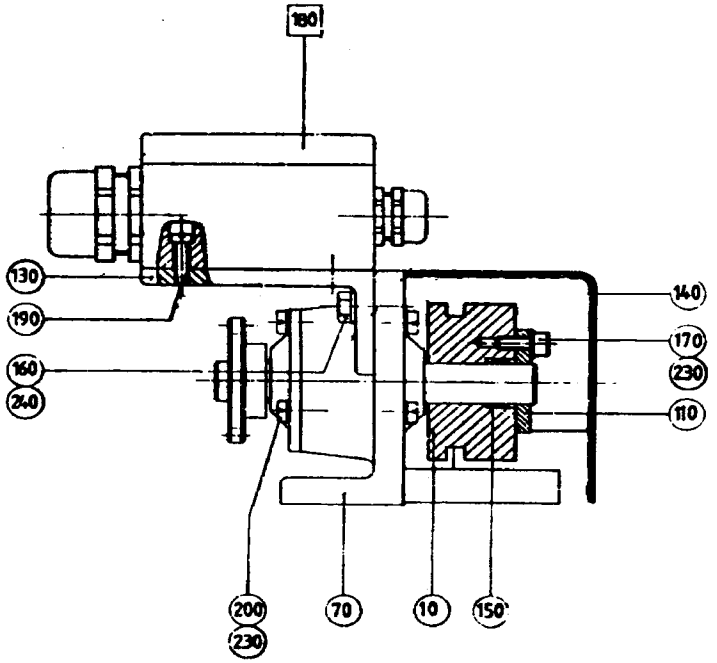

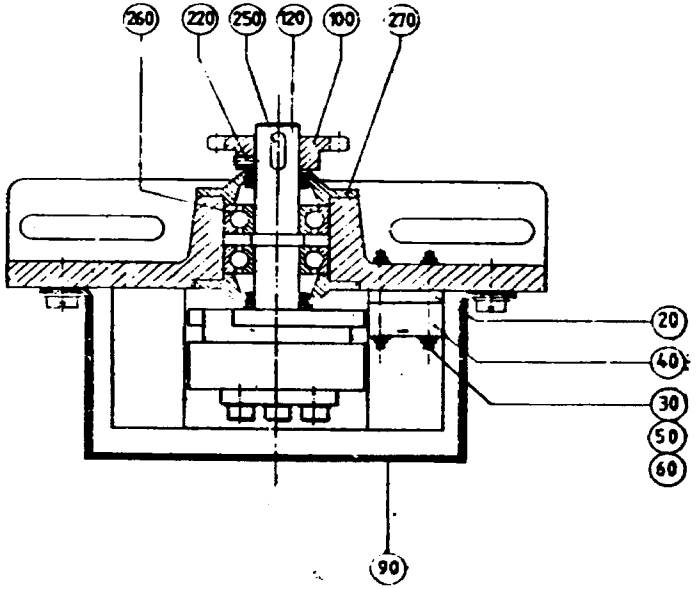

23664102.tif
236641-2
AM 8810

From	Pos	Part No	SP	UN Qty	Description
TC/150, TCA/150					
	F000	**C- 236641-0301**			**Impulse Transmitter IH, Ass'y**
	010	283791	-	1	CURVE
	020	236647-0001	-	1	GAUGE BLOCK
	030	236986	-	2	STUD SCREW
	040	90044-0104	R	1	INDUCTIVE SWITCH
	050	90099-0050	-	4	NUT
	060	315101-0124	-	4	WASHER BRB3,2X6FZB
TCA/300					
	F000	**C- 236641-0305**			**Impulse Transmitter IH, Ass'y**
	010	449959	-	1	CURVE
	020	236647-0001	-	1	GAUGE BLOCK
	030	236986	-	2	STUD SCREW
	040	90044-0104	R	1	INDUCTIVE SWITCH
	050	90099-0050	-	4	NUT
	060	315101-0124	-	4	WASHER BRB3,2X6FZB
TCA/500					
	F000	**C- 236641-0306**			**Impulse Transmitter IH, Ass'y**
	010	458790	-	1	CURVE
	020	236647-0001	-	1	GAUGE BLOCK
	030	236986	-	2	STUD SCREW
	040	90044-0104	R	1	INDUCTIVE SWITCH
	050	90099-0050	-	4	NUT
	060	315101-0124	-	4	WASHER BRB3,2X6FZB
ALL	**F180**	**C- 236638-020V**	**-**	**1**	**CONNECTION BOX**
		C- 236637-0101			. TERMINAL PLINTH
Common Parts					
	070	236644	-	1	MACHINE BODY
	080	236645	-	1	HOLDER
	090	236646	-	1	COVER
	100	6216	-	1	SPROCKET
	110	230613	-	1	FLANGE
	120	236649	-	1	SHAFT
	130	522159	-	2	CANTILEVER
	140	263110	-	1	SIGN
	150	90208-0004	-	1	LOCKING ELEMENT
	160	312101-0368	-	2	SCREW M6S6X16FZB
	170	312111-0327	-	3	SCREW MC6S5X12FZB
	180	312111-0341	-	2	SCREW MC6S5X50FZB
	190	312121-0293	-	2	SLOTTED HEMCS4X16FZB

From	Pos	Part No	SP	UN Qty	Description
	200	312121-0327	-	6	SLOTTED HEMCS5X12FZB
	210	312121-0366	-	2	SLOTTED HEMCS6X12FZB
	220	312306-0287	-	1	STOP SCREW P6SS4X8FZB
	230	315101-0146	-	9	WASHER BRB5,3X10FZB
	240	315101-0153	-	6	WASHER BRB6,4X12FZB
	250	315701-0198	-	1	FLAT WEDGE5X5X14
	260	321309-0102	-	2	BALL BEARISKF6202
	270	321600-0102	-	2	OIL SEAL (LL1535

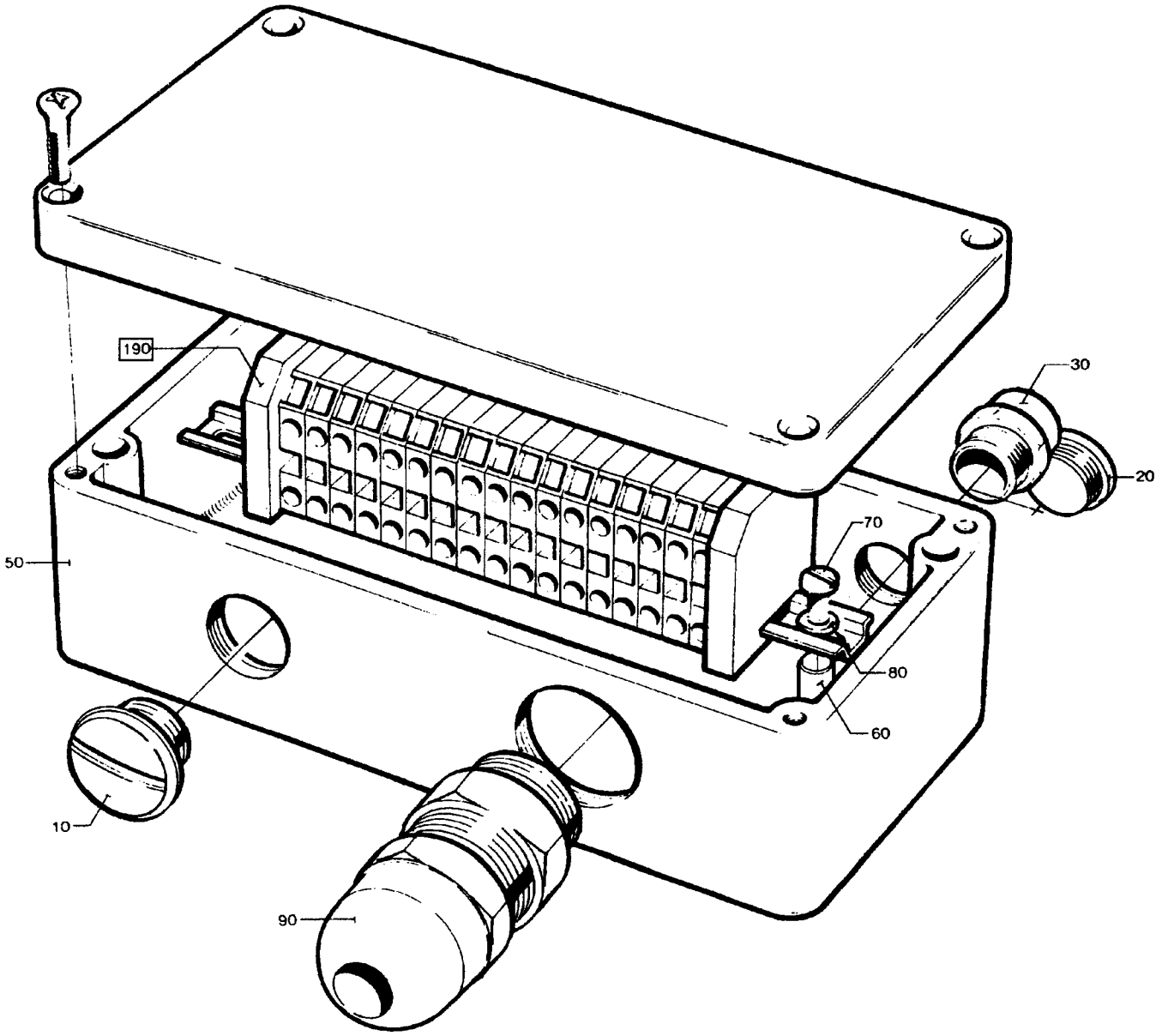

23663802.TIF
236638-2
AM 5719

From	Pos	Part No	SP	UN	Qty	Description
	F190	C- 236637-0101	-		1	**TERMINAL PLINTH**
		C- 236638-0201				**CONNECTION BOX, ASS'Y**
	010	90002-0003	-		1	BLANK-OFF PLUG
	020	90002-0013	-		3	BLANK-OFF PLUG
	030	352103-0101	-		1	CABLE GLANR.ST 9
Common Parts						
	050	440578	-		1	CONNECTION BOX
	060	10641	-		2	SPACER
	070	312121-0291	-		2	SLOTTED HEMCS4X12FZB
	080	315101-0136	-		2	WASHER BRB4,3X8FZB
	090	352103-0115	-		1	CABLE GLANR.STR 21

From	Pos	Part No	SP	UN	Qty	Description

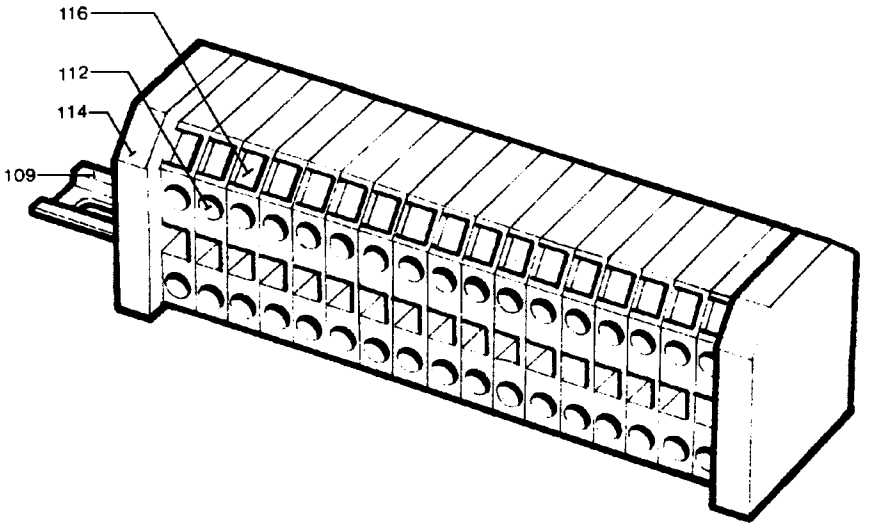

23663701.TIF
236637-1
AM 5719

From	Pos	Part No	SP	UN	Qty	Description
	F000	**C- 236637-0101**				**Terminal Plinth, Ass'y**
	109	8490-0003	-		1	RAIL
	112	90077-0079	-		18	TERMINAL BLOCK
	114	90135-0026	-		2	EARTHING CLAMP
	116	359011-0802	-		1	SIGN BOARDBSFW 11-20

From	Pos	Part No	SP	UN	Qty	Description

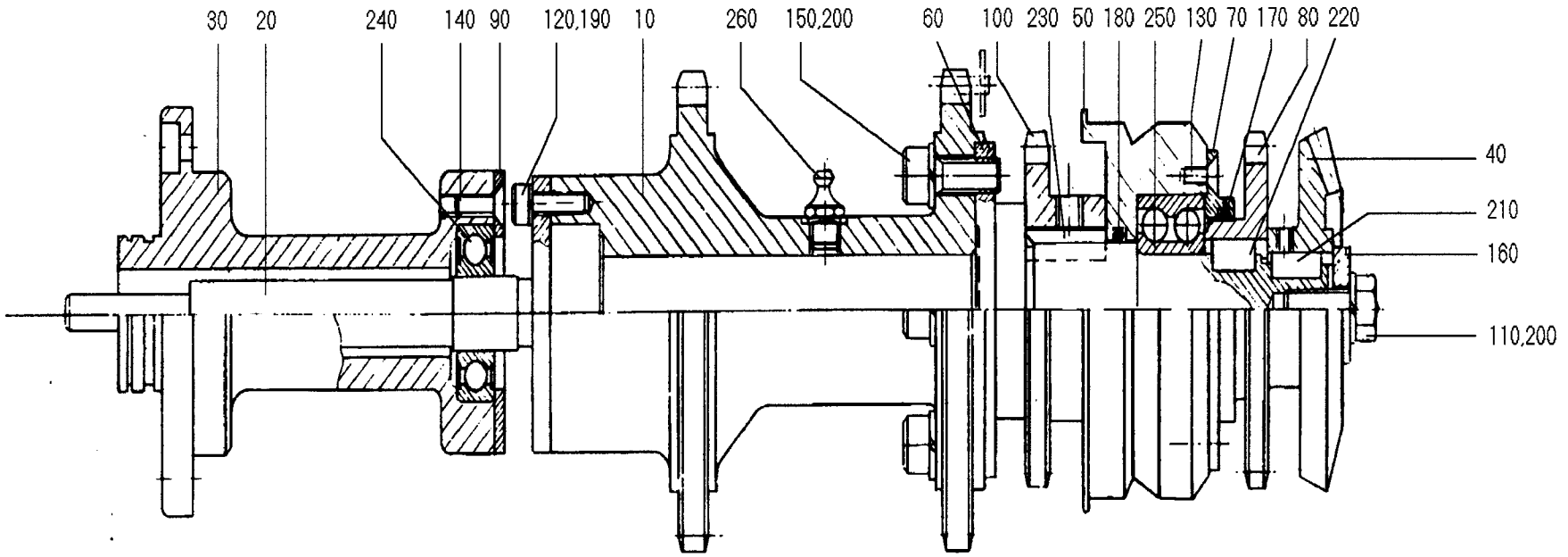

53993501.TIF
539935-1
AM 14775

From	Pos	Part No	SP	UN Qty	Description
		C- 539935-0101			**DRIVE SHAFT, ASS'Y**
	010	539927	-	1	SPROCKET
	020	12358	-	1	SHAFT
	030	12359	-	1	AXLE SUPPORT
	040	3303	-	1	GEAR WHEEL
	050	5056	-	1	BEARING HOUSING
	060	539928	-	1	FLANGED SHAFT
	070	5058	-	1	LID
	080	5059	-	1	SPROCKET
	090	11460	-	1	WASHER
	100	539929	-	1	SPROCKET
	110	312101-0453	-	1	SCREW M6S8X25FZB
	120	312111-0329	-	3	SCREW MC6S5X16FZB
	130	312151-0291	-	3	SCREW MF6S4X12FZB
	140	312151-0327	-	3	SCREW MF6S5X12FZB
	150	312111-0452	-	4	SCREW MC6S8X22FZB
	160	315121-0165	-	1	WASHER TBRSB8,4X26FZB
	170	315202-0224	-	1	O-RING 42,2X3
	180	315202-0523	-	1	O-RING 31,34X3,53
	190	315401-0146	-	3	WASHER FBH 5,1 FZB
	200	315401-0165	-	5	WASHER FBH8,2FZB
	210	315701-0230	-	1	FLAT WEDGE6X6X16
	220	315701-0260	-	1	FLAT WEDGE8X7X14
	230	315701-0264	-	1	FLAT WEDGE8X7X22
	240	321313-0103	-	1	BALL BEARISKF6203-2RS
	250	321330-0105	-	1	BALL BEARISKF3205
	260	344502-0026	-	1	NIPPLE L AHKR1/8"

From	Pos	Part No	SP	UN Qty	Description

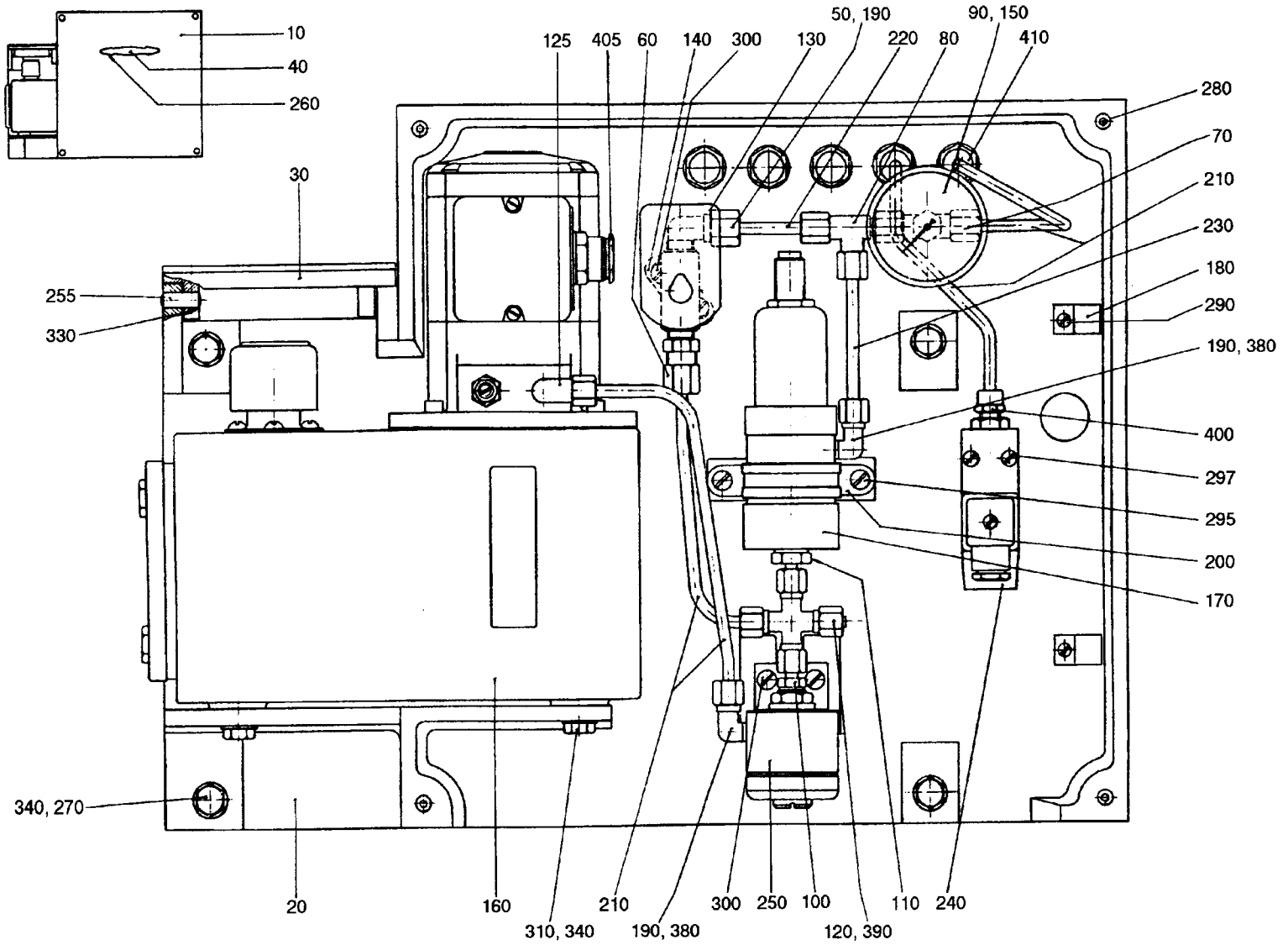

23017704.TIF
230177-4
AM 13231

From	Pos	Part No	SP	UN	Qty	Description
Relay						
	F000	**C- 230177-0301**				**Central Lubrication, Ass'y**
	130	90042-0128	-		1	SOLENOID VALVE
	405	352100-0107	-		1	CABLE GLANR.18,6-12
TPMC						
	F000	**C- 230177-0302**				**Central Lubrication, Ass'y**
	130	90042-0150	S		1	SOLENOID VALVE
Common Parts						
	405	352136-0127	-		1	GLAND FITT
	010	230179	-		1	FRONT GUARD
	020	G- 252665	-		1	CANTILEVER
	030	230180	-		1	OPENING
	040	7309	-		1	HANDLE
	050	90030-0004	-		1	CONNECTION
	060	90030-0126	-		1	PIPE CONNECTION
	070	90030-0127	-		1	PIPE CONNECITON
	080	90030-0128	-		1	PIPE CONNECTION
	090	90030-0129	-		1	PIPE CONNECTION
	100	90030-0130	-		1	PIPE CONNECITON
	110	90030-0131	-		1	PIPE CONNECTION
	120	90030-0132	-		1	PLUG
	125	90030-0146	-		1	CONNECTION
	140	90042-0350	-		1	BRACKET
	150	90043-0015	-		1	PRESSURE GAUGE
	160	90048-0007	-		1	OILPUMP
		90048-0338	S		0	# GASKET
		90048-0417	S		0	# LEVEL GLASS
		90048-0418	S		0	# MOTOR
		90048-0419	S		0	# PUMP
		90048-0420	S		0	# FILTER
		90048-0421	S		0	# GASKET
		90048-0423	S		0	# VALVE SEAT
		90048-0424	S		0	# BRACKET
		90048-0425	S		0	# ADJUSTING SCREW
		90048-0426	S		0	# SPRING
		90048-0427	S		0	# STEEL BALL
		90048-0441	S		0	# REPAIR KIT
		90048-0445	S		0	# FILLING NOZZLE
	170	90048-0016	-		1	ACKUMULATOR
		90048-0447	R		0	# SPARE PARTS KIT
	180	90074-0002	-		2	CLIP
	190	90157-0021	-	ML	X	LOCKING FLUID
	200	90165-0040	-		1	CLIP
	210	90166-0011	-	M	3	HOSE

From	Pos	Part No	SP	UN	Qty	Description
	220	90266-0006	-	MM	X	TUBE
	230	90266-0006	-	MM	X	TUBE
	240	90274-0056	-		1	PRESSURE SWITCH
	250	90415-0004	-		1	FILTER
		90415-0302	S		0	# FILTER
		90415-0329	S		0	# GASKET
	255	311101-0405	-		2	CYLINDRICACP8H6X30
	260	312101-0362	-		2	SCREW M6S6X8FZB
	270	312101-0461	-		4	SCREW M6S8X50FZB
	280	312115-0327	-		4	SCREW MC6S5X12 A4 80
	290	312121-0285	-		4	SLOTTED HEMCS4X6FZB
	295	312121-0325	-		2	SLOTTED HEMCS5X10FZB
	297	312121-0339	-		2	SLOTTED HEMCS5X40FZB
	300	312121-0364	-		4	SLOTTED HEMCS6X10FZB
	310	312204-0154	-		4	SCREW U6S5/16X25FZB
	330	312316-0284	-		2	STOP SCREW SK6SS4X5FZB
	340	315111-0165	-		8	WASHER TBRB8,4X16FZB
	380	342731-0102	-		2	ELBOW PIPE WE6-LRFZB
	390	342754-0102	-		1	CROSS CONNK6-LFZB
	400	342921-0114	-		1	PIPE COUPL6/4-1/4"
	410	352101-0103	-		5	LEAD-IN G 18,6

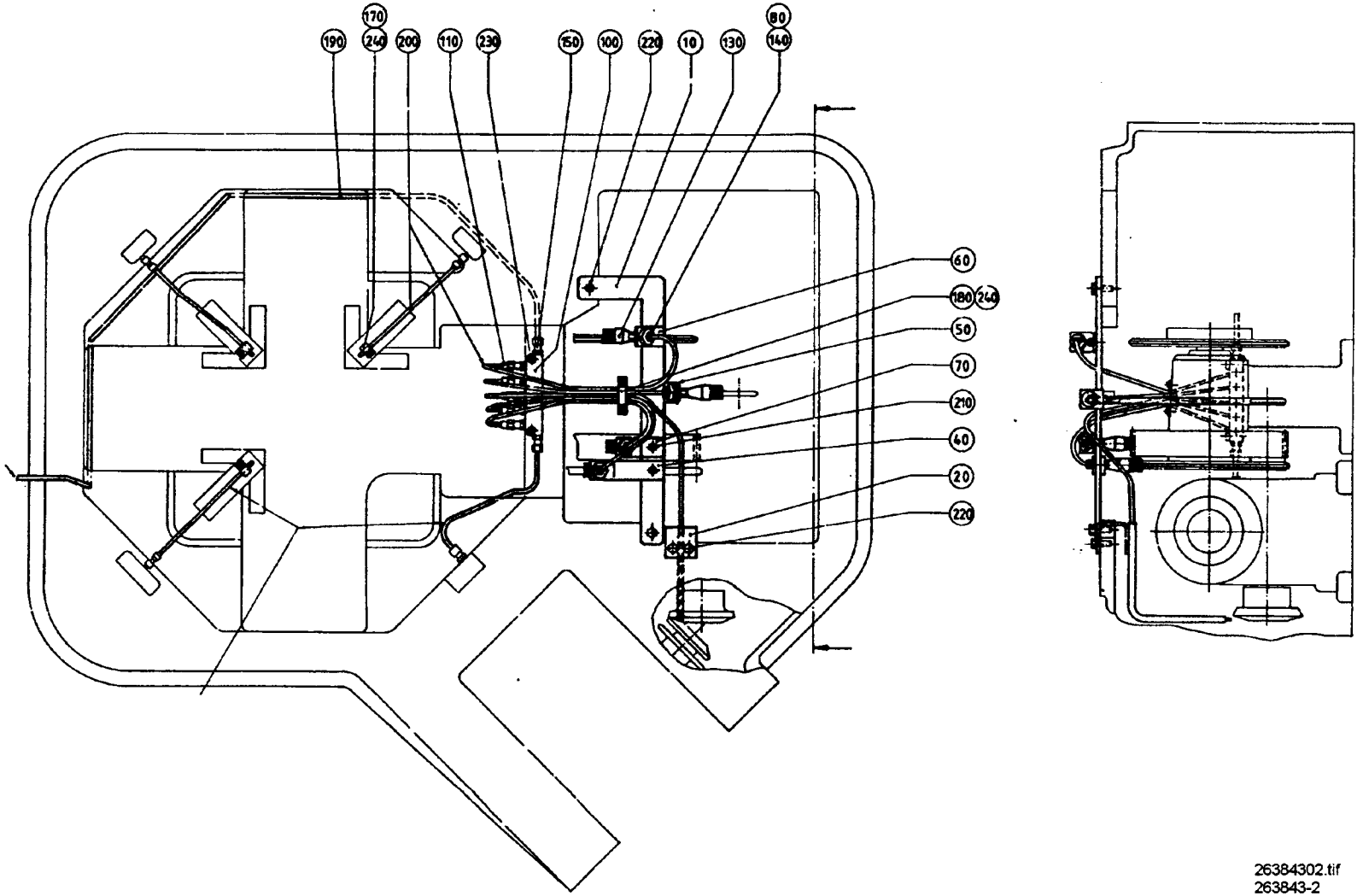

26384302.tif
263843-2
AM 8810

From	Pos	Part No	SP	UN	Qty	Description
		C- 263843-0201				**CENTRAL LUBRICATION, ASS'Y**
	010	259850	-		1	BRACKET
	020	259923	-		1	GUIDE PIPE
	040	259851	-		1	HOLDER
	050	522151	-		1	HOLDER
	060	259853	-		1	HOLDER
	070	259854	-		1	HOLDER
	080	90028-0001	R		4	CONE
	100	90032-0036	-		1	JUNCTION BLOCK
	110	90092-0064	R		5	METERING VALVE
	130	90092-0048	R		4	OIL BRUSH
	140	90134-0003	-		4	BUSHING
	150	90134-0034	-		2	NIPPLE
	170	90165-0003	-		4	CLIP
	180	90165-0014	-		1	CLIP
	190	90166-0011	-	MM	2500	HOSE
	200	90166-0103	-	M	4	HOSE
	210	312101-0325	-		4	SCREW M6S5X10FZB
	220	312101-0364	-		4	SCREW M6S6X10FZB
	230	312101-0372	-		2	SCREW M6S6X25FZB
	240	312121-0285	-		3	SLOTTED HEMCS4X6FZB

From	Pos	Part No	SP	UN	Qty	Description

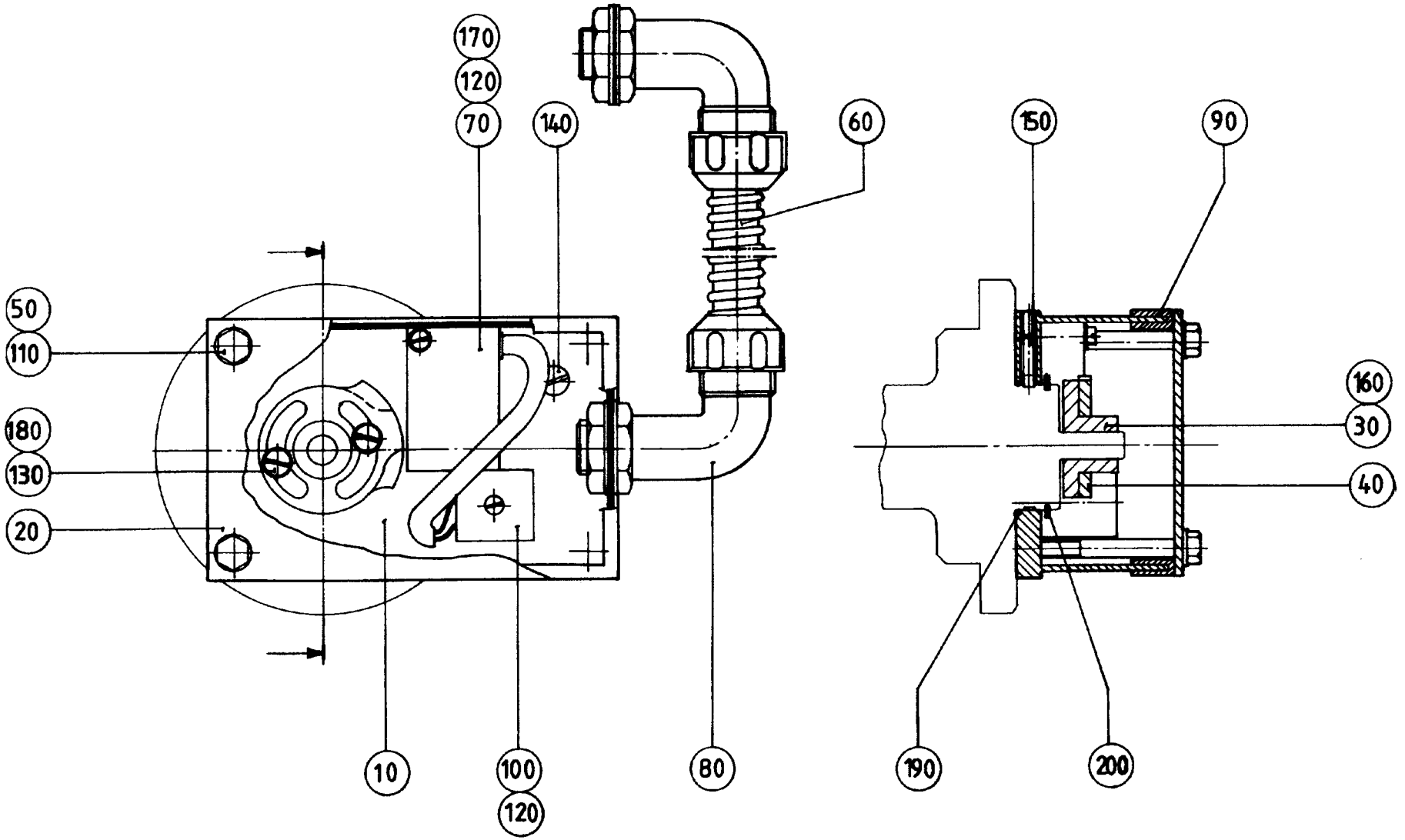

44032501.TIF
440325-1
AM 5719

From	Pos	Part No	SP	UN	Qty	Description
		C- 440325-0101				**IMPULSE TRANSMITTER, ASS'Y**
	010	11458	-		1	HOUSE
	020	11459	-		1	LID
	030	436381	-		1	CURVE
	040	436382	-		1	CURVE
	050	90005-0010	-		4	WASHER
	060	90012-0064	-		2	GLAND
	070	90044-0062	-		1	PROXIMITY SWITCH
	080	90152-0033	-	M	1	HOSE
	090	90161-0006	-	MM	500	STRIP
	100	90195-0020	-		1	TERMINAL BLOCK
	110	312101-0340	-		4	SCREW M6S5X45FZB
	120	312121-0230	-		3	SLOTTED HEMCS3X20FZB
	130	312125-0287	-		2	SLOTTED HEMCS4X8RFR
	140	312132-0323	-		1	SLOTTED HEMSCS5X8MSGFN
	150	312311-0366	-		2	STOP SCREW T6SS6X12FZB
	160	312318-0285	-		2	STOP SCREW SK6SS4X6RFR
	170	315101-0124	-		2	WASHER BRB3,2X6FZB
	180	315105-0136	-		2	WASHER BRB4,3X8RFR
	190	315202-0123	-		1	O-RING 35,1X1,6
	200	315750-0124	-		1	CIRCLIP SGA35

From	Pos	Part No	SP	UN	Qty	Description

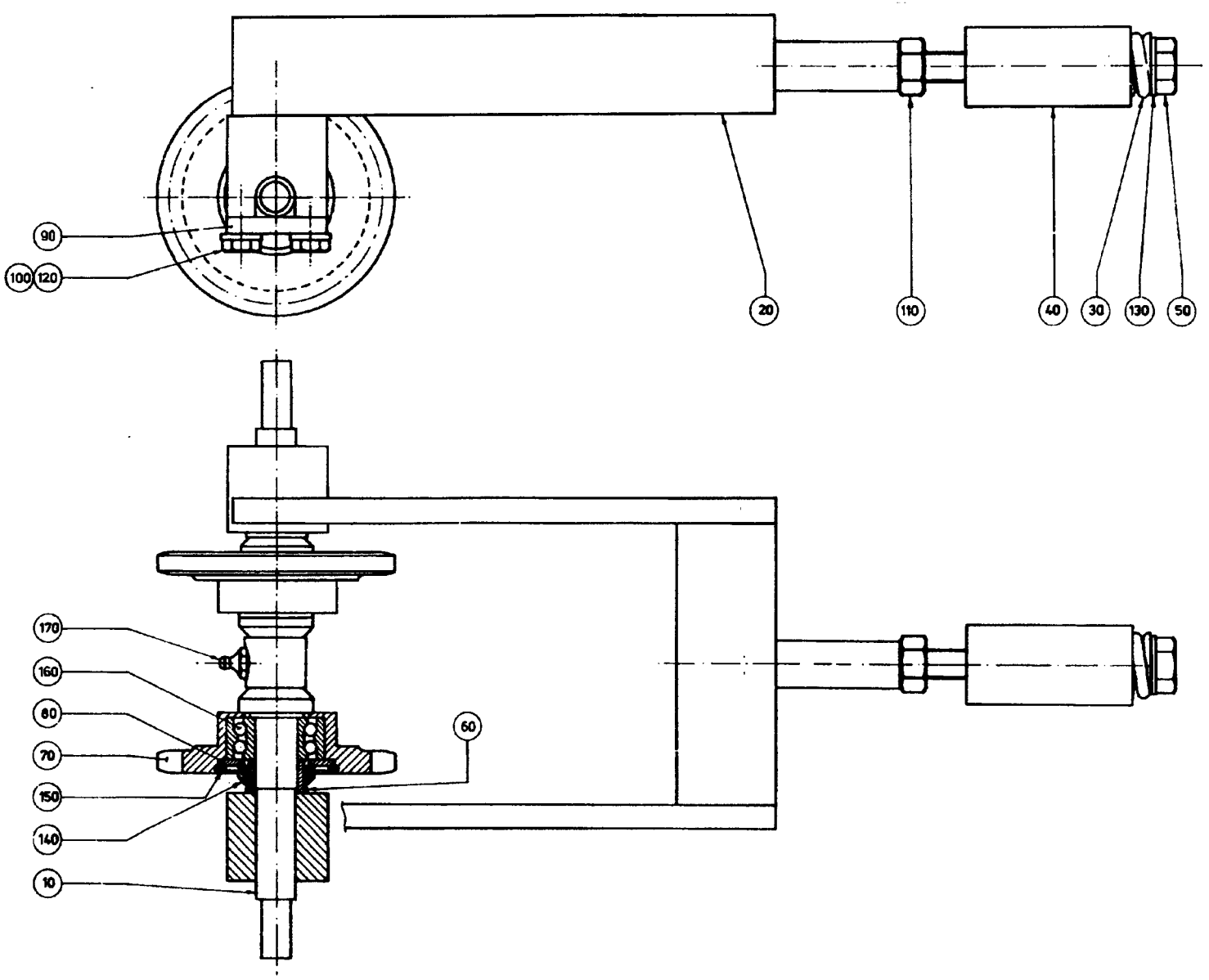

3394601.TIF
33946-1
AM 6801

From	Pos	Part No	SP	UN	Qty	Description
		C- 33946-0101				**CHAIN TENSIONER, ASS'Y**
	010	33942	-		1	SHAFT
	020	33945	-		1	TENSION ARM
	030	7352	-		1	COMPRESSION SPRING
	040	7353	-		1	COVER
	050	7354-0002	-		1	SCREW
	060	33940	-		2	SPACER RING
	070	33941	-		2	SPROCKET
	080	33943	-		2	WASHER
	090	33944	-		2	PLATE
	100	312101-0451	-		4	SCREW M6S8X20FZB
	110	312601-0322	-		1	NUT M6M12FZB
	120	315101-0165	-		4	WASHER BRB8,4X16FZB
	130	315101-0178	-		1	WASHER BRB13X24FZB
	140	315220-0148	-		4	SEAL RING V-22S
	150	315752-0130	-		2	CIRCLIP SGH47
	160	321330-0103	-		2	BALL BEARISKF3203
	170	344502-0021	-		1	NIPPLE L AHM6

From	Pos	Part No	SP	UN	Qty	Description

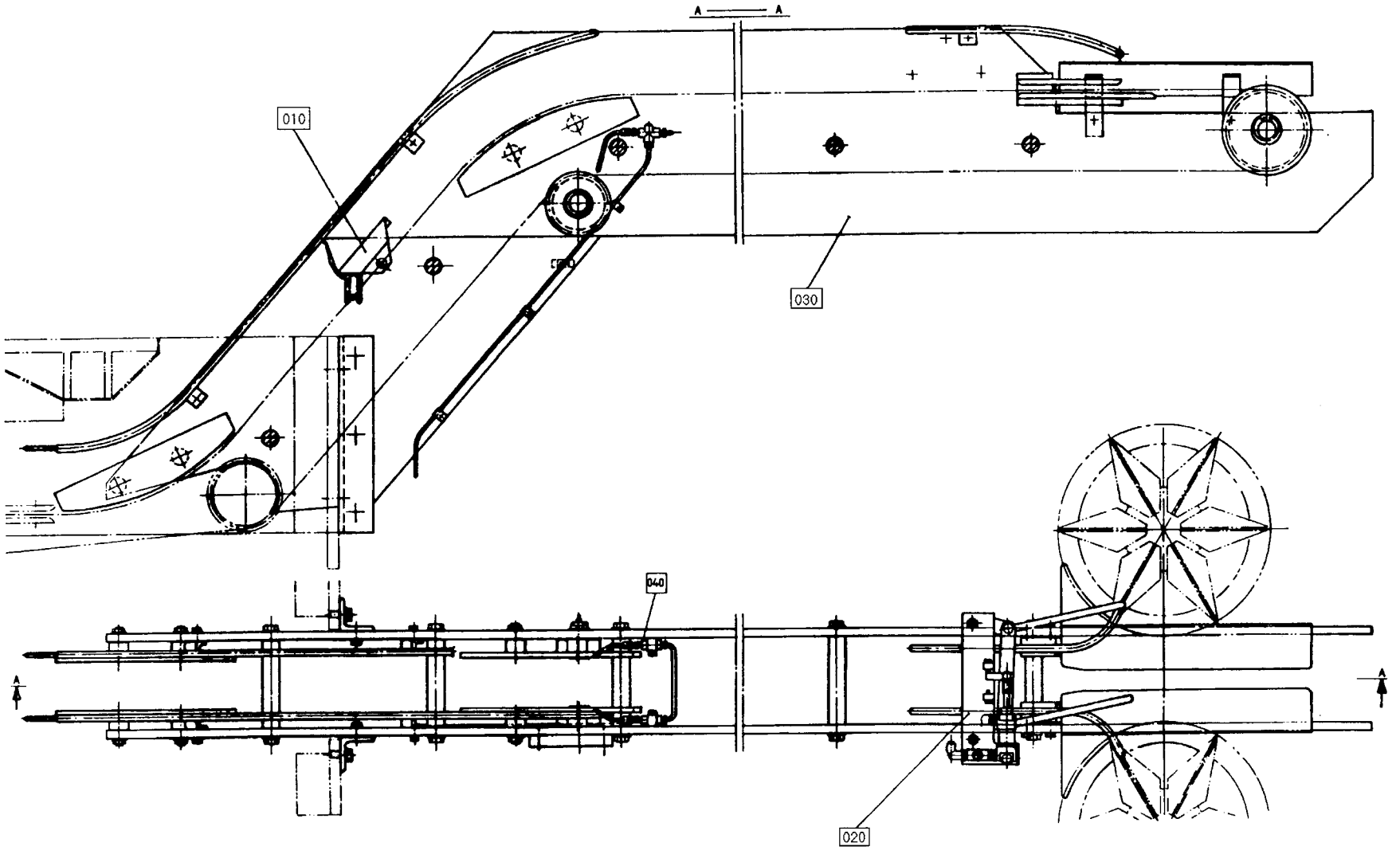

63022501.tif
630225-1/2
AM 14775

From	Pos	Part No	SP	UN	Qty	Description

From	Pos	Part No	SP	UN	Qty	Description

Pos	Group No	Description	Page
25-F100	630225-010V	Elevator	203
25-F020	236727-010V	Package Guide	205
25-F030	535876-0101	Frame Section	207
	535876-0102	Frame Section	209
25-F010	33738-010V	Chain Feed Conveyor	211
25-F040	535881-010V	Elevator	213

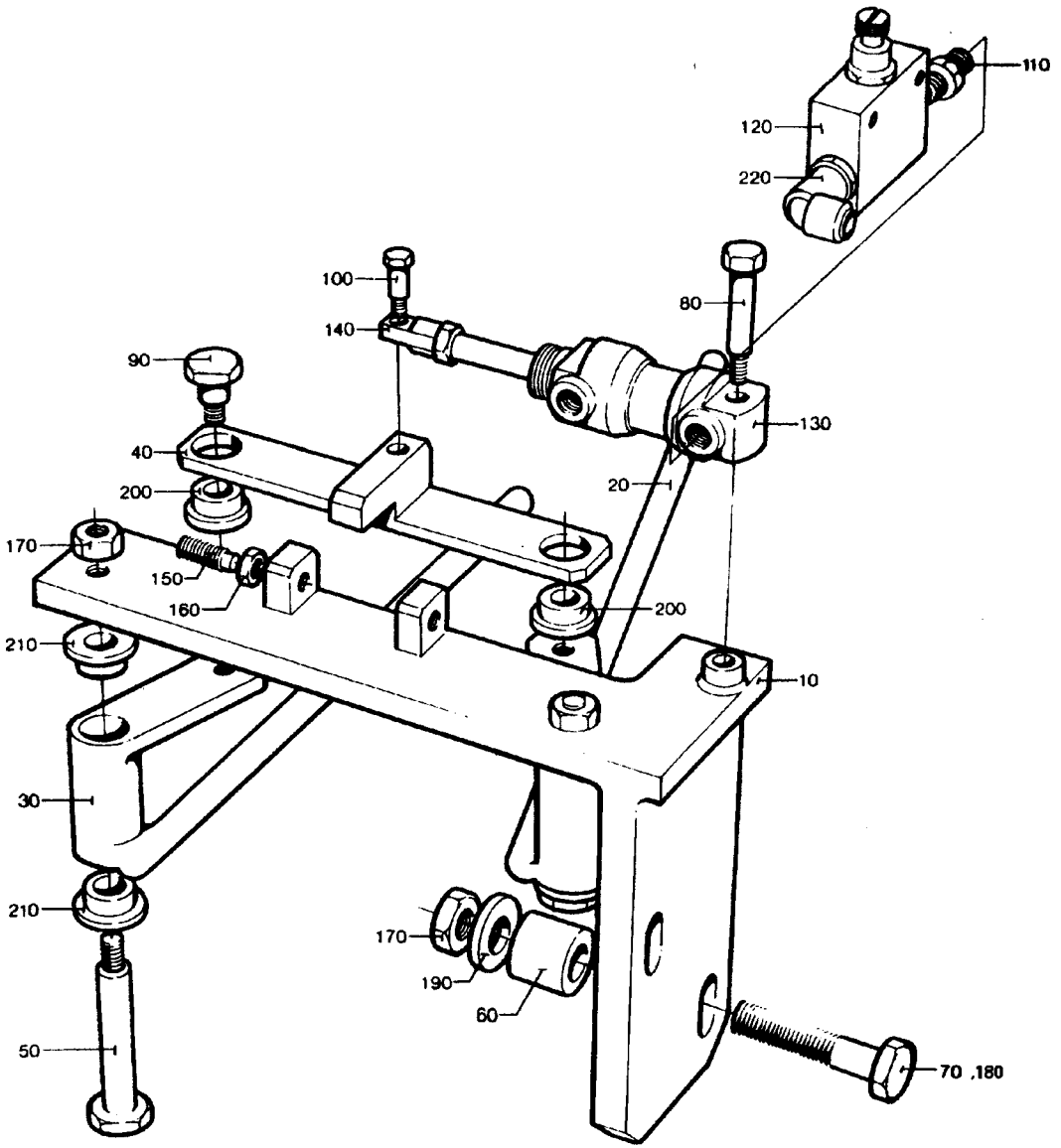

23672701.tif
236727-1
AM

From	Pos	Part No	SP	UN	Qty	Description
		C- 236727-0101				**PACKAGE GUIDE, ASS'Y**
	010	560458	-		1	BRACKET
	020	33763	-		1	LEAD ARM
	030	33764	-		1	LEAD ARM
	040	560457	-		1	LINK ARM
	050	33766	-		2	SHOULDER SCREW
	060	33771	-		2	SPACER PIPE
	070	312101-0463	-		2	SCREW M6S8X60FZB
	080	312105-0457	-		1	SCREW M6S8X35RFR
	090	33768	-		2	SHOULDER SCREW
	100	312105-0455	-		1	SCREW M6S8X30RFR
	110	90224-0005	-		2	NIPPLE
	120	90235-0028	-		2	VALVE
	130	90239-0846	-		1	CYLINDER
	140	90239-0146	-		1	BRACKET
	150	312105-0370	-		2	SCREW M6S6X20RFR
	160	312605-0316	-		2	NUT M6M6RFR
	170	312605-0318	-		4	NUT M6M8RFR
	180	315101-0165	-		2	WASHER BRB8,4X16FZB
	190	315111-0165	-		2	WASHER TBRB8,4X16FZB
	200	321110-0143	-		2	FLANGE BUS 8E7X8
	210	321110-0162	-		4	FLANGE BUS 10E7X8
	220	342732-0102	R		2	ELBOW PIPE D6-R1/8"

From	Pos	Part No	SP	UN	Qty	Description

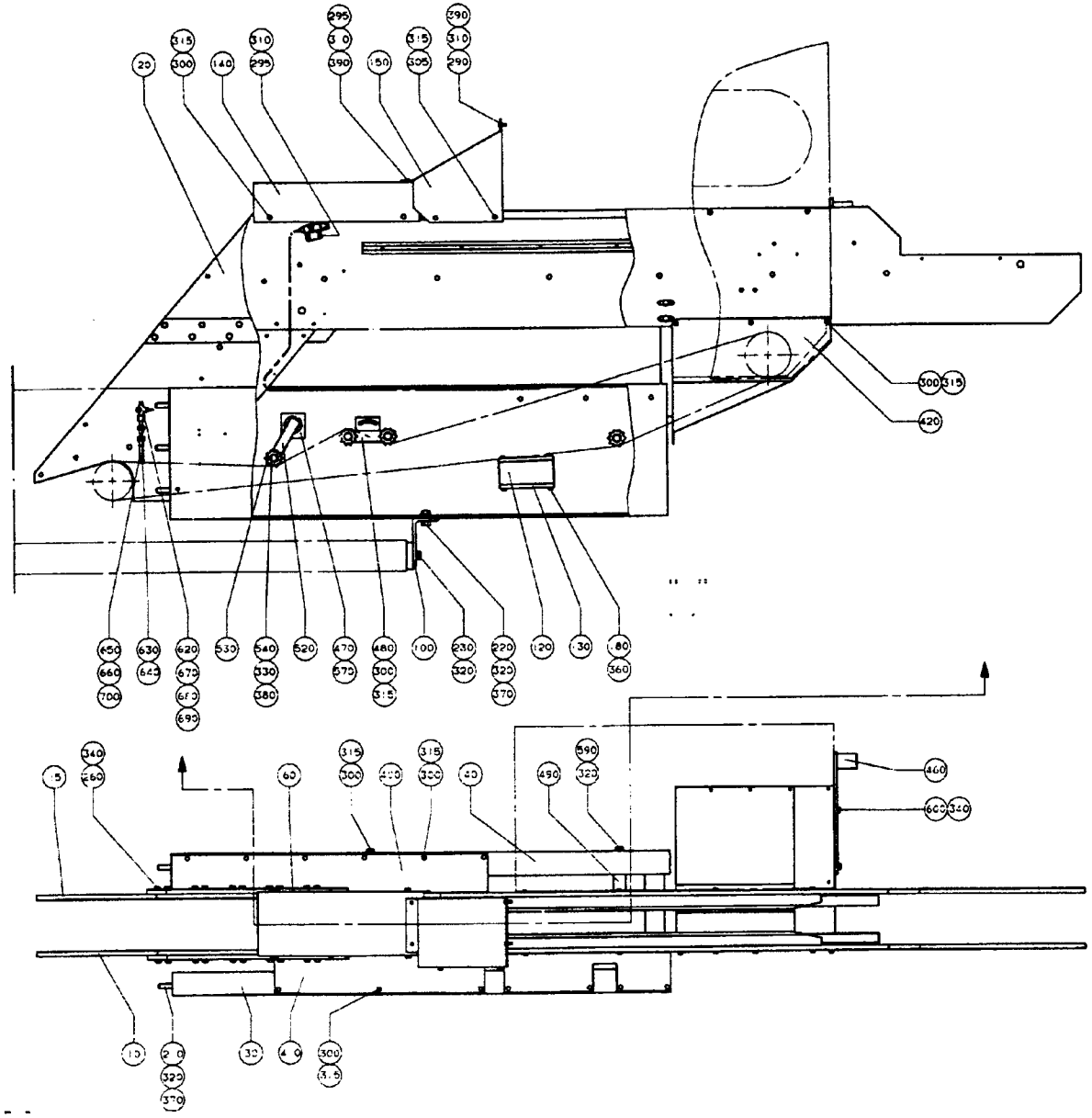

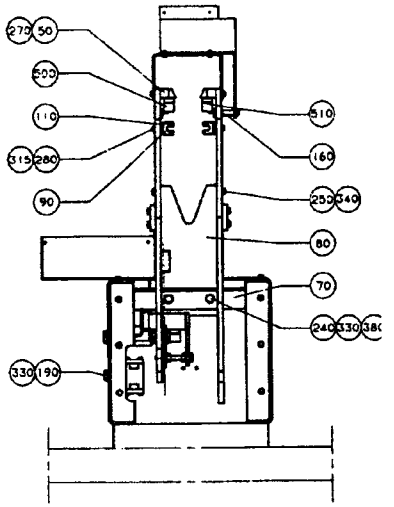

53587601.tif
535876-1
AM 15225

From	Pos	Part No	SP	UN	Qty	Description
Machine with packer						
		C- 535876-0101				**FRAME SECTION, ASS'Y**
	460	560455	-		1	BRACKET
	600	312101-0451	-		2	SCREW M6S8X20FZB
Common Parts						
	010	536080	-		2	SIDE PLATE
	015	560454	-		1	SIDE PLATE
	020	535880	-		2	SIDE PLATE
	030	535840	-		1	SIDE PIECE
	040	535841	-		1	SIDE PIECE
	050	535874	-		2	RIM
	060	535842	-		2	JUNCTION STRIP
	070	535865	-		1	FASTENING IRON
	080	535866	-		1	PLATE
	090	535878	-		2	HEAD RAIL
	100	535879	-		1	FASTENING BRACKET
	110	535856	-		14	WASHER
	120	535835	-		1	CHAIN GUIDE
	130	535836	-		2	LID
	140	535818	-		1	COVER
	150	535819	-		1	COVER
	160	535822	-		2	SPACER
	180	312105-0331	-		8	SCREW M6S5X20 A4 80
	190	312105-0499	-		2	SCREW M6S10X40RFR
	200	312105-0544	-		6	SCREW M6S12X60RFR
	210	312105-0538	-		6	SCREW M6S12X35RFR
	220	312105-0536	-		2	SCREW M6S12X30RFR
	230	312105-0534	-		2	SCREW M6S12X25RFR
	240	312105-0501	-		2	SCREW M6S10X50RFR
	250	312105-0455	-		4	SCREW M6S8X30RFR
	260	312105-0453	-		20	SCREW M6S8X25RFR
	270	312105-0374	-		4	SCREW M6S6X30RFR
	280	312105-0370	-		14	SCREW M6S6X20RFR
	290	312115-0293	-		2	SCREW 4 X 16 A4 80
	295	312115-0291	-		2	SCREW MC6S4X12 A4 80
	300	312105-0368	-		39	SCREW M6S6X16RFR
	305	312105-0379	-		2	SCREW M6S6X45RFR
	310	315105-0136	-		8	WASHER BRB4,3X8RFR
	315	315105-0153	-		62	WASHER BRB6,4X12RFR
	320	315105-0178	-		18	WASHER BRB13X24RFR
	330	315105-0173	-		4	WASHER BRB10,5X22RFR
	340	315105-0165	-		24	WASHER BRB8,4X16RFR
	350	315105-0153	-		26	WASHER BRB6,4X12RFR
	360	315105-0146	-		8	WASHER BRB5,3X10RFR
	370	312605-0322	-		8	NUT M6M12RFR
	380	312605-0320	-		2	NUT M6M10RFR
	390	312605-0312	-		4	NUT M6M4RFR
	400	552823	-		1	PROTECTION
	410	552822	-		1	PROTECTION
	420	552824	-		1	CHAIN GUARD
	470	539932	-		1	BRACKET
	480	539934	-		1	BRACKET
	490	546667	-		1	BRACKET
	500	90232-0059	-		1	PHOTOCELL
	510	90232-0060	-		1	PHOTOCELL
	520	90344-0042	-		1	BELT STRETCHER
	530	90344-0054	-		4	SPROCKET
	540	312105-0503	-		4	SCREW M6S10X60RFR
	570	312101-0367	-		2	SCREW M6S6X14FZB
	580	312101-0491	-		1	SCREW M6S10X20FZB
	590	312101-0532	-		1	SCREW M6S12X20FZB
	610	312101-0289	-		4	SCREW M6S4X10FZB
	620	90032-0027	-		1	BRANSCH
	630	90092-0067	-		1	METERING VALVE
	640	90136-0002	-		1	PLUG
	650	90134-0003	-		1	BUSHING
	660	90151-0001	-	MM	200	BRASS PIPE
	670	90166-0051	-	M	2	HOSE
	680	90165-0002	-		4	CLIP
	690	312125-0287	-		4	SLOTTED HEMCS4X8RFR
	700	90092-0080	-		1	OIL BRUSH F.4 MM TUBE

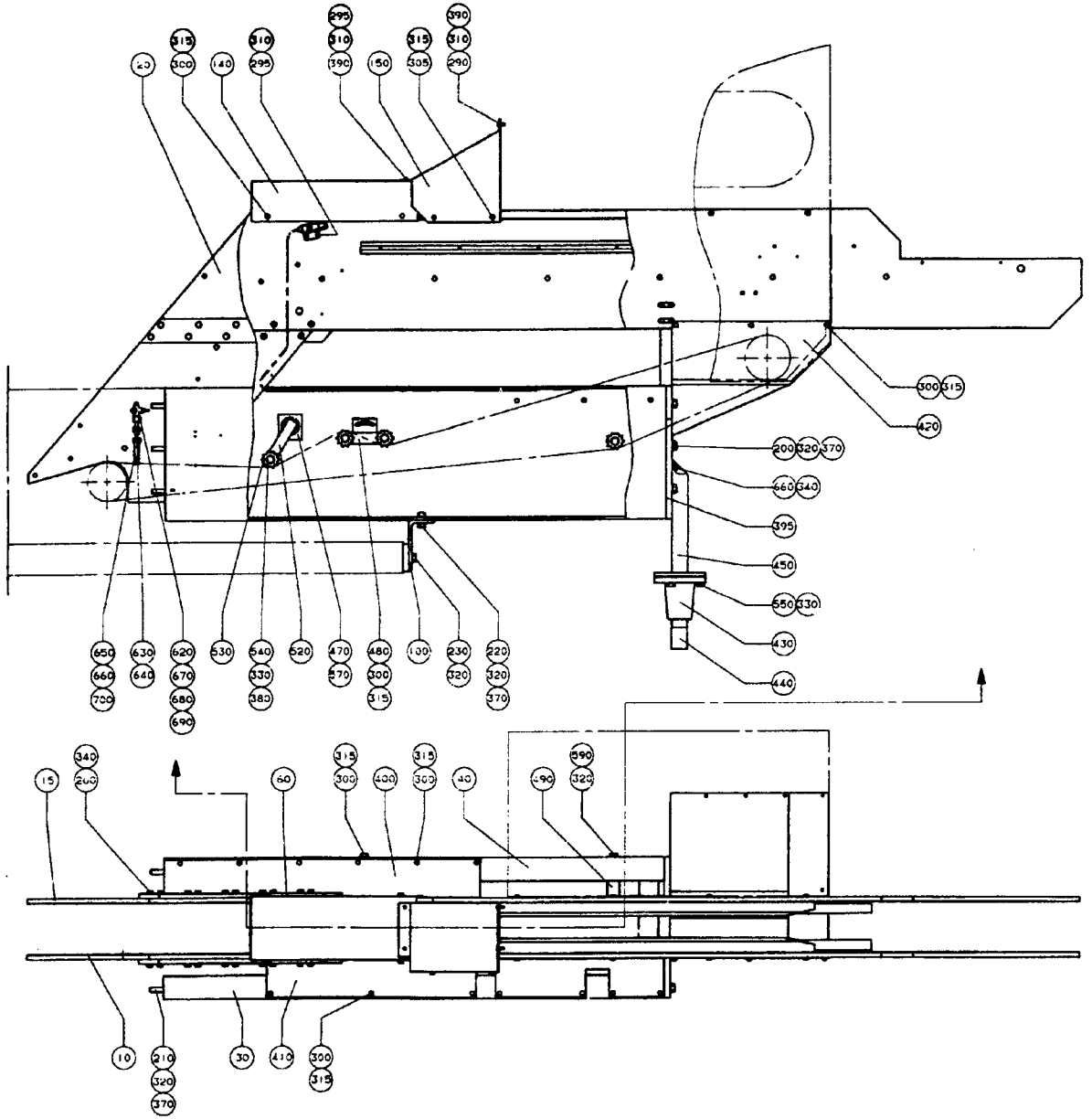

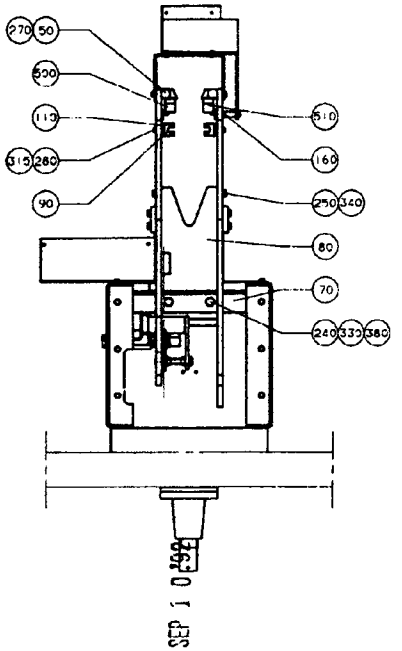

53587602.tif
535876-2
AM 14775

From	Pos	Part No	SP	UN	Qty	Description
Machine without packer						
		C- 535876-0102				**FRAME SECTION, ASS'Y**
	395	546585	-		1	PLATE
	430	3271	-		1	BRACKET
	440	3318	-		1	LEG
	450	546668	-		1	FOOT
	550	312101-0495	-		3	SCREW M6S10X30FZB
	560	312101-0451	-		2	SCREW M6S8X20FZB
Common Parts						
	010	536080	-		2	SIDE PLATE
	015	560454	-		1	SIDE PLATE
	020	535880	-		2	SIDE PLATE
	030	535840	-		1	SIDE PIECE
	040	535841	-		1	SIDE PIECE
	050	535874	-		2	RIM
	060	535842	-		2	JUNCTION STRIP
	070	535865	-		1	FASTENING IRON
	080	535866	-		1	PLATE
	090	535878	-		2	HEAD RAIL
	100	535879	-		1	FASTENING BRACKET
	110	535856	-		14	WASHER
	120	535835	-		1	CHAIN GUIDE
	130	535836	-		2	LID
	140	535818	-		1	COVER
	150	535819	-		1	COVER
	160	535822	-		2	SPACER
	180	312105-0331	-		8	SCREW M6S5X20 A4 80
	190	312105-0499	-		2	SCREW M6S10X40RFR
	200	312105-0544	-		6	SCREW M6S12X60RFR
	210	312105-0538	-		6	SCREW M6S12X35RFR
	220	312105-0536	-		2	SCREW M6S12X30RFR
	230	312105-0534	-		2	SCREW M6S12X25RFR
	240	312105-0501	-		2	SCREW M6S10X50RFR
	250	312105-0455	-		4	SCREW M6S8X30RFR
	260	312105-0453	-		20	SCREW M6S8X25RFR
	270	312105-0374	-		4	SCREW M6S6X30RFR
	280	312105-0370	-		14	SCREW M6S6X20RFR
	290	312115-0293	-		2	SCREW 4 X 16 A4 80
	295	312115-0291	-		2	SCREW MC6S4X12 A4 80
	300	312105-0368	-		39	SCREW M6S6X16RFR
	305	312105-0379	-		2	SCREW M6S6X45RFR
	310	315105-0136	-		8	WASHER BRB4,3X8RFR
	315	315105-0153	-		62	WASHER BRB6,4X12RFR
	320	315105-0178	-		18	WASHER BRB13X24RFR
	330	315105-0173	-		4	WASHER BRB10,5X22RFR
	340	315105-0165	-		24	WASHER BRB8,4X16RFR
	350	315105-0153	-		26	WASHER BRB6,4X12RFR
	360	315105-0146	-		8	WASHER BRB5,3X10RFR
	370	312605-0322	-		8	NUT M6M12RFR
	380	312605-0320	-		2	NUT M6M10RFR
	390	312605-0312	-		4	NUT M6M4RFR
	400	552823	-		1	PROTECTION
	410	552822	-		1	PROTECTION
	420	552824	-		1	CHAIN GUARD
	470	539932	-		1	BRACKET
	480	539934	-		1	BRACKET
	490	546667	-		1	BRACKET
	500	90232-0059	-		1	PHOTOCELL
	510	90232-0060	-		1	PHOTOCELL
	520	90344-0042	-		1	BELT STRETCHER
	530	90344-0054	-		4	SPROCKET
	540	312105-0503	-		4	SCREW M6S10X60RFR
	570	312101-0367	-		2	SCREW M6S6X14FZB
	580	312101-0491	-		1	SCREW M6S10X20FZB
	590	312101-0532	-		1	SCREW M6S12X20FZB
	610	312101-0289	-		4	SCREW M6S4X10FZB
	620	90032-0027	-		1	BRANSCH
	630	90092-0067	-		1	METERING VALVE
	640	90136-0002	-		1	PLUG
	650	90134-0003	-		1	BUSHING
	660	90151-0001	-	MM	200	BRASS PIPE
	670	90166-0051	-	M	2	HOSE
	680	90165-0002	-		4	CLIP
	690	312125-0287	-		4	SLOTTED HEMCS4X8RFR
	700	90092-0080	-		1	OIL BRUSH F.4 MM TUBE

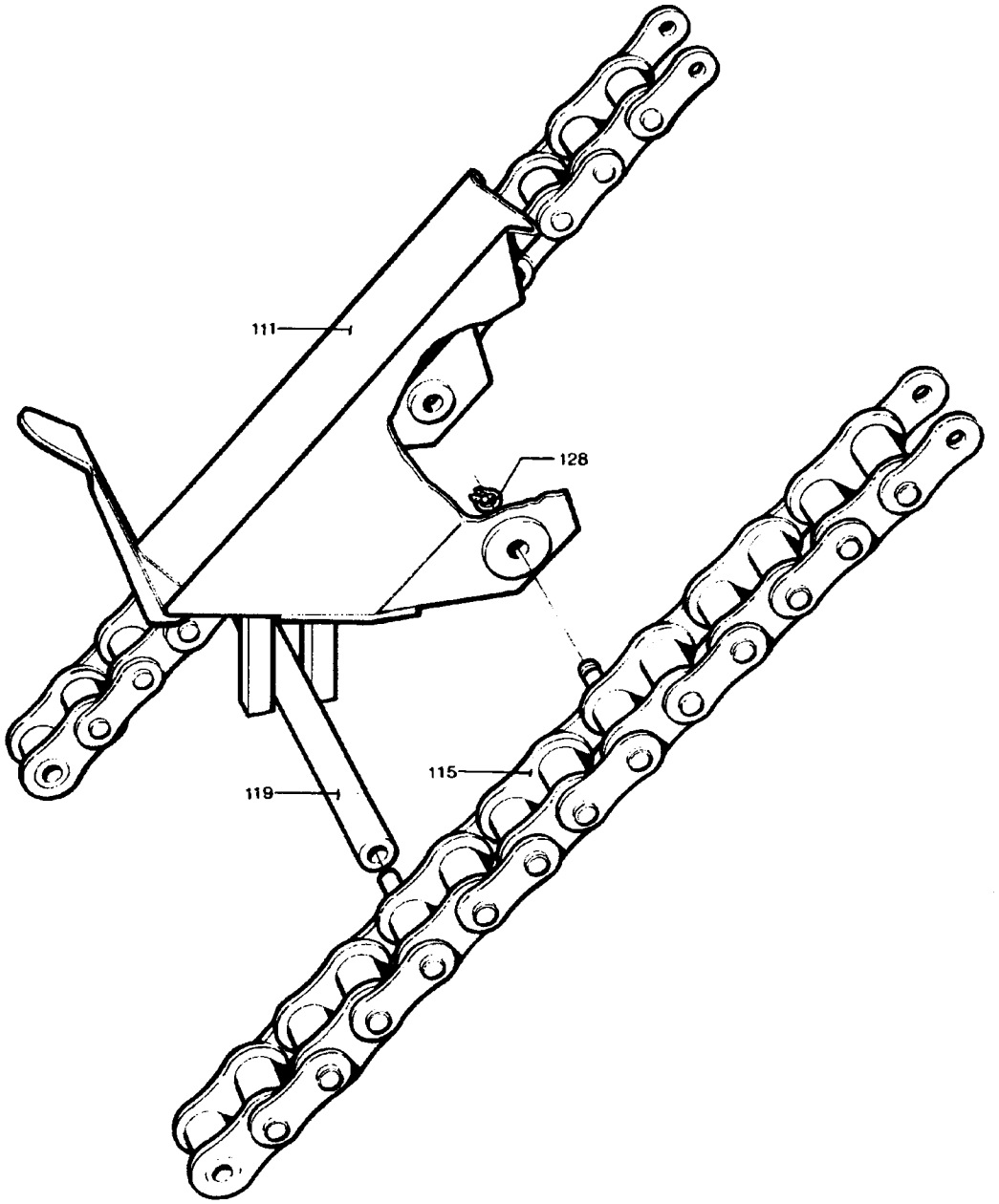

3373801.tif
33738-1/2
AM 10504

From	Pos	Part No	SP	UN Qty	Description
Machine without elevator					
		C- 33738-0101			**CHAIN FEED CONVEYOR, ASS'Y**
	111	33739	-	27	SCOOP
	115	33740	-	2	CHAIN
	119	33741	-	27	SPACER ROD
	128	315750-0101	R	54	CIRCLIP SGA4
TC, TCA/150, 300 with elevator E37					
		C- 33738-0102			**CHAIN FEED CONVEYOR, ASS'Y**
	111	33739	-	43	SCOOP
	115	542962-0001	-	2	CHAIN
	119	33741	-	43	SPACER ROD
	128	315750-0101	R	86	CIRCLIP SGA4
TC, TCA/500 with elevator E37					
		C- 33738-0103			**CHAIN FEED CONVEYOR, ASS'Y**
	111	539302	-	49	SCOOP
	115	542962-0002	-	2	CHAIN
	119	33741	-	49	SPACER ROD
	128	315750-0101	R	98	CIRCLIP SGA4

From	Pos	Part No	SP	UN Qty	Description

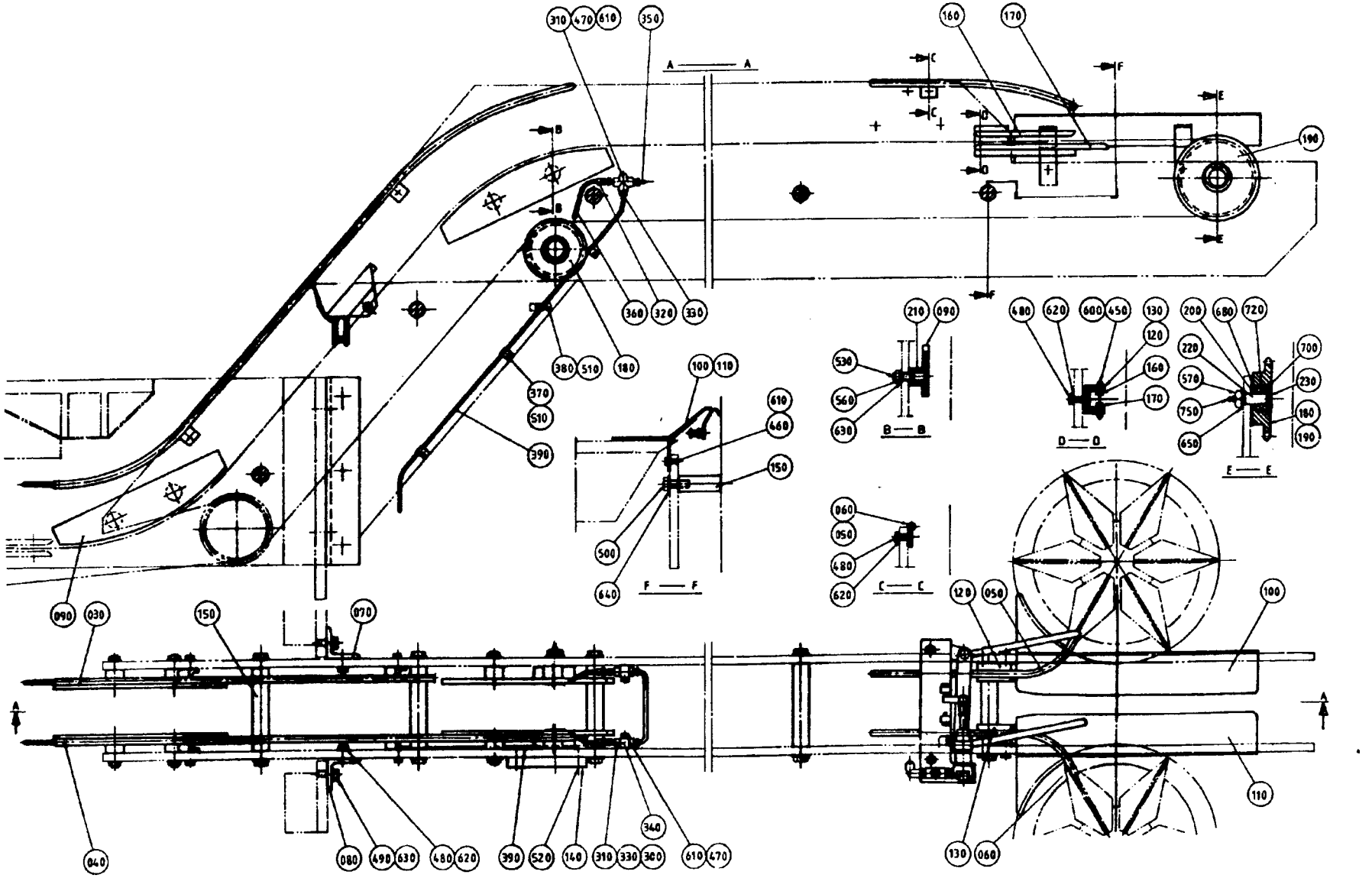

53588101.tif
535881-1
AM 14775

From	Pos	Part No	SP	UN	Qty	Description
TC, TCA/150						
		C- 535881-0101				**ELEVATOR, ASS'Y**
	050	535885	-		1	RAIL RIGHT, OUTER
	060	535886	-		1	RAIL LEFT, OUTER
	100	33750	-		1	SLIDE PLATE
	110	33749	-		1	SLIDE PLATE
	150	535882	-		8	SPACER ROD
	460	312105-0368	-		4	SCREW M6S6X16RFR
	480	312105-0451	-		18	SCREW M6S8X20RFR
	500	312105-0536	-		16	SCREW M6S12X30RFR
TC, TCA/500						
		C- 535881-0102				**ELEVATOR, ASS'Y**
	050	539281	-		1	HAND RAIL
	060	539282	-		1	HAND RAIL
	150	535882	-		6	SPACER ROD
	480	312105-0451	-		14	SCREW M6S8X20RFR
	500	312105-0536	-		14	SCREW M6S12X30RFR
Common Parts						
	030	535883	-		1	RAIL RIGHT , INNER
	040	535884	-		1	RAIL LEFT , INNER
	070	33748	-		1	ANGLE BRACKET
	080	33747	-		1	ANGLE BRACKET
	090	33746	-		1	SLIDE RAIL
	120	G- 33752	-		1	BRACKET, RIGHT
	130	G- 33751	-		1	BRACKET, LEFT
	140	294101	-		1	SPACER
	160	33753	-		2	STEERING RAIL
	170	33754	-		2	STEERING RAIL
	180	33760-0001	-		2	SPROCKET
	190	33760-0002	-		2	SPROCKET
	200	33758	-		4	SPACER RING
	210	33755	-		8	SPACER PIPE
	220	33759	-		4	SCREW
	230	33757	-		4	LID

From	Pos	Part No	SP	UN	Qty	Description
	300	90028-0001	S		3	CONE
	310	90032-0027	-		2	BRANSCH
	320	90092-0067	S		2	METERING VALVE
	330	90134-0003	S		3	BUSHING
	340	90136-0002	-		1	PLUG
	350	90151-0001	-	MM	160	BRASS PIPE
	360	90151-0001	-	MM	240	BRASS PIPE
	370	90165-0002	-		3	CLIP
	380	90165-0005	-		2	CLIP
	390	90166-0051	-	M	2	HOSE
	450	312105-0293	-		8	SCREW M6S4X16 A4 80
	470	312105-0370	-		2	SCREW M6S6X20RFR
	490	312105-0493	-		4	SCREW M6S10X25RFR
	510	312125-0287	-		4	SLOTTED HEMCS4X8RFR
	520	312145-0333	-		2	SLOTTED HEMFS5X25RFR
	530	312155-0501	-		8	SCREW MF6S10X50RFR
	560	312605-0320	-		8	NUT M6M10RFR
	570	312605-0324	-		4	NUT M6M16RFR
	600	315105-0136	-		8	WASHER BRB4,3X8RFR
	610	315105-0153	-		6	WASHER BRB6,4X12RFR
	620	315105-0165	-		18	WASHER BRB8,4X16RFR
	630	315105-0173	-		12	WASHER BRB10,5X22RFR
	640	315105-0178	-		16	WASHER BRB13X24RFR
	650	315105-0186	-		4	WASHER BRB17X30RFR
	680	315221-0152	-		4	SEAL RING CB24X35X7
	700	315753-0127	-		4	CIRCLIP GH 40 RFR
	720	321330-0103	-		4	BALL BEARISKF3203
	750	344502-0026	-		4	NIPPLE L AHKR1/8"
	760	90092-0080	-		2	OIL BRUSH F.4 MM TUBE

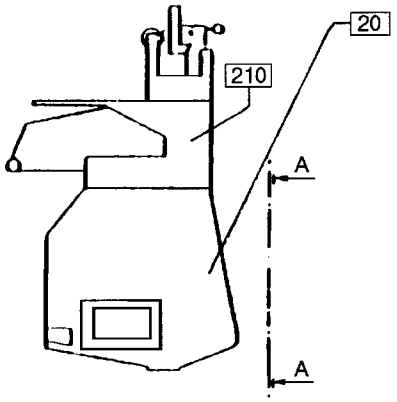

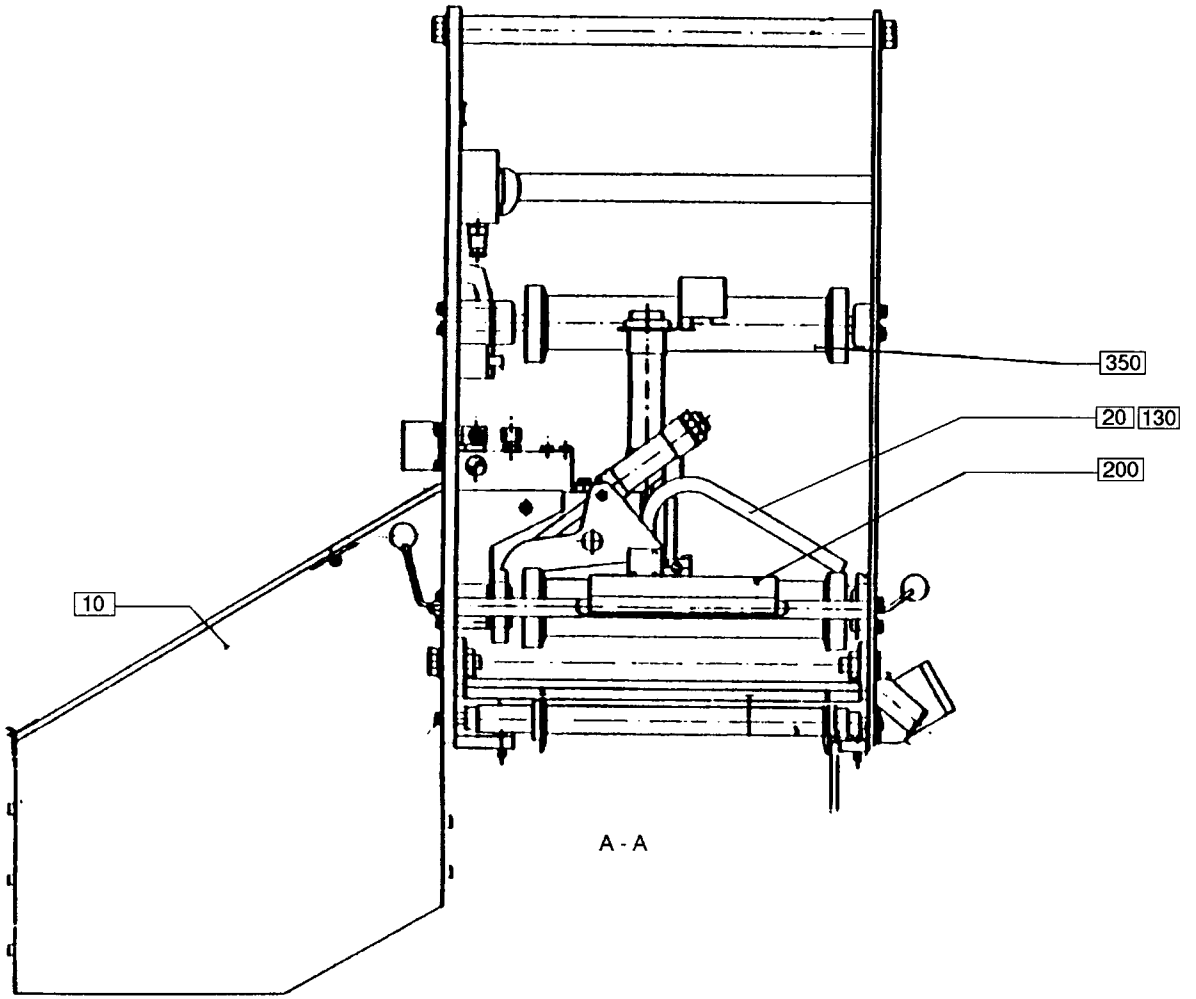

A - A

61030801.TIF
610308
AM

Pos	Group No	Description	Page
.8-F020	610308-150V	Hole punch	217
.8-F020	19519-030V	Opening arrangement	219
.	263886-030V	Sealing Device	221
.	19573-020V	Connection box	223
.	19521-020V	Carriage	225
.	19522-010V	Counter roller	227
.	19523-010V	Free-wheel coupling	229
.	20991-010V	Steering	231
.	19525-070V	Punch unit	233
.	486705-010V	Feeder	235
.	19526-030V	Frame	237
.8-F350	239793-010V	Bending Roller	239
.8-F000	265768-030V	Hole Punch, relay machines	241
	265768-030V	Hole Punch, relay machines	243
.	537570-010V	Air distribution unit	245
.8-F010	13852-020V	Magazine	247
.8-F200	20036-010V	Brake	249
.8-F210	251344-020V	Strip Applicator	251
.	37459-010V	Holder	253
.	37460-010V	Dating unit	255
.	37461-010V	Printing wheel	257
.	33608-010V	Screw	259
.	37485-010V	Holder	261
.	450343-010V	Paper guide	263
.	293483-010V	Fastening plate	265
.	20387-010V	Bobbin	267
.	20389-010V	Brake	269
.	293484-010V	Fastening plate	271
.	20387-010V	Bobbin	273
.	20389-010V	Brake	275
.	294112-020V	Element group	277
.8-F370	267052-030V	Start-up Kit	279

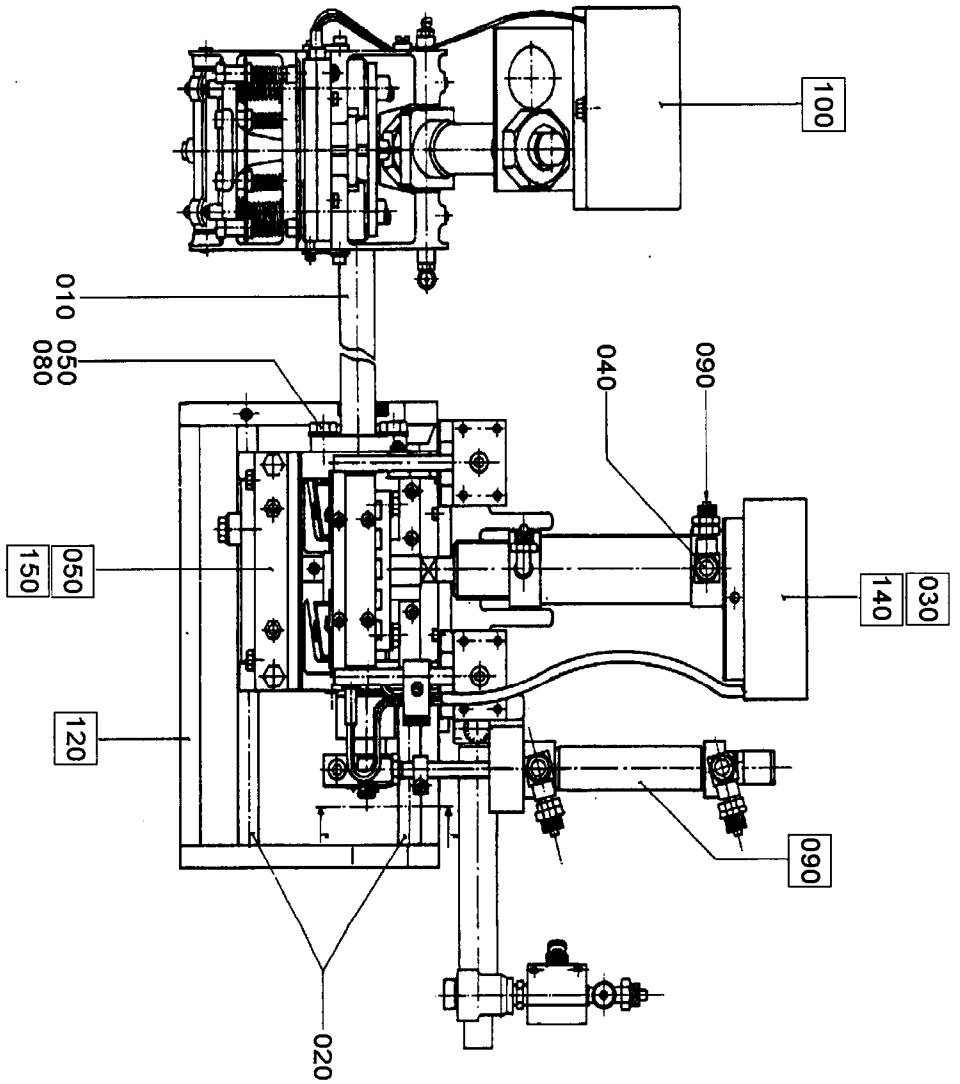

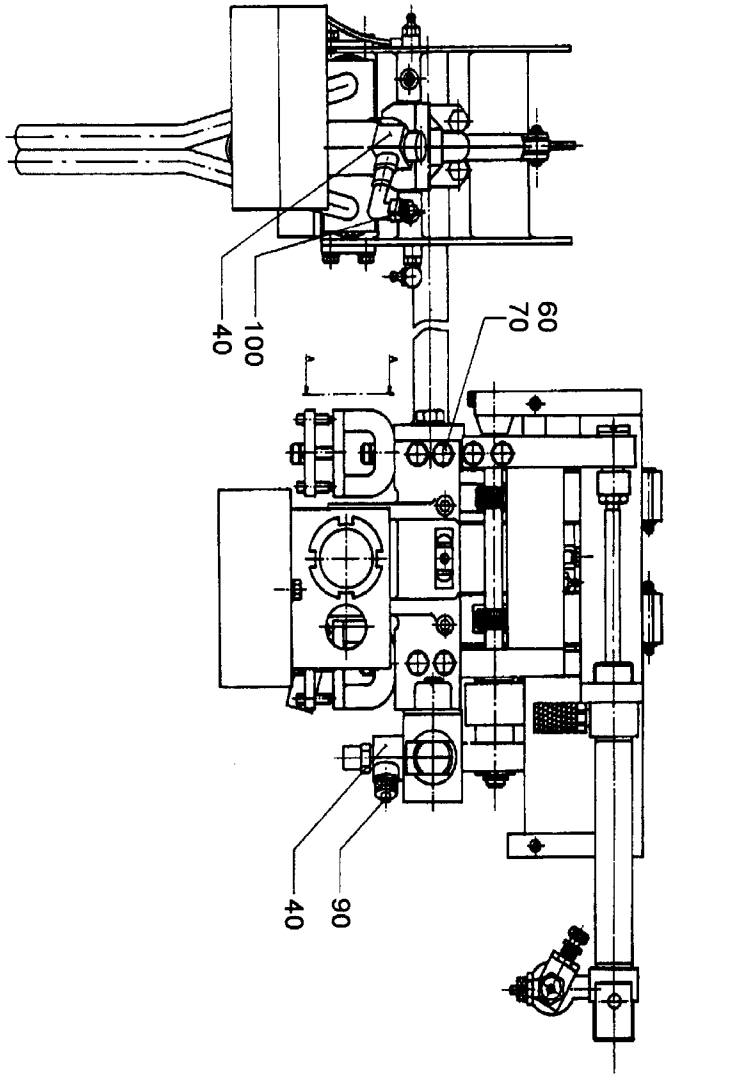

1951902.tif
19519-2/3
AM 8312

From	Pos	Part No	SP	UN	Qty	Description
Opening arrangement all except TCA/25						
	F000	**C- 019519-0301**				**Opening arrangement all except TCA/25, Assy'**
	F030	**C- 263886-030V**	**-**		**1**	**SEALING DEVICE**
		C- 019573-0201				**. CONNECTION BOX**
	F050	**C- 019521-0201**	**-**		**1**	**CARRIAGE**
		C- 019522-0101				**. COUNTER ROLLER**
		C- 019523-0101				**. FREE-WHEEL COUPLING**
		C- 020991-0101				**. STEERING**
	F100	**C- 019525-070V**	**-**		**1**	**PUNCH UNIT**
	010	19560	-		1	PIPE
Opening arrangement TCA/25						
	F000	**C- 019519-0302**				**Opening arrangement TCA/25, Assy'**
	F140	**C- 263886-030V**	**-**		**1**	**SEALING DEVICE**
		C- 019573-0201				**. CONNECTION BOX**
	F150	**C- 019521-0202**	**-**		**1**	**CARRIAGE**
		C- 019522-0102				**. COUNTER ROLLER**
		C- 019523-0102				**. FREE-WHEEL COUPLING**
		C- 020991-0102				**. STEERING**
	F190	**C- 265823-020V**	**-**		**1**	**PUNCH UNIT TSA/25**
	010	36677	-		1	MOUNTING BEAM
Common Parts						
	F090	**C- 486705-010V**	**-**		**1**	**FEEDERALL**
	F120	**C- 019526-030V**	**-**		**1**	**FRAME**
	020	11436	-		2	SHAFT
	040	90235-0241	-		3	VALVE
	050	312101-0453	-		2	SCREW M6S8X25FZB
	060	312105-0374	-		4	SCREW M6S6X30RFR
	070	315105-0153	-		4	WASHER BRB6,4X12RFR
	080	315105-0165	-		2	WASHER BRB8,4X16RFR
	090	342920-0113	-		2	PIPE COUPL6/4-1/8
	100	342950-0113	-		1	ELBOW FITT6/4-1/8

From	Pos	Part No	SP	UN	Qty	Description

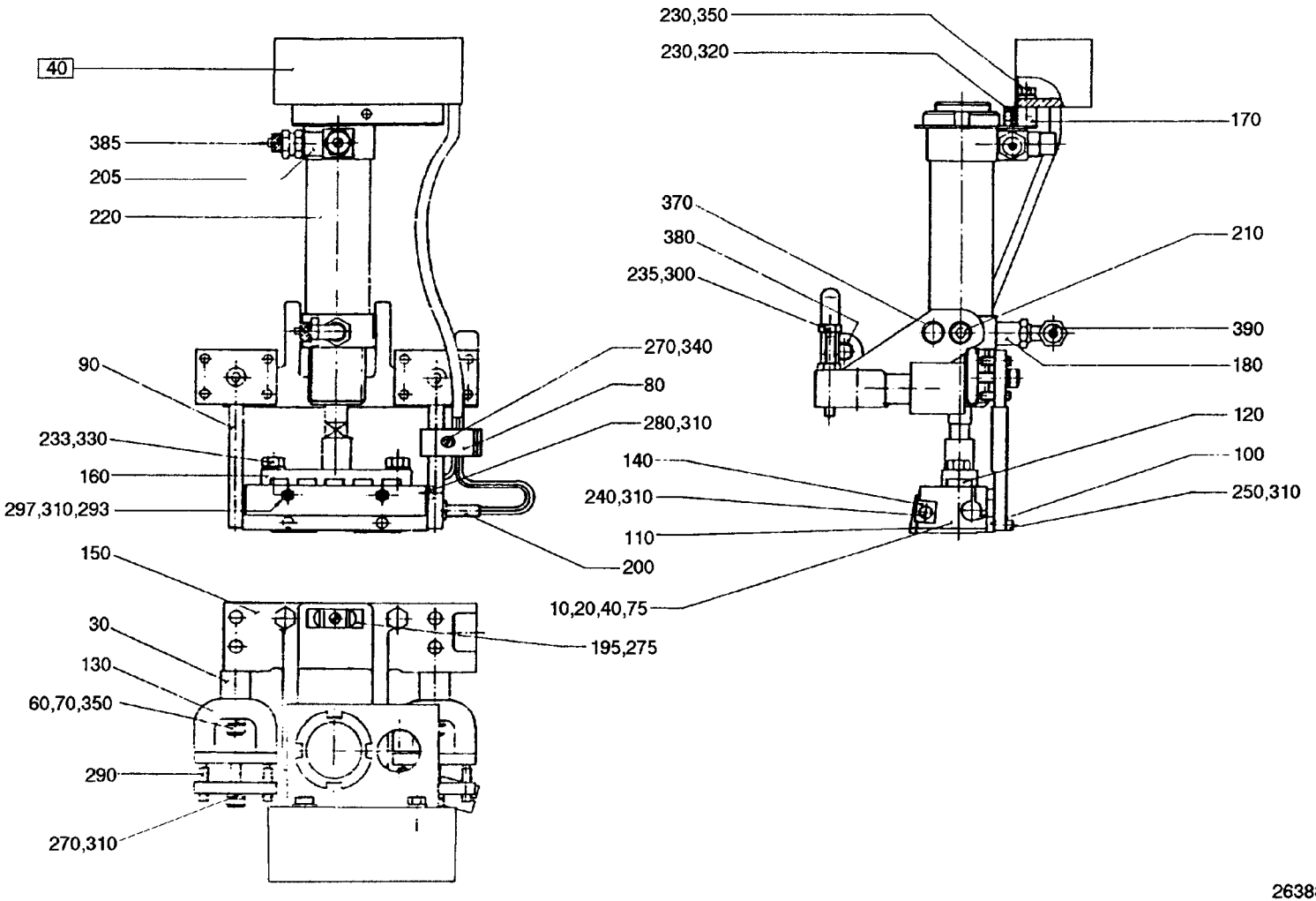

26388602.TIF
263886-2
AM

From	Pos	Part No	SP	UN	Qty	Description
Wax coated paper						
		C- 263886-0301				**SEALING DEVICE, ASS'Y**
	010	19122	-		1	HEATING BLOCK
	060	312111-0331	-		2	SCREW MC6S5X20FZB
PE coated paper						
		C- 263886-0302				**SEALING DEVICE, ASS'Y**
	060	312111-0331	-		2	SCREW MC6S5X20FZB
	075	536965	-		1	HEATING BLOCK
Uncoated paper TCA/25						
		C- 263886-0303				**SEALING DEVICE, ASS'Y**
	020	36652	-		1	HEATING BLOCK
	030	532250	-		2	SPACER
	070	312111-0339	-		2	SCREW MC6S5X40FZB
PE coated paper TCA/25						
		C- 263886-0304				**SEALING DEVICE, ASS'Y**
	030	532250	-		2	SPACER
	040	535666	-		1	HEATING BLOCK
	070	312111-0339	-		2	SCREW MC6S5X40FZB
Common Parts						
	F040	**C- 019573-0201**	**-**		**1**	**CONNECTION BOX**
	080	19120	-		1	CLAMPING PIECE
	090	19124	-		1	MOUNTING SHEET (METAL)
	100	19127	-		1	INSULATION
	110	19128	-		2	KNIFE
	120	19129	-		1	INSULATION
	130	19530	-		2	MAGNET
	140	19536	-		2	CLAMPING PART
	150	486703	-		1	BRACKET
	160	486704	-		1	BRACKET
	170	486710	-		1	BRACKET
	180	90030-0210	-		1	NIPPLE
	195	90165-0067	-		1	TOOL HOLDER
	200	90206-0073	S		1	HEATING ELEMENT
	205	90235-0241	-		1	VALVE
	210	90239-0505	-		2	BRACKET
	220	90239-0911	-		1	CYLINDER
	230	312101-0327	-		3	SCREW M6S5X12FZB
	233	312101-0368	-		2	SCREW M6S6X16FZB
	235	312104-0379	-		2	SCREW M6S6X45H8.8 FZB

From	Pos	Part No	SP	UN	Qty	Description
	240	312111-0291	-		2	SCREW MC6S4X12FZB
	250	312111-0293	-		2	SCREW MC6S4X16FZB
	260	312111-0372	-		2	SCREW MC6S6X25FZB
	270	312121-0293	-		1	SLOTTED HEMCS4X16FZB
	275	312125-0220	-		1	SLOTTED HEMCS3X6RFR
	280	312132-0289	-		1	SLOTTED HEMSCS4X10MSGFN
	290	312311-0333	-		8	STOP SCREW T6SS5X25FZB
	293	312316-0295	-		2	STOP SCREW SK6SS 4X20 FZB
	297	312601-0312	-		2	NUT M6M4FZB
	300	312601-0316	-		2	NUT M6M6FZB
	310	315105-0136	-		9	WASHER BRB4,3X8RFR
	320	315105-0146	-		1	WASHER BRB5,3X10RFR
	330	315105-0153	-		2	WASHER BRB6,4X12RFR
	340	315401-0136	-		1	WASHER FBH 4,1 FZB
	350	315401-0146	-		4	WASHER FBH 5,1 FZB
	360	315401-0153	-		2	WASHER FBH6,1FZB
	370	321120-0098	-		4	BUSHING 10/12,0X8
	380	321120-0100	-		1	BUSHING 8/10X12
	385	342920-0113	-		1	PIPE COUPL6/4-1/8
	390	342930-0113	-		1	ELBOW PIPE6/4-1/8

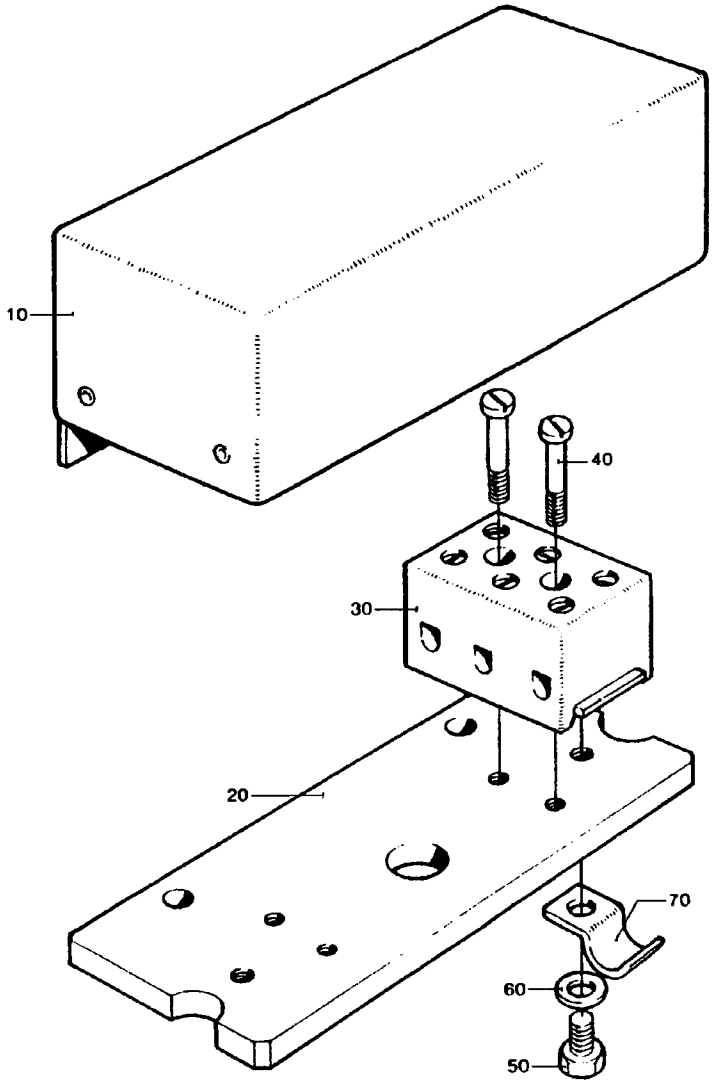

1957302.TIF
19573-2
AM

Last Alteration: AM 5569 83-09-08

Corresponding group: 19573-020V
Assembly Drawing: 19573-2

Issue: **930702**

From	Pos	Part No	SP	UN	Qty	Description
	F000	**C- 19573-0201**				**Connection box, Assy'**
	010	19126	-		1	COVER
	020	436615	-		1	PLATE
	030	90195-0017	-		1	TERMINAL BLOCK
	040	312121-0230	-		2	SLOTTED HEMCS3X20FZB
	050	312121-0287	-		1	SLOTTED HEMCS4X8FZB
	060	315101-0136	-		1	WASHER BRB4,3X8FZB
	070	352110-0101	-		1	CRAMP TK 7-10

From	Pos	Part No	SP	UN	Qty	Description

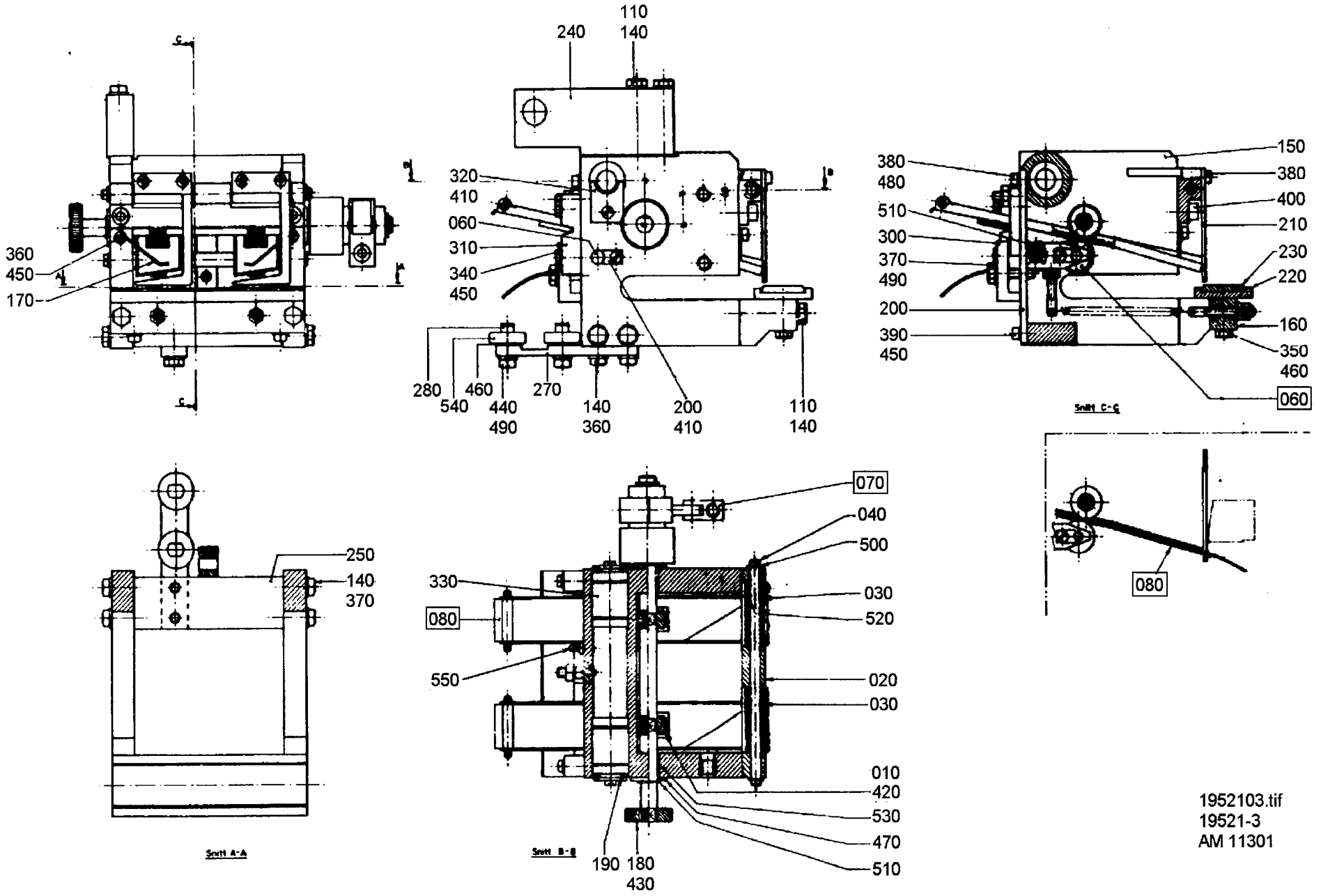

1952103.tif
19521-3
AM 11301

From	Pos	Part No	SP	UN	Qty	Description
Rekt. TAB						
	F000	**C- 195210201**				**Carriage , Assy'**
	F060	C- 019522-0101	-		2	COUNTER ROLLER
	F070	C- 019523-0101	-		1	FREE-WHEEL COUPLING
	F080	C- 020991-0101	-		1	STEERING
	020	19125	-		1	LINK
	030	19140	-		2	KNIFE HOLDER
	040	19142	-		1	SHAFT
	060	19547	-		1	SHAFT
	110	312101-0380	-		4	SCREW M6S6X50FZB
	140	315105-0153	-		10	WASHER BRB6,4X12RFR
Romb. TAB						
	F000	**C- 195210202**				**Carriage , Assy'**
	F160	C- 19522-0102	-		2	COUNTER ROLLER
	F170	C- 19523-0102	-		1	FREE-WHEEL COUPLING
	F180	C- 20991-0102	-		1	STEERING
	110	312101-0380	-		2	SCREW M6S6X50FZB
	120	312101-0383	-		2	SCREW M6S6X65FZB
	130	312316-0321	-		2	STOP SCREW SK6SS5X6FZB
	140	315105-0153	-		12	WASHER BRB6,4X12RFR
	020	36657	-		1	LINK
	070	36658	-		1	KNIFE HOLDER
	080	36659	-		2	SHAFT
	060	36661	-		1	SHAFT
	090	36662	-		1	KNIFE HOLDER
	100	36663	-		2	SPACER
Common Parts						
	010	36656	-		2	ROLL
	150	19537	-		1	FRAME
	160	19538	-		1	BRACKET
	170	11423	-		2	SPRING
	180	11424	-		1	SHIFTER HANDLE
	190	13643	-		2	WASHER
	200	19135	-		1	LOCK WASHER
	210	19139	-		2	KNIFE
	220	538526	-		1	RAIL
	230	538527	R		1	RUBBER RAIL
	240	19540	-		1	CARRIER
	250	19542	-		1	SPACER
	260	19543	-		1	SUPPORT
	270	19544	-		1	BRACKET
	280	19545	-		2	ECCENTRIC SHAFT
	290	19546	-		2	WASHER
	300	19548	-		1	CLAMPING PIECE
	310	19549	-		2	BRACKET

From	Pos	Part No	SP	UN	Qty	Description
	320	21014	-		2	WASHER
	330	90189-0003	-		2	B BUSHING
	340	312101-0293	-		4	SCREW M6S4X16FZB
	350	312101-0332	-		2	SCREW M6S5X22FZB
	360	312101-0368	-		2	SCREW M6S6X16FZB
	370	312101-0372	-		5	SCREW M6S6X25FZB
	380	312111-0287	-		7	SCREW MC6S4X8FZB
	390	312111-0291	-		1	SCREW MC6S4X12FZB
	400	312111-0368	-		2	SCREW MC6S6X16FZB
	410	312121-0287	-		3	SLOTTED HEMCS4X8FZB
	420	312316-0283	-		2	STOP SCREW SK6SS4X4FZB
	430	312316-0287	-		1	STOP SCREW SK6SS4X8FZB
	440	312601-0316	-		2	NUT M6M6FZB
	450	315105-0136	-		7	WASHER BRB4,3X8RFR
	460	315105-0146	-		2	WASHER BRB5,3X10RFR
	470	315105-0173	-		2	WASHER BRB10,5X22RFR
	480	315401-0136	-		1	WASHER FBH 4,1 FZB
	490	315401-0153	-		3	WASHER FBH6,1FZB
	500	315754-0106	-		2	LOCKING WAE 4
	510	315754-0109	R		5	LOCKING WAE 7
	520	321120-0102	-		4	BUSHING 6/8X10
	530	321120-0104	-		2	BUSHING 10/12X10
	540	321302-0298	-		2	B BEARISKF608-2RS
	550	344502-0021	-		1	NIPPLE L AHM6

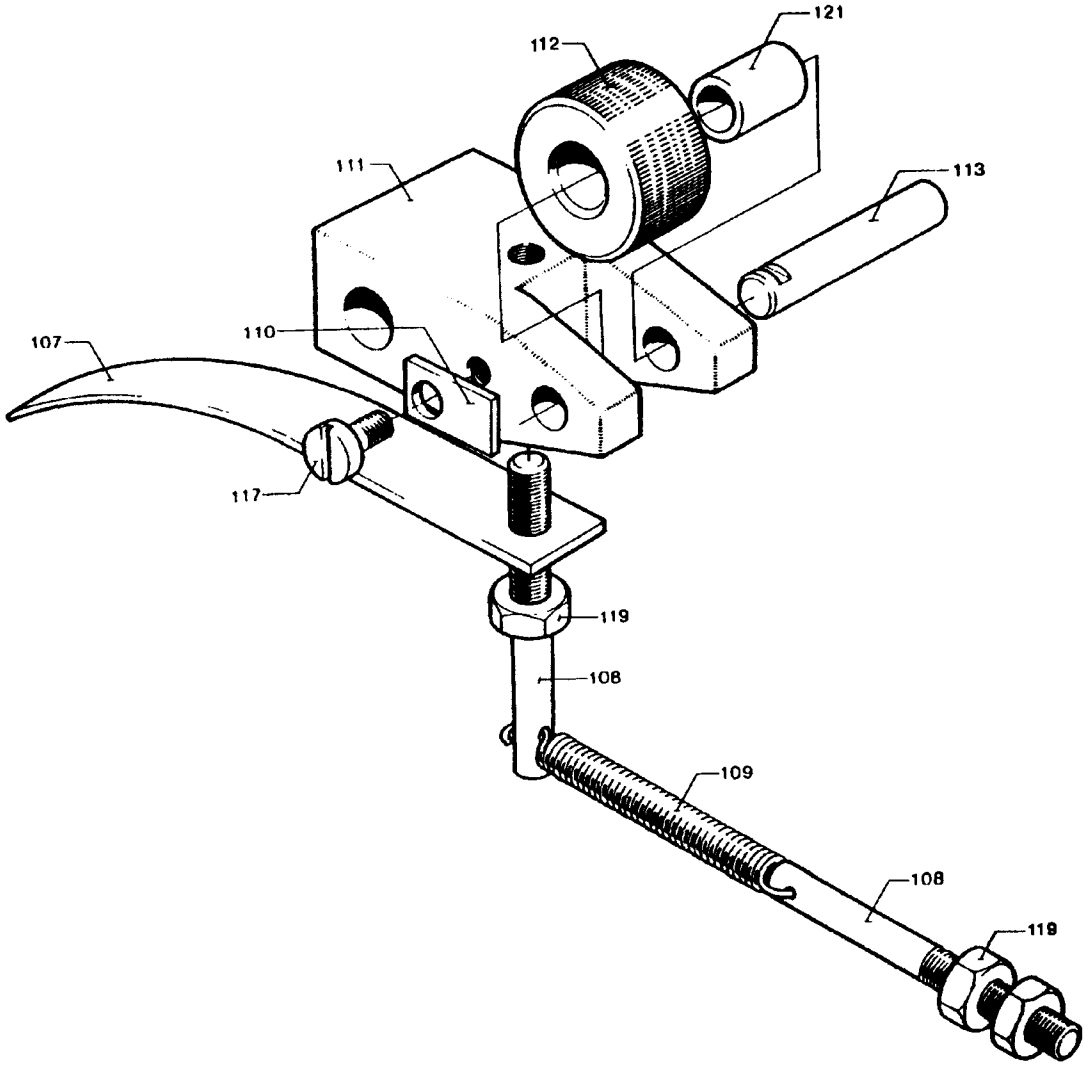

1952201.TIF
19522-1
AM

From	Pos	Part No	SP	UN	Qty	Description
Rekt TAB						
	F000	**C- 19522-0101**				**Counter roller, Assy'**
	108	11390	-		2	SCREW
	112	19552	-		1	ROLL
Alu TAB						
	F000	**C- 19522-0102**				**Counter roller, Assy'**
	108	36664	-		2	SCREW
	112	36665	-		1	ROLL
Romb TAB						
	F000	**C- 19522-0103**				**Counter roller, Assy'**
	112	19552	-		1	ROLL
	108	36664	-		2	SCREW
Common Parts						
	107	11389	-		1	BOW CLAMP
	109	11391-0002	-		1	TENSION SPRING
	110	19135	-		1	LOCK WASHER
	111	19551	-		1	HOLDER
	113	19553	-		1	SHAFT
	117	312121-0285	-		1	SLOTTED HEMCS4X6FZB
	119	312601-0314	-		3	NUT M6M5FZB
	121	321120-0102	-		1	BUSHING 6/8X10

From	Pos	Part No	SP	UN	Qty	Description

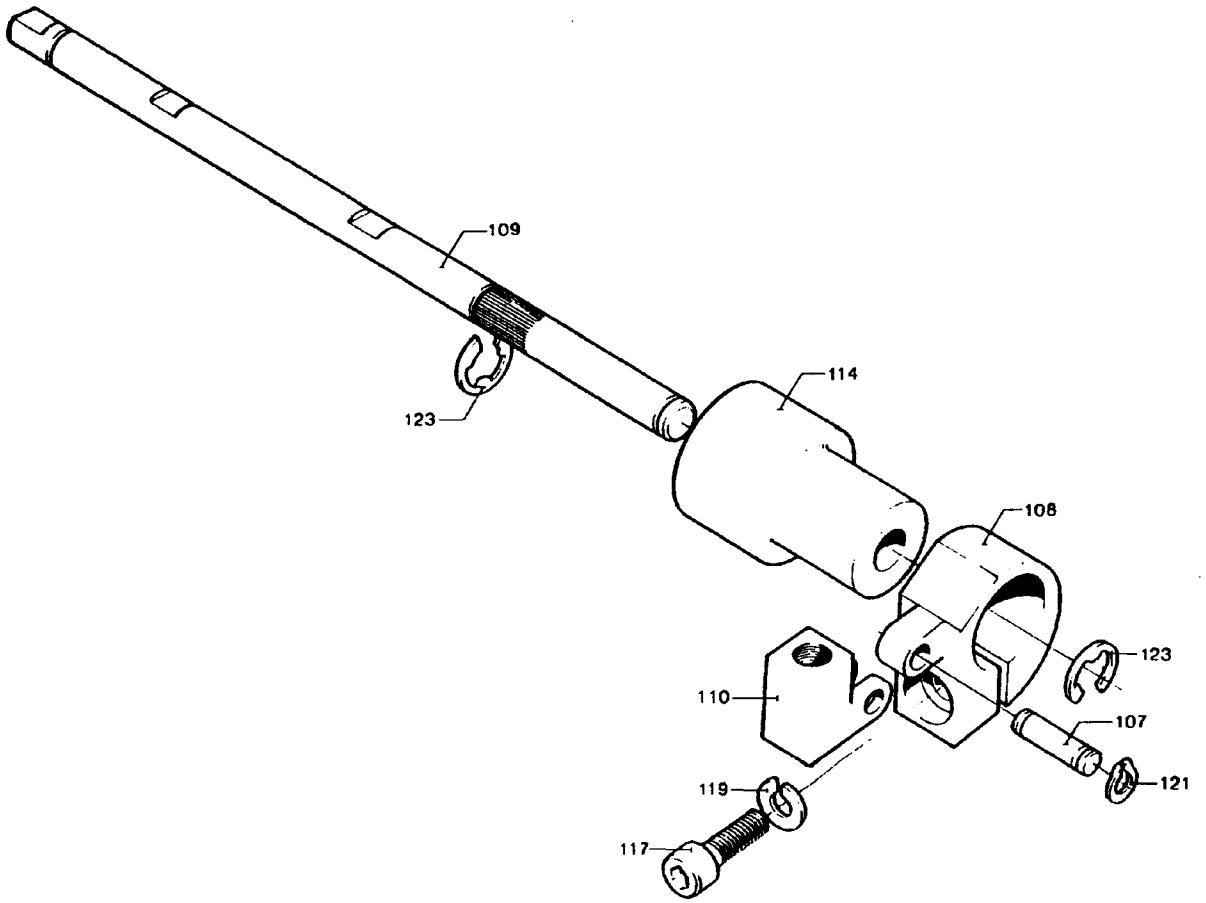

1952301.TIF
19523-1
AM

From	Pos	Part No	SP	UN	Qty	Description
	F000	**C- 19523-0101**				**Free-wheel coupling Norm. TAB, Assy'**
	F000	**C- 19523-0102**				**Free-wheel coupling Romb. TAB, Assy'**
	109	19554	-		1	SHAFT Norm. TAB
	109	36666	-		1	SHAFT Romb. TAB
	107	13354	R		1	SHAFT
	108	14637	-		1	LINK
	110	19555	-		1	FORK
	114	90340-0014	-		1	FREE WHEEL COUPLING
		90340-0309	P		0	# SPRING
	117	312111-0371	-		1	SCREW MC6S6X22FZB
	119	315401-0153	-		1	WASHER FBH6,1FZB
	121	315750-0102	-		2	CIRCLIP SGA5
	123	315754-0109	R		2	LOCKING WAE 7

From	Pos	Part No	SP	UN	Qty	Description

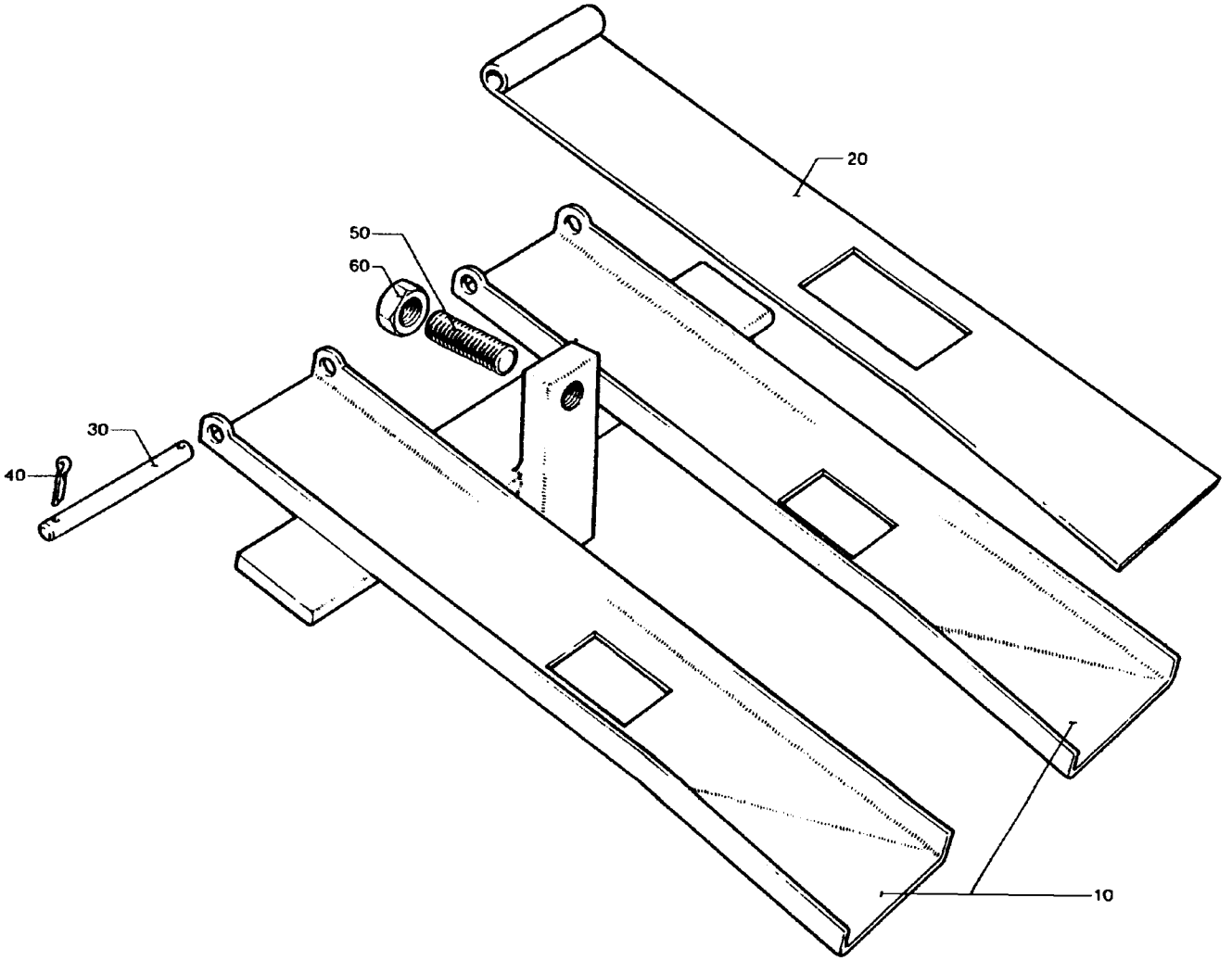

2099101.TIF
20991-1, 2
AM

From	Pos	Part No	SP	UN	Qty	Description
Normal TAB						
	F000	**C- 20991-0101**				**Steering, Assy'**
	010	20992	-		1	STEERING RAIL
	020	14617	-		2	HEAD PLATE
Rombi TAB						
	F000	**C- 20991-0102**				**Steering, Assy'**
	010	36676	-		1	STEERING RAIL
	020	36675	-		2	HEAD PLATE
Common Parts						
	030	14618	-		2	SHAFT
	040	311411-0117	-		4	SPLIT PIN SP1X10RFR
	050	312316-0368	-		1	STOP SCREW SK6SS6X16FZB
	060	312601-0316	-		1	NUT M6M6FZB

From	Pos	Part No	SP	UN	Qty	Description

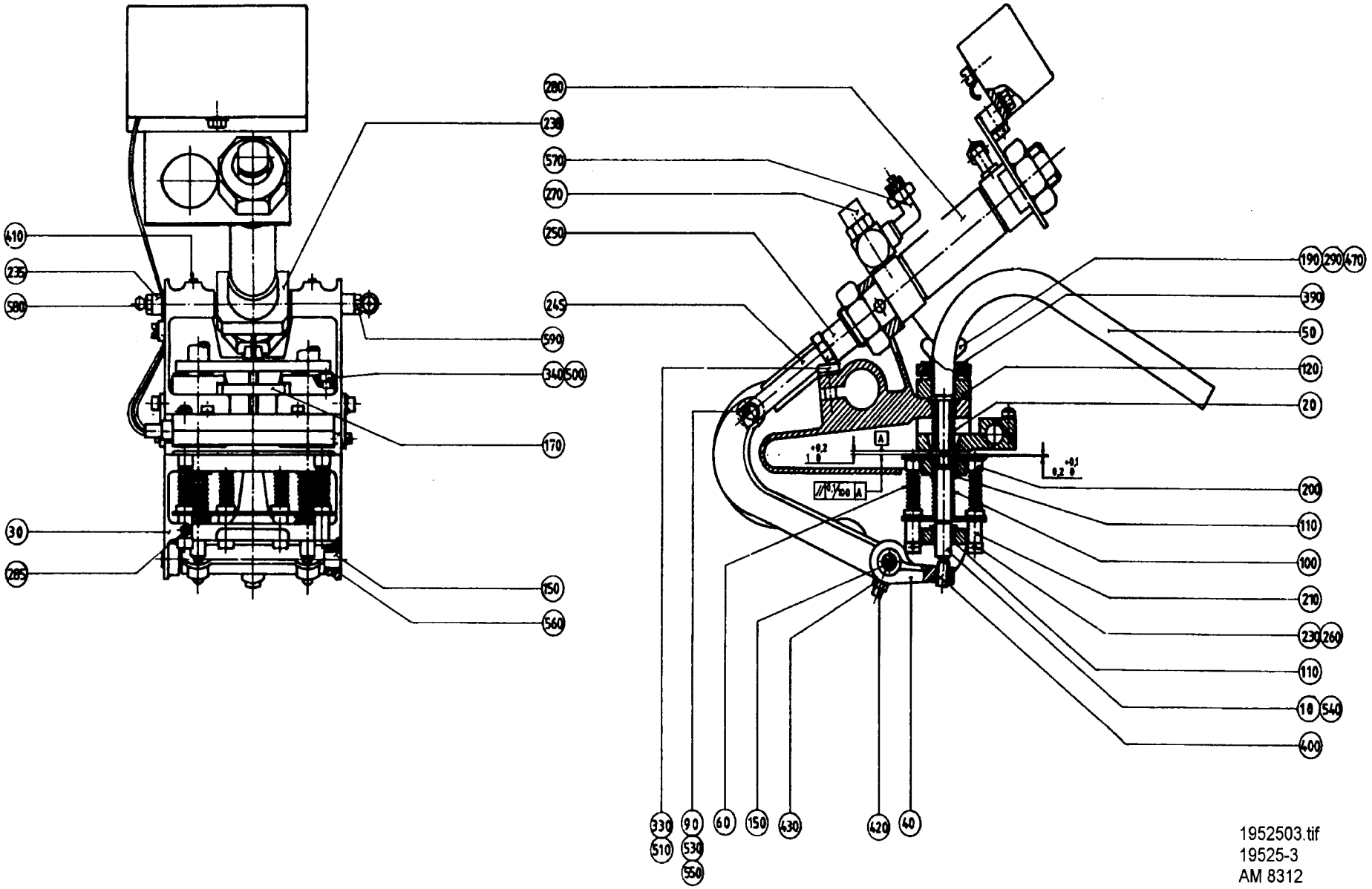

1952503.tif
19525-3
AM 8312

From	Pos	Part No	SP	UN	Qty	Description
Ø 3,5mm						
	F000	**C- 19525-701**				**Punch unit, Assy'**
	010	21520-0001	-		2	PUNCH
	020	21522-0001	-		2	DIE
Ø 4,0mm						
	F000	**C- 19525-702**				**Punch unit, Assy'**
	010	21520-0002	-		2	PUNCH
	020	21522-0002	-		2	DIE
Ø 5,0mm						
	F000	**C- 19525-703**				**Punch unit, Assy'**
	010	21520-0003	-		2	PUNCH
	020	21522-0003	-		2	DIE
Ø 6,0mm						
	F000	**C- 19525-704**				**Punch unit, Assy'**
	010	21520-0004	-		2	PUNCH
	020	21522-0004	-		2	DIE
Ø 8,0mm						
	F000	**C- 19525-705**				**Punch unit, Assy'**
	010	21520-0005	-		2	PUNCH
	020	21522-0005	-		2	DIE
Common Parts						
	030	21232	-		1	BRACKET
	040	21233	-		1	LEVER
	050	538479	-		1	PIPE
	060	8479	-		4	COMPRESSION SPRING
	090	21518	-		1	SHAFT
	100	21521	R		2	COMPRESSION SPRING
	110	21524	-		4	BUSHING
	120	21525	-		2	LID
	150	21530	-		1	SHAFT
	170	21590	-		1	PLATE
	190	21622	-		1	THUMB SCREW
	200	23358	-		1	PLATE
	210	23359	-		1	PLATE
	230	35806	-		4	SCREW
	235	486708	-		2	SHAFT
	238	486709	-		1	FASTENING PLATE
	240	486710	-		1	BRACKET
	245	486713	-		1	ROD
	250	486714	-		1	SPACER SLEEVE
	260	90145-0003	-	MM	220	WIRE
	270	90235-0241	-		1	VALVE
	280	90239-0828	-		1	CYLINDER
	285	311103-0274	-		2	CYLINDRICACP 4X25 RFR
	290	311411-0117	-		1	SPLIT PIN SP1X10RFR
	330	312101-0370	-		2	SCREW M6S6X20FZB
	340	312111-0291	-		6	SCREW MC6S4X12FZB
	390	312306-0327	-		2	STOP SCREW P6SS5X12FZB
	400	312306-0366	-		2	STOP SCREW P6SS6X12FZB
	410	312316-0323	-		2	STOP SCREW SK6SS5X8FZB
	420	312316-0329	-		1	STOP SCREW SK6SS5X16FZB
	430	312601-0314	-		1	NUT M6M5FZB
	470	315105-0146	-		3	WASHER BRB5,3X10RFR
	500	315401-0136	-		6	WASHER FBH 4,1 FZB
	510	315401-0146	-		4	WASHER FBH 5,1 FZB
	530	315754-0106	-		2	LOCKING WAE 4
	540	315754-0109	R		2	LOCKING WAE 7
	550	321120-0101	-		1	BUSHING 6/8X6
	560	321120-0103	-		2	BUSHING 8/10X8
	570	342930-0113	-		2	ELBOW PIPE6/4-1/8
	580	344502-0021	-		1	NIPPLE L AHM6
	590	344502-0061	-		1	NIPPLE L M6AL.

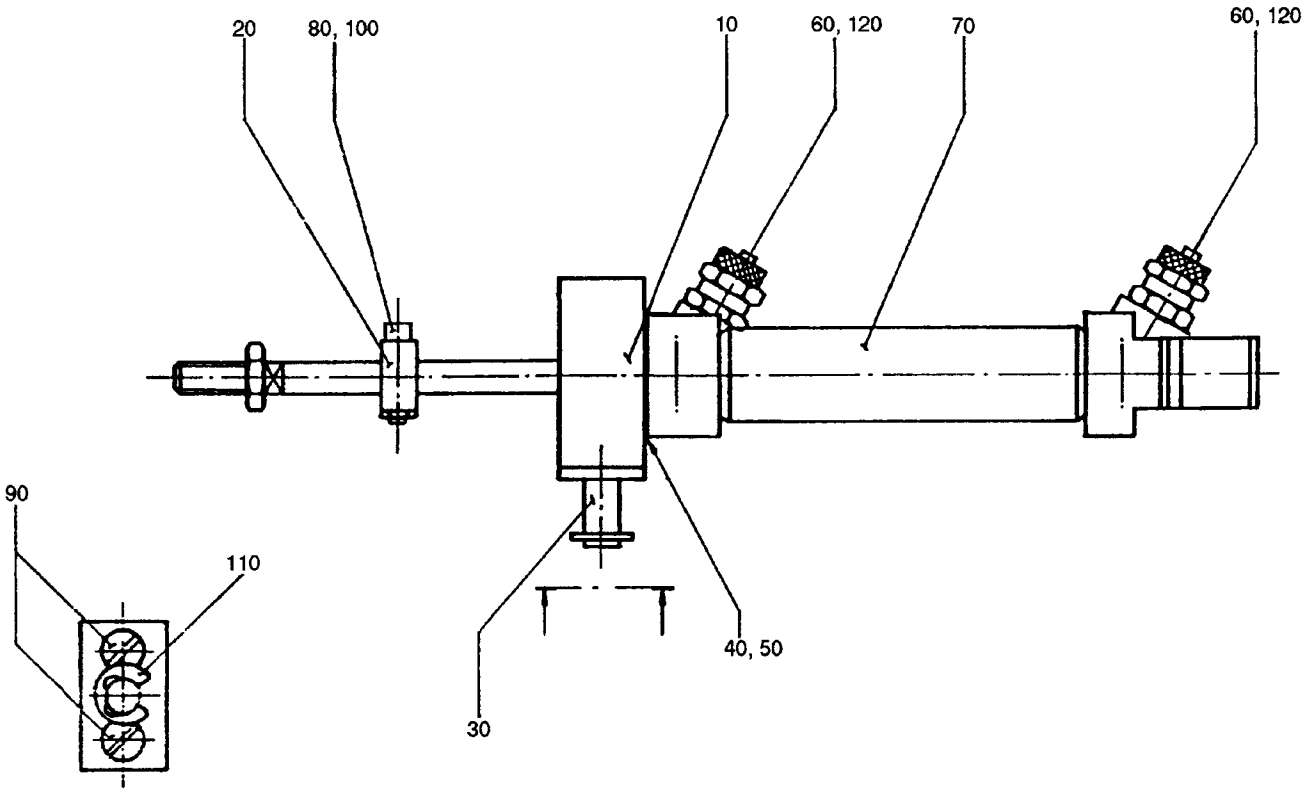

48670501.TIF
486705-1
AM

From	Pos	Part No	SP	UN	Qty	Description
	F000	**C- 486705-0101**				**Feeder, Assy'**
	010	486706	-		1	BRACKET
	020	19556	-		1	STOP LUG
	030	486711	-		1	AXLE SUPPORT
	040	527131	-		3	SHIM
	500	526969	-		3	SHIM
	060	90235-0241	-		2	VALVE
	070	90239-0822	-		1	CYLINDER
	080	312111-0293	-		1	SCREW MC6S4X16FZB
	090	312145-0327	-		2	SLOTTED HEMFS5X12RFR
	100	312601-0312	-		1	NUT M6M4FZB
	110	315755-0108	-		1	LOCKING WAE 6RFR
	120	342920-0113	-		2	PIPE COUPL6/4-1/8

From	Pos	Part No	SP	UN	Qty	Description

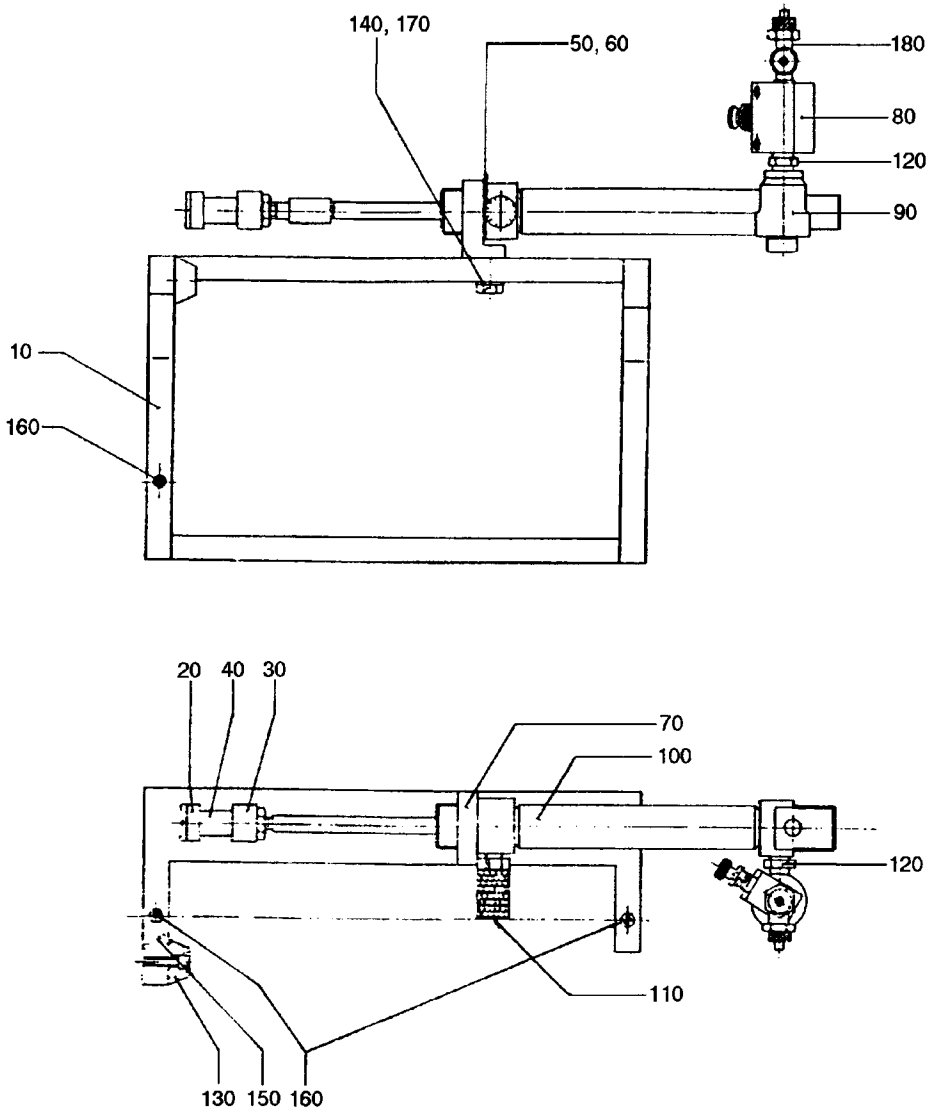

1952602.TIF
19526-2
AM

From	Pos	Part No	SP	UN	Qty	Description
	F000	**C- 19526-0301**				**Frame, Assy'**
	010	19564	-		1	FRAME
	020	538430	-		1	WASHER
	030	14826	-		1	BUSHING
	040	19567	-		1	SCREW
	050	526969	-		3	SHIM
	060	527131	-		3	SHIM
	070	536698	-		1	CYLINDER BRACKET
	080	90235-0251	-		1	VALVE
	090	90235-0259	-		1	VALVE
	100	90239-0989	-		1	CYLINDER
	110	90328-0012	-		1	SILENCER
	120	90330-0032	-		2	NIPPLE
	130	90347-0005	-		1	VIBRATION DAMPER
	140	312101-0370	-		2	SCREW M6S6X20FZB
	150	312111-0291	-		1	SCREW MC6S4X12FZB
	160	312316-0362	-		3	STOP SCREW SK6SS6X8FZB
	170	315401-0153	-		2	WASHER FBH6,1FZB
	180	342950-0113	-		1	ELBOW FITT6/4-1/8

From	Pos	Part No	SP	UN	Qty	Description

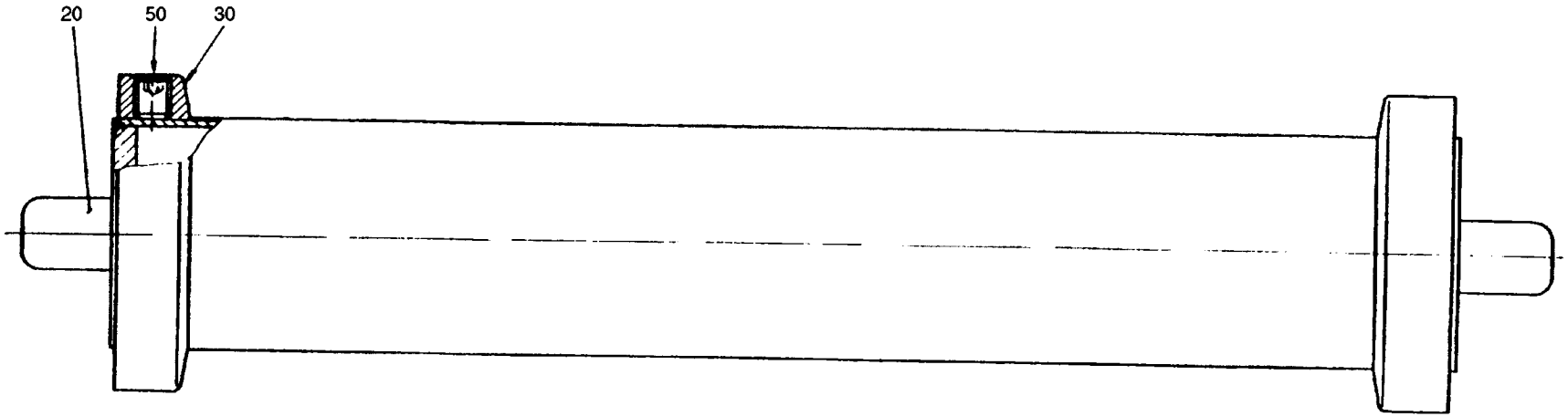

23979301.TIF
239793-1
AM

From	Pos	Part No	SP	UN	Qty	Description
		C- 239793-0101				**BENDING ROLLER, ASS'Y**
	030	239011	-		2	FLANGE
	050	312318-0362	-		6	STOP SCREW SK6SS6X8RFR
	020	239010	-		1	BENDING ROLLER
		C- 239793-0102				**BENDING ROLLER, ASS'Y**
	030	239011	-		3	FLANGE
	050	312318-0362	-		8	STOP SCREW SK6SS6X8RFR
	060	312105-0366	-		1	SCREW M6S6X12RFR
	070	312605-0316	-		1	NUT M6M6RFR
	020	239010	-		1	BENDING ROLLER

From	Pos	Part No	SP	UN	Qty	Description

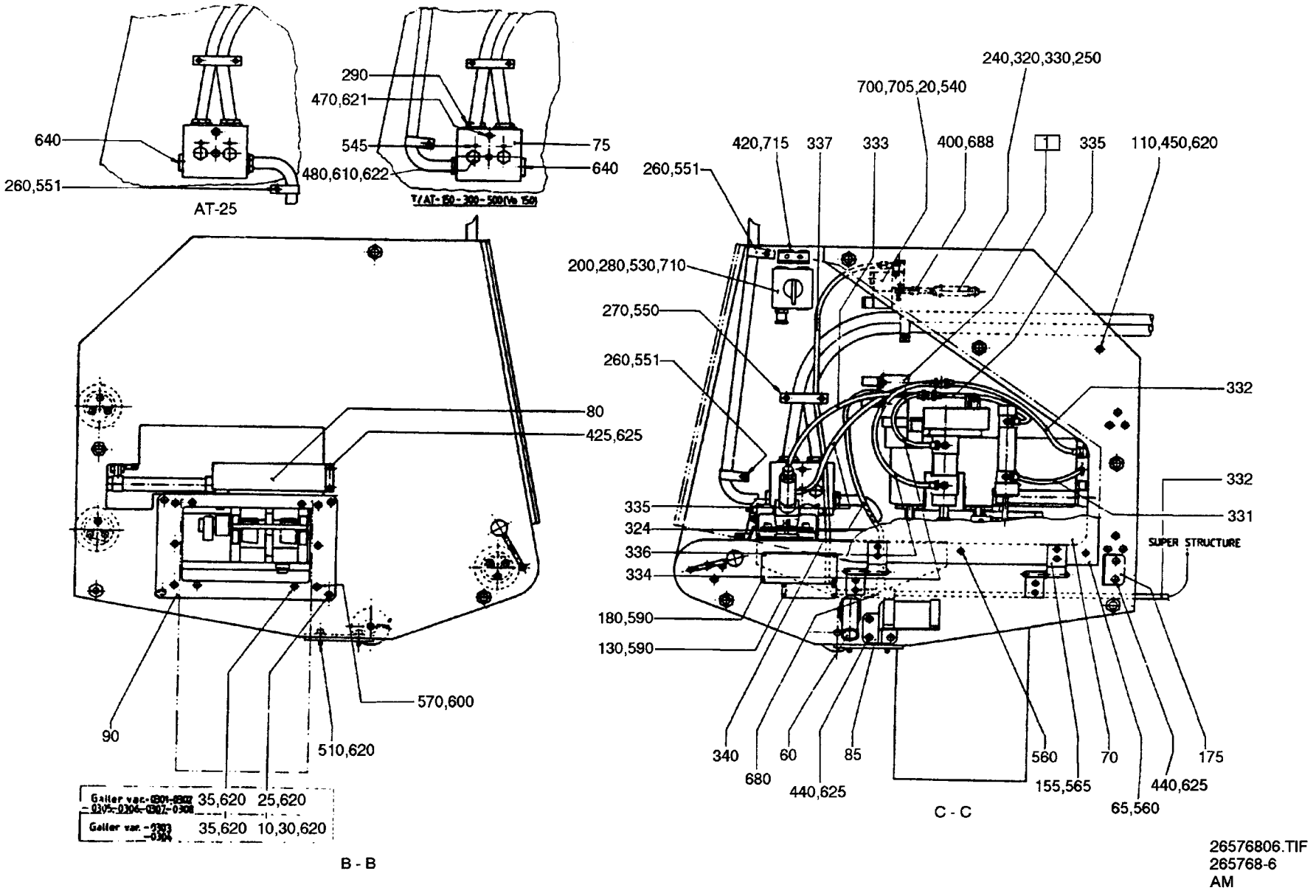

26576806.TIF
265768-6
AM

From	Pos	Part No	SP	UN	Qty	Description
TC, TCA/150, 300						
		C- 256768-0301				**HOLE PUNCH, ASS'Y**
	035	312111-0380	-		6	SCREW MC6S6X50FZB
Common Parts						
	F001	**C- 537570-010V**	**-**		**1**	**AIR DISTRIBUTION UNIT**
	020	90042-0346	-		1	COIL
	020	90042-0166	-		1	SOLENOID VALVE
	025	312101-0370	-		6	SCREW M6S6X20FZB
	045	537904	-		1	LEFT GABLE
	050	537903	-		1	RIGHT GABLE
	065	540345	-		1	FRAME
	070	540346	-		1	PROTECTIVE GLASS
	075	537173	-		1	JUNCTION BLOCK
	080	537174	-		1	PROTECTION
	085	23267	-		1	SUPPORT
	090	36679	-		1	FRAME
	093	540309	-		1	SPACER BRACKET
	095	4288-0005	-		1	BENDING ROLLER
	100	4317	-		6	BEARING
	105	10908	-		2	RETAINING RING
	110	11448	-		2	SHAFT
	115	11452	-		3	LACE
	120	13401	-		9	LACE
	130	20497	-		1	GROUP NUMBER PLATE
	135	20674	-		2	GUIDE FLANGE
	140	21155	-		5	SPACER ROD
	155	21161	-		2	HINGE
	170	21229	-		6	SPACER
	175	23266	-		1	STOP
	180	27402	-		1	MACHINE PLATE
	200	90002-0009	-		1	BLANK-OFF PLUG
	240	90052-0009	-		1	WHISTLE
	250	90055-0073	-		1	HOSE NIPPLE
	260	90074-0005	-		2	CLIP
	270	90074-0029	-		3	CLIP
	280	90111-0073	-		1	SWITCH
	290	90163-0067	-		3	HOSE NIPPLE
	310	90165-0015	-		6	CLIP
	320	90166-0013	-	MM	26	HOSE
	322	90166-0013	-	MM	1300	HOSE
	324	90166-0013	-	MM	600	HOSE
	330	90166-0117	-	MM	30	HOSE
	331	90166-0117	-	MM	200	HOSE
	332	90166-0117	-	MM	220	HOSE
	333	90166-0117	-	MM	340	HOSE
	334	90166-0117	-	MM	350	HOSE
	335	90166-0117	-	MM	400	HOSE
	336	90166-0117	-	MM	450	HOSE
	337	90166-0117	-	MM	600	HOSE
	340	90166-0105	-	MM	550	HOSE
	350	90347-0007	-		2	VIBRATION DAMPER
	400	90235-0289	-		1	VALVE
	420	311520-0429	-		2	BLANK RIVE3,2X8
	425	312101-0325	-		2	SCREW M6S5X10FZB
	440	312101-0366	-		7	SCREW M6S6X12FZB
	450	312101-0368	-		10	SCREW M6S6X16FZB
	460	312101-0381	-		9	SCREW M6S6X55FZB
	465	312101-0538	-		2	SCREW M6S12X35FZB
	470	312105-0376	-		2	SCREW M6S6X35RFR
	480	312105-0499	-		2	SCREW M6S10X40RFR
	490	312111-0291	-		12	SCREW MC6S4X12FZB
	510	312111-0368	-		4	SCREW MC6S6X16FZB
	530	312121-0291	-		4	SLOTTED HEMCS4X12FZB
	540	312122-0234	-		2	SLOTTED HEMCS3X30MSGFN
	545	312125-0285	-		2	SLOTTED HEMCS4X6RFR
	550	312125-0323	-		4	SLOTTED HEMCS5X8RFR
	551	312125-0323	-		2	SLOTTED HEMCS5X8RFR
	560	312165-0366	-		17	SLOTTED HEMKFS6X12RFR
	565	312165-0370	-		4	SLOTTED HEMKFS6X20RFR
	570	312303-0378	-		4	STUD SCREWMPS 6X30 RFR
	585	312316-0360	-		2	STOP SCREW SK6SS6X6FZB
	590	312502-0221	-		8	DRIVE SCREKDS4X6FNB
	600	312601-0316	-		6	NUT M6M6FZB
	605	312601-0322	-		10	NUT M6M12FZB
	610	312605-0320	-		2	NUT M6M10RFR
	615	315101-0146	-		4	WASHER BRB5,3X10FZB
	620	315101-0153	-		36	WASHER BRB6,4X12FZB
	621	315105-0153	-		2	WASHER BRB6,4X12RFR
	622	315105-0173	-		2	WASHER BRB10,5X22RFR
	625	315401-0153	-		8	WASHER FBH6,1FZB
	630	315401-0178	-		10	WASHER FBH12,2FZB
	640	342713-0213	-		1	BLIND PLUG
	680	342748-0103	-		4	T-CONNECTI D=8

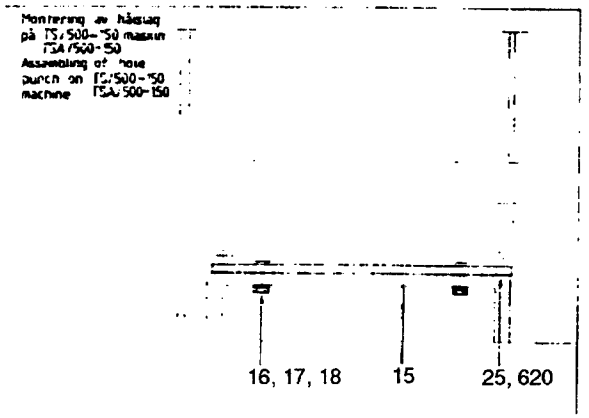

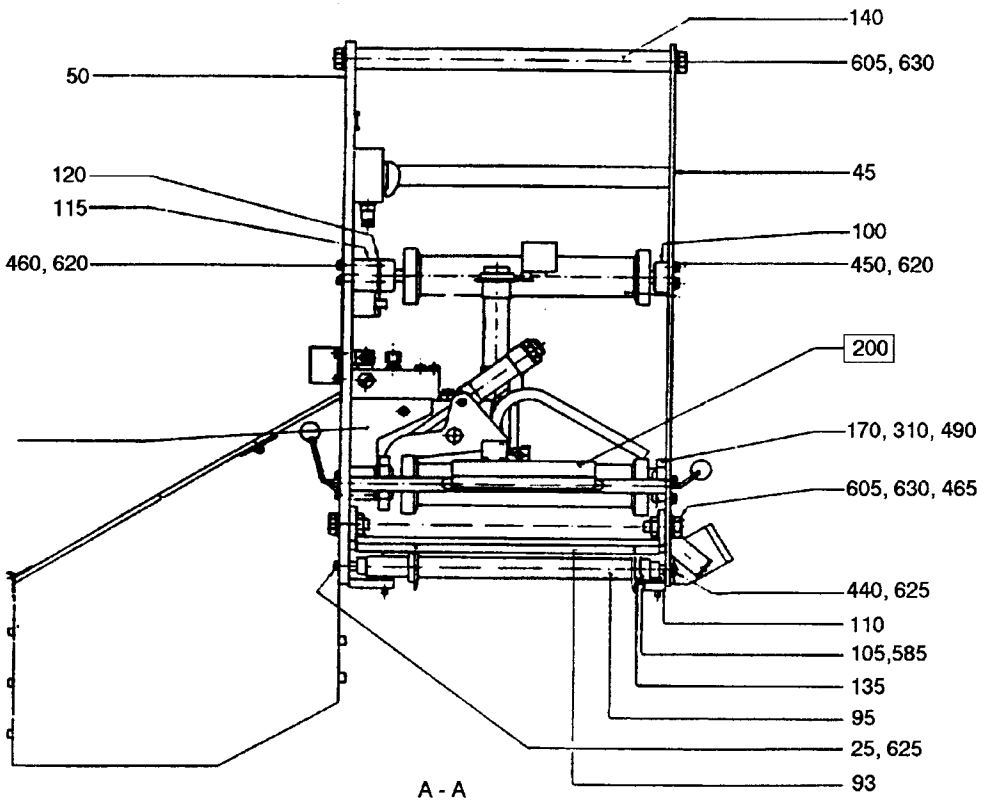

26576805.TIF
265768-5
AM

From	Pos	Part No	SP	UN	Qty	Description
	688	342921-0111	-		1	PIPE COUPL6/4-5M
	700	342980-0111	-		1	BANJO CONNSINGEL 6/4-5M
	705	342980-0301	-		1	BANJO CONN SINGEL 5M
	705.1	315233-0101	P		0	. SEAL RINM5
	710	352103-0105	-		1	CABLE GLANR.STR 11
	715	359240-0100	-		1	SIGN HOLDER

From	Pos	Part No	SP	UN	Qty	Description

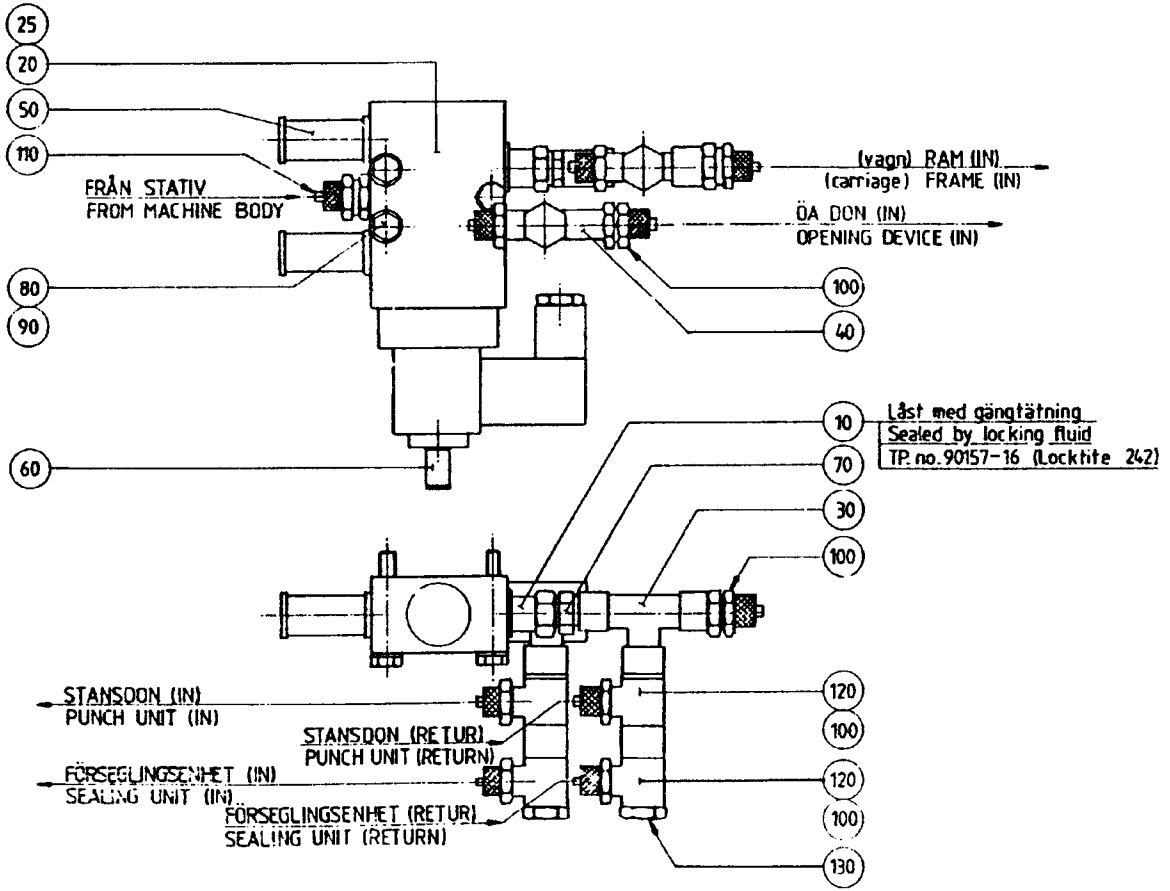

53757001.TIF
537570-1
AM

From	Pos	Part No	SP	UN	Qty	Description
	F000	**C- 537570-0101**				**Air distr. unit Relay Machine, Assy'**
	F000	**C- 537570-0102**				**Air distr. unit TPMC Machine, Assy'**
	020	90042-0159	-		1	SOLENOID VALVE
	025	90042-0346	-		1	COIL Relay Machine
	025	90042-0455	-		1	SOLENOID TPMC Machine
	010	90030-0210	-		1	NIPPLE
	030	90140-0015	-		1	T-PIECE
	040	90140-0022	-		1	T-PIECE
	050	90328-0012	-		2	SILENCER
	060	90328-0020	-		1	SILENCER
	070	90330-0032	-		1	NIPPLE
	080	312105-0337	-		3	SCREW M6S5X35RFR
	090	315105-0146	-		3	WASHER BRB5,3X10RFR
	100	342920-0113	-		6	PIPE COUPL6/4-1/8
	110	342920-0121	-		1	PIPE COUPL8/6-1/8
	120	342980-0113	-		4	BANJO CONNSINGEL 6/4-1/8
	130	342980-0313	-		2	BANJO CONN DUBBEL 1/8

From	Pos	Part No	SP	UN	Qty	Description

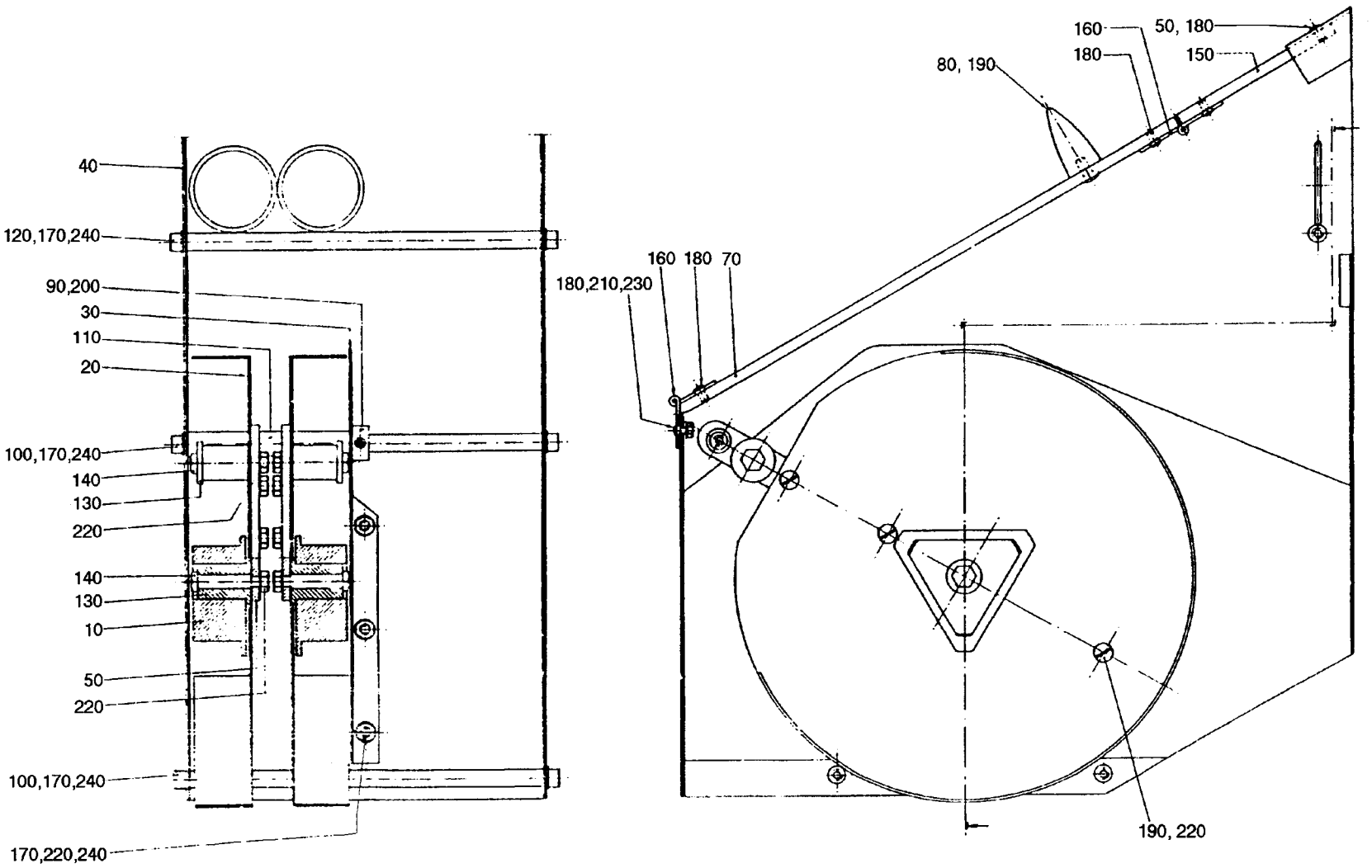

1385202.TIF
13852-2
AM

From	Pos	Part No	SP	UN	Qty	Description
	F000	**C- 13852-0201**				**MAGAZINE, ASSY' ∅ 70MM**
	F000	**C- 13852-0202**				**MAGAZINE, ASSY' ∅ 3"**
	010	13665	-		2	BOBBIN HOLDER ∅ 70mm
	010	13855	-		2	BOBBIN HOLDER ∅ 3"
	020	13663	-		2	CASSETTE
	030	13853	-		1	GABLE PLATE
	040	13854	-		1	HOLDER
	050	11445	-		1	MOUNTINGS
	060	13664	-		2	ARM
	070	21652	-		1	LID
	080	7309	-		1	HANDLE
	090	10908	-		1	RETAINING RING
	100	11305	-		3	SPACER
	110	11307	-		1	BUSHING
	120	11312	-		1	GUIDE RING
	130	13666	-		4	BUSHING
	140	13667	-		4	SHOULDER BOLT
	150	21653	-		1	LID
	160	90248-0002	-		4	HINGE
	170	312115-0366	-		13	SCREW 6X12 A4 80
	180	312165-0287	-		26	SLOTTED HEMKFS4X8RFR
	190	312165-0366	-		8	SLOTTED HEMKFS6X12RFR
	200	312306-0360	-		1	STOP SCREW P6SS6X6FZB
	210	312605-0312	-		6	NUT M6M4RFR
	220	312605-0316	-		15	NUT M6M6RFR
	230	315105-0136	-		6	WASHER BRB4,3X8RFR
	240	315105-0153	-		13	WASHER BRB6,4X12RFR

From	Pos	Part No	SP	UN	Qty	Description

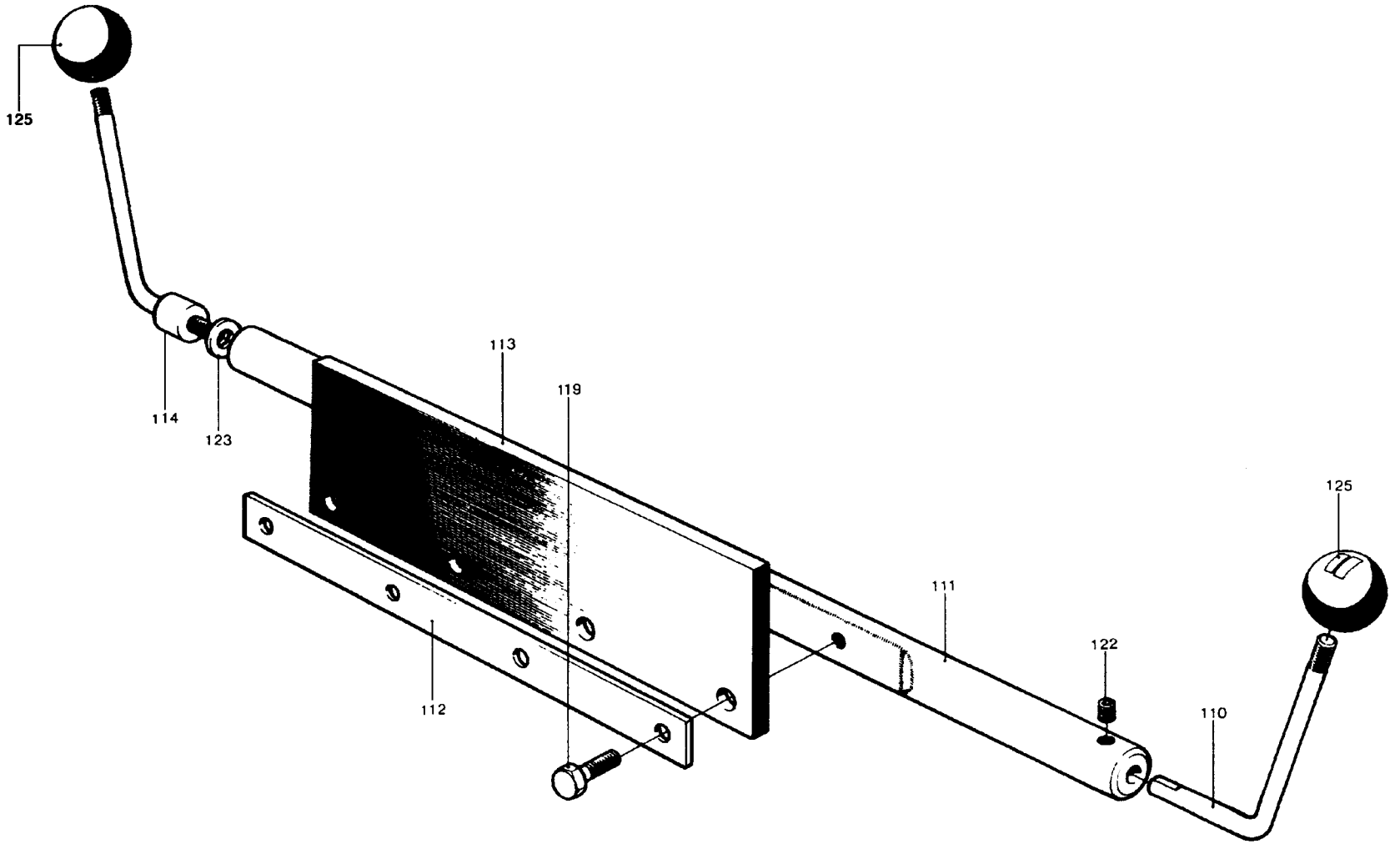

2003601.TIF
20036-1
AM

From	Pos	Part No	SP	UN	Qty	Description
HS227						
	F000	**C- 20036-0101**				**Hose clamp, Assy'**
	111	20037	-		1	SHAFT
	113	20039	-		1	RUBBER STRIP
RP3						
	F000	**C- 20036-0102**				**Hose clamp, Assy'**
	111	263067	-		1	SHAFT
	113	263069	-		1	RUBBER STRIP
SA4						
	F000	**C- 20036-0103**				**Hose clamp, Assy'**
	111	268815	-		1	SHAFT
	113	20039	-		1	RUBBER STRIP
Common parts						
	110	4292	-		1	HANDSPIKE
	112	20038	-		1	CLAMP PLATE
	114	20040	-		1	HANDSPIKE
	119	312105-0329	-		4	SCREW M6S5X16 A4 80
	122	312316-0360	-		1	STOP SCREW SK6SS6X6FZB
	123	315105-0153	-		1	WASHER BRB6,4X12RFR
	125	318800-0103	-		2	HANDLE BALLA D.25-M6

From	Pos	Part No	SP	UN	Qty	Description

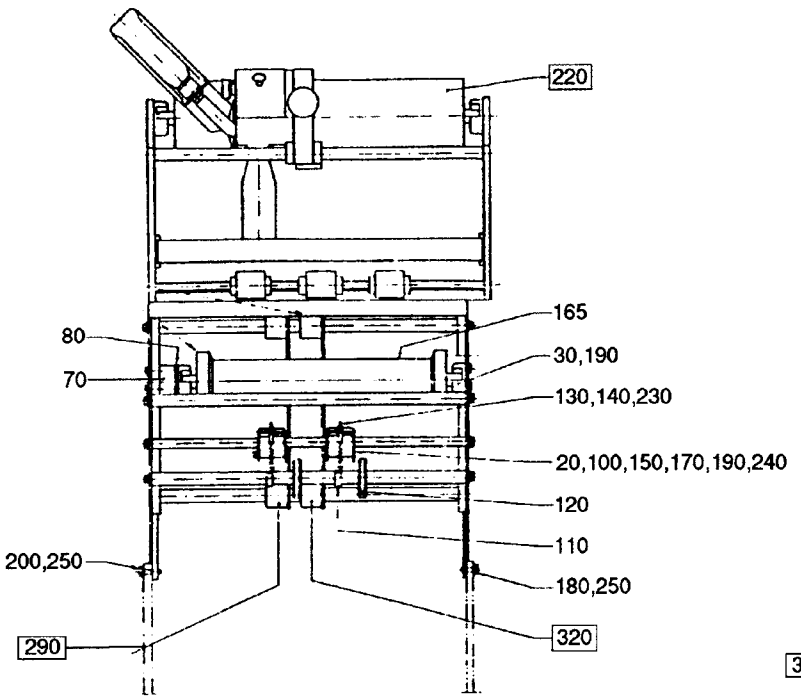

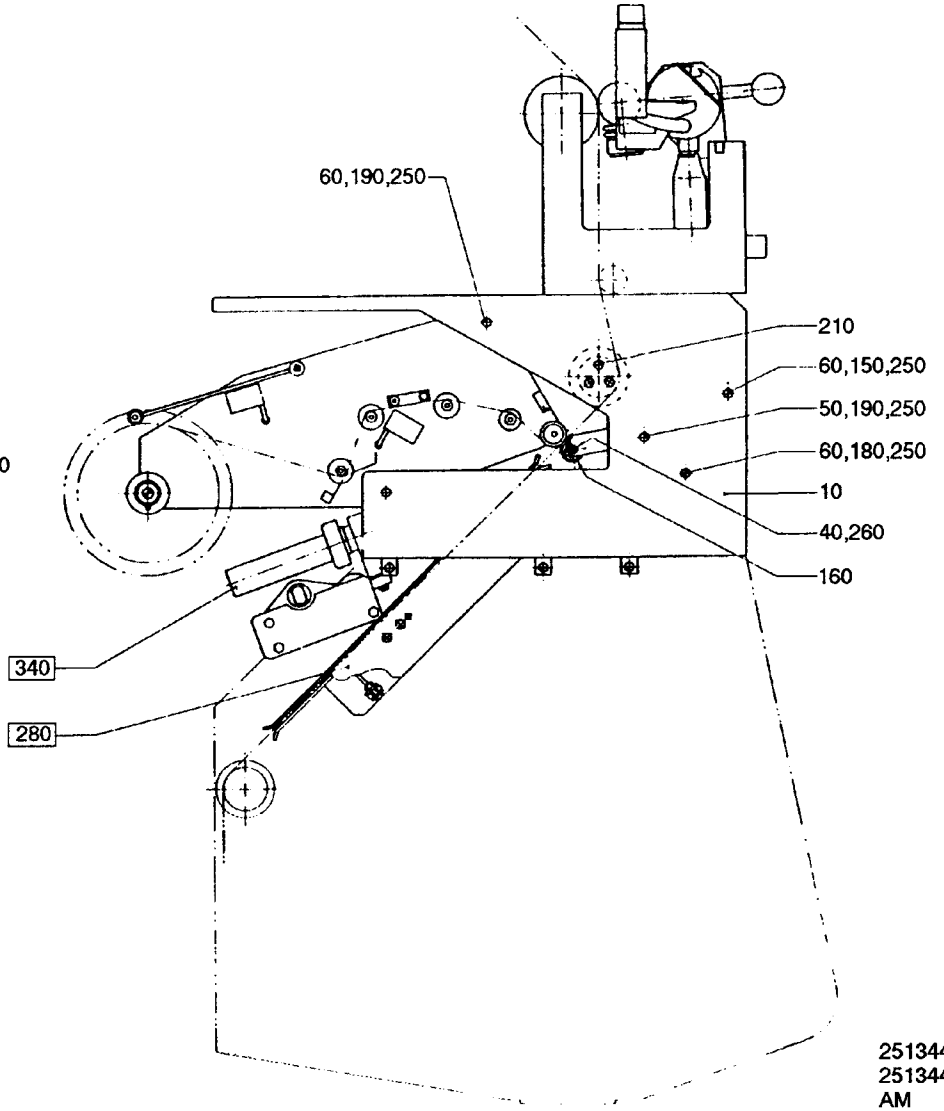

25134402.TIF
251344-2
AM

From	Pos	Part No	SP	UN	Qty	Description
		C- 251344-0201				**STRIP APPLICATOR, ASS'Y**
		C- 251344-0202				**STRIP APPLICATOR, ASS'Y** (TCA/25)
	F220	**C- 037459-0101**	**-**		**1**	**HOLDER**
		C- 037460-0101				**. DATING UNIT**
		C- 037461-0101				**. . PRINTING WHEEL**
		C- 033608-0101				**. . . SCREW**
		C- 037485-010V				**. HOLDER**
	F280	**C- 450343-010V**	**-**		**1**	**PAPER GUIDE**
	F290	**C- 293483-010V**	**-**		**1**	**FASTENING PLATE**
		C- 020387-0101				**. BOBBIN**
		C- 020389-0101				**. BRAKE**
	F320	**C- 293484-0101**	**-**		**1**	**FASTENING PLATE**
		C- 020387-0101				**. BOBBIN**
		C- 020389-0101				**. BRAKE**
	F340	**C- 294112-020V**	**-**		**1**	**ELEMENT GROUP**
	010	19779	-		1	HOUSE
	020	23169	-		2	FORK
	030	4317	-		2	BEARING
	040	6759-0001	-		2	SHAFT
	050	11448	-		1	SHAFT
	060	11450	-		4	SHAFT
	070	11452	-		1	LACE
	080	13401	-		3	LACE
	100	19791	-		2	RETAINING RING
	110	19792	-		2	SPRING BRACKET
	120	20401	-		2	RING
	130	21631	-		2	TENSION SPRING
	140	23175	-		2	SCREW
	150	23176	-		4	BRACKET
	160	539619	R		2	ROLL
	165	90166-0053	R	MM	300	SHRINKABLE HOSE
	170	312105-0325	-		8	SCREW M6S5X10 A4 80
	180	312105-0366	-		7	SCREW M6S6X12RFR
	190	312105-0368	-		11	SCREW M6S6X16RFR
	200	312105-0370	-		3	SCREW M6S6X20RFR
	210	312105-0378	-		3	SCREW M6S6X40RFR
	230	312715-0116	-		2	WING NUT MVM-K 6 A4
	240	315105-0146	-		14	WASHER BRB5,3X10RFR
	250	315105-0153	-		16	WASHER BRB6,4X12RFR
	260	315754-0106	-		4	LOCKING WAE 4

From	Pos	Part No	SP	UN	Qty	Description

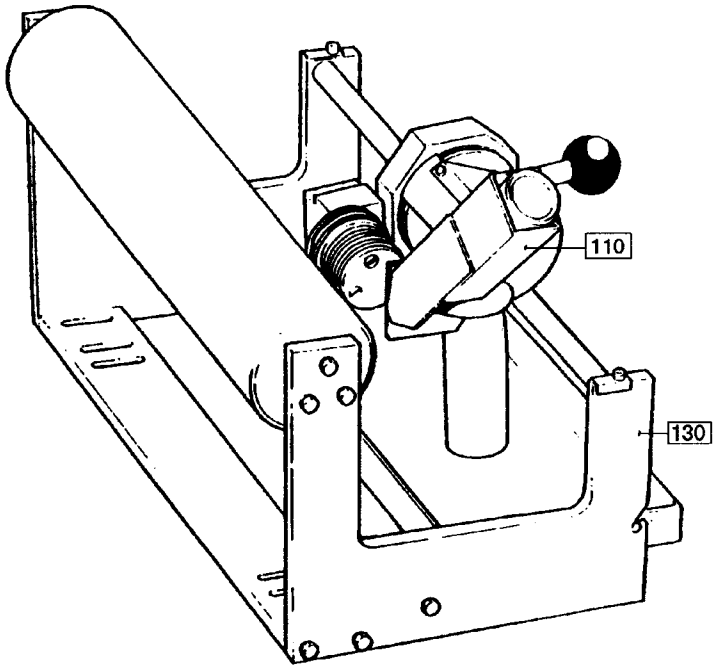

3745901.TIF
37459-1
AM

From	Pos	Part No	SP	UN	Qty	Description
	F000	**C- 37459-0101**				**Holder, Assy'**
	F100	C- 037460-0101	-		1	DATING UNIT
		C- 037461-0101				. PRINTING WHEEL
		C- 033608-0101				. . SCREW
	F130	C- 037485-010V	-		1	HOLDER

From	Pos	Part No	SP	UN	Qty	Description

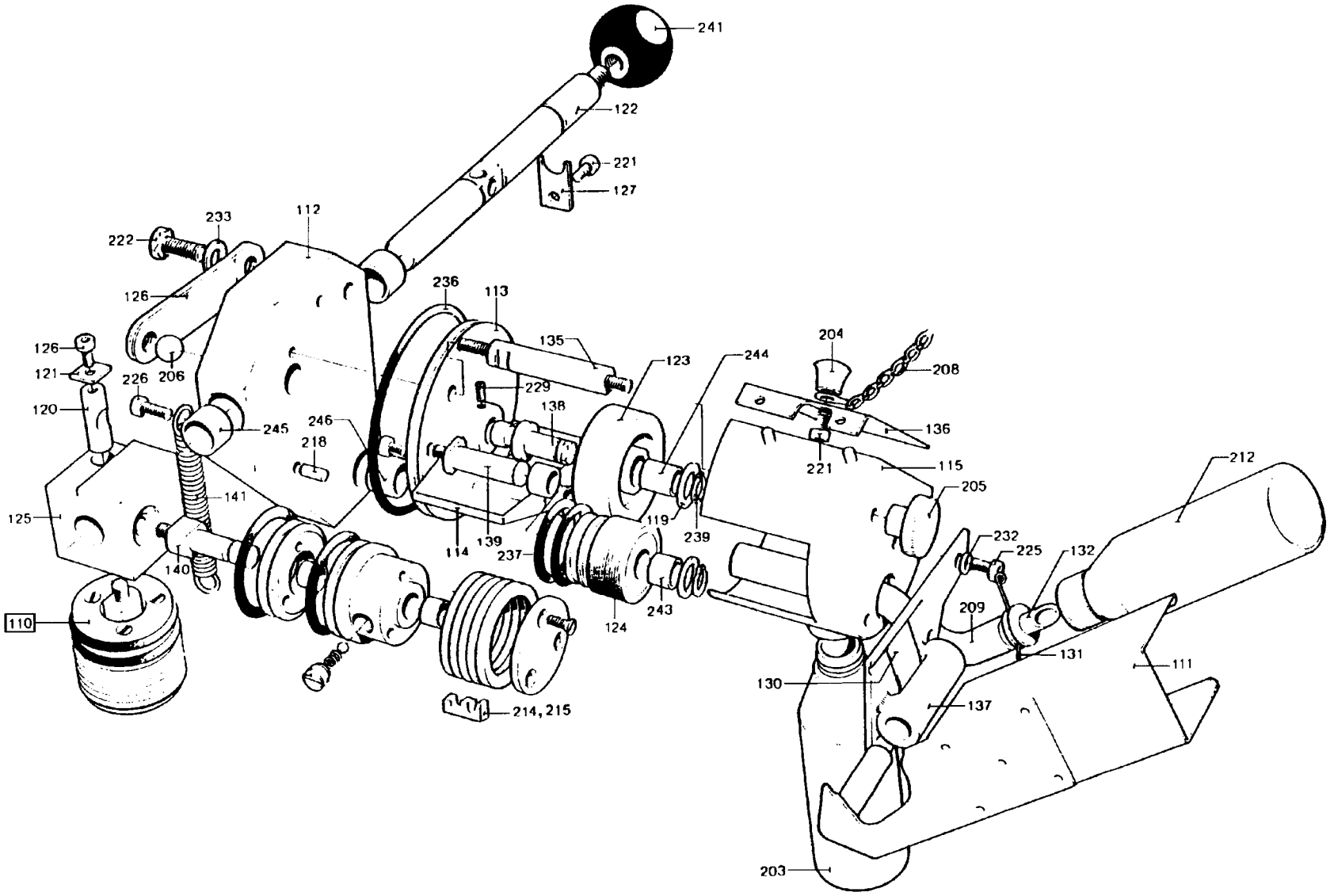

3746001.TIF
37460-1
AM

From	Pos	Part No	SP	UN	Qty	Description
	F000	**C- 37460-0101**				**Dating unit, Assy'**
	F110	**C- 037461-0101**	**-**		**2**	**PRINTING WHEEL**
		C- 033608-0101				**. SCREW**
	111	36361	-		1	HOLDER
	112	37465	-		1	HEAD
	113	37466	-		1	ROLLER BRACKET
	114	37467	-		1	INK WELL
	115	37468	-		1	COVER
	119	2033-0009	R		2	WASHER
	120	6071	-		1	LOCKING FINGER
	121	6074	-		1	WASHER
	122	33611	-		1	PIVOT AXLE
	123	33615	-		1	INK ROLLER
	124	33617	-		1	INK TRANSFER ROLLER
	125	33621	-		1	MOUNTING BLOCK
	126	33622	-		3	LEAF SPRING
	127	33624	-		1	SECURING PLATE
	130	35547	-		1	SPRING
	131	35548	-		1	SPRING
	132	35549	-		1	CANNULAR TUBE
	135	37476	-		1	SHAFT
	136	37477	-		1	LID
	137	37478	-		1	PIVOT BRACKET
	138	37482	-		1	ECCENTRIC SHAFT
	139	37483	-		1	SHAFT
	140	37484	-		2	SHAFT
	141	37486	-		1	TENSION SPRING
	203	90050-0008	-		1	BOTTLE
	204	90051-0026	-		1	HANDLE
	205	90051-0053	-		1	HANDLE
	206	90090-0003	-		1	STEEL BALL
	208	90155-0001	-	MM	400	CHAIN
	209	90166-0113	-	MM	100	HOSE
	212	90299-0013	-		1	INK
		90299-0300	R		0	* COVER
	214	90413-0033	-		2	CODE INSERT SET
	215	90413-0047	-		2	CODE INSERT SET
	218	311103-0351	-		2	CYLINDRICACP M6 6X16 RFR
	221	312105-0327	-		1	SCREW M6S5X12 A4 80
	222	312105-0449	-		1	SCREW M6S8X16RFR
	225	312115-0323	-		4	SCREW 5X8 A4 80
	226	312115-0325	-		2	SCREW 5X10 A4 80
	229	312318-0285	-		1	STOP SCREW SK6SS4X6RFR
	232	315105-0146	-		2	WASHER BRB5,3X10RFR
	233	315105-0165	-		1	WASHER BRB8,4X16RFR
	236	315202-0307	R		1	O-RING 79,5X3
	237	315202-0910	R		2	O-RING 25,80X3,53
	239	315750-0107	R		2	CIRCLIP SGA10
	241	318800-0106	-		1	HANDLE BALLA D.40-M10
	243	321120-0104	-		2	BUSHING 10/12X10
	244	90240-0028	-		1	PLAIN BEARING
	245	321120-0122	-		2	BUSHING 15/17X15
	246	321120-0124	-		1	BUSHING 15/17X25

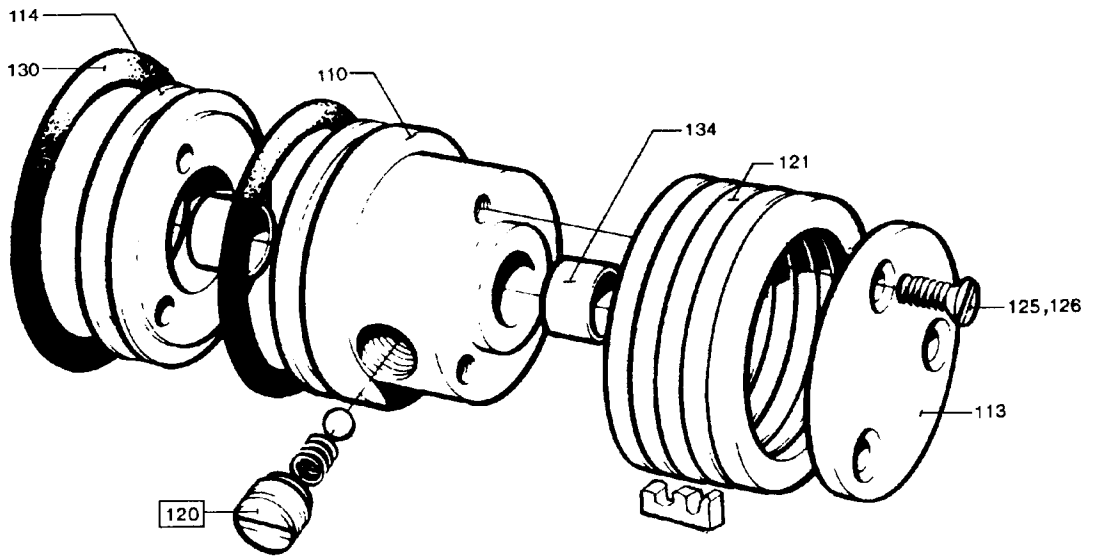

3746101.TIF
37461-1
AM 4466

From	Pos	Part No	SP	UN	Qty	Description
	F000	**C- 37461-0101**				**Printing Wheel, Assy'**
	F120	**C- 033608-0101**	**-**		**1**	**SCREW**
	110	37469	-		1	PRINTING WHEEL
	113	33618	-		1	LID
	114	37479	-		1	RING
	121	90427-0312	-		5	DATING UNIT
	125	312145-0287	-		3	SLOTTED HEMFS4X8RFR
	126	312145-0291	-		3	SLOTTED HEMFS4X12RFR
	130	315202-0527	R		2	O-RING 37,47X5,33
	134	321120-0104	-		2	BUSHING 10/12X10

From	Pos	Part No	SP	UN	Qty	Description

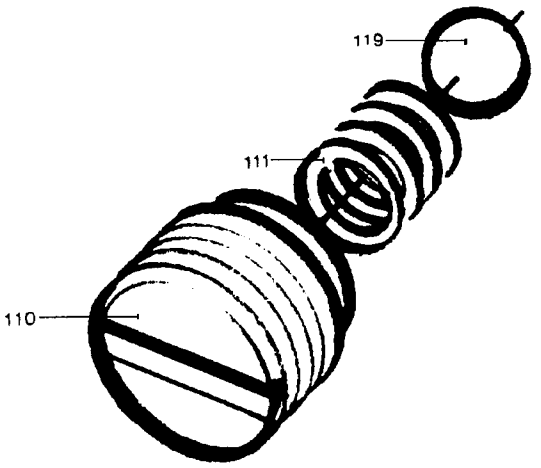

3360801.TIF
33608-1
AM

From	Pos	Part No	SP	UN	Qty	Description
	F000	**C- 33608-0101**				**Screw, Assy'**
	110	33625	-		1	SCREW
	111	33626	-		1	COMPRESSION SPRING
	119	90090-0002	-		1	STEEL BALL

From	Pos	Part No	SP	UN	Qty	Description

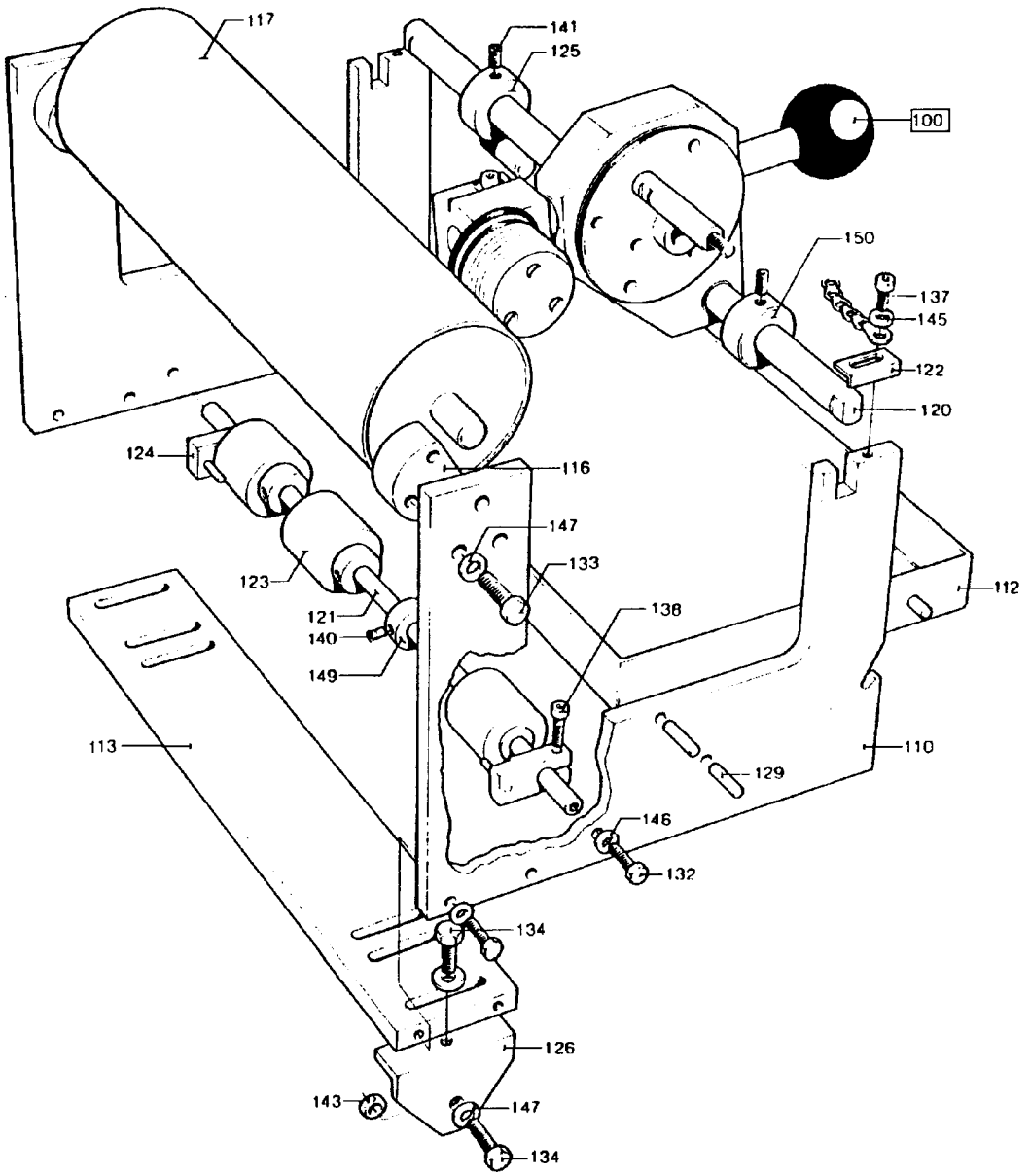

3748501.TIF
37485-1
AM

From	Pos	Part No	SP	UN	Qty	Description
Machines with strip applicator						
	000	**C- 37485-0101**				**HOLDER, ASS'Y**
	126	37771	-		2	FASTENING BRACKET
	133	312105-0368	-		8	SCREW M6S6X16RFR
	147	315105-0153	-		10	WASHER BRB6,4X12RFR
Machines with hole punch device						
	000	**C- 37485-0102**				**HOLDER, ASS'Y**
	133	312105-0368	-		6	SCREW M6S6X16RFR
	147	315105-0153	-		8	WASHER BRB6,4X12RFR
Common Parts						
	110	37462	-		2	END SECTION
	112	37463	-		1	BOX
	113	37464	-		1	BOTTOM PLATE
	116	4317	-		2	BEARING
	117	4319-0005	-		1	COUNTER ROLLER
	120	37470	-		1	SHAFT
	121	37471	-		1	SHAFT
	122	37472	-		2	LOCK
	123	37473	-		3	ROLL
	124	37474	-		2	GUIDE FINGER
	125	37475	-		1	HOLDER
	129	311103-0306	-		4	CYLINDRICACP M6 5X12 RFR
	132	312105-0329	-		6	SCREW M6S5X16 A4 80
	134	312105-0370	-		2	SCREW M6S6X20RFR
	137	312115-0287	-		2	SCREW 4X8 A4 80
	138	312115-0293	-		2	SCREW 4 X 16 A4 80
	140	312318-0285	-		4	STOP SCREW SK6SS4X6RFR
	141	312318-0360	-		3	STOP SCREW SK6SS6X6RFR
	143	312605-0316	-		2	NUT M6M6RFR
	145	315105-0136	-		3	WASHER BRB4,3X8RFR
	146	315105-0146	-		6	WASHER BRB5,3X10RFR
	149	315742-0104	-		4	RETAINING 8SMS199RFR
	150	315742-0111	-		1	RETAINING 15SMS199RFR

From	Pos	Part No	SP	UN	Qty	Description

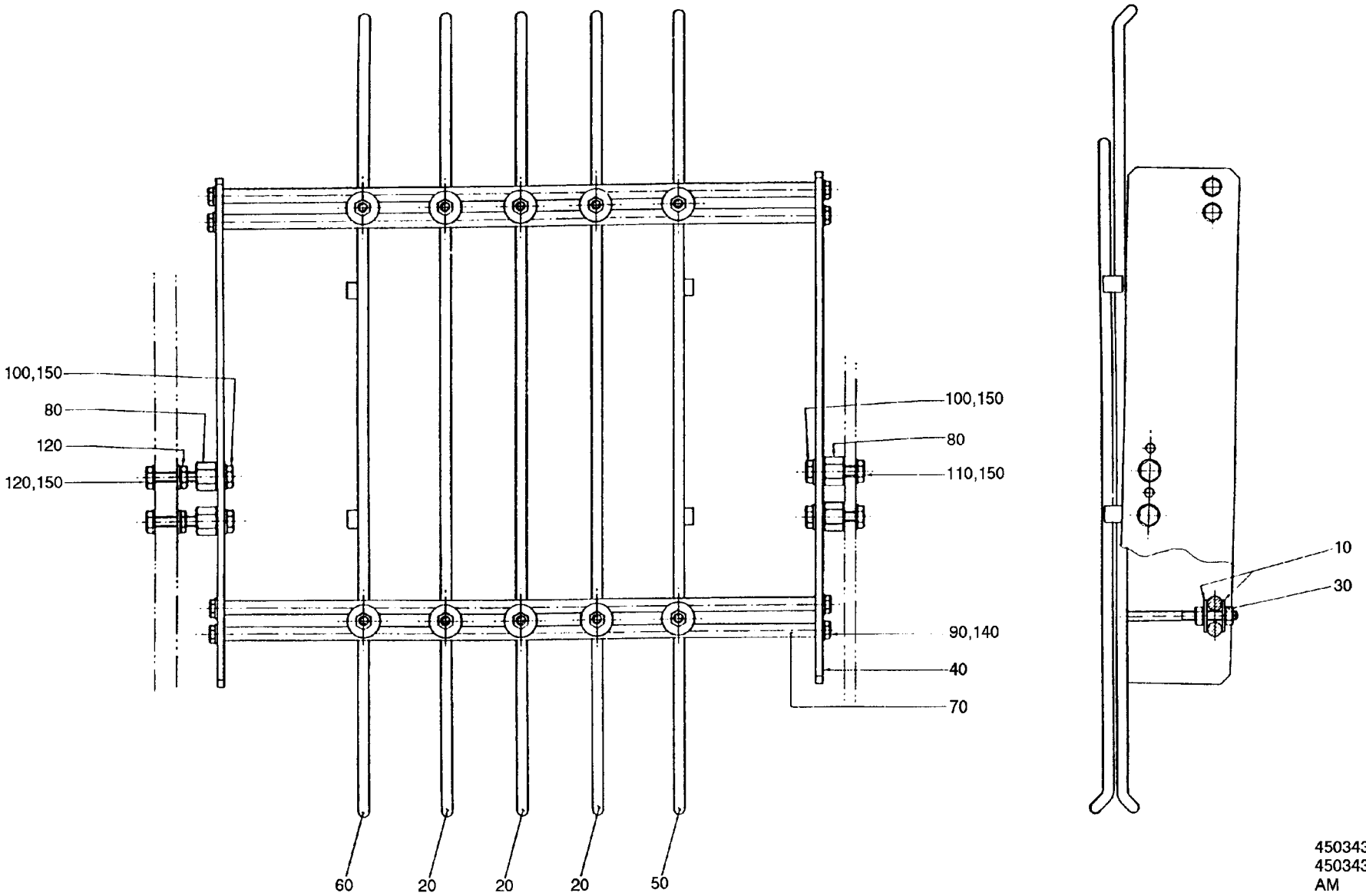

45034301.TIF
450343-1
AM

From	Pos	Part No	SP	UN Qty	Description
TC/150 TCA/150 TC/300 TCA/300					
	F000	**C- 450343-0101**			**Paper Guide, Assy'**
	010	19262	-	20	WASHER
	020	283721	-	3	GUIDE ROD
	030	312605-0314	-	20	NUT M6M5RFR
TCA/25					
	F000	**C- 450343-0102**			**Paper Guide, Assy'**
	010	19262	-	12	WASHER
	020	283721	-	1	GUIDE ROD
	030	312605-0314	-	12	NUT M6M5RFR
Common Parts					
	040	267922	-	2	END SECTION
	050	283719	-	1	GUIDE ROD
	060	283720	-	1	GUIDE ROD
	070	4318-0009	-	4	SHAFT
	080	267929	-	4	NUT
	090	312105-0329	-	8	SCREW M6S5X16 A4 80
	100	312105-0364	-	4	SCREW M6S6X10RFR
	110	312105-0366	-	2	SCREW M6S6X12RFR
	120	312105-0374	-	2	SCREW M6S6X30RFR
	130	312605-0316	-	2	NUT M6M6RFR
	140	315105-0146	-	8	WASHER BRB5,3X10RFR
	150	315105-0153	-	10	WASHER BRB6,4X12RFR

From	Pos	Part No	SP	UN Qty	Description

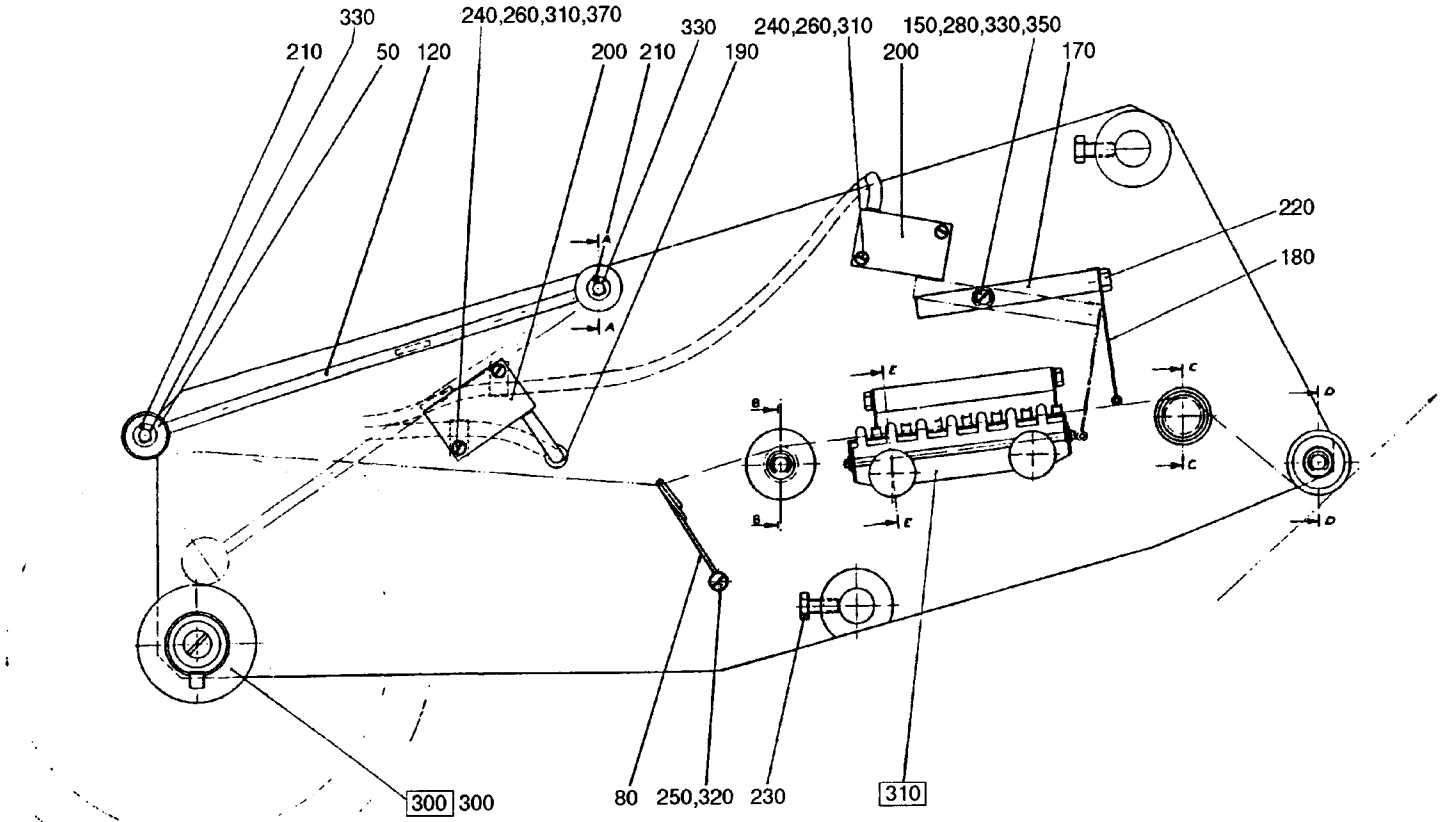

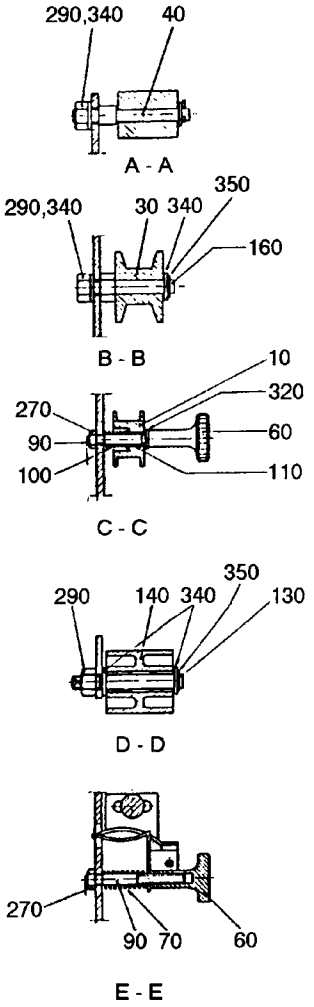

29348301.TIF
293483-1
AM 14805

From	Pos	Part No	SP	UN	Qty	Description
Strip width RB-10 Relay Machine						
	F000	**C- 293483-0101**				**Fastening plate, Asssy'**
	010	19787-0002	-		1	ROLL
	140	539619	-		1	ROLL
	200	90044-0062	-		2	PROXIMITY SWITCH
Strip width RB-10 TPMC Machine						
	F000	**C- 293483-0102**				**Fastening plate, Asssy'**
	010	19787-0002	-		1	ROLL
	140	539619	-		1	ROLL
	200	90044-0104	-		2	INDUCTIVE SWITCH
Strip width RB-10 TPMC Machine TCA/25						
	F000	**C- 293483-0103**				**Fastening plate, Asssy'**
	010	19787-0002	-		1	ROLL
	145	18052-0003	-		1	MANTEL RUBBER
	155	267607	-		1	ROLL
	200	90044-0104	-		2	INDUCTIVE SWITCH
Strip width RB-15 TPMC Machine TCA/25						
	F000	**C- 293483-0104**				**Fastening plate, Asssy'**
	010	19787-0003	-		1	ROLL
	145	18052-0003	-		1	MANTEL RUBBER
	155	267607	-		1	ROLL
	200	90044-0104	-		2	INDUCTIVE SWITCH
Common Parts						
	F300	**C- 020387-0101**	**-**		**1**	**BOBBIN**
	F310	**C- 020389-0101**	**-**		**1**	**BRAKE**
	020	436566	-		1	MOUNTING SHEET (METAL)
	030	6695	-		1	ROLL
	040	14964-0002	-		1	SHAFT
	050	14966	-		1	ROLL
	060	19217	-		3	KNURLED SCREW
	070	19223	-		2	COMPRESSION SPRING
	080	19788	-		1	BOW CLAMP
	090	19790	-		3	STUD SCREW
	100	19795	-		1	COMPRESSION SPRING
	110	19797	-		1	BUSHING
	120	269051	-		1	ARM
	130	436567	-		1	SHAFT
	150	436569	-		1	SCREW
	160	436571	-		1	SHAFT
	170	449600	-		1	LINK
	180	449601	-		1	ARM
	182	529025	-		1	CRAMP
	185	538431	-		1	HOLDER
	190	90015-0026	-		1	BUSHING
	210	311411-0137	-		3	SS 2343

From	Pos	Part No	SP	UN	Qty	Description
	215	312105-0289	-		2	SCREW M6S4X10 A4 80
	220	312105-0325	-		1	SCREW M6S5X10 A4 80
	230	312105-0366	-		2	SCREW M6S6X12RFR
	235	312125-0220	-		1	SLOTTED HEMCS3X6RFR
	240	312125-0230	-		4	SLOTTED HEMCS3X20RFR
	250	312125-0285	-		1	SLOTTED HEMCS4X6RFR
	260	312605-0310	-		5	NUT M6M3RFR
	270	312605-0312	-		5	NUT M6M4RFR
	280	312605-0314	-		1	NUT M6M5RFR
	290	312605-0316	-		3	NUT M6M6RFR
	300	312605-0318	-		1	NUT M6M8RFR
	310	315105-0124	-		5	WASHER BRB3,2X6RFR
	320	315105-0136	-		5	WASHER BRB4,3X8RFR
	330	315105-0146	-		5	WASHER BRB5,3X10RFR
	340	315105-0153	-		8	WASHER BRB6,4X12RFR
	350	315754-0106	-		3	LOCKING WAE 4
	370	352110-0100	-		2	CRAMP TK 5-7

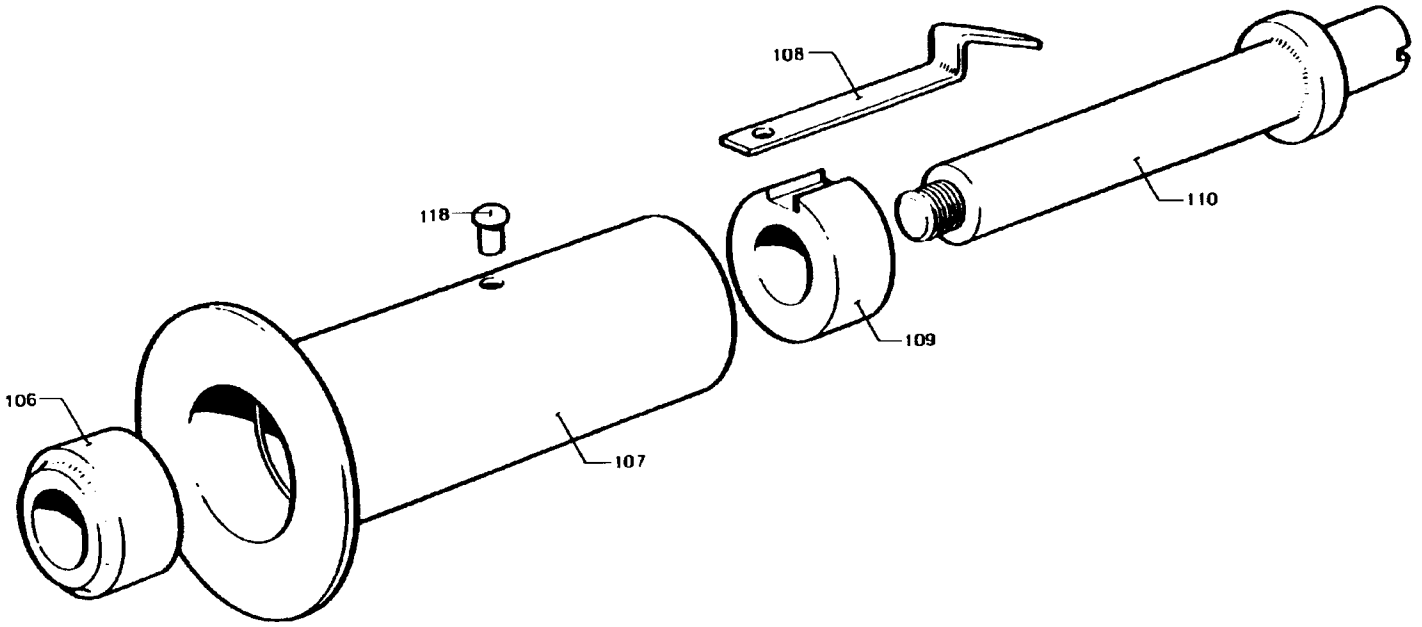

2038701.TIF
20387-1
AM

From	Pos	Part No	SP	UN	Qty	Description
	F000	**C- 20387-0101**				**Bobbin, Assy'**
	106	5486	-		1	BEARING
	107	6157	-		1	BOBBIN
	108	6158	-		1	SPRING
	109	6159	-		1	BEARING
	110	19784	-		1	SHAFT
	118	311506-0278	-		1	RIVET KN2,6X6KPR

From	Pos	Part No	SP	UN	Qty	Description

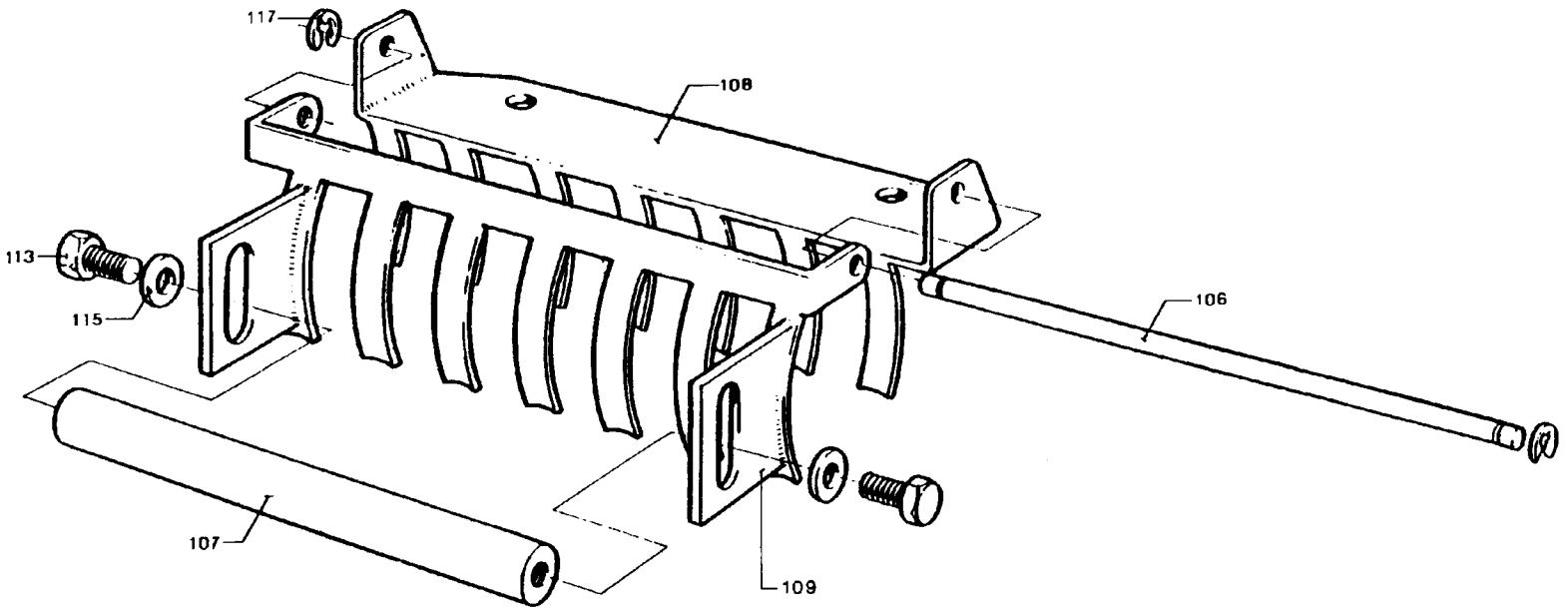

2038901.TIF
20389-1
AM 15086

From	Pos	Part No	SP	UN	Qty	Description
	F000	**C- 20389-0101**				**Hose clamp, Assy'**
	106	5778	-		1	SHAFT
	107	19083	-		1	WEIGHT
	108	21071	-		1	BRAKE
	109	21072	-		1	BRAKE
	113	312101-0291	-		2	SCREW M6S4X12FZB
	115	315105-0136	-		2	WASHER BRB4,3X8RFR
	117	315754-0103	-		2	LOCKING WAE 1,9

From	Pos	Part No	SP	UN	Qty	Description

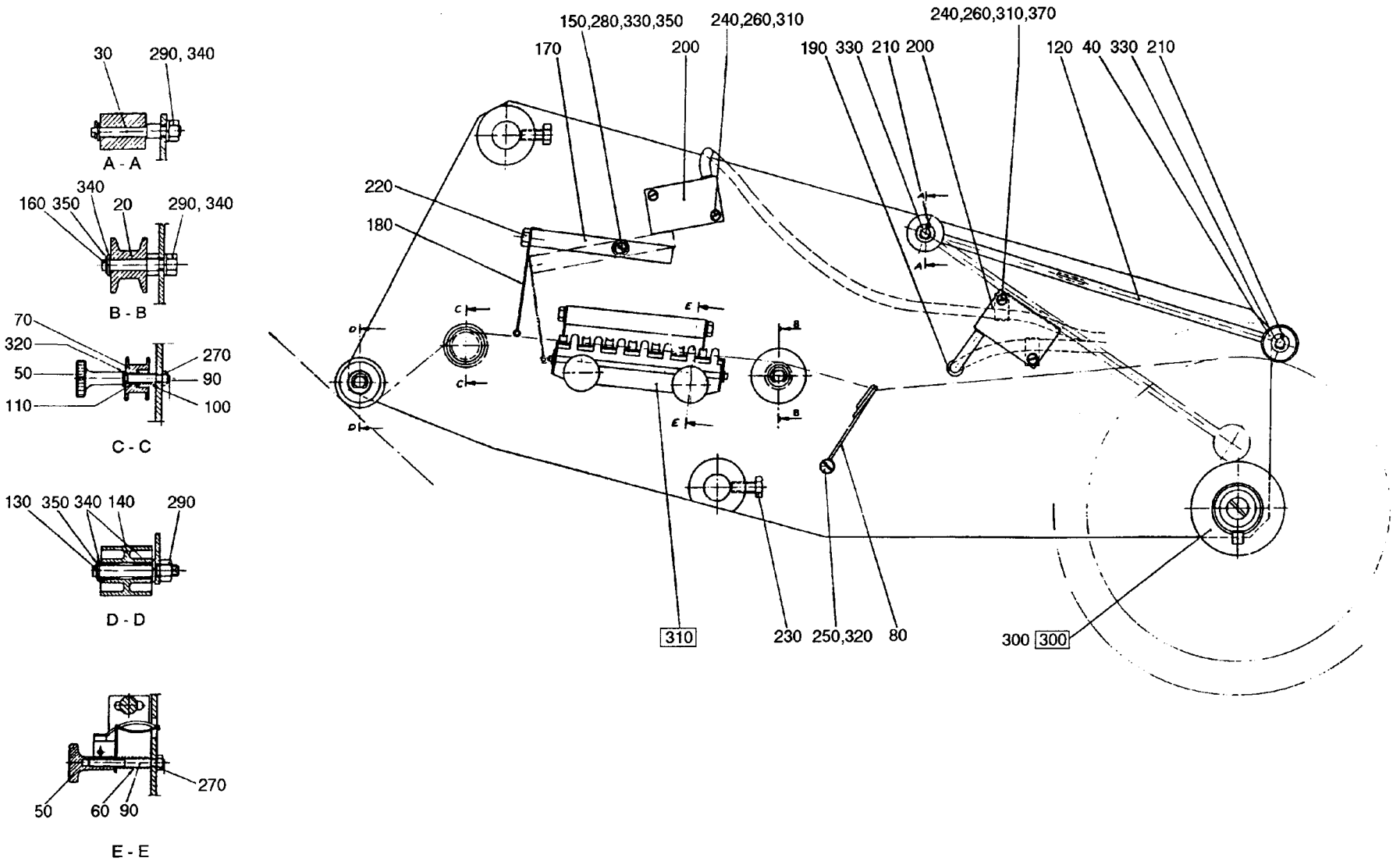

29348401.TIF
293484-1
AM 14805

From	Pos	Part No	SP	UN	Qty	Description
	F000	**C- 293484-0101**				**Fastening plate Relay Machine, Assy'**
	F000	**C- 293484-0102**				**Fastening plate TPMC Machine, Assy'**
	F300	**C- 020387-0101**	**-**		**1**	**BOBBIN**
	F310	**C- 020389-0101**	**-**		**1**	**BRAKE**
	200	90044-0062	-	*	2	PROXIMITY SWITCH Relay Machine
	200	90044-0104	-		2	INDUCTIVE SWITCH TPMC Machine
	010	436566	-		1	MOUNTING SHEET (METAL)
	020	6695	-		1	ROLL
	030	14964-0002	-		1	SHAFT
	040	14966	-		1	ROLL
	050	19217	-		3	KNURLED SCREW
	060	19223	-		2	COMPRESSION SPRING
	070	19787-0001	-		1	ROLL
	080	19788	-		1	BOW CLAMP
	090	19790	-		3	STUD SCREW
	100	19795	-		1	COMPRESSION SPRING
	110	19797	-		1	BUSHING
	120	269051	-		1	ARM
	130	436567	-		1	SHAFT
	140	539619	R		1	ROLL
	150	436569	-		1	SCREW
	160	436571	-		1	SHAFT
	170	449600	-		1	LINK
	180	449601	-		1	ARM
	182	538431	-		1	HOLDER
	187	529025	-		1	CRAMP
	190	90015-0026	-		1	BUSHING
	210	311411-0137	-		3	SS 2343
	215	312105-0289	-		2	SCREW M6S4X10 A4 80
	220	312105-0325	-		1	SCREW M6S5X10 A4 80
	230	312105-0366	-		2	SCREW M6S6X12RFR
	235	312125-0220	-		1	SLOTTED HEMCS3X6RFR
	240	312125-0230	-		4	SLOTTED HEMCS3X20RFR
	250	312125-0285	-		1	SLOTTED HEMCS4X6RFR
	260	312605-0310	-		5	NUT M6M3RFR
	270	312605-0312	-		5	NUT M6M4RFR
	280	312605-0314	-		1	NUT M6M5RFR
	290	312605-0316	-		3	NUT M6M6RFR
	300	312605-0318	-		1	NUT M6M8RFR
	310	315105-0124	-		5	WASHER BRB3,2X6RFR
	320	315105-0136	-		5	WASHER BRB4,3X8RFR
	330	315105-0146	-		5	WASHER BRB5,3X10RFR
	340	315105-0153	-		8	WASHER BRB6,4X12RFR
	350	315754-0106	-		3	LOCKING WAE 4
	370	352110-0100	-		2	CRAMP TK 5-7

From	Pos	Part No	SP	UN	Qty	Description

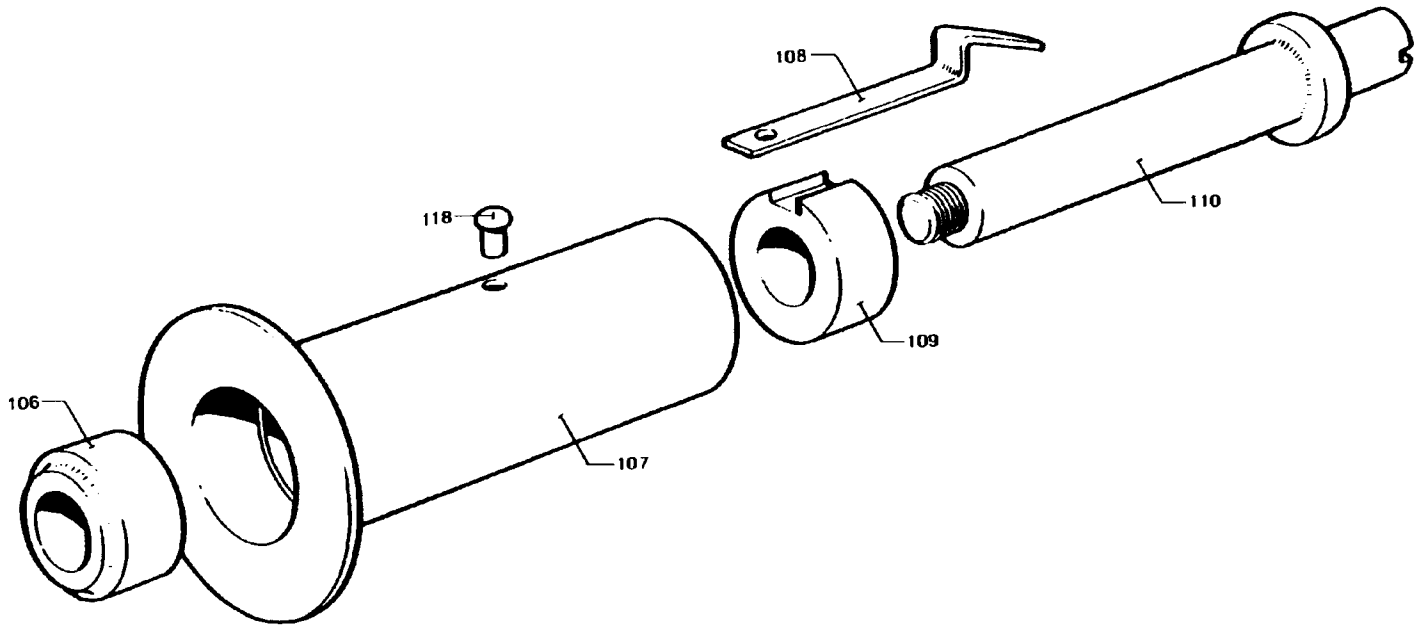

2038701.TIF
20387-1
AM

From	Pos	Part No	SP	UN	Qty	Description
	F000	**C- 20387-0101**				**Bobbin, Assy'**
	106	5486	-		1	BEARING
	107	6157	-		1	BOBBIN
	108	6158	-		1	SPRING
	109	6159	-		1	BEARING
	110	19784	-		1	SHAFT
	118	311506-0278	-		1	RIVET KN2,6X6KPR

From	Pos	Part No	SP	UN	Qty	Description

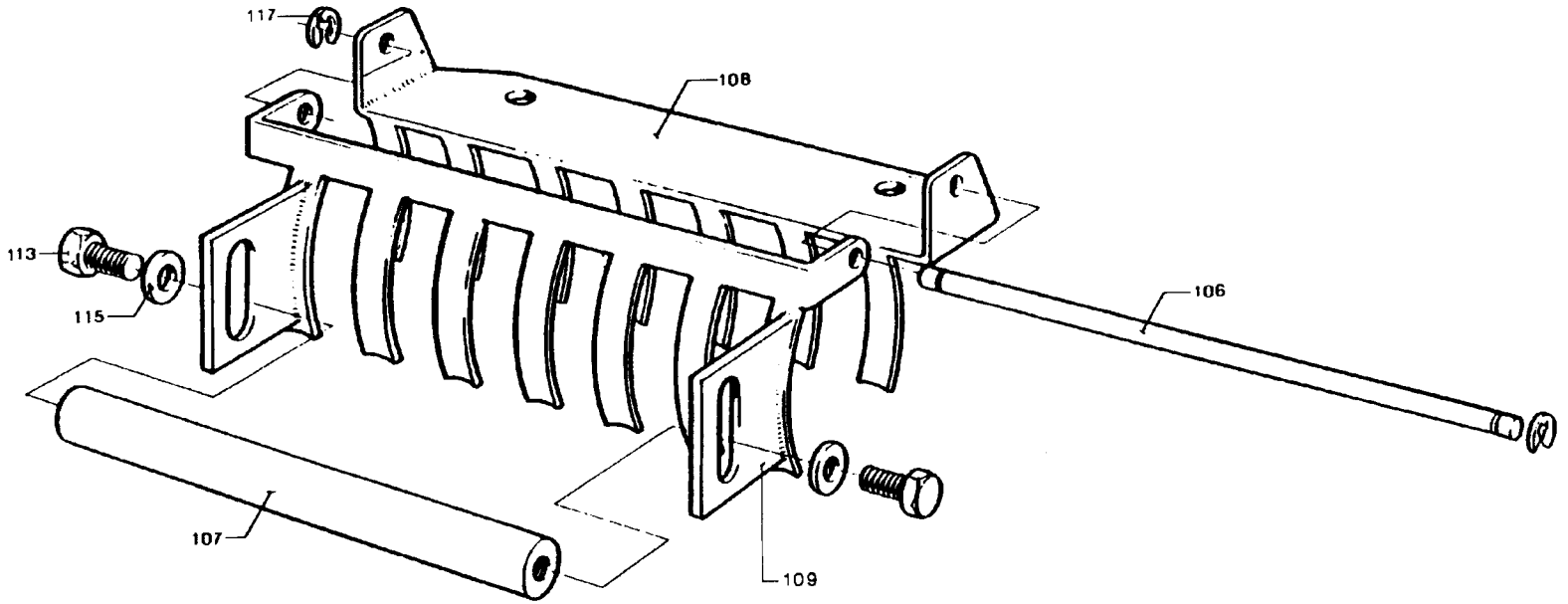

2038901.TIF
20389-1
AM 15086

From	Pos	Part No	SP	UN	Qty	Description
	F000	**C- 20389-0101**				**Hose clamp, Assy'**
	106	5778	-		1	SHAFT
	107	19083	-		1	WEIGHT
	108	21071	-		1	BRAKE
	109	21072	-		1	BRAKE
	113	312101-0291	-		2	SCREW M6S4X12FZB
	115	315105-0136	-		2	WASHER BRB4,3X8RFR
	117	315754-0103	-		2	LOCKING WAE 1,9

From	Pos	Part No	SP	UN	Qty	Description

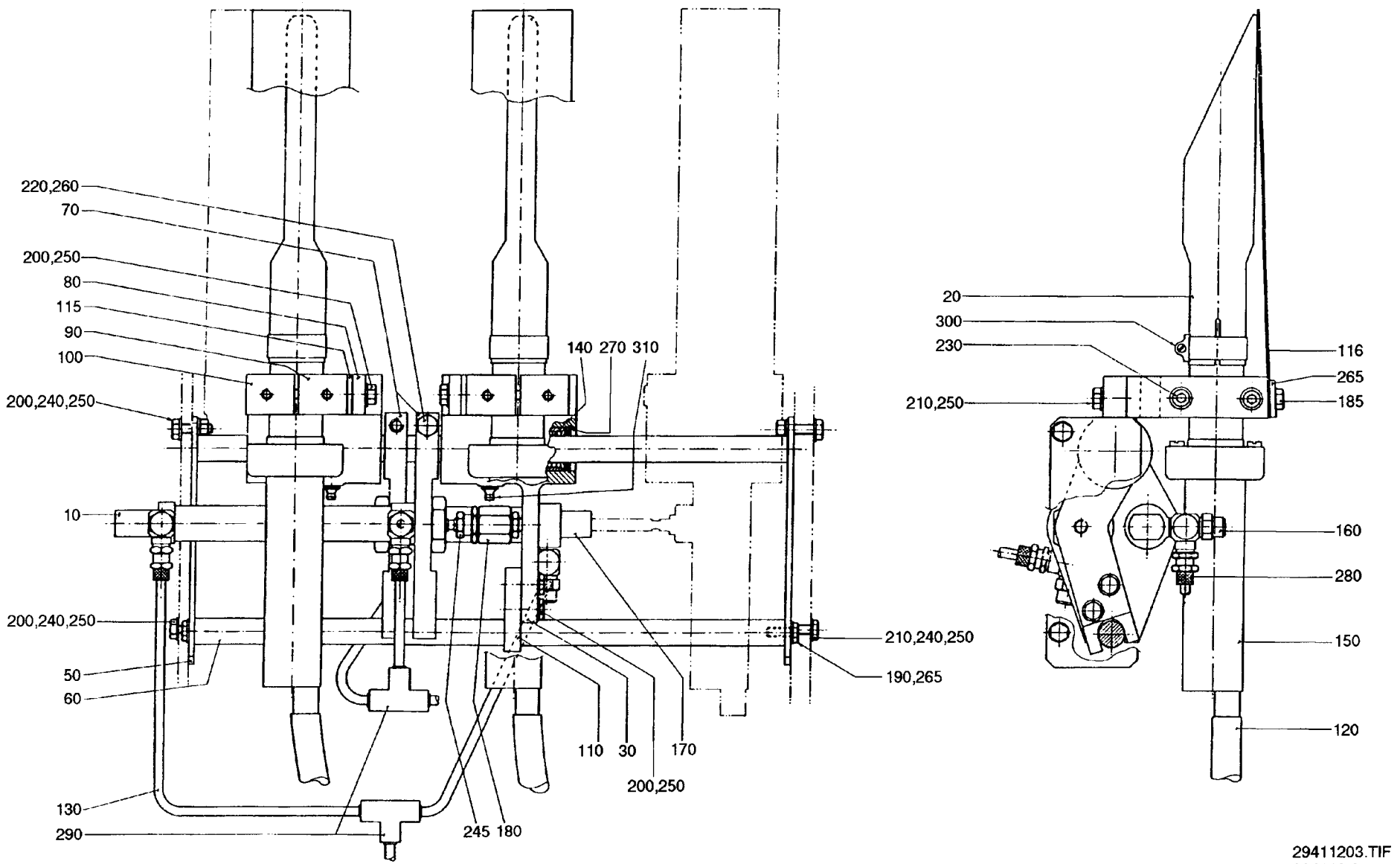

29411203.TIF
294112-3
AM

From	Pos	Part No	SP	UN	Qty	Description
	F000	**C- 294112-0201**				**Element group, Assy'**
	010	90239-0825	-		1	CYLINDER
	020	538132	-		2	NOZZLE
	030	G- 283468	-		2	BEARING CONSOLE
	050	267923	-		2	PLATE
	060	267924	-		2	SHAFT
	070	283470	-		2	YOKE
	080	283471	-		2	BRACKET
	090	283472	-		2	BRACKET
	100	283473	-		2	CRAMP
	110	283474	-		2	STEERING
	115	294498	-		2	INSULATING PLATE
	116	294499	-		2	HEAT GUARD
	120	90166-0098	-	MM	600	SHRINKABLE HOSE
	130	90166-0081	-	MM	2000	HOSE
	140	90189-0011	-		4	BALL BUSHING
	150	90206-0052	-		2	HOT AIR ELEMENT
		90166-0190	S		0	# PLASTIC HOSE
		90206-0324	S		0	# HEATING CARTRIDGE
	160	90235-0241	-		4	VALVE
	170	90239-0821	-		1	CYLINDER
	180	90239-0370	-		2	CONNECTION
	185	312105-0364	-		4	SCREW M6S6X10RFR
	190	312105-0368	-		2	SCREW M6S6X16RFR
	200	312105-0370	-		10	SCREW M6S6X20RFR
	210	312105-0372	-		6	SCREW M6S6X25RFR
	220	312105-0455	-		2	SCREW M6S8X30RFR
	230	312115-0378	-		4	SCREW 6X40 A4 80
	240	312605-0316	-		4	NUT M6M6RFR
	245	312621-0318	-		2	NUT ML6M8FZB
	250	315105-0153	-		20	WASHER BRB6,4X12RFR
	260	315105-0165	-		2	WASHER BRB8,4X16RFR
	265	315121-0153	-		6	WASHER TBRSB6,4X22FZB
	270	315752-0120	-		4	CIRCLIP SGH26
	280	342920-0113	-		4	PIPE COUPL6/4-1/8
	290	342946-0112	-		2	T-CONNECTI6/4
	300	342991-0106	-		2	HOSE CLIP 26-38MMRFR
	310	344502-0021	-		2	NIPPLE L AHM6

From	Pos	Part No	SP	UN	Qty	Description

From	Pos	Part No	SP	UN Qty	Description
		C- 267052-0301			**START-UP KIT, ASS'Y**
		C- 267052-0302			**START-UP KIT, ASS'Y** (TCA/25)
	130	18052-0003	-	2	MANTEL RUBBER
Common Parts					
	100	2033-0009	-	2	WASHER
	170	19536	-	1	CLAMPING PART
	180	538527	-	1	RUBBER RAIL
	320	90206-0073	-	1	HEATING ELEMENT
	325	90206-0324	-	1	HEATING CARTRIDGE
	410	315202-0527	-	2	O-RING 37,47X5,33
	420	315202-0910	-	2	O-RING 25,80X3,53
	430	315750-0107	-	2	CIRCLIP SGA10
	440	315754-0109	-	2	LOCKING WAE 7

From	Pos	Part No	SP	UN Qty	Description

This page is intentionally left blank

From	Pos	Part No	SP	UN	Qty	Description
		265718				WIRING DIAGRAM
	210	*)266504	-		1	WORKMAN'S TROLLEY
	220	451170	-		1	PAPER TROLLEY

Pos	Group No	Description	Page
09-F000	633209-070V	Regular Accessories	283
09-F010	499134-010V	Roller Stand	285
09-F030	532265-010V	Cable Duct	287
09.F040	451432-010V	Tools AT-Machines	289
.	449969-010V	Tool	291
09-F050	451434-020V	Start-Up Kit	293
	451434-020V	Start-Up Kit	295
09-F060	544536-010V	Set of Signs	297
***09-**	567111-010V	Air Jet Gun	299

From	Pos	Part No	SP	UN	Qty	Description

***) Deviates from the B-group development step**

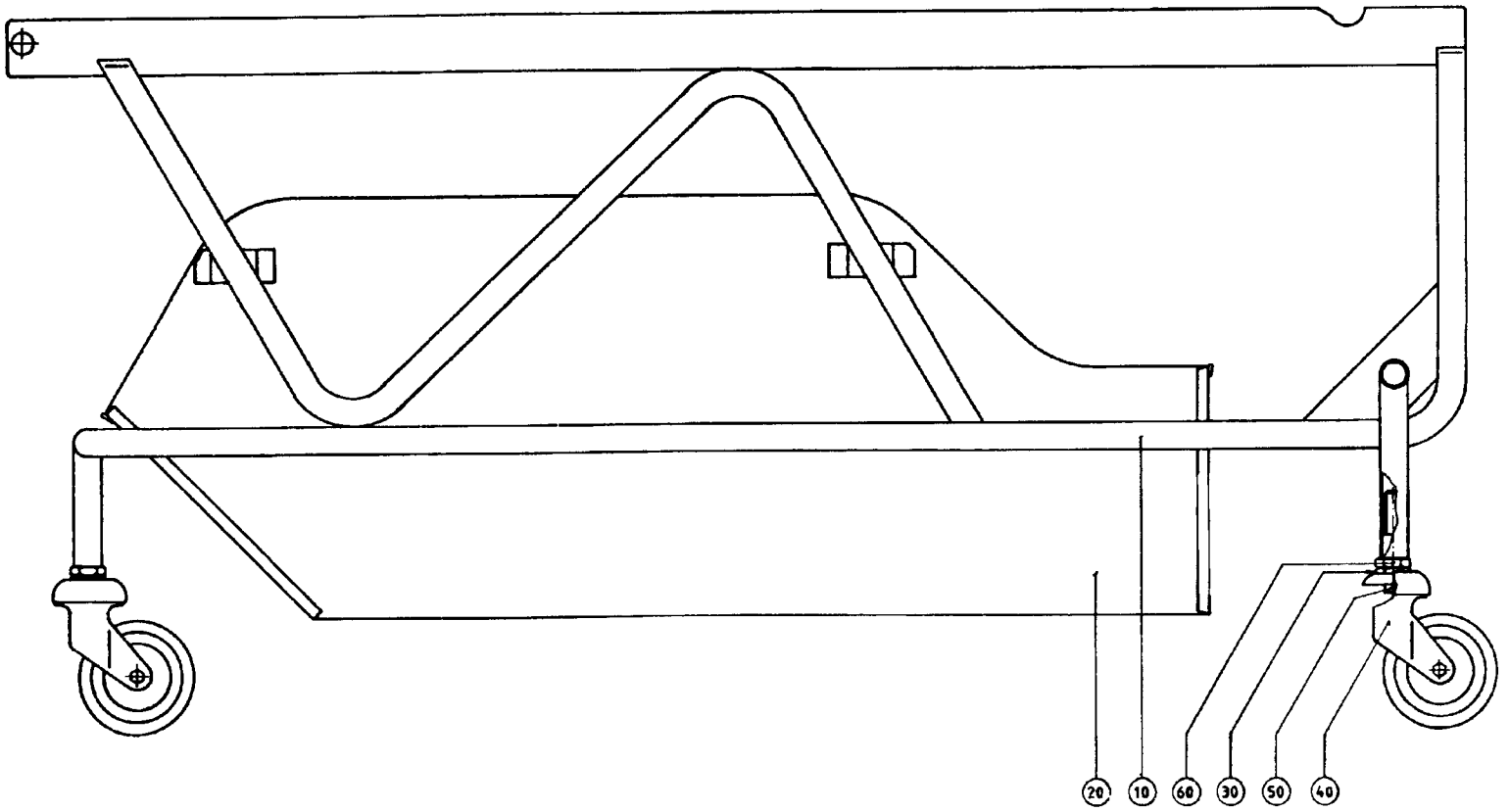

49913401.TIF
499134-1
AM 8421

From	Pos	Part No	SP	UN	Qty	Description
TCA/150						
	F000	**C- 499134-0101**				**Roller Stand, Ass'y**
	010	499047-0003	-		1	MACHINE BODY
	020	11045	-		1	VAT
TC/150						
	F000	**C- 499134-0105**				**Roller Stand, Ass'y**
	010	499047-0001	-		1	MACHINE BODY
	020	11045	-		1	VAT
Common Parts						
	030	499048	-		3	DOWEL
	040	90191-0045	-		3	WHEEL
	050	312111-0495	-		3	SCREW MC6S10X30FZB
	060	312621-0324	-		3	NUT ML6M16FZB

From	Pos	Part No	SP	UN	Qty	Description

From	Pos	Part No	SP	UN	Qty	Description
	F000	**C- 532265-0101**				**Cable Duct, Ass'y**
	010	90153-0001	-		1	ADHESIVE
	020	90157-0003	-	M	6	SEALING COMPOUND
	040	312101-0370	-		20	SCREW M6S6X20FZB
	050	312601-0316	-		20	NUT M6M6FZB
	060	312701-0316	-		26	CAP NUT MHM6 FZB
	160	352032-0101	-	M	2	CABLE DUCT CK 001
	170	352032-0103	-	M	4	CABLE DUCT CK 002
	180	352032-0113	-		1	CABLE DUCT CK 102
	190	352032-0118	-		1	CABLE DUCT CK 112
	200	352032-0119	-		1	CABLE DUCT CK 113
	210	352032-0120	-		1	CABLE DUCT CK 121
	220	352032-0121	-		1	CABLE DUCT CK 122
	230	352032-0130	-	M	18	RUBBER STRCK 000-10
	240	352032-0131	-		20	CABLE HOLDRE CK 000-30
	250	352032-0132	-		26	SCREW 9 00 0610
	260	352032-0134	-		50	CLAMPING PCK 000-20
	270	352032-0139	-		1	BRACKET CK 200-40
	280	353001-0104	-		150	END SLEEVE1,5
	290	353001-0105	-		10	END SLEEVE2,5
	300	359000-0900	-		1	MARKING COYLSOR PA
	310	359009-0800	-		1	CABLE MARKM#RKEN PK

From	Pos	Part No	SP	UN	Qty	Description

From	Pos	Part No	SP	UN	Qty	Description
TCA/150						
Volume 180 ml						
	F000	**C- 451432-0101**				**Tool, Ass'y**
	080	7090-0003	-		1	DIP STICK
	100	11113-0002	-		1	HEAT GUARD
	110A	11140	-		1	PIPE
	120	11141	-		1	CENTERING DISC
	130	11142	-		1	PLUMMET AT-300
Volume 189 ml						
	F000	**C- 451432-0102**				**Tool, Ass'y**
	070	7090-0002	-		1	DIP STICK
	100	11113-0002	-		1	HEAT GUARD
	110A	11140	-		1	PIPE
	120	11141	-		1	CENTERING DISC
	130	11142	-		1	PLUMMET AT-300
Volume 200 ml						
	F000	**C- 451432-0103**				**Tool, Ass'y**
	100	11113-0002	-		1	HEAT GUARD
	110A	11140	-		1	PIPE
TCA/300						
Volume 236 ml						
	F000	**C- 451432-0104**				**Tool, Ass'y**
	030	3577-0004	-		1	DIP STICK
	100	11113-0002	-		1	HEAT GUARD
	110A	11140	-		1	PIPE
	120	11141	-		1	CENTERING DISC
	130	11142	-		1	PLUMMET AT-300
Volume 250 ml						
	F000	**C- 451432-0105**				**Tool, Ass'y**
	040	3577-0005	-		1	DIP STICK
	100	11113-0002	-		1	HEAT GUARD
	110A	11140	-		1	PIPE
	120	11141	-		1	CENTERING DISC
	130	11142	-		1	PLUMMET AT-300
Volume 300 ml						
	F000	**C- 451432-0106**				**Tool, Ass'y**
	050	3577-0007	-		1	DIP STICK
	100	11113-0002	-		1	HEAT GUARD
	110A	11140	-		1	PIPE
	120	11141	-		1	CENTERING DISC
	130	11142	-		1	PLUMMET AT-300

From	Pos	Part No	SP	UN	Qty	Description
TCA/500						
Volume 473 ml						
	F000	**C- 451432-0107**				**Tool, Ass'y**
	020	3576-0003	-		1	DIP STICK
	090	11113-0001	-		1	HEAT GUARD
	140	12244	-		1	PLUMMET
	150A	12635	-		1	PIPE BEND
	160	21016	-		1	CENTERING DISC
Volume 500 ml						
	F000	**C- 451432-0108**				**Tool, Ass'y**
	010	3576-0001	-		1	DIP STICK
	090	11113-0001	-		1	HEAT GUARD
	140	12244	-		1	PLUMMET
	150A	12635	-		1	PIPE BEND
	160	21016	-		1	CENTERING DISC
Common Parts						
	F045	**C- 449969-0101**	-		1	**TOOL**
	200	2705	-		2	KEY
	210	36430	-		1	PULL-TROUGH BRUSH
	220	72947	-		1	HOOK SPANNER
	400	90303-0004	-		1	GLOVES
	410	90337-0001	-		1	AEROMETER
	420	90337-0002	-		1	MEASURING CYLINDER
	430	90337-0003	-		1	PIPETTE
	500A	315250-0101	-		1	GASKET 32/25
	510	315250-0104	-		2	GASKET 61/51
	520A	342803-0101	-		1	NUT 25
	530A	342803-0103	-		1	NUT 38
	540	342803-0104	-		2	NUT 51
	550	342812-0101	-		1	SLEEVE ANSL.25
	560	342812-0103	-		1	SLEEVE ANSL.38
	570	342812-0104	-		2	SLEEVE ANSL.51
	700	776422-0101	-		2	BRASS WIRESTE
	750	777510-0101	-		1	SCISSORS
	760	779130-0102	-		1	PROTECTIVE GOGGLES

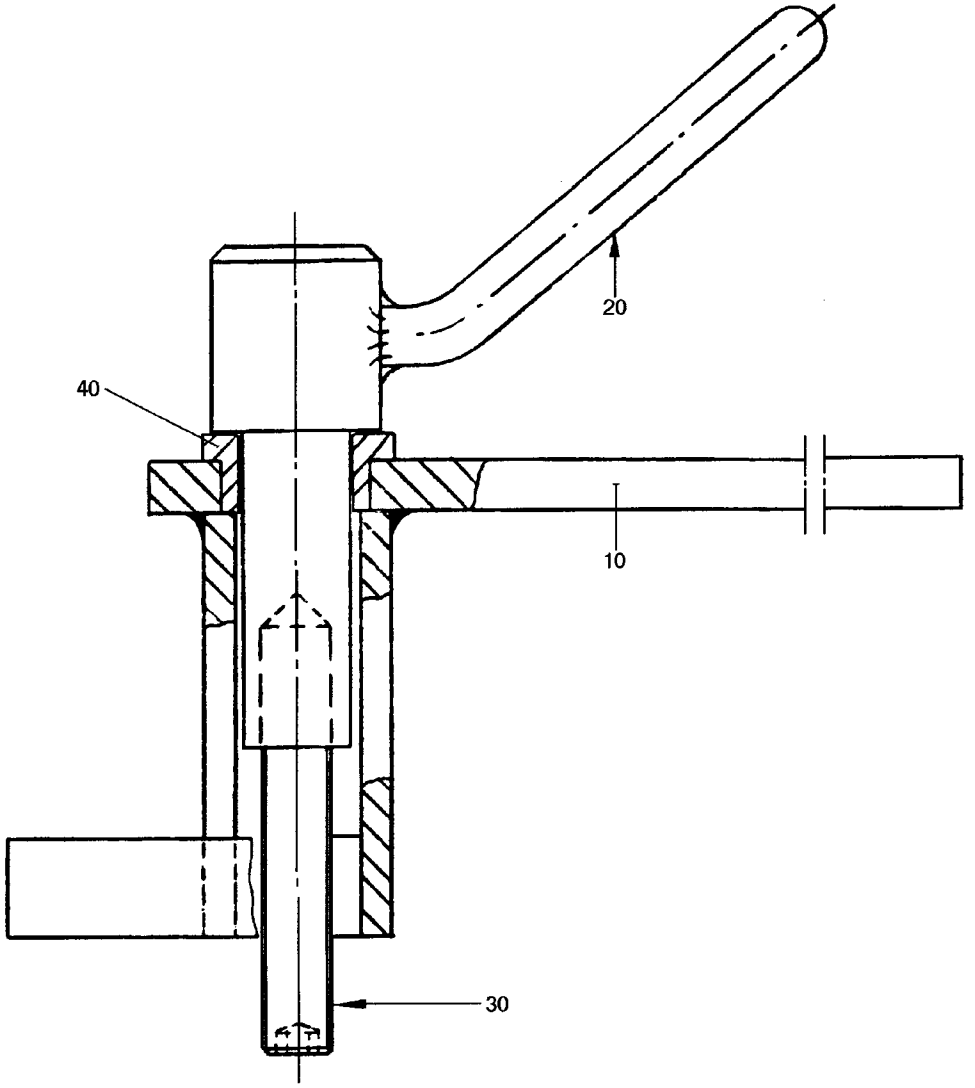

44996901.TIF
449969-1
AM 6514

Last Alteration: AM 6514 84-03-22

Corresponding group: 449969-010V
Assembly Drawing: 449969-1

Issue: **950817**

From	Pos	Part No	SP	UN	Qty	Description
	F000	**C- 449969-0101**				**Tool, Ass'y**
	010	449970	-		1	HOLDER
	020	449971	-		1	SPINDLE
	030	312306-0546	-		1	STOP SCREW P6SS12X70FZB
	040	321101-0222	-		1	FLANGE BUS 18F7X12

From	Pos	Part No	SP	UN	Qty	Description

TCA/150
Volume 180 ml, 189 ml, 200 ml

From	Pos	Part No	SP	UN	Qty	Description
	F000	**C- 451434-0201**				**Start-Up Kit, Ass'y**
	100	530647	-		4	INDUCTOR 150IH
	150	279233	-		1	CARBON BRUSH HOLDER
	310	*)263062	-		2	PRESS.ROLLER
	330	266495	-		2	TENSION SPRING
	350	294327	-		20	RUBBER RAIL

TCA/300
Volume 250 ml

From	Pos	Part No	SP	UN	Qty	Description
	F000	**C- 451434-0202**				**Start-Up Kit, Ass'y**
	100	536383	-		4	INDUCTOR 300IH
	150	436959	-		1	CARBON BRUSH HOLDER
	200	11084	-		1	TEFLON HOSE
	300	3630	-		5	ROLL
	310	32301	-		2	PRESS.ROLLER LONG.ELEMENT
	320	229506	-		2	RAIL
	330	1978	-		2	TENSION SPRING
	340	283029	-		4	SUPPORT
	350	522402	-		20	RUBBER RAIL
	400	90020-0008	-		1	SLEEVE
	450	315202-0221	-		1	O-RING 34,2X3

Volume 300 ml

From	Pos	Part No	SP	UN	Qty	Description
	F000	**C- 451434-0203**				**Start-Up Kit, Ass'y**
	100	536384	-		4	INDUCTOR 300IH
	150	436959	-		1	CARBON BRUSH HOLDER
	200	11084	-		1	TEFLON HOSE
	300	3630	-		5	ROLL
	310	32301	-		2	PRESS.ROLLER LONG.ELEMENT
	320	229506	-		2	RAIL
	330	1978	-		2	TENSION SPRING
	340	283029	-		4	SUPPORT
	350	522402	-		20	RUBBER RAIL
	400	90020-0008	-		1	SLEEVE
	450	315202-0221	-		1	O-RING 34,2X3

TCA/500
Volume 500 ml

From	Pos	Part No	SP	UN	Qty	Description
	F000	**C- 451434-0204**				**Start-Up Kit, Ass'y**
	100	530648	-		4	INDUCTOR 500IH
	150	458166	-		1	CARBON BRUSH HOLDER
	200	12194	-		1	TEFLON HOSE
	300	207661	-		5	ROLL
	310	26619	-		2	PRESSURE ROLLER
	320	229505	-		2	RAIL
	330	2881	-		2	TENSION SPRING
	340	269916	-		4	SUPPORT
	350	531378	-		20	RUBBER RAIL
	400	90020-0007	-		1	SLEEVE
	450	315202-0224	-		1	O-RING 42,2X3
	460	315204-0116	-		10	O-RING 18,1X1,6VITON

Volume 150 ml Slim

From	Pos	Part No	SP	UN	Qty	Description
	F000	**C- 451434-0205**				**Start-Up Kit, Ass'y**
	100	540274	-		4	INDUCTOR
	150	458166	-		1	CARBON BRUSH HOLDER
	200	12194	-		1	TEFLON HOSE
	300	207661	-		5	ROLL
	310	32197	-		2	PRESSURE ROLLER
	320	229505	-		2	RAIL
	330	2881	-		2	TENSION SPRING
	340	269916	-		4	SUPPORT
	350	531378	-		20	RUBBER RAIL
	400	90020-0007	-		1	SLEEVE
	450	315202-0224	-		1	O-RING 42,2X3

Common Parts

From	Pos	Part No	SP	UN	Qty	Description
	F010	SP- 499255-0101	-		1	SEAL KIT
	500	5850	-		2	SHAFT FOR SCOOP
	510	10593	-		5	LOCKING RUBBER
	520	29120-0002	-		1	HEATING RIBBON
	570	37369	-		2	GASKET

***) Deviates from the C-group development step**

From	Pos	Part No	SP	UN Qty	Description
	610	255336	-	1	SLIDE RAIL
	620	279668	-	2	CARBON BRUSH COMPLETE
	630	535500	-	1	BRACKET
	700	90028-0001	-	4	CONE
	705	90044-0104	-	1	INDUCTIVE SWITCH
	715	90092-0064	-	1	METERING VALVE
	720	90092-0065	-	1	METERING VALVE
	735	90206-0014	-	1	HEATING ELEMENT
	740	90242-0036	-	2	O-RING
	745	90242-0064	-	1	O-RING
	790	90287-0171	-	5	SCREW
	920	312122-0289	-	5	SLOTTED HEMCS4X10MSGFN
	925	312122-0327	-	5	SLOTTED HEMCS5X12MSGFN
	930	312122-0366	-	5	SLOTTED HEMCS6X12MSGFN
	935	312122-0368	-	5	SLOTTED HEMCS6X16MSGFN
	945	312602-0316	-	1	NUT M6M6MSGFN
	950	315103-0136	-	5	WASHER BRB4,3X8MSGFN
	955	315103-0146	-	5	WASHER BRB5,3X10MSGFN
	960	315103-0153	-	1	WASHER BRB6,4X12MSGFN
	970	315204-0206	-	1	O-RING 7,3X2,4VITON
	975	315204-0219	-	1	O-RING 29,2X3VITON
	980	315250-0101	-	5	GASKET 32/25
	985	315250-0103	-	5	GASKET 48/38
	990	315250-0104	-	5	GASKET 61/51
	995	315754-0105	-	10	LOCKING WAE 3,2

From	Pos	Part No	SP	UN Qty	Description

From	Pos	Part No	SP	UN	Qty	Description
TETRA BRIK						
		C- 544536-0101				**Set of Sign, ass'y**
	010	544526	-		2	MACHINE PLATE TB
	060	544533	-		4	PLASTIC PEHD 21172-10
	100	90165-0086	-		4	CRAMP
TETRA BRIK ASEPTIC						
		C- 544536-0102				**Set of Sign, ass'y**
	010	544527	-		2	MACHINE PLATE TBA
	060	544533	-		4	PLASTIC PEHD 21172-10
	100	90165-0086	-		4	CRAMP
TETRA CLASSIC replaced by -0109						
		C- 544536-0103				**Set of Sign, ass'y**
	010	551612	-		2	MACHINE PLATE TCA
	060	544533	-		4	PLASTIC PEHD 21172-10
	100	90165-0086	-		4	CRAMP
TETRA CLASSIC ASEPTICreplaced by -0110						
		C- 544536-0104				**Set of Sign, ass'y**
	010	551613	-		1	MACHINE PLATE TCA
	050	545818	-		2	HOLDER FOR SIGN
	060	544533	-		2	PLASTIC PEHD 21172-10
TETRA REX						
		C- 544536-0105				**Set of Sign, ass'y**
	010	544530	-		2	MACHINE PLATE TR
	060	544533	-		4	PLASTIC PEHD 21172-10
	100	90165-0086	-		4	CRAMP
TETRA TOP						
		C- 544536-0106				**Set of Sign, ass'y**
	010	544531	-		2	MACHINE PLATE TT
	060	544533	-		4	PLASTIC PEHD 21172-10
	100	90165-0086	-		4	CRAMP
TETRA KING						
		C- 544536-0107				**Set of Sign, ass'y**
	010	544532	-		2	MACHINE PLATE TK
	060	544533	-		4	PLASTIC PEHD 21172-10
	100	90165-0086	-		4	CRAMP
TETRA REX ASEPTIC						
		C- 544536-0108				**Set of Sign, ass'y**
	010	544534	-		2	MACHINE PLATE TRA
	060	544533	-		4	PLASTIC PEHD 21172-10
	100	90165-0086	-		4	CRAMP
TETRA CLASSIC						
		C- 544536-0109				**Set of Sign, ass'y**
	010	551612	-		2	MACHINE PLATE TCA
	060	544533	-		4	PLASTIC PEHD 21172-10
	100	90165-0086	-		4	CRAMP

From	Pos	Part No	SP	UN	Qty	Description
TETRA CLASSIC ASEPTIC						
		C- 544536-0110				**Set of Sign, ass'y**
	010	551613	-		1	MACHINE PLATE TCA
	050	545818	-		2	HOLDER FOR SIGN
	060	544533	-		2	PLASTIC PEHD 21172-10
LP40						
		C- 544536-0111				**Set of Sign, ass'y**
	010	554560	-		2	MACHINE PLATE LP40
	060	544533	-		4	PLASTIC PEHD 21172-10
	100	90165-0086	-		4	CRAMP
LP222						
		C- 544536-0112				**Set of Sign, ass'y**
	010	554561	-		2	MACHINE PLATE LP222
	060	544533	-		4	PLASTIC PEHD 21172-10
	100	90165-0086	-		4	CRAMP
LP800						
		C- 544536-0113				**Set of Sign, ass'y**
	010	554562	-		2	MACHINE PLATE LP800
	060	544533	-		4	PLASTIC PEHD 21172-10
	100	90165-0086	-		4	CRAMP
LP1800						
		C- 544536-0114				**Set of Sign, ass'y**
	010	554563	-		2	MACHINE PLATE LP1800
	060	544533	-		4	PLASTIC PEHD 21172-10
	100	90165-0086	-		4	CRAMP
LPX						
		C- 544536-0115				**Set of Sign, ass'y**
	010	554564	-		2	MACHINE PLATE LPX
	060	544533	-		4	PLASTIC PEHD 21172-10
	100	90165-0086	-		4	CRAMP
TETRA CLASSIC ASEPTIC TCA/25						
		C- 544536-0116				**Set of Sign, ass'y**
	010	551613	-		2	MACHINE PLATE TCA
	110	564605	-		2	ROD
	120	564606	-		2	BRACKET
Common parts						
	200	312155-0370	-		4	SCREW MF6S6X20RFR
	210	312812-0316	-		4	LOCK NUT A2-M6RFR

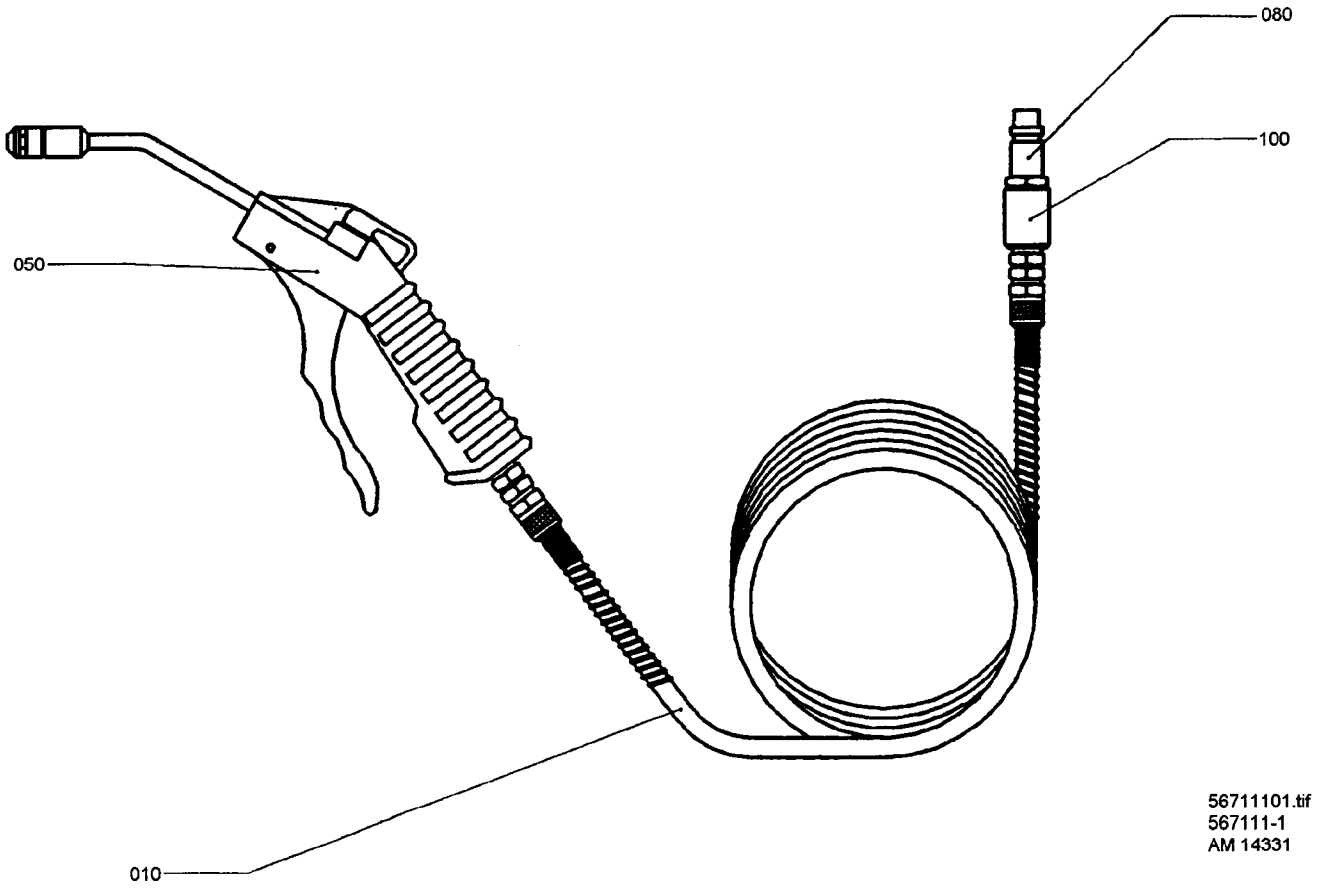

56711101.tif
567111-1
AM 14331

From	Pos	Part No	SP	UN	Qty	Description
		C- 567111-0101				**AIR JET GUN, ASS'Y**
	010	90152-0016	S		1	HOSE
	050	90243-0061	S		1	FAN NOZZLE
	080	90163-0007	-		1	CONNECTION
	100	90330-0102	-		1	SLEEVE

From	Pos	Part No	SP	UN	Qty	Description

Tetra Pak