SPC
Spare Parts Catalogue

TCA/150 010V

633218-0103

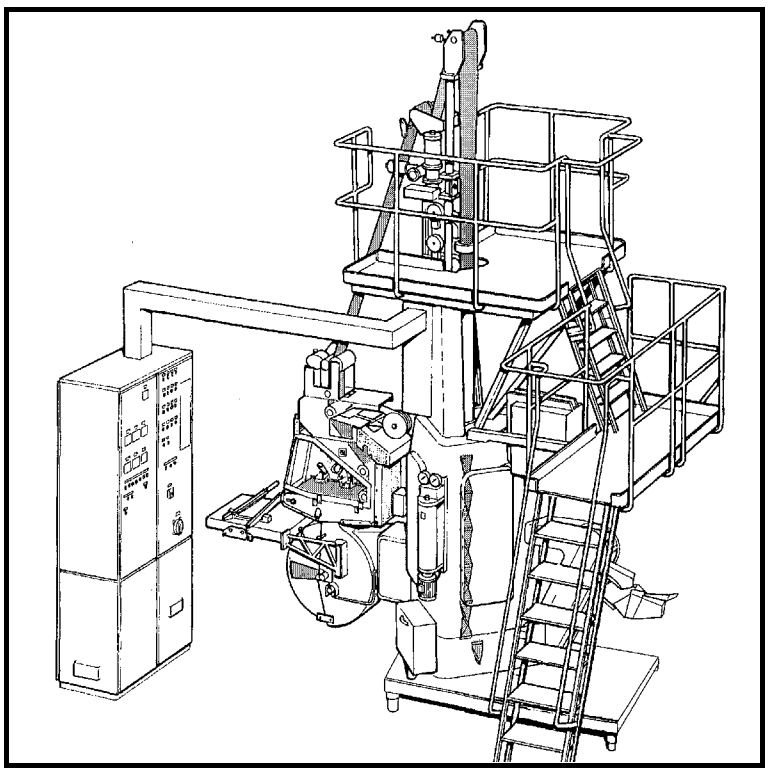

Tetra Pak

Doc No: SPC-85521-01

Main Groups of the Machine

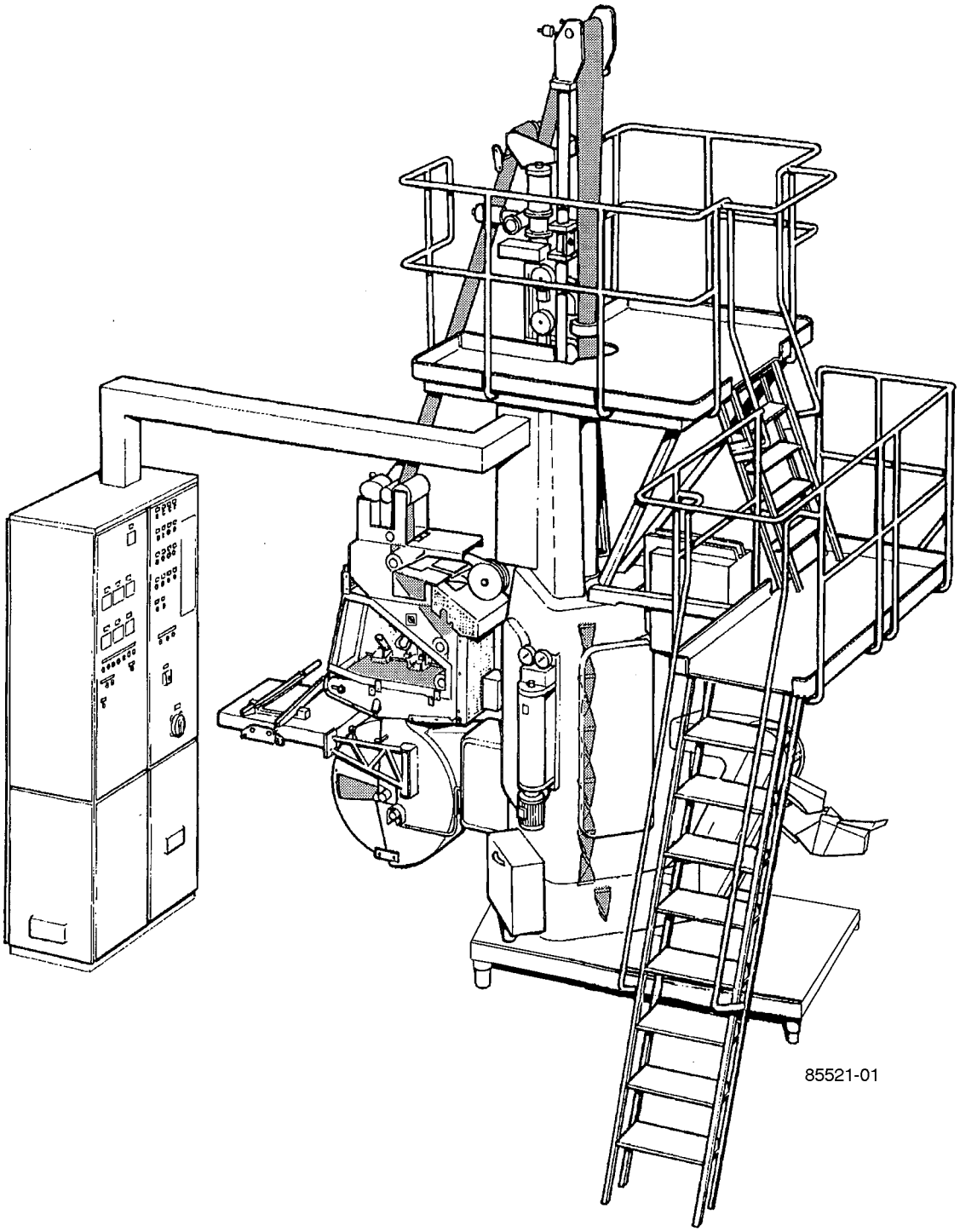

For the correct machine data, check your machine specification, supplied with the machine!

This document is valid for:

Series No/ Machine No Sign.

SPC
Spare Parts Catalogue

TCA/150 010V
633218-0103

Equipment Included:

To check your actual machine data and eventual installed extra equipments, check the machine specification, supplied with the machine delivery!

Order/add necessary documents.

Table of Content:

Introduction **5**

Cassette
B-633201-0801 ..... **17**

Superstructure
B-633202-1601 ..... **29**

Side Frame
B-633203-120V **113**

Machine Body
B-633204-1901 ..... **151**

Cutting Device
B-633205-1301 ..... **173**

Elevator
B-630206-0401 ..... **225**

Hole Punch Device
B-610308-1501 ..... **239**

Part number index
..... **301**

Doc No: SPC-85521-01

Issue 9503

Tetra Pak

Tetra Laval Food Packaging Systems AB

This page is intentionally left blank

Service

When ordering spare parts for your machine, contact the nearest Tetra Pak service station.

Manufacturer

This machine is produced by:
Tetra Laval Food Packaging Systems AB
Öresundsvägen
221 86 Lund /Sweden

Machine identification

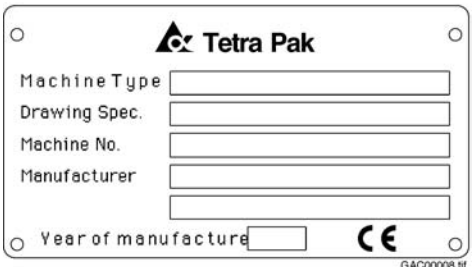

Figure 1 Example of machine plate

This machine plate is an example of the type of machine plate, attached to the machine frame. The plate carries data needed when contacting Tetra Pak concerning this particular machine.
The location of the different machine plates is shown on the page “Location of machine number plates”, **see page 7**

Purpose of the Spare Parts Catalogue.

The purpose of the Spare Parts Catalogue (SPC) is to provide the technicians and contact personnel with information on how to find and order spare parts for maintenance and service of the machine. For instructions of how to replace parts and adjust machine setup, see the Maintenance Manual.

Design modification

The content of this document is in accordance with the design and construction of the machine at the time it was delivered from the Tetra Pak machine production facility
.

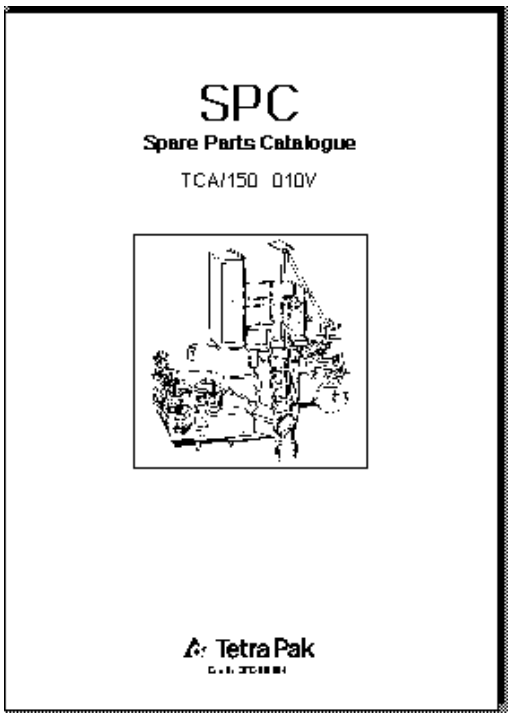

Figure 2 Example of catalogue front cover

Copyright © 1995 Tetra Laval Food Packaging Systems AB

All rights reserved. No parts of this document may be reproduced or copied in any forms or by any means, without written permission from Tetra Laval Food Packaging Systems AB.

Document producer

This document has been produced by:
Tetra Laval Food Packaging Systems AB
Technical Publications
Öresundsvägen
221 86 Lund /Sweden

Further copies

Additional copies can be ordered from the producer (see above). When ordering technical publications, always quote the document number printed on the front cover of the document concerned.

Number of pages

This document contains totally **394 pages,** including the first **14** introduction pages.

Tetra Pak Part numbering system

T

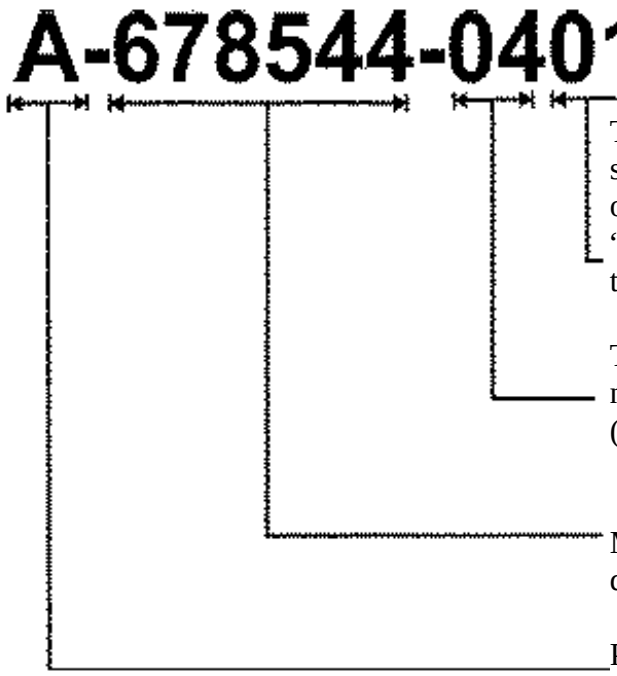

The third and forth digits in the subnumber, specify one unique group which can be ordered. If the forth digit is replaced by a “V”, the number combination only points to a bill-of-material document.

The first and second digits in the sub-number, specify the development step (model) of the machine or group.

Main number of machine /group /article, depending on level.

Prefix, giving information about level, eg.
A = Machine
B = Main section (*****)
C = Groups and subgroups

***)** Customized distribution machines are registered as B-level as well.

Figure 3

How to find the correct Spare Part Number

A. Check that the data on your machine sign, and /or machine specification, corresponds with the catalogue.

1) Main groups of the machine

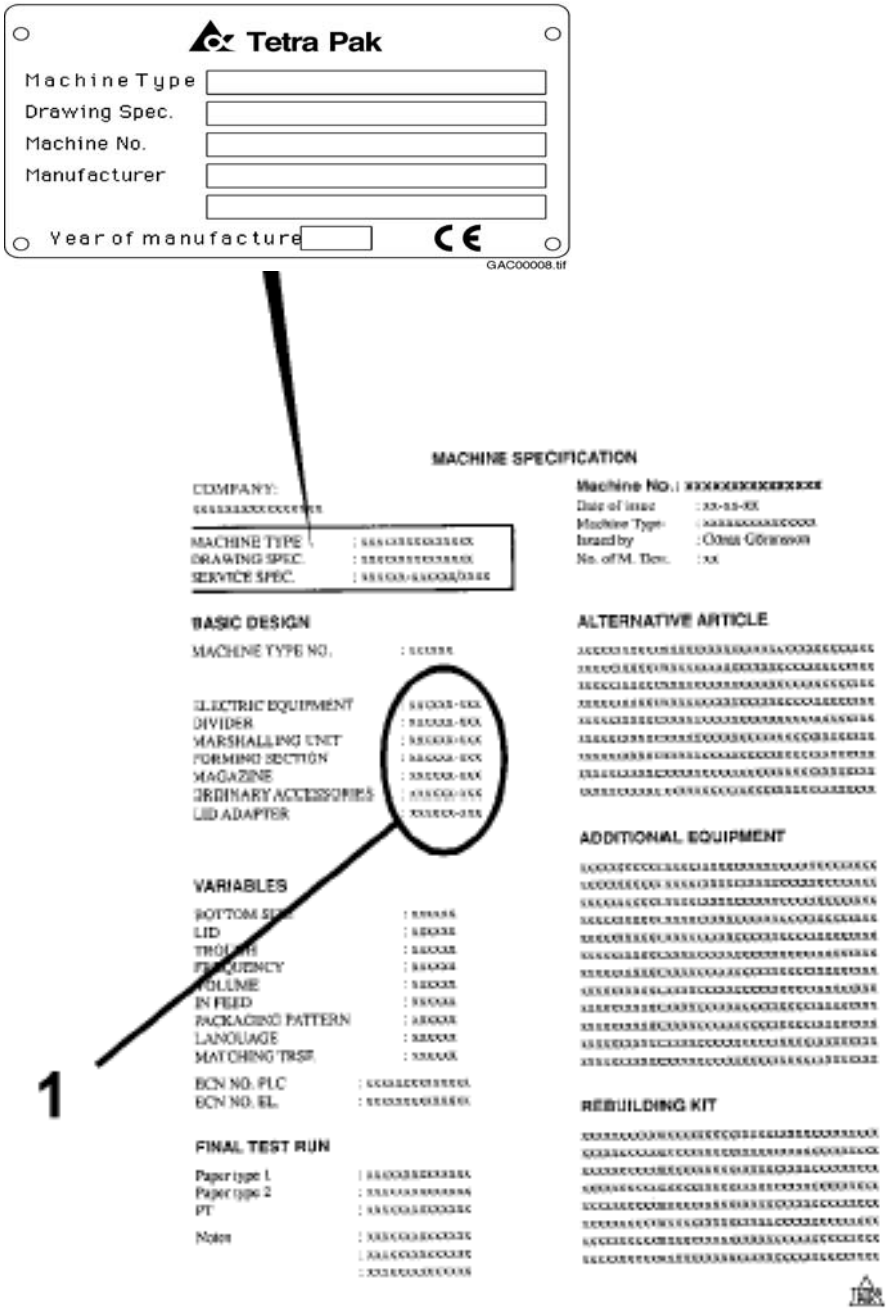

Figure 6 Example of Machine Specification

B. The second catalogue sheet contains a table of content for the main groups, included in the catalogue. The information regarding machine and main group status MUST correspond with your machine specification.
Locate and choose the main groups page number (1), in which you want to search for spare parts.

1) Main group
2) Machine type

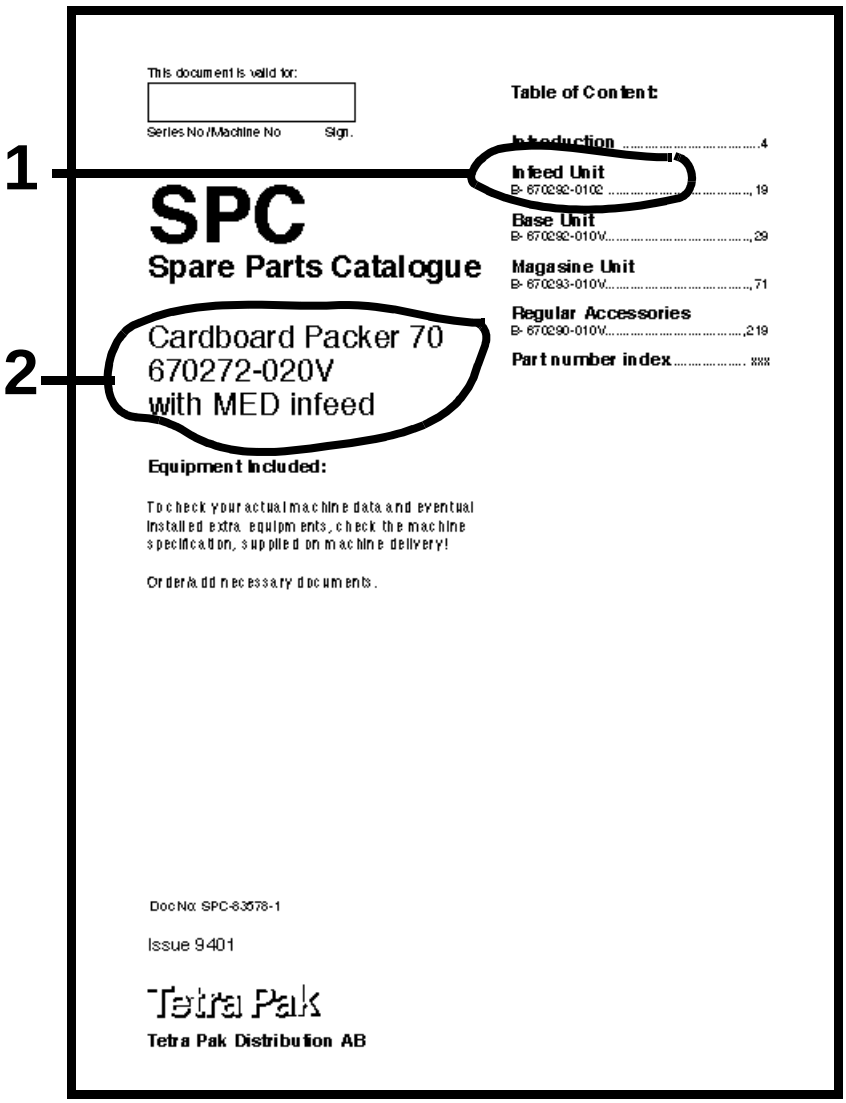

Figure 3 Example of catalogue page

C. Search in the main group illustration, the item number, which may hold your wanted spare part. Go to the text page below and find the page number for the actual group.

3) Internal information, such as latest Engineering Change, bill-of-material included in the catalogue page.
4) Used-In reference to next higher level in the machine structure
5) Pos numbering on illustration
6) Illustration number in the SPC database
7) Continuous page numbering through the document
8) Pos number corresponding to illustration
9) Group or article number.
10) Group or article description
11) Machine type including development staus
12) Group description
13) Group number (bill-of-material) including development status
14) Document number

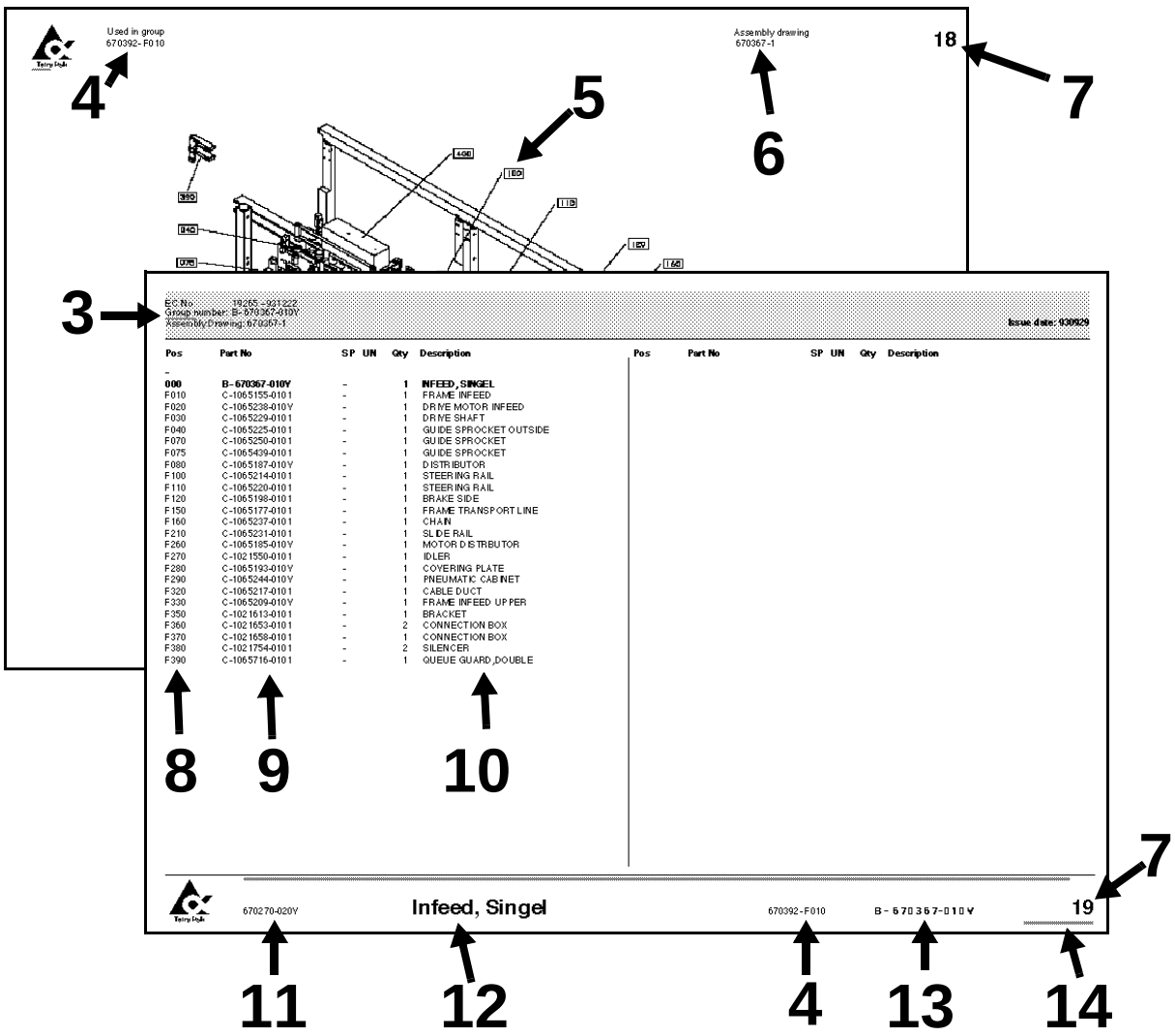

Figure 8 Example of catalogue page

D. Continue to the found page number, and search in the illustration for your spare part. Go to the text row for the found item number, and read the part number. Take eventual variant headings in consideration; if you are unsure, read your machine specification.

15) Variant heading, eg volume, left /right etc.
16) Heading for common parts
17) SP = Code for articles, which are included into various spare part kits.
    - U = starting-up kit supplied on machine delivery.
    - P = production kit to be held at production site workshop.
    - S = service kit to be held at service stations store.
    - C = central depot kit to be available at the central store.
18) UN = Short code for measure units, eg mm, kg etc.
19) Qty = Number of items needed in the complete assembly.

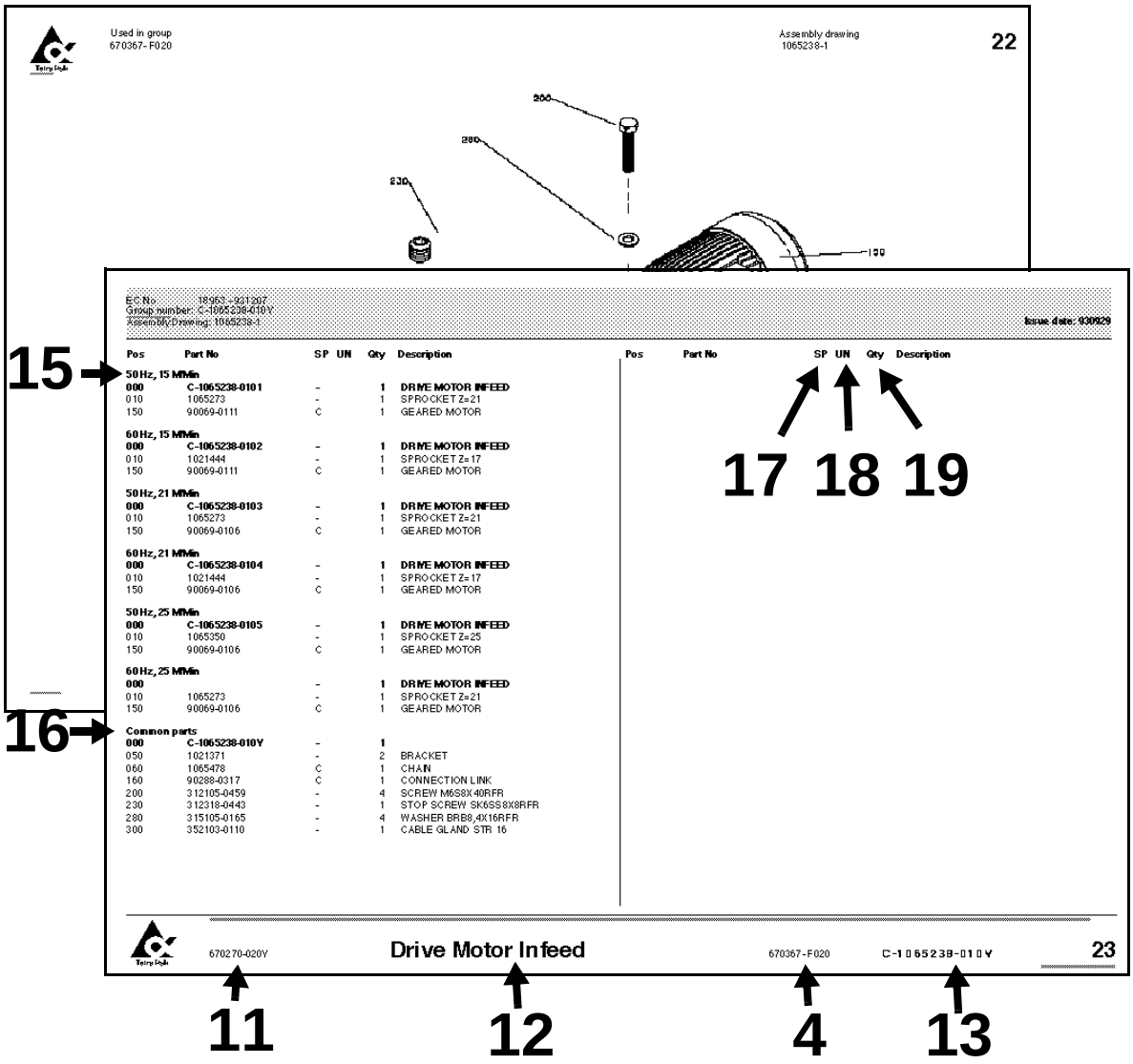

Figure 9 Example of catalogue page

This page is intentionally left

Special terminology and abbreviations

This page is intentionally left

SPC

Spare Parts Catalogue

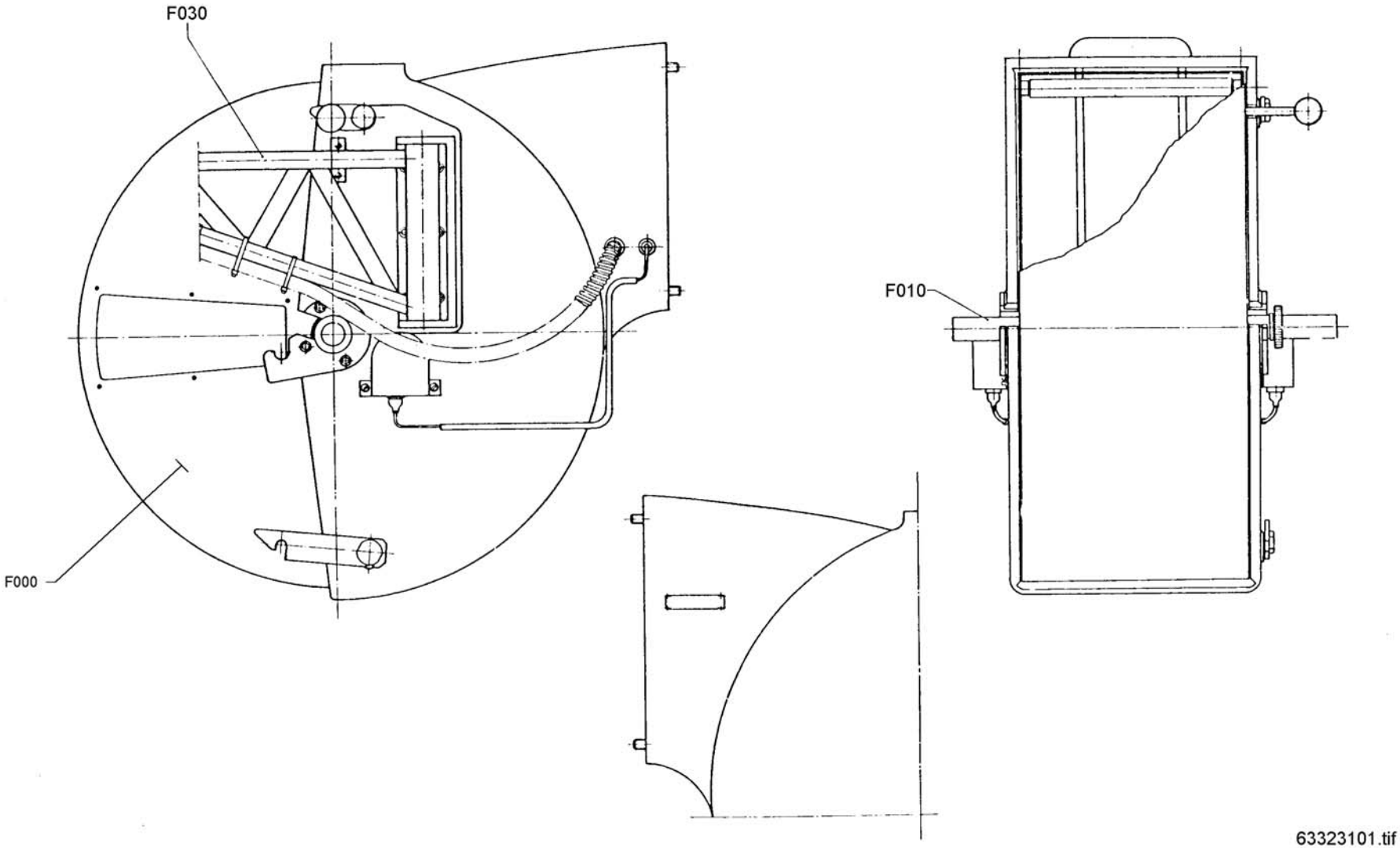

63323101.tif
633231-1
ECN

Pos	Part No	SP	UN	Qty	Description	Page No
-						
000	**B- 633201-0801**	**-**			**CASSETTE**	
000	C- 11040-0401			1	CASSETTE	**19**
010	C- 7105-0106	-		2	PAPER REEL HOLDER	**21**
***) F030**	***C- 33163-0201***	***-***		***1***	***SPLICING APPARATUS***	***23***
	C- 33216-0101				. CANTILEVER	**25**

Pos	Part No	SP	UN	Qty	Description	Page No

) Deviatess from the B-grpoup development step

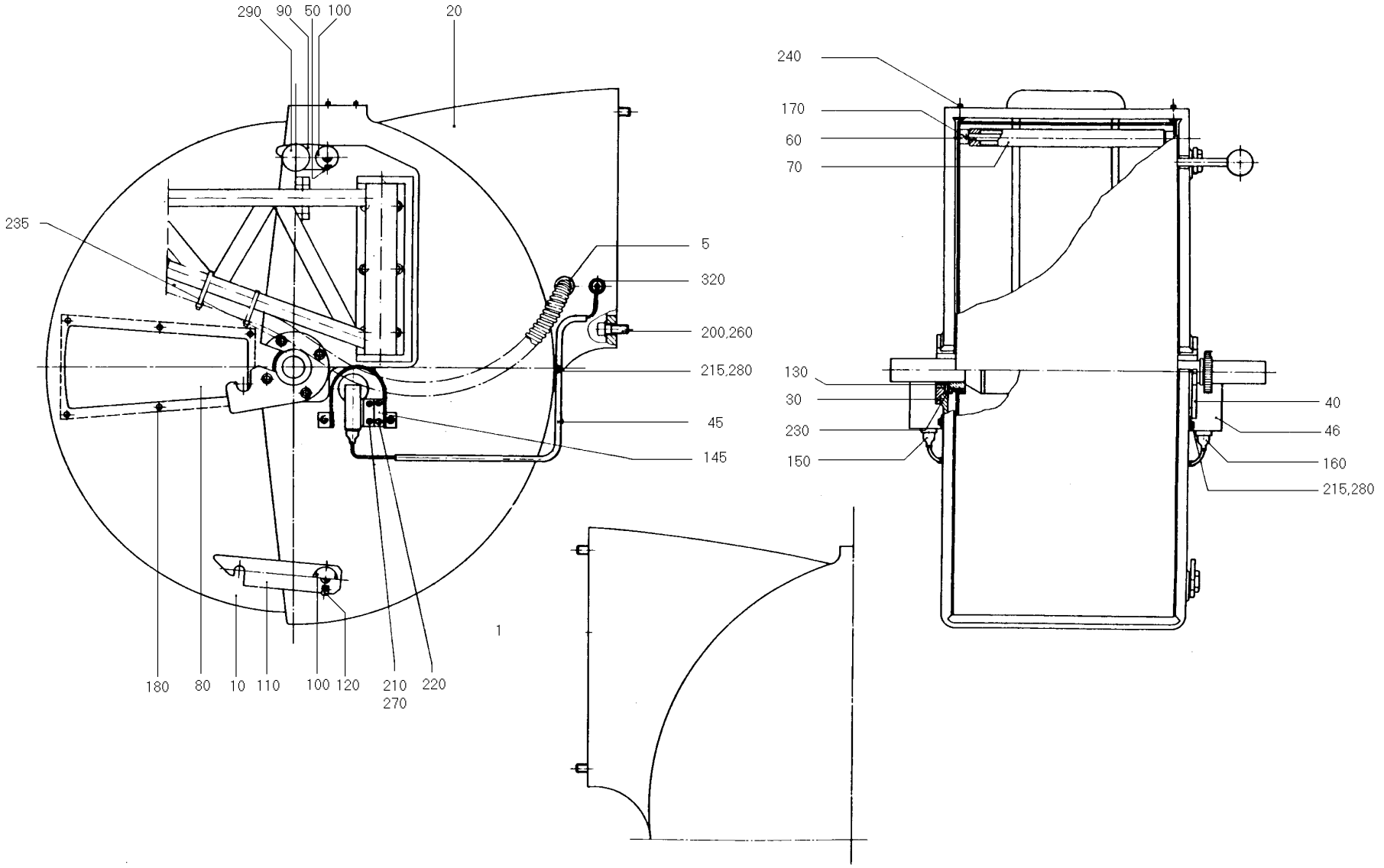

1104003.tif
11040-3
AM 10075

Pos	Part No	SP	UN	Qty	Description	Page No
000	**C- 11040-0401**	**-**		**1**	**CASSETTE**	
005	352103-0106	-		1	CABLE GLANR.ST 11	
000	**C- 11040-0402**	**-**		**1**	**CASSETTE**	
005	352136-0127	-		1	GLAND FITT	
Common parts						
010	**445953-0002**	**-**		**1**	**HOOD**	
020	19477	-		1	CASSETTE	
030	13890-0001	-		1	HOLDER	
040	13890-0002	-		1	HOLDER	
045	294261	-		2	PIPE	
046	294262	-		2	COVER	
050	1013	-		1	SHAFT	
060	4287-0004	-		1	SHAFT	
070	4288-0007	-		1	BENDING ROLLER	
080	4948	-		2	WINDOW	
090	G- 4961	-		1	CATCH	
100	4962	-		2	SCREW	
110	10325	-		1	CATCH	
120	10363	-		1	PIN	
130	13888	-		2	BEARING	
140	20497	-		1	GROUP NUMBER PLATE	
145	294263	-		2	LUG	
150	90232-0034	-		1	PHOTOCELL	
160	90232-0035	-		1	PHOTOCELL	
170	311305-0238	-		1	SLOTTED PIRPC3X20FZB	
180	311508-0416	-		12	RIVET KN4X10ALUM.	
200	312111-0536	-		4	SCREW MC6S12X30FZB	
210	312125-0289	-		4	SLOTTED HEMCS4X10RFR	
215	312125-0327	-		6	SLOTTED HEMCS5X12RFR	
220	312145-0331	-		4	SLOTTED HEMFS5X20RFR	
230	312145-0366	-		6	SLOTTED HEMFS6X12RFR	
235	312165-0368	-		8	SLOTTED HEMKFS6X16RFR	
240	312306-0371	-		4	STOP SCREW P6SS6X22FZB	
250	312502-0221	-		4	DRIVE SCREKDS4X6FNB	
260	315101-0178	-		4	WASHER BRB13X24FZB	
270	315105-0136	-		4	WASHER BRB4,3X8RFR	
280	315105-0146	-		6	WASHER BRB5,3X10RFR	
290	318800-0106	-		1	HANDLE BALLA D.40-M10	
320	352101-0103	-		2	LEAD-IN G 18,6	

Pos	Part No	SP	UN	Qty	Description	Page No

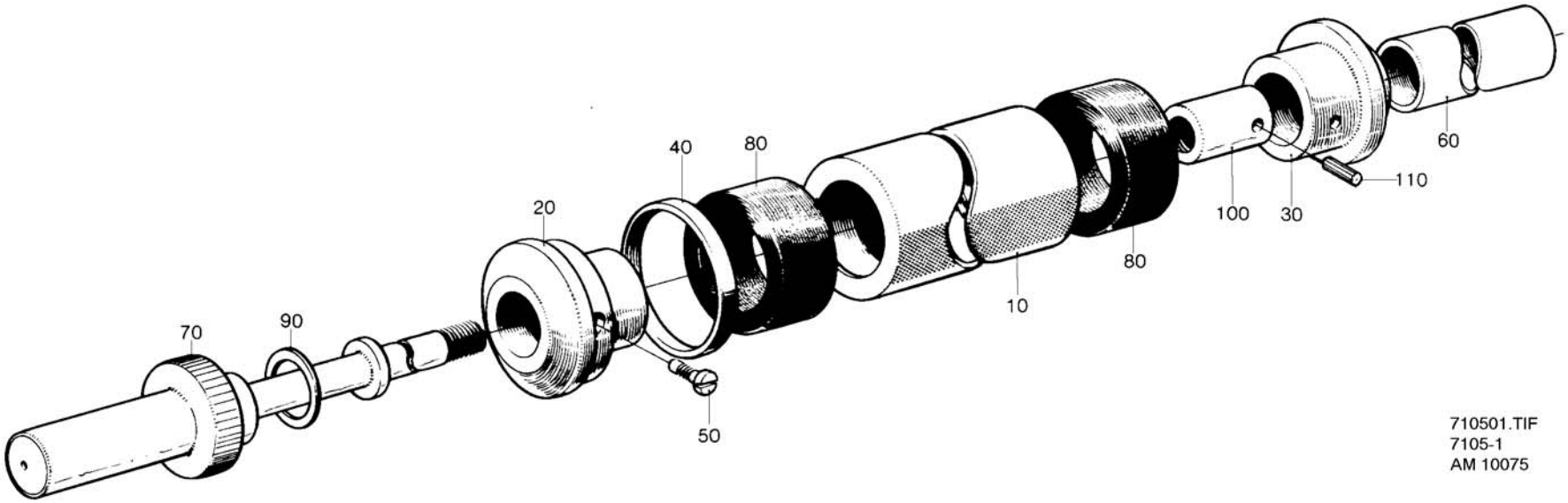
70
90
20
40
80
50
10
80
100
30
110
60
710501.TIF
7105-1
AM 10075

Pos	Part No	SP	UN	Qty	Description	Page No
(PB211, PB21) Volume 180 ml						
000	**C- 7105-0104**	**-**		**2**	**PAPER REEL HOLDER**	
010	G- 4071-0004	-		1	SPACER SLEEVE	
020	7108	-		1	STOP SLEEVE	
030	7109	-		1	PUSH SLEEVE	
040	4075-0008	-		1	SPACER RING	
050	4410-0001	-		2	SCREW	
060	4974-0003	-		1	SHAFT	
(PB220) Volume 190 ml						
000	**C- 7105-0105**	**-**		**2**	**PAPER REEL HOLDER**	
010	G- 4071-0004	-		1	SPACER SLEEVE	
020	7108	-		1	STOP SLEEVE	
030	7109	-		1	PUSH SLEEVE	
040	4075-0007	-		1	SPACER RING	
050	4410-0001	-		2	SCREW	
060	4974-0003	-		1	SHAFT	
(PB226) Volume 200 ml						
000	**C- 7105-0106**	**-**		**2**	**PAPER REEL HOLDER**	
010	G- 4071-0004	-		1	SPACER SLEEVE	
020	7108	-		1	STOP SLEEVE	
030	7109	-		1	PUSH SLEEVE	
040	4075-0004	-		1	SPACER RING	
050	4410-0001	-		2	SCREW	
060	4974-0003	-		1	SHAFT	
Common parts						
070	**4977-0003**	**-**		**1**	**SPINDLE**	
080	4072	-		2	RUBBER RING	
090	4975	-		1	WASHER	
100	4976	-		1	NUT	
110	311102-0369	-		1	CYLINDRICACP M6 6X60	

Pos	Part No	SP	UN	Qty	Description	Page No

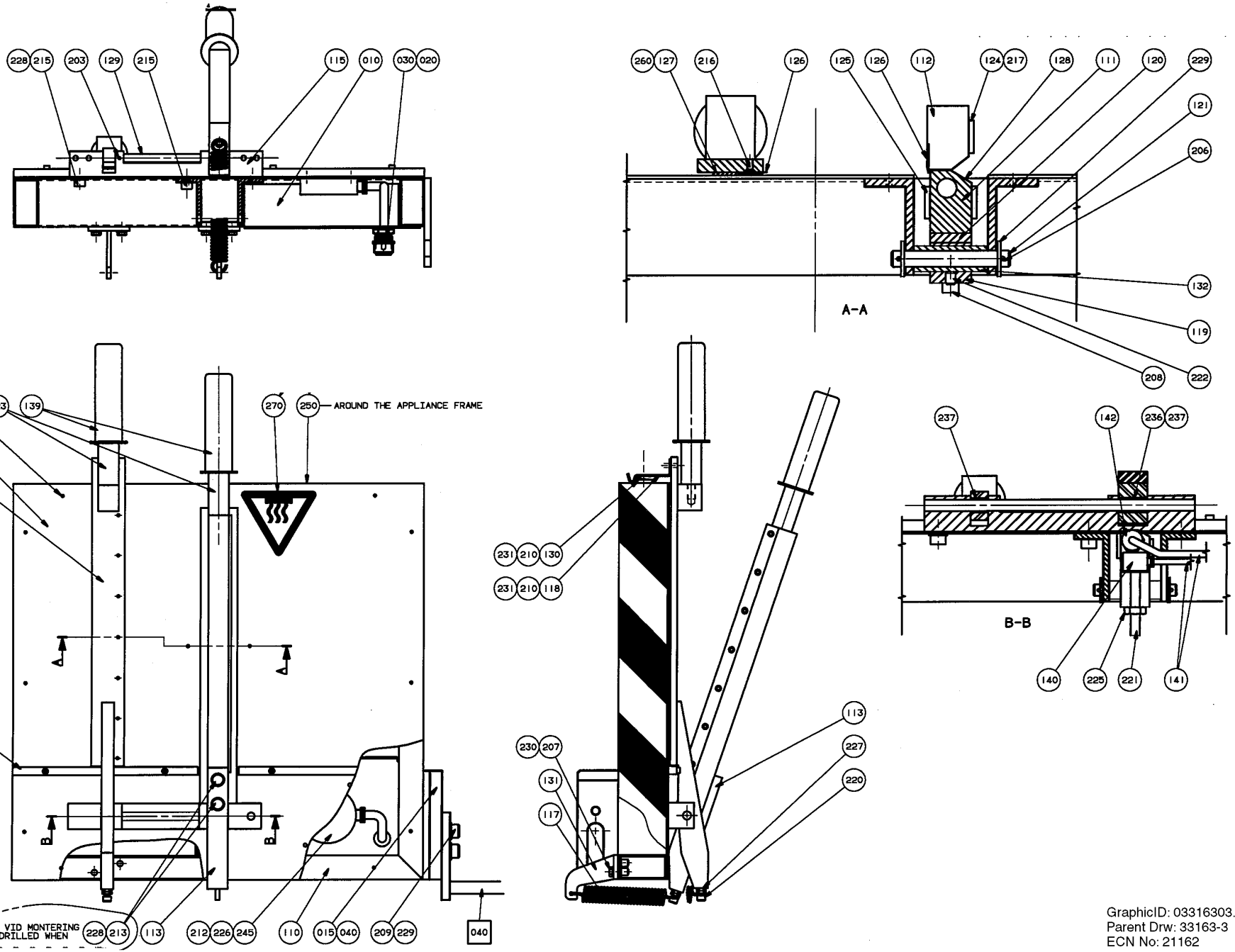

GraphicID: 03316303.tif
Parent Drw: 33163-3
ECN No: 21162

Pos	Part No	SP	UN	Qty	Description	Page No
000	**C- 33163-201**	**-**		**1**	**SPLICING APPARATUS**	
000	33164	-		1	APPLIANCE FRAME	
010	534747	-		1	COVERING PLATE	
015	537943	-		1	ADAPTER	
020	352135-0106	-	M	2	HOSE .016	
030	352136-0127	-		1	GLAND FITT	
040	312151-0495	-		3	SCREW MF6S10X30FZB	
110	33164	-		1	APPLIANCE FRAME	
111	33165	-		1	HEATING BLOCK	
112	33167	-		1	PRESSURE ARM	
113	578767	-		1	BRACKET	
114	33166	-		1	SHEET	
115	33168	-		1	BRACKET	
116	578768	-		1	TEARING BAR	
117	37885	-		2	TENSION SPRING	
118	206913	-		1	LOCKING LOOP	
119	33170	-		1	BRACKET	
120	33171	-		1	INSULATING PLATE	
121	33172	-		1	SHAFT	
122	33173	-		2	HEAD RAIL	
123	33174	-		2	SHAFT	
124	33175	-		2	SIDE PLATE	
125	33176	-		1	SIDE PLATE	
126	33177	-		2	ABRASION SAW BLADE	
127	33178	-		1	RUBBER SHIM	
128	33179	R		2	TEFLON CLOTH	
129	33180	-		1	SHAFT	
130	554218	-		1	LOCKING LUG	
131	581591	-		2	BRACKET	
132	33472	-		1	BUSHING	
139	90017-0001	-		2	HANDLE	
140	90059-0001	-		1	THERMOSTAT	
141	90142-0005	-	MM	500	HOSE	
142	90206-0009	-		1	HEATING ELEMENT	
203	311305-0238	-		1	SLOTTED PIRPC3X20FZB	
206	311411-0165	-		2	SPLIT PIN SP2,5X16RFR	
207	312105-0370	-		4	SCREW O4017 M6X20A280	
208	312111-0378	-		2	SCREW MC6S6X40FZB	
209	312111-0495	-		3	SCREW MC6S10X30FZB	
210	312105-0327	-		4	SCREW O4017 M5X12A280	
211	312115-0287	-		5	SCREW O4762 M4X8A280	
212	312115-0291	-		3	SCREW O4762 M4X12A280	
213	312105-0451	-		2	SCREW SO4017 8X20A280	
215	312115-0447	-		3	SCREW O4762 M8X12A280	
216	312145-0285	-		25	SLOTTED HEMFS4X6RFR	
217	312145-0287	-		22	SLOTTED HEMFS4X8RFR	
220	312115-0368	-		2	SCREW O4762 M6X16A280	
221	312311-0459	-		2	STOP SCREW T6SS8X40FZB	
222	312318-0360	-		1	STOP SCREW SK6SS6X6RFR	
225	312601-0318	-		2	NUT M6M8FZB	
226	312605-0312	-		2	NUT M6M4RFR	
227	312625-0316	-		4	NUT M 6	
228	315105-0165	-		3	WASHER BRB8,4X16RFR	
229	315105-0173	-		5	WASHER BRB10,5X22RFR	
230	315105-0153	-		4	WASHER BRB6,4X12RFR	
231	315105-0146	-		4	WASHER BRB5,3X10RFR	
236	321120-0104	-		1	BUSHING 10/12X10	
237	90240-0028	-		2	PLAIN BEARING	
241	351175-0104	-	MM	300	CABLE AWM YELL/GREEN 1,5	
243	351127-0144	-	MM	1500	CABLE H07RN-F 3X1,5MM2	
245	352020-0105	-		1	CONNECTIONOSA UE5	
247	353101-0130	-		1	CABLE SHOE	
260	90153-0017	-	G	150	ADHESIVE	
F040	C- 33216-0101	-		1	CANTILEVER	**25**

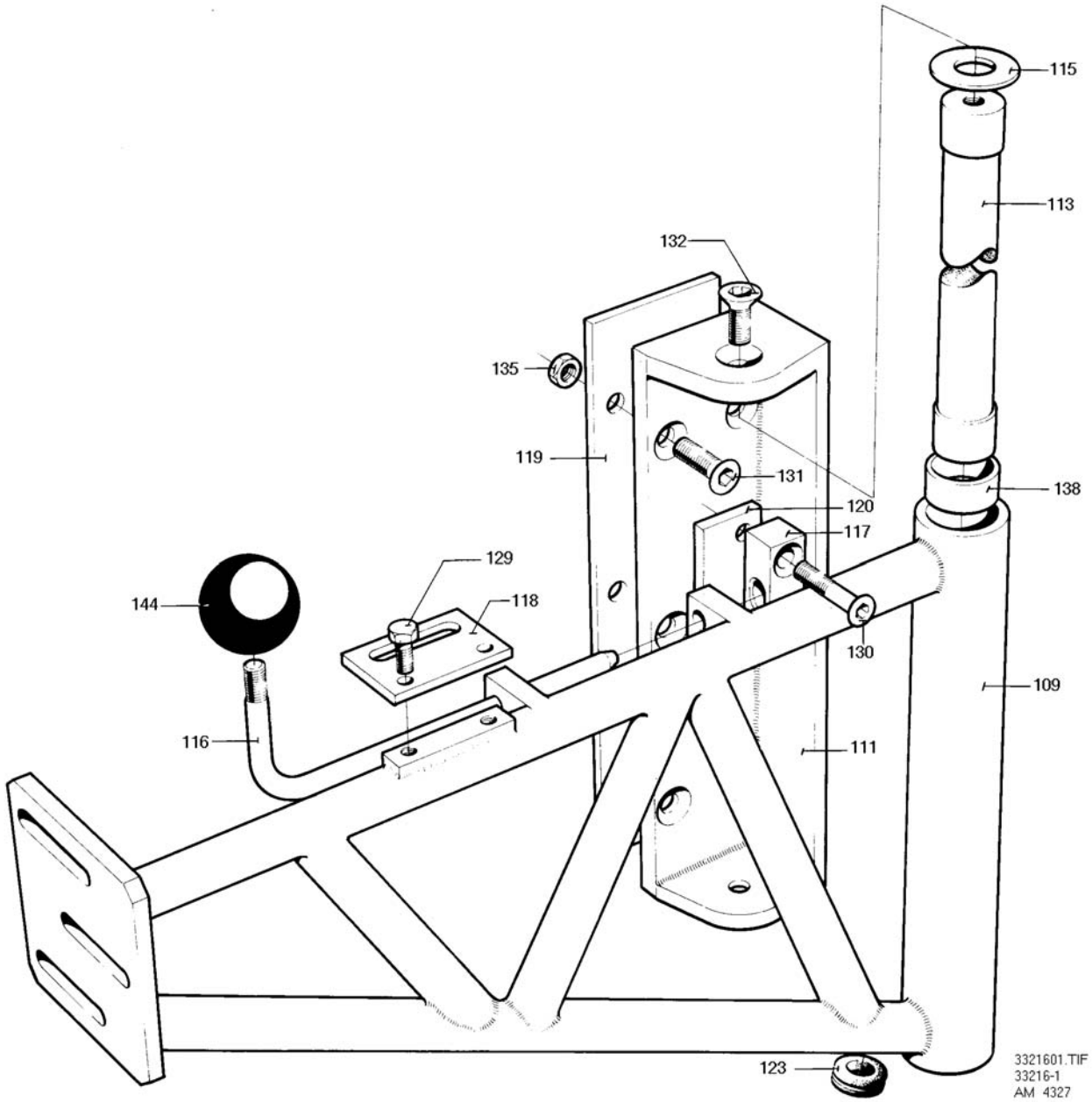
115
113
132
135
119
131
138
120
117
129
144
118
130
109
116
111
123
3321601.TIF
33216-1
AM 4327

Pos	Part No	SP	UN	Qty	Description	Page No
SERIEUTFÖRANDE						
000	**C- 33216-0101**	**-**			**CANTILEVER**	
OMBYGGNADSUTFÖRANDE - KASSETT UTAN GJUTET PÅLÄGG						
000	**C- 33216-0102**	**-**			**CANTILEVER**	
119	33474	-		1	LACE	
120	33478	-		1	LACE	
Common parts						
109	**33217**	**-**		**1**	**SUPPORTING ARM**	
111	33218	-		1	SUPPORTING ARM HOLDER	
113	27115	-		1	SHAFT	
115	27118	-		2	THRUST WASHER	
116	27729	-		1	LATCH	
117	27730	-		1	LOCKING COMPOUND	
118	27731	-		1	SHEET	
123	90015-0016	-		1	BUSHING	
129	312105-0362	-		2	SCREW O4017 M6X8A280	
130	312151-0459	-		2	SCREW MF6S8X40FZB	
131	312151-0495	-		6	SCREW MF6S10X30FZB	
132	312151-0536	-		2	SCREW MF6S12X30FZB	
135	312621-0320	-		6	NUT ML6M10FZB	
138	321120-0171	-		2	BUSHING 30/34X30	
144	318800-0106	-		1	HANDLE BALLA D.40-M10	

Pos	Part No	SP	UN	Qty	Description	Page No

Tetra Pak

SPC

Spare Parts Catalogue

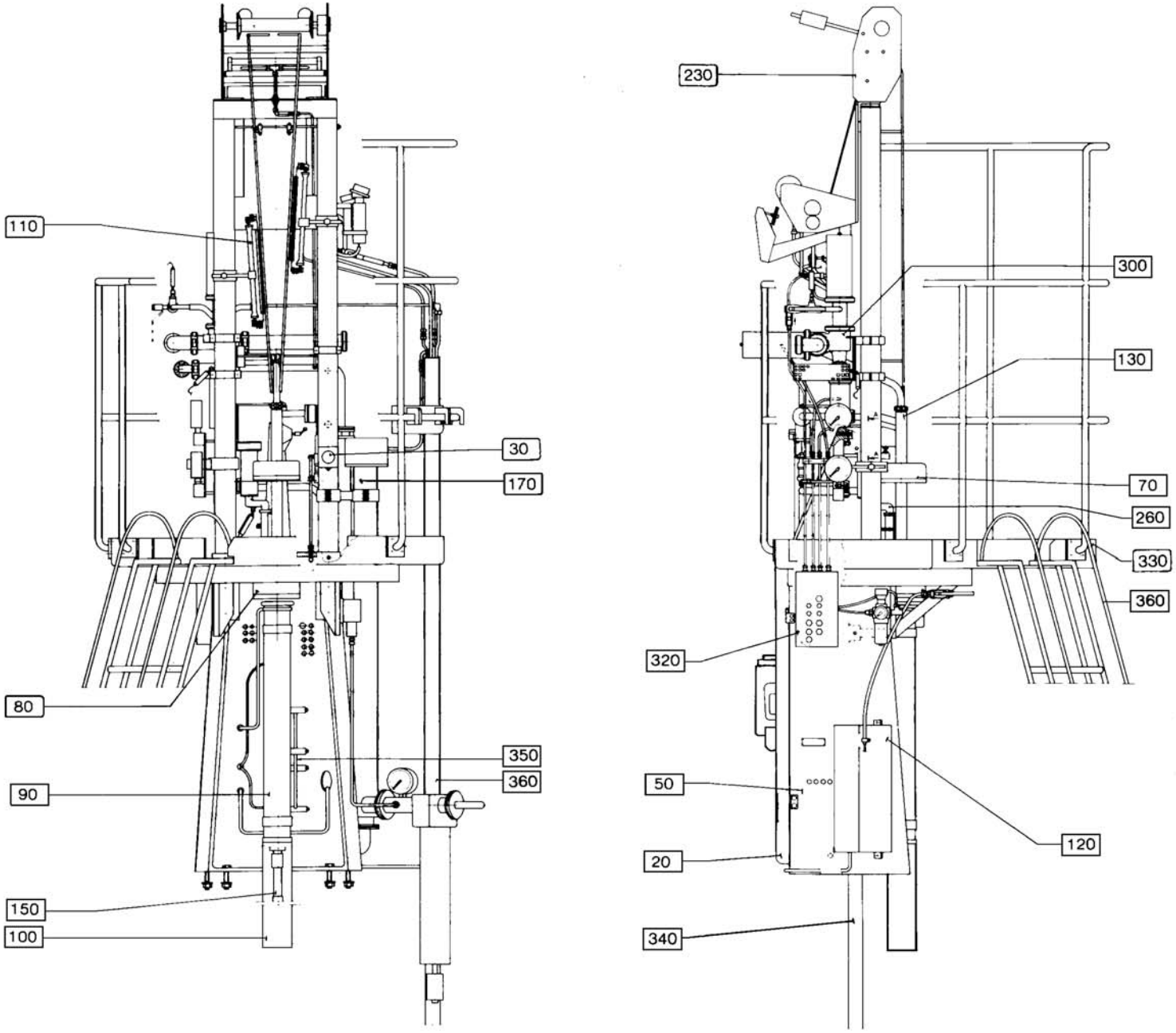

63320201.TIF
633202-1
AM 15086

Pos	Part No	SP	UN	Qty	Description	Page No
-						
000	**B- 633202-1601**	**-**		**1**	**SUPERSTRUCTURE**	
F000	C- 247463-0502	-		1	SUPERSTRUCTURE	**31**
F020	C- 11126-0101	-		1	DOOR	**35**
F030	C- 209969-0101	-		1	OPERATION DEVICE	**37**
F050	C- 445679-0201	-		1	TERMINAL PLINTH	**39**
F070	C- 13247-0103	-		1	UPPER FORMING RING	**41**
F080	C- 33038-0205	-		1	LOWER FORMING RING	**43**
F090	C- 552869-0101	-		1	(TUBULAR)JACKET	**45**
F100	C- 552873-0101	-		1	TEFLON HOSE	**47**
F120	C- 450044-0301	-		1	VALVE GROUP	**49**
F130	C- 449122-0201	-		1	TUBE HEATER	**51**
	C- 36351-0102				. PRESSURE ROLLER	**53**
F150	C- 38699-0101	-		1	FLOAT ASSEMBLY	**55**
F170	C- 247181-0601	-		1	STERILE AIR UNIT	**57**
	C- 12270-0401				. STERILE FILTER	**59**
	C- 30119-0401				. AIR SUPER-HEATER	**61**
	C- 38094-0101				. GAUGE GROUP	**63**
	C- 247207-0302				. AIR VALVE	**65**
	C- 497371-0101				. VENT. PIPE AIR VALVE	**67**
F230	C- 37496-0405	-		1	STERILIZER	**69**
	C- 32744-0201				. LEVEL GUARD	**71**
	C- 247368-0305				. STERILIZATION BATH	**73**
	C- 268188-0101				. PAPER GUIDE	**75**
	C- 268554-0101				. . PAPER GUIDE	**77**
	C- 497924-0101				. PEROXIDE COOLER	**79**
F260	C- 236892-0402	-		1	ELEMENT GROUP	**81**
	C- 207637-0302				. ELEMENT	**83**
	C- 207638-0201				. . SLEEVE CONTACT	**85**
	C- 207638-0202				. . SLEEVE CONTACT	**85**
	C- 536952-0202				. LS-ELEMENT	**87**
F300	C- 246893-0501	-		1	VALVE	**91**
	C- 440630-0203				. AP-VALVE	**91**
	C- 539209-0101				. . A-CYLINDER	**93**
	C- 539210-0101				. . C-CYLINDER	**95**
	C- 539211-0101				. . B-CYLINDER	**97**
	C- 541163-0101				. . CLAMP RING	**99**
	C- 541164-0101				. . CLAMP RING	**101**
F320	C- 247382-0401	-		1	VALVE GROUP	**103**
***) F330**	***C-1175003-0101***	***-***		***1***	***PLATFORM***	***105***
F340	C- 449123-0303	-		1	PIPE	**107**
F370	C- 538979-0101	-		1	FAN ASSEMBLY	**109**

***) DEVIATES FROM THE B-GROUP DEVELOPMENT STEP.**

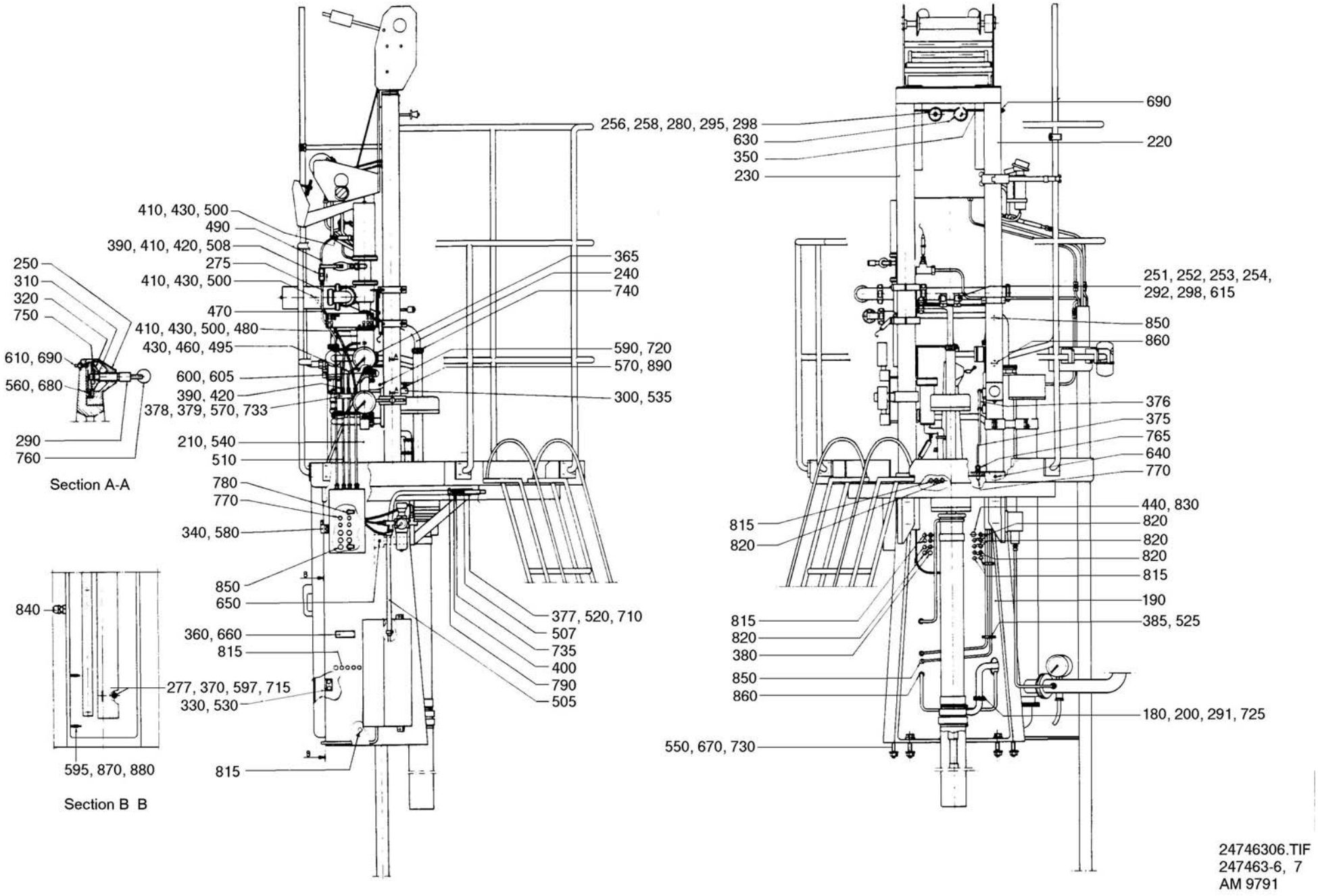
256, 258, 280, 295, 298
630
350
230
690
220
251, 252, 253, 254,
292, 298, 615
850
860
376
375
765
640
770
440, 830
820
820
820
815
190
385, 525
180, 200, 291, 725
550, 670, 730
815
820
380
850
860
410, 430, 500
490
390, 410, 420, 508
275
410, 430, 500
470
410, 430, 500, 480
430, 460, 495
600, 605
390, 420
378, 379, 570, 733
210, 540
510
780
770
340, 580
850
650
360, 660
815
277, 370, 597, 715
330, 530
815
365
240
740
590, 720
570, 890
300, 535
377, 520, 710
507
735
400
790
505
250
310
320
750
610, 690
560, 680
290
760
Section A-A
840
595, 870, 880
Section B B
24746306.TIF
247463-6, 7
AM 9791

Pos	Part No	SP	UN	Qty	Description	Page No
000	**C- 247463-0502**	**-**		**1**	**SUPERSTRUCTURE**	
180	532027	-		1	PIPE	
200	33730-0001	-		2	GASKET	
240	466158	-		1	PIPE BEND	
242	32724-0001	-		1	COOLING PIPE	
291	312105-0327	-		8	SCREW O4017 M5X12A280	
725	315105-0146	-		8	WASHER BRB5,3X10RFR	
Common parts						
190	G- 247471	-		1	MACHINE BODY LOWER	
210	G- 552867	-		1	MACHINE BODY UPPER	
220	12353	-		1	COLUMN RIGHT	
230	12354	-		1	COLUMN LEFT	
250	G- 2404	-		1	CAP	
275	466105	-		1	PIPE	
277	522191	-		1	CABLE DUCT	
280	1756	-		4	ROD SUPPORT	
290	2410	-		1	HANDLE CRANK	
300	13225	-		1	SUPPORT	
310	10385	-		1	WASHER	
320	10386	-		1	LOCKING FINGER	
330	11154	-		2	ANGLE	
340	11155	-		2	HINGE	
350	11165-0001	-		2	STRUT	
360	20497	-		1	GROUP NUMBER PLATE	
365	90091-0180	-		1	GASKET	
370	522192	-		4	SPACER	
375	530645	-		1	PIPE	
376	530646	-		1	PIPE	
377	541686	-		2	HOLDER	
378	466106	-		1	CRAMP	
379	466107	-		1	LID	
380	90002-0003	-		4	BLANK-OFF PLUG	
385	90165-0057	-		4	CLIP	
390	90030-0052	-		4	PIPE CONNECTION	
400	90163-0041	-		2	NIPPLE	
410	90055-0042	-		4	NIPPLE	
420	90055-0056	-		4	HOSE COUPLING	
430	90055-0057	-		4	HOSE COUPLING	
440	90110-0024	-		1	PLUG	
460	90131-0002	-		1	HOSE COUPLING	
470	90148-0010	-	MM	X	HOSE	
480	90148-0010	-	MM	X	HOSE	
490	90148-0010	-	MM	X	HOSE	
495	90148-0010	-	MM	X	HOSE	
500	90163-0001	-		3	CONNECTION	
505	90162-0027	-	M	1	HOSE	
507	90187-0073	-		1	VALVE	
508	90235-0180	-		1	VALVE	
510	476817	-		3	PIPE	
520	312121-0291	-		4	SLOTTED HEMCS4X12FZB	
525	312125-0289	-		4	SLOTTED HEMCS4X10RFR	
530	312101-0366	-		6	SCREW M6S6X12FZB	
535	312151-0368	-		2	SCREW MF6S6X16FZB	
540	312101-0455	-		6	SCREW M6S8X30FZB	
550	312101-0636	-		4	SCREW M6S16X80FZB	
560	312105-0333	-		1	SCREW O4017 M5X25A280	
570	312105-0372	-		3	SCREW O4017 M6X25A280	
580	312111-0370	-		4	SCREW MC6S6X20FZB	
590	312111-0459	-		4	SCREW MC6S8X40FZB	
595	312122-0289	-		2	SLOTTED HEMCS4X10MSGFN	
597	312122-0376	-		4	SLOTTED HEAD SCREW	
600	312306-0360	-		1	STOP SCREW P6SS6X6FZB	
605	312311-0372	-		1	STOP SCREW T6SS6X25FZB	
610	312311-0374	-		3	STOP SCREW T6SS6X30FZB	
630	312316-0443	-		8	STOP SCREW SK6SS8X8FZB	
640	312316-0447	-		8	STOP SCREW SK6SS8X12FZB	
650	312316-0487	-		4	STOP SCREW SK6SS10X12FZB	
660	312502-0221	-		4	DRIVE SCREKDS4X6FNB	
670	312601-0324	-		4	NUT M6M16FZB	
680	312605-0314	-		1	NUT M6M5RFR	
690	312605-0316	-		6	NUT M6M6RFR	
710	315101-0136	-		4	WASHER BRB4,3X8FZB	
715	315101-0153	-		4	WASHER BRB6,4X12FZB	
720	315101-0165	-		5	WASHER BRB8,4X16FZB	
730	315101-0186	-		8	WASHER BRB17X30FZB	
733	315105-0153	-		2	WASHER BRB6,4X12RFR	
735	315233-0111	-		2	SEAL RING R3/8"	
740	315250-0101	R		1	GASKET 32/25	
750	315750-0109	-		1	CIRCLIP SGA12	
760	318800-0104	-		1	HANDLE BALLA D.30-M8	
765	342752-0102	-		2	STRAIGHT C	
770	342722-0202	-		10	PIPE COUPLD=6-R1/8"	
780	342732-0104	-		4	ELBOW PIPE D8-R1/4"	

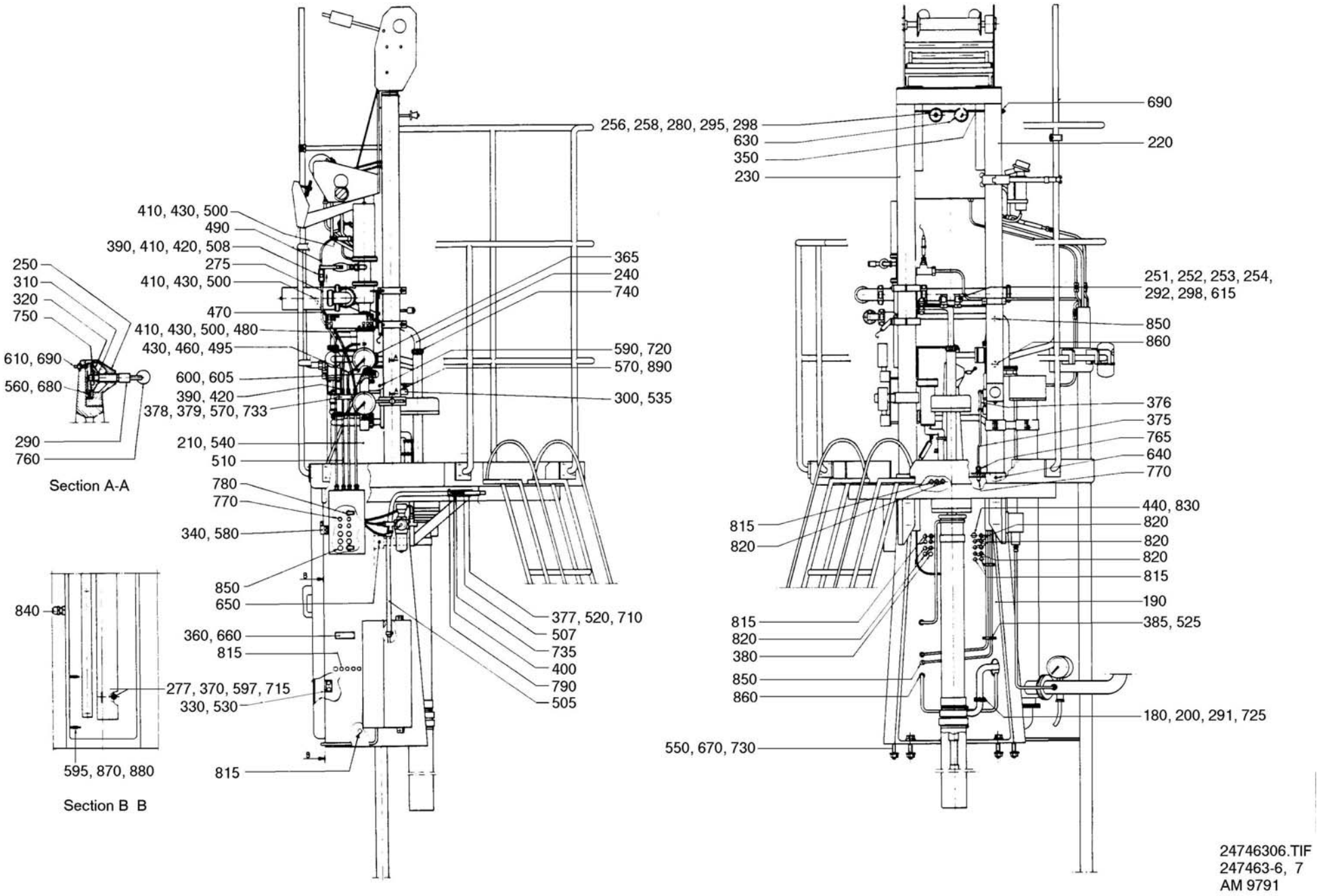
256, 258, 280, 295, 298
630
350
230
690
220
410, 430, 500
490
390, 410, 420, 508
275
410, 430, 500
470
410, 430, 500, 480
430, 460, 495
600, 605
390, 420
378, 379, 570, 733
365
240
740
590, 720
570, 890
300, 535
251, 252, 253, 254,
292, 298, 615
850
860
376
375
765
640
770
250
310
320
750
610, 690
560, 680
290
760
Section A-A
210, 540
510
780
770
340, 580
850
650
360, 660
815
277, 370, 597, 715
330, 530
815
377, 520, 710
507
735
400
790
505
440, 830
820
820
820
815
190
385, 525
815
820
380
850
860
180, 200, 291, 725
550, 670, 730
840
595, 870, 880
Section B B
24746306.TIF
247463-6, 7
AM 9791

Pos	Part No	SP	UN	Qty	Description	Page No
790	342991-0102	-		2	HOSE CLIP 13-20MMRFR	
815	352103-0105	-		13	CABLE GLANR.STR 11	
820	352103-0106	-		12	CABLE GLANR.ST 11	
830	352103-0110	-		1	CABLE GLAND STR 16	
840	352103-0111	-		1	CABLE GLAND ST 16	
850	352101-0103	-		22	LEAD-IN G 18,6	
860	352101-0105	-		3	LEAD-IN G 22,5	
870	352113-0102	-		4	RIBBON CLA	
880	352113-0202	-		2	ANCHOR TM2S8-M	
***)**	***497926***	***-***			***ROD, RIGHT***	
***)**	***497927***	***-***			***ROD, LEFT***	

Pos	Part No	SP	UN	Qty	Description	Page No

) DEVIATES FROM THE C-GROUP DEVELOPMENT STEP

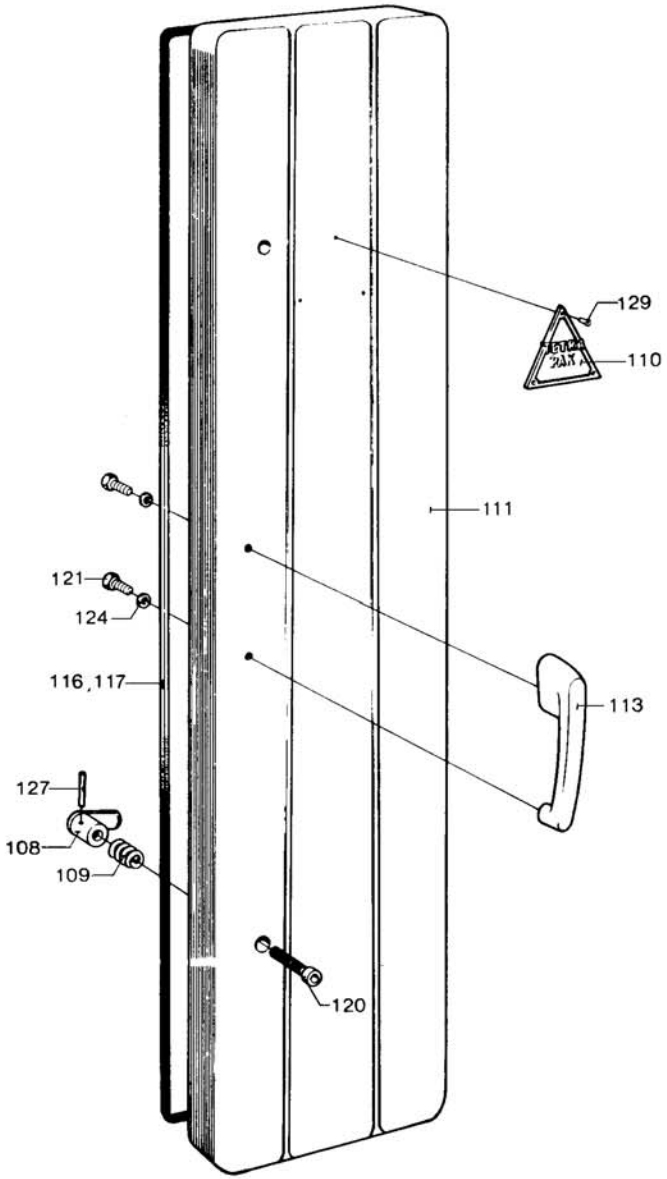

1112601.TIF
11126-1
AM 3981

Pos	Part No	SP	UN	Qty	Description	Page No
-						
000	**C- 11126-0101**	**-**		**1**	**DOOR**	
108	2702	-		2	LATCH	
109	2703	-		2	COMPRESSION SPRING	
110	3675	-		1	TETRA PAK NAME PLATE	
111	11077	-		1	DOOR	
112	G- 11158	-		1	HANDLE	
116	90143-0028	-	MM	2810	STRIP	
117	90153-0002	-		X	ADHESIVE	
120	312115-0459	-		2	SCREW O4762 M8X40A280	
121	312105-0327	-		2	SCREW O4017 M5X12A280	
124	315101-0146	-		2	WASHER BRB5,3X10FZB	
127	311307-0240	-		2	SLOTTED PIRPD3X24FZB	
129	311508-0199	-		3	RIVET KN2X6ALUM.	

Pos	Part No	SP	UN	Qty	Description	Page No

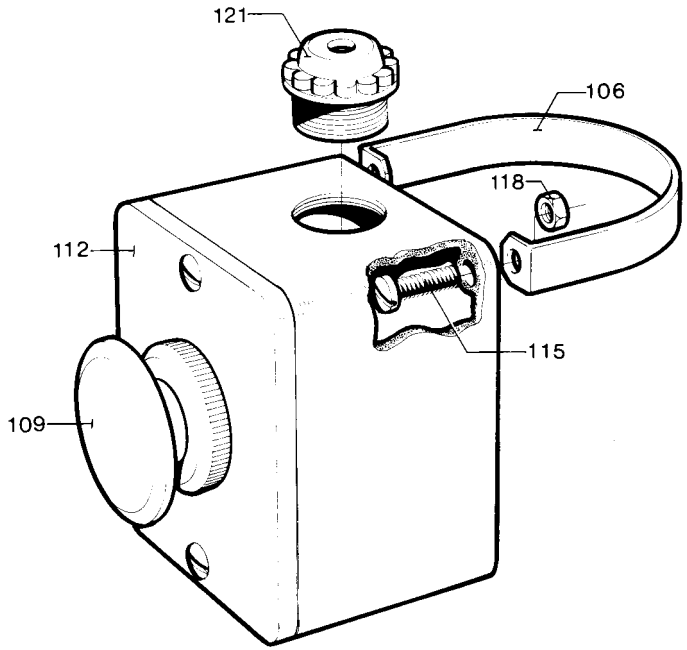
121
106
118
112
115
109

Pos	Part No	SP	UN	Qty	Description	Page No
-						
000	**C- 209969-0101**	**-**		**1**	**OPERATION DEVICE**	
106	10782	-		2	CLAMP STRI P	
109	90064-0052			1	PUSH BUTTON	
112	90066-0013			3	PUSH BUTTON BOX	
115	312125-0329			4	SLOTTED HEAD SCREW	
118	312605-0314			4	NUT	
121	352101-0105			1	LEAD-IN	

Pos	Part No	SP	UN	Qty	Description	Page No

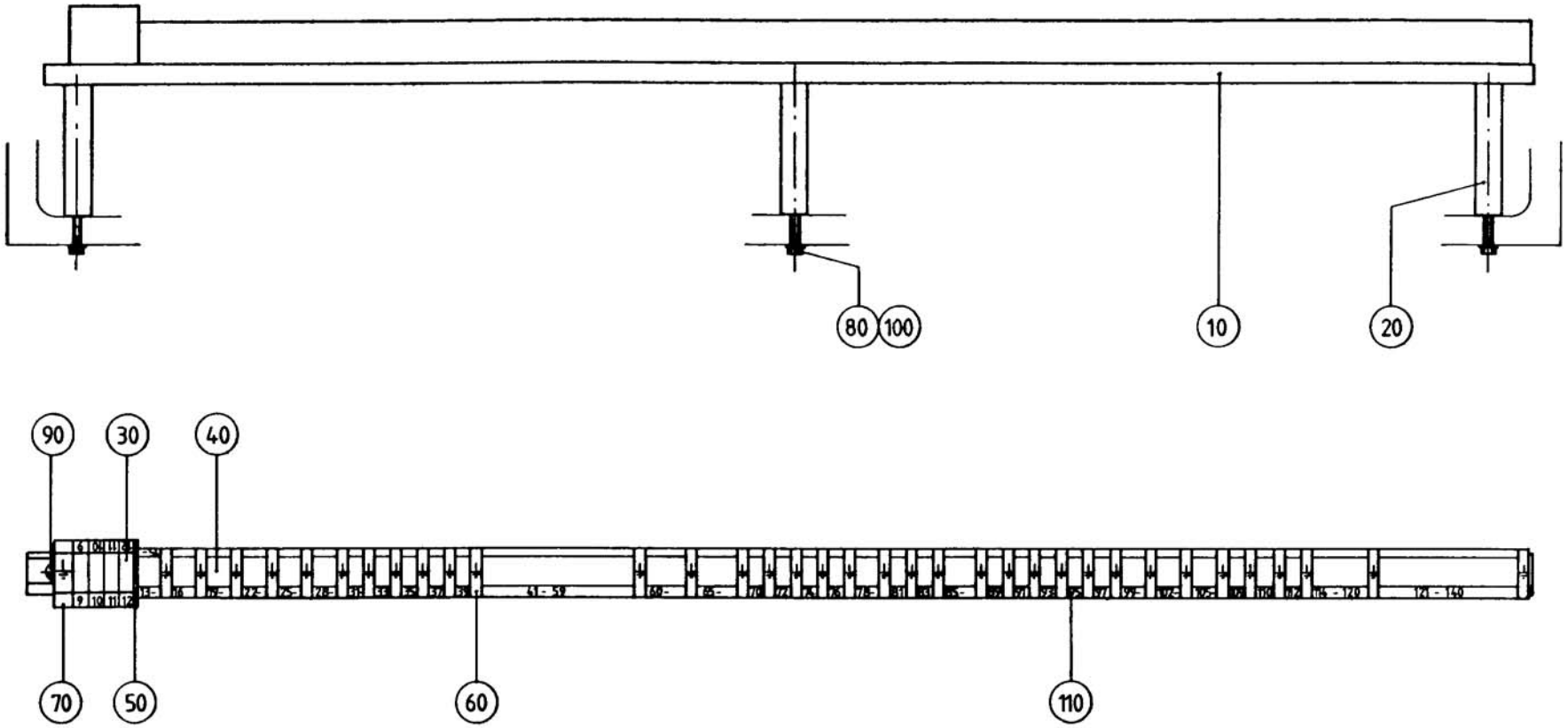

44567902.TIF
445679-2
AM 8784

Pos	Part No	SP	UN	Qty	Description	Page No
-						
000	**C- 445679-0201**	**-**		**1**	**TERMINAL PLINTH**	
010	445677	-		1	MOUNTING RAIL	
020	445678	-		3	SPACER	
030	90077-0041	-		4	FEED THROUGH TERMINAL	
040	90077-0064	-		136	FEED THROUGH TERMINAL	
050	90093-0008	-		1	END PLATE	
060	90135-0022	-		35	EARTHING CLAMP	
070	90135-0024	-		1	EARTHING CLAMP	
080	312101-0376	-		3	SCREW M6S6X35FZB	
090	312141-0368	-		3	SLOTTED HEMFS6X16FZB	
100	315101-0153	-		3	WASHER BRB6,4X12FZB	
110	359011-0804	-		2	SIGN BOARDATS 1-150	

Pos	Part No	SP	UN	Qty	Description	Page No

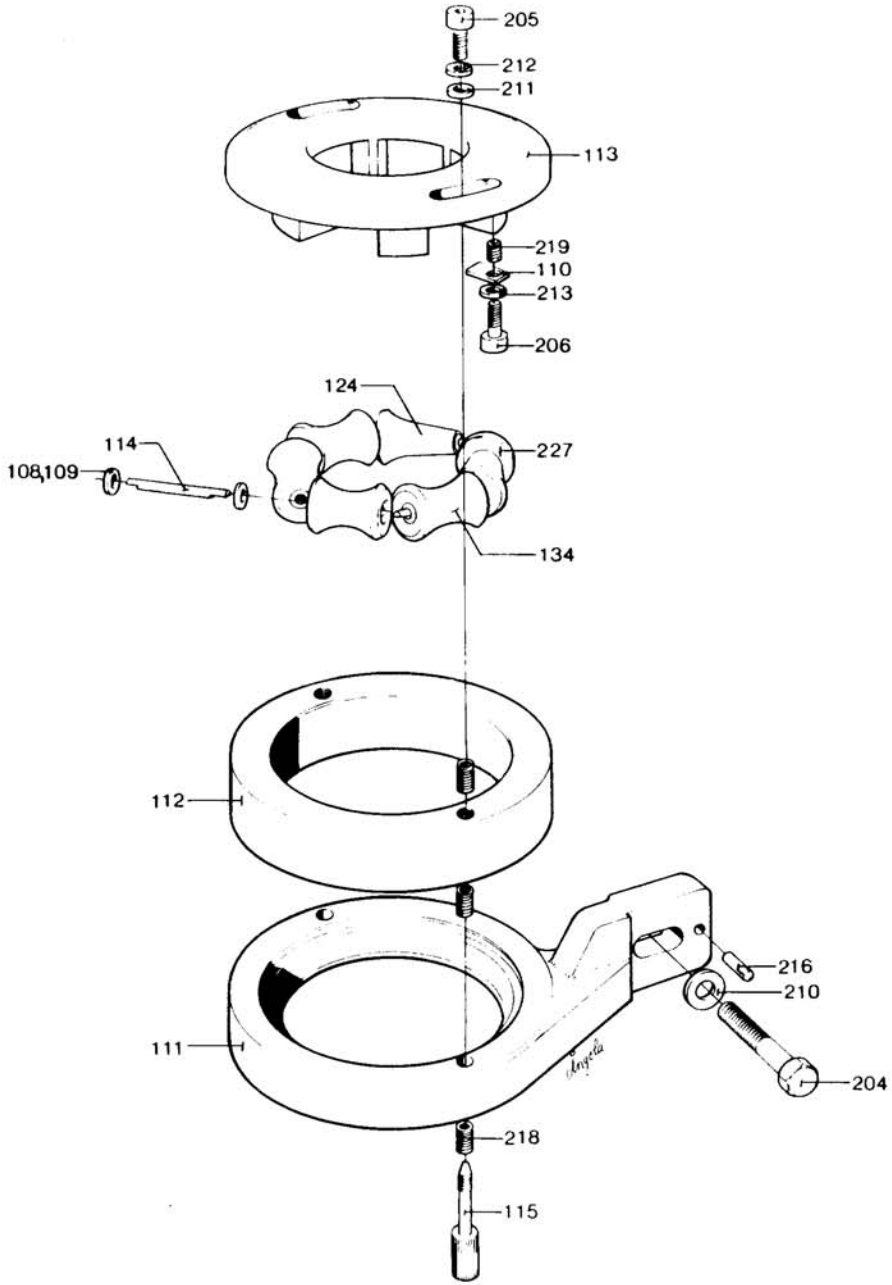

1324701.tif
13247-1
AM 10854

Pos	Part No	SP	UN	Qty	Description	Page No
VOLUME 180						
000	**C- 13247-0101**	**-**		**1**	**UPPER FORMING RING**	
110	4999	-		6	WASHER	
113	5006	-		1	LID, UPPER FORMING RING	
114	5007	-		6	SHAFT	
116	13242	-		1	SPACER LUG	
124	13244	-		1	ROLL	
134	13245	-		4	ROLL	
204	312105-0501	-		1	SCREW 4017 M10X50A280	
206	312115-0291	-		6	SCREW O4762 M4X12A280	
211	315105-0153	-		2	WASHER BRB6,4X12RFR	
213	315402-0136	-		6	WASHER FBB4,1RFR	
219	90026-0002	-		6	THREADED BUSH	
227	13474	-		1	ROLL	
V0LUME 189						
000	**C- 13247-0102**	**-**		**1**	**UPPER FORMING RING**	
110	4999	-		6	WASHER	
113	5006	-		1	LID, UPPER FORMING RING	
114	5007	-		6	SHAFT	
116	13242	-		1	SPACER LUG	
124	13243	-		1	ROLL	
134	13246	-		4	ROLL	
204	312105-0501	-		1	SCREW 4017 M10X50A280	
206	312115-0291	-		6	SCREW O4762 M4X12A280	
211	315105-0153	-		2	WASHER BRB6,4X12RFR	
213	315402-0136	-		6	WASHER FBB4,1RFR	
219	90026-0002	-		6	THREADED BUSH	
227	13475	-		1	ROLL	
VOLUME 200						
000	**C- 13247-0103**	**-**		**1**	**UPPER FORMING RING**	
110	4999	-		6	WASHER	
113	5006	-		1	LID, UPPER FORMING RING	
114	5007	-		6	SHAFT	
116	13242	-		1	SPACER LUG	
124	13126	-		1	ROLL	
134	13127	-		4	ROLL	
204	312105-0501	-		1	SCREW 4017 M10X50A280	
206	312115-0291	-		6	SCREW O4762 M4X12A280	
211	315105-0153	-		2	WASHER BRB6,4X12RFR	
213	315402-0136	-		6	WASHER FBB4,1RFR	
219	90026-0002	-		6	THREADED BUSH	
227	13128	-		1	ROLL	
Common parts						
108	**2033-0002**	**-**		**12**	**WASHER**	
109	2033-0003	-		12	WASHER	
111	5004	-		1	UPPER FORMING RING	
112	5005	-		1	SPACING WASHER	
115	5008	-		2	KNURLED SCREW	
205	312115-0368	-		2	SCREW O4762 M6X16A280	
210	315105-0173	-		1	WASHER BRB10,5X22RFR	
212	315402-0156	-		2	WASHER FBB6,5RFR	
216	311303-0310	-		1	SLOTTED PIRPB5X20FZB	
218	90026-0004	-		6	THREADED BUSH	

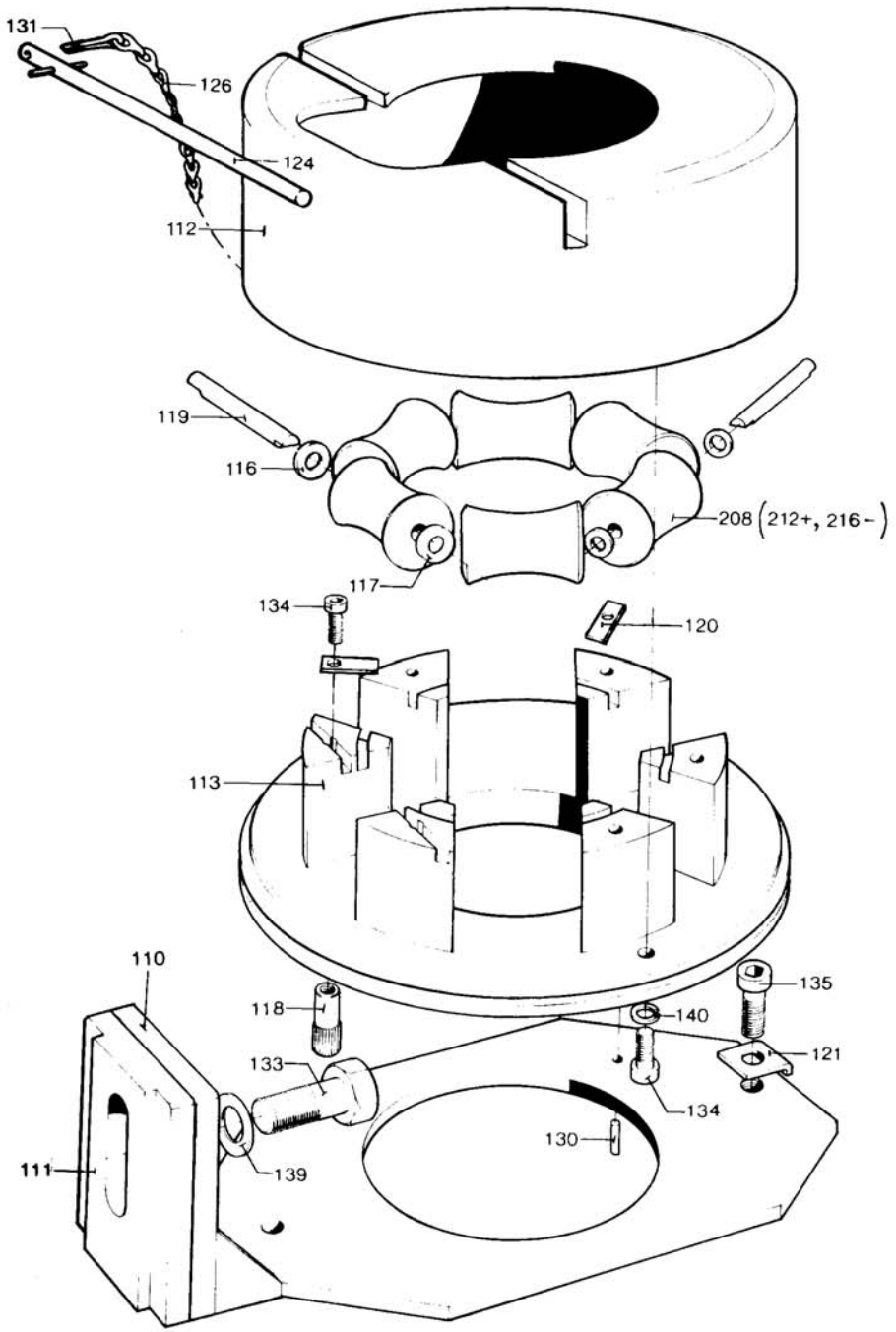

3303803.TIF
33038-3
AM 12583

Pos	Part No	SP	UN	Qty	Description	Page No
VOLUME 180						
000	**C- 33038-0203**	**-**		**1**	**LOWER FORMING RING**	
110	19162	-		1	HOLDER	
112	G- 13284	-		1	LID	
113	19160	-		1	RING	
118	2795	-		6	NUT	
119	4998	-		6	SHAFT	
120	4999	-		6	WASHER	
121	19150	-		2	THRUST WASHER	
124	12155	-		1	STOP PIN	
126	90155-0001	-	MM	500	CHAIN	
130	311305-0233	-		1	SLOTTED PIRPC3X10FZB	
131	311411-0179	-		2	SPLIT PIN SP3,2X16RFR	
133	312105-0495	-		1	SCREW 4017 M10X30A280	
134	312115-0293	-		8	SCREW O4762 M4X16A280	
135	312115-0366	-		2	SCREW O4762 M6X12A280	
140	315401-0136	-		2	WASHER FBH 4,1 FZB	
208	6443-0001	-		6	ROLLER TO LOWER RING	
212	13248-0001	-		6	TRIMMING ROLLER PLUS	
216	13248-0002	-		6	TRIMMING ROLLER MINUS	
VOLUME 189						
000	**C- 33038-0204**	**-**		**1**	**LOWER FORMING RING**	
110	19162	-		1	HOLDER	
112	G- 13284	-		1	LID	
113	19160	-		1	RING	
118	2795	-		6	NUT	
119	4998	-		6	SHAFT	
120	4999	-		6	WASHER	
121	19150	-		2	THRUST WASHER	
124	12155	-		1	STOP PIN	
126	90155-0001	-	MM	500	CHAIN	
130	311305-0233	-		1	SLOTTED PIRPC3X10FZB	
131	311411-0179	-		2	SPLIT PIN SP3,2X16RFR	
133	312105-0495	-		1	SCREW 4017 M10X30A280	
134	312115-0293	-		8	SCREW O4762 M4X16A280	
135	312115-0366	-		2	SCREW O4762 M6X12A280	
140	315401-0136	-		2	WASHER FBH 4,1 FZB	
208	5206-0001	-		6	ROLLER TO LOWER RING	
212	13249-0001	-		6	TRIMMING ROLLER PLUS	
216	13249-0002	-		6	TRIMMING ROLLER MINUS	

Pos	Part No	SP	UN	Qty	Description	Page No
VOLUME 200						
000	**C- 33038-0205**	**-**		**1**	**LOWER FORMING RING**	
110	19162	-		1	HOLDER	
112	G- 13284	-		1	LID	
113	19160	-		1	RING	
118	2795	-		6	NUT	
119	4998	-		6	SHAFT	
120	4999	-		6	WASHER	
121	19150	-		2	THRUST WASHER	
124	12155	-		1	STOP PIN	
126	90155-0001	-	MM	500	CHAIN	
130	311305-0233	-		1	SLOTTED PIRPC3X10FZB	
131	311411-0179	-		2	SPLIT PIN SP3,2X16RFR	
133	312105-0495	-		1	SCREW 4017 M10X30A280	
134	312115-0293	-		8	SCREW O4762 M4X16A280	
135	312115-0366	-		2	SCREW O4762 M6X12A280	
140	315401-0136	-		2	WASHER FBH 4,1 FZB	
208	5205-0001	-		6	ROLLER TO LOWER RING	
212	13129-0001	-		6	TRIMMING ROLLER PLUS	
216	13129-0002	-		6	TRIMMING ROLLER MINUS	
Common parts						
116	**2033-0002**	**-**		**12**	**WASHER**	
117	2033-0003	-		12	WASHER	
139	315105-0173	-		1	WASHER BRB10,5X22RFR	

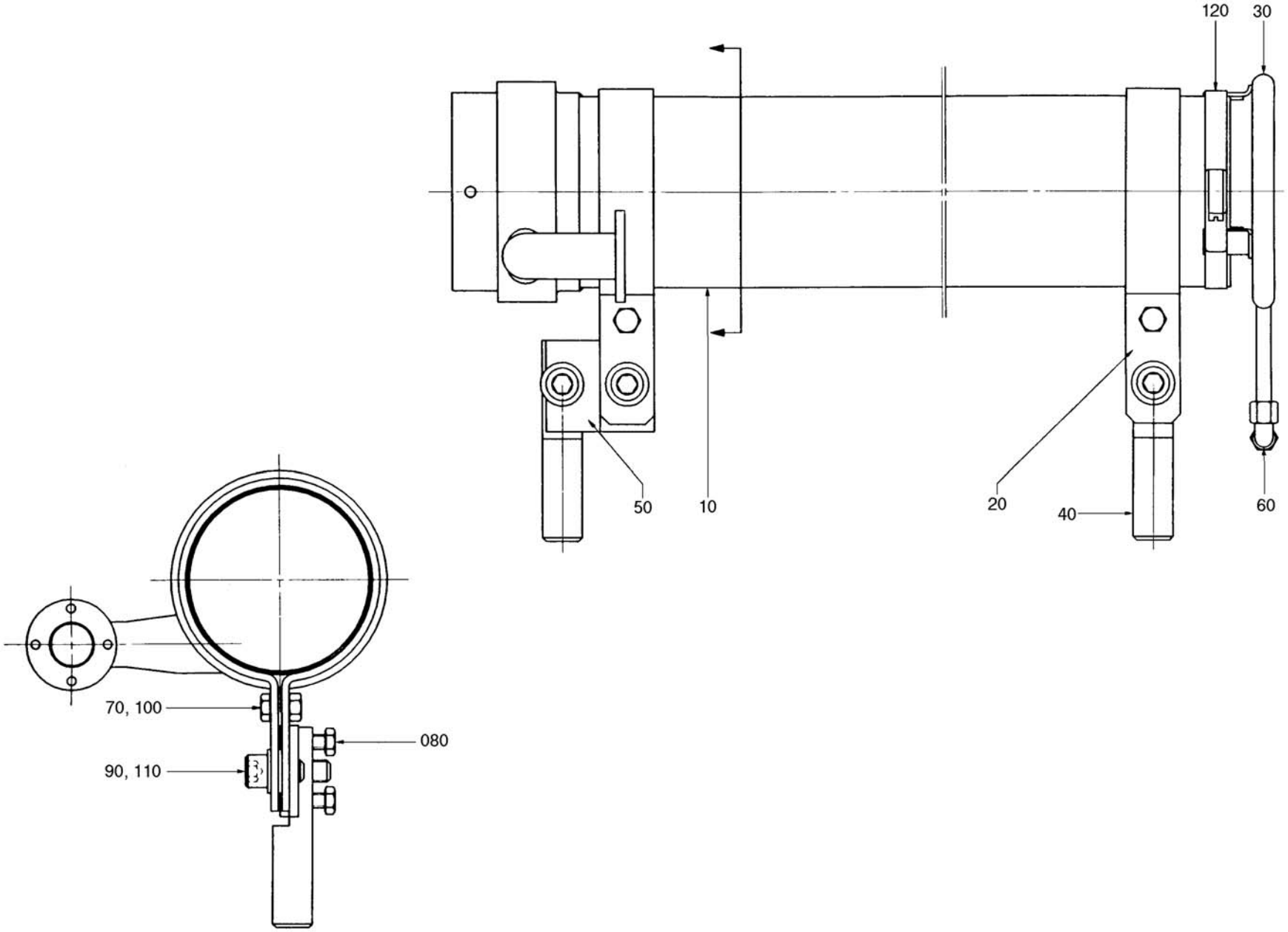

55286901.TIF
552869-1
AM 9791

Pos	Part No	SP	UN	Qty	Description	Page No
-						
000	**C- 552869-0101**	**-**		**1**	**(TUBULAR)JACKET**	
010	552868	-		1	(TUBULAR)JACKET	
020	12167	-		2	CLAMP RING	
030	32724-0002	-		2	COOLING PIPE	
040	12168	-		2	HOLDER	
050	552870	-		1	LACE	
060	90030-0077	-		1	PIPE CONNECTION	
070	312105-0451	-		2	SCREW SO4017 8X20A280	
080	312105-0455	-		4	SCREW O4017 M8X30A280	
090	312115-0538	-		3	SCREW 4762 M12X35A280	
100	312605-0318	-		2	NUT M6M8RFR	
110	315115-0178	-		5	WASHER TBRB13X24RFR	
120	342991-0115	-		1	HOSE CLIP 104-138MMRFR	

Pos	Part No	SP	UN	Qty	Description	Page No

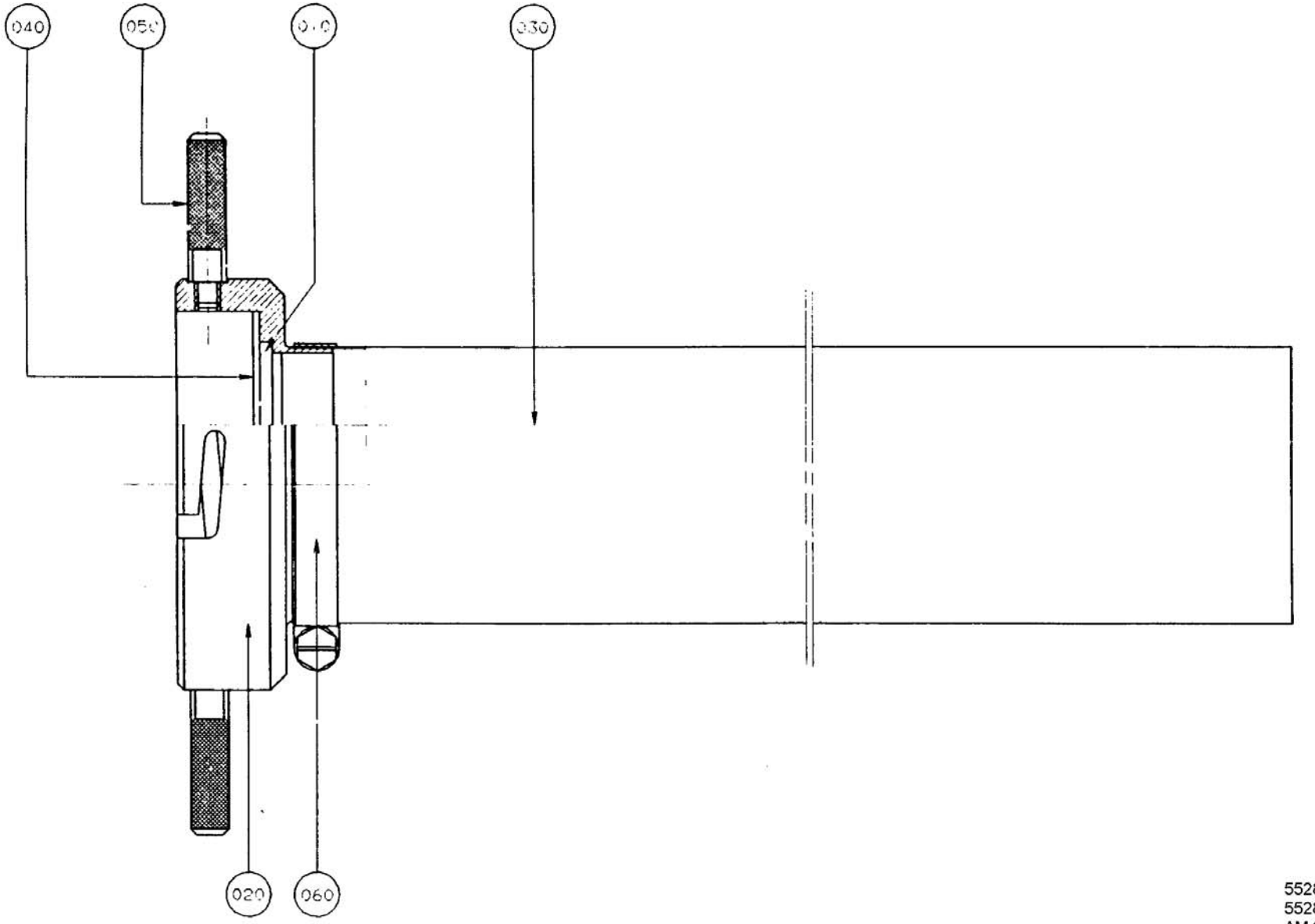

55287301.tif
552873-1
AM 9791

Pos	Part No	SP	UN	Qty	Description	Page No
VOLUME 200,						
000	**C- 552873-0101**	**-**		**1**	**TEFLON HOSE**	
010	11081-0002	-		1	GUIDE RING	
VOLUME 180, 189						
000	**C- 552873-0103**	**-**		**1**	**TEFLON HOSE**	
010	11081-0004	-		1	GUIDE RING	
Common parts						
020	**552871**	**-**		**1**	**HOSE ATTACHMENT**	
030	11084	-		1	TEFLON HOSE	
040	552872	-		1	WASHER	
050	12195	-		1	HANDLE	
060	342991-0113	-		1	HOSE CLIP 77-95MMRFR	

Pos	Part No	SP	UN	Qty	Description	Page No

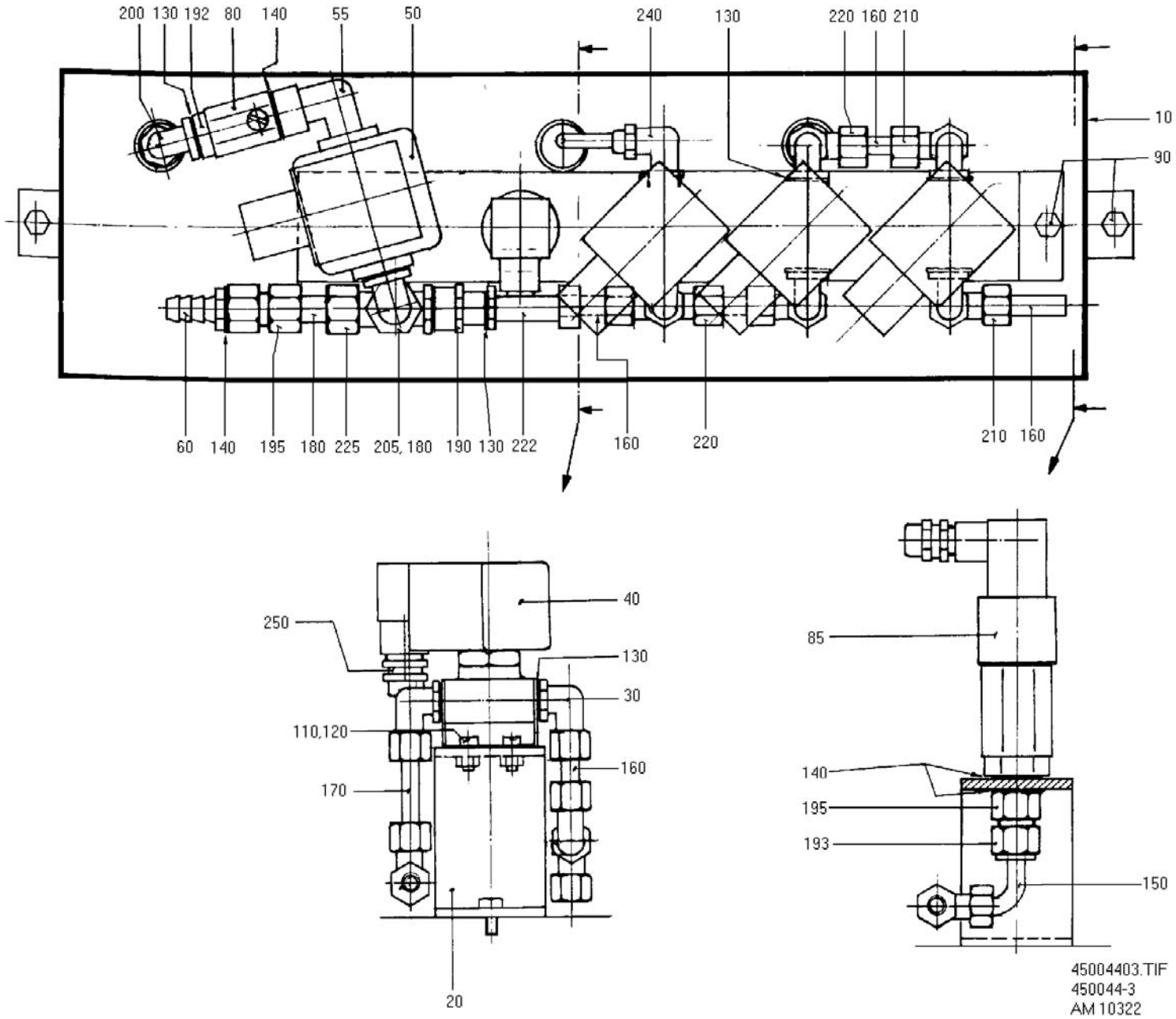
200 130 192 80 140 55 50
240 130 220 160 210
10
90
60 140 195 180 225 205, 180 190 130 222
160 220
210 160
250
40
130
30
110,120
160
170
20
85
140
195
193
150
45004403.TIF
450044-3
AM 10322

Pos	Part No	SP	UN	Qty	Description	Page No
RELAY						
000	**C- 450044-0301**	**-**		**1**	**VALVE GROUP**	
050	90042-0164	-		1	SOLENOID VALVE	
Common parts						
010	**476473**	**-**		**1**	**PROTECTIVE CASING**	
020	449881	-		1	BRACKET	
030	90030-0056	-		7	PIPE CONNECTION	
040	90042-0098	-		3	SOLENOID VALVE	
055	90140-0020	-		1	ELBOW PIPE	
060	90163-0041	-		1	NIPPLE	
080	90187-0058	-		1	VALVE	
085	90274-0042	-		1	GUARD	
090	312101-0366	-		4	SCREW M6S6X12FZB	
110	312121-0327	-		6	SLOTTED HEMCS5X12FZB	
120	312601-0314	-		6	NUT M6M5FZB	
130	315233-0110	-		7	SEAL RING R1/4"	
140	315233-0111	-		7	SEAL RING R3/8"	
150	341001-0148	-	MM	50	COPPER TUB	
160	341001-0148	-	MM	45	COPPER TUB	
170	341001-0148	-	MM	60	COPPER TUB	
180	341001-0192	-	MM	40	COPPER TUB	
190	342212-0104	-		1	MUFF	
192	342701-0203	-		1	BUSHING RNI3/8"-1/4"	
193	342710-0203	-		1	REDUCER RBM12/8	
195	342723-0109	-		2	PIPE COUPLGI-12-3/8"	
200	342730-0104	-		1	ELBOW PIPE WA-8-1/4"	
205	342730-0109	-		1	ELBOW PIPE WA-12-3/8"	
210	342736-0103	-		3	ELBOW PIPE W-8	
220	342746-0103	-		2	T-CONNECTI T-8	
222	342750-0103	-		1	ELBOW FITT LA-8-1/4"	
225	342750-0109	-		1	ELBOW FITT LA-12-3/8"	
240	342930-0114	-		1	ELBOW PIPE6/4-1/4	
250	352103-0101	-		4	CABLE GLAND ST 9	

Pos	Part No	SP	UN	Qty	Description	Page No

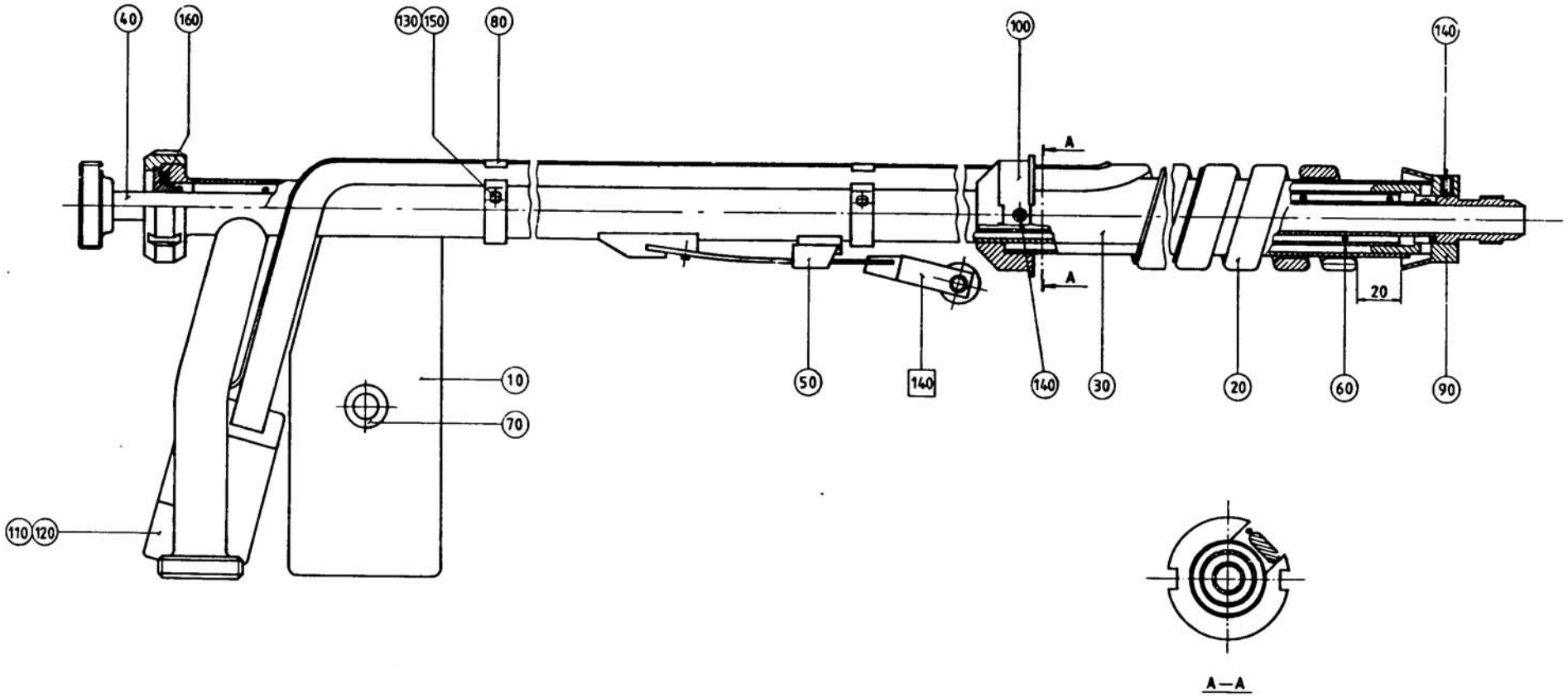

44912202.tif
449122-2
AM 8784

Pos	Part No	SP	UN	Qty	Description	Page No
-						
000	**C- 449122-0201**	**-**		**1**	**TUBE HEATER**	
010	486856	-		1	PROTECTION PIPE	
020	278513	-		1	ELEMENT	
030	33023	-		1	REFLECTOR TUBE	
040	269399	-		1	FILLER TUBE	
050	10707	-		1	HOOD	
060	11146	-		1	GUIDE SPRING	
070	12265	-		1	BUSHING	
080	20914	-		2	HOLDER	
090	33019	-		1	SLEEVE	
100	209170	-		1	HOLDER	
110	90326-0012	-		1	PROTECTIVE COVER	
120	90326-0020	-		1	SOCKET	
130	312115-0297	-		2	SCREW O4762 M4X25A280	
140	312318-0360	-		4	STOP SCREW SK6SS6X6RFR	
150	312605-0312	-		2	NUT M6M4RFR	
160	315250-0101	-		1	GASKET 32/25	
F140	C- 36351-0102	-		1	PRESSURE ROLLER	

Pos	Part No	SP	UN	Qty	Description	Page No

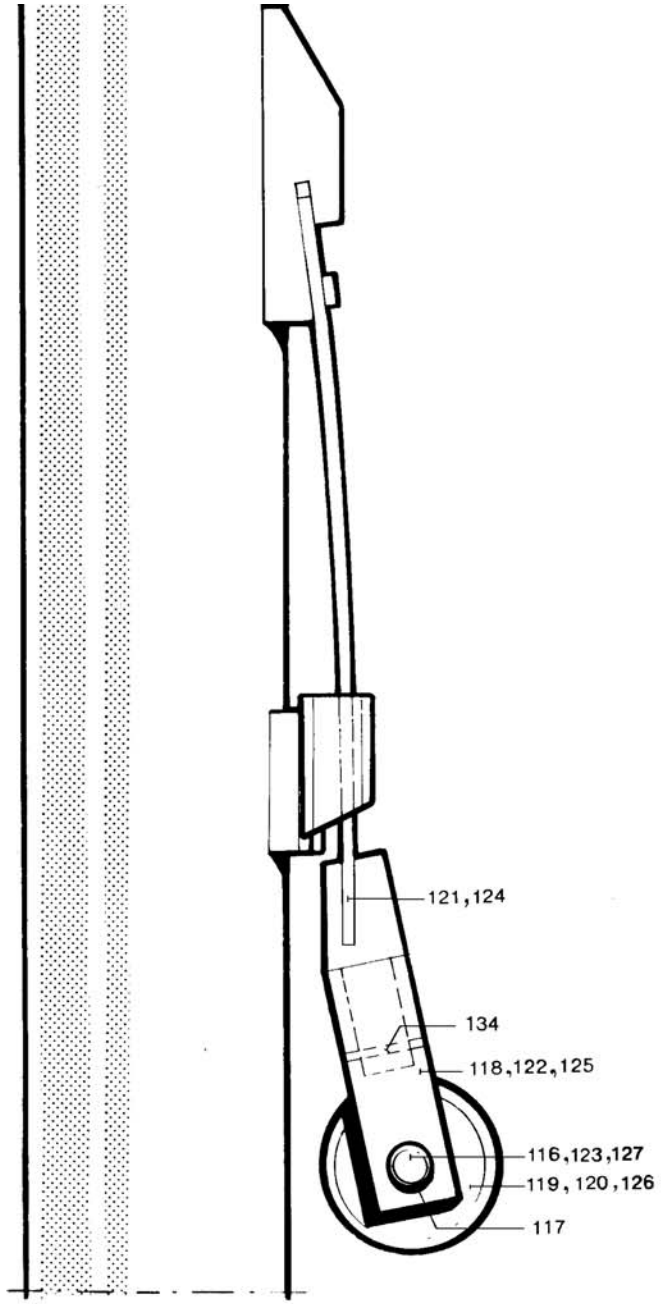

3635101.TIF
36351-1
AM 3621

Pos	Part No	SP	UN	Qty	Description	Page No
VOLUME 180, 189, 200						
000	**C- 36351-0102**	**-**		**1**	**PRESSURE ROLLER**	
120	32301	PU		1	PRESS.ROLLER LONG.ELEMENT	
121	32733	-		1	SPRING	
122	33017	-		1	FORK	
123	33018	-		1	SHAFT	
Common parts						
117	**10593**	**PU**		**1**	**LOCKING RUBBER**	
134	311307-0207	-		1	SLOTTED PIRPD2,5X10FZB	

Pos	Part No	SP	UN	Qty	Description	Page No

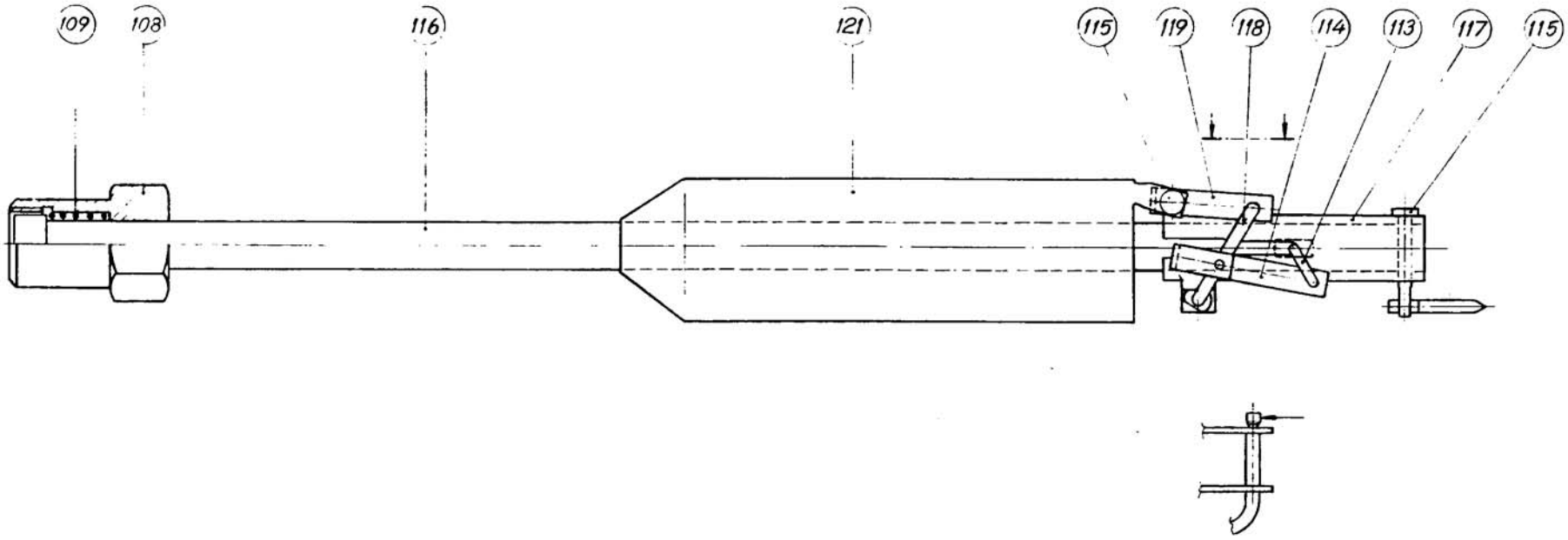

3869901.tif
38699-1
AM 6084

Pos	Part No	SP	UN	Qty	Description	Page No
-						
000	**C- 38699-0101**	**-**		**1**	**FLOAT ASSEMBLY**	
108	11065	-		1	NUT	
109	11071	-		1	SPRING	
113	36815	-		1	THROTTLE	
114	36816	-		1	LINK	
115	36821-0002	-		2	SHEAR PIN	
116	38227	-		1	FILLER TUBE	
117	38228	-		1	SLEEVE	
118	38229	-		1	ARM	
119	38230	-		1	CLAMPING ELEMENT	
121	38700	-		1	FLOAT	

Pos	Part No	SP	UN	Qty	Description	Page No

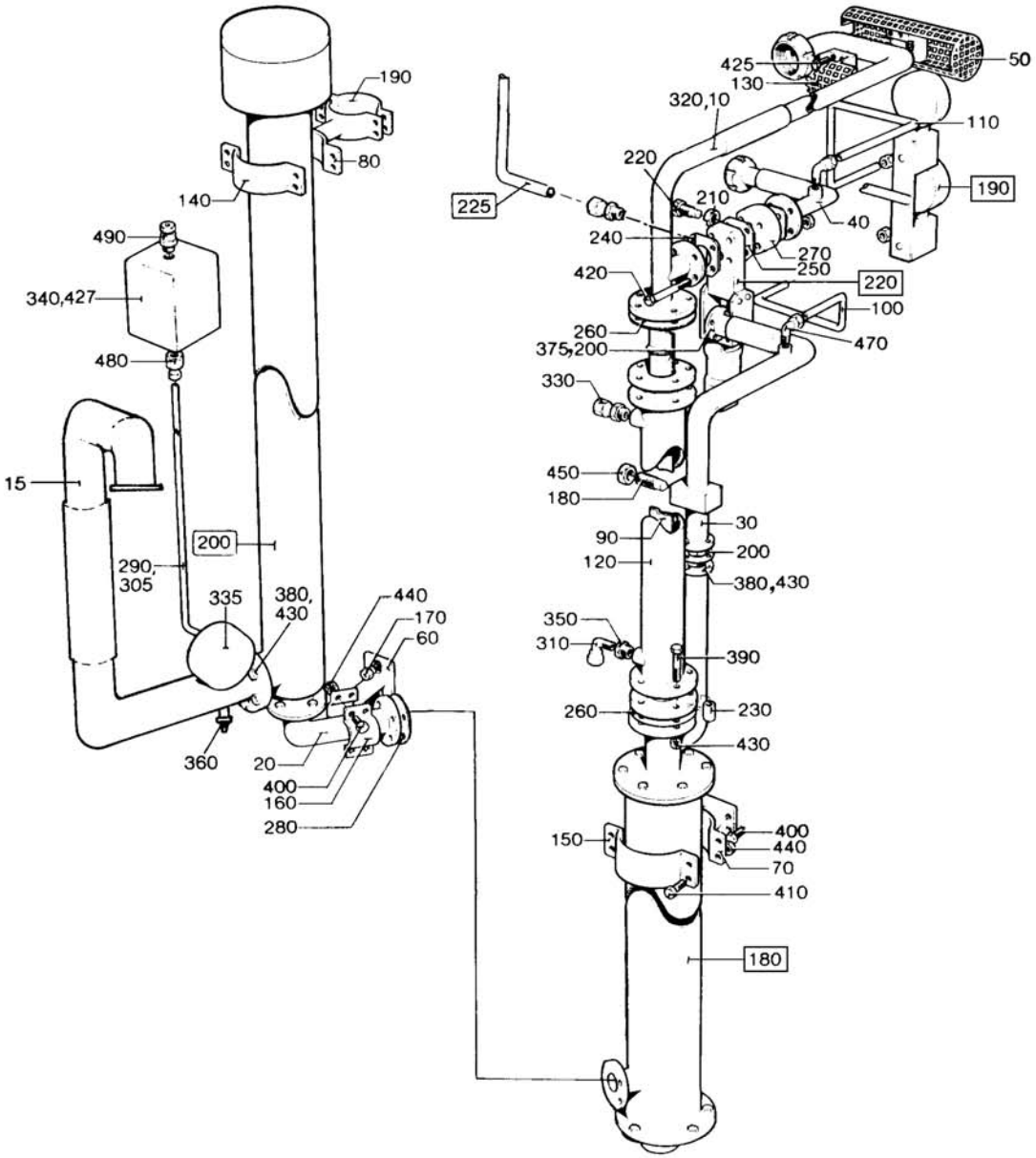
190
80
140
490
340,427
480
15
200
290,
305
335
380,
430
440
170
60
360
20
400
160
280
425
130
320,10
50
110
220
210
225
190
40
240
270
250
420
220
100
260
375,200
470
330
450
180
30
90
200
120
380,430
350
310
390
260
230
430
150
400
440
70
410
180

Pos	Part No	SP	UN	Qty	Description	Page No
TCA/150						
000	**C- 247181-0601**	**-**		**1**	**STERILE AIR UNIT**	
040	247224	-		1	ATTACHMENT PIPE	
Common parts						
010	**247223**	**-**		**1**	**PIPE**	
015	531898	-		1	PIPE	
020	247126	-		1	PIPE BEND	
030	247184	-		1	ATTACHMENT PIPE	
050	531376	-		1	TOUCH GUARD	
060	11087	-		1	HOLDER	
070	11090	-		1	HOLDER	
080	35972	-		1	HOLDER	
090	37973	-		1	INSERT	
100	247492	-		1	PIPE	
110	247493	-		1	PIPE	
120	252982	-		1	HEAT EXCHANGER	
130	531375	-		1	TOUCH GUARD	
140	11089	-		1	CAP	
150	12300	-		1	CAP	
160	12301	-		1	CAP	
170	12308	-		2	SCREW	
180	32712	-		1	SCREW	
190	33268	-		1	CAP	
200	33730-0001	R		2	GASKET	
210	35810-0002	-		1	NUT	
220	35812	-		1	SCREW	
230	36861	-		12	SPACER SLEEVE	
240	531987	R		2	GASKET	
250	535699	-		1	GASKET	
260	531737	R		5	GASKET	
270	247225	-		1	VALVE HOUSING	
280	535700	R		1	GASKET	
290	247494	-		1	PIPE	
305	90030-0052	-		1	PIPE CONNECTION	
310	90030-0071	-		1	PIPE CONNECTION	
320	90330-0029	-		1	PLUG	
330	90030-0115	-		1	PIPE CONNECTION	
335	90043-0009	-		1	PRESSURE GAUGE	
340	90274-0032	-		1	GUARD	
350	90330-0042	-		1	BUSHING	
360	90163-0067	-		1	HOSE NIPPLE	
375	312105-0366	-		4	SCREW O4017 M6X12A280	
380	312105-0370	-		26	SCREW O4017 M6X20A280	
390	312105-0380	-		12	SCREW O4014 M6X50A280	
400	312105-0451	-		8	SCREW SO4017 8X20A280	
410	312105-0455	-		12	SCREW O4017 M8X30A280	
420	312105-0469	-		4	SCREW O4014 M8X90A280	
425	312115-0329	-		4	SCREW O4762 M5X16A280	
427	312121-0293	-		2	SLOTTED HEMCS4X16FZB	
430	312605-0316	-		38	NUT M6M6RFR	
440	312605-0318	-		20	NUT M6M8RFR	
450	312605-0324	-		1	NUT M6M16RFR	
460	315105-0153	-		6	WASHER BRB6,4X12RFR	
470	342731-0102	-		2	ELBOW PIPE WE6-LRFZB	
480	342790-0103	-		1	GAUGE CONN MAV8-LRFZB	
490	352103-0106	-		1	CABLE GLANR.ST 11	
F180	C- 12270-0401	-		1	STERILE FILTER	
F190	C- 38094-0101	-		1	GAUGE GROUP	
F200	C- 30119-0401	-		1	AIR SUPER-HEATER	
F220	C- 247207-030V	-		1	AIR VALVE	
F225	C- 497371-0101	-		1	VENT. PIPE AIR VALVE	

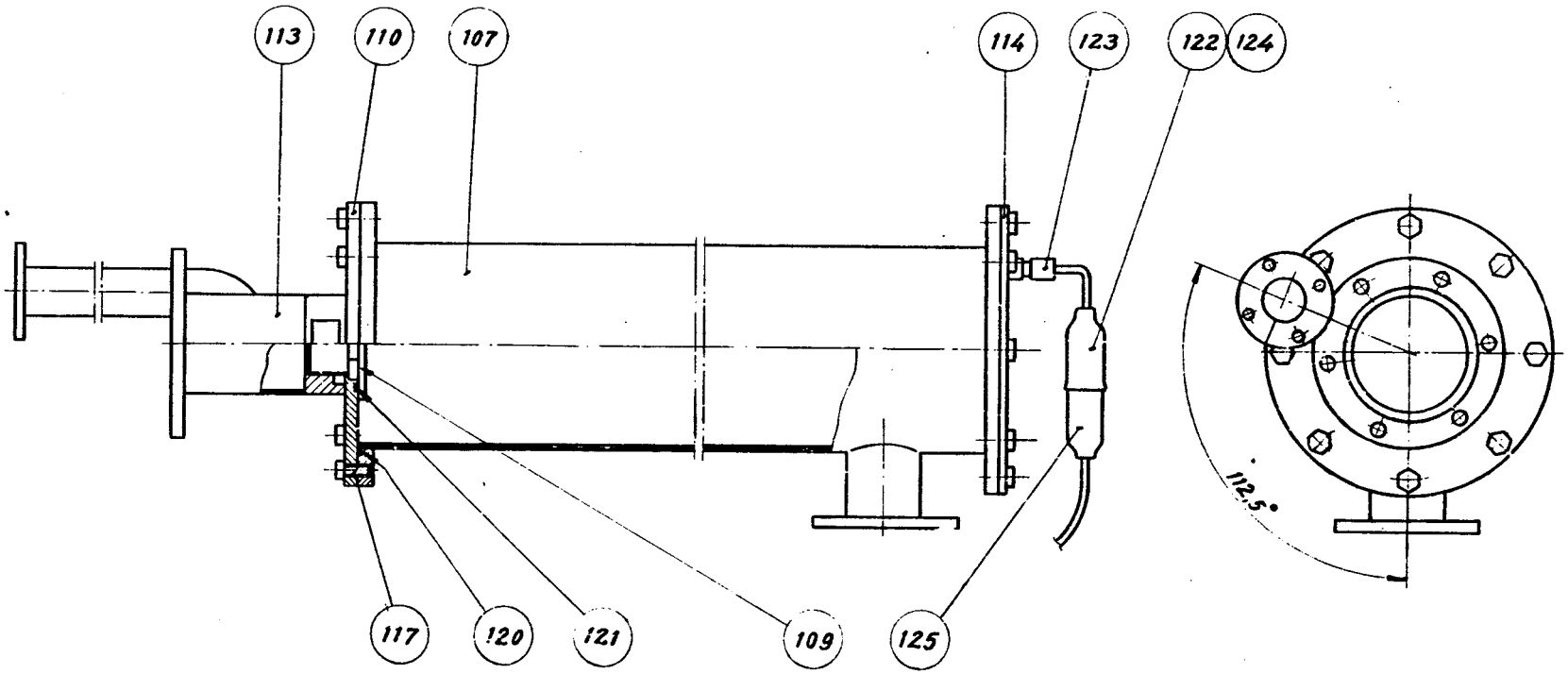

GraphicID: 01227004.tif
Parent Drw: 12270-4
ECN No:

Pos	Part No	SP	UN	Qty	Description	Page No
-						
000	**C- 12270-0401**	**-**		**1**	**STERILE FILTER**	
107	247127	-		1	CONTAINER	
109	555053	-		1	FLANGE	
110	12274	-		1	LID	
113	247183	-		1	BASE	
114	247472	-		1	BOTTOM	
117	312105-0366	-		16	SCREW O4017 M6X12A280	
120	315204-0313	-		2	O-RING 109,5X3VITON	
121	315204-0225	-		1	O-RING 44,2X3VITON	
122	90326-0012	-		1	PROTECTIVE COVER	
123	90326-0017	-		1	GLAND	
124	90326-0019	-		1	THERMOELEMENT	
125	90326-0020	-		1	SOCKET	

Pos	Part No	SP	UN	Qty	Description	Page No

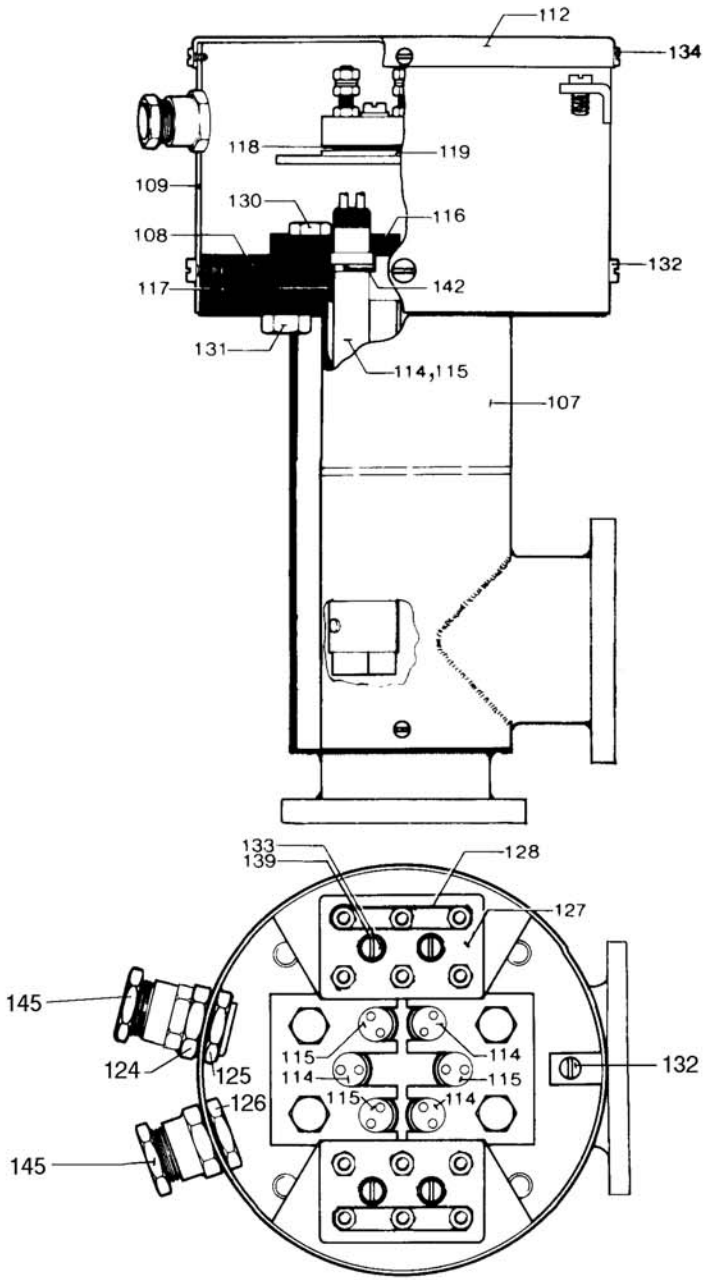

3011903.TIF
30119-3
AM 7838

Pos	Part No	SP	UN	Qty	Description	Page No
-						
000	**C- 30119-0401**	**-**		**1**	**AIR SUPER-HEATER**	
107	247125	-		1	HEATING PIPE	
108	29861	-		1	BRACKET	
109	29874	-		1	CONNECTION HOUS.(MINOR)	
112	29876	-		1	LID	
114	29877-0001	-		3	ROD ELEMENT	
115	29877-0002	R		3	ROD ELEMENT	
116	29897	-		2	HOLDER	
117	531731	R		1	GASKET	
118	751009	-		2	INSULATION	
119	30298	-		2	INSULATION	
120	484838	-		1	WIRING DIAGRAM	
124	90089-0004	-		1	SLEEVE	
125	90099-0004	-		1	NUT	
126	90099-0003	-		1	NUT	
127	90195-0028	-		2	TERMINAL BLOCK	
128	90195-0029	-		4	COUPLING STRIP	
130	312105-0449	-		4	SCREW O4017 M8X16A280	
131	312105-0491	-		4	SCREW 4017 M10X20A280	
132	312125-0323	-		5	SLOTTED HEMCS5X8RFR	
133	312125-0331	-		4	SLOTTED HEMCS5X20RFR	
134	312503-0279	-		12	DRIVE SCRERXKB6X9,5FZB	
139	315105-0146	-		4	WASHER BRB5,3X10RFR	
142	315204-0211	R		6	O-RING 13,3X2,4VITON	
145	352100-0111	-		2	CABLE GLANR.22,5-13,5	

Pos	Part No	SP	UN	Qty	Description	Page No

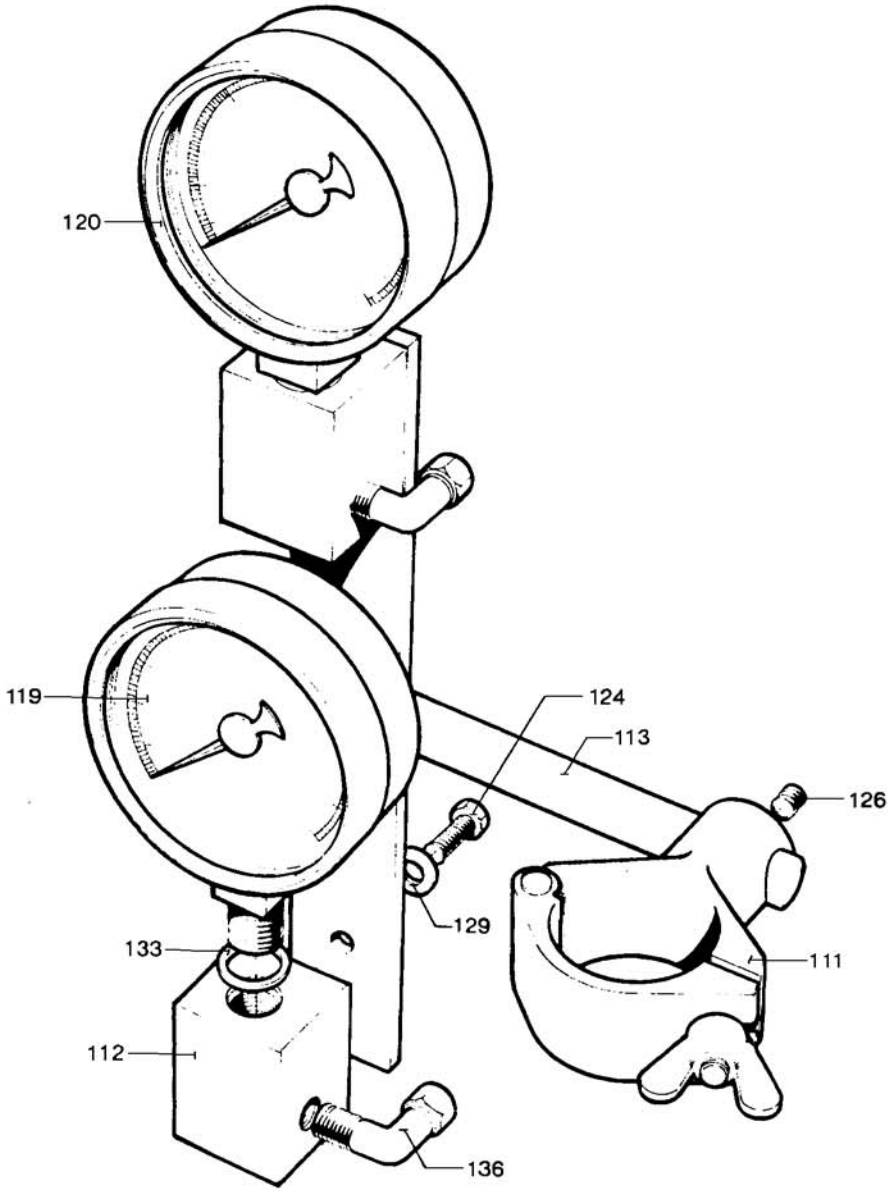

3809401.TIF
38094-1
AM 4289

Pos	Part No	SP	UN	Qty	Description	Page No
-						
000	**C- 38094-0101**	**-**		**1**	**GAUGE GROUP**	
111	10789	-		1	PIPE CLAMP	
112	36986	-		2	GAUGE BRACKET	
113	36987	-		1	HOLDER	
119	90043-0028	-		1	PRESSURE GAUGE	
120	90043-0047	-		1	PRESSURE GAUGE	
124	312105-0366	-		4	SCREW O4017 M6X12A280	
126	312115-0447	-		1	SCREW O4762 M8X12A280	
129	315105-0153	-		4	WASHER BRB6,4X12RFR	
133	315233-0111	-		2	SEAL RING R3/8"	
136	342731-0102	-		2	ELBOW PIPE WE6-LRFZB	

Pos	Part No	SP	UN	Qty	Description	Page No

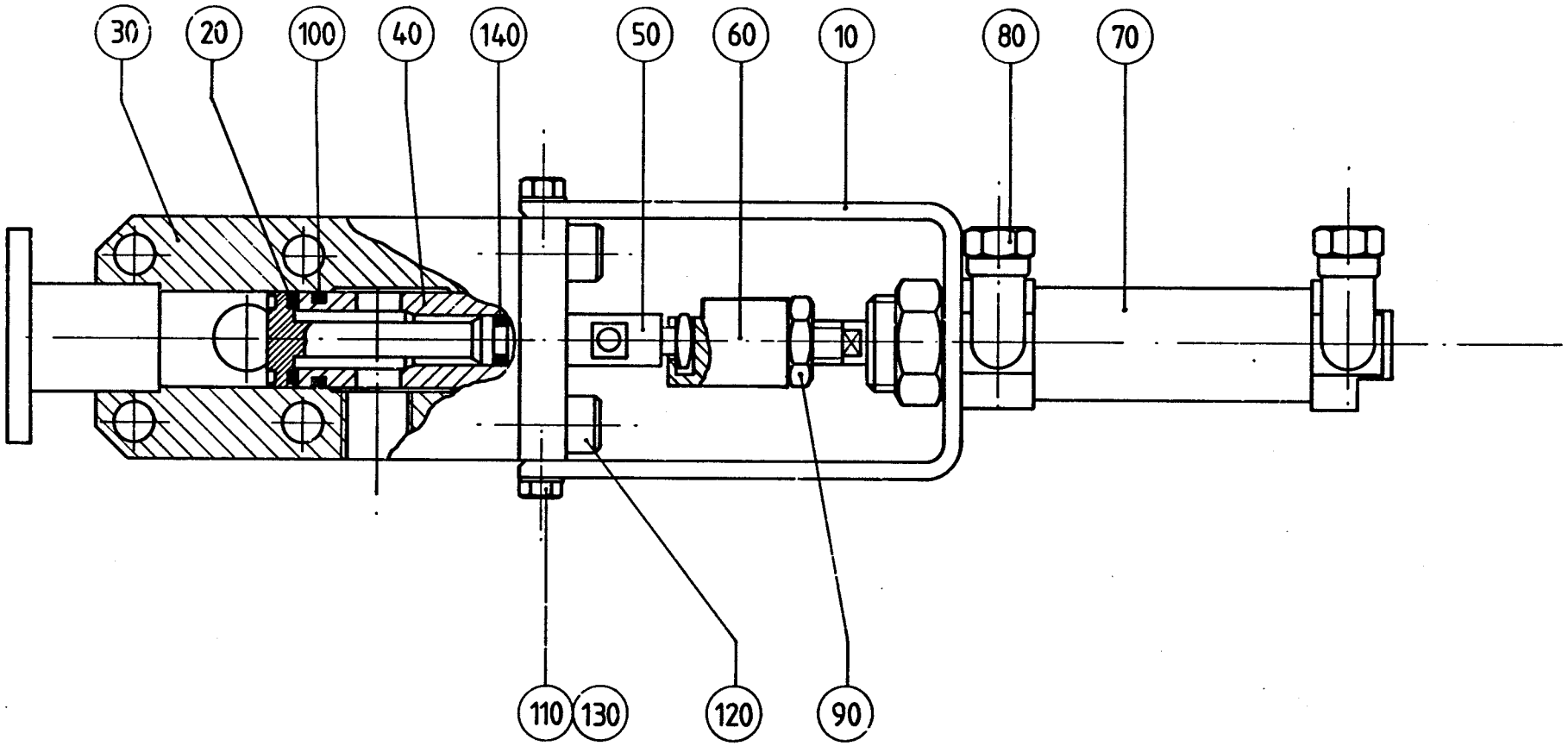

GraphicID: 24220703.tif
Parent Drw: 242207-3
ECN No:

Pos	Part No	SP	UN	Qty	Description	Page No
TCA/150						
000	**C- 247207-0302**	**-**		**1**	**AIR VALVE**	
020	37369	R		1	GASKET	
030	532029	-		1	VALVE HOUSING	
Common parts						
010	**530615**	**-**		**1**	**CYLINDER BRACKET**	
040	38832	-		1	SPINDLE GUIDE	
050	38833	-		1	VALVE SPINDLE	
060	530616	-		1	PENDULUM SUSPENSION	
070	90239-0959	-		1	CYLINDER	
080	90030-0137	-		2	CONNECTION	
090	90099-0051	-		1	NUT	
100	90242-0064	R		1	O-RING	
110	312105-0327	-		4	SCREW O4017 M5X12A280	
120	312115-0449	-		2	SCREW O4762 M8X16A280	
130	315105-0146	-		4	WASHER BRB5,3X10RFR	
140	315204-0206	R		1	O-RING 7,3X2,4VITON	

Pos	Part No	SP	UN	Qty	Description	Page No

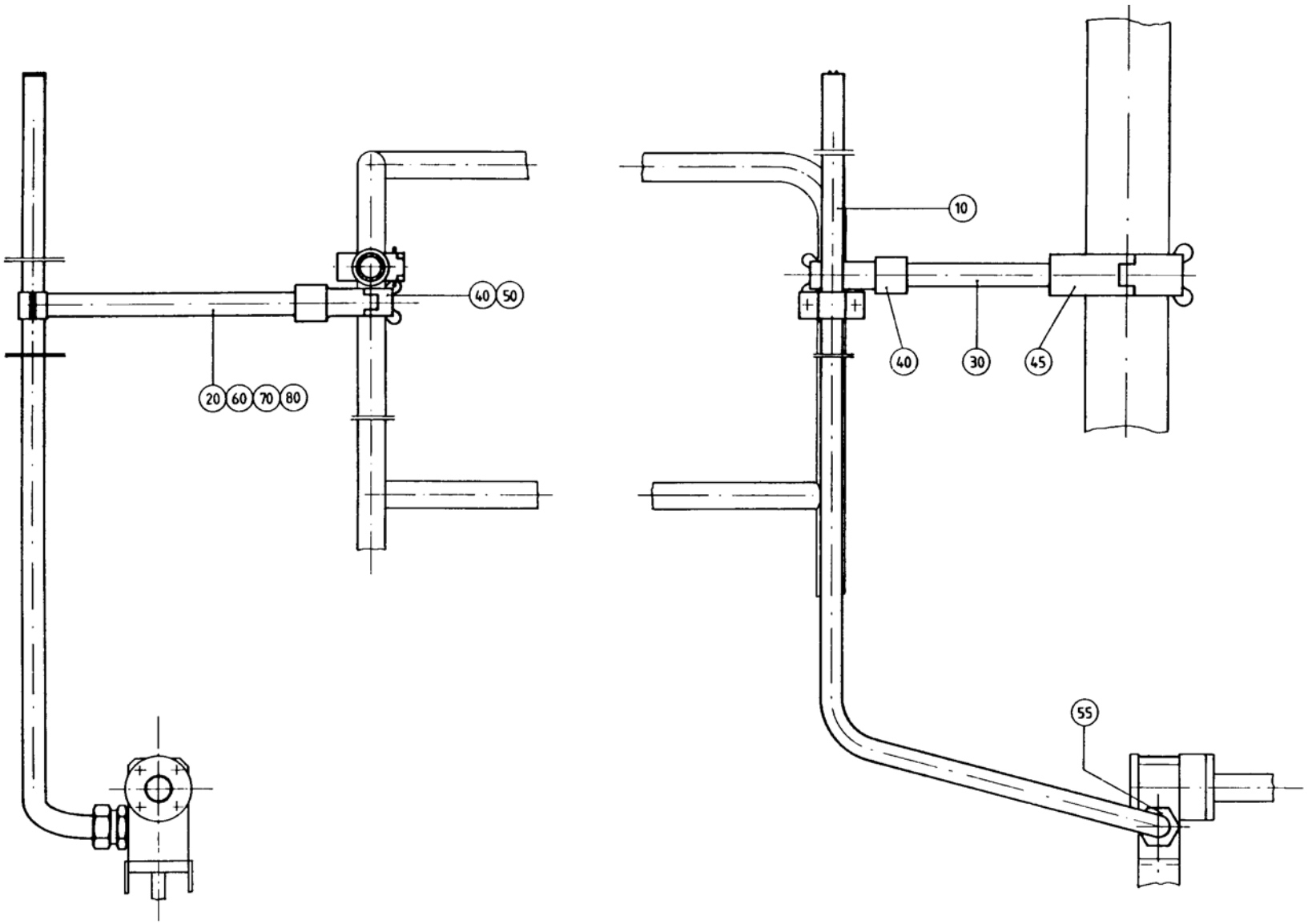

49737101. TIF
497371-1
AM 8784

Pos	Part No	SP	UN	Qty	Description	Page No
-						
000	**C- 497371-0101**	**-**		**1**	**VENT. PIPE AIR VALVE**	
010	497372	-		1	VENTILATING PIPE	
020	497373	-		1	STRUT	
030	493659	-		1	STRUT	
040	90101-0001	-		2	HOLDER	
045	90101-0005	-		1	HOLDER	
050	90165-0302	-		1	DECREASING SLEEVE	
055	90330-0018	-		1	CONNECTION	
060	312105-0370	-		2	SCREW O4017 M6X20A280	
070	312605-0316	-		2	NUT M6M6RFR	
080	315105-0153	-		2	WASHER BRB6,4X12RFR	

Pos	Part No	SP	UN	Qty	Description	Page No

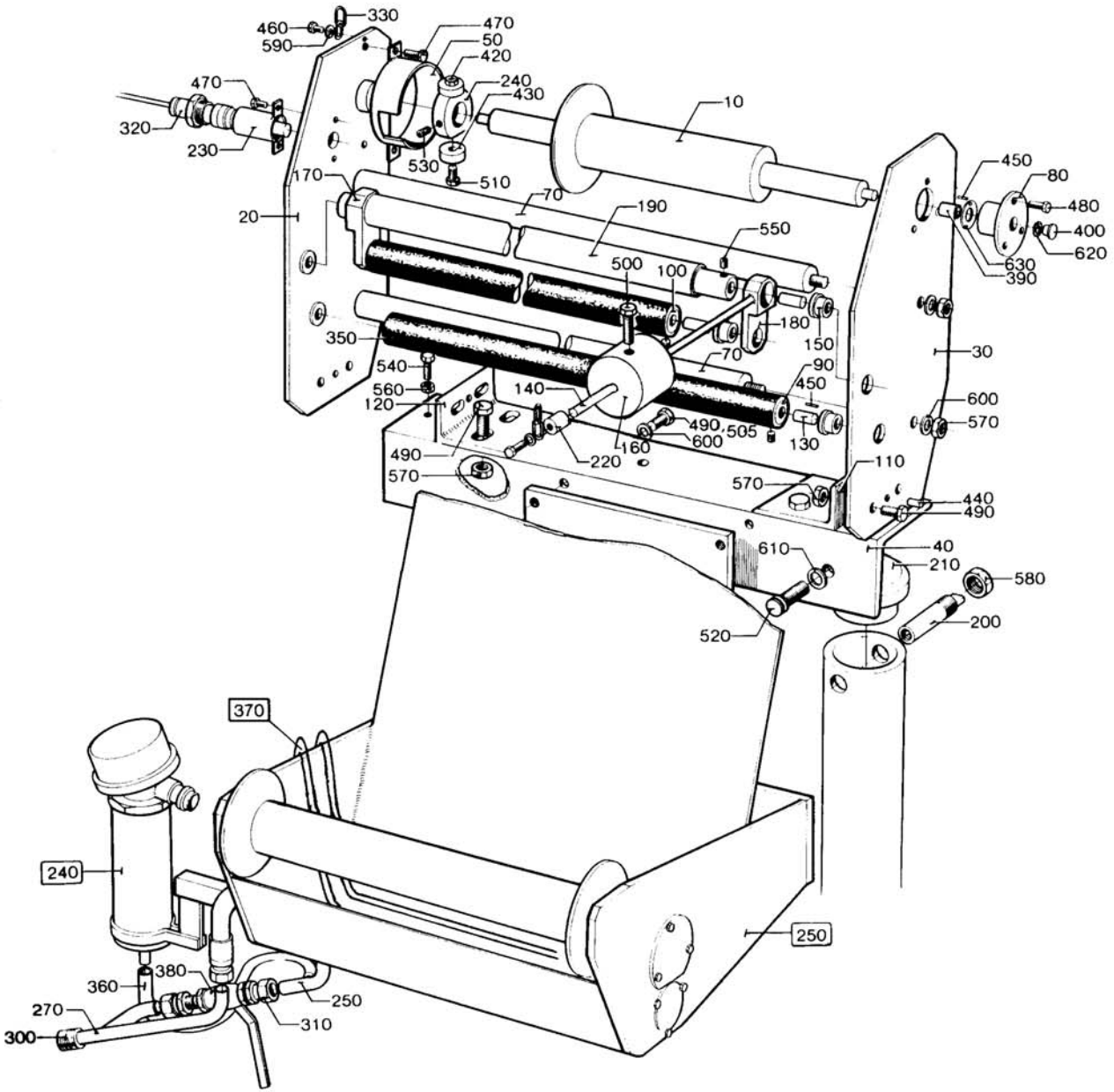

3749603.TIF
37496-3
AM 9791

Pos	Part No	SP	UN	Qty	Description	Page No
VOLUME 200						
000	**C- 37496-0405**	**-**		**1**	**STERILIZER**	
010	37498-0005	-		1	BENDING ROLLER	
VOLUME 189						
000	**C- 37496-0406**	**-**		**1**	**STERILIZER**	
010	37498-0006	-		1	BENDING ROLLER	
VOLUME 180						
000	**C- 37496-0407**	**-**		**1**	**STERILIZER**	
010	37498-0007	-		1	BENDING ROLLER	
Common parts						
020	**37353**	**-**		**1**	**END SECTION**	
030	37354	-		1	END SECTION	
040	12176	-		1	CANTILEVER	
050	37356	-		1	PROTECTION	
070	10418	-		2	SPACER ROD	
080	10434	-		2	BEARING HOUSING	
090	10683-0001	-		1	SQUEE-GEE ROLLER	
100	10683-0002	-		1	SQUEE-GEE ROLLER	
110	12180-0001	-		1	BRACKET	
120	12180-0002	-		1	BRACKET	
130	12181	-		6	AXLE PIN	
140	12183	-		2	LEVER	
150	12184	-		6	BUSHING	
160	497166	-		2	COUNTER WEIGHT	
170	12548-0001	-		1	LUG	
180	12548-0002	-		1	LUG	
190	12549-0001	-		1	SHAFT	
200	12686	-		2	SPINDLE	
210	12687	-		2	LACE	
220	36533	-		1	SLEEVE	
230	37152	-		1	HOLDER	
240	37153	-		1	RING	
250	252677	-		1	PIPE	
270	279778	-		1	PIPE	
300	90030-0106	-		1	PIPE CONNECTION	
310	90030-0109	-		2	PIPE CONNECTION	
320	90044-0037	-		1	MAGNETIC SWITCH	
330	90155-0008	-	MM	300	CHAIN	
340	90155-0008	-	MM	800	CHAIN	
350	90162-0013	-	MM	600	HOSE	
360	90166-0005	-	MM	300	HOSE	
380	90187-0059	-		1	VALVE	
390	90240-0028	-		2	PLAIN BEARING	
400	90261-0001	-		2	PIPE PLUG	
420	90339-0006	-		1	MAGNET	
430	90339-0007	-		1	MAGNET	
440	311103-0350	-		2	CYLINDRICACP M6 6X14 RFR	
450	311305-0185	-		6	SLOTTED PIRPC2X6FZB	
460	312101-0325	-		6	SCREW M6S5X10FZB	
470	312101-0364	-		4	SCREW M6S6X10FZB	
480	312101-0366	-		6	SCREW M6S6X12FZB	
490	312101-0495	-		10	SCREW M6S10X30FZB	
500	312109-0335	-		2	SCREW M6S5X30HRFR	
505	312109-0374	-		2	SCREW M6S6X30HRFR	
510	312115-0293	-		2	SCREW O4762 M4X16A280	
520	312115-0536	-		2	SCREW 4762 M12X30A280	
530	312311-0366	-		1	STOP SCREW T6SS6X12FZB	
540	312311-0374	-		4	STOP SCREW T6SS6X30FZB	
550	312318-0362	-		6	STOP SCREW SK6SS6X8RFR	
560	312601-0316	-		2	NUT M6M6FZB	
570	312601-0320	-		12	NUT M6M10FZB	
580	312601-0326	-		2	NUT M6M20FZB	
590	315105-0146	-		6	WASHER BRB5,3X10RFR	
600	315105-0173	-		22	WASHER BRB10,5X22RFR	
610	315105-0178	-		2	WASHER BRB13X24RFR	
620	315752-0109	-		2	CIRCLIP SGH12	
630	321129-0104	-		2	THRUST WAS12/24X1,5	
F240	C- 32744-0201	-		1	LEVEL GUARD	
F250	C- 247368-030V	-		1	STERILIZATION BATH	
F253	C- 268188-0101	-		1	PAPER GUIDE	
F370	C- 497924-0101	-		1	PEROXIDE COOLER	

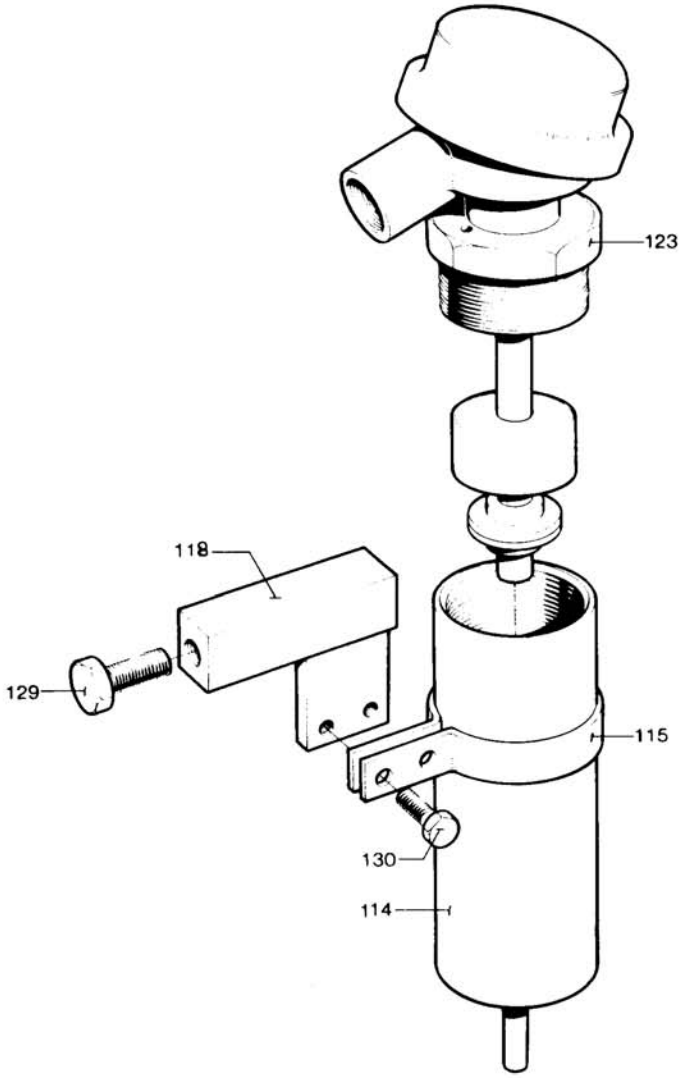

3274401.TIF
32744-1
AM 3406

Pos	Part No	SP	UN	Qty	Description	Page No
-						
000	**C- 32744-0201**	**-**		**1**	**LEVEL GUARD**	
114	35921	-		1	VESSEL	
115	32746	-		1	CLAMP RING	
118	36008	-		1	BRACKET	
123	90274-0020	-		1	LEVEL PROBE	
129	312105-0491	-		1	SCREW 4017 M10X20A280	
130	312105-0368	-		2	SCREW O4017 M6X16A280	

Pos	Part No	SP	UN	Qty	Description	Page No

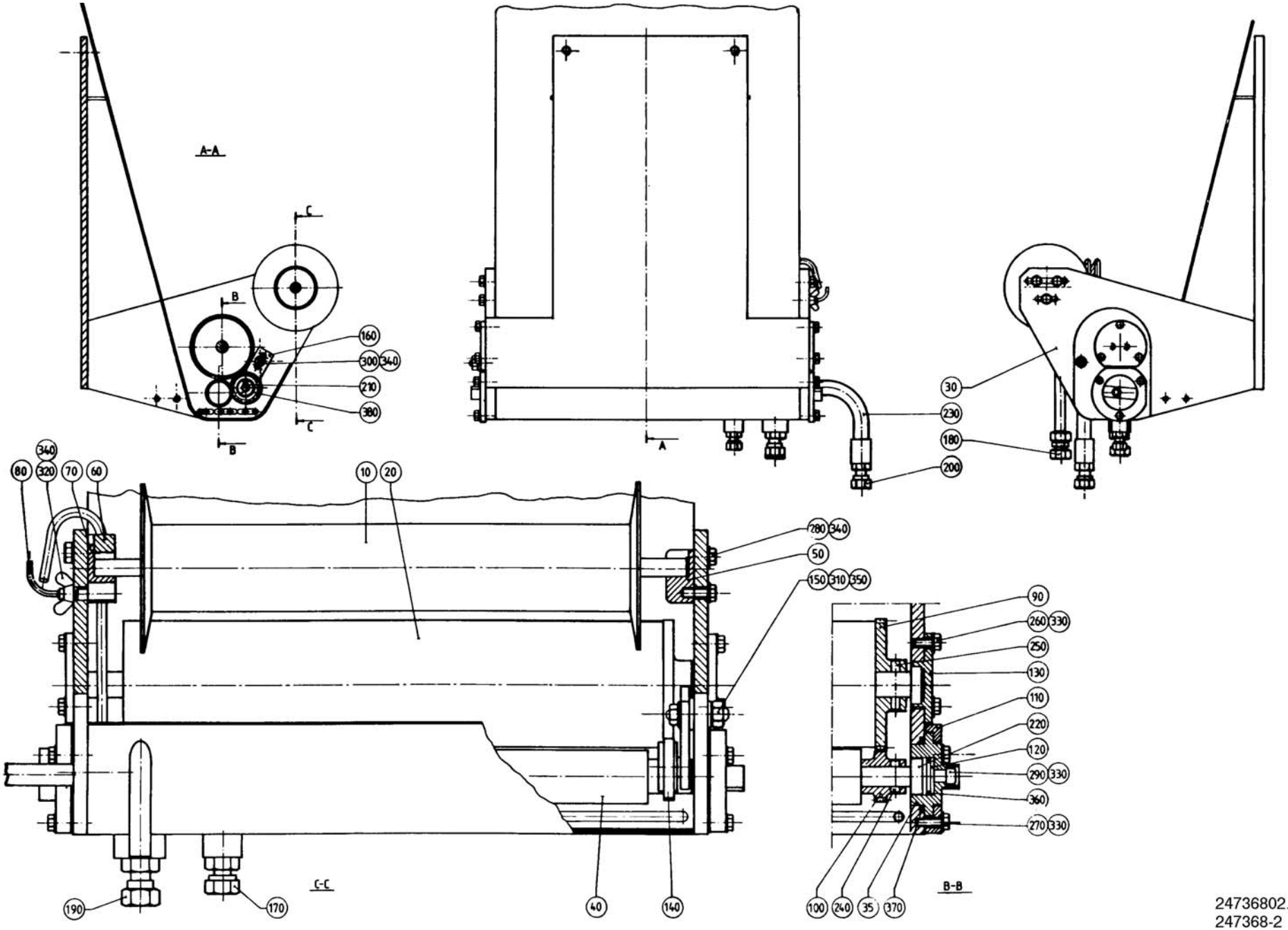

24736802.TIF
247368-2

Pos	Part No	SP	UN	Qty	Description	Page No
VOLUME 200						
000	**C- 247368-0305**	**-**		**1**	**STERILIZATION BATH**	
010	37345-0005	-		1	BENDING ROLLER	
020	37499-0005	-		1	BENDING ROLLER	
VOLUME 189						
000	**C- 247368-0306**	**-**		**1**	**STERILIZATION BATH**	
010	37345-0006	-		1	BENDING ROLLER	
020	37499-0006	-		1	BENDING ROLLER	
VOLUME 180						
000	**C- 247368-0307**	**-**		**1**	**STERILIZATION BATH**	
010	37345-0007	-		1	BENDING ROLLER	
020	37499-0007	-		1	BENDING ROLLER	
Common parts						
030	**37340**	**-**		**1**	**STERILIZATION BATH**	
035	534167	-		2	BEARING HOUSING	
040	535567	-		1	WETTING ROLLER	
050	10349	-		1	BEARING	
060	10561	-		1	BEARING BRACKET	
070	10562	-		1	BEARING BOX	
080	10563	-		1	ECCENTRIC	
090	27726	-		1	GEAR WHEEL	
100	27727	-		1	GEAR WHEEL	
110	534168	-		2	CLAMPING RING	
120	534169	-		2	BEARING BRACING	
130	534175	-		2	BEARING COVER	
140	535568	-		1	GEAR WHEEL	
150	535569	-		1	DOWEL	
160	535570	-		1	LEVER	
170	90030-0052	-		1	PIPE CONNECTION	
180	90030-0106	-		1	PIPE CONNECTION	
190	90030-0109	-		1	PIPE CONNECTION	
200	90030-0187	-		1	PIPE CONNECTION	
210	90141-0015	-		1	LOCK RING	
220	90214-0040	R		5	BALL BEARING	
230	90330-0050	-		1	ELBOW PIPE	
240	311103-0310	-		2	CYLINDRICACP M6 5X20 RFR	
250	311103-0314	-		1	CYLINDRICACP M6 5X30 RFR	
260	312105-0325	-		6	SCREW M6S5X10 A2 80	
270	312105-0328	-		6	SCREW M6S5X14 A2 80	
280	312105-0368	-		5	SCREW O4017 M6X16A280	
290	312115-0325	-		2	SCREW 5X10 A4 80	
300	312605-0316	-		1	NUT M6M6RFR	
310	312605-0318	-		1	NUT M6M8RFR	
320	312711-0116	-		1	WING NUT VM6FZB	
330	315105-0146	-		15	WASHER BRB5,3X10RFR	
340	315105-0153	-		7	WASHER BRB6,4X12RFR	
350	315105-0165	-		1	WASHER BRB8,4X16RFR	
360	315202-0116	-		2	O-RING 18,1X1,6	
370	315202-0223	R		2	O-RING 39,2X3	

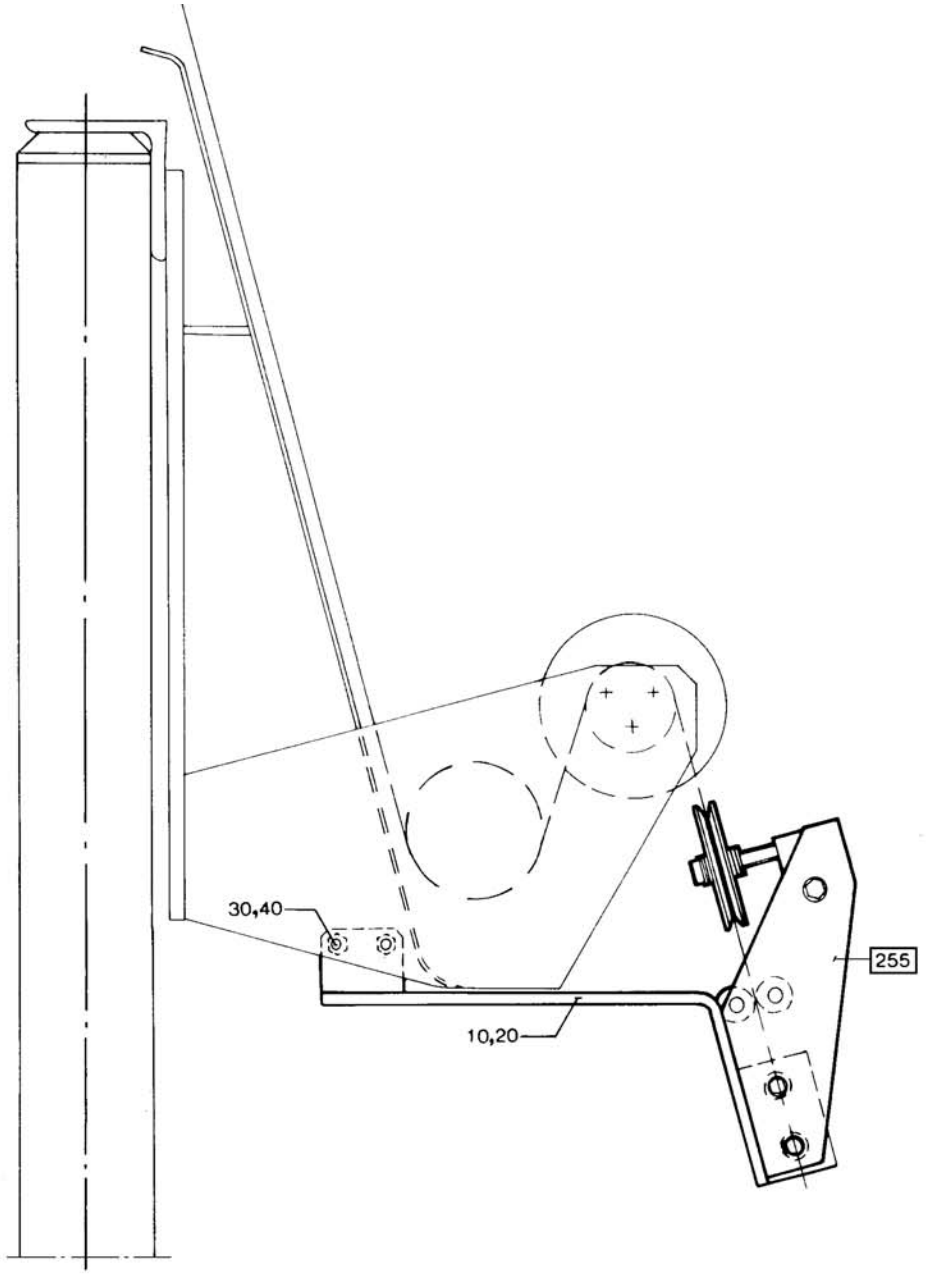

26818801.TIF
268188-1
AM 5367

Pos	Part No	SP	UN	Qty	Description	Page No
-						
000	**C- 268188-0101**	**-**		**1**	**PAPER GUIDE**	
010	292365	-		1	CANTILEVER	
020	292366	-		1	CANTILEVER	
030	312105-0370	-		4	SCREW O4017 M6X20A280	
040	315105-0153	-		4	WASHER BRB6,4X12RFR	
F255	C- 268554-0101	-		1	PAPER GUIDE	

Pos	Part No	SP	UN	Qty	Description	Page No

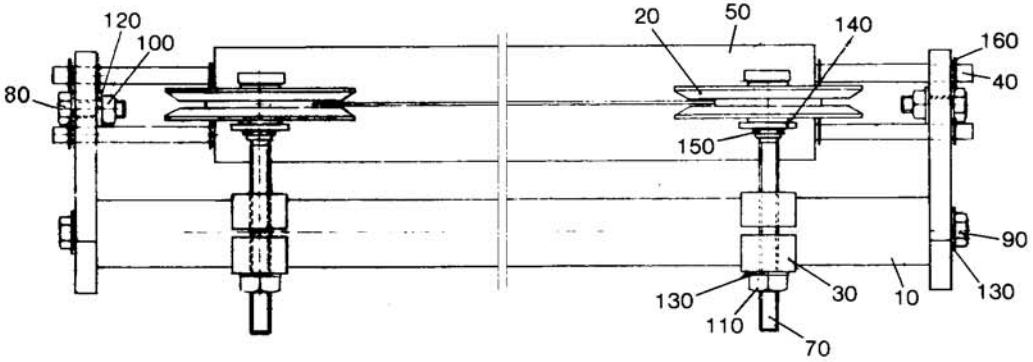

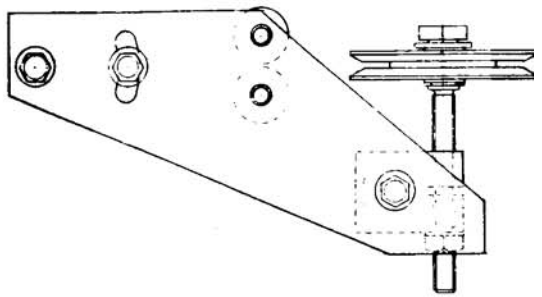

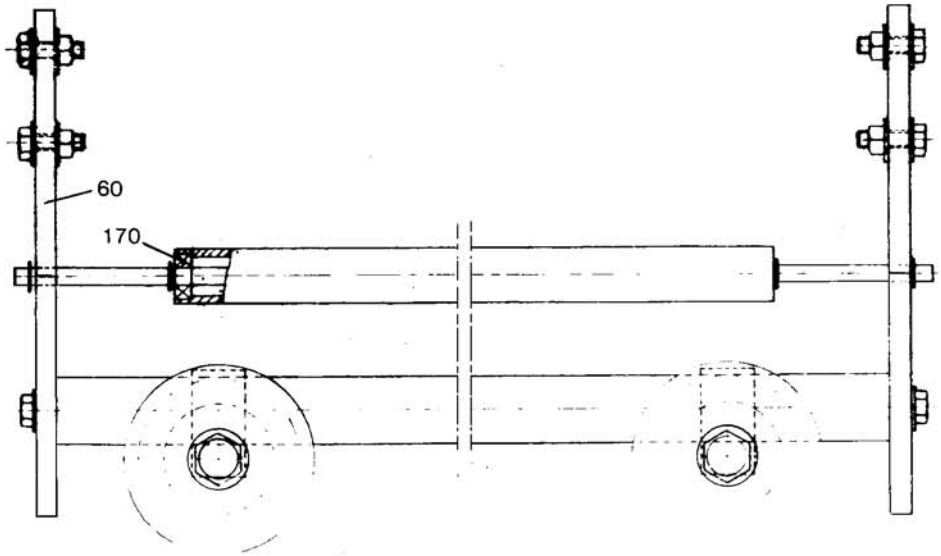

26855401.TIF
268554-1
AM 5367

Pos	Part No	SP	UN	Qty	Description	Page No
-						
000	**C- 268554-0101**	**-**		**1**	**PAPER GUIDE**	
010	267488	-		1	SHAFT	
020	31425	-		2	GUIDE WHEEL	
030	267491	-		2	CRAMP	
040	267805	-		2	SHAFT	
050	267806	-		2	ROLL	
060	268557	-		2	FORK	
070	268558	-		2	SHAFT	
080	312105-0370	-		4	SCREW O4017 M6X20A280	
090	312105-0453	-		2	SCREW O4017 M8X25A280	
100	312605-0316	-		4	NUT M6M6RFR	
110	312605-0318	-		2	NUT M6M8RFR	
120	315105-0153	-		8	WASHER BRB6,4X12RFR	
130	315105-0165	-		4	WASHER BRB8,4X16RFR	
140	315105-0173	-		2	WASHER BRB10,5X22RFR	
150	315754-0110	-		2	LOCKING WAE 9	
160	315755-0107	-		8	LOCKING WAE 5RFR	
170	321302-0296	-		4	BALL BEARISKF626-2RS	

Pos	Part No	SP	UN	Qty	Description	Page No

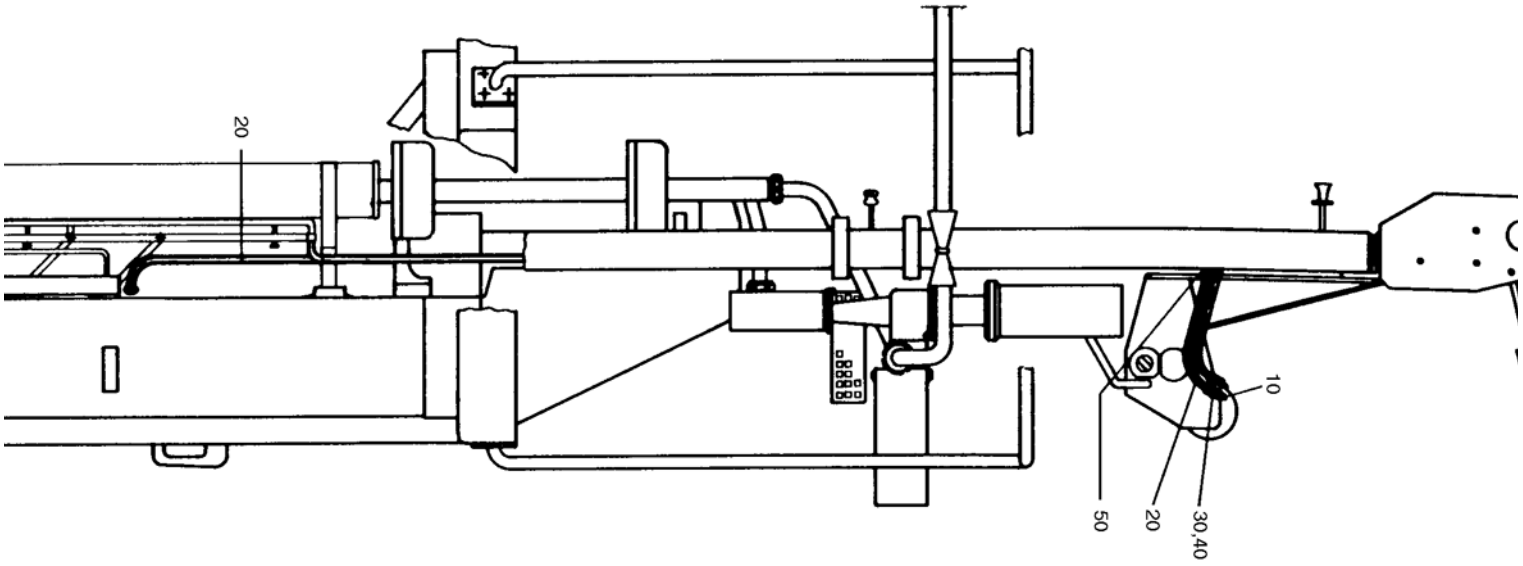
20
10
50
20
30,40

Pos	Part No	SP	UN	Qty	Description	Page No
-						
000	**C- 497924-0101**	**-**		**1**	**PEROXIDE COOLER**	
010	537034	-		1	COOLING PIPE COIL	
020	90166-0089	-	MM	5500	HOSE	
030	342725-0102	-		2	STRAIGHT PGI 6 LR/RO RFR	
040	342921-0113	-		2	PIPE COUPL6/4-1/8"	
050	352101-0103	-		2	LEAD-IN G 18,6	

Pos	Part No	SP	UN	Qty	Description	Page No

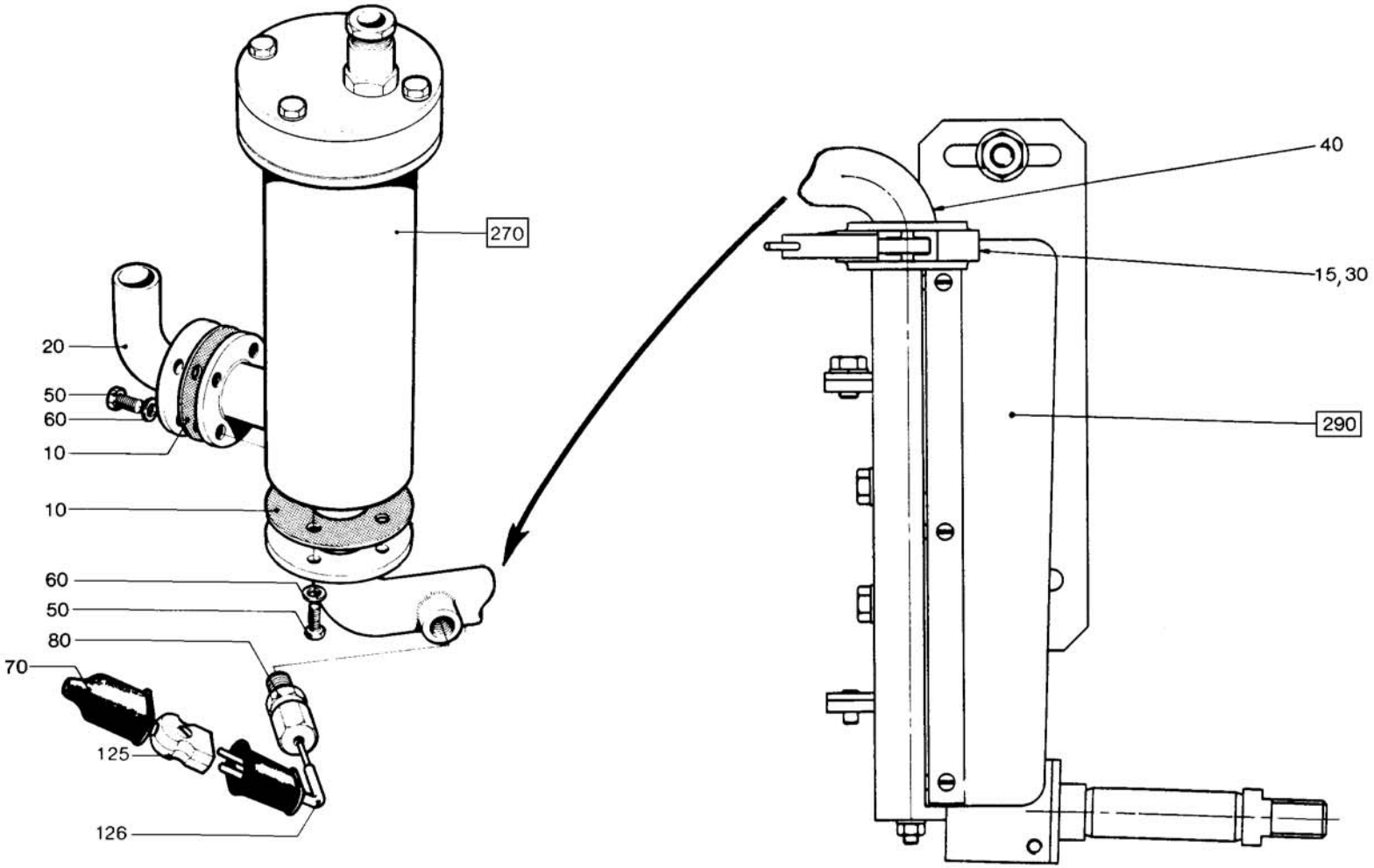

23689202.TIF
236892-2
AM 14237

Pos	Part No	SP	UN	Qty	Description	Page No
TCA/150						
000	**C- 236892-0402**	**-**		**1**	**ELEMENT GROUP**	
010	33730-0001	-		1	GASKET	
050	312105-0366	-		4	SCREW O4017 M6X12A280	
060	315105-0153	-		4	WASHER BRB6,4X12RFR	
Common parts						
015	**33730-0004**	**-**		**1**	**GASKET**	
030	547518	-		1	CRAMP	
040	547572	-		1	ATTACHMENT PIPE	
070	90326-0012	-		1	PROTECTIVE COVER	
080	90326-0017	-		1	GLAND	
125	90326-0020	-		1	SOCKET	
126	90326-0043	-		1	THERMOELEMENT	
F270	C- 207637-030V	-		1	ELEMENT	
F290	C- 536952-020V	-		1	LS-ELEMENT	

Pos	Part No	SP	UN	Qty	Description	Page No

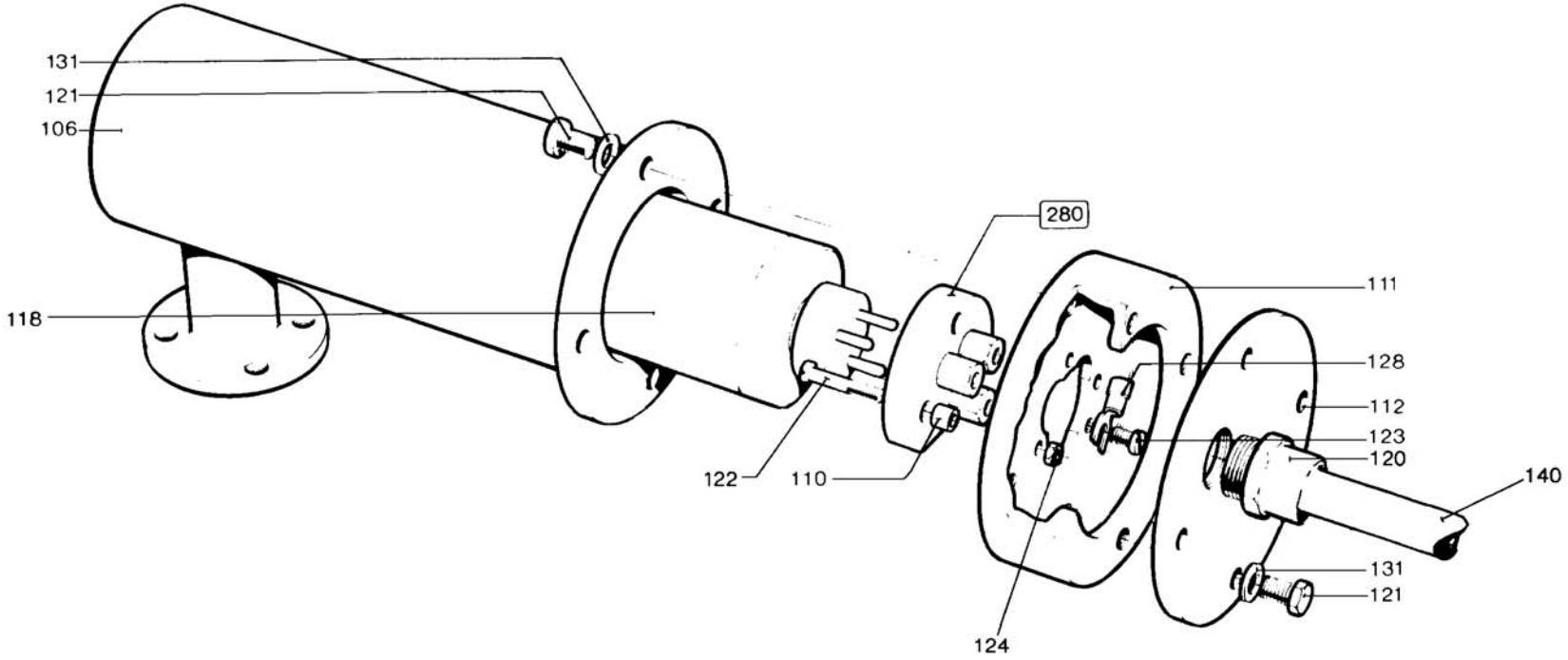

20763702.TIF
207637-2
AM 10076

Pos	Part No	SP	UN	Qty	Description	Page No
TCA/150						
000	**C- 207637-0302**	**-**		**1**	**ELEMENT**	
F280	C- 207638-0202	-		1	SLEEVE CONTACT	
Common parts						
106	**38960**	**-**		**1**	**COIL HEATER**	
110	19797	-		3	BUSHING	
111	38962	-		1	CLUTCH PIECE	
112	38963	-		1	LID	
118	90206-0014	R		1	HEATING ELEMENT	
120	352136-0127	-		1	GLAND FITT	
121	312105-0366	-		8	SCREW O4017 M6X12A280	
122	312121-0230	-		3	SLOTTED HEMCS3X20FZB	
123	312132-0287	-		1	SLOTTED HEMSCS4X8MSGFN	
124	312601-0310	-		3	NUT M6M3FZB	
128	353103-0130	-		1	CABLE SHOE	
131	315105-0153	-		8	WASHER BRB6,4X12RFR	
140	352135-0106	-	M	2	HOSE .016	

Pos	Part No	SP	UN	Qty	Description	Page No

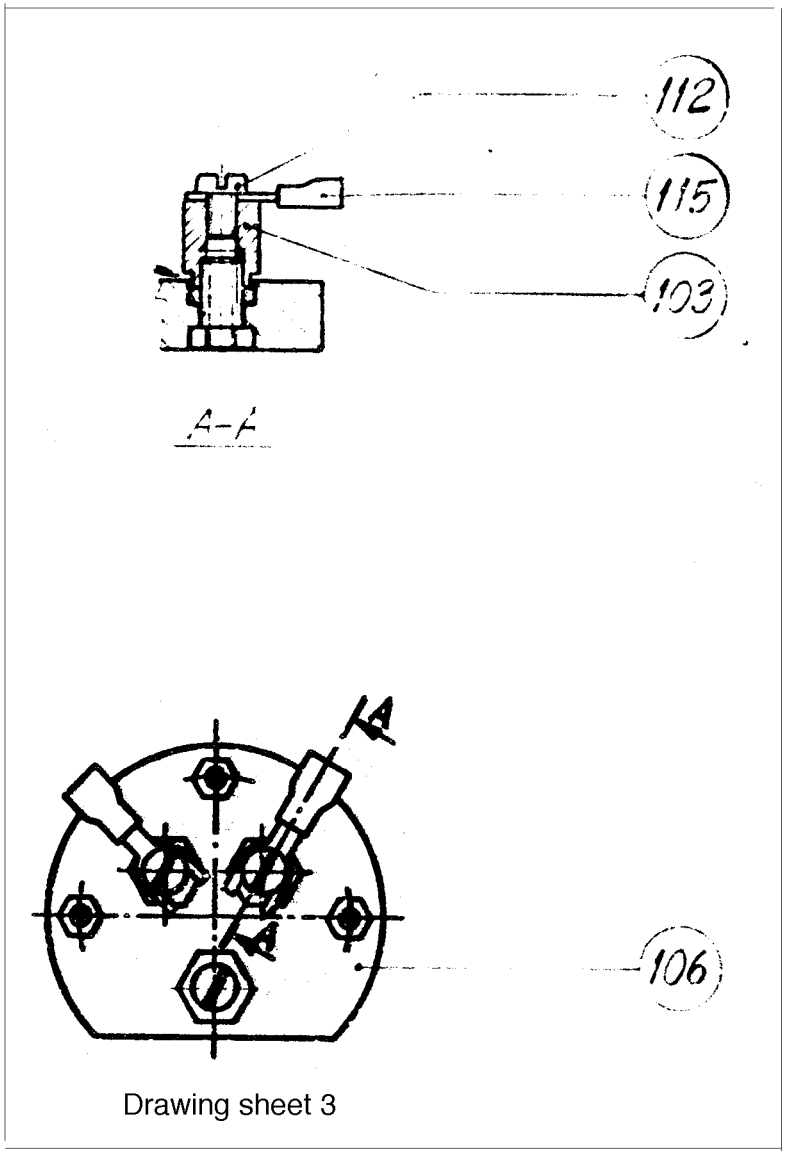

Drawing sheet 3

Pos	Part No	SP	UN	Qty	Description	Page No
625W (1250X2 SERIEKOPPLING)						
000	**C- 207638-0202**	**-**		**1**	**SLEEVE CONTACT**	
Common parts						
103	**207639**	**-**		**3**	**SPACER**	
106	90125-0020	-		1	PLATE	
112	312132-0287	-		3	SLOTTED HEMSCS4X8MSGFN	
115	353103-0130	-		2	CABLE SHOE	

Pos	Part No	SP	UN	Qty	Description	Page No

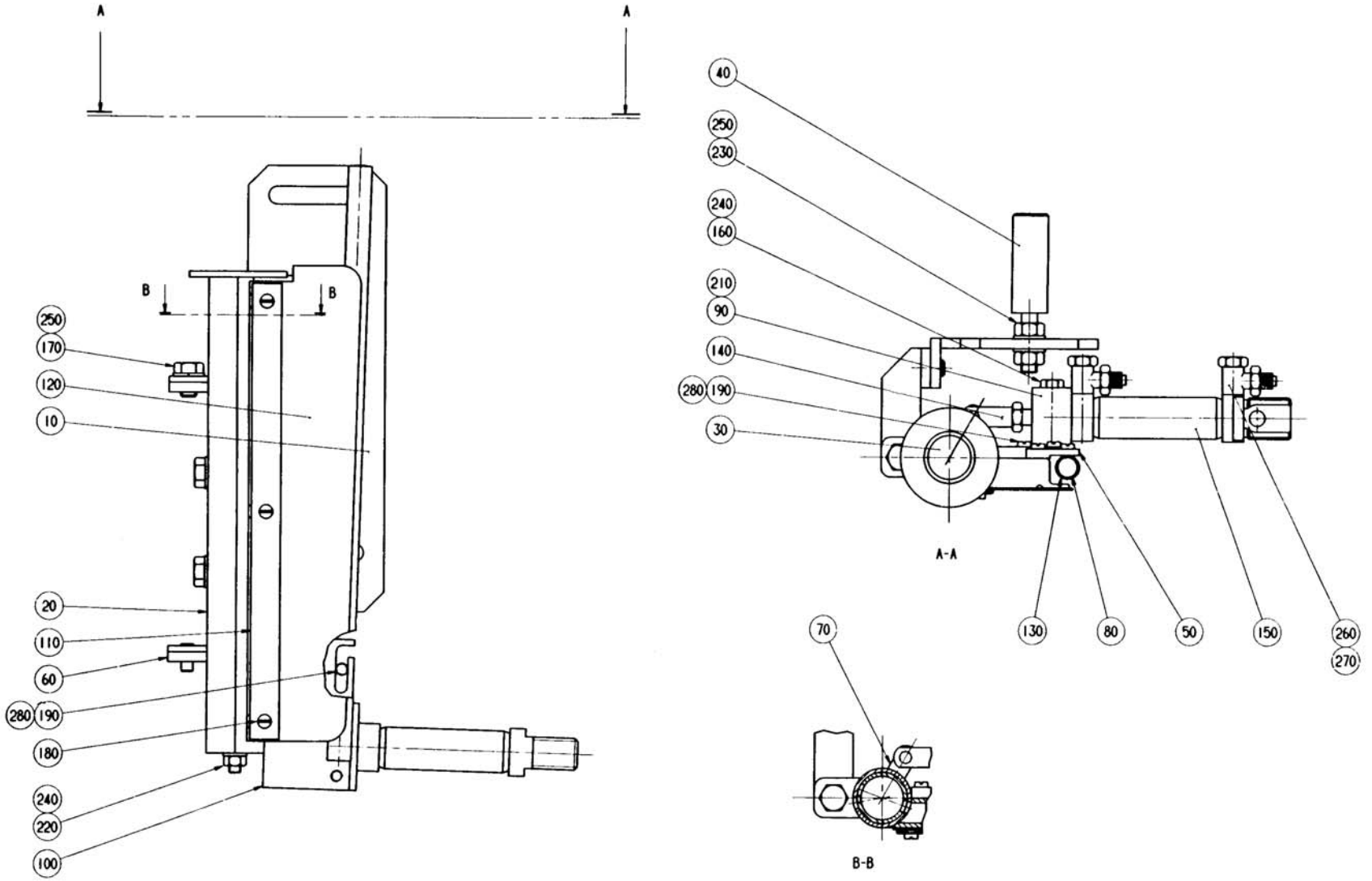

53695202.TIF
536952-2
AM 14237

Pos	Part No	SP	UN	Qty	Description	Page No
TCA/150						
000	**C- 536952-0202**	**-**		**1**	**LS-ELEMENT**	
010	32288-0004	-		1	HOLDER, LS ELEMENT	
Common parts						
020	**547519**	**S**		**1**	**HOT AIR ELEMENT**	
030	230518	-		1	CYLINDER	
040	32289	-		2	DOWEL	
050	547515	-		1	BRACKET	
060	232946	-		1	HOLDER	
070	232948	-		1	ARM	
080	547516	-		1	ROD	
090	283147	-		1	BRACKET	
100	547514	-		1	BRACKET	
110	536547	C		1	RAIL	
120	536548	PU		1	SLIDE RAIL	
130	547517	-		1	TEFLON PIPE	
140	90239-0088	-		1	BRACKET	
150	90239-0821	-		1	CYLINDER 20-25	
160	312105-0376	-		2	SCREW O4017 M6X35A280	
170	312105-0447	-		3	SCREW O4017 M8X12A280	
180	312125-0285	-		3	SLOTTED HEMCS4X6RFR	
190	312115-0325	-		8	SCREW 5X10 A4 80	
210	312318-0360	-		1	STOP SCREW SK6SS6X6RFR	
220	312605-0316	-		1	NUT M6M6RFR	
230	312605-0318	-		4	NUT M6M8RFR	
240	315105-0153	-		3	WASHER BRB6,4X12RFR	
250	315105-0165	-		7	WASHER BRB8,4X16RFR	
260	342980-0113	-		2	BANJO CONNSINGEL 6/4-1/8	
270	342980-0303	-		2	BANJO CONN SINGEL 1/8"	
280	315101-0146	-		8	WASHER BRB5,3X10FZB	

Pos	Part No	SP	UN	Qty	Description	Page No

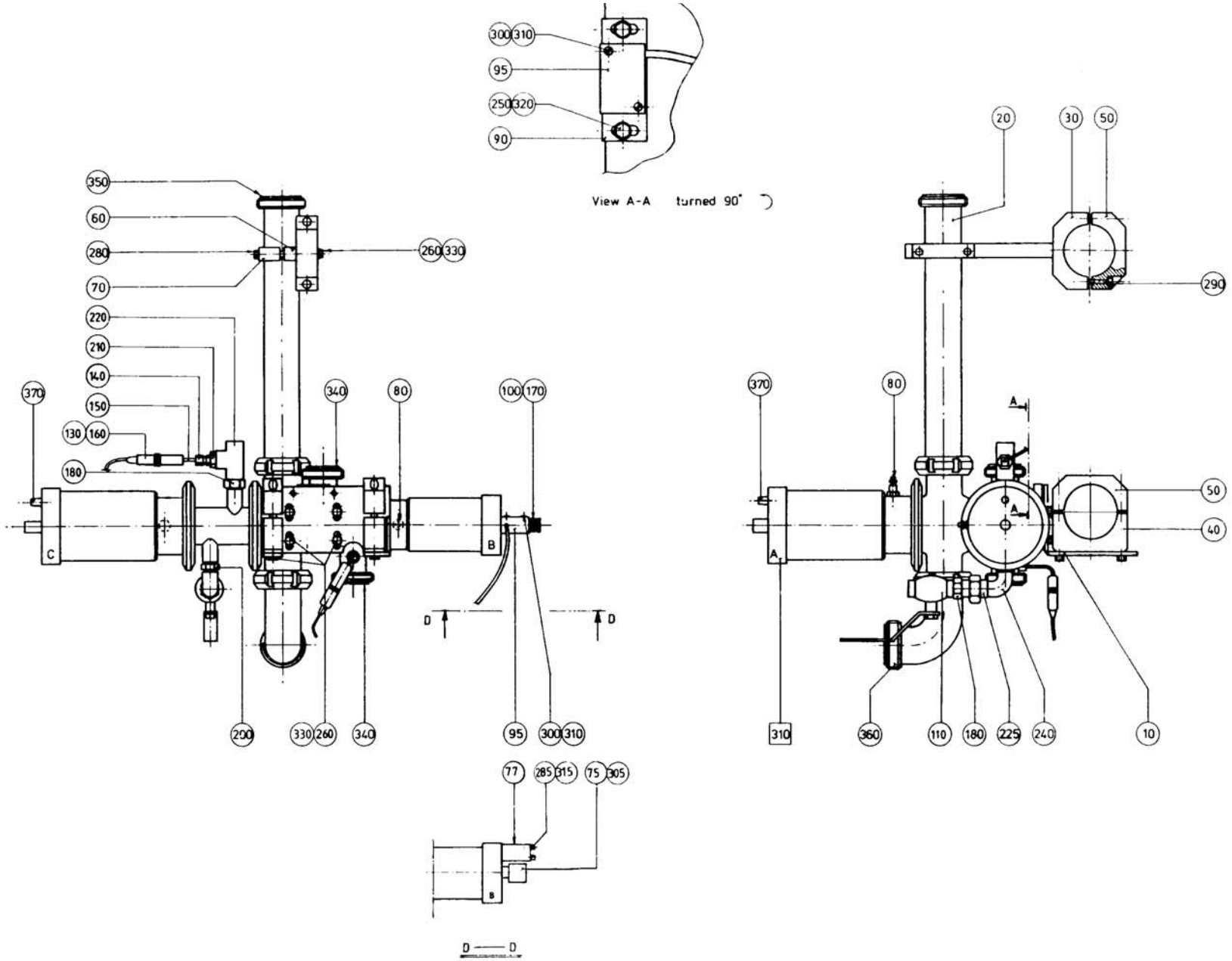

24689304.TIF
246893-4
AM 11007

Pos	Part No	SP	UN	Qty	Description	Page No
-						
000	**C- 246893-0501**	**-**		**1**	**VALVE**	
010	529031	-		1	CANTILEVER	
020	38518	-		1	PIPE	
030	255199	-		2	HOLDER	
040	522988	-		2	HOLDER	
050	37853	-		3	CAP	
060	252703	-		1	HOLDER	
070	252704	-		1	CAP	
075	440647	-		1	SLEEVE	
077	440731	-		1	PLATE	
080	466627	-		3	NIPPLE	
090	522989	-		1	SPACER	
095	90044-0062	-		2	PROXIMITY SWITCH	
100	90163-0001	-		1	CONNECTION	
110	90187-0059	-		1	VALVE	
130	90326-0012	-		2	PROTECTIVE COVER	
140	90326-0017	-		2	GLAND	
150	90326-0019	-		2	THERMOELEMENT	
160	90326-0020	-		2	SOCKET	
170	90330-0013	-		1	REDUCTION NIPPLE	
180	90330-0019	-		2	REDUCTION NIPPLE	
200	90330-0028	-		1	NIPPLE	
210	90330-0036	-		1	BUSHING	
220	90330-0049	-		1	T-PIECE	
225	90330-0062	-		1	COUPLING	
240	90330-0065	-		1	ELBOW PIPE	
250	312105-0329	-		2	SCREW O4017 M5X16A280	
260	312105-0451	-		10	SCREW SO4017 8X20A280	
280	312105-0459	-		2	SCREW O4017 M8X40A280	
285	312115-0304	-		2	SCREW O4762 M4X45A280	
290	312115-0459	-		6	SCREW O4762 M8X40A280	
300	312125-0228	-		4	SLOTTED HEMCS3X16RFR	
305	312155-0532	-		1	SCREW MF6S12X20RFR	
310	315105-0124	-		4	WASHER BRB3,2X6RFR	
315	315105-0136	-		2	WASHER BRB4,3X8RFR	
320	315105-0146	-		2	WASHER BRB5,3X10RFR	
330	315105-0165	-		10	WASHER BRB8,4X16RFR	
340	315250-0103	R		2	GASKET 48/38	
350	315250-0104	R		4	GASKET 61/51	
360	342807-0104	-		1	ELBOW PIPE51	
370	346800-0109	-		2	SILENCER FILTER R1/8"	
F310	C- 440630-0203	-		1	AP-VALVE	

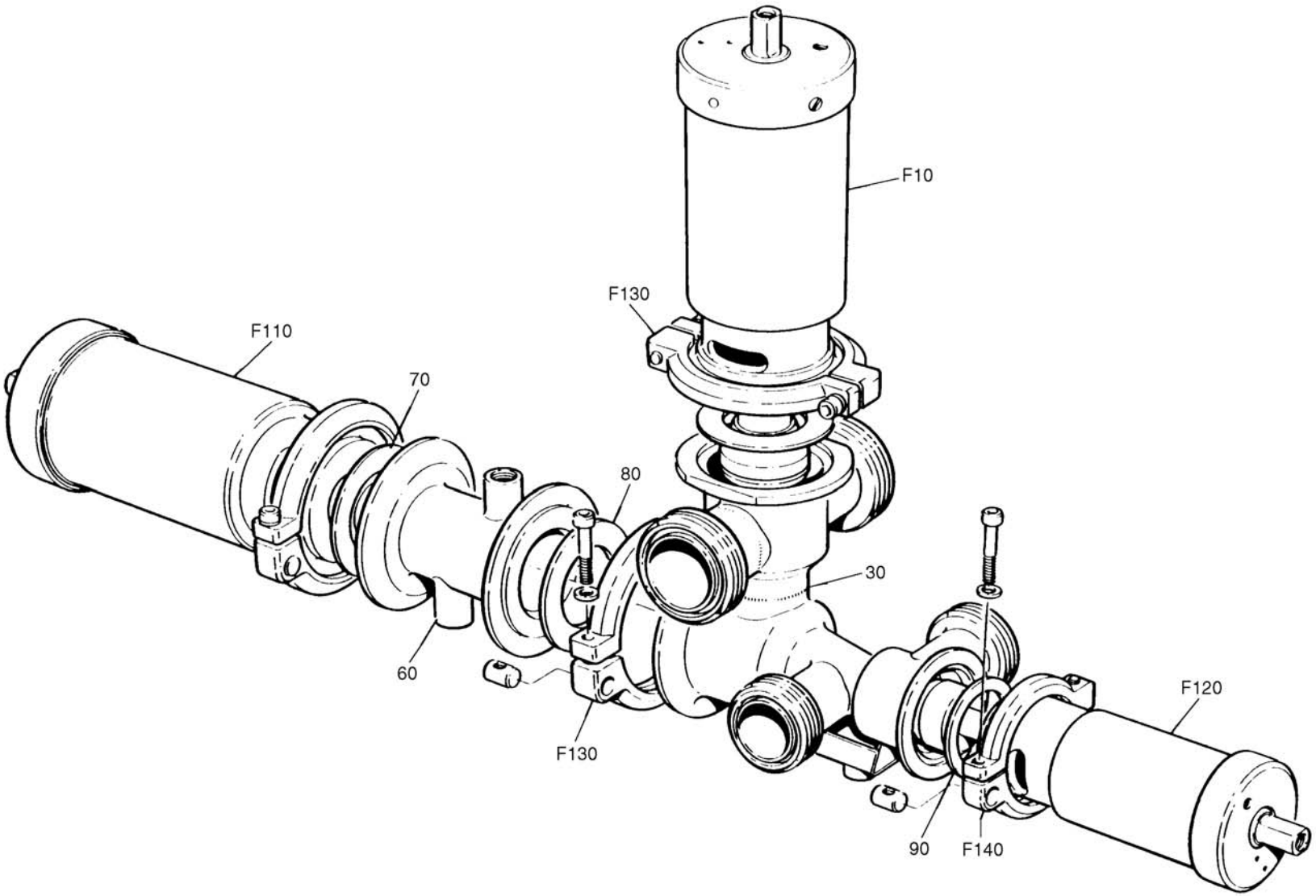

44063003.TIF
440630-3
AM

Pos	Part No	SP	UN	Qty	Description	Page No
PRODUCT VALVE 2"						
000	**C- 440630-0203**	**-**		**1**	**AP-VALVE**	
040	484997	-		1	VALVE BODY 51	
F010	C- 539209-0101	-		1	A-CYLINDER	
Common parts						
060	**440634**	**-**		**1**	**HOUSE**	
070	539212	-		1	GASKET	
080	90207-0363	-		1	GASKET	
090	90207-0365	-		1	GASKET	
F110	C- 539210-0101	-		1	C-CYLINDER	
F120	C- 539211-0101	-		1	B-CYLINDER	
F130	C- 541163-0101	-		3	CLAMP RING	
F140	C- 541164-0101	-		1	CLAMP RING	

Pos	Part No	SP	UN	Qty	Description	Page No

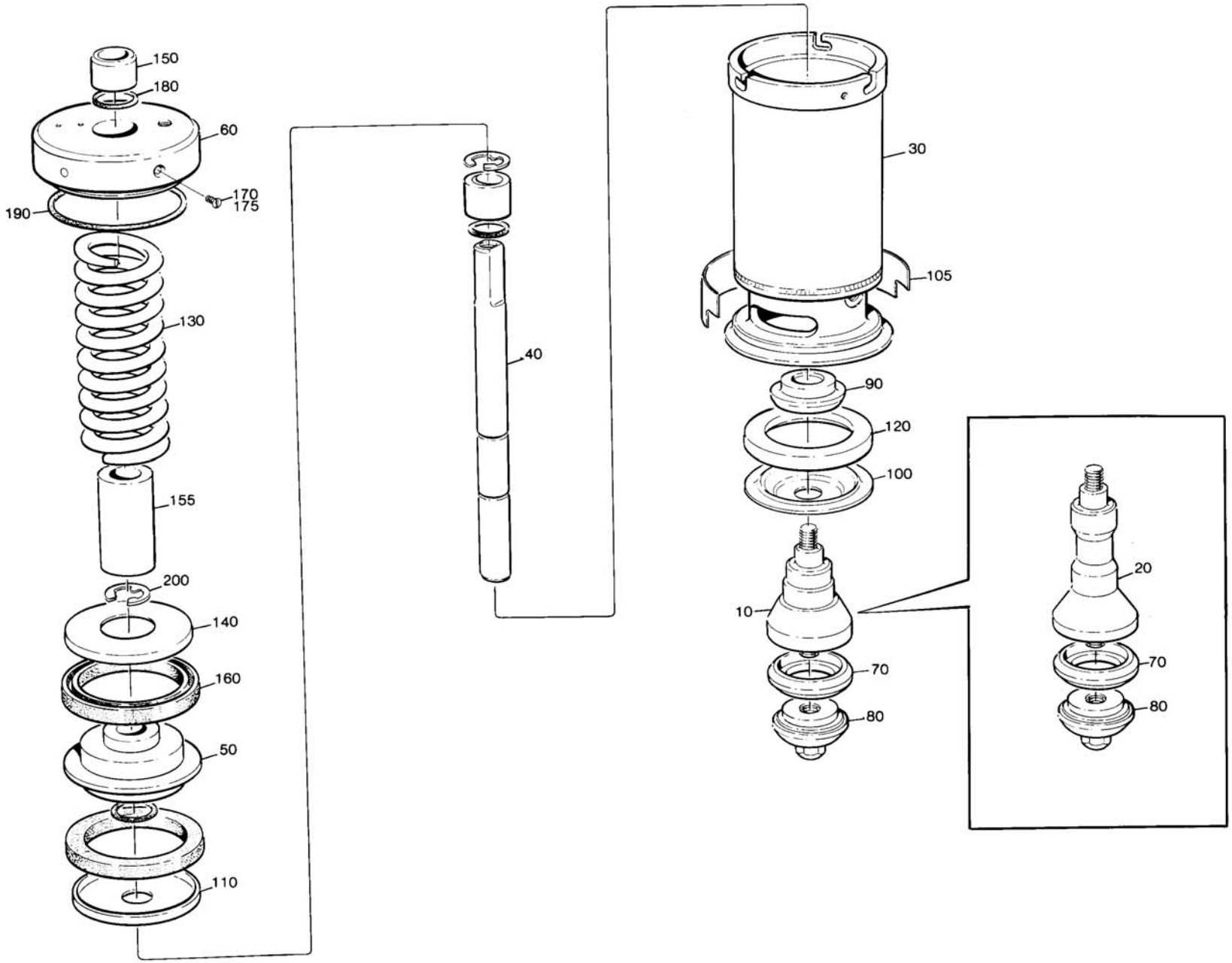

53920901.TIF
539209-1
AM

Pos	Part No	SP	UN	Qty	Description	Page No
PRODUCT VALVE 2"						
000	**C- 539209-0101**	**-**		**1**	**A-CYLINDER**	
010	530592	-		1	SEAL RING HOLDER	
Common parts						
030	**440632**	**-**		**1**	**CYLINDER HOUSING**	
040	440637	-		1	PISTON ROD	
050	440638	-		1	PISTON	
060	484998	-		1	END SECTION	
070	530589	PU		1	SEAL RING	
080	530590	-		1	VALVE CONE	
090	541166	-		1	WASHER	
100	533169	PU		1	DIAPHRAGM	
105	476203	-		1	PROTECTION	
110	440651	-		1	WASHER	
120	440655	-		1	RING	
130	440663	-		1	COMPRESSION SPRING	
140	484975	-		1	WASHER	
150	497933	-		2	BUSHING	
155	541167	-		1	SPACER SLEEVE	
160	90020-0028	P		2	SLEEVE	
170	312125-0323	-		1	SLOTTED HEMCS5X8RFR	
175	315233-0101	-		1	SEAL RING M5	
180	315202-0308	P		1	O-RING 84,5X3	
190	315204-0215	P		3	O-RING 19,2X3VITON	
200	315754-0113	P		2	LOCKING WAE 15	

Pos	Part No	SP	UN	Qty	Description	Page No

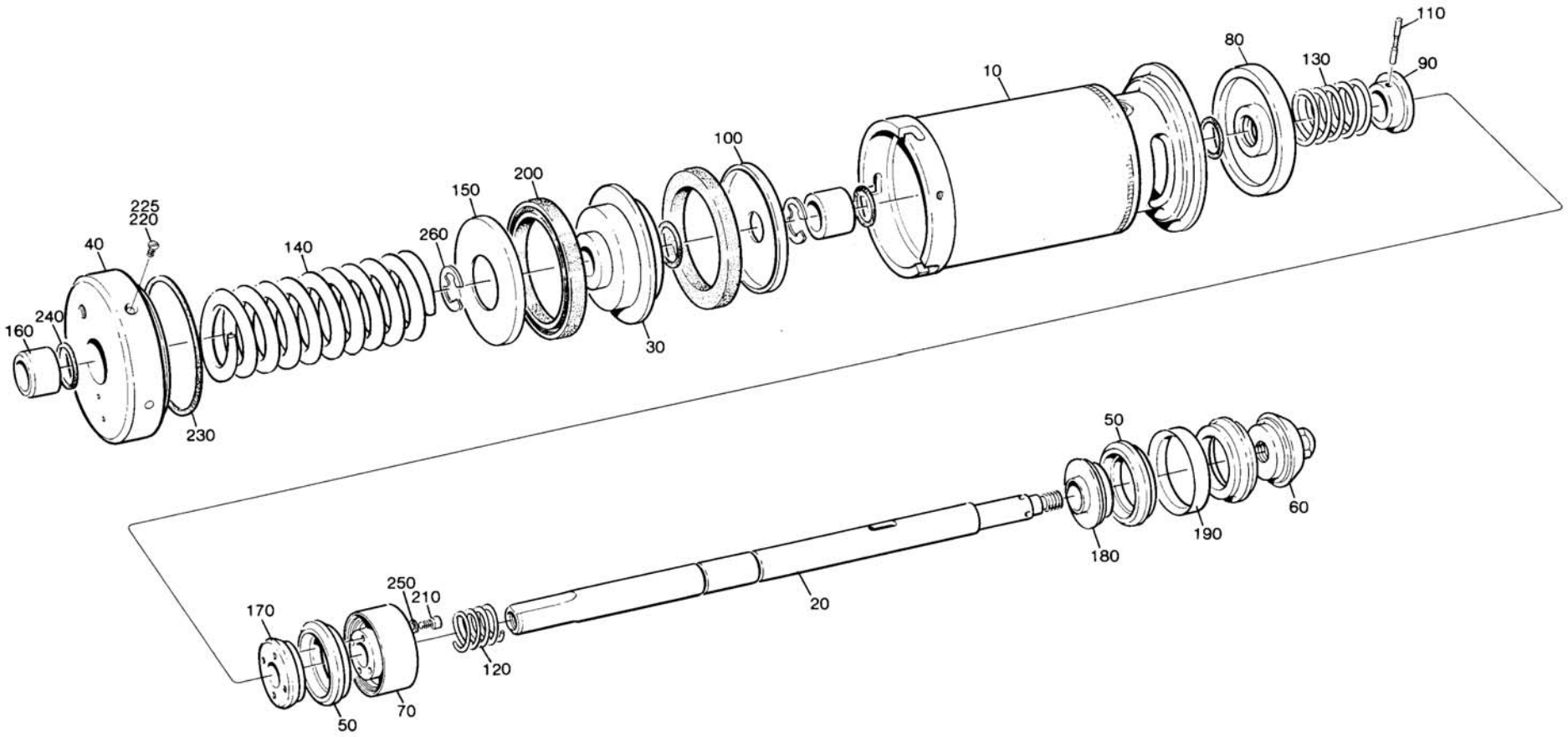

53921001.TIF
539210-1
AM

Pos	Part No	SP	UN	Qty	Description	Page No
-						
000	**C- 539210-0101**	**-**		**1**	**C-CYLINDER**	
010	440632	-		1	CYLINDER HOUSING	
020	440635	-		1	PISTON ROD	
030	440638	-		1	PISTON	
040	484998	-		1	END SECTION	
050	530589	PU		3	SEAL RING	
060	530590	-		1	VALVE CONE	
070	530591	-		1	HOLDER	
080	440648	-		1	SEALING WASHER	
090	440650	-		1	WASHER	
100	440651	-		1	WASHER	
110	440659	-		1	CYLINDRICAL PIN	
120	440660	-		1	COMPRESSION SPRING	
130	440661	-		1	COMPRESSION SPRING	
140	440663	-		1	COMPRESSION SPRING	
150	484975	-		1	WASHER	
160	497933	-		2	BUSHING	
170	530597	-		1	WASHER	
180	530598	-		1	WASHER	
190	530599	-		1	RING	
200	90020-0028	P		2	SLEEVE	
210	312115-0291	-		4	SCREW O4762 M4X12A280	
220	312125-0323	-		1	SLOTTED HEMCS5X8RFR	
225	315233-0101	-		1	SEAL RING M5	
230	315202-0308	P		1	O-RING 84,5X3	
240	315204-0215	P		4	O-RING 19,2X3VITON	
250	315402-0136	-		4	WASHER FBB4,1RFR	
260	315754-0113	P		2	LOCKING WAE 15	

Pos	Part No	SP	UN	Qty	Description	Page No

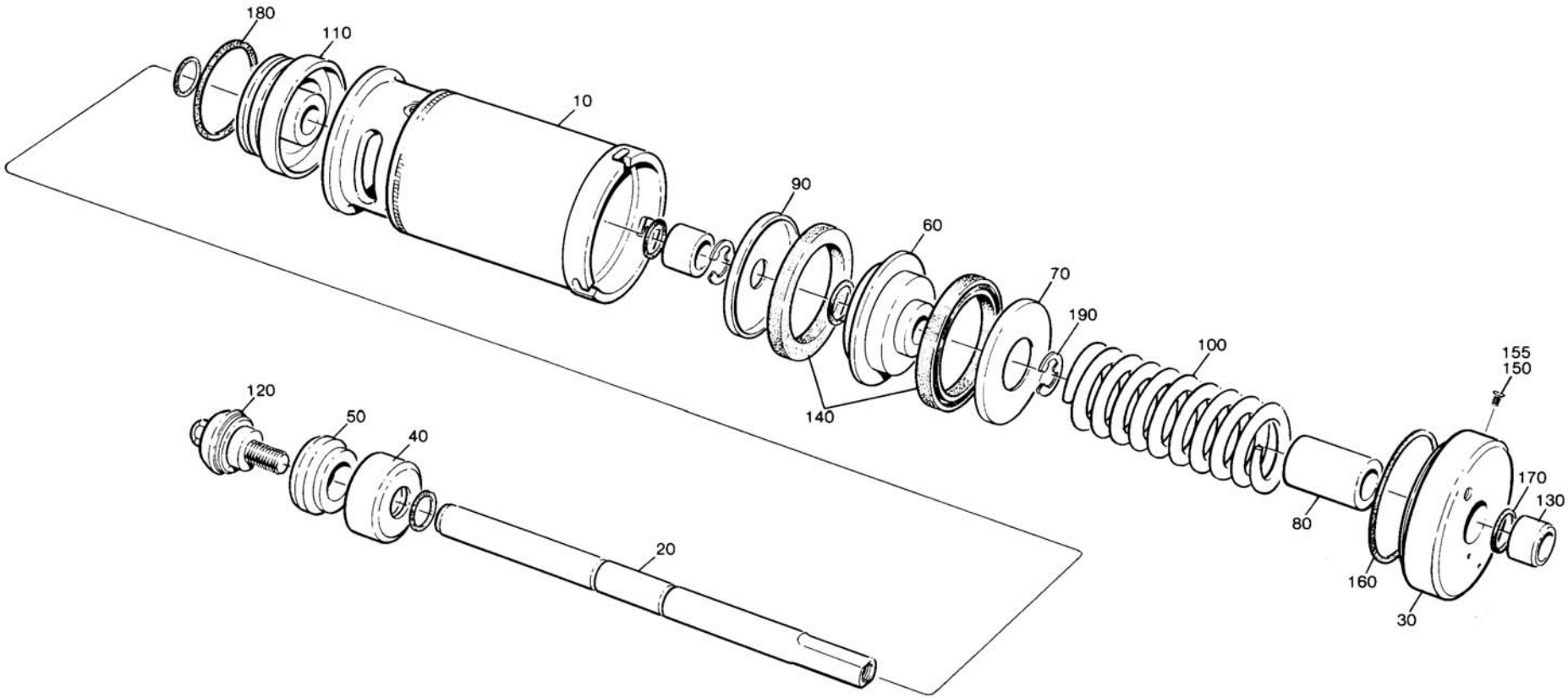

53921101.TIF
539211-1
AM

Pos	Part No	SP	UN	Qty	Description	Page No
-						
000	**C- 539211-0101**	**-**		**1**	**B-CYLINDER**	
010	440633	-		1	CYLINDER HOUSING	
020	440636	-		1	PISTON ROD	
030	440695	-		1	END SECTION	
040	530587	-		1	WASHER	
050	530588	PU		1	SEAL RING	
060	440646	-		1	PISTON	
070	440652	-		1	WASHER	
080	440654	-		1	SPACER SLEEVE	
090	440656	-		1	WASHER	
100	440662	-		1	COMPRESSION SPRING	
110	440664	-		1	SEALING WASHER	
120	476185	-		1	VALVE CONE	
130	497933	-		2	BUSHING	
140	90020-0027	P		2	SLEEVE	
150	312125-0323	-		1	SLOTTED HEMCS5X8RFR	
155	315233-0101	-		1	SEAL RING M5	
160	315202-0304	P		1	O-RING 64,5X3	
170	315204-0215	PU		5	O-RING 19,2X3VITON	
180	315204-0301	PU		1	O-RING 49,5X3VITON	
190	315754-0113	P		2	LOCKING WAE 15	

Pos	Part No	SP	UN	Qty	Description	Page No

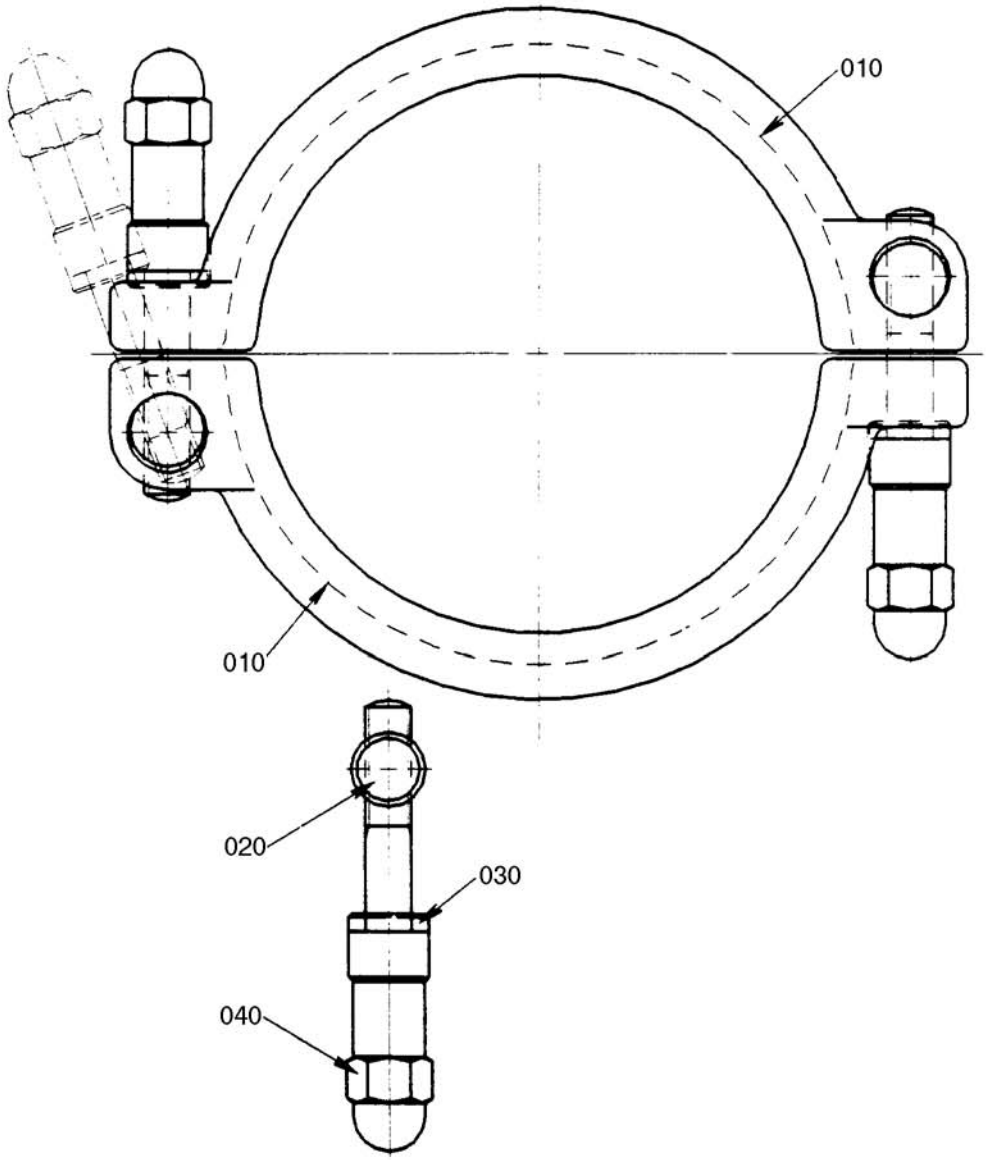

54116302.TIF
541163-2
AM 14130

Pos	Part No	SP	UN	Qty	Description	Page No
-						
000	**C- 541163-0101**	**-**		**3**	**CLAMP RING**	
010	G- 532117	-		2	CLAMP RING	
020	497748	-		2	PIN	
030	541165	-		2	WASHER	
040	312115-0459	-		2	SCREW O4762 M8X40A280	

Pos	Part No	SP	UN	Qty	Description	Page No

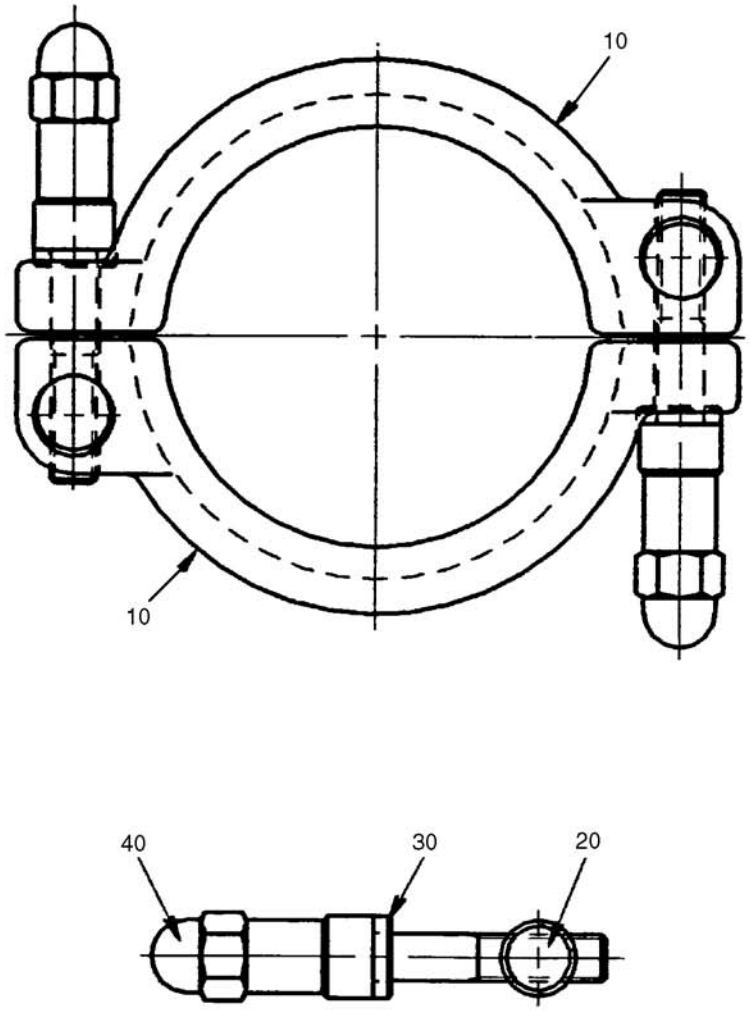

54116402.TIF
541164-2
ECN 12996

Pos	Part No	SP	UN	Qty	Description	Page No
-						
000	**C- 541164-0101**	**-**		**1**	**CLAMP RING**	
010	G- 532118	-		2	CLAMP RING	
020	497748	-		2	PIN	
030	541165	-		2	WASHER	
040	312115-0459	-		2	SCREW O4762 M8X40A280	

Pos	Part No	SP	UN	Qty	Description	Page No

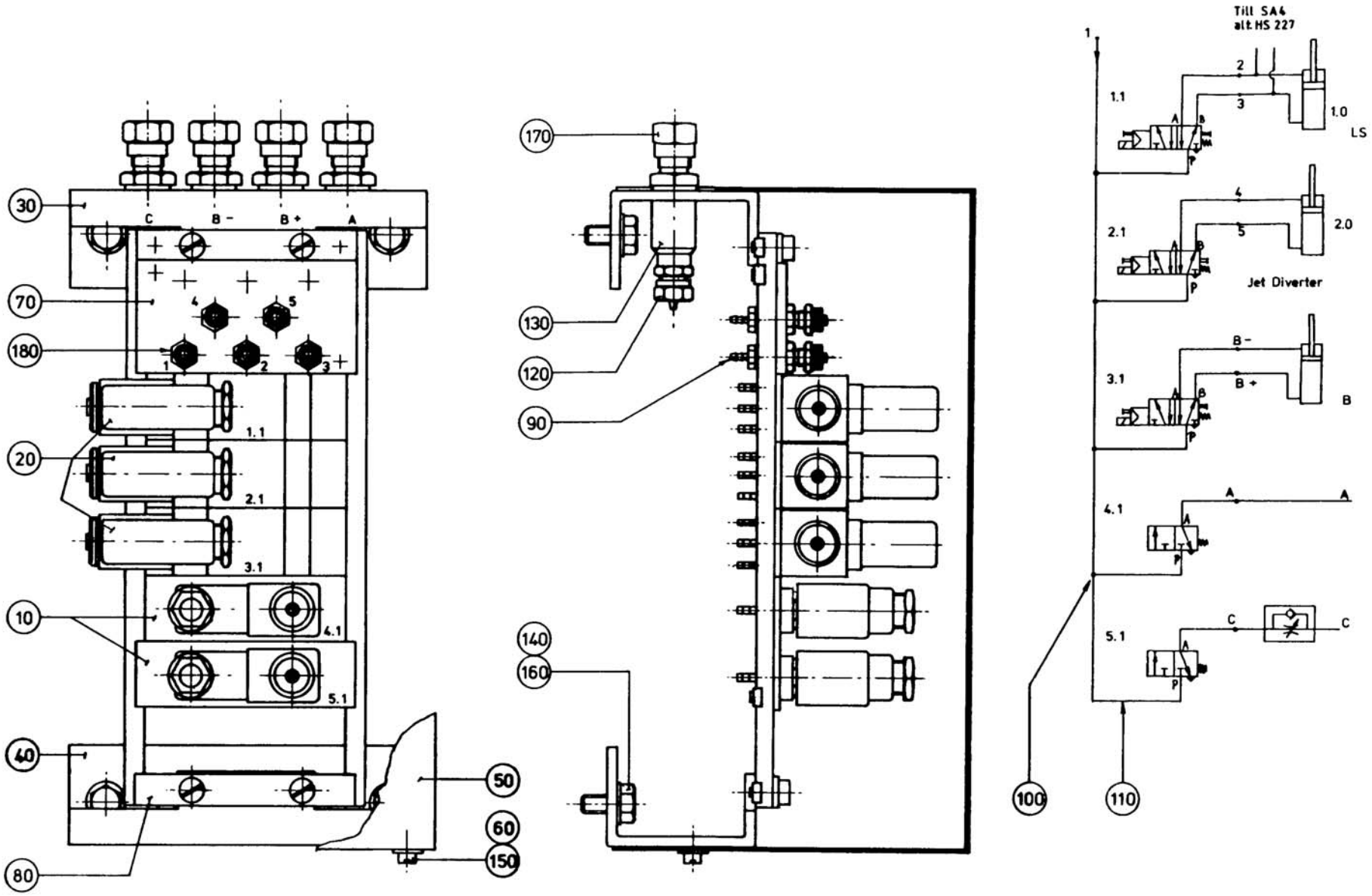

24738202.TIF
247382-2
AM 13231

Pos	Part No	SP	UN	Qty	Description	Page No
50 HZ						
000	**C- 247382-0401**	**-**		**1**	**VALVE GROUP**	
010	90042-0045	-		2	SOLENOID VALVE	
020	90042-0047	-		3	SOLENOID VALVE	
Common parts						
030	**466104**	**-**		**1**	**BRACKET**	
040	436721	-		1	BRACKET	
050	247435	-		1	PROTECTIVE CASING	
060	2033-0012	-		4	WASHER	
070	237499	-		1	PLATE	
080	90042-0328	-		1	RAMP	
090	90055-0044	-		5	HOSE NIPPLE	
100	90055-0045	-		4	HOSE NIPPLE	
110	90166-0099	-	M	2	HOSE	
120	90224-0230	-		4	GLAND FITTING	
130	90330-0012	-		4	REDUCTION SLEEVE	
140	312105-0449	-		4	SCREW O4017 M8X16A280	
150	312125-0287	-		4	SLOTTED HEMCS4X8RFR	
160	315105-0165	-		4	WASHER BRB8,4X16RFR	
170	342752-0103	-		4	STRAIGHT C	
180	342921-0111	-		5	PIPE COUPL6/4-5M	

Pos	Part No	SP	UN	Qty	Description	Page No

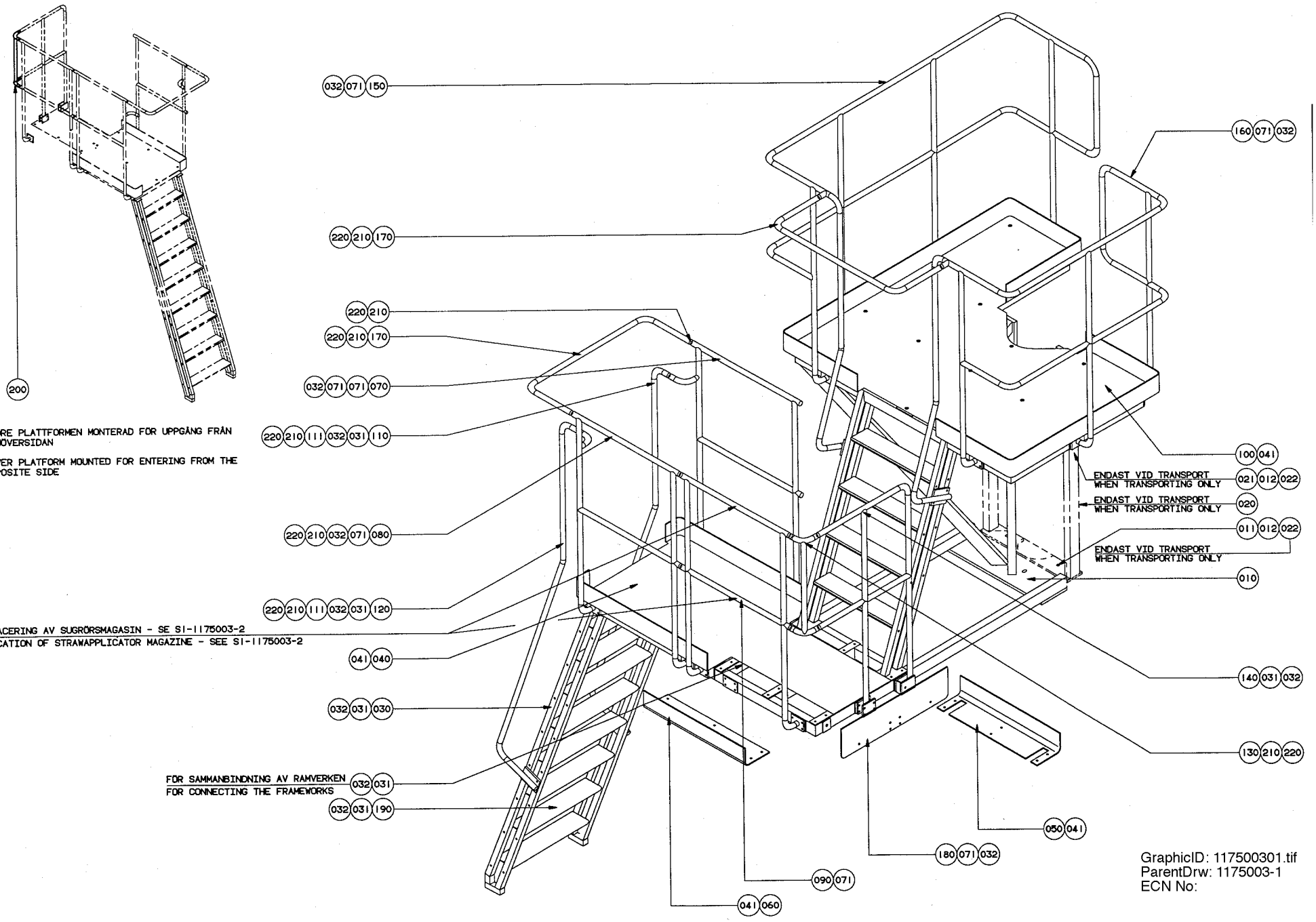

GraphicID: 117500301.tif
ParentDrw: 1175003-1
ECN No:

Pos	Part No	SP	UN	Qty	Description	Page No
-						
000	**C- 1175003-0101**	**-**		**1**	**PLATFORM**	
010	578505	-		1	RAM	
011	312105-0629	-		4	SCREW ISO4017 M16X45A280	
012	315105-0186	-		8	WASHER BRB17X30RFR	
021	312105-0630	-		4	SCREW	
022	312605-0324	-		8	NUT	
030	578613	-		1	FRAME	
031	312109-0461	-		67	SCREW	
032	315105-0165	-		121	WASHER	
040	578614	-		1	PLATFORM	
041	312145-0449	-		47	SLOTTED HEAD SCREW	
050	578615	-		1	PLATFORM	
060	578616	-		1	PLATFORM	
070	578617	-		1	RAILING	
071	312105-0449	-		51	SCREW	
080	578618	-		1	RAILING	
090	578619	-		1	RAILING	
100	578620	-		1	PLATFORM	
110	578621	-		1	HAND RAIL	
111	312605-0318	-		8	NUT	
120	578622	-		1	HAND RAIL	
130	578629	-		1	RAILING	
140	578630	-		1	RAILING	
150	578631	-		1	RAILING	
160	578632	-		1	RAILING	
170	578633	-		2	RAILING	
180	578634	-		1	END PIECE	
190	578635	-		12	STAIR	
200	578636	-		1	RAILING	
210	751484	-		12	CLAMPING RING	
220	751485	-		12	SCREW	
230	580034	-		1	HOLDER	
231	312105-0368	-		4	SCREW	
232	315125-0153	-		4	WASHER	
233	312605-0316	-		4	NUT	

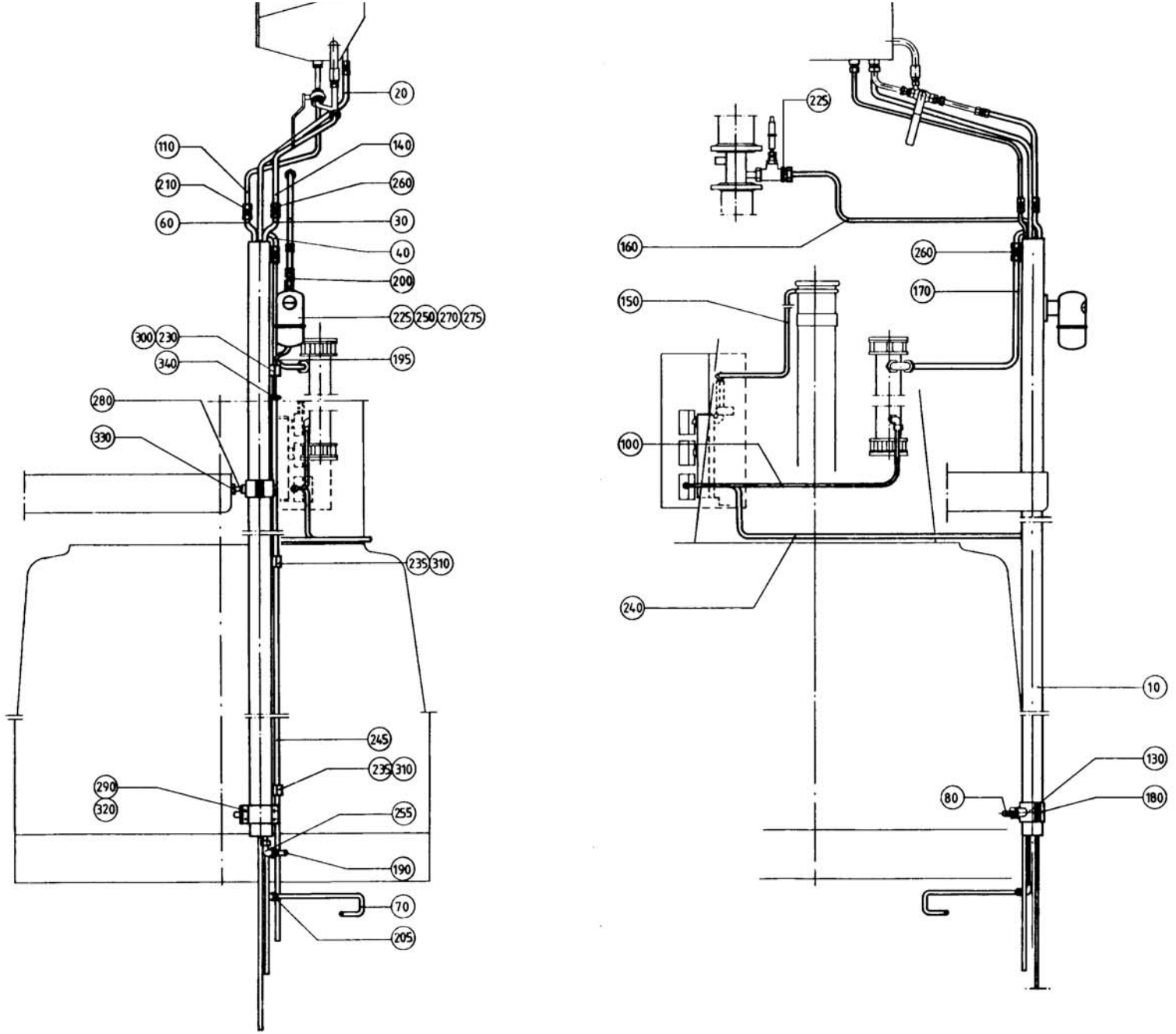

44912302.TIF
449123-2
AM 8784

Pos	Part No	SP	UN	Qty	Description	Page No
TCA/150						
000	**C- 449123-0303**	**-**		**1**	**PIPE**	
010	449736-0002	-		1	PROTECTION PIPE	
020	449737-0002	-		1	PIPE	
030	449774-0002	-		1	PIPE	
040	449775-0002	-		1	PIPE	
060	449777-0002	-		1	PIPE	
070	449778	-		1	PIPE	
080	497512-0003	-		1	STRUT	
Common parts						
100	**493964**	**-**		**1**	**PIPE**	
110	449735	-		1	PIPE	
130	255066	-		2	HOLDER	
140	279626	-		1	PIPE	
150	292317	-		1	PIPE	
160	484940	-		1	PIPE STEAM AP-VALVE	
170	484980	-		1	PIPE COOL-WATER	
180	252676	-		2	CAP	
190	279781-0002	-		1	PIPE	
195	497126	-		1	PIPE	
200	522170	-		1	PIPE	
205	90030-0077	-		1	PIPE CONNECTION	
210	90030-0091	-		1	PIPE CONNECTION	
225	90030-0213	-		3	PIPE COUPLING	
230	90165-0051	-		1	CLIP	
235	90165-0062	-		2	CLIP	
240	90166-0045	-	MM	1200	HOSE	
245	90166-0121	-	MM	2400	HOSE	
250	90230-0025	-		1	NON-RETURN VALVE	
255	90330-0023	-		2	PIPE JOINT	
260	90330-0063	-		2	CONNECTION	
270	90360-0005	-		1	STEAM TRAP	
275	90360-0006	-		1	ATTACHMENT	
280	312104-0501	-		1	SCREW M6S10X50H8.8FZB	
290	312105-0451	-		8	SCREW SO4017 8X20A280	
300	312115-0372	-		2	SCREW O4762 M6X25A280	
310	312115-0376	-		4	SCREW O4762 M6X35A280	
320	312605-0318	-		8	NUT M6M8RFR	
330	312605-0320	-		1	NUT M6M10RFR	
340	342991-0102	-		1	HOSE CLIP 13-20MMRFR	

Pos	Part No	SP	UN	Qty	Description	Page No

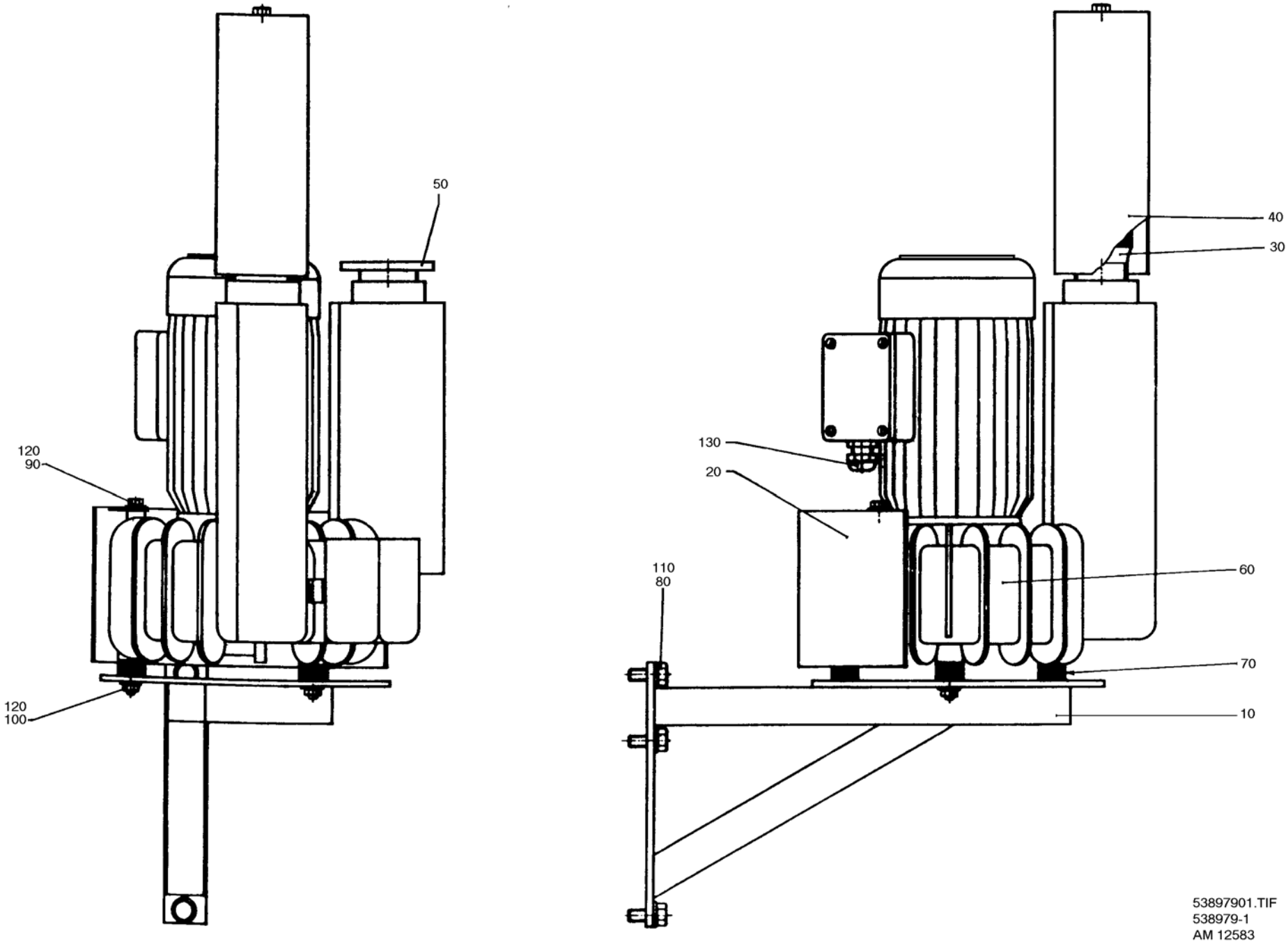
50
120
90
120
100
40
30
130
20
110
80
60
70
10
53897901.TIF
538979-1
AM 12583

Pos	Part No	SP	UN	Qty	Description	Page No
-						
000	**C- 538979-0101**	**-**		**1**	**FAN ASSEMBLY**	
010	531899	-		1	CANTILEVER	
020	533480	-		1	HEAT GUARD	
030	533965	-		1	AIR FILTER	
040	533981	-		1	FILTER HOUSING	
050	538980	-		1	FLANGE COUPLING	
060	90264-0041	-		1	AIR COMPR.FAN	
070	90347-0064	-		3	DAMPER	
080	312101-0493	-		3	SCREW M6S10X25FZB	
090	312105-0370	-		3	SCREW O4017 M6X20A280	
100	312605-0316	-		3	NUT M6M6RFR	
110	315101-0173	-		3	WASHER BRB10,5X22FZB	
120	315105-0153	-		6	WASHER BRB6,4X12RFR	
130	352103-0111	-		1	CABLE GLAND ST 16	

Pos	Part No	SP	UN	Qty	Description	Page No

Tetra Pak

SPC

Spare Parts Catalogue

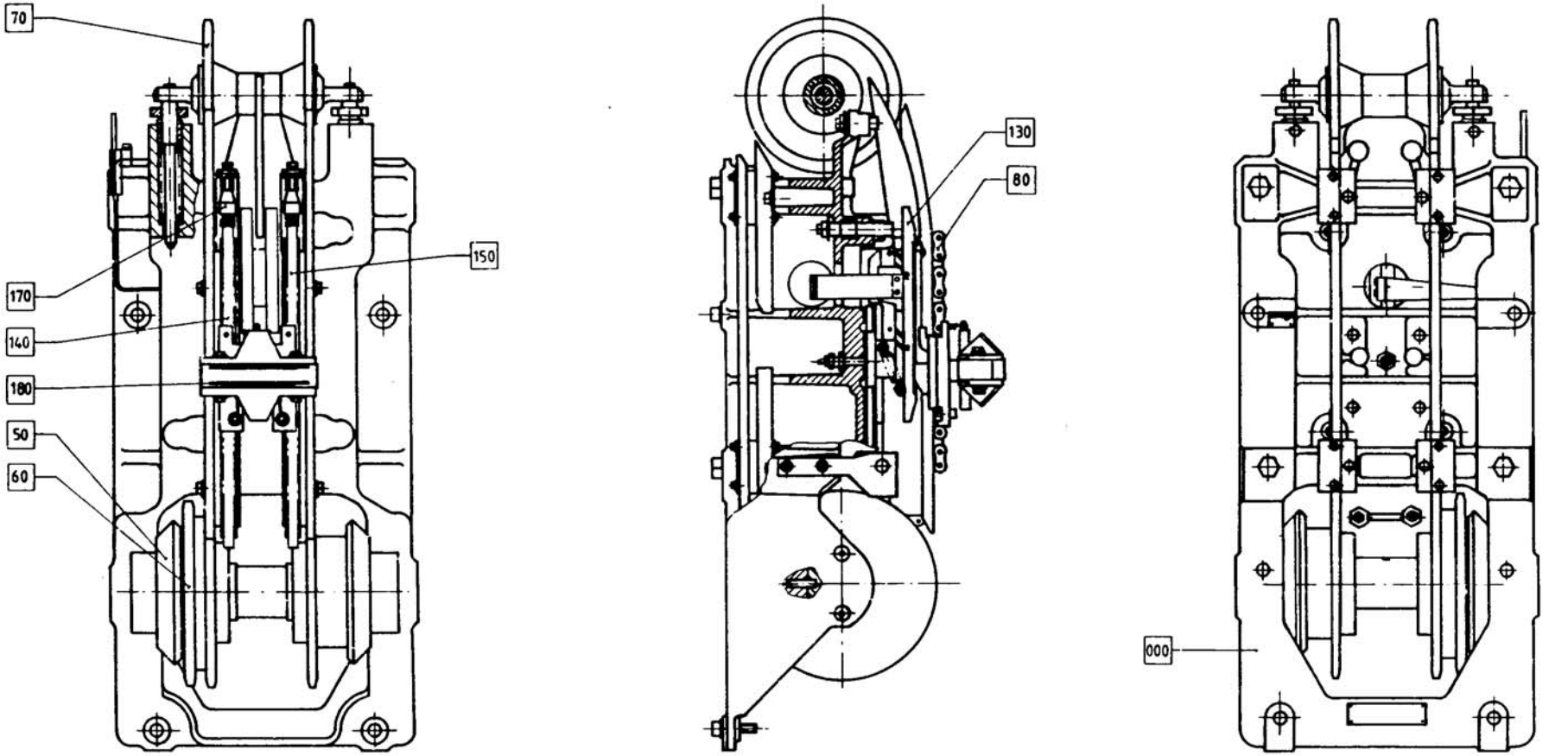

63320303.tif
633203-3
AM 11935

Pos	Part No	SP	UN	Qty	Description	Page No
HEATING DRIVE SIDE 1/2						
000	**B- 633203-1201**	**-**		**1**	**SIDE FRAME**	
000	**B- 633203-1202**	**-**		**1**	**SIDE FRAME**	
F000	C- 536535-0203	-		1	MACHINE BODY SIDE	**117**
F000	C- 536535-0204	-		1	MACHINE BODY SIDE	**117**
F050	C- 4579-0101	-		1	LINK CHAIN WHEEL	**119**
F060	C- 4579-0102	-		1	LINK CHAIN WHEEL	**119**
F070	C- 4580-0101	-		1	LINK CHAIN WHEEL	**121**
F080	C- 4586-0201	-		1	DOUBLE CHAIN 3/4"	**123**
F130	C- 283911-0101	-		1	CONTACT UNIT	**125**
F130	C- 283912-0101				. CONTACT UNIT	**127**
F140	C- 532009-0101	-		1	ROLLER CONVEYOR	**129**
F150	C- 532009-0102	-		1	ROLLER CONVEYOR	**129**
F180	C- 283773-0104	-		8	HEATING JAW IH	**131**

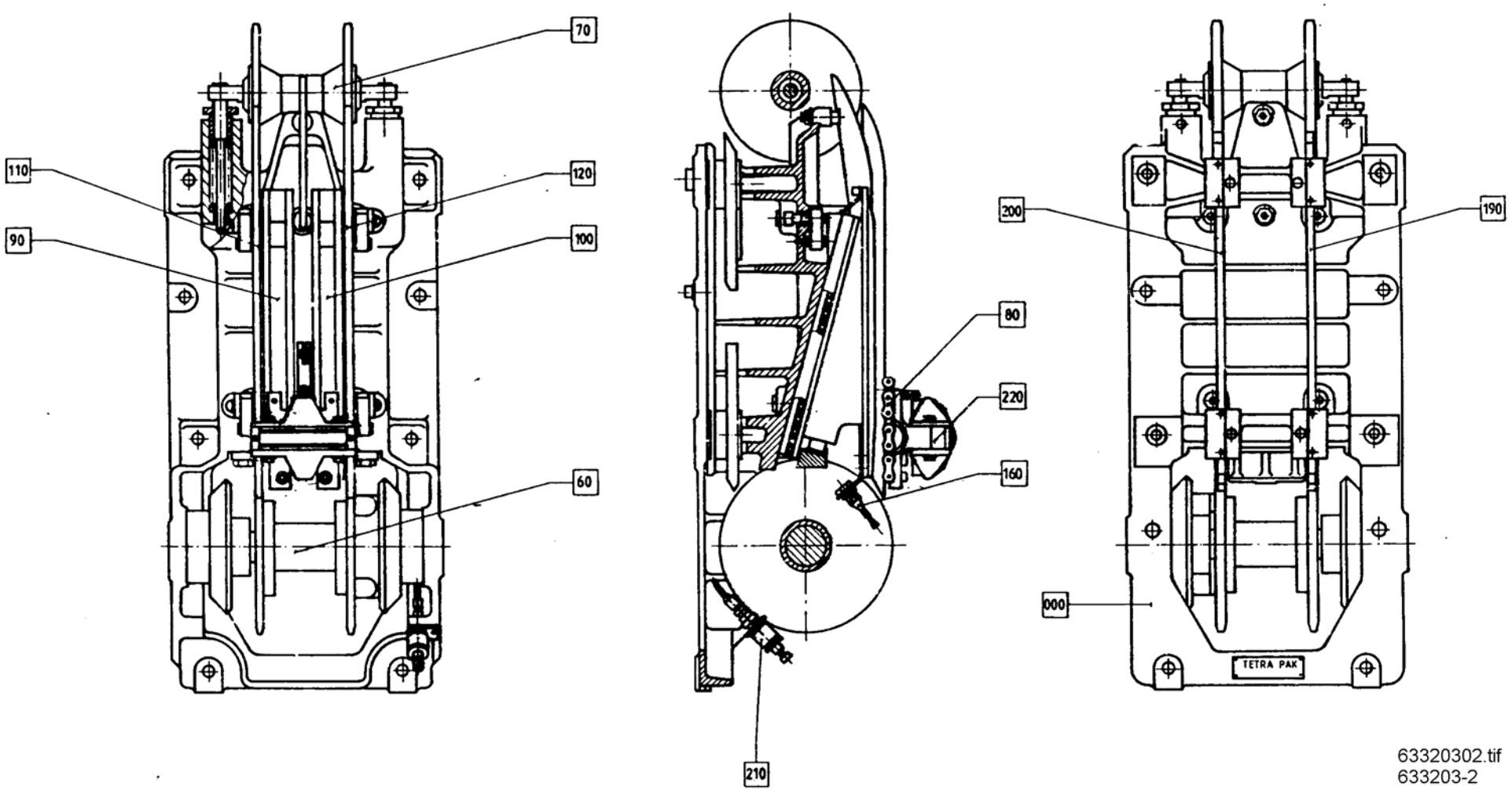

63320302.tif
633203-2
AM 11935

Pos	Part No	SP	UN	Qty	Description	Page No
PRESSURE SIDE 3/4						
000	**B- 633203-1203**	**-**		**1**	**SIDE FRAME**	
000	**B- 633203-1204**	**-**		**1**	**SIDE FRAME**	
F000	C- 536536-0201	-		1	MACH. BODY PRESSURE SIDE	**133**
F000	C- 536536-0202	-		1	MACH. BODY PRESSURE SIDE	**133**
F060	C- 4579-0102	-		1	LINK CHAIN WHEEL	**119**
F070	C- 4580-0101	-		1	LINK CHAIN WHEEL	**121**
F080	C- 4586-0201	-		1	DOUBLE CHAIN 3/4"	**123**
F090	C- 532007-0201	-		1	PLUNGER	**135**
F100	C- 532007-0202	-		1	PLUNGER	**135**
F110	C- 542226-0101	-		1	TRANSMISSION RAIL	**137**
F120	C- 542226-0102	-		1	TRANSMISSION RAIL	**137**
F160	C- 536537-0101	-		1	CENTRALLUBR. PRESSURESIDE	**139**
F170	C- 536538-0101	-		1	CENTRALLUBR. HEATINGSIDE	**141**
F190	C- 532010-0101	-		1	TRANSMISSION RAIL	**143**
F200	C- 532010-0102	-		1	TRANSMISSION RAIL	**143**
F210	C- 532157-0101	-		1	HYDRAULIC SYSTEM SIDE	**145**
F220	C- 532011-0105	-		8	PRESSURE JAW	**145**

Pos	Part No	SP	UN	Qty	Description	Page No

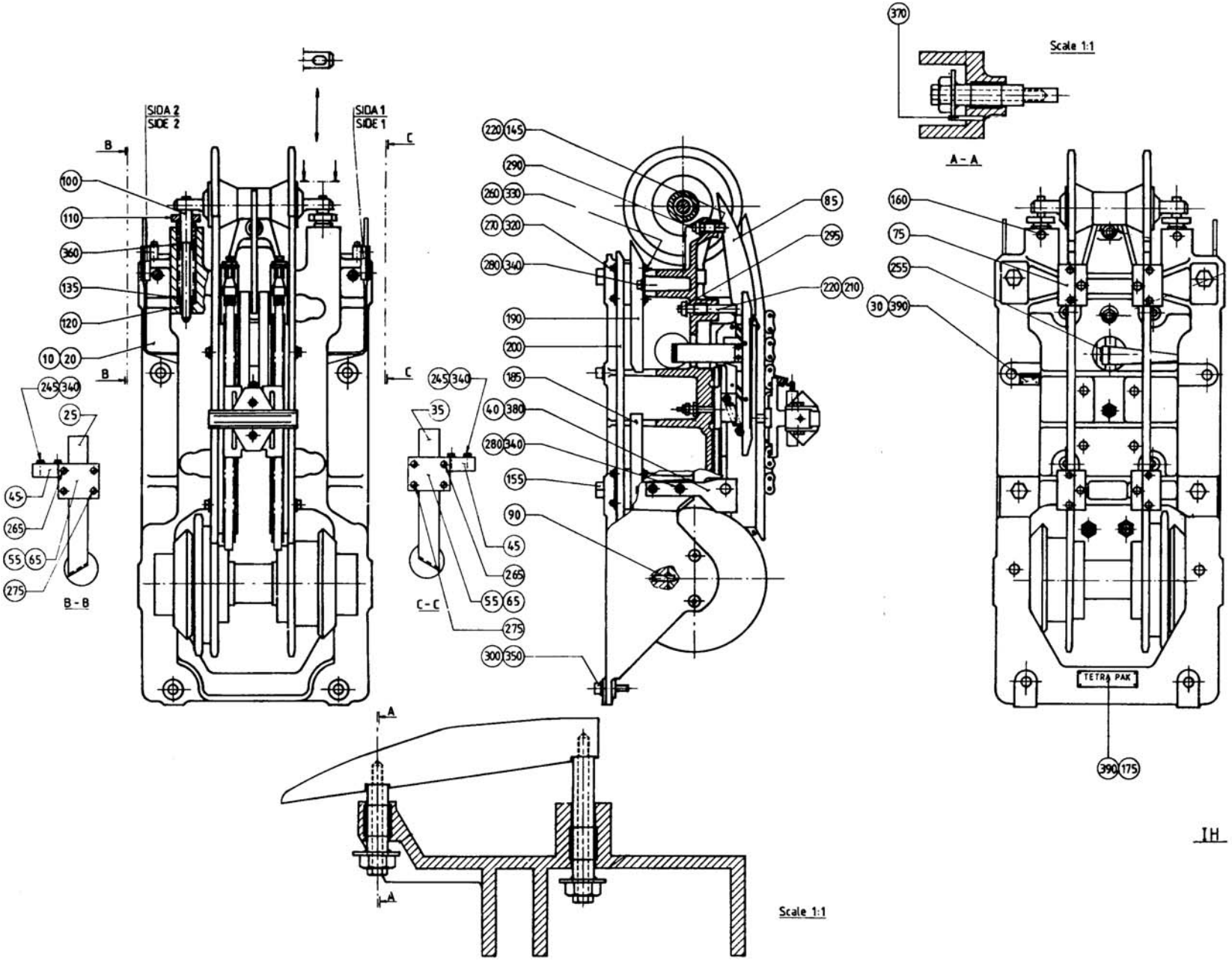

53653502.tif
536535-2
AM 14805

Pos	Part No	SP	UN	Qty	Description	Page No
SIDE 1						
000	**C- 536535-0203**	**-**		**1**	**MACHINE BODY SIDE**	
020	G- 37824-0002	-		1	SIDE FRAME RIGHT	
030	10816	-		1	MARKING PLATE	
035	293459	-		1	CABLE	
045	294102	-		1	HOLDER	
055	294250	-		1	LUG	
065	294251	-		1	CAP	
245	312101-0374	-		2	SCREW M6S6X30FZB	
255	312132-0289	-		4	SLOTTED HEMSCS4X10MSGFN	
265	312141-0366	-		2	SLOTTED HEMFS6X12FZB	
275	312141-0372	-		2	SLOTTED HEMFS6X25FZB	
340	315101-0153	-		14	WASHER BRB6,4X12FZB	
380	13389-0002	-		1	SHEET	
390	312502-0221	-		6	DRIVE SCREKDS4X6FNB	
SIDE 2						
000	**C- 536535-0204**	**-**		**1**	**MACHINE BODY SIDE**	
010	G- 37824-0001	-		1	SIDE FRAME LEFT	
025	293458	-		1	CABLE	
040	13389-0001	-		1	SHEET	
045	294102	-		1	HOLDER	
055	294250	-		1	LUG	
065	294251	-		1	CAP	
245	312101-0374	-		2	SCREW M6S6X30FZB	
255	312132-0289	-		4	SLOTTED HEMSCS4X10MSGFN	
265	312141-0366	-		2	SLOTTED HEMFS6X12FZB	
275	312141-0372	-		2	SLOTTED HEMFS6X25FZB	
340	315101-0153	-		14	WASHER BRB6,4X12FZB	
390	312502-0221	-		4	DRIVE SCREKDS4X6FNB	
Common parts						
075	**263217**	**-**		**4**	**BOW CLAMP**	
085	542230	-		1	CURVE	
090	2481	-		2	TACK	
100	*555069*	-		*2*	*PLUNGER*	
110	*2864*	-		*2*	*ADJUSTING NUT*	
120	*2865*	-		*2*	*BUSHING*	
135	*273545*	-		*2*	*COMPRESSION SPRING*	
145	543511	-		1	ADJUSTMENT SLEEVE	
155	4660	-		4	STRUT	
160	7502	-		2	STOP SCREW	
175	20497	-		1	GROUP NUMBER PLATE	
185	263096	-		2	TRANSMISSION RAIL	
190	263097	-		2	TRANSMISSION RAIL	
200	263218	-		2	RAIL	
210	543512	-		1	ADJUSTMENT SLEEVE	
220	543513	-		2	WASHER	
260	312101-0327	-		8	SCREW M6S5X12FZB	
270	312111-0287	-		8	SCREW MC6S4X8FZB	
280	312111-0368	-		6	SCREW MC6S6X16FZB	
290	312105-0381	-		1	SCREW O4014 M6X55A280	
295	312105-0388	-		1	SCREW O4014 M6X90A280	
300	312111-0540	-		4	SCREW MC6S12X40FZB	
320	315101-0136	-		8	WASHER BRB4,3X8FZB	
330	315101-0146	-		8	WASHER BRB5,3X10FZB	
350	315101-0178	-		4	WASHER BRB13X24FZB	
360	*2867*	-		*2*	*WASHER*	
370	311303-0238	-		2	SLOTTED PIRPB3X20FZB	

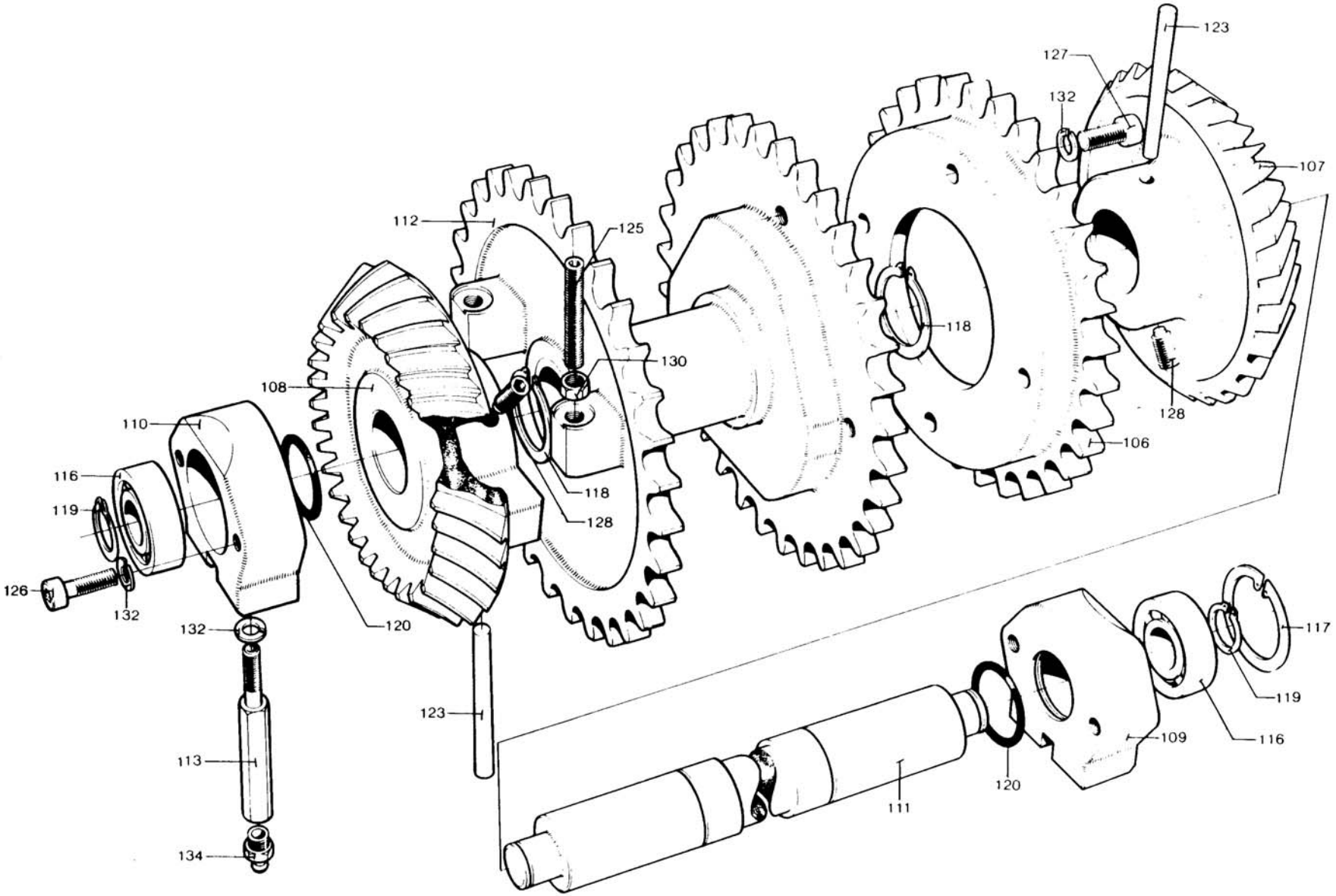

457901.tif
4579-1
AM 4450

Pos	Part No	SP	UN	Qty	Description	Page No
DRIVE SIDE						
000	**C- 4579-0101**	**-**		**1**	**LINK CHAIN WHEEL**	
106	G- 4596	-		1	LINK CHAIN WHEEL	
127	312111-0452	-		4	SCREW MC6S8X22FZB	
132	315401-0165	-		10	WASHER FBH8,2FZB	
SIDE 2/3/4						
000	**C- 4579-0102**	**-**		**1**	**LINK CHAIN WHEEL**	
132	315401-0165	-		6	WASHER FBH8,2FZB	
Common parts						
107	4597	-		1	CONICAL GEAR	
108	G- 4598	-		1	CONICAL GEAR	
109	G- 4599	-		1	BEARING HOUSING	
110	G- 4600	-		1	BEARING HOUSING	
111	4627	-		1	SHAFT	
112	G- 4633	-		1	LINK CHAIN WHEEL	
113	6453-0001	-		2	LUBRICATING PIPE	
116	321309-0104	-		2	BALL BEARISKF6204	
117	315752-0130	-		1	CIRCLIP SGH47	
118	315750-0124	-		2	CIRCLIP SGA35	
119	315750-0116	-		2	CIRCLIP SGA20	
120	315202-0528	-		2	O-RING 37,69X3,53	
123	311201-0327	-		2	TAPER PIN KP8X70SLIPAD	
125	312306-0461	-		2	STOP SCREW P6SS8X50FZB	
126	312111-0455	-		4	SCREW MC6S8X30FZB	
128	312316-0447	-		4	STOP SCREW SK6SS8X12FZB	
130	312601-0318	-		2	NUT M6M8FZB	
134	344502-0026	-		2	NIPPLE L AHKR1/8"	

Pos	Part No	SP	UN	Qty	Description	Page No

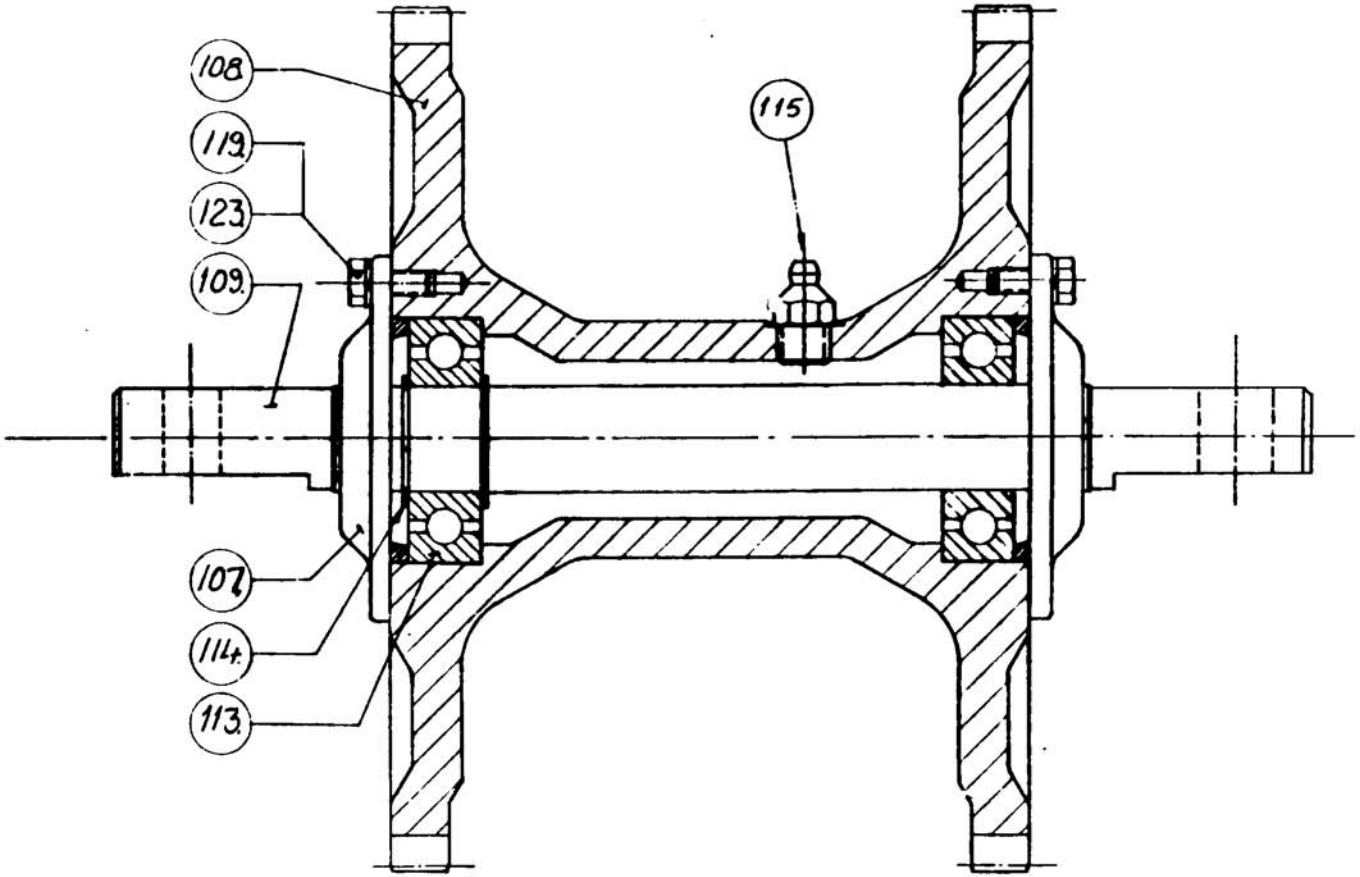

458001.tif
4580-1
AM 1592

Pos	Part No	SP	UN	Qty	Description	Page No
-						
000	**C- 4580-0101**	**-**		**1**	**LINK CHAIN WHEEL**	
107	3749	-		2	OIL SEAL (LÖVALOCK)	
108	G- 4595	-		1	LINK CHAIN WHEEL	
109	4628	-		1	SHAFT	
113	321309-0104	-		2	BALL BEARISKF6204	
114	315750-0116	-		2	CIRCLIP SGA20	
115	344502-0026	-		1	NIPPLE L AHKR1/8"	
119	312101-0327	-		6	SCREW M6S5X12FZB	
123	315401-0146	-		6	WASHER FBH 5,1 FZB	

Pos	Part No	SP	UN	Qty	Description	Page No

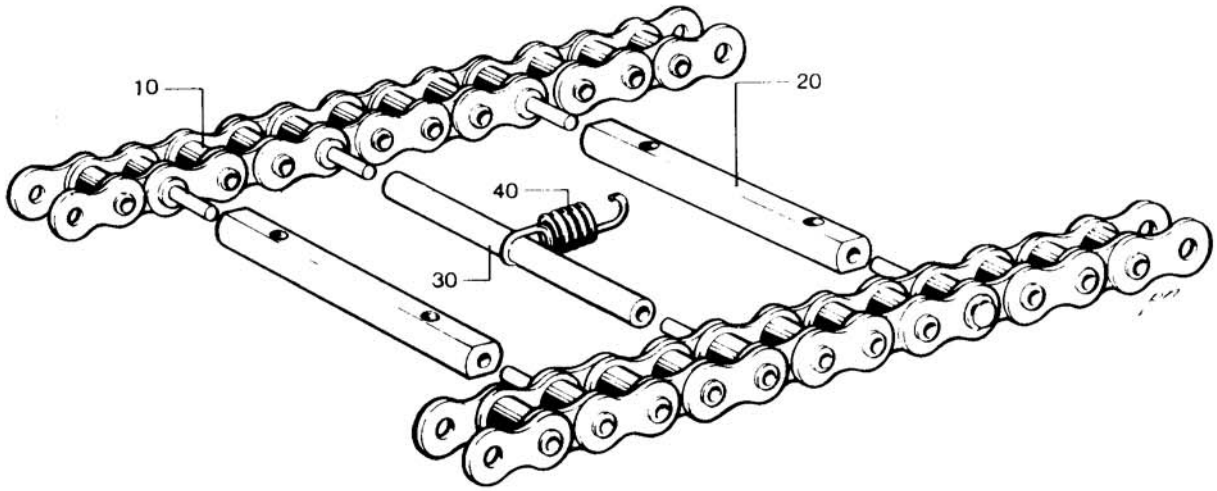

458601.tif
4586-1
AM 8332

Pos	Part No	SP	UN	Qty	Description	Page No
-						
000	**C- 4586-0201**	**-**		**1**	**DOUBLE CHAIN 3/4"**	
010	4624	-		2	ROLLER PLATE	
020	484567	-		8	SHAFT	
030	4626	-		8	SHAFT	
040	4623	-		8	SPRING	

Pos	Part No	SP	UN	Qty	Description	Page No

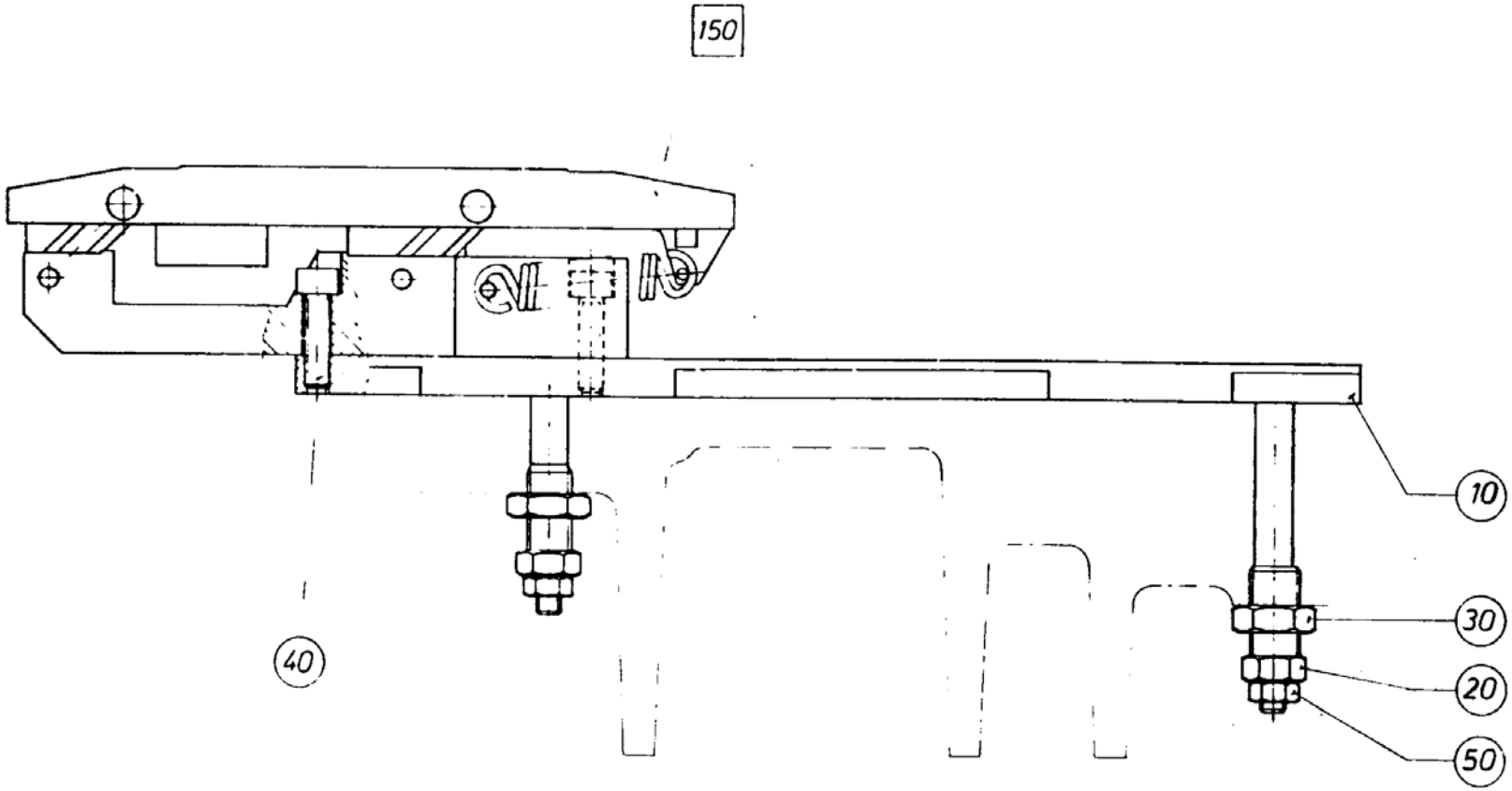

28391101.tif
283911-1
AM 5719

Pos	Part No	SP	UN	Qty	Description	Page No
TCA/150						
000	**C- 283911-0101**	**-**		**1**	**CONTACT UNIT**	
F150	C- 283912-0101	-		1	CONTACT UNIT	
Common parts						
010	**259503**	**-**		**1**	**MOUNTING BAR**	
020	13172	-		3	ADJUSTING SCREW	
030	13254	-		3	NUT	
040	312111-0372	-		2	SCREW MC6S6X25FZB	
050	312605-0316	-		3	NUT M6M6RFR	

Pos	Part No	SP	UN	Qty	Description	Page No

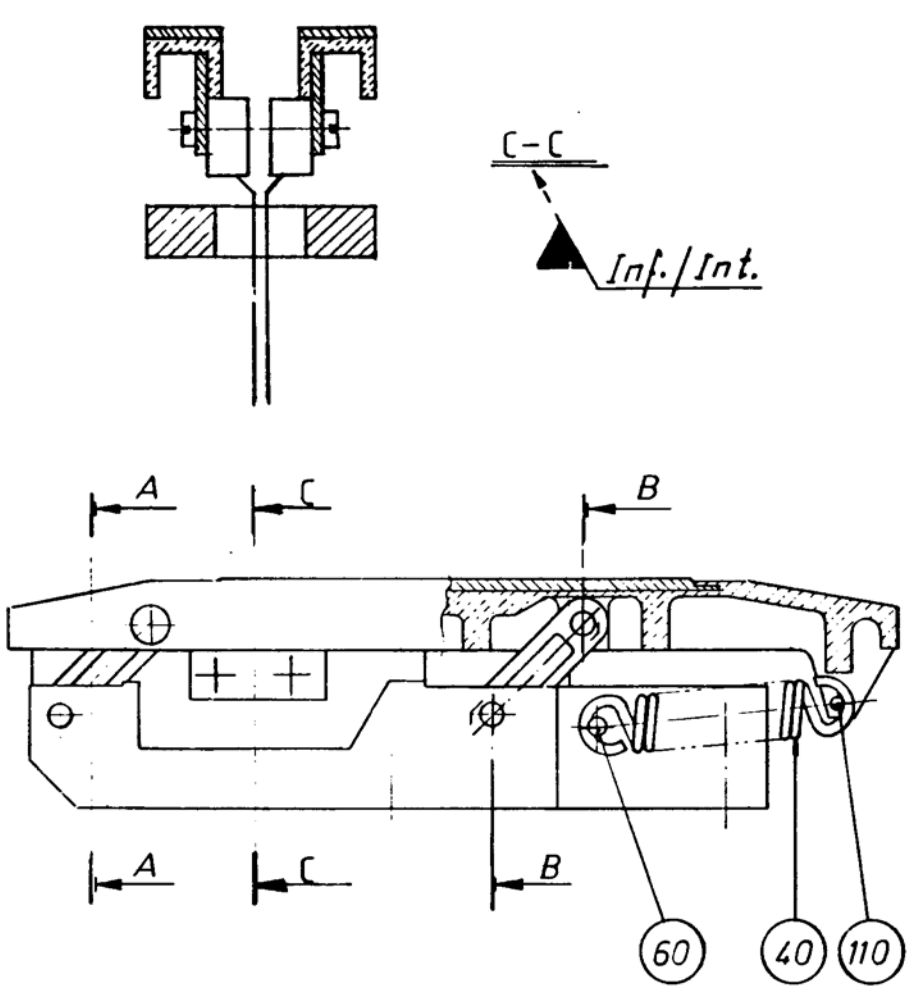

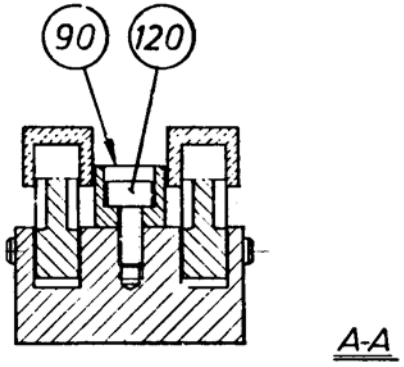

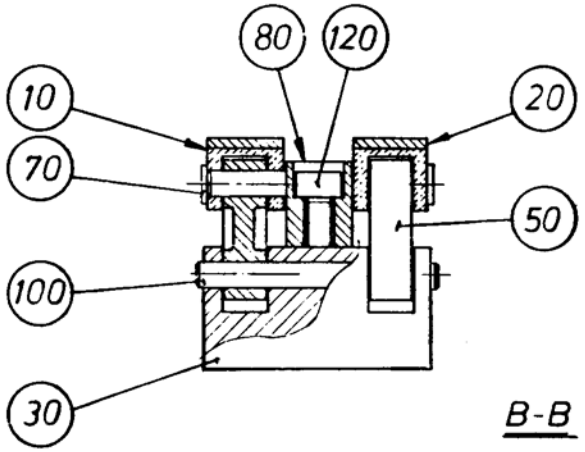

28391201.tif
283912-1
AM 10164

Pos	Part No	SP	UN	Qty	Description	Page No
-						
000	**C- 283912-0101**	**-**		**1**	**CONTACT UNIT**	
010	279578	-		1	CONTACT RAIL LEFT	
020	279579	-		1	CONTACT RAIL RIGHT	
030	279664	-		1	BRACKET	
040	243989	-		2	TENSION SPRING	
050	243990	-		4	LINK ARM	
060	244588	-		1	SHAFT	
070	246520	-		4	SHAFT	
080	246523	-		1	STOP LUG	
090	284047	-		1	GUIDE LUG	
100	255256	-		2	SHAFT	
110	311103-0235	-		2	CYLINDRICACP M6 3X14 RFR	
120	312115-0329	-		3	SCREW O4762 M5X16A280	

Pos	Part No	SP	UN	Qty	Description	Page No

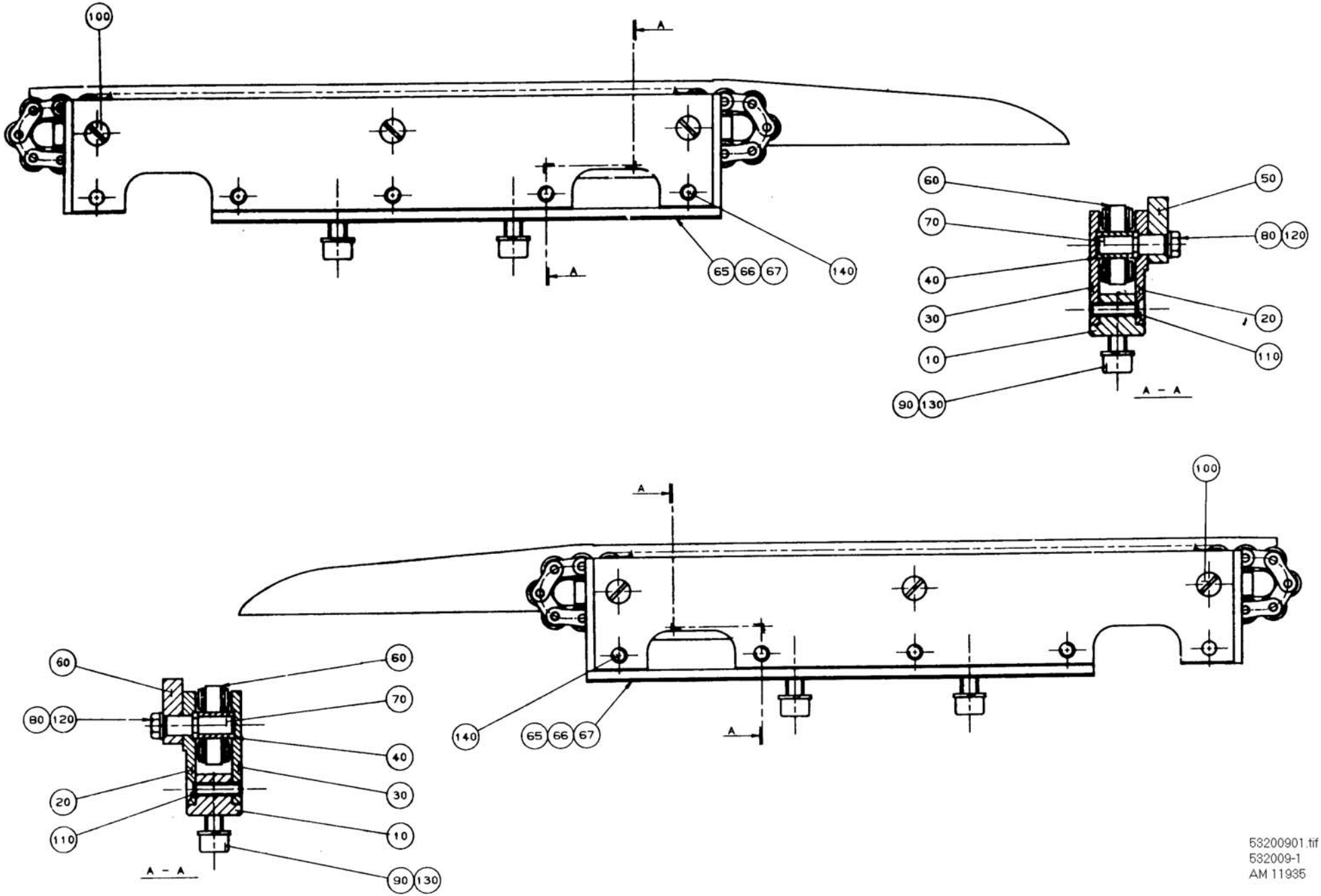

53200901.tif
532009-1
AM 11935

Pos	Part No	SP	UN	Qty	Description	Page No
RIGHT HAND VERSION						
000	**C- 532009-0101**	**-**		**1**	**ROLLER CONVEYOR**	
LEFT HAND VERSION						
000	**C- 532009-0102**	**-**		**1**	**ROLLER CONVEYOR**	
Common parts						
010	**531991**	**-**		**1**	**BRACKET**	
020	543519	C		1	END SECTION	
030	531993	C		1	END SECTION	
040	531994	S		1	ROLLER CONVEYOR	
050	543517	S		1	TRANSMISSION RAIL	
060	531996	S		1	PRESSURE CHAIN	
065	273725-0001	S		5	LACE	
066	273725-0002	S		5	LACE	
067	273725-0003	S		5	LACE	
070	543508	C		2	BUSHING	
080	312101-0366	S		2	SCREW M6S6X12FZB	
090	312111-0451	S		2	SCREW MC6S8X20FZB	
100	312145-0364	S		6	SLOTTED HEMFS6X10RFR	
110	312145-0372	S		3	SLOTTED HEMFS6X25RFR	
120	315101-0153	S		3	WASHER BRB6,4X12FZB	
130	315401-0165	S		2	WASHER FBH8,2FZB	
140	312101-0372	S		1	SCREW M6S6X25FZB	

Pos	Part No	SP	UN	Qty	Description	Page No

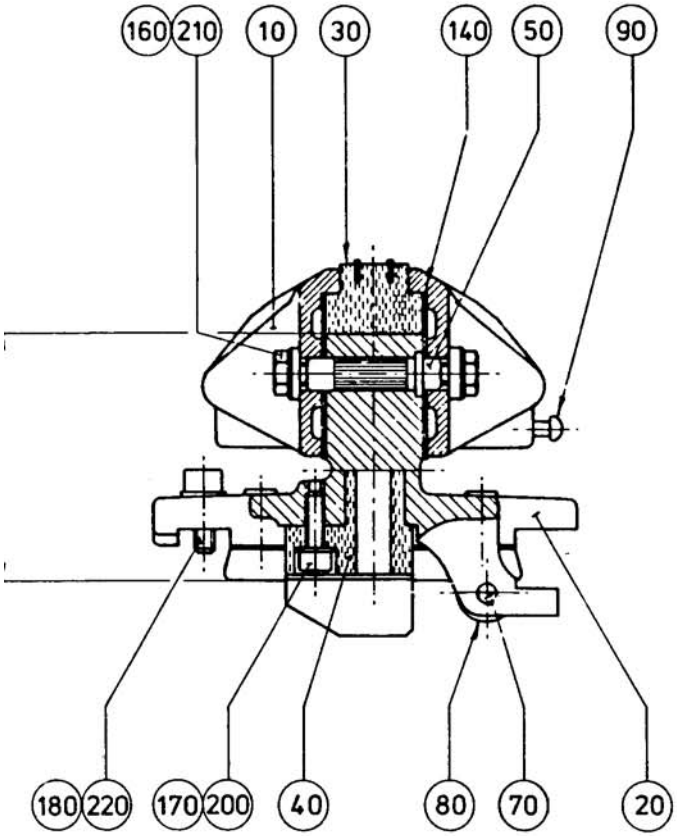

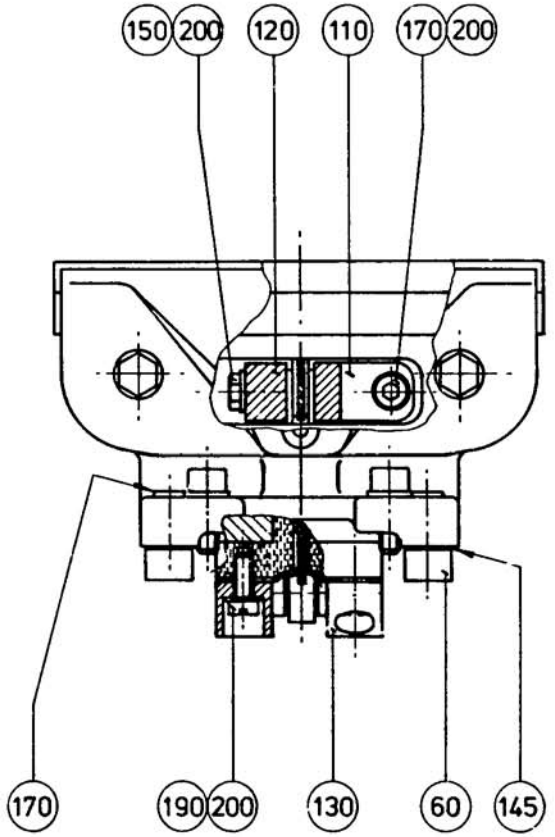

28377301.tif
283773-1
AM 10374

Pos	Part No	SP	UN	Qty	Description	Page No
VOLUME 180, 189, 200						
000	**C- 283773-0104**	**-**		**8**	**HEATING JAW IH**	
010	G- 4609	-		2	FLAP	
030	530647	UP		1	INDUCTOR 150IH	
Common parts						
020	**G- 278985**	**C**		**1**	**HEATING JAW**	
040	G- 279233	S		1	CARBON BRUSH HOLDER	
050	4613	C		2	BUSHING	
060	4615	S		2	ROLLER BAR	
070	533998	S		1	PIN	
080	4617	S		1	ROLL	
090	5809	-		1	TACK	
110	535500	S		1	BRACKET	
120	G- 440419	S		1	BRACKET	
130	279668	S		2	CARBON BRUSH COMPLETE	
140	284046	-		2	GASKET	
145	493071	-		X	LACE	
150	90287-0171	S		2	SCREW	
160	312105-0366	-		4	SCREW O4017 M6X12A280	
170	312115-0329	-		6	SCREW O4762 M5X16A280	
180	312115-0368	-		2	SCREW O4762 M6X16A280	
190	312122-0327	S		2	SLOTTED HEMCS5X12MSGFN	
200	315103-0146	S		6	WASHER BRB5,3X10MSGFN	
210	315115-0153	-		4	WASHER TBRB6,4X12RFR	
220	315402-0156	-		2	WASHER FBB6,5RFR	

Pos	Part No	SP	UN	Qty	Description	Page No

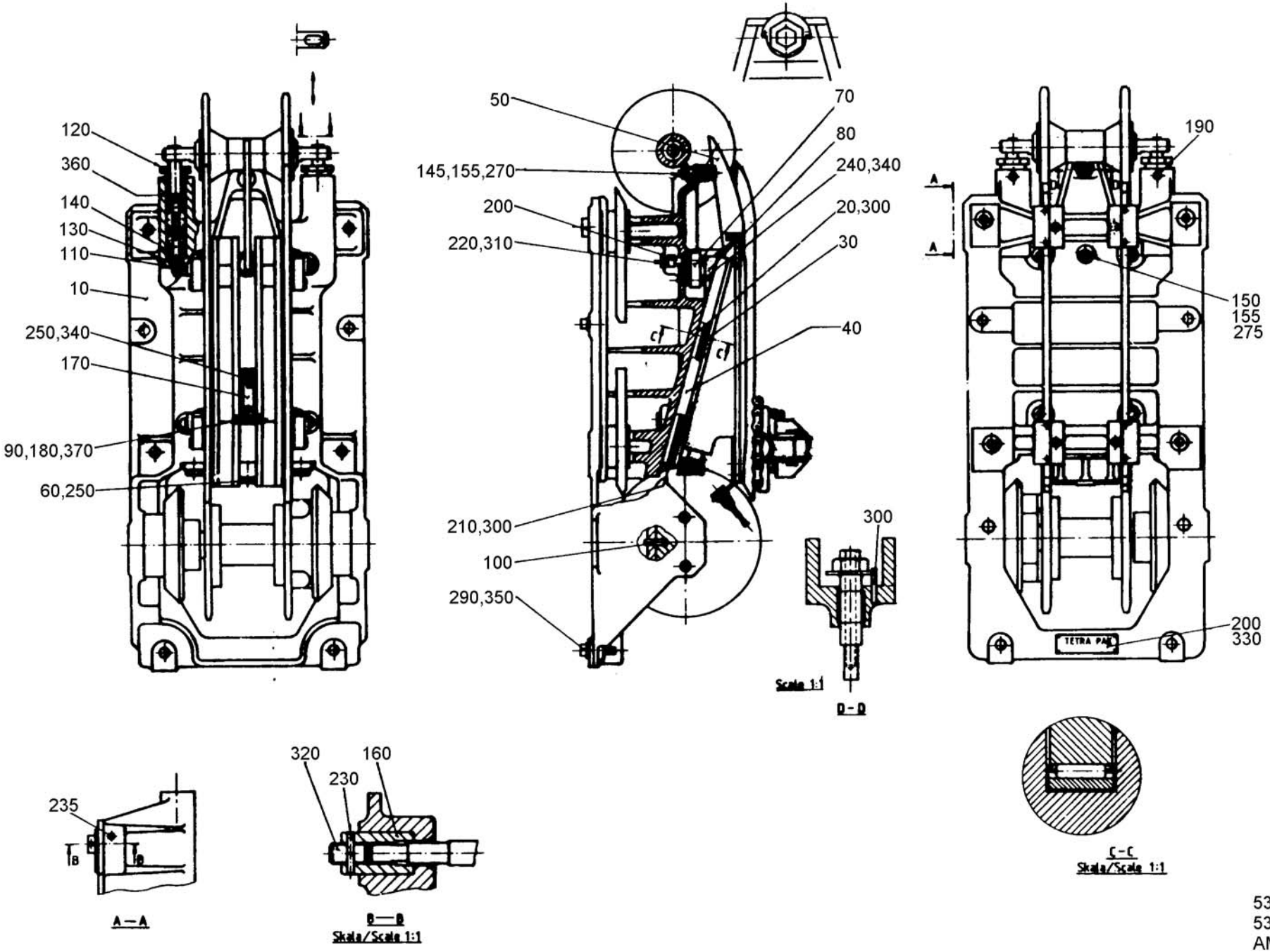

53653601.tif
536536-1
AM12594

Pos	Part No	SP	UN	Qty	Description	Page No
SIDE 3						
000	**C- 536536-0201**	**-**		**1**	**MACH. BODY PRESSURE SIDE**	
010	G- 37806-0002	-		1	SIDE FRAME	
SIDE 4						
000	**C- 536536-0202**	**-**		**1**	**MACH. BODY PRESSURE SIDE**	
010	G- 37806-0001	-		1	SIDE FRAME	
Common parts						
020	**543501**	**S**		**2**	**ROLLER PLATE**	
030	484671	S		2	ROLLER BEARING	
040	499490	S		2	PROTECTION	
050	542229	-		1	CURVE	
060	484672	-		1	YOKE	
070	484675	-		1	NUT	
080	484676	-		1	LUG	
090	2189	S		2	SLEEVE	
100	2481	-		2	TACK	
110	*555069*	-		*2*	*PLUNGER*	
120	*2864*	-		*2*	*ADJUSTING NUT*	
130	*2865*	-		*2*	*BUSHING*	
140	*273545*	-		*2*	*COMPRESSION SPRING*	
145	543511	-		1	ADJUSTMENT SLEEVE	
150	543512	-		1	ADJUSTMENT SLEEVE	
155	543513	-		2	WASHER	
160	4666	-		4	NUT	
170	4677	-		1	BRACKET	
180	4678	-		1	ECCENTRIC SHAFT	
190	7502	-		2	STOP SCREW	
200	20497	-		1	GROUP NUMBER PLATE	
210	484680	-		2	STOP LUG	
220	493718	-		4	WASHER	
230	311305-0274	-		4	SLOTTED PIRPC4X25FZB	
235	311305-0356	-		4	SLOTTED PIRPC6X28FZB	
240	312101-0374	-		2	SCREW M6S6X30FZB	
250	312101-0540	-		3	SCREW M6S12X40FZB	
260	312111-0374	-		2	SCREW MC6S6X30FZB	
270	312105-0381	-		1	SCREW O4014 M6X55A280	
275	312105-0388	-		1	SCREW O4014 M6X90A280	
280	312111-0499	-		2	SCREW MC6S10X40FZB	
290	312111-0540	-		4	SCREW MC6S12X40FZB	
300	312115-0287	S		20	SCREW O4762 M4X8A280	
310	312151-0457	-		4	SCREW MF6S8X35FZB	
320	312311-0532	-		4	STOP SCREW T6SS12X20FZB	
330	312502-0221	-		4	DRIVE SCREKDS4X6FNB	
340	315101-0153	-		20	WASHER BRB6,4X12FZB	
350	315101-0178	-		4	WASHER BRB13X24FZB	
360	*2867*	-		*2*	*WASHER*	
370	315750-0105	-		2	CIRCLIP SGA8	
380	311303-0238	-		2	SLOTTED PIRPB3X20FZB	

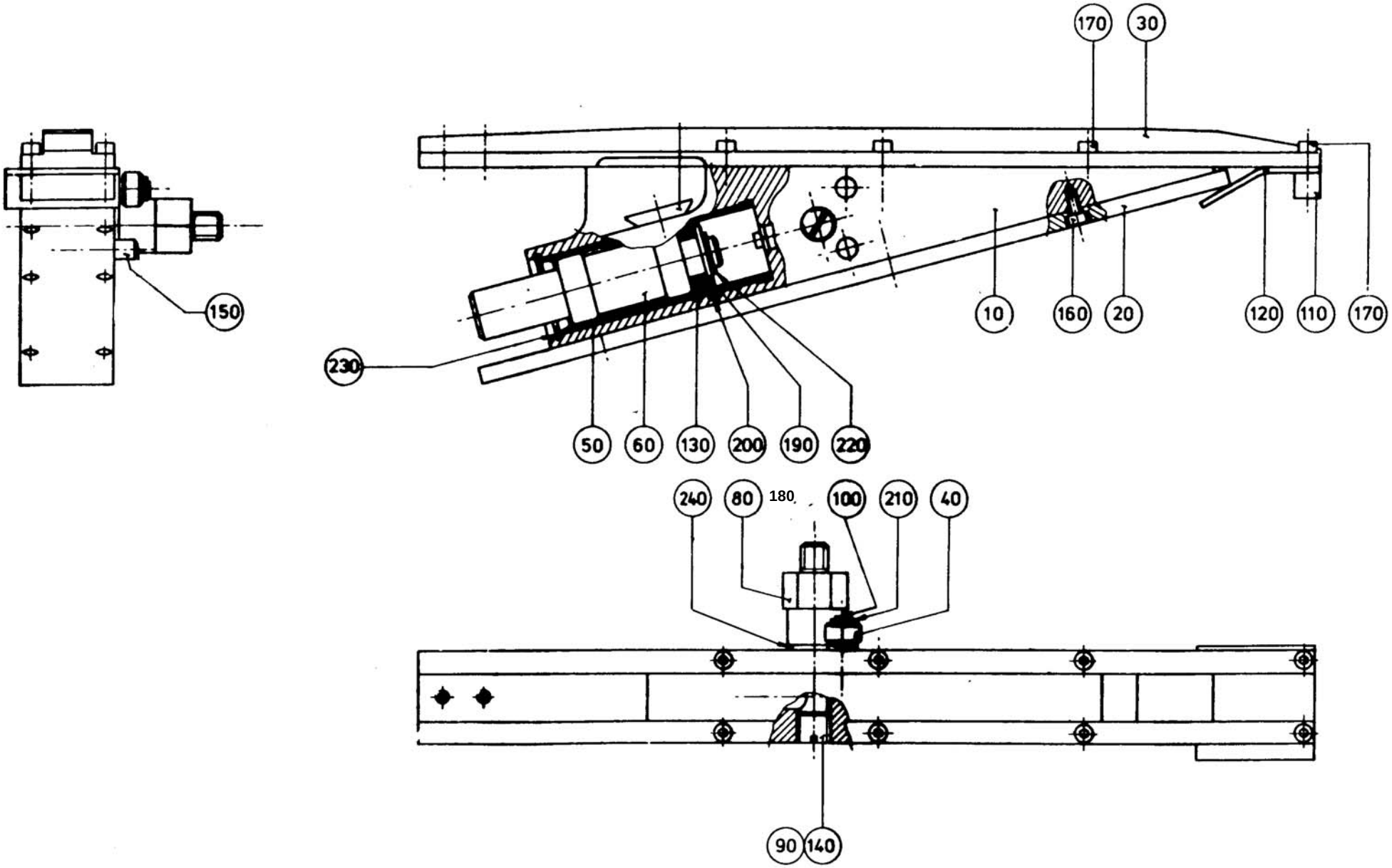

53200701.tif
532007-1/2
AM 11935

Pos	Part No	SP	UN	Qty	Description	Page No
RIGHT HAND VERSION						
000	**C- 532007-0201**	**-**		**1**	**PLUNGER**	
LEFT HAND VERSION						
000	**C- 532007-0202**	**-**		**1**	**PLUNGER**	
Common parts						
010	**G- 484668**	**C**		**1**	**PLUNGER**	
020	543501	S		1	ROLLER PLATE	
030	541032	S		1	ROLLER CONVEYOR	
040	2189	S		1	SLEEVE	
050	37807	S		1	LINING	
060	37808	S		1	PISTON	
080	543502	C		1	CONNECTION	
100	493719	C		1	SHAFT	
110	529297	C		1	WASHER	
120	529298	S		1	RUBBER CLOTH	
130	90020-0020	S		1	SLEEVE	
140	342713-0210	-		1	BLIND PLUG	
150	311303-0404	-		1	SLOTTED PIN RPB 8X28 FZB	
160	312115-0287	S		6	SCREW O4762 M4X8A280	
170	312115-0293	S		8	SCREW O4762 M4X16A280	
180	315233-0110	-		1	SEAL RING R1/4"	
190	315101-0178	-		1	WASHER BRB13X24FZB	
200	315202-0219	S		1	O-RING 29,2X3	
210	315750-0103	S		1	CIRCLIP SGA6	
220	315750-0109	S		1	CIRCLIP SGA12	
230	315752-0123	S		1	CIRCLIP SGH32	

Pos	Part No	SP	UN	Qty	Description	Page No

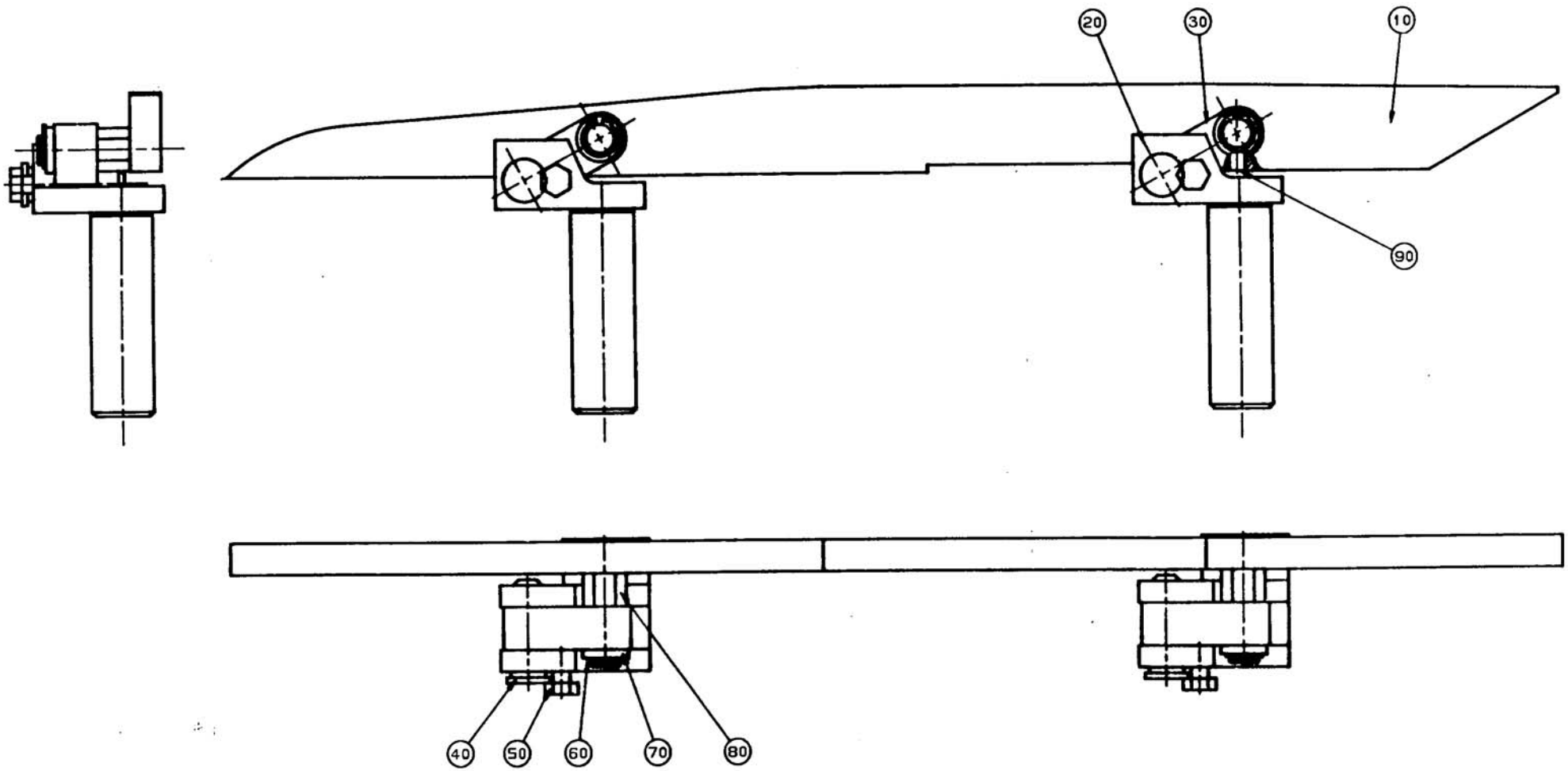

54222601.TIF
542226-1
AM 11935

Pos	Part No	SP	UN	Qty	Description	Page No
RIGHT HAND VERSION						
000	**C- 542226-0101**	**-**		**1**	**TRANSMISSION RAIL**	
020	542223	C		2	BRACKET RIGHT	
LEFT HAND VERSION						
000	**C- 542226-0102**	**-**		**1**	**TRANSMISSION RAIL**	
020	542224	C		2	BRACKET LEFT	
Common parts						
010	**543518**	**S**		**1**	**TRANSMISSION RAIL**	
030	541036	C		2	LINK	
040	542225	S		2	SHAFT	
050	312105-0364	-		2	SCREW M6S6X10RFR	
060	315750-0107	SU		2	CIRCLIP SGA10	
070	128593	S		2	WASHER	
080	543507	S		2	SHAFT	
090	312318-0362	S		2	STOP SCREW SK6SS6X8RFR	

Pos	Part No	SP	UN	Qty	Description	Page No

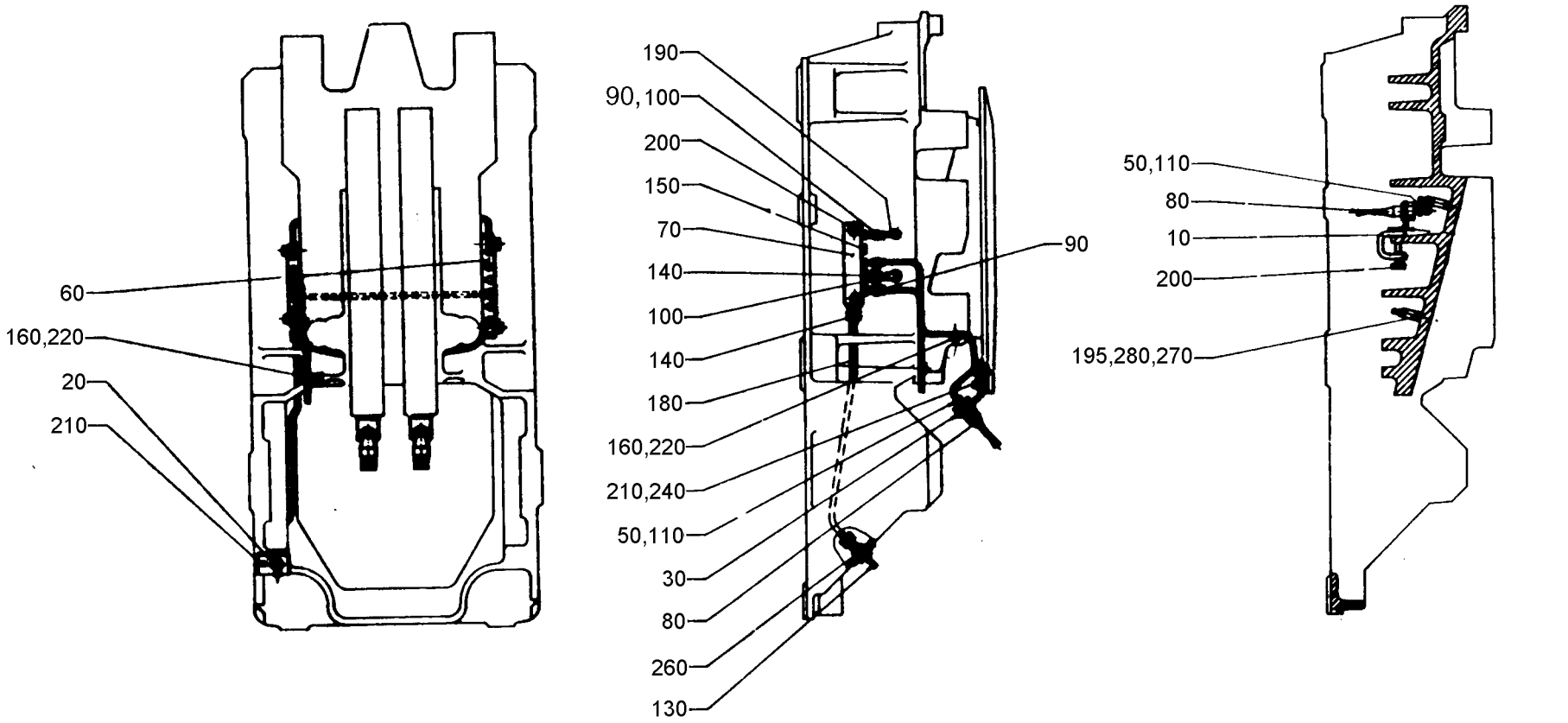

53653701.tif
536537-1
AM 11935

Pos	Part No	SP	UN	Qty	Description	Page No
-						
000	**C- 536537-0101**	**-**		**1**	**CENTRALLUBR. PRESSURESIDE**	
010	263106	-		1	HOLDER	
020	259962-0002	-		1	PLATE	
030	484681	-		2	HOLDER	
050	90028-0001	S		4	CONE	
060	90032-0035	-		1	JUNCTION BLOCK	
070	90032-0036	-		1	JUNCTION BLOCK	
080	90092-0048	S		4	OIL BRUSH	
090	90092-0064	S		1	METERING VALVE	
100	90092-0065	S		4	METERING VALVE	
110	90134-0003	S		4	BUSHING	
130	90134-0033	-		1	NIPPLE	
140	90134-0034	-		3	NIPPLE	
150	90136-0002	-		7	PLUG	
160	90165-0003	-		5	CLIP	
180	90166-0011	S	MM	700	HOSE	
190	90166-0103	S	M	3	HOSE	
195	90330-0032	-		4	NIPPLE	
200	312101-0372	-		6	SCREW M6S6X25FZB	
210	312115-0327	-		5	SCREW O4762 M5X12A280	
220	312121-0285	-		5	SLOTTED HEMCS4X6FZB	
240	315105-0146	-		4	WASHER BRB5,3X10RFR	
260	342724-0102	-		1	PIPE COUPLGI6-LRFZB	
270	344502-0026	S		4	NIPPLE L AHKR1/8"	
280	342707-0109	-		4	MUFF	

Pos	Part No	SP	UN	Qty	Description	Page No

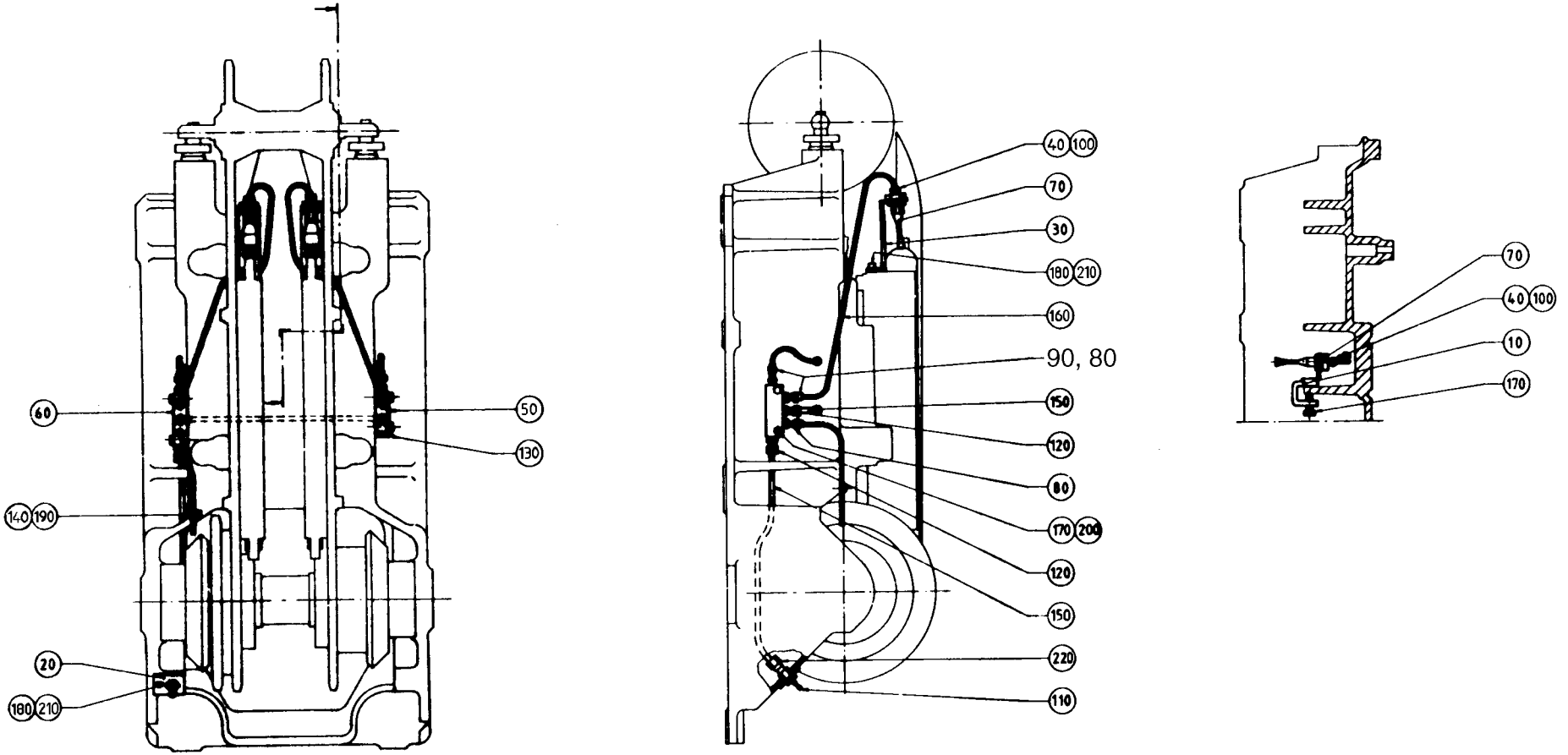

53653801.tif
536538-1
AM 10077

Pos	Part No	SP	UN	Qty	Description	Page No
-						
000	**C- 536538-0101**	**-**		**1**	**CENTRALLUBR. HEATINGSIDE**	
010	263106	-		1	HOLDER	
020	259962-0002	-		1	PLATE	
030	493726	-		2	HOLDER	
040	90028-0001	S		4	CONE	
050	90032-0012	-		1	JUNCTION BLOCK	
060	90032-0013	-		1	JUNCTION BLOCK	
070	90092-0048	S		4	OIL BRUSH	
080	90092-0064	S		1	METERING VALVE	
090	90092-0065	S		4	METERING VALVE	
100	90134-0003	S		4	BUSHING	
110	90134-0033	-		1	NIPPLE	
120	90134-0034	-		3	NIPPLE	
130	90136-0002	-		1	PLUG	
140	90165-0003	-		1	CLIP	
150	90166-0011	S	MM	700	HOSE	
160	90166-0103	S	M	2	HOSE	
170	312101-0372	-		6	SCREW M6S6X25FZB	
180	312115-0327	-		3	SCREW O4762 M5X12A280	
190	312121-0285	-		1	SLOTTED HEMCS4X6FZB	
200	315101-0153	-		4	WASHER BRB6,4X12FZB	
210	315105-0146	-		3	WASHER BRB5,3X10RFR	
220	342724-0102	-		1	PIPE COUPLGI6-LRFZB	

Pos	Part No	SP	UN	Qty	Description	Page No

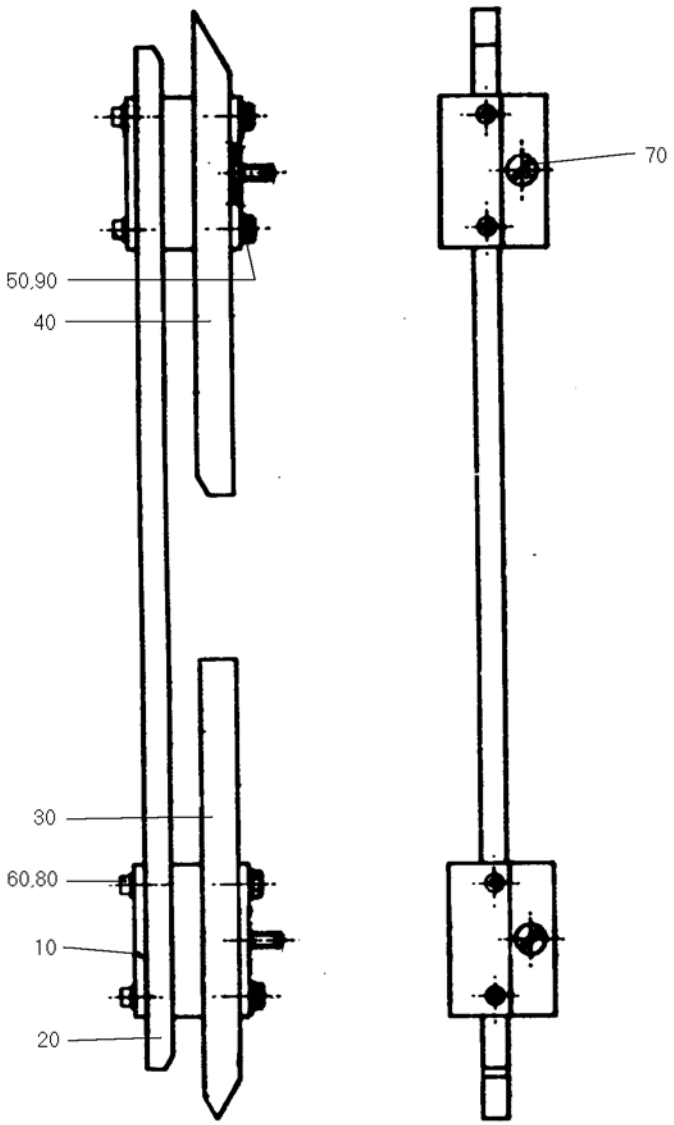

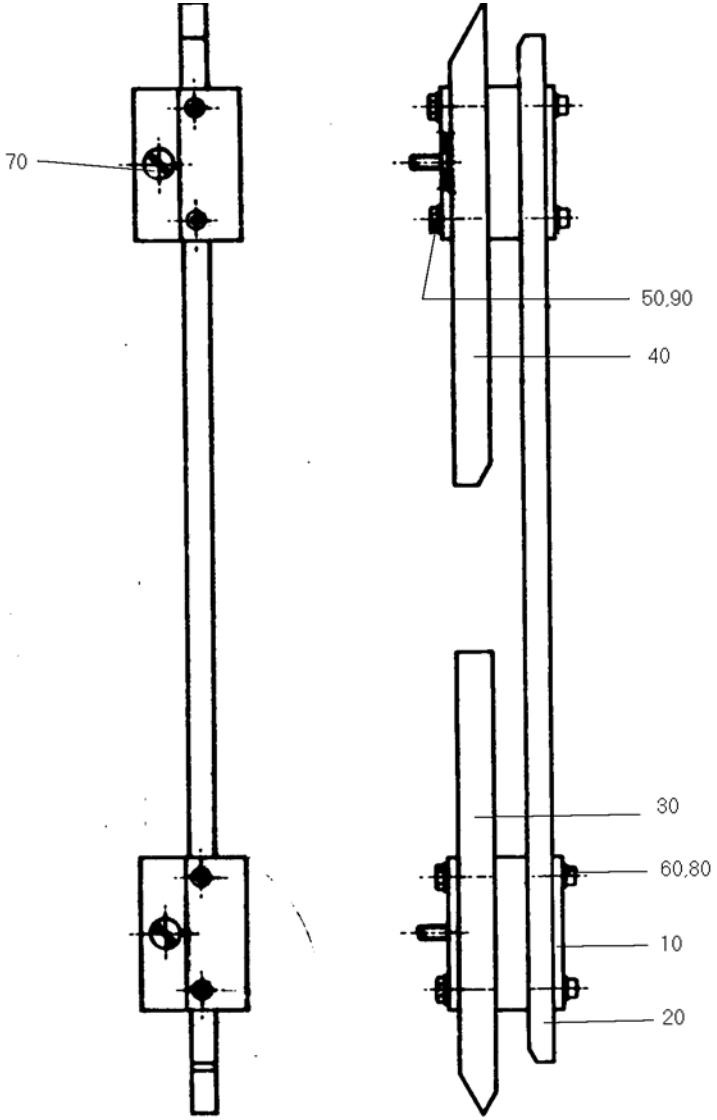

53201001.TIF
532010-1
AM 11975

Pos	Part No	SP	UN	Qty	Description	Page No
RIGHT HAND VERSION						
000	**C- 532010-0101**	**-**		**1**	**TRANSMISSION RAIL**	
LEFT HAND VERSION						
000	**C- 532010-0102**	**-**		**1**	**TRANSMISSION RAIL**	
Common parts						
010	**484677**	**-**		**2**	**BOW CLAMP**	
020	263218	-		1	RAIL	
030	484678	-		1	TRANSMISSION RAIL	
040	484679	-		1	TRANSMISSION RAIL	
050	312101-0327	-		4	SCREW M6S5X12FZB	
060	312111-0291	-		4	SCREW MC6S4X12FZB	
070	312141-0368	-		2	SLOTTED HEMFS6X16FZB	
080	315101-0136	-		4	WASHER BRB4,3X8FZB	
090	315101-0146	-		4	WASHER BRB5,3X10FZB	

Pos	Part No	SP	UN	Qty	Description	Page No

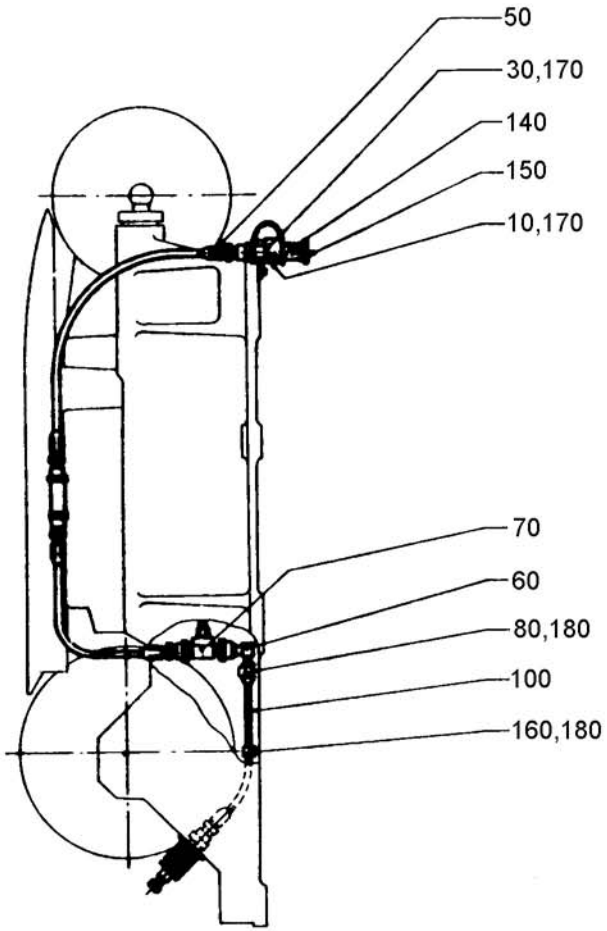

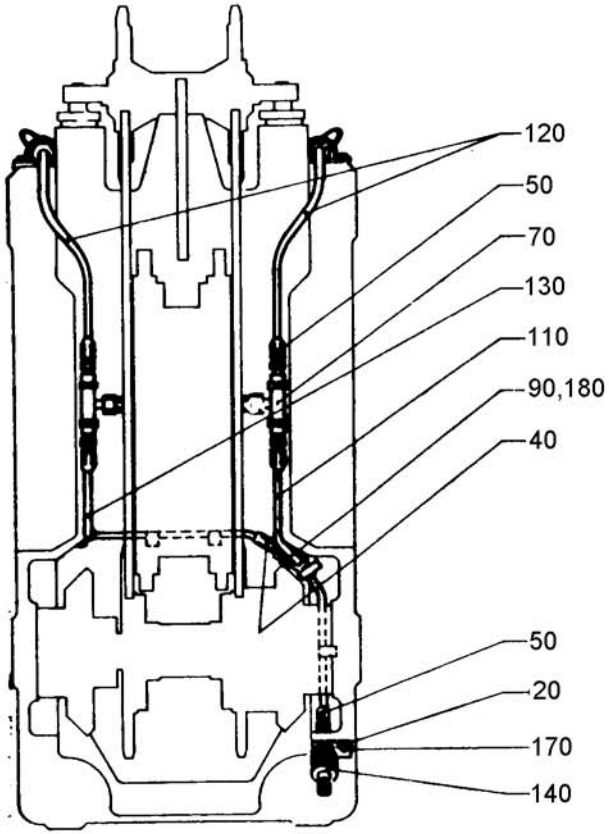

53215701.tif
532157-1
AM 10077

Pos	Part No	SP	UN	Qty	Description	Page No
-						
000	**C- 532157-0101**	**-**		**1**	**HYDRAULIC SYSTEM SIDE**	
010	259961	-		2	HOLDER	
020	259962-0001	-		1	PLATE	
030	284116	-		2	CAP	
040	90055-0055	-		1	HOSE COUPLING	
050	90055-0056	-		8	HOSE COUPLING	
060	90055-0057	-		1	HOSE COUPLING	
070	90055-0058	-		3	HOSE COUPLING	
080	90074-0003	-		1	CLIP	
090	90074-0015	-		1	CLIP	
100	90148-0010	-	MM	160	HOSE	
110	90148-0010	-	MM	190	HOSE	
120	90148-0010	-	MM	350	HOSE	
130	90148-0010	-	MM	420	HOSE	
140	90163-0044	S		3	CONNECTION	
150	90163-0306	S		2	DUST COVER	
160	90165-0007	-		4	CLIP	
170	312111-0327	-		9	SCREW MC6S5X12FZB	
180	312121-0323	-		7	SLOTTED HEMCS5X8FZB	

Pos	Part No	SP	UN	Qty	Description	Page No

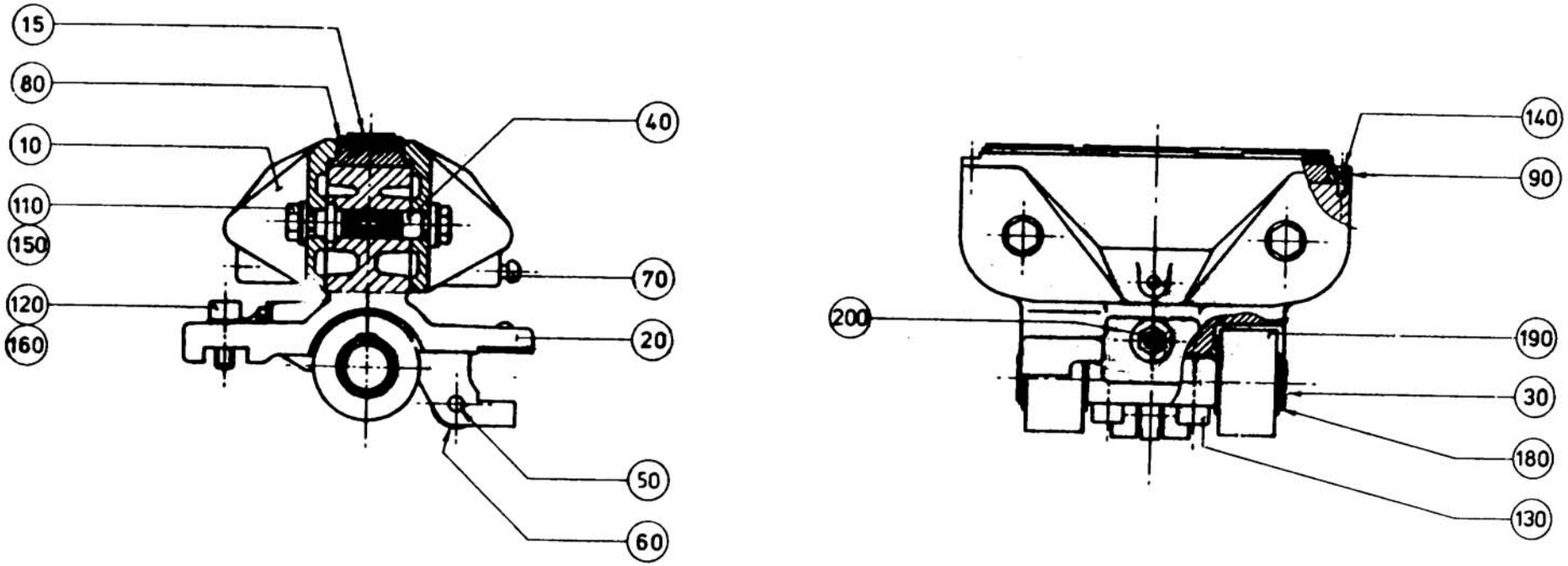

53201101.tif
532011-1
AM14237

Pos	Part No	SP	UN	Qty	Description	Page No
VOLUME 200, 189, 180 -IH						
000	**C- 532011-0105**	**-**		**8**	**PRESSURE JAW**	
010	G- 30820	C		2	FLAP	
015	294327	PU		1	RUBBER RAIL	
080	263963	C		1	RUBBER HOLDER	
090	531998	SU		2	SUPPORT	
110	312105-0367	S		4	SCREW M6S6X14RFR	
140	312145-0224	S		4	SLOTTED HEMFS3X10RFR	
Common parts						
020	**G- 484673**	**C**		**1**	**PRESSURE JAW**	
030	484674	S		1	SHAFT	
040	4613	C		2	BUSHING	
050	550193	S		1	PIN	
060	543509	PU		1	ROLL	
070	5809	C		1	TACK	
120	312115-0368	S		2	SCREW O4762 M6X16A280	
130	312115-0372	S		2	SCREW O4762 M6X25A280	
150	315115-0153	S		4	WASHER TBRB6,4X12RFR	
160	315401-0153	S		2	WASHER FBH6,1FZB	
180	315750-0112	SU		2	CIRCLIP SGA15	
190	321576-0197	SU		2	SUPPORT RONUTR15	
200	344502-0021	S		1	NIPPLE L AHM6	
210	312101-0287	-		X	SCREW M6S4X8FZB	

Pos	Part No	SP	UN	Qty	Description	Page No

Tetra Pak

SPC

Spare Parts Catalogue

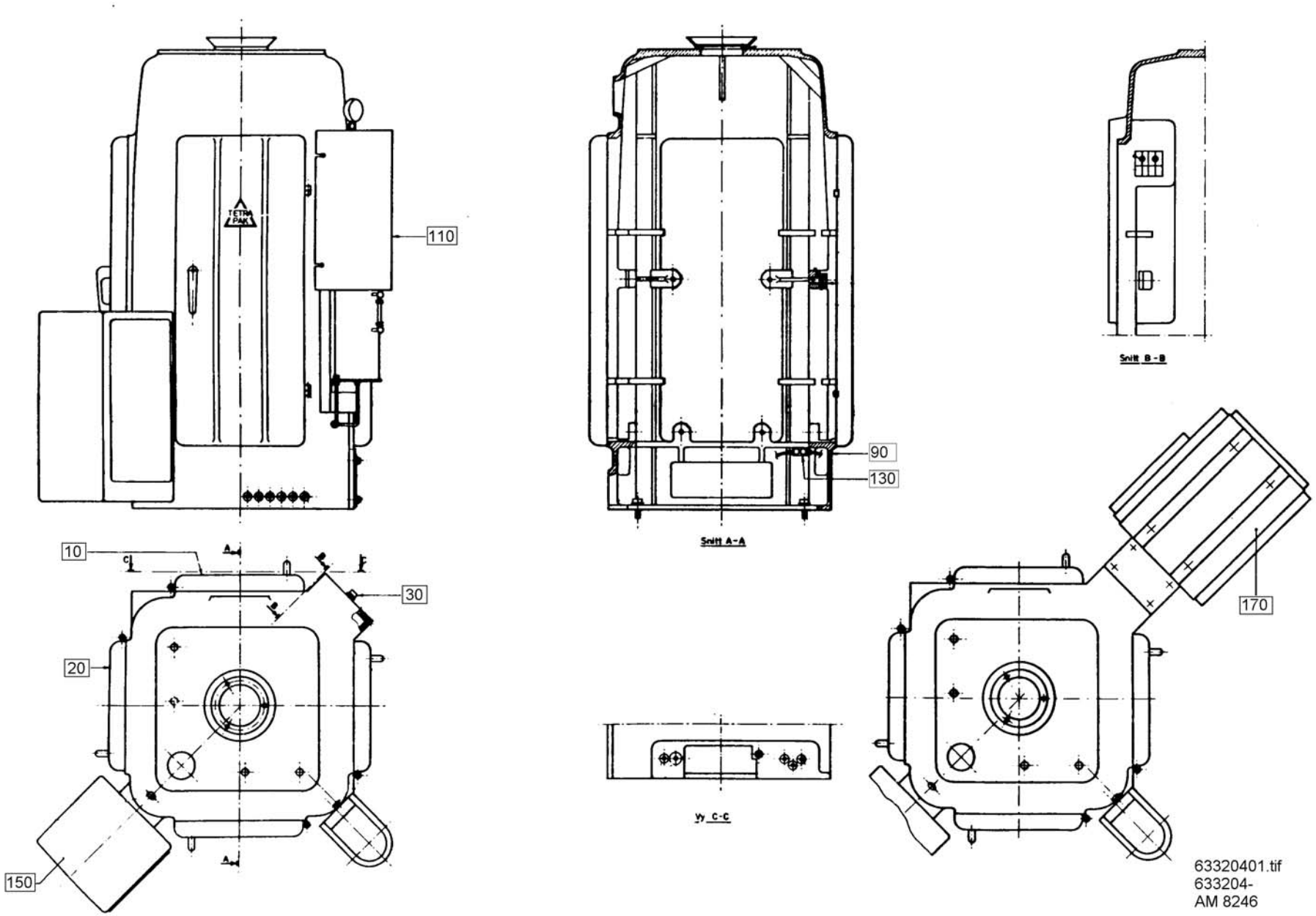
110
90
130
Snitt A-A
Snitt B-B
10
30
20
150
170
yy C-C
63320401.tif
633204-
AM 8246

Pos	Part No	SP	UN	Qty	Description	Page No
-						
000	**B- 633204-1901**	**-**		**1**	**MACHINE BODY**	
F000	C- 449404-0201	-		1	MACHINE BODY	**153**
**) F010*	*C- 548468-0101*	-		*2*	*DOOR*	***155***
**) F020*	*C- 548468-0102*	-		*2*	*DOOR*	***155***
F090	C- 449972-0101	-		1	AIR PIPE-LINE	**157**
**) F110*	*C- 532160-0201*	-		*1*	*HYDRAULIC PRESSURE SYSTEM*	***159***
**)*	*C- 537961-0101*				*. HYDRAULIC SYSTEM*	***161***
F130	C- 263812-0101	-		1	CENTRAL LUBRICATION	**163**
F150	C- 294214-0101	-		1	APPLIANCE BOX	**165**
	C- 450114-0101				. TERMINAL PLINTH	**167**
F170	C- 499860-0101	-		1	BRACKET IH	**169**

Pos	Part No	SP	UN	Qty	Description	Page No

**) Deviates from the B-groups development step*

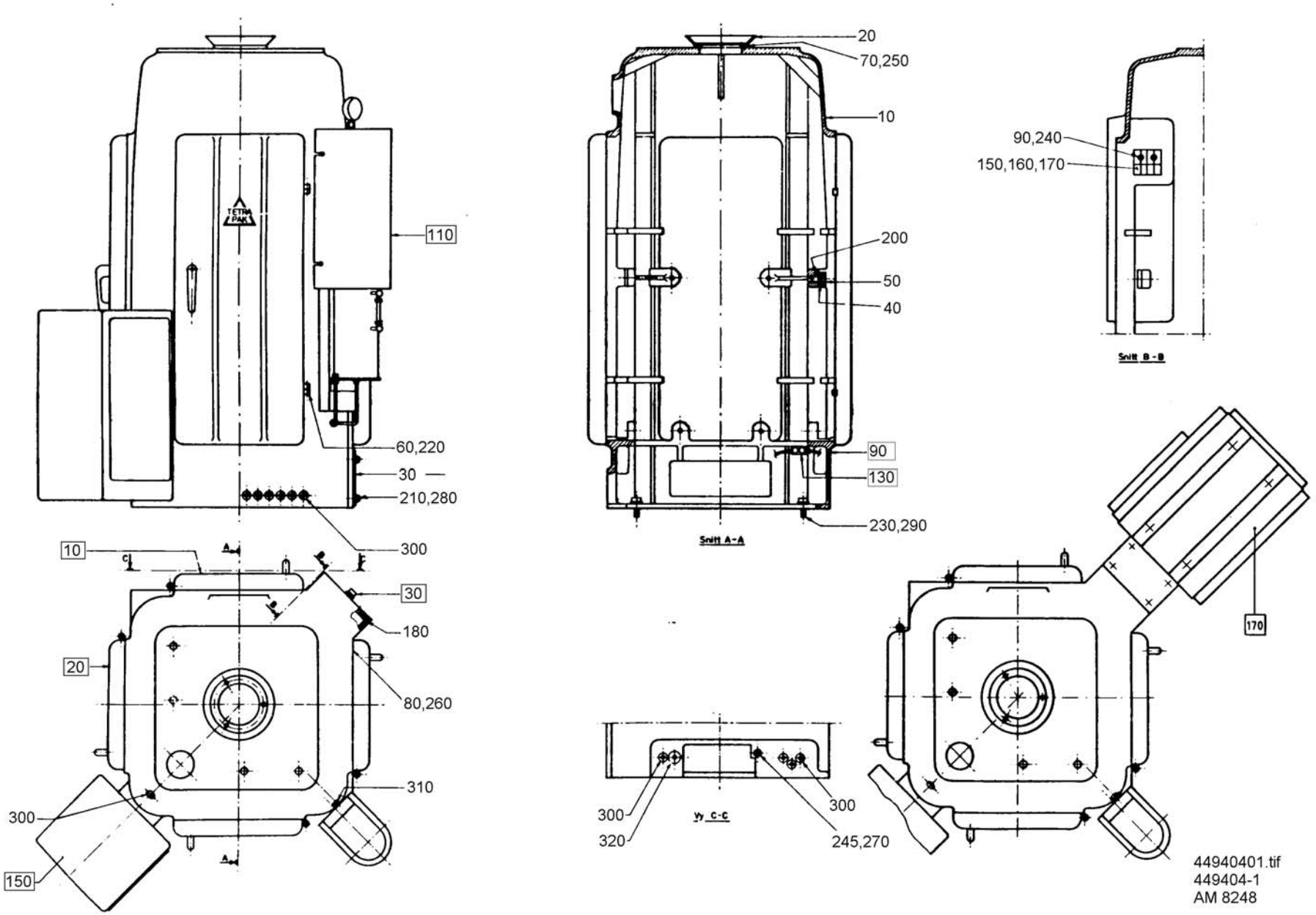
110
60,220
30
210,280
300
10
30
180
20
80,260
310
300
150
20
70,250
10
200
50
40
90
130
230,290
Snitt A-A
90,240
150,160,170
Snitt B-B
170
300
320
Vy C-C
300
245,270
44940401.tif
449404-1
AM 8248

Pos	Part No	SP	UN	Qty	Description	Page No
-						
000	**C- 449404-0201**	**-**		**1**	**MACHINE BODY**	
010	G- 526614	-		1	MACHINE BODY	
020	33267	-		1	BOWL	
030	236651	-		1	SHEET	
040	2612-0001	-		20	WASHER	
040	2612-0002	-		20	WASHER	
040	2612-0003	-		12	WASHER	
040	2612-0004	-		12	WASHER	
050	2613	-		8	SCREW	
060	2965	-		8	HINGE	
070	2975	-		1	RING	
080	20497	-		1	GROUP NUMBER PLATE	
200	311305-0310	-		8	SLOTTED PIRPC5X20FZB	
210	312101-0449	-		4	SCREW M6S8X16FZB	
220	312101-0366	-		8	SCREW M6S6X12FZB	
230	312111-0628	-		4	SCREW MC6S16X40FZB	
245	312311-0548	-		1	STOP SCREW T6SS12X80FZB	
250	312165-0329	-		3	SLOTTED HEMKFS5X16RFR	
260	312502-0221	-		4	DRIVE SCREKDS4X6FNB	
270	312601-0322	-		1	NUT M6M12FZB	
280	315101-0165	-		4	WASHER BRB8,4X16FZB	
290	315101-0186	-		4	WASHER BRB17X30FZB	
300	352101-0103	-		10	LEAD-IN G 18,6	
310	352101-0105	-		1	LEAD-IN G 22,5	

Pos	Part No	SP	UN	Qty	Description	Page No

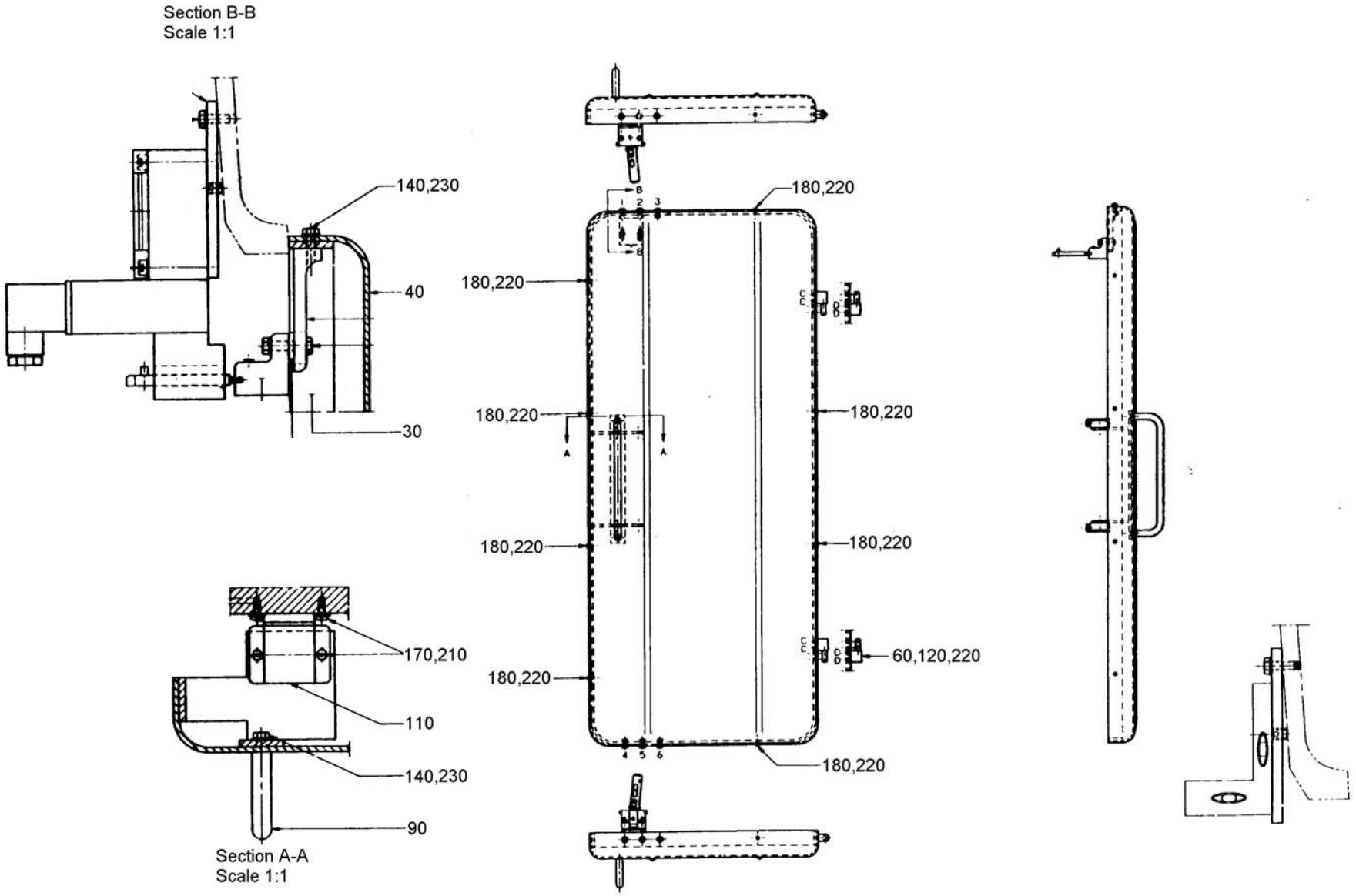

54846801.tif
548468-1
AM 12589

Pos	Part No	SP	UN	Qty	Description	Page No
-						
000	**C- 548468-0101**	**-**		**4**	**DOOR (SIDE 1 and #)**	
000	**C- 548468-0102**	**-**		**4**	**DOOR (SIDE 2 and 4)**	
030	547509	-		1	FRAME	
040	547510	-		1	DOOR	
060	547508	-		2	HINGE	
090	90017-0012	-		1	HANDLE	
110	90237-0046	-		2	LOCK PART	
120	312105-0291	-		4	SCREW M6S4X12 A2 80	
140	312105-0329	-		8	SCREW M6S5X16 A2 80	
170	312125-0222	-		8	SLOTTED HEMCS3X8RFR	
180	312125-0287	-		8	SLOTTED HEMCS4X8RFR	
200	312605-0314	-		6	NUT M6M5RFR	
210	315105-0124	-		8	WASHER BRB3,2X6RFR	
220	315105-0136	-		12	WASHER BRB4,3X8RFR	
230	315105-0146	-		14	WASHER BRB5,3X10RFR	

Pos	Part No	SP	UN	Qty	Description	Page No

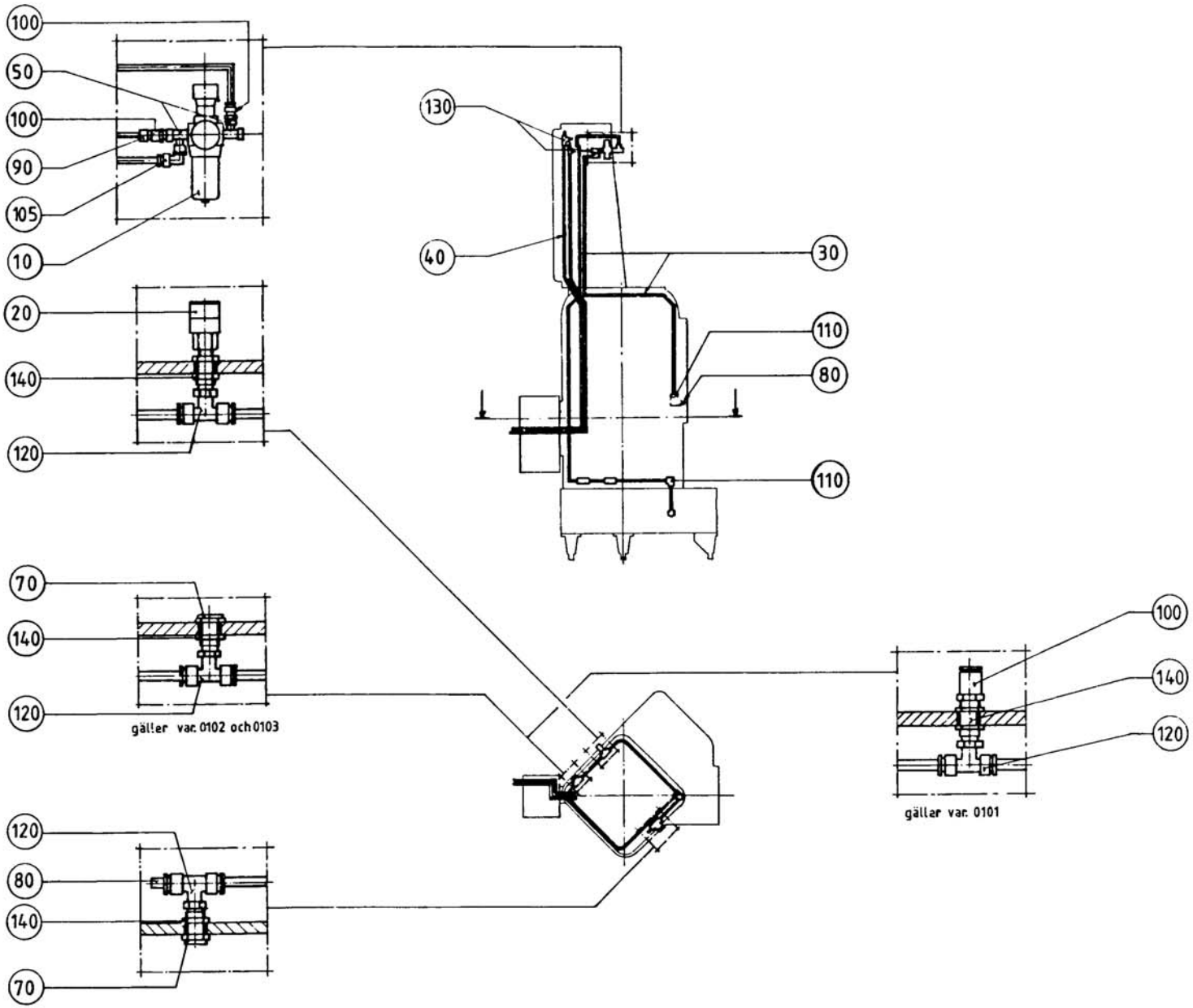

44997201.TIF
449972-1
AM 7752

Pos	Part No	SP	UN	Qty	Description	Page No
TCA/150 with Hole Punch device						
000	**C- 449972-0101**	**-**		**1**	**AIR PIPE-LINE**	
070	342713-0210	-		1	BLIND PLUG	
080	342715-0103	-		2	PLUG D=8	
100	342722-0205	-		3	PIPE COUPLD=8-R1/4"	
105	342732-0104	-		1	ELBOW PIPE D8-R1/4"	
110	342735-0103	-		2	ELBOW PIPE D=8	
120	342742-0104	-		3	T-CONNECTI D8-R1/4"	
140	342767-0104	-		3	BULKHEAD LR1/4	
Common parts						
010	**90113-0013**	**-**		**1**	**REGULATOR**	
020	90163-0008	-		1	CONNECTION	
030	90166-0013	-	M	7	HOSE	
040	90166-0105	-	M	6	HOSE	
050	342245-0102	-		2	T-PIPE	
090	342716-0203	-		1	REDUCER 6-8	
130	342748-0102	-		2	T-CONNECTI D=6	

Pos	Part No	SP	UN	Qty	Description	Page No

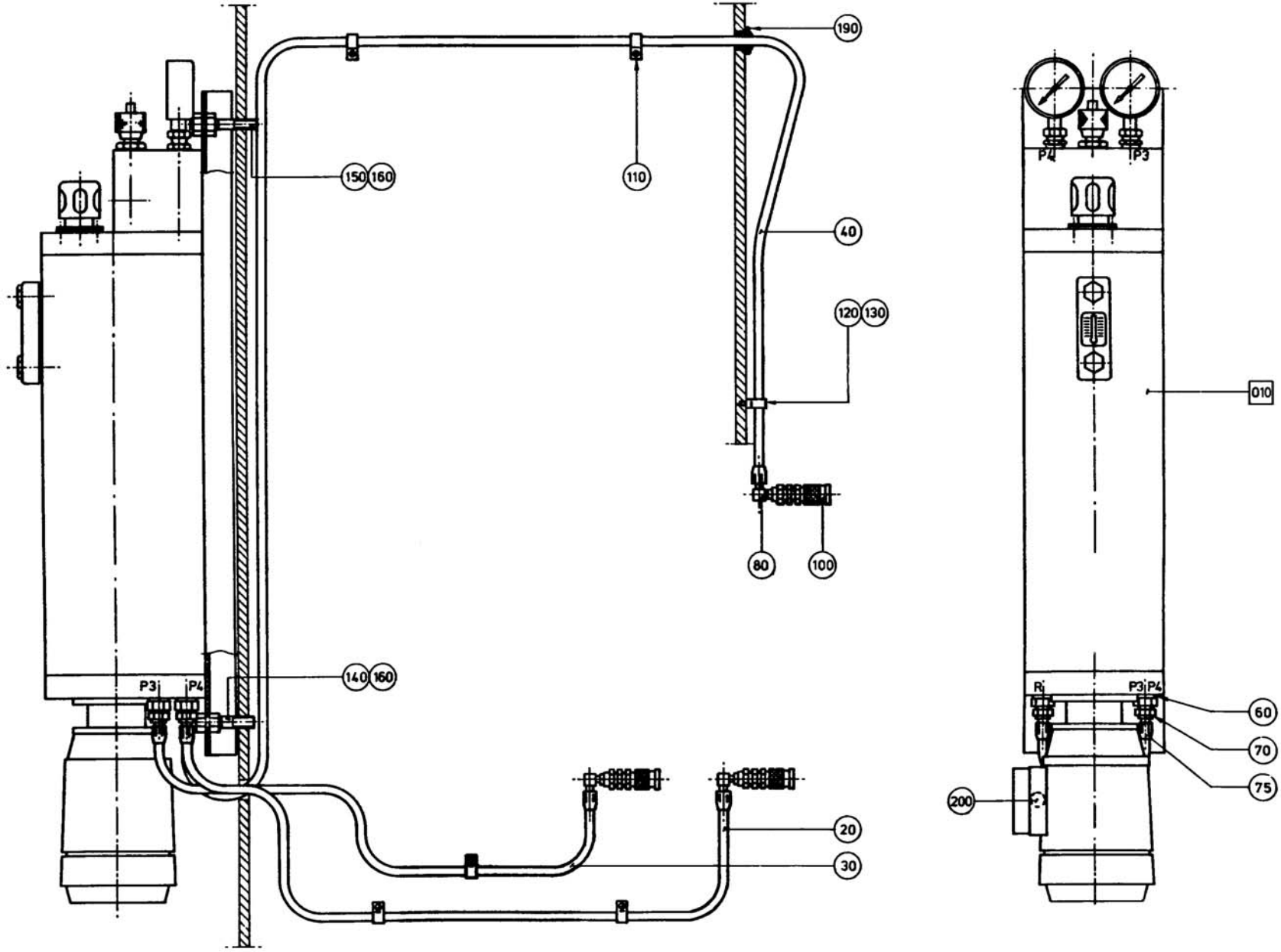

53216002.TIF
532160-2
AM 10078

Pos	Part No	SP	UN	Qty	Description	Page No
TCA/150						
000	**C- 532160-0201**	**-**		**1**	**HYDRAULIC SYSTEM**	
020	90148-0010	-	MM	450	HOSE	
030	90148-0010	-	MM	1100	HOSE	
040	90148-0010	-	MM	2800	HOSE	
COMMON PARTS						
020	90148-0010	-	MM	870	HOSE	
030	90148-0010	-	MM	1460	HOSE	
040	90148-0010	-	MM	2900	HOSE	
020	90148-0010	-	MM	500	HOSE	
030	90148-0010	-	MM	1100	HOSE	
040	90148-0010	-	MM	3000	HOSE	
060	90005-0005	-		3	WASHER	
070	90055-0042	-		3	NIPPLE	
075	90055-0056	-		3	HOSE COUPLING	
080	90055-0057	-		3	HOSE COUPLING	
100	90163-0043	-		3	CONNECTION	
110	90165-0007	-		5	CLIP	
120	90165-0013	-		1	CLIP	
130	312121-0220	-		1	SLOTTED HEMCS3X6FZB	
140	312303-0541	-		1	STUD SCREWMPS 12X30 RFR	
150	312303-0543	-		1	STUD SCREWMPS 12X40 RFR	
160	312601-0322	-		4	NUT M6M12FZB	
190	352101-0103	-		1	LEAD-IN G 18,6	
200	352136-0127	-		1	GLAND FITT	
F010	C- 537961-0101	-		1	HYDRAULIC SYSTEM	

Pos	Part No	SP	UN	Qty	Description	Page No

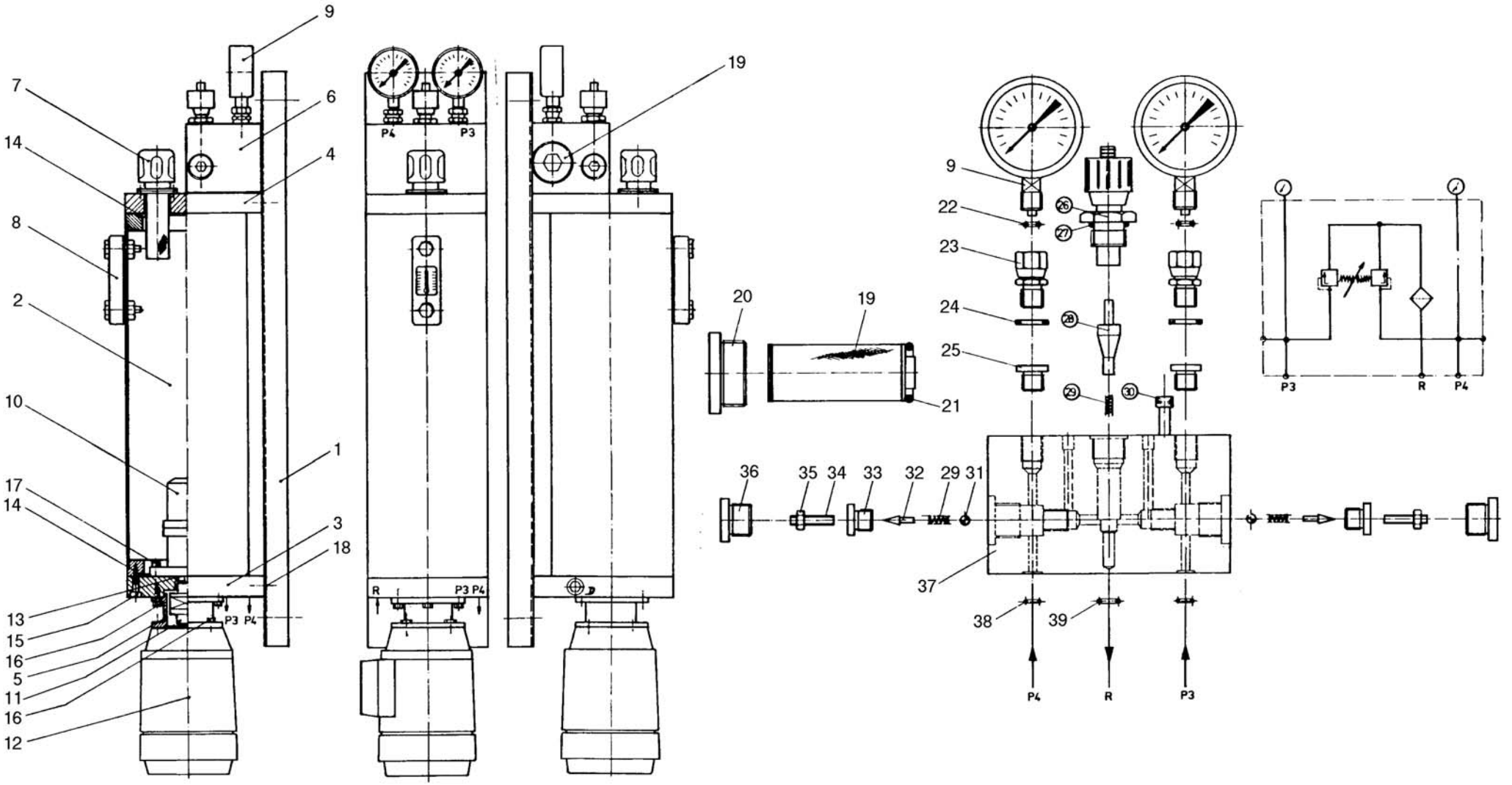

53796101.TIF
537961-1, 2
AM 10078

Pos	Part No	SP	UN	Qty	Description	Page No
-						
000	**C- 537961-0101**	**-**		**1**	**HYDRAULIC SYSTEM**	
007	90415-0333	C		1	FILLER CAP	
008	90199-0020	C		1	LEVEL GLASS	
009	90043-0081	C		2	PRESSURE GAUGE	
010	90321-0053	C		1	PUMP	
011	90321-0468	C		1	SHAFT COUPLING	
012	90045-0115	C		1	MOTOR	
019	90415-0334	S		1	FILTER	
021	90242-0144	S		1	O-RING	
026	90201-0027	C		1	SHUT-OFF VALVE	
100	90321-0469	S		1	O-RING SET	

Pos	Part No	SP	UN	Qty	Description	Page No

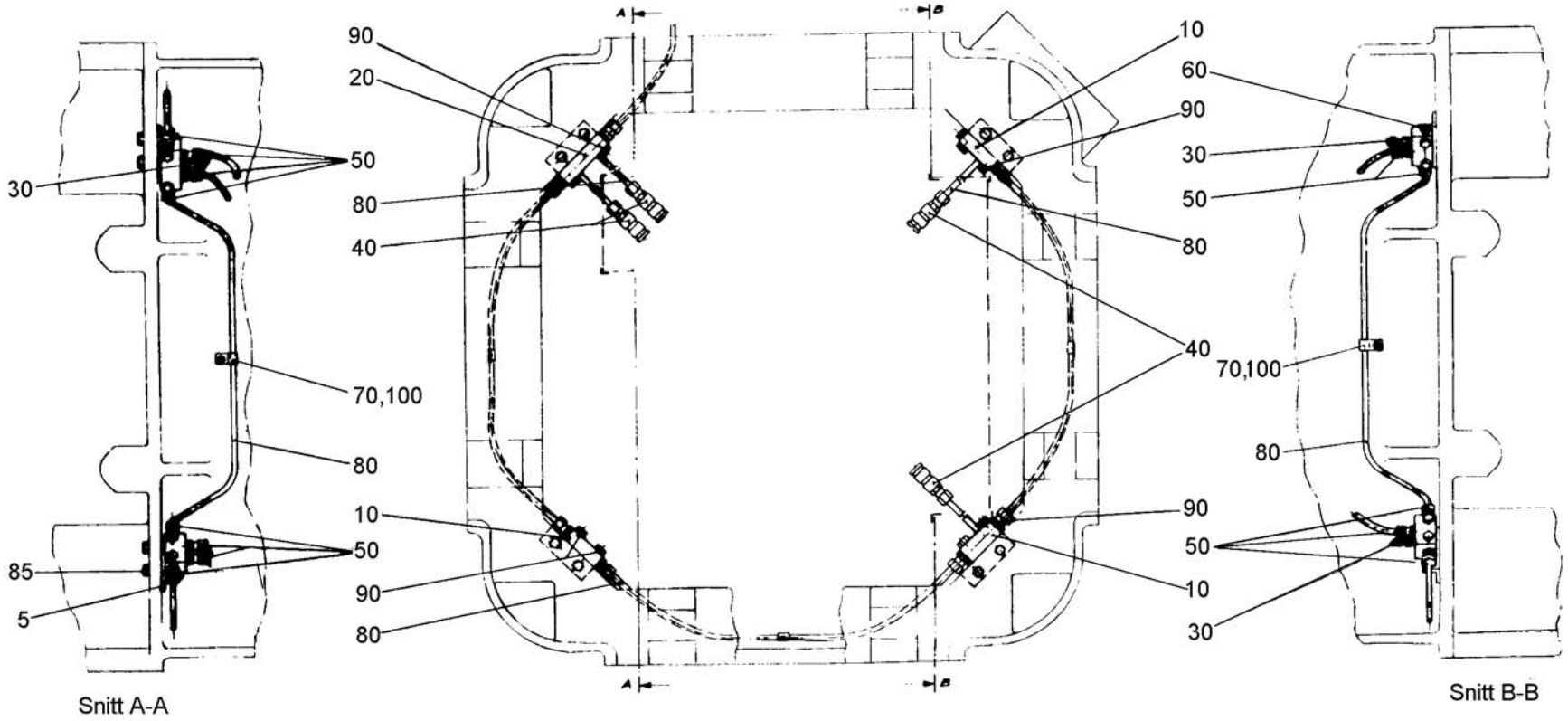

26381201.tif
263812-1
AM 4817

Pos	Part No	SP	UN	Qty	Description	Page No
-						
000	**C- 263812-0101**	**-**		**1**	**CENTRAL LUBRICATION**	
005	268022	-		4	FASTENING BRACKET	
010	90032-0012	-		3	JUNCTION BLOCK	
020	90032-0013	-		1	JUNCTION BLOCK	
030	90092-0064	R		3	METERING VALVE	
040	90134-0032	-		4	CONNECTION	
050	90134-0034	-		13	NIPPLE	
060	90136-0002	-		1	PLUG	
070	90165-0005	-		3	CLIP	
080	90166-0011	-	MM	3500	HOSE	
085	312101-0368	-		8	SCREW M6S6X16FZB	
090	312101-0372	-		8	SCREW M6S6X25FZB	
100	312121-0285	-		3	SLOTTED HEMCS4X6FZB	

Pos	Part No	SP	UN	Qty	Description	Page No

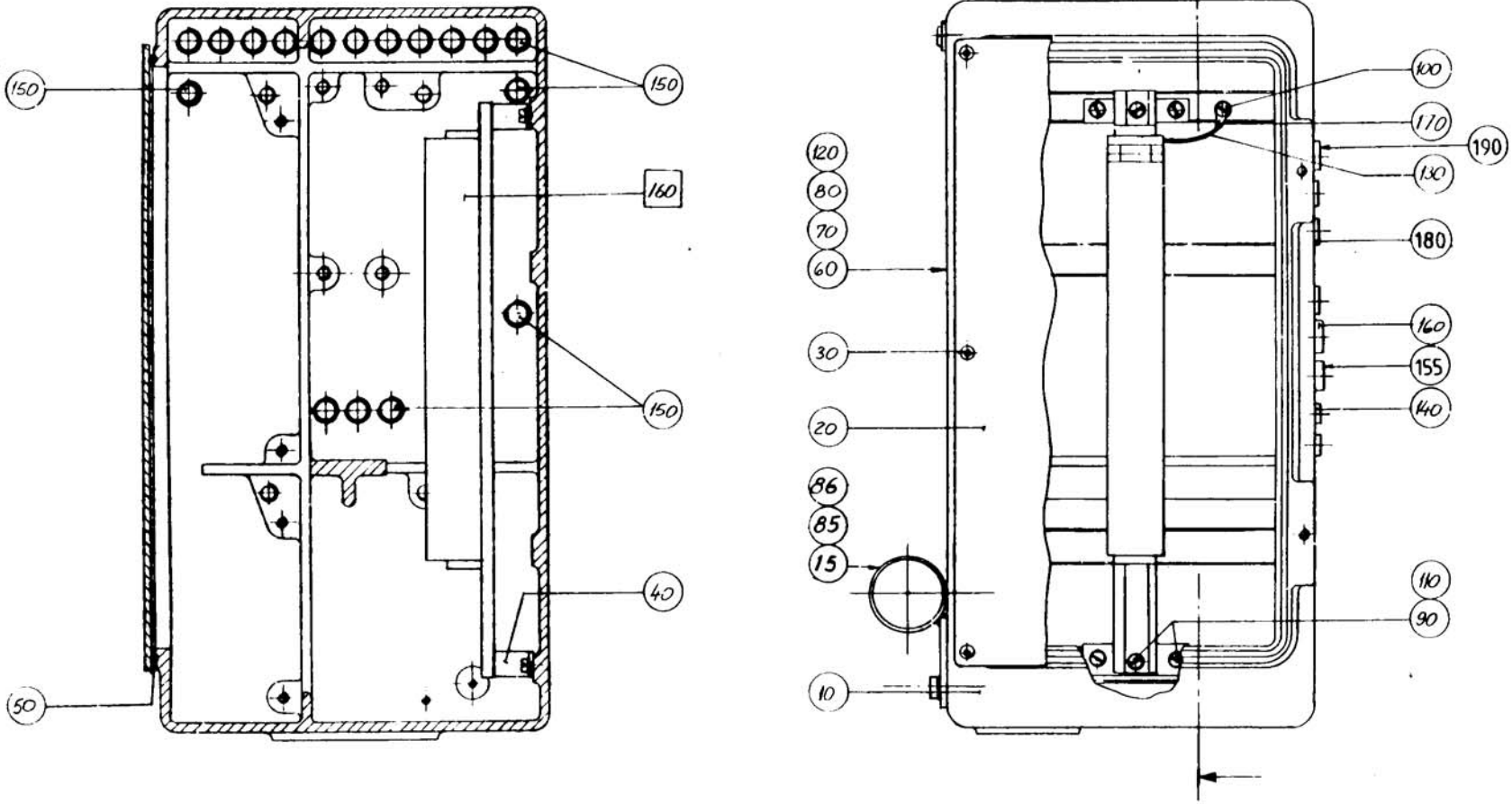

29421401.tif
294214-1
AM 13620

Pos	Part No	SP	UN	Qty	Description	Page No
TCA/150,						
000	**C- 294214-0101**	**-**		**1**	**APPLIANCE BOX**	
010	G- 436613	-		1	BOX	
080	312101-0540	-		4	SCREW M6S12X40FZB	
120	315101-0178	-		4	WASHER BRB13X24FZB	
160	352103-0110	-		6	CABLE GLAND STR 16	
Common parts						
020	**436614**	**-**		**1**	**OPENING**	
030	21613	-		5	SCREW	
035	90002-0004	-		3	BLANK-OFF PLUG 22,5	
036	90002-0009	-		15	BLANK-OFF PLUG	
037	90002-0013	-		4	BLANK-OFF PLUG 15,2	
040	90077-0310	-		2	BRACKET	
050	90143-0012	-	MM	1400	STRIP	
090	312121-0366	-		6	SLOTTED HEMCS6X12FZB	
100	312122-0364	-		1	SLOTTED HEMCS6X10MSGFN	
110	315101-0153	-		6	WASHER BRB6,4X12FZB	
130	351175-0106	-	MM	80	CABLE AWM YELL/GREEN 4,0	
140	352103-0100	-		4	CABLE GLANR.STR 9	
150	352103-0106	-		26	CABLE GLANR.ST 11	
170	353101-0153	-		1	CABLE SHOE	
F160	C- 450114-0101	-		1	TERMINAL PLINTH	

Pos	Part No	SP	UN	Qty	Description	Page No

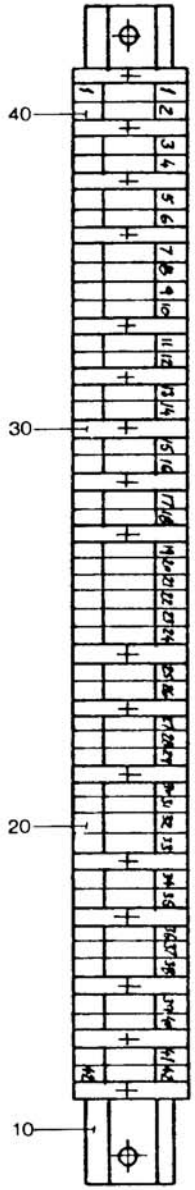

45011401.TIF
450114-1
AM 5976

Pos	Part No	SP	UN	Qty	Description	Page No
-						
000	**C- 450114-0101**	**-**		**1**	**TERMINAL PLINTH**	
010	10793-0030	-		1	MOUNTING RAIL	
020	90077-0065	-		42	FEED THROUGH TERMINAL	
030	90135-0021	-		17	EARTHING CLAMP	
040	359011-0801	-		2	SIGN BOARDBSFW 1-50	

Pos	Part No	SP	UN	Qty	Description	Page No

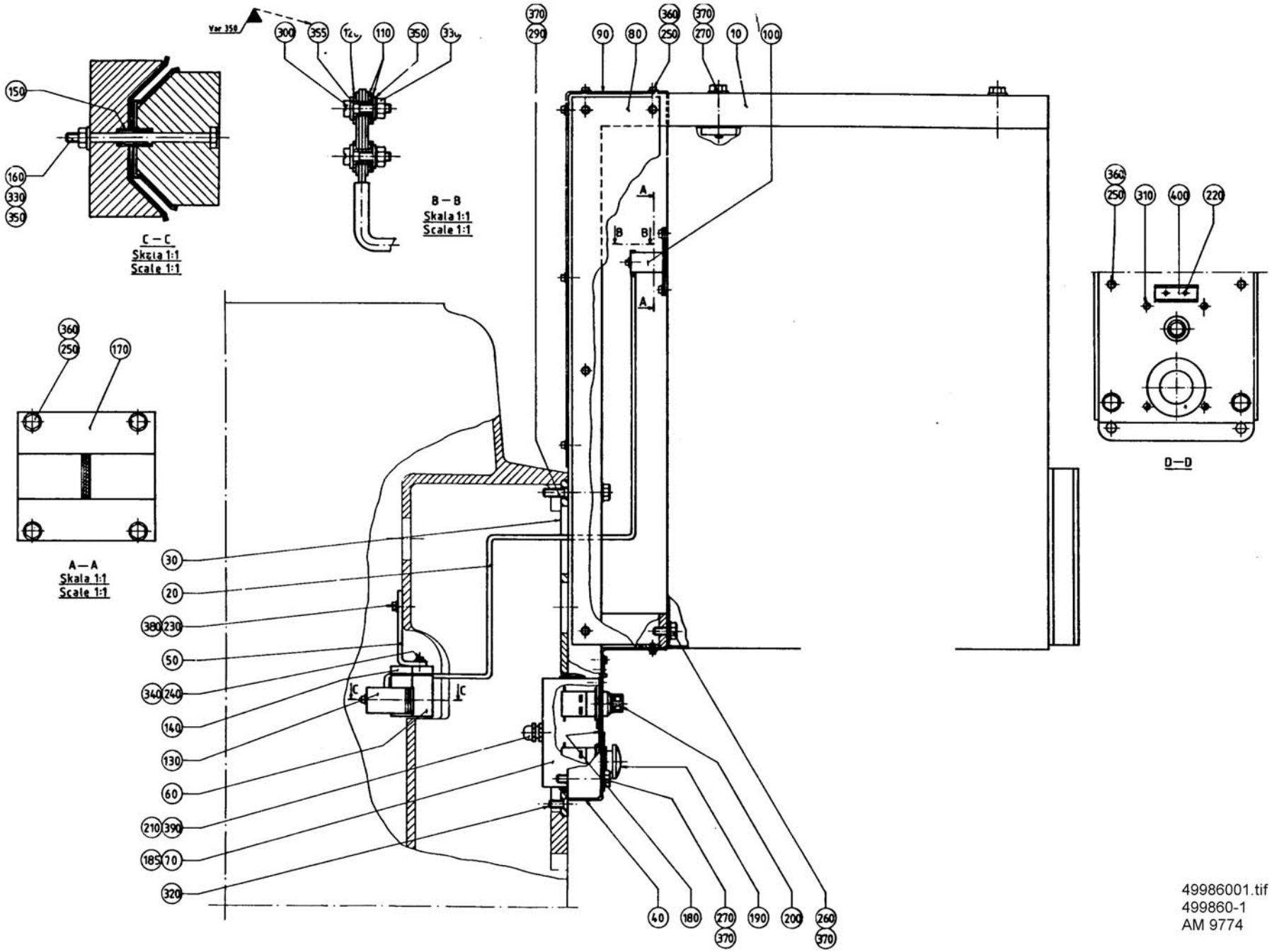
Var 358
C – C
Skala 1:1
Scale 1:1
B – B
Skala 1:1
Scale 1:1
A – A
Skala 1:1
Scale 1:1
D – D
49986001.tif
499860-1
AM 9774

Pos	Part No	SP	UN	Qty	Description	Page No
-						
000	**C- 499860-0101**	**-**		**1**	**BRACKET IH**	
010	499377	-		2	CANTILEVER	
020	499378	C		1	CONTACT RAIL	
030	499379	-		1	PLATE	
040	499380	-		1	CONTROL PANEL	
050	294244	-		1	HOLDER	
060	294245	C		1	BRACKET	
070	499381	-		1	PUSH BUTTON BOX	
080	499382	-		2	SHEET	
090	499383	-		1	SHEET	
100	499384	C		1	BUSBAR	
110	32545	C		4	INSULATION WASHER	
120	32546-0001	C		2	INSULATION NUT	
130	294246	C		1	CAP	
140	294247	C		1	LID	
150	294248	C		1	PIPE	
160	294249	C		1	SCREW	
170	440528	C		2	CLAMPING PLATE	
180	499385	C		1	GASKET	
185	90002-0004	-		1	BLANK-OFF PLUG 22,5	
190	90064-0052	C		1	PUSH BUTTON	
200	90064-0054	C		1	PUSH BUTTON	
210	90099-0002	-		1	NUT	
220	311520-0429	C		2	BLANK RIVE3,2X8	
230	312101-0370	-		2	SCREW M6S6X20FZB	
240	312101-0372	-		2	SCREW M6S6X25FZB	
250	312105-0325	-		28	SCREW M6S5X10 A2 80	
260	312105-0491	-		2	SCREW 4017 M10X20A280	
270	312105-0502	-		6	SCREW 4014 M10X55A280	
290	312105-0505	-		2	SCREW 4014 M10X70A280	
300	312122-0372	S		2	SLOTTED HEMCS6X25MSGFN	
310	312145-0299	-		4	SLOTTED HEMFS4X30RFR	
320	312155-0491	-		2	SCREW MF6S10X20RFR	
330	312602-0316	S		3	NUT M6M6MSGFN	
340	315101-0153	-		2	WASHER BRB6,4X12FZB	
350	315103-0153	S		3	WASHER BRB6,4X12MSGFN	
355	315103-0165	-		2	WASHER BRB8,4X16MSGFN	
360	315105-0146	-		28	WASHER BRB5,3X10RFR	
370	315105-0173	-		10	WASHER BRB10,5X22RFR	
380	315121-0153	-		2	WASHER TBRSB6,4X22FZB	
390	352103-0106	-		1	CABLE GLANR.ST 11	
400	359240-0100	C		1	SIGN HOLDER	

Tetra Pak

SPC

Spare Parts Catalogue

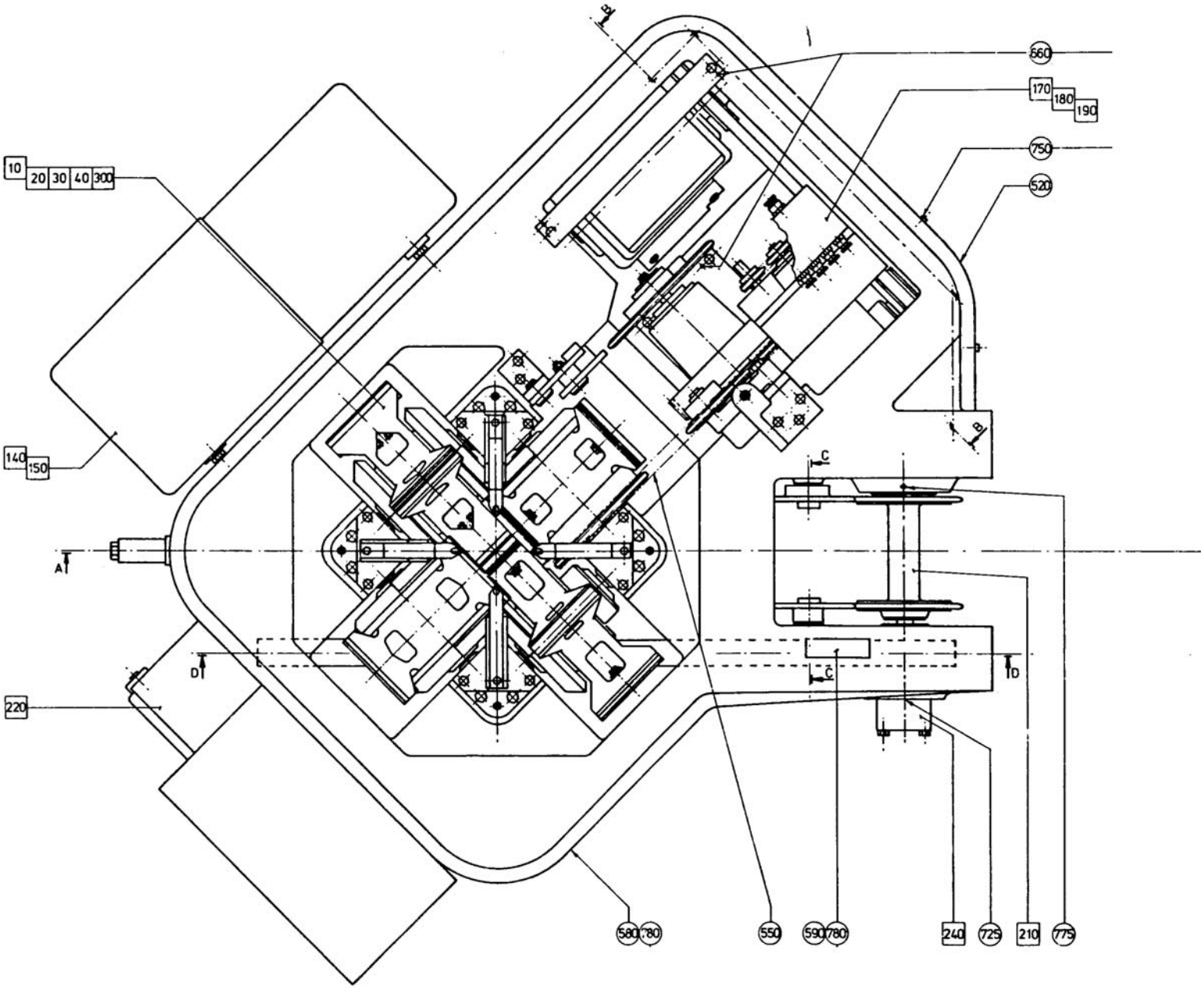
B
560
170
180
190
750
520
10
20
30
40
300
140
150
C
A
D
220
580
780
550
590
780
240
725
210
775

Pos	Part No	SP	UN	Qty	Description	Page No
000	**B- 633205-1301**	**-**		**1**	**CUTTING DEVICE**	
F000	C- 257840-0302	-		1	CUTTING DEVICE	**175**
F010	C- 434042-0201	-		1	SHEARING DEVICE	**179**
F010	C- 4865-0301				. COUNTER WHEEL	**181**
F010	C- 4865-0302				. COUNTER WHEEL	**181**
F010	C- 6880-0102				. STEERING	**183**
F010	C- 529316-0101				. CUTTING WHEEL	**185**
F050	C- 4866-0301	-		1	WORM GEAR	**187**
F050	C- 4438-0302				. SLIP DISC	**189**
F070	C- 4867-0101	-		1	OPENING	**191**
F080	C- 4868-0101	-		1	INTERMEDIARY SHAFT	**193**
F090	C- 4869-0101	-		1	CHAIN TENSIONER	**195**
F100	C- 4870-0102	-		1	CHAIN TENSIONER	**197**
F110	C- 4871-0101	-		1	CHAIN TENSIONER	**199**
F120	C- 4872-0501	-		1	MOTOR	**201**
F130	C- 6830-0101	-		1	EXPANSION BOLT	**203**
F140	C- 247367-0101	-		1	PUMP	**205**
F140	C- 38715-0101				. PUMP	**207**
F170	C- 236641-0301	-		1	IMPULSE TRANSMITTER	**209**
F170	C- 236638-0201				. CONNECTION BOX	**211**
F170	C- 236637-0101				. . TERMINAL PLINTH	**213**
F210	C- 13372-0202	-		1	DRIVE SHAFT	**215**
F220	C- 230177-0301	-		1	CENTRAL LUBRICATION	**217**
F230	C- 263843-0201	-		1	CENTRAL LUBRICATION	**219**
F240	C- 440325-0101	-		1	IMPULSE TRANSMITTER	**221**

Pos	Part No	SP	UN	Qty	Description	Page No

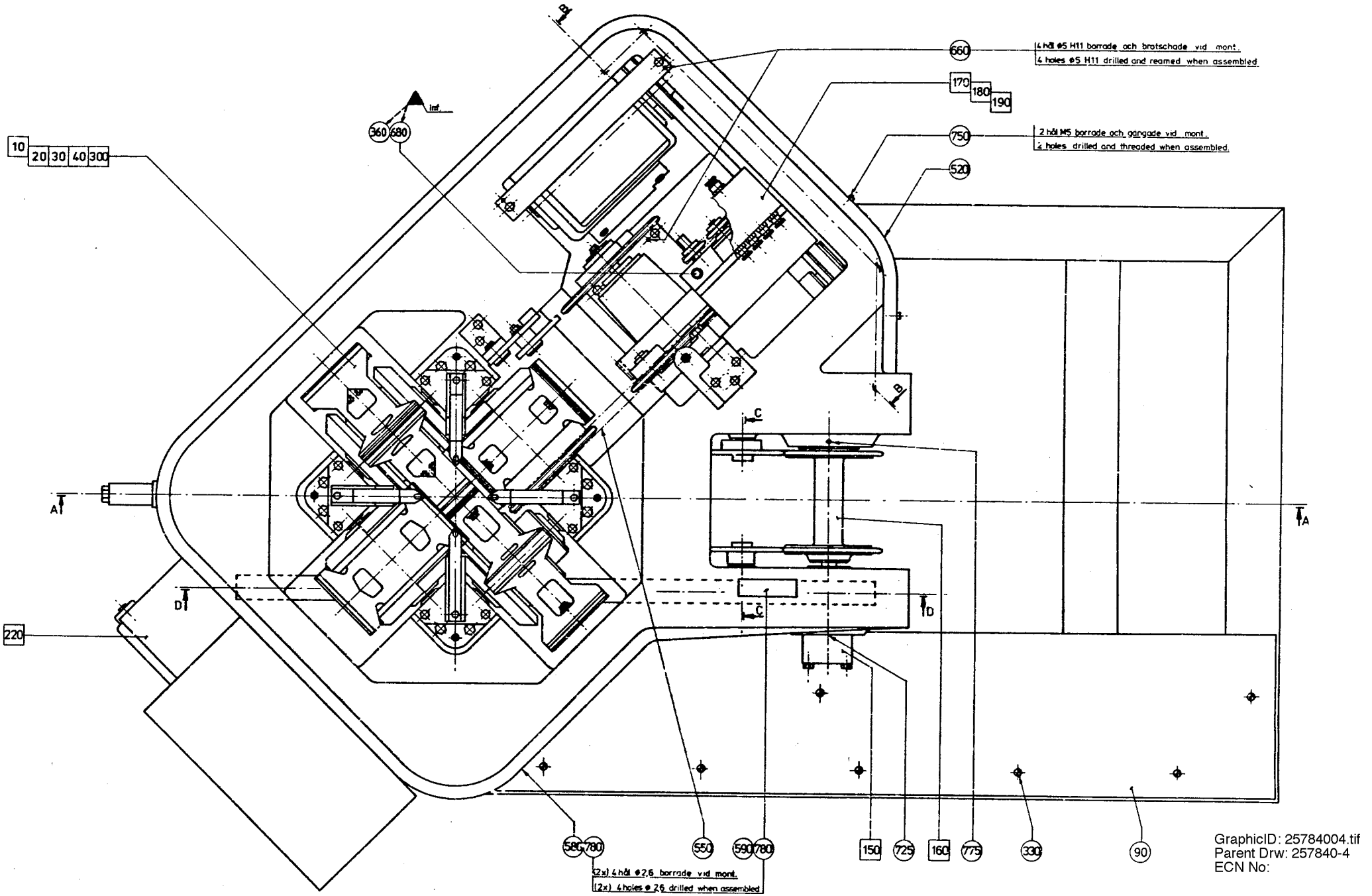

GraphicID: 25784004.tif
Parent Drw: 257840-4
ECN No:

Pos	Part No	SP	UN	Qty	Description	Page No
000	**C- 257840-0302**	**-**		**1**	**CUTTING DEVICE**	
010	263203	-		1	FRAME	
020	4451	-		1	LEAD PLATE	
050	3271	-		5	BRACKET	
090	245068	-		1	SHEET	
100	263267	-		3	SPACER	
110	263268	-		1	SPACER	
120	263269	-		1	SPACER	
130	3274-0001	-		1	BOLT	
140	3311	-		1	DOWEL PIN	
150	3329	-		2	STEERING RAIL	
160	4830	-		2	LID	
170	4899	-		4	HOLDER	
180	4900	-		4	SUPPORT BAR	
190	4902	-		2	SPROCKET	
200	4904	-		2	SPACER RING	
260	312101-0453	-		8	SCREW M6S8X25FZB	
270	312101-0495	-		35	SCREW M6S10X30FZB	
280	312101-0556	-		5	SCREW M6S12X120FZB	
310	312151-0287	-		6	SCREW MF6S4X8FZB	
330	312165-0366	-		7	SLOTTED HEMKFS6X12RFR	
340	312316-0530	-		2	STOP SCREW SK6SS12X16FZB	
360	315101-0165	-		22	WASHER BRB8,4X16FZB	
370	315101-0173	-		39	WASHER BRB10,5X22FZB	
380	315121-0178	-		5	WASHER TBRSB13X36FZB	
390	315203-0520	-		2	O-RING 26,57X3,53F	
400	321330-0103	-		2	BALL BEARISKF3203	
410	344502-0021	-		2	NIPPLE L AHM6	
Common parts						
450	**G- 4907**	**-**		**1**	**CUTTING MECHANISM BODY**	
460	G- 4909	-		1	MOTOR COVER	
470	G- 4905	-		1	GEARBOX SHELF	
480	284541	-		2	CUSHION	
490	440059	-		1	CANTILEVER	
500	3318	-		5	LEG	
510	4488	-		1	ANGLE	
520	7018	-		1	COVERING PLATE	
530	7309	-		2	HANDLE	
540	7470-0006	-		1	CHAIN	
550	7470-0007	-		1	CHAIN	
560	10920	-		1	TENSION SPRING	
580	27402	-		1	MACHINE PLATE	
590	20497	-		1	GROUP NUMBER PLATE	
600	440467	-		1	CABLE HOLDER	
650	311211-0294	-		2	TAPER PIN GKP6X6X35	
660	311305-0312	-		4	SLOTTED PIRPC5X25FZB	
670	312101-0366	-		3	SCREW M6S6X12FZB	
680	312101-0451	-		6	SCREW M6S8X20FZB	
690	312101-0455	-		13	SCREW M6S8X30FZB	
700	312101-0499	-		3	SCREW M6S10X40FZB	
710	312101-0501	-		1	SCREW M6S10X50FZB	
720	312111-0293	-		8	SCREW MC6S4X16FZB	
725	312111-0368	-		2	SCREW MC6S6X16FZB	
730	312111-0371	-		4	SCREW MC6S6X22FZB	
740	312111-0447	-		2	SCREW MC6S8X12FZB	
750	312121-0323	-		2	SLOTTED HEMCS5X8FZB	
760	312125-0333	-		2	SLOTTED HEMCS5X25RFR	
770	312151-0493	-		4	SCREW MF6S10X25FZB	
775	312311-0370	-		2	STOP SCREW T6SS6X20FZB	
780	312502-0221	-		8	DRIVE SCREKDS4X6FNB	
790	312601-0316	-		7	NUT M6M6FZB	
800	312601-0320	-		1	NUT M6M10FZB	
810	312605-0314	-		2	NUT M6M5RFR	
820	315101-0136	-		16	WASHER BRB4,3X8FZB	
830	315101-0153	-		9	WASHER BRB6,4X12FZB	
835	315121-0153	-		1	WASHER TBRSB6,4X22FZB	
840	315401-0165	-		7	WASHER FBH8,2FZB	
850	315401-0173	-		8	WASHER FBH10,2FZB	
860	318201-0060	-		1	ROLLER CHA3/8"	
870	352100-0111	-		1	CABLE GLANR.22,5-13,5	

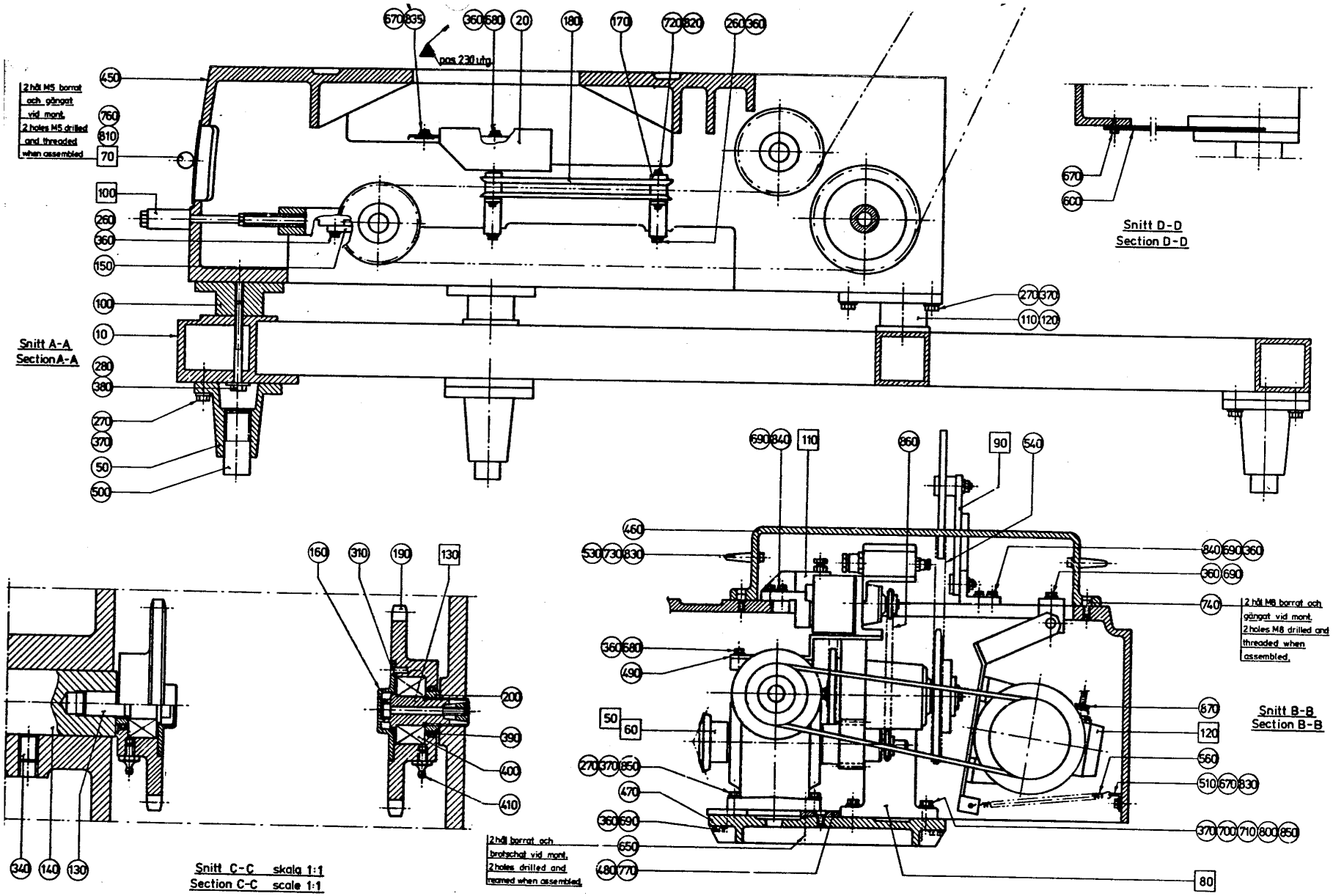

GraphicID: 25784005.tif
Parent Drw: 257840-5
ECN No:

Pos	Part No	SP	UN	Qty	Description	Page No
000	**C- 257840-0302**	**-**		**1**	**CUTTING DEVICE**	
010	263203	-		1	FRAME	
020	4451	-		1	LEAD PLATE	
050	3271	-		5	BRACKET	
090	245068	-		1	SHEET	
100	263267	-		3	SPACER	
110	263268	-		1	SPACER	
120	263269	-		1	SPACER	
130	3274-0001	-		1	BOLT	
140	3311	-		1	DOWEL PIN	
150	3329	-		2	STEERING RAIL	
160	4830	-		2	LID	
170	4899	-		4	HOLDER	
180	4900	-		4	SUPPORT BAR	
190	4902	-		2	SPROCKET	
200	4904	-		2	SPACER RING	
260	312101-0453	-		8	SCREW M6S8X25FZB	
270	312101-0495	-		35	SCREW M6S10X30FZB	
280	312101-0556	-		5	SCREW M6S12X120FZB	
310	312151-0287	-		6	SCREW MF6S4X8FZB	
330	312165-0366	-		7	SLOTTED HEMKFS6X12RFR	
340	312316-0530	-		2	STOP SCREW SK6SS12X16FZB	
360	315101-0165	-		22	WASHER BRB8,4X16FZB	
370	315101-0173	-		39	WASHER BRB10,5X22FZB	
380	315121-0178	-		5	WASHER TBRSB13X36FZB	
390	315203-0520	-		2	O-RING 26,57X3,53F	
400	321330-0103	-		2	BALL BEARISKF3203	
410	344502-0021	-		2	NIPPLE L AHM6	
Common parts						
450	**G- 4907**	**-**		**1**	**CUTTING MECHANISM BODY**	
460	G- 4909	-		1	MOTOR COVER	
470	G- 4905	-		1	GEARBOX SHELF	
480	284541	-		2	CUSHION	
490	440059	-		1	CANTILEVER	
500	3318	-		5	LEG	
510	4488	-		1	ANGLE	
520	7018	-		1	COVERING PLATE	
530	7309	-		2	HANDLE	
540	7470-0006	-		1	CHAIN	
550	7470-0007	-		1	CHAIN	
560	10920	-		1	TENSION SPRING	
580	27402	-		1	MACHINE PLATE	
590	20497	-		1	GROUP NUMBER PLATE	
600	440467	-		1	CABLE HOLDER	
650	311211-0294	-		2	TAPER PIN GKP6X6X35	
660	311305-0312	-		4	SLOTTED PIRPC5X25FZB	
670	312101-0366	-		3	SCREW M6S6X12FZB	
680	312101-0451	-		6	SCREW M6S8X20FZB	
690	312101-0455	-		13	SCREW M6S8X30FZB	
700	312101-0499	-		3	SCREW M6S10X40FZB	
710	312101-0501	-		1	SCREW M6S10X50FZB	
720	312111-0293	-		8	SCREW MC6S4X16FZB	
725	312111-0368	-		2	SCREW MC6S6X16FZB	
730	312111-0371	-		4	SCREW MC6S6X22FZB	
740	312111-0447	-		2	SCREW MC6S8X12FZB	
750	312121-0323	-		2	SLOTTED HEMCS5X8FZB	
760	312125-0333	-		2	SLOTTED HEMCS5X25RFR	
770	312151-0493	-		4	SCREW MF6S10X25FZB	
775	312311-0370	-		2	STOP SCREW T6SS6X20FZB	
780	312502-0221	-		8	DRIVE SCREKDS4X6FNB	
790	312601-0316	-		7	NUT M6M6FZB	
800	312601-0320	-		1	NUT M6M10FZB	
810	312605-0314	-		2	NUT M6M5RFR	
820	315101-0136	-		16	WASHER BRB4,3X8FZB	
830	315101-0153	-		9	WASHER BRB6,4X12FZB	
835	315121-0153	-		1	WASHER TBRSB6,4X22FZB	
840	315401-0165	-		7	WASHER FBH8,2FZB	
850	315401-0173	-		8	WASHER FBH10,2FZB	
860	318201-0060	-		1	ROLLER CHA3/8"	
870	352100-0111	-		1	CABLE GLANR.22,5-13,5	

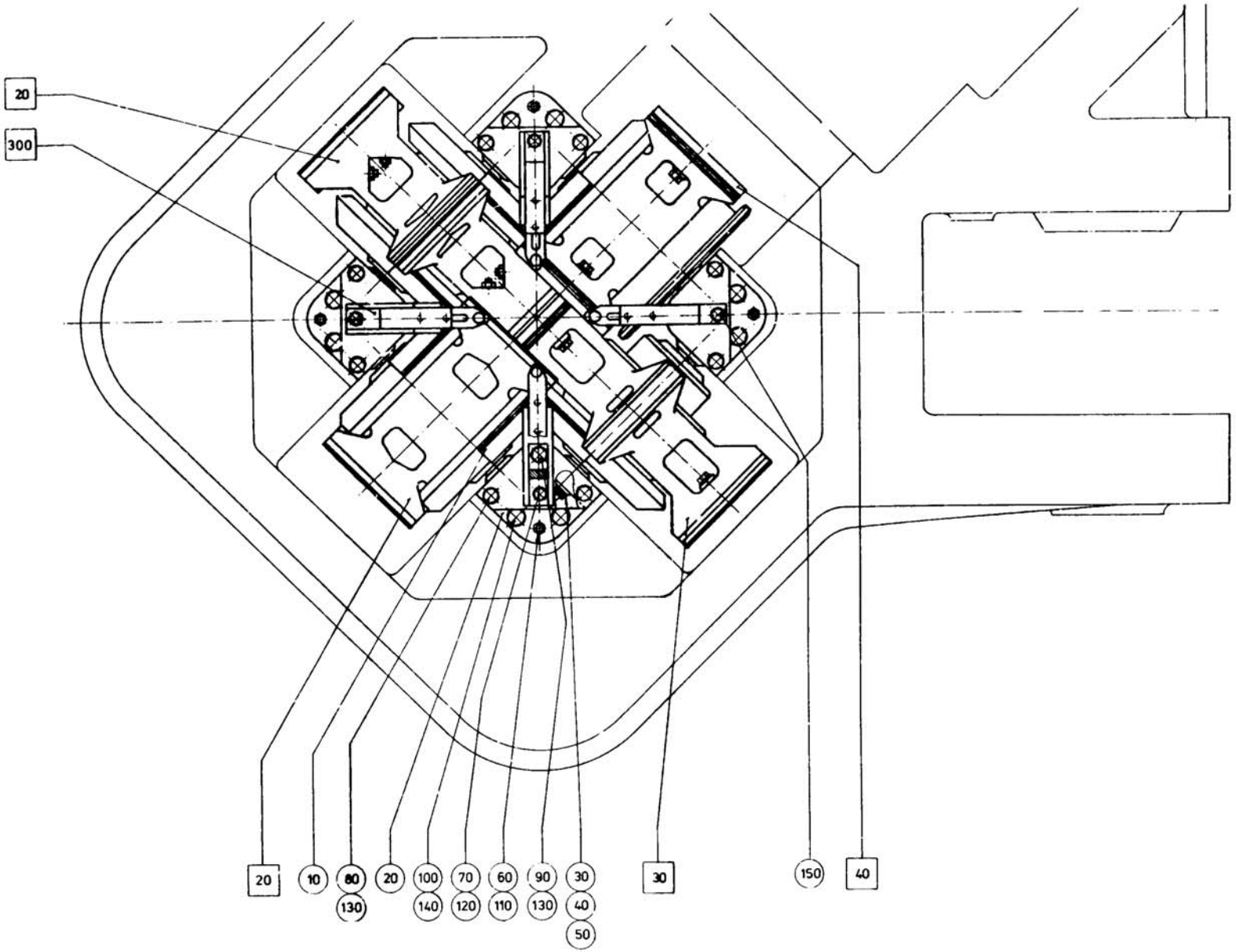

43404201.tif
434042-1
AM 8810

Pos	Part No	SP	UN	Qty	Description	Page No
TCA/150						
000	**C- 434042-0201**	**-**		**1**	**SHEARING DEVICE**	
F300	C- 6880-0102	-		4	STEERING	
Common parts						
010	**4910**	**-**		**3**	**PROTECTION**	
020	G- 4895	-		4	BEARING BRACKET	
030	1755-0005	-		16	WASHER	
040	1755-0006	-		32	WASHER	
050	1755-0007	-		16	WASHER	
060	311211-0299	-		4	TAPER PIN GKP6X6X55	
070	312101-0366	-		4	SCREW M6S6X12FZB	
080	312101-0461	-		8	SCREW M6S8X50FZB	
090	312101-0463	-		4	SCREW M6S8X60FZB	
100	312101-0499	-		8	SCREW M6S10X40FZB	
110	312601-0316	-		4	NUT M6M6FZB	
120	315101-0153	-		4	WASHER BRB6,4X12FZB	
130	315101-0165	-		12	WASHER BRB8,4X16FZB	
140	315101-0173	-		8	WASHER BRB10,5X22FZB	
150	315111-0173	-		2	WASHER TBRB10,5X22FZB	
F020	C- 529316-0101	-		2	CUTTING WHEEL	
F030	C- 4865-0301	-		1	COUNTER WHEEL	
F040	C- 4865-0302	-		1	COUNTER WHEEL	

Pos	Part No	SP	UN	Qty	Description	Page No

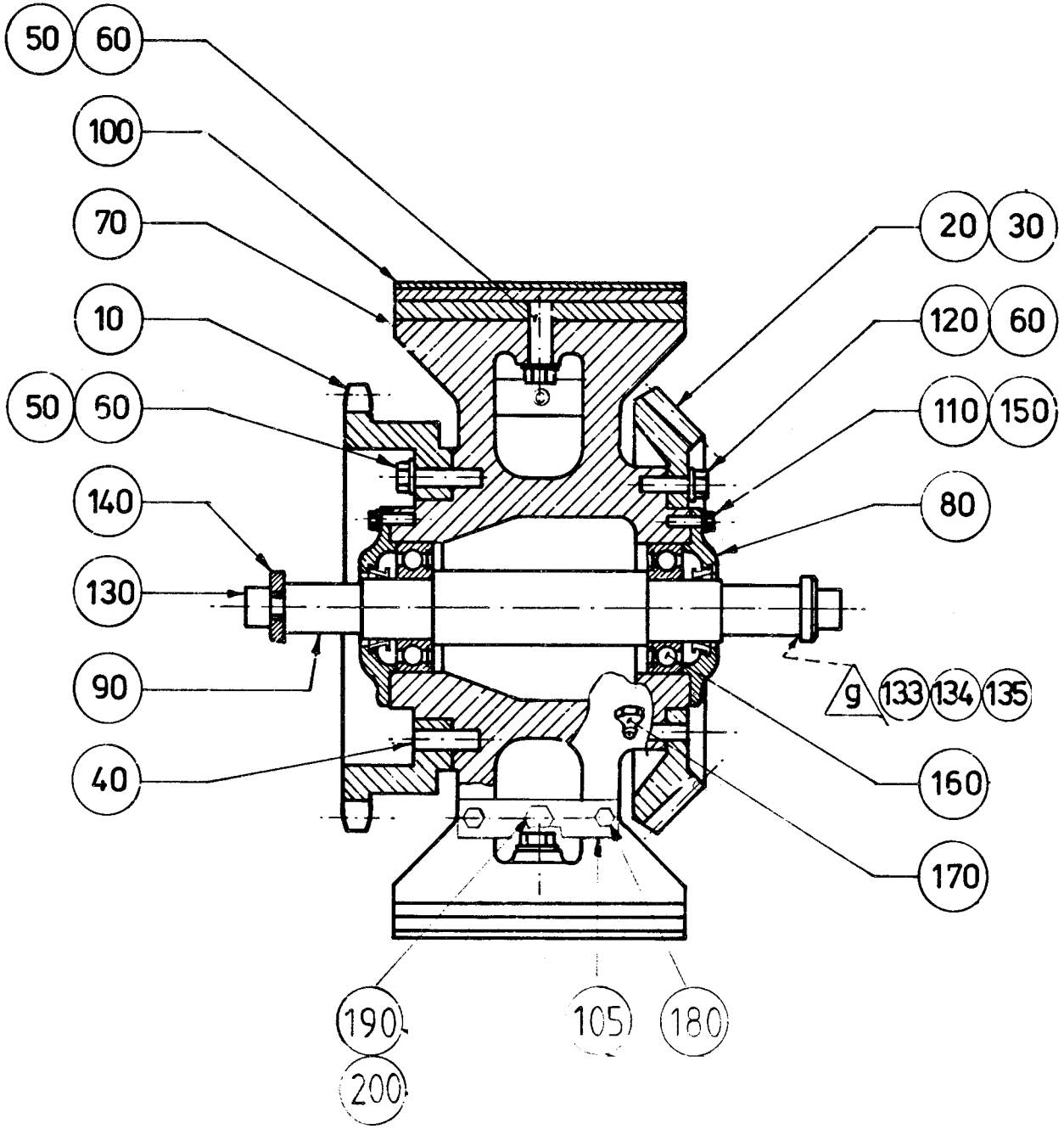
50
60
100
70
10
50
60
140
130
90
40
20
30
120
60
110
150
80
g
133
134
135
160
170
190
200
105
180

Pos	Part No	SP	UN	Qty	Description	Page No
WITHOUT DRIVE SPROCKET						
000	**C- 4865-0301**	**-**		**1**	**COUNTER WHEEL**	
030	4886-0002	-		1	GEAR WHEEL	
040	311101-0406	-		1	CYLINDRICACP8H6X32	
050	312101-0455	-		4	SCREW M6S8X30FZB	
060	315401-0165	-		8	WASHER FBH8,2FZB	
WITH DRIVE SPROCKET						
000	**C- 4865-0302**	**-**		**1**	**COUNTER WHEEL**	
010	4888	-		1	SPROCKET	
020	4886-0001	-		1	GEAR WHEEL	
040	311101-0406	-		2	CYLINDRICACP8H6X32	
050	312101-0455	-		8	SCREW M6S8X30FZB	
060	315401-0165	-		12	WASHER FBH8,2FZB	
Common parts						
070	**4887**	**-**		**1**	**COUNTER WHEEL**	
080	2467	-		2	OIL SEAL (LÖVALOCK)	
090	4884	-		1	SHAFT	
100	209972	-		4	RAIL	
105	577540	-		4	SCREW HOLDER	
110	312101-0368	-		6	SCREW M6S6X16FZB	
120	312101-0453	-		4	SCREW M6S8X25FZB	
130	312111-0492	-		2	SCREW MC6S10X22FZB	
140	315121-0173	-		2	WASHER BRSB10,5X28FZB	
150	315401-0153	-		6	WASHER FBH6,1FZB	
160	321312-0105	-		2	BALL BEARISKF6205RS	
170	344502-0026	-		2	NIPPLE L AHKR1/8"	
180	312105-0327	-		8	SCREW O4017 M5X12A280	
190	312109-0378	-		4	SCREW M6S6X40H RFR	
200	312605-0316	-		4	NUT M6M6RFR	

Pos	Part No	SP	UN	Qty	Description	Page No

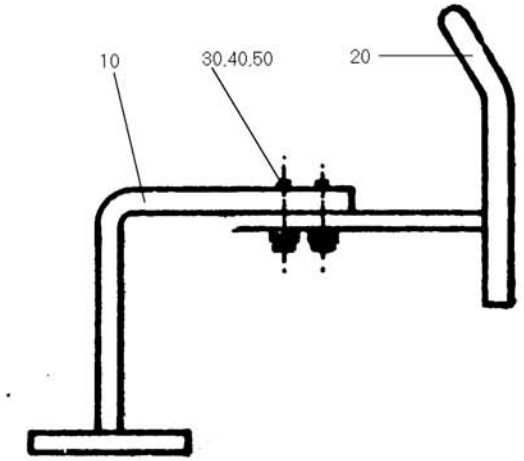

688001.tif
6880-1
AM 8410

Pos	Part No	SP	UN	Qty	Description	Page No
TCA/150						
000	**C- 6880-0102**	**-**		**4**	**STEERING**	
Common parts						
010	**6881**	**-**		**1**	**CANTILEVER**	
020	6882	-		1	LEAD ARM	
030	312101-0368	-		2	SCREW M6S6X16FZB	
040	315101-0153	-		2	WASHER BRB6,4X12FZB	
050	315401-0153	-		2	WASHER FBH6,1FZB	

Pos	Part No	SP	UN	Qty	Description	Page No

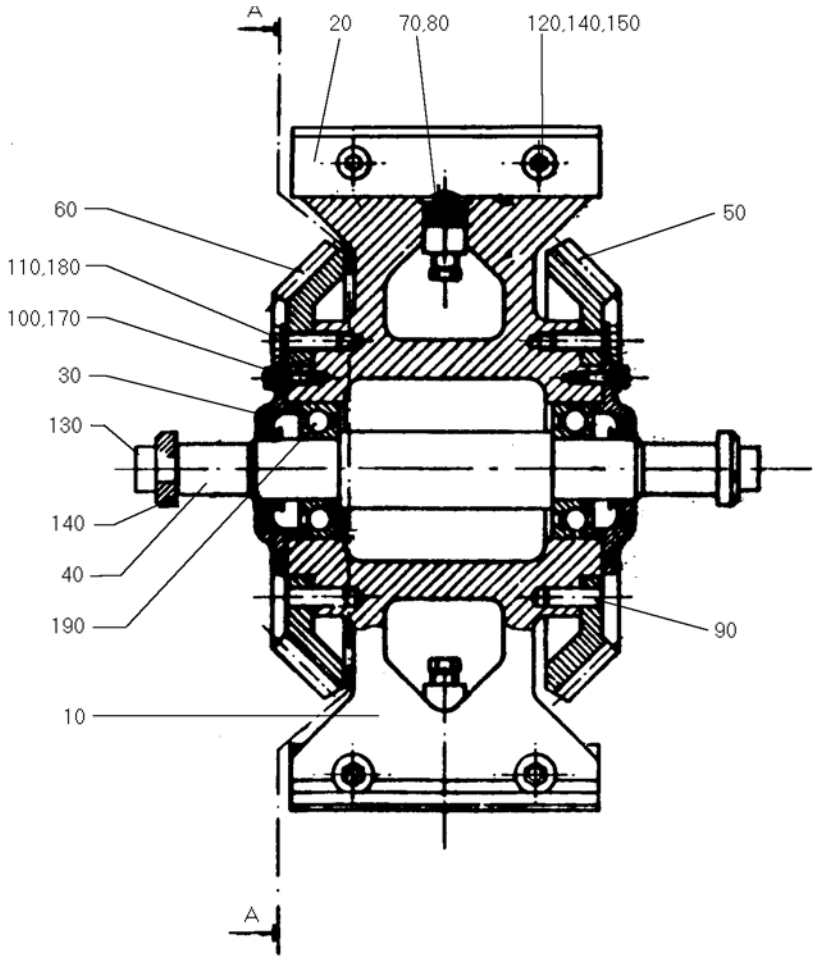

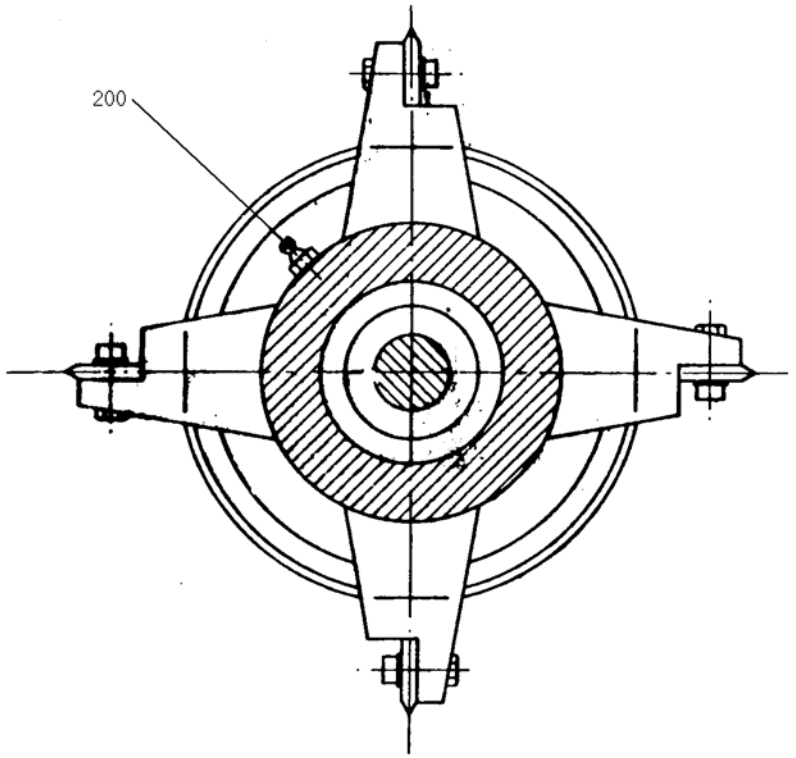

Section A - A

52931601.tif
529316-1
AM 8810

Pos	Part No	SP	UN	Qty	Description	Page No
-						
000	**C- 529316-0101**	**-**		**2**	**CUTTING WHEEL**	
010	G- 529317	-		1	KNIFE WHEEL	
020	484815	-		4	KNIFE	
030	2467	-		2	OIL SEAL (L@VALOCK)	
040	4884	-		1	SHAFT	
050	4886-0001	-		1	GEAR WHEEL	
060	4886-0002	-		1	GEAR WHEEL	
070	529293	-		4	SCREW	
080	529294	-		4	NUT	
090	311101-0406	-		2	CYLINDRICACP8H6X32	
100	312101-0368	-		6	SCREW M6S6X16FZB	
110	312101-0453	-		8	SCREW M6S8X25FZB	
120	312111-0371	-		8	SCREW MC6S6X22FZB	
130	312111-0492	-		2	SCREW MC6S10X22FZB	
140	312601-0316	-		8	NUT M6M6FZB	
150	315111-0153	-		8	WASHER TBRB6,4X12FZB	
160	315121-0173	-		2	WASHER BRSB10,5X28FZB	
170	315401-0153	-		6	WASHER FBH6,1FZB	
180	315401-0165	-		8	WASHER FBH8,2FZB	
190	321312-0105	-		2	BALL BEARISKF6205RS	
200	344502-0026	-		2	NIPPLE L AHKR1/8"	

Pos	Part No	SP	UN	Qty	Description	Page No

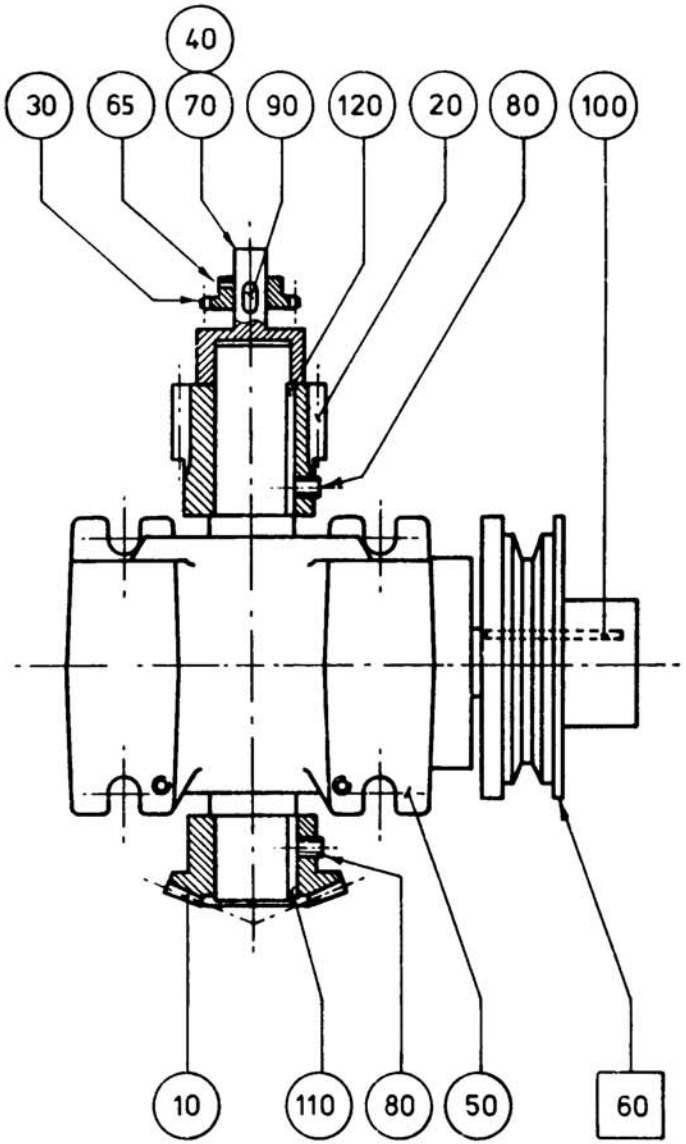

486602.tif
4866-2
AM 10079

Pos	Part No	SP	UN	Qty	Description	Page No
000	**C- 4866-0301**	**-**		**1**	**WORM GEAR**	
030	6216	-		1	SPROCKET	
065	312306-0287	-		1	STOP SCREW P6SS4X8FZB	
Common parts						
010	**4881**	**-**		**1**	**GEAR WHEEL**	
020	4882	-		1	GEAR WHEEL	
040	6849	-		1	AXLE PIN	
050	90056-0075	-		1	WORM GEAR	
070	312316-0323	-		4	STOP SCREW SK6SS5X8FZB	
080	312316-0447	-		4	STOP SCREW SK6SS8X12FZB	
090	315701-0198	-		1	FLAT WEDGE5X5X14	
100	315701-0276	-		1	FLAT WEDGE8X7X70	
110	315701-0300	-		1	FLAT WEDGE10X8X35	
120	315701-0305	-		1	FLAT WEDGE10X8X60	
F060	C- 4438-0302	-		1	SLIP DISC	

Pos	Part No	SP	UN	Qty	Description	Page No

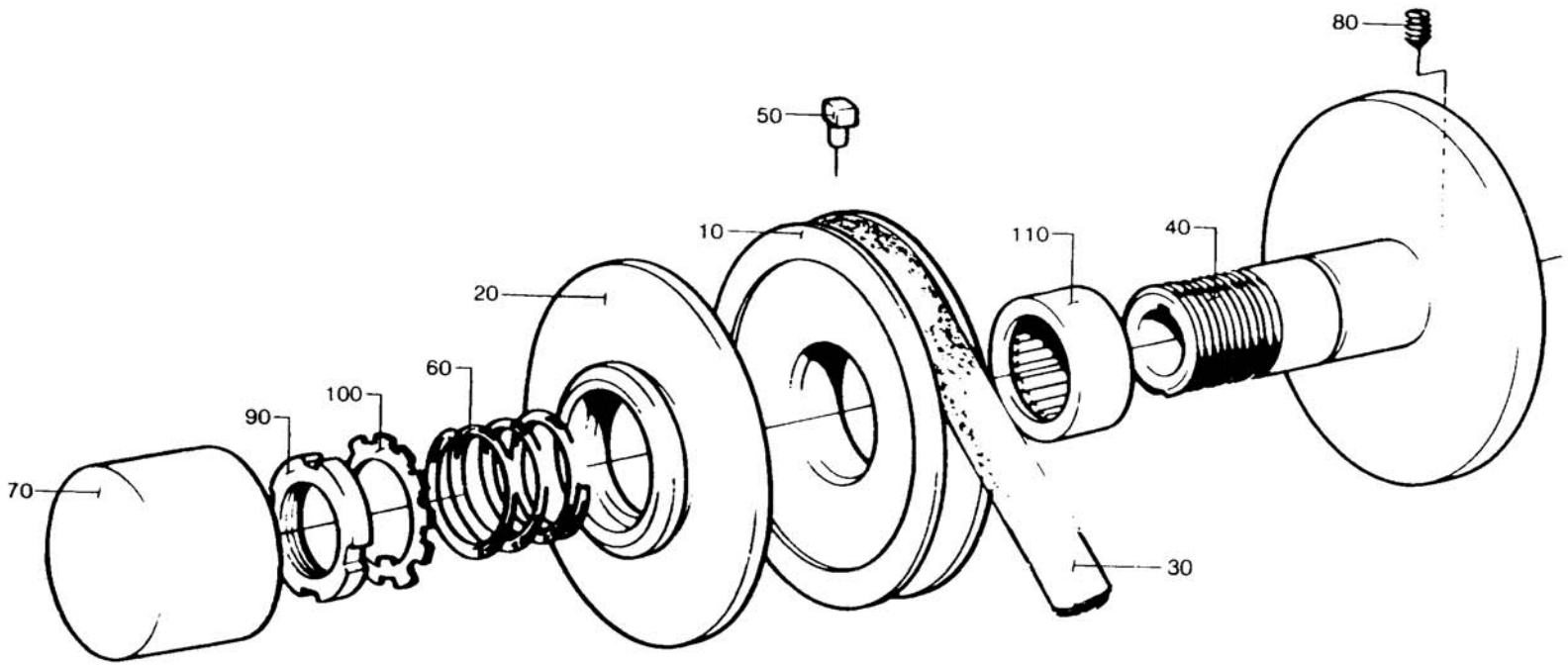

443802.tif
4438-2
AM 6702

Pos	Part No	SP	UN	Qty	Description	Page No
TCA/150, -75/M, -HZ-50						
000	**C- 4438-0302**	**-**		**1**	**SLIP DISC**	
010	4465-0002	-		1	PULLEY	
020	4466-0002	-		1	FLANGE	
030	318101-0039	-		1	V-BELT B39	
TCA/150, -75/M, -HZ-60						
000	**C- 4438-0304**	**-**		**1**	**SLIP DISC**	
010	4465-0004	-		1	PULLEY	
020	4466-0002	-		1	FLANGE	
030	318101-0040	-		1	V-BELT B40	
Common parts						
040	**G- 4467**	**-**		**1**	**HUB**	
050	4468	-		1	DOWEL	
060	4469	-		1	SPRING	
070	5450-0001	-		1	CARTON	
080	312316-0362	-		2	STOP SCREW SK6SS6X8FZB	
090	312805-0108	-		1	ROUND NUT KM8	
100	315410-0108	-		1	LOCK WASHESKFMB8	
110	321511-0422	-		1	NEEDLE BEANK40/20	

Pos	Part No	SP	UN	Qty	Description	Page No

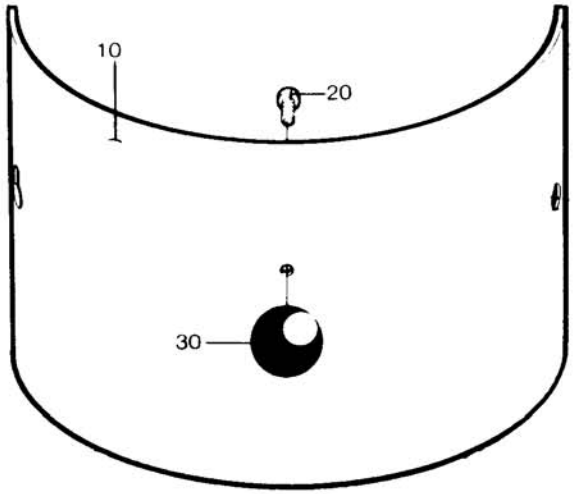
10
20
30

Pos	Part No	SP	UN	Qty	Description	Page No
-						
000	**C- 4867-0101**	**-**		**1**	**OPENING**	
010	4912	-		1	OPENING	
020	312125-0366	-		1	SLOTTED HEMCS6X12RFR	
030	318800-0103	-		1	HANDLE BALLA D.25-M6	

Pos	Part No	SP	UN	Qty	Description	Page No

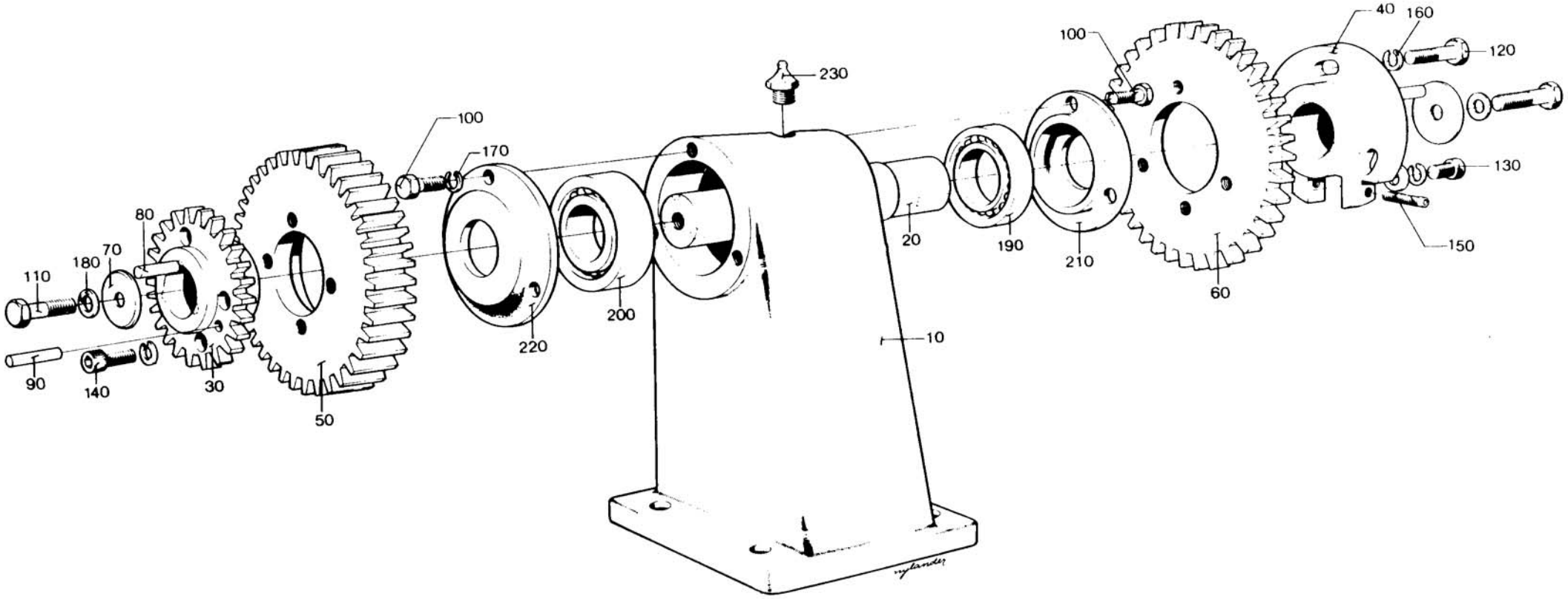
40
160
120
100
230
100
170
130
80
70
180
110
20
190
210
150
60
200
10
220
90
140
30
50

Pos	Part No	SP	UN	Qty	Description	Page No
-						
000	**C- 4868-0101**	**-**		**1**	**INTERMEDIARY SHAFT**	
010	G- 4874	-		1	CANTILEVER	
020	4875	-		1	SHAFT	
030	4876	-		1	SPROCKET	
040	4878	-		1	CARRIER FLANGE	
050	4877	-		1	GEAR WHEEL	
060	4879	-		1	SPROCKET	
070	4880	-		2	WASHER	
080	311102-0404	-		6	CYLINDRICACP M6 8X28	
090	311102-0406	-		1	CYLINDRICACP M6 8X32	
100	312101-0368	-		6	SCREW M6S6X16FZB	
110	312101-0453	-		2	SCREW M6S8X25FZB	
120	312101-0455	-		4	SCREW M6S8X30FZB	
130	312111-0447	-		1	SCREW MC6S8X12FZB	
140	312111-0452	-		4	SCREW MC6S8X22FZB	
150	312306-0455	-		2	STOP SCREW P6SS8X30FZB	
160	315101-0165	-		4	WASHER BRB8,4X16FZB	
170	315401-0153	-		6	WASHER FBH6,1FZB	
180	315401-0165	-		11	WASHER FBH8,2FZB	
190	321306-0107	-		1	BALL BEARISKF6007	
200	321309-0107	-		1	BALL BEARISKF6207	
210	321600-0120	-		1	OIL SEAL (LL3562	
220	321600-0124	-		1	OIL SEAL (LL3572	
230	344502-0026	-		1	NIPPLE L AHKR1/8"	

Pos	Part No	SP	UN	Qty	Description	Page No

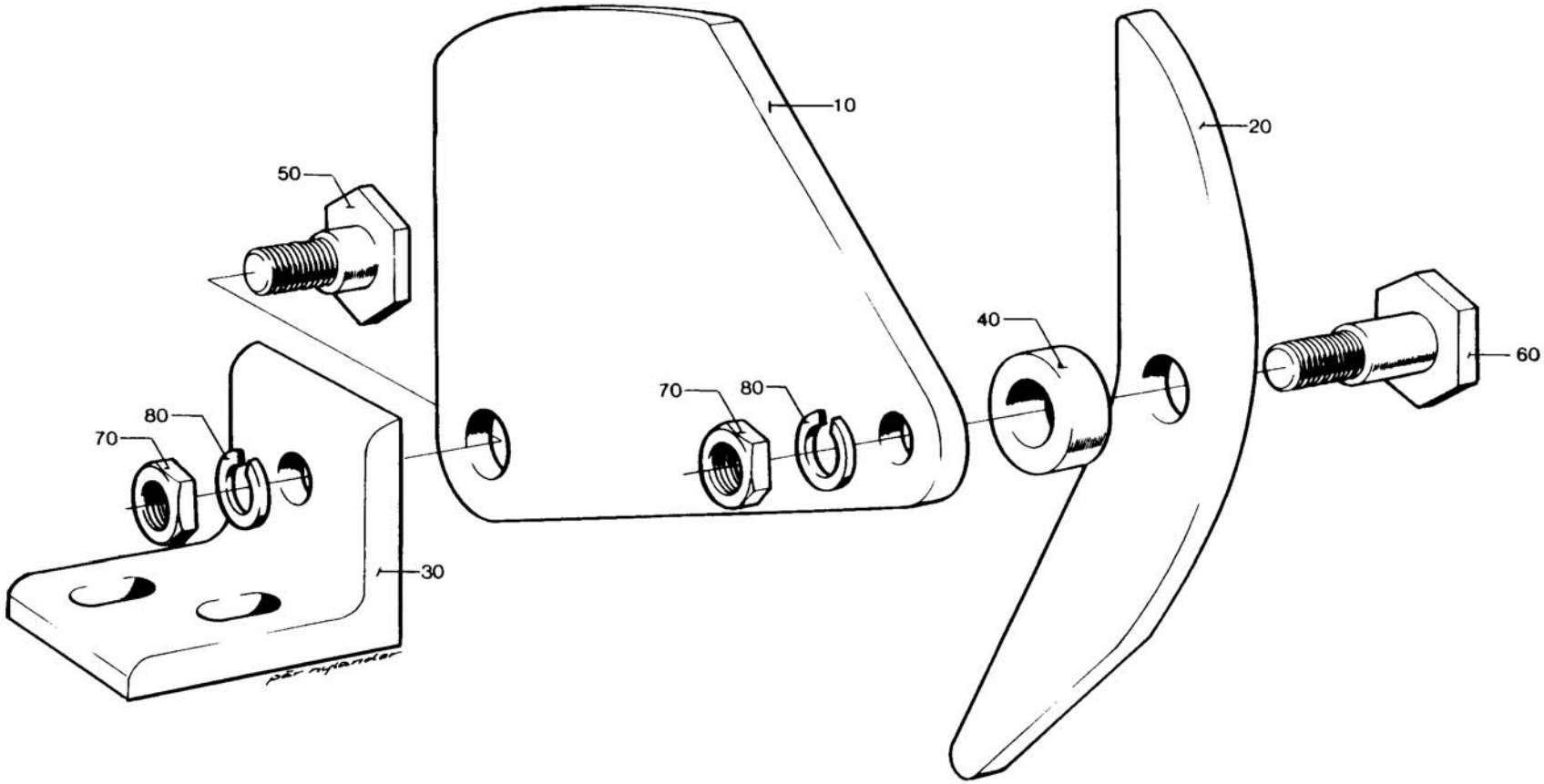

486901.tif
4869-1
AM 6801

Pos	Part No	SP	UN	Qty	Description	Page No
000	**C- 4869-0101**	**-**		**1**	**CHAIN TENSIONER**	
010	4891	-		1	TENSION ARM	
020	4892	-		1	CURVE	
030	4890	-		1	ANGLE	
040	4893	-		1	SPACER SLEEVE	
050	4894-0001	-		1	BOLT	
060	4894-0002	-		1	BOLT	
070	312601-0320	-		2	NUT M6M10FZB	
080	315401-0173	-		2	WASHER FBH10,2FZB	

Pos	Part No	SP	UN	Qty	Description	Page No

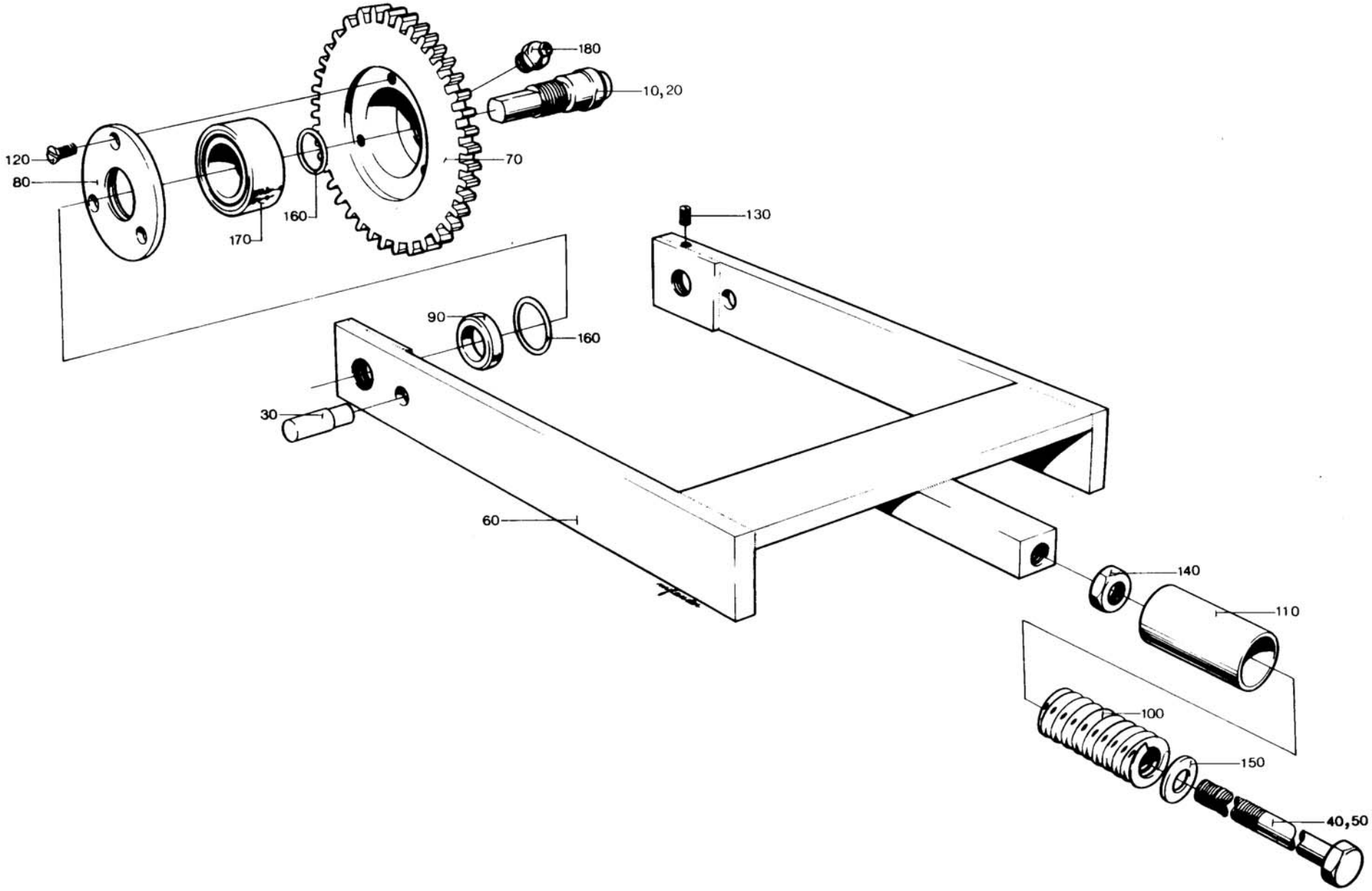

487001.TIF
4870-1
AM 6801

Pos	Part No	SP	UN	Qty	Description	Page No
000	**C- 4870-0102**	**-**		**1**	**CHAIN TENSIONER**	
020	4832	-		2	BOLT	
040	7354-0001	-		1	SCREW	
Common parts						
060	**4901**	**-**		**1**	**TENSION ARM**	
070	4902	-		2	SPROCKET	
080	4903	-		2	SEAL COVER	
090	4904	-		2	SPACER RING	
100	7352	-		1	COMPRESSION SPRING	
110	7353	-		1	COVER	
120	312151-0291	-		6	SCREW MF6S4X12FZB	
130	312316-0366	-		1	STOP SCREW SK6SS6X12FZB	
140	312601-0322	-		1	NUT M6M12FZB	
150	315101-0178	-		1	WASHER BRB13X24FZB	
160	315202-0520	-		4	O-RING 26,58X3,53	
170	321330-0103	-		2	BALL BEARISKF3203	
180	344502-0021	-		2	NIPPLE L AHM6	

Pos	Part No	SP	UN	Qty	Description	Page No

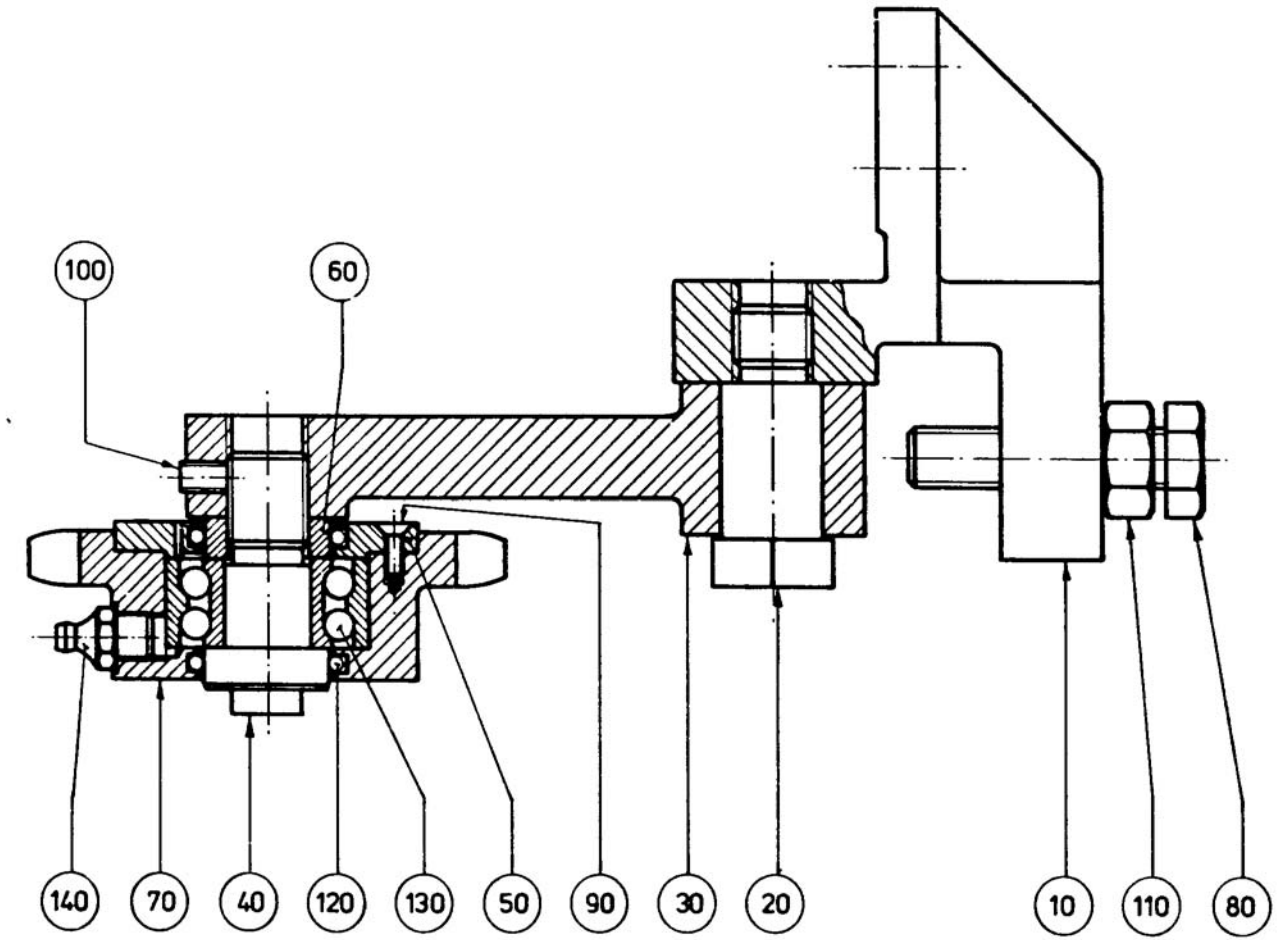

487101.tif
4871-1
AM 6801

Pos	Part No	SP	UN	Qty	Description	Page No
-						
000	**C- 4871-0101**	**-**		**1**	**CHAIN TENSIONER**	
010	G- 4476	-		1	CANTILEVER	
020	2141	-		1	BOLT	
030	4474-0001	-		1	TENSION ARM	
040	4831-0001	-		1	BOLT	
050	4903	-		1	SEAL COVER	
060	4904	-		1	SPACER RING	
070	4906	-		1	SPROCKET	
080	312104-0546	-		1	SCREW M6S12X70H8.8FZB	
090	312151-0291	-		3	SCREW MF6S4X12FZB	
100	312316-0362	-		1	STOP SCREW SK6SS6X8FZB	
110	312601-0322	-		1	NUT M6M12FZB	
120	315202-0520	-		2	O-RING 26,58X3,53	
130	321330-0103	-		1	BALL BEARISKF3203	
140	344502-0026	-		1	NIPPLE L AHKR1/8"	

Pos	Part No	SP	UN	Qty	Description	Page No

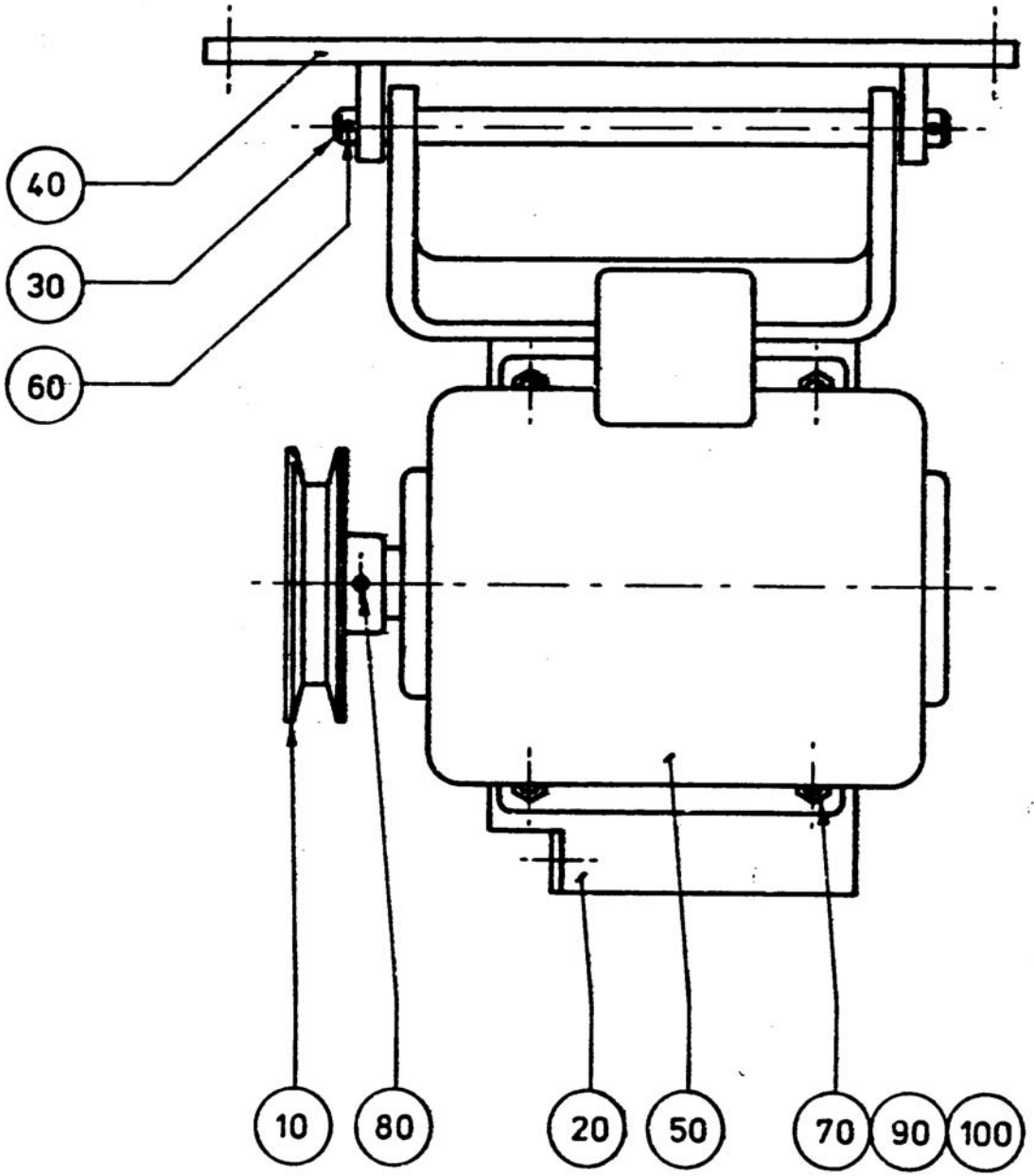

487201.tif
4872-1
AM 6801

Pos	Part No	SP	UN	Qty	Description	Page No
75/M						
000	**C- 4872-0501**	**-**		**1**	**MOTOR**	
010	284893	-		1	PULLEY	
Common parts						
020	**4896**	**-**		**1**	**MOTOR SHELF**	
030	4897	-		1	SHAFT	
040	4898	-		1	FASTENING IRON	
050	90045-0049	-		1	MOTOR	
060	311401-0199	-		2	SPLIT PIN SP4X32FZB	
070	312101-0455	-		4	SCREW M6S8X30FZB	
080	312316-0323	-		2	STOP SCREW SK6SS5X8FZB	
090	312601-0318	-		4	NUT M6M8FZB	
100	315401-0165	-		4	WASHER FBH8,2FZB	

Pos	Part No	SP	UN	Qty	Description	Page No

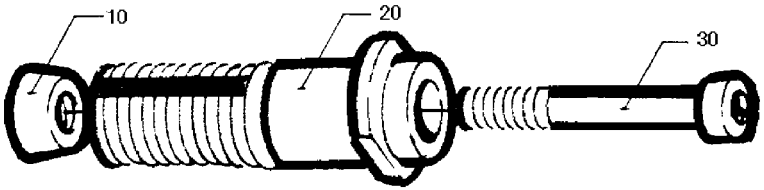

683001.TIF
6830-1
AM 5976

Pos	Part No	SP	UN	Qty	Description	Page No
-						
000	**C- 6830-0101**	**-**		**1**	**EXPANSION BOLT**	
010	6827	-		1	TAPER	
020	6831	-		1	BOLT	
030	312111-0340	-		1	SCREW MC6S5X45FZB	

Pos	Part No	SP	UN	Qty	Description	Page No

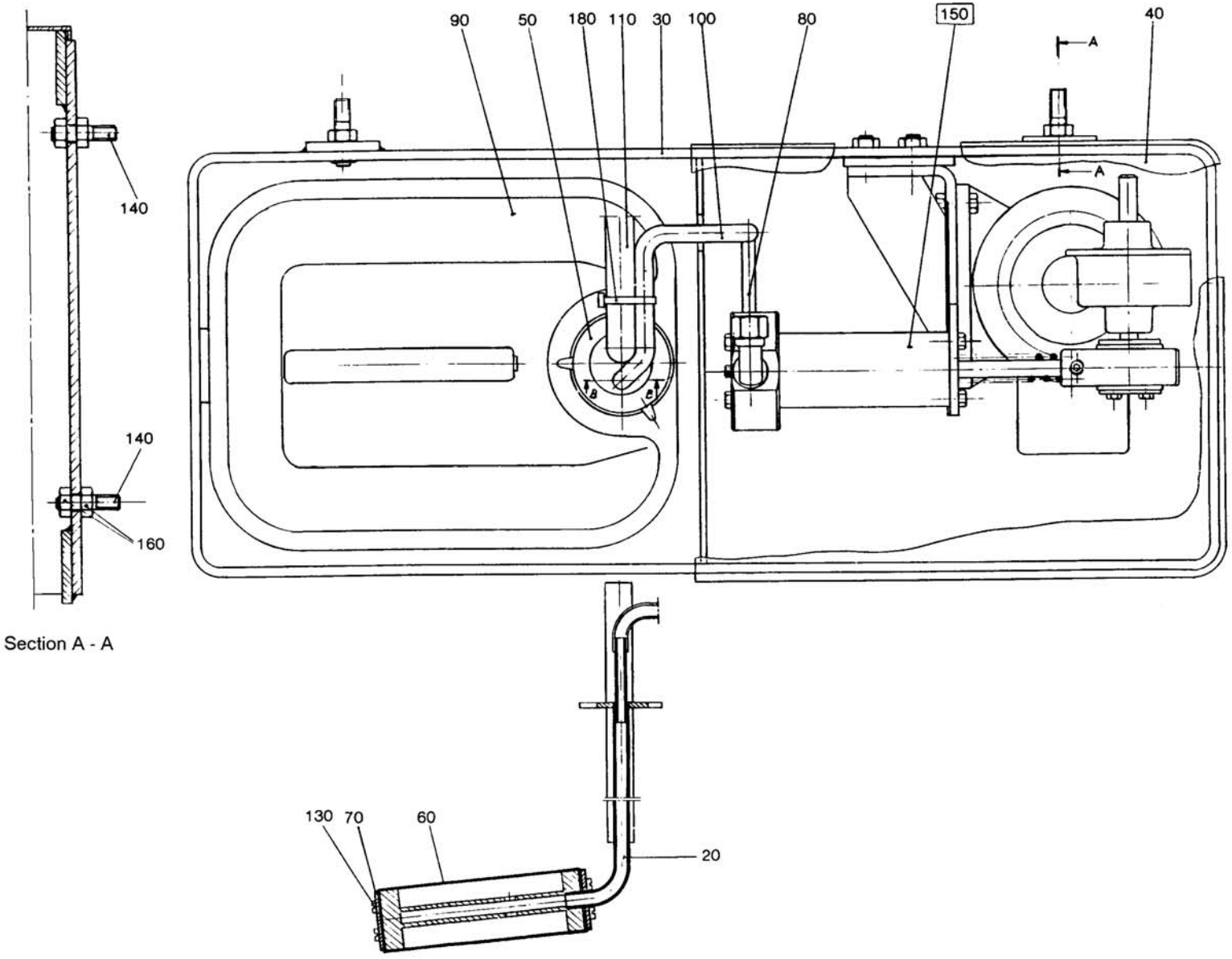

24736701.TIF
247367-1
AM 9786

Pos	Part No	SP	UN	Qty	Description	Page No
-						
000	**C- 247367-0101**	**-**		**1**	**PUMP**	
020	36189	-		1	IMMERSION PIPE	
030	38439	-		1	HOLDER	
040	38440	-		1	COVER	
050	35962	-		1	LID	
060	36200	R		1	FILTER MESH	
070	36201	-		1	WASHER	
080	38848	-		1	PIPE	
090	90050-0010	-		1	BOTTLE	
100	90166-0005	-	MM	500	HOSE	
110	90166-0059	-	MM	500	HOSE	
130	312125-0285	-		8	SLOTTED HEMCS4X6RFR	
140	312303-0457	-		4	STUD SCREWMPS 8X25 RFR	
160	312605-0318	-		8	NUT M6M8RFR	
180	352113-0101	-		3	RIBBON CLA	
F150	C- 38715-0101	-		1	PUMP	

Pos	Part No	SP	UN	Qty	Description	Page No

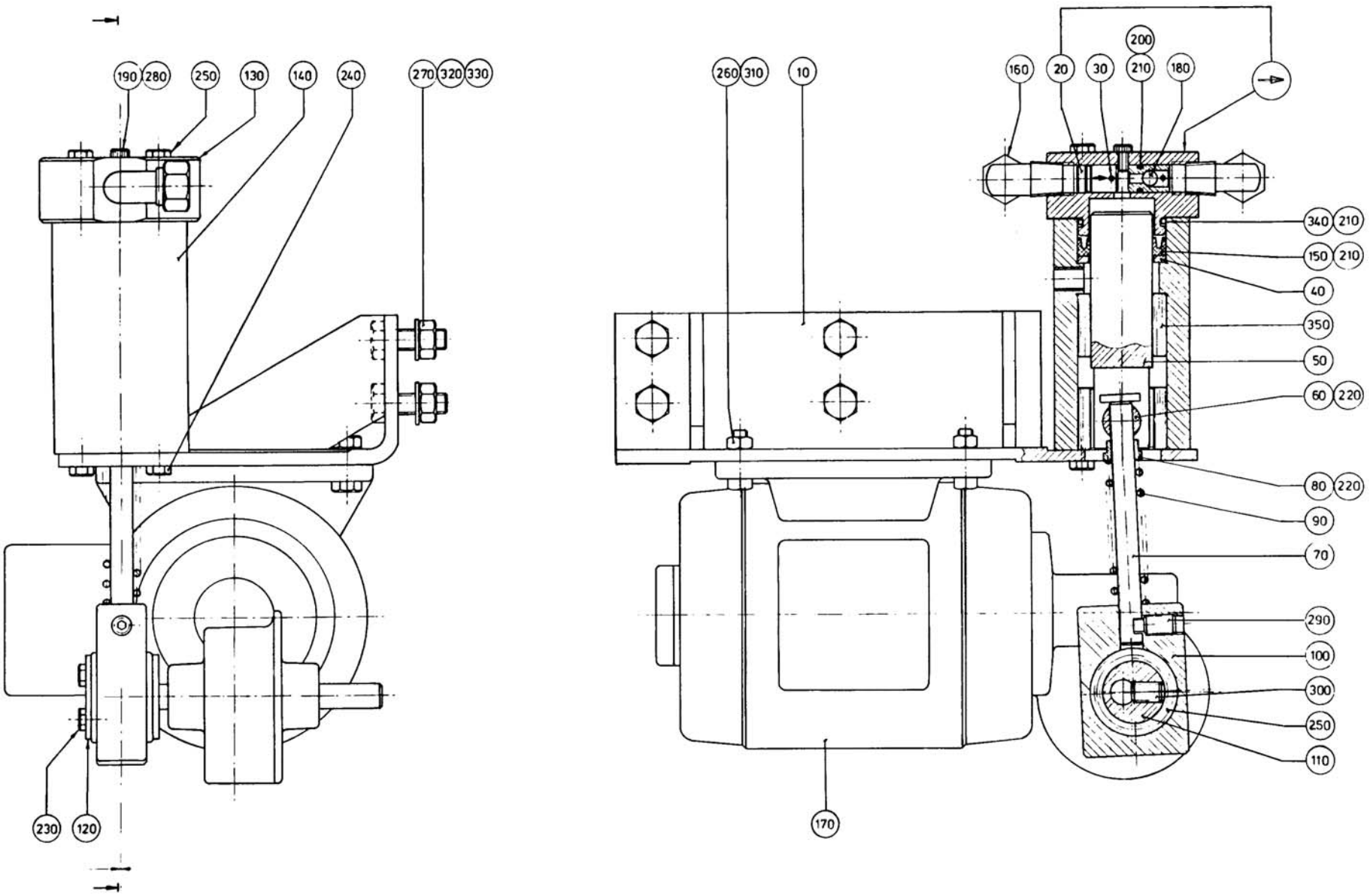

3871501.TIF
38715-1
AM 5976

Pos	Part No	SP	UN	Qty	Description	Page No
-						
000	**C- 38715-0101**	**-**		**1**	**PUMP**	
010	38351	-		1	CANTILEVER	
020	38354	-		2	VALVE HOUSING	
030	38355	-		2	TACK	
040	38357	-		1	SUPPORT RING	
050	38359	-		1	PISTON	
060	38360-0001	-		1	PISTON PIN	
070	38361	-		1	CONNECTING ROD	
080	38362	-		1	SLEEVE	
090	38364	-		1	COMPRESSION SPRING	
100	38365	-		1	CRANK BRACKET	
110	38366	-		1	ECCENTRIC	
120	38367	-		1	LOCK WASHER	
130	38666	-		1	PUMP HOUSING	
140	38667	-		1	BEARING HOUSING	
150	90020-0021	-		1	SLEEVE	
160	90030-0071	-		2	PIPE CONNECTION	
170	90069-0007	-		1	WORM GEAR MOTOR	
180	90090-0010	-		2	STEEL BALL	
190	90144-0004	-	MM	100	TAPE	
200	90242-0036	R		2	O-RING	
210	90296-0009	-	G	X	GREASE	
220	90296-0068	-	G	X	GREASE	
230	312101-0287	-		2	SCREW M6S4X8FZB	
240	312105-0327	-		2	SCREW O4017 M5X12A280	
250	312105-0337	-		2	SCREW O4014 M5X35A280	
260	312105-0370	-		4	SCREW O4017 M6X20A280	
270	312105-0453	-		4	SCREW O4017 M8X25A280	
280	312115-0287	-		1	SCREW O4762 M4X8A280	
290	312311-0449	-		1	STOP SCREW T6SS8X16FZB	
300	312316-0447	-		1	STOP SCREW SK6SS8X12FZB	
310	312605-0316	-		4	NUT M6M6RFR	
320	312605-0318	-		4	NUT M6M8RFR	
330	315105-0165	-		4	WASHER BRB8,4X16RFR	
340	315204-0219	R		1	O-RING 29,2X3VITON	
350	321115-0253	-		3	BUSHING 25E7/35X25	

Pos	Part No	SP	UN	Qty	Description	Page No

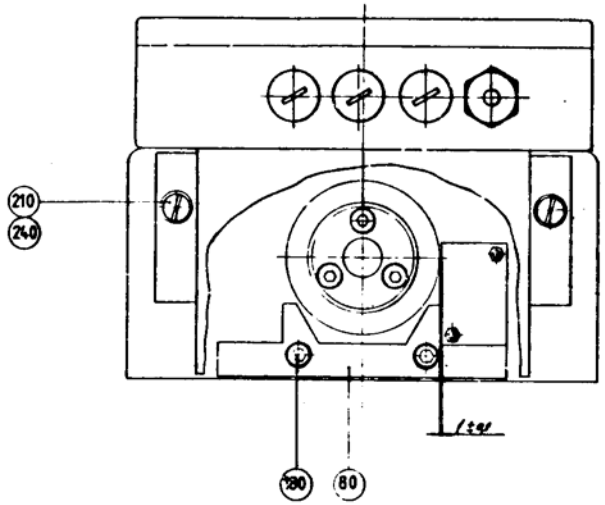

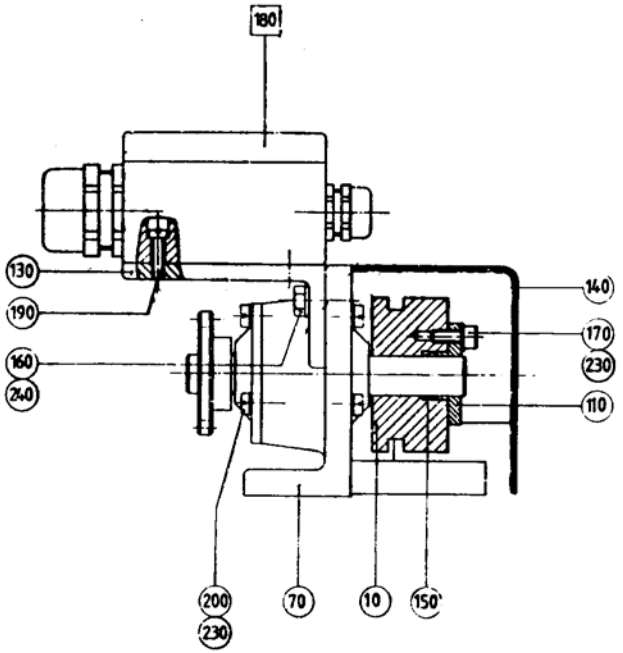

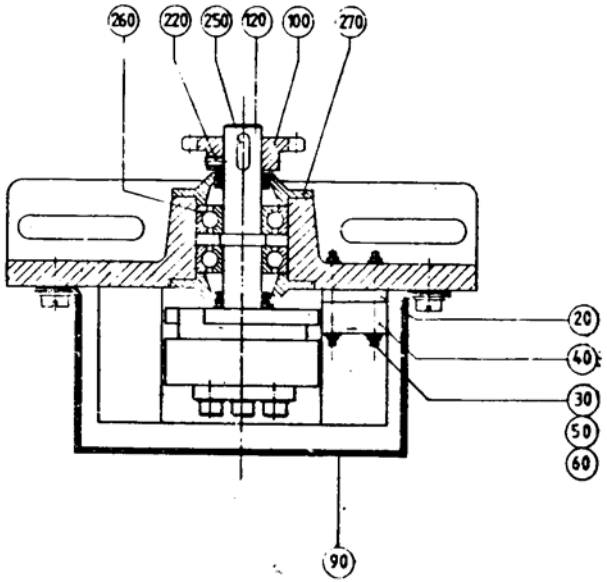

23664102.tif
236641-2
AM 8810

Pos	Part No	SP	UN	Qty	Description	Page No
TCA/150,						
000	**C- 236641-0301**	**-**		**1**	**IMPULSE TRANSMITTER**	
010	283791	-		1	CURVE	
020	236647-0001	-		1	GAUGE BLOCK	
030	236986	-		2	STUD SCREW	
040	90044-0104	R		1	INDUCTIVE SWITCH	
050	90099-0050	-		4	NUT	
060	315101-0124	-		4	WASHER BRB3,2X6FZB	
Common parts						
070	**G- 236644**	**-**		**1**	**MACHINE BODY**	
080	236645	-		1	HOLDER	
090	236646	-		1	COVER	
100	6216	-		1	SPROCKET	
110	230613	-		1	FLANGE	
120	236649	-		1	SHAFT	
130	522159	-		2	CANTILEVER	
140	263110	-		1	SIGN	
150	90208-0004	-		1	LOCKING ELEMENT	
160	312101-0368	-		2	SCREW M6S6X16FZB	
170	312111-0327	-		3	SCREW MC6S5X12FZB	
180	312111-0341	-		2	SCREW MC6S5X50FZB	
190	312121-0293	-		2	SLOTTED HEMCS4X16FZB	
200	312121-0327	-		6	SLOTTED HEMCS5X12FZB	
210	312121-0366	-		2	SLOTTED HEMCS6X12FZB	
220	312306-0287	-		1	STOP SCREW P6SS4X8FZB	
230	315101-0146	-		9	WASHER BRB5,3X10FZB	
240	315101-0153	-		6	WASHER BRB6,4X12FZB	
250	315701-0198	-		1	FLAT WEDGE5X5X14	
260	321309-0102	-		2	BALL BEARISKF6202	
270	321600-0102	-		2	OIL SEAL (LL1535	
F180	C- 236638-020V	-		1	CONNECTION BOX	

Pos	Part No	SP	UN	Qty	Description	Page No

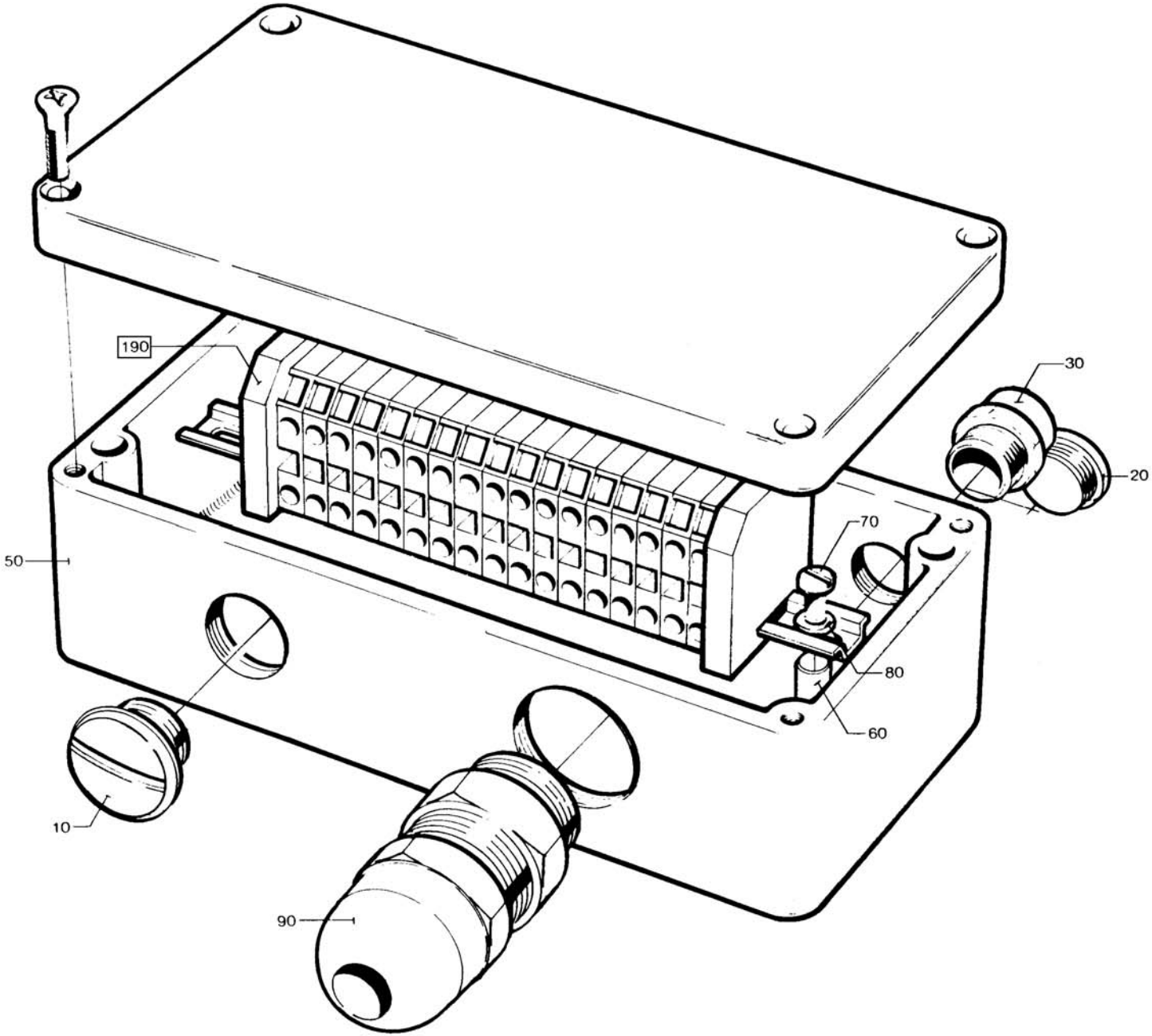

23663802.TIF
236638-2
AM 5719

Pos	Part No	SP	UN	Qty	Description	Page No
000	**C- 236638-0201**	**-**		**1**	**CONNECTION BOX**	
010	90002-0002	-		1	BLANK-OFF PLUG	
020	90002-0013	-			BLANK-OFF PLUG	
030	352103-0101	-		1	CABLE GLAND ST 9	
Common parts						
050	**440578**	**-**		**1**	**CONNECTION BOX**	
060	10641	-		2	SPACER	
070	312121-0291	-		2	SLOTTED HEMCS4X12FZB	
080	315101-0136	-		2	WASHER BRB4,3X8FZB	
090	352103-0115	-		1	CABLE GLANR.STR 21	
F190	C- 236637-0101	-		1	TERMINAL PLINTH	

Pos	Part No	SP	UN	Qty	Description	Page No

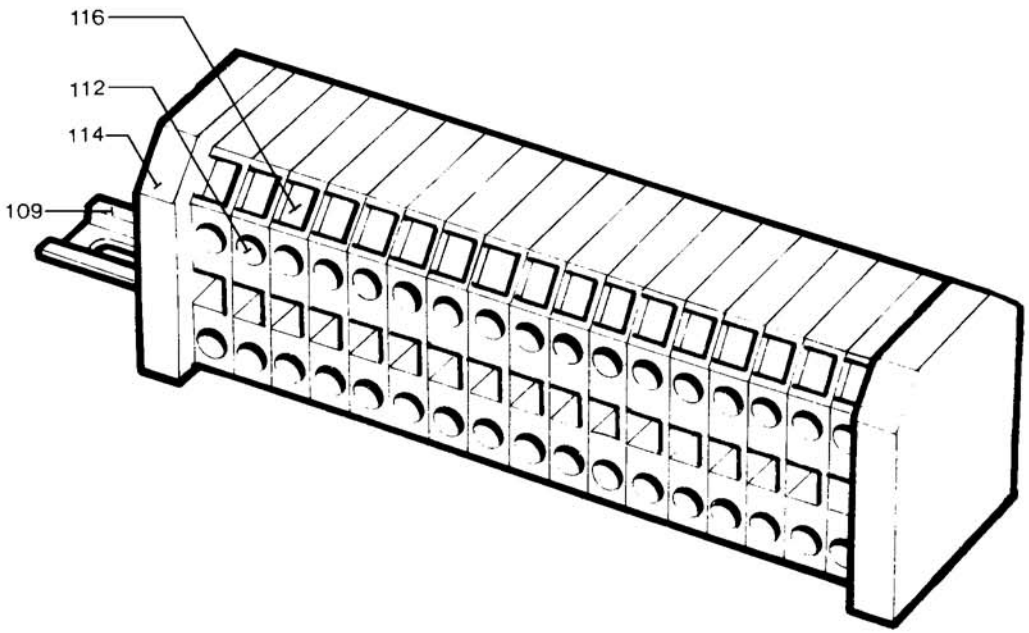

23663701.TIF
236637-1
AM 5719

Pos	Part No	SP	UN	Qty	Description	Page No
-						
000	**C- 236637-0101**	**-**		**1**	**TERMINAL PLINTH**	
109	8490-0003	-		1	RAIL	
112	90077-0079	-		18	FEED THROUGH TERMINAL	
114	90135-0026	-		2	EARTHING CLAMP	
116	359011-0802	-		1	SIGN BOARDBSFW 11-20	

Pos	Part No	SP	UN	Qty	Description	Page No

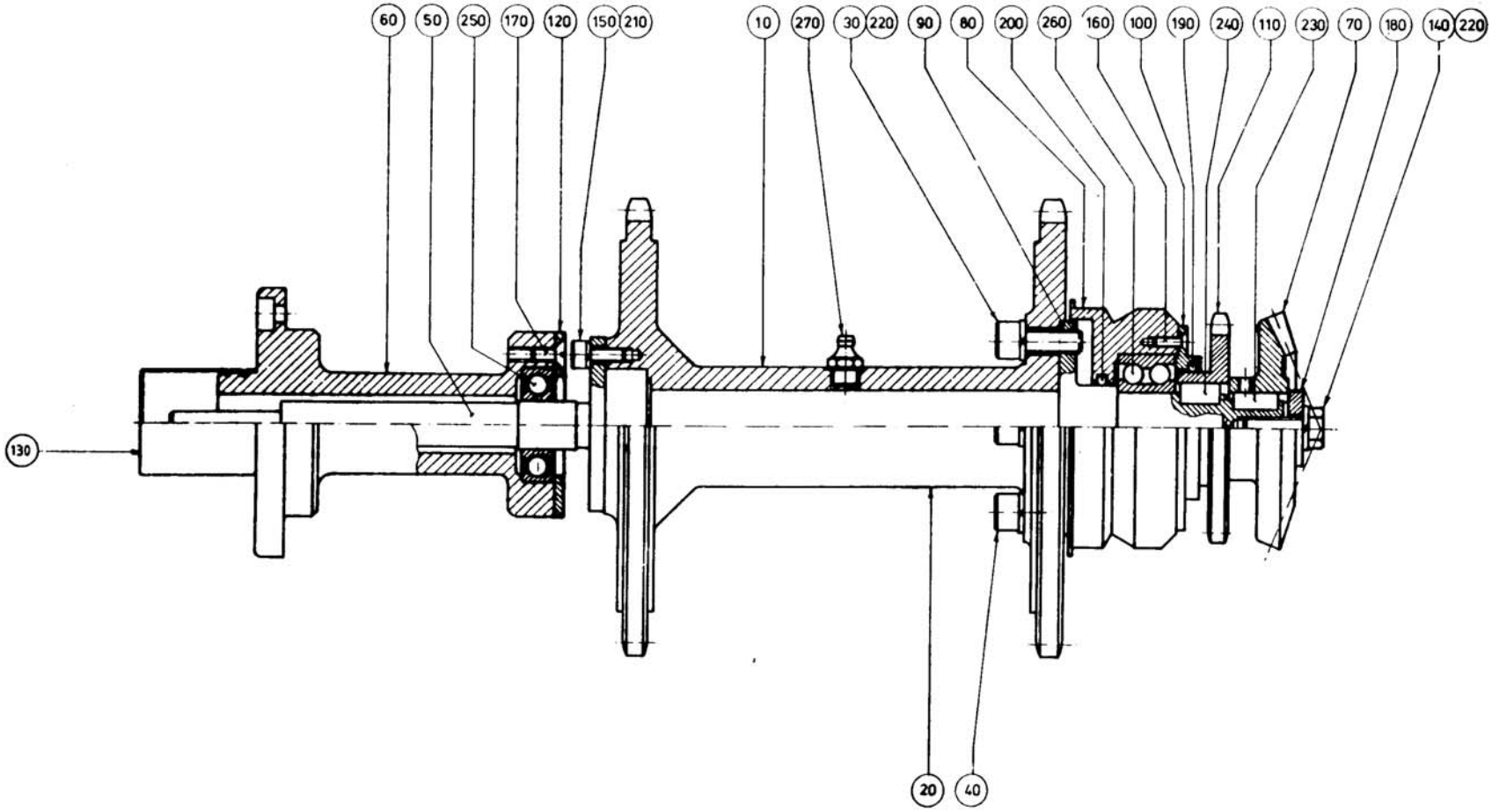

1337201.tif
13372-1
AM 8410

Pos	Part No	SP	UN	Qty	Description	Page No
000	**C- 13372-0202**	**-**		**1**	**DRIVE SHAFT**	
010	G- 4460	-		1	DOUBLE SPROCKET	
030	312111-0451	-		4	SCREW MC6S8X20FZB	
Common parts						
050	**12358**	**-**		**1**	**SHAFT**	
060	12359	-		1	AXLE SUPPORT	
070	3303	-		1	GEAR WHEEL	
080	5056	-		1	BEARING HOUSING	
090	5057	-		1	FLANGED SHAFT	
100	5058	-		1	LID	
110	5059	-		1	SPROCKET	
120	11460	-		1	WASHER	
130	13319	-		1	CUP	
140	312101-0453	-		1	SCREW M6S8X25FZB	
150	312111-0329	-		3	SCREW MC6S5X16FZB	
160	312151-0291	-		3	SCREW MF6S4X12FZB	
170	312151-0327	-		3	SCREW MF6S5X12FZB	
180	315121-0165	-		1	WASHER TBRSB8,4X26FZB	
190	315202-0224	-		1	O-RING 42,2X3	
200	315202-0523	-		1	O-RING 31,34X3,53	
210	315401-0146	-		3	WASHER FBH 5,1 FZB	
220	315401-0165	-		5	WASHER FBH8,2FZB	
230	315701-0230	-		1	FLAT WEDGE6X6X16	
240	315701-0260	-		1	FLAT WEDGE8X7X14	
250	321313-0103	-		1	BALL BEARISKF6203-2RS	
260	321330-0105	-		1	BALL BEARISKF3205	
270	344502-0026	-		1	NIPPLE L AHKR1/8"	

Pos	Part No	SP	UN	Qty	Description	Page No

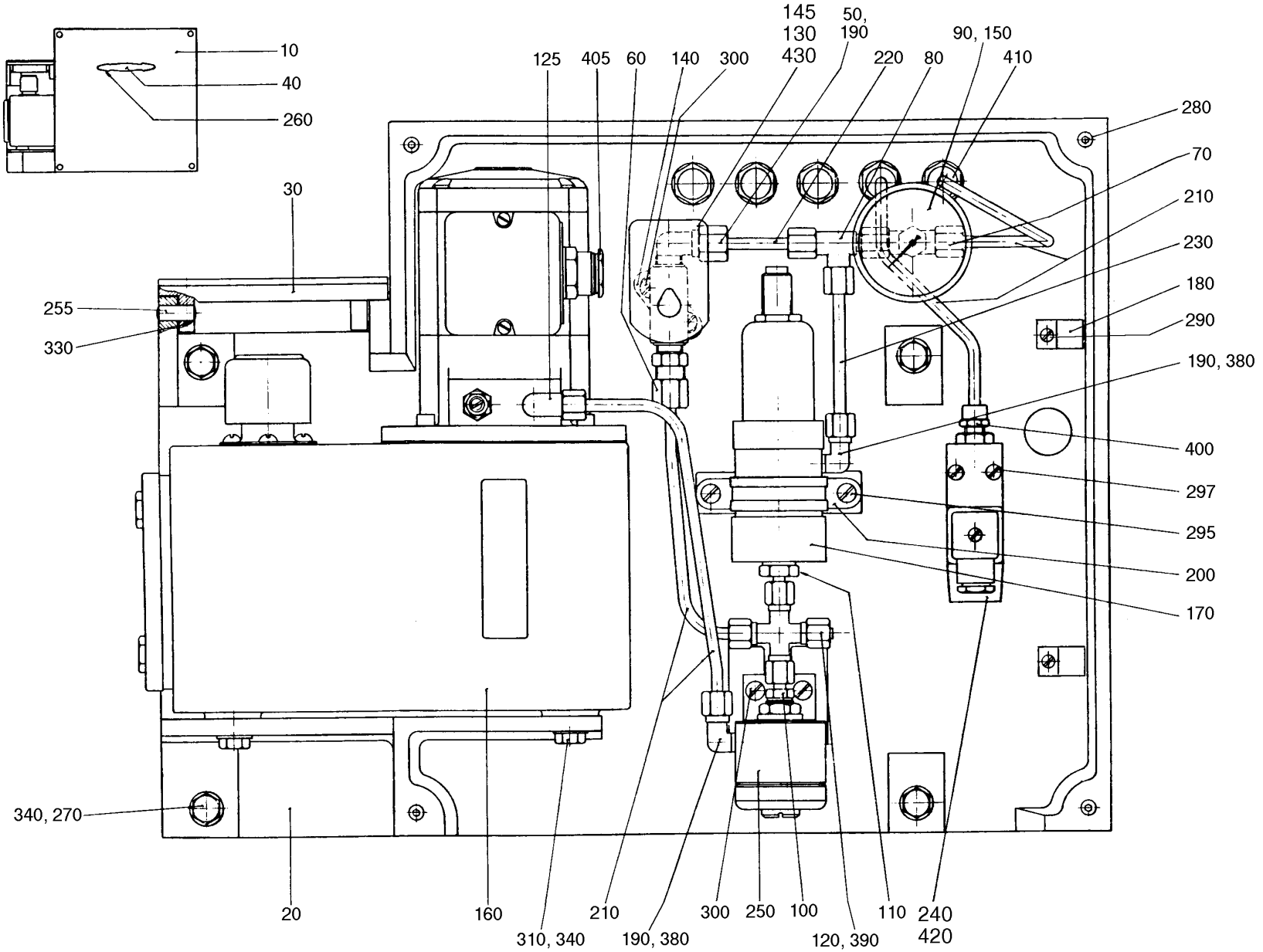
10
40
260
30
255
330
340, 270
20
160
310, 340
210
190, 380
300
250
100
120, 390
110
240
420
125
405
60
140
300
145
130
430
50,
190
220
80
90, 150
410
280
70
210
230
180
290
190, 380
400
297
295
200
170

Pos	Part No	SP	UN	Qty	Description	Page No
000	**C- 230177-0301**	**-**		**1**	**CENTRAL LUBRICATION**	
130	90042-0128	-		1	SOLENOID VALVE	
405	352100-0107	-		1	CABLE GLANR.18,6-12	
Common parts						
010	**230179**	**-**		**1**	**FRONT GUARD**	
020	G- 252665	-		1	CANTILEVER	
030	G- 230180	-		1	OPENING	
040	7309	-		1	HANDLE	
050	90030-0004	-		1	CONNECTION	
060	90030-0126	-		1	PIPE CONNECTION	
070	90030-0127	-		1	PIPE CONNECITON	
080	90030-0128	-		1	PIPE CONNECTION	
090	90030-0129	-		1	PIPE CONNECTION	
100	90030-0131	-		1	PIPE CONNECTION	
110	90030-0130	-		1	PIPE CONNECITON	
120	90030-0132	-		1	PLUG	
125	90030-0146	-		1	CONNECTION	
140	90042-0350	-		1	BRACKET	
150	90043-0015	-		1	PRESSURE GAUGE	
160	90048-0007	-		1	OILPUMP	
170	90048-0016	-		1	ACKUMULATOR	
180	90074-0002	-		2	CLIP	
190	90157-0021	-	ML	X	LOCKING FLUID	
200	90165-0040	-		1	CLIP	
210	90166-0011	-	M	3	HOSE	
220	90266-0006	-	MM	X	TUBE	
230	90266-0006	-	MM	X	TUBE	
240	90274-0056	-		1	PRESSURE SWITCH	
250	90415-0004	-		1	FILTER	
255	311103-0401	-		2	CYLINDRICACP M6 8X20 RFR	
260	312105-0362	-		2	SCREW O4017 M6X8A280	
270	312105-0469	-		4	SCREW O4014 M8X90A280	
280	312115-0327	-		4	SCREW O4762 M5X12A280	
290	312125-0285	-		4	SLOTTED HEMCS4X6RFR	
295	312125-0325	-		2	SLOTTED HEMCS5X10RFR	
297	312125-0339	-		2	SLOTTED HEMCS5X40RFR	
300	312125-0364	-		4	SLOTTED HEMCS6X10RFR	
310	312204-0154	-		4	SCREW U6S5/16X25FZB	
330	312318-0284	-		2	STOP SCREW SK6SS4X5RFR	
340	315115-0165	-		8	WASHER TBRB8,4X16RFR	
380	342731-0102	-		2	ELBOW PIPE WE6-LRFZB	
390	342754-0102	-		1	CROSS CONNK6-LFZB	
400	342921-0114	-		1	PIPE COUPL6/4-1/4"	
410	352101-0103	-		5	LEAD-IN G 18,6	
420	352103-0101	-		1	CABLE GLAND ST 9	
430	352103-0105	-		1	CABLE GLANR.STR 11	

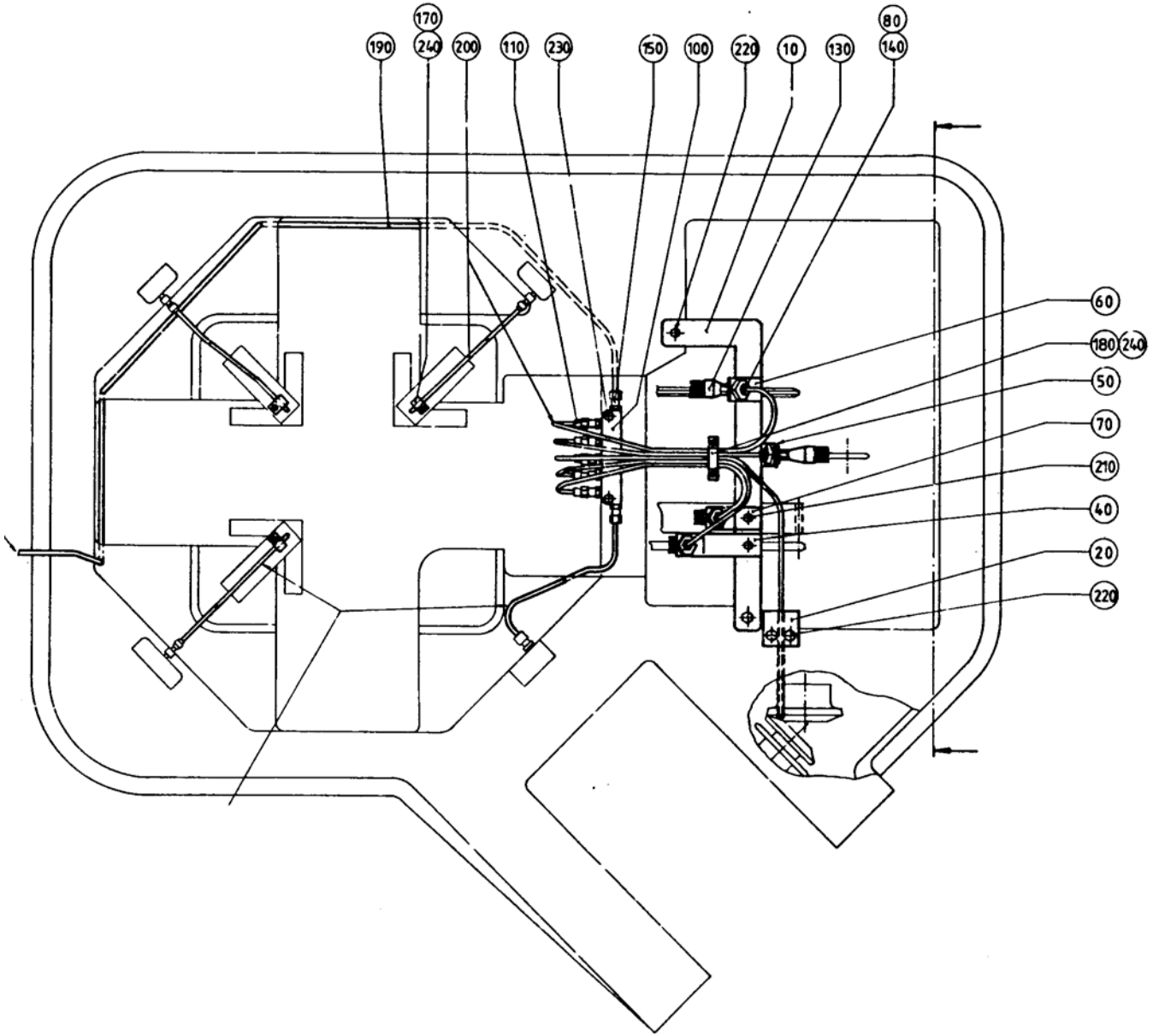

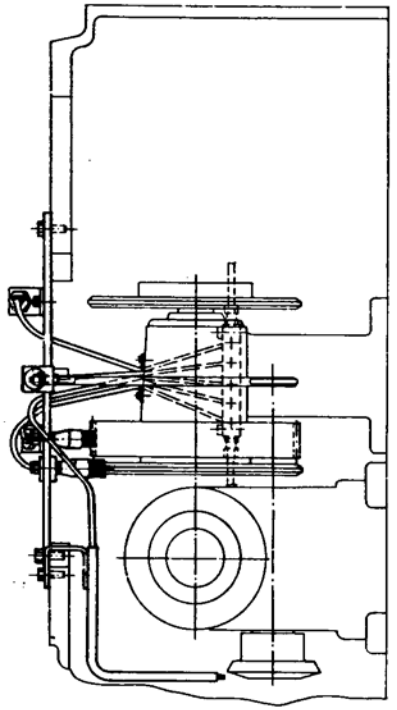

26384302.tif
263843-2
AM 8810

Pos	Part No	SP	UN	Qty	Description	Page No
-						
000	**C- 263843-0201**	**-**		**1**	**CENTRAL LUBRICATION**	
010	259850	-		1	BRACKET	
020	259923	-		1	GUIDE PIPE	
040	259851	-		1	HOLDER	
050	522151	-		1	HOLDER	
060	259853	-		1	HOLDER	
070	259854	-		1	HOLDER	
080	90028-0001	R		4	CONE	
100	90032-0036	-		1	JUNCTION BLOCK	
110	90092-0064	R		5	METERING VALVE	
130	90092-0048	R		4	OIL BRUSH	
140	90134-0003	-		4	BUSHING	
150	90134-0034	-		2	NIPPLE	
170	90165-0003	-		4	CLIP	
180	90165-0014	-		1	CLIP	
190	90166-0011	-	MM	2500	HOSE	
200	90166-0103	-	M	4	HOSE	
210	312101-0325	-		4	SCREW M6S5X10FZB	
220	312101-0364	-		4	SCREW M6S6X10FZB	
230	312101-0372	-		2	SCREW M6S6X25FZB	
240	312121-0285	-		3	SLOTTED HEMCS4X6FZB	

Pos	Part No	SP	UN	Qty	Description	Page No

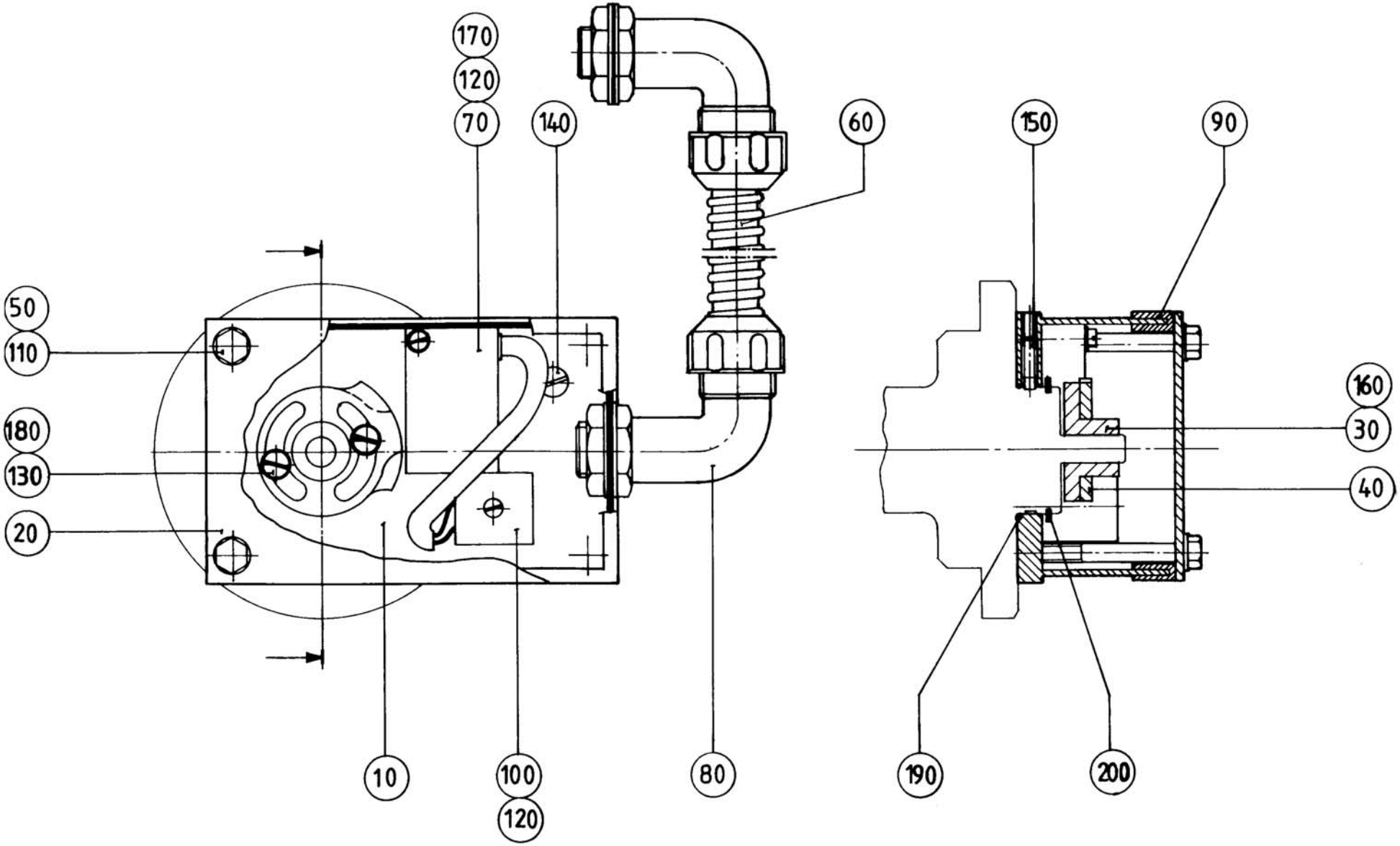

44032501.TIF
440325-1
AM 5719

Pos	Part No	SP	UN	Qty	Description	Page No
-						
000	**C- 440325-0101**	**-**		**1**	**IMPULSE TRANSMITTER**	
010	11458	-		1	HOUSE	
020	11459	-		1	LID	
030	436381	-		1	CURVE	
040	436382	-		1	CURVE	
050	90005-0010	-		4	WASHER	
060	90012-0064	-		2	GLAND	
070	90044-0062	-		1	PROXIMITY SWITCH	
080	90152-0033	-	M	1	HOSE	
090	90161-0006	-	MM	500	STRIP	
100	90195-0020	-		1	TERMINAL BLOCK	
110	312101-0340	-		4	SCREW M6S5X45FZB	
120	312121-0230	-		3	SLOTTED HEMCS3X20FZB	
130	312125-0287	-		2	SLOTTED HEMCS4X8RFR	
140	312132-0323	-		1	SLOTTED HEMSCS5X8MSGFN	
150	312311-0366	-		2	STOP SCREW T6SS6X12FZB	
160	312318-0285	-		2	STOP SCREW SK6SS4X6RFR	
170	315101-0124	-		2	WASHER BRB3,2X6FZB	
180	315105-0136	-		2	WASHER BRB4,3X8RFR	
190	315202-0123	-		1	O-RING 35,1X1,6	
200	315750-0124	-		1	CIRCLIP SGA35	

Pos	Part No	SP	UN	Qty	Description	Page No

Tetra Pak

SPC

Spare Parts Catalogue

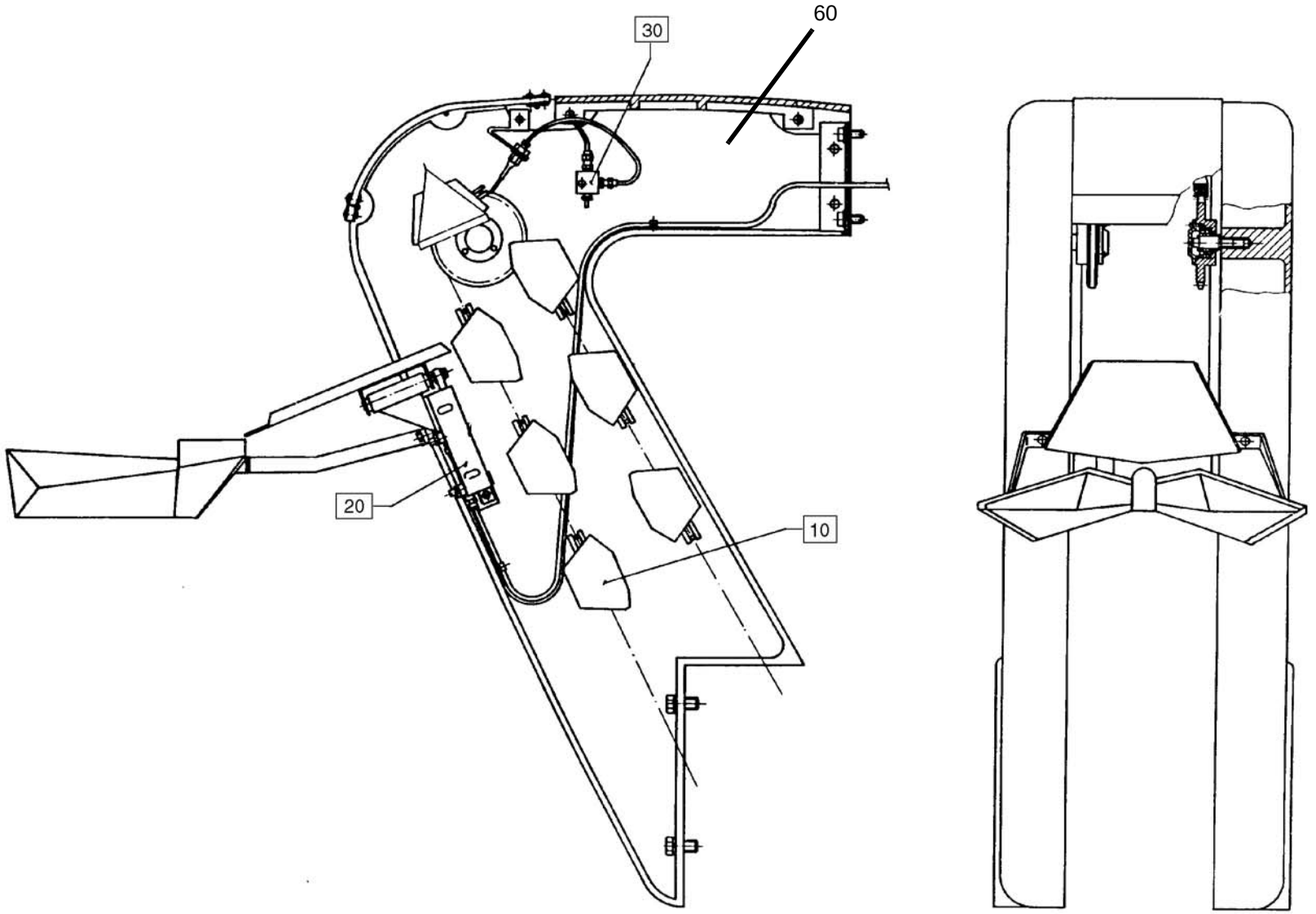

63323601.TIF
633236-1
ECN 13649

Pos	Part No	SP	UN	Qty	Description	Page No
-						
000	**B- 633206-0401**	**-**		**1**	**ELEVATOR**	
F000	C- 5332-0201	-		1	ELEVATOR	**227**
F010	C- 5333-0101	-		1	CHAIN	**229**
F020	C- 497873-0101	-		1	TILTING TRAY	**231**
F060	C- 450344-0101	-		1	PNEUMATIC PANEL	**233**
F070	C- 522409-0101	-		1	CENTRAL LUBRICATION	**235**

Pos	Part No	SP	UN	Qty	Description	Page No

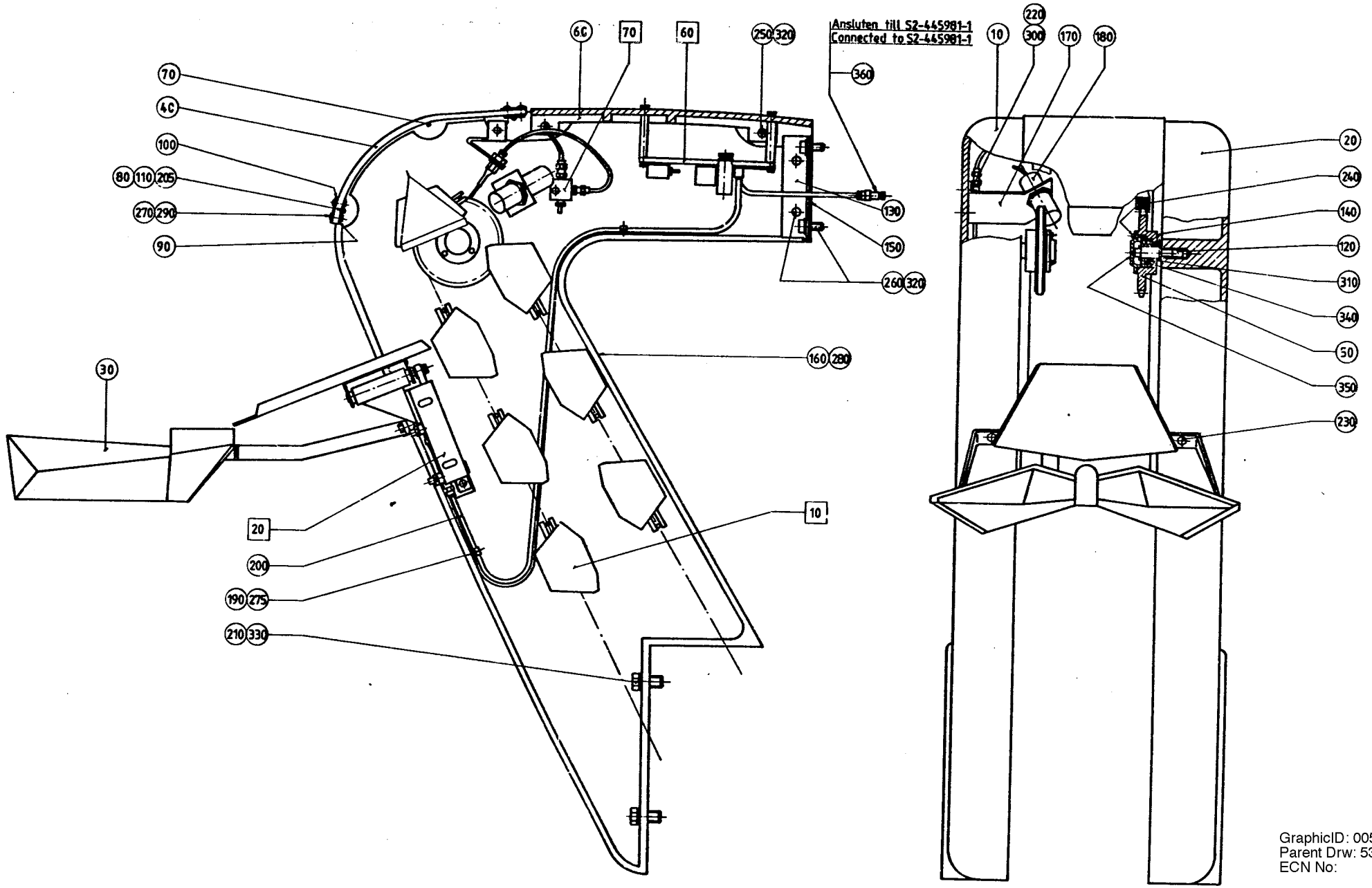

GraphicID: 00533202.tif
Parent Drw: 5332-2
ECN No:

Pos	Part No	SP	UN	Qty	Description	Page No
-						
000	**C- 5332-0201**	**-**		**1**	**ELEVATOR**	
360	342716-0203	-		1	REDUCER 6-8	
010	G- 5336	-		1	ELEVATOR FRAME LEFT	
020	G- 5337	-		1	ELEVATOR FRAME RIGHT	
030	5350	-		1	LEAD PLATE	
040	5339	-		1	PLASTIC COVER	
050	4554	-		2	SPROCKET	
060	G- 5338	-		1	PLATE	
070	1013	-		2	SHAFT	
080	2551	-		4	DOWEL	
090	2767	-		2	HINGE	
100	2768	-		2	COVERING PLATE	
110	2781	-		2	COMPRESSION SPRING	
120	3274-0002	-		2	BOLT	
130	3570-0001	-		2	FASTENING IRON	
140	4569	-		2	SPACER RING	
150	4642	-		1	PROTECTION PLATE	
160	20497	-		1	GROUP NUMBER PLATE	
170	243361	-		1	BRACKET	
180	90044-0122	-		1	INDUCTIVE SWITCH	
190	90074-0001	-		2	CLIP	
200	90166-0089	-	M	3	HOSE	
205	311307-0210	-		4	SLOTTED PIRPD2,5X16FZB	
210	312101-0624	-		4	SCREW M6S16X30FZB	
220	312105-0364	-		2	SCREW M6S6X10RFR	
230	312105-0449	-		2	SCREW M6S8X16RFR	
240	312111-0291	-		6	SCREW MC6S4X12FZB	
250	312111-0493	-		4	SCREW MC6S10X25FZB	
260	312115-0491	-		8	SCREW 10X20 A4 80	
270	312165-0329	-		16	SLOTTED HEMKFS5X16RFR	
275	312125-0323	-		2	SLOTTED HEMCS5X8RFR	
280	312502-0221	-		4	DRIVE SCREKDS4X6FNB	
290	312605-0314	-		16	NUT M6M5RFR	
300	315105-0153	-		2	WASHER BRB6,4X12RFR	
310	315202-0518	-		2	O-RING 23,40X3,53	
320	315401-0173	-		12	WASHER FBH10,2FZB	
330	315401-0186	-		4	WASHER FBH16,2FZB	
340	321330-0103	-		2	BALL BEARISKF3203	
350	321601-0103	-		2	OIL SEAL (LL40	

Pos	Part No	SP	UN	Qty	Description	Page No

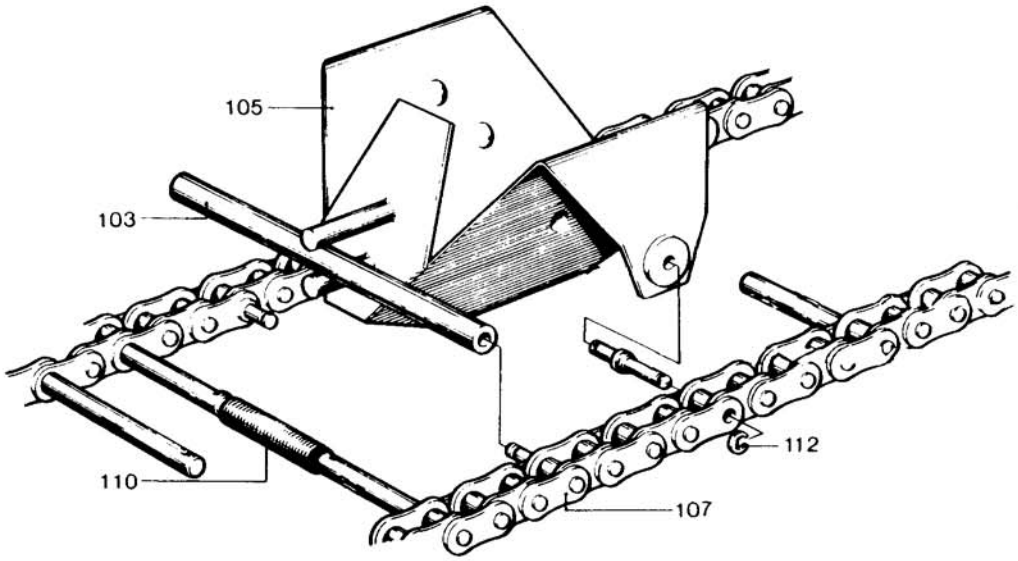

533301.tif
5333-1
AM 6936

Pos	Part No	SP	UN	Qty	Description	Page No
-						
000	**C- 5333-0101**	**-**		**1**	**CHAIN**	
105	6299	-		15	SCOOP	
Common parts						
103	4374	-		15	SHAFT	
107	5344-0002	-		2	CONVEYING CHAIN EQUIP.	
110	6116-0002	-		15	TENSION SPRING	
112	315754-0105	R		30	LOCKING WAE 3,2	

Pos	Part No	SP	UN	Qty	Description	Page No

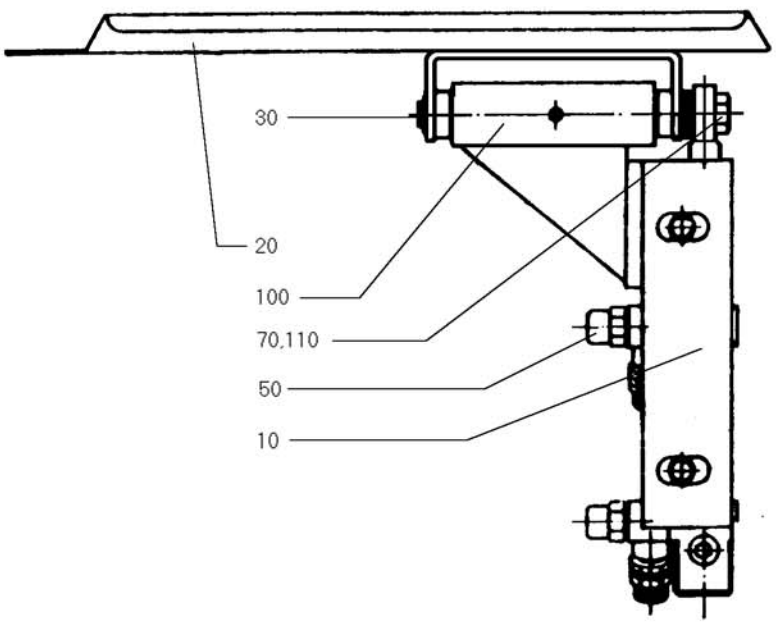

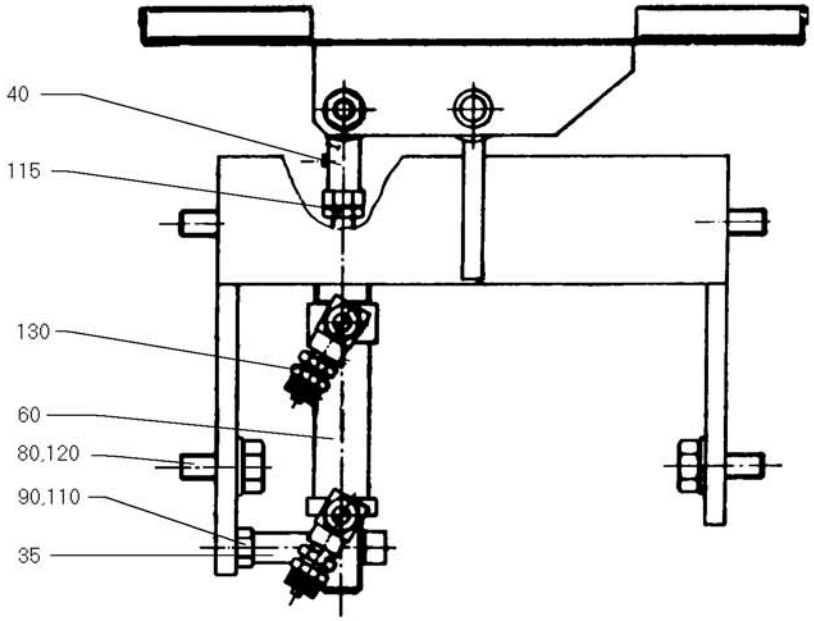

49787301.tif
497873-1
AM 8333

Pos	Part No	SP	UN	Qty	Description	Page No
-						
000	**C- 497873-0101**	**-**		**1**	**TILTING TRAY**	
010	466014	-		1	CANTILEVER	
020	522160	-		1	CHUTE	
030	5310	-		1	SHAFT	
035	522303	-		1	SPACER PIPE	
040	90115-0008	-		1	ROD END	
050	90235-0241	-		2	VALVE	
060	90239-0821	-		1	CYLINDER	
070	312105-0455	-		1	SCREW M6S8X30RFR	
080	312105-0493	-		4	SCREW M6S10X25RFR	
090	312115-0463	-		1	SCREW 8X60 A4 80	
100	312306-0366	-		1	STOP SCREW P6SS6X12FZB	
110	312605-0318	-		2	NUT M6M8RFR	
115	312621-0318	-		1	NUT ML6M8FZB	
120	315105-0173	-		4	WASHER BRB10,5X22RFR	
130	342920-0113	-		2	PIPE COUPL6/4-1/8	

Pos	Part No	SP	UN	Qty	Description	Page No

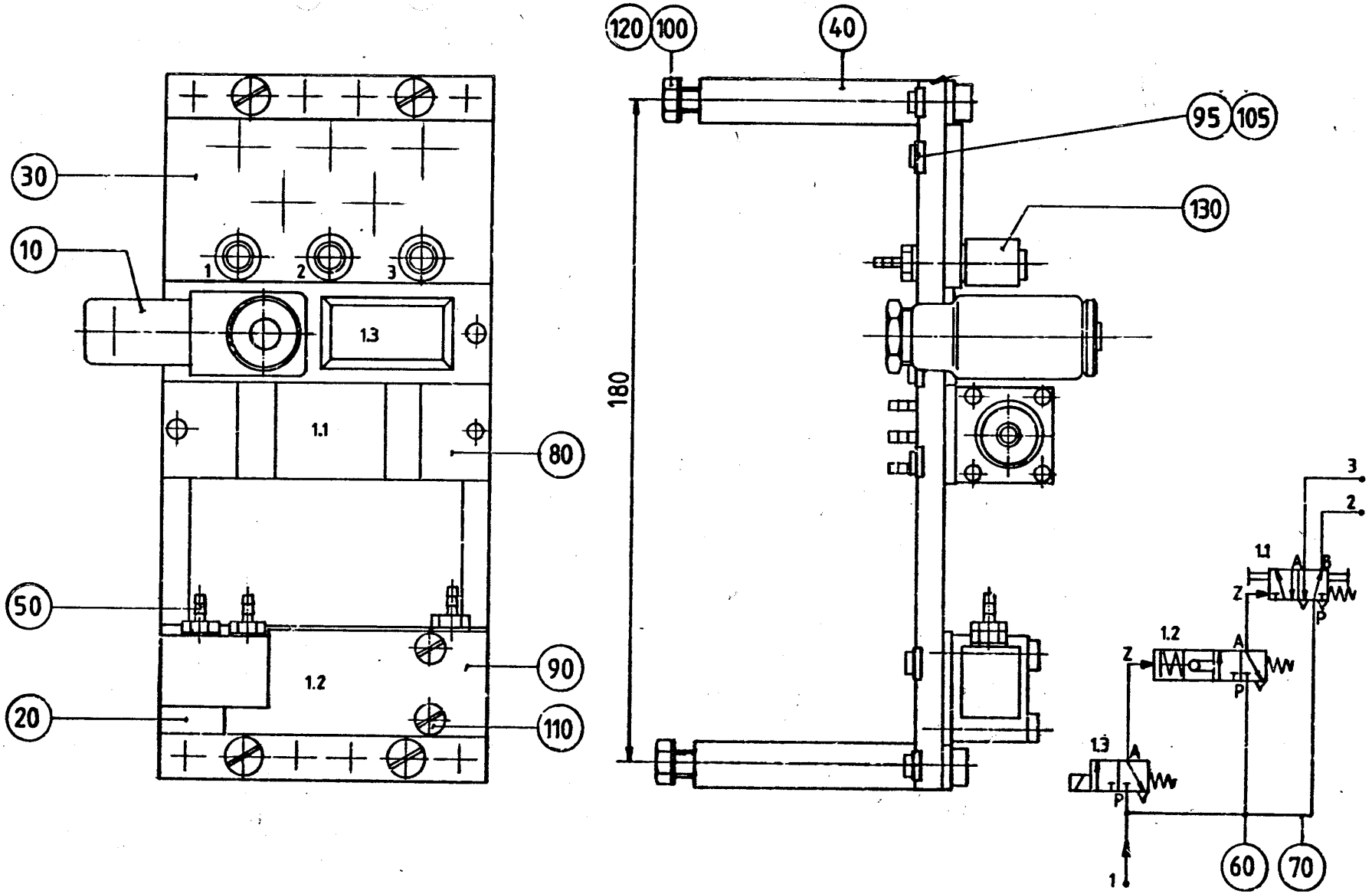

GraphicID: 45034401.tif
Parent Drw: 450344-1
ECN No:

Pos	Part No	SP	UN	Qty	Description	Page No
-						
000	**C- 450344-0101**	**-**		**1**	**PNEUMATIC PANEL**	
010	90042-0045	-		1	SOLENOID VALVE	
020	237427	-		1	PLATE	
030	237499	-		1	PLATE	
040	90042-0328	-		1	RAMP	
050	90055-0044	-		6	HOSE NIPPLE	
060	90055-0045	-		2	HOSE NIPPLE	
070	90166-0099	-	M	1	HOSE	
080	90235-0194	-		1	VALVE	
090	90235-0198	-		1	VALVE	
095	90236-0026	-		4	FASTENING BRACKET	
100	312105-0370	-		4	SCREW M6S6X20RFR	
105	312125-0289	-		4	SLOTTED HEMCS4X10RFR	
110	312125-0299	-		2	SLOTTED HEMCS4X30RFR	
120	315105-0153	-		4	WASHER BRB6,4X12RFR	
130	342722-0197	-		3	PIPE COUPLD=6-M5	

Pos	Part No	SP	UN	Qty	Description	Page No

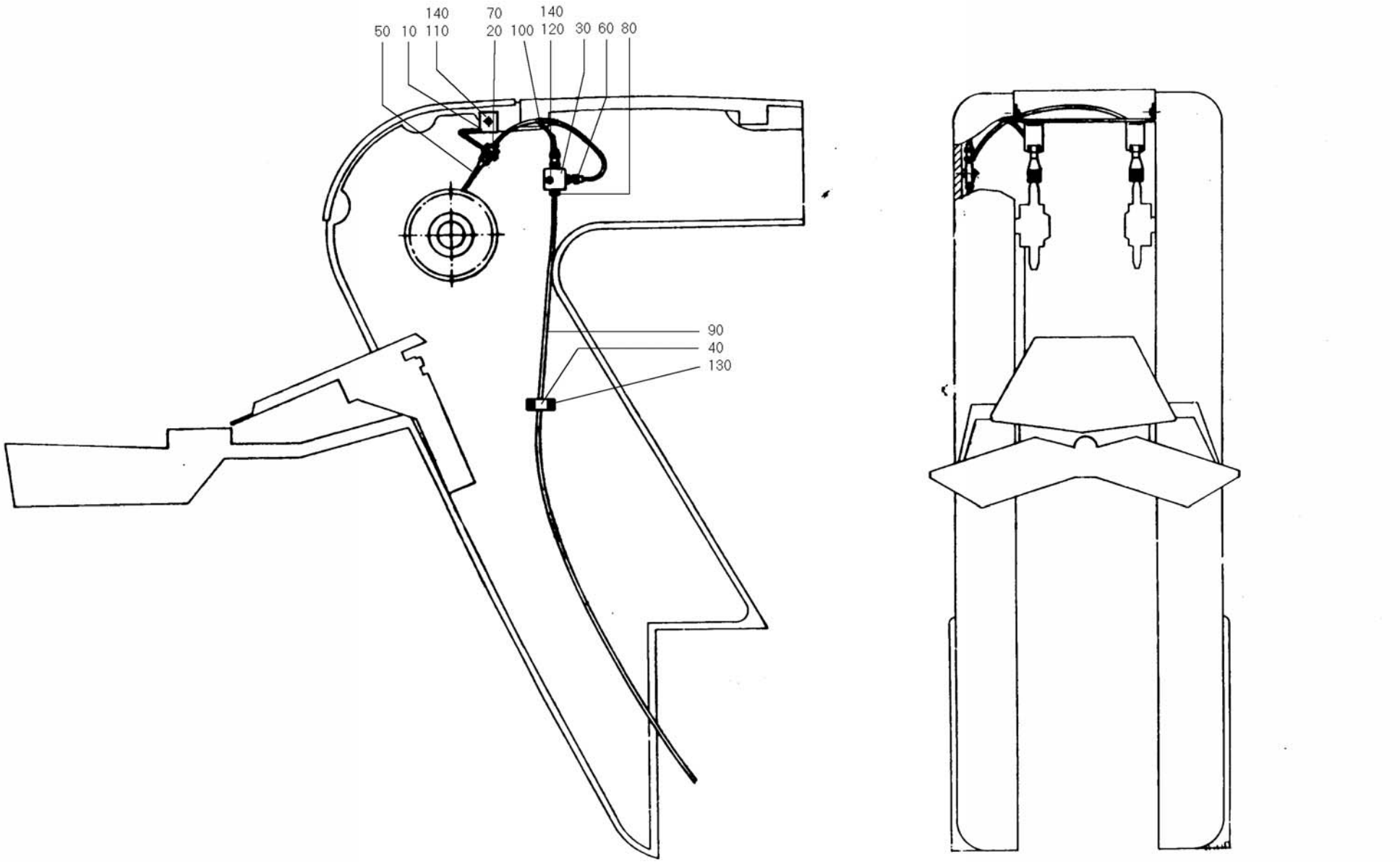

52240901.tif
522409-1
AM 8333

Pos	Part No	SP	UN	Qty	Description	Page No
-						
000	**C- 522409-0101**	**-**		**1**	**CENTRAL LUBRICATION**	
010	522021	-		1	HOLDER	
020	90028-0001	-		2	CONE	
030	90032-0027	-		1	BRANSCH	
040	90074-0018	-		1	CLIP	
050	90092-0048	-		2	OIL BRUSH	
060	90092-0065	-		2	METERING VALVE	
070	90134-0003	-		2	BUSHING	
080	90134-0034	-		1	NIPPLE	
090	90166-0011	-	M	2	HOSE	
100	90166-0103	-	M	1	HOSE	
110	312105-0366	-		2	SCREW M6S6X12RFR	
120	312105-0372	-		1	SCREW M6S6X25RFR	
130	312125-0287	-		2	SLOTTED HEMCS4X8RFR	
140	315105-0153	-		2	WASHER BRB6,4X12RFR	

Pos	Part No	SP	UN	Qty	Description	Page No

Tetra Pak

SPC

Spare Parts Catalogue

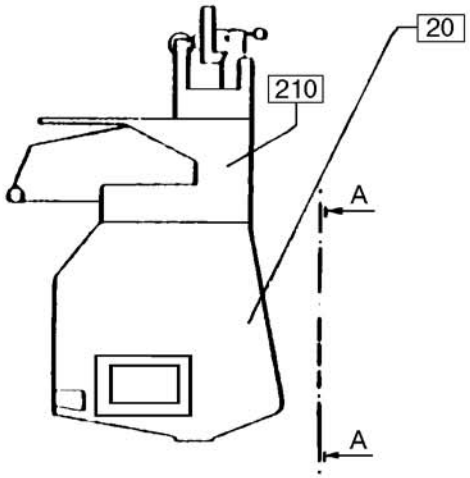

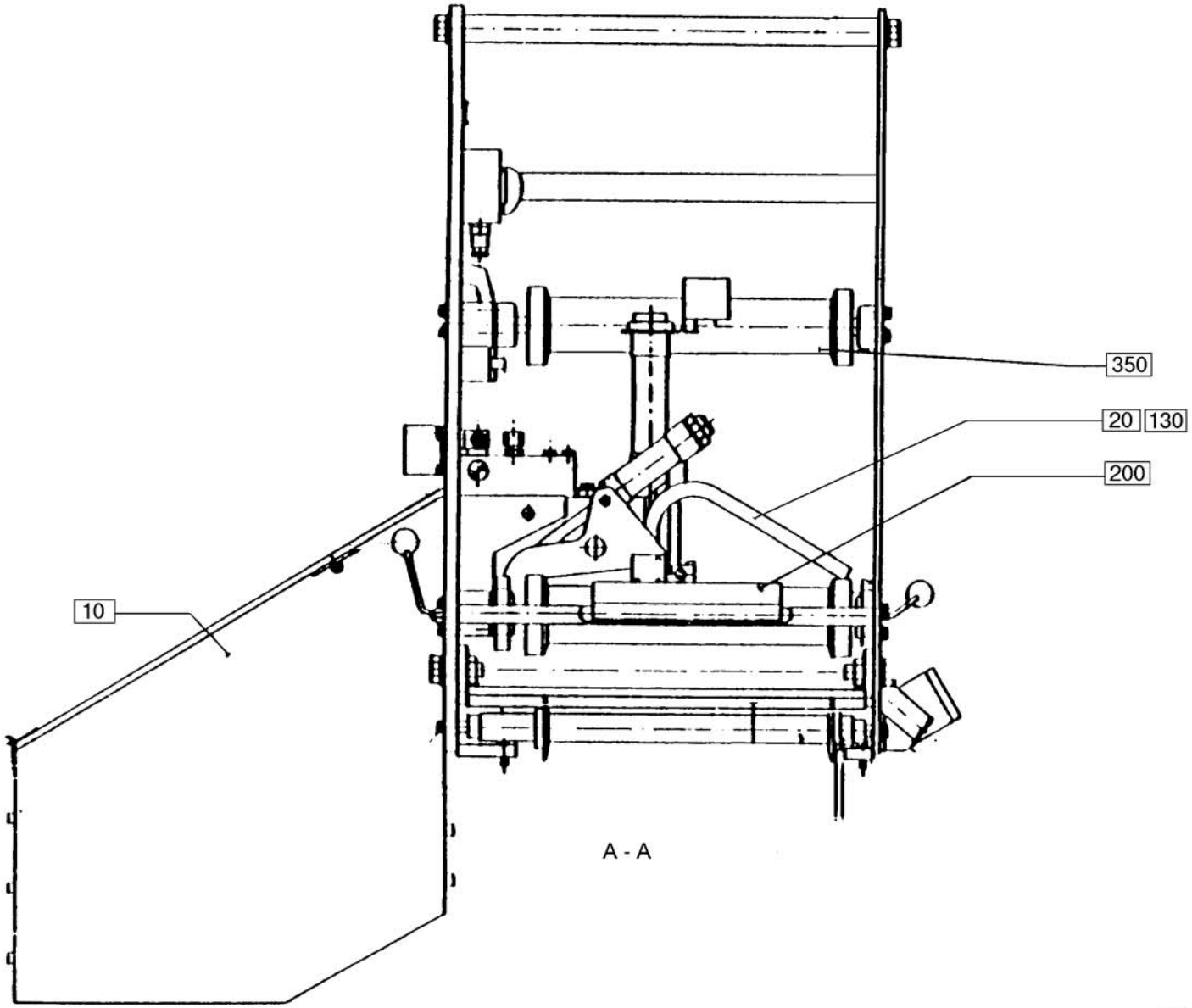

61030801.TIF
610308
AM

Pos	Part No	SP	UN	Qty	Description	Page No
000	**B- 610308-1501**	**-**		**1**	**HOLE PUNCH**	
F000	C- 265768-0301	-		1	HOLE PUNCH	**241**
F000	C- 537570-0101				. AIR DISTRIBUTION UNIT	**245**
F010	C- 13852-0201	-		1	MAGAZINE	**247**
F020	C- 19519-0301	-		1	OPENING ARRANGEMENT	**249**
F020	C- 19521-0201				. CARRIAGE	**251**
F020	C- 19522-0101				. . COUNTER ROLLER	**253**
F020	C- 19523-0101				. . FREE-WHEEL COUPLING	**255**
F020	C- 20991-0101				. . STEERING	**257**
F020	C- 19525-0703				. PUNCH UNIT	**259**
F020	C- 19526-0301				. FRAME	**261**
F020	C- 263886-0302				. SEALING DEVICE	**263**
F020	C- 19573-0201				. . CONNECTION BOX	**265**
F020	C- 486705-0101				. FEEDER	**267**
F200	C- 20036-0101	-		1	BRAKE	**269**
F210	C- 251344-0201	-		1	STRIP APPLICATOR	**271**
F210	C- 37459-0101				. HOLDER	**273**
F210	C- 37460-0101				. . DATING UNIT	**275**
F210	C- 37461-0101				. . . PRINTING WHEEL	**277**
F210	C- 33608-0101				. . . . SCREW	**279**
F210	C- 37485-0102				. . HOLDER	**281**
F210	C- 293483-0101				. FASTENING PLATE	**283**
F210	C- 20387-0101				. . BOBBIN	**285**
F210	C- 20389-0101				. . BRAKE	**287**
F210	C- 293484-0101				. FASTENING PLATE	**289**
F210	C- 20387-0101				. . BOBBIN	**285**
F210	C- 20389-0101				. . BRAKE	**287**
F210	C- 294112-0201				. ELEMENT GROUP	**291**
F210	C- 450343-0101				. PAPER GUIDE	**293**
F350	C- 239793-0101	-		4	BENDING ROLLER	**295**
F370	C- 267052-0301	-		1	START-UP KIT	**297**
	C- 541001-0101	-		1	CONTROL INSTRUMENT	**299**

Pos	Part No	SP	UN	Qty	Description	Page No

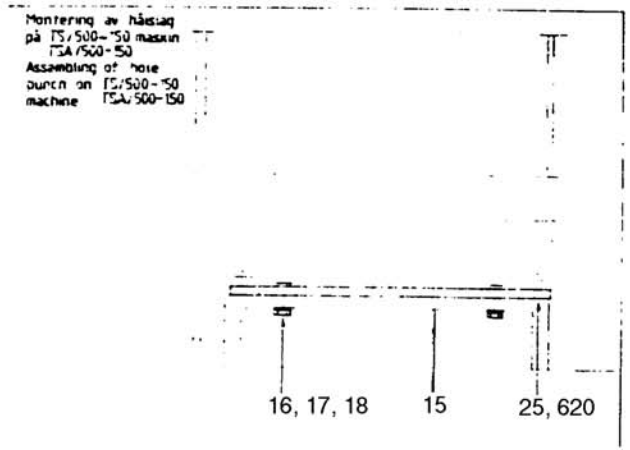

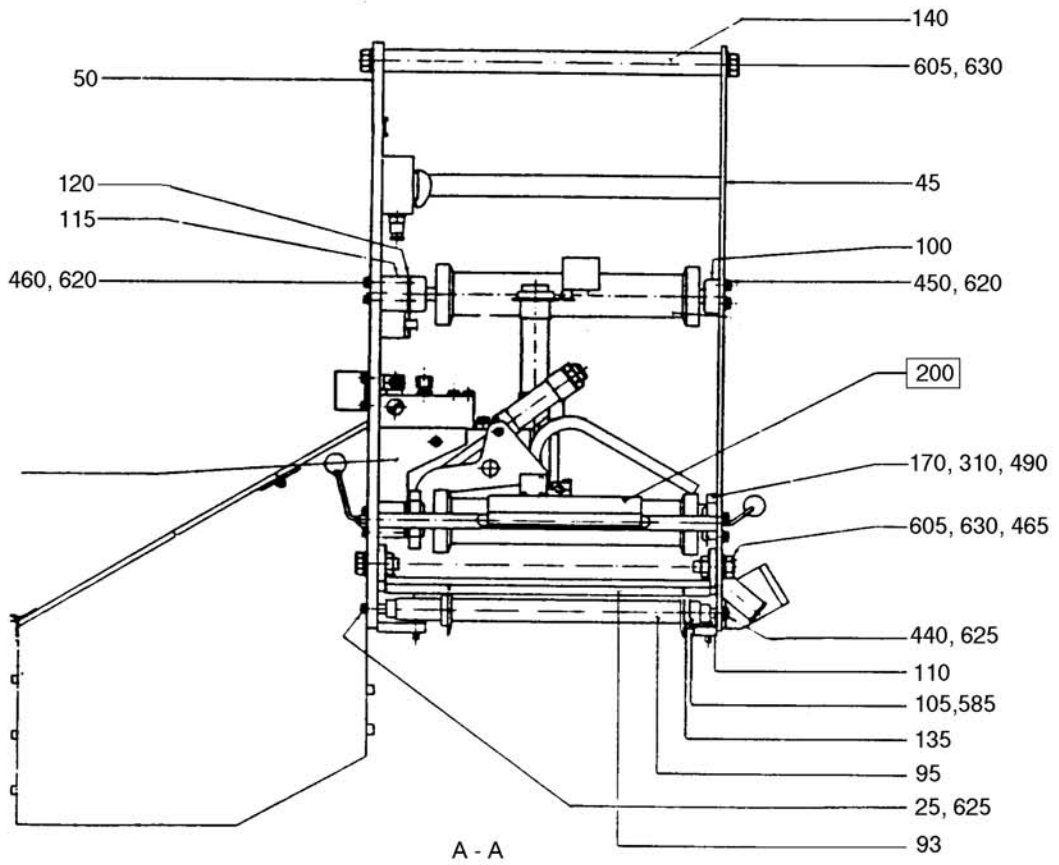

26576805.TIF
265768-5
AM

EC No: 19102 - 930709
Group number: C- 265768-030V
Assembly Drawing: 265768-5/6

Issue date: 9503

Pos	Part No	SP	UN	Qty	Description	Page No
000	**C- 265768-0301**	**-**		**1**	**HOLE PUNCH**	
025	312105-0370	-		6	SCREW O4017 M6X20A280	
035	312115-0380	-		6	SCREW O4762 M6X50A280	
200	90002-0009	-		1	BLANK-OFF PLUG	
250	90055-0073	-		1	HOSE NIPPLE	
260	90074-0005	-		2	CLIP	
280	90111-0073	-		1	SWITCH	
320	90166-0013	-	MM	26	HOSE	
322	90166-0013	-	MM	1300	HOSE	
330	90166-0117	-	MM	30	HOSE	
400	90235-0289	-		1	VALVE	
420	311520-0429	-		2	BLANK RIVE3,2X8	
530	312125-0291	-		4	SLOTTED HEMCS4X12RFR	
540	312125-0234	-		2	SLOTTED HEMCS3X30RFR	
551	312125-0323	-		2	SLOTTED HEMCS5X8RFR	
620	315105-0153	-		38	WASHER BRB6,4X12RFR	
680	342748-0103	-		4	T-CONNECTI D=8	
688	342921-0111	-		1	PIPE COUPL6/4-5M	
700	342980-0111	-		1	BANJO CONNSINGEL 6/4-5M	
705	342980-0301	-		1	BANJO CONN SINGEL 5M	
710	352103-0105	-		1	CABLE GLANR.STR 11	
715	359240-0100	-		1	SIGN HOLDER	
Common parts						
045	537904	-		1	LEFT GABLE	
050	537903	-		1	RIGHT GABLE	
060	21150	-		1	FUNNEL	
065	540345	-		1	FRAME	
070	540346	-		1	PROTECTIVE GLASS	
075	537173	-		1	JUNCTION BLOCK	
080	537174	-		1	PROTECTION	
085	23267	-		1	SUPPORT	
090	36679	-		1	FRAME	
093	540309	-		1	SPACER BRACKET	
095	4288-0005	-		1	BENDING ROLLER	
100	G- 4317	-		6	BEARING	
105	10908	-		2	RETAINING RING	
110	11448	-		1	SHAFT	
115	11452	-		3	LACE	
120	13401	-		9	LACE	
130	20497	-		1	GROUP NUMBER PLATE	
135	20674	-		2	GUIDE FLANGE	
140	21155	-		4	SPACER ROD	
155	21161	-		2	HINGE	
170	575505	-		6	SPACER	
175	23266	-		1	STOP	
180	27402	-		1	MACHINE PLATE	
270	90074-0029	-		3	CLIP	
290	90163-0067	-		3	HOSE NIPPLE	
310	90165-0015	-		6	CLIP	
324	90166-0013	-	MM	600	HOSE	
331	90166-0117	-	MM	200	HOSE	
332	90166-0117	-	MM	220	HOSE	
333	90166-0117	-	MM	340	HOSE	
334	90166-0117	-	MM	350	HOSE	
335	90166-0117	-	MM	400	HOSE	
336	90166-0117	-	MM	450	HOSE	
337	90166-0117	-	MM	600	HOSE	
340	90166-0105	-	MM	550	HOSE	
350	90347-0007	-		2	VIBRATION DAMPER	
425	312105-0325	-		2	SCREW M6S5X10 A2 80	
440	312105-0366	-		7	SCREW O4017 M6X12A280	
450	312105-0368	-		10	SCREW O4017 M6X16A280	
460	312105-0381	-		9	SCREW O4014 M6X55A280	
465	312105-0538	-		2	SCREW 4017 M12X35A280	
470	312105-0376	-		2	SCREW O4017 M6X35A280	
480	312105-0499	-		2	SCREW 4017 M10X40A280	
490	312115-0289	-		12	SCREW S4X10 A4 80	
510	312115-0368	-		4	SCREW O4762 M6X16A280	
545	312125-0285	-		2	SLOTTED HEMCS4X6RFR	
550	312125-0323	-		4	SLOTTED HEMCS5X8RFR	
560	312165-0366	-		17	SLOTTED HEMKFS6X12RFR	
565	312165-0368	-		4	SLOTTED HEMKFS6X16RFR	
570	312316-0374	-		4	STOP SCREW SK6SS 6X30 FZB	
580	312318-0285	-		2	STOP SCREW SK6SS4X6RFR	
585	312318-0360	-		2	STOP SCREW SK6SS6X6RFR	
590	312502-0221	-		8	DRIVE SCREKDS4X6FNB	
600	312605-0316	-		6	NUT M6M6RFR	
605	312605-0322	-		10	NUT M6M12RFR	
610	312605-0320	-		2	NUT M6M10RFR	
615	315105-0146	-		4	WASHER BRB5,3X10RFR	
622	315105-0173	-		2	WASHER BRB10,5X22RFR	
625	315401-0153	-		8	WASHER FBH6,1FZB	
630	315401-0178	-		10	WASHER FBH12,2FZB	
640	342713-0213	-		1	BLIND PLUG	
F001	C- 537570-0101	-		1	AIR DISTRIBUTION UNIT	**245**

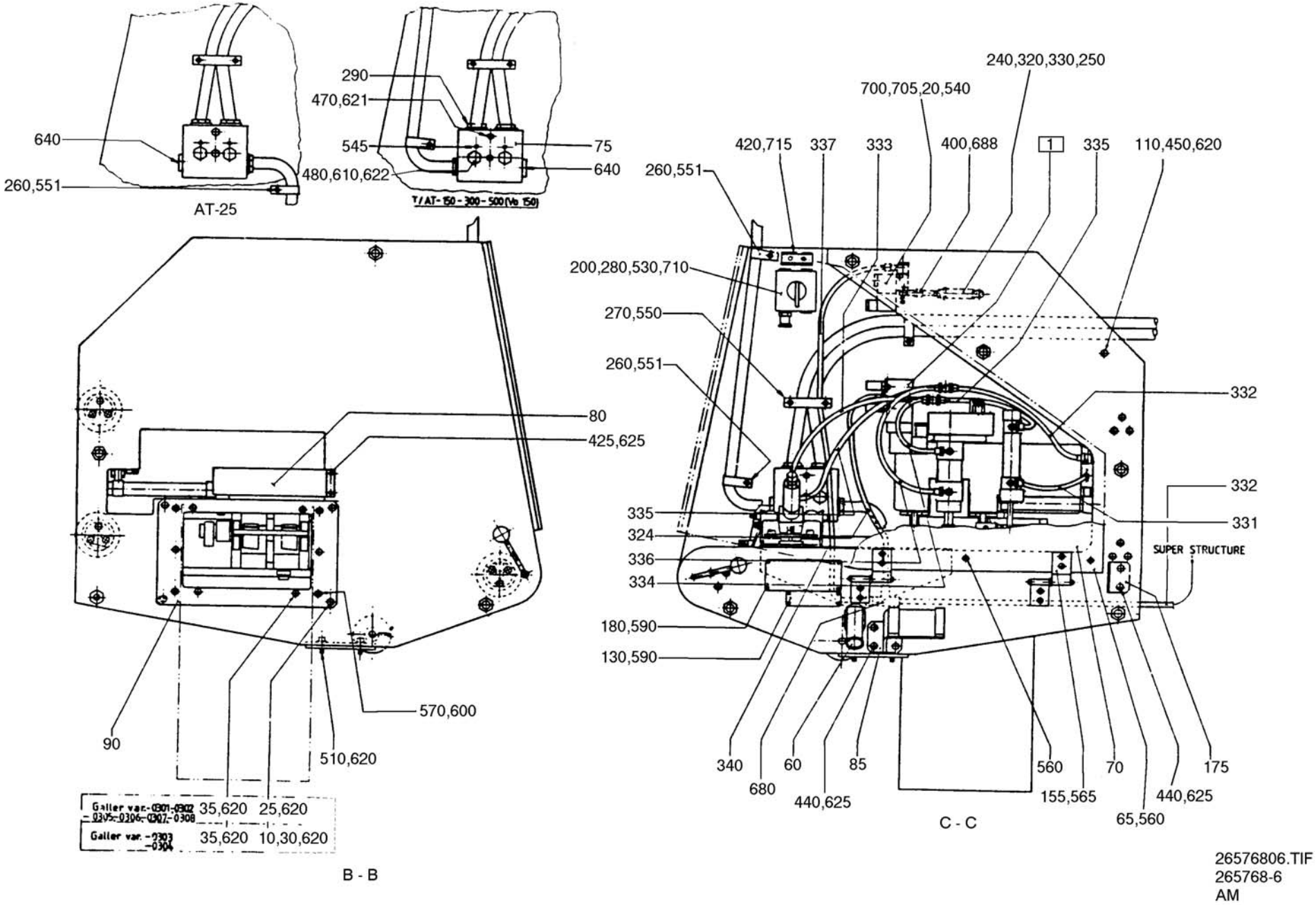
640
260,551
AT-25
290
470,621
545
480,610,622
75
640
T/AT-150-300-500(Vo 150)
80
425,625
570,600
90
510,620
Galler var.-0301-0302 35,620 25,620
-0305-0306-0307-0308
Galler var. -0303 35,620 10,30,620
-0304
B - B
240,320,330,250
700,705,20,540
420,715
337
333
400,688
1
335
110,450,620
260,551
200,280,530,710
270,550
260,551
332
332
331
SUPER STRUCTURE
335
324
336
334
180,590
130,590
340
680
60
440,625
85
560
155,565
70
65,560
175
440,625
C - C
26576806.TIF
265768-6
AM

Pos	Part No	SP	UN	Qty	Description	Page No
000	**C- 265768-0301**	**-**		**1**	**HOLE PUNCH**	
025	312105-0370	-		6	SCREW O4017 M6X20A280	
035	312115-0380	-		6	SCREW O4762 M6X50A280	
200	90002-0009	-		1	BLANK-OFF PLUG	
250	90055-0073	-		1	HOSE NIPPLE	
260	90074-0005	-		2	CLIP	
280	90111-0073	-		1	SWITCH	
320	90166-0013	-	MM	26	HOSE	
322	90166-0013	-	MM	1300	HOSE	
330	90166-0117	-	MM	30	HOSE	
400	90235-0289	-		1	VALVE	
420	311520-0429	-		2	BLANK RIVE3,2X8	
530	312125-0291	-		4	SLOTTED HEMCS4X12RFR	
540	312125-0234	-		2	SLOTTED HEMCS3X30RFR	
551	312125-0323	-		2	SLOTTED HEMCS5X8RFR	
620	315105-0153	-		38	WASHER BRB6,4X12RFR	
680	342748-0103	-		4	T-CONNECTI D=8	
688	342921-0111	-		1	PIPE COUPL6/4-5M	
700	342980-0111	-		1	BANJO CONNSINGEL 6/4-5M	
705	342980-0301	-		1	BANJO CONN SINGEL 5M	
710	352103-0105	-		1	CABLE GLANR.STR 11	
715	359240-0100	-		1	SIGN HOLDER	
Common parts						
045	**537904**	**-**		**1**	**LEFT GABLE**	
050	537903	-		1	RIGHT GABLE	
060	21150	-		1	FUNNEL	
065	540345	-		1	FRAME	
070	540346	-		1	PROTECTIVE GLASS	
075	537173	-		1	JUNCTION BLOCK	
080	537174	-		1	PROTECTION	
085	23267	-		1	SUPPORT	
090	36679	-		1	FRAME	
093	540309	-		1	SPACER BRACKET	
095	4288-0005	-		1	BENDING ROLLER	
100	G- 4317	-		6	BEARING	
105	10908	-		2	RETAINING RING	
110	11448	-		1	SHAFT	
115	11452	-		3	LACE	
120	13401	-		9	LACE	
130	20497	-		1	GROUP NUMBER PLATE	
135	20674	-		2	GUIDE FLANGE	
140	21155	-		4	SPACER ROD	
155	21161	-		2	HINGE	
170	575505	-		6	SPACER	
175	23266	-		1	STOP	
180	27402	-		1	MACHINE PLATE	
270	90074-0029	-		3	CLIP	
290	90163-0067	-		3	HOSE NIPPLE	
310	90165-0015	-		6	CLIP	
324	90166-0013	-	MM	600	HOSE	
331	90166-0117	-	MM	200	HOSE	
332	90166-0117	-	MM	220	HOSE	
333	90166-0117	-	MM	340	HOSE	
334	90166-0117	-	MM	350	HOSE	
335	90166-0117	-	MM	400	HOSE	
336	90166-0117	-	MM	450	HOSE	
337	90166-0117	-	MM	600	HOSE	
340	90166-0105	-	MM	550	HOSE	
350	90347-0007	-		2	VIBRATION DAMPER	
425	312105-0325	-		2	SCREW M6S5X10 A2 80	
440	312105-0366	-		7	SCREW O4017 M6X12A280	
450	312105-0368	-		10	SCREW O4017 M6X16A280	
460	312105-0381	-		9	SCREW O4014 M6X55A280	
465	312105-0538	-		2	SCREW 4017 M12X35A280	
470	312105-0376	-		2	SCREW O4017 M6X35A280	
480	312105-0499	-		2	SCREW 4017 M10X40A280	
490	312115-0289	-		12	SCREW S4X10 A4 80	
510	312115-0368	-		4	SCREW O4762 M6X16A280	
545	312125-0285	-		2	SLOTTED HEMCS4X6RFR	
550	312125-0323	-		4	SLOTTED HEMCS5X8RFR	
560	312165-0366	-		17	SLOTTED HEMKFS6X12RFR	
565	312165-0368	-		4	SLOTTED HEMKFS6X16RFR	
570	312316-0374	-		4	STOP SCREW SK6SS 6X30 FZB	
580	312318-0285	-		2	STOP SCREW SK6SS4X6RFR	
585	312318-0360	-		2	STOP SCREW SK6SS6X6RFR	
590	312502-0221	-		8	DRIVE SCREKDS4X6FNB	
600	312605-0316	-		6	NUT M6M6RFR	
605	312605-0322	-		10	NUT M6M12RFR	
610	312605-0320	-		2	NUT M6M10RFR	
615	315105-0146	-		4	WASHER BRB5,3X10RFR	
622	315105-0173	-		2	WASHER BRB10,5X22RFR	
625	315401-0153	-		8	WASHER FBH6,1FZB	
630	315401-0178	-		10	WASHER FBH12,2FZB	
640	342713-0213	-		1	BLIND PLUG	
F001	C- 537570-0101	-		1	AIR DISTRIBUTION UNIT **245**	

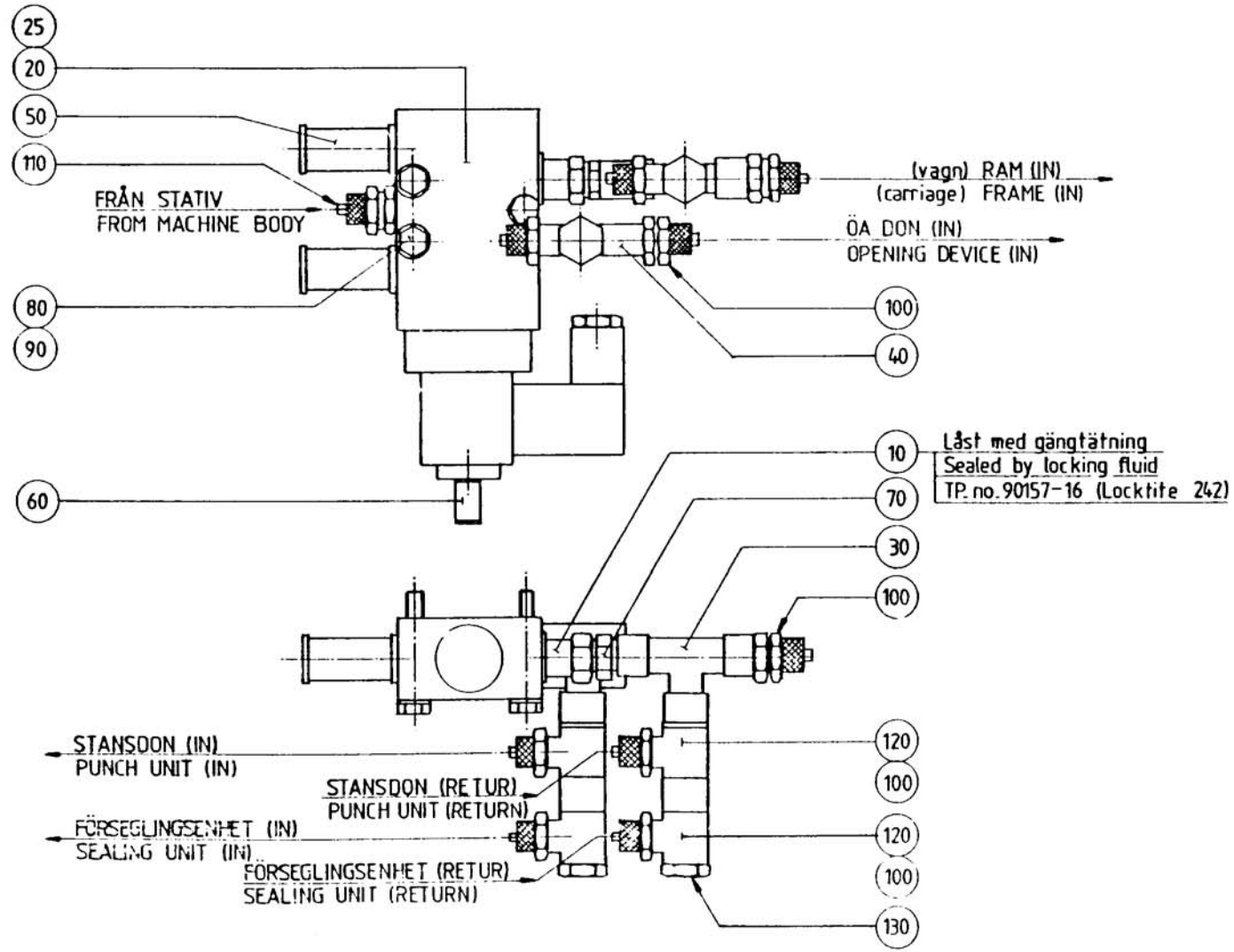

53757001.TIF
537570-1
AM

Pos	Part No	SP	UN	Qty	Description	Page No
000	**C- 537570-0101**	**-**		**1**	**AIR DISTRIBUTION UNIT**	
025	90042-0346	-		1	COIL	
Common parts						
010	**90030-0210**	**-**		**1**	**NIPPLE**	
020	90042-0159	-		1	SOLENOID VALVE	
030	90140-0015	-		1	T-PIECE	
040	90140-0022	-		1	T-PIECE	
045	90166-0013	-	M	2	HOSE	
050	90328-0012	-		2	SILENCER	
060	90328-0020	-		1	SILENCER	
070	90330-0032	-		1	NIPPLE	
080	312105-0337	-		3	SCREW O4014 M5X35A280	
090	315105-0146	-		3	WASHER BRB5,3X10RFR	
095	342728-0103	-		1	PIPE COUPL	
100	342920-0113	-		6	PIPE COUPL6/4-1/8	
110	342920-0121	-		1	PIPE COUPL8/6-1/8	
120	342980-0113	-		4	BANJO CONNSINGEL 6/4-1/8	
130	342980-0313	-		2	BANJO CONN DUBBEL 1/8	

Pos	Part No	SP	UN	Qty	Description	Page No

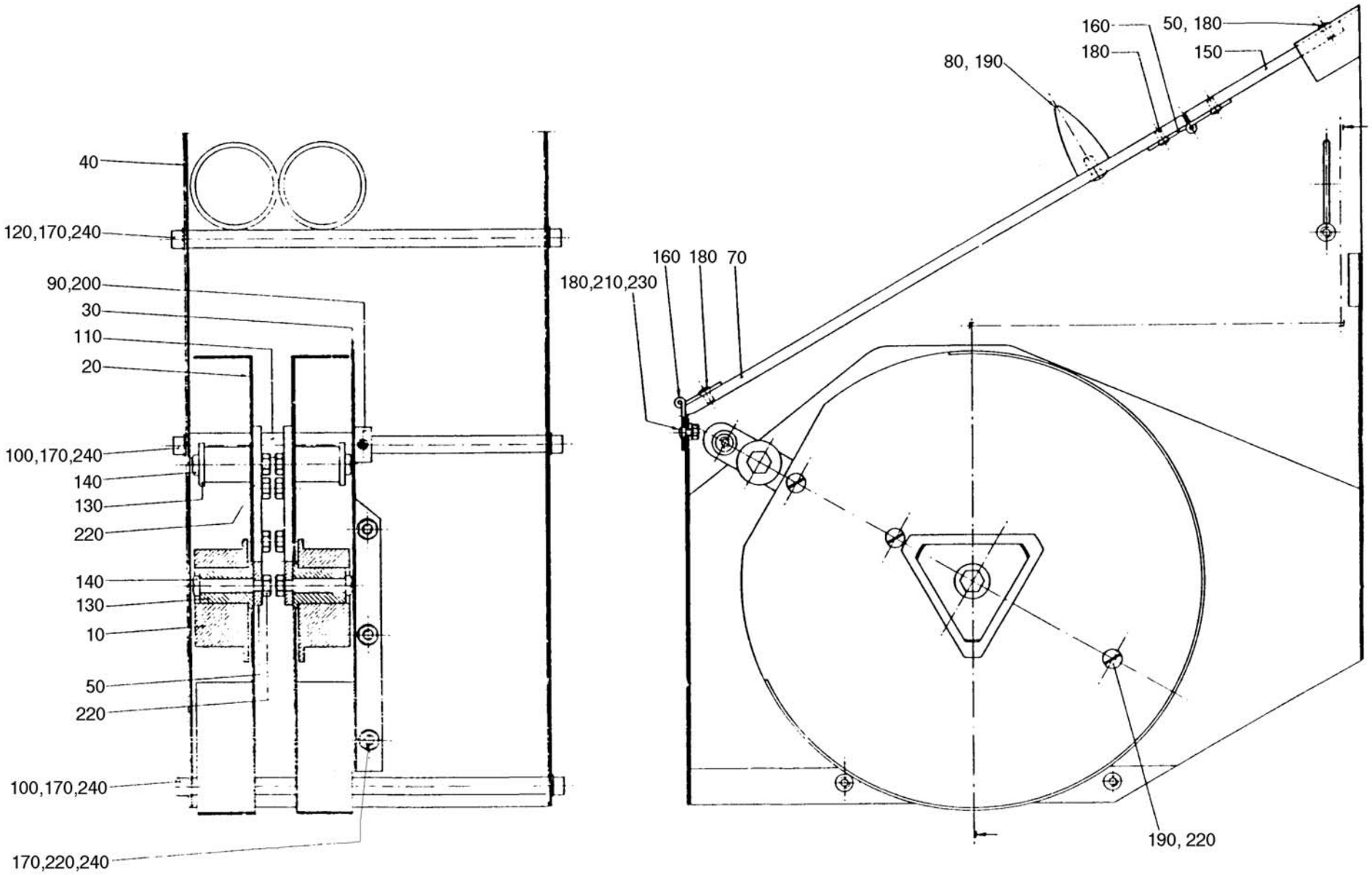

1385202.TIF
13852-2
AM

Pos	Part No	SP	UN	Qty	Description	Page No
70MM BOBBIN						
000	**C- 13852-0201**	**-**		**1**	**MAGAZINE**	
010	13665	-		2	BOBBIN HOLDER	
020	13663	-		2	CASSETTE	
030	13853	-		1	GABLE PLATE	
040	13854	-		1	HOLDER	
050	11445	-		1	MOUNTINGS	
060	13664	-		2	ARM	
070	575504	-		1	LID	
080	7309	-		1	HANDLE	
090	10908	-		1	RETAINING RING	
100	11305	-		3	SPACER	
110	11307	-		1	BUSHING	
120	11312	-		1	GUIDE RING	
130	13666	-		4	BUSHING	
140	13667	-		4	SHOULDER BOLT	
160	90248-0002	-		2	HINGE	
170	312115-0366	-		13	SCREW O4762 M6X12A280	
180	312165-0287	-		14	SLOTTED HEMKFS4X8RFR	
190	312165-0366	-		8	SLOTTED HEMKFS6X12RFR	
200	312306-0360	-		1	STOP SCREW P6SS6X6FZB	
210	312605-0312	-		6	NUT M6M4RFR	
220	312605-0316	-		15	NUT M6M6RFR	
230	315105-0136	-		6	WASHER BRB4,3X8RFR	
240	315105-0153	-		13	WASHER BRB6,4X12RFR	

Pos	Part No	SP	UN	Qty	Description	Page No

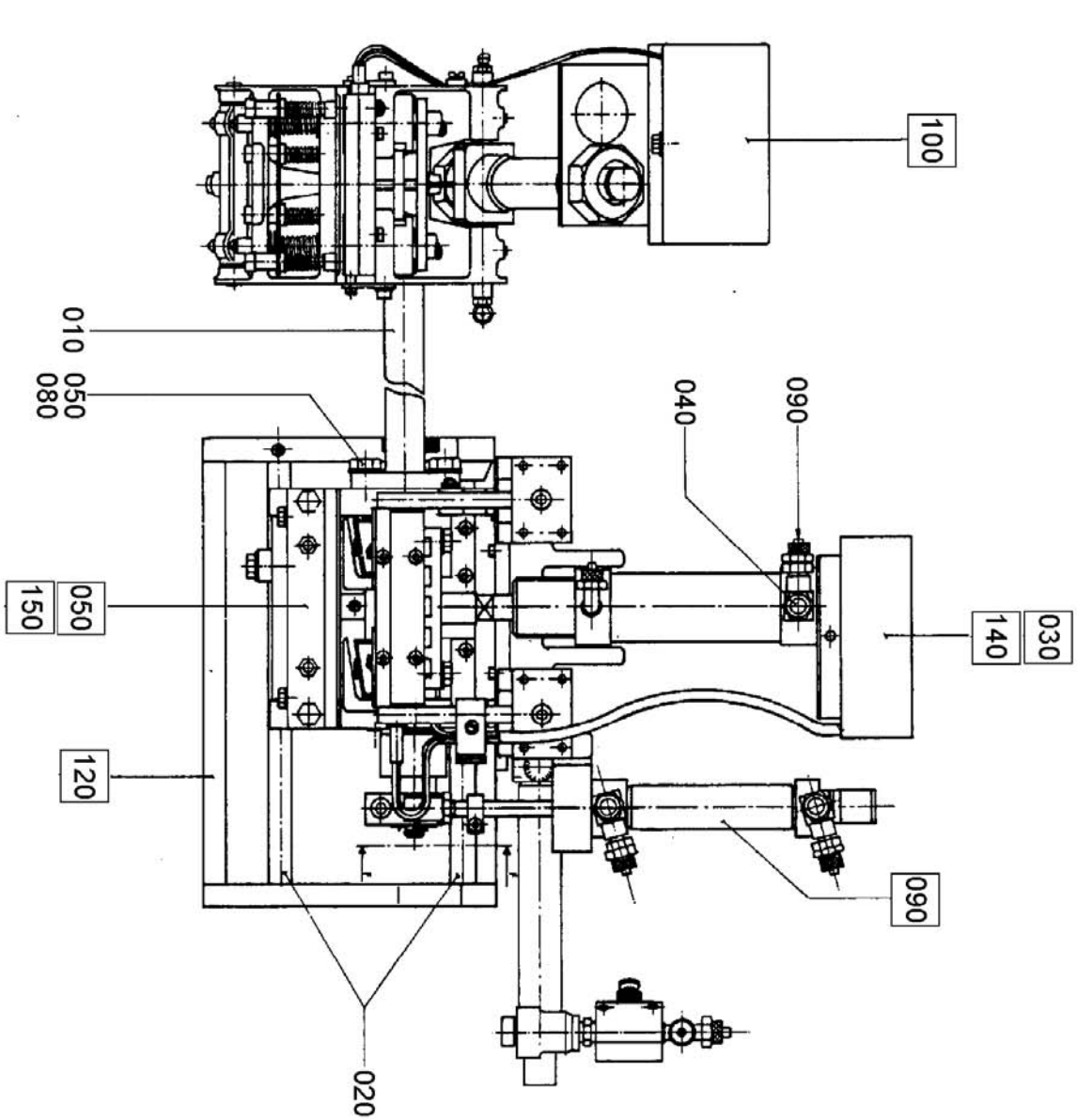

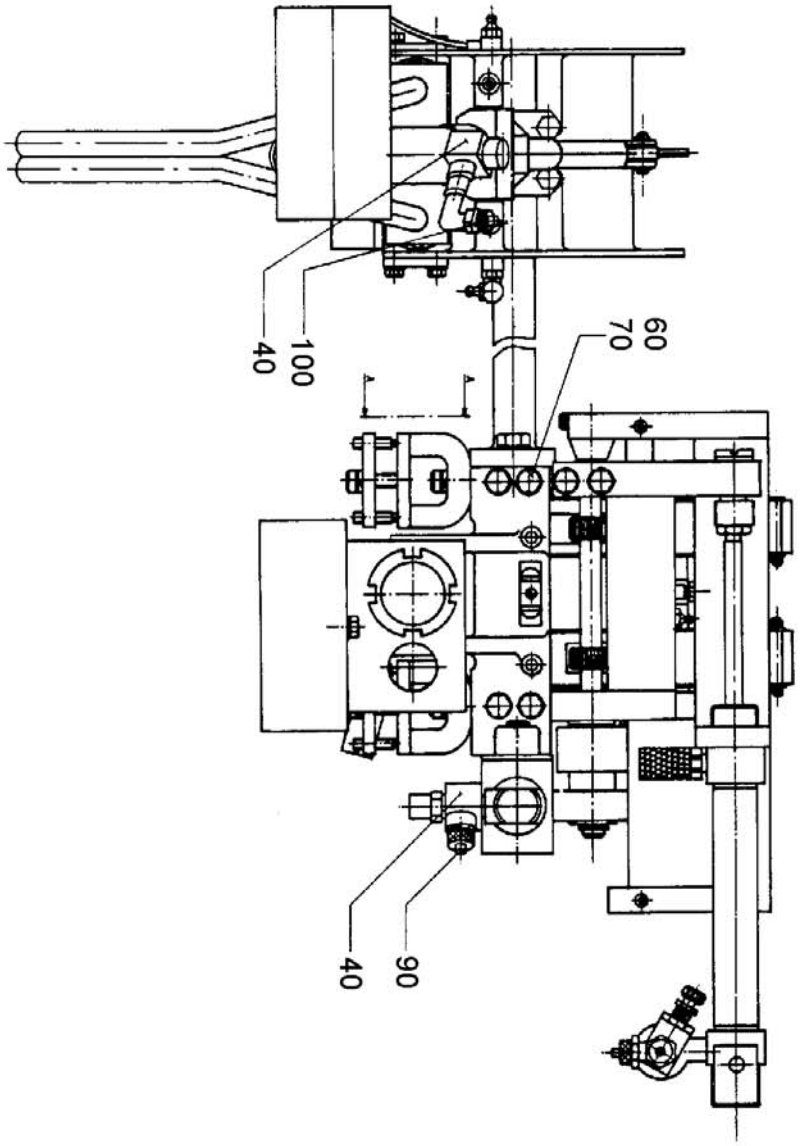

1951902.tif
19519-2 /3
AM 8312

Pos	Part No	SP	UN	Qty	Description	Page No
TC/150, TC/155, TC/300, TC/500, TCA/150, TCA/300, TCA/500						
000	**C- 19519-0301**	**-**		**1**	**OPENING ARRANGEMENT**	
010	19560	-		1	PIPE	
F030	C- 263886-0302	-		1	SEALING DEVICE	**263**
F050	C- 19521-0201	-		1	CARRIAGE	**251**
F100	C- 19525-0703	-		1	PUNCH UNIT	**259**
Common parts						
020	11436	-		2	SHAFT	
050	312101-0453	-		2	SCREW M6S8X25FZB	
060	312105-0374	-		4	SCREW O4017 M6X30A280	
070	315105-0153	-		4	WASHER BRB6,4X12RFR	
080	315105-0165	-		2	WASHER BRB8,4X16RFR	
F090	C- 486705-0101	-		1	FEEDER	**267**
F120	C- 19526-0301	-		1	FRAME	**261**

Pos	Part No	SP	UN	Qty	Description	Page No

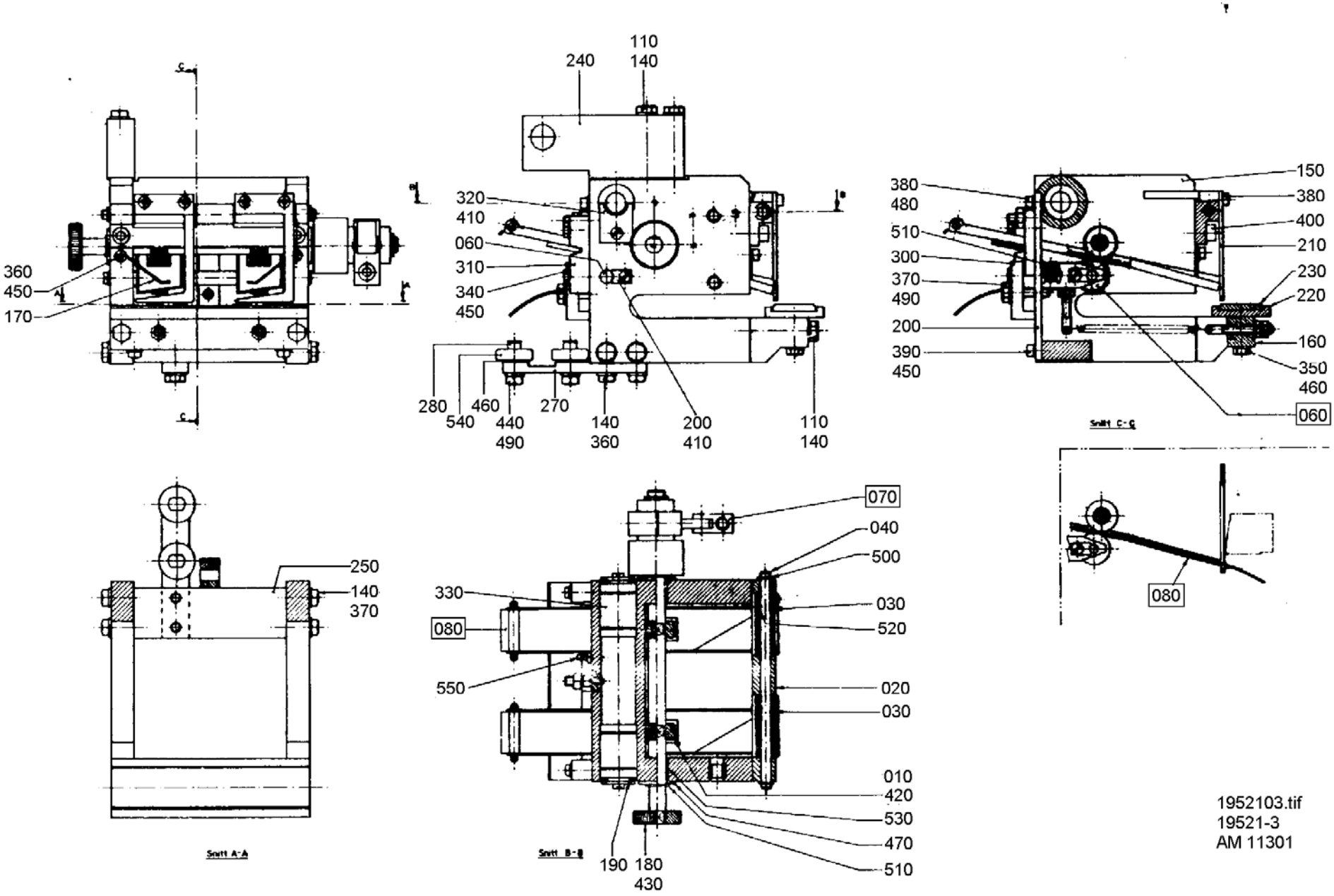

1952103.tif
19521-3
AM 11301

Pos	Part No	SP	UN	Qty	Description	Page No
REKT.TAB						
000	**C- 19521-0201**	**-**		**1**	**CARRIAGE**	
020	19125	-		1	LINK	
030	19140	-		2	KNIFE HOLDER	
040	19142	-		1	SHAFT	
060	19547	-		1	SHAFT	
110	312101-0380	-		4	SCREW M6S6X50FZB	
140	315105-0153	-		10	WASHER BRB6,4X12RFR	
F060	C- 19522-0101	-		2	COUNTER ROLLER	**253**
F070	C- 19523-0101	-		1	FREE-WHEEL COUPLING	**255**
F080	C- 20991-0101	-		1	STEERING	**257**
Common parts						
010	**36656**	**-**		**2**	**ROLL**	
150	19537	-		1	FRAME	
160	19538	-		1	BRACKET	
170	11423	-		2	SPRING	
180	11424	-		1	SHIFTER HANDLE	
190	13643	-		2	WASHER	
200	19135	-		1	LOCK WASHER	
210	19139	-		2	KNIFE	
220	538526	-		1	RAIL	
230	538527	R		1	RUBBER RAIL	
240	19540	-		1	CARRIER	
250	19542	-		1	SPACER	
260	19543	-		1	SUPPORT	
270	19544	-		1	BRACKET	
280	19545	-		2	ECCENTRIC SHAFT	
290	19546	-		2	WASHER	
300	19548	-		1	CLAMPING PIECE	
310	19549	-		2	BRACKET	
320	21014	-		2	WASHER	
330	90189-0003	-		2	BALL BUSHING	
340	312101-0293	-		4	SCREW M6S4X16FZB	
350	312101-0332	-		2	SCREW M6S5X22FZB	
360	312101-0368	-		2	SCREW M6S6X16FZB	
370	312101-0372	-		5	SCREW M6S6X25FZB	
380	312111-0287	-		7	SCREW MC6S4X8FZB	
390	312111-0291	-		1	SCREW MC6S4X12FZB	
400	312111-0368	-		2	SCREW MC6S6X16FZB	
410	312121-0287	-		3	SLOTTED HEMCS4X8FZB	
420	312316-0283	-		2	STOP SCREW SK6SS4X4FZB	
430	312316-0287	-		1	STOP SCREW SK6SS4X8FZB	
440	312601-0316	-		2	NUT M6M6FZB	
450	315105-0136	-		7	WASHER BRB4,3X8RFR	
460	315105-0146	-		2	WASHER BRB5,3X10RFR	
470	315105-0173	-		2	WASHER BRB10,5X22RFR	
480	315401-0136	-		1	WASHER FBH 4,1 FZB	
490	315401-0153	-		3	WASHER FBH6,1FZB	
500	315754-0106	-		2	LOCKING WAE 4	
510	315754-0109	R		5	LOCKING WAE 7	
520	321120-0102	-		4	BUSHING 6/8X10	
530	321120-0104	-		2	BUSHING 10/12X10	
540	321302-0298	-		2	BALL BEARISKF608-2RS	
550	344502-0021	-		1	NIPPLE L AHM6	

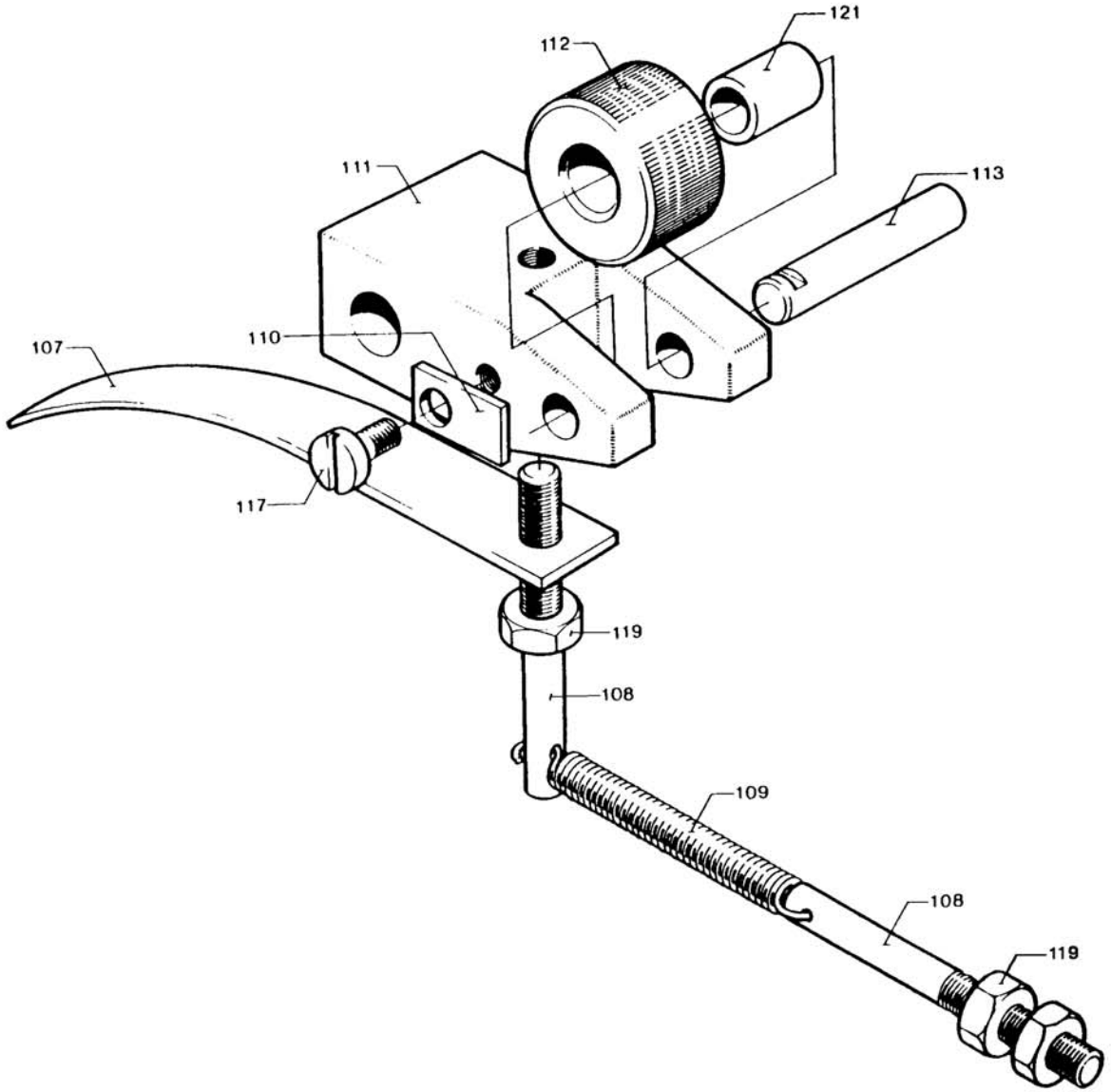

1952201.TIF
19522-1
AM

Pos	Part No	SP	UN	Qty	Description	Page No
REKT.TAB						
000	**C- 19522-0101**	**-**		**2**	**COUNTER ROLLER**	
108	11390	-		2	SCREW	
112	19552	-		1	ROLL	
Common parts						
107	**11389**	**-**		**1**	**BOW CLAMP**	
109	11391-0002	-		1	TENSION SPRING	
110	19135	-		1	LOCK WASHER	
111	19551	-		1	HOLDER	
113	19553	-		1	SHAFT	
117	312121-0285	-		1	SLOTTED HEMCS4X6FZB	
119	312601-0314	-		3	NUT M6M5FZB	
121	321120-0102	-		1	BUSHING 6/8X10	

Pos	Part No	SP	UN	Qty	Description	Page No

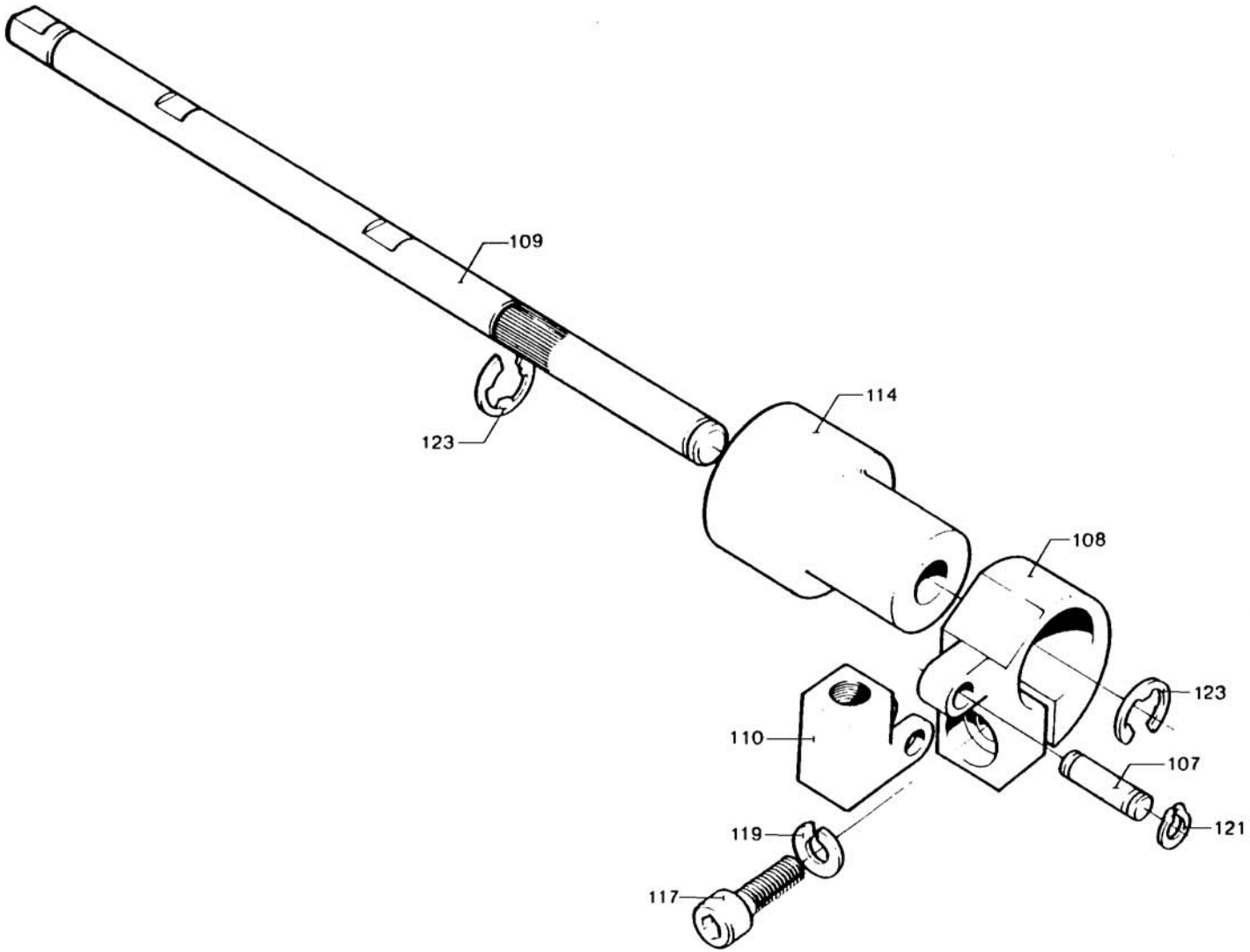

1952301.TIF
19523-1
AM

Pos	Part No	SP	UN	Qty	Description	Page No
NORM. TAB						
000	**C- 19523-0101**	**-**		**1**	**FREE-WHEEL COUPLING**	
109	19554	-		1	SHAFT	
Common parts						
107	**13354**	**R**		**1**	**SHAFT**	
108	14637	-		1	LINK	
110	19555	-		1	FORK	
114	90340-0014	-		1	FREE WHEEL COUPLING	
114A	90340-0309	P		0	* SPRING	
117	312111-0371	-		1	SCREW MC6S6X22FZB	
119	315401-0153	-		1	WASHER FBH6,1FZB	
121	315750-0102	-		2	CIRCLIP SGA5	
123	315754-0109	R		2	LOCKING WAE 7	

Pos	Part No	SP	UN	Qty	Description	Page No

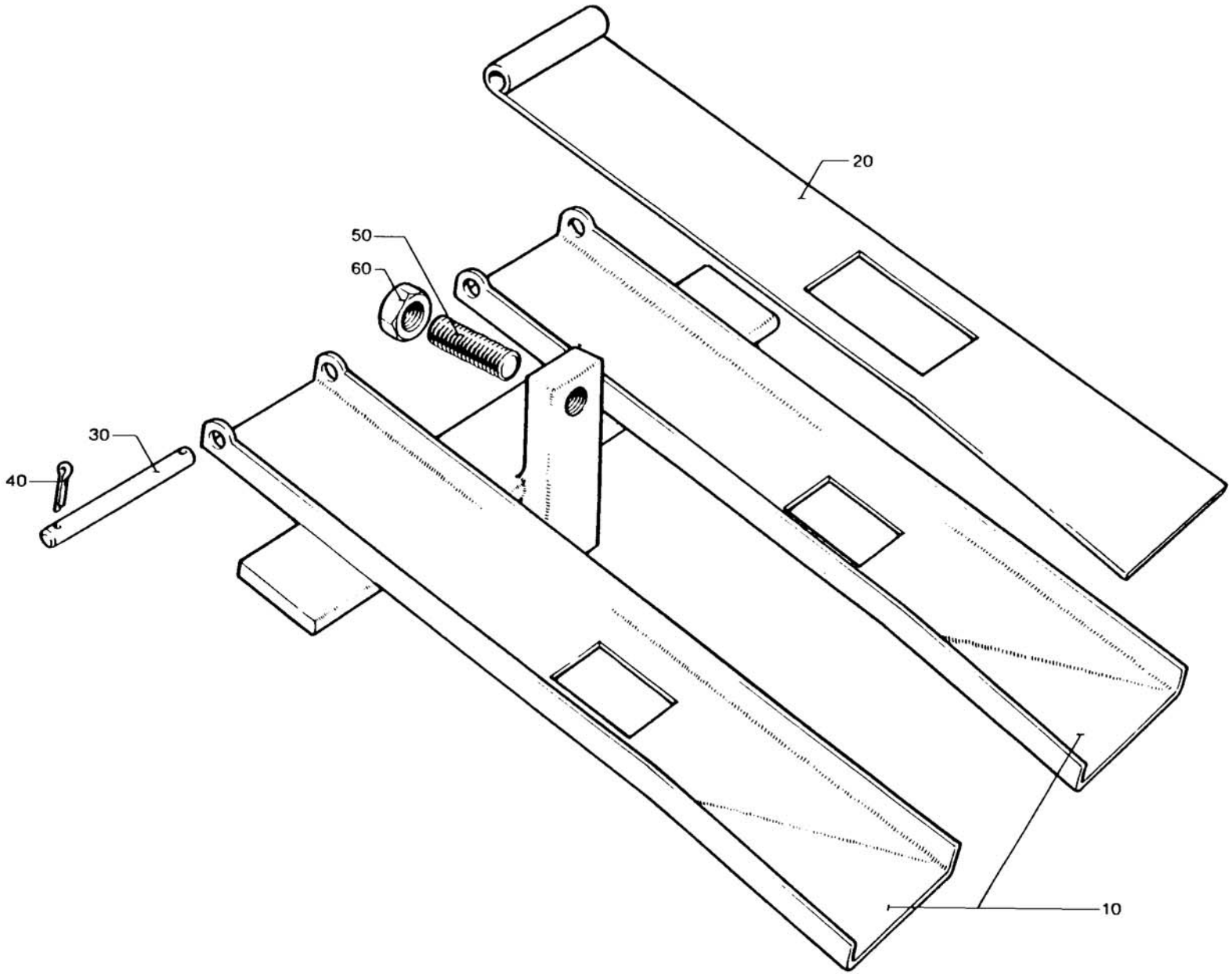

2099101.TIF
20991-1, 2
AM

Pos	Part No	SP	UN	Qty	Description	Page No
NORM.TAB						
000	**C- 20991-0101**	**-**		**1**	**STEERING**	
010	20992	-		1	STEERING RAIL	
020	14617	-		2	HEAD PLATE	
Common parts						
030	**14618**	**-**		**2**	**SHAFT**	
040	311411-0117	-		4	SPLIT PIN SP1X10RFR	
050	312316-0368	-		1	STOP SCREW SK6SS6X16FZB	
060	312601-0316	-		1	NUT M6M6FZB	

Pos	Part No	SP	UN	Qty	Description	Page No

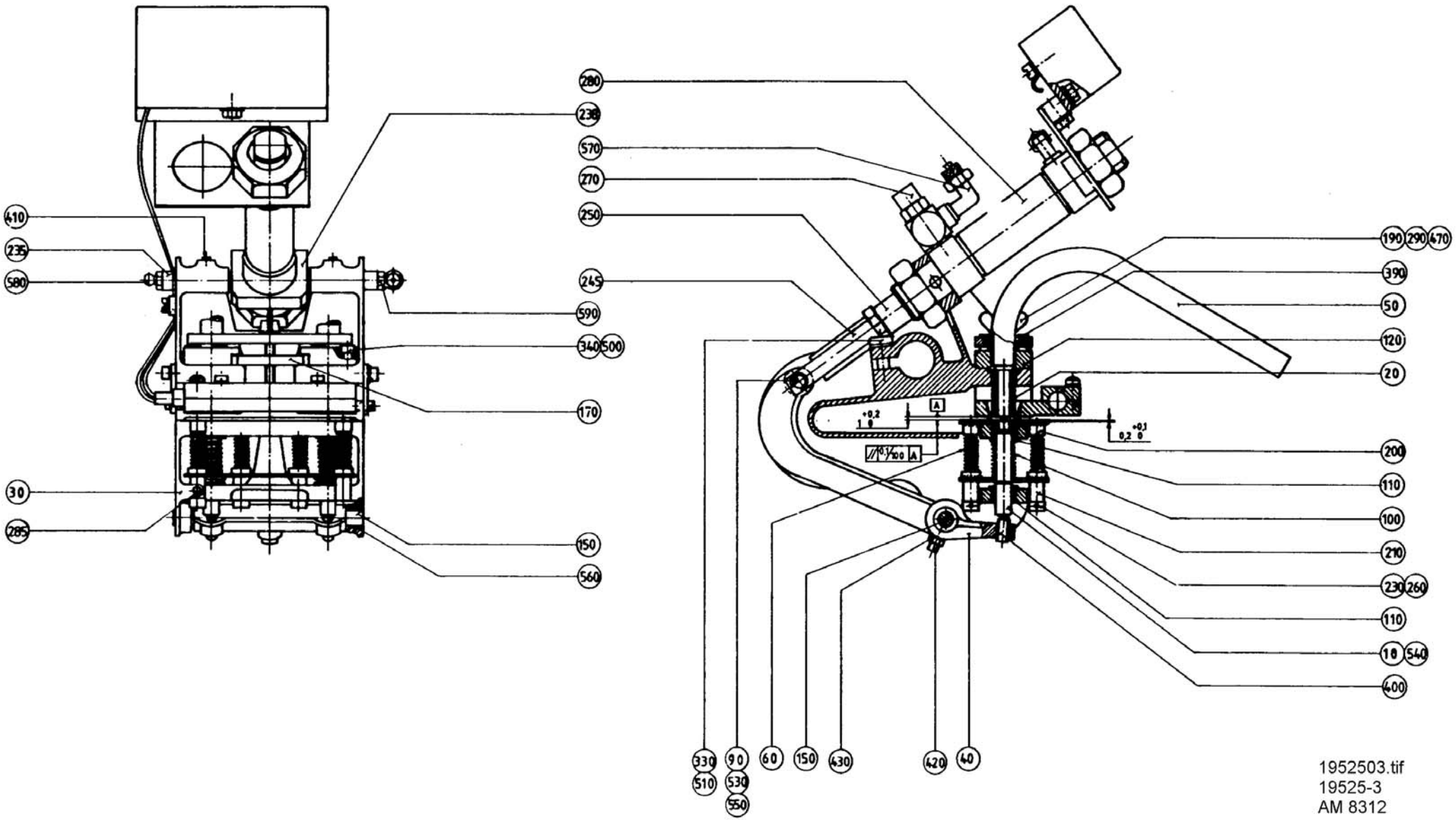
280
238
570
270
250
245
590
340
500
170
150
560
410
235
580
30
285
190
290
470
390
50
120
20
200
110
100
210
230
260
110
18
540
400
330
510
90
530
550
60
150
430
420
40
1952503.tif
19525-3
AM 8312

Pos	Part No	SP	UN	Qty	Description	Page No
HOLEPUNCH DIAMETER 4,0						
000	**C- 19525-0702**	**-**		**1**	**PUNCH UNIT**	
010	21520-0002	-		2	PUNCH	
020	21522-0002	-		2	DIE	
HOLEPUNCH DIAMETER 5,0						
000	**C- 19525-0703**	**-**		**1**	**PUNCH UNIT**	
010	21520-0003	-		2	PUNCH	
020	21522-0003	-		2	DIE	
Common parts						
030	**21232**	**-**		**1**	**BRACKET**	
040	G- 21233	-		1	LEVER	
050	538479	-		1	PIPE	
060	8479	-		4	COMPRESSION SPRING	
090	21518	-		1	SHAFT	
100	21521	R		2	COMPRESSION SPRING	
110	21524	-		4	BUSHING	
120	21525	-		2	LID	
150	21530	-		1	SHAFT	
170	21590	-		1	PLATE	
190	21622	-		1	THUMB SCREW	
200	23358	-		1	PLATE	
210	23359	-		1	PLATE	
230	35806	-		4	SCREW	
235	486708	-		2	SHAFT	
238	486709	-		1	FASTENING PLATE	
240	486710	-		1	BRACKET	
245	486713	-		1	ROD	
250	486714	-		1	SPACER SLEEVE	
260	90145-0003	-	MM	220	WIRE	
270	90235-0241	-		1	VALVE	
280	90239-0828	-		1	CYLINDER 25-25	
285	311103-0274	-		2	CYLINDRICACP 4X25 RFR	
290	311411-0117	-		1	SPLIT PIN SP1X10RFR	
330	312101-0370	-		2	SCREW M6S6X20FZB	
340	312111-0291	-		6	SCREW MC6S4X12FZB	
390	312306-0327	-		2	STOP SCREW P6SS5X12FZB	
400	312306-0366	-		2	STOP SCREW P6SS6X12FZB	
410	312316-0323	-		2	STOP SCREW SK6SS5X8FZB	
420	312316-0329	-		1	STOP SCREW SK6SS5X16FZB	
430	312601-0314	-		1	NUT M6M5FZB	
470	315105-0146	-		3	WASHER BRB5,3X10RFR	
500	315401-0136	-		6	WASHER FBH 4,1 FZB	
510	315401-0146	-		4	WASHER FBH 5,1 FZB	
530	315754-0106	-		2	LOCKING WAE 4	
540	315754-0109	R		2	LOCKING WAE 7	
550	321120-0101	-		1	BUSHING 6/8X6	
560	321120-0103	-		2	BUSHING 8/10X8	
570	342930-0113	-		2	ELBOW PIPE6/4-1/8	
580	344502-0021	-		1	NIPPLE L AHM6	
590	344502-0061	-		1	NIPPLE L M6AL.	

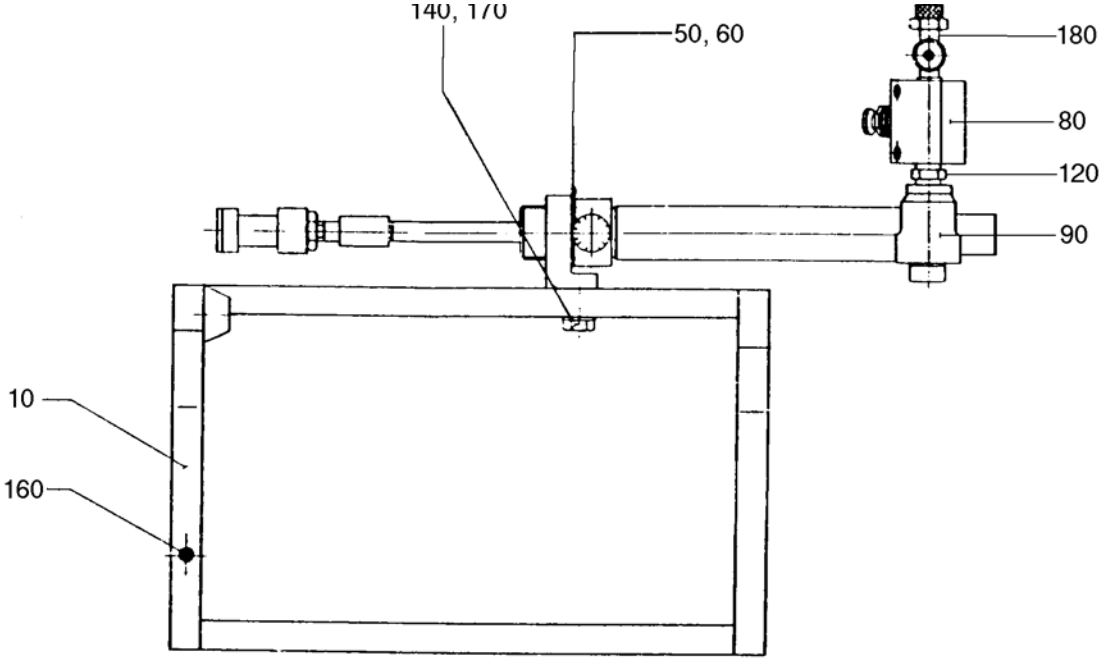

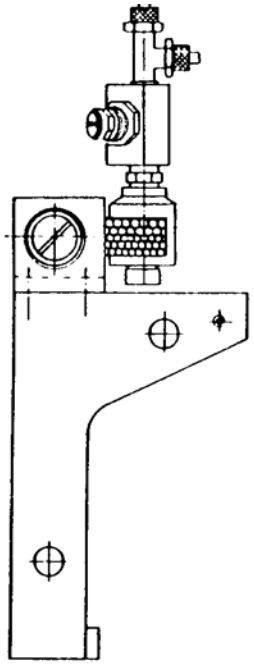

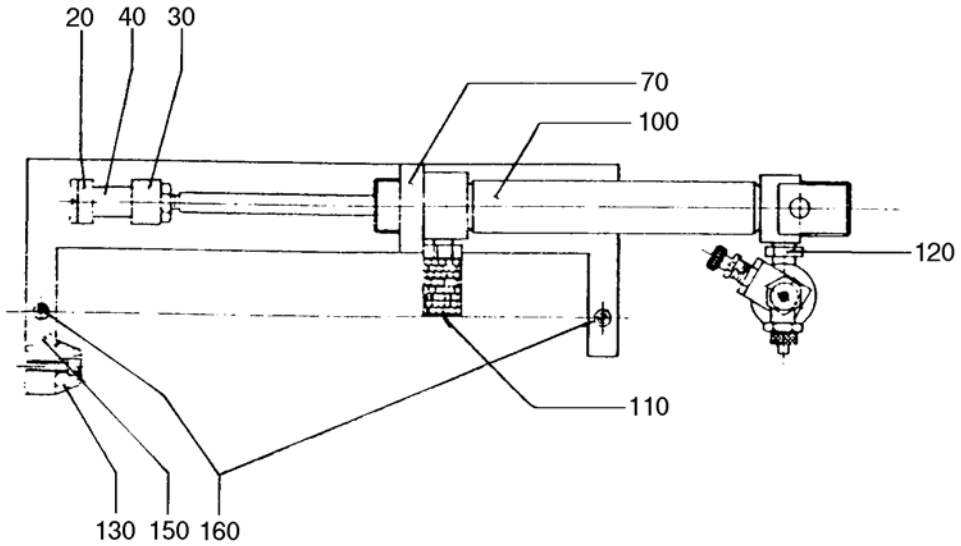

1952602.TIF
19526-2
AM

Pos	Part No	SP	UN	Qty	Description	Page No
-						
000	**C- 19526-0301**	**-**		**1**	**FRAME**	
010	19564	-		1	FRAME	
020	538430	-		1	WASHER	
030	14826	-		1	BUSHING	
040	19567	-		1	SCREW	
050	526969	-		3	SHIM	
060	527131	-		3	SHIM	
070	536698	-		1	CYLINDER BRACKET	
080	90235-0028	-		1	VALVE	
090	90235-0259	-		1	VALVE	
100	90239-0989	-		1	CYLINDER	
110	90328-0012	-		1	SILENCER	
120	90330-0032	-		2	NIPPLE	
130	90347-0005	-		1	VIBRATION DAMPER	
140	312101-0370	-		2	SCREW M6S6X20FZB	
150	312111-0291	-		1	SCREW MC6S4X12FZB	
160	312316-0362	-		3	STOP SCREW SK6SS6X8FZB	
170	315401-0153	-		2	WASHER FBH6,1FZB	
180	342950-0113	-		1	ELBOW FITT6/4-1/8	

Pos	Part No	SP	UN	Qty	Description	Page No

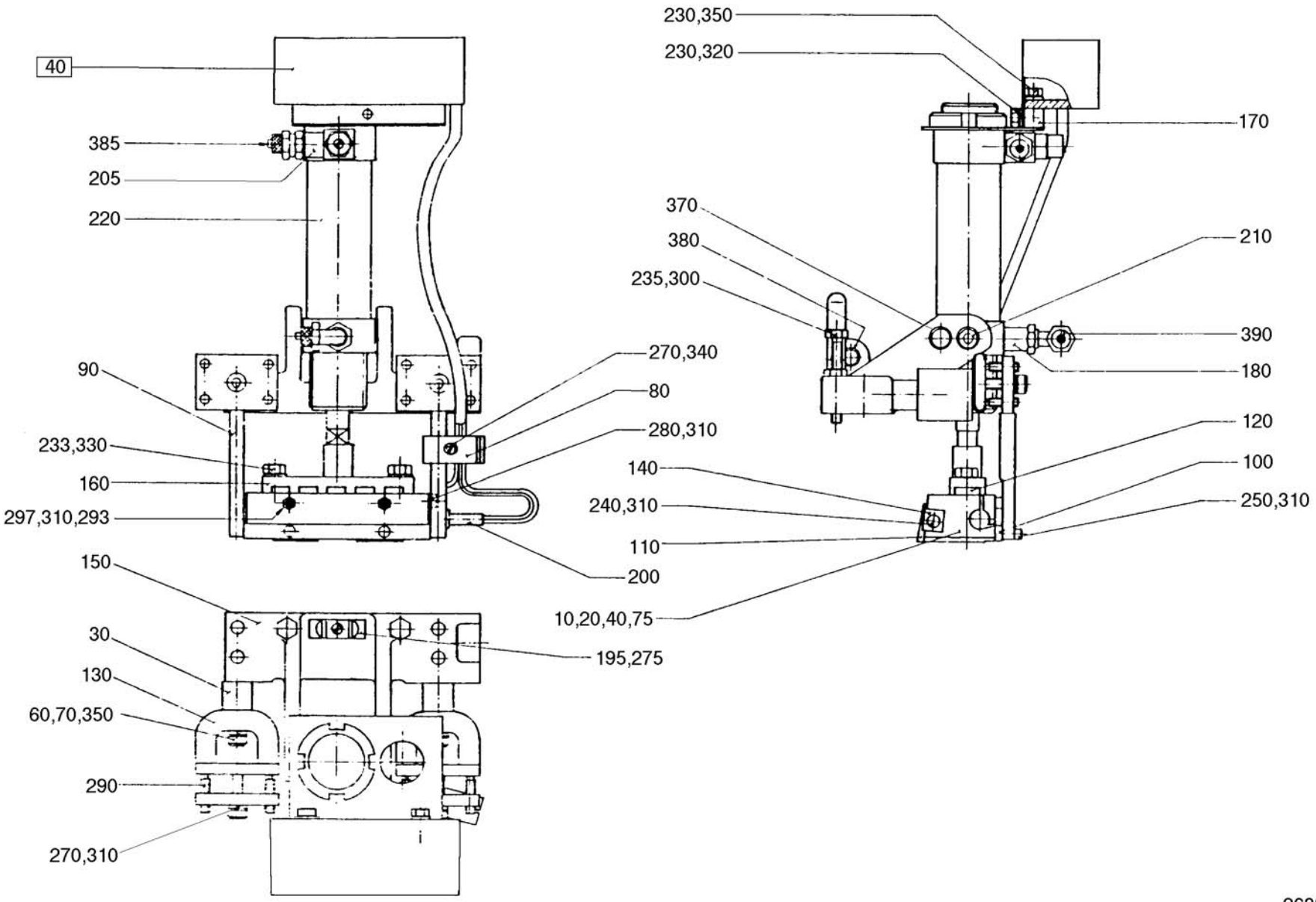

26388602.TIF
263886-2
AM

Pos	Part No	SP	UN	Qty	Description	Page No
000	**C- 263886-0302**	**-**		**1**	**SEALING DEVICE**	
060	312111-0331	-		2	SCREW MC6S5X20FZB	
075	536965	-		1	HEATING BLOCK	
Common parts						
080	**19120**	**-**		**1**	**CLAMPING PIECE**	
090	19124	-		1	MOUNTING SHEET	
100	19127	-		1	INSULATION	
110	19128	-		2	KNIFE	
120	19129	-		1	INSULATION	
130	19530	-		2	MAGNET	
140	19536	-		2	CLAMPING PART	
150	486703	-		1	BRACKET	
160	486704	-		1	BRACKET	
170	486710	-		1	BRACKET	
180	90030-0210	-		1	NIPPLE	
195	90165-0067	-		1	TOOL HOLDER	
200	90206-0073	S		1	HEATING ELEMENT	
205	90235-0241	-		1	VALVE	
210	90239-0505	-		2	BRACKET	
220	90239-0911	-		1	CYLINDER	
230	312101-0327	-		3	SCREW M6S5X12FZB	
233	312101-0368	-		2	SCREW M6S6X16FZB	
235	312104-0379	-		2	SCREW M6S6X45H8.8 FZB	
240	312111-0291	-		2	SCREW MC6S4X12FZB	
250	312111-0293	-		2	SCREW MC6S4X16FZB	
260	312111-0372	-		2	SCREW MC6S6X25FZB	
270	312121-0293	-		1	SLOTTED HEMCS4X16FZB	
275	312125-0220	-		1	SLOTTED HEMCS3X6RFR	
280	312132-0289	-		1	SLOTTED HEMSCS4X10MSGFN	
290	312311-0333	-		8	STOP SCREW T6SS5X25FZB	
293	312316-0295	-		2	STOP SCREW SK6SS 4X20 FZB	
297	312601-0312	-		2	NUT M6M4FZB	
300	312601-0316	-		2	NUT M6M6FZB	
310	315105-0136	-		9	WASHER BRB4,3X8RFR	
320	315105-0146	-		1	WASHER BRB5,3X10RFR	
330	315105-0153	-		2	WASHER BRB6,4X12RFR	
340	315401-0136	-		1	WASHER FBH 4,1 FZB	
350	315401-0146	-		4	WASHER FBH 5,1 FZB	
360	315401-0153	-		2	WASHER FBH6,1FZB	
370	321120-0098	-		4	BUSHING 10/12,0X8	
380	321120-0100	-		1	BUSHING 8/10X12	
385	342920-0113	-		1	PIPE COUPL6/4-1/8	
390	342930-0113	-		1	ELBOW PIPE6/4-1/8	
F040	C- 19573-0201	-		1	CONNECTION BOX **265**	

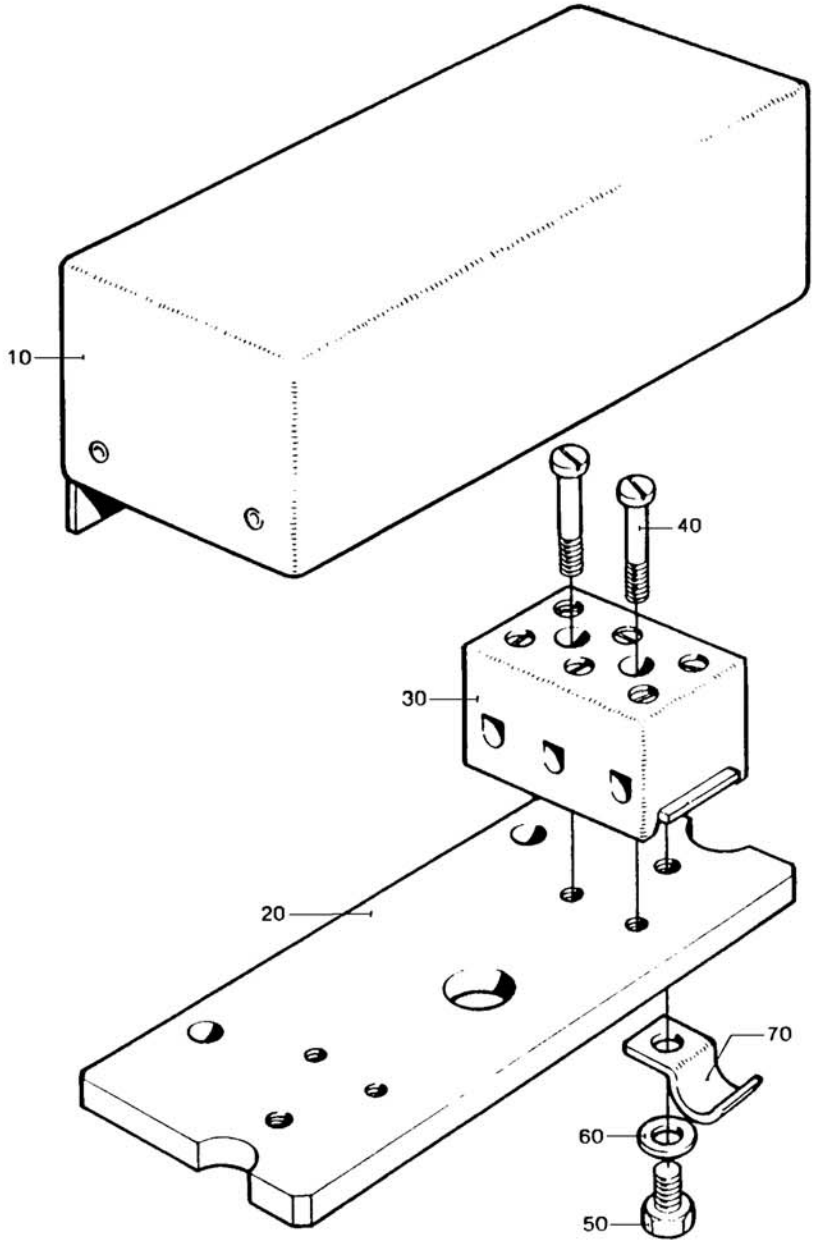

1957302.TIF
19573-2
AM

Pos	Part No	SP	UN	Qty	Description	Page No
-						
000	**C- 19573-0201**	**-**		**1**	**CONNECTION BOX**	
010	19126	-		1	COVER	
020	436615	-		1	PLATE	
030	90195-0017	-		1	TERMINAL BLOCK	
040	312121-0230	-		2	SLOTTED HEMCS3X20FZB	
050	312121-0287	-		1	SLOTTED HEMCS4X8FZB	
060	315101-0136	-		1	WASHER BRB4,3X8FZB	
070	352110-0101	-		1	CRAMP TK 7-10	

Pos	Part No	SP	UN	Qty	Description	Page No

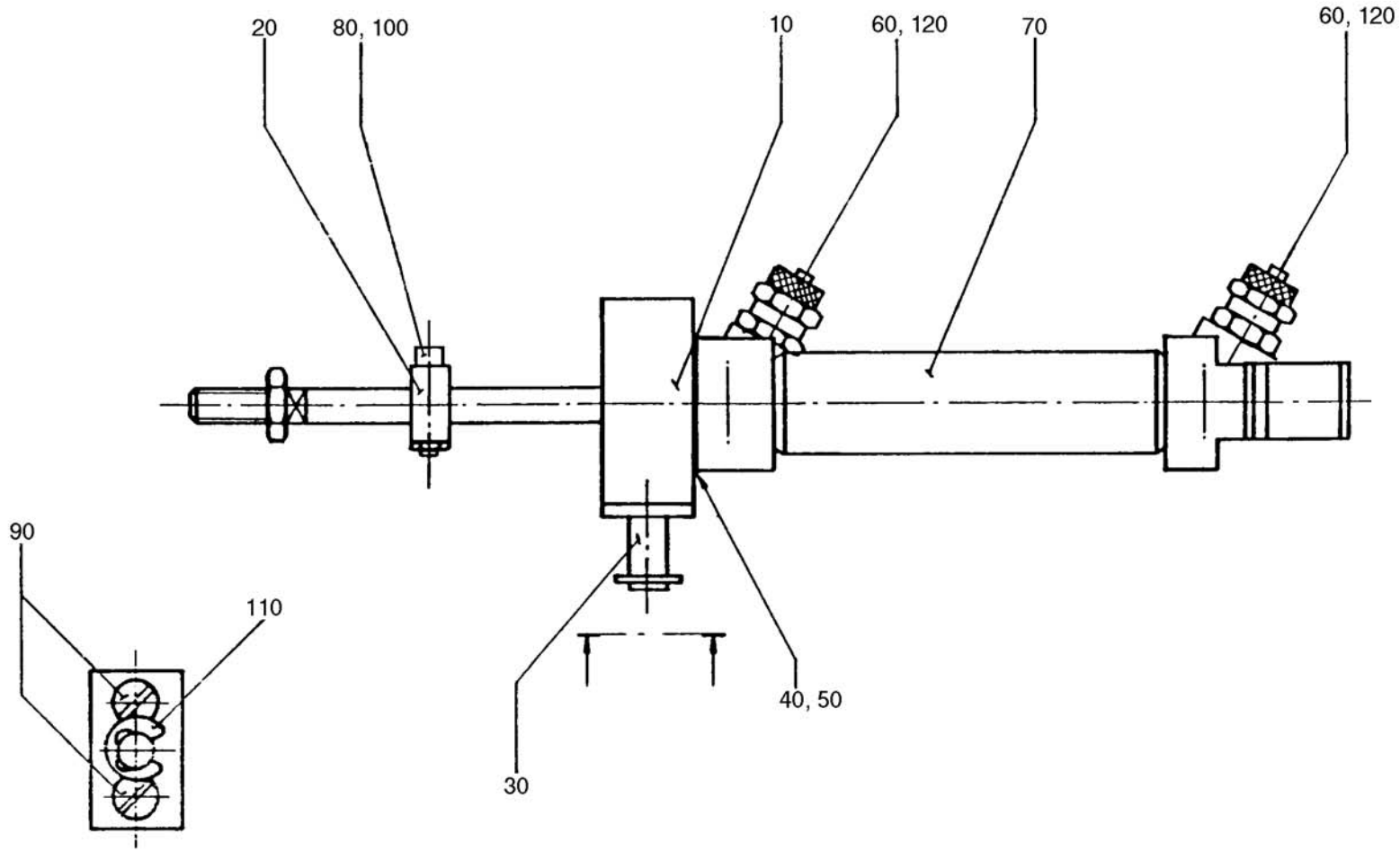

48670501.TIF
486705-1
AM

Pos	Part No	SP	UN	Qty	Description	Page No
-						
000	**C- 486705-0101**	**-**		**1**	**FEEDER**	
010	486706	-		1	BRACKET	
020	19556	-		1	STOP LUG	
030	486711	-		1	AXLE SUPPORT	
040	527131	-		3	SHIM	
0500	526969	-		3	SHIM	
060	90235-0241	-		2	VALVE	
070	90239-0822	-		1	CYLINDER 20-50	
080	312111-0293	-		1	SCREW MC6S4X16FZB	
090	312145-0327	-		2	SLOTTED HEMFS5X12RFR	
100	312601-0312	-		1	NUT M6M4FZB	
110	315755-0108	-		1	LOCKING WAE 6RFR	
120	342920-0113	-		2	PIPE COUPL6/4-1/8	

Pos	Part No	SP	UN	Qty	Description	Page No

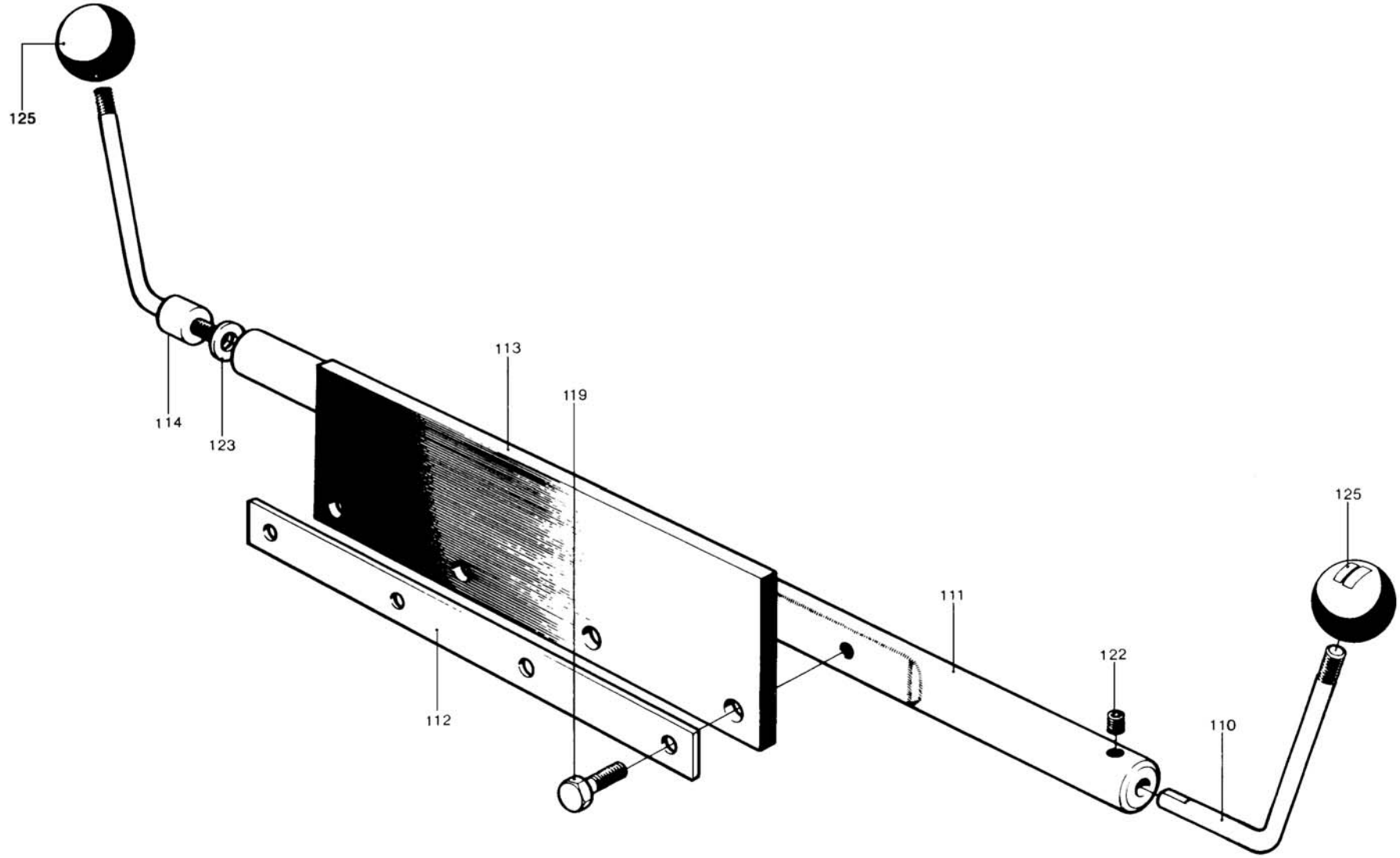

2003601.TIF
20036-1
AM

Pos	Part No	SP	UN	Qty	Description	Page No
HS227						
000	**C- 20036-0101**	**-**		**1**	**BRAKE**	
111	20037	-		1	SHAFT	
113	20039	-		1	RUBBER STRIP	
Common parts						
110	4292	-		1	HANDSPIKE	
112	20038	-		1	CLAMP PLATE	
114	20040	-		1	HANDSPIKE	
119	312105-0329	-		4	SCREW O4017 M5X16A280	
122	312316-0360	-		1	STOP SCREW SK6SS6X6FZB	
123	315105-0153	-		1	WASHER BRB6,4X12RFR	
125	318800-0103	-		2	HANDLE BALLA D.25-M6	

Pos	Part No	SP	UN	Qty	Description	Page No

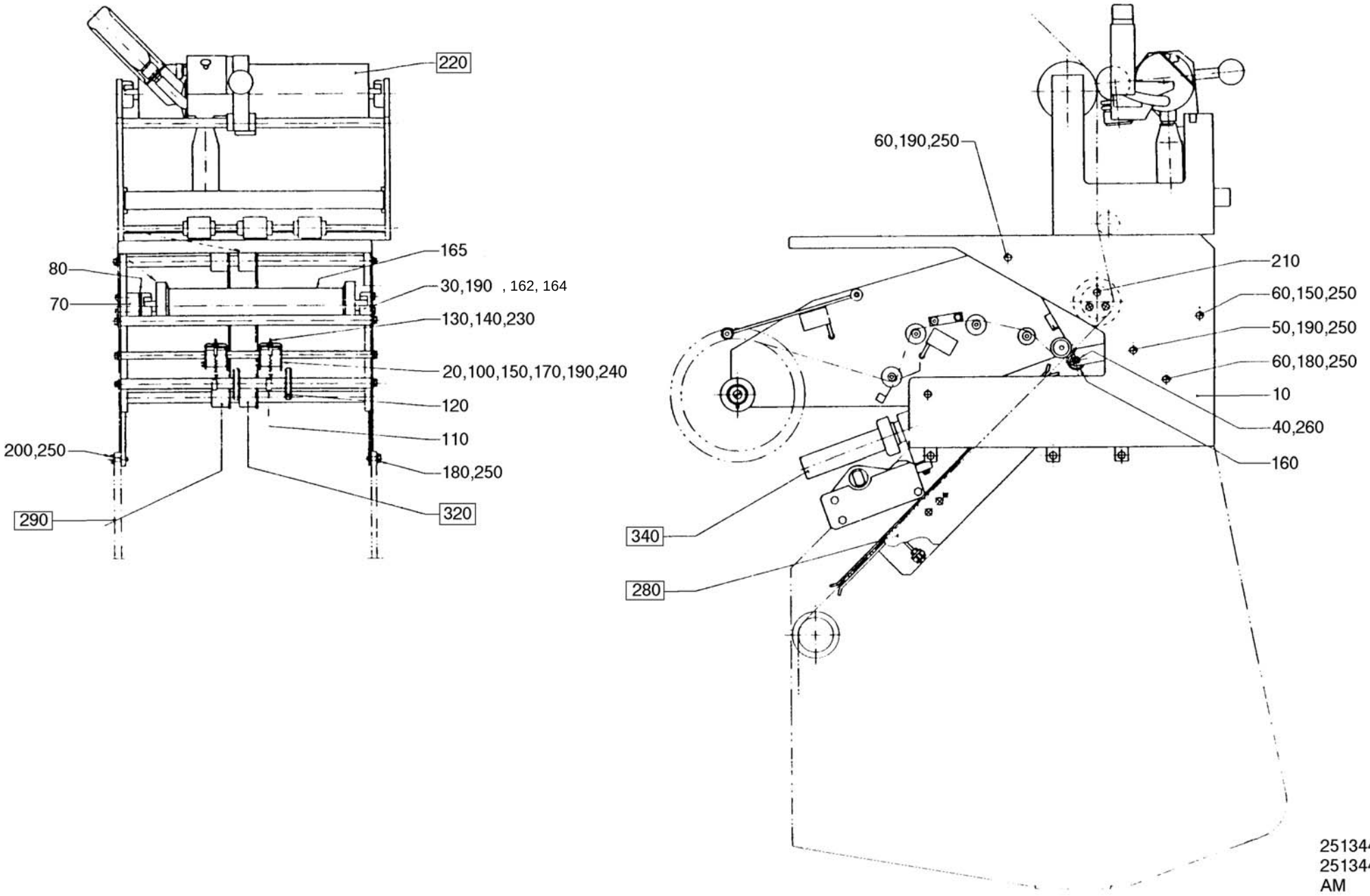
220
165
80
30,190 , 162, 164
70
130,140,230
20,100,150,170,190,240
120
110
200,250
180,250
290
320
60,190,250
210
60,150,250
50,190,250
60,180,250
10
40,260
160
340
280
25134402.TIF
251344-2
AM

Pos	Part No	SP	UN	Qty	Description	Page No
TC/150, TC/300, TCA/150, TCA/300,TCA/500						
000	**C- 251344-0201**	**-**		**1**	**STRIP APPLICATOR**	
160	539619	R		2	ROLL	
Common parts						
010	**19779**	**-**		**1**	**HOUSE**	
020	23169	-		2	FORK	
030	G- 4317	-		2	BEARING	
040	6759-0001	-		2	SHAFT	
050	11448	-		1	SHAFT	
060	11450	-		4	SHAFT	
070	11452	-		1	LACE	
080	13401	-		3	LACE	
100	19791	-		2	RETAINING RING	
110	19792	-		2	SPRING BRACKET	
120	20401	-		2	RING	
130	21631	-		2	TENSION SPRING	
140	23175	-		2	SCREW	
150	23176	-		4	BRACKET	
162	575505	-		1	SPACER	
164	90165-0015	-		1	CLIP	
165	90166-0053	R	MM	300	SHRINKABLE HOSE	
170	312105-0325	-		8	SCREW M6S5X10 A2 80	
180	312105-0366	-		7	SCREW O4017 M6X12A280	
190	312105-0368	-		11	SCREW O4017 M6X16A280	
200	312105-0370	-		3	SCREW O4017 M6X20A280	
210	312105-0378	-		3	SCREW O4017 M6X40A280	
220	312115-0289	-		2	SCREW S4X10 A4 80	
230	312715-0116	-		2	WING NUT MVM-K 6 A2	
240	315105-0146	-		14	WASHER BRB5,3X10RFR	
250	315105-0153	-		16	WASHER BRB6,4X12RFR	
260	315754-0106	-		4	LOCKING WAE 4	
F220	C- 37459-0101	-		1	HOLDER	**273**
F280	C- 450343-0101	-		1	PAPER GUIDE	**283**
F290	C- 293483-0101	-		1	FASTENING PLATE	**283**
F320	C- 293484-0101	-		1	FASTENING PLATE	**289**
F340	C- 294112-0201	-		1	ELEMENT GROUP	**291**

Pos	Part No	SP	UN	Qty	Description	Page No

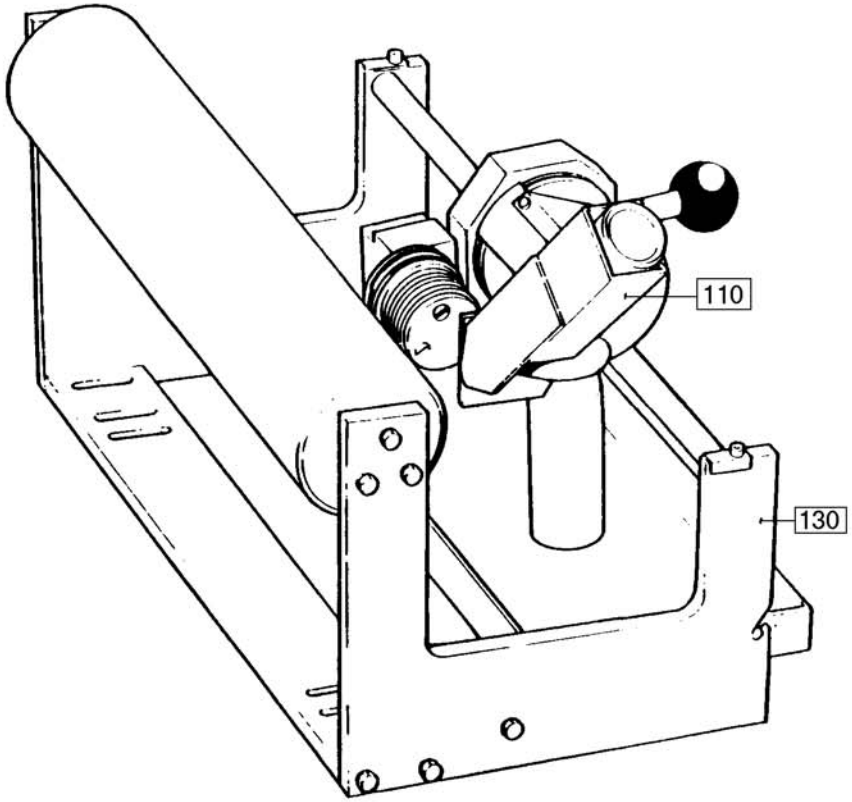

3745901.TIF
37459-1
AM

Pos	Part No	SP	UN	Qty	Description	Page No
-						
000	**C- 37459-0101**	**-**		**1**	**HOLDER**	
F100	C- 37460-0101	-		1	DATING UNIT	**275**
F130	C- 37485-0102	-		1	HOLDER	**281**

Pos	Part No	SP	UN	Qty	Description	Page No

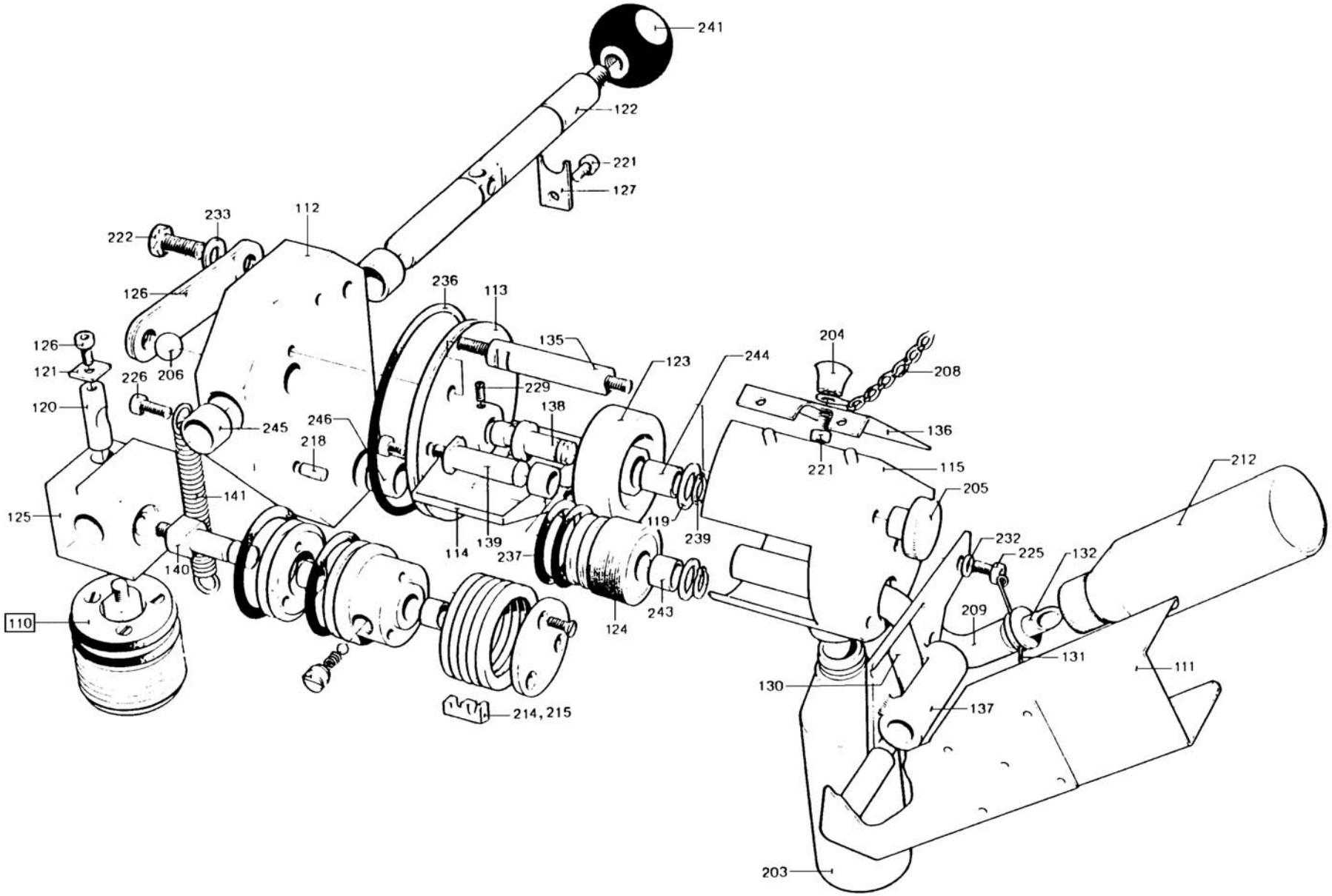

3746001.TIF
37460-1
AM

Pos	Part No	SP	UN	Qty	Description	Page No
-						
000	**C- 37460-0101**	**-**		**1**	**DATING UNIT**	
111	36361	-		1	HOLDER	
112	37465	-		1	HEAD	
113	37466	-		1	ROLLER BRACKET	
114	37467	-		1	INK WELL	
115	37468	-		1	COVER	
119	2033-0009	R		2	WASHER	
120	6071	-		1	LOCKING FINGER	
121	6074	-		1	WASHER	
122	33611	-		1	PIVOT AXLE	
123	33615	-		1	INK ROLLER	
124	33617	-		1	INK TRANSFER ROLLER	
125	33621	-		1	MOUNTING BLOCK	
126	33622	-		3	LEAF SPRING	
127	33624	-		1	SECURING PLATE	
130	35547	-		1	SPRING	
131	35548	-		1	SPRING	
132	35549	-		1	CANNULAR TUBE	
135	37476	-		1	SHAFT	
136	37477	-		1	LID	
137	37478	-		1	PIVOT BRACKET	
138	37482	-		1	ECCENTRIC SHAFT	
139	37483	-		1	SHAFT	
140	37484	-		2	SHAFT	
141	37486	-		1	TENSION SPRING	
203	90050-0008	-		1	BOTTLE	
204	90051-0026	-		1	HANDLE	
205	90051-0053	-		1	HANDLE	
206	90090-0003	-		1	STEEL BALL	
208	90155-0001	-	MM	400	CHAIN	
209	90166-0113	-	MM	100	HOSE	
212	90299-0072	-		1	INK	
214	90413-0033	-		2	CODE INSERT SET	
215	90413-0047	-		2	CODE INSERT SET	
218	311103-0351	-		2	CYLINDRICACP M6 6X16 RFR	
221	312105-0327	-		1	SCREW O4017 M5X12A280	
222	312105-0449	-		1	SCREW O4017 M8X16A280	
225	312115-0323	-		4	SCREW O4762 M5X8A280	
226	312115-0325	-		2	SCREW 5X10 A4 80	
229	312318-0285	-		1	STOP SCREW SK6SS4X6RFR	
232	315105-0146	-		2	WASHER BRB5,3X10RFR	
233	315105-0165	-		1	WASHER BRB8,4X16RFR	
236	315202-0307	R		1	O-RING 79,5X3	
237	315202-0910	R		2	O-RING 25,80X3,53	
239	315750-0107	R		2	CIRCLIP SGA10	
241	318800-0106	-		1	HANDLE BALLA D.40-M10	
243	321120-0104	-		2	BUSHING 10/12X10	
244	90240-0028	-		1	PLAIN BEARING	
245	321120-0122	-		2	BUSHING 15/17X15	
246	321120-0124	-		1	BUSHING 15/17X25	
F110	C- 37461-0101	-		2	PRINTING WHEEL	**277**

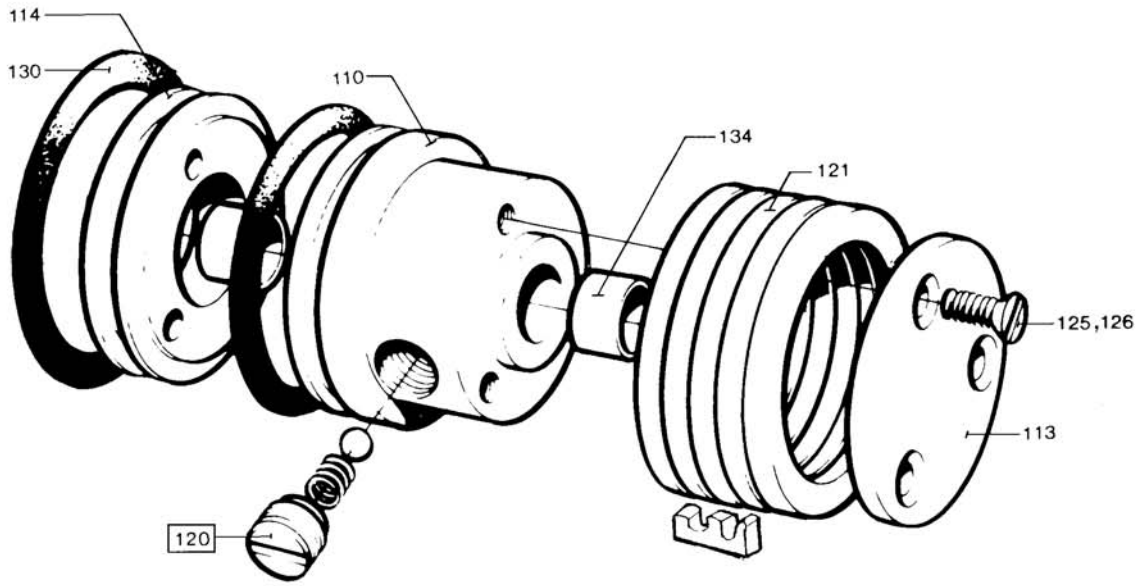

3746101.TIF
37461-1
AM 4466

Pos	Part No	SP	UN	Qty	Description	Page No
-						
000	**C- 37461-0101**	**-**		**2**	**PRINTING WHEEL**	
110	37469	-		1	PRINTING WHEEL	
113	33618	-		1	LID	
114	37479	-		1	RING	
121	90427-0312	-		5	DATING UNIT	
125	312145-0287	-		3	SLOTTED HEMFS4X8RFR	
126	312145-0291	-		3	SLOTTED HEMFS4X12RFR	
130	315202-0527	R		2	O-RING 37,47X5,33	
134	321120-0104	-		2	BUSHING 10/12X10	
F120	C- 33608-0101	-		1	SCREW	**279**

Pos	Part No	SP	UN	Qty	Description	Page No

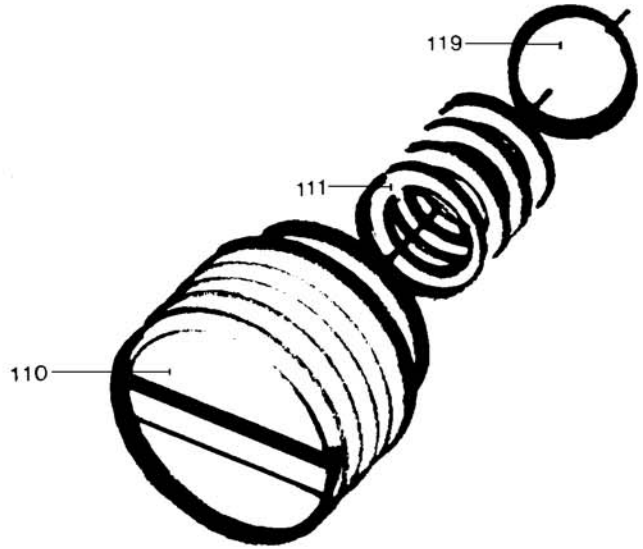

3360801.TIF
33608-1
AM

Pos	Part No	SP	UN	Qty	Description	Page No
-						
000	**C- 33608-0101**	**-**		**1**	**SCREW**	
110	33625	-		1	SCREW	
111	33626	-		1	COMPRESSION SPRING	
119	90090-0002	-		1	STEEL BALL	

Pos	Part No	SP	UN	Qty	Description	Page No

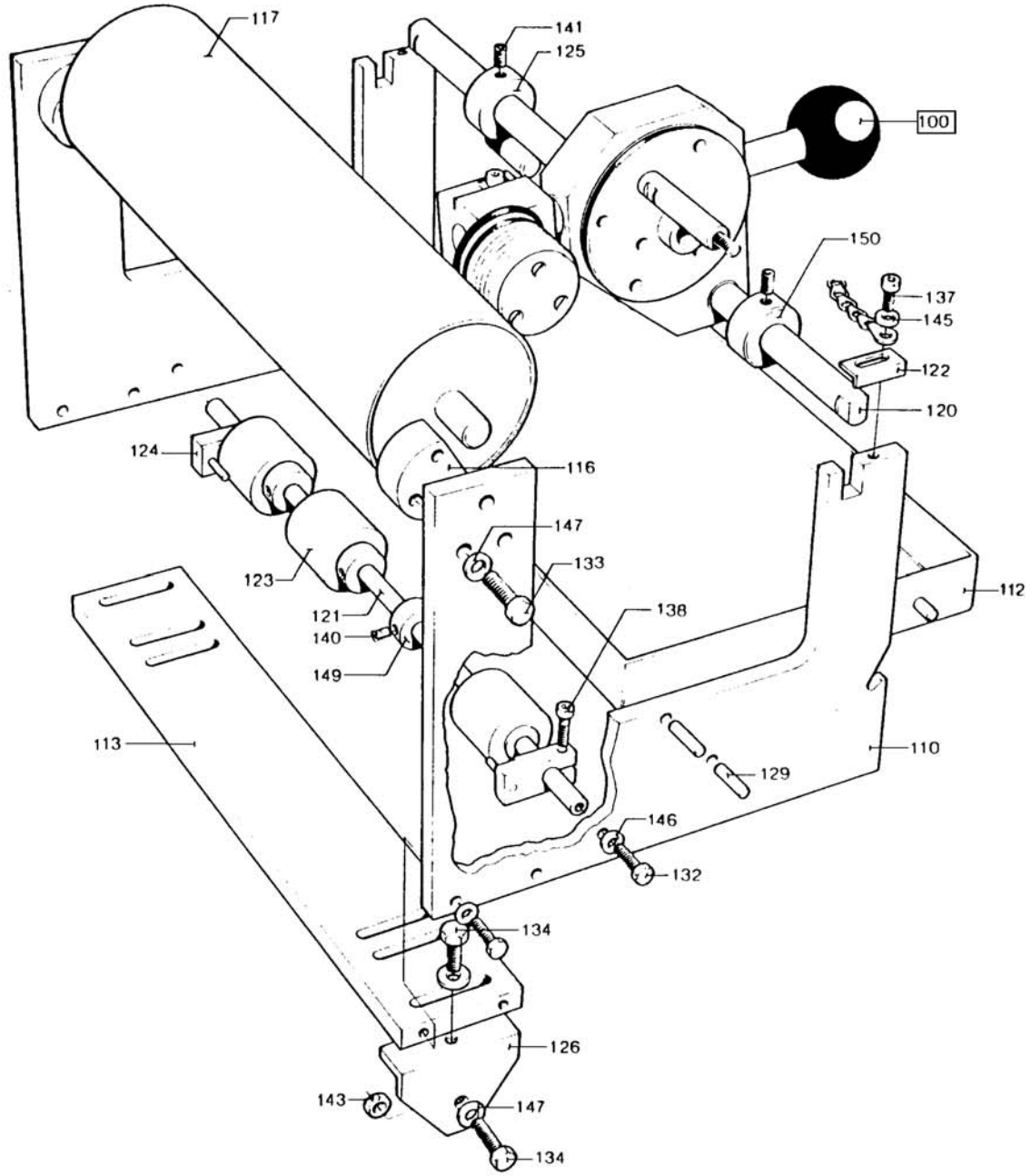

3748501.TIF
37485-1
AM

Pos	Part No	SP	UN	Qty	Description	Page No
000	**C- 37485-0102**	**-**		**1**	**HOLDER**	
133	312105-0368	-		6	SCREW O4017 M6X16A280	
Common parts						
110	37462	-		2	END SECTION	
112	37463	-		1	BOX	
113	37464	-		2	BOTTOM PLATE	
116	G- 4317	-		2	BEARING	
117	4319-0005	-		1	COUNTER ROLLER	
120	37470	-		1	SHAFT	
121	37471	-		1	SHAFT	
122	37472	-		2	LOCK	
123	37473	-		3	ROLL	
124	37474	-		2	GUIDE FINGER	
125	37475	-		1	HOLDER	
127	575505	-		2	SPACER	
129	311103-0306	-		4	CYLINDRICACP M6 5X12 RFR	
132	312105-0329	-		10	SCREW O4017 M5X16A280	
134	312105-0370	-		4	SCREW O4017 M6X20A280	
137	312115-0287	-		6	SCREW O4762 M4X8A280	
138	312115-0293	-		2	SCREW O4762 M4X16A280	
140	312318-0285	-		4	STOP SCREW SK6SS4X6RFR	
141	312318-0360	-		3	STOP SCREW SK6SS6X6RFR	
143	312605-0316	-		4	NUT M6M6RFR	
145	315105-0136	-		3	WASHER BRB4,3X8RFR	
146	315105-0146	-		10	WASHER BRB5,3X10RFR	
147	315105-0153	-		10	WASHER BRB6,4X12RFR	
149	315742-0104	-		4	RETAINING 8SMS199RFR	
150	315742-0111	-		1	RETAINING 15SMS199RFR	
160	90165-0015	-		2	CLIP	

Pos	Part No	SP	UN	Qty	Description	Page No

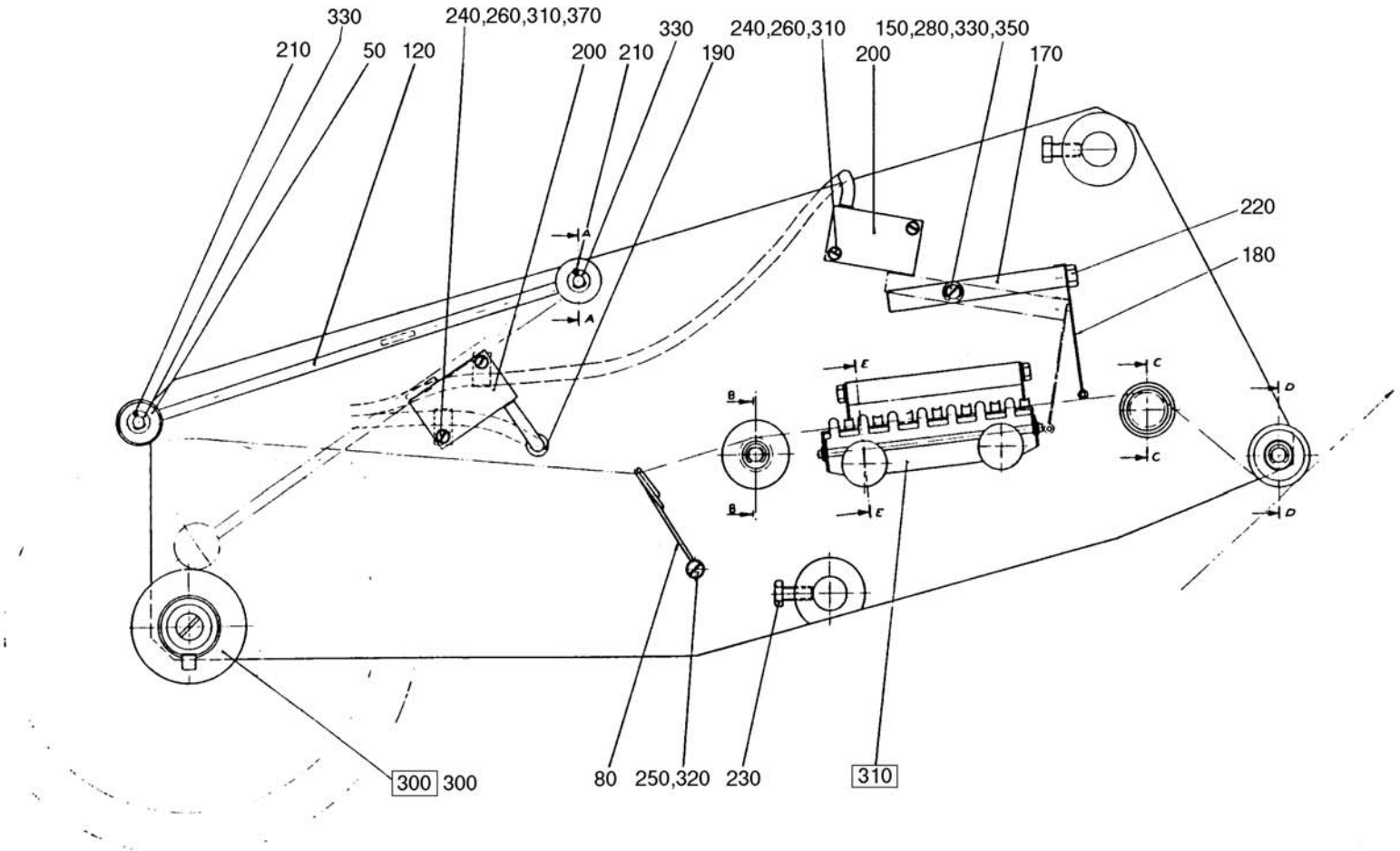

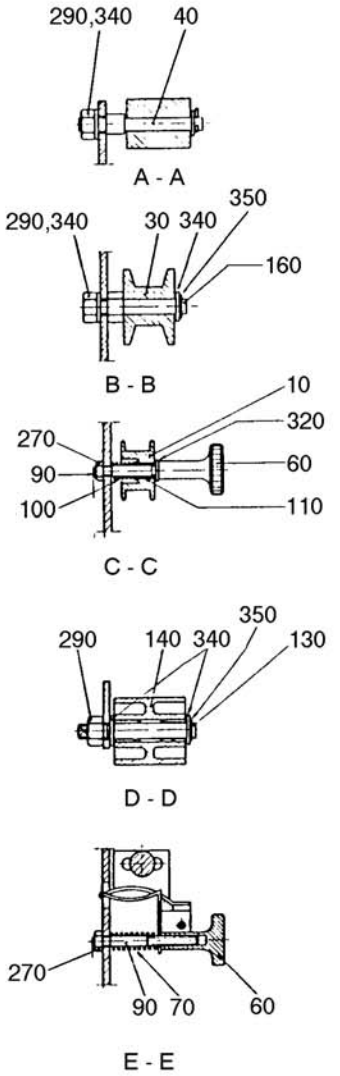

29348301.TIF
293483-1
AM 14805

Pos	Part No	SP	UN	Qty	Description	Page No
000	**C- 293483-0101**	**-**		**1**	**FASTENING PLATE**	
010	19787-0002	-		1	ROLL	
140	539619	-		1	ROLL	
200	90044-0062	-		2	PROXIMITY SWITCH	
Common parts						
020	**436566**	**-**		**1**	**MOUNTING SHEET**	
030	6695	-		1	ROLL	
040	14964-0002	-		1	SHAFT	
050	14966	-		1	ROLL	
060	19217	-		3	KNURLED SCREW	
070	19223	-		2	COMPRESSION SPRING	
080	19788	-		1	BOW CLAMP	
090	19790	-		3	STUD SCREW	
100	19795	-		1	COMPRESSION SPRING	
110	19797	-		1	BUSHING	
120	269051	-		1	ARM	
130	436567	-		1	SHAFT	
150	436569	-		1	SCREW	
160	436571	-		1	SHAFT	
170	449600	-		1	LINK	
180	449601	-		1	ARM	
182	529025	-		1	CRAMP	
185	538431	-		1	HOLDER	
190	90015-0026	-		1	BUSHING	
210	311411-0137	-		3	SS 2343	
215	312105-0289	-		2	SCREW M6S4X10 A2 80	
220	312105-0325	-		1	SCREW M6S5X10 A2 80	
230	312105-0366	-		2	SCREW O4017 M6X12A280	
235	312125-0220	-		1	SLOTTED HEMCS3X6RFR	
240	312125-0230	-		4	SLOTTED HEMCS3X20RFR	
250	312125-0285	-		1	SLOTTED HEMCS4X6RFR	
260	312605-0310	-		5	NUT M6M3RFR	
270	312605-0312	-		5	NUT M6M4RFR	
280	312605-0314	-		1	NUT M6M5RFR	
290	312605-0316	-		3	NUT M6M6RFR	
300	312605-0318	-		1	NUT M6M8RFR	
310	315105-0124	-		5	WASHER BRB3,2X6RFR	
320	315105-0136	-		5	WASHER BRB4,3X8RFR	
330	315105-0146	-		5	WASHER BRB5,3X10RFR	
340	315105-0153	-		8	WASHER BRB6,4X12RFR	
350	315754-0106	-		3	LOCKING WAE 4	
370	352110-0100	-		2	CRAMP TK 5-7	
F300	C- 20387-0101	-		1	BOBBIN	**285**
F310	C- 20389-0101	-		1	BRAKE	**287**

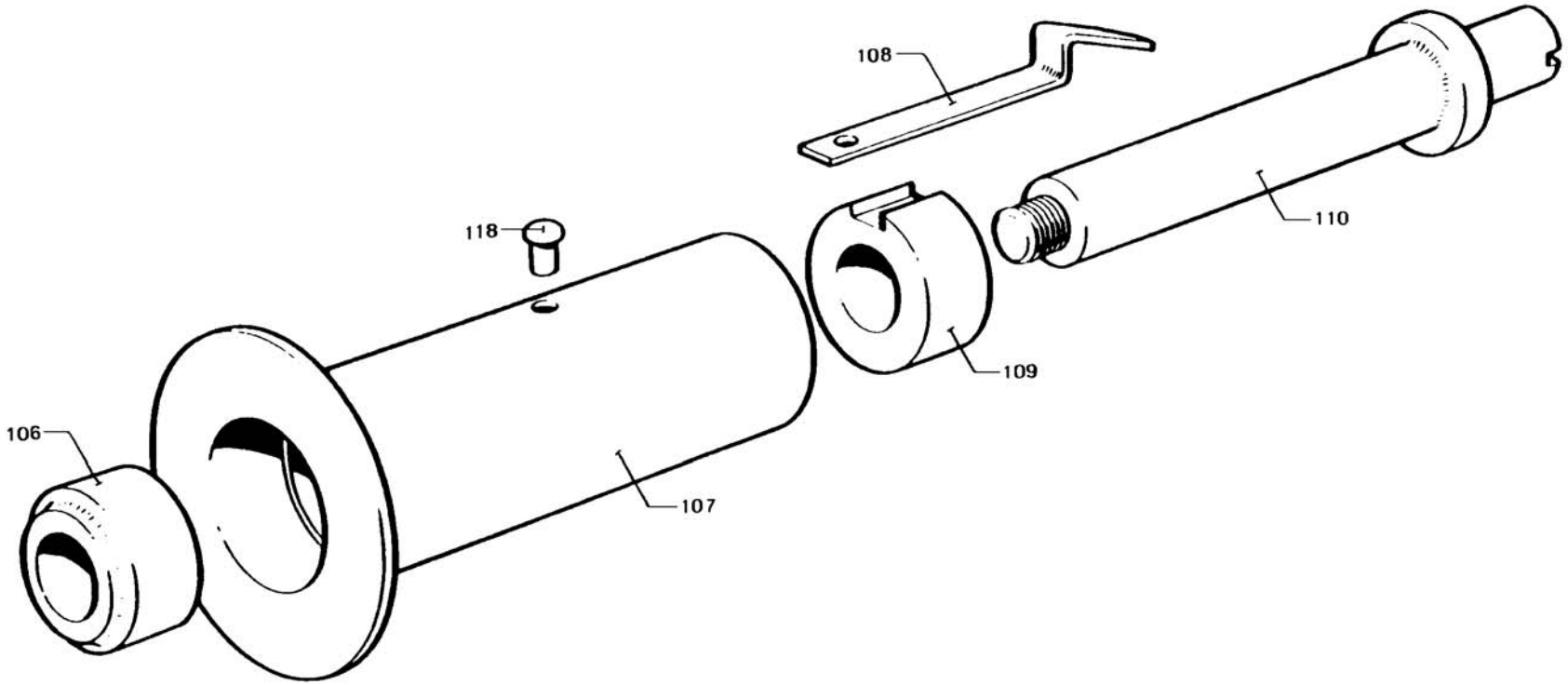

2038701.TIF
20387-1
AM

Pos	Part No	SP	UN	Qty	Description	Page No
-						
000	**C- 20387-0101**	**-**		**1**	**BOBBIN**	
106	5486	-		1	BEARING	
107	6157	-		1	BOBBIN	
108	6158	-		1	SPRING	
109	6159	-		1	BEARING	
110	19784	-		1	SHAFT	
118	311506-0278	-		1	RIVET KN2,6X6KPR	

Pos	Part No	SP	UN	Qty	Description	Page No

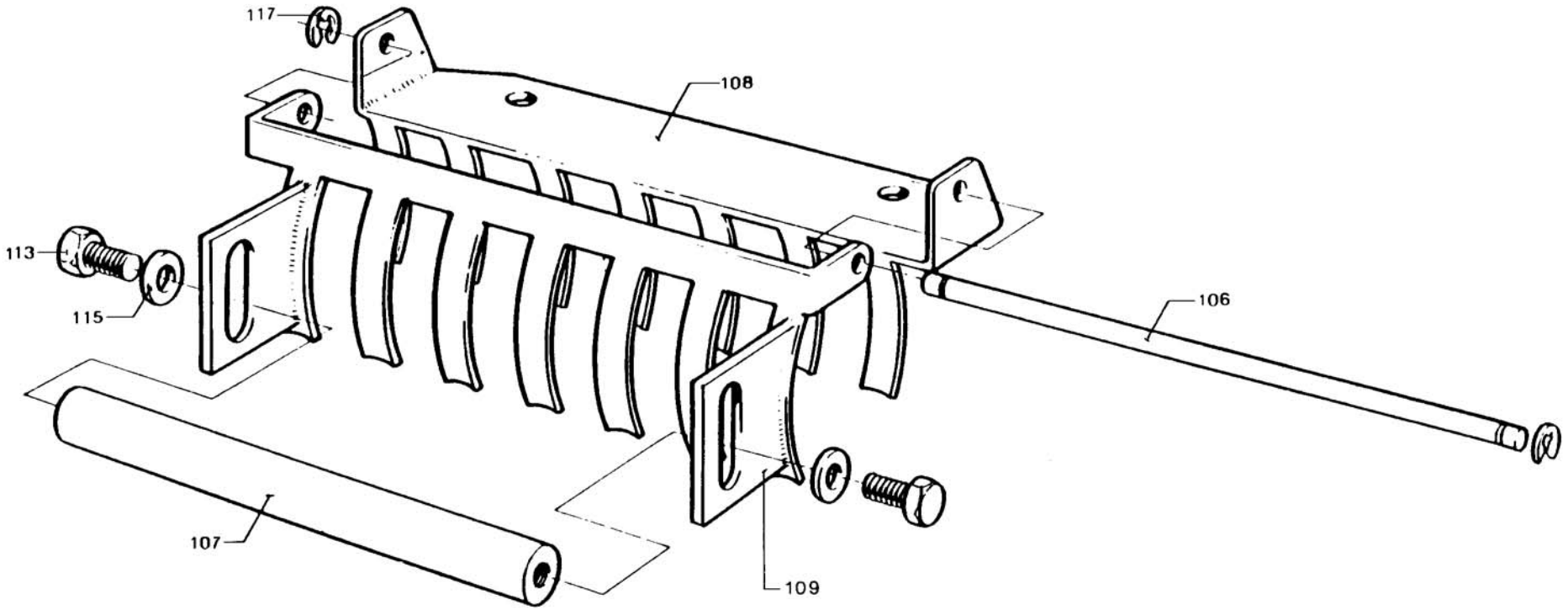

2038901.TIF
20389-1
AM 15086

Pos	Part No	SP	UN	Qty	Description	Page No
-						
000	**C- 20389-0101**	**-**		**1**	**BRAKE**	
106	5778	-		1	SHAFT	
107	19083	-		1	WEIGHT	
108	21071	-		1	BRAKE	
109	21072	-		1	BRAKE	
113	312101-0291	-		2	SCREW M6S4X12FZB	
115	315105-0136	-		2	WASHER BRB4,3X8RFR	
117	315754-0103	-		2	LOCKING WAE 1,9	

Pos	Part No	SP	UN	Qty	Description	Page No

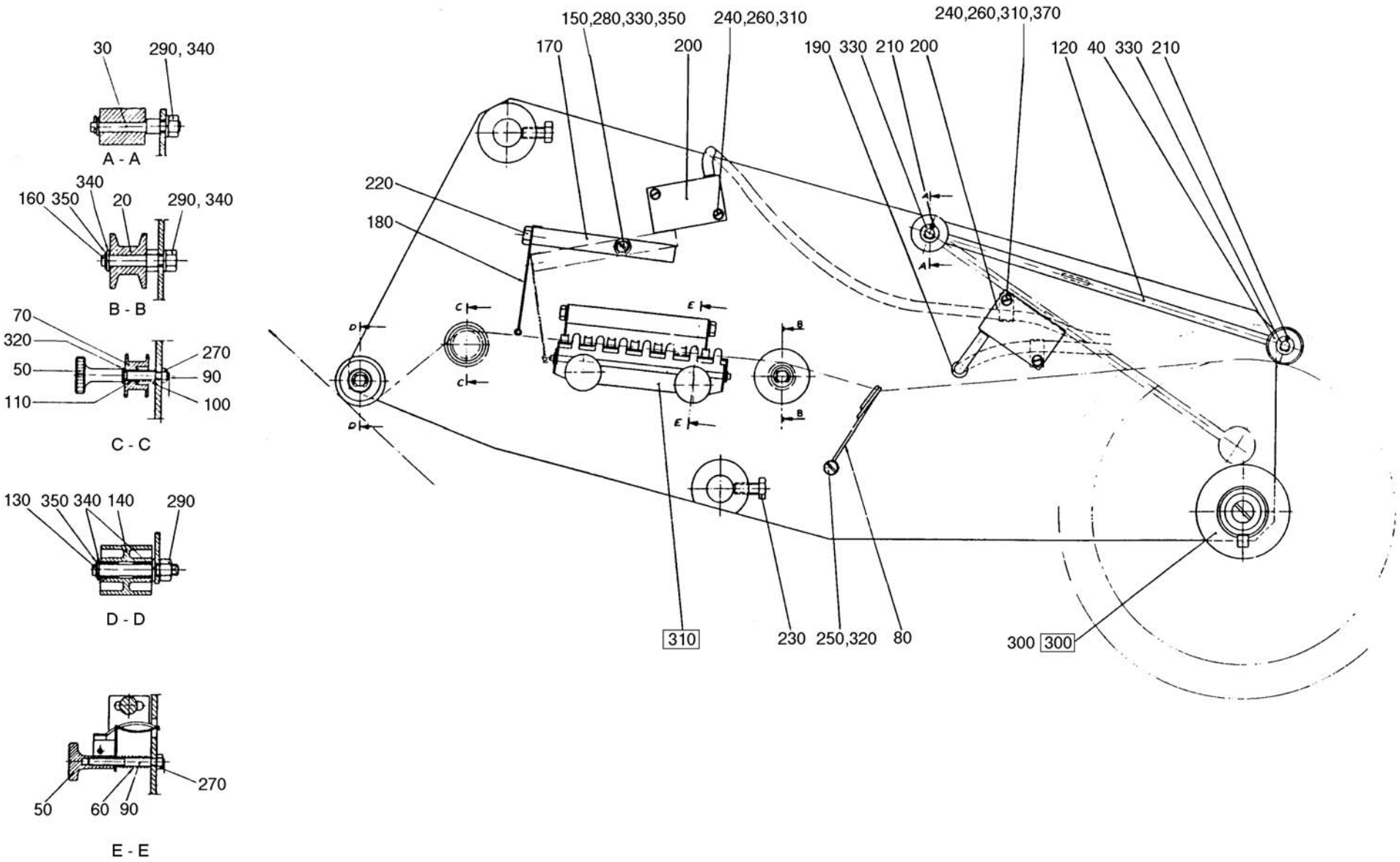

29348401.TIF
293484-1
AM 14805

Pos	Part No	SP	UN	Qty	Description	Page No
000	**C- 293484-0101**	**-**		**1**	**FASTENING PLATE**	
200	90044-0062	-		2	PROXIMITY SWITCH	
Common parts						
010	**574617**	**-**		**1**	**MOUNTING SHEET**	
020	6695	-		1	ROLL	
030	14964-0002	-		1	SHAFT	
040	14966	-		1	ROLL	
050	19217	-		3	KNURLED SCREW	
060	19223	-		2	COMPRESSION SPRING	
070	19787-0001	-		1	ROLL	
080	19788	-		1	BOW CLAMP	
090	19790	-		3	STUD SCREW	
100	19795	-		1	COMPRESSION SPRING	
110	19797	-		1	BUSHING	
120	269051	-		1	ARM	
130	436567	-		1	SHAFT	
140	539619	R		1	ROLL	
150	436569	-		1	SCREW	
160	436571	-		1	SHAFT	
170	449600	-		1	LINK	
180	449601	-		1	ARM	
182	538431	-		1	HOLDER	
187	529025	-		1	CRAMP	
190	90015-0026	-		1	BUSHING	
210	311411-0137	-		3	SS 2343	
215	312105-0289	-		2	SCREW M6S4X10 A2 80	
220	312105-0325	-		1	SCREW M6S5X10 A2 80	
230	312105-0366	-		2	SCREW O4017 M6X12A280	
235	312125-0220	-		1	SLOTTED HEMCS3X6RFR	
240	312125-0230	-		4	SLOTTED HEMCS3X20RFR	
250	312125-0285	-		1	SLOTTED HEMCS4X6RFR	
260	312605-0310	-		5	NUT M6M3RFR	
270	312605-0312	-		5	NUT M6M4RFR	
280	312605-0314	-		1	NUT M6M5RFR	
290	312605-0316	-		3	NUT M6M6RFR	
300	312605-0318	-		1	NUT M6M8RFR	
310	315105-0124	-		5	WASHER BRB3,2X6RFR	
320	315105-0136	-		5	WASHER BRB4,3X8RFR	
330	315105-0146	-		5	WASHER BRB5,3X10RFR	
340	315105-0153	-		8	WASHER BRB6,4X12RFR	
350	315754-0106	-		3	LOCKING WAE 4	
370	352110-0100	-		2	CRAMP TK 5-7	
F300	C- 20387-0101	-		1	BOBBIN	**285**
F310	C- 20389-0101	-		1	BRAKE	**287**

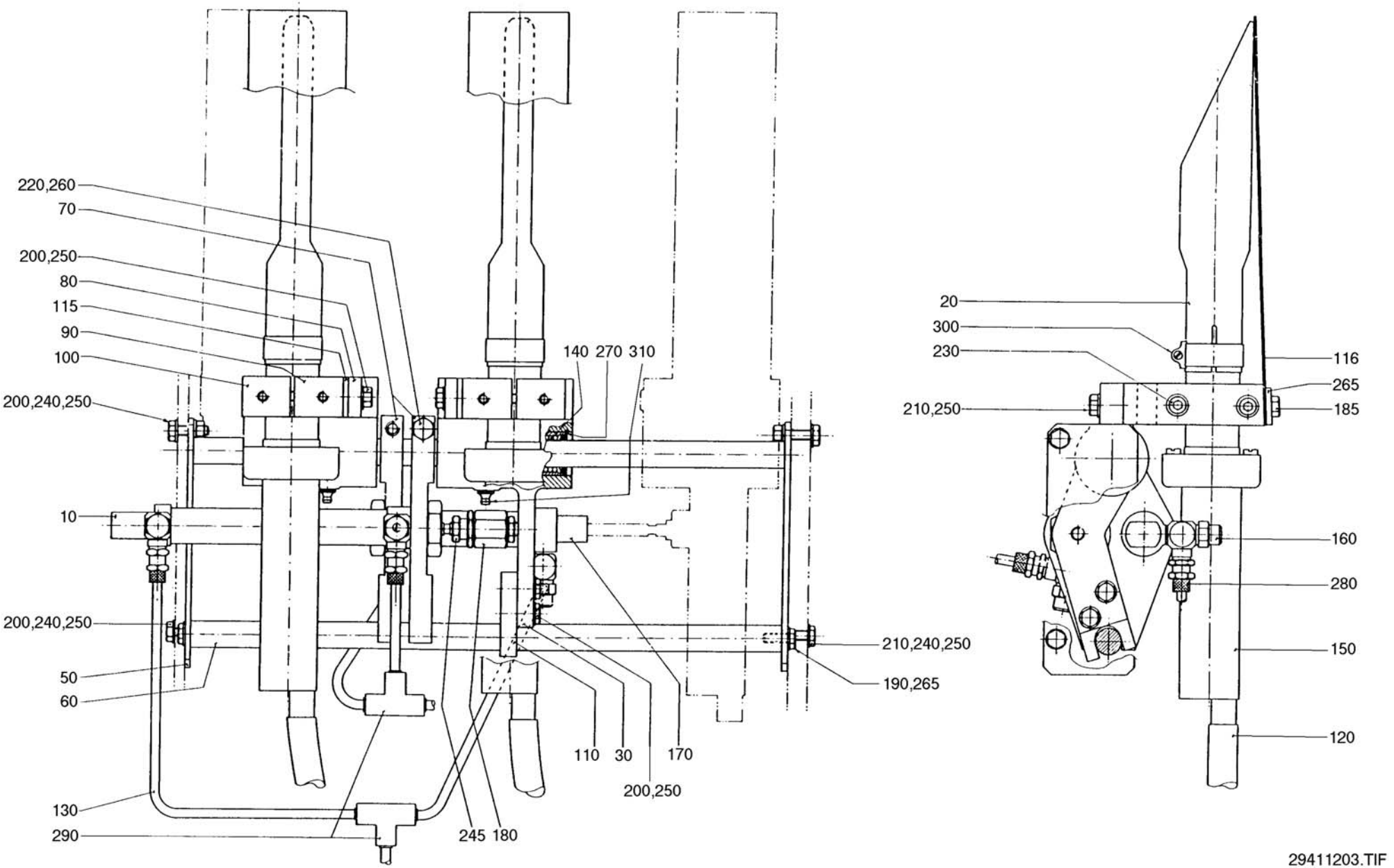

29411203.TIF
294112-3
AM

Pos	Part No	SP	UN	Qty	Description	Page No
000	**C- 294112-0201**	**-**		**1**	**ELEMENT GROUP**	
010	90239-0825	-		1	CYLINDER 20-125	
020	538132	-		2	NOZZLE	
Common parts						
030	**G- 283468**	**-**		**2**	**BEARING CONSOLE**	
050	267923	-		2	PLATE	
060	267924	-		2	SHAFT	
070	283470	-		2	YOKE	
080	283471	-		2	BRACKET	
090	283472	-		2	BRACKET	
100	283473	-		2	CRAMP	
110	283474	-		2	STEERING	
115	294498	-		2	INSULATING PLATE	
116	294499	-		2	HEAT GUARD	
120	90166-0098	-	MM	600	SHRINKABLE HOSE	
130	90166-0081	-	MM	2000	HOSE	
140	90189-0011	-		4	BALL BUSHING	
150	90206-0052	-		2	HOT AIR ELEMENT	
150A	90166-0190	S		0	* PLASTIC HOSE	
150B	90206-0324	S		0	* HEATING CARTRIDGE	
160	90235-0241	-		4	VALVE	
170	90239-0821	-		1	CYLINDER 20-25	
180	90239-0370	-		2	CONNECTION	
185	312105-0364	-		4	SCREW M6S6X10RFR	
190	312105-0368	-		2	SCREW O4017 M6X16A280	
200	312105-0370	-		10	SCREW O4017 M6X20A280	
210	312105-0372	-		6	SCREW O4017 M6X25A280	
220	312105-0455	-		2	SCREW O4017 M8X30A280	
230	312115-0378	-		4	SCREW O4762 M6X40A280	
240	312605-0316	-		4	NUT M6M6RFR	
245	312621-0318	-		2	NUT ML6M8FZB	
250	315105-0153	-		20	WASHER BRB6,4X12RFR	
260	315105-0165	-		2	WASHER BRB8,4X16RFR	
265	315121-0153	-		6	WASHER TBRSB6,4X22FZB	
270	315752-0120	-		4	CIRCLIP SGH26	
280	342920-0113	-		4	PIPE COUPL6/4-1/8	
290	342946-0112	-		2	T-CONNECTI6/4	
300	342991-0106	-		2	HOSE CLIP 26-38MMRFR	
310	344502-0021	-		2	NIPPLE L AHM6	

Pos	Part No	SP	UN	Qty	Description	Page No

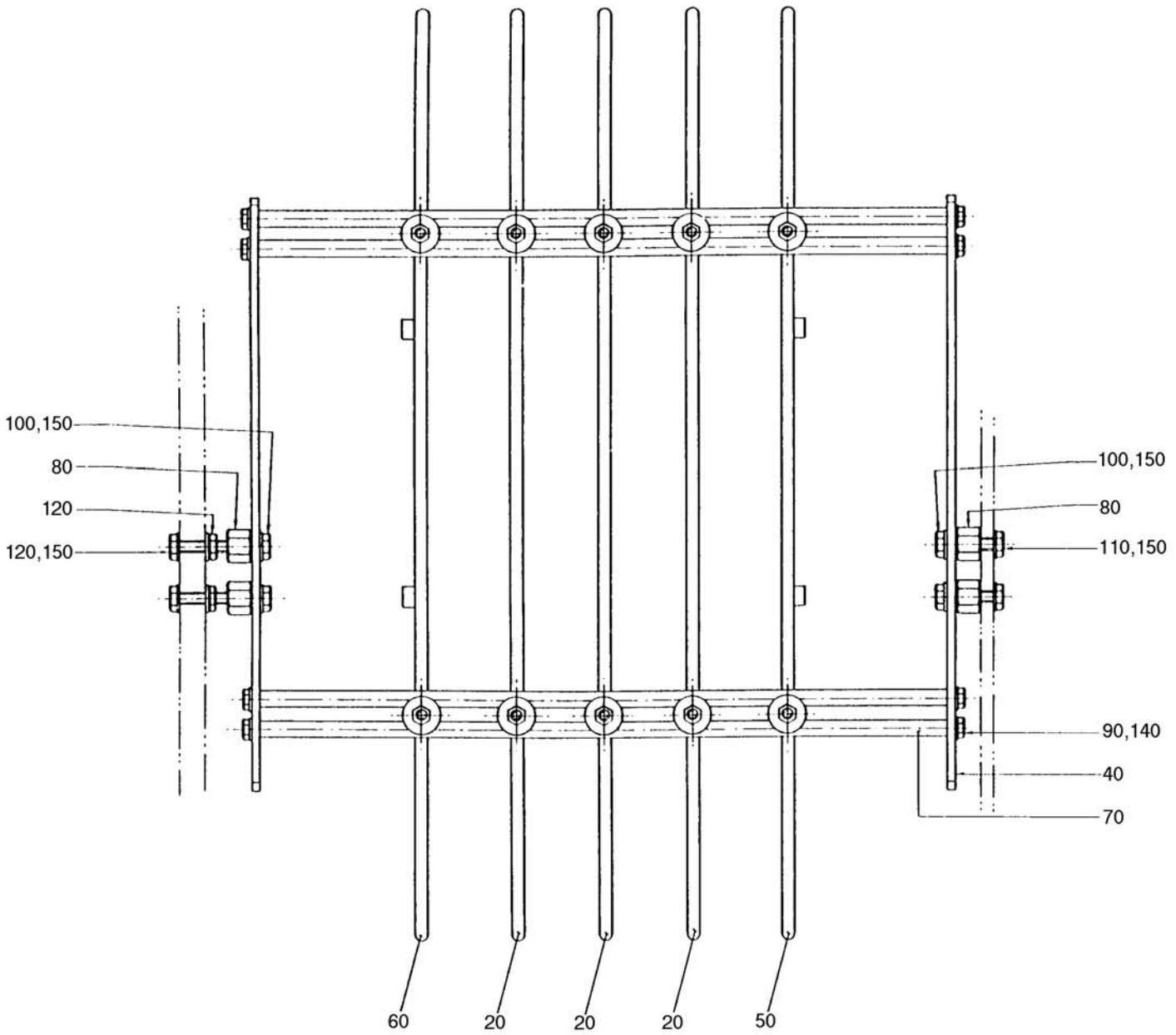

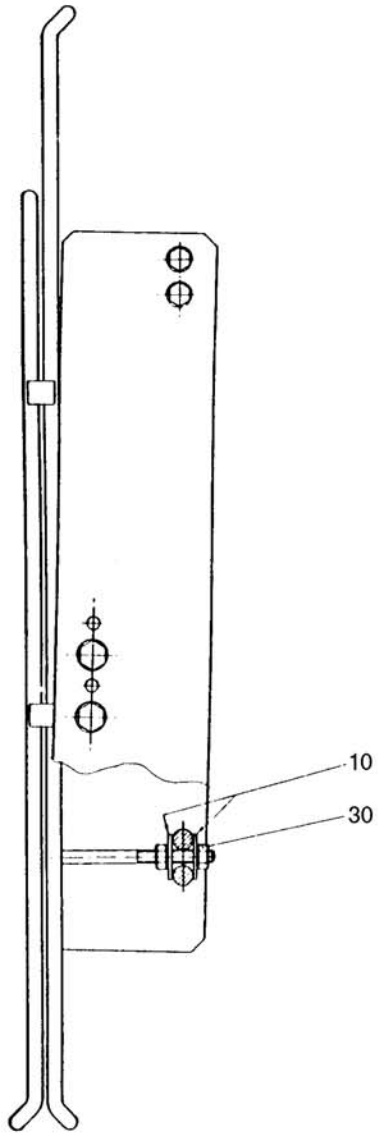

45034301.TIF
450343-1
AM

Pos	Part No	SP	UN	Qty	Description	Page No
000	**C- 450343-0101**	**-**		**1**	**PAPER GUIDE**	
010	19262	-		20	WASHER	
020	283721	-		3	GUIDE ROD	
030	312605-0314	-		20	NUT M6M5RFR	
060	283720	-		1	GUIDE ROD	
Common parts						
040	**267922**	**-**		**2**	**END SECTION**	
050	283719	-		1	GUIDE ROD	
070	4318-0009	-		4	SHAFT	
080	267929	-		4	NUT	
090	312105-0329	-		8	SCREW O4017 M5X16A280	
100	312105-0364	-		4	SCREW M6S6X10RFR	
110	312105-0366	-		2	SCREW O4017 M6X12A280	
120	312105-0374	-		2	SCREW O4017 M6X30A280	
130	312605-0316	-		2	NUT M6M6RFR	
140	315105-0146	-		8	WASHER BRB5,3X10RFR	
150	315105-0153	-		10	WASHER BRB6,4X12RFR	

Pos	Part No	SP	UN	Qty	Description	Page No

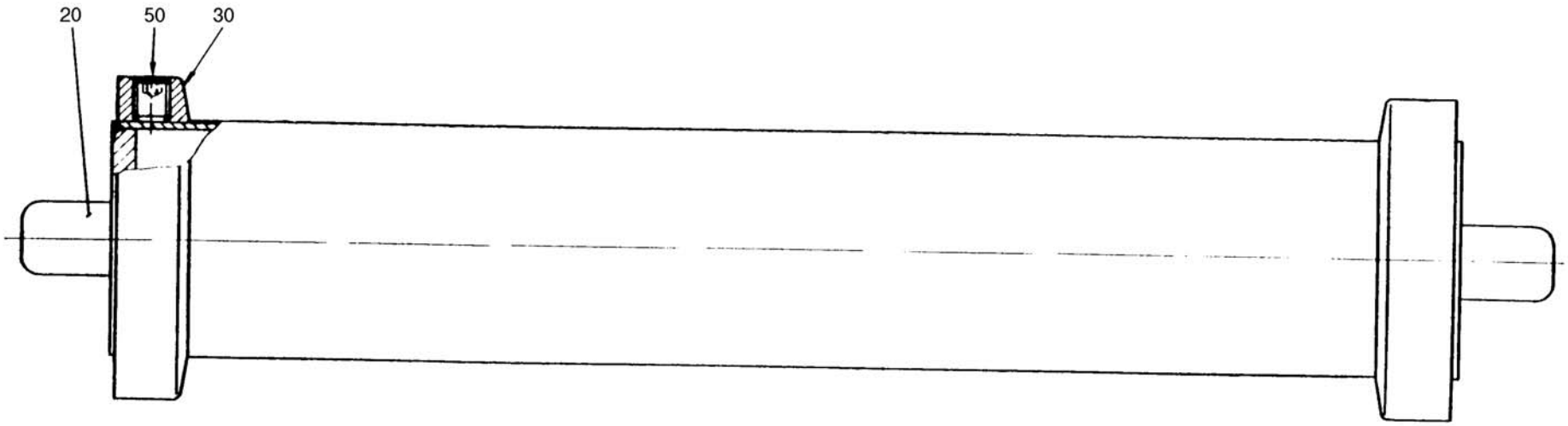

23979301.TIF
239793-1
AM

Pos	Part No	SP	UN	Qty	Description	Page No
000	**C- 239793-0101**	**-**		**4**	**BENDING ROLLER**	
030	239011	-		2	FLANGE	
050	312318-0362	-		6	STOP SCREW SK6SS6X8RFR	
020	239010	-		1	BENDING ROLLER	

Pos	Part No	SP	UN	Qty	Description	Page No

This page is intentionally left blank

Pos	Part No	SP	UN	Qty	Description	Page No
000	**C- 267052-0301**	**-**		**1**	**START-UP KIT**	
180	538527	-		1	RUBBER RAIL	
320	90206-0073	-		1	HEATING ELEMENT	
325	90206-0324	-		1	HEATING CARTRIDGE	

Pos	Part No	SP	UN	Qty	Description	Page No

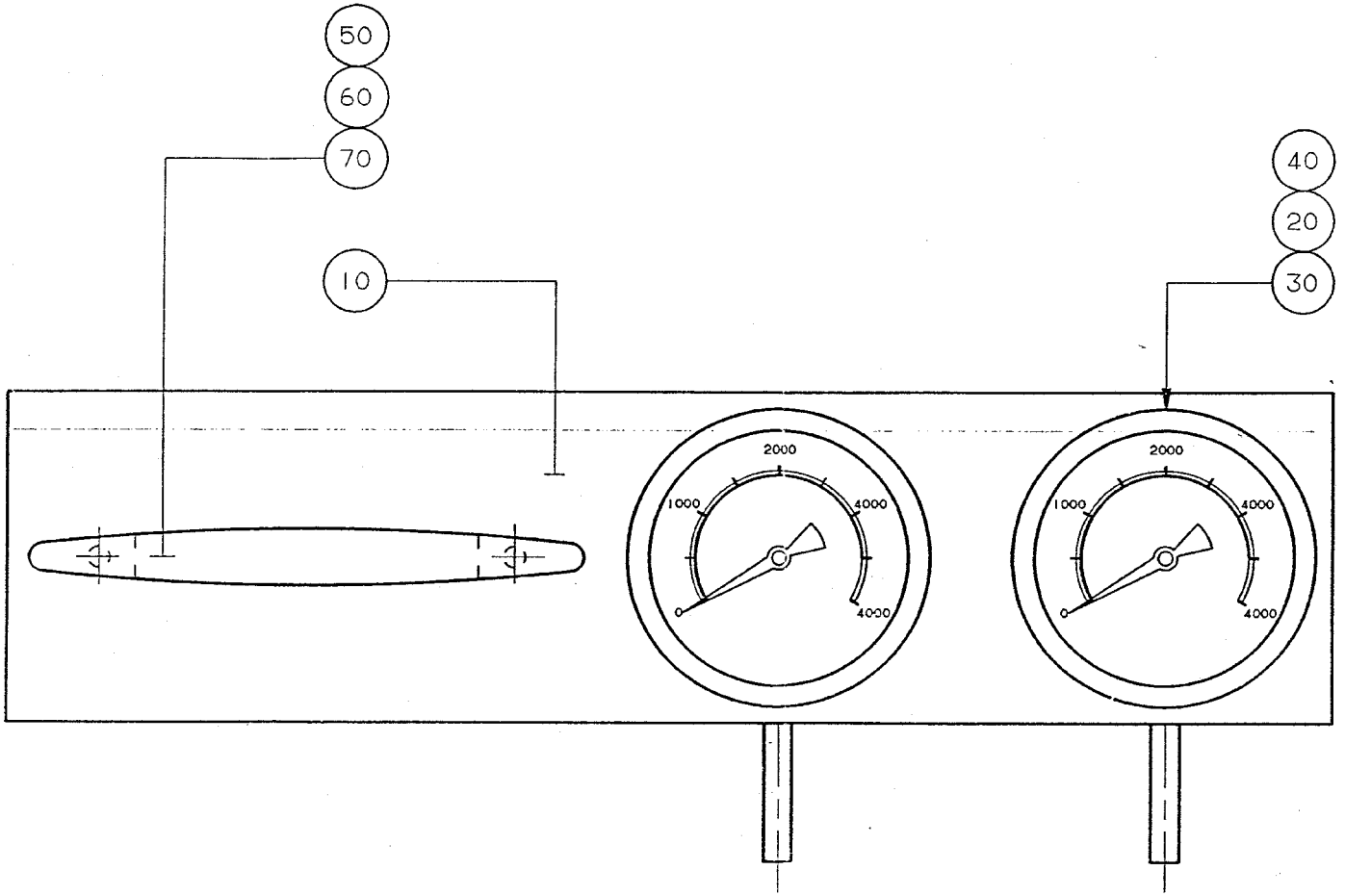

GraphicID: 54100101.tif
ParentDrw: 541001-1
ECN No:

Pos	Part No	SP	UN	Qty	Description	Page No
000	**C- 541100-0101**	**-**		**1**	**CONROL INSTRUMENT**	
010	541002	-		1	SHEET	
020	541003	-		2	NIPPLE	
030	90043-0061	-		2	PRESSURE GAUGE	
040	90166-0176	-	M	1	RUBBER HOSE	
050	90017-0008	-		1	HANDLE	
060	312125-0287	-		2	SLOTTED HEMCS4X8RFR	
070	315105-0136	-		2	WASHER BRB4,3X8RFR	

Pos	Part No	SP	UN	Qty	Description	Page No

Tetra Pak

SPC

Spare Parts Catalogue

Part No	Description	Page No
1013	SHAFT	19, 227
10325	CATCH	19
10349	BEARING	73
10363	PIN	19
10385	WASHER	31
10386	LOCKING FINGER	31
10418	SPACER ROD	69
10434	BEARING HOUSING	69
10561	BEARING BRACKET	73
10562	BEARING BOX	73
10563	ECCENTRIC	73
10593	LOCKING RUBBER	53
10641	SPACER	211
10683-0001	SQUEE-GEE ROLLER	69
10683-0002	SQUEE-GEE ROLLER	69
10707	HOOD	51
10789	PIPE CLAMP	63
10793-0030	MOUNTING RAIL	167
10816	MARKING PLATE	117
10908	RETAINING RING	241, 243, 247
10920	TENSION SPRING	175, 177
11065	NUT	55
11071	SPRING	55
11077	DOOR	35
11081-0002	GUIDE RING	47
11081-0004	GUIDE RING	47
11084	TEFLON HOSE	47
11087	HOLDER	57
11089	CAP	57
11090	HOLDER	57
11146	GUIDE SPRING	51
11154	ANGLE	31
11155	HINGE	31
11165-0001	STRUT	31
11305	SPACER	247
11307	BUSHING	247
11312	GUIDE RING	247
11389	BOW CLAMP	253
11390	SCREW	253
11391-0002	TENSION SPRING	253
11423	SPRING	251
11424	SHIFTER HANDLE	251
11436	SHAFT	249
11445	MOUNTINGS	247
11448	SHAFT	241, 243, 271
11450	SHAFT	271
11452	LACE	241, 243, 271
11458	HOUSE	221
11459	LID	221
11460	WASHER	215
12155	STOP PIN	43
12167	CLAMP RING	45
12168	HOLDER	45
12176	CANTILEVER	69
12180-0001	BRACKET	69
12180-0002	BRACKET	69
12181	AXLE PIN	69
12183	LEVER	69
12184	BUSHING	69
12195	HANDLE	47
12265	BUSHING	51
12274	LID	59
12300	CAP	57
12301	CAP	57
12308	SCREW	57
12353	COLUMN RIGHT	31
12354	COLUMN LEFT	31
12358	SHAFT	215
12359	AXLE SUPPORT	215
12548-0001	LUG	69
12548-0002	LUG	69
12549-0001	SHAFT	69
12686	SPINDLE	69
12687	LACE	69
128593	WASHER	137
13126	ROLL	41
13127	ROLL	41
13128	ROLL	41
13129-0001	TRIMMING ROLLER PLUS	43
13129-0002	TRIMMING ROLLER MINUS	43
13172	ADJUSTING SCREW	125
13225	SUPPORT	31
13242	SPACER LUG	41
13243	ROLL	41
13244	ROLL	41
13245	ROLL	41

Part No	Description	Page No
13246	ROLL	41
13248-0001	TRIMMING ROLLER PLUS	43
13248-0002	TRIMMING ROLLER MINUS	43
13249-0001	TRIMMING ROLLER PLUS	43
13249-0002	TRIMMING ROLLER MINUS	43
13254	NUT	125
13319	CUP	215
13354	SHAFT	255
13389-0001	SHEET	117
13389-0002	SHEET	117
13401	LACE	241, 243, 271
13474	ROLL	41
13475	ROLL	41
13643	WASHER	251
13663	CASSETTE	247
13664	ARM	247
13665	BOBBIN HOLDER	247
13666	BUSHING	247
13667	SHOULDER BOLT	247
13853	GABLE PLATE	247
13854	HOLDER	247
13888	BEARING	19
13890-0001	HOLDER	19
13890-0002	HOLDER	19
14617	HEAD PLATE	257
14618	SHAFT	257
14637	LINK	255
14826	BUSHING	261
14964-0002	SHAFT	283, 289
14966	ROLL	283, 289
1755-0005	WASHER	179
1755-0006	WASHER	179
1755-0007	WASHER	179
1756	ROD SUPPORT	31
19083	WEIGHT	287
19120	CLAMPING PIECE	263
19124	MOUNTING SHEET	263
19125	LINK	251
19126	COVER	265
19127	INSULATION	263
19128	KNIFE	263
19129	INSULATION	263
19135	LOCK WASHER	251, 253
19139	KNIFE	251
19140	KNIFE HOLDER	251
19142	SHAFT	251
19150	THRUST WASHER	43
19160	RING	43
19162	HOLDER	43
19217	KNURLED SCREW	283, 289
19223	COMPRESSION SPRING	283, 289
19262	WASHER	293
19477	CASSETTE	19
19530	MAGNET	263
19536	CLAMPING PART	263
19537	FRAME	251
19538	BRACKET	251
19540	CARRIER	251
19542	SPACER	251
19543	SUPPORT	251
19544	BRACKET	251
19545	ECCENTRIC SHAFT	251
19546	WASHER	251
19547	SHAFT	251
19548	CLAMPING PIECE	251
19549	BRACKET	251
19551	HOLDER	253
19552	ROLL	253
19553	SHAFT	253
19554	SHAFT	255
19555	FORK	255
19556	STOP LUG	267
19560	PIPE	249
19564	FRAME	261
19567	SCREW	261
19779	HOUSE	271
19784	SHAFT	285
19787-0001	ROLL	289
19787-0002	ROLL	283
19788	BOW CLAMP	283, 289
19790	STUD SCREW	283, 289
19791	RETAINING RING	271
19792	SPRING BRACKET	271
19795	COMPRESSION SPRING	283, 289
19797	BUSHING	83, 283, 289
20037	SHAFT	269

Part No	Description	Page No
20038	CLAMP PLATE	269
20039	RUBBER STRIP	269
20040	HANDSPIKE	269
2033-0002	WASHER	41, 43
2033-0003	WASHER	41, 43
2033-0009	WASHER	275
2033-0012	WASHER	103
20401	RING	271
20497	GROUP NUMBER PLATE	19, 31, 117, 133, 153, 175, 177, 227, 241, 243
20674	GUIDE FLANGE	241, 243
206913	LOCKING LOOP	23
207639	SPACER	85
20914	HOLDER	51
209170	HOLDER	51
20992	STEERING RAIL	257
209972	RAIL	181
21014	WASHER	251
21071	BRAKE	287
21072	BRAKE	287
21150	FUNNEL	241, 243
21155	SPACER ROD	241, 243
21161	HINGE	241, 243
21232	BRACKET	259
2141	BOLT	199
21518	SHAFT	259
21520-0002	PUNCH	259
21520-0003	PUNCH	259
21521	COMPRESSION SPRING	259
21522-0002	DIE	259
21522-0003	DIE	259
21524	BUSHING	259
21525	LID	259
21530	SHAFT	259
21590	PLATE	259
21613	SCREW	165
21622	THUMB SCREW	259
21631	TENSION SPRING	271
2189	SLEEVE	133, 135
230179	FRONT GUARD	217
230518	CYLINDER	87
230613	FLANGE	209
23169	FORK	271
23175	SCREW	271
23176	BRACKET	271
23266	STOP	241, 243
23267	SUPPORT	241, 243
232946	HOLDER	87
232948	ARM	87
23358	PLATE	259
23359	PLATE	259
236645	HOLDER	209
236646	COVER	209
236647-0001	GAUGE BLOCK	209
236649	SHAFT	209
236651	SHEET	153
236986	STUD SCREW	209
237427	PLATE	233
237499	PLATE	103, 233
239010	BENDING ROLLER	295
239011	FLANGE	295
2410	HANDLE CRANK	31
243361	BRACKET	227
243989	TENSION SPRING	127
243990	LINK ARM	127
244588	SHAFT	127
245068	SHEET	175, 177
246520	SHAFT	127
246523	STOP LUG	127
2467	OIL SEAL (L@VALOCK)	185
2467	OIL SEAL (LÖVALOCK)	181
247125	HEATING PIPE	61
247126	PIPE BEND	57
247127	CONTAINER	59
247183	BASE	59
247184	ATTACHMENT PIPE	57
247223	PIPE	57
247224	ATTACHMENT PIPE	57
247225	VALVE HOUSING	57
247435	PROTECTIVE CASING	103
247472	BOTTOM	59
247492	PIPE	57
247493	PIPE	57
247494	PIPE	57
2481	TACK	117, 133
252676	CAP	107
252677	PIPE	69

Part No	Description	Page No
252703	HOLDER	89
252704	CAP	89
252982	HEAT EXCHANGER	57
255066	HOLDER	107
2551	DOWEL	227
255199	HOLDER	89
255256	SHAFT	127
259503	MOUNTING BAR	125
259850	BRACKET	219
259851	HOLDER	219
259853	HOLDER	219
259854	HOLDER	219
259923	GUIDE PIPE	219
259961	HOLDER	145
259962-0001	PLATE	145
259962-0002	PLATE	139, 141
2612-0001	WASHER	153
2612-0002	WASHER	153
2612-0003	WASHER	153
2612-0004	WASHER	153
2613	SCREW	153
263096	TRANSMISSION RAIL	117
263097	TRANSMISSION RAIL	117
263106	HOLDER	139, 141
263110	SIGN	209
263203	FRAME	175, 177
263217	BOW CLAMP	117
263218	RAIL	117, 143
263267	SPACER	175, 177
263268	SPACER	175, 177
263269	SPACER	175, 177
263963	RUBBER HOLDER	147
267488	SHAFT	77
267491	CRAMP	77
267805	SHAFT	77
267806	ROLL	77
267922	END SECTION	293
267923	PLATE	291
267924	SHAFT	291
267929	NUT	293
268022	FASTENING BRACKET	163
268557	FORK	77
268558	SHAFT	77

Part No	Description	Page No
269051	ARM	283, 289
269399	FILLER TUBE	51
2702	LATCH	35
2703	COMPRESSION SPRING	35
27115	SHAFT	25
27118	THRUST WASHER	25
273725-0001	LACE	129
273725-0002	LACE	129
273725-0003	LACE	129
27402	MACHINE PLATE	175, 177, 241, 243
2767	HINGE	227
2768	COVERING PLATE	227
27726	GEAR WHEEL	73
27727	GEAR WHEEL	73
27729	LATCH	25
27730	LOCKING COMPOUND	25
27731	SHEET	25
2781	COMPRESSION SPRING	227
278513	ELEMENT	51
2795	NUT	43
279578	CONTACT RAIL LEFT	127
279579	CONTACT RAIL RIGHT	127
279626	PIPE	107
279664	BRACKET	127
279668	CARBON BRUSH COMPLETE	131
279778	PIPE	69
279781-0002	PIPE	107
283147	BRACKET	87
283470	YOKE	291
283471	BRACKET	291
283472	BRACKET	291
283473	CRAMP	291
283474	STEERING	291
283719	GUIDE ROD	293
283720	GUIDE ROD	293
283721	GUIDE ROD	293
283791	CURVE	209
284046	GASKET	131
284047	GUIDE LUG	127
284116	CAP	145
284541	CUSHION	175, 177
284893	PULLEY	201
292317	PIPE	107

Part No	Description	Page No
292365	CANTILEVER	75
292366	CANTILEVER	75
293458	CABLE	117
293459	CABLE	117
294102	HOLDER	117
294244	HOLDER	169
294245	BRACKET	169
294246	CAP	169
294247	LID	169
294248	PIPE	169
294249	SCREW	169
294250	LUG	117
294251	CAP	117
294261	PIPE	19
294262	COVER	19
294263	LUG	19
294327	RUBBER RAIL	147
294498	INSULATING PLATE	291
294499	HEAT GUARD	291
2965	HINGE	153
2975	RING	153
29861	BRACKET	61
29874	CONNECTION HOUS.(MINOR)	61
29876	LID	61
29877-0001	ROD ELEMENT	61
29877-0002	ROD ELEMENT	61
29897	HOLDER	61
30298	INSULATION	61
311101-0406	CYLINDRICACP8H6X32	181, 185
311102-0369	CYLINDRICACP M6 6X60	21
311102-0404	CYLINDRICACP M6 8X28	193
311102-0406	CYLINDRICACP M6 8X32	193
311103-0235	CYLINDRICACP M6 3X14 RFR	127
311103-0274	CYLINDRICACP 4X25 RFR	259
311103-0306	CYLINDRICACP M6 5X12 RFR	281
311103-0310	CYLINDRICACP M6 5X20 RFR	73
311103-0314	CYLINDRICACP M6 5X30 RFR	73
311103-0350	CYLINDRICACP M6 6X14 RFR	69
311103-0351	CYLINDRICACP M6 6X16 RFR	275
311103-0401	CYLINDRICACP M6 8X20 RFR	217
311201-0327	TAPER PIN KP8X70SLIPAD	119
311211-0294	TAPER PIN GKP6X6X35	175, 177
311211-0299	TAPER PIN GKP6X6X55	179

Part No	Description	Page No
311303-0238	SLOTTED PIRPB3X20FZB	117, 133
311303-0310	SLOTTED PIRPB5X20FZB	41
311303-0404	SLOTTED PIN RPB 8X28 FZB	135
311305-0185	SLOTTED PIRPC2X6FZB	69
311305-0233	SLOTTED PIRPC3X10FZB	43
311305-0238	SLOTTED PIRPC3X20FZB	19, 23
311305-0274	SLOTTED PIRPC4X25FZB	133
311305-0310	SLOTTED PIRPC5X20FZB	153
311305-0312	SLOTTED PIRPC5X25FZB	175, 177
311305-0356	SLOTTED PIRPC6X28FZB	133
311307-0207	SLOTTED PIRPD2,5X10FZB	53
311307-0210	SLOTTED PIRPD2,5X16FZB	227
311307-0240	SLOTTED PIRPD3X24FZB	35
311401-0199	SPLIT PIN SP4X32FZB	201
311411-0117	SPLIT PIN SP1X10RFR	257, 259
311411-0137	SS 2343	283, 289
311411-0165	SPLIT PIN SP2,5X16RFR	23
311411-0179	SPLIT PIN SP3,2X16RFR	43
311506-0278	RIVET KN2,6X6KPR	285
311508-0199	RIVET KN2X6ALUM.	35
311508-0416	RIVET KN4X10ALUM.	19
311520-0429	BLANK RIVE3,2X8	169, 241, 243
312101-0287	SCREW M6S4X8FZB	147, 207
312101-0291	SCREW M6S4X12FZB	287
312101-0293	SCREW M6S4X16FZB	251
312101-0325	SCREW M6S5X10FZB	69, 219
312101-0327	SCREW M6S5X12FZB	117, 121, 143, 263
312101-0332	SCREW M6S5X22FZB	251
312101-0340	SCREW M6S5X45FZB	221
312101-0364	SCREW M6S6X10FZB	69, 219
312101-0366	SCREW M6S6X12FZB	31, 49, 69, 129, 153, 175, 177, 179
312101-0368	SCREW M6S6X16FZB	163, 181, 183, 185, 193, 209, 251, 263
312101-0370	SCREW M6S6X20FZB	169, 259, 261
312101-0372	SCREW M6S6X25FZB	129, 139, 141, 163, 169, 219, 251
312101-0374	SCREW M6S6X30FZB	117, 133
312101-0376	SCREW M6S6X35FZB	39
312101-0380	SCREW M6S6X50FZB	251
312101-0449	SCREW M6S8X16FZB	153
312101-0451	SCREW M6S8X20FZB	175, 177
312101-0453	SCREW M6S8X25FZB	175, 177, 181, 185, 193, 215, 249
312101-0455	SCREW M6S8X30FZB	31, 175, 177, 181, 193, 201
312101-0461	SCREW M6S8X50FZB	179
312101-0463	SCREW M6S8X60FZB	179

Part No	Description	Page No
312101-0493	SCREW M6S10X25FZB	109
312101-0495	SCREW M6S10X30FZB	69, 175, 177
312101-0499	SCREW M6S10X40FZB	175, 177, 179
312101-0501	SCREW M6S10X50FZB	175, 177
312101-0540	SCREW M6S12X40FZB	133, 165
312101-0556	SCREW M6S12X120FZB	175, 177
312101-0624	SCREW M6S16X30FZB	227
312101-0636	SCREW M6S16X80FZB	31
312104-0379	SCREW M6S6X45H8.8 FZB	263
312104-0501	SCREW M6S10X50H8.8FZB	107
312104-0546	SCREW M6S12X70H8.8FZB	199
312105-0289	SCREW M6S4X10 A2 80	283, 289
312105-0291 t	SCREW M6S4X12 A2 80	155
312105-0325	SCREW M6S5X10 A2 80	73, 169, 241, 243, 271, 283, 289
312105-0327	SCREW O4017 M5X12A280	23, 31, 35, 65, 181, 207, 275
312105-0328	SCREW M6S5X14 A2 80	73
312105-0329	SCREW O4017 M5X16A280	89, 269, 281, 293
312105-0329 t	SCREW M6S5X16 A2 80	155
312105-0333	SCREW O4017 M5X25A280	31
312105-0337	SCREW O4014 M5X35A280	207, 245
312105-0362	SCREW O4017 M6X8A280	25, 217
312105-0364	SCREW M6S6X10RFR	137, 227, 291, 293
312105-0366	SCREW M6S6X12RFR	235
312105-0366	SCREW O4017 M6X12A280	57, 59, 63, 81, 83, 131, 241, 243, 271, 283, 289, 293
312105-0367	SCREW M6S6X14RFR	147
312105-0368	SCREW O4017 M6X16A280	71, 73, 241, 243, 271, 281, 291
312105-0368	SCREW	105
312105-0370	SCREW M6S6X20RFR	233
312105-0370	SCREW O4017 M6X20A280	23, 57, 67, 75, 77, 109, 207, 241, 243, 271, 281, 291
312105-0372	SCREW M6S6X25RFR	235
312105-0372	SCREW O4017 M6X25A280	31, 291
312105-0374	SCREW O4017 M6X30A280	249, 293
312105-0376	SCREW O4017 M6X35A280	87, 241, 243
312105-0378	SCREW O4017 M6X40A280	271
312105-0380	SCREW O4014 M6X50A280	57
312105-0381	SCREW O4014 M6X55A280	117, 133, 241, 243
312105-0388	SCREW O4014 M6X90A280	117, 133
312105-0447	SCREW O4017 M8X12A280	87
312105-0449	SCREW M6S8X16RFR	227
312105-0449	SCREW O4017 M8X16A280	61, 103, 275
312105-0449	SCREW	105
312105-0451	SCREW SO4017 8X20A280	23, 45, 57, 89, 107
312105-0453	SCREW O4017 M8X25A280	77, 207
312105-0455	SCREW M6S8X30RFR	231
312105-0455	SCREW O4017 M8X30A280	45, 57, 291
312105-0459	SCREW O4017 M8X40A280	89
312105-0469	SCREW O4014 M8X90A280	57, 217
312105-0491	SCREW 4017 M10X20A280	61, 71, 169
312105-0493	SCREW M6S10X25RFR	231
312105-0495	SCREW 4017 M10X30A280	43
312105-0499	SCREW 4017 M10X40A280	241, 243
312105-0501	SCREW 4017 M10X50A280	41
312105-0502	SCREW 4014 M10X55A280	169
312105-0505	SCREW 4014 M10X70A280	169
312105-0538	SCREW 4017 M12X35A280	241, 243
312105-0629	SCREW ISO4017 M16X45A280	105
312105-0630	SCREW	105
312109-0335	SCREW M6S5X30HRFR	69
312109-0374	SCREW M6S6X30HRFR	69
312109-0378	SCREW M6S6X40H RFR	181
312109-0461	SCREW	105
312111-0287	SCREW MC6S4X8FZB	117, 251
312111-0291	SCREW MC6S4X12FZB	143, 227, 251, 259, 261, 263
312111-0293	SCREW MC6S4X16FZB	175, 177, 263, 267
312111-0327	SCREW MC6S5X12FZB	145, 209
312111-0329	SCREW MC6S5X16FZB	215
312111-0331	SCREW MC6S5X20FZB	263
312111-0340	SCREW MC6S5X45FZB	203
312111-0341	SCREW MC6S5X50FZB	209
312111-0368	SCREW MC6S6X16FZB	117, 175, 177, 251
312111-0370	SCREW MC6S6X20FZB	31
312111-0371	SCREW MC6S6X22FZB	175, 177, 185, 255
312111-0372	SCREW MC6S6X25FZB	125, 263
312111-0374	SCREW MC6S6X30FZB	133
312111-0378	SCREW MC6S6X40FZB	23
312111-0447	SCREW MC6S8X12FZB	175, 177, 193
312111-0451	SCREW MC6S8X20FZB	129, 215
312111-0452	SCREW MC6S8X22FZB	119, 193
312111-0455	SCREW MC6S8X30FZB	119
312111-0459	SCREW MC6S8X40FZB	31
312111-0492	SCREW MC6S10X22FZB	181, 185
312111-0493	SCREW MC6S10X25FZB	227
312111-0495	SCREW MC6S10X30FZB	23
312111-0499	SCREW MC6S10X40FZB	133

Part No	Description	Page No
312111-0536	SCREW MC6S12X30FZB	19
312111-0540	SCREW MC6S12X40FZB	117, 133
312111-0628	SCREW MC6S16X40FZB	153
312115-0287	SCREW O4762 M4X8A280	23, 133, 135, 207, 281
312115-0289	SCREW S4X10 A4 80	241, 243, 271
312115-0291	SCREW O4762 M4X12A280	23, 41, 95
312115-0293	SCREW O4762 M4X16A280	43, 69, 135, 281
312115-0297	SCREW O4762 M4X25A280	51
312115-0304	SCREW O4762 M4X45A280	89
312115-0323	SCREW O4762 M5X8A280	275
312115-0325	SCREW 5X10 A4 80	73, 87, 275
312115-0327	SCREW O4762 M5X12A280	139, 141, 217
312115-0329	SCREW O4762 M5X16A280	57, 127, 131
312115-0366	SCREW O4762 M6X12A280	43, 247
312115-0368	SCREW O4762 M6X16A280	23, 41, 131, 147, 241, 243
312115-0372	SCREW O4762 M6X25A280	107, 147
312115-0376	SCREW O4762 M6X35A280	107
312115-0378	SCREW O4762 M6X40A280	291
312115-0380	SCREW O4762 M6X50A280	241, 243
312115-0447	SCREW O4762 M8X12A280	23, 63
312115-0449	SCREW O4762 M8X16A280	65
312115-0459	SCREW O4762 M8X40A280	35, 89, 99, 101
312115-0463	SCREW 8X60 A4 80	231
312115-0491	SCREW 10X20 A4 80	227
312115-0536	SCREW 4762 M12X30A280	69
312115-0538	SCREW 4762 M12X35A280	45
312121-0220 t	SLOTTED HEMCS3X6FZB	159
312121-0230	SLOTTED HEMCS3X20FZB	83, 221, 265
312121-0285	SLOTTED HEMCS4X6FZB	139, 141, 163, 219, 253
312121-0287	SLOTTED HEMCS4X8FZB	251, 265
312121-0291	SLOTTED HEMCS4X12FZB	31, 211
312121-0293	SLOTTED HEMCS4X16FZB	57, 209, 263
312121-0323	SLOTTED HEMCS5X8FZB	145, 175, 177
312121-0327	SLOTTED HEMCS5X12FZB	49, 209
312121-0366	SLOTTED HEMCS6X12FZB	165, 209
312122-0289	SLOTTED HEMCS4X10MSGFN	31
312122-0327	SLOTTED HEMCS5X12MSGFN	131
312122-0364	SLOTTED HEMCS6X10MSGFN	165
312122-0372	SLOTTED HEMCS6X25MSGFN	169
312122-0376	SLOTTED HEAD SCREW	31
312125-0220	SLOTTED HEMCS3X6RFR	263, 283, 289
312125-0222 t	SLOTTED HEMCS3X8RFR	155
312125-0228	SLOTTED HEMCS3X16RFR	89
312125-0230	SLOTTED HEMCS3X20RFR	283, 289
312125-0234	SLOTTED HEMCS3X30RFR	241, 243
312125-0285	SLOTTED HEMCS4X6RFR	87, 205, 217, 241, 243, 283, 289
312125-0287	SLOTTED HEMCS4X8RFR	103, 221, 235
312125-0287 t	SLOTTED HEMCS4X8RFR	155
312125-0289	SLOTTED HEMCS4X10RFR	19, 31, 233
312125-0291	SLOTTED HEMCS4X12RFR	241, 243
312125-0299	SLOTTED HEMCS4X30RFR	233
312125-0323	SLOTTED HEMCS5X8RFR	61, 93, 95, 97, 227, 241, 243
312125-0325	SLOTTED HEMCS5X10RFR	217
312125-0327	SLOTTED HEMCS5X12RFR	19
312125-0331	SLOTTED HEMCS5X20RFR	61
312125-0333	SLOTTED HEMCS5X25RFR	175, 177
312125-0339	SLOTTED HEMCS5X40RFR	217
312125-0364	SLOTTED HEMCS6X10RFR	217
312125-0366	SLOTTED HEMCS6X12RFR	191
312132-0287	SLOTTED HEMSCS4X8MSGFN	83, 85
312132-0289	SLOTTED HEMSCS4X10MSGFN	117, 263
312132-0323	SLOTTED HEMSCS5X8MSGFN	221
312141-0366	SLOTTED HEMFS6X12FZB	117
312141-0368	SLOTTED HEMFS6X16FZB	39, 143
312141-0372	SLOTTED HEMFS6X25FZB	117
312145-0224	SLOTTED HEMFS3X10RFR	147
312145-0285	SLOTTED HEMFS4X6RFR	23
312145-0287	SLOTTED HEMFS4X8RFR	23, 277
312145-0291	SLOTTED HEMFS4X12RFR	277
312145-0299	SLOTTED HEMFS4X30RFR	169
312145-0327	SLOTTED HEMFS5X12RFR	267
312145-0331	SLOTTED HEMFS5X20RFR	19
312145-0364	SLOTTED HEMFS6X10RFR	129
312145-0366	SLOTTED HEMFS6X12RFR	19
312145-0372	SLOTTED HEMFS6X25RFR	129
312145-0449	SLOTTED HEAD SCREW	105
312151-0287	SCREW MF6S4X8FZB	175, 177
312151-0291	SCREW MF6S4X12FZB	197, 199, 215
312151-0327	SCREW MF6S5X12FZB	215
312151-0368	SCREW MF6S6X16FZB	31
312151-0457	SCREW MF6S8X35FZB	133
312151-0459	SCREW MF6S8X40FZB	25
312151-0493	SCREW MF6S10X25FZB	175, 177
312151-0495	SCREW MF6S10X30FZB	23, 25
312151-0536	SCREW MF6S12X30FZB	25
312155-0491	SCREW MF6S10X20RFR	169

Part No	Description	Page No
312155-0532	SCREW MF6S12X20RFR	89
312165-0287	SLOTTED HEMKFS4X8RFR	247
312165-0329	SLOTTED HEMKFS5X16RFR	153, 227
312165-0366	SLOTTED HEMKFS6X12RFR	175, 177, 241, 243, 247
312165-0368	SLOTTED HEMKFS6X16RFR	19, 241, 243
312204-0154	SCREW U6S5/16X25FZB	217
312303-0457	STUD SCREWMPS 8X25 RFR	205
312303-0541 t	STUD SCREWMPS 12X30 RFR	159
312303-0543 t	STUD SCREWMPS 12X40 RFR	159
312306-0287	STOP SCREW P6SS4X8FZB	187, 209
312306-0327	STOP SCREW P6SS5X12FZB	259
312306-0360	STOP SCREW P6SS6X6FZB	31, 247
312306-0366	STOP SCREW P6SS6X12FZB	231, 259
312306-0371	STOP SCREW P6SS6X22FZB	19
312306-0455	STOP SCREW P6SS8X30FZB	193
312306-0461	STOP SCREW P6SS8X50FZB	119
312311-0333	STOP SCREW T6SS5X25FZB	263
312311-0366	STOP SCREW T6SS6X12FZB	69, 221
312311-0370	STOP SCREW T6SS6X20FZB	175, 177
312311-0372	STOP SCREW T6SS6X25FZB	31
312311-0374	STOP SCREW T6SS6X30FZB	31, 69
312311-0449	STOP SCREW T6SS8X16FZB	207
312311-0459	STOP SCREW T6SS8X40FZB	23
312311-0532	STOP SCREW T6SS12X20FZB	133
312311-0548	STOP SCREW T6SS12X80FZB	153
312316-0283	STOP SCREW SK6SS4X4FZB	251
312316-0287	STOP SCREW SK6SS4X8FZB	251
312316-0295	STOP SCREW SK6SS 4X20 FZB	263
312316-0323	STOP SCREW SK6SS5X8FZB	187, 201, 259
312316-0329	STOP SCREW SK6SS5X16FZB	259
312316-0360	STOP SCREW SK6SS6X6FZB	269
312316-0362	STOP SCREW SK6SS6X8FZB	189, 199, 261
312316-0366	STOP SCREW SK6SS6X12FZB	197
312316-0368	STOP SCREW SK6SS6X16FZB	257
312316-0374	STOP SCREW SK6SS 6X30 FZB	241, 243
312316-0443	STOP SCREW SK6SS8X8FZB	31
312316-0447	STOP SCREW SK6SS8X12FZB	31, 119, 187, 207
312316-0487	STOP SCREW SK6SS10X12FZB	31
312316-0530	STOP SCREW SK6SS12X16FZB	175, 177
312318-0284	STOP SCREW SK6SS4X5RFR	217
312318-0285	STOP SCREW SK6SS4X6RFR	221, 241, 243, 275, 281
312318-0360	STOP SCREW SK6SS6X6RFR	23, 51, 87, 241, 243, 281
312318-0362	STOP SCREW SK6SS6X8RFR	69, 137, 295

Part No	Description	Page No
312502-0221	DRIVE SCREKDS4X6FNB	19, 31, 117, 133, 153, 175, 177, 227, 241, 243
312503-0279	DRIVE SCRERXKB6X9,5FZB	61
312601-0310	NUT M6M3FZB	83
312601-0312	NUT M6M4FZB	263, 267
312601-0314	NUT M6M5FZB	49, 253, 259
312601-0316	NUT M6M6FZB	69, 175, 177, 179, 185, 251, 257, 263
312601-0318	NUT M6M8FZB	23, 119, 201
312601-0320	NUT M6M10FZB	69, 175, 177, 195
312601-0322	NUT M6M12FZB	153, 197, 199
312601-0322 t	NUT M6M12FZB	159
312601-0324	NUT M6M16FZB	31
312601-0326	NUT M6M20FZB	69
312602-0316	NUT M6M6MSGFN	169
312605-0310	NUT M6M3RFR	283, 289
312605-0312	NUT M6M4RFR	23, 51, 247, 283, 289
312605-0314	NUT M6M5RFR	31, 175, 177, 227, 283, 289, 293
312605-0314 t	NUT M6M5RFR	155
312605-0316	NUT M6M6RFR	31, 57, 67, 73, 77, 87, 109, 125, 181, 207, 241, 243, 247, 281, 283, 289, 291, 293
312605-0316	NUT	105
312605-0318	NUT M6M8RFR	45, 57, 73, 77, 87, 107, 205, 207, 231, 283, 289
312605-0318	NUT	105
312605-0320	NUT M6M10RFR	107, 241, 243
312605-0322	NUT M6M12RFR	241, 243
312605-0324	NUT M6M16RFR	57
312605-0324	NUT	105
312621-0318	NUT ML6M8FZB	231, 291
312621-0320	NUT ML6M10FZB	25
312625-0316	NUT M 6	23
312711-0116	WING NUT VM6FZB	73
312715-0116	WING NUT MVM-K 6 A2	271
312805-0108	ROUND NUT KM8	189
31425	GUIDE WHEEL	77
315101-0124	WASHER BRB3,2X6FZB	209, 221
315101-0136	WASHER BRB4,3X8FZB	31, 117, 143, 175, 177, 211, 265
315101-0146	WASHER BRB5,3X10FZB	35, 87, 117, 143, 209
315101-0153	WASHER BRB6,4X12FZB	31, 39, 117, 129, 133, 141, 165, 169, 175, 177, 179, 183, 209
315101-0165	WASHER BRB8,4X16FZB	31, 153, 175, 177, 179, 193
315101-0173	WASHER BRB10,5X22FZB	109, 175, 177, 179
315101-0178	WASHER BRB13X24FZB	19, 117, 133, 135, 165, 197
315101-0186	WASHER BRB17X30FZB	31, 153
315103-0146	WASHER BRB5,3X10MSGFN	131

Part No	Description	Page No
315103-0153	WASHER BRB6,4X12MSGFN	169
315103-0165	WASHER BRB8,4X16MSGFN	169
315105-0124	WASHER BRB3,2X6RFR	89, 283, 289
315105-0124 t	WASHER BRB3,2X6RFR	155
315105-0136	WASHER BRB4,3X8RFR	19, 89, 221, 247, 251, 263, 281, 283, 287, 289
315105-0136 t	WASHER BRB4,3X8RFR	155
315105-0146	WASHER BRB5,3X10RFR	19, 23, 31, 61, 65, 69, 73, 89, 139, 141, 169, 241, 243, 245, 251, 259, 263, 271, 275, 281, 283, 289, 293
315105-0146 t	WASHER BRB5,3X10RFR	155
315105-0153	WASHER BRB6,4X12RFR	23, 31, 41, 57, 63, 67, 73, 75, 77, 81, 83, 87, 109, 227, 233, 235, 241, 243, 247, 249, 251, 263, 269, 271, 281, 283, 289, 291, 293
315105-0165	WASHER BRB8,4X16RFR	23, 73, 77, 87, 89, 103, 207, 249, 275, 291
315105-0165	WASHER	105
315105-0173	WASHER BRB10,5X22RFR	23, 41, 43, 69, 77, 169, 231, 241, 243, 251
315105-0178	WASHER BRB13X24RFR	69
315105-0186	WASHER BRB17X30RFR	105
315111-0153	WASHER TBRB6,4X12FZB	185
315111-0173	WASHER TBRB10,5X22FZB	179
315111-0178	WASHER	117
315111-0178	WASHER TBRB13X24FZB	133
315115-0153	WASHER TBRB6,4X12RFR	131, 147
315115-0165	WASHER TBRB8,4X16RFR	217
315115-0178	WASHER TBRB13X24RFR	45
315121-0153	WASHER TBRSB6,4X22FZB	169, 175, 177, 291
315121-0165	WASHER TBRSB8,4X26FZB	215
315121-0173	WASHER BRSB10,5X28FZB	181, 185
315121-0178	WASHER TBRSB13X36FZB	175, 177
315125-0153	WASHER	105
315202-0116	O-RING 18,1X1,6	73
315202-0123	O-RING 35,1X1,6	221
315202-0219	O-RING 29,2X3	135
315202-0223	O-RING 39,2X3	73
315202-0224	O-RING 42,2X3	215
315202-0304	O-RING 64,5X3	97
315202-0307	O-RING 79,5X3	275
315202-0308	O-RING 84,5X3	93, 95
315202-0518	O-RING 23,40X3,53	227
315202-0520	O-RING 26,58X3,53	197, 199
315202-0523	O-RING 31,34X3,53	215
315202-0527	O-RING 37,47X5,33	277
315202-0528	O-RING 37,69X3,53	119
315202-0910	O-RING 25,80X3,53	275
315203-0520	O-RING 26,57X3,53F	175, 177
315204-0206	O-RING 7,3X2,4VITON	65
315204-0211	O-RING 13,3X2,4VITON	61
315204-0215	O-RING 19,2X3VITON	93, 95, 97
315204-0219	O-RING 29,2X3VITON	207
315204-0225	O-RING 44,2X3VITON	59
315204-0301	O-RING 49,5X3VITON	97
315204-0313	O-RING 109,5X3VITON	59
315233-0101	SEAL RING M5	93, 95, 97
315233-0110	SEAL RING R1/4"	49, 135
315233-0111	SEAL RING R3/8"	31, 49, 63
315250-0101	GASKET 32/25	31, 51
315250-0103	GASKET 48/38	89
315250-0104	GASKET 61/51	89
315401-0136	WASHER FBH 4,1 FZB	43, 251, 259, 263
315401-0146	WASHER FBH 5,1 FZB	121, 215, 259, 263
315401-0153	WASHER FBH6,1FZB	147, 181, 183, 185, 193, 241, 243, 251, 255, 261, 263
315401-0165	WASHER FBH8,2FZB .	119, 129, 175, 177, 181, 185, 193, 201, 215
315401-0173	WASHER FBH10,2FZB	175, 177, 195, 227
315401-0178	WASHER FBH12,2FZB	241, 243
315401-0186	WASHER FBH16,2FZB	227
315402-0136	WASHER FBB4,1RFR	41, 95
315402-0156	WASHER FBB6,5RFR	41, 131
315410-0108	LOCK WASHESKFMB8	189
315701-0198	FLAT WEDGE5X5X14	187, 209
315701-0230	FLAT WEDGE6X6X16	215
315701-0260	FLAT WEDGE8X7X14	215
315701-0276	FLAT WEDGE8X7X70	187
315701-0300	FLAT WEDGE10X8X35	187
315701-0305	FLAT WEDGE10X8X60	187
315742-0104	RETAINING 8SMS199RFR	281
315742-0111	RETAINING 15SMS199RFR	281
315750-0102	CIRCLIP SGA5	255
315750-0103	CIRCLIP SGA6	135
315750-0105	CIRCLIP SGA8	133
315750-0107	CIRCLIP SGA10	137, 275
315750-0109	CIRCLIP SGA12	31, 135
315750-0112	CIRCLIP SGA15	147
315750-0116	CIRCLIP SGA20	119, 121
315750-0124	CIRCLIP SGA35	119, 221
315752-0109	CIRCLIP SGH12	69
315752-0120	CIRCLIP SGH26	291
315752-0123	CIRCLIP SGH32	135

Part No	Description	Page No
315752-0130	CIRCLIP SGH47	119
315754-0103	LOCKING WAE 1,9	287
315754-0105	LOCKING WAE 3,2	229
315754-0106	LOCKING WAE 4	251, 259, 271, 283, 289
315754-0109	LOCKING WAE 7	251, 255, 259
315754-0110	LOCKING WAE 9	77
315754-0113	LOCKING WAE 15	93, 95, 97
315755-0107	LOCKING WAE 5RFR	77
315755-0108	LOCKING WAE 6RFR	267
318101-0039	V-BELT B39	189
318101-0040	V-BELT B40	189
318201-0060	ROLLER CHA3/8"	175, 177
318800-0103	HANDLE BALLA D.25-M6	191, 269
318800-0104	HANDLE BALLA D.30-M8	31
318800-0106	HANDLE BALLA D.40-M10	19, 25, 275
321115-0253	BUSHING 25E7/35X25	207
321120-0098	BUSHING 10/12,0X8	263
321120-0100	BUSHING 8/10X12	263
321120-0101	BUSHING 6/8X6	259
321120-0102	BUSHING 6/8X10	251, 253
321120-0103	BUSHING 8/10X8	259
321120-0104	BUSHING 10/12X10	23, 251, 275, 277
321120-0122	BUSHING 15/17X15	275
321120-0124	BUSHING 15/17X25	275
321120-0171	BUSHING 30/34X30	25
321129-0104	THRUST WAS12/24X1,5	69
321302-0296	BALL BEARISKF626-2RS	77
321302-0298	BALL BEARISKF608-2RS	251
321306-0107	BALL BEARISKF6007	193
321309-0102	BALL BEARISKF6202	209
321309-0104	BALL BEARISKF6204	119, 121
321309-0107	BALL BEARISKF6207	193
321312-0105	BALL BEARISKF6205RS	181, 185
321313-0103	BALL BEARISKF6203-2RS	215
321330-0103	BALL BEARISKF3203	175, 177, 197, 199, 227
321330-0105	BALL BEARISKF3205	215
321511-0422	NEEDLE BEANK40/20	189
321576-0197	SUPPORT RONUTR15	147
321600-0102	OIL SEAL (LL1535	209
321600-0120	OIL SEAL (LL3562	193
321600-0124	OIL SEAL (LL3572	193
321601-0103	OIL SEAL (LL40	227
32288-0004	HOLDER, LS ELEMENT	87
32289	DOWEL	87
32301	PRESS.ROLLER LONG.ELEMENT	53
32545	INSULATION WASHER	169
32546-0001	INSULATION NUT	169
3271	BRACKET	175, 177
32712	SCREW	57
32724-0001	COOLING PIPE	31
32724-0002	COOLING PIPE	45
32733	SPRING	53
3274-0001	BOLT	175, 177
3274-0002	BOLT	227
32746	CLAMP RING	71
33017	FORK	53
33018	SHAFT	53
33019	SLEEVE	51
33023	REFLECTOR TUBE	51
3303	GEAR WHEEL	215
3311	DOWEL PIN	175, 177
33164	APPLIANCE FRAME	23
33165	HEATING BLOCK	23
33166	SHEET	23
33167	PRESSURE ARM	23
33168	BRACKET	23
33170	BRACKET	23
33171	INSULATING PLATE	23
33172	SHAFT	23
33173	HEAD RAIL	23
33174	SHAFT	23
33175	SIDE PLATE	23
33176	SIDE PLATE	23
33177	ABRASION SAW BLADE	23
33178	RUBBER SHIM	23
33179	TEFLON CLOTH	23
3318	LEG	175, 177
33180	SHAFT	23
33217	SUPPORTING ARM	25
33218	SUPPORTING ARM HOLDER	25
33267	BOWL	153
33268	CAP	57
3329	STEERING RAIL	175, 177
33472	BUSHING	23
33474	LACE	25
33478	LACE	25

Part No	Description	Page No
33611	PIVOT AXLE	275
33615	INK ROLLER	275
33617	INK TRANSFER ROLLER	275
33618	LID	277
33621	MOUNTING BLOCK	275
33622	LEAF SPRING	275
33624	SECURING PLATE	275
33625	SCREW	279
33626	COMPRESSION SPRING	279
33730-0001	GASKET	31, 57, 81
33730-0004	GASKET	81
341001-0148	COPPER TUB	49
341001-0192	COPPER TUB	49
342212-0104	MUFF	49
342245-0102	T-PIPE	157
342701-0203	BUSHING RNI3/8"-1/4"	49
342707-0109	MUFF	139
342710-0203	REDUCER RBM12/8	49
342713-0210	BLIND PLUG	135, 157
342713-0213	BLIND PLUG	241, 243
342715-0103	PLUG D=8	157
342716-0203	REDUCER 6-8	157, 227
342722-0197	PIPE COUPLD=6-M5	233
342722-0202	PIPE COUPLD=6-R1/8"	31
342722-0205	PIPE COUPLD=8-R1/4"	157
342723-0109	PIPE COUPLGI-12-3/8"	49
342724-0102	PIPE COUPLGI6-LRFZB	139, 141
342725-0102	STRAIGHT PGI 6 LR/RO RFR	79
342728-0103	PIPE COUPL	245
342730-0104	ELBOW PIPE WA-8-1/4"	49
342730-0109	ELBOW PIPE WA-12-3/8"	49
342731-0102	ELBOW PIPE WE6-LRFZB	57, 63, 217
342732-0104	ELBOW PIPE D8-R1/4"	31, 157
342735-0103	ELBOW PIPE D=8	157
342736-0103	ELBOW PIPE W-8	49
342742-0104	T-CONNECTI D8-R1/4"	157
342746-0103	T-CONNECTI T-8	49
342748-0102	T-CONNECTI D=6	157
342748-0103	T-CONNECTI D=8	241, 243
342750-0103	ELBOW FITT LA-8-1/4"	49
342750-0109	ELBOW FITT LA-12-3/8"	49
342752-0102	STRAIGHT C	31
342752-0103	STRAIGHT C	103

Part No	Description	Page No
342754-0102	CROSS CONNK6-LFZB	217
342767-0104	BULKHEAD LR1/4	157
342790-0103	GAUGE CONN MAV8-LRFZB	57
342807-0104	ELBOW PIPE51	89
342920-0113	PIPE COUPL6/4-1/8	231, 245, 263, 267, 291
342920-0121	PIPE COUPL8/6-1/8	245
342921-0111	PIPE COUPL6/4-5M	103, 241, 243
342921-0113	PIPE COUPL6/4-1/8"	79
342921-0114	PIPE COUPL6/4-1/4"	217
342930-0113	ELBOW PIPE6/4-1/8	259, 263
342930-0114	ELBOW PIPE6/4-1/4	49
342946-0112	T-CONNECTI6/4	291
342950-0113	ELBOW FITT6/4-1/8	261
342980-0111	BANJO CONNSINGEL 6/4-5M	241, 243
342980-0113	BANJO CONNSINGEL 6/4-1/8	87, 245
342980-0301	BANJO CONN SINGEL 5M	241, 243
342980-0303	BANJO CONN SINGEL 1/8"	87
342980-0313	BANJO CONN DUBBEL 1/8	245
342991-0102	HOSE CLIP 13-20MMRFR	33, 107
342991-0106	HOSE CLIP 26-38MMRFR	291
342991-0113	HOSE CLIP 77-95MMRFR	47
342991-0115	HOSE CLIP 104-138MMRFR	45
344502-0021	NIPPLE L AHM6	147, 175, 177, 197, 251, 259, 291
344502-0026	NIPPLE L AHKR1/8"	119, 121, 139, 181, 185, 193, 199, 215
344502-0061	NIPPLE L M6AL.	259
346800-0109	SILENCER FILTER R1/8"	89
351127-0144	CABLE H07RN-F 3X1,5MM2	23
351175-0104	CABLE AWM YELL/GREEN 1,5	23
351175-0106	CABLE AWM YELL/GREEN 4,0	165
352020-0105	CONNECTIONOSA UE5	23
352100-0107	CABLE GLANR.18,6-12	217
352100-0111	CABLE GLANR.22,5-13,5	61, 175, 177
352101-0103	LEAD-IN G 18,6	19, 33, 79, 153, 217
352101-0103 t	LEAD-IN G 18,6	159
352101-0105	LEAD-IN G 22,5	33, 153
352103-0100	CABLE GLANR.STR 9	165
352103-0101	CABLE GLAND ST 9	49, 211, 217
352103-0105	CABLE GLANR.STR 11	33, 217, 241, 243
352103-0106	CABLE GLANR.ST 11	19, 33, 57, 165, 169
352103-0110	CABLE GLAND STR 16	33, 165
352103-0111	CABLE GLAND ST 16	33, 109
352103-0115	CABLE GLANR.STR 21	211
352110-0100	CRAMP TK 5-7	283, 289

Part No	Description	Page No
352110-0101	CRAMP TK 7-10	265
352113-0101	RIBBON CLA	205
352113-0102	RIBBON CLA	33
352113-0202	ANCHOR TM2S8-M	33
352135-0106	HOSE .016	23, 83
352136-0127	GLAND FITT	19, 23, 83
352136-0127 t	GLAND FITT	159
353101-0130	CABLE SHOE	23
353101-0153	CABLE SHOE	165
353103-0130	CABLE SHOE	83, 85
35547	SPRING	275
35548	SPRING	275
35549	CANNULAR TUBE	275
3570-0001	FASTENING IRON	227
35806	SCREW	259
35810-0002	NUT	57
35812	SCREW	57
359011-0801	SIGN BOARDBSFW 1-50	167
359011-0802	SIGN BOARDBSFW 11-20	213
359011-0804	SIGN BOARDATS 1-150	39
35921	VESSEL	71
359240-0100	SIGN HOLDER	169, 241, 243
35962	LID	205
35972	HOLDER	57
36008	BRACKET	71
36189	IMMERSION PIPE	205
36200	FILTER MESH	205
36201	WASHER	205
36361	HOLDER	275
36533	SLEEVE	69
36656	ROLL	251
36679	FRAME	241, 243
3675	TETRA PAK NAME PLATE	35
36815	THROTTLE	55
36816	LINK	55
36821-0002	SHEAR PIN	55
36861	SPACER SLEEVE	57
36986	GAUGE BRACKET	63
36987	HOLDER	63
37152	HOLDER	69
37153	RING	69
37340	STERILIZATION BATH	73
37345-0005	BENDING ROLLER	73
37345-0006	BENDING ROLLER	73
37345-0007	BENDING ROLLER	73
37353	END SECTION	69
37354	END SECTION	69
37356	PROTECTION	69
37369	GASKET	65
37462	END SECTION	281
37463	BOX	281
37464	BOTTOM PLATE	281
37465	HEAD	275
37466	ROLLER BRACKET	275
37467	INK WELL	275
37468	COVER	275
37469	PRINTING WHEEL	277
37470	SHAFT	281
37471	SHAFT	281
37472	LOCK	281
37473	ROLL	281
37474	GUIDE FINGER	281
37475	HOLDER	281
37476	SHAFT	275
37477	LID	275
37478	PIVOT BRACKET	275
37479	RING	277
37482	ECCENTRIC SHAFT	275
37483	SHAFT	275
37484	SHAFT	275
37486	TENSION SPRING	275
3749	OIL SEAL (LÖVALOCK)	121
37498-0005	BENDING ROLLER	69
37498-0006	BENDING ROLLER	69
37498-0007	BENDING ROLLER	69
37499-0005	BENDING ROLLER	73
37499-0006	BENDING ROLLER	73
37499-0007	BENDING ROLLER	73
37807	LINING	135
37808	PISTON	135
37853	CAP	89
37885	TENSION SPRING	23
37973	INSERT	57
38227	FILLER TUBE	55
38228	SLEEVE	55
38229	ARM	55

Part No	Description	Page No
38230	CLAMPING ELEMENT	55
38351	CANTILEVER	207
38354	VALVE HOUSING	207
38355	TACK	207
38357	SUPPORT RING	207
38359	PISTON	207
38360-0001	PISTON PIN	207
38361	CONNECTING ROD	207
38362	SLEEVE	207
38364	COMPRESSION SPRING	207
38365	CRANK BRACKET	207
38366	ECCENTRIC	207
38367	LOCK WASHER	207
38439	HOLDER	205
38440	COVER	205
38518	PIPE	89
38666	PUMP HOUSING	207
38667	BEARING HOUSING	207
38700	FLOAT	55
38832	SPINDLE GUIDE	65
38833	VALVE SPINDLE	65
38848	PIPE	205
38960	COIL HEATER	83
38962	CLUTCH PIECE	83
38963	LID	83
4072	RUBBER RING	21
4075-0004	SPACER RING	21
4075-0007	SPACER RING	21
4075-0008	SPACER RING	21
4287-0004	SHAFT	19
4288-0005	BENDING ROLLER	241, 243
4288-0007	BENDING ROLLER	19
4292	HANDSPIKE	269
4318-0009	SHAFT	293
4319-0005	COUNTER ROLLER	281
436381	CURVE	221
436382	CURVE	221
436566	MOUNTING SHEET	283
436567	SHAFT	283, 289
436569	SCREW	283, 289
436571	SHAFT	283, 289
436614	OPENING	165
436615	PLATE	265

Part No	Description	Page No
436721	BRACKET	103
4374	SHAFT	229
440059	CANTILEVER	175, 177
440467	CABLE HOLDER	175, 177
440528	CLAMPING PLATE	169
440578	CONNECTION BOX	211
440632	CYLINDER HOUSING	93, 95
440633	CYLINDER HOUSING	97
440634	HOUSE	91
440635	PISTON ROD	95
440636	PISTON ROD	97
440637	PISTON ROD	93
440638	PISTON	93, 95
440646	PISTON	97
440647	SLEEVE	89
440648	SEALING WASHER	95
440650	WASHER	95
440651	WASHER	93, 95
440652	WASHER	97
440654	SPACER SLEEVE	97
440655	RING	93
440656	WASHER	97
440659	CYLINDRICAL PIN	95
440660	COMPRESSION SPRING	95
440661	COMPRESSION SPRING	95
440662	COMPRESSION SPRING	97
440663	COMPRESSION SPRING	93, 95
440664	SEALING WASHER	97
440695	END SECTION	97
440731	PLATE	89
4410-0001	SCREW	21
4451	LEAD PLATE	175, 177
445677	MOUNTING RAIL	39
445678	SPACER	39
445953-0002	HOOD	19
4465-0002	PULLEY	189
4465-0004	PULLEY	189
4466-0002	FLANGE	189
4468	DOWEL	189
4469	SPRING	189
4474-0001	TENSION ARM	199
4488	ANGLE	175, 177
449600	LINK	283, 289

Part No	Description	Page No
449601	ARM	283, 289
449735	PIPE	107
449736-0002	PROTECTION PIPE	107
449737-0002	PIPE	107
449774-0002	PIPE	107
449775-0002	PIPE	107
449777-0002	PIPE	107
449778	PIPE	107
449881	BRACKET	49
4554	SPROCKET	227
4569	SPACER RING	227
4597	CONICAL GEAR	119
4613	BUSHING	131, 147
4615	ROLLER BAR	131
4617	ROLL	131
4623	SPRING	123
4624	ROLLER PLATE	123
4626	SHAFT	123
4627	SHAFT	119
4628	SHAFT	121
4636	PLUNGER	117, 133
4637	ADJUSTING NUT	117, 133
4638	BUSHING	117, 133
4639	COMPRESSION SPRING	117, 133
4642	PROTECTION PLATE	227
4660	STRUT	117
466014	CANTILEVER	231
466104	BRACKET	103
466105	PIPE	31
466106	CRAMP	31
466107	LID	31
466158	PIPE BEND	31
4666	NUT	133
466627	NIPPLE	89
4677	BRACKET	133
4678	ECCENTRIC SHAFT	133
476185	VALVE CONE	97
476203	PROTECTION	93
476473	PROTECTIVE CASING	49
476817	PIPE	31
4830	LID	175, 177
4831-0001	BOLT	199
4832	BOLT	197
484567	SHAFT	123
484671	ROLLER BEARING	133
484672	YOKE	133
484674	SHAFT	147
484675	NUT	133
484676	LUG	133
484677	BOW CLAMP	143
484678	TRANSMISSION RAIL	143
484679	TRANSMISSION RAIL	143
484680	STOP LUG	133
484681	HOLDER	139
484815	KNIFE	185
484838	WIRING DIAGRAM	61
484940	PIPE STEAM AP-VALVE	107
484975	WASHER	93, 95
484980	PIPE COOL-WATER	107
484997	VALVE BODY 51	91
484998	END SECTION	93, 95
486703	BRACKET	263
486704	BRACKET	263
486706	BRACKET	267
486708	SHAFT	259
486709	FASTENING PLATE	259
486710	BRACKET	259, 263
486711	AXLE SUPPORT	267
486713	ROD	259
486714	SPACER SLEEVE	259
486856	PROTECTION PIPE	51
4875	SHAFT	193
4876	SPROCKET	193
4877	GEAR WHEEL	193
4878	CARRIER FLANGE	193
4879	SPROCKET	193
4880	WASHER	193
4881	GEAR WHEEL	187
4882	GEAR WHEEL	187
4884	SHAFT	181, 185
4886-0001	GEAR WHEEL	181, 185
4886-0002	GEAR WHEEL	181, 185
4887	COUNTER WHEEL	181
4888	SPROCKET	181
4890	ANGLE	195
4891	TENSION ARM	195

Part No	Description	Page No
4892	CURVE	195
4893	SPACER SLEEVE	195
4894-0001	BOLT	195
4894-0002	BOLT	195
4896	MOTOR SHELF	201
4897	SHAFT	201
4898	FASTENING IRON	201
4899	HOLDER	175, 177
4900	SUPPORT BAR	175, 177
4901	TENSION ARM	197
4902	SPROCKET	175, 177, 197
4903	SEAL COVER	197, 199
4904	SPACER RING	175, 177, 197, 199
4906	SPROCKET	199
4910	PROTECTION	179
4912	OPENING	191
493071	LACE	131
493659	STRUT	67
493718	WASHER	133
493719	SHAFT	135
493726	HOLDER	141
493964	PIPE	107
4948	WINDOW	19
4962	SCREW	19
497126	PIPE	107
497166	COUNTER WEIGHT	69
497372	VENTILATING PIPE	67
497373	STRUT	67
4974-0003	SHAFT	21
4975	WASHER	21
497512-0003	STRUT	107
4976	NUT	21
4977-0003	SPINDLE	21
497748	PIN	99, 101
497933	BUSHING	93, 95, 97
499377	CANTILEVER	169
499378	CONTACT RAIL	169
499379	PLATE	169
499380	CONTROL PANEL	169
499381	PUSH BUTTON BOX	169
499382	SHEET	169
499383	SHEET	169
499384	BUSBAR	169
499385	GASKET	169
499490	PROTECTION	133
4998	SHAFT	43
4999	WASHER	41, 43
5004	UPPER FORMING RING	41
5005	SPACING WASHER	41
5006	LID, UPPER FORMING RING	41
5007	SHAFT	41
5008	KNURLED SCREW	41
5056	BEARING HOUSING	215
5057	FLANGED SHAFT	215
5058	LID	215
5059	SPROCKET	215
5205-0001	ROLLER TO LOWER RING	43
5206-0001	ROLLER TO LOWER RING	43
522021	HOLDER	235
522151	HOLDER	219
522159	CANTILEVER	209
522160	CHUTE	231
522170	PIPE	107
522191	CABLE DUCT	31
522192	SPACER	31
522303	SPACER PIPE	231
522988	HOLDER	89
522989	SPACER	89
526969	SHIM	261, 267
527131	SHIM	261, 267
529025	CRAMP	283, 289
529031	CANTILEVER	89
529293	SCREW	185
529294	NUT	185
529297	WASHER	135
529298	RUBBER CLOTH	135
530587	WASHER	97
530588	SEAL RING	97
530589	SEAL RING	93, 95
530590	VALVE CONE	93, 95
530591	HOLDER	95
530592	SEAL RING HOLDER	93
530597	WASHER	95
530598	WASHER	95
530599	RING	95
530615	CYLINDER BRACKET	65

Part No	Description	Page No
530616	PENDULUM SUSPENSION	65
530645	PIPE	31
530646	PIPE	31
530647	INDUCTOR 150IH	131
5310	SHAFT	231
531375	TOUCH GUARD	57
531376	TOUCH GUARD	57
531731	GASKET	61
531737	GASKET	57
531898	PIPE	57
531899	CANTILEVER	109
531987	GASKET	57
531991	BRACKET	129
531993	END SECTION	129
531994	ROLLER CONVEYOR	129
531996	PRESSURE CHAIN	129
531998	SUPPORT	147
532027	PIPE	31
532029	VALVE HOUSING	65
533169	DIAPHRAGM	93
533480	HEAT GUARD	109
5339	PLASTIC COVER	227
533965	AIR FILTER	109
533981	FILTER HOUSING	109
533998	PIN	131
534167	BEARING HOUSING	73
534168	CLAMPING RING	73
534169	BEARING BRACING	73
534175	BEARING COVER	73
5344-0002	CONVEYING CHAIN EQUIP.	229
534747	COVERING PLATE	23
5350	LEAD PLATE	227
535500	BRACKET	131
535567	WETTING ROLLER	73
535568	GEAR WHEEL	73
535569	DOWEL	73
535570	LEVER	73
535699	GASKET	57
535700	GASKET	57
536547	RAIL	87
536548	SLIDE RAIL	87
536698	CYLINDER BRACKET	261
536965	HEATING BLOCK	263

Part No	Description	Page No
537034	COOLING PIPE COIL	79
537173	JUNCTION BLOCK	241, 243
537174	PROTECTION	241, 243
537903	RIGHT GABLE	241, 243
537904	LEFT GABLE	241, 243
537943	ADAPTER	23
538132	NOZZLE	291
538430	WASHER	261
538431	HOLDER	283, 289
538479	PIPE	259
538526	RAIL	251
538527	RUBBER RAIL	251, 297
538980	FLANGE COUPLING	109
539212	GASKET	91
539619	ROLL	271, 283, 289
540309	SPACER BRACKET	241, 243
540345	FRAME	241, 243
540346	PROTECTIVE GLASS	241, 243
541032	ROLLER CONVEYOR	135
541036	LINK	137
541165	WASHER	99, 101
541166	WASHER	93
541167	SPACER SLEEVE	93
541686	HOLDER	31
542223	BRACKET RIGHT	137
542224	BRACKET LEFT	137
542225	SHAFT	137
542229	CURVE	133
542230	CURVE	117
543501	ROLLER PLATE	133, 135
543502	CONNECTION	135
543507	SHAFT	137
543508	BUSHING	129
543509	ROLL	147
543511	ADJUSTMENT SLEEVE	117, 133
543512	ADJUSTMENT SLEEVE	117, 133
543513	WASHER	117, 133
543517	TRANSMISSION RAIL	129
543518	TRANSMISSION RAIL	137
543519	END SECTION	129
5450-0001	CARTON	189
547508 t	HINGE	155
547509 t	FRAME	155

Part No	Description	Page No
547510 t	DOOR	155
547514	BRACKET	87
547515	BRACKET	87
547516	ROD	87
547517	TEFLON PIPE	87
547518	CRAMP	81
547519	HOT AIR ELEMENT	87
547572	ATTACHMENT PIPE	81
5486	BEARING	285
550193	PIN	147
552868	(TUBULAR)JACKET	45
552870	LACE	45
552871	HOSE ATTACHMENT	47
552872	WASHER	47
554218	LOCKING LUG	23
555053	FLANGE	59
574617	MOUNTING SHEET	289
575504	LID	247
575505	SPACER	241, 243, 271, 281
577540	SCREW HOLDER	181
5778	SHAFT	287
578505	RAM	105
578613	FRAME	105
578614	PLATFORM	105
578615	PLATFORM	105
578616	PLATFORM	105
578617	RAILING	105
578618	RAILING	105
578619	RAILING	105
578620	PLATFORM	105
578621	HAND RAIL	105
578622	HAND RAIL	105
578629	RAILING	105
578630	RAILING	105
578631	RAILING	105
578632	RAILING	105
578633	RAILING	105
578634	END PIECE	105
578635	STAIR	105
578636	RAILING	105
578767	BRACKET	23
578768	TEARING BAR	23
580034	HOLDER	105

Part No	Description	Page No
5809	TACK	131, 147
581591	BRACKET	23
6071	LOCKING FINGER	275
6074	WASHER	275
6116-0002	TENSION SPRING	229
6157	BOBBIN	285
6158	SPRING	285
6159	BEARING	285
6216	SPROCKET	187, 209
6299	SCOOP	229
6443-0001	ROLLER TO LOWER RING	43
6453-0001	LUBRICATING PIPE	119
6695	ROLL	283, 289
6759-0001	SHAFT	271
6827	TAPER	203
6831	BOLT	203
6849	AXLE PIN	187
6881	CANTILEVER	183
6882	LEAD ARM	183
7018	COVERING PLATE	175, 177
7108	STOP SLEEVE	21
7109	PUSH SLEEVE	21
7309	HANDLE	175, 177, 217, 247
7352	COMPRESSION SPRING	197
7353	COVER	197
7354-0001	SCREW	197
7470-0006	CHAIN	175, 177
7470-0007	CHAIN	175, 177
7502	STOP SCREW	117, 133
751009	INSULATION	61
751484	CLAMPING RING	105
751485	SCREW	105
8479	COMPRESSION SPRING	259
8490-0003	RAIL	213
90002-0002	BLANK-OFF PLUG	211
90002-0003	BLANK-OFF PLUG	31
90002-0004	BLANK-OFF PLUG 22,5	165, 169
90002-0009	BLANK-OFF PLUG	165, 241, 243
90002-0013	BLANK-OFF PLUG	211
90002-0013	BLANK-OFF PLUG 15,2	165
90005-0005 t	WASHER	159
90005-0010	WASHER	221
90012-0064	GLAND	221

Part No	Description	Page No
90015-0016	BUSHING	25
90015-0026	BUSHING	283, 289
90017-0001	HANDLE	23
90017-0012 t	HANDLE	155
90020-0020	SLEEVE	135
90020-0021	SLEEVE	207
90020-0027	SLEEVE	97
90020-0028	SLEEVE	93, 95
90026-0002	THREADED BUSH	41
90026-0004	THREADED BUSH	41
90028-0001	CONE	139, 141, 219, 235
90030-0004	CONNECTION	217
90030-0052	PIPE CONNECTION	31, 57, 73
90030-0056	PIPE CONNECTION	49
90030-0071	PIPE CONNECTION	57, 207
90030-0077	PIPE CONNECTION	45, 107
90030-0091	PIPE CONNECTION	107
90030-0106	PIPE CONNECTION	69, 73
90030-0109	PIPE CONNECTION	69, 73
90030-0115	PIPE CONNECTION	57
90030-0126	PIPE CONNECTION	217
90030-0127	PIPE CONNECITON	217
90030-0128	PIPE CONNECTION	217
90030-0129	PIPE CONNECTION	217
90030-0130	PIPE CONNECITON	217
90030-0131	PIPE CONNECTION	217
90030-0132	PLUG	217
90030-0137	CONNECTION	65
90030-0146	CONNECTION	217
90030-0187	PIPE CONNECTION	73
90030-0210	NIPPLE	245, 263
90030-0213	PIPE COUPLING	107
90032-0012	JUNCTION BLOCK	141, 163
90032-0013	JUNCTION BLOCK	141, 163
90032-0027	BRANSCH	235
90032-0035	JUNCTION BLOCK	139
90032-0036	JUNCTION BLOCK	139, 219
90042-0045	SOLENOID VALVE	103, 233
90042-0047	SOLENOID VALVE	103
90042-0098	SOLENOID VALVE	49
90042-0128	SOLENOID VALVE	217
90042-0159	SOLENOID VALVE	245
90042-0164	SOLENOID VALVE	49
90042-0328	RAMP	103, 233
90042-0346	COIL	245
90042-0350	BRACKET	217
90043-0009	PRESSURE GAUGE	57
90043-0015	PRESSURE GAUGE	217
90043-0028	PRESSURE GAUGE	63
90043-0047	PRESSURE GAUGE	63
90043-0081 t	PRESSURE GAUGE	161
90044-0037	MAGNETIC SWITCH	69
90044-0062	PROXIMITY SWITCH	89, 221, 283, 289
90044-0104	INDUCTIVE SWITCH	209
90044-0122	INDUCTIVE SWITCH	227
90045-0049	MOTOR	201
90045-0115 t	MOTOR	161
90048-0007	OILPUMP	217
90048-0016	ACKUMULATOR	217
90050-0008	BOTTLE	275
90050-0010	BOTTLE	205
90051-0026	HANDLE	275
90051-0053	HANDLE	275
90055-0042	NIPPLE	31
90055-0042 t	NIPPLE	159
90055-0044	HOSE NIPPLE	103, 233
90055-0045	HOSE NIPPLE	103, 233
90055-0055	HOSE COUPLING	145
90055-0056	HOSE COUPLING	31, 145
90055-0056 t	HOSE COUPLING	159
90055-0057	HOSE COUPLING	31, 145
90055-0057 t	HOSE COUPLING	159
90055-0058	HOSE COUPLING	145
90055-0073	HOSE NIPPLE	241, 243
90056-0075	WORM GEAR	187
90059-0001	THERMOSTAT	23
90064-0052	PUSH BUTTON	169
90064-0054	PUSH BUTTON	169
90069-0007	WORM GEAR MOTOR	207
90074-0001	CLIP	227
90074-0002	CLIP	217
90074-0003	CLIP	145
90074-0005	CLIP	241, 243
90074-0015	CLIP	145
90074-0018	CLIP	235
90074-0029	CLIP	241, 243

Part No	Description	Page No
90077-0041	FEED THROUGH TERMINAL	39
90077-0064	FEED THROUGH TERMINAL	39
90077-0065	FEED THROUGH TERMINAL	167
90077-0079	FEED THROUGH TERMINAL	213
90077-0310	BRACKET	165
90089-0004	SLEEVE	61
90090-0002	STEEL BALL	279
90090-0003	STEEL BALL	275
90090-0010	STEEL BALL	207
90091-0180	GASKET	31
90092-0048	OIL BRUSH	139, 141, 219, 235
90092-0064	METERING VALVE	139, 141, 163, 219
90092-0065	METERING VALVE	139, 141, 235
90093-0008	END PLATE	39
90099-0002	NUT	169
90099-0003	NUT	61
90099-0004	NUT	61
90099-0050	NUT	209
90099-0051	NUT	65
90101-0001	HOLDER	67
90101-0005	HOLDER	67
90110-0024	PLUG	31
90111-0073	SWITCH	241, 243
90113-0013	REGULATOR	157
90115-0008	ROD END	231
90125-0020	PLATE	85
90131-0002	HOSE COUPLING	31
90134-0003	BUSHING	139, 141, 219, 235
90134-0032	CONNECTION	163
90134-0033	NIPPLE	139, 141
90134-0034	NIPPLE	139, 141, 163, 219, 235
90135-0021	EARTHING CLAMP	167
90135-0022	EARTHING CLAMP	39
90135-0024	EARTHING CLAMP	39
90135-0026	EARTHING CLAMP	213
90136-0002	PLUG	139, 141, 163
90140-0015	T-PIECE	245
90140-0020	ELBOW PIPE	49
90140-0022	T-PIECE	245
90141-0015	LOCK RING	73
90142-0005	HOSE	23
90143-0012	STRIP	165
90143-0028	STRIP	35

Part No	Description	Page No
90144-0004	TAPE	207
90145-0003	WIRE	259
90148-0010	HOSE	31, 145
90148-0010 t	HOSE	159
90152-0033	HOSE	221
90153-0002	ADHESIVE	35
90153-0017	ADHESIVE	23
90155-0001	CHAIN	43, 275
90155-0008	CHAIN	69
90157-0021	LOCKING FLUID	217
90161-0006	STRIP	221
90162-0013	HOSE	69
90162-0027	HOSE	31
90163-0001	CONNECTION	31, 89
90163-0008	CONNECTION	157
90163-0041	NIPPLE	31, 49
90163-0043 t	CONNECTION	159
90163-0044	CONNECTION	145
90163-0067	HOSE NIPPLE	57, 241, 243
90163-0306	DUST COVER	145
90165-0003	CLIP	139, 141, 219
90165-0005	CLIP	163
90165-0007	CLIP	145
90165-0007 t	CLIP	159
90165-0013 t	CLIP	159
90165-0014	CLIP	219
90165-0015	CLIP	241, 243, 271, 281
90165-0040	CLIP	217
90165-0051	CLIP	107
90165-0057	CLIP	31
90165-0062	CLIP	107
90165-0067	TOOL HOLDER	263
90165-0302	DECREASING SLEEVE	67
90166-0005	HOSE	69, 205
90166-0011	HOSE	139, 141, 163, 217, 219, 235
90166-0013	HOSE	157, 241, 243, 245
90166-0045	HOSE	107
90166-0053	SHRINKABLE HOSE	271
90166-0059	HOSE	205
90166-0081	HOSE	291
90166-0089	HOSE	79, 227
90166-0098	SHRINKABLE HOSE	291
90166-0099	HOSE	103, 233

Part No	Description	Page No
90166-0103	HOSE	139, 141, 219, 235
90166-0105	HOSE	157, 241, 243
90166-0113	HOSE	275
90166-0117	HOSE	241, 243
90166-0121	HOSE	107
90166-0190	* PLASTIC HOSE	291
90187-0058	VALVE	49
90187-0059	VALVE	69, 89
90187-0073	VALVE	31
90189-0003	BALL BUSHING	251
90189-0011	BALL BUSHING	291
90195-0017	TERMINAL BLOCK	265
90195-0020	TERMINAL BLOCK	221
90195-0028	TERMINAL BLOCK	61
90195-0029	COUPLING STRIP	61
90199-0020 t	LEVEL GLASS	161
90201-0027 t	SHUT-OFF VALVE	161
90206-0009	HEATING ELEMENT	23
90206-0014	HEATING ELEMENT	83
90206-0052	HOT AIR ELEMENT	291
90206-0073	HEATING ELEMENT	263, 297
90206-0324	* HEATING CARTRIDGE	291
90206-0324	HEATING CARTRIDGE	297
90207-0363	GASKET	91
90207-0365	GASKET	91
90208-0004	LOCKING ELEMENT	209
90214-0040	BALL BEARING	73
90224-0230	GLAND FITTING	103
90230-0025	NON-RETURN VALVE	107
90232-0034	PHOTOCELL	19
90232-0035	PHOTOCELL	19
90235-0180	VALVE	31
90235-0194	VALVE	233
90235-0198	VALVE	233
90235-0241	VALVE	231, 259, 263, 267, 291
90235-0251	VALVE	261
90235-0259	VALVE	261
90235-0289	VALVE	241, 243
90236-0026	FASTENING BRACKET	233
90237-0046 t	LOCK PART	155
90239-0088	BRACKET	87
90239-0370	CONNECTION	291
90239-0505	BRACKET	263
90239-0821	CYLINDER	231
90239-0821	CYLINDER 20-25	87, 291
90239-0822	CYLINDER 20-50	267
90239-0825	CYLINDER 20-125	291
90239-0828	CYLINDER 25-25	259
90239-0911	CYLINDER	263
90239-0959	CYLINDER	65
90239-0989	CYLINDER	261
90240-0028	PLAIN BEARING	23, 69, 275
90242-0036	O-RING	207
90242-0064	O-RING	65
90242-0144 t	O-RING	161
90248-0002	HINGE	247
90261-0001	PIPE PLUG	69
90264-0041	AIR COMPR.FAN	109
90266-0006	TUBE	217
90274-0020	LEVEL PROBE	71
90274-0032	GUARD	57
90274-0042	GUARD	49
90274-0056	PRESSURE SWITCH	217
90287-0171	SCREW	131
90296-0009	GREASE	207
90296-0068	GREASE	207
90299-0072	INK	275
90321-0053 t	PUMP	161
90321-0468 t	SHAFT COUPLING	161
90321-0469 t	O-RING SET	161
90326-0012	PROTECTIVE COVER	51, 59, 81, 89
90326-0017	GLAND	59, 81, 89
90326-0019	THERMOELEMENT	59, 89
90326-0020	SOCKET	51, 59, 81, 89
90326-0043	THERMOELEMENT	81
90328-0012	SILENCER	245, 261
90328-0020	SILENCER	245
90330-0012	REDUCTION SLEEVE	103
90330-0013	REDUCTION NIPPLE	89
90330-0018	CONNECTION	67
90330-0019	REDUCTION NIPPLE	89
90330-0023	PIPE JOINT	107
90330-0028	NIPPLE	89
90330-0029	PLUG	57
90330-0032	NIPPLE	139, 245, 261
90330-0036	BUSHING	89

Part No	Description	Page No
90330-0042	BUSHING	57
90330-0049	T-PIECE	89
90330-0050	ELBOW PIPE	73
90330-0062	COUPLING	89
90330-0063	CONNECTION	107
90330-0065	ELBOW PIPE	89
90339-0006	MAGNET	69
90339-0007	MAGNET	69
90340-0014	FREE WHEEL COUPLING	255
90340-0309	* SPRING	255
90347-0005	VIBRATION DAMPER	261
90347-0007	VIBRATION DAMPER	241, 243
90347-0064	DAMPER	109
90360-0005	STEAM TRAP	107
90360-0006	ATTACHMENT	107
90413-0033	CODE INSERT SET	275
90413-0047	CODE INSERT SET	275
90415-0004	FILTER	217
90415-0333 t	FILLER CAP	161
90415-0334 t	FILTER	161
90427-0312	DATING UNIT	277
B		
B- 610308-1501	HOLE PUNCH	239
B- 633201-0801	CASSETTE	17
B- 633202-1601	SUPERSTRUCTURE	29
B- 633203-1101	SIDE FRAME	113
B- 633203-1103	SIDE FRAME	115
B- 633204-1901	MACHINE BODY AT150	151
B- 633205-1301	CUTTING DEVICE	173
B- 633206-0401	ELEVATOR	225
C		
C- 11040-0401	CASSETTE	17, 19
C- 11040-0402	CASSETTE	19
C- 11126-0101	DOOR	29, 35
C- 1175003-0101	PLATFORM	105
C- 12270-0401	. STERILE FILTER	29
C- 12270-0401	STERILE FILTER	57, 59
C- 13247-0101	UPPER FORMING RING	41
C- 13247-0102	UPPER FORMING RING	41
C- 13247-0103	UPPER FORMING RING	41
C- 13247-010V	UPPER FORMING RING	29
C- 13372-0202	DRIVE SHAFT	215
C- 13372-020V	DRIVE SHAFT	173
C- 13852-0201	MAGAZINE	247
C- 13852-020V	MAGAZINE	239
C- 19519-0301	OPENING ARRANGEMENT	239, 249
C- 19521-0201	. CARRIAGE	239
C- 19521-0201	CARRIAGE	249, 251
C- 19522-0101	. . COUNTER ROLLER	239
C- 19522-0101	COUNTER ROLLER	251, 253
C- 19523-0101	. . FREE-WHEEL COUPLING	239
C- 19523-0101	FREE-WHEEL COUPLING	251, 255
C- 19525-0702	PUNCH UNIT	259
C- 19525-0703	PUNCH UNIT	259
C- 19525-070V	. PUNCH UNIT	239
C- 19525-070V	PUNCH UNIT	249
C- 19526-030V	. FRAME	239
C- 19526-030V	FRAME	249, 261
C- 19573-0201	. . CONNECTION BOX	239
C- 19573-0201	CONNECTION BOX	263, 265
C- 20036-0101	BRAKE	239, 269
C- 20387-0101	. . BOBBIN	239
C- 20387-0101	BOBBIN	283, 285, 289
C- 20389-0101	. . BRAKE	239
C- 20389-0101	BRAKE	283, 287, 289
C- 207637-0302	ELEMENT	83
C- 207637-030V	. ELEMENT	29
C- 207637-030V	ELEMENT	81
C- 207638-0201	. . SLEEVE CONTACT	29
C- 207638-0202	. . SLEEVE CONTACT	29
C- 207638-0202	SLEEVE CONTACT	83, 85
C- 20991-0101	. . STEERING	239
C- 20991-0101	STEERING	251, 257
C- 209969-0101	OPERATION DEVICE	29, 37
C- 230177-0301	CENTRAL LUBRICATION	173, 217
C- 236637-0101	. . TERMINAL PLINTH	173
C- 236637-0101	TERMINAL PLINTH	211, 213
C- 236638-0202	CONNECTION BOX	211
C- 236638-020V	. CONNECTION BOX	173
C- 236638-020V	CONNECTION BOX	209
C- 236641-0301	IMPULSE TRANSMITTER	173, 209
C- 236892-0402	ELEMENT GROUP	29, 81
C- 239793-0101	BENDING ROLLER	239, 295
C- 246893-0501	VALVE	29, 89
C- 247181-0601	STERILE AIR UNIT	29, 57

Part No	Description	Page No
C- 247207-0302	AIR VALVE	65
C- 247207-030V	. AIR VALVE	29
C- 247207-030V	AIR VALVE	57
C- 247367-0101	PUMP	173, 205
C- 247368-0305	STERILIZATION BATH	73
C- 247368-0306	STERILIZATION BATH	73
C- 247368-0307	STERILIZATION BATH	73
C- 247368-030V	. STERILIZATION BATH	29
C- 247368-030V	STERILIZATION BATH	69
C- 247382-0401	VALVE GROUP	103
C- 247382-040V	VALVE GROUP	29
C- 247463-0502	SUPERSTRUCTURE	29, 31
C- 251344-0201	STRIP APPLICATOR	271
C- 251344-020V	STRIP APPLICATOR	239
C- 257840-0302	CUTTING DEVICE	175, 177
C- 257840-030V	CUTTING DEVICE	173
C- 263812-0101	CENTRAL LUBRICATION	151, 163
C- 263843-0201	CENTRAL LUBRICATION	173, 219
C- 263886-0302	SEALING DEVICE	263
C- 263886-030V	. SEALING DEVICE	239
C- 263886-030V	SEALING DEVICE	249
C- 265711-0101	. HYDRAULIC UNIT	151
C- 265768-0301	HOLE PUNCH	241, 243
C- 265768-030V	HOLE PUNCH	239
C- 266503-0101	HYDRAULIC PRESSURE SYSTEM	151
C- 267052-0301	START-UP KIT	297
C- 267052-030V	START-UP KIT	239
C- 268188-0101	. PAPER GUIDE	29
C- 268188-0101	PAPER GUIDE	69, 75
C- 268554-0101	. . PAPER GUIDE	29
C- 268554-0101	PAPER GUIDE	75, 77
C- 283773-0104	HEATING JAW IH	131
C- 283773-010V	HEATING JAW IH	113
C- 283911-0101	CONTACT UNIT	113, 125
C- 283912-0101	. CONTACT UNIT	113
C- 283912-0101	CONTACT UNIT	125, 127
C- 293483-0101	FASTENING PLATE	283
C- 293483-010V	. FASTENING PLATE	239
C- 293483-010V	FASTENING PLATE	271
C- 293484-0101	FASTENING PLATE	289
C- 293484-010V	. FASTENING PLATE	239
C- 293484-010V	FASTENING PLATE	271
C- 294112-0201	ELEMENT GROUP	291
C- 294112-020V	. ELEMENT GROUP	239
C- 294112-020V	ELEMENT GROUP	271
C- 294214-0101	APPLIANCE BOX	151, 165
C- 30119-0401	. AIR SUPER-HEATER	29
C- 30119-0401	AIR SUPER-HEATER	57, 61
C- 32744-0201	. LEVEL GUARD	29
C- 32744-0201	LEVEL GUARD	69, 71
C- 33038-0203	LOWER FORMING RING	43
C- 33038-0204	LOWER FORMING RING	43
C- 33038-0205	LOWER FORMING RING	43
C- 33038-020V	LOWER FORMING RING	29
C- 33163-0101	SPLICING APPARATUS	17
C- 33163-201	SPLICING APPARATUS	23
C- 33216-0101	. CANTILEVER	17
C- 33216-0101	CANTILEVER	23, 25
C- 33216-0102	CANTILEVER	25
C- 33608-0101	. . . . SCREW	239
C- 33608-0101	SCREW	277, 279
C- 36351-0102	. PRESSURE ROLLER	29
C- 36351-0102	PRESSURE ROLLER	51, 53
C- 37459-0101	. HOLDER	239
C- 37459-0101	HOLDER	271, 273
C- 37460-0101	. . DATING UNIT	239
C- 37460-0101	DATING UNIT	273, 275
C- 37461-0101	. . . PRINTING WHEEL	239
C- 37461-0101	PRINTING WHEEL	275, 277
C- 37485-0102	HOLDER	281
C- 37485-010V	. . HOLDER	239
C- 37485-010V	HOLDER	273
C- 37496-0405	STERILIZER	69
C- 37496-0406	STERILIZER	69
C- 37496-0407	STERILIZER	69
C- 37496-040V	STERILIZER	29
C- 38094-0101	. GAUGE GROUP	29
C- 38094-0101	GAUGE GROUP	57, 63
C- 38699-0101	FLOAT ASSEMBLY	29, 55
C- 38715-0101	. PUMP	173
C- 38715-0101	PUMP	205, 207
C- 434042-0201	SHEARING DEVICE	173, 179
C- 440325-0101	IMPULSE TRANSMITTER	173, 221
C- 440630-0203	. AP-VALVE	29
C- 440630-0203	AP-VALVE	89, 91
C- 4438-0302	SLIP DISC	189

Part No	Description	Page No
C- 4438-0304	SLIP DISC	189
C- 4438-030V	. SLIP DISC	173
C- 4438-030V	SLIP DISC	187
C- 445679-0201	TERMINAL PLINTH	29, 39
C- 449122-020V	TUBE HEATER	29, 51
C- 449123-0303	PIPE	29, 107
C- 449404-0201	MACHINE BODY AT150	151, 153
C- 449972-0101	AIR PIPE-LINE	157
C- 449972-010V	AIR PIPE-LINE	151
C- 450044-0301	VALVE GROUP	49
C- 450044-030V	VALVE GROUP	29
C- 450114-0101	. TERMINAL PLINTH	151
C- 450114-0101	TERMINAL PLINTH	165, 167
C- 450343-0101	PAPER GUIDE	293
C- 450343-010V	. PAPER GUIDE	239
C- 450343-010V	PAPER GUIDE	271
C- 450344-0101	PNEUMATIC PANEL	233
C- 450344-010V	PNEUMATIC PANEL	225
C- 4574-0101	DOOR	151
C- 4575-0101	DOOR	151
C- 4579-0101	LINK CHAIN WHEEL	113, 119
C- 4579-0102	LINK CHAIN WHEEL	113, 115, 119
C- 4580-0101	LINK CHAIN WHEEL	113, 115, 121
C- 4586-0201	DOUBLE CHAIN 3/4"	113, 115, 123
C- 4865-0301	. COUNTER WHEEL	173
C- 4865-0301	COUNTER WHEEL	179, 181
C- 4865-0302	. COUNTER WHEEL	173
C- 4865-0302	COUNTER WHEEL	179, 181
C- 4866-0301	WORM GEAR	173, 187
C- 4867-0101	OPENING	173, 191
C- 486705-0101	FEEDER	267
C- 486705-010V	. FEEDER	239
C- 486705-010V	FEEDER	249
C- 4868-0101	INTERMEDIARY SHAFT	173, 193
C- 4869-0101	CHAIN TENSIONER	173, 195
C- 4870-0102	CHAIN TENSIONER	197
C- 4870-010V	CHAIN TENSIONER	173
C- 4871-0101	CHAIN TENSIONER	173, 199
C- 4872-0501	MOTOR	173, 201
C- 497371-0101	. VENT. PIPE AIR VALVE	29
C- 497371-0101	VENT. PIPE AIR VALVE	57, 67
C- 497873-0101	TILTING TRAY	225, 231
C- 497924-0101	. PEROXIDE COOLER	29
C- 497924-0101	PEROXIDE COOLER	69, 79
C- 499860-0101	BRACKET IH	151, 169
C- 522409-0101	CENTRAL LUBRICATION	225, 235
C- 529316-0101	. CUTTING WHEEL	173
C- 529316-0101	CUTTING WHEEL	179, 185
C- 532007-0101	PLUNGER	115, 135
C- 532007-0102	PLUNGER	115, 135
C- 532009-0101	ROLLER CONVEYOR	113, 129
C- 532009-0102	ROLLER CONVEYOR	113, 129
C- 532010-0101	TRANSMISSION RAIL	115, 143
C- 532010-0102	TRANSMISSION RAIL	115, 143
C- 532011-0105	PRESSURE JAW	147
C- 532011-010V	PRESSURE JAW	115
C- 532157-0101	HYDRAULIC SYSTEM SIDE	115, 145
C- 532160-0201 t	HYDRAULIC SYSTEM	159
C- 5332-0201	ELEVATOR	225, 227
C- 5333-0101	CHAIN	229
C- 5333-010V	CHAIN	225
C- 536535-0103	MACHINE BODY SIDE	113, 117
C- 536535-0104	MACHINE BODY SIDE	117
C- 536536-0101	MACH. BODY PRESSURE SIDE	115, 133
C- 536536-0102	MACH. BODY PRESSURE SIDE	133
C- 536537-0101	CENTRALLUBR. PRESSURESIDE	115, 139
C- 536538-0101	CENTRALLUBR. HEATINGSIDE	115, 141
C- 536952-0202	LS-ELEMENT	87
C- 536952-020V	. LS-ELEMENT	29
C- 536952-020V	LS-ELEMENT	81
C- 537570-0101	AIR DISTRIBUTION UNIT	245
C- 537570-010V	. AIR DISTRIBUTION UNIT	239
C- 537570-010V	AIR DISTRIBUTION UNIT	241, 243
C- 537961-0101 t	HYDRAULIC SYSTEM	159, 161
C- 538979-0101	FAN ASSEMBLY	29, 109
C- 539209-0101	. . A-CYLINDER	29
C- 539209-0101	A-CYLINDER	91, 93
C- 539210-0101	. . C-CYLINDER	29
C- 539210-0101	C-CYLINDER	91, 95
C- 539211-0101	. . B-CYLINDER	29
C- 539211-0101	B-CYLINDER	91, 97
C- 541163-0101	. . CLAMP RING	29
C- 541163-0101	CLAMP RING	91, 99
C- 541164-0101	. . CLAMP RING	29
C- 541164-0101	CLAMP RING	91, 101
C- 542226-0101	TRANSMISSION RAIL	115, 137

Part No	Description	Page No
C- 542226-0102	TRANSMISSION RAIL	115, 137
C- 548468-010V t	DOOR	155
C- 552869-0101	(TUBULAR)JACKET	29, 45
C- 552873-0101	TEFLON HOSE	47
C- 552873-0103	TEFLON HOSE	47
C- 552873-010V	TEFLON HOSE	29
C- 6830-0101	EXPANSION BOLT	173, 203
C- 6880-0102	. STEERING	173
C- 6880-0102	STEERING	179, 183
C- 7105-0104	PAPER REEL HOLDER	21
C- 7105-0105	PAPER REEL HOLDER	21
C- 7105-0106	PAPER REEL HOLDER	21
C- 7105-010V	PAPER REEL HOLDER	17
C-1175003-0101	PLATFORM	29
G		
G- 11158	HANDLE	35
G- 13284	LID	43
G- 21233	LEVER	259
G- 230180	OPENING	217
G- 236644	MACHINE BODY	209
G- 2404	CAP	31
G- 247471	MACHINE BODY LOWER	31
G- 252665	CANTILEVER	217
G- 278985	HEATING JAW	131
G- 279233	CARBON BRUSH HOLDER	131
G- 283468	BEARING CONSOLE	291
G- 30820	FLAP	147
G- 37806-0001	SIDE FRAME	133
G- 37806-0002	SIDE FRAME	133
G- 37824-0001	SIDE FRAME LEFT	117
G- 37824-0002	SIDE FRAME RIGHT	117
G- 4071-0004	SPACER SLEEVE	21
G- 4317	BEARING	241, 243, 271, 281
G- 436613	BOX	165
G- 440419	BRACKET	131
G- 4460	DOUBLE SPROCKET	215
G- 4467	HUB	189
G- 4476	CANTILEVER	199
G- 4595	LINK CHAIN WHEEL	121
G- 4596	LINK CHAIN WHEEL	119
G- 4598	CONICAL GEAR	119
G- 4599	BEARING HOUSING	119
G- 4600	BEARING HOUSING	119
G- 4609	FLAP	131
G- 4633	LINK CHAIN WHEEL	119
G- 484668	PLUNGER	135
G- 484673	PRESSURE JAW	147
G- 4874	CANTILEVER	193
G- 4895	BEARING BRACKET	179
G- 4905	GEARBOX SHELF	175, 177
G- 4907	CUTTING MECHANISM BODY	175, 177
G- 4909	MOTOR COVER	175, 177
G- 4961	CATCH	19
G- 526614	MACHINE BODY	153
G- 529317	KNIFE WHEEL	185
G- 532117	CLAMP RING	99
G- 532118	CLAMP RING	101
G- 5336	ELEVATOR FRAME LEFT	227
G- 5337	ELEVATOR FRAME RIGHT	227
G- 5338	PLATE	227
G- 552867	MACHINE BODY UPPER	31

Tetra Pak

Tetra Laval Food Packaging Systems AB

MES-SAGE

021125

Technical Publications
Lars Willander

Re.: **SPC TCA/150 010V, 633218-0103**, issue 9503

The Doc No: SPC-85521-01 (issue 9503), Spare Parts Catalogue, for TCA/150 010V, 633218-0103 is now ready.

The document contains a total number of **410** catalogue pages, including the first **14** introduction pages.

Please send your order to Tetra Pak P&PS Service AB, Central Technical Publications, Lund.

Best regards,
Technical Publications

Editor

This page intentionally left blank

Tetra Pak P&PS Service AB

Central Technical Publications
Publication Supports
Ruben Rausings gata
221 86 LUND

Phone: +46 46 361000
Fax No: +46 46 362004

PURCHASE ORDER

.....copies of SPC 633218-0103, TCA/150 010V,
Doc No: SPC-85521-01 issue 9503.

Cost centre /
Customer code .....

Name .....

Company .....

Adress .....

Date .....

Please mail or fax your order to the above address

SPC binder labels. 40 mm Full width *Note! This page is generated **automaticall** using the **variable definitions** made in the **front page** file!!*

TCA/150 010V
633218-0103

Issue: 9503 Doc No: SPC-85521-01

TCA/150 010V
633218-0103

Issue: 9503 Doc No: SPC-85521-01

TCA/150 010V
633218-0103

Issue: 9503 Doc No: SPC-85521-01

TCA/150 010V
633218-0103

Issue: 9503 Doc No: SPC-85521-01

TCA/150 010V
633218-0103

Issue: 9503 Doc No: SPC-85521-01

TCA/150 010V
633218-0103

Issue: 9503 Doc No: SPC-85521-01

TCA/150 010V
633218-0103

Issue: 9503 Doc No: SPC-85521-01

TCA/150 010V
633218-0103

Issue: 9503 Doc No: SPC-85521-01

TCA/150 010V
633218-0103

Issue: 9503 Doc No: SPC-85521-01

TCA/150 010V
633218-0103

Issue: 9503 Doc No: SPC-85521-01

TCA/150 010V
633218-0103

Issue: 9503 Doc No: SPC-85521-01

TCA/150 010V
633218-0103
Issue: 9503 Doc No: SPC-85521-01

TCA/150 010V
633218-0103
Issue: 9503 Doc No: SPC-85521-01

TCA/150 010V
633218-0103
Issue: 9503 Doc No: SPC-85521-01

TCA/150 010V
633218-0103
Issue: 9503 Doc No: SPC-85521-01

TCA/150 010V
633218-0103
Issue: 9503 Doc No: SPC-85521-01

TCA/150 010V
633218-0103
Issue: 9503 Doc No: SPC-85521-01

TCA/150 010V
633218-0103
Issue: 9503 Doc No: SPC-85521-01

TCA/150 010V
633218-0103
Issue: 9503 Doc No: SPC-85521-01

TCA/150 010V
633218-0103
Issue: 9503 Doc No: SPC-85521-01

TCA/150 010V
633218-0103
Issue: 9503 Doc No: SPC-85521-01

TCA/150 010V
633218-0103
Issue: 9503 Doc No: SPC-85521-01

TCA/150 010V
633218-0103
Issue: 9503 Doc No: SPC-85521-01

TCA/150 010V
633218-0103
Issue: 9503 Doc No: SPC-85521-01

This page intentionally left blank